RUTHZIL TRATOR COMERCIAL DE PEÇAS LTDA 11 97083-6812 ROLANDO

1965 - 1975 FORD TRACTOR Service Manual

TRACTORS Ford EQUIPMENT

JANEIRO 1965

Tractor Series
2000, 3000, 4000, 5000, 7000 3400, 3500, 3550, 4400, 4500, 5500, and 5550

Part 1 – Engine Systems
Part 2 – Fuel Systems
Part 3 – Electrical System
Part 4 – Clutches
Part 5 – Four-Speed Transmission
Part 6 – Six-Speed Transmission
Part 7 – Seven and Eight-Speed Transmission
Part 8 – Select-O-Speed Transmission
Part 9 – Power Take-Off
Part 10 – Rear Axle and Brakes
Part 11 – Hydraulic Systems
Part 12 – Steering Systems
Part 13 – Front Axle
Part 14 – Wheels and Tyres
Part 15 – Separating the Tractor
Part 16 – Accessories and General
Part 17 – Tractor Maintenance Schedule

This three-volume manual provides information for the proper servicing of the Ford 2000, 3000, 4000, 5000, and 7000 agricultural tractors Keep this manual readily available for reference at all times.

FOREWORD

This three-volume manual provides information for the proper servicing of the Ford 2000, 3000, 4000, 5000, and 7000 agricultural tractors Keep this manual readily available for reference at all times.

The manual is grouped into 17 parts. Each part contains chapter divisions. The chapters contain such information as general operating principles, detailed inspection and repair procedures, and full specifics regarding troubleshooting, specifications, and special tools. Whenever possible, the special tools are illustrated performing their specific operations.

The page and figure numbers are consecutively numbered throughout each part of the manual and each page bears the date of issue. Specifications listed on some pages may differ from those in the text. In these cases, the specifications listed on the pages bearing the latest issue date should be used. Any reference made in the manual to right, left, front, rear, top, or bottom, is as viewed facing the direction of forward travel from the driver's seat.

The tractor and engine serial numbers, and the production code numbers for the transmission, hydraulic pump, rear axle and hydraulic power lift, are located on the individual components. An explanation covering the usage and location of these numbers is detailed on the following page. The serial numbers and production codes should be used on all correspondence relative to these Ford tractors.

The material contained in this manual was correct at the time the manual was approved for printing. Ford policy is one of continuous improvement and the Ford Motor Company reserves the right to discontinue models at any time or change specifications or design without notice and without incurring obligation.



SAFETY PRECAUTIONS

Appropriate service methods and proper repair procedures are essential for the safe, reliable operation of all tractors, as well as the personal safety of the individual doing the work. This manual provides general directions for accomplishing service and repair work with tested, effective techniques. Following them will help ensure reliability.

There are numerous variations in procedures, techniques, tools, and parts for servicing tractors, as well as in the skill of the individual doing the work. This manual cannot possibly anticipate all such variations and provide advice or cautions as to each. Accordingly, anyone who departs from the instructions provided in this manual must first establish that he compromises neither his personal safety nor the machine integrity by his choice of methods, tools, or parts.

PRODUCTION CODES AND SERIAL NUMBERS

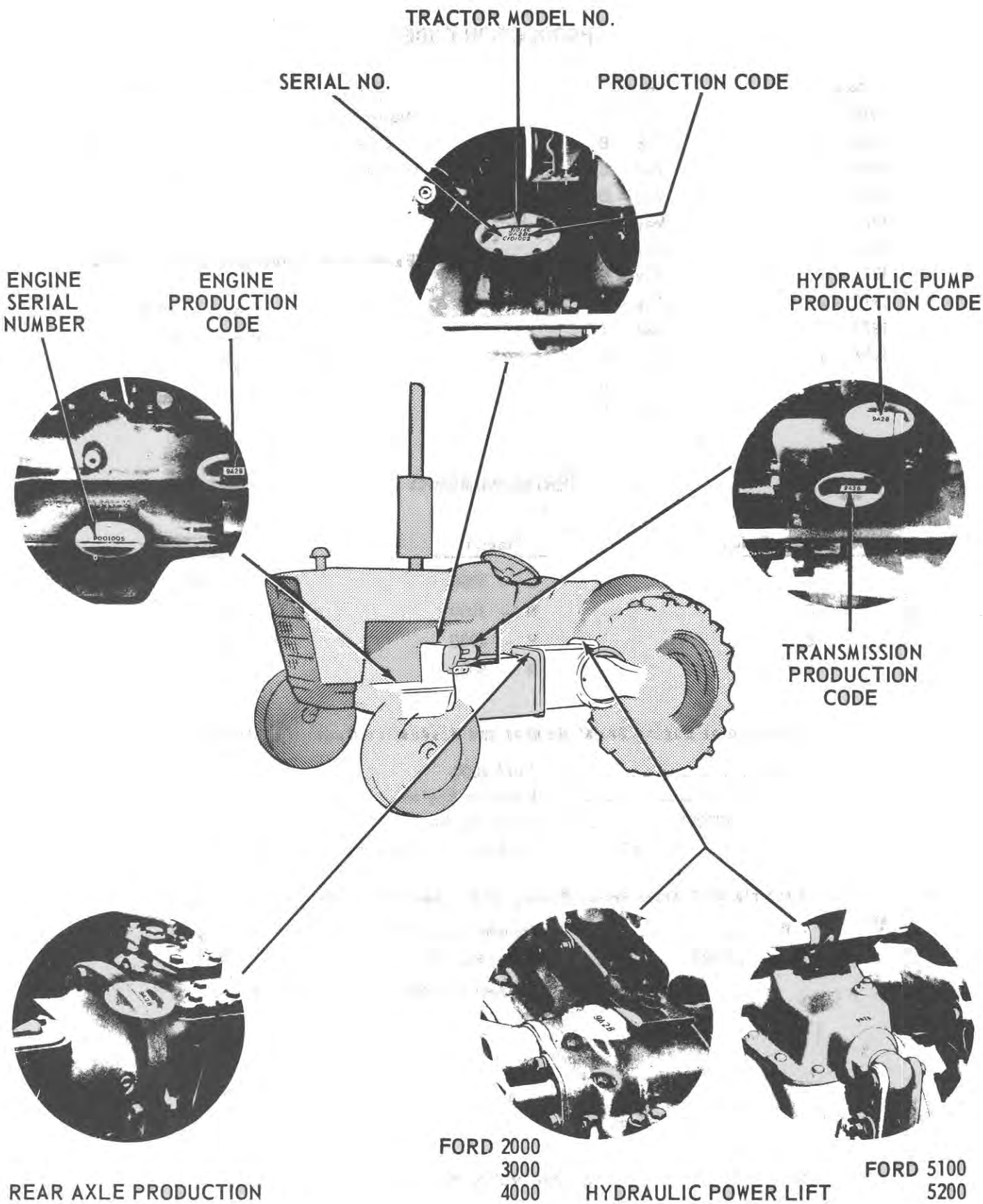

PRODUCTION CODES

Year	Month	Day	Shift
1965 – 5	Jan – A	Numerical	Midnight – A
1966 – 6	Feb – B	Date	Day – B
1967 – 7	Mar – C	1 through 31	Afternoon – C
1968 – 8	Apr – D		
1969 – 9	May – E		
1970 – 0	June – F		
1971 – 1	July – G		
1972 – 2	Aug – H		
1973 – 3	Sept – J		
1974 – 4	Oct – K		
	Nov – L		
	Dec – M		

Example of Production Code: 5A2B

5 _ _ _	Year – 1965
A _ _	Month – Jan
2 _	Day – 2nd
B	Shift – Day

SERIAL NUMBERS

Manufacturing Codes	Tractor	Fuel Type
A	L – 2000	D – Diesel
B	N – 3000	G – Gasoline
C	P – 4000	P – Liquid Petroleum
	R – 5000	

Example of Engine Serial Number and Production Code: LG001005A5

L _ _ _ _ _ _ _ _ _ _	Ford 2000
G _ _ _ _ _ _ _ _ _	Gasoline Engine
001005 _ _ _ _	Serial Number
A5 _ _	Production Code – Built January, 1965

Example of Tractor Serial Number and Production Code: C1010025A2

C _ _ _ _ _ _ _ _ _	Manufacturing Code
101002 _ _ _	Serial Number
5A2 _ _	Production Code – Built 1965 January 2nd

© FORD MOTOR CO. 1966

NEW MODELS

FOREWORD

This Supplement covers the major differences between new and previous type Ford 2000, 3000, 4000 and 5000 Agricultural tractors. The mechanical changes detailed also apply to Ford 3400, 3500, 4400, 4500 and 5500 Industrial models. Changes to styling have little effect on service procedures, therefore where changes are merely ones of appearance, reference to the Parts Catalog should be made when replacing such items as radiator grilles, hoods and exhaust mufflers.

SERIAL NUMBERING AND DATE CODING

The following Serial Numbering and Coding information should be noted:

Model Code

The model code is stamped on the right-hand implement mounting pad of the transmission and is also shown on the identification decal located under the right-hand hood panel.

The first numerical digit which identified previous models has been changed to a letter for the new models. The chart below details the new code.

Model Identification		Chassis Type	Fuel Type	P.T.O. Type	Trans Type
Previous Model	*New Model*				
2 —— 2000 —— B		10–Agricultural All Purpose	1–Diesel	1–No P.T.O.	A–4-Speed
3 —— 3000 —— C			2–Gas	2–Trans 540	
4 —— 4000 —— D		11–L.C.G.	3–L.P.	3–Live 540	C–8-Speed
5 —— 5000 —— E		12–Highway		4–Independent 540	
		13–Rice			E–Select-O-Speed
		20–Row Crop		5–Independent 540-1000	F–4/4 T-C Power Reversing
		30–Vineyard			
		31–Narrow		6–Independent 540/1000 GD	K–6/4 Manual Reversing
		40–Utility			
		50–Industrial			
Example	E	10	1	4	C

Thus a model E1014C indicates a new model Ford 5000 All Purpose Tractor equipped with a diesel engine, Independent (540 r.p.m.) P.T.O. and an 8-speed transmission.

Tractor Serial Numbers

These will carry on in the same sequence as with previous models. The following chart shows the approximate Serial Number of each new model.

Assembly Plant	Ford 2000	Ford 3000	Ford 4000	Ford 5000
Highland Park	C204631	C204849	C204998	C204852

NOTE: *For an interim period previous model and new model tractors were being produced simultaneously; however, there were no previous model tractors produced with a date code after 8G19B.*

Engine Serial Numbers

With the new models, Engine Serial Numbers begin again at 000001, while the "power class" prefixes have been changed as indicated below.

NOTE: *A few of the first production new model Ford 2000 and 3000 engines were stamped with the previous Engine Number sequence.*

Model	Engine Serial Number Prefix	
	Previous	New Model
Ford 2000	L	B
Ford 3000	N	C
Ford 4000	P	D
Ford 5000	R	E

Part 1

ENGINE SYSTEMS

FORD 4000 DIESEL ENGINE

To provide increased power, a new cylinder head with modified porting has been introduced together with a new high lift camshaft, fuel injection pump and injectors, and a new air cleaner.

Cylinder Head

The inlet ports of the new cylinder head are larger than those of the previous cylinder head to provide improved breathing. All valve seats are located 0.020 in. (0.52 mm) deeper.

This head may be used in service on previous Ford 4000 tractors.

When milling a new type head for service, the distance between the top of the valve seat and the head to cylinder block jointing face must not be less than 0.137 in. (3.48 mm) after milling.

Cylinder Head Gasket

An improved cylinder head gasket with wider beading on the underside of the gasket is used on the new models. This gasket may be used on previous Ford 4000 diesel engines. See Figure 1.

Camshaft

A new camshaft with higher cam lift and wider timing is used with the new model diesel engine.

Connecting Rod

Heavier I-section connecting rods are used on all new model Ford 4000 and 5000 engines. While these may be installed when servicing a previous type engine, they must not be mixed with the previous type connecting rods.

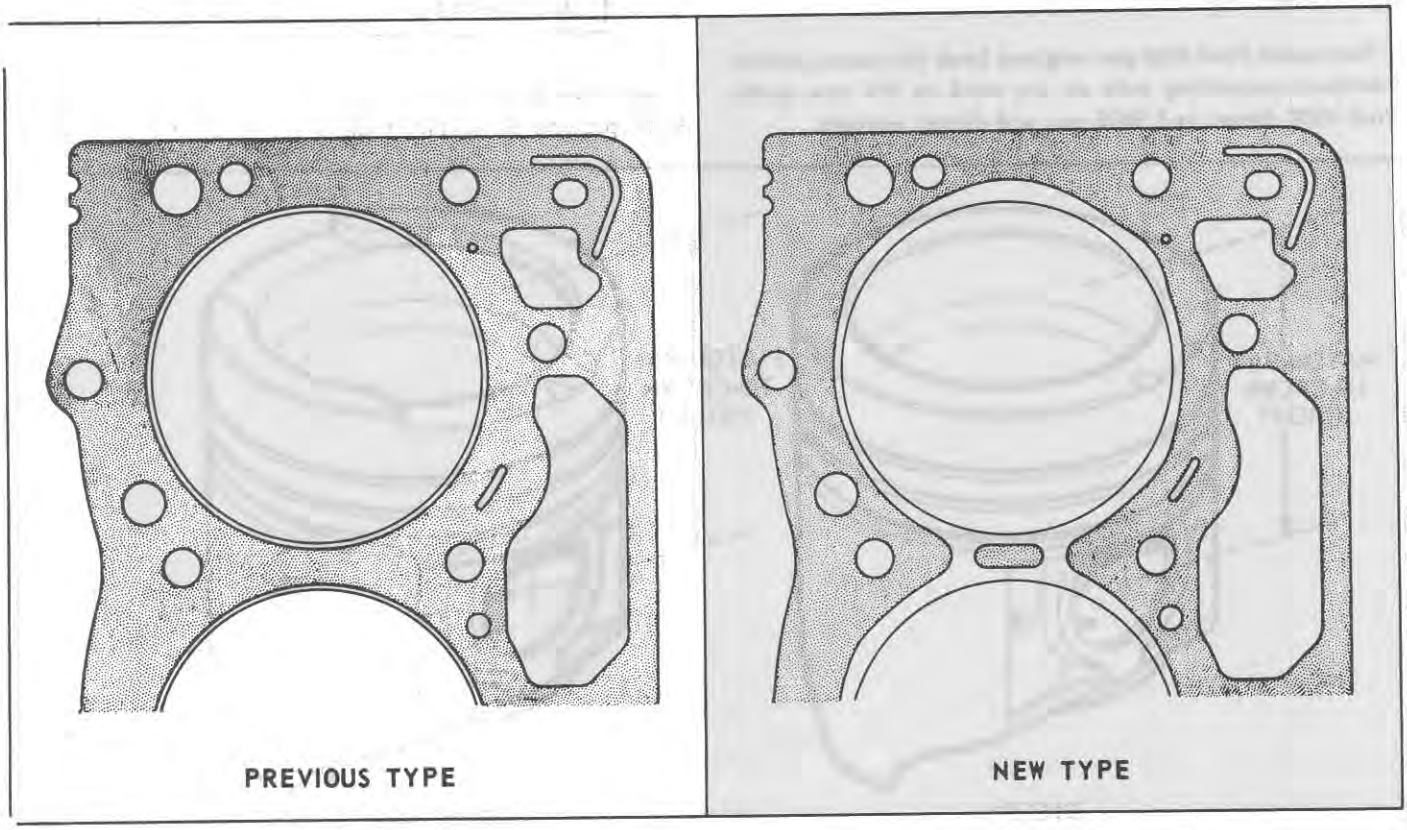

Figure 1
Cylinder Head Gasket

FORD 4000 GAS ENGINE

Increased power has been obtained by increasing the stroke from 4.2 in. (106.68 mm) to 4.4 in. (111.76 mm).

Cylinder Head and Gasket

A new cylinder head has been introduced which differs from that used on previous Ford 4000 gas engines in that the valve seats are located 0.020 in. (0.52 mm) deeper. There is no change to the cylinder head gasket.

Crankshaft

The crankshaft used in the new model Ford 4000 gas engine is common with the Ford 4000 diesel crankshaft and provides a stroke of 4.4 in. (111.76 mm).

Pistons

New pistons are used which have a piston pin-to-piston crown height of 2.523/2.525 in. (64.08/64.14 mm). Previous Ford 4000 gas pistons had a piston pin to crown height of 2.741/2.743 in. (69.62/69.67 mm). See Figure 2.

Connecting Rods

New model Ford 4000 gas engines have the same heavier I-section connecting rods as are used on the new model Ford 4000 diesel and 5000 gas and diesel engines.

FORD 5000 DIESEL ENGINE

Increased power for the new model Ford 5000 diesel engine has been achieved by increasing the cylinder bore diameter, introducing a new cylinder head with modified porting, a new camshaft and pistons, and a new injection pump and injectors.

Cylinder Block

The new model Ford 5000 cylinder block has piston bores which are 4.4 in. (111.76 mm) diameter, whereas the previous Ford 5000 bores were 4.2 in. (106.88 mm) diameter.

Pistons

While the pistons have been increased to the same diameter as those of the Ford 4000, they are not identical with the Ford 4000 pistons in that the Ford 5000 piston pin-to-piston crown height is greater. See Figure 2.

Piston Pin to Crown Height – Diesel	
Ford 4000	Ford 5000
2.661/2.663 in. (67.59/67.64 mm)	2.761/2.763 in. (70.13/70.18 mm)

Specified piston-to-bore clearance with these new Ford 5000 pistons is 0.0080/0.0090 in. (0.2032/0.2286 mm).

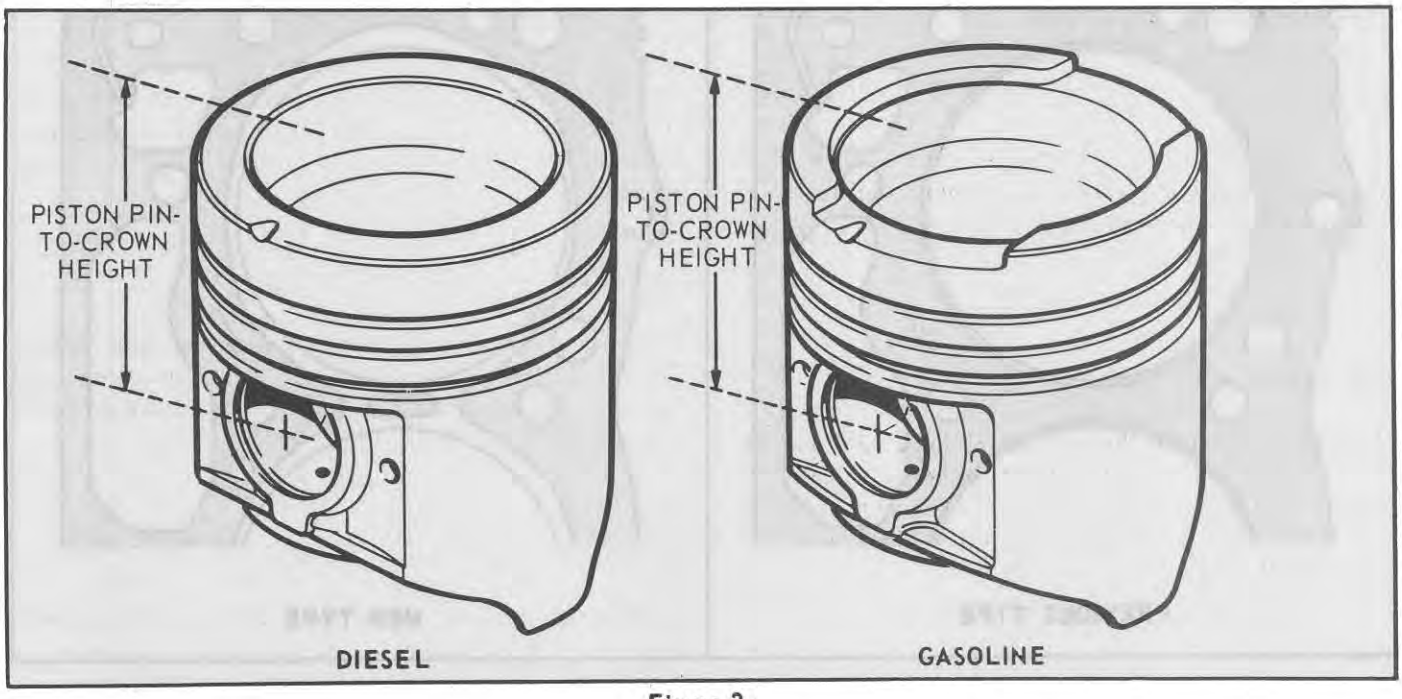

Figure 2
Piston Pin-to-Crown Height

Connecting Rods

Heavier I-section connecting rods, identical with those used on the new model Ford 5000 gas and Ford 4000 diesel and gas engines, are used on the new model Ford 5000 diesel engine.

Cylinder Head

A new cylinder head with increased diameter inlet ports to provide improved breathing, and valve seats located 0.020 in. (0.52 mm) deeper, is used on the new model Ford 5000 diesel engine.

The new head may be used on previous Ford 5000 engines but, as with the new model Ford 4000 diesel engine cylinder head, if it ever requires milling, the distance between the valve seat and the head face must not be less than 0.137 in. (3.48 mm) after milling.

Cylinder Head Gasket

New type with wide beading interconnecting the bores on the underside of the gasket. Because of the larger bores in the new model Ford 5000 diesel engine, this gasket is not suitable for use on any previous engine.

Camshaft

New type with higher cam lift.

Oil Pan

A new oil pan has been introduced on new model Ford 5000 engines and the specified oil capacity of the engine, including filter, has been increased to 10 U.S.qts. (16.75 Imp. pints) (9.5 litres).

FORD 5000 GAS ENGINE

Increased power for the new model Ford 5000 gas engine has been achieved by increasing the cylinder bore diameter, introducing new pistons to suit, a new cylinder head with deeper valve seats, and a new air cleaner with increased oil capacity.

Cylinder Block

Piston bore diameter increased from 4.2 in. (106.68 mm) to 4.4 in. (111.76 mm).

Pistons

New type pistons are used on new model Ford 5000 gas engines. Although these are of the same diameter as the Ford 4000 gas engine piston, the new model Ford 5000 piston has a greater piston pin-to-piston crown height than the new Ford 4000 gas piston, and a lesser piston pin-to-crown height than the previous 4000 gas piston.

Piston Pin-to-Crown Height – Gas		
Previous Ford 4000	New Model Ford 4000	New Model Ford 5000
2.741/2.743 in. (69.62/69.67 mm)	2.523/2.525 in. (64.08/64.14 mm)	2.662/2.664 in. (67.62/67.67 mm)

Specified piston-to-bore clearance is 0.0032/0.0042 in. (0.8128/0.8627 mm) with these new pistons.

Cylinder Head and Gasket

The cylinder head is new in that the valve seats are located 0.020 in. (0.52 mm) deeper than on the previous Ford 5000 gas engine.

A new cylinder head gasket has been introduced to suit the larger bore size of the new model Ford 5000 gas engine.

Connecting Rods

Heavier I-section connecting rods, identical with those used on new model Ford 5000 diesel and Ford 4000 gas and diesel engines, are used on the new model Ford 5000 gas engine.

Oil Pan and Dipstick

The new oil pan described under Ford 5000 Diesel Engine is also used on the Ford 5000 Gas engine, and the oil capacity of the engine has been increased to 10 U.S. qts. (16.75 Imp. pints) (9.5 litres).

FORD 2000 AND 3000 GAS AND DIESEL ENGINES

The changes in new model Ford 2000 and 3000 engines are minor and are mainly introduced to take maximum advantage of machining and manufacturing techniques which have been changed to accommodate the new model Ford 4000 and 5000 engines.

Cylinder Head and Gasket

Although new cylinder head part numbers have been allocated, the only difference between the cylinder heads used previously and those used with the new model engines is that the latter have the valve seats located 0.020 in. (0.52 mm) deeper.

A new cylinder head gasket with wide beading interconnecting the bores on the underside of the gasket is used on new model Ford 2000 and 3000 diesel engines. This gasket may be used for service on previous Ford 2000 and 3000 diesel engines.

Camshaft – Diesel Engines only

A new camshaft with higher cam lift is used in new model Ford 2000 and 3000 diesel engines. This change is merely to commonize with the camshaft of the new model 4000 diesel engine.

The camshaft of the Ford 2000 gas engines, and also that of the Ford 3000 gas engines, are unchanged.

Crankshaft – Ford 3000 Diesel

Apart from a difference in material, the crankshaft in the Ford 3000 diesel engine is virtually identical with that of the previous type Ford 4000 gas engine. The current Ford 3000 diesel crankshaft will be discontinued when existing stock is exhausted. The crankshaft used in the previous Ford 4000 gas engine will then be used for production and service of all Ford 3000 diesel engines, as well as for service of the previous Ford 4000 gas engine.

COOLING SYSTEM

New radiators have been introduced with some of the new model Ford 4000 and 5000 Agricultural tractors and the 5200 Row Crop tractor. The difference is in the number of cooling fins per inch. There are no changes to the radiators in Ford 2000 and 3000 tractors.

Model	Engine	Trans.	Cooling Option	No. of Radiator Fins/inch	
				Previous	*New Model*
4000	Gas	8-Speed and Select-O-Speed	Standard	5	7
4000	Gas	Select-O-Speed	Tropical	7	9
4000	Diesel	8-Speed	Standard	5	7
4000	Diesel	8-Speed	Tropical	5	7
4000	Diesel	Select-O-Speed	Standard	No change	
5000	Gas	8-Speed and Select-O-Speed	Standard	7	9
5000	Diesel	8-Speed	Standard	5	9
5000	Diesel	Select-O-Speed	Standard	7	9
5000	Diesel	8-Speed and Select-O-Speed	Tropical	7	9
5200	Row Crop	All Models		7	9

Part 2

FUEL SYSTEMS–DIESEL

FORD 2000 and 3000

The fuel injection pumps and injectors of new model Ford 2000 and 3000 tractors are identical to those used on the previous model Ford 2000 and 3000 tractors.

FUEL INJECTORS

The fuel injectors used in new model Ford 4000 and 5000 engines differ from those used in previous Ford 4000 and 5000 engines. The outward appearance of the new injector is the same as those used on the previous tractors. The difference between current and previous injectors is in the size and angle of the nozzle holes which, without accurate gauges, cannot be readily recognized.

For this reason, when re-conditioning injectors in service, special attention should be given to the identification code numbers which are etched on the body of the nozzle. This number in conjunction with the following chart will enable each nozzle to be identified with the actor it was designed for.

Previous New Range Tractors	Nozzle Identification	Current New Model Tractors	Nozzle Identification
Ford 2000	BDLL150S6443	Ford 2000	BDLL150S6443
Ford 3000	NL 413	Ford 3000	NL 413
Ford 4000	BDLL150S6476	Ford 4000	BDLL140S6422
Ford 5000	NL 413	Ford 5000	BDLL140S6422

FORD 4000 DIESEL – AIR CLEANER

The air cleaner specified for use with the new Ford 4000 diesel engine is the same as that used on the previous and current Ford 5000 tractor. The diameter of this cleaner is 7 in. (178 mm) as compared to the 6.5 in. (165 mm) diameter cleaner previously used on the Ford 4000. The inlet and outlet ports are 2.25 in. (57.15 mm) diameter as compared to the 2 in. (50.8 mm) diameter ports in the previous cleaner. The air cleaner hoses have been changed accordingly.

Part 2

FUEL SYSTEMS–GAS

FORD 5000 (GAS) – AIR CLEANER

A new air cleaner is used with the new model Ford 5000 gas engine. This cleaner has a diameter of 7 in. (178 mm) compared to the 6.5 in. (165 mm) diameter cleaner used on the previous Ford 5000 gas tractor. It has an inlet port diameter of 2.25 in. (57.15 mm) as compared to the 2.0 in. (50.8 mm) diameter inlet port in the previous cleaner used on Ford 5000 gas tractors.

ALL GAS ENGINES – NO LOAD AND IDLE SPEEDS

The following no load and idle speeds are specified for new model gasoline engines.

Model	No Load Speed	Idle Speed
Ford 2000	2065–2165	600–700
Ford 3000	2285–2385	600–700
Ford 4000	2395–2495	600–700
Ford 5000	2285–2385	600–700

Part 3

ELECTRICAL SYSTEM

ALL MODELS – GENERATORS AND REGULATORS

All new model Ford 3000, 4000 and 5000 tractors have 22 amp. generators and regulators as standard equipment.

For a short period the 11 amp. generator and regulator may be installed on Ford 2000 tractors but eventually this model will also have the 22 amp. parts.

NOTE: ***It is not permissible to mix a 22 amp. generator with an 11 amp. regulator or vice versa. It is important, therefore, that care is taken to check which type is installed on a Ford 2000 before installing a service replacement.***

ALL TRACTORS WITH SELECT-O-SPEED – OIL PRESSURE WARNING LIGHT

It is no longer considered necessary to have an oil pressure warning light on Select-O-Speed transmissions and this item is, therefore, not incorporated on new model tractors.

Existing stocks of Select-O-Speed transmissions which incorporate a distributor plate assembly with a threaded hole for the warning light switch will continue to be used. As an interim measure, the switch will still be installed in the distributor plate assembly but its function will be merely that of a blanking plug to maintain pressure in the system.

Similarly, existing wiring harnesses will continue to be used but the wire connecting the warning light switch to the light (white/light green) is cut at a point 5 in. (12.7 cm) outside the rubber grommet in the cover, and at the wire clip inside the cover.

When existing stocks of wiring harnesses are exhausted, new wiring harnesses with only two wires will be introduced, and the warning light switch will be superseded by a pipe plug.

Part 4

CLUTCHES

FORD 5000 – 13" CLUTCH DISC

In December, 1967, the standard 12 in. (30.5 cm) diameter clutch disc was changed to the type which has a torsion spring damped hub and woven linings. A similar 13 in. (33 cm) disc has been introduced with the new model Ford 5000 for use in heavy duty applications where requested, Figure 3.

It should be noted that the spacers used between the new 13 in. clutch pressure plate cover and the flywheel have a different thickness from those used with the previous 13 in. clutch. It is important that the correct spacers are used in accordance with the disc being installed.

Previous type spacer thickness	0.184/0.200 in. (4.67/5.08 mm)
New type spacer thickness	0.090/0.100 in. (2.29/2.54 mm)

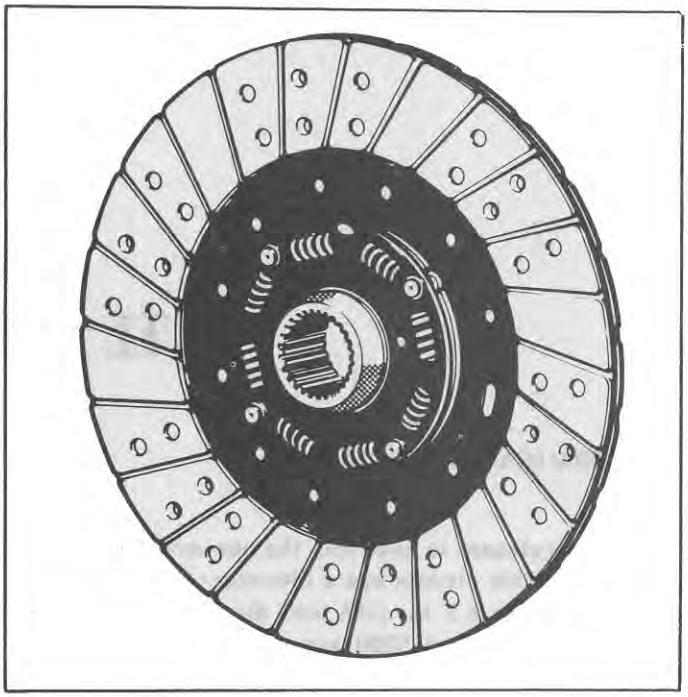

Figure 3
Ford 5000 – 13" Clutch Disc for Special Applications

FORD 2000/3000 WITH LIVE P.T.O. – DOUBLE CLUTCH ASSEMBLY

A new double clutch assembly has been released for use with the new model Ford 2000 and 3000 tractors with Live P.T.O.

The principal difference between the new assembly and that used previously is that the new assembly has a larger gap adjustment between the socket head (Allen) screws on the top of the P.T.O. pressure plate connecting links and the release lever struts, see Part 4, Chapter 2, of the Tractor Repair Manual.

This gap should be adjusted on new model double clutches to 0.070–0.074 in. (1.78–1.88 mm). The shank of a No. 50 drill may be used as a gauge when adjusting this gap, Figure 4.

The new double clutch assembly may be used in a previous tractor, but before installation, the gap mentioned bove should be adjusted to the previous specification of 0.050–0.054 in. (1.27–1.37 mm) using the shank of a No. 54 drill as a gauge.

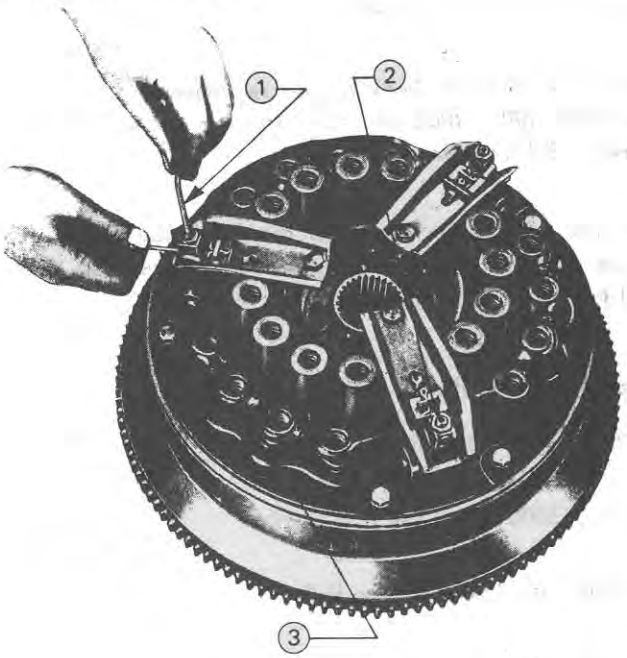

Figure 4
Setting P.T.O. Clutch Gap

(1) Socket Key
(2) Socket Head Adjusting Screw
(3) Drill Shank as Gauge

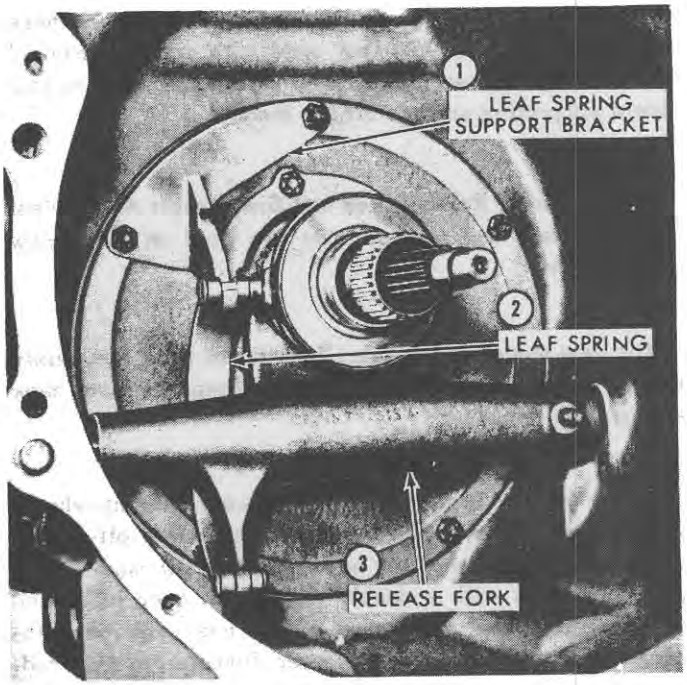

Figure 5
Clutch Release Bearing Spring and Fork

FORD 2000/3000 DOUBLE AND FORD 4000 SINGLE CLUTCH – RELEASE LINKAGE

Release Bearing Return Spring – A new leaf type clutch release bearing return spring has been introduced on Ford 2000 and 3000 tractors with a double clutch and on the Ford 4000 with a single clutch. See Figure 5.

Clutch Release Fork – New forks which extend fully across the transmission housing and completely enclose the cross-shaft are used in conjunction with the above-mentioned leaf spring. See Figure 5. The material from which the fork is manufactured has been changed, and the fork pads, which contact the release bearing hub, are specially hardened to reduce wear and provide minimal friction losses.

Release Bearing Hub – New release bearing hubs with specially hardened faces at the points of contact with the release fork have been introduced on these new models.

Release Bearing Hub Support Plate and Bracket – A bracket for each model has been introduced which acts as a falcrum point for the new leaf spring. This bracket is secured by two longer bolts which pass through the release bearing hub support plate. See Figure 5.

The release bearing hub support plate used on these new models differs from that used with previous models in that the plate casting is filled in and machined to provide a supporting surface for the bracket.

Clutch Pedal, Release Rod and Cross-shaft Arm – New design pedals and release rods are used on these new type models.

The new model pedals vary from those used previously in that the portion below the pivot is longer and set back at a greater angle.

The release rods for the new models are straight, whereas the previous rods had a portion which was off-set. In addition, the release rod used on the new model Ford 2000 and 3000 with a double clutch has been increased in diameter. The adjustable clevis has also been increased in size to suit the larger diameter release rod.

The cross-shaft arm of new model Ford 2000 and 3000 Live P.T.O. tractors is longer between centers than that used on previous models, and it has a different off-set to suit the new type release rod.

Together, these changes enable the clutches to be released with less effort than was required on previous models.

FORD 2000/3000/5000 SINGLE CLUTCH – RELEASE LINKAGE

Clutch Release Forks – New release forks have been introduced that differ only in the material. The fork contacts pads are specially hardened.

Release Bearing Hubs – New release bearing hubs with specially hardened faces at the points of contact with the release fork have been introduced.

Release Bearing Hub Support Plate – This has been changed for new model Ford 2000 and 3000 tractors with a single clutch to commonize with the support plate used on new model Ford 2000 and 3000 tractors with a double clutch. As the leaf spring type of release mechanism is not used on these models, there is no necessity for a spring fulcrum bracket; hence the change to the hub support plate is of no significance in service.

There is no change to the hub support plate on the Ford 5000.

Clutch Pedals, Release Rods and Cross-shaft Arms – New design pedals, release rods and cross-shaft arms are used on the new model Ford 2000 and 3000 tractors with a single clutch and on the new model Ford 5000.

Each of the new pedals is longer below the pivot point and the lower end is set back at a greater angle.

On the new model Ford 2000 and 3000 tractors with a single clutch, the clutch release rod is straight compared to the off-set design of the previous rod. It is also longer than the previous rod, as is the new release rod used on the Ford 5000.

The cross-shaft arm of the Ford 5000 is unchanged, but on the new model Ford 2000 and 3000 tractors with a single clutch, a new arm is used which has a different off-set to the previous arm.

CLUTCH PEDAL ADJUSTMENT

Regular checks on clutch pedal free play is very important. Recommendations are that this check be made at intervals of 50 hours of operation.

NOTE: ***This 50 hour check is now recommended for previous 2000, 3000, 4000 and 5000 tractors as well as on the new model tractors.***

Because of linkage changes, the free play specified for new models, see following table, differs from that specified for previous models.

Clutch Pedal Free Play – New Model Tractors

Ford 2000/3000 with Transmission P.T.O.	1.12–1.38 in. (28–35 mm)
Ford 2000/3000 with Live P.T.O.	1.38–1.63 in. (35–41 mm)
Ford 4000 with Transmission P.T.O.	1.25–1.50 in. (32–38 mm)
Ford 4000 with Independent P.T.O.	1.62–1.88 in. (41–48 mm)
Ford 5000	1.25–1.50 in. (32–38 mm)

Clutch Pedal Total Travel – Tractors with Live P.T.O.

On Ford 2000 and 3000 tractors with Live P.T.O. it may also be necessary to adjust the clutch pedal linkage in order to maintain correct **total** travel of the clutch pedal and so ensure that the P.T.O. clutch can be released when the pedal is fully depressed.

To adjust the pedal travel:

First adjust the length of the clutch release rod so that the clutch pedal is 8.50 in. (22 cm) above the foot platform with free play taken up, see Figure 6. This is the initial setting height for the pedal and some slight alteration may be required, as indicated below, to ensure that full release of the P.T.O. clutch is obtained.

Move the P.T.O. shift lever into the engaged position and start the engine, then fully depress the clutch pedal and check that the P.T.O. shaft stops revolving.

If the P.T.O. shaft does not stop revolving when the pedal strikes the stop on the foot platform, re-adjust the length of the release rod, and hence the pedal height, until satisfactory release of the P.T.O. clutch is obtained.

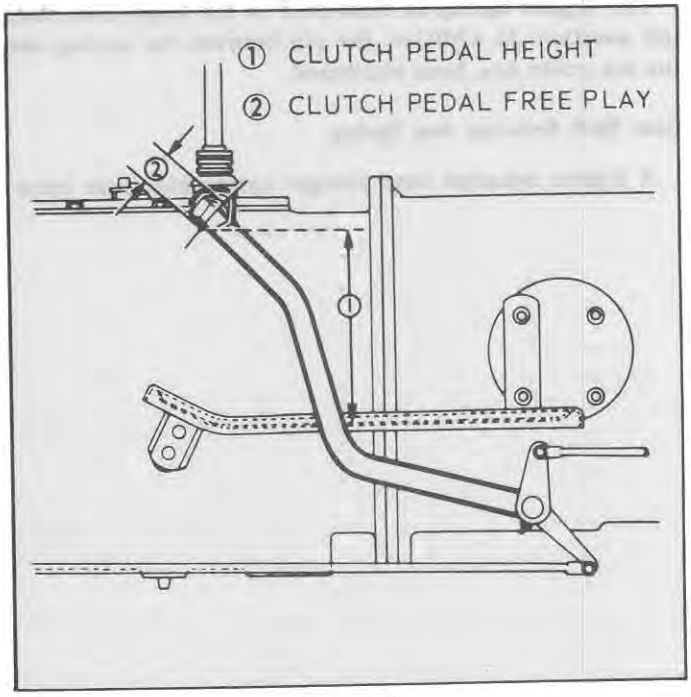

Figure 6
Clutch Pedal Height and Free Play

Part 7

SEVEN-AND EIGHT-SPEED TRANSMISSIONS

FORD 5000 – OIL CAPACITY

The quantity of oil specified in 7-speed and 8-speed transmissions of new model Ford 5000 tractors has been reduced to 10.5 U.S. qts. (18.5 Imp. pints) (10.2 litres). No oil level plug is used on these transmissions. A new combined filler plug and dipstick has been introduced.

A new 7/8 speed transmission housing has been introduced on new model Ford 5000 tractors. The new housing has an oil groove for feeding oil to the reverse idler gear.

Should it be necessary to install a service replacement housing, it is essential that only the correct new type be used in conjunction with the oil level dipstick and lower oil level of a new model Ford 5000.

GEAR SHIFT EFFORT

To reduce the physical effort required to shift gears on the 7-speed and 8-speed transmissions, the following changes have been made effective with new model tractors.

Gear Shift Levers and Lever Spring

The main gear shift lever and the High/Low gear shift lever of new model Ford 5000 tractors are 3 in. (76.2 mm) and 2.5 in. (63.5 mm) longer respectively than their counterparts.

Similarly, the main gear shift lever and the High/Low gear shift lever used on new model Ford 2000, 3000 and 4000 tractors are 2.38 in. (60.5 mm) and 2.72 in. (69.0 mm) longer respectively than their counterparts.

The gear shift lever ball retainer spring, common to all the levers, has been changed to one which applies a lighter load.

Gear Shift Rail Detent Springs and Pins

Lighter springs have been introduced between the main gear shift rail detent balls and the gear shift cover of 7-speed and 8-speed transmissions.

The lighter spring is also used in the High/Low shift rail position. In addition, the pin between the spring and the top cover has been shortened.

Gear Shift Selector Arm Spring

A lighter selector stop plunger spring has been introduced for the 4th/8th selector fork of the 7-speed and 8-speed transmissions of the new model Ford 5000.

This spring is also used on the 4th/8th selector arm of the 7-speed and 8-speed transmissions of the new model Ford 2000, 3000 and 4000 tractors.

Part 9

POWER TAKE-OFF

FORD 5000 INDEPENDENT P.T.O.

Independent P.T.O. Clutch Valve Operating Pressure

The increase in power of the new model Ford 5000 engine gives a corresponding increase in power available at the P.T.O. Because of the increased P.T.O. power, the operating pressure of the drive clutch regulating valve has been increased by introducing a new pressure regulating valve spring.

When checking the pressure of the P.T.O. system at the hydraulic pump of a new model Ford 5000, a reading of 150/225 psi (10.5/15.8 kg/cm^2) should be obtained when the oil is at operating temperature.

P.T.O. Clutch Dowel Locating Pin

To improve the efficiency of the independent P.T.O. clutch brake, new model Ford 5000 tractors have an adjustable pin locating the P.T.O. clutch valve assembly in the rear axle center housing. This new pin allows for better contact between the brake arm pad and the P.T.O. clutch housing than was possible with the previous non-adjustable locating pin.

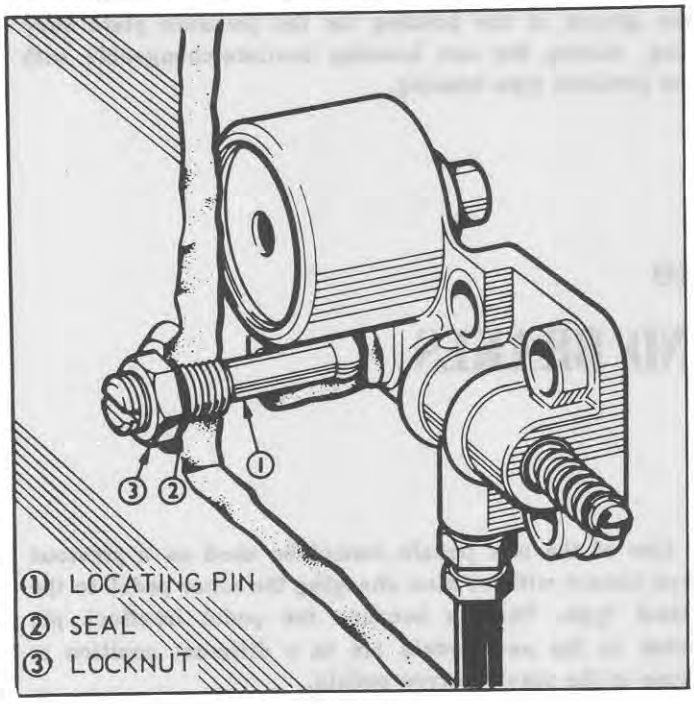

Figure 15
P.T.O. Valve Locating Pin

The new locating pin, Figure 15, incorporates an O-ring seal to prevent oil leakage. A nut is used to retain the pin.

The following adjustment procedure applies to the new type pin.

1. Loosen the locating pin nut, then back off the locating pin.
2. Screw in the locating pin until the P.T.O. brake piston spring just starts to compress.
3. Hold the locating pin with a screwdriver and tighten the nut to a torque of 15–20 lbs. ft. (2.07–2.77 kgm).

Where cases of inadequate P.T.O. braking are encountered on previous Ford 5000 tractors, and the evidence shows uneven contact between the brake arm pad and the clutch housing, the new type parts may be installed to overcome the condition.

P.T.O. Drive Clutch Operating Handle

A new operating handle has been introduced which extends rearward at a greater angle to provide better clearance for the operator's legs, Figure 16.

FORD 4000 P.T.O.

P.T.O. Rear Cover and Rear Axle Center Housing

On new model Ford 4000 Tractors, the P.T.O. rear plate and P.T.O. cover have been superseded by an integral cover and plate component.

The rear axle center housing has been modified and now has two additional tapped holes at the rear cover location, i.e., it now has 4 large and 4 small tapped holes at this location.

The new rear cover is secured by four bolts at the smaller tapped holes. The four large holes are used for retaining two new anchor brackets which have been introduced for attachment of hydraulic linkage check chains.

NOTE: *When installing a belt pulley on a new model Ford 4000 with internal check chains, the check chain anchor brackets should be located between the pulley and the*

rear axle center housing. Four longer bolts are supplied with the belt pulley kit to retain the pulley and the brackets to the center housing. If the tractor has external check chains, four spacers, which are supplied with the belt pulley kit, should be installed between the pulley and the rear axle center housing.

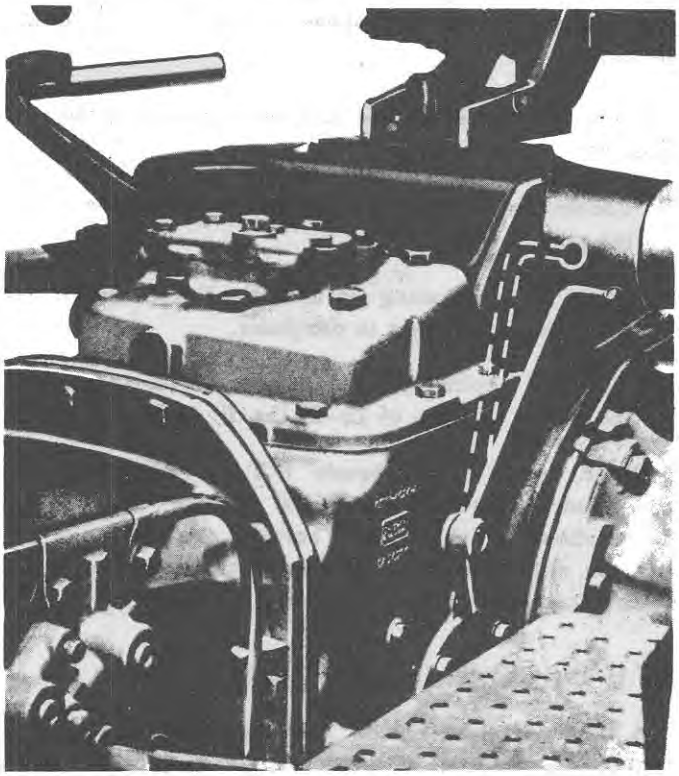

Figure 16
P.T.O. Operating Handle

P.T.O. Clutch Plates

The P.T.O. clutch plates and the P.T.O. clutch housing of the new model Ford 4000 tractor differ from those used on previous models.

Six externally splined steel plates and six internally splined phosphor bronze plates are now used instead of six internally splined steel plates and seven externally splined phosphor bronze plates.

The externally splined steel plates are identical with those already in use at various locations in Select-O-Speed transmissions. The internally splined phosphor bronze plates are also dimensionally the same as those used in P.T.O. clutches of Select-O-Speed transmissions but they have radial grooves on both sides and are, therefore, not interchangeable with the Select-O-Speed parts.

An externally splined steel plate is installed adjacent to the P.T.O. drive clutch piston in the new type P.T.O. clutch pack, thereafter the phosphor bronze and steel plates alternate so that the sixth phosphor bronze plate is adjacent to the P.T.O. clutch pressure plate.

The new steel plates are flat, whereas in previous type tractors they were dished. This, together with the reduced total number of plates in the pack, means that the pressure plate takes up a different position in the P.T.O. clutch housing. This in turn necessitates relocation of the groove in the housing for the pressure plate snap ring, making the new housing non-interchangeable with the previous type housing.

Part 10

REAR AXLE AND BRAKES

BRAKE PEDALS

New brake pedals have been introduced on all models except the Ford 4000 and 5000 Row Crop and the Ford 5500. The new pedals have parallel width throughout their length, whereas the previous pedals tapered in towards the pad end.

One of the new pedals cannot be used on a previous type tractor without also changing the other pedal to the latest type. This is because the pedal interlock pin holes in the new pedals are in a different position to those in the previous type pedals.

Part 11

HYDRAULIC SYSTEMS

ALL MODELS – HYDRAULIC PRESSURE RELIEF VALVE

A new type of pressure relief valve assembly, Figure 17, has been introduced in the hydraulic pumps of new model Ford 4000 and 5000 tractors with Independent P.T.O. This valve will also be introduced shortly as a running change in the rear axle center housing of all models with the engine mounted hydraulic pump. It may also be installed when servicing previous type tractors if so desired.

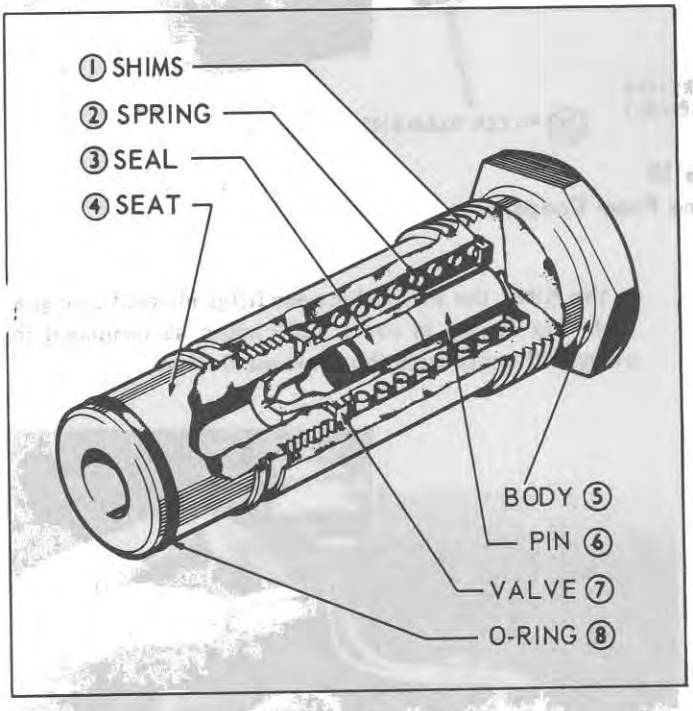

Figure 17
Hydraulic Pressure Relief Valve

With the previous type valve assembly, a sudden heavy lifting load, in excess of the designed lifting capacity of the hydraulics, caused the valve to open. It was then necessary for the pressure in the system to be reduced considerably by relieving the load before the valve would reseat and allow lifting to be resumed.

The new valve re-seats at a higher pressure, enabling maximum lifting power to be sustained in the hydraulic system.

The following is a comparison of the operating pressure characteristics of the previous and new valve assemblies.

Pressure	Previous Type	New Type
Initial Opening (Minimum Crack-Off)	2100 psi (147.5 kg/cm^2)	2150–2450 psi (151–172 kg/cm^2)
Full Opening (Maximum By-Pass)	2550–2650 psi (179–186 kg/cm^2)	2400–2600 psi (169–183 kg/cm^2)
Re-seat (Minimum)	1600 psi (112.5 kg/cm^2)	1950 psi (137 kg/cm^2)

Relief Valve Adjustment

If, on checking the pressure of the hydraulic system, the maximum pressure is found to be above or below that specified, 2400–2600 psi (169–183 kg/cm^2), no attempt should be made to adjust the valve without first establishing that it is in fact the valve which is at fault.

The easiest way to check this is to install another valve assembly known to have the correct setting. If this corrects the fault then the original valve should be dismantled for examination. Where necessary, the valve may be adjusted by adding or subtracting shims (1), Figure 17, from behind the spring.

To gain access to the shims, grip the assembly lightly in a soft jaw vice, unscrew the body and remove the valve and spring.

Two thicknesses of shims are available. One has a thickness of 0.010 in. (0.25 mm) and provides a pressure difference of 63–70 psi (4.4–4.9 kg/cm^2). The other has a thickness of 0.015 in. (0.38 mm) and provides a pressure difference of 95–106 psi (6.8–7.4 kg/cm^2).

Part 12

STEERING SYSTEMS

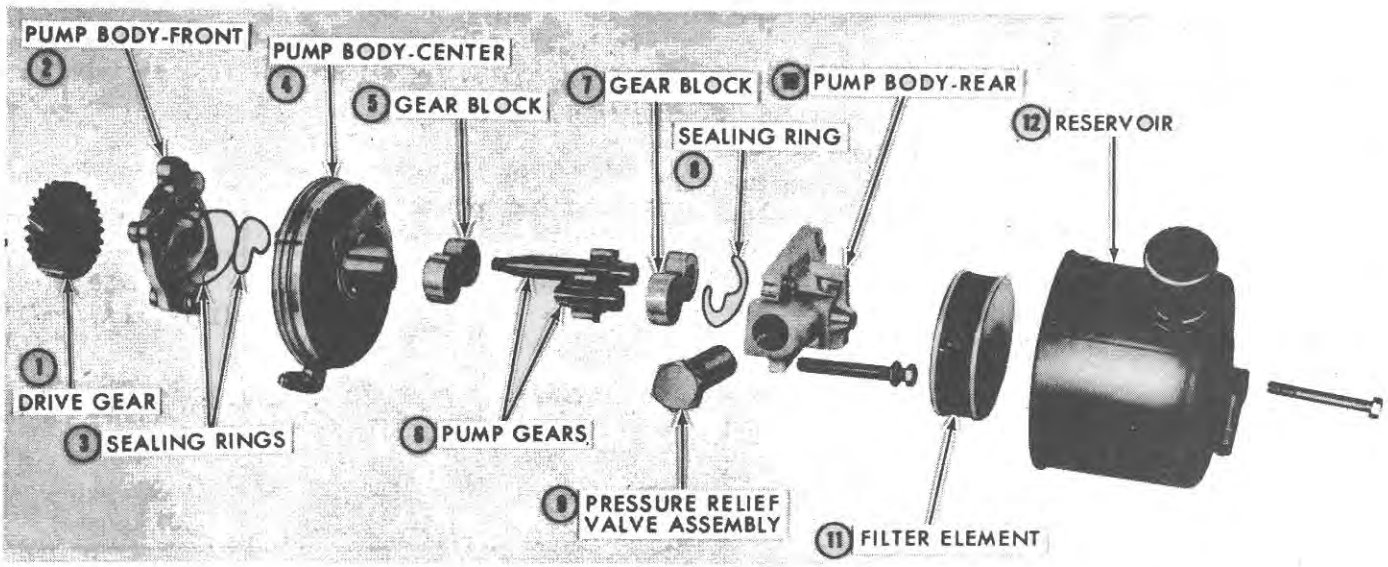

Figure 18
Power Assisted Steering Pump Components

POWER ASSISTED STEERING – ALL MODELS
(where fitted)

While there will be no significant change in the steering systems of early production new model tractors, a change is being made to agricultural tractors with power assisted steering. Three new pump assemblies, each with integral reservoir and filter will be introduced. These three pumps will be identical except for the pressure relief valve setting.

Figure 18 shows the pump and reservoir components. The new reservoir will completely enclose the rear of the pump. See Figures 18 and 19. The following should be noted when servicing the unit.

1. Every 300 operating hours the oil level in the reservoir should be checked with the oil at operating temperature and the wheels in the straight ahead position. If necessary, add fresh oil of the correct grade to bring the level up to the bottom of the filler neck. Then, with the engine running, turn the steering from lock-to-lock to purge air from the system. Add oil as necessary to maintain the level.

2. Oil must be Ford Oil Part No. M2C41.

3. While it will be necessary to remove the complete pump and reservoir assembly in order to gain access to the filter, the period between filter element changes with this design is every 1200 hours as compared to every 600 hours with the previous design.

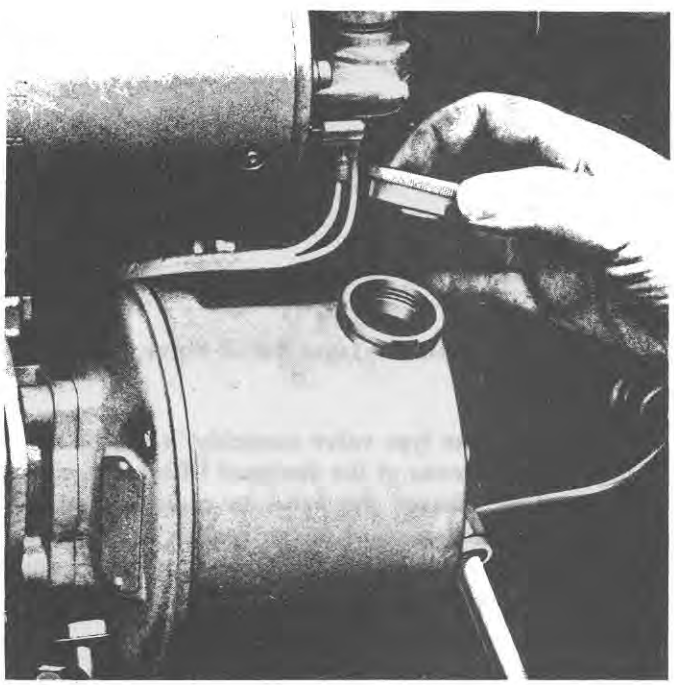

Figure 19
Power Assisted Steering Reservoir Filler Cap

To remove the filter element, disconnect the oil tubes from the pump, remove the pump and reservoir assembly (two bolts) from the engine, drain the oil from the reservoir then remove the reservoir and filter element from the pump.

Clean the inside of the reservoir, install a new filter element and re-install the reservoir. The flat detent in the reservoir should be placed between the two locators on the pump (2), Figure 20.

Re-install the pump and reservoir assembly on the engine. Connect the oil tubes and refill the reservoir with clean oil of the correct grade. Purge the system of air by running the engine and turning the steering wheel from lock to lock several times. Add oil as necessary to maintain the level at the bottom of the filler neck.

Power Steering Pump Pressure Relief Valve

While the new type pump is similar in principle to that used previously, detail changes have been made to the components, including the introduction of a new type pressure relief valve. The new valve, which is incorporated in the rear body of the pump, is similar in design to the pressure relief valve used in the hydraulics of the new models, see Hydraulic Section of this Supplement, but it has a different spring, a lower pressure setting and a thinner head. It has a larger capacity than the previous type relief valve, therefore the flow control spool valve, which was used in previous pumps, has been discontinued for use in the new pump.

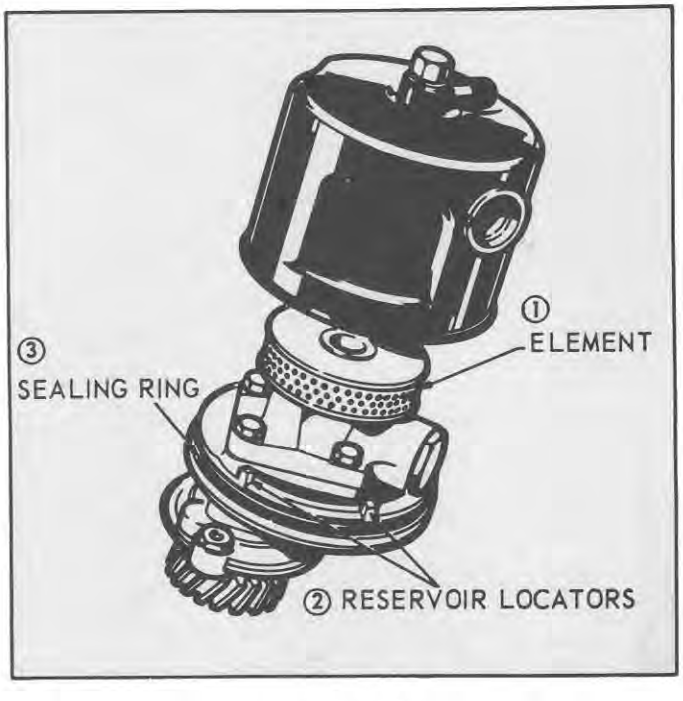

Figure 20
Power Assisted Steering Pump, Filter, and Reservoir

Pressure Testing and Adjustment

The relief valve operating pressure and the procedure for pressure testing the system will be the same for the new pumps as with the previous types.

If pressure testing the system shows that the operating pressure of the new type pump pressure relief valve needs to be adjusted, the following procedure applies:

1. Disconnect the two tubes from the pump and remove the two bolts retaining the pump assembly to the engine.
2. Remove the pump assembly from the engine. Drain the oil from the reservoir.
3. Remove the reservoir and filter element from the pump.
4. Remove the pressure relief valve from the rear body of the pump, grip it lightly in a soft jawed vice and unscrew the head from the body. Extract the valve and spring.
5. The pressure adjusting shims are now accessible. Shims are available in thicknesses of 0.010 in., 0.015 in. and 0.060 in. (0.25 mm, 0.38 mm and 1.52 mm). The addition or subtraction of one of these shims will vary the opening pressure of the relief valve by the following amount.

   0.010 in. (0.25 mm) – 66–74 psi (4.6–5.2 kg/cm^2)
   0.015 in. (0.38 mm) – 99–110 psi (7.0–7.7 kg/cm^2)
   0.060 in. (1.52 mm) – 396–440 psi (27.8–30.9 kg/cm^2)

6. On re-assembly, care should be taken to be sure the head of the valve is not overtightened. The specified tightening torque is 6–10 lbs. ft. (0.83–1.38 kgm).
7. Install the valve assembly in the pump, re-assemble the filter element and reservoir, and install the unit on the tractor.
8. Refill the reservoir with fresh oil of the correct grade. Run the engine and turn the steering from lock-to-lock to expel air from the system. Add oil as necessary to maintain the level.

7000 SUPPLEMENT

FOREWORD

This supplement provides information for the proper servicing of the Ford 7000 Tractor. Where service information for the Ford 5000 Tractor also applies to the Ford 7000, this supplement refers to the appropriate section of your Ford Tractor Repair Manual, SE 9205, for that information. This supplement can be kept in its entirety at the front of your repair manual, or it can be separated into its various parts and inserted behind the appropriate dividers of the repair manual.

The material contained in this supplement was correct at the time the supplement was approved for printing. Ford policy is one of continuous improvement and the Ford Motor Company reserves the right to discontinue models at any time or change specifications or design without notice and without incurring obligation.

FORD TRACTOR OPERATIONS

FORD MOTOR COMPANY

Part 1

ENGINE SYSTEM

The Ford 7000 diesel engine is similar to the Ford 5000 diesel engine and develops greater power through use of a turbocharger along with different pistons, valves, connecting rods, and air cleaner.

PISTONS

The Ford 7000 diesel engine has pistons of 4.3922-4.3947 inch (111.56-111.62 mm) diameter. Specified piston-to-bore clearance with the 7000 diesel piston is 0.0080/0.0090 inch (0.2032/0.2286 mm). The ring set for the 7000 diesel piston is comprised of 3 compression rings, 1 oil control ring, and 1 oil control ring expander (slotted).

PISTON RINGS

The Production Piston Ring Set consists of:

Top Compression Ring – bright chrome finish, keystone tapered.

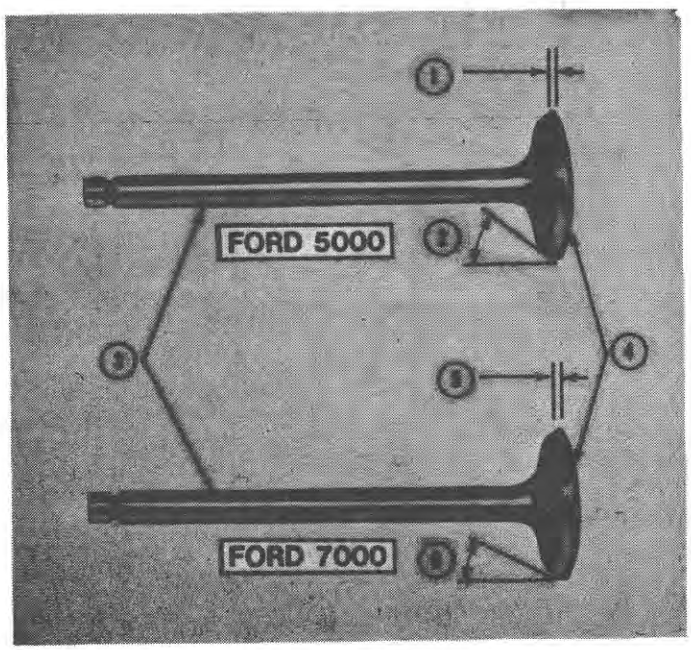

Figure 1
Critical Tolerances – Intake Valves

1. 1/32 Inch (0.7937 mm.) Minimum
2. 45° 30' – 45° 45'
3. Check for Bent Stem and Correct Diameter
4. Check Maximum Valve Face Runout
5. 1/16 (1.58 mm) Minimum
6. 29° 15' – 29° 30'

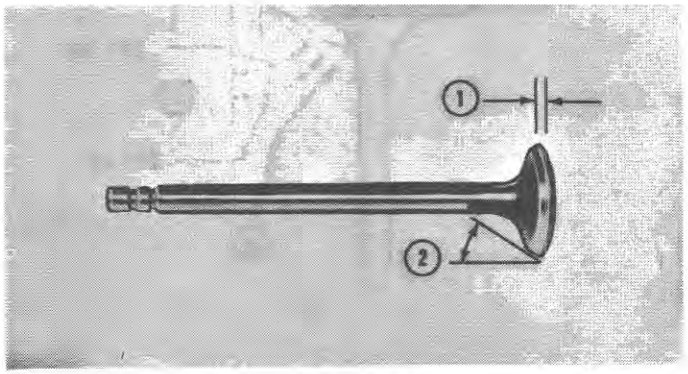

Figure 2
Critical Tolerances – Exhaust Valves
Ford 5000 and 7000

1. 1/32 Inch (0.79mm) Minimum
2. 45° 30' – 45° 45'

2nd Compression Ring – bright chrome finish, step on inside diameter, assemble with step facing upwards.

3rd Compression Ring – dull black finish, step on inside diameter, assemble with step facing upwards, no expander behind ring.

Oil Control Ring – install either face upwards with slotted expander behind ring.

The Service Piston Ring Set consists of:

Top Compression Ring – bright chrome finish, keystone tapered. Assemble with either taper facing upwards.

2nd Compression Ring – bright chrome finish, step on inside diameter. Assemble with step facing upwards.

3rd Compression Ring – dull black finish, step on outside diameter. Assemble with step facing downwards and non-slotted expander behind ring.

Oil Control Ring – install either ring upwards with slotted expander behind ring.

Piston installation and ring fitting is performed in the same manner as outlined in Part 1, Engine Systems, of this manual.

VALVES

The critical inspection points and tolerances of the valves are shown in Figure 1 for the intake valves, and Figure 2 for the exhaust valves. The intake valves do

© FORD MOTOR CO. 1971

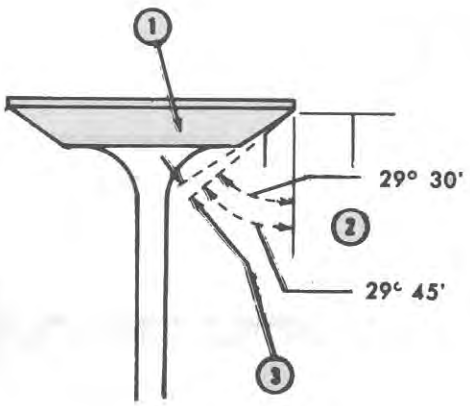

Figure 3
Interference Angle on Intake Valve Seat
1. Valve Face 29° 30'
2. Valve Seat 29°
3. Interference Angle 1°

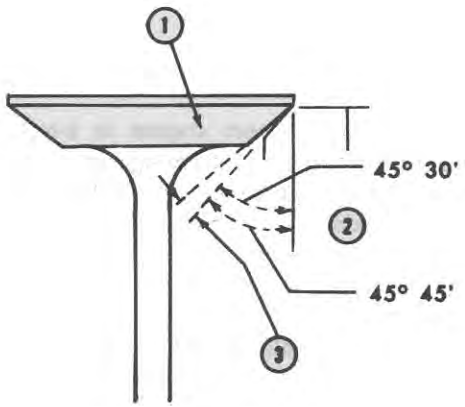

Figure 4
Interference Angle on Exhaust Valve Seat
1. Valve Face 45° 30'
2. Valve Seat 45°
3. Interference Angle 1°

not have umbrella seals. Inspection and refacing of valves is performed in the same manner as outlined in Part 1, Engine Systems, of this manual.

NOTE: *The valve refacing operation should be closely coordinated with the valve seat refacing operation so that the finished angle of the valve is 1° more than the valve seat to provide an interference angle for better seating. Adjust the refacing tool to obtain a face angle of 29° 30' for intake valves, Figure 3, and 45° 30' for exhaust valves, Figure 4.*

The valve seats are inspected and refaced as outlined in Part 1, Engine Systems, of this manual, except when adjusting the seat width of the intake valve. Use a 15° grinding wheel to remove stock from the top of the seat (lowers the seat), and use a 45° grinding wheel to remove stock from the bottom of the seat (raises the seat). Refer to Figure 5.

CONNECTING RODS

The connecting rods in the Ford 7000 engine contain a drilled passage for oil to aid in piston cooling and incorporate a different bearing. If new connecting rods or bearings are required, follow the installation procedures covered in Part 1, Engine Systems, of this manual.

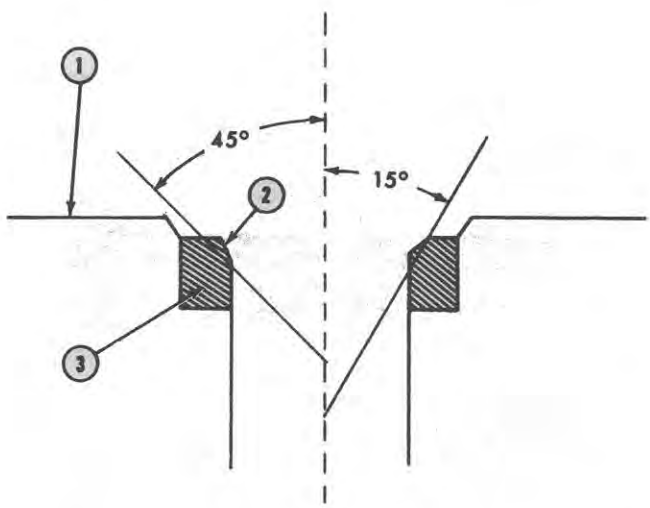

Figure 5
Intake Valve Seat Dimensions
1. Cylinder Head Surface
2. Valve Seat
3. Insert

COOLING SYSTEM

OIL COOLER

An engine oil cooler is located in the radiator bottom tank of all Ford 7000 diesel engine tractors.

Part 1

ENGINE SYSTEMS

Chapter 4

TURBOCHARGER – FORD 7000

Section		Page
1.	Description and Operation	1
2.	Turbocharger Overhaul	2

1. DESCRIPTION AND OPERATION

The turbocharger is a small turbine mounted directly on the engine exhaust manifold. A sectional view of the turbocharger is shown in Figure 1. The turbine wheel and the compressor wheel are mounted on a common shaft, supported by bearings in the bearing housing. Exhaust gasses from the engine flow into the turbine housing and drive the turbine wheel and shaft assembly and the compressor wheel at speeds in excess of 80,000 rpm. The compressor wheel forces clean air drawn from the air cleaner into the engine at an increased rate. This increased air supply helps the engine develop more power and better fuel economy.

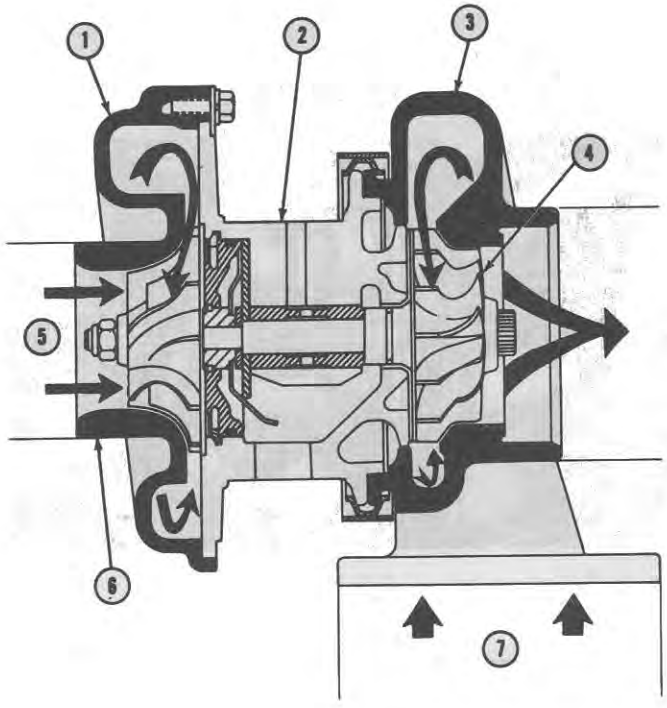

Figure 1
Turbocharger Air Flow

1. Compressor Cover
2. Bearing Housing
3. Turbine Housing
4. Turbine Wheel
5. From Air Cleaner
6. Compressor Wheel
7. From Exhaust Manifold

The turbocharger consists of turbine, bearing, and compressor housings. The turbine housing is flange mounted on the exhaust manifold and ducted to the exhaust stack. It contains the turbine wheel and shaft assembly. The turbine wheel is made of cobalt steel to withstand the high temperatures of the exhaust gasses.

The compressor housing consists of the compressor wheel and cover. The cover is ducted to the air intake manifold. The compressor wheel is made from aluminum since it operates in relatively cool air.

The bearing housing contains the bearings, seals, and retainers. The housing also contains a passage for oil used for cooling and lubrication. Figure 2 illustrates the oil flow through the bearing housing. Oil directed from the engine oil pump enters the passage at the top of the housing and flows under pressure to the bearing area. The oil completely surrounds the bearing by flowing in both directions between the bearing O.D. and the bearing housing, and between the bearing I.D. and the turbine shaft. Sealing rings at each end of the bearing housing, with air or gas pressure behind them, prevent oil from leaking into the compressor and turbine housings.

The oil moves to the lower portion of the bearing housing and drains to sump by gravity.

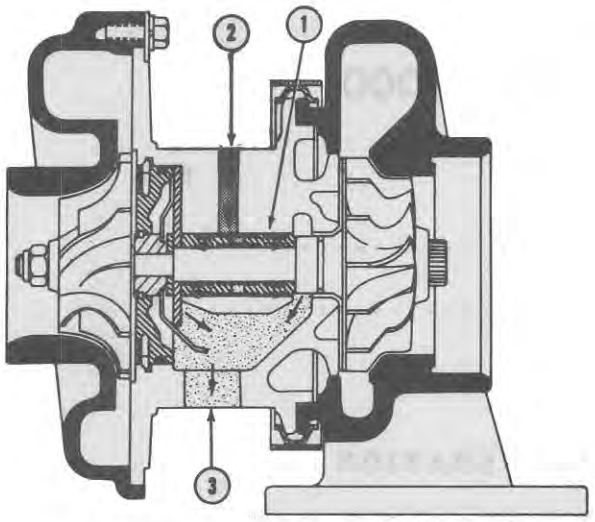

Figure 2
Turbocharger Lubrication
1. Bearing
2. From Pump
3. To Sump

The oil acts as a heat barrier between the hot turbi and the compressor, lubricates the bearings, and aids i. the removal of excess heat.

The high speed at which the turbine wheel and compressor wheel revolve, and the high temperature of the exhaust gasses, require the turbocharger to receive an adequate supply of clean quality oil, adequate clean air, and the full pressure of the exhaust gasses.

CAUTION: ***To avoid personal injury and prevent flange warp, allow the exhaust manifold to cool sufficiently after the tractor engine has been run before attempting to service the turbocharger.***

2. TURBOCHARGER OVERHAUL

A. Removal

1. Remove both hood side panels and the exhaust extension (muffler) from the tractor.

2. Remove the exhaust pipe by removing the four bolts from the exhaust flange, Figure 3.

3. Remove the three bolts that secure the exhaust flange to the manifold and remove the flange and seal ring.

4. Disconnect the air cleaner-to-turbocharger tube and the turbocharger-to-intake manifold tube, Figure 3, from the compressor side of the turbocharger by loosening the clamps securing the tubes to the turbocharger.

5. Remove the oil supply tube and disconnect the oil return tube from the cylinder block. Cap the ends of the tubes and the openings to prevent foreign material from entering the system.

IMPORTANT: ***Dirt or other foreign material that may enter the lubrication system will seriously damage the turbocharger and/or engine components. Take care to prevent dirt entry into the system.***

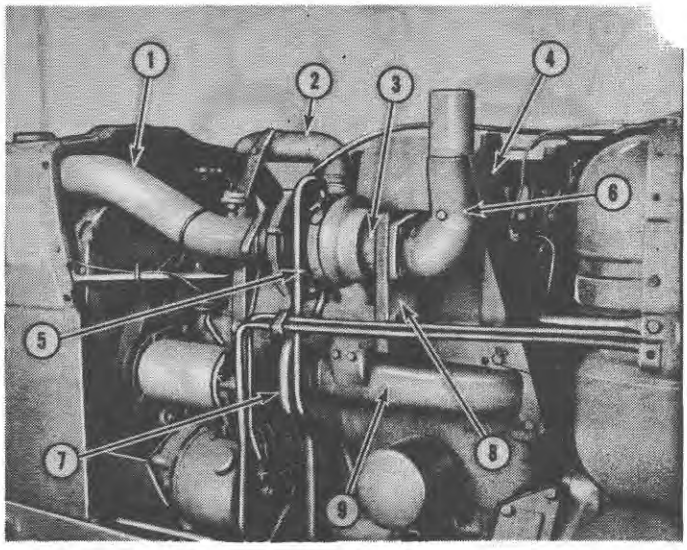

Figure 3
Component Identification – Left Side

1. Air Cleaner-to-Turbocharger Tube
2. Turbocharger-to-Intake Manifold Tube
3. Seal Ring
4. Heat Shield
5. Oil Supply Tube
6. Exhaust Pipe
7. Oil Return Tube
8. Exhaust Flange
9. Exhaust Manifold

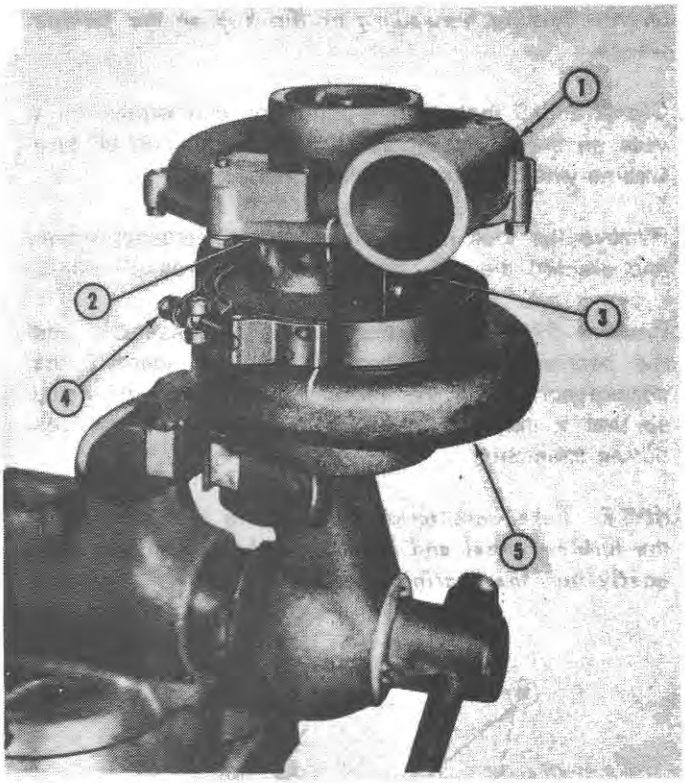

Figure 4
Turbocharger Disassembly

1. Compressor Cover
2. Clamp Plate
3. Bearing Housing
4. Clamp Band
5. Turbine Housing

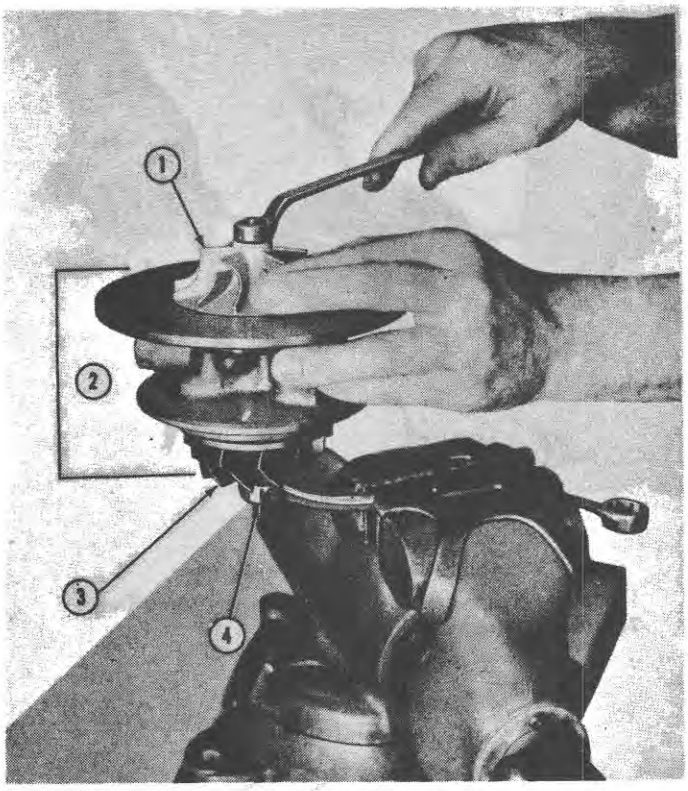

Figure 5
Compressor Wheel Removal

1. Compressor Wheel
2. Core Assembly
3. Turbine Wheel and Shaft Assembly
4. 5/8" 12-Point Socket

6. Remove the heat shield and manifold attaching bolts.

7. Remove the four nuts and lock washers securing the turbocharger to the manifold and remove the turbocharger. Remove the gasket between the turbocharger mounting flange and the manifold. Cover the exhaust opening in the manifold with a clean cloth to prevent foreign material from entering the exhaust manifold.

   IMPORTANT: *Because of the high rpm at which the turbocharger operates, dirt or other foreign material which may enter the exhaust manifold will seriously damage the turbine wheel blades. Take care to prevent foreign material from entering the exhaust system.*

8. Remove the oil return tube and gasket.

B. Disassembly

1. Mark the relative positions of the compressor cover, the bearing housing, and the turbine housing, Figure 4, before disassembling the turbocharger to aid in reassembling the unit.

2. Remove the eight bolts, lockwashers, and four clamp plates from the compressor cover. Remove the cover.

   NOTE: *The bolts are of a special design. Do not replace the bolts with a different type since no substitute will be satisfactory.*

3. Remove the nut from the clamp band screw. Remove the clamp band and the core assembly, Figure 5, from the turbine housing.

   NOTE: *If the core assembly is frozen in the turbine housing, hold the core assembly and drive the housing down and away from the core. DO NOT hammer*

© FORD MOTOR CO. 1971

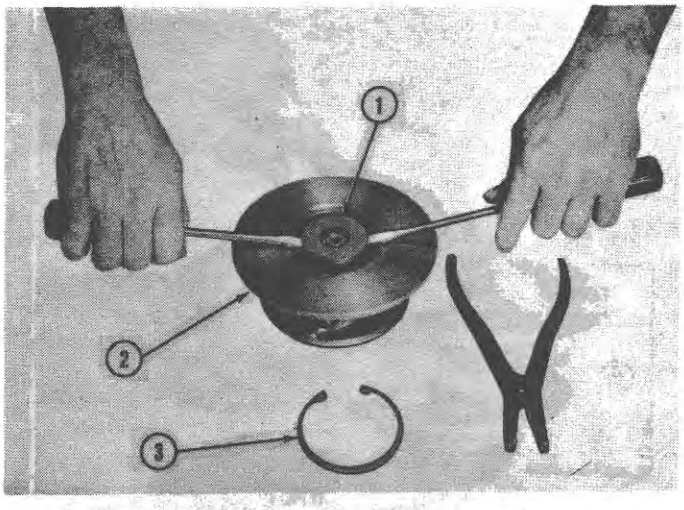

Figure 6
Compressor Insert Removal

1. Compressor Insert
2. Bearing Housing
3. Insert Snap Ring

on the bearing housing or the hub of the turbine wheel.

4. Clamp a 5/8 inch twelve-point box end wrench in a vise as shown in Figure 5. Place the hub of the turbine wheel in the wrench socket.

5. Remove the lock nut retaining the compressor wheel and discard the nut. Remove the compressor wheel.

6. Remove the turbine wheel and shaft assembly and the bearing from the bearing housing. Identify the compressor end of the bearing with a piece of string so that it may be installed in the same position during assembly.

NOTE: *Take care to avoid dropping the bearing or the turbine wheel and shaft assembly. Both will slip easily from the bearing housing.*

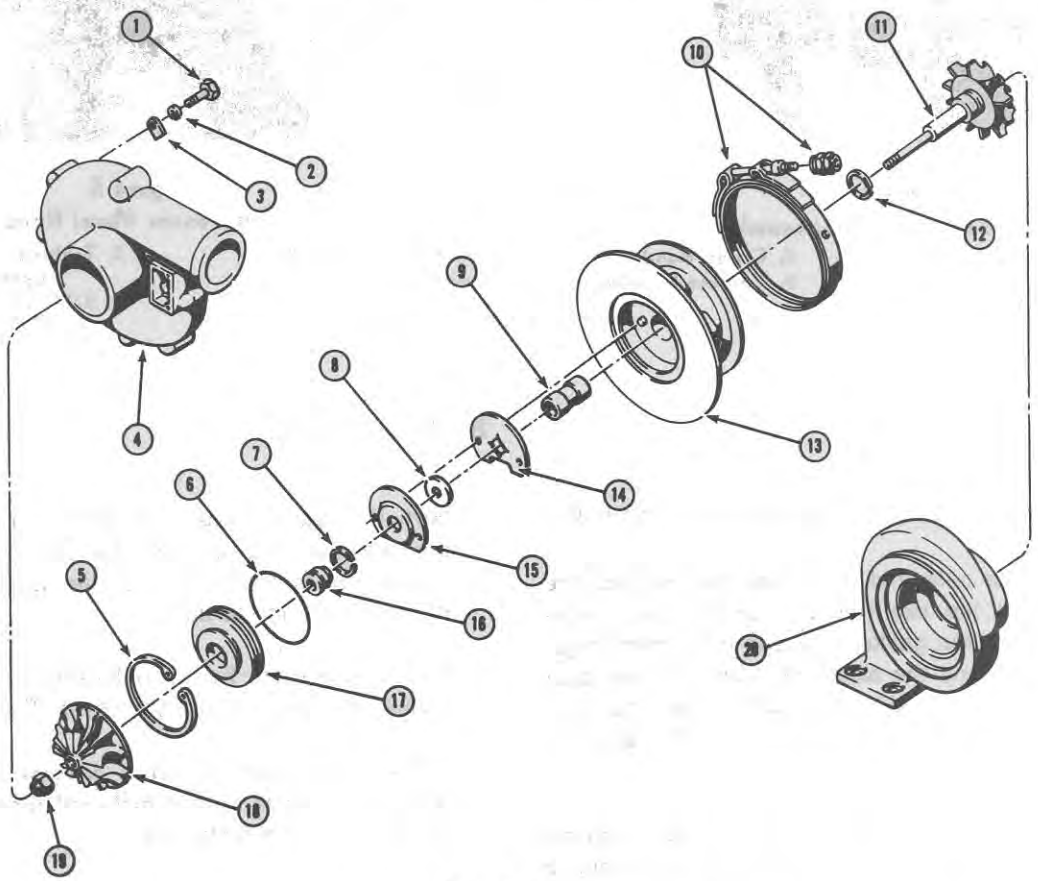

Figure 7
Turbocharger – Exploded View

1. Bolt
2. Lock Washer
3. Clamp Tab
4. Compressor Cover
5. Snap Ring
6. "O" Ring
7. Sealing Ring
8. Thrust Ring
9. Bearing
10. Clamp and Nut Assy.
11. Turbine Wheel & Shaft Assy.
12. Sealing Ring
13. Bearing Housing Assy.
14. Thrust Bearing
15. Deflector-Oil
16. Flinger Sleeve
17. Insert
18. Compressor Wheel
19. Locknut
20. Turbine Housing

Place the housing on a clean flat surface with the compressor side up as shown in Figure 6. Remove the snap ring retaining the compressor insert. Place a hand over the snap ring while removing it to prevent either loss of the ring or personal injury.

8. Using two screwdrivers, gently lift the insert from the bearing housing as shown in Figure 6. Remove and discard the O-ring from the insert.

9. Remove the flinger sleeve, the oil deflector, the thrust ring, and the thrust bearing. Refer to Figure 7. Do not remove the two dowel pins from the bearing housing.

10. Remove the sealing ring from the flinger sleeve and the copper-coated sealing ring from the turbine wheel and shaft assembly.

NOTE: ***The sealing rings have different diameters and must not be interchanged. Identify each ring with a tag so that they will be properly installed at assembly.***

Refer to the exploded view illustration, Figure 7, and to the following Turbocharger Diagnosis Guide during the inspection and repair of the turbocharger parts.

TURBOCHARGER DIAGNOSIS GUIDE

PROBLEM	POSSIBLE CAUSE	CORRECTION
DAMAGED COMPRESSOR BLADES	Foreign object	Determine source and correct.
DAMAGED TURBINE BLADES	Foreign object	Determine source and correct.
DAMAGED TURBINE AND COMPRESSOR BLADES	Turbine shaft and/or bearing worn (possibly due to cold start)	Install necessary new parts.
CARBONIZED CRUST ON BEARING	Excessive heat (due to hot shut-down)	Install necessary new parts.
BEARING DISCOLORED TO BLUE (OR BLACK)	Excessive exhaust temperatures	Determine cause and correct.
BEARING WEAR ON ENDS OF OUTER SURFACES	Damage due to dirty oil	Install necessary new parts, change oil and filter.
BEARING BRONZE WIPED ONTO SHAFT	Due to cold start (oil lag)	Possibly require new bearing and shaft.
END OF BEARING WORN	Excessive end play	Install new wear parts.
DIRT BUILD-UP COMPRESSOR WHEEL AND/OR COVER	Air leak between air cleaner and compressor	Locate and repair leak.
	Operating without air cleaner	Install clean air filter.

© FORD MOTOR CO. 1971

TURBOCHARGER DIAGNOSIS GUIDE (CONT.)

PROBLEM	POSSIBLE CAUSE	CORRECTION
EXCESSIVE WEAR ON BACK OF TURBINE WHEEL	Oil lag or starvation	Determine cause and correct. Install necessary new parts.
BURNT OR WORN OIL SEAL RINGS	Oil lag or starvation	Determine cause and correct. Install necessary new parts.
HEAT DISCOLORATION OR EXCESSIVE WEAR OF THRUST BEARINGS AND WASHER	Oil starvation	Determine cause and correct. Install necessary new parts.

C. Inspection and Repair

1. Soak all parts in a commercially approved cleaner that is safe for aluminum. Allow the parts to soak until all deposits are loose.

   IMPORTANT: *A caustic solution will damage aluminum parts and should not be used.*

2. Clean all aluminum parts with a bristle-type brush or a plastic scraper. Use a fine abrasive cloth to clean the turbine housing.

3. Clean all drilled passages with compressed air.

4. Make certain that surfaces adjacent to the turbine wheel and the compressor wheel are clean and smooth.

5. Inspect the turbine wheel shaft for excessive scoring or wear on the bearing surfaces. Check the wall of the sealing ring groove for scoring.

6. Inspect the turbine wheel and the compressor wheel for cracked, bent, or damaged blades. A very slight bend of 20° or less on any one blade of the wheel is tolerable.

   IMPORTANT: ***DO NOT attempt to straighten the wheel blades. If more than one blade is bent, replace the wheel.***

7. Check the I.D. and O.D. of the bearing for heavy scratches or grooves. Light scratches on the bearing surface are tolerable. Slight discoloration of the bearing due to heat will not affect its performance.

8. Inspect the bearing housing externally for cracks or other damage. Inspect the housing internally for excessive scratch marks or wear in the bearing bore or in the sealing ring recess.

9. Inspect the sealing ring groove on the flinger slee for wear or damage. Replace the flinger sleeve if is damaged, worn, or scored.

10. Inspect the thrust ring and the thrust bearing for excessive or uneven wear on the thrust faces. Polished areas on the face of the thrust ring and bearing will not impair operation.

11. Inspect the oil supply and return tube seals. Replace the seals if they are damaged.

D. Assembly

Refer to Figure 7 for parts identification during assembly.

1. Install the copper-coated sealing ring in the groove of the turbine wheel shaft.

2. Lubricate the sealing ring with engine oil and install the turbine wheel and shaft assembly in the bearing housing as shown in Figure 8. Be caref when seating the sealing ring in the bearing housi to prevent damage to the ring or the bore.

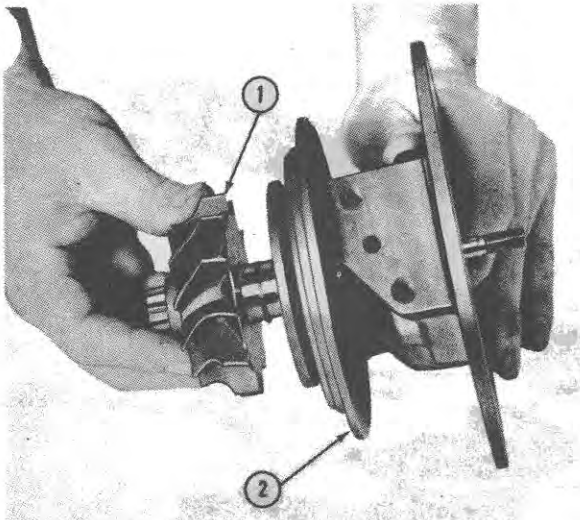

Figure 8
Turbine Wheel and Shaft Installation
1. Turbine Shaft and Wheel Assembly
2. Bearing Housing

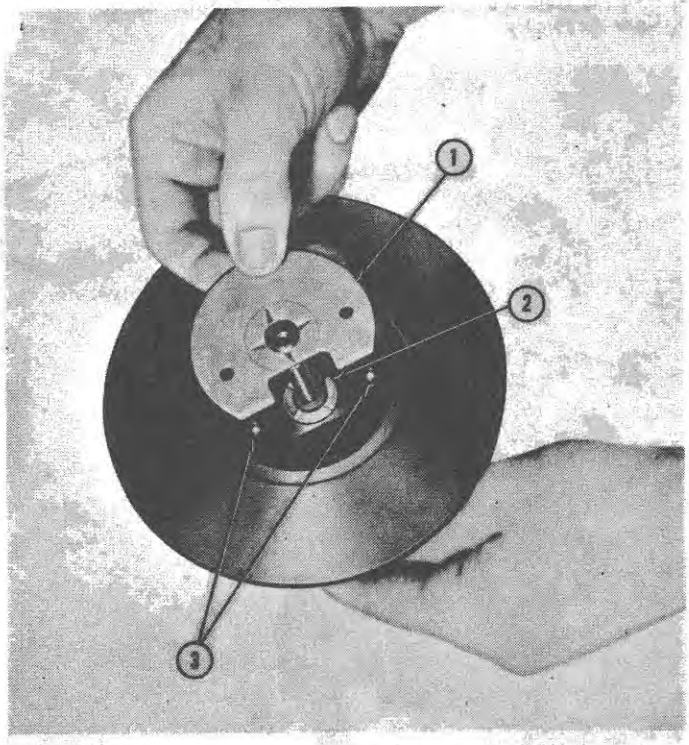

Figure 9
Thrust Bearing Installation
1. Thrust Bearing
2. Bearing
3. Dowel Pins

3. Lubricate the bearing thoroughly. Slide the bearing onto the shaft and into the bearing housing bore, Figure 9.

NOTE: ***If the original bearing is being reinstalled, make sure the end previously identified as the compressor end of the bearing is installed toward the compressor side of the housing.***

4. Lubricate the thrust bearing thoroughly and install it, bronze face up, over the shaft, aligning the holes in the bearing with the two dowel pins in the bearing housing. See Figure 9.

5. Install the thrust ring over the shaft and against the thrust bearing.

6. Place the oil deflector, with the lip down, over the shaft, aligning the holes in the deflector with the two dowel pins in the bearing housing.

NOTE: ***The oil deflector will go on the pins only one way. Make sure the deflector is correctly positioned on the dowel pins.***

7. Install the sealing ring in the groove of the flinger sleeve and lubricate thoroughly. Press the flinger sleeve into the compressor insert so that the flat side of the flinger sleeve is flush with the flat side of the compressor insert.

8. Lightly lubricate the new O-ring and place it in the groove in the compressor insert.

9. Slide the compressor insert, flat side out, over the turbine shaft. Press the insert firmly into the bearing housing counterbore until it clears the snap ring groove in the housing. See Figure 10. Keep the flinger sleeve in place and be careful not to damage the O-ring seal while installing the insert.

10. Install the snap ring, beveled side out, in the snap ring groove to secure the compressor insert. Make sure that the snap ring is completely seated in the snap ring groove by lightly tapping the ends of the ring with a flat end punch or other appropriate tool.

11. Slide the compressor wheel over the turbine shaft until it bottoms against the flinger sleeve.

© FORD MOTOR CO. 1971

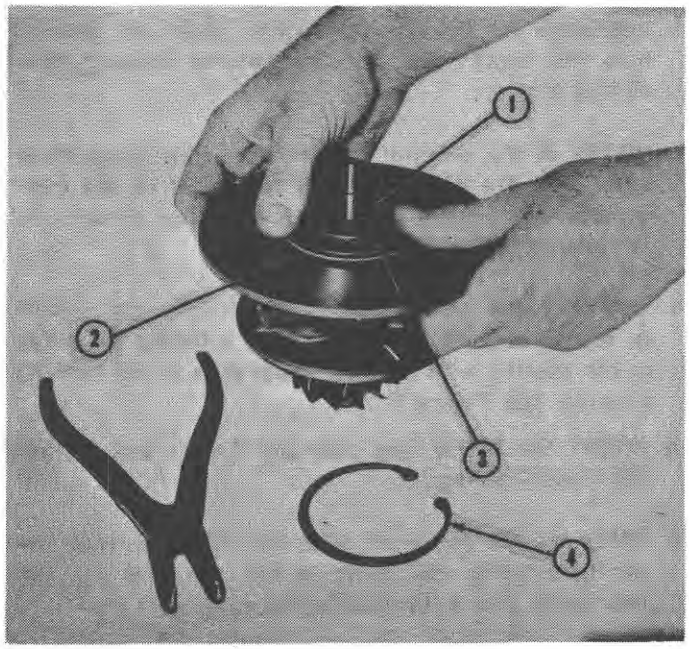

Figure 10
Compressor Insert Installation

1. Flinger Sleeve
2. "O" Ring
3. Compressor Insert
4. Snap Ring

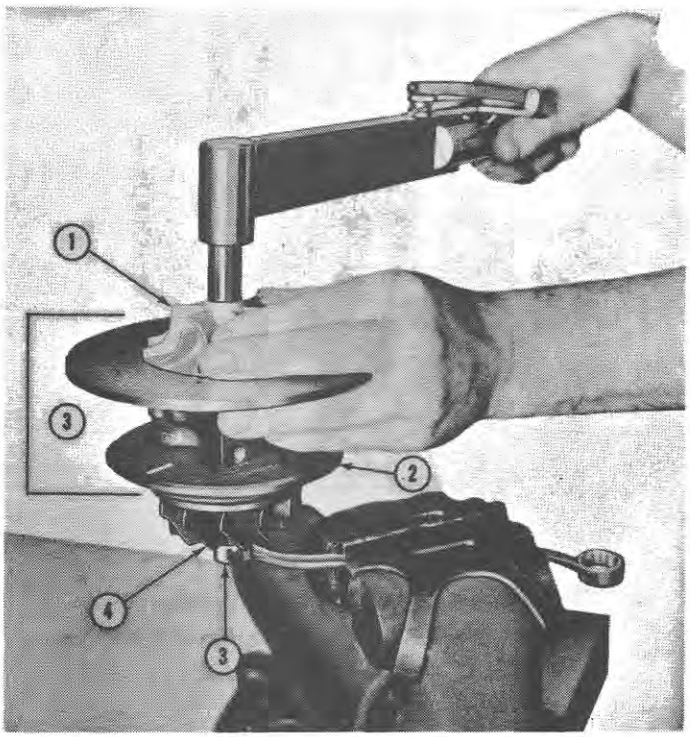

Figure 11
Compressor Wheel Installation

1. Compressor Wheel
2. Bearing Housing
3. Core Assembly
4. Turbine Wheel
5. 5/8" 12-Point Socket

12. Clamp a 5/8 inch twelve-point box end wrench in a vice, as shown in Figure 11, and position the hub of the turbine wheel in the wrench socket.

    IMPORTANT: ***Use care when positioning the turbine wheel hub in the wrench socket since the assembly is free to slide out of the bearing housing.***

13. Coat the threads and the flat shoulder of a new lock nut with graphite grease. Install the lock nut to secure the compressor wheel, as shown in Figure 11, using a 1/2 inch socket and a lbs. in. torque wrench. Tighten the nut to a torque of 156 lbs. in. (1.794 kgm).

14. Spin the compressor wheel. The rotating parts of the assembly must spin freely with no binding or rubbing. If binding or rubbing exists, disassemble, correct the problem, and reassemble.

    NOTE: ***A slight amount of end play will exist in the turbine shaft when the components are assembled in the bearing housing.***

15. Clamp the turbine housing in a vise as shown in Figure 12.

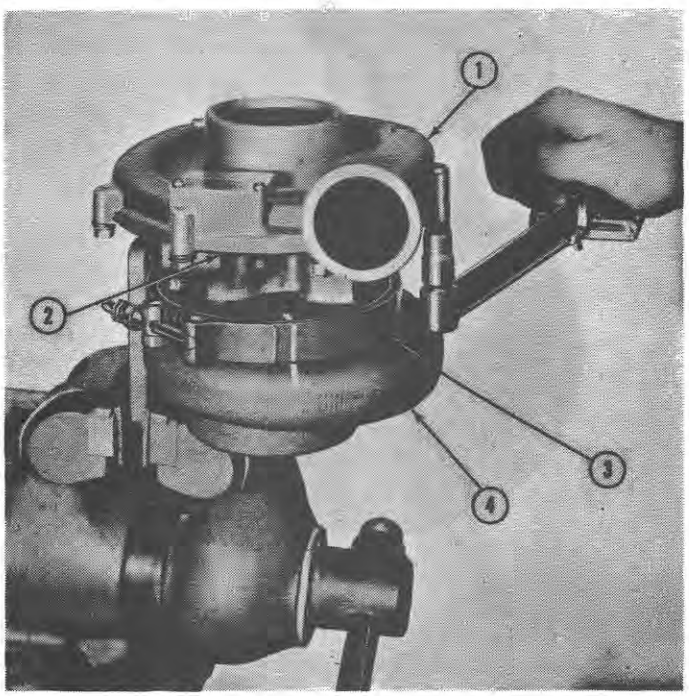

Figure 12
Compressor Cover Installation

1. Compressor Cover
2. Clamp Plate
3. Clamp Band
4. Turbine Housing

6. Place the clamp band over the flange on the turbine housing. Position the core assembly in the turbine housing aligning all reference marks.

IMPORTANT: ***Make sure the mating surfaces are clean and free of burrs to prevent possible misalignment and damaged blades.***

17. Coat the threads of the clamp band bolt and the flat face of the clamp band nut with graphite grease. Make sure the band is properly positioned to catch the flanges of both housings. Install the nut and tighten it to a torque of 120 lbs. in. (1.380 kgm).

18. Apply graphite grease lightly around the machined flange of the compressor cover to ease positioning the cover when the turbocharger is completely assembled.

IMPORTANT: ***Make sure the mating surfaces are free of burrs to prevent possible blade damage.***

19. Position the compressor cover on the bearing housing aligning the reference marks as shown in Figure 12.

20. Secure the compressor cover to the bearing housing with the eight bolts, lock washers, and the four clamp plates. Tighten the bolts diagonally to a torque of 60 lbs. in. (.990 kgm).

21. Spin the turbine wheel. The compressor wheel and the turbine wheel should rotate freely. If a drag is felt, remove the compressor cover and the turbine housing to determine the problem area. If necessary, completely disassemble the unit and inspect all parts again. Reassemble and recheck.

E. Installation

Before installing the turbocharger on the tractor, the following checks must be made and corrected if necessary:

- Check the exhaust and air intake systems for leaks, and remove any loose, foreign, or deteriorating material.

- Clean the air cleaner element.

Foreign material can quickly damage the turbocharger blades and destroy the precise balance of the rotating components. Exhaust and air intake leaks or restrictions will cause a reduction in the air supply to the engine and result in high exhaust temperatures.

1. Install the oil return tube and gasket on the turbocharger.

2. Position a new gasket and the turbocharger on the manifold, Figure 13, at the same time locating the oil return tube on the cylinder block adapter. Secure the turbocharger with the four nuts and lock washers and tighten the nuts to a torque of 30-35 lbs. ft. (4.15–4.84 kgm).

3. Add an ample supply of clean engine oil to the turbocharger through the oil intake port to thoroughly lubricate the turbocharger.

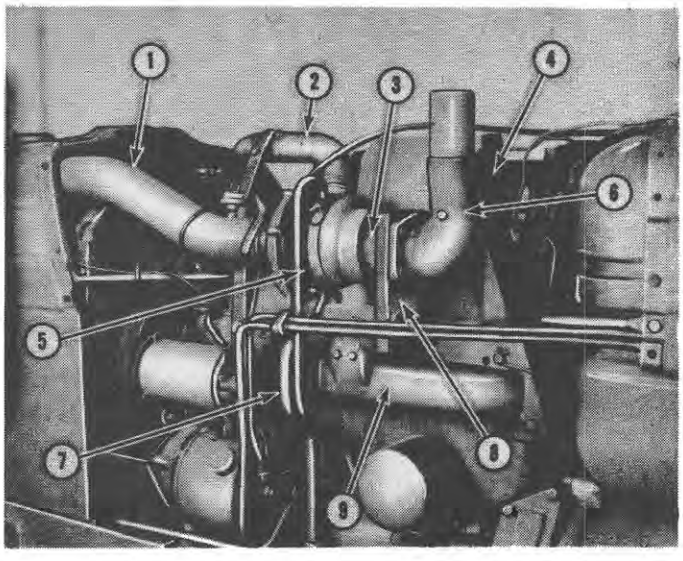

Figure 13
Component Identification

1. Air-Cleaner-to-Turbocharger Tube
2. Turbocharger-to-Intake Manifold Tube
3. Seal Ring
4. Heat Shield
5. Oil Supply Tube
6. Exhaust Pipe
7. Oil Return Tube
8. Exhaust Flange
9. Exhaust Manifold

© FORD MOTOR CO. 1971

4. Install a new gasket and connect the oil supply tube to the cylinder block adapter. Tighten the oil supply and oil return tube connections.

5. Install the heat shield and secure it with the manifold bolts and new locking tabs.

6. Position the exhaust seal ring into the recess of the turbine hub. Install the exhaust flange and secure it to the manifold with the three bolts and lock washers. Tighten the bolts securely.

   IMPORTANT: ***Make certain that the intake manifold tube is not producing a strain on the compressor cover. If necessary, loosen the clamp plate bolts and realign the cover with the intake manifold tube. Be sure that the mating flanges of the compressor cover are properly seated and the clamp plate bolts are properly tightened to a torque of 60 lbs. in. (.990 kgm).***

7. Connect the turbocharger-to-intake manifold tube as shown in Figure 13, and secure it with the clamps. Tighten each clamp bolt to a torque of 15-20 lbs. (.172—.230 kgm).

8. Connect the air cleaner-to-turbocharger tube as shown, and secure it with the clamps. Tighten each clamp to a torque of 15-20 lbs. in. (.172—.230 kgm).

9. Install the exhaust pipe on the exhaust flange and a new gasket. Secure the pipe by installing the four bolts in the exhaust flange. Tighten the bolts to a torque of 20-26 lbs. ft. (2.77—3.59 kgm).

10. Crank the engine for approximately 15 seconds with the diesel engine stop control out. This will provide initial lubrication to the turbocharger.

11. Install both hood side panels and the exhaust extension.

12. Check the engine oil level and add oil as required.

13. After several hours of operation, retighten all bolts.

Part 2

FUEL SYSTEM

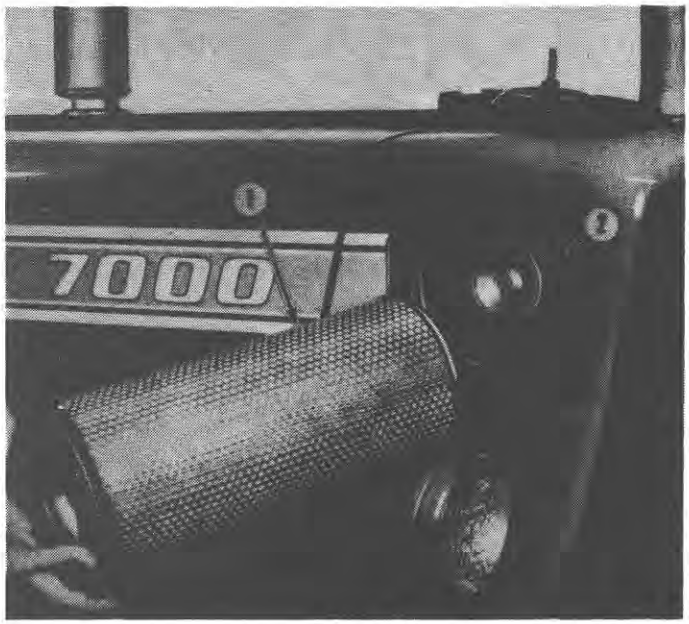

Figure 1
Air Cleaner

1. Air Cleaner Primary Element
2. Air Cleaner Secondary (Safety) Element

AIR CLEANER

The air cleaner, Figure 1, on the Ford 7000 Tractor is located in front of the radiator and is of the dry element type. It consists of a primary element and a secondary (safety) element.

The primary element should be cleaned whenever the air cleaner restriction warning light glows red. To clean the primary element:

1. Remove the filter element, Figure 1.

2. Check the rubber seal on the end of the element for adhesion. If the seal is loose, install a new element. A loose, damaged, or missing seal will allow dust to enter the engine and cause severe engine wear.

3. Clean the element by tapping it against the palm of your hand. DO NOT beat the element against the tire or a hard surface as damage to the element will result.

   NOTE: *Compressed air, not to exceed 100 psi, may be used for cleaning. Blow dust from the inside to the outside by inserting the nozzle inside the element. Blow loose particles from the outside by holding the nozzle at least 6 inches from the element.*

4. Inspect the element for signs of damage. If any damage exists, install a new filter element.

5. Clean the inside of the cannister with a damp, lint free cloth, then reinstall the element.

6. Check and tighten all air induction connections before resuming operation.

   The primary air cleaner element should be changed every 600 hours, (or whenever the 300 hour inspection shows the element to be damaged), or after ten cleanings, or whenever damage to the element is observed.

The secondary filter element is a safety element. It will protect the engine from damage in the event dust passes through a damaged primary element. The secondary (safety) element should be replaced when a new primary filter fails to extinguish the air cleaner restriction warning light, provided that the glowing light is not due to a malfunction in the electrical circuit. To install a new secondary (safety) element:

1. Remove the retaining nut and seal, Figure 1.

2. Remove the secondary (safety) element.

3. Install the new secondary element making certain that it seats properly to avoid admitting dust or dirt into the air intake tubes.

4. Install the retaining nut and seal. Tighten the retaining nut to a torque of 20 to 40 in. lbs. (.23 to .46 kgm).

5. Install a new primary filter element or the cleaned element as necessary. Tighten the wing nut securely.

6. Install the air cleaner cover.

   IMPORTANT: *The secondary (safety) filter element is not serviceable and must be replaced with a new one when required.*

© FORD MOTOR CO. 1971

FUEL INJECTION PUMP

Calibration

Test bench specifications and calibrating procedures for the Ford 7000 Injection pump are identical to those of the Ford 5000 with the 256 cu. in. engine with the following exception:

Maximum fuel delivery from each element is specified as 16.8 cc ± 0.2 cc for 200 shots at 900 rpm.

Part 3

ELECTRICAL SYSTEM

ELECTRICAL SYSTEM

The electrical system of the Ford 7000 Tractor uses a 128 ampere hour battery, with either a 55 ampere alternator and regulator or a 22 ampere generator and regulator, depending upon market area. All tractors with "A" or "B" prefixed serial numbers are equipped with a generator and all tractors with "C" prefixed serial numbers are equipped with an alternator. The respective voltage regulators for either the alternator or generator is located to the left side and in front of the fuel tank. The alternator regulator is an all-electronic transistorized unit that uses no mechanical contacts or relays. The generator regulator is electro-mechanical. Both units are sealed and cannot be adjusted.

Figure 1 illustrates a circuit schematic for tractors with a "C" prefixed serial number. Exercise care to avoid damage when removing electrical harnesses or wires. When installing the harnesses or wires, be sure that all clips are installed properly and that the wiring is not damaged by sharp corners or hot surfaces. For tractors with "A" or "B" prefixed serial numbers, refer to Part 3, Electrical System, of this manual.

IMPORTANT: ***Never connect or disconnect the battery leads while the tractor engine is running. Avoid reversed polarity when connecting booster cables to the battery. Do not run the tractor engine without a battery in the circuit.***

AIR CLEANER RESTRICTION WARNING LIGHT

The Ford 7000 Tractor incorporates an air cleaner restriction warning light. When the light glows red, it is an indication that sufficient air is not reaching the engine and the air cleaner must be serviced. Refer to Part 2, "Fuel System", of this supplement for procedures on servicing the primary and secondary air cleaner elements.

NOTE: ***The air cleaner restriction warning light will glow red for approximately 15 seconds after the key starter switch is turned to the on position. If the warning light glows red for more than 15 seconds after the engine starts, stop the engine immediately and investigate the possible cause.***

KEY TO WIRING CODES FOR FIGURE 1
(Circuit Descriptions – Tractors with "C" prefixed serial numbers).

Wire No.	Wire Description	Wire Code
1	Alternator to Starter Relay	Brown
2	Voltage Regulator F to Alternator	Brown/Green
3	Voltage Regulator I to Key Starter Switch	Brown/White
4	Starting Motor Relay to Key Starter Switch	Brown
5	Alternator to Key Starter Switch	Red
6	Voltage Regulator A to Key Starter Switch	Brown/Yellow
7	Starting Motor Relay to Starter Safety Switch	White/Red
8	Key Starter Switch to Starter Safety Switch	White/Yellow
9	Thermostart Connection to Key Starter Switch	Brown/Red
10	Key Starter Switch to Fuse	White
11	Key Starter Switch to Light Switch	Brown
12	Fuse to Voltage Stabilizer and Warning Lights	White
13	Light Switch to Rear Lamps and Head Lamps (Row Crop only)	Red
14	Light Switch to Head Lamps	Blue/Red
15	Temperature Gauge to Temperature Sending Unit	Green/Blue
16	Light Switch to Panel Light Connection	Red/White
17	Oil Pressure Switch to Oil Pressure Warning Light	Blue
18	Air Cleaner Restriction Vacuum Switch to Key Starter Switch	Red/Yellow
19	Voltage Regulator G to Alternator Warning Light	Black

© FORD MOTOR CO. 1971

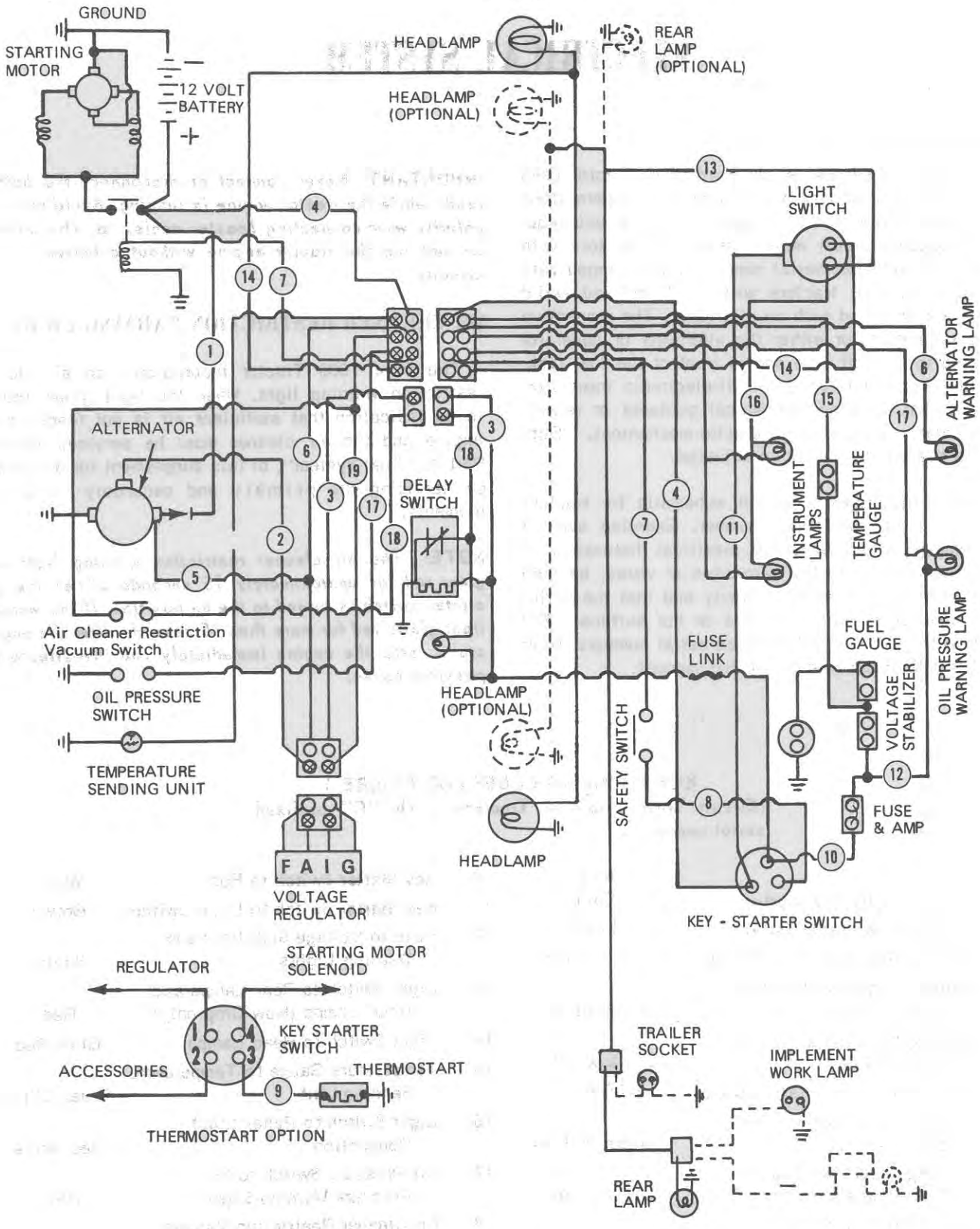

Figure 1
Electrical System Schematic

Part 3

ELECTRICAL SYSTEM

Chapter 7

ALTERNATOR AND REGULATOR – FORD 7000

Section		Page
1.	Introduction	1
2.	In-Vehicle Tests and Service Procedures	6
3.	Alternator Overhaul and Bench Check	16
4.	Trouble Shooting	30
5.	Specifications	32
6.	Special Tools	33

1. INTRODUCTION

ALTERNATOR

The alternator system consists of an alternator and solid state voltage regulator, Figure 1. Figure 2 shows the terminal arrangement at the rear of the alternator. Figure 3 shows the side view.

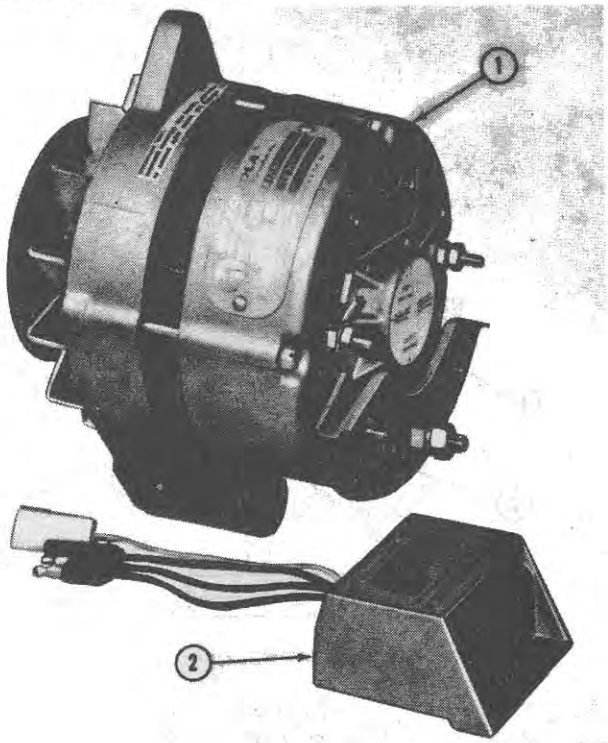

Figure 1
Alternator and Regulator

1. Alternator
2. Voltage Regulator

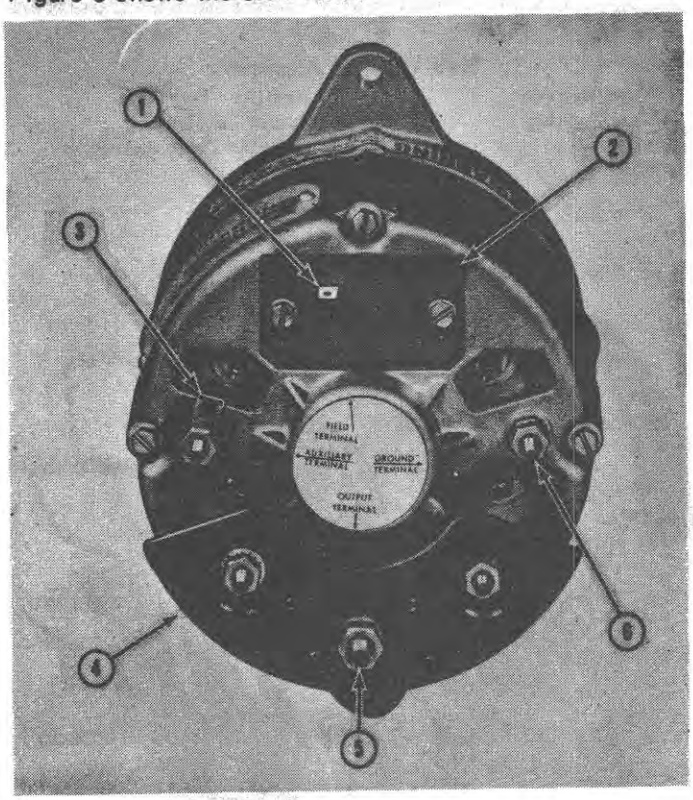

Figure 2
Alternator Terminal Identification

1. Brush (Field) Terminal
2. Dust Shield
3. Auxiliary Terminal
4. Isolation Diode Assembly
5. Output Terminal (Positive)
6. Ground Terminal (Negative)

© FORD MOTOR CO. 1971

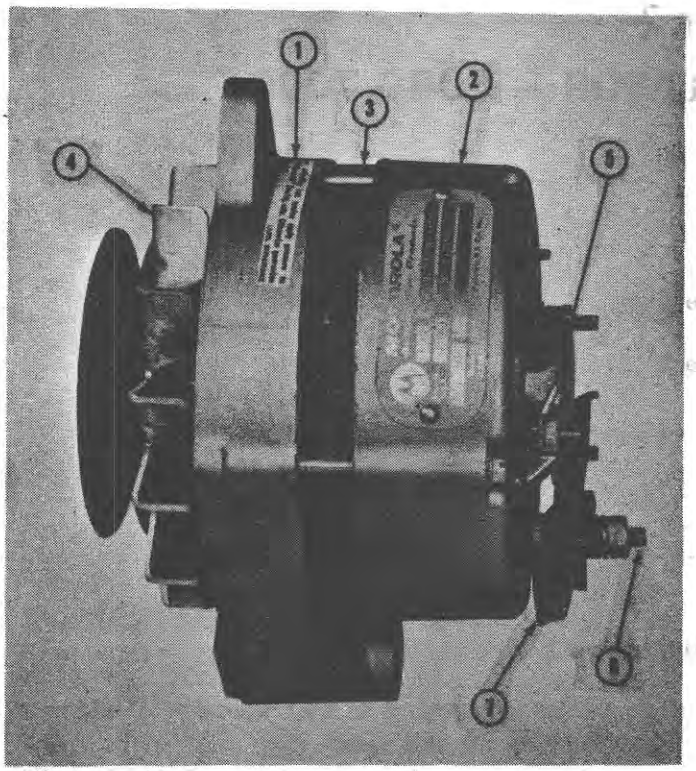

Figure 3
Side View of Alternator

1. Front Housing
2. Rear Housing
3. Stator
4. Fan
5. Auxiliary Terminal
6. Output Terminal
7. Isolation Diode Assembly

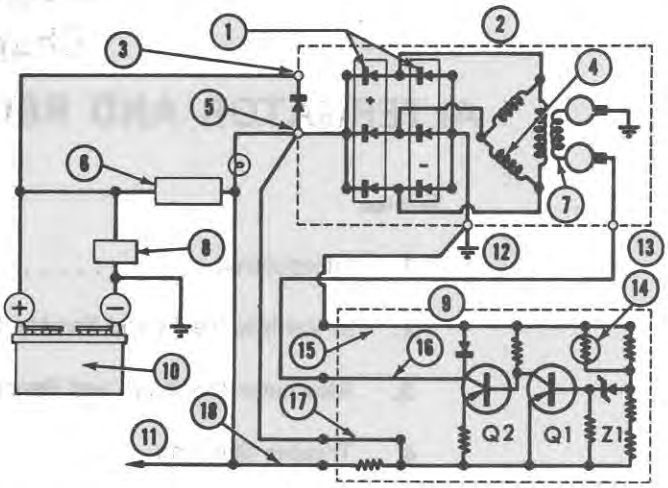

Figure 5
Alternator System Schematic

1. Rectifying Diodes (Six)
2. Alternator
3. Output
4. Stator
5. Auxiliary
6. Key-Switch
7. Rotor
8. Load
9. Regulator
10. Battery
11. To Distributor (If Applicable)
12. GND
13. Field
14. Right
15. Black
16. Green
17. Red
18. Yellow

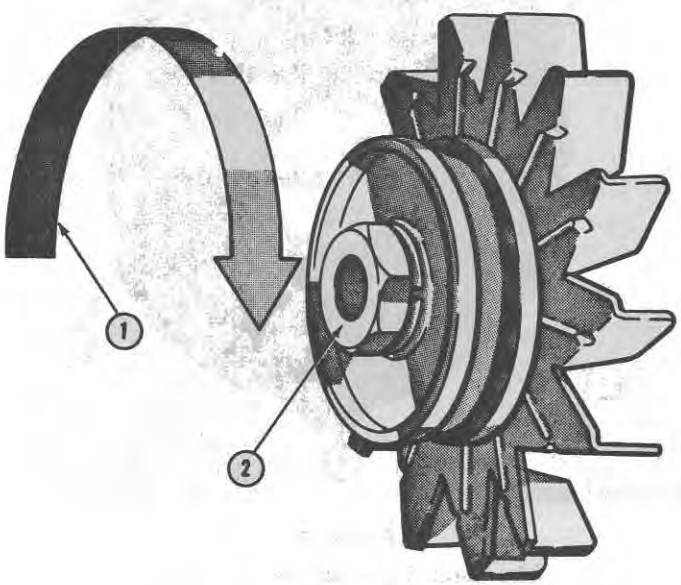

Figure 4
Front Mounted Cooling Fan

1. (Standard) CW Rotation
2. Tighten to 35–50 Lbs. Ft.

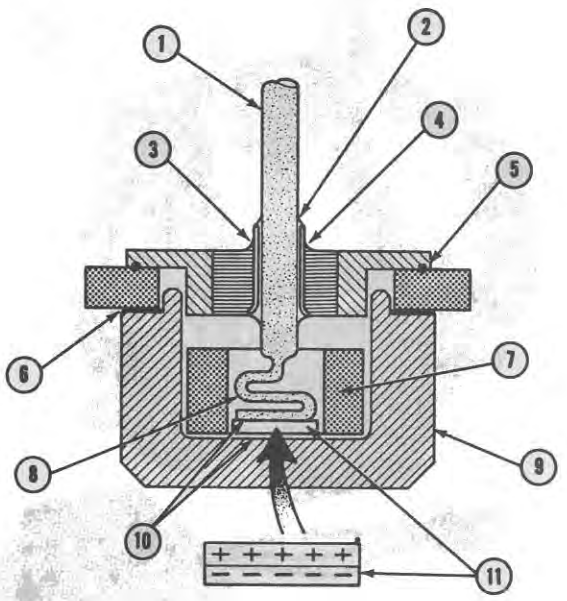

Figure 6
Diode Construction

1. Copper Lead
2. Solder
3. Glass Insulator
4. Tube
5. Weld
6. Solder
7. Getter Material
8. Flattened Wire
9. Brass Case
10. Solder
11. Silicon Crystal Wafer

The alternator is cooled by a front mounted fan, Figure 4, that draws air into the rear housing. The air stream is directed across the rectifying diodes, stator and rotor, and expelled out the openings in the front housing. The rotor assembly is mounted on ball bearings.

The alternator converts magnetic and mechanical energy to alternating current by rotating an electromagnet (the rotor) inside the stator assembly. The alternating current and voltage is changed to direct current (D.C.) by a three-phase, full wave rectifier system, employing six silicon rectifying diodes. See Figure 5.

DIODES

A diode, simply stated, is an electrical "check valve" that allows current to flow in one direction only, from positive (+) to negative (–). Figure 6 shows the construction of a diode. The silicon crystal wafer is the "heart", or rectifying element; it determines the direction of current flow through the diode. The silicon crystal wafer consists of two substances. The silicon crystal has a natural positive charge. It is coated on one side with a substance that has a negative charge. Current passes through the wafer in one direction only – FROM THE POSITIVE SIDE TO THE NEGATIVE SIDE – due to the chemical composition of the electrically opposite sides. The side to which the flattened wire is soldered determines the direction of current flow in relation to the construction of the diode, and consequently, establishes the diode as being positive or negative. When the copper lead is soldered to the positive side of the wafer, the diode is positive. When the copper lead is soldered to the negative side of the wafer, the diode is negative. Diodes with part numbers printed in **red** are POSITIVE. Diodes with part numbers printed in **black** are NEGATIVE.

Since diodes pass direct current in only one direction, their arrangement in the alternator eliminates the need for a cut-out or a relay to connect or disconnect the alternator from the battery. The diodes are assembled into two heat-dissipating plates. These plates or heat sinks are placed in the alternator with mounting studs that also serve as system terminal connections. See Figure 7.

The isolation diode, shown in Figure 8, is directly connected to the auxiliary terminal stud that is a part of the positive rectifier diode assembly. This places the isolation diode in series with the rectifier diodes and the positive output terminal of the alternator. The auxiliary terminal is considered to be the voltage regulator connecting terminal.

The isolation diode consists of a pair of negative diodes, connected in parallel and mounted in a heat sink. The heat sink is coated with a special corrosion resistant red paint to prevent electrolysis. The red color indicates that the electrical potential at this point is **positive,** therefore, the alternator is a **"negative ground machine".**

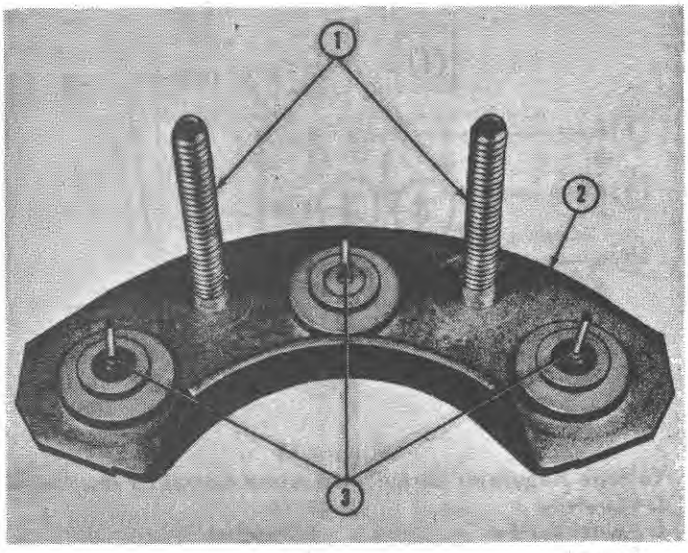

Figure 7
Rectifying Diode Assembly
1. Terminal Studs 2. Heat Sink 3. Diodes

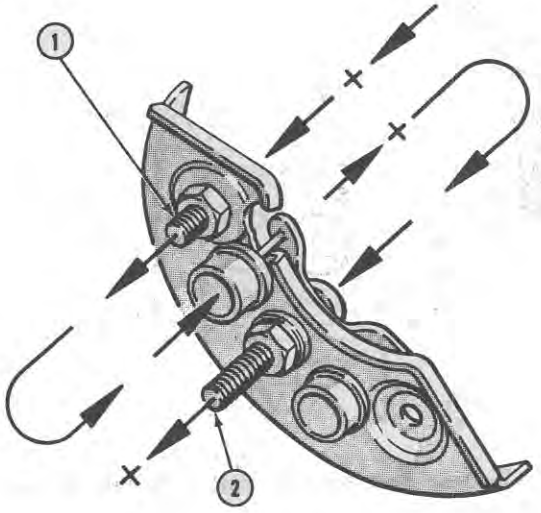

Figure 8
Current Flow Through Isolation Diode
1. Auxiliary Terminal (Part of Rear Housing Assembly) 2. Output

© FORD MOTOR CO. 1971

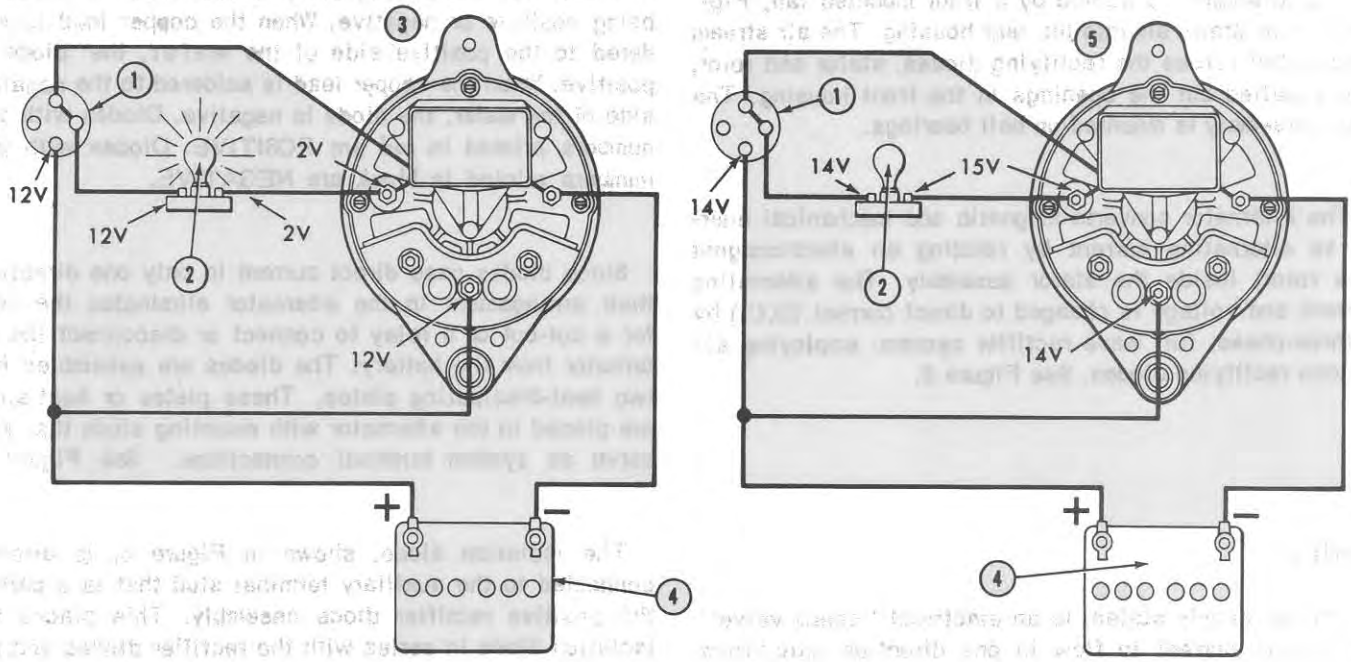

Figure 9
Charge Indicator Light Circuit

1. Key-Switch
2. Charge Indicator Light
3. Key on Engine Not Running Voltage Across Light 10 Volts (Light Will Come On)
4. Battery
5. Key on Engine Running Voltage Across Light 1.0 Volt (Light Will Not Come On)

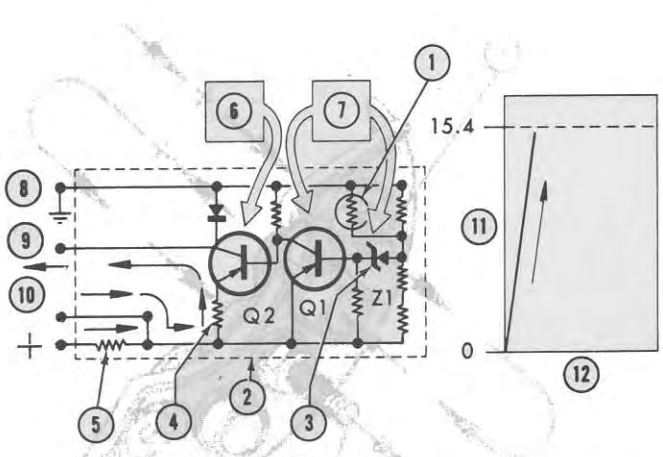

Figure 10
Voltage Regulator Circuit – Battery Current Flow

1. Thermistor
2. Emitter Resistor
3. Zener Diode
4. Regulator
5. Excitation Resistor
6. On
7. Off
8. Negative
9. Field
10. Auxiliary
11. Volts
12. Time

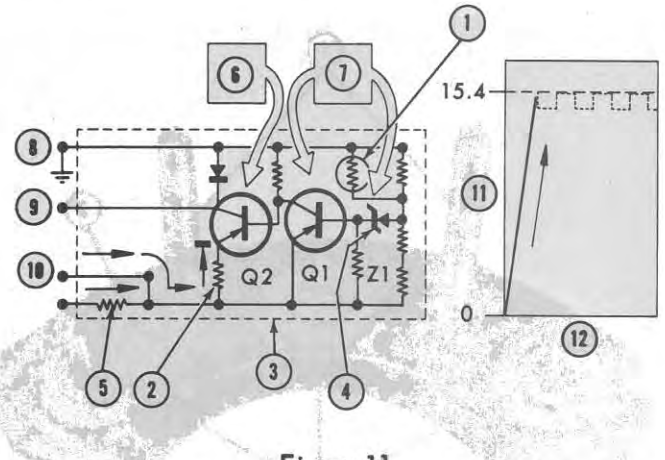

Figure 11
Voltage Regulator Circuit – Battery Current Flow Cut-Off

1. Thermistor
2. Emitter Resistor
3. Regulator
4. Zener Diode
5. Excitation Resistor
6. Off
7. On
8. Negative
9. Field
10. Auxiliary
11. Volts
12. Time

The isolation diode provides a means of operating the charge indicator light without using a special relay. Electrically, the charge indicator light is connected in parallel with the isolation diode. When the alternator is producing a normal charge, the voltage differential across the isolation diode is so small that the light will not come on, indicating that the alternator is charging. See Figure 9.

REGULATOR

The voltage regulator, Figure 1, is an electronic switching device. It senses voltage appearing at the alternator auxiliary terminal, and supplies the necessary current to the rotor winding (field) for maintaining system voltage at the alternator output terminal.

The components of the voltage regulator are sealed in epoxy resin for protection against damage from vibration, dust, and moisture.

A zener diode (Z1), Figure 10, and a thermistor are incorporated in the voltage regulator circuit, along with calibrating resistors and two switching transistors (Q1 and Q2). The zener diode is the voltage sensitive component, while the thermistor serves to adjust the zener diode action to suit regulator operating temperatures.

Note that the output transistor (Q2) is in series with the regulator input lead and with the regulator output lead to the rotor (field) winding. This transistor is turned "on" and "off" by the action of the regulating zener diode, and the driver transistor (Q1).

Initial alternator excitation, creating a light magnetic field around the rotor assembly, is accomplished by passing battery energy through the excitation resistor, emitter resistor, output transistor (Q2) to the rotor (field) winding.

During initial excitation, and any other time the alternator system voltage is below the regulating level of the zener diode, the zener diode and driver transistor are turned "off". The only switching component in the regulator that is turned "on" at this time, is the output transistor (Q2), allowing battery energy to pass through the regulator circuit to the rotor (field) winding.

Rotating the magnetized rotor in the alternator induces current flow in the stator windings as alternating current and voltage. This energy is converted to direct current by the rectifying diodes and appears at the auxiliary terminal as direct current and voltage. The system voltage then starts to rise, as shown in the graph, Figure 10.

When alternator D.C. voltage reaches the regulating level of the zener diode, the zener diode conducts, turning the driver transistor "on". The output transistor is turned "off", cutting off the flow of current to the rotor (field) winding, as shown in Figure 11.

The magnetic field of the rotor winding begins to collapse, reducing alternator voltage, as shown in the graph, Figure 11. The instant that the voltage drops below the zener diode conducting or "regulating" level, the zener diode becomes an open circuit and the driver transistor switches "off", allowing the output transistor (Q2) to switch "on" again. The dotted trace in the graph shows the slight drop in voltage and the rapid rise, caused by the "on/off" action of the semi-conductors.

The thermistor exerts its influence on the regulated voltage level by changing its resistance with changes in temperature. The resistance variations have a direct effect on the function of the zener diode, providing higher charging rates in cold weather and lower charge rates in warm weather.

A typical temperature-resistance characteristic curve is shown in Figure 12. Also refer to the voltage vs. ambient air temperature chart on page 12.

© FORD MOTOR CO. 1971

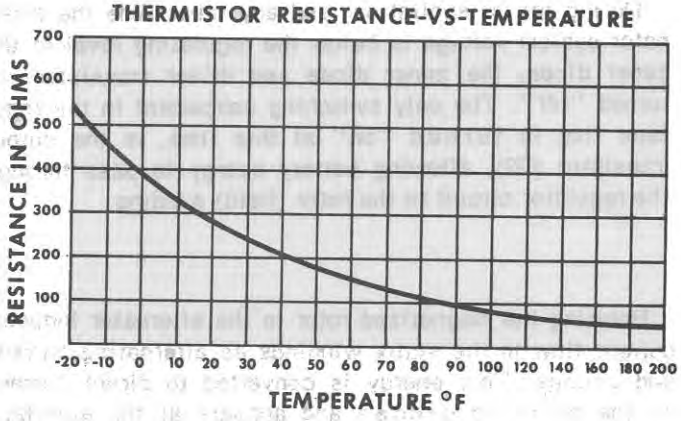

Figure 12
Typical Temperature – Resistance Characteristics of Thermistor

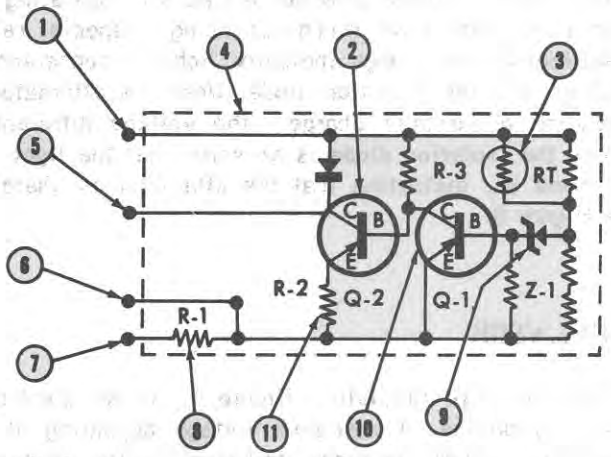

Figure 13
Voltage Regulator Circuit

1. Black Lead Ground
2. Output Transistor
3. Thermistor
4. Regulator
5. Green Lead Field (Rotor)
6. Red Lead Auxiliary (Stator)
7. Yellow Lead Excitation
8. Excitation Resistor
9. Zener Diode
10. Driver Transistor
11. Emitter Resistor

A series of short connecting cables are soldered to the regulator circuit board, with the opposite ends terminating in a polarized connector plug. The regulator circuit is insulated from the metal housing, therefore the regulator requires no external ground. The regulator will function as long as it is connected, even if it is merely hanging by the connector.

Generally, red leads connect to the voltage sensing auxiliary terminal of the alternator, the positive source. Black leads connect to the negative or ground terminal of the alternator. Green leads connect to the brush, (field) terminal. The fourth lead, the external lead from the excitation resistor (R1), Figure 13, connects to the key-starter switch. The fifth lead, the output from the alternator to the battery, is a heavier brown lead.

2. IN-VEHICLE TESTS AND SERVICE PROCEDURES

IN-VEHICLE TESTS

Preliminary Checks

Prior to electrical testing, a thorough inspection of the charging and electrical system is required to eliminate associated conditions that may be interpreted as a defective alternator or regulator.

1. Check all electrical leads and connections, repair or replace necessary parts. Check the condition of the alternator drive belt and pulleys. Severe operating conditions will accelerate belt and pulley wear. Tighten the belt to avoid slippage during testing. Belt adjustment is covered on page 14.
2. Check the alternator brushes for wear. Replace if worn more than half their original length. Brush removal and installation is covered on page 14. Brushes worn too short tend to lose contact with the slip rings. While the brush cavity is exposed, check the slip rings for cleanliness. If cleaning is required, use a fine grade of crocus cloth for this purpose. Inspect radio capacitors (filter), if installed, for open or shorted conditions, replace defective units.

Check the battery. The battery used in electrical testing must be of correct voltage and must be in good condition and fully charged. If a slave or jumper battery is used for testing, the connecting cables must be securely fastened to the system.

IMPORTANT: *Observe proper battery and system polarity when installing the battery in the tractor. The alternator nameplate indicates the system polarity. See Figure 14. Incorrect battery polarity will destroy the rectifier diodes in the alternator.*

As a precautionary measure, always disconnect the battery ground cable from the battery when charging the battery with any battery charger. This is mandatory with fast chargers that may have defective rectifying systems, as the rectifier diodes in the alternator could be destroyed.

DO NOT, under any circumstances, short the alternator field terminal to ground, as permanent damage to the regulator may result.

DO NOT disconnect the voltage regulator connector plug from the tractor wiring harness while the alternator is operating. A large voltage transient could develop and may damage the alternator.

DO NOT disconnect the alternator output lead from the alternator while the alternator is operating. This same precaution applies to the battery cables, they must not be switched "off" or disconnected from the battery while the alternator is operating. The loss of battery resistance would cause system voltage to rise to an extreme value, damaging the alternator, regulator, and possibly other accessories.

ALWAYS disconnect the battery ground cable from the battery when removing or installing the alternator.

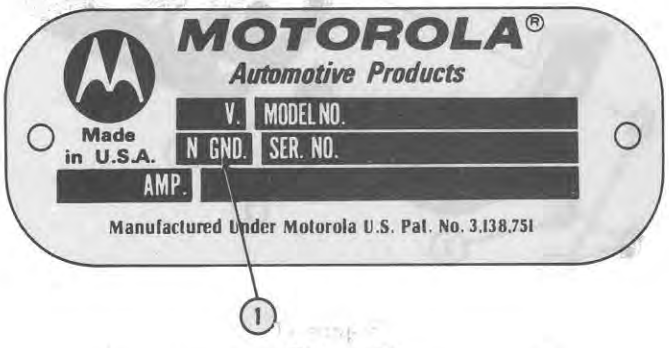

Figure 14
Alternator Nameplate
1. Ground Information

4. Check the key-starter switch. One of its functions is to supply initial excitation current for the alternator rotor (field) windings. The switch must be in good condition to perform the following tests. Switch removal and installation is covered in Chapter 1.

Test Equipment Required

The alternator and regulator tests require electrical test equipment that will measure voltage, current, and resistance. Individual meters are used in the following in-vehicle tests, however, most commercial testing equipment incorporate several testing devices in a single assembly. Use your equipment according to the manufacturers instructions. Equipment should provide:

- Voltmeter, with 0 to 20 volt scale
- Ammeter, with 0 to 60 ampere and 0 to 6 ampere scales
- Field Rheostat, wire-wound, 0 to 50 ohms, 100 watt rating, with alligator clips on connecting leads
- Series Resistor, 1/4 ohm, with connecting clip or leads
- Carbon Pile (Sun BST-11 or equal)
- Volt-Ohm-Milliammeter (Simpson 260 or equal)
- 12 volt test lamp, and 115–120 volt A.C. Test Lamp
- Diode Tester, any commercial type (optional)
- Assortment of jumper cables with alligator clips

The ammeter will be connected into the system when the field current is tested, and for the total output test, page 12. If the ammeter has provisions for reversing meter circuit, and for switching from one scale to another, the test will advise this action. If necessary, meter leads would be reversed to accomplish this action.

NOTE: *Ammeter leads must be secure and should not separate during testing. If alligator clips on the ammeter leads are questionable, replace them.*

© FORD MOTOR CO. 1971

Reference to "ground" indicates that a good ground is necessary. The alternator ground stud would be the best grounding point.

Battery Voltage and Shorted Isolation Diode Test

Conditions: Key Starter Switch OFF, Engine NOT Running

1. This test will determine if the tractor battery is properly installed and if the isolation diode is functioning properly by keeping battery voltage off of the alternator auxiliary terminal, Figure 15. A shorted isolation diode will allow the battery to discharge through the voltage regulator. The charge indicator light will "burn" when the key is off if the isolation diode is shorted.

2. Connect the voltmeter negative lead to ground and the positive lead to the output terminal at the isolation diode heat sink, Figure 15. The voltmeter should indicate battery voltage.

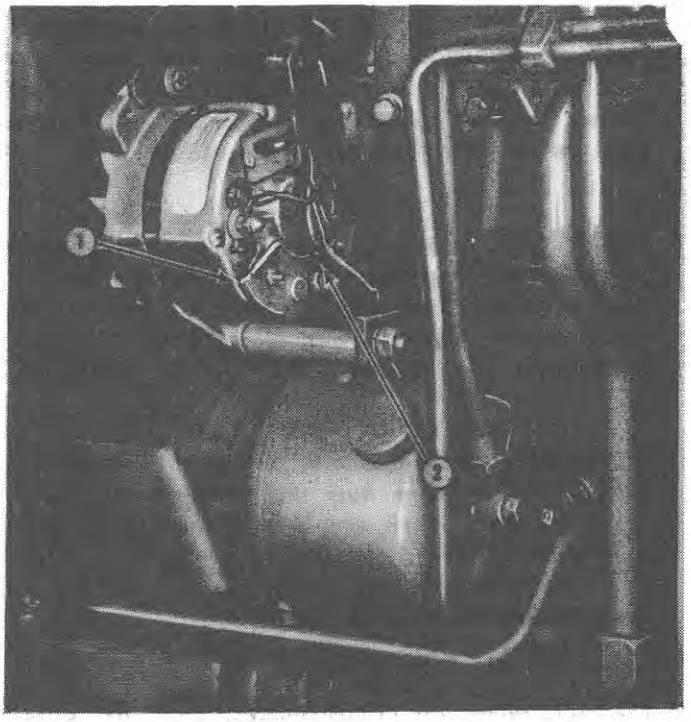

Figure 16
Output Lead Position

1. Heat Sink
2. Do Not Allow Output Lead To Touch Heat Sink

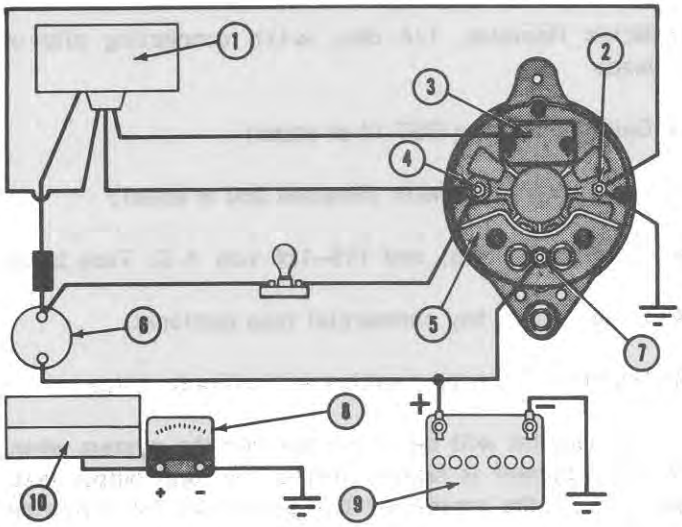

Figure 15
Battery Voltage and Shorted Isolation Diode Test

1. Regulator
2. Ground
3. Field
4. Auxiliary
5. Isolation Diode Heat Sink
6. Key-Switch
7. Output
8. Test Voltmeter
9. Battery
10. Auxiliary Output

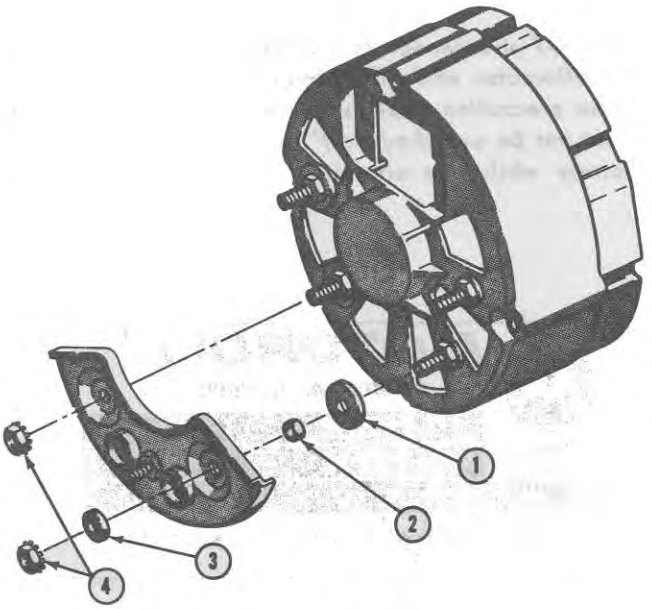

Figure 17
Insulators for Isolation Diode Assembly

1. 3/4" O.D. Washer
2. Nylon Sleeve
3. 1/2" O.D. Fiber Washer
4. Lock Nuts

3. Move the positive voltmeter lead to the auxiliary terminal, Figure 15. The voltmeter should read zero volts. If the voltmeter continues to indicate battery voltage, either the isolation diode is shorted, or the output lead is contacting the isolation diode heat sink, Figure 16, allowing battery current to bypass the isolation diode. Loosen the nut and reposition the output lead if necessary.

4. The isolation diode may be replaced without removing the alternator. Remove the battery ground cable (negative) during replacement.

NOTE: ***Reinstall the heat sink insulators in their original positions, Figure 17.***

Excitation Voltage Test

Conditions: Key Starter Switch ON, After Connecting Voltmeter Leads, Engine NOT Running

1. The results of this test will indicate if battery voltage and current, controlled by the key-starter switch.

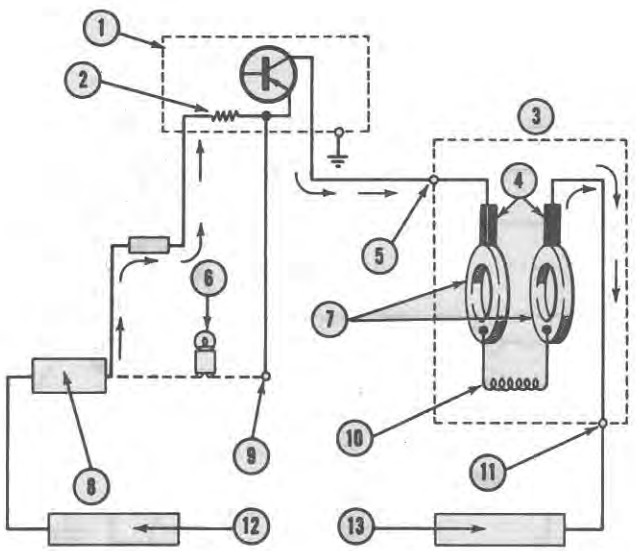

Figure 18
Alternator Field Circuit

1. Regulator
2. Excitation Resistor
3. Alternator
4. Brush Set
5. Field Terminal (Alt)
6. Ind. Lamp
7. Slip Rings
8. Key-Switch
9. Auxiliary Terminal (Alt)
10. Rotor Winding
11. Negative Output
12. Battery Positive
13. Battery Negative

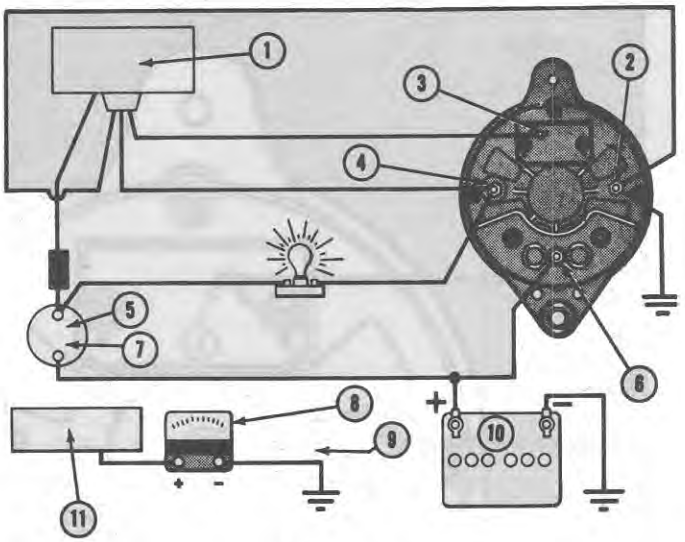

Figure 19
Excitation Voltage Test

1. Regulator
2. Ground
3. Field
4. Auxiliary
5. Key-Switch
6. Output
7. On
8. Test Voltmeter
9. 1.5 to 2.5 Volts
10. Battery
11. Auxiliary

is passing through the voltage regulator and into the rotor (field) winding to provide initial excitation of the alternator. Figure 18 shows the circuit involved.

2. Connect the voltmeter negative lead to ground and the positive lead to the auxiliary terminal, Figure 19. Turn the key-starter switch on. The voltmeter reading should be approximately 2.5 volts. If the voltmeter reads approximately 2.5 volts, remove the fuse from the instrument panel. The charge indicator light should go out and the voltmeter should drop to 1.5 volts

3. If the voltmeter indicates zero volts, recheck all connections between the key-starter switch and the excitation lead of the regulator. Repair as needed and continue the test.

4. If the voltmeter reads more than 2.5 volts or 1.5 volts with the instrument fuse removed, it indicates a fault in the regulator or in the alternator rotor (field) winding. Bypass the regulator input-output circuit with a jumper cable in order to isolate the fault. See Figure 20.

© FORD MOTOR CO. 1971

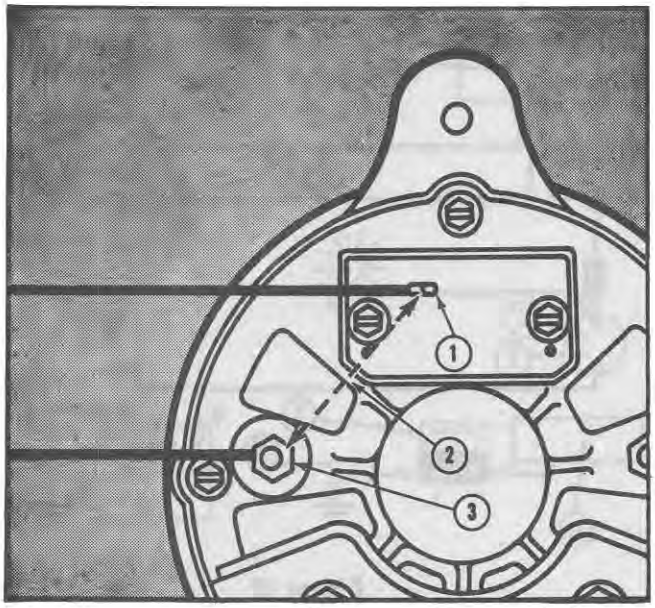

Figure 20
Application of Test Jumper

1. Field
2. Jumper
3. Auxiliary

5. Connect the jumper cable between the alternator auxiliary terminal and the brush terminal (field). Note the voltmeter reading. If the jumper causes the voltmeter to indicate 1.5 volts (2.5 volts with charge indicator light burning), the regulator is defective. Replace the regulator and repeat the test.

NOTE: ***If the application of the jumper does not correct the high voltage reading, check the brushes, brush holder and slip rings for grounding or short circuit. Then check current draw of the rotor (field) winding, as in the "Field (Rotor) Circuit Test", page 12, and the "Rotor Coil Current Draw" and "Rotor Coil (Field) Ground Tests", page 27.***

Open Isolation Diode Test

Conditions: Key Starter Switch ON, Engine Running at Fast Idle, After Voltmeter is Connected

1. This test determines if the isolation diode is conducting the electrical energy, produced in the alternator, to the tractor battery.

2. Connect the voltmeter negative lead to ground and the positive lead to the alternator auxiliary terminal. See Figure 21. Start the engine, run at fast idle. The voltmeter should indicate 15.1 to 15.4 volts (depending on ambient temperature). Refer to the chart on page 12.

3. Move the voltmeter positive lead to the output terminal. The voltmeter should indicate 14.1 to 14.8 volts if the isolation diode is conducting the alternator energy to the tractor battery. If the voltmeter indicates battery voltage (12.0 to 12.6 volts), the isolation diode is open circuited and requires replacement. Retest after installing a new isolation diode. Figure 17 shows the position of the isolation diode insulators.

Voltage Regulator Operating Voltage Test

Conditions: Key Starter Switch ON, Engine Running at Fast Idle, After Making Ammeter, Voltmeter, Series Resistor, and Carbon Pile Connections

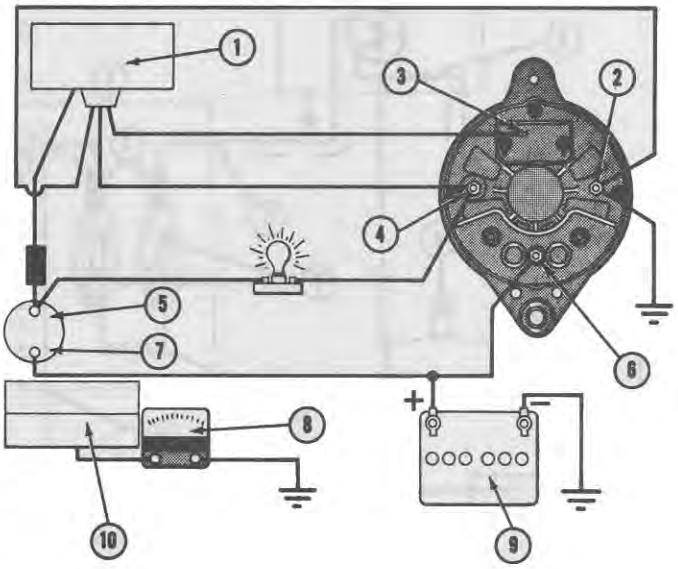

Figure 21
Open Isolation Diode Test

1. Regulator
2. Ground
3. Field
4. Auxiliary
5. Key-Switch
6. Output
7. ON
8. Test Voltmeter
9. Battery
10. Output Auxiliary

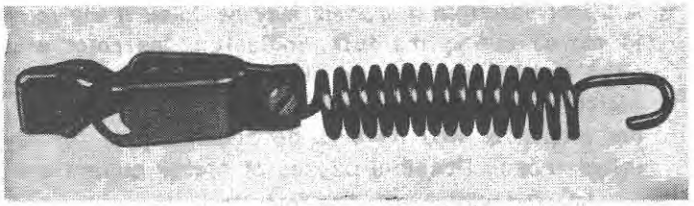

Figure 22
Typical ¼ Ohm Resistor

1. Turn the load control knob of the carbon pile rheostat to "off", before connecting the leads to the battery terminals.

2. Disconnect the battery ground cable from the battery. Connect the test ammeter and the 1/4 ohm series resistor between the output terminal and the output lead. Figure 22 shows a typical 1/4 ohm series resistor. The meter circuit should be set on the 0 to 60 ampere scale. Reconnect the battery ground cable.

3. Connect the voltmeter negative lead to ground and and positive lead to the output terminal. See Figure 23. The voltmeter should indicate battery voltage. Secure all connections. Start the engine and run for 5 minutes to normalize component temperatures.

4. The 1/4 ohm resistor will reduce charging current to 8 to 10 amperes, allowing the alternator voltage to rise to the point where the voltage regulator will commence limiting voltage.

5. If the charging current, indicated on the test ammeter, is less than 8 amperes, apply a small load to the battery with the carbon pile.

NOTE: ***The voltage indicated, while the alternator is charging 8–10 amperes, is the regulated voltage. The chart below shows acceptable voltage levels at various temperatures. If higher or lower voltmeter readings are noted, replace the voltage regulator and repeat the test.***

6. Turn the carbon pile load control knob to "off" immediately after the test to avoid discharging the battery. Leave the loading cables on the battery terminals.

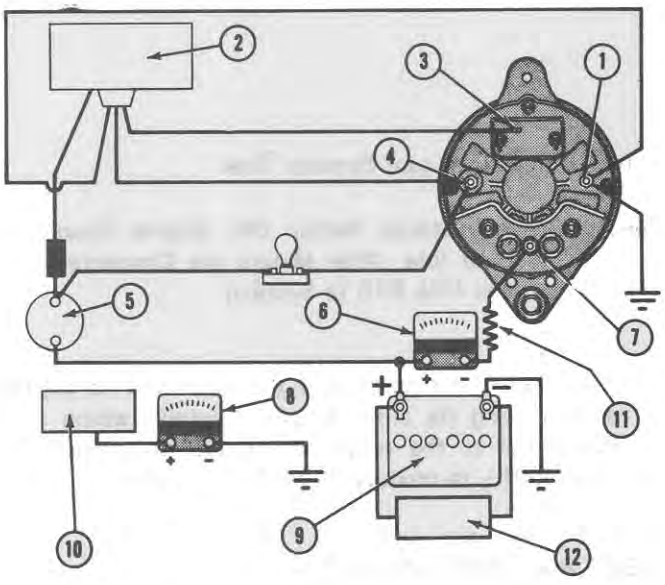

Figure 23
Voltage Regulator Operating Voltage

1. Ground
2. Regulator
3. Field
4. Auxiliary
5. On (Key-Switch)
6. Ammeter
7. Output
8. Test Voltmeter
9. Battery
10. Output
11. ¼ Ohm Resistor
12. Carbon Pile

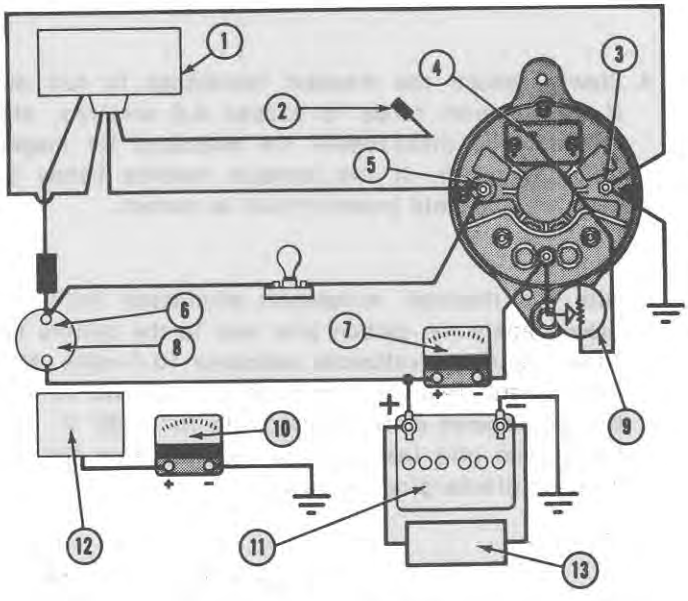

Figure 24
Field (Rotor) Circuit Test

1. Regulator
2. Regulator Field Lead Disconnected from Brush
3. Ground
4. Field
5. Auxiliary
6. Key-Switch.
7. Ammeter
8. OFF
9. Field Rheostat
10. Test Voltmeter
11. Battery
12. Field
13. Carbon Pile

©FORD MOTOR CO. 1971

7. Remove the 1/4 ohm resistor from the circuit.

Field (Rotor) Circuit Test

Conditions: Key Starter Switch OFF, Engine NOT Running

1. This test requires the temporary application of a carbon pile across the battery to adjust battery voltage to a common reference value. The field rheostat is placed in series with the battery positive terminal and the field (brush) winding to protect the ammeter from possible overload.

2. Remove the lead from the brush terminal (field). Set the field rheostat to maximum resistance. Connect the leads to the alternator output terminal stud and to the brush terminal. Connect the voltmeter negative lead to ground and the positive lead to the brush terminal. See Figure 24.

3. Place the ammeter circuit on the low-scale operation (0 to 6 amperes). Connect the ammeter between the output terminal and the output lead so the negative lead (black) is connected at the alternator terminal.

4. Slowly reduce the rheostat resistance to full out. If the ammeter tends to exceed 3.0 amperes, stop the test and disassemble the alternator for inspection and repair. If the ammeter remains below 3.0 amperes, the field (rotor) circuit is correct.

5. With the rheostat resistance eliminated (full out), slowly apply the carbon pile load to the battery terminals until the voltmeter indicates 10.0 volts. Note the ammeter reading immediately, it should be 1.65 to 2.25 amperes at 10.0 volts, with 70° to 80° F. Turn the carbon pile load control knob off after the test to avoid discharging the battery.

6. A slight variation in current may be noted if the rotor is moved during the test, indicating the rotor slip rings and brushes require cleaning. If the test result indicates that field current is too high or too low, the alternator will have to be disassembled for detailed repair. Possible causes of higher current are:
   - Shorted windings in the rotor coil
   - Foreign material lodged between the slip rings
   - Grounded slip ring or a short circuit in the leads connecting the slip rings to the winding

NOTE: *Low field current may be the result of a high-resistance soldered connection or an open circuit between the slip rings and the winding.*

7. If this test is satisfactory, or if repairs are completed, remove the field rheostat from the circuit and reconnect the brush lead to the brush terminal. Reverse the ammeter polarity (switch leads) and switch the circuit to 0 to 60 ampere operation.

8. Leave the carbon pile loading leads connected to the battery. Proceed with the next test.

Alternator Output and System Test

Conditions: Key Starter Switch ON, Engine Running at Fast Idle, After Meters are Connected (Carbon Pile Still in System)

1. This test will determine if the alternator is capable of producing its minimum rated output, which is an evaluation of the rotor, stator and all diodes; and their ability to produce current and voltage.

REGULATOR VOLTAGE vs. AMBIENT AIR TEMPERATURE

Temperature in Degrees (°F)	*0°*	*20°*	*40°*	*60°*	*80°*	*100°*	*120°*	*140°*	*160°*
Minimum Output Terminal Voltage (10 Amp. Load)	14.60	14.45	14.26	14.13	13.95	13.80	13.65	13.60	13.30
Maximum Output Terminal Voltage (10 Amp. Load)	15.40	15.25	15.08	14.92	14.75	14.60	14.45	14.28	14.13

2. Maximum alternator output depends on alternator ambient temperature as well as rotor speed, therefore a **general minimum rated output** is acceptable for common reference.

3. The charging system is also tested under partial load to determine if an excessive voltage loss exists between the alternator and the battery through the connecting cables. Figure 25 shows the circuit. Connect the voltmeter negative lead to ground and the positive lead to the output terminal. The ammeter should be on the 0 to 60 ampere scale.

4. Turn the key-starter switch on. Start the engine and run it at approximately 750 rpm for 5 minutes to normalize component temperature. If the ammeter indicates less than 10 ampere charge, slowly load the battery with the carbon pile until 10 ampere is shown on the ammeter. Record the voltmeter reading.

5. Move the positive voltmeter lead to the positive battery post, note the voltmeter reading. The voltmeter readings obtained should be within 0.3 volt of each other. If a greater differential exists, inspect all cables and connections between the alternator and the battery for poor or loose connections. If satisfactory voltage loss is indicated, proceed with the test.

6. Increase engine speed to provide 3000 to 4000 rpm alternator rotor speed (1400 to 1870 engine rpm). Increase the carbon pile load, causing the alternator to deliver maximum output in amperes. Voltage should remain between 13.0 and 15.0 volts (with voltmeter positive lead on output terminal.) The ammeter should indicate a **minimum of 45 amperes.**

7. To avoid discharging the battery, turn the carbon pile loading knob to "off" after the test.

8. If the alternator does not produce the **minimum rated output (45 amps)**, it should be disassembled and repaired. The problem could be one or more defective rectifying diodes or defective stator windings (open or shorted).

9. This concludes the series of in-vehicle tests. If it is necessary to repair the alternator, follow the suggested procedures in Section 3, "Alternator Overhaul and Bench Check", page 16.

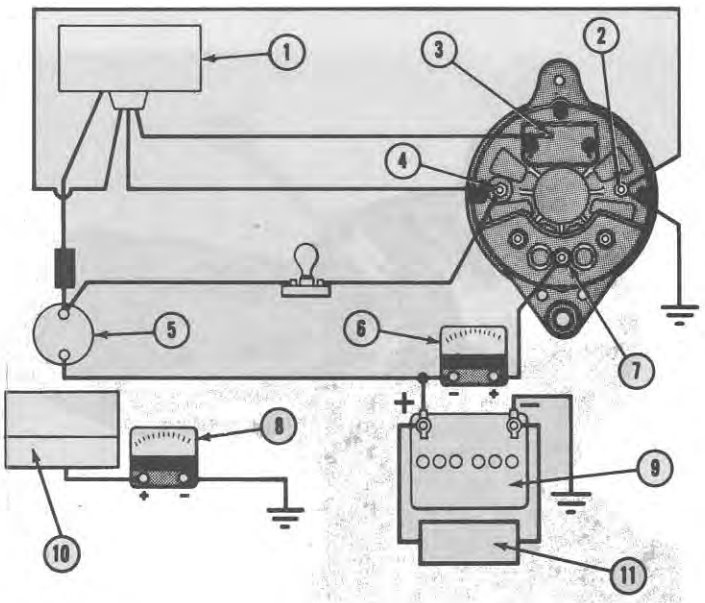

Figure 25
Alternator Output and System Test

1. Regulator
2. Ground
3. Field
4. Auxiliary
5. Key-Switch ON
6. Ammeter
7. Output
8. Test Voltmeter
9. Battery
10. Battery Positive Output
11. Carbon Pile

IN-VEHICLE SERVICE PROCEDURES

Alternator Belt Adjustment

Check the condition and tension of the alternator belt, Figure 26, every 300 hours of operation and/or before performing the "In-Vehicle Tests" on page 6. A correctly adjusted belt will deflect 3/4 to 1 inch (19.05 to 25.40 mm.) when a 25 pound (11.34 kg) force is applied midway between the alternator pulley and crankshaft pulley. If the belt shows signs of cracking or fraying, install a new belt.

To Adjust the Belt:

1. Loosen the alternator attaching bolts.

© FORD MOTOR CO. 1971

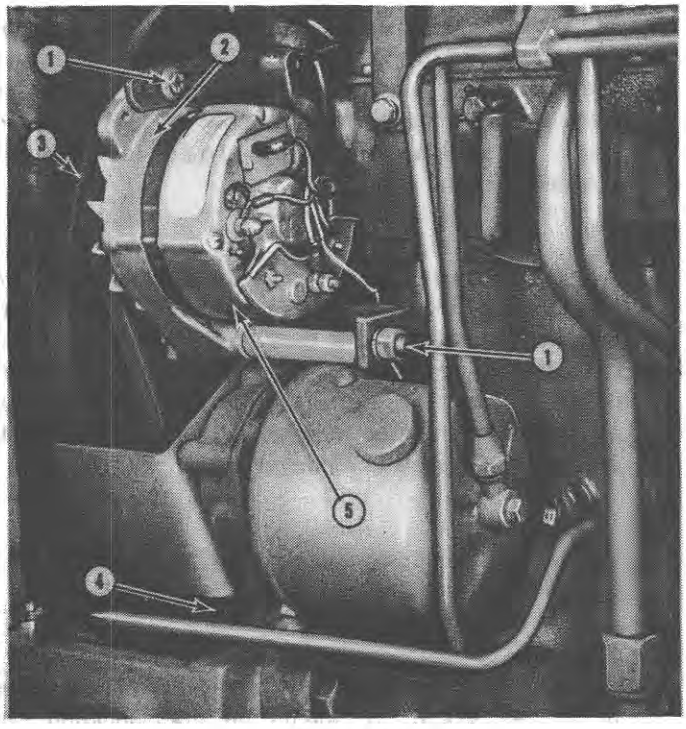

Figure 26
Alternator Belt Adjustment

1. Attaching Bolt
2. Apply Pressure to Front Housing Only When Adjusting Belt
3. Alternator Pulley
4. Crankshaft Pulley
5. Do Not Apply Pressure To Rear Housing When Adjusting Belt

2. Pry the alternator away from the engine, then tighten the attaching bolts.

   IMPORTANT: *When prying the alternator away from the engine, apply pressure to the front housing only. Do not pry on the rear housing.*

3. Recheck belt deflection. Readjust if necessary.

Alternator Brush Removal and Installation

Removal:

1. Disconnect the battery ground cable (negative) from the battery.

2. Disconnect the field wire from the brush assembly terminal.

3. Remove the two brush mounting screws, then lift the cover and dust shield from brush assembly.

4. Grasp the field terminal and gently pull the brush assembly down and away from the alternator as shown in Figure 27. Refer to page 16 for inspection and repair of the brush assembly.

Installation:

1. With the battery ground cable (negative) disconnected, grasp the brush assembly by the field terminal and insert it into the brush opening as shown in Figure 27.

2. Place the dust shield and cover over the brush assembly. Secure the assembly in place with the two brush mounting screws.

3. Connect the field wire to the brush assembly terminal.

4. Connect the battery ground cable (negative) to the battery.

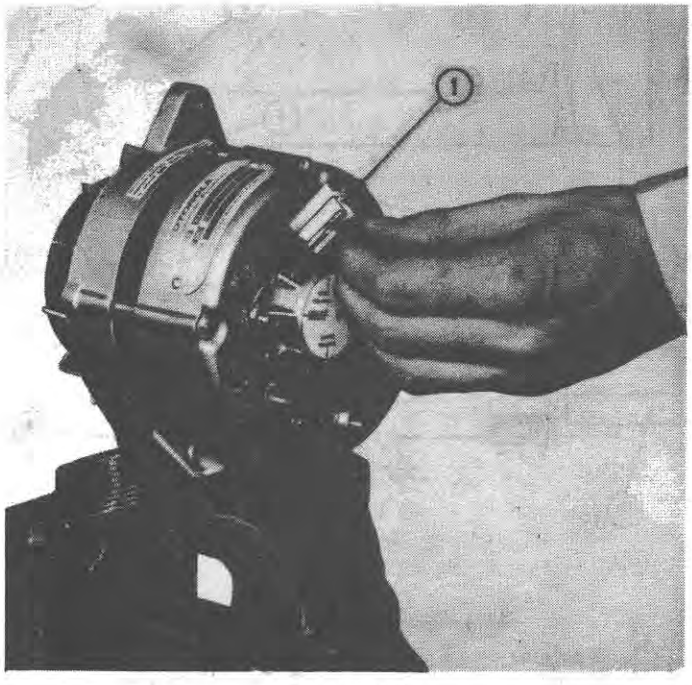

Figure 27
Alternator Brush Removal and Installation

1. Brush Assembly

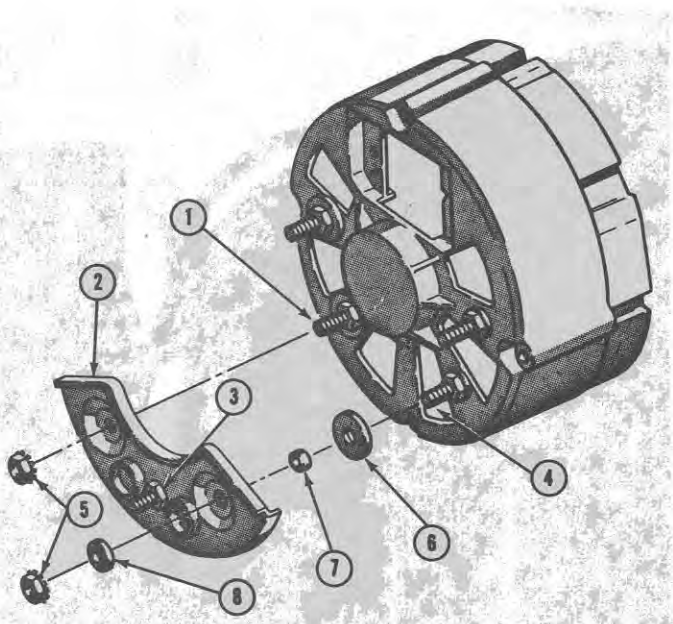

Figure 28
Isolation Diode Removal and Installation

1. Auxiliary Output Stud
2. Isolation Diode Assembly
3. Output Terminal
4. Negative Output Stud
5. Locknuts
6. 3/4" O.D. Washer
7. Nylon Sleeve
8. 1/2" O.D. Fiber Washer

Isolation Diode Removal and Installation

Removal:

1. Disconnect the battery ground cable (negative) from the battery.

2. Remove the two 10-24 locknuts and the 1/2" O.D. (12.70 mm.) fiber washer from the auxiliary terminal and the negative output stud. Notice the nylon sleeve on the negative output stud, Figure 28.

3. Disconnect the output lead from the output terminal.

4. Lift the isolation diode assembly from the terminal studs, and remove the nylon sleeve from the heat sink and/or negative output stud. Refer to page 20 for inspection and repair of the diode assembly.

Installation:

1. With the battery ground cable (negative) disconnected from the battery, place the isolation diode assembly, Figure 28, over the terminal studs. Make sure the 3/4" (19.05 mm.) O.D. washer and nylon sleeve is installed on the negative output stud behind the diode assembly.

2. Secure the diode assembly to the terminals by installing the 10-24 locknuts. Make sure the 1/2" (12.70 mm.) O.D. fiber washer is installed on the negative output stud between the diode assembly and locknut.

3. Connect the output lead to the output terminal.

IMPORTANT: ***Make sure the output lead does not touch the heat sink. See Figure 16.***

4. Connect the battery ground cable (negative) to the battery.

Voltage Regulator Removal and Installation

Removal:

1. Disconnect the battery ground cable (negative) from the battery.

2. Remove the tool box cover.

3. Disconnect the wiring harness from the voltage regulator quick disconnects. See Figure 29.

4. Remove the attaching screws from the regulator. Remove the regulator from the tractor.

Installation:

1. Attach the voltage regulator to the tool box compartment with the attaching screws.

© FORD MOTOR CO. 1971

2. Connect the wiring harness to the regulator quick disconnects.

3. Install the tool box cover.

4. Connect the battery ground cable (negative) to the battery.

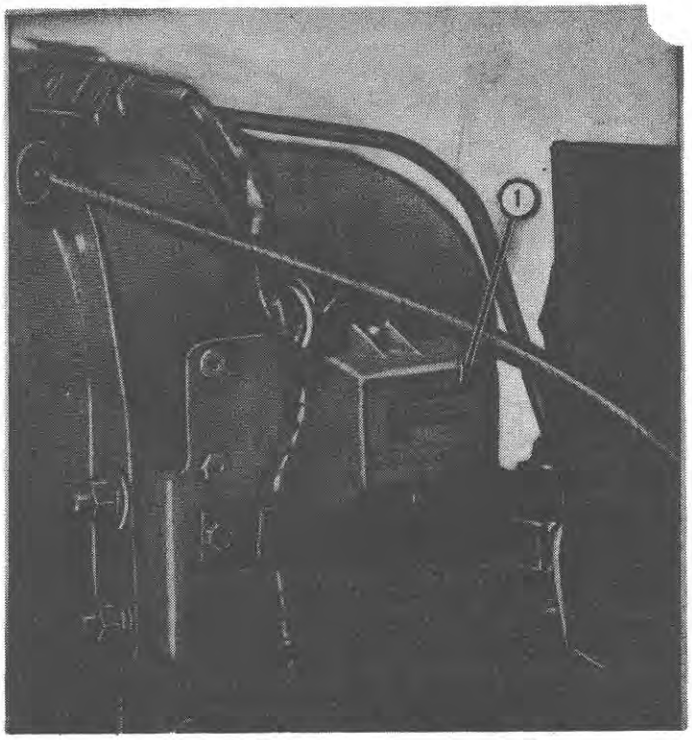

Figure 29
Voltage Regulator Installed in Tractor
1. Voltage Regulator

3. ALTERNATOR OVERHAUL AND BENCH CHECK

ALTERNATOR OVERHAUL

A. Removal

1. Disconnect the battery ground cable (negative) from the battery.

2. Disconnect all wires from the alternator, Figure 30.

3. Remove the alternator from the tractor by removing the attaching bolts.

B. Disassembly

Brush Removal:

1. Remove the two brush mounting screws, then lift the cover and dust shield from the brush assembly.

2. Grasp the field terminal and gently pull the brush assembly down and away from the alternator as shown in Figure 27. Refer to page 18 for inspection and repair of the brush assembly.

Isolation Diode Removal:

1. Remove the two 10-24 locknuts and the 1/2" (12.70 mm.) O.D. fiber washer, Figure 28, from the auxiliary and negative output studs.

2. Lift the isolation diode assembly from the alternator.

IMPORTANT: ***Do not loose the nylon sleeve th insulates the diode assembly from the negative output terminal.***

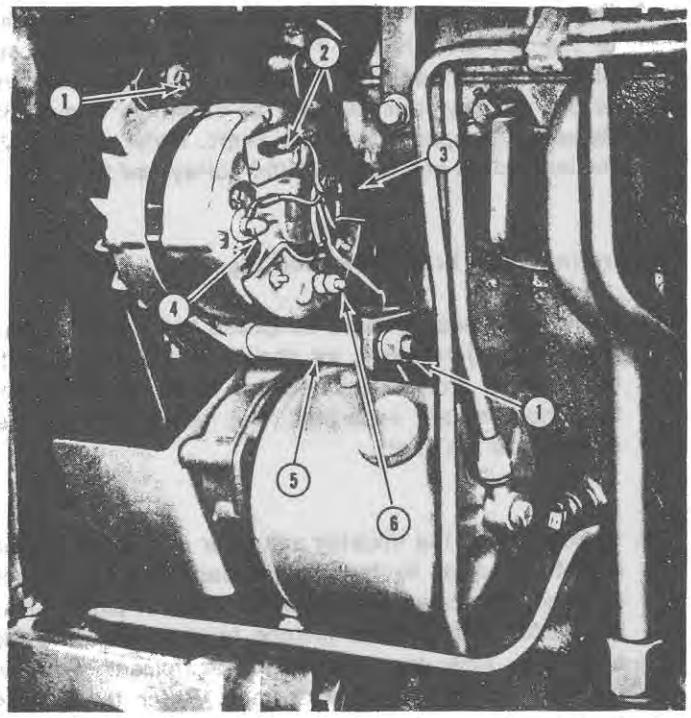

Figure 30
Alternator Installed on Tractor

1. Attaching Bolt
2. Brush (Field) Terminal
3. Ground (Negative)
4. Auxiliary Terminal
5. Spacer
6. Output Terminal (Pos.)

3. Remove the nylon sleeve and 3/4" (19.05 mm.) O.D. washer from the negative output terminal. Refer to page 20 for inspection and repair of the diode assembly.

Rear Housing Removal:

1. Removal the four through bolts and square nuts holding the housings together. See Figure 31.

2. Insert two small screwdrivers in the stator slots between the stator and front housing, as shown in Figure 32.

IMPORTANT: ***Do not insert the screwdriver blades deeper than 1/16" (1.59 mm.), see Figure 33, to avoid damaging the stator winding.***

3. Apply pressure at several points around the stator to extract the rotor and front housing as an assembly. Do not burr the stator core, as it may make reassembly difficult.

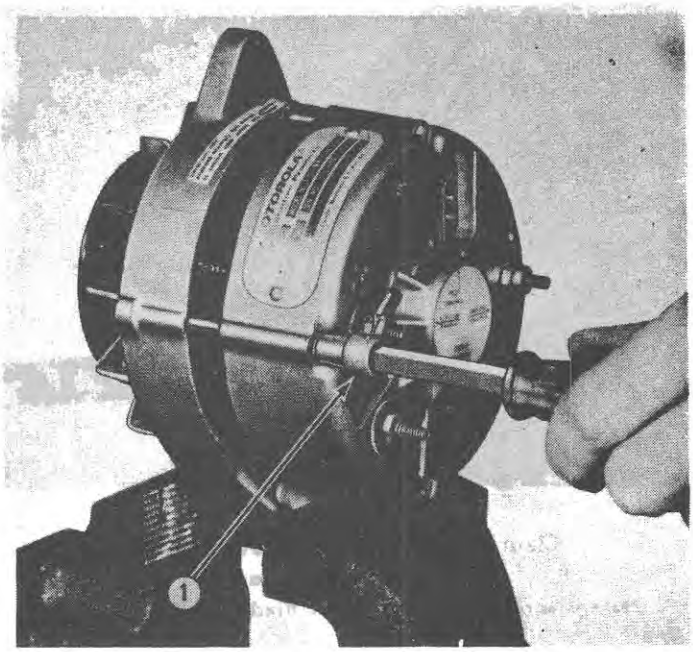

Figure 31
Removing Through Bolts

1. ¼ Inch Socket

Separating Stator From Rear Housing:

1. Place the stator and rear housing assembly on a clean smooth working surface, free of metal chips that could damage the windings.

2. Remove the remaining locknuts and insulating washers from the rectifying diode terminal studs. Carefully slip the diode plate studs from the rear housing. Do not exert unnecessary pressure on the stator leads. Refer to page 20 for inspection and repair of the rear housing.

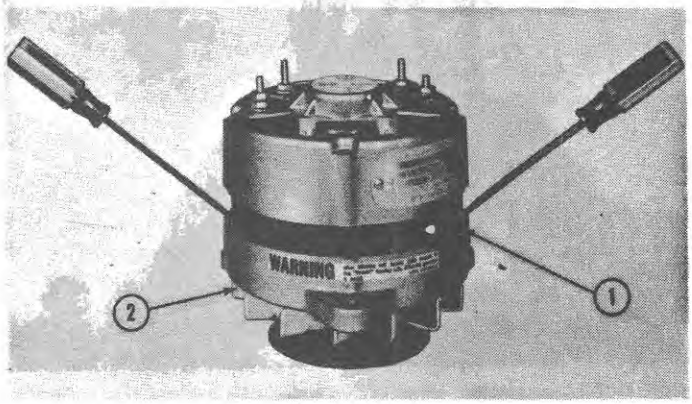

Figure 32
Separating Stator from Front Housing

1. Stator
2. Front Housing

© FORD MOTOR CO. 1971

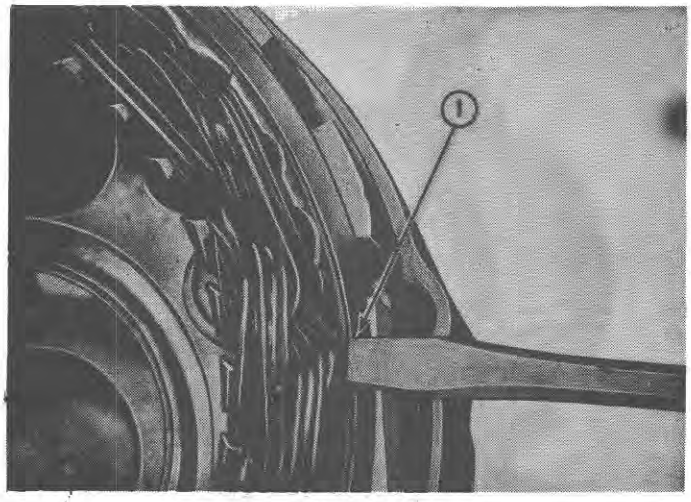

Figure 33
Clearance Required to Prevent Damage During Housing Separation
1. Note Clearance Between Stator Winding and Screwdriver

Pulley, Fan, and Spacer Removal:

1. The pulley is a slip-fit on the rotor shaft, positioned with a Woodruff Key. To remove the nut and lockwasher from the shaft, clamp the pulley in a vise using an old oversize belt to protect the pulley from the vise jaws. See Figure 34.

2. After the pulley nut and lockwasher have been removed, the pulley may be separated from the alternator. Stubborn cases may require a puller for this operation. The fan will then slide over the key.

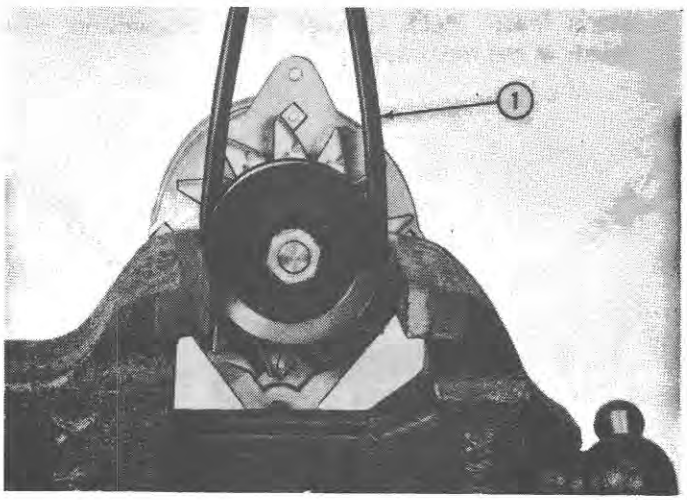

Figure 34
Pulley Removal
1. Old Oversize Belt

3. Remove the key with diagonal pliers. If the side of the key are slightly rounded from running loose, place the nut back on the shaft. Use a screwdriver to pry the key from the slot as shown in Figure 35. Remove the spacer from the shaft. Refer to page 23 for inspection and repair of the pulley and fan.

Separating Rotor From Front Housing:

1. Using long nose pliers, compress the ears of the front bearing retainer, as shown in Figure 36. Lift the retainer free of the recess. After the rotor and front housing are separated, the retainer can be removed from the shaft.

2. In most cases the housing and rotor can be separated from the bearing by tapping the assembly on a block of wood, as shown in Figure 37. Special pullers may be needed if the above method fails to separate the assembly. After the use of such equipment, examine the housing for possible damage. Refer to page 24 for inspection and repair of the rotor and front housing.

C. Inspection and Repair

Brush Inspection:

1. Inspect the brush assembly for excessive wear. Install a new assembly if the brushes are worn to the

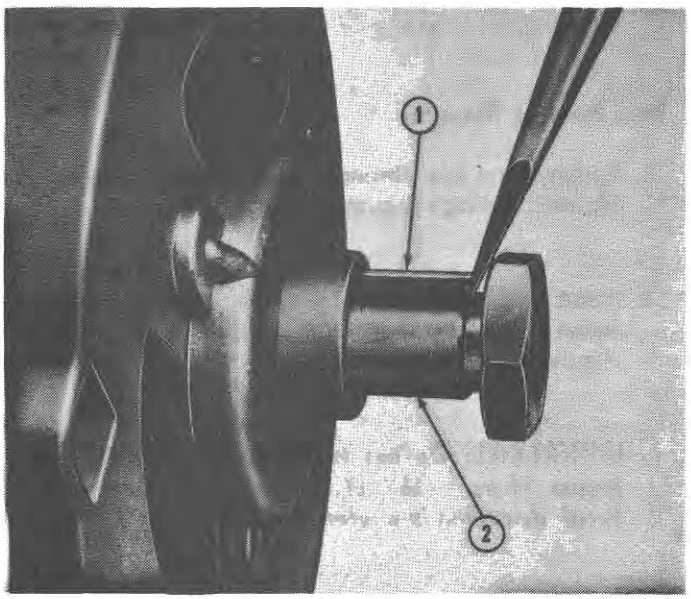

Figure 35
Woodruff Key Removal
1. Woodruff Key 2. Spacer

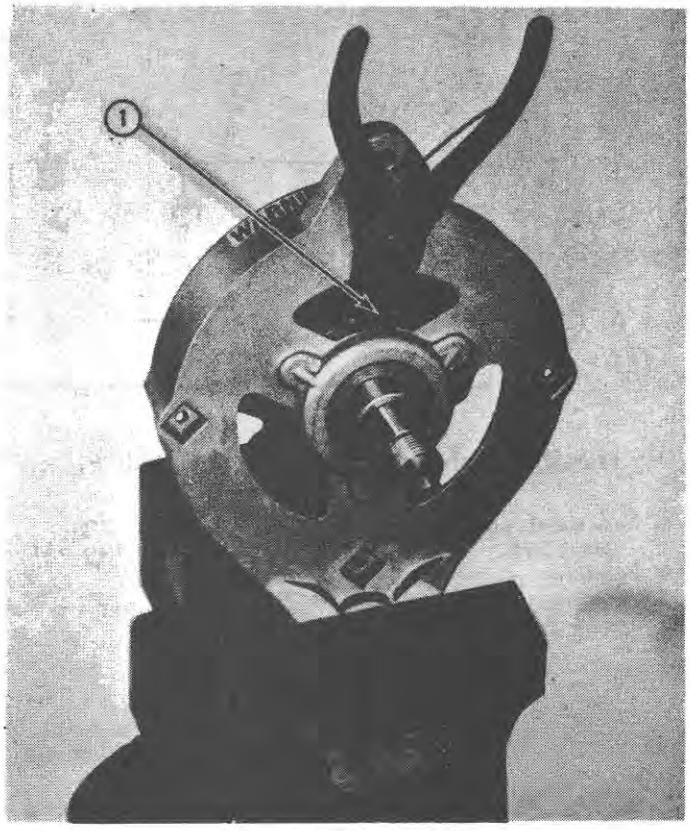

Figure 36
Releasing Front Bearing Retainer
1. Compress Ears of Front Bearing Retainer to Unlock

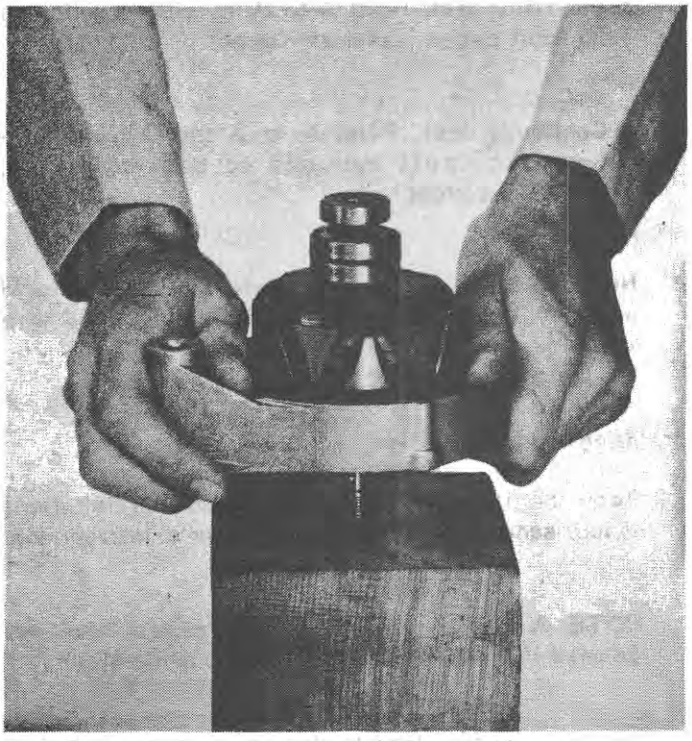

Figure 37
Separating Front Housing from Rotor

point where they protrude from the brush holder less than 3/16 inch (4.76 mm.)(half their original length).

2. Check for deposits of foreign material, oil or dirt, that may bind brush movement or result in poor slip ring contact. Clean the entire assembly in cleaning solvent. Blow dry with compressed air.

3. Check the brush spring tension. It should be 4 to 6 ozs. (153.4 to 170.1 grams). Install a new brush assembly if the tension is too high or too low.

4. Check the insulation and continuity with a 12 volt test lamp or ohmmeter. (Single terminal assembly). See Figure 38 and the following:

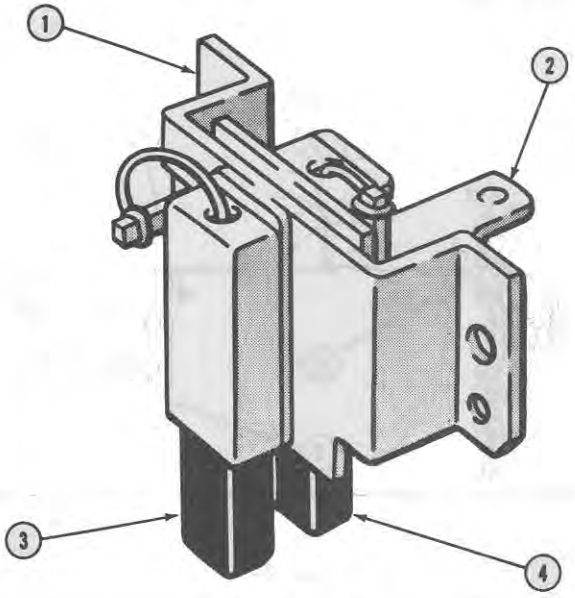

Figure 38
Insulation and Continuity Test Points
1. Bracket D
2. Field Terminal A
3. Grounded Brush E
4. Insulated Brush C

© FORD MOTOR CO. 1971

- Insulation test, Point A to D, no circuit indicates no short circuit, assembly correct.

- Continuity test, Point A to C and D to E, continuous circuit indicates no open connection, assembly correct.

NOTE: *In each of the above tests, resistance should not vary when the brush and connecting lead wire is moved around.*

Isolation Diode Inspection:

1. Test the isolation diode with a commercial diode tester according to the manufacturer's instructions.

NOTE: *A 9 to 12 volt battery operated test lamp may be used if a commercial tester is not available.*

2. Connect one test lead to the output terminal stud of the diode and the other to the exposed metal area on the auxiliary terminal of the heat sink. See Figure 39.

3. Repeat the test with the leads reversed as shown in Figure 40.

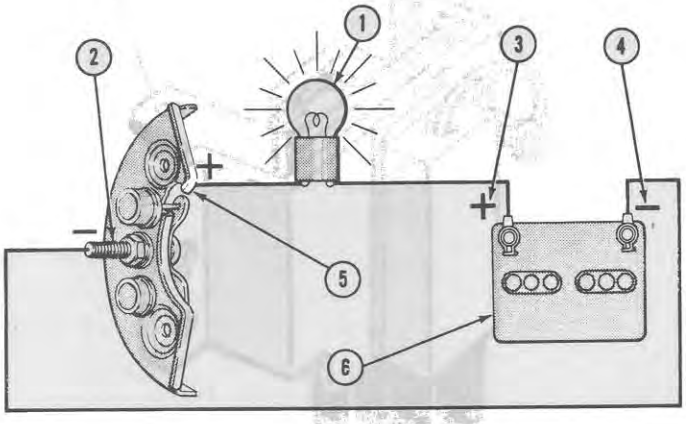

Figure 39
Isolation Diode Test, Red or Yellow Diode Plate (Lamp Should Light)

1. Lamp Should Light
2. Positive Output Terminal
3. Positive
4. Negative
5. Bare Metal Input Area of Heat Sink
6. Battery 12V

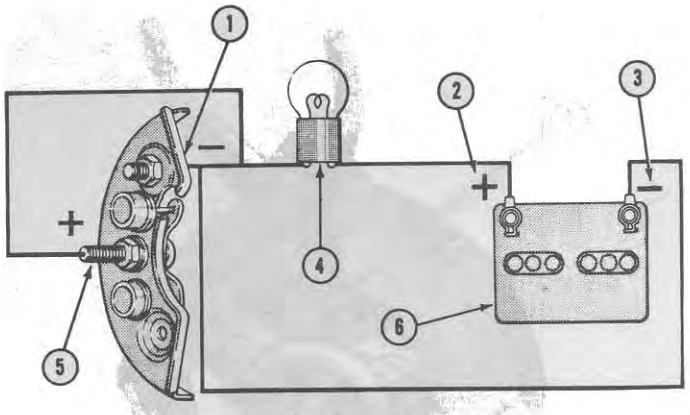

Figure 40
Isolation Diode Test, Red or Yellow Diode Plate (Lamp Should Not Light)

1. Bare Metal Input Area of Heat Sink
2. Positive
3. Negative
4. Lamp Should Not Light
5. Positive Output Terminal
6. Battery 12V

NOTE: *The lamp should light when the leads are connected as shown in Figure 39. If the lamp fails to light, the diode is open and it must be replaced. The lamp should not light when the leads are reversed, as in Figure 40. If the lamp does light, the diode is shorted and it must be replaced. Replace a defective isolation diode as a complete assembly. Do not immerse the isolation diode in a severe cleaning chemical as it may remove the special corrosion resistant paint.*

Rear Housing Inspection:

1. Check the rear housing for cracks around the drilled openings.

2. If the rear bearing bore has been scuffed from the bearing turning in the casting, the housing must be replaced with a new housing.

3. Clean the housing in solvent if it is to be re-used.

4. Install a new rear bearing retainer (O-ring) in the bore recess. See Figure 41.

Rectifier Diode Inspection:

1. Separate the diode assemblies from the stator leads, as shown in Figure 42. Use pliers as a heat dam between the diodes and solder point to protect the diodes from heat damage. Avoid bending or twisting the diode terminal.

2. With the equipment and procedure used for testing the isolation diode, test each rectifier diode. All diodes in the same heat sink must test alike. Replace the complete assembly if one or more of the diodes are defective.

NOTE: ***Do not connect the test lead to the heat sink studs, Figure 43, when testing the diodes. Use the heat sink itself, as the studs may be loose. When assembled in the alternator, the studs are tightened with lock nuts.***

Diodes with RED part numbers are Positive Diodes and will conduct Postive potential through the diode, as shown in Figure 44.

Diodes with BLACK part numbers are Negative Diodes and will conduct Negative potential through the diode, as shown in Figure 45.

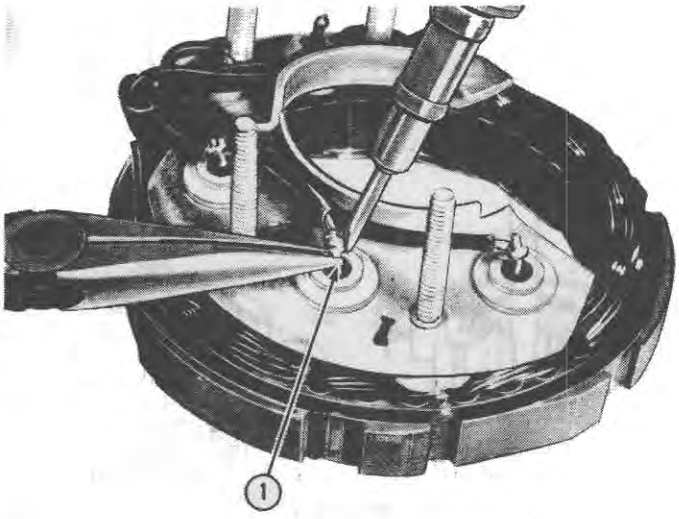

Figure 42
Soldering and Unsoldering Diode Leads Using Pliers as Heat Dam
1. Place Heat Dam Between Diode and Solder Point

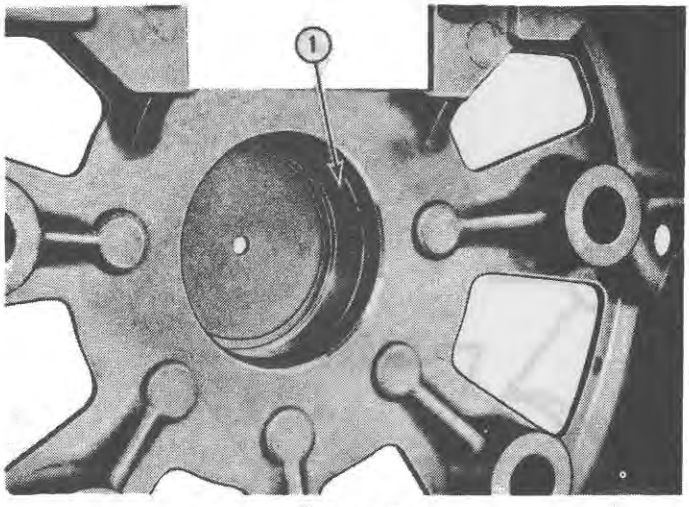

Figure 41
Rear Bearing Retainer Installed
1. Retainer (O-Ring)

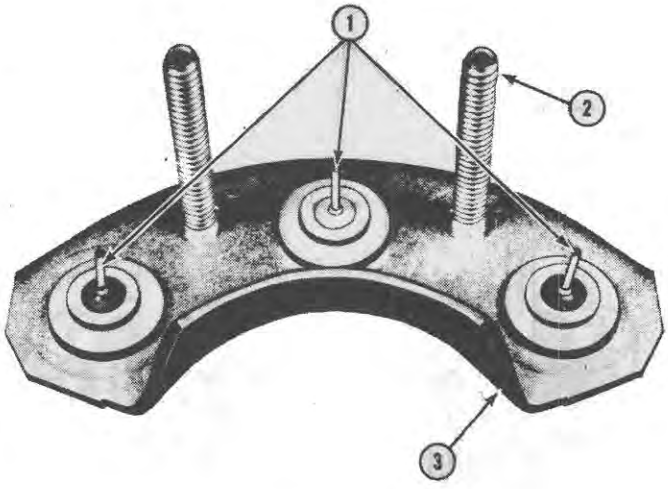

Figure 43
Diode Testing
1. Diodes
2. Do Not Use Studs
3. Connect Test Lead to Heat Sink

© FORD MOTOR CO. 1971

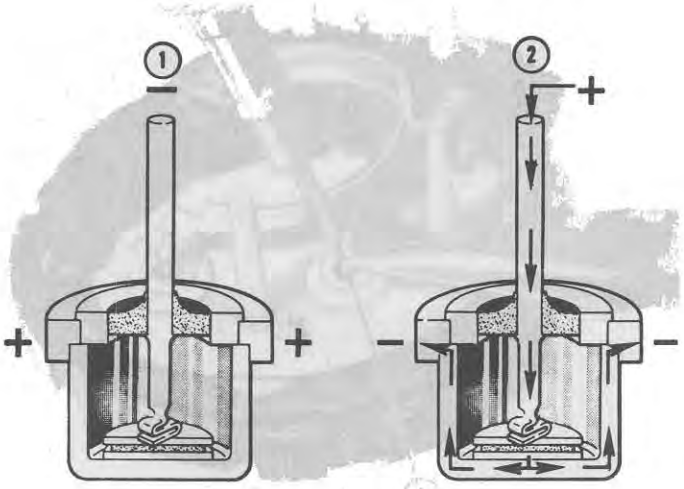

Figure 44
Positive Diode Testing (Red Paint on Diode)
1. Current Does Not Flow 2. Current Flows

Stator Inspection:

1. The alternator stator assembly, Figure 46, consists of three individual windings, wound on a common core or lamination. The lamination is epoxy coated to provide durable insulation.

NOTE: ***Discoloration of the enamel on the windings is evidence of overheating and a shorted condition.***

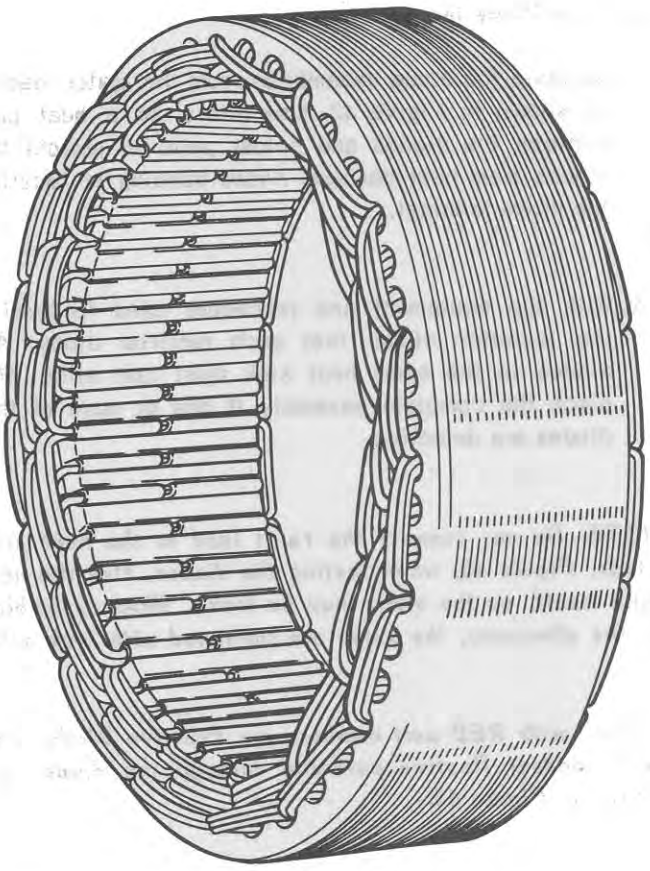

Figure 46
Stator Assembly

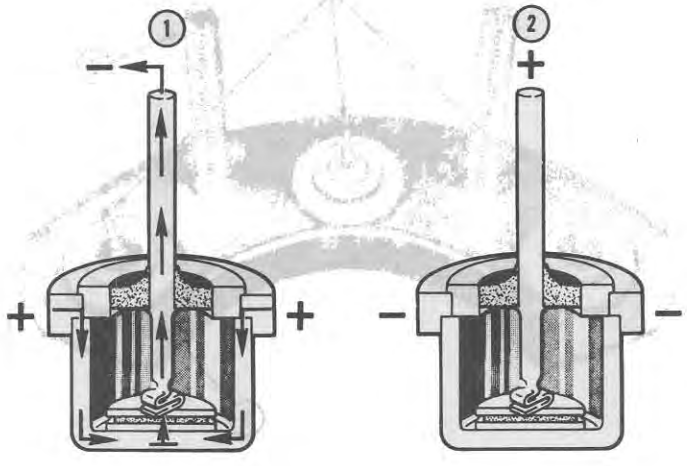

Figure 45
Negative Diode Testing (Black Paint on Diode)
1. Current Flows 2. Current Does Not Flow

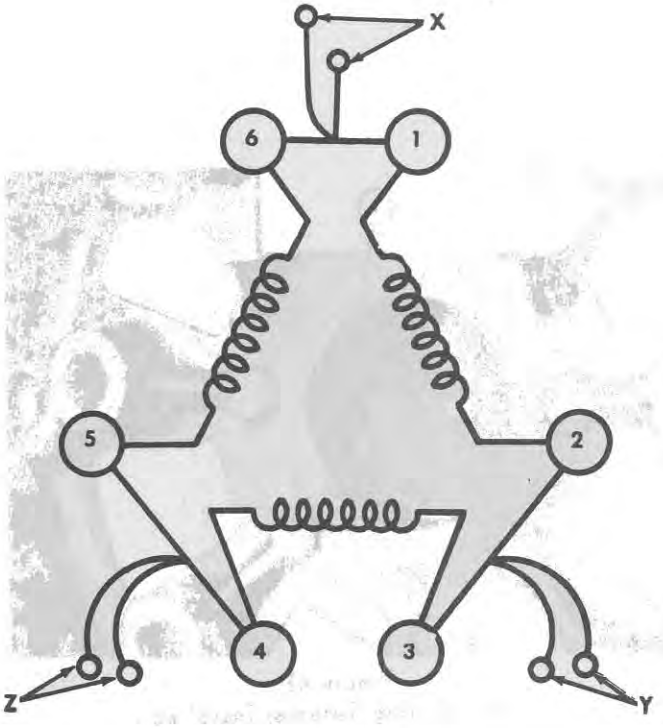

Figure 47
Delta Type Winding

2. The Delta wound stator, used in 55 ampere alternators, terminates the ends of the three windings to form three junctions of two conductors each, as shown at X, Y, and Z, Figure 47.

3. Unsolder the diode connecting leads from the stator junctions, Figure 48. Separate the leads as shown in Figure 49.

4. With an ohmmeter or 12 volt test lamp, test each circuit (A, B, and C) for faults. Re-use the stator if the tests indicate that it is in good condition.

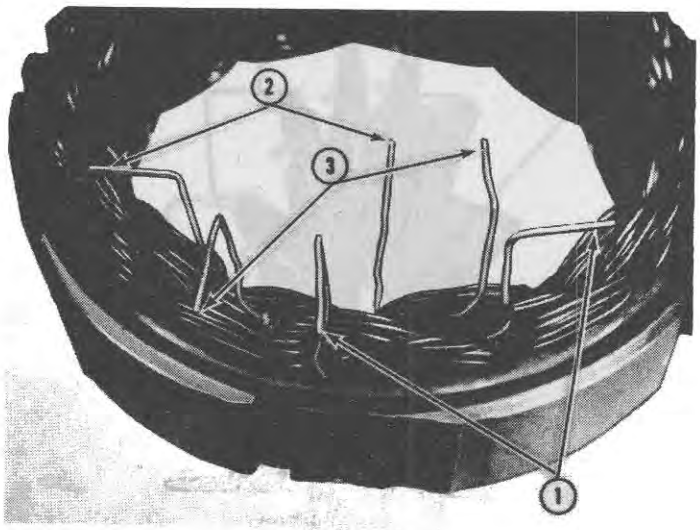

Figure 49
Stator Connecting Leads Separated for Test Purposes
1. Circuit A
2. Circuit B
3. Circuit C

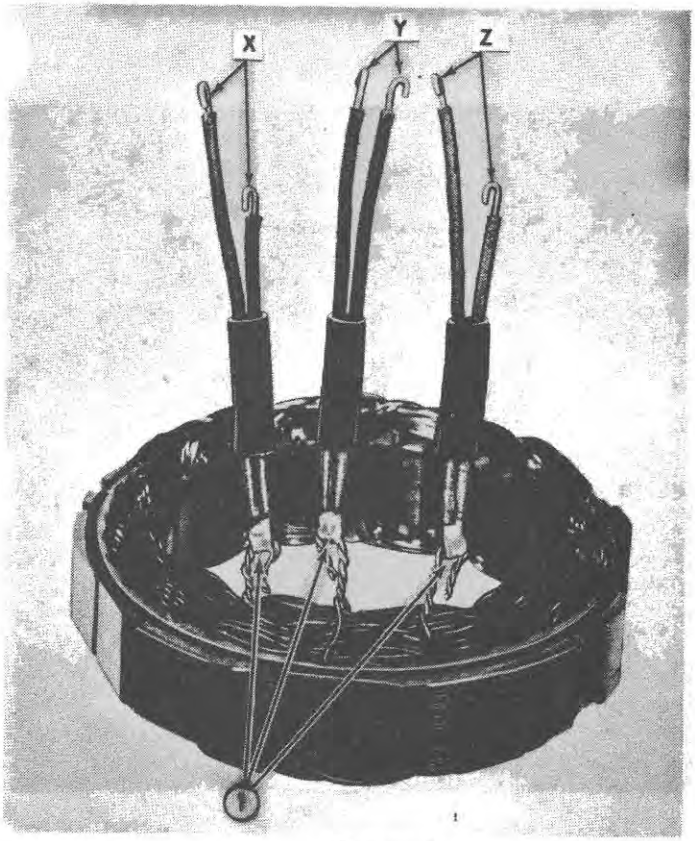

Figure 48
Stator Connecting Lead Junctions
1. Stator Junctions

NOTE: *The resistance of each winding is very low, approximately 0.1 ohm, therefore, the ohmmeter test will indicate continuity, open circuit, or ground without much reference to actual value or resistance. The 12 volt test lamp will also indicate continuity, open circuit, and ground.*

5. Reassemble the stator and diodes using only **rosin core solder** to secure good mechanical connections. Route the leads in their original position for ease of assembly.

IMPORTANT: *Be sure to use a heat dam to protect the diodes when resoldering them to the stator. See Figure 42.*

Fan, Pulley, and Spacer Inspection:

1. Inspect the fan for cracked or broken fins, also note the condition of the mounting hole. If the hole is worn from running loose, install a new fan. See Figure 50.

© FORD MOTOR CO. 1971

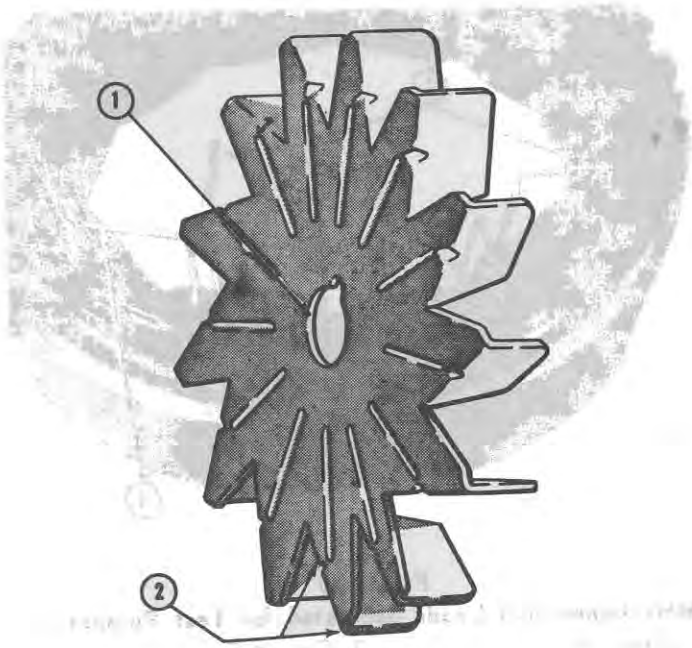

Figure 50
Fan Inspection Points
1. Inspect Bore for Wear
2. Check for Cracked Fins

2. Inspect the pulley for possible wear at the point shown in Figure 51.

3. Check the spacer, Figure 35, for cracks. Install a new spacer if cracks exist.

Rotor and Front Housing Inspection:

1. Inspect the front bearing cavity for evidence of wear. Note the condition of the retainer recess, replace the housing if necessary. If the original housing is re-used, clean with solvent, then dry with compressed air.

2. Using the tools shown in Figure 52, pull the front bearing from the rotor shaft. If the bearing is to be re-used, the pulling attachment must contact the inner race only.

3. Remove the front bearing retainer from the shaft, inspect for distortion, replace if unsatisfactory.

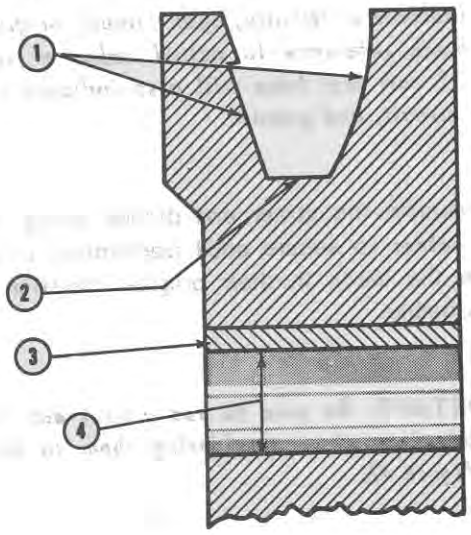

Figure 51
Cross-Section of Typical Pulley Showing Inspection Points
1. Check for Worn Drive Surfaces
2. Check for Polished Surface Here
3. Note Conditton of Key Groove
4. Check Bore for Wear

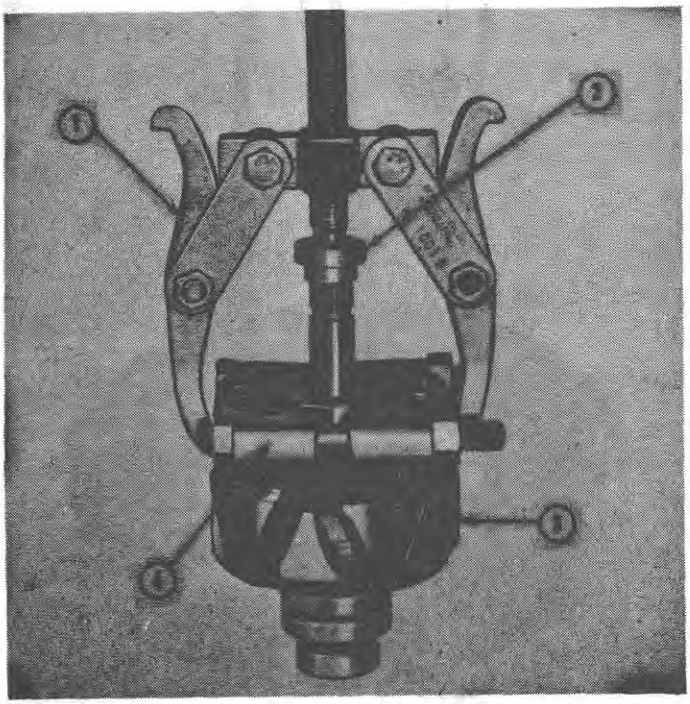

Figure 52
Front Bearing Removal
1. OTC-1001 Puller
2. 630-1 Step Plate
3. Rotor
4. OTC-950 Pulling Attachment

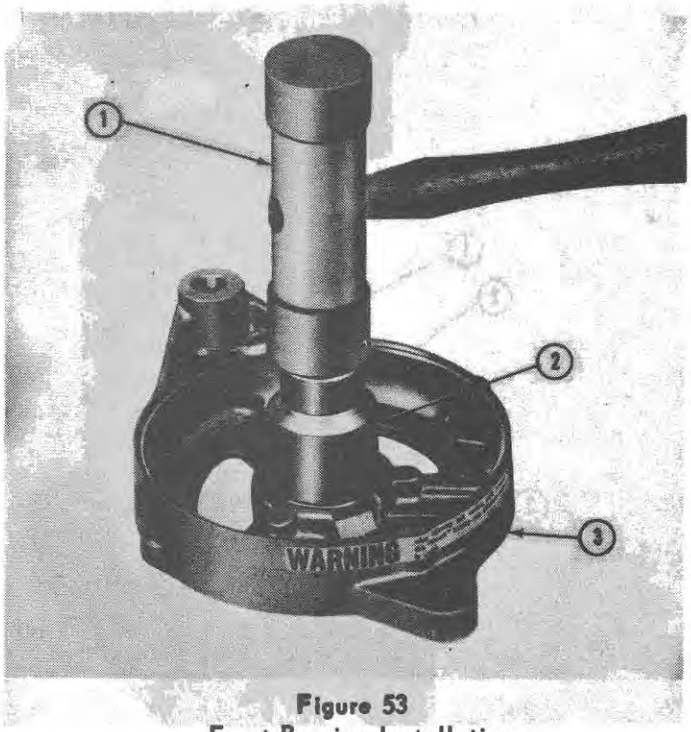

Figure 53
Front Bearing Installation

1. Mallet
2. 1-1/8 Inch Socket
3. Front Housing

4. Clean the front bearing cavity, remove any burrs.

5. Tap the bearing into the housing using a 1-1/8 inch (28.6 mm.) socket or a driver tool that exerts pressure on the outer race only. See Figure 53. Apply only sufficient pressure to seat the bearing against the bottom of the cavity.

6. Replace the front bearing retainer in the recess, Figure 54. Make certain the retainer ears line up with the opening in the housing. Use a wood dowel or a 1-1/8 inch (28.6 mm.) socket to exert pressure on the retainer while locking the edge into the recess.

7. Using the tools shown in Figure 55, pull the rear bearing from the rotor. If the bearing is to be re-used, the pulling attachment must contact the inner race only.

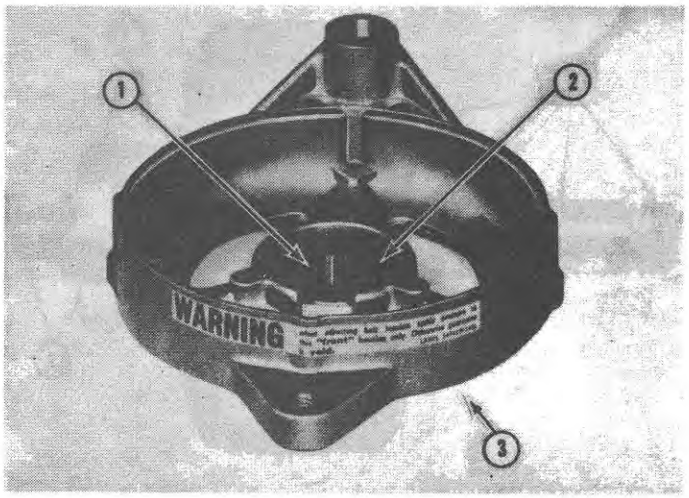

Figure 54
Front Bearing Retainer Installed

1. Bearing
2. Retainer
3. Front Housing

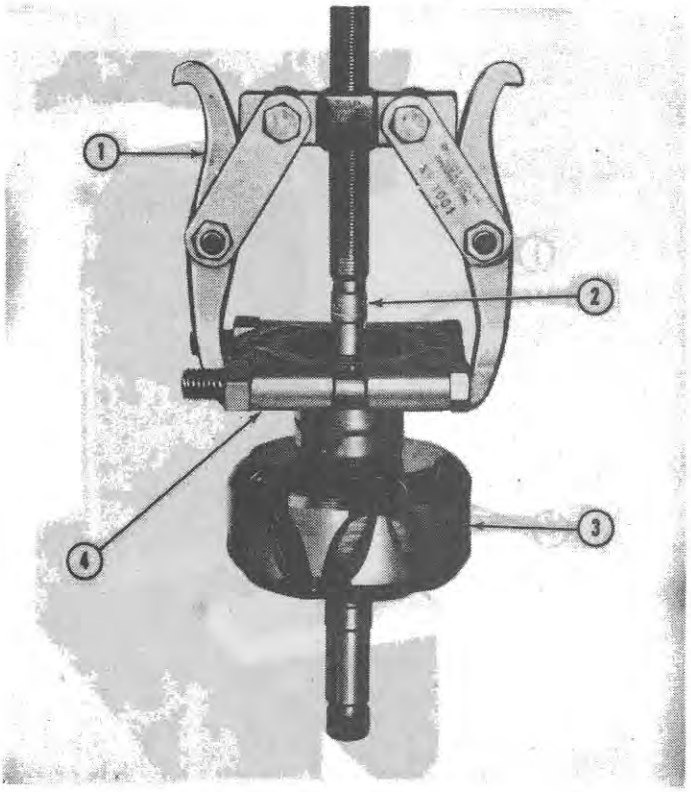

Figure 55
Rear Bearing Removal

1. OTC-1001 Puller
2. 7/32 Inch Socket
3. Rotor
4. OTC-950 Pulling Attachment

© FORD MOTOR CO. 1971

8. Inspect the bearings for adequate lubrication. If replacement bearings are required they must equal or exceed original equipment.

9. Support the front of the rotor shaft in a press. Using a 7/16 inch (11.11 mm.) socket or sleeve that contacts the inner race only, press the rear bearing over the rotor, as shown in Figure 56.

10. Support the bottom (rear bearing area) of the rotor in a press, then place the front housing and bearing assembly over shaft.

11. Using a 11/16 inch (17.46 mm.) deep socket or sleeve that contacts the inner bearing race only, press the front housing and bearing over the rotor shaft until the bearing contacts the shoulder on the shaft. See Figure 57.

12. Check the rotor assembly, Figure 58, for electrical properties as follows:

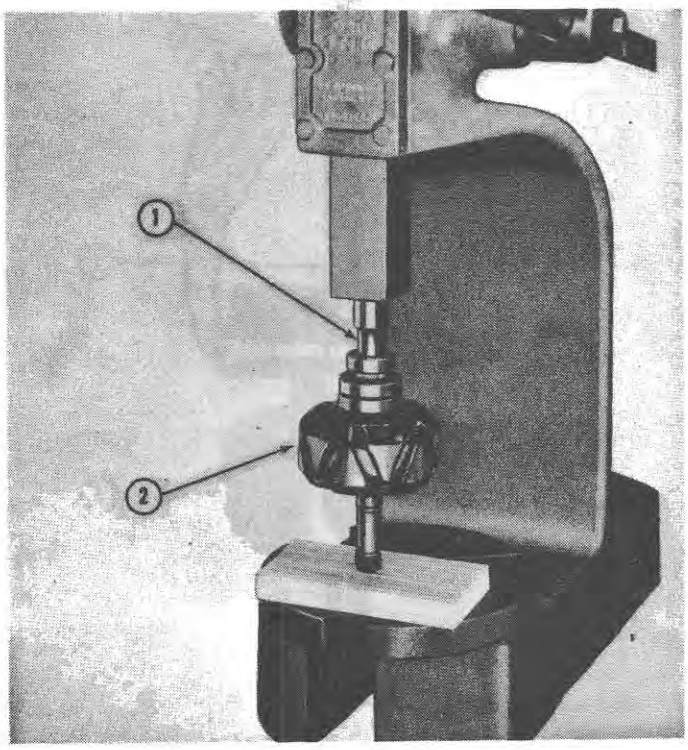

Figure 56
Rear Bearing Installation

1. 7/16 Inch Socket or Sleeve to Fit Inner Bearing Race
2. Rotor

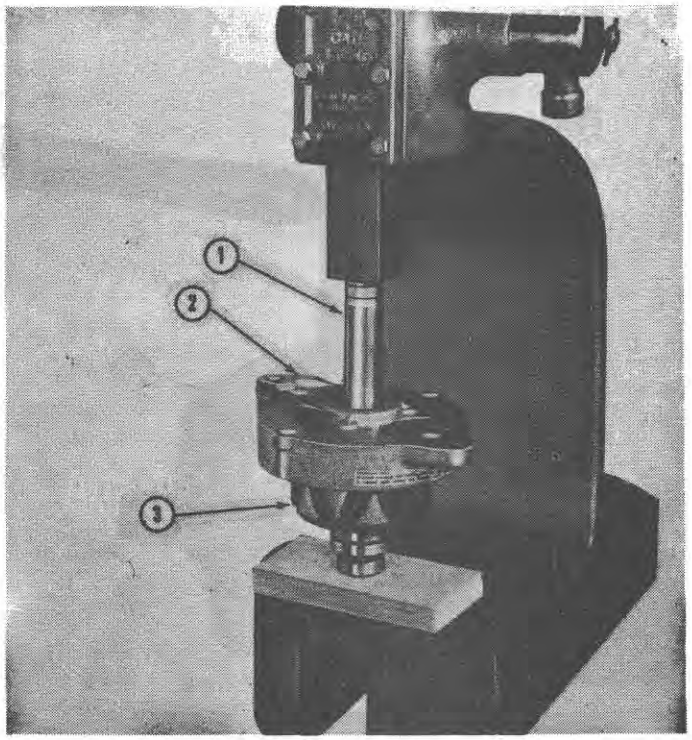

Figure 57
Pressing Front Housing (With Bearing Installed) Over Rotor Shaft

1. 11/16 Inch Deep Socket or Sleeve to Fit Inner Bearing Race
2. Front Housing and Bearing
3. Rotor

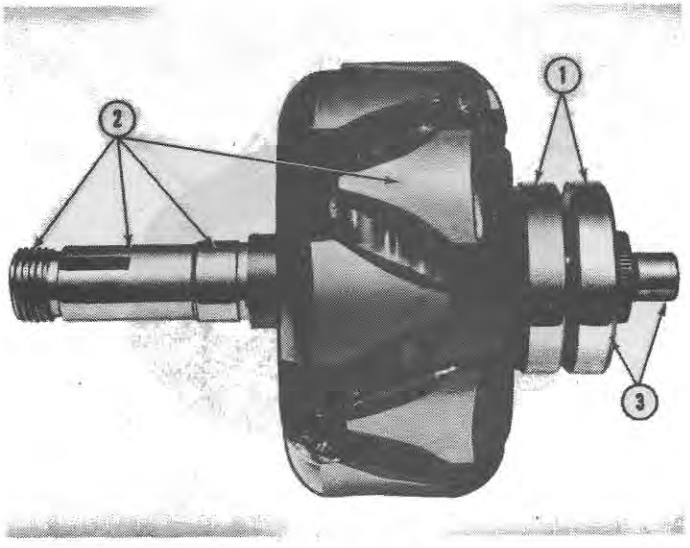

Figure 58
Rotor Test Points

1. Test A & B
2. Check
3. Test C

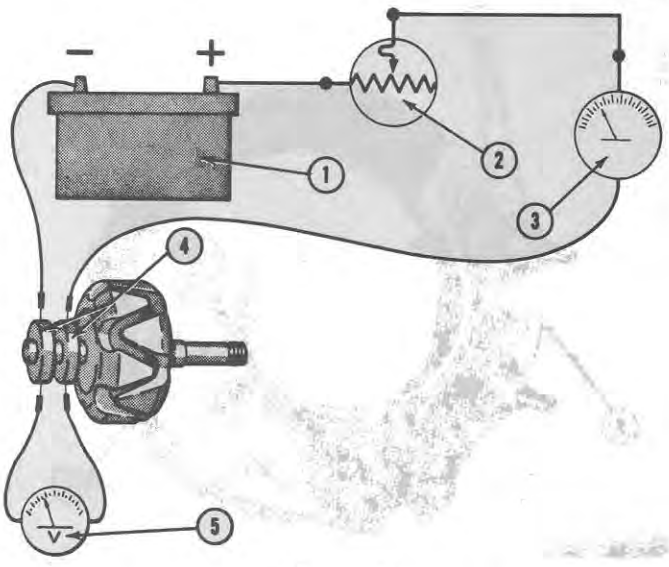

Figure 59
Rotor Coil Current Draw Test

1. 12V Battery
2. Field Rheostat
3. Ammeter
4. Slip Rings
5. Voltmeter

Test A – Rotor Coil Current Draw – 1.65 to 2.25 Amperes:

1. Connect a field rheostat in series with an ammeter and the battery positive terminal. Connect the black lead (negative) from the ammeter to one of the two rotor slip rings. See Figure 59.

2. Connect a voltmeter between the slip rings. The positive lead should be attached to the same slip ring as the ammeter negative lead.

3. With the field rheostat adjusted to maximum resistance, attach a jumper from the battery negative terminal to the other slip ring.

4. Adjust the field rheostat until the voltmeter reads 10 volts.

5. The ammeter should read 1.65 to 2.25 Amps. at 70° to 80° F.

Test B – Rotor Coil Resistance – 4.5 to 5.2 Ohms:

1. Using an ohmmeter, check the resistance of the rotor coil winding.

2. Connect the ohmmeter leads to the two slip rings. The resistance should be 4.5 to 5.2 ohms.

3. If the resistance is less than 4.5 ohms, it indicates a "shorted" rotor coil.

4. If the resistance is greater than 5.5 ohms, it indicates a broken winding or defective slip ring connection and the rotor assembly should be replaced.

Test C – Rotor Slip Ring Ground Test:

1. Using a 12 volt test light, touch one test probe to the rotor shaft.

2. Touch the other test probe to one slip ring and then the other.

3. If the light burns when either of the slip rings are contacted, it indicates a grounded slip ring and the rotor assembly should be replaced.

4. Clean the brush contacting surface of the slip rings with fine crocus cloth, wipe away all dust and residue.

5. Check for a worn key slot, worn bearing surfaces, stripped threads, and scuff marks on the pole fingers. Replace the rotor if any of the above faults are noted.

Test D – Rotor Coil (Field) Ground Test: Defective coil or lead wire insulation allowing the wire to contact any metal part of the rotor will ground the rotor (field) coil. Damage to the regulator can result and the alternator will fail to reach its rated output. By using a relatively high voltage for this check, slight leakage can be detected before actual failure occurs. The test instrument is a

© FORD MOTOR CO. 1971

115 volt to 120 volt A.C. test light. This can be made locally using a 15 watt bulb, bulb holder, male wall plug, and necessary wiring. See Figure 60.

1. Insert the plug into a 115 volt to 120 volt A.C. outlet.

CAUTION: *Avoid touching the bare test probes, as severe electrical shock will result.*

2. Touch one test probe to the rotor shaft and the other to the slip rings. The 15 watt bulb should not light.

3. Replace the rotor assembly if even the slightest glow is seen in the test lamp.

NOTE: *If the rotor winding has higher current draw, it will provide uncontrolled output, while endangering the components in the voltage regulator. If the rotor winding has less current draw, the alternator may fail to develop its rated output at specified speeds. A grounded rotor winding will probably damage the regulator and provide uncontrolled output.*

D. Assembly

Rotor and Front Housing Assembly: Assemble the front housing and the rotor as covered in the preceding "Rotor and Front Housing Inspection" procedure.

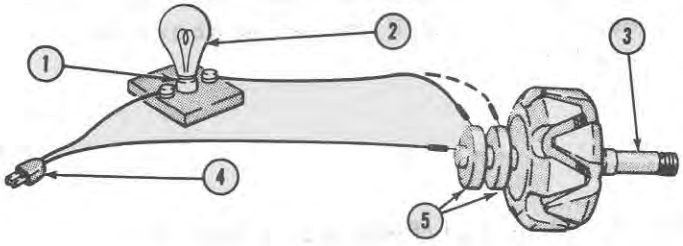

Figure 60
Rotor Coil (Field) Ground Test

1. Bulb Holder
2. 12 Watt Bulb
3. Rotor Shaft
4. Male Wall Plug
5. Slip Rings

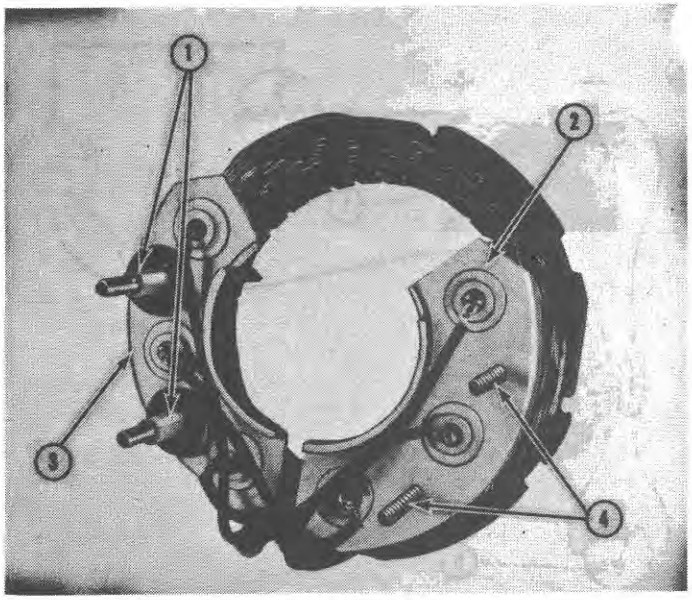

Figure 61
Diode Insulators – Internal

1. Insulating Sleeves and Washers
2. Negative Diode Assembly
3. Positive Diode Assembly
4. Not Insulated

Pulley, Fan, and Spacer Installation:

1. Place the spacer, Figure 35, over the shaft and install the Woodruff key.

2. Place the fan and pulley over the shaft. Install the lockwasher and nut.

3. Clamp the pulley in a vise, using an old oversize belt to protect the pulley as shown in Figure 34. Tighten the pulley nut to 35-50 lbs. ft. (4.84-6.92 kgm.).

Stator and Rear Housing Assembly:

1. Place the insulating sleeves and washers over the rectifying diode studs, as shown in Figure 61, for 12 volt negative ground alternators.

2. Insert the heat sink studs through the openings in the rear housing. Place the insulating washers over the studs, as shown in Figure 62, for 12 volt negativ ground units. Install the locknuts as shown an tighten securely.

Rear Housing Installation:

1. Be sure the rear bearing retainer (O-ring), Figure 41, is installed in the recess.

2. Position the rear housing and stator assembly over the rotor. Hand-press the housings together.

3. Install the through bolts, Figure 31, and tighten evenly. Spin the rotor by hand to test for freedom of the bearings and rotor.

Isolation Diode Installation:

1. Refer to Figure 28 for correct installation of the insulators and the isolation diode assembly.

2. Install the assembly and secure with the locknuts.

Brush Installation:

1. Place the brush assembly, Figure 27, in the cavity.

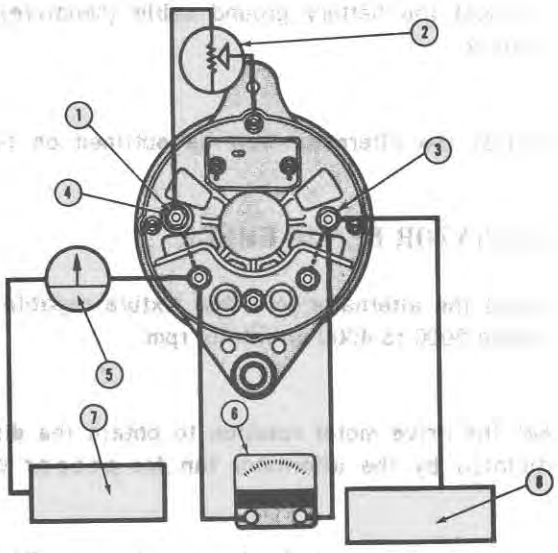

Figure 63
Alternator Operating Test (Less Regulator)

1. Terminals Connected with Dotted Line Have Same Polarity and Function
2. Field Rheostat
3. Negative Output
4. Auxiliary
5. Ammeter
6. Test Voltmeter
7. Battery Positive
8. Battery Negative

2. Install the dust shield and cover plate. Secure with the screws.

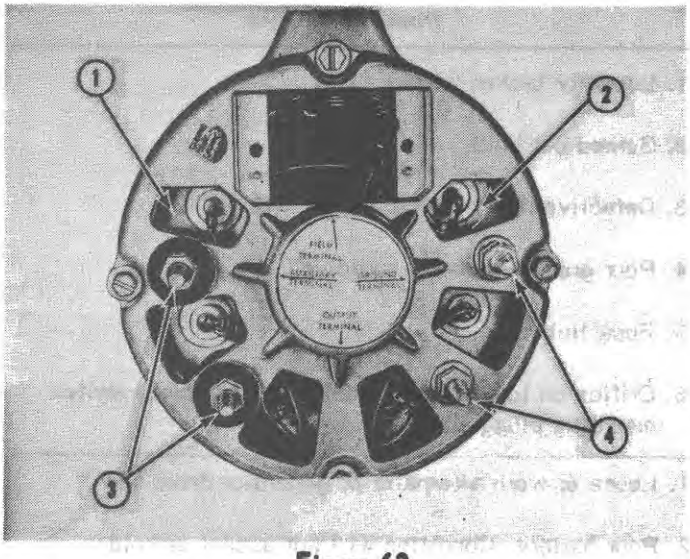

Figure 62
Diode Insulators – External

1. Postive Diode Assembly
2. Negative Diode Assembly
3. Place 3/4" Insulating Washers Under Nuts Here
4. Do Not Use Insulators Here

3. Bench check the alternator as covered under "Alternator Bench Check", this page.

E. Installation

1. Make sure the battery ground cable (negative) is disconnected from the battery.

2. Place the alternator in position on the tractor and install the attaching bolts and spacer, Figure 30. Snug the bolts so the alternator is free to pivot when moderate pressure is applied.

3. Position the alternator belt over the pulley.

4. Connect the wires to the alternator as shown in Figure 30.

©FORD MOTOR CO. 1971

5. Connect the battery ground cable (negative) to the battery.

6. Adjust the alternator belt as outlined on page 11.

ALTERNATOR BENCH CHECK

1. Mount the alternator in a test fixture capable of providing 3000 to 4000 alternator rpm.

2. Set the drive motor rotation to obtain the direction dictated by the alternator fan for proper cooling.

3. Connect the circuit leads as shown in Figure 63.

NOTE: *The ammeter shown is the panel ammeter of the test fixture, although a separate ammeter will serve the same purpose.*

4. Switch the ammeter to show possible discharge durin the hook-up. Reverse the meter for the output test.

5. Set the field rheostat to the maximum resistance before connecting it to the system.

6. Start the drive motor and adjust it to obtain 3000 to 4000 alternator rpm.

7. Reduce the resistance of the field rheostat, the alternator should begin to charge.

8. Continue to reduce the rheostat resistance until the alternator reaches its rated output. DO NOT operate the alternator for more than a few minutes in this manner, due to lack of voltage control. If the alternator delivers rated current output, terminate the test. If rated output cannot be obtained, the rotor, stator, or diodes are at fault. Refer to the "In-Vehicle Tests" on page 5.

4. TROUBLE SHOOTING

The following information must be used in conjunction with the Trouble Shooting Guide listed in Part 3, "Electrical System", of the repair manual when diagnosing Ford 7000 Tractor electrical difficulties.

Trouble	Possible Causes
Air Cleaner Restriction Warning Light Inoperative	1. Loose or broken wiring. 2. Burned out bulb. 3. Defective delay switch or vacuum switch. 4. Poor ground on delay switch. 5. Fuse link open. 6. Orifice on turbocharger inlet tube at vacuum switch mounting plugged.
Battery Low in Charge	1. Loose or worn alternator or generator drive belt. 2. Poor battery. Condition will not accept or hold a charge. Electrolyte low. 3. Alternator or generator not producing rated output.

Trouble	Possible Causes
Battery Low in Charge (Cont.)	4. Defective voltage regulator. 5. Excessive resistance in alternator or generator-to-battery or battery-to-ground circuits. (Corroded terminals).
Generator Charging at High Rate	1. Loose charging system connections. 2. High voltage regulator setting. 3. Burned voltage regulator contacts.
No Output from Generator	1. Generator drive belt broken. 2. Loose connections or broken cable in charging system. 3. Defective generator or regulator
Intermittent or Low Generator Output	1. Generator drive belt slipping. 2. Loose connections or broken cables in charging system. 3. Defective generator or regulator.
Alternator Charging at High Rate	1. Defective voltage regulator.
No Output from Alternator	1. Alternator drive belt broken. 2. Loose output connection. 3. All rectifying diodes defective. 4. Defective rotor or stator. 5. Defective isolation diodes (open). 6. Defective voltage regulator.
Intermittent or Low Alternator Output	1. Alternator drive belt slipping. 2. Loose connections or broken cables in charging system. 3. One or two rectifying diodes defective. 4. Defective voltage regulator. 5. Wire broken in stator.

© FORD MOTOR CO. 1971

5. SPECIFICATIONS

LIGHTS AND INSTRUMENTS

Headlamps:	
Headlamps (Sealed Beam)	No. 4411
Taillight Bulb	No. 1141
Flasher Warning Lamp Bulb	No. 1156
Instrument and Warning Light Bulbs	No. 1895
Light Circuit Fuse	3 amp.
Air Cleaner Restriction Warning Light Bulb	No. 1816
Fuse Link Air Cleaner Restriction	D1NN-14A094A

CHARGING SYSTEM

Battery:	
Capacity (Ampere Hour at 20 Hour Rate)	128
Voltage	12
Cells	6
Plates Per Cell	25
Ground Terminal	negative
Generator:	
Maximum Output (Hot):	
Amperes at Approximately 1350 Engine rpm (2650 Generator rpm) and 15 Volts	22 ± 1 amp.
Cut-In Speed (Approximate Engine rpm)	76
Field Coil Current	2 amp
Field Coil Resistance	6 ohms
Brush Length (Minimum)	13/32 in. (10.32 mm)
Commutator Diameter (Minimum)	1.450 in. (36.830 mm)
Brush Spring Tension with New Brush (Minimum)	18 oz. (509 gms)
Commutator Runout	0.002 in. (0.050 mm)
Armature Shaft Runout	0.002 in. (0.050 mm)
Alternator:	
Maximum Output (Hot) (160°F.):	
Amperes at Approximately 2400 Engine rpm (5136 Alternator rpm) and 14.4 Volts	47 amp.
Field Current	1.8–2.4 amps.
Field Resistance	6 ohms
Brush Length (Minimum)	3/16 in. (4.76 mm)
Brush Spring Tension with New Brush (Minimum)	4 oz. (113.4 gms)
Voltage Regulator (With Generator):	
Cutout Relay:	
Cut-In Voltage	12.4–13.2
Cut-Out Voltage	9.5–11.0
Cut-Out Current	4 amps.
Armature-to-Core Air Gap	0.035–0.045 in. (0.89–1.14 mm)
Moveable Contact Blade Movement	0.010–0.020 in. (0.25–0.51 mm)
Current Regulator:	
On-Load Setting (Amps)	22 ± 1 amp.
Armature-to-Core Air Gap	0.054 in. (1.37 mm)

CHARGING SYSTEM (Cont.)

Voltage Regulator:
- Opening Voltage at 50°F. (10°C.) 14.9–15.5
- 68°F. (20°C.) 14.7–15.3
- 86°F. (30°C.) 14.5–15.1
- 104°F. (40°C.) 14.3–14.9

Armature-to-Core Air Gap . . . . . 0.053 in. (1.34 mm)

Voltage Regulator (With Alternator):
Output Terminal Voltage at
- 10 Amp. Load: 40°F. (4°C.) 14.2–15.0
- 60°F. (16°C.) 14.1–14.9
- 80°F. (27°C.) 13.9–14.7
- 100°F. (38°C.) 13.8–14.6
- 120°F. (49°C.) 13.6–14.4

STARTING SYSTEM

No Load Current Draw (Maximum):
At 12 Volts and 5500–7500 Starter rpm 100 amps.

Current Draw (Starter Installed on Warm Engine):
- At 12 Volts and 150–200 Engine rpm . . . . . 250–300 amps.
- Brush Length (Minimum) . . . . . 0.313 in. (7.94 mm)
- Brush Spring Tension with New Brush (Minimum) . . . . . 42 oz. (1190.7 gms)
- Commutator Diameter (Minimum) . . . . . 1.53 in. (38.89 mm)
- Armature Shaft End Play (Maximum) . . . . . 0.020 in. (0.508 mm)
- Armature Shaft Runout (Maximum) . . . . . 0.005 in. (0.127 mm)
- Drive Pinion Clearance (Engaged) . . . . . 0.010–0.020 in. (0.254–0.508 mm)

TORQUE SPECIFICATIONS (LUBRICATED THREADS)

	Pounds Feet	Kilogram-Metres
Voltage Regulator Mounting Screws	12 lbs. in.	0.138
Generator Drive End Plate Assembly Securing Nut	25	3.46
Alternator Pulley Nut	35–50	4.84–6.92

6. SPECIAL TOOLS

Description	Tool No.
Step Plate	630-1
Bushing Driver	801
Bushing Driver	802
Bushing Driver Mandrel	813
Bearing Pulling Attachment	950
Bearing Puller	954 or 7600-E
Grip-O-Matic Puller	1001

© FORD MOTOR CO. 1971

Part 4

CLUTCHES

The Ford 7000 Tractor is equipped with a 13 inch (33.0 cm.) diameter organic friction disc clutch. Service procedures are the same as those provided for the Ford 5000 Tractor equipped with the previous design 13 inch (33.0 cm.) heavy duty organic clutch. The clutch cover assembly for the Ford 7000 can be adjusted by using the SW-510 Universal Clutch Fixture, and Spacer 510-5D1 with a thickness of 0.575 ± 0.010 inch (14.6 ± .254 cm.); or Tool Number SW-12B and Spacer SW-12B/10.

The pressure plate and cover assembly for the Ford 7000 Tractor contains heavier pressure release springs. The 16 springs have a compression rate of 145–155 lbs. (65.8–70.3 kg.) at a compressed length of 1.69 inches (42.9 mm.) The springs are color coded violet with a black stripe. Cover-to-flywheel spacers .090 inch (2.29 mm) thick are the same as used with the previous Ford 5000 Tractor equipped with a 13 inch (33.0 cm.) heavy duty organic clutch.

The clutch pedal free travel adjustment remains at 1-3/8 inches (35 mm.)

With the exception of the pressure release springs, the specifications listed for the 5000 Tractor equipped with a 13 inch (33.0 cm) heavy duty organic clutch also apply to the Ford 7000 Tractor.

© FORD MOTOR CO. 1971

Part 7

TRANSMISSION

The transmission for the Ford 7000 Tractor is of a constant mesh design and provides eight forward and two reverse speeds. The basic design of this transmission is identical to the eight-speed transmission for the Ford 5000 Tractors with the following exceptions:

- Helical gears, Figure 1, as opposed to the spur-type gears on the Ford 5000 Transmission are provided on the secondary countershaft assembly, 3rd-7th gear assembly, mainshaft assembly, and main countershaft assembly.
- To compensate for the thrust loads caused by the helical gears, tapered roller bearings replace the ball bearings previously used on each end of the mainshaft. Whenever the front end of the transmission is overhauled, the input shaft bearing preload must be checked, and if necessary, adjusted. The procedure for checking the preload is contained on page 3 of this supplement.

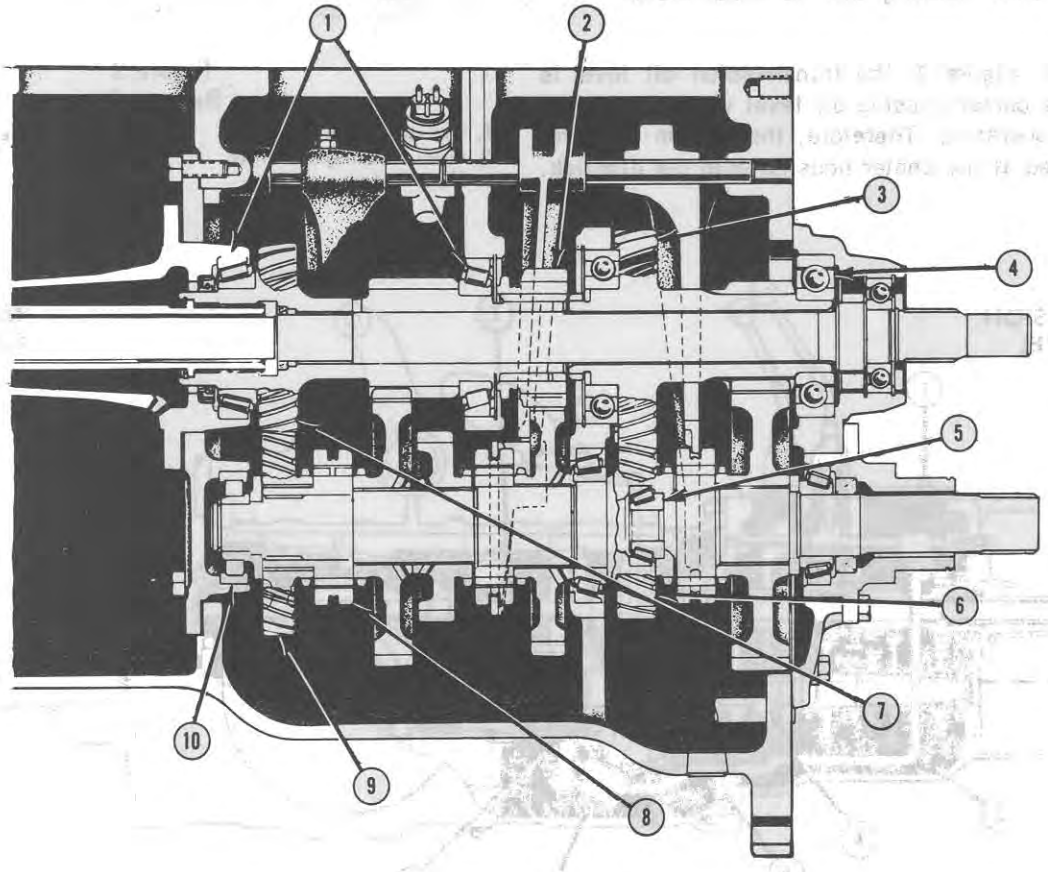

Figure 1
Ford 7000 Transmission – Cross Sectional View

1. Tapered Roller Bearings
2. 4th-8th Sliding Gear Coupling
3. Secondary Countershaft Assembly
4. Secondary Countershaft Rear Bearing
5. Output Shaft Bearing
6. Main Countershaft Assembly
7. Mainshaft Assembly
8. 1st-3rd, 5th-7th Sliding Gear Coupling
9. 3rd-7th Gear Assembly
10. Front Countershaft Bearing

© FORD MOTOR CO. 1971

- The rear bearing retainer, Figure 2, has four holes provided to allow oil to pass easily between the transmission case and the rear axle center housing, thus making for a common reservoir.

- An oil supply tube is incorporated from the external oil filter to provide for better lubrication of the transmission. See Figure 3.

Other changes have also been incorporated; however, service procedures are not affected. Refer to Part 7, Chapter 2, of this manual for all service procedures.

The lubricant used in the transmission with common reservoir is M2C53A or M2C86A hydraulic oil. The common reservoir has a total capacity of 55 U.S. quarts (45.8 Imp. qts., 52 liters) and can be drained from plugs in the rear axle center housing and the transmission.

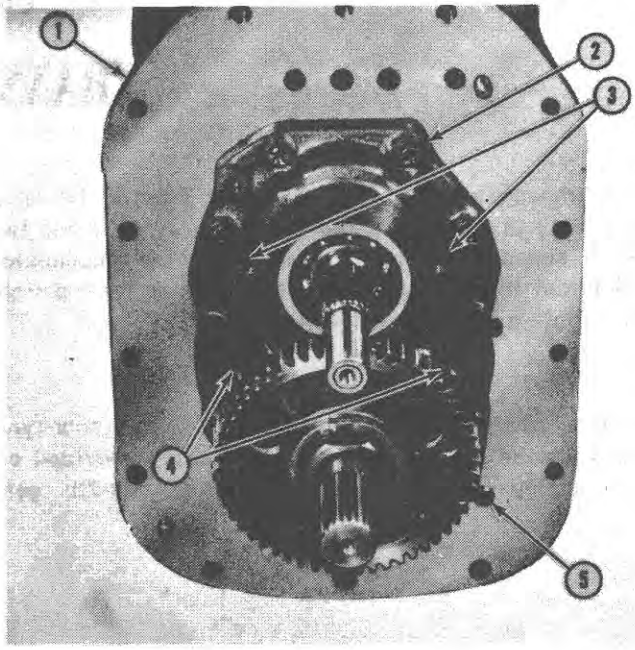

Figure 2
Rear Bearing Retainer

1. Transmission Case
2. Rear Bearing Retainer
3. Vent Holes
4. Oil Transfer Holes
5. Oil Supply Tube

As shown in Figure 3, the transmission oil level is higher than the center housing oil level when the tractor engine is not operating. Therefore, the system oil level must be checked at the center housing with the dipstick.

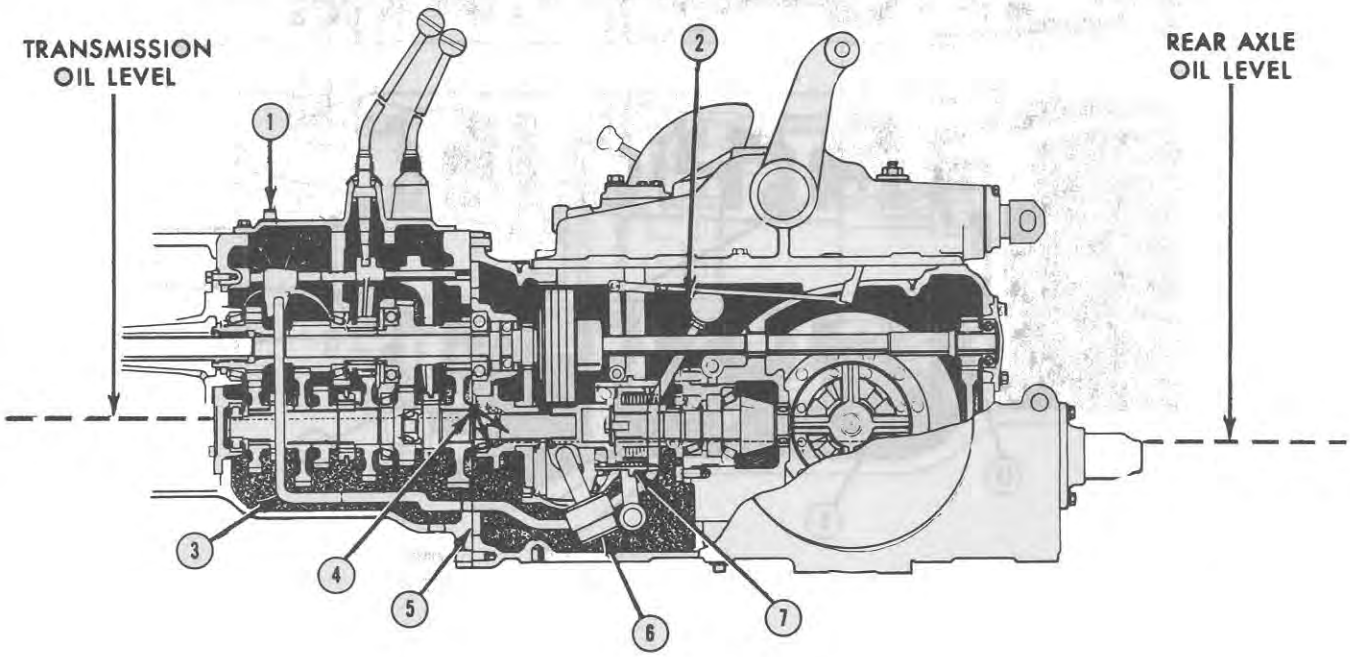

Figure 3
Oil Replenishment System

1. Oil Filler Plug
2. Oil Tilter Manifold
3. Oil Supply Tube
4. Oil Transfer Hole
5. Rear Bearing Retainer
6. Intake Screen
7. Load Monitor

YSTEM OIL LEVEL CHECK

Because of the difference in oil levels of the transmission and center housing, it is essential that the oil level is checked with the tractor standing on a level surface, as follows.

1. With the tractor on a level surface and the engine shut off, remove the dipstick, Figure 4.
2. The system is filled to the correct level when the oil level is between the two marks on the dipstick.
3. If oil level is low, add M2C53A or M2C86A hydraulic oil through the transmission filler cap. When oil is added to the transmission it flows through oil transfer holes to the center housing. Do not fill above the top mark on the dipstick.
4. Install the filler cap and dipstick.

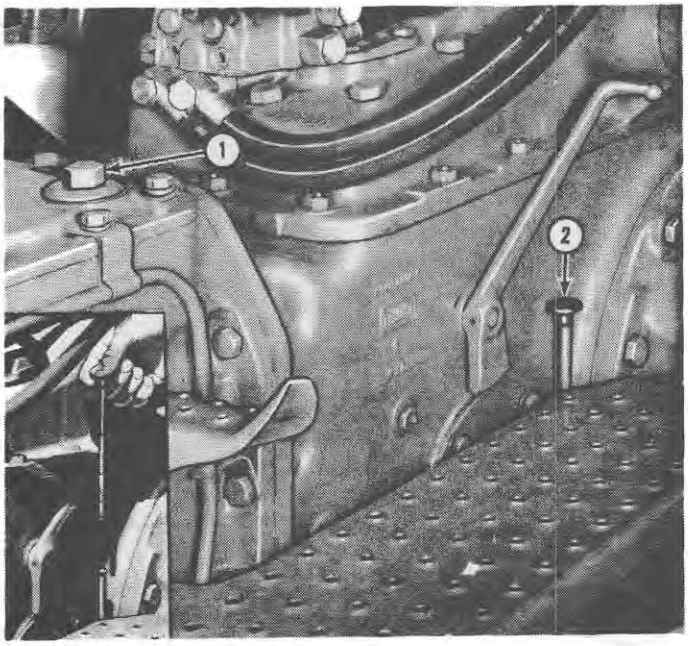

Figure 4
Transmission and Rear Axle Oil Level Dipstick and Filler Plug

1. Filler Plug
2. Oil Level Dipstick

INPUT SHAFT BEARING PRELOAD CHECK

During reassembly, after overhauling the front end of the transmission, it is necessary to check and adjust the preload of the input shaft bearing. Preload on the input shaft bearing is governed by shims located between the mating surfaces of the clutch release hub support and the transmission case. Check and adjust the preload of the bearing as follows:

1. When installing the clutch release hub support, install two .012 inch (.30 mm) shims between the support and case. Refer to Figure 5.
2. Install the five hub support retaining bolts and tighten them alternately to a torque of 35–47 lbs. ft. (4.84–6.50 kgm).
3. Remove the snap ring retaining the P.T.O. drive shaft rear bearing, and move the shaft rearward.
4. Place the transmission in neutral.
5. Using a torque wrench capable of measuring pounds inches (kgm), rotate the input shaft clockwise until the shaft turns steadily and record the reading at

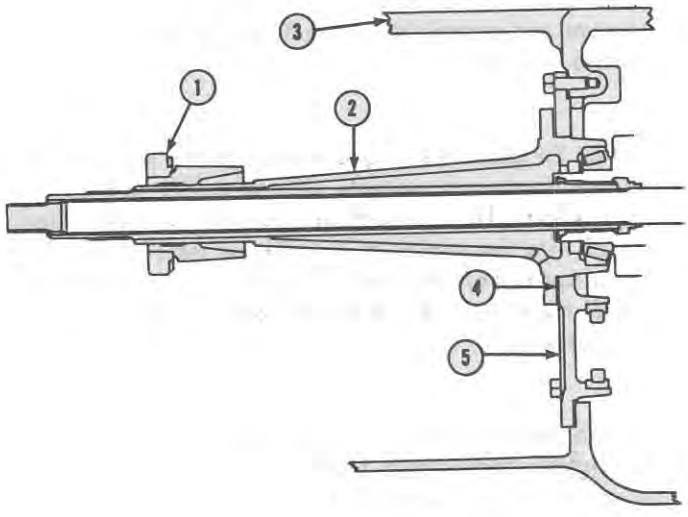

Figure 5
Input Shaft Bearing Preload

1. Clutch Release Bearing
2. Clutch Release Bearing Support Assembly
3. Transmission Case
4. Shims
5. Front Support Plate

© FORD MOTOR CO. 1971

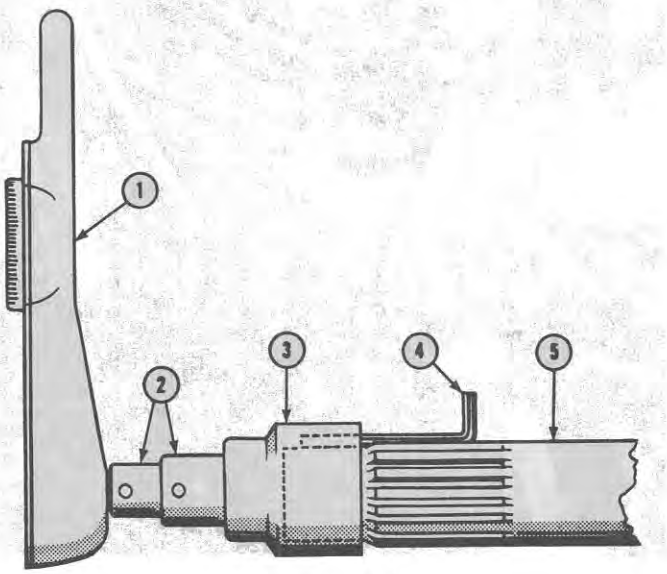

Figure 6
Torque Wrench Adapted to Input Shaft

1. Torque Wrench
2. Adapters
3. Socket
4. Allen Wrench
5. Input Shaft

which this occurs. Rotate the input shaft again and measure and record the torque a second time. Average the two readings.

NOTE: *To adapt the torque wrench to the input shaft, place a socket of suitable size over the end of the input shaft. Then insert an appropriate size Allen wrench into the socket to lock the points of the socket to the splines of the shaft, as shown in Figure 6. Install the torque wrench on the socket, using adapters if necessary.*

6. Loosen the five clutch release hub retaining bolts and tighten them finger tight. Rotate the input shaft using the torque wrench and record the torque required to rotate the shaft with no preload. Rotate the shaft again to obtain an additional reading and average the two readings.

7. Subtract the averaged preload torque reading obtained in Step 6 from the averaged preload torque reading obtained in Step 5. The torque should be within 10–20 lbs. in. (.115–.230 kgm).

8. If the torque determined in Step 7 is above the 10–20 lbs. in. (.115–.230 kgm) range, add shims starting with the .003 inch (.08 mm) shim and progressing to the .005 inch (.13 mm) shim, or combinations of the three shims, until the proper preload is obtained. If the torque is below the 10–20 lbs. in. (.115–.230 kgm) range, reduce the amount of shimming by using combinations of the three shims until the proper preload is obtained.

9. After the initial bearing preload has been obtained, add an additional .005 inch (.13 mm) shim between the hub and transmission case.

Example:

- Average torque required to turn input shaft with two .012 inch (.30 mm) shims installed (Step 5) – 38 lbs. in. (.437 kgm)
- Average torque required to turn input shaft with no preload (Step 6) – 5 lbs. in. (.058 kgm)
- No preload torque obtained in Step 6 subtracted from preload torque obtained in Step 5 (Step 7) – 33 lbs. in. (.380 kgm)

Since the 33 lbs. in. (.380 kgm) torque value is greater than the recommended 10–20 lbs. in. (.115–.230 kgm) limit, shims must be added to reduce the 33 lbs. in. (.380 kgm) to the 10–20 lbs. in. (·115–.230 kgm) range. Then, when within the limit, an additional .005 inch (.13 mm) shim must be installed.

10. Move the P.T.O. drive shaft forward and install the snap ring retaining the drive shaft rear bearing.

Part 9

POWER TAKE-OFF

The Ford 7000 Tractor is equipped with a 540 rpm independent P.T.O. Ford 7000 and 5000 Tractors equipped with Load Monitor must be separated between the transmission and rear axle to remove the P.T.O. clutch and valve assembly. For overhaul procedures, refer to Chapter 3, Part 9, "Power Take-Off", of this manual.

P.T.O. CLUTCH AND VALVE ASSEMBLY REMOVAL

1. Separate the tractor between the transmission and rear axle. Refer to Chapter 2, Part 15, "Separating the Tractor", of this manual.
2. Remove the hydraulic lift cover as described in Part II, "Hydraulics" of this supplement.
3. Remove the cotter pins from the hydraulic lift bracket lower clevis pin and remove the clevis pin and bracket.
4. Remove the four bolts retaining the upper rear shaft coverplate and withdraw the shaft and gear assembly.
5. Remove the P.T.O. valve locating bolt from the left-hand side of the rear axle differential center housing.
6. Disconnect the nylon tube from the P.T.O. valve assembly.
7. Remove the P.T.O. clutch and valve assembly.

P.T.O. CLUTCH AND VALVE ASSEMBLY INSTALLATION

1. Position the clutch and valve assembly in the center housing. Engage the internal splines of the clutch plates with the splines on the clutch hub which is integral with the hydraulic pump drive gear and splined to the P.T.O. countershaft. Make sure the thrust washer is in place with the three prongs located in the holes in the hub of the clutch housing.
2. Join the tractor at the transmission and rear axle center housing. Refer to Chapter 2, Part 15, "Separating the Tractor".
3. Connect the nylon tube to the valve assembly. Install the valve locating bolt in the center housing.
4. With a new cover gasket in position install the rear upper P.T.O. shaft assembly, engaging the splines with the P.T.O. clutch. Install the four cover plate retaining bolts and tighten to 40–50 lbs. ft. (5.5–6.98 kgm).
5. Install the hydraulic lift bracket and retain with the clevis pins and new cotter pins.
6. Install the hydraulic lift cover as described in Part II, "Hydraulics" of this supplement.

© FORD MOTOR CO. 1971

Part 10

REAR AXLE AND BRAKES

For Service information pertaining to the Ford 7000 Tractor, refer to Chapter 2, Part 10, "Rear Axle and Brakes", of this manual. Although there are some differences in the size of components, the service procedures remain the same.

SPECIFICATIONS

Axle Housing Bolts	110–135 (15.21–18.59)
Inner Disc Brake Housing Nuts	72–90 (9.95–12.44)
Axle Shaft Retaining Bolt/Bolts	95–120 (13.13–16.59)
Differential Case Bolts	65–75 (8.99–10.37)
Differential Ring Gear Nuts	40–45 (5.53–6.22)
Pinion Bearing Retainer Bolts	80–100 (11.06–13.82)
Wheel Nuts	304–336 (42.03–46.44)
Axle Ratio	
8-Speed Transmission	23.787
Axle Weight	3424 lbs.
(Fully Fueled)	(1553.0 kg)
Oil Capacity	55 U.S. Qts. (45.8 Imp. Qts.) (52 Liters)
Grade	
Ford Specification	M2C53A or M2C86A
Differential Ring Gear	
Diameter (8-Speed Trans.)	13.12 in. (33.33 cm)
Number of Teeth (8-Speed Trans.)	37
Drive Pinion	
Number of Teeth (8-Speed Trans.)	7
Number of Splines	23
Pinion Bearing Pre-Load (Using Tool No. T. 4062)	12–16 lb. in. (0.138–0.184 kgm.)
Pinion Bearing Pre-Load (Using Pull Scale)	16–21 lb. (7.26–9.53 kg.)
Axle Shafts	
Diameter at Outer Bearing Length	2.877 in. (73.078 mm) 18.84 in. (47.85 cm)
Number of Splines	54
End Play	0.001 in. loose – 0.003 in. tight (0.025–0.076 mm)
Wheel Brakes	
Type	Disc-Wet
Size	8.75 in. x 7.40 in. (22.23 x 18.80 cm.)
Lining Area	99.31 sq. in. (640.71 sq. cm.)
Wheel Attachment	
Bolt Circle Diameter	8 inches (20.32 cm)
Number of Bolts	8
Size of Bolts	3/4" x 2.06" (19.05 x 52.32 mm)

© FORD MOTOR CO. 1971

Part 11

HYDRAULIC SYSTEMS

Chapter 6

HYDRAULIC SYSTEMS WITH LOAD MONITOR — FORD 5000 AND 7000 TRACTORS

Section		Page
1.	Description and Operation	1
2.	Adjustments	9
3.	Overhaul Load Monitor	16
4.	Overhaul Lift Cylinder Assembly	22
5.	Overhaul Lift Cover Assembly	23

1. DESCRIPTION AND OPERATION

Figure 1 illustrates a schematic of the valves, controls, and related linkage found in the lift cover of the Load Monitor hydraulic system. A detailed description of each of these components and their function is provided in this

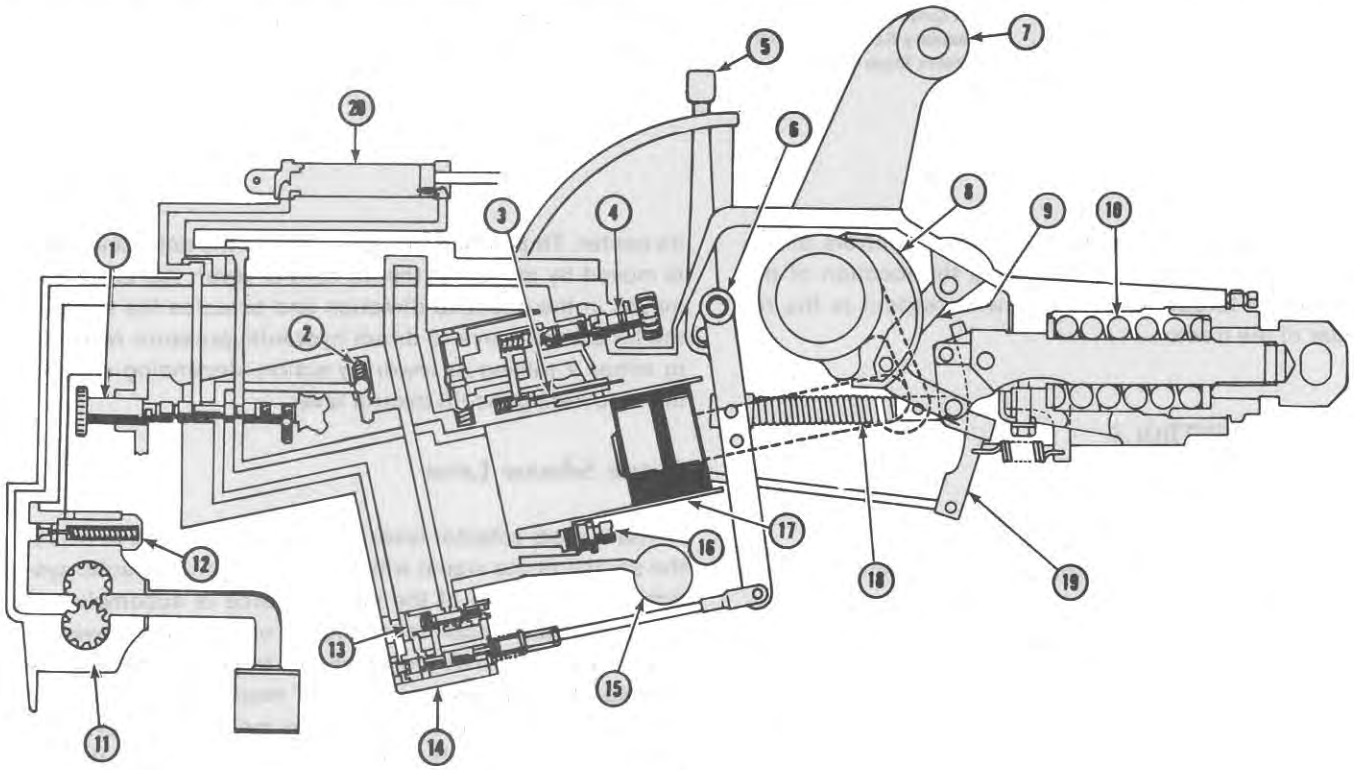

Figure 1
Load Monitor Hydraulic System

1. Selector Valve
2. Check Valve
3. Override Valve
4. Flow Control Valve
5. Lift Control Lever
6. Actuating Lever
7. Lift Arm
8. Cam
9. Position Control Link
10. Draft Control Mainspring
11. Hydraulic Pump
12. Relief Valve
13. Unload Valve
14. Control Valve
15. Filter
16. Relief Valve
17. Lift Piston
18. Selector (Control) Rod and Roller Assembly
19. Selector Linkage Assembly
20. Special Load Monitor Remote Cylinder

© FORD MOTOR CO. 1971

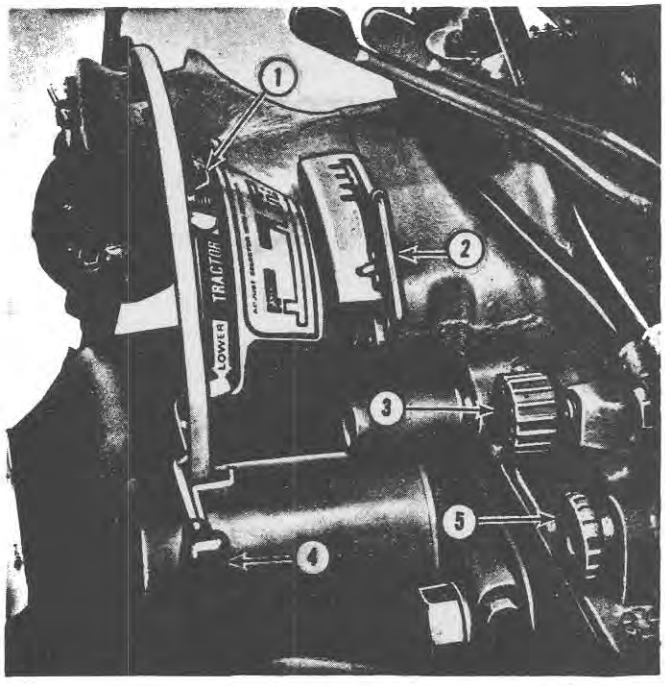

Figure 2
Hydraulic System Controls

1. Adjustable Stop
2. System Selector Lever
3. Flow Control Knob
4. Lift Control Lever
5. Auxiliary Service Control Valve Knob

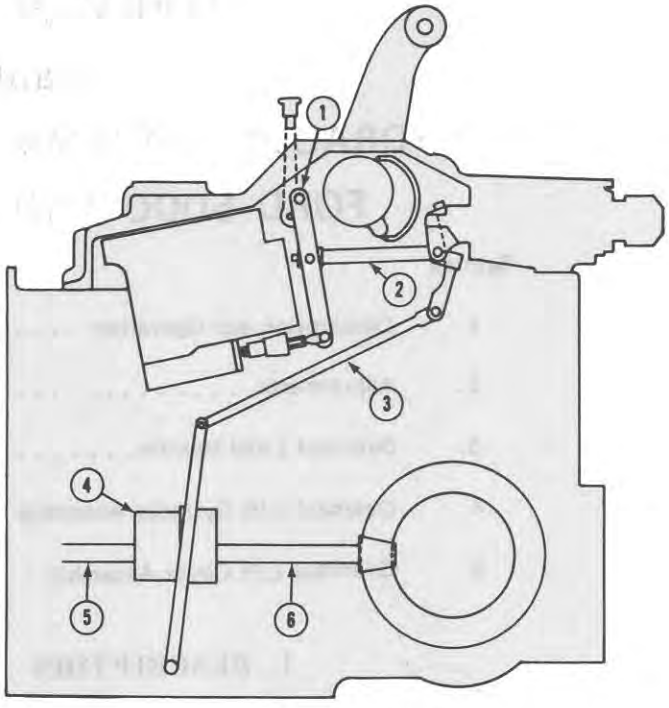

Figure 3
Load Monitor and Linkage

1. Actuating Lever
2. Control Rod and Roller Assembly
3. Strut
4. Load Monitor
5. Transmission Output Shaft
6. Rear Axle Pinion Shaft

section. Figure 2 illustrates the external controls of the hydraulic system. Figure 3 illustrates the location of the Load Monitor torque sensing unit with respect to the remainder of the tractor.

EXTERNAL CONTROLS

Lift Control Lever

The lift control lever (4), Figure 2, is the primary control of the hydraulic system. Moving the lift control lever upward on the quadrant initiates the sequence of events that result in the lift arms raising. Similarly, moving the lift control lever downward on the quadrant results in lowering of the lift arms. The following paragraphs describe this action.

Any movement of the lift control lever is transferred through its pivot to the actuating lever (7), Figure 4, located inside the lift cover. This actuating lever is attached to the lift control valve at its opposite end and is pivoted near its center. Thus, when the upper end of the actuating lever is moved by motion of the lift control lever, the lower end moves in the opposite direction and actuates the spool of the lift control valve to direct hydraulic pressure resulting in either a raising or lowering action, depending on raising or lowering the lift control lever.

System Selector Lever

The system selector lever (2), Figure 2, is used to select the source of the signal which activates the hydraulic system. The selection of the signal source is accomplished by pulling the selector lever slightly upward and moving it to the setting which corresponds to the signal source desired. As the selector lever is moved to a particular setting, the motion is transferred by means of a clevis link to the shorter end of the selector arm (5), Figure 4, the opposite (longer) end of which is connected to the control rod and roller assembly (6), Figure 4. When the selector lever is moved, the selector arm raises or lowers the control rod so that the roller is aligned with that portion of the selector linkage assembly (8) and (9), Figure 4, which

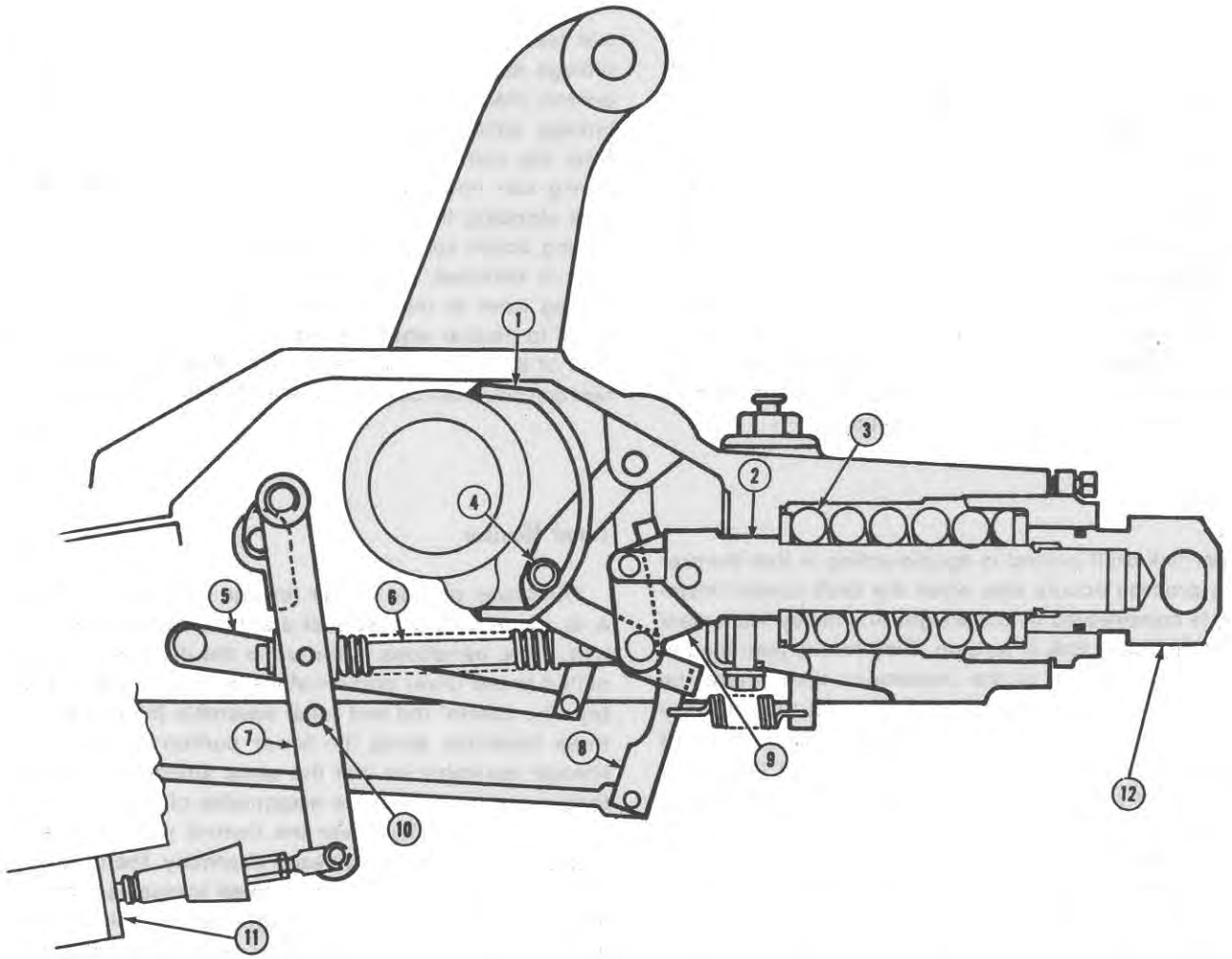

Figure 4
Lift Control Linkage

1. Position Control Cam
2. Draft Control Mainspring Plunger
3. Draft Control Mainspring
4. Position Control Link Roller
5. Selector Arm
6. Control Rod and Roller Assembly
7. Actuating Lever
8. Selector Linkage Assembly (Lower Portion)
9. Selector Linkage Assembly (Upper Portion)
10. Stop Pin
11. Control Valve
12. Yoke

transmits the signal from the source selected. These are as follows:

System Selector Lever	Control Rod Position
Uppermost Position (Hare)	Lowest Position on Lower Linkage
2nd Position (L.M.)	Mid Position on Lower Linkage
3rd Position (Tortoise)	Upper Position on Lower Linkage
Mid Position (Position Control)	Aligned with Linkage Center Pivot
.owest Position (Draft Control)	Aligned with Draft Control Main Spring

INTERNAL LINKAGE

Some portions of the internal linkage of the hydraulic lift cover have been previously described with the related external controls. This section contains the description and operation of the remaining components and their relation to the other components. These descriptions are based on the source of the signal involved and the system of control desired.

Draft Control

The draft control signal is derived directly from the draft load imposed on mounted equipment. The draft load causes the implement to tend to rotate about the lower link hitch points thus developing a pushing force on the

© FORD MOTOR CO. 1971

upper link. This pushing force is transmitted through the upper link to the draft control plunger (2), Figure 4. Upon overcoming the force of the draft control mainspring, the draft force produces movement of the yoke, which in turn moves the upper portion of the selector linkage assembly (9) forward, pushing on the control rod (6) to transmit the signal to the actuating lever. When the draft load is decreased by the implement raising slightly, the draft control mainspring forces (pushes) the yoke back to its original position, drawing the upper portion of the linkage assembly back with it. The compressive force is now removed from the control rod spring, and it neutralizes at its free length. The light rate control valve follower spring can now push the control valve spool to neutral.

Upper link draft control is double-acting in that the preceding process occurs also when the draft control mainspring is compressed by the weight of a heavy implement placing the upper link in tension. Draft forces then tend to overcome the weight of the implement, thus where the implement draft increases in excess of that required, the tension in the upper link is decreased allowing the draft control plunger (2) to move forward, pushing the upper portion of the selector linkage (9) forward to obtain raise action and restore constant draft at the implement. Conversely, a decrease in draft at the implement increases tension in the upper link drawing the yoke and plunger together with the linkage rearward thus causing the lift to lower and restore constant draft to the implement.

Position Control

The only activating signal in position control is derived from manual movement of the lift control lever. When the system selector lever is set for position control, the control rod is positioned with the roller aligned with the center pivot of the selector linkage assembly. Therefore, no effect of movement of the upper or lower portions of the selector linkage assembly is transmitted to the lift control valve. When a lift action is initiated by moving the lift control lever upward on the quadrant, the actuating lever moves the lift control valve spool as previously described to effect a raising of the lift arms. In this action, the position control cam (1), Figure 4, rotates with the lift arm cross shaft to which it is attached. The position control link roller (4), which rides inside the cam, is permitted rearward movement by the cam as the lift arms reach the height which corresponds to the position of the lift control lever on the quadrant. As this occurs, the selector linkage assembly, which is also attached to the position control link, at its center pivot, is drawn rearward by the linkage tension spring removing the compressive force from the control rod spring. The control valve follower spring can now push the control valve spool to neutral thus stopping the flow of oil to the lift cylinder and the raising action stops. In a lowering action, the entire process is reversed. A stop pin (10) is provided on the actuating lever to mechanically bring the lift control valve spool to neutral when the lift cylinder piston reaches the limit of its travel at full raise, regardless of whether position control, draft control, or Load Monitor is selected.

Load Monitor

The lower portion of the linkage assembly (8), Figure 4, is connected by means of a strut to the torque sensing unit. Thus, variations in torque in the driveline are transmitted to the lower portion of the selector linkage assembly. The control rod and roller assembly (6), can be set at three locations along the lower portion of the selector linkage assembly so that the same amount of change in torque can produce three magnitudes of signal to the hydraulic system. The lower the control rod roller is with respect to the selector linkage assembly, the greater the magnitude of signal desired. When torque is increased, the signal is transmitted through the control rod to the actuating arm to move the spool of the lift control valve, resulting in raising of the tractor lift arms. When the torque is decreased, the lower portion of the linkage assembly moves back away from the control rod allowing the remainder of the linkage to return to neutral. At any time that the tractor lift cylinder reaches the limit of its travel, it contacts a stop pin (10), Figure 4, which is attached to the actuating lever; which moves the actuating lever rearward and thus moves the lift control valve spool to neutral, stopping the flow of oil to the lift cylinder.

LIFT COVER – VALVES

The valves, shown in Figure 1, are described in this section. The relationship of these valves is shown in schematic form in Figure 5 without the mechanical linkage which was described in the preceding section.

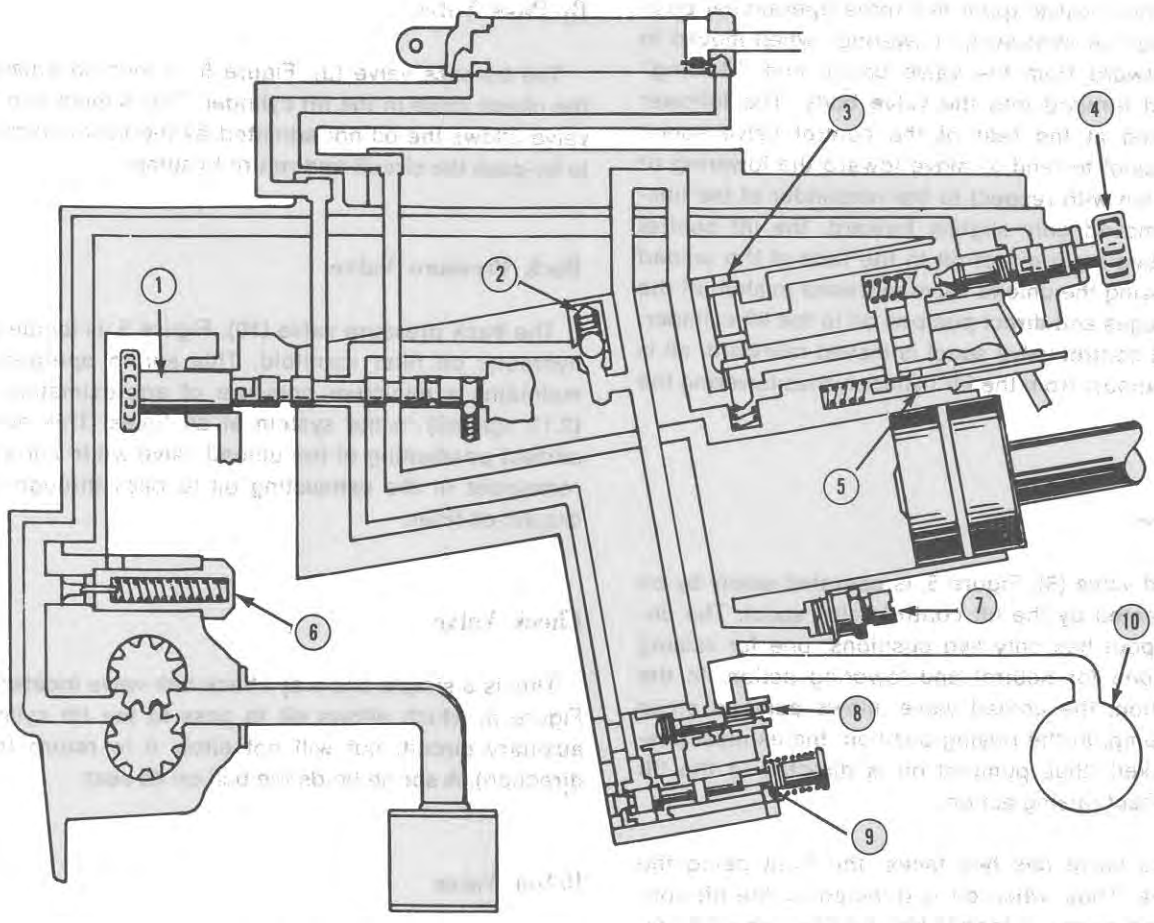

Figure 5
Hydraulic Control Valves

1. Auxiliary Service Selector Valve
2. One-Way Check Ball Valve
3. By-Pass Valve
4. Flow Control Valve Knob
5. Override Valve
6. Relief Valve
7. Lift Cylinder Safety Valve
8. Unload Valve
9. Lift Control Valve Spool
10. Back Pressure Valve

Flow Control Valve

The flow control valve knob (4), Figure 5, is an external control. Its setting determines the rate of oil flow into the lift cylinder. Turning the knob clockwise, in the direction of the tortoise, decreases this rate of flow. Conversely, turning the knob counterclockwise, in the direction of the hare, increases this rate of flow. The setting of the flow control valve is overriden to obtain maximum flow when the lift control lever is raised beyond the fixed stop at the top of the quadrant.

Auxiliary Service Selector Valve

The auxiliary service selector valve knob (1), Figure 5, is the only external control not yet covered. This valve basically functions as a diverter valve. When the valve is in its full "in" position, only the tractor lift links are functional. When the valve is in its full "out" position only the remote circuit is functional. Further details of the remote circuit will be found in the section pertaining to "Special Ford Load Monitor Remote Cylinder."

Lift Control Valve

The spool of the lift control valve (9), Figure 5, is connected by a turnbuckle to the actuating lever. Thus, it is always controllable with the lift control lever, or the control rod, depending on the position of the control rod roller with respect to the linkage assembly.

© FORD MOTOR CO. 1971

The lift control valve spool has three operational positions; "Neutral" at midtravel, "Lowering" when moved to the rear (outward from the valve body), and "Raising" when pushed forward into the valve body. The follower spring, located at the rear of the control valve spool, causes the spool to tend to move toward the lowering or neutral position with respect to the remainder of the linkage. When moved only slightly forward, the lift control valve spool begins to direct oil to the face of the unload valve (8), moving the unload valve rearward to shut off the neutral passages and direct pumped oil to the lift cylinder. When the lift control valve spool is moved rearward, oil is allowed to exhaust from the lift cylinder, thus lowering the lift arms.

Unload Valve

The unload valve (8), Figure 5, is operated solely by oil pressure directed by the lift control valve spool. The unload valve spool has only two positions; one for raising action, and one for neutral and lowering action. In the neutral position, the unload valve allows pumped oil to exhaust to sump. In the raising position, the exhaust passage is blocked, thus pumped oil is directed to the lift cylinder to effect raising action.

The unload valve has two faces; the front being the larger in area. Thus, when oil is directed by the lift control valve spool to the unload valve, equal pressure is exerted on both faces. The total force, however, is greater on the larger face (front), thus the unload valve spool is moved rearward to the raising position.

When the control valve is in the neutral or lowering position, the pressure on the larger face of the unload valve is removed as the oil is allowed to exhaust. The valve then has pressure only on its smaller rear face and it therefore moves forward to the neutral or lowering position. It will stay in this position until the control valve moves to the raising position.

Override Valve

This valve (5), Figure 5, is mechanically operated by the action of the lift control lever when it is moved toward the top of the quadrant; an actuator, located on the lift control lever pivot shaft, pushes the override plunger further into the housing causing the rate of flow of oil into the lift cylinder (normally controlled by the flow control valve setting) to increase to the maximum rate, resulting in a quick raise of the implement.

By-Pass Valve

The by-pass valve (3), Figure 5, is located adjacent to the check valve in the lift cylinder. This simple non-return valve allows the oil not admitted by the flow control valve to by-pass the circuit and return to sump.

Back Pressure Valve

The back pressure valve (10), Figure 5, is located in the hydraulic oil filter manifold. This spring operated valve maintains a minimum pressure of approximately 35 psi (2.11 kg/cm2) in the system at all times. This maintains correct positioning of the unload valve while allowing the remainder of the exhausting oil to pass through the hydraulic oil filter.

Check Valve

This is a simple one-way check ball valve located at (2), Figure 5, which allows oil to pass to the lift cylinder or auxiliary circuit, but will not allow it to return (reverse direction). A spring holds the ball on its seat.

Relief Valve

The relief valve (6), Figure 5, is located in the hydraulic pump and limits the maximum pressure at which oil enters the system to prevent overloading of the components.

Lift Cylinder Safety Valve

This valve (7), Figure 5, is spring operated and fitted directly into the lift cylinder. If shock loadings are encountered, for example: transporting heavy equipment over rough terrain, the safety valve opens to relieve the pressure and thus protect the components of the system.

LOAD MONITOR

The Load Monitor torque sensing unit, Figure 6, is located in the driveline of the tractor as shown at (4), Figure 3. It connects the transmission output shaft to the pinion shaft of the differential.

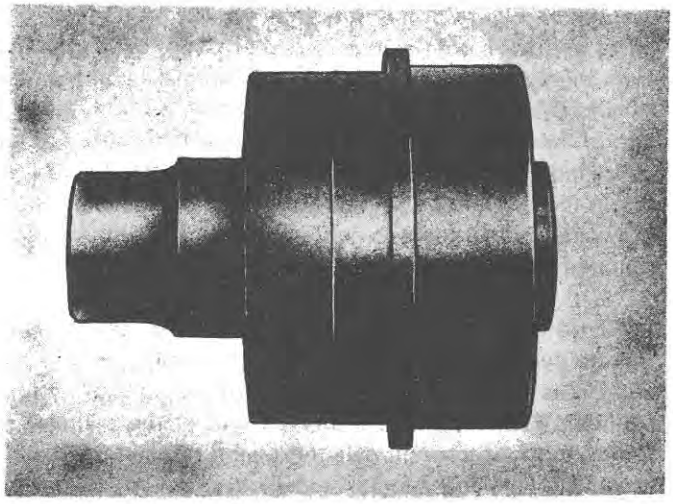

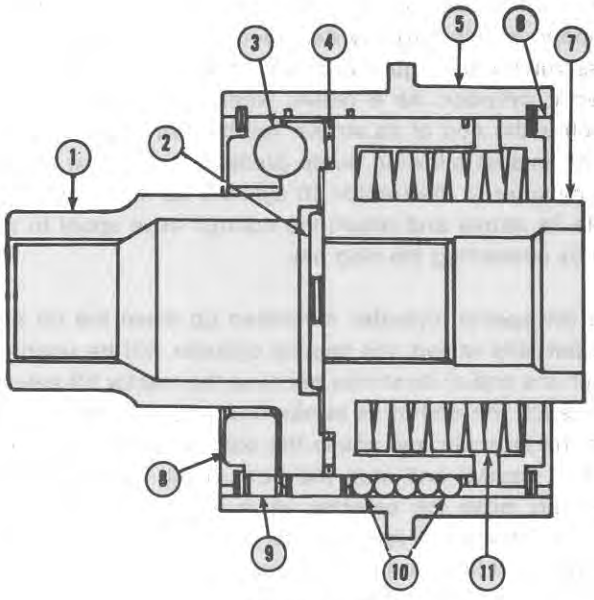

Figure 6
Load Monitor Torque Sensing Unit

1. Input Hub
2. Retaining Washer
3. Ball
4. Thrust Bearing
5. Coupling
6. Spring Retainer
7. Output Hub
8. Plate
9. Pin
10. Balls
11. Spring (Belleville Washers)

Raising: When the tractor is not moving, the Load Monitor is said to be in the "at rest" position shown in Figure 7. When the tractor begins to move, there is resistance to turning the drive wheels. Consequently, the input hub tends to turn more than the output hub. Any increase in torque results in a slight displacement of the balls with respect to their sockets, producing a parting (separation) of the input hub and the plate. This parting effects a forward movement of the coupling which in turn tilts the fork forward. The fork is attached by means of the strut to the lower portion of the linkage assembly, Figure 3, so the linkage assembly is also drawn forward, pushing on the control rod. The control rod causes the actuating lever to rotate about its upper pivot, moving the control valve spool forward to the raising position, causing the implement to raise. When the lift control lever is moved down the quadrant until the desired working depth is established, the balls (3), Figure 6, will be displaced to some degree between the "rest" state, top view of Figure 7, and maximum displacement, bottom view of Figure 7. This condition is referred to as being "under load," or as the "established" load.

As the implement is running at its working depth and there is an increase in load, an additional displacement of the ball occurs in that a greater torque input is required to turn the tractor drive wheels. The displacement of the balls produces additional separation in the Load Monitor

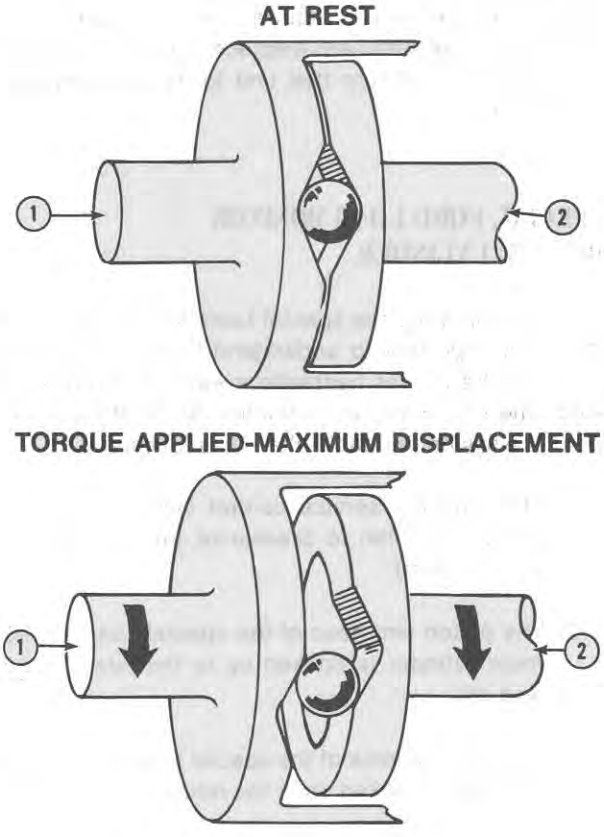

Figure 7
Load Monitor Torque Sensing Unit Function

1. Input Shaft
2. Output Shaft

© FORD MOTOR CO. 1971

which is transmitted through the strut to the lower linkage assembly as described previously and the implement is caused to raise. When the draft diminishes to a point where it is less difficult to turn the drive wheels, and the Load Monitor begins returning to the established load, the implement is lowered as described in the following paragraph.

Lowering: Lowering the implement (increasing the working depth) occurs when less torque is required to turn the tractor drive wheels. In this situation, the force on the balls (3), Figure 6, decreases, allowing them to relocate in their sockets. This allows the input hub (1) and the plate (8) to close together, resulting in the coupling (5) moving rearward. This movement of the coupling is passed to the control rod via the fork, strut, and lower portion of the selector linkage assembly; all of which move rearward. This movement permits the control rod spring to push the control rod rearward, relieving spring pressure on the actuating lever and allowing the control valve spool follower spring to move the control valve spool to the lowering position. As the working depth increases to a point where the load increases to the "established" load, lowering ceases as the torque required to turn the tractor drive wheels causes sufficient displacement of the balls in the load monitor to return that unit to its "established load" condition.

SPECIAL FORD LOAD MONITOR REMOTE CYLINDER

When operating the special Load Monitor remote cylinder, it is important to understand that all of the components of the tractor hydraulic system function as before when the implement was attached to the three-point linkage. The system is simply altered as follows:

1. The auxiliary service control valve is moved to its full out position to pressurize the auxiliary service port (lift port).

2. The piston end hose of the special Load Monitor remote cylinder is hooked up to the auxiliary service port (lift).

3. The rod end hose of the special Load Monitor remote cylinder is hooked up to the return (drop) port.

4. The special Load Monitor remote cylinder is installed on the implement in the same manner as would standard 3-inch diameter, 8-inch stroke remote cylinder.

Refer to Figure 5 and note that by moving the selector valve to the full out position, pump pressure oil is diverted from the system ram cylinder to the special Load Monitor remote cylinder. At the same time, return oil from the rod end of the special remote cylinder is routed to the tractor lift cylinder. This latter feature retains the lift cylinder piston in the circuit so that the lift shaft will turn and return the control valve spool to neutral once both cylinders have reached the end of their stroke.

Figure 8 illustrates the hydraulic system and special remote cylinder in schematic form. Typically, pump pressure oil is routed to the piston end of the special remote cylinder. Exhaust oil from the rod end of the cylinder is routed to the tractor lift cylinder piston to extend it simultaneously with the special remote cylinder. Because the special remote cylinder is smaller than the tractor lift cylinder, it will reach the end of its stroke while the tractor lift cylinder is only partially extended. For this reason, a bypass valve (16), Figure 8, is provided in the piston of the special cylinder. As a result, when the special cylinder reaches the end of its stroke, the bypass valve is pushed off of its seat allowing pump pressure oil to flow through the cylinder to the tractor lift cylinder so it can also complete its stroke and return the control valve spool to neutral by contacting the stop pin.

If the special cylinder is hooked up when the lift arms are partially raised, the special cylinder will be unable to reach the end of its stroke because the tractor lift cylinder will reach the end of its stroke first and in doing so, contact the stop pin and cause the control valve spool to return to neutral and stop the flow of oil. To remedy this situation, push the selector valve fully in; move the hydraulic lift control lever to the bottom of the quadrant; when the lift links are fully lowered, pull the selector valve fully out; and move the lift control lever to the top of the quadrant. When the special cylinder reaches the end of its stroke, the lift arms should stop moving a moment later when the tractor lift cylinder reaches the end of its stroke. The cylinders should now be in phase (synchronized).

HYDRAULIC OIL CIRCUIT

The description of the hydraulic oil circuits presented on page 38 of Part II, Chapter 2, of this manual, is applicable to both the Ford 5000 and 7000 Tractors equipped with the Load Monitor. The only difference from the previous schematics is due to a change in configuration of the hydraulic lift cover casting. The auxiliary services feed port, and the return port used in conjunction with remote cylinder Load Monitor application, are located on the front face of the lift cover.

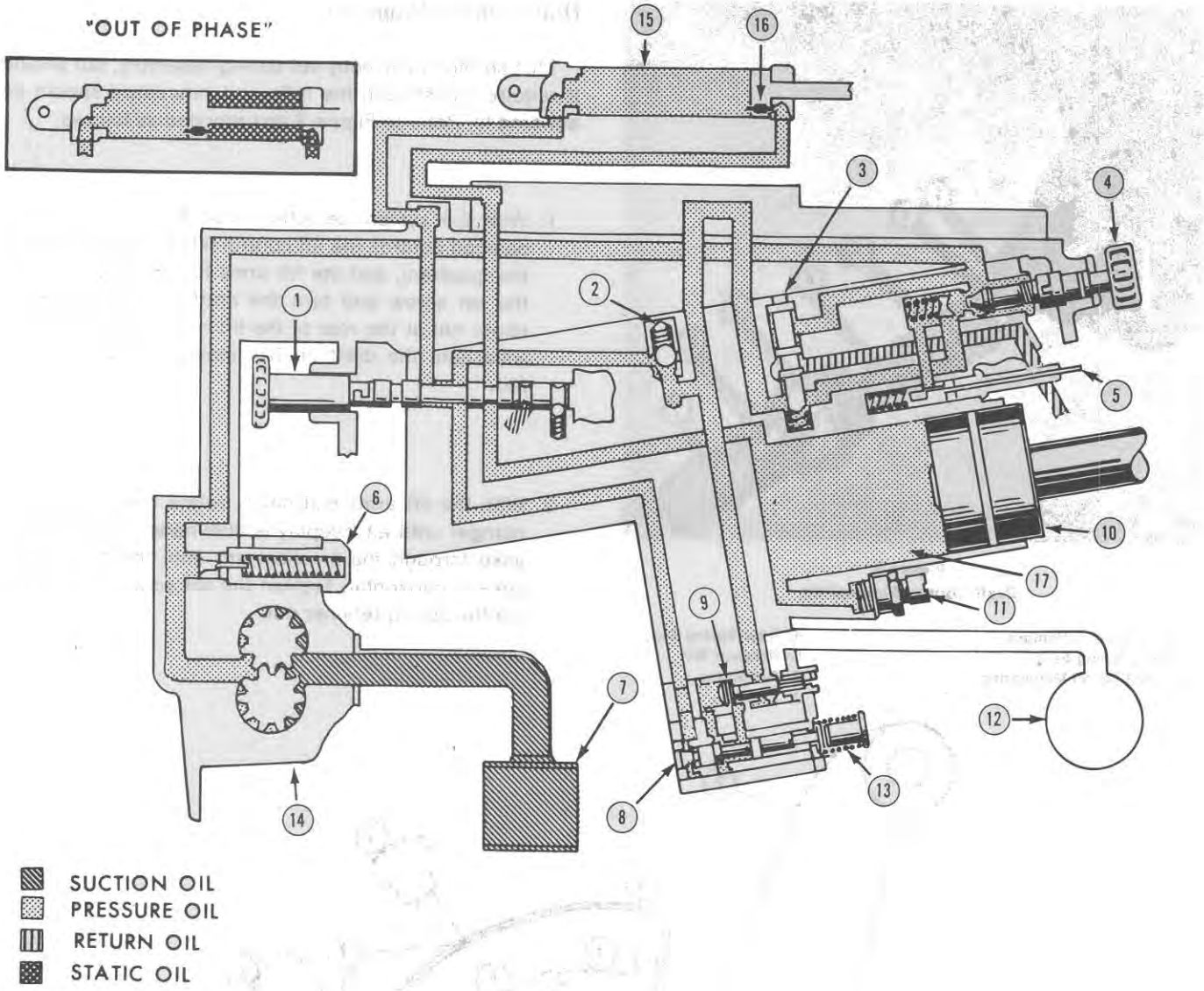

Figure 8
Oil Flow — Special Load Monitor Remote Cylinder

1. Hydraulic Selector Valve
2. Check Valve
3. By-Pass Valve
4. Flow Control Valve
5. Flow Control Override Spool
6. Pump Relief Valve
7. Suction Oil Filter
8. Control Valve Spool
9. Unload Valve
10. Lift Cylinder Piston
11. Lift Cylinder Safety Valve
12. Hydraulic Oil Filter
13. Return Spring
14. Hydraulic Pump
15. "Special" Remote Cylinder
16. By-Pass Valve
17. Lift Cylinder

2. ADJUSTMENTS

With the exception of the draft control mainspring adjustment procedure, it will be necessary to remove the hydraulic lift cover from the rear axle center housing to perform the linkage adjustments described in this section. Remove the lift cover as described in Section 5, "Overhaul Lift Cover Assembly."

© FORD MOTOR CO. 1971

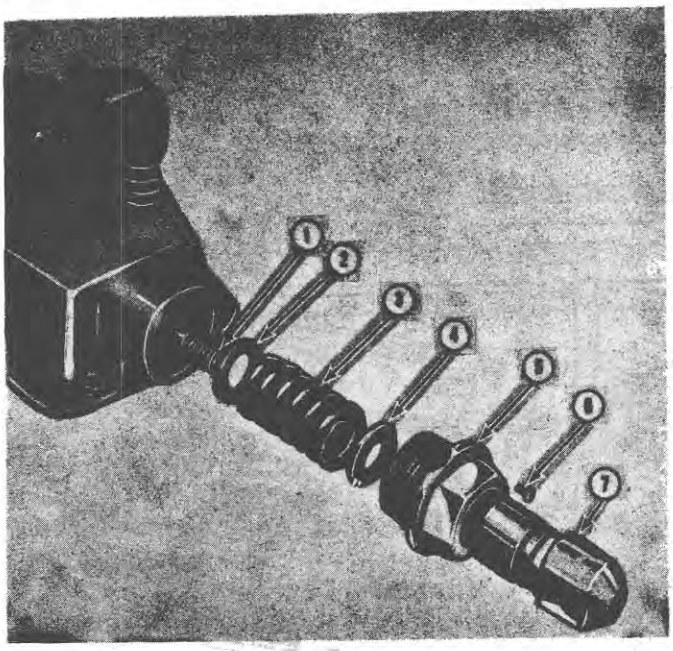

Figure 9
Draft Control Mainspring

1. Draft Control Plunger
2. Front Spring Seat
3. Draft Control Mainspring
4. Rear Spring Seat
5. Retainer Nut
6. Set Screw
7. Yoke

Draft Control Mainspring

This spring is correctly set during assembly, but should it require adjustment, the following procedure should be adhered to. Refer to Figure 9 and proceed as follows:

1. With the system selector lever, Figure 10, set for position control, the lift control lever at the bottom of the quadrant, and the lift arms fully lowered, loosen the set screw and turn the draft control spring retainer nut at the rear of the lift cover housing clockwise until the draft control mainspring pressure is felt.

2. With the lift arms still down, rotate the yoke on the plunger until all freeplay is eliminated, then turn the yoke through the smallest arc until the hole in the yoke is horizontal. Tighten the set screw in the draft control spring retainer nut.

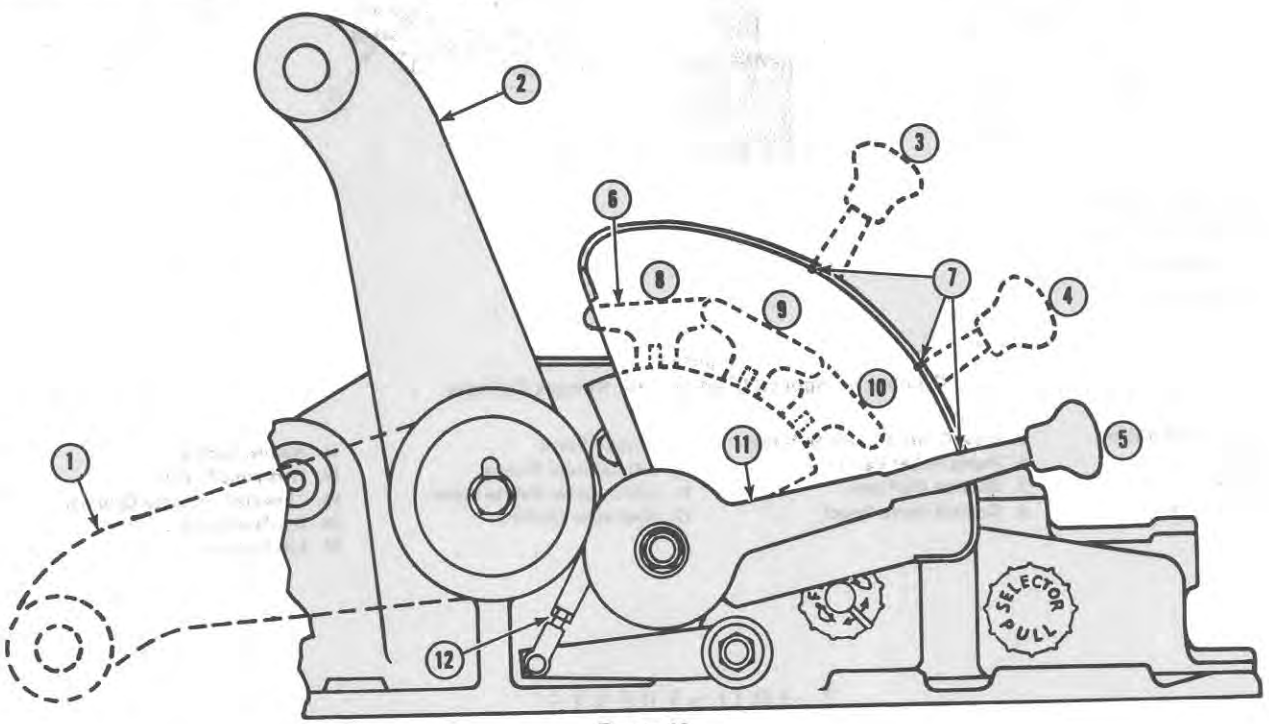

Figure 10
Lift Control Lever — Adjustment Positions

1. Lift Arms Lowered
2. Lift Arms Raised
3. Draft Control Position
4. Load Monitor Position
5. Position Control Position
6. System Selector Lever
7. Locating Notches
8. Load Monitor Setting (HARE)
9. Position Control Setting
10. Draft Control Setting
11. Lift Control Lever
12. Selector Lever Clevis

LIFT COVER LINKAGE

NOTE: Perform the post-adjustment check as detailed on Page 15 prior to lift cover removal. If the lift assembly checks out according to the procedure and the service operation does not involve the lift cover linkage, omit the following preparatory adjustments.

Preparatory to any lift cover linkage adjustment, remove the lift cover from the tractor as described in Section 5, "Overhaul Lift Cover Assembly," then proceed to perform the following adjustments.

1. Adjust the length of the strut to obtain a dimension of 14.3 ± .12 inches (36.32 ± 0.31 cm) as measured at the centerlines of the two attaching holes.
2. Loosen the draft control adjustment screw retaining nut (1), Figure 11, and position the offset of the screw in its highest position (with respect to normal operating position of the lift cover), then tighten the nut.
3. Install Tool No. SW 862-A, Figure 12, or Tool No. SW 25, Figure 13, on the lift cover as shown. Clamp the tool to the lift cover to fix rigidly the position of the strut for all remaining adjustments. Install the strut on the tool.

IMPORTANT: Each of the following adjustments must be performed in the sequence presented. The system will not perform satisfactorily unless all adjustments, including the preceding, are executed.

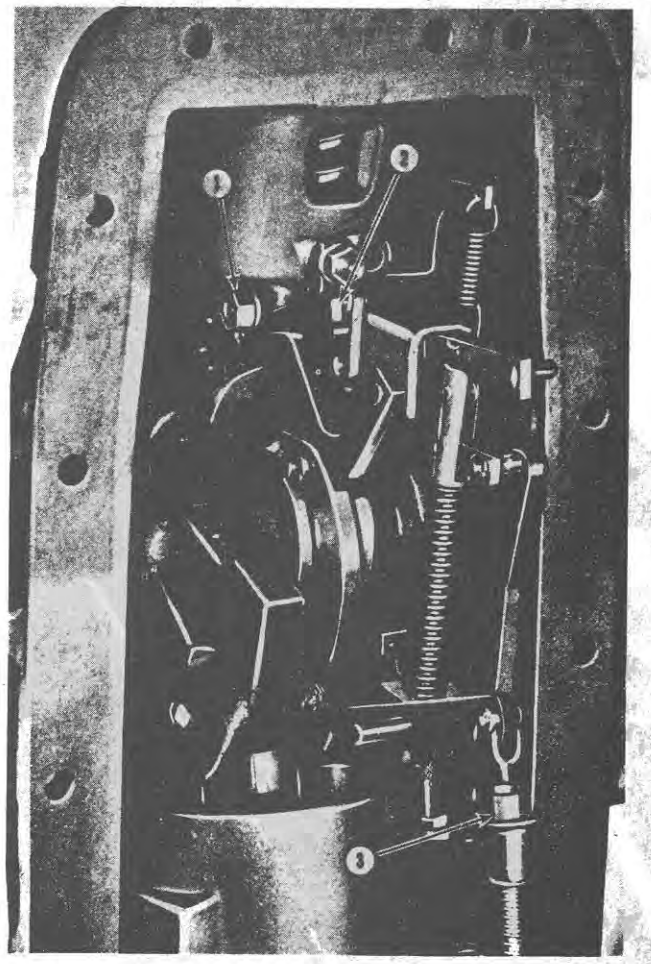

Figure 11
Lift Cover Linkage Pre-Adjustment

1. Adjustment Screw Retaining Nut
2. Draft Control Adjustment Screw
3. Turnbuckle

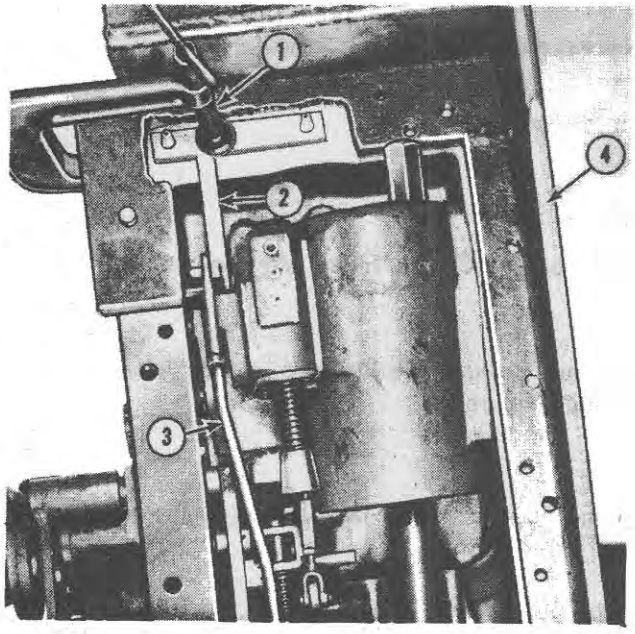

Figure 12
Strut Connected to Linkage Adjustment Fixture SW 862-A

1. Clamp
2. Linkage Adjustment Fixture SW 862-A
3. Strut
4. Stand

© FORD MOTOR CO. 1971

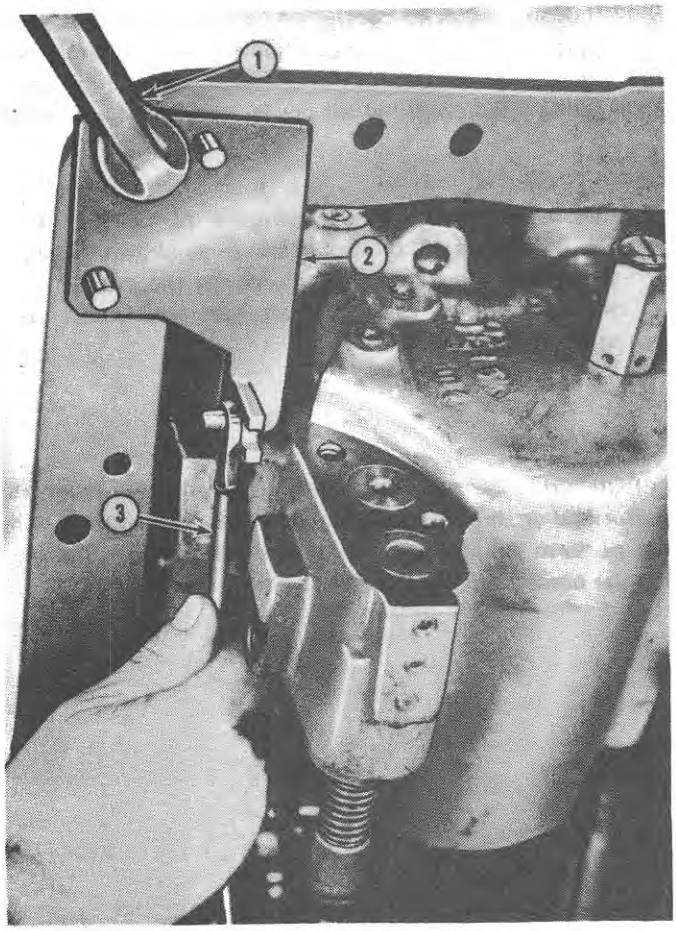

Figure 13
Connecting the Strut to Linkage Adjustment Fixture SW 25

1. Clamp
2. Linkage Adjustment Fixture SW 25
3. Strut

System Selector Lever – Index Adjustment

1. Manually position the lift arms in their fully raised position, Figure 10.

2. Set the system selector lever for position control.

3. Position the lift control lever so that the upper edge is aligned with the position control adjustment notch on the quadrant. Refer to Figure 10. (Row Crop Tractors: Align the lower edge of the lift control lever with the notch).

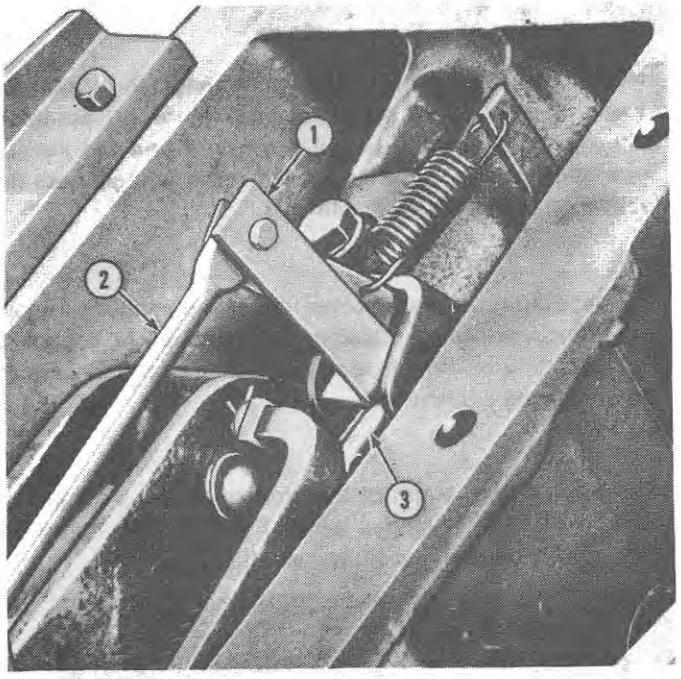

Figure 14
Tool No. SW 862-B Installed

1. Tool No. SW 862-B
2. Strut
3. Control Rod and Roller Assembly

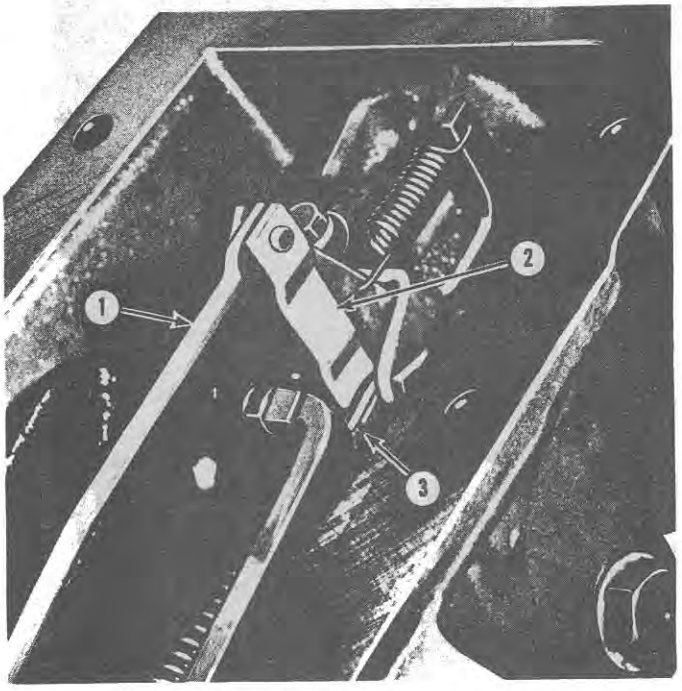

Figure 15
Tool No. SW 26 Installed

1. Strut
2. Tool No. SW 26
3. Control Rod and Roller Assembly

4. Remove the cotter pin and washer from the strut attaching pin and install Tool No. SW 862-B, Figure 14, or Tool No. SW 26, Figure 15, between the control rod roller and strut attaching pin as shown.

5. Adjust the length of the selector lever clevis (12), Figure 10, until the foot of the gauge is in contact with the control rod roller, then tighten the selector lever clevis lock nut.

NOTE: On Row Crop Tractors, loosen the selector quadrant attaching bolts and realign the quadrant as necessary until the foot of the gauge is firmly in contact with the control rod roller, then tighten the quadrant attaching bolts.

6. If Tool No. 862-B was used to make the index adjustment, remove the tool. If Tool No. SW 26 was used, leave the tool in position while carrying out the following position control adjustment.

Position Control Adjustment

1. With the system selector lever still set at position control, and the lift control lever still aligned with the position control notch, physically reposition the lift arms to their fully lowered position.

2. Remove the baffle and plate assembly from the front face of the lift cylinder and control valve assembly.

3. Adjust the control valve spool turnbuckle, Figure 11, until the control valve spool is recessed inside the control valve bushing 0.030 ± 0.005 inch (.762 ± .127 mm). Use the hydraulic lift control valve setting gauge, SW 508A or SW3B, to check this dimension.

4. Tighten the turnbuckle locknut.

5. Remove Tool No. SW 26 if previously installed.

Load Monitor Adjustment

1. With the lift arms still in their fully lowered position, set the system selector lever in the full load monitor (HARE) position.

2. Set the lift control lever so that the upper edge aligns with the Load Monitor adjustment notch in the quadrant, Figure 10.

3. Adjust the length of the strut until the control valve spool is recessed inside the control valve bushing 0.030 ± 0.012 inch (.762 ± .305 mm). Use the hydraulic lift control valve setting gauge, SW 508-A or SW 3B, to check this dimension.

4. Tighten the strut locknut.

Top Link Draft Control Adjustment

1. With the lift arms still in their fully lowered position, set the system selector lever for top link draft control.

2. Set the lift control lever so that the upper edge aligns with the draft control adjustment notch in the quadrant, Figure 10.

3. Adjust the position of the draft control adjustment screw, Figure 11, until the control valve spool is recessed inside the control valve bushing 0.030± 0.005 inch (.762±.127 mm). Use the hydraulic lift control valve setting gauge, SW 508-A or SW 3B, to check this dimension.

4. Tighten the adjustment screw retaining nut to a torque of 24-31 lbs. ft. (3.32-4.29 kgm).

5. Install the baffle and plate assembly on the lift cylinder and control valve assembly.

6. Remove the tool, SW 862-A or SW 25, from the lift cover.

© FORD MOTOR CO. 1971

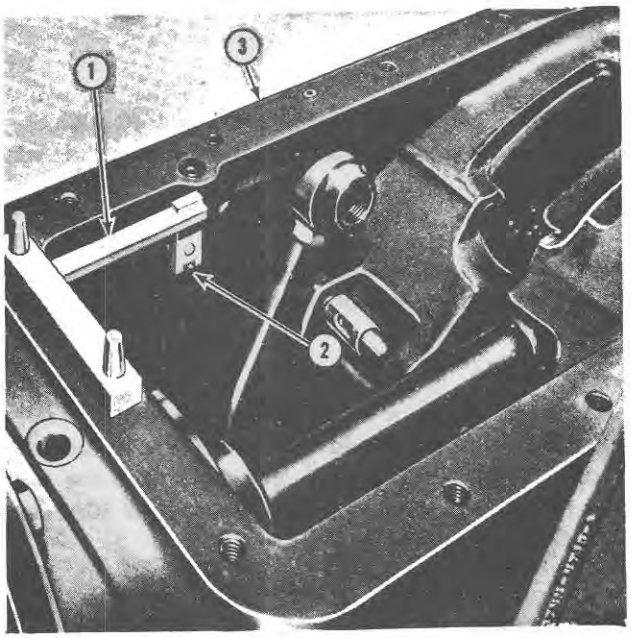

Figure 16
Checking Fork Adjustment — Load Monitor Control (Tool SW 862-A)

1. Tool No. SW 862-A
2. Fork
3. Center Housing

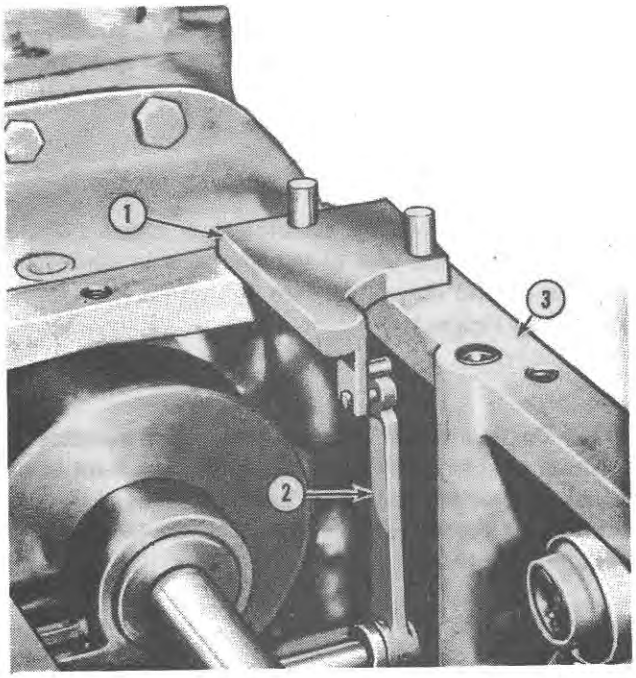

Figure 17
Checking Fork Adjustment — Load Monitor Control (Tool No. SW 25)

1. Tool No. SW 25
2. Fork
3. Center Housing

Load Monitor Fork Adjustment

1. Install Tool No. SW 862-A or SW 25 on the rear axle center housing. Refer to Figure 16 or 17.

2. Place the Load Monitor fork and lever assembly firmly in contact with the Load Monitor (the thrust blocks must be flat against the flange of the Load Monitor and the Load Monitor must be pressed to the rear).

3. The strut attaching pin of the fork lever should locate easily within the notch in the tool. If the pin does not easily locate in the notch, turn the fork adjusting screw as required to obtain this fit.

NOTE: Figure 18 shows the adjusting screw viewed from the side of the tractor with the cover removed from the transmission center housing. It is not necessary to remove the plate when carrying out the adjustment when the top cover is removed.

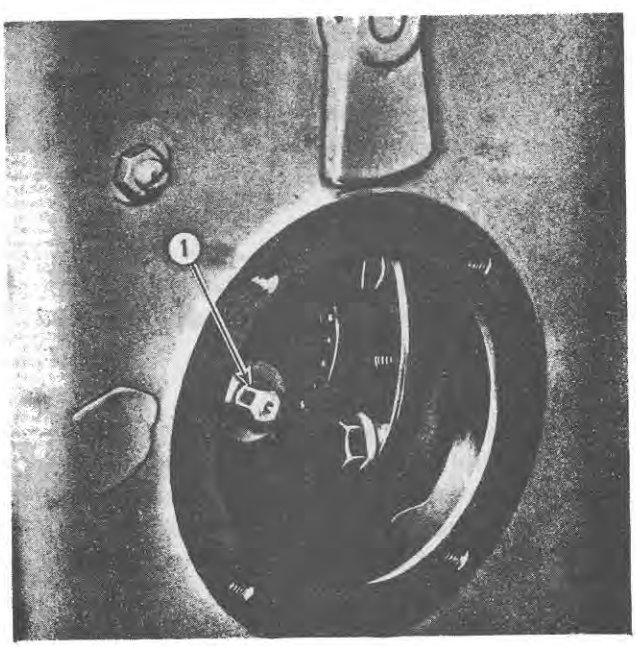

Figure 18
Load Monitor Fork Adjustment

1. Fork Adjusting Screw

4. Remove Tool No. SW 862-A or SW 25.

5. Install the hydraulic lift cover on the rear axle center housing as described in Section 5, "Overhaul Lift Cover Assembly."

POST ADJUSTMENT CHECK

After the tractor has been completely assembled and is otherwise prepared for normal operation, the preceding adjustments may be verified as follows:

1. Upon being seated in the operator's seat, start the tractor engine.

2. Move the lift control lever to the bottom of the quadrant, then set the system selector lever for draft control. Begin moving the lift control lever upward until the first tendency for the lift links to raise is sensed. At this point the upper edge of the lift control lever should be within 1/2 inch (12.7 mm) of the draft control notch of the quadrant.

3. Move the lift control lever to the bottom of the quadrant, then set the system selector lever for position control. Begin moving the lift control lever upward until the first tendency for the lift links to raise is noted. At this point, the upper edge of the lift control lever should be within 1/2 inch (12.7 mm) of the position control notch of the quadrant. (Lower edge of the lift control lever for Row Crop Tractors).

4. Move the lift control lever to the bottom of the quadrant, then set the system selector lever for full Load Monitor (HARE position). Slowly move the lift control lever up the quadrant until the first tendency for the lift links to raise is sensed. At this point the lift control lever upper edge should be within 3/4 inch (19.05 mm) of the Load Monitor notch of the quadrant. If this dimension is not obtained, proceed to "Load Monitor Field Adjustment."

NOTE: The foregoing procedure is intended for use in verifying the adjustment of the lift cover internal adjustments. It can also be utilized as a diagnostic aid.

LOAD MONITOR FIELD ADJUSTMENT

1. Remove the left step plate from the tractor.

2. Drain sufficient oil from the rear axle center housing to avoid spillage when the inspection plate is removed.

3. Remove the dipstick plate from the side of the center housing.

4. Block the tractor rear wheels fore and aft and engage the parking brake or handbrake.

5. Set both transmission gearshift levers in neutral, then start the engine.

6. Set the system selector lever at the hare Load Monitor setting, then align the upper edge of the lift control lever with the Load Monitor notch of the qaudrant. If the lift linkage has not raised, proceed to Step 7. If the lift links have raised, lower the lift control lever and rotate the Load Monitor fork adjusting screw, Figure 18, so that the fork lever moves slightly rearward. Repeat this procedure as necessary until the lift control lever can be aligned with the Load Monitor notch without lift action.

7. Rotate the Load Monitor fork adjusting screw to move the fork lever forward until the first tendency of the lift linkage to raise is noted.

8. Stop the engine and install the dipstick plate and the left step plate.

© FORD MOTOR CO. 1971

3. OVERHAUL LOAD MONITOR

A. Removal

1. Separate the tractor between the transmission and rear axle center housing as described in Part 15, "Separating the Tractor." Be prepared to drain approximately 55 U.S. quarts (45.8 Imp. qts.; 52 liters) of oil from the common reservoir. Remove both the transmission and rear axle drain plugs to speed the process.

2. Remove the cap nut, Figure 19, from the hydraulic oil filter manifold.

   NOTE: It may be desirable to remove the hydraulic oil filter prior to removing the cap nut.

3. With the appropriate hex wrench, remove the sleeve which was exposed by removal of the cap nut in Step 2, above.

4. Disconnect the strut from the Load Monitor fork lever, Figure 20, by removing the cotter pin.

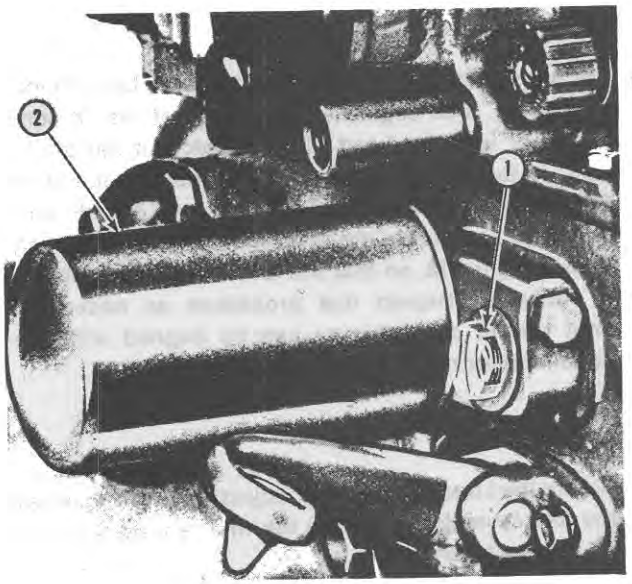

Figure 19
Cap Nut and Sleeve Removal

1. Cap Nut (Removed) and Sleeve
2. Hydraulic Oil Filter

5. Remove the hydraulic lift cover assembly by disconnecting the rocker from the yoke at the rear of the cover, removing the 15 cover attaching bolts, and raising the cover clear of the center housing.

6. Remove the P.T.O. clutch and control valve, Figure 20, as described in Part 9, "Power Take-Off"

7. Remove the brake pedals from the brake cross shaft and remove the Load Monitor fork assembly and brake cross shaft as described in Part 10, "Rear Axle and Brakes."

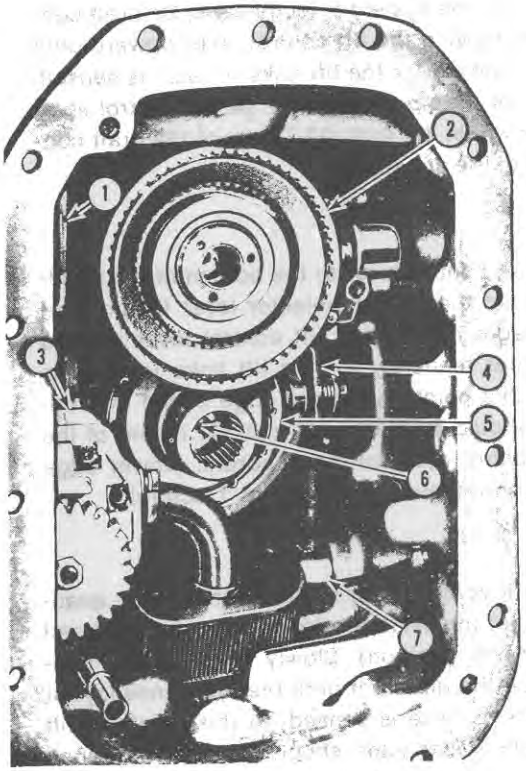

Figure 20
Load Monitor Removal

1. Fork Assembly Lever
2. P.T.O. Clutch
3. Hydraulic Pump
4. Fork Assembly
5. Load Monitor
6. Retaining Bolt
7. Brake Cross Shaft

8. Remove the hydraulic pump and suction screen assembly, Figure 20, as described in Part 11, "Hydraulics."

9. Remove the Load Monitor retaining bolt, Figure 20.

10. Pull the Load Monitor assembly off the pinion shaft.

11. On Select-O-Speed Tractors, remove any shims which may have been installed between the Load Monitor and pinion shaft clamp.

12. Remove the P.T.O. rear shaft as described in Part 9, "Power Take-Off."

B. Disassembly

1. Install the Load Monitor unit in a press as shown in **Figure 21.**

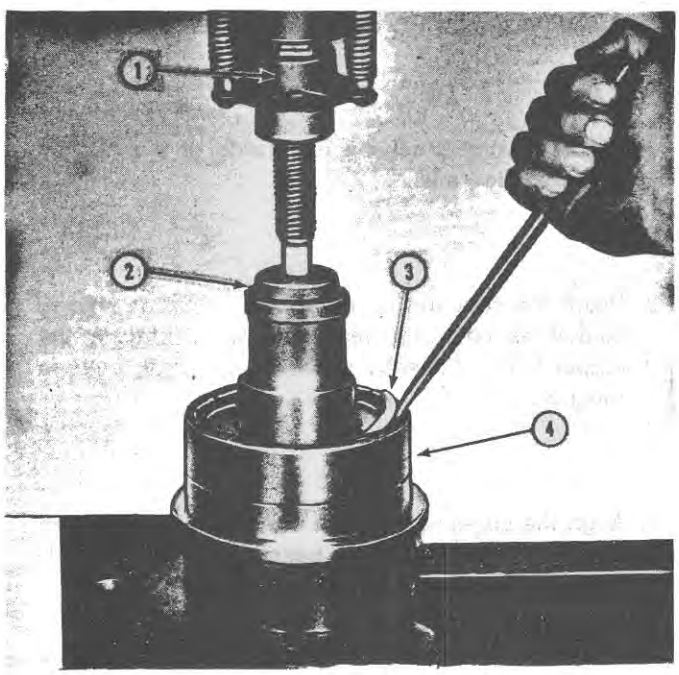

Figure 21
Load Monitor Disassembly

1. Hydraulic Press
2. Plate
3. Retaining Ring
4. Load Monitor

2. Compress the unit just enough to remove the retaining ring as shown.

3. Remove the unit from the press.

4. Carefully raise the input hub from the unit. The plate assembly and balls, Figure 22, will remove with the input hub. Exercise care not to misplace the pins which dislodge as the input hub is removed, since they will be loose once the plate clears the coupling.

5. Remove the washer and thrust bearing.

6. Install the remainder of the unit in a press, Figure 23, with the output hub upward.

7. With a suitable sleeve, compress the unit sufficient to remove the retaining ring.

8. Remove the unit from the press.

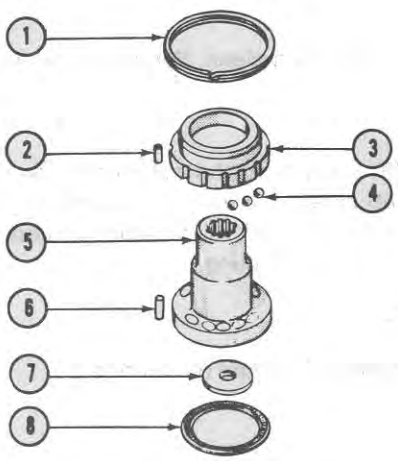

Figure 22
Input Hub Removal

1. Retaining Ring
2. Pin
3. Plate
4. Balls
5. Input Hub
6. Stop Pin
7. Retaining Washer
8. Thrust Bearing

© FORD MOTOR CO. 1971

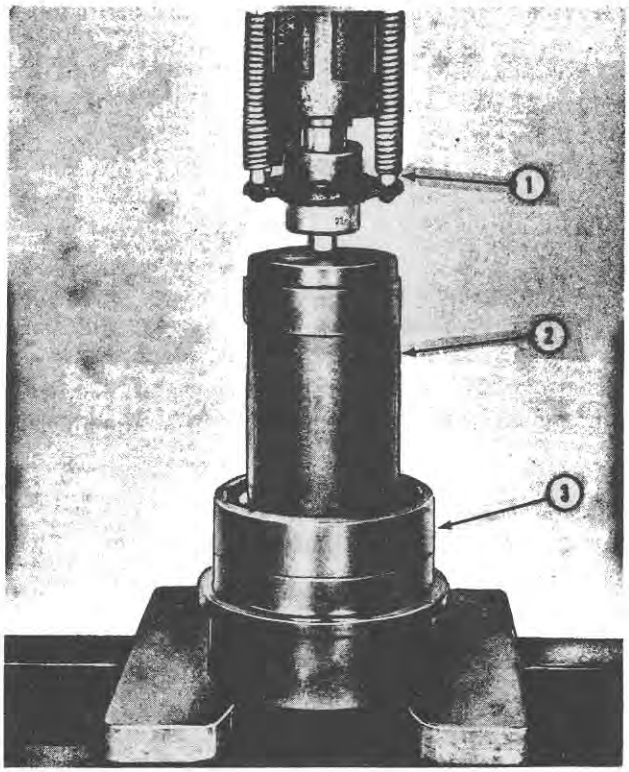

Figure 23
Output Hub Removal

1. Hydraulic Press
2. Sleeve
3. Load Monitor

9. Remove the spring seat from the unit by lifting it clear.

10. Place the unit on a clean, flat, cloth-covered surface.

11. Slowly lift upward on the output hub. As the bottom of the hub clears the inside retaining ring, the small balls will be allowed to fall from position onto the cloth, inside the coupling.

12. Lift the springs from the output hub.

C. Inspection and Repair

Refer to Figure 24.

1. Inspect the machined surfaces of the input hub, output hub, and plate for nicks, scratches, or burrs. Minor defects may be polished out; however, severe defects will necessitate installing a new component.

2. Inspect the displacement balls for scratches or nicks. Minor defects may be polished out; however, severe defects will necessitate installing new ball(s).

3. Inspect the thrust bearing for smooth function. Any distortion or binding of the rollers will necessitate installing a new bearing.

4. Inspect all retaining rings for nicks, dents, and distortion. If damage is evident, install new ring(s).

5. Inspect each of the nine springs for cracks due to fatigue.

D. Assembly

1. Stand the output hub on its pinion shaft end.

2. Place a wood block on each side of the hub as shown in Figure 25.

3. Place the coupling over the output hub as shown, so that the inner ring clears the upper surface of the output hub sufficiently to install the small balls in the grooves.

4. Align the coupling grooves with the grooves of the output hub and install five balls in each pair of matting grooves, except the stop pin grooves.

5. Remove the blocks from beneath the coupling and allow the coupling to settle. The balls should now be firmly retained by the two inner rings. Take care not to disrupt this relationship.

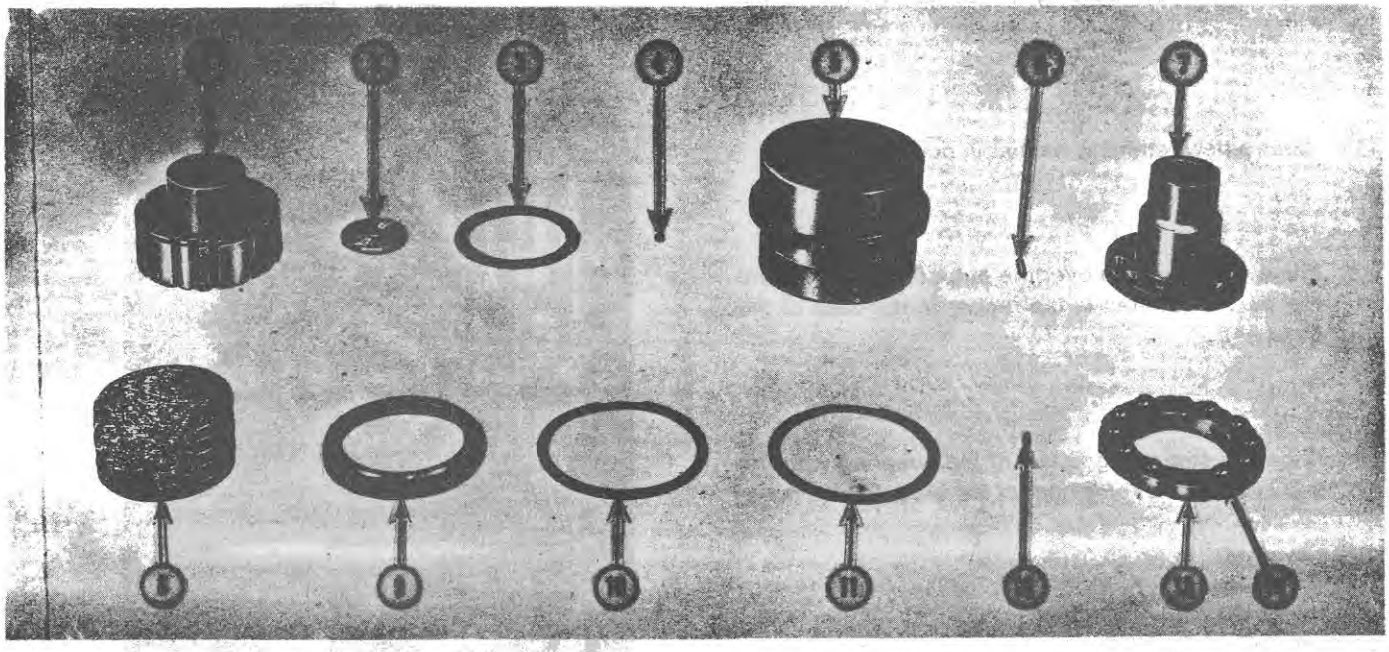

Figure 24
Load Monitor Unit — Exploded View

1. Output Hub
2. Retaining Washer
3. Thrust Bearing
4. Ball
5. Coupling
6. Stop Pin
7. Input Hub
8. Springs
9. Spring Seat
10. Retaining Ring
11. Retaining Ring
12. Pin
13. Plate
14. Ball

6. Turn the coupling and output hub over so that the pinion shaft end of the output hub faces upward.

7. Install the springs so the alternate spacing is obtained. See Figure 24.

8. Place the spring retainer in position over the springs.

9. Place the assembly in a press and compress it only enough to install the retaining ring.

10. Install the retaining ring.

11. Remove the unit from the press.

12. Turn the unit over so it is resting on the output hub.

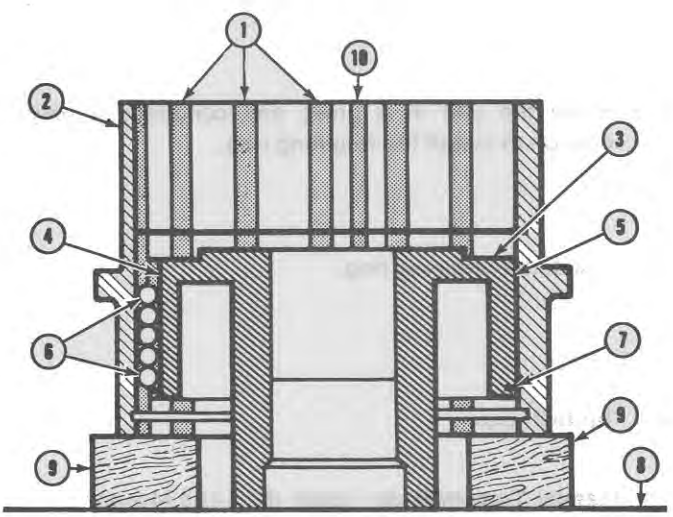

Figure 25
Load Monitor Assembly

1. Coupling Inner Grooves
2. Coupling
3. Coupling Ball Retaining Ring
4. Output Hub External Grooves
5. Output Hub
6. Balls (Coupling-to-Output Hub)
7. Output Hub Ball Retaining Ring
8. Work Surface
9. Wood Blocks
10. Stop Pin Groove

© FORD MOTOR CO. 1971

13. Place the thrust bearing in position on the output hub.

14. Place a new retaining washer in position.

15. Place the input hub over the output hub. Make sure the washer is fitted in the recess in the base of the input hub.

16. Align the stop pin grooves of the coupling with the input hub so the remainder of the grooves also mate.

17. Install the stop pins.

18. Place the balls in their sockets as shown and place the plate over the balls.

19. Install the 12 plate retaining pins.

0. Place the unit in a press and compress it only enough to install the retaining ring.

21. Install the retaining ring.

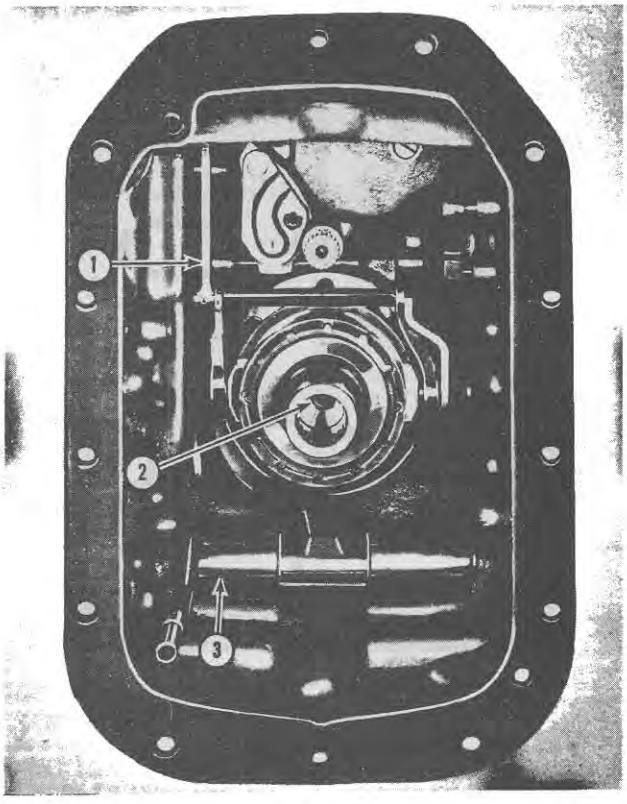

Figure 26
Load Monitor Installation
(Hydraulic Pump Removed for Illustration Purposes)

1. Fork Assembly
2. Retaining Bolt
3. Brake Cross Shaft

E. Installation

1. **Manual Transmission:** Install the Load Monitor unit on the pinion shaft, securing it with the bolt previously removed and a new washer. Refer to Figure 26.

Select-O-Speed Transmission (Ford 5000 Only): When installing the Load Monitor in the drive line, it is important that it be properly located to insure proper functioning. When properly installed, the front surface of the Load Monitor is flush with the end of the pinion shaft, and the clearance between the rear surface of the Load Monitor output hub and the pinion shaft clamp ranges from .000 inch (.00 mm) to .003 inch (.08 mm) as shown in Figure 27. To properly install the Load Monitor on the pinion shaft:

a. Place the Load Monitor on the pinion shaft so that it protrudes slightly beyond the end of the shaft.

b. Install the retaining washer, lockwasher and bolt. Tighten the bolt to a torque of 55 to 75 lbs. ft. (7.61-10.37 kgm). The Load Monitor is now aligned with the end of the pinion shaft.

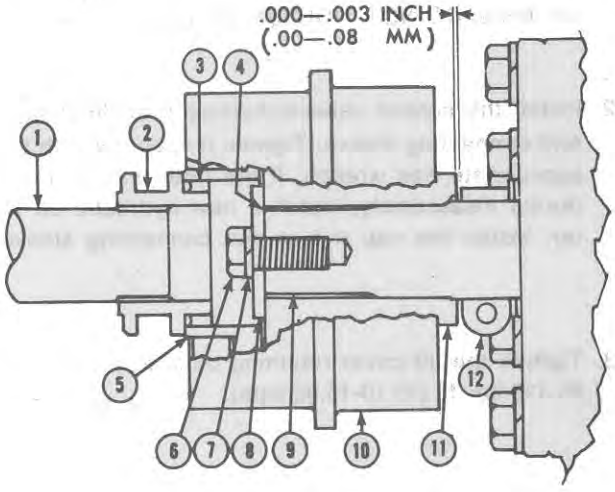

Figure 27
Checking End Clearance

1. Transmission Output Shaft
2. Driveline Disconnect Coupling
3. Splines (Coupling-to-Load Monitor)
4. Alignment Hub
5. Input Hub
6. Retaining Bolt
7. Lockwasher
8. Retaining Washer
9. Pinion Shaft
10. Load Monitor (Coupling)
11. Output Hub
12. Pinion Shaft Clamp

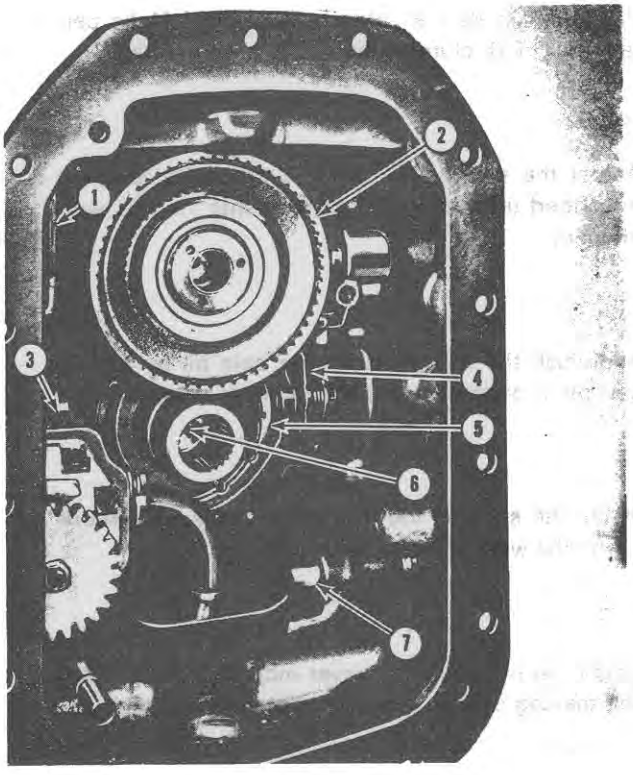

Figure 28
Load Monitor Installation

1. Fork Assembly Lever
2. P.T.O. Clutch
3. Hydraulic Pump
4. Fork Assembly
5. Load Monitor
6. Retaining Bolt
7. Brake Cross Shaft

c. Measure the gap between the Load Monitor output hub and the pinion shaft clamp with a set of feeler gauges.

d. If the clearance exceeds .003 inch (.08 mm), remove the Load Monitor from the pinion shaft and install sufficient shims to reduce the clearance to a maximum of .003 inch (.08 mm). Shims are available in thicknesses of .003, .004, .012, .032, .052, and .089 inch. (.08, .10, .30, .81, 1.32, and 2.26 mm).

e. Install the Load Monitor as described in a and b above, then recheck the clearance as in c and d above.

2. Install the hydraulic pump and suction screen assembly, Figure 28, as described in Part II, "Hydraulics."

3. Install the brake cross shaft and Load Monitor fork assembly as shown in Figure 28. Refer to Part 10, "Rear Axle and Brakes."

4. Install the brake pedals on the cross shaft.

5. Install the P.T.O. clutch pack on the transmission output shaft.

6. Join the tractor at the transmission and rear axle center housing.

7. Complete the installation of the P.T.O. clutch and control valve, and install the P.T.O. rear shaft as

© FORD MOTOR CO. 1971

described in Part 9, "Power Take-Off." Make certain the P.T.O. clutch supply tube is connected.

8. Adjust the position of the fork assembly lever as described in Section 2, "Adjustments" in this supplement.

9. Replenish the transmission/rear axle oil by adding new oil through the transmission filler plug.

10. Install the strut on the fork assembly lever. Secure it with the washer and a new cotter pin.

11. Install the hydraulic lift cover including a new gasket, making certain the strut is attached to the linkage assembly. Install the 15 cover-to-center housing bolts. DO NOT TIGHTEN the bolts at this time.

12. Install the control valve-to-hydraulic oil filter manifold connecting sleeve. Tighten it securely with the appropriate hex wrench. If the filter was removed during disassembly, install a new hydraulic oil filter. Install the cap nut on the connecting sleeve.

13. Tighten the lift cover retaining bolts to a torque of 95-115 lbs. ft. (13.13-15.90 kgm).

14. Start the engine and cycle the hydraulic system several times.

15. Check and replenish the oil level as required.

4. OVERHAUL LIFT CYLINDER ASSEMBLY

For procedures relating to the overhaul of the lift cylinder assembly, refer to Chapter 2, Part II, "Hydraulics" of this repair manual noting the following amendments to the assembly procedure.

D. Assembly

Steps 1 through 12 are unchanged, Steps 13 and 14 are amended as follows:

13. The lift piston incorporates an O-ring and either a nylon or a leather back-up seal. The O-ring should be soaked in hydraulic oil for a period of 5 minutes prior to installation. If a new nylon back-up ring is to be installed, dip it in hydraulic oil and install it with the chamfered ends of the ring located as shown in Figure 29. If a new leather seal is to be installed, soak it in water for a maximum time of two minutes prior to the installation of the piston. Install the seal with the flesh (rough) side toward the piston. In either case, position the O-ring nearest the closed end of the piston as shown in Figure 29.

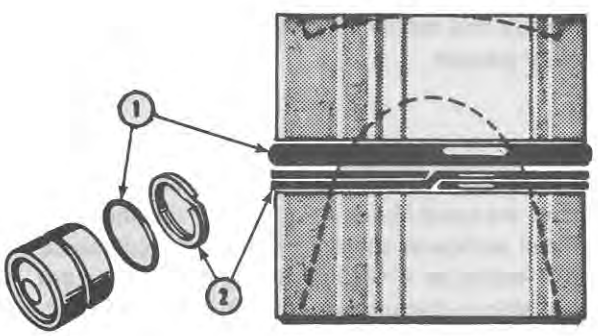

Figure 29
Hydraulic Lift Cylinder Piston Seal and Back-Up Ring Installation

1. O-Ring Seal **2. Nylon Back-Up Ring**

14. Lubricate the piston, and if a leather back-up seal is incorporated, allow it to contract to its original size, then install the piston assembly in the lift cylinder.

Proceed with Steps 15 and 16.

5. OVERHAUL LIFT COVER ASSEMBLY

IMPORTANT: It is necessary, when working on lift cover assemblies, that the utmost cleanliness is maintained. The entry of dirt into the hydraulic system is harmful to the numerous working parts and must therefore be eliminated.

A. Removal

1. Make sure the lift arms are in their lowest position to exhaust oil from the lift cylinder.

2. Remove the top link and disconnect the lift linkage by removing the cotter pin and clevis pin from each of the lift arms.

3. Remove the clevis pin securing the draft control main spring yoke plunger to the rocker, and swing the rocker away from the yoke.

4. Remove the seat assembly and install the Lifting Bracket, SW 522 or No. SW2, to facilitate removal of the lift cover.

5. Clean the area around the hydraulic oil filter manifold and remove the cap nut located to the front of the filter. Refer to Figure 19. Using a suitable hex wrench, remove the sleeve from the manifold.

6. Clean the lift cover around the gasket joint and remove the fifteen bolts which secure the lift cover to the rear axle center housing. Using a suitable hoist attached to the lifting bracket, raise the lift cover assembly clear of the center housing approximately 3-1/2 inches (88.9 mm) to detach the strut from the selector linkage assembly, (8), Figure 30.

7. Remove the lift cover from the tractor and place the cover on a stand with the internal linkage facing upward. Make sure that the assembly is not resting on any of the controls.

B. Disassembly

An exploded view of the lift cover assembly is shown in Figure 30. Refer also to Figure 31.

1. Bend back the locking tabs on the lift arm retaining bolts, unscrew the bolts and remove the lift arms.

2. Remove the lift control lever retaining nut together with the double-coil spring washer, flat washer, friction disc and lever.

3. Disconnect the selector lever clevis (10), Figure 31, from the selector actuator arm (11) by removing the cotter pin and clevis pin.

4. Remove the anchor nut from the selector actuator arm and remove the arm.

5. Remove the two bolts from the quadrant assembly and slide the assembly outwards and off the control lever shaft.

6. Remove the tension spring (16), Figure 30, connected to the spring retainer (13) and selector linkage assembly (8).

7. Disconnect the control rod and roller assembly (35), Figure 30, from the selector arm (18) by removing the cotter pin and washer.

© FORD MOTOR CO. 1971

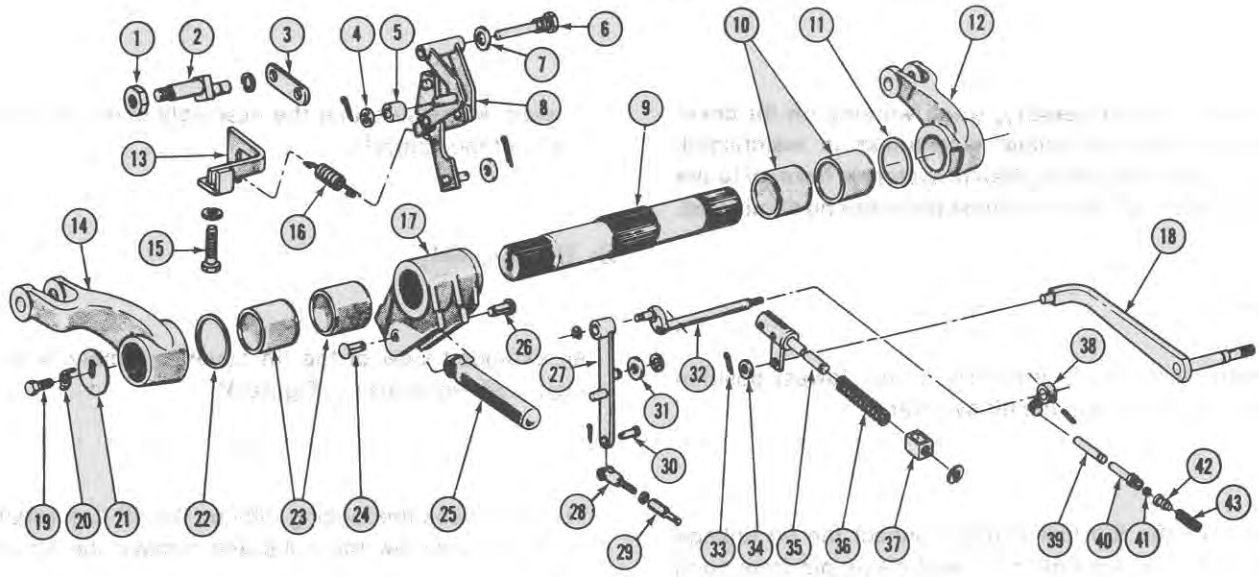

Figure 30
Lift Cover Assembly — Exploded View

1. Draft Control Adjustment Screw Nut
2. Draft Control Adjustment Screw
3. Draft Control Connector Link
4. Lift Linkage Spacer
5. Lift Position Cam Follower Roller
6. Lift Position Control Pivot Shaft
7. Lift Position Pivot Pin Seal
8. Hydraulic Lift Selector Linkage Assembly
9. Lift Cross Shaft
10. Lift Shaft Bushings
11. Dust Seal
12. Lift Arm
13. Lift Spring Retainer
14. Lift Arm
15. Lift Plunger Guide Bolt
16. Lift Tension Spring
17. Ram Arm
18. Selector Arm Assembly
19. Retaining Bolt
20. Tabbed Lock Washer
21. Lift Cross Shaft Washer
22. Dust Seal
23. Lift Shaft Bushings
24. Connecting Rod Retaining Pin
25. Lift Piston Connecting Rod
26. Connecting Rod Retaining Pin
27. Control Valve Actuating Lever
28. Control Valve Clevis
29. Control Valve Turnbuckle
30. Clevis Pin
31. Spacer (Washer)
32. Control Lever Shaft
33. Cotter Pin
34. Spacer
35. System Selector (Control) Rod and Roller Assembly
36. Control Rod Spring
37. Lift Rod Connector
38. Flow Control Valve Override Actuator
39. Override Valve Plunger
40. Override Valve Plunger Guide
41. Retaining Ring
42. Override Valve Spool
43. Override Valve Spring

8. Remove the clevis pin and cotter pin from the control valve clevis (28) and lift the turnbuckle assembly (29) out of the control valve.

9. Remove the two retaining pins from the lift piston connecting rod (25) and lift the rod clear of the cylinder.

10. Remove the snap ring from the juncture of the control valve actuating lever (27) and control lever shaft (32) and remove the actuating lever.

11. Disconnect the control rod and roller assembly from the control valve actuating lever by compressing the spring and removing the retaining ring from the end of the control rod and removing the rod.

12. Remove the draft control adjustment screw retaining nut (1), Figure 30, and externally, the lift position control pivot shaft (6). Remove the selector linkage assembly (8) by disengaging the draft control connector link (3) and lifting the linkage out of the lift cover.

13. The draft control adjustment screw can now be removed by sliding it out of the plunger.

14. To remove the lift cross shaft (9), invert the lift cover on the stand so that the lift cylinder is underneath.

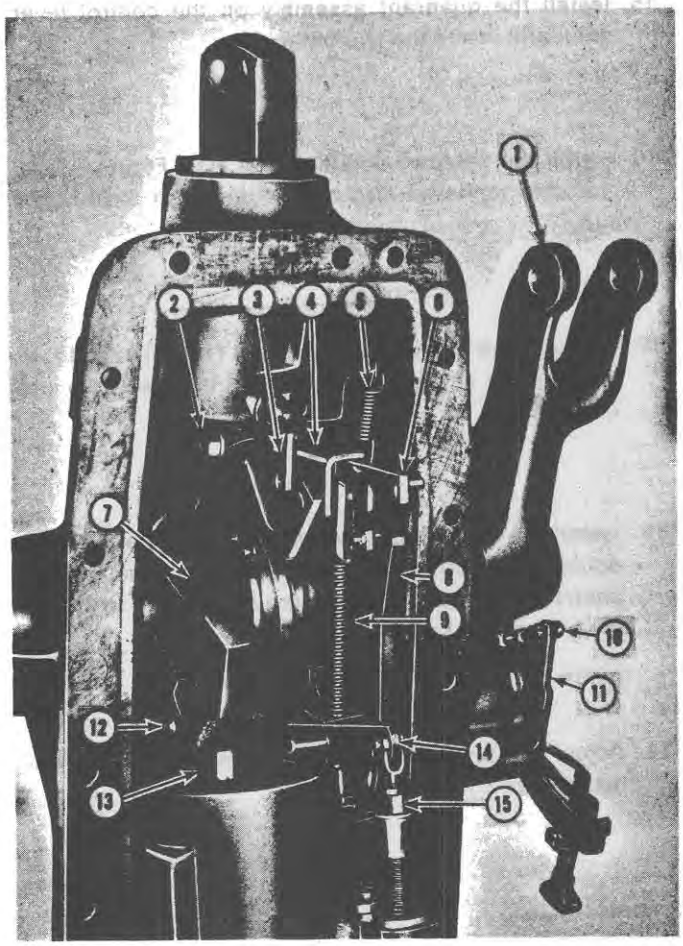

Figure 31
Lift Cover Components

1. Lift Arm
2. Draft Control Adjustment Screw Nut
3. Draft Control Adjustment Screw
4. Draft Control Connector Link
5. Tension Spring
6. Selector Linkage Assembly
7. Lift Ram Arm
8. Selector Arm Assembly
9. System Selector (Control) Rod and Roller Assembly
10. Selector Lever Clevis
11. Selector Actuator Arm
12. Connecting Rod Retaining Pin
13. Lift Piston Connecting Rod
14. Control Valve Actuating Lever
15. Control Valve Turnbuckle

15. Remove the "O" ring at each end of the lift cross shaft.

16. Drive the lift cross shaft out of the cover using a soft headed hammer while supporting the ram arm. This will remove the bushings from one end of the shaft. Remove the bushings from the shaft.

17. Remove the two remaining bushings from the other side of the cover using the lift cross shaft and a soft headed hammer.

NOTE: It is not necessary to interfere with the draft control mainspring. However, if it is suspected of being faulty, it can be removed by unscrewing the yoke, loosening the set screw and removing the large hexagonal retaining nut at the rear of the lift cover housing.

C. Assembly

Position the lift cover upright on the stand, with the seat studs at the top.

1. If removed, install the draft control main spring, spring seats, plunger, hexagonal retaining nut, set screw, and yoke. (For proper adjustment, refer to "Draft Control Mainspring," Page 10.)

2. Position the two lift shaft bushings (10), Figure 30, on the lift cross shaft and, using the shaft as an installing tool, install the bushing by tapping the end of the shaft with a soft headed hammer until the outer bushing is flush with the housing.

3. Remove the shaft and install it in the other side of the housing sliding the shaft through the housing and position the ram arm so that the master spline on the shaft corresponds to that on the ram arm. Push the shaft through the ram arm and through the bushings in the opposite side of the housing. Place one of the other bushings on the end of the shaft and, using a lift arm, gently tap the bushing into position. Carry out the same procedure for the second bushing until it is flush with the housing.

4. Install a new "O" ring on both ends of the lift shaft and position the lift arms to engage with the master spline of the shaft.

© FORD MOTOR CO. 1971

5. Position the cross shaft washers (21), Figure 30, on both sides, install the tabbed lock washers, and tighten the bolts on the ends of the shaft equally until the lift arms will just drop under their own weight. Lock the bolts with the lockwashers.

6. Invert the lift cover on the stand.

7. Install the draft control adjustment screw in the end of the plunger.

8. Position the selector linkage assembly (8), Figure 30, in the cover and engage the draft control connector link (3). Install the lift position control pivot shaft (6), from the outside of the cover to secure the selector linkage assembly. Install the adjustment screw retaining nut (1).

9. Position the control rod spring (36) on the control rod and insert the rod through the lift rod connector (37) installed on the control valve actuating lever (27). Compress the spring and install the retaining ring on the end of the control rod.

10. Position the control valve actuating lever and rod and roller assembly on the control lever shaft (32) and secure with the snap ring.

11. Connect the rod and roller assembly to the selector arm (18) with the cotter pin and washer.

12. Install the lift piston connecting rod (25) and attach it to the ram arm (17) with the two retaining pins.

13. Install the control valve turnbuckle and attach it to the actuating lever with the clevis pin and cotter pin.

14. Install the tension spring between the spring retainer (13), and selector linkage assembly (8).

15. Install the quadrant assembly on the control lever shaft and install the two bolts.

16. Install the selector actuator arm (11), Figure 31, on the selector lever arm and secure with the anchor nut.

17. Connect the selector lever clevis (10), Figure 31, to the selector actuator arm (11) with the clevis pin and cotter pin.

18. Install the lift control lever, friction disc, flat washer, double coil spring washer and retaining nut on the control lever shaft. Tighten to a torque of 8 to 10 lbs. ft. (3.63 to 4.54 kgm).

19. Adjust the linkage as described in Section 2, "Adjustments."

D. Installation

1. Carefully lower the hydraulic lift cover into position over the rear axle center housing. Stop lowering the cover when it is still approximately 3-1/2 inches (88.9 cm) above the center housing.

2. Place a new gasket in position between the lift cover and center housing. Install a new O-ring in the bore near the right front corner of the lift cover mounting surface.

3. Connect the strut to the selector linkage assembly, securing it with the washer and new cotter pin.

4. Lower the lift cover into position and install the 15 cover-to-center housing bolts. Do not tighten at this time.

5. Install the control valve-to-hydraulic oil filter manifold connecting sleeve. Refer to Figure 19. If the hydraulic oil filter was previously removed, install a new filter. Install the cap nut on the sleeve.

6. Tighten the lift cover-to-center housing bolts to a torque of 95 to 115 lbs. ft. (13.13 to 15.9 kgm).

7. Connect the rocker to the draft plunger yoke.

8. Connect the lift rods to the lift arms.

9. Install the seat assembly.

© FORD MOTOR CO. 1971

PART 1
ENGINE SYSTEMS

Part 1

ENGINE SYSTEMS

Chapter 1

ENGINES AND LUBRICATION SYSTEM

Section		Page
1.	Description and Operation	1
2.	Cylinder Head, Valves, and Related Parts	6
3.	Engine Front Cover and Timing Gears	14
4.	Oil Pan Sump and Oil Pan	21
5.	Connecting Rods, Bearings, Pistons, Rings, and Cylinder Block	25
6.	Balancer, Main Bearings, Flywheel, and Crankshaft	34
7.	Camshaft	43

Chapter 2

COOLING SYSTEM

Section		Page
1.	Description and Operation	49
2.	Radiator and Thermostat	50
3.	Water Pump	51

Chapter 3

TROUBLE SHOOTING, SPECIFICATIONS, AND SPECIAL TOOLS

Section		Page
1.	Trouble Shooting	55
2.	Specifications	58
3.	Special Tools	69

Part 1
ENGINE SYSTEMS
Chapter 1
ENGINES AND LUBRICATION SYSTEM

Section		Page
1.	Description and Operation	1
2.	Cylinder Head, Valves, and Related Parts	6
3.	Engine Front Cover and Timing Gears	14
4.	Oil Pan Sump and Oil Pan	21
5.	Connecting Rods, Bearings, Pistons, Rings, and Cylinder Block	25
6.	Balancer, Main Bearings, Flywheel, and Crankshaft	34
7.	Camshaft	43

1. DESCRIPTION AND OPERATION

This part of the manual covers both the 3- and 4-cylinder engines. See Figures 1 through 4. Both the 3- and 4-cylinder engines are available with the diesel or gasoline fuel systems.

This part of the manual deals with the disassembly, inspection and repair, and assembly of engines and the lubrication system, plus the cooling system. Service procedures for all engines are basically the same. The procedures described in the following pages apply equally to all engines. The engine identification chart will aid in identifying the engine options available.

THE ENGINE IDENTIFICATION CHART

MODEL	FORD		FORD		FORD		FORD	
DESIGNATION	2000		3000		4000		5000	
FUEL SYSTEM	GAS	DIESEL	GAS	DIESEL	GAS	DIESEL	GAS	DIESEL
NO. OF CYLINDERS	3	3	3	3	3	3	4	4
BORE	4·2 in. (106·68 mm.)	4·2 in.	4·2 in. (106·68 mm.)	4·2 in.	4·4 in. (111·76 mm.)	4·4 in.	4·2 in. (106·68 mm.)	4·2 in.
STROKE	3·8 in. (96·52 mm.)	3·8 in. (96·52 mm.)	3·8 in. (96·52 mm.)	4·2 in. (106·68 mm.)	4·2 in. (106·68 mm.)	4·4 in. (111·76 mm.)	4·2 in. (106·68 mm.)	4·2 in. (106·68 mm.)
DISPLACEMENT	158 cu. ins. (2590 c.c.)	158 cu. ins. (2590 c.c.)	158 cu. ins. (2590 c.c.)	175 cu. ins. (2868 c.c.)	192 cu. ins. (3147 c.c.)	201 cu. ins. (3300 c.c.)	233 cu. ins. (3819 c.c.)	233 cu. ins. (3819 c.c.)

© FORD MOTOR COMPANY LTD., 1967

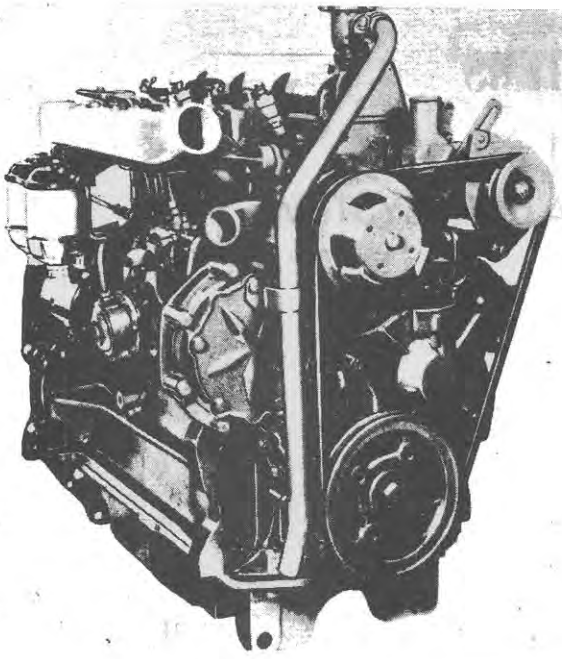

Figure 1
4-Cylinder Diesel Engine

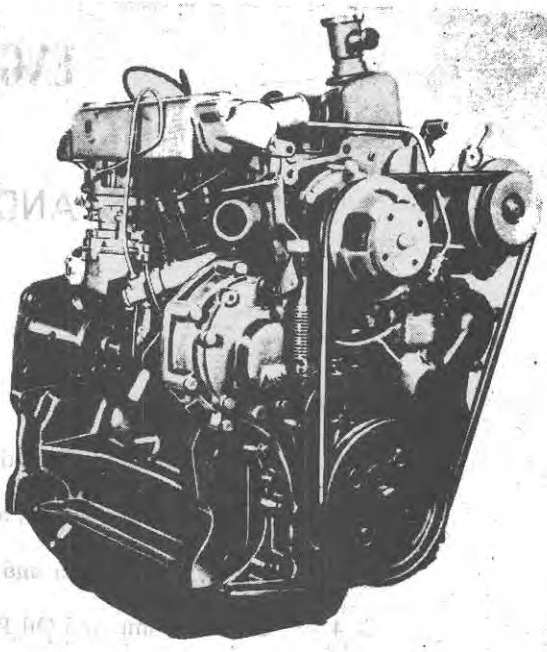

Figure 2
3-Cylinder Gasoline Engine

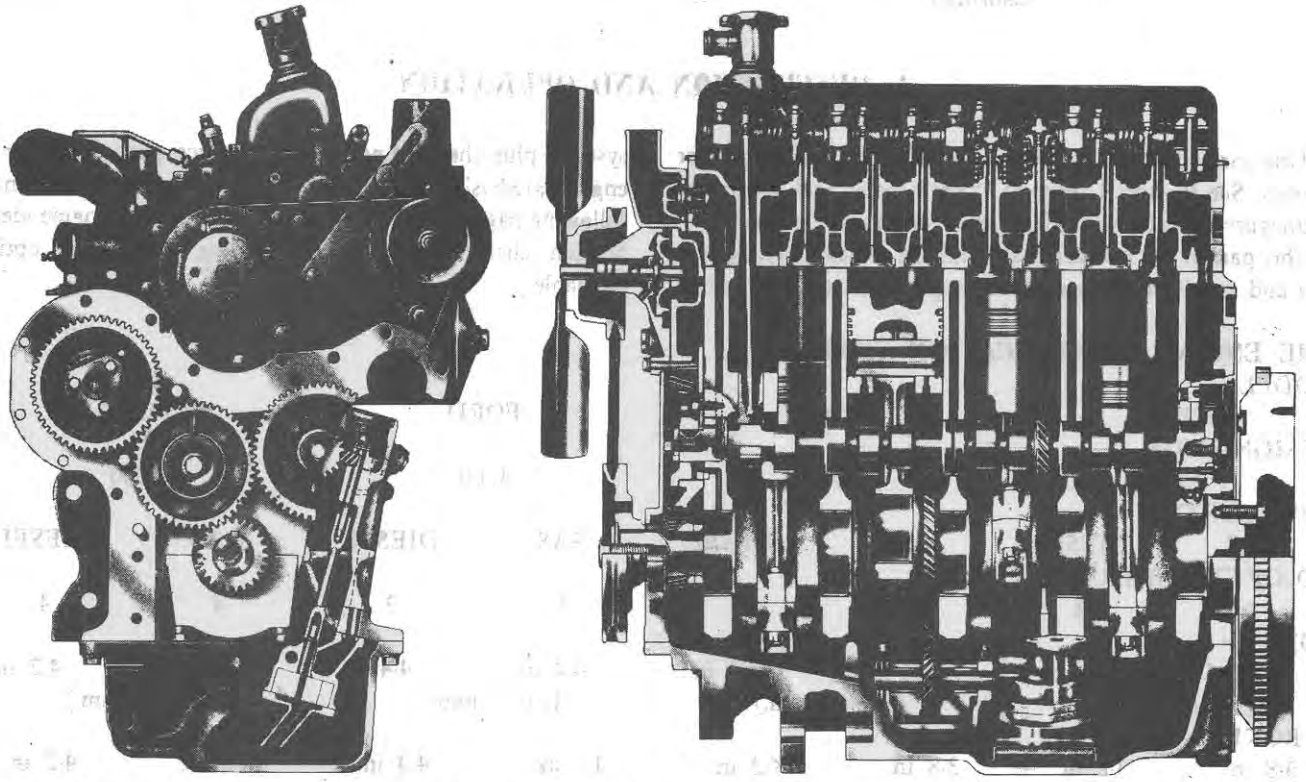

Figure 3
4-Cylinder Diesel Engine Sectional View

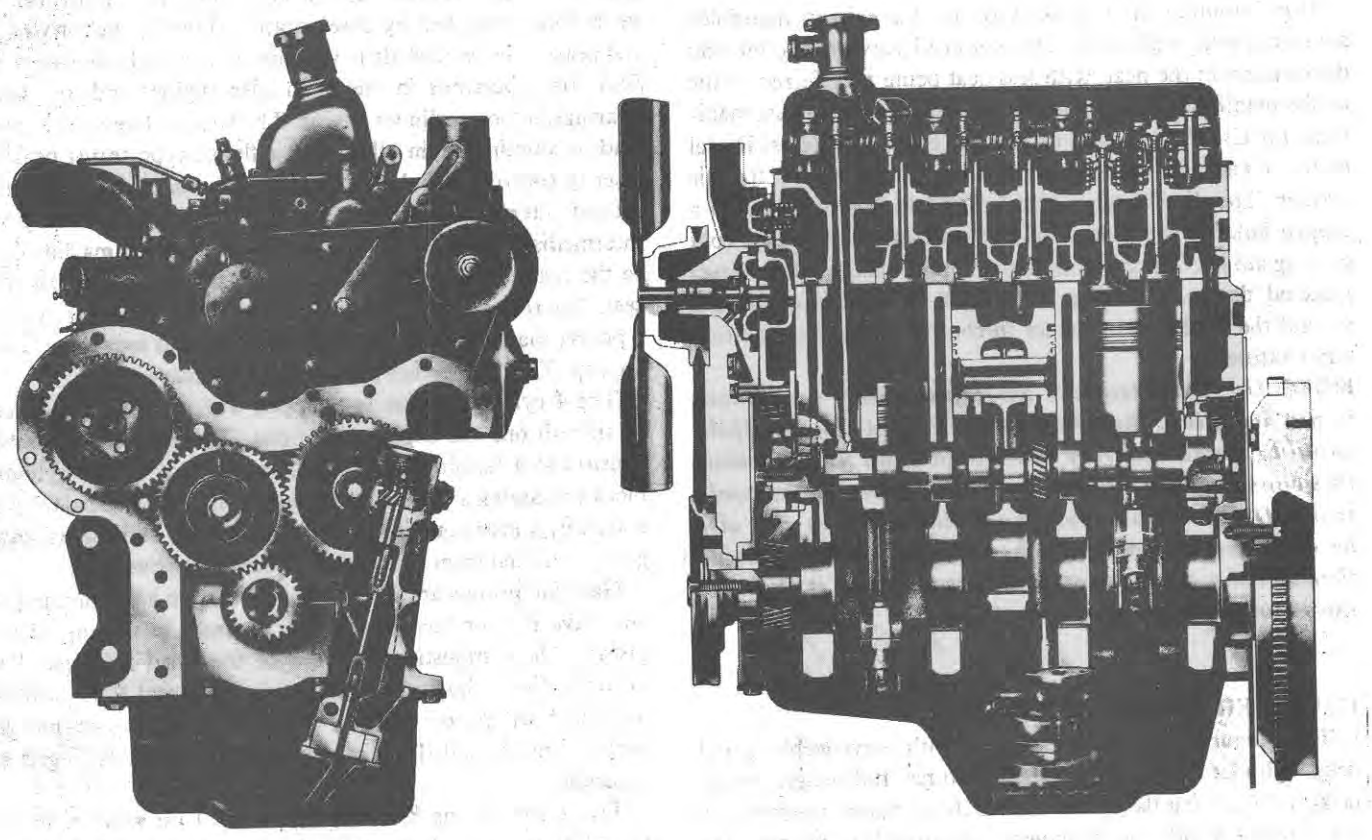

Figure 4
3-Cylinder Diesel Engine Sectional View

CYLINDER HEAD ASSEMBLY—INCLUDING VALVE TRAIN COMPONENTS

The cylinder head assembly incorporates the valves, valve springs, and rotators. The valve rocker arm shaft assembly is bolted to the cylinder block, through the head. The intake and exhaust manifolds are bolted to the head. The intake manifold is on the right side from the rear of the engine, and the exhaust manifold is on the left side. On all diesel, liquid petroleum (LP) and 4-cylinder gasoline engines, the water outlet connection and thermostat are attached to the front of the cylinder head. 3-cylinder gasoline engines have the water outlet and thermostat at the front of the intake manifold. Valve guides are an integral part of the cylinder head, and valves with oversize stems are available for service. Special replaceable cast alloy valve seats are pressed into each valve port of the cylinder head. The exhaust valves are fitted with positive valve rotators. Intake valves use umbrella-type seals while the exhaust valves use a square section O-ring. Two different length push rods are used depending on the type of valve tappet installed. The short push rod is used with the barrel (shallow push rod socket) type tappet. The long push rod is used with the partly hollow mushroom foot (deep push rod socket) type tappet. The short push rods are installed in gasoline, LP gas, and earlier production diesel engines. The long push rods are installed in current production diesel engines.

Valve lash is maintained by self-locking adjusting screws. The camshaft is supported by four replaceable bearings on the 3-cylinder engine and five replaceable bearings on the 4-cylinder engine. The camshaft is driven by the camshaft drive gear which is in mesh with the camshaft gear. Camshaft thrust is controlled by a plate secured to the block and located between the camshaft gear and the front journal of the camshaft. A helical gear is mounted on the rear of all the camshafts which drives the hydraulic lift pump used with some tractor models.

The cylinder heads use six evenly spaced head bolts per cylinder. On diesel engines, the fuel injectors are mounted outside the rocker cover.

The engine cylinder heads are designed with the entire face of the cylinder head flat. The combustion chambers are in the heads of the pistons.

© FORD MOTOR COMPANY LTD., 1967

MANIFOLDS

The aluminium alloy intake and cast iron exhaust manifolds are on opposing sides of the cylinder head providing better heat distribution in the head with less heat being transferred to the intake manifold. Tractors can be equipped with exhaust manifolds for either horizontal or vertical exhaust systems. Diesel intake manifolds are connected through tubing to the air cleaner. The diesel engine intake manifold is provided with a tapped hole for installation of a thermostart or an ether cold starting aid kit. The gasoline engine intake manifold is a water-jacketed design, providing a constant circulation of coolant around the intake main runner to control the intake manifold temperatures.

NOTE: ***On diesel tractors where cold start equipment is not installed, the plug assembled in the manifold should remain securely assembled at all times, failing this considerable damage to the cylinder bores could result from its absence. The cylinder bores can also be damaged by grit and other foreign matter passing through the air cleaner hose connections if they are not properly secured.***

CYLINDER BLOCK ASSEMBLY

The cylinder block is alloy cast iron with heavy webbing and deep cylinder skirts. The block features full length water jackets for cooling the cylinders, which are bored integral with the block. Cylinder arrangement is vertical in-line with the cylinders numbered from 1 to 3 or 4, starting at the front of the block. The firing order is 1-2-3 on the 3-cylinder engine and 1-3-4-2 on the 4-cylinder.

The oil pan sump on the 3-cylinder engine is pressed steel, and heavy cast iron on industrial and utility tractors. On the 4-cylinder tractors it is heavy cast iron. The cast iron pan is used as part of the attaching area for the front axle of the tractor on 4-cylinder engine equipped tractors. The oil pan is attached to the bottom of the cylinder block and is the sump for the lubrication system. The engine front cover is attached to the front engine adapter plate forming a cover for the timing gears. On gasoline engines, the fuel lift pump is mounted on the front cover. The gasoline engine governor is also housed in the cover. The crankshaft gear is keyed and press fitted on the front of the crankshaft. The crankshaft gear drives the camshaft drive gear, which is attached to the front of the cylinder block. The camshaft drive gear drives the camshaft gear and either the injection pump drive gear on diesel engines, or the distributor governor drive gear on gasoline engines.

The camshaft gear is attached to the front of the camshaft by a bolt, lock washer, flat washer and a spacer. On gasoline engines, an eccentric is mounted on the front of the camshaft which drives the fuel pump through a push rod. In both cases, the gear is keyed to the camshaft to maintain the position of the gear and drive the shaft. On gasoline engines, the governor ball cage and inner race are also attached to the distributor drive gear, which in effect becomes the governor drive. All the timing gears can be checked by observing the timing punch marks on the gears. The crankshaft is supported in the cylinder block by four main bearings in the 3-cylinder engine, and five main bearings in the 4-cylinder engine. The bearing liners are copper lead or aluminium tin alloy with a flange-type thrust bearing liner to control crankshaft end play. The thrust bearing is the second intermediate on the 3-cylinder engine and the third intermediate on the 4-cylinder engine. A slinger is machined on to the rear of the crankshaft to direct oil away from the rear seal. The rear seal is a circular lip-type rubber seal that fits into a pocket machined into the cylinder block and rear main bearing cap. The cap also has two composition side seals.

The 4-cylinder engine is equipped with a dynamic balancer to smooth out the engine vibrations. The balancer assembly consists of a housing attached to the bottom of the cylinder block containing a drive gear and a driven gear. The balancer is driven by a gear machined on the crankshaft, and the balancer gears are timed from the crankshaft balancer drive gear.

Gasoline pistons are manufactured from an aluminium alloy and have the combustion chamber entirely in the top of the piston. The combustion chamber of the Ford 5000 gasoline piston is slightly larger than that of the 2000 and 3000 gasoline pistons. Each piston has two compression rings and one oil control ring. Installed behind the slotted oil control ring is an expander.

Two types of ring kits may be supplied for service, one of these kits will include an expander for installation behind the second compression ring. The other kit is the production type which does not require an expander behind the second compression ring.

Diesel engines have trunk-type pistons with a continuous skirt around the entire piston. Each diesel piston has three compression rings and one oil control ring, all of which are above the piston pin. As with the gasoline engine two types of ring kits are supplied for service on the diesel engine, one type having an expander for installation behind the third compression ring and the other without this expander.

The piston is connected to the crankshaft by a heavy I-beam connecting rod. The crankshaft end of the connecting rod has an insert-type copper lead or aluminium tin alloy bearing. The piston end of the connecting rod has a replaceable bronze bushing. The piston pin is a free-floating steel pin held in place in the piston by two snap-rings (circlips).

LUBRICATION SYSTEM

Oil from the oil pan sump is pumped through the pressure lubrication system by a rotor-type oil pump mounted on the bottom of the cylinder block and is driven from a gear on the camshaft, Figure 5. The pump body incorporates a spring-loaded relief valve that limits the maximum pressure of the system. Oil relieved by the valve is directed back to the intake side of the pump.

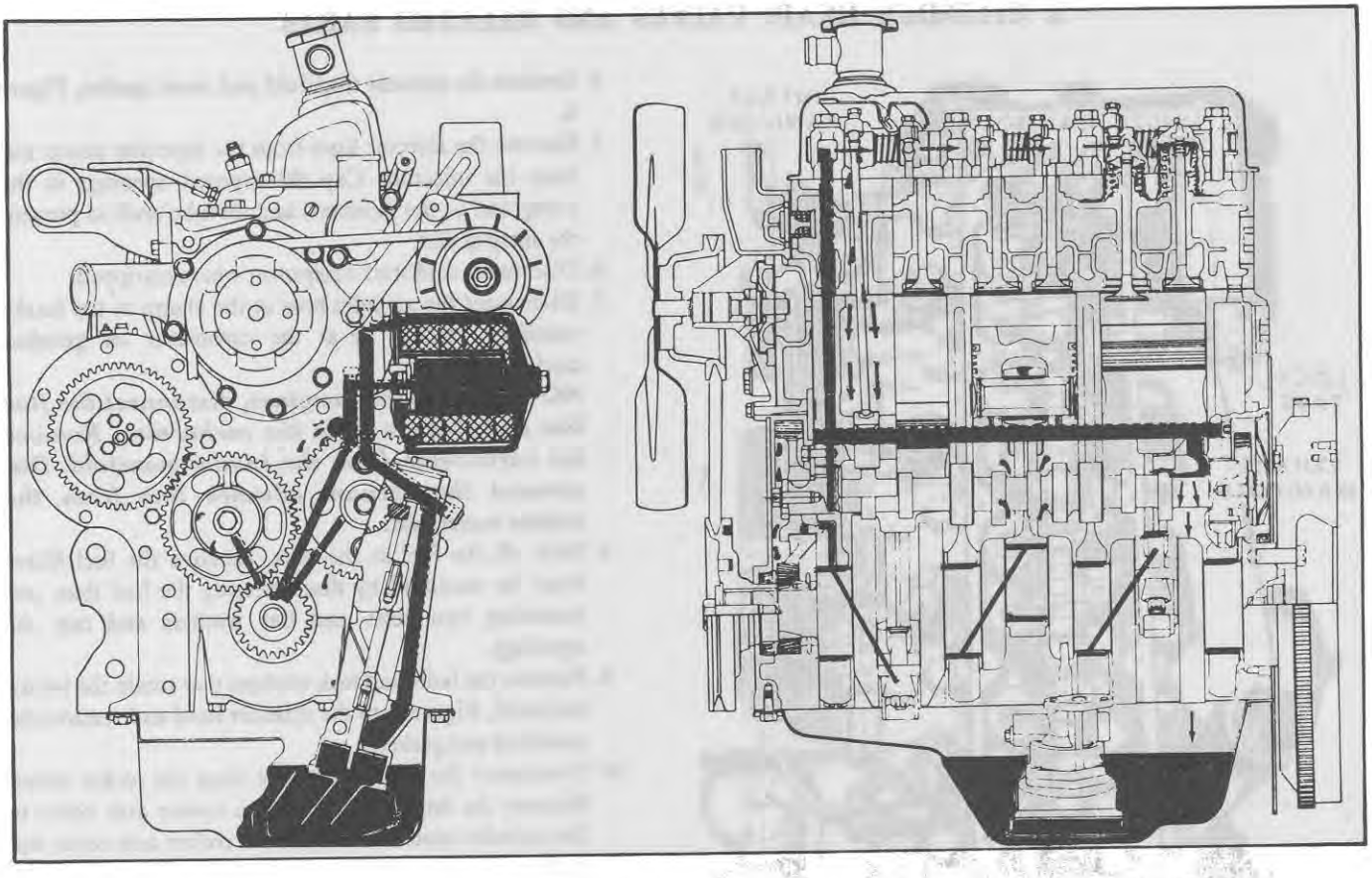

Figure 5
3-Cylinder Engine Lubrication System

Oil, after leaving the pump, passes through an external filter. Engines are equipped with a two-quart can type filter assembly with a replaceable cartridge. The filter incorporates a relief valve. The relief valve permits oil to by-pass the filter if it becomes clogged, thereby maintaining oil to the engine at all times.

From the filter, the oil flows through a drilled passage in the block to the main oil gallery. The oil gallery is a drilled passage running the full length of the cylinder block which intersects the tappet chambers for lubrication of the tappets. The main oil gallery also supplies oil to all the crankshaft main bearings through a drilled passage in the cylinder block, and from the main bearing journals through the crankshaft, to the connecting rod journals. Camshaft bearings are lubricated by drilled passages in the cylinder block from each main bearing.

The camshaft drive gear bushing is pressure-lubricated through a drilled passage from the front main bearing. The camshaft drive gear has a bushing which has spiral grooves to direct oil toward the outside of the gear, and on both sides of the gear. The gear has small oil passages machined on both sides which allows the oil to exhaust. The timing gears are splash-lubricated by oil from the tappet chamber and from the pressure-lubricated camshaft drive gear. On the 4-cylinder engine, the balancer is pressure lubricated through a drilled passage from the block intermediate thrust bearing web to the balancer housing. Oil flows through the balancer housing to the hollow balancer shafts and onto the bushings in the balancer gears.

Cylinder walls, pistons, and piston pins are splash-lubricated by the crankshaft. An intermittent flow of oil is fed to the valve rocker arm shaft assembly through a drilled passage in the cylinder block at the No. 1 camshaft bearing which indexes with a hole in the cylinder head. From the head, the oil flows up around the No. 1 rocker arm support bolt to the rocker shaft. The oil from the shaft flows through drilled holes in each rocker arm to lubricate the valve end and the adjusting screw end of the rocker arm. Oil from the ball ends of the rocker arms flows down the push rods and assists in lubricating the tappets and push rods. Excess oil drains into the push rod chamber through the push rod holes in the cylinder head and then back to the oil pan sump through cored openings in the block.

2. CYLINDER HEAD, VALVES AND RELATED PARTS

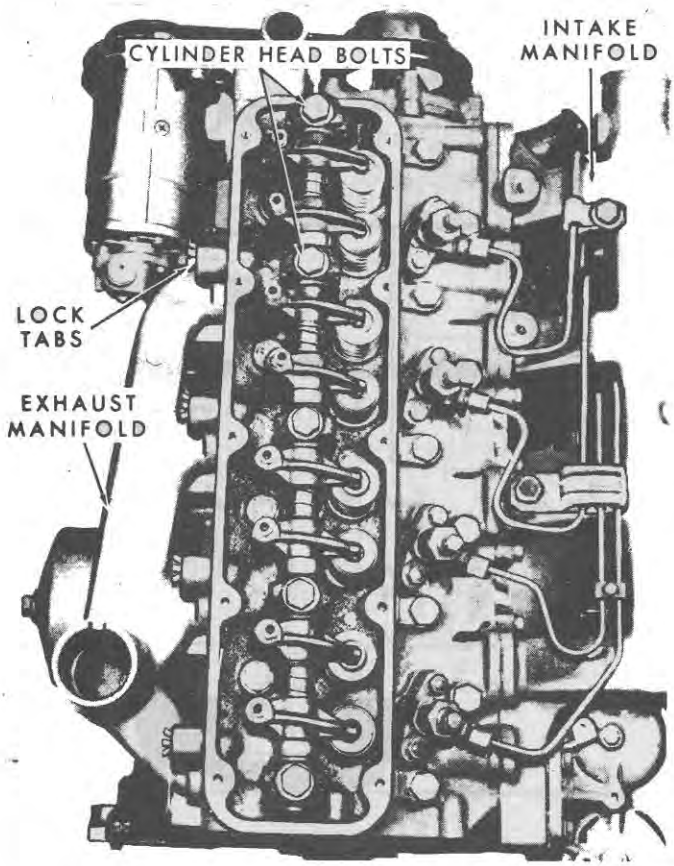

Figure 6
4-Cylinder Diesel Engine with Rocker Arm Cover Removed

CYLINDER HEAD

The cylinder head can be removed from the engine for service with the engine installed in the tractor. The following procedure applies to all models of the 3- and 4-cylinder engines.

A. Removal

1. Remove the vertical muffler if so equipped and disconnect the main wiring harness from the hood panel assembly. Remove the hood panel assembly.
2. Remove the battery. Remove the air cleaner assembly and related components in gasoline units. Remove the battery tray support bolts from the head and remove the radiator shell support. Disconnect the exhaust pipe from the exhaust manifold on units that are equipped with horizontal exhaust systems. Drain the radiator and cylinder block.
3. Bend the lock tabs back, Figure 6, and remove the bolts that secure the exhaust manifold to the cylinder head.
4. Remove the exhaust manifold and metal gasket, Figure 6.
5. Remove the injector lines from the injection pump and from the injectors. Cap the exposed openings in the pump and in the injectors, and all tube ends to prevent the entry of dirt.
6. Disconnect cold start equipment where equipped.
7. Disconnect the air inlet hose at the clamp at the intake manifold (diesel), or at the carburetor on gasoline models.

   NOTE: ***On gasoline engines, disconnect the fuel line and linkage from the carburetor. Remove the carburetor from the intake manifold. Disconnect the vacuum advance line from the intake manifold.***
8. Shut off the fuel at the tank. Remove the fuel filters from the manifold by disconnecting the fuel lines and removing two bolts and flat washers and cap the openings.
9. Remove the bolts and lock washers that retain the intake manifold, Figure 6, to the cylinder head and remove the manifold and gasket.
10. Disconnect the ventilation tube from the rocker cover. Remove the bolts that attach the rocker arm cover to the cylinder head and remove the rocker arm cover and gasket.

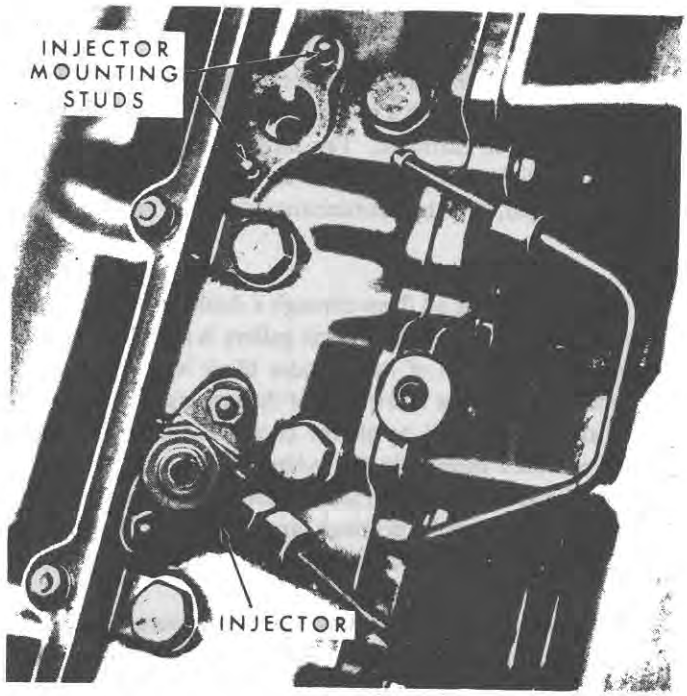

Figure 7
Diesel Engine Injector Removed

11. Disconnect the injector leak-off pipe. Remove the two nuts from the studs that retain each injector, Figure 7, and remove each injector from its bore in the cylinder head. Be sure the area surrounding the injectors is clean of any dirt. If the injectors cannot be readily pulled by hand, it may be necessary to pry the injectors out.
NOTE: ***On gasoline engines remove the spark plugs, Figure 8.***

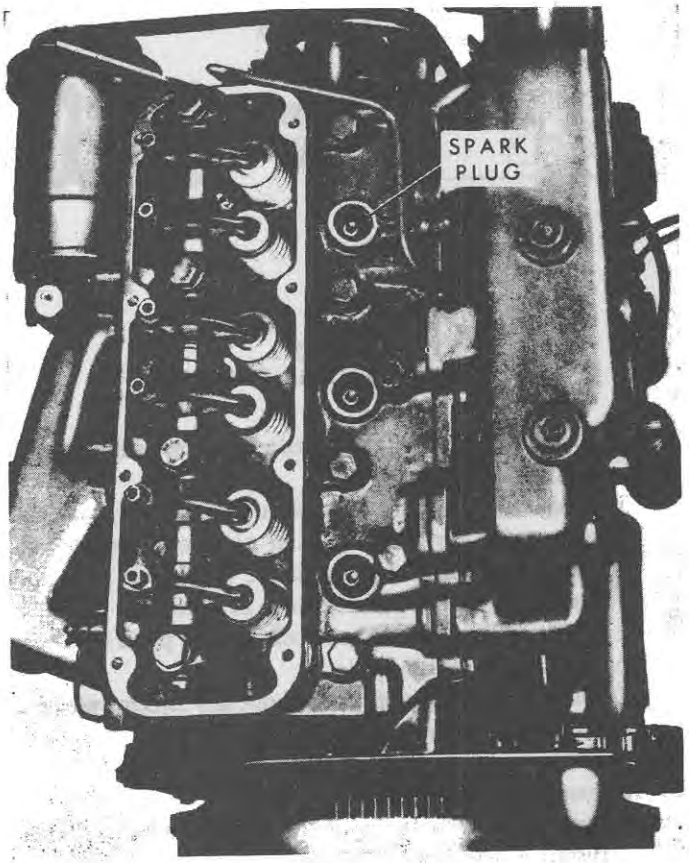

Figure 8
Gasoline Engine Spark Plug Location

12. Visually check the push rods for straightness before they are removed by rotating them with the valve closed. Loosen the bolts that retain the rocker shaft to the cylinder head, Figure 6, evenly and alternately until all tension has been relieved, and lift the rocker shaft assembly from the cylinder head.
NOTE: ***The rocker shaft retaining bolts should be left in place in the rocker shaft supports during removal. The bolts hold the rocker shaft assembly together; therefore, only remove the bolts when it is necessary to dis-assemble the rocker shaft.***
13. Remove the valve push rods from their holes in the cylinder head and arrange them in a rack in the order in which they were removed.

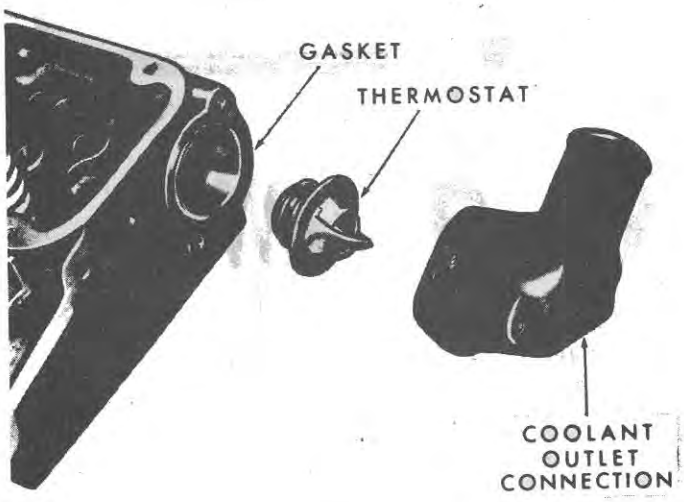

Figure 9
Diesel Engine Thermostat

14. Remove the remaining cylinder head attaching bolts and carefully lift the cylinder head from the block.

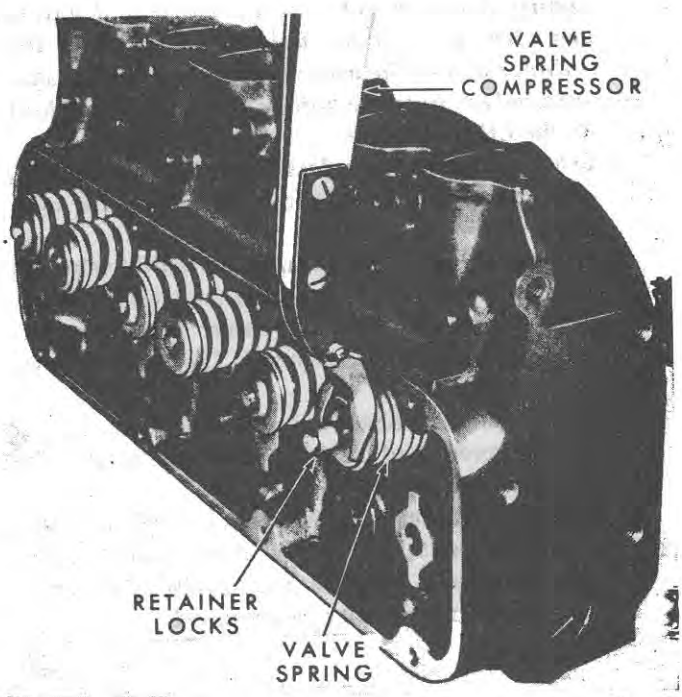

Figure 10
Removing Valves

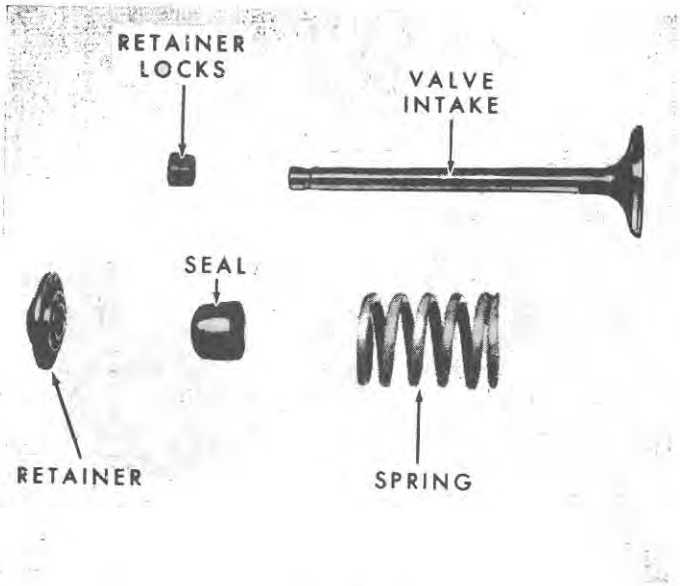

Figure 11
Intake Valve Assembly

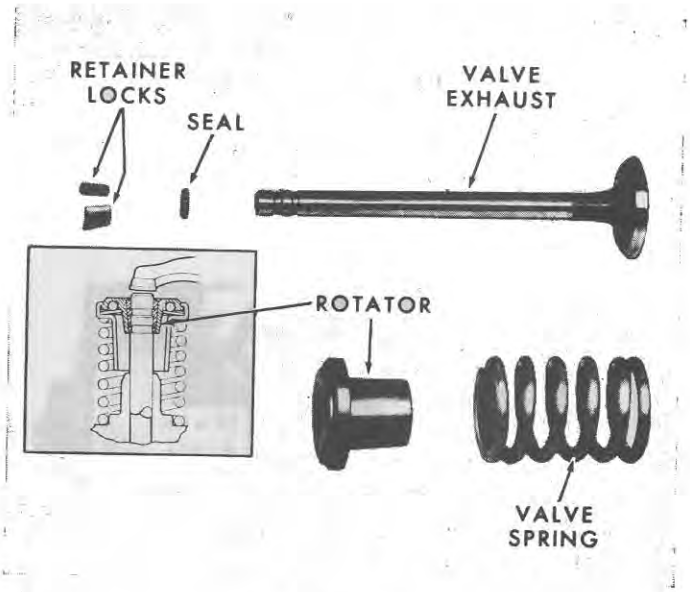

Figure 12
Exhaust Valve Assembly

B. Disassembly

1. On diesel, LP gas and 4-cylinder gasoline engines, remove the two bolts that attach the water outlet connection to the cylinder head. Remove the connection, thermostat, and gasket, as shown in Figure 9.
   NOTE: ***On 3 cylinder gasoline engines, the water outlet connection is incorporated in the intake manifold and a water outlet cover and gasket are used to cover the hole in the front of the cylinder head. The water outlet cover and gasket are used to cover the hole in the intake manifold on the LP gas engine.***
2. Before removing the valves from the cylinder head, clean any carbon deposits from the area of the valve heads.
3. Position the valve spring compressor over the valve and spring, as shown in Figure 10, and compress the spring.
   Intake Valves: Remove the retainer locks, spring retainer, spring, and valve stem seal. The parts are shown in Figure 11.
   Exhaust Valves: Remove the retainer locks, the seal from its groove, and the valve rotator and spring. The parts are shown in Figure 12.
4. Lift the valves from the cylinder head and place them in a numbered rack so they can be reinstalled in their respective guides. Keep the exhaust valve rotators with the valves from which they were removed.

C. Cleaning

1. After the valves are removed, clean the valve guide bores with a valve guide cleaning tool.
2. Remove all dirt, grit, and grease from the cylinder head with cleaning solvent.
3. Scrape all gasket surfaces clean. If necessary, soak the head gasket surface with paint remover to loosen the gasket material. Carefully scrape the gasket from the head, applying the paint remover as required.
   Caution: Be careful when working with paint remover, as it is highly combustible.
   Diesel Engines: Be sure to remove any injector washers that may have remained in the bores.

D. Inspection and Repair

1. Inspect the cylinder head for cracks, nicks, or burrs. Install a new head if necessary. Remove all burrs or nicks from the gasket surface with an oil stone.
2. With a straight edge and feeler gauge, check the flatness of the cylinder head lengthwise, diagonally and crosswise as shown in Figure 13. Specifications for flatness are 0·006 in. (0·15mm.) maximum overall or 0·003 in. (0·076 mm.) in any six inches (152·40 mm.).
   NOTE: ***If the cylinder head bottom face is not within the flatness specification, it may be skimmed provided the depth from the lower face of the valve seat insert to the cylinder head face after skimming is not less than 0·117 in. (2·97 mm.).***
3. If the head has been skimmed, check to determine whether the head bolts will bottom. To do this, place the cylinder head, less gasket, on the block and install and finger tighten all the head bolts (rocker arm shaft supports and washers should be used under the long bolts). Using a feeler gauge, check the clearance between the

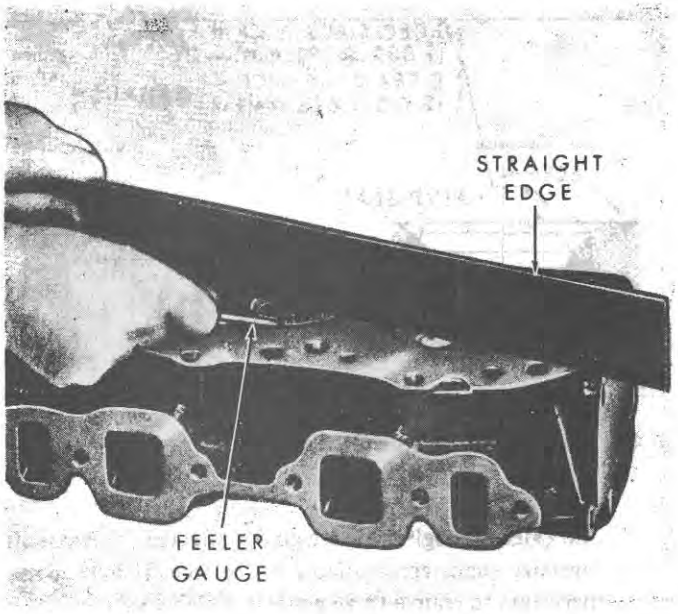

Figure 13
Measuring Cylinder Head Flatness

underside of the head bolts and the cylinder head rocker arm support. If the clearance is 0·010 in. (0·254 mm.) or greater for any bolt, use a $\frac{1}{2}$ in. × 13 UNC-2A thread tap and increase the tap depth. The head bolts should be marked so that they are reinstalled in the hole in which they were checked.

IMPORTANT:

Valve seat inserts of 0·010 in. (0·25 mm.) and 0·020 in. (0·508 mm.) oversize in diameter have been fitted to some cylinder heads in production. Heads having oversize inserts fitted are stamped with the following identification marking $\frac{SO10}{OS}$ ***and*** $\frac{SO20}{OS}$ ***on the exhaust manifold side of the cylinder head in line with the valve seat concerned.***

4. The intake and exhaust valve ports in the cylinder head are equipped with removable valve seat inserts. Check the inserts for cracks, looseness, or excessive wear. If any of these conditions exist, remove the inserts and install new ones.
5. To install a larger insert than originally fitted, machine the counter bore for the seat in the cylinder head to the following dimension shown in table 1.
   The insert must be thoroughly chilled in dry-ice before installation.
6. Measure the width of the valve seats, Figure 14, and reface the seats if they do not meet the specifications shown in Figure 16.
7. Measure the concentricity of the valve seat with a suitable gauge, as shown in Figure 15, or with Prussian Blue. If the valve seat runout exceeds 0·002 in. (0·0508 mm.) reface the seat. Refacing the valve seat should always be co-ordinated with refacing of the valve face so the finished seat will match the valve face and be centred. This is important so that the valve and seat will have a good compression-tight fit. Grind the valve seat to a true 44°30′ angle, Figure 16. Remove only enough stock to clean up the pits and grooves or to correct the valve seat runout. After the seat has been refaced, measure the seat width, Figure 14, to be sure it

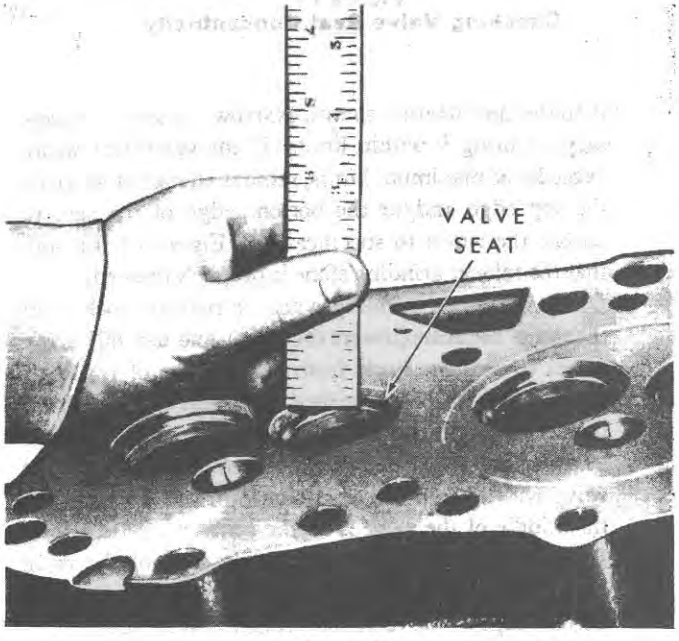

Figure 14
Measuring Valve Seat Width—Gasoline Engines

	Exhaust Valve Insert	Intake Valve Seat Insert
Insert Oversize	Counterbore Diameter in Cylinder Head	Counterbore Diameter in Cylinder Head
0·010 in. (0·254 mm.)	1·607/1·608 in. (40·82/40·84 mm.)	1·907/1·908 (43·44/43·46 mm.)
0·020 in. (0·508 mm.)	1·617/1·618 in. (41·07/41·10 mm.)	1·917/1·918 (43·69/43·72 mm.)
0·030 in. (0·762 mm.)	1·627/1·628 in. (41·33/41·36 mm.)	1·927/1·928 (43·95/43·97 mm.)

Table 1

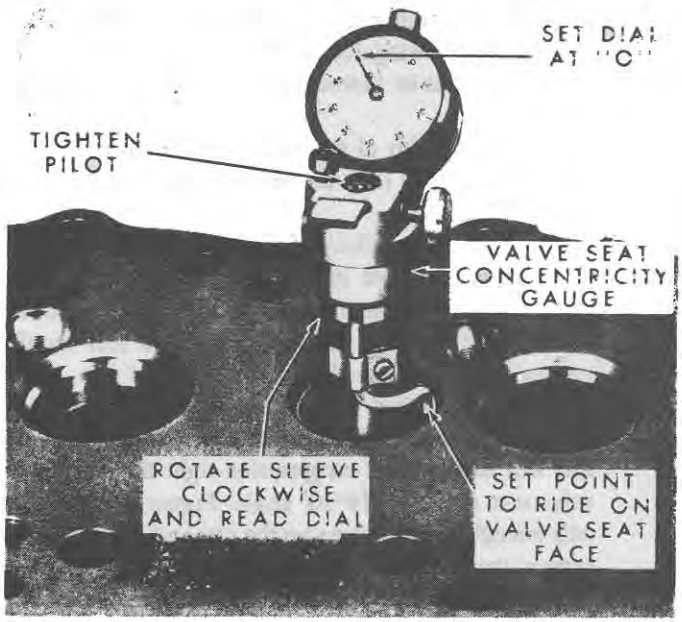

Figure 15
Checking Valve Seat Concentricity

is to the specification shown. Narrow the seat, if necessary, to bring it within limits. If the valve seat width exceeds the maximum limits, remove enough stock from the top edge and/or the bottom edge of the seat to reduce the width to specifications, Figure 16. Be sure that the refacer grinding stone is properly dressed.

8. Use a 30° angle grinding wheel to remove stock from the top of the seats (lowers the seats), and use 60° angle wheel to remove stock from the bottom of the seats (raises the seats). The finished valve seat should contact the centre of the valve face. Using a refaced or new valve, check the seat, using Prussian Blue. Rotate the valve with light pressure. If the blue is transferred to the middle of the valve face, the contact is satisfactory. If the blue is transferred to the top edge of the valve face, lower the seat. If the blue is transferred to the bottom edge of the valve face, raise the valve seat.

IMPORTANT:

Some production cylinder heads may have one or more 0·015 in. (0·381 mm.) oversize valve guide and valve installed. Where this condition applies, the exhaust manifold side of the cylinder head opposite the valve concerned will be stamped "15" or $^{\text{VO15}}_{\text{OS}}$.

9. Measure the valve stem-to-guide clearance with a telescoping gauge and micrometer, as shown in Figure 17. If the valve stem-to-guide clearance is not within 0·0010-0·0045 in. (0·0254-0·114 mm.) for the intake valve and 0·0020-0·0055 in. (0·0508-0·139 mm.) for the exhaust valve, or if excessive oil consumption is

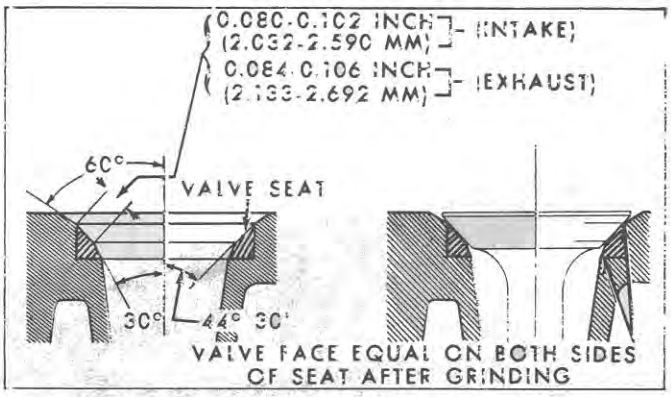

Figure 16
Valve Seat Width

indicated through the valve guides affected. Valves with oversize stems are available for service. If it becomes necessary to ream a valve guide to install a valve with an oversize stem, use Valve Reaming Kit, No. SW 502. The kit contains the following reamer and pilot combinations: a 0·003 in. (0·0762 mm.) oversize reamer with a standard diameter pilot; a 0·015 in. (0·3810 mm.) oversize reamer with a 0·003 in. (0·0762 mm.) oversize pilot; and a 0·030 in. (0·7620 mm.) oversize reamer and a 0·015 in. (0·3810 mm.) diameter pilot.

NOTE: ***When going from a standard valve stem to an oversize always use the reamers in sequence. Always reface the valve seat after reaming a valve guide.***

VALVES AND PUSH RODS

A. Inspection

The critical inspection points and tolerance of the valves are shown in Figure 18. Inspect the valve face and the edge of the

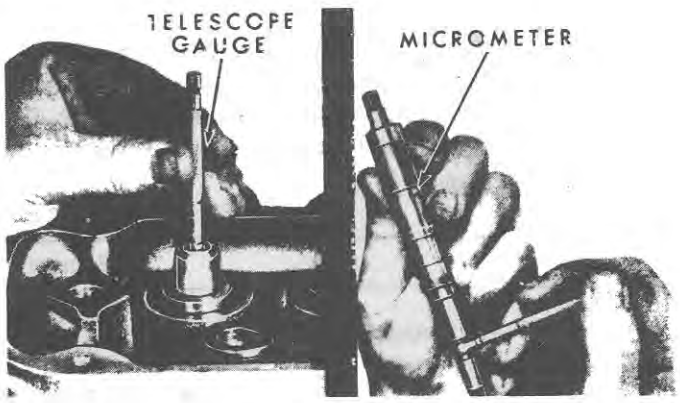

Figure 17
Measuring Valve Guide

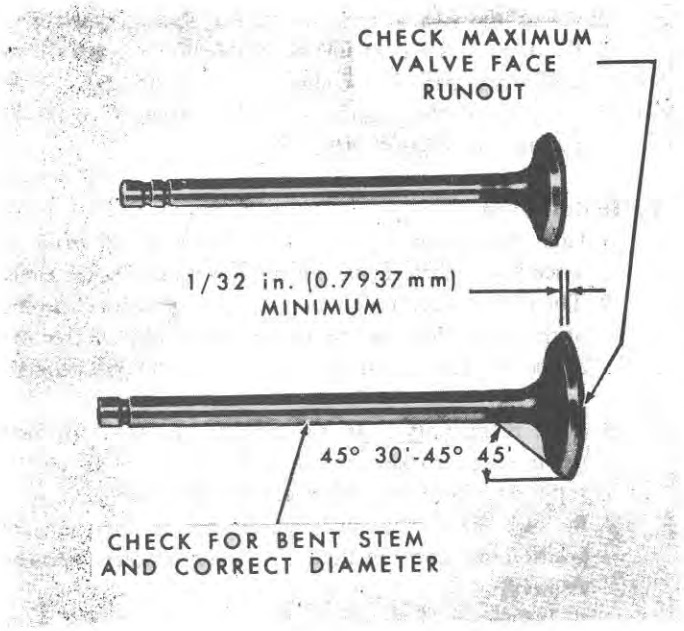

Figure 18
Critical Valve Tolerances

valve head for pits, grooves, scores, or other defects. Inspect the stem for a bent condition and the end of the stem for grooves or

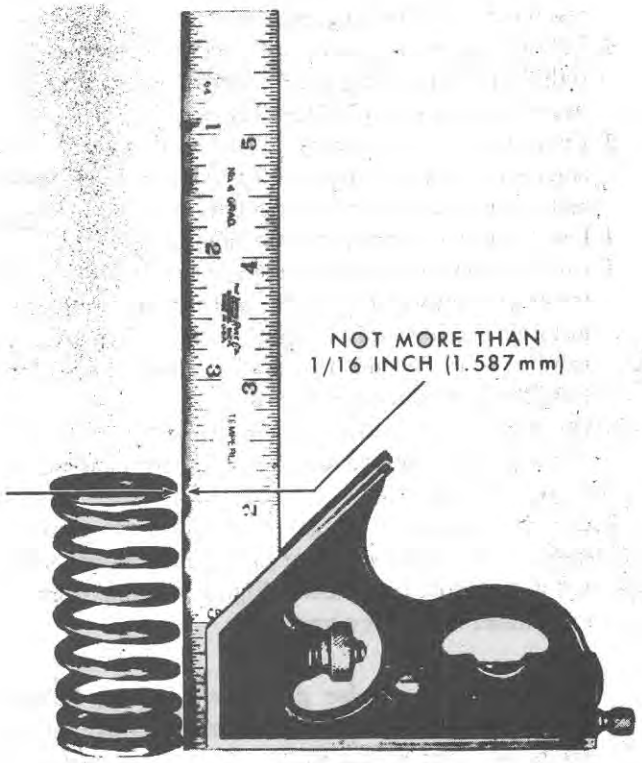

Figure 19
Checking Valve Spring Squareness

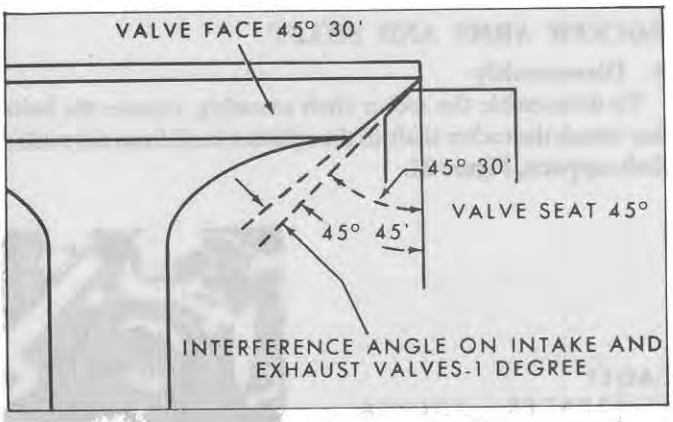

Figure 20
Interference Angle on Valve Seat

scores. Check the valve head for cracks, erosion, warpage, or being burned. Minor defects such as small pits or grooves, can be removed. Check the valve tip for pits or grooves and replace the valve if such a condition exists. Discard valves that are severely damaged.

Discard any valve springs that show any signs of erosion or rust. Check each valve spring for squareness, as shown in Figure 19. Discard valve springs that are out of square in excess of $\frac{1}{16}$ in. (1·5873 mm.).

Check specified free length and loaded height of the valve springs. Weak valve springs cause poor engine performance; therefore, if the pressure of any spring is below specification, install a new spring.

Check the valve spring retainer locks to be sure they are in good condition. Rotate the exhaust valve positive rotator to be sure it is not binding or excessively worn. Install new rotators if necessary.

Check the ends of the push rods for nicks, grooves, roughness, or excessive wear. If the push rods were not straight when checked in step 12 of "Removal", or if any of the above wear conditions exist, install new rods. Do not attempt to straighten push rods.

B. Refacing Valves

The valve refacing operation should be closely co-ordinated with the valve seat refacing operation so the finished angle of the valve is 1° more than the valve seat to provide an interference angle for better seating, Figure 20. Adjust the refacing tool to obtain a face angle of 45° 30′ as shown in Figure 20.

Remove only enough stock to clean up the pits and grooves. Check the edge of the valve head; if less than $\frac{1}{32}$ in. (0·7937 mm.) margin, install a new valve, Figure 18.

Remove all grooves or score marks from the valve tip, then chamfer as necessary. Do not remove more than 0·010 in. (0·2540 mm.) from the tip.

© FORD MOTOR COMPANY LTD., 1967

ROCKER ARMS AND SHAFT

A. Disassembly

To disassemble the rocker shaft assembly, remove the bolts that attach the rocker shaft to the cylinder head from the rocker shaft supports, Figure 21.

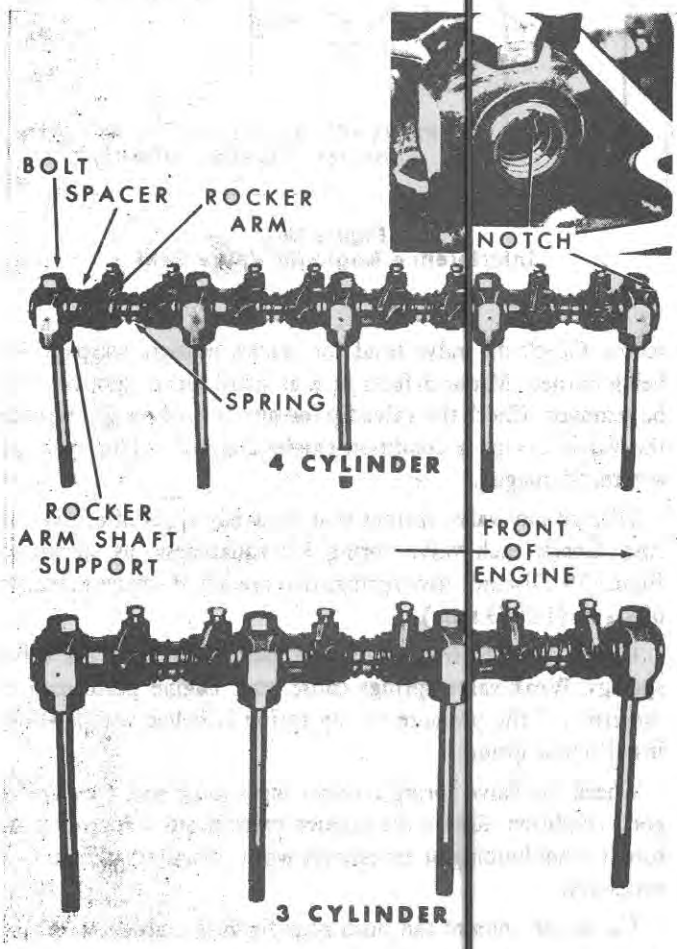

Figure 21
Rocker Arm Shafts

B. Inspection

1. Inspect the rocker arm adjusting screws and the push rod ends of the rocker arms for stripped or worn threads.
2. Check the ball end of the screws for nicks, scratches, or excessive wear.
3. Check the rocker arm locating springs and spacers for breaks or other damage.
4. Inspect the pad end of the rocker arm for roughness, grooves, or excessive wear. If any of the above conditions exist, install new parts.
5. Check the rocker arm and rocker shaft diameters. If the diameters are outside of specifications, page 61, install a new part. If the shaft meets specifications, page 61, clean it thoroughly in solvent. Make sure the oil passages are clean of obstructions.

C. Installation

1. Coat the rocker arm shaft with engine oil prior to assembly. Lubricate the valve pads on all rocker arms.
2. The rocker shaft has an identification groove at one end of the shaft. Position the mark upward and use this end as the front of the shaft, Figure 21. This puts the oil holes and grooves in the shaft facing down.
3. Start reassembly from the rear of the shaft by first positioning a rocker arm support with the notch on the support to the right of the shaft facing forward.
4. Be sure the springs and spacers are in their correct position, as shown in Figure 21, then proceed with the assembly.

CYLINDER HEAD

A. Assembly

1. Insert each valve in the guide bore from which it was removed and lap it in position to give an even seat around the valve. On completion of this operation remove the valve and carefully clean the valve seat and seat insert of any lapping compound.
2. Lubricate all moving parts with engine oil prior to installation. Refer to Figures 11 and 12 for reference to parts of the intake and exhaust valves.
3. Insert each valve in the guide bore from which it was removed or to which it was fitted. Position a new valve seal over each intake valve and guide.
4. Install the valve springs over the valve guides.
5. On intake valves, compress the springs and spring retainer as shown in Figure 10, and install the retainer locks. On exhaust valves, compress the spring and the valve rotator. Be sure to install the rotator onto the valve from which it was removed.
6. On exhaust valves install a new sealing ring into the second groove from the top of the valve stem and install the retainer locks.
7. On diesel engines, LP gas, and 4-cylinder gasoline engines, install the thermostat (spring end towards head) and water outlet connections, Figure 9, to the front of the cylinder head. Use a new gasket.

NOTE: ***On 3 cylinder gasoline engines, install the water outlet cover on the front of the cylinder head using a new gasket. On LP gas engines the outlet cover with a new gasket will be installed on the front of the intake manifold.***

8. If service is required on the thermostat or water outlet, refer to page 49, "COOLING SYSTEM".

B. Installation

1. Place a new head gasket on the cylinder block, then carefully position the cylinder head on the gasket. Two dowels are incorporated on the top of the cylinder block at opposite corners to aid in positioning the cylinder head and gasket.
   NOTE: ***Current cylinder heads and blocks have modified cooling ports which replace the original design. Both previous and current type blocks and heads are interchangeable. The original and modified cooling ports of a 3 cylinder block are illustrated in Figure 22A and are similar on 4 cylinder engines.***
2. Lubricate the cylinder head bolts and install them finger tight.
3. Install the valve push rod, with cupped end up, in the holes in the cylinder head from which they were removed. Be sure the ball ends of the push rods are seated in the tappet sockets.
4. Position the rocker shaft assembly on the cylinder head, the long cylinder head bolts and washers in the respective holes. Refer to Figure 6. Make sure that the ball ends of the rocker arm adjusting screws are seated in the cupped end of the push rods.

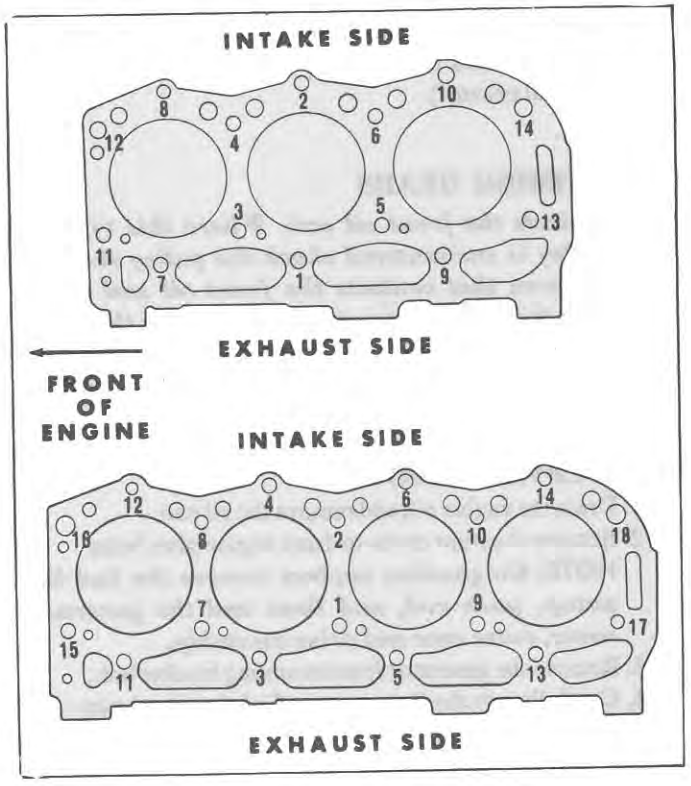

Figure 22
Cylinder Head Tightening Sequence

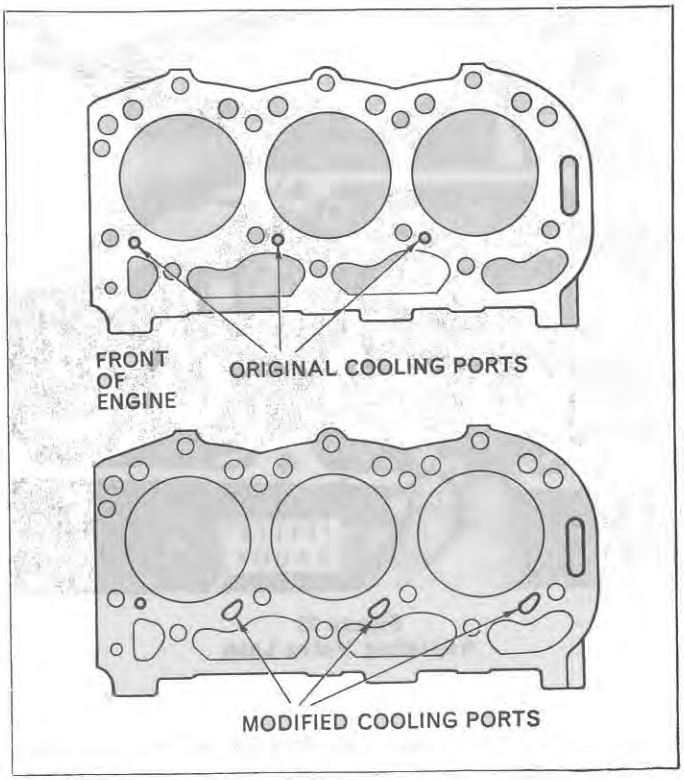

Figure 22A
Modified Cooling Ports

5. Tighten the cylinder head bolts in the proper sequence, as shown in Figure 22. Tighten the bolts progressively in three steps; First to 80 lbs. ft. (11·04 m.k.g.); then to 90 lbs. ft. (12·42 m.k.g.), and finally to 100 lbs. ft. (13·8 m.k.g.), page 68.
   NOTE: ***The cylinder head bolts should be torqued only when the engine is cold.***
6. Rotate the engine and set the preliminary valve lash, Figure 23, to the specified limits, page 59.
7. Install a new seat washer in each injector bore in the cylinder head. Position new cork seals over the injectors.
8. Install each injector into the cylinder head and over the two studs, as shown in Figure 7. Install the nut on each stud and tighten progressively to the specified torque, page 68.
9. Using new copper washers, install the injector leak-off line.
10. Install a new gasket and the intake manifold onto the cylinder head. Secure the manifold with the bolts and lock washers and tighten the bolts to the specified torque, page 68.
11. Attach the fuel filters to the manifold with two bolts and flat washers, and connect the fuel lines.
12. Connect the air intake hose to the intake manifold and secure with the clamp.

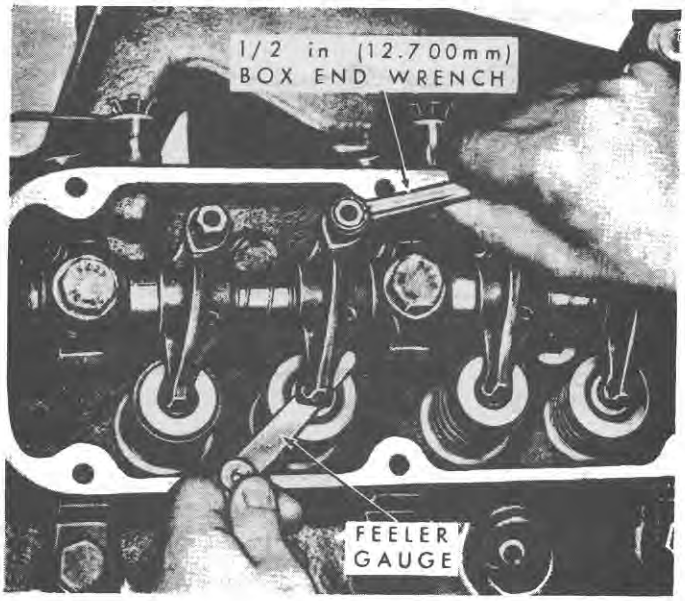

Figure 23
Adjusting Valve Lash

NOTE: ***On gasoline models, attach the carburetor to the intake manifold, using a new gasket, and attach the vacuum advance line to the fitting on the intake manifold. Connect the fuel feed line.***

13. Connect the injector lines to the injection pump and to the injectors. Position the clamps on the injector lines in the same position from which they were removed.
14. Reconnect cold start equipment where equipped.
15. Position a new metal exhaust manifold gasket on the cylinder head and install the exhaust manifold, as shown in Figure 6. Use new lock tabs and tighten the bolts to the specified torque, page 68. Bend the lock tabs to retain the bolts.
16. If the tractor is equipped with a horizontal exhaust system, connect the exhaust pipe.
17. Connect the hose to the water outlet and secure it with the clamp. On 3-cylinder gasoline engines, install the thermostat (spring end towards manifold) and water outlet connection to the front of the intake manifold.
18. Fill the radiator with coolant.
19. Install the battery tray support bolts and radiator shell support. Install the battery and connect the battery leads.
20. On diesel engines, bleed the fuel system as outlined in Part 2, "FUEL SYSTEMS". Start the engine and make a final valve lash adjustment, page 59.

    NOTE: ***Do not make valve lash adjustments when the engine is operating at above normal operating temperature.***
21. Install the rocker cover, using a new gasket and tighten the bolts to the specified torque, page 68. Connect the ventilation tube.
22. Install the air cleaner and related parts (gasoline engine).
23. Install the hood panel assemblies and reconnect the wiring harness to the hood clips. Install the muffler (vertical exhaust).

3. ENGINE FRONT COVER AND TIMING GEARS

Engine front cover and timing gears service operation can be performed after removing the radiator and front axle.

CRANKSHAFT PULLEY REMOVAL

1. Remove the fan belt. Remove the bolt and washer from the crankshaft pulley, Figure 24, using Puller No. 518 and Shaft Protector No. 625-1, as shown in Figure 25. To use the puller for this purpose, $\frac{7}{16}$ in. $\times$ 14 UNC bolts have to be used and the slots in the puller enlarged.
2. Check the pulley belt groove to be sure the surface is smooth and the flanges are not cracked or broken.
3. Check the shaft spacer in the area that contacts the front oil seal to be sure it is free of scratches or grooves that may cause oil leakage past the seal. Clean the seal contact surface with solvent and polish with crocus cloth prior to installation.

   NOTE: ***On earlier production models the crankshaft pulley was integral with the spacer which contacts the front oil seal. Where this type of pulley is encountered check the pulley shaft in the area that contacts the front oil seal to be sure it is free of scratches or grooves that may cause oil leakage past the seal. Clean the seal contact surface in solvent and polish with a crocus cloth prior to installation.***

FRONT COVER REMOVAL

1. Drain the engine oil, and remove the oil pan.
2. Remove the front cover-to-front engine plate bolts.
   NOTE: ***On gasoline engines remove the fuel lift pump, push rod, and lines and the governor cover, outer race and drive assembly.***
3. Remove the generator front mounting bracket bolt.
4. Carefully pry the front cover off of the dowel pins and remove it.
5. Remove the oil slinger.
6. Clean all the gasket material from the front cover and from the front engine plate.



Figure 24
Crankshaft Pulley

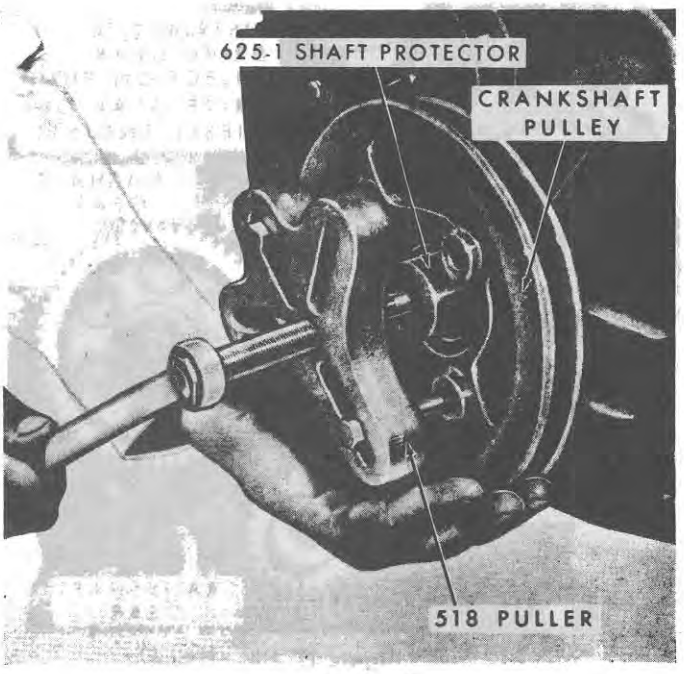

Figure 25
Removing Crankshaft Pulley

FRONT COVER CRANKSHAFT SEAL REMOVAL

The front cover oil seal should be removed and a new seal installed every time the front cover is removed.

1. Drive out the old oil seal and dust seal with a punch. Be careful not to damage the cover.
2. Thoroughly clean the seal bore in the cover.
3. Insert the dust seal in the seal bore before installing the oil seal. Coat the new oil seal with petroleum jelly and install the seal as shown in Figure 26. To install the seal, use Step Plate No. 630-16 and a driver handle. Drive the seal in until it is fully seated in the seal bore. Check after installation to be sure the spring is properly positioned in the seal.

CHECKING TIMING GEAR BACKLASH

1. The timing gears are shown in Figure 27. The gears are correctly assembled when the timing marks on the gear teeth line up, as shown in the illustration, with the No. 1 piston on T.D.C.
2. Check the backlash of the gears with a dial indicator or a feeler gauge, as shown in Figure 28.
3. Check between the camshaft drive gear and camshaft gear as shown, and also between the injection pump gear (distributor drive gear on LP and gasoline engines) and camshaft drive gear. Also check between the crankshaft gear and camshaft drive gear.
4. Check the backlash at four equidistant points on the gears.
5. If the backlash is within specifications, page 60, the gears are suitable for reinstallation. If not, install new gears.

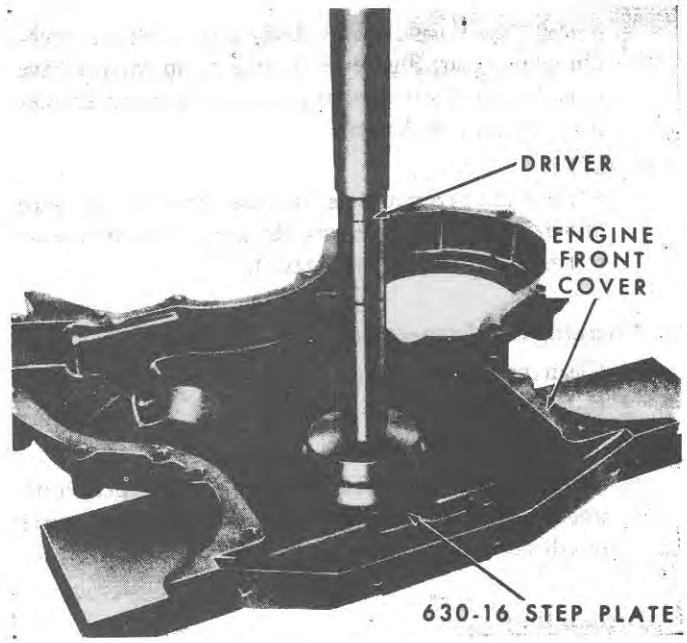

Figure 26
Installing Front Cover Oil Seal

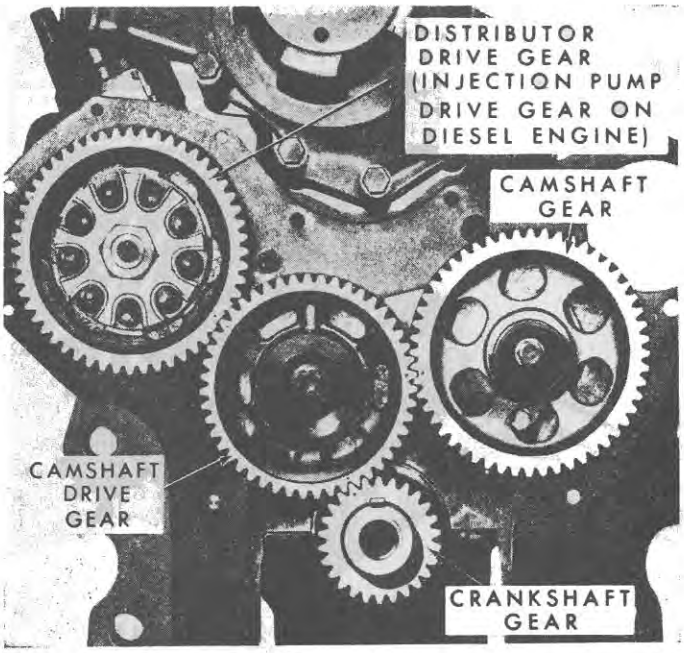

Figure 27
Timing Gears

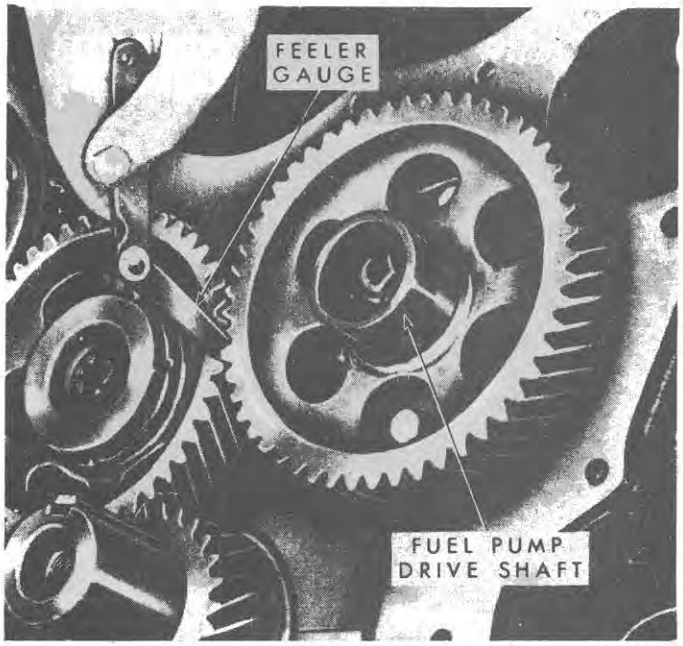

Figure 28
Checking Timing Gear Backlash

INJECTION PUMP OR DISTRIBUTOR DRIVE GEAR

A. Removal

Turn the crankshaft until the camshaft gear is in the approximate timed position, Figure 29.

DIESEL

Remove the three retaining bolts that retain the injection pump gear, Figure 29 (in line pump engines have three bolts and a triangular plate), to the pump adapter plate and remove the gear.

GASOLINE

Remove the governor outer race assembly, the governor driver assembly and remove the gear. (The drive gear retaining nut has left-hand thread.)

B. Cleaning and Inspection

1. Clean the gear in solvent.
2. Inspect gear teeth for scores, nicks and the condition of the teeth contact pattern.
3. Use a carborundum stone to remove minor gear teeth imperfection. If gear teeth wear or damage is severe install a new gear.

C. Installation

1. Retime the engine before installing the injection pump or distributor drive gear. To do this remove the camshaft drive gear, place No. 1 piston at top dead centre, and reinstall the camshaft drive gear in mesh and the timing marks aligned to the other gears as shown in Figures 27 and 29. Tighten the camshaft drive gear adapter bolt to the specified torque, page 68.
2. Install the new injection pump gear on the pump adapter plate, with the timing mark aligned.

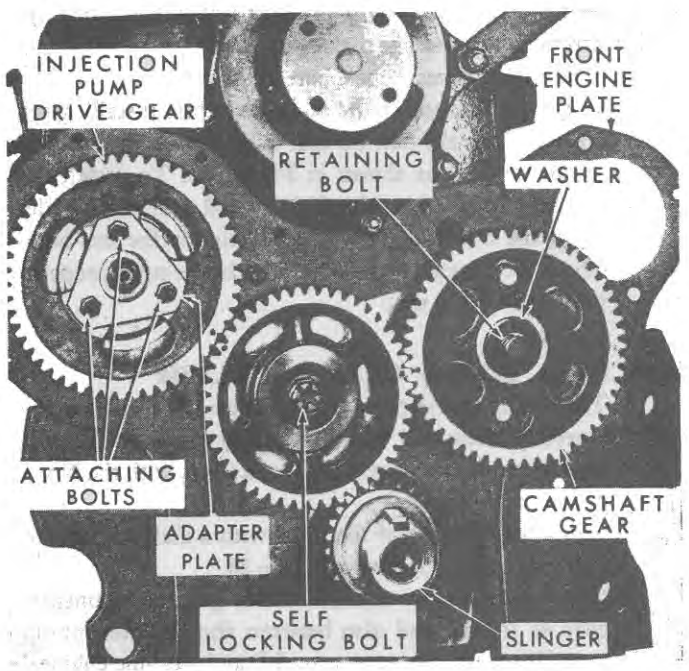

Figure 29
Engine Front Cover Removed

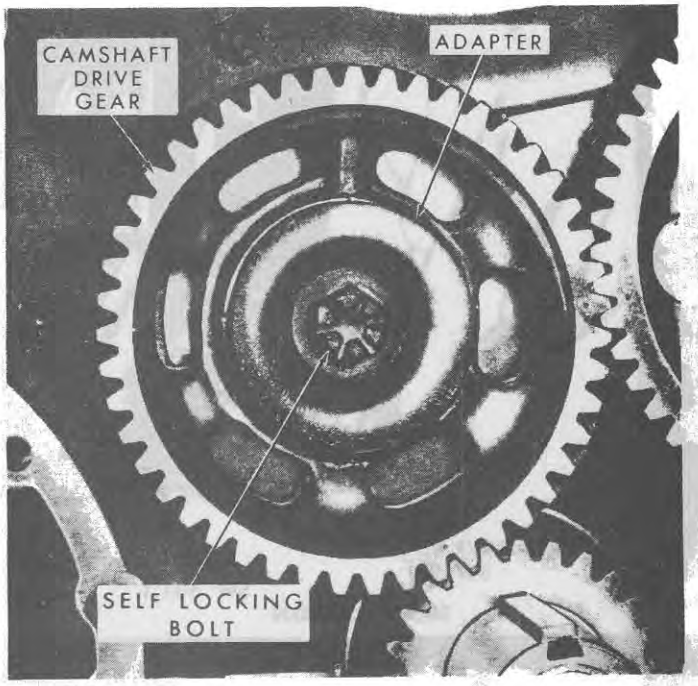

Figure 30
Camshaft Drive Gear

3. Install the three bolts (and plate on the in line pump engines) and tighten to the specified torque, page 68.

GASOLINE

1. Install the gear with the timing mark aligned, governor driver and tighten the nut to the torque specified on page 68.
2. Install the governor outer race assembly.

CAMSHAFT DRIVE GEAR AND ADAPTER

A. Removal

1. Remove the self-locking bolt that retains the camshaft drive gear and adapter to the cylinder block, Figure 30.
2. Remove the adapter and camshaft drive gear, as shown in Figure 31.

B. Cleaning and Inspection

1. Clean the gear and adapter in solvent.
2. Inspect gear teeth for scores, nicks and the condition of the teeth contact pattern. Use a carborundum stone to remove minor gear teeth imperfections. If tooth wear or damage is severe install a new gear.
3. Check the adapter oil passage, Figure 32, to be sure that it is clear.
4. Inspect the camshaft drive gear bushing, Figure 32, for wear, nicks or burrs, and install a new gear if any of these conditions exist.
5. If excessive backlash, page 60, existed in the gears when checked, install a new gear.

C. Installation

1. Install the gear and adapter in mesh with the timing marks aligned.
2. Install the adapter self-locking bolt and tighten the bolt to the specified torque, page 68. Check the end float as outlined on page 43, "Camshaft—Removal".

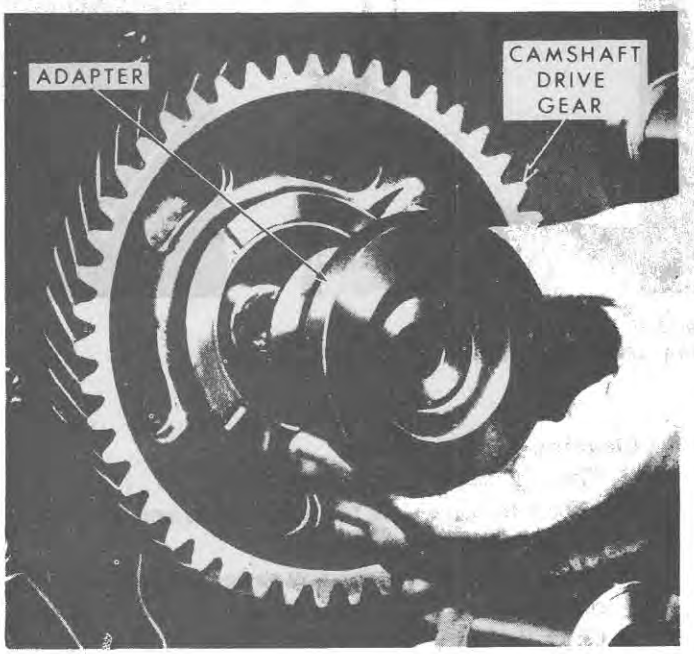

Figure 31
Removing Camshaft Drive Gear Adapter

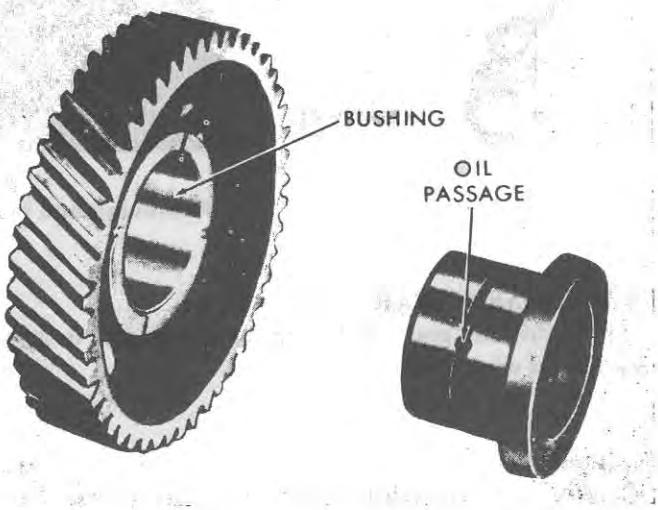

Figure 32
Camshaft Drive Gear and Adapter

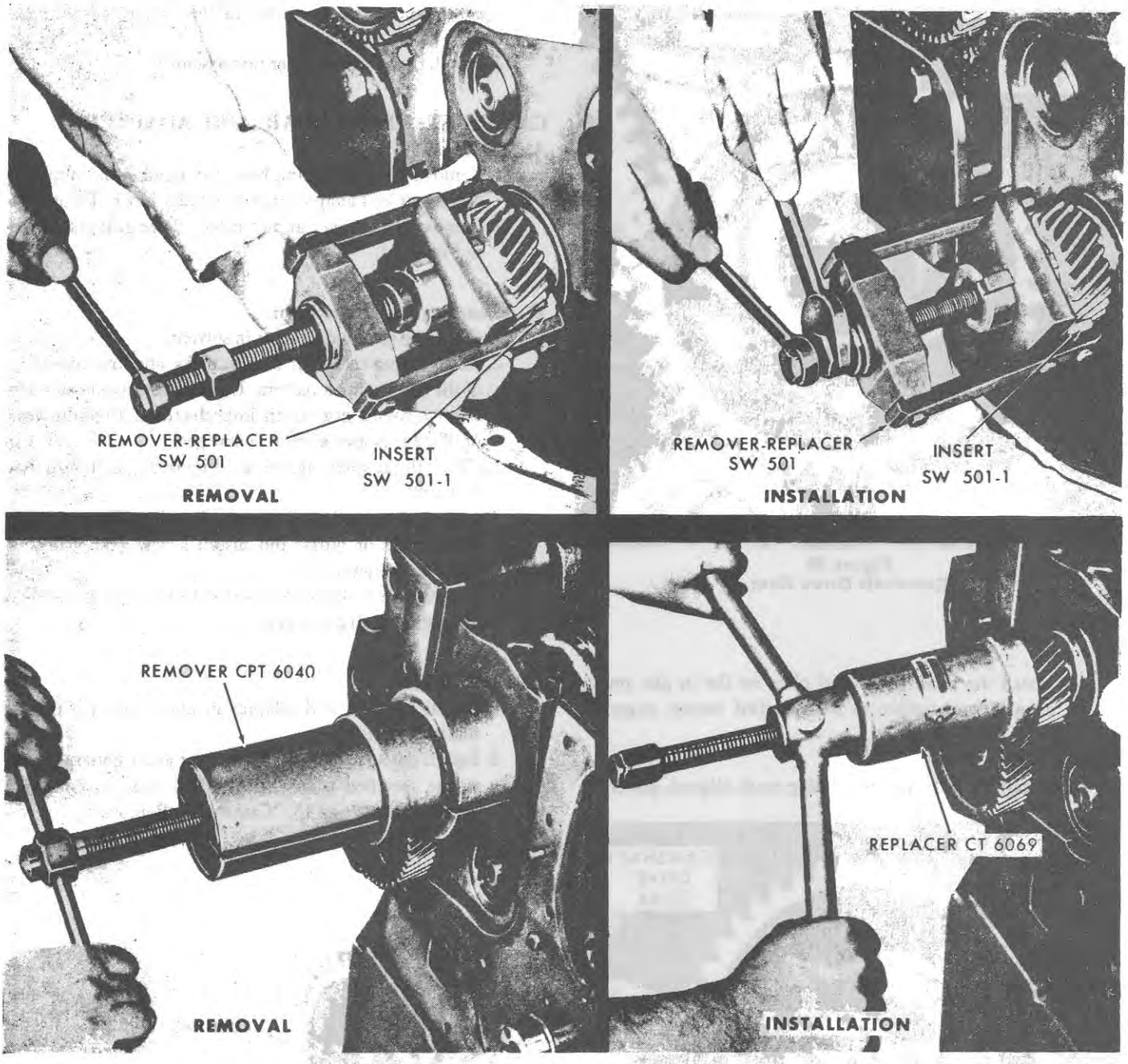

Figure 33
Removing and Installing Crankshaft Gear

CRANKSHAFT GEAR

The crankshaft gear should only be removed if it shows signs of wear or chipping.

A. Removal

Remove the crankshaft gear with Crankshaft Gear Remover-Replacer, No. SW 501 with Insert SW 501-1, or Remover No. CPT 6040, as shown in Figure 33.

B. Cleaning and Inspection

1. Clean the gear in cleaning solvent.
2. Inspect the gear teeth for scores, nicks and the condition of the teeth wear pattern.
3. Check the crankshaft keyway to be sure it is in good condition.
4. Check the key. If there is any evidence of distortion or chipping, use a new key when installing the gear. Insta a new gear if any wear or damage is evident.

C. Installation

1. Drive the key into the keyway until it is seated.
2. Install the crankshaft gear with Crankshaft Gear Remover-Replacer No. SW 501 with Insert SW 501-1, or Replacer No. CT 6069, as shown in Figure 33.

CAMSHAFT GEAR

A. Removal

1. Remove the bolt and flat washer, as shown in Figure 29.
2. Remove the camshaft gear from the end of the shaft.

NOTE: ***On gasoline engines, an eccentric, Figure 28, is attached to the front of the camshaft gear. Removal and installation is the same as on diesel engines. At the time of removal of the gear, the shaft should be inspected and a new one installed if any abnormal wear pattern, cracks or grooves are found.***

B. Cleaning and Inspection

1. Clean the gear in solvent.
2. Inspect gear teeth for scores, nicks, and the condition of the teeth wear pattern.
3. Check the keyway and key on the end of the camshaft. If the key is damaged in any way, install a new key before installing the gear. Use a carborundum stone to remove minor gear teeth imperfections. If tooth wear or damage is severe install a new gear.

C. Installation

1. Install the camshaft gear spacer.
2. Install the key in the camshaft keyway.
3. Install the camshaft gear, with timing marks aligned. Install the eccentric (LP and gasoline engines) or flat washer, lock washer, and bolt, and tighten to the specified torque, page 68.

TIMING THE GEARS

When removing and reinstalling any or all of the timing gears, be sure that the timing marks line up correctly, as shown in Figure 29. On all engines, the No. 1 piston must be at T.D.C. on the firing stroke, when the timing marks are aligned.

On tractors equipped with power steering, the power steering pump drive gear does not require timing.

FRONT COVER INSTALLATION

1. Position a new gasket on the engine front adapter plate.
2. Install the oil slinger dish out, Figure 29.
3. Install the front cover, being sure the cover aligns with the dowel pins.
4. Install the front cover-to-front engine plate bolts and tighten to the specified torque, page 68.

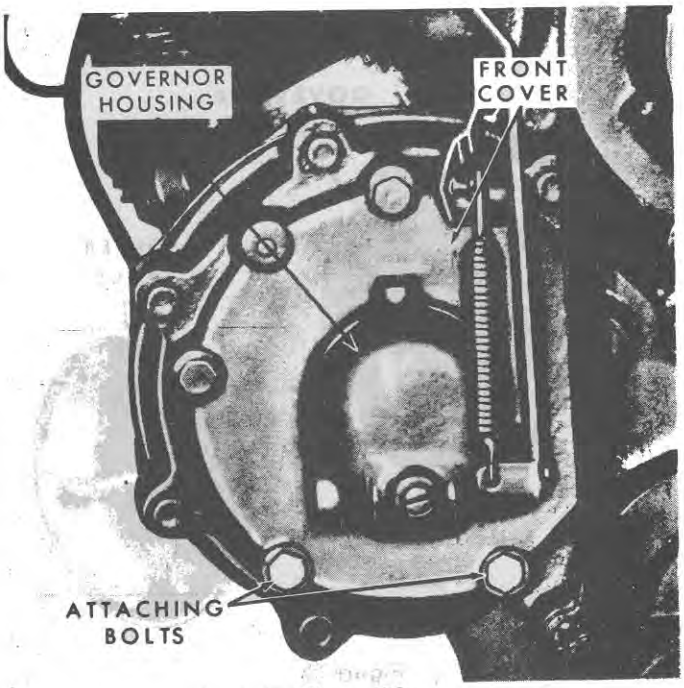

Figure 34
Gasoline Engine Governor Housing

5. On gasoline engines install the governor lever linkage, fuel pump push rod, fuel pump, and fuel pump lines.
6. Install the oil pan with new gasket and tighten bolts to the specified torque, page 68.
7. Install the generator support front mounting bolt.
8. Refill the crankcase with the proper grade and quantity of oil.

CRANKSHAFT PULLEY INSTALLATION

1. Lubricate the crankshaft pulley spacer, align the keyway in the spacer with the crankshaft keyway and slide it back as far as it will go.
2. Lubricate the pulley hub and align the keyway in the pulley with the key in the end of the crankshaft. Tap the pulley onto the crankshaft.

NOTE: ***To install the pulley with longer hub, lubricate the hub internally and externally align the keyway in the pulley with the key in the end of the crankshaft. Tap the pulley onto the crankshaft.***

3. Install the flat washer and bolt and tighten the bolt to the specified torque, page 68.

GASOLINE ENGINE GOVERNOR AND DRIVE GEAR

The gasoline engine governor is located inside the engine front cover, Figure 34. Linkage connects the throttle control, governor, and the carburetor together. All service work on the

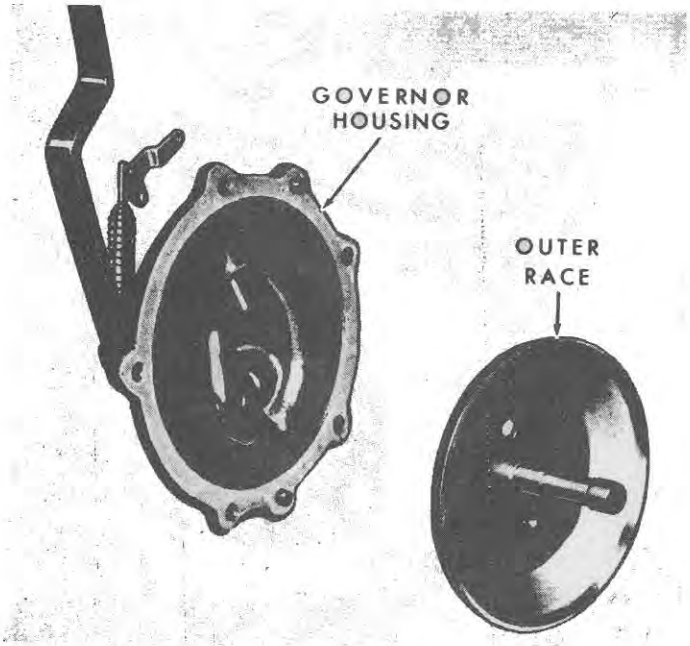

Figure 35
Governor Housing and Outer Race

governor can be performed with the engine in the tractor, except removal of the drive gear. The engine front cover governor opening is not large enough to permit removal of the drive gear.

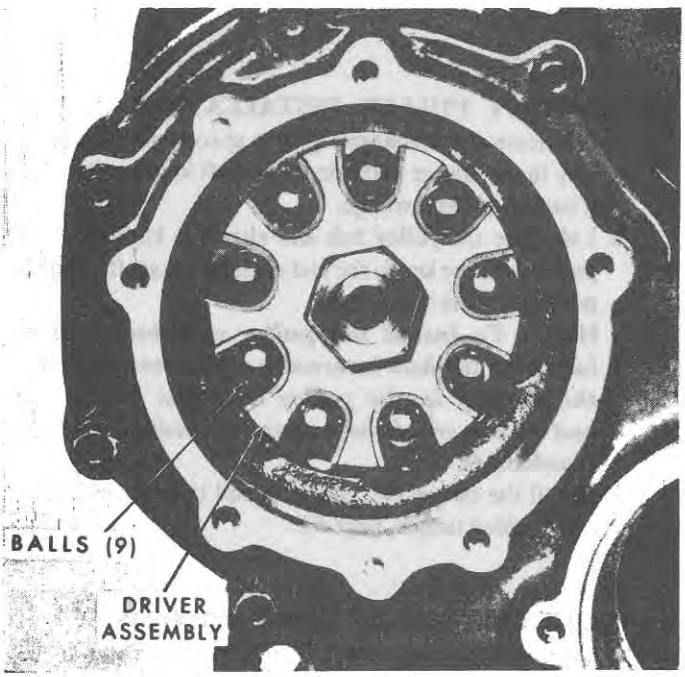

Figure 36
Governor Drive Assembly

A. Governor Removal

1. Disconnect the governor lever linkage, Figure 34.
2. Remove the bolts and the governor housing from the engine front cover, Figure 34. Pry the governor housing from the engine front cover. Remove and discard the old gasket.
3. Remove the governor outer race, Figure 35. The governor balls are shown in position in the governor driver assembly, Figure 36.
4. Remove the distributor drive gear retaining nut (the nut has a left-hand thread), and remove the driver assembly.

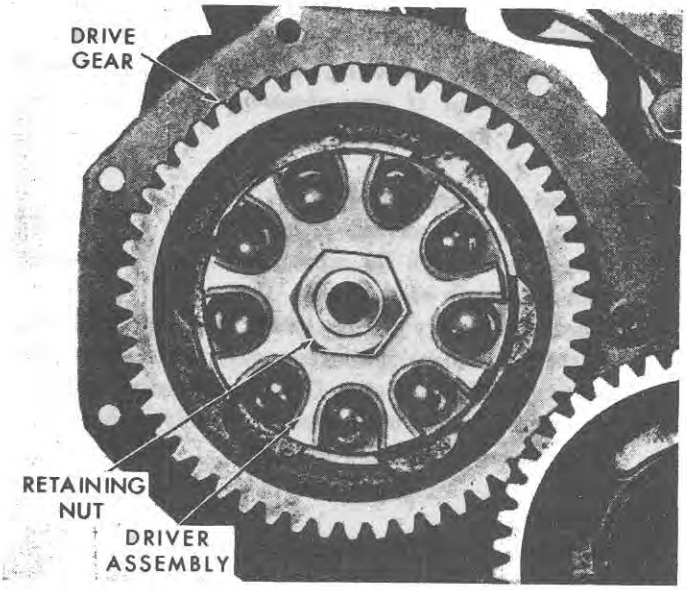

Figure 37
Engine Front Cover Removed—Gasoline Engine

B. Inspection

1. Check the driver assembly and outer race for damage or wear. Install new ones if necessary.
2. Inspect the bushings and oil seal in the governor housing assembly for burrs or excessive wear. Replace the assembly if wear or damage is evident.

C. Governor Installation

1. Install the driver assembly. Install the retaining nut (left-hand thread), and tighten to the specified torque, page 68.
2. Install the governor outer race.
3. Position a new gasket and align the dowel pins in the housing with the holes in the front cover.
4. Install the bolts and tighten to the specified torque, page 68.

D. Drive Gear Removal

If it becomes necessary to install a new drive gear, Figure 37, remove the front cover as outlined on page 14, under "FRONT COVER REMOVAL", and repeat the procedure for removing the driver assembly. The drive gear is keyed to the distributor drive shaft and, at this point, can be removed.

E. Drive Gear Installation

1. Position a new gear and install the driver assembly, as shown in Figure 37. Install the retainer nut (left-hand thread) and tighten to the specified torque, page 68.
2. Position a new gasket and install the engine front cover.
3. Install the outer race, as outlined under "Governor Installation".
4. Install the governor cover and gasket, as outlined under "Governor Installation".
5. Install the pulley spacer and crankshaft pulley.
6. Install the fan belt and adjust the belt tension.
7. For adjustments to the governor and carburetor refer to Part 2 "FUEL SYSTEMS".

4. OIL PAN SUMP AND OIL PUMP

OIL PAN SUMP

A. Removal

To remove the oil pan sump from an engine installed in a tractor.

Ford 2000 and Ford 3000 Tractors

1. Drain the engine oil and remove the oil level dip-stick.
2. Remove the oil pan sump retaining bolts, Figure 38, and remove the oil pan sump.

Ford 4000 Tractor

1. Drain the engine oil and remove the oil level dip-stick.
2. Support the transmission on a jack.
3. Remove the hood.
4. Disconnect the radiator shell support, slacken the engine to front support bolts leaving the nuts flush or partly disengaged from the end of the bolts.
5. Ease the front support and radiator assembly forward to allow the front sump bolts and sump to be removed.

Ford 5000 Tractor

The sump on a Ford 5000 tractor can be removed by replacing the cylinder block to front support bolts one at a time with 8 inch long bolts, similar to those used to secure the front end weights. The purpose of these bolts is to allow with safety the front support and radiator assembly to be eased forward about 1½ in. permitting the removal of the sump front bolts.

1. Drain the engine oil, and remove the dip-stick.
2. Support the tractor under the transmission with a jack, and the front support and radiator assembly with a hoist or crane.
3. Remove the hood.
4. Disconnect the radiator shell support.
5. Disconnect steering linkage to enable the front axle to be moved away.
6. Remove the front and rear axle support pins and roll the front axle away.
7. Move the front axle support and radiator assembly forward to allow the front sump bolts and sump to be removed.

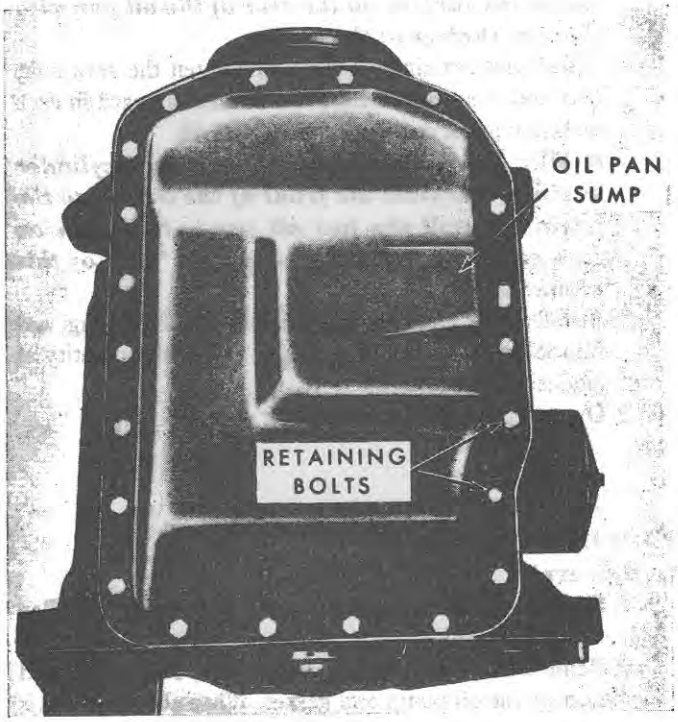

Figure 38
3-Cylinder Engine Oil Pan (Sump)

NOTE: ***Due to the weight of the oil pan sump, care is to be taken when removing it.***

Using the above method on Ford 5000 tractors it is not necessary to disconnect the radiator hoses, power steering, and cooler tubes where installed.

B. Cleaning and Inspection

1. Scrape any dirt or metal particles from the inside of the oil pan sump.
2. Scrape all gasket material from the gasket surface.
3. Wash the oil pan sump in a solvent and dry thoroughly.
4. Check the pan for cracks, holes, damaged drain plug threads, or a nicked or warped gasket surface.
5. Repair any damage, or install a new pan if repairs cannot be made.

C. Installation

To install the oil pan sump to an engine assembled in a tractor reverse the disassembly procedure on page 21 paying attention to the following points:

1. Be sure that the gasket surfaces on the oil pan and block are clean.
2. Position the gasket on the cylinder block and apply a thin film of gasket sealer on the gasket, front cover, and the oil pan.
3. Hold the oil pan in place against the block and install a bolt finger tight at each corner of the oil pan.

   NOTE: ***When a cast oil pan is installed, align the machined surface on the rear of the oil pan with the rear surface of the engine.***
4. Install the remaining bolts and tighten the rear bolts first and then tighten from the middle outward in each direction to the specified torque, page 68.

   NOTE: ***On tractors equipped with 4-cylinder engines, assemble the front of the tractor to the engine. Install the two oil pan-to-transmission case attaching bolts. Refer to Part "15" of this manual.***
5. Install the oil level dip-stick, tighten the drain plug, and fill the crankcase with the proper grade and quantity of engine oil.
6. Operate the engine and check for oil leaks.

OIL PUMP

A. Removal

1. Remove the oil pan sump, as outlined under "Oil Pan Sump Removal".
2. Remove the oil pump retaining bolts, Figure 39, and remove the oil pump and gasket. When the oil pump is removed, the intermediate shaft is loose and should be removed.
3. Remove the engine oil filter, and oil drain shield when installed to gain access to the oil pump drive gear and shaft cover, Figure 42. Remove the cover and extract the drive gear and shaft.
4. The addition of the drain shield has resulted in an increase in the depth of the oil pump gear stop sealing surface, Figure 42A. Because of this change, a current shorter Oil Pump Stop must be used with the current block. If the previous longer stop is used with the current block, interference will exist between the stop and the oil pump drive gear. Such interference will cause oil pump failure.

B. Disassembly

1. Remove the oil pump screen spring and pump screen, Figure 39.

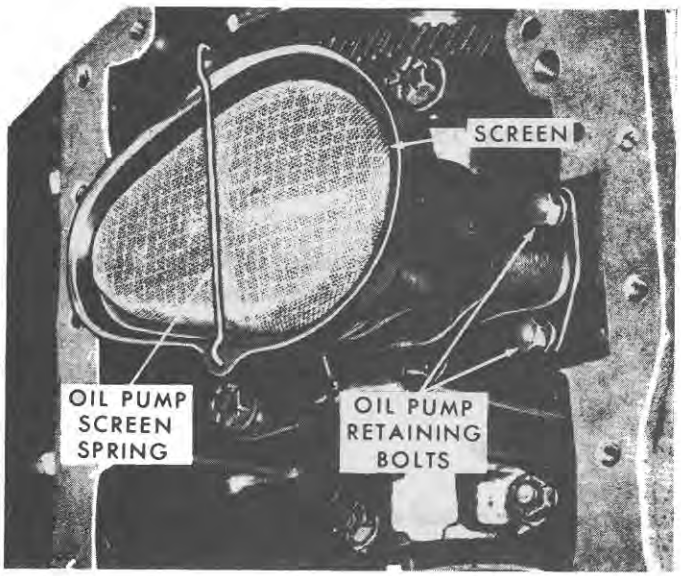

Figure 39
Oil Pump

2. Remove the four cap screws and remove the screen cover and pump cover, Figure 40. Remove the rotor and shaft assembly.
3. Remove retaining screw and washer on 3-cylinder models.
4. Insert a self-tapping screw of the correct size into the hole in the relief valve plug and pull the plug out of the chamber. Remove the spring and relief valve, Figure 40.

C. Cleaning and Inspection

1. Wash all parts in solvent and dry thoroughly. Use a brush to clean the inside of the pump housing and the pressure relief valve chamber. Be sure all dirt and metal chips are removed.
2. Check the inside of the pump housing and the rotor and shaft assembly for excessive wear.
3. Check the inside face of the pump cover for wear or score marks. If these conditions exist, install a new cover.
4. With the rotor and shaft assembly installed in the pump body, place a straight edge over the rotor and shaft assembly and the pump body. Measure the clearance between the straight edge and the inner rotor and shaft assembly and between the straight edge and the outer rotor, Figure 41. If the measurement is not within specifications, see page 66, install a new rotor assembly.

   NOTE: ***The shaft and rotors are serviced only as an assembly.***
5. Measure the rotor-to-housing clearance by inserting feeler blades between the rotor and the housing. Take the measurements at four places, 90° apart. If the

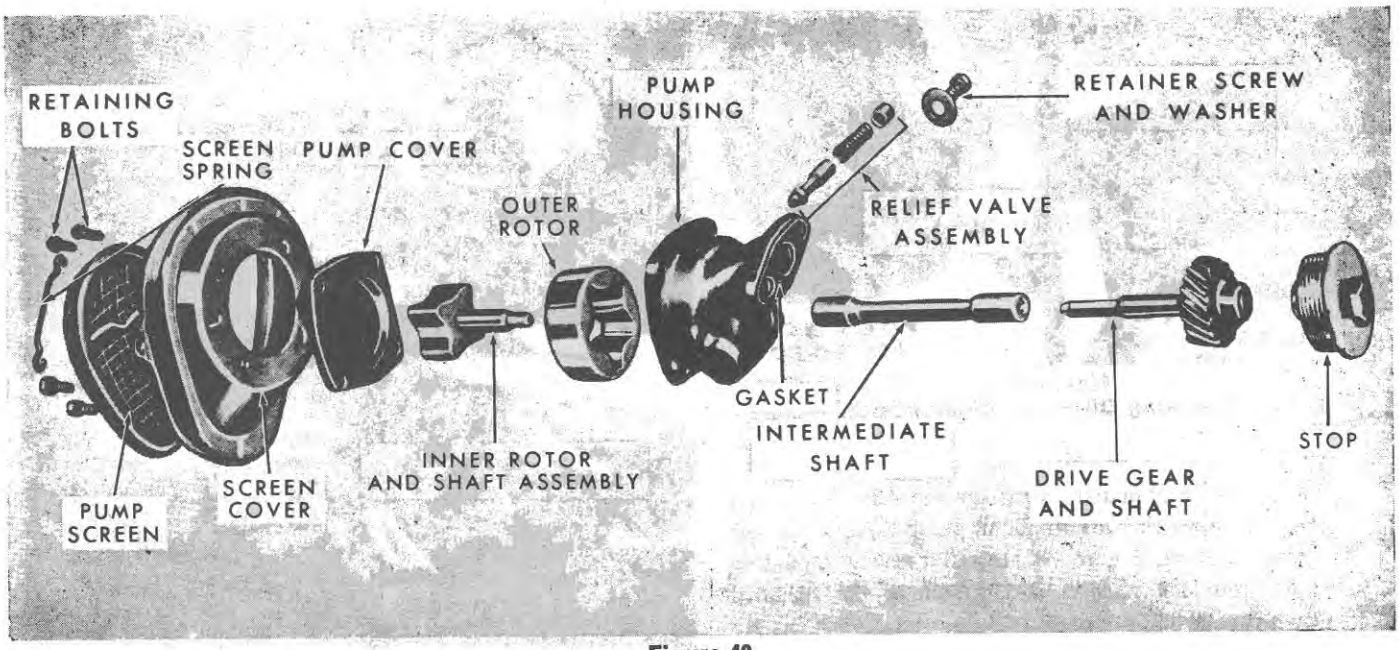

Figure 40
Oil Pump Disassembled

measurements are not within specifications, page 66, install a new rotor assembly. Remeasure clearances with the new rotor assembly in the pump body. If the measurements are still not within specifications install a new pump body.

6. Check the relief valve spring tension. If the spring tension is not within specifications, page 66, install a new spring.
7. Check the relief valve for score marks and be sure it is free to move within the bore; the valve should have two flats on each side at the location shown in Figure 40A.
8. Check the oil pump drive gear for worn or broken teeth. If any of these conditions exist install a new drive gear and shaft assembly.
9. Check the intermediate drive shaft to be sure the hexagon socket ends are not excessively worn.

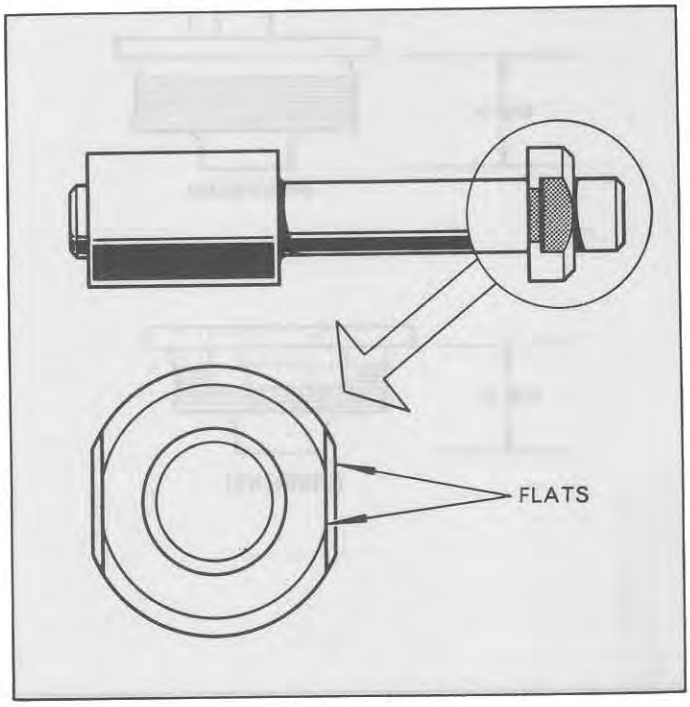

Figure 40A
Relief Valve

D. Assembly

The oil pump assembly is shown in Figure 40.

1. Oil all the parts thoroughly.
2. Install the oil pressure relief valve piston and spring, and drive in a new plug.
3. Install the retaining screw and washer on 3-cylinder models.
4. Install the rotor and shaft and outer race into the pump body. The rotor and shaft assembly and outer race are serviced as an assembly. One part should not be replaced without replacing the other.
5. Install the pump cover and screen cover together and tighten the four cap screws to the specified torque, page 68.
6. Install the screen assembly and secure it with the screen spring.

E. Installation

1. Prime the pump by filling the inlet port with clean engine oil. Rotate the pump shaft to distribute oil within the pump body.

© FORD MOTOR COMPANY LTD., 1967

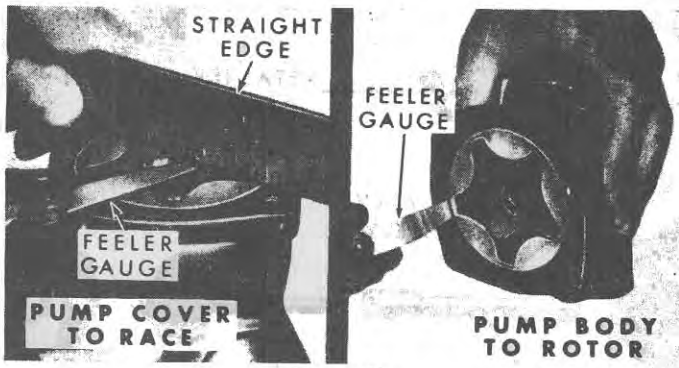

Figure 41
Checking Oil Pump Clearance

2. Place the intermediate shaft on the rotor shaft and using a new gasket install the oil pump assembly on the cylinder block, Figure 39. Install the two mounting bolts and lock washers and tighten to the specified torque, page 68.

3. Install the pump drive gear and shaft, Figure 42. Install a new gear stop gasket and install the gear stop. Install the drain shield.

4. Install a new oil filter adapter if the adapter threads are damaged. Install a new oil filter cover gasket and the oil filter assembly.

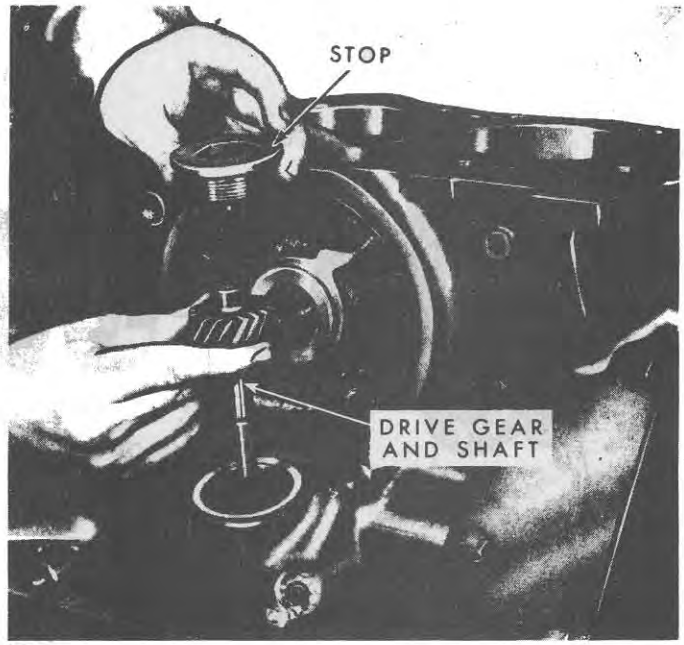

Figure 42
Removing Oil Pump Drive Gear

5. Install the oil pan sump as outlined on page 22, under "Oil Pan Sump Installation".

Engine Oil Filters: Refer to Part 17 of this manual for service information on the engine oil filters.

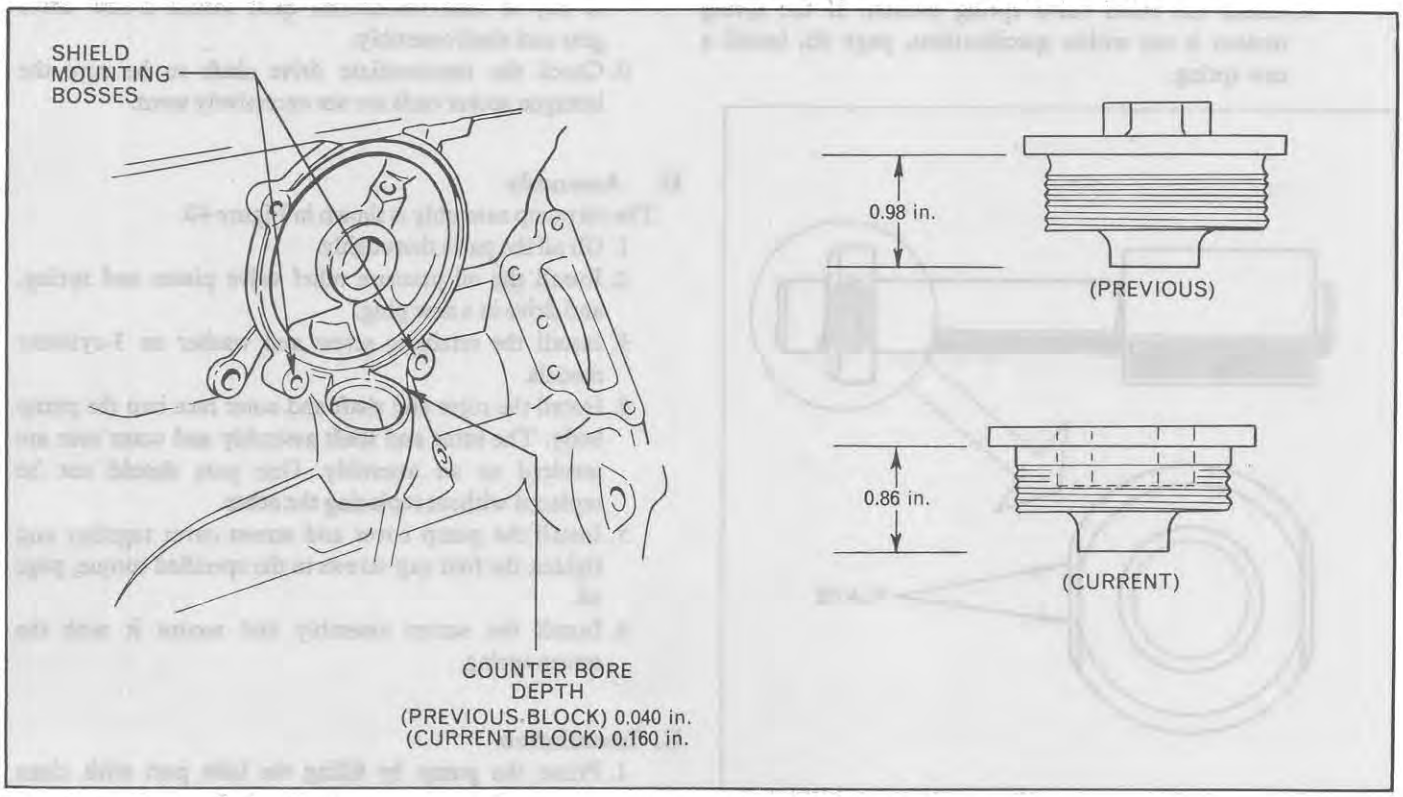

Figure 42A
Oil Pump Stop and Counterbore Depth

5. CONNECTING RODS, BEARINGS, PISTONS, RINGS, AND CYLINDER BLOCK

PISTON AND CONNECTING ROD ASSEMBLY

A. Removal

1. Remove the cylinder head assembly as outlined on page 6, "Cylinder Head Removal".
2. Remove the oil pan sump and oil pump assembly as outlined on page 21, "Oil Pan Sump Removal" and page 22, "Oil Pump Removal".
   NOTE: ***On 4-cylinder diesel engines, remove the balancer.***
3. If necessary, remove the ridge from the top of each cylinder with a cylinder ridge reamer or a hand scraper, Figure 43. (Ridge removal is not necessary when reboring or if the old pistons are not to be used. However, it may be necessary to remove a ridge in order to remove an old piston). When removing the cylinder ridge do not cut down into the ring travel more than $\frac{1}{32}$ in. (0·793 mm.). It is possible to cut so deeply into the cylinder wall and so far down into the ring travel that reboring, or the installation of a new engine block is necessary. Do not attempt to remove and reuse a piston from a cylinder with an excessive ridge. Forcing the piston past the ridge may break the lands on the piston or the rings.
4. Remove the nuts from the connecting rod bearing cap bolts of the piston that is at the bottom of its stroke. Remove the rod bearing cap and liner, Figure 44, from the rod. Push the piston and rod assembly away from the crank pin and remove the bearing liner from the rod. Push the rod and piston assembly out of the top of the cylinder, using the handle end of a hammer. Be careful not to scratch the crank pin or the cylinder. Turn the crankshaft to bring each piston to the bottom of its stroke and repeat this procedure. Keep the bearing caps and liners with their respective connecting rods.
5. Remove the piston rings from the pistons with a piston ring expander or other suitable means, as shown in Figure 45.

B. Disassembly

1. Remove the piston pin snap ring (circlip) from each side of the piston and remove the pin.
2. Identify each piston to be sure it will be reassembled onto the rod from which it was removed.

C. Cleaning

Clean the piston ring grooves with a piston ring groove cleaner, Figure 46. Be careful not to scratch or remove metal from the groove sides. Place the piston assembly in liquid cleaner, if available, to soften carbon and lead deposits. Clean the rod bore and the back of the connecting rod bearing liners thoroughly. Dry the parts with compressed air. Do not use a wire brush.

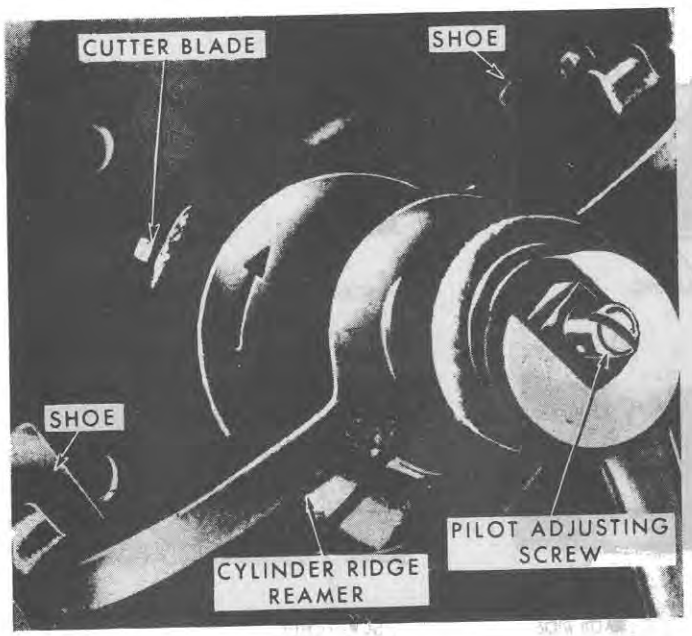

Figure 43
Removing Cylinder Ridge

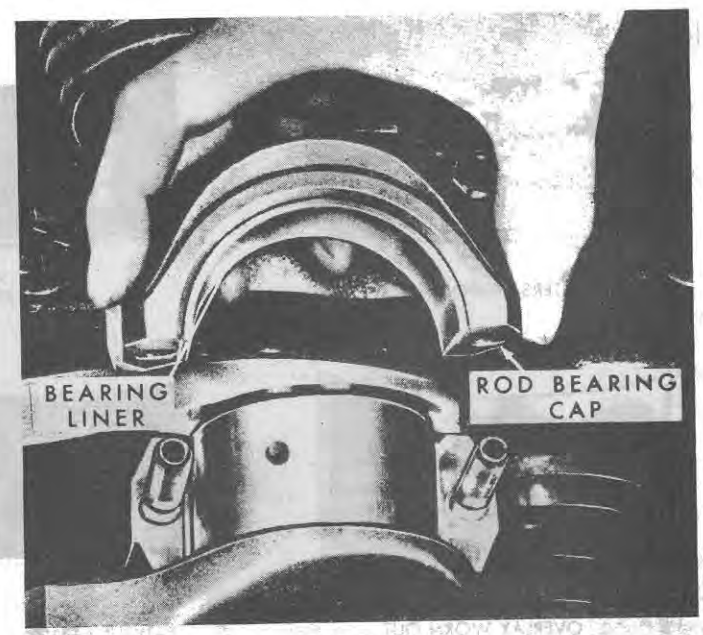

Figure 44
Removing Connecting Rod Bearing Cap

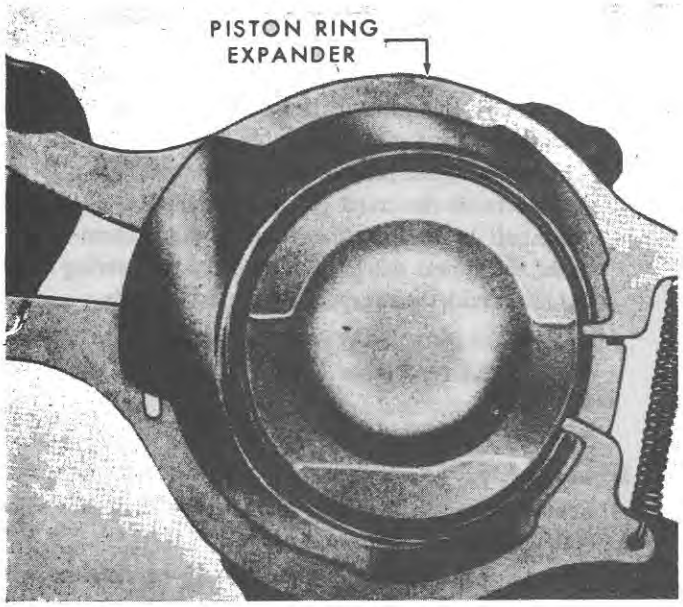

Figure 45
Removing Piston Ring With Ring Expander

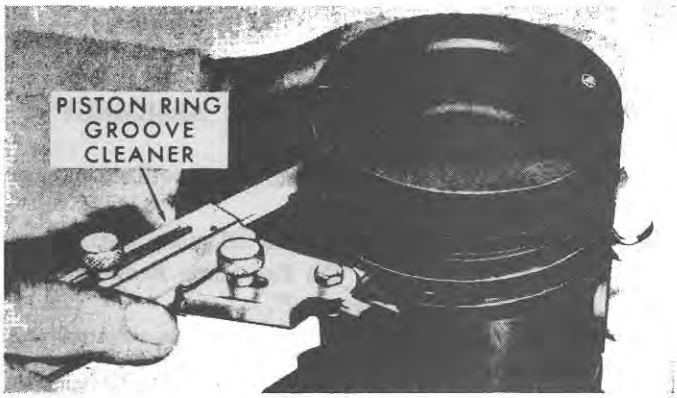

Figure 46
Cleaning Piston Ring Grooves

D. Inspection

Connecting Rods:

1. Inspect the connecting rods for signs of damage and the bearing bores for out-of-round and taper. If the bore exceeds the recommended limits or is damaged, a new connecting rod should be installed.
2. Check the connecting rod nuts and bolts. Any part that shows signs of wear or damage should be replaced. Always use new connecting rod bearing cap nuts.
3. Check piston pin bushings for wear or damage. Measure outside diameter of piston pin and inside diameter of piston pin bushing. If bushing is damaged, or if the measurements indicate that a clearance between the bushing and the pin is not between 0·0005-0·0007 in. (0·0127-0·01778 mm.) the bushings must be removed. **NOTE:** ***If a new piston pin bushing is installed, it must be reamed to provide the clearance listed above.***
4. A shiny surface on the pin boss side of the piston will usually indicate that a connecting rod is bent. Abnormal connecting rod bearing wear is also an indication of bent

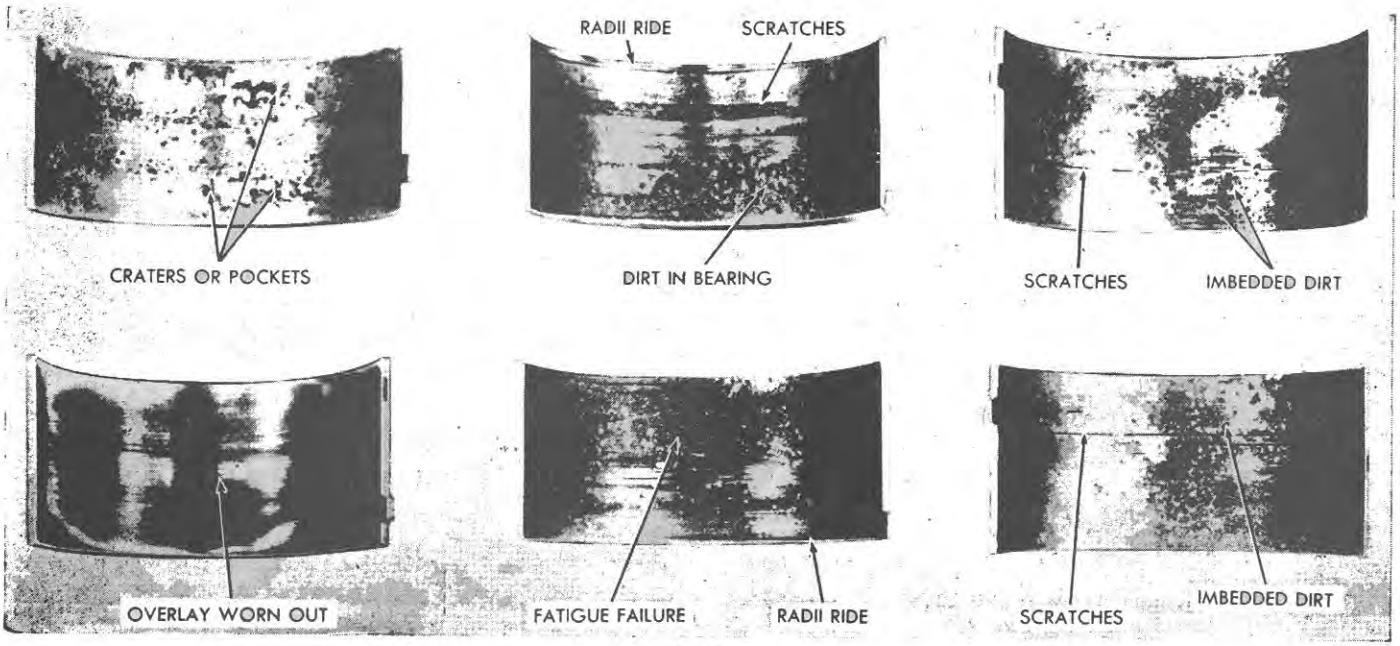

Figure 47
Typical Defective Bearing

connecting rods. Twisted connecting rods will not create an easily identifiable wear pattern, but badly twisted rods will disturb the action of the entire piston assembly. Refer to "Connecting Rod Alignment".

Connecting Rod Bearings:

1. If the bearing liners are scored, have the flash overlay wiped out, show fatigue failure, or are badly scratched, as shown in Figure 47, install new bearing liners.
2. If the bearing liners appear to be serviceable, keep with their respective rods for reassembly in the engine. If the clearance exceeds the specified limits, page 62, new bearings must be installed. Undersize connecting rod bearings are available in 0·002 in. (0·0508 mm.), 0·010 in. (0·254 mm.), 0·020 in. (0·508 mm.), 0·030 in. (0·762 mm.) and 0·040 in. (1·016 mm.) for service. If new bearings are required, follow the procedure covered on page 43.

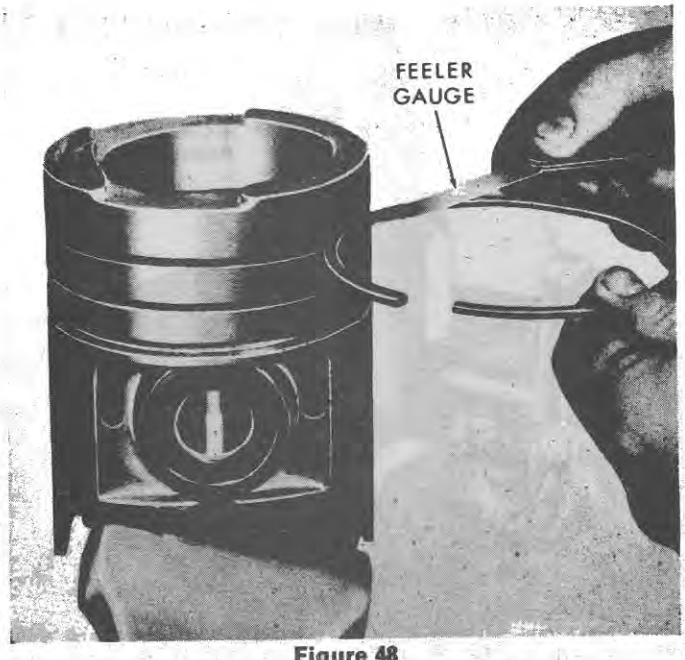

Figure 48
Checking Ring Side Clearance

Pistons:

1. Inspect pistons for damage at the ring lands, skirts, and pin bosses. Check for separation of the top ring insert from the piston. Check for wear in the ring lands by using a new ring and a feeler gauge, as shown in Figure 48. The rings should have the clearances as specified on page 65.
2. If the pistons have excessive skirt clearance, wavy ring lands, fractures, or damage from detonation, install new pistons.
3. Piston pins having wear or damage should be discarded and new ones installed. Always use new piston pin snap rings (circlips).

Connecting Rod Alignment:

1. Place each connecting rod in an alignment fixture, as shown in Figure 49.
2. If the connecting rod is twisted more than 0·0120 in. (0·3048 mm.) or bent more than 0·0040 in. (0·1016 mm.) install a new rod.

E. Repair

Connecting Rod Bushing:

1. Remove the connecting rod bushing from the connecting rod with Driving Mandrel No. 815, Adapter No. T-809, and an arbor press, Figure 50.
2. Clean the connecting rod bore and make sure there are no burrs or scratches in the bore. Press a new bushing into the connecting rod, using the same bushing tool that was used for removal.
3. Using the hole in the top of the connecting rod as a guide, drill a $\frac{1}{4}$ in. (6·350 mm.) diameter hole in the bushing, Figure 51.
4. Using an expansion reamer, ream the bushing in the connecting rod to obtain the specified bushing-to-piston pin clearance, page 64. A spiral expansion reamer is recommended.

Fitting Pistons:

1. Pistons are available in both standard and oversizes to fit all engines. New pistons should be installed if the clearance exceeds the specified limits, page 64.
2. The cylinder bores must be checked for taper and out-of-round before fitting a piston, as outlined on page 33, under "Cylinder Block Inspection".
3. Before installing a piston and new rings in a used block, remove the high polish on the cylinder wall to aid ring seating. This is done by passing a hone lightly through the cylinder bore a few times. Do not hone more than enough to rough up the polish. After honing, bores should be washed with hot water and detergent, then rinsed in cold water and dried thoroughly. The bores should then be oiled to prevent rusting.

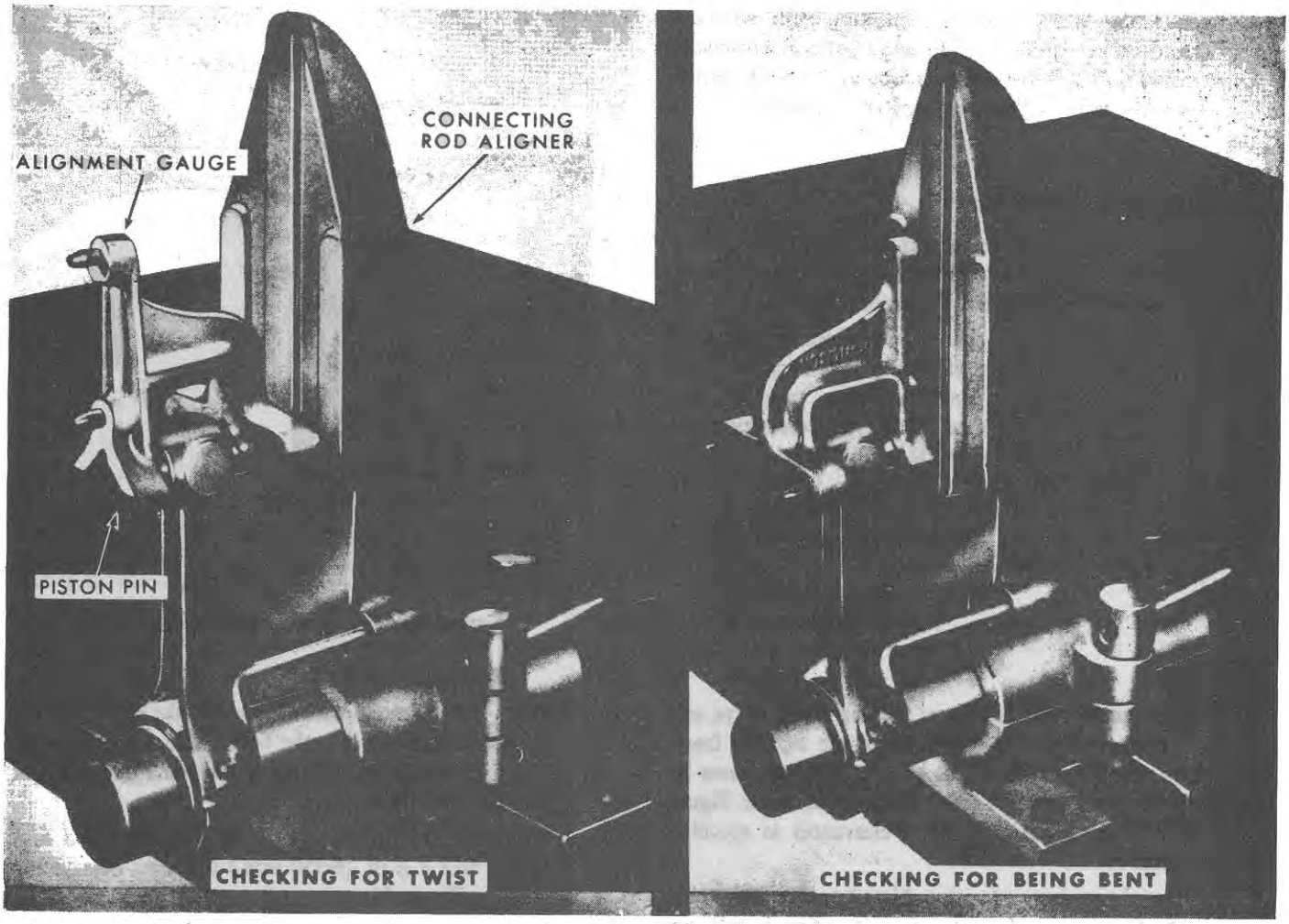

Figure 49
Connecting Rod Alignment

4. Using a bore gauge (or inside micrometer) check and record the cylinder bore diameter in a crosswise direction as shown in Figure 52.
5. With an outside micrometer, check and record the "W" diameter of the piston to be fitted, Figure 52A.
6. Subtract the piston diameter from the bore diameter. The resultant figure should be within the clearance specification given on page 64.
7. If the resultant figure is greater than the clearance given in the specifications, page 64, try another piston. If none can be fitted rebore the cylinder to the next oversize. If the clearance is less than specified, hone the bore until the desired clearance is obtained.

NOTE: ***Dimension "W" is not the point of largest diameter of the piston, but it is the datum from which bore clearances are calculated.***

The combustion chambers of Ford 2000 diesel pistons have been modified to increase the compression of the engine to 17·5-1. Because of the modification to these pistons, they should be installed only in sets in engines prior to engine date code E246 if proper operation and balance of the engine is to be maintained.

Fitting Piston Rings:

1. Before installing new rings on a piston, the rings should be checked for proper ring gap. Each ring should be fitted and checked in the cylinder in which it is going to be used, and marked accordingly after the cylinders have been checked and reconditioned as required. Push the ring down into the cylinder bore to the lower unworn portion of the cylinder, using the head of a piston so that the ring is square with the cylinder wall.

NOTE: ***When positioning the piston ring inside the cylinder for checking ring gap, be very careful not to damage the ring or the cylinder bore.***

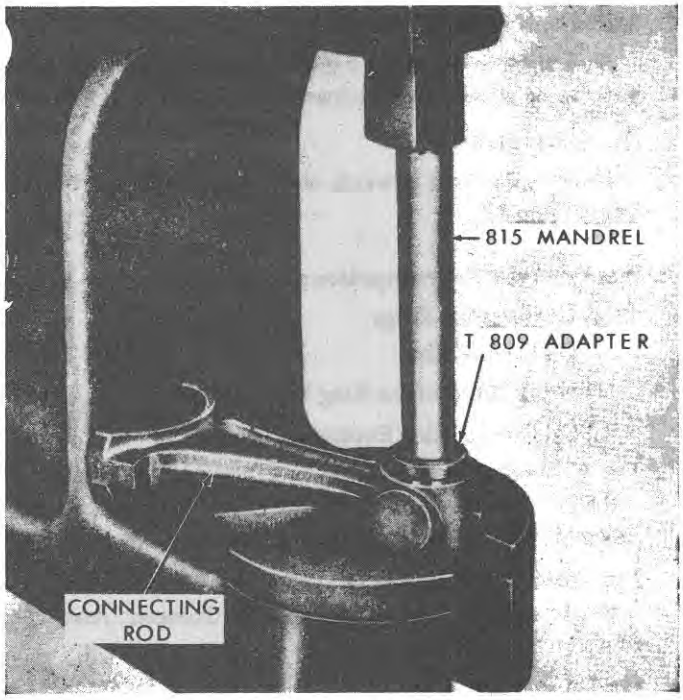

Figure 50
Removing and Installing Connecting Rod Bushing

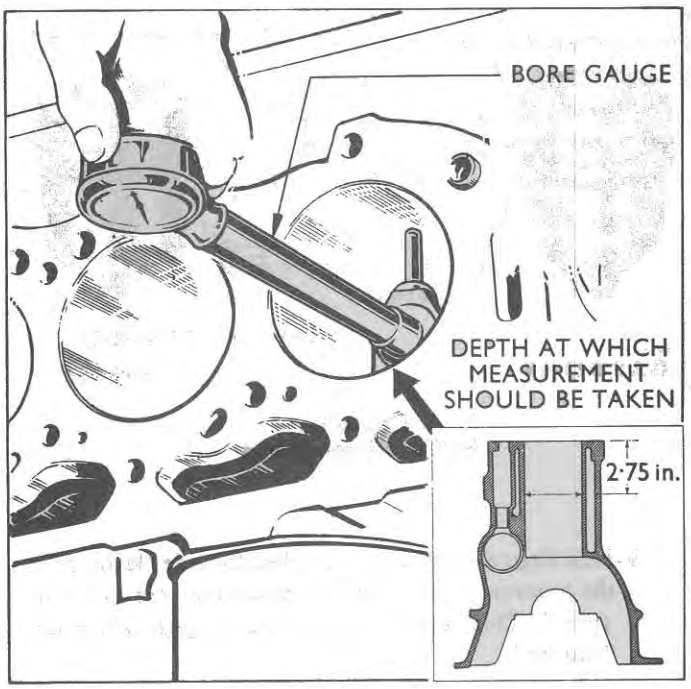

Figure 52
Cylinder Bore Grading Depth

2. Check the gap between the ends of the ring with a feeler gauge, Figure 54. The ring gap should be as specified on page 65. It is important that all rings have at least the minimum gap clearance to provide for the expansion that may occur when the engine warms up to operating temperature; otherwise, the ring ends may butt together and cause scuffing, scoring, or ring breakage.

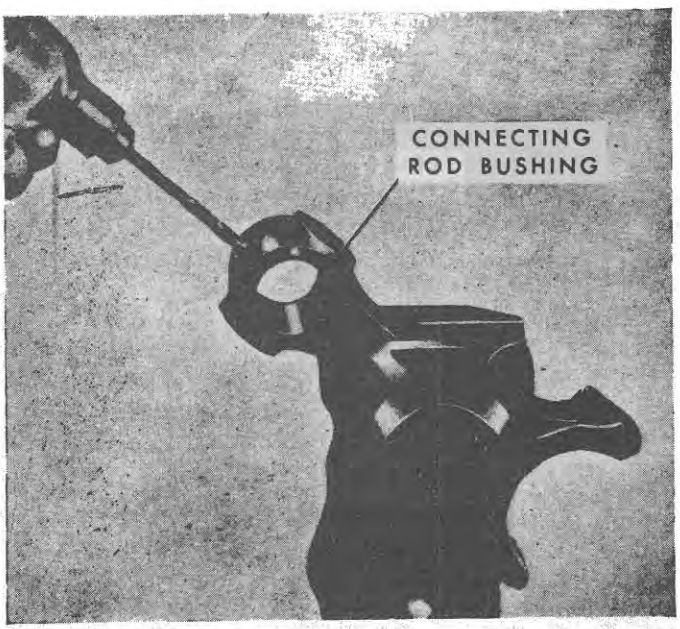

Figure 51
Drilling Connecting Rod Bushing

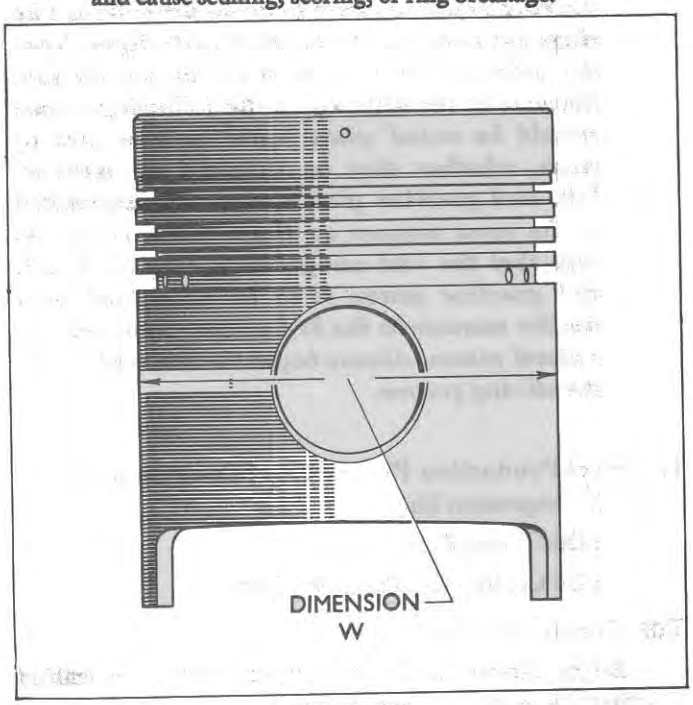

Figure 52A
Piston Grading Diameter

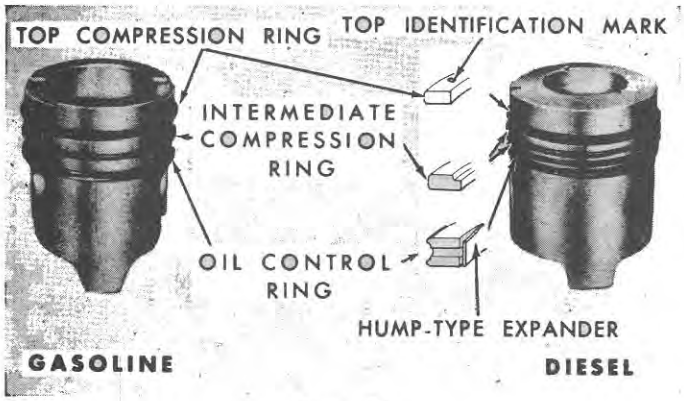

Figure 53
Fitting Piston Rings

3. New rings should also be checked for side clearance in the grooves of the piston on which they are to be installed. This is done as outlined on page 27, under "Pistons".

Installing Piston Rings:

NOTE: ***When installing the piston rings, it is recommended that a piston ring expander be used as shown in Figure 45. This tool will prevent over-expansion of the ring, and will expand the ring to a true circle to avoid distortion. The rings supplied in Service Ring Kits differ from the standard size rings used in production. Because of the differences the following points should be noted when installing new sets of rings, whether they be standard or oversize. L.P. and gasoline piston rings are assembled in the same manner as diesel piston rings, except that the 2nd compression ring on a L.P. and gasoline piston is to be assembled in a similar manner to the 3rd compression ring on a diesel piston. Always begin the assembly from the oil ring groove.***

1. Diesel Production Piston Ring Set—comprises:

3 Compression Rings

1 Oil Control Ring

1 Oil Control Ring Expander (Slotted)

TOP COMPRESSION RING

Bright chrome finish, non-stepped. May be assembled either side upwards, Figure 53.

2ND COMPRESSION RING

Bright chrome finish, step on inside diameter. Assemble with step facing upwards.

3RD COMPRESSION RING

Dull black finish, step on inside diameter. Assemble with step facing upwards—no expander behind ring, Figure 53.

OIL CONTROL RING

Install either way upwards with slotted expander behind ring, Figure 53.

2. Service type Set comprises:

3 Compression Rings

1 Oil Control Ring

1 No. 3 Compression Ring Expander (Non-slotted)

1 Oil Control Ring Expander (Slotted)

TOP COMPRESSION RING

Bright chrome finish, chamfer on inside diameter. Assemble with chamfer facing upwards.

2ND COMPRESSION RING

Bright chrome finish, step on inside diameter. Assemble with step facing upwards.

3RD COMPRESSION RING

Dull black finish, step on outside diameter, facing downwards and non-slotted expander behind ring.

OIL CONTROL RING

Install either way upwards with slotted expander behind ring.

3. Space the rings on the piston as follows:

Hump-type Expander—

Position gap in line with piston dome identification mark, Figure 56.

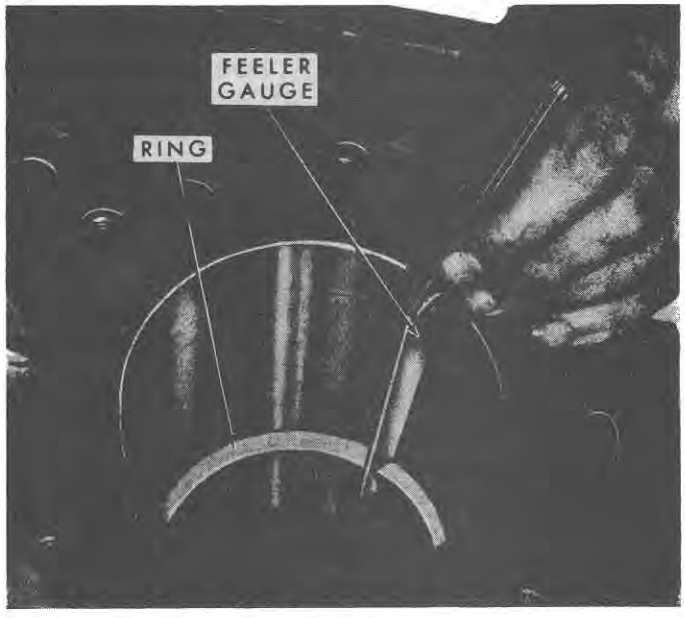

Figure 54
Checking Piston Ring Gap

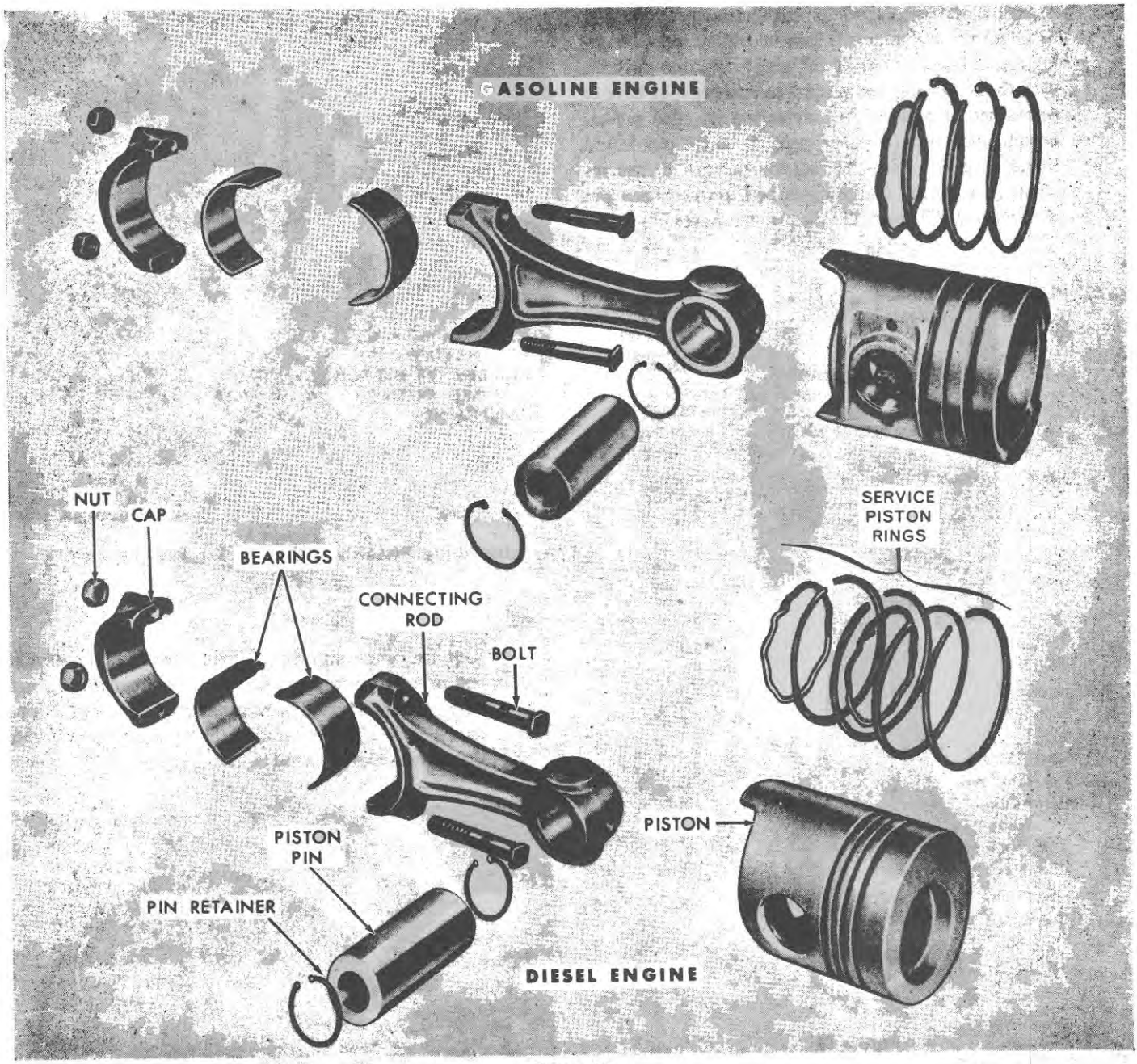

Figure 55
Piston and Connecting Rod Assembly

Oil Control Ring

Position gap 90° from piston dome identification mark.

Lower Compression Ring—

Position gap 180° from oil control ring gap.

Remaining Compression Rings—

Position gap 120° intervals from lower compression ring.

Piston Assembly:

1. Lubricate all parts generously with engine oil during assembly. All parts of the piston and connecting rod assembly are shown in Figure 55, for both the LP and gasoline and diesel engines. Use the illustration for reference during assembly.

2. Assemble the piston to the connecting rod with the notch on the piston crown and the pip on the connecting rod in line as shown in Figure 56. If a new piston is used the connecting rod piston pin bushing may have to be reamed or replaced to provide the specified pin-to-bushing clearance (when properly fitted the pin should rotate snugly in both the rod and piston). Before installing the piston in the block be sure the piston pin retainers are fully seated in the piston grooves.

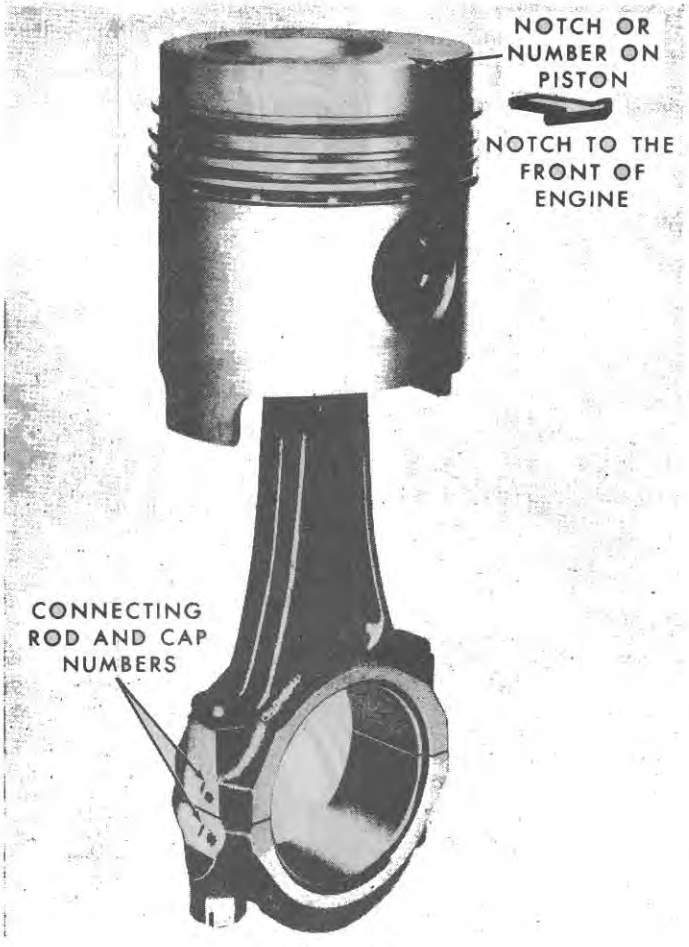

Figure 56
Correct Position of Piston in Relation to Connecting Rod

F. Installation

1. Turn the crankshaft to position the No. 1 crankpin at the bottom of its stroke.
2. Liberally lubricate the No. 1 piston with engine oil. Compress the rings with a Piston Ring Compressor as shown in Figure 57. Install the bearing liner in the connecting rod.
3. Position the piston and rod assembly in the cylinder block with the identification mark on the piston facing the front of the engine.



Figure 57
Installing Piston and Connecting Rod Assembly

4. Tap the piston into the cylinder bore with the handle end of a hammer, Figure 57, until the connecting rod bearing liner is seated on the crankpin. Be careful not to damage the cylinder wall or the bearing journal with the connecting rod or rod bolts.

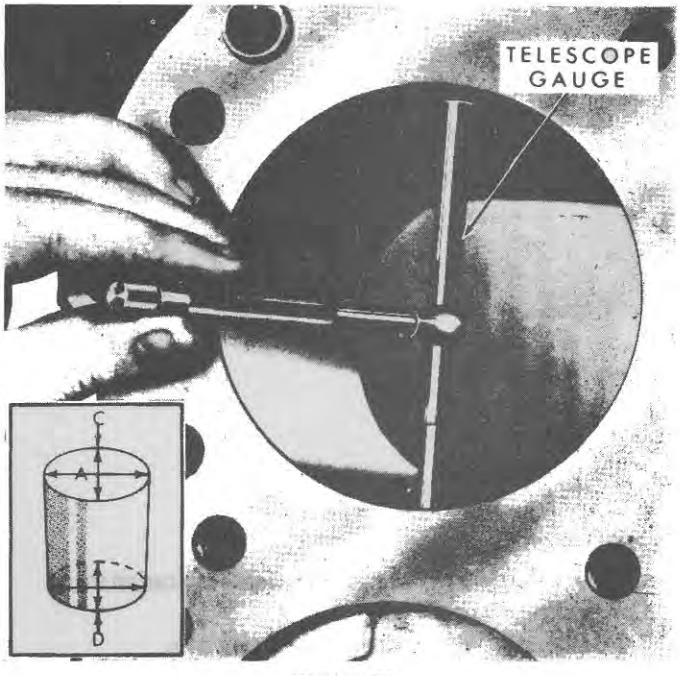

Figure 58
Measuring Cylinder Bore

5. Having ensured correct liner clearance, refer to page 43 "Fitting Main and Connecting Rod Bearings". Lubricate the crankpin and liners and install the bearing cap on the rod, with the number on the cap on the same side as the number on the rod. Install new nuts and tighten to the specified torque, page 68.
6. Install the remaining pistons and rods in the same manner, each time checking the bearing clearance.
7. Install the oil pump and the oil pan sump as outlined on page 23, "Oil Pump Installation", and page 22. "Oil Pan Sump Installation". Install the balancer on 4-cylinder engines as outlined on page 36.
8. Install the cylinder head as outlined on page 13, "Cylinder Head Installation".
9. Fill the crankcase with oil and the radiator with coolant.
10. Start the engine and check for leaks.

CYLINDER BLOCK

The following is the procedure for inspection and repair of the cylinder block.

A. Inspection

1. Inspect the core plugs for evidence of rust. If rust is present this indicates leakage and new plugs should be installed. Remove the defective plugs. Apply sealer to the new plugs and install them securely.
2. Inspect or measure the cylinder bores for waviness, scratches, scuffing, out-of-round, wear, and taper. A wavy cylinder wall has a series of parallel lines or rings worn around the cylinder, generally found at the top or bottom of the piston ring travel. These irregularities and scratches, although in most cases too small to be measured with the naked eye, usually can be felt by running a finger over the cylinder surface. A scuffed cylinder can be identified by discoloured areas. The colour varies from a light straw-to-dark blue, depending on the severity of the scuffing. Out-of-roundness, wear, and taper can be detected with a cylinder bore gauge using the procedures given in step 3, see Figure 58.
3. Record the measurements taken lengthwise and crosswise at the top and bottom of the piston travel as follows:
   a. Lengthwise of the block, measure and record as "A" the diameter of the cylinder at the area of greatest ring wear near the top of the cylinder.
   b. Also lengthwise of the block, measure and record as "B" the cylinder diameter at the bottom of piston skirt travel.
   c. Crosswise of the block, measure and record as "C" the diameter at the top of the cylinder in the same area as measurement "A", the greatest wear point.
   d. Measure and record as "D" the diameter at the bottom of the piston skirt travel and crosswise of the block.
   e. Reading "A" compared to reading "B" and reading "C" compared to reading "D" indicates cylinder taper.
   f. Reading "A" compared to reading "C" and reading "B" compared to reading "D" indicates whether the cylinder is out-of-round.

The specified limits for the measurements listed above are given on page 59.

If the cylinder taper, out-of-roundness or wear (piston-to-bore clearance) are above the maximum specification, the cylinders should be honed or bored to fit the next oversize piston. Check the flatness of the cylinder block gasket surfaces and the depth of the cylinder head bolts hole taps.

B. Repair

If the cylinder walls have only minor surface imperfections and the out-of-round and taper is within limits, page 59, it may be possible to remove the imperfections by honing the cylinder walls and installing new piston rings, provided the piston clearance is within limits.

Cylinder walls that are severely marked or worn beyond the specified limits should be bored. Manufacturer's recommendations on the use of boring equipment should be followed and the work should be performed by experienced personnel.

The exact finished bore size can be determined, by measuring the diameter of the piston at right-angles to the piston pin axis (Dimension W—Figure 52A) then add to this dimension the appropriate piston clearance as shown in specification on page 64.

Bore the cylinder with the most wear first to determine the proper oversize. Oversize pistons are available in 0·004 in. (0·1016 mm.), 0·020 in. (0·508 mm.), 0·030 in. (0·762 mm.) and 0·040 in. (1·015 mm.) oversize. Bores into which 0·004 in. (0·1016 mm.) pistons will be installed need only be honed. All honing should be accomplished with a rigid hone using a grit size of 150-220. When boring a cylinder leave approximately 0·002-0·003 in. (0·051-0·077 mm.) stock for honing. After the final operation and prior to installing the piston, thoroughly wash the cylinder walls with hot water and detergent to remove all abrasive particles, and carefully dry the walls. Coat the walls with engine oil after drying to prevent rusting. Identify the piston to correspond to the cylinders to which they are to be installed. Thoroughly clean the entire block to remove all particles from the bearing bores, oil passages, cylinder head bolt holes, etc.

6. BALANCER, MAIN BEARINGS, FLYWHEEL, AND CRANKSHAFT

The main bearings and balancer can be overhauled with the engine in the tractor. To remove the flywheel, the engine must be removed from the tractor, or the tractor separated between the engine and the transmission, as outlined in Part 15, "SEPARATING THE TRACTOR". The engine must be removed from the tractor before the crankshaft can be removed.

BALANCER

The Ford 5000 4-cylinder engines are equipped with a dynamic balancer to minimize engine vibration. The balancer is attached to the cylinder block with four bolts. The balancer is lubricated by oil from the engine oil pressure system.

A. Removal

1. Remove the oil pan sump, as previously outlined, on page 21.
2. Check the backlash between the crankshaft gear and the balancer drive gear, using the procedure given in step 3, page 36. If the backlash is not within specifications, page 63, install new balancer gears.
3. Remove the four bolts attaching the balancer to the cylinder block and remove the balancer.

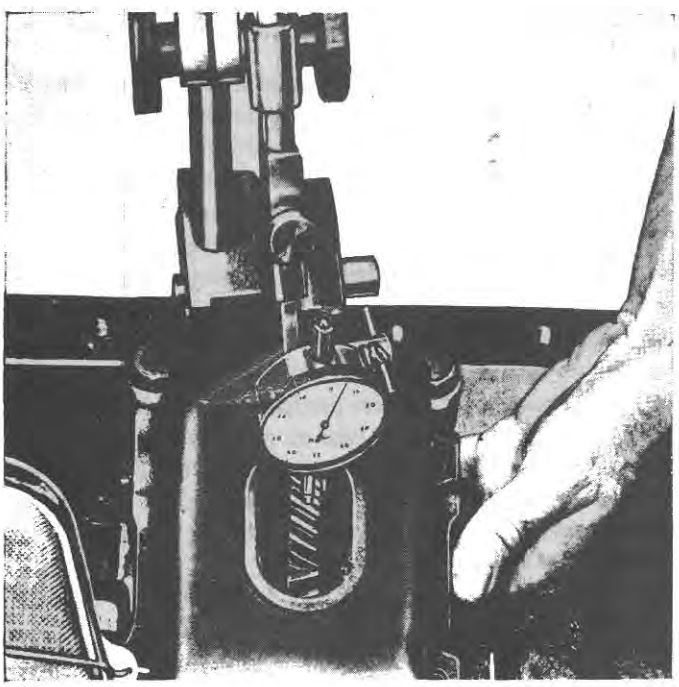

Figure 59
Checking Balancer Backlash

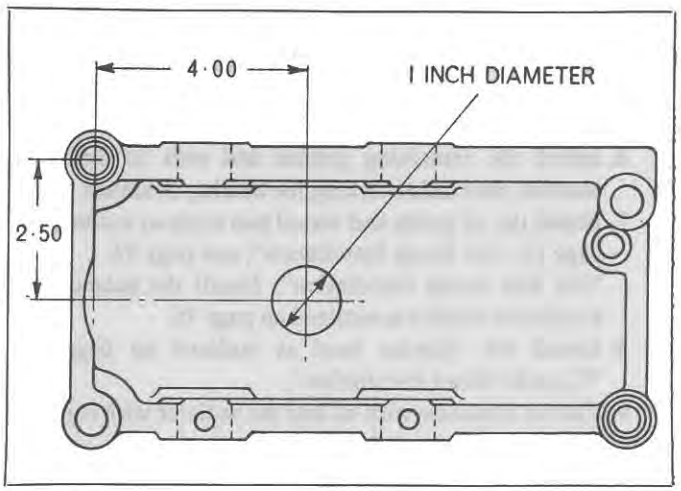

Figure 60
Balancer Support Hole

B. Disassembly and Inspection

1. Check the balancer gears for wear, cracks, or looseness on the shafts.
2. Check the gear backlash with a feeler gauge or a dial indicator. The gear backlash must be within the specified limits, page 63.
3. Check the balancer support for cracks or damage.
4. Drive out the pins in the balancer shaft, Figure 61.
5. Remove the shafts, balancer gears, and thrust washers, Figure 62, from the balancer support.

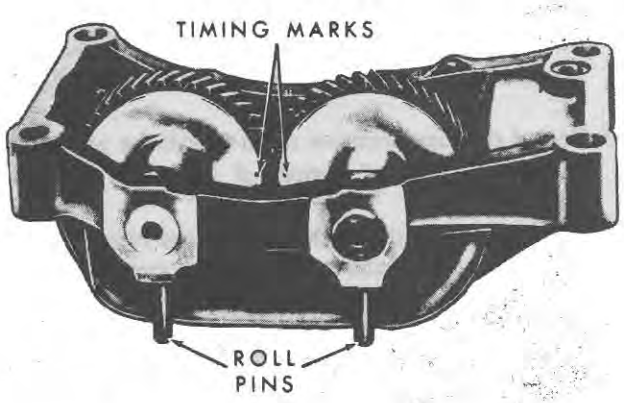

Figure 61
Balancer Timing Marks and Roll Pins

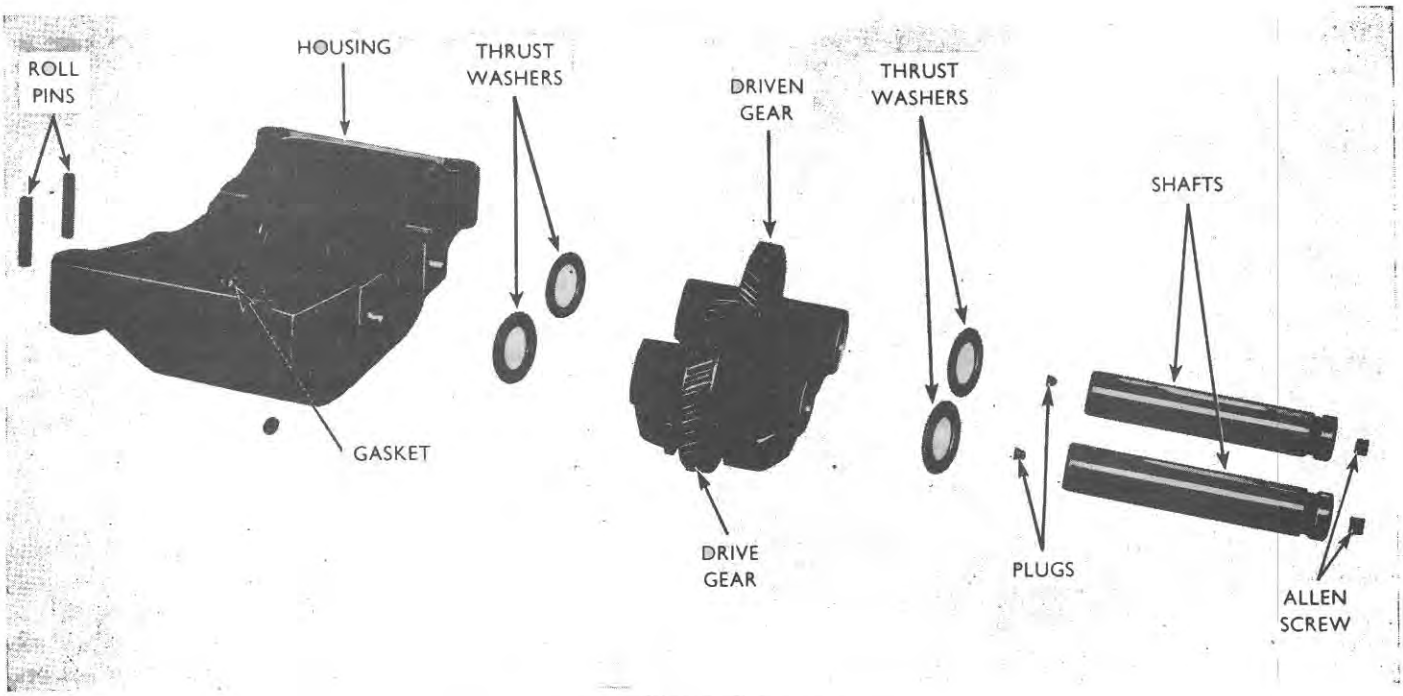

Figure 62
Balancer Disassembled

C. Repair

1. Check the shafts for wear and be sure the lubrication holes are free of obstructions.
2. Using micrometers, measure the outside diameter of the shafts and the inside diameter of the bushings, Figure 63. If shaft-to-bushing clearance, or shaft diameter, exceeds the specifications, page 63, install a new shaft or a new gear, and recheck shaft-to-bushing clearance.

D. Assembly

1. Position the two balancer gears into the housing. Be sure the gears are in the position shown in Figure 61, with the timing marks aligned. The timing marks should be facing the roll pin end of the balancer housing.
2. Position new thrust washers at each end of each gear and insert the shafts.
3. Drive the two pins, Figure 61, through the housing and shafts to secure the shafts.
4. Check the backlash between the two gears using a dial indicator (clock gauge) on the tooth of one gear while holding the other gear firmly. Move the gear on which the point of the indicator rests backwards and forwards noting the indicator reading. This should be done in four positions at 90° intervals around the gear. If backlash cannot be obtained or exceeds the specification page 63, either one of the gears or both are to be changed and the procedure repeated.

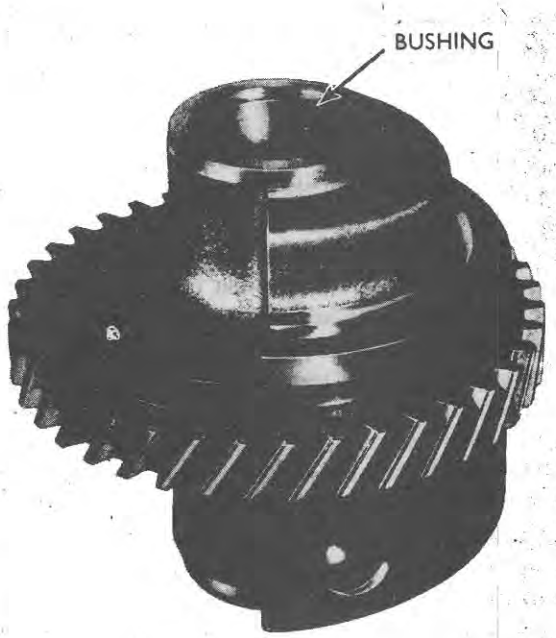

Figure 63
Balancer Gear Bushing

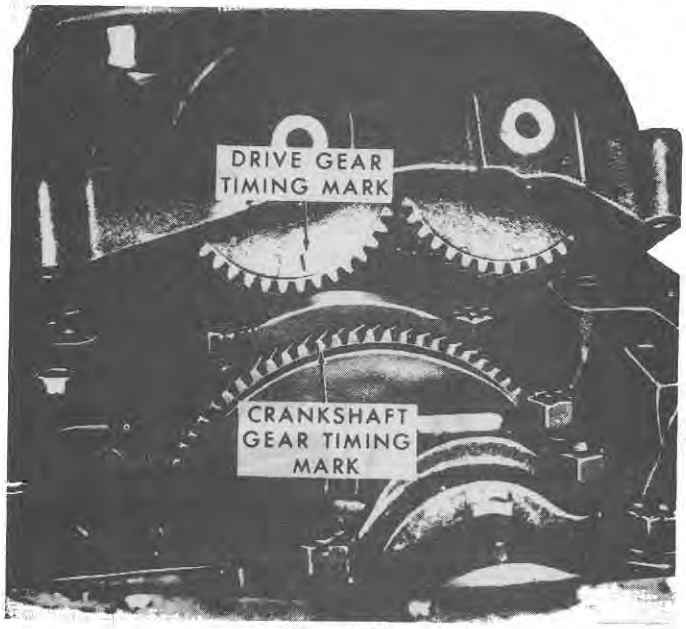

Figure 64
Timing the Balancer to the Crankshaft

E. Installation

1. Make sure that the mounting surfaces on the cylinder block and balancer are clean and the aligning dowels in the cylinder block are not damaged. Rotate the crankshaft until the timing mark on the crankshaft gear is at the bottom of the block, Nos. 2 & 3 pistons are at T.D.C. (top dead centre). Rotate the balancer gears to align the balance mark on the balancer drive gear with the timing mark on the crankshaft gear, as shown in Figure 64.
2. With the timing mark aligned and a new gasket installed around the lubrication passage in the cylinder block, position the balancer over the aligning dowels on the cylinder block. Install and tighten the four balancer mounting bolts to the specified torque, page 68. Recheck the timing marks on the balancer gear and the crankshaft gear to be sure they are in line.
3. With the balancer mounted to the engine block, check the backlash between the balancer drive gear and crankshaft dynamic balancer gear. To do this, use a dial indicator as shown in Figure 59 with the dial plunger perpendicular against the face of one of the drive gear teeth, "rock" the drive gear to obtain the backlash. Backlash is to be taken at 90° intervals around the drive gear. On balancer supports that do not have a slot in the bottom, drill a 1·0 in. (25·4 mm.) diameter hole as shown in Figure 60. If the gears do not meet backlash specification on page 63 one or both should be replaced until the specified backlash has been obtained.
4. Replace the oil pan sump.

MAIN BEARINGS

A. Removal

1. Remove the oil pan sump as outlined on page 21, "Oil Pan Sump Removal".
   NOTE: ***On the 4-cylinder gasoline and diesel engines which are equipped with a balancer, remove the balancer as outlined on page 34, "Balancer Removal", to facilitate removal of the intermediate thrust bearing cap.***
2. Remove the oil pump and the intermediate shaft.
3. Remove the main bearing cap to which new bearing liners are to be installed. Install one bearing at a time, leaving the other main bearing caps securely in place.
4. Install a bearing liner remover in the oil passage of the crankshaft. Turn the crankshaft counter-clockwise slowly until the tool forces the bearing out of the cylinder block.
   NOTE: ***If a bearing insert tool is not available, flatten the head of a 1 in. × $\frac{1}{8}$ in cotter pin (split pin) and bend the head at approximately a 30° angle to conform to the angle of the oil passage in the crankshaft. See Figure 65. Use the fabricated tool in the same manner to remove and install bearing inserts. The shorter cotter pin (split pin) must be used to remove the thrust bearing insert.***

B. Inspection

Clean the bearing liners, journals, and caps thoroughly. Inspect each bearing carefully. Bearing liners that have a

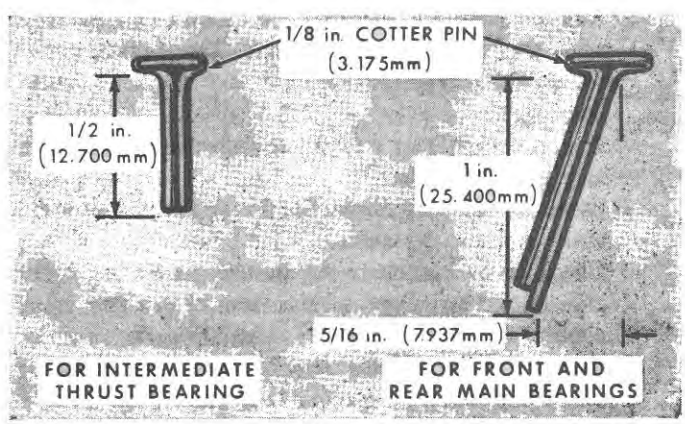

Figure 65
Fabricated Main Bearing Insert Tool

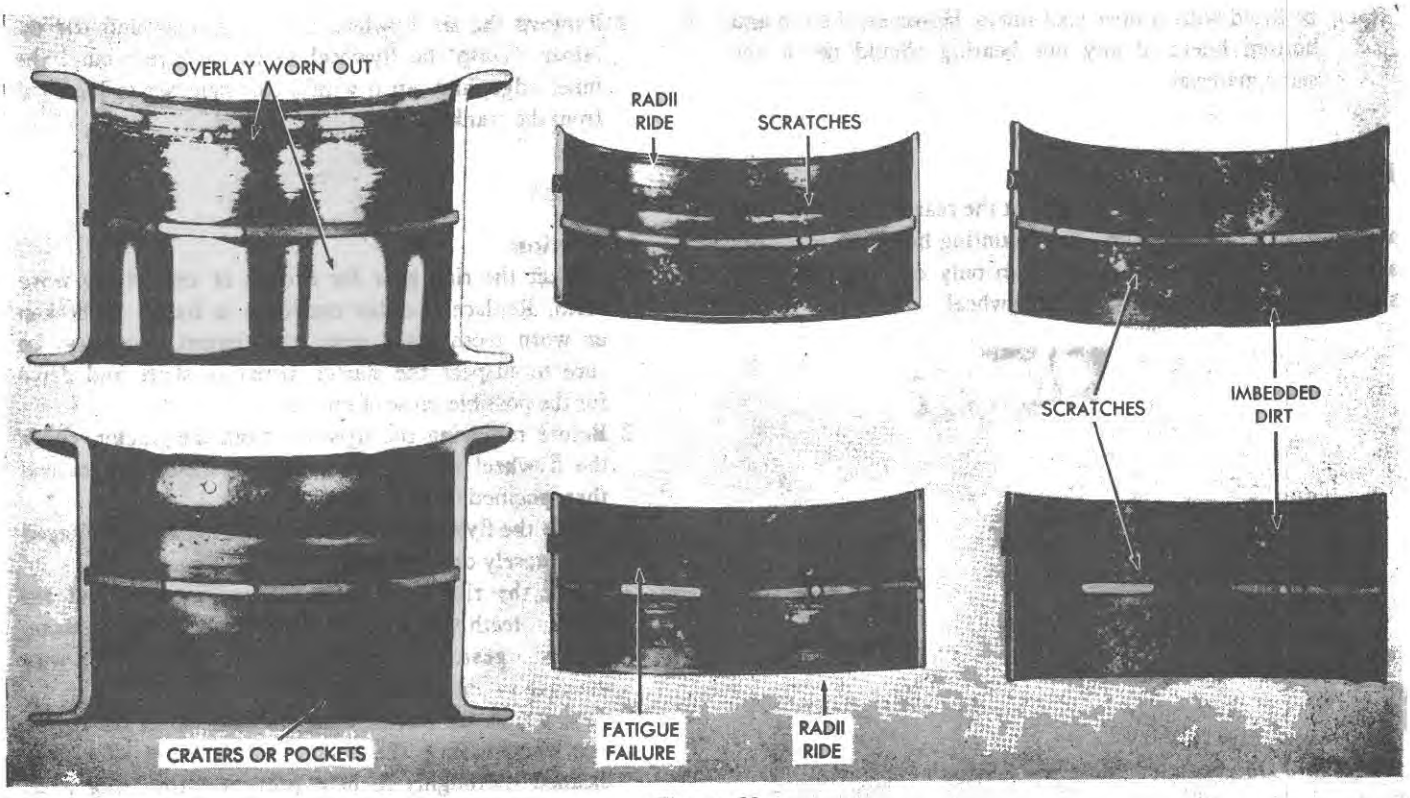

Figure 66
Typical Bearing Failures

scored, chipped, or worn surface, as shown in Figure 66, should be replaced. Re-install the liners that appear serviceable. If new liners are installed, check the clearances, using Plastiguage method, page 43. If the crankshaft is damaged, it should be reworked or replaced.

C. Installation

1. Remove the bearing cap and liner and apply a light coat of engine oil to the journal and bearing liner.
2. With the bearing liner installation tool in the crankshaft oil hole, hold the bearing liner in place on the crankshaft with the plain end of the bearing at the tang side of the cylinder block. Turn the crankshaft clockwise until the bearing is seated in the block with the bearing ends flush with the bearing cap surface of the cylinder block. Remove the installation tool.
3. Lubricate the bearing cap and bearing liner with engine oil and install the liner into the cap. Hold the bearing cap in place with the locking tang toward the camshaft side of the engine and install the two bolts. Tighten the bolts to the specified torque, page 68.
4. If a new rear main bearing liner is to be installed, the engine will have to be separated from the tractor and a new rear oil seal installed as outlined on page 40.
5. If a new thrust bearing liner has been installed, the bearing should be aligned as outlined on page 41, step 6. The thrust bearing is the one with the flange-type liner on the front intermediate main bearing of the 3-cylinder engine, or the third intermediate bearing on the 4-cylinder engine.
6. Install the oil pump and intermediate shaft.
7. Install the balancer (if equipped) and the oil pan sump.

BEARING LINERS AND CRANKSHAFTS

1. Bearing liners are fitted in production to obtain the desired liner-to-crankshaft journal clearances. Because of the variation in tolerances, different conditions of liners (colour codes) are used to obtain the desired clearances. (The difference between the liners is in the wall thickness.)
2. When fitting standard liners in service, using the "Plastiguage" method, it may be necessary to fit colour code red, colour code blue, or a combination of both liners on the same journal to obtain the desired clearance.
3. Engines may be assembled with liners of different material. For example, one journal may be fitted with aluminium tin alloy liners, while another journal may

be fitted with copper lead liners. However, the top and bottom liners of any one bearing should be of the same material.

FLYWHEEL

The flywheel mounts on a flange at the rear of the crankshaft and is retained by six bolts. The mounting holes are unevenly spaced so that it can be mounted in only one position. The starter ring gear is mounted on the flywheel.

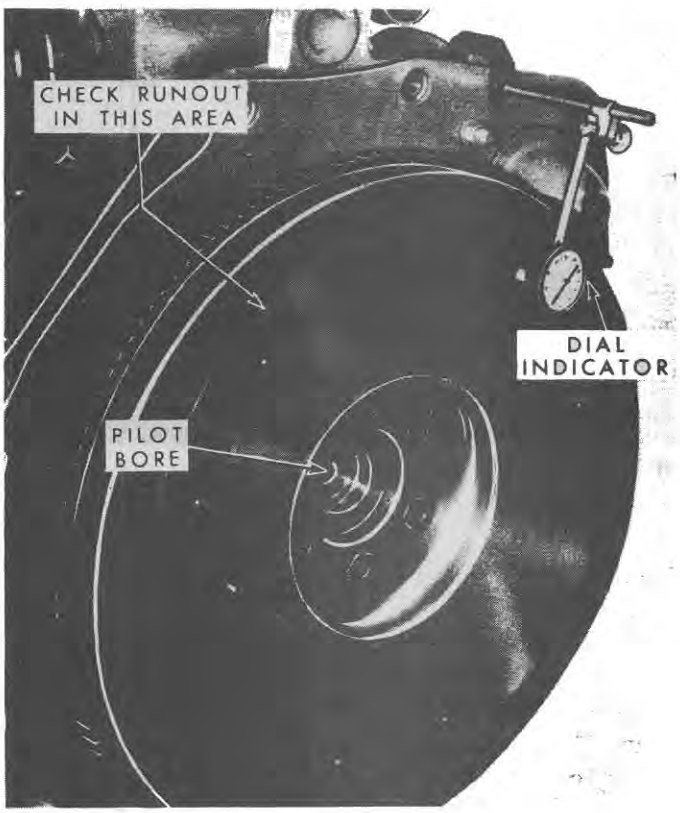

Figure 67
Checking Flywheel Runout

A. Removal

1. Separate the tractor between the engine and transmission as outlined in Part 15, "SEPARATING THE TRACTOR".
2. Remove the pressure plate and clutch disc assembly (torque limiting clutch on Select-O-Speed) from the flywheel as outlined in Part 4, "CLUTCHES".
3. Before removing the flywheel attaching bolts, check the runout with a dial indicator, Figure 67. Measure runout between outer edge of friction surface and mounting bolt holes.
4. Remove the six flywheel attaching bolts and the retainer. Grasp the flywheel in the groove around the inner edge, and tap it with a soft hammer to loosen it from the crankshaft.

B. Inspection

1. Inspect the ring gear for broken or excessively worn teeth. Replace if either condition is found. If broken or worn teeth make gear replacement necessary, be sure to inspect the starter armature shaft and drive for the possible cause of failure.
2. Before removing the flywheel from the tractor, check the flywheel runout. Total runout should not exceed that specified on page 66.
3. Check the flywheel to be sure it has not been damaged by a loosely or improperly fitted ring gear.
4. Check the ring gear teeth for rough edges and for missing teeth which could scuff or gouge the teeth on the drive gear. If necessary, dress the teeth with a wire wheel to smooth up the edges.
5. At any time the tractor is separated between the engine and transmission, the clutch compartment should be cleaned thoroughly to help prevent future ring gear, starter drive, or clutch failure due to abrasives or grease which can accumulate with usage.
6. After installing the flywheel, check the gear runout. Maximum allowable runout is as specified on page 66.

C. Flywheel Ring Gear Repair

1. The mating surfaces of the flywheel and the ring gear must be cleaned thoroughly and any manufacturing "flash" on the gear teeth should be removed.
2. Use two temperature indicating crayons: One indicating 400°F. (204°C.), one indicating 450°F. (212°C.). (These crayons are designed to melt at a specified temperature.)
3. Mark the inner half of the gear face at six equally spaced places with the 400°F. (204°C.) crayon. Mark the face just below the root of the tooth at each of these six places with the 450°F. (212°C.) crayon.
4. Heat the gear *evenly* with an oxy-acetylene torch having a tip size not larger than No. 2 and a rich acetylene adjustment. Direct the flame against the inside of the gear so the heat will travel outwards toward the teeth. Avoid directing the flame against either face of the gear. *Stop* applying heat when the 400°F. (204°C.) crayon mark melts and before the 450°F. (212°C.) crayon begins to melt. Quickly spot check the 400°F. (204°C.) crayon to be sure the gear and not the flame has melted the crayon marks.

5. Quickly place the hot gear on the flywheel with the flat gear face against the shoulder on the flywheel. Be sure the gear face is flush with the shoulder on the flywheel, then quench the gear with water to cool it rapidly.

D. Clutch Pilot Bearing Installation

The clutch pilot bearing can be removed without removing the flywheel, but the flywheel retaining bolts and the grease baffle must first be removed in order to gain access to the bearing.

1. Remove the bearing from the end of the crankshaft with a slide hammer and puller.
2. Coat the pilot bearing bore in the crankshaft with a small quantity of high melting point lubricant.
3. Using a driver and adapter of the correct size, install the bearing to flush with the bore.

E. Flywheel Installation

1. Clean the crankshaft rear flange and the mating surface of the flywheel.
2. Determine the correct relationship of the bolt holes in the flywheel and crankshaft and place the flywheel in position on the crankshaft. Install grease baffle and six caps screws and tighten to the specified torque. Recheck flywheel runout. Install the clutch as outlined in Part 4, "CLUTCHES".
3. Reassemble the tractor as outlined in Part 15, "SEPARATING THE TRACTOR".

CRANKSHAFT

A. Removal

1. Remove the engine from the tractor as outlined in Part 15, "SEPARATING THE TRACTOR", and place it on an engine stand.
2. Remove the flywheel and the engine rear cover plate.

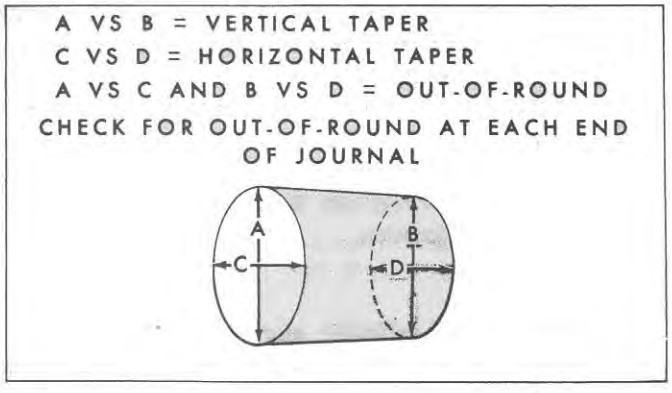

Figure 68
Crankshaft Journal Measurement

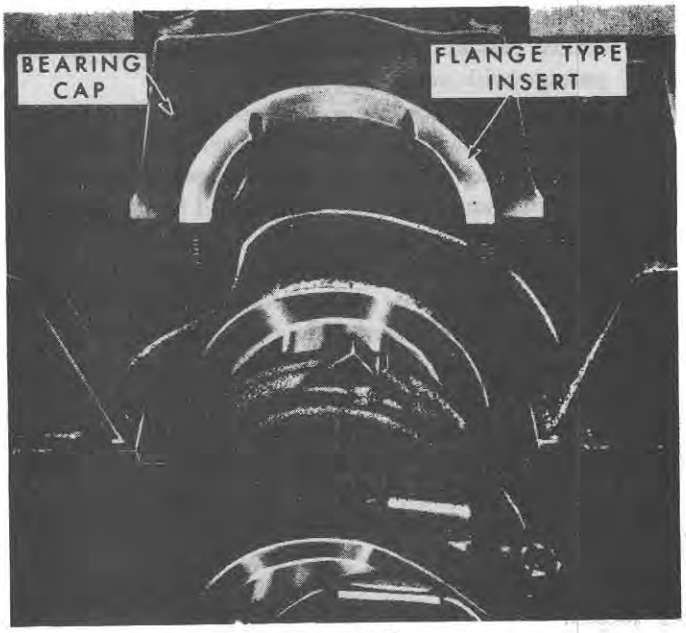

Figure 69
Thrust Bearing

3. Remove the crankshaft pulley and engine front cover, as outlined on page 14.

NOTE: ***If at any time the crankshaft is to be removed with the cylinder head in position, it is necessary to first realign all timing marks. This is necessary to be sure that interference between the valves and pistons does not occur during reassembly.***

4. Remove the oil pan sump and oil pump, as outlined on page 21, "Oil Pan Sump Removal", and page 22, "Oil Pump Removal".

NOTE: ***In the case of the 4-cylinder engine, remove the balancer as previously outlined in this section.***

5. Remove the connecting rod bearing caps and liners. Remove the main bearing caps and liners.
6. Make sure all of the bearing caps and liners are identified so they can be installed in their original position.
7. Carefully lift the crankshaft out of the cylinder block so the thrust bearing surfaces are not damaged. Handle the crankshaft with care to avoid possible damage to the finished surfaces.

B. Inspection

NOTE: ***Current production engines may have a crankshaft with main bearings and/or crankpin bearing journals ground 0·010 in. (0·254 mm) undersized. These crankshafts can be identified from the letters "010 MUS" and/or "010 PUS" stamped on one of the counterbalance weights of the crankshaft.***

1. Clean the crankshaft in a tank of solvent. Clean all drilled passages with a rifle brush, then blow out the passages with compressed air.
2. Place the crankshaft on V-blocks to check the runout at the intermediate main bearing journals with a dial indicator. If the crankshaft appears damaged or misaligned, or if the runout exceeds the specified limits, page 61, install a new crankshaft.
3. Inspect the main and connecting rod journals for cracks, scratches, grooves or scores. Dress minor imperfections with an oil stone. Refinish severely marked journals.
4. Measure the diameter of each journal in at least four places to determine out-of-round, taper or wear, Figure 68. If the journals exceed the specified wear limits, page 61, they should be refinished to size for the next undersize bearing, page 63.

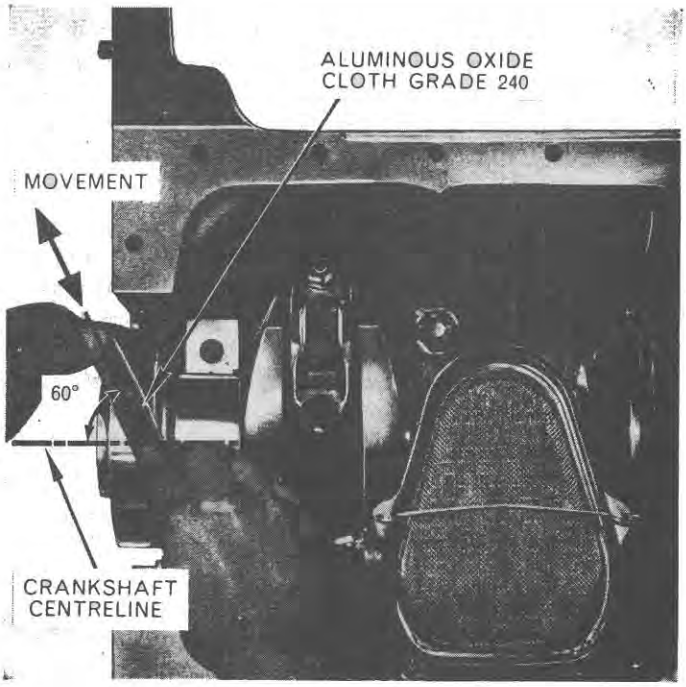

Figure 70
Scrolling Oil Seal Journal

C. Repair

1. If the crankshaft gear teeth are excessively worn or if any teeth are chipped, install a new crankshaft gear. Remove the gear as outlined on page 18, "Crankshaft Gear Removal".
2. Install a new gear as outlined on page 18, "Crankshaft Gear Installation". Be sure the gear is all the way onto the shoulder of the crankshaft.
3. On the 4-cylinder engine, if the crankshaft dynamic balancer drive gear teeth are worn or chipped install a new crankshaft.
4. Refinish the journals to give the proper clearance with the next undersize bearing, page 63. If the journals will not clean up at the maximum under size bearing available, install a new crankshaft. Always reproduce the same journal radius, page 61, that originally existed. Too small a radius will result in fatigue failure of the crankshaft. Too large a radius will result in bearing failure due to radius ride of the bearing. After refinishing the journals, be sure to chamfer the oil holes.

D. Installation

1. Be sure the main bearing bores and rear main bearing oil seal area are thoroughly cleaned before installing the bearings in the block. Polish the oil seal running surface with crocus cloth. Remove any nicks or burrs that could damage the seal. Install a new crankshaft if the oil seal surface is deeply grooved.
2. Lubricate the main bearing liners and install them in the block and bearing caps. If the main bearing journals have been refinished to undersize, install the correct undersize bearings, page 62. Be sure the bearing liners are clean. (Foreign material under the liners will distort the bearing and cause premature failure.) And the tangs on the bearings are in the slots provided in the cylinder block and caps.
3. Turn the crankshaft to align the timing mark on the gear with the timing mark on the camshaft drive gear. Lower the crankshaft into place, being careful not to damage the bearing surfaces.
4. Check the clearance of each main and connecting rod bearing with Plastiguage, as outlined on page 43, under "Fitting Main and Connecting Rod Bearings (Plastiguage Method)".
   NOTE: ***If Plastiguage is not available, the bearing clearances will have to be checked, using micrometers, before the crankshaft is installed.***
5. After the bearing clearances have been measured, apply a light coat of engine oil to the journals and bearings. Install the thrust bearing cap with the flange-type bearing liner, Figure 69, first. Then, install all main bearing caps except the rear cap. Be sure they are installed in their original location.

NOTE: ***On 3-cylinder engines the front intermediate main bearing is the thrust bearing. On 4-cylinder engines the third main bearing is the thrust bearing.***

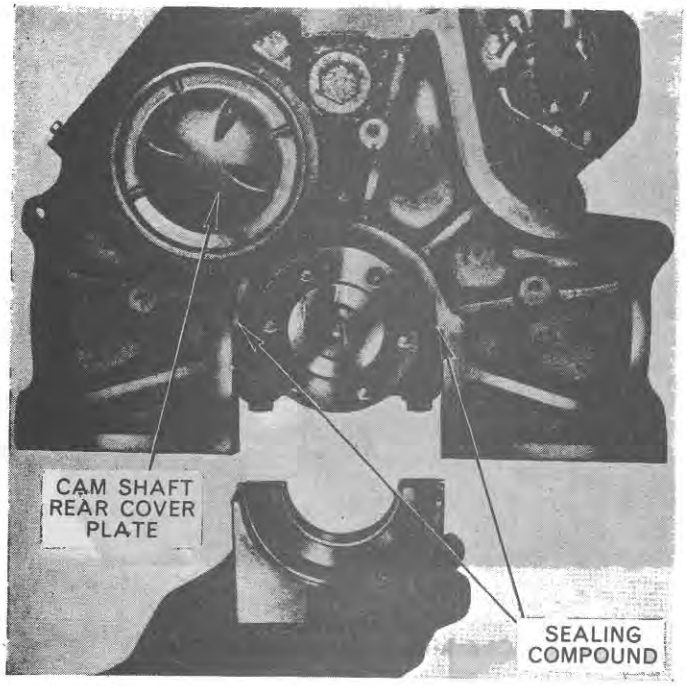

Figure 71
Assembling Rear Main Bearing Cap and Vertical Seals

6. Install the thrust bearing cap, Figure 69, with the bolts finger tight, then pry the crankshaft forward against the thrust surface of the bearing. Hold the crankshaft forward and pry the bearing cap to the rear. Be careful not to pry against the flange of the bearing liner. This will align the thrust surfaces of both halves of the bearing. Hold the forward pressure on the crankshaft and tighten the bearing cap bolts to the specified torque, page 68.
7. Check the crankshaft end play. Install a dial indicator so that the contact point rests against the rear flange of the crankshaft, Figure 73. Force the crankshaft toward the rear of the engine. Set the dial on zero, then pry the crankshaft forward and note the reading on the dial. If the end play exceeds the limits, page 61, install a new thrust bearing liner. If the end play is less than the specified limit, inspect the thrust bearing surfaces for burrs, scratches, or dirt. If the thrust surfaces are not defective or dirty, re-align the thrust bearings following the above procedure.

NOTE: ***The rear oil seal journal has a finishing operation which has the effect of providing a scroll which acts as a "feed back" for oil from the sealing location. It is virtually a polish and definite lines are not apparent to the naked eye.***

8. The crankshaft rear oil seal journal can be scrolled, working from underneath the engine, or with the engine inverted. Use a $\frac{3}{4}$ in. wide strip of aluminium oxide cloth, Grade 240, to put a reverse scroll on the crankshaft rear oil seal journal. Hold the cloth as shown in Figure 70 and work on the same area until a high polish is obtained on the journal (definite lines should not be apparent to the naked eye). After finishing the accessible area, rotate the crankshaft a little at a time until the complete circumference of the journal has been worked. The lines of the finished job should give the effect of a very fine right-handed thread, and each rubbing should overlap the other.

   NOTE: ***It is important that the cloth is held as near as possible to the angle illustrated in Figure 70, otherwise the lines will tend to follow around the circumference rather than across the journal and defeat the object of the scroll.***
9. Clean the mating surfaces of the block and rear main bearing cap. Apply a light coating of a suitable sealing compound to these surfaces.
10. Install new side seals in the rear main bearing cap to project slightly beyond the block face of the cap, and assemble the cap and seals into the cylinder block, as shown in Figure 71.
11. Tighten the rear main bearing cap bolts to insure positive bottoming of the seals against the block. Cut the side seals to allow a projection of $\frac{1}{64}$ in. (0·396 mm.) above the pan rail as shown in Figure 72.



Figure 72
Trimming Vertical Seal

© FORD MOTOR COMPANY LTD.

12. Apply a light coating of sealer to the seal bore surface at the two cap-to-block split lines. (Do not permit sealer on the crankshaft seal journal.)
13. Apply a light coat of high temperature grease to the block seal bore, the crankshaft seal journal, and the outside diameter and lip of a new crankshaft seal. Also pack grease around the lip of the seal.
14. Install the seal with Seal Installation Tool SW520. The steps below should be followed when using this tool:
    a. Slide the seal (lip first) on to the journal;
    b. Using three flywheel bolts, attach the tool (flanged surface towards the seal) to the crankshaft flange;
    c. Tighten the three bolts in sequence and evenly until the tool bottoms against the crankshaft flange. Then tighten each bolt to 25 lbs./ft. (3·46 mkg.) to be sure the seal is square with the crankshaft centreline;
    d. Remove the bolts and the tool.

    Three different types of seal may be encountered in service
    (1) Black single-lipped type;
    (2) Red double-lipped type;
    (3) Red double-lipped type (for use after 1000 hours).

    The first two are alternative types used for service where the engine has worked less than 1,000 hours and the crankshaft is unmarked by the seal lips.

    The third type is for use where the engine has worked more than 1,000 hours. This type provides a new location for the sealing lips on the crankshaft and obviates any possibility of leakage from the original seal "track".

    The first type seal should be assembled so that it protrudes 0·015 in. (0·381 mm.) outside the rear face of the cylinder block.

    The second type should be assembled so that it is 0·024 in. (0·61 mm.) inside the rear face of the block and the third type should be 0·060 in. (1·52 mm.) inside the rear face of the block.

    A tool SW520 is available in certain territories which will install the third type only. In other territories, where the tool is not available, use a sleeve 4⅞ in. I.D. and carefully press the seal to its specified position in the block. Then, using a dial indicator mounted to the end of the crankshaft, check the run-out of the rear face of the seal. The total run-out should not exceed 0·015 in. (0·38 mm.).
15. Apply a liberal amount of penetrating oil to the side seals to cause them to swell.
16. Install the connecting rod bearing liners in the connecting rods and caps. Check the clearance of each bearing with a micrometer and shim stock method or by the Plastigage method, following the procedure outlined under "Fitting Main and Connecting Rod Bearings (Plastiguage Method)".

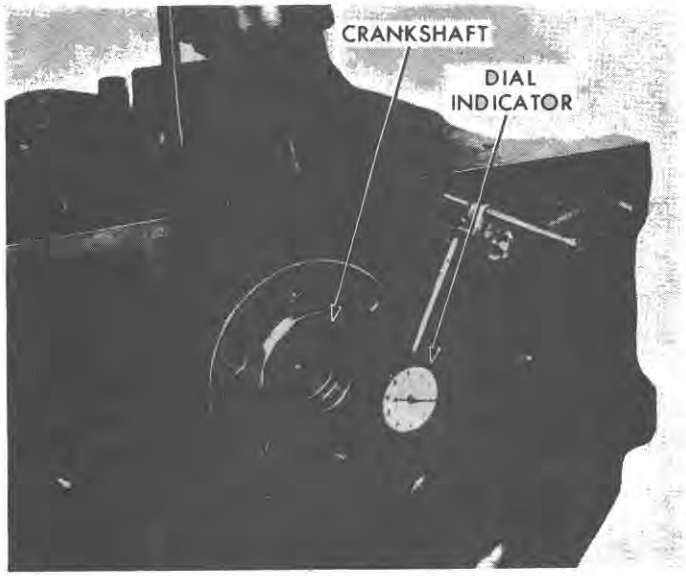

Figure 73
Checking Crankshaft End Play

17. If the bearing clearances are to specifications, apply a light coat of engine oil to the journals and bearings. Install the bearings in the connecting rods and bearing caps, making sure the bearings are installed with the tangs in the slots in the rods and caps.
18. Install the connecting rod caps as outlined on page 32, "Installation", and tighten the nuts to specified torque, page 68.
19. After the connecting rod assemblies have been installed, check the side clearance of each connecting rod by inserting a feeler gauge between the side of the connecting rod and the crankshaft journal. If the clearance is not within limits as indicated on page 63, check the crankshaft journal dimensions and refinish or, if not within specifications, install a new crankshaft.
20. Install the oil pump (and balancer, if the engine is so equipped).
21. Install the oil pan sump.
22. Install the engine front cover, pulley spacer and crankshaft pulley.

    NOTE: ***Where the pulley with the longer hub is to be assembled install in the manner as given in stage 2 Crankshaft Pulley Installation, page 19.***
23. Install the engine rear cover plate and flywheel.
24. Remove the engine from the stand and install in the tractor, as outlined in Part 15, "SEPARATING THE TRACTOR".

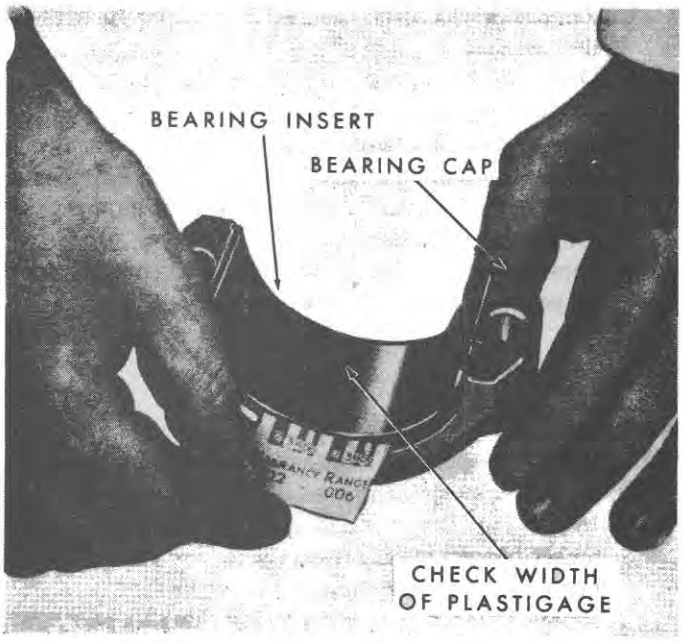

Figure 74
Checking Bearing Clearance—Plastiguage Method

E. Fitting Main and Connecting Rod Bearings (Plastiguage Method)

1. Remove the oil pan sump as outlined on page 21, "Oil Pan Sump Removal". Remove the bearing cap and wipe the oil from the bearing liner and crankshaft journal.
   NOTE: ***If the main bearing liners are being fitted with the engine in a tractor, a jack should be used adjacent to the liner being fitted, and light pressure applied to hold the crankshaft up against the upper main bearing liners.***
2. Place a piece of the correct size Plastiguage on the bearing liner surface the full width of the bearing cap and about $\frac{1}{4}$ in. (6·350 mm.) off centre.
3. Install the cap and tighten the bolts to the specified torque, page 68. Do not turn the crankshaft while the Plastiguage is in place.
4. Remove the cap. Using the Plastiguage scale on the package, Figure 74, check the width of the Plastiguage. When checking the width of the Plastiguage, check at the widest point in order to get the minimum clearance. Check at the narrowest point in order to get the maximum clearance. The difference between the two readings is the taper.
   NOTE: ***Normally, main bearing journals wear evenly and will not be out-of-round. However, if a liner is being fitted to an out-of-round journal which is within specifications, page 61, be sure to fit the bearing to the maximum diameter of the journal.***
5. When checking clearances, red liners, having a thinner wall section than blue liners, will provide greater clearance. Conversely, blue liners having a thicker wall section will provide less clearance. As stated previously a combination of red and blue liners may be required to obtain the desired clearance. If the measured clearance is greater than specified when two blue liners are used it is permissible to fit an 0·002 in. (0·0508 mm.) undersize liner with either a red or a blue liner.
6. If one of these combinations of liners does not bring the clearance within the specified limits, page 62, refinish the crankshaft journal to fit undersize bearings, page 63.

7. CAMSHAFT

A. Removal

1. With the engine in the work stand and the flywheel removed, remove the front cover as outlined on page 14, "FRONT COVER REMOVAL".
2. Remove the cylinder head as outlined on page 6, "Cylinder Head Removal".
3. Remove the engine rear cover plate.
4. Using a magnet, remove the "Dumbell" type tappets from their bores in the cylinder block. Keep them in order so they can be installed in their original location. On engines fitted with the mushroom foot type tappets, the engine has to be inverted before the camshaft can be removed.
5. Remove the oil pump drive gear from the cylinder block as outlined on page 22, "Oil Pump Removal".
6. Pry the camshaft gear away from the cylinder block with a screwdriver. Check the clearance between the hub of the camshaft gear and the thrust plate with a dial indicator against the camshaft bolt or with a feeler gauge, Figure 75. If the clearance exceeds the specified limits, page 63, install a new thrust plate before reassembly.
7. If the camshaft bearings and/or the partly hollow mushroom type tappets are to be removed, invert the engine on the stand and remove the oil pan sump.

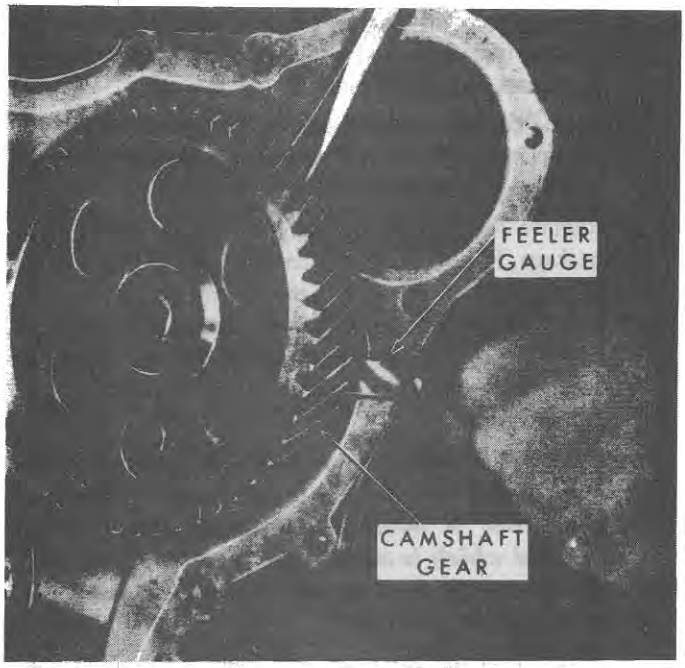

Figure 75
Checking Camshaft End Play

8. Remove the bolt and flat washer, and remove the camshaft drive gear.
9. Remove the two bolts and remove the camshaft thrust plate.
10. Remove the Woodruff key and spacer from the front of the camshaft.
11. Drive out the camshaft rear cover plate with a punch and hammer, as shown in Figure 76.
12. Remove the cover plate O-ring.
13. Carefully remove the camshaft by pulling it out the rear of the engine. Be careful not to damage the bearings or the lobes on the shaft.
14. Remove the hydraulic pump drive gear from the rear of the camshaft by removing the bolt and washer.

B. Inspection

1. Visually inspect the camshaft journals and lobes for roughness, scores, nicks, pits, or discoloration from heat.
2. Inspect the oil pump drive gear on the camshaft for broken or worn teeth. Inspect the mating gear on the oil pump drive shaft for the same conditions.
3. If any of the above conditions exist, install a new camshaft or oil pump drive gear.
4. Measure the diameter and out-of-round of the bearing journals. If the camshaft does not meet specifications, page 63, install a new camshaft.
5. Inspect the hydraulic pump drive gear for worn or broken teeth. If either condition exists, install a new gear.

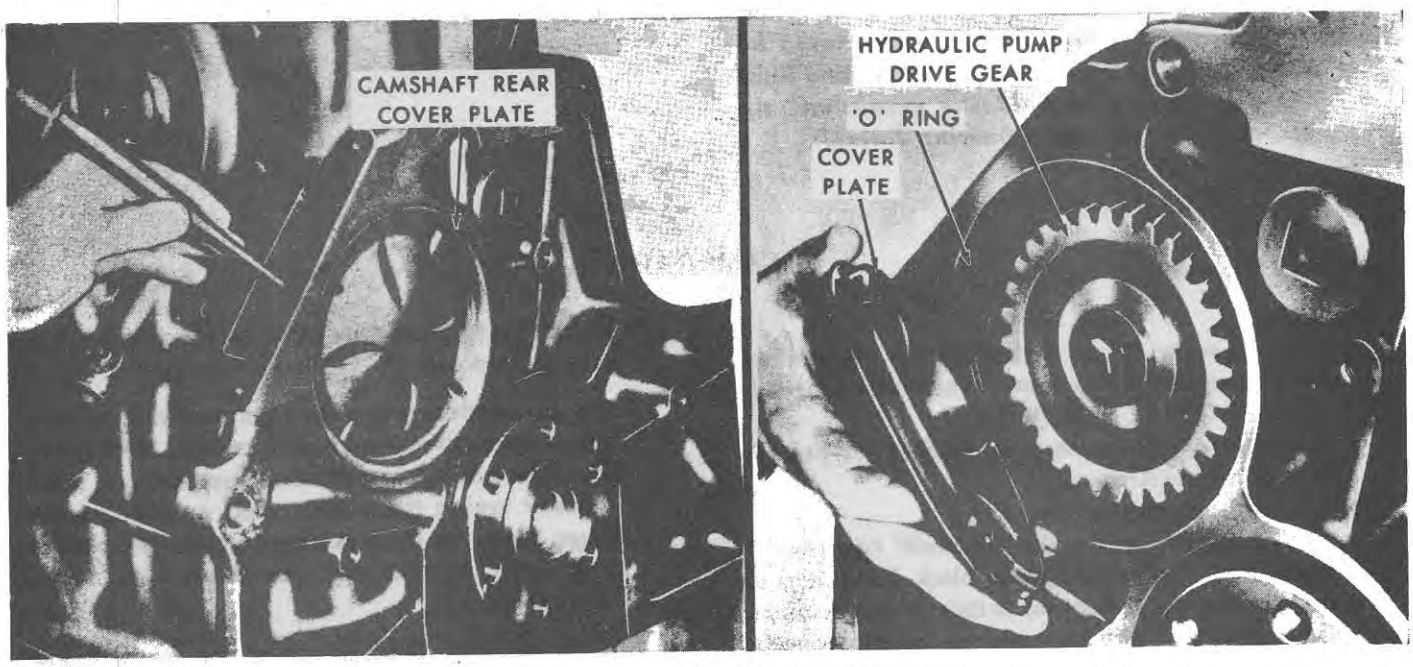

Figure 76
Removing Camshaft Rear Cover Plate

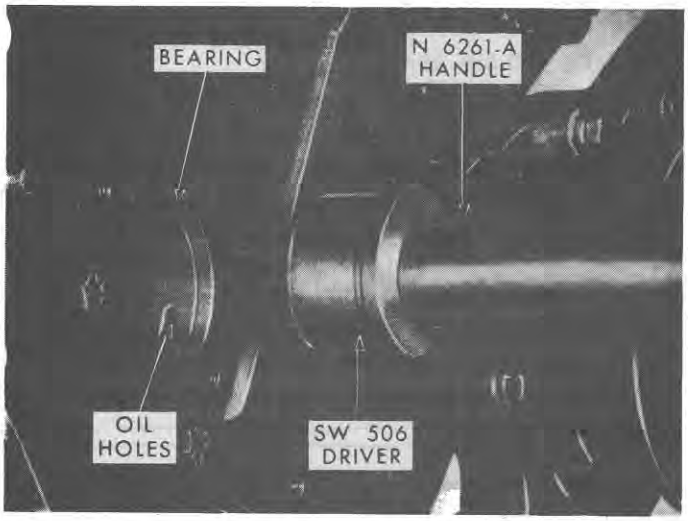

Figure 77
Removing and Installing Camshaft Bearings Using Tools SW 506 and N 6261-A

6. Inspect the camshaft bearings for pits, grooves, or score marks. Measure the clearance between the bearing and the camshaft journal. If the clearance between the I.D. of the bearing and O.D. of the camshaft journal exceeds the specifications, page 63, install new bearings.

C. Camshaft Bearing Removal and Installation Using Special Tools SW 506 and N 6261A.

1. Position Driver No. SW 506 against the camshaft bearing to be removed and attach Handle No. N 6261-A, to the Driver, Figure 77.
2. Drive the camshaft bearings from the bearing bore.
3. Align the oil holes in the new camshaft bearings with the oil holes in the engine block, then drive the new bearings into place, using the same tools.

IMPORTANT: ***After driving the new camshaft bearings into place in the bearing bore, be sure the oil holes in the bearings are aligned with the oil holes in the engine block.***

Using Special Tool SW 16:

Removal:

1. Insert the small diameter spigot of the remover and guide, SW 16/e, into the rear of Number 2 bearing liner as shown in "A", Figure 78. Position the centralizer, SW 16/h, in front of Number 1 bearing with the smaller diameter spigot located in the bearing liner. Pass the center screw of main tool No. SW 16 through this centralizer and the guide and fit "C" washer to the end of the center screw. Place the tommy bar in the hole at the inner end of the center screw and withdraw the bearing liner from its location in the block by tightening the wing nut of the tool.
2. On 4-cylinder engines locate the remover and guide, SW 16/e, in the rear of Number 3 bearing liner and repeat the above procedure to remove this liner from the block. Number 4 bearing, on 4-cylinder blocks and Number 3 bearing liner on 3-cylinder blocks can be removed in a similar manner, but they must be pulled out towards the rear of the cylinder block, the centralizer, SW 16/h, being placed in the rear bearing liner and the remover and guide SW 16/e in the front of the liner being removed.
3. Insert the smaller diameter spigot of the remover and guide, SW16/e, in the rear of the front bearing liner, and the intermediate bearing replacer; SW 16/g, in the front of the front bearing liner as shown in "B", Figure 78. Install the center screw, lock washer and tommy bar as outlined above and pull out the front bearing liner from its location in the block.
4. Repeat this procedure for the rear bearing liner but operate the tool from the rear of the cylinder block.

Installation: Clean all bearing bores, making sure that the oil passages from the crankshaft main bearings to the camshaft bearings are free from obstruction. Thoroughly clean the new bearing liners and lightly coat with oil on the outer surface prior to assembly. It is essential that when assembled, the oil holes in the bearing liners coincide with those in the cylinder block. Particular attention should, therefore, be paid to the positioning of the liner before it is drawn into the bore.

1. Insert the remover and guide, SW 16/e, into Number 2 bearing bore with the smaller diameter towards the rear of the block. Place the centralizer, SW 16/h, in the front of Number 1 bearing bore with the larger diameter spigot located in the bore. Locate the new bearing liner on the smaller diameter spigot of the remover and guide and insert the smaller diameter spigot of the intermediate bearing replacer, SW 16/g, into the other side of the liner. Insert the center screw and install the lock washer and tommy bar as shown in "C", Figure 78.
2. Turn the liner until the center of the oil hole is opposite the center line of the oil drilling between the crankshaft bearing and camshaft bore. Draw the liner into the bore by tightening the wing nut onto the center screw of the tool.
3. Check that the oil hole in the liner is correctly aligned with the oil passage in the cylinder block. A positive check of this can only be made with the crankshaft removed when a $\frac{3}{16}$ in. (4·76 mm.) diameter rod may be

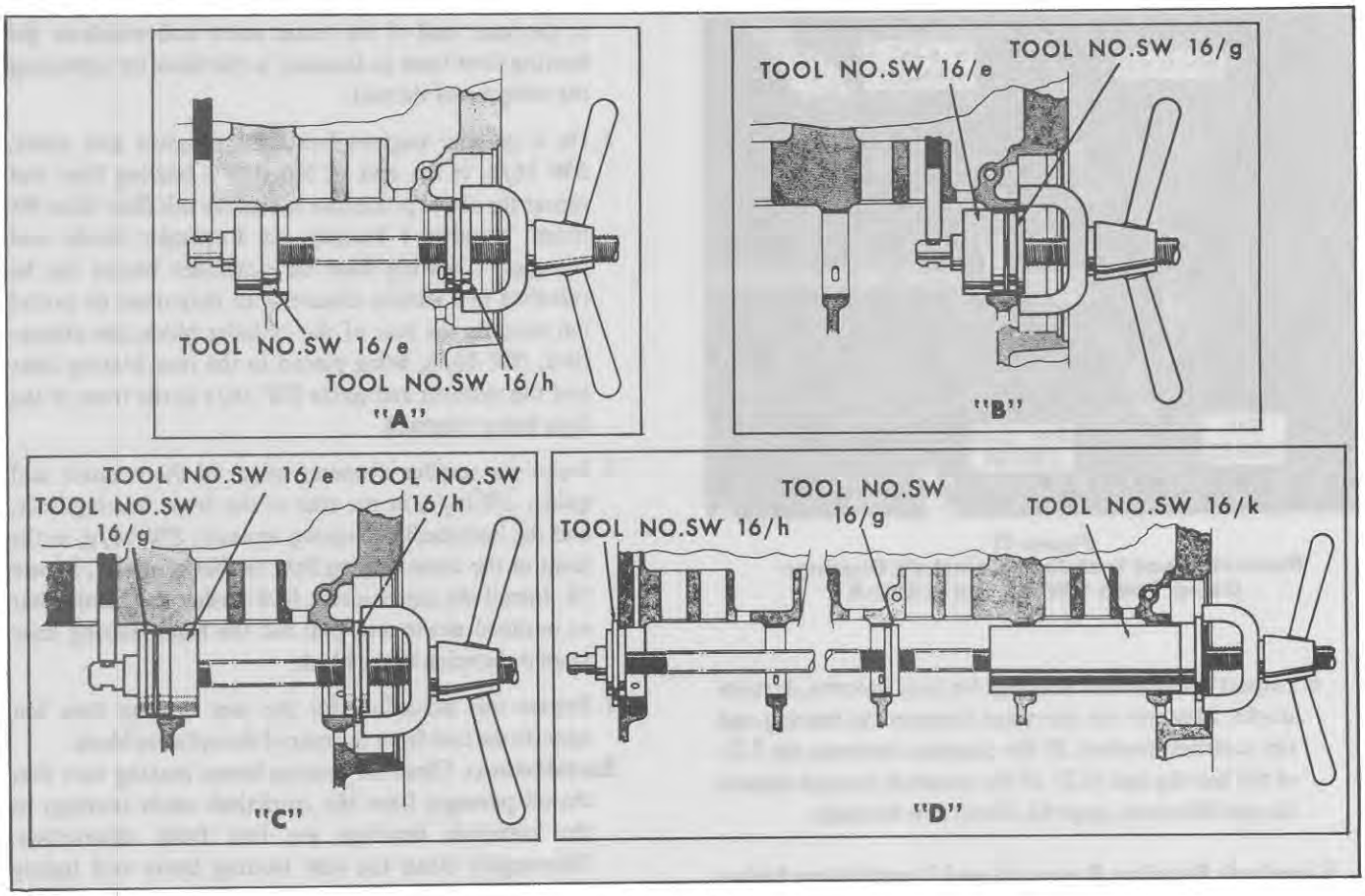

Figure 78
Removing and Installing Camshaft Bearings Using Tool SW 16

passed down the oil passage from the crankshaft main bearing. The liner is correctly positioned when the inner end of the rod will pass through the oil hole in the liner.

4. Repeat operations 1 through 3 for Number 3 bearing liner on 4-cylinder blocks, taking extra care to make sure the oil holes are in alignment as this bore has another oil passage drilled into it, which provides an oil feed to the engine balancer housing. Bearing liner Number 4 on 4-cylinder blocks and Number 3 on 3-cylinder blocks are installed in a similar manner, but should be pulled in with the tool being operated from the rear of the block.

5. Place a new liner on the replacer mandrel, SW 16/k, so that it contacts the small shoulder, and pass the mandrel through Number 1 bore and Number 2 bearing liner. Place the intermediate bearing replacer SW 16/g, in Number 4 bearing on 4-cylinder blocks (in Number 3 bearing on 3-cylinder blocks) to centralize the center screw. Insert the centralizer, SW 16/h, in the rear bore with larger diameter spigot in the bore. Install the center screw and lock washer as shown in "D", Figure 78. Make sure the main tool body is placed vertically for this operation so that the center screw is kept central by the body locating on the spigot of the mandrel.

6. After making sure the oil holes in the liner are opposite the center of the holes in the bore, press the liner into the bore by turning the wing nut onto the center screw.

7. Repeat this operation for the rear bearing liner on 3 and 4-cylinder blocks by operating the tool from the rear of the block.

8. Check the alignment of the oil holes in the liners with the corresponding oil passages in the block by passing a length of $\frac{3}{16}$ in. (4·76 mm.) rod through each oil passage, making sure that the position of each liner is such as to allow the inner end of the rod to pass through the oil hole in the liner.

D. Installation

1. Fit the hydraulic pump gear to the rear of the camshaft. Align the dowel pin and install the washer and bolt. Tighten the bolts to the specified torque, page 68.

2. On engines fitted with the "Partly Hollow Mushroom" type tappet, apply petroleum jelly to each tappet foot. Coat the remainder of the tappet with engine oil, and install the tappets in the bores from which they were removed. Install the "Dumbell" type tappet in a similar manner after the camshaft is in position.
3. Oil the camshaft and apply petroleum jelly to all the lobes. Carefully slide the camshaft into position in the bearings. On diesel engines, with the partly hollow mushroom tappet, the tappet should first be installed.
4. Install the spacer and a new Woodruff key on the front of the camshaft.
5. Position the thrust plate and install the two bolts and lock washers. Tighten the bolts to the specified torque, page 68.
6. Position the drive gear on the front of the camshaft, making sure the timing mark is lined up, and secure with the washer and bolts. Tighten the bolts to the specified torque, page 68. Check the camshaft end-play as outlined on page 43, under "Removal—Step 6".
7. Position a new O-ring and install the hydraulic pump drive gear cover plate. Tap the cover with a soft hammer to be sure it is seated. If the cover does not fit tight, install a new one.
   NOTE: ***On gasoline engines, install the eccentric and cap screw.***
8. Install the oil pan sump as outlined on page 22, "Oil Pan Sump Installation".
9. Install the oil pump drive gear. Be sure the drive shaft indexes with the intermediate shaft. Install the retaining cap.
10. Install the engine rear cover plate.
11. Install the engine front cover, as outlined on page 19, "FRONT COVER INSTALLATION".

Part 1
ENGINE SYSTEMS
Chapter 2
COOLING SYSTEM

Section		Page
1.	Description and Operation	49
2.	Radiator and Thermostat	50
3.	Water Pump	51

1. DESCRIPTION AND OPERATION

The cooling system, Figure 79, is of the recirculating bypass type with full length water jackets for each cylinder. The coolant is drawn from the bottom tank of the radiator by the water pump which delivers the coolant to the cylinder block. As the coolant enters the block it travels through cored passages to cool the cylinder walls. Upon reaching the rear of the cylinder block, the coolant flows into the cylinder head. It then flows through cored passages to the spark plug thread area on gasoline engines, or the nozzle tip area on diesel engines. This flow within the cylinder head water jacket provides sufficient cooling at maximum temperature cooling points. The coolant continues to flow through the cylinder head to the thermostat. In diesel, 4-cylinder gasoline and LP gas engines, the thermostat is located in the front of the head. In the case of 3-cylinder gasoline engines, the thermostat is located in the front of the temperature-controlled intake manifold which receives coolant from the cylinder head, to permit engine warm-up as well as cooling of the manifold intake ports.

On diesel engines, if the thermostat is closed, a recirculating bypass is provided, allowing a portion of the coolant to recirculate from the head to the block for faster warm-up. On gasoline engines, if the thermostat is closed, a recirculating bypass is provided allowing a portion of the coolant to recirculate from the water-heated intake manifold to the cylinder head, and to the block for faster warm-up. In both cases, when the thermostat is open, the coolant flows from the outlet connection of the head or manifold to the top tank of the radiator. Cooling is accomplished as the coolant flows down through the radiator tubes which are exposed to the cooler air temperatures created by the fan blast.

On tractors equipped with the Select-O-Speed transmission, a heat exchanger tube is incorporated in the bottom tank of the radiator to cool the transmission oil.

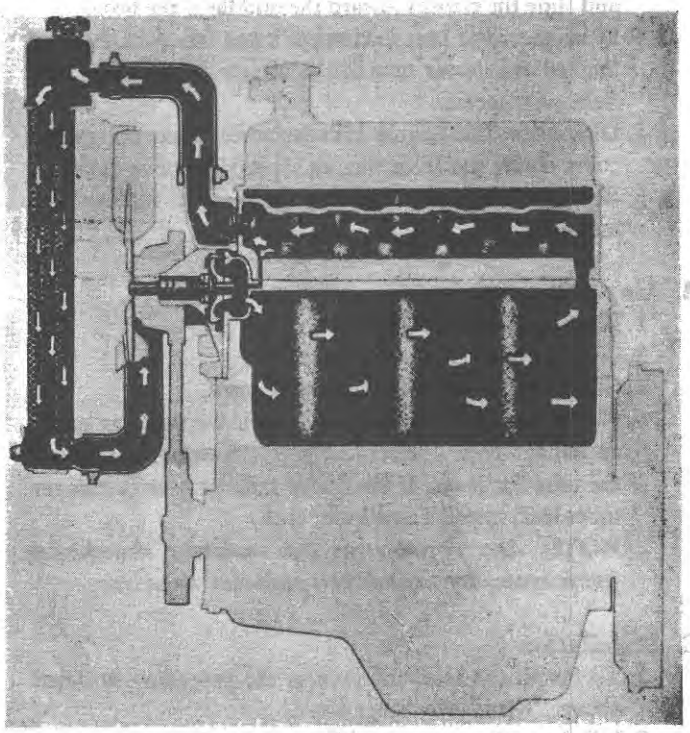

Figure 79
Cooling System

© FORD MOTOR COMPANY LTD., 1967

MAINTENANCE

Cleaning the Cooling System:

Normally, rust, sludge, and other foreign material can readily be removed from the cooling system by using a cooling system cleaning solvent. However, in severe cases, pressure flushing may be required. Various types of flushing equipment are available. A pulsating or reversed-flow flushing will loosen sediment more quickly and more efficiently than a steady flushing in the normal direction of coolant flow. If pressure flushing is to be used, always remove the thermostat and make sure the cylinder head bolts are tightened properly before flushing. After the cooling system has been cleaned and filled, a good commercial rust inhibitor should be added. However, the rust inhibitor is not necessary if the cooling system is to be conditioned with permanent antifreeze containing rust inhibitor.

Draining and filling the Cooling System:

To drain the cooling system, open the drain cock on the right-hand side of the engine block, and the radiator outlet on the lower left-hand side of the radiator. Open the radiator pressure cap to speed draining. To fill the system, close the drain cocks, fill the system with coolant and add rust inhibitor or antifreeze, according to the season and locality. All permanent antifreeze sold by reputable manufacturers contains an anti-rust additive. Therefore, the addition of rust inhibitor, when permanent antifreeze is used, will not generally be necessary.

2. RADIATOR AND THERMOSTAT

RADIATOR

A. Removal

1. Drain the cooling system as previously outlined.
2. Disconnect the air cleaner hose connection and the headlight wires, and remove the front sheet metal.
3. Disconnect the radiator hose connection at the radiator and slide the clamps toward the middle of the hose.
4. Disconnect the heat exchanger tubes from the front of the radiator lower tank if the tractor is equipped with Select-O-Speed.
5. Disconnect the engine breather tube from the rocker cover outlet and from the fan shroud. Remove the tube.
6. Remove the two attaching bolts and remove the radiator.

B. Inspection and Repair

1. Remove the fan shroud.
2. Check the upper tank for leaks.
3. Check the fins for being bent or clogged.
4. Check the lower tank for leaks and if the tank has a heat exchanger tube (Select-O-Speed transmission), check the tube for leaks. If the lower tank or heat exchanger tubes leak, install a new lower tank.

   NOTE: ***Any repairs on the radiator should be performed by a qualified radiator repairer.***

C. Installation

1. To install the radiator, reverse the procedure outlined above, "Removal—Steps 1–6".
2. Fill the cooling system with coolant and add the proper amount of antifreeze, depending upon the weather conditions.

   NOTE: ***If the tractor is equipped with Select-O-Speed transmission, add oil to the transmission, as required.***

3. Run the engine for several minutes and check for radiator leaks.

THERMOSTAT

The thermostat on diesel, LP gas and 4-cylinder gasoline engines is located in the coolant outlet connection in the front of the cylinder head, Figure 80. The 3-cylinder gasoline engine thermostat is located in the coolant outlet connection on the front of the intake manifold, Figure 81. Thermostat opening and full open temperatures are listed in the specifications, page 67.

A. Removal

1. Drain the cooling system to below the level of the cooling outlet connection.
2. Remove the coolant outlet connection retaining bolts and slide the connection with the hose attached, to one side.
3. Remove the thermostat and gasket.

B. Inspection

Place the thermostat in a container of water and heat the water. If the thermosat valve does not open at or near the thermostat opening temperature or if it fails to close, install a new thermostat.

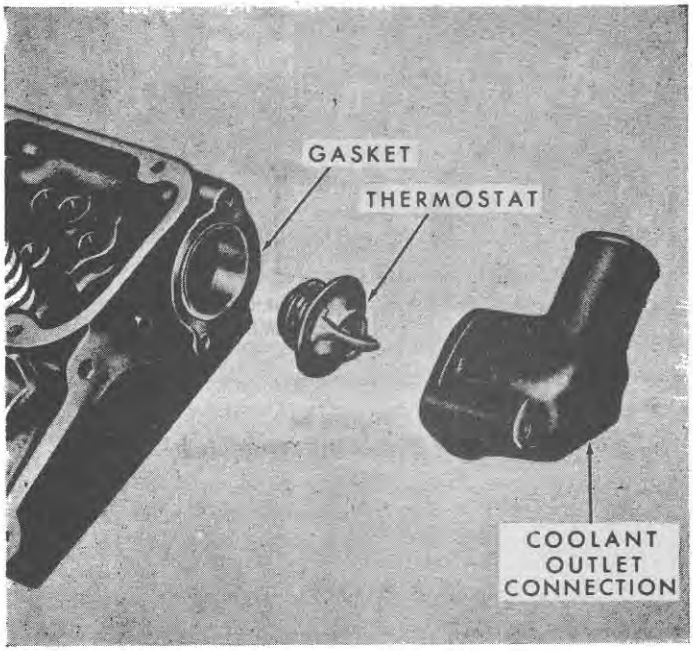

Figure 80
Location of Diesel Engine Thermostat

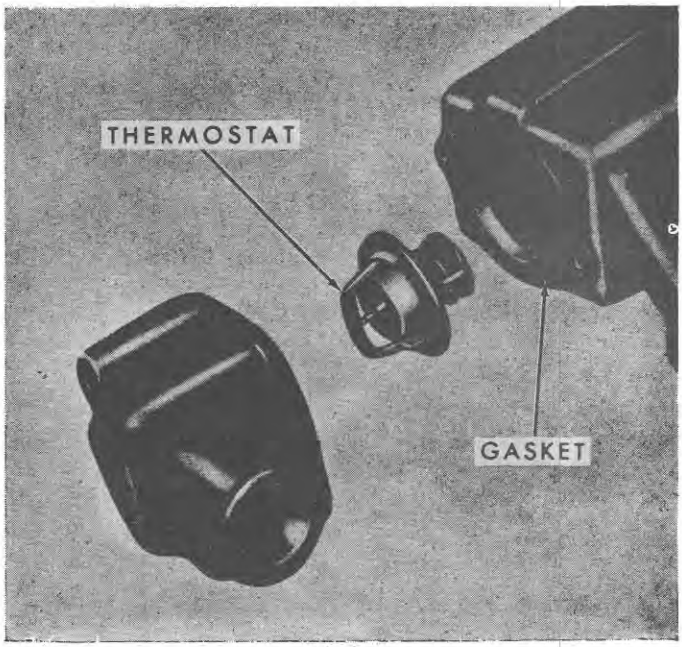

Figure 81
Location of 3 cylinder Gasoline Engine Thermostat

C. Installation

1. Clean the coolant outlet connection and cylinder head or manifold surface. Coat a new coolant outlet connection gasket with sealer. Position the gasket on the cylinder head, or manifold.
   NOTE: ***The gasket must be positioned on the cylinder head or manifold before the thermostat is installed.***
2. Coat the edge of the thermostat with grease so it will stick in the water outlet connection.
3. Position the thermostat in the recess of the water outlet connection so that the heat element will be in the cylinder head (or intake manifold on 3 cylinder gasoline engines).
4. Position the water outlet connection and install the retaining bolts. Be careful not to disturb the thermostat.
5. Fill the radiator and operate the engine. Check for coolant leaks.
   NOTE: ***When filling 4-cylinder gasoline radiator, open the breather on top of the intake manifold. Close the breather when coolant flows from the vent.***

3. WATER PUMP

A. Removal

1. Drain the cooling system.
2. Remove the radiator as outlined on page 48. "A. Radiator Removal."
3. Loosen the generator adjusting arm bolt and the two generator pivot bolts and relax the tension on the belt.
4. Remove the four water pump attaching bolts and remove the water pump and gasket.

B. Disassembly

1. Remove the four attaching bolts and remove the fan from the pump pulley.
2. Using Puller No. 518 and a sleeve slightly smaller than the pulley shaft, remove the pump pulley from the shaft, as shown in Figure 82.
3. Remove the four bolts that retain the front and rear covers of the pump housing together. Separate the pump covers and discard the gasket.
4. Using an arbor press with a piece of pipe or a sleeve of 1 in (25.4mm) I.D. and $1\frac{1}{8}$ in (28.6mm) O.D. over the shaft and positioned on the outer case of the bearing,

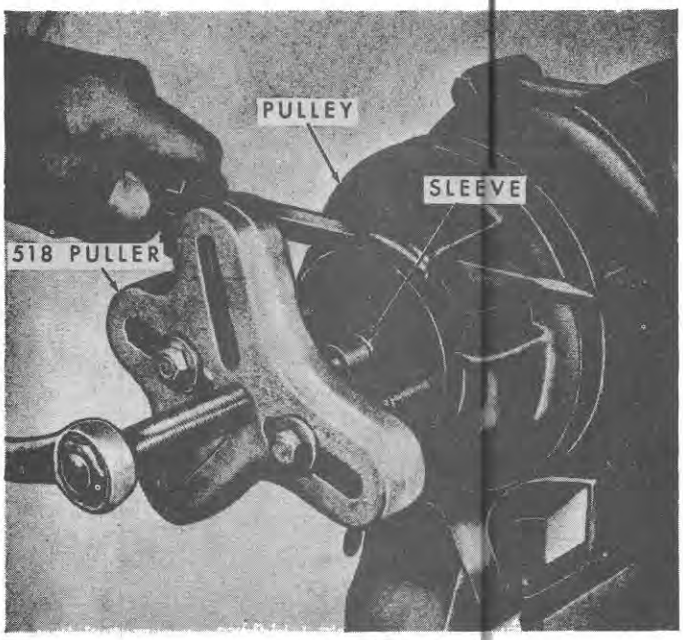

Figure 82
Removing Water Pump Pulley

press the bearing assembly, shaft and impeller out of the pump housing, as shown in Figure 83.

5. Support the flat side of the impeller between two blocks and press the shaft assembly by using a sleeve slightly smaller than the shaft.

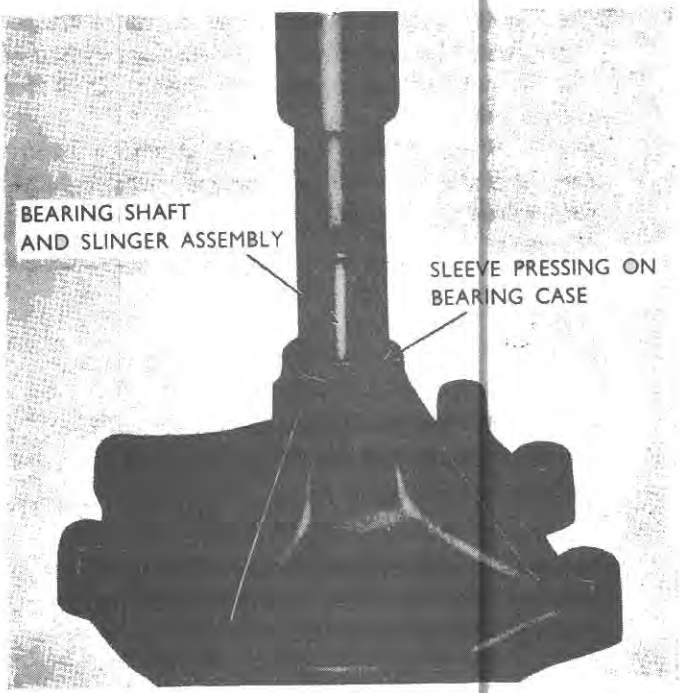

Figure 83
Removing Water Pump Bearing Shaft and Slinger Assembly

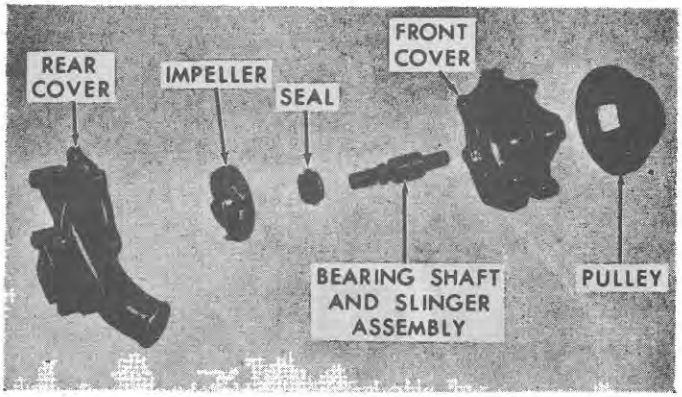

Figure 84
Water Pump Disassembled

6. Remove the seal from the shaft. Discard the seal.

C. Inspection and Repair

1. Check the impeller for worn or damaged vanes and check the seal seat on the rear face of the impeller to be sure it is in good condition. Install a new impeller if the seat or vanes are damaged.
2. Check the individual parts of the bearing shaft and slinger assembly for nicks, scores, or other damage, and the slinger for correct position on the shaft, Figure 85. If the bearing and shaft are undamaged and the slinger is damaged or incorrectly positioned, remove it using care not to damage the shaft.
3. Check both parts of the pump housing for cracks, fractures, or signs of leakage.
4. If there are any defective parts, install new ones.

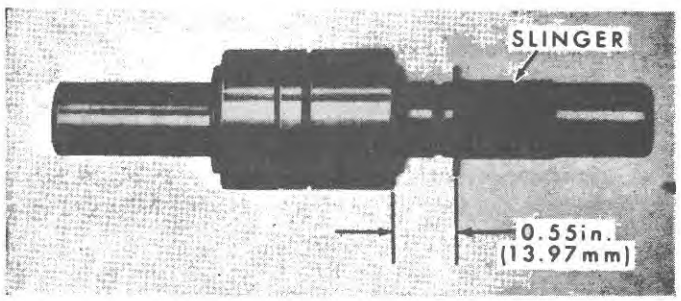

Figure 85
Correct Position of Slinger

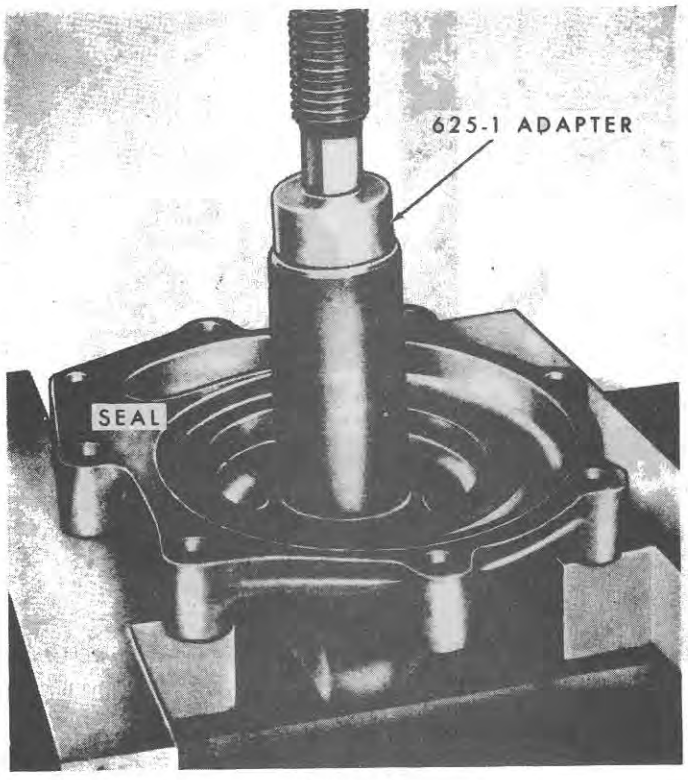

Figure 86
Installing Water Pump Seal

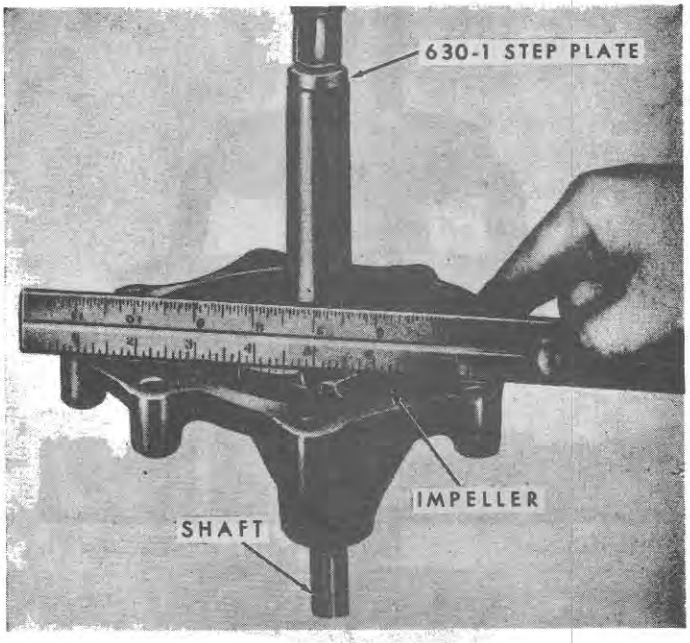

Figure 88
Correct Position of Impeller

D. Assembly

1. Figure 84 is an exploded view of the water pump. Use it for reference during reassembly. With a piece of pipe or sleeve slightly larger than the bearing shaft, press a new slinger onto the shaft. Press the slinger to the dimension shown in Figure 85.
2. Using a piece of $1\frac{5}{16}$ in. (33 mm.) I.D. gas pipe and No. 625-1 Adapter, press a new seal into the pump housing, Figure 86.
3. Press the bearing shaft and slinger assembly into the housing using a sleeve which passes over the shaft and rests on the bearing. Press the bearing to flush with the face of the housing, Figure 87. Use a straight edge to check the final position. Check the edge of the bearing (not the seal).
4. Support the shaft on a block of wood so as not to damage its end. Using the arbor press, $\frac{3}{4}$ in. (19.050 mm) I.D. gas pipe, and No. 630-1 Step Plate, press the impeller onto the shaft, Figure 88, until it is flush with the rear face of the housing. Check with a straight edge across the housing and impeller vanes to ensure correct final position.
5. Support the shaft (not the pump housing) on a block of wood and press the pulley onto the shaft, Figure 89. Press the pulley on to the dimension shown in Figure 90. The measurement is made from the rear face of the front cover of the pump, to the centre of the V-groove of the pulley. After installation, be sure the pulley runs true on the shaft.

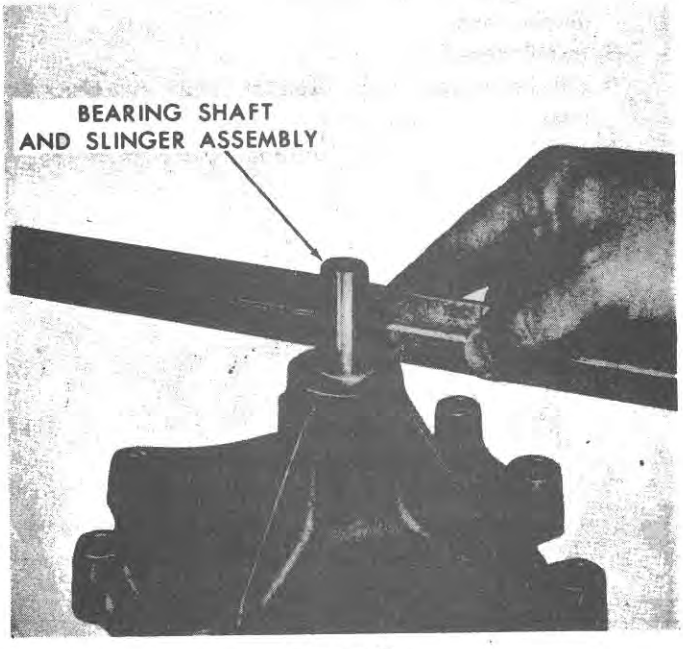

Figure 87
Correct Position of Bearing Shaft and Slinger Assembly

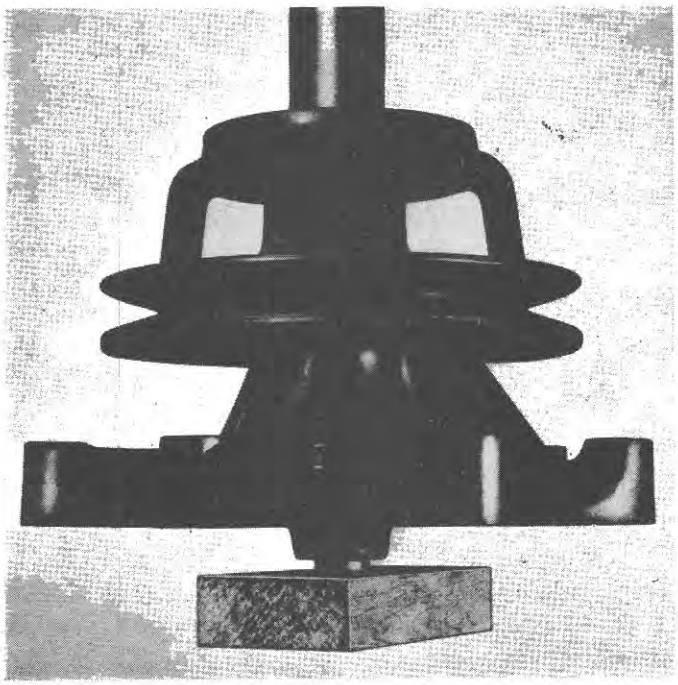

Figure 89
Installing Water Pump Pulley

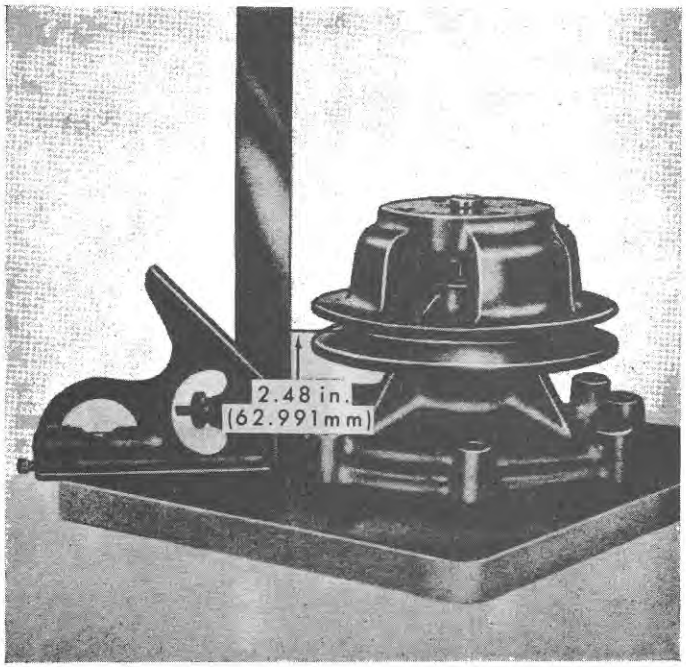

Figure 90
Correct Position of Water Pump Pulley

6. Assemble the front and rear halves of the pump together using a new gasket. Tighten the bolts to the specified torque, page 68.
7. Install the fan on the pulley. Tighten the bolts to the specified torque, page 68.

E. Installation

1. Position a new water pump gasket and place the water pump onto the front of the cylinder block and install the four attaching bolts. Tighten the bolts to the specified torque, page 68.
2. Position the drive belt and adjust the belt tension, page 67. Tighten the adjusting arm bolt and the two generator pivot bolts.
3. Install the radiator.
4. Fill the cooling system. Run the engine and check for leaks.

Part 1

ENGINE SYSTEMS

Chapter 3

TROUBLE SHOOTING, SPECIFICATIONS, AND SPECIAL TOOLS

Section		Page
1.	Trouble Shooting	55
2.	Specifications	58
3.	Special Tools	69

1. TROUBLE SHOOTING

Trouble	Possible Causes
Engine Does Not Develop Full Power—Gasoline Engine	1. Clogged air cleaner. 2. Improper governor linkage adjustment. 3. Carburetor and choke out of adjustment. 4. Low coil voltage. 5. Improper breaker point dwell or gap. 6. Faulty ignition timing. 7. Improper valve lash adjustment. 8. Worn or bent push rods. 9. Burned, worn, or sticking valves. 10. Improper valve timing. 11. Blown or burned head gasket. 12. Low cylinder compression.
Engine Does Not Develop Full Power—Diesel Engine	1. Clogged air cleaner. 2. Fuel line obstructed. 3. Faulty injectors. 4. Low cylinder compression. 5. Improper valve lash adjustment. 6. Burned, worn, or sticking valves. 7. Blown head gasket. 8. Incorrect fuel delivery.

Trouble	Possible Causes
Engine Knocks	1. Diluted or thin oil. 2. Insufficient oil supply. 3. Low oil pressure. 4. Excessive crankshaft end play. 5. Flywheel runout excessive. 6. Excessive connecting rod or main bearing clearance. 7. Bent or twisted connecting rods. 8. Crankshaft journals out-of-round. 9. Excessive piston-to-cylinder bore clearance. 10. Excessive piston ring side clearance. 11. Broken rings. 12. Excessive piston pin clearance. 13. Piston pin retainer loose or missing. 14. Excessive camshaft end play. 15. Imperfections on timing gear teeth. 16. Excessive timing gear backlash.
Low Oil Pressure	1. Engine oil level low. 2. Wrong grade of oil. 3. Blocked oil pump sump screen. 4. Oil pressure relief valve faulty. 5. Oil pump drive shaft worn. 6. Excessive oil pump rotor and shaft assembly clearance. 7. Excessive main or connecting rod bearing clearances.
Oil Pressure Warning Light Fails to Operate	1. Bulb burned out. 2. Warning light pressure switch faulty. 3. Warning light circuit faulty.
Excessive Oil Consumption	1. Engine oil level too high. 2. External oil leaks from the engine. 3. Worn valves and/or valve guides or worn seals. 4. Head gasket not sealing. 5. Oil loss past the pistons and rings.

Trouble	Possible Causes
Engine Overheats	1. Hose connection leaking or collapsed. 2. Radiator cap not sealing or defective. 3. Radiator leakage. 4. Improper fan belt adjustment. 5. Radiator fins restricted. 6. Thermostat operating improperly. 7. Internal engine leakage. 8. Water pump operating improperly. 9. Exhaust gas leakage into cooling system. 10. Coolant aeration. 11. Cylinder head gasket improperly installed. 12. Hot spot due to rust and scale clogged water jackets. 13. Obstruction to radiator air flow. 14. Extended engine idling.
Indicator Fails to Reach Normal Operating Temperature	1. Faulty temperature sender switch. 2. Improper or faulty thermostat. 3. Faulty gauge or warning light.
Coolant Found in Transmission Oil— Select-O-Speed Only	1. Faulty heat exchanger tube in radiator lower tank. 2. Faulty fitting in radiator lower tank.

2. SPECIFICATIONS

The following specifications apply to all engines except where noted:

	FORD 2000		FORD 3000		FORD 4000		FORD 5000	
	Gas	Diesel	Gas	Diesel	Gas	Diesel	Gas	Diesel
Displacement	158 cu. ins. (2590 c.c.)	158 cu. ins. (2590 c.c.)	158 cu. ins. (2590 c.c.)	175 cu. ins. (2868 c.c.)	192 cu. ins. (3147 c.c.)	201 cu. ins. (3294 c.c.)	233 cu. ins. (3819 c.c.)	233 cu. ins. (3819 c.c.)
Compression Ratio	8·0–1	17·5–1	8·0–1	16·5–1	8·0–1	16·5–1	8·0–1	16·5–1
Stroke	3·8 ins. (96·52 mm.)	3·8 ins. (96·52 mm.)	3·8 ins. (96·52 mm.)	4·2 ins. (106·68 mm.)	4·2 ins. (106·68 mm.)	4·4 ins. (111·75 mm.)	4·2 ins. (106·68 mm.)	4·2 ins. (106·68 mm.)
Bore	4·2 ins. (106·68 mm.)	4·2 ins. (106·68 mm.)	4·2 ins. (106·68 mm.)	4·2 ins. (106·68 mm.)	4·4 ins. (111·76 mm.)	4·4 ins. (111·76 mm.)	4·2 ins. (106·68 mm.)	4·2 ins. (106·68 mm.)
Bore/Stroke Ratio	1·105 : 1	1·105 : 1	1·105 : 1	1·00 : 1	1·048 : 1	1·00 : 1	1·00 : 1	1·00 : 1
Firing Order	1–2–3	1–2–3	1–2–3	1–2–3	1–2–3	1–2–3	1–3–4–2	1–3–4–2
Rated Engine Speed (RPM)	1900	2000	2100	2000	2200	2200	2100	2100
Idle Speed	All Diesel Models—600-650 r.p.m.				All Gasoline Models—600-650 r.p.m.			
Maximum No-Load Speed (RPM)	2065-2115	2175-2225	2285-2335	2175-2225	2395-2445	2395-2445	2275-2325	2285-2335

Compression Pressure (at 200 RPM) Cranking Speed

Gasoline:	With all the spark plugs removed Choke closed and throttle wide open	115–150 PSI ±25 PSI Cylinder-to-Cylinder Variation
Diesel:	With the throttle closed and stop control out	420–510 PSI ±50 PSI Cylinder-to-Cylinder Variation

Cylinder Block	
Material	Cast Iron
Cylinder Arrangement	In line vertical
Taper of Cylinder Bore	0·001 in. (0·0254 mm.)
Cylinder Bore Out-of-Round	0·001 in. (0·0254 mm.)
Cylinder Bore Diameter:	
Ford 2000, Ford 3000, Ford 5000	4·2007–4·2032 in. (106·698–106·761 mm.)
Ford 4000	4·4007–4·4032 in. (111·777–111·841 mm.)
Gasket Surface Finish	90–150 R.M.S. micro
Rear Oil Seal Bore Diameter	5·542–5·546 in. (140·77–140·87 mm.)
Cylinder Head	
Material	Cast Alloy Iron
Valve Design	Overhead Valves
Bolt Pattern	6 Bolts per Cylinder
Valve Guide Bore Diameter	0·3728–0·3735 in. (8·4691–9·4869 mm.)
Gasket Surface Finish	90–150 R.M.S. micro
Valve Springs	
Number per Valve	1
Type	Cylindrical Coil
Free Length	2·15 in. (53·509 mm.)
Load at 1·74 in. length (44·196 mm.)	61–69 lbs.
Load at 1·32 in. length (33·528 mm.)	125–139 lbs.
Exhaust Valves	
Face Angle	45° 30′ to 45° 45′
Stem Diameter	0·3701–0·3708 in. (9·4005–9·4183 mm.) Standard
	0·3731–0·3738 in. (9·477–9·495 mm.) 0·003 in. (0·076 mm.) Oversize
	0·3851–0·3858 in. (9·781–9·799 mm.) 0·015 in. (0·381 mm.) Oversize
	0·4001–0·4008 in. (10·163–10·180 mm.) 0·030 in. (0·762 mm.) Oversize
Head Diameter	1·505–1·515 in. (38·227–38·481 mm.)
Stem-to-Guide Clearance	0·0020–0·0055 in. (0·0508–0·0139 mm.)
Lash Clearance	0·017–0·019 in. (0·43–0·48 mm.)
Rotation	Positive Rotator Fitted
Intake Valve	
Face Angle	45° 30′ to 45° 45′
Stem Diameter	0·3711–0·3718 in. (9·4259–9·4437 mm.) Standard
	0·3741–0·3748 in. (9·502–9·520 mm.) 0·003 in. (0·076 mm.) Oversize
	0·3861–0·3868 in. (9·807–9·885 mm.) 0·015 in. (0·381 mm.) Oversize
	0·4011–0·4018 in. (10·188–10·206 mm.) 0·030 in. (0·762 mm.) Oversize
Head Diameter	1·800–1·810 in. (45·720–45·974 mm.)
Stem-to-Guide Clearance	0·0010–0·0045 in. (0·0254–0·0114 mm.)
Lash Clearance	0·014–0·016 in. (0·36–0·41 mm.)

© FORD MOTOR COMPANY LTD. 1967

Valve Timing—Ford 5000	Gasoline	Diesel
Intake Opening	10°B.T.D.C.	10°B.T.D.C.
Intake Closing	106°A.B.D.C.	34°A.B.D.C.
Exhaust Opening	45°B.B.D.C.	37°B.B.D.C.
Exhaust Closing	17°A.T.D.C.	7°A.T.D.C.

Valve Timing—Ford 3000 and Ford 4000	Produced before Date Code L185	Produced after Date Code L185	
Intake Opening	10°B.T.D.C.	10°B.T.D.C.	10°B.T.D.C.
Intake Closing	96°A.B.D.C.	106°A.B.D.C.	34°A.B.D.C.
Exhaust Opening	37°B.B.D.C.	45°B.B.D.C.	37°B.B.D.C.
Exhaust Closing	7°A.T.D.C.	7°A.T.D.C.	7°A.T.D.C.

Valve Timing—Ford 2000		
Intake Opening	at T.D.C.	10°B.T.D.C.
Intake Closing	106°A.B.D.C.	34°A.B.D.C.
Exhaust Opening	27°B.B.D.C.	37°B.B.D.C.
Exhaust Closing	17°A.T.D.C.	7°A.T.D.C.

Valve Seats	
Seat Angle	44° 30′ to 45° 0′
Seat Runout	0·015 in. (0·381 mm.) T.I.R. Max.
Seat Width	
Intake	0·080–0·102 in. (2·032–2·590 mm.)
Exhaust	0·084–0·106 in. (2·133–2·692 mm.)

Crankshaft Drive Gear	
Number of teeth	26
Timing Mark	Punch Mark on Tooth

Camshaft Drive Gear	
Number of teeth	47
Timing Mark	Punch Mark, Three Places
End play	0·001–0·011 in. (0·025–0·28 mm.)
Bushing Inside diameter	2·0005–2·0015 in. (50·81–50·83 mm.)
Adapter Hole outside diameter	1·9985–1·9990 in. (50·76–50·77 mm.)
Backlash with crankshaft gear	0·001–0·006 in. (0·025–0·15 mm.) Gasoline
	0·001–0·009 in. (0·025–0·23 mm.) Diesel
Backlash with camshaft gear	0·001–0·006 in. (0·025–0·15 mm.) Gasoline
	0·001–0·009 in. (0·025–0·23 mm.) Diesel
Fuel injection pump or Governor drive gear	0·001–0·012 in. (0·025–0·30 mm.)

Camshaft Gear	
Number of teeth	52
Timing Mark	Punch Mark on Tooth Space
Timing Gear Backlash	0·003–0·008 in. (0·076–0·203 mm.)
Rocker Arm Shaft	
Shaft Diameter	1·000–1·001 in. (25·400–25·425 mm.)
Support Diameter (I.D.)	1·002–1·004 in. (25·450–25·501 mm.)
Rocker Arm	
Inside Diameter	1·003–1·004 in. (25·476–25·501 mm.)
Tappet	
Type	Barrel (shallow push rod socket) or Partly hollow mushroom foot (deep push rod socket)
Clearance to Bore	0·0006–0·0021 in. (0·0152–0·0530 mm.)
Tappet Diameter	0·9889–0·9894 in. (25·1180–25·1303 mm.)
Tappet Bore Diameter	0·990–0·991 in. (25·146–25·171 mm.)
Crankshaft	
Main Journal Diameter	3·3718–3·3723 in. (85·643–85·656 mm.) Red 3·3713–3·3718 in. (85·631–85·643 mm.) Blue
Main Journal Length	1·455–1·465 in. (36·957–37·211 mm.)
Main Journal Wear Limits	0·005 in. (0·076 mm.) Maximum
Main and Crankpin Fillet Radius	0·12–0·14 in. (3·048–3·556 mm.)
Thrust Bearing Journal Length	1·459–1·461 in. (37·058–37·109 mm.)
Intermediate Bearing Journal Length	1·455–1·465 in. (36·957–37·211 mm.)
Rear Bearing Journal Length	1·485–1·515 in. (37·719–38·481 mm.)
Crankpin Journal Length	1·678–1·682 in. (42·671–42·875 mm.)
Crankpin Diameter	2·7496–2·7500 in. (69·839–69·860 mm.) Blue 2·7500–2·7504 in. (69·86–69·87 mm.) Red
End Play	0·004–0·008 in. (0·102–0·203 mm.)
Crankpin out of round	0·0002 in. (0·005 mm.) T.I.R.
Taper-surface parallel to centre line of main journal	0·0002 in. (0·005 mm.) in/in.
Crankshaft Rear Oil Seal Journal Diameter	4·814–4·808 in. (122·710–122·123 mm.)
Crankshaft Pulley Journal Diameter	1·751–1·750 in. (44·475–44·450 mm.)
Crankshaft Timing Gear Journal Diameter	1·821–1·820 in. (46·253–46·228 mm.)
Crankshaft Flange Runout	0·0015 in. (0·038 mm.) Max.

© FORD MOTOR COMPANY LTD., 1967

Main Bearing

Number	4 (3-Cylinder) and 5 (4-Cylinder)
Thrust taken by	2nd Main (3-Cylinder) and 3rd Main (4-Cylinder)
Liner Length (except thrust liner)	1·10–1·11 in. (27·94–28·19 mm.)
Liner Length (thrust liner)	1·453–1·455 in. (36·906–36·957 mm.)

Identifying Mark	Colour Code	Material	Wall Thickness	Specified Clearance
PV or G	Red	Copper Lead	0·1245–0·1250 in. (3·1623–3·1750 mm.)	0·0022–0·0045 in. (0·0559–0·1143 mm.)
PV or G	Blue	Copper Lead	0·1249–0·1254 in. (3·1724–3·1861 mm.)	0·0022–0·0045 in. (0·0559–0·1143 mm.)
G and AL	Red	Aluminium Tin Alloy	0·1245–0·1250 in. (3·1623–3·1750 mm.)	0·0022–0·0045 in. (0·0559–0·1143 mm.)
G and AL	Blue	Aluminium Tin Alloy	0·1249–0·1254 in. (3·1724–3·1861 mm.)	0·0022–0·0045 in. (0·0559–0·1143 mm.)

Crankpin Bearings:

Number	3 (3-cylinder) and 4 (4-cylinder)
Liner Length	1·40–1·41 in. (35·56–35·81 mm.)

Identifying Mark	Colour Code	Material	Wall Thickness	Specified Clearance
PV or G	Red	Copper Lead	0·0943–0·0948 in. (2·3952–2·4079 mm.)	0·0017–0·0038 in (0·0432–0·0965 mm.)
PV or G	Blue	Copper Lead	0·0947–0·0952 in. (2·4054–2·4181 mm.)	0·0017–0·0038 in. (0·0432–0·0965 mm.)
G and AL	Red	Aluminium Tin Alloy	0·0939–0·0944 in. (2·3851–2·3978 mm.)	0·0025–0·0046 in. (0·0635–0·117 mm.)
G and AL	Blue	Aluminium Tin Alloy	0·0943–0·0948 in. (2·3952–2·4079 mm.)	0·0025–0·0046 in. (0·0635–0·117 mm.)

Crankshaft Regrinding

When regrinding a crankshaft, the main and crankpin journal diameters should be reduced the same amount as the undersize bearings used. The following dimensions apply. The rear end of the crankshaft should be located on the 60° chamfer of the pilot bearing bore.

Undersize Bearings Available	**Main Journal Diameters**
0·002 in. (0·0508 mm.)	3·3698–3·3693 in. (85·5929–85·5809 mm.)
0·010 in. (0·254 mm.)	3·3623–3·3618 in. (85·4024–85·3897 mm.)
0·020 in. (0·508 mm.)	3·3523–3·3518 in. (85·1484–85·1357 mm.)
0·030 in. (0·762 mm.)	3·3423–3·3418 in. (84·8944–84·8817 mm.)
0·040 in. (1·016 mm.)	3·3323–3·3318 in. (84·6404–84·6277 mm.)

Crankpin Journal Diameters	
0·002 in. (0·0508 mm.)	2·7480–2·7476 in. (69·7992–69·7890 mm.)
0·010 in. (0·254 mm.)	2·7404–2·7400 in. (69·6060–69·5900 mm.)
0·020 in. (0·508 mm.)	2·7304–2·7300 in. (69·3521–69·3420 mm.)
0·030 in. (0·762 mm.)	2·7204–2·7200 in. (69·0980–69·0880 mm.)
0·040 in. (1·016 mm.)	2·7104–2·7100 in. (68·8440–68·8340 mm.)

Crankshaft Balancer— 4-Cylinder	
Gear Backlash	0·002–0·010 in. (0·0508–0·254 mm.)
Shaft-to-Bushing Clearance	0·0002–0·0008 in. (0·0050–0·0203 mm.)
Shaft Diameter	0·9895–1·000 in. (25·3873–25·400 mm.)

Camshaft	
Number of Journals	4 (3-Cylinder) and 5 (4-Cylinder)
Bearing Journal Diameter	2·3895–2·3905 in. (60·6933–60·7187 mm.)
Bearing Clearance	0·001–0·003 in. (0·0254–0·0762 mm.)
End Play	0·001–0·007 in. (0·0254–1·7780 mm.)
Thrust Taken By	Thrust Plate-Front

Connecting Rods	
Small End Bushing (I.D.)	1·5003–1·5006 in. (38·1076–38·1152 mm.)
Clearance Bushing-to-Piston Pin	0·0005–0·0007 in. (0·0127–0·0177 mm.)
Side Float	0·007–0·013 in. (0·1778–0·3302 mm.)
Maximum Twist	0·012 in. (0·3048 mm.)
Maximum Bend	0·004 in. (0·1016 mm.)

Pistons

Material	Aluminium Alloy
Make	Autothermic taper sides

FORD 2000		FORD 3000		FORD 4000		FORD 5000	
Gas	Diesel	Gas	Diesel	Gas	Diesel	Gas	Diesel
Length							
5·26 ins. (133·60 mm.)	5·28 ins. (134·11 mm.)	5·26 ins. (133·60 mm.)	5·08 ins. (129·03 mm.)	5·06 ins. (128·54 mm.)	4·98 ins. (126·49 mm.)	5·06 ins. (128·54 mm.)	5·08 ins. (129·03 mm.)
Number of Compression Ring Grooves							
2	3	2	3	2	3	2	3
Number of Oil Ring Grooves							
1	1	1	1	1	1	1	1
Skirt-to-Cylinder Clearance							
0·0027 in. (0·0686 mm.)	0·0075 in. (0·1905 mm.)	0·0027 in. (0·0686 mm.)	0·0075 in. (0·1905 mm.)	0·0032 in. (0·8128 mm.)	0·0080 in. (0·2032 mm.)	0·0027 in. (0·0686 mm.)	0·0075 in. (0·1905 mm.)
0·0037 in. (0·0939 mm.)	0·0085 in. (0·2159 mm.)	0·0037 in. (0·0939 mm.)	0·0085 in. (0·2159 mm.)	0·0042 in. (0·8627 mm.)	0·0090 in. (0·2286 mm.)	0·0037 in. (0·0939 mm.)	0·0085 in. (0·2159 mm.)
Taper (Out-of-Round)							
0·0005 in. (0·0127 mm.)	0.005 in. (0.127 mm.)	0·0005 in. (0·0127 mm.)	0.005 in. (0.127 mm.)	0·0005 in. (0·0127 mm.)	0.005 in. (0.127 mm.)	0·0005 in. (0·0127 mm.)	0.005 in. (0.127 mm.)
0·0015 in. (0·0381 mm.)	0·0025 in. (0·0635 mm.)	0·0015 in. (0·0381 mm.)	0·0025 in. (0·0635 mm.)	0·0015 in. (0·0381 mm.)	0·0025 in. (0·0635 mm.)	0·0015 in. (0·0381 mm.)	0·0025 in. (0·0635 mm.)
Grading Diameter							
4·1975 in. (106·62 mm.)	4·1927 in. (106·52 mm.)	4·1975 in. (106·62 mm.)	4·1927 in. (106·52 mm.)	4·3970 in. (111·62 mm.)	4·3922 in. (111·47 mm.)	4·1975 in. (106·62 mm.)	4·1927 in. (106·52 mm.)
IN INCREMENTS OF 0·0005 in (0·0127 mm.)							
4·2000 in. (106·68 mm.)	4·1952 in. (106·56 mm.)	4·2000 in. (106·68 mm.)	4·1952 in. (106·56 mm.)	4·3995 in. (111·75 mm.)	4·3947 in. (106·68 mm.)	4·2000 in. (106·68 mm.)	4·1952 in. (106·56 mm.)

Piston Pin Clearance 0·0003–0·0005 in. (0·0076–0·0127 mm.)

Piston Crown to Block Face

All Diesel Models	–0·014/–0·002 in.	(–0·36/–0·05 mm.)
3-Cylinder Gasoline	–0·034/–0·022 in.	(–0·86/–0·56 mm.)
4-Cylinder Gasoline	–0·041/–0·029 in.	(–1·04/–0·74 mm.)

Piston Rings

Oil:	
Type	Slotted with Expander
Number and Location	1 Above Piston Pin
Material	Cast Iron
Finish	Chrome Plate
Width	0·1859–0·1866 in. (4·7219–4·7396 mm.)
Gap Width	0·013–0·033 in. (0·330–0·84 mm.)
Compression:	
Number and Location—Diesel	1 Top and 2 Intermediate above Piston Pin
—Gasoline	1 Top and 1 Intermediate above Piston Pin
Type—Top	Barrel Face
—Intermediate	Straight Face—Inner Bevel
Material	Cast Iron
Finish—Diesel—Top	Chrome Plate
—Intermediate	1 Chrome Plate, 1 Plain
Finish—Gasoline—Top	Chrome Plate
—Intermediate	Plain
Width—Top	0·0929–0·0936 in. (2·36–2·37 mm.)
—Intermediate	0·0925–0·0935 in. (2·25–2·37 mm.)
Radial Wall Thickness—Top	0·178 in. (4·521 mm.) Maximum (4·200 in. (106·680 mm.) Bore)
	0·184 in. (4·673 mm.) Maximum (4·400 in. (111·760 mm.) Bore)
Diesel—Intermediate	0·178 in. (4·521 mm.) Maximum (4·200 in. (106·680 mm.) Bore)
	0·184 in. (4·673 mm.) Maximum (4·400 in. (111·760 mm.) Bore)
Gasoline—Intermediate	0·165 in. (4·191 mm.) Maximum (4·200 in. (106·68 mm.) Bore)
	0·165 in. (4·191 mm.) Maximum (4·400 in (111·76 mm.) Bore)
Side Clearance	
Gasoline:	
Top compression	0·0046–0·0029 in. (0·117–0·074 mm.)
2nd compression	0·0045–0·0025 in. (0·114–0·064 mm.)
Oil control ring	0·0031–0·014 in. (0·079–0·036 mm.)
Diesel:	
Top compression	0·0044–0·0061 in. (0·1117–0·1548 mm.)
2nd compression	0·0039–0·0056 in. (0·099–0·1422 mm.)
3rd compression	0·0039–0·0056 in. (0·099–0·1422 mm.)
Oil control ring	0·0024–0·0041 in. (0·0609–0·1041 mm.)
Gap Width—Top	0·012–0·038 in. (0·305–0·965 mm.)
—Intermediate	0·010–0·035 in. (0·254–0·889 mm.)

Detailed installation instructions and specifications are furnished with each set of piston rings.

Piston Pin

Outside Diameter	1·4997–1·5000 in. (38·0923–38·1000 mm.)

Flywheel

Number of Gear Teeth—Diesel	128
—Gasoline	162
Runout of Clutch Face (between outer edge of friction surface and mounting bolt holes)	0·0055 in. (0·127 mm.)
Ring Gear runout	0·025 in. (0·635 mm.)

Lubrication System

Main Bearings	Pressure
Connecting Rod Large Bearings	Pressure
Piston Pin Bushings	Splash
Cylinder Walls	Splash
Camshaft Bearings	Pressure
Timing Drive	Squirt
Tappets	Splash and Drain
Push Rods	Drip from Rocker Arms
Rocker Arms	Pressure (Intermittent Flow)
Dynamic Balancer	Pressure and splash
Capacity—Refill	6 qts. (5·0 imp. Qts.) (5·7 Ltrs.)
Capacity—Dry Fill	8 qts. (6·7 imp. Qts.) (7·6 Ltrs.)

Engine Oil Grade:

Consult the operator's manual for recommended oil types and viscosities for gasoline and diesel engines.

Oil Pump

Rotor Clearance	0·001–0·006 in. (0·0254–0·1524 mm.)
Rotor-to-Pump Housing Clearance	0·006–0·011 in. (0·1524–0·2794 mm.)
Rotor End Play	0·001–0·0035 in. (0·0254–0·0889 mm.)
Pump Pressure	60–70 p.s.i. (4·2–4·9 Kg. sq. Cm.) at 1,000 r.p.m.
Relief Valve Pressure	60–70 p.s.i. (4·2–4·9 Kg. sq. Cm.) at 1,000 r.p.m.
Relief Valve Spring Tension	1·07 in. (25·57 mm.) under 10·7–11·9 lbs. load

Cooling System	
Capacity—Ford 2000	13·2 Qts. (11·0 Imp. Qts.) (12·5 Ltrs.)
—Ford 3000	13·8 Qts. (11·5 Imp. Qts.) (13·0 Ltrs.)
—Ford 4000	14·0 Qts. (11·6 Imp. Qts.) (13·2 Ltrs.)
—Ford 5000	15·3 Qts. (12·75 Imp. Qts.) (14·5 Ltrs.)
Radiator Cap Pressure	7 p.s.i.
Fan Belt Deflection	½ in. (12·700 mm.) Maximum
Water Pump:	
Type	Centrifugal
Drive	V-belt
Thermostat:	
Opening Temperature	188°F. (87·6°C.)
Full Open	212°F. (100°C.)

Torque Specifications (Lubricated Threads)	Thread Size	Pounds Feet	Metre Kilograms
Main Bearing Bolts	9/16–12	115–125	15·89–17·28
Connecting Rod Nuts	7/16–20	60–65	8·30–8·99
Cylinder Head Bolts (with Engine Cold)	1/2 –13	95–105	13·13–14·51
Intake Manifold-to-Cylinder Head	3/8 –16	23–28	3·18–3·87
Exhaust Manifold-to-Cylinder Head	3/8 –16	25–30	3·46–4·14
Flywheel-to-Crankshaft	9/16–18	100–110	13·82–15·21
Oil Pan Drain Plug	7/8 –16	25–35	3·46–4·84
Valve Rocker Cover Bolts	5/16–18	10–15	1·38–2·07
Crankshaft Pulley-to-Crankshaft	3/4 –16	130–160	17·96–22·12
Self-Locking Screw—Valve Rocker Arm	7/16–20	9–26	1·24–3·59
Injector Attachment Bolts	5/16–24	10–15	1·38–2·07
Oil Pump to Block	3/8 –16	23–28	3·18–3·87
Water Pump-to-Cylinder Block	3/8 –16	23–28	3·18–3·87
Water Pump Cover-to-Pump	5/16–18	18–22	2·49–3·04
Oil Pan-to-Cylinder Block (Stamped)	3/8 –16	20–24	2·76–3·31
Oil Pan-to-Cylinder Block (Cast)	3/8 –16	30–35	4·15–4·84
Injector Line Nuts	M12x1·5	18–22	2·49–3·04
Injection Pump-to-Front Adapter Plate	5/16–24	20–25	2·76–3·46
Camshaft Drive Gear-to-Block	1/2 –20	100–105	13·82–14·51
Spark Plugs (Dry Thread)	14 mm.	26–30	3·59–4·15
Front Adapter Plate-to-Cylinder Block	5/16–18	13–18	1·80–2·49
Front Cover-to-Front Adapter Plate	5/16–18	13–18	1·80–2·49
Camshaft Gear Bolts	7/16–14	40–45	5·54–6·22
Oil Filter Retaining Bolt	3/4 –16	45–50	6·22–6·91
Oil Filter Mounting Bolt Insert	1·3/8 –12	120–130	16·58–17·96
Starting Motor-to-Rear Adapter Plate	7/16–14	30–35	4·15–4·84
Dynamic Balancer—Cylinder Block	1/2 –13	60–70	8·30–9·68
Governor Drive Gear Nut	7/8 –20	95–105	13·13–14·51
Oil Pump Gear Stop	1·1/8 –16	65–75	8·99–10·37
Oil Pressure Switch Assembly		20–25	2·76– 3·46

Torque specifications not listed above:

Thread Size	Pounds Feet	Metre Kilograms	Thread Size	Pounds Feet	Metre Kilograms
1/4 –12	6–9	0·83–1·24	7/16–14	45–50	6·22– 6·91
1/4 –28	6–9	0·83–1·24	7/16–20	50–60	6·91– 8·29
5/16–18	12–15	1·66–2·07	1/2 –13	60–70	8·29– 9·68
5/16–24	15–18	2·07–2·49	1/2 –20	70–80	9·68–11·06
3/8 –16	20–25	2·76–3·46	9/16–18	85–95	11·75–13·13
3/8 –24	30–35	4·15–4·84	5/8 –18	130–145	17·96–20·04

3. SPECIAL TOOLS

Tool No.	Description
SW 501–1	Remover and Replacer
or CPT 6040 and CT 6069	Remover and Replacer
SW 502	Valve Reaming Kit
SW 506 with	Driver
N 6261–A	Handle
or SW 16	Remover and Replacer
T 809	Adapter
SW 520	Crankshaft Rear Oil Seal Installer

Tool No.	Description
518	Puller
625–1	Shaft Protector
630–1	Step Plate
630–16	Step Plate
809	Adapter
814	Driving Mandrel
815	Driving Mandrel

PART 2
FUEL SYSTEMS

Part 2

FUEL SYSTEMS

Chapter 1

FUEL SYSTEMS GENERAL—GASOLINE

Section		Page
1.	Description and Operation	1
2.	Adjustments	4
3.	Dry-Type Air Cleaner	5
4.	Fuel Tank, Fuel Lines, Fuel Pump, and Fuel Filter and Sediment Bowl	5
5.	Carburetor	6

Chapter 2

FUEL SYSTEMS GENERAL—DIESEL

Section		Page
1.	Description and Operation	11
2.	Adjustments	13
3.	Oil Bath Type Air Cleaner	15
4.	Fuel Tank, Fuel Lines, and Fuel Filters	16
5.	Fuel Lift Pump—Super Major 5000	17
6.	Fuel Injection Pump	18

© FORD MOTOR CO. 1965

Part 2

FUEL SYSTEMS

Chapter 3

INJECTORS

Section		Page
1.	Description and Operation	21
2.	Removing and Installing Injectors	22
3.	Injector Testing	22
4.	Injector Overhaul	24
5.	Storage of Injectors	26

Chapter 4

TROUBLE SHOOTING, SPECIFICATIONS, AND SPECIAL TOOLS

Section		Page
1.	Trouble Shooting	27
2.	Specifications	31
3.	Special Tools	32

Part 2

FUEL SYSTEMS

Chapter 1

FUEL SYSTEMS GENERAL—GASOLINE

Section		Page
1.	Description and Operation	1
2.	Adjustments	4
3.	Dry-Type Air Cleaner	5
4.	Fuel Tank, Fuel Lines, Fuel Pump, and Fuel Filter and Sediment Bowl	5
5.	Carburetor	6

1. DESCRIPTION AND OPERATION

AIR CLEANER

The air cleaner, Figure 1, is located above and to the rear of the engine. It is a paper element, dry-type air cleaner. The air intake for the air cleaner is located at the top front of the radiator hood panel. As air enters the air intake, large foreign particles are rejected by a coarse screen, or filtered out by louvers on the air intake cover. Air is channeled through a tube into the air cleaner. This air is directed around the outside of the paper element filter. At this point any coarse dirt particles that may have passed the louvered intake cover are collected at the bottom of the cleaner housing and down into a rubber boot at the bottom of the cleaner. The boot has an opening slot in the bottom for dirt to escape. After the air is filtered through the paper element, the clean air passes through an air tube to the carburetor.

CARBURETOR

The carburetor, Figure 2, is an updraft single venturi type and has an aluminum die cast housing. It consists of two major castings; the carburetor body and the fuel bowl. The function of the carburetor is to mix air and fuel in the proper proportions and to supply this mixture to the engine in the proper amount and at the proper time. To achieve this result the carburetor is designed with four metering systems: the idle system, the main metering system, the power system, and the accelerator pump system. In addition, there is a float system to maintain the supply of fuel, and a choke system to assist in starting a cold engine.

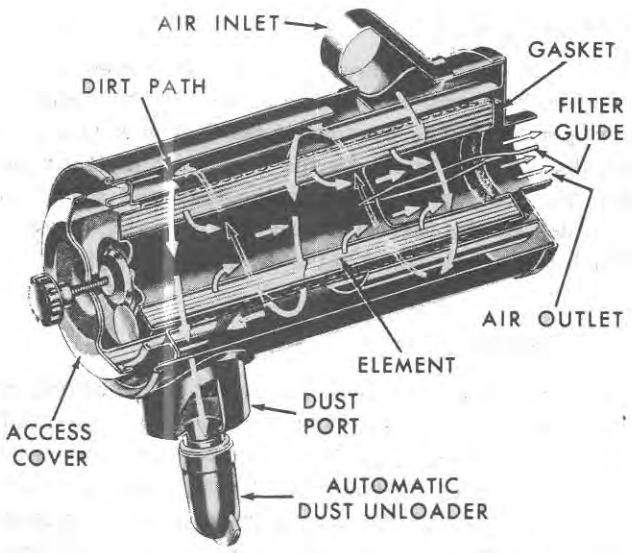

Figure 1
Dry-Type Air Cleaner

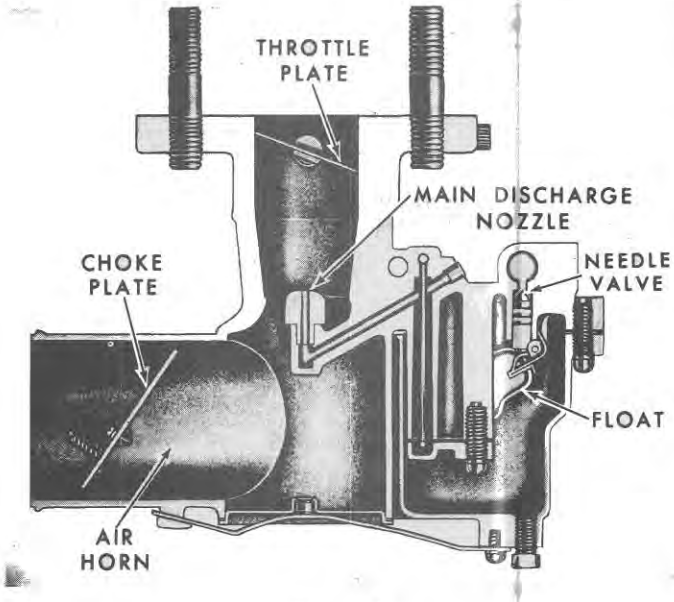

Figure 2
Carburetor

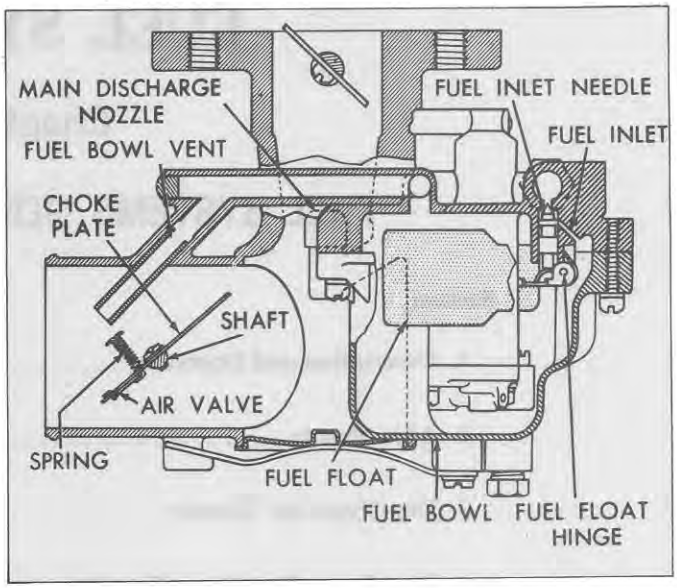

Figure 3
Float and Choke Systems

The idle system, the main metering system, the power system, and the pump system are contained in a cluster in the middle of the carburetor body and are entirely surrounded by fuel. By having these metering components positioned in this manner, the fuel tends to keep the components cool, thus assisting in the metering of liquid fuel rather than vapors. The location and fact that the metering components are surrounded by fuel, permits operation of the tractor at extremely steep angles on hillsides. The carburetor is equipped with a brass float and stainless steel float lever and hinge pin.

A. Float System

The float system, Figure 3, controls the level of fuel in the fuel bowl and admits fuel as required to maintain the proper level. The position of the fuel inlet needle is controlled by the float. As the fuel level in the bowl drops, the float drops, allowing the fuel inlet needle to admit fuel. As the fuel level rises, the float rises, closing the fuel inlet needle which shuts off the fuel supply.

B. Idle System

The idle system, Figure 4, controls the flow of fuel at idle and at minimum power operation when the manifold vacuum is relatively high. The fuel used during idle and minimum power operation enters through the main fuel jet which is connected by a passage in the metering cluster cover to the main well. From there the fuel flows through the idle feed restriction and up the idle well. Air enters the idle air bleed in the lower skirt of the venturi and partially vaporizes the fuel. This mixture travels up the idle passage to the idle orifice where it is regulated by the idle adjusting screw. The flow of fuel is the result of a differential in pressure created by the intake vacuum. As the throttle plate is opened, the idle transfer orifice is exposed to the reduced pressure and the fuel and air mixture is discharged out of both ports.

C. Main Metering System

The main metering system, Figure 5, supplies fuel during all phases of engine operation above the operating

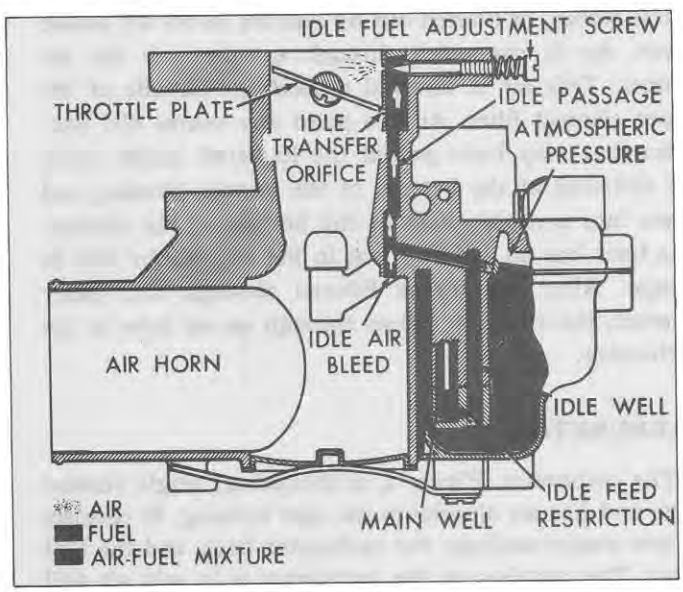

Figure 4
Idle System

range of the idle system. As the throttle plate is opened further and air flow increases, a partial vacuum is created in the venturi of the carburetor. When sufficient vacuum is produced, fuel flows through the main jet and into the carburetor main well. The fuel is then partially vaporized by the air entering through the main well or high speed air bleed in the lower skirt of the venturi. The air enters the main well through the main well tube. This fuel and air mixture is discharged out of the main discharge nozzle where it is vaporized further by the air passing through the venturi. As the throttle plate is opened wider, the idle system begins to fade and the main metering system continues to supply a greater portion of the fuel.

D. Power System

The power system, Figure 6, is controlled by vacuum and is operated by a synthetic rubber valve attached to the bottom end of the accelerator pump piston assembly. During normal load operation, the high manifold vacuum on the top of the pump piston is sufficient to compress the pump spring and hold the synthetic rubber valve off of the channel restriction seat. This will also permit the fuel to flow in through the pump inlet orifice, through the channel restrictor and into the main well, supplementing the fuel entering the main jet.

The power system is open and in operation during high and intermediate manifold vacuum conditions and is closed at wide open throttle or extremely low vacuum operation.

E. Accelerator Pump System

The accelerator pump system, Figure 7, is operated entirely by manifold vacuum. During acceleration, the manifold vacuum drops, and the pump spring forces the pump piston down. Fuel is forced up the accelerator pump channel lifting the pump discharge check off of its seat. The fuel then flows through a metering orifice and is discharged through the pump jet into the air stream above the venturi. When the throttle is closed, the high manifold vacuum overcomes the spring tension and lifts the pump piston and prepares it for the next cycle.

F. Choke System

The manual choke system, Figure 3, consists of a choke plate and shaft assembly. An air valve in the choke plate permits the engine to breath upon initial start until the choke plate can be opened. A spring on the shaft holds the choke plate open during operation. The function of the choke plate is to restrict the air flow into the carburetor which causes a higher vacuum on the main discharge nozzle; this, in turn, gives a richer mixture for starting the engine.

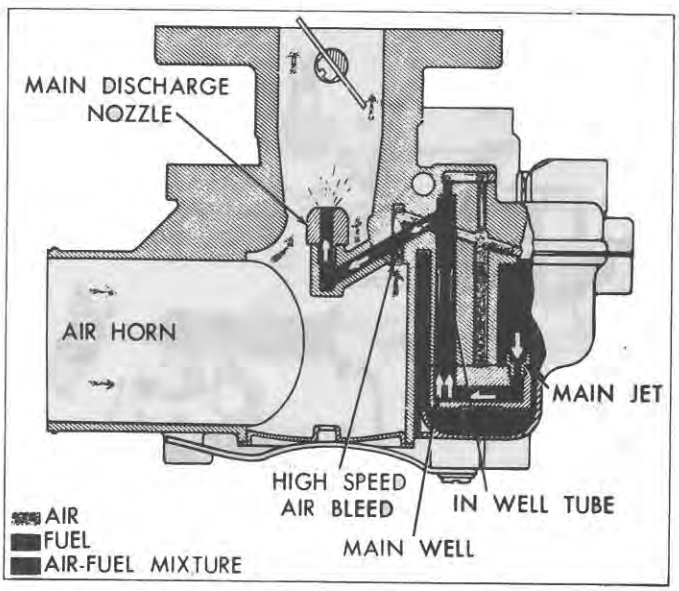

Figure 5
Main Metering System

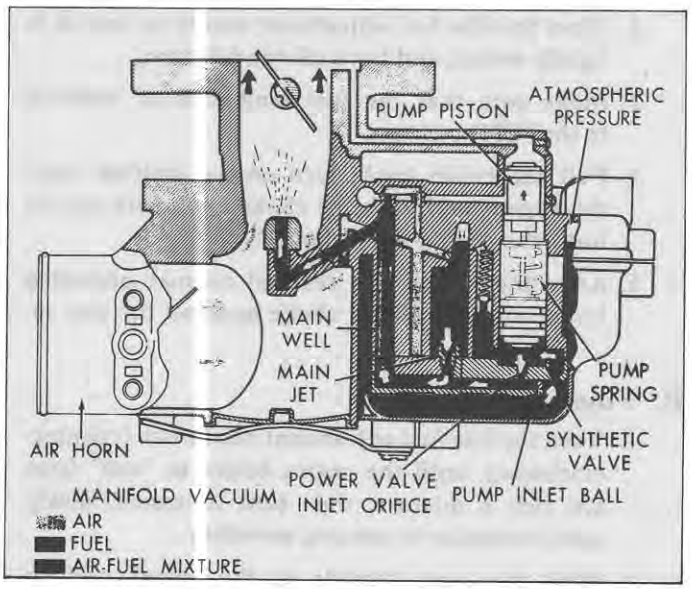

Figure 6
Power System

FUEL PUMP

The fuel pump is mounted on the engine front cover. It contains a screen, diaphragm, driving mechanism, and inlet and outlet valves. The pump is driven by an eccentric bolted to the engine camshaft.

FUEL TANK, FUEL LINES, AND FUEL FILTER AND SEDIMENT BOWL

The fuel tank is located to the rear and above the engine. The fuel outlet and shut-off valve is located at the front bottom right-hand side of the tank.

The fuel lines run from the tank outlet to the fuel pump, to the fuel filter and sediment bowl, and then to the carburetor.

The fuel filter and sediment bowl is located between the fuel pump and carburetor. The bowl traps condensation and dirt particles that may flow through the fuel lines from the tank.

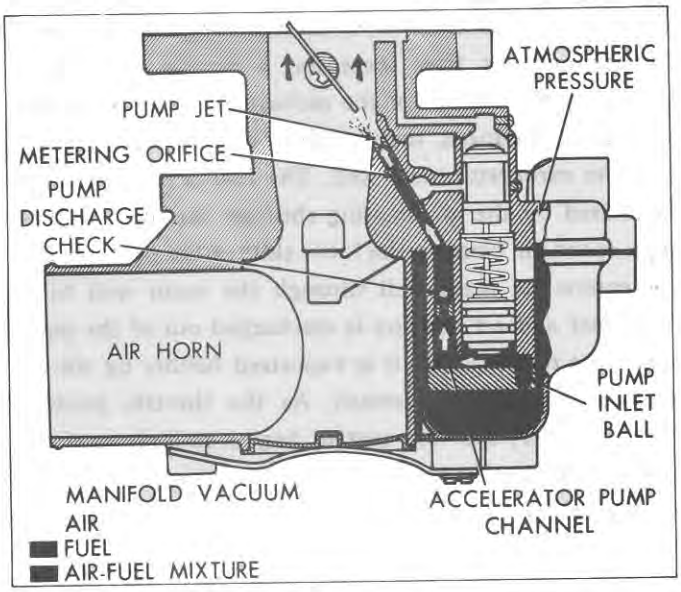

Figure 7
Accelerator Pump System

2. ADJUSTMENTS

CARBURETOR AND GOVERNOR LINKAGE ADJUSTMENTS

There are two adjustments on the gasoline carburetor, as shown in Figure 8. They are the idle fuel adjustment and the idle speed adjustment.

A. Preliminary Adjustment

1. Set the idle speed adjustment screw so the throttle plate is slightly open.
2. Turn the idle fuel adjustment needle in until it is lightly seated, and back off one full turn.
3. Make sure that the fuel tank shut-off valve is to the "ON" position.
4. Pull the choke knob, turn on the ignition, start the engine, and push the choke knob part-way in until the engine runs smoothly.
5. After the engine has reached normal operating temperature, push the choke knob all the way in.

B. Final Adjustments

1. Turn the idle fuel adjustment needle out (counter-clockwise) until the engine begins to "roll" from too rich a mixture, then turn it inward slowly until the engine is running smoothly.
2. With the hand throttle in the closed position (fully forward), turn the idle speed adjustment screw until the engine low idle speed is to the specified rpm, page 31. On new engines, it may be necessary to set the low idle speed slightly higher for the first few hours, to prevent stalling.
3. With the hand throttle in the wide open position, adjust the stop screw on the throttle linkage bracket to obtain the specified maximum no-load rpm, page 31.
4. If these adjustments cannot be obtained, it may be necessary to adjust the throttle linkage.

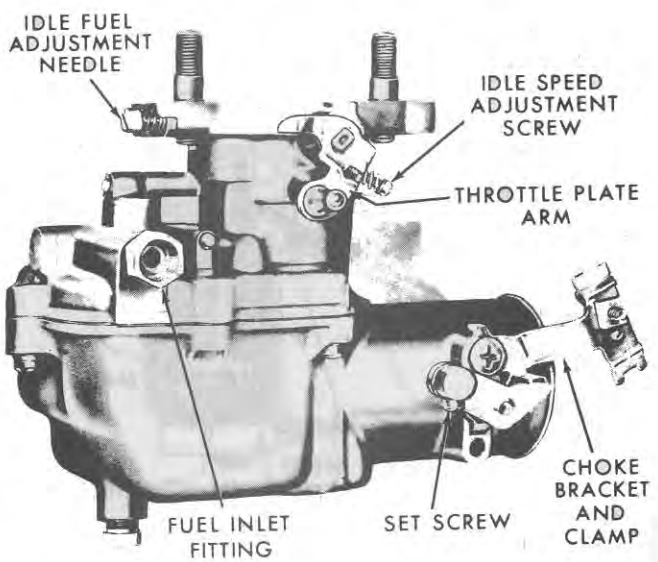

Figure 8
Adjustments

3. DRY-TYPE AIR CLEANER

A. Removal

1. Disconnect the carburetor air intake tube from the end of the air cleaner.
2. Disconnect the air intake tube from the upper side of the air cleaner.
3. Remove the four bolts that attach the air cleaner to the rear engine baffle plate, and remove the assembly.
4. Remove the filter element by loosening the thumbscrew and turning the cover until it is free to be removed.

B. Installation

1. Install the filter element into the air cleaner.
2. Position the air cleaner assembly on the rear engine baffle plate and secure it with the four bolts.
3. Connect the air intake tube to the upper side of the air cleaner and tighten the clamp.
4. Connect the carburetor air intake tube to the end of the air cleaner and tighten the clamp.

4. FUEL TANK, FUEL LINES, FUEL PUMP, AND FUEL FILTER AND SEDIMENT BOWL

FUEL TANK

For removal and installation of the fuel tank, refer to page 16, under "FUEL TANK, A, Removal."

FUEL LINES

A. Removal

1. Turn the fuel tank shut-off valve to the "OFF" position and remove the line connecting the tank to the fuel pump by disconnecting it at both ends.
2. Disconnect the line connecting the fuel pump to the fuel filter and sediment bowl. Then, disconnect the fuel line from the carburetor fuel inlet fitting and remove the line and the sediment bowl.

B. Installation

1. Connect the fuel line from the carburetor to the fuel filter and sediment bowl.
2. Connect the line from the fuel filter and sediment bowl to the fuel pump. Connect the line from the fuel pump to the fuel tank.
3. Tighten all fittings securely and turn the fuel shut-off valve to the "ON" position. Loosen the fuel filter and sediment bowl reainer screw to allow the bowl to fill with fuel. Tighten the retainer screw.

FUEL PUMP

A. Removal

1. Disconnect the fuel tank line from the fuel pump.
2. Disconnect the carburetor line from the fuel pump.
3. Remove the two cap screws that retain the fuel pump to the engine front cover and remove the fuel pump.
4. Remove the pin in the engine front cover that drives the fuel pump. It may be necessary to use a magnet or needle nose pliers to remove the pin.
5. Inspect the drive pin for wear and install a new one if it appears to be worn or damaged at the ends.
6. Remove the pump top cover by removing the hex head screw at the top of the pump and remove the screen. Clean the pump and screen in solvent and dry with compressed air. Install the screen and cover.

B. Installation

1. Install the drive pin in the front cover.
2. Position the pump on the mounting flange on the front cover and secure it with the two cap screws and lock washers.
3. Connect the fuel inlet and outlet lines to the fittings on the pump.

FUEL FILTER AND SEDIMENT BOWL

A. Removal

1. Turn the fuel shut-off valve to the "OFF" position.
2. Disconnect the inlet and outlet fuel lines from the fuel filter and sediment bowl and remove the assembly.
3. Clean the bowl and filter and check the bowl gasket. Reinstall the bowl gasket.

B. Installation

1. Connect the inlet and outlet fuel lines to the fuel filter and sediment bowl and tighten securely.

   NOTE: ***Tighten all fittings carefully, as overtightening may strip the threads.***

2. Turn the fuel shut-off valve to the "ON" position.
3. Loosen the fuel filter and sediment bowl retainer screw and allow the bowl to fill with fuel. Tighten the retainer screw.

5. CARBURETOR

A. Removal

1. Turn the fuel tank shut-off valve to the "OFF" position.
2. Loosen the air intake tube clamp at the carburetor and pull the hose off the carburetor.
3. Disconnect the fuel line at the fitting on the carburetor.
4. Disconnect the throttle linkage at the carburetor.
5. Remove the two nuts and lock washers that attach the carburetor to the intake manifold. Remove the carburetor and clean the gasket surfaces.
6. Clean the outside of the carburetor with solvent and examine it for damage.

B. Disassembly

Refer to Figure 11 for identification of parts while disassembling the carburetor.

1. Remove the fuel inlet fitting and screen.
2. Remove the air horn plug retaining spring and air horn plug.
3. Remove the retaining screws and remove the fuel bowl.
4. Remove the hinge pin and float assembly, Figure 9. The hinge pin is held in place by a baffle in the fuel bowl. When the fuel bowl is removed, the pin is free to be removed.
5. Remove the fuel inlet needle, Figure 9.
6. Remove the three screws retaining the metering cluster cover and remove the cover and gasket, Figure 10.
7. Using a screwdriver with a blade wide enough to contact both sides of the slot in the main metering jet, remove the jet from the cover.

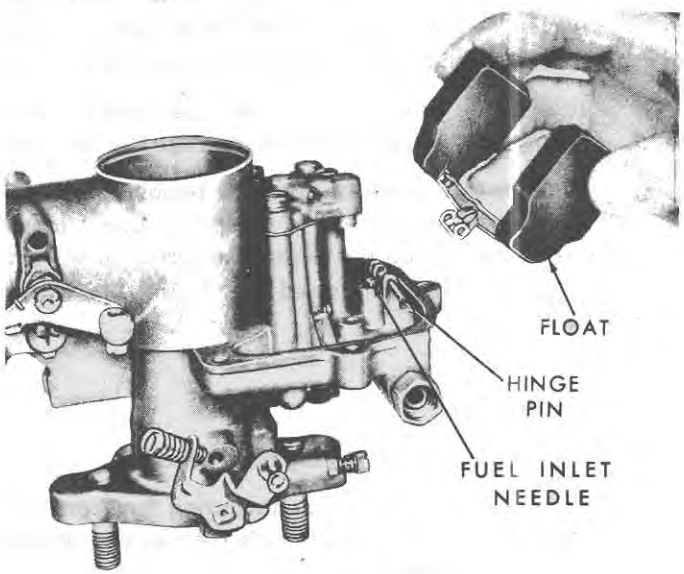

Figure 9
Removing the Float and Fuel Inlet Needle

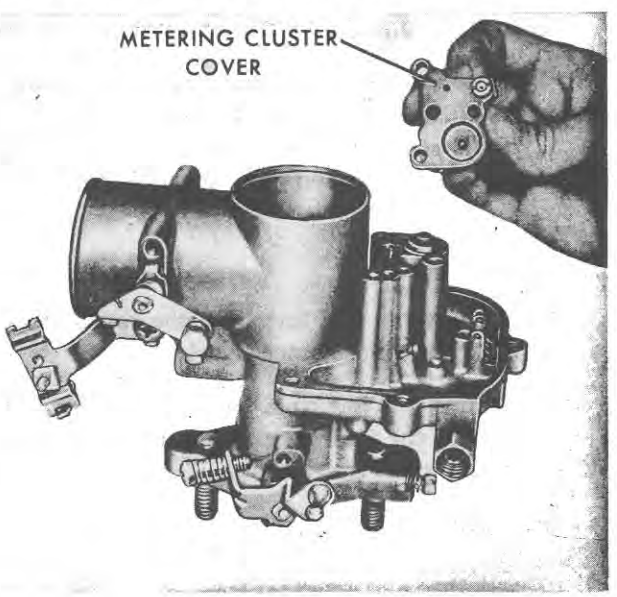

Figure 10
Removing the Metering Cluster Cover

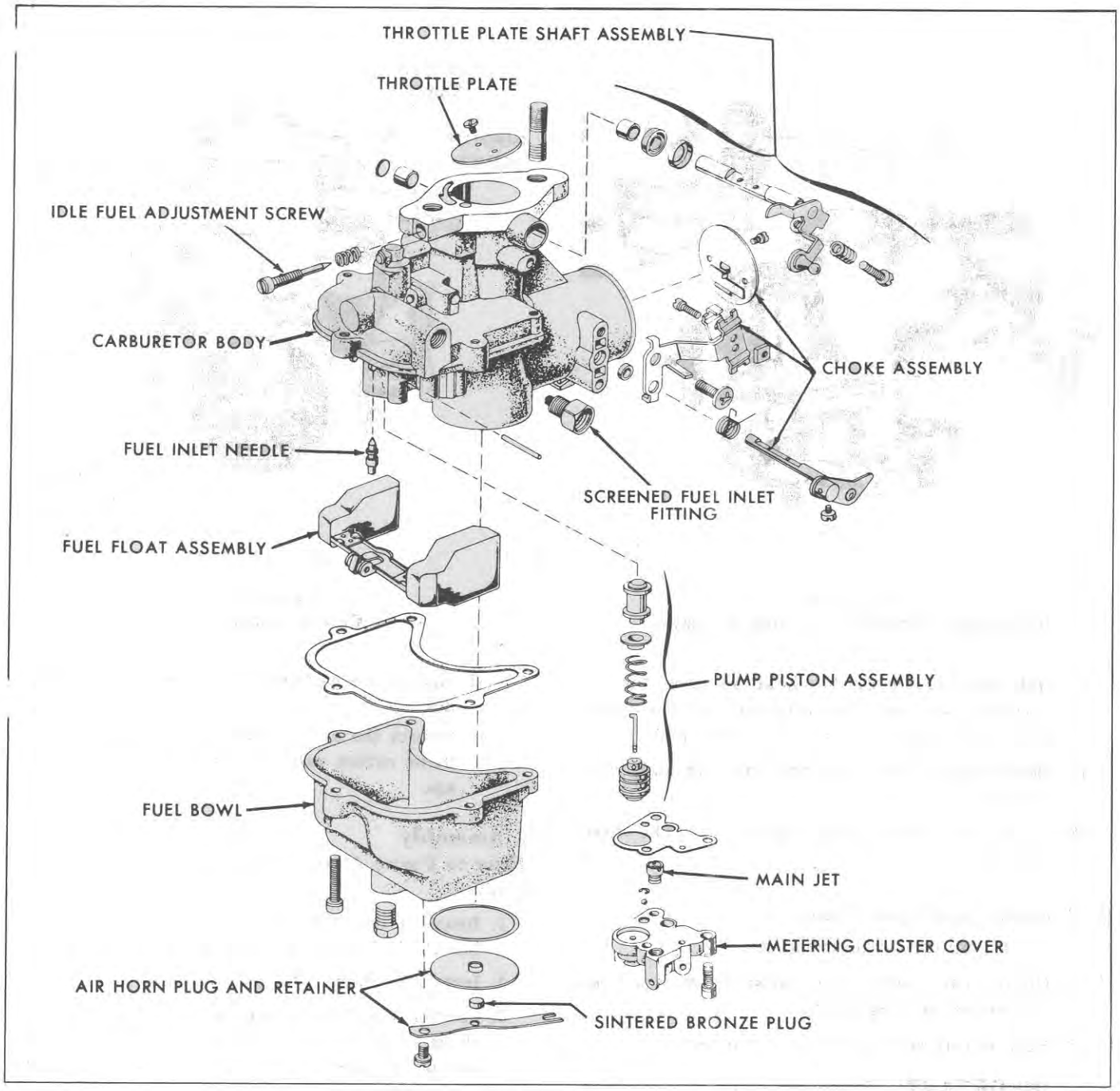

Figure 11
Carburetor—Disassembled

8. Remove the accelerator piston and pump assembly, Figure 12.
9. Remove the idle adjusting screw and spring.
10. Scribe a mark on the throttle plate so it can be reassembled in the same position.
11. Remove the throttle plate screws and the throttle plate.
12. Remove the throttle shaft and lever from the carburetor body.

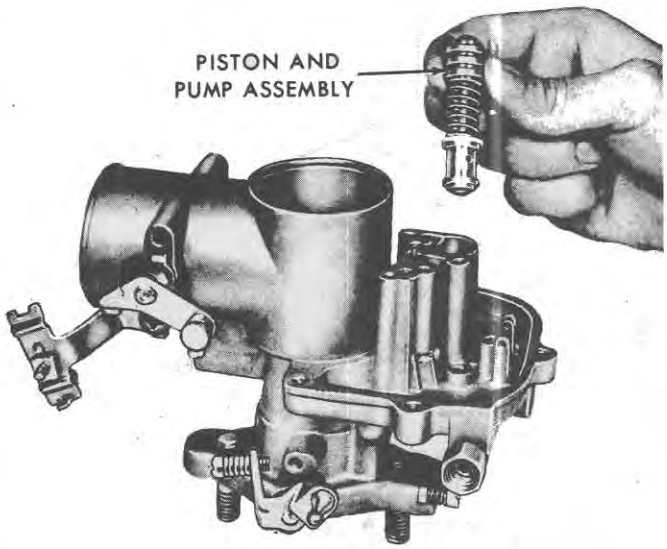

Figure 12
Removing the Piston and Pump Assembly

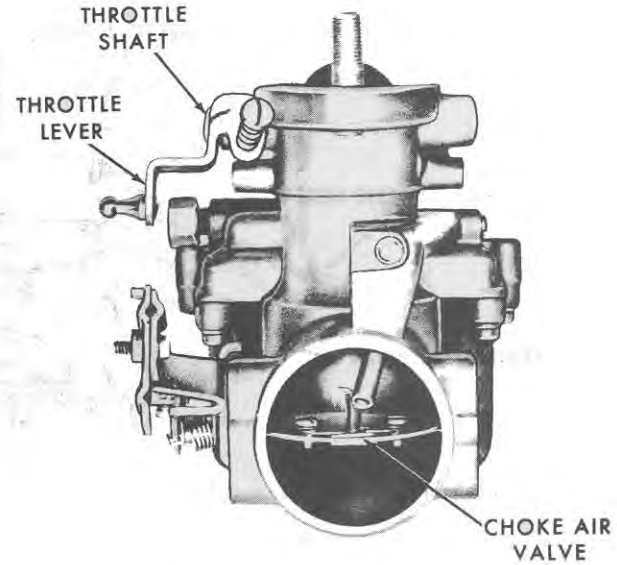

Figure 13
Choke Assembly

13. Note the location of the choke air valve for reassembly purposes, Figure 13. Remove the choke plate retaining screws and the choke plate.
14. Remove the choke shaft and lever assembly and spring.
15. Remove the choke cable bracket and choke shaft felt seal.

C. Cleaning and Inspection

1. Discard all used gaskets and seals.
2. Clean all the parts of the carburetor with a good carburetor cleaning solution.
3. Blow out all passages with compressed air.

   IMPORTANT: ***Never use a wire or drill to clean orifices or jets. Even small scratches will affect carburetor calibration.***

4. To properly service the carburetor, a repair kit should be installed. If a repair kit is not available:
   a. Examine the fuel inlet needle carefully for damage or wear.
   b. Examine the idle adjusting needle and discard if grooved or damaged.
   c. Examine the throttle shaft for wear.
   d. Inspect the carburetor body and fuel bowl for damage.
   e. Inspect the accelerator piston spring and synthetic rubber valve carefully for wear or damage.

D. Assembly

Refer to Figure 11 for identification of parts during assembly.

1. Install a new felt choke shaft seal in the carburetor body.
2. Install the choke cable bracket.
3. Position the choke spring on the shaft. Start the choke shaft into the air horn and pull the straight end of the spring into position above the choke lever stop tab.

   NOTE: ***The spring must be properly positioned to hold the choke plate in the open position.***

4. Position the choke plate (note correct position of the air valve), and install the choke plate screws.
5. Install a new felt throttle shaft seal.
6. Install the throttle shaft into the carburetor body, from the left-hand to the right-hand side, as shown in Figure 13.

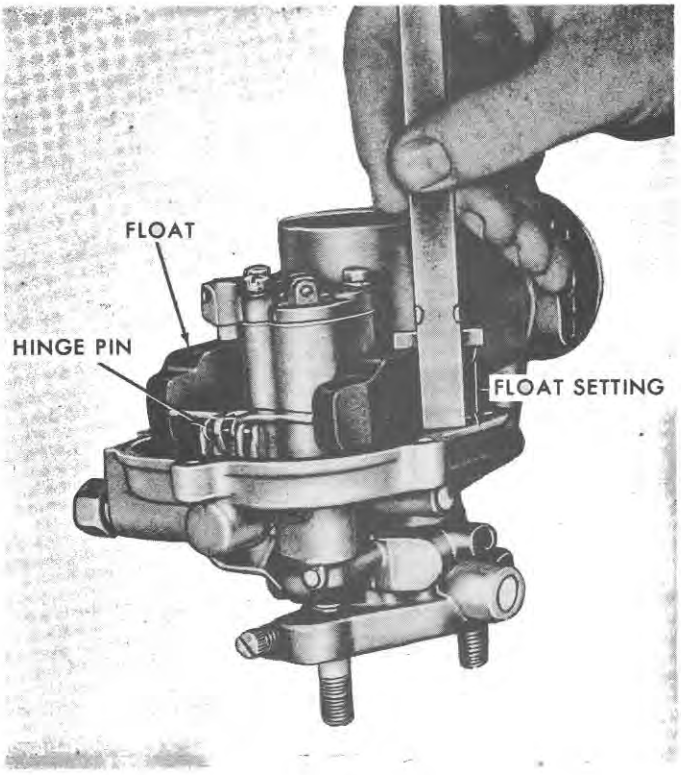

Figure 14
Float Setting

7. Install the throttle plate in relation to the reference mark made during disassembly and start the two screws. Carefully tap the plate to align it in the throttle bore and tighten the screws.
8. Install the accelerator piston and pump assembly in the carburetor body.
9. Install the main metering jet in the cover. Use a screwdriver with a blade wide enough to contact the entire slot in the jet, to prevent possible damage to the jet.
10. Install a new cluster cover gasket and install the cover.
11. Install the fuel inlet needle in its bore in the carburetor.
12. Install the float and float hinge pin.
13. Check the float setting as shown in Figure 14. Adjust the float by bending the float lever to contact the inlet needle as specified on page 31.
14. Install a new fuel bowl gasket and install the fuel bowl.
15. Install the bowl retaining screws and tighten them evenly to the specified torque, page 31.
16. Install the air horn plug and retaining spring, Figure 15.
17. Install the idle adjusting needle and spring. Turn the needle in until it is lightly seated and back off one full turn for the initial adjustment.

E. Installation

1. Use a new carburetor-to-manifold flange gasket and install the carburetor in place on the manifold. Install the two lock washers and nuts and tighten them to the specified torque, page 31.
2. Connect the fuel line to the carburetor fuel inlet fitting.
3. Install the air intake tube hose on the carburetor and tighten the hose clamp securely.

   IMPORTANT: ***Air inlet hose connections must be tight to prevent dirt from entering the engine.***
4. Connect the throttle rod to the throttle lever on the carburetor.

   IMPORTANT: ***Operate the throttle to be sure the lever adjustment will permit the throttle to fully open and close.***
5. Turn the fuel tank shut-off valve to the "ON" position.
6. Loosen the fuel filter and sediment bowl retainer screw to allow fuel to fill the bowl. Tighten the retainer screw.

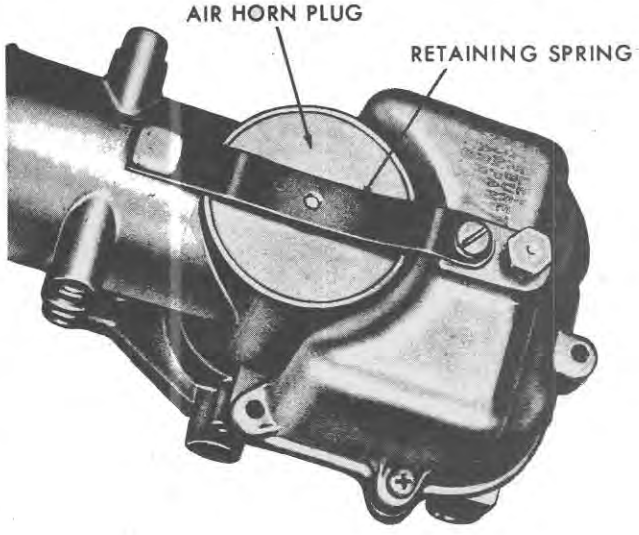

Figure 15
Air Horn Plug Installation

Part 2

FUEL SYSTEMS

Chapter 2

FUEL SYSTEMS GENERAL—DIESEL

Section	Page
1. Description and Operation	11
2. Adjustments	13
3. Oil Bath Type Air Cleaner	15
4. Fuel Tank, Fuel Lines, and Fuel Filters	16
5. Fuel Lift Pump—Super Major 5000	17
6. Fuel Injection Pump	18

1. DESCRIPTION AND OPERATION

AIR CLEANER

The air cleaner is located in front of the radiator and is mounted on the radiator shroud. It is an oil bath, center tube inlet type. Air enters at the top of the air cleaner and passes through a duct to the surface of the oil bath sump where it is deflected upward. Much of the dust and other foreign material in the air is caught in the sump at this point, due to the velocity and abrupt change in the direction of air flow. The air passes upward through the filter, carrying oil droplets with it. As the air passes through the filter mesh, most of the remaining dirt adheres to the oil-wetted surfaces and drains back into the sump. The air outlet is on the side, and the removable cup fitted to the bottom permits convenient cleaning and servicing, Figure 16.

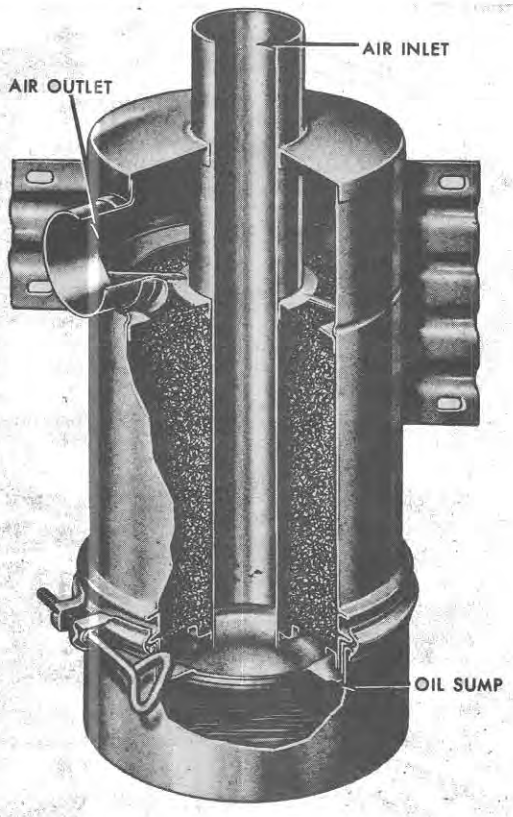

Figure 16
Oil Bath Air Cleaner

PRE-CLEANER (Accessory)

The pre-cleaner is mounted on the inlet tube above the radiator hood panel assembly. It is for use under severe dust conditions to protect the air cleaner by reducing the load on it. Vanes fitted into the inlet induce a rotary motion to the air stream as the air enters the inlet at high speed. Centrifugal force, therefore, causes the heavier dust and other foreign matter to be thrown into the space between the inner and outer shells. The pre-cleaned air then passes to the oil bath air cleaner, Figure 17.

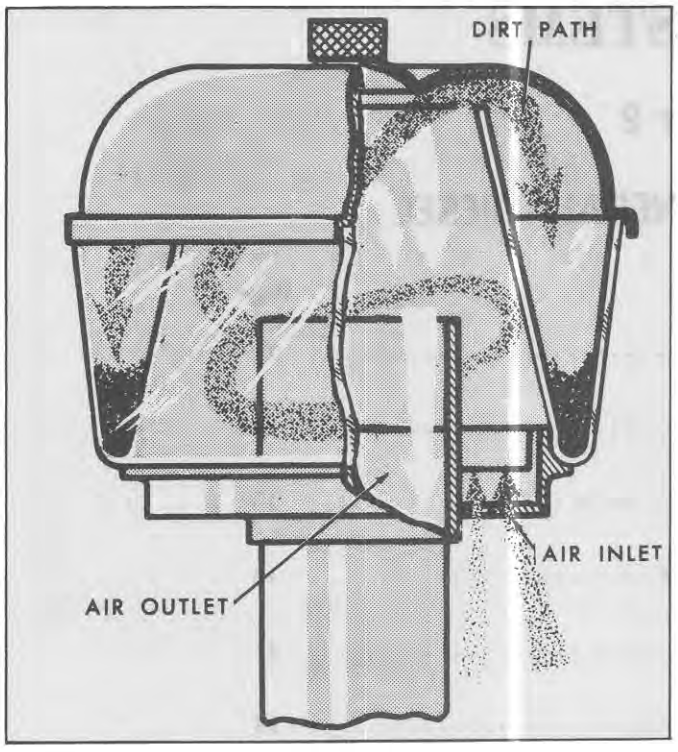

Figure 17
Pre-Cleaner

FUEL TANK, FILTERS, AND LINES

The fuel tank, Figure 18, is located to the rear and above the engine. The tank has a vented cap and the filler neck contains an injector leak-off line connector. The fuel tank outlet is located in the bottom right front corner of the tank. The fuel shut-off valve is an integral part of the outlet fitting. In the top of the fuel shut-off valve is a nylon screen filter.

The Dexta 2000 Tractor has one disposable element filter whereas the Super Dexta 3000 and Major 4000 Tractors utilize two disposable element filters. Fuel flows from the tank through the line into the filter adapter inlet. As the fuel passes through the elements in parallel, it flows around the middle retaining bolts and up through a cross drilling to the fuel line to the injection pump. The incoming fuel and the filtered fuel are kept separated at the top of the filters by hollow bosses containing O-rings which seal against the O.D. of the center posts. The fuel is drawn from the adapter housing into the injection pump inlet by the transfer pump vacuum. The transfer pump delivers fuel to the injection pump to supply fuel at high pressure to each injector, and provides extra fuel which lubricates and cools the injection pump. Such extra fuel is recirculated from a fitting on the pump housing to the return feed port of the filter.

The Super Major 5000 Tractors utilize the same dual filter arrangement except the fuel flows to the fuel lift

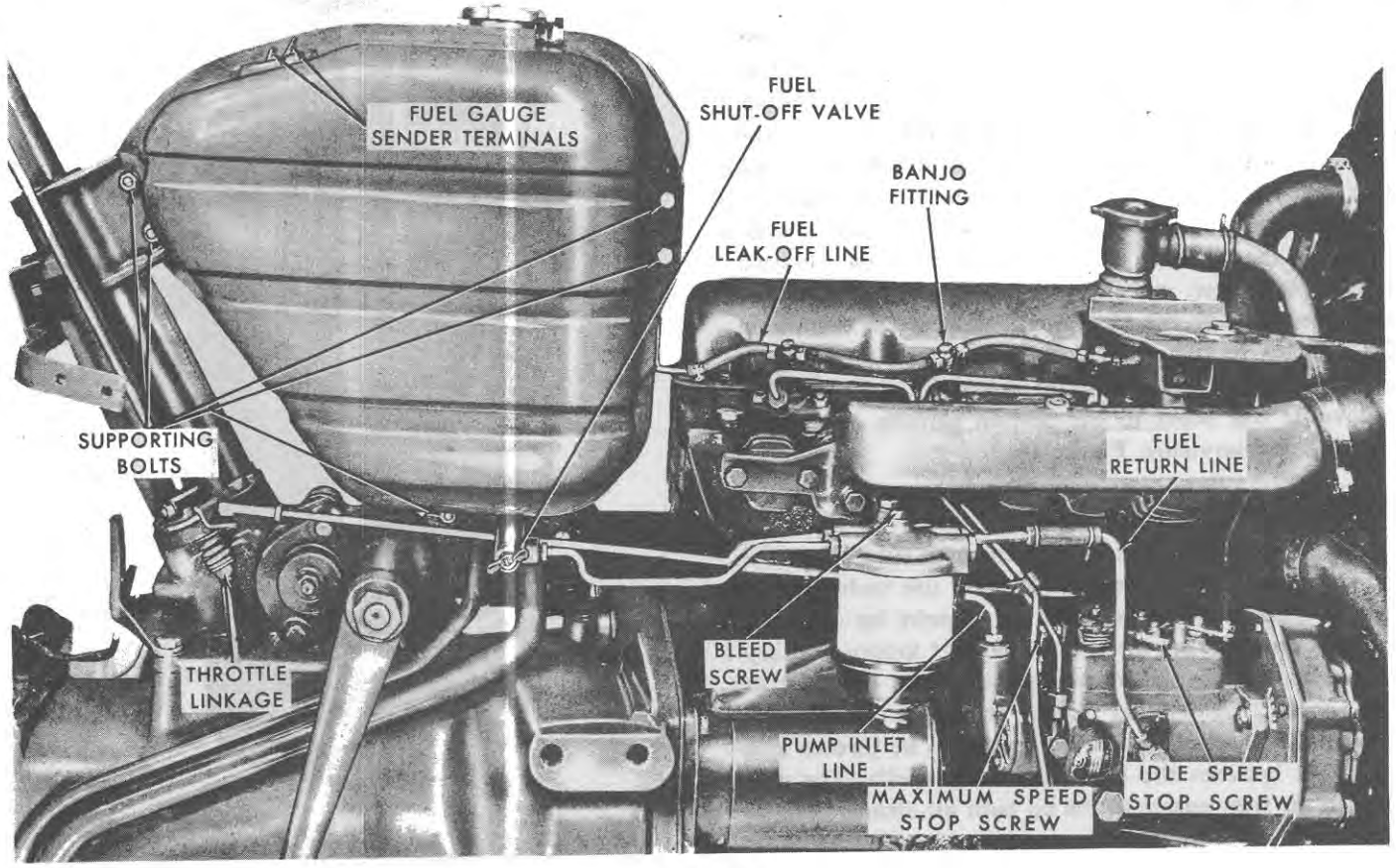

Figure 18
Distributor-Type Fuel System (Dexta 2000 Shown)

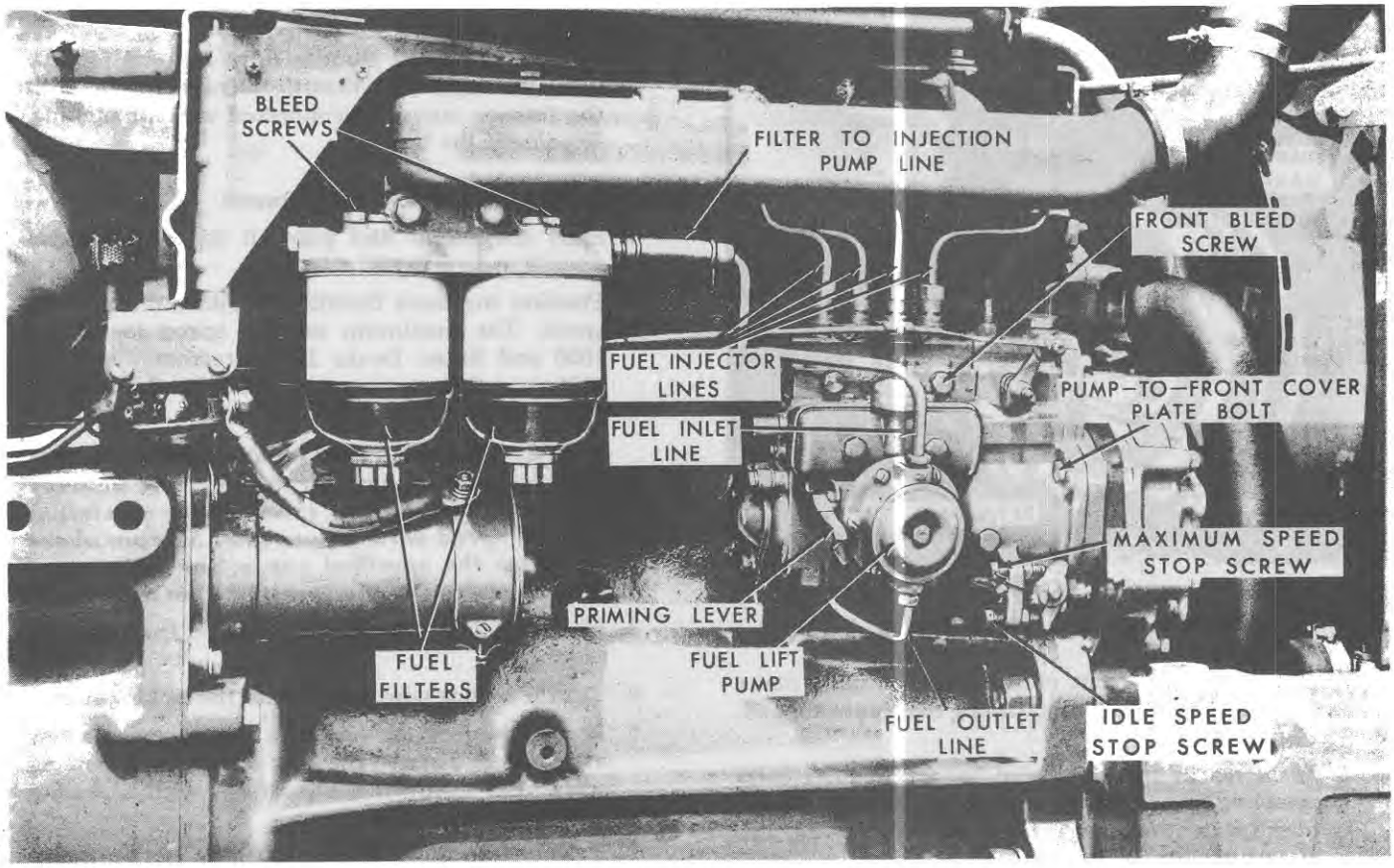

Figure 19
Minimec Fuel System

pump where is is pressurized to 2-3 psi (0.1406-0.2109 kg/sq. cm) and then routed through the two filters, see Figure 19.

The excess fuel that leaks past the needle and nozzle of the injector is directed back into the fuel tank at the filler tube by the leak-off line, connected from injector to injector.

INJECTION PUMP

The Dexta 2000, Super Dexta 3000, and Major 4000 Tractors use the distributor-type injection pump, Figure 18. The pump is mounted to the rear of the engine front cover plate and is driven by the pump timing gear. There is only one pumping element, and this is provided with a distributor or means of connecting the pump delivery to each of the injectors in proper order.

The Super Major 5000 Tractors are equipped with the Minimec injection pump with a mechanical governor, Figure 19. The pump is mounted to the front cover plate and is driven by the pump timing gear. The pump has one pumping element per cylinder.

INJECTORS

The fuel injectors are sealed and mounted in the cylinder head and are held in position by retainer nuts on screw-in studs. Fuel from the injection pump enters the injector inlet and passes through a drilling in the nozzle holder and nozzle assembly before reaching the needle valve seat. The pressure of the fuel causes the needle valve to open against the action of the injector spring. Fuel is then forced, in a highly atomized state, through the four holes in the nozzle tip. A small amount of fuel leaks up between the needle valve stem and the nozzle body, providing lubrication. This leak-back fuel is forced to the top of the injector where it is returned to the fuel tank through the injector leak-off line.

2. ADJUSTMENTS

INJECTION PUMP TIMING

A. Minimec Injection Pump

1. Remove the flywheel inspection cover at the right rear of the engine. Rotate the engine until the No. 1 piston is on its compression stroke, and the 19° btdc mark on the flywheel is aligned with the timing mark in the inspection window, Insert, Figure 20.

2. Drain the coolant from the radiator and remove the lower radiator hose. Remove the inspection

© FORD MOTOR CO. 1965

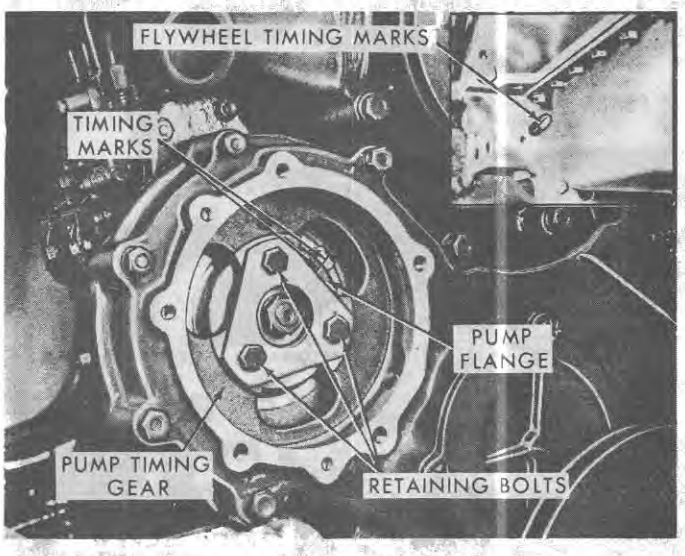

Figure 20
Minimec Injection Pump Timing

plate from the front of the engine timing cover and check that the pump timing marks are aligned, Figure 20.

3. If the marks are not aligned, loosen the three bolts retaining the driving gear to the pump flange, and rotate the flange until the marks line up. Retighten the bolts.
4. Install the front engine timing cover, connect the radiator hose, and refill the radiator. Install the flywheel inspection cover.

B. Distributor-Type Injection Pump

The distributor-type injection pump drive is doweled and bolted to the pump timing gear. When mounted on the tractor with the mark on the pump mounting flange lined up with the "O" mark on the engine front cover plate, the pump is in time with the engine. Additional marks are provided on the engine front cover plate if advancing or retarding of the injection pump should become necessary, Figure 21.

IMPORTANT: ***Do not loosen the pump mounting bolts when the engine is running.***

IDLE SPEED AND MAXIMUM NO-LOAD SPEED ADJUSTMENTS

A. Dexta 2000, Super Dexta 3000, and Major 4000

Idle Speed Adjustment:

1. Start the engine and allow it to reach normal operating temperature.
2. Disconnect the throttle linkage from the injection pump. Loosen the lock nut and adjust the low idle speed stop screw, Figure 18, on the injection pump, so that the idling speed is 600-650 rpm. Secure the screw in position with the lock nut.
3. Position the hand throttle fully forward for low idle and adjust the throttle linkage length until the linkage may be reconnected without binding. Reconnect the linkage.

Maximum No-Load Speed Adjustment:

1. Start the engine and allow it to reach normal operating temperature.
2. Position the hand throttle for maximum no-load speed. The maximum no-load speed for Dexta 2000 and Super Dexta 3000 Tractors should be 2200 rpm. The maximum no-load speed for Major 4000 Tractors should be 2420 rpm.

   NOTE: ***The maximum no-load speed screw is sealed at the factory for correct fuel delivery and maximum no-load speed. If the maximum no-load speed varies more than 50 rpm above or below the specified range, the adjustment may be altered to the specified rpm as follows:***
3. Disconnect the throttle linkage at the injection pump.
4. Cut the sealing wire and remove the locking sleeve.
5. Loosen the lock nut and turn the adjusting screw as required. Tighten the lock nut on the adjusting screw and secure the adjustment with a sealing wire and the locking sleeve.
6. Position the throttle lever at the injection pump for the specified maximum no-load speed. Check to be sure that the throttle linkage may be reconnected to the throttle lever without binding. Adjust the linkage length if necessary.
7. Reconnect the throttle linkage and recheck the idle speed adjustment.

B. Super Major 5000

Idle Speed Adjustment:

1. Start the engine and allow it to reach normal operating temperature.

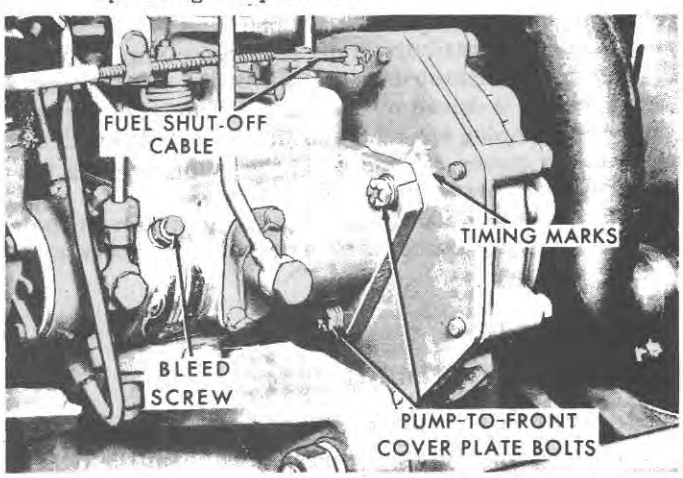

Figure 21
Distributor-Type Injection Pump Timing

2. Disconnect the throttle linkage from the injection pump. Loosen the lock nut and adjust the low idle speed stop screw, Figure 19, on the governor housing so that the idling speed is 600-650 rpm. Secure the screw in position with the lock nut.
3. Position the hand throttle fully forward for low idle and adjust the throttle linkage length until the linkage may be reconnected without binding. Reconnect the linkage.

Maximum No-Load Speed Adjustment:

1. Start the engine and allow it to reach normal operating temperature.
2. Position the hand throttle for maximum no-load speed. The maximum no-load speed for Super Major 5000 Tractors should be 2310 rpm.

   NOTE: ***The maximum no-load speed screw is sealed at the factory for correct fuel delivery and maximum no-load speed. If the maximum no-load speed varies more than 50 rpm above or below the specified range, the adjustment may be altered to the specified rpm as follows:***
3. Disconnect the throttle linkage at the injection pump.
4. Cut the sealing wire from the maximum no-load speed stop screw.
5. Loosen the lock nut and turn the adjusting screw as required. Tighten the lock nut on the adjusting screw and secure the adjustment with a sealing wire.
6. Position the throttle lever at the injection pump for the specified maximum no-load speed. Check to be sure that the throttle linkage may be reconnected to the throttle lever without binding. Adjust the linkage length if necessary.
7. Reconnect the throttle linkage and recheck the idle speed adjustment.

BLEEDING THE FUEL SYSTEM

A. Fuel Filters and Pump—Dexta 2000, Super Dexta 3000, and Major 4000

1. Make sure there is adequate fuel in the tank.
2. Tighten all fuel line connections.
3. Remove the bleed screws, Figure 18, from the top of the fuel filters. (Dexta 2000 Tractors have only one fuel filter.) Allow the fuel to flow until it is free of air bubbles. Install and tighten the bleed screws.

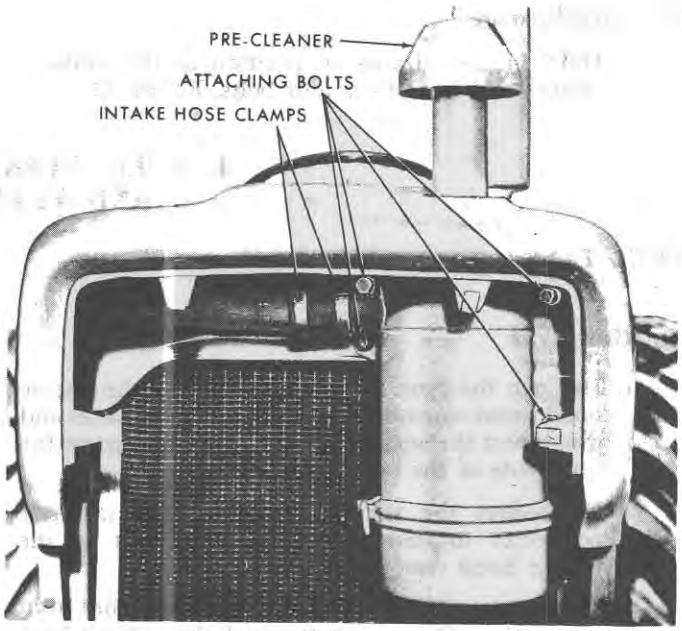

Figure 22
Air Cleaner Installed

4. Loosen the bleed screw on the injection pump, Figure 21. Crank the engine until fuel flowing from the bleed screw is free from air bubbles. Tighten the bleed screw.

B. Fuel Filters and Pump—Super Major 5000

1. Make sure there is adequate fuel in the tank.
2. Tighten all fuel line connections.
3. Remove the bleed screws from the top of the fuel filters, Figure 19, and operate the priming lever on the fuel lift pump until a stream of fuel, free from air bubbles, flows from the filters. Replace and tighten the bleed screws.
4. Loosen the front bleed screw on the injection pump gallery and operate the lift pump. Tighten the bleed screw when the fuel flowing from the pump is free from air bubbles.

C. Injector Lines

1. Loosen the bleed screw in the injection pump.
2. Loosen the injector lines at the injectors.
3. Set the throttle lever at wide open position.
4. Crank the engine and when fuel without air is emitted from the injector lines and bleed screw in the pump body, tighten the line nuts.

3. OIL BATH TYPE AIR CLEANER

A. Removal

1. Remove the pre-cleaner assembly, Figure 22.
2. Loosen the intake hose clamps and disconnect the intake hose from the air cleaner.
3. Remove the four bolts attaching the air cleaner body to the radiator shroud and remove the air cleaner.

B. Installation

1. Hold the air cleaner in position at the radiator shroud and install the four bolts, Figure 22.
2. Connect the intake hose and tighten the clamps securely.
3. Install the pre-cleaner assembly.

4. FUEL TANK, FUEL LINES, AND FUEL FILTERS

FUEL TANK

A. Removal

1. Remove the four screws which retain the engine hood panel assembly. Remove the hood panel and disconnect the wiring harness from the clips on the underside of the hood panel.
2. Disconnect the wiring harness at the multiple connector located just under the front of the engine hood rear panel.
3. Disconnect the Proof-meter cable at the front connection. Disconnect the fuel shut-off cable at the injection pump.
4. Remove the steering wheel. Remove the metal attaching screws from the right and left steering gear covers and remove the covers.
5. Disconnect the safety starter switch connector. Disconnect the tail light harness at the connector located at the steering gear housing.
6. Disconnect the throttle linkage and remove the nut, washer, spring, and friction disc plate from the throttle control lever. See Figure 18.
7. Remove the right hex head bolts which secure the engine hood rear panel assembly to the support brackets.
8. Remove the hood rear panel.
9. Disconnect the two fuel gauge sender wires, Figure 18.
10. Turn the fuel shut-off valve to the "OFF" position. Disconnect the fuel tank-to-filter line.
11. Disconnect the fuel leak-off line at the fuel tank.
12. Remove the five supporting bolts and remove the fuel tank. See Figure 18.

NOTE: ***On Select-O-Speed transmission equipped tractors, it will be necessary to remove the selector mechanism and P.T.O. control handle. Refer to "Part 8, SELECT-O-SPEED TRANSMISSION".***

B. Installation

1. Lift the fuel tank into position and install the five supporting bolts. See Figure 18.
2. Connect the fuel tank-to-filter line and the fuel leak-off line.
3. Position the hood rear panel and connect the fuel gauge sender wires. Connect the tail light wire, the safety starter switch wire, and the multiple connector.
4. Install the friction disc, spring, washer, nut, and connect the throttle linkage. Connect the fuel shut-off cable.
5. Install the eight hex head bolts which secure the engine hood rear panel assembly to the support brackets.
6. Install the right and left steering gear covers. Install the steering wheel.
7. Connect the Proof-meter cable and install the engine hood panel assembly. Secure the wiring harness on the clips provided on the underside of the hood panel.
8. Turn the fuel shut-off valve to the "ON" position and bleed the system as outlined on page 15, "BLEEDING THE FUEL SYSTEM".

FUEL LINES

A. Removal

1. Turn the fuel shut-off valve, Figure 18, to the "OFF" position.
2. Disconnect the line nuts at both ends of the line to remove any line assembly from the fuel tank to the injection pump.
3. Remove the fluid-type bolts, washers, and banjo fittings at the injectors to remove the fuel leak-off line, Figure 18.

B. Installation

1. Connect the line nuts at both ends of each fuel line, Figure 18, before tightening. Care must be taken in connecting the line nuts to prevent cross threading.
2. Install new washers and tighten all leak-off line banjo fittings securely. Turn the fuel shut-off valve to the "ON" position. Bleed the system as outlined on page 15, "BLEEDING THE FUEL SYSTEM", and check for leaks.

FUEL FILTERS

A. Removal

1. Turn the fuel shut-off valve, Figure 18, to the "OFF" position.
2. Disconnect the inlet and outlet fuel lines. On distributor-type systems, disconnect the return fuel line.
3. Remove the two bolts securing the fuel filter head to the manifold and remove the assembly. See Figure 19.

B. Installation

1. Install the fuel filter assembly with the two attaching bolts, Figure 19.
2. Connect the inlet and outlet fuel lines, and the return fuel line on distributor-type systems, being careful to prevent cross threading.
3. Turn the fuel shut-off valve to the "ON" position and bleed the system as outlined on page 15, "BLEEDING THE FUEL SYSTEM".

5. FUEL LIFT PUMP–SUPER MAJOR 5000

A. Removal

1. Turn the fuel shut-off valve to the "OFF" position and disconnect the fuel inlet and outlet lines from the fuel lift pump. See Figure 19.
2. Remove the two nuts securing the pump to the injection pump cam box and remove the pump. Remove the pump gasket.

B. Disassembly

1. Remove the screw and washer which holds the pump cover plate and lift off the cover and rubber pulsator diaphragm. See Figure 23.
2. Mark the positions of the two halves of the pump, and the position of the diaphragm and pull rod assembly so that they can be reassembled in the same relative positions.
3. Remove the six screws and washers securing the two halves of the pump together. If necessary, punch back the staking and remove the valves from the outer half.
4. Push down the diaphragm and disengage the pull rod, then lift out the diaphragm and pull rod assembly and the return spring.
5. Drive out the retaining pin holding the hand priming lever and withdraw the lever, seal, and lever spring.

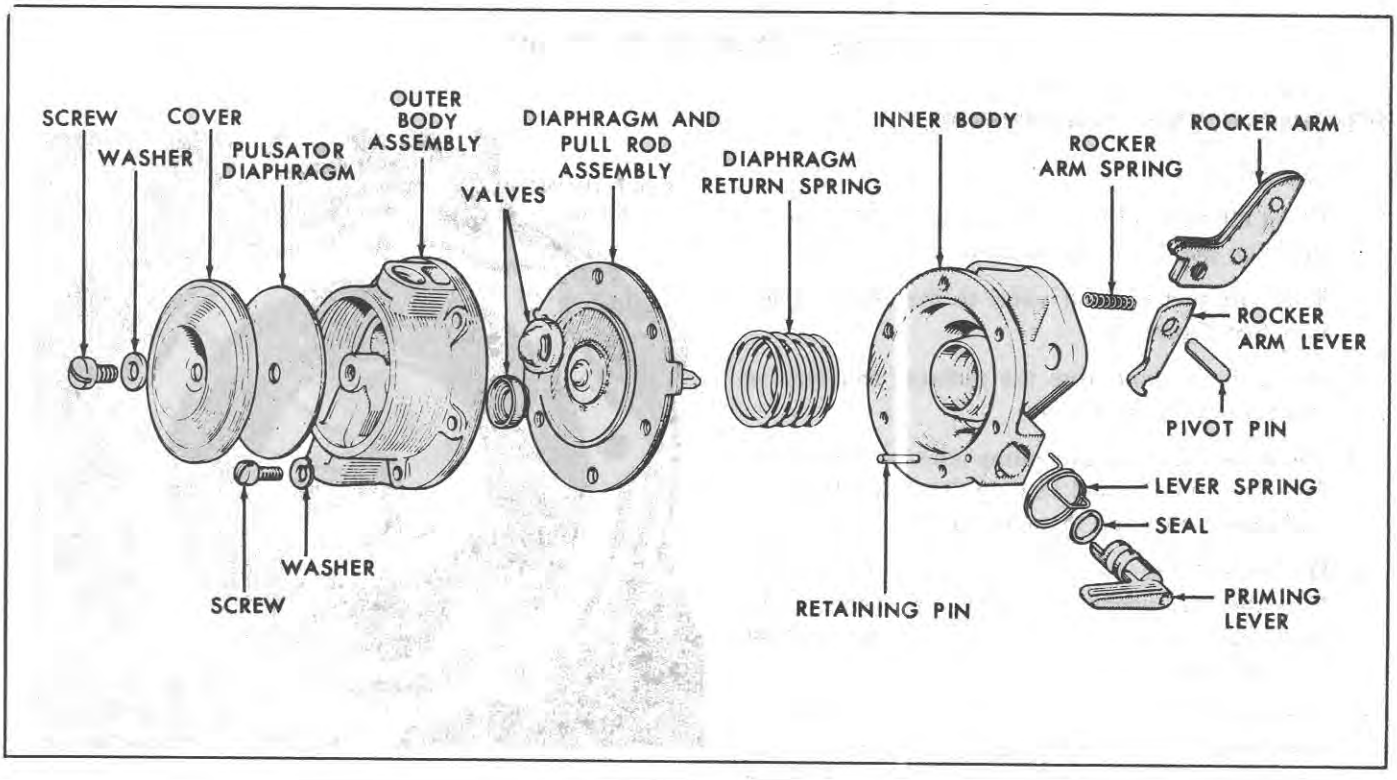

Figure 23
Fuel Lift Pump

6. Tap out the pivot pin and withdraw the rocker arm assembly. Do not lose the small spring fitted between the rocker arm and the housing.

C. Assembly

1. Insert the rocker arm assembly and small spring, then install the pivot pin and stake it into place. See Figure 23.
2. Install a new seal on the priming lever. Position the lever spring on the lever, and insert the assembly into the priming lever bore. Hold the lever in position and drive in the retaining pin.

   NOTE: ***Be sure the retaining pin is installed below the machined surface of the inner body or damage to the diaphragm may result.***

3. Install the diaphragm return spring on the diaphragm and pull rod assembly. Insert the assembly into the inner body. Hold the rocker arm lever inward and hook the slotted end of the pull rod over the end of the rocker arm lever. Test the operation of the rocker arm and diaphragm by moving the rocker arm towards the body with the diaphragm moved inward. With the diaphragm held fully inward, the rocker arm should be free to move without transmitting motion to the diaphragm.
4. If the valves have been removed from their locations in the outer body, install and stake them in position. The valves should be examined to be sure they are seating correctly.
5. Reassemble the two pump halves and fit the six screws and lock washers. Fully depress the rocker arm to stretch the diaphragm, then tighten the six screws which hold the two halves of the body.
6. Install the rubber pulsator diaphragm and pump cover plate with the screw and washer. Tighten the screw securely.

D. Installation

1. Use a new gasket and install the pump to the injection pump cam box with the two nuts and lock washers. See Figure 19.
2. Connect the fuel inlet and outlet lines, turn the fuel shut-off valve to the "ON" position, and bleed the system as outlined on page 15 "BLEEDING THE FUEL SYSTEM".

6. FUEL INJECTION PUMP

DISTRIBUTOR-TYPE INJECTION PUMP

A. Removal

1. Clean all dirt and other foreign material from the injection pump and surrounding tractor parts.
2. Turn the fuel shut-off valve to the "OFF" position. See Figure 18.
3. Drain the coolant from the radiator and remove the bottom radiator hose.
4. Disconnect the injection pump inlet line, the return fuel line and the fuel leak-off line. Cap the inlet and return lines and the openings in the pump.
5. Disconnect and remove the fuel injector lines. Cap the line openings in the pump and in the injectors. Disconnect the throttle and fuel shut-off control linkage.
6. Remove the timing cover on the cylinder front cover and remove the three gear-to-pump bolts attaching the pump drive to the injection pump timing gear. See Figure 24.

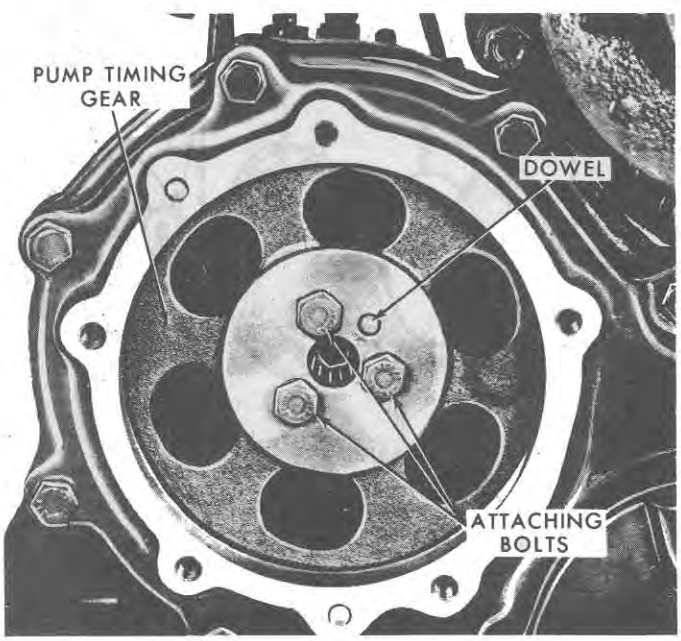

Figure 24
Injection Pump Drive

7. Remove the three pump-to-engine front cover plate mounting bolts. Remove the pump and cap off all the fittings and openings to prevent dirt from entering the pump, lines, or injectors.

B. Installation

1. Remove all dust caps from the injection pump openings and injectors.
2. Place a new pump-to-front cover plate O-ring on the injection pump mounting flange, and install the injection pump. Align the gear-to-pump dowel pin with the drive hub slot, install the three gear-to-pump bolts, and tighten to the specified torque, page 31. See Figure 24.
3. Install the three pump-to-engine front cover plate bolts. Line up the timing scribe mark on the pump mounting flange with the "0" degree mark on the front plate. See Figure 21. Tighten the injection pump mounting bolts to the specified torque, page 31.
4. Connect the fuel injector lines. Connect the throttle and fuel shut-off control linkage.
5. Connect the injection pump inlet line, the return fuel line, and the fuel leak-off line.
6. Position a new inspection cover gasket and install the inspection cover on the timing gear housing. Install the bottom radiator hose and refill the radiator.
7. Turn the fuel shut-off valve to the "ON" position and bleed the system as outlined on page 15, "BLEEDING THE FUEL SYSTEM".

MINIMEC INJECTION PUMP

A. Removal

1. Clean all dirt and other foreign material from the injection pump and surrounding tractor parts.
2. Remove the flywheel timing cover and turn the engine until the number one cylinder is on its compression stroke, and the 19° btdc line on the flywheel registers with the mark in the timing window. See Figure 20.
3. Turn the fuel shut-off valve to the "OFF" position.
4. Drain the coolant from the radiator and remove the bottom radiator hose.
5. Disconnect the fuel inlet and outlet lines from the fuel lift pump. Disconnect the filter-to-injection pump line. Disconnect and remove the fuel injector lines. See Figure 19.
6. Disconnect the throttle and fuel shut-off control linkage.
7. Remove the timing cover on the cylinder front cover and remove the three gear-to-pump bolts retaining the pump drive to the injection pump timing gear. See Figure 20.
8. Remove the pump mounting bolts and lock washers and remove the injection pump from its location on the engine front cover plate. Remove the cambox leak-off line. Cap off all the pump openings, to prevent dirt from entering the pump.

B. Installation

1. Install the cambox leak-off line.
2. Turn the engine until the number one cylinder is on its compression stroke, and the 19° btdc line on the flywheel registers with the mark in the timing window. See Figure 20.
3. Place a new gasket on the pump and install it to the engine front cover plate so that the pump timing gear is in mesh, and timing dots aligned with the camshaft drive gear, and that the line on the pump body pointer lines up with the mark on the pump drive gear adapter flange. Install the three gear-to-pump bolts and tighten to the specified torque, page 31. See Figure 20.
4. Install the mounting bolts and lock washers which attach the pump to the engine front cover plate. See Figure 19.
5. Connect the throttle and fuel shut-off control linkage. Connect the filter-to-injection pump line and the fuel lift pump inlet and outlet lines. Connect the fuel injector lines at the pump.
6. Position a new timing cover gasket and install the timing cover on the cylinder front cover. Install the bottom radiator hose and refill the radiator. Install the flywheel timing window cover.
7. Turn the fuel shut-off valve to the "ON" position and bleed the system as outlined on page 15, "BLEEDING THE FUEL SYSTEM".

Part 2

FUEL SYSTEMS

Chapter 3

INJECTORS

Section		Page
1.	Description and Operation	21
2.	Removing and Installing Injectors	22
3.	Injector Testing	22
4.	Injector Overhaul	24
5.	Storage of Injectors	26

1. DESCRIPTION AND OPERATION

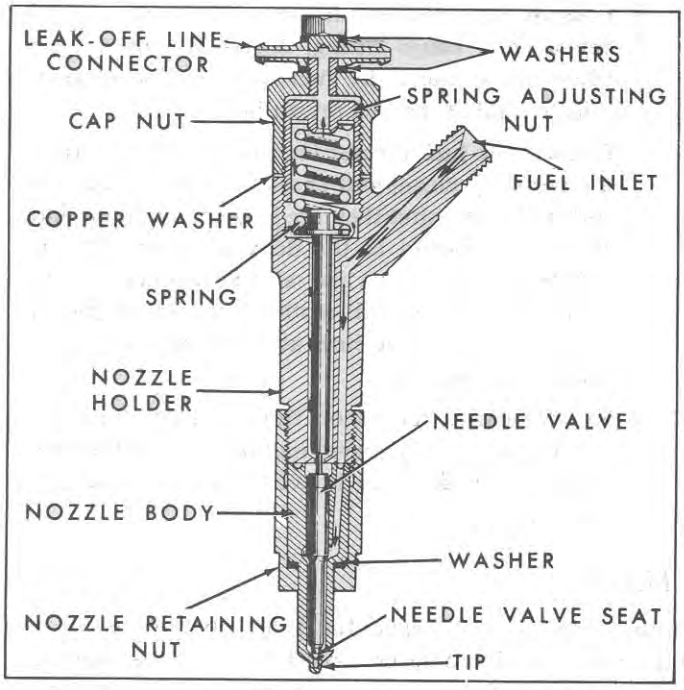

Figure 25
Fuel Injector—Sectional View

A sectional view of an injector is shown in Figure 25. Fuel from the injection pump enters the injector fuel inlet and passes through the injector body before reaching the nozzle valve seat. The pressure of the fuel from the injection pump causes the needle valve to open against the action of the injector spring. Fuel is then forced in a highly atomized state through the holes in the nozzle tip. When the pressure from the injection pump drops off, the injector spring forces the needle valve back on its seat. A small amount of fuel leaks up between the needle valve sleeve and the nozzle body, thus providing lubrication. The excess fuel rises to the top of the injector where it is gradually forced back to the fuel tank through the injector leak-off line.

© FORD MOTOR CO. 1965

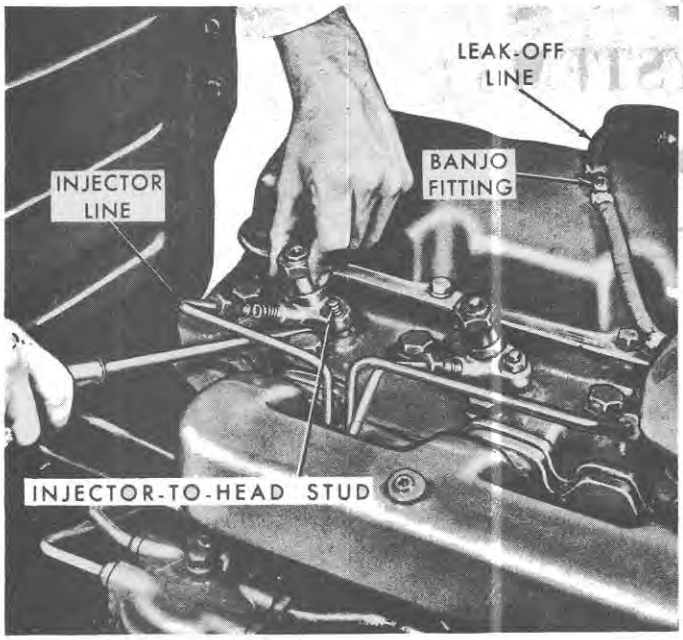

Figure 26
Injector Removal

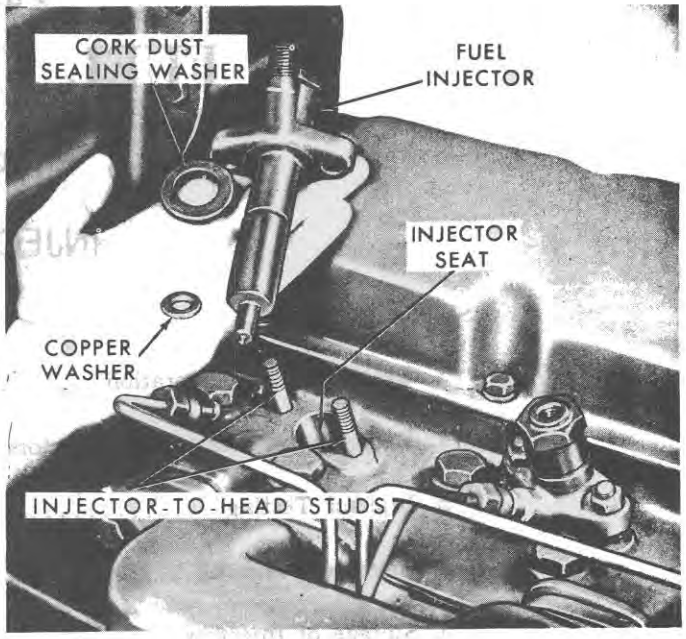

Figure 27
Injector and Washers

2. REMOVING AND INSTALLING INJECTORS

A. Removal

1. Clean dirt and other foreign material from the area near the injectors to be removed.
2. Disconnect the injector leak-off line, Figure 26, at each injector and at the fuel return line.
3. Disconnect the injector line at the pump and at the injector. Cap off the injector lines, and pump openings.
4. Remove the two nuts which hold the injector to the cylinder head and carefully withdraw the injector. Do not let dirt or other foreign material drop into the injector seat, Figure 27.

B. Installation

1. Check the injector seat in the cylinder head to see that it is clean and free from any carbon deposit. Install a new copper washer in the seat. See Figure 27.
2. Install a new cork dust sealing washer around the body of the injector and place it into its bore in the cylinder head. Install a flat washer and nut on the injector-to-head studs and tighten the nuts evenly to the specified torque, page 31.
3. Position new leak-off fitting gaskets above and below each banjo fitting. Insert the fluid type bolts and connect the fuel leak-off line to each injector and at the fuel return line.
4. Connect the fuel injector lines being sure that they are perfectly clean, and check the tapered swaged ends to be sure that they are in good condition and will seat correctly in the delivery valve holders. Tighten the injector line at the injector pump. Crank the engine until a steady stream of fuel is pumped out of the line at each injector joint. Tighten the line nuts.
5. Run the engine for a short time to be sure that the injector is properly seated and sealed, and that the leak-off line and the injector line nuts are not leaking.

3. INJECTOR TESTING

It is recommended that all injectors be tested before disassembly as well as after being assembled. Before testing, clean the outside of the injectors with a good grade of carbon solvent and a soft wire brush.

Fill the Injector Tester, page 32, Figure 28, with calibrating fuel oil and leave the filler plug loose. It is important that this plug be loose to prevent the forming of a vacuum inside the tester when the fuel oil is pumped out during the testing operation. Prime the tester by pumping the handle (approximately 16 strokes) until calibrating fuel oil is emitted from the tester line.

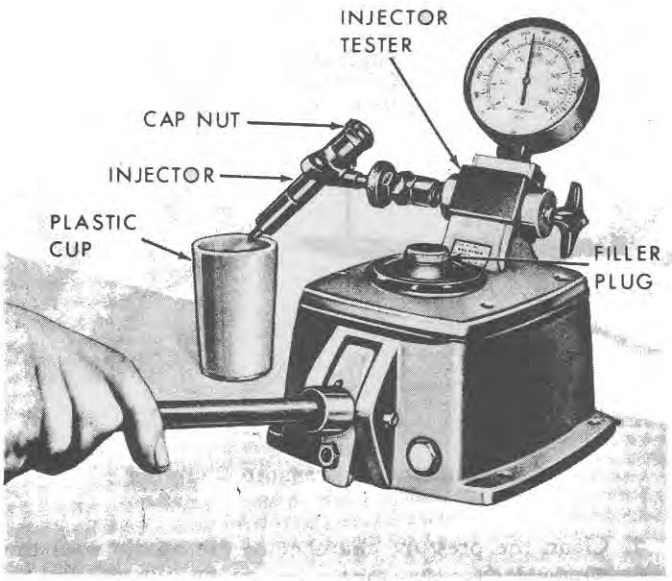

Figure 28
Checking Nozzle Opening Pressure and Spray Pattern

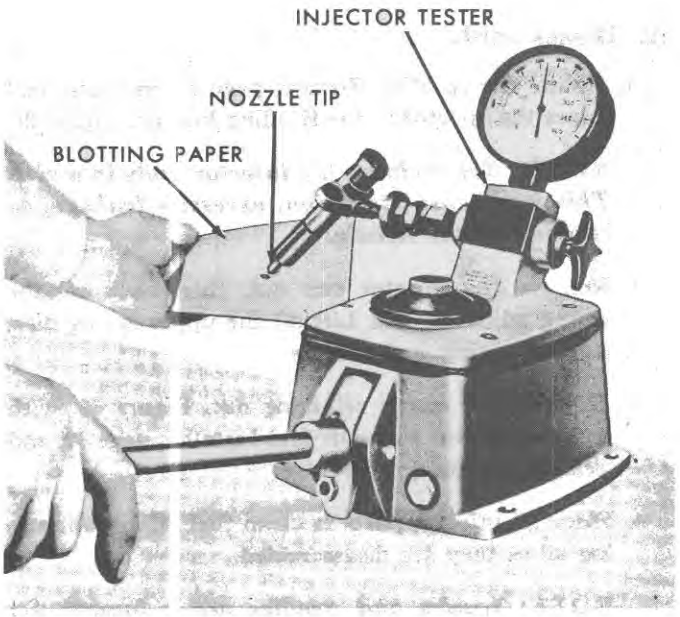

Figure 29
Checking Nozzle Seat Leakage

IMPORTANT: ***The handle on the right side of the tester (opposite the injector) controls the valve which regulates the flow of oil to the gauge. Because it is possible to build up enough pressure in the tester to damage the gauge, it is recommended that the valve be closed until it has been determined whether or not the injector nozzle is plugged. When it is found that the nozzle is free to open, or has been unplugged, open the valve and proceed with the testing.***

Using a plastic cup to catch the fuel, check each injector as follows:

1. **Nozzle Opening Pressure:** Pump the injector tester, Figure 28, and observe the gauge reading at which the nozzle "pops off". The nozzle opening pressure should be between 2720-2794 psi (190.4-196.4 kg/sq. cm). To adjust the pressure, remove the cap nut, Figure 25, and tighten or loosen the spring adjusting nut as required.

2. **Spray Pattern:** Pump the tester at approximately 6-8 strokes per second and observe the spray pattern. All four sprays must be similar and spaced at approximately right angles to each other in a horizontal plane. Each spray should be well atomized and spread into about a 3 in. (76.199 mm) diameter cone ⅜ in. (9.525 mm) away from the injector.

3. **Nozzle Seat Leakage:** Wipe the nozzle tip dry with clean blotting paper, Figure 29. Apply 2520-2594 psi (176.4-182.4 kg/sq. cm) to the injector, and hold the pressure for one minute. Apply a piece of blotting paper to the tip of the nozzle as shown. The calibrating fuel oil stain should not exceed ½ in. (12.700 mm) diameter.

4. **Nozzle Leak Back Test:** Apply approximately 2300 psi (161.0 kg/sq. cm) pressure to the injector and measure the time it takes for the pressure to fall from 2200 psi to 1500 psi (154.0-105.0 kg/sq. cm). The time should be betweeen ten and forty seconds. If the pressure drops through this range in less than ten seconds, it indicates that the needle is loose or there is dirt between the nozzle and injector body faces.

IMPORTANT: ***If the injector passes the above tests, it is satisfactory to reinstall it in an engine. However, if any of the above tests prove the injector to be faulty, it should be completely disassembled, cleaned, reassembled, and retested.***

4. INJECTOR OVERHAUL

A. Disassembly

1. Secure the Holding Fixture, page 32, in a vise and place the injector in the Holding Fixture, Figure 30.

   NOTE: ***Never clamp the injector body in a vise. This may cause distortion, excessive leakage, or sticking of the needle.***

2. Remove the injector cap nut, then back off the spring adjusting nut. Lift off the upper spring disc, injector spring, and spindle.

3. Remove the nozzle retaining nut, Figure 30, with the Nozzle Nut Remover and Installer, page 32, and remove the nozzle and valve.

4. Place all injector parts in clean fuel oil or calibrating oil as they are disassembled.

   NOTE: ***Nozzles and needles are a lapped fit; consequently, they must never be interchanged.***

B. Cleaning, Inspection and Repair

Use the tools in the Injector Nozzle Cleaning Kit, page 32, to remove all carbon from the nozzle and interior of the nozzle as outlined in the following steps:

1. Soften the hard carbon deposits formed in the spray holes and the needle tip by soaking the needle and nozzle in a carbon solvent for a short period. Then, use a soft wire brush to remove all carbon from the needle and nozzle exterior. It is important that the nozzle and needle be rinsed in clean fuel oil immediately after soaking in the carbon solvent, to prevent corrosion on the highly finished surfaces.

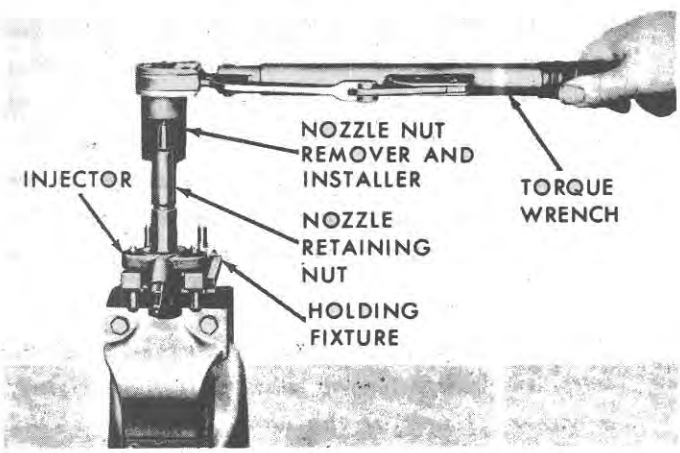

Figure 30
Removing Nozzle Retaining Nut

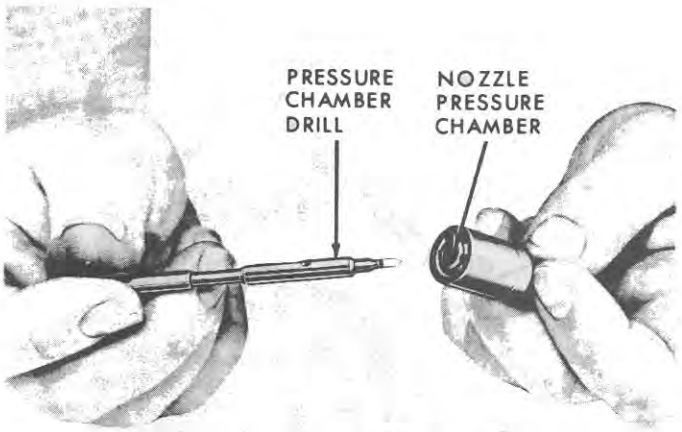

Figure 31
Cleaning Nozzle Pressure Chamber

2. Clean the pressure chamber of the nozzle with the Pressure Chamber Drill, page 32, Figure 31.

3. Clean the spray holes in the nozzle with the Nozzle Cleaning Wire and the Pin Vise, page 32. The wire should protrude from the Pin Vise just far enough to pass through the holes in the nozzle. Rotate the the Pin Vise slowly without applying undue pressure, being careful not to break the wire, Figure 32.

4. Clean the valve seats by inserting the Valve Seat Scraper, page 32, in the nozzle, Figure 33 and rotating with light pressure. Then clean the upper chamber with the same tool.

5. Clean the annular groove in the top of the nozzle and the pressure chamber groove in the nozzle with the Pressure Chamber Carbon Remover, page 32, Figure 34.

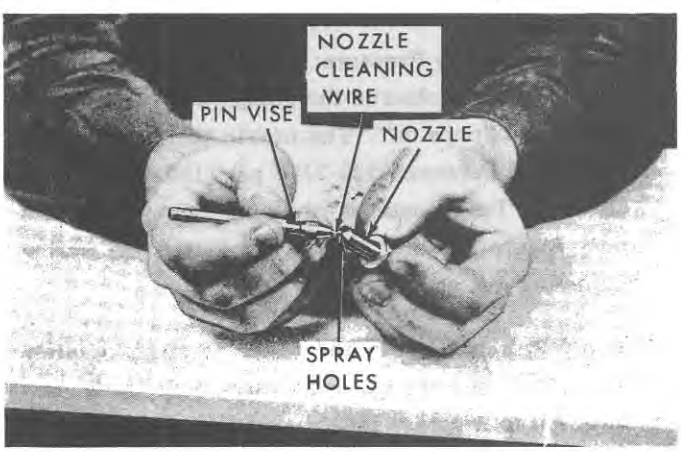

Figure 32
Cleaning Nozzle Spray Holes

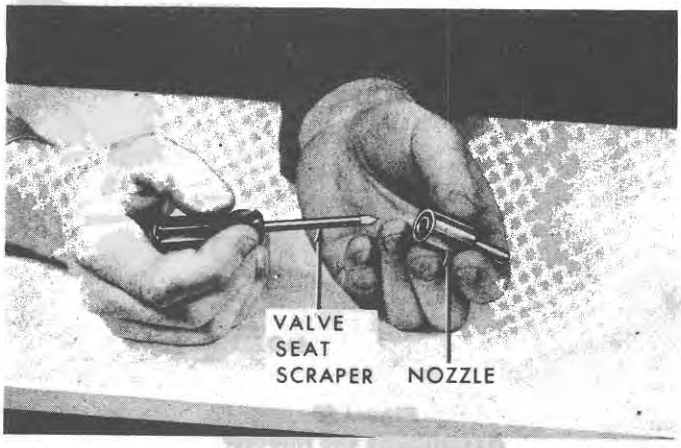

Figure 33
Cleaning Nozzle Valve Seats

6. Steps 1 through 5 have outlined the procedure for removing carbon from the nozzle. The nozzle and needle must be thoroughly back-flushed to remove all loosened carbon deposits. Place the Reverse Flush Nozzle Adapter, page 32, on the Injector Tester, Figure 35. Position the nozzle and valve in the Adapter, tip end first, and secure with the knurled nut. Tighten the handle at the right of the tester to prevent possible gauge damage. Note the position of the brass washer. This washer is supplied with the service tool set and acts as a seal to prevent the loss of pressure during the back-flushing operation. (This washer is not supplied or required with the Reverse Flush Nozzle Adapter, CT 9024, page 32).
7. After the nozzle is thoroughly back-flushed to remove all loose carbon, polish the seat by placing a very small amount of Tallow (polishing paste) on the end of a Polishing Stick, page 32, and rotating in the nozzle, Figure 36.

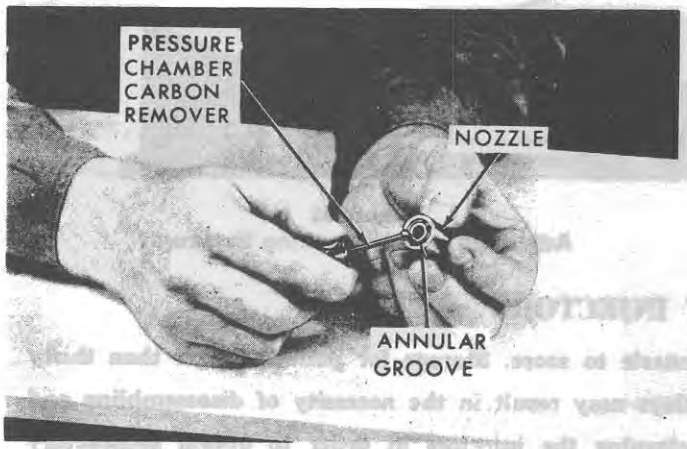

Figure 34
Checking Nozzle Annular Groove

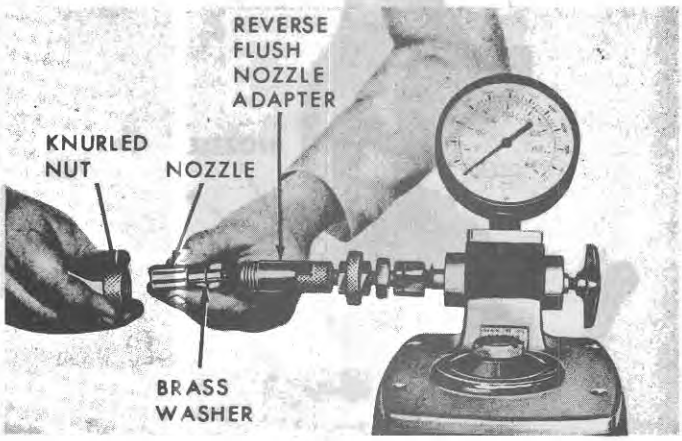

Figure 35
Installing Nozzle in Tester for Back-Flushing

8. If the "Nozzle Leak Back Test" was slower than ten seconds, or the valve sticks slightly, it can be corrected by rematching the needle and nozzle assembly, as shown in Figure 37. This is done by using the Tallow (polishing paste) in one the following methods:
   a. Hold the needle in a drill chuck and polish with a piece of felt, coated with a very small amount of the Tallow (polishing paste).
   b. Place the nozzle in a drill chuck having a maximum speed of 450 rpm. Apply a small quantity of the Tallow (polishing paste) on the needle body and turn to lap. Hold the needle up off the pressure chamber shoulder while lapping to avoid damage to the needle. Care should be taken so that the lapping compound does not damage the needle seat.

NOTE: ***Never lap a needle more than five seconds at a time. Always allow the needle to cool between lappings. Lapping should be done by skilled personnel only.***

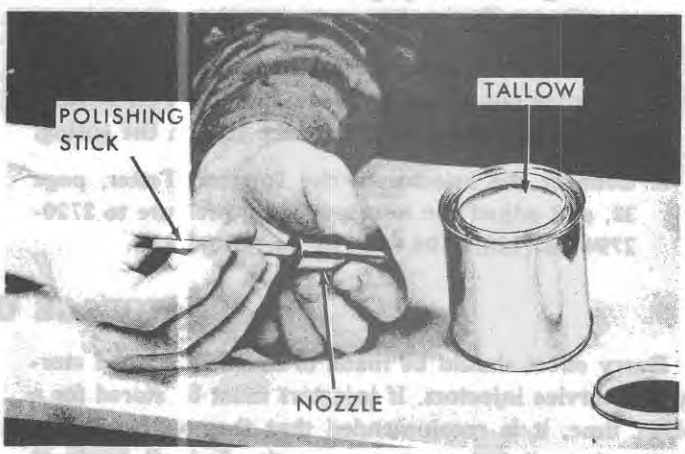

Figure 36
Polishing Nozzle Seat

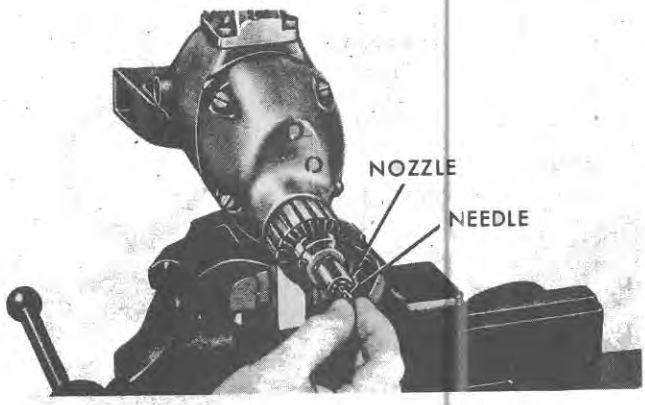

Figure 37
Lapping Needle in Valve

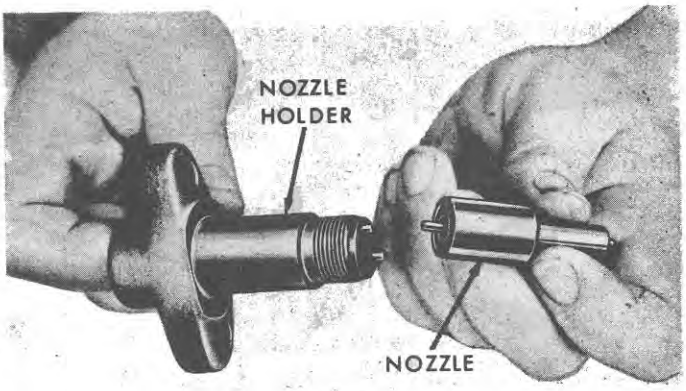

Figure 38
Assembling the Injector

9. The assembly must be thoroughly washed, backflushed with diesel calibrating fuel oil and cleaned after lapping and before assembly and testing.

C. Assembly

All injector parts should be reassembled wet after rinsing in clean fuel oil or calibrating oil.

1. Normally, the injector inlet adapter need not be removed from the injector body. However, if the adapter is removed, it will be necessary to use a new steel washer to obtain a proper seal (Injectors used with Minimec-type only).

2. Position the nozzle and needle valve on the injector holder, making certain the dowel pins in the holder are correctly located in the nozzle, Figure 38. Position a new antifriction washer in the bottom of the nozzle nut bore. Position the nozzle retaining nut over the nozzle and tighten to 50 lbs. ft. (6.9 kgm) with the Nozzle Nut Remover and Installer, page 32. It will be necessary to place the injector in the Holding Fixture, page 32, while tightening the nozzle nut, Figure 30.

3. Position the spindle, spring, upper disc, and spring adjusting nut on the nozzle holder. Turn the adjusting nut in until pressure can be felt on the spring.

4. Connect the injector to the Injector Tester, page 32, and adjust the nozzle opening pressure to 2720-2794 psi (190.4-196.4 kg/sq. cm), Figure 39.

5. Position a new copper gasket over the spring adjusting nut and secure the injector cap nut. Repeat the "Nozzle Opening Pressure Test" to make certain it has not changed.

6. Test the injector as previously outlined. If, after cleaning, the injector fails to pass these tests, the needle and nozzle should be replaced.

IMPORTANT: ***When installing an injector tighten the holding nuts evenly. Uneven tightening will cause injector nozzle distortion and uneven wear or binding will result.***

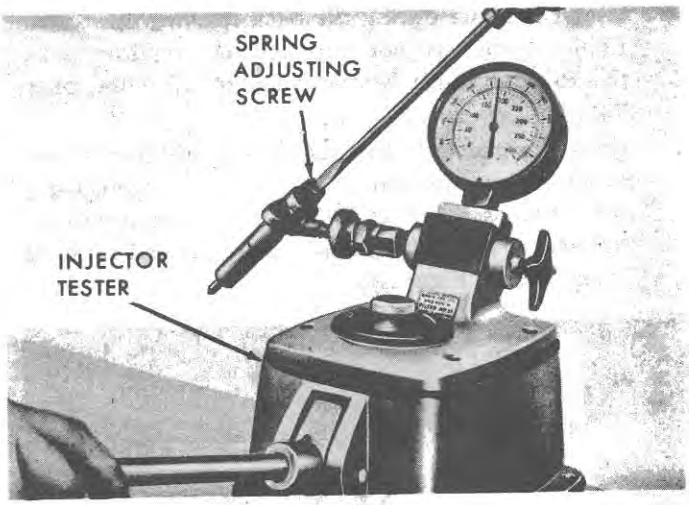

Figure 39
Adjusting Nozzle Opening Pressure

5. STORAGE OF INJECTORS

Every effort should be made to avoid prolonged storage of service injectors. If injectors must be stored for a short time, it is recommended that they be cleaned in calibrating oil before storage as the fuel oil tends to separate and allow the lapped surfaces of the needle and nozzle to score. Storage for periods longer than thirty days may result in the necessity of disassembling and cleaning the injectors in order to obtain satisfactory performance.

Part 2

FUEL SYSTEMS

Chapter 4

TROUBLE SHOOTING, SPECIFICATIONS, AND SPECIAL TOOLS

Section	Page
1. Trouble Shooting	27
2. Specifications	31
3. Special Tools	32

1. TROUBLE SHOOTING

GASOLINE FUEL SYSTEM

Trouble	Correction
FUEL NOT REACHING THE CARBURETOR	1. Check the fuel shut-off valve at the fuel tank to be sure it is in the "ON" position. 2. Loosen the fuel shut-off valve-to-sediment bowl line at the bowl; make sure fuel is reaching the sediment bowl. 3. Check the sediment bowl to be sure it is not plugged. 4. Check the fuel inlet fitting at the carburetor to be sure the wire mesh in the fitting is not plugged.
CARBURETOR FLOODS OR LEAKS	1. Check to be sure the choke plate is not sticking and the air valve in the choke plate is functioning properly. 2. Remove and disassemble the carburetor. Examine the float and inlet needle. Install any new parts as required and set the level of the float. 3. Check the main body and fuel bowl for cracks and leaks. 4. Check all gaskets for leaks.
FUEL MIXTURE TOO LEAN	1. Check for restrictions in the fuel lines. 2. Check the operation of the fuel pump. 3. Check the fuel level and float setting in the carburetor. 4. Check the fuel inlet fitting screen for restrictions. 5. Check fuel passages for gum or varnish.

© FORD MOTOR CO. 1965

Trouble	Correction
FUEL MIXTURE TOO RICH	1. Check air cleaner for dirt or chaff. 2. Check idle air bleed and high speed air bleeds for dirt. 3. Check passages for gum or varnish. 4. Check the float setting. 5. Check the metering valve to see if it is tight or if it has been drilled out.
ROUGH IDLE	1. Any of the items listed under "Fuel Mixture Too Lean" can cause rough idle and should be checked. 2. Check the idle fuel adjustment. 3. Check the idle adjustment needle to be sure it is not grooved, worn, or otherwise damaged. 4. Remove and disassemble the carburetor. Check the internal passages of the metering systems for restrictions and clean the carburetor before reassembly.
LOW FUEL PUMP PRESSURE	1. Check the cam lobe attached to the front of the camshaft gear for wear or grooves. 2. Check the shaft that runs on the cam lobe for damage. 3. Check the fittings to be sure they are not loose or cracked. 4. Operate the pump plunger pin with your fingers over the fuel fittings to check for a ruptured pump diaphragm. If a defective diaphragm is indicated, install a new fuel pump.
FUEL PUMP LEAKS	1. Check the gasket between the two halves of the pump to be sure it is not leaking. 2. Check for loose fuel line fittings. 3. Check the fuel pump body for cracks. 4. Check the screws that retain the two halves of the pump to be sure they are tight.

DIESEL FUEL SYSTEM

Trouble	Correction
FUEL NOT REACHING INJECTION PUMP	1. Check the fuel shut-off valve at the fuel tank to be sure it is in the "ON" position. 2. Check the filters for being clogged. 3. Bleed the fuel filters. 4. Check the fuel lines and connectors for damage.

Trouble	Correction
FUEL REACHING NOZZLES BUT ENGINE WILL NOT START	1. Check the cranking speed. 2. Check the throttle control rod travel. 3. Check the pump timing. 4. Check the fuel lines and connectors for leakage. 5. Check the injectors. 6. Check the engine compression.
ENGINE HARD TO START	1. Check the cranking speed. 2. Check the pump timing. 3. Check for clogging in the fuel filters. 4. Check for water in the fuel. 5. Check the engine compression. 6. Check for air leaks on the suction side of the system.
ENGINE STARTS AND STOPS	1. Check for clogged or restricted fuel lines or fuel filters. 2. Check for water in the fuel. 3. Check for restrictions in the air intake. 4. Check the engine for overheating. 5. Check for air leaks on the suction side of the system.
ERRATIC ENGINE OPERATION (SURGE, MISFIRING, POOR GOVERNOR REGULATION)	1. Check the injector lines and connectors for leakage. 2. Check for clogged or restricted fuel lines or filters. 3. Check the pump timing. 4. Check for water in the fuel. 5. Bleed the fuel system. 6. Check for faulty or sticking injector nozzles. 7. Check for faulty engine valves.
ENGINE DOES NOT DEVELOP FULL POWER OR SPEED	1. Check for insufficient throttle control movement. 2. Check for incorrect maximum no-load speed adjustment. 3. Check for clogged or restricted fuel lines and filters. 4. Check for air leaks on the suction side of the system. 5. Check pump timing. 6. Check engine compression. 7. Check for improper valve adjustment or faulty valves.

Trouble	Correction
ENGINE EMITS BLACK SMOKE	1. Check for a restricted air intake. 2. Check the engine for overheating. 3. Check the pump timing. 4. Check the injectors. 5. Check the engine compression. 6. Check the engine valves.

DIESEL FUEL SYSTEM (INJECTORS)

Trouble	Correction
NOZZLE DOES NOT BUSS WHILE INJECTING	1. Check to be sure needle valve is clean and not binding. 2. Check to be sure valve seat is not leaking. 3. Examine nozzle retaining cap for damage.
NOZZLE LEAK-BACK	1. Check for worn needle valve. 2. Check for carbon or foreign matter on faces of nozzle and nozzle holder. 3. Inspect faces and tighten nozzle retaining nut.
NOZZLE OPENING PRESSURE INCORRECT	1. Check adjusting nut for looseness and reset. 2. Check for damaged nozzle or siezed needle valve. 3. Check nozzle holes for carbon or foreign matter.
NOZZLE SEAT LEAKAGE	1. Check for carbon or foreign matter on faces of nozzle or nozzle holder. 2. Check for sticking or binding needle valve.
SPRAY PATTERN DISTORTED	1. Check for carbon or foreign matter on needle valve tip. 2. Check for carbon in needle valve holes. 3. Examine nozzle and needle valve for damage.

2. SPECIFICATIONS

(NOTE: The following specifications supersede the specifications in the text.)

GASOLINE ENGINES

	Ford 2000	Ford 3000	Ford 4000	Ford 5000
Fuel Tank Capacity:				
U. S. Gallons	13.0	13.0	16.0	20.0
Imperial Gallons	10.8	10.8	13.3	16.6
Liters	49.2	49.2	60.5	75.7
Air Cleaner Diameter:				
Dry Type	6.5 ins. (165.1 mm)	6.5 ins. (165.1 mm)	6.5 ins. (165.1 mm)	———
Oil Bath Type	———	———	———	6.5 ins. (165.1 mm)
Carburetor Float Setting:				
Without Hillside Flooding Kit	All Models $^{63}/_{64} \pm 1/32$ in. (25.000±0.793 mm)			
With Hillside Flooding Kit	All Models $7/8 \pm 1/32$ in. (22.225±0.793 mm)			
Carburetor Main Jet Sizes:				
Prior to Production Code 5K1	(No. 43) 0.043 in. (1.092 mm)	(No. 51 or 53) 0.051 or 0.053 in. (1.295 or 1.346 mm)	(No. 56) 0.056 in. (1.422 mm)	(No. 57) 0.057 in. (1.447 mm)
After Production Code 5K1	(No. 43) 0.043 in. (1.092 mm)	(No. 53) 0.053 in. (1.346 mm)	(No. 60) 0.060 in. (1.524 mm)	(No. 57) 0.057 in. (1.447 mm)
Fuel Pump Pressure	5.6 U.S. gals. (4.5 Imp. gals.) (21.1 liters) per hour at 1200 engine rpm with pressure of 1.8 psi (0.070 kg/sq. cm) at fuel pump outlet			
Maximum No-Load Speed	2065-2115 rpm	2285-2335 rpm	2395-2445 rpm	2275-2325 rpm
Idle Speed	All Gasoline Models—600-650 rpm			

DIESEL ENGINES

	Ford 2000	Ford 3000	Ford 4000	Ford 5000
Fuel Tank Capacity:				
U. S. Gallons	13.0	13.0	16.0	20.0
Imperial Gallons	10.8	10.8	13.3	16.6
Liters	49.2	49.2	60.5	75.7
Air Cleaner Dia. (Oil-bath Type)	6.0 ins. (152.4 mm)	6.5 ins. (165.1 mm)	6.5 ins. (165.1 mm)	7.0 ins. (177.8 mm)
Fuel Filter (Throw-away Type)	1	2	2	2
Injection Pump Type	distributor	distributor or in-line	distributor	in-line
Lubricating Oil Capacity	———	1/2 U.S. pt. (0.236 liters)	———	3/4 U.S. pt. (0.354 liters)
Pump Timing	19°btdc	19°btdc	19°btdc	19°btdc
Maximum No-Load Speed	2175-2225 rpm	2175-2225 rpm	2395-2445 rpm	2285-2335 rpm
Idle Speed	All Diesel Models—600-650 rpm			

Torque Specifications (Lubricated Threads)	Thread Size	Pounds Feet	Kilogram-meters
Injector Line Nuts	M12 x 1.5	18-22	2.49-3.04
Injector Retaining Nuts	5/16-24	10-15	1.38-2.07
Injector Pump-to-Front Adapter Plate	5/16-24	26-30	3.59-4.14
Delivery Valve Holder (In-Line Type Pump)	M20 x 1.5	40-45	4.14-4.84
Injector Leak-Off Line Bolt	5/16-24	8-10	1.04-1.38
Fuel Filter Line Nuts (with Extension)	1/2-20	15-30	2.07-4.14

(NOTE: The following specifications supersede the specifications in the text.)

Torque Specifications (Lubricated Threads) (Cont'd)	Thread Size	Pounds Feet	Kilogram-meters
Injection Pump-to-Gear Bolt	5/16-24	20-25	2.76-3.46
Injection Pump Outlet Tube Bolt	1/2-20	15-20	2.07-2.76
Injector Nozzle	5/16-18	15-18	2.07-2.49
Fuel Pump Drive	5/16-18	10-23	1.38-3.18
Fuel Filter Element Pump (Diesel)	1/4-20	6-10	0.76-1.38

Torque specifications not listed above:

Thread Size	Pounds Feet	Kilogram-meters	Thread Size	Pounds Feet	Kilogram-meters
1/4-12	6-9	0.83-1.24	7/16-14	45-50	6.22-6.91
1/4-28	6-9	0.83-1.24	7/16-20	50-60	6.91-8.29
5/16-18	12-15	1.66-2.07	1/2-13	60-70	8.29-9.68
5/16-24	15-18	2.07-2.49	1/2-20	70-80	9.68-11.06
3/8-16	20-25	2.76-3.46	9/16-18	85-95	11.75-13.13
3/8-24	30-35	4.15-4.84	5/8-18	130-145	17.96-20.04

3. SPECIAL TOOLS

GASOLINE ENGINE

No special tools are needed to service the gasoline engine fuel system.

DIESEL ENGINES

Tool Description	Tool Numbers		
Injector Tester	HD550	J8666	NHD550
Injector Nozzle Holding Fixture	HD145	Part of J8537	NHD145
Nozzle Nut Remover and Installer	CT9009	Part of J8537	CT9009
Reverse Flush Nozzle Adapter	CT9024	Part of J8537	CT9024
Tallow (Polishing Paste)	Obtain locally	Part of J8537	Obtain locally
Polishing Sticks (5 mm)	Obtain locally	Part of J8537	Obtain locally
Injector Nozzle Cleaning Kit	SW20 or CT9014	J8537	HD148

Kit consists of:
- Nozzle Cleaning Wires
- Pressure Chamber Drills
- *Reverse Flush Nozzle Adapter
- *Injector Nozzle Holding Fixture
- *Nozzle Nut Remover and Replacer
- Pressure Chamber Carbon Remover
- Valve Seat Scraper
- *Polishing Sticks
- Brass Wire Brush
- *Tallow (Polishing Paste)
- Pin Vise

*Are not included in SW20 or CT9014 and HD148

PART 3
ELECTRICAL SYSTEM

Part 3

ELECTRICAL SYSTEM

Chapter 1

WIRING, LIGHTS, AND INSTRUMENTS

Section	Page
1. Wiring Harness Identification	1
2. Lights and Light Switch	4
3. Instrument Cluster	7

Chapter 2

BATTERY

Section	Page
1. Description	11
2. Specific Gravity	11
3. Periodic Maintenance	12
4. Battery Tests	13

Chapter 3

CHARGING SYSTEM

Section	Page
1. Description	15
2. Generator	15
3. Generator Regulator	23

© FORD MOTOR CO. 1966

Chapter 4

STARTING SYSTEM

Section		Page
1.	Description	29
2.	Starting Motor	30
3.	Starting Motor Relay (4½-Inch Models Only)	43
4.	Safety Starter Switch	43
5.	Key-Starter Switch	44

Chapter 5

IGNITION SYSTEM

Section		Page
1.	Description	45
2.	Ignition System Tests	47
3.	Distributor	51
4.	Distributor Drive	58
5.	Ignition Coil	60
6.	Spark Plugs and Wires	61

Chapter 6

TROUBLE SHOOTING, SPECIFICATIONS, AND SPECIAL TOOLS

Section		Page
1.	Trouble Shooting	65
2.	Specifications	68
3.	Special Tools	71

Part 3

ELECTRICAL SYSTEM

Chapter 1

WIRING, LIGHTS, AND INSTRUMENTS

Section		Page
1.	Wiring Harness Identification	1
2.	Lights and Light Switch	4
3.	Instrument Cluster	7

1. WIRING HARNESS IDENTIFICATION

The wiring harnesses used depend upon the tractor assembly point and the model involved. The assembly points are identified by the stamped letters A, B, or C, prefixing the tractor serial number. See Figure 1. Figure 2 is an electrical system schematic for tractors with "A" or "B" prefixed serial numbers, and Figure 3 is an electrical system schematic for tractors with a "C" prefixed serial number.

A or B Prefix Letters: Tractors with serial numbers prefixed with the letters "A" or "B" use a single main wiring harness, Figure 4. If lights are installed, the headlamps may have been mounted either externally on the radiator shell or internally in the tractor grille, depending upon the requirements of the country in which the tractor is to be operated. Two rear lamps are used; one on each rear fender. On Ford 2000 and Ford 3000 Tractors, these lamps are combined with parking lamps. On Ford 4000 and Ford 5000 Tractors, the parking lamps are separate from the rear lamps.



Figure 1
Tractor Serial Number

Either a four- or five-position rotary light switch with a 15-ampere fuse is used, depending upon the lighting requirements of the country in which the tractor is to be operated. These tractors are equipped with either an 11- or 22-ampere generating system, again depending upon the model, type of transmission and operating conditions of the tractor concerned.

C Prefix Letter: Tractors with serial numbers prefixed with the letter "C" use a front and rear main wiring harness with a multiple connector located in front of the fuel tank, Figure 7. If lights are installed, a three-position push-pull light switch incorporating a circuit breaker is used. The headlamps are mounted externally on the radiator shell and one rear lamp is used on the left rear fender. The tractors are equipped with a 22-ampere generating system.

Figure 6 shows circuit descriptions for tractors with "A" or "B" prefixed serial numbers, and Figure 7 shows circuit description for tractors with a "C" prefixed serial number.

When removing electrical harnesses or wires use extreme caution to avoid damage. When installing the harnesses or wires be sure that all clips are installed properly and that the wiring is not damaged by sharp corners or hot surfaces.

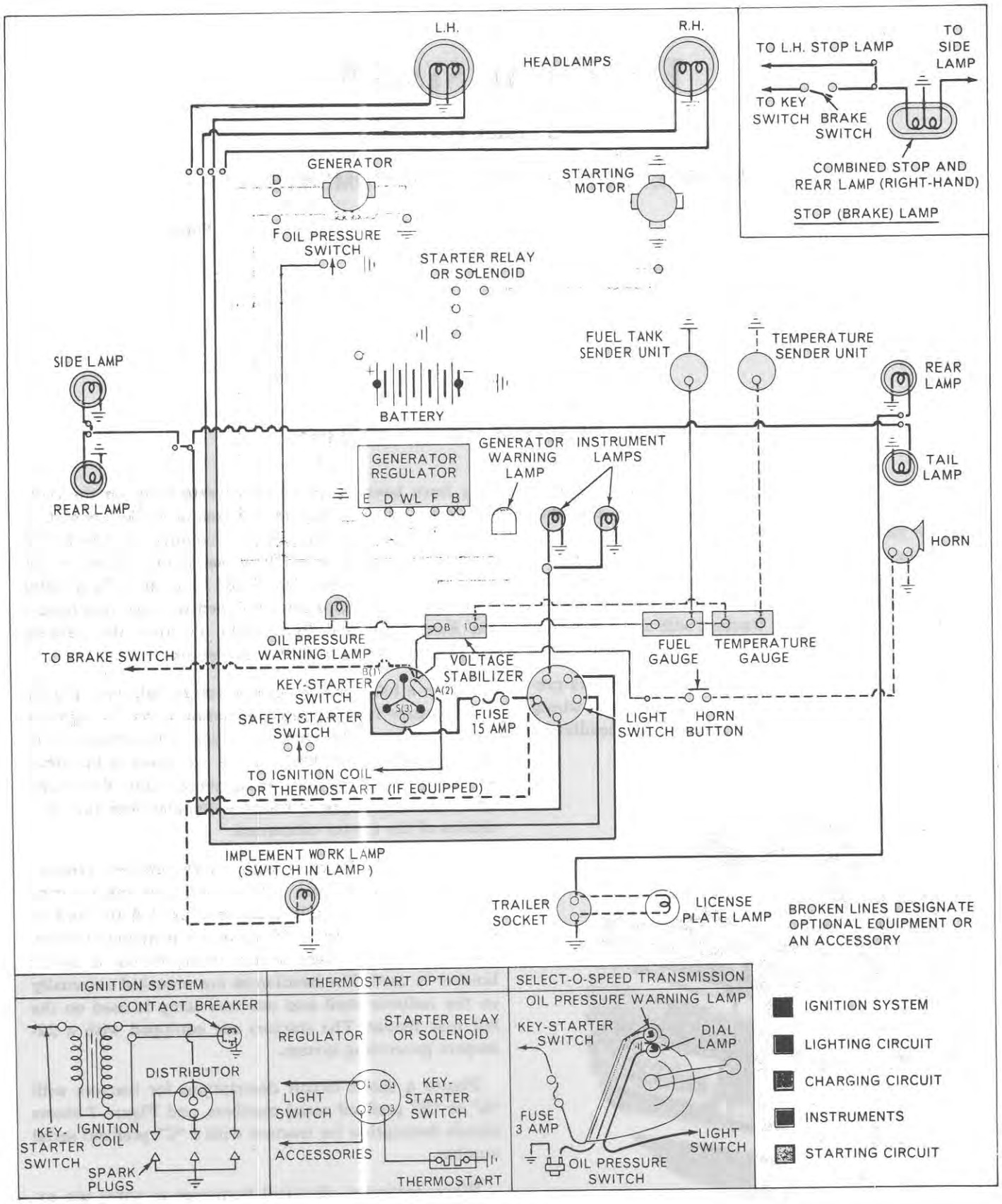

Figure 2
Electrical System Schematic—Tractors with "A" or "B" Prefixed Serial Numbers

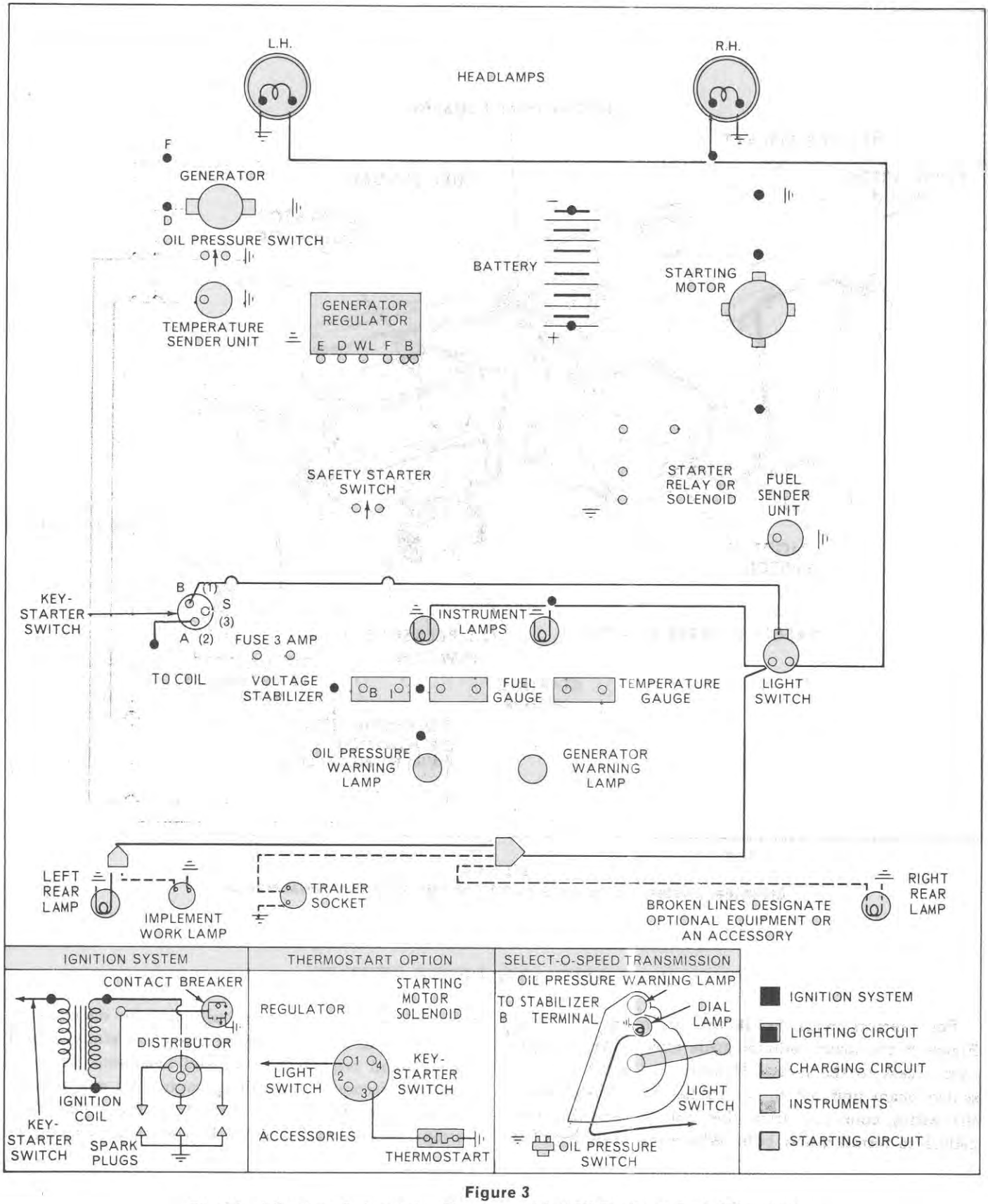

Figure 3
Electrical System Schematic—Tractors with "C" Prefixed Serial Numbers

© FORD MOTOR CO. 1966

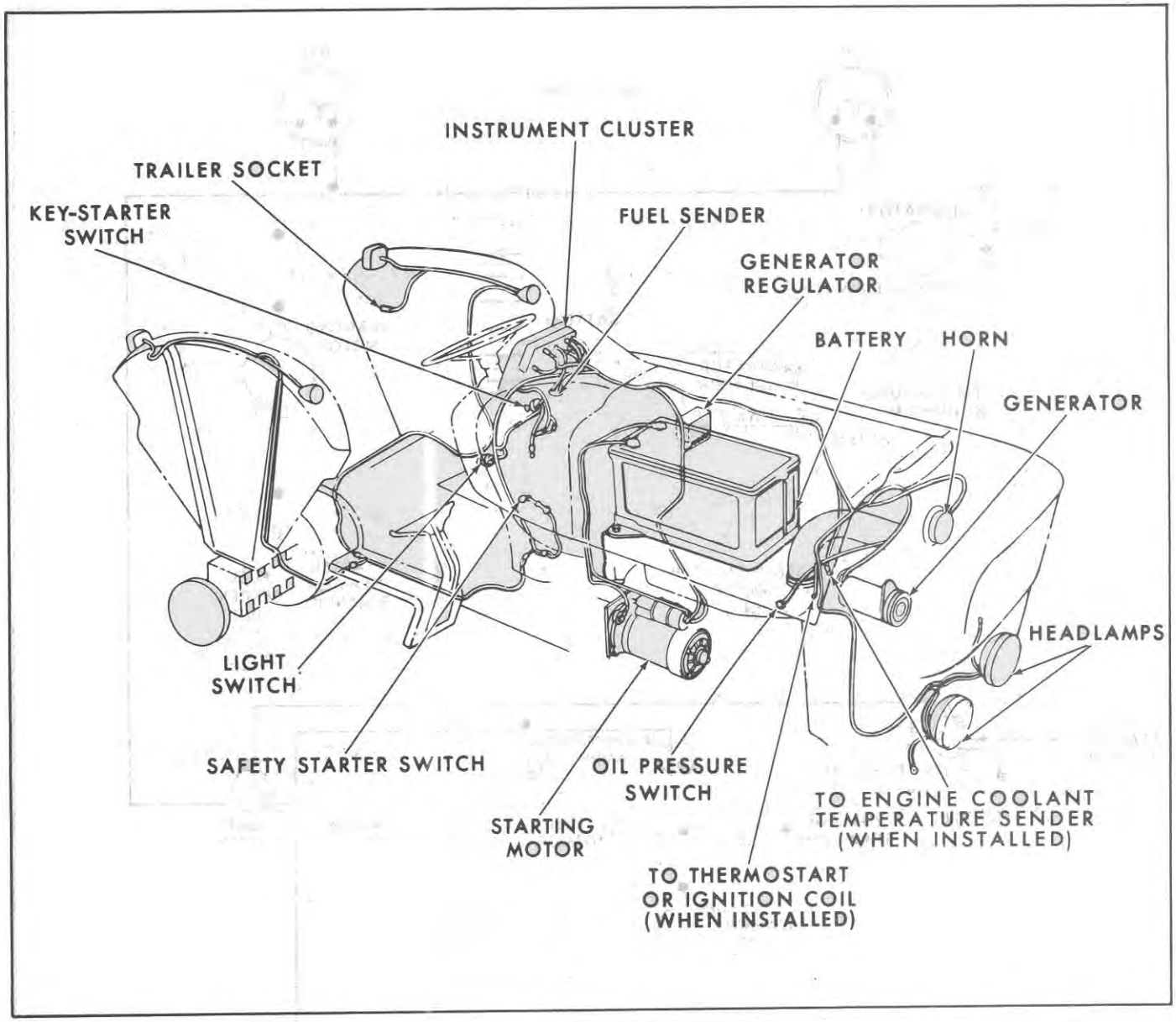

Figure 4
Electrical System—Tractors with "A" or "B" Prefixed Serial Numbers

2. LIGHTS AND LIGHT SWITCH

For tractors with headlamps mounted internally, Figure 4, the lower radiator grille must be removed to gain access to the lamps. Remove the lamp, ease the sealed beam unit out of the rubber rim. Then release the wiring connector from the unit. Reverse the procedure to install a new bulb. Where the headlamps are mounted externally, a new bulb may be installed by first loosening the rim locking screw. Carefully spread the rim and remove the rim and headlamp from the housing. Disconnect the wiring connectors and remove the bulb. Reverse the procedure to install a new bulb. In the case of rear lamps the lens must be removed in

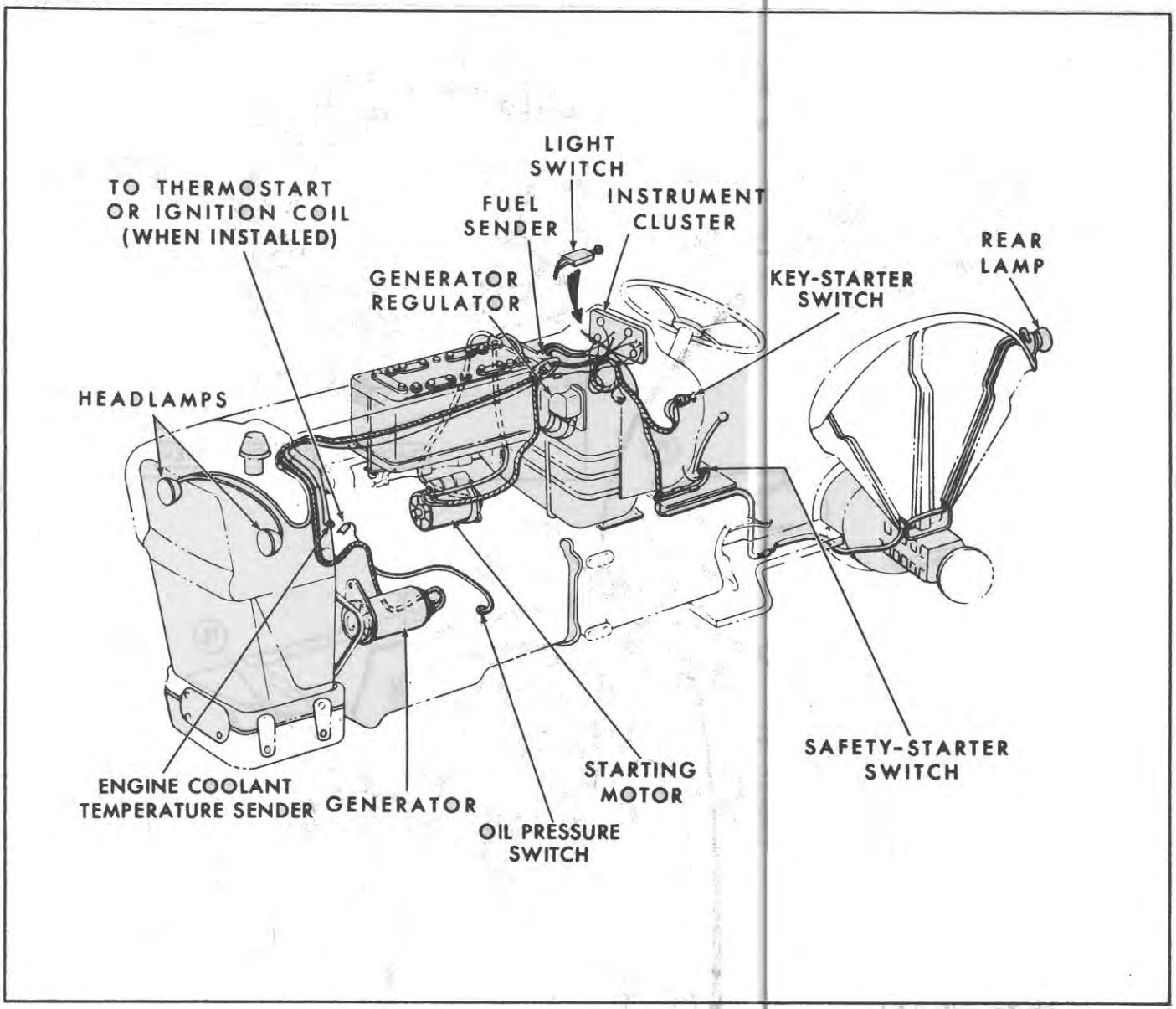

Figure 5
Electrical System—Tractors with "C" Prefixed Serial Numbers

order to install a new bulb. The light switch is serviced as follows:

1. Disconnect the ground (negative) cable from the battery.
2. Loosen the locking screw (if equipped) in the light switch knob and remove the knob.
3. Remove the nut retaining the switch assembly to the rear hood panel assembly.
4. Disconnect the electrical wires and remove the switch assembly.
5. Install the parts in reverse of the above procedure.

© FORD MOTOR CO. 1966

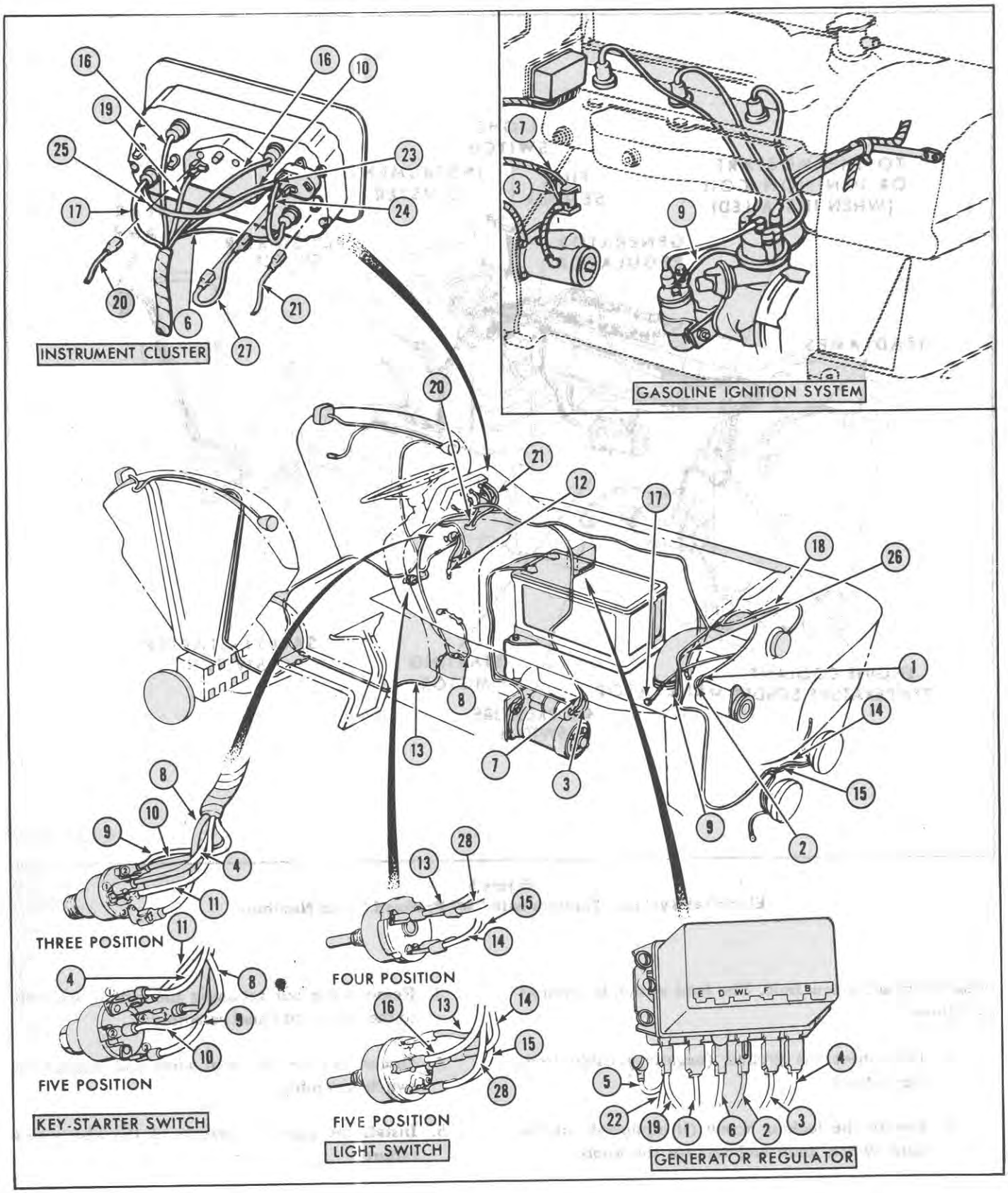

Figure 6
Circuit Descriptions—Tractors with "A" or "B" Prefixed Serial Numbers

KEY TO WIRING CODES FOR FIGURE 6

(Circuit Descriptions—Tractors with "A" or "B" Prefixed Serial Numbers)

Wire No.	Wire Description	Wire Code
1	Regulator "D" to generator "D"	Brown-Yellow
2	Regulator "F" to generator "F"	Brown-Green
3	Regulator "B" to starting motor solenoid	Brown
4	Regulator "B" to key-starter switch	Brown
5	Regulator "E" to ground	Black
6	Regulator "WL" to generator warning light	Brown-Yellow
7	Starting motor solenoid to safety-starter switch	White-Red
8	Key-starter switch to safety-starter switch	White-Yellow
9	Key-starter switch to thermostart (diesel) (to coil—gasoline)	Brown-Red
10	Key-starter switch to instrument panel voltage stabilizer	White
11	Key-starter switch feed to fuse	Brown
12	Key-starter switch to accessories	White
13	Light switch to side and rear lamps	Red
14	Light switch to headlamp low beam	Blue-Red
15	Light switch to headlamp main beam	Blue-White
16	Light switch to panel light connection	Red-White
17	Oil pressure switch to oil pressure warning light connection	White-Brown
18	Horn to horn button	White-Green
19	Instrument panel ground to regulator "E"	Black
20	Fuel tank unit to instrument panel ground	Black
21	Fuel tank unit to fuel gauge connection	Green-Black
22	Horn to regulator "E"	Black
23	Instrument panel feed to warning light connection	White
24	Instrument panel warning light connection to generator warning light	White
25	Instrument panel warning light connection to oil pressure warning light	White
26	Temperature sender unit to temperature gauge	Green-Blue
27	Voltage stabilizer to fuel gauge	Green-Blue
28	Fuse to light switch	Brown

3. INSTRUMENT CLUSTER

The instrument cluster, Figure 8, includes the Proof-Meter, fuel gauge, temperature gauge, generator indicator light, engine oil pressure light, and a constant voltage stabilizer. The voltage stabilizer maintains approximately 10 volts for fuel and temperature gauge operation.

In order to service any of the components, the cluster must be removed. The warning light bulbs are serviced after performing step 2 under "A. Removal".

A. Removal

NOTE: ***The instrument cluster assembly contains delicate instruments and gauges. Use extreme care during maintenance and repair, not to drop, jar, or cause other damage to the assembly.***

1. Disconnect the ground (negative) cable from the battery.
2. Remove the four screws securing the cluster assembly, Figure 8, to the rear hood panel assembly.

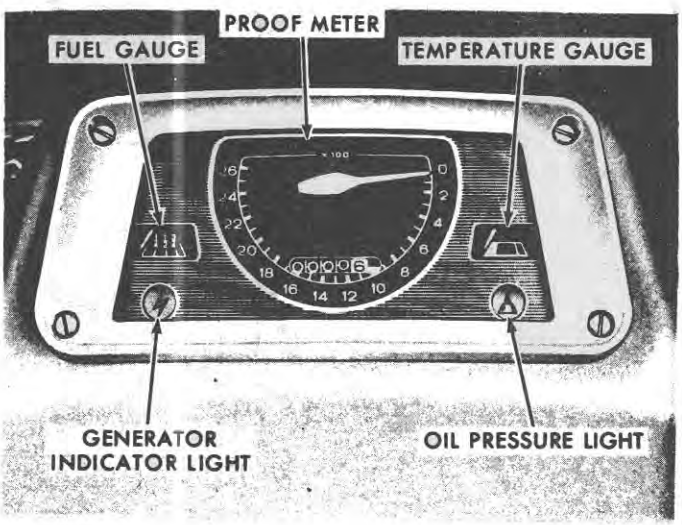

Figure 8
Instrument Cluster Assembly

© FORD MOTOR CO. 1966

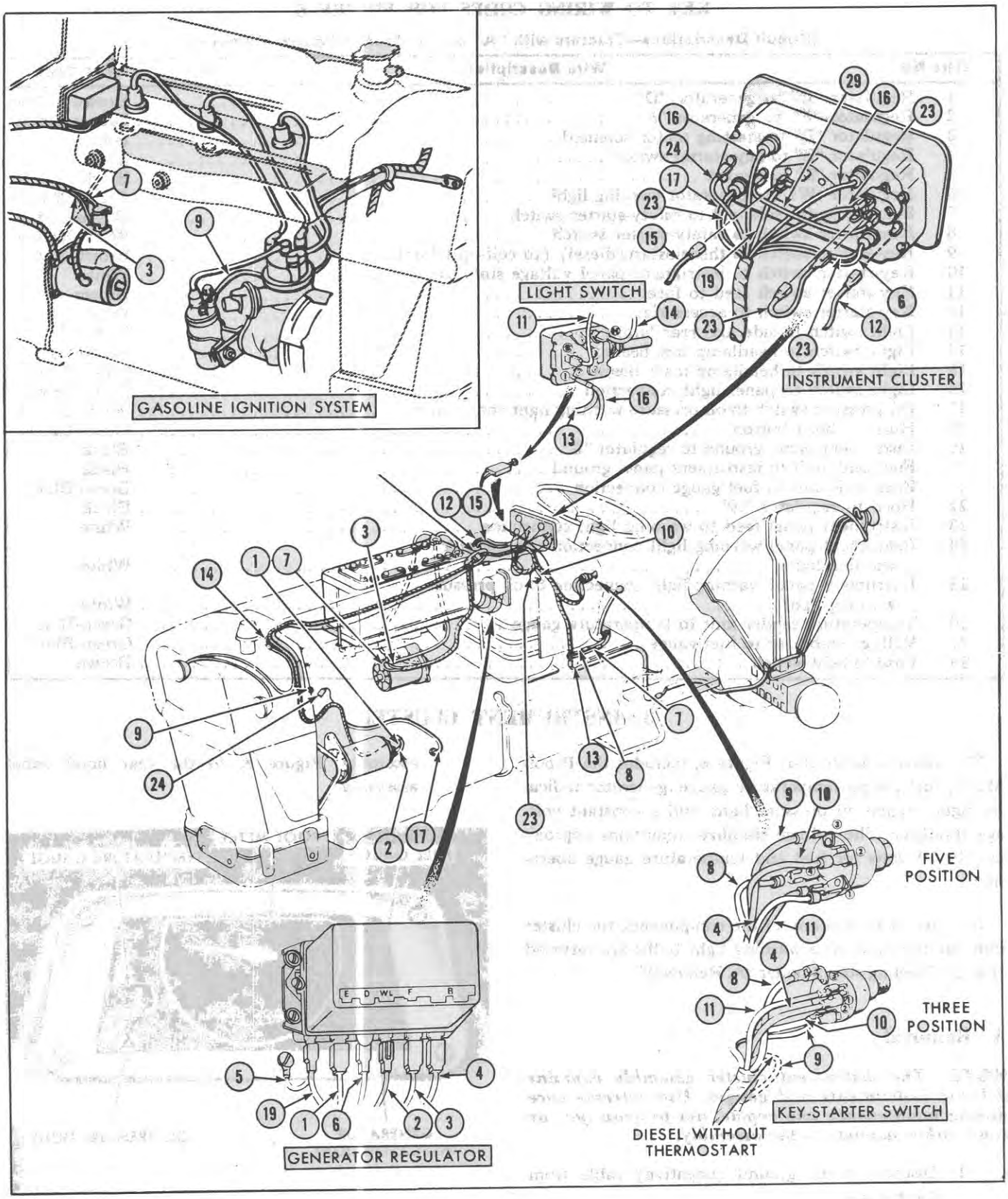

Figure 7
Circuit Descriptions—Tractors with "C" Prefixed Serial Numbers

KEY TO WIRING CODES FOR FIGURE 7

(Circuit Descriptions—Tractors with "C" Prefixed Serial Numbers)

Wire No.	Wire Description	Wire Code
1	Regulator "D" to generator "D"	Brown-Yellow
2	Regulator "F" to generator "F"	Brown-Green
3	Regulator "B" to starting motor relay or solenoid	Brown
4	Regulator "B" to key-starter switch "batt"	Brown
5	Regulator "E" to ground	Black
6	Regulator "WL" to generator warning light	Brown-Yellow
7	Starting motor relay to safety-starter switch	White-Red
8	Key-starter switch "start" to safety-starter switch	White-Yellow
9	Thermostart connection to key-starter switch connection	Brown-Red
10	Key-starter switch "aux" to fuse	White
11	Key-starter switch light terminal to light switch	Brown
12	Fuel sender to fuel gauge	Green-Black
13	Light switch to tail lamp connection	Red
14	Light switch to headlamp connection	Blue-Red
15	Fuel sender ground to instrument panel ground	Black
16	Light switch to panel light connection	Red-White
17	Oil pressure switch to oil pressure warning light	White-Brown
19	Regulator "E" to instrument panel ground	Black
23	Fuse to voltage stabilizer and warning lights	White
24	Temperature gauge to temperature sender assembly	Green-Blue
29	Voltage stabilizer to temperature gauge	White

3. Carefully pull the cluster assembly away from the rear hood panel assembly and disconnect the electrical wires and Proof-Meter cable assembly.

4. Remove the cluster assembly and remove the sealing gasket.

B. Disassembly

1. Remove the four screws and lock washers, Figure 9, which retain the case assembly to the bezel assembly.

2. Loosen the two screws and washers which retain the Proof-Meter assembly to the case assembly.

3. Remove the terminal nuts and lock washers which retain the gauges to the case assembly. Remove the terminal and two insulating washers and remove the gauges.

4. Remove the two screws and lock washers which hold the constant voltage stabilizer to the case assembly.

C. Assembly

1. Attach the constant voltage stabilizer, Figure 9, to the case assembly. Secure tightly with the two screws and lock washers.

2. Insert the gauges in the case assembly (fuel gauge on left side, temperature gauge on right side—as viewed from the front of the cluster). Place the two insulated washers (slotted washer over the thin washer) and blade terminal over the gauge studs and secure with the nuts and lock washers.

3. Insert the Proof-Meter assembly into the case assembly. Secure the assembly with the two screws and lock washers. Be sure the two rubber seals and flat washers are placed between the case and the lock washer (seals against the case).

4. Position the case assembly on the bezel. Be sure the sealing strips are fitted between the bezel and the assembly. Secure the assembly with the four screws and lock washers.

D. Installation

1. Place the instrument cluster on the rear hood panel and connect the main harness connectors, warning light, and instrument panel sockets as shown in Figures 6 or 7. Connect the Proof-Meter cable. If it is difficult to connect the cable, first remove the cable from the generator then connect the cable upper end to the instrument cluster. Reconnect the cable to the gener-

© FORD MOTOR CO. 1966

ator after the cluster assembly is secured to the rear hood panel assembly.

2. Secure the cluster assembly to the rear hood panel, making sure that the gasket is properly seated. Do not overtighten the four retaining screws.
3. Connect the ground (negative) cable to the negative terminal of the battery.

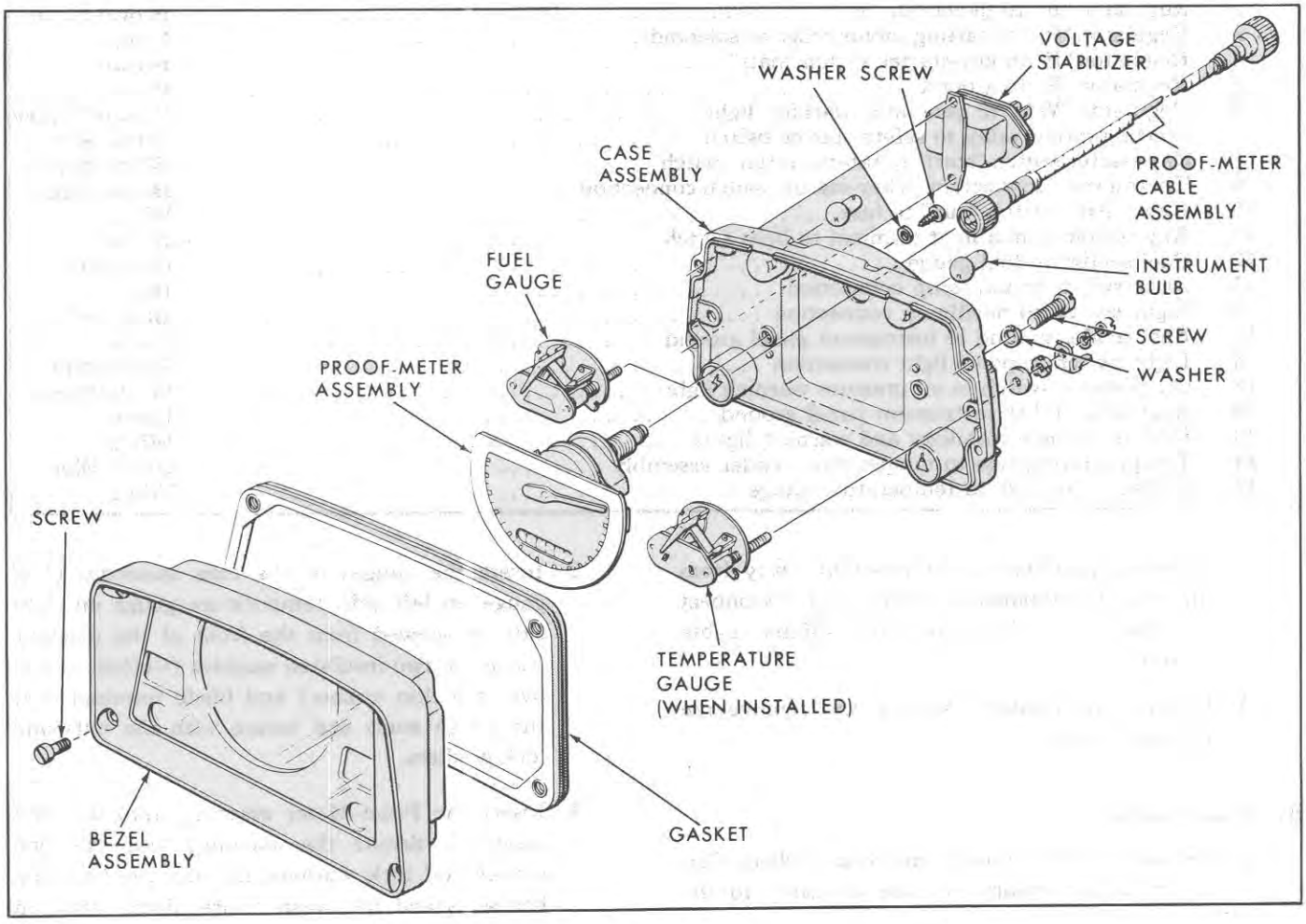

Figure 9
Instrument Cluster Assembly Components

Part 3

ELECTRICAL SYSTEM

Chapter 2

BATTERY

Section		Page
1.	Description	11
2.	Specific Gravity	11
3.	Periodic Maintenance	12
4.	Battery Tests	13

1. DESCRIPTION

Two different lead acid type storage batteries may be used, depending upon the electrical requirements of the model tractor concerned. One is a 128-ampere hour unit, while the other is an 80-ampere hour battery. Both batteries are 12 volts with six-cell construction and are negatively grounded. Each cell produces approximately 2.1 volts for a total battery output of 12.6 volts. The battery is located above the tractor engine and is securely mounted to a swing-out type tray for easy servicing.

The battery has three major functions:

- To provide a source of current for starting, lighting, and ignition (gasoline tractors)
- To help control the voltage in the electrical system
- To furnish current when the electrical demands exceed the generator output

The battery is constructed in such a manner that each cell contains positive and negative plates alternately placed next to each other. Each positive plate is separated from a negative plate by a non-conducting porous separator which prevents the plates from touching each other. If any of the positive plates should make contact with negative plates within a cell, the cell will short-circuit and no longer be useful. All of the positive plates are welded to a post strap, forming a positive group, and all the negative plates are welded to a similar post strap, forming a negative group.

Each positive plate is composed of a lead grid with lead peroxide (lead and oxygen) pasted into the grid openings. The negative plates are composed of a lead grid with spongy lead pasted into the grid openings.

The liquid electrolyte is comprised of sulphuric acid and water mixed together to form a sulphuric acid solution.

2. SPECIFIC GRAVITY

The specific gravity of battery electrolyte indicates the state of charge of the battery. The electrolyte in a fully charged battery is approximately 1.280 times as heavy as pure water when both liquids are at the same temperature. Therefore, the electrolyte of a fully charged battery would be described as having a specific gravity of 1.280 (approximately 32° Baumé*). When the battery discharges, sulphuric acid in the electrolyte combines chemically with the plates, thus lightening the weight of the remaining electrolyte. The battery hydrometer will determine the specific gravity of the electrolyte in a cell. The amount of unused sulphuric acid in the solution is a measure of the degree of charge of a normal cell.

The table on page 12 illustrates a typical range of specific gravity for a cell in various stages of charge based on the ability of the battery to "turn over" the engine at 80 F. (26.7°C.).

The lower the temperature at which a battery is required to operate, the more necessary it is that the battery be maintained in a fully charged condition. A battery having a low specific gravity of 1.225 at 80°F. (26.7°C.) will operate the starting motor at warm temperatures but may fail at extremely low temperatures due to the lower battery efficiency at a low temperature.

*1.280 points specific gravity = 32° Baumé
1.260 points specific gravity = 31° Baumé
0.010 points specific gravity = 1° Baumé

© FORD MOTOR CO. 1966

3. PERIODIC MAINTENANCE

BATTERY EFFICIENCY AT VARIOUS TEMPERATURES

Temperature	Efficiency of a Fully Charged Battery
80°F. (26.7°C.)	100%
50°F. (10.0°C.)	82%
30°F. (—1.1°C.)	64%
20°F. (—6.7°C.)	58%
10°F. (—12.2°C.)	50%
0°F. (—17.8°C.)	40%
—10°F. (—23.3°C.)	33%

Maximum battery life can be obtained only when proper care and periodic inspection is given the battery. It is also important that output capacity should not be exceeded by constant and excessive overloading, and that charging requirements be maintained.

Water is one of the essential chemicals of a storage battery and under normal conditions of operation is the only component of the battery which is lost as a result of charging. It is important that the recommended level of electrolyte be maintained for maximum battery life.

SERVICING THE BATTERY

The following steps must be observed when servicing a battery:

1. Never allow the electrolyte level to drop below the top of the plates, otherwise the acid will reach a high concentration that will damage the separators and impair the performance of the plates. The plates must be completely covered by the electrolyte to take full part in the battery performance. The level of the electrolyte is correct when the liquid just covers the ring in the bottom of the filler well; the top of the red shield; or ¼" above the plates, depending upon the type of battery in use.
2. Check the level of the electrolyte, when at or near room temperature.
3. When refilling battery cells, use only distilled water. Do not use well water.
4. Always keep the battery at least ¾ charged, otherwise the battery plates will become sulfated and loss of efficiency will result with possible damage from freezing during cold temperature.
5. Be careful to avoid overcharging the battery. Excessive charging will create high internal heat, expanding the positive plates and causing them to buckle and warp. Distortion of the battery case and displacement of the sealing compound will also result.
6. When fast charging the battery, be sure that the battery temperature does not exceed 125°F. (51.7°C.), otherwise the battery may be severely damaged.

NOTE: ***Thermostatic control assures maximum charge in the shortest possible time. Maximum fast charge rate for a 12-volt battery should not exceed 30 amperes.***

7. Never add sulphuric acid to a cell unless the electrolyte has been lost through spilling. Any electrolyte added must be at the proper specific gravity.

Dry Charged Batteries

If the tractor is equipped with a dry charge battery, or if a new dry charged battery is to be installed, prepare the battery for service as follows:

NOTE: ***Dry charged batteries must not be allowed to stand in an unfilled state after the time period (approximately one year) stamped on the battery has expired.***

1. Remove the battery cell vent plugs.
2. Fill each cell with electrolyte of the correct specific gravity as outlined in the following chart. The cells should be filled until the electrolyte is at the top of the ring in cell; to the top of the red shield; or ¼ inch above the plates, depending upon the type of battery in use.

IMPORTANT: ***The electrolyte should be diluted sulphuric acid sufficiently pure for storage battery use and should preferably be at a temperature between 70°F. (21.1°C.) and 90° F. (32.2°C.). In cold climates it may be necessary to place the electrolyte and the battery to be serviced in a warm room until both have attained room temperature.***

3. After filling, allow the battery to stand for at least 15 minutes. The electrolyte level in the cells may fall due to absorption. In this case it must be restored by adding more electrolyte of the correct specific gravity.
4. Install the battery cell vent plugs.

The battery is then ready for installation on the tractor, and can be used to start the tractor engine 15 minutes after filling. If, however, an attempt to start is made and fails, the battery should be left to stand for one hour before a further attempt is made.

If facilities exist, it is a useful practice before installing the battery on the tractor, to give a freshening charge for about four hours at the normal charging rate of 8.0 amps. and then check that all cells are gassing freely.

REMOVAL AND INSTALLATION

1. Disconnect the battery cables from the battery terminals, always removing the ground cable first.
2. Remove the wing nut and washer from the hold-down clamp bolts. Remove the bolts.

SPECIFIC GRAVITY OF ELECTROLYTE FOR FILLING DRY AND DRY CHARGED BATTERIES

	Temperate Climates	Tropical Climates
Specific gravity of electrolyte for filling new batteries	1.260-1.270 (30°-31° Baumé)	1.230-1.240 (27°-28° Baumé)
Specific gravity of electrolyte at end of charge	1.270-1.285 (31°-32° Baumé)	1.240-1.255 (28°-29.5° Baumé)
Maximum permissible temperature of electrolyte during charge	125°F. (51.7°C.)	125°F. (51.7°C.)

3. Remove the hold-down clamp from the battery and lift the battery from the battery tray.
4. For 80-ampere hour batteries, install the battery in the tray with the positive terminal at the rear. For 128-ampere hour batteries, both terminals are at the rear. Secure the hold-down clamps with the wing nuts and washers.

IMPORTANT: ***Always connect the positive battery cable first and the ground (negative) cable last.***

CHARGING THE BATTERY

A slow charge is the only method which can be used to fully charge a battery. A high rate charger can be used to quickly boost the capacity of a battery, but must be followed by a slow charger to bring a battery to full charge.

1. Thoroughly clean the battery casing, cell covers, and terminals.
2. Check the level of the electrolyte in each cell. If necessary, add water as previously mentioned.
3. With a slow charger, use a rate of 3 to 4 amperes for a length of time necessary to bring the battery to a full charge. This may take 24 hours, or more, if the battery is heavily sulfated. A severely sulfated battery might not accept a charge at all. When the battery is fully charged, the cells will gas freely and the specific gravity will remain constant. Remove the charger after three consecutive hydrometer readings taken at hourly intervals indicate that the specific gravity has stopped rising.
4. When using fast rate or high rate charges, carefully follow the manufacturer's instructions. A high rate charger cannot be used to charge a battery to full capacity. If a full charge is desired, use a slow charge after the high rate charge.

IMPORTANT: ***High rate charging raises the temperature of the electrolyte, and, unless the charger is equipped with an automatic time or temperature device, the electrolyte will exceed 125°F. (51.7°C.) which may cause violent battery gassing.***

CAUTION: ***When the battery is being charged, an explosive gas is being produced. Do not smoke or use an exposed flame when checking electrolyte level.***

4. BATTERY TESTS

Before preparing the battery tests, check the battery for a dirty top, clogged vents, corrosion, raised cell covers, or a cracked case. Add water if the electrolyte is below the plates. Distilled water may be added to bring the electrolyte up to the proper level.

The state of battery charge can be determined by making the "SPECIFIC GRAVITY TEST" outlined below.

The condition of a discharged battery can be determined by its ability to deliver current as covered on page 14, under "CAPACITY TEST".

The condition of a charged battery can be determined by its ability to accept charges as covered on page 14, under "TEST CHARGING".

NOTE: ***The following tests are performed using a hydrometer, a battery starter tester (high-rate discharge tester), and battery charger.***

SPECIFIC GRAVITY TEST

To determine the state of charge, check the specific gravity of the battery with a hydrometer. If water has recently been added, accurate hydrometer readings will not be obtained.

1. With the float in a vertical position, away from the side of the barrel, take the reading with your eye at the level of the bottom of the curved portion of the liquid.
2. Adjust the hydrometer reading for electrolyte temperature variations by subtracting four points (0.004 specific gravity) for each 10 degrees Fahrenheit below the temperature at which the hydrometer is calibrated and adding four points (0.004 specific gravity) for each 10 degrees Fahrenheit above this temperature.

© FORD MOTOR CO. 1966

The following are examples using a hydrometer calibrated at 80°F. (26.7°C.).

Example 1:

Temperature below 80°F. (26.7°C.):
Electrolyte temperature .....20°F. (–6.7°C.)
Hydrometer reading 1.270
Subtract (6 x 0.004) 0.024
Corrected Specific Gravity 1.246

Example 2:

Temperature above 80°F. (26.7°C.):
Electrolyte temperature .....100°F. (37.8°C.)
Hydrometer reading 1.255
Add (2 x 0.004) 0.008
Corrected Specific Gravity 1.263

3. Determine the state of charge using the following information:

State of Charge	Adjusted Specific Gravity
100%	1.280
75%	1.230
50%	1.180
25%	1.130
Discharged	1.080

NOTE: ***Specific gravity should not vary more than 0.025 points between cells.***

4. If the specific gravity is 1.280 or more, the battery is fully charged and in good operating condition.
5. If the specific gravity is below 1.280, charge the battery and inspect the charging system to determine the cause of the low battery charge.

CAPACITY TEST

The battery capacity test is made to determine if the battery has sufficient discharge capacity for the load imposed upon it by the accessories while cranking the engine. The voltage reading obtained in this test is used to determine the battery condition. Before testing the battery, be sure that the electrolyte level is above the cell plates and that the specific gravity of each cell is 1.225 or more.

The battery may be tested on or off the tractor.

1. Set the current control switch of the battery starter tester (high-rate discharge tester) in the "OFF" position and the voltage selector switch at a voltage equal to, or slightly higher than, the rated battery voltage. Connect the tester positive leads to the battery positive terminal and the tester negative leads to the battery negative terminal.
2. Turn the current control knob until the ammeter reading is three times the ampere-hour rating of the battery being tested. Note the voltage reading.

- If the reading is 9.6 volts or more, the battery has a good output capacity and will readily accept a normal charge.
- If the reading is below 9.6, test charge the battery as outlined on page 14, under "TEST CHARGING".

CAUTION: ***Avoid leaving the high discharge load on the battery for periods longer than 15 seconds.***

TEST CHARGING

IMPORTANT: ***Use this test only on batteries that have failed the "BATTERY CAPACITY TEST".***

1. Attach the battery starter tester (high rate discharge tester) positive leads to the battery positive terminal and the negative leads to the battery negative terminal.
2. Connect the battery charger positive lead to the battery positive terminal and the negative lead to the battery negative terminal.
3. Turn the charger timer past a "3 minutes" charge indication, and then back to the "3 minutes" indication.
4. Set the charging rate as close as possible to 40 amperes.
5. After three minutes of this fast charge, with the charger still operating on fast charge, observe the voltmeter reading as indicated below:

- If the total voltage is over 15.5 volts, the battery is unsatisfactory in its present condition and probably is sulfated or worn out.
- If the total voltage is under 15.5 volts, test the individual cell voltages (if battery has external cell connections) with the charger still operating on fast charge.
- If the individual cell voltages are even, within 0.1 volt, test the specific gravity of each cell and recharge the battery according to the following:

Specific Gravity*	Fast Charge Up To
1.150 or less	1 Hour
1.150 to 1.175	¾ Hour
1.175 to 1.200	½ Hour
1.200 to 1.225	¼ Hour
1.200 to 1.225	Slow Charge Only

- If individual cell voltages are uneven by more than 0.1 volt, install a new battery.

NOTE: ***Always test the complete charging system whenever battery trouble is experienced. Refer to page 15.***

*1.280 points specific gravity = 32° Baumé
1.260 points specific gravity = 31° Baumé
0.010 points specific gravity = 1° Baumé

Part 3

ELECTRICAL SYSTEM

Chapter 3

CHARGING SYSTEM

Section	Page
1. Description	15
2. Generator	15
3. Generator Regulator	23

1. DESCRIPTION

The charging system consists of the generator, generator regulator, generator charge indicator, and the necessary wiring to connect the circuit. See Figures 2, 3, and 24. A shunt wound, two-pole type generator provides the electrical energy necessary to keep the battery in a fully charged condition. Generator output is controlled by the generator regulator which consists of the cutout relay, the current regulator, and the voltage regulator.

Before attempting to make any repairs or adjustments to components of the charging system, make certain that the fan belt is properly adjusted, the battery is fully charged, and that all electrical terminal connections are secure.

2. GENERATOR

DESCRIPTION AND OPERATION

A 22-ampere ventilated generator, or an 11-ampere non-ventilated generator is used on the Ford Tractors. When using the 22-ampere generator, a 22-ampere generator-regulator must be used. When using the 11-ampere generator, an 11-ampere generator-regulator must be used. The generator-regulator may be identified by the numbers stamped on the base plate as outlined on page 70. Both generators are shunt wound, two-pole, two-brush units, and incorporate a Proof-Meter drive assembly attached to the commutator end plate. The generator pulley-to-crankshaft pulley drive ratio is 2.14:1.

Both generators are designed with a "B" type circuit. In this type of circuit, one of the field coil leads is connected either to the ground brush inside the generator or to the generator frame. The other field coil lead is connected to the armature terminal through the regulator. Current in the "B" circuit travels from the insulated brush, to the generator-regulator, the generator field coils, and to ground inside the generator. See Figure 24.

In operation, both generators function the same. The generator armature is driven by the belt which also drives the water pump and fan. The output of the generator is controlled by the generator-regulator, the state of charge of the battery, and the electrical loads imposed by the equipment in use. The armature rotation within the strong magnetic field imposed by the generator field coils produces an electric current. At normal operating speed, adequate current is generated to operate electrical accessories and replenish the battery.

GENERATOR TESTS

Output Test

For easier and rapid diagnosis and for most conclusive test results, it is recommended that a generator-regulator tester be used when diagnosing charging system problems. When using test equipment, follow the manufacturer's recommended test procedures. If test equipment is not available, follow the test procedures outlined below. Charging system specifications are outlined in the specifications section, page 69.

© FORD MOTOR CO. 1966

Using a standard voltmeter (0-20 volts), the generator can be checked for proper operation without removing it from the engine by using the following procedure:

1. Check the generator drive belt and make sure it is adjusted to the proper tension.
2. Inspect the generator terminals for dirt or loose connections.
3. Disconnect the wires from the generator terminals and connect a jumper wire across the two terminals.
4. Start the engine and run it at idle speed.
5. Connect the voltmeter positive lead to one of the generator terminals. Connect the voltmeter negative lead to a good ground point on the generator frame.
6. Slowly increase the engine speed while observing the voltmeter. The voltmeter reading should rise rapidly and without fluctuation.

   NOTE: ***Do not allow the voltmeter reading to reach 20 volts, and do not race the engine in an attempt to increase the voltage.***

- If the voltage rises rapidly and without fluctuation, the generator is functioning properly.
- If the voltage does not rise rapidly or fluctuates, the generator is defective and must be disassembled to determine the cause of trouble. Refer to page 17, under "DISASSEMBLY".

   NOTE: ***Excessive sparking at the commutator while making this test indicates a defective armature which must be discarded.***

7. If the generator is functioning properly, remove the jumper wire and reconnect the generator electrical connections.

If trouble is still experienced in the charging system, an excessive resistance may exist in the system wires and/or connections. This excessive resistance may be due to a bad connection, a defective wire-to-terminal solder joint, a break in a wire, or an improper ground connection. All these items should be visually checked before proceeding with further charging system tests.

REMOVAL AND INSTALLATION

A. Removal

If a generator failure is suspected, perform the generator tests and generator-regulator tests, as outlined on pages 17 and 25, before removing the generator. To remove the generator, proceed as follows:

1. Unscrew the Proof-Meter drive cable from the Proof-Meter drive housing. See Figure 10.
2. Disconnect the wires attached to the generator field and armature terminals.
3. If installed, remove the perforated metal safety guard enclosing the fan belt and generator pulley.
4. Loosen the bolts on the adjusting arm and generator brackets. Rotate the generator toward the engine and remove the belt from the generator pulley.
5. Remove the bolts from the generator adjusting arm and generator brackets. Remove the generator.

B. Installation

1. Position the generator on the generator bracket, Figure 10.
2. Install the generator bracket and adjusting arm bolts. Do not tighten the bolts completely.
3. Rotate the generator toward the engine and install the generator drive belt. Pull the generator away from the engine until the belt has a ½-inch (12.70 mm) deflection measured mid-way between the generator and crankshaft pulleys; then tighten the generator bracket and adjusting arm bolts.
4. Attach the wires to the generator field and armature terminals.

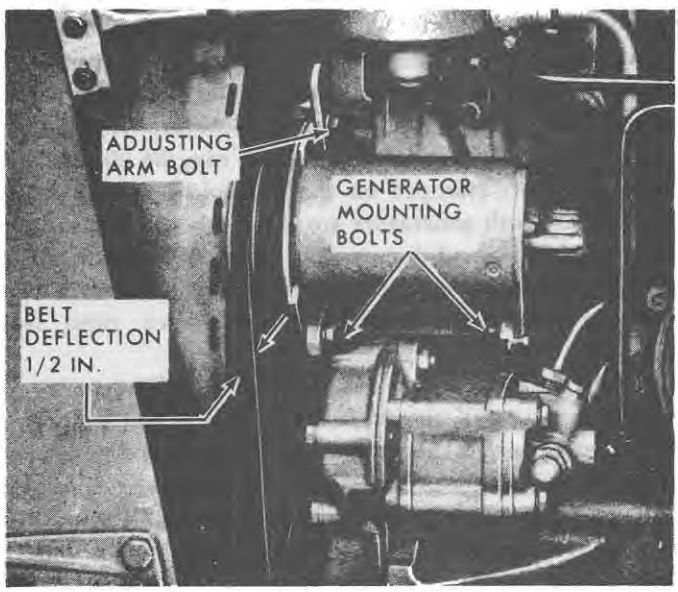

Figure 10
Generator Installed—(11 Amp. Generator Shown)

5. Screw the Proof-Meter drive cable into the Proof-Meter drive housing.

6. Polarize the generator as outlined on page 23.

7. Perform the generator output test as outlined on page 15.

8. If removed, install the perforated metal safety guard over the fan belt and generator pulley.

DISASSEMBLY

Both the 11-amp. and the 22-amp. generators are covered in the disassembly procedure. Refer to Figures 11 and 12 to identify the components.

1. Secure the generator in a vise equipped with soft jaws. Do not overtighten the vise.

2. Unscrew the through bolts and remove the commutator end plate assembly. The Proof-Meter drive can be removed by loosening the two retaining screws.

3. Remove the armature and drive end plate assembly.

4. Place the armature in a vise equipped with soft jaws. Do not overtighten. Remove the following parts:

- Nut, lock washer, and pulley on 11-amp. models.
- Nut, lock washer, pulley and fan on 22-amp. models.
- Woodruff key and spacer.

5. Press the drive end plate assembly off the armature shaft using a press as shown in Figure 13. After removing the end plate, remove the stop ring and thrust collar from the armature shaft.

BENCH TESTS

A. Checking Armature for Open Circuits

Burned spots on the surface of the commutator indicate that the armature has an open circuit. The burned spots are caused by an arc that is formed when the commutator segment, attached to an open circuit winding, passes under a brush. If burned spots are detected, install a new armature.

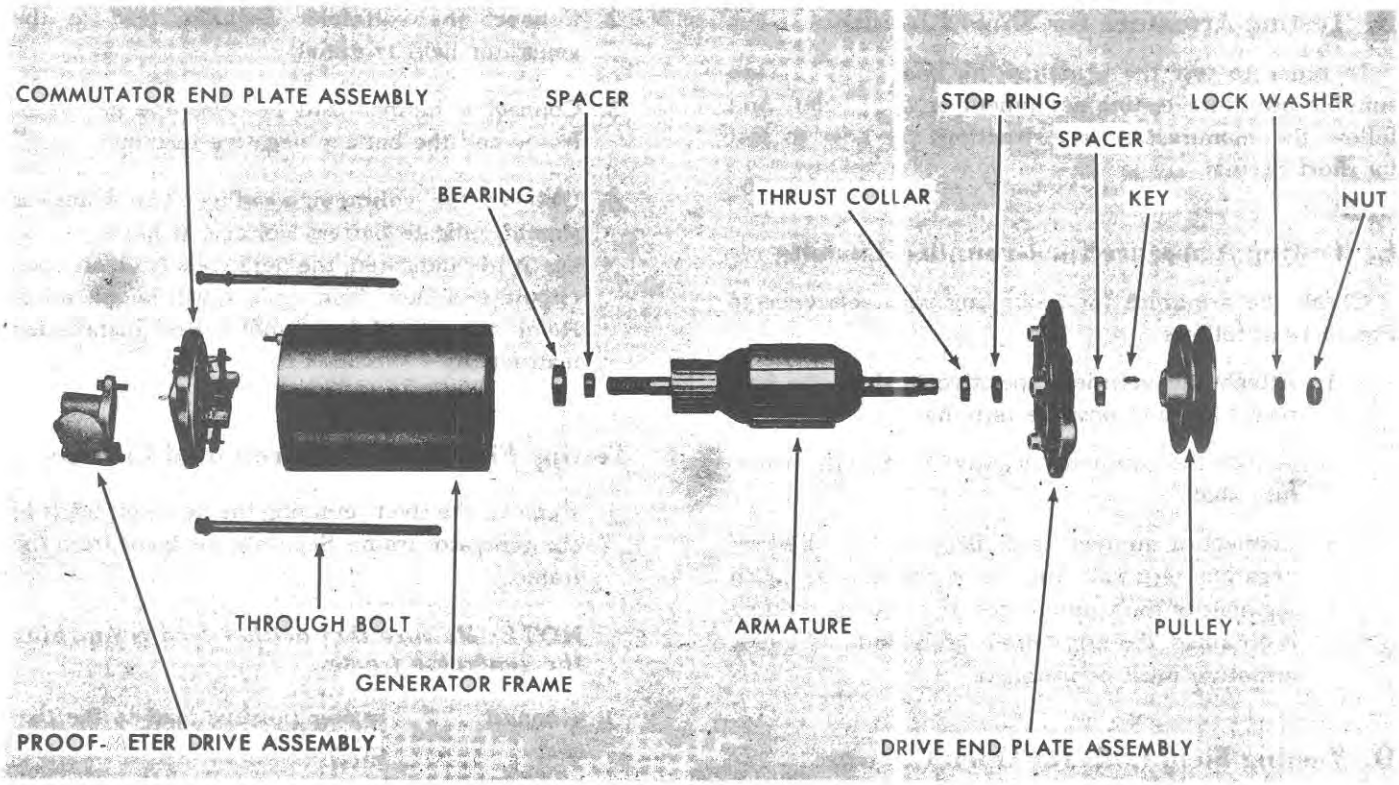

Figure 11
11 Amp. Generator—Disassembled

© FORD MOTOR CO. 1966

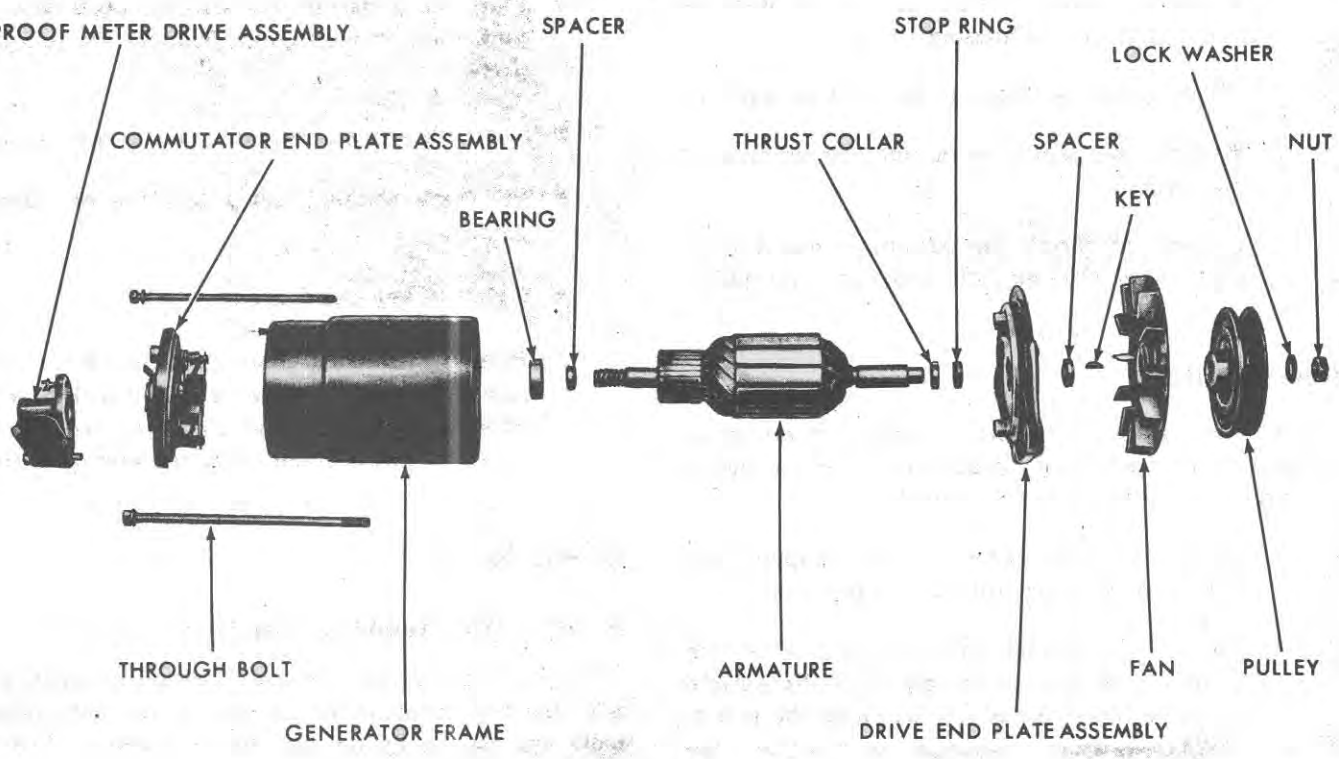

Figure 12
22 Amp. Generator—Disassembled

B. Testing Armature for Short Circuits

In order to test the armature for short circuits, use suitable armature testing equipment or a "growler" and follow the manufacturer's instructions on how to test for short circuits.

C. Testing Armature for Grounded Circuits

Check the armature for grounding with reference to Figure 14 as follows:

1. Attach the voltmeter positive lead to the battery (12-volt) positive terminal.
2. Attach the voltmeter negative lead to the armature shaft.
3. Connect a jumper lead between the battery negative terminal and, in succession, to each segment of the commutator. If a voltage reading is obtained, the armature is grounded and a new armature must be installed.

D. Testing Field Coils for Open Circuits

1. Connect the voltmeter positive lead to the battery positive terminal.
2. Connect the voltmeter negative lead to the generator field terminal.
3. Connect a jumper lead between the generator frame and the battery negative terminal.
4. Observe the voltmeter reading. The volmeter should indicate battery voltage. If battery voltage is not indicated, the field coils have an open circuit and new field coils must be installed. Refer to page 16 for removal and installation instructions.

E. Testing Field Coils for Grounded Circuits

1. Remove the rivet retaining the field coil leads to the generator frame. Separate the leads from the frame.

   NOTE: ***Be sure that neither lead is touching the generator frame.***

2. Connect the voltmeter positive lead to the battery positive terminal.
3. Connect the voltmeter negative lead to the generator field terminal.

4. Connect a jumper wire between the generator frame and the battery negative terminal.
5. There should be no voltage indication on the voltmeter. If there is a voltage indication, the field coils have a grounded circuit and new field coils must be installed. Refer to page 16 for removal and installation instructions.

F. Testing Field Coils for Short Circuits and High Resistance

Ammeter Connections:

1. Connect the ammeter positive lead to the positive terminal of a fully charged 12-volt battery.
2. Connect the ammeter negative lead to the generator field terminal.
3. Connect a jumper wire between the battery negative terminal and the generator frame.

Ohmmeter Connections:

1. Connect one lead of an ohmmeter to the generator field terminal.
2. Connect the other lead of the ohmmeter to the generator frame.

- If the ohmmeter reading (resistance) or ammeter reading (current) is as specified on page 70, the field coils are satisfactory.
- If the resistance is higher, or the current is lower than specified on page 70, the field coils have an open circuit and new field coils must be installed.
- If the resistance is lower, or the current is higher than specified on page 70, the field coils are shorted and new field coils must be installed.

Refer to page 16 for removal and installation instructions.

INSPECTION AND REPAIR

A. Brush Inspection

To gain access to the brushes, complete Steps 1 and 2 of the disassembly procedure, page 17.

1. On the 11-amp. generator, lift the brush springs and check the movement of the brushes within the holders. If they do not move freely, polish the sides of the brushes with a fine abrasive or a smooth file.
2. Check the brushes for wear. If they are worn to less than the length specified on page 70, install new brushes.
3. Check brush spring tension with reference to Figures 15 and 16. The end plate must be installed so the brushes are in position on the commutator. Pull the spring scale radially. On the 22-amp. generator, position the scale finger under the brush arm, as close to the brush as possible. Install new springs if the tension is less than specified on page 70.

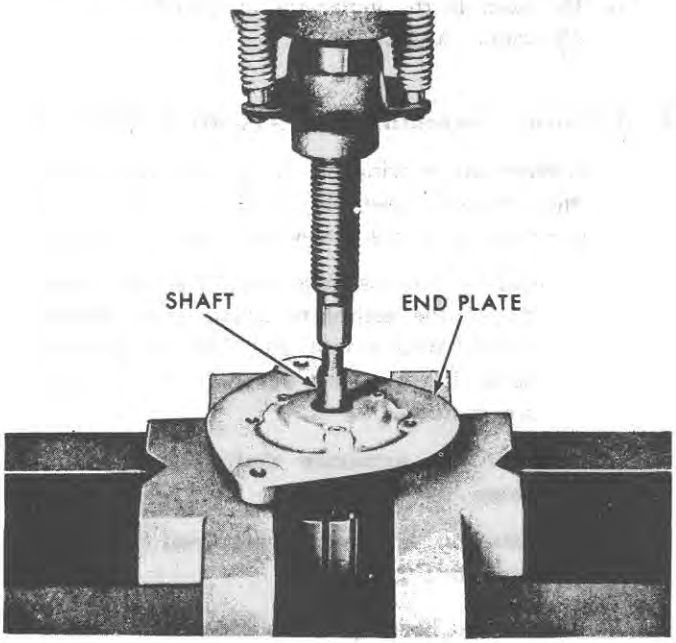

Figure 13
Drive End Plate Removal

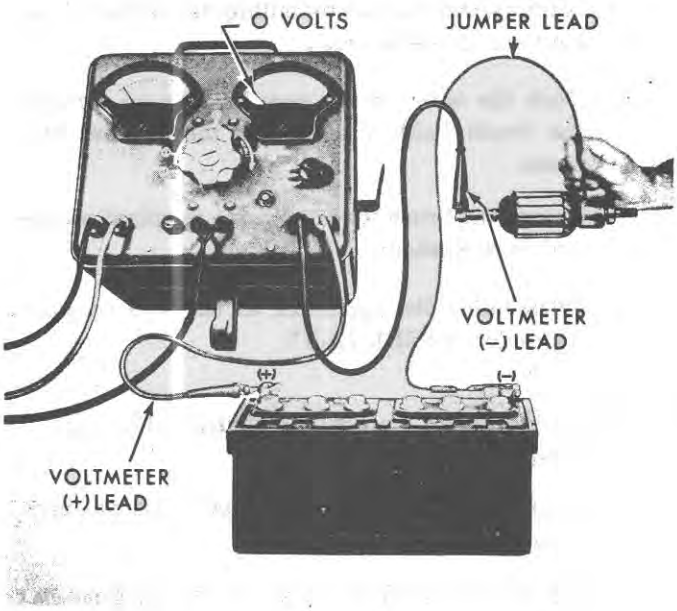

Figure 14
Armature Ground Test

© FORD MOTOR CO. 1966

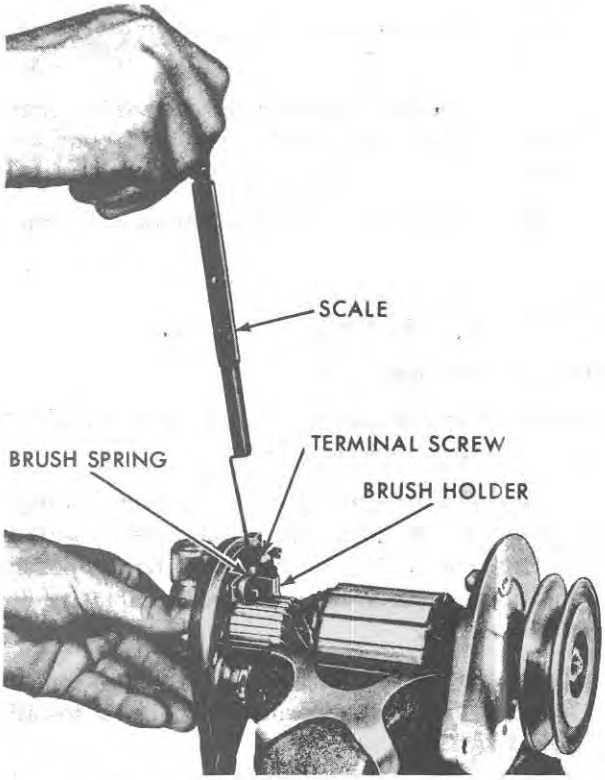

Figure 15
Checking Brush Spring Tension—11 Amp. Generator

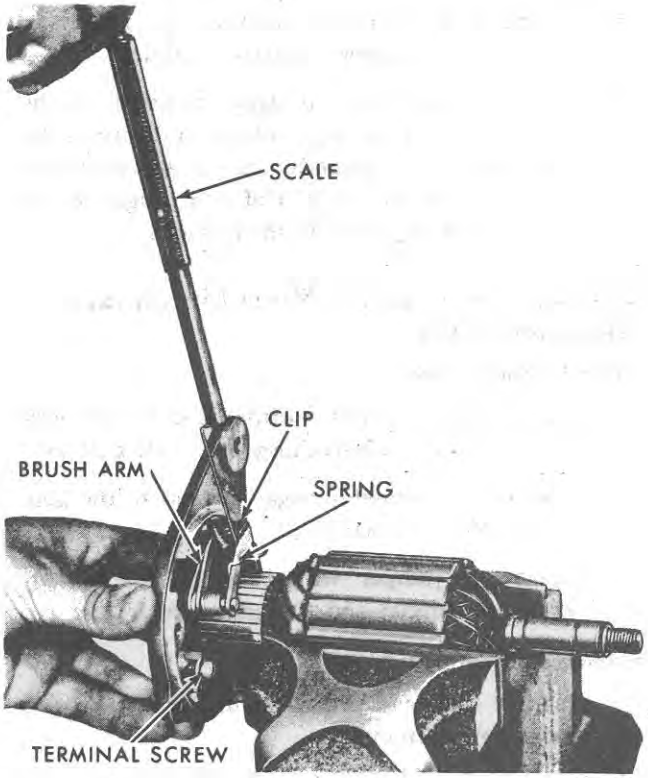

Figure 16
Checking Brush Spring Tension—22 Amp. Generator

B. Brush Removal and Installation—11-amp. Generator

1. Remove the terminal screws and lock washers, Figures 15 and 16.
2. Remove the brushes by pulling them toward the center of the end plate.
3. Push the wires of the new brushes up through the brush holders and slide the brushes into place.
4. Secure the brush wires with the terminal screws and lock washers.
5. Reassemble the generator as outlined on page 22, under "ASSEMBLY".

C. Brush Removal and Installation—22-amp. Generator

1. Remove the terminal screws and lock washers, Figure 16.
2. Pry the clips off the tops of the brushes and slide the brushes out from between the brush arms.
3. Position new brushes between the brush arms Secure them in place with the clips.
4. Attach the brush wires to the terminals.
5. Reassemble the generator as outlined on page 22, under "ASSEMBLY".

D. Armature Assembly and Armature Bearings

1. Inspect the bearing on the commutator end of the armature assembly. If the bearing is worn or defective, install a new bearing as follows:
   a. Remove the bearing from the commutator end of the armature shaft, using Bearing Pulling Attachment No. 950 as shown in Figure 17; then slide the spacer off the armature shaft.
   b. Clean the armature shaft and install the spacer.
   c. Install a new commutator end bearing as shown in Figure 18.
2. Inspect the bearing in the drive end plate assembly for wear or damage. If the bearing is defective, install a new bearing as follows:

a. Drill out the rivets (or remove the screws) which secure the bearing retainer plate to the end bracket and remove the plate.

b. Press the bearing out of the drive end plate assembly.

c. Remove and clean the corrugated washer and felt ring (when fitted). Clean the bearing bore.

d. Place the felt ring and corrugated washer (when fitted) in the bearing bore in the drive end plate assembly.

NOTE: ***If the service bearing is an unsealed type, it must be lubricated with a good quality high temperature melting point bearing grease.***

e. Press the bearing into the end plate until it reaches the bottom of the bore.

f. Install the bearing retainer plate and secure with the three screws and lock nuts provided in the bearing kit. Install the screws from the pulley side of the end plate assembly.

3. Check the armature for damage to the core and wires. If damage is evident, install a new armature; do not attempt to machine the armature core.

4. Clean the commutator with a gasoline-moistened cloth. Inspect the commutator surface for pits and burned spots. If necessary, turn down the surface as described in Step 5.

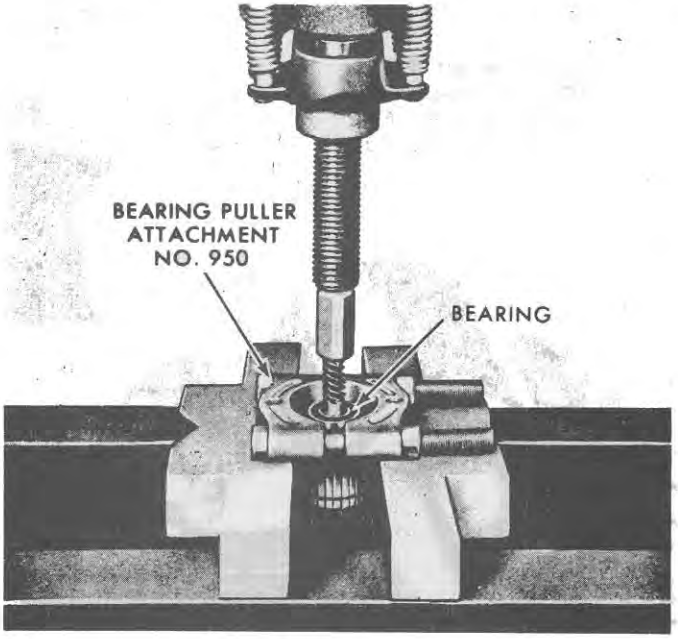

Figure 17
Removing Commutator End Bearing

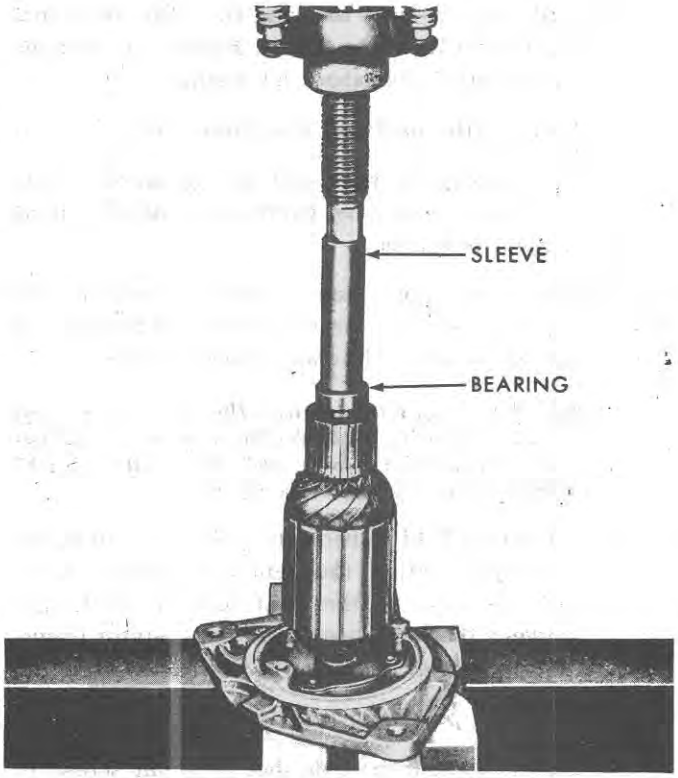

Figure 18
Installing Commutator End Bearing

5. Check the comutator runout following the method shown for checking the starter commutator runout (see Figure 39). If the runout is more than specified on page 70, turn down the commutator using a lathe and sharp cutting tool. Rotate the armature at a high speed and take light cuts with the tool. Then, polish the surface with No. 00 sandpaper. Do not use emery cloth or emery paper.

NOTE: ***Do not reduce the diameter of the commutator to less than the dimension specified on page 70, or a new armature must be installed.***

6. Perform the armature ground test as outlined on page 18. Reassemble the generator as outlined on page 22, under "ASSEMBLY".

E. Field Coils

To gain access to the field coils, complete disassembly Steps 1 through 3, page 17. Check the field coils for open, shorted, and grounded circuits as outlined on page 18 and 19. If faulty, install new coils as follows:

© FORD MOTOR CO. 1966

1. Drill out the rivet securing the field coil terminal assembly to the frame, Figure 19. Remove the terminal insulator and washer.
2. Remove the field coil insulation piece.
3. Mark the pole shoes and the generator frame so that the pole shoes can be reinstalled in their original positions.
4. Loosen the pole shoe retaining screws, Figure 20; then remove the screws and withdraw the pole shoes and field coils from the frame.

   NOTE: *A tool to remove the pole shoes can be fabricated by welding the end of a Phillips head screwdriver to a nut, or Tool No. CP. 9504 (if available) may be used.*

5. Place new field coils on the pole shoes and position them within the generator frame. Make sure the tape on the field coils is not caught between the pole shoes and the generator frame, or the electrical output will be impaired.
6. Start the pole shoe retaining screws.
7. Lightly tighten the pole shoe retaining screws to seat the pole shoes; then tighten the screws securely.
8. Secure the terminal assembly to the frame, Figure 19, with the screw and washer, tighten securely.
9. Install the field coil insulation piece, Figure 19.
10. Repeat the ground test, page 18. Reassemble the generator as outlined below.

ASSEMBLY

Both the 11-amp. and the 22-amp. generators are covered in the assembly procedure. Refer to Figures 11 and 12 to identify the components.

1. Place the armature in a vise equipped with soft jaws. Install the thrust collar and a new stop ring on the armature shaft.
2. Press the drive end plate assembly into position using a suitable sleeve placed over the drive end of the armature shaft to support the inner race of the bearing as shown in Figure 21.
3. With the armature in a vise, install the spacer, Woodruff key, fan (22-amp. generator only), and pulley. Secure the components with the lock washer and nut. Tighten the nut to the specified torque, page 71.
4. Place the generator frame in the vise and slide the armature assembly into the frame. Position the drive end place assembly so the locating pin fits into the slot in the generator frame.
5. Align the generator terminal with the slot in the commutator end plate and install the end plate. The brushes should be spread with the index fingers and placed on the commutator; do not try to force the plate.

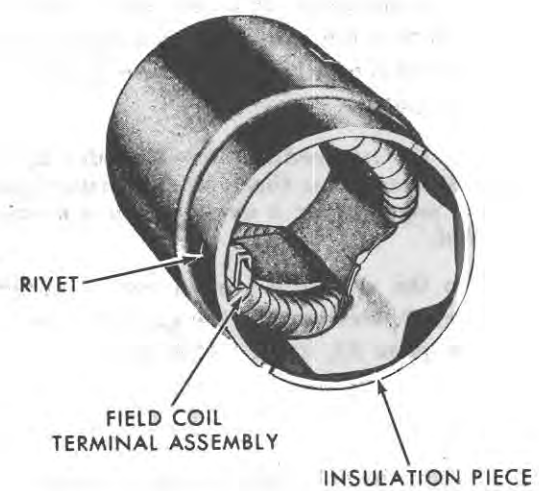

Figure 19
Field Coil Assembly

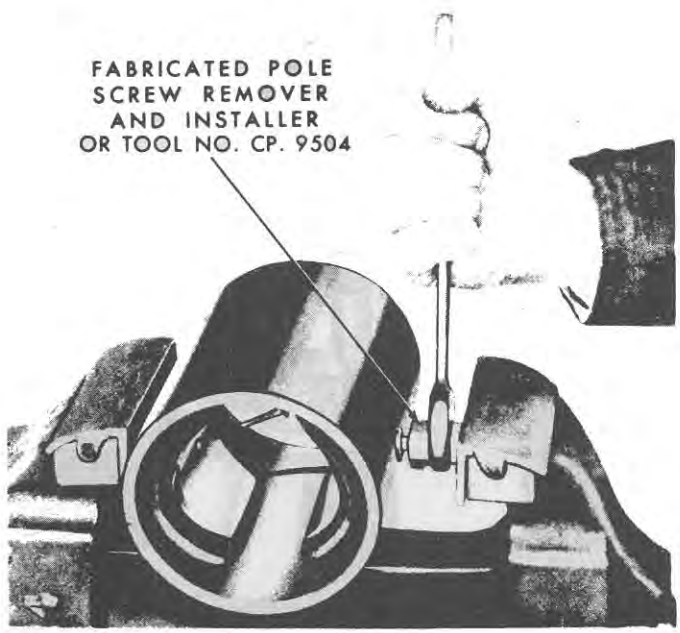

Figure 20
Removing and Installing Pole Shoe Screws

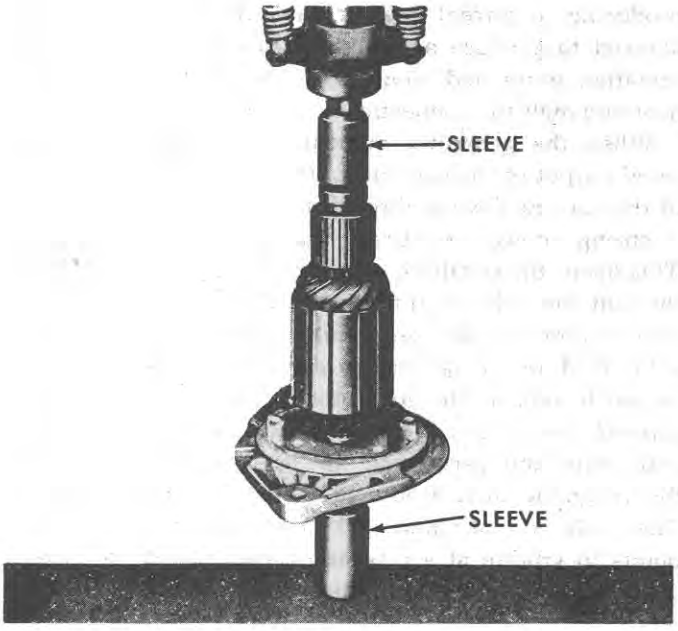

Figure 21
Installing Drive End Plate Assembly

IMPORTANT: ***Be careful not to pinch the brush wires between the end plate and generator frame.***

6. With each end plate locating pin seated in the frame slots, install the through bolts.

7. Reinstall the Proof-Meter drive assembly.

POLARIZING GENERATOR

After the installation of a new or rebuilt generator, make sure the generator has the correct polarity before starting the engine. Reversed polarity will cause the generator regulator cutout relay and limiter contact points to vibrate and burn. To assure correct polarity, disconnect the wire from the field terminal ("F") of the generator regulator, and momentarily touch it to the battery terminal ("B") of the regulator. The quick surge of current will correctly polarize the generator.

IMPORTANT: ***Do not use a "jumper" wire to polarize the generator. The generator regulator points may be burned by this method.***

3. GENERATOR REGULATOR

DESCRIPTION AND OPERATION

This section includes information on both the 11-amp. and the 22-amp. generator regulators. The generator regulators are not interchangeable. An 11-amp. generator regulator must be used with an 11-amp. generator, and a 22-amp. generator regulator must be used with a 22-amp. generator. The 11-amp. generator regulator and the 22-amp. generator regulator can be identified by the numbers stamped on the base plate. See Figure 26. Refer to the specifications, page 70, for the respective identification numbers. Electrical checks and mechanical adjustments are the same for both models; differences in the settings are detailed as required.

The generator regulator consists of three basic units: the cutout relay, the current regulator, and the voltage regulator, Figure 22.

A. Cutout Relay

The cutout relay, Figure 22, is an electro-magnetic switch with its contacts connected between the generator and the battery. The relay has two windings on one core, a series winding (current sensitive) of low resistance (a few turns of a large wire) and a shunt, parallel winding (voltage sensitive) of high resistance (many turns of a small wire).

A movable cutout contact is located on the end of an extension to the armature, Figure 23; the stationary contact is an integral part of terminal "B". The contact points are held open by a flat spring attached to the armature, Figure 22. The end of the spring rests on an adjustment cam which can be rotated to control the movement of the cutout contacts.

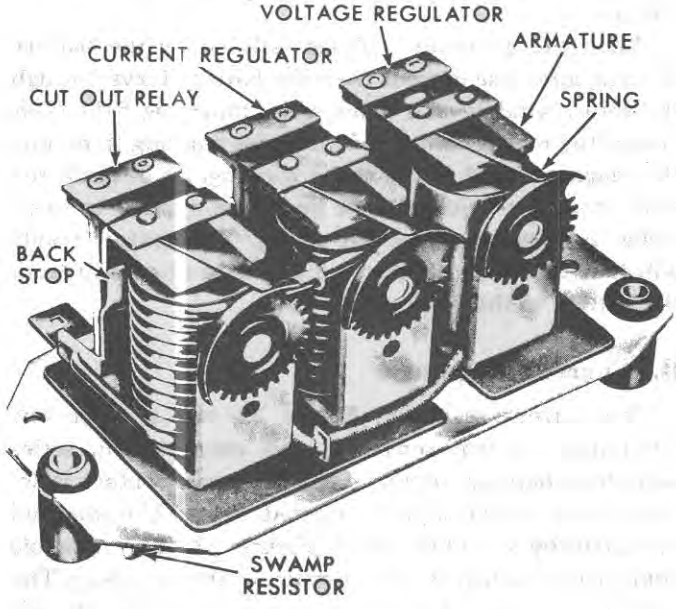

Figure 22
Generator Regulator

© FORD MOTOR CO. 1966

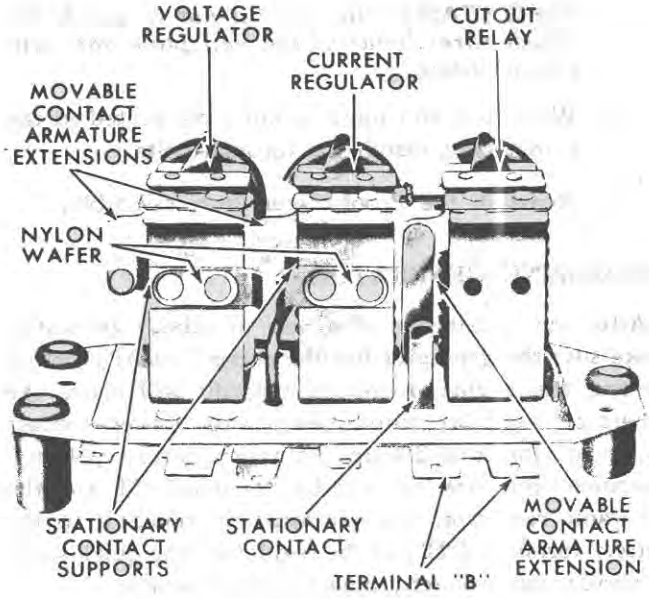

Figure 23
Armature Contacts

The cutout relay prevents the battery from discharging through the generator when the generator voltage falls below the battery voltage.

When the generator voltage reaches a predetermined value above the battery voltage, the current through both the series and shunt windings, Figure 24, produces a combined electro-magnetic field strong enough to overcome the resistance of the flat spring. This pulls the armature downward to close the contact points and permits a current to flow from the generator to the battery.

When the generator voltage falls below the battery voltage, a reverse current from the battery flows through the series winding and changes its magnetic field. This causes the magnetic field of the series winding to oppose the magnetic field of the shunt winding. As a result, the total magnetic field will not be strong enough to overcome the tension of the flat spring. The contact points will then be opened to prevent a reverse of current from the battery to the generator.

B. Current Regulator

The current regulator, Figure 22, has a single low resistance (current sensitive) coil connected in series with the charging circuit. The stationary contact is located on a metal support, riveted to the U-frame and insulated by a nylon wafer, Figure 23. The movable contact is attached to an extension of the armature. The flat spring, armature assembly, and adjustment cam are similar to those used on the cutout relay.

The current regulator prevents the generator from producing a current greater than its rated output. If allowed to produce an excessive current, the generator armature wires and commutator segments would over heat and melt the connections.

When the generator current reaches the maximum rated output of the generator, the electro-magnetic effect of the current flowing through the current regulator coil is strong enough to attract the armature to the core. This opens the regulator contacts and directs the current through the field circuit resistor, Figure 24. The resistance imposed in the generating circuit reduces the magnetic field in the generator and causes the generator output to fall. As the generator output falls, the current through the regulator coil is reduced, reducing its magnetic field and permitting the flat spring to overcome the magnetic attraction and close the contact points. The cycle is continuous and rapid, causing the contact points to vibrate at a rate necessary to hold the generator output at a constant value.

C. Voltage Regulator

The voltage regulator, Figure 22, has a single high resistance (voltage sensitive) coil connected in parallel with the generator field. Except for the coil and bi-metal hinge spring, the voltage regulator is identical to the current regulator.

The voltage regulator limits the voltage output of the generator to prevent overcharging the battery and burn ing out accessories. The regulator contacts remain closed until the generator voltage reaches the regulator operating setting. When the setting is reached, the current through the voltage regulator shunt winding, Figure 24, produces a magnetic field strong enough to attract the regulator armature and open the contact points.

When the contact points are opened, current is directed through the field circuit resistor in the generator circuit. The resistance in the circuit reduces the generator field current, which lowers the generator output and causes the voltage regulator points to close. This cycle is rapid and continuous, causing the points to vibrate at a rate which will provide a safe generator output.

D. Automatic Temperature Compensation

High resistance caused by heat reduces the current flow through the generator regulator. This weakens the magnetic fields and reduces the operating voltages of the cutout relay and the voltage regulator. To maintain a constant voltage under all temperature conditions, a bi-metal material is used in the spring assemblies of both units. The two metals have different heat sensitivity which automatically reduces spring tension as the temperatures rise, and increases the spring tension as the temperatures fall.

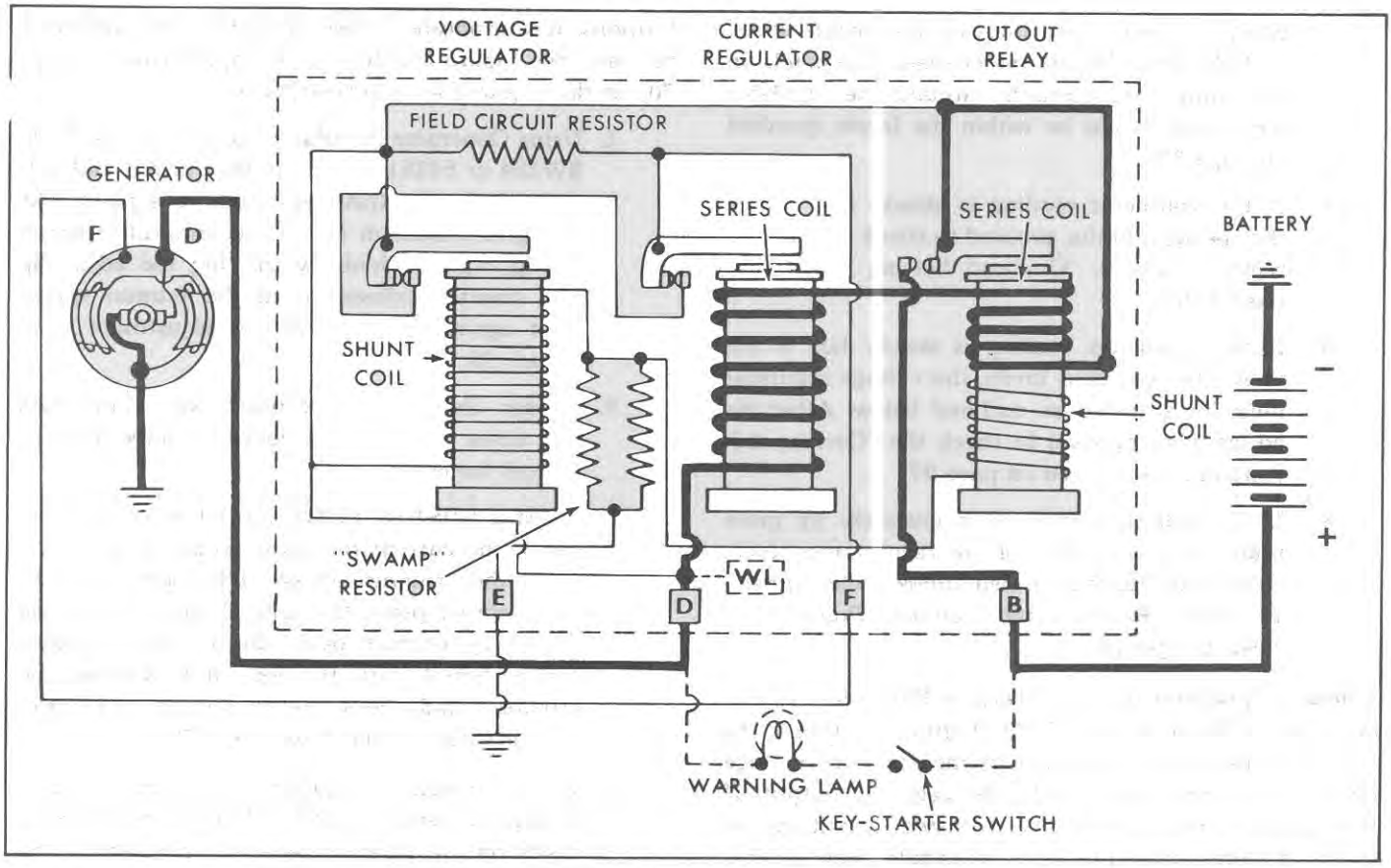

Figure 24
Charging System Wiring Diagram

To further minimize the effects of heat, a two-coil "swamp" resistor is connected in series with the shunt coils, Figure 24. The resistor reduces the arcing tendency when the points start to open, resulting in a lower regulator temperature.

TESTS AND ADJUSTMENTS

For easier and rapid diagnosis and for most conclusive test results, it is recommended that a generator-regulator tester be used when diagnosing charging system problems. When using test equipment, follow the manufacturer's recommended test procedures. If test equipment is not available, follow the test procedures outlined below. Charging system specifications are outlined in the specifications section, page 70. Before starting the test procedures on the generator regulator, make the following checks:

- Check to be sure the battery is properly charged. Refer to page 13, under "BATTERY TESTS".
- Check to be sure the fan belt is adjusted to the specified limits. Refer to page 16, under "GENERATOR REMOVAL AND INSTALLATION".
- Inspect the charging system wiring circuit for frayed or broken wires and for loose connections. Check all ground wires for good connections.

Using a standard voltmeter (0-20 volts) and an ammeter (0-40 amps.), proceed as follows:

A. Voltage Regulator

Open Circuit Setting Test:

NOTE: ***When checking the voltage regulator open circuit setting, all checks and adjustments should be completed as rapidly as possible to avoid errors due to heating of the operating coil.***

1. Disconnect the electrical wires from the generator regulator "B" terminal.

   NOTE: ***It will be necessary to use a jumper wire to connect the two wires disconnected from the "B" terminal. If these wires are not connected together, the engine will not start.***

2. Disconnect the wire from the generator regulator "WL" terminal. Connect the voltmeter positive lead to the regulator "WL" terminal, and the voltmeter negative lead to a good ground.

© FORD MOTOR CO. 1966

3. Start the engine and increase the engine speed to 1500 rpm. The voltmeter reading depends on the ambient temperature around the regulator cover and should be within the limits specified on page 70.

- If the voltmeter reading is steady and within the specified limits, proceed to check the current regulator under, "On-Load Setting Test," outlined below.
- If the voltmeter reading is steady but is not within the specified limits, the voltage regulator must be adjusted as outlined below. After the adjustment, proceed to check the "Current Adjustment" as covered on page 27.
- If the voltmeter reading is unsteady by more than ±0.3 volt, the voltage regulator contacts should be checked for cleanliness. Refer to page 28, under "Reconditioning Contact Points", and clean the points.

Voltage Adjustment: Using Generator Regulator Adjusting Tool, SW504 or 54381742, Figure 25, rotate the cam adjusting tool clockwise to increase the voltage output or counterclockwise to decrease the output. If the voltage output cannot be adjusted to within the specified limits covered on page 70, install a new generator regulator.

Air Gap Adjustment: If the movable contact points have been removed for cleaning, or if the gap is not to specifications, the armature-to-core air gap clearances must be reset. See Figure 26. Refer to the specifications, page 70, for the required air gap clearances.

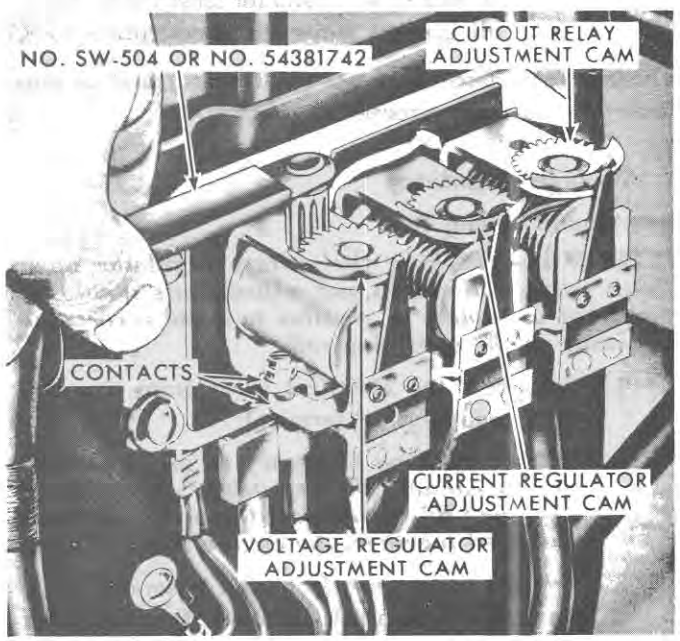

Figure 25
Generator Regulator Adjustments

1. Using Generator Regulator Cam Adjusting Tool, SW504 or 54381742, rotate the current and voltage regulator adjustment cams to a point that will give minimum lift to the armature tension spring. This is done by rotating the adjusting tool counterclockwise until the tension spring rests against the end of the adjustment cam, Figure 25.
2. Loosen the movable contact point lock nuts and screw the movable contact points outward several turns.
3. Insert a 0.054 in. (1.370 mm) feeler blade between the current regulator armature and core. Press the armature down and screw the movable contact point "in" until it just touches the stationary contact point. Secure the movable contact point with the lock nut. Release the armature and check the air gap to make sure it meets the specifications, page 70.
4. Check the voltage regulator air gap as described in Step 3, using a 0.055 in. (1.397 mm) feeler blade on the 11-amp. generator regulators, and a 0.053 in. (1.346 mm) feeler blade on the 22-amp. generator regulators.
5. Reinstall the generator regulator on the tractor. Make sure the wires are properly connected, see Figures 6 and 7. Refer to the procedures covered under "Current and Voltage Adjustment" to obtain the specified current and voltage output. Install the regulator cover.

B. Current Regulator

On-Load Setting Test:

IMPORTANT: ***During the current regulator on-load setting, the generator must develop its maximum rated output. This can be done by using a suitable clip large enough to physically hold the contacts, Figure 25, together.***

1. With the voltage regulator contacts shorted out, disconnect the wires from the regulator "B" terminal.
2. Using a jumper wire, connect the wires removed from the regulator "B" terminal to the ammeter negative lead.
3. Connect the ammeter positive lead to the regulator "B" terminal.

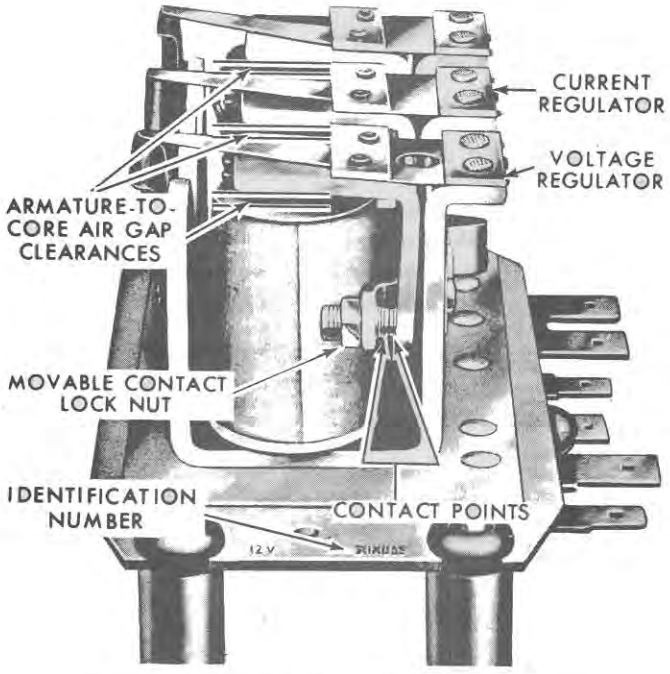

Figure 26
Armature-to-Core Air Gap Adjustments

4. Turn on all tractor lights (if equipped).

   NOTE: ***If the tractor is not equipped with lights, connect a 100-watt lamp across the battery terminals.***

5. Start the engine and increase the speed to 1500 rpm. The ammeter reading should be steady and indicate a current equal to the maximum rated output of the generator. Refer to the specifications on page 70.

   - If the ammeter reading is steady and within the specified limits, perform the "Cut-In Voltage" test.
   - If the ammeter reading is steady but not within the specified limits, the current regulator must be adjusted as outlined in the "Current Adjustment" procedure below.
   - If the ammeter reading is unsteady, the current regulator contacts should be checked for cleanliness. Refer to page 28, and clean the points as outlined under "Reconditioning Contact Points".

6. After the adjustments have been made, turn the engine off, reconnect the generator regulator electrical connections, and install the cover.

Current Adjustment: Using Generator Regulator Cam Adjusting Tool, SW504 or 54381742, Figure 25, rotate the cam adjusting tool clockwise to increase the current, or counterclockwise to decrease the current. If the current output cannot be adjusted to within the specified limits as covered on page 70, install a new generator regulator.

Air Gap Adjustment: Refer to the procedure covered on page 26.

C. Cutout Relay

IMPORTANT: ***Checking and adjusting the cutout relay should be completed as rapidly as possible to avoid errors due to heating of the relay coil.***

Cut-In Voltage Test:

1. Disconnect the wire from the generator regulator "WL" terminal.
2. Connect the voltmeter positive lead to the regulator "WL" terminal and the voltmeter negative lead to a good ground.
3. Turn on all tractor lights (if equipped).

   NOTE: ***If the tractor is not equipped with lights, connect a 100-watt lamp across the battery terminals.***

4. Start the engine and slowly increase the speed while observing the voltmeter reading. The voltage should rise steadily; then drop slightly at the instant the contacts close. The cut-in voltage is the voltage indicated immediately before the voltmeter pointer drops. Refer to the specifications, page 70, for the cut-in voltage limits.

   - If the cut-in voltage occurs outside the specified limits, an adjustment must be made.

     IMPORTANT: ***If an adjustment is necessary, reduce the engine speed below the cut-in speed (refer to specification, page 70) and make the adjustment as outlined below.***

5. Repeat the checking procedure until the proper setting is obtained.
6. Turn off the engine, reconnect the generator regulator electrical wires, and install the cover.

Cut-In Voltage Adjustment: Using Generator Regulator Cam Adjusting Tool, SW504 or 54381742, Figure 25, slowly rotate the cam adjusting tool clockwise to increase the cut-in voltage, or counterclockwise to decrease the voltage. If the voltage cannot be adjusted to within the specified limits, page 70, install a new generator regulator.

© FORD MOTOR CO. 1966

Air Gap Adjustment: The cutout relay armature-to-core air gap should be 0.035-0.045 in. (0.890-1.140 mm), measured by a suitable feeler blade inserted as far as the rivet heads will allow, Figure 26.

If an adjustment is necessary, carefully bend the back stop, Figure 22, as required. After completing the adjustments, perform the "Cut-In Voltage" test to be sure the adjustment is correct.

Cut-Out Voltage Test:

1. Disconnect the wires from the generator regulator "B" terminal.

   NOTE: ***It will be necessary to use a jumper wire to connect the two wires disconnected from the "B" terminal. If these wires are not connected together, the engine will not start.***

2. Connect the voltmeter positive lead to the regulator "B" terminal. Connect the voltmeter negative lead to a good ground.

3. Start the engine and increase the speed to approximately 1500 rpm.

4. Slowly reduce the engine speed while observing the voltmeter reading. The cut-out voltage is the voltage indicated immediately before the pointer drops to zero. Refer to the specifications, page 70, for the cut-out voltage limits.

   • If the cut-out voltage is not within the specified limits, an adjustment must be made. Stop the engine and adjust the voltage as outlined below.

5. Repeat the checking procedure until the proper setting is obtained.

6. Turn off the engine, reconnect the generator regulator electrical wires, and install the cover.

Cut-Out Voltage Adjustment: Bend the stationary contact, Figure 23, toward the movable contact point to increase the cut-out voltage, or away from the movable contact point to decrease the cut-out voltage. Refer to the specifications, page 70, for the amount of travel of the movable contact armature extension when the armature is depressed. If the correct setting cannot be made, install a new generator regulator.

D. Reconditioning Contact Points

1. Disconnect and remove the wires from the generator regulator terminals.

2. Unscrew the three mounting screws and remove the generator regulator from the tractor. Remove the cover.

3. Remove the voltage regulator or current regulator movable contact points by loosening the movable contact lock nuts, Figure 26, and unscrewing the contacts from the armature extensions.

4. Clean the contact points. Use a fine carborundum stone or silicone-carbide paper on the current and voltage regulator contacts. The cut-out contacts should be polished with fine sandpaper only. After polishing the contacts, clean them with methylated spirits (denatured alcohol).

5. Reinstall the voltage and current regulator movable contact points. Set the armature air gaps as outlined on page 26, under "Air Gap Adjustment".

6. Install the generator regulator on the tractor and reconnect the regulator wires. Install the cover.

REMOVAL AND INSTALLATION

A. Removal

1. Disconnect the ground (negative) cable from the battery.

2. Disconnect the wires from the generator regulator terminals.

3. Unscrew the three mounting screws and remove the generator regulator from the tractor.

B. Installation

1. Position the generator regulator on the mounting bracket and install the three mounting screws. Tighten the screws as specified on page 71. Do not overtighten.

2. Connect the generator regulator electrical wires to their respective terminals on the regulator. Refer to Figures 6 and 7.

   NOTE: ***When connecting the generator regulator ground terminal wire, the internal-external star washer must be positioned between the generator regulator mounting bracket and the ground wire eyelet connection. This will provide a good ground connection.***

3. Connect the ground (negative) cable to the negative terminal of the battery.

4. Polarize the generator as covered on page 23.

5. Refer to pages 25 through 28 and perform the generator regulator tests, then make any necessary adjustments.

Part 3

ELECTRICAL SYSTEM

Chapter 4

STARTING SYSTEM

Section — Page

1. Description 29
2. Starting Motor 30
3. Starting Motor Relay (4½-Inch Models Only) 43
4. Safety Starter Switch 43
5. Key-Starter Switch 44

1. DESCRIPTION

The function of the starting system is to crank the engine fast enough to enable it to start. The starting system consists of the starting motor (4½-inch or 5-inch type), the starting relay (4½-inch starting motor only), the safety starter switch, the key-starter switch, and heavy circuit wiring. Refer to Figures 27 and 28.

Before attempting to make any repairs or adjustments to components of the starting system, make certain that the fan belt is properly adjusted, the battery is fully charged, and that all electrical terminal connections are secure.

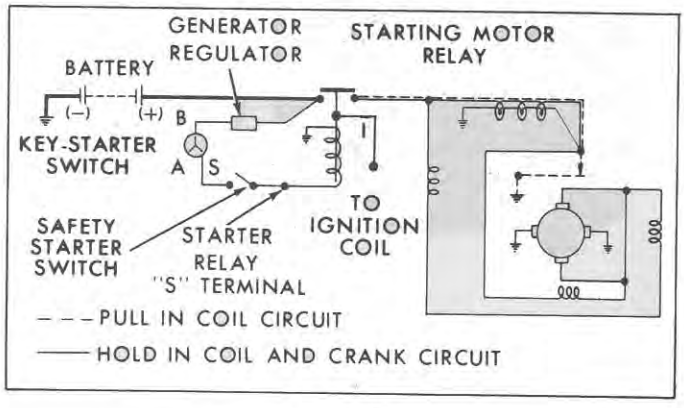

Figure 27
Starting System Schematic—4½ Inch Starting Motors

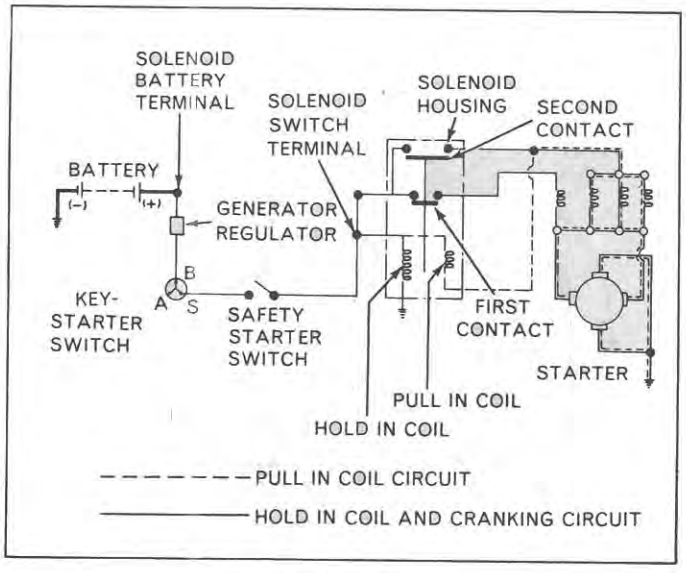

Figure 28
Starting System Schematic—5 Inch Starting Motors

© FORD MOTOR CO. 1966

2. STARTING MOTOR

DESCRIPTION AND OPERATION

Ford Tractors are equipped with either a 4½-inch starting motor, Figure 29, or a 5-inch starting motor, Figure 30. Both starting motors are four-pole, four-brush ground return motors. The 4½-inch starting motor utilizes a series-parallel connected field coil arrangement, an integral positive engagement drive assembly and a movable pole piece which, together with one of the field coils, acts as a solenoid to engage the drive assembly. The 4½-inch starting motor is identified by a sloping "tower" which houses the movable pole piece. The 5-inch starting motor uses parallel-connected field coils and a solenoid-operated positive engagement drive assembly which prevents the pinion from being thrown out of mesh while starting.

When the 4½-inch starting motor is not in use, one of the field coils is connected directly to ground through the set of actuating coil contacts. Closing the key-starter switch, with the transmission in neutral or park position, completes the circuit from the battery to the grounded field coil. This causes current to flow through the grounded field coil resulting in the movable pole piece to be attracted to the field coil. The starting motor drive lever assembly (drive lever and movable pole piece) is engaged with the drive assembly, and pivots on the drive lever pivot pin when the pole piece is attracted to the field coil. This pivoting action forces the drive pinion into engagement with the flywheel.

When the movable pole piece shoe is fully seated, it opens the field coil grounding contacts. This applies full field power for normal starting motor operation.

In the 5-inch starting motor solenoid, a two-stage switching arrangement is incorporated. Closing the key-starter switch, with the transmission in neutral or park position, causes the solenoid plunger to be magnetically attracted to the solenoid, thus closing both stages of the two-stage switching arrangement. This attraction through a pivoted linkage mechanism forces the starting motor pinion gear into mesh with the flywheel ring gear. If the pinion and ring gear teeth are in an end-to-end abutment, the plunger, having been attracted, compresses the engaging spring and closes only the first stage of the two-stage switching arrangement. Battery current will then flow in only one of the four field coils through the armature to ground. The excitation of this coil provides enough current to the motor to rotate the armature and clear the tooth abutment. Once this has occurred, the drive moves into full mesh by the action of the engaging spring. This results in completion of the second stage of the switching arrangement with all four field coils being energized giving full field power to the starting

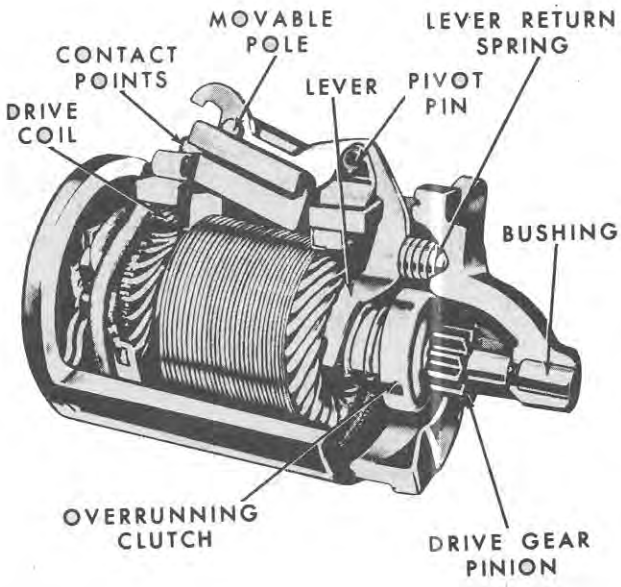

Figure 29
4½ Inch Starting Motor—Cutaway View

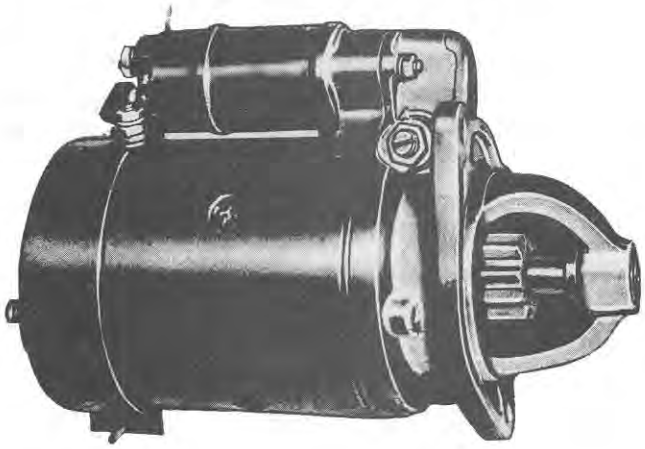

Figure 30
5 Inch Starting Motor

motor. Once the key-starter switch is released, current to the starting motor is retracted. When the pinion is retracted, the rotating armature is quickly stopped by a pair of moulded shoes located in the brush end plate.

Both the starting motors contain a roller clutch which provides over-speed protection until the pinion is disengaged from the ring gear.

STARTING SYSTEM TESTS

For easier and rapid diagnosis and for most conclusive test results, it is recommended that a battery-starter tester (high-rate discharge tester) incorporating a 0-20-volt voltmeter and a 0-500-amp. ammeter be used to diagnose starting system problems. When using test equipment, follow the manufacturer's recommended test procedures. If test equipment is not available, follow the test procedures outlined below. Starting system specifications are outlined in the specifications section, page 70.

If a battery-starter tester (high-rate discharge tester) is not available, the starting system may be checked using a standard voltmeter (0-20 volts) and ammeter (0-500 amps.), and by using the procedure covered in this section. Before testing:

- Check to be sure the battery is fully charged. Refer to page 13, and check the battery as outlined under Section "4. BATTERY TESTS".
- Check the complete starting system wiring circuit for frayed or broken wires or for loose connections.
- Check to be sure that the engine is not seized.

A. Starting Motor Circuit Current Draw

1. Disconnect the battery ground (negative) cable the battery.
2. **4½-Inch Starting Motor:** Disconnect the battery positive cable from the starting motor relay. Connect the ammeter positive lead to the battery positive terminal and the ammeter negative lead to the starting motor relay input terminal.
3. **5-Inch Starting Motor:** Disconnect the battery positive cable from the starter solenoid. Connect the ammeter positive lead to the battery positive terminal and the ammeter negative lead to the solenoid input terminal.
4. Reconnect the battery ground (negative) cable to the battery negative terminal.
5. Connect the voltmeter positive lead to the battery positive terminal and the voltmeter negative lead to the battery negative terminal.
6. **Gasoline Tractors:** Ground the distributor-to-coil high tension wire.
7. **Diesel Tractors:** Pull out the "Pull-to-Stop" knob.
8. Crank the engine while observing the voltmeter and ammeter readings. Refer to the specifications, page 70, for the specified allowable current draw.

- If the current draw is within specifications, the starting motor is functioning properly. Proceed to "B. Starting System Circuit Resistance".
- If the current draw is greater than specified, check the circuit as outlined below. If the starting motor circuit tests are satisfactory the starting motor is defective and must be disassembled to determine the cause of trouble. Refer to page 32.
- If the current draw is less than specified, the starting motor is defective and must be disassembled to determine the cause of trouble. Refer to page 32.

B. Starting System Circuit Resistance (Voltage Drop)

If there is an excessive current draw, the circuit should be checked by recording voltage drops across the individual components in the circuit.

IMPORTANT: ***On gasoline engine tractors, ground the distributor-to-coil high tension wire. On diesel engine tractors, pull out the "Pull-to-Stop" knob.***

Battery Positive Cable:

1. Connect the voltmeter positive lead to the battery positive terminal.
2. Connect the voltmeter negative lead to the starting motor relay input terminal on 4½-inch starting motors, or to the solenoid battery terminal on 5-inch starting motors.
3. Crank the engine while observing the voltmeter reading. If the voltage exceeds 0.2 volt, check and tighten the cable connections. Recheck the voltage; if it is still excessive, install a new cable assembly.

© FORD MOTOR CO. 1966

Starting Motor Relay (4½-Inch Starting Motors):

IMPORTANT: *Be sure the mating surface between the starting motor relay bracket and the surface to which it is mounted is free from dirt, grease, or paint. If the mounting surface is not clean, malfunction may result due to an improper ground.*

1. Connect the voltmeter positive lead to the starting motor relay input terminal.
2. Connect the voltmeter negative lead to the starting motor relay output terminal.
3. Crank the engine while observing the voltmeter reading. If the voltmeter reading exceeds 0.5 volt while the engine is being cranked, install a new starting motor relay.

Starting Motor Relay-to-starter-Cable (4½-Inch Starting Motors):

1. Connect the voltmeter positive lead to the starting motor relay output terminal.
2. Connect the voltmeter negative lead to the starting motor terminal.
3. Crank the engine while observing the voltmeter reading. If the voltmeter reading exceeds 0.2 volt, check and tighten the cable connections. Recheck the voltage; if it is still excessive, install a new cable assembly.

Starting Motor Ground Connections:

NOTE: *The 5-inch starting motor uses a ground strap while the 4½-inch starting motor is directly grounded to the engine block.*

1. Connect the voltmeter positive lead to the starting motor frame.
2. Connect the voltmeter negative lead to the engine block.
3. Crank the engine while observing the voltmeter reading. If the voltmeter reading exceeds 0.2 volt, check the ground connections between the starting motor flange and the rear engine plate.

Battery Ground Cable:

1. Connect the voltmeter positive lead to the engine block.
2. Connect the voltmeter negative lead to the battery negative terminal.
3. Crank the engine while observing the voltmeter reading. If the voltmeter reading exceeds 0.2 volt, check and tighten the ground cable connections. Recheck the voltage; if it is still excessive, install a new ground cable assembly.

STARTING MOTOR SERVICE

A. Removal and Installation

1. Disconnect the battery ground (negative) cable from the battery.
2. Remove the fuel shield from diesel tractors.
3. **5-Inch Starting Motor:** Disconnect the starting motor ground cable from the starting motor brush end plate.
4. Disconnect the positive battery cable from the solenoid or starting motor terminal.
5. Remove the starting motor mounting bolts and remove the starting motor.
6. Reinstall the starting motor on the tractor in the reverse order of steps 1 through 5. Refer to the specifications, page 71, for bolt torques.

B. Disassembly

4½-Inch Starting Motor: Refer to Figure 31 to identify the components.

1. Secure the starting motor assembly in a vise equipped with soft jaws. Do not overtighten the vise.
2. Loosen the brush cover band screw and remove the cover band and movable pole piece cover.
3. Remove the strip of tape covering the brush access slots. Save the tape for reuse.
4. After noting how the brush wires are arranged within the starting motor housing, remove the brushes by lifting the brush springs with a hooked instrument and sliding the brushes out of the holders.
5. Remove the through bolts, the brush end plate assembly, the drive housing assembly, and the drive actuating return spring.
6. Remove the pivot pin that retains the drive actuating lever and separate the actuating lever assembly from the starting motor frame.
7. Remove the armature assembly from the front of the starting motor frame.
8. Remove the leather thrust washer from the commutator end of the armature shaft.
9. Remove the stop ring retainer, stop ring, and drive assembly from the armature shaft. Discard the stop ring.

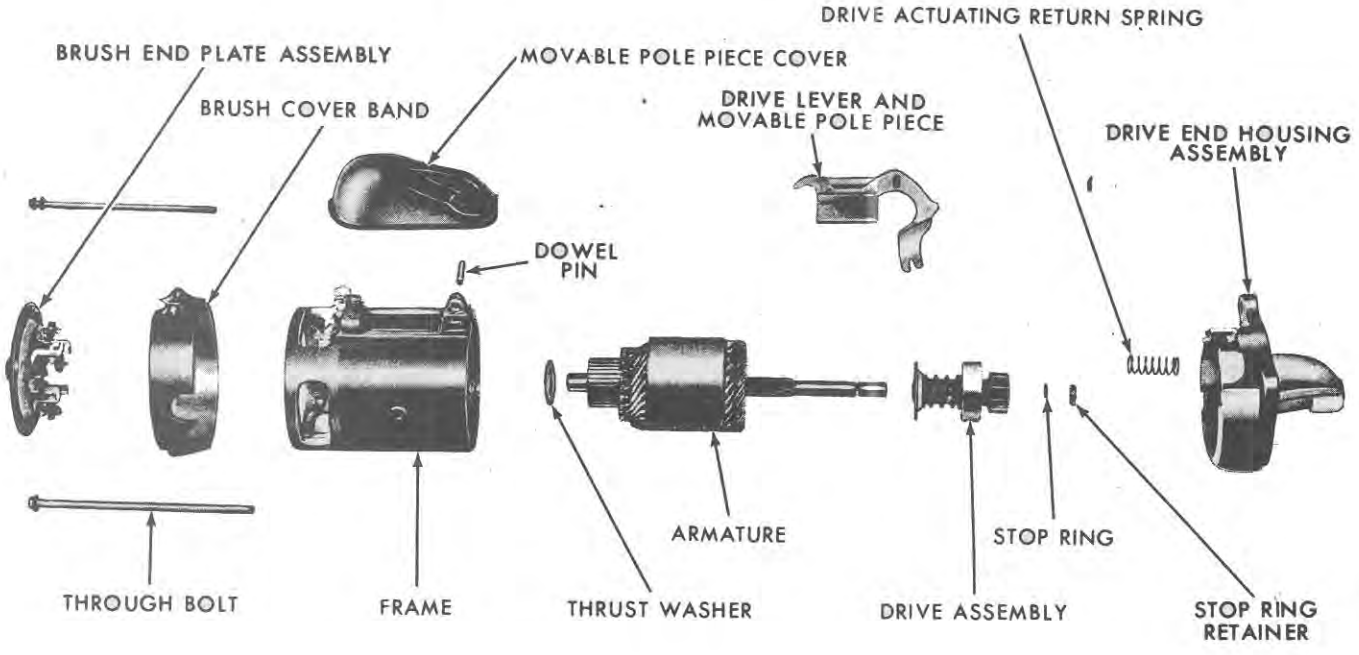

Figure 31
4½ Inch Starting Motor Disassembled

5-Inch Starting Motor: Refer to Figure 32 to identify the components.

1. Secure the starting motor in a vise equipped with soft jaws. Do not overtighten the vise.
2. Loosen the brush cover band screw and remove the cover band.
3. Pull the brushes through the access slots in the starting motor frame by lifting the brush springs with a hooked instrument and sliding the brushes out of the holders.
4. Remove the through bolts and carefully pull the brush end plate from the starting motor frame.
5. Disconnect the copper link and eyelet cable from the solenoid terminals.
6. Remove the two solenoid retaining nuts and washers; remove the solenoid and spring. With the drive fully engaged, lift the solenoid plunger from the drive lever yoke.
7. Loosen the lock nut on the drive lever pivot pin, (see Figure 50). Remove the nut and pivot pin.
8. Remove the drive end housing and armature assembly from the starting motor frame. Remove the dust plug from the drive end housing and slide the drive lever off the drive assembly.
9. Slide the stop collar off the collar retainer. Spread the collar retainer and slide it off the armature shaft. The retainer may be reused if it is not damaged.
10. Remove the thrust collar, drive assembly, intermediate plate, and shim (if installed) from the armature shaft.

C. Bench Tests

Field Coil Open Circuit Test:

1. Connect the voltmeter positive lead to the starting motor field terminal.
2. Connect the voltmeter negative lead to the battery negative terminal.
3. Attach a jumper lead between the battery positive terminal and to one of the insulated brushes. The voltmeter should indicate battery voltage.

© FORD MOTOR CO. 1966

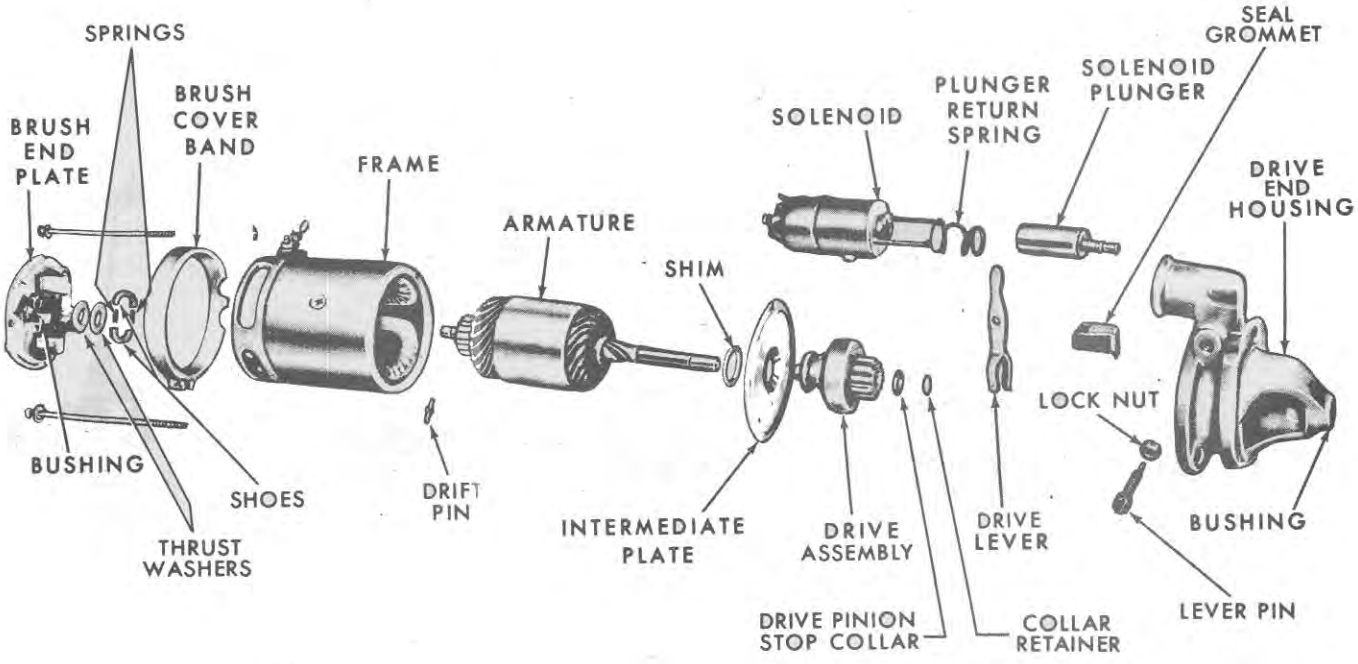

Figure 32
5 Inch Starting Motor—Disassembled

4. Repeat the complete test with the jumper lead connected to the other insulated brush. The voltmeter should indicate battery voltage.

5. **5-Inch Starting Motor:** Disconnect the voltmeter positive lead from the starting motor field terminal and connect it to the eyelet wire, see Figure 34. Connect the jumper lead between the battery positive terminal and, in turn, to each of the insulated brushes. The voltmeter should indicate battery voltage.

NOTE: ***If no voltage is indicated in Steps 3, 4, and 5, an open circuit exists in the field coils and new coils must be installed. Refer to page 38 for the removal and installation instructions.***

Field Coil Ground Circuit Test:

1. **4½-Inch Starting Motor:** Complete steps 1 through 7 of the disassembly procedure, page 32, and refer to Figure 33 when performing the test.

2. **5-Inch Starting Motor:** Complete steps 1 through 8 of the disassembly procedure, page 32, and refer to Figure 34 when performing the test.

3. Connect the voltmeter positive lead to the starting motor field terminal.

4. Connect the voltmeter negative lead to the battery negative terminal.

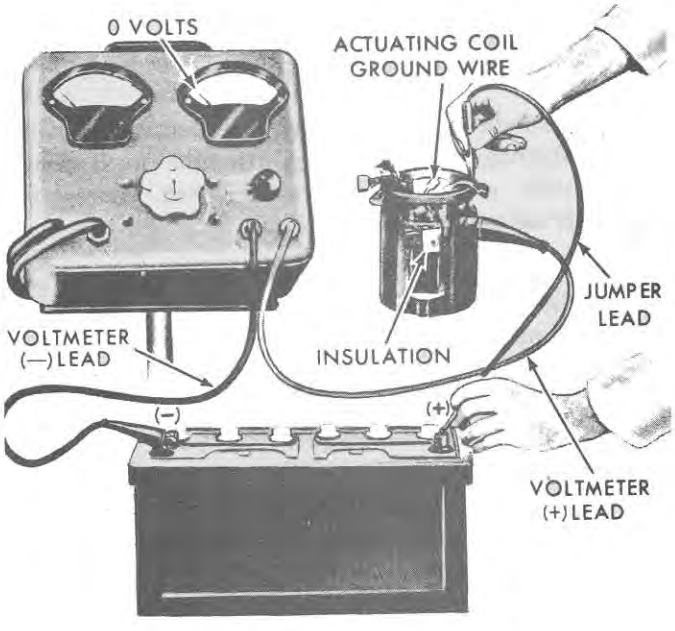

Figure 33
Field Coil Ground Circuit Test—4½ Inch Starting Motor

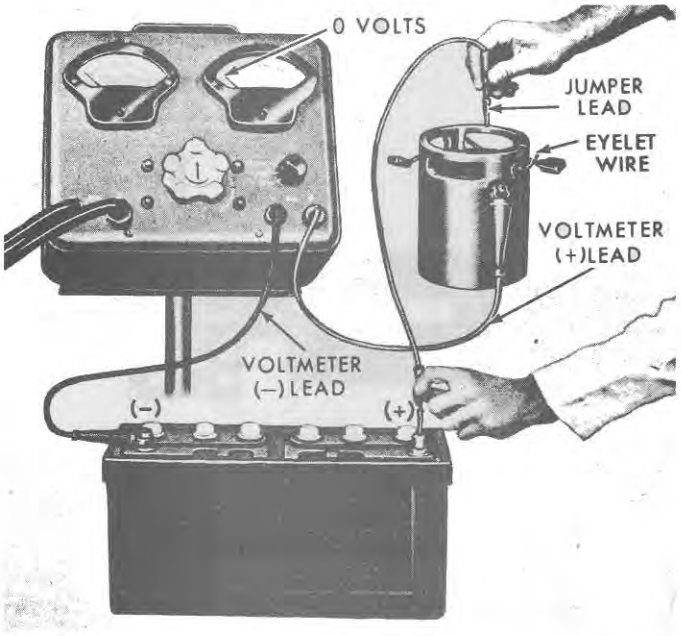

Figure 34
Field Coil Ground Circuit Test—5 Inch Starting Motor

5. **4½-Inch Starting Motor:** Insert a piece of insulation between the actuating coil contacts.

   NOTE: ***When performing this test, make sure the brush leads are not touching the starting motor frame, and in the case of the 4½-inch starting motors, the actuating coil ground wire is not touching the frame. An incorrect reading will result if the leads touch the frame.***

6. Attach a jumper lead between the battery positive terminal and the starting motor frame.
7. The voltmeter reading should indicate zero voltage. If a reading is indicated, the field coils are grounded and new coils must be installed.

Refer to page 38 for the removal and installation instructions.

Inspecting Armature for Open Circuits: Inspect the commutator surface for burned spots. These indicate the armature has an open circuit. The burned spots are caused by an arcing condition which results whenever the commutator segment connected to the open circuit winding passes under a brush. If burned spots are evident, install a new armature.

Armature Ground Circuit Test:

1. **4½-Inch Starting Motor:** Complete steps 1 through 7 of the disassembly procedure, page 32, and refer to Figure 35 when performing the test.
2. **5-Inch Starting Motor:** Complete steps 1 through 8 of the disassembly procedure, page 33, and refer to Figure 36 when performing the test.
3. Attach the voltmeter negative lead to the battery negative terminal.
4. Attach a jumper lead to the battery positive terminal.

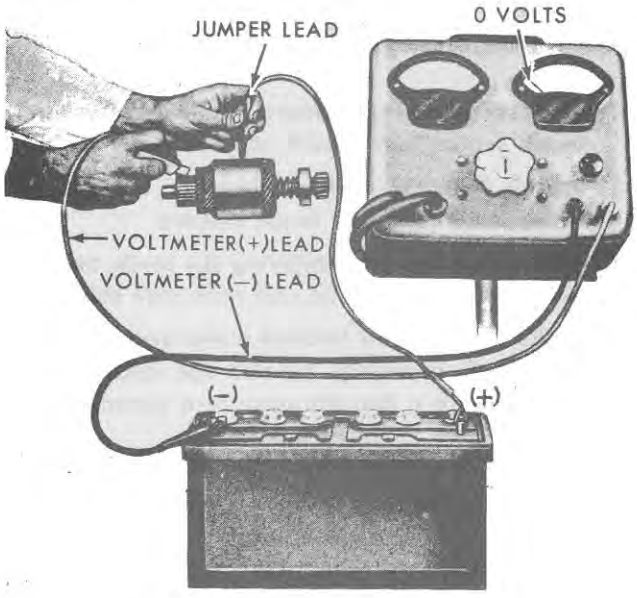

Figure 35
Armature Ground Test—4½ Inch Starting Motor

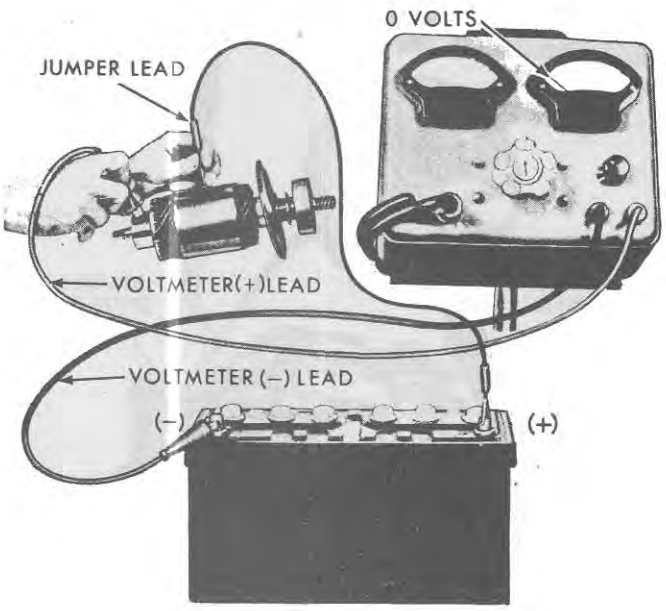

Figure 36
Armature Ground Test—5 Inch Starting Motor

© FORD MOTOR CO. 1966

5. Touch the armature core with the jumper lead while at the same time touching a commutator segment with the voltmeter positive lead. Test each segment of the commutator in this manner.
6. Observe the voltmeter and note if a voltage reading occurs. If voltage is evident, the armature windings are grounded and a new armature must be installed.

Armature Short Circuit Test: In order to perform this test, armature test equipment or a "growler" is required. Refer to the manufacturer's instructions for locating short circuits.

D. Inspection and Repair

Brush Inspection:

1. **4½-Inch Starting Motor:** Complete steps 1 through 4 of the disassembly procedure, page 32, to gain access to the brushes.
2. **5-Inch Starting Motor:** Complete steps 1 and 2 of the disassembly precedure, page 33, to gain access to the brushes.
3. Check the movement of the brushes in their holders. If the brushes are sticking, clean them with a suitable solvent and if necessary, smooth the sides of the brushes with a fine abrasive or a smooth file.

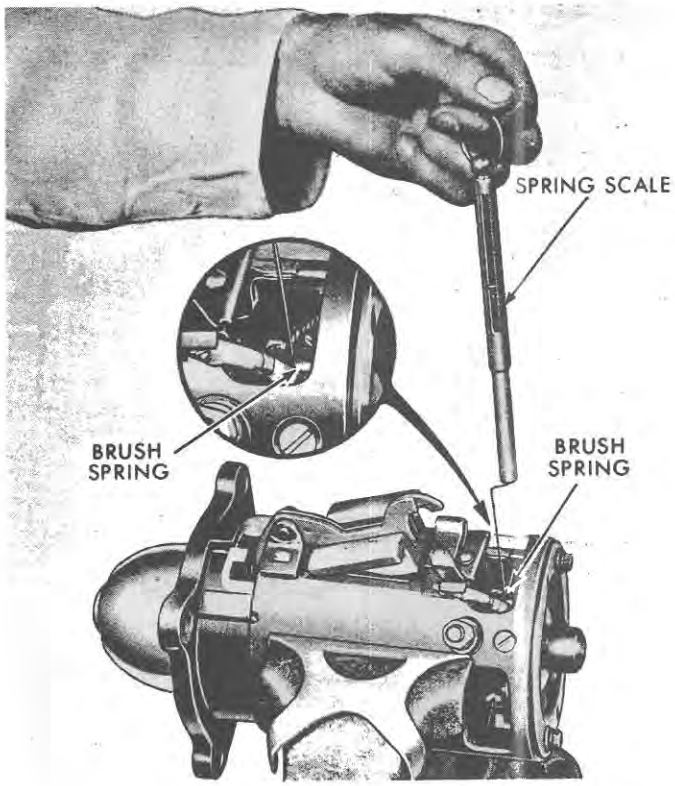

Figure 37
Measuring Brush Spring Tension

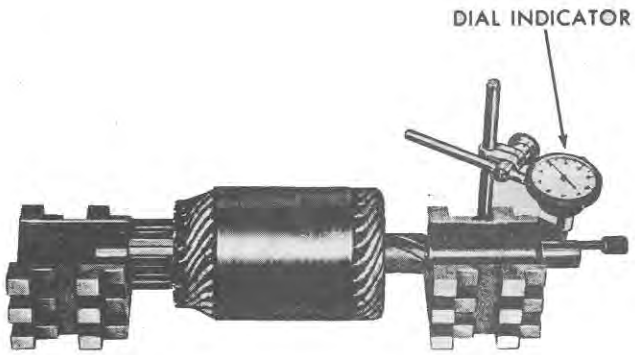

Figure 38
Checking Armature Shaft Runout

4. Measure the length of the brushes. If they do not meet the specifications listed on page 71, install new brushes as outlined under "Brush Installation".
5. Check the brush spring tension, Figure 37. Install new springs if the tension does not meet specifications, page 71.
6. Install a new brush end plate assembly if the insulators between the field brush holders and the end plate are defective, see Figure 40.

Brush Removal and Installation:

1. Unsolder the field brush leads from the field coils.
2. **4½-Inch Starting Motor:** Remove the ground brush screws and detach the brushes.
3. **5-Inch Starting Motor:** Unsolder the ground brush leads from the brush holders.
4. Install new brushes; soldering the leads, using a 300-watt soldering iron and resin core solder.
5. Make sure the new brushes move freely in their holders. If necessary, smooth the sides of the brushes with a fine abrasive or a smooth file.

Armature Assembly and Armature Bushing Inspection:

1. **4½-Inch Starting Motor:** Complete steps 1 through 9 of the disassembly procedure, page 32, to remove the armature.
2. **5-Inch Starting Motor:** Complete steps 1 through 10 of the disassembly procedure, page 33, to remove the armature.

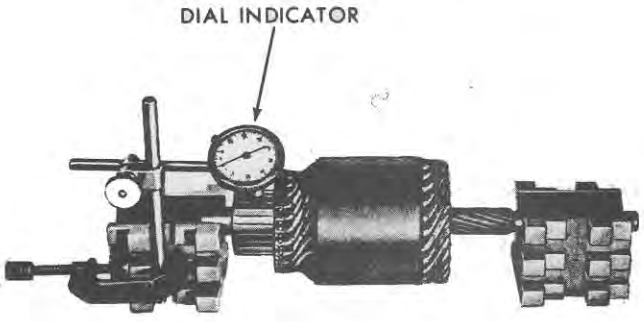

Figure 39
Checking Commutator Runout

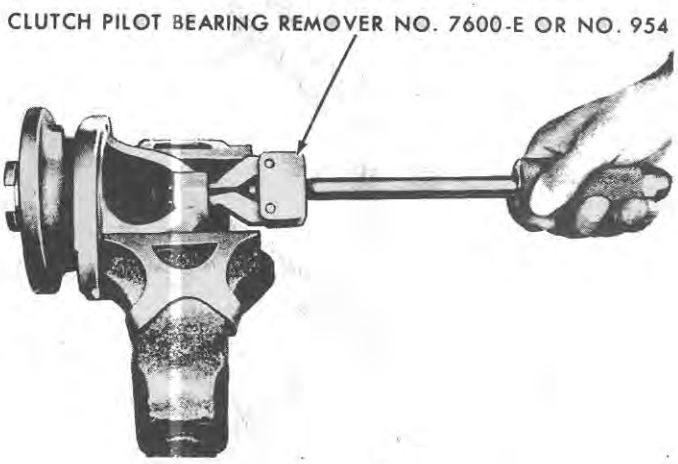

Figure 41
Removing Drive End Housing Bushing

3. Inspect the armature for damage to the core and wire areas. If damaged, install a new armature; do not attempt to machine the core.
4. Inspect the armature shaft for distortion. Check the armature shaft runout as shown in Figure 38. Install a new armature if the runout is greater than that specified on page 71, or if the shaft is badly worn.
5. Examine the armature shaft bushing in the brush end plate. On 4½-inch starting motors, install a new bushing if it is found worn or scored. On 5-inch starting motors, install a new plate.

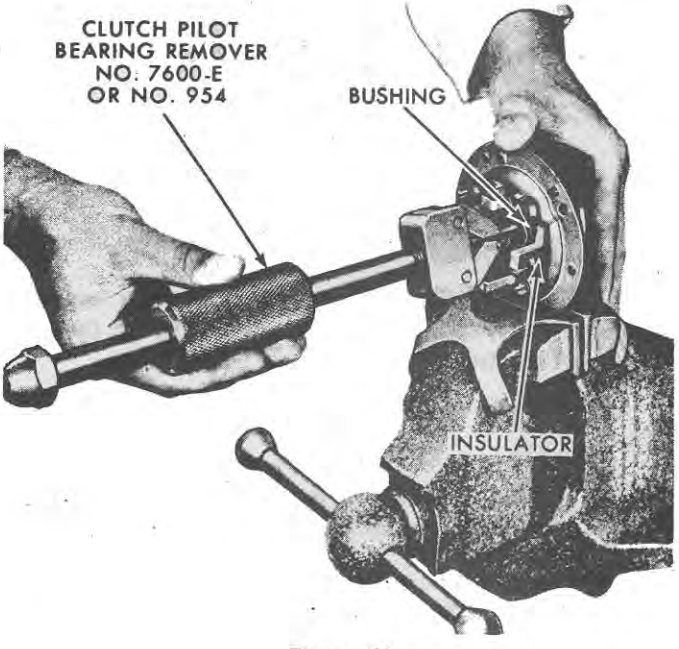

Figure 40
Removing Brush End Plate Bushing

6. **5-Inch Starting Motor:** Inspect the brake shoes in the brush end plate and the bushing in the intermediate plate. If worn or scored, install new parts.
7. Inspect the bushing in the drive end housing. If the bushing is worn or scored, install a new bushing in diesel engine starting motors. On gasoline engine starting motors, a new drive-end housing assembly must be installed.
8. Clean the commutator with a suitable solvent. The surface of the comutator should be burnished and free from pits and burned spots.
9. Check the commutator runout as shown in Figure 39. If the runout exceeds the specified limits, page 71, turn the surface using a lathe and sharp cutting tool. Rotate the armature at a high speed taking light cuts with the tool. After turning, polish the commutator using a fine abrasive.

   IMPORTANT: ***Do not reduce the diameter of the commutator to less than the dimensions specified on page 71. Do not undercut the insulation between the commutator segments.***
10. Before installing the armature, check it for grounding as outlined on page 35.

Armature Assembly and Armature Bushing Repair:

1. **4½-Inch Starting Motor:** Remove the bushing from the brush end plate with clutch pilot bearing removal tool, No. 7600-E or No. 954. Refer to Figure 40.
2. **Diesel Tractors:** Remove the bushing from the drive end housing with clutch pilot bearing removal tool, No. 7600-E or No. 954, Figure 41.

© FORD MOTOR CO. 1966

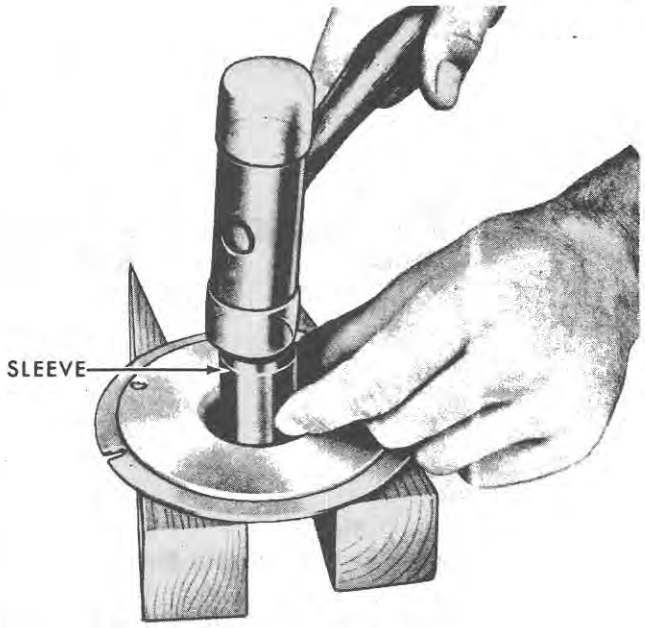

Figure 42
Removing Intermediate Plate Bushing

3. **5-Inch Starting Motor:** Remove the bushing from the intermediate plate using a 1-7/32-inch (30.86 mm) O. D. sleeve as shown in Figure 42.
4. **4½-Inch Starting Motor:** Install the brush end plate bushing with Bushing Driver, No. 813, and Bushing Driver Cap, No. 801, Figure 43.
5. **Diesel Tractors:** Install the drive end housing bushing with Bushing Driver No. 813 and Bushing Driver Cap No. 802, Figure 44.

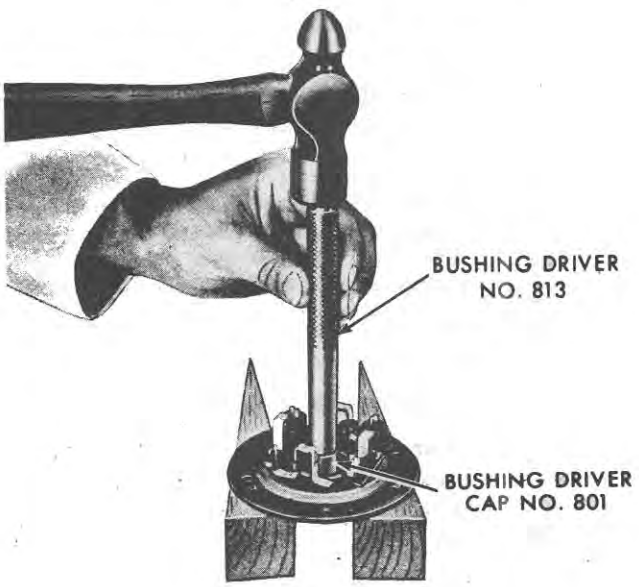

Figure 43
Installing Brush End Plate Bushing

6. **5-Inch Starting Motor:** Install the intermediate plate bushing with a 1-1/16-inch (26.99 mm) O. D. sleeve, Figure 45.
7. Install the armature assembly as outlined on page 40.

Field Coil Inspection and Repair:

1. Check the field coils by performing the field coil ground circuit test as covered on page 34.
2. **4½-Inch Starting Motor:** Remove the retainer from the starting motor actuating field coil,

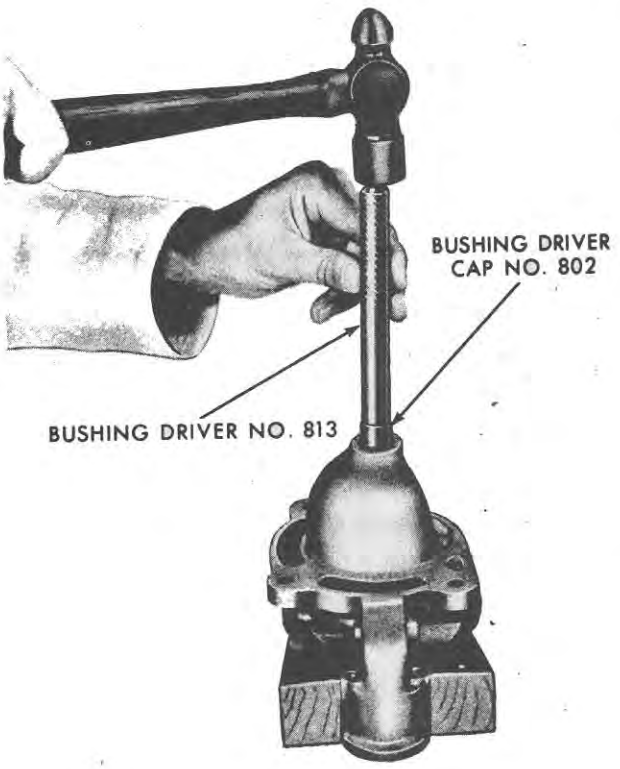

Figure 44
Installing Drive End Housing Bushing

Figure 46. Do not bend the lips of the retainer. Instead, compress the retainer and push the lips off the frame.

3. Unsolder the field coil leads from the field terminal.
4. **5-Inch Starting Motor:** Unsolder the eyelet cable from the field coil connection.
5. Remove the pole shoe screws following the method illustrated in Figure 47. The highly-torqued screws require the use of a press to keep the tool engaged.

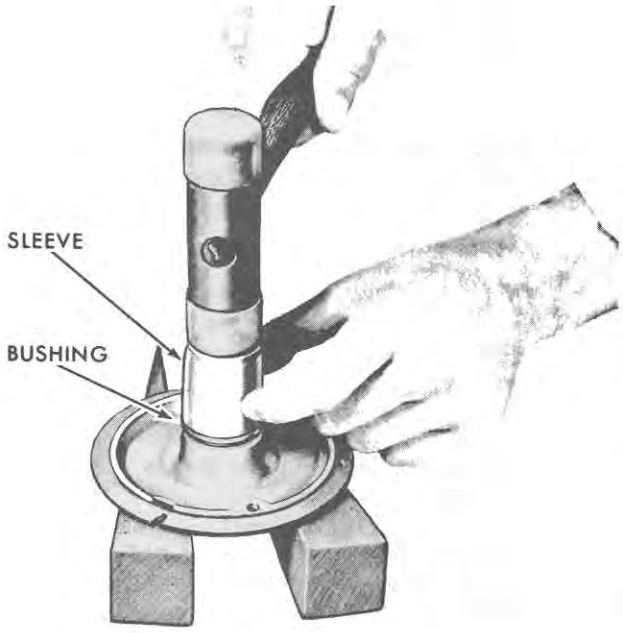

Figure 45
Installing Intermediate Plate Bushing

NOTE: *4½-Inch Starting Motor: A tool can be fabricated by welding a 5/16" x 1" (7.94 x 25.40 mm) piece of square bar stock to a nut if Tool No. CP. 9504 is not available.*

NOTE: *5-Inch Starting Motor: A tool can be fabricated by welding the end of a Phillips head screwdriver to a nut if Tool No. CP. 9504 is not available.*

6. **5-Inch Starting Motor:** Remove the insulation band.

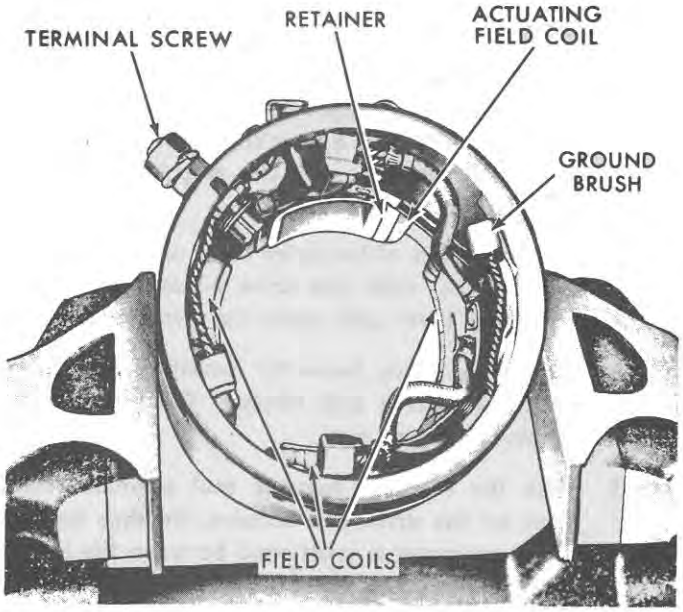

Figure 46
Field Coil Assembly

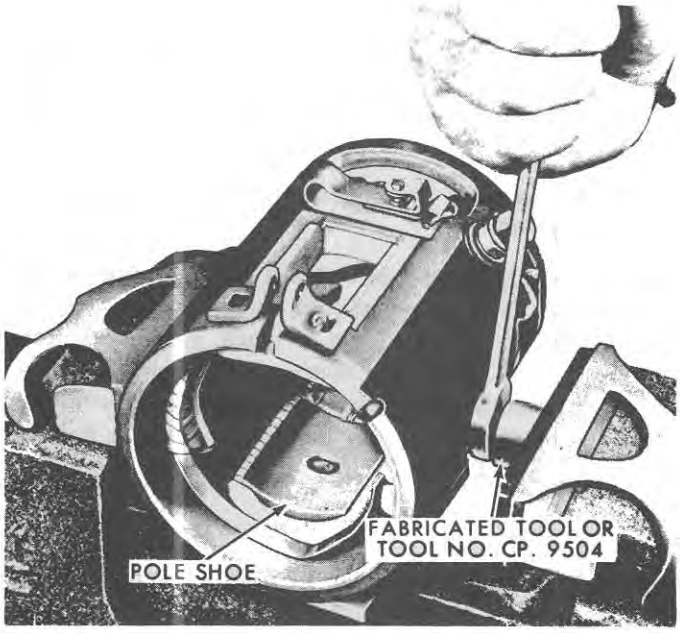

Figure 47
Pole Shoe Screw Removal and Installation

7. Remove the pole shoes and field coils from the starting motor frame.
8. **4½-Inch Starting Motor:** Remove the terminal nut, washer, insulator, and screw, Figure 46. Clean excessive solder from the slot in the terminal screw.
9. **4½-Inch Starting Motor:** Reinstall the starter terminal insulator, washers, and retaining nut in the frame. Position the slot in the terminal perpendicular to the frame end surface, Figure 46. Place the field coil leads in the terminal screw slot.
10. Position the new field coils over the pole shoes and place the coils in the starting motor frame.
11. **5-Inch Starting Motor:** Place the insulation band in position.
12. Install the pole shoes retaining screws, Figure 47. While tightening the screws, tap the starting motor frame with a soft-faced hammer to align and set the pole shoes. Once installed, stake the screws to prevent them from loosening.
13. Resolder the field coil leads to the starting motor field terminal using resin core solder.
14. **5-Inch Starting Motor:** Resolder the eyelet cable connections.
15. **4½-Inch Starting Motor:** Install the starting motor actuating field coil retainer, Figure 46.

© FORD MOTOR CO. 1966

Compress the retainer and slide the lips onto the frame. Do not bend the lips of the retainer.

16. Check the field coils for grounding as outlined on page 34.
17. Reassemble the starting motor as outlined on page 40.

Drive Assembly Inspection: Check the operation of the roller clutch. The pinion should rotate clockwise only. See Figure 48. If the pinion is stuck, rotates in both directions, or if the pinion teeth are damaged, install a new drive assembly. If damaged pinion teeth are evident, check the flywheel ring gear teeth as covered in Part 1, "ENGINE SYSTEMS".

E. Assembly

4½-Inch Starting Motor: Refer to Figure 31 to identify the components.

1. Secure the armature in a soft-jawed vise. Apply a thin coat of petroleum jelly on the shaft splines.
2. Install the drive assembly, a new stop ring, and the stop ring retainer (open side toward the armature).
3. Slide the leather thrust washer onto the commutator end of the armature shaft.

NOTE: ***Prior to installing the starting motor components, be sure the starting motor frame is free from dirt or other foreign objects by cleaning the frame using compressed air.***

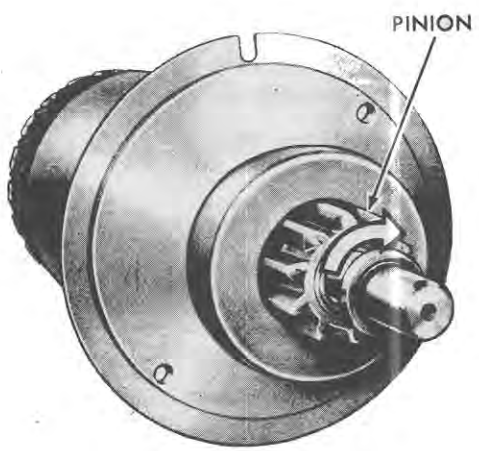

Figure 48
Pinion Gear Rotation

4. Place the starting motor frame in a vise equipped with soft jaws. Slide the armature assembly into the frame.
5. Position the drive lever assembly on the starting motor frame and starting motor drive. Secure the lever assembly to the frame with the pivot pin.
6. While holding the drive actuating return spring in position, install the drive housing. Be sure the stop ring retainer is seated properly in the drive housing.
7. Install the brush end plate assembly so the locating pin fits into the slot in the end of the starting motor frame.

IMPORTANT: ***Be careful not to pinch the brush wires between the end plate and the starting motor frame.***

8. Lift the brush springs with a hooked instrument and install the brushes in the holders. Be sure to center the springs on the brushes.
9. Seal the brush access slots with the strip of tape and install the movable pole piece cover and brush cover band.
10. Check the no-load current draw, as outlined on page 42.

5-Inch Starting Motor: Refer to Figure 32 to identify the components.

1. Secure the starting motor frame in a vise equipped with soft jaws. Use an air hose to remove dirt and abrasives from the frame.
2. Install the armature shim, intermediate plate, drive assembly, stop collar (flat side toward the armature), and a new collar retainer. Force the collar retainer over the stop collar to secure the components.
3. Place the yoke of the drive lever on the starting motor drive; slide the drive housing end over the drive lever and onto the armature shaft.
4. Secure the drive lever by installing the pivot pin in the drive end housing. Do not tighten the pivot pin lock nut.
5. Slide the solenoid housing seal grommet into place on the drive end housing. Be sure the lip of the grommet is positioned between the intermediate plate and the drive end housing.
6. Slide the armature assembly into the starting motor frame.

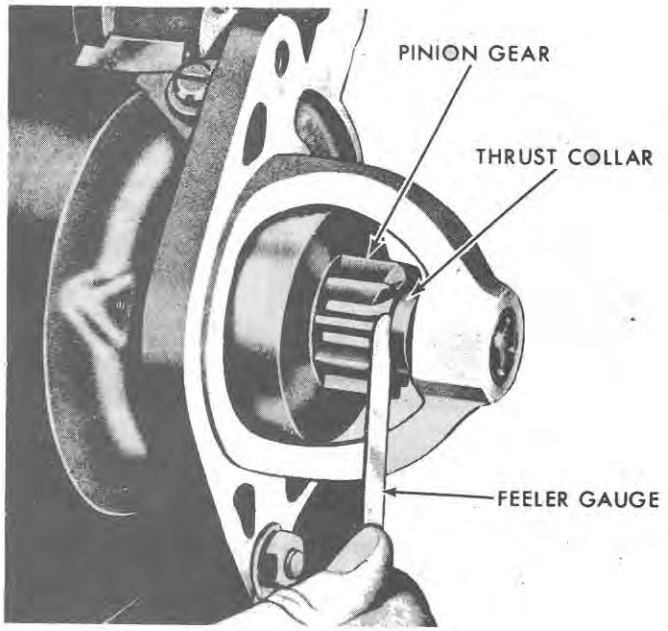

Figure 49
Measuring Pinion Gear Clearance—5 Inch Starting Motor

NOTE: ***Before the drive end housing can be firmly seated, the slot in the intermediate plate must be aligned with the pin on the drive end housing and the slot in the starting motor frame.***

7. Pull the brushes out through the slots in the starting motor frame.
8. Align the locating pin on the brush end plate with the locating groove on the end of the starting motor frame; then align the drift pin on the armature shaft with the slots in the brake shoes.
9. Tap the brush end plate into place and install the through bolts. Tighten the through bolts to the specified torque, page 71.
10. With the upper end of the drive lever toward the brush end plate, place the end of the solenoid plunger in the yoke on the drive lever. Place the spring over the solenoid plunger and install the solenoid (switch terminal up) and solenoid nuts.
11. Install the copper link and eyelet cable. The solenoid nuts may have to be loosened to enable the copper link to fit. Tighten the solenoid nuts to the specified torque, page 71.
12. Install the brushes and the brush cover band.
13. Set the pinion clearance, check the armature end play and perform the starting motor no-load test as outlined on page 42.

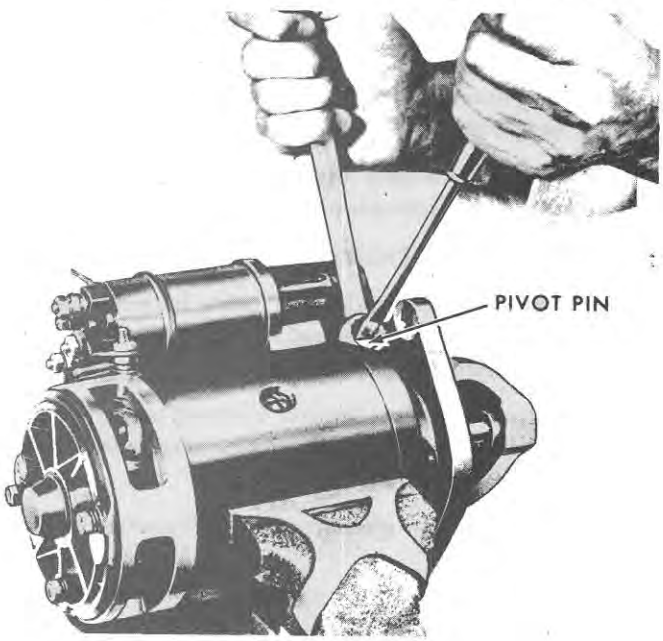

Figure 50
Adjusting Pinion Clearance—5 Inch Starting Motor

F. Final Tests and Adjustments

Setting the Pinion Clearance—5-Inch Starting Motor:

1. Secure the starting motor in a vise equipped with soft jaws.
2. Using a 6-volt source, connect a jumper lead, through a switch, to the solenoid switch terminal. Connect another lead to the starting motor mounting flange.
3. Measure the pinion clearance as outlined below. Refer to the specifications, page 71, for the correct clearance.
   a. Insert a feeler gauge of the proper thickness between the pinion gear and thrust collar, Figure 49.
   b. Close the switch.
   c. Lightly press the pinion toward the armature to take up slack in the drive linkage and check the clearance.
   d. If the clearance is incorrect, loosen the lock nut on the drive lever pivot pin, Figure 50; turn the pin clockwise to increase the clearance or counterclockwise to reduce the clearance.

   NOTE: ***The head of the arrow marked on the pivot pin must be set between the arrows cast on the drive end housing.***
4. After setting the clearance, hold the pivot pin in position with a screwdriver and tighten the lock nut, Figure 50.

© FORD MOTOR CO. 1966

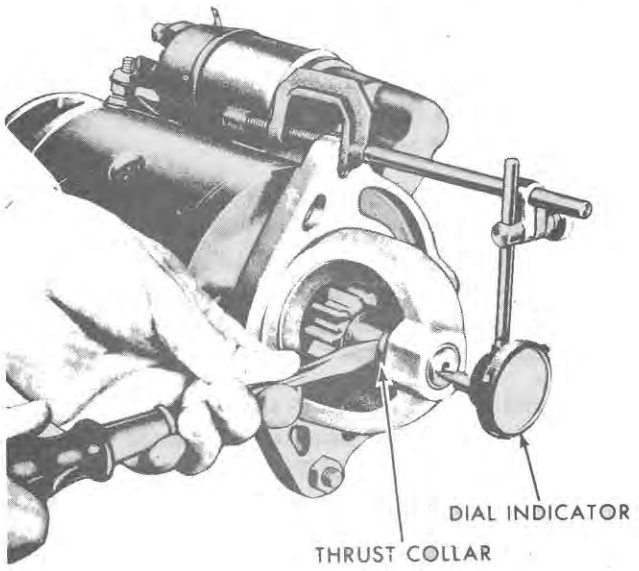

Figure 51
Checking Armature Shaft End Play

Setting the Armature End Play—5-Inch Starting Motor:

1. Secure the starting motor in a vise equipped with soft jaws and attach a dial indicator as shown in Figure 51.
2. Move the armature shaft forward as far as it will go by pressing on the thrust collar. Set the dial indicator shaft on the end of the armature shaft and adjust the gauge dial to zero.

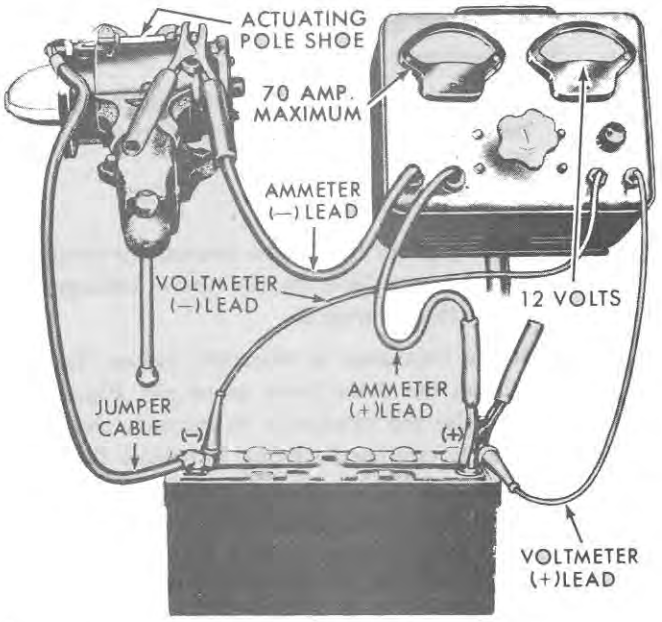

Figure 52
Starting Motor No-Load Test—4½ Inch Starting Motor

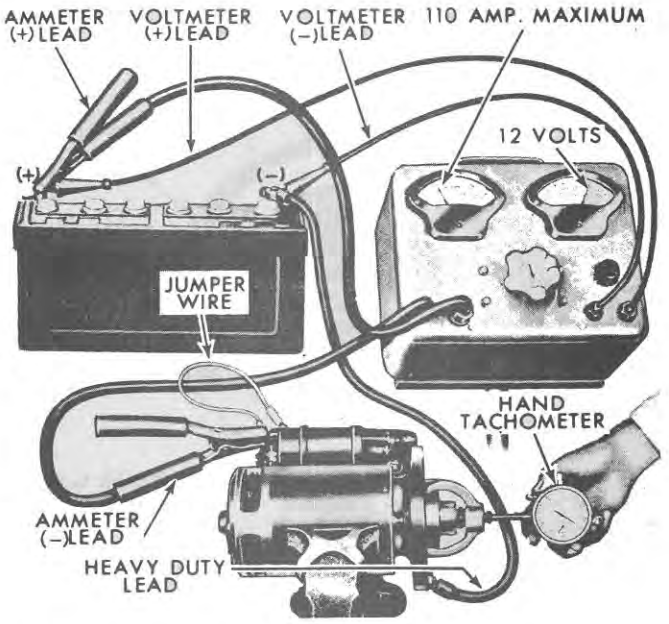

Figure 53
Starting Motor No-Load Test—5 Inch Starting Motor

3. Push the armature shaft rearward as far as possible and record the gauge reading.
4. If the end play is greater than specified on page 71, disassemble the starting motor and install a shim, or shims, between the armature core and the intermediate plate.

Starting Motor No-Load Test: A fully-charged battery and a battery starter tester (high-rate discharge tester) with a carbon pile (current regulating device) should be used to perform this test.

1. **4½-Inch Starting Motor:** Perform the no-load test with reference to Figure 52.
2. **5-Inch Starting Motor:** Perform the no-load test with reference to Figure 53.
3. Secure the starting motor in a soft-jawed vise.
4. Connect a heavy jumper cable between the battery negative terminal and the starting motor mounting flange.
5. **5-Inch Starting Motor:** Connect a short jumper lead between the solenoid battery, and solenoid switch terminals.
6. Connect the ammeter and voltmeter leads as follows:

- Voltmeter positive lead to battery positive terminal.
- Voltmeter negative lead to battery negative terminal.

- Ammeter positive lead to battery positive terminal.
- Ammeter negative lead to the solenoid or starting motor terminal.

7. **5-Inch Starting Motor:** Hold a hand tachometer on the end of the armature shaft.
8. **5-Inch Starting Motor:** Actuate the starting motor by turning the carbon pile knob (current regulating device) fully clockwise. When the armature shaft rotates between 5500 and 7500 rpm the maximum current should not exceed 110 amps at 12 volts.
9. **4½-Inch Starting Motor:** Adjust the carbon pile (current regulating device) until the voltmeter registers 12 volts. The starting motor should draw a maximum of 70 amps.

NOTE: *If the starting motor does not perform to specifications in Steps 8 and 9, check for grounded field coils, a rubbing armature, or a distorted armature shaft. Refer to the specifications on page 71 for armature shaft distortion.*

3. STARTING MOTOR RELAY (4½-INCH MODELS ONLY)

DESCRIPTION AND OPERATION

The starting motor relay, Insert Figures 6 and 7, is used with the 4½-inch starting motors only. The relay consists basically of a movable contact and a stationary coil enclosed in a weatherproof case. The relay is internally grounded, and is equipped with four terminals; two large heavy current terminals, and two small screw terminals. The small terminals are designated "I" and "S". The "S" terminal is used with all 4½-inch starting motor installations. The "I" terminal is used on gasoline tractors equipped with the resistance wire shown in Figure 56.

When the key-starter switch is rotated to the "start" position and the transmission is in either neutral or park position, current flows through the relay coil. The flow of current through the coil sets up a magnetic field which attracts the movable contact. This closes the battery-to-starting motor circuit, and permits a large amount of current to flow to the starting motor.

As soon as the key-starter switch is released, the magnetic field of the stationary coil is dissipated and the movable contact return spring opens the battery-to-starting motor circuit.

REMOVAL AND INSTALLATION

A. Removal

The starting motor relay is serviceable only as a complete assembly. Remove the relay as follows:

1. Disconnect the ground (negative) cable from the battery.
2. Disconnect the wire and cables, Figure 7, from the starting motor relay.
3. Remove the two bolts and lock washers that secure the relay to the mounting bracket. Remove the relay.

B. Installation

1. Bolt the relay to the mounting bracket.
2. Connect the wire and cables to the relay terminals, Figure 7.
3. Connect the battery ground (negative) cable to the negative terminal of the battery.

4. SAFETY-STARTER SWITCH

The safety-starter switch on four-, six- and eight-speed transmission-equipped tractors is mounted in the transmission case cover assembly. On Select-O-Speed-equipped tractors it is located inside the transmission case, mounted on the control valve assembly.

The function of the safety-starter switch is to allow the engine to be started only when the transmission gear selected lever is in the neutral (neutral (N) or park (P) on Select-O-Speed models) position.

The safety-starter switch is serviced only as an assembly. For removal and installation instructions, refer to the "Part" of this manual that is applicable to the type of transmission concerned.

© FORD MOTOR CO. 1966

5. KEY-STARTER SWITCH

Two key-starter switches, Figures 6 and 7, are available; one for gasoline tractors and diesel tractors without thermostart, and one for diesel tractors with thermostart. The switch positions are shown in Figure 54.

REMOVAL AND INSTALLATION

A. Removal

1. Disconnect the battery ground (negative) cable from the battery.
2. Remove the switch lock nut and remove the switch, Figures 4 and 5, from the rear hood panel assembly.
3. Disconnect the wire harness connectors from the switch terminals, Figures 6 and 7.

B. Installation

1. Connect the wire harness connectors to the switch terminals, Figures 6 and 7.
2. Place the switch in the rear hood panel assembly "D" slot. Fasten the switch securely to the panel with the switch lock nut.
3. Connect the battery ground (negative) cable to the negative terminal of the battery.

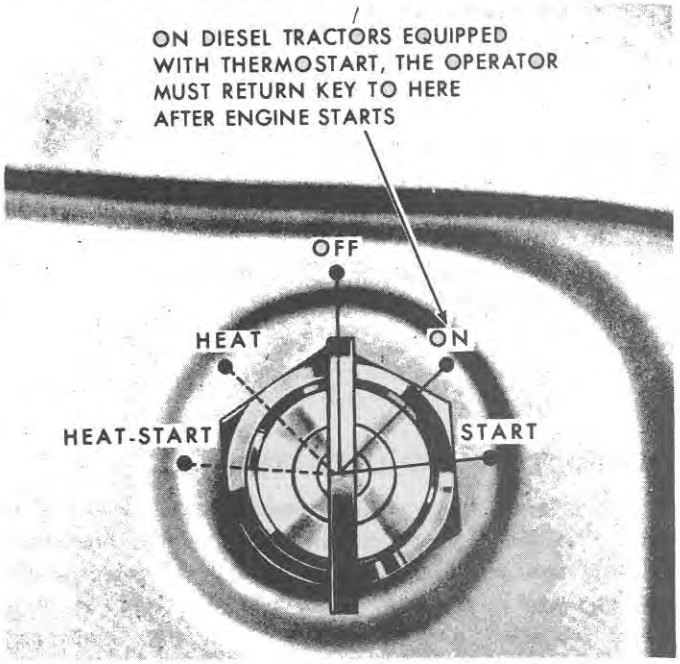

Figure 54
Key-Starter Switch Positions

Part 3

ELECTRICAL SYSTEM

Chapter 5

IGNITION SYSTEM

Section		Page
1.	Description	45
2.	Ignition System Tests	47
3.	Distributor	51
4.	Distributor Drive	58
5.	Ignition Coil	60
6.	Spark Plugs and Wires	61

1. DESCRIPTION

The ignition system consists of the distributor and distributor drive assembly, ignition coil, spark plugs, and wiring necessary to connect the components. See wiring diagram, Figure 55. The purpose of the ignition system is to have available, at the proper spark plug, enough voltage to cause a spark to jump the spark plug gap for ignition of the fuel-air mixture in the cylinder. Two basic circuits, the primary (low voltage) circuit and the secondary (high voltage) circuit, are contained in the ignition system.

The primary circuit consists of the battery and generator, key-starter switch, ignition coil primary windings, distributor contact breaker points, condenser and associated primary circuit wiring. The purpose of the primary circuit is to build up a strong magnetic field in and about the ignition coil secondary windings, and to cause the field to collapse when required.

The secondary circuit consists of the ignition coil secondary windings, the ignition coil secondary lead, distributor rotor, distributor cap, spark plug wires, and the spark plugs.

NOTE: ***Two types of breaker point assemblies are used on Ford Tractors; a pivoting-type or a non-pivoting-type. See Figure 58. The function and adjustment of both types are the same; however, the electrical connection on the pivoting-type is secured with a nut and lock washer, whereas the non-pivoting-type uses a screw.***

The purpose of the ignition system is to provide a spark to ignite the fuel-air mixture at the proper instant under all operating conditions. As stated previously, the ignition system is divided into two different circuits, the low voltage or primary circuit, and the high voltage or secondary circuit. See Figure 56. The primary circuit consists of the:

- Battery
- Key-starter switch and low tension wires
- Primary circuit resistance wire (when installed)
- Primary windings of the ignition coil
- Distributor contact breaker points
- Ignition condenser

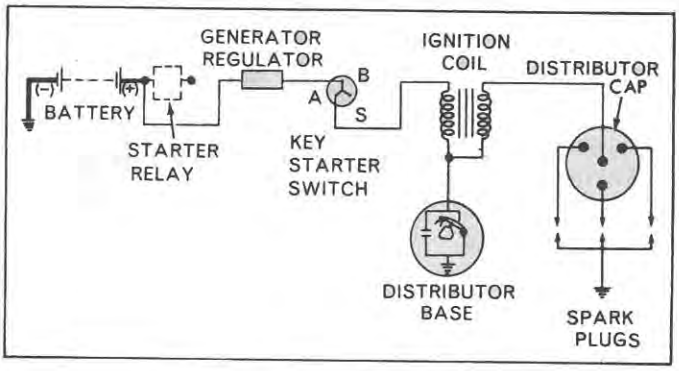

Figure 55
Ignition System Wiring Diagram

© FORD MOTOR CO. 1966

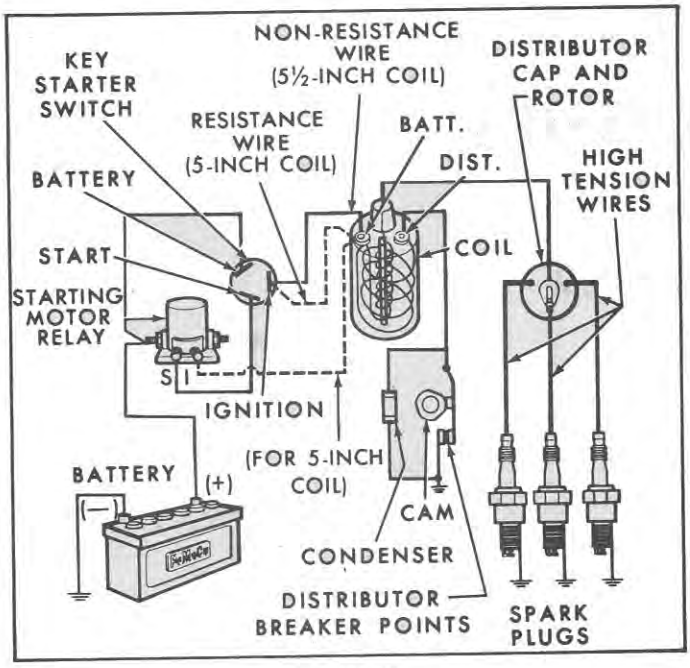

Figure 56
Ignition System Electrical Circuit

The secondary circuit consists of the:

- Secondary windings of the ignition coil
- High tension wires
- Distributor rotor and cap
- Spark plugs

With the key-starter switch in the "start" position and the distributor contact points closed, the current in the primary circuit flows from the battery, through the low tension wires, through the ignition coil primary windings, through the distributor contact points, and back to the battery through ground.

The flow of current through the primary windings creates a strong magnetic field within the ignition coil. When the contact points begin to open, the primary circuit is broken and the low voltage current flows into the condenser. The condenser stops the flow of the primary current suddenly, resulting in a quick collapse of the magnetic field around the coil primary windings. This action induces a high (secondary) voltage in the secondary windings of the coil. The high voltage carries the required current from the coil, through a high tension wire, to the distributor center terminal. From the center terminal, the high voltage is transmitted by the distributor rotor to the correct spark plug wire contact in the distributor cap, to the spark plug high tension wire, and into the spark plug. The current passes through the spark plug and across the spark plug gap where a spark occurs, resulting in the ignition of the fuel-air mixture in the combustion chamber.

The spark timing is regulated by centrifugal and vacuum spark advance mechanisms. The centrifugal

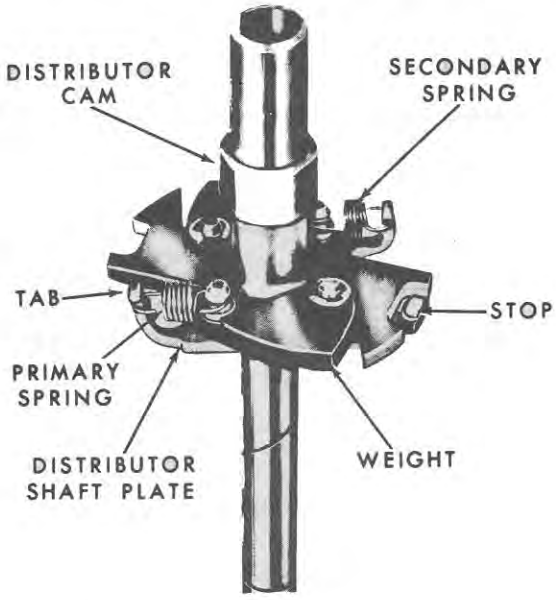

Figure 57
Centrifugal Spark Advance Mechanism

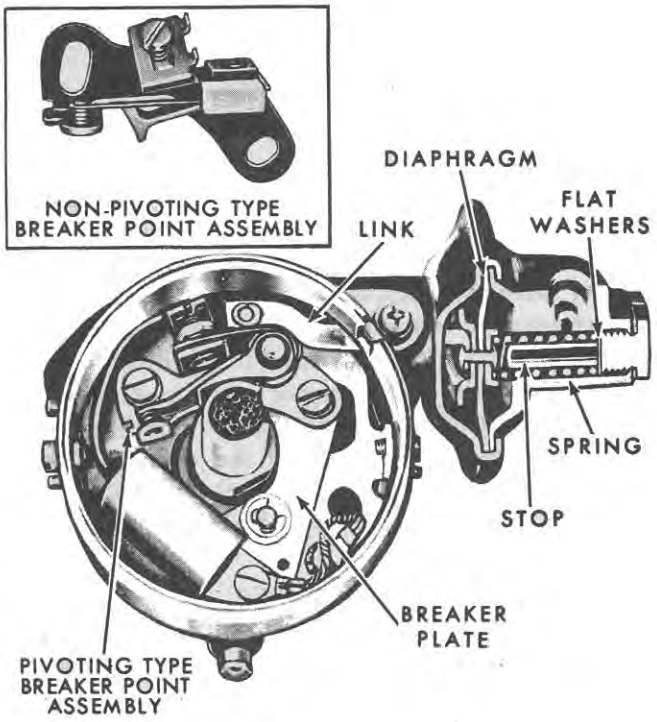

Figure 58
Distributor and Cutaway of Vacuum Spark Advance Mechanism

spark advance, Figure 57, through a set of weights and springs, advances the spark as required for engine speed and maximum power. The weights are attached to the distributor cam assembly which rides on the distributor shaft. As engine speed is increased, the outward movement of the weights overcomes the spring tension and advances the cam assembly in relation to the distributor shaft, providing an earlier spark.

The vacuum spark advance, Figure 58, provides the spark timing required for fuel economy under part throttle operations. This advance is additional to the centrifugal advance obtained under these conditions. The vacuum advance is operated by engine vacuum which acts on a diaphragm attached to the distributor breaker plate. When a vacuum is applied, the breaker plate is rotated against the direction of rotation of the cam assembly, advancing the spark.

2. IGNITION SYSTEM TESTS

Trouble in the ignition system is caused by a failure in the primary circuit, secondary circuit, or improper ignition timing. For easier and rapid diagnosis, and for most conclusive test results, it is recommended that an oscilloscope be used to diagnose ignition system problems. When using the test equipment, follow the manufacturer's recommended test procedures. If test equipment is not available, follow the test procedures outlined below. Ignition system specifications are outlined in the specifications section, page 69.

Prior to testing the ignition system, note the following points:

- To accurately check the ignition system, the battery must be fully charged; otherwise, specified test values cannot be obtained. Refer to page 13, and check the battery as outlined under "Section 4. BATTERY TESTS."
- In each of the ignition system checks, the engine must be cranked to obtain a voltmeter reading.
- Remove the coil-to-distributor high tension lead from the distributor and ground it to prevent the engine from starting during cranking.

PRIMARY CIRCUIT

A. Voltage at the Coil

1. Attach the voltmeter positive lead to the ignition coil "BAT" (battery) terminal.
2. Attach the voltmeter negative lead to a good ground.
3. Crank the engine and observe the voltage reading. The voltage reading should be approximately battery voltage.

- If the voltage reading is approximately the same as battery voltage, the primary circuit from the battery to the coil is satisfactory. Proceed to "B. Ignition Coil Test," as outlined on page 48.
- If the voltage reading is more than 0.7 volt below battery voltage, proceed to Step 4.

4. With the voltmeter leads still in position, attach a jumper lead between the battery positive terminal and the ignition coil "BAT" terminal.

- If the voltage reading does not change, check the ground circuit as outlined on page 48. If the voltage reading does not exceed 0.2 volt during the ground circuit test, the ignition coil is defective; if the voltage reading exceeds 0.2 volt, the ground circuit is poor. Check the connections and if necessary, install a new cable.
- If the voltage reading changes to approximately battery voltage, there is an excessive voltage drop (resistance) in one or more of the components in the circuit from the battery to the ignition coil. Without disconnecting the voltmeter leads, check the individual components by using a jumper lead to bypass each portion of the circuit as outlined below.

NOTE: ***Install a new component if, during any of the checks in Step 4, the voltmeter reading was approximately battery voltage.***

Ignition Coil-to-Starting Motor Relay Wire—
Connect jumper lead between battery positive terminal and relay input terminal.

Starting Motor Relay-to-Key-Starter Switch Wire—
Connect jumper lead between relay input terminal and key-starter switch "BAT" terminal.

Key-Starter Switch—
Connect jumper between key-starter switch "BAT" terminal and key-starter switch "accessory" terminal.

Key-Starter Switch-to-Ignition Coil Wire—
Connect jumper lead between key-starter switch "accessory" terminal and ignition coil "BAT" terminal.

© FORD MOTOR CO. 1966

B. Ignition Coil Test

If correct battery voltage is available at the ignition coil "BAT" terminal, check the voltage at the ignition coil "DIST" (distributor) terminal as follows:

1. Attach the voltmeter positive lead to the ignition coil "DIST" terminal.
2. Attach the voltmeter negative lead to a good ground.
3. Reinstall the high tension lead in the distributor and start the engine.
4. With the engine idling, the voltmeter reading should be 9.6 volts, or more. If the voltage is less than 9.6 volts, install a new ignition coil as outlined on page 60, under "Section 5. IGNITION COIL."

NOTE: ***A weak battery will cause a lower-than-normal voltage reading.***

C. Contact Breaker Point Resistance

1. Connect the voltmeter positive lead to the ignition coil "DIST" terminal.
2. Attach the voltmeter negative lead to a good ground.
3. With the contact breaker points closed, the voltmeter reading should not exceed 0.1 volt. If the reading is greater than 0.1 volt, install new contact breaker points as outlined on page 57, under "A. Contact Breaker Point Removal and Installation."

NOTE: ***If the voltmeter indicates battery voltage after connecting the voltmeter leads, the points are open. To close the points, crank (but do not start) the engine using the key-starter switch.***

CONDITION	DESCRIPTION OR CAUSE
 BURNED	Any discoloration other than a frosted slate grey shall be considered as burned points.
 EXCESSIVE METAL TRANSFER OR PITTING	Incorrect alignment. Defective condenser. Extended operation of the engine at speeds other than normal.

Figure 59
Breaker Point Inspection

4. Check the condition of the contact breaker points. See Figure 59.

SECONDARY CIRCUIT

A. Ignition Coil-to-Distributor High Tension Lead

1. Remove the ignition coil-to-distributor high tension lead from the distributor.
2. While cranking the engine, hold the high tension lead approximately ¾ inch (19.05 mm) from a good ground.
3. Observe the spark. If the primary circuit is in good condition, a blue spark should jump the gap regularly. If not, either the high tension wire or the secondary windings in the ignition coil are defective. To install a new ignition coil, refer to page 60, under "Section 5. IGNITION COIL."

B. Distributor-to-Spark Plug High Tension Leads

Check each spark plug lead as follows:

1. Disconnect the lead from the spark plug and push the lead terminal through the insulator.

NOTE: ***The spark plug terminal on the high tension lead must extend outside the insulator to properly check the gap, as outlined in Steps 2 and 3, below. An adapter wire may be used by inserting it into the connector inside the insulator, providing a good connection is made.***

2. While cranking the engine, hold the end of the lead (or adapter) approximately ½ inch (12.70 mm) from a good ground.

CAUTION: ***Place the transmission selector lever in neutral (neutral (N) or park (P) on Select-O-Speed models) before cranking the engine.***

3. Observe the spark. A blue spark should jump the gap regularly. If not, either the rotor or distributor cap is defective, or hairline cracks exist in the rotor or distributor, or the spark plug wires are defective.

C. Ignition Coil Polarity

Polarity is checked by connecting a voltmeter positive lead to ground and the negative lead to a spark plug terminal (engine running). If the voltmeter reads upscale, polarity is correct; if it reads downscale, it is

reversed. If reversed polarity is detected, reverse the wires attached to the "Dist" and "Bat" terminals on the ignition coil.

SPARK PLUGS

If the checks under "Distributor-to-Spark Plug High Tension leads" are satisfactory, inspect and clean the spark plugs as covered on page 62. If a spark plug tester is available, check the plugs for compression leakage following the manufacturer's instructions for the use of the equipment.

INITIAL IGNITION TIMING WITH A TIMING LIGHT

NOTE: ***Always check ignition timing with the vacuum line disconnected.***

1. Disconnect the No. 1 spark plug wire from the distributor cap. Plug a timing light adapter, similar to the one shown in Figure 60, into the distributor cap and into the spark plug wire. Connect the secondary (high tension) lead of the timing light to the adapter.
2. Connect the primary negative (black) lead of the timing light to the battery ground terminal. Connect the primary positive (red) lead to the battery positive terminal.
3. Start the engine and direct the timing light onto the flywheel housing opening, Figure 60. The timing should be as outlined in the specifications, page 69.

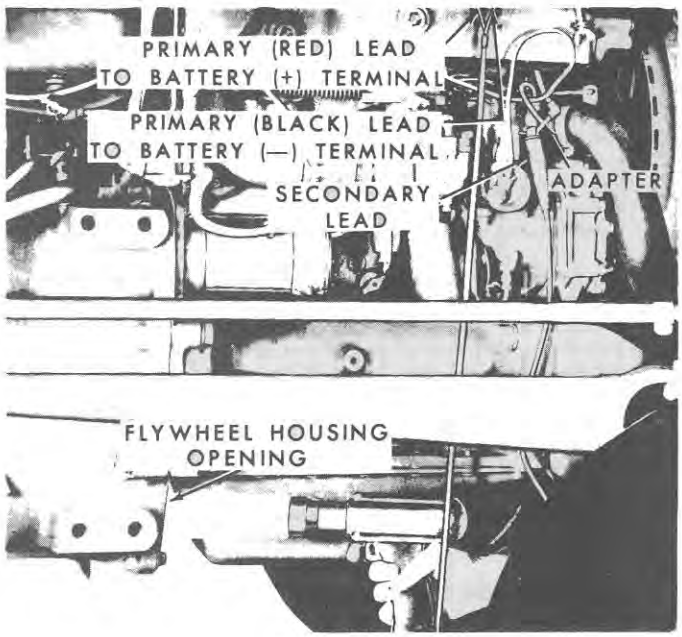

Figure 60
Ignition Timing

4. If the timing is not correct, loosen the distributor timing clamp bolt and turn the distributor clockwise to advance the timing or counterclockwise to retard the timing. Tighten the timing clamp bolt after setting the timing.
5. Reconnect the vacuum line.

CENTRIFUGAL AND VACUUM ADVANCE

If it is necessary to check the distributor advance mechanisms, a distributor tester must be used. Follow the manufacturer's instructions for proper use of the tester. Refer to Figure 61 for the centrifugal advance curves, and Figure 63 for the vacuum advance curves.

A. Centrifugal Advance Setting

If the centrifugal minimum advance setting is not within the specified limits, Figure 61, adjust as follows:

1. Align the primary spring adjustment tab with the hole in the upper breaker plate, and bend the tab in the required direction with a screwdriver. Bend the primary spring adjustment tab, Figure 62, away from the distributor shaft to decrease the advance, and toward the shaft to increase the advance.
2. After making the adjustment, recheck the minimum advance point. If proper adjustment cannot be obtained, install a new primary spring and readjust the spring tab as necessary.
3. Check the maximum advance point. If the maximum advance point is not within limits, bend the secondary spring adjustment tab as required, Figure 62, in the same manner as for the primary spring adjustment in Step 1. If necessary, install a new secondary spring and readjust the spring tab as required.
4. Recheck the complete centrifugal advance range to be sure the distributor is within its operating range at minimum, intermediate, and maximum advance points.

B. Vacuum Advance Setting

If the vacuum advance is not within the specified limits, Figure 63, add or remove the diaphragm spring flat washers, Figure 58, as required. Adding washers between the diaphragm spring and the diaphragm plug decreases the advance, and removing washers increases the advance.

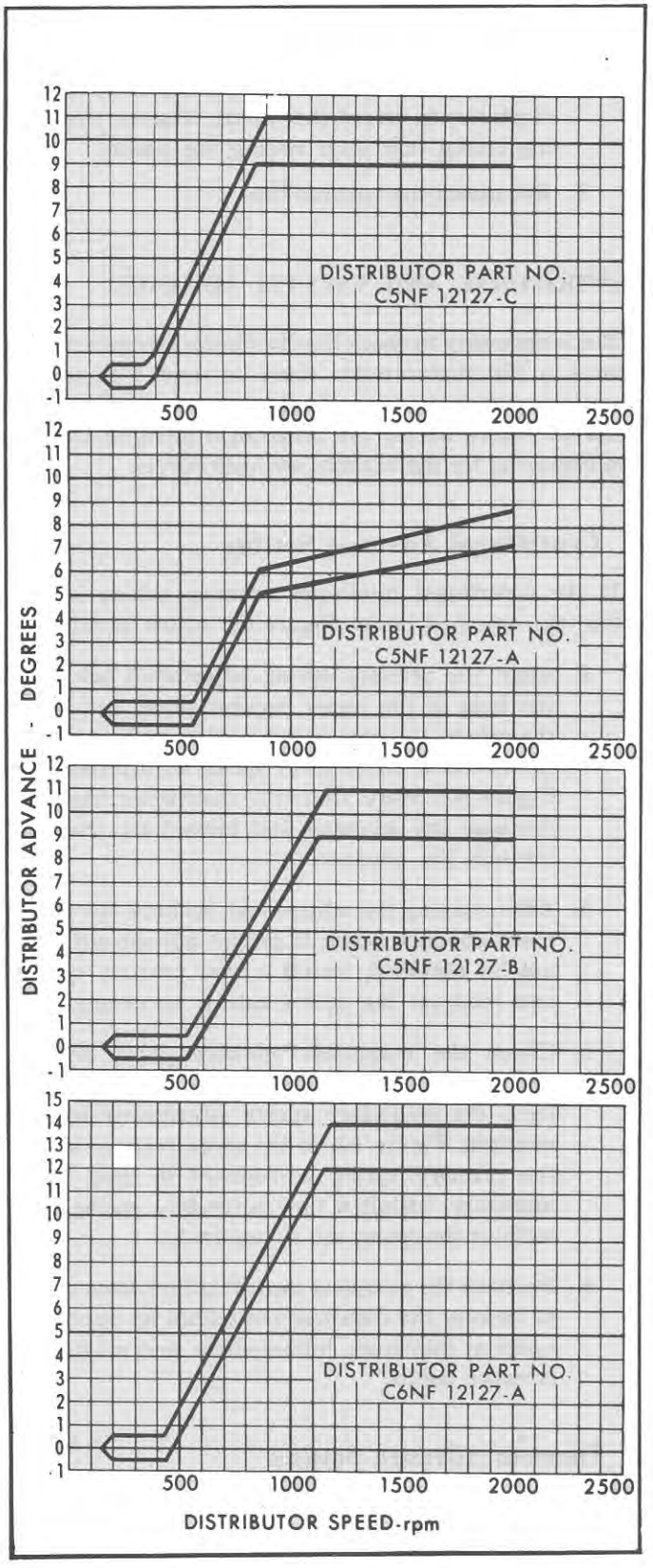

Figure 61
Centrifugal Spark Advance Curves

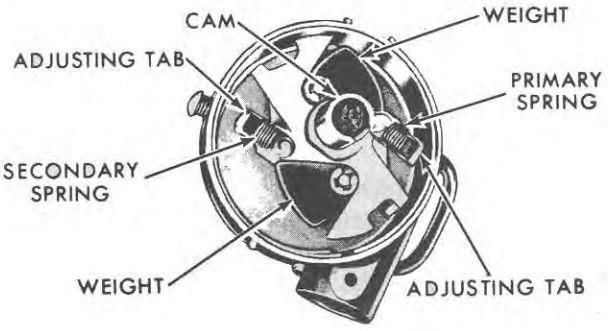

Figure 62
Distributor Weight Assemblies

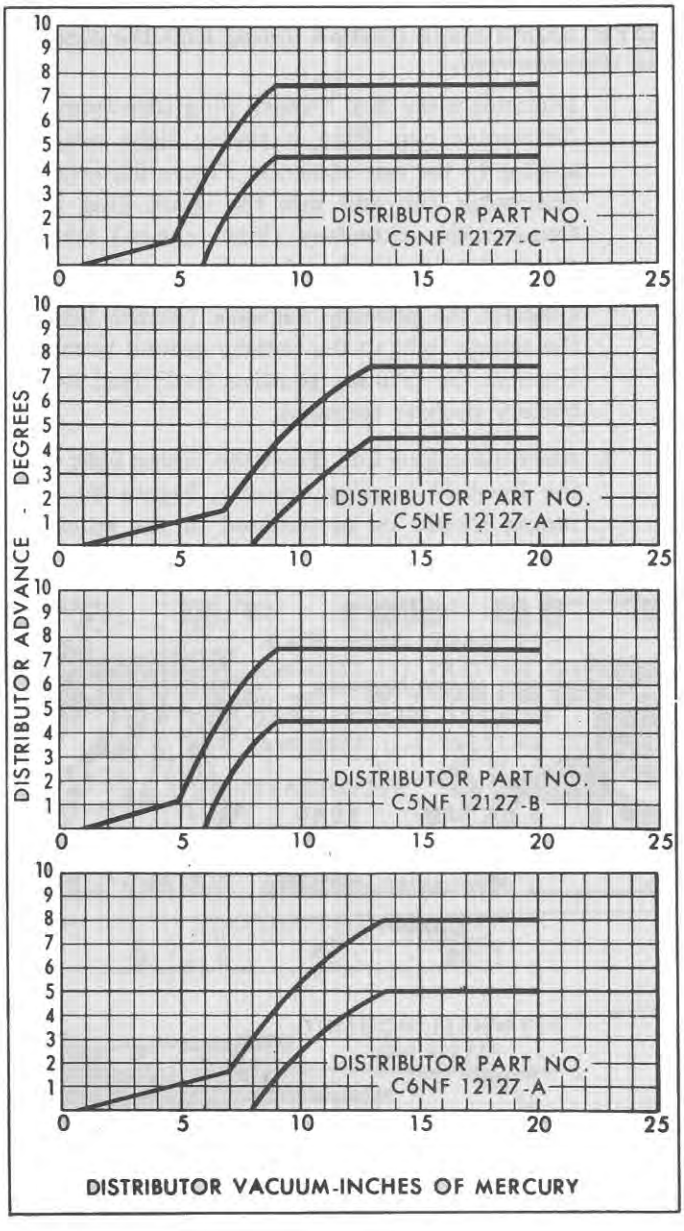

Figure 63
Vacuum Spark Advance Curves

CHECKING IGNITION CONTACT POINT DWELL ANGLE

Dwell angle is the number of degrees of cam rotation in which the contact points remain closed. The dwell angle must be properly set so the ignition coil has time to build a magnetic field. Dwell angle is extremely important at high engine speeds because of the reduced time for the ignition coil to build this magnetic field.

At low and high speed operations, both dwell angle and point gap must be correctly set to provide good all around ignition system performance. There is a definite relationship between point gap and point dwell angle. See Figure 72. When the point dwell angle is increased, point gap is decreased and vice versa. The distributor is designed so that when dwell is properly set, the gap should also be properly set. However, it is not sufficient to check only the dwell or only the gap. Several items can cause insufficient gap even though the dwell is properly adjusted. Among these are improper or wrongly positioned fiber block, worn cam lobes or fiber block, or using the wrong type breaker point assembly.

The most accurate method of checking the dwell angle is with an oscilloscope or a dwell meter. Several types of dwell meters, either electrical or mechanical which will record dwell angle, are available.

- Connect the dwell meter by following the manufacturer's recommendations furnished with the unit.
- Record the dwell angle as indicated by the dwell meter.

NOTE: ***Most dwell meters will not have a 3-lobe position (for 3-cylinder engines). Therefore, it will be necessary to use the 6-lobe position. The specified 35°-38° dwell angle will read 70°-76° when using the 6-lobe selection.***

Ignition point dwell angle is normally determined by point gap. Ignition points that are not adjusted properly will cause extended or retarded dwell, and subsequent misfiring. The following items should be considered when adjusting point dwell angle:

- Points that are pitted or corroded cannot be adjusted properly.
- An excessively worn fiber block will prevent proper point adjustment.
- The distributor shaft must be properly aligned; a bent distributor shaft will cause a distorted dwell angle measurement.
- The cam must be properly lubricated to allow proper travel of the fiber rubbing block.

3. DISTRIBUTOR

DESCRIPTION

The distributor is mounted on the distributor drive housing and is driven at one-half engine speed. The distributor contains the distributor cap, rotor, dust cover, breaker points, ignition condenser, and the spark advance mechanisms required to properly time the spark. Each of these components are as follows:

A. Distributor Cap, Rotor, and Breaker Dust Cover

The distributor cap fits over the distributor housing and is retained by two metal clips. Aluminum inserts are cast into the cap towers to hold the ends of the spark plug wires. These inserts extend down inside the cap and make an electrical contact (through an air gap) with the metal strip protruding from the outer end of the rotor. This strip serves to extend the secondary circuit to the applicable spark plug as the distributor shaft rotates and the rotor moves from plug wire contact to plug wire contact.

The opposite end of the strip bears against a carbon button located under the center or ignition coil terminal of the distributor cap.

The dust cover divides the high and low tension sides of the distributor and serves to seal foreign material and moisture from gaining access to the breaker points and advance mechanism. An O-ring is used at the outside of the cover to form a seal with the distributor housing and a felt washer at the center of the cover to form a seal with the distributor shaft.

B. Breaker Points

The function of the breaker points is to open and close the primary circuit to interrupt the current flow through the primary winding of the ignition coil, thus causing the coil to produce voltage high enough to jump the gap at the spark plugs at the desired instant during the compression stroke.

C. Condenser

The condenser, connected across the breaker points, suddenly stops the flow of electricity in the primary circuit when the breaker points begin to open. This prevents arcing at the breaker points while the points are opening, and quickly collapses the magnetic field in the coil.

© FORD MOTOR CO. 1966

D. Spark Advance Mechanisms

The spark advance mechanisms time the delivery of the high voltage current to the cylinders at the exact instant to ignite the fuel-air mixture. The advance mechanisms are:

- Vacuum advance, which regulates the spark timing required for maximum economy under part throttle operations.
- Centrifugal advance, which regulates the spark timing required for speed and maximum power.

DISTRIBUTOR OVERHAUL

A. Removal

1. Disconnect the primary wire from the coil "BAT" terminal.

   CAUTION: ***Be sure the key-starter switch is in the "OFF" position.***

2. Loosen the vacuum line at the intake manifold. Remove the vacuum line from the distributor and swing it out of the way.
3. Disconnect the spark plug wires and the secondary high tension lead from the distributor terminal housing (cap).
4. Unsnap the distributor cap clamps and remove the cap from the distributor. Note the position of the rotor in relation to a fixed point on the distributor housing for installation purposes.

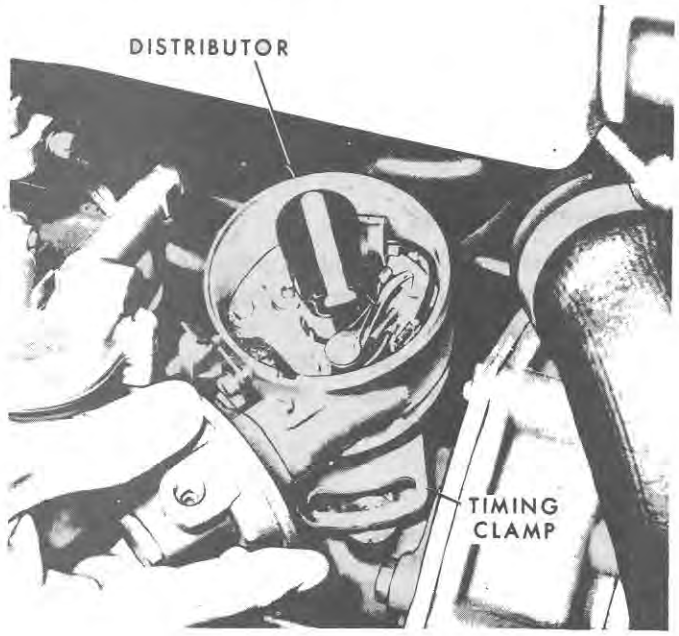

Figure 64
Removing Distributor

5. Remove the distributor timing clamp retaining bolt and lift the distributor from the drive housing, Figure 64.
6. Cover the distributor hole in the drive housing to prevent the entry of foreign material.

B. Disassembly

Refer to Figure 65 to identify the distributor components.

1. Remove the rotor and dust cover.
2. Remove the retaining clip that secures the diaphragm arm to the upper breaker plate.
3. Remove the screw and lockwasher assembly, and the flat washer that secures the vacuum advance assembly to the distributor base; then lift the diaphragm arm off the pin and remove the vacuum advance assembly.
4. Disconnect the primary wire and the condenser wire from the breaker point assembly. Remove the primary wire from the distributor housing. (Pull the wire from the inside to avoid damaging the seal.)
5. Remove the condenser and breaker point assemblies. Remove the ground wire from the lower breaker point plate.

   NOTE: ***Two types of breaker point assemblies are used on Ford Tractors: a pivoting-type or a non-pivoting-type. See Figure 58. The function and adjustment of both types are the same; however, the electrical connection on the pivoting-type is secured with a lock washer and nut, whereas the non-pivoting-type uses a screw.***

6. Remove the lubrication wick from the top of the cam assembly.
7. Detach the upper breaker plate by removing the retaining clip, flat washer, and spring washer.
8. Detach the bracket and clamp assemblies by removing the two retaining screws.
9. Remove the lower breaker plate. Using a pair of needle-nose pliers, remove the cam retainer.
10. Unhook and remove the centrifugal advance weight spring.

    NOTE: ***Mark each advance spring, weight, and adjusting tab so they will be reassembled correctly. The primary spring is the spring under tension when in a static position.***

11. Remove the cam assembly, Figure 62.

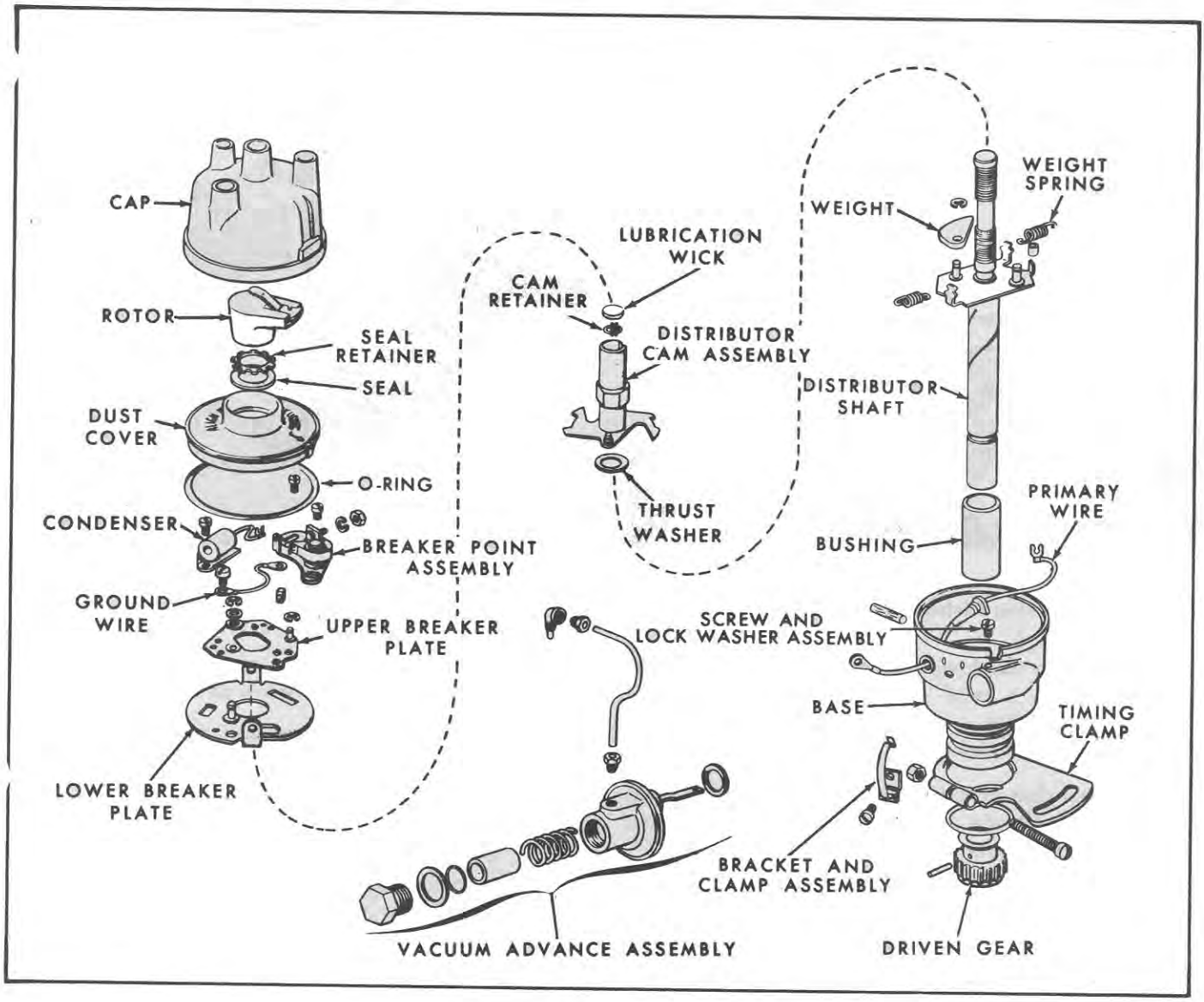

Figure 65
Distributor—Disassembled

12. Remove the distributor shaft thrust washer, Figure 65.
13. Remove the distributor weight retaining clips and remove the weights.
14. If the gear and shaft are to be reused, mark them so the pin holes can be easily aligned during reassembly. Remove the gear by using a small punch to drive out the retaining pin. Press the gear off the shaft.
15. Pull the shaft out of the top of the distributor housing.
16. Remove the O-ring seal from the distributor base.
17. Scribe a mark on the timing clamp and distributor housing for an aid in reassembly. Remove the timing clamp by removing the screw and square head nut and sliding the clamp off the bottom of the distributor housing.
18. If the shaft bushing is damaged, or not within specified limits, page 69, remove it from the distributor housing. Where available, use Distributor Shaft Bushing Remover and Installer, No. SW-503, Figure 66.

C. Inspection and Repair

1. Soak all parts of the distributor (except the condenser, breaker point assembly, lubricating wick,

© FORD MOTOR CO. 1966

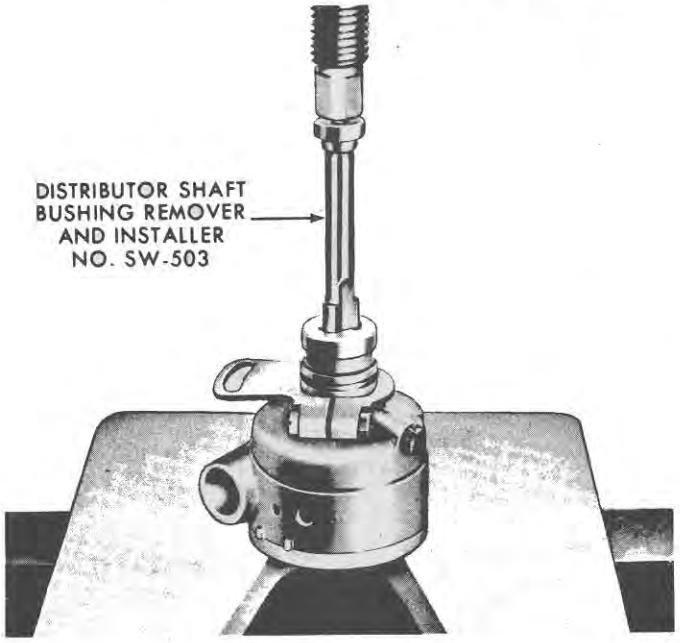

Figure 66
Removing Distributor Shaft Bushing

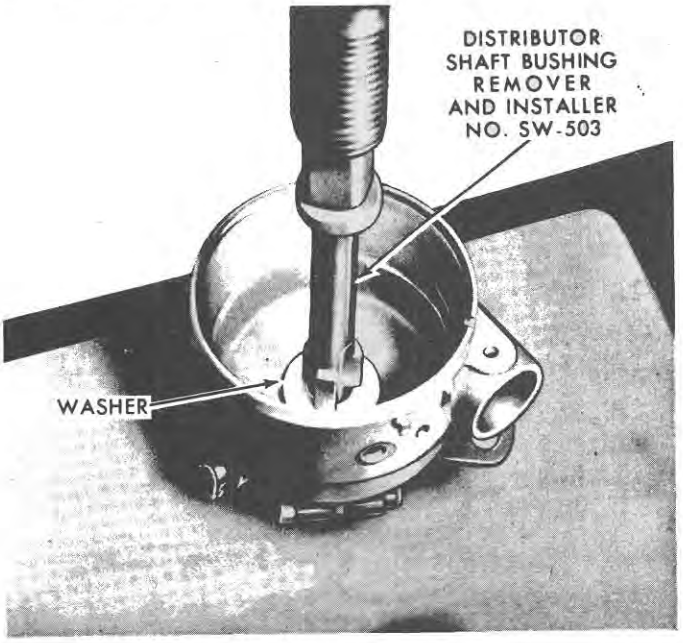

Figure 67
Installing Distributor Shaft Bushing

vacuum diaphragm, oil seals and electrical wiring) in a mild cleaning solvent or mineral spirits. With a clean dry cloth, wipe all parts mentioned above that cannot be immersed.

2. After dust deposits have been loosened by soaking, scrub the parts with a soft bristled brush. Dry the parts with compressed air.

   NOTE: ***Do not use a wire brush, file, or other abrasive material to clean the parts.***

3. Inspect the cap and rotor for cracks and carbon tracks which will cause the high tension current to short out to ground. Also check these parts for burned terminals and any indications of erosion. The breaker cover should be inspected for breakage. If the felt and O-ring seals are damaged, new ones should be installed.

4. Inspect the bearing surface of the distributor shaft for wear. Install a new shaft if it is excessively worn.

5. Inspect the distributor cam lobes for wear. If any lobe is scored or worn, install a new cam assembly.

6. Inspect the upper and lower breaker plate assemblies for signs of distortion. Install new assemblies if they are defective.

   NOTE: ***New breaker points and condenser should be installed whenever the distributor is overhauled.***

7. Inspect the electrical wiring for fraying and breaks. Install new wires as required.

8. Check the distributor base for cracks or other damage.

9. Check the vacuum diaphragm housing and arm for damage. Check the vacuum line fitting for stripped threads or other damage. Test the vacuum fittings, case, and diaphragm for leakage. Install new parts if necessary.

D. Assembly

Refer to Figure 65 for identification of parts during assembly.

1. Coat a new distributor shaft bushing with oil and install it in the distributor base using Distributor Shaft Bushing Remover and Installer No. SW 503, (where available) as shown in Figure 67. To prevent damaging the bushing, use a flat washer under the shoulder of the tool.

2. Ream the bushing to the limits specified, page 69, Figure 68.

3. Apply a small amount of oil on the shaft and slide the shaft into the distributor housing.

4. Press the gear into position on the shaft. Use the marks on the shaft and gear to align the pin holes.

5. Install the gear retaining pin.

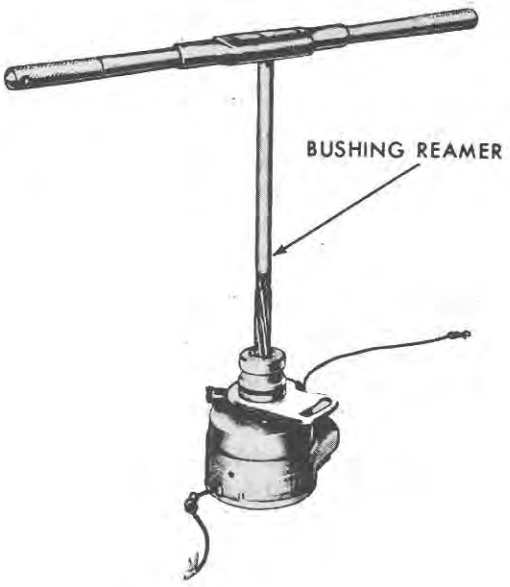

Figure 68
Reaming the Distributor Shaft Bushing

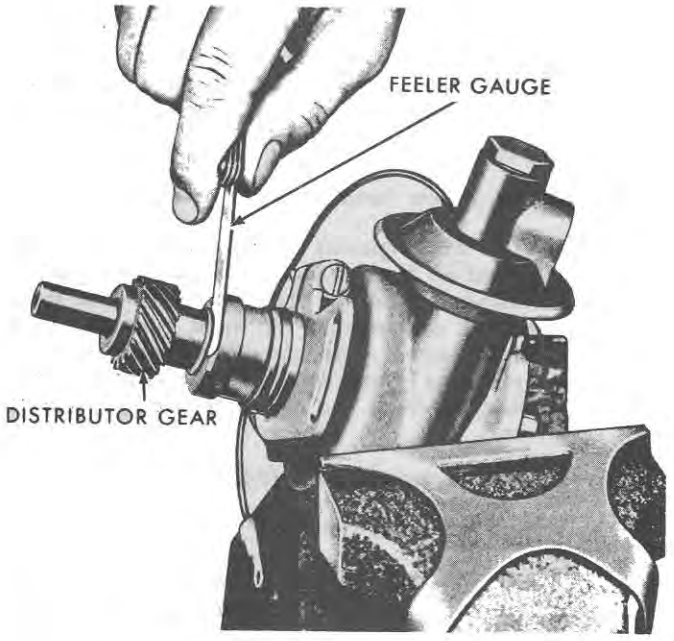

Figure 69
Checking Distributor Shaft End Play

6. Check the shaft gear end play with a feeler gauge placed between the gear and distributor base, Figure 69. Refer to page 69, for the acceptable distributor shaft end play limits.

7. Position the distributor in a vise equipped with soft jaws. Fill the grooves in the weight pivot pin with a multi-purpose lithium-base type grease.

8. Position the weights on the pivot pins and secure them with the retaining clips, Figure 62.

9. Install the distributor shaft thrust washer.

10. Fill the grooves in the upper portion of the shaft with a multi-purpose lithium-base type grease.

11. Install the cam assembly. Make sure the slots in the cam base are positioned over the weights.

12. Install the weight springs as shown in Figure 62.

    NOTE: ***Be sure the proper weight spring and adjusting tab are assembled as marked when removed.***

13. Apply a light film of cam lubricant evenly on the cam surface and install the cam retainer.

14. Saturate the lubrication wick with SAE 10W engine oil and install the wick in the top of the cam assembly.

15. Position the lower breaker plate in the distributor. Be sure the breaker plate tabs are up and the pivot pin located in the position shown in Figure 70.

16. Position each distributor cap bracket and clamp assembly on the distributor housing and secure them to the lower breaker plate.

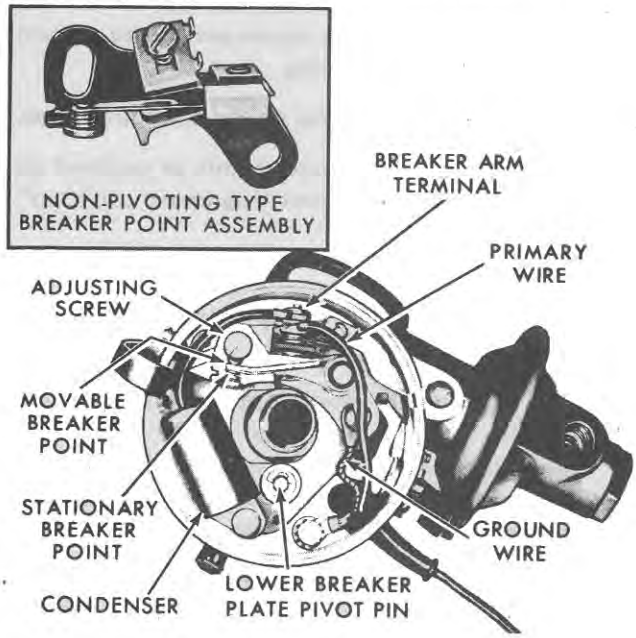

Figure 70
Distributor Component Identification

© FORD MOTOR CO. 1966

17. Position the upper breaker plate over the pivot pin on the lower breaker plate. Install the spring washer (dished face up) on the pivot pin. Place the flat washer on the spring washer and install the retaining clip.

18. Install a new breaker point assembly.

    NOTE: ***Two types of breaker point assemblies are used on Ford Tractors: a pivoting type or a non-pivoting type. See Figure 70. The function and adjustment of both types are the same; however, the electrical connection on the pivoting type is secured with a nut and lock washer, whereas the non-pivoting type uses a screw.***

19. Install the ground wire, Figure 70.

20. Install the condenser.

21. Install the primary wire. Pull the wire in the distributor base, feeding it through the opening from the inside until the locating stop is flush with the inside of the distributor.

22. Connect the primary wire and condenser wire to the breaker point terminal.

23. Install a new O-ring seal on the vacuum advance assembly and position the assembly in the distributor base. Hook the diaphragm arm over the pin on the breaker plate. Secure the advance assembly with the screw and lock washer assembly, and the diaphragm arm with the retaining clip.

24. Install the clamp assembly, flat side toward the gear, aligning the two marks previously scribed on the clamp and housing.

25. Install a new O-ring seal on the distributor base.

26. Align and set the contact points as outlined on page 57, under "B. Point Alignment and Gap".

E. Installation

1. Remove the No. 1 (front) spark plug and the valve rocker arm cover.

2. Rotate the engine slowly until air is forced from the No. 1 spark plug hole. At the same time, check the intake and exhaust valve push rods. Both rods should rotate freely, indicating that the piston is on the compression stroke.

3. Continue rotating the engine slowly until the 0° (TDC) flywheel mark is aligned with the arrow in the rectangular inspection opening in the rear engine cover plate.

   NOTE: ***This inspection opening is covered by a dust cap which must be removed to view the flywheel.***

4. With this setting, place the distributor, dust cover installed, in the distributor drive housing with the rotor pointing toward the No. 1 cylinder distributor cap contact. In this position, the distributor drive gear will be meshed properly with the timing gear.

   NOTE: ***When the gears are properly meshed, there should be an angle of approximately 60° between the center line of the rotor at the No. 1 distributor terminal, and the front face of the cylinder block, Figure 71.***

5. Loosen the bolt holding the timing clamp to the distributor base and rotate the distributor housing until the breaker points start to open.

6. Hold the distributor housing, and center the timing clamp slot on the timing clamp bolt hole; then tighten the timing clamp bolt.

7. Install the spark plug, spark plug wire, distributor cap, and valve rocker arm cover.

8. Reconnect the spark plug wires. Connect the secondary wire to the distributor cap, and the primary wire to the coil "DIST" terminal.

9. Check the ignition timing as outlined on page 49, under "IGNITION TIMING WITH TIMING LIGHT."

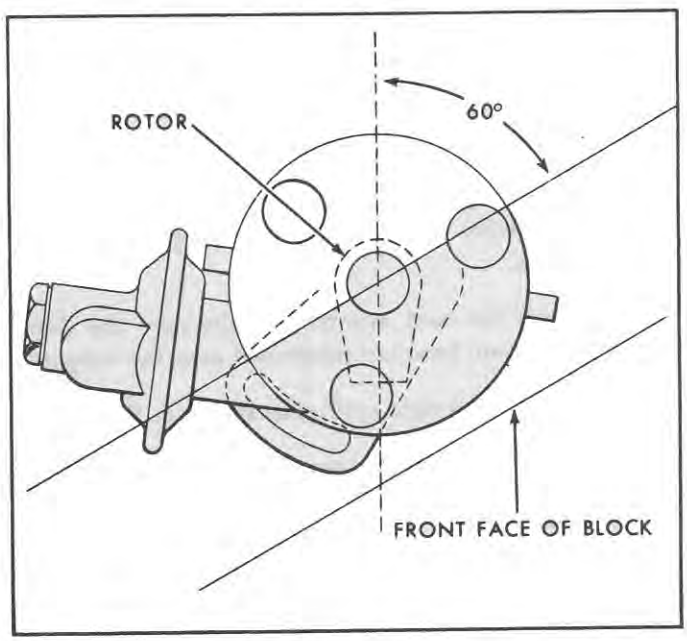

Figure 71
Correct Angle for Proper Gear Mesh

CONTACT BREAKER POINTS MAINTENANCE

A. Point Removal and Installation

The distributor does not have to be removed from the engine to service the distributor breaker point assembly, Figure 70.

NOTE: ***Be sure the key-starter switch is in the "OFF" position.***

1. Remove the distributor (terminal housing) cap.
2. Remove the rotor assembly and dust cover from the distributor shaft.
3. Loosen the nut and lock washer (or screw) that secures the condenser and primary wires to the moveable breaker arm terminal and remove the wire leads, Figure 70.
4. Remove the screws and lock washers securing the breaker point assembly to the upper breaker plate and remove the point assembly. Remove the screw securing the condenser to the upper breaker plate.
5. Breaker points should be inspected, cleaned, and adjusted. If the contacts are badly burned or excessive metal transfer between the points is evident, Figure 59, install a new breaker point assembly and condenser. (Metal transfer is considered excessive when it equals or exceeds the gap setting.) Tighten the screws and make sure the ground wire is secured to the breaker point assembly rear screw.
6. Secure the condenser lead and the primary wire to the ignition point primary terminal.
7. When the point gap has been properly set, reinstall the dust cover, rotor, and distributor cap. Make sure the rotor contacts and the distributor cap contacts are clean. Install a new rotor and a new distributor cap if their contacts are pitted or badly worn.
8. Check the ignition timing as outlined on page 49, under "IGNITION TIMING WITH A TIMING LIGHT." Adjust as necessary. See Figure 72.
9. Check the dwell angle as outlined on page 51, under "CHECKING IGNITION POINT DWELL ANGLE." Adjust as necessary. See Figure 72.

B. Point Alignment and Gap

1. To align the breaker points, rotate the cam (by cranking the engine) until the points are closed.

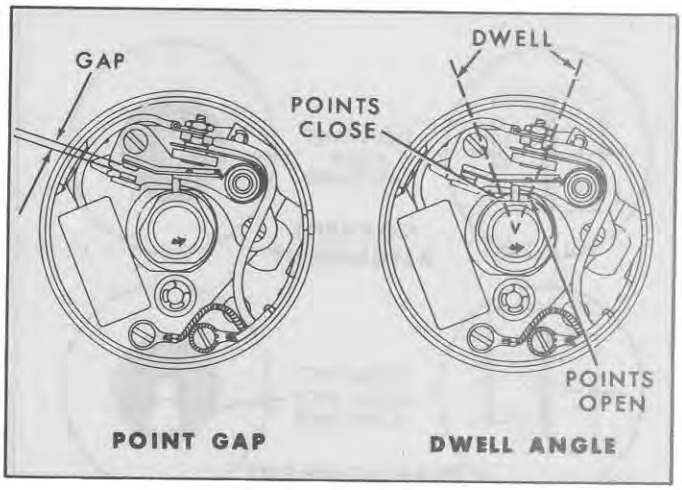

Figure 72
Distributor Point Gap and Dwell Angle

Using a suitable tool, align the contacts by bending the stationary breaker point bracket, Figures 73 and 74.

2. To adjust the breaker point gap, crank the engine slowly until the fiber rubbing block on the moving arm contact is on the high point of one of the distributor cam lobes, Figure 72. Turn the key-starter switch to the OFF position.
3. Slightly loosen the two breaker point bracket adjusting screws. Insert a screwdriver blade into the adjustment slots; rotate the screwdriver



Figure 73
Aligning and Adjusting Breaker Points

© FORD MOTOR CO. 1966

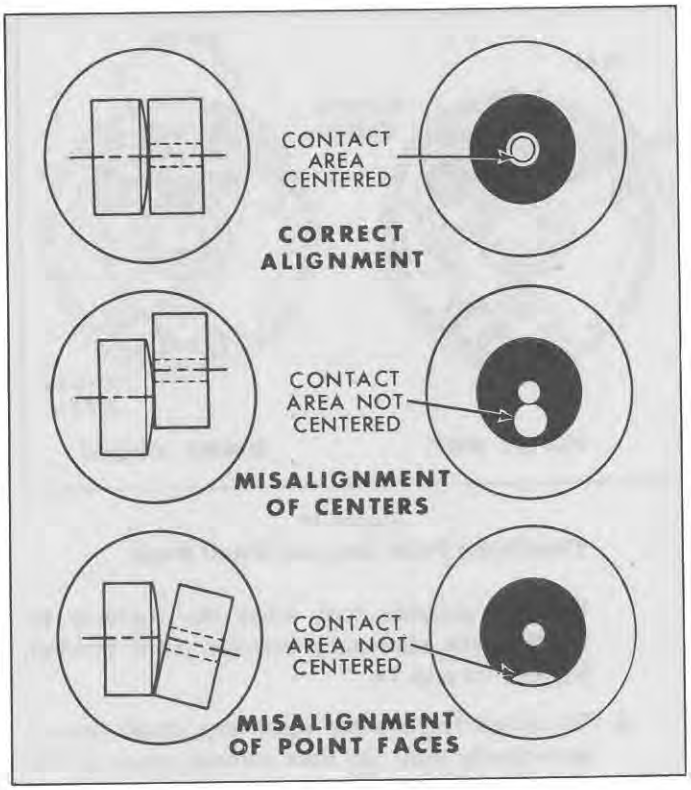

Figure 74
Breaker Point Alignment

until a feeler gauge blade of the thickness specified, page 69, can be positioned between the contacts. With the feeler blade in position, rotate the screwdriver to obtained the desired gap.

4. Tighten the adjusting screws and recheck the gap. Repeat the adjustment if the point gap changed while tightening the adjusting screws.

C. Point Spring Tension (Pivot-Type Only)

Correct breaker point spring tension is essential for proper engine operation and normal breaker point life. To check the spring tension, place the hooked end of a Spring Tension Scale over the end of the movable breaker point, Figure 75. Pull the scale at a right angle (90°) to the moveable arm until the breaker points just start to open. If the tension is not within specifications, page 69, adjust the spring tension as follows:

1. Disconnect the primary and condenser leads from the breaker point assembly primary terminal.
2. Loosen the nut holding the breaker point spring in position; move the slotted spring toward the breaker arm pivot to decrease tension, and in the opposite direction to increase tension.
3. Tighten the lock nut; then check the spring tension. Repeat the adjustment until the specified spring tension, page 69, is obtained.
4. Install the primary and condenser leads using the lock washer and nut. Tighten the nut securely.

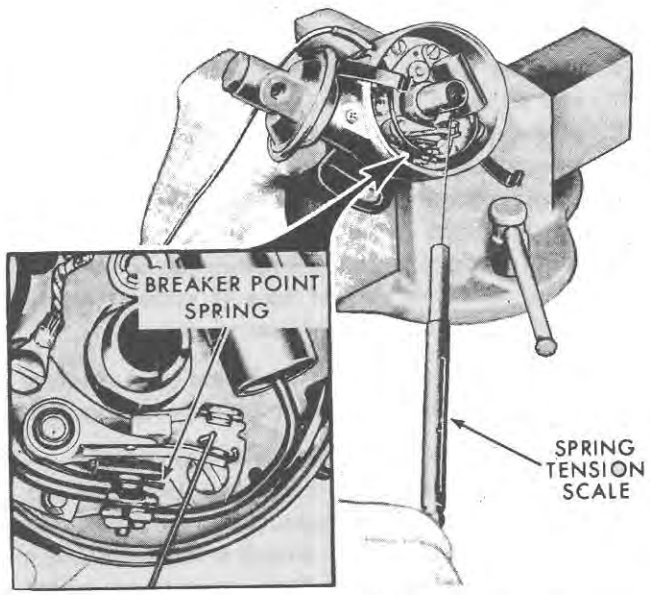

Figure 75
Checking Breaker Point Tension—Pivot-Type Point Assembly

4. DISTRIBUTOR DRIVE

DESCRIPTION

The distributor drive assembly, Figure 76, is located on the front right-hand side of the engine and is attached to the engine and front adapter plate. The distributor drive assembly consists of a housing, housing cover, gasket, and distributor drive shaft assembly, and is driven by the governor drive gear which is keyed to the distributor drive shaft assembly. The gear on the drive shaft assembly meshes with the distributor-driven gear. The assembly is lubricated from the engine main oil gallery through a tube leading into the drive housing.

The distributor is attached to the top of the drive housing and is secured with a retaining bolt. The bolt also acts to adjust the timing by securing the timing clamp. Refer to Figure 77 to identify the parts of the distributor drive assembly.

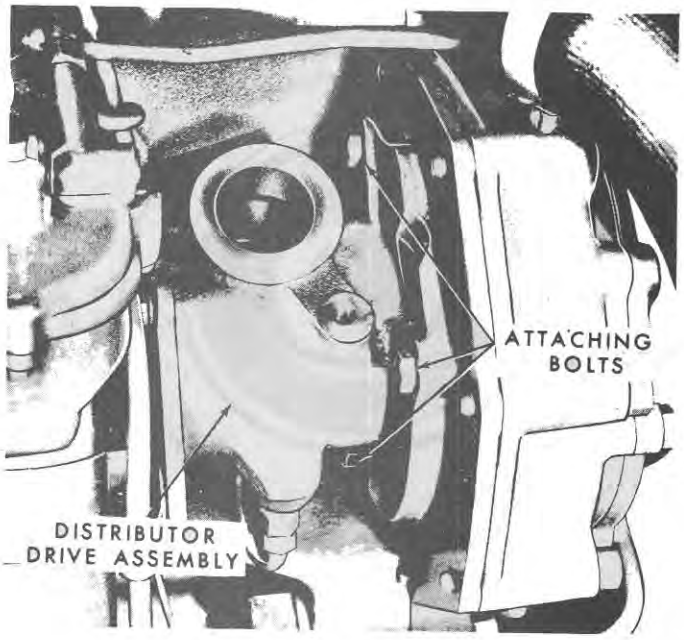

Figure 76
Distributor Drive Assembly

DISTRIBUTOR DRIVE MAINTENANCE

A. Removal

1. Remove the ignition coil as outlined on page 60, under "A. Removal."

2. Remove the distributor as outlined on page 52, under "A. Removal."

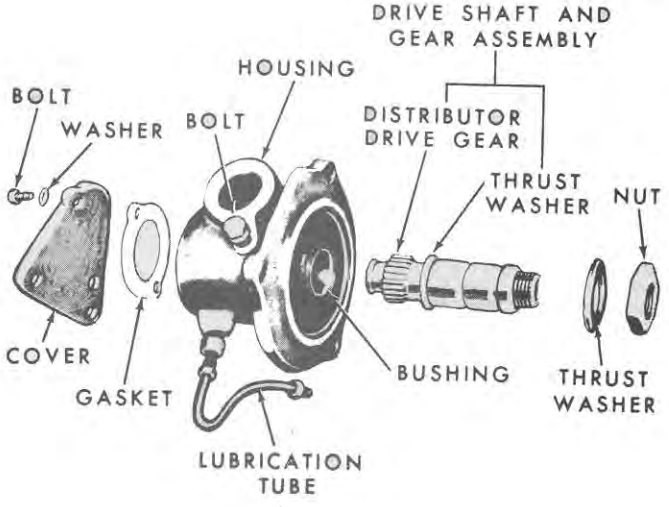

Figure 77
Distributor Drive Assembly—Disassembled

3. Disconnect the governor linkage from the governor arm. Remove the governor cover bolts and pry the governor cover off the dowel pins. Remove and discard the old gasket. Refer to "Part 1. ENGINE SYSTEMS".

4. Remove the governor outer race.

5. Remove the left-hand threaded nut and detach the governor driver assembly.

6. Disconnect the lubrication line from the engine block and the distributor drive housing.

7. Remove the three bolts that attach the distributor drive housing to the front engine plate and remove the housing, Figure 76. It may be necessary to tap the shaft from the governor drive gear with a soft hammer.

B. Disassembly

1. Remove the Woodruff key from the front of the shaft and remove the thrust washer, Figure 77.

2. Remove the two rear housing cover bolts and remove the rear cover and gasket. Discard the old gasket.

3. Remove the shaft and drive gear from the housing.

NOTE: ***Do not remove the roll pin to separate the drive gear from the shaft. The gear, thrust washer, and shaft are a matched set and must be serviced as an assembly.***

C. Inspection and Repair

1. Wash the drive housing in cleaning solvent. Clean the gasket surfaces. Inspect the gasket surfaces for nicks or burrs. Check the lubrication line fitting.

2. Check the shaft bushing in the housing, Figure 78, for wear, score marks, or burrs. Check the I.D. of the bushing with an inside micrometer; refer to page 69, for the correct bushing diameter.

3. Check the shaft assembly, Figure 77, for wear. Be sure the keyway is in good condition. Check the drive gear for wear or broken teeth. Check the thrust washer and snap ring between the gear and the shaft for damage. If any of these conditions exist, discard the shaft assembly.

4. Check the Woodruff key and the governor gear thrust washer for wear or damage.

© FORD MOTOR CO. 1966

D. Assembly

Refer to Figure 77 for reference during assembly.

1. If the housing shaft bushing, Figure 78, does not meet specifications, page 69, install a new bushing.
2. Install a new lubrication line fitting if the old one is damaged.
3. Install the drive gear and shaft assembly in the housing. Use a new rear cover plate gasket.
4. Install the front thrust washer and position the Woodruff key in the keyway.

E. Installation

1. Using a new gasket, position the drive assembly on the front engine plate. Align the key on the shaft with the keyway in the drive gear and start the shaft into the gear. Install the three drive housing bolts and lock washers, Figure 76.
2. Position the governor driver assembly on the shaft and start the nut on the shaft. Tighten the nut to draw the gear onto the shaft; then tighten the nut to the specified torque, page 71.
3. Install the outer race. The shaft on the outer race fits into the distributor drive shaft.
4. Using a new gasket, place the governor cover in position on the dowel pins and install the attaching bolts. Tighten the bolts to the specified torque, page 71.

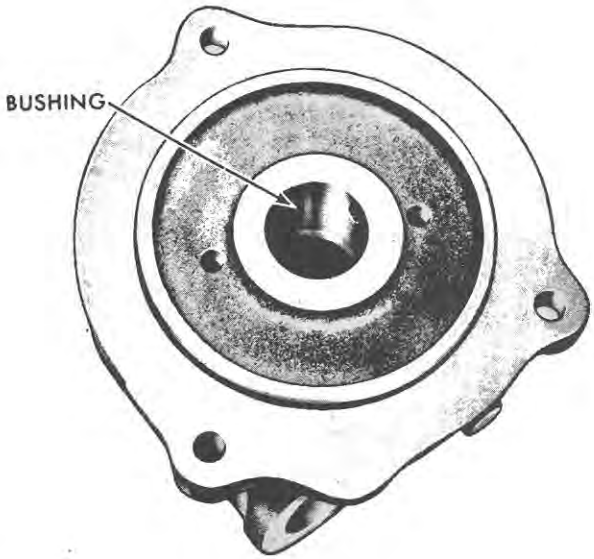

Figure 78
Drive Shaft Bushing

5. Connect the linkage to the arm on the governor front cover. Refer to "Part 1. ENGINE SYSTEMS".
6. Install the distributor as outlined on page 56, under "E. Installation."
7. Install the ignition coil as outlined on page 61, under "C. Installation".

5. IGNITION COIL

DESCRIPTION

The ignition coil is a step-up transformer which increases the low voltage output from the battery to the high voltage needed to jump the gap at the spark plug and ignite the fuel-air mixture in the combustion chamber.

Two ignition coils may be encountered in service. Each is identified by its length and is to be used in the installations listed below:

- The 5-inch ignition coil is used with the key-starter switch-to-coil **resistance** wire assembly, and the starting motor relay-to-coil jumper wire assembly. See Figure 56.
- The 5½-inch ignition coil is used with the key-starter switch-to-coil **non-resistance** wire assembly. See Figure 56.

NOTE: ***To determine if the ignition coil is functioning properly, perform the ignition coil tests as outlined on page 47.***

IGNITION COIL MAINTENANCE

A. Removal

1. Turn the key-starter switch to the "OFF" position.
2. Disconnect the key-starter switch-to-coil lead, or leads, (coil "BAT" terminal) and the primary lead (coil "DIST" terminal). Remove the high tension (secondary) lead from the coil tower.
3. Remove the two coil bracket-to-distributor drive housing cover screws. Remove the coil and bracket assembly.

4. Remove the coil from the bracket. The bracket may be reused if it is not damaged.

B. Inspection

Inspect the coil for dents, cracks, or a broken or damaged tower terminal. Install a new coil if necessary.

C. Installation

IMPORTANT: ***The primary terminal posts of the coil are marked "BAT" and "DIST" to distinguish the positive battery terminal and the negative distributor terminals. Care should be exercised in connecting the wires to the correct terminals. If the primary ignition wires are incorrectly attached to the coil, the coil will have reverse polarity. This will result in poor engine performance and probably a high speed missfiring condition.***

1. Attach the coil and bracket assembly (tower up) to the distributor drive housing cover. Tighten the attaching screws securely.
2. Reconnect the secondary lead to the tower, the distributor primary lead to the "DIST" terminal, and the key-starter switch (battery) lead or leads to the "BAT" terminal.

NOTE: ***Do not overtighten the "Distributor" and "Battery" terminal nuts. Make sure the secondary lead is properly fitted in the tower.***

6. SPARK PLUGS AND WIRES

DESCRIPTION

The spark plugs are located in the engine head and are easily accessible for removal and installation.

The purpose of the spark plug is to provide a proper gap, in the combustion chamber, across which a spark can be made to jump and ignite the fuel-air mixture under all engine speed and load conditions.

The heat range of a spark plug refers to the heat dissipation properties of the plug or the temperature limits within which a particular plug operates most efficiently, depending upon its ability to dissipate the heat of combustion. If the electrodes do not sustain a sufficiently high temperature, these deposits would accumulate to the extent of fouling the plug. If excessive heat is retained by the plug rather than dissipated through the plug shell and cylinder head to the engine water jacket, the insulator tip will become heated to the point of glowing and cause preignition. This is a premature ignition of the mixture by incandescence of the plug rather than by the correctly timed spark jumping the gap.

The swirling action of the gases minimize the formation of carbon deposits at low speed by cleaning the inside of the plugs. The net result is a spark plug which resists low speed fouling, will not cause deterioration and renders improved service life.

The spark plug gap must be large enough to provide an ample spark for idle and low speed operation but not so large as to prevent a spark at high speed and heavy load conditions.

Spark plugs may become fouled by carbon from leaking or stuck valves, over rich carburetion, an improper point gap setting, or oil. See Figure 79 for fouling conditions.

Spark plugs should be cleaned and the gap checked (with a wire gauge) every 300 hours. Under normal operating conditions, new spark plugs should be installed every 600 hours, or sooner if necessary.

SPARK PLUG MAINTENANCE

A. Removal

1. Remove the battery tray retaining bolt and rotate the battery tray away from the engine.
2. Withdraw the spark plug wire and seal assemblies from the cylinder head.
3. Loosen each plug about one turn (counterclockwise) to break free any accumulation of carbon, dirt or gravel which may be lodged around the shell of the plug.

   IMPORTANT: ***Use the correct size deep socket to avoid slipping and breakage of the spark plug insulator.***
4. Blow out spark plug ports with compressed air to remove dirt or gravel which may have collected around the base of the plug.
5. Remove spark plugs and sealing washers and place them in a suitable holder in the order they were removed from the engine.

© FORD MOTOR CO. 1966

CONDITION	IDENTIFICATION	CAUSED BY
 OIL FOULING	Wet, sludgy deposits.	Excessive oil entering combustion chamber through worn rings and pistons, excessive clearance between valve guides and stems, or worn or loose bearings.
 GAS FOULING	Dry, black, fluffy deposits.	Incomplete combustion caused by too rich a fuel-air mixture or by a defective coil, breaker points or ignition wiring.
 BURNED OR OVERHEATING	White, burned, or blistered insulator nose and eroded electrodes.	Engine overheating caused by improper ignition timing, wrong type of fuel, loose spark plugs, or too hot a plug, low fuel pump pressure.
 NORMAL CONDITIONS	Rusty brown to grayish-tan powder deposit and minor electrode erosion.	Regular or unleaded gasoline.
 HIGH LEAD DEPOSITS	White, powdery deposits.	Highly leaded gasolines (premium gasoline.)
 CARBON FOULING	Hard, baked on black carbon.	Too cold a plug. Weak ignition, defective fuel pump, dirty air cleaner, too rich a fuel mixture.
 SILICONE DEPOSIT	Hard and scratchy.	Formed when fine sand particles combine with anti-knock compounds in the fuel. Most common in dusty areas. The plugs cannot be cleaned.
 SPLASHED FOULING		Deposits, accumulated after a long period of misfiring, suddenly loosened when normal combustion chamber deposits are restored after new plugs are installed. During a high speed run these deposits are thrown into the plug.

Figure 79
Spark Plug Inspection

B. Inspection

Spark plug testing consists of a careful visual inspection and a comparison test in a pressure type tester (if available).

Carefully inspect each plug for damage as outlined below. Damaged or defective plugs should be discarded.

- Cracks and chips on the insulator inside and outside and loose terminals.
- Blow-by marks on the outside of the insulator.
- Excessive electrode erosion.
- Blistering and erosion of the insulator tip.
- Black carbon or oil deposits on insulator tip.

A white deposit and blistering on the insulator and excessive wear of the electrodes is usually caused by a spark plug that is loose in the cylinder head, a cracked or loose insulator, a leaking intake manifold gasket, or a lean air-fuel mixture (carburetor adjustment).

An oily carbon deposit on the inside of the insulator would indicate excessive oil in the combustion chamber. This could be caused by weak or worn rings. A dry, fluffy, black deposit could be caused by a rich fuel-air mixture (carburetor fault) or an ignition failure.

If a spark plug shows signs of operating too hot or is accumulating carbon and oil deposits, find the cause before installing a new spark plug.

If the plugs have operated at normal temperatures the condition of the electrodes usually indicates the extent and amount of service they have been subjected to. If the ground electrode is worn thin or the center electrode is worn down so the gap is difficult or impossible to adjust, the spark plug should be removed and a new plug installed.

Inspect the spark plug wires for frayed or cracked insulation, oil impregnation, or any indications of short-circuiting. New wires should be installed if any of these

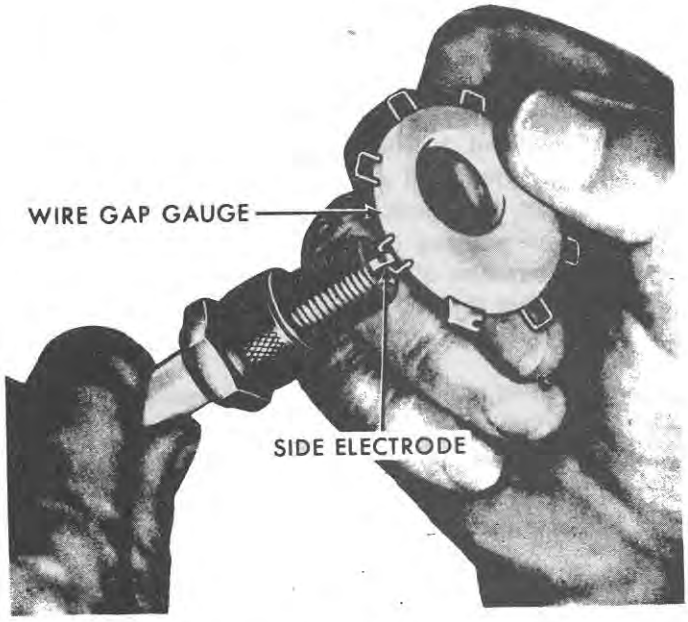

Figure 80
Checking Spark Plug Gap

conditions exist. Also check the insulator seal to make sure it is effective sealing foreign matter and water from the spark plug bore in the cylinder head. Install a new seal if necessary.

C. Cleaning and Adjusting

1. Remove and examine the spark plugs.
2. If the insulator and firing end of a plug is oily, clean by brushing with a suitable solvent and an air blast. Failure to do this before cleaning with an abrasive blast will cause abrasive to pack in the shell of the plug and make cleaning difficult.
3. Clean the plug, preferably in an abrasive blast type cleaner. Follow the manufacturer's instructions for the use of the equipment. Limit the cleaning time to about 3 seconds. Rotate the plug while it is being subjected to the abrasive blast. If upon inspection, the plug is not found to be entirely clean it may be placed in the abrasive blast again for not longer than 3 seconds. Prolonged use of the abrasive blast will wear away the insulator.
4. Be sure to remove all traces of the cleaning abrasive with the air blast.
5. Clean threads of plugs by brushing with a wire brush.
6. File the end of the center electrode until it is flat. File the sparking areas of the ground electrode to obtain a flat, parallel surface. Less voltage is required to fire the spark plug and the gap can be more accurately adjusted if the electrodes are flat. If the ground electrode is filed too thin it may cause pre-ignition.
7. Check the gap with a wire gauge, Figure 80, held parallel to the gap surface. A light drag should be felt when the wire gauge passes through the gap. Adjust the gap by bending the ground electrode to the center electrode. Do not move the center electrode as the insulator tip may be damaged.

D. Installation

Before installing a new plug or one that has been cleaned, always be sure the gap has been set to specifications, page 69.

1. Check the threads in the cylinder head. It should be possible to seat a new plug by hand. If threads require cleaning, apply a few drops of penetrating oil or kerosene on the threads. Obtain an old plug of the same size, inspect the plug threads to make sure they are in good condition and screw this used plug into the cylinder head as far as it will go. Work the plug in and out until it can be seated by hand.
2. Check tapered seat surface on both the cylinder head and spark plug shell. The seat must be clean and free from dirt to assure proper seating of the spark plug.
3. Install a new sealing washer.
4. Install the spark plugs by hand to make sure plugs seat properly.
5. Tighten each plug to specified torque, page 71.
6. Install the spark plug wires and seal assemblies.
7. Reposition the battery tray and install the retaining bolt.

© FORD MOTOR CO. 1966

Part 3

ELECTRICAL SYSTEM

Chapter 6

TROUBLE SHOOTING, SPECIFICATIONS, AND SPECIAL TOOLS

Section — Page

1. Trouble Shooting 65
2. Specifications 68
3. Special Tools 71

1. TROUBLE SHOOTING

INSTRUMENT TROUBLE SHOOTING GUIDE

Trouble	Possible Causes
Warning Lights and Gauges Inoperative	1. Key-starter switch faulty. 2. Fuse burned out. (C Prefixed Tractors).
Fuel Gauge Erratic or Inoperative	1. Loose or broken wiring. 2. Defective fuel gauge. 3. Defective fuel sender unit. 4. Defective constant voltage stabilizer.
Temperature Gauge Erratic or Inoperative	1. Loose or broken wiring. 2. Defective temperature gauge. 3. Defective temperature sender unit. 4. Defective constant voltage stabilizer.
Oil Pressure Warning Light Inoperative	1. Loose or broken wiring. 2. Burned out bulb. 3. Defective oil pressure sender unit.
Generator Warning Light Inoperative	1. Loose or broken wiring. 2. Burned out bulb. 3. Defective generator regulator.

© FORD MOTOR CO. 1966

LIGHTING SYSTEM TROUBLE SHOOTING GUIDE

Trouble	Possible Causes
All Lights Do Not Light	1. Dead battery. 2. Loose battery cable connections. 3. Fuse burned out (if equipped) 4. Faulty wiring in the lighting circuit. 5. Defective light switch. 6. All light bulbs burned out. 7. Improperly adjusted voltage regulator. 8. Multiple connector between front and rear harnesses loose (if equipped).
Individual Lights Do Not Light	1. Burned out bulb. 2. Loose or broken light wires. 3. Poor ground.
Lights Burn Out Repeatedly	1. Loose or corroded wiring connections. 2. Improperly adjusted voltage regulator.

CHARGING SYSTEM TROUBLE SHOOTING GUIDE

Trouble	Possible Causes
Battery Low in Charge	1. Loose or worn generator drive belt. 2. Poor battery. Condition will not accept or hold a charge. Electrolyte low. 3. Generator not producing rated output. 4. Generator regulator out of adjustment. 5. Excessive resistance in generator-to-battery or battery-to-ground circuits.
Generator Charging at High Rate	1. Loose charging system connections. 2. High voltage regulator setting. 3. Burned voltage regulator contacts.
No Output from Generator	1. Generator drive belt broken. 2. Loose connections or broken cable in charging system. 3. Defective generator.
Intermittent or Low Generator Output	1. Generator drive belt slipping. 2. Loose connections or broken cables in charging system. 3. Defective Generator.

STARTING SYSTEM TROUBLE SHOOTING GUIDE

Problem	Possible Causes
Engine Will Not Crank and Starting Motor Relay (4½-Inch Starting Motor) or Solenoid (5-Inch Starting Motor) Does Not Click	1. Battery completely discharged. 2. Key-starter switch, safety starter switch, or starting motor relay inoperative. 3. Starting circuit open or has a high resistance.
Engine Will Not Crank But Starting Motor Relay (or Solenoid) Clicks	1. Burned relay (or solenoid) terminal contacts. 2. Defective starting motor or loose or defective battery cables and connections. 3. Defective starting motor drive assembly. 4. Low charge in battery. 5. Hydrostatic lock in engine cylinders. 6. Engine seized.
Starting Motor Spins But Does Not Crank Engine	1. Defective starting motor drive assembly. 2. Defective flywheel ring gear.
Engine Cranks Slowly	1. Battery low in charge. 2. Excessive resistance in starting circuit. 3. Defective starting motor. 4. Tight engine.

IGNITION SYSTEM TROUBLE SHOOTING GUIDE

Trouble	Possible Causes
No Spark At Any Spark Plug Wire	1. Defective coil-to-distributor high tension wire. 2. Defective ignition coil. 3. Defective condenser and/or ignition points. 4. Defective rotor. 5. Defective primary circuit wiring.
Satisfactory Spark From Some, But Not All Spark Plug Wires	1. Defective spark plug wires. 2. Defective distributor cap. 3. Worn distributor cam.
Intermittent Spark at All Spark Plug Wires	1. Loose or dirty connections in the primary circuit. 2. Defective coil or condenser. 3. Distributor cap cracked, dirty, or wet internally.
Weak Spark At All Spark Plug Wires	1. Improper distributor point gap or defective points. 2. Defective rotor or cap. 3. Defective coil high tension wire.

© FORD MOTOR CO. 1966

2. SPECIFICATIONS

LIGHTS AND INSTRUMENTS

Headlamps:
- Volts 12.8
- Amperes at 12.8 Volts 2.7
- Watts:
  - Dual Beam (High and Low) ..... 35 each
  - Single Beam 35
- Bulb Type ..... sealed beam
- Filament:
  - External Mounted Lamps ..... single
  - Internal Mounted Lamps ..... double

Rear Lamps:
- Watts 6
- Volts 12.8
- Amperes at 12.8 Volts 0.4
- Bulb Type ..... single contact—bayonet

Instrument Panel Lamps:
- Volts 12.8
- Watts 2.2
- Amperes at 12.8 Volts 0.1
- Bulb Type ..... single contact—bayonet

Instrument Panel Fuse—Maximum Capacity (C Prefixed Tractors) ..... 3 amps.
Lighting Circuit Fuse (A and B Prefixed Tractors) ..... 15 amps.

Implement Work Lamp:
- Volts 12.8
- Watts 35
- Amperes at 12.8 Volts 2.7
- Integral Switch Rating ..... 5 amps.
- Bulb Type ..... P225-21 Prefocus

License Plate Lamp:
- Volts 12.8
- Watts 6
- Amperes at 12.8 Volts 0.4
- Bulb Type ..... single contact—bayonet

Horn:
- Voltage 13.5
- Current Draw ..... 2.5 amps.

Oil Pressure Switch (Engine):
- Rating at 13.5 Volts ..... 0.2 amps.
- Operating Pressure ..... 11-15 psi (0.77-1.05 kg/cm^2)

Oil Pressure Switch (Select-O-Speed Transmission):
- Rating at 13.5 Volts ..... 0.25 amps.
- Operating Pressure (without cooler) ..... 13±1.25 psi (0.76±0.08 kg/cm^2)
  (with cooler) ..... 20±2 psi (1.40±0.14 kg/cm^2)

(NOTE: The following specifications supersede the specifications in the text.)

IGNITION SYSTEM

Type ..... coil and distributor

Distributor:

Basic Ignition Timing (@ 600-650 rpm with vacuum line disconnected):

Ford 2000 and 3000 ..... 2° ± 2°
Ford 4000 ..... 4° ± 2°
Ford 5000 ..... 2° ± 2°

Breaker Arm Tension (Pivot Type Points):

Measured at End of Breaker Points Contact ..... 17-21 oz. (481-595 gms)
Measured Through Hole ..... 15-18 oz. (425-510 gms)

Point Gap (Except LP-Gas) ..... 0.024-0.026 in. (0.609-0.660 mm)
Point Gap (LP-Gas) ..... 0.022-0.028 in. (0.558-0.711 mm)
Cam Angle (Dwell) ..... 35°—38°
Drive Shaft Bushing Diameter ..... 0.468-0.469 in. (11.90-11.91 mm)
Distributor Gear End Play ..... 0.029-0.042 in. (0.73-1.05 mm)
Distributor Rotation ..... counterclockwise

Condenser:

Maximum Series Resistance ..... 0.9 ohms

Coil:	5½ Inch Long	5 Inch Long
Primary Resistance @ 75°F. ± 5°F. (23.9°C. ± 15°C.) (Ohms)	3.2-3.5	1.4-1.5
Secondary Resistance @ 75°F. ± 5°F. (23.9°C. ± 15°C.) (Ohms)	3700-4100	8000-8700
Current Draw with Engine Stopped— Breaker Points Closed (Approximate amperes)	3.75	4.5
Primary Circuit Resistor @ 75°F. ± 5°F. (23.9°C. ± 15°C.) (Approximate amperes)	—	1.30-1.40

Spark Plugs:

Make ..... Autolite AG5
Heat Range ..... normal
Size ..... 14 mm
Gap (Except LP-Gas) ..... 0.023-0.027 in. (0.584-0.686 mm)
Gap (LP-Gas) ..... 0.018-0.022 in. (0.457-0.558 mm)
Tightening Torque (Dry Thread) ..... 26-30 lbs. ft. (3.59-4.15 kgm)

Key-Starter Switch:

Amperes at 13.5 Volts 20

Positions:

Gasoline & Diesel w/o Thermostart 3
Diesel with Thermostart 5

Safety Starter Switch:

Amperes at 13.5 Volts 20

CHARGING SYSTEM

Battery:	80 Amp. Hours	128 Amp. Hours
Capacity (Ampere Hour at 20 Hour Rate)	80	128
Voltage	12	12
Cells	6	6
Plates Per Cell	17	25
Ground Terminal	negative	negative

CHARGING SYSTEM (Cont'd):

Generator:	11 Amp. Type	22 Amp. Type
Maximum Output (Hot):		
Amperes at Approximately 1200 Engine rpm (2350 Generator rpm) and 15 Volts	11	—
Amperes at Approximately 1350 Engine rpm (2650 Generator rpm) and 15 Volts	—	22
Cut-In Speed (Approximate Engine rpm)	860	765
Field Coil Current	2 amps.	2 amps.
Field Coil Resistance	6 ohms	6 ohms
Brush Length (Minimum)	7/32 in. (5.56 mm)	13/32 in. (10.32 mm)
Commutator Diameter (Minimum)	1.450 in. (36.830 mm)	1.450 in. (36.830 mm)
Brush Spring Tension with New Brush (Minimum)	28 oz. (793 gms)	18 oz. (509 gms)
Commutator Runout	0.002 in. (0.050 mm)	0.002 in. (0.050 mm)
Armature Shaft Runout	0.002 in. (0.050 mm)	0.002 in. (0.050 mm)

Generator-Regulator	11 Amp. Type	22 Amp. Type
Identification Number Stamped on Base Plate	C5NF-10505-A or 37432-D	C5NF-10505-B or 37451-A

Cutout Relay:	11 Amp. Type	22 Amp. Type
Cut-In Voltage	12.4 - 13.2	12.4 - 13.2
Cut-Out Voltage	9.5 - 11.0	9.5 - 11.0
Cut-Out Current	—4 amps.	—4 amps.
Armature-to-Core Air Gap	0.035 - 0.045 in. (0.89 - 1.14 mm)	0.035 - 0.045 in. (0.89 - 1.14 mm)
Moveable Contact Blade Movement	0.010 - 0.020 in. (0.25 - 0.51 mm)	0.010 - 0.020 in. (0.25 - 0.51 mm)

Current Regulator:		
On-Load Setting (Amps)	11 ± 1	22 ± 1
Armature-to-Core Air Gap	0.054 in. (1.37 mm)	0.054 in. (1.37 mm)

Voltage Regulator:		
Opening Voltage at 50°F. (10°C.)	14.9 - 15.5	14.9 - 15.5
at 68°F. (20°C.)	14.7 - 15.3	14.7 - 15.3
at 86°F. (30°C.)	14.5 - 15.1	14.5 - 15.1
at 104°F. (40°C.)	14.3 - 14.9	14.3 - 14.9
Armature-to-Core Air Gap	0.055 in. (1.39 mm)	0.053 in. (1.34 mm)

STARTING SYSTEM

No-Load Current Draw (Maximum):	4-½ Inch	5 Inch
Gasoline at 12 Volts and 6000 - 9500 Starter rpm	70 amps.	—
Diesel and Ford 5000 Gasoline Engine at 12 Volts and 5220 - 9440 Starter rpm	60 amps.	—
Diesel at 12 Volts and 5500 - 7500 Starter rpm	—	100 amps.

Current Draw (Starter Installed on Warm Engine):		
Gasoline Engine at 12 Volts and 150 - 200 Engine rpm	150 - 200 amps.	—
Diesel and Ford 5000 Gasoline Engine at 12 Volts and 150 - 200 Engine rpm	225 - 275 amps.	—

	4-½ Inch	5 Inch
Current Draw (Starter Installed on Warm Engine) (Cont'd):		
Diesel Engine at 12 Volts and 150 - 200 Engine rpm	—	250 - 300 amps.
Brush Length (Minimum)	0.25 in. (6.33 mm)	0.313 in. (7.94 mm)
Brush Spring Tension with New Brush (Minimum)	40 oz. (1052 gms)	42 oz. (1188 gms)
Commutator Diameter (Minimum)	1.46 in. (37.08 mm)	1.53 in. (38.89 mm)
Armature Shaft End Play (Maximum)	0.058 in. (1.483 mm)	0.020 in. (0.508 mm)
Armature Shaft Runout (Maximum)	0.005 in. (0.127 mm)	0.005 in. (0.127 mm)
Drive Pinion Clearance (Engaged)	—	0.010 - 0.020 in. (0.254 - 0.508 mm)

Torque Specifications (Lubricated Threads)	Pounds Feet	Kilogram-Metres
4½ Inch Starting Motor Through Bolts	5	0.690
5 Inch Starting Motor Through Bolts	8	1.10
Starting Motor-to-Rear Adapter Plate Bolts	30-35	4.15-4.84
Spark Plugs (Dry Threads)	26-30	3.59-4.15
5 Inch Starting Motor Solenoid Terminal Nuts	24 lbs. in.	0.276
5 Inch Starting Motor Solenoid Securing Nuts	4.5	0.622
Governor Drive Gear Nut	95-105	13.13-14.51
Governor Housing-to-Engine Front Cover Bolts	10-23	1.38-3.18
Generator-Regulator Mounting Screws	12 lbs. in.	0.138
Generator Drive End Plate Assembly Securing Nut	25	3.46

3. SPECIAL TOOLS

Tool Number	Description
SW 503	Distributor Shaft Bushing Remover and Installer
SW 504 or 54381742	Generator-Regulator Cam Adjusting Tool
801 (Part of Kit No. 818)	Bushing Driver Cap
802 (Part of Kit No. 818)	Bushing Driver Cap
813 (Part of Kit No. 818)	Bushing Driver
950	Bearing Pulling Attachment
954 or 7600-E	Clutch Pilot Bearing Remover

© FORD MOTOR CO. 1966

PART 4
CLUTCHES

Part 4
CLUTCHES

Chapter 1
SINGLE CLUTCHES

Section		Page
1.	Description and Operation	1
2.	Important Changes	2
3.	Adjustments	9
4.	Single Clutch Removal and Installation	9
5.	Overhaul the Single Clutch Pressure Plate and Cover Assemblies	11

Chapter 2
DOUBLE CLUTCHES

Section		Page
1.	Description and Operation	25
2.	Important Changes	28
3.	Adjustments	29
4.	Double Clutch Removal and Installation ..	30
5.	Overhaul Double Clutch Assembly	32

Chapter 3
SERVICING CLUTCH ASSOCIATED PARTS

Section		Page
1.	Clutch Pilot Bearing	41
2.	Clutch Release Bearing	42
3.	Clutch Release Cross-shaft Bushings	44
4.	Clutch Pedal Bushings	45

Chapter 4
SPECIFICATIONS AND SPECIAL TOOLS

Section		Page
1.	Specifications	47
2.	Special Tools	50

Part 4
CLUTCHES
Chapter 1
SINGLE CLUTCHES

Section		*Page*
1.	Description and Operation	1
2.	Important Changes	2
3.	Adjustments	9
4.	Single Clutch Removal and Installation.. ..	9
5.	Overhaul the Single Clutch Pressure Plate and Cover Assemblies	11

1. DESCRIPTION AND OPERATION

All tractors with manual gearchange transmissions utilise a single plate clutch, the disc of which incorporates either friction linings or cerametallic friction buttons on each side and a splined hub which locates the disc on the splines of the transmission input shaft. The disc is installed between the flywheel and a pressure plate assembly which is itself attached to the flywheel.

In the clutch "engaged" position the spring loaded pressure plate presses the clutch disc into contact with the engine flywheel and the drive from the engine is transmitted to the transmission by the friction between the linings, or cerametallic buttons, of the disc and the surfaces of the flywheel and pressure plate.

A clutch pedal is connected by a rod to a lever and cross-shaft assembly on which is mounted a fork. This fork engages a sliding release bearing and hub assembly, the bearing of which contacts the ends of release levers in the pressure plate assembly.

Depression of the clutch pedal causes the cross-shaft and fork to move the release bearing forward and depress the pressure plate release levers thus drawing the pressure plate away from the clutch disc and releasing the disc from contact with the flywheel. The frictional drive to the transmission is thereby disconnected to enable gearchanging to take place.

After a gearchange is made and the clutch pedal is released, a spring returns the pedal to its free position and the release bearing is drawn away from the release levers of the pressure plate assembly.

The main springs of the pressure plate assembly then reassert pressure on the plate moving it forward to press the clutch disc into contact with the flywheel and re-establish the drive to the transmission.

NOTE – The pressure plate assembly of the Ford 4000 with Independent P.T.O. differs from the others in that it incorporates a splined hub, Figure 1, which is rivetted to the pressure plate cover. The P.T.O. input shaft locates in this hub thus the drive to the P.T.O. is transmitted direct from the engine flywheel and is independent of the normal transmission clutch.
Independent P.T.O. drive on the Ford 5000 is achieved in a different manner. Here the P.T.O. input shaft, Figure 2, passes through the inside of the transmission main drive input shaft and is splined into a drive plate which is bolted to the engine crankshaft.

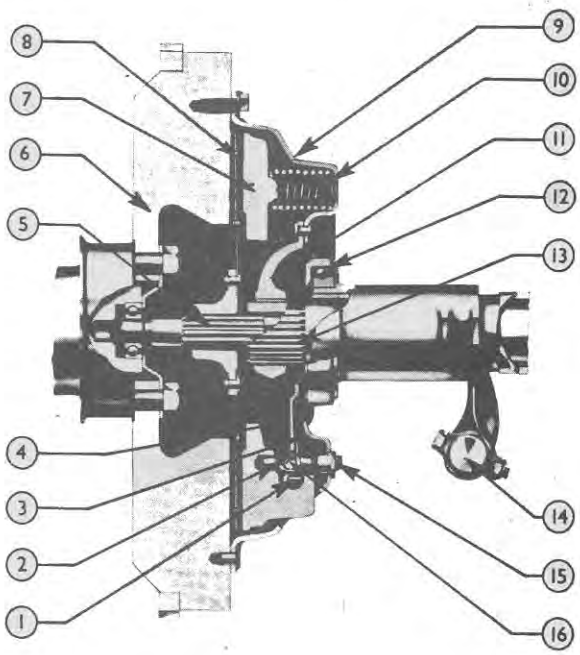

Figure 1
Ford 4000 Clutch with Independent P.T.O. Drive (Previous Type)

1. Strut
2. Eyebolt
3. Anti-rattle Spring
4. Release Lever
5. Transmission Input Shaft
6. Flywheel
7. Pressure Plate
8. Clutch Disc
9. Clutch Cover
10. Pressure Plate Springs
11. P.T.O. Drive Hub
12. Release Bearing
13. P.T.O. Input Shaft
14. Cross-shaft
15. Nut
16. Pivot Pin

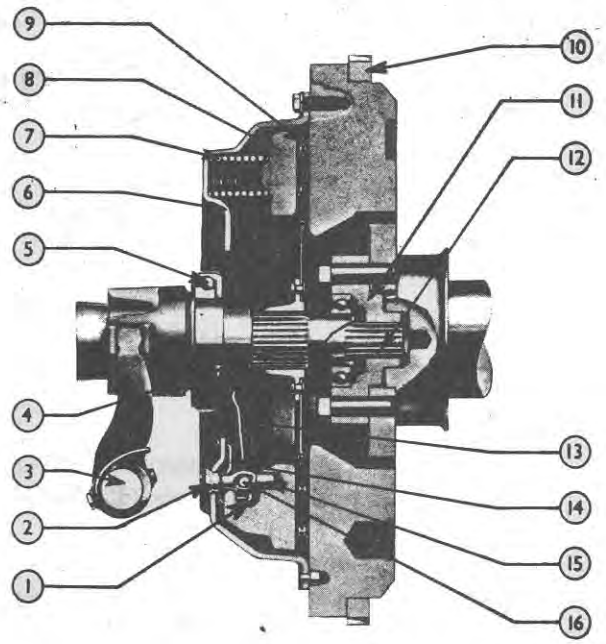

Figure 2
Ford 5000 Clutch with Independent P.T.O. Drive (Previous Type)

1. Strut
2. Nut
3. Cross-shaft
4. Transmission Input Shaft
5. Release Bearing
6. Cover
7. Pressure Plate Springs
8. Pressure Plate
9. Clutch Disc
10. Flywheel
11. P.T.O. Drive Plate
12. P.T.O. Input Shaft
13. Release Lever
14. Anti-rattle Spring
15. Eyebolt
16. Pivot Pin

2. IMPORTANT CHANGES

The type of clutch disc and pressure plate assembly used depends upon the tractor model concerned and when it was manufactured. Two distinct basic designs have been used and they are not interchangeable. The dates when the change was made from the previous to the current design varies for different models and different Assembly Plants, but a tractor may be identified externally as having a current design clutch if it has an external clutch pedal return spring as shown in Figure 3.

NOTE – Tractors with a previous design clutch had a clutch pedal return spring located inside the front compartment of the front transmission.

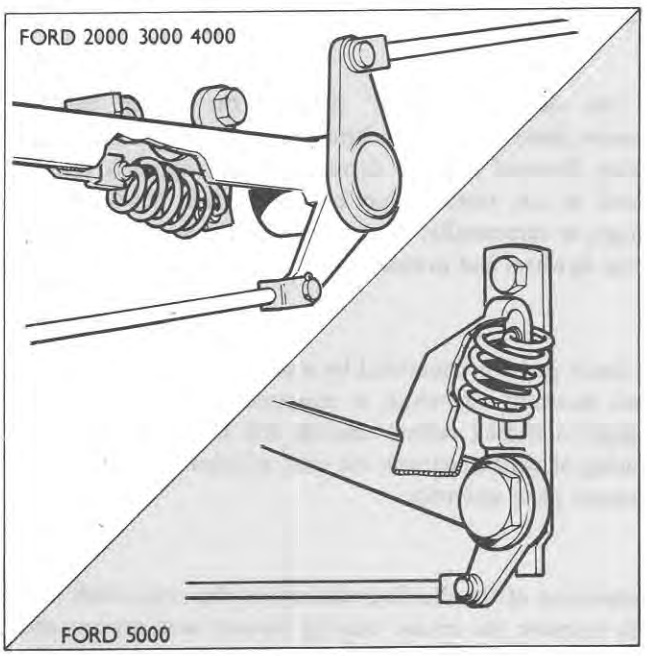

Figure 3
Clutch Pedal Return Springs (Current Tractors)

Clutch Discs (Previous Design)

Previous design clutch discs had continuous band linings of pressed or woven organic material and various types were used. Irrespective of the type used in original production the disc which should be installed in service on tractors where the pressure plate assembly is secured to the

flywheel by eight bolts is the one which incorporates a torsion damped hub and grooved facings. Figure 4 illustrates two typical discs of this type, but it should be noted that the disc diameter and the build-up of the hub relative to the centre plate varies in accordance with the model concerned.

The following table shows the part numbers of these clutch discs.

Part Number	*Diameter*	*Model Usage*
C7NN–7550–V	11 in. (27.9 cm.)	2000/3000/4000 with Trans. P.T.O. and Less P.T.O.
C7NN–7550–AA	11 in. (27.9 cm.)	4000 with Independent P.T.O.
C7NN–7550–Z	12 in. (30.5 cm.)	5000 Standard
C5NN–7550–AV	13 in. (33.0 cm.)	5000 Heavy Duty

Points to note when installing a torsion damped hub type of disc as a replacement for a non-torsion hub type are:

1. Where a 12 in. (30.5 cm.) diameter disc is being installed on a Ford 5000, the two washers under the heads of the bolts which retain the pilot bearing in the P.T.O. drive plate should be changed to a thinner type, Part Number C7NN–7N424–A. These washers have a thickness of 0.04 in. (1.02 mm.) as compared to the original washers which had a thickness of 0.07 in. (1.78 mm.). Tighten these bolts to a torque of 100 to 110 lb. ft. (13.8 to 15.2 m.kg.) on re-installation.

As the torsion damped hub type of disc is thicker than the previous type disc, four spacers, Part Number C7NN–7C596–A, which have a thickness of 0.07 to 0.08 in. (1.8 to 2.0 mm.), must be installed between the cover of the pressure plate assembly and the flywheel. It will be necessary to also use longer fixing bolts, Part Number 304684–S8, to secure the cover to the flywheel. These bolts have a length of 1 in. (25.4 mm.) as compared to the original bolts which had a length of 0.875 in. (22.2 mm.).

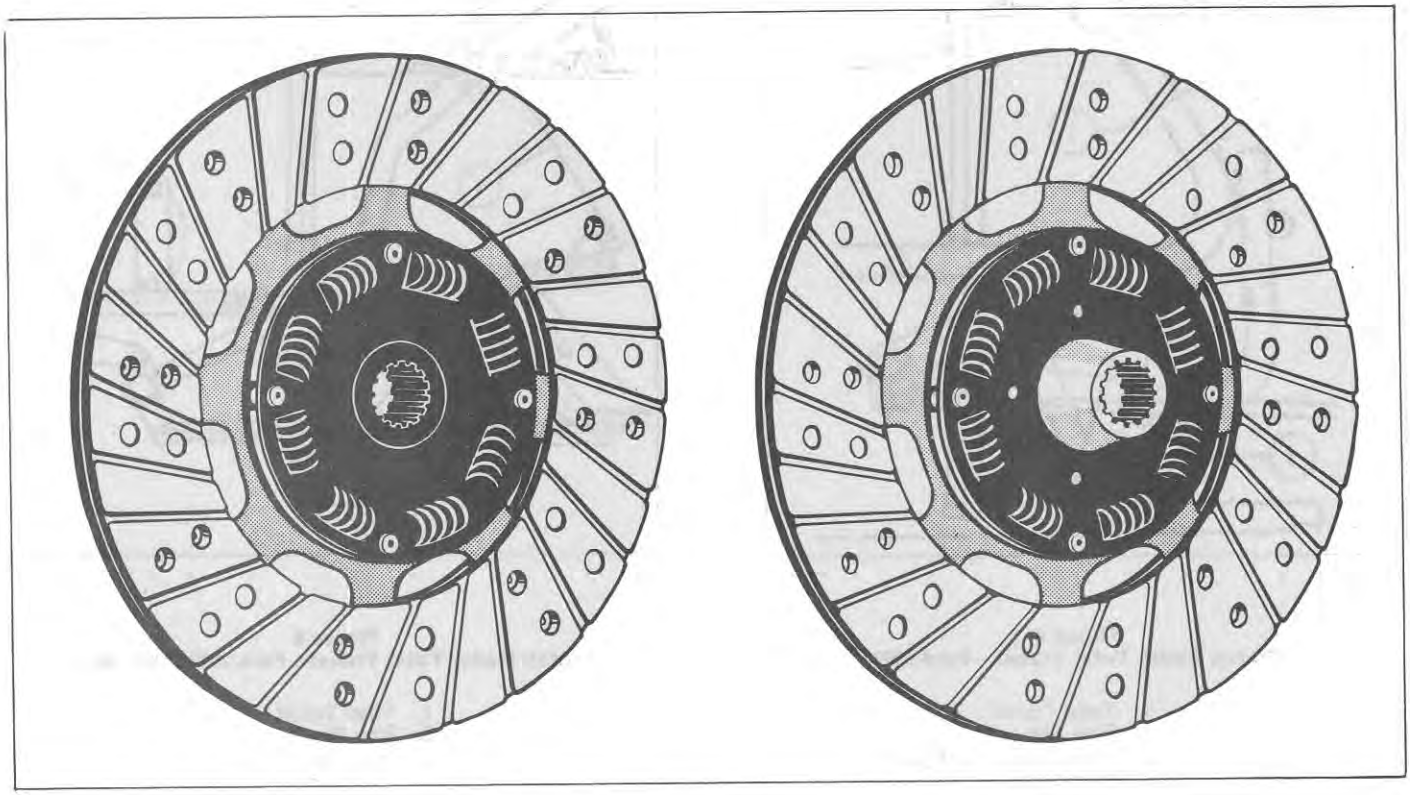

Ford 4000 with Independent P.T.O. **Ford 3000**

Figure 4
Typical Torsion Damped Hub Type Clutch Discs

2. Where a 13 in. (33 cm.) diameter torsion damped hub type of disc is being installed in place of an earlier 13 in. (33 cm.) heavy duty disc it will not be necessary to change the pilot bearing retaining washers but the spacers fitted originally between the pressure plate cover and the flywheel should be changed to a **thinner** type, Part Number C5NN–7N596–B. These have a thickness of 0.09 to 0.10 in. (2.3 to 2.5 mm.).

3. In all cases a check should be made after setting the correct clutch pedal free play that there is sufficient total travel of the clutch pedal to fully release the clutch disc when the pedal is depressed. On early models it may be necessary to increase the pedal total travel in order to obtain sufficient release.

On the Ford 5000 additional total travel may be obtained by removing metal from the bottom of the slot where the pedal passes through the foot-platform, Figure 5. On other models additional pedal travel may be obtained by removing metal from the upper stop on the platform, Figure 6.

Clutch Discs (Current Design)

The current types of clutch discs are illustrated in Figure 7. Two discs cover the complete range of current 2000, 3000, 4000 and 5000 agricultural tractors and both have a diameter of 11 in. (27.9 cm.). Both incorporate cera-metallic friction buttons on both sides of the disc. The disc used in the Ford 5000 has four pairs of buttons while the disc used in Ford 2000, 3000 and 4000 models has three pairs of buttons. The same disc is used in the Ford 5000 for standard and heavy duty applications.

These discs are not interchangeable with those used previously, i.e., they are only suitable for use where the pressure plate assembly is secured to the flywheel by six dowel bolts.

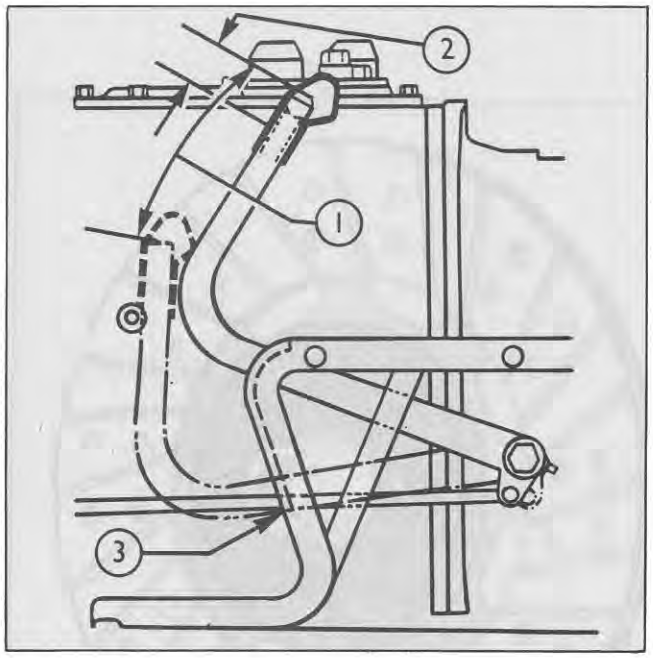

Figure 5
Clutch Pedal Total Travel – Ford 5000

1. Total Travel
2. Free Play
3. Pedal Lower Stop (Slot in platform)

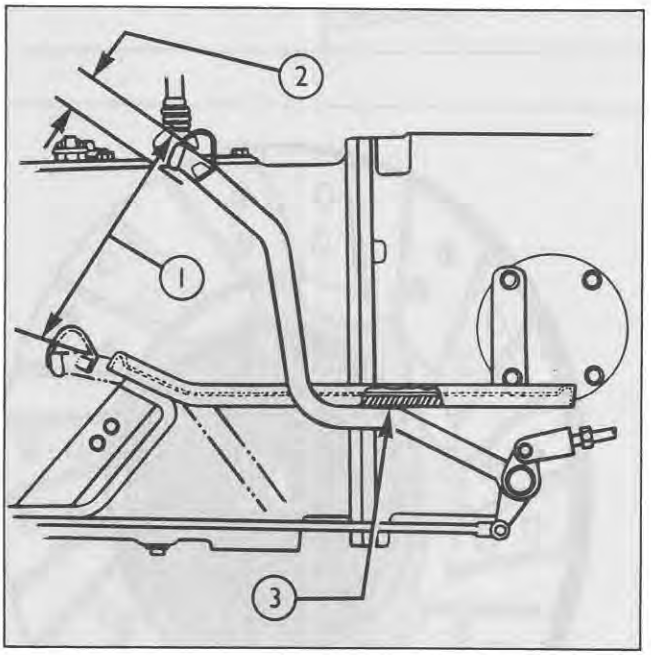

Figure 6
Clutch Pedal Total Travel – Ford 2000, 3000, 4000

1. Total Travel
2. Free Play
3. Pedal Upper Stop

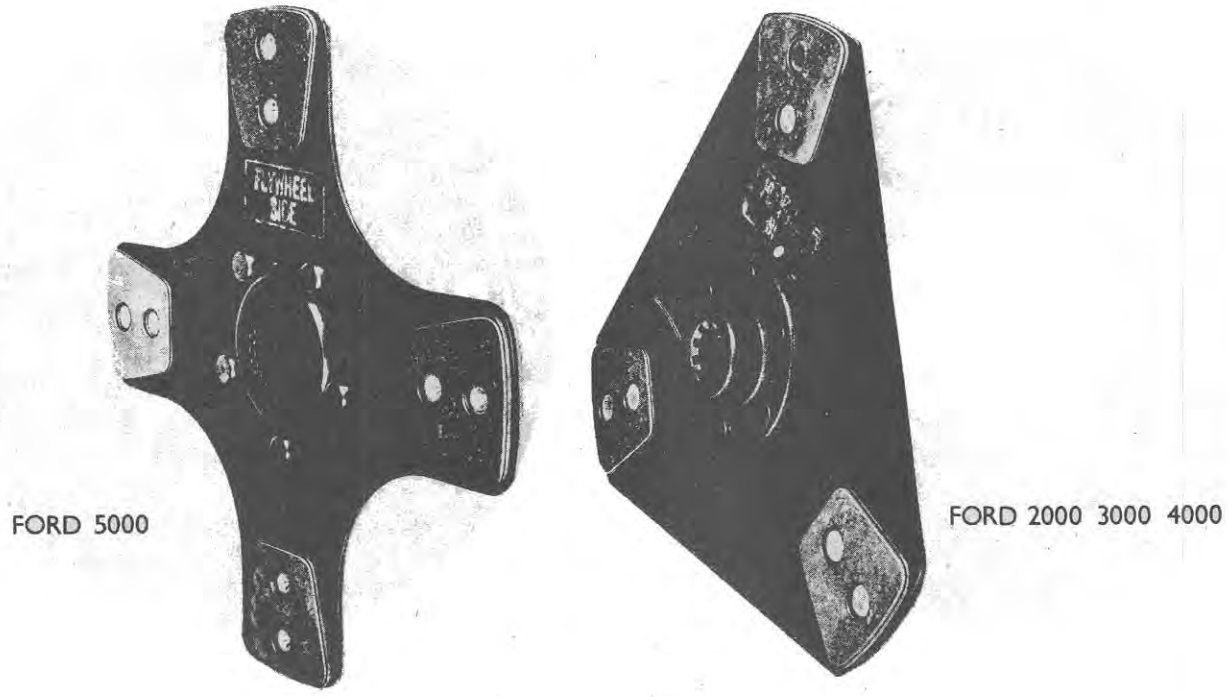

Figure 7
Cerametallic Button Type Clutch Discs

Clutch Pressure Plate Assemblies (Previous Design)
Typical previous design pressure plate assemblies are illustrated in Figures 8, 9, 10 and 11. They all comprise a pressed steel cover and a cast iron pressure plate loaded by coil springs which vary in number and specification in accordance with the size of clutch and the model concerned. Mounted on the pressure plate are release levers which pivot on floating pins, Figures 1 and 2. The pins are located in eyebolts which are fixed to the pressure plate and pass through the cover to which they are retained by adjustment nuts. Struts are interposed between lugs on the pressure plate and the outer ends of the release levers and anti-rattle springs are incorporated between the levers and the cover.

The standard and heavy duty pressure plate assemblies of the Ford 5000 differ from the assemblies used on other models in the method of transmitting the drive from the cover to the pressure plate, i.e., torque on a Ford 5000 clutch is transmitted through four sets of spring steel straps which are rivetted to the cover at one end and bolted to the pressure plate at the other, Figure 21. On the other clutches the drive is transmitted by lugs on the pressure plate which pass through slots in the cover, Figure 8.

All previous design pressure plate assemblies are located on the flywheel by two dowels and secured by eight fixing bolts. It should be noted that the dowels used with the 13 in. (33 cm.) heavy duty assembly are of unequal diameters and this pressure plate assembly can, therefore, only be installed in one position relative to the flywheel.

The 13 in. (33 cm.) heavy duty assembly also includes a release lever thrust plate which is held to the release levers by springs, Figure 11. Such a thrust plate is not used on the other assemblies.

Clutch Pressure Plate Assemblies (Current Design)
All current design pressure plate assemblies have a diameter of 11 in. (27.9 cm.) and all are secured to the flywheel by six dowel bolts. Four assemblies cover the complete range of Ford 2000, 3000, 4000 and 5000 tractors and their derivatives. The assembly used on the Ford 4000 with Independent P.T.O. differs from the others in that it incorporates a splined hub to transmit the drive to the P.T.O. input shaft. The other three assemblies differ only in the pressure rating of the main coil springs, see "SPECIFICATIONS", Chapter 4.

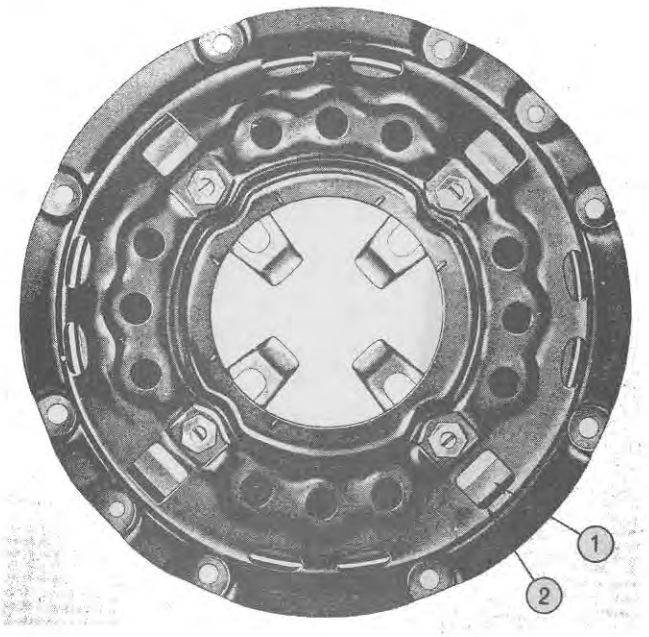

Figure 8
Previous Pressure Plate Assembly – Ford 3000
1. Pressure Plate Driving Lug 2. Cover Driving Slot

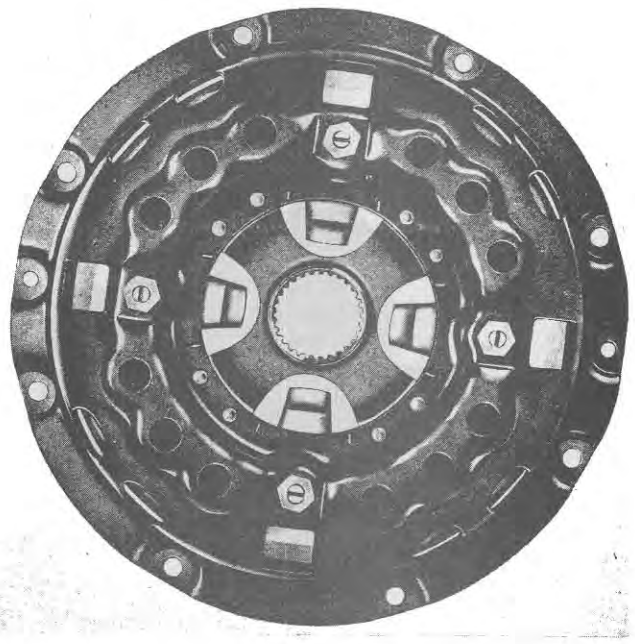

Figure 9
Previous Pressure Plate Assembly – Ford 4000 with Independent P.T.O.

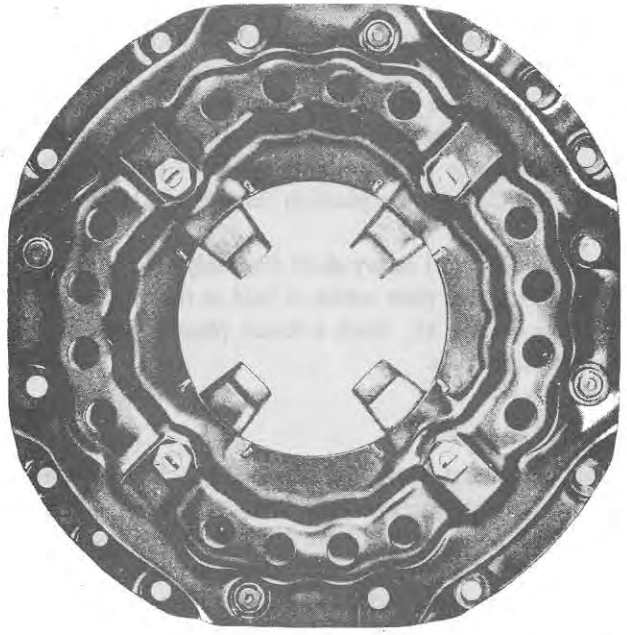

Figure 10
Previous Pressure Plate Assembly – Ford 5000 (Standard)

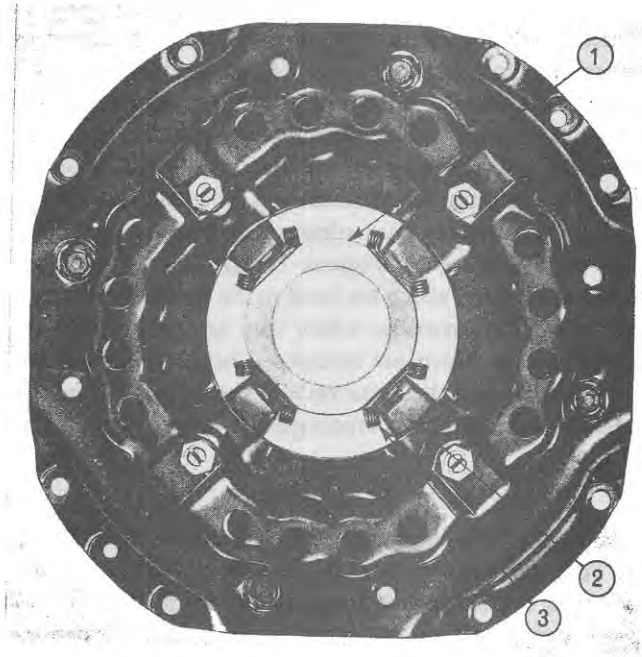

Figure 11
Previous Pressure Plate Assembly – Ford 5000 (Heavy Duty)
1. Release Lever Thrust Plate 3. Release Lever Spring
2. Release Lever

The following points should be noted in respect of these springs:—

1. Current clutches are manufactured at two different locations and colour marking on the springs vary

(*a*) in accordance with the source of manufacture

(*b*) in accordance with the model concerned.

It is not permissible to mix springs of differing colour marking in a pressure plate assembly.

2. Some pressure plate assemblies used in production on the Ford 5000 have spacers under the springs. If these springs are removed from the assembly during service overhaul and are subsequently re-installed, the spacers must also be reinstalled. The spacers will not be supplied for service and they must not be used where new service springs are being installed.

Figures 12 and 13 illustrate typical pressure plate assemblies, Figure 14 is a diagrammatic illustration of how the clutch operates and Figure 24 shows the component parts.

It will be noted that the main coil springs are not in direct contact with the pressure plate but are located between the pressure plate cover and a spring retainer which is connected by angle links to the release levers. As shown by diagram "A" Figure 14, in the "clutch engaged" position pressure from the springs is applied to the spring retainer which pulls on the angle links and draws the inner ends of the release levers rearwards. The outer ends of the release levers are in contact with adjusting screws which are threaded into the pressure plate and thus the pull on the inner ends of the release levers causes them to rotate around the pivot pins forcing the pressure plate forward to hold the clutch disc in contact with the flywheel.

Diagram "B", Figure 14, shows the condition when the clutch pedal is depressed. The inner ends of the release levers have now moved forward and the outer ends rearward. "C" shaped clips connect the outer ends of the release levers to the underside of the heads of the adjusting screws in the pressure plate and thus the rearward movement of the outer ends of the levers has pulled the pressure plate away from the clutch disc and released the clutch disc from the flywheel.

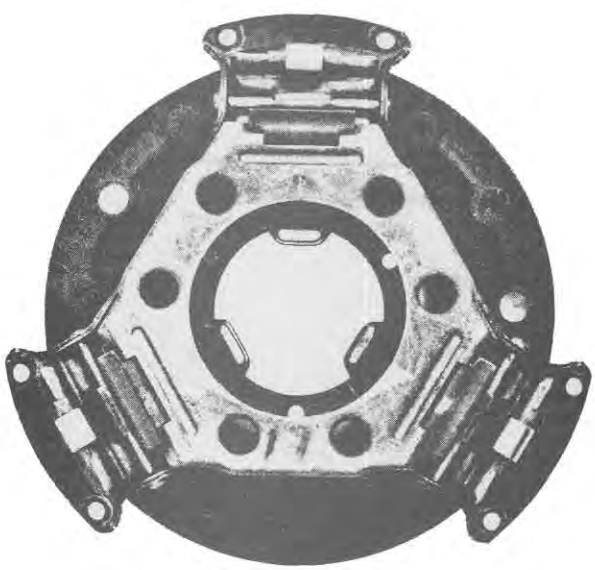

Figure 12
Current Pressure Plate Assembly
(Except Ford 4000 with Independent P.T.O.)

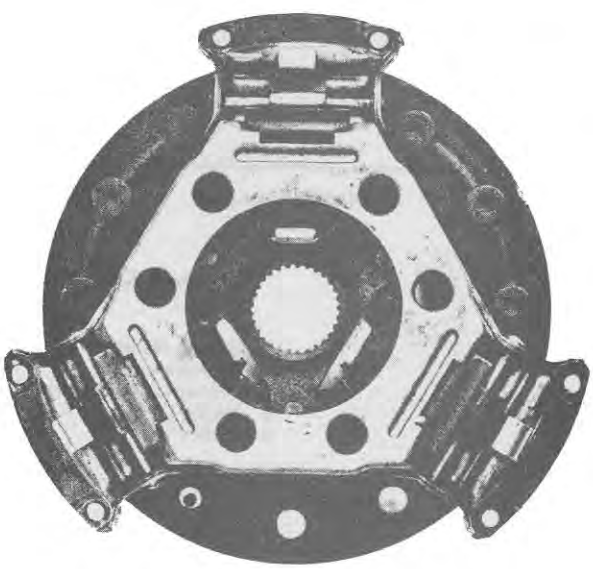

Figure 13
Current Pressure Plate Assembly
(Ford 4000 with Independent P.T.O.)

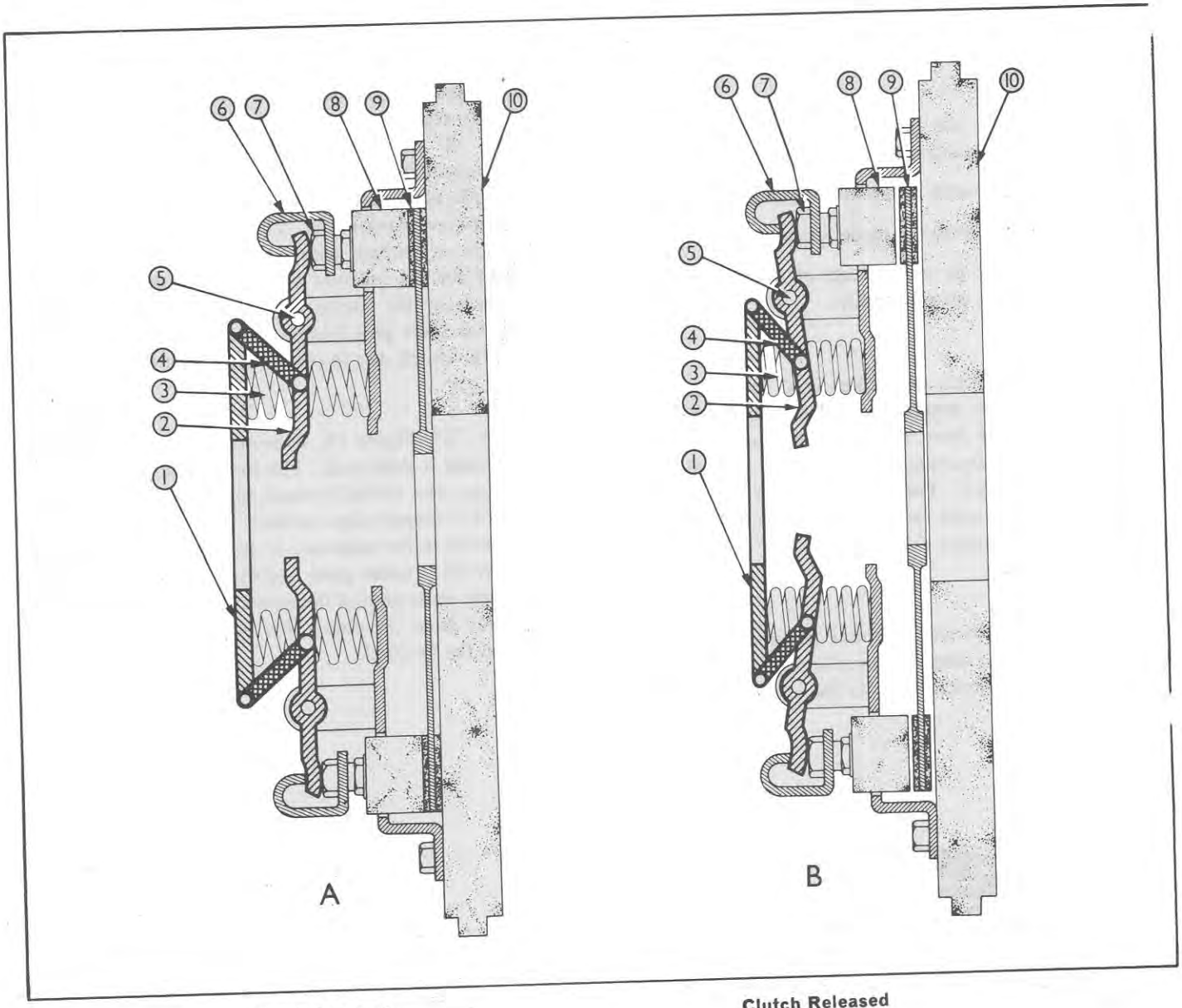

Figure 14
Current Clutch Pressure Plate Assembly and Disc
(Diagramatic)

1. Spring Retainer
2. Release Lever
3. Pressure Plate Spring
4. Angle Link
5. Pivot Pin
6. Release Lever Retainer Clip
7. Adjusting Screw
8. Pressure Plate
9. Clutch Disc
10. Flywheel

3. ADJUSTMENTS

The only routine adjustment required is to check and, where necessary, adjust the clutch pedal free travel every 50 operating hours. The exact amount of free travel is listed under "SPECIFICATIONS", Chapter 4, and it should be noted that it varies in accordance with the model concerned and whether a previous or a current type clutch is incorporated. Clutch pedal free travel is the amount of movement from the fully released position of the pedal to the point where resistance is just felt – dimension "X", Figure 15.

To adjust the pedal free travel:

1. Remove the split pin, Figure 15, loosen the locknut and then remove the clevis pin.

2. Turn the clevis to increase or decrease the effective overall length of the release rod. Increasing the effective length will give greater free travel – reducing the length will give less free travel.

3. Re-connect the clevis to the clutch cross-shaft lever, Figure 15, and check the pedal free travel. Repeat the adjustment as necessary until the correct free travel is obtained then tighten the locknut and install a new split pin to retain the clevis pin.

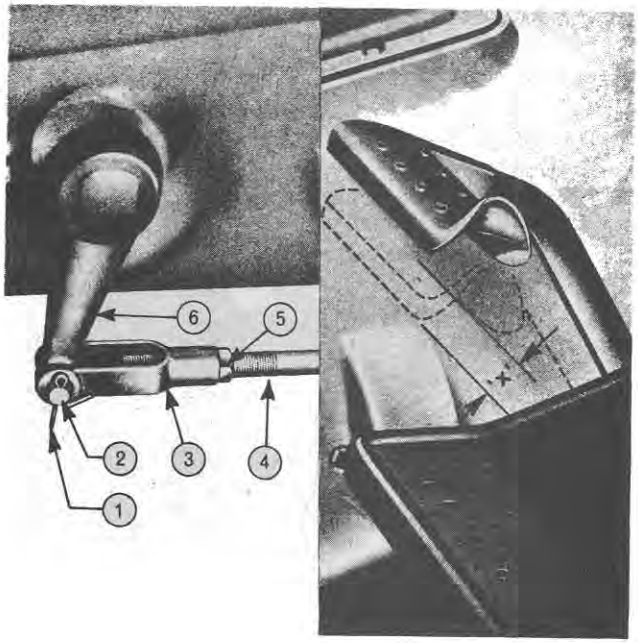

Figure 15
Clutch Pedal Adjustment
"X" – Clutch Pedal Free Travel

1. Split Pin
2. Clevis Pin
3. Clevis
4. Release Rod
5. Locknut
6. Cross-shaft Lever

4. SINGLE CLUTCH REMOVAL AND INSTALLATION

A. REMOVAL

1. Separate the front axle and engine as an assembly from the front transmission.

2. Remove the bolts securing the clutch pressure plate and cover assembly to the flywheel, and remove the pressure plate assembly and the clutch disc. Care should be taken to slacken the bolts progressively across the clutch to avoid distortion of the cover plate.

B. INSPECTION

Previous Type Clutch Disc and Pressure Plate

1. Inspect the clutch disc to make sure that the linings are not loose, cracked, worn or oil soaked, and that the rivets are secure. The disc should be discarded and a new one installed if there are signs of overheating due to clutch slippage or excessive wear, or if the friction faces are contaminated with oil. 'Investigate the source of any oil or grease on the facings and rectify before installing a new disc. Examine the pressure plate assembly to make sure the release levers are free to operate smoothly, and that the pressure plate and springs are not discoloured due to overheating. Check the face of the pressure plate for cracks, scoring and distortion.

Current Type Clutch Disc, Pressure Plate and Release Lever Assembly, and Flywheel

1. Inspect the cerametallic buttons of the clutch disc. If they are oil saturated, but abnormal wear is not present, they should be washed in a suitable solvent and the disc may then be reinstalled. It is a characteristic of this type of clutch disc for some signs of flaking and grooving of the buttons to be apparent immediately it is put to use. This is not detrimental to future operation of the disc providing the amount of wear and depth of grooving is not excessive. Only where the buttons are worn to within 0.010 in. (0.25 mm.) of the heads of the rivets will it be necessary to discard the disc and install a new one. Figure 16 illustrates

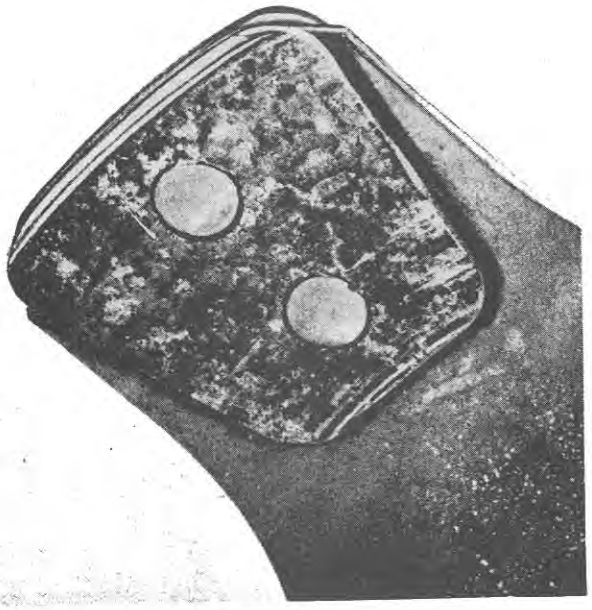

Figure 16
Clutch Disc Button – Partially Worn

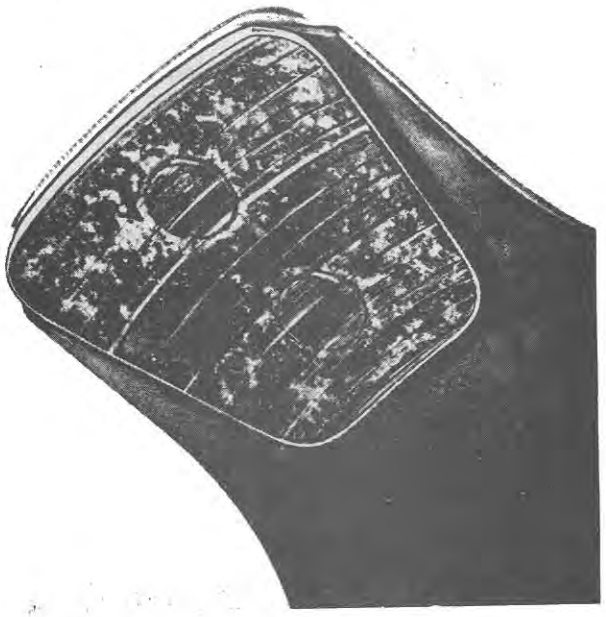

Figure 17
Clutch Disc Button – Excessively Worn and Scored

a cerametallic button of a disc which although showing signs of wear is still suitable for further use. Figure 17 shows one which has worn to the point where both the rivet heads and the sides of the cups containing the cerametallic material have contacted the pressure plate, and such a disc should not be re-installed.

It should be noted that it is normal for the buttons of a used clutch disc to have a dark blue appearance and a disc should not be discarded because of this.

2. Inspect the surfaces of the pressure plate and flywheel for grooving, cracking or distortion.

Grooving of the pressure plate is not considered to be detrimental unless the depth of the grooves exceeds 0.025 in. (0.64 mm.) in which case the pressure plate and release lever assembly should be discarded and a new assembly installed. Figure 18, for example, illustrates a pressure plate which although grooved is perfectly suitable for further use.

Similarly, grooving of the flywheel is not considered to be detrimental unless the depth of the grooves exceeds 0.025 in. (0.64 mm.). Where groove depth exceeds this amount the flywheel may be refaced providing that not more than 0.080 in. (2.03 mm.) of material is removed.

Short heat cracks on the pressure plate and flywheel surfaces are of no consequence providing they are not more than $\frac{3}{8}$ in. (9.5 mm.) in length and do not extend to the outside or the inside edges of the pressure plate or flywheel.



Figure 18
Pressure Plate – Scored but suitable for further use

C. INSTALLATION

It is important that all new pressure plate and clutch assemblies be checked and, if necessary, adjusted prior to installation in the tractor. Do not attempt to disassemble, assemble or adjust the clutch assembly without using the recommended service tools.

NOTE – If any adjustment is found to be necessary to the release levers of a current type pressure plate and cover assembly it will be necessary to remove the "C" shaped clips linking the release levers to the adjusting screws. Ensure that these clips are replaced correctly after adjustment with the lower end of each clip around the adjusting screw and seating under the head of the screw.

Where a new pressure plate and cover assembly is drawn from stock, the friction face of the pressure plate should be wiped with a rag which has been dipped in white spirit (Stoddard's solvent). The white spirit removes the preserving film of lanolin which would contaminate the disc facings if not removed.

Lightly lubricate the hub splines of the input shaft with a silicon grease prior to installing the clutch disc.

1. Position the clutch disc on the flywheel, centralizing it with a clutch locator tool, Figure 19, – see "SPECIAL TOOLS", Chapter 4, for clutch disc locator tool numbers and usage.

NOTE – Where a previous type clutch disc is being installed the side with the longer hub protrusion must face the pressure plate, except in the case of a Ford 4000 with Independent P.T.O. when the side with the longer hub protrusion must face the flywheel.

Where a current cerametallic button type of clutch disc is being installed on a Ford 2000, 3000 or 4000 tractor, the side with the longer hub protrusion should face towards the flywheel but on a Ford 5000 the side with the longer hub protrusion should face towards the pressure plate.

2. Locate the pressure plate assembly on the flywheel and install the locating bolts and lockwashers. Tighten the bolts evenly to the specified torque as listed under "SPECIFICATIONS", Chapter 4, then remove the disc locator tool.

NOTE – Where a 13 in. (33 cm.) diameter clutch disc, and also where a 12 in. (30.5 cm.) diameter torsion damped hub type of clutch disc, is installed on a Ford 5000 tractor, spacers are used between the clutch cover and the flywheel – for details see "IMPORTANT CHANGES", Section 2.

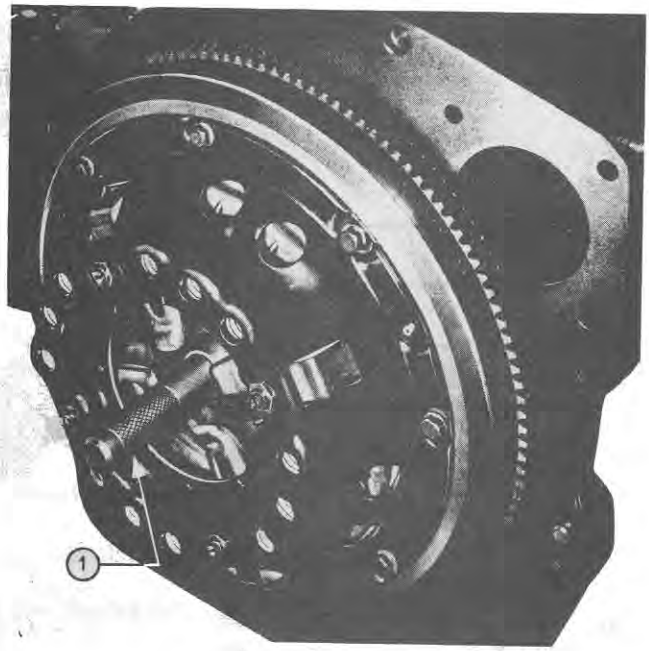

Figure 19
Installing Previous Type Clutch
1. Clutch Disc Locator Tool

3. Re-connect the front axle and engine assembly to the front transmission.

4. Check and adjust the clutch pedal free play. The amount of free play varies in accordance with the model concerned – see "SPECIFICATIONS", Chapter 4.

5. Check that there is sufficient total travel of the clutch pedal to ensure total release of the clutch when the pedal is fully depressed.

NOTE – Where a torsion damped hub type of disc is being installed as a replacement for a non-torsion damped type it may be necessary to modify the pedal stops on the foot platform – see "IMPORTANT CHANGES", Section 2.

5. OVERHAUL OF SINGLE CLUTCH PRESSURE PLATE ASSEMBLIES

Two clutch pressure plate overhaul and adjustment fixture tools have been developed. One of these, Tool Number SW12B, is available for all territories except the U.S.A. The other is available in the U.S.A. only and consists of a basic tool SW510, an adaptor kit SW511, and a spacer gauge SW510–5K.

Overhaul procedures using Tool SW12B are detailed in the following sub-sections A1 and B1, while those applicable when using tools SW510, SW511 and SW510–5K are detailed in sub-section A2 and B2.

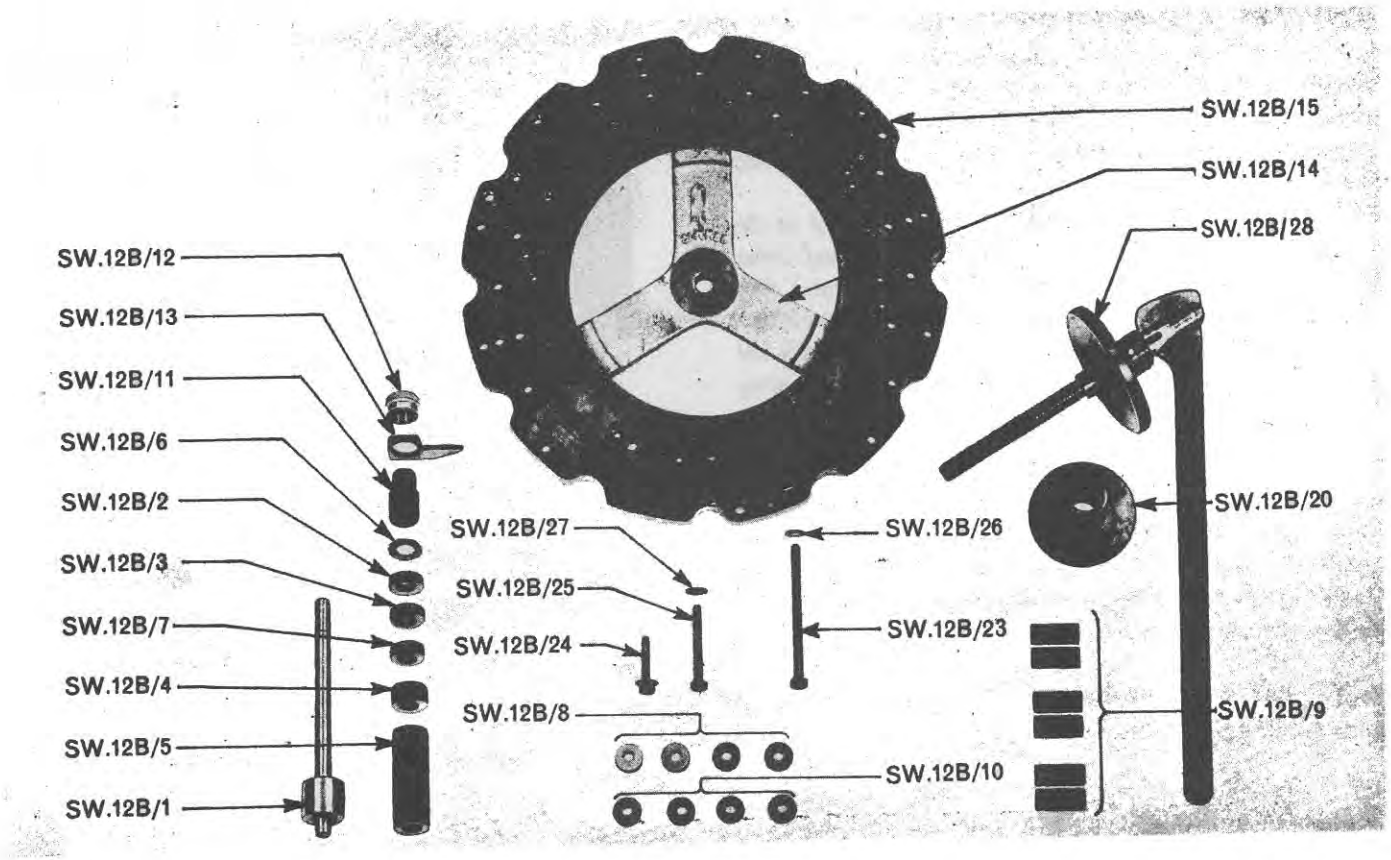

Figure 20
Clutch Pressure Plate Assembly Overhaul and Adjustment Tool No. SW12B

Component No.	*Description*	*Quantity*
SW12B/1	Pillar Spacer	1
SW12B/2	Centre Spacer	1
SW12B/3	Centre Spacer	1
SW12B/4	Centre Spacer	1
*SW12B/5	Centre Spacer	1
SW12B/6	Centre Spacer	1
SW12B/7	Centre Spacer	1
SW12B/8	Disc Spacers	4
*SW12B/9	Riser Spacer	6
SW12B/10	Disc Spacers	4
SW12B/11	Gauge Finger Body	1

Component No.	*Description*	*Quantity*
SW12B/12	Locknut	1
SW12B/13	Gauge Finger	1
SW12B/14	Bridge Spider	1
SW12B/15	Base Plate	1
SW12B/20	Actuator Cam Platform Extension	1
*SW12B/23	Bolt – $\frac{5}{16}$ in. Whit. × 5 in.	6
SW12B/24	Bolt – $\frac{5}{16}$ in. Whit. × 2 in.	8
SW12B/25	Bolt – $\frac{3}{8}$ in. Whit. × 3 in.	8
SW12B/26	$\frac{5}{16}$ in. Washers	8
SW12B/27	$\frac{3}{8}$ in. Washers	8
SW12B/28	Actuator Assembly	1

*For use in double clutch overhaul.

A1. DISASSEMBLY – Using Tool Number SW12B

Previous Type Clutches

1. Clean the pressure plate and cover assembly thoroughly then locate the assembly centrally on the base plate, Figure 21, with the four clutch disc spacers, SW12B/8 or SW12B/10 between the pressure plate and the base of the tool. Spacers SW12B/8 are for use when handling an 11 in. (27.9 cm.) clutch – spacers SW12B/10 when handling 12 in. (30.5 cm.) and 13 in. (33 cm.) clutches.

2. Secure the assembly to the base plate with the eight special tool bolts, Figure 21. Use special bolts SW12B/24

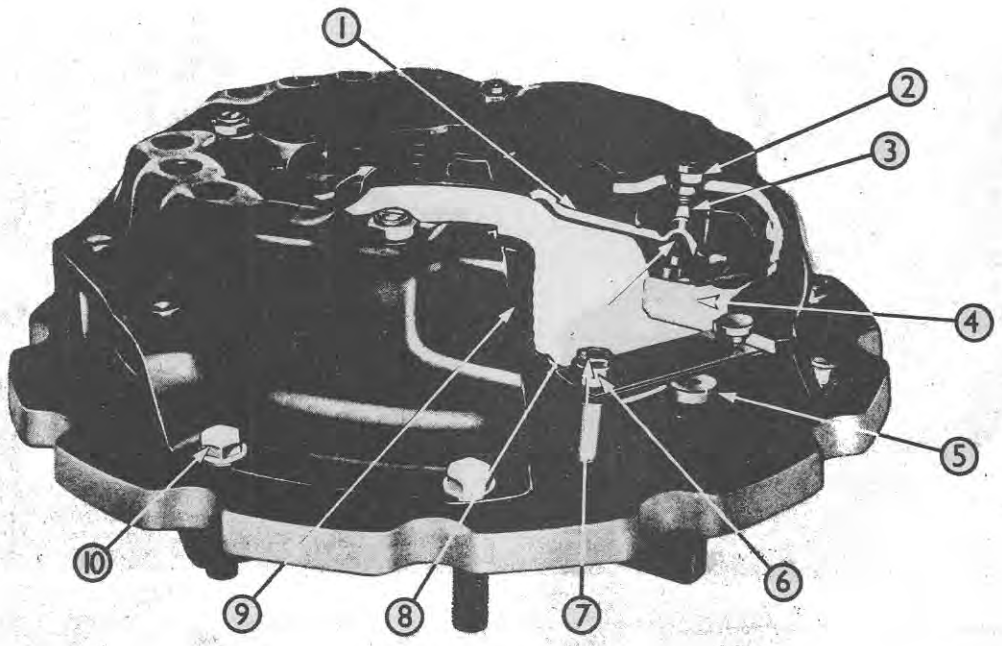

Figure 21
Cut-Away View of Previous 12 in. (30.5 cm.) Clutch on Base Plate of Tool No. SW12/B

1. Release Lever
2. Eyebolt Nut
3. Eyebolt
4. Pressure Plate
5. Tool Spacers (SW12B/10)
6. Ferrule
7. Drive Strap Bolt
8. Pivot Pin
9. Spring
10. Tool Bolts (SW12B/25)

with an 11 in. (27.9 cm.) clutch – bolts SW12B/25 with 12 in. (30.5 cm.) and 13 in. (33 cm.) clutches. Tighten the bolts evenly and diagonally across the clutch.

3. On 12 in. (30.5 cm.) and 13 in. (33 cm.) clutch assemblies, punch the ferrules, Figure 21, clear of the drive strap bolt heads and remove the bolts, using a socket through the holes in the cover.
On 13 in. (33 cm.) cover assemblies remove the release lever thrust plate and retaining springs, Figure 11.

4. Unscrew and remove the four nuts, Figure 21, which are staked to the release lever eyebolts.

5. Gradually slacken off the bolts retaining the pressure plate cover to the base plate of the tool until all spring pressure is released, then remove the bolts and the pressure plate cover.
NOTE – The bolts must be slackened evenly and diagonally across the clutch to prevent distortion of the cover.

6. Remove the coil springs from their locations on the pressure plate, Figure 21.

7. Hold the inner ends of the release levers, Figure 22, upwards against the eyebolts and move the struts until the eyebolts and release levers can be removed from the pressure plate.

8. Withdraw the eyebolts from the release levers and remove the pivot pins, Figure 21.

Current Type Clutches

1. Locate the pressure plate and cover assembly on the base plate of the tool and secure with six bolts SW12B/24. Disc spacers are not required between the pressure plate and the base plate of the tool during disassembly.

2. Remove the "C" shaped retaining clips, Figure 24, from the release levers using a screwdriver to press down the lower slotted end of each clip and thin nose pliers to pull it free from its location under the head of the release lever adjusting screw. Discard and renew on assembly.

3. Slacken the adjusting screw locknuts, Figure 24, and screw the adjusting screws into the pressure plate to allow the release levers greater movement.

4. Install actuator assembly SW12B/28 by screwing it into the bridge spider of the base plate until depressing the actuator lever fully produces a gap of 0·25 in. (6·4 mm.) between the corner of the spring retainer and the cover, see Figure 23.

CAUTION—The cam of the actuator lever must go "over-centre". Failure to observe this precaution could result in the lever being tripped upwards with considerable force.

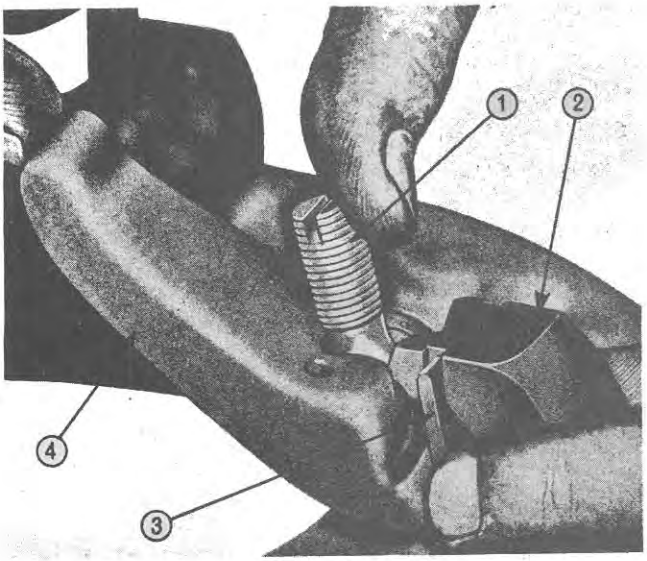

Figure 22
Removing Release Lever – Previous Clutch
1. Eyebolt
2. Pressure Plate
3. Strut
4. Release Lever

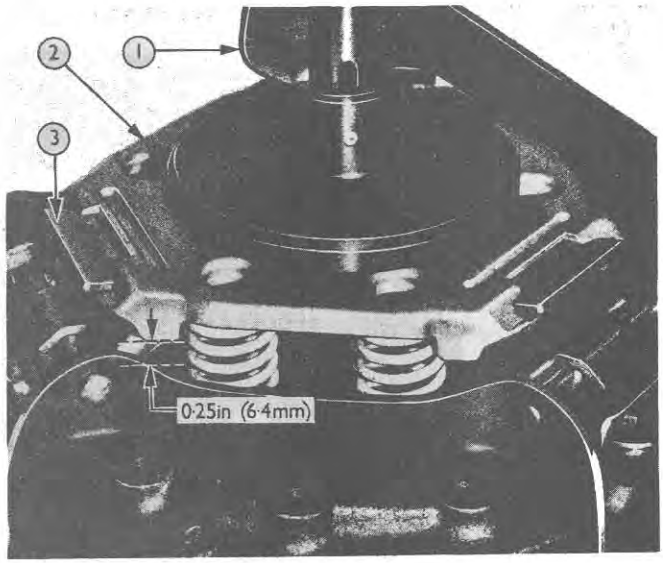

Figure 23
Removing Angle Link – Current Clutch
1. Actuator Cam
2. Spring Retainer
3. Angle Link

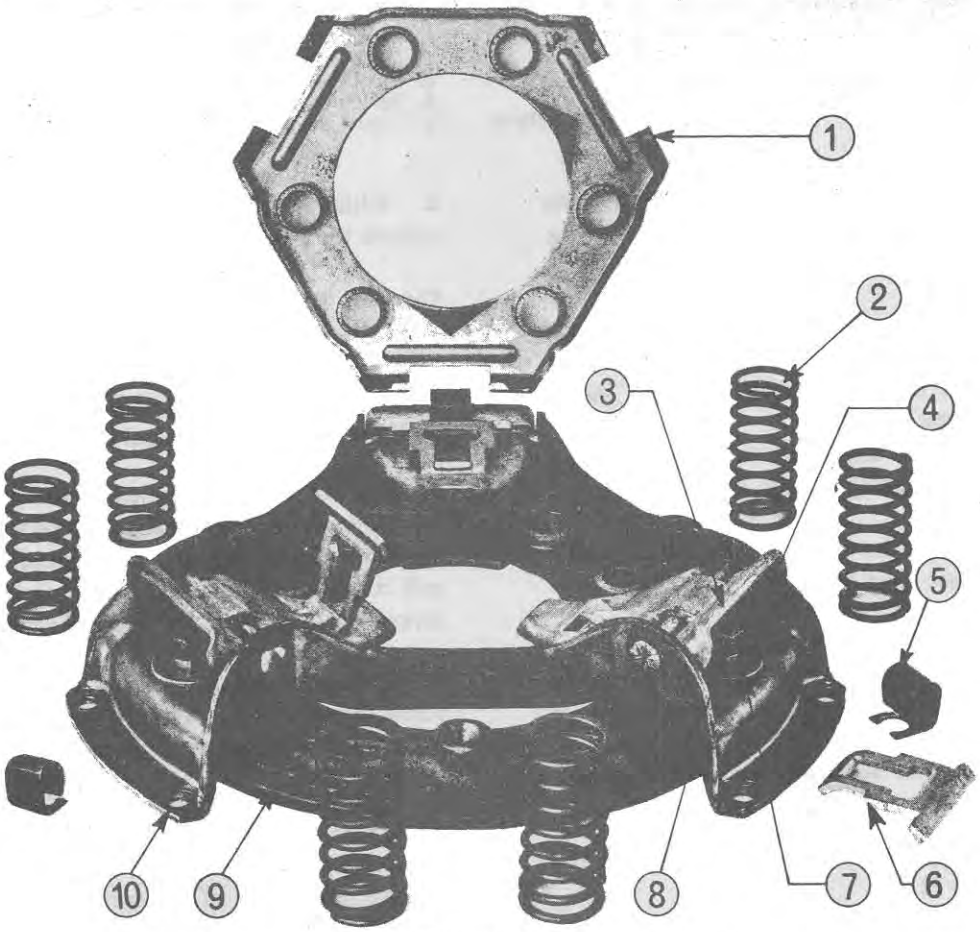

Figure 24
Pressure Plate Assembly Components (Current Type)
1. Spring Retainer
2. Spring
3. Release Lever
4. Locking Nut
5. Release Lever Retainer Clip
6. Angle Links
7. Washer
8. Adjusting Screw
9. Pressure Plate
10. Pressure Plate Cover

5. Push the angle links, Figure 23, from their location in the spring retainer. It may be necessary to release the actuator and screw it further into, or out of, the base plate spider in order to obtain the position which will completely free the angle links from the spring retainer.

6. Move the actuator lever upwards to its free position and remove it from the base of the tool.

7. Remove the spring retainer, Figure 24, the coil springs and the angle links.

8. Remove the adjusting screws, locknuts and washers, Figure 24, then separate the cover and release lever assembly from the pressure plate by removing the cover to tool base plate retaining bolts.
NOTE – Do not remove the release lever pivot pins and the release levers from the pressure plate cover. Absolute accuracy is necessary when installing these pins, and for this reason the pins, levers and cover are supplied for service as an assembly.

B1. ASSEMBLY—Using Tool Number SW12B Previous Type Clutches

After overhaul the following parts should be lightly coated with silicon grease prior to re-assembly:—The plain end of the eyebolts, the eyebolt nut seats in the cover, the overall length of the release lever pivot pins, the contact edges of the release lever struts, the drive lug sides of the pressure plate of 11 in. (27.9 cm.) clutches, and the tips of the release levers where a release lever thrust plate is installed.

1. Position the pivot pins in the eyebolts and pass the threaded ends of the eyebolts through the release levers.

2. Place the struts in position under the lugs on the pressure plate end, holding the inner ends of the release levers towards the eyebolts, place the plain ends of the eyebolts in their locations in the pressure plate.

3. Position the coil springs on the bosses of the pressure plate.

4. Place the cover over the pressure plate making sure that the anti-rattle springs are correctly engaged in the cover and located over the release levers, Figure 21.

5. Position four of the appropriate disc spacers, Figure 21, on the base plate of the tool, one opposite each pair of mounting bolt holes. Use disc spacers SW12B/8 with an 11 in. (27.9 cm.) clutch and SW12B/10 with 12 in. (30.5 cm.) and 13 in. (33 cm.) clutches. Place the cover and pressure plate assembly on the spacers so that the holes in the cover line up with the appropriate holes in the base plate of the tool.

6. Install the eight special tool bolts, Figure 21, and tighten them down evenly until the cover meets the base plate. Use special bolts SW12B/25 with 12 in. (30.5 cm.) and 13 in. (33 cm.) clutches – use bolts SW12B/24 with an 11 in. (27.9 cm.) clutch.

7. Install new nuts onto the eyebolts. Screw each nut down until it is level with the top of the thread of the eyebolt.

8. On 12 in. (30.5 cm.) and 13 in. (33 cm.) assemblies, place new locking ferrules and drive bolts, Figure 21, into the drive straps and tighten to the specified torque (see "SPECIFICATIONS", Chapter 4) making sure that the ferrules are correctly located in the straps and pressure plate. Punch the ferrules over against the bolt heads to lock them in position.

9. Locate the actuator cam platform extension, SW12B/20, on the threaded pillar of the actuator with the flange of the extension facing downwards. Screw the actuator into the spider, SW12B/14, of the tool base until the flange of the extension contacts the clutch release levers, Figure 25.

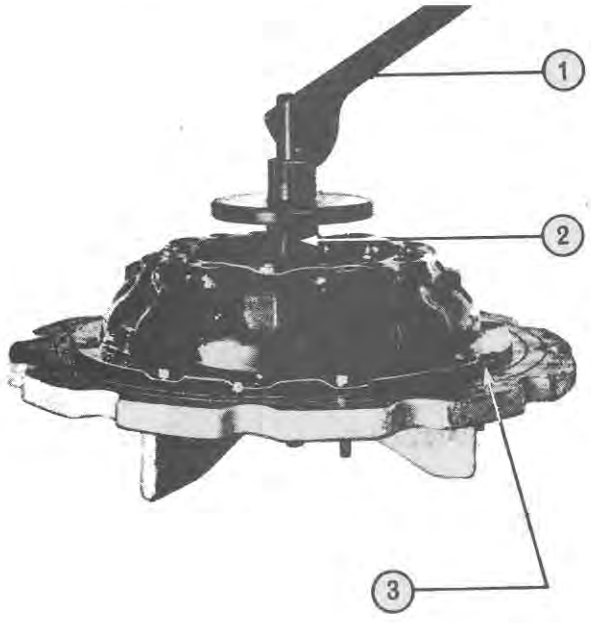

Figure 25
Settling Previous Type Clutch Mechanism

1. Actuator
2. Actuator Cam Platform Extension
3. Special Fixing Bolts

Operate the handle of the actuator to depress the clutch release levers and repeat several times to settle the clutch mechanism. Remove the actuator and extension.

10. Locate the pillar spacer, SW12B/1, in the bridge spider, SW12B/14, of the tool base and position the appropriate centre spacer over the pillar.

Figure 26 shows the spacer SW12B/4 which is used when adjusting a 12 in. (30.5 cm.) clutch. Different centre spacers are used with other clutches as indicated below.

Type of Clutch	*Tool Centre Spacer to be used*
11 in. (27.9 cm.) – Ford 4000 with Ind. P.T.O. ..	SW12B/2
11 in. (27.9 cm.) – except Ford 4000 with Ind. P.T.O.	SW12B/3
12 in. (30.5 cm.) – Ford 5000 standard	SW12B/4
13 in. (33.0 cm.) – Ford 5000 heavy duty	SW12B/6

Place the gauge finger body, SW12B/11, over the pillar and install the gauge finger SW12B/13, with ground side of finger facing downwards. Secure with tool locknut SW12B/12 as shown in Figure 26.

11. Rotate the finger over each release lever in turn and where necessary adjust the eyebolt nut until each release lever just touches the gauge finger. Remove the centre pillar spacer and finger gauge assembly.

12. Lock the eyebolt nuts of the clutch by staking the cylindrical portion of the nut into the slot in the eyebolt.

13. On the 13 in. (33 cm.) clutch install the release lever thrust plate and retaining springs.

14. Remove the cover to base plate retaining bolts and lift the pressure plate and cover assembly from the base plate. The pressure plate and cover assembly is now ready for installing in the engine.

Current Type Clutches

1. After overhaul the following parts should be lightly coated with silicon grease prior to re-assembly:
All contact points between the angle links and the spring retainer and between the angle links and the release levers.
The sides of the pressure plate driving lugs.
The release lever pivot pins.

2. Locate the pressure plate cover and release lever assembly over the pressure plate. Assemble the adjusting screw locknut to each adjusting screw and thread it up to the reduced section of the screw.

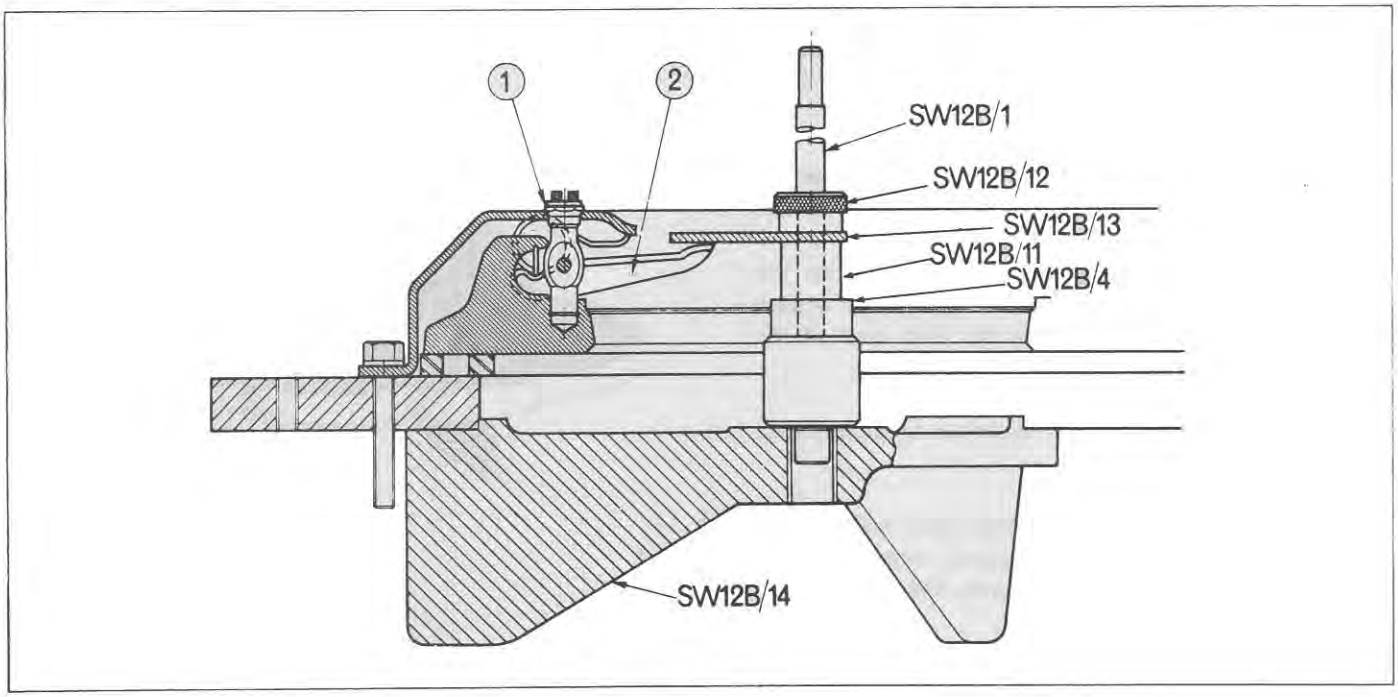

Figure 26
Adjusting Previous Clutch Pressure Plate Release Levers
1. Eyebolt Nut 2. Release Lever

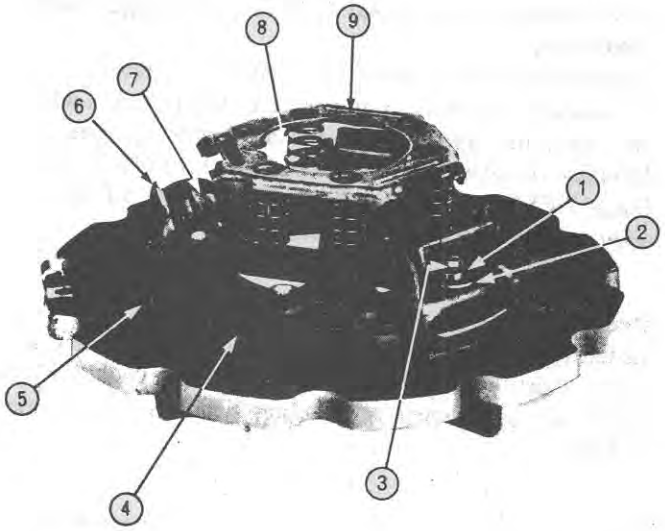

Figure 27
Current Clutch Pressure Plate Components

1. Locknut
2. Washer
3. Adjusting Screw
4. Pressure Plate
5. Cover
6. Release Lever
7. Angle Link
8. Coil Spring
9. Retainer

Place the appropriate washer on each screw and install the screws through the cover and into the pressure plate, Figure 27. Each adjusting screw must be fully screwed into the pressure plate to ensure adequate movement of the release levers during subsequent installation of the angle links.

3. Place the cover and pressure plate assembly on the base plate of tool SW12B. Install the special bolts, SW12B 24, to secure the cover to the base plate of the tool, but do not tighten at this stage.

4. Install the angle links, Figure 27, in the release levers.

5. Place the clutch coil springs in the cover and locate the spring retainer on the upper ends of the springs, Figure 27.

6. Install the actuator, SW12B/28, by screwing it into the bridge of the tool base, then pull the actuator lever down to compress the springs.

7. Lift the outer end of each angle link and locate it in the spring retainer.
Gradually release the actuator at the same time making sure that the angle links do not slip from their locations in the spring retainer. Remove the actuator.

8. Slacken the special tool bolts, SW12B 24, lift the clutch assembly and insert four disc spacers, SW12B/8,

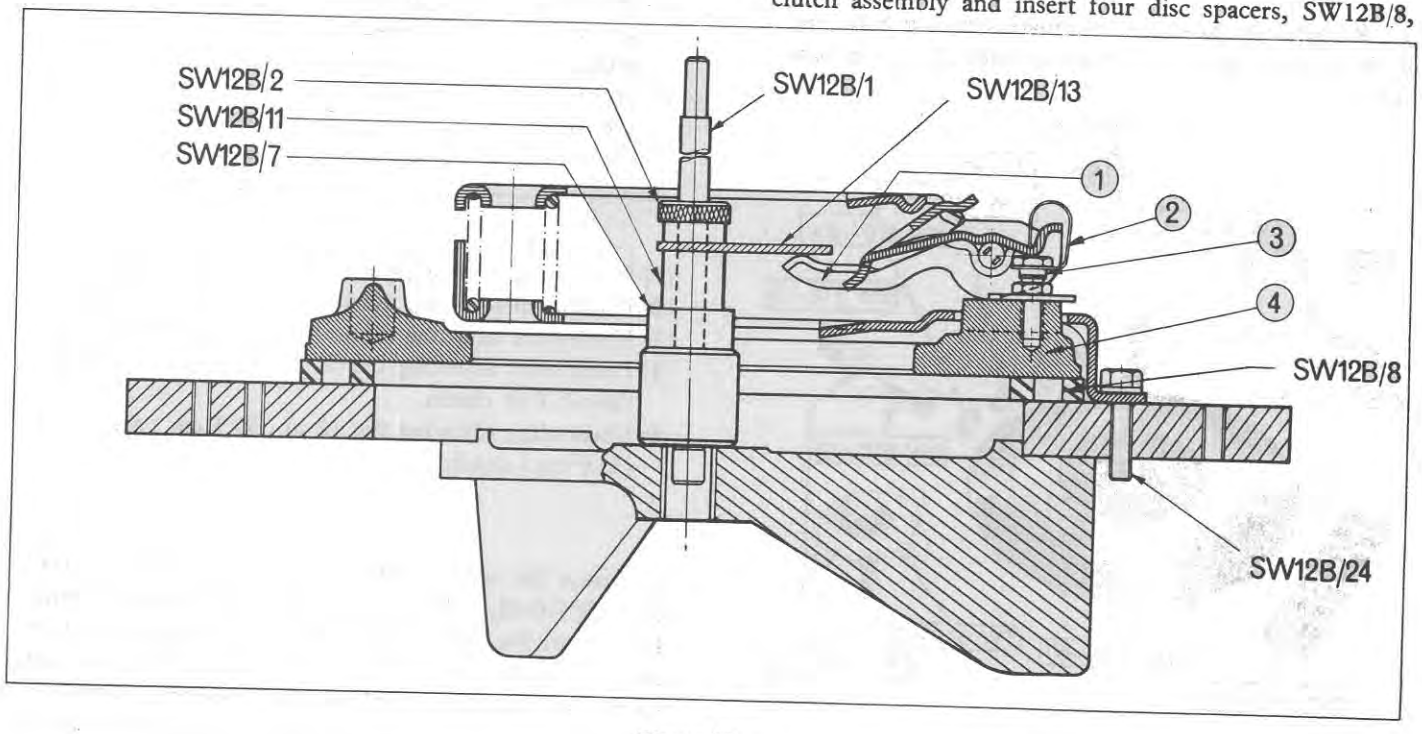

Figure 28
Adjusting the Release Lever Height – Current Clutch

1. Release Lever
2. Release Lever Retainer Clip
3. Adjusting Screw
4. Pressure Plate

between the pressure plate and the base of the tool, Figure 28. Fully tighten the cover to base plate securing bolts SW12B/24.

9. Install the pillar spacer SW12B/1, centre spacer SW12B/7, gauge finger body SW12B/11, gauge finger SW12B/13 and locknut SW12B/12. The ground side of the gauge finger must point downwards.

10. Move the gauge finger over the inner end of each release lever, Figure 28, and adjust the height of each release lever so that it just touches the gauge finger. As the adjusting screws, Figure 28, were screwed fully into the pressure plate during initial assembly, it will now be necessary to screw them back in order to bring the release levers up to the gauge finger.

11. After adjustment tighten the adjusting screw locknuts and recheck the height of the release levers then remove the gauge finger and pillar spacer assembly from the tool.

12. Install one of the "C" shaped release lever retainer clips over the outer end of each release lever and at the same time push the slotted end of the clip down and move it inward to locate around the adjusting screw. Ensure that the clip seats correctly on the underside of the screw head, Figure 28.

13. Remove the cover to base plate securing bolts and lift the pressure plate and cover assembly from the base plate.

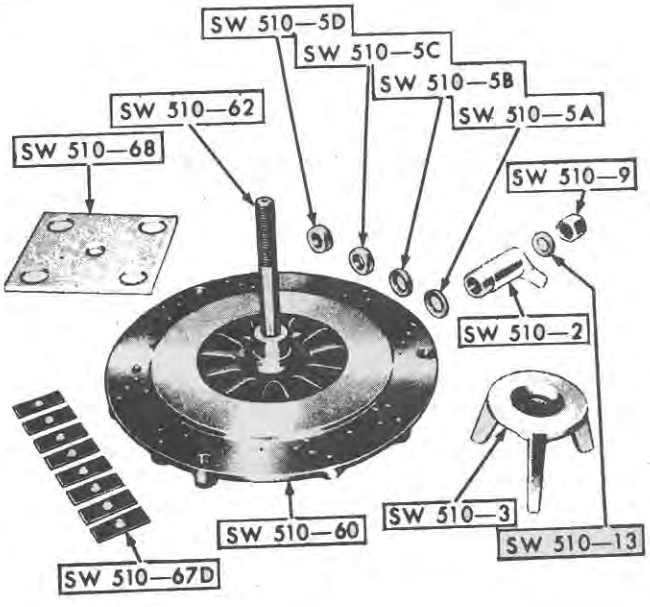

Figure 29
Tool No. SW510 Universal Clutch Fixture (Single Clutch Application)

A2. DISASSEMBLY—Using Universal Clutch Fixture SW510, Adaptor Kit SW511 and Gauge Spacer SW510-5K

Universal Clutch Fixture Tool SW510 contains all the necessary components to disassemble, assemble and adjust previous type single clutches and all double clutches.

NOTE – An additional tool Adapter Kit SW511 and Spacer Gauge SW510-5K are available for use with the SW510 tool when overhauling current type clutches.

Previous Type Clutches

Listed below and illustrated in Figure 29 are those component parts of Universal Clutch Fixture Tool SW510 which are used when overhauling previous type single clutches.

Component No.	*Description*	*Quantity*
SW510-60	Base Fixture	1
SW510-68	Plate–Adapter	1
SW510-3	Bridge–Spring Compressor	1
SW510-62	Spindle–Fixture	1
(1) SW510-5D	Spacer–Gauge	1
(2) SW510-5C	Spacer–Gauge	1
(3) SW510-5B	Spacer–Gauge	1
(4) SW510-5A	Spacer–Gauge	1
SW510-2	Gauge–Release Lever	1
SW510-13	Washer–Amplex Thrust	1
SW510-9	Nut–Spindle	1
(5) SW510-67D	Spacer–Shim	8
SW510-65	Nut–Jam (Not Shown)	1
SW510-66	Washer–(Not Shown)	1

(1) Used when adjusting the 12 in. (30.5 cm.) clutch.
(2) Used when adjusting the 13 in. (33.0 cm.) clutch.
(3) Used when adjusting the 11 in. (27.9 cm.) clutch.
(4) Used when adjusting the 11 in. (27.9 cm.) independent P.T.O. clutch.
(5) Used when adjusting the 12 in. (30.5 cm.) and 13 in. (33.0 cm.) clutch.

1. Insert the serrated end of the Fixture Spindle, Tool No. SW510-62, Figure 29, into the hub of the Fixture Base, Tool No. SW510-60. Position the fixture base on edge and install the Washer, Tool No. SW510-66 (not shown) and Jam Nut, Tool No. SW510-65 (not shown) on the end of the spindle that protrudes from the bottom of the base. Tighten the nut until the spindle bottoms in the hub.

2. Bolt the assembled Fixture Base, Tool No. SW510-60, Figure 29, to a work bench.
IMPORTANT – It is essential that the mounting area be level and the mounting bolts be torqued equally to eliminate the possibility of warping the fixture. It is also essential that the mating surfaces on the fixture base, and fixture components, be kept clean.

3. Thoroughly clean the mating surfaces on the clutch pressure plate and cover assembly in addition to cleaning the fixture base.

4. Place the assembled clutch pressure plate and cover assembly on the fixture base. Install the adapter plate, the bridge, the thrust washer, and the spindle nut as shown in Figure 30. Relieve the spring tension on the release levers by tightening the spindle nut until the clutch cover is drawn to the fixture base. During disassembly it will not be necessary to install the clutch cover-to-flywheel bolts, although they are shown installed. To prevent distorting the top of the clutch cover, do not overtighten the spindle nut.
NOTE – The step on the base of the fixture substitutes for the clutch disc assembly, therefore the disc is not required when using the Universal Clutch Fixture.

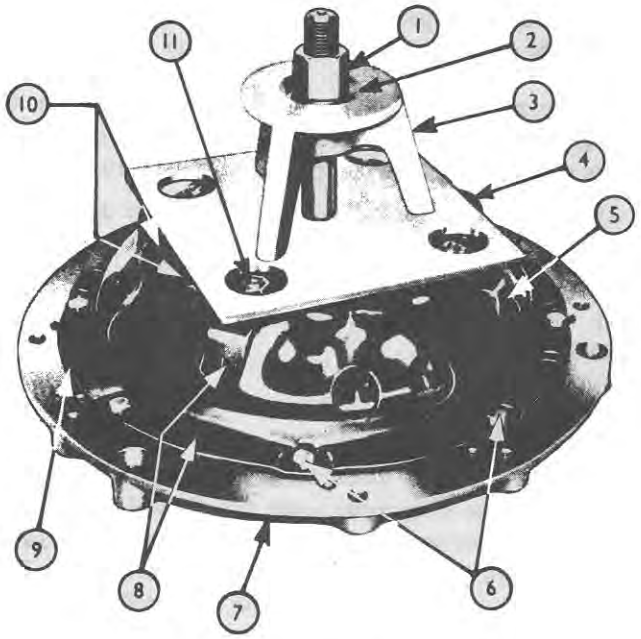

Figure 30
Servicing a Previous 11 in. (27.9 cm.) Clutch Using Fixture Tool No. SW510

1. Spindle Nut
2. Thrust Washer
3. Bridge
4. Adaptor Plate
5. Pressure Plate Lug
6. Cover to Flywheel Bolts
7. Fixture Base
8. Identification Marks
9. Cover
10. Spring Cups
11. Release Lever Eyebolt Nut

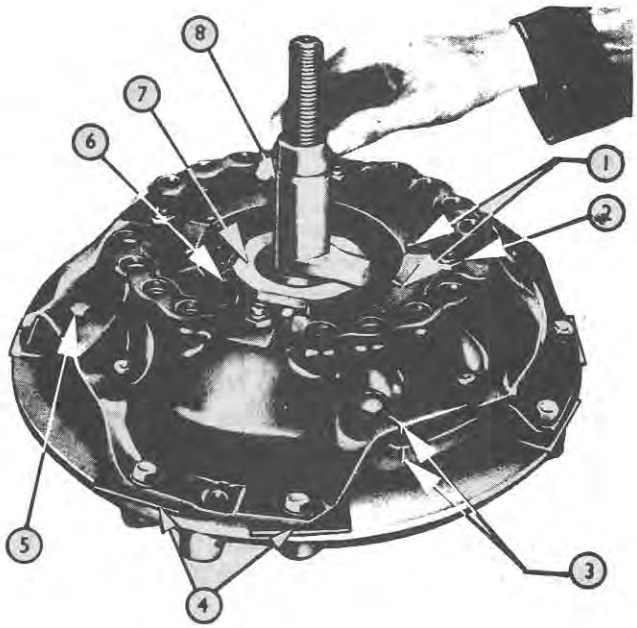

Figure 31
Adjusting Release Levers on a 13 in. (33.0 cm.) Clutch Using Tool No. SW510

1. Anti-rattle Spring
2. Release Lever Eyebolt Nut
3. Identification Marks
4. Shim Spacers
5. Drive Strap Locking Ferrule Bolt
6. Retaining Spring
7. Release Lever Plate
8. Release Lever Gauge

5. Remove the four release lever eyebolt nuts, Figure 30, after first "cleaning" the staked portion of the nuts from the slot in each eyebolt. Failure to "clean" the slots may result in stripped threads. On the 12 in. (30.5 cm.) and 13 in. (33 cm.) clutch, it will be necessary to remove the drive strap locking ferrule bolts, shown in Figure 31, in addition to removing the eyebolt nuts. Remove the locking ferrule bolts before removing the eyebolt nuts.

NOTE – It is suggested that the clutch cover, the clutch pressure plate, and the release levers be marked for identification purposes before the clutch is taken apart. Doing this will enable the parts to be re-installed in their original position and will maintain the balance built into the clutch.

6. Separate the clutch cover from the pressure plate by removing the spindle nut, the thrust washer, the bridge, and the adapter plate, Figure 30.

7. Remove the clutch pressure release springs from the pressure plate, then remove the release lever struts, the eyebolts, and the release levers by applying pressure to the levers and eyebolts as shown in Figure 22. Remove the eyebolts from the levers, and the pivot pins from the eyebolts.

Current Type Clutches

Listed below and illustrated in Figure 32 are the components of Adapter Kit SW511, Gauge Spacer SW510-5K and the detail parts of Universal Clutch Fixture SW510 which are used to overhaul the current type single clutches.

Component No.	*Description*	*Quantity*
SW510-60	Fixture Base	1
SW510-62	Fixture Spindle	1
SW510-65	Spindle Jam Nut (not shown)	1
SW510-66	Spindle Washer (not shown)	1
SW510-2	Release Lever Gauge	1
SW510-3	Spring Compressor Bridge	1
SW510-9	Spindle Nut	1
SW510-13	Thrust Washer	1
SW510-5K	Gauge Spacer 0.300 in.	1
SW511	Clutch Adapter Kit (consists of)	
SW510-69	Spacer Clamp	3
SW510-70	Clamp Bolts	3
SW510-71	Heavy Nut – $\frac{3}{8}$ in. × 16	3
SW510-72	$\frac{7}{16}$ in. S.A.E. Washer	6

1. Insert the serrated end of the Fixture Spindle, SW510-62, Figure 32, into the hub of the Fixture Base, SW510-60. Place the fixture base on edge and install the Washer, SW510-66 (not shown) and the Jam Nut, SW510-65 (not shown) on the end of the spindle protruding from the bottom of the fixture base. Tighten the nut until the spindle bottoms firmly in the hub.

2. Thoroughly clean the mating surfaces on the clutch pressure plate and cover assembly, in addition to cleaning the fixture base.

3. Install the three Bolts, SW510-70, with three Washers, SW510-72, through the bottom of the fixture base and position the Spacer Clamps, SW510-69, with the flat side downward, as shown in Figure 33.

4. Place the assembled clutch pressure plate and cover assembly on the fixture and center the assembly on the three Spacer Clamps, SW510-69.

5. Remove the three "C" shaped release lever retainer clips using two screwdrivers as shown in Figure 35. Discard and renew on assembly.

6. Install the Spring Compressor Bridge, SW510-3, Washer, SW510-13, and the Spindle Nut, SW510-9, as shown in Figure 34.

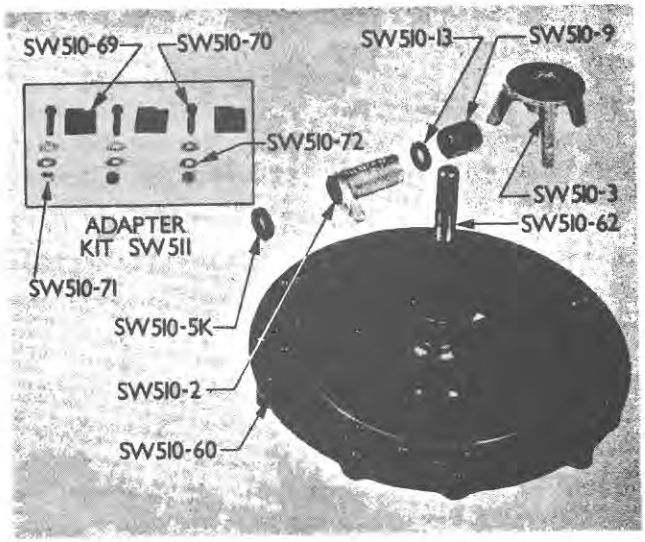

Figure 32
Universal Clutch Fixture, SW510, and Adaptor Kit, SW511

7. Slacken the adjusting screw locknuts and screw the adjusting screws into the pressure plate to allow the release levers greater movement.

8. Tighten the spindle nut to compress the springs until a gap of approximately $\frac{1}{4}$ in. (6 mm.) is produced between the corner of the spring retainer and the cover, see Figure 34, when the links may be disengaged from the spring retainer.

9. Be certain that all three release lever links are disengaged, then carefully loosen the spindle nut and remove the spring compressor bridge. Remove the spring retainer.

10. Remove the six pressure springs and the three release lever links, Figure 36.

11. Separate the cover assembly from the pressure plate by removing the three adjuster screws, locknuts, and flat washers.

B2. ASSEMBLY

Previous Type Clutches

The following parts should be lightly coated with a silicon grease prior to reassembly:—the plain end of the eyebolts, the eyebolt nut seats in the cover, the overall length of the release lever pivot pins, the contact edges of the release lever struts, the drive lug sides of the pressure plate of 11 in. (27.9 cm.) clutches and the release lever tips when release lever thrust plate is installed.

1. Insert the pivot pins in the eyebolts, then insert the threaded end of the eyebolts up through the release levers.

2. Place the release levers, eyebolts, and struts in position under the pressure plate lugs as shown in Figure 22. Apply

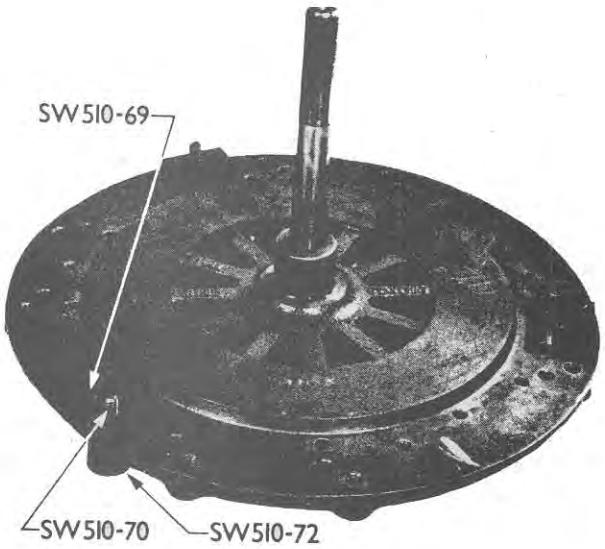

Figure 33
Spacer Clamps Positioned for Current Clutch Disassembly and Assembly

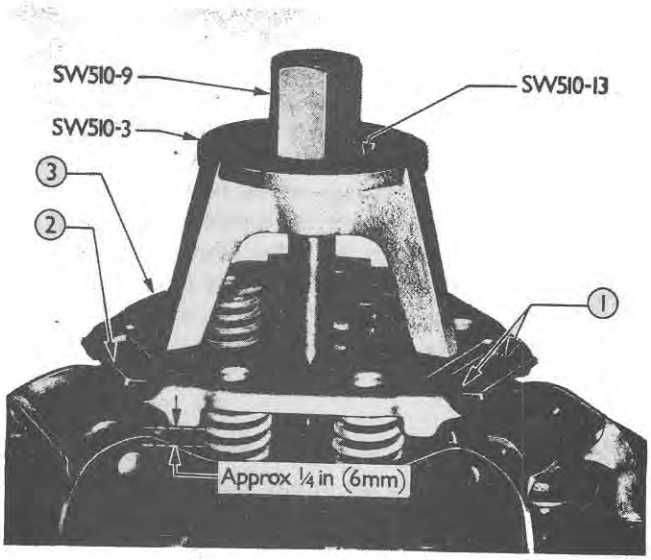

Figure 34
Removing Spring Retainer

1. "Notches"
2. Release Lever Links
3. Spring Retainer

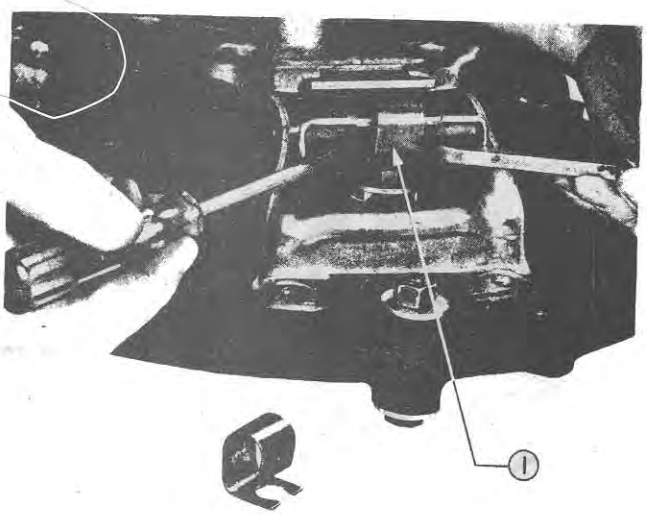

Figure 35
Removing Release Lever Retainer Clips

1. Clip

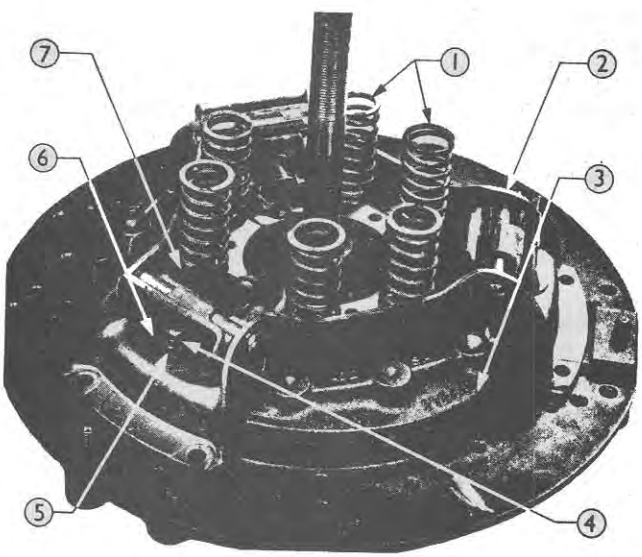

Figure 36
Pressure Springs and Release Lever Links

1. Pressure Springs
2. Cover Assembly
3. Pressure Plate
4. Adjuster Screw
5. Locknut
6. Flat Washer
7. Release Lever Link

pressure to the levers and eyebolts as shown, then slip the struts into place.

3. Place the assembled clutch pressure plate on the Fixture Base, Tool No. SW510-60, then position the clutch pressure release springs on the bosses of the plate. Position the clutch cover over the eyebolts and springs so the eyebolts pass through the holes in the cover and so the springs are seated in the "cups" of the cover, Figure 30. Check the anti-rattle springs, Figure 31, to see that they are seated against the release levers.

4. Rotate the assembly on the fixture base until the bolt holes in the clutch cover are in line with the mating holes in the fixture base, then drop the clutch cover-to-flywheel bolts, Figure 30, into place. The bolts are to be used as guides during this stage of assembly and need not be tightened. On the 12 in. (30.5 cm.) and 13 in. (33 cm.) clutches, it will be necessary to install one Shim Spacer, Tool No. SW510-67D under the clutch cover at the location of each clutch cover-to-flywheel bolt, as shown in Figure 31, before dropping the bolts into place. The drive strap locking ferrules as well as the ferrule bolts should also be installed, but not tightened.

5. Install the adapter plate, the bridge, the thrust washer, and the spindle nut, as shown in Figure 30. Slowly draw the clutch cover down over the pressure plate by tightening the spindle nut until the cover contacts the fixture base. Exercise care to prevent the lugs on the pressure plate, Figure 30, from catching on the cover. To prevent distorting the top of the clutch cover, do not overtighten the spindle nut.

6. After the clutch cover has made contact with the fixture base, complete the installation of the clutch cover-to-flywheel bolts, Figure 30, by torquing the bolts equally in a diagonally staggered manner. On the 12 in. (30.5 cm.) and 13 in. (33 cm.) clutches, torque the drive strap locking ferrule bolts, Figure 31, in the same manner. See Specifications Section, Chapter 4, for torque values.

7. After torquing the bolts, remove the spindle nut, the thrust washer, and the bridge, Figure 30. Install the applicable gauge spacer (see following listing) and the release lever gauge as shown in Figure 37. Install the gauge spacer so the identifying number is "up".

Component No.	*Clutch Application*
SW510-5A 0.200 in. (5.1 mm.)	11 in. (27.9 cm.) Independent P.T.O. Clutch
SW510-5B 0.255 in. (6.5 mm.)	11 in. (27.9 cm.) Clutch
SW510-5C 0.467 in. (11.9 mm.)	13 in. (33.0 cm.) Clutch
SW510-5D 0.550 in. (14.0 mm.)	12 in. (30.5 cm.) Clutch

8. Install the release lever eyebolt nuts, Figure 37. Raise the release levers by adjusting each eyebolt nut until a slight drag can be felt when the "foot" of the release lever gauge is rotated across the levers. Apply light pressure to the gauge to obtain an equal "feel" on each lever. When adjusting the 13 in. (33 cm.) clutch, be sure that the release lever plate, Figure 31, is attached to the release levers as shown. The "feel" on this clutch should be the same all the way around the release lever plate.

9. After the levers are adjusted, stake the cylindrical portion of each eyebolt nut into the slot of each eyebolt. Recheck the "feel" after staking, and if necessary, readjust the nuts until the "feel" is the same on each lever.

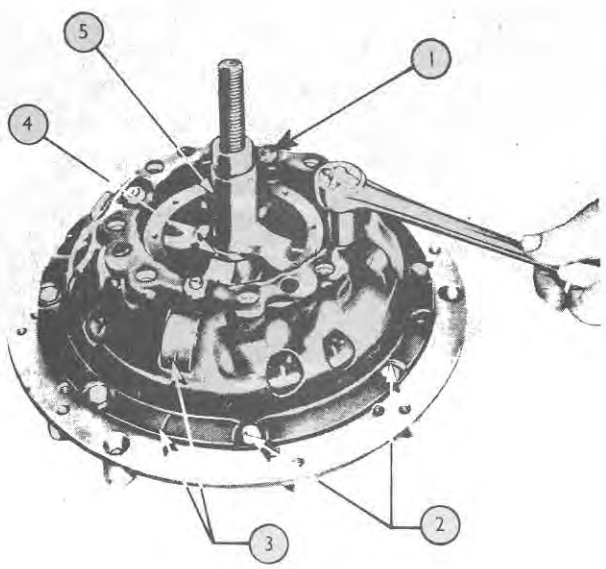

Figure 37
Adjusting Release Levers on an 11 in. (27.9 cm.) Clutch Using Tool No. SW510

1. Release Lever Eyebolt Nut
2. Clutch Cover to Flywheel Bolts
3. Identification Marks
4. Gauge Spacer
5. Release Lever Gauge

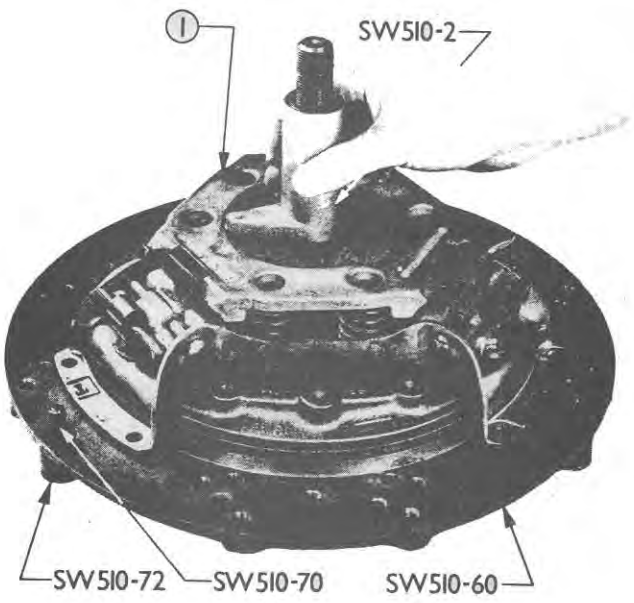

Figure 38
Centering Clutch Assembly on Fixture Base
1. Spring Retainer

10. Remove the release lever gauge and the gauge spacer, Figure 37. Re-install the adapter plate, bridge, thrust washer, and the spindle nut as shown in Figure 30. Tighten the spindle nut fingertight, then remove the clutch cover-to-flywheel bolts. After removing the bolts, remove the clutch from the fixture by removing the spindle nut, the thrust washer, the bridge, and the adapter plate. The clutch is now ready for installation on the flywheel.

Current Type Clutches

Before assembly the following parts should be lightly coated with silicon grease –

All contact points between the angle links and the spring retainer and between the angle links and the release levers.

The sides of the pressure plate driving lugs.

The release lever pivot pins.

1. Install the three Bolts, SW510-70, with Washer SW510-72, through the bottom of the Fixture Base, SW510-60, and position the Spacer Clamps, SW510-69, with the flat side downward as shown in Figure 33.

2. Place the pressure plate on the fixture base and secure he cover assembly to the pressure plate with the three adjusting screws, flat washers, and locknuts, Figure 36, Tighten the locknuts fingertight.

NOTE – When attaching the cover assembly to the pressure plate be certain that the square bosses on the plate engage with the three square holes in the cover assembly.

3. Position the three release lever links on the release levers as shown in Figure 36, and install the six pressure springs.

4. Position the spring retainer on the pressure springs being sure the springs are centered in the spring seats, Figure 34.

5. Install the Spring Compressor Bridge, SW510-3, Washer SW 510-13, and the Spindle Nut, SW510-9. Tighten the spindle nut, compressing the pressure springs until the release lever links may be engaged in the notches of the spring retainer.

NOTE – When compressing the springs, make certain that the spring retainer does not bind on the cover assembly. Clearance must be maintained between the plate and the cover at all sides.

6. Making sure the release lever links remain engaged, loosen the spindle nut to release the tension of the pressure springs.

CAUTION – Extreme care must be exercised to assure that the release lever links are engaged with the spring retainer prior to loosening the spindle nut.

7. Lift the pressure plate and cover assembly from the fixture and remove the nuts SW510-71, washer SW510-72 and spacer clamps SW510-69. Leave the bolts SW510-70 in position in the fixture base.

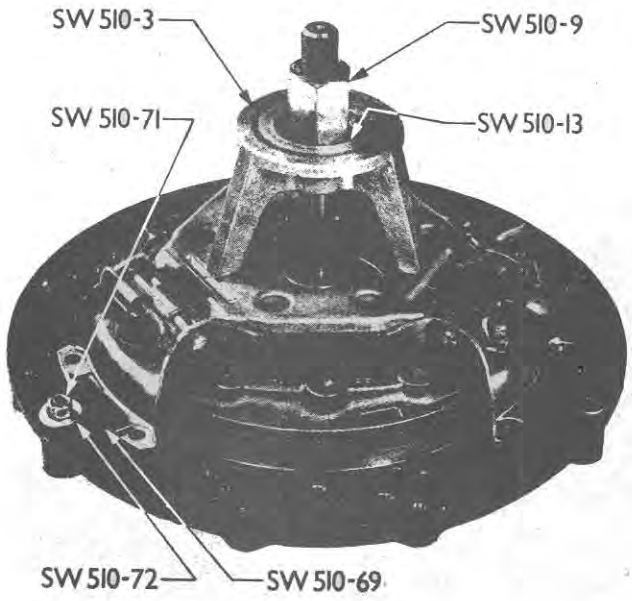

Figure 39
Securing Clutch Assembly to Fixture Base

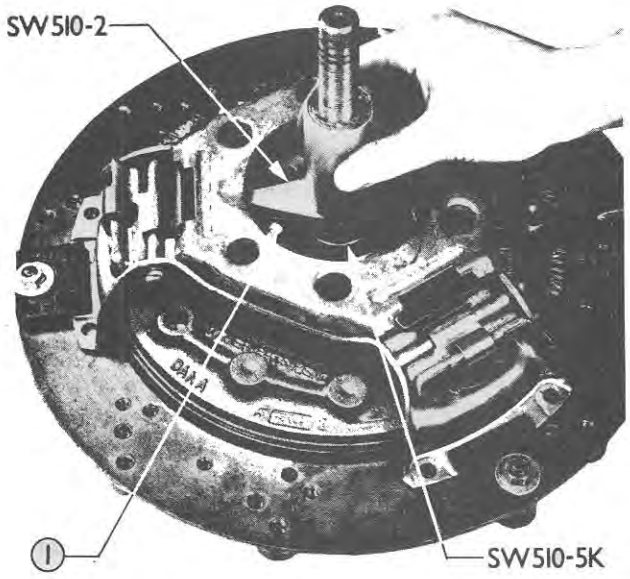

Figure 40
Checking Release Lever Height
1. Release Lever

8. Lower the pressure plate and cover assembly onto the fixture, and using Release Lever Gauge SW510-2 as shown in Figure 38, center the assembly on the fixture by rotating the gauge completely around the inside of the spring retainer. After the clutch is centered on the fixture base remove the release lever gauge.

9. Install the Spring Compressor Bridge, SW510-3, Washer, SW510-13, and the Spindle Nut, SW510-9, as shown in Figure 39.

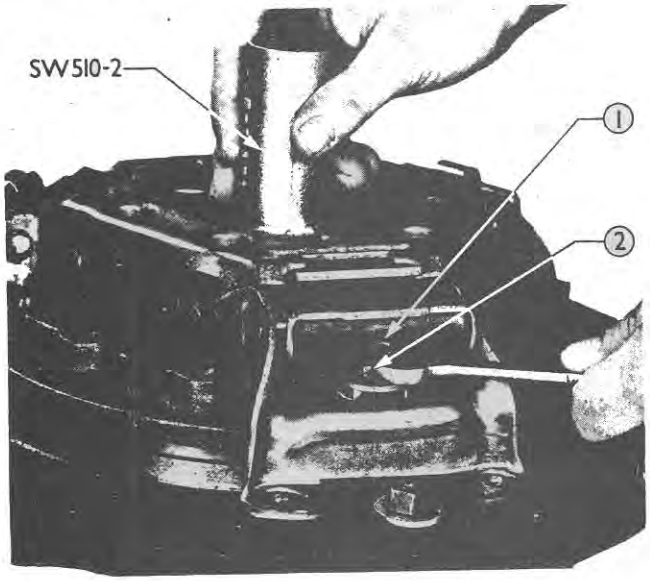

Figure 41
Adjusting Release Lever Height
1. Adjuster Screw 2. Locknut

10. Compress the clutch mechanism by tightening the spindle nut until the clutch cover contacts the fixture base, then install the three Spacer Clamps, SW510-69, Washers, SW510-72, and Nuts, SW510-71, as shown in Figure 39. Tighten the nuts securely. Remove the spindle nut, washer, and spring compressor bridge.

11. Place the Gauge Spacer, SW510-5K, on the spindle and install the Release Lever Gauge, SW510-2, as shown in Figure 40. Check the height of each of the three release levers by rotating the Release Lever Gauge, SW510-2, over each lever. A slight drag should be felt when the foot of the gauge is rotated across each release lever end.

12. Where a release lever requires adjustment loosen the locknut as shown in Figure 41, and raise or lower the release lever by turning the adjuster screw, while rotating the Release Lever Gauge, SW510-2, across the release lever end. Retighten the adjuster locknut.

13. Depress each release lever several times, then recheck the settings and readjust if necessary.

14. Install the release lever retainer clip using long-nose pliers, as shown in Figure 42. Make certain that each retainer clip is fully seated on the adjuster screw.

15. Install the spring compressor bridge, washer, and spindle nut, as shown in Figure 39, and fully compress the clutch mechanism.

16. Remove the three nuts, washers, and spacer clamps, then remove the spindle nut and spring compressor gauge, and remove the clutch assembly from the fixture base.

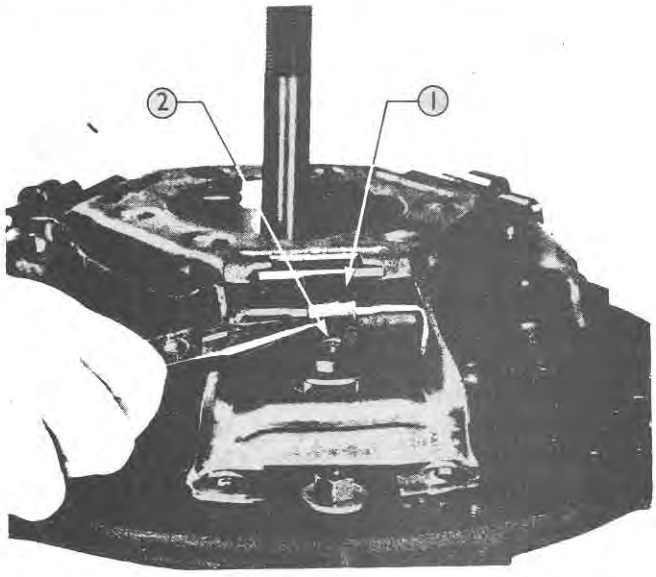

Figure 42
Installing Release Lever Retainer Clips
1. Release Lever Retainer Clip 2. Adjuster Screw

Part 4
CLUTCHES

Chapter 2
DOUBLE CLUTCHES

Section		*Page*
1.	Description and Operation	25
2.	Important Changes	28
3.	Adjustments	29
4.	Double Clutch Removal and Installation ..	30
5.	Overhaul Double Clutch Assembly	32

1. DESCRIPTION AND OPERATION

A. DESCRIPTION

A feature of the double clutch, which is available as an option in Ford 2000 tractors with 6-speed transmission and in Ford 2000 and 3000 tractors with 7-speed and 8-speed transmissions, is that it provides Live P.T.O. operation, thus permitting the drive to be disconnected from the main transmission, for gear changing purposes, without stopping the drive to the P.T.O.

As supplied for service, the double clutch assembly is comprised of one fixed and two movable pressure plates, a P.T.O. clutch disc, two sets of coil springs, three release levers, and three sets of linkage connecting the release levers to the pressure plate, all of which are enclosed in one cover. A transmission clutch disc is supplied separately for service and is installed between the double clutch assembly and the engine flywheel.

The transmission clutch disc, which has a diameter of 11 in. (27.9 cm.), transmits the drive from the engine to the transmission input shaft while the P.T.O. clutch disc, which has a diameter of 8.5 in. (21.6 cm.), transmits the drive to the P.T.O. input shaft.

Figure 43 illustrates the component parts of the double clutch together with the current type transmission clutch disc, and Figure 44 shows the installation on the engine flywheel.

The double clutch is attached to a recessed flywheel, Figure 44, by six dowel bolts and lock-washers. These bolts pass through both the cover and the intermediate pressure plate. Torque is transmitted to the transmission clutch pressure plate by three lugs on the plate which engage in slots in the intermediate pressure plate. Torque is transmitted to the P.T.O. clutch pressure plate by three lugs which engage in slots in the pressed steel cover.

Three release levers pivot on knife-edged fulcrum brackets which are attached to the pressed steel cover by rivets, one of which is extended upwards to act as a position post for the release levers. The release levers actuate the transmission pressure plate through struts and pairs of links which are attached by pins to the drive lugs of the transmission pressure plate.

The P.T.O. pressure plate connecting links are located between the transmission plate links and are attached to the P.T.O. pressure plate by pins which pass through slotted holes in the transmission plate links. The release lever struts bear on adjustable, socket-headed (Allen) screws in the tops of the P.T.O. pressure plate links.

Hardened spherical-headed screws, located at the inner ends of the release levers, provide adjustment for the levers. Adjusting the socket-headed (Allen) screws alters the gap between their hardened ends and the release lever struts. This gap determines how far the release levers travel before they actuate the P.T.O. clutch pressure plate.

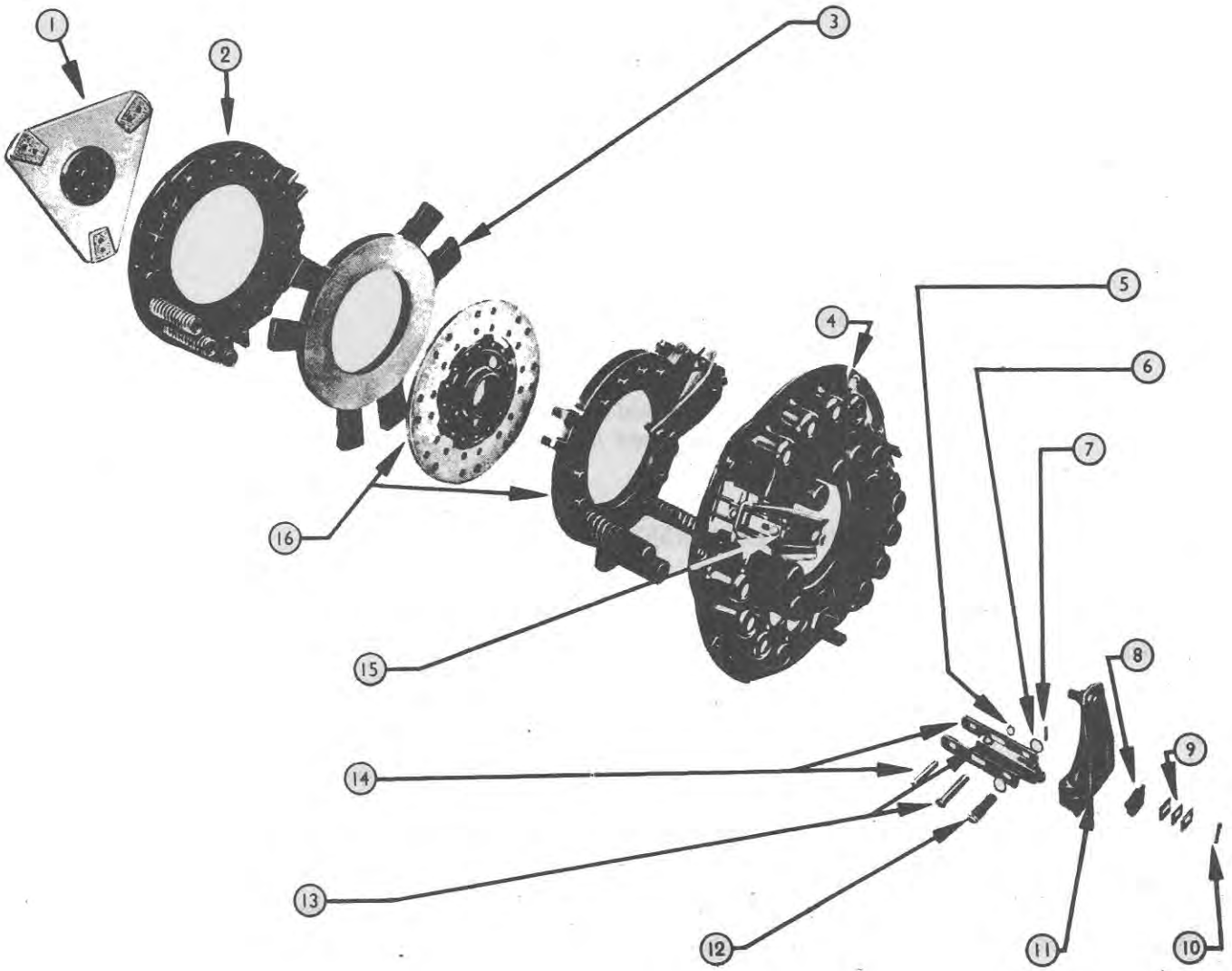

Figure 43
Double Clutch Components and Transmission Clutch Disc

1. Transmission Clutch Disc
2. Transmission Pressure Plate
3. Intermediate Pressure Plate
4. Cover
5. Snap Ring
6. Spacer
7. Cotter Pin
8. Clip
9. Shims
10. Cotter Pin
11. Release Lever
12. Strut
13. P.T.O. Pressure Plate Connecting Pin and Link
14. Transmission Pressure Plate Connecting Pin and Links
15. Socket Head Adjusting Screw
16. P.T.O. Clutch Disc and Pressure Plate

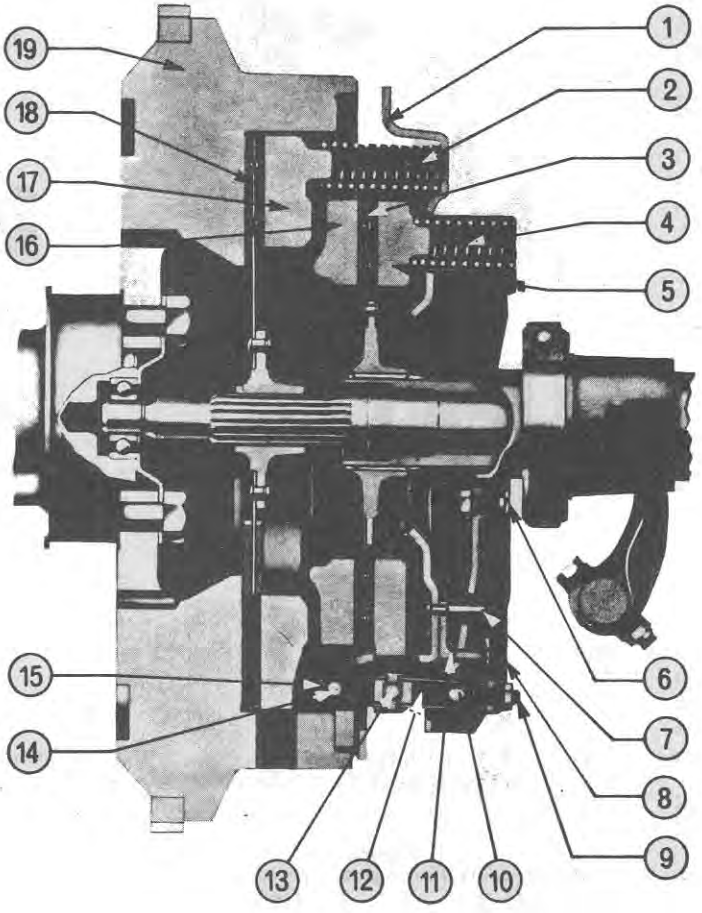

Figure 44
Double Clutch Installation

1. Cover
2. Transmission Clutch Spring
3. P.T.O. Clutch Disc
4. P.T.O. Clutch Spring
5. P.T.O. Pressure Plate
6. Release Lever Adjusting Screw
7. Position Post
8. Release Lever
9. Socket-Headed Adjusting Screw
10. Strut
11. Fulcrum Bracket
12. P.T.O. Pressure Plate Link
13. P.T.O. Pressure Plate Link Pin
14. Transmission Pressure Plate Link Pin
15. Transmission Pressure Plate Link
16. Intermediate Pressure Plate
17. Transmission Pressure Plate
18. Transmission Clutch Disc
19. Flywheel

B. OPERATION

When both clutches are engaged, Figure 45 (view "A"), the drive from the engine is transmitted to both the transmission input shaft and the P.T.O. input shaft. By depressing the clutch pedal through approximately half its total travel the transmission clutch pressure plate is withdrawn, Figure 45 (view "B"). This releases the transmission clutch disc from the flywheel and disconnects the drive to the transmission. The P.T.O. clutch will still be engaged thus maintaining the drive to the P.T.O. while transmission gear changes are being made.

By depressing the clutch pedal through the remainder of its travel, the P.T.O. pressure plate is also withdrawn, Figure 45 (view "C"), releasing both the transmission disc and the P.T.O. disc and disconnecting the drive to the transmission and P.T.O.

NOTE – The clevis between the clutch operating rod and the clutch cross-shaft lever of current production tractors has only one pair of holes for the connecting pin. On earlier tractors the clevis had two pairs of holes, and for normal operation requiring movement of the tractor and operation of the P.T.O., the connecting pin is inserted through the rear holes in the clevis. Where, however, the P.T.O. is not required for the field operation being undertaken, the connection is made through the front holes in the clevis thus limiting the total amount of pedal travel so that only the transmission clutch is released when the clutch pedal is fully depressed.

Where a two position clevis is incorporated, the connection to the clutch release cross-shaft lever should always be made through the rear holes in the clevis when the P.T.O. is being used. This will ensure that the P.T.O. may be readily stopped in an emergency by merely depressing the clutch pedal through the whole of its travel.

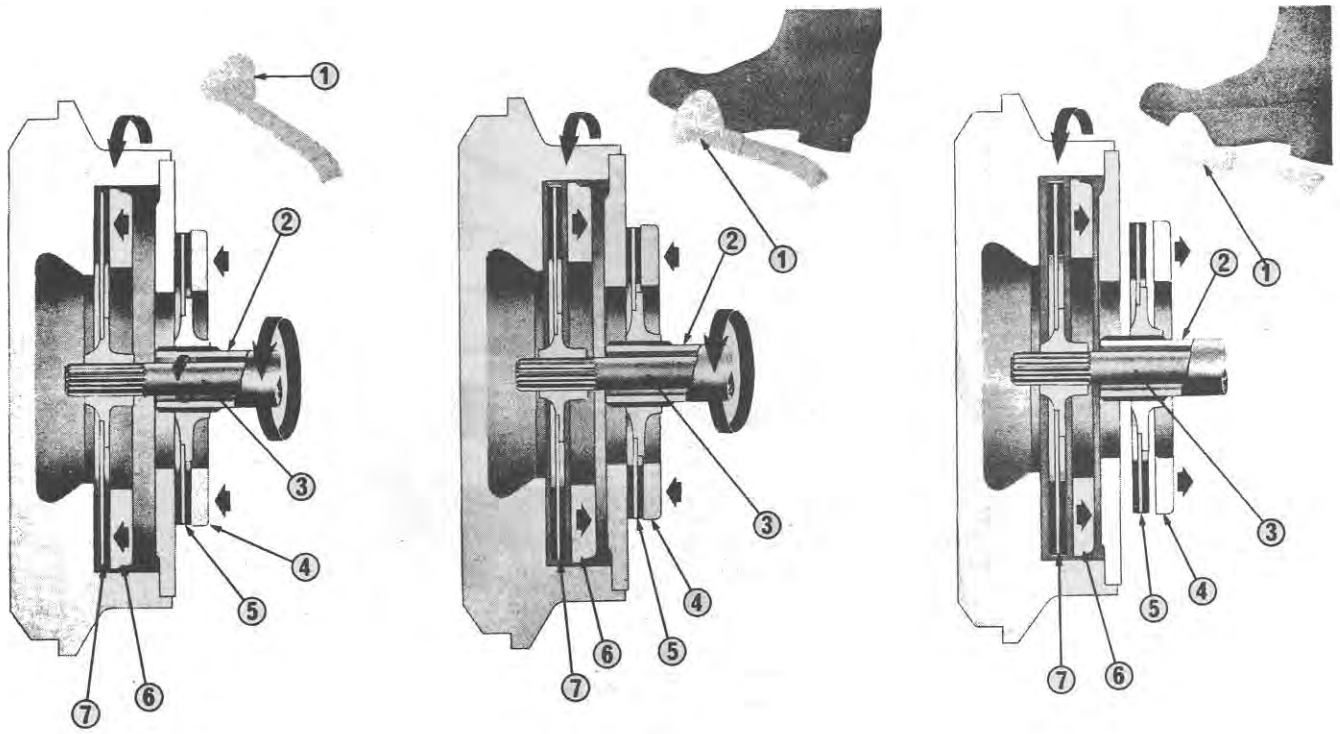

Figure 45
Power Flow Through the Double Clutch

1. Clutch Pedal
2. P.T.O. Input Shaft
3. Transmission Input Shaft
4. P.T.O. Pressure Plate
5. P.T.O. Clutch Disc
6. Transmission Clutch Pressure Plate
7. Transmission Clutch Disc

2. IMPORTANT CHANGES

Transmission Clutch Disc

The current transmission clutch disc of the double clutch has three pairs of cerametallic buttons and is the same disc as is used on Ford 2000, 3000 and 4000 tractors with Transmission P.T.O., Figure 7.

Prior to the introduction of the current disc, various types of discs were used, all of which had continuous band organic linings but culminating in one which also had a torsion damped hub similar to those shown in Figure 4. This is the only disc which is now being supplied for service use with the double clutch of tractors built prior to the introduction of the cerametallic button type of disc. It is not interchangeable with the current clutch disc.

Transmission Clutch Springs

Early production transmission clutch springs, painted light blue for identification purposes, have been superseded for service by lighter load springs which are painted yellow. The yellow springs are the only ones which are supplied for use in service on double clutches of tractors built prior to the introduction of the cerametallic button type of transmission clutch disc. They should be used in sets where it is necessary to renew the light blue springs of an early clutch.

Where the cerametallic button type of transmission clutch disc is installed a different linkage to the clutch pedal is used and the transmission clutch springs differ from those used previously. These springs are coloured dark blue and they are not suitable for use in an earlier type clutch.

P.T.O. Clutch Springs

The double clutch used in early production had 12 P.T.O. clutch springs but this was subsequently reduced to 9. When servicing a double clutch which originally incorporated 12 P.T.O. clutch springs, three of the springs may be removed together with the corresponding spring cups in the cover but the remaining 9 springs should be disposed as shown in Figure 46.

Double Clutch Assembly Adjustment

Two double clutch assemblies are currently available through service. One is for use in current tractors which have an external clutch pedal return spring. The other is for previous tractors where the spring is fitted internally in the front compartment of the front transmission housing.

The gap between each socket-headed (Allen) screw and the corresponding release lever strut of the double clutch for current tractors is set at 0.050 to 0.054 in. (1.27 to 1.37 mm.) as specified for these models.

The corresponding gaps on the other service clutch is set at 0.070 to 0.074 in. (1.78 to 1.88 mm.), and this clutch is suitable for use without alteration in tractors which have an internal **leaf** type of pedal return spring as shown in Figure 65. If, however, this clutch is being installed in a tractor with an internal **coil** type of pedal return spring as shown in Figure 64, the gaps should be re-adjusted at the time of installation to 0.050 to 0.054 in. (1.27 to 1.37 mm.).

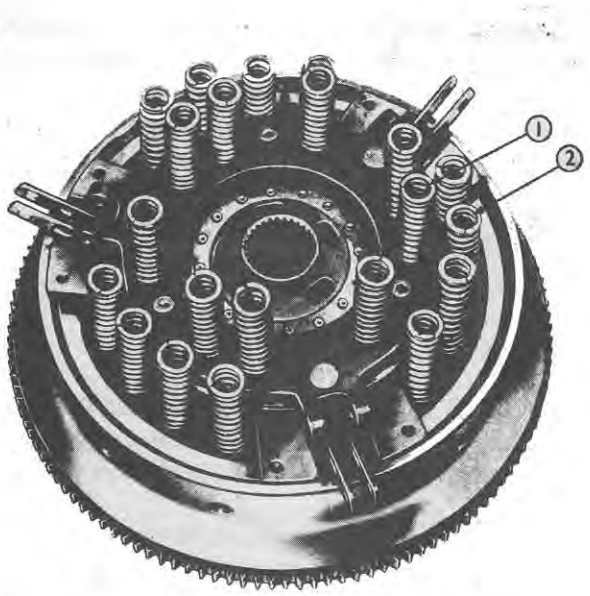

Figure 46
Disposition of P.T.O. Clutch Springs

1. P.T.O. Clutch Springs
2. Transmission Clutch Springs

3. ADJUSTMENTS

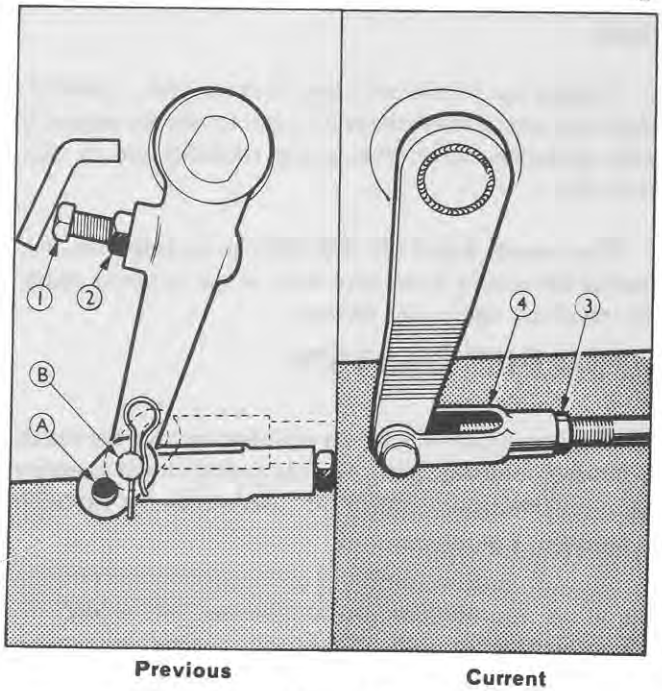

Figure 47
Clutch Pedal Linkage Adjustment

1. Stop Screw
2. Stop Screw Locknut
3. Clevis Locknut
4. Clevis

A. PEDAL FREE TRAVEL

In service, the clutch pedal free travel, measured at the centre of the pedal pad, should be maintained at the dimension listed in "SPECIFICATIONS", Chapter 4.

It is recommended that the pedal free travel be checked and adjusted every 50 operating hours, but it should be noted that the method of adjustment on current tractors differs from the method for adjustment on previous tractors.

Previous Tractors

On these tractors the pedal upper stop is provided by an adjustable stop screw in the clutch release cross-shaft lever which abuts a stop cast on the side of the front transmission housing, Figure 47. To adjust the pedal free travel loosen the locknut on the stop screw and move the screw into the lever to increase the free travel and out of the lever to decrease the free travel. Do not attempt to adjust pedal free travel on these tractors by adjusting the length of the release rod.

Current Tractors

On current tractors the foot platform acts as the upper stop for the clutch pedal and no stop screw is provided in the clutch release cross-shaft lever.

To adjust the pedal free travel on these tractors loosen the clutch release rod clevis locknut, Figure 47, and remove the pin connecting the clevis to the clutch release cross-shaft lever. Rotate the clevis on the release rod to increase or decrease its overall effective length and so adjust the free travel of the pedal. Lengthening the rod will give greater free travel – reducing the length will give less free travel.

Tighten the locknut and install a new split pin in the clevis pin after completing the adjustment.

B. CLUTCH PEDAL LINKAGE ADJUSTMENT

On current tractors no linkage adjustment is required apart from that necessary to maintain the free play at the pedal.

On previous tractors the length of the clutch release rod, which is correctly set at initial assembly, will normally not require adjustment. If, however, the rod is disturbed during other servicing operations, or if the clutches fail to disengage when the pedal is depressed and the pedal free play adjustment is correct, then the following adjustment to the release rod may be necessary.

1. Connect the release rod clevis to the cross-shaft lever using the rear holes in the clevis (Connection "B", Figure 47).

2. Start the engine, engage the P.T.O. shifter lever and check that the P.T.O. shaft stops revolving just before the clutch pedal, when depressed, touches the platform.

3. If the P.T.O. shaft does not stop, disconnect the clevis from the cross-shaft lever and screw the clevis further onto the release rod. Reconnect to the cross-shaft lever and re-check in line with Step 2. Repeat the adjustment as necessary until the correct condition is obtained.
NOTE – Do not screw the clevis onto the rod to such an extent that the total release movement of the clutch is taken up before the clutch pedal contacts the platform. If the clevis has been screwed on too far, the clutch mechanism will "bottom" before the pedal meets the platform. This point can be felt if the pedal is slowly depressed and movement of the pedal beyond this point may cause damage to the clutch. Under such circumstances the clutch and its associated parts should be removed for examination to determine why over-adjustment of the release rod has been necessary.

4. Change the connection of the release rod to the release lever by inserting the pin through the front holes in the clevis (Connection "A", Figure 47).

5. Again depress the clutch pedal until it contacts the platform, at which point the transmission clutch should be completely disengaged. This can be verified by engaging and disengaging a gear.

If necessary, re-adjust the release rod by screwing the clevis onto the rod until the clutch disengages when the pedal is fully depressed.
NOTE – If re-adjustment of the release rod has been necessary, connect the rear holes in the release rod clevis to the release arm and make sure that the clutch pedal, when depressed, contacts the platform before the total clutch release travel is expended.

6. With the release rod adjustment completed, move the P.T.O. lever into the disengaged position and stop the engine.

7. Tighten the release rod clevis locknut, then, with the release rod connected to the release arm to give the required pedal operation, insert the spring retaining pin in the clevis pin.

8. If necessary, adjust the stop screw projecting from the front of the release lever until there is the required pedal free travel and tighten the locknut.

4. DOUBLE CLUTCH REMOVAL AND INSTALLATION

A. REMOVAL

1. Treating the engine and front axle as an assembly, split the tractor at the engine front transmission housing flanges and move the engine and front axle assembly away from the front transmission.

2. Where available, use Compressor Tool SW13 b to depress each release lever of the double clutch and install a release lever hold-down clip on each lever.
NOTE – These clips are supplied in assembly with all service double clutches. For convenience they are also included in Tool Kit SW13A (not available in U.S.A.) and were in previous Tool Kit SW13.

3. Support the double clutch and then remove the clutch to flywheel retaining bolts. Lift the double clutch assembly and the transmission clutch disc away from the flywheel.

B. INSTALLATION

1. If a new double assembly is to be installed, the friction face of the transmission clutch pressure plate should be cleaned with white spirit (Stoddard's Solvent) to remove the anti-rust film which would otherwise contaminate the disc.

2. To ensure easy sliding of the disc on the splines of the transmission and P.T.O. input shafts, lightly smear the

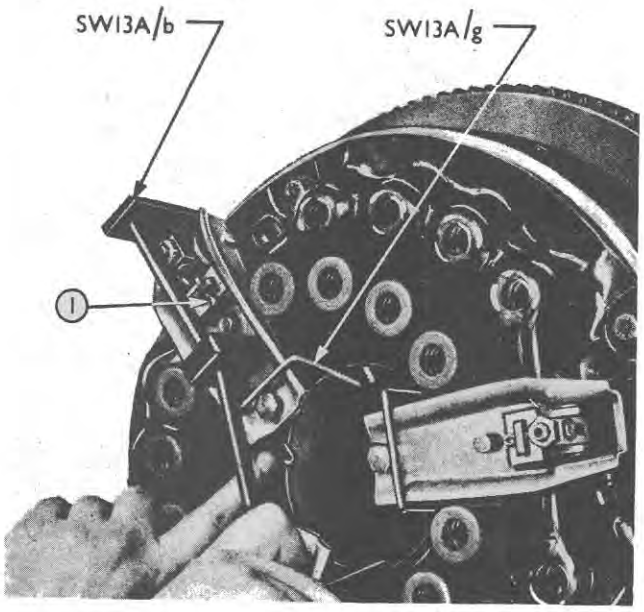

Figure 48
Installation of Release Lever Hold-Down Clips
1. Cotter Pin

splines in the hubs of the discs with silicon grease prior to assembly of the double clutch to the engine flywheel.

3. Locate the transmission clutch disc on the flywheel, centralizing it with a clutch locator tool, Figure 49. Where a current cerametallic button clutch disc is being installed, the side with the longer hub protrusion must face the flywheel, but where a previous organic friction lined disc is being installed the longer hub protrusion must face the double clutch assembly.
NOTE – Figure 49 illustrates disc locator, Tool Number SW13–1 (not available in U.S.A.) which is suitable for both current and previous transmission clutch discs used with double clutch assemblies.
Two similar tools are available in the U.S.A. under Tool Number SW509 (for previous type discs) and SW509A (for current cerametallic button type discs).

4. Install the double clutch assembly on the engine flywheel passing it over the clutch locator tool and secure with the correct dowel bolts and lockwashers. Tighten the bolts to the torque listed in "SPECIFICATIONS", Chapter 4.

5. Remove the clutch disc locator tool and the three release lever hold-down clips.

6. If a new double clutch assembly is being installed in a tractor with an internal coil type clutch pedal return spring, Figure 64, re-adjust the gap between the socket-headed adjusting screw of each release lever and the corresponding strut to 0.050 to 0.054 in. (1.27 to 1.37 mm.) – see "IMPORTANT CHANGES", Section 2 of this Chapter. The shank of a Number 55 drill may be used as a gauge when setting this gap.

NOTE – No re-adjustment is necessary when installing a new double clutch assembly in a current tractor or when installing a new one in a previous tractor with a leaf-type pedal return spring, Figure 65.

7. Re-connect the engine and front axle assembly to the front transmission, connect the clutch pedal linkage to the clutch cross-shaft lever and carry out the clutch pedal "Free Travel" and "Linkage" adjustments as detailed in Section 3 of this Chapter.

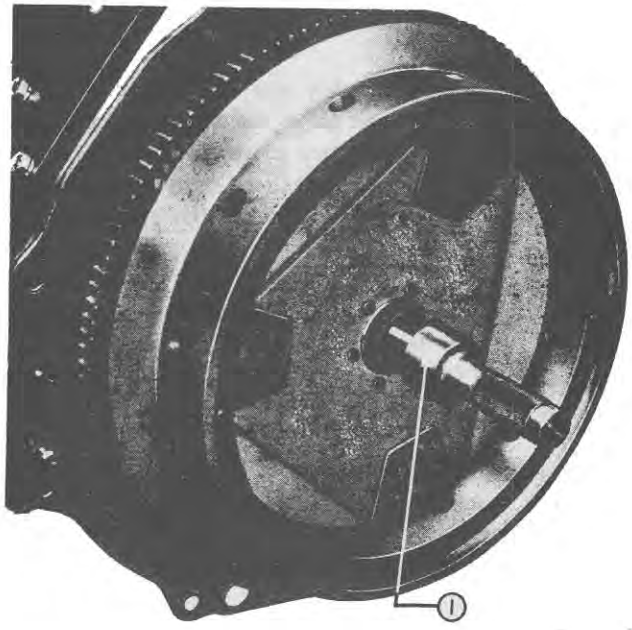

Figure 49
Installing Transmission Clutch Disc
1. Clutch Disc Locator Tool

5. OVERHAUL DOUBLE CLUTCH ASSEMBLY

It is recommended that no attempt is made to overhaul a double clutch without using the specialized tools which have been developed for the purpose. Basically these are the same tools with the addition of adaptors which are used when overhauling the single clutches as described in Chapter 1, Section 4.

Tool Number SW12B, available for all countries except the U.S.A., includes all the necessary adaptors to suit both the single and double clutches of Ford 2000, 3000, 4000 and 5000 tractors. Overhaul procedures using this tool are detailed in the following sub-sections A1, B1 and C1.

Tool Number SW510 is the equivalent tool available in the U.S.A., and overhaul procedures using this tool are detailed in sub-sections A2, B2 and C2.

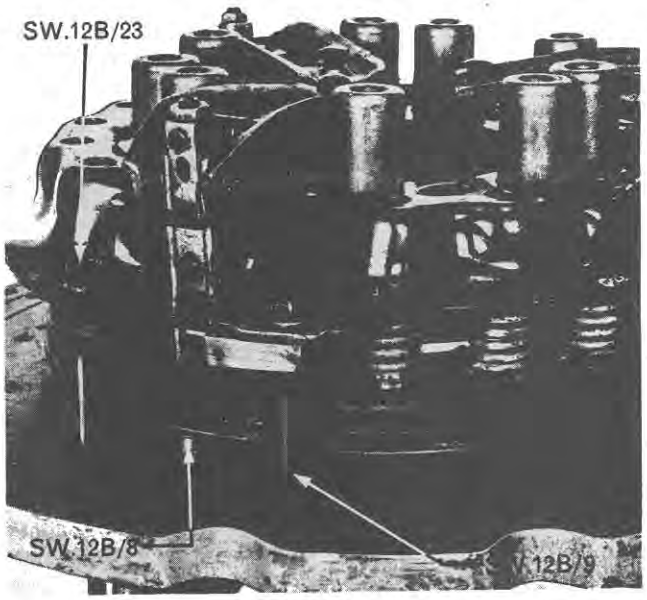

Figure 50
Double Clutch Tool Disc Spacers, Riser Spacers and Fixing Bolts

A1. DISASSEMBLY – Using Tool SW12B

The following procedures are applicable when using Tool Number SW12B, the detail parts of which are illustrated in Figure 20, Chapter 1.

1. Clean the clutch assembly and the tool thoroughly, and mark the three pressure plates and the cover relative to each other so that, should they prove subsequently to be suitable for further use, they may be reassembled in the same relative positions and so maintain the balance of the double clutch assembly.

2. Place three transmission disc spacers, Tool Number SW12B/8, on the base plate, SW12B/15, of the tool. Locate a spacer adjacent to each pair of fixing bolt holes, Figure 50.

3. Install the double clutch assembly on the spacers and insert riser spacers, SW12B/9, between the intermediate pressure plate and the base plate of the tool, positioning one at each of the fixing bolt locations, Figure 50.

4. Centralize the clutch on the base plate of the tool and insert the special fixing bolts SW12B/23 passing them through the clutch cover and the riser spacers, and screwing them into the appropriate threaded holes in the base of the tool. Tighten the bolts and then remove the lever hold-down clips.

5. Remove the cotter pin, Figure 48, and extract the shims and release lever retaining clip from each release lever fulcrum bracket.

6. Remove one of the cotter pins from each release lever strut and withdraw the strut from the other side, Figure 52, then remove the release levers and spacers.

7. Slowly release the spring pressure by gradually and evenly unscrewing each of the six SW12B/23 bolts holding the clutch to the tool.

8. Lift off the cover and remove the springs from their locations on the P.T.O. and transmission pressure plates.

9. Remove one of the snap rings from the P.T.O. pressure plate connecting pins and push out the pins. Withdraw the P.T.O. pressure plate connecting links from their location between the transmission plate connecting links.

10. Remove the P.T.O. pressure plate and the P.T.O. disc followed by the intermediate pressure plate.

11. Push out the pins retaining the transmission pressure plate links to the transmission plate and remove the links.

12. Lift the transmission pressure plate from the tool.
NOTE – It will only be necessary to remove the socket-headed adjusting screws from the P.T.O. pressure plate links, or the adjusting screws and nuts from the release levers, if these parts require to be renewed.

B1. INSPECTION

1. Examine the organic linings of previous type clutch disc assemblies for loose rivets and ensure that the linings are not excessively worn or scored. Any disc of this type with oil contaminated linings should also be renewed.

Refer to Chapter 1, Section 4 "SINGLE CLUTCH REMOVAL AND INSTALLATION", and note the information regarding inspection of the current cera-metallic button type clutch disc and the friction surfaces of the pressure plate and flywheel. This information applies equally to the transmission clutch disc and transmission pressure plate of the current double clutch, and to the flywheel.

It should, however, be noted that where this type of flywheel is to be re-faced the same thickness of material must be removed from the clutch fixing bolt circle surface (on which the clutch cover locates) as is removed from the friction surface of the flywheel. A maximum of 0.030 in. (0.7 mm.) may be removed from the flywheel before the double clutch fixing dowel bolts bottom in the threaded holes but up to 0.090 in. (2.29 mm.) may be removed providing washers of equivalent thickness are used under the heads of the double clutch fixing bolts.

2. Examine the release lever connecting links, pins and struts of the double clutch and renew if they exhibit signs of excessive wear.

3. The following parts should be lightly coated with a silicon grease prior to re-assembly:
- the drive lug sides of the transmission pressure plate and the P.T.O. pressure plate
- the contact edges of the release lever fulcrum brackets
- the full length of the release lever position posts
- the overall length of the release lever struts
- the transmission and P.T.O. pressure plate connecting links and pins.

C1. ASSEMBLY - Using Tool SW12B

1. Install the transmission plate connecting links between the lugs of the plate, and retain them by inserting the appropriate pins through the holes in the lugs and the square shaped holes in the end of the links.

2. Using the base plate and bridge spider of Tool Number SW12B, position the three spacers SW12B/8 equidistant apart on the base plate SW12B/15. Locate the transmission pressure plate on the spacers, Figure 51, with the smooth surface of the plate facing downwards.

3. Position the intermediate pressure plate, smooth side facing upwards, on the transmission pressure plate with the lugs of the transmission plate locating inside the slotted arms of the intermediate plate and with the marks, made on both plates during disassembly, in line.

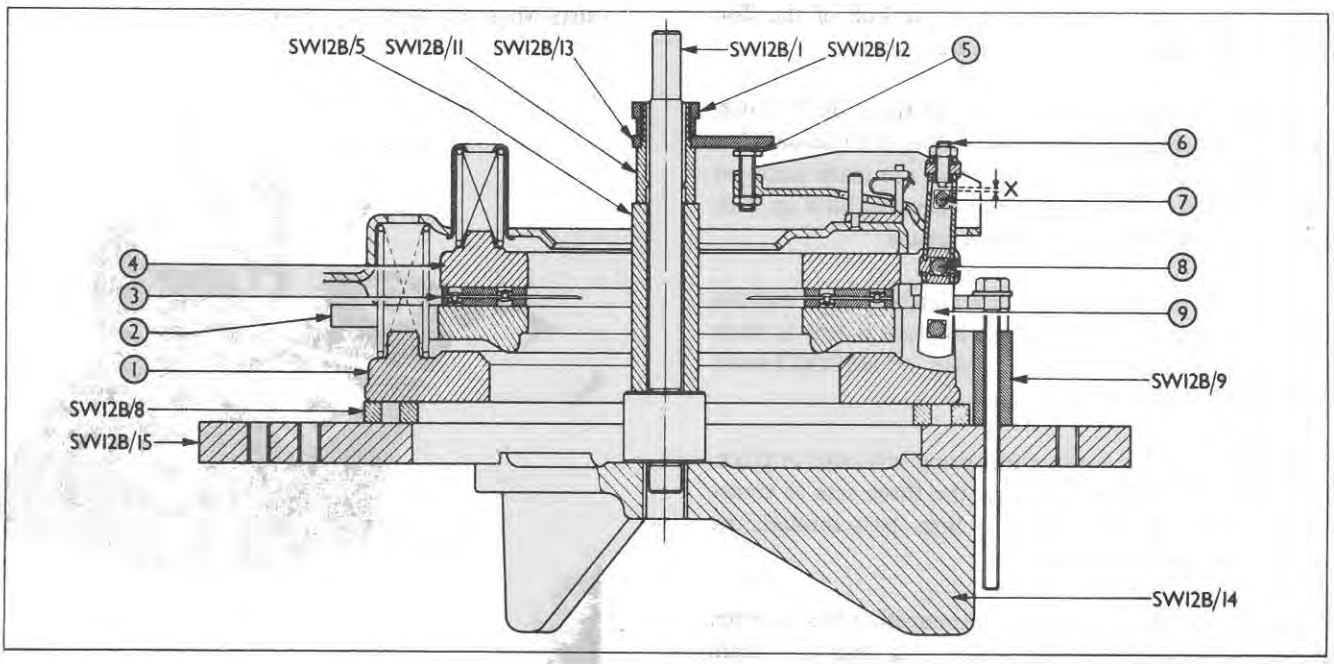

Figure 51
Double Clutch Assembly Adjustment

1. Transmission Clutch Pressure Plate
2. Intermediate Pressure Plate
3. P.T.O. Clutch Disc
4. P.T.O. Clutch Pressure Plate
5. Release Lever Adjusting Screw
6. Socket-Headed Adjusting Screw
7. Strut
8. P.T.O. Pressure Plate Connecting Link Pin
9. Transmission Pressure Plate Connecting Link

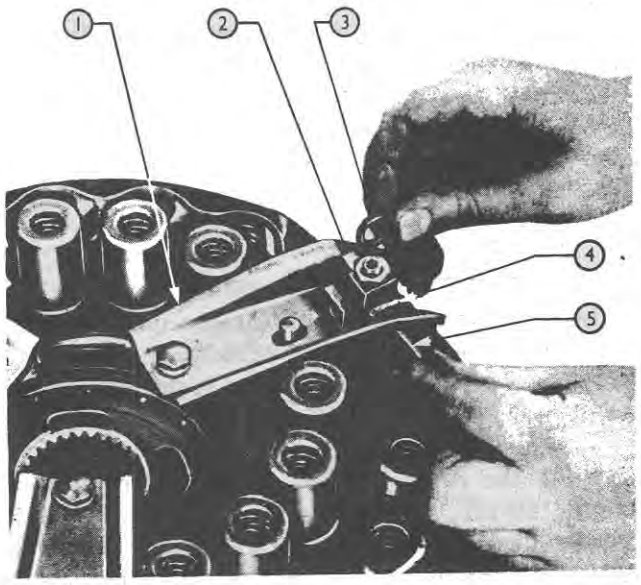

Figure 52
Installing Clutch Release Levers

1. Release Lever
2. P.T.O. Pressure Plate Connecting Links
3. Spacer
4. Transmission Pressure Plate Connecting Links
5. Strut

4. Place the P.T.O. clutch disc on the intermediate pressure plate, with the long end of the hub of the disc facing upwards and centralize it on the plate.

5. Place the P.T.O. pressure plate on the P.T.O. clutch disc with the lugs on the plate straddling the transmission plate connecting links. Make sure that the mark made on the P.T.O. pressure plate during disassembly lines up with the marks on the other two pressure plates.

6. Install the twelve transmission clutch springs and the nine P.T.O. clutch springs on the location bosses in their respective pressure plates. See "IMPORTANT CHANGES", Section 2.

7. Locate the clutch cover, with spring seat cups in place, over the springs. Make sure that the three sets of transmission pressure plate connecting links pass through the openings provided in the cover.

8. Install a P.T.O. pressure plate connecting link between each pair of transmission plate connecting links and retain by inserting the appropriate connecting pins through the holes in the lugs of the P.T.O. pressure plate, the slotted holes in the transmission pressure plate links and the square holes in the P.T.O. pressure plate links. Secure the pins with new snap rings at each end.

9. Insert riser spacers SW12B/9, Figure 51, between the intermediate pressure plate and the base of the tool, locating a riser spacer at each securing bolt hole. Pass special tool bolts SW12B/23 through cover, intermediate plate and riser spacers and screw them into the threaded holes provided in the base plate of the tool.

10. Make sure that the cover is correctly positioned to slide down past the lugs on the P.T.O. pressure plate, then tighten each SW12B/23 bolt a little at a time, working in turn on diagonally opposite bolts, to draw the clutch cover down evenly until it meets the intermediate plate.

11. Install the release levers, locating each lever over one of the connecting link assemblies. Position two spacers between each connecting link assembly and the inside of the corresponding release lever (one spacer each side of the link assembly), Figure 52. Insert a release lever strut through the holes in each release lever, spacer and connecting link assembly. Retain with new cotter pins on each end of the strut.

12. Install the release lever retaining clips over the fulcrum brackets of the clutch cover then install shims, Figure 55, above the clips and retain by inserting new cotter pins, Figure 53. Check that sufficient shims have been installed to eliminate any up and down free play of the clip. If necessary add shims until a slight preload exists when the cotter pin is installed.

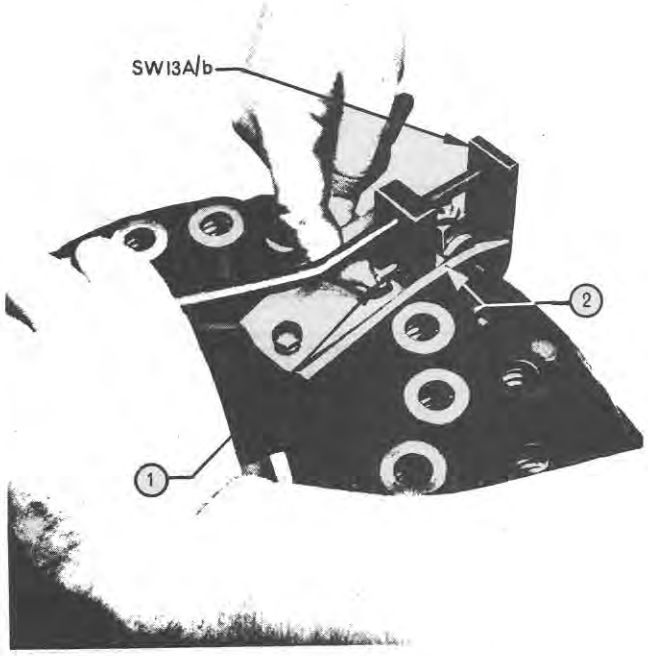

Figure 53
Installing Release Lever Retainer Clip Cotter Pin

1. Cotter Pin
2. Shims

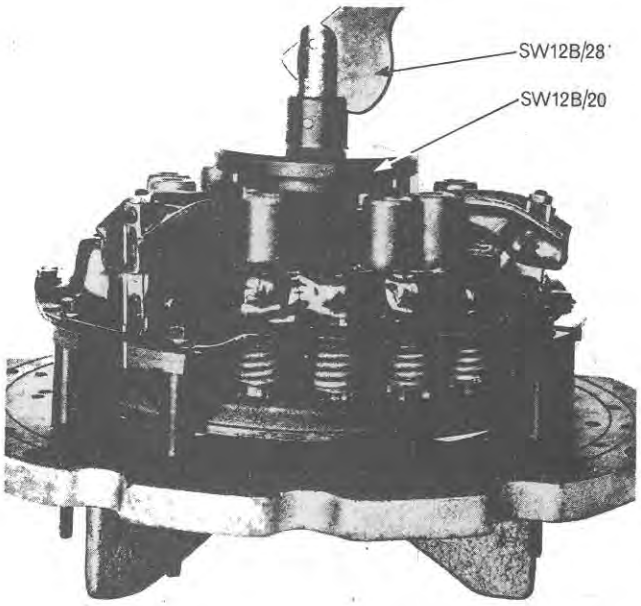

Figure 54
Settling the Double Clutch Linkage

13. Locate tool actuator cam platform extension, SW12B/20, on the threaded pillar of the actuator, SW12B/28, with the flange of the extension against the cam platform of the actuator, Figure 54.

14. Screw the actuator pillar into the bridge spider, SW12B/14, of the tool base until the platform extension contacts the adjusting screws of the release levers then operate the actuator lever several times to "settle" the clutch linkage.

15. Remove the cam actuator and platform extension assembly and install pillar spacer SW12B/1 in the bridge spider SW12B/14. Locate centre spacer SW12B/5, finger body SW12B/11 and gauge finger SW12B/13 with the ground side of the finger facing downwards. Secure with tool locknut SW12B/12, Figure 51.
Rotate the gauge finger, SW12B/13, over each release lever adjusting screw in turn, adjusting each screw until it just touches the underside of the finger gauge, Figures 51 and 55. Tighten the adjusting screw locknut when adjustment is completed.

16. With the pressure plate connecting link held centrally and using the shank of a suitable sized drill as a gauge, set the gap, "X", Figure 51, between the lower end of each socket headed adjusting screw and the corresponding connecting link strut by inserting the drill shank in the gap, loosening the socket-headed screw locknut and turning the screw until it just touches the drill. Tighten the locknuts after adjustment.

NOTE – The specified gap differs according to when the tractor was produced and details of this are given under "IMPORTANT CHANGES", Section 2, of this Chapter. The following drills are suitable for establishing the correct gap.

Specified Gap	*Drill Number*
0.050 to 0.054 in. (1.27 to 1.37 mm.)	55
0.070 to 0.074 in. (1.78 to 1.88 mm.)	50

17. Remove the pillar spacer and gauge finger assembly, then, while the clutch is still attached to the tool, attach hold-down clips, Figure 48, to the release levers.

18. Remove the six special tool bolts SW12B/23 and lift the double clutch assembly from the tool.

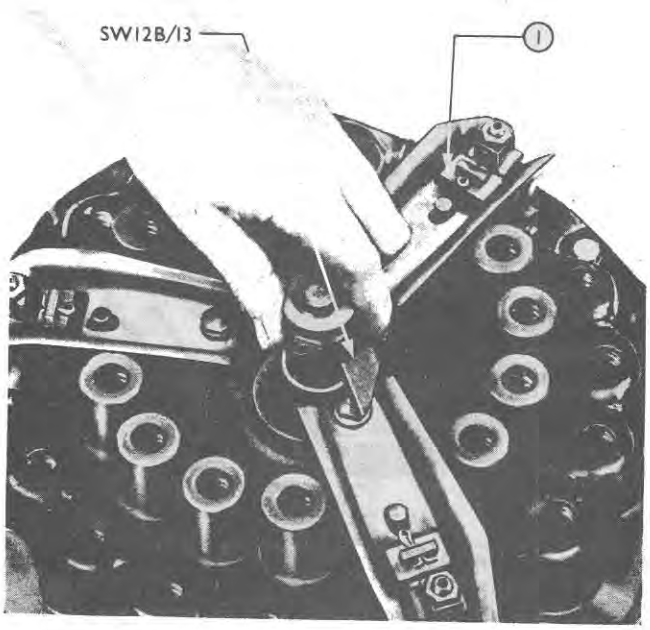

Figure 55
Checking Height of Release Lever Adjusting Screws
1. Release Lever Retaining Clip Shims

A2. DISASSEMBLY – Using Tool SW510

Listed below, and illustrated in Figure 56, are the detail parts of Universal Clutch Fixture, Tool Number SW510, which are used to disassemble, assemble and adjust the double clutch.

Component No.	*Description*	*Quantity*
SW510-61A	Block–Riser	3
SW510-60	Base–Fixture	1
SW510-3	Bridge–Spring Compressor	1
SW510-62	Spindle–Fixture	1
SW510-5B	Spacer–Gauge	1
SW510-2	Gauge–Release Lever	1
SW510-13	Washer–Amplex Thrust	1
SW510-9	Nut–Spindle	1
SW510-7	Pin–Gauge	1
SW510-6	Spacer Assembly–Gauge	3
SW510-12	Pin–Guide	1
SW510-63B	Screw–Long Cap	6
SW510-64C	Screw–Short Cap	3
SW510-65	Nut–Jam (Not Shown)	1
SW510-66	Washer (Not Shown)	1

NOTE – Additional components other than those shown, or listed, are supplied with the fixture for performing maintenance on single clutches. Use of the fixture for this purpose is described and illustrated in Chapter 1 "Single Clutches".

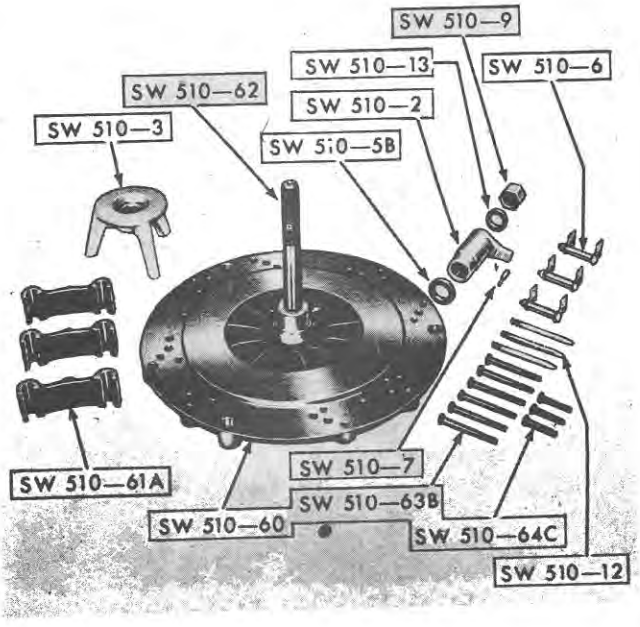

Figure 56
Universal Clutch Fixture SW510
(Double Clutch Application)

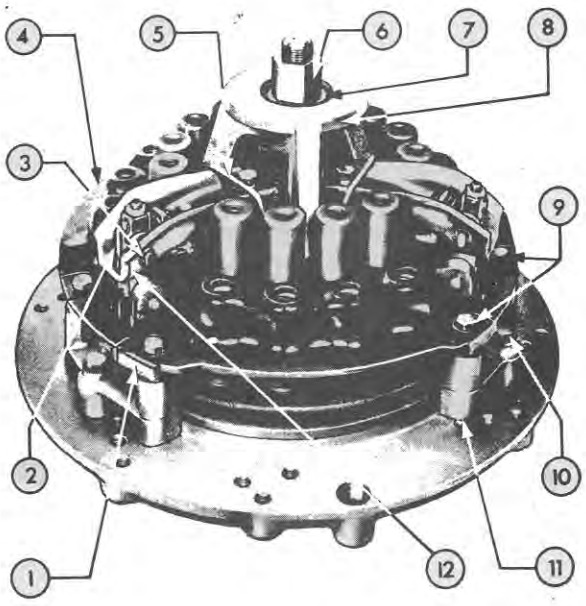

Figure 57
Preparation for Disassembly of Double Clutch

1. Intermediate Pressure Plate
2. Spacer
3. Strut
4. Clutch Cover Assembly
5. Release Lever Hold-down Clip
6. Spindle Nut
7. Thrust Washer
8. Bridge
9. Long Cap Screws
10. Short Cap Screw
11. Riser Block
12. Identification Marks

1. Insert the serrated end of the Fixture Spindle, Tool No. SW510-62, Figure 56, into the hub of the Fixture Base, Tool No. SW510-60. Position the fixture base on edge and install the Washer, Tool No. SW510-66 (not shown) and Jam Nut, Tool No. SW510-65 (not shown) on the end of the spindle that protrudes from the bottom of the base. Tighten the nut until the spindle bottoms in the hub.

2. Bolt the assembled Fixture Base, Tool No. SW510-60, Figure 56, to a work bench.
IMPORTANT – It is essential that the mounting area be level and the mounting bolts be torqued equally to eliminate the possibility of warping the fixture. It is also essential that the mating surfaces on the fixture base, and fixture components, be kept clean.

3. Thoroughly clean the mating surfaces on the clutch pressure plate and cover assembly in addition to cleaning the fixture base.

4. Attach the riser blocks to the fixture base by installing one short cap screw in each block. Figure 57 illustrates two of the blocks installed. Be sure to torque the cap screws equally.

5. Place the assembled clutch pressure plate and cover assembly on the fixture. Align the mounting holes in the clutch cover assembly with the holes in the riser blocks, and install one guide pin and one long cap screw in each block as shown in Figure 57. Do not tighten the long cap screws at this time.
NOTE – The step on the base of the fixture substitutes for the transmission clutch disc assembly, therefore, this disc is not required when using the Universal Clutch Fixture.

6. Install the bridge, the thrust washer, and the spindle nut as shown in Figure 57. Be sure that the legs of the bridge are positioned at the center of each row of spring cups as shown.

7. Relieve the spring tension on the release levers by tightening the spindle nut until the clutch cover assembly is drawn down to the intermediate pressure plate. To prevent distorting the top of the cover assembly, do not overtighten the nut.

8. After relieving spring tension on the release levers, tighten the long cap screws finger tight, then remove the release lever hold-down clips, Figure 57.

9. Remove the release lever retaining clip shims and clips, Figure 58, after first removing the cotter pins that hold them in place.

NOTE – It is suggested that the clutch cover assembly, the clutch pressure plates, and the release levers be marked for identification purposes before the clutch is taken apart. Doing this will enable the parts to be reinstalled in their original position and will maintain the balance built into the clutch. Figure 58 illustrates a good practice of keeping the parts in groups, while Figure 57 illustrates identification of parts.

10. Remove one cotter pin from one end of each strut, Figure 58, then remove the release levers by removing the struts. When removing the struts, exercise care to prevent losing the spacers.

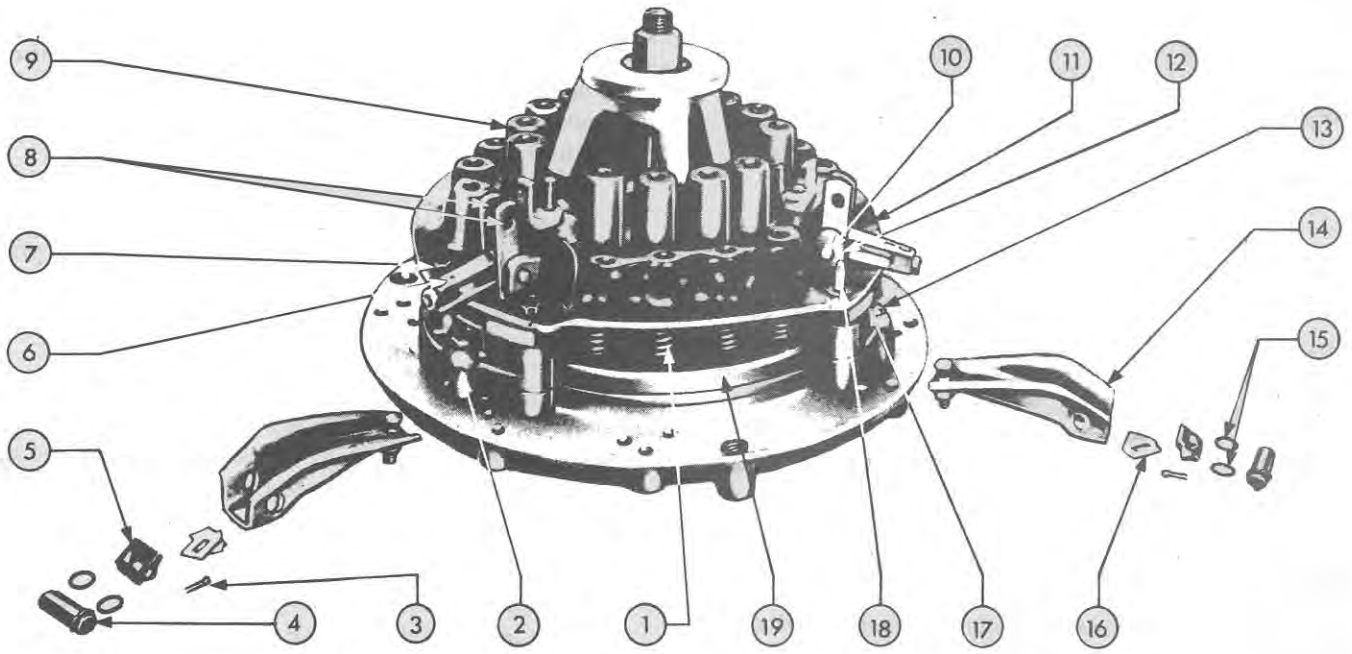

Figure 58
Assembly and Disassembly of the Double Clutch

1. Transmission Clutch Spring
2. Riser Block
3. Cotter Pin
4. Strut
5. Release Lever Retaining Clip
6. P.T.O. Pressure Plate Connecting Link
7. Long Cap Screw
8. Transmission Pressure Plate Connecting Links
9. P.T.O. Clutch Spring and Cup
10. P.T.O. Pressure Plate Connecting Pin
11. Clutch Cover Assembly
12. P.T.O. Pressure Plate
13. Short Cap Screw
14. Release Lever
15. Spacers
16. Clip Shims
17. Intermediate Pressure Plate
18. Guide Pin
19. Transmission Pressure Plate

11. Remove one snap ring from one end of each P.T.O. pressure plate connecting pin, Figure 58, then remove the P.T.O. pressure plate connecting links by removing the pins.

12. Remove the guide pins, Figure 58, and the long cap screws, then back off the spindle nut. Remove the nut, thrust washer, and bridge, then lift the clutch cover assembly from the clutch. Remove the P.T.O. clutch springs and cups, and the transmission clutch springs. Lift the P.T.O. clutch pressure plate, and clutch disc (not shown) from the clutch.

13. Lift the intermediate pressure plate, Figure 58, from the riser blocks, then remove the transmission pressure plate connecting links by removing the connecting pins (not shown). Lift the transmission clutch pressure plate from the fixture base.

NOTE – It will not be necessary to remove the adjusting screw nuts and adjusting screws from the P.T.O. pressure plate connecting links, or the hexagon nuts and adjusting screws from the release levers, unless the parts are being replaced.

B1. INSPECTION

1. Examine the organic linings of previous type clutch disc assemblies for loose rivets, and ensure that the linings are not excessively worn or scored. Any disc of this type with oil contaminated linings should also be renewed.

Refer to Chapter 1, Section 4 "SINGLE CLUTCH REMOVAL AND INSTALLATION", and note the information regarding inspection of the current cera-metallic button type clutch disc and the friction surfaces of the pressure plate and flywheel. This information applies equally to the transmission clutch disc and transmission pressure plate of the current double clutch, and to the current flywheel.

It should, however, be noted that where this type of flywheel is to be re-faced the same thickness of material must be removed from the clutch fixing bolt circle surface (on which the clutch cover locates) as is removed from the friction surface of the flywheel. A maximum of 0.030 in. (0.7 mm.) may be removed from the flywheel before the double clutch fixing dowel bolts bottom in the threaded holes but up to 0.090 in. (2.29 mm.) may be removed providing washers of equivalent thickness are used under the heads of the double clutch fixing bolts.

2. Examine the release lever connecting links, pins and struts of the double clutch and renew if they exhibit signs of excessive wear.

3. The following parts should be lightly coated with a silicon grease prior to re-assembly:
- the drive lug sides of the transmission pressure plate and the P.T.O. pressure plate
- the contact edges of the release lever fulcrum brackets
- the full length of the release lever position posts
- the overall length of the release lever struts
- the transmission and P.T.O. pressure plate connecting links and pins.

C2. ASSEMBLY – Using Tool SW510

1. Attach the riser blocks to the fixture base by installing one short cap screw in each block. Figure 57 illustrates the blocks installed. Be sure to torque the cap screws equally.

2. Place the transmission clutch pressure plate, Figure 58, smooth side "down", on the fixture base so the lugs on the plate are centered at each riser block. Install two transmission pressure plate connecting links between the lugs on the plate and retain them in place by installing the connecting pins (not shown). Position the pins so each end is flush with the lugs.

3. Place the intermediate pressure plate, Figure 58, smooth side "up", over the transmission clutch pressure plate so the "ears" of the intermediate plate straddle the lugs on the transmission plate.

4. Center the P.T.O. clutch disc over the intermediate pressure plate, Figure 58, then install the P.T.O. clutch pressure plate so the lugs on the plate straddle the transmission pressure plate connecting links. Be sure to install the clutch so the long end of the disc hub is "up".

5. Place the twelve transmission clutch springs, Figure 58, on the bosses of the transmission clutch pressure plate and nine P.T.O. clutch springs and cups, on the bosses of the P.T.O. clutch pressure plate. See "IMPORTANT CHANGES" in Section 2 of this Chapter.

6. Install one guide pin, Figure 58, in each riser block, then install the clutch cover assembly over the partially assembled clutch so the spring cups and transmission pressure plate connecting links pass through the openings of the cover assembly. Check the transmission clutch springs to see that they are properly seated in the "cups" of the cover assembly.

7. Drop one long cap screw, Figure 58, into place at each riser block, but do not tighten at this time. Install the bridge, thrust washer, and spindle nut as shown in Figure 58. Be sure that the legs of the bridge are positioned at the center of each row of spring cups as shown.

8. Slowly draw the clutch cover assembly down over the lugs on the P.T.O. clutch pressure plate, Figure 58, by tightening the spindle nut until the cover assembly contacts the intermediate clutch pressure plate. Exercise care to prevent the guide from catching on the cover. To prevent distorting the top of the cover, do not overtighten the spindle nut.

9. After the cover has made contact with the intermediate pressure plate, remove the guide pins, Figure 58, and replace them with the long cap screws. Torque the screws equally in a diagonally staggered manner. See Chapter 4, "SPECIFICATIONS", for torque values.

10. After torquing the screws, remove the spindle nut, the thrust washer, and the bridge, Figure 58.

11. Install the P.T.O. pressure plate connecting links, Figure 58, between the transmission pressure plate connecting links and retain them in place by installing the connecting pins. Retain the pins in place by installing the snap rings. Be sure the snap rings are seated in the grooves of the pins.

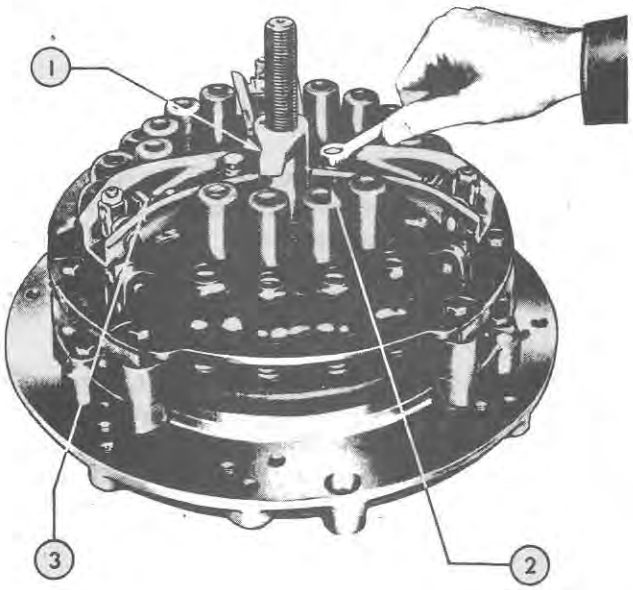

Figure 59

1. Release Lever Gauge
2. Hexagon Nut
3. Cotter Pin

12. Position the P.T.O. pressure plate connecting links, Figure 58, so they are parallel with the transmission pressure plate connecting links, then install the release levers. Retain the levers in place by installing the struts. Be sure one spacer is positioned between each transmission pressure plate connecting link and the inner walls of the release levers before installing the struts. Retain the struts in place by installing new cotter pins. Figure 57 illustrates one of the spacers and struts properly installed.

13. Install the release lever retaining clips, Figure 58, over the fulcrum brackets of the clutch cover assembly then place the release lever retaining clip shims over the clips. Be sure the clips are installed so the flat side is "up" and so the closed end is towards the center of the clutch assembly. Retain the shims and clips in place by installing new cotter pins. Figure 59 illustrates proper installation of the cotter pins.

NOTE – After installing the cotter pins, check the clips, Figure 58, and shims for "up and down" end play. If end play exists, remove the cotter pins and add additional shims. The shimming should be such that a slight pre-load is established when the cotter pins are installed.

14. Install the Gauge Spacer, Tool No. SW510-5B, over the fixture spindle so the identifying number is "up", then install the release lever gauge as shown in Figure 59.

15. Loosen the hexagon nuts on the underside of the release levers then adjust the adjusting screws, as shown in Figure 59, until a slight drag can be felt when the "foot" of the release lever gauge is rotated across the levers. Apply light pressure to the gauge to obtain an equal "feel" on each lever.

16. After the levers are adjusted, lock the adjusting screws by tightening the hexagon nuts on the underside of the release levers. Re-check the "feel" after locking the screws, and if necessary, re-adjust the screws until the "feel" is the same on each lever.

17. Remove the release lever gauge, Figure 59, then install the bridge, the thrust washer, and the spindle as shown in Figure 60. Raise the clutch pressure plate by tightening the

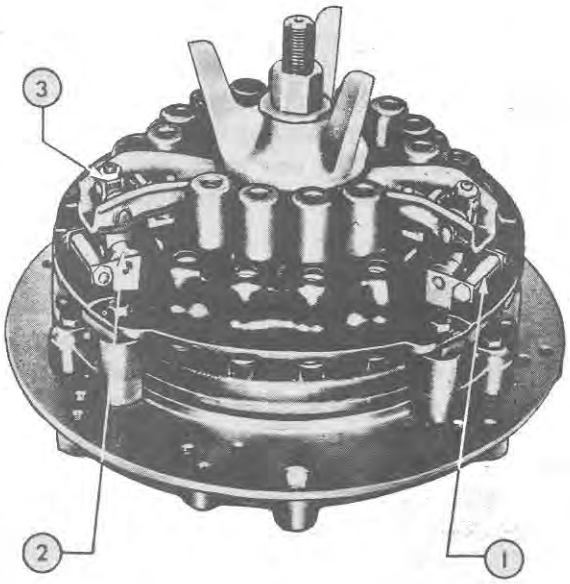

Figure 60
Preparation for Adjustment of the P.T.O. Pressure Plate Connecting Links

1. Gauge Spacer Assembly
2. P.T.O. Pressure Plate
3. P.T.O. Pressure Plate Connecting Link

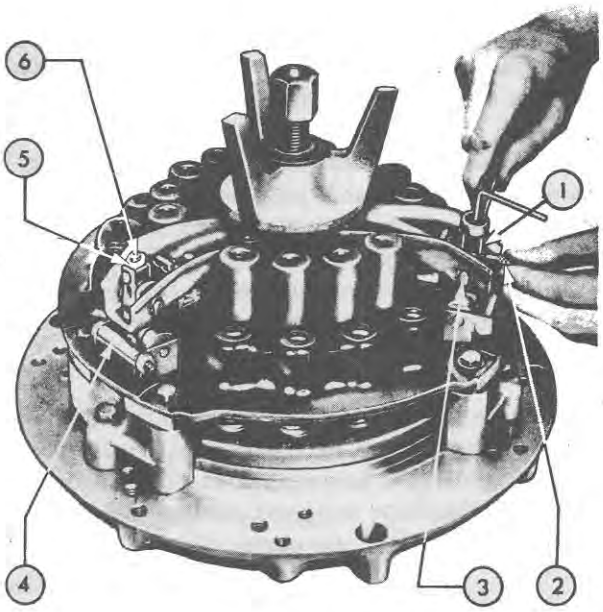

Figure 61
Adjusting the P.T.O. Clutch Gap

1. P.T.O. Pressure Plate Connecting Link
2. Gauge Pin
3. Strut
4. Gauge Spacer Assembly
5. Adjusting Screw

spindle nut until the Gauge Spacer Assemblies, Tool No. SW510-6, can be installed as shown in Figure 60. Adjust the nut on the spacer assemblies so the spacers are held in place as shown.

IMPORTANT – Do not tighten the spindle nut more than is necessary to install the gauge spacer assemblies, as damage to the release levers may result.

18. Being sure that the gauge spacer assemblies are in position, back off the spindle nut until it clears the thrust washer as shown in Figure 61. Position the center link so the adjusting screw in the top of the link is centered over the strut, then insert the Gauge Pin Tool No. SW510-7, through the link as shown. Loosen the adjusting screw nut, and turn the adjusting screw as required until a slight drag is felt on the gauge pin when the pin is rotated. Do not obtain the "feel" by pushing or pulling on the gauge pin. The "feel" between the strut and adjusting screw should be equal on each link.

19. Lock the adjusting screws, Figure 61, in place with the adjusting screw nuts and re-check the "feel". If necessary, re-adjust until the "feel" is the same on each link.

20. After the links are adjusted, tighten the spindle nut, Figure 61, just enough to relieve the tension on the spacer assemblies. Remove the spacers, then remove the spindle nut, the thrust washer, and the bridge.

21. Install the release lever hold-down clips, Figure 57, then remove the long cap screws that secure the clutch assembly to the riser blocks. The clutch is now ready for installation on the flywheel as outlined in Section 4, "B. Installation".

Part 4
CLUTCHES

Chapter 3
SERVICING CLUTCH ASSOCIATED PARTS

Section		*Page*
1.	Clutch Pilot Bearing	41
2.	Clutch Release Bearing	42
3.	Clutch Release Cross-shaft Bushings	44
4.	Clutch Pedal Bushings	45

1. CLUTCH PILOT BEARING

The same pre-lubricated ball bearing is used on all models except the Ford 5000 which uses one of a larger diameter. On all models, the space behind the bearing should be packed with a suitable high melting point grease whenever overhaul or installation is carried out.

A. REMOVAL

1. Remove the clutch following the procedures detailed in Section 4, Chapter 1 (Single Clutches) or Section 4, Chapter 2 (Double Clutches).

2. **Ford 2000, 3000 and 4000.** Remove the pilot bearing retainer and the flywheel, and extract the bearing from the crankshaft using Tools Number 954 and 955-14 as shown in Figure 62.

Ford 5000. Remove the two P.T.O. drive plate retaining bolts which have a washer under the bolt head and extract the bearing from the P.T.O. drive plate using Tools Number 943-S and FT943.

B. INSTALLATION

1. Lightly tap the bearing, baffle side facing outwards, into the flywheel or P.T.O. drive plate. Tool Number 630-5 used with the larger diameter against the bearing, Figure 63, is suitable for use on Ford 2000, 3000 and

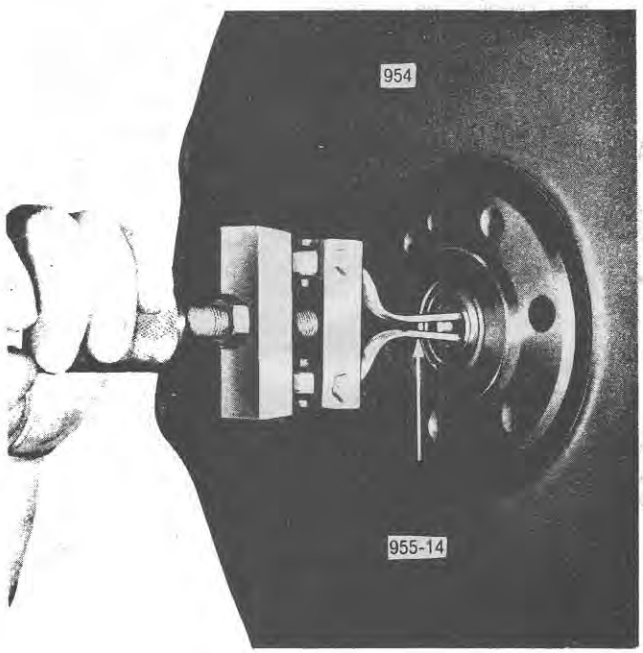

Figure 62
Removing the Clutch Pilot Bearing from Crankshaft

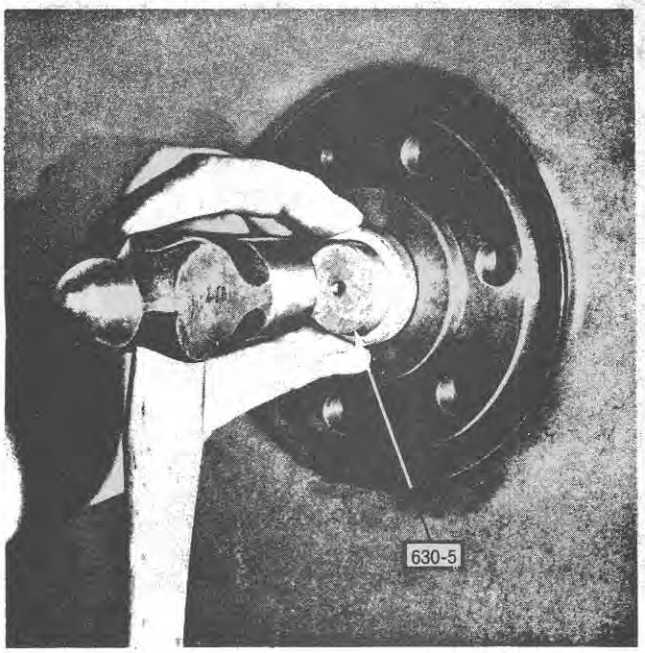

Figure 63
Installing Clutch Pilot Bearing

4000 tractors, and Tool Number 630-12 for use on a Ford 5000.

2. **Ford 2000, 3000 and 4000.** Re-install the flywheel and pilot bearing retainer, tightening the securing bolts to the specified torque – see "SPECIFICATIONS", Chapter 4.

Ford 5000. Re-install the two P.T.O. drive plate retaining bolts ensuring that the appropriate washer is installed under the head of each bolt to retain the pilot bearing. Tighten the two bolts to the specified torque – see "SPECIFICATIONS", Chapter 4.

3. Re-install the clutch assembly following the procedures detailed in Section 4, Chapter 1 (Single Clutches) or Section 4, Chapter 2 (Double Clutches).

2. CLUTCH RELEASE BEARING

Standard agricultural models incorporate pre-lubricated clutch release bearings mounted on a sliding hub. An optional build of the Ford 5000 is, however, available on request with a heavy duty clutch release bearing and hub assembly and an external greaser. In this case the hub is drilled to feed grease to the bearing through the medium of a flexible connection from the external greaser.

Tractors with three types of clutch pedal return spring may be encountered depending upon the production date of the tractor and the procedure for removing the release bearing varies in accordance with the type of spring incorporated.

A. REMOVAL

1. Separate the engine and front axle, as an assembly, from the front transmission.

2. Disconnect the rod between the clutch pedal and the clutch release cross-shaft lever by removing the clevis pin at the lever end.

3. Where an external greaser is fitted, disconnect the flexible connection from the release bearing hub.

4a. **Models with Internal Coil Return Spring (Figure 64)**

Disengage the spring from the fork, rotate the fork towards the front of the housing and draw the bearing and hub assembly off the hub support.

4b. **Models with Internal Leaf Type Return Spring (Figure 65)**

Slacken off the two bolts retaining the leaf spring bracket to the hub support plate and release the upper end of the leaf spring from the support bracket.

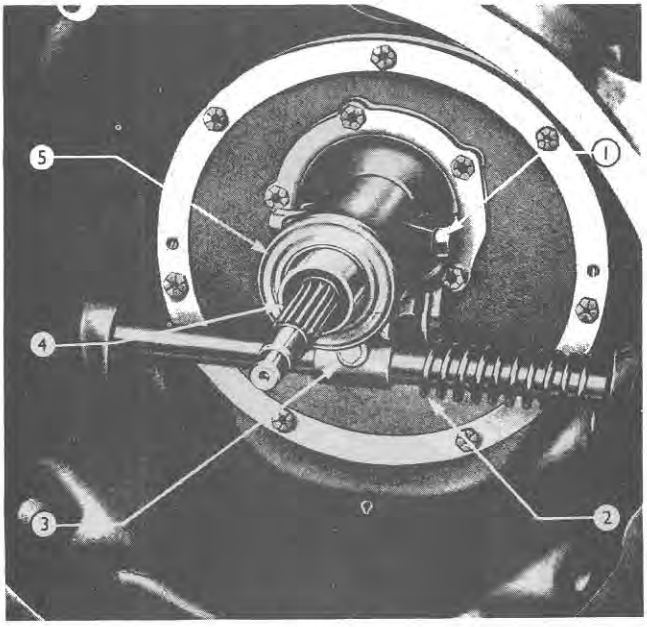

Figure 64
Clutch Release Bearing and Internal Coil Return Spring

1. Release Fork
2. Return Spring
3. Bolt (Fork to Cross-shaft)
4. Release Bearing Hub Support
5. Release Bearing

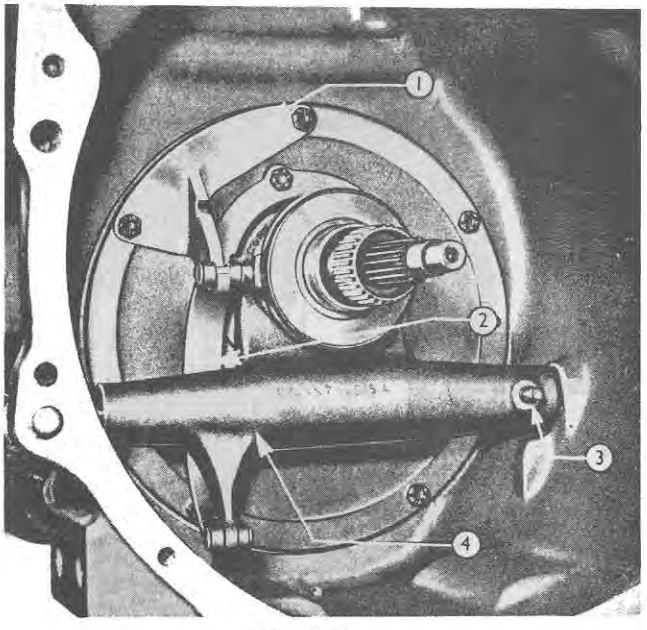

Figure 65
Clutch Release Bearing and Internal "Leaf" Type Return Spring

1. Spring Bracket
2. Leaf Spring
3. Fork Retaining Pin
4. Fork

Remove the retaining nut from the inner threaded end of the tapered pin retaining the release fork to the cross-shaft and install the nut on the threaded outer end of the pin. Tighten the nut to draw the tapered pin out of the fork. Support the fork and remove the cross-shaft then withdraw the release bearing assembly, and the fork and spring assembly.

4c. Models with an External Return Spring (Figures 66 and 67)

Remove the bolt and nut at the base of the fork, support the fork and withdraw the cross-shaft. Remove the fork and the release bearing assembly.

5. Where no greaser is incorporated, remove the release bearing from the hub using Tools Number 951, 1002, and the appropriate step plate, Figure 68.

Where a greaser is incorporated do not remove the bearing from the hub as both hub and bearing are serviced as an assembly.

B. INSTALLATION

1. Gently tap the release bearing onto the hub making sure that the thrust face of the bearing faces away from the shoulder on the hub.

2. Pack the recess in the bearing hub bore with a good quality, high melting point grease.

3a. Models with Internal Coil Return Spring (Figure 64)

Locate the bearing and hub assembly on the hub support and engage the arms of the fork with the slots in the hub. Pull the inner end of the coil spring forward and engage it in the groove in the hub.

3b. Models with Internal Leaf Type Return Spring (Figure 65)

Install the bearing and hub assembly on the hub support, locate the fork and spring engaging the fork with the slots in the hub and install the clutch release cross-shaft picking up the fork on the shaft.

Align the hole in the shaft with the hole in the fork and install the tapered pin. Secure with a locknut on the threaded inside end of the pin, tightening the locknut to draw the pin into position.

Check that not less than four threads of the leaf spring support bracket bolts are engaged in the threaded holes of the front transmission housing then lift the upper end of the spring into the notch in the support bracket.

Tighten the spring support bracket bolts to a torque of 23 to 29 lb. ft. (3.2 to 4.0 m.kg.).

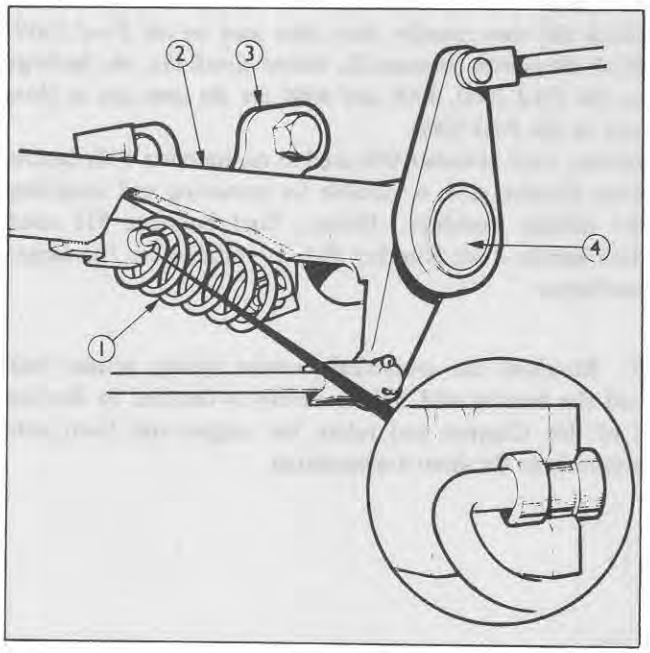

Figure 66
Clutch Pedal External Return Spring (Ford 2000, 3000 and 4000)

1. Return Spring
2. Clutch Pedal
3. Retaining Bracket
4. Brake Cross-shaft

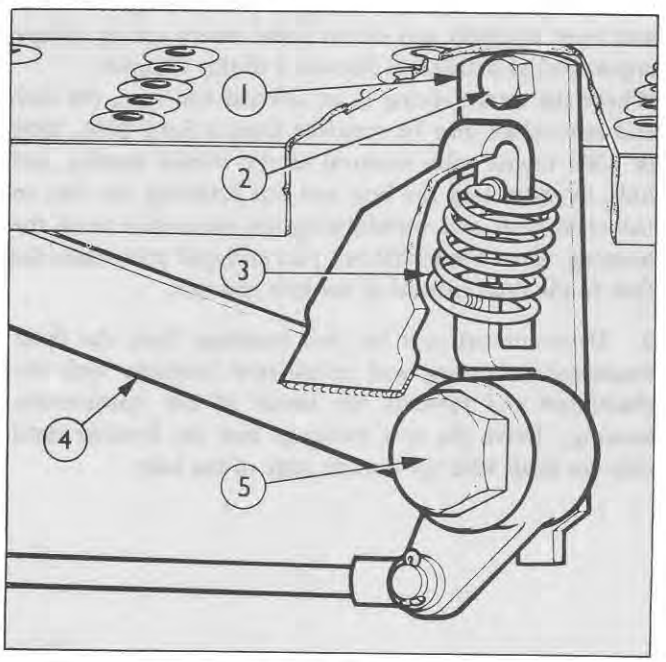

Figure 67
Clutch Pedal External Return Spring (Ford 5000)

1. Spring Retaining Bracket
2. Spring Retaining Bracket Bolt
3. Return Spring
4. Clutch Pedal
5. Pivot Bolt

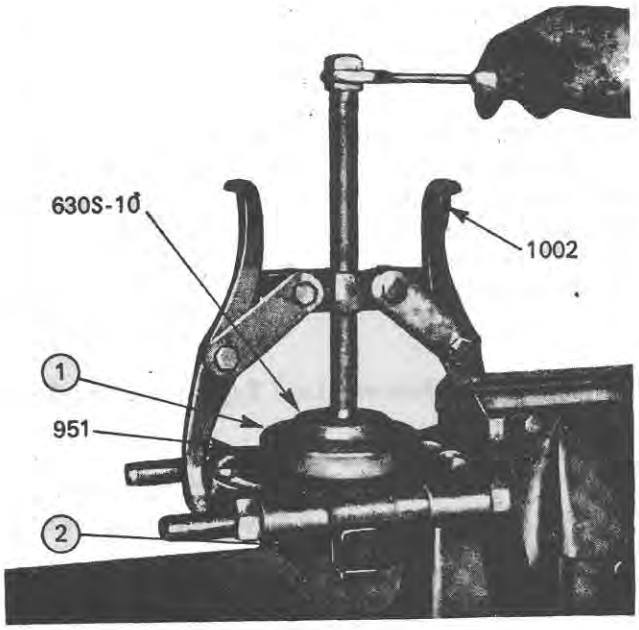

Figure 68
Removing Clutch Release Bearing from Hub
1. Bearing
2. Hub

3c. **Models with an External Return Spring (Figures 66 and 67)**

Install the bearing and hub assembly on the hub support. Engage the release fork in the slots in the release bearing hub and install the cross-shaft picking up with the fork on the shaft.

Align the groove in the cross-shaft with the holes in the split lower portion of the fork. Install the pinch bolt and nut and tighten securely.

4. Where an external greaser is fitted, attach the flexible connection to the threaded hole in the release bearing hub.

5. Reconnect the release rod to the clutch release cross-shaft lever and operate the clutch pedal to check that the bearing and hub assembly slides freely on the hub support.

6. Reconnect the engine and front axle assembly to the front transmission then check, and adjust where necessary, the clutch pedal free play.

7. Start the engine and check that the clutch is operating correctly making any necessary re-adjustments to the pedal linkage as detailed in "Adjustments", Chapters 1 and 2.

3. CLUTCH RELEASE CROSS-SHAFT BUSHINGS

1. Follow the same procedure for removing the clutch release bearing and hub assembly, release fork, cross-shaft and lever assembly and clutch pedal return spring (where applicable) as detailed in Section 2 of this Chapter.

Where the return spring is an internal coil type, the fork and cross-shaft may be removed from a Ford 2000, 3000 or 4000 tractor after removal of the release bearing and hub, by extracting the bolt and nut retaining the fork to the cross-shaft and withdrawing the cross-shaft from the housing. On a Ford 5000 two pins and split pins retain the fork to the shaft instead of the bolt and nut.

2. Drive, or cut, out the two bushings from the front transmission housing and install new bushings with the chamfered end towards the inside of the transmission housing. Drive the new bushings into the housing until they are flush with the outside edge of the hole.

NOTE – Bushings for Ford 2000, 3000 and 4000 tractors built prior to the introduction of the cerametallic button clutch disc were smaller than those used on the Ford 5000. With the current cerametallic button clutch disc the bushings for the Ford 2000, 3000 and 4000 are the same size as those used on the Ford 5000.

Driver, Tool Number 808 used in conjunction with handle Tool Number 814, is suitable for removing and installing the smaller bushings. Driver, Tool Number 811 used with handle Tool Number 814, is suitable for the larger bushings.

3. Re-install the cross-shaft, return spring, release fork and the bearing and hub assembly as detailed in Section 2 of this Chapter and rejoin the engine and front axle assembly to the front transmission.

4. CLUTCH PEDAL BUSHINGS

A. REMOVAL

1. Disconnect the clutch release rod from the clutch pedal.

2a. **Tractors without an External Clutch Pedal Return Spring.**

Ford 2000, 3000 and 4000. Drain the oil from the rear transmission then remove the brake pedals, brake pedal cross-shaft and clutch pedal.

Ford 5000. Unscrew the clutch pedal pivot bolt (left-hand thread) from the rear transmission housing and remove the pedal, clutch pedal shaft and washer.

2b. **Tractors with an External Clutch Pedal Return Spring (Figures 66 and 67)**

Ford 2000, 3000 and 4000. Remove the left-hand platform and fender and drain the oil from the rear transmission.

Remove the brake pedals and withdraw the brake cross-shaft approximately 1.0 in. (25.4 mm.) but do not remove it completely from the rear transmission housing at this stage.

Relieve the compression of the clutch pedal return spring by depressing the pedal past the boss on the transmission housing so that the spring goes "over centre" then remove the spring from the locating "U" slots in pedal and spring retaining bracket.

Fully remove the brake cross-shaft and the clutch pedal.

Ford 5000. Remove the bolt securing the top end of the spring retaining bracket to the rear transmission housing, Figure 67. Slowly unscrew the pivot bolt (left-hand thread) while allowing the spring retaining bracket to pivot and relieve the spring compression then remove the pivot bolt completely.

Remove the spring and spring retaining bracket from the pedal and withdraw the pedal through the slot in the foot-platform.

3. Remove the bushings from the pedal. Driver handle Tool Number 814 with driver 810 is suitable for removing the bushings of Ford 2000, 3000 and 4000 clutch pedals. Driver handle 814 with driver 808 is suitable for the Ford 5000 clutch pedal.

B. ASSEMBLY

1. Position a new bushing in one side of the pedal, chamfered end of the bushing inwards, and tap the bushing into the bushing bore in the pedal until it is flush with the pedal boss. Driver handle Tool Number 814 with driver 811 is suitable for Ford 2000, 3000 and 4000 clutch pedals. Driver handle 814 with driver 809 is suitable for the Ford 5000 clutch pedal.

Turn the pedal over and install the second bushing in a similar manner.

2a. **Tractors without an External Clutch Pedal Return Spring.**

Ford 2000, 3000 and 4000. Assemble the clutch pedal to the brake cross-shaft then install the cross-shaft in the rear transmission housing. Install the brake pedals and re-connect the brake and clutch pedal linkages.

Refill the rear transmission with the correct lubricant.

Ford 5000. Install the clutch pedal shaft and the pivot bolt in the clutch pedal with the appropriate washer between the head of the pivot bolt and the pedal. Screw the pivot bolt into the rear transmission housing (left-hand thread) and tighten to the specified torque – see "SPECIFICATIONS", Chapter 4.

2b. **Tractors with an External Clutch Pedal Return Spring (Figures 66 and 67)**

Ford 2000, 3000 and 4000. Assemble the clutch pedal to the brake pedal cross-shaft and insert the shaft in the rear transmission housing.

Locate the left-hand brake pedal key in its keyway in the brake pedal cross-shaft and install the left-hand brake pedal on the shaft but do not tighten the bolt securing the pedal to the shaft at this stage.

Depress the clutch pedal below the boss on the transmission housing and locate the clutch pedal return spring between the "U" slots in the pedal and spring retaining bracket, see inset Figure 66. Raise the clutch pedal so that the spring goes "over centre" and is thereby retained in compression in the "U" slots of pedal and bracket. Fully assemble the left-hand brake pedal and tighten the pedal to cross-shaft retaining bolt then install the right-hand brake pedal and reconnect the brake linkage.

Re-install the platform and fender and refill the rear transmission with the correct lubricant.

Ford 5000. Insert the clutch pedal through the opening in the platform and assemble the pedal shaft and pivot bolt with a washer between the head of the bolt and the pedal.
Locate the spring retaining bracket on the bolt then locate the return spring in the "U" slots of the retaining bracket and pedal. Support this assembly and screw the left-hand threaded pivot bolt into the rear transmission housing but do not tighten the bolt at this stage. Pivot the retaining bracket to an upright position, install the retaining bolt through the top hole in the bracket and screw it into the rear transmission housing.
Tighten the pivot bolt to the specified torque – see "SPECIFICATIONS", Chapter 4.

3. Re-connect the clutch release rod to the clutch pedal with the appropriate clevis pin and cotter pin.

Part 4
CLUTCHES

Chapter 4

SPECIFICATIONS AND SPECIAL TOOLS

Section		*Page*
1.	Specifications	47
2.	Special Tools	50

1. SPECIFICATIONS

Where the word "previous" is used in the following specifications it refers to clutches used prior to the introduction of the current cerametallic button type of clutch disc.

Single Clutches

DISC ASSEMBLY

Diameter

Ford 2000, 3000 and 4000—current and previous	11 in. (27.9 cm.)
Ford 5000—current	11 in. (27.9 cm.)
—previous (standard)	12 in. (30.5 cm.)
—previous (heavy duty)	13 in. (33.0 cm.)

Type of Hub Splines

Ford 2000, 3000 and 4000—current	Square cut
—previous	Involute.
Ford 5000—current and previous	Involute

Friction Material

Ford 2000, 3000 and 4000—current	3 pairs cerametallic buttons
Ford 5000—current	4 pairs cerametallic buttons
All models—previous	Continuous band organic

Total Friction Area (both sides of disc)

Ford 2000, 3000 and 4000—current	22.8 in.^{2} (147 cm.^{2})
—previous	111.0 in.^{2} (716 cm.^{2})
Ford 5000—current	30.4 in.^{2} (196 cm.^{2})
—previous (standard)	128.0 in.^{2} (825 cm.^{2})
—previous (heavy duty)	162.0 in.^{2} (1045 cm.^{2})

Single Clutches *continued* —

PRESSURE PLATE AND COVER ASSEMBLIES

Pressure Plate Diameter

Ford 2000, 3000 and 4000—current and previous	11 in. (27.9 cm.)
Ford 5000—current	11 in. (27.9 cm.)
—previous (standard)	12 in. (30.5 cm.)
—previous (heavy duty)	13 in. (33.0 cm.)

Springs	*Number*	*Spring Load at Compressed Length of 1.69 in. (42.9 mm.)*
Ford 2000/3000—current	6	53 lb. (24.0 kg.)
Ford 4000—current	6	66 lb. (29.9 kg.)
Ford 5000—current	6	85 lb. (38.6 kg.)
Ford 2000—previous	8	145 lb. (65.8 kg.)
Ford 3000—previous	12	112 lb. (50.8 kg.)
Ford 4000—previous	12	155 lb. (70.3 kg.)
Ford 5000—previous (standard)	16	125 lb. (56.7 kg.)
Ford 5000—previous (heavy duty)	16	140 lb. (63.5 kg.)

CLUTCH LINKAGE

Clutch Pedal Free Travel

Ford 2000, 3000, 4000 and 5000—current	1.25 in. (32 mm.)
Ford 4200—current	1.375 in. (35 mm.)
Ford 2000 and 3000 with Transmission P.T.O.—previous	1.25 in. (32 mm.)
Ford 4000 with Transmission P.T.O.—previous	1.375 in. (35 mm.)
Ford 4000 with Independent P.T.O.—previous	1.75 in. (44 mm.)
Ford 5000—previous	1.375 in. (35 mm.)

TIGHTENING TORQUES

Clutch Cover to Flywheel Bolts	23 to 29 lb. ft. (3.2 to 4.0 m.kg.)
Clutch Pedal Pivot Bolt—Ford 5000	130 to 160 lb. ft. (18 to 22 m.kg.)
Pressure Plate Drive Strap Locking Ferrule Bolts—Ford 5000—previous	20 to 25 lb. ft. (2.8 to 3.5 m.kg.)
Flywheel to Crankshaft Bolts	100 to 110 lb. ft. (13.8 to 15.2 m.kg.)
Leaf Type Clutch Pedal Return Spring Bracket Bolts	23 to 29 lb. ft. (3.2 to 4.0 m.kg.)

CLUTCH RELEASE BEARING

Lubricant—Ford 5000 Heavy Duty with Greaser	Non-fibrous, lithium base

Double Clutch

DISC ASSEMBLIES

Diameter

Transmission Disc—current and previous	11 in. (27.9 cm.)
P.T.O. Disc	8.5 in. (21.6 cm.)

Type of Hub Splines

Transmission Disc—current	square cut
—previous	Involute
P.T.O. Disc	Involute

Friction Material

Transmission Disc—current	3 pairs cerametallic buttons
—previous	Continuous band organic
P.T.O. Disc	Continuous band organic

Total Friction Area (both sides of disc)

Transmission Disc—current	22.8 in.^{2} (147 cm.^{2})
—previous	111.0 in.^{2} (716 cm.^{2})
P.T.O. Disc	64.0 in.^{2} (413 cm.^{2})

PRESSURE PLATE AND COVER ASSEMBLIES

Diameter

Transmission Pressure Plate	11.2 in. (28.5 cm.)
P.T.O. Pressure Plate	8.6 in. (21.8 cm.)

Transmission Clutch Springs	*Number*	*Spring Load at Compressed Length of 2.27 in. (57.7 mm.)*
Current	12	81 lb. (36.7 kg.)
Previous	12	97 lb. (44.0 kg.)

P.T.O. Clutch Springs	*Number*	*Spring Load at Compressed Length of 1.95 in. (49.5 mm.)*
Current	9	115 lb. (52.2 kg.)

Gap—Socket-headed Screw to Release Lever Strut

Tractors with External Clutch Pedal Return Spring	0.050 to 0.054 in. (1.27 to 1.37 mm.)
Tractors with Internal Leaf Type Clutch Pedal Return Spring	0.070 to 0.074 in. (1.78 to 1.88 mm.)
Tractors with Internal Coil Type Clutch Pedal Return Spring	0.050 to 0.054 in. (1.27 to 1.37 mm.)

CLUTCH LINKAGE

Clutch Pedal Free Travel

Current	1.25 in. (32 mm.)
Previous	1.5 in. (38 mm.)

TIGHTENING TORQUES

Clutch Cover to Flywheel	13 to 15 lb. ft. (1.8 to 2.1 m.kg.)
P.T.O. Drive Plate and Flywheel to Crankshaft Bolts	100 to 110 lb. ft. (13.8 to 15.2 m.kg.)
Leaf Type Clutch Pedal Return Spring Bracket Bolts	23 to 29 lb. ft. (3.2 to 4.0 m.kg.)

2. SPECIAL TOOLS

Tool Number	*Description*
‡SW510	Universal Clutch Fixture
‡SW511	Universal Clutch Fixture Adaptor Kit
‡SW510-5K	Universal Clutch Fixture Gauge Spacer
*SW12B	Single and Double Clutch Overhaul and Adjustment Fixture
*SW13	Double Clutch Release Lever Clip Compressor and Hold-down Clips
*SW13-1	Clutch Disc Locator—Double Clutch and 11 in. (27.9 cm.) Single Clutches
*SW14	Clutch Disc Locator—12 in. (30.5 cm.) and 13 in. (33.0 cm.) Clutches
‡SW509	Clutch Disc Locator—previous type Ford 2000, 3000 and 4000 Clutches, also all previous and current Ford 5000 Clutches
‡SW509A	Clutch Disc Locator—current type Ford 2000, 3000 and 4000 Clutches
954	Pilot Bearing Puller
955-14	Puller Adaptors (Set of two)
943-S	Slide Hammer
FT943	Internal Puller Adaptors (Set of two)
630-S	Step Plate (Set of eleven)
630-T	Step Plate Adaptors (Set of six)
951	Puller Attachment (Small)
1002	Puller—Reversible Arm (Medium)
818	Bushing Kit

‡U.S.A. only.

*Except U.S.A.

PART 5
FOUR-SPEED
TRANSMISSION

Part 5

FOUR-SPEED TRANSMISSION

Chapter 1

SERVICING THE TRANSMISSION

Section		Page
1.	Description and Operation	1
2.	Overhaul Shifter Cover	1
3.	Overhaul Front End	4
4.	Overhaul Rear End	8
5.	Complete Overhaul	9

Chapter 2

SPECIFICATIONS AND SPECIAL TOOLS

Section		Page
1.	Specifications	15
2.	Special Tools	15

Part 5

FOUR-SPEED TRANSMISSION

Chapter 1

SERVICING THE TRANSMISSION

Section	Page
1. Description and Operation	1
2. Overhaul Shifter Cover	1
3. Overhaul Front End	4
4. Overhaul Rear End	8
5. Complete Overhaul	9

1. DESCRIPTION AND OPERATION

The four-speed transmission, Figure 1, is equipped with constant mesh, helical gears in all forward speeds. Input shaft, output shaft and countershaft are supported by tapered roller bearings. Pre-load on these bearings is obtained through the use of metal shims located at the rear bearing retainers. A safety-type starter switch is located on top of the transmission cover assembly. As a safety feature, the starter switch will not allow the engine to start until the gearshift lever is placed in the neutral position.

Reverse gear is obtained through a combination of spur and helical gearing. Sliding splined couplings are used with connectors to engage the gears. The couplings are splined internally to the connectors and slide over the engaging teeth on the side of each gear when the gearshift lever is moved. This locks the gear to the shaft through the coupling and connector. Transmission power flows for the four-speed transmission are illustrated in Figures 2 through 6.

2. OVERHAUL SHIFTER COVER

A. Removal and Disassembly

1. Disconnect the safety starter switch wire.
2. Remove the nine bolts that attach the shift cover assembly to the transmission case and lift the cover off the case.
3. Remove the safety starter switch and plunger, Figure 7.
4. Compress the gearshift lever spring and remove the spring seat as shown in Figure 8.
5. Loosen the shift lever dust seal from the cover and remove the shift lever from the cover, Figure 7.
6. Inspect and repair or install new parts as required.

B. Assembly

1. Insert the shift lever in the cover and reposition the dust seal.
2. Install the gearshift lever spring and spring seat, Figure 8. Move the lever to check for proper seat position. A clicking noise will indicate that the spring seat is improperly positioned.
3. Install the safety starter switch and plunger.
4. Position a new cover gasket on the case. Place the cover gasket on the case, with the gearshift lever properly located in the gearshift plates. Install the nine cover bolts and tighten them securely.
5. Connect the safety starter switch wire.

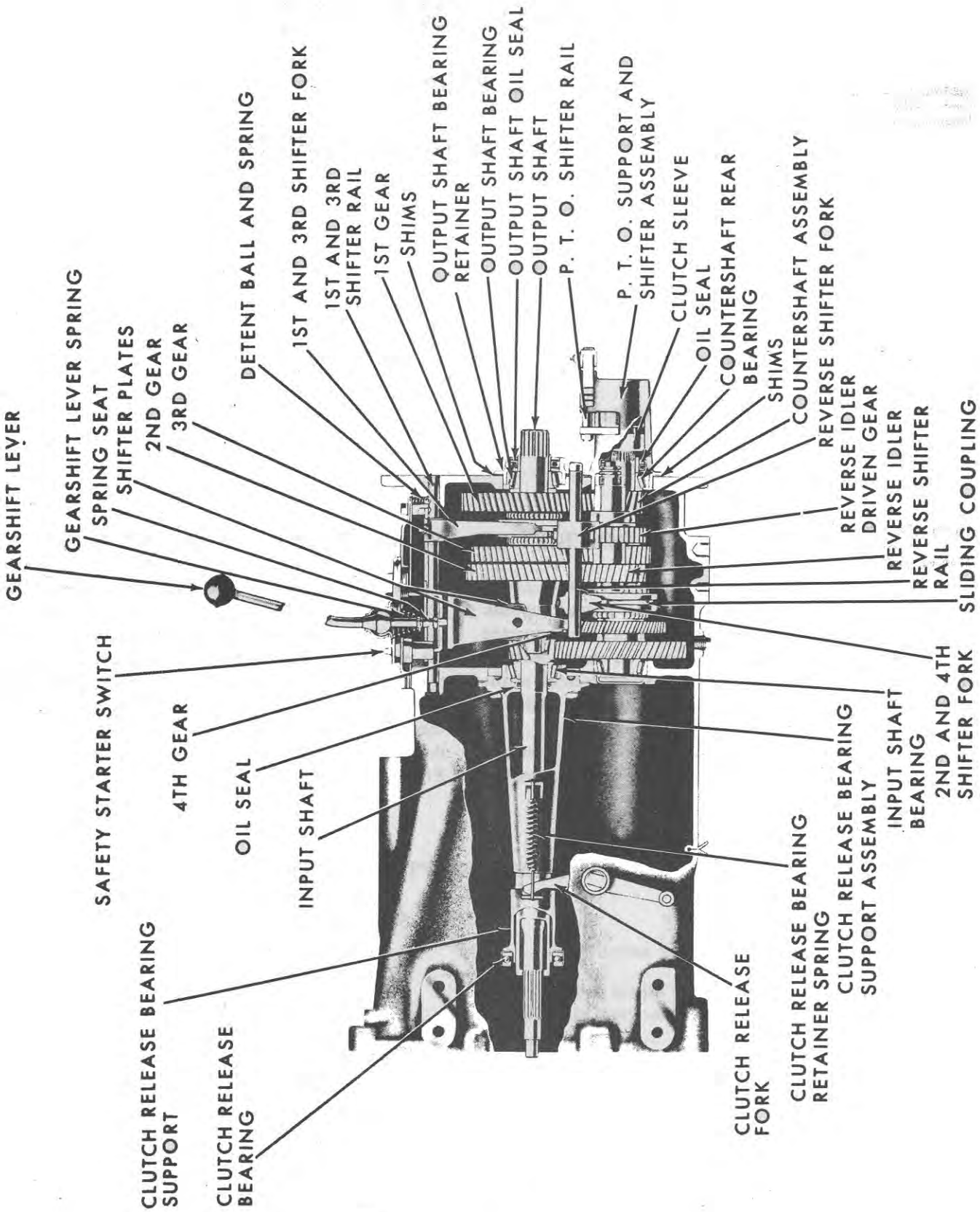

Figure 1
Four Speed Transmission

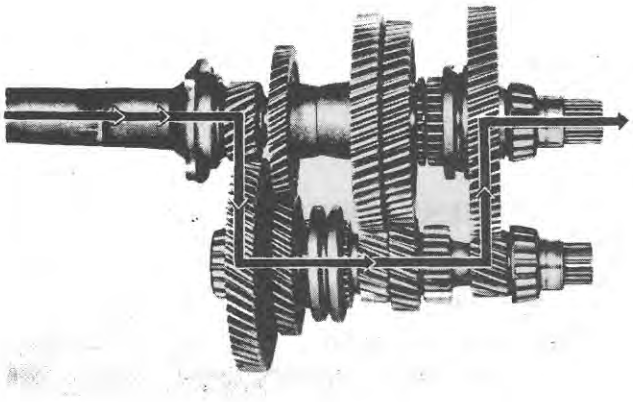

Figure 2
Power Flow—First Gear

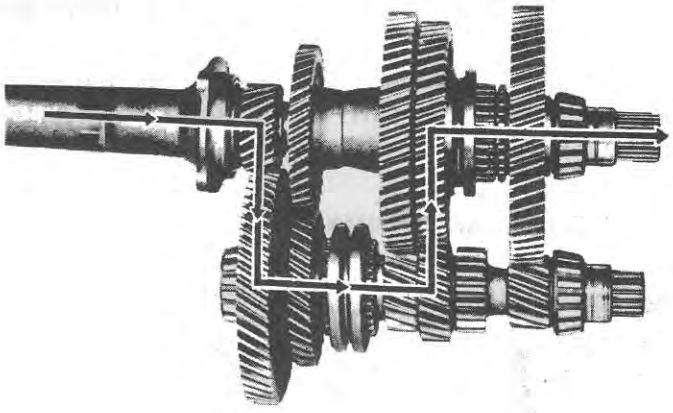

Figure 4
Power Flow—Third Gear

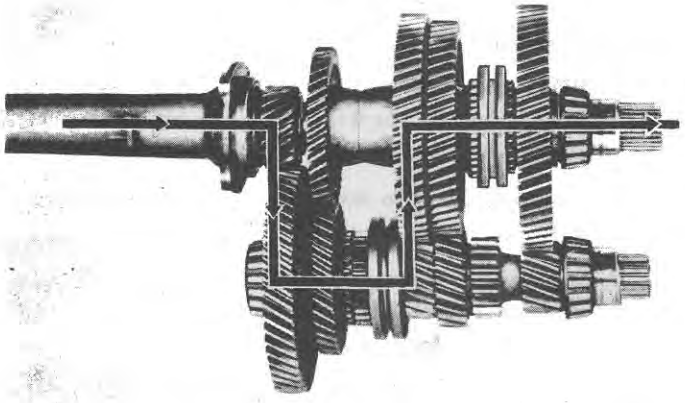

Figure 3
Power Flow—Second Gear

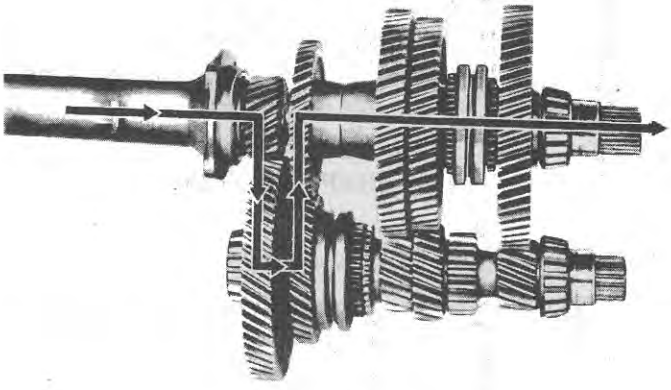

Figure 5
Power Flow—Fourth Gear

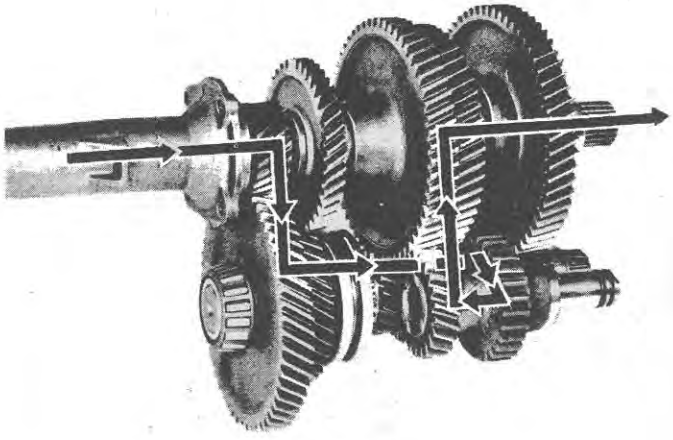

Figure 6
Power Flow—Reverse Gear

© FORD MOTOR CO. 1964

3. OVERHAUL FRONT END

Separate the tractor between the engine and transmission as described in Part 15, "SEPARATING THE TRACTOR".

CLUTCH PEDAL BUSHING:

A. Removal and Disassembly

1. Remove the clutch pedal and place it in a vise to facilitate bushing removal.
2. Using Driver No. 810 and Handle No. 814, drive the bushing out of the pedal.

B. Assembly

1. Position a new bushing with the chamfered end started in the bore of the pedal.
2. Using Driver No. 811 and Handle No. 814, install the bushing so that the end of the bushing is flush with the linkage side of the pedal.

CLUTCH RELEASE SHAFT BUSHING:

A. Removal and Disassembly

1. Disconnect the clutch release bearing retainer springs and remove the bearing and hub assembly.
2. Remove the bolt that retains the clutch release fork to the clutch release shaft and withdraw the shaft and release shaft fork from the transmission case.
3. Using Driver No. 808 and Handle No. 814, drive the clutch release shaft bushings out of the transmission case.

B. Assembly

1. Position a new bushing with the chamfered end started in the bore of the transmission case. Then, using Step Plate No. 630-3, drive the bushing into the bore until the end of the bushing is flush with the counter bore. Install the other bushing in the same manner.
2. Install the clutch release fork and clutch release shaft in the transmission case. Be sure the shaft moves without binding. Align the bore in the shoulder of the release fork with the bore in the shaft and install a new retaining bolt.
3. Install the clutch release bearing and hub assembly. Position the release fork on the hub and install the clutch release bearing springs.

CLUTCH RELEASE BEARING:

A. Removal and Disassembly

1. Disconnect the clutch release bearing retainer springs and remove the bearing and hub assembly.
2. Hold the clutch release bearing and tap the hub out of the bearing with a soft hammer. Inspect the bearing to determine if it has been turning on the hub. If score marks are present on the hub, install a new bearing and hub.

B. Assembly

1. Place the hub and bearing in a vise using soft jaws and press the bearing on the hub being careful to keep the bearing aligned.
2. Thoroughly clean the portion of the clutch release bearing support on which the hub slides.
3. Install the release bearing and hub assembly. Position the release fork on the hub and install the clutch release bearing springs.

INPUT SHAFT AND SUPPORT ASSEMBLY:

A. Removal and Disassembly

1. Disconnect the clutch release bearing springs and remove the bearing and hub assembly, Figure 9.
2. Remove the four bolts and lock washers that attach the clutch release bearing support assembly, Figure 11, to the transmission case. Remove the input shaft and support assembly as a unit.
3. Slip the input shaft out of the bearing support.
4. Remove the input shaft bearing with Puller No. 951, Extension No. 930-B, Puller No. 938, and Wrench No. P-61 as illustrated in Figure 10. Remove the bearing cup from the support with Bearing Cup Pulling Attachment No. 943 and Slide Hammer No. 943-S. Remove the oil seal using Puller No. 956-2 and Slide Hammer.
5. Inspect and repair or install new parts as required.

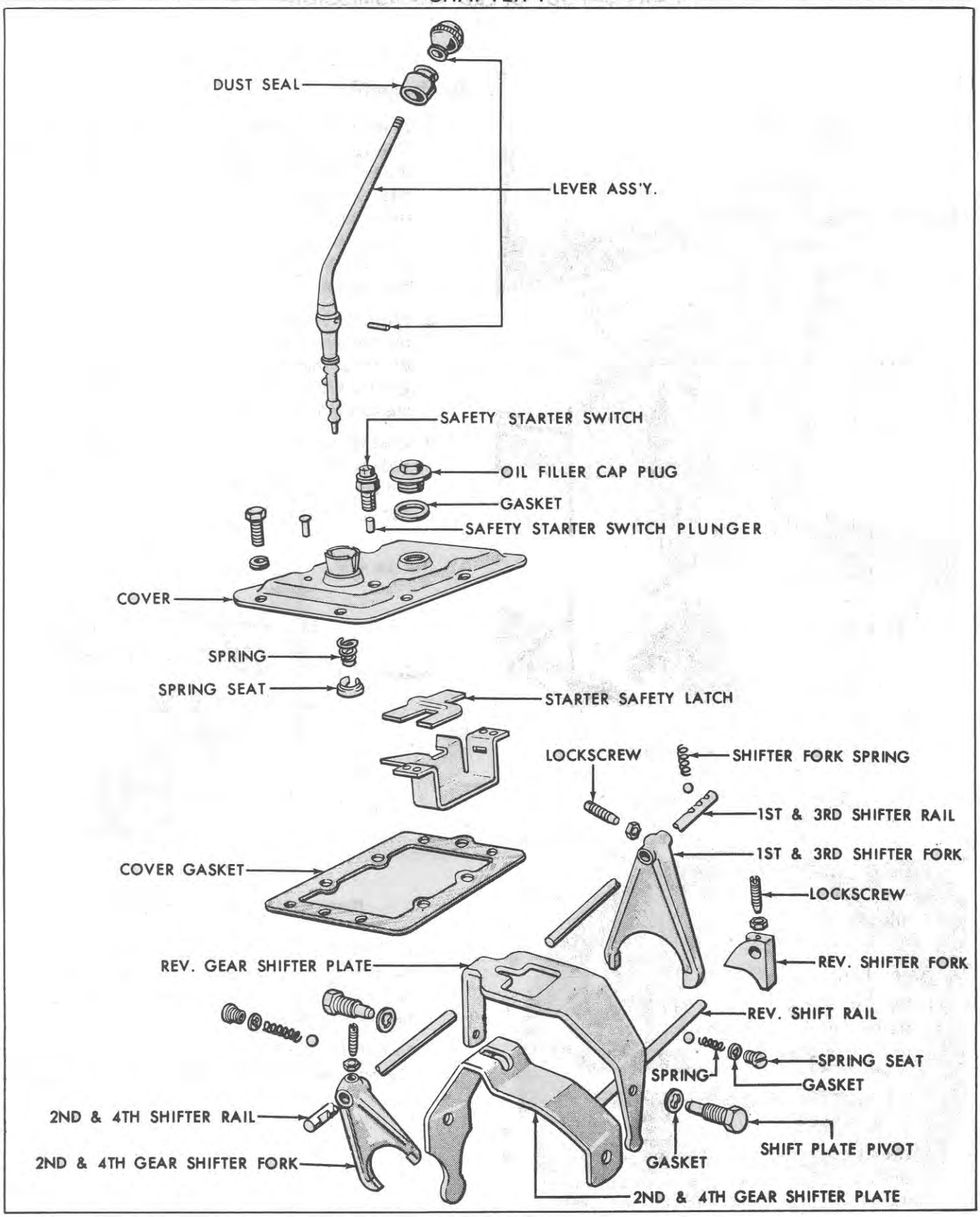

Figure 7
Shifting Mechanism—Disassembled

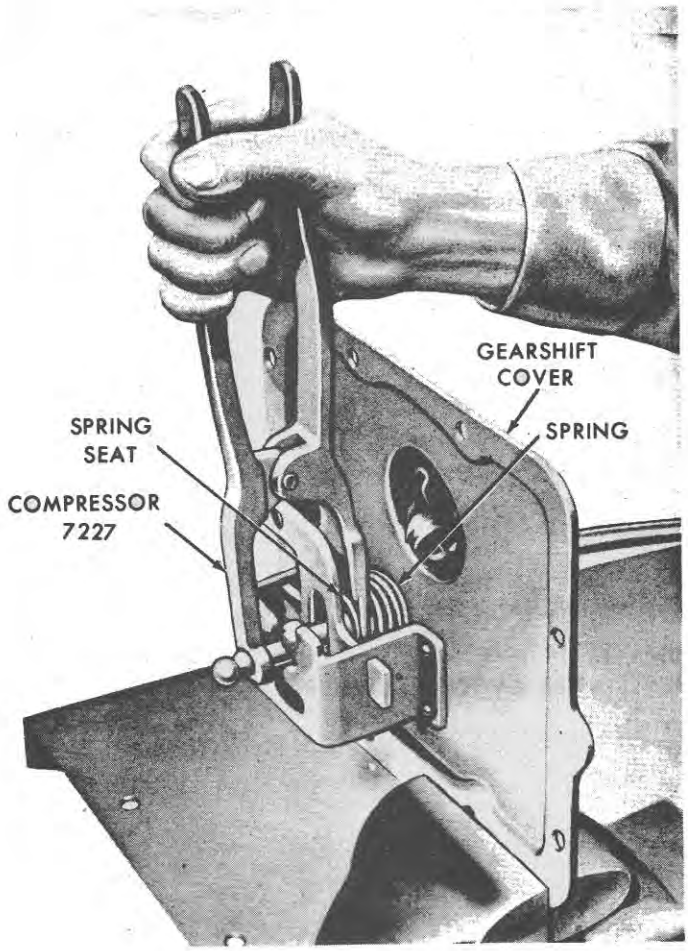

Figure 8
Removing Shift Lever Spring

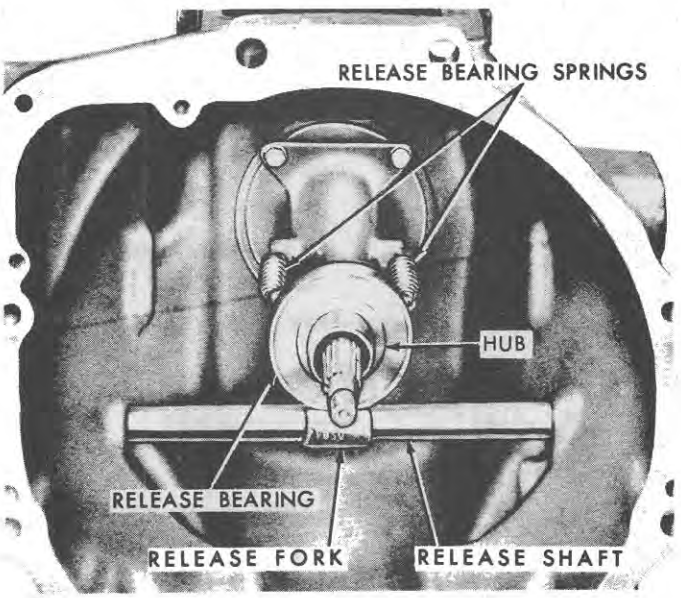

Figure 9
Removing Clutch Release Bearing

B. Assembly

1. Place a 1⅜ in. (34.925mm) I.D. x 3 in. (76.199mm) long sleeve on two arbor press split plates. Place the bearing in position on the input shaft and insert the splined end of the shaft through the sleeve until the inner race of the bearing rests on top of the sleeve. Place a suitable driver on the face of the shaft, then press the shaft into the bearing until the bearing bottoms on the shaft.
2. With Driver No. 630-9, install a new oil seal in the retainer with the lip of the seal facing toward the rear. Coat the sealing surface of the seal with grease. With Driver No. 630-15, install the bearing cup into the retainer.
3. Coat the splines of the input shaft with grease and slide the shaft assembly into the bearing support. Rotate the shaft during assembly to prevent damage to the oil seal.

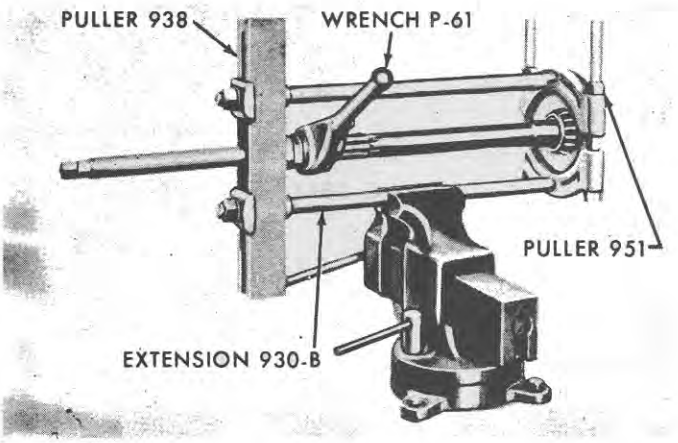

Figure 10
Removing Input Shaft Bearing

4. Position the input shaft and support assembly at the front end of the case and install the four bolts and lock washers. Tighten the bolts to the specified torque, page 15.
5. Install the clutch release bearing and hub assembly, and connect the clutch release bearing springs.

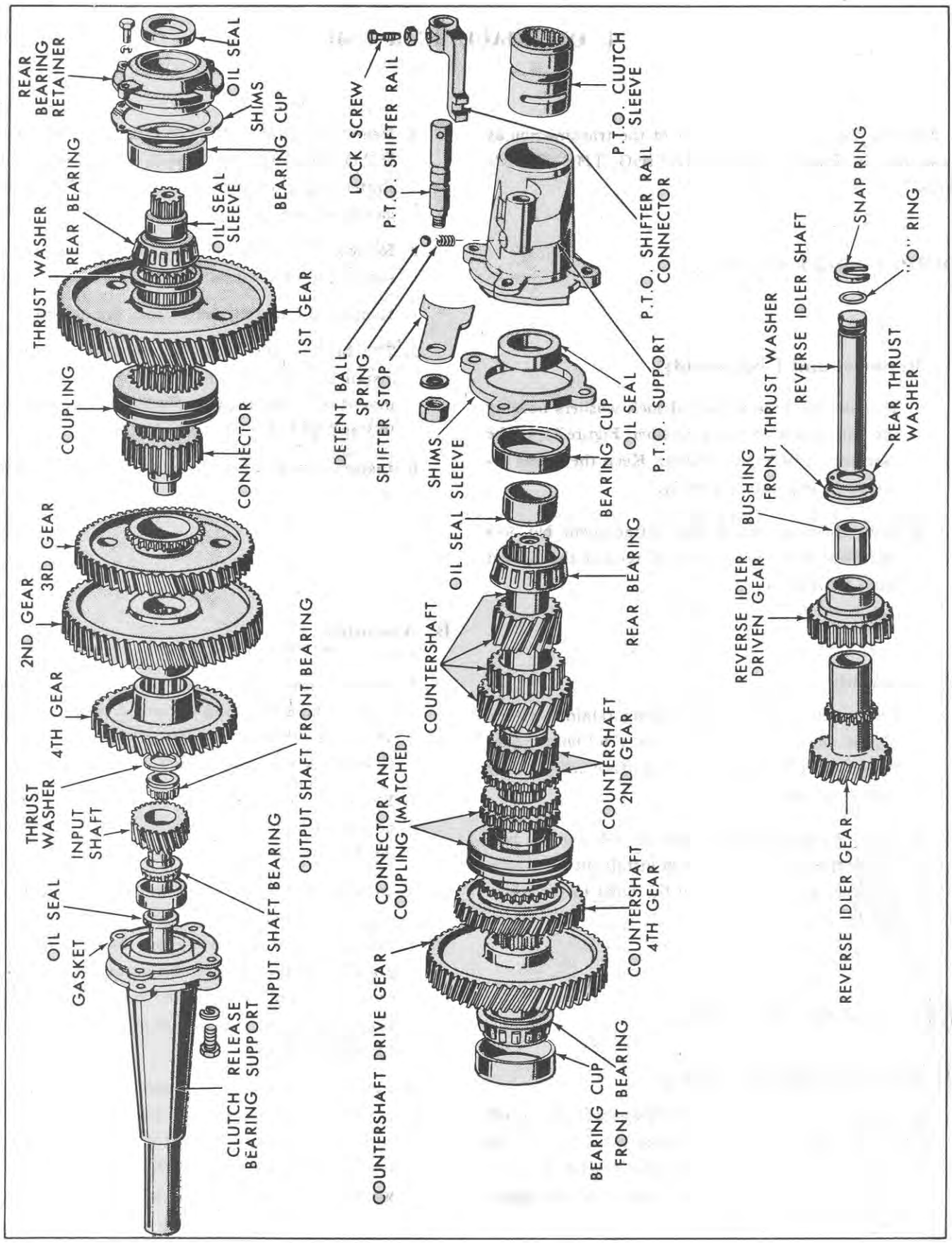

Figure 11
Transmission—Disassembled

© FORD MOTOR CO. 1964

4. OVERHAUL REAR END

Separate the tractor at the rear of the transmission as described in Part 15, "SEPARATING THE TRACTOR."

OUTPUT SHAFT OIL SEAL:

A. Removal and Disassembly

1. Remove the four bolts and lock washers holding the output shaft bearing retainer, Figure 11, to the case and remove the retainer. Keep the shims together to facilitate assembly.
2. With Bearing Cup Pulling Attachment No. 943 and Slide Hammer No. 943-S, remove the oil seal from the retainer.

B. Assembly

1. Press a new seal in the bearing retainer with a 2 9/16 in. (65.086mm) O.D. x 3 in. (76.199mm) long sleeve. Coat the seal contact surface with a light film of grease.
2. Place the shims and retainer assembly in the rear of the transmission case and install the four bolts and lock washers. Tighten the bolts to the specified torque, page 15.

P.T.O. SHIFTER ASSEMBLY:

A. Removal and Disassembly

1. Remove the four bolts and lock washers that attach the P.T.O. support and shifter assembly, Figure 11, to the rear of the transmission case. Remove the assembly and keep the shims together to permit proper assembly.
2. Remove the nut and lock washer that retains the P.T.O. shifter stop to the shift rail and remove the shifter stop from its location in the P.T.O. clutch sleeve, Figure 11.
3. Remove the shift rail, detent ball and detent spring from the support housing.
4. Remove the clutch sleeve from the assembly.
5. The bearing cup must be removed in order to install the oil seal. The cup and seal can be removed with Bearing Cup Pulling Attachment No. 943 and Slide Hammer No. 943-S.
6. Inspect and repair or install new parts as required.

B. Assembly

1. Install a new oil seal and the bearing cup in the support housing using an arbor press and Step Plates No. 630-12 and No. 630-15, respectively. Coat the sealing surface of the seal with grease.
2. Place the P.T.O. clutch sleeve in the support housing with the wide land end of the sleeve facing toward the bearing cup end of the support.
3. Install the shift rail detent spring and ball, Figure 11. Push the ball down far enough to permit partial insertion of the shifter rail into the housing. Then, place the shifter stop in the groove in the clutch sleeve and push the shifter rail into the shifter stop. Install the lock washer and nut and tighten the nut securely.
4. Place the P.T.O. support and shifter assembly in position at the rear of the transmission case. Be sure the shims are located between the support assembly and case. Install the four bolts and lock washers and tighten to the specified torque, page 15.

5. COMPLETE OVERHAUL

Remove the transmission from the tractor as described in Part 15, "SEPARATING THE TRACTOR."

A. Disassembly

1. Remove the nine bolts that attach the cover assembly to the transmission case and lift the cover off the case.
2. Remove the shifter fork spring and the detent ball, Figure 7, that are held in place by the cover.
3. Disconnect the clutch release bearing springs and remove the bearing and hub assembly, Figure 9.
4. Remove the four bolts and lock washers that attach the clutch release bearing support assembly, Figure 11, to the transmission case. Remove the input shaft and support assembly as a unit.
5. Loosen the lock nut on the lock screw in the 1st and 3rd gear shifter fork, Figure 7. Back off the screw and slide the shifter rail out of the transmission case. Remove the shifter fork from its position in the output shaft connector coupling.
6. Remove the shifter plate pivots and gaskets, Figure 7, from each side of the housing and lift the plates out of the case.
7. Remove the four bolts and lock washers holding the output shaft bearing retainer, Figure 11, to the case and remove the retainer. Keep the shims together to facilitate assembly.
8. Lift the output shaft gear assembly out of the case. It may be necessary to push the reverse gear shifter fork and 2nd and 4th gear shifter fork, Figure 7, toward the front of the case to provide clearance for removing the output shaft.
9. Remove the shifter rail spring seat, gasket, spring and detent ball from the right side of the transmission case. Loosen the lock nut on the lock screw in the 2nd and 4th gear shifter fork, Figure 7, and back off the screw. Remove the shifter rail cap plug from the rear of the transmission case and pull the shifter rail out of the case. Remove the shifter fork from its position in the countershaft connector coupling.
10. Remove the four bolts and lock washers that attach the P.T.O. support and shifter assembly, Figure 11, to the rear of the transmission case. Remove the assembly and keep the shims together to permit proper assembly.
11. Slide the countershaft assembly, Figure 11, to the rear and lift it out of the case.
12. Remove the reverse shifter rail spring seat, gasket, spring and detent ball from the left side of the transmission case, Figure 7.
13. Loosen the lock nut on the lock screw in the reverse gearshift fork, Figure 7, and back off the lock screw. Remove the shifter rail cap plug from the rear of the transmission case and pull the reverse gearshift rail out of the housing. Remove the shifter fork from its position on the reverse idler driven gear, Figure 7.
14. Pull the reverse idler shaft from its bore in the case and lift the gears and thrust washers out of the transmission.
15. Remove the snap ring and O-ring from the reverse idler shaft, Figure 11.

B. Repair of Sub-Assemblies

After the sub-assemblies have been removed from the transmission and disassembled, it will be necessary to follow the cleaning and inspection procedure as required below prior to repairing or installing the components as detailed in this section.

1. Clean all old lubricant and dirt from the parts with a suitable cleaning solvent.
2. To clean the bearings, rotate the bearings in cleaning solvent until all of the old lubricant has been removed. Dry the bearings with compressed air, being careful not to spin them. Slowly turn the bearings by hand while directing the air at right angles, to prevent them from spinning.
3. Inspect all bearings for wear, scores, discoloration from overheating or for missing rollers. Check bearing cups for wear, cracks, or scores. Check bearings for worn or bent retainers. Discard all defective bearings and cups.

4. After inspecting the bearings, lubricate them thoroughly, and wrap each bearing in a clean, lint-free cloth until ready for use.
5. Inspect the transmission case for cracks, worn bearing bores, damaged threads, or other damage. Install a new case if any of these conditions are evident.
6. Discard all gears, couplings, and connectors that are worn, chipped, broken or otherwise damaged. Small nicks or burrs should be removed with a fine grinding stone.
7. Inspect all shift lever forks, rails, and shift gates for wear and damage. Discard all defective parts as required.
8. Install all new oil seals and gaskets at time of assembly.

Output Shaft: The following procedure covers the disassembly and assembly of the output shaft and output shaft bearing retainer.

1. With Bearing Cup Pulling Attachment No. 943 and Slide Hammer No. 943-S, remove the rear bearing cup and oil seal from the retainer, Figure 11.
2. Remove the 4th gear, thrust washer, and front bearing with Gear Puller No. 1002, as shown in "A", Figure 12.

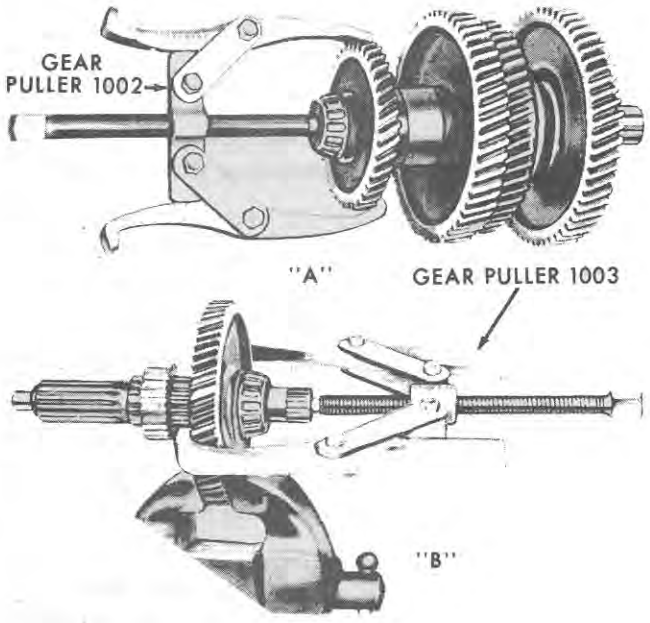

Figure 12
Removing Output Shaft Gears and Bearings

3. Slide the 2nd gear off the shaft.
4. Remove the 1st gear, thrust washer, rear bearing and oil seal sleeve with Gear Puller No. 1003, as shown in "B", Figure 12.
5. Slide the coupling, the connector, and 3rd gear off the output shaft.
6. Inspect and repair or install new parts as required.
7. Place the 2nd gear, 4th gear and thrust washer on the front of the output shaft.
8. With an arbor press and a 7/8 in. (22.225mm) I.D. x 3 in. (76.199mm) long sleeve, press the output shaft front bearing on the output shaft.
9. Place the 3rd gear, 1st and 3rd gear connector and coupling, and the 1st gear and thrust washer on the rear of the shaft.
10. Press the rear bearing and oil seal sleeve on the output shaft using an arbor press and a 1½ in. (38.100mm) I.D. x 3 in. (76.199mm) long sleeve.

Countershaft: The following procedure covers the disassembly and assembly of the countershaft.

1. Remove the countershaft front bearing cup from the transmission housing with Bearing Cup Pulling Attachment No. 943 and Slide Hammer No. 943-S as shown in Figure 13.

   NOTE: ***It is not necessary to remove the expansion plug when removing the countershaft front bearing cup.***

2. With Bearing puller No. 951 and Gear Puller No. 1002, as shown in "A", Figure 14, pull the countershaft rear bearing and oil seal sleeve off the countershaft.
3. With Gear Puller No. 1003, as shown in "B", Figure 14, pull the countershaft drive gear and front bearing off the countershaft.
4. Slide the countershaft 4th gear, 2nd and 4th gear connector and coupling off the countershaft. Slide the countershaft 2nd gear off the shaft.

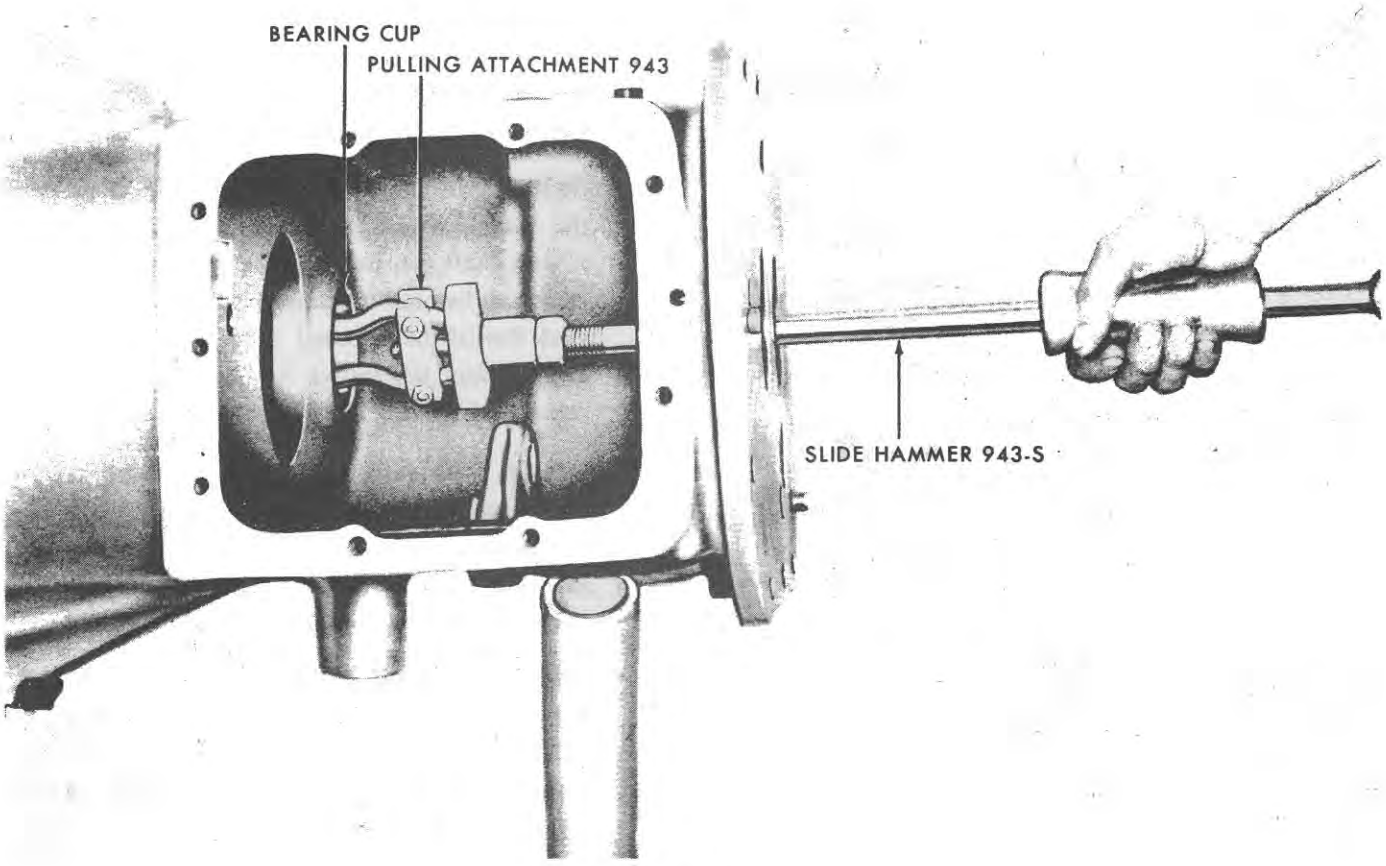

Figure 13
Removing Countershaft Front Bearing Cup

5. Inspect and repair or install new parts as required.

6. Install the front bearing cup in the transmission housing with Step Plate No. 630-15.

7. Install in order on the countershaft, the countershaft 2nd gear, 2nd and 4th gear connector and coupling, countershaft 4th gear and countershaft drive gear.

8. With an arbor press and a 1½ in. (38.100mm) I.D. x 3 in. (76.199mm) long sleeve, press the countershaft front bearing on the countershaft.

9. Press the rear bearing and oil seal sleeve on the countershaft using an arbor press and a 1⅜ in. (34.925mm) I.D. x 3 in. (76.199mm) long sleeve.

C. Assembly

Before beginning a complete buildup, the output shaft preload must be checked. This is accomplished by installing the output shaft in the case as detailed in Steps 12 through 17 of the following procedure. Check the output shaft preload with a cord and pull scale in the same manner as for the countershaft, illustrated in Figure 15. Preload should be checked when the lower gear forks are in neutral and with the top gear forks not installed, with the gears and bearings lightly oiled. Add or remove shims as required to provide specified preload. After establishing the correct preload, remove the output shaft from the transmission case and begin the complete buildup. Lubricate all gears and bearings with the transmission lubricant before installing them in the case.

© FORD MOTOR CO. 1964

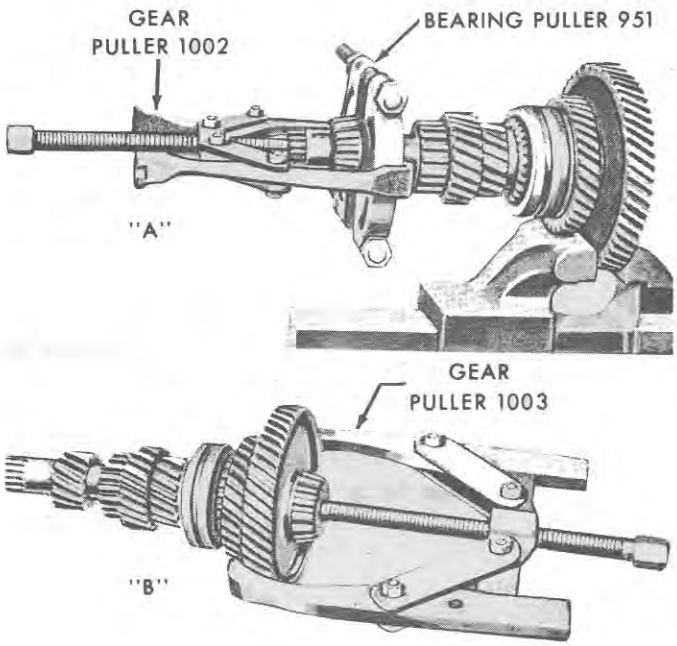

Figure 14
Removing Countershaft Gears and Bearings

1. Install a new O-ring and circlip type snap ring on the reverse idler shaft.

2. Position the reverse idler gear, reverse idler driven gear and thrust washers in the transmission case. Figure 8 shows their relative position in the transmission case. The oil grooves in the front thrust washer must face the rear thrust washer and the tang on the back face of the rear washer must be located in the groove cast in the transmission case.

3. Start the reverse idler shaft in the bore in the case. Align the washers and gears and slide the shaft into place.

4. Position the shifter fork over the reverse idler driven gear and install the shifter rail in the housing and fork. Install the lock screw in the shifter fork and secure the screw with a lock nut. Install the reverse shifter rail cap.

5. Install the detent ball, spring, gasket and shifter rail spring seat in the left side of the case.

6. Position the countershaft assembly in the transmission case.

7. Place the P.T.O. support and shifter assembly in position at the rear of the case. Be sure the shims are located between the support assembly and case. Install the four bolts and lock washers and tighten to the specified torque, page 15.

8. At this time, check the countershaft preload with the cord and pull scale, as shown in Figure 15. A stub shaft can be used as shown, or the P.T.O. shaft can be used if properly supported. The preload should be checked with the bearings and gears lightly lubricated. Add or remove shims as required to obtain the specified preload, page 15.

NOTE: ***The reverse idler gear assembly should be in place (shifter not engaged) when the countershaft preload is checked. If the output shaft preload is on the low side, the countershaft preload should be on the low side also.***

9. Place the 2nd and 4th gear shifter fork in position in the coupling and install the shifter rail in the case and fork. Install the lock screw in the shifter fork and secure the screw with the lock nut. Install the shifter rail cap.

10. Install the detent ball, spring, gasket, and shifter rail spring seat in the right side of the transmission case.

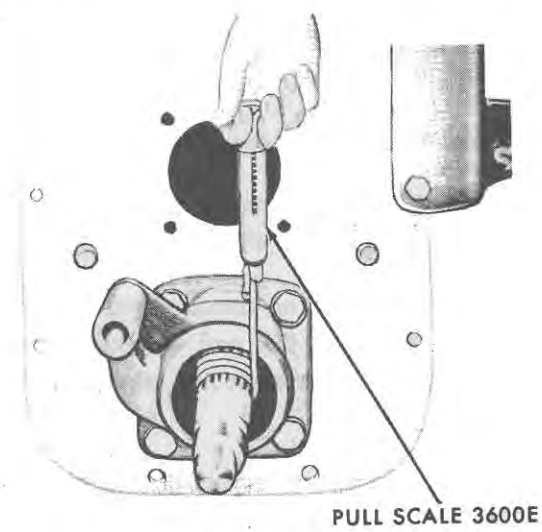

Figure 15
Checking Countershaft Bearing Preload

11. Position the output shaft gear assembly in the transmission case.
12. Press a new oil seal in the rear bearing retainer with a 2 9/16 in. (65.087mm) O.D. x 3 in. (76.199mm) long sleeve. Coat the seal contact surface with a light film of grease. Press the bearing cup in the retainer with a 2 7/8 in. (73.024mm) O.D. x 3 in. (76.199mm) long sleeve.
13. Place the correct shims and retainer assembly in the rear of the transmission case and install the four bolts and lock washers. Tighten the bolts to the specified torque, page 15.
14. Position the input shaft and support assembly at the front end of the case and install four bolts and lock washers. Tighten the bolts to the specified torque, page 15.
15. Position the shift plates in the case with the finger of each plate located in the shifter rails. Install the gaskets and shifter plate pivots in the side of the case.
16. Position the 1st and 3rd gear shift fork in the output shaft connector coupling. Slide the first and third shifter rail into the case and shifter fork. Install the lock screw in the shift fork and secure the screw with a lock nut.
17. Place the shifter rail detent ball and spring in location in the case. Position a new cover gasket on the case.
18. Place the cover assembly on the case with the gearshift lever properly located in the gearshift plates. Install the nine bolts and tighten them securely.

© FORD MOTOR CO. 1964

Part 5

FOUR-SPEED TRANSMISSION

Chapter 2

SPECIFICATIONS AND SPECIAL TOOLS

Section	Page
1. Specifications	15
2. Special Tools	15

1. SPECIFICATIONS

(NOTE: The following specifications supersede the specifications in the text.)

Gear Ratios

1st	11.0:1
2nd	9.06:1
3rd	6.22:1
4th	2.98:1
Rev.	10.50:1

Lubricant

Oil Type	M4864A or M2C85-A
Oil Capacity	6.6 U.S. Quarts
	5.5 Imperial Quarts
	6.2 Liters

Torque

P.T.O. Support and Shifter Assembly Bolts	23-30 lbs. ft. (3.18—4.14 mkg)
Output Shaft Rear Bearing Retainer Bolts	23-30 lbs. ft. (3.18—4.14 mkg)
Clutch Release Bearing Support Bolts	40-50 lbs. ft. (5.53—6.91 mkg)
Gearshift Cover Assembly Bolts	23-29 lbs. ft. (3.18—4.00 mkg)
Shifter Fork Lock Nut	23-29 lbs. ft. (3.18—4.00 mkg)

Preload

Output Shaft	27-47 lbs. pull (12.25—21.32 kg)
Countershaft	22-44 lbs. pull (10.00—20.00 kg)

2. SPECIAL TOOLS

Tool No.	Description
P-61	Ratchet Wrench
630-3	Step Plate
630-9	Step Plate
630-12	Step Plate
630-15	Step Plate
930-B	Extension
938	Push Puller
943	Bearing Cup Pulling Attachment
943-S	Slide Hammer
951	Bearing Pulling Attachment

Tool No.	Description
954	Pilot Bearing Puller
1002	Puller
1003	Puller
3600-E	Pull Scale
7227	Shift Lever Spring Compressor
808	Driver
810	Driver
811	Driver
814	Handle

© FORD MOTOR CO. 1966

PART 6
SIX-SPEED
TRANSMISSION

Part 6

SIX-SPEED TRANSMISSION

Chapter 1

SERVICING THE TRANSMISSION

Section		Page
1.	Description and Operation	1
2.	Shift Levers and Cover Overhaul	1
3.	Front End Overhaul	5
4.	Rear End Overhaul	9
5.	Complete Overhaul	15

Chapter 2

SPECIFICATIONS AND SPECIAL TOOLS

Section		Page
1.	Specifications	21
2.	Special Tools	22

Part 6

SIX-SPEED TRANSMISSION

Chapter 1

SERVICING THE TRANSMISSION

Section		Page
1.	Description and Operation	1
2.	Shift Levers and Cover Overhaul	1
3.	Front End Overhaul	3
4.	Rear End Overhaul	9
5.	Complete Overhaul	15

1. DESCRIPTION AND OPERATION

This constant mesh type transmission, Figure 1, provides six forward and two reverse gear ratios selected by two levers mounted on the top cover plate. The longer (main) lever selects three forward and one reverse ratio, while the shorter (secondary) lever provides a High and a Low range in each gear, Figure 4.

A safety feature incorporated in the top cover is an electrical switch which is connected in series with the starting circuit and allows the starter motor to be operated only when the main gear lever is in the neutral position.

With the exception of the helical gear drive to the P.T.O. and main countershafts, the gears are of the spur type, all the gears being in constant mesh and the gear train connections being made by sliding the couplings and connectors.

Two types of Six-Speed Transmission are available, one with conventional transmission P.T.O. and the other with Live P.T.O. The components which differ in the two assemblies are illustrated in Figure 2.

The main countershaft on the transmission P.T.O. version is splined internally to accept the external splines of a short P.T.O. countershaft. In the live P.T.O. version, an extra pair of constant mesh helical gears transmit the drive from the P.T.O. clutch to the P.T.O. countershaft.

One of these gears is integral with the P.T.O. input shaft and revolves around the outside of the main drive input shaft. The other helical gear is splined onto the forward end of the P.T.O. countershaft where it is driven by the P.T.O. input shaft.

The normal engineering procedure of making the bearings a press fit on the shafts and a push fit in the housing has been employed and, unless it is necessary to replace the bearings, or to gain access to other components, it is recommended that they are not removed from the shafts.

2. SHIFT LEVERS AND COVER OVERHAUL

A. Disassembly

1. Remove the rubber cover and disconnect the wires from the starter safety switch. Unscrew the nine retaining bolts and spring washers from the cover and remove the cover and levers as an assembly.
2. Unscrew the safety switch from the top of the cover. Remove the two self-locking bolts retaining the roller support plate to the switch retainer. Remove the plate, the actuating connector, the roller and the plunger from their locations, Figure 3.

NOTE: ***No attempt should be made to remove the main shift lever stop plate or the switch retainer, Figure 3, which are riveted onto the***

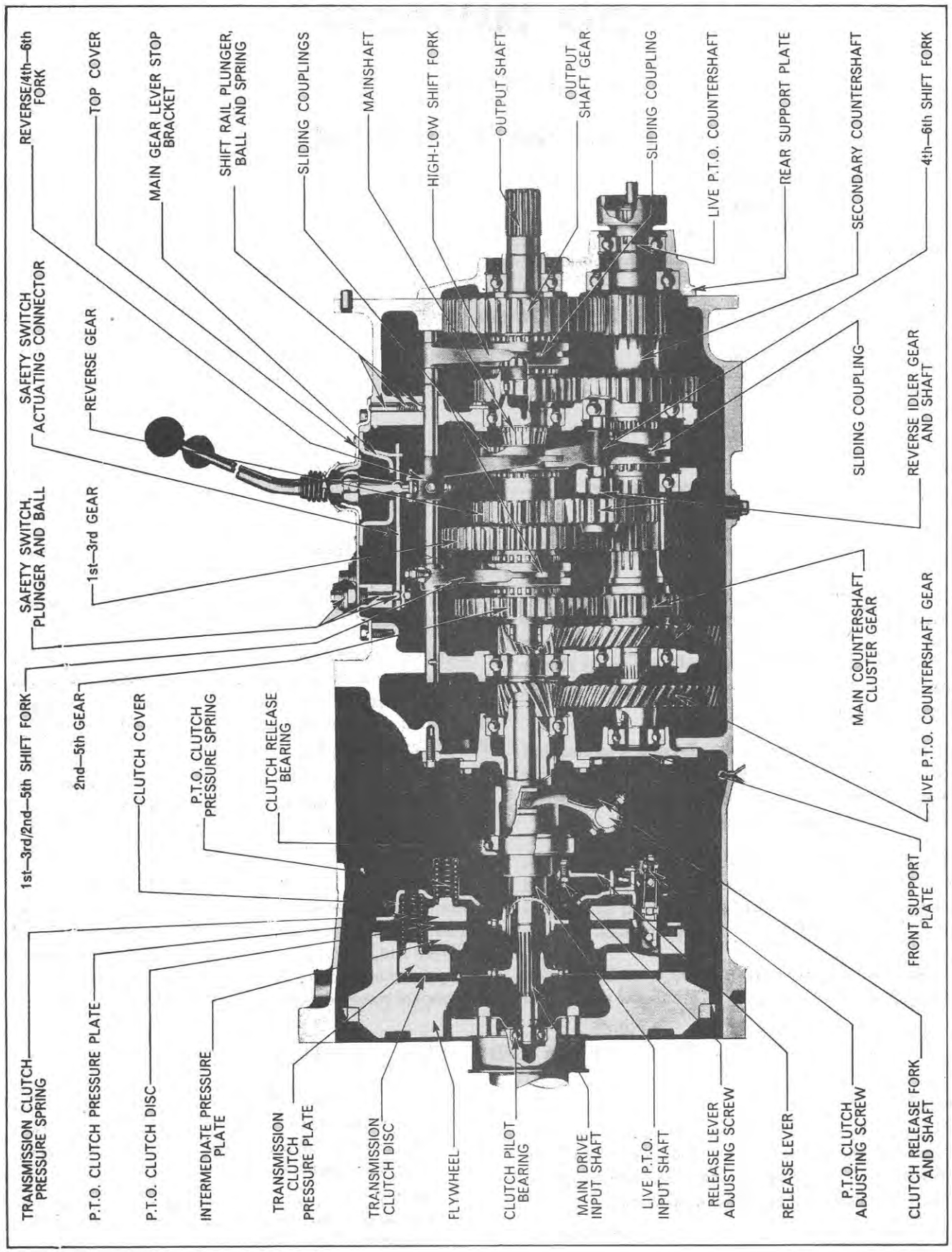

Figure 1
Six-Speed Transmission (Live P.T.O.)

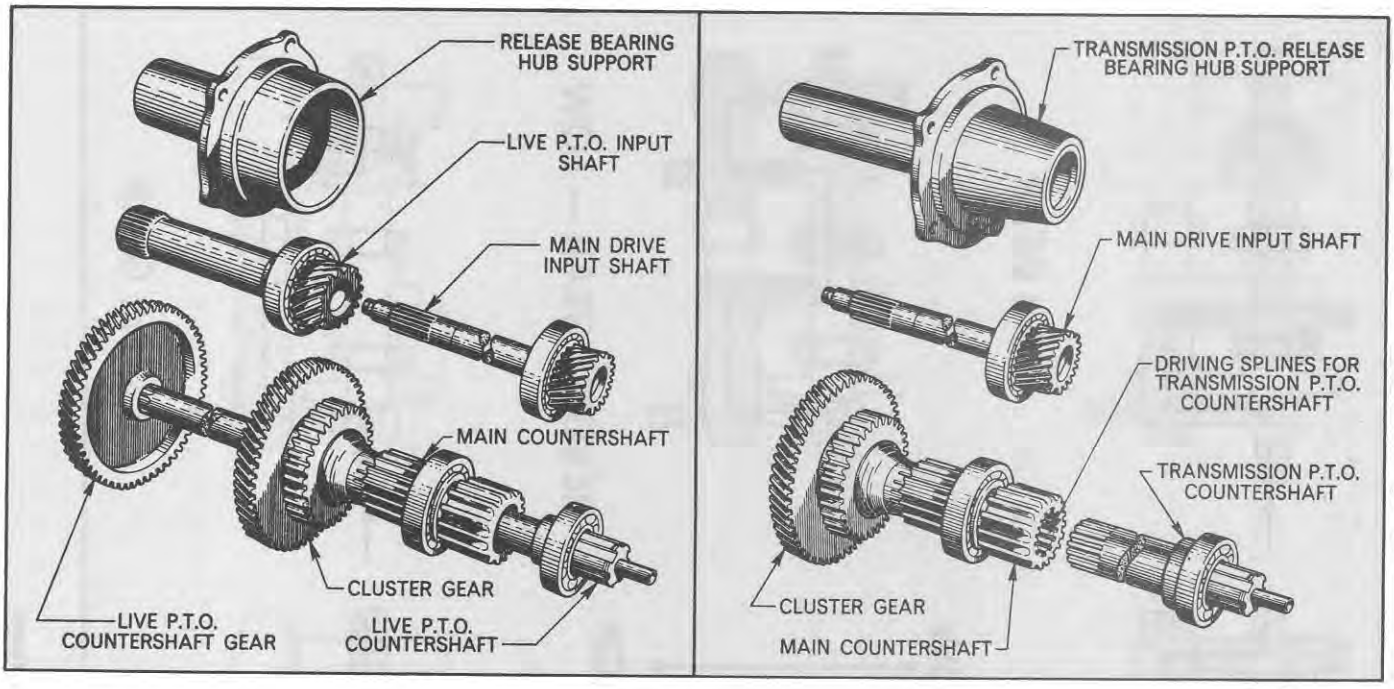

Figure 2
Live and Transmission P.T.O. Components

cover, as these parts are serviced as an assembly with the cover.

Using a file or hacksaw, partially cut through the gear shift lever spring retaining clips, completing the cut with a hammer and chisel. Having first removed the shift lever balls, withdraw the levers through the cover.

B. Inspection and Repair

1. Using a suitable test bulb, wires and battery, Figure 5, test the starter safety switch for correct operation by depressing the operating button which should close the circuit and light the test bulb. On releasing the operating button the test bulb should be extinguished. If the switch is faulty install a new part.
2. Check the rivets retaining the safety switch components for tightness.
3. Inspect gear shift lever ends and all sliding parts for wear or damage and install new parts as necessary.

C. Assembly

1. Pass the gear shift levers through the cover, installing the retainers and springs. Compress the springs and secure with new spring retaining clips. Screw the balls onto the gear shift levers.

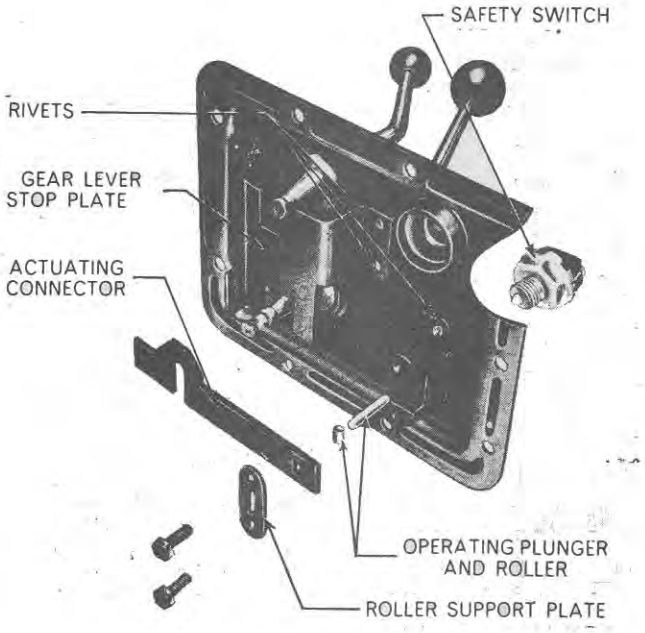

Figure 3
Safety Switch Operating Components

2. Screw the safety switch into the switch retainer. Position the safety switch actuating connector and install the plunger, operating roller and roller retaining plate, Figure 3. Screw in the two self-locking retaining bolts.

© FORD MOTOR COMPANY LTD. 1964

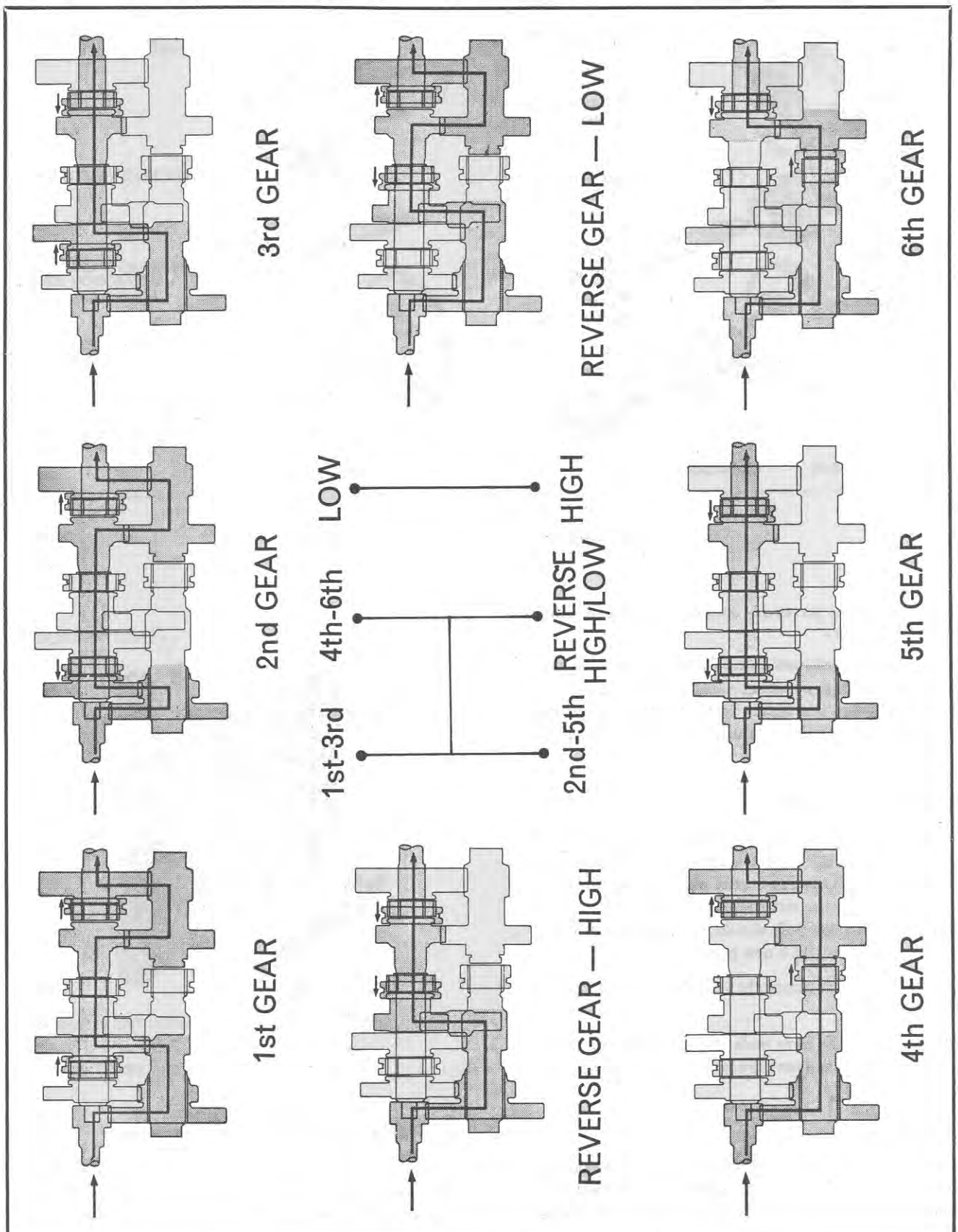

Figure 4
Power Flow and Shift Pattern Diagrams

Tighten the bolts to the specified torque. (See Specifications, Chapter 2.)

3. Using a new gasket, position the gear shift lever and cover assembly and screw in the nine retaining bolts and spring washers. Tighten the bolts to the specified torque. (See Specification, Chapter 2.) Reconnect the wires to the safety switch and install the rubber cover.

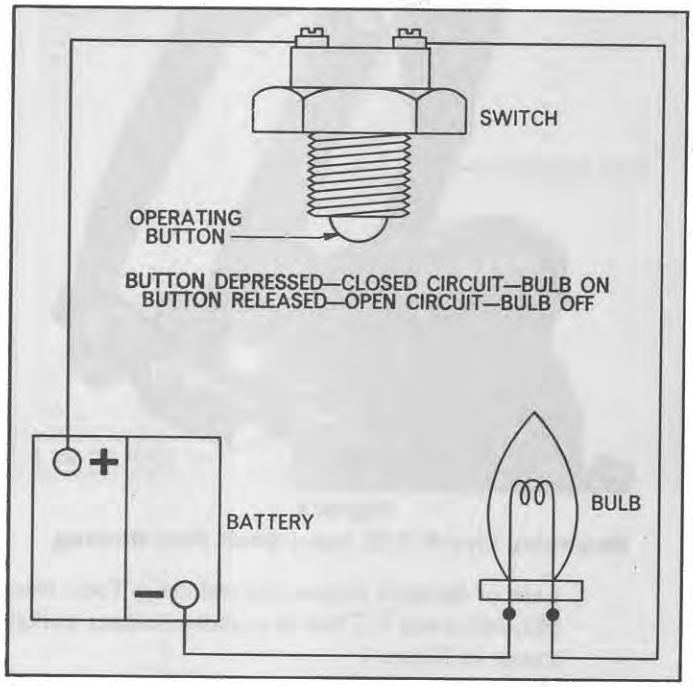

Figure 5
Safety Switch Test Circuit

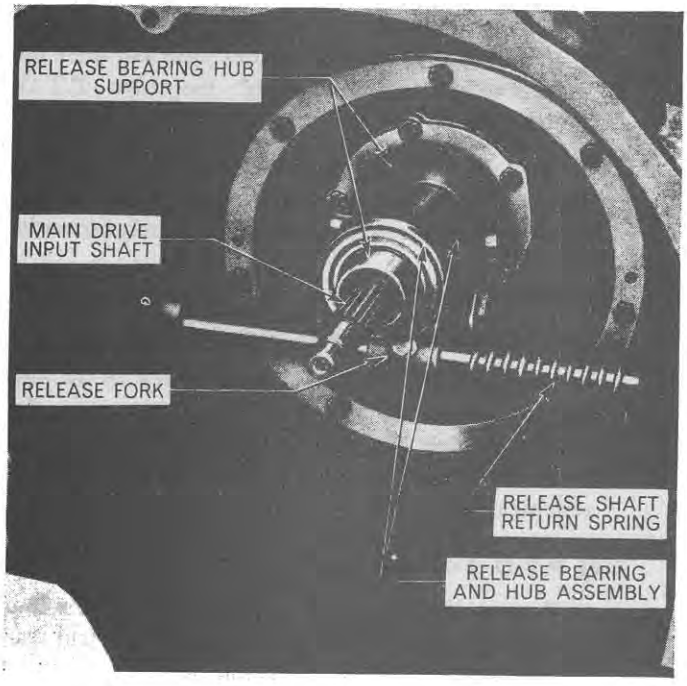

Figure 6
Clutch Operating Linkage

3. FRONT END OVERHAUL

A. Disassembly

1. Remove the plug, Figure 13, and drain the transmission oil.
2. Separate the engine and front axle assembly from the transmission (See Part 15).
3. Remove the clevis pin securing the clutch release rod clevis to the clutch release shaft arm.
4. Lever the release shaft return spring off the cast lug on the inside of the front end of the transmission housing, Figure 6.
5. Unscrew the self-locking nut from the bolt securing the clutch release fork to the release shaft and withdraw the shaft from the housing.
6. Remove the release fork and return spring followed by the release bearing and hub assembly.
7. Remove the five bolts retaining the clutch release bearing hub support and remove the hub support assembly.

Live P.T.O. Transmission

Remove the Live P.T.O. input shaft and release bearing hub support as an assembly.

8. Remove the seven self-locking retaining bolts and withdraw the front support plate.

Live P.T.O. Transmission

a. As the front bearing on the Live P.T.O. countershaft is housed in the bottom of the plate, take care to withdraw the plate squarely.

b. Use Tools Nos. T.7072 and T.7077, Figure 14(A), or Tools Nos. SW.501 and SW.501-2, Figure14 (B), to remove the Live P.T.O. countershaft front bearing.

© FORD MOTOR COMPANY

c. Refer to Part 15 to separate the transmission from the rear axle assembly.

d. Remove the snap ring from the rear of the Live P.T.O. countershaft and slide off the coupling sleeve.

e. Remove the snap ring retaining the Live P.T.O. countershaft to the rear support plate and drive the countershaft rearward until the Live P.T.O. countershaft gear can be removed at the front.

9. Remove the snap ring retaining the main drive input shaft and bearing assembly in the transmission casing, and withdraw the shaft and bearing assembly forwards.

B. Inspection and Repair

Clutch Release Bearing Hub Support Assembly

1. Inspect the main drive input shaft oil seal in the hub support for wear or damage. If necessary remove the seal using Tools Nos. 943, 943-S and F.T.943, Figure 7. Install a new seal using Tool No. 630-9 and a suitable driver.

Live P.T.O. Transmission

a. Remove the large snap ring at the rear of the hub support and drive the P.T.O. input shaft and rear bearing assembly out of the hub support.

b. Inspect the rear oil seal in the hub support and if worn or damaged remove the seal using Tools Nos. 943, 943-S and F.T.943 in a similar manner to that shown in Figure 7.

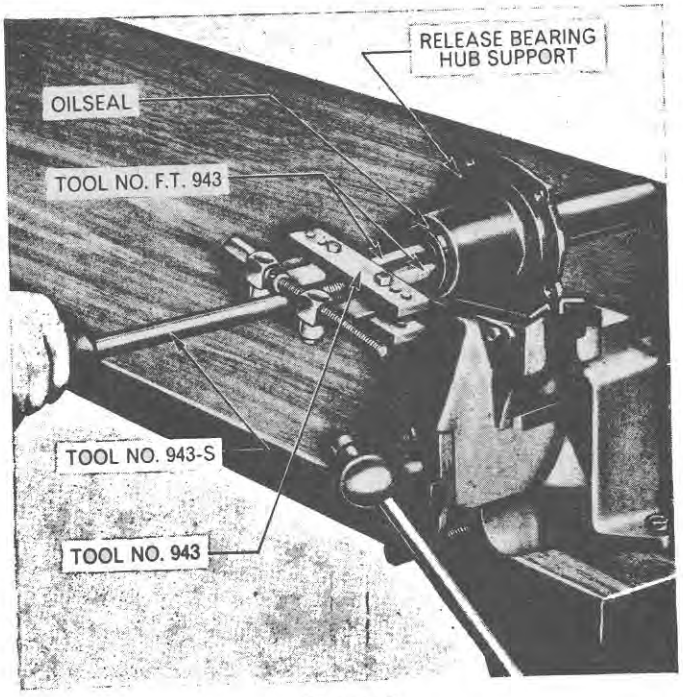

Figure 7
Removing Input Shaft Oil Seal (Trans. P.T.O.)

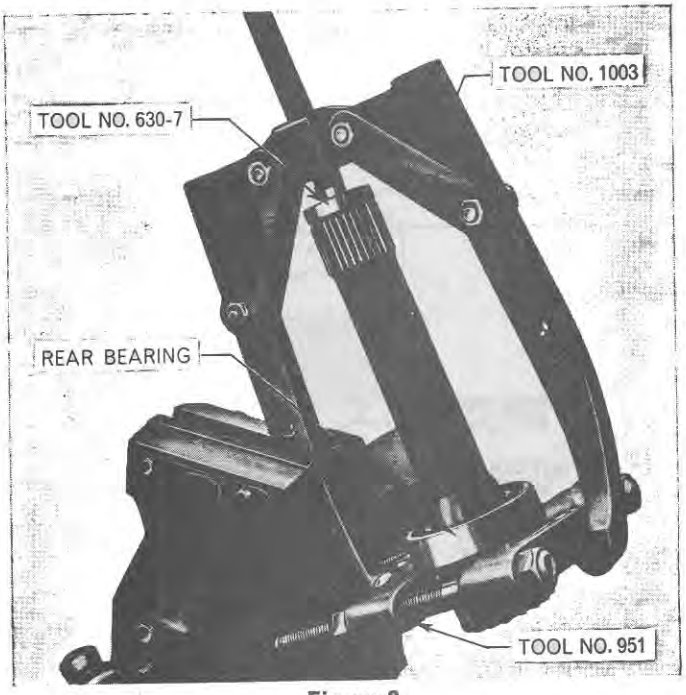

Figure 8
Removing Live P.T.O. Input Shaft Rear Bearing

c. Lightly grease the new seal and install making sure that the sealing lip faces to the rear. Tool No. 630-15 reversed will provide a suitable flat surface to locate against the seal when driving it into position.

d. Inspect the gear teeth and the oil seal journals on the Live P.T.O. input shaft for damage or excessive wear and check the rear bearing for wear or damage. If necessary, remove the snap ring from the shaft and withdraw the rear bearing using Tools Nos. 1003, 951 and 630-7, Figure 8.

e. Install the bearing onto the shaft using Tools Nos. 1003, 951, 630-4 and 625-3. Secure the bearing to the shaft with the appropriate snap ring.

f. If necessary, remove the front oil seal and needle roller bearing from the Live P.T.O. input shaft, withdrawing seal and bearing in one operation, using Tools Nos. 954 and 955-14, Figure 9.

g. When installing a new needle roller bearing, make sure that the manufacturers name, which is stamped on the bearing shell, faces outwards. Use Tool No. 630-3 with a hammer and drift to drive the bearing into the input shaft. Make sure the bearing seats against the shoulder in the bore of the input shaft. Lightly grease the oil seal and locate it on the spigot of Tool No. 630-4. Use a hammer and small punch

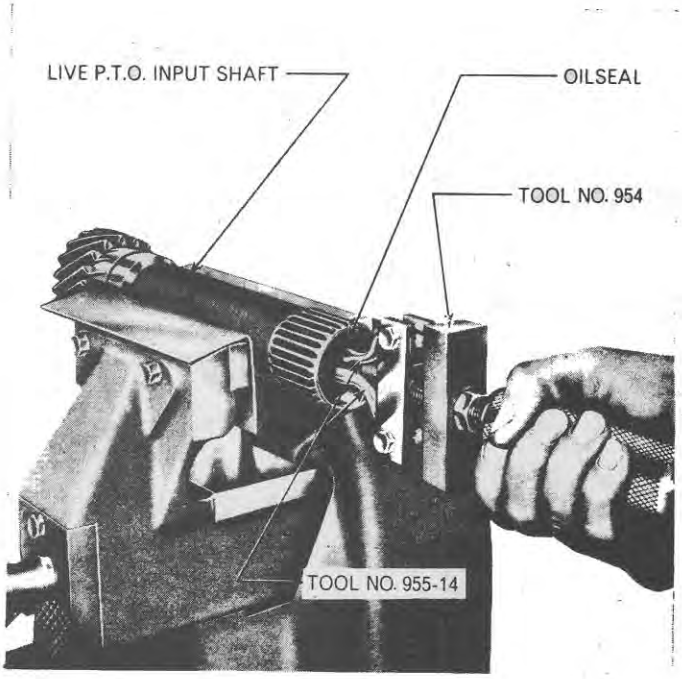

Figure 9
Removing Live P.T.O. Input Shaft Front Oil Seal and Roller Bearing

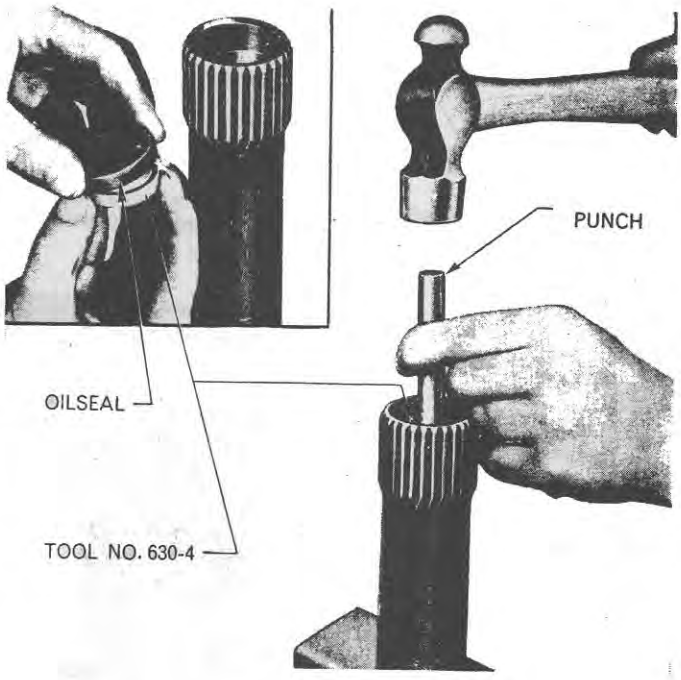

Figure 10
Installing Live P.T.O. Input Shaft Front Oil Seal

to punch the seal into position against the shoulder in the shaft, Figure 10.

NOTE: ***Make sure that Tool No. 630-4 is free from burrs or sharp edges to avoid damage to the seal.***

h. Drive the Live P.T.O. input shaft and bearing assembly into the hub support and secure with the appropriate snap ring.

Main Drive Input Shaft Assembly

1. Remove the needle roller bearing, which is a loose fit in the bore at the gear end of the input shaft, Figure 11. Check the bearing and the bore in the shaft for wear and install new parts if necessary.

2. Inspect the oil seal journals and the gear teeth of the shaft for excessive wear or damage. Check the ball bearings for wear or damage. If necessary, remove the snap ring and draw the bearing off the shaft using Tools Nos. 952, 930B, 930E, 938, P61 and 924, Figure 12.

NOTE: ***If a hydraulic press is available, only Tool No. 952 is required.***

Press the bearing onto the shaft using tools 952, 1002 and 630-5 until it is seated firmly against the gear. Secure with the appropriate snap ring.

Clutch Operating Components

1. Inspect the release bearing and hub, the release fork, the return spring, and the release shaft and bushings, and if any part requires servicing, refer to Part 4, Clutches.

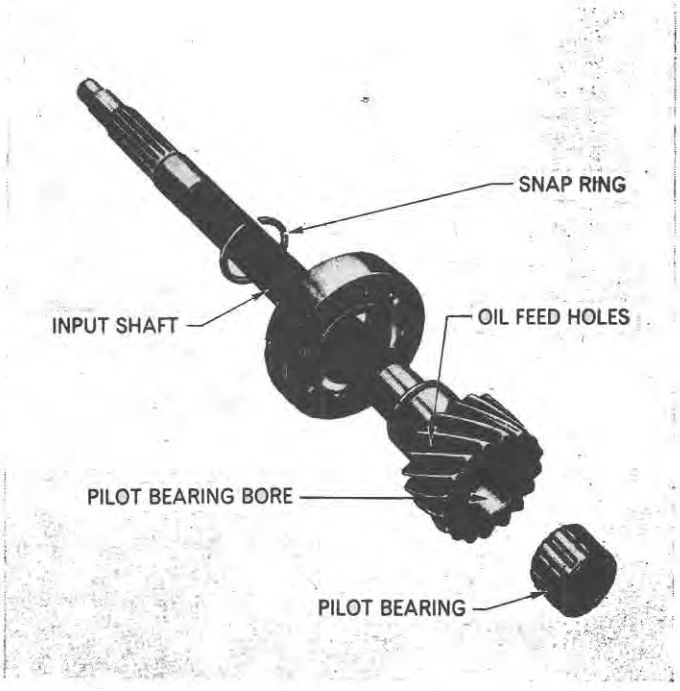

Figure 11
Main Drive Input Shaft Components

© FORD MOTOR COMPANY 1964

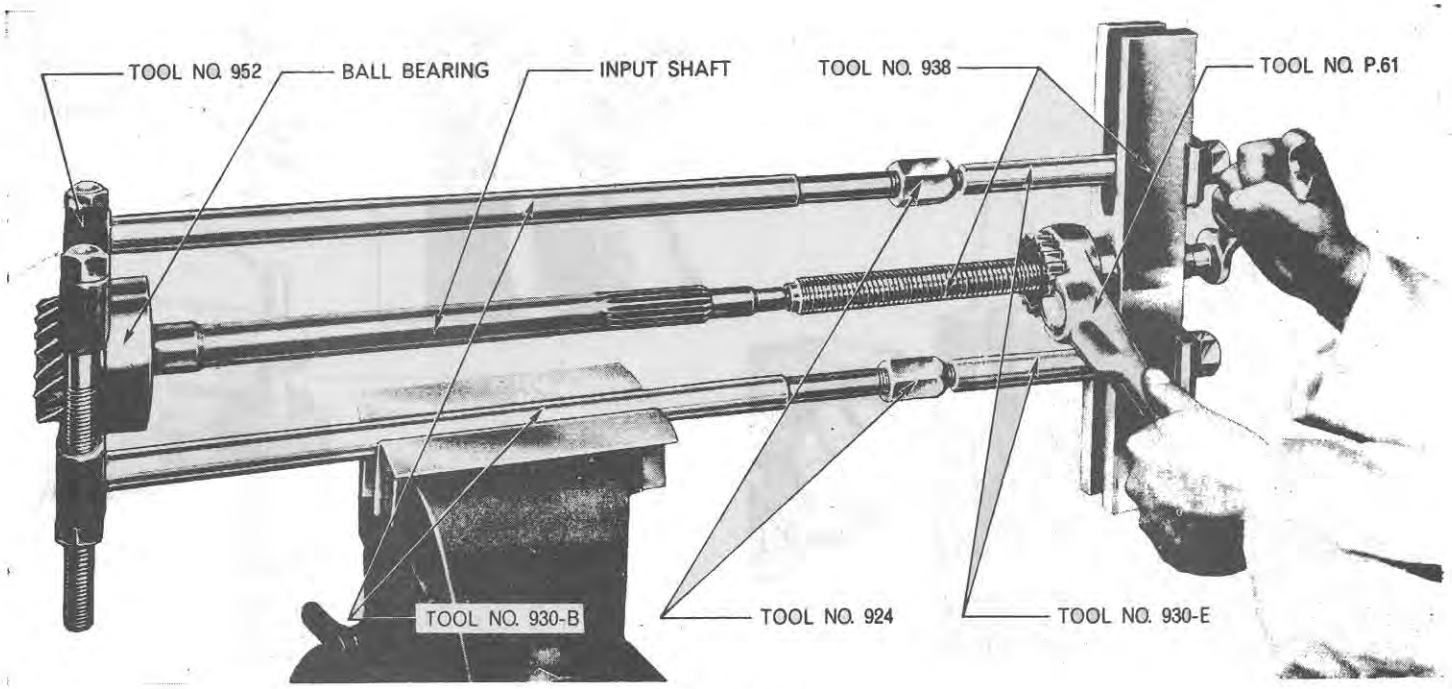

Figure 12
Removing Main Drive Input Shaft Rear Bearing

C. Assembly

1. Install the main drive input shaft and bearing assembly in the transmission case and secure with the appropriate snap ring.

Live P.T.O. Transmission

a. Position the Live P.T.O. countershaft gear in the front compartment, and push the countershaft forward to engage in the splines of the gear.

b. Protect the spigot at the rear of the P.T.O. Countershaft and drive it into the rear support plate. Secure the P.T.O. countershaft rear bearing to the rear support plate with the appropriate snap ring.

c. Use a convenient length sleeve 1 in (25.4 mm) I.D. and $1\frac{3}{8}$ in (34·9 mm) O.D. to drive the Live P.T.O. countershaft front bearing into position against the gear.

2. Using a new gasket, position the support plate into the transmission case and screw in the seven self-locking bolts. Tighten the bolts to the specified torque. (See Specifications, Chapter 2.)

Live P.T.O. Transmission

Proceed as described in Step 2 above, but note the front support plate houses the P.T.O. countershaft front bearing and therefore must be tapped in a sufficient amount at the bottom to allow the seven retaining bolts to be screwed in. The plate may then be drawn evenly into position by tightening these bolts a little at a time.

3. Position a new gasket on the release bearing hub support then slide the support assembly over the main drive input shaft, taking care not to damage the oil seal. Screw in the five retaining bolts and tighten to the specified torque. (See Specifications, Chapter 2.)

Live P.T.O. Transmission

Locate a new gasket on the clutch release bearing hub support, slide the P.T.O. input shaft and hub support assembly over the main drive shaft and secure to the front support plate in a similar manner to that detailed in Step 3.

4. Position the clutch release bearing and hub assembly on the release bearing hub support.

5. Pass the release shaft through the left hand side bushing in the transmission case enough to install the release shaft return spring, Figure 6.

6. Locate the release fork arms in the slots in the release bearing hub, then push the release shaft through the bore in the fork. Install the bolt and locknut to secure the fork to the shaft, and tighten to the specified torque. (See Specifications, Chapter 2.)

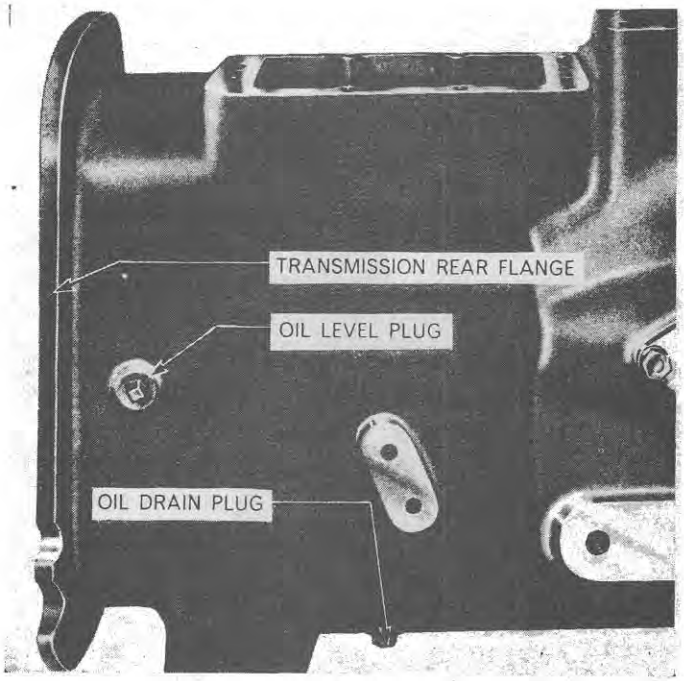

Figure 13
Level Plug and Drain Plug

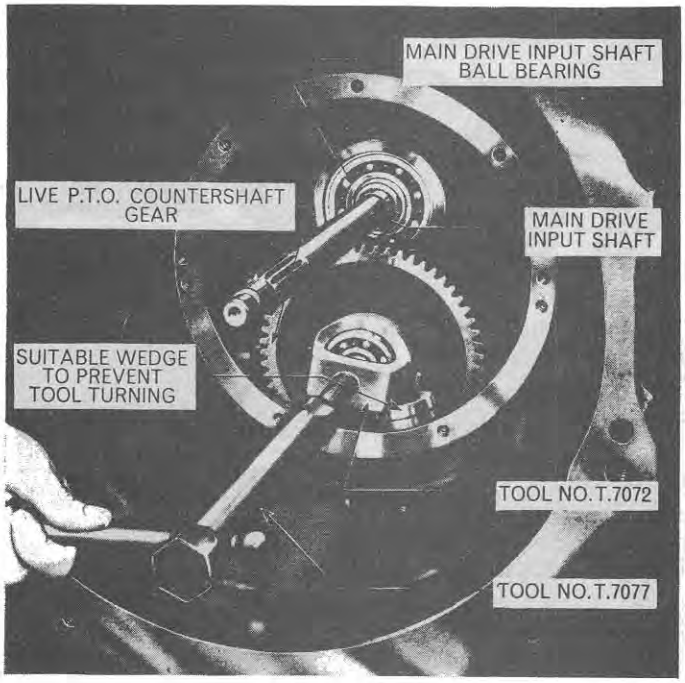

Figure 14(A)
Removing Live P.T.O. Countershaft Front Bearing

7. Place the outer end of the return spring on the lug cast on the inside of the transmission housing and lever the other end onto the web of the release fork, Figure 6.

NOTE: ***Make sure the release fork is not binding in the slots in the release bearing hub.***

8. Join the engine and front axle assembly to the transmission (See Part 15).

9. Install the drain plug and remove the transmission level plug, Figure 13. Fill the transmission to the level plug hole with oil of the specified grade (See Specifications, Chapter 2). Install and tighten the level plug.

4. REAR END OVERHAUL

A. Disassembly

1. Separate the tractor at the transmission to rear axle centre housing flange (See Part 15).

Live P.T.O. Transmission

a. Suitably support the transmission assembly and separate the tractor at the transmission to engine flange (See Part 15).

b. Remove the clutch release bearing and hub, fork, spring, release shaft, hub support and front support plate as detailed in Section 3A.

c. Remove the P.T.O. countershaft front bearing using Tools Nos. T.7072 and T.7077, or Tools Nos. SW.501 and SW.501-2, Figures 14(A) and (B). Make sure that the sliding pegs of Tool No. T.7072 locate in the clearance slots in the P.T.O. countershaft gear, Figure 14.

2. Remove the snap ring and coupling sleeve from the rear of the P.T.O. countershaft, then remove the locking wire and the ten bolts securing the rear support plate.

3. Remove the rear support plate and P.T.O. countershaft as an assembly, Figure 16.

NOTE: ***The plate may be a tight fit on its dowelled location on the rear face of the transmission, in which case it will be necessary to lever it away.***

Live P.T.O. Transmission

Support the Live P.T.O. countershaft gear, and drive the countershaft rearwards until the rear support plate assembly is free from its dowelled location in the housing. Remove the Live P.T.O. countershaft gear, then withdraw completely the rear support plate and Live P.T.O. countershaft as

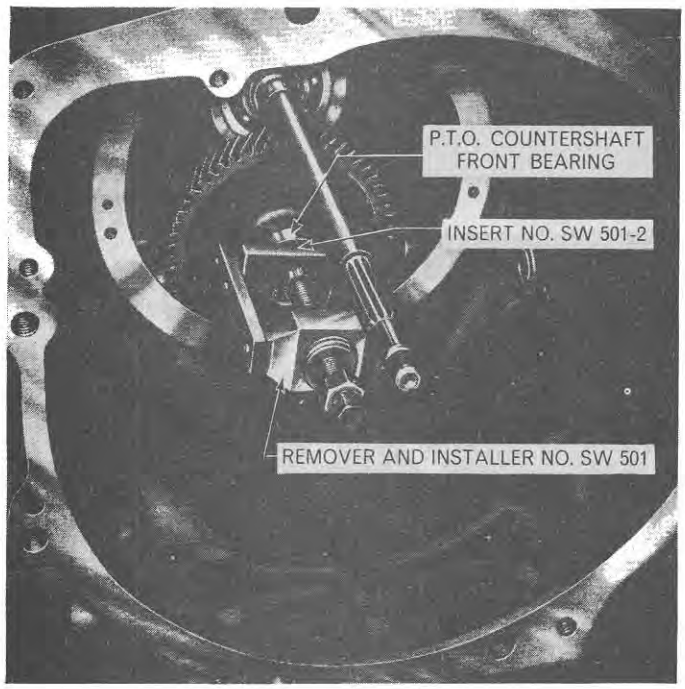

Figure 14(B)
Removing P.T.O. Countershaft Front Bearing

an assembly, as indicated in Step 3 above.

4. Partially withdraw the secondary countershaft assembly until the front bearing is out of its location. Rest the assembly on the bottom of the rear compartment and withdraw the output shaft immediately above it. The secondary countershaft assembly can then be lifted out, Figure 15.

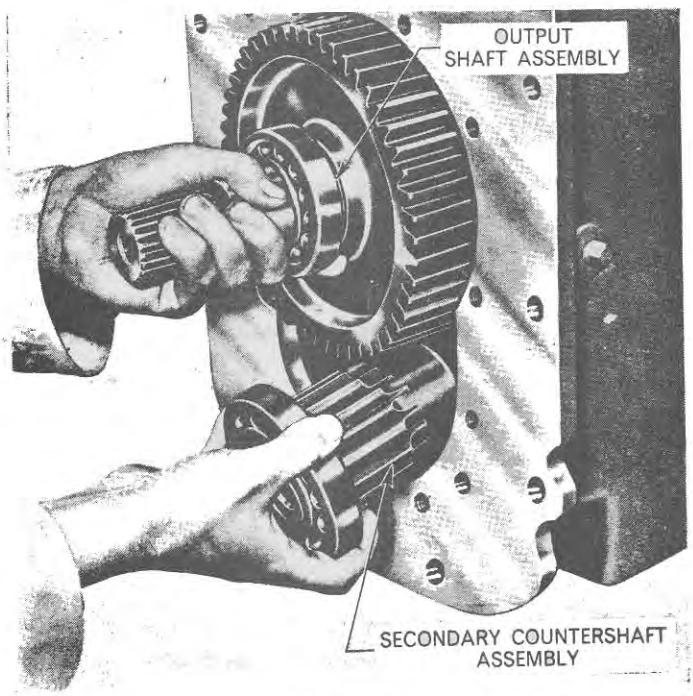

Figure 15
Removing Output Shaft

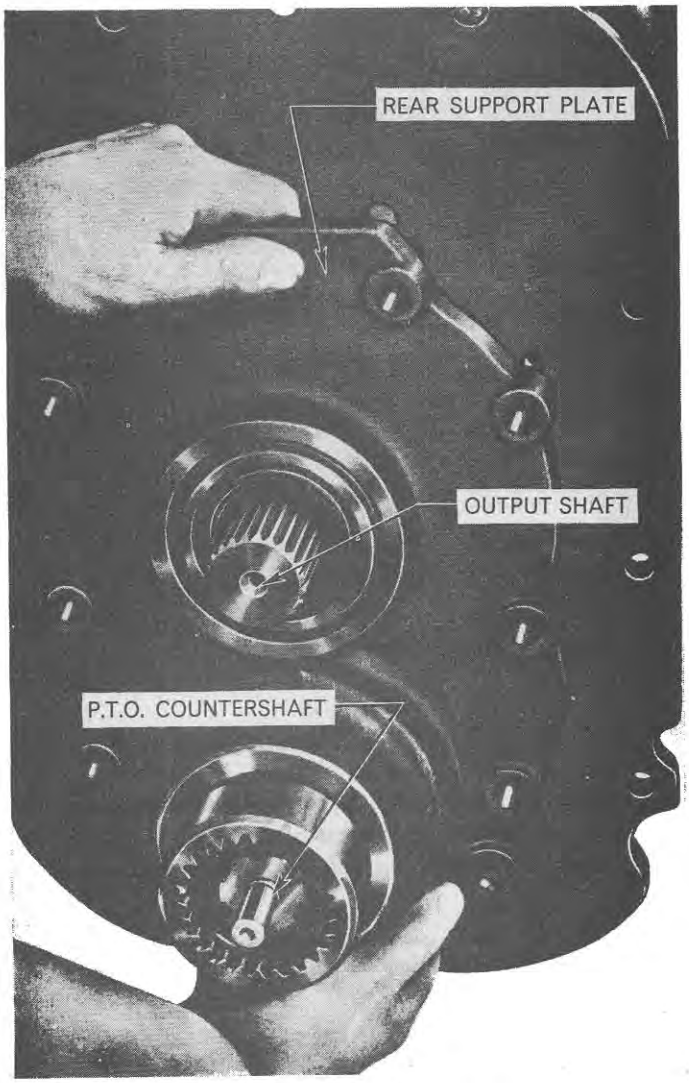

Figure 16
Removing Rear Support Plate

5. Remove the High/Low sliding coupling from the rear of the mainshaft, Figure 17.

B. Inspection and Repair

P.T.O. Countershaft Assembly

1. Remove the snap ring retaining the P.T.O. countershaft rear bearing and push the shaft and rear bearing rearwards out of the support plate.
2. Inspect the countershaft and the rear bearing and, if necessary, pull the bearing off the shaft using Tools Nos. 1002, 951 and 625-6, Figure 18.

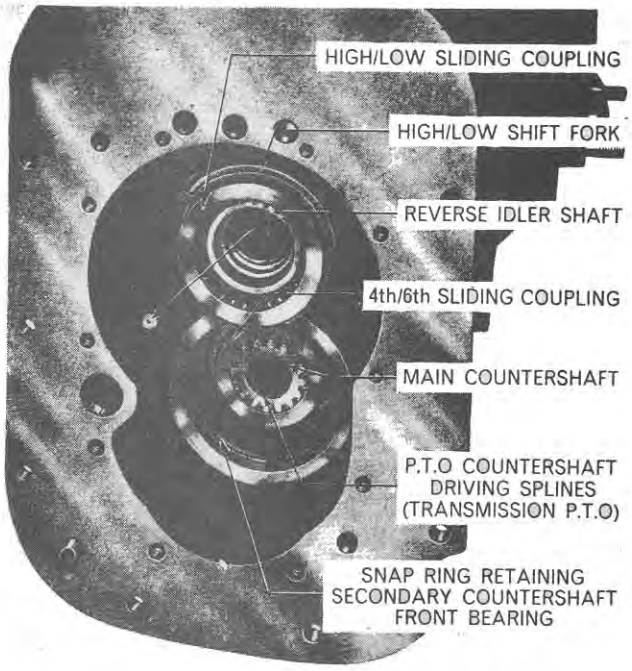

Figure 17
Transmission Rear Compartment

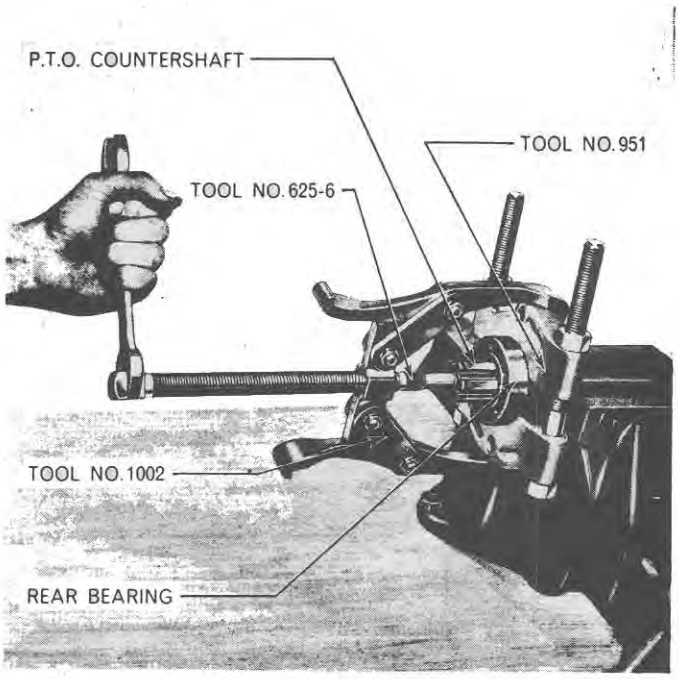

Figure 18
Removing P.T.O. Countershaft Rear Bearing

3. Drive a new rear bearing onto the P.T.O. countershaft using a convenient length sleeve $1\frac{7}{16}$ in (36·5 mm) I.D. and $1\frac{3}{4}$ in (44·4 mm) O.D. and a hammer, Figure 19.
4. Inspect the Live P.T.O. countershaft gear and front bearing and, if necessary, install new parts.

Rear Support Plate

1. Inspect the rear support plate for distortion, cracks or other damage, and if necessary use a new part on assembly.
2. Inspect the P.T.O. countershaft oil seal in the rear support plate and if necessary remove the snap ring, and drive the seal forwards out of the plate with a suitable drift. Assemble a new oil seal to the rear support plate using Tool No. 630-13 with a suitable driver and secure with the appropriate snap ring.
3. Inspect the output shaft oil seal and if necessary drive the seal from the rear support plate using a suitable drift. Assemble a new output shaft oil seal using Tool No. 630-16 and a suitable driver.

NOTE: ***Make sure that the sealing lips on both oil seals are lightly greased before assembly.***

Output Shaft Assembly

1. Inspect the output shaft rear bearing and, if necessary, draw off the output shaft gear, thrust washer, rear bearing and oil seal sleeve in one operation using Tools Nos. 1003 and 625-1, Figure 21.

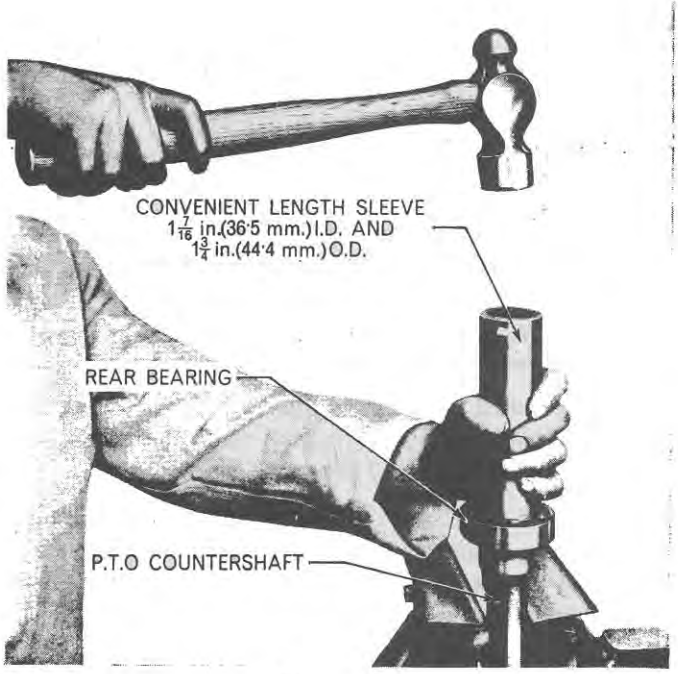

Figure 19
Installing P.T.O. Countershaft Rear Bearing

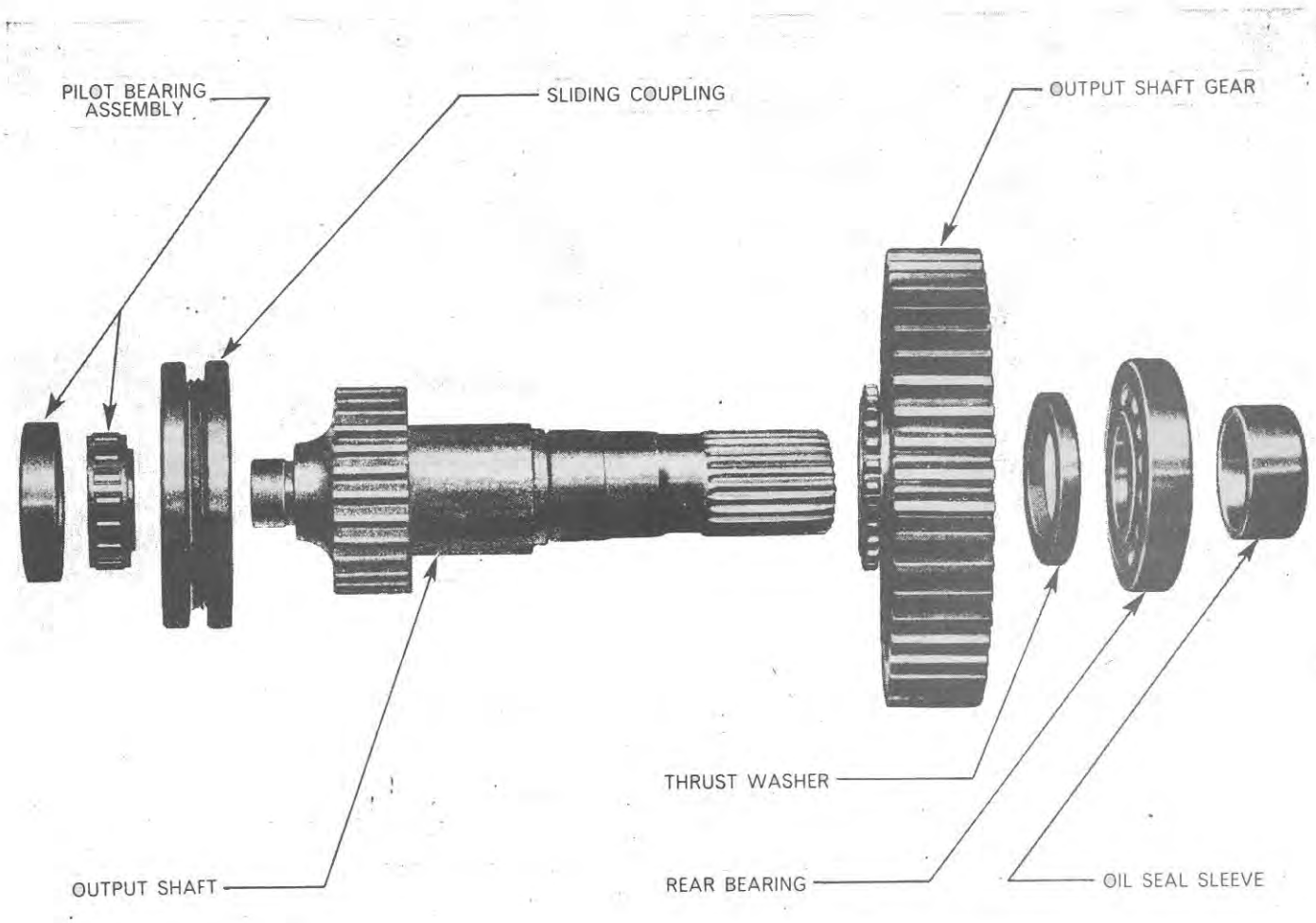

Figure 20
Exploded view of Output Shaft Components

2. Inspect the bushing in the output shaft gear, and the location on the output shaft where the gear runs. Mate the shaft and gear and check for free play. Replace any damaged or worn parts (See Note below).

   NOTE: ***The output shaft gear and bush, and also the output shaft and sliding coupling, are serviced as matched assemblies.***

3. The output shaft oil seal sleeve, Figure 20, should be examined and, unless in good condition, a new part installed. (See Step 5 below.)

4. Inspect the High/Low sliding coupling, and the connecting splines on the output shaft, for wear or damage and install a new shaft and coupling (matched) assembly if required.

5. Position the output shaft gear on the shaft so that the dog-teeth on the gear adjoin the dog-teeth integral with the shaft, Figure 20. Assemble the thrust washer, aligning the flats on the washer with the flats on the shaft, and install the rear bearing and the oil seal sleeve, making sure the chamfered end of the sleeve faces away from the bearing. Draw the bearing and oil seal sleeve into position using Tools Nos. 1003, 952, 625-2, Figure 22.

6. Inspect the output shaft pilot bearing and if necessary remove the pilot bearing from the output shaft using Tools Nos. 1002, 951 and 625-2, Figure 23.

   NOTE: ***In order to obtain sufficient grip on the pilot bearing inner track, the rollers can be easily pulled from the bearing inner track assembly using a pair of pliers. Tool No. 951 is then mounted on the inner track groove. (See Figure 23).***

7. Drive a new pilot bearing inner track assembly into position on the output shaft using a sleeve, 1 in (25·4 mm) I.D. and $1\frac{3}{8}$ in (34·9 mm) O.D. of con-

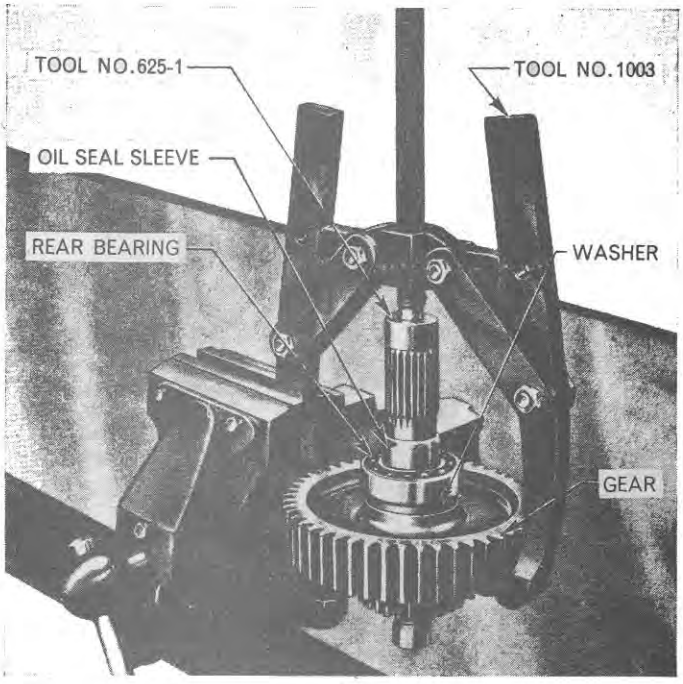

Figure 21
Removing Output Shaft Rear Bearing and Oil Seal Sleeve

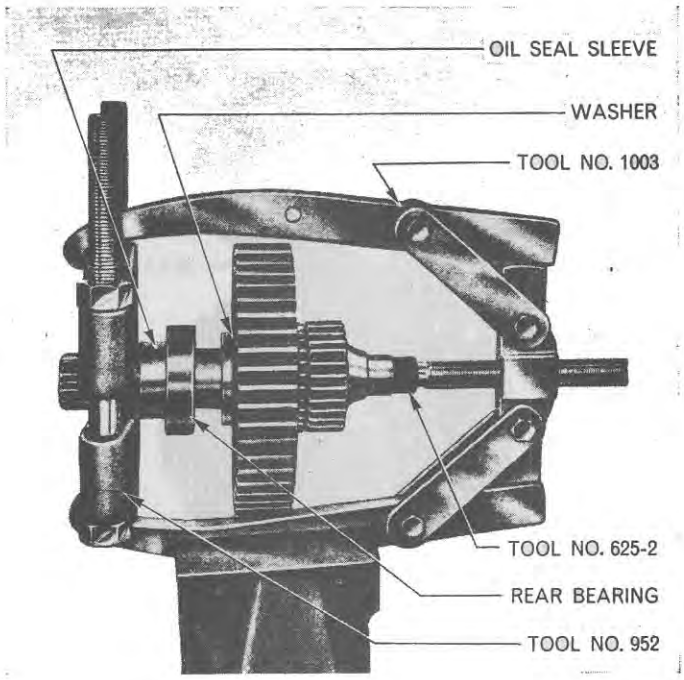

Figure 22
Installing Output Shaft Rear Bearing and Oil Seal Sleeve

venient length, and a hammer.

NOTE: ***If a new pilot bearing inner track and roller assembly is installed, a new outer track must be installed in the mainshaft, as inner and outer tracks are serviced as a matched assembly.***

Secondary Countershaft Assembly

1. Inspect the secondary countershaft rear bearing and if necessary remove using Tools Nos. 1003, 951, 630-5 and 625-2. Use the same tools to install the new bearing.
2. Similarly inspect the secondary countershaft front bearing and, if necessary, remove using Tools Nos. 1003, 951, 630-5, 625-2 and two pieces of steel rod $\frac{3}{16}$ in (4·8 mm) diameter and 2 in (50·8 mm) long. The two pieces of steel rod are inserted through the driving holes in the gear, Figure 24, to contact the bearing. The assembly is then mounted in the tools indicated above, so that the rods push the bearing off, Figure 25. Use the same tools as in Step 1 above to install the new front bearing.

C. Assembly

NOTE: ***Bearings, bushings, and all sliding surfaces should be lightly lubricated on assembly.***

1. Make certain that the High/Low sliding coupling is engaging the dog-teeth on the rear of the mainshaft and that the High/Low shift fork is located in the groove of the 4th/6th sliding coupling, Figure 17.

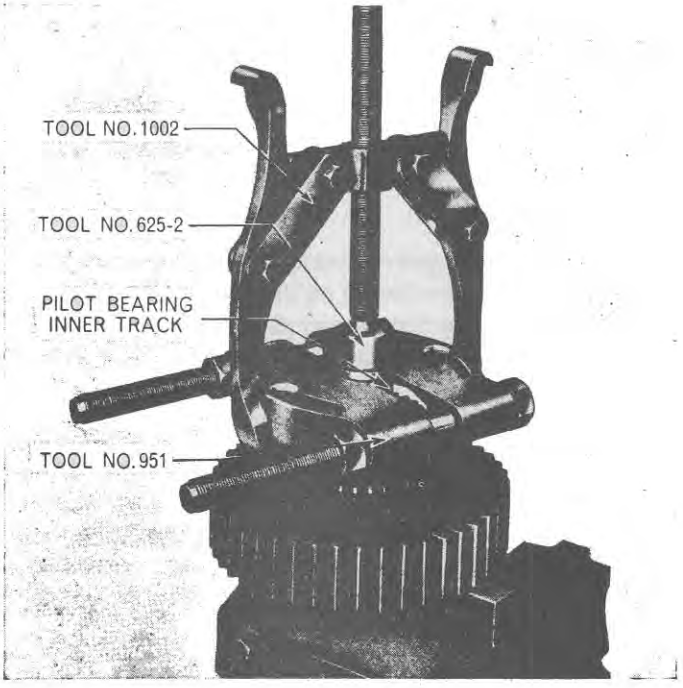

Figure 23
Removing Output Shaft Pilot Bearing



Figure 24
Positioning Steel Rods in Secondary Countershaft

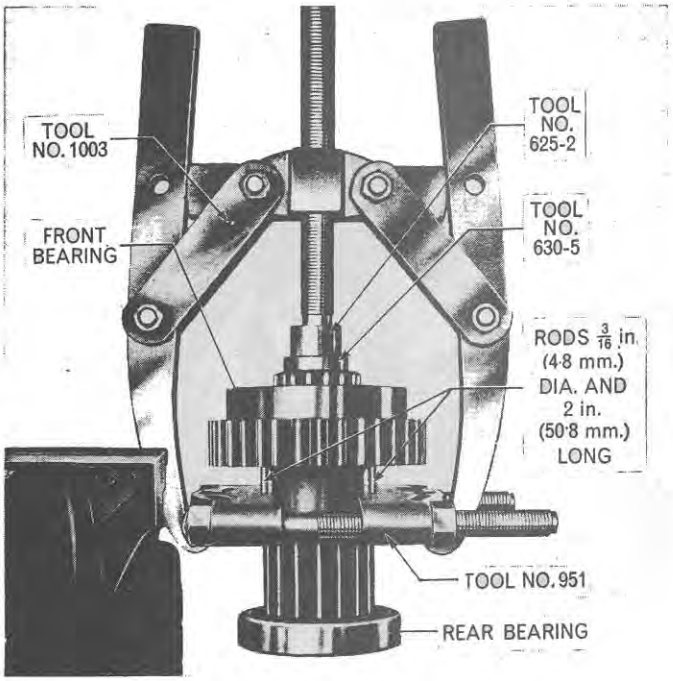

Figure 25
Removing Secondary Countershaft Front Bearing

2. Make sure the snap ring, located immediately in front of the secondary countershaft front bearing in the transmission case, Figure 17, is in position before proceeding.
3. Place the secondary countershaft assembly in its approximate location, but resting on the bottom of the compartment.
4. Locate the output shaft and push it into position.
5. Tap the secondary countershaft forward squarely until the front bearing is felt to seat on the snap ring in the transmission case.
6. Using a new gasket, locate the rear support plate, aligning the two dowels on the rear face of the transmission and tap the support plate into position. Install the ten retaining bolts and tighten to the specified torque (See Specifications, Chapter 2 of this Part) and secure with suitable locking wire.
7. Pass the P.T.O. countershaft and bearing assembly through the secondary countershaft and locate it in the splines in the main countershaft. Protect the spigot with a suitable sleeve and tap the P.T.O. countershaft and bearing into the rear support plate and secure with the appropriate snap ring.

Live P.T.O. Transmission

a. The P.T.O. countershaft gear (which is splined onto the front of the Live P.T.O. countershaft) must be placed in position in the front compartment, and the Live P.T.O. countershaft pushed through the rear to engage the splines in this gear, Figure 3. Install the retaining snap ring in the rear support plate.

NOTE: ***If a new Live P.T.O. countershaft gear is being installed the small thrust washer and snap ring must be positioned inside the hub at the front of the gear prior to installation.***

b. Using a sleeve 1 in (25·4 mm) I.D. and 1⅜ in (34·9 mm) O.D. of convenient length, drive the front bearing onto the Live P.T.O. countershaft to seat firmly against the countershaft gear.

8. Install the P.T.O. coupling sleeve onto the rear of the P.T.O. countershaft and secure with the appropriate snap ring.
9. Refer to Part 15, for instructions for joining the tractor at the transmission to rear axle centre housing flange.

Live P.T.O. Transmission

a. See Section 3C for instructions for installing the front support plate, the release bearing hub support, the release bearing and hub assembly, the release fork, return spring, release shaft, and release rod.

b. See Part 15 for instructions on rejoining the tractor at the transmission to engine flange.

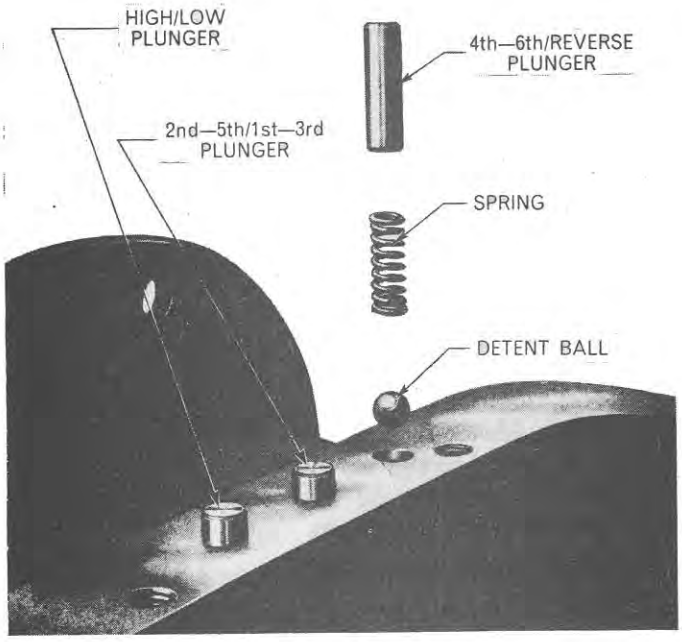

Figure 26
Detent Plungers, Spring and Ball

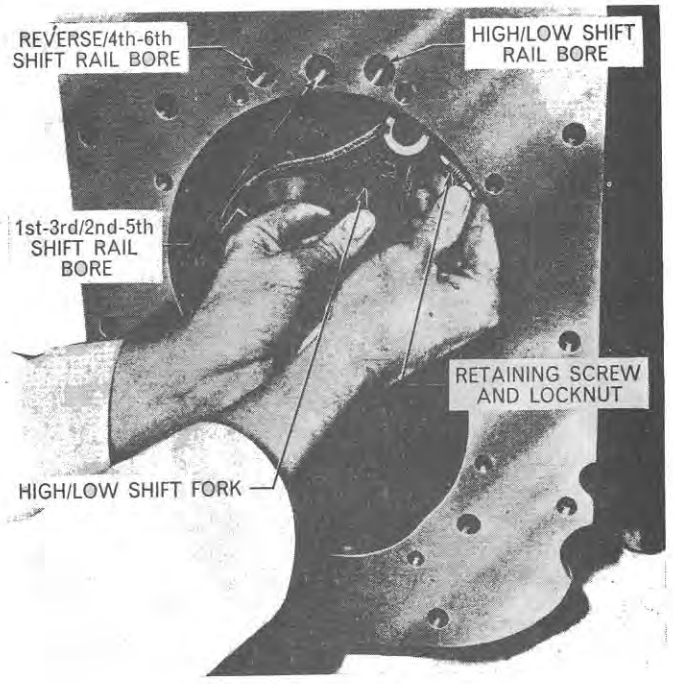

Figure 27
Removing/Installing High/Low Shift Fork

5. COMPLETE OVERHAUL

A. Disassembly

1. Refer to Part 15 for separating the tractor at the engine and at the rear axle, thus removing the transmission as an assembly.
2. Refer to Section 2A of this Part for removing the gear shift levers and cover assembly.
3. Refer to Section 3A for removing the clutch operating components, the clutch release hub support and the front support plate.
4. Refer to Section 4A for removing the rear support plate assembly, the secondary countershaft, and the output shaft.

Gear Shift Mechanism

1. Extract the three shift rail plungers and springs from their bores, Figure 26. Pull the High/Low shift fork rearward and remove the sliding coupling. Loosen the locknut, remove the screw retaining the High/Low fork, Figure 27, and remove the fork to the rear. Rotate the High/Low rail until the screw and locknut retaining the shift connector are uppermost. Loosen the locknut, remove the screw and slide the rail out to the rear, removing the shift connector.

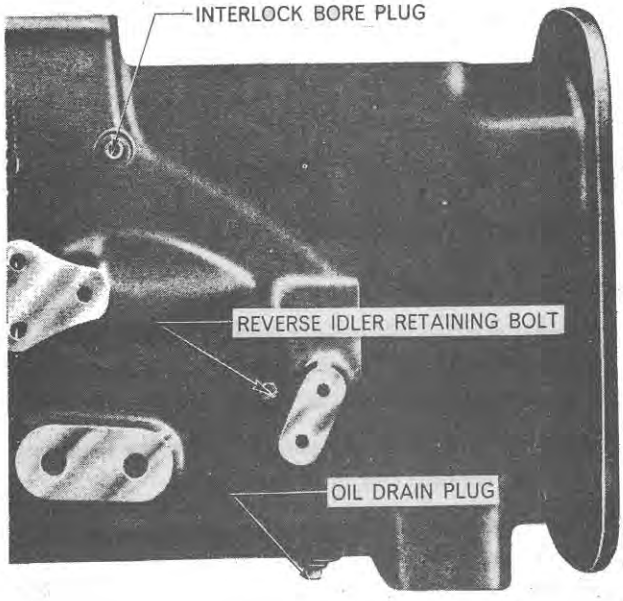

Figure 28
Left-hand side of Transmission

© FORD MOTOR COMPANY LTD., 1964



Figure 29
Mainshaft Rear Bearing Retaining Plate

NOTE: ***As each shift rail is removed, be sure that each of the three shift rail detent balls is collected from the rail support bores.***

2. Loosen the locknuts and remove the retaining screws from the remaining shift forks and connectors. Remove the forks and connectors as each rail is withdrawn rearwards.

NOTE: ***The 4th/6th shift fork is removed at a later operation due to its inaccessibility at this stage.***

3. If necessary extract the screwed plug from the left-hand side of the transmission case, Figure 28, and remove the interlock plunger from the bore.

Mainshaft Assembly

1. Remove the two self-locking bolts, Figure 29, holding the mainshaft rear bearing retaining plate onto the transmission case, and remove the retaining plate.
2. Using suitable snap ring pliers, remove the snap ring from the forward end of the mainshaft.
3. Withdraw the mainshaft rearwards removing the gears, sliding couplings, connectors and thrust washers one by one.

NOTE: ***Keep the respective sliding couplings and connectors in pairs, as they are matched assemblies.***

Reverse Idler Assembly

1. Unscrew the reverse idler shaft retaining screw situated on the outside of the transmission case, Figure 28. Push the idler shaft forwards and lift out the 4th/6th shift fork.
2. Withdraw the 4th/6th coupling to the rear. Push the reverse idler shaft out to the rear, and lift out the reverse idler gear.

Main Countershaft Assembly

1. Remove the snap ring, retaining the main countershaft rear bearing, from the transmission case. Using Tool No. 630-4 (or 630-5 for Live P.T.O. Transmissions) and a suitable drift, drive the countershaft rearwards until both bearings are out of their locations in the transmission case and the assembly is loose in the bottom of the transmission.
2. Place suitable wooden blocks behind the cluster gear so that the shaft can be driven rearwards through the cluster gear and front bearing. Withdraw the countershaft through the rear compartment and remove the cluster gear and front bearing from the main transmission compartment.

B. Inspection and Repair

Transmission Case

1. When the transmission has been completely disassembled, the case should be thoroughly cleaned inside to prevent small particles of metal or dirt causing subsequent damage to bearings, oil seals, and gears.
2. Inspect the case for cracks or other damage and, if beyond repair, use a new case on assembly.

Mainshaft Assembly

1. The mainshaft should be carefully examined for excessive wear or damage, and if necessary a new part used on assembly.
2. The mainshaft gears must be checked for wear or chipping, and if necessary new gears used on assembly.
3. Inspect the reverse and the 1st-3rd/2nd-5th sliding couplings and connectors, making sure the couplings slide freely on the connectors. If installing new sliding couplings, or their respective connectors, make sure the couplings and connectors are installed as matched assemblies.
4. Examine the mainshaft rear ball bearing and if necessary, remove the two snap rings from the mainshaft and use Tools Nos. 1003, 951 and 625-2 to draw the bearing off, Figure 30.

5. Install a new mainshaft rear bearing using Tools Nos. 1003, 951 and 630-11. Position the snap ring to retain the ball bearing.

6. The output shaft pilot bearing outer track can be removed from the mainshaft by means of a hammer and a suitable small punch located in the two holes provided through the mainshaft gear.

   NOTE: ***The output shaft pilot bearing outer track cannot be removed from the mainshaft until the mainshaft rear bearing is drawn off. If a new outer track is installed the inner race on the output shaft must also be installed as the pilot bearing is serviced as a matched assembly.***

7. Press the output shaft pilot bearing outer track into the rear of the mainshaft using Tools Nos. 1002 and 630-8, Figure 31.

Main Countershaft

1. Examine the main countershaft for wear or damage and if necessary use a new part on assembly.

2. Examine the main countershaft rear bearing, and remove, if necessary, using Tools Nos. 1003, 952 and 630-4. Use Tools 952, 1003 and 630-5 to press on the new bearing.

Live P.T.O. Transmission

On Live P.T.O. transmissions the main countershaft is not internally splined and Tool No. 630-5 is more suitable than Tool No. 630-4 for removing the rear bearing in Step 2 above.

Reverse Idler Assembly

1. Mate the reverse idler shaft and gear and check for free play, also examine the teeth on the gear. If necessary, use new parts on assembly.

   NOTE: ***No attempt should be made to install the reverse idler gear bushing alone, as it is serviced as an assembly with the gear.***

Gear Shift Mechanism

1. Examine the shift forks and connectors for wear or distortion and use new parts, if necessary, on assembly.

2. Examine the detents on the gear shift rails for wear, and check the rails for straightness by rolling them on a flat surface. Renew any damaged parts on assembly.

3. Make sure the detent balls and plungers are not sticking in their bores. If necessary, use a fine abrasive paper to clean the plungers and balls. Lubricate the parts on assembly.

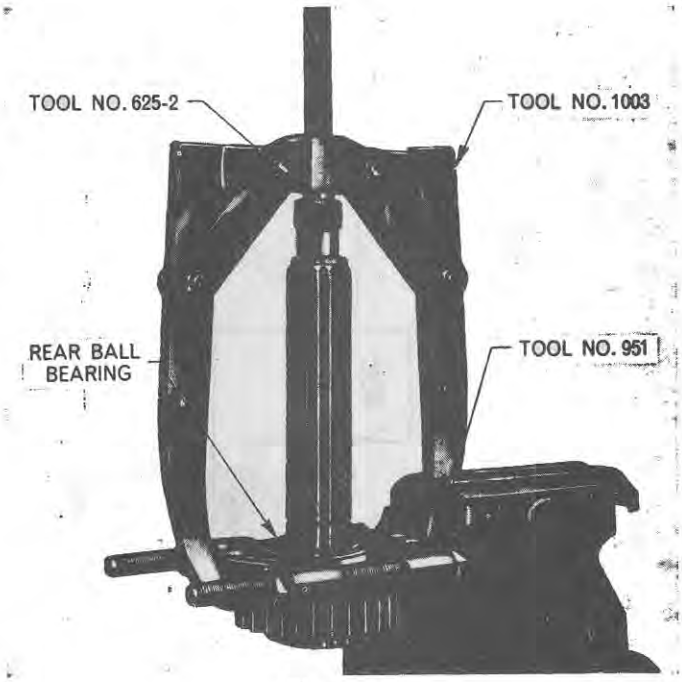

Figure 30
Removing Mainshaft Rear Bearing

C. Assembly

NOTE: ***Clean all components thoroughly in a gasoline or kerosene bath before installation. Bearings, bushings, and all sliding surfaces should be lightly lubricated on assembly.***

Main Countershaft

1. Tap the main countershaft front bearing into the transmission case to seat against the snap ring.

2. Rest the cluster gear in the bottom of the main compartment, with the large helical gear to the front.

3. Pass the main countershaft and rear bearing assembly in from the rear compartment to engage in the internal splines of the cluster gear.

4. Use Tool No. 630-4 (630-5 for Live P.T.O. Transmission) and a suitable drift and hammer to drive the main countershaft assembly forward into the front bearing. When in position, retain with the snap ring behind the rear bearing.

5. Install the 4th-6th coupling onto the rear of the main countershaft with the shift fork groove to the front, Figure 17.

Reverse Idler Assembly

1. Insert the reverse idler shaft through the rear compartment, larger diameter forward, into the main

© FORD MOTOR COMPANY LTD. 1964

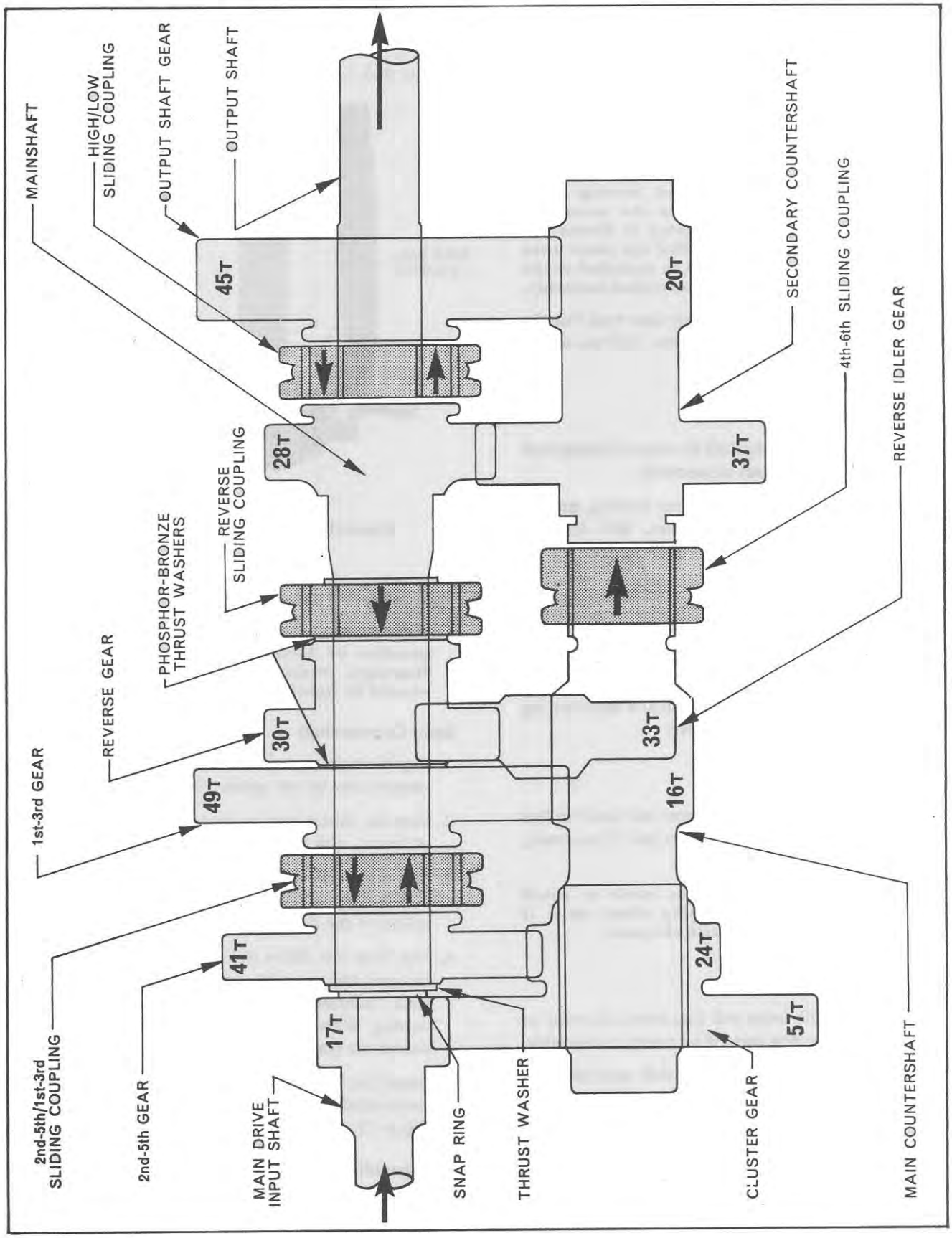

Figure 31
Gear Identification Diagram

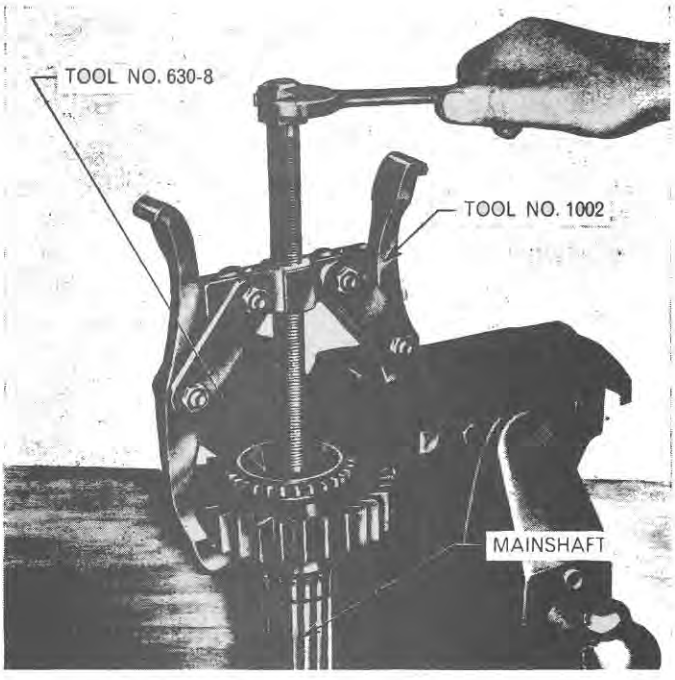

Figure 32
Installing Output Shaft Pilot Bearing Outer Track

compartment. Hold the reverse idler gear in position with the hub of the gear facing forward, and push the shaft through the gear.

2. Push the shaft forward enough to allow the 4th-6th shift fork to be mounted on the small diameter of the shaft, making sure the fork is located in the groove in the 4th/6th sliding coupling, Figure 17.
3. Secure the shaft with the retaining screw and rubber coated sealing washer located through the left-hand side of the transmission case, Figure 28.

Mainshaft Assembly

1. Pass the mainshaft through the rear compartment assembling the gears to the shaft in the following sequence, Figure 31.
   a. Snap ring.
   b. Reverse sliding coupling and connector assembly.
   c. Phosphor-bronze thrust washer.
   d. Reverse gear (dog-teeth rearward).
   e. Phosphor-bronze thrust washer.
   f. 1st-3rd gear (dog-teeth forward).
   g. 1st-3rd/2nd-5th sliding coupling and connector assembly.
   h. 2nd-5th gear (dog-teeth rearward).
   i. Thrust washer.
   j. Snap ring.
2. Position the mainshaft rear bearing retaining plate, secure with the two self-locking bolts, Figure 29, and tighten to the specified torque. (See Specifications, Chapter 2.)

Gear Shift Mechanism

1. If necessary, insert the interlock plunger into the bore on the left-hand side of the housing and replace the screwed plug, Figure 28.
2. Pass the 4th-6th shift rail into the shift rail bore on the left-hand side of the transmission face with the single detent to the front.
3. Assemble the Reverse shift fork onto the rail so that the operating tongue is located in the slot in the 4th-6th shift fork mounted on the reverse idler shaft.
4. Slide the rail forward until it locates in the front support bore. Screw in the shift connector retaining screw and locknut and tighten to the specified torque. (See Specifications, Chapter 2.)

   NOTE: ***Before installing the 1st-3rd/2nd-5th shift rail, make sure that the 4th-6th/Reverse shift rail is in the neutral position because otherwise the interlock plunger will prevent the 1st-3rd/2nd-5th rail from entering the front support bore.***
5. Assemble the 1st-3rd/2nd-5th shift rail into the second bore from the left-hand side of the housing, with the three detents to the rear, and position the 1st-3rd/2nd-5th shift fork and the shift connector on the rail.
6. Slide the rail forward until it locates in the front support bore. Screw in the shift fork and connector retaining screws and locknuts, and tighten to the specified torque. (See Specifications, Chapter 2.)
7. Install the High/Low shift rail into the right hand bore. Assemble the shift connector onto the extreme forward end of the rail, and also the High/Low fork to the rear end of the rail in the rear compartment, Figure 27.
8. Screw in the respective retaining screws and locknuts and tighten to the specified torque. (See Specification, Chapter 2.)
9. Locate the High/Low sliding coupling, positioning it on the dog-teeth at the rear of the mainshaft, Figure 17.
10. Lightly lubricate and position the three shift rail detent balls, springs and plungers in their bores, Figure 26.

© FORD MOTOR COMPANY LTD. 1964

Remaining Assemblies

1. Install the secondary countershaft, output shaft and rear support plate assembly as described in Section 4C.
2. Install the front support plate, the release bearing hub-support, and the clutch operating components as described in Section 3C.
3. Make sure that all gears and shafts rotate freely, and that the sliding couplings will engage with their respective gears.
4. Install the gear shift levers and cover assembly, as described in Section 2C.
5. Rejoin the tractor at the transmission to engine flange, and also at the transmission to rear axle centre housing flange as described in Part 15.

Part 6

SIX-SPEED TRANSMISSION

Chapter 2

SPECIFICATIONS AND SPECIAL TOOLS

Section		Page
1.	Specifications	21
2.	Special Tools	22

1. SPECIFICATIONS

Number of Speeds, Forward ..... Six
Number of Speeds, Reverse ..... Two
Type of Drive Line ..... In Line
Main Drive Input Gear Ratio ..... 17/57 (Helical)
Live P.T.O. Input Gear Ratio ..... 17/57 (Helical)
Oil Capacity:
(11·0 Qts. U.K.) (13·2 Qts. U.S.) (12·5 Ltrs.)

	Ford Specification.	General Specification.
Oil Grade:	ESEN-M2C85-A or ESN-M2C77-A	(S.A.E. 80 E.P.) or (S.A.E. 20W/30)

Number of Shift Levers ..... Two
Bearing Types:
Shaft ..... Ball
Pilot ..... Straight Roller
Reverse Idler and Output Shaft Gear Phosphor-Bronze Bushing
P.T.O. Speed:
(Live and Transmission) ..... 540 r.p.m. at 1810 Engine r.p.m.

Ground Speed Chart:

Gear	Ratios		Ground Speed*											
			Engine r.p.m. 1000		1250		1500		1750		1900		Diesel only 2000	
	Transmission	Final	m.p.h.	k.p.h.	m.p.h.	k.p.h.	m.p.h.	k.p.h.	m.p.h.	k.p.h.	m.p.h.	k.p.h.	m.p.h.	k.p.h.
1st	30·53	188·27	0·69	1·11	0·86	1·39	1·04	1·67	1·21	1·94	1·31	2·11	1·38	2·22
2nd	17·03	105·02	1·24	2·00	1·55	2·49	1·86	2·99	2·17	3·49	2·36	3·79	2·48	3·99
3rd	10·27	63·33	2·06	3·32	2·58	4·14	3·09	4·97	3·61	5·80	3·91	6·30	4·12	6·63
4th	7·54	46·50	2·80	4·51	3·50	5·63	4·20	6·76	4·90	7·88	5·32	8·56	5·60	9·01
5th	5·73	35·33	3·69	5·94	4·61	7·43	5·54	8·91	6·46	10·40	7·44	11·29	7·38	11·88
6th	2·54	15·66	8·33	13·41	10·41	16·76	12·50	20·11	14·58	23·46	15·83	25·47	16·66	26·81
Reverse Low	18·69	115·25	1·13	1·82	1·41	2·28	1·69	2·73	1·98	3·19	2·15	3·46	2·26	3·64
Reverse High	6·29	38·79	3·36	5·41	4·20	6·76	5·04	8·11	5·88	9·46	6·38	10·27	6·72	10·81

*Ground Speeds Based on 6·17:1. Rear Axle Ratio and 11·2/10–28 Rear Tyres

© FORD MOTOR COMPANY LTD., 1967

Tightening Torques	Pounds. Feet	Metre-Kilograms
Rear Support Plate Assembly Retaining Bolts	23–29	3·18–4·00
Main Shaft Rear Bearing Retainer Plate Bolts	6–8 (72–96 lbs. in.)	0·83–1·10
Front Support Plate Retaining Bolts	23–29	3·18–4·00
Clutch Release Bearing Hub Support Retaining Bolts (Live and Transmission P.T.O.)	23–29	3·18–4·00
Clutch Release Fork Retaining Bolt and Locknut	23–30	3·18–4·15
Gear Shift Fork Retaining Screws and Locknuts	20–25	2·76–3·45
Reverse Idler Retaining Bolt	15–19	2·07–2·63
Shift Levers and Cover Assembly Retaining Bolts	23–29	3·18–4·00

2. SPECIAL TOOLS

Tool No.	Description
1003	Puller—Single end arm/Large
1002	Puller—Reversible arm/Medium
952.....	Pulling Attachment/Large
951.....	Pulling Attachment/Small
630-S.....	Step Plate Adaptors (Set of Eleven)
630-T	Step Plate Adaptors (Set of Six)
625-A	Shaft Protectors (Set of Six)
943.....	Internal/External Pulling attachment
943-S.....	Slide Hammer
FT.943	Internal Pulling Adaptors (Set of Two)
955-14	Puller Adaptors (Set of Two)
954.....	Pilot Bearing Puller
T.7072	Special Bearing Puller
T.7077	Tubular Spanner
P.61	Heavy Duty Ratchet
938.....	Push-Puller
930-B	Push-Puller Legs (Set of Two)
930-E	Short Legs (Set of Two)
924.....	Female Threaded Adaptors (Set of Two)
Steel Rods ..	$\frac{3}{16}$ in. (4·8 mm.) Dia. and 2 in. (50·8 mm.) Long (Two Pieces)
Sleeve	1 in. (25·4 mm.) I.D. and $1\frac{3}{8}$ in. (34·9 mm.) O.D. of suitable length
Sleeve	$1\frac{7}{16}$ in. (36·5 mm.) I.D. and $1\frac{3}{4}$ in. (44·4 mm.) O.D. of suitable length

PART 7
SEVEN
AND
EIGHT-SPEED
TRANSMISSION

Part 7
SEVEN AND EIGHT-SPEED TRANSMISSION

Chapter 1
DEXTA 2000, SUPER DEXTA 3000 AND MAJOR 4000

Section		Page
1.	Description and Operation	1
2.	Shift Levers and Cover Overhaul	6
3.	Front End Overhaul	7
4.	Rear End Overhaul	16
5.	Complete Overhaul	22
6.	Seven-Speed Transmission	30

Chapter 2
SUPER MAJOR 5000

Section		Page
1.	Description and Operation	33
2.	Shift Levers and Cover Overhaul	33
3.	Front End Overhaul	37
4.	Rear End Overhaul	39
5.	Complete Overhaul	44
6.	Seven-Speed Transmission	50

Chapter 3
SPECIFICATIONS AND SPECIAL TOOLS

Section		Page
1.	Specifications	53
2.	Special Tools	58

© FORD MOTOR COMPANY LTD., 1965

Chapter 4

DUAL POWER TRANSMISSION—FORD 5000 AND 7000

Section		Page
1.	Description and Operation	65
2.	Planetary Gear Set Overhaul	69
3.	Pressure Testing	80

Chapter 5

DUAL POWER TRANSMISSION TROUBLE SHOOTING, SPECIFICATIONS AND SPECIAL TOOLS

Section		Page
1.	Trouble Shooting	83
2.	Specifications	85
3.	Special Tools	87

Part 7

SEVEN AND EIGHT-SPEED TRANSMISSION

Chapter 1

DEXTA 2000, SUPER DEXTA 3000, AND MAJOR 4000

Section		Page
1.	Description and Operation	1
2.	Shift Levers and Cover Overhaul	6
3.	Front End Overhaul	7
4.	Rear End Overhaul	16
5.	Complete Overhaul	22
6.	Seven-Speed Transmission	30

1. DESCRIPTION AND OPERATION

Dexta 2000 and Super Dexta 3000

This constant mesh type transmission, Figure 1, provides eight forward and two reverse gear ratios selected by two levers mounted on the top cover plate. The longer (main) lever selects four forward and one reverse ratio, while the shorter (secondary) lever provides a High and a Low range in each gear, Figure 3.

A safety feature incorporated in the top cover is an electrical switch which is connected in series with the starting circuit and allows the starter motor to be operated only when the main gear lever is in the neutral position.

With the exception of the helical gear drive to the P.T.O. and main countershafts, the gears are of the spur type, all the gears being in constant mesh and the gear train connections being made by sliding couplings and connectors.

Two types of this transmission are available, one with conventional transmission P.T.O. and the other with Live P.T.O. The components which differ in the two assemblies are illustrated together in Figure 4.

The main countershaft on the transmission P.T.O. version is splined internally to accept the external splines of a short P.T.O. countershaft. In the live P.T.O. version an extra pair of constant mesh helical gears transmit the drive from the P.T.O. clutch to the P.T.O. countershaft. One of these gears is integral with the P.T.O. input shaft and revolves around the outside of the main drive input shaft. The other helical gear is splined onto the forward end of the P.T.O. countershaft where it is driven by the P.T.O. input shaft.

Major 4000

The eight-speed transmission on the Major 4000, Figure 2, is available with either Independent P.T.O., Transmission P.T.O. or Less P.T.O. For all P.T.O. types, the main and secondary compartments are identical in layout to the Dexta 2000/Super Dexta 3000 eight-speed transmission, many of the components being interchangeable.

The Major 4000 transmission, however, differs in the main drive and P.T.O. input components and in the mainshaft and mainshaft gears. The main differences are as follows:

All P.T.O. Types

1. The gear shift lever cover is made of cast iron instead of pressed steel. The layout and components, however, differ only slightly from the pressed steel type, Figures 6 and 7.

2. The mainshaft has three different working diameters, Figure 5, and is only splined in two locations to accept the gear shift connectors. The gears supported by the mainshaft have internal bushings.

© FORD MOTOR COMPANY LTD. 1965

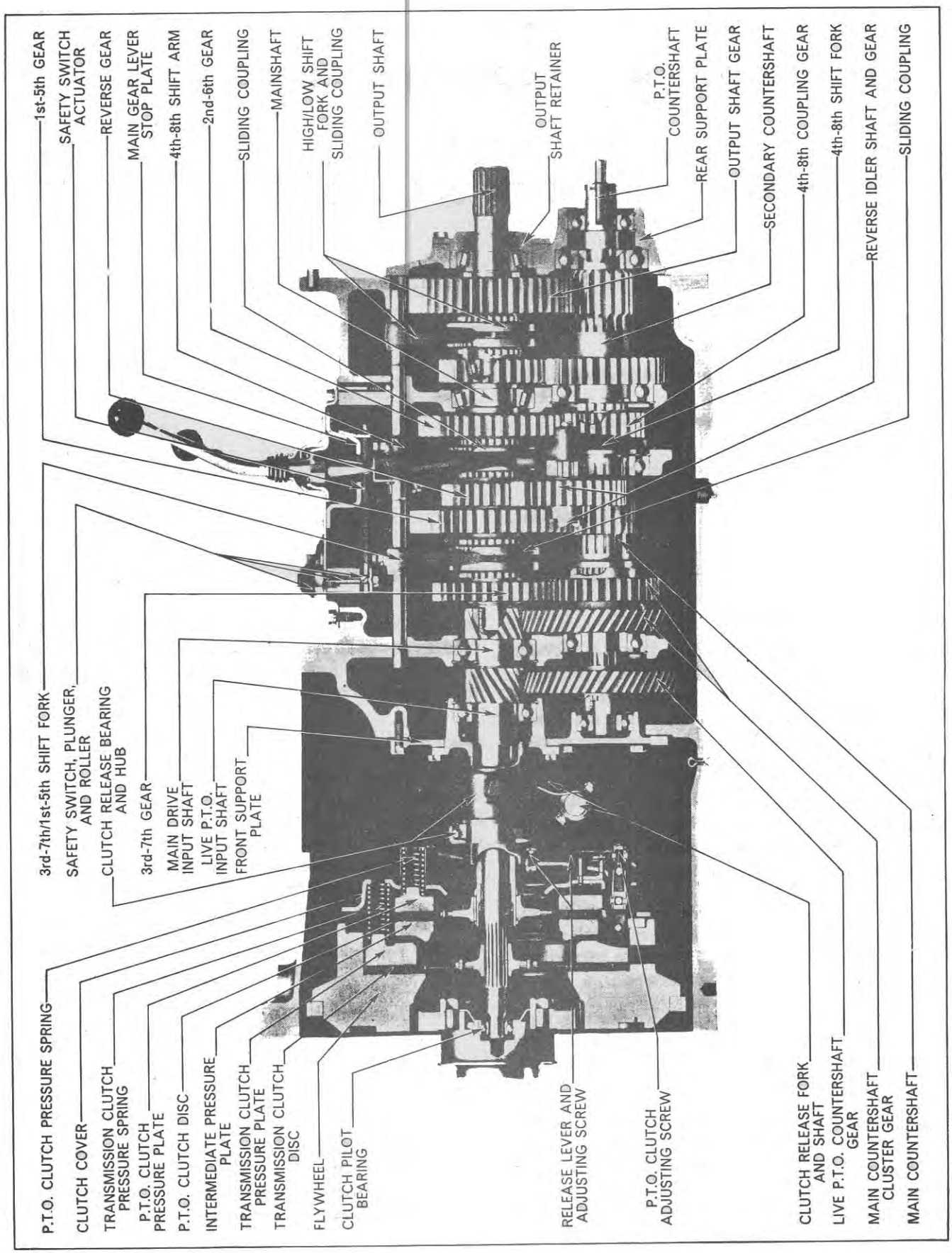

Figure 1
Dexta 2000, Super Dexta 3000 Transmission

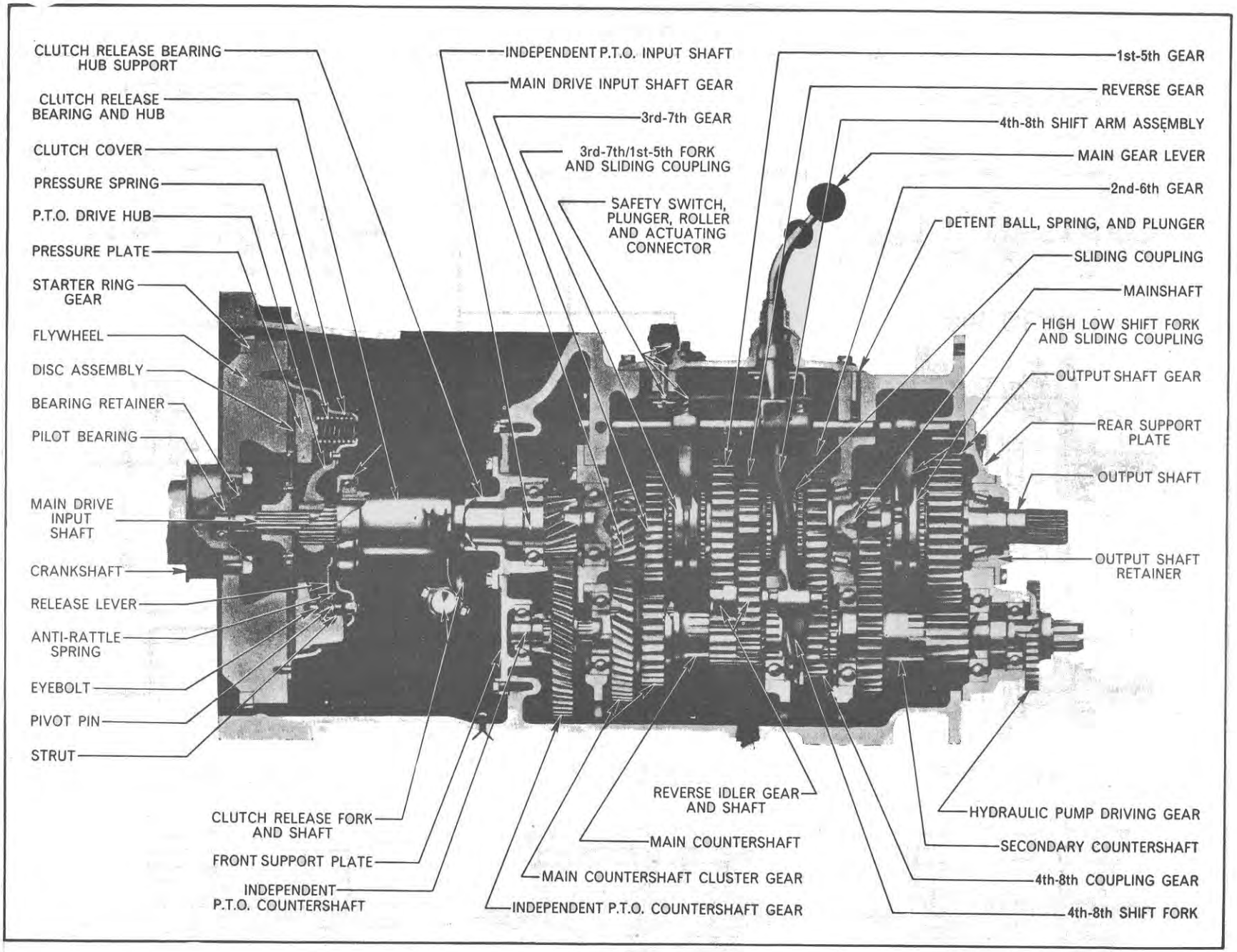

Figure 2
Major 4000 Transmission

2/65 © FORD MOTOR COMPANY LTD. 1965

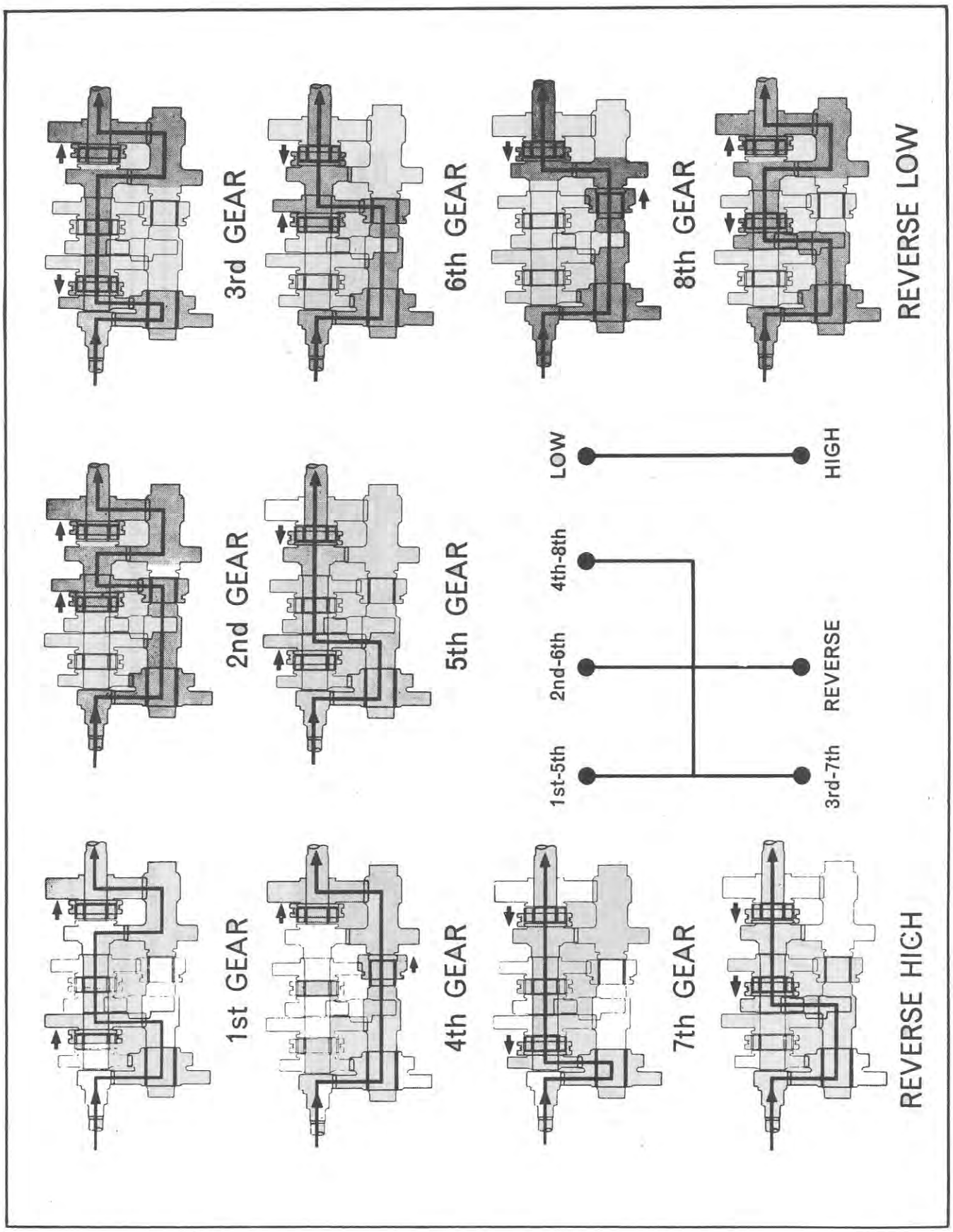

Figure 3
Power Flow and Shift Pattern Diagrams

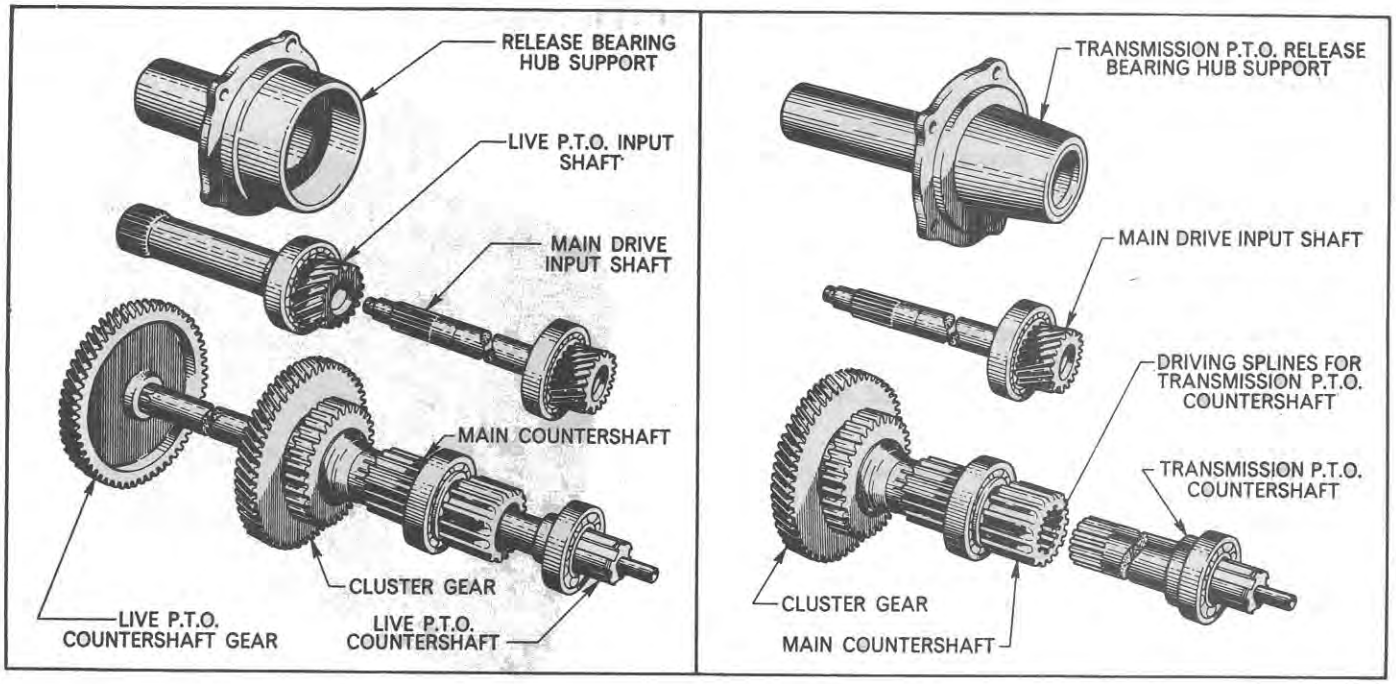

Figure 4
Live and Transmission P.T.O. Components—Dexta 2000, Super Dexta 3000

3. The main drive input shaft has a bigger gear compared with the Dexta/Super Dexta. (See Specifications, Chapter 3.) This necessitates a bearing retaining plate, Figure 11, to allow assembly and disassembly of the input shaft. The front half of the main countershaft cluster gear, Figure 50, is correspondingly smaller than that in the Dexta/Super Dexta transmission, Figure 49.

4. The Independent P.T.O. input shaft has no front bearing and the oil seal is located internally at the rear. The forward end of the shaft is splined direct into the clutch cover, providing a constant drive.

Transmission P.T.O. Type

5. The P.T.O. input gear is splined on to the main drive input shaft providing a drive to the P.T.O. countershaft only when the clutch is engaged. The main drive input shaft is composed of two pieces splined together. This allows the P.T.O. input gear and front bearing to be removed and installed, Figure 11.

Less P.T.O. Type

6. Transmissions less P.T.O. are virtually identical to models with Transmission P.T.O. but all the P.T.O. components are removed and a sealing plug is located in the rear support plate where the P.T.O. countershaft would otherwise pass through.

The normal engineering procedure of making the bearings a press fit on the shafts and a push fit in the housing has been employed, and unless it is necessary to install new bearings, or to gain access to other components, it is recommended that they are not removed from the shafts.

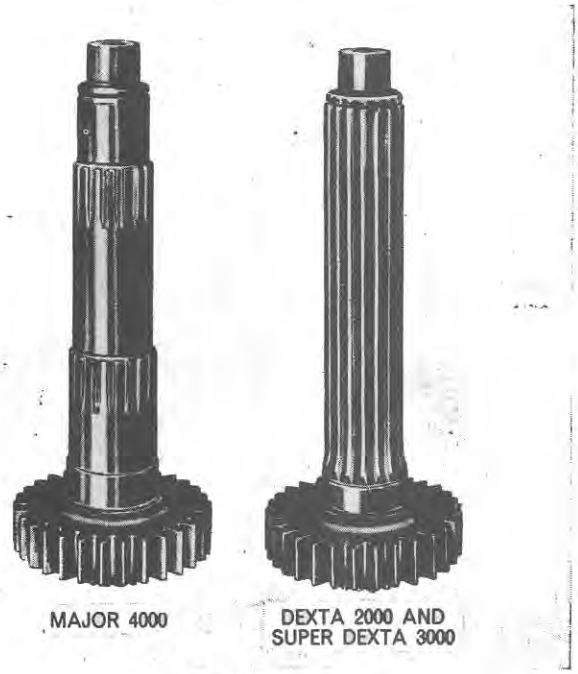

Figure 5
Mainshaft Types

© FORD MOTOR COMPANY LTD., 1965

2. SHIFT LEVERS AND COVER OVERHAUL

A. Disassembly

1. Remove the rubber cover and disconnect the wires from the starter safety switch. Unscrew the nine retaining bolts and spring washers from the cover and remove the cover and levers as an assembly.

Dexta 2000 and Super Dexta 3000 Only

2. Remove the two self-locking bolts retaining the roller support plate to the switch retainer. Remove the plate, the actuating connector, the roller and the plunger from their locations, Figure 6.

NOTE: ***No attempt should be made to remove the main shift lever stop plate or the switch retainer, which are riveted to the cover as these parts are serviced as an assembly with the cover.***

Major 4000 Only

a. Remove the two self-locking bolts retaining the roller support plate and the switch retainer to the cover, Figure 7. Remove the roller support plate, the switch retainer, the actuating connector, the roller and the plunger.

b. Unscrew the four self-locking bolts and remove the gear lever stop plate from the cover.

3. Using a file or hacksaw, partially cut through the gear shift lever spring retaining clips, completing the cut with a hammer and chisel. Having first removed the shift lever balls, withdraw the levers through the cover.

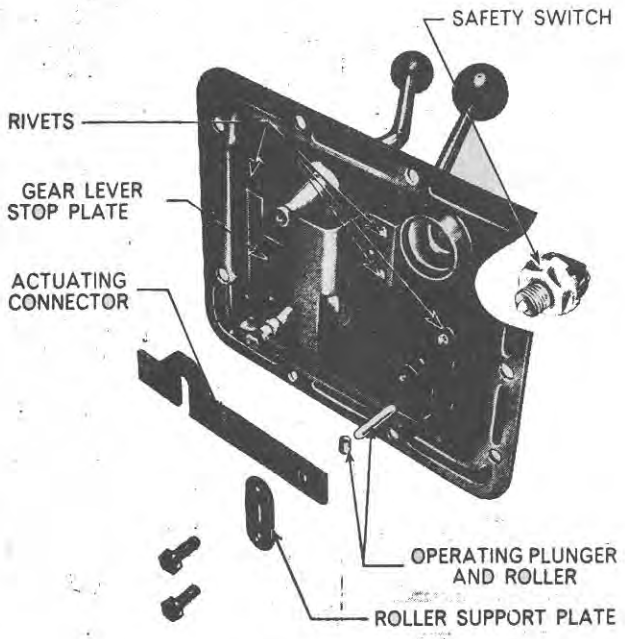

Figure 6
Safety Switch Operating Components

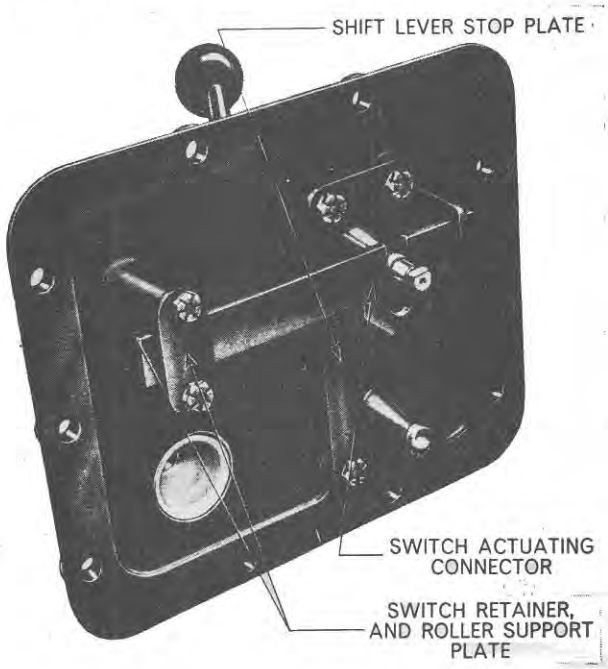

Figure 7
Safety Switch Operating Components (4000)

B. Inspection and Repair

1. Using a suitable test bulb, wires and battery, Figure 8, test the starter safety switch for correct operation by depressing the operating button. This should close the circuit and light the test bulb. On releasing the operating button the test bulb should be extinguished. If the switch is faulty, install a new part.

2. Inspect the cover for cracks or other damage, and if necessary, use a new part on assembly.

Dexta 2000 and Super Dexta 3000

3. a. Check the two locating dowels, one in each gear lever, for excessive wear or looseness.

b. If necessary remove the dowels and drive new parts into each lever.

Major 4000

a. Inspect the two locating dowels, one in each shift lever socket and if necessary drive them from the cover with a suitable punch.

b. Install new dowels prior to assembling the levers.

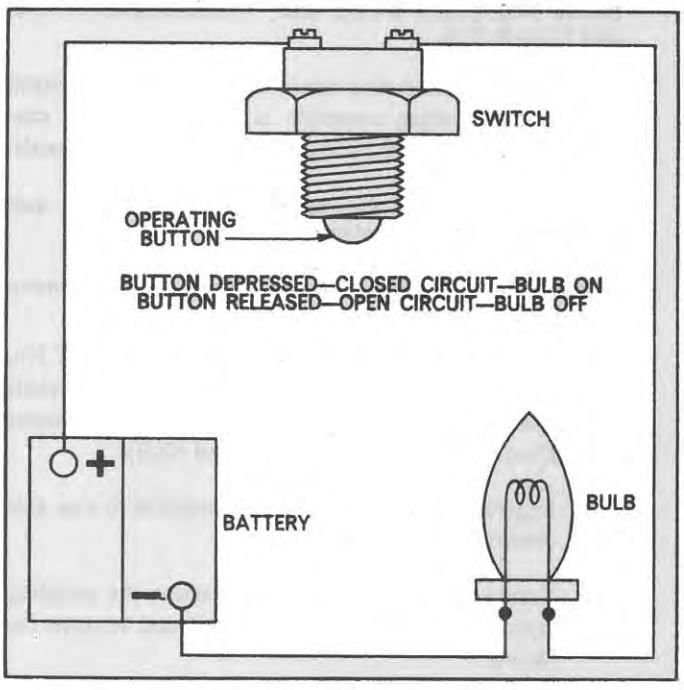

Figure 8
Safety Switch Test Circuit

4. Inspect the gear shift lever ends and all sliding parts for wear or damage and install new parts as necessary.

C. Assembly

1. Pass the gear shift levers through the cover, installing the retainer and springs. Compress the springs and secure with new spring retaining clips. Screw the balls onto the gear shift levers.

Dexta 2000 and Super Dexta 3000

2. a. Screw the starter safety switch into the switch retainer.

   b. Position the switch actuating connector and install the operating plunger, roller, and roller support plate, Figure 6.

   c. Install the two self-locking bolts to the retainer and tighten to the specified torque. (See Specifications, Chapter 3.)

Major 4000

   a. Screw the safety switch into the top of the shift cover.

   b. Position the shift lever stop plate, Figure 7, and install the four self-locking screws. Tighten the screws to the specified torque. (See Specifications, Chapter 3.)

   c. Position the switch retainer, the actuating connector, the operating plunger, the operating roller and the roller support plate, Figure 7.

   d. Install the two self-locking retaining screws and tighten to the specified torque. (See Specifications Chapter 3.)

3. Using a new gasket, position the gear shift lever and cover assembly on the case, and screw in the nine retaining bolts and spring washers. Tighten the bolts to the specified torque. (See Specifications, Chapter 3.)

4. Reconnect the wires to the safety switch, and install the rubber cover.

3. FRONT END OVERHAUL

A. Disassembly

1. Remove the drain plug, Figure 26, and drain the transmission oil.

2. Separate the engine and front axle assembly from the transmission. (See Part 15.)

3. Remove the clevis pin securing the external clutch release rod clevis to the clutch release shaft arm.

4. Lever the release shaft return spring off the cast lug on the inside of the front end of the transmission case, Figure 9.

5. Unscrew the self-locking nut from the bolt securing the clutch release fork to the release shaft and withdraw the shaft from the housing.

6. Remove the release fork and return spring followed by the release bearing and hub assembly.

7. Remove the five bolts retaining the clutch release bearing hub support and pull the hub support out forwards.

Dexta 2000 and Super Dexta 3000–Live P.T.O. Only

Remove the Live P.T.O. input shaft and release bearing hub support as an assembly.

Major 4000–Independent P.T.O. Only

Remove the Independent P.T.O. input shaft and release bearing hub support as an assembly.

8. Remove the seven self-locking retaining bolts and withdraw the front support plate.

Dexta 2000, Super Dexta 3000–Live P.T.O.; and Major 4000–Independent P.T.O. and Transmission P.T.O.

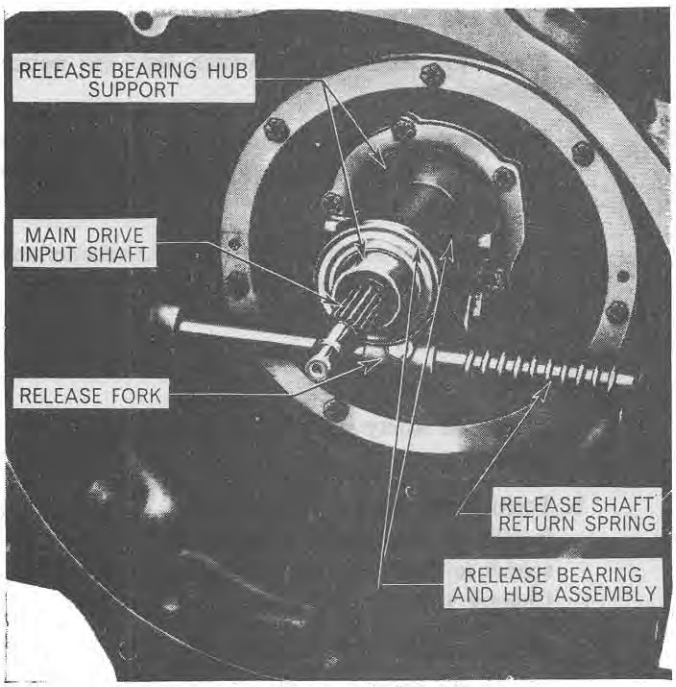

Figure 9

Clutch Operating Linkage

The P.T.O. countershaft front bearing is located in the front support plate so care must be taken to withdraw the plate squarely.

Dexta 2000, Super Dexta 3000, Transmission P.T.O. and Live P.T.O.

9. Remove the snap ring retaining the main drive input shaft and bearing assembly in the transmission case and withdraw the shaft and bearing assembly forwards.

Dexta 2000, Super Dexta 3000–Live P.T.O.; and All Major 4000 transmissions

NOTE: ***For transmission less P.T.O. ignore steps a, b, c, d, and e.***

a. Use Tools Nos. T.7072 and T.7077 (or Tool No. SW-501-2) to remove the P.T.O. countershaft front bearing as shown for the Dexta 2000, Super Dexta 3000, in Figures 10(A) and 10(B).

b. Separate the tractor at the transmission to rear axle centre housing. (See Part 15.)

c. Remove the snap ring, which retains the coupling sleeve to the P.T.O. countershaft and remove the sleeve.

NOTE: ***The Major 4000 with Independent P.T.O. has an hydraulic pump driving gear instead of a coupling sleeve. This gear is enclosed by a steel shroud. Remove the shroud by cutting the locking wire and removing the two retaining bolts. Remove the circlip, and slide off the hydraulic pump driving gear.***

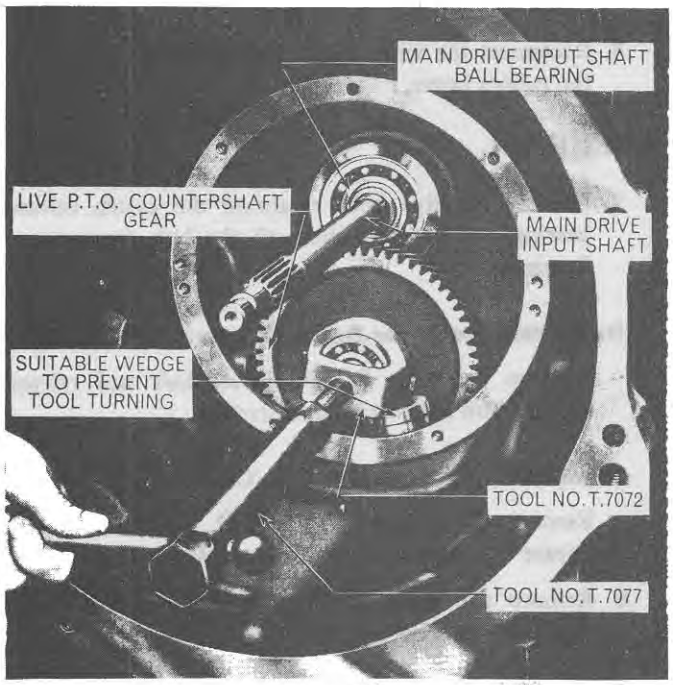

Figure 10(A)

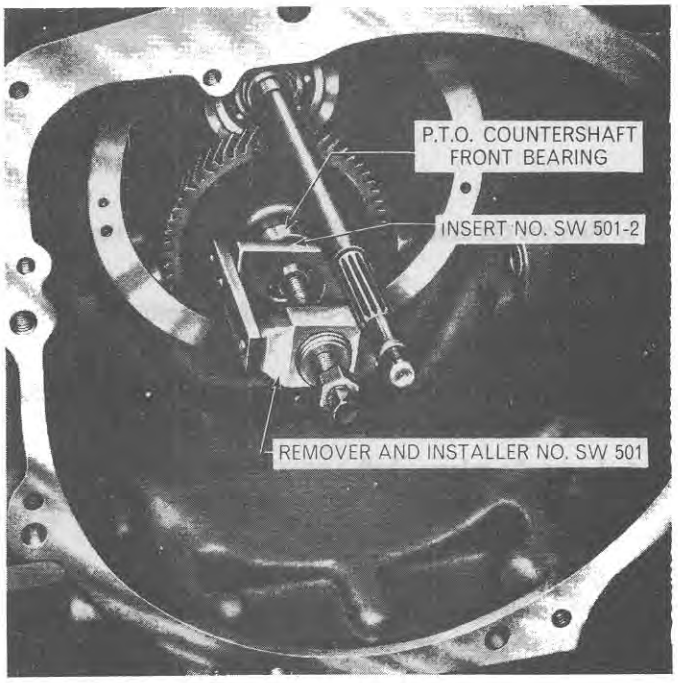

Figure 10(B)

Removing Live P.T.O., Countershaft Front Bearing

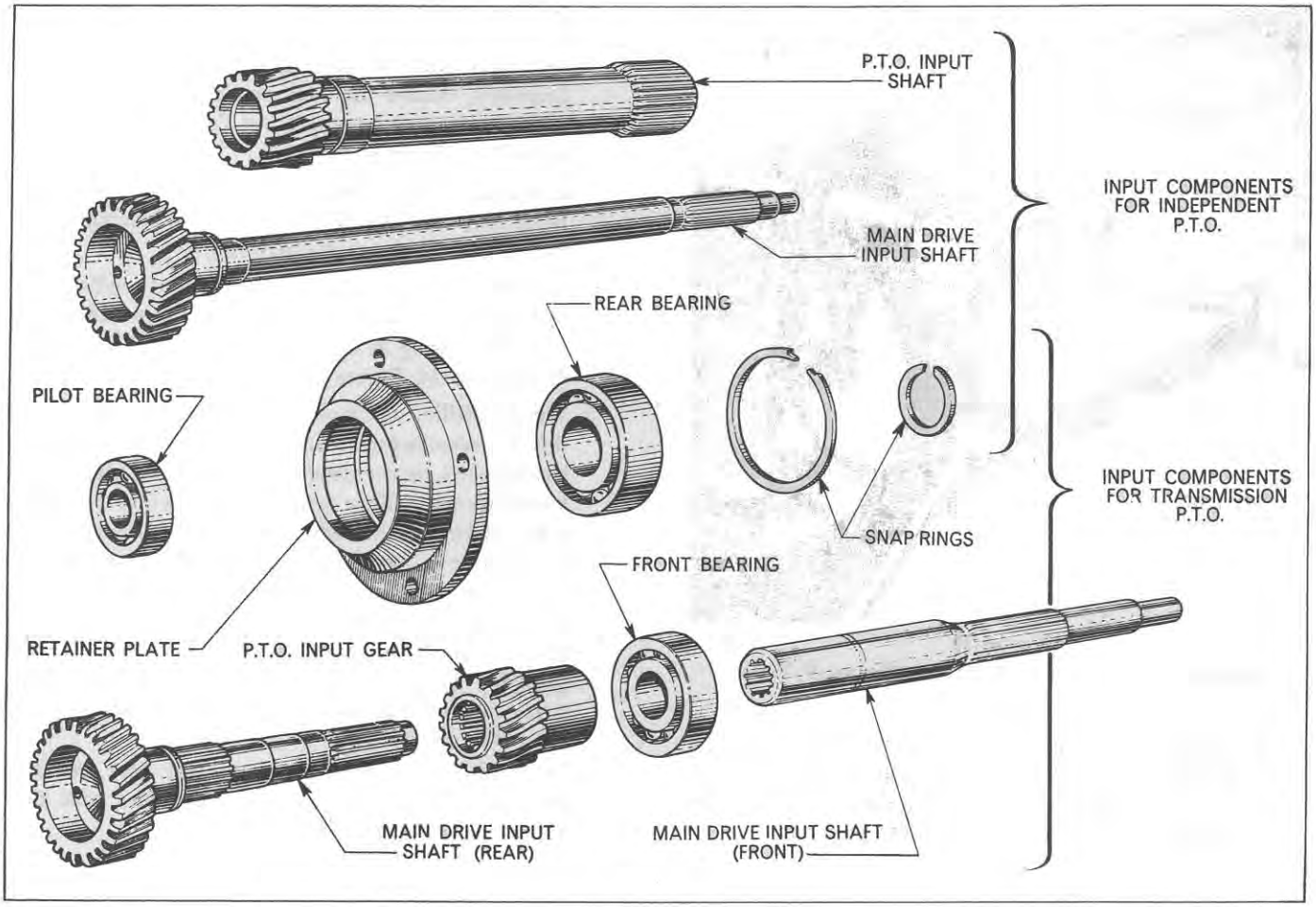

Figure 11
Transmission and Independent P.T.O. Input Shaft Assemblies (Major 4000)

d. Remove the snap ring retaining the P.T.O. countershaft rear bearing, and drive the countershaft rearwards out of the transmission.

e. Remove the P.T.O. countershaft gear which is now loose in the transmission front compartment.

f. Remove the four self-locking bolts and withdraw the input shaft, retainer plate and bearing, Figure 11, as an assembly. The Dexta/Super Dexta has no retainer plate and the input shaft is removed as described in Step 9.

NOTE: ***On Transmission P.T.O. (Major 4000), the input shaft consists of two sections splined together, Figure 11. The rear section of the shaft has the P.T.O. input gear splined to it, the gear being retained by a ball bearing located in the hub support. The front section usually remains in the clutch assembly when the tractor is separated.***

B. Inspection and Repair

Clutch Release Bearing Hub Support–Dexta 2000, Super Dexta 3000–Transmission P.T.O.; Major 4000 –Transmission P.T.O. and Less P.T.O.

1. Inspect the main drive input shaft oil seal in the hub support for wear or damage. If necessary remove the seal using Tool Nos. 943, 943-S and FT.943, Figure 12.
2. Install a new seal using Tool No. 630-9 (reversed) and a suitable driver.

Dexta 2000, Super Dexta 3000–Live P.T.O. Only

1. Remove the large snap ring at the rear of the hub support and drive the P.T.O. input shaft and rear bearing assembly out of the hub support.
2. Inspect the oil seal in the hub support and if worn or damaged remove the seal using Tools Nos. 943, 943-S and FT.943 in a similar manner to that shown in Figure 12.

© FORD MOTOR COMPANY LTD. 1965

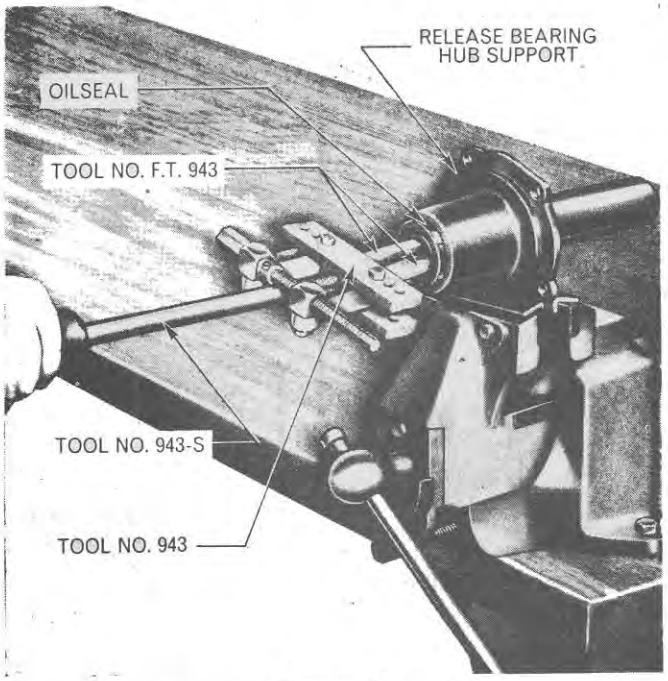

Figure 12
Removing Input Shaft Oil Seal (Trans. P.T.O.)

3. Lightly grease the new seal and install, making sure that the sealing lip faces to the rear. Tool No. 630-15 (reversed) will provide a suitable flat surface to locate against the seal when driving it into position.

4. Inspect the gear teeth and the oil seal journals on the Live P.T.O. input shaft for damage or excessive wear, and check the rear bearing for wear or damage. If necessary, remove the snap ring from the shaft and withdraw the rear bearing using Tools Nos. 1003, 951 and 630-7, Figure 13.
5. Install the bearing onto the shaft using Tools Nos. 1003, 951, 630-4 and 625-3. Secure the bearing to the shaft with the appropriate snap ring.
6. If necessary, remove the front oil seal and needle roller bearing from the Live P.T.O. input shaft, withdrawing seal and bearing in one operation, using Tools Nos. 954 and 955-14, Figure 14.
7. When installing a new needle roller bearing, make sure that the manufacturers name, which is stamped on the bearing shell, faces outwards. Use Tool No. 630-3 with a hammer and drift to drive the bearing into the input shaft. Make sure the bearing seats against the shoulder in the bore of the input shaft. Lightly grease the oil seal and locate it on the spigot of Tool No. 630-4. Use a hammer and small punch to drive the seal into position against the shoulder in the shaft, Figure 15.

   NOTE: ***Make sure that Tool No. 630-4 is free from burrs or sharp edges to avoid damage to the seal.***
8. Drive the Live P.T.O. input shaft and bearing assembly into the hub support and secure with the appropriate snap ring.



Figure 13
Removing Live P.T.O. Input Shaft Rear Bearing

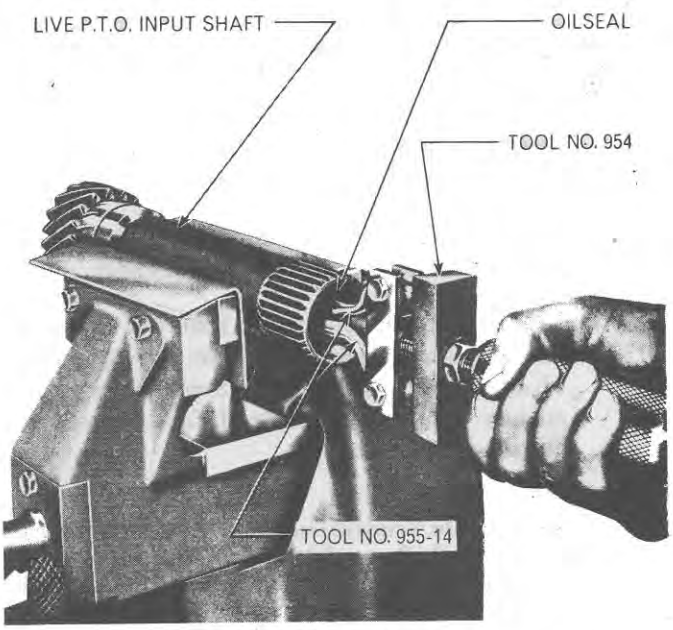

Figure 14
Removing Live P.T.O. Input Shaft Front Oil Seal and Roller Bearing

Major 4000–Independent P.T.O.

1. Remove the snap ring retaining the Independent P.T.O. input shaft rear bearing and drive the shaft and rear bearing out of the hub support.
2. Inspect the oil seal in the hub support and if necessary use Tools Nos. 943, 943-S, and FT.943, to remove the seal.
3. Make sure the new seal is lightly greased and install it to the hub support, with the sealing lip facing rearwards, using Tool No. 630-15 (reversed).
4. Examine the oil seal at the rear of the P.T.O. input shaft, and if necessary lever out the seal with a suitable screwdriver.

   NOTE: ***Do not install a new oil seal until the rear bearing has been pressed on, otherwise Tool No. 630-3 cannot be used when installing the rear bearing. (See Step 6).***
5. Inspect the input shaft and rear bearing for wear or damage and if necessary remove the bearing using Tools Nos. 952, 930-B (pair), 630-4, 938, and P 61, Figure 16.
6. Press a new bearing into position against the input shaft gear, using Tools Nos. 1003, 951, 630-3, 938 and 625-4.
7. The oil seal at the rear of the P.T.O. input shaft can now be assembled using Tool No. 630-4 (reversed) and a soft faced mallet.

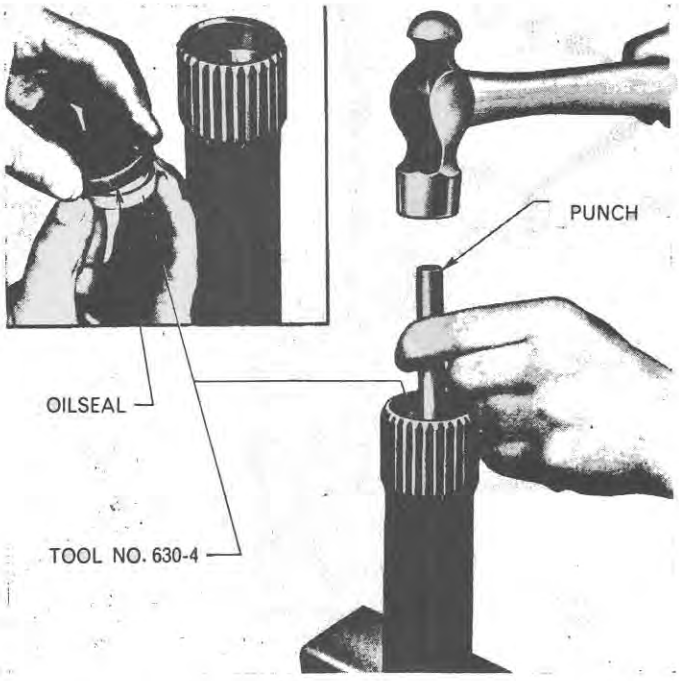

Figure 15
Installing Live P.T.O. Input Shaft Front Oil Seal

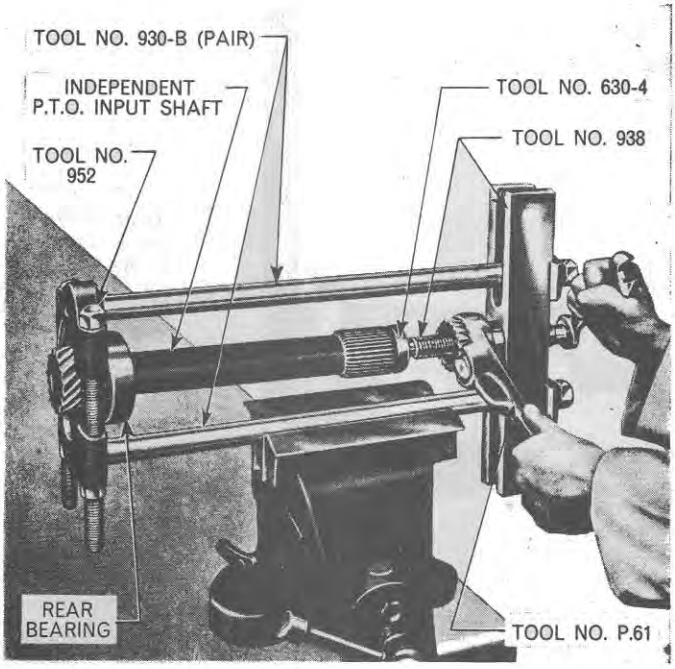

Figure 16
Removing Independent P.T.O. Input Shaft Rear Bearing

8. Assemble the input shaft to the hub support and secure with the appropriate snap ring.

Main Drive Input Shaft Assembly–Major 4000, Independent P.T.O. and Less P.T.O.

1. Examine the input shaft for wear or damage. If

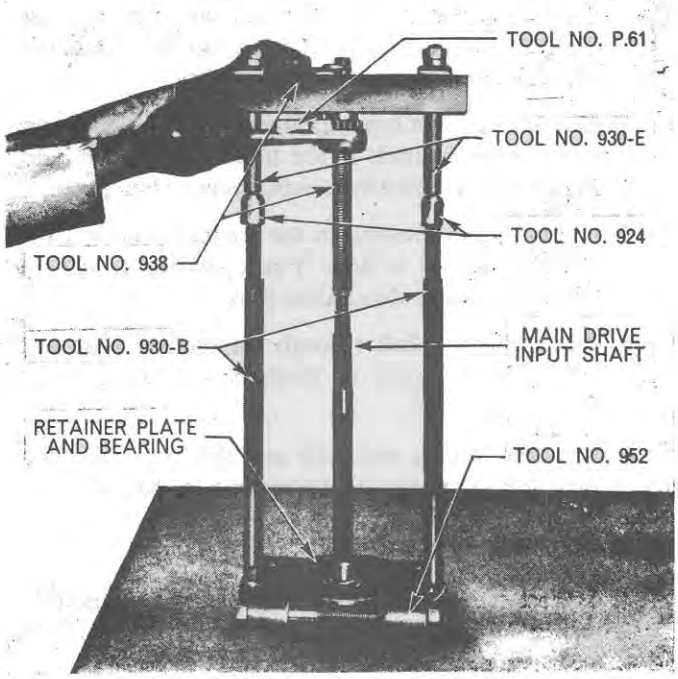

Figure 17
Removing Main Drive Input Shaft from Retainer Plate (Major 4000, Ind. P.T.O.)

© FORD MOTOR COMPANY LTD., 1965

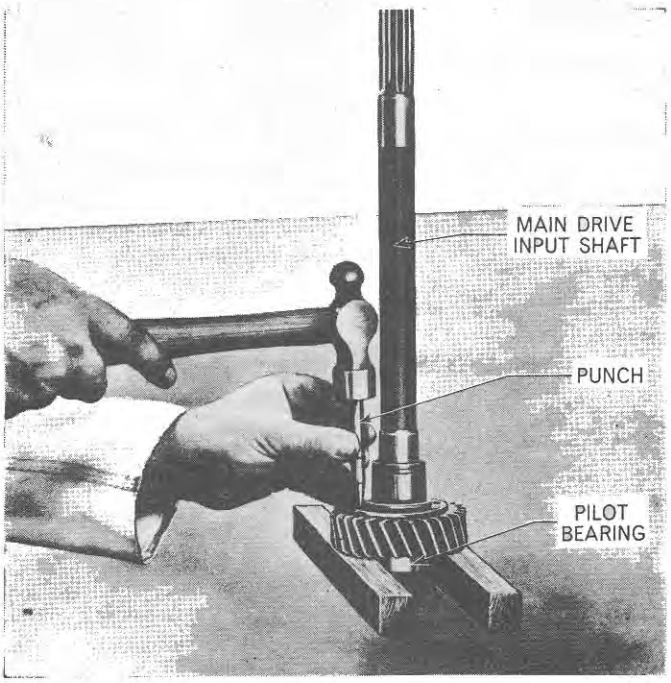

Figure 18
Removing Pilot Bearing from Main Drive Input Shaft

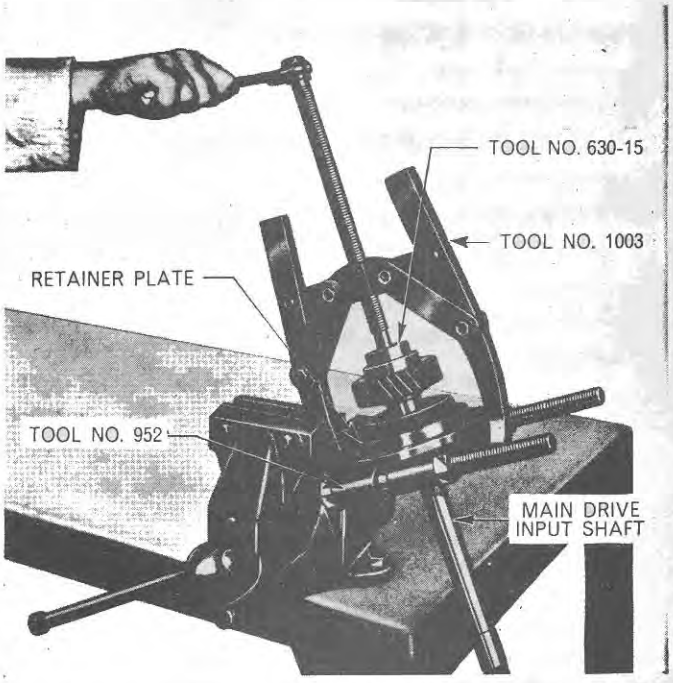

Figure 19
Installing Main Drive Input Shaft to Retainer Plate

necessary remove the inner snap ring from the input shaft and press the shaft out of the bearing and plate assembly, using Tools Nos. 952, P.61, 930-B (pair), 930-E (pair), 924 (pair), and 938, Figure 17.

2. Examine the retainer plate and bearing and if necessary remove the outer snap ring from the plate and use Tool No. 630-15 (reversed) and a soft faced mallet to drive the bearing from the retainer plate.
3. Examine the pilot bearing, Figure 11, and if necessary locate a small punch in the holes through the gear, Figure 18, and drive the bearing from its location.
4. Position a new bearing in the retainer plate and use Tool No. 630-17 to drive it into position. Install the outer snap ring to the retainer plate.
5. Pass the input shaft through the retainer plate and mount the assembly in Tools Nos. 1003, 952 and 630-15, Figure 19.
6. Press the bearing and plate assembly onto the input shaft and install the inner snap ring to the shaft.

Major 4000–Transmission P.T.O.

1. Inspect the front shaft and sleeve assembly, especially the weld joining the shaft and sleeve. If necessary use a new part on assembly.
2. Inspect the rear shaft, P.T.O. input gear, the retainer plate and the bearings, Figure 11. If necessary remove the front bearing (which retains the P.T.O. input gear) using Tools Nos. 1002, and 951, Figure 20.
3. Slide the P.T.O. input gear from the shaft and remove the inner snap ring retaining the rear bearing to the shaft.

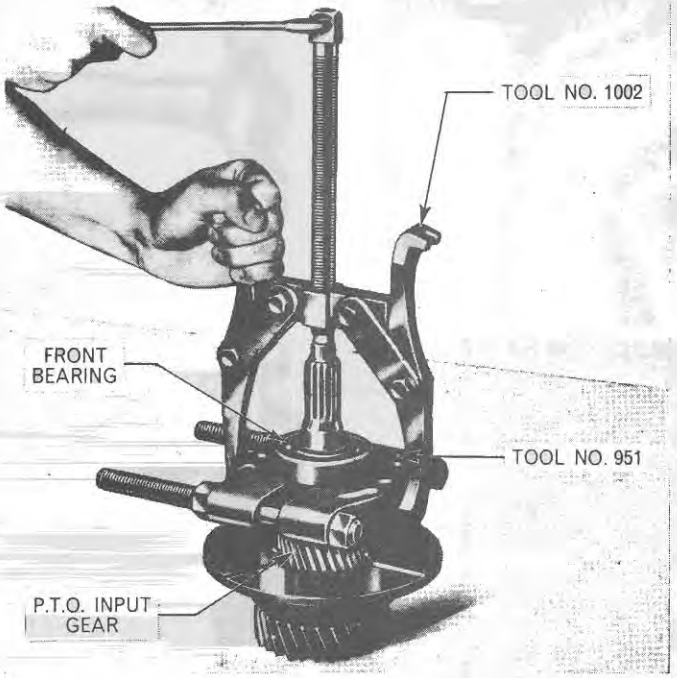

Figure 20
Removing Main Drive Input Shaft Front Bearing—Major, Trans. P.T.O.

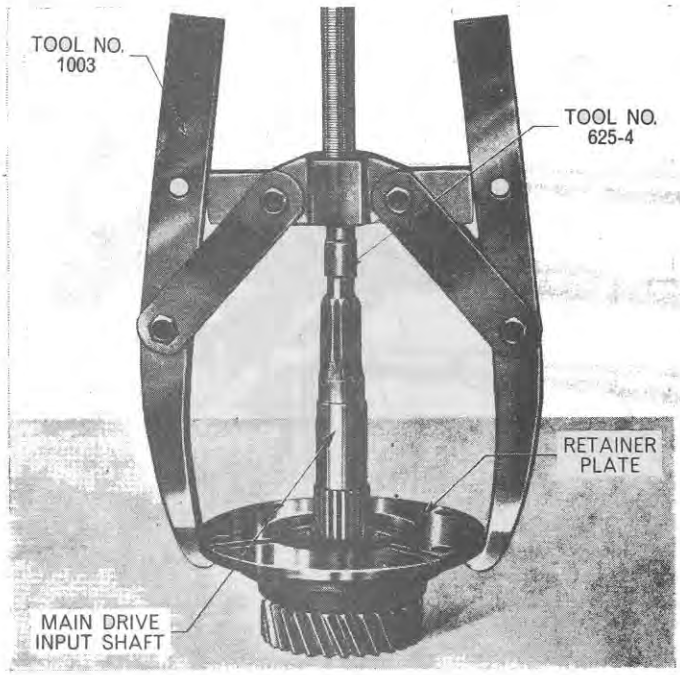

Figure 21
Pressing Input Shaft out of Retainer Plate

4. Use Tools Nos. 1003 and 625-4, Figure 21, to remove the rear bearing and retainer plate assembly.
5. Remove the outer snap ring retaining the rear bearing to the retainer plate. Use Tool No. 630-15 (reversed)

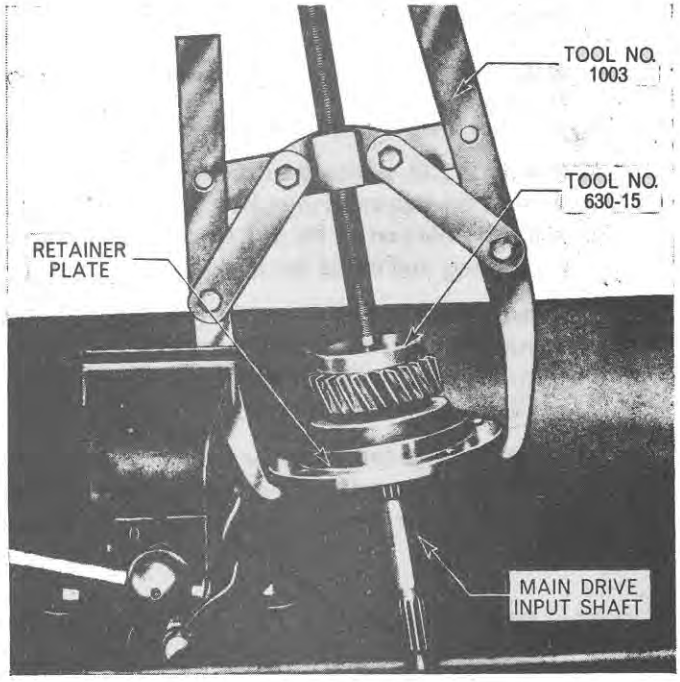

Figure 22
Installing Main Drive Input Shaft to Retainer Plate

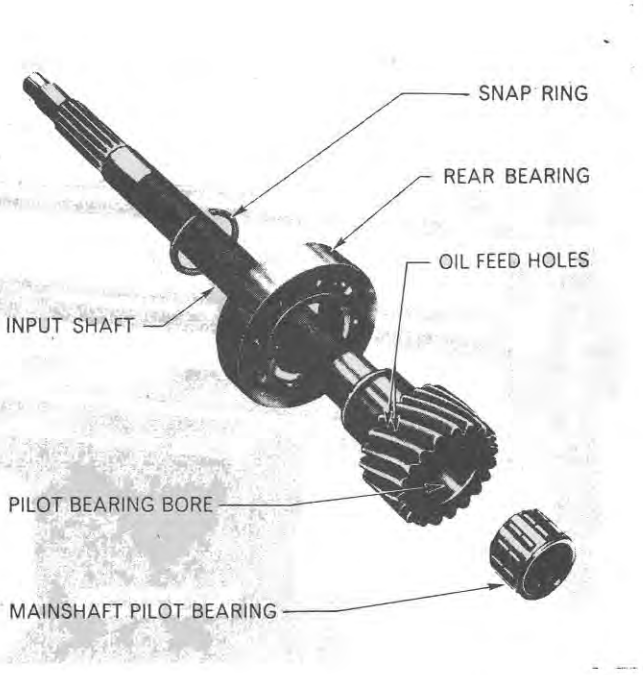

Figure 23
Main Drive Input Components—Dexta, Super Dexta

and a soft faced mallet to drive the bearing from the plate.

6. If necessary, locate a small punch in the holes through the gear and drive out the pilot bearing in the same manner as that illustrated for the Independent P.T.O. transmission, Figure 18.
7. Drive the rear bearing into the retainer using Tool No. 630-17 (reversed) and a soft faced mallet. Secure the bearing to the plate with the appropriate snap ring.
8. Pass the main drive input shaft through the retainer plate and bearing, Figure 22, and press the shaft into position using Tools Nos. 1003, 630-15.
9. Locate the P.T.O. input gear onto its splined location on the main drive input shaft, making sure the teeth are facing the retainer plate. Locate the front bearing, and drive it into position with a sleeve, $1\frac{3}{16}$ in. (30·2 mm) I.D. and $1\frac{3}{4}$ in. (44·4 mm) O.D. of convenient length.

Dexta 2000, Super Dexta 3000–Live and Transmission P.T.O.

1. Remove the needle roller pilot bearing, which is a loose fit in the bore at the gear end of the input shaft, Figure 23. Check the bearing, and the bore in the shaft, for wear and install new parts if necessary.
2. Inspect the oil seal journals and the gear teeth of the shaft for excessive wear or damage. Check the rear

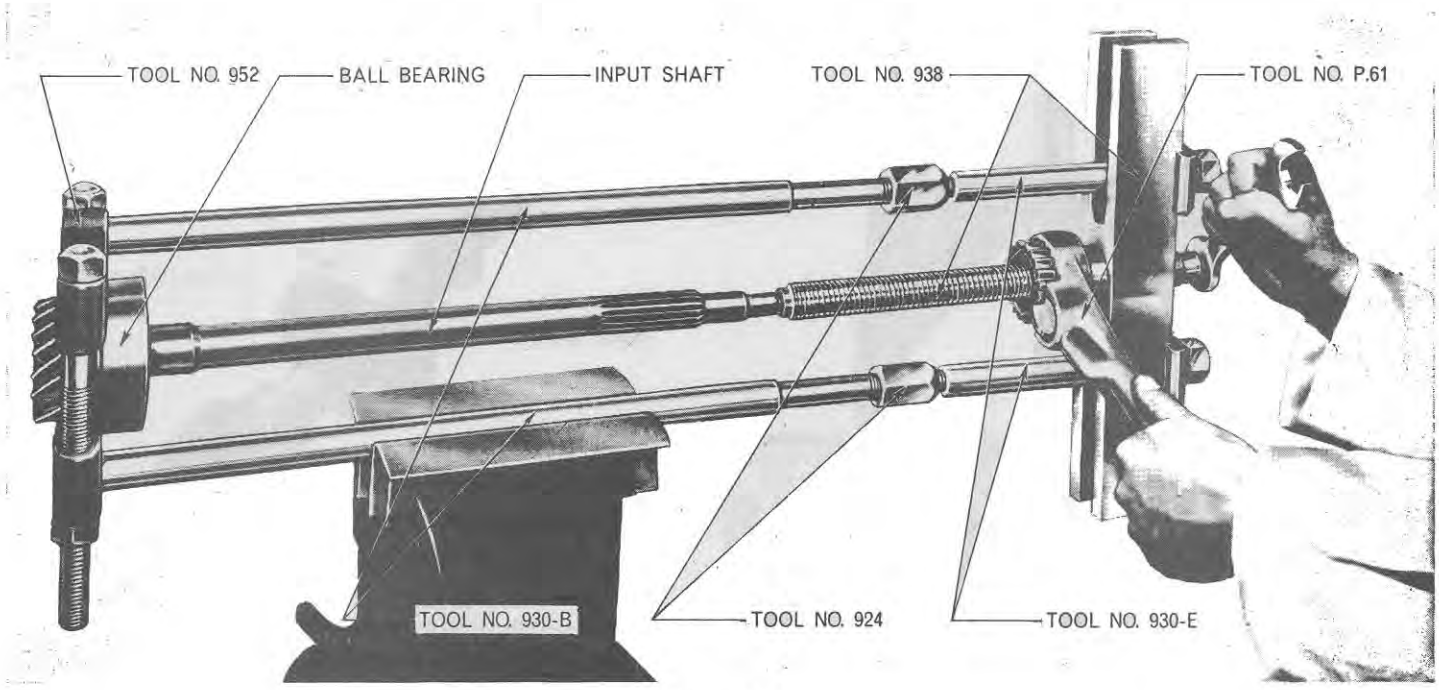

Figure 24
Removing Main Drive Input Shaft Rear Bearing—Dexta, Super Dexta

bearing for wear or damage. If necessary, remove the snap ring and draw the bearing off the shaft using Tools Nos. 952, 930-B (pair), 930-E (pair), 938, P 61, and 924 (pair), Figure 24.

NOTE: ***If a hydraulic press is available only Tool No. 952 is required.***

3. Press a new bearing onto the shaft using Tools 952, 1002 and 630-5 until it is seated firmly against the gear. Secure with the appropriate snap ring.

Clutch Operating Components

1. Inspect the release bearing and hub, the release fork, the return spring, the release shaft and bushings, and if any part requires servicing, refer to Part 4, "Clutches".

C. Assembly

Main Drive Input Shaft Assembly–All Major 4000 Transmissions

1. Assemble the main drive input shaft assembly into the transmission case, using a new gasket, and making sure the mainshaft spigot locates in the pilot bearing situated inside the input shaft gear.
2. Tap the input shaft rearwards until the retainer plate is flush against the case, Figure 25.
3. Install the four self-locking bolts and tighten to the specified torque. (See Specifications, Chapter 3.)

NOTE: ***Ignore steps 4, 5, 6, 8a, 8b, and 9 when servicing transmissions less P.T.O.***

4. Position the P.T.O. countershaft gear in the front compartment.

NOTE: ***If a new gear is being used, make sure the small thrust washer and snap ring are in position inside the hub of the gear.***

5. Pass the P.T.O. countershaft and rear bearing assembly through the transmission to locate in the countershaft gear. Tap the rear of the P.T.O. countershaft to seat the bearing, and install the snap ring.
6. Drive the front bearing onto the P.T.O. countershaft, immediately in front of the countershaft gear, using a sleeve of suitable length and 1 in. (25·4 mm) I.D. and $1\frac{3}{8}$ in. (34·9 mm) O.D.
7. Using a new gasket, locate the front support plate and install the seven self-locking retaining bolts. Tighten the bolts to the specified torque. (See Specifications, Chapter 3.)
8. a. With Transmission P.T.O., the coupling sleeve at the rear of the P.T.O. countershaft must be installed and secured with the appropriate snap ring.



Figure 25
Main Drive Input Shaft Installed—Major 4000

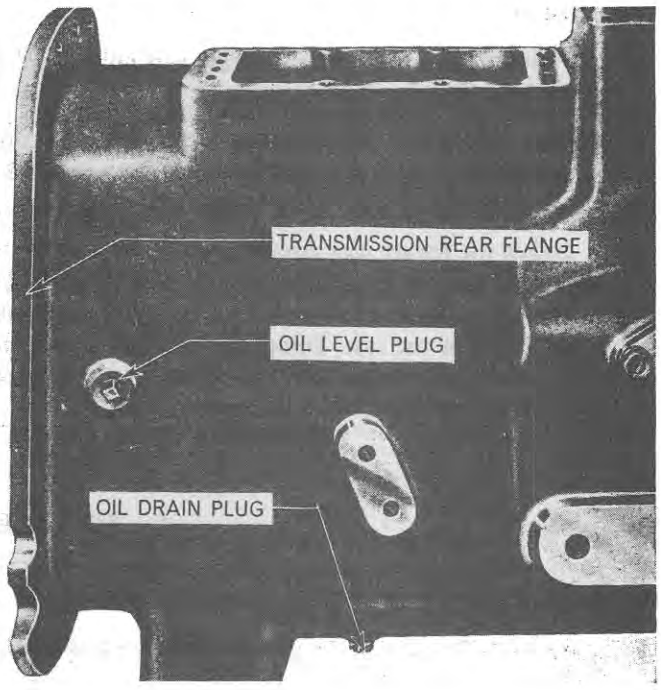

Figure 26
Level Plug and Drain Plug

b. With Independent P.T.O., the hydraulic pump driving gear must be installed, in place of the coupling sleeve mentioned above, and secured with the appropriate snap ring. Also install the drive gear shroud with two rear support plate retaining bolts. Tighten to the specified torque, (See Specifications, Chapter 3), and install new locking wire to all the rear support plate bolts.

9. See Part 15 for details on joining the transmission to the rear axle centre housing.

Dexta 2000, Super Dexta 3000–Live and Transmission P.T.O.

1. Assemble the main drive input shaft assembly to the transmission case, and secure with the appropriate snap ring.

NOTE: ***Ignore steps 2, 3, and 4, when servicing Dexta 2000, Super Dexta 3000, Transmission P.T.O.***

2. Position the P.T.O. countershaft gear in the front compartment, and pass the P.T.O. countershaft through the transmission from the rear to locate in the countershaft gear.

3. Tap the P.T.O. countershaft forward to seat the rear bearing and retain with the appropriate snap ring.

4. Assemble the coupling sleeve to the rear of the P.T.O. countershaft and install the appropriate snap ring.

5. See Part 15 for details on joining the transmission to the rear axle centre housing.

6. Drive the front bearing onto P.T.O. countershaft to locate against the gear, using a convenient length sleeve 1 in. (25·4 mm) I.D. and $1\frac{3}{8}$ in. (34·9 mm) O.D.

7. Using a new gasket locate the front support plate and install the seven self-locking retaining bolts. Tighten the bolts to the specified torque. (See Specifications, Chapter 3.)

NOTE: ***When servicing Live P.T.O. transmissions, note that the P.T.O. countershaft front bearing is housed in the front support plate which must, therefore, be tapped in a sufficient amount at the bottom to allow the seven retaining bolts to be screwed in. The plate may then be drawn evenly into position by tightening these bolts a little at a time.***

8. Position a new gasket on the release bearing hub support, then slide the support assembly over the main drive input shaft, taking care not to damage the oil seal. Install the five retaining bolts and tighten to the specified torque. (See Specifications, Chapter 3.)

NOTE: ***When servicing Major 4000, Transmission P.T.O. make certain the front shaft and sleeve assembly, Figure 11, of the main drive input shaft has been installed. If it has not, install it before proceeding further.***

© FORD MOTOR COMPANY LTD. 1965

Clutch Operating Components

1. Position the clutch release bearing and hub assembly on the release bearing hub support.
2. Pass the release shaft through the left-hand side bushing in the transmission case enough to install the clutch release return spring, Figure 9.
3. Locate the release fork arms in the slots in the release bearing hub, then push the release shaft through the bore in the fork to locate in the bushing in the right-hand side of the case. Install the bolt and locknut to secure the fork to the shaft, and tighten to the specified torque. (See Specifications, Chapter 3.)
4. Place the outer end of the return spring on the lug cast on the inside of the transmission housing and lever the other end onto the web of the release fork, Figure 9.

   NOTE: ***Make sure the release fork is not binding in the slots in the release bearing hub.***
5. Install the transmission oil drain plug and remove the oil level plug, Figure 26. Fill the transmission with oil of the specified grade (see Specifications, Chapter 3), up to the level plug hole. Install and tighten the level plug.
6. Join the engine and front axle assembly to the transmission. (See Part 15.)

4. REAR END OVERHAUL

A. Disassembly

1. Separate the tractor at the transmission to rear axle centre housing flange. (See Part 15.)

Dexta 2000, Super Dexta 3000–Live P.T.O.; Major 4000–Independent and Transmission P.T.O.

a. Suitably support the transmission assembly and separate the tractor at the transmission to engine flange. (See Part 15.)

b. Remove the clutch release bearing and hub, shaft, fork, spring, hub support assembly, and front support plate as detailed in Section 3.

c. Remove the P.T.O. countershaft front bearing using Tools Nos. T.7072 and T.7077 (or Tool No. SW-501-2), Figures 10(A) and 10(B). Make sure that the sliding pegs of Tool No. T.7072 locate in the clearance slots in the P.T.O. countershaft gear, Figure 10(A).

Dexta 2000, Super Dexta 3000–Transmission P.T.O.; Major 4000–Less P.T.O.

2. Remove the locking wire and the ten bolts securing the rear support plate. Lever the support plate assembly off the transmission rear face, and remove the plate, and the P.T.O. countershaft (if applicable), as an assembly, Figure 27.

Major 4000–Independent P.T.O. Only

Cut the locking wire and remove the ten bolts retaining the rear support plate. Lift off the shroud from round the hydraulic pump drive gear.

Dexta 2000, Super Dexta 3000–Live P.T.O.; Major 4000–Independent and Transmission P.T.O.

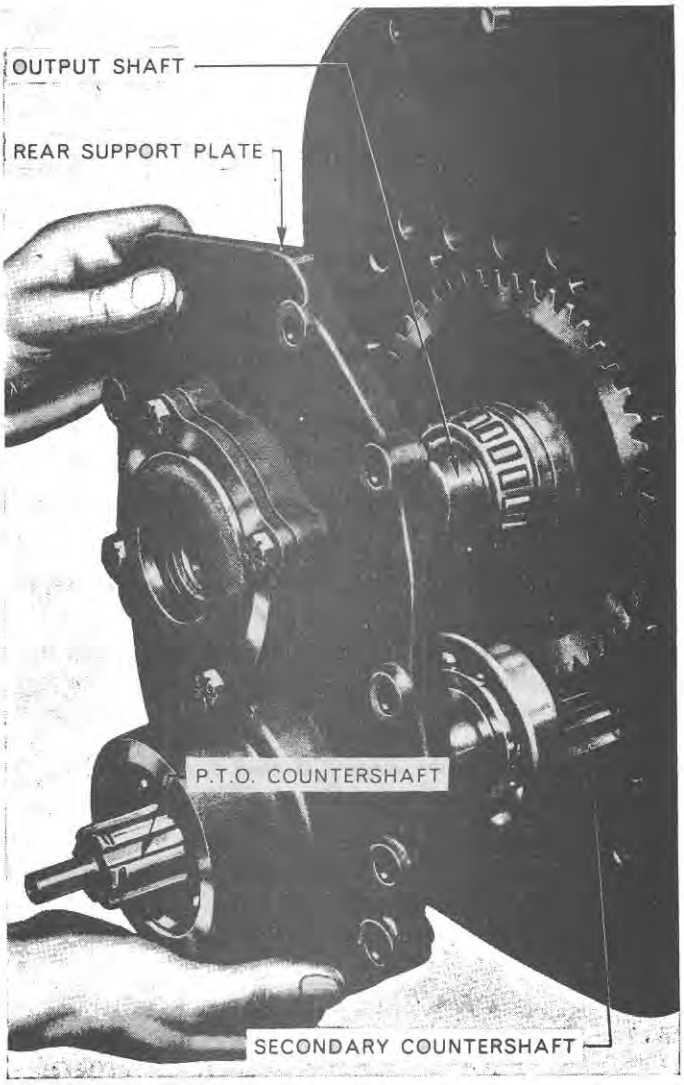

Figure 27
Removing Rear Support Plate Assembly

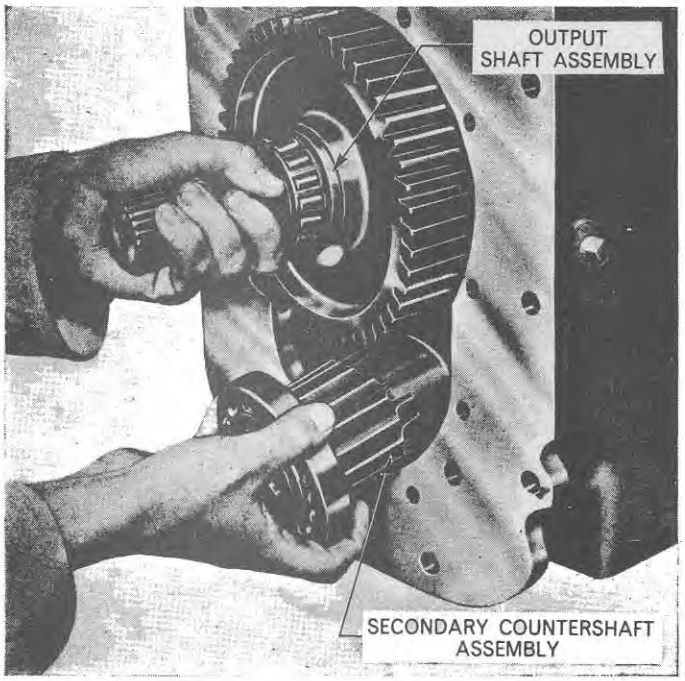

Figure 28
Removing Output Shaft Assembly

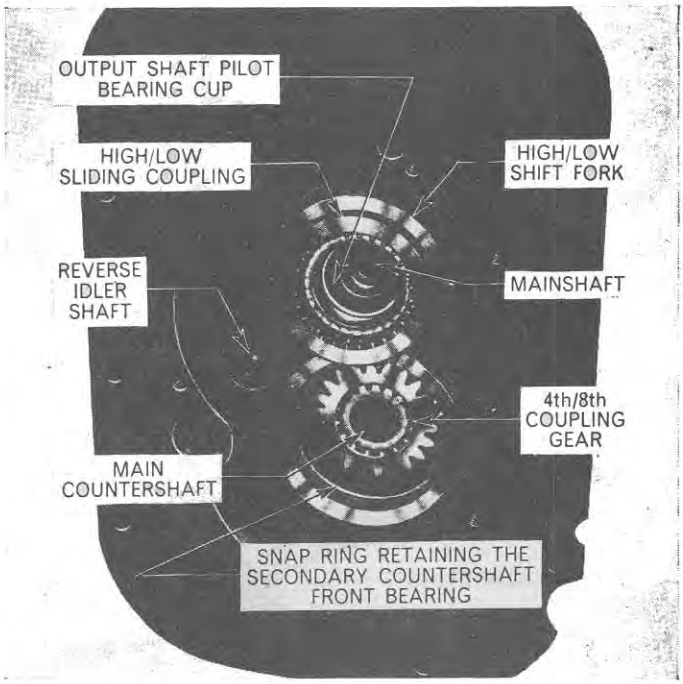

Figure 29
Transmission Rear Compartment

Drive the P.T.O. countershaft rearwards (from the front compartment) with a soft faced mallet, and withdraw the rear support plate and P.T.O. countershaft as an assembly, Figure 27.

3. Unscrew the four self-locking bolts and remove the output shaft retainer and shims from the rear support plate.
4. Partially withdraw the secondary countershaft until the front bearing is out of its location. Rest the assembly on the bottom of the rear compartment, and withdraw the output shaft immediately above it, Figure 28. The secondary countershaft can then be lifted out.
5. Remove the High/Low sliding coupling from the rear of the mainshaft, Figure 29.

B. Inspection and Repair

P.T.O. Countershaft Assembly

1. Inspect the P.T.O. countershaft and rear bearing for wear or damage. If necessary remove the snap ring retaining the coupling sleeve to the rear of the P.T.O. countershaft and slide the sleeve from the countershaft.

Major 4000–Independent P.T.O. Only

Remove the snap ring retaining the hydraulic pump driving gear and remove the gear from the countershaft.

2. Remove the snap ring which retains the P.T.O. countershaft rear bearing to the rear support plate.
3. Use a soft faced mallet to drive the P.T.O. countershaft and rear bearing rearward, out of the support plate.

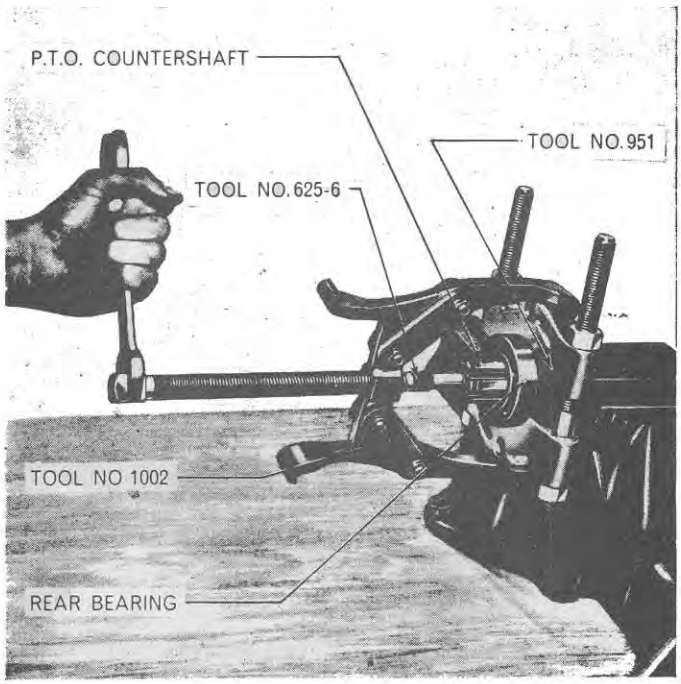

Figure 30
Removing P.T.O. Countershaft Rear Bearing

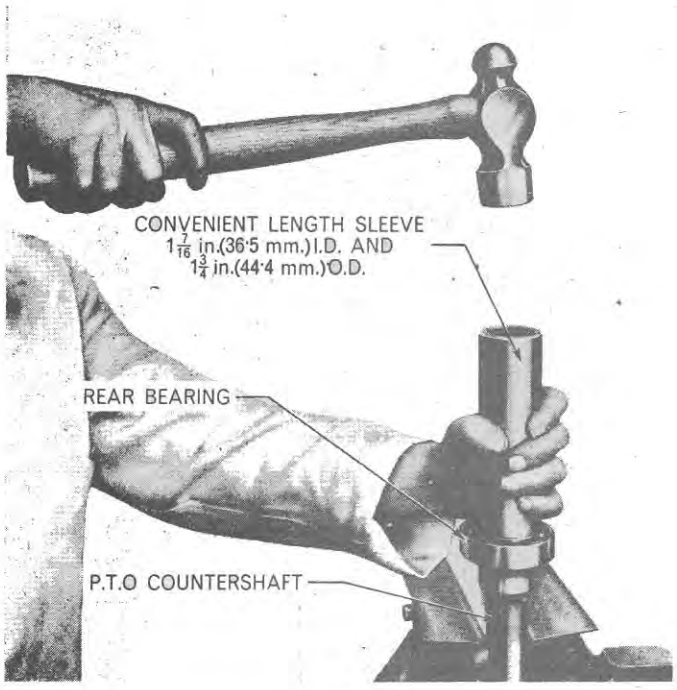

Figure 31
Installing P.T.O. Countershaft Rear Bearing

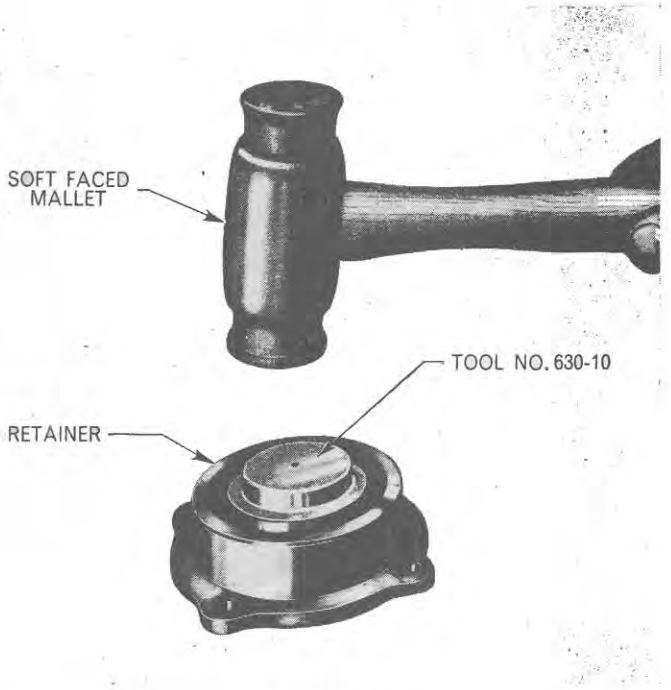

Figure 33
Installing Output Shaft Oil Seal

4. Remove the rear bearing, Figure 30, using Tools Nos. 1002, 951 and 625-6 (625-2 for Major-Independent P.T.O.).
5. Install a new rear bearing to the countershaft using a convenient length sleeve $1\frac{7}{16}$ in. (36·5 mm) I.D. and $1\frac{3}{4}$ in. (44·4 mm) O.D., Figure 31.

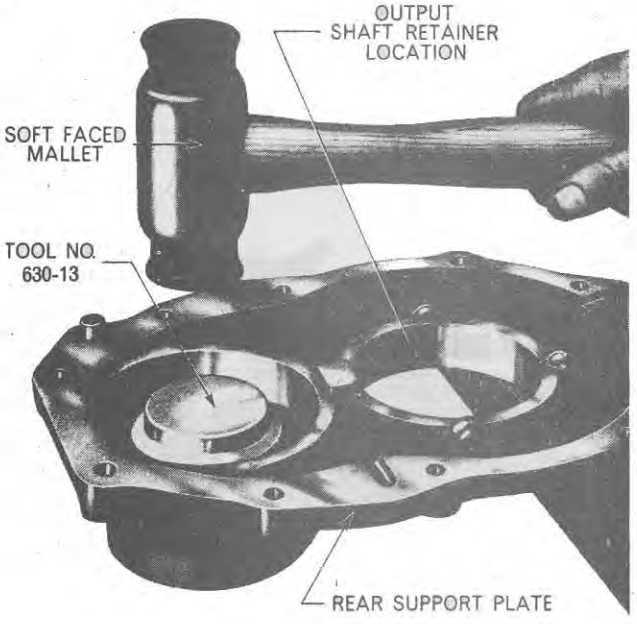

Figure 32
Installing P.T.O. Countershaft Oil Seal

Rear Support Plate

1. Inspect the rear support plate for wear or other damage and if necessary use a new part on assembly.
2. Examine the P.T.O. countershaft oil seal and install a new part unless in perfect condition. If necessary remove the seal with a suitable punch.
3. Install a new P.T.O. countershaft seal to the rear support plate using Tool No. 630-13 (reversed) and a soft faced mallet, Figure 32.

Output Shaft Retainer

1. Inspect the output shaft retainer, oil seal and bearing cup assembly. If any new parts are required, remove first the oil seal, then the bearing cup with a suitable punch.
2. Install a new oil seal to the output shaft retainer with Tool No. 630-10 (reversed) and a suitable driver, Figure 33. The oil seal must be installed before the bearing cup. Install the bearing cup in the same manner using Tool No. 630-15.

Output Shaft

1. Examine the output shaft assembly, Figure 34, for wear or damage. To renew any defective parts, use

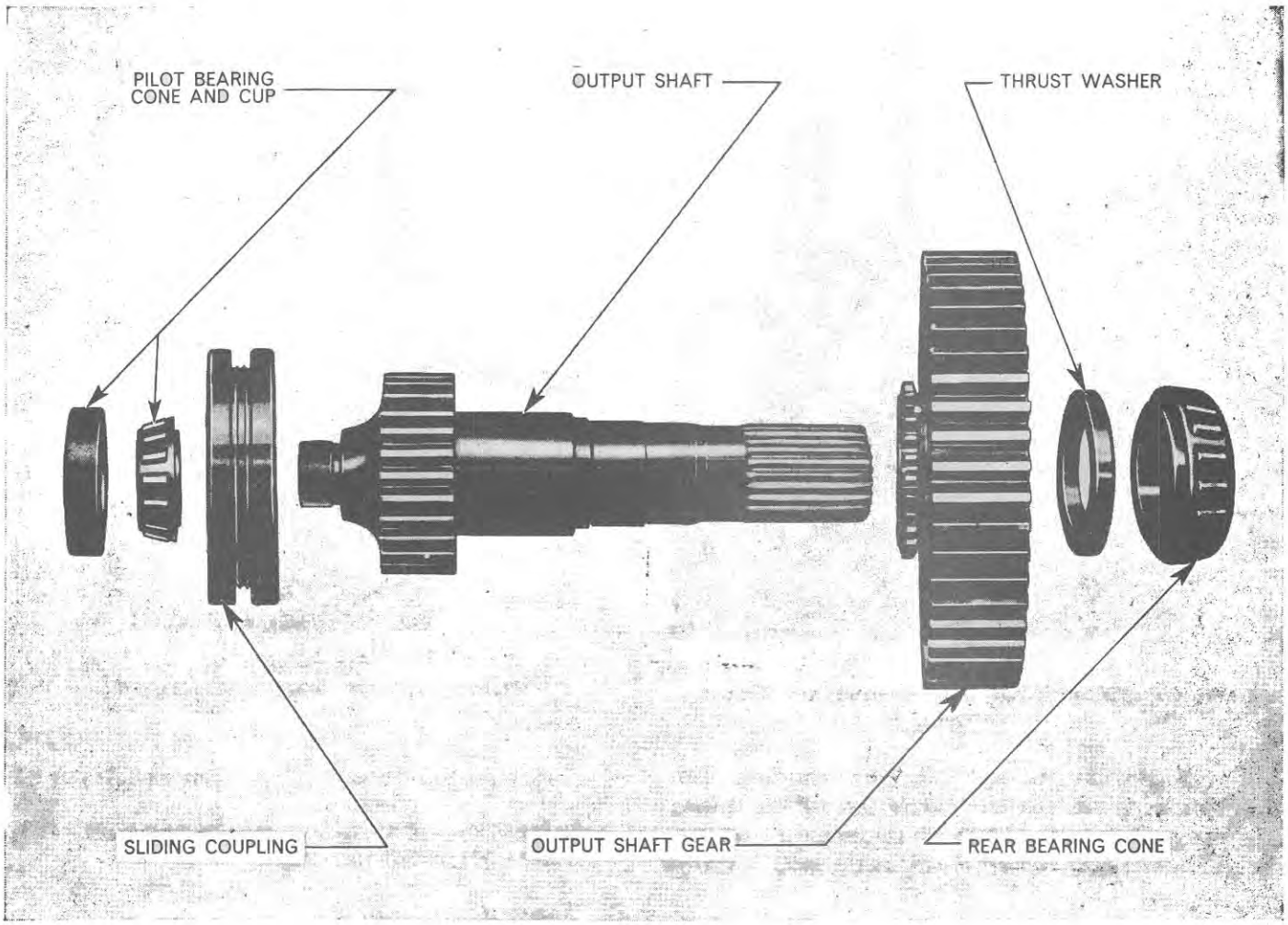

Figure 34
Exploded View of Output Shaft Components

Tools Nos. 1003 and 625-1, to draw off the gear, bearing cone and roller assembly, and thrust washer in one operation, Figure 35.

2. If necessary remove the pilot bearing cone and roller assembly using Tools Nos. 1002, 951 and 625-4, Figure 37.

3. Assemble the output shaft gear so that the dog-teeth on the gear adjoin the dog-teeth integral with the shaft, Figure 34. Install the steel thrust washer aligning the flats on the washer with those on the output shaft. Pull the bearing into position using Tools Nos. 1003, 952, 625-2 and suitable sleeve $1\frac{9}{16}$ in. (39·7 mm) I.D. and $2\frac{1}{16}$ in. (52·4 mm) O.D. of convenient length, Figure 36.

NOTE: ***The output shaft gear and bushing, and also the output shaft and High/Low sliding coupling, are serviced as matched assemblies.***

4. Drive a new pilot bearing into position on the output shaft with a sleeve $1\frac{1}{16}$ in. (26·9 mm) I.D. and $1\frac{1}{4}$ in. (31·7 mm) O.D. of convenient length and a hammer.

NOTE: ***If any bearing cone and roller assembly is found to be damaged the mating bearing cup must be carefully inspected as it is also likely to be damaged. The reverse will also apply if a bearing cup is found to be damaged. If however, only the cone, or only the cup is to be renewed, the new part must bear the same manufacturer's name as the damaged part.***

Secondary Countershaft

1. Check the secondary countershaft assembly for wear or damage and if necessary the rear bearing can be pulled off using Tools 1003, 952, 630-5, and 625-2. The front bearing is removed using Tools Nos. 1003, 951, 630-5, 625-2, also two pieces of steel rod $\frac{3}{16}$ in.

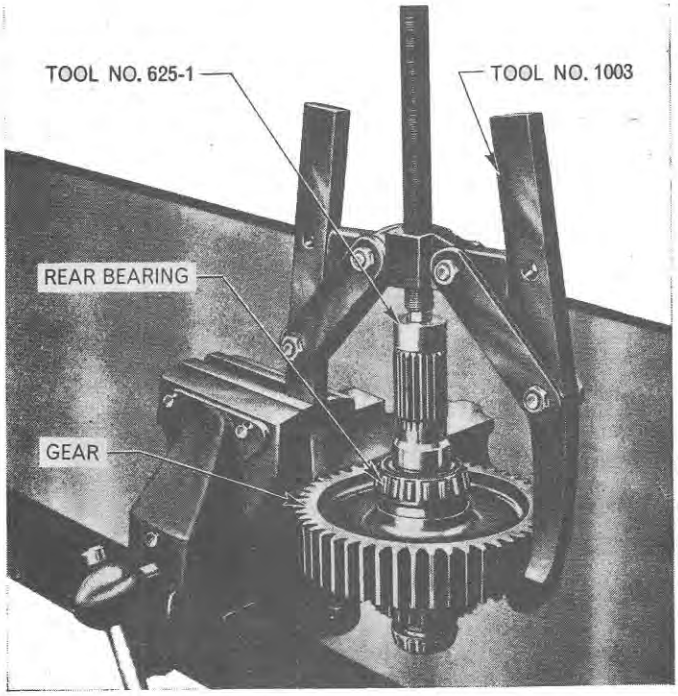

Figure 35
Removing Output Shaft, Rear Bearing, and Thrust Washer

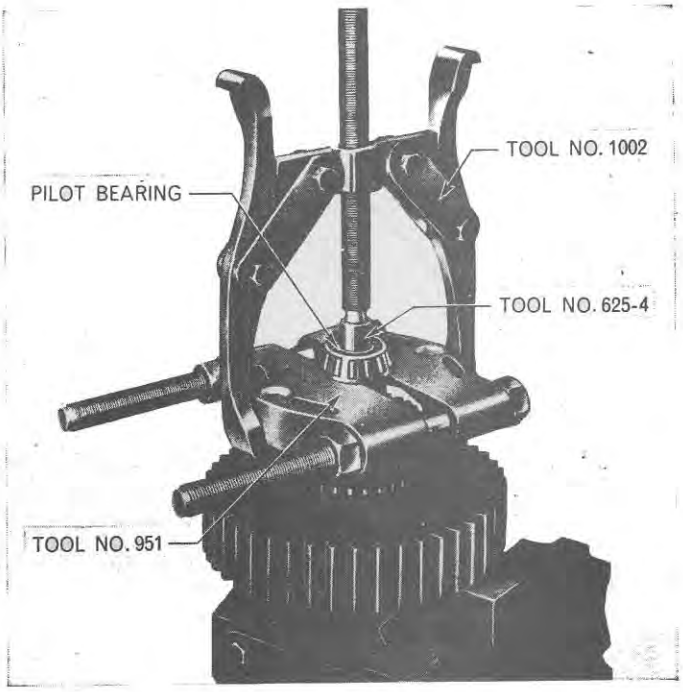

Figure 37
Removing Output Shaft Pilot Bearing

(4·8 mm) diameter and 2 in. (50·8 mm) long. Two pieces of steel rod are inserted through the driving holes in the gear, Figure 38, to contact the bearing. The assembly is then placed in the tools indicated above, so that the rods push the bearing off, Figure 39.

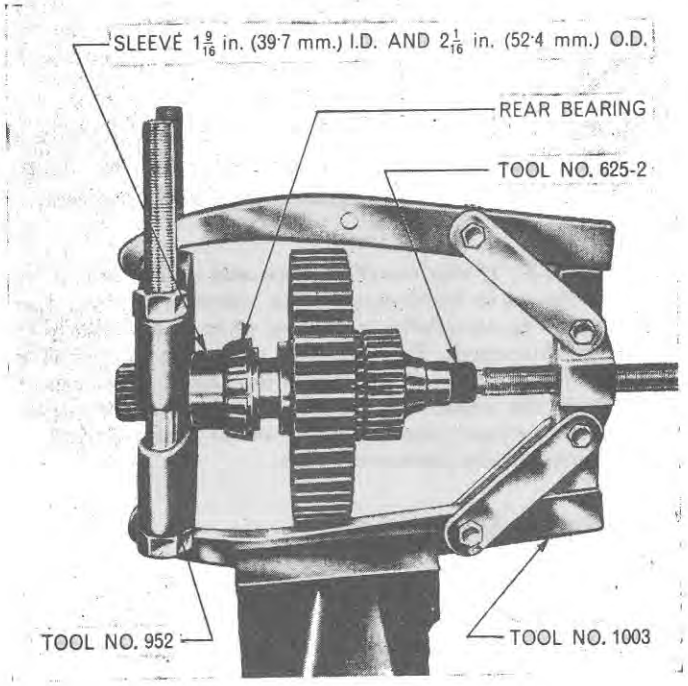

Figure 36
Installing Output Shaft Rear Bearing

2. Install both front and rear bearings using Tools Nos. 1003, 951, 625-2 and 630-5.

C. Assembly

NOTE: ***Bearings, bushings, and all sliding surfaces should be lubricated on assembly. Oil seals should be lightly greased.***

1. Make certain that the High/Low sliding coupling is engaging the dog-teeth on the rear of the mainshaft, Figure 29, and that the High/Low shift fork is located in the groove of the sliding coupling.

2. Make sure the snap ring, located immediately in front of the secondary countershaft front bearing, in the transmission case, Figure 29, is in position before proceeding.

3. Place the secondary countershaft assembly in its approximate location, but resting on the bottom of the compartment.

4. Locate the output shaft above the secondary countershaft and push it into position.

5. Tap the secondary countershaft forward squarely until the front bearing is felt to seat on the snap ring in the transmission case.



Figure 38
Positioning Steel Rods in Secondary Countershaft

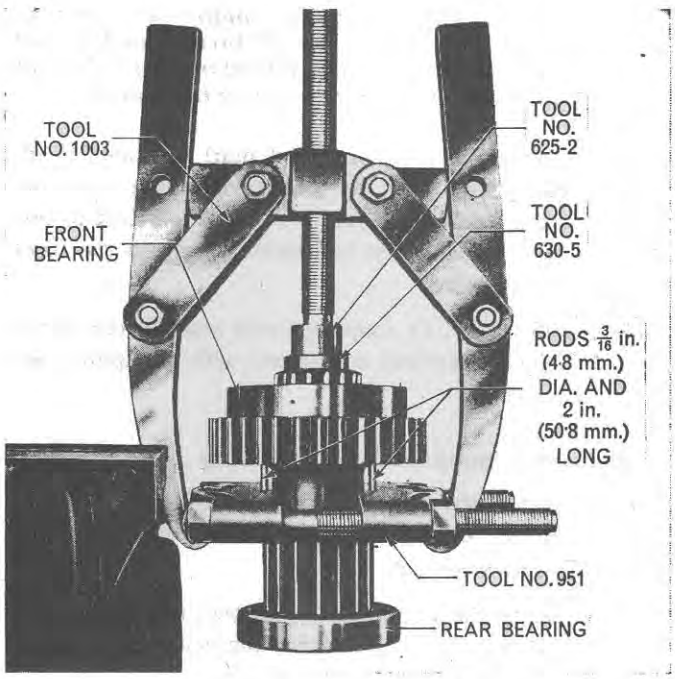

Figure 39
Removing Secondary Countershaft Front Bearing

6. Using a new gasket, locate the rear support plate (less the output shaft retainer assembly) on the transmission rear face by means of the two dowels located in the support plate, and tap the plate into position. Install and tighten the ten retaining bolts to the specified torque. (See Specifications, Chapter 3.) Secure the ten bolts with suitable locking wire.

Major 4000–Independent P.T.O. Only

Install and tighten eight of the retaining bolts, leaving out the ones each side of the P.T.O. countershaft. These two bolts retain the hydraulic pump gear shroud, which is installed in Step 8a, below. Do not install the locking wire at this stage.

Dexta 2000, Super Dexta 3000–Transmission P.T.O. Only

7. Pass the P.T.O. countershaft and bearing assembly through the secondary countershaft to locate in the splines in the main countershaft.

Dexta 2000, Super Dexta 3000–Live P.T.O. and Major 4000–Independent and Transmission P.T.O.

a. Position the P.T.O. countershaft gear in the front compartment and pass the P.T.O. countershaft through the transmission from the rear to engage in the splines in the gear. Protect the spigot and drive the P.T.O. countershaft forward to seat the rear bearing. Secure the bearing with the appropriate snap ring.

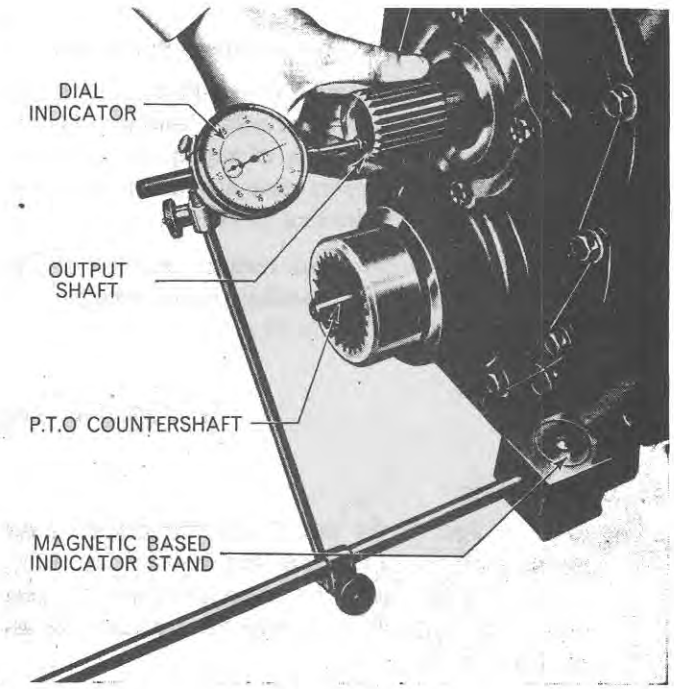

Figure 40
Measuring Output Shaft End-float

NOTE: ***If a new P.T.O. countershaft gear is being installed, the small thrust washer and snap ring must be positioned inside the hub, at the front of the gear prior to installation.***

b. Using a sleeve 1 in. (25·4 mm) I.D. and $1\frac{3}{8}$ in. (34·9 mm) O.D. of convenient length drive the front bearing onto the P.T.O. countershaft to seat firmly against the countershaft gear in the front compartment.

8. Install the P.T.O. coupling sleeve onto the rear of the P.T.O. countershaft and secure with the appropriate snap ring.

Major 4000–Independent P.T.O. Only

a. Install the hydraulic pump driving gear to the P.T.O. countershaft and secure with the appropriate snap ring.

b. Install the shroud round the gear, retaining it with the two support plate retaining bolts, one on either side of the P.T.O. countershaft.

c. Tighten the two bolts to the same torque as the other eight rear support plate retaining bolts. (See Specifications, Chapter 3.) Secure all ten bolts with suitable locking wire.

NOTE: ***When servicing Major 4000 transmissions–Less P.T.O., ignore Steps 7, 7a, 7b, 8, 8a, 8b, and 8c.***

Output Shaft and Mainshaft End-float Elimination

9. It is necessary to eliminate all end-float in the mainshaft and output shaft taper roller bearings. This is effected by installing shims of appropriate thickness between the rear support plate and the output shaft retainer, using the following procedure:—

a. Locate the output shaft retainer assembly in the rear support plate, installing shims totalling approximately 0·060 in. (1·58 mm).

b. Install the four self-locking retaining bolts and tighten to the specified torque. (See Specifications, Chapter 3.)

c. Using a standard dial indicator, calibrated in 0·001 in., or 0·01 mm divisions, Figure 40, set the indicator plunger against the end face of the output shaft. Move the shaft in and out, noting the end-float reading on the indicator.

d. Remove the indicator, and the four self-locking retainer bolts. Withdraw the retainer and shims.

e. Remove a number of shims whose total thickness corresponds with the reading obtained on the dial indicator.

NOTE: ***The total thickness of shims removed can be up to 0.002 in. (0.0508 mm) more than the reading obtained on the indicator, (i.e. 0.002 in. (0.0508 mm) pre-load is achieved), but must not be less than the reading obtained on the indicator. Shims are available in thicknesses of 0.003 in., 0.005 in., and 0.012 in., (0.076 mm, 0.127 mm, and 0.305 mm).***

f. Having selected the correct shims, install the retainer, shims and four self-locking bolts. Tighten the bolts to the specified torque. (See Specifications, Chapter 3.) Reposition the indicator and recheck for end-float.

10. Refer to Part 15, for instructions for joining the tractor at the transmission to rear axle centre housing flange.

Major 4000–Independent and Transmission P.T.O.; Dexta 2000, Super Dexta 3000–Live P.T.O.

a. Install front support plate, the release bearing hub support assembly, and the clutch operating linkage, as previously detailed in Section 3C.

b. Refer to Part 15 for instructions on joining the transmission to the engine and front axle assembly.

5. COMPLETE OVERHAUL

A. Disassembly

1. Refer to Part 15 for instructions on separating the transmission from the engine and front axle assembly, and also for separating the transmission from the rear axle assembly, thus removing the transmission assembly from the tractor.

2. Remove the shift levers and cover assembly as detailed in Section 2A, Step 1.

3. See Section 3A to remove the clutch operating components, the release bearing hub support assembly, the front support plate , the P.T.O. countershaft front bearing and gear (where applicable), and the main drive input shaft assembly.

4. See Section 4A to remove the rear support plate assembly, the output shaft assembly, and the secondary countershaft assembly.

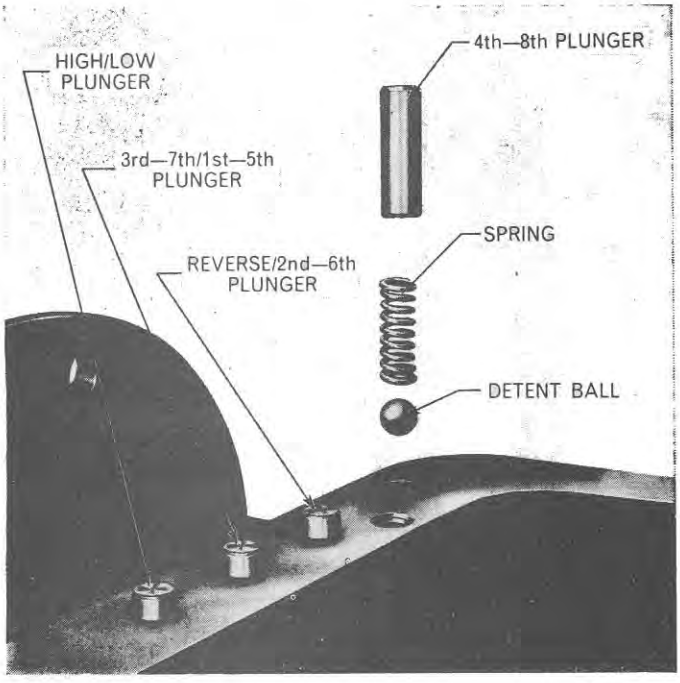

Figure 41
Detent Plungers, Spring, and Ball

Gear Shift Mechanism

NOTE: ***See Section 6, for Seven-Speed Transmission.***

1. Extract the four shift rail plungers and springs from their bores, Figure 41. Pull the High/Low shift fork rearwards, and remove the sliding coupling. Loosen the locknut and remove the screw retaining the fork. Remove the fork to the rear, Figure 42.
2. Rotate the High/Low rail until the screw and locknut, retaining the shift connector, are uppermost. Loosen the locknut, remove the screw, and slide the rail out to the rear, removing the shift connector.

   NOTE: ***As each shift rail is removed, make sure that all four shift rail detent balls are collected from rear rail support bores.***

3. Loosen the locknuts and remove the retaining screws from the remaining shift forks and connectors. Remove the forks and connectors as each rail is withdrawn rearwards.

   NOTE: ***The 4th/8th shift fork is removed at a later operation due to its inaccessibility at this stage.***

4. If necessary remove the threaded plug from the left-hand side of the transmission case, Figure 43, and remove the two interlock plungers from the bore.

Mainshaft Assembly

NOTE: ***On Major transmissions, the mainshaft pilot bearing should have been withdrawn inside the main drive input shaft gear. If, however, due to excess wear or other damage, the bearing is found to have remained on the mainshaft, it must be removed using Tool Nos. T.7072 and T.7077.***

1. Using suitable snap ring pliers, remove the snap ring retaining the mainshaft gears at the front of the mainshaft.
2. Carefully withdraw the mainshaft rearwards, through the secondary compartment, removing the gears, sliding couplings, connectors, and thrust washers, one by one, as they become free.

NOTE: ***Although the mainshafts in each of the two basic transmissions are of different design, Figure 5, the disassembly procedure is identical.***

Reverse Idler Assembly

1. Unscrew the reverse idler shaft retaining bolt situated on the outside of the transmission case, Figure 43. Push the idler shaft forwards and remove the 4th/8th shift fork.
2. Withdraw the 4th/8th coupling gear to the rear.
3. Push the reverse idler shaft out to the rear and lift out the reverse idler gear.

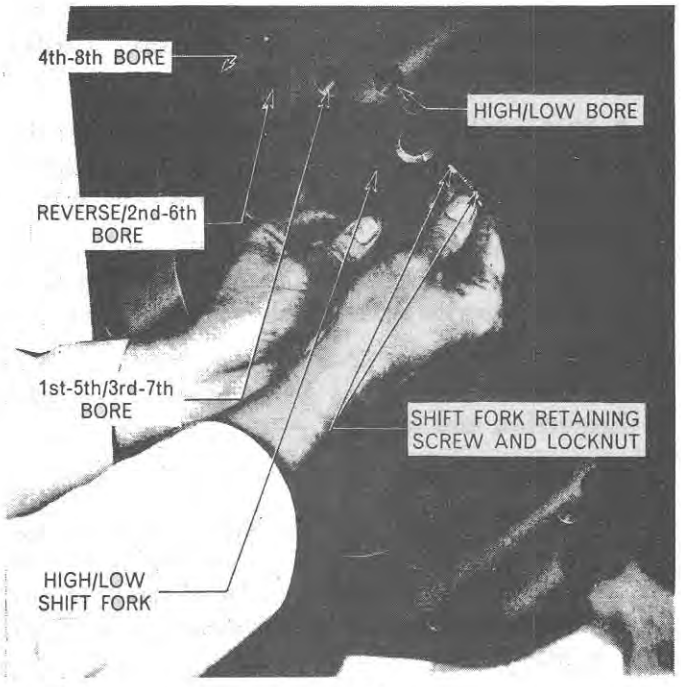

Figure 42
Removing Installing High Low Shift Fork

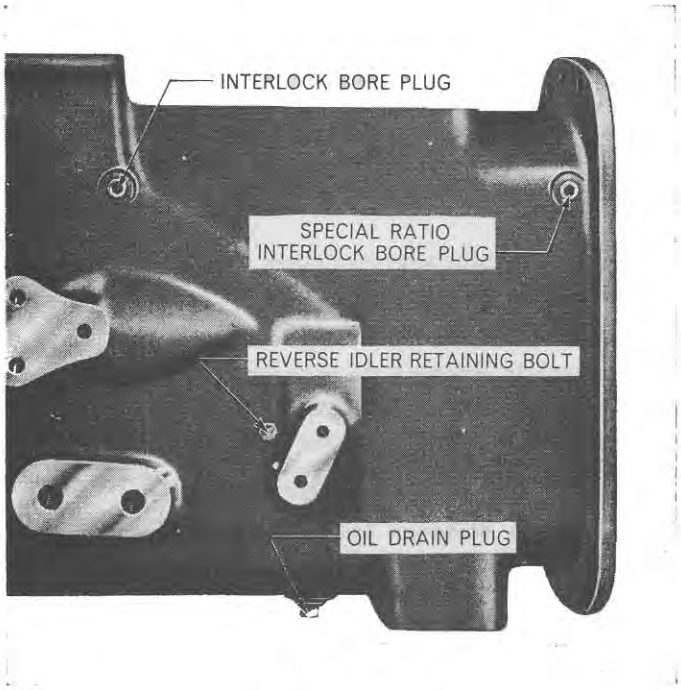

Figure 43
Left-hand side of Transmission

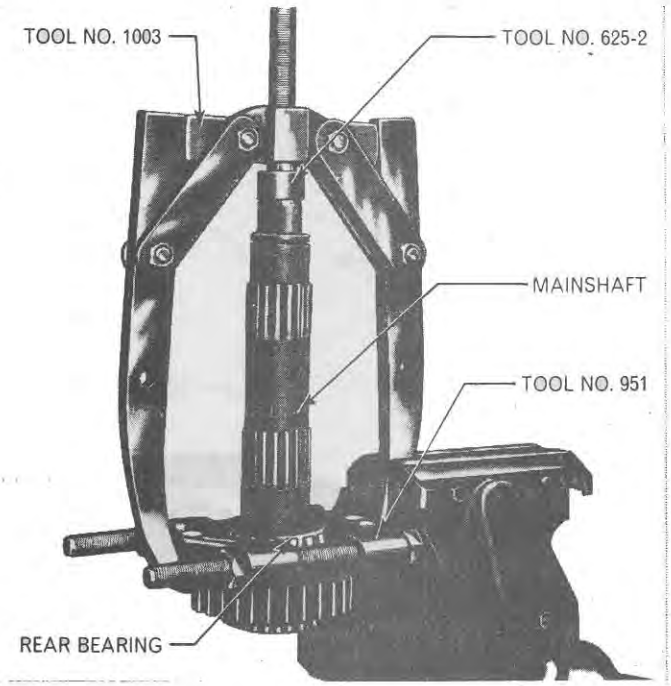

Figure 44
Removing Mainshaft Rear Bearing—Major 4000

Main Countershaft Assembly

1. Remove from the transmission case, the snap ring retaining the main countershaft rear bearing. Using Tool 630-5 and a suitable drift, drive the countershaft rearwards until both front and rear bearings are out of their locations and the main countershaft assembly is loose in the bottom of the transmission.

2. Place suitable wooden or copper blocks behind the cluster gear so that the main countershaft can be driven rearwards through the front bearing and cluster gear.

3. Withdraw the main countershaft through the rear compartment and remove the cluster gear and front bearing from the main transmission compartment.

B. Inspection and Repair

Transmission Case

1. When the transmission has been completely disassembled, the case should be thoroughly cleaned inside to prevent small particles of metal or dirt causing subsequent damage to bearings, oil seals, and gears.

2. Inspect the case for cracks or other damage, and if beyond repair, use a new case on assembly.

Mainshaft Assembly

1. The mainshaft assembly should be carefully examined for excessive wear or damage and any damaged parts renewed.

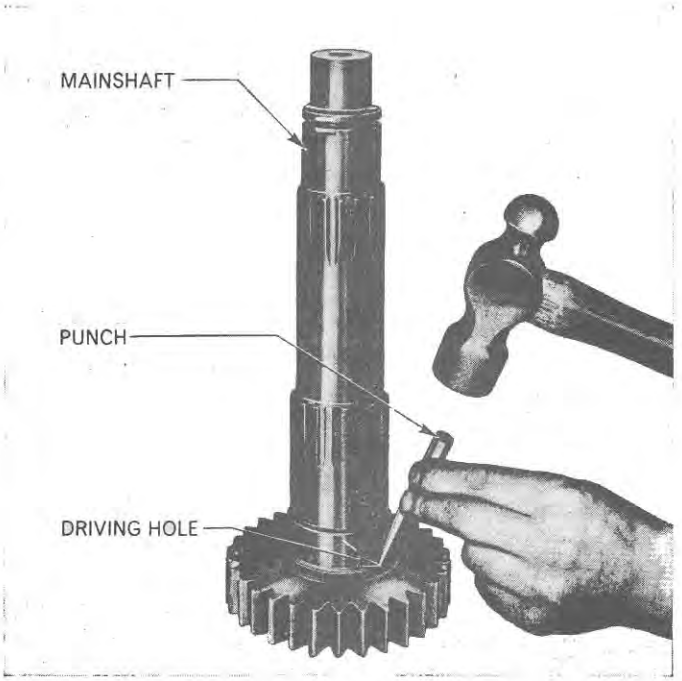

Figure 45
Removing Output Shaft Pilot Bearing Cup

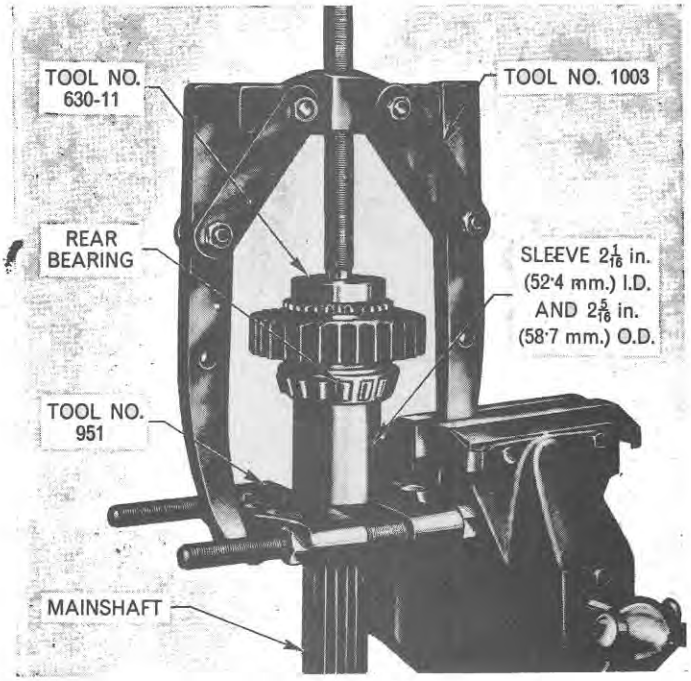

Figure 46

Installing Mainshaft Rear Bearing—Dexta and Super Dexta

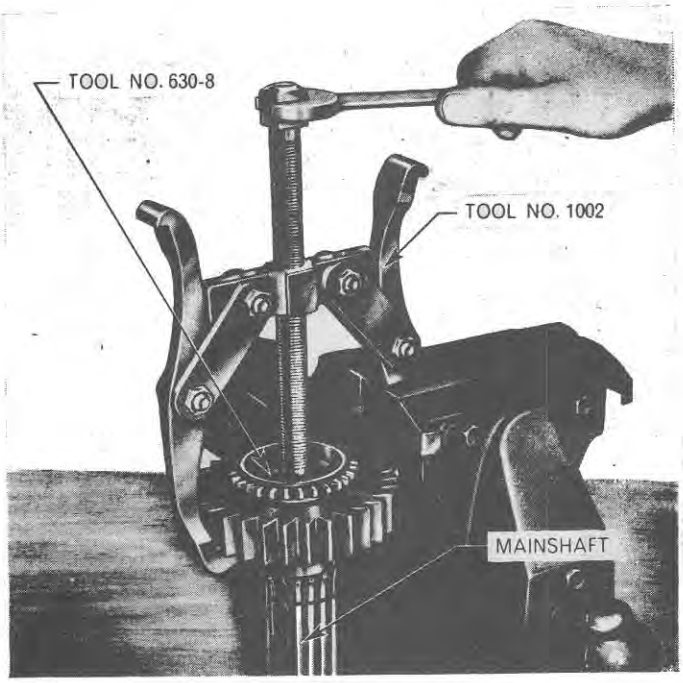

Figure 47

Installing Output Shaft Pilot Bearing Cup

2. If necessary remove the mainshaft rear bearing using Tools Nos. 1003, 951 and 625-2, Figure 44.

3. If necessary remove the output shaft pilot bearing cup from the mainshaft. Use a suitable small punch located through the holes provided in the mainshaft gear, Figure 45, and drive the cup from its location with a hammer.

NOTE: ***The output shaft pilot bearing cup can only be removed from the mainshaft after the mainshaft rear bearing has been removed. If the pilot bearing cup has to be renewed, it must bear the same manufacturer's name as the cone and roller assembly on the output shaft.***

Dexta 2000 and Super Dexta 3000

4. Install the mainshaft rear bearing using Tools Nos. 1003, 951, and 630-11 and hollow sleeve of suitable length; $2\frac{1}{16}$ in. (52·4 mm) I.D. and $2\frac{5}{16}$ in. (58·7 mm) O.D., Figure 46.

Major 4000 Only

Install the mainshaft rear bearing with the same tools as detailed in Step 3 above, but use a larger sleeve, $2\frac{3}{16}$ in. (55·6 mm) I.D. and $2\frac{5}{8}$ in. (66·7 mm) O.D. of convenient length.

5. Install a new pilot bearing cup in the mainshaft using Tools Nos. 1002, and 630-8, Figure 47.

6. If necessary remove the mainshaft rear bearing cup from the transmission case, using Tools 943 and 943-S, Figure 48.

Dexta 2000 and Super Dexta 3000

7. Use Tool No. 630-17, with a suitable drift and hammer, to install the mainshaft rear bearing cup in the transmission case.

Major 4000

Drive the mainshaft rear bearing cup into position with a suitable soft metal drift.

Dexta 2000, Super Dexta 3000

8. Carefully examine the mainshaft gears for excess tooth wear or chipping, and use new parts where necessary on assembly.

Major 4000

Mount the mainshaft gears on the mainshaft and check for excess wear on the bushings in the gears. Also examine the gear teeth, and the dog-teeth with which the sliding couplings engage. Install new gear and bushing assemblies where necessary.

NOTE: ***All mainshaft gears and bushings are serviced as assemblies and must be installed as such.***

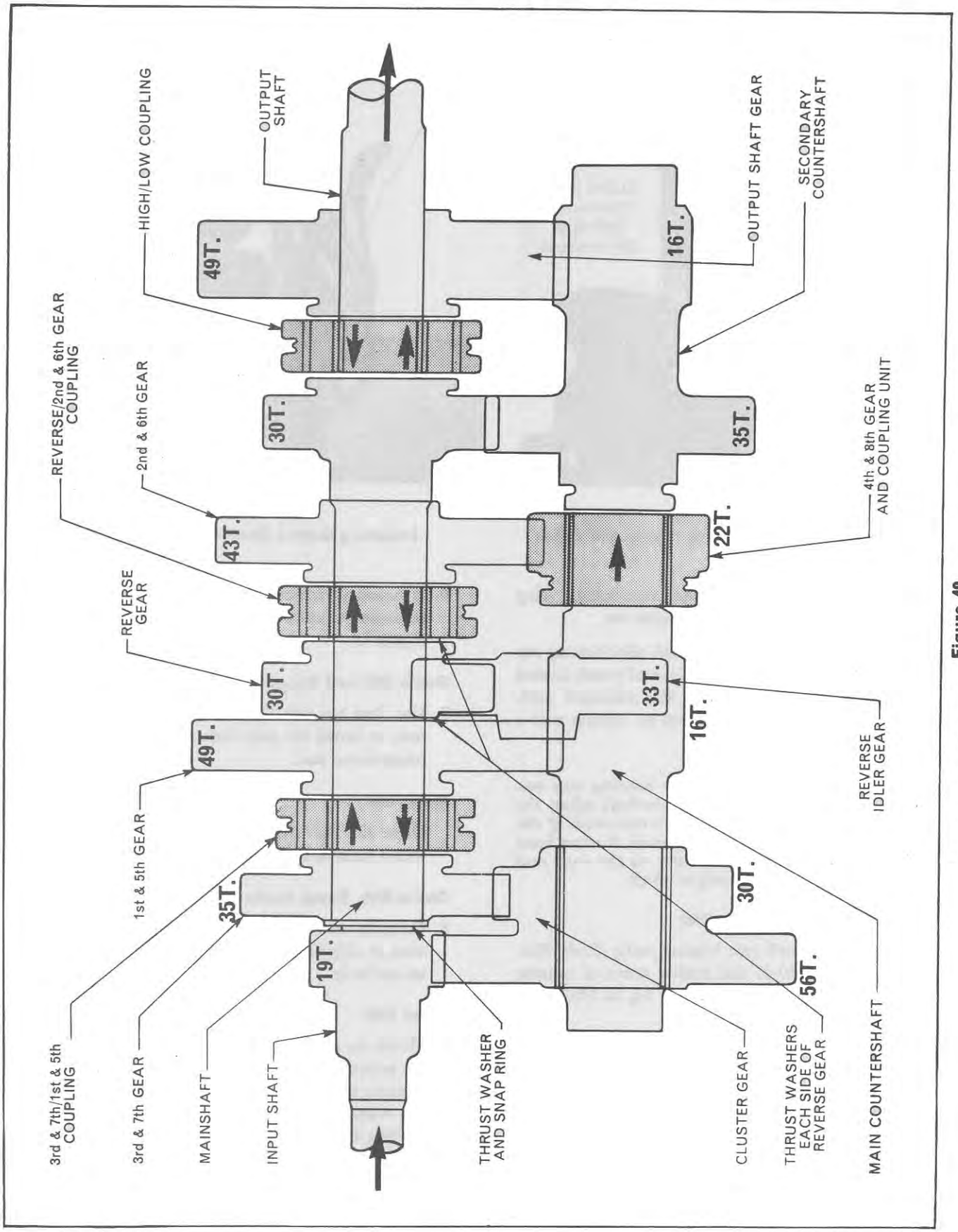

Figure 49
Gear Identification Diagram- Dexta 2000, Super Dexta 3000

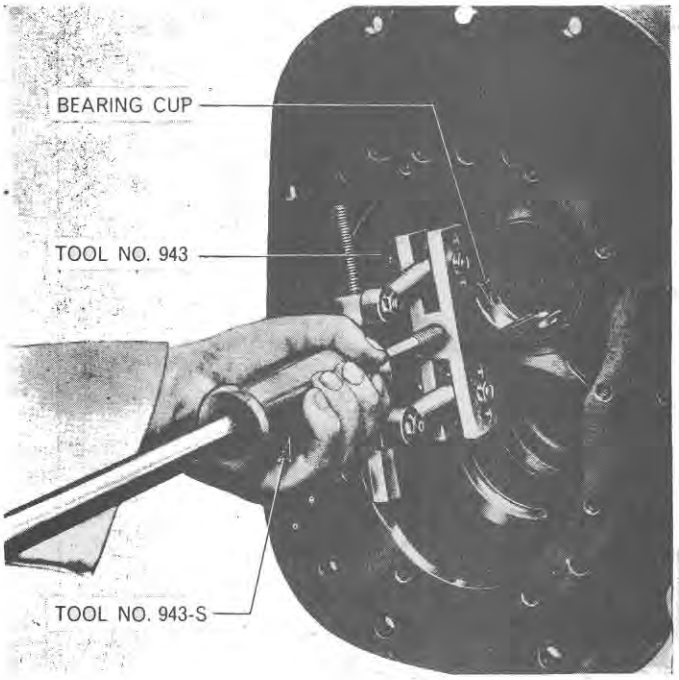

Figure 48
Removing Mainshaft Rear Bearing Cup

Main Countershaft Assembly

1. Check the main countershaft for wear or other damage and if necessary use a new part on assembly.
2. Examine the main countershaft front bearing and if necessary use a new part on assembly.
3. Examine the main countershaft cluster gear and if necessary use a new part on assembly.
4. Examine the main countershaft rear bearing and if necessary remove, using Tools Nos. 1003, 951 and 630-5.

Dexta 2000, Super Dexta 3000–Transmission P.T.O. Only

Use Tool No. 630-4 instead of 630-5. This is due to the internal splines, Figure 4, inside this countershaft causing a reduction in diameter.

Reverse Idler Assembly

1. Mate the reverse idler shaft and gear, and check for free play between bushing and shaft.
2. Examine the idler gear teeth for excessive wear or chipping.
3. Mount the 4th/8th shift fork on the small diameter of the idler shaft and make sure the fork slides freely, but without any wobble, or binding, due to wear.
4. Make sure the sealing washer, on the bolt retaining the reverse idler shaft, is not damaged.
5. Renew any defective parts on assembly.

NOTE: ***No attempt should be made to install the reverse idler gear bushing alone, as it is serviced as an assembly with the gear.***

Gear Shift Mechanism

1. Examine the shift forks, couplings and connectors for wear or distortion. Special care must be taken to see that the 4th/8th fork and coupling gear are sliding freely and not affected by wear. Excessive wear would cause these particular parts to bind more easily than the other forks and couplings.
2. Examine the detents on the four shift rails for wear, and check the rails for straightness by rolling them on a flat surface. Renew any damaged parts on assembly.
3. Make sure the detent balls, springs and plungers are not sticking in their bores. If necessary, use a fine abrasive paper to clean the plungers. Renew any badly damaged parts.

C. Assembly

NOTE: ***Clean all components thoroughly in a gasoline or kerosene bath before installation. Bearings, bushings and all sliding surfaces should be lubricated on assembly.***

Main Countershaft

1. Make sure the snap ring, located immediately in front of the main countershaft front bearing in the case, is in position before proceeding.
2. Tap the main countershaft front bearing into the transmission case to seat against the snap ring mentioned in Step 1 above.
3. Rest the main countershaft cluster gear in the bottom of the main compartment, with the larger helical gear to the front.
4. Pass the main countershaft and rear bearing assembly in from the rear compartment to engage in the internal splines of the cluster gear.
5. Use Tool No. 630-5 and a suitable drift and hammer to drive the main countershaft assembly forward into the front bearing. When in position, retain with the snap ring behind the rear bearing.

Dexta 2000, Super Dexta 3000–Transmission P.T.O. Only

Proceed as outlined in Step 5 (above) but use Tool No. 630-4 instead of 630-5.

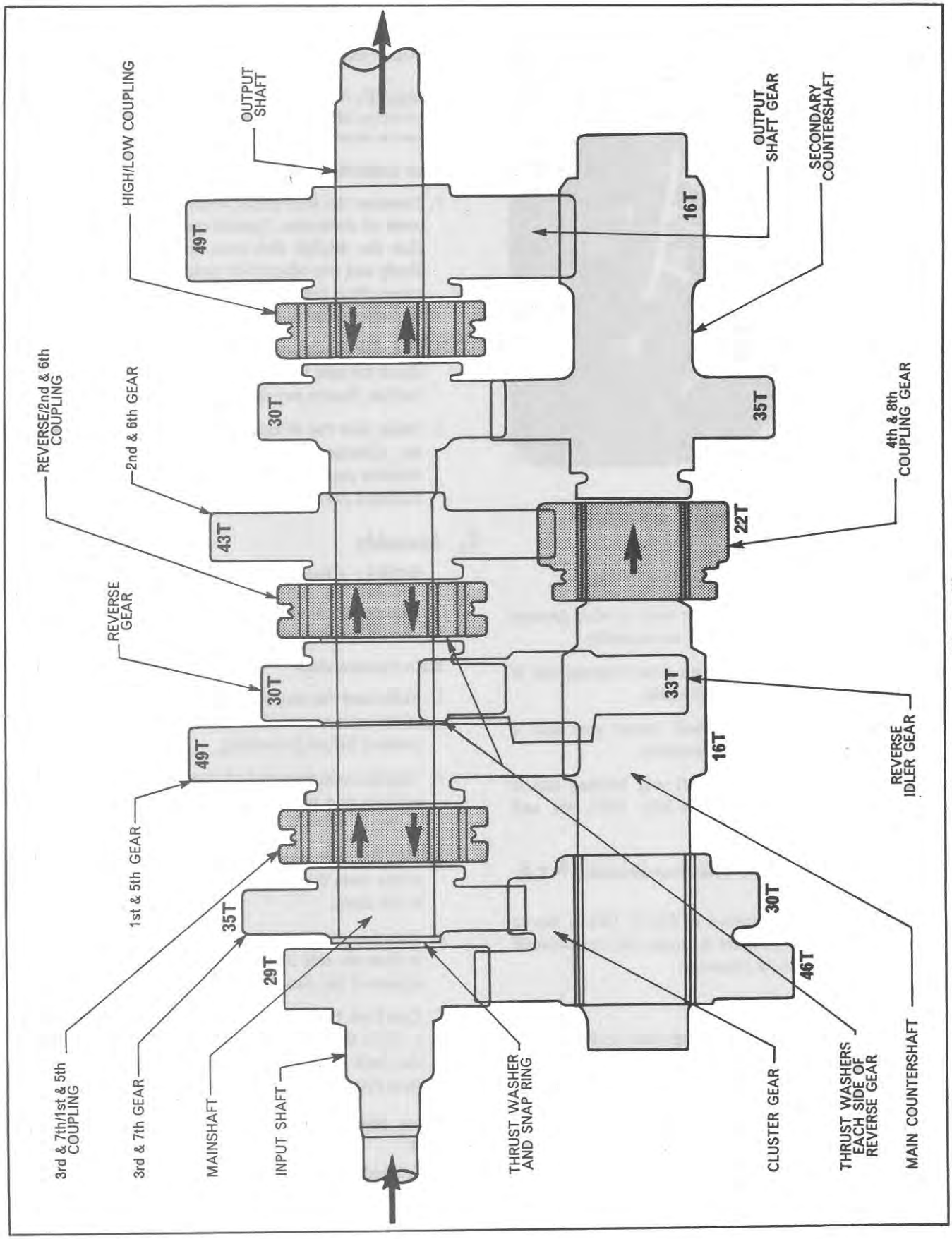

Figure 50
Gear Identification Diagram—Major 4000

6. Install the 4th/8th coupling gear onto the rear of the main countershaft, Figure 29, with the shift fork groove to the front.

Reverse Idler Assembly

1. Insert the reverse idler shaft through the rear compartment, larger diameter forward, into the main compartment. Hold the reverse idler gear in position with the hub of the gear facing forward, and push the shaft through the gear.
2. Push the shaft forward enough to allow the 4th/8th shift fork to be mounted on the small diameter of the shaft, making sure the fork is located in the groove in the 4th/8th sliding coupling.
3. Secure the shaft with the locking bolt and rubber-coated sealing washer located in the left-hand side of the transmission case, Figure 43.

Mainshaft Assembly

1. Pass the mainshaft and rear bearing assembly through the rear compartment assembling the gears to the shaft in the following sequence, Figures 49 and 50.
   a. 2nd-6th gear (dog-teeth forward)
   b. Reverse/2nd-6th sliding coupling and connector
   c. Phosphor-bronze thrust washer
   d. Reverse gear (dog-teeth rearwards)
   e. Phosphor-bronze thrust washer
   f. 1st-5th gear (dog-teeth forward)
   g. 3rd-7th/1st-5th sliding coupling and connector
   h. 3rd-7th gear (dog-teeth rearward)
   i. Steel thrust washer
   j. Snap ring.

Gear Shift Mechanism

NOTE: ***See Section 6, for Seven-Speed Transmission.***

1. If necessary, install the two interlock plungers in the bore from the left-hand side of the transmission case and replace the threaded plug, Figure 43.
2. Pass the 4th-8th shift rail, Figure 51, into the rear of the bore nearest the left-hand side of the casing with the single detent to the front. Assemble the 4th/8th shift arm assembly onto the rail, so that the operating arm is located in the hole in the 4th-8th shift fork mounted on the reverse idler shaft.
3. Slide the rail forwards until it locates in the front support bore. Install the shift arm retaining screw and locknut and tighten to the specified torque. (See Specifications, Chapter 3.)

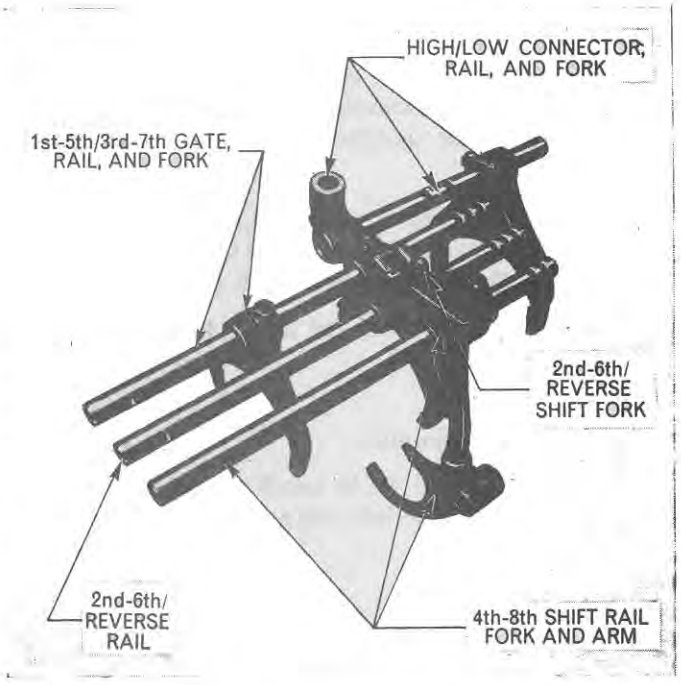

Figure 51
Shift Mechanism Components

NOTE: ***When installing the remaining shift rails, make sure that the rails already in place are in the neutral position, because otherwise the interlock plunger will prevent the rail about to be installed from entering the front support bore.***

4. Install the Reverse/2nd-6th shift rail into the second bore, Figure 42, from the left-hand side of the transmission, with the three detents to the rear, and assemble the Reverse/2nd-6th shift fork onto the rail.
5. Slide the rail forwards until it locates in the front support bore. Install the shift fork retaining screw and locknut (see Note below), and tighten to the specified torque. (See Specifications, Chapter 3.)

NOTE: ***This locknut must be tightened at this stage as it becomes inaccessible when the next rail is fitted.***

6. Install the 3rd-7th/1st-5th rail, single detent forward, into the third bore, Figure 42, from the left-hand side of the transmission. Assemble the shift gate, and the shift fork onto the rail and push the rail forward into the front support bore.
7. Install the respective retaining screws and locknuts and tighten to the specified torque. (See Specifications, Chapter 3.)
8. Install the High/Low rail into the extreme right-hand

bore and assemble the shift connector onto the forward end. Assemble the High/Low fork to the rear end of the rail in the secondary compartment, Figure 42. Install the respective retaining screws and locknuts and tighten to the specified torque. (See Specifications, Chapter 3.)

9. Locate the High/Low shift fork on the High/Low sliding coupling and position the coupling on the dog-teeth at the rear of the mainshaft, Figure 29.
10. Install the four shift rail detent balls, springs and plungers, Figure 41.

Remaining Assemblies

1. Refer to Section 4C to install the output shaft, the secondary countershaft, the rear support plate assembly, and to carry out the mainshaft and output shaft end-float adjustment.
2. Refer to Section 3C to install the main drive input shaft, the P.T.O. countershaft gear (where applicable), the front support plate, the clutch release hub support assembly, and the clutch operating components.
3. Carry out a functional check, before proceeding further, by making sure all gears and shafts will rotate without binding, and that the sliding couplings will freely engage with their respective gears.
4. Refer to Section 2C for installing the gear shift levers and cover assembly.
5. Join the transmission to the engine and front axle assembly, and to the rear axle assembly as detailed in Part 15.

6. SEVEN-SPEED TRANSMISSION

Legal requirements in certain territories call for a road speed limit for tractors. Using an eight-speed transmission the Dexta, Super Dexta, and Major tractors can exceed this speed limit in 8th gear. To prevent this, a seven-speed transmission is available for these territories. The seven-speed transmission is identical to the eight-speed, with the following exceptions:

1. A special interlock plunger is located between the High/Low shift rail, and the 4th/8th shift rail, Figure 52. This plunger prevents the 4th/8th shift rail moving into the engaged (rearward) position when the High/Low rail is in the High position, Figure 53. Conversely, it prevents the High-Low shift rail moving into the High position when the 4th/8th rail is in the engaged (rearward) position. Hence, 8th gear is locked out without interfering with the rest of the shift mechanism. This interlock system involves only three parts which are different to the eight-speed transmission. These are an extended 4th shift rail with an extra detent; a High/Low shift rail with an extra detent; and the interlock plunger itself, Figure 52. This system is identical in both the Dexta/Super Dexta, and the Major, seven-speed transmissions.
2. These seven-speed transmissions have slightly lower input gear ratios than the eight-speed versions. (See Specifications, Chapter 3.) This of course necessitates a different main drive input shaft and main countershaft cluster gear on both the Dexta/Super Dexta, and the Major transmissions.

Servicing procedure is affected only when removing or installing the shift rails. Details are given below to cover the removal and installation of the interlock plunger. Note that the shift rails are removed in the reverse order to those in the eight-speed transmission.

Disassembly

1. Refer to Section 2A, Step 1, to remove the gear shift levers and cover assembly.

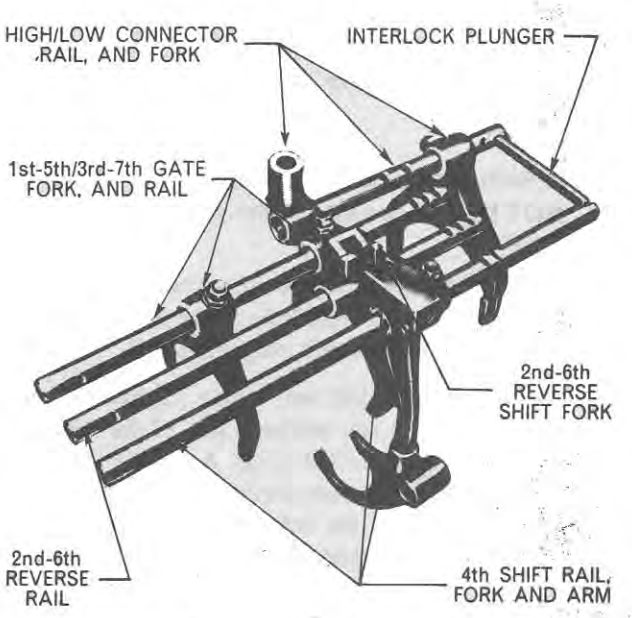

Figure 52
Shift Mechanism Components—7-Speed

2. Refer to Section 4A to remove the rear support plate assembly, and also the output shaft and secondary countershaft assemblies.
3. Make sure the High/Low shift rail is in the Low position (rearward). Remove the locknut and retaining screw from the 4th shift arm assembly, Figure 52.
4. Slide out the 4th shift rail rearwards, removing the shift arm assembly.
5. Remove the threaded plug from the interlock bore on the left-hand side of the transmission, Figures 43 and 53.
6. Insert a small screwdriver through the rear of one of the shift rail bores, and move the special interlock plunger to the left until it can be removed from the end of the bore.
7. The remaining rails and associated parts are removed as detailed in Section 5A, "Gear Shift Mechanism".

Assembly

NOTE: ***The shift rails are installed in the reverse order to those on the eight-speed transmission.***

1. Install the High/Low shift rail to the right-hand shift rail bore, Figure 42, assembling the shift fork and the connector. Install the respective retaining screws and locknuts, and tighten to the specified torque. (See Specifications, Chapter 3.)
2. Install the 1st-5th/3rd-7th shift rail, Figure 52, in the second bore from the right-hand side, assembling the gate and fork, and installing the retaining screws and locknuts. Tighten the screws and locknuts to the specified torque. (See Specifications, Chapter 3.)
3. Install the reverse/2nd-6th shift rail, assembling the shift fork. Install the retaining screw and locknut, and tighten to the specified torque. (See Specifications, Chapter 3.)
4. Insert the special interlock plunger into the bore from the left-hand side of the casing. Install and tighten the threaded plug, Figure 43.
5. Install the 4th shift rail into the left-hand shift rail bore, assembling the 4th shift arm assembly. Make sure the bottom of the arm is located in the 4th shift fork, Figure 52, and install the retaining screw and locknut. Tighten the screw and locknut to the specified torque, (See Specifications, Chapter 3.)
6. From this stage on, all assembly details are identical to the eight-speed. (See Section 5C, "Gear Shift Mechanism".)

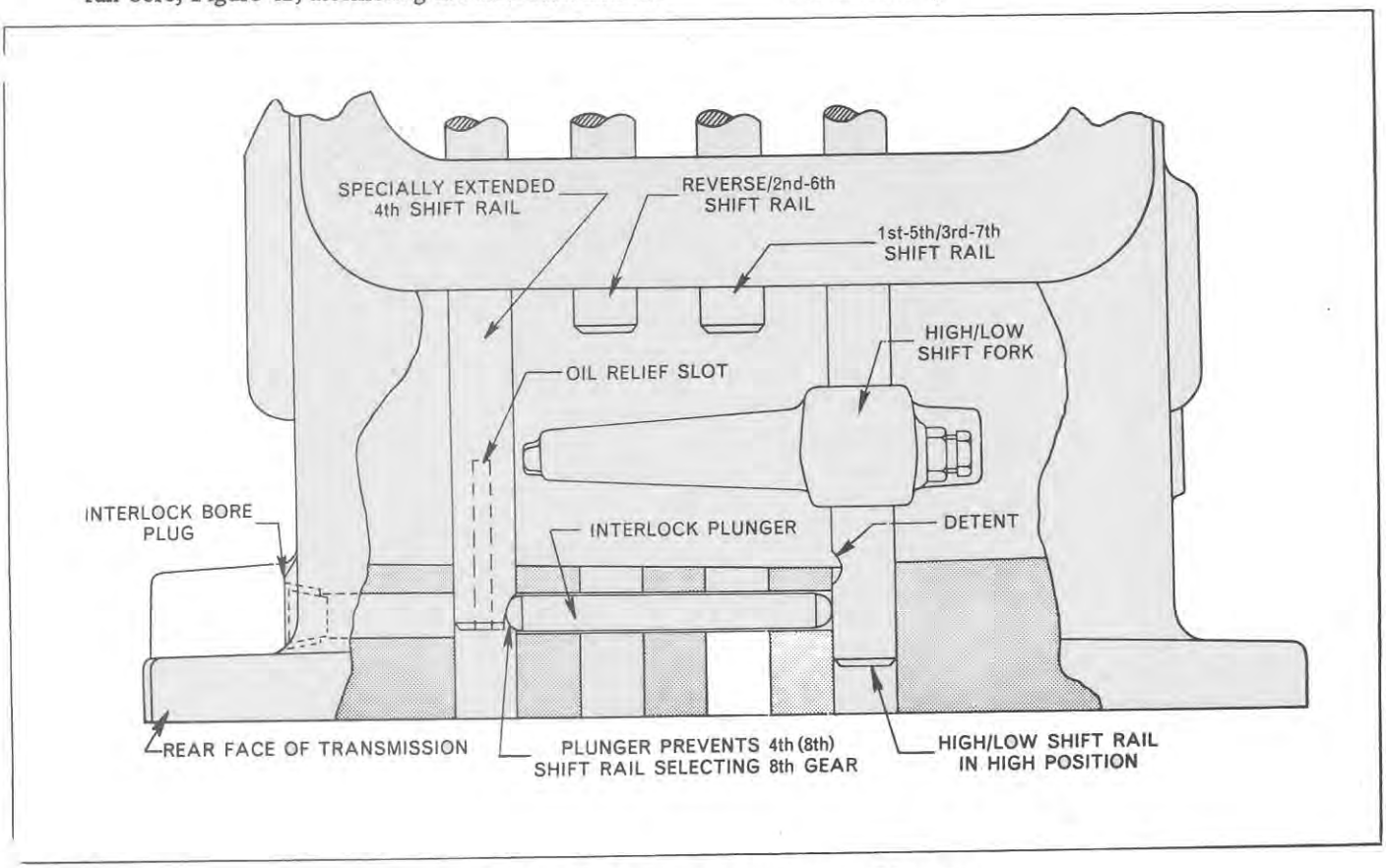

Figure 53. 7-Speed Interlock Plunger Diagram

Part 7

SEVEN AND EIGHT-SPEED TRANSMISSION

Chapter 2

SUPER MAJOR 5000

Section		Page
1.	Description and Operation	33
2.	Shift Levers and Cover Overhaul	33
3.	Front End Overhaul	37
4.	Rear End Overhaul	39
5.	Complete Overhaul	44
6.	Seven-Speed Transmission	50

1. DESCRIPTION AND OPERATION

This transmission is of constant mesh design and provides eight forward and two reverse speeds, Figure 57. The (longer) main lever selects four forward and one reverse basic ratios, the (shorter) secondary lever giving a high and low range in each basic ratio.

Incorporated in the transmission top cover assembly is a starter safety switch to make sure the starter can be operated only when the main gear lever is in the neutral position.

The gears are all of the spur type and the gear connections are made by sliding couplings and connectors. In contrast to the eight-speed transmissions covered in Chapter 1, this transmission has an inverted layout, i.e. the mainshaft becomes the main countershaft and is located in the bottom drive line, and the main countershaft becomes the mainshaft in the top drive line, Figure 54. Similarly the output shaft and the secondary countershaft are inverted in location, but retain the same component titles as the other eight-speed equivalents.

This transmission is available only with Independent P.T.O. The Independent P.T.O. drive shaft is a single component which is splined into the engine flywheel and transmits the drive right through the top drive line of the transmission to engage in the Independent P.T.O. clutch pack situated in the rear axle centre housing.

NOTE: ***The normal engineering procedure of making the bearings a press fit on the shafts and a push fit in the housings has been employed in this transmission and, unless it is necessary to install new bearings, or gain access to other components, it is recommended that they are not removed from the shafts.***

Refer to Section 6 of this Chapter for details of the Seven-Speed Transmission.

2. SHIFT LEVERS AND COVER OVERHAUL

A. Disassembly

1. Remove the metal and rubber cover, disconnecting the wires from the starter safety switch and unscrew the thirteen bolts and spring washers retaining the gear levers and cover, and remove as an assembly.
2. Unscrew the starter safety switch from the top of the cover. Remove the two self-locking bolts retaining the roller support plate and the switch retainer to the cover. Remove the roller support plate, the roller, the plunger, and the switch retainer from their locations, Figure 55.
3. Remove the three self-locking bolts retaining the main gear lever stop plate and actuating connector assembly. Remove the assembly from the cover.
4. Remove the two self-locking bolts retaining the secon-

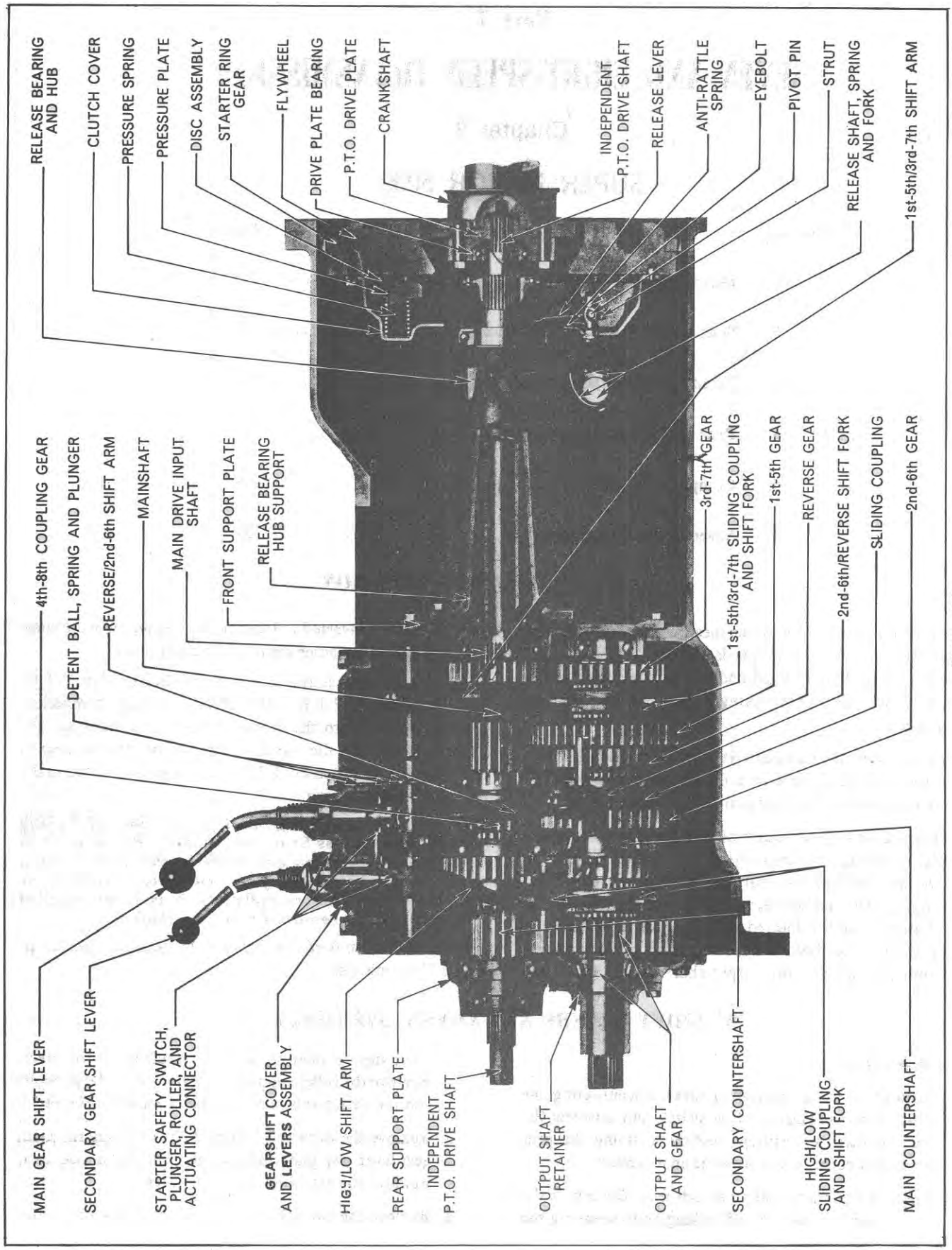

Figure 54
Super Major 5000 Eight-Speed Transmission

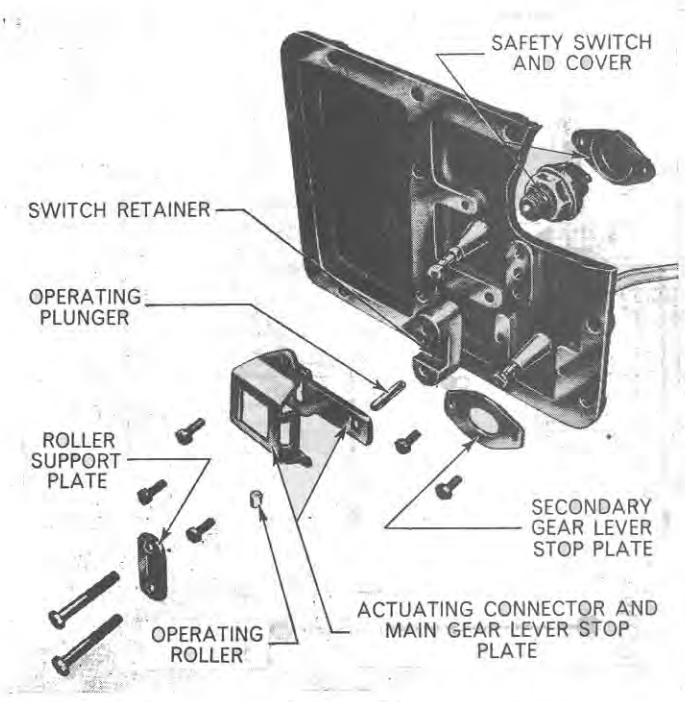

Figure 55
Safety Switch Operating Components

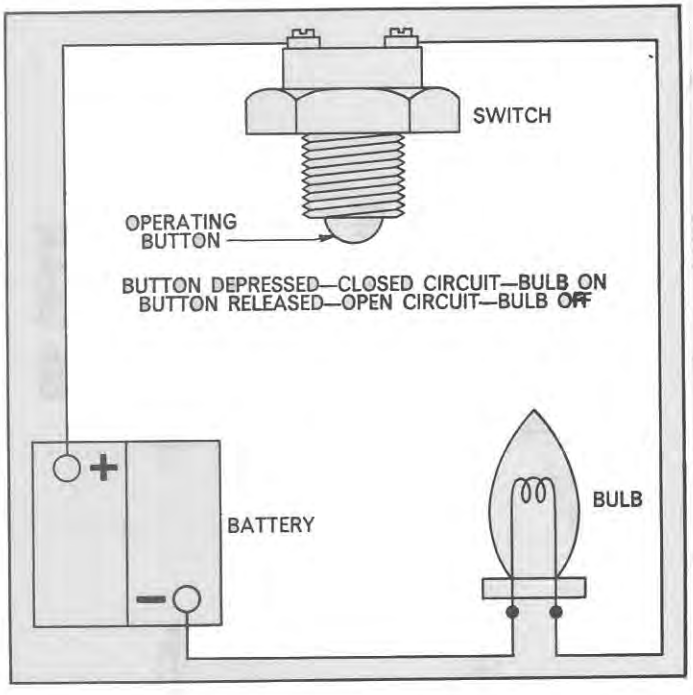

Figure 56
Safety Switch Test Circuit

dary gear lever stop plate, Figure 55, and remove the plate.

5. Using a file or hacksaw, partially cut through the gear lever spring retaining clips, completing the cut with a hammer and small chisel. Having first removed the balls, withdraw the levers through the cover, removing the springs and retainers.

6. If worn or damaged, or a new cover is to be installed, the two small dowels, which prevent the gear levers from rotating in the sockets in the cover, may be punched out from the exterior of the cover.

B. Inspection and Repair

1. Using a suitable test bulb, wires, and battery, Figure 56, test the starter safety switch for correct operation by depressing the operating ball, which should close the circuit and light the test bulb. On releasing the operating ball, the test bulb should be extinguished. If the switch is faulty, a new part should be installed.

2. Inspect the gear lever ends, and all other sliding parts, for wear or damage. Install new parts as necessary.

C. Assembly

1. If necessary, install the two small dowels to the inside of the gear lever sockets.

2. Pass the levers through the cover from underneath, positioning the retainers and springs. Compress the springs and secure with two new spring retaining clips. Install the gear lever balls.

3. Install the secondary gear lever stop plate, and screw in the two self-locking bolts. Tighten the bolts to the specified torque. (See Specifications, Chapter 3.)

4. Position the main gear lever stop plate and actuating connector, installing the three self-locking bolts. Tighten the bolts to the specified torque. (See Specifications, Chapter 3.)

5. Install the switch retainer, the plunger, the roller and the roller support plate, in that order. Secure them with two self-locking bolts. Tighten the bolts to the specified torque. (See Specifications, Chapter 3.)

6. Screw the starter safety switch into the cover.

7. Position the cover and levers assembly on top of the transmission, together with a new gasket and screw in the thirteen bolts and spring washers. Tighten the bolts to the specified torque. (See Specifications, Chapter 3.) Reconnect the wires to the terminals of the starter safety switch and install the metal and rubber cover.

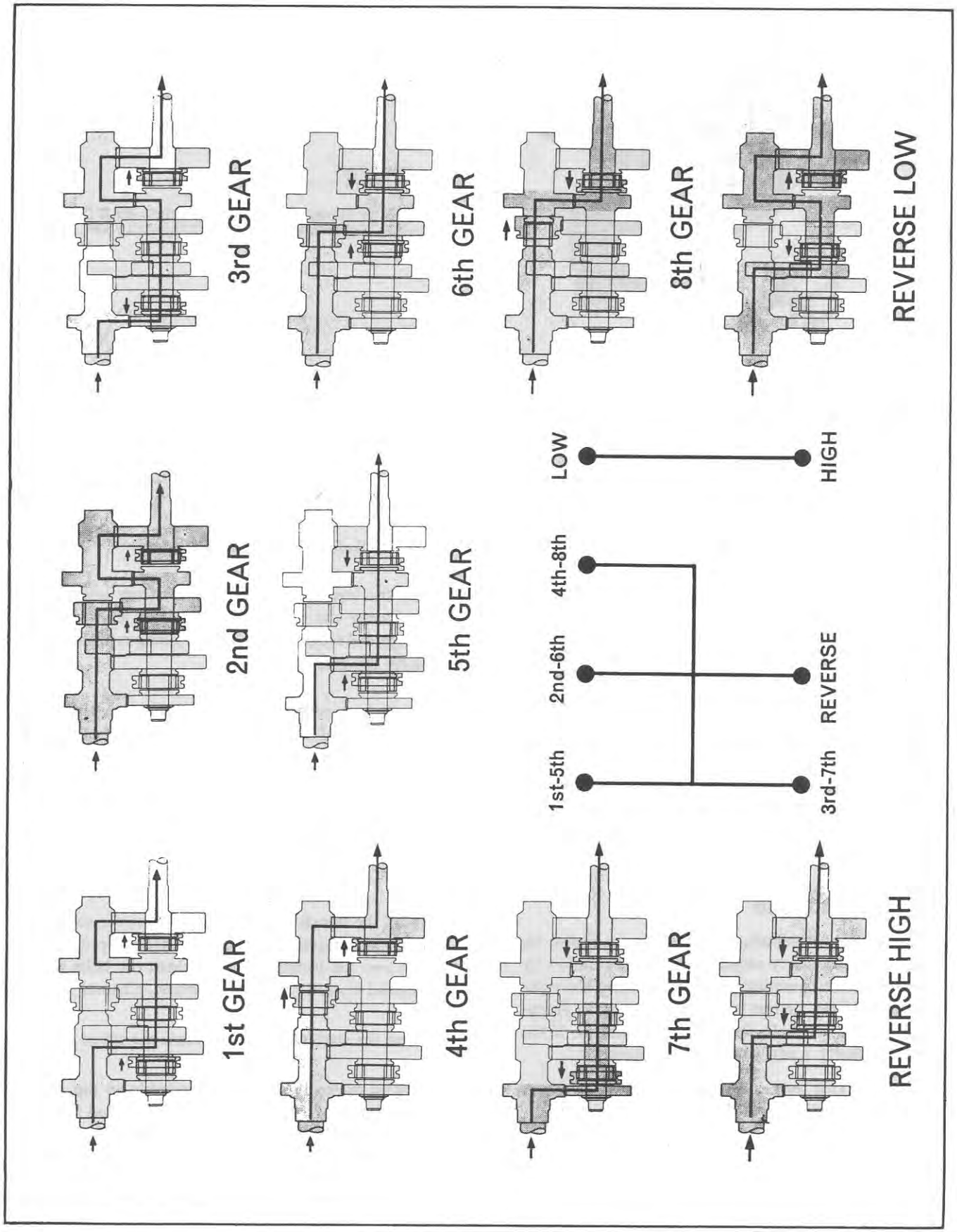

Figure 57
Power Flow Diagram

3. FRONT END OVERHAUL

A. Disassembly

1. See Part 15 for instructions on separating the engine and front axle assembly from the transmission.
2. Lever the release shaft return spring off the stop inside the transmission case, remove the cotter pins from the two clevis pins securing the clutch release fork to the release shaft. Withdraw the shaft from the case, removing the clutch release fork and return spring, Figure 58.
3. Slide the clutch release bearing and hub from the clutch release hub support.
4. Drain the oil from the transmission by removing the drain plug situated in the bottom of the compartment, Figure 59.
5. Unscrew the five self-locking retaining bolts. Lift out the clutch release bearing hub support.
6. Remove the snap ring retaining the main drive input shaft to the mainshaft, Figure 60, and pull the shaft out forwards.
7. Unscrew the seven self-locking retaining bolts and pull the front support plate from the housing. If it is tight, a suitable drift can be inserted into the main transmission compartment, and the plate carefully driven out forwards.

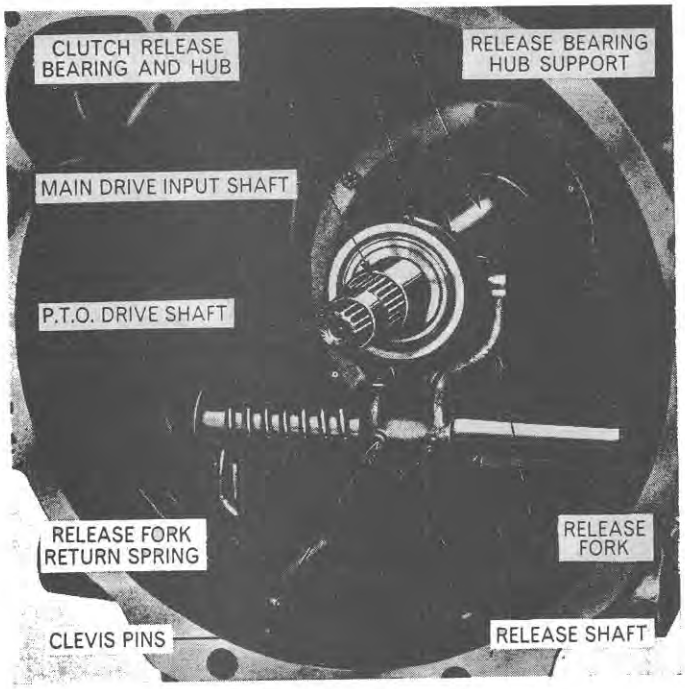

Figure 58
Clutch Operating Linkage

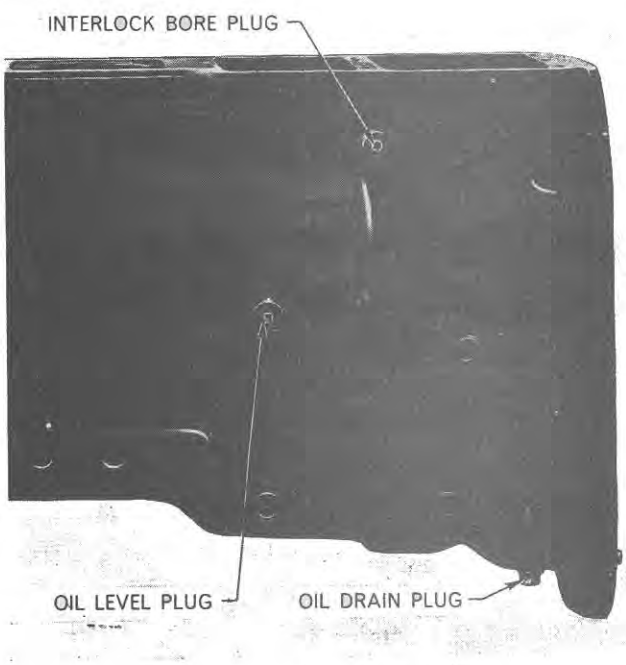

Figure 59
Left-hand Side of Transmission

B. Inspection and Repair

1. Examine the clutch operating components for wear or damage and if necessary refer to Part 4 for servicing the individual components.
2. Inspect the mainshaft front oil seal located in the clutch release bearing hub support and if necessary remove the seal using Tools Nos. 943 and 943-S, Figure 61.
3. Install a new oil seal into the hub support, making sure the sealing lip faces to the rear, using Tool No. 630-11 and a sleeve 2 in. (50·8 mm) I.D. and $2\frac{3}{8}$ in. (60·3 mm) O.D. of suitable length. Lightly smear the sealing lip with a suitable grease, before installing the oil seal.
4. Check the plug sealing the 1st-5th/3rd-7th bottom shift rail bore, Figure 62, for leaks and make certain that it is firmly staked round the edge.

   NOTE: ***The plug sealing the 1st-5th/3rd-7th top shift rail bore must also be checked for leaks but is not to be staked as it is retained by the front support plate, Figure 62.***

5. Make sure the main drive input shaft and retaining snap ring are in good condition and install new parts if necessary, on reassembly.
6. Examine the main countershaft front bearing and if

© FORD MOTOR COMPANY LTD., 1965

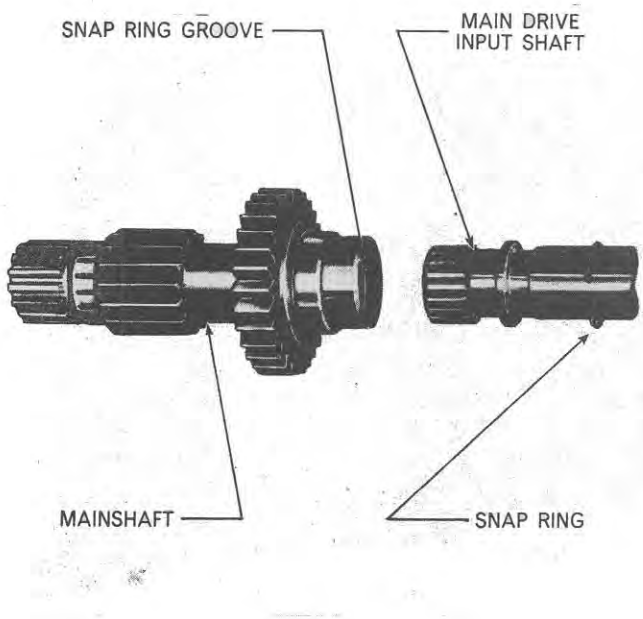

Figure 60
Main Drive Input Shaft and Snap Ring

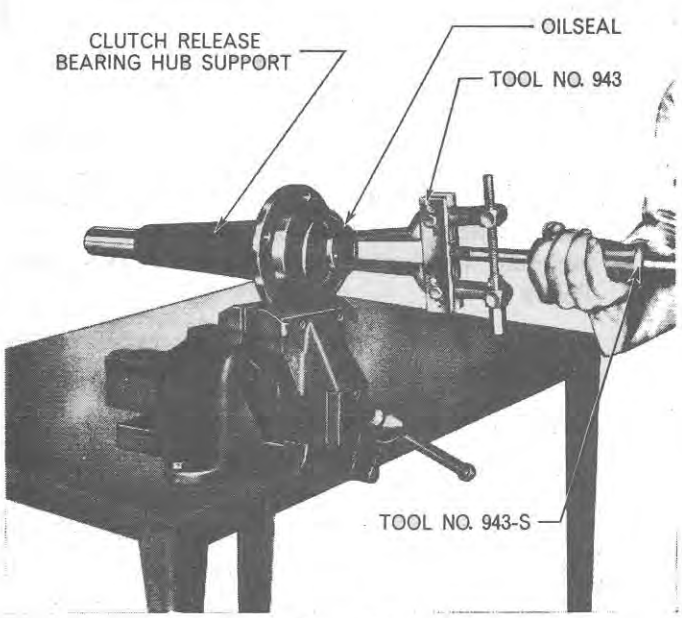

Figure 61
Removing Mainshaft Front Oilseal

worn or damaged remove it from the shaft using Tools Nos. T.7077 and SW.4, Figure 63(A) (or SW.501 and SW.501-3, Figure 63(B).

Drive a new main countershaft front bearing into position with a convenient length sleeve $1\frac{1}{4}$ in. (31·7 mm) I.D. and $1\frac{5}{8}$ in. (41·3 mm) O.D., and a hammer.

C. Assembly

1. Using a new gasket, install the front support plate to the transmission case. It may be necessary to lift the mainshaft and main countershaft to line up the main countershaft front bearing and thus facilitate its location in the front support plate. Screw in the seven self-locking bolts and tighten to the specified torque. (See Specifications, Chapter 3.)
2. Push the main drive input shaft into the forward end of the mainshaft and secure with the snap ring, Figure 60.
3. Using a new gasket, slide the clutch release hub support over the input shaft, taking care not to damage the oil seal. Tap the hub support into the front support plate, with the drain hole downwards.
4. Screw in the five self-locking retaining bolts and tighten the bolts to the specified torque. (See Specifications, Chapter 3.)
5. Refill the transmission with oil of the specified grade (See Specifications, Chapter 3) until up to the level plug hole situated on the left-hand side of the transmission case, Figure 59.

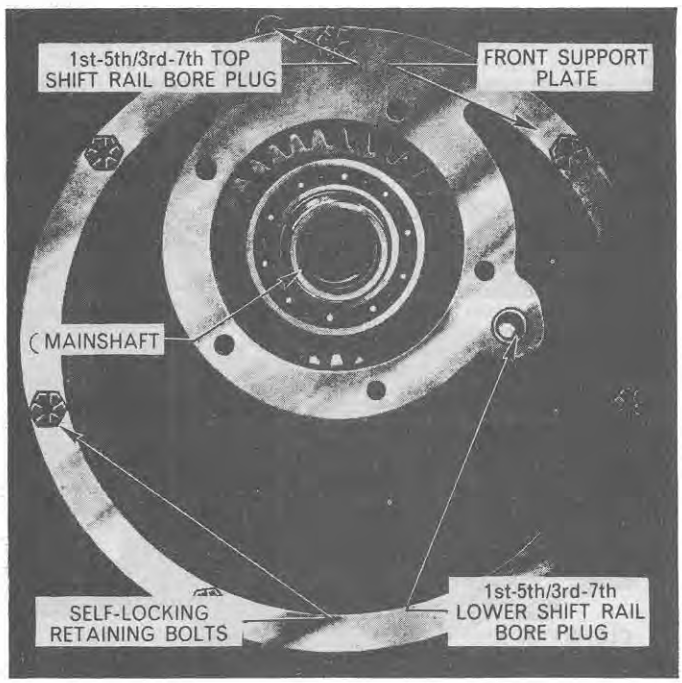

Figure 62
Front Support Plate

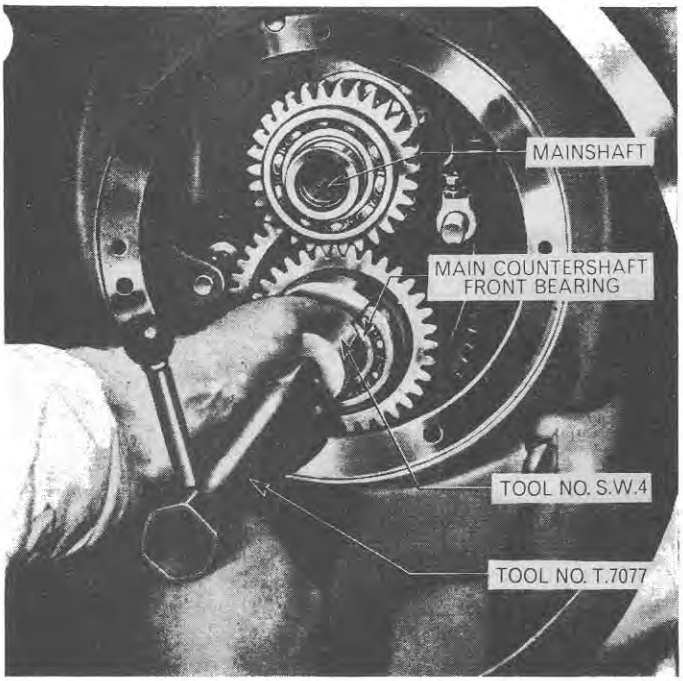

Figure 63 (A)
Removing Main Countershaft Front Bearing

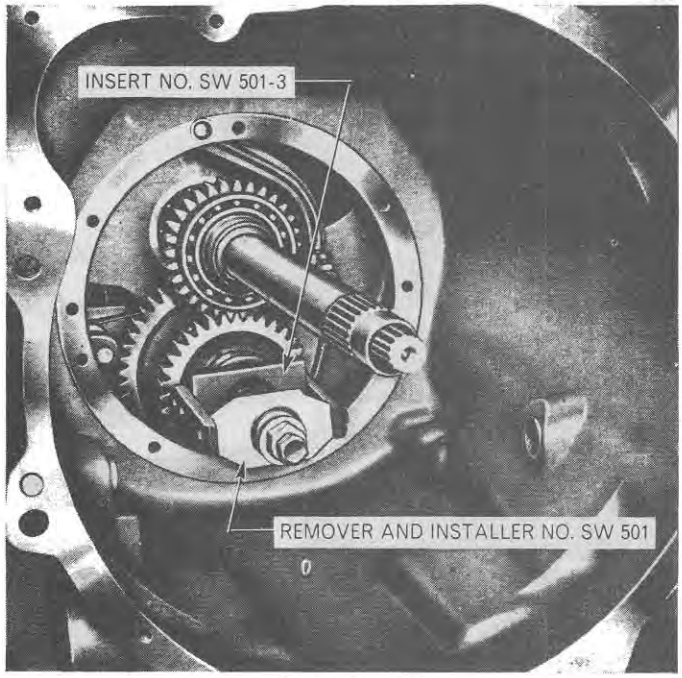

Figure 63 (B)
Removing Main Countershaft Front Bearing

6. Assemble the release bearing and hub assembly to the hub support.
7. Locate the release fork fingers in the slots in the release hub and pass the release shaft through the left hand side of the casing, through the fork and return spring, and into the bushing at the right-hand side. Install the two clevis pins and cotters securing the release fork to the shaft. Place one end of the return spring on the web of the release fork and lever the other end up and onto the lug cast immediately underneath the right-hand release shaft bushing, Figure 58.
8. Refer to Part 15 for instructions on rejoining the engine and front axle assembly to the transmission.

4. REAR END OVERHAUL

A. Disassembly

1. Refer to Part 15 for separating the tractor at the engine and at the rear axle, thus removing the transmission as a unit. Remove the clutch operating linkage, the clutch release hub support, the front support plate, and the main drive input shaft assembly as previously described in Section 3A.
2. Remove the snap ring, the hydraulic pump idler gear, the retaining washer, and the two thrust washers, located on the output shaft retainer, Figure 64.
3. Cut and remove the locking wire and unscrew the ten bolts retaining the rear support plate.
4. Use a soft faced mallet to drive the forward end of the P.T.O. drive shaft rearward, and withdraw the rear support plate and P.T.O. drive shaft as an assembly.
5. Remove the snap ring retaining the P.T.O. drive shaft rear bearing and drive the shaft and rear bearing out of the support plate rearwards.
6. Remove the four self-locking bolts retaining the output shaft retainer, Figure 64, and withdraw the retainer and shims from the rear support plate.
7. Partially withdraw the secondary countershaft assembly until the front bearing is out of its location. Pull out slightly and lift up the secondary countershaft, thereby allowing the output shaft assembly to be lifted out, Figure 65, followed by the secondary countershaft.

B. Inspection and Repair

Rear Support Plate Assembly

1. Inspect the P.T.O. drive shaft and bearing assembly

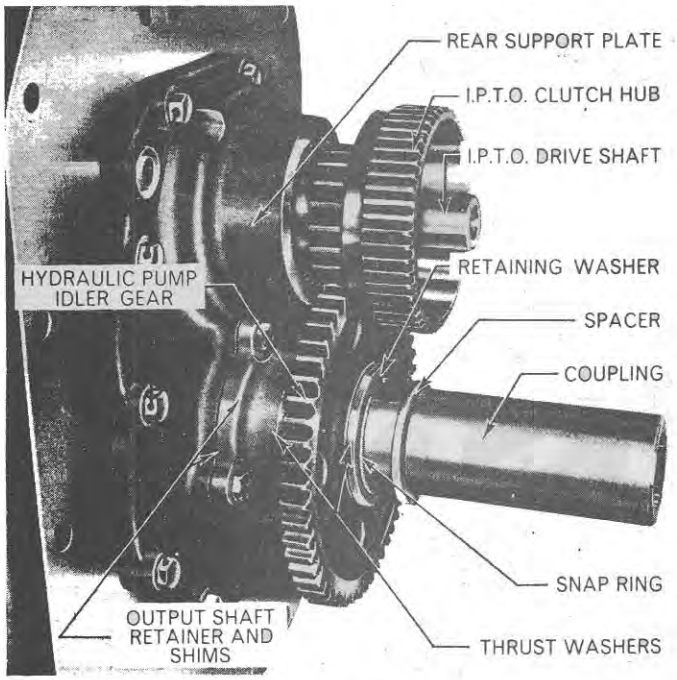

Figure 64
Rear Support Plate in Position

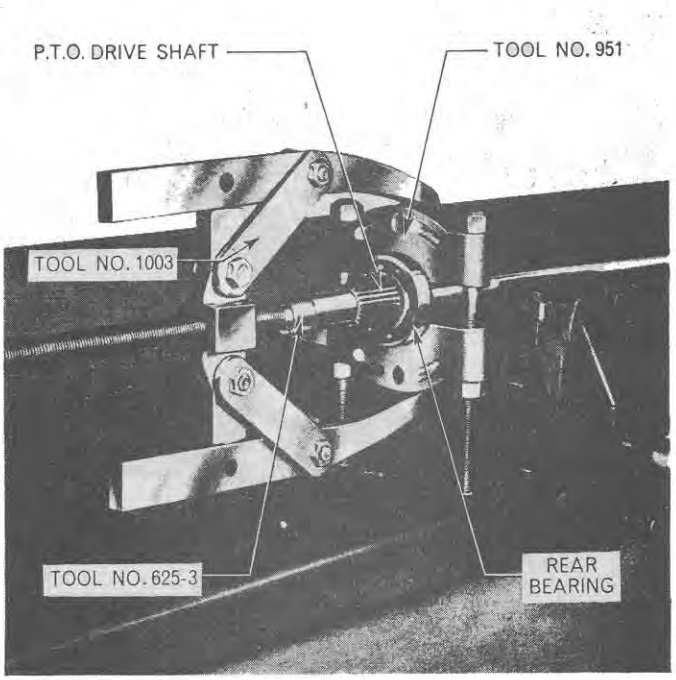

Figure 66
Removing P.T.O. Drive Shaft Rear Bearing

and, if necessary, pull the bearing off the drive shaft using Tools Nos. 1003, 951, and 625-3, Figure 66. Using the necessary new parts, drive the bearing onto the shaft using a sleeve $1\frac{7}{16}$ in. (36·5 mm) I.D. and $1\frac{3}{4}$ in. (44·4 mm) O.D. of convenient length and a hammer, Figure 67.

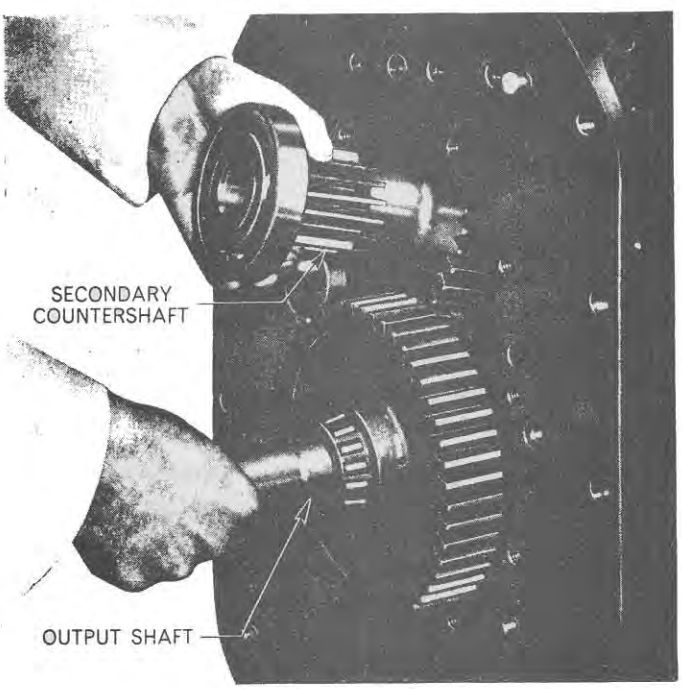

Figure 65
Removing/Installing Output Shaft

2. Examine the rear support plate and the P.T.O. drive shaft rear oil seal and if necessary remove the seal using Tool No. 630-13 (reversed) and a soft faced mallet. Install a new oil seal after lightly greasing the sealing lip, with the same Tool, Figure 68, and secure with the snap ring.
3. Check the output shaft retainer, rear bearing cup, and oil seal for wear or damage. If necessary remove the oil seal and cup from the retainer with a suitable punch and hammer.

   NOTE: ***The oil seal must be removed before the bearing cup.***
4. Install a new oil seal and bearing cup with Tool No. 630-14 and a suitable driver. Lightly grease the sealing lip and install the oil seal before the bearing cup.

Output Shaft Assembly

1. Examine the output shaft assembly for wear or damage. Renew any defective parts by using Tools Nos. 1003 and 625-1 to draw off the gear, bearing cone and roller assembly, and thrust washer in one operation, Figure 69.
2. If necessary remove the pilot bearing cone and roller assembly using Tools Nos. 1002, 951 and 625-4.
3. Assemble the output shaft gear so that the dog-teeth

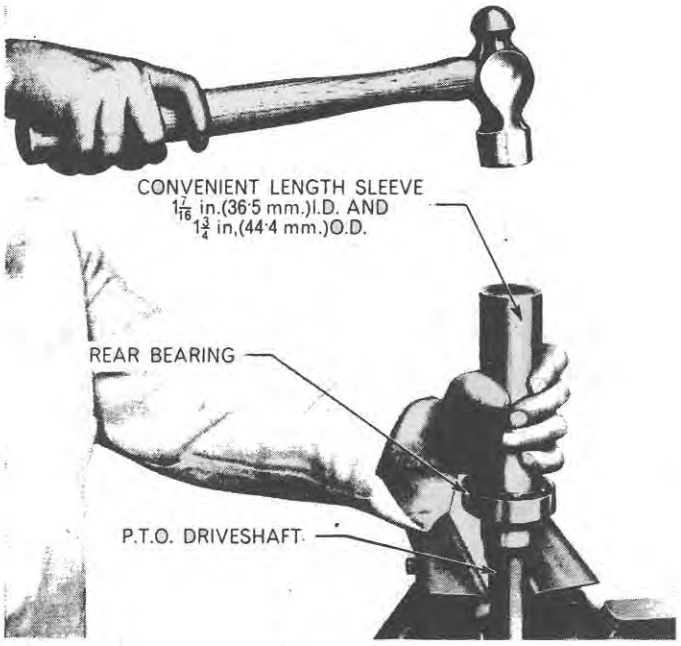

Figure 67
Installing P.T.O. Drive Shaft Rear Bearing

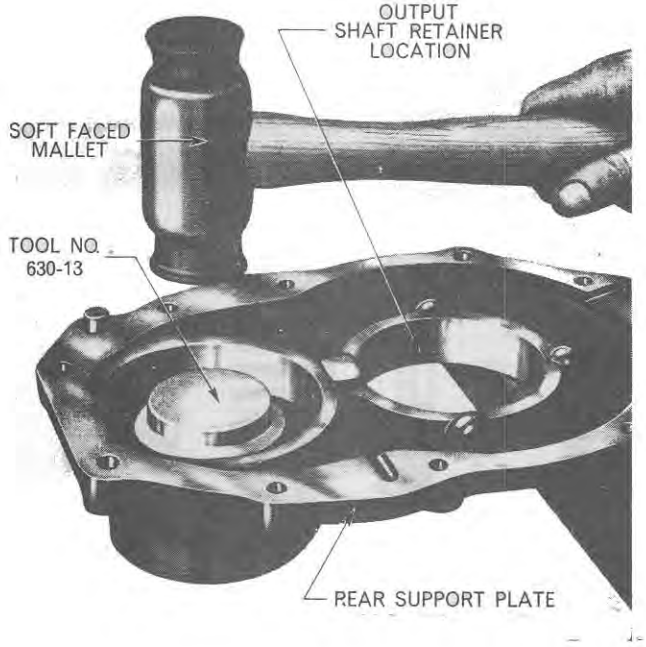

Figure 68
Installing P.T.O. Drive Shaft Rear Oilseal

on the gear adjoin the dog-teeth integral with the shaft, Figure 70.

4. Install the steel thrust washer aligning the flats on the washer with those on the shaft, and position the rear bearing on the output shaft. Pull the bearing into position using Tools Nos. 1003, 952, 625-2 and suitable sleeve $1\frac{9}{16}$ in. (39·7 mm) I.D. and $2\frac{1}{16}$ in. (52·4 mm) O.D. of convenient length, Figure 71.

5. Drive the pilot bearing into position on the output shaft with a sleeve $1\frac{1}{16}$ in. (26·9 mm) I.D. and $1\frac{1}{4}$ in. (31·7 mm) O.D. of convenient length and a hammer.

Secondary Countershaft Assembly

1. Check the secondary countershaft assembly for wear or damage. If necessary the rear bearing can be pulled off using Tools 1003, 952, 630-5 and 625-2.

2. The front bearing is removed using Tools Nos. 1003, 951, 630-5, 625-2, also two pieces of steel rod $\frac{3}{16}$ in. (4·8 mm) diameter and 2 in. (50·8 mm) long. Two pieces of steel rod are inserted through the driving holes in the gear, Figure 72, to contact the bearing. The assembly is then placed in the Tools indicated above, so that the rods push the bearing off, Figure 73.

3. Install both front and rear bearings, using Tools Nos. 1003, 951, 625-2, and 630-5.

NOTE: ***If any bearing cone and roller assembly is found to be damaged, the mating bearing cup must be carefully inspected as it is also likely to be damaged. The reverse will also apply if a bearing cup is found to be damaged. If however***

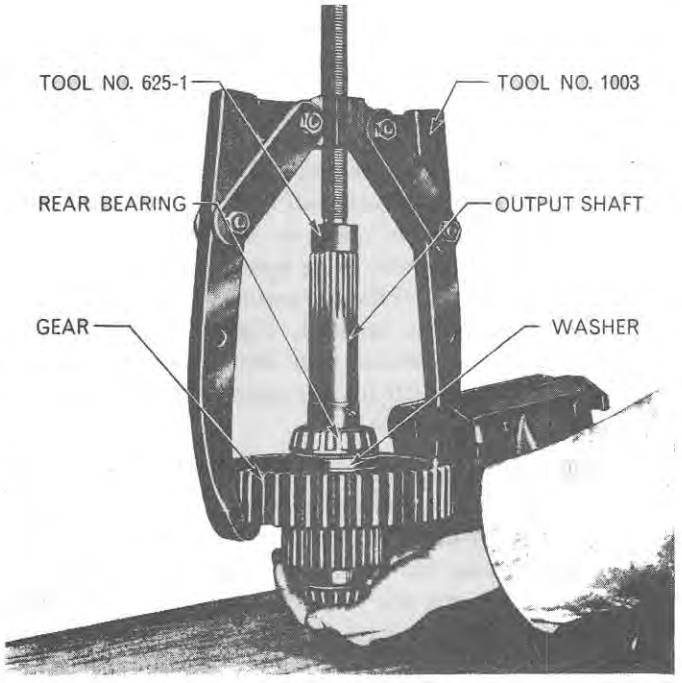

Figure 69
Removing Output Shaft Rear Bearing

© FORD MOTOR COMPANY LTD. 1965

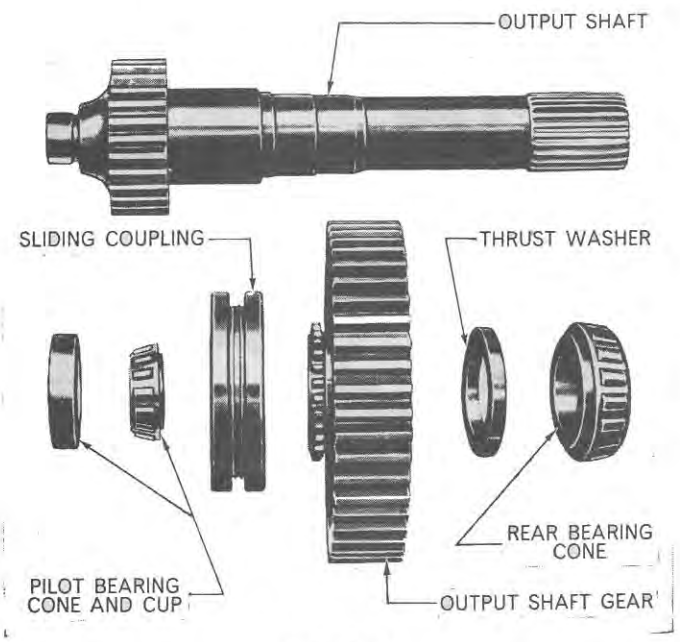

Figure 70
Output Shaft Components

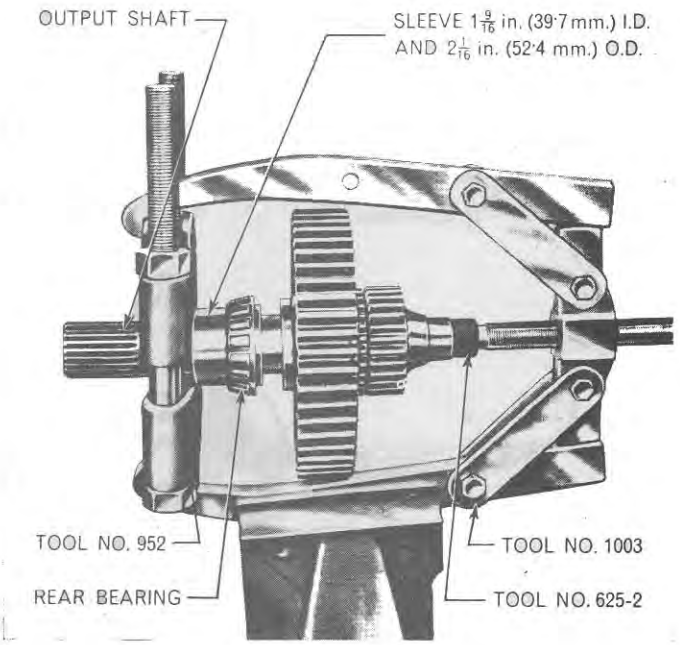

Figure 71
Installing Output Shaft Rear Bearing

only the cone, or only the cup is to be renewed, the new parts must bear the same manufacturer's name as the damaged part.

C. Assembly

1. Make certain that the High/Low sliding coupling is engaging the dog-teeth on the rear of the main countershaft and that the High/Low shift fork is located in the sliding coupling groove, Figure 74.
2. Make sure the snap ring located immediately in front of the secondary countershaft front bearing in the rear compartment is in position. Place the secondary countershaft assembly in its approximate location and hold it at the top of the compartment while the output shaft assembly is installed, Figure 65. Align the secondary countershaft and drive forwards until the front bearing is felt to seat against the snap ring in the transmission case.
3. Using a new gasket, locate the rear support plate (less the output shaft retainer assembly) on the transmission rear face by means of the two dowels located in the support plate, and tap the plate into position. Install and tighten the ten retaining bolts to the specified torque. (See Specifications, Chapter 3.)
4. Pass the P.T.O. drive shaft and rear bearing through the transmission from the rear. Using a soft faced mallet, drive the shaft and bearing forward into the rear support plate and secure with the appropriate snap ring.
5. Carry out the main countershaft and output shaft end-float elimination procedure as detailed below, Step 6.

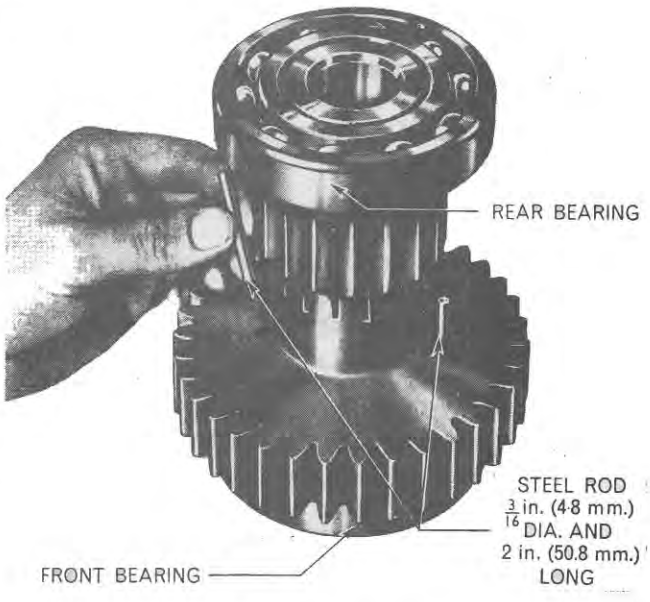

Figure 72
Positioning Rods in Secondary Counter Shaft

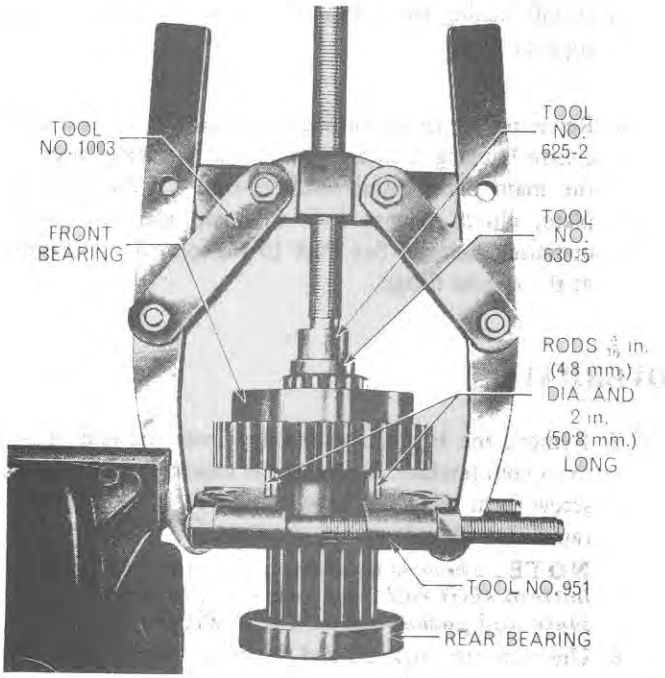

Figure 73
Removing Secondary Countershaft Front Bearing

6. Output Shaft and Main Countershaft End-float Elimination:

It is necessary to eliminate all end-float in the main countershaft and output shaft taper roller bearings.

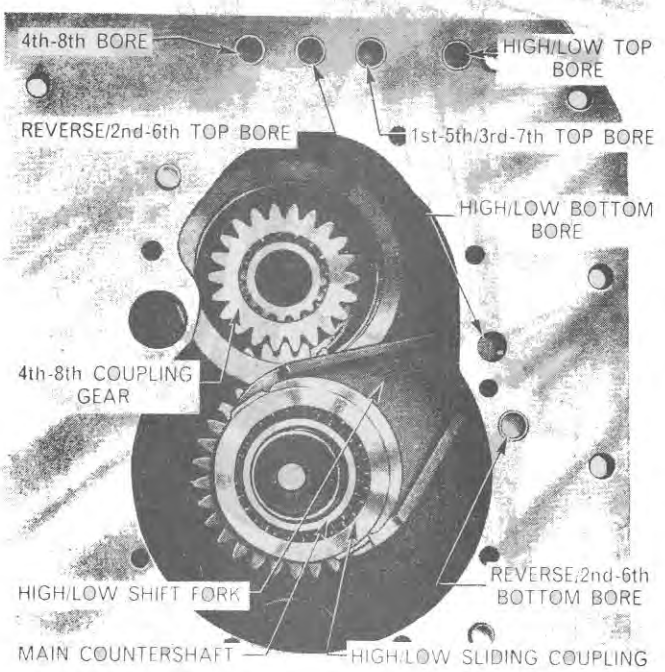

Figure 74
Transmission Rear Compartment

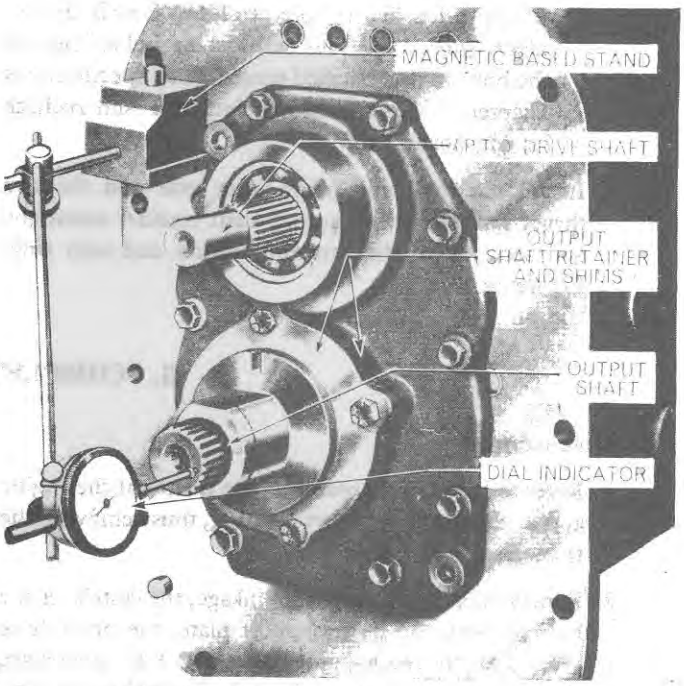

Figure 75
Measuring Output Shaft End-Float

This is effected by installing shims of appropriate thickness between the rear support plate and the output shaft retainer, using the following procedure:—

a. Locate the output shaft retainer assembly in the rear support plate, installing shims totalling approximately 0·060 in. (1·58 mm).

b. Install the four self-locking retaining bolts and tighten to the specified torque. (See Specifications, Chapter 3.)

c. Using a standard dial indicator, calibrated in 0·001 in. or 0·01 mm divisions, Figure 75, set the indicator plunger against the end face of the output shaft. Move the shaft in and out, noting the end-float reading on the indicator.

d. Remove the indicator and the four self-locking retainer bolts. Withdraw the retainer and shims.

e. Remove a number of shims whose total thickness corresponds with the reading obtained on the dial indicator.

IMPORTANT: ***The total thickness of shims removed can be up to 0·002 in. (0·0508 mm) more than the reading obtained on the indicator, (i.e. 0.002 in. (0·0508 mm) pre-load is achieved), but must not be less than the reading obtained on the indicator. Shims are available in thicknesses of 0·003 in, 0·005 in, and 0·012 in (0·076 mm, 0·127 mm, and 0·305 mm respectively).***

f. Having selected the correct shims, install the retainer, shims, and four self-locking bolts. Tighten the bolts to the specified torque. (See Specifications Chapter 3.) Reposition the indicator and recheck for end-float.

7. Install the hydraulic pump idler gear and the two thrust washers to the output shaft retainer assembly, and secure with the retaining washer and snap ring, Figure 64.

8. Install locking wire to the ten bolts retaining the rear support plate.

9. Refer to Part 15 for joining the tractor at the rear axle centre housing. See Section 3C for the installation of the main drive input shaft assembly, front support plate, clutch release hub support, and the clutch operating linkage. See Part 15 for joining the tractor at the engine flange.

5. COMPLETE OVERHAUL

A. Disassembly

1. Refer to Part 15 for separating the tractor at the engine and at the rear axle centre housing, thus removing the transmission as a unit.

2. Remove the clutch operating linkage, the clutch release hub support, the front support plate, the main drive input shaft, the rear support plate, the P.T.O. drive shaft, the output shaft and secondary countershaft assemblies, and the shift levers and cover assembly, as previously described in Sections 2A, 3A, and 4A.

Gear Shift Mechanism

1. Unscrew the locknut and retaining screw from the High/Low shift arm, Figure 76, and remove the top shift rail rearward, pushing the sealing plug out with the end of the rail.

2. Remove the locknut and retaining screw from the 1st-5th/3rd-7th shift connector at the rear of the top shift rail, and also from the shift arm at the front of the rail, Figure 76.

3. Remove the connector and arm and slide the rail out to the front, pushing the front sealing plug out with the end of the rail. If necessary remove the rear sealing plug from the bore, Figure 74.

NOTE: ***See Section 6 for removing Seven-Speed Transmission special interlock plunger.***

4. Unscrew the locknut and remove the screw retaining the Reverse/2nd-6th shift arm to the Reverse/2nd-6th top rail. Slide the rail rearward, removing the arm and pushing out the sealing plug with the end of the rail.

5. Remove the locknut and retaining screw from the 4th-8th shift fork and slide the top rail out rearwards removing the fork and pushing out the sealing plug with the end of the rail.

6. Remove the four shift rail detent balls, springs and plungers from their locations, Figure 77.

7. Remove the High/Low coupling from the rear of the main countershaft. Unscrew the locknut and retaining screw from the High/Low bottom fork, withdraw the rail rearward and remove the fork.

NOTE: ***There is no sealing plug in the High/Low bottom shift rail bore because the rear support plate and gasket act as a seal, Figure 75.***

8. Unscrew the locknut and retaining screw from the

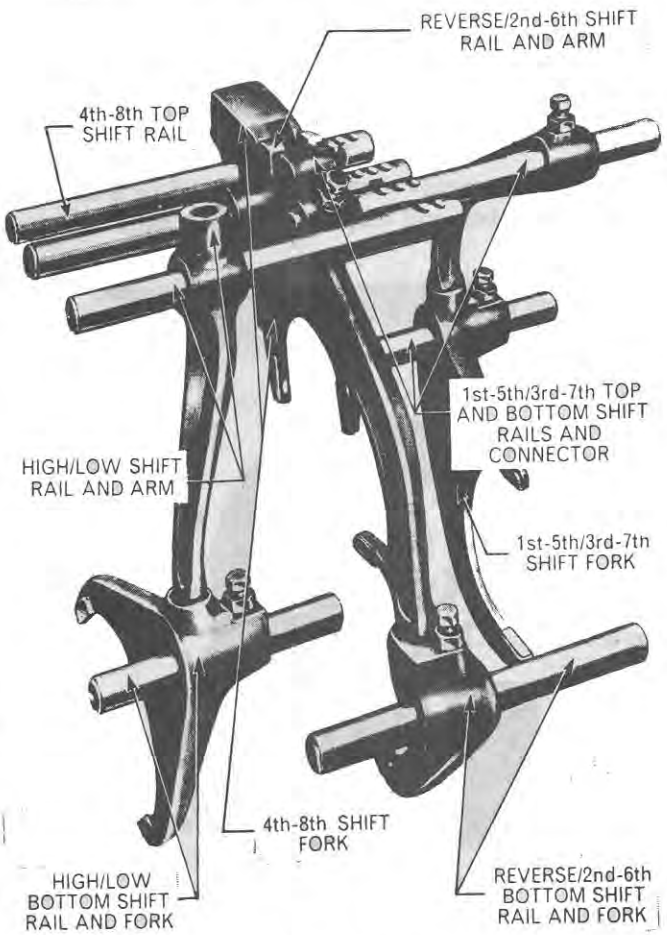

Figure 76
Gear Shift Mechanism

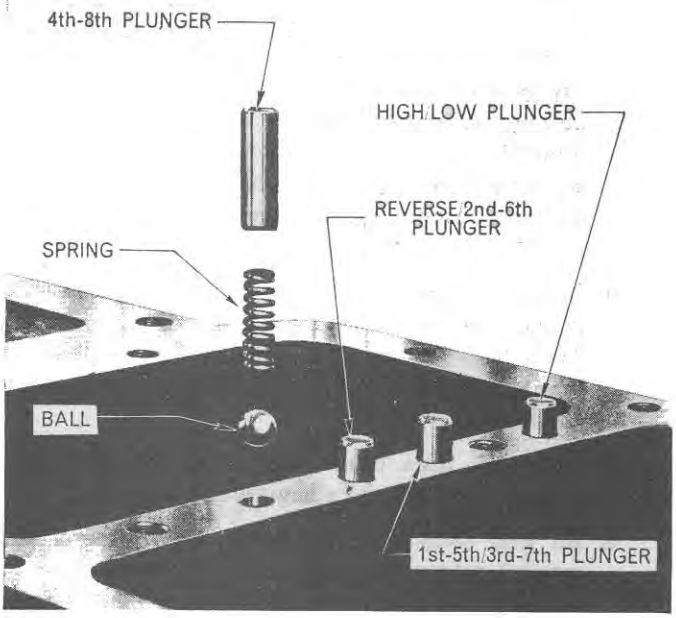

Figure 77
Detent Ball, Spring, and Plungers

Reverse/2nd-6th shift fork and slide the bottom rail out rearwards, pushing out the sealing plug. Remove the Reverse/2nd-6th shift fork.

9. Unscrew the locknut and retaining screw holding the shift fork to the 1st-5th/3rd-7th bottom rail and remove the rail forwards lifting out the fork.
10. If necessary, remove the interlock bore plug situated on the left-hand side of the transmission case, Figure 59, and remove the two interlock plungers.

Reverse Idler Assembly

1. Bend down the locktab and remove the bolt, Figure 78, retaining the reverse idler shaft.
2. Drive the shaft out forwards and lift out the reverse idler gear.

Mainshaft Assembly

1. Position Tool No. 630-5 in the bore at the rear of the mainshaft.
2. Use a suitable drift to drive the shaft out forwards, removing the 4th-8th coupling gear, Figure 74.

Main Countershaft Assembly

1. Use Tool No. SW.4 (or Tools Nos. SW.501 and SW.501-3) to remove the main countershaft front bearing, Figures 63(A) and 63(B).
2. Remove the snap ring immediately behind the bearing with suitable snap ring pliers and remove the thrust washer.
3. Pull the main countershaft out rearwards removing the gears, couplings and thrust washers one by one.

B. Inspection and Repair

Transmission Case

1. When the transmission is completely disassembled, the case should be thoroughly washed out inside to prevent small particles of metal or dirt causing subsequent damage to bearings, oil seals and gears.
2. Inspect the case for cracks or other damage and if beyond repair, use a new case on assembly.

Mainshaft Assembly

1. Inspect the mainshaft, the front and rear bearings and the P.T.O. drive shaft front oil seal located inside the forward end of the shaft.
2. If necessary, remove the mainshaft rear bearing using Tools 1003, 630-5, and 952, Figure 79. If necessary remove the front bearing using Tools 1003, 951, 630-5, 625-2 and two pieces of steel $\frac{3}{16}$ in. (4·8 mm) diameter and 2 in. (50·8 mm) long, as described for removing the secondary countershaft front bearing in Section 4A.
5. Use a suitably hooked piece of rod to extract the P.T.O. drive shaft oil seal located in the bore at the front end of the mainshaft.

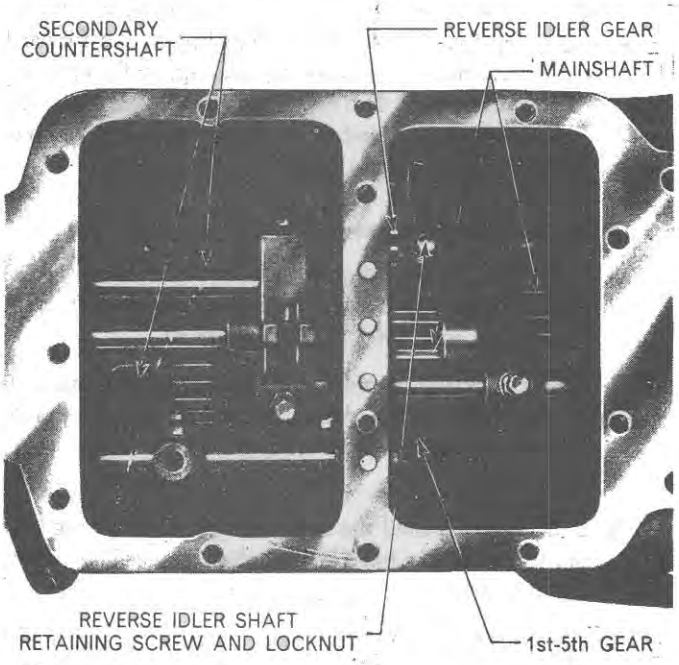

Figure 78
Transmission Main Compartment

© FORD MOTOR COMPANY LTD. 1965

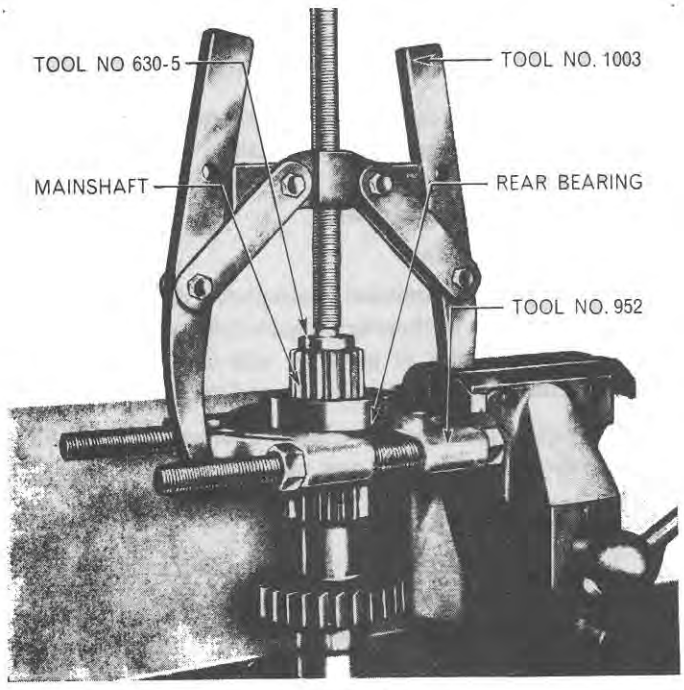

Figure 79
Removing Mainshaft Rear Bearing

6. If necessary, install the mainshaft rear bearing using Tools Nos. 1003, 952, and 630-10, and also the front bearing using a sleeve $2\frac{1}{2}$ in. (63·5 mm) I.D. and 3 in. (76·2 mm) O.D. of convenient length.

7. If necessary, install a new P.T.O. drive shaft oil seal (after lightly greasing the sealing lip) in the forward end of the mainshaft, with the sealing lip facing rearwards, using Tool No. 630-5 (reversed) and sleeve $1\frac{1}{4}$ in. (31·8 mm) I.D. and $1\frac{5}{8}$ in. (41·3 mm) O.D. of convenient length, Figure 80.

Main Countershaft Assembly

1. Carefully examine the main countershaft and, if necessary, pull the rear bearing from the countershaft using Tools Nos. 951, 1003, 625-2, Figure 81.

2. If necessary, the output shaft pilot bearing cup can then be driven out of the main countershaft with a suitable punch through the two holes provided in the gear, Figure 82.

3. If necessary, install the output shaft pilot bearing cup in the rear of the main countershaft using Tools Nos. 630-8 and 1002.

4. If necessary, install the rear bearing on the main countershaft using Tools Nos. 1003, 952, 630-11 and a sleeve $2\frac{1}{16}$ in. (52·4 mm) I.D. and $2\frac{5}{16}$ in. (58·7 mm) O.D. of convenient length, Figure 83.

5. The teeth on all the gears which revolve on the main countershaft must be carefully inspected for damage or excessive wear. Assemble the gears to the main countershaft and check the bushings for free play. If any gear or bushing is defective, a new gear and bushing assembly must be used on installation. Similarly examine the reverse idler gear and bushing assembly. If either gear or bushing are defective, a new gear and bushing assembly must be used on installation.

6. Inspect the main countershaft rear bearing cup situated in the transmission case. If damaged, remove using Tools Nos. 943 and 943-S, Figure 84. Install a new bearing cup using Tool No. 630-17 and a suitable drift and hammer.

7. Check the main countershaft front bearing and, if worn or damaged, use a new part on assembly.

8. All gear teeth and components with internal and external splines not previously mentioned, must be carefully examined for signs of wear or other damage and, if required, new parts used on assembly.

Gear Shift Mechanism

1. Gear shift forks, rails, arms and connectors must all be checked for wear and distortion. The detents on the shift rails should be examined because, if worn, jumping out of gear could result.

2. Renew any damaged parts as necessary.

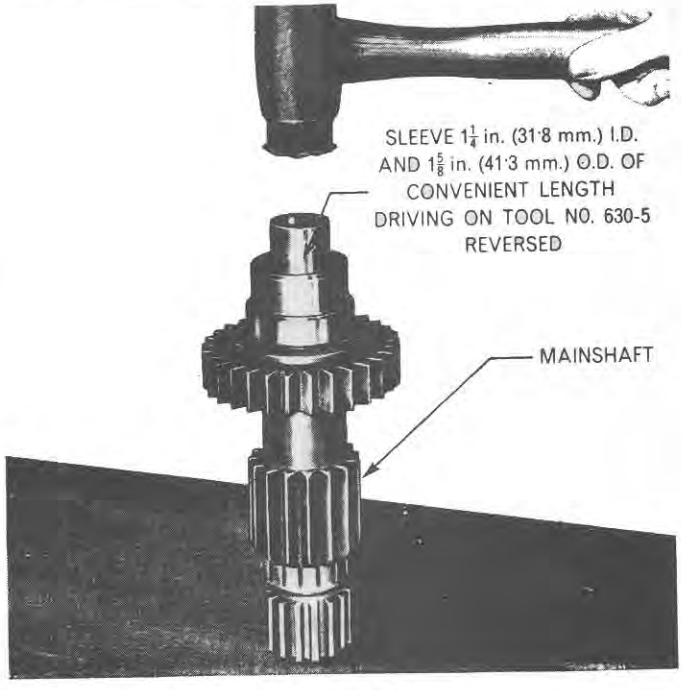

Figure 80
Installing P.T.O. Drive Shaft Oil Seal

NOTE: ***Wash all components thoroughly in a gasoline or kerosene bath before installation.***

C. Assembly

Main Countershaft Assembly

1. Pass the main countershaft through the rear compartment assembling the gears in the following sequence, Figure 85:—
   a. 2nd-6th gear (dog-teeth forward).
   b. Reverse/2nd-6th sliding coupling and connector.*
   c. Phosphor-bronze thrust washer.
   d. Reverse gear (dog-teeth rearward).
   e. Phosphor-bronze thrust washer.
   f. 1st-5th gear (dog-teeth forward).
   g. 3rd-7th/1st-5th sliding coupling and connector.*
   h. 3rd-7th gear (dog-teeth rearward).
   i. Thrust washer.
   j. Snap ring.

NOTE:** ***These connectors have a chamfer on one side on the inside diameter. This chamfer must be facing the rear of the transmission, to allow the connector to seat correctly on the splines of the main countershaft.

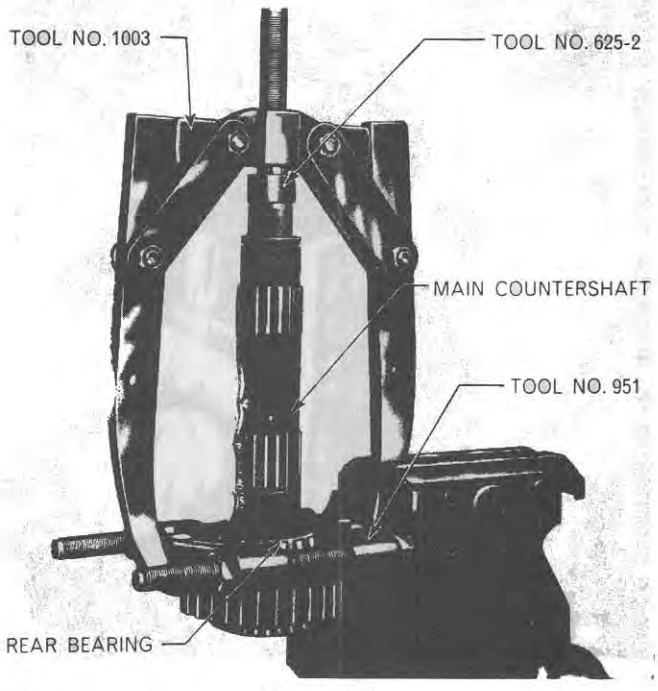

Figure 81
Removing Main Countershaft Rear Bearing

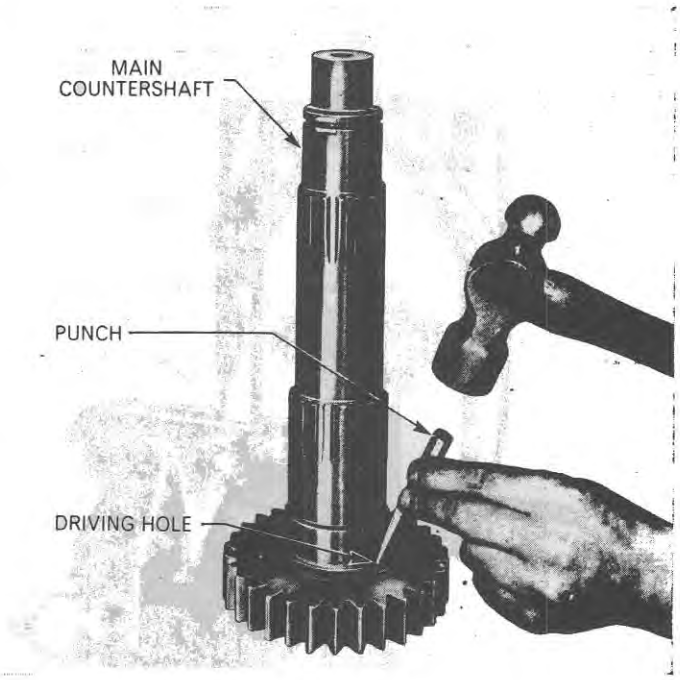

Figure 82
Removing Output Shaft Pilot Bearing Outer Track

Mainshaft Assembly

1. Make sure the snap ring retaining the mainshaft rear bearing is in position in the transmission housing.
2. Install the 4th-8th coupling gear on the rear of the mainshaft with the shift fork groove to the front.
3. Position the mainshaft assembly and tap rearward until the rear bearing seats on the snap ring.

Reverse Idler Assembly

1. Position the reverse idler gear between its supporting lugs, Figure 78, with the extended hub of the gear forward.
2. Pass the reverse idler shaft in from the rear compartment with the retaining bolt hole forwards. Install the retaining bolt and locktab, tighten the bolt to the specified torque, (See Specifications, Chapter 3) and bend up the locktab.

Gear Shift Mechanism

1. Position the 1st-5th/3rd-7th shift fork Figure 76, on its appropriate sliding coupling, and pass the 1st-5th/3rd-7th bottom shift rail through the fork to locate in the bore of the reverse idler shaft. Make sure the oil relief groove on the shift rail is facing forwards.
2. Locate the Reverse/2nd-6th shift fork on its appropriate

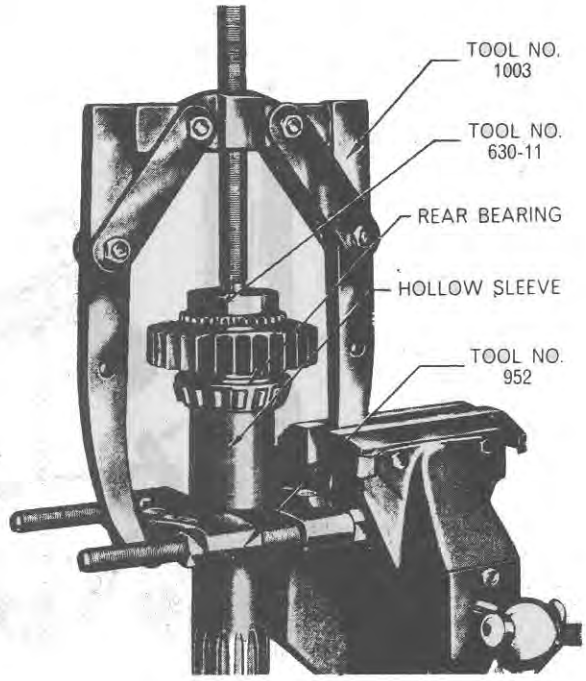

Figure 83
Installing Main Countershaft Rear Bearing

sliding coupling and pass the Reverse/2nd-6th bottom rail through from the rear with the fork retaining hole to the rear of the shift rail. Install the retaining screw and locknut to the fork and tighten to the specified torque. (See Specifications, Chapter 3.) Drive the sealing plug into the rear of the bore, but do not stake the plug as it is retained by the rear support plate, Figure 75.

3. Position the High/Low shift fork and pass the High/Low bottom shift rail through the rear compartment, with the oil relief groove to the rear, so that the rail locates in the fork. Install the retaining screw and locknut and tighten to the specified torque. (See Specifications, Chapter 3.)

NOTE: ***No sealing plug is fitted to the High/Low bottom shift rail bore, as the bore is covered and sealed by the rear support plate and gasket, Figure 74.***

4. If necessary, insert the two interlock plungers into the bore from the left-hand side of the transmission case and install the screwed plug, Figure 59.

5. Pass the 4th-8th top shift rail in from the rear with the oil relief groove rearward and install the 4th-8th shift fork. Install the retaining screw and locknut and tighten to the specified torque. (See Specifications, Chapter 3.) Drive in the sealing plug, Figure 74, and stake round the edge to secure.

NOTE: ***When installing the remaining top shift rails, make sure that the rails already in place are in the neutral position because otherwise the interlock plungers will prevent the rail about to be installed from entering the front support bore. See Section 6 for installing Seven-Speed Transmission special interlock plunger.***

6. Pass the Reverse/2nd-6th top shift rail in from the rear, the oil relief groove rearward and assemble the Reverse/2nd-6th shift arm so that the bottom of the arm locates in the corresponding hole in the Reverse/2nd-6th shift fork. Install the retaining screw and locknut and tighten to the specified torque. (See Specifications, Chapter 3.) Drive the sealing plug into the bore and secure by staking round the edge.

7. Pass the 1st-5th/3rd-7th top rail into the bore from the front of the transmission with the oil relief groove forwards, assembling the connector to the rear end of the rail and the arm to the forward end, making sure the arm locates in the 1st-5th/3rd-7th fork. Install the respective retaining screws and locknuts and tighten to the specified torque. (See Specifications, Chapter 3.) Install the sealing plug,* Figure 62, at the front of the transmission, but do not stake as the plug is retained by the front support plate. If necessary, install the rear sealing plug and stake securely round the edge.

NOTE:** ***There are a total of seven shift rail bore sealing plugs in this transmission. Five are located in the rear face of the transmission, Figure 74, one in the front support plate and one behind



Figure 84
Removing Main Countershaft Rear Bearing Cup

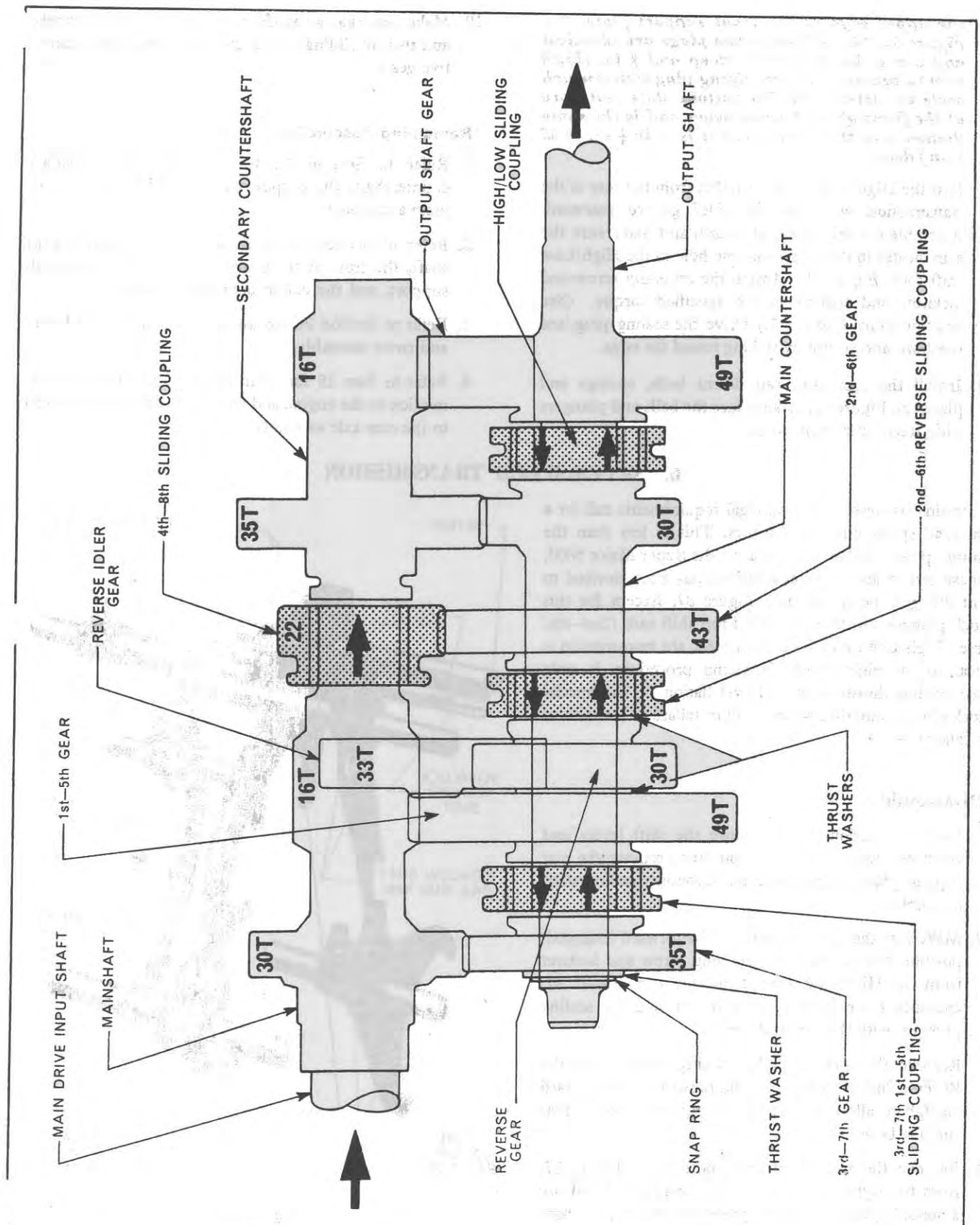

Figure 85
Gear Identification Diagram

© FORD MOTOR COMPANY LTD. 1965

the upper edge of the front support plate, See Figure 62. Six of these seven plugs are identical and are $\frac{5}{16}$ in. (7.94 mm) deep and $\frac{5}{8}$ in. (15.88 mm) diameter. The remaining plug is that which seals the 1st-5th/3rd-7th bottom shift rail bore at the front of the transmission, and is the same diameter as the other six, but is only $\frac{1}{4}$ in. (6.35 mm) deep.

8. Pass the High/Low top shift rail in from the rear of the transmission with the oil relief groove rearward. Assemble the High/Low shift arm and make sure the arm locates in the corresponding hole in the High/Low shift fork, Figure 76. Install the retaining screw and locknut, and tighten to the specified torque. (See Specifications, Chapter 3.) Drive the sealing plug into the bore and secure by staking round the edge.

9. Install the four shift rail detent balls, springs and plungers, Figure 77, making sure the balls and plungers slide freely into their bores.

10. Make sure that all shafts and gears will rotate freely, and that all sliding couplings will engage their respective gears.

Remaining Assemblies

1. Refer to Section 4C for installing the secondary countershaft, the output shaft, and the rear support plate assemblies.
2. Refer to Section 3C to install the main drive input shaft, the front support plate, the clutch release hub support, and the clutch operating linkage.
3. Refer to Section 2C for installing the gear shift levers and cover assembly.
4. Refer to Part 15 for instructions to rejoin the transmission to the engine and front axle assembly, and also to the rear axle assembly.

6. SEVEN-SPEED TRANSMISSION

In certain territories, the local legal requirements call for a certain road speed limit for tractors. This is less than the maximum speed possible in 8th gear on the Super Major 5000. For these territories a special interlock has been devised to prevent 8th gear being selected, Figure 87. Except for this interlock plunger and three modified top shift rails (2nd-6th/Reverse; High/Low; and 4th), Figure 86, the transmission is identical to the eight-speed. Servicing procedure is only affected during disassembly and installation of the special interlock plunger and disassembly and installation instructions are as follows:—

A. Disassembly

1. Refer to Section 2A to remove the shift levers and cover assembly; and to Section 4A to remove the rear support plate, output shaft and secondary countershaft assemblies.
2. Make sure the 4th shift rail is in the forward (engaged) position and remove the retaining screw and locknut from the High/Low shift connector arm, Figure 87, and slide the rail out to the rear, pushing the sealing plug out with the end of the rail.
3. Remove the locknut and retaining screw from the Reverse/2nd-6th shift fork and move the rail forward enough to allow the rear of the rail to clear the rear support bore.
4. Remove the special interlock bore plug, Figure 87, from the right hand side of the transmission and use a suitable piece of wire to push the interlock plunger out of the bore.

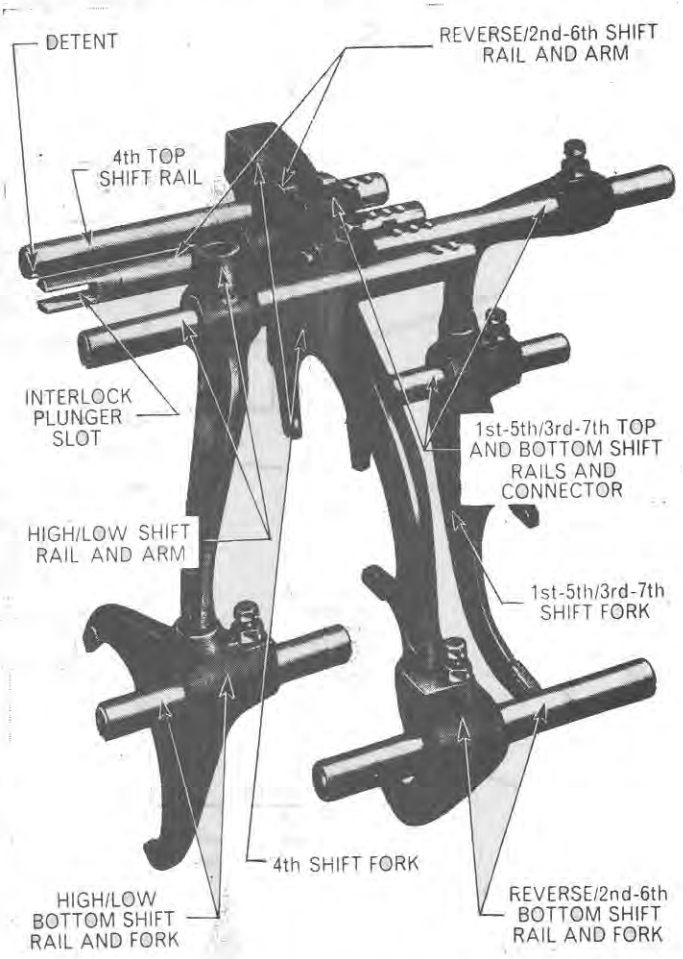

Figure 86
7-Speed Shift Mechanism Components

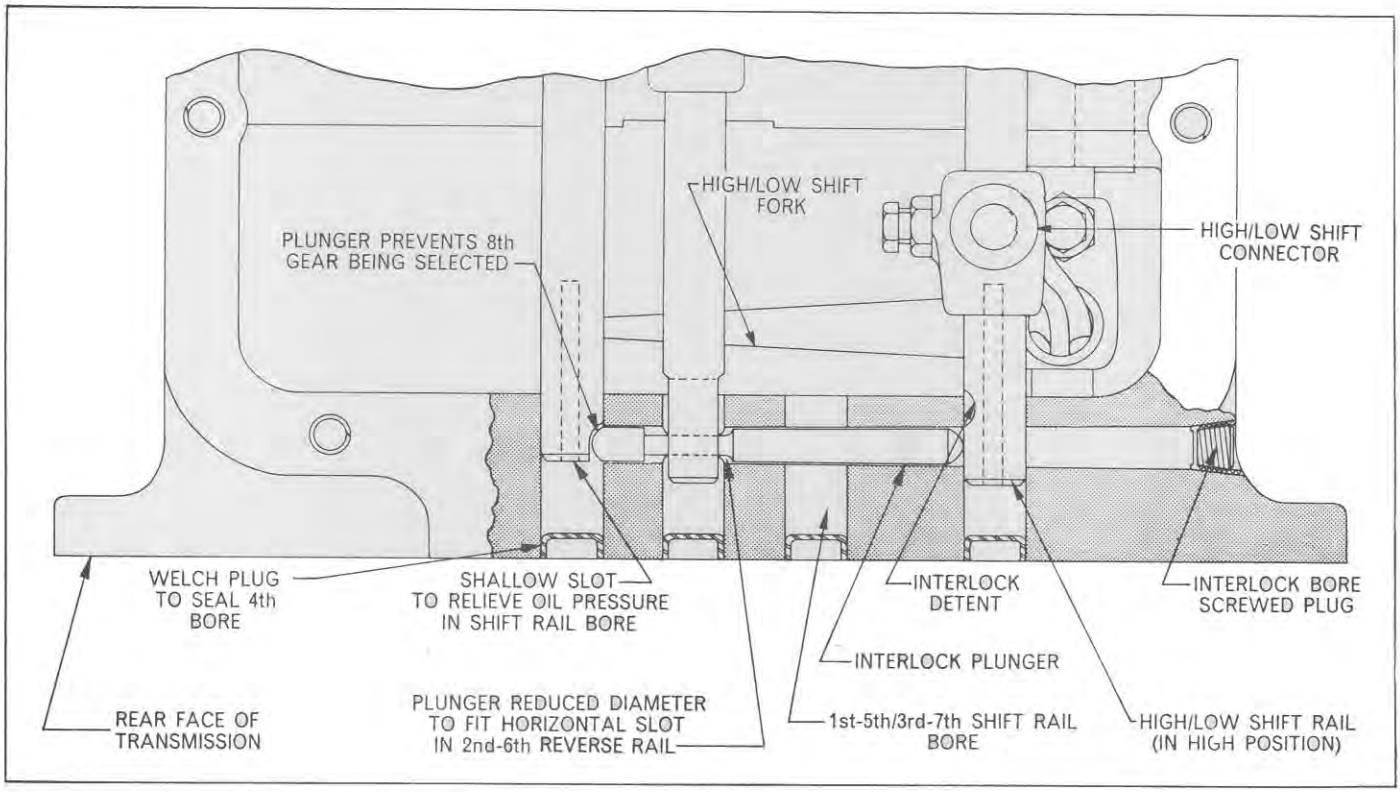

Figure 87

7-Speed Interlock Plunger Diagram

5. Proceed with disassembly as described for the eight-speed transmission in Section 5A.

B. Assembly

1. Pass the 4th top shift rail into the bore from the rear, with the oil groove and detent rearwards and install the 4th fork. Install the retaining screw and locknut to the fork and tighten to the specified torque. (See Specifications, Chapter 3.) Drive in the sealing plug and stake round the edge to secure.
2. Pass the Reverse/2nd-6th shift rail in from the rear with the slotted end rearwards and assemble the shift arm so that the bottom of the arm locates in the corresponding hole in the Reverse/2nd-6th shift fork, Figure 86. Push the rail forward enough to allow the slotted end to clear the rear support bore.
3. Insert the special interlock plunger, the reduced diameter section foremost, until it contacts the 4th shift rail.
4. Slide the Reverse/2nd-6th rail rearward locating the slotted end onto the reduced diameter of the special interlock plunger. Install the shift fork retaining screw and locknut.
5. Drive the Reverse/2nd-6th bore sealing plug into position and secure by staking round the edge. Screw in the plug sealing the special interlock bore and securely tighten.
6. Proceed with assembly as described for the eight-speed transmission in Section 5C.

Part 7

SEVEN AND EIGHT-SPEED TRANSMISSION

Chapter 3

SPECIFICATIONS AND SPECIAL TOOLS

Section		Page
1.	Specifications	53
2.	Special Tools	60

1. SPECIFICATIONS

SPECIFICATIONS	FORD 2000 AND FORD 3000	FORD 4000	FORD 5000
Number of Speeds: Forward	Eight (or Seven)		
Reverse	Two		
Type of Drive Line	In Line	In Line	Stepped
Main Drive Input Ratio: Eight Speed	19 : 56	29 : 46	Direct
Seven Speed	17 : 57	27 : 48	Direct
Number of Shift Levers	Two	Two	Two
Bearing Types	Ball, Taper and Straight Roller	Ball and Taper Roller	
Gear Bushings	Reverse Idler Gear, Output Shaft Gear	All Mainshaft Gears, Output Shaft Gear, Reverse Idler Gear	All Main Countershaft Gears, Output Shaft Gear, Reverse Idler Gear
Output Shaft End Float	Nil	Nil	Nil
	Maximum Permissible Pre-load 0·002 in. (0·0508 mm.)		
End Float Shims Available	(All 7 and 8-Speed Transmissions) 0·003 in. (0·076 mm.) 0·005 in. (0·127 mm.) 0·012 in. (0·305 mm.)		
P.T.O. Output Shaft Speed/Engine Speed	Trans. P.T.O. 540 r.p.m. at 1600 r.p.m. Live P.T.O. 540 r.p.m. at 1810 r.p.m.	Ind. and Trans. P.T.O. 540 r.p.m. at 1810 r.p.m.	Ind. P.T.O. 540 r.p.m. at 1900 r.p.m.
Oil Capacity:	Trans. and Live P.T.O.	Trans. and Ind. P.T.O.	Ind. P.T.O.
Imperial Quarts	11·0	11·0	12·5
U.S. Quarts	13·2	13·2	15·0
Litres	12·5	12·5	14·2
Oil Grade: (All 7 and 8-Speed Transmissions)	Ford Specification ESEN-M2C85-A or ESN-M2C77-A		General Specification SAE 80 EP or SAE 20W/30

GROUND SPEED CHARTS

FORD 2000 and FORD 3000 (8-Speed) (Prior to September 1965)

Gear	Ratios		Ground Speeds* Engine r.p.m. 1000		1250		1500		1750		1900		2000		† 2100	
	Front Trans.	Final	mph	kph	mph	kph	mph	kph	mph	kph	mph	kph	mph	kph	mph	kph
1st	32·25	198·85	0·66	1·06	0·82	1·32	0·98	1·58	1·15	1·85	1·24	2·00	1·31	2·11	1·38	2·22
2nd	20·58	126·89	1·03	1·66	1·28	2·06	1·54	2·48	1·79	2·88	1·95	3·14	2·05	3·30	2·15	3·46
3rd	12·29	75·78	1·72	2·77	2·15	3·46	2·58	4·15	3·01	4·85	3·27	5·26	3·44	5·54	3·61	5·81
4th	9·03	55·68	2·34	3·77	2·93	4·72	3·51	5·65	4·10	6·60	4·45	7·16	4·68	7·53	4·91	7·91
5th	9·03	55·68	2·34	3·77	2·93	4·72	3·51	5·65	4·10	6·60	4·45	7·16	4·68	7·53	4·91	7·91
6th	5·76	35·52	3·67	5·91	4·59	7·39	5·23	8·42	6·42	10·34	6·97	11·22	7·34	11·81	7·71	12·41
7th	3·44	21·21	6·15	9·90	7·68	12·36	9·22	14·84	10·75	17·31	11·68	18·80	12·29	19·79	12·90	20·77
8th	2·53	15·60	8·37	13·48	10·46	16·84	12·55	20·2	14·64	23·57	15·89	25·58	16·73	26·94	17·57	28·29
Low Reverse	19·73	121·66	1·07	1·72	1·34	2·16	1·61	2·59	1·87	3·01	2·03	3·27	2·14	3·44	2·25	3·62
High Reverse	5·53	34·10	3·83	6·17	4·78	7·70	5·74	9·24	6·69	10·77	7·27	11·70	7·65	12·32	8·03	12·93

FORD 2000 and FORD 3000 (8-Speed) (After September 1965)

Gear	Ratios		Ground Speeds* Engine r.p.m. 1000		1250		1500		1750		1900		2000		† 2100	
	Front Trans.	Final	mph	kph	mph	kph	mph	kph	mph	kph	mph	kph	mph	khp	mph	kph
1st	26·91	165·94	0·79	1·27	0·98	1·58	1·18	1·90	1·37	2·21	1·49	2·40	1·57	2·53	1·65	2·66
2nd	21·56	132·95	0·98	1·58	1·23	1·97	1·47	2·36	1·72	2·76	1·86	2·99	1·96	3·15	2·06	3·31
3rd	12·29	75·79	1·72	2·77	2·15	3·46	2·58	4·16	3·01	4·85	3·27	5·26	3·44	5·54	3·61	5·82
4th	9·03	55·68	2·34	3·77	2·92	4·71	3·51	5·66	4·10	6·59	4·45	7·15	4·68	7·53	4·91	7·91
5th	7·54	46·50	2·81	4·51	3·51	5·64	4·21	6·77	4·91	7·89	5·33	8·57	5·61	9·02	5·89	9·47
6th	6·03	37·18	3·51	5·64	4·38	7·04	5·26	8·45	6·13	9·86	6·66	10·71	7·01	11·27	7·36	11·83
7th	3·44	21·21	6·15	9·88	7·68	12·36	9·22	14·84	10·75	17·31	11·68	18·79	12·29	19·78	12·90	20·77
8th	2·53	15·60	8·37	13·46	10·46	16·83	12·55	20·19	14·64	23·56	15·89	25·57	16·73	26·92	17·57	28·27
Low Reverse	18·72	115·44	1·13	1·82	1·41	2·27	1·70	2·72	1·98	3·18	2·15	3·45	2·26	3·63	2·37	3·81
High Reverse	5·24	32·31	4·04	6·49	5·04	8·11	6·05	9·74	7·06	11·36	7·67	12·33	8·07	12·98	8·47	13·63

* Ground Speeds Based on 6·17:1. Rear Axle Ratio and 11·2/10–28 Rear Tyres
† Only Ford 3000—Gasoline

FORD 2000 and FORD 3000 (7-Speed) (Prior to September 1965)

Gear	Ratios		Ground Speeds* Engine r.p.m.				
			1000	1250	1500	1750	2000
	Front Trans.	Final	kph	kph	kph	kph	kph
1st	36·69	226·23	0·96	1·20	1·44	1·68	1·92
2nd	23·42	144·40	1·50	1·87	2·24	2·62	2·99
3rd	13·98	86·20	2·51	3·14	3·76	4·39	5·02
4th	10·27	63·32	3·42	4·28	5·13	5·99	6·84
5th	10·27	63·32	3·42	4·28	5·13	5·99	6·84
6th	6·55	40·39	5·36	6·70	8·04	9·38	10·72
7th	3·91	24·11	8·97	11·21	11·78	15·70	17·94
Low Reverse	22·46	138·49	1·56	1·95	2·34	2·73	3·12
High Reverse	6·29	38·78	5·58	6·97	8·36	9·76	11·15

FORD 2000 and FORD 3000 (7-Speed) (After September 1965)

Gear	Ratios		Ground Speeds* Engine r.p.m.				
			1000	1250	1500	1750	2000
	Front Trans.	Final	kph	kph	kph	kph	kph
1st	36·69	226·25	0·96	1·20	1·44	1·68	1·92
2nd	24·53	151·27	1·43	1·79	2·15	2·50	2·86
3rd	13·98	86·21	2·51	3·14	3·77	4·39	5·02
4th	10·27	63·33	3·42	4·28	5·13	5·99	6·84
5th	10·27	63·33	3·42	4·28	5·13	5·99	6·84
6th	6·87	42·36	5·11	6·39	7·67	8·94	10·22
7th	3·91	24·11	8·97	11·21	13·46	15·70	17·94
Low Reverse	22·46	138·50	1·56	1·95	2·34	2·73	3·12
High Reverse	6·29	38·79	5·58	6·97	8·36	9·76	11·15

* Ground Speeds Based on 6·17:1 Rear Axle Ratio, and 11·2/10–28 Rear Tyres

FORD 4000 (8-Speed) (Prior to September 1965)

Gear	Ratios		Ground Speeds* Engine r.p.m.											
			1000		1250		1500		1750		2000		2200	
	Front Trans.	Final	mph	kph	mph	kph	mph	kph	mph	kph	mph	kph	mph	kph
1st	17·36	273·42	0·58	0·93	0·73	1·18	0·87	1·40	1·02	1·64	1·16	1·87	1·28	2·06
2nd	11·08	174·51	0·91	1·47	1·14	1·84	1·37	2·21	1·60	2·58	1·83	2·95	2·01	3·24
3rd	6·61	104·11	1·53	2·46	1·91	2·49	2·30	3·70	2·68	4·32	3·06	4·93	3·37	5·43
4th	4·86	76·55	2·08	3·35	2·61	4·20	3·13	5·04	3·65	5·88	4·17	6·72	4·59	7·39
5th	4·86	76·55	2·08	3·35	2·61	4·20	3·13	5·04	3·65	5·88	4·17	6·72	4·59	7·39
6th	3·10	48·83	3·26	5·25	4·07	6·55	4·89	7·88	5·71	9·20	6·53	10·51	7·18	11·56
7th	1·85	29·14	5·47	8·81	6·84	11·01	8·21	13·22	9·57	15·41	10·94	17·62	12·04	19·39
8th	1·36	21·42	7·44	11·98	9·30	14·98	11·17	17·99	13·02	20·97	14·89	23·98	16·38	26·38
Low Reverse	10·63	167·42	0·95	1·54	1·19	1·92	1·43	2·30	1·67	2·69	1·90	3·06	2·10	3·38
High Reverse	2·97	46·77	3·40	5·47	4·25	6·84	5·11	8·23	5·95	9·58	6·80	10·95	7·49	12·06

FORD 4000 (8-Speed) (After September 1965)

Gear	Ratios		Ground Speeds* Engine r.p.m.											
			1000		1250		1500		1750		2000		2200	
	Front Trans.	Final	mph	kph	mph	kph	mph	kph	mph	kph	mph	kph	mph	kph
1st	14·49	228·22	0·70	1·12	0·87	1·40	1·04	1·68	1·22	1·96	1·39	2·25	1·53	2·47
2nd	11·61	182·86	0·87	1·40	1·09	1·75	1·31	2·10	1·53	2·45	1·75	2·80	1·92	3·08
3rd	6·61	104·11	1·53	2·46	1·91	3·08	2·30	3·70	2·68	4·31	3·06	4·93	3·37	5·42
4th	4·86	76·55	2·09	3·36	2·61	4·30	3·13	5·04	3·65	5·88	4·17	6·72	4·59	7·39
5th	4·06	63·95	2·50	4·03	3·13	5·03	3·75	6·04	4·37	7·05	5·00	8·05	5·50	8·86
6th	3·25	58·19	3·11	5·01	3·89	6·27	4·67	7·52	5·45	8·77	6·23	10·03	6·85	11·03
7th	1·85	29·14	5·47	8·81	6·84	11·01	8·21	13·21	9·58	15·42	10·95	17·62	12·04	19·38
8th	1·36	21·42	7·44	11·98	9·31	14·98	11·17	17·97	13·03	20·97	14·89	23·96	16·38	26·36
Low Reverse	10·08	158·76	1·00	1·62	1·26	2·02	1·51	2·43	1·76	2·83	2·01	3·24	2·21	3·56
High Reverse	2·82	44·42	3·59	5·78	4·49	7·22	5·39	8·67	6·28	10·11	7·18	11·55	7·90	12·71

* Ground Speeds Based on 15·75:1 Rear Axle Ratio, and 12·4/11–36 Rear Tyres.

FORD 4000 (7-Speed) (Prior to September 1965)

Gear	Ratios		Ground Speeds* Engine r.p.m. 1000	1250	1500	1750	2000	2200
	Front Trans.	Final	kph	kph	kph	kph	kph	kph
1st	19·45	306·34	0·86	1·08	1·30	1·51	1·73	1·90
2nd	12·41	195·46	1·35	1·68	2·02	2·35	2·69	2·96
3rd	7·41	116·71	2·25	2·82	3·38	3·95	4·51	4·96
4th	5·45	85·84	3·06	3·83	4·60	5·36	6·13	6·74
5th	5·45	85·84	3·06	3·83	4·60	5·36	6·13	6·74
6th	3·48	54·81	4·80	6·00	7·21	8·41	9·61	10·57
7th	2·07	32·60	8·08	10·09	12·12	14·13	16·15	17·77
Low Reverse	11·91	187·58	1·40	1·76	2·11	2·46	2·81	3·09
High Reverse	3·33	52·45	5·02	6·27	7·53	8·78	10·04	11·04

FORD 4000 (7-Speed) (After September 1965)

Gear	Ratios		Ground Speeds* Engine r.p.m. 1000	1250	1500	1750	2000	2200
	Front Trans.	Final	kph	kph	kph	kph	kph	kph
1st	19·45	306·34	0·86	1·08	1·30	1·51	1·73	1·90
2nd	13·01	204·91	1·29	1·61	1·93	2·25	2·57	2·83
3rd	7·41	116·71	2·25	2·82	3·38	3·95	4·51	4·96
4th	5·45	85·84	3·06	3·83	4·60	5·36	6·13	6·74
5th	5·45	85·84	3·06	3·83	4·60	5·36	6·13	6·74
6th	3·64	57·33	4·59	5·74	6·89	8·03	9·18	10·10
7th	2·07	32·60	8·08	10·10	12·12	14·13	16·15	17·77
Low Reverse	11·91	187·58	1·40	1·76	2·11	2·46	2·81	3·09
High Reverse	3·33	52·45	5·02	6·27	7·53	8·78	10·04	11·04

* Ground Speeds Based on 15·75:1 Rear Axle Ratio, and 12·4/11–36 Rear Tyres.

© FORD MOTOR COMPANY LTD. 1967

FORD 5000 (8-Speed) (Prior to September 1965)

Gear	Ratios		Ground Speeds* Engine r.p.m. 1000		1250		1500		1750		2000		2100	
	Front Trans.	Final	mph	kph	mph	kph	mph	kph	mph	kph	mph	kph	mph	kph
1st	10·93	259·99	0·61	0·98	0·76	1·22	0·92	1·48	1·07	1·72	1·23	1·98	1·29	2·08
2nd	6·98	166·03	0·96	1·55	1·20	1·93	1·44	2·32	1·68	2·70	1·92	3·09	2·02	3·25
3rd	4·17	99·19	1·61	2·59	2·01	3·23	2·41	3·88	2·82	4·54	3·22	5·18	3·38	5·44
4th	3·06	72·79	2·19	3·53	2·74	4.41	3·29	5·30	3·83	6·17	4·38	7·05	4·60	7·41
5th	3·06	72·79	2·19	3·53	2·74	4·41	3·29	5·30	3·83	6·17	4·38	7·05	4·60	7·41
6th	1·96	46·62	3·43	5·52	4·28	6·89	5·14	8·27	6·00	9·60	6·85	11·03	7·20	11·59
7th	1·17	27·83	5·75	9·26	7·18	11·56	8·62	13·88	10·06	16·20	11·49	18·50	12·07	19·43
8th	0·86	20·46	7·82	12·60	9·77	15·73	11·74	18·90	13·68	22·02	15·63	25·16	16·42	26·44
Low Reverse	6·71	159·61	1·00	1·61	1·25	2·01	1·50	2·42	1·75	2·82	2·00	3·22	2·10	3·38
High Reverse	1·88	44·72	3·57	5·75	4·47	7·20	5·37	8·65	6·26	10·08	7·15	11·51	7·51	12·05

* Ground Speeds Based on 23·787:1 Rear Axle Ratio and 12·4/11–36 Rear Tyres.

FORD 5000 (8-Speed) (After September 1965)

Gear	Ratios		Ground Speeds* Engine r.p.m. 1000		1250		1500		1750		2000		2100	
	Front Trans.	Final	mph	kph	mph	kph	mph	kph	mph	kph	mph	kph	mph	kph
1st	9·13	217·18	0·78	1·26	0·98	1·57	1·17	1·89	1·37	2·20	1·56	2·51	1·64	2·64
2nd	7·32	174·12	0·98	1·57	1·22	1·96	1·46	2·36	1·71	2·75	1·95	3·14	2·05	3·30
3rd	4·17	99·19	1·71	2·75	2·14	3·44	2·57	4·13	3·00	4·82	3·43	5·50	3·60	5·78
4th	3·06	72·79	2·33	3·74	2·91	4·68	3·49	5·61	4·07	6·55	4·66	7·49	4·89	7·86
5th	2·54	60·42	2·79	4·49	3·49	5·61	4·19	6·73	4·88	7·85	5·58	8·97	5·86	9·42
6th	2·05	48·76	3·48	5·60	4·35	6·99	5·22	8·39	6·09	9·79	6·96	11·19	7·31	11·75
7th	1·17	27·83	6·12	9·56	7·65	11·95	9·18	14·34	10·71	17·23	12·24	19·11	12·85	20·07
8th	0·86	20·46	8·32	13·38	10·40	16·73	12·49	20·07	14·57	23·42	16·65	26·76	17·48	28·10
Low Reverse	6·36	151·29	1·12	1·80	1·40	2·25	1·68	2·70	1·96	3·15	2·24	3·60	2·35	3·78
High Reverse	1·78	42·34	4·01	6·45	5·01	8·07	6·01	9·68	7·02	11·29	8·02	12·90	8·42	13·55

* Ground Speeds Based on 23·787:1 Rear Axle Ratio, and 13·6/12–38 Rear Tyres.

FORD 5000 (7-Speed) (Prior to September 1965)

Gear	Ratios		Ground Speeds* Engine r.p.m.					
			1000	1250	1500	1750	2000	2100
	Front Trans.	Final	kph	kph	kph	kph	kph	kph
1st	10·94	281·30	1·00	1·26	1·51	1·76	2·01	2·11
2nd	6·98	179·48	1·57	1·96	2·36	2·75	3·14	3·30
3rd	4·17	107·22	2·64	3·30	3·96	4·62	5·28	5·54
4th	3·06	78·68	3·59	4·48	5·38	6·27	7·17	7·53
5th	3·06	78·68	3·59	4·48	5·38	6·27	7·17	7·53
6th	1·96	50·40	5·60	7·00	8·40	8·00	11·20	11·76
7th	1·17	30·08	9·38	11·73	14·08	16·42	18·77	19·71
Low Reverse	6·70	172·28	1·64	2·05	2·46	2·87	3·28	3·44
High Reverse	1·88	48·34	5·85	7·31	8·77	10·23	11·69	12·28

FORD 5000 (7-Speed) (After September 1965)

Gear	Ratios		Ground Speeds* Engine r.p.m.					
			1000	1250	1500	1750	2000	2100
	Front Trans.	Final	kph	kph	kph	kph	kph	kph
1st	10·94	281·30	1·00	1·26	1·51	1·76	2·01	2·11
2nd	7·32	188·21	1·50	1·87	2·25	2·62	3·00	3·15
3rd	4·17	107·22	2·64	3·30	3·96	4·62	5·28	5·54
4th	3·06	78·68	3·59	4·48	5·38	6·27	7·17	7·53
5th	3·06	78·68	3·59	4·48	5·38	6·27	7·17	7·53
6th	2·05	52·71	5·37	6·71	8·05	9·39	10·73	11·27
7th	1·17	30·08	9·39	11·73	14·08	16·42	18·77	19·71
Low Reverse	6·70	172·28	1·64	2·05	2·46	2·87	3·28	3·44
High Reverse	1·88	48·34	5·85	7·31	8·77	10·23	11·70	12·28

* Ground Speeds Based on 25·713:1 Rear Axle Ratio, and 13·6/12–38 Rear Tyres.

TIGHTENING TORQUES—lb. ft. (m.kg., equivalents in parentheses)	FORD 2000 AND FORD 3000	FORD 4000	FORD 5000
Release Bearing Hub Support Bolts	23–29 (3·18–4·00)	23–29 (3·18–4·00)	35–47 (4·84–6·50)
Clutch Release Fork (bolt and locknut)	Refer to Part 4, Clutches, Specification Section.		Not Applicable
Front Support Plate Bolts	23–29 (3·18–4·00)	23–29 (3·18–4·00)	23–29 (3·18–4·00)
Gear Shift Cover Assembly Bolts	23–29 (3·18–4·00)	23–29 (3·18–4·00)	35–47 (4·84–6·50)
Gear Shift Forks (bolts and locknuts)	20–25 (2·76–3·46)	20–25 (2·76–3·46)	20–25 (2·76–3·46)
Shift Lever Stop Plate(s) Bolts/Nuts	14–17 (1·94–2·35)	14–17 (1·94–2·35)	14–17 (1·94–2·35)
Safety Switch Operating Roller Support Plate/Switch Retainer Bolts	14–17 (1·94–2·35)	14–17 (1·94–2·35)	14–17 (1·94–2·35)
Output Shaft Retainer Bolts	23–30 (3·18–4·15)	23–30 (3·18–4·15)	24–30 (3·31–4·15)
Rear Support Plate Bolts	24–30 (3·31–4·15)	24–30 (3·31–4·15)	24–30 (3·31–4·15)
Reverse Idler Shaft Retaining Bolt	15–18 (2·07–2·49)	15–18 (2·07–2·49)	15–18 (2·07–2·49)
Main Drive Input Shaft Bearing Retainer Plate Bolts	Not Applicable	40–50 (5·53–6·91)	Not Applicable

2. SPECIAL TOOLS

Tool Number	Description
1002	Puller—Reversible Arm (Medium).
1003	Puller—Single End Arm (Large).
951	Pulling Attachment (Small).
952	Pulling Attachment (Large).
625-A	Shaft Protectors (Set of Six).
630-S	Step Plate Adaptors (Set of Eleven).
630-T	Step Plate Adaptors (Set of Six).
943	Internal/External Pulling Attachment.
943-S	Slide Hammer.
FT.943	Internal Pulling Adaptors (Set of Two).
SW.4	Main Countershaft Front Bearing Remover.
SW.501-2	Main Countershaft Front Bearing Remover.
T.7077	Tube Spanner.

T.7072	P.T.O. Countershaft Front Bearing Remover.
SW.501–3	P.T.O. Countershaft Front Bearing Remover.
954	Pilot Bearing Puller.
955–14	Puller Adaptors (Set of Two).
P.61	Heavy Duty Ratchet.
938	Push-Puller.
930-B	Push-Puller Legs (Set of Two).
930-E	Push-Puller Legs (Set of Two).
924	Female Threaded Adaptors (Set of Two).
* * *	Steel Rods—$\frac{3}{16}$ in. (4·8 mm.) dia., and 2 in. (50·8 mm.) long.
* * *	Sleeves of Convenient Length (Listed below):

1. 2 in. (50·8 mm.) I.D. and $2\frac{3}{8}$ in. (60·3 mm.) O.D.
2. $1\frac{1}{4}$ in. (31·8 mm.) I.D. and $1\frac{5}{8}$ in. (41·3 mm.) O.D.
3. $1\frac{7}{16}$ in. (36·5 mm.) I.D. and $1\frac{3}{4}$ in. (44·4 mm.) O.D.
4. $1\frac{1}{16}$ in. (26·9 mm.) I.D. and $1\frac{1}{4}$ in. (31·7 mm.) O.D.
5. $1\frac{9}{16}$ in. (39·7 mm.) I.D. and $2\frac{1}{16}$ in. (52·4 mm.) O.D.
6. $2\frac{1}{16}$ in. (52·4 mm.) I.D. and $2\frac{5}{16}$ in. (58·7 mm.) O.D.
7. $2\frac{1}{2}$ in. (63·5 mm.) I.D. and 3 in. (76.2 mm.) O.D.
8. 1 in. (25·4 mm.) I.D. and $1\frac{3}{8}$ in. (34·9 mm.) O.D.

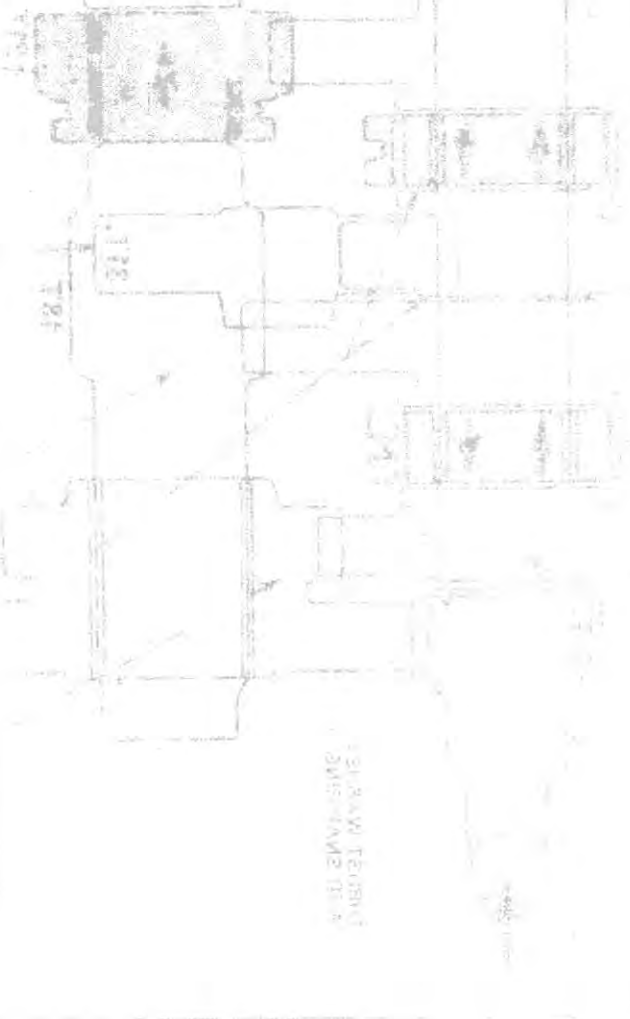

© FORD MOTOR COMPANY LTD., 1967

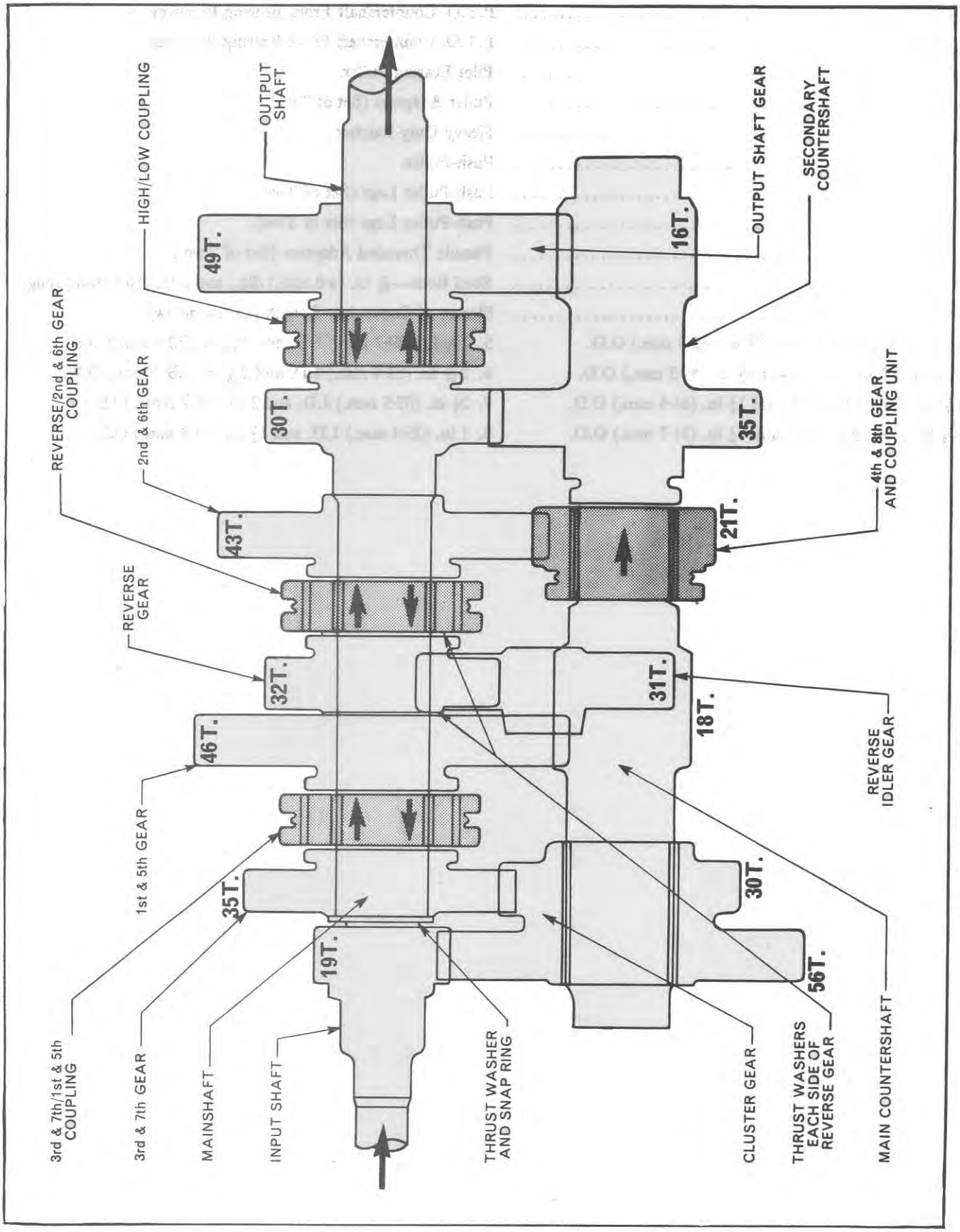

FORD 2000, FORD 3000 — Gear Identification Diagram (Current Ratios)
For previous ratio gears see Page 26

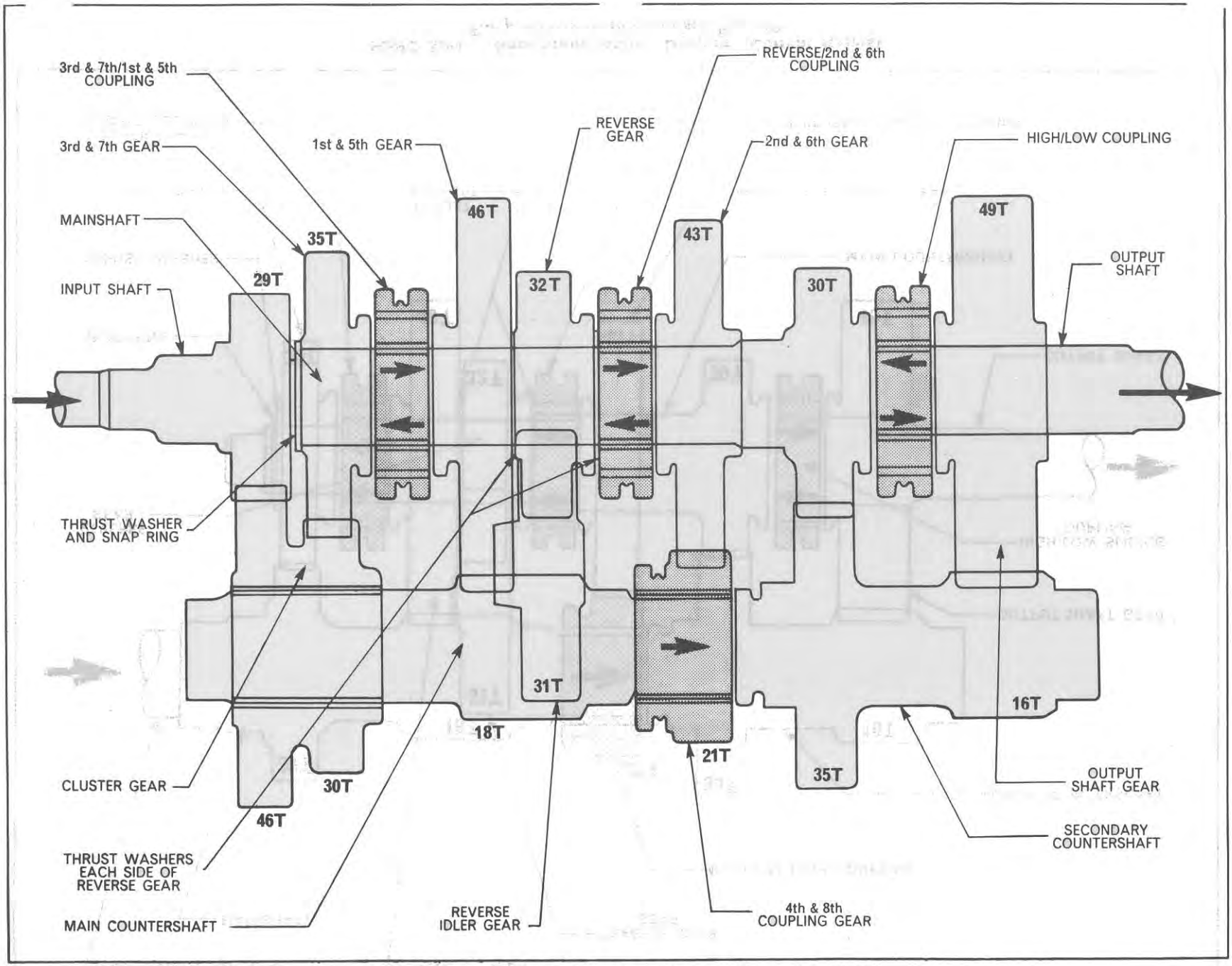

FORD 4000 — Gear Identification Diagram (Current Ratios)

For previous ratio gears see Page 28

© FORD MOTOR COMPANY LTD. 1967

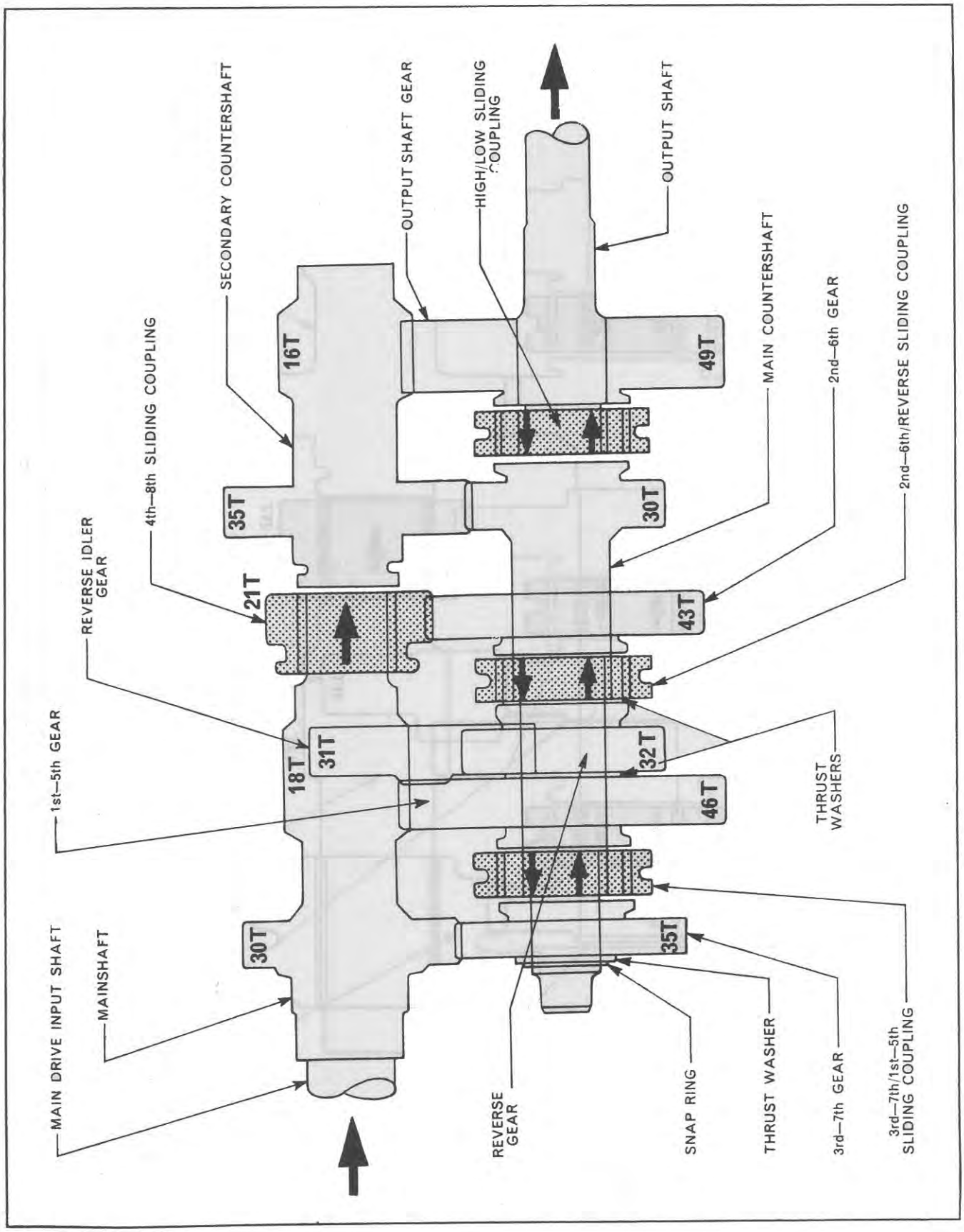

FORD 5000 — Gear Identification Diagram (Current Ratios)
For previous ratio gears see Page 49

Part 7

SEVEN AND EIGHT SPEED TRANSMISSION

Chapter 4

DUAL POWER TRANSMISSION — FORD 5000 AND 7000

Section		*Page*
1.	Description and Operation	65
2.	Planetary Gear Set Overhaul	69
3.	Pressure Testing	80

1. DESCRIPTION AND OPERATION

The Dual Power transmission consists of a planetary gear set installed directly between the clutch and the input shaft of the transmission.

The planetary gear set incorporates two hydraulically operated clutches which lock an element or elements of the planetary gear system together to produce either a normal direct drive to the transmission or a power underdrive which lowers the speed but increases the torque.

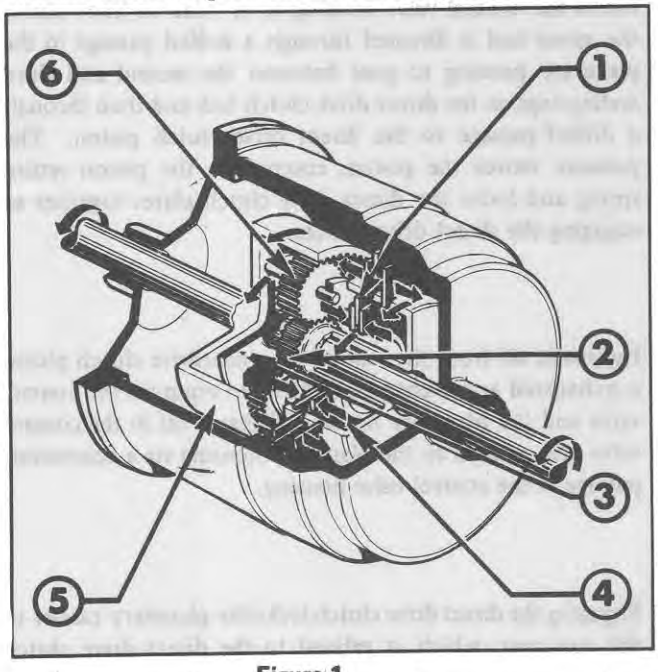

Figure 1
Dual Power Planetary Gear Set-Normal Direct Drive Operation

1. Direct Drive Clutch Plates
2. Sun Gear
3. Planetary Carrier
4. Direct Drive Clutch Piston Pressure
5. Ring Gear
6. Pinion

Normal Direct Drive
With reference to Figure 1.

Locking any two members of a planetary gear system together results in a direct drive with no change in speed or direction of rotation.

Compressing the direct drive clutch plates locks the sun gear to the planetary carrier which is the output member of the system. Applying power to the ring gear results in a normal direct drive.

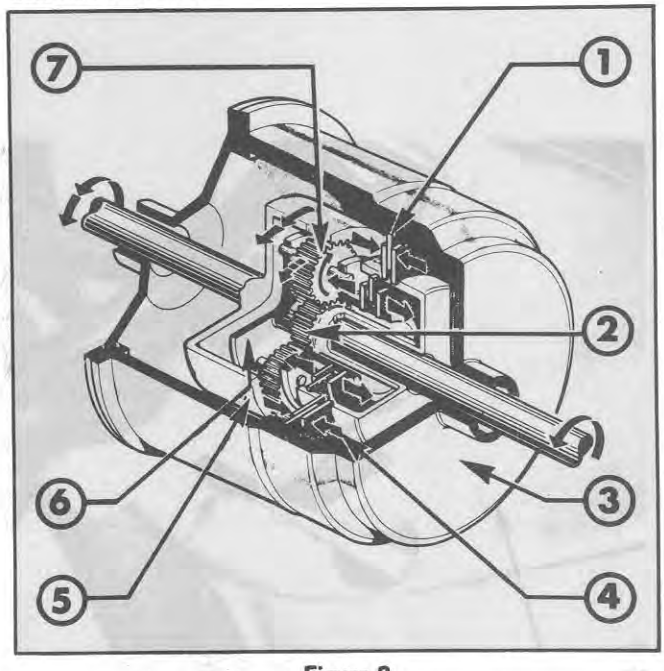

Figure 2
Dual Power Planetary Gear Set-Power Underdrive Operation

1. Underdrive Clutch Plates
2. Sun Gear
3. Planetary Housing
4. Underdrive Clutch Piston Pressure
5. Ring Gear
6. Planetary Carrier
7. Pinion

Power Underdrive

With reference to Figure 2.

Compressing the underdrive clutch plates, locks the sun gear to the planetary housing. Applying power to the ring gear forces the pinions to rotate on their own axes and 'walk' around the sun gear, taking the planetary carrier with them. The planetary carrier is the output member of the system and turns in the same direction as the ring gear but at a lower speed with a resultant increase in torque. This condition produces a power underdrive.

The Dual Power transmission is operated by a two-position control valve, located on the side of the planetary gear set housing, which directs hydraulic oil from the independent power take-off (I.P.T.O.) pump to engage either the direct drive or the underdrive clutch assembly. The hydraulic oil pressure is controlled by a Dual Power regulating valve located in the P.T.O. drive clutch valve assembly.

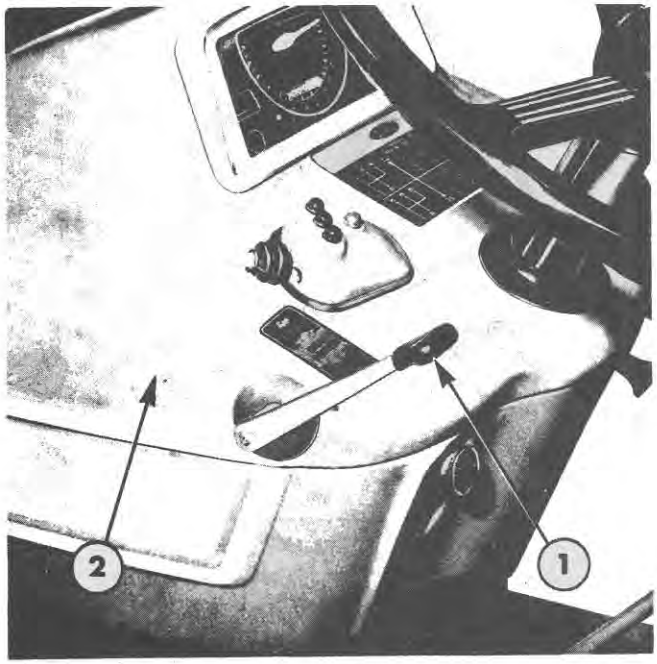

Figure 3
Dual Power Control Lever Location
1. Dual Power Control Lever 2. Fuel Tank Shroud

The control valve, which has no neutral position, is connected through an adjustable cable and linkage to a hand lever on the left-hand side of the fuel tank shroud, see Figure 3. The lever is pulled rearward to select power drive and is pushed forward to return the transmission to a normal direct drive.

The ground speeds in normal direct drive are unchanged from the previous 8-speed transmission ground speeds.

The Dual Power transmission ratios and corresponding gear shift lever positions are shown in Specifications, Chapter 5.

Oil Flow to the Direct Drive Clutch

With reference to Figure 4.

When the Dual Power control lever is pushed forward to the normal position, the control valve spool is moved downwards and the hydraulic oil from the I.P.T.O. pump enters the control valve housing at 'A'. The oil flows across the spool and is directed through a drilled passage in the planetary housing to pass between the second and third sealing rings on the direct drive clutch hub and then through a drilled passage to the direct drive clutch piston. The pressure moves the piston, compresses the piston return spring and locks the direct drive clutch plates together so engaging the direct drive clutch.

Hydraulic oil from the rear of the underdrive clutch piston is exhausted and eventually returns to sump via the control valve and the planetary housing. Exhaust oil in the control valve also returns to the planetary housing via a connecting passage in the control valve housing.

Engaging the direct drive clutch locks the planetary carrier to the sun gear, which is splined to the direct drive clutch housing. When any two members of the planetary assembly are locked together a direct drive results with no change in speed or direction of rotation. Therefore, as the planetary carrier and the sun gear are locked together, power input at the ring gear is passed directly to the planetary carrier which is splined via a connecting shaft to the input shaft of the transmission

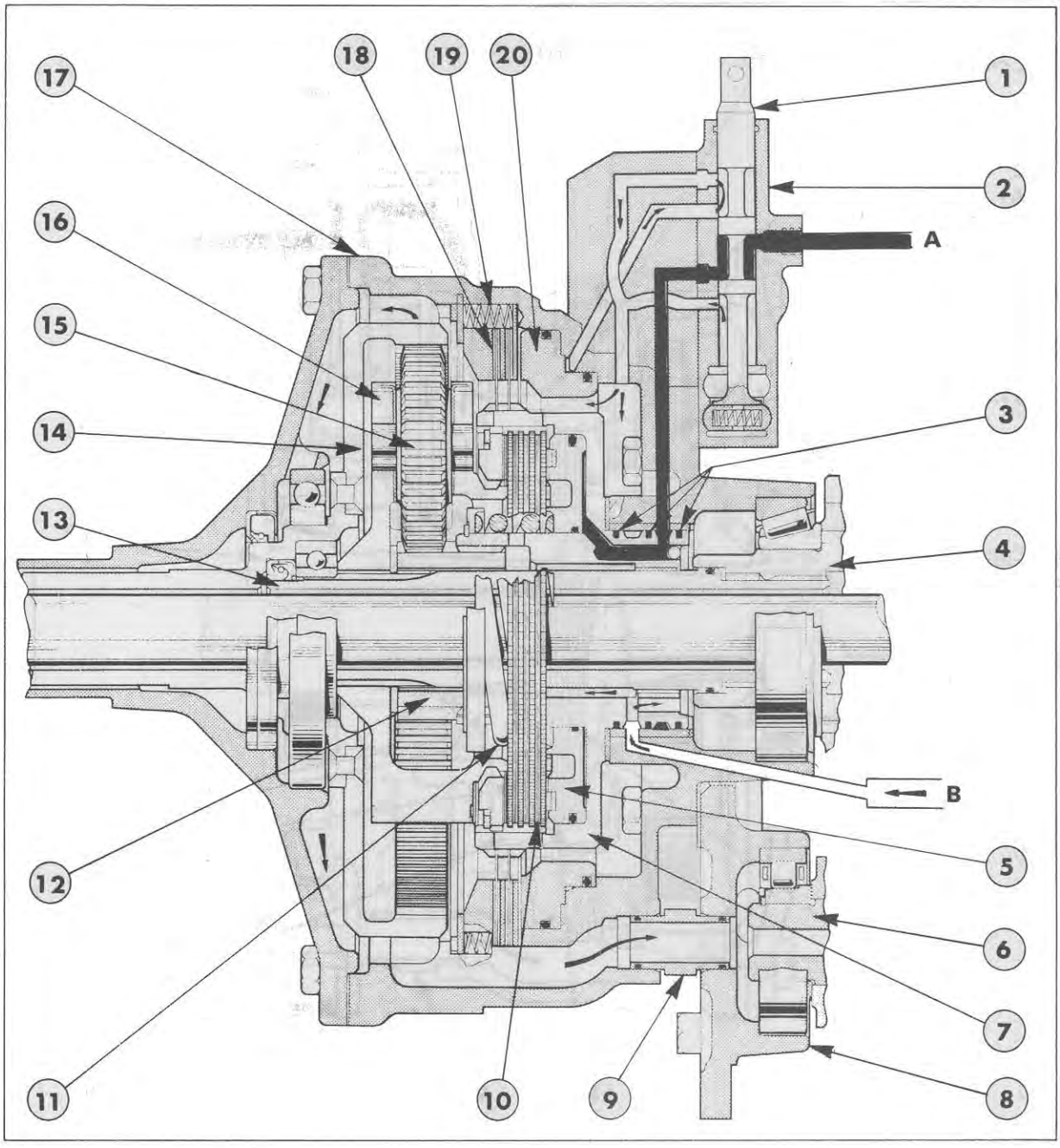

Figure 4
Oil Flow to Direct Drive Clutch

Pressure Oil | **Lubrication Oil** | **Reservoir and Exhaust Oil**

1. Control Valve Spool
2. Control Valve Housing
3. Sealing Rings
4. Transmission Input Shaft
5. Direct Drive Clutch Piston
6. Transmission Countershaft
7. Direct Drive Clutch Housing
8. Hub Support Plate
9. Lubrication Oil Tube
10. Direct Drive Clutch Plates
11. Direct Drive Clutch Piston Return Spring
12. Sun Gear
13. Centre Shaft
14. Ring Gear and Input Shaft
15. Pinion
16. Planetary Carrier
17. Planetary Housing
18. Underdrive Clutch Plates
19. Underdrive Clutch Piston Return Springs
20. Underdrive Clutch Piston

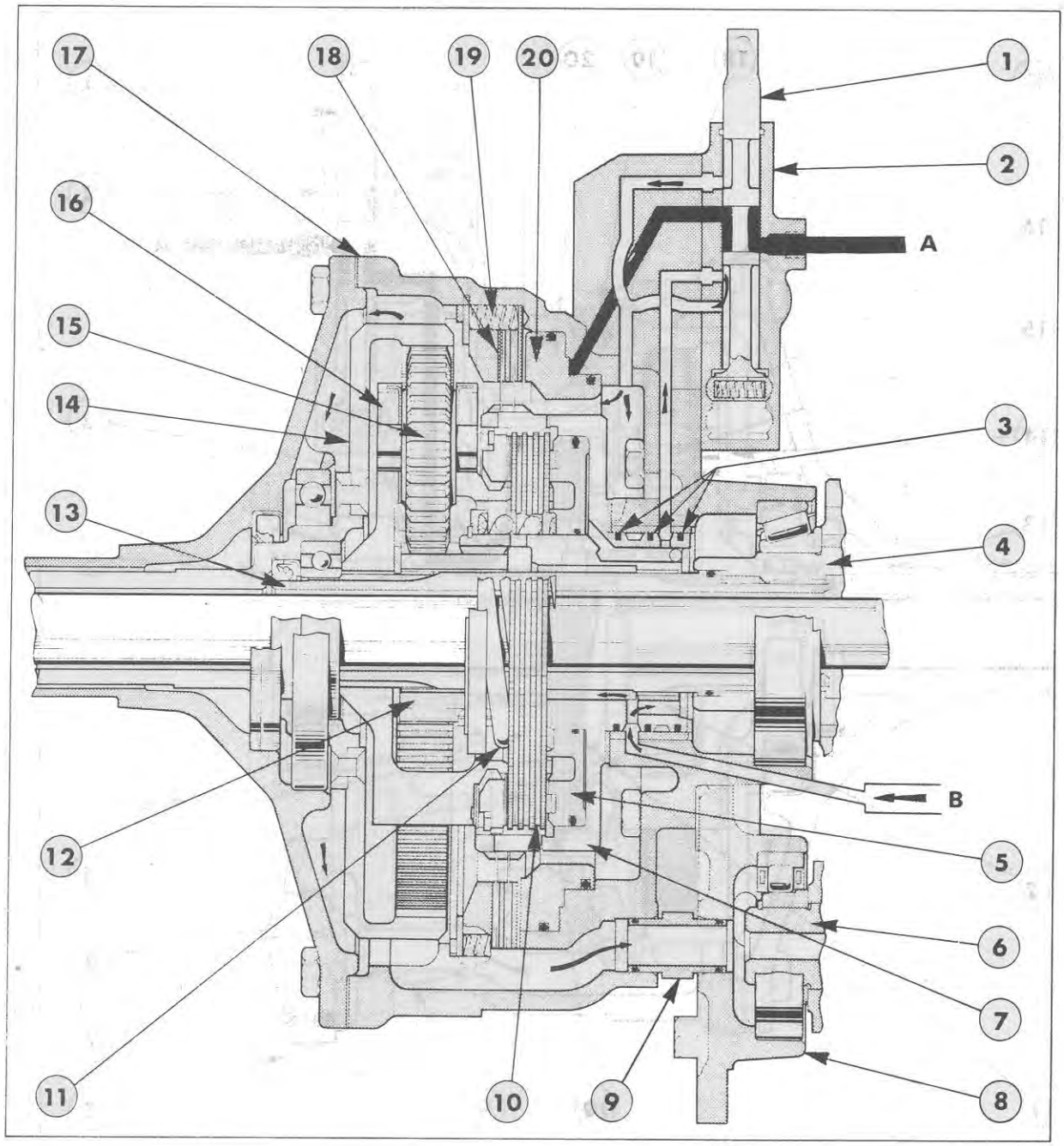

Figure 5
Oil Flow to Underdrive Clutch

Pressure Oil | **Lubrication Oil** | **Reservoir and Exhaust Oil**

1. Control Valve Spool
2. Control Valve Housing
3. Sealing Rings
4. Transmission Input Shaft
5. Direct Drive Clutch Piston
6. Transmission Countershaft
7. Direct Drive Clutch Housing
8. Hub Support Plate
9. Lubrication Oil Tube
10. Direct Drive Clutch Plates
11. Direct Drive Clutch Piston Return Spring.
12. Sun Gear
13. Centre Shaft
14. Ring Gear and Input Shaft
15. Pinion
16. Planetary Carrier
17. Planetary Housing
18. Underdrive Clutch Plates
19. Underdrive Clutch Piston Return Springs
20. Underdrive Clutch Piston

Oil Flow to the Underdrive Clutch

With reference to Figure 5.

When the Dual Power control lever is pulled rearwards to the power position, the control valve spool is moved upwards. Hydraulic oil flows across the spool and is directed through a drilled passage in the planetary housing to the underdrive clutch piston. The pressure moves the piston, compresses the piston return springs and locks the underdrive clutch plates together so engaging the underdrive clutch.

Hydraulic oil from the rear of the direct drive clutch piston is exhausted and eventually returns to sump via the control valve and the planetary housing. Exhaust oil in the control valve also returns to the planetary housing via a connecting passage in the control valve housing.

Engaging the underdrive clutch locks the direct drive clutch housing to the planetary housing. As the sun gear is splined to the inner hub of the direct drive clutch assembly, it is also locked to the planetary housing. Applying power to the ring gear and holding the sun gear, causes the pinions of the planetary carrier to rotate on their own axes and 'walk' around the sun gear taking the carrier with them. The carrier, being the output member of the system, turns in the same direction but at a slower speed than the ring gear thereby producing an underdrive with a resultant decrease in speed and increase in torque.

Lubrication Oil Flow

Lubrication oil is supplied at low pressure from the external hydraulic oil filter manifold. This oil is directed via tubing through a transmission oil cooler, before entering a passage in the control valve body shown schematically at 'B' in Figures 4 and 5.

The oil passes through a drilled passage in the planetary housing between the first and second sealing rings on the direct drive clutch hub and through a drilled passage in line with the direct drive clutch plates. The oil flows around the clutch plates and through the planetary assembly. As the members of the planetary assembly rotate, oil is thrown off to lubricate the bearings and other components in the housing. Oil in the bottom of the housing is directed through a tube connecting the housing with the main countershaft bearing in the hub support plate.

Excess oil in the housing flows directly into the transmission case to lubricate the transmission gears and bearings. Oil entering the hub support plate flows into the centre passages of the countershaft and output shaft and lubricates the bearings and gears through cross drillings in the two shafts. As the components on the countershaft and output shaft revolve, oil is carried to the input shaft and secondary countershaft to lubricate the upper gears and bearings in the transmission case.

Oil collected in the transmission case is allowed to flow into the rear axle centre housing, with which it forms a common oil reservoir, through passages in the transmission output shaft retainer.

2. PLANETARY GEAR SET OVERHAUL

A. REMOVAL

1. Drain the oil from the transmission and rear axle centre housings.

2. Disconnect the oil cooler feed tube from the hydraulic oil filter manifold.

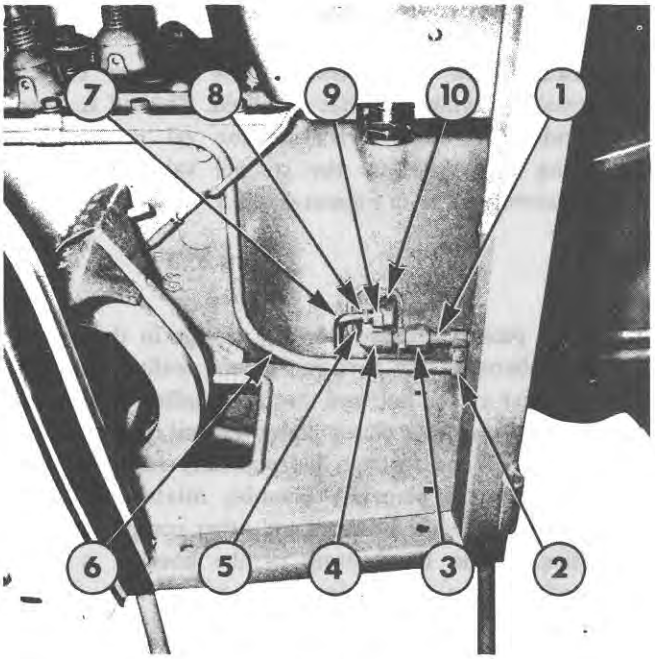

Figure 6

Dual Power Lubrication and Pressure Line Control Tube Connections

1. Transmission Lubrication Tube
2. Clamp
3. Connector
4. Elbow
5. Nipple
6. Oil Cooler Feed Tube
7. Pressure Line Control Tube
8. Connector
9. Elbow
10. Nipple

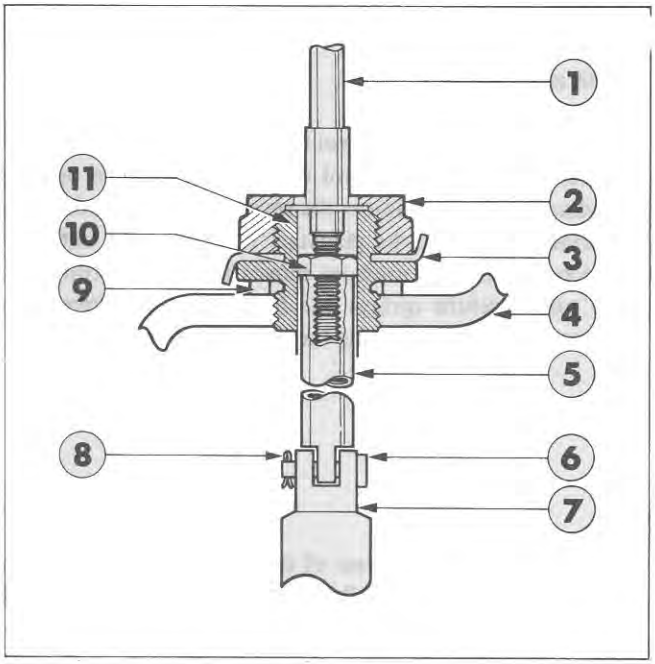

Figure 7

Dual Power Control Linkage Assembly

1. Dual Power Control Cable
2. Retaining Nut
3. Tab Washer
4. Transmission Housing
5. Control Valve Extension Rod
6. Clevis Pin
7. Control Valve Spool
8. Cotter Pin
9. Lockwasher
10. Internal Locknut
11. Connector

3. Remove the clamps and disconnect the lubrication and pressure line control tubes from the control valve, Figure 6, and remove the elbows and connecting nipples.

4. Separate the engine from the transmission.

5. Disconnect the dual power control valve extension rod from the valve spool by removing the cotter pin and clevis pin, see Figure 7.

6. Remove the retaining nut, tab washer, connector and lock washer from the transmission housing and withdraw the dual power control cable and valve extension rod.

7. Disconnect the rod between the clutch pedal and the clutch release cross-shaft lever by removing the clevis pin at the lever end.

8. Remove the hexagon headed bolt and nut at the base of the fork, Figure 8, support the fork and withdraw the clutch release cross-shaft.



Figure 8

Dual Power Planetary Gear Set Installed

1. Retaining Bolts
2. Planetary Cover
3. Clutch Release Bearing
4. Clutch Release Fork
5. Clutch Release Cross-Shaft
6. Hexagon Headed Bolt and Nut
7. Control Valve

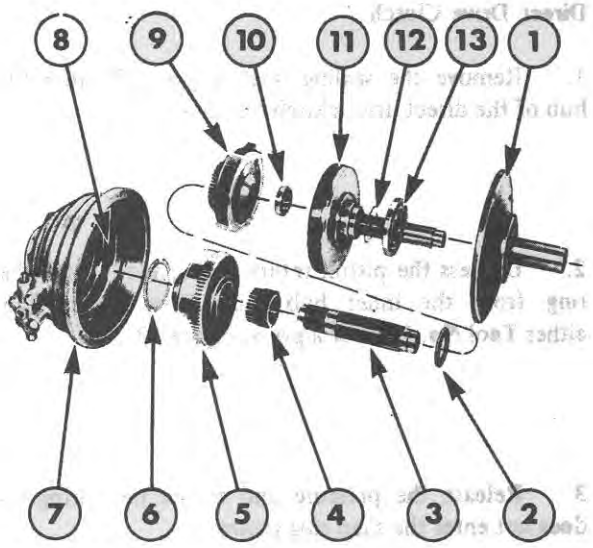

Figure 9
Planetary Gear Set Components - Exploded View

1. Cover
2. Thrust Washer
3. Shaft
4. Sun Gear
5. Direct Drive Clutch
6. Thrust Washer
7. Planetary Housing
8. Underdrive Clutch Assembly
9. Planetary Carrier
10. Pilot Bearing
11. Ring Gear and Shaft Assembly
12. Shim
13. Ring Gear Bearing

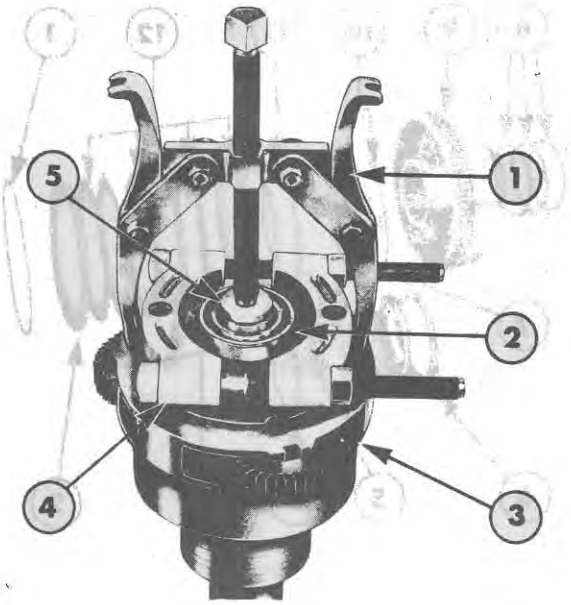

Figure 10
Removing Pilot Bearing from Planetary Shaft

1. Tool No. 1002
2. Pilot Bearing
3. Planetary Carrier
4. Tool No. 951
5. Tool No. 630 - S/4

9. Remove the fork and the release bearing assembly.

10. Remove the bolts from the planetary cover.

11. Carefully remove the cover from the planetary housing.

12. Remove the gasket from the cover.

13. Remove the ring gear and shaft assembly, Figure 9, from the housing.

14. Carefully remove the planetary carrier, shaft, sun gear and direct drive clutch assembly as a complete unit.

15. Remove the pilot bearing from the shaft using Tool Nos. 1002, 630S/4 and 951, as shown in Figure 10.

16. Remove the shaft and separate the planetary carrier from the direct drive clutch assembly.

17. Remove the sun gear from the inner splines of the direct drive clutch assembly.

18. Carefully remove the bolts securing the planetary housing to the transmission case, Figure 11.

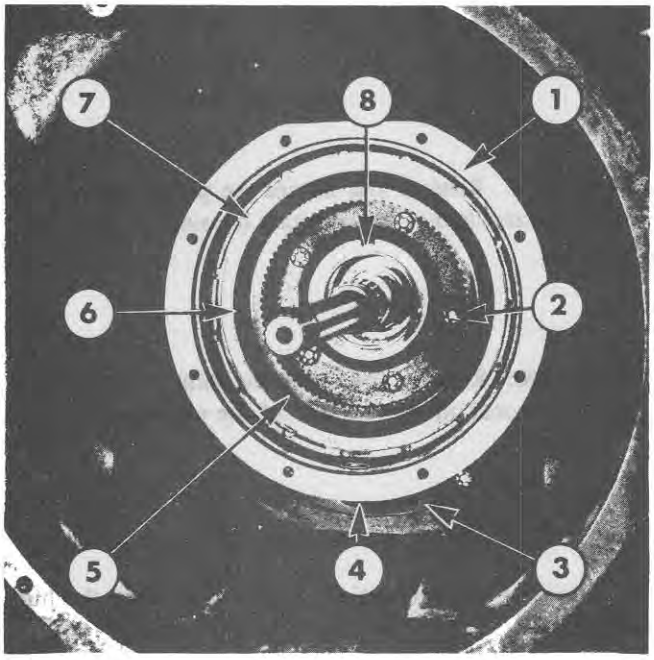

Figure 11
Underdrive Clutch Assembly Installed

1. Planetary Housing
2. Retaining Bolts
3. Hub Support Plate
4. Lubrication Supply Tube
5. Friction Plate
6. Pressure Plate
7. Snap Ring
8. Thrust Washer

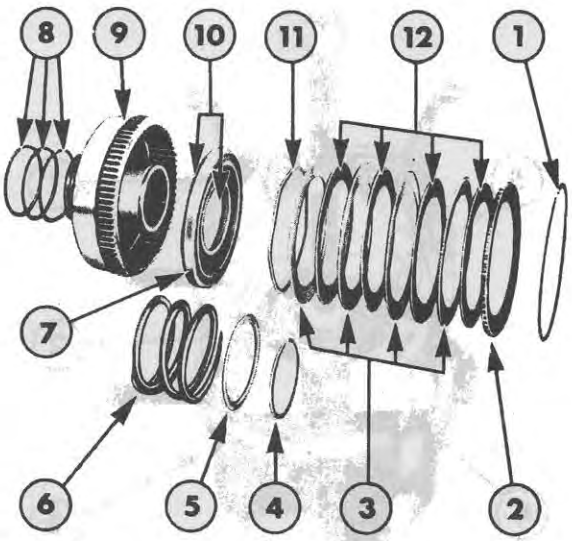

Figure 12
Direct Drive Clutch Assembly - Exploded View

1. Snap Ring
2. Pressure Plate
3. Steel Plates
4. Snap Ring
5. Spring Retainer
6. Piston Return Spring
7. Piston
8. Sealing Rings
9. Direct Drive Clutch Housing
10. Piston Seals
11. Feathering Spring
12. Friction Plates

19. Remove the planetary housing from the case.

FORD 5000: Remove and discard the gasket and 'O' ring seal on the rear hub of the planetary housing.

FORD 7000: Remove and retain the shim (s) but discard the 'O' ring seal on the rear hub of the planetary housing.

20. Remove the lubrication supply tube from the hub support plate.

21. Remove the 'O' ring from each end of the tube.

B. DISASSEMBLY

Direct Drive Clutch

1. Remove the sealing rings, Figure 12, from the rear hub of the direct drive clutch housing.

2. Depress the piston return spring and remove the snap ring from the inner hub using Tool No. N-775 and either Tool No. 1003 or a press, Figure 13.

3. Release the pressure and ensure the spring retainer does not enter the snap ring groove.

4. Remove the spring retainer and spring.

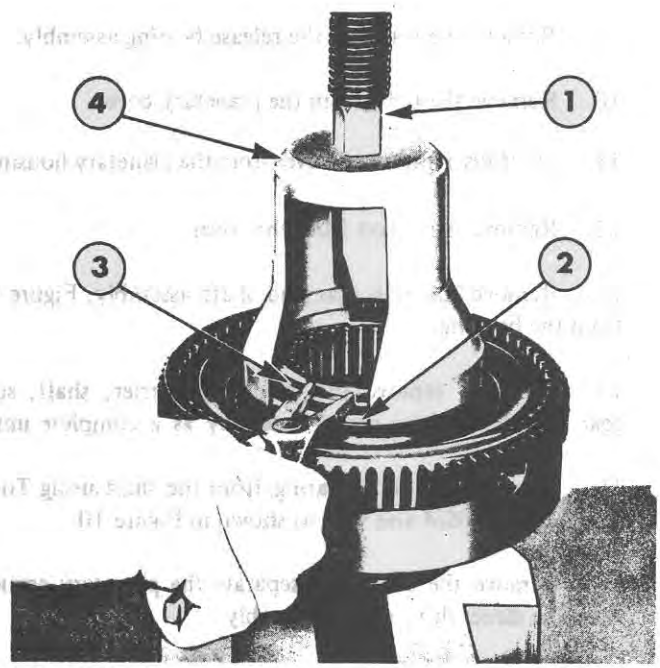

Figure 13
Direct Drive Clutch Piston Return Spring Snap Ring - Removal and Installation

1. Press Ram
2. Spring Retainer
3. Snap Ring
4. Tool No. N-775

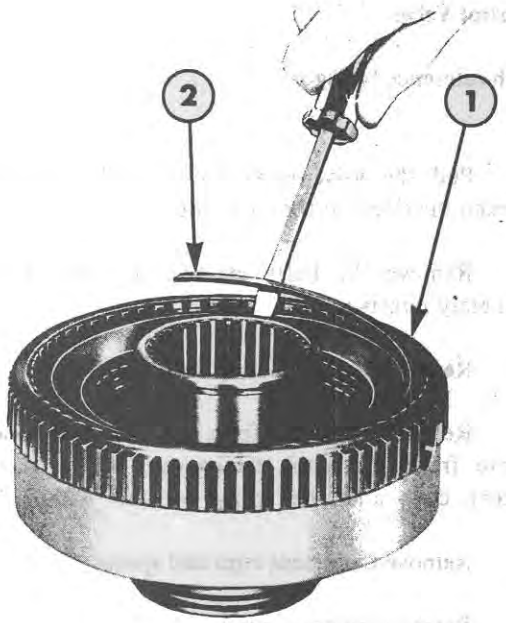

Figure 14
Direct Drive Clutch Pressure Plate Snap Ring - Removal and Installation
1. Direct Drive Clutch Housing 2. Pressure Plate Snap Ring

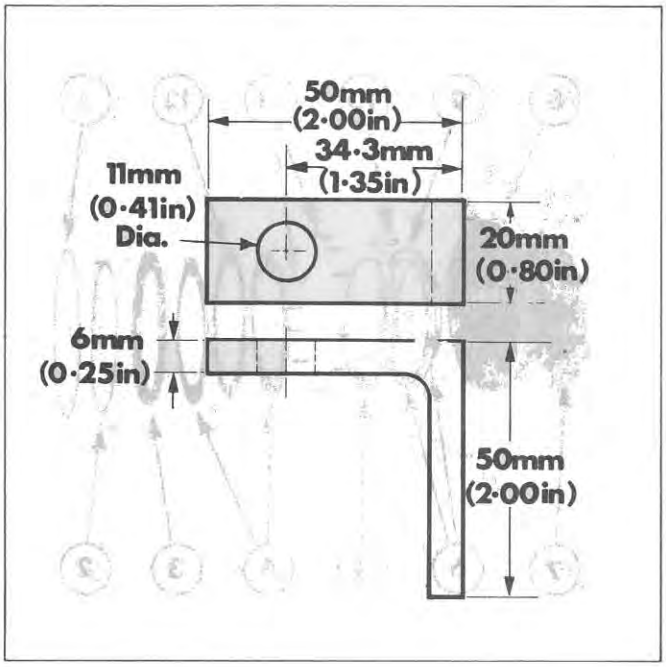

Figure 15
Restraining Clamp for Removal of Underdrive Clutch Snap Ring

5. Remove the clutch pressure plate snap ring as shown in Figure 14.

6. Remove the pressure plate, the friction and steel plates from the clutch housing.

IMPORTANT: Note the order in which the clutch plates were removed.

7. Remove the feathering spring from the face of the piston.

8. Place an air hose nozzle in the hole between the middle and rear sealing ring grooves in the clutch housing hub and blow out the piston.

9. Remove the piston inner and outer seals.

Underdrive Clutch

1. Remove the large snap ring from the inner surface of the planetary housing.

NOTE - To remove the snap ring it is recommended that four restraining clamps be made as shown in Figure 15. Equispace the four clamps, Figure 16, around the rim of the planetary housing and secure with the housing bolts.

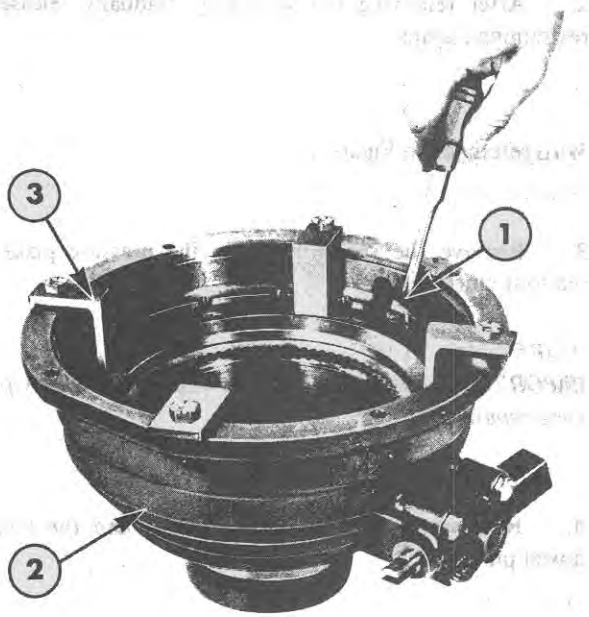

Figure 16
Underdrive Clutch Snap Ring - Removal and Installation
1. Snap Ring 3. Restraining Clamp
2. Planetary Housing

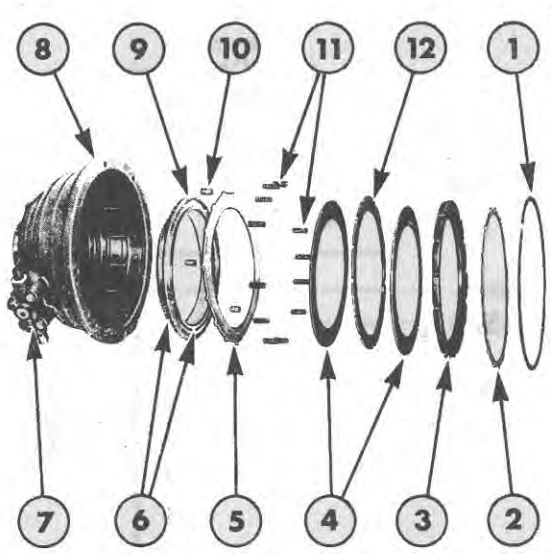

Figure 17
Underdrive Clutch Assembly - Exploded View

1. Snap Ring
2. Spring Retainer
3. Pressure Plate
4. Friction Plates
5. Rear Plate
6. Piston Seals
7. Control Valve Body
8. Planetary Housing
9. Piston
10. Dowel Pins
11. Piston Return Springs
12. Spacer Plate

2. After removing the snap ring, gradually release the restraining clamps.

With reference to Figure 17:

3. Remove the spring retainer, the pressure plate and the four clutch plates.

IMPORTANT: Note the order in which the clutch plates were removed.

4. Remove the piston return springs and the locating dowel pins.

5. Remove the clutch piston.

6. Remove the inner and outer seals from the piston.

Control Valve

With reference to Figure 18:

1. Pull the valve spool to the full out position and slacken the sleeve at the valve body.

2. Remove the bolts securing the valve body to the planetary housing.

3. Remove the gasket from the valve body.

4. Remove the sleeve from the valve body and pull the sleeve from the spool, taking care not to lose the two detent cups and the spring located within the spool.

5. Remove the detent cups and spring.

6. Remove the valve spool.

7. Remove the 'O' ring seal from the valve spool bore.

8. Remove the sleeve 'O' ring seal from the valve body.

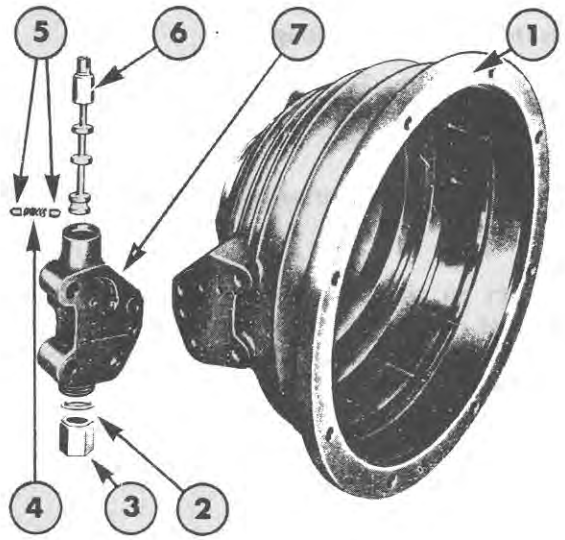

Figure 18
Control Valve and Planetary Housing - Exploded View

1. Planetary Housing
2. 'O' Ring Seal
3. Sleeve
4. Detent Spring
5. Detent Cup
6. Valve Spool
7. Valve Body

C. INSPECTION AND REPAIR

1. Clean all parts in a suitable solvent and dry thoroughly with a dry, lint-free cloth or compressed air.

2. Examine the lubrication inlet tube, the pressure inlet tube and the lubrication supply tube for damage or distortion. Discard any defective tubes.

3. Examine the control cable and linkage assembly for damage or binding. Inspect the control lever pivot to ensure freedom of operation. If any part of the control system is found to be defective, discard and replace.

4. Examine the clutch release hub and bearing for excessive wear or damage. If necessary, remove the bearing from the hub with Tool Nos. 951, 630 S/10 and either a press or Tool No. 1002, see Figure 19. Press a new bearing onto the hub ensuring the thrust face of the bearing faces away from the shoulder on the hub.

5. Pack the recess in the bearing hub bore with a high melting point grease.

6. Inspect the clutch release fork, for cracks or excessive wear and replace as necessary.

7. Examine the cross-shaft and lever for distortion or excessive wear and install a new assembly, if damage is evident. Inspect the shaft bushings for excessive wear and replace if found to be defective. Bushings should be driven into the housing until they are flush with the outside edges of the cross-shaft locating bores.

8. Inspect the planetary cover for damage or distortion. Check the face of the cover and the mating surface for nicks or burrs and remove any imperfections with an abrasive stone.

9. Inspect the planetary carrier and gears, planetary shaft, pilot bearing and thrust washer for damage or wear. Install new parts where necessary.

10. Inspect the sun gear for excessive wear or damaged teeth.

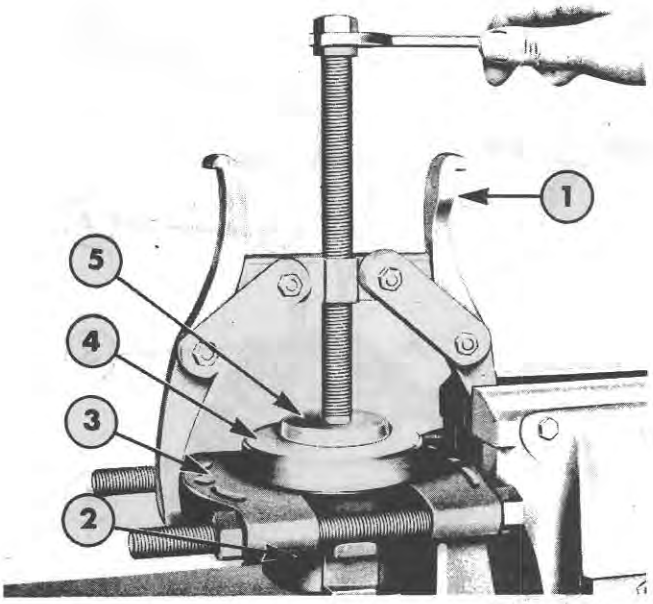

Figure 19
Removing Clutch Release Bearing From Hub

1. Tool No. 1002
2. Hub
3. Tool No. 951
4. Release Bearing
5. Tool No. 630-S/10

11. Inspect the sealing rings from the rear hub of the direct drive clutch assembly for damage, distortion or cracks.

12. Examine the direct drive clutch housing both externally for cracks or damage and internally for wear and piston scuffing. Inspect the housing external splines for cracked, broken or missing teeth.

13. Inspect the direct drive clutch piston, feathering spring, friction plates, steel plates, pressure plate and snap ring and install new piston seals. Any defective parts must be replaced during re-assembly.

14. Examine the direct drive clutch piston return spring, spring retainer and snap ring for damage.

15. Examine the thrust washer for damage or distortion.

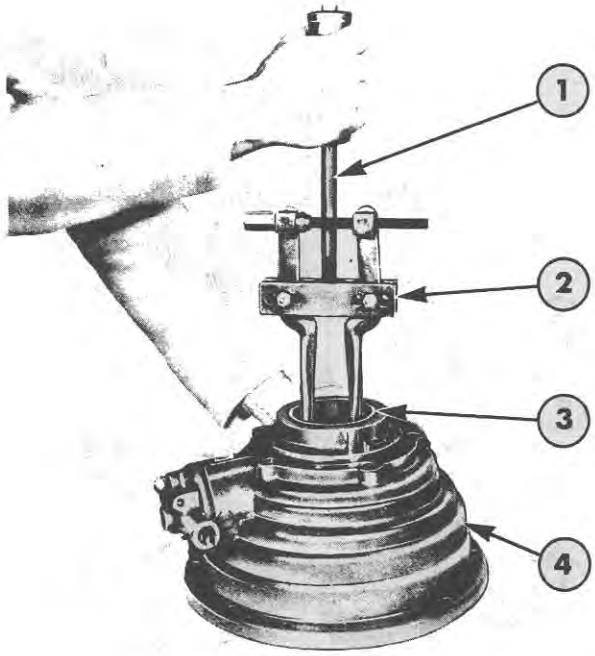

Figure 20
Transmission Input Shaft Bearing Cup Removal

1. Tool No. 943-S
2. Tool No. 943
3. Input Shaft Bearing Cup
4. Planetary Housing

16. Inspect the planetary housing for cracks or damage. Examine the underdrive clutch piston, locating dowel pins, springs, rear plate, friction plates, spacer plate, pressure plate, spring retainer and snap ring and install new piston seals. Discard and replace any cracked, damaged or badly worn parts.

17. **FORD 5000**: Examine the transmission input shaft front bearing for excessive damage or wear. Replace if necessary.

FORD 7000: Examine the transmission input shaft front bearing cup in the hub of the planetary housing and the cone and roller assembly on the input shaft, for excessive damage or wear. Remove the cup, if necessary, using Tool Nos. 943 and 943-S, as shown in Figure 20. Press a new cone and roller assembly on the input shaft.

IMPORTANT: During re-assembly check and adjust the preload of the transmission input shaft front bearing assembly. Refer to "FORD 7000 Transmission Input Shaft Bearing Preload Check" in this Chapter.

18. Examine the sleeve in the hub of the planetary housing, Figure 21, for excessive damage or wear. Remove the sleeve, if necessary, with a press and suitable step plate. Press a new sleeve into the housing.

IMPORTANT: The sleeve must be pressed flush with the front face of the locating bore and ensure the holes in the sleeve align with the holes in the housing.

19. Inspect the ring gear and shaft assembly for damage or wear. Inspect the shaft splines for damage. If necessary, install a new ring gear and shaft assembly.

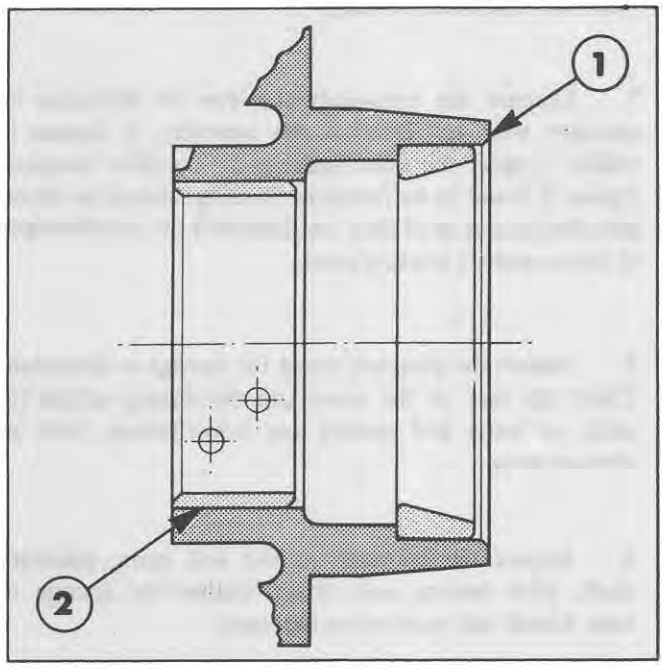

Figure 21
Planetary Housing Sleeve Location

1. Planetary Housing
2. Sleeve

20. Examine the ring gear bearing for wear or damage. If necessary remove the bearing with Tool Nos. 930–B, 938, 952 and 630–S4 as shown in Figure 22. Take care not to damage the shim located behind the bearing. Ensure the shim is placed against the step on the ring gear shaft and then press the new bearing onto the shaft, using a convenient length sleeve of 82,6mm (3.25 in) internal diameter and 95,3 mm (3.75 in.) external diameter.

IMPORTANT: The shim located behind the ring gear bearing governs the planetary gear set end play. If any of the major components of the planetary gear set are changed, refer to "Planetary Gear Set Shimming Procedure" in this Chapter, to determine the correct size shim to be installed.

21. Examine the valve spool bore in the valve body for damage or wear.

22. Inspect the valve spool lands for scratches, wear or other damage. Minor burrs or scratches may be removed with a fine abrasive material but parts must be washed and dried prior to re-assembly.

23. Examine the two detent cups, the spring and the sleeve for wear or damage.
If damage or serious wear is present on any component part, install a replacement during re-assembly.

D. RE-ASSEMBLY

Re-assembly of the direct drive clutch, the underdrive clutch and control valve follows the disassembly procedure in reverse.

E. PLANETARY GEAR SET SHIMMING PROCEDURE

IMPORTANT: This procedure must be followed whenever a new cover, bearing, ring gear, planetary carrier, sun gear, direct drive clutch or planetary housing is installed.

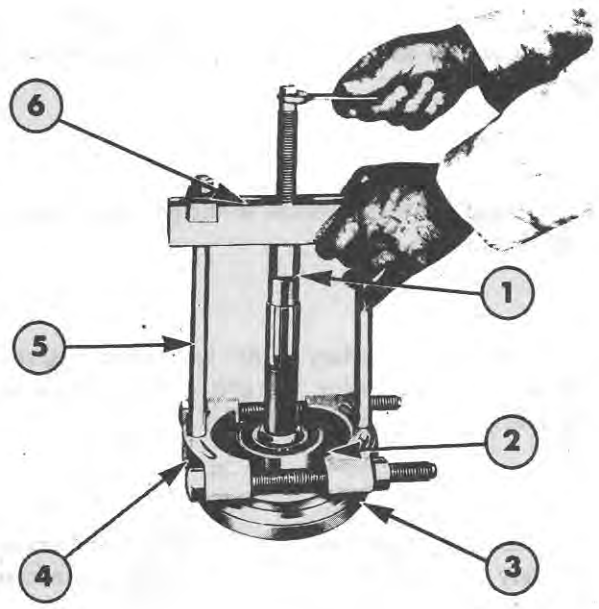

Figure 22
Ring Gear Bearing Removal

1. Tool No. 630-S/4
2. Bearing
3. Ring Gear and Shaft Assembly
4. Tool No. 952
5. Tool No. 930-B
6. Tool No. 938

Free play among the components of the planetary housing is governed by means of a shim located between the bearing and the step on the ring gear shaft.
For free play requirement and available shims - See Specifications Chapter 5.
Determine the shim required to give the specified free play as follows:

1. Position the planetary housing (with underdrive clutch installed) on a bench.

2. Place the thrust washer in the housing with the tab up and towards the rear of the transmission.

3. Install and ensure the direct drive clutch assembly is fully seated in the housing.

4. Insert the planetary carrier in order to align the internal splines of the direct drive clutch plates.

5. Remove the planetary carrier and carefully install the sun gear in the inner splines of the direct drive clutch assembly.

6. Install the thrust washer in the planetary carrier and align the splines.

7. Install the planetary carrier and thrust washer onto the sun gear and ensure the unit is fully seated within the direct drive clutch assembly.

8. Hold the components tightly together and install the planetary shaft from the rear. Tap the shaft, if necessary, to ensure full engagement.

9. Press the pilot bearing onto the shaft using a sleeve of 41,2mm (1.62in.) internal diameter and 47,8 mm (1.88in.) external diameter.

10. Install the ring gear and shaft assembly (without the ring gear bearing or shim) in the housing. Place the ring gauge, Tool No. SW-523, on the step of the ring gear shaft.

11. Position the cover on the planetary housing.

IMPORTANT: Ensure all components are properly seated in the housing.

12. Measure the distance between the face of the cover and the face of the housing at three conveniently spaced intervals. Average the three measurements. For correct shimming gap – See Specifications Chapter 5. If the average measurement is within specification the free play is within the required limits and no shims are necessary.

13. If the average measurement is less than the range stated, determine the shim thickness required by referring to the relevant chart in Specifications Chapter 5.

14. Remove the cover and the ring gear and shaft assembly from the planetary housing. Remove the ring gauge and place the appropriate shim(s) on the step of the ring gear shaft. Press the bearing onto the ring gear using a convenient length sleeve of 82,6mm (3.25in.) internal diameter and 95,3mm (3.75in.) external diameter.

15. Remove the components from the planetary housing and retain in order for final installation.

FORD 7000 TRANSMISSION INPUT SHAFT BEARING PRELOAD CHECK AND SHIMMING PROCEDURE

IMPORTANT: This procedure must be followed whenever a new planetary housing or transmission input shaft front bearing assembly is installed in a FORD 7000 Tractor with Dual Power Transmission.

Preload on the input shaft bearing is governed by shims located between the mating surfaces of the planetary housing and the support plate in the transmission case.

Preload is determined by recording the torque required to rotate the input shaft.

NOTE: To rotate the input shaft, it is recommended that a simple extension tube be made from thin wall tubing 4,45mm (1.75in.) internal diameter and 46cm (18in.) in length. Make four equispaced lateral cuts, approximately 50mm (2in.) in length, at each end of the extension tube and install two adjustable band clamps.

Check and adjust the preload of the input shaft bearing as follows:

1. Install two 0,3mm (0.012in.) shims on the rear hub of the planetary housing.

2. Position the planetary housing in the transmission case and install the housing retaining bolts. Tighten the bolts diagonally and evenly to the specified torque – See Specifications, Chapter 5.

3. Position the extension tube over the planetary shaft and secure with the band clamp.

4. Locate the combined extension tube and planetary shaft in the transmission shaft.

5. Insert a socket of suitable size into the end of the extension tube and secure with the band clamp.

6. Install a torque wrench on the socket using adaptors if necessary.

7. Ensure the transmission is in neutral.

8. Using the torque wrench, steadily rotate the input shaft clockwise until the torque reading stabilises. Record the stabilised reading.

9. Loosen off the housing retaining bolts until they are finger tight.

10. Steadily rotate the input shaft with the torque wrench until the torque reading stabilises. Record the stabilised reading.

11. Subtract the stabilised torque reading obtained in Step 10 from the stabilised torque reading obtained in Step 8. The resultant torque should be within the limits stated in Specifications, Chapter 5.

12. If the resultant torque is above or below the specified range, add or subtract shims until the correct preload is obtained.

13. When the required preload has been obtained, add an additional shim as stated in Specifications, Chapter 5.

14. Remove and dismantle the extension tube and planetary shaft.

G. INSTALLATION

NOTE: **FORD 5000 & 7000.** *If it is necessary to install a new cover, bearing, ring gear, planetary carrier, sun gear, direct drive clutch or planetary housing, refer to "Planetary Gear Set Shimming Procedure" in this Chapter, before installing the planetary components in the transmission case.*

FORD 7000: *If it is necessary to install a new planetary housing or transmission input shaft front bearing assembly, refer to "FORD 7000 Transmission Input Shaft Bearing Preload Check" in this Chapter before installing the planetary components in the transmission case.*

Installation of the planetary gear set follows the removal procedure in reverse. Pay particular attention to the following important points:

(i) If all components are correctly installed, the cover should easily seat in the housing. Any need for force indicates incorrect re-assembly.

(ii) Coat all tube joints with a proprietary sealing compound.

(iii) Ensure the thread end of the control cable bottoms in the valve extension rod. Tighten the internal locknut to the specified torque. See Specifications, Chapter 5.

3. PRESSURE TESTING

For the following tests ensure the tractor hydraulic oil is at operating temperature, the transmission and hydraulic system are in neutral and the independent power take-off is disengaged.

DUAL POWER SYSTEM PRESSURE TEST

NOTE: To perform this test it will first be necessary to make a special tool by drilling and tapping a 1/8 Dry Seal NPTF or 1/8 BSP female thread in the top face of a pressure control tube elbow. This modified tube elbow facilitates installation of a pressure gauge in the pressure control circuit, as shown in Figure 23.

1. With the engine stopped, slacken the transmission oil cooler feed and return tube clamps.

2. Disconnect the transmission lubrication and pressure line control tubes at the transmission housing.

3. Remove the pressure control tube elbow and replace with the modified elbow.

4. Reconnect the transmission lubrication and pressure line control tubes at the transmission housing.

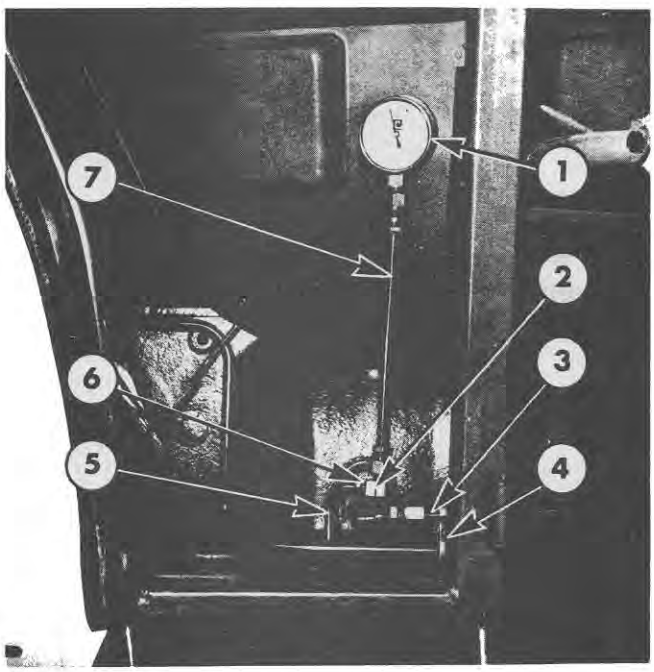

Figure 23
Dual Power System Pressure Test

1. N–774 Pressure Gauge
2. Modified Elbow
3. Transmission Lubrication Tube
4. Clamp
5. Pressure Line Control Tube
6. Nipple
7. Pressure Gauge Tube

5. Connect an N–774 pressure gauge and tube into the modified elbow.

6. Start the engine and set the speed at 1000 rev/min.

7. Engage and disengage the normal drive and power drive several times noting the pressures recorded. The pressure gauge reading should be 10,3–12,4 bar (150–180 lbf/in^2) in normal drive and 10,7–12.8 bar (155–185 lbf/in^2) in power drive. The difference between readings should not exceed 0,69 bar (10 lbf/in^2). If the readings are above or below the specified figures, refer to Dual Power Trouble Shooting, Chapter 5, for possible causes.

IMPORTANT: At completion of this test coat all tube threads with a proprietary sealing compound.

TRANSMISSION LUBRICATION PRESSURE TEST

NOTE: To perform this pressure test it will first be necessary to make a special tool by drilling and tapping a 1/8 Dry Seal NPTF or 1/8 BSP female thread in the end of a lubrication tube elbow. This modified tube elbow facilitates installation of a pressure gauge in the lubrication circuit, as shown in Figure 24.

1. With the engine stopped, slacken the transmission oil cooler feed and return tube clamps.

2. Disconnect the transmission lubrication and pressure line control tubes at the transmission housing.

3. Remove the lubrication tube elbow and replace with the modified elbow.

4. Reconnect the transmission lubrication and pressure line control tubes at the transmission housing.

5. Connect an N–774 pressure gauge and tube into the modified elbow.

6 Start the engine and set the speed at 1000 rev/min.

7. The pressure gauge reading should be 0,69–1,38 bar (10–20 lbf/in^2). If the reading is above or below the specified figures, refer to Dual Power Trouble Shooting Chapter 5, for possible causes.

IMPORTANT: At completion of this test coat all tube threads with a proprietary sealing compound.

NOTE: Both of these pressure tests can be conducted simultaneously using two pressure gauges If only one pressure gauge is available then both the modified elbows can still be installed and the tests performed individually. However, in this case the circuit elbow not being utilised must be plugged with an adaptor plug, Part No. 87650–S8.

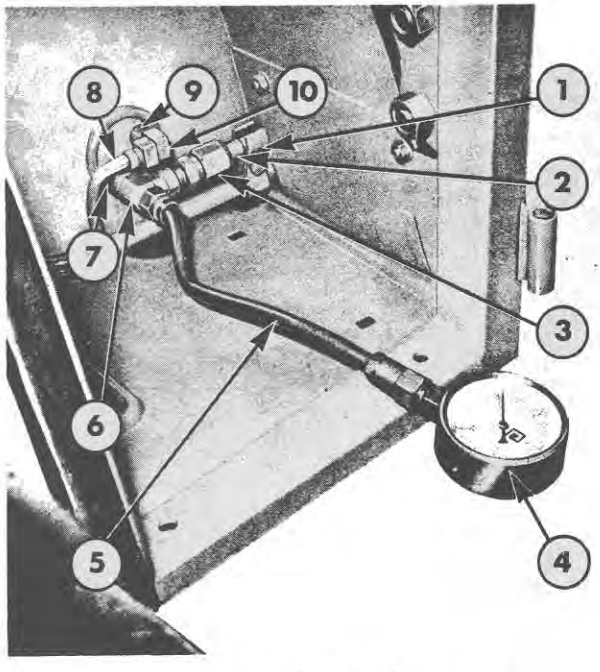

Figure 24
Transmission Lubrication Pressure Test

1. Clamp
2. Transmission Lubrication Tube
3. Connector
4. N-774 Pressure Gauge
5. Pressure Gauge Tube
6. Modified Elbow
7. Nipple
8. Pressure Line Control Tube
9. Nipple
10. Elbow

Part 7
SEVEN AND EIGHT SPEED TRANSMISSION
Chapter 5
DUAL POWER TRANSMISSION TROUBLE SHOOTING, SPECIFICATIONS AND SPECIAL TOOLS

Section		*Page*
1.	Trouble Shooting	83
2.	Specifications	85
3.	Special Tools	87

1. TROUBLE SHOOTING

Before removing the Planetary Gear Set from the transmission, attempt to isolate the possible cause of the trouble referring to the following trouble shooting chart.

DUAL POWER TROUBLE SHOOTING CHART

TROUBLE	POSSIBLE CAUSE
1. Dual Power system pressure too low in normal drive only (internal leakage).	1. Leaking valve spool. 2. Damaged or leaking gasket between control valve body and planetary gear set. 3. Cracked, broken or worn seal rings on direct drive clutch housing hub or worn sleeve. 4. Damaged or leaking seals on direct drive clutch piston-inner or outer. 5. Broken or cracked direct drive clutch piston.
2. Dual Power system pressure too low in power drive only (internal leakage).	1. Leaking valve spool. 2. Damaged or leaking gasket between control valve body and planetary gear set housing. 3. Damaged or leaking seals on underdrive clutch piston-inner or outer. 4. Broken or cracked underdrive clutch piston.
3. Dual Power system pressure too low in both normal drive and power drive.	1. Low rear axle oil level. 2. Hydraulic pump or P.T.O. system relief valve faulty or valve stuck open. 3. Weak or broken Dual Power and P.T.O. regulating valve springs or valves stuck open.
4. Dual Power system pressure too high in both normal drive and power drive.	1. Extremely cold oil in rear axle centre housing. 2. Incorrect Dual Power regulating valve spring (spring too stiff), or valve stuck closed.

©FORD MOTOR COMPANY LTD. 1973

TROUBLE	POSSIBLE CAUSE
5. No power to rear wheels when normal drive engaged (power drive operative).	1. Low Dual Power system pressure in direct drive clutch circuit. 2. Scored, burred or binding direct drive clutch piston. 3. Control rod linkage disconnected at valve spool and/or valve spool jammed in underdrive position. 4. Worn or defective direct drive clutch plates. 5. Direct drive clutch pressure plate snap ring out of groove or broken. 6. Damaged or broken direct drive clutch pressure plate.
6. No power to rear wheels when power drive engaged (normal drive operative).	1. Low Dual Power system pressure in underdrive clutch circuit. 2. Scored, burred or binding underdrive clutch piston. 3. Control rod linkage disconnected at valve spool and /or valve spool jammed in direct drive position. 4. Worn or defective underdrive clutch plates. 5. Underdrive clutch pressure plate snap ring out of groove. 6. Damaged or broken underdrive clutch pressure plate.
7. No power to rear wheels when Dual Power engaged in normal drive or power drive.	1. Low Dual Power system pressure. 2. Defective planetary gear set ring gear, planetary carrier, sun gear, shaft or mainshaft splines. 3. Transmission problem. 4. Clutch problem.
8. Engine stalls or lugs when shifting from power drive to normal drive.	1. Scored, burred or binding underdrive clutch piston. 2. Broken or defective underdrive clutch piston return springs. 3. Warped or defective underdrive clutch plates.
9. Engine stalls or lugs when shifting from normal drive to power drive.	1. Scored, burred or binding direct drive clutch piston. 2. Broken or defective direct drive clutch piston return spring. 3. Warped or defective direct drive clutch plates.
10. Lubrication pressure too low.	1. Weak or broken back pressure valve spring, or valve stuck open. 2. Blocked or restricted oil cooler.
11. Lubrication pressure too high.	1. Incorrect back pressure valve spring (spring too stiff) or valve stuck closed. 2. Blocked or restricted hydraulic oil filter.

2. SPECIFICATIONS

SPECIFICATIONS	FORD 5000	FORD 7000
Planetary Gear Set Free Play	0,10 - 0,51 mm (0.004 - 0.020 in.)	0,10 - 0,51 mm (0.004 - 0.020 in.)
Planetary Gear Set Free Play Shims Available	0,28 - 0,38 mm (0.011 - 0.015 in.)	0,28 - 0,38 mm (0.011 - 0.015 in.)
	0,76 - 0,86 mm (0.030 - 0.034 in.)	0,76 - 0,86 mm (0.030 - 0.034 in.)
Planetary Cover to Housing Shimming Gap	1,17 - 1,52 mm (0.046 - 0.060 in.)	1,17 - 1,52 mm (0.046 - 0.060 in.)

FORD 5000 & 7000	Average Planetary Cover to Housing Shimming Gap	Shim Thickness To be Added
Planetary Gear Set Free Play Shimming Chart	0,025 - 0,33 mm (0.001 - 0.013 in.)	1,04 - 1,24 mm (0.041 - 0.049 in.)
	0,35 - 0,66 mm (0.014 - 0.026 in.)	0,76 - 0,86 mm (0.030 - 0.034 in.)
	0,68 - 0,81 mm (0.027 - 0.032 in.)	0,56 - 0,76 mm (0.022 - 0.030 in.)
	0,84 - 1,14 mm (0.033 - 0.045 in.)	0,28 - 0,38 mm (0.011 - 0.015 in.)
	1,17 - 1,52 mm (0.046 - 0.060 in.)	NONE

Transmission Input Shaft Bearing Preload Torque	–	1,1 - 2,3 Nm (10 - 20 in.lbf.)
Transmission Input Shaft Bearing Preload Shims Available	– – –	0,076 mm (0.003 in.) 0,127 mm (0.005 in.) 0,305 mm (0.012 in.)
Additional Transmission Input Shaft Bearing Preload Shim	–	0,127 mm (0.005 in.)
Oil Capacity		
Single Speed P.T.O.		
Imperial Quarts	47.5	47.5
U.S. Quarts	58.0	58.0
Litres	54.8	54.8
2-Speed P.T.O:		
Imperial Quarts	50.8	50.8
U.S. Quarts	62.0	62.0
Litres	58.6	58.6
Oil Grade:		
Ford Specification	ESN–M2C86–A	ESN–M2C86–A

TRANSMISSION RATIOS

GEAR	TRANSMISSION RATIO		SELECTOR LEVER POSITIONS		
	FORD 5000	FORD 7000	DUAL POWER	MAIN GEAR	HIGH/LOW GEAR
1	11.74	11.80	POWER	1	L
2	9.41	9.45	POWER	2	L
3	9.13	9.18	NORMAL	1	L
4	7.32	7.35	NORMAL	2	L
5	5.36	5.41	POWER	3	L
6	4.17	4.21	NORMAL	3	L
7	3.94	3.94	POWER	4	L
8	3.29	3.29	POWER	5	H
9	3.06	3.06	NORMAL	4	L
10	2.63	2.63	POWER	6	H
11	2.56	2.56	NORMAL	5	H
12	2.05	2.05	NORMAL	6	H
13	1.50	1.51	POWER	7	H
14	1.17	1.17	NORMAL	7	H
15	1.10	1.10	POWER	8	H
16	0.86	0.85	NORMAL	8	H
R1	8.17	8.21	POWER	R	L
R2	6.35	6.38	NORMAL	R	L
R3	2.29	2.29	POWER	R	H
R4	1.78	1.78	NORMAL	R	H

NOTE: Slight variations in transmission ratios between the FORD 5000 and 7000 Tractors are due to helical gears being installed in the FORD 7000 Tractor transmission.

TIGHTENING TORQUES - Nm (Ft.lbf. equivalents in parentheses)	FORD 5000	FORD 7000
Control Valve Body Retaining Bolts	27 - 37 (20 - 27)	27 - 37 (20 - 27)
Control Valve Spool Sleeve	34 - 41 (25 - 30)	34 - 41 (25 - 30)
Planetary Housing Retaining Bolts	68 - 81 (50 - 60)	68 - 81 (50 - 60)
Planetary Cover Retaining Bolts	30 - 37 (22 - 27)	30 - 37 (22 - 27)
Lubrication Tube Connector	41 - 54 (30 - 40)	41 - 54 (30 - 40)
Lubrication Tube Elbow	11 - 16 (8 - 12)	11 - 16 (8 - 12)
Lubrication Tube Nipple	11 - 16 (8 - 12)	11 - 16 (8 - 12)
Pressure Line Control Tube Connector	14 - 20 (10 - 15)	14 - 20 (10 - 15)
Pressure Line Control Tube Elbow	11 - 16 (8 - 12)	11 - 16 (8 - 12)
Pressure Line Control Tube Nipple	11 - 16 (8 - 12)	11 - 16 (8 - 12)
Control Cable Retaining Nut	34 - 41 (25 - 30)	34 - 41 (25 - 30)
Control Cable Connector	34 - 41 (25 - 30)	34 - 41 (25 - 30)
Control Cable Locknut	7 - 12 (5 - 9)	7 - 12 (5 - 9)

3. SPECIAL TOOLS

Tool Number	Description
SW–523	Spacer Gauge
630-S4/10	Step Plate Adaptors
N-774	Pressure Gauge and Tube Assembly
N-775	Compressor
930 - B	Push - Puller Legs (Set of Two)
938	Push - Puller
943	Internal/External Pulling Attachment
943 - S	Slide Hammer
951	Pulling Attachment (Small)
952	Pulling Attachment (Large)
1002	Puller-Reversible Arm (Medium)
1003	Puller-Single End Arm (Large)
***	Modified Pressure Control Tube Elbow
***	Modified Lubrication Tube Elbow
***	Underdrive Clutch Snap Ring Restraining Clamp (Set of Four)
***	Preload Torque Extension Tube - 44,5 mm (1.75 in.) I.D. and 46 cm (18 in.) long.
***	Sleeves of Convenient Length (Listed Below):
1. 82,6 mm (3.25 in.) I.D. and 95,3 mm (3.75 in.) O.D.	2. 41,2 mm (1.62 in.) I.D. and 47,8 mm (1.88 in.) O.D.

PART 8
SELECT-O-SPEED TRANSMISSION

Part 8

SELECT-O-SPEED TRANSMISSION

Chapter 1

SERVICING THE TRANSMISSION

Section	Page
1. Description and Operation	1
2. Adjustments	21
3. Introduction to Servicing the Transmission	29
4. Assemblies Serviced with the Transmission Installed	30
5. Rear End Overhaul	35
6. Front End Overhaul	54
7. Complete Overhaul	57
8. Repair of the Sub-Assemblies	60

Chapter 2

TROUBLE SHOOTING, SPECIFICATIONS, AND SPECIAL TOOLS

Section	Page
1. Trouble Shooting	73
2. Specifications	81
3. Special Tools	84

© FORD MOTOR CO. 1964

Part 8

SELECT-O-SPEED TRANSMISSION

Chapter 1

SERVICING THE TRANSMISSION

Section		Page
1.	Description and Operation	1
2.	Adjustments	21
3.	Introduction to Servicing the Transmission	29
4.	Assemblies Serviced with the Transmission Installed	30
5.	Rear End Overhaul	35
6.	Front End Overhaul	54
7.	Complete Overhaul	57
8.	Repair of the Sub-Assemblies	60

1. DESCRIPTION AND OPERATION

The Select-O-Speed transmission is available in three models. The basic operation of the transmission is the same for all models.

NOTE: ***This manual relates to the deluxe transmission except where otherwise specified.***

There are also three P.T.O. options available with the Select-O-Speed transmission for the Dexta 2000, Super Dexta 3000, and Major 4000 Tractors. They are:

No P.T.O.
Single speed independent engine driven P.T.O.
Deluxe two speed independent engine-driven P.T.O. with proportional ground speed P.T.O.

The Super Major 5000 Tractors with Select-O-Speed transmission are available only with the independent engine-driven 540 rpm P.T.O.

The transmission provides for ease of control and high efficiency in the utilization of engine power and engine fuel. It is a manually selected, hydraulically controlled system, which transmits power from the engine through the planetary gear sets, providing the ten forward speed ratios and two reverse speed ratios to the final drive of the tractor. Park and neutral positions are also provided. A brief description and the principles of operation of the major assemblies in the transmission are discussed in this section. All design and operational differences between the transmission models are fully explained.

PLANETARY GEAR TRAIN

For purposes of identification, the planetary gear or epicyclic systems used in the transmissions have been labeled from front to rear, "A", "B", "C", and "D", as shown in Figure 1. The "D" planetary is used in the Dexta 2000 and Super Dexta 3000 tractors only. The ten forward and two reverse speeds are obtained by controlling the movement of the elements within the planetary gear systems.

Each of the planetary gear systems is comprised of three elements; a sun gear, a carrier with three pinions, and a ring gear, as shown in Figure 2. The three pinions are mounted within the carrier frame and rotate on needle bearings around pinion shafts, which are secured to the carrier frame. The sun gear, which is centered between the pinions, has external teeth. The ring gear, which encompasses the pinions, has internal teeth. All of the gears in the planetary system are constantly in mesh.

© FORD MOTOR CO. 1964

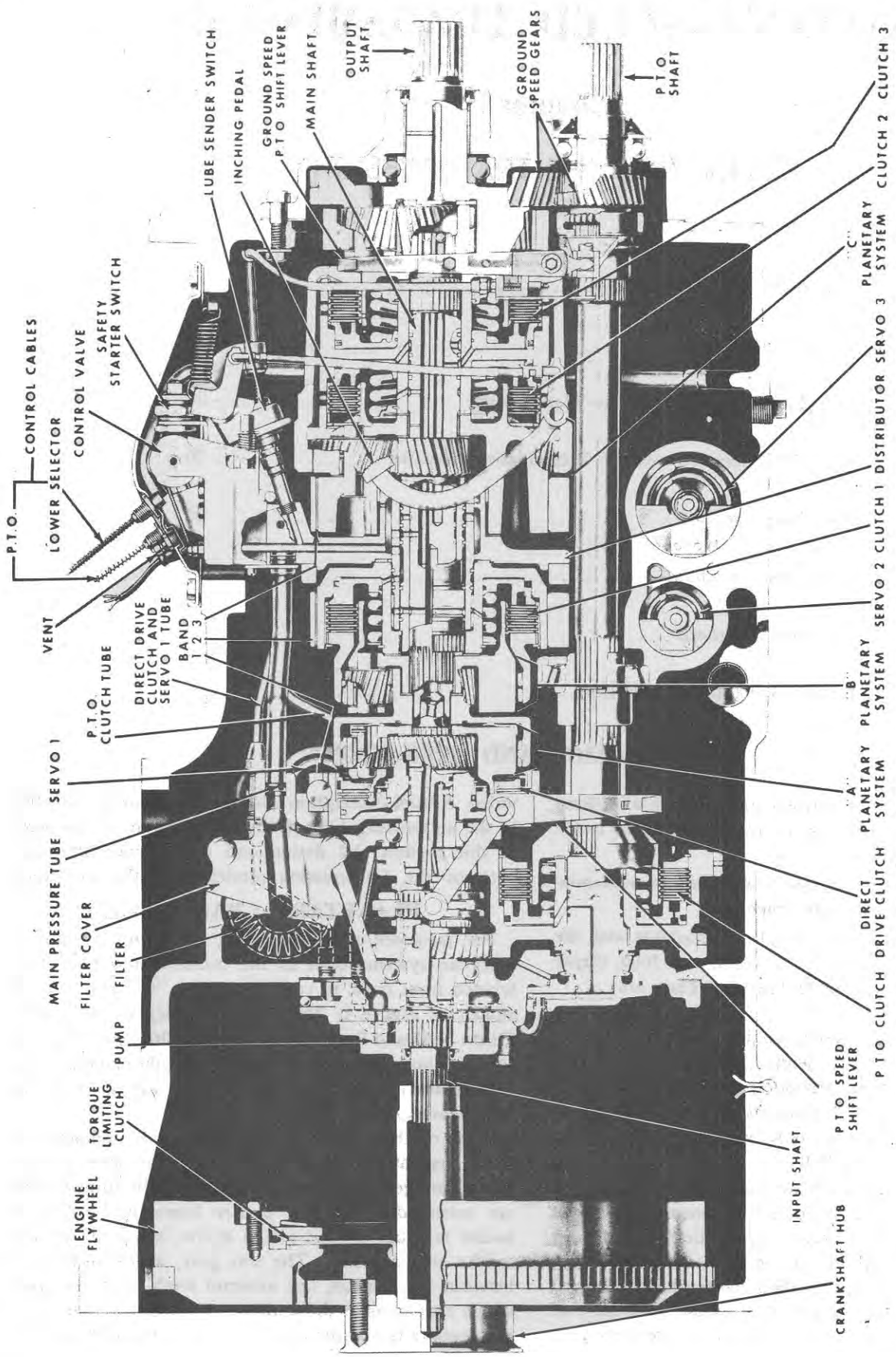

Figure 1
Select-O-Speed Transmission
Dexta 2000 and Super Dexta 3000

When a planetary system is connected to a source of power, all of the components in the system will rotate unless an external force is applied to hold an element. The sun gear, carrier, and the ring gear, can rotate on the central axis of the system and the pinions will rotate on their own axes at the same time as they are being carried around the central axis.

PLANETARY GEAR POWER FLOW

Depending upon which element of a planetary system is held, power can be applied or taken out at the sun gear, carrier, or ring gear. The general flow of power through the planetary system will be as follows:

1. Applying power to the sun gear and holding the ring gear forces the pinions to rotate on their own axes and "walk" within the ring gear, taking the carrier with them. The carrier, therefore, becomes the power output member of the system, turning in the same direction but at a slower speed than the sun gear. This condition produces an underdrive ratio.
2. Applying power to the ring gear and holding the sun gear forces the pinions to rotate on their own axes and "walk" around the sun gear, taking the carrier with them. The carrier, therefore, becomes the power output member of the system, turning in the same direction but at a slower speed than the ring gear. This condition produces an underdrive ratio.
3. Applying power to the carrier and holding the ring gear forces the pinions to rotate on their own axes and "walk" within the ring gear. The sun gear, therefore, becomes the power output member of the system, turning in the same direction but at a higher speed than the carrier. This condition produces an overdrive ratio.
4. Applying power to the carrier and holding the sun gear, forces the pinions to rotate on their own axes and "walk" around the sun gear. The ring gear, therefore, becomes the power output member of the system, turning in the same direction but at a higher speed than the carrier. This condition produces an overdrive ratio.
5. Applying power to the sun gear and holding the carrier, forces the pinions to act as idlers, rotating in the opposite direction on their own axes. This drives the ring gear at a lower speed and in the opposite direction from the sun gear. This condition produces an underdrive reverse ratio.
6. Applying power to the ring gear and holding the carrier, forces the pinions to act as idlers, rotating in the same direction of their own axes. This drives the sun gear at a higher speed and in the opposite direction from the ring gear. This condition produces an overdrive reverse ratio.
7. Locking any two units of a planetary system together results in a direct drive with no change in speed or direction of rotation.

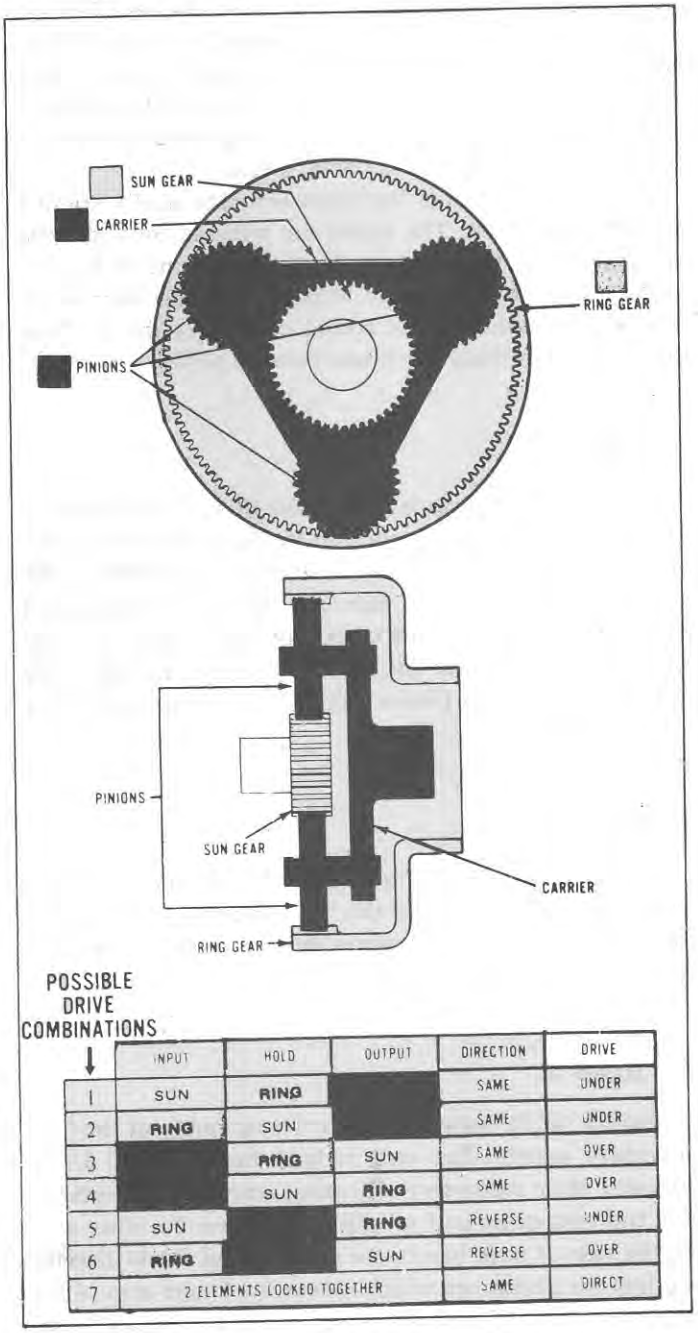

	INPUT	HOLD	OUTPUT	DIRECTION	DRIVE
1	SUN	RING		SAME	UNDER
2	RING	SUN		SAME	UNDER
3		RING	SUN	SAME	OVER
4		SUN	RING	SAME	OVER
5	SUN		RING	REVERSE	UNDER
6	RING		SUN	REVERSE	OVER
7	2 ELEMENTS LOCKED TOGETHER			SAME	DIRECT

Figure 2
Planetary System—Front and Side View

© FORD MOTOR CO. 1964

BRAKE BANDS AND SERVOS

The transmission uses three servo-operated brake bands, labeled for reference purposes 1, 2, and 3, see Figure 1. The bands are located in the "A," "B," and "C" planetary systems, and are self-energizing in the forward direction. Each band controls or holds a planetary element. The bands are made of spring steel and have linings bonded to the inside surface. Band 1 has an organic lining. Bands 2 and 3 have semi-metallic linings.

The bands are actuated by hydraulic servos. Each servo consists of a piston, piston rod, spring and spring retainer. The servo cylinders are machined integrally with the transmission case. Band adjusting screws are used in the case to adjust band tension.

In operation, each of the bands is mechanically applied by spring pressure. The bands are released by hydraulic oil pressure acting against the servo pistons and overcoming the spring pressure. When the oil pressure is removed, the action of the spring discharges the oil from the servo permitting the brake band to apply.

A. Band 1

Band 1 (B-1) encircles the direct drive clutch housing which is physically attached to the sun gear of the "A" planetary system. The ends of the band are between the adjusting screw on one side, and the servo piston rod on the other. A band strut is located between the end of the piston rod and the band. The servo spring reacts directly against the piston rod, band strut and band end to apply the band.

B. Band 2

Band 2 (B-2) encircles the clutch 1 housing which is splined to the ring gear of the "B" planetary system. The sun gear of the "C" planetary system is also physically splined to the housing, Figure 4.

C. Band 3

Band 3 (B-3) encircles the carrier assembly of the "C" planetary system. The ends of both bands, 2 and 3, are between their respective adjusting screws and struts on one end and struts and actuating levers on the other end. In the case of both bands, the servo spring reacts directly against the piston rod which moves the longer arm of the actuating lever. The lever pivots about a fixed shaft and the shorter end thrusts directly against the strut and end of the band to tighten the band.

The following chart shows the band applications and the other planetary elements affected:

Band	Applied	Planetary Element Involved
1	*Mechanically	Sun Gear "A"
2	*Mechanically	Ring Gear "B" and Sun Gear "C"
3	*Mechanically	Carrier "C"

*The bands are hydraulically released.

CLUTCH ASSEMBLIES

In addition to the brake bands used to control planetary gear operation, the transmission incorporates four multiple-disc clutch packs or assemblies. For purposes of illustration and reference, the clutch assemblies have been labeled direct drive, 1, 2, and 3, as shown in Figure 1. These clutches are used to link two elements of one planetary system or the elements of adjacent planetaries together to obtain the desired power flow. The four hydraulically operated clutch assemblies in the transmission are all basically the same and consist of a clutch housing, clutch piston, piston inner seal, piston outer seal, return spring and retainer, a series of flat steel and bronze plates, pressure plate and retainer snap ring. With two exceptions, the steel plates have external splines which engage with the clutch housing and the bronze plates have internal splines which engage a planetary gear element.

When oil pressure is applied to a clutch assembly, the pressure moves the piston compressing the return spring locking the steel and bronze plates together, engaging the clutch. The piston is returned to the released position by the return spring after hydraulic pressure has been removed.

The function of each individual clutch assembly is listed in the following table:

Clutch	Planetary Elements Combined
Direct Drive	Sun "A"—Carrier "A"
1	Carrier "B"—Ring Gear "B"
2	Carrier "B"—Carrier "C"
3	Carrier "B"—Sun Gear "D" (Dexta 2000 & Super Dexta 3000) Carrier "B"—Output Shaft (Major 4000 & Super Major 5000)

POSITION OR GEAR	OVER DRIVE	DIRECT DRIVE CLUTCH	BAND 1 (B1)	BAND 2 (B2)	BAND 3 (B3)	CLUTCH 1 (C1)	CLUTCH 2 (C2)	CLUTCH 3 (C3)
PARK (P)			A	A	A			
R1		A			A	A		
R2	OF R1		A		A	A		
NEUTRAL (N)		A						
1ST		A			A			A
3RD	OF 1ST		A		A			A
2ND		A			A		A	
4TH	OF 2ND		A		A		A	
5TH		A		A				A
7TH	OF 5TH		A	A				A
6TH		A		A		—	A	
8TH	OF 6TH		A	A			A	
9TH		A				A	A	
10TH	OF 9TH.		A			A	A	

A— BAND OR CLUTCH APPLIED FOR THAT POSITION.

Figure 3
Application of Bands and Clutches

© FORD MOTOR CO. 1964

BAND	APPLIED	UNIT AFFECTED
1	MECH.	SUN GEAR "A"
2	MECH.	RING GEAR "B" & SUN GEAR "C"
3	MECH.	CARRIER "C"

CLUTCH PACK	APPLIED	UNIT AFFECTED
DIRECT DRIVE	HYD.	LOCKS SUN GEAR "A" TO CARRIER "A"
	HYD.	LOCKS RING GEAR "B" TO CARRIER "B"
	HYD.	LOCKS CARRIER "C" TO CARRIER "B"
	HYD.	LOCKS CARRIER "B" TO SUN GEAR "D", * OR OUTPUT SHAFT * *

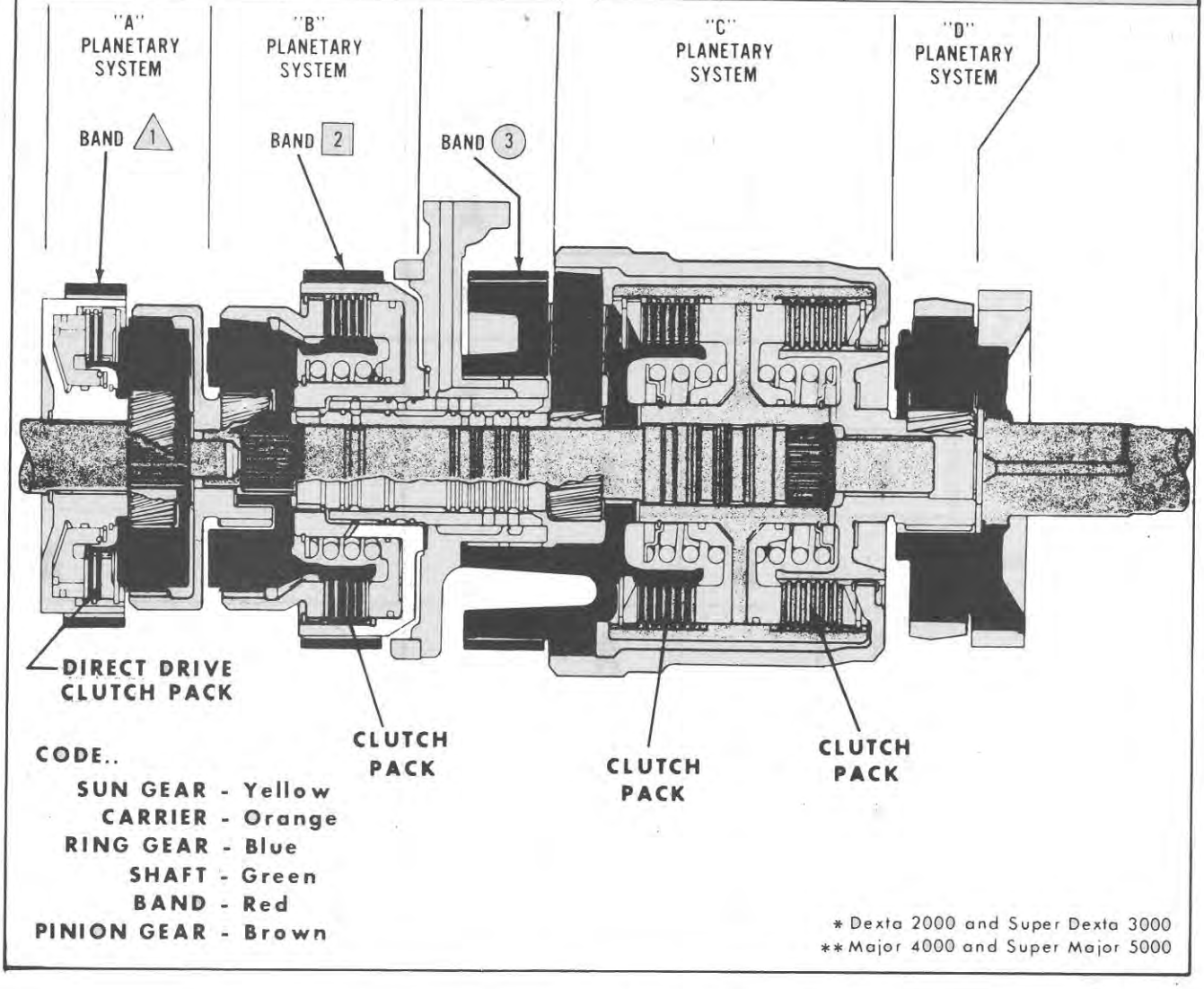

Figure 4
Units Affected by Application of Bands and Clutch Assemblies

TRANSMISSION POWER FLOWS

When certain combinations of elements in the planetary gear train of the transmission are held by the bands and others linked together by the clutch assemblies, the flow of power through the transmission provides ten forward speed ratios and two reverse speed ratios. All of the basic power flows are illustrated and described in this section for the Dexta 2000, Super Dexta 3000 and Major 4000 Tractors. A chart illustrating the application of the bands and clutch assemblies for each gear ratio is shown in Figure 3.

NOTE: ***Direction of rotation of the planetary components in the Super Major 5000 is opposite those in the Dexta 2000, Super Dexta 3000, and Major 4000.***

DIRECT DRIVE AND OVERDRIVE

The power flow through the "A" planetary system, shown in Figure 4, is always the same. The carrier is splined to the transmission input shaft and power is taken out at the ring gear. The only function of the "A" planetary system is to transmit power from the engine to the "B" planetary system either at engine speed, for a direct drive condition, or at an increased speed, providing an overdrive condition. When the direct drive clutch (D.D.C.) is applied, it locks the sun gear to the carrier and the "A" planetary system rotates as a unit at engine speed. When band 1 is applied to hold the sun gear, the direct drive clutch is released and the ring gear, which is the output member, is driven at a faster speed, providing an overdrive condition.

FINAL REDUCTION

The "D" planetary system, shown in Figure 4 and used only in the Dexta 2000 and Super Dexta 3000 transmissions, is used to reduce the high speeds developed within the transmission to the required operating speeds and deliver the flow of power through the output shaft. The power always enters the "D" planetary through the sun gear. The ring gear is held stationary in the case. Thus, the carrier which is integral with the transmission output shaft rotates at a reduced speed. In the case of the Major 4000 and Super Major 5000, the "D" planetary system becomes the output shaft.

PRIMARY VARIABLE REDUCTION

The six basic speed ratios, five forward and one reverse, are obtained through the various combinations of holding or driving elements in the "B" and "C" planetary systems only. Therefore, ten forward speeds and two reverse speeds are made possible by the dual range characteristics of the "A" planetary system.

A. Power Flow—Park Position

To provide the park position, which prevents any movement of the tractor, band 2 is applied to hold the "B" ring gear and "C" sun gear, and band 3 is also applied to hold the "C" carrier, as shown in Figure 5. With the "B" sun gear turning clockwise, the pinions "walk" around the "B" ring gear causing the "B" carrier, mainshaft, and housing for clutches 2 and 3, to rotate. Since neither clutch 2 or clutch 3 is engaged, power is not transmitted to the "D" sun gear or output shaft. Since "C" sun gear is being held by band 2, the "C" planetary system is locked and will prevent the rear wheels from turning.

B. Power Flow—Reverse Speed Ratios

The basic reverse speed ratio is obtained with the direct drive clutch applied, applying band 3 to hold the "C" carrier, and linking the "B" carrier to "B" ring gear with clutch 1, as shown in Figure 6. Rotation of the "B" sun gear causes the "B" planetary system to turn clockwise as an assembly. The "C" sun gear is, therefore, driven clockwise resulting in the counterclockwise rotation of the "C" ring gear and "D" sun gear or output shaft, which drives the "D" carrier and output shaft counterclockwise. Reverse 2, being the overdrive ratio of reverse 1, is obtained by the application of band 1.

C. Power Flow—Neutral

When the transmission is in neutral, no bands are applied, as shown in Figure 7. The clockwise rotation of the "B" sun gear causes the pinions to "walk" within the "B" ring gear, resulting in the rotation of the "B" carrier, mainshaft, and the housing for clutches 2 and 3. Since neither clutch is engaged, power is not transmitted to the "D" sun gear or output shaft. The rear wheels are now free to turn as the "B" ring gear can rotate around the pinions.

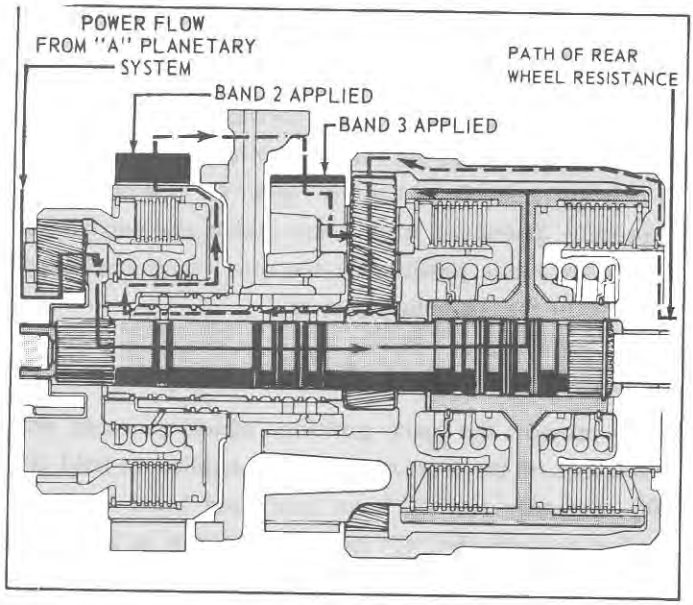

Figure 5
Power Flow—Park Position

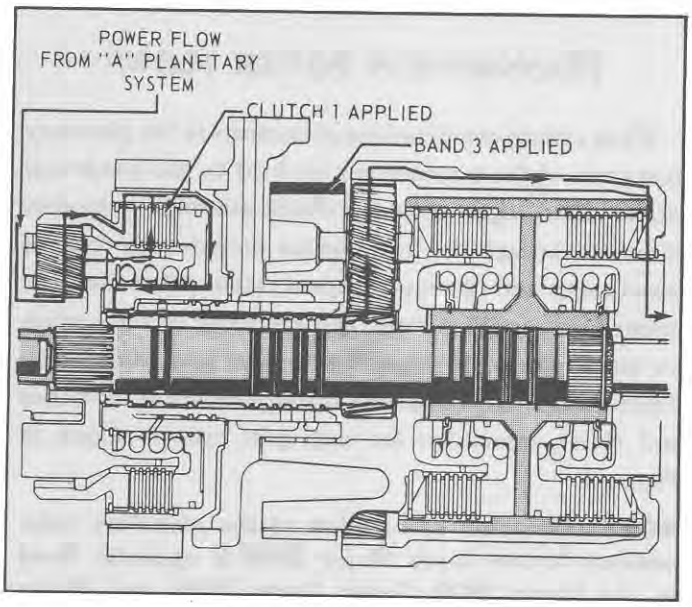

Figure 6
Power Flow—R_1 and R_2 Speed Ratios

D. Power Flow—First and Third Speed Ratios

The basic ratio is obtained with the direct drive clutch applied, holding the "C" carrier with band 3 and linking the "B" carrier to the "D" sun gear or output shaft with clutch 3 (C-3), as shown in Figure 8. This combination mechanically links both the "B" carrier and the "B" ring gear to the output shaft and results in a divided power flow. With the "B" sun gear turning clockwise, the "B" pinions will revolve counterclockwise and initiate the divided power flow to the "C" ring gear. On one side of the divided power flow, the "B" pinions spend a part of their rotation to "walk" clockwise around the inside of the "B" ring gear and thereby drive the "B" carrier, mainshaft, clutch 3, and "D" sun gear or output shaft in a clockwise direction. On the other side of the divided power flow, the "B" pinions spend a part of their rotation to drive the "B" ring gear and the "C" sun gear in a counterclockwise direction. The "C" sun gear drives the "C" pinions which cannot orbit the central axis because band 3 is holding their carrier. Therefore, the "C" pinions rotate clockwise on their own axes and drive the "C" ring gear and the "D" sun gear, or output shaft, in the same direction. Thus, two distinct drives are established between the "B" pinions and the "C" ring gear. This type of drive permits a high reduction ratio. Third speed, being the overdrive ratio of first, is obtained by the application of band 1.

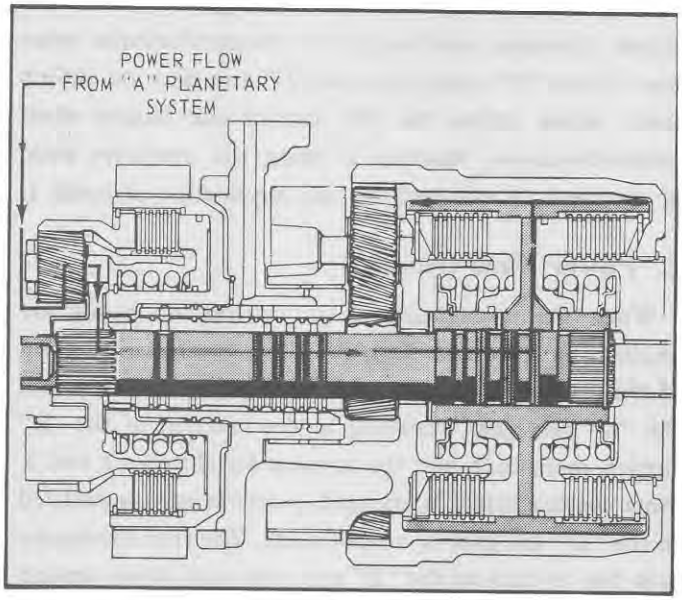

Figure 7
Power Flow—Neutral

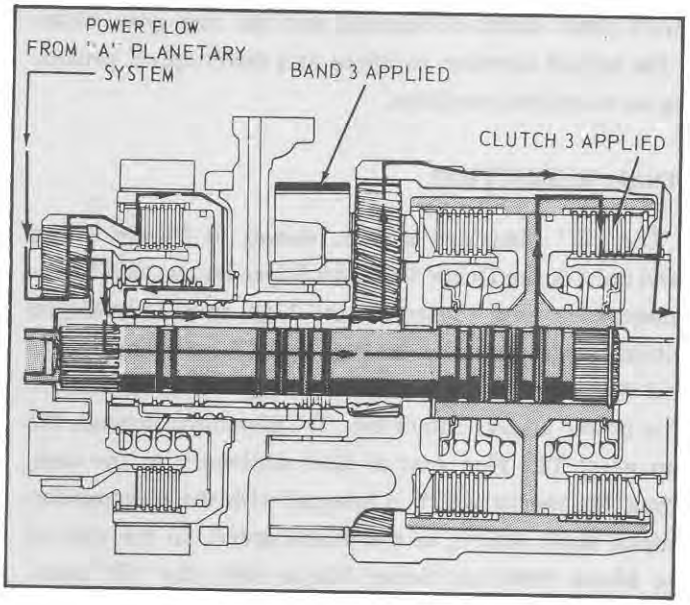

Figure 8
Power Flow—1st and 3rd

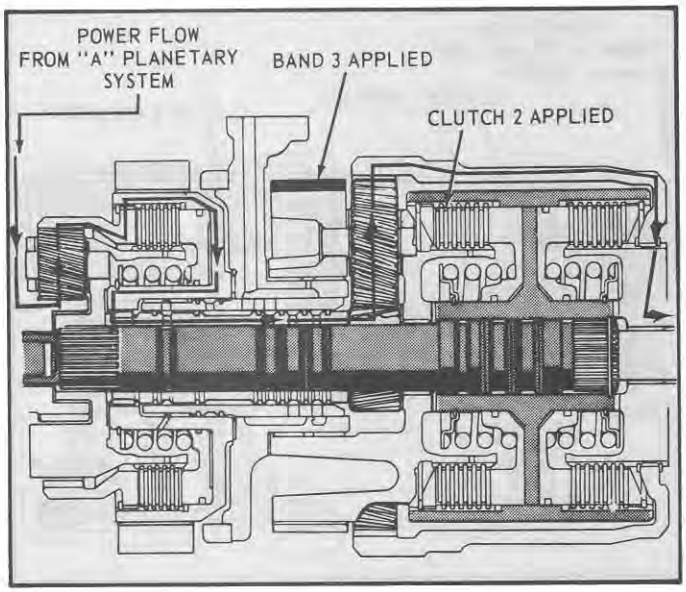

Figure 9
Power Flow—2nd and 4th

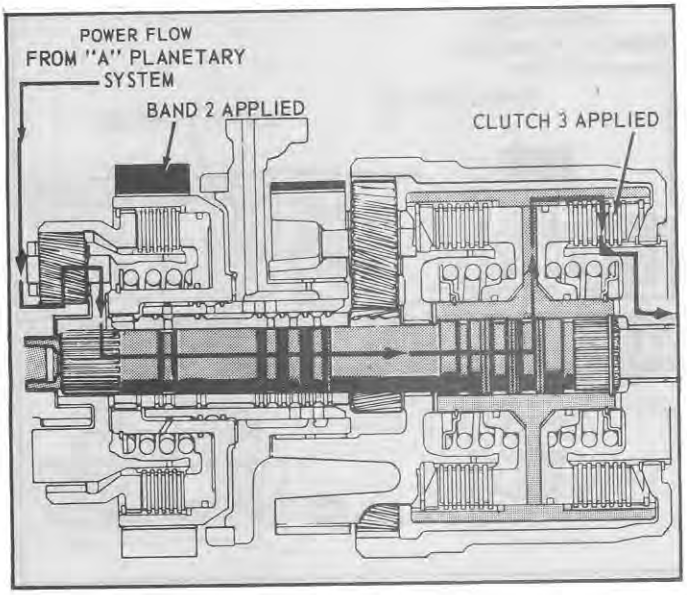

Figure 10
Power Flow—5th and 7th

E. Power Flow—Second and Fourth Speed Ratios

The basic speed ratio is obtained with the direct drive clutch applied, holding the "C" carrier with band 3 and linking the "B" carrier to "C" carrier with clutch 2 (C-2), as shown in Figure 9. With both the "C" carrier and the "B" carrier being held, neither the "C" pinions nor the "B" pinions can orbit the central axis. Clockwise rotation of the "B" sun gear causes the "B" pinions to rotate on fixed axis driving the "B" ring gear and "C" sun gear in a counterclockwise direction. The "C" sun gear causes the "C" pinions to rotate on fixed axis, driving the "C" ring gear and "D" sun gear or output shaft in a clockwise direction. Fourth speed, being the overdrive ratio of second, is obtained by the application of band 1.

F. Power Flow—Fifth and Seventh Speed Ratios

The basic speed ratio is obtained with the direct drive clutch applied, holding the "B" ring gear with band 2 and linking the "B" carrier to "D" sun gear with clutch 3, as shown in Figure 10. With band 2 holding the "B" ring gear, the clockwise rotation of the "B" sun gear causes the pinions to "walk" around the ring gear and drive the "B" carrier, mainshaft, and "D" sun gear or output shaft in a clockwise direction. Seventh speed, being the overdrive of fifth, is obtained by the application of band 1.

G. Power Flow—Sixth and Eighth Speed Ratios

The basic speed ratio is obtained with the direct drive clutch applied, holding the "B" ring gear and "C" sun gear with band 2, and linking the "B" carrier to "C" carrier with clutch 2, as shown in Figure 11. With band 2 holding the "B" ring gear, the clockwise rotation of the "B" sun gear causes the pinions to "walk" within the ring gear, driving the "B" carrier, mainshaft, and "C" carrier in a clockwise direction. Since the "C" sun gear is also being held, the pinions "walk" around the sun gear driving the "C" ring gear and "D" sun gear or output shaft in a clockwise direction. Eighth speed, being the overdrive of sixth, is obtained by the application of band 1.

H. Power Flow—Ninth and Tenth Speed Ratios

The basic speed ratio is obtained with the direct drive clutch applied, linking the "B" carrier to "B" ring gear with clutch 1 (C-1), and linking the "B" carrier to "C" carrier with clutch 2, as shown in Figure 12. As the "B" sun gear rotates clockwise, the complete "B" planetary system turns as an assembly, driving the mainshaft, "C" sun gear and "C" carrier at the same speed. This results in the "C" planetary system rotating as an assembly with the "C" ring gear driving the "D" sun gear or output shaft clockwise at the same speed. Tenth speed, being the overdrive of ninth, is obtained by the application of band 1.

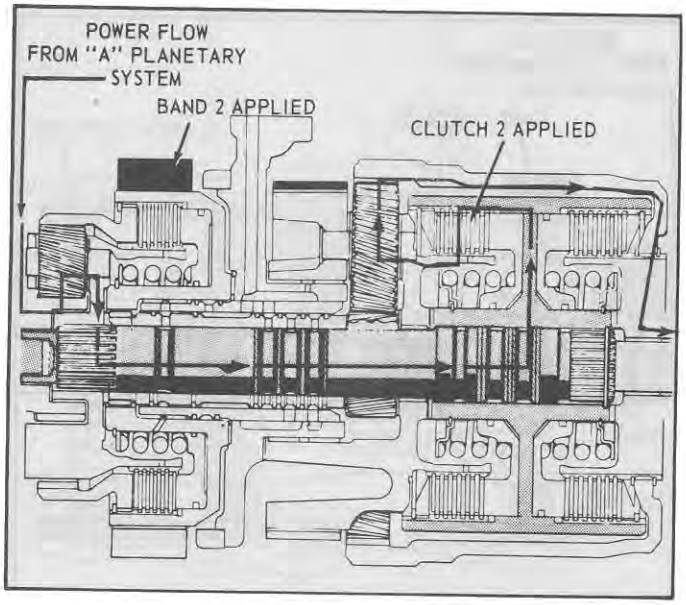

Figure 11
Power Flow—6th and 8th

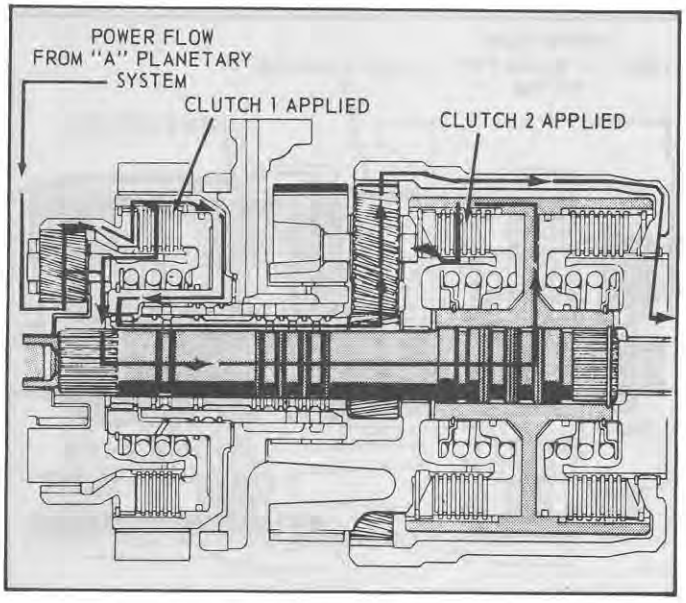

Figure 12
Power Flow—9th and 10th

HYDRAULIC CONTROL SYSTEM

RESERVOIR

The hydraulic oil reservoir for this system is the transmission case. The oil pumped from the reservoir passes through a 40-mesh strainer screen which is easily removed for servicing. A plug on the bottom of the case drains the transmisison.

PUMP

The pump, shown in Figure 1, is a roller vane type which supplies oil pressure through the main pressure tube to the full flow filter. The pump, driven by the input shaft to the transmission, or countershaft in the Super Major 5000, operates whenever the engine is running and will supply a sufficient quantity of oil to maintain the required operating pressure and lubricate the entire transmission system.

FILTER

A replaceable element full flow filter is used on the pressure side of the transmission pump. The element, a 10 micron pleated paper type, filters all the oil before it enters the control valve.

A pressure relief valve located in the inlet end of the element is set to open when the pressure differential across the filter exceeds 12-16 psi (0.8—1.1 kg/cm^2). Thus, in the event the element becomes clogged with impurities, the oil bypasses the filter permitting normal transmission operation.

The element is easily serviced by the removal of an external cover from the left-hand side of the transmission case.

DISTRIBUTOR

The distributor is co-axially mounted on the transmission mainshaft and is secured to the center web of the transmission case, as shown in Figure 1. The distributor acts as bearing journals for the clutch 1 and "C" carrier assemblies. Further, it channels all oil to and from the control valve assembly for all servos and clutch assemblies. The main pressure tube connects the full flow filter to a port in the front of the distributor. The control valve mounts on the distributor controlling the oil flow to:

The cast iron sealing rings on the front distributor journal for clutch 1.

The ports on the left side of the distributor for the servo 2 and 3 cover.

The ports in the distributor bore which align with sealing ring channels on the "C" sun gear and mainshaft for lubrication and clutches 2 and 3.

The ports in the front of the distributor for servo 1, direct drive clutch and the P.T.O. clutch.

In addition, distributors fitted to transmissions having the heat exchanger option, incorporate 2 ports on the side to direct oil to and from the heat exchanger.

CONTROL VALVE ASSEMBLY

The control valve assembly is mounted directly on the distributor, as shown in Figures 1 and 15, and consists of upper and lower housing assemblies. The control valve is actuated by a flexible cable extending from the selector assembly. As the selector handle is moved, the cable wheel and camshaft assembly attached to the valve upper housing rotates to select the individual gear ratios. Cam followers operate the six spool valves in the lower housing which control the oil flow to three clutch pistons and three band servos. A safety switch mounted on the control valve permits the tractor engine to be started only when the selector lever is in the park (P) position. This switch is actuated by the camshaft assembly. As the selector is moved to park (P), the cam closes the switch completing the circuit to the tractor starter switch. Three adjustable spring-loaded, plunger-type valves are incorporated in the valve upper housing to control and regulate system pressure. In addition, feathering valves are incorporated in the valve lower housing to control the oil flow to clutches 1, 2, and 3 and the P.T.O. clutch for feathering control.

SYSTEM CIRCUITS

The control valve separates the hydraulic system into the following direct and indirect circuits. See Figure 13.

A. Direct Transmission Circuit

Servos 1, 2, and 3, and the direct drive clutch with their respective valve spools and the P.T.O. clutch with its feathering valve are in a direct circuit with the pump.

B. Indirect Transmission Circuit

Clutch assemblies 1, 2, and 3 are in an indirect circuit with the pump, as their respective valve spools and the transmission feathering valve are separated from the pump by the transmission sequencing valve.

C. Indirect Lubrication Circuit

The transmission lubrication circuit is separated from the pump by the system regulating valve.

VALVE OPERATION

The operation of the valves is as follows:

A. System Regulating Valve

The system regulating valve located in the upper valve housing, regulates and controls the oil pressure in the transmission hydraulic system. The regulating valve pressure is adjusted to 205 $\pm$5 psi (14.35 $\pm$0.35 kg/cm^2) at 800 engine rpm with 100°F. (38°C.) oil.

When the pressure exceeds this setting, the valve opens and the excess oil passes over the valve into the cooling and lubrication circuit.

B. Transmission Relief Valve

The transmission relief valve is located in the upper valve housing and limits the maximum oil pressure in the transmission circuit. The relief valve functions only at high engine rpm, as it is adjusted to bypass oil when the pressure exceeds 225 psi (15.8 kg/cm^2). The bypassed oil flows from a port on top of the upper valve housing through a flange and tubing to sump.

The lubrication circuit consists of a passage from the control valve, through the distributor to the lube passage in the transmission mainshaft, as shown in Figure 14. In the case of transmissions with the heat exchanger option, the oil enters the distributor and is bypassed to the cooler. From the cooler it flows back to the distributor and onto the mainshaft. Cast iron sealing rings are used on the mainshaft to direct the oil flow. Lubrication is accomplished by controlled bleeding along the mainshaft to the bearing and thrust surfaces, clutch plates, etc. At the rear end of the mainshaft, the lube oil passes through an orifice to lubricate the rear mainshaft journal and rear support components. Oil flows from the front port of the mainshaft into a gallery in the input shaft to lubricate the P.T.O. gears as well as other bearing surfaces. Oil bleeding past the rear end of the input shaft flows into a collector ring on the "A" carrier for lubricating the pinion shaft bearings. A sender switch is tapped into the lube passage at the rear of the distributor. The switch controls a warning light on the instrument panel. At any time the lubrication pressure is below the specified pressure, the switch closes the electrical circuit and the lube light illuminates. The warning light will come on when the starter key switch is on and the engine is not running. In addition, the light may momentarily flash on when shifting between 4 and 5 gear ratio. In the case of tractors with ground speed P.T.O., the ground speed driven gear is pressure lubricated from the distributor lube passage.

NOTE: ***Two different lube sender switches are used as follows: One with a pressure setting of 13 $\pm$1¼ psi (0.91 $\pm$0.07 kg/cm^2) used in transmissions less heat exchanger and one with a pressure setting of 20 $\pm$2 psi (1.40 $\pm$0.14 kg/cm^2) used in transmissions with heat exchanger.***

© FORD MOTOR CO. 1964

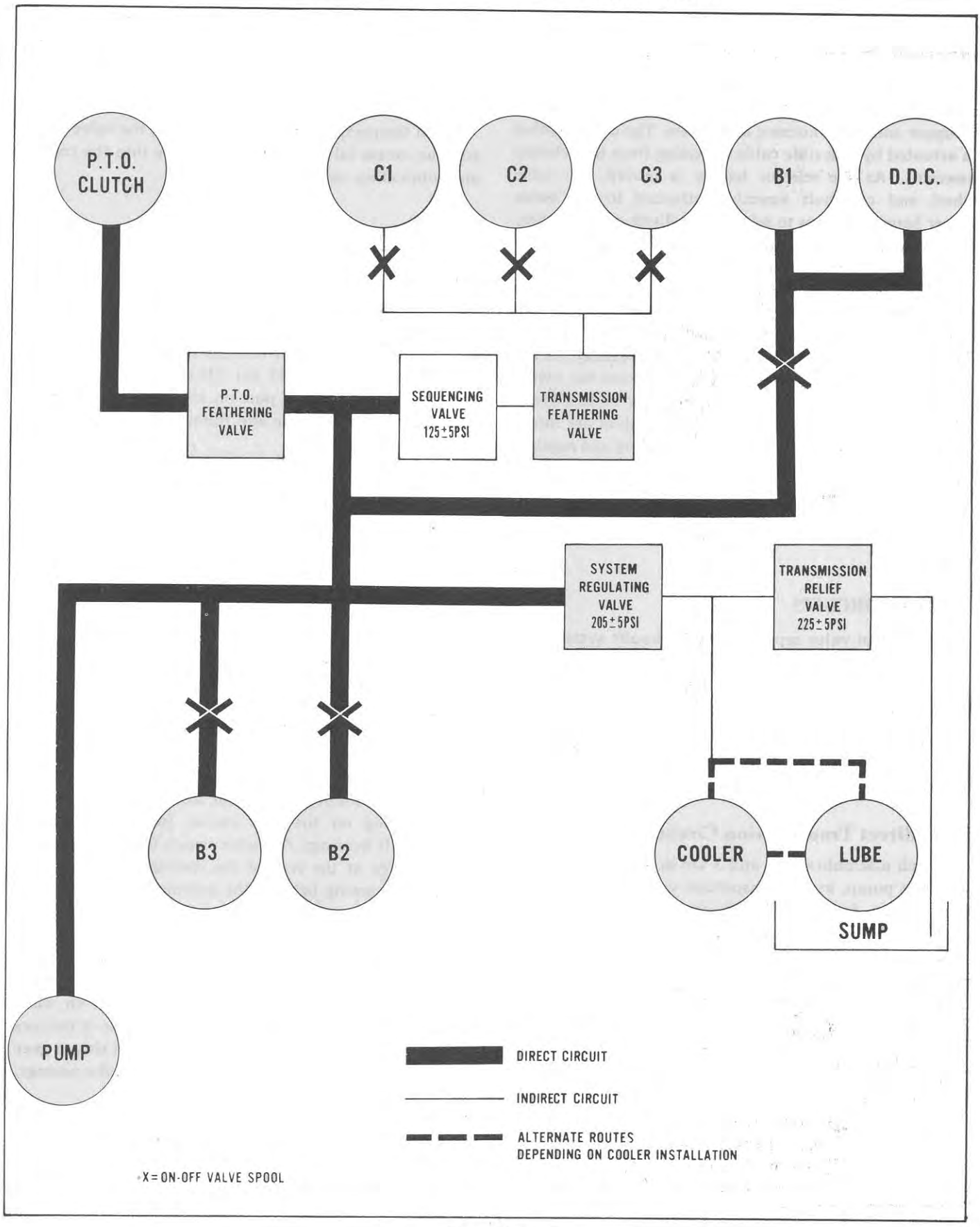

Figure 13
Hydraulic Circuits

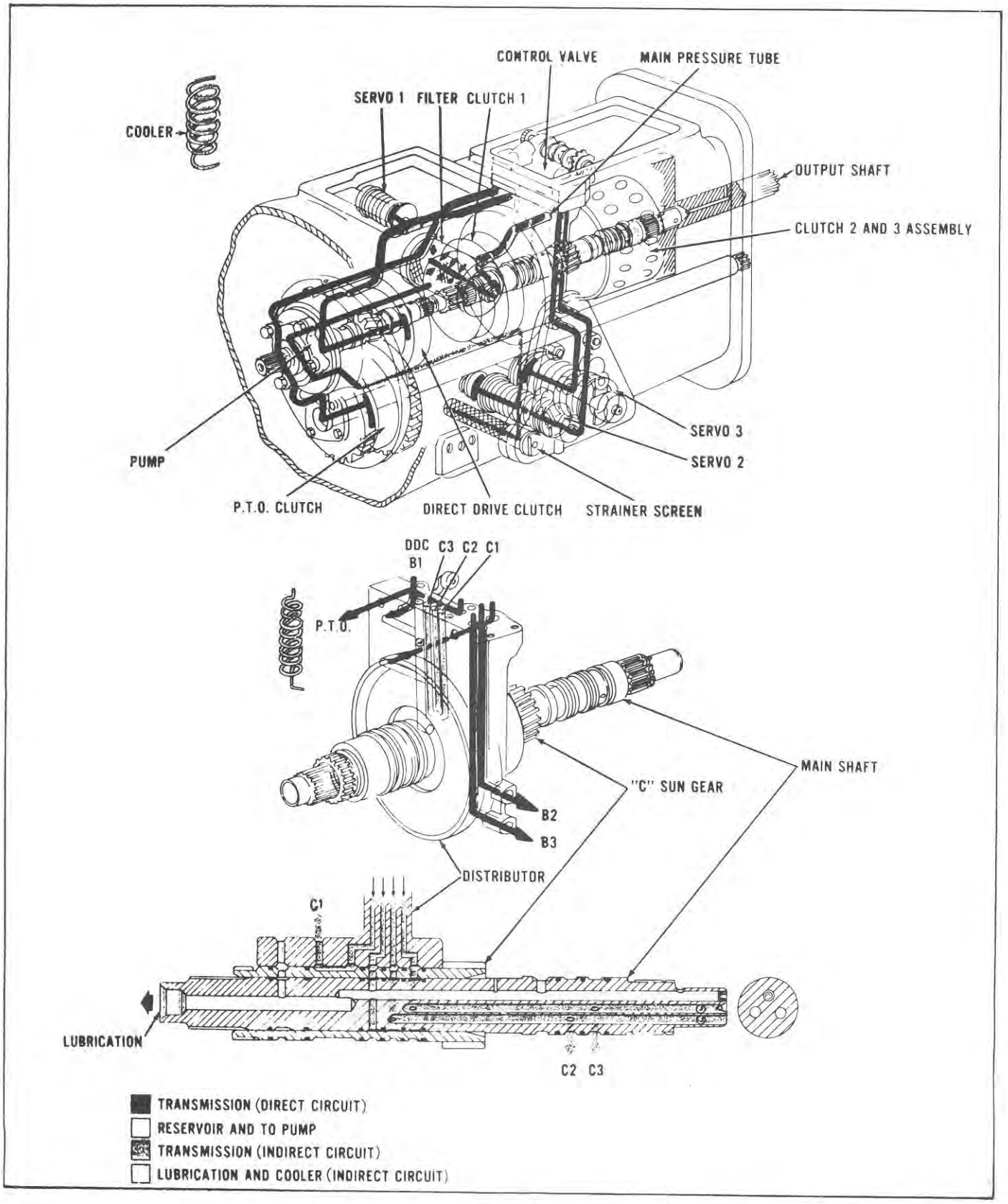

Figure 14
Oil Flow Chart

© FORD MOTOR CO. 1964

C. Sequencing Valve

The sequencing valve, located in the upper valve housing, separates the pump or direct circuit from the transmission indirect circuit consisting of the clutch assemblies 1, 2, and 3. The function of the sequencing valve is to direct pump oil first to the direct circuit, i.e., bands 1, 2, and 3 servos, direct drive clutch and P.T.O. clutch for their actuation before oil enters the transmission indirect circuit.

The sequencing valve is set at 125 psi (8.75 Kg/cm^2) or approximately 80 psi (5.6 Kg/cm^2) below the system regulating valve. Thus, when a relatively large volume of oil is required, a condition which occurs when making the 4-5 or 5-4 shifts, the pump supplies oil first to the servos to release bands 2 and 3, as required to eliminate the possibility of the transmission going to park (Bands 2 and 3 are both applied in park). Then when the pressure builds up past 125 psi (8.75 Kg/cm^2), the sequencing valve opens permitting the oil to enter the transmissions indirect circuit.

D. Transmission Feathering Valve

The transmission inching pedal is located on the left side of the transmission case. It can be used to maneuver the tractor very slowly for hitching or unhitching equipment, as well as a means of interrupting the power flow to the rear wheels. This pedal, through linkage, actuates a feathering valve located in the control valve lower housing.

The feathering valve is located in the transmission indirect circuit ahead of the valve spools that control the oil flow to clutch assemblies 1, 2, and 3. When the inching pedal is in the normal "up" position, the valve directs all of the oil to the clutches as shown in A, Figure 16. When the pedal is completely depressed, the valve, shown in C, Figure 16, shuts off pump oil pressure to the transmission indirect circuit and opens the clutch circuit to sump. This causes the oil to be forced from the applied clutches by action of the piston return springs to release the clutches. Consequently, the flow of power to the rear wheels is interrupted. If the tractor is to be inched slightly, the pedal is slowly raised from the depressed position. This causes the pedal linkage to exert a force on the outer spool depending upon the pedal height. This force moves the outer spool which in turn moves the spring and inner spool. Movement of the upper land of the inner spool first closes the passage to sump before the lower edge of the land opens the pressurized oil passage to the clutch circuit.

The degree of pressure build up in the circuit will be directly proportional to the force exerted on the outer spool, since the pressure reacts on the end area of the inner spool. Thus, when the pressure increases to the point where the force on the end of the inner spool exceeds the pedal linkage force, the inner spool will move outward compressing the regulating spring. Movement of the spool will first close the pressurized oil passage and then open the passage to sump relieving excess pressure and equalizing the opposing forces.

If greater or less feathering action is desired, the pedal is either raised or lowered as this will indirectly vary the pressure build-up in the clutch circuit. Pressure regulation from 0 to 90 psi (0–6.3 Kg/cm^2) is possible with

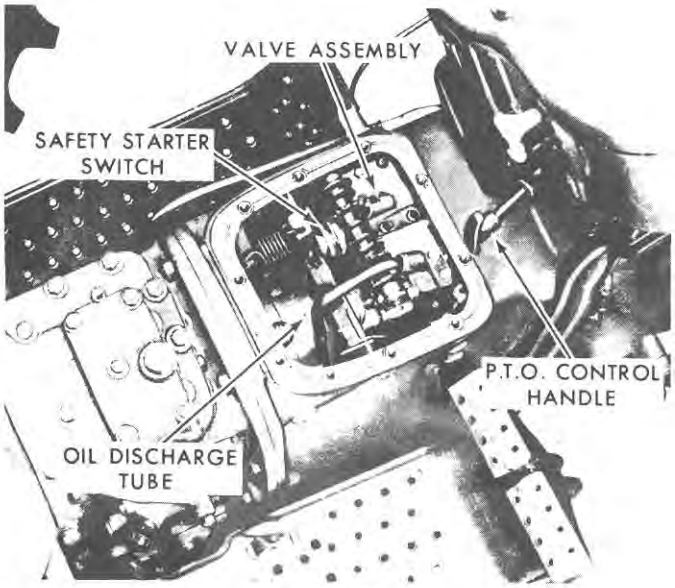

Figure 15
Transmission Cover Removed

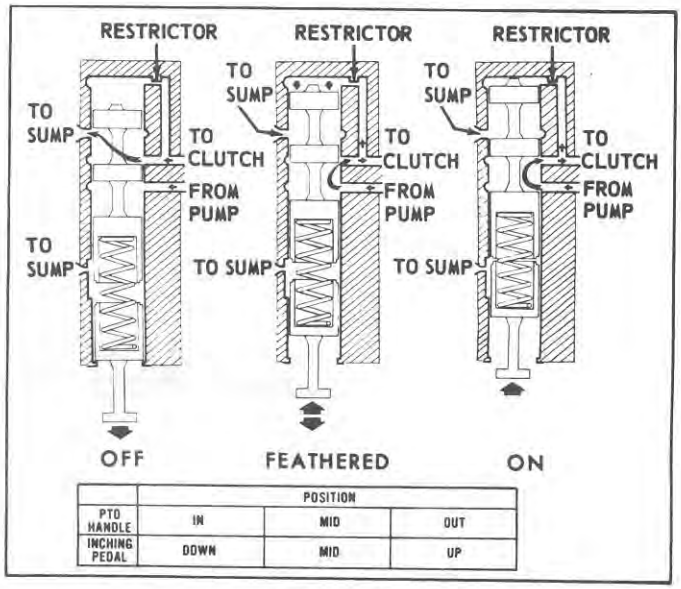

Figure 16
Feathering Valve Operation

the feathering valve. Above 90 psi (6.3 Kg/cm²), the clutch assemblies are applied or locked up and therefore, feathering action is not possible.

E. P.T.O. Feathering Valve

In the P.T.O. model transmissions, except the Super Major 5000, the P.T.O. feathering valve is actuated by a T-handle and cable assembly mounted on the lower right side of the instrument cluster on the hood. The P.T.O. feathering valve, located in the control valve lower housing, directs and controls the oil pressure in the P.T.O. circuit. The feathering valve operation is identical to the transmission feathering valve. The valve positions with respect to the "T" handle positions are shown in Figure 16. The P.T.O. clutch is feathered in by slowly pulling the "T" handle outward.

F. Valve Spools

Six interchangeable spring-loaded, off-and-on valve spools direct oil pressure to three clutch assemblies in the indirect circuit and the three servos and 1 clutch in the direct circuit. The spools are located in the control valve lower body and are controlled by the six cam followers. As combinations of valve spools are moved into the control valve body, oil pressure is directed to the specific clutch pistons, and/or band servos to obtain the various speed ratios. Refer to Figure 13. When the force is removed from the cam follower, the spool automatically returns to the "OUT" position by spring action, and the clutch or band servo oil is dumped to sump through the return ports in the valve body.

In the case of control valves used in Super Major 5000 Tractors, the valve spools are notched and positively positioned, in or out, and do not use return springs.

HEAT EXCHANGER

Transmissions with the heat exchanger circulate the transmission oil from the lubrication circuit to the tractor radiator and back. Two ports located on the right-hand side of the transmission case connect internally with ports in the distributor, and externally with tubing which channels the oil to and from the lower tank of the radiator. The oil is cooled by passing through a heat exchanger around which radiator cool liquid circulates.

TIMING VALVES

Two timing valve assemblies are incorporated in the servo 2 and 3 cover assembly, Figure 17, to provide, primarily, for gradual application of bands 2 and 3. This function promotes smooth shifting characteristics during the 4-5 and 5-4 shift cycles when one of the bands is releasing and the other band is applying. Each valve assembly is located in its respective servo circuit in a bore of the servo cover. The assembly consists of a valve, valve spring, sleeve, and retaining snap ring. A valve return spring holds the valve assembly against a pressed-in valve seat. The valve assembly is free to move in the bore and is held in the closed position against the seat by the return spring. The retaining snap ring limits the travel of the valve with respect to the sleeve. The valve spring is positioned between the sleeve and the valve shoulder holding the sleeve against the snap ring.

The valve has four radially positioned ports extending into the centrally drilled passage. At the shoulder end of the valve is a small metering orifice. The machined surface on the flat end of the sleeve mates with the valve seat.

The valves are hydraulically actuated to control the flow of oil from each servo during the dump cycle to ease the band application.

When the servo is pressurized to release the band, the flow of oil enters the valve chamber through the center of the seat and moves the valve assembly off the seat, compressing the return spring. The hydraulic oil is then free to flow to the servo to release the band. This sequence is shown in Figure 17.

When the servo piston reaches the end of its stroke, the flow of oil stops, resulting in the valve return spring seating the valve assembly against the seat.

During the servo-dumping cycle, when the flow of oil to the servo is stopped and the valve spool in the transmission control valve assembly permits the servo oil to dump to sump and the band to apply, the oil is passed through the timing valve in three sequenced operations.

1. The initial return pressure created by the force of the servo spring against the piston, forces the valve assembly against its seat. The valve is acted upon by this hydraulic pressure and in turn, is forced against the sleeve compressing the valve

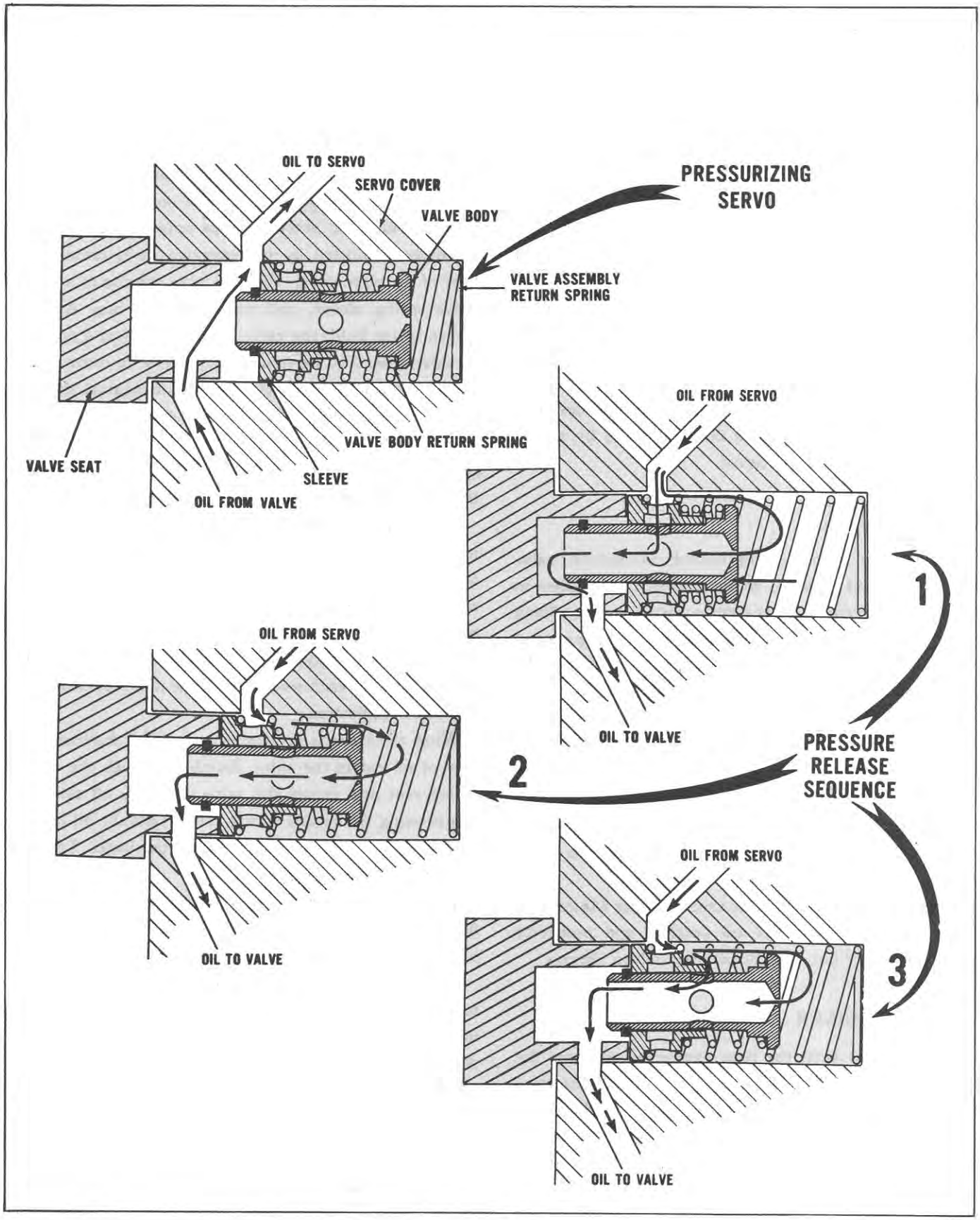

Figure 17
Timing Valves in Servo 2 and 3 Cover

spring. The radial ports and the inside annular groove of the sleeve are then indexed with the radial ports of the valve permitting the return oil to pass through the sleeve and valve ports to the central passage of the assembly and on to sump. This operation is shown in Figure 17.

2. As the pressure is reduced in the servo, the valve spring returns the valve blocking the radial ports, shutting off the flow of return oil. At this point, the oil then flows through the orifice in the end of the valve, to the control valve and then to sump. This is illustrated in Figure 17.

3. As the oil pressure continues to drop, the valve spring further extends the valve, with respect to the sleeve, until the radial ports of the valve are opened through which the remainder of the oil is passed to sump as shown in Figure 17.

The sequence of the dumping action thus provides:

A fast initial pressure drop to begin band application.

A relatively slow continued pressure drop permitting gradual band application.

A final dumping of oil to assure that the servo spring has completely applied the band.

HYDRAULIC CIRCUIT OIL FLOWS

Oil flow to individual clutch assemblies and servos is determined by the on-off type valve spools as well as the proper operation of the various pressure valves in the control valve body. Since the proper oil flow to these components is an essential part of transmission operation, the individual circuit flows are covered below.

A. Band 1 Servo and Direct Drive Clutch

One valve spool is used to control oil flow to both band 1 servo and the direct drive clutch. Thus, a common passage is used for both of these elements. From the control valve and distributor, the oil flows through tubing to a T-fitting installed in the transmission case band 1 servo opening. The direct drive clutch tube directs oil from the fitting to the pump adapter plate. Drilled passages joined by a short length of tubing in the pressure kidney part of the plate carries the oil to a drilled passage in the transmission input shaft. The front of the shaft is sealed by a steel ball. Cast iron sealing rings are used on the input shaft at both the adapter plate and direct drive clutch locations to seal the oil flow between rotating components, Figure 14.

B. Clutch 1

The oil to clutch 1 flows from its passage in the distributor to the "C" sun gear. Cast iron sealing rings seal the rotating sun gear from the distributor bore and channel the oil into a forward passage in the distributor which leads to the clutch 1 housing. Cast iron sealing rings on the front distributor sleeve, seal the rotating clutch housing from the sleeve and direct the oil into the clutch assembly.

C. Clutches 2 and 3

The oil to clutches 2 and 3 flows from their respective passages in the bore of the rear distributor sleeve to the "C" sun gear and onto drilled passages in the transmission mainshaft. Cast iron sealing rings seal the rotating sun gear and mainshaft and channel the oil to the correct passages in the mainshaft. At the clutch 2 and 3 location on the mainshaft, cast iron sealing rings are used to direct the oil to the clutch assemblies. Steel balls are pressed into the clutch 2 and clutch 3 passages at the rear of the shaft to seal the drilled openings.

D. P.T.O.

The oil to the power take-off clutch flows from the distributor through tubing to the pump adaptor plate. The front P.T.O. tube connects the adaptor plate to the front P.T.O. cover where the oil is channeled to a drilled passage in the end of the P.T.O. shaft. The drilled passage extends through the shaft to the P.T.O. clutch location where the oil is directed into the clutch assembly. Cast iron sealing rings are used at the front of the shaft and at the P.T.O. clutch location to seal the components.

© FORD MOTOR CO. 1964

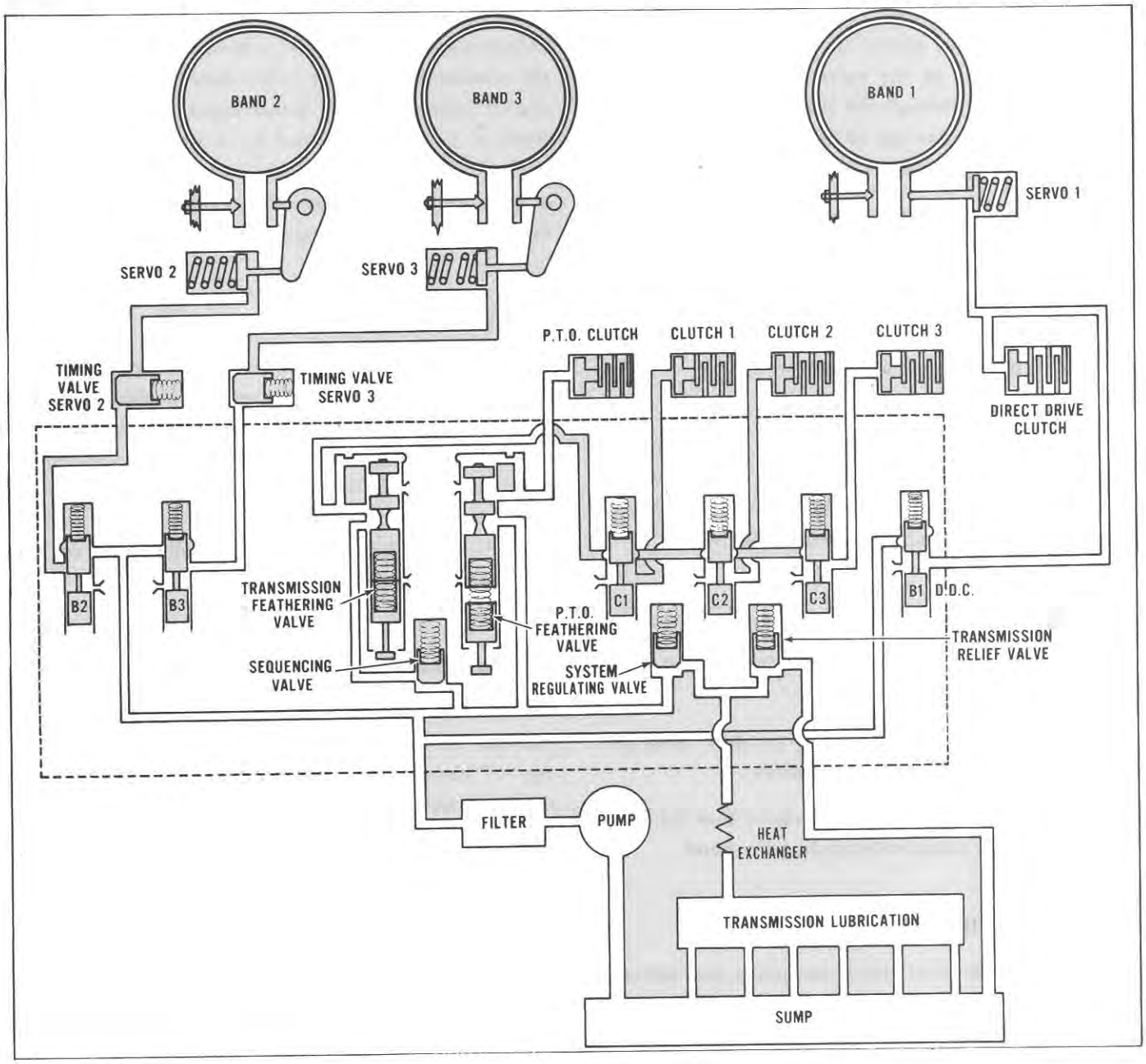

Figure 18
Transmission Circuits

GEAR RATIO OIL FLOWS

In addition to the items listed under "HYDRAULIC CIRCUIT OIL FLOWS", the details covering transmission control operation in each gear ratio are provided.

A. Park Position

When the selector lever is in park (P), the six valve spools in the control valve lower housing are in the "OFF" position and there is no delivery of oil pressure past the control valve assembly other than lubrication. Bands 2 and 3 are mechanically applied to hold the "C" planetary system and prevent any movement of the rear wheels. Figure 18 illustrates in schematic form the hydraulic system in park (P) position.

B. Reverse Speed Ratios

In the basic reverse speed ratio (R_1), the direct drive clutch-B-1 valve spool is moved inward and pump pressure is directed to apply the direct drive clutch and

hydraulically release B-1. The valve spools B-2 and C-1 are moved inward and oil pressure is directed to apply C-1 and release B-2. B-3 remains mechanically applied.

The overdrive reverse ratio (R_2) is obtained when valve spool D.D.C.-B-1 is closed to shut-off oil pressure to the direct drive clutch and servo-1. This permits the oil in the elements to return to sump releasing the direct drive clutch while at the same time permitting B-1 to mechanically apply.

C. Neutral

In the neutral position, the direct drive clutch B-1 valve spool is moved inward and pump pressure is directed to apply the direct drive clutch and hydraulically release B-1. The valve spools B-2 and B-3 are moved inward and oil pressure is directed to servos 2 and 3, hydraulically releasing B-2 and B-3. Power cannot be transmitted to the rear wheels; however, the tractor is free to roll forward or backward.

D. First and Third Speed Ratios

In the first speed ratio, the direct drive clutch B-1 valve spool is moved inward and pump pressure is directed to apply the direct drive clutch and hydraulically release B-1. The valve spools B-2 and C-3, which control the oil passages to Servo-2 and clutch-3 are moved inward. Hydraulic pressure releases B-2 and applies C-3 which, combined with B-3, being mechanically applied, gives this forward speed.

The third speed ratio (overdrive of first speed) is obtained when the D.D.C.-B-1 valve spool is closed to shut off oil pressure to the direct drive clutch and servo 1. This permits the oil in the elements to return to sump releasing the direct drive clutch while at the same time permitting B-1 to mechanically apply.

E. Second and Fourth Speed Ratios

In the second speed ratio the direct drive clutch B-1 valve spool is moved inward and pump pressure is directed to apply the direct drive clutch and hydraulically release Band 1. The valve spools B-2 and C-2 are moved inward to permit hydraulic pressure to reach clutch 2 and servo 2. Band 2 is now hydraulically released. Clutch 2 is hydraulically applied and band 3 is mechanically applied to establish this forward speed.

The fourth speed ratio (overdrive of second speed) is obtained when the D.D.C.-B-1 valve spool is closed to shut off oil pressure to the direct drive clutch and servo 1. This permits the oil in the elements to return to sump releasing the direct drive clutch while at the same time permitting band 1 to mechanically apply.

F. Fifth and Seventh Speed Ratios

In the fifth speed ratio, the D.D.C.-B-1 valve spool is moved inward and pump pressure is directed to apply the direct drive clutch and hydraulically release Band 1. The valve spools B-3 and C-3 in the control valve lower body are moved inward to open the passages to clutch 3 and servo 3. Now band 3 is hydraulically released, band 2 is mechanically applied and clutch 3 is hydraulically applied to give this forward speed.

The seventh speed ratio (overdrive of fifth) is obtained when the D.D.C.-B-1 valve spool is closed to shut off oil pressure to the direct drive clutch and servo 1. This permits the oil in the elements to return to sump releasing the direct drive clutch while at the same time permitting band 1 to mechanically apply.

G. Sixth and Eighth Speed Ratios

In the sixth speed ratio, the direct drive clutch B-1 valve spool is moved inward and pump pressure is directed to apply the direct drive clutch and hydraulically release band 1. The valve spools B-3 and C-2 which control the passages to servo 3 and clutch 2 are moved inward. Band 3 is hydraulically released, clutch 2 is hydraulically applied, and band 2 is mechanically applied to give this forward speed.

The eighth speed ratio (overdrive of sixth) is obtained when he D.D.C.-B-1 valve spool is closed to shut off oil pressure to the direct drive clutch and servo 1. This permits the oil in the elements to return to sump releasing the direct drive clutch while at the same time permitting band 1 to mechanically apply.

H. Ninth and Tenth Speed Ratios

In the ninth speed ratio, the direct drive clutch B-1 valve spool is moved inward and pump pressure is directed to apply the direct clutch and hydraulically release band 1. The valve spools B-2, B-3, and C-1, and C-2, are moved inward, allowing hydraulic pressure to actuate servos 2 and 3, and clutches 1 and 2. With bands 2 and 3 hydraulically released, this forward speed is obtained by the application of clutches 1 and 2.

The tenth speed ratio (overdrive of ninth) is obtained when the D.D.C.-B-1 valve spool is closed to shut off oil pressure to the direct drive clutch and servo 1. This permits the oil in the elements to return to sump releasing the direct drive clutch while at the same time permitting band 1 to mechanically apply.

TRANSMISSION CONTROLS

TRANSMISSION CONTROL SELECTOR ASSEMBLY

The selector assembly, shown in Figure 19, mechanically transmits the speed selections through a flexible cable to the control valve in the Select-O-Speed Transmission. A wheel attached to the camshaft on the control valve rotates as the selector extends or retracts the cable. The camshaft is accurately indexed for each transmission gear ratio by a detent which engages notches in a detent cam on the camshaft.

A selector indicator is fixed to and rotates with the selector lever shaft. The corresponding ground speeds in each gear ratio at given engine rpm are shown on a chart located on the tractor dash. A lamp is installed in the top of the selector assembly to illuminate the dial whenever the tractor key is "ON". In addition, the transmission lube light is located at the top of the Selector Assembly.

The selector assembly permits shuttle-type operation as screw stops can be installed in the R_1, R_2, 3rd, 5th, or 7th gear selections as desired. Refer to Figure 20.

Also, a bypass shuttle plate is available to permit the selector lever to over-ride the neutral notch. The selector lever and notched cover may be installed on either side of the assembly for right-hand or left-hand operation.

P.T.O. CONTROL HANDLE ASSEMBLY

The P.T.O. control assembly located on the right rear hood panel, shown in Figure 19, operates the P.T.O. clutch assembly in the transmission. The control consists of a slider mechanism and T-handle attached to a flexible cable. The cable, which is enclosed in a conduit, is threaded into a slider assembly in the transmission cover. The slider, in turn, is linked to the feathering valve rocker assembly. When the T-handle is pulled out, the rocker contacts and forces the P.T.O. feathering valve spool into the control valve upper body. The handle mid-position is the feathering point which permits P.T.O. clutch slippage by bleeding oil past the valve for easing into loads. In the full "OUT" position, the feathering valve directs all the P.T.O. clutch circuit oil to apply the clutch assembly. This does not apply to the Super Major 5000.

P.T.O. SPEED SHIFT LEVER

In the deluxe transmissions, either 540 or 1000 rpm A.S.A.E. standard P.T.O. speeds can be obtained at 1800 (540) and 1950 (1000) engine rpm. This is accomplished by a sliding coupling arrangement on the transmission input shaft, as shown in Figure 1. The P.T.O. speed shift lever, when in the forward position as illustrated in Figure 21, selects the 540 rpm speed by sliding the shifter collar rearward on the shaft which causes the rear input

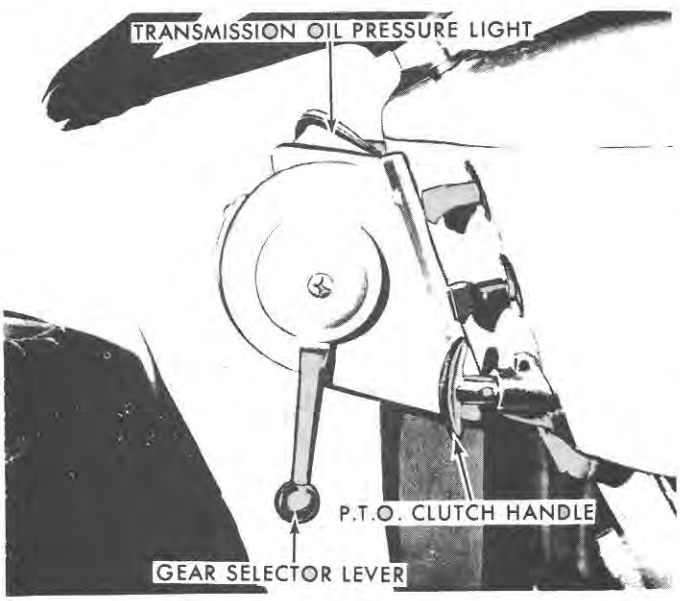

Figure 19
Speed Selector Assembly

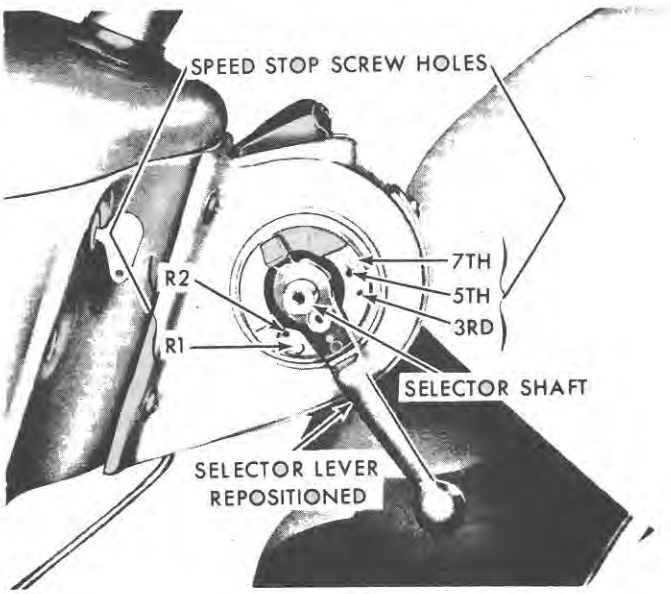

Figure 20
Repositioning the Selector Lever

shaft gear to drive the P.T.O. clutch housing. The 1000 rpm speed is obtained by moving the lever to the rear and selecting the forward set of gears. A neutral, or middle, position disengages the gears and should be used when operating the tractor without P.T.O. equipment, Figure 21. P.T.O. power flows are illustrated in Figure 22. This is not available in the Super Major 5000.

GROUND SPEED P.T.O. SHIFT LEVER

In the deluxe transmissions, a P.T.O. speed proportional to the tractor forward travel, is obtained by driving the P.T.O. shaft from the output shaft of the transmission. Figure 1 illustrates the P.T.O. drive gear mounted on the "D" carrier which is integral with the output shaft through a sliding coupling arrangement. The coupling is moved by a shifter fork connected to the ground speed shift lever. This is not available in the Super Major 5000.

Figure 21 shows the ground speed P.T.O. shift lever in the disengaged position.

An interlock arrangement, shown in Figure 31, prevents both engine and ground speed P.T.O. drives from being engaged at the same time.

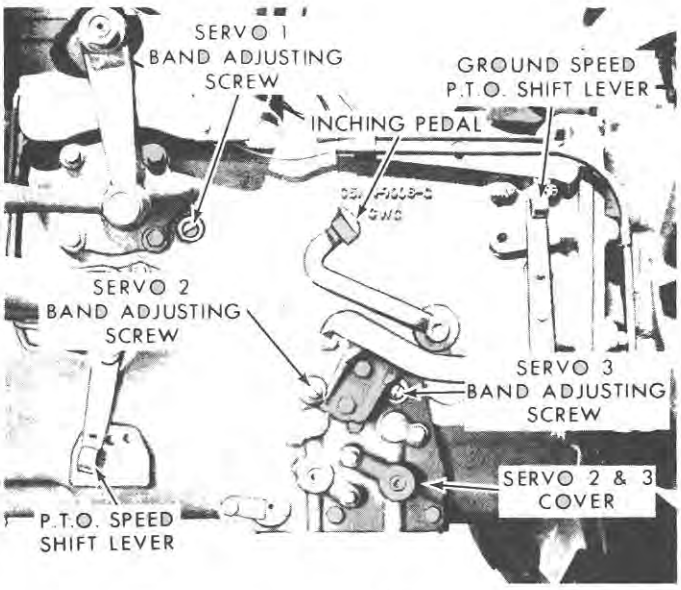

Figure 21
Left Side of Transmission Case

DRIVE LINE DISENGAGEMENT

The transmission output shaft incorporates a coupling which can be shifted to disengage the power from the differential pinion shaft. It will be necessary to disengage the coupling whenever the tractor is to be moved without the engine running as bands 2 and 3 mechanically apply to hold the rear wheels. It is also recommended that the coupling be disengaged before any servicing or adjusting of the transmission or of the complete tractor is undertaken with the engine running.

The coupling is manually disengaged by the drive line disengagement lever which is located on the right-hand side of the tractor center-housing. When the lever is in the "Down" position, the coupling is engaged. When the lever is in the "Up" position, the coupling is disengaged (Dexta 2000, Super Dexta 3000 and Major 4000). When the lever is in the "Up" position, the coupling is engaged. In the "Down" position, the coupling is disengaged.

2. ADJUSTMENTS

BAND ADJUSTMENTS

The three brake bands should be adjusted during predelivery and again at the 50-hour inspection. Thereafter, the bands should be adjusted after each 600 hours of operation. Before adjusting the bands, make certain the oil in the transmission is at the proper level. The bands are adjusted as follows:

1. Disconnect the drive line disengagement making sure it is in the disengaged position.
2. Operate the tractor until the transmission reaches normal operating temperature: 80-120°F. (27-49°C.) Set the engine speed so that 205 psi (14.35 Kg/cm²) at the servos is reached.
3. Refer to the chart on page 23 and move the gear selector lever to apply the desired band. Hold the band adjusting screw as shown in Figure 23, and loosen the lock nut two full turns.
4. Adjust Band 2 and Band 3. Refer to the chart and select the correct released gear ratio for the band involved. Tighten the adjusting screw to the torque specified and back the screw off the proper number of turns. Refer to Figure 24.
5. Tighten Band 2 and Band 3 lock nuts by selecting the gear ratio to apply the band involved to prevent the adjusting screw from turning. Tighten the lock nuts while holding the adjusting screws.
6. Adjust B-1 with the tractor engine "OFF", so that the band is applied. When tightening the lock nut, make sure the adjusting screw does not turn.

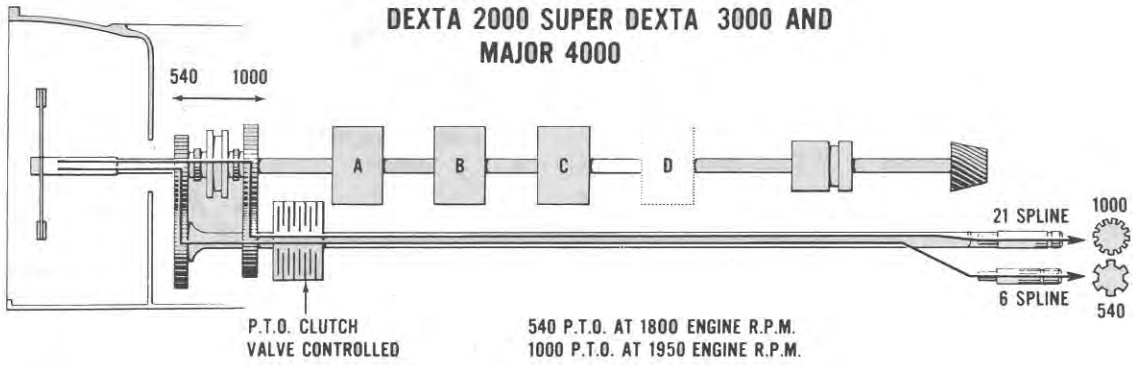

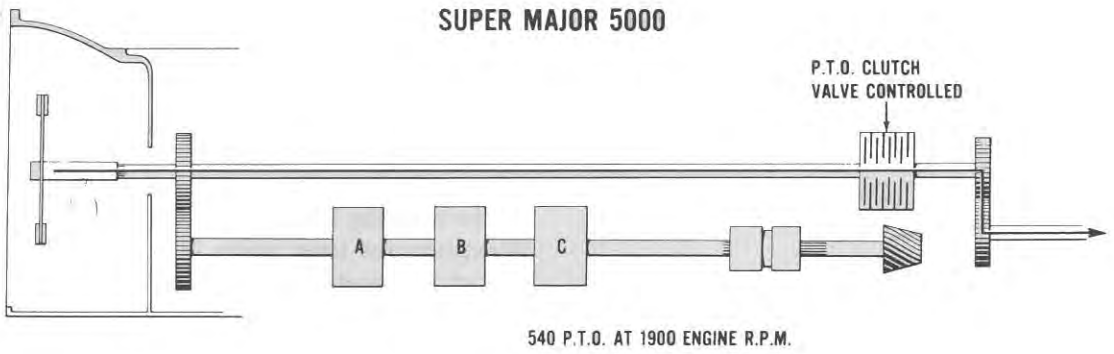

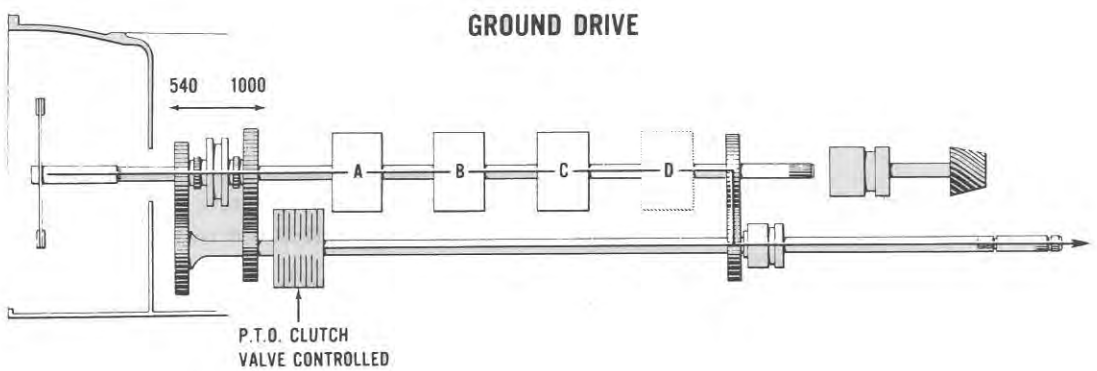

DEXTA 2000 AND SUPER DEXTA 3000
1 REVOLUTION OF THE P.T.O. SHAFT=7 ins.(17.78 cm.)OF FORWARD TRACTOR TRAVEL · 540 P.T.O. R.P.M.=3.7 M.P.H. (5.95 K.M.H.)

MAJOR 4000
1 REVOLUTION OF THE P.T.O SHAFT=6 ins. (15.24 cm.) FORWARD TRAVEL
540 P.T.O. R.P.M.=3.0 M.P.H. (4.82 K.M.H.)

Figure 22
P.T.O. Power Flows

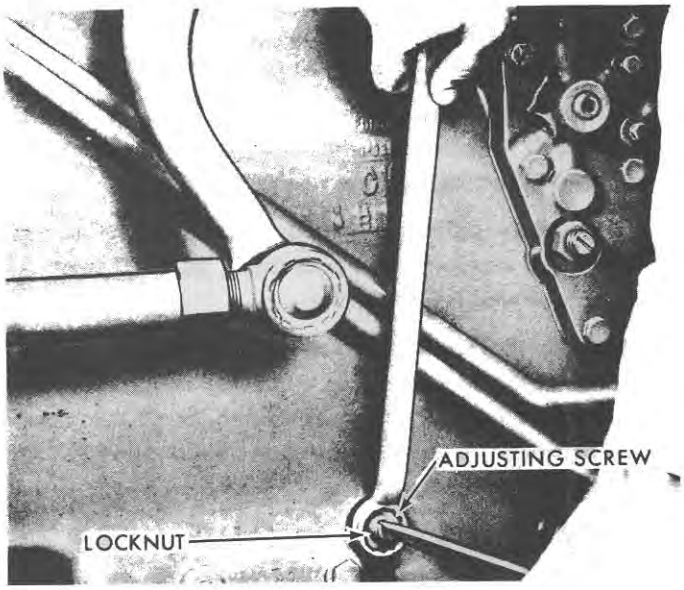

Figure 23
Loosening the Adjusting Screw Lock Nut

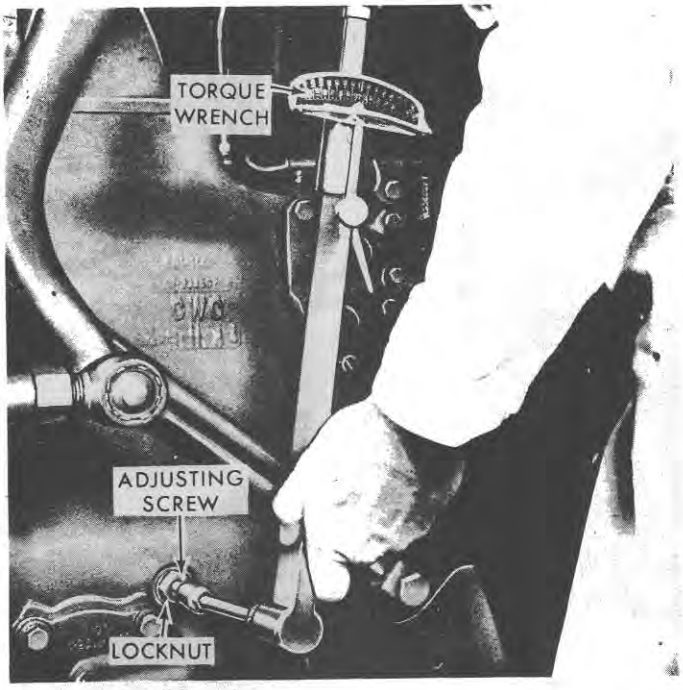

Figure 24
Adjusting the Bands

SELECTOR LEVER ALIGNMENT

For positive identification of speed selections, selector alignment is important. The individual speed identifications on the dial should always register with the pointers in the selector housing. The following adjustment makes it possible to compensate for normal wear in the selector assembly and for slight wear of the flexible selector cable.

1. Remove the left-hand selector shaft cover to expose the shaft and hex nut as shown in Figure 25.

   NOTE: ***If the selector lever is on the left side, remove it and mount it on the right side while making the adjustment.***

2. Move the selector lever to the neutral position and, with a suitable wrench, such as a deep well socket, loosen the nut while holding the lever securely in the detent, as shown in the insert, Figure 25.

3. The dial can now be moved in either direction as required, to register the dial with the pointers without changing the relationship of the flexible cable with the control valve assembly.

4. With the dial in the proper position, hold the lever and tighten the hex nut to the specified torque, page 23.

5. Check for proper dial registration adjustment in all speed selections and install the shaft cover.

   NOTE: ***If the selector is difficult to operate, binding at the transmission cover may exist. This can be overcome by loosening the cover mounting bolts and tapping the cover to reposition it.***

BAND ADJUSTMENT

Band	Released Gear Ratio	Screw Torque	Turns Backed Off	Applied Gear Ratio	Lock Nut Torque
1	*	19-21 lbs. ft. (2.62-2.90 mkg)	1¼	*	20-25 lbs. ft. (2.76-3.45 mkg)
2	Neutral	110-130 lbs. in. (126.73-149.77 cmkg)	¾	Park	20-25 lbs. ft. (2.76-3.45 mkg)
3	Neutral	110-130 lbs. in. (126.73-149.77 cmkg)	¾	Park	20-25 lbs. ft. (2.76-3.45 mkg)

*Adjusted with engine off.

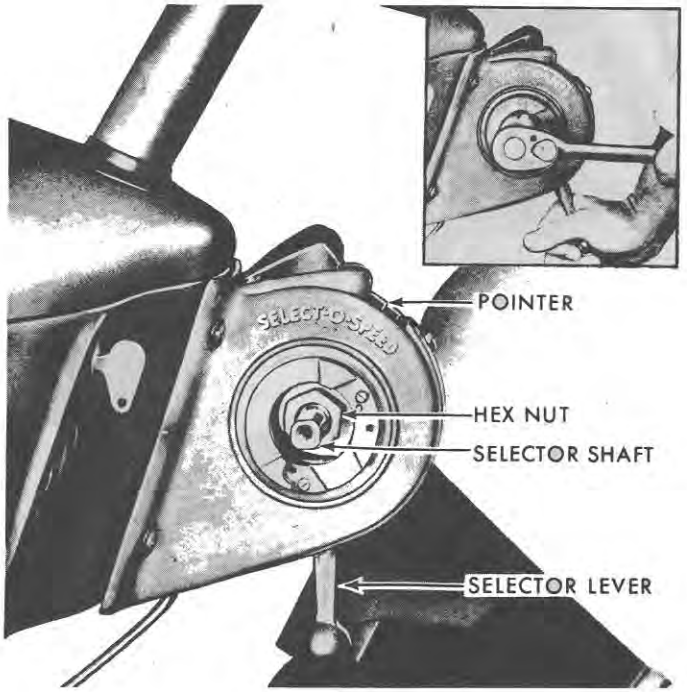

Figure 25
Adjustment of the Selector Assembly

P.T.O. CONTROL HANDLE ADJUSTMENT

Correct P.T.O. handle travel is essential for proper P.T.O. operation and transmission functioning. If the handle is improperly adjusted, handle travel will be affected and it is possible to continually feather the P.T.O. clutch in the handle engaged and disengaged positions. This procedure does not apply to the Super Major 5000.

If improper P.T.O. control handle adjustment is indicated:

1. Pull the P.T.O. handle to its out position.
2. Disconnect the lower P.T.O. conduit fitting and the upper fitting behind the tractor hood. See Figure 33.
3. Remove the upper jam nut and washer and push the control assembly through the opening.
4. Turn the P.T.O. handle clockwise until the lower end of the conduit can be raised above the fitting on the transmission cover. Pull the handle to make sure it is fully out.
5. Turn the P.T.O. handle counterclockwise until the lower end of the conduit just contacts the fitting on the cover. To obtain a vertical, readable handle position, turn the handle clockwise as required, but not exceeding one full turn.
6. Position the spacer, washer, and jam nut on the P.T.O. control assembly behind the instrument panel and tighten the nut securely.
7. Securely tighten the conduit nut. The lower end of the conduit must seat freely on the transmission cover P.T.O. fitting.
8. With the handle remaining in the "OUT" detent, force the conduit lower end away from the transmission cover. A separation of $\frac{3}{32}$ in. (0-2.54 mm) between the conduit and transmission cover P.T.O. fitting must result.

   NOTE: ***This check, combined with step 10, should be carried out whenever incorrect P.T.O. handle adjustment is suspected.***
9. Securely tighten the conduit lower nut on the transmission cover fitting.
10. Place the handle in the "IN" detent position. Using a scale or other suitable measuring tool, measure the distance the handle travels from detent to detent or from the full "IN" to the "OUT" position. This distance must be within $1\frac{3}{8}$-$1\frac{7}{16}$ in. (35.0-36.5 mm). If the measurement obtained is not within specifications, readjust the handle until the correct measurement is obtained. See Figure 26.

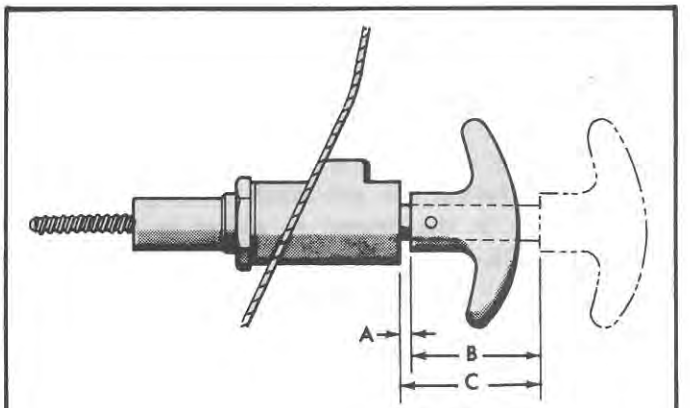

Figure 26
P.T.O. Handle Adjustment

CONTROL VALVE ADJUSTMENT

NOTE: ***The control valve on the Super Major 5000 cannot be adjusted in the tractor due to the valve location. To adjust the Super Major 5000 control valve install it in either the Dexta 2000, Super Dexta 3000 or Major 4000.***

Valve Adjustment: Valve adjustment is to be performed when:

1. The transmission pressures have been checked and it has been determined that valve adjustment is required.
2. The valve body has been reassembled after servicing, so that the correct pressure settings can be made.

Valve Adjustment Purposes: The procedure for adjusting the valve and checking valve pressures in this section is also effective for trouble shooting purposes to determine:

1. The condition of the transmission hydraulic system.
2. If transmission malfunctioning is the result of incorrect pressure settings or other circuit difficulties.

A. Adjusting the Control Valve (Dexta 2000, Super Dexta 3000 and Major 4000)

1. Disconnect the drive line disengagement.
2. Remove the hex head plugs from Servos 1, 2, and 3, and install the pressure gauges. See Figures 27 and 28.
3. Start the tractor engine and warm up the transmission oil to 80-120°F. (27-49°C.).

NOTE: ***It is essential that the engine is operating properly so that accurate pressure readings are obtained. To get an accurate adjustment of the transmission relief valve, it is important that the transmission oil temperature does not exceed 120° F. (49° C.).***

4. Remove the transmission cover and control valve, as covered on page 31.

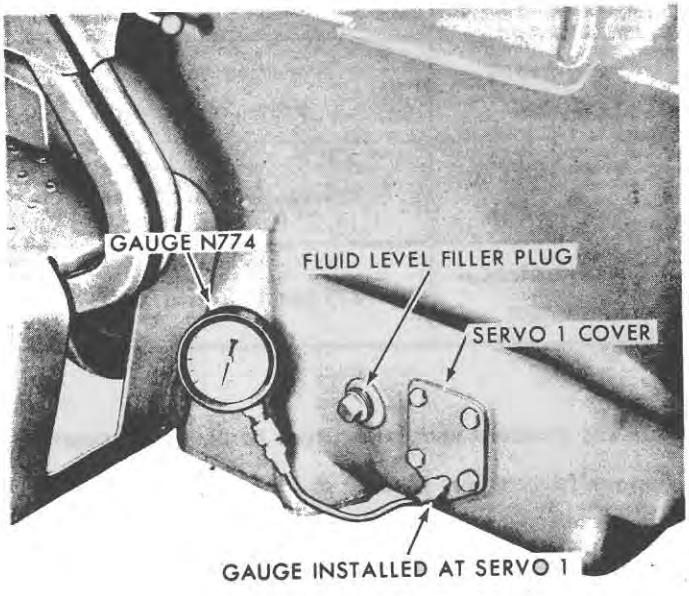

Figure 27
Gauge Installed in Servo 1

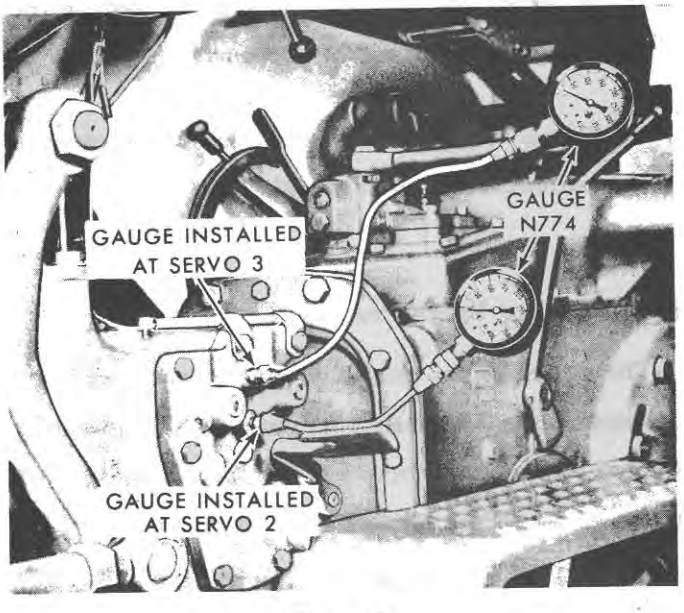

Figure 28
Gauge Installed in Servos 2 and 3

5. Remove the screws which secure the retainers to the upper valve body and remove the retainers.

   NOTE: ***If the spring adjusting screws have been removed, the adjusting screw heads should initially set flush with the valve body.***

6. Remount the valve assembly on the distributor and secure the discharge tube to the valve.

7. With the valve in park (P) position, start the engine by grounding the safety starter switch wire. Operate the engine at 800 rpm.

8. Referring to the chart on page 27, use an offset screwdriver or a retainer removed in step 5 and adjust the control valve. The procedure is detailed under "Checking Valve Pressures" on page 26.

9. When the control valve has been properly adjusted, remove the control valve and install the retainers removed in step 5. If necessary, turn the adjusting screws inward so that the slots in the screws will align with the retainers.

10. Install the valve body and transmission cover as outlined on pages 31 and 32.

B. Checking Valve Pressures

The procedure for checking valve pressures requires following steps 1 through 3 on page 25, "Adjusting the Control Valve" and following the specific instructions under each heading below. It should be noted that the chart on page 28 summarizes this checking procedure and therefore may be referred to after the procedure is understood.

System Regulating Valve Pressure: Set the engine speed at 800 rpm and shift the selector lever to neutral and note the pressure readings at the three servo locations. If the servos are pressurized at 205 psi (14.35 kg/cm^2), the system regulating valve is functioning properly. If the pressures are out of specification, adjust the valve. If the pressure check is used to diagnose transmission malfunctioning and the servo readings in any of the gear ratios as shown in the chart on page 28 vary more than 3 psi (0.21 Kg/cm^2), refer to page 74, Hydraulic Condition #4.

Transmission Relief Valve Pressure: After the system regulating valve pressure has been checked and adjusted, set the engine at 2400 rpm and shift the selector lever to neutral. Note the pressure readings at each servo. If the pressure reading is not to specifications as shown in the chart below, adjust the valve. If the pressure check is used to diagnose transmission malfunctioning and the valve cannot be adjusted to specifications refer to page 75, Hydraulic Condition #5.

Transmission Equipped:	Transmission Relief Valve Pressure
With Heat Exchanger	225 psi (15.8 Kg/cm^2)
Without Heat Exchanger	215 psi (15.1 Kg/cm^2)

If the pressure checks are used to diagnose transmission malfunctioning, proceed as follows:

1. Record the pressure readings and compare them with the "Hydraulic Conditions" covered in Trouble Shooting.

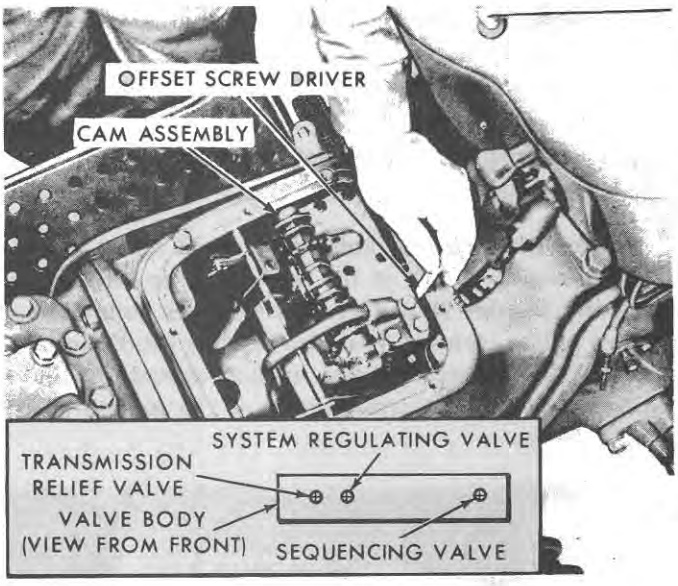

Figure 29
Adjusting Valve Pressure

2. If a pressure differential of more than 3 psi (0.21 kg/cm²) between servo readings, refer to "Hydraulic Conditions" covered in Trouble Shooting on page 74.

3. Pull the P.T.O. handle out. If the pressure drops, a leak is occuring in the P.T.O. clutch circuit. This step does not apply to the Super Major 5000.

Lubrication Pressure: If the lube light comes on while the transmission is operating and malfunctioning in the lubrication circuit or sender switch is thought to exist, the lubrication pressure should be checked as follows:

1. On transmissions not having an external heat exchanger, the transmission top cover must be removed as covered on page 30. Remove the sender switch and install a pressure gauge.

NOTE: ***On transmissions having an external heat exchanger, drill into the head of an oil line adapter bolt, which is located at the banjo fittings on the transmission case and thread for a ¼ inch pipe plug. Install the adapter bolt into the banjo fitting where the oil leaves the transmission and goes forward to the heat exchanger. This is the top connection on the Dexta 2000, Super Dexta 3000 and Major 4000 Tractors. It is the bottom connection on the Super Major 5000 Tractors. Install pressure gauge in the adapter bolt.***

VALVE PRESSURE SETTINGS

Valve	Gears	Inching Pedal	P.T.O. Handle	Servo 1	Servo 2	Servo 3	RPM
System Regulating Valve	Neutral	up or down	in or out	205 ±5	205 ±5	205 ±5	800
Transmission Relief Valve (Oil Temperature not to Exceed 80-120°F., 27-49°C.)	*Neutral	up	in	225 ±5	225 ±5	225 ±5	2400
Sequencing Valve		Valve screw to be flush with face of valve body.					

NOTE: All pressure readings should be within 5 psi (0.35 kg/cm²) of each other.

(205 psi=14.35 kg/cm²)
(5 psi= 0.35 kg/cm²)
*(225 psi= 15.8 kg/cm² with heat exchanger)
*(215 psi= 15.1 kg/cm² without heat exchanger)

PRESSURE GAUGE READINGS

System Regulating Valve

Gear Ratio	Band 1 Servo	Band 2 Servo	Band 3 Servo
P			
R^2		205	
R^1	205	205	
N	205	205	205
1	205	205	
2	205	205	
3		205	
4		205	
5	205		205
6	205		205
7			205
8			205
9	205	205	205
10		205	205

NOTE: All readings should be within ± 5 psi (0.35 Kg/cm²) of figures shown above.

205 psi=14.35 kg/cm²)
(5 psi = 0.35 kg/cm²)

2. Operate the engine at 800 rpm and note the pressure reading.
   a. If the specified pressure is exceeded, the sender is malfunctioning and should be discarded.

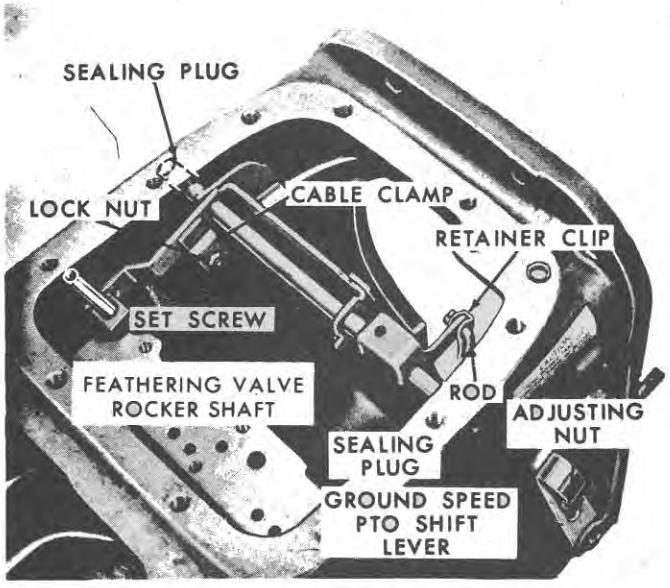

Figure 30
Feathering Linkage

   b. If the pressure is less than that specified, excessive leakage is occurring in the lube circuit. Refer to "Hydraulic Condition #1" on page 74.

GROUND SPEED P.T.O. INTERLOCK ADJUSTMENT

To prevent engaging both the ground speed P.T.O. and the engine P.T.O. at the same time, an interlock is provided, Figures 30 and 31. The interlock consists of a flexible cable, enclosed in a conduit. The cable connects the P.T.O. feathering valve rocker assembly and a plunger and bracket arrangement at the ground speed P.T.O. lever.

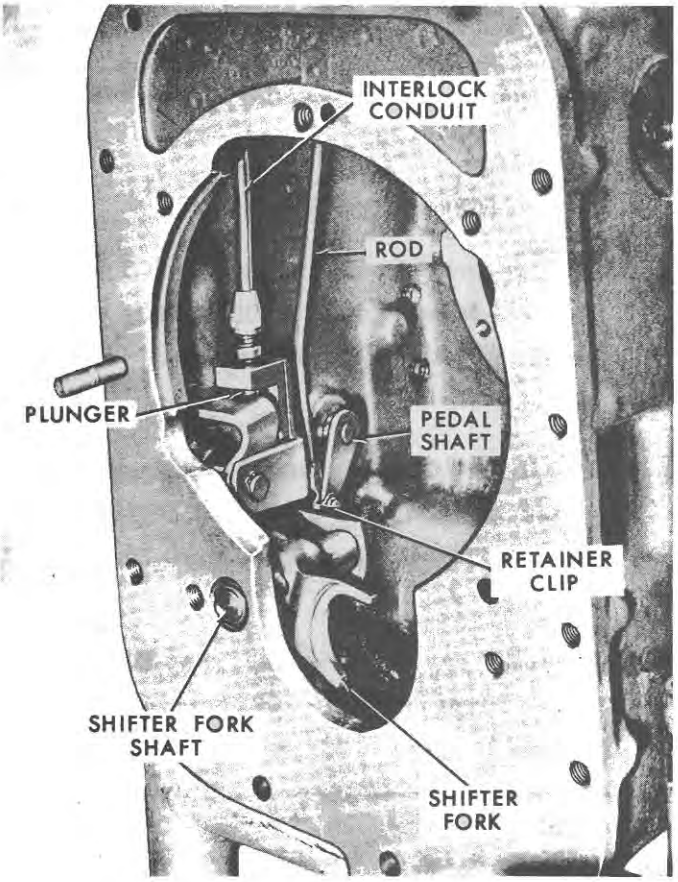

Figure 31
P.T.O. Interlock Linkage

With the P.T.O. clutch disengaged, the cable is completely extended through to ground speed shift lever so that the plunger is below the forked bracket. When the ground speed lever is moved forward to engage ground speed P.T.O., the fork moves to surround the cable. In this position, the plunger cannot be raised by the cable to engage the P.T.O. clutch.

When the P.T.O. clutch is engaged, the cable is pulled up so that the feathering valve rocker lever depresses

the valve spool into the valve body. In this position, the plunger lies in the path of the forked bracket so that the ground speed P.T.O. cannot be engaged.

Adjust the interlock mechanism as follows:

1. Remove the transmission cover as covered on page 30.
2. Position the ground speed shift lever in the forward notch to engage the ground speed P.T.O. If sufficient lever travel is not available, loosen the adjusting nut on the lever and reposition the lever plate. See Figure 30.
3. Loosen the lock nut and set screw in the cable clamp, shown in Figure 30.
4. Pull all the excess cable through the clamp until the plunger is firm against the ground speed shift lever.
5. With the P.T.O. feathering valve plunger in the out position, secure the cable clamp so that 0.005-0.015 in. (0.127-0.381 mm.) clearance exists between the end of the plunger and the P.T.O. feathering valve lever.
6. Engage the ground speed P.T.O. lever and pull up on the cable connector. The feathering valve rocker lever should not move the feathering valve plunger.
7. Disengage the ground speed P.T.O. and pull up on the P.T.O. control cable connector to depress the feathering valve. Now check to be certain the ground speed P.T.O. can not be engaged.

3. INTRODUCTION TO SERVICING THE TRANSMISSION

The arrangement of the procedures in this chapter permits servicing the transmission with minimum disassembly. Transmission disassembly and assembly are separated into four groupings, as covered below. Each grouping includes those operations which can be performed or assemblies which can be serviced under the conditions established. In the case of Condition 4, Section 7, it is necessary to follow the procedures in each of the preceding groupings to completely disassemble the transmission. In the case of 3, it is necessary to follow the procedures in Condition 1. A 5th grouping, covering detailed service procedures for the repair of sub-assemblies is also included.

CONDITION 1

Assemblies Serviced With Transmission Installed: On Dexta 2000, Super Dexta 3000, and Major 4000, refer to page 30. On Super Major 5000, refer to page 34.

P.T.O. Cable Assembly (except Super Major 5000)
Speed Selector Assembly
Transmission Cover
Filter
Safety Starter Switch
Lubrication Sender Switch
Servo Covers
Servo Assemblies
Oil Inlet Screen
Control Valve

CONDITION 2

Assemblies Serviced With Transmission Rear End Overhaul: On Dexta 2000, Super Dexta 3000, and for Major 4000, refer to page 35. On Super Major 5000, refer to page 45.

Rear Support
Planetary Assemblies A, B, C and D*
Clutch Assemblies Direct Drive, 1, 2, and 3
Oil Distributor
Brake Bands 1, 2 and 3
Feathering Linkage
Ground Speed P.T.O. Linkage**
Servo Assemblies 1, 2, and 3
Main Pressure Tube
*Dexta 2000 and Super Dexta 3000.
**Dexta 2000, Super Dexta 3000 and Major 4000.

CONDITION 3

Assemblies Serviced With Transmission Front End Overhaul: On Dexta 2000, Super Dexta 3000, and Major 4000, refer to page 54. On Super Major 5000, refer to page 55.

Transmission Oil Pump
Pump Adapter Plate
Servo 1 Tube
Torque Limiting Clutch
Front P.T.O. Clutch Pressure Tube*
Front Direct Drive Clutch Tube

Input Shaft Front Seals
P.T.O. Front Shaft (with 540 and 1000 rpm*)
P.T.O. Shaft Front Seal*
*Dexta 2000, Super Dexta 3000 and Major 4000.

CONDITION 4

Assemblies Serviced With a Complete Overhaul: On Dexta 2000, Super Dexta 3000, and Major 4000, page 57. On Super Major 5000, page 59.

Input Shaft
Band 2
Servo 2 and 3 Levers
P.T.O. Clutch Assembly and Shaft*
P.T.O. Pressure Tube
P.T.O. Shifter Linkage*
P.T.O. Shaft**

*Dexta 2000, Super Dexta 3000, and Major 4000.
**Super Major 5000.

CONDITION 5

Repair of Sub-assemblies: See page 60 for all models.
When disassembling the transmission, work in clean surroundings with clean tools. Thoroughly clean the transmission case to prevent dirt entry. Use only lint-free towels when wiping your hands or the parts. Lay cleaned parts out on new paper so that a thorough inspection can be made.

When assembling the transmission components, care must be exercised not to use force. If the parts do not assemble freely, examine them for the cause of difficulty. The following general instructions should be followed.

Always install new gaskets and seals.

Compare the shaft sealing rings with new ones or install new ones.

Use petroleum jelly on the shaft sealing rings to center them on the shafts and on the gaskets and thrust washers so that they remain in position.

Care should be exercised when installing tubes with assembled O-rings so that the sealing surfaces are not damaged. Always install the O-rings in the chamfered end of the bore and use petroleum jelly to facilitate assembly.

Refer to Figure 42 for the proper location of the thrust washers.

Always check front and rear compartment end play.

4. ASSEMBLIES SERVICED WITH TRANSMISSION INSTALLED

DEXTA 2000, SUPER DEXTA 3000, AND MAJOR 4000

A. Speed Selector Assembly—Removal

1. Remove the four housing-to-sheet metal retaining screws.
2. Place the selector lever in park (P) and loosen the conduit nut at the transmission cover.
3. Move the selector lever to the tenth speed position, allowing the complete assembly to move away from the transmission cover, as shown in Figure 32.
4. Separate the upper cable from the lower cable, disconnect the selector lamp wires and remove the selector assembly by lifting it out of the tractor sheet metal.

B. P.T.O. Cable Assembly—Removal

1. Remove the metal attaching screws from the right-hand steering gear cover and remove the cover. Pull the control handle all the way out and completely loosen the conduit nut, Figure 33, at the transmission cover.
2. Loosen the nut securing the conduit to the control handle and the rod assembly at the back of the instrument panel.
3. Completely loosen the jam nut which secures the unit to the instrument panel.
4. Turn the P.T.O. handle clockwise until the cable disengages from the P.T.O. connector in the transmission.

C. Transmission Cover—Removal

1. Disconnect the P.T.O. cable assembly and remove the speed selector assembly as covered under A and B, above.
2. Remove the lower selector cable by turning it clockwise to thread it from the control valve assembly.
3. Remove the ten cover-securing bolts, and lift the cover sufficiently from the case to detach the

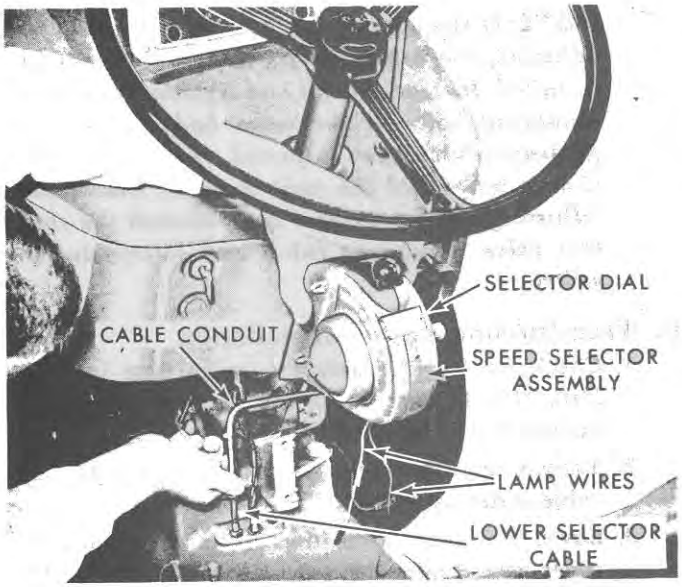

Figure 32
Removing Speed Selector

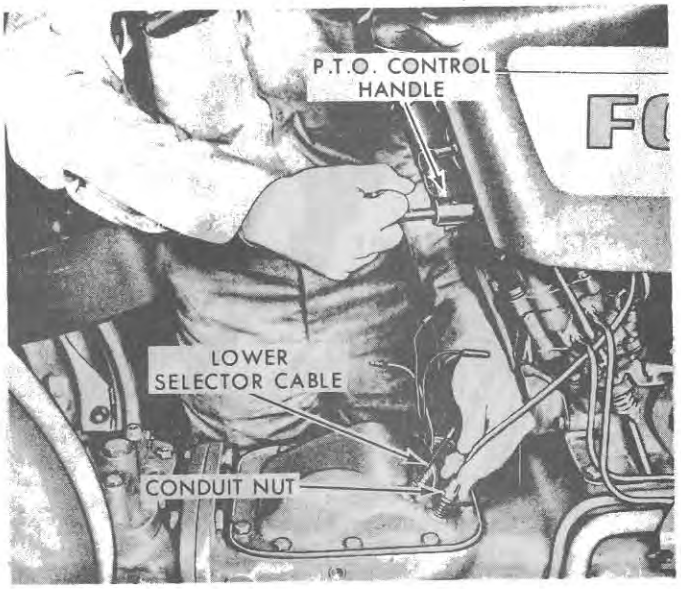

Figure 33
P.T.O. Control Removal

safety starter switch wire and the lube light switch wire. See Figure 15. Remove the cover.

D. Oil Discharge Tube, Safety Starter Switch, and Control Valve—Removal

1. Disconnect the P.T.O. cable and remove the speed selector, and transmission cover as covered under A, B, and C, above.

2. Remove the three bolts which secure the tube manifold to the top of the control valve, Figure 15. Remove the inching pedal return spring.

3. Lift out the manifold and tube as an assembly by lifting and threading the lower end of the tube from around the "C" ring gear assembly. Refer to Figure 34.

   NOTE: ***The oil discharge tube or the pedal return spring need not be removed to remove the control valve. The upper manifold portion can be swung up and back to provide adequate clearance.***

4. Remove the two bolts that secure the safety starter switch bracket to the control valve, and remove the switch and bracket.

5. Remove the remaining mounting bolts at the left front of the control valve.

   NOTE: ***Do not loosen the two bolts that hold the two halves of the control valve together.***

6. Depress the inching pedal and remove the control valve as shown in Figure 35.

   NOTE: ***It may be necessary to gently pry the valve body to free the gasket sealing surface.***

E. Oil Discharge Tube, Safety Starter Switch and Control Valve—Installation

1. Lower the oil discharge tube through the opening at the rear of the transmission adjacent to the

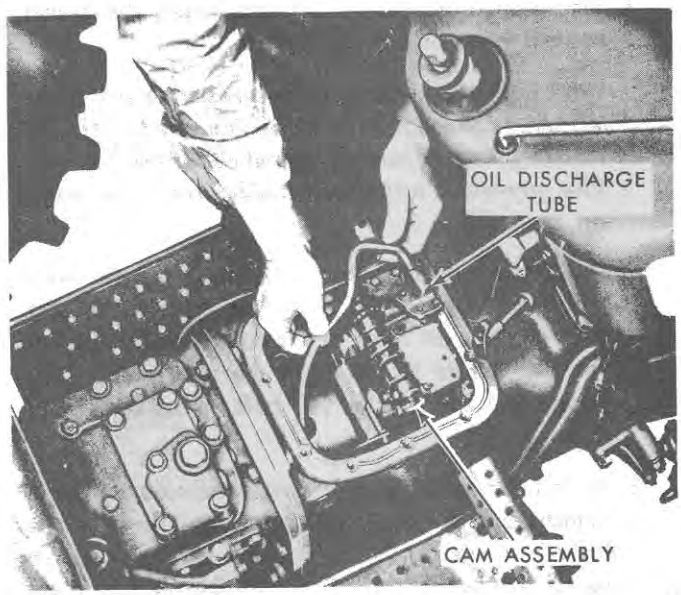

Figure 34
Oil Discharge Tube Removal

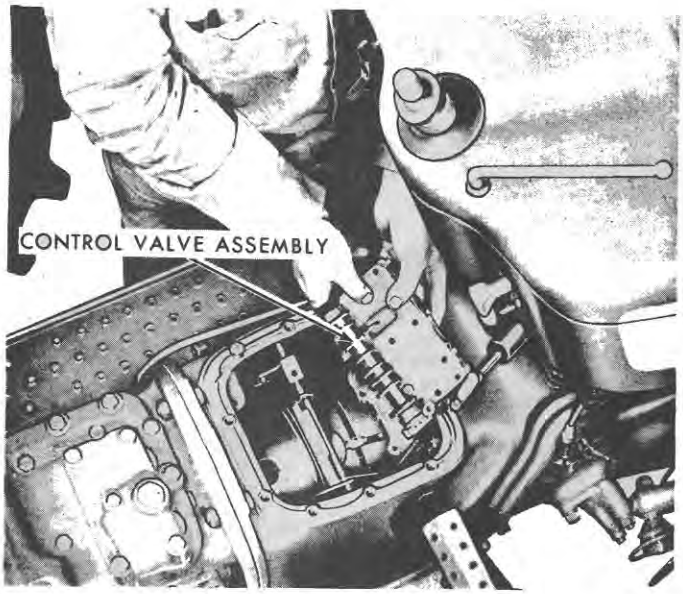

Figure 35
Removing Control Valve

"C"-ring gear. The tube is positioned between the "C"-ring gear and the right-hand wall of the transmission case.

2. Locate the web in the bottom of the transmission case by moving the lower end of the tube forward and back. After locating the web, seat the clip at the lower end of the tube, as near as possible to the center of the transmission but still maintaining sufficient clearance between the outlet tube and "C"-ring gear.

3. Depress the inching pedal and install the gasket control valve on the distributor.

NOTE: ***If the control valve pressures are to be adjusted, the valve is to be installed with the valve spring adjusting screw retainers left off. The pressure adjusting procedure is covered on page 25.***

4. Position a new manifold tube gasket on the control valve upper body. Align the holes in the inlet tube flange with those in the control valve. Install the two longer ¼" bolts in the right side of the flange and the shorter ¼" bolt in the remaining hole.

5. Install the safety starter switch bracket with the camshaft in the Park (P) position. The switch is to be held against the boss on the cam for positive switch actuation. Install the remaining two bolts and tighten all bolts to the specified torque, page 83. Install the inching pedal return spring.

NOTE: ***If the control valve pressures are to be adjusted, the safety starter switch need not be installed. Instead, install and tighten the switch mounting bolts in the valve body. After the pressures have been adjusted, remove the discharge tubes and the control valve. Install the adjusting screw retainers and reinstall the control valve, discharge tubes and safety starter switch.***

F. Transmission Cover—Installation

1. Check the control valve to make sure it is in Park (P). In park, all of the six valve spools are in the "OUT" position.
2. Thread the lower selector cable into the P.T.O. cable slider assembly.
3. Lower the cover over the case and thread the cover wires under the valve camshaft and attach them to the safety starter switch, and connect the lube light switch wire to its terminal.
4. Insert the lower selector cable (being used as a guide tool) into the slider assembly a few turns.
5. Install the slider assembly and guide in the cover and move the cable through the guide.
6. Align the cover bolt holes with the case and install and loosely tighten the bolts and lock washers.
7. Slide the cable up and down to be sure the cable slider assembly is free to move and then remove the cable.
8. Install the selector cable through the cover in the camshaft cable wheel and note if the cable is easy to turn.

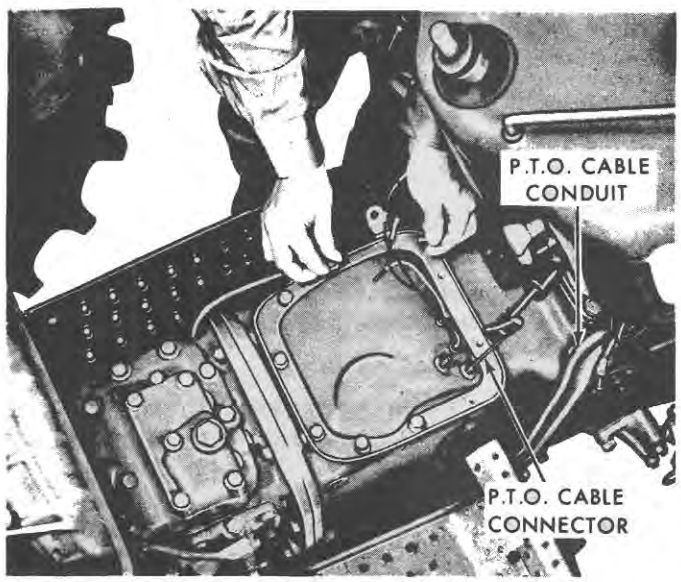

Figure 36
Transmission Cover Installation

NOTE: ***If binding in either steps 6 or 7 is encountered, it will be necessary to reposition the cover with respect to the case by tapping the cover as required.***

9. Tighten the cover bolts to the specified torque, page 83.

G. P.T.O. Control Assembly—Installation

1. Install the P.T.O. control assembly in the tractor sheet metal, placing the spacer, washer, and jam nut loosely on the assembly behind the sheet metal. Carefully push the cable through the conduit and loosely install the conduit upper nut. Refer to Figure 33.

   NOTE: ***If the P.T.O. control assembly has not been removed for servicing, disregard step 1.***

2. Lift the lower end of the conduit and insert the end of the cable in the cover fitting.

3. Permit the cable to go into the fitting until it contacts the P.T.O. cable connector and turn the P.T.O. handle counterclockwise to thread the cable into the connector.

   NOTE: ***Do not exert excessive down pressure on the connector as it is possible to force the connector from the pilot, necessitating cover removal.***

4. Pull the handle to the "OUT" position and continue to turn the P.T.O. cable by turning the handle counterclockwise until the lower end of the conduit is drawn up to the top of the cover fitting (approximately 25 turns). To obtain a vertical, readable handle position, turn the handle clockwise as required, but not exceeding one full turn.

5. Position the spacer, washer, and jam nut on the P.T.O. control assembly behind the instrument panel and tighten the nut securely.

6. Securely tighten the conduit nut. The lower end of the conduit must now seat freely on the transmission cover P.T.O. fitting.

7. With the handle remaining in the "OUT" detent, force the conduit lower end away from the transmission cover. A separation of from $\frac{3}{32}$ in. (2.54 mm) between the conduit and transmission cover P.T.O. fitting must result.

   NOTE: ***This check, combined with step 9, should be carried out whenever incorrect P.T.O. handle adjustment is suspected.***

8. Securely tighten the conduit lower nut on the transmission cover fitting.

9. Place the handle in the "IN" detent position. Using a scale or other suitable measuring tool, measure the distance the handle travels from detent to detent or from the full "IN" to the full "OUT" position. This distance must be within $1\frac{3}{8}$ to $1\frac{7}{16}$ ins. (35.0 to 36.5 mm). If the measurement obtained is not within specification, readjust the handle until the correct measurement is obtained. See Figure 26.

10. Attach the right-hand steering gear cover with the metal attaching screws.

H. Speed Selector Assembly—Installation

1. Thread the lower selector cable into the cover to obtain a protruding length of $2\frac{3}{4}$ ins. (70.00 mm) as shown in Figure 37. The distance is determined from the top of the fitting to the upper side of the notch. This dimension synchronizes the selector to the control valve when the valve is in the park (P) position.

2. Insert the end of the selector conduit through the opening in the sheet metal and install the bullet connectors for the dial lamp.

3. Shift the selector to tenth speed so that the cable extends through the conduit.

4. Connect the selector cable to the lower cable extending from the cover and shift the selector lever to park (P) to bring the conduit to the fitting on the cover.

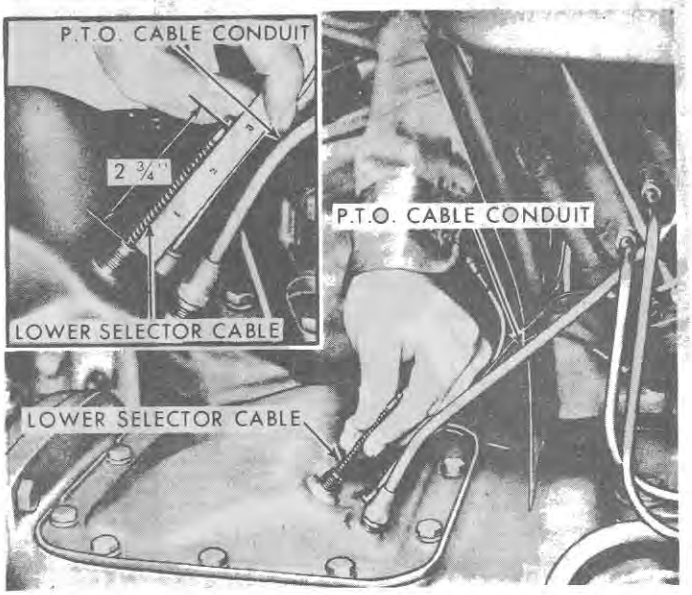

Figure 37
Installation of Lower Selector Cable

5. Tighten the lower conduit nut and secure the speed selector assembly to the hood with the four screws.
6. Shift the selector to Neutral and note if the dial is aligned with the housing. If misalignment is evident, align the selector as covered on page 23.
7. When the transmission can be operated, check the operation of the selector assembly in all gear ratios.

I. Servos 2 and 3 Assemblies, O-Ring—Installation

1. Drain the transmission oil.
2. Loosen Band 2 and 3 adjusting screws to relieve the tension from the Servos, and remove the Servo 2 and 3 cover assembly.
3. Tighten the band adjusting screws to remove the free travel in the band linkage.
4. Remove the servos from the case and remove the piston rod guides out of the servo bores, Figures 38 and 39.
5. Install the O-rings, (three in each servo) assemble the rod guides over the servo rods and install the servos in the bores.
6. Reassemble the removed components, install the oil, adjust the bands, and pressure-check the transmission.

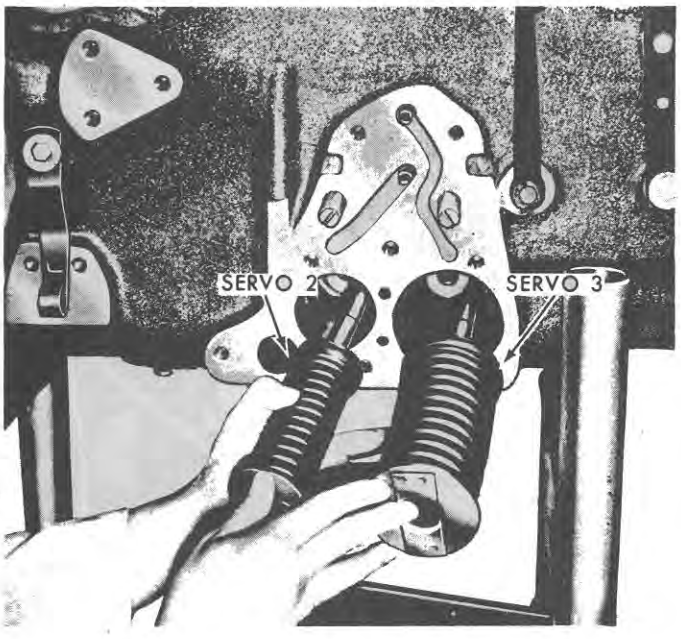

Figure 38
Removing Servos 2 and 3

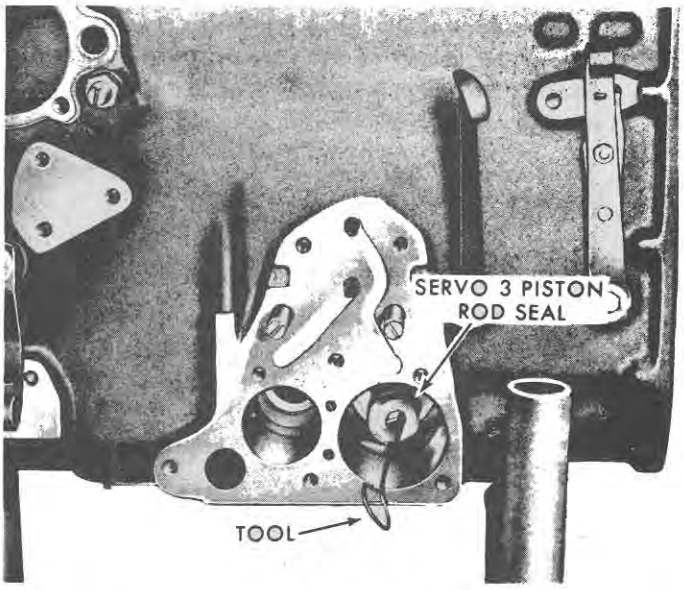

Figure 39
Removing Servo 2 and 3 Piston Rod Seal

SUPER MAJOR 5000

A. Speed Selector Assembly—Removal

Remove the speed selector assembly as outlined on page 30, "A. Speed Selector Assembly—Removal".

B. Bottom Cover, Oil Inlet Screen, Safety Starter Switch, and Control Valve—Removal

1. Remove the bottom cover retaining bolts and remove the cover.
2. Remove the oil inlet screen, shown in Figure 40.
3. Disconnect the inching pedal return spring.
4. Thread the control selector cable out of the cable wheel and withdraw the cable, Figure 41.
5. Disconnect the two wires from the safety starter switch. Remove the two bolts that secure the safety starter switch bracket to the control valve, and remove the switch and bracket.
6. Remove the mounting bolt and selector cable conduit bolt at the left and the remaining two bolts at the right of the control valve, and remove the control valve.

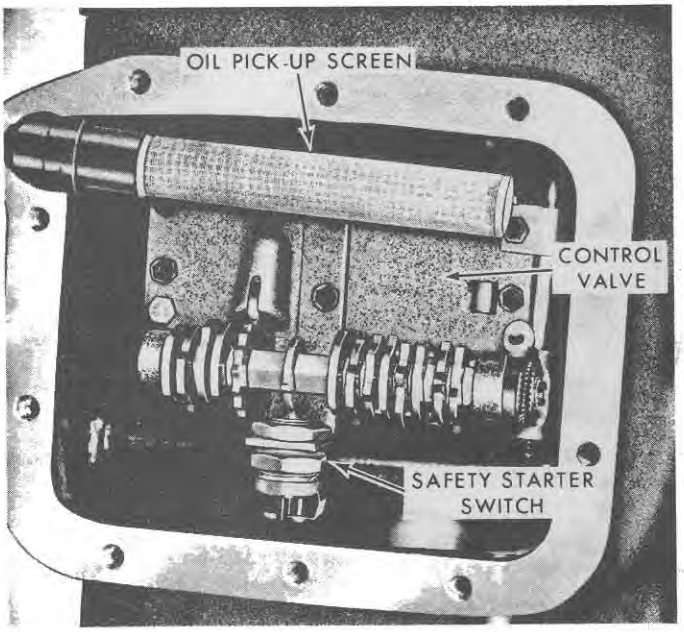

Figure 40
Bottom Cover Removal

C. Bottom Cover, Oil Inlet Screen, Safety Starter Switch, and Control Valve—Installation

1. Position a new gasket on the distributor, using petroleum jelly, and install the control valve.
2. Install the safety starter switch with the camshaft in the park (P) position. Tighten the bolts to the specified torque, page 83. Connect the two wires to the safety starter switch.
3. Install the mounting bolt at the left and right of the control valve.
4. Install the selector cable conduit retaining bolt but do not tighten.

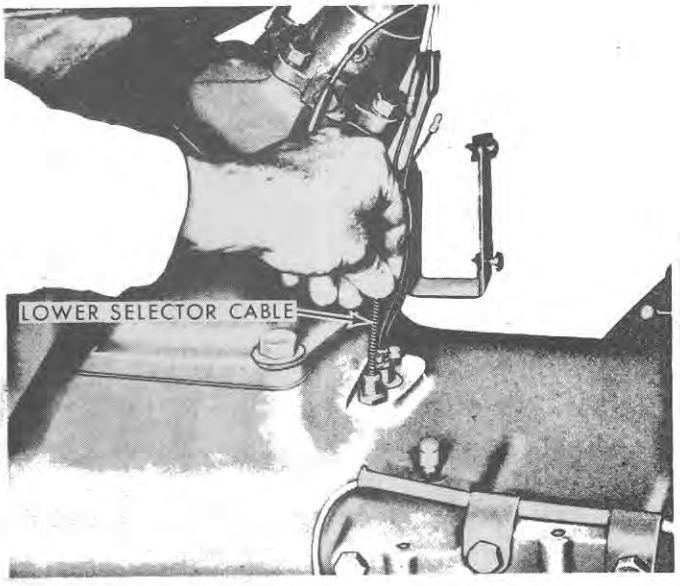

Figure 41
Installing Lower Selector Cable

5. Insert the control selector cable into the conduit and thread the cable into the cable wheel. Align the cable so there is no binding and tighten the conduit retaining bolt, Figure 41.
6. Install the inching pedal return spring and oil inlet screen.
7. Install the bottom cover using a new gasket.

D. Speed Selector Assembly—Installation

Install the speed selector assembly as outlined on page 33, "H. Speed Selector Assembly—Installation".

E. Servos 2 and 3 Assemblies, O-Ring—Installation

Install the servo O-rings as outlined on page 34, "I. Servos 2 and 3 assemblies, O-ring-Installation".

5. REAR END OVERHAUL

DEXTA 2000, SUPER DEXTA 3000, AND MAJOR 4000

A. Separating the Rear Axle Center Housing from the Transmission

1. Drain the transmission oil.
2. Separate the rear axle center housing from the transmission as covered in Part 15, "SEPARATING THE TRACTOR".

B. Transmission End Play Checks

Variable thickness selective thrust washers, Figure 42, are used in the front and rear compartments of the transmission to permit proper end float of the components. Refer to Specifications, page 81, for selective washer sizes.

The rear compartment end play check should be made before the transmission is disassembled.

The front compartment end play check is made with the transmission disassembled from the rear to the "C" sun gear.

If improper end play readings are noted, the correct selective washer can be installed during reassembly.

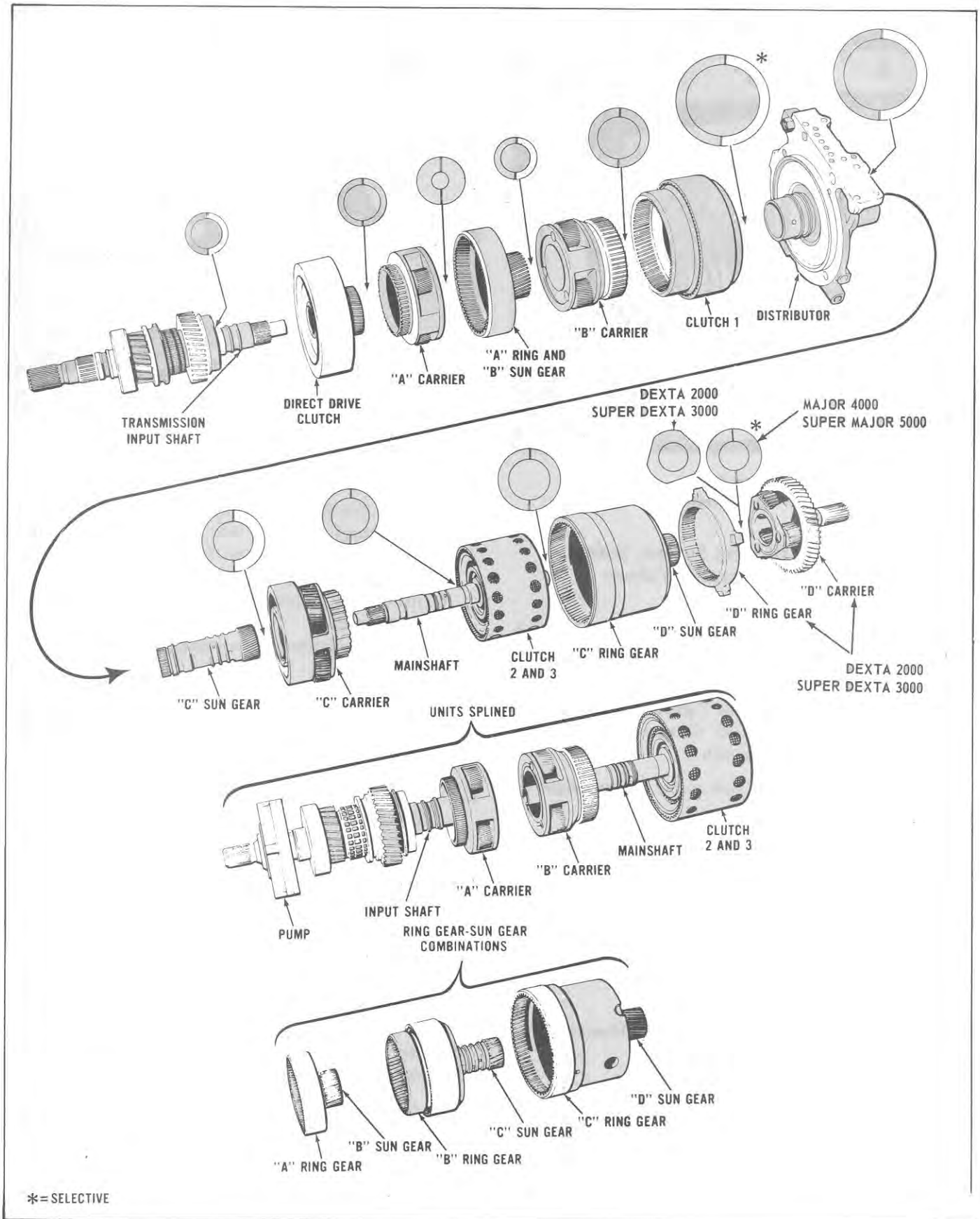

Figure 42
Transmission Components

Checking Transmission Rear End Play:

1. Back off the band 3 adjusting screw to completely release the band from the "C" carrier.
2. Mount the dial indicator support tool on the rear of the transmission case and install the dial indicator on the support so that the contact rests on the end of the transmission output shaft, Figure 43.
3. Push the output shaft toward the front of the transmission and set the dial indicator to zero, as shown in Figure 43, while maintaining a slight pressure on the shaft.
4. Pry the output shaft rearward by inserting a screwdriver between the "C" carrier and the "C" ring gear. Record the dial indicator reading for reference during transmission assembly. The output shaft end play should be from 0.005 in. to 0.015 in. (0.127 to 0.381 mm).
5. Remove the dial indicator and support tool from the rear of the transmission.

Checking Transmission Front End Play: Remove the speed selector assembly, transmission cover, safety starter switch and the control valve as covered on page 30. Disassemble the transmission from the rear to the "C" sun gear and proceed as follows:

1. Mount the dial indicator on the transmission case as shown in Figure 44.

   NOTE: ***To gain access to the front compartment, remove the four steering gear retaining bolts and raise the steering gear assembly and fuel tank until a long screwdriver can be inserted between the "B" carrier and "A" ring gear.***

2. Loosen band 2 adjusting screw. Insert a screwdriver between the "B" carrier and "A" ring gear and pry the ring gear toward the front of the transmission.
3. Set the dial indicator on zero while maintaining a slight pressure on the ring gear. See Figure 44.
4. With the screwdriver pry towards the front of the transmission and record the dial indicator reading for reference during transmission assembly. Front end play should be 0.005 in. to 0.015 in. (0.127 to 0.381 mm).
5. Remove the dial indicator from the transmission case.

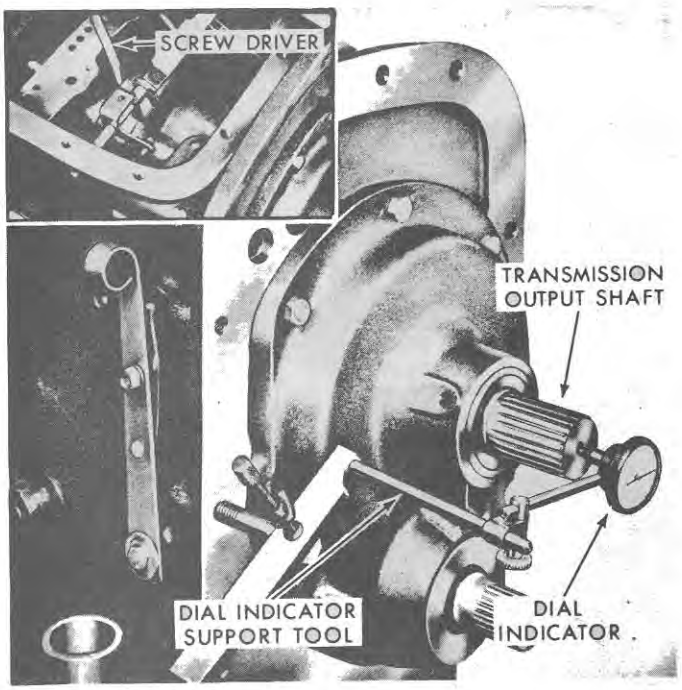

Figure 43
Checking Transmission Rear End Play

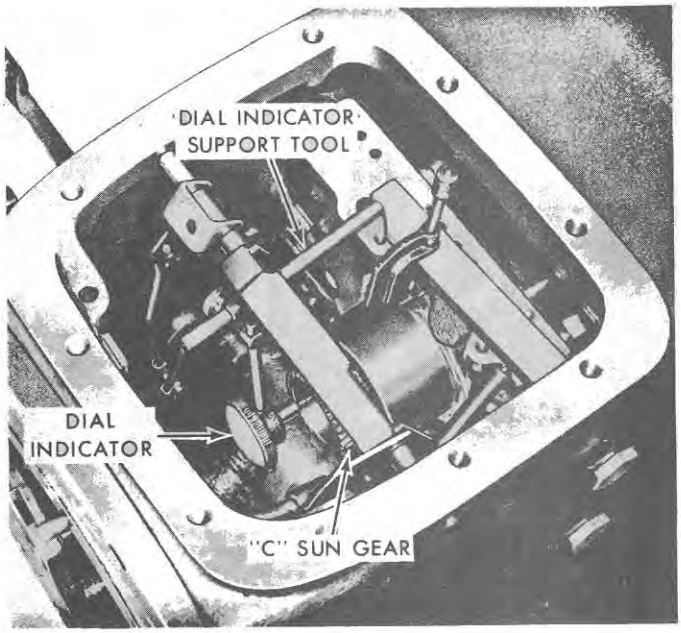

Figure 44
Checking Transmission Front End Play

C. Transmission Components—Removal

1. Separate the center housing from the transmission and check transmission rear end play, as covered in "A." and "B." above.
2. Remove the five rear support bolts. Before removing the upper bolt, remove the nut and washer on the inside of the case which secure the interlock linkage to the bolt.
3. Separate the rear support from the transmission case by using the two jack screws. Remove the rear support with the P.T.O. shaft as shown in Figure 45.

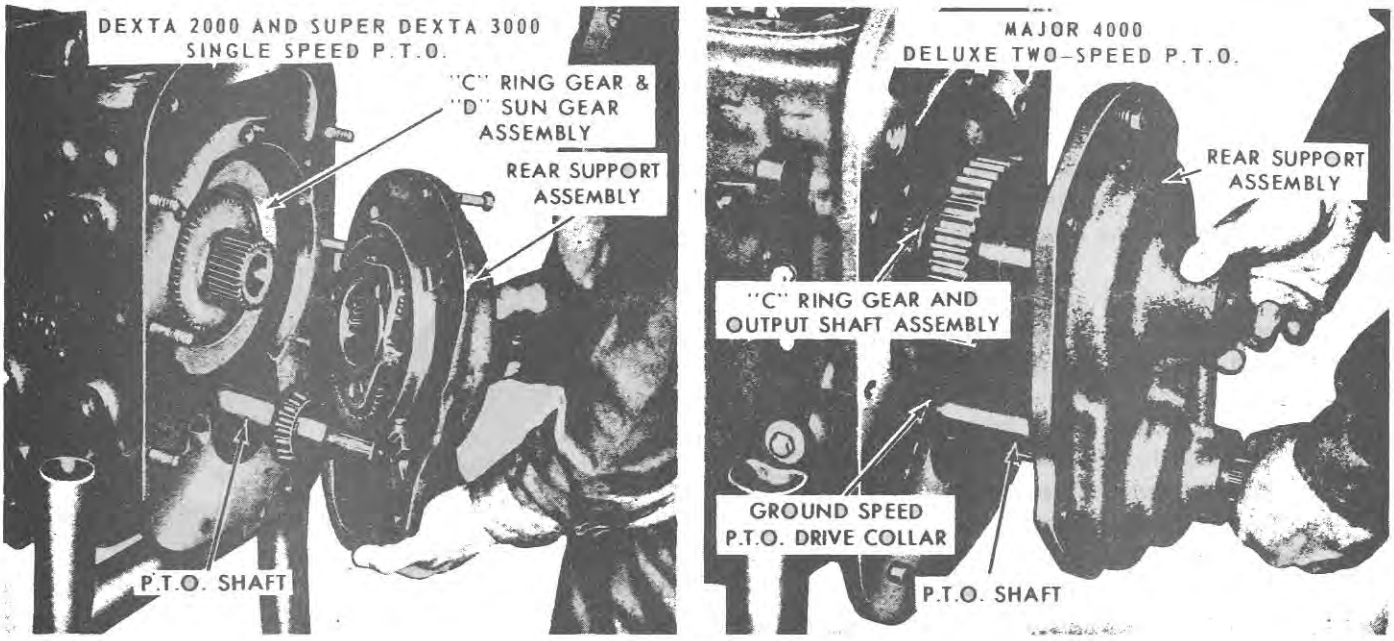

Figure 45
Removing the Rear Support

NOTE: ***In the case of the single speed P.T.O. models, the P.T.O. shaft remains in the transmission. See Figure 45.***

4. Remove the "C" ring gear, output shaft, and ground speed drive gear from the rear support. Remove the snap ring from the output shaft and remove the gear (Major 4000). Remove the "D" carrier and ground speed drive gear from the rear support (Dexta 2000 and Super Dexta 3000).

5. Remove the ground speed P.T.O. drive collar, shown in Figure 45, from the shifter fork.

6. Move the ground speed P.T.O. shift lever as required to locate the drive collar shifter fork in its lower position. Remove the "C" ring gear assembly, as shown in Figure 46.

7. Loosen the No. 3 band adjusting screw and remove the clutch 2 and 3 housing, "C" carrier, and the mainshaft in one assembly, as shown in Figure 47.

NOTE: ***If the clutch housing is pulled away from the "C" carrier, breakage of the mainshaft seals can result.***

8. Check the transmission front compartment end play as outlined in "B. Transmission End Play Check".

9. Remove the "C" sun gear as shown in Figure 48.

NOTE: ***At this point, the inching pedal shaft and P.T.O. interlock linkage can be removed.***

10. Manually compress No. 3 band, shown in Figure 49, while holding the adjusting strut and actuating strut. Remove the band and two struts from the case.

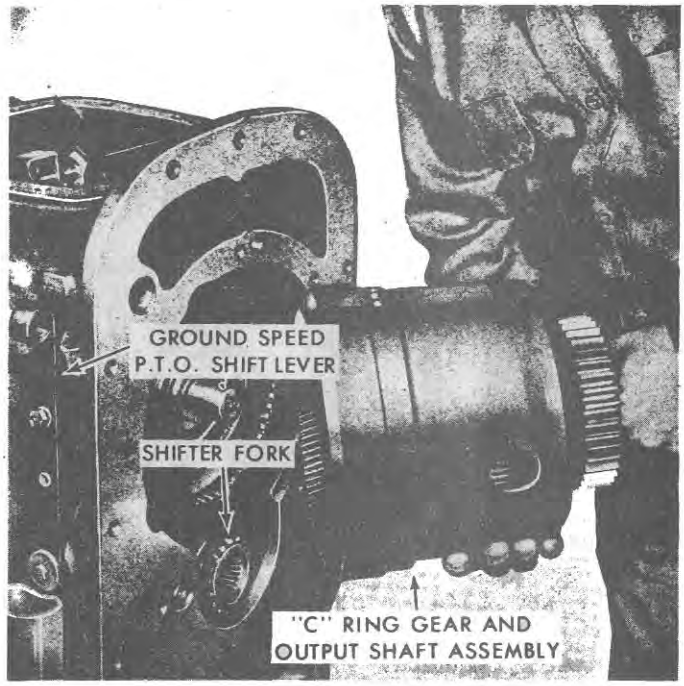

Figure 46
Removing the "C" Ring Gear and Output Shaft

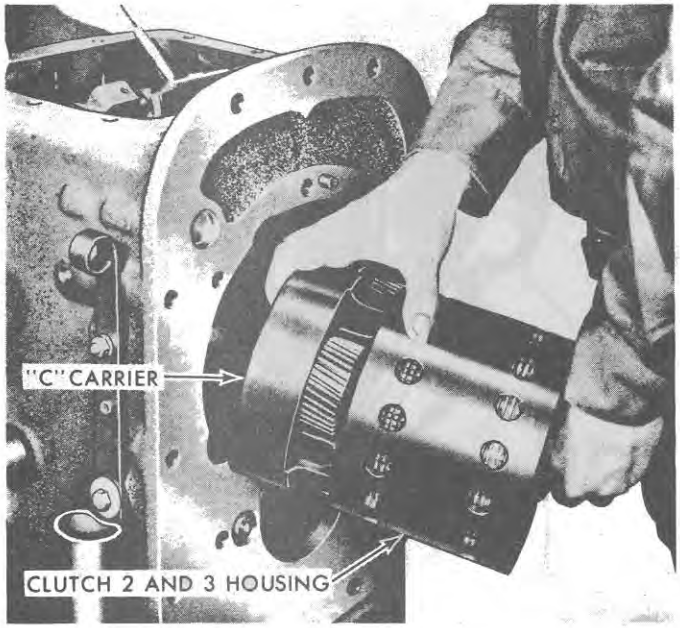

Figure 47
Removing Clutch 2 and 3 Housing and "C" Carrier

11. Remove the band 3 adjusting screw by threading it in through the case.
12. Remove the band 2 adjusting screw lock nut and washer and loosen the adjusting screw.
13. Remove the eight servo 2 and 3 cover attaching bolts and remove the cover and gasket. See Figure 50.
14. Loosen the four distributor mounting bolts, shown in Figure 49, and remove the two servo hydraulic oil tubes from the distributor (but not from the transmission case) by twisting and pulling at the same time, as shown in the Insert, Figure 50.
15. Disconnect the fitting that attaches the P.T.O. hydraulic oil line to the distributor. Refer to Figure 51.

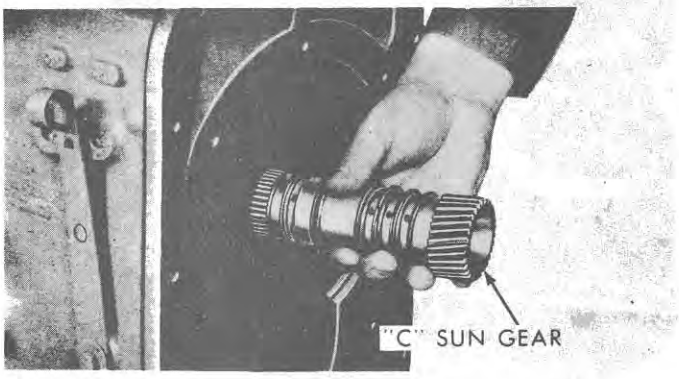

Figure 48
Removing the "C" Sun Gear

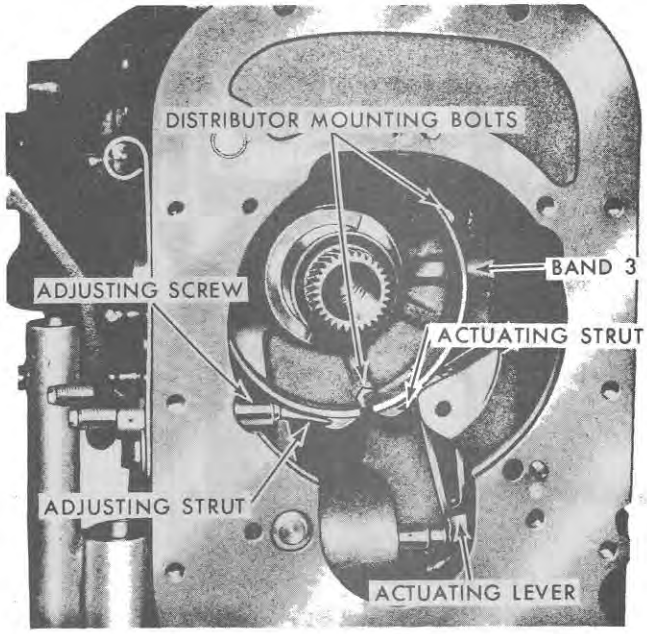

Figure 49
Band 3 in Position

16. On tractors fitted with heat exchangers, remove the two heat exchanger line adapter bolts from the distributor. See Figure 51.
17. Remove the distributor, clutch 1, "B" ring gear, and "B" carrier as an assembly. The distributor can also be removed separately prior to the removal to the clutch 1 and "B" carrier assembly. Refer to Figures 52 and 53. Remove band 2.
18. Remove the "B" sun gear and "A" ring gear,

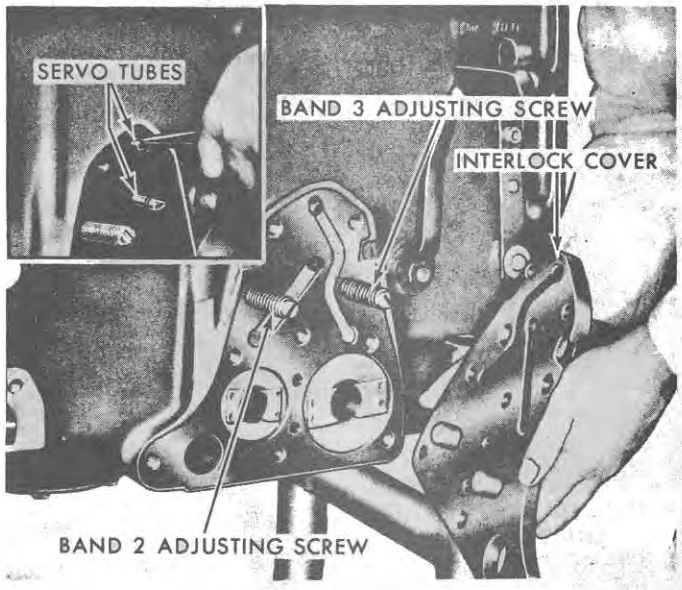

Figure 50
Removing the Servo 2 and 3 Cover

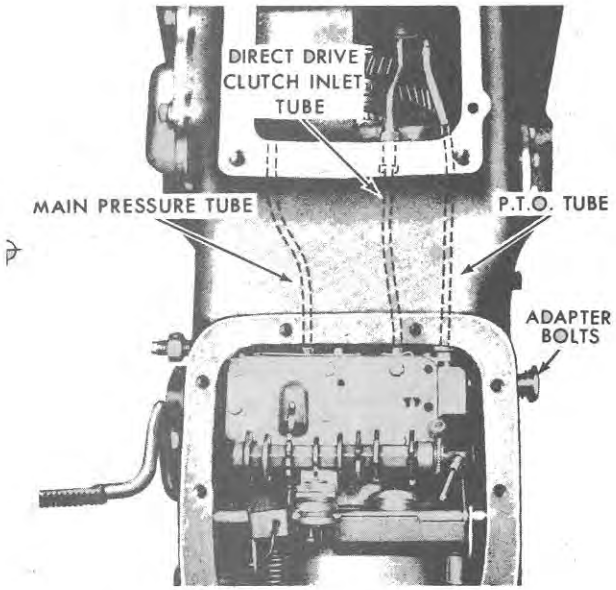

Figure 51
Oil Lines to Distributor

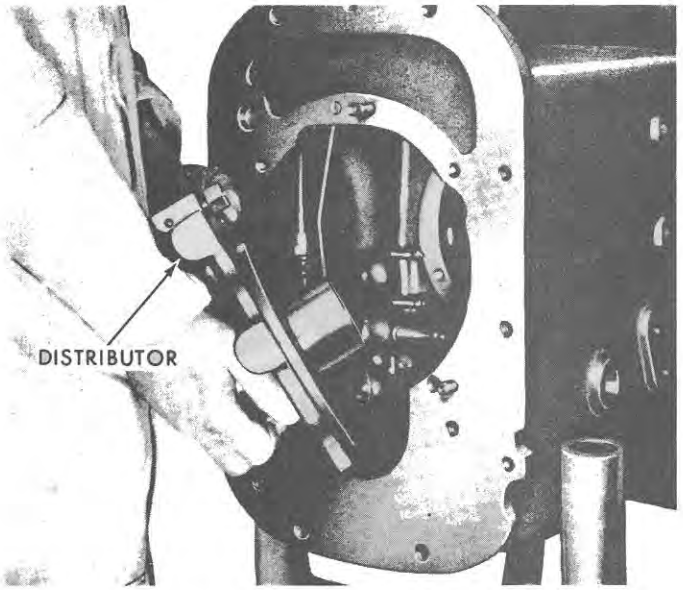

Figure 53
Removing the Distributor

shown in Figure 54. The "A" carrier can now be removed from the transmission input shaft.

19. Loosen the No. 1 band adjusting screw and remove the direct drive clutch. Compress the band while holding the actuating strut, and remove the band and strut from the case.

20. Remove the four servo 1 cover attaching bolts and remove the cover. Remove the servo from the transmission, as shown in Figure 55.

21. Remove the servos 2 and 3 from the left side of the transmission case. See Figure 38.

22. Remove the servo rod guides from the 2 and 3 servo bores, pulling them out with a suitable hooked tool as shown in Figure 39.

23. Remove the four filter cover plate bolts and remove the plate and filter as shown in Figure 56. Unscrew the filter from the adapter plate and discard the filter.

24. Remove the roll pin that secures the inching pedal to the shaft and remove the pedal. Remove the upper and lower cotter keys and retaining clips from the inching pedal rod. See Figures 57 and

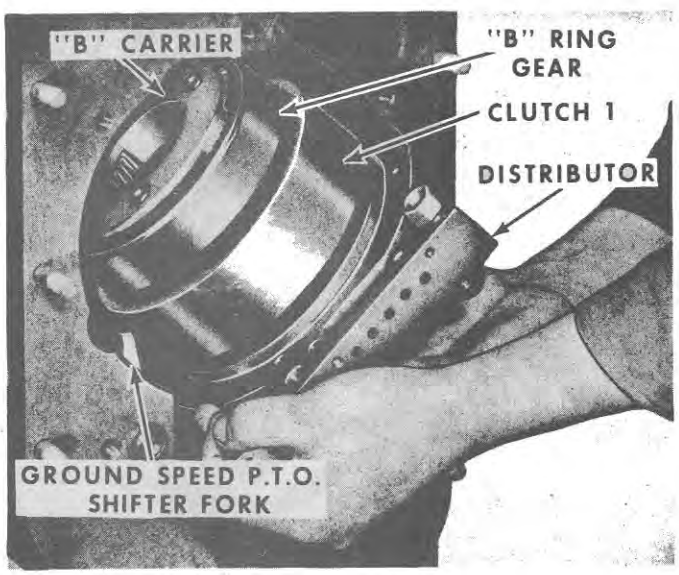

Figure 52
Removing the Distributor, Clutch 1, "B" Ring Gear, and "B" Carrier

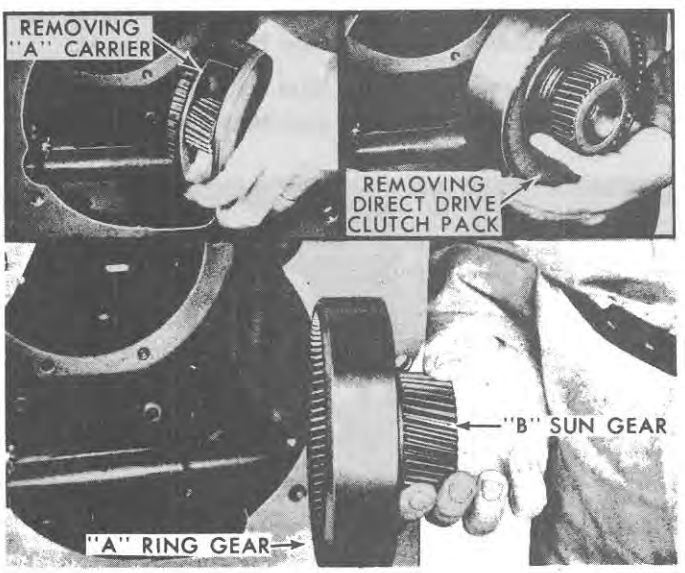

Figure 54
Removing the "B" Sun Gear and "A" Ring Gear

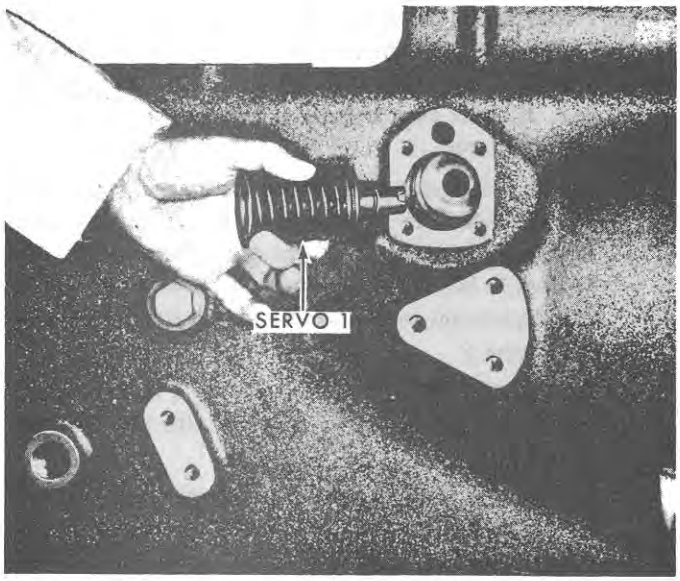

Figure 55
Removing Servo 1

58. Remove the rod and the pedal shaft assembly from the case.

25. Remove the two snap rings from the feathering valve rocker shaft. Drive the shaft to the right until the sealing plug is out of the case. For ground speed P.T.O. transmissions, it will also be necessary to loosen the interlock cable clamp.

26. Remove the P.T.O. interlock mechanism, ground speed P.T.O. shift lever, and the shifter fork by removing the snap rings from the lever and fork shafts.

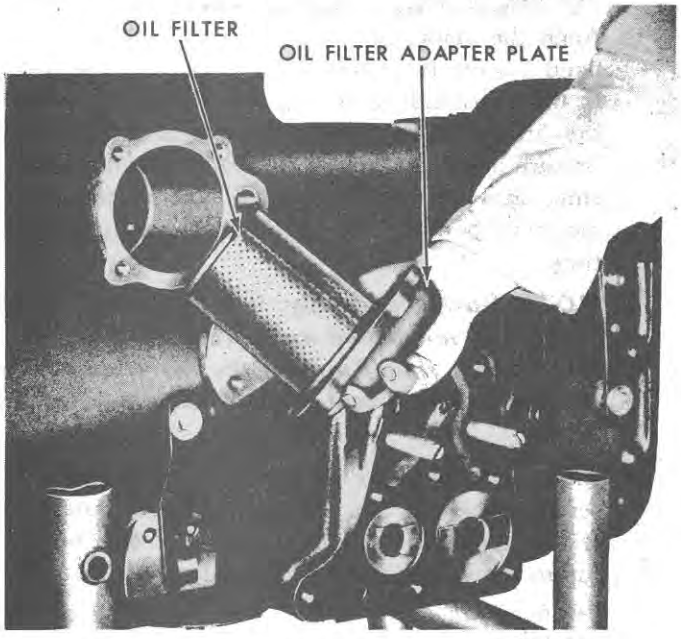

Figure 56
Removing the Oil Filter

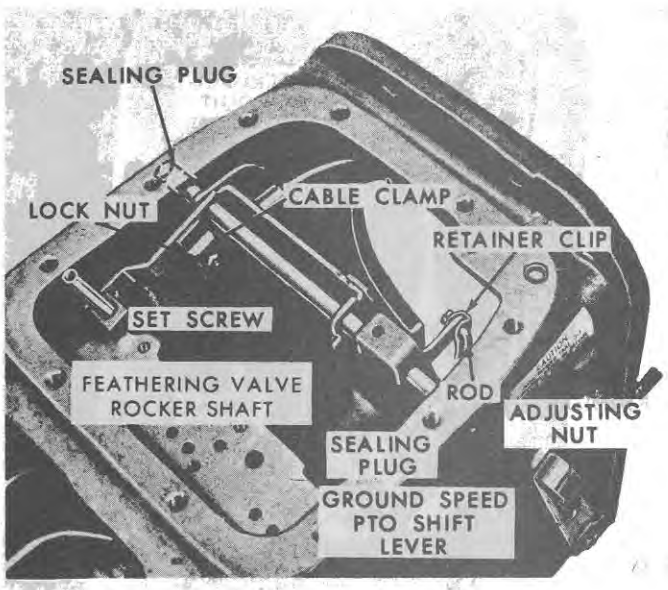

Figure 57
Feathering Linkage

D. Transmission Components—Installation

1. Install the feathering valve rocker shaft in the case with the transmission spacer, P.T.O. feathering control rocker, and P.T.O. interlock assemblies. Secure with two snap rings. Install two sealing plugs, assembled tight against the shaft.

   NOTE: ***Alignment of the feathering levers is performed with the valve body installed. Drive the shaft and sealing plugs to align the levers with the center of the feathering valve spools.***

2. Install the inching pedal shaft with O-ring in the left side of the transmission case. Install the control rod with the retainer clips and cotter keys. Refer to Figures 57 and 58.

3. Install the pedal on the shaft and secure with the roll pin.

4. Install the ground speed P.T.O. shift and shifter fork securing the shafts with snap rings.

5. Install the P.T.O. interlock cable and conduit in the case, inserting the top through the clamp in the P.T.O. feathering valve rocker assembly. The plunger on the bottom of the cable is installed in the shift-shaft lever. Secure the conduit fitting to the lever. See Figure 58.

6. The P.T.O. interlock cable must be adjusted after the control valve is positioned on the distributor.

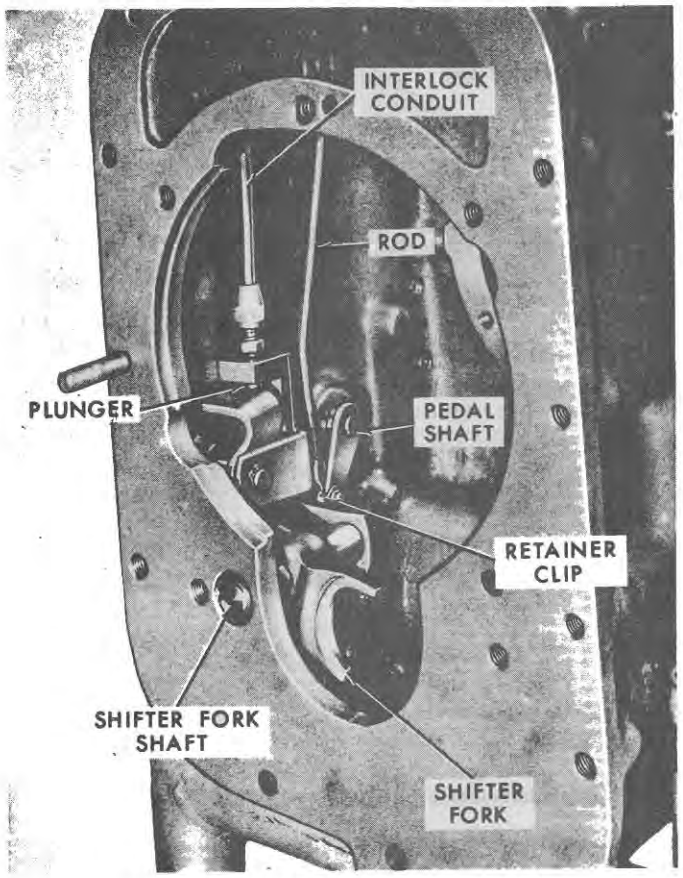

Figure 58
P.T.O. Interlock Linkage

See "Ground Speed P.T.O. Interlock Adjustment", page 28.

7. Install new O-rings on the servo 2 and 3 rod guides and pistons and install the servos in the case, as shown in Figure 38.

8. Install servo 1 in the bore with the slot in the horizontal position, as shown in Figure 55. Install the servo 1 cover.

9. Install the "A" sun gear front thrust washer over the rear of the input shaft and against the bearing. Position the "A" sun gear rear thrust washer onto the "A" sun gear and the "A" carrier and install the "A" carrier in the direct drive clutch. Install the direct drive clutch and the "A" carrier as an assembly on the input shaft. Transmission components and thrust washers are shown in Figure 42.

10. Install band 1 over the direct drive clutch housing. Install the band 1 actuating strut, thin end toward the band, and tighten the adjusting screw to hold the band and strut in position.

11. Position the "A" ring, "B" sun gear thrust washer, Figure 42, over the rear of the input shaft and install the "A" ring, and "B" sun gear. Then, place the "B" sun gear thrust washer in the hub of the "B" sun gear.

12. Position the clutch 1 thrust washer in place and assemble the "B" carrier into the clutch 1 assembly, aligning the "B" carrier splines with the splines in the clutch assembly. Install band 2 with the depression in the band end toward the adjusting screw.

13. Install the "B" carrier and clutch 1 as an assembly, aligning the carrier pinions with the "B" sun gear.

    NOTE: ***At this point, the front end play is determined by comparing the thickness of the thrust washer with the reading prior to disassembly. If the end play measured previously is not to specification, select a new thrust washer of such thickness that the correct end play is obtained.***

14. Install the selective thrust washer, shown in Figure 42, over the distributor sleeve. Install and center the sleeve cast iron seals on the distributor using petroleum jelly.

    NOTE: ***The seal with the square joint ends is forward. The seal with the step joint end is closest to the distributor body.***

15. Install the distributor into the transmission case, inserting the sleeve with sealing rings into clutch 1.

16. Align the main pressure, direct drive clutch, and band 1 servo tubes with their respective openings in the distributor, and align the P.T.O. tube with the fitting in the distributor, Figure 51. Apply presure to the distributor so that the sealing rings enter into the clutch housing. Install the four mounting bolts but do not tighten securely at this time.

    NOTE: ***During assembly, it is important that clutch 1 is not pulled away from the "B" carrier. If this should occur, the carrier cannot be fully inserted and aligned with the clutch plates.***

17. Install and properly position the band 2 and 3 servo tubes into the distributor. See Figure 51. If the tubes are not aligned with the distributor, rotate the distributor as required, and insert the tubes.

    NOTE: ***The leading chamfer for inserting the tubes with O-rings is on the outside of the case.***

18. Tighten the distributor mounting bolts to the specified torque, page 83. Attach the P.T.O. hydraulic line to the distributor fitting.

    NOTE: ***An alternate way of installing the distributor is to first install clutch 1 and the "B" carrier as an assembly on the distributor, as shown in Figure 59. After the distributor is installed in the case, align the tubes.***

19. Install the six shaft seals on the "C" sun gear. Use petroleum jelly to center the seals. Insert the gear into the distributor so the splines align with the clutch 1 housing splines. See Figure 48. Install the thrust washer on the distributor rear journal.

    NOTE: ***Do not use force when installing the "C" sun gear. Breakage of the cast iron seals may result.***

20. Check the transmission front components end play as covered on page 37. If the end play is incorrect, it will be necessary to replace the selective washer with one of correct thickness. The end play should be 0.005 in. to 0.015 in. (0.127-0.381 mm). Lack of end clearance can be immediately detected by inserting the "C" sun gear into the distributor and clutch 1 splines and noting if it is free to turn.

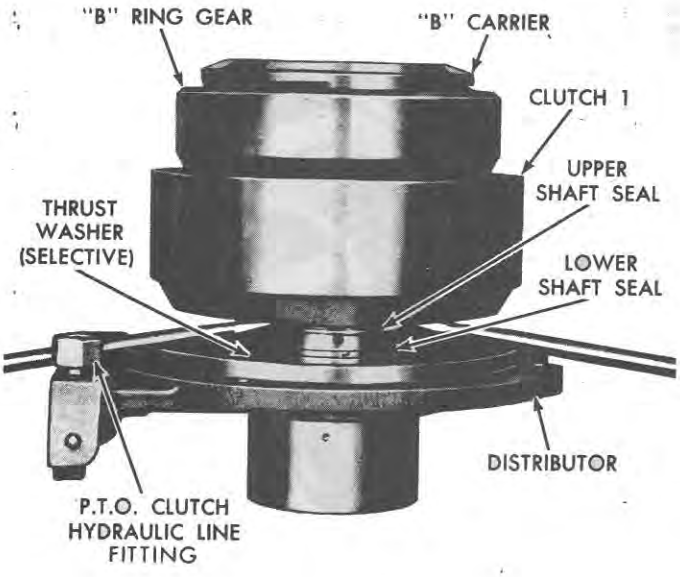

Figure 59
Installing the Distributor Shaft in Clutch 1

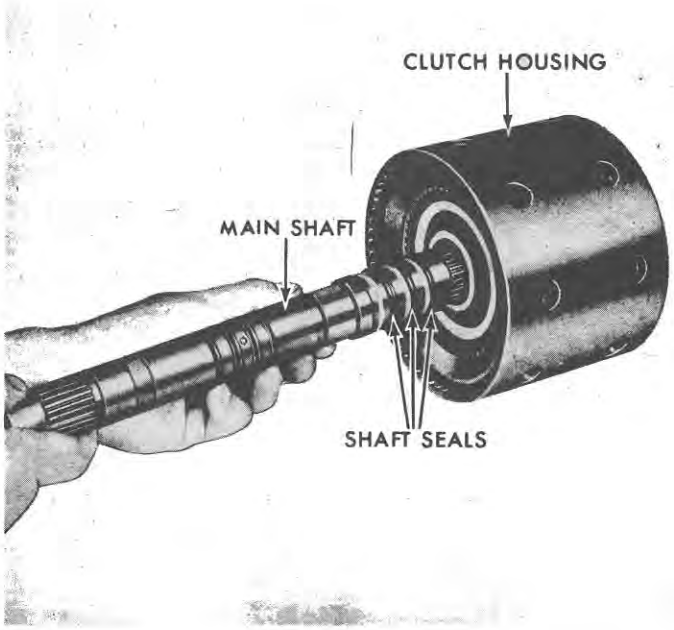

Figure 60
Installing the Mainshaft in the Clutch Housing

21. Install band 3 adjusting screw and secure band 3 in position with the depression in the band end toward the adjusting screw. Join the band to the screw with the adjusting strut and to the servo lever with the actuating strut. See Figure 49.

22. Install the servo 2 and 3 cover and gasket. See Figure 50. Install the oil inlet screen assembly. Install and tighten the servo cover attaching bolts evenly to the specified torque, page 83. Install bands 2 and 3 sealing washers and lock nuts.

23. Install the three rearmost shaft seals on the mainshaft. Use petroleum jelly to center the seals. Install the shaft in the clutch 2 and 3 housing, as shown in Figure 60. Install the clutch housing retaining snap ring (circlip) and position the "C" carrier-to-housing thrust washer over the shaft.

24. Insert the "C" sun gear-to-carrier thrust washer into the "C" carrier so it is positioned beneath the planetary pinions. Install the "C" carrier over the end of the mainshaft, as shown in Figure 61. Align the "C" carrier splines with the clutch assembly rotating the carrier back and forth so it drops down into the clutch assembly.

25. Install the remaining four shaft seals on the mainshaft. Use petroleum jelly to center the seals.

26. Install the mainshaft, "C" carrier, and clutch 2 and 3 housing as an assembly, inserting the forward end of the mainshaft into the "C" sun gear. Hold the "C" carrier to the clutch housing so

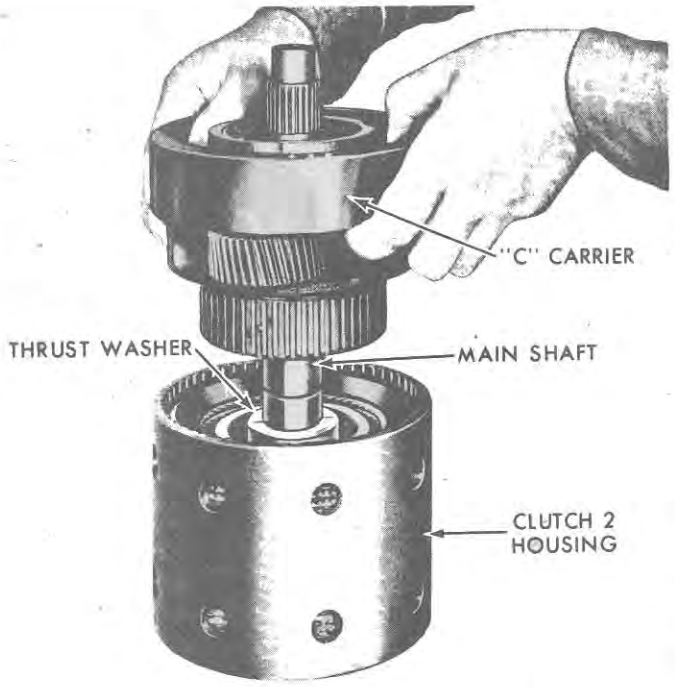

Figure 61
Installing the "C" Carrier in Clutch 2

separation does not take place, and gently force the complete assembly forward into band 3 until the splines on the mainshaft align with the "B" carrier splines.

Dexta 2000 and Super Dexta 3000 Tractors: Follow steps 27 through 30 to complete the assembly. Omit steps 31 through 35.

27. Install the "D" sun gear-to-housing thrust washer on the end of the mainshaft with the counterbored side over the snap ring on the end of the shaft.

28. Install the "C" ring—"D" sun gear over the clutch 2 and 3 housing assembly, first aligning the ring gear with the "C" carrier pinions and the mainshaft with the bushing in the "D" sun gear. At the same time, align the splines with the spline plates in clutch 3, rotating the "D" sun gear back and forth while applying pressure toward the clutch assembly.

NOTE: ***Do not pull the assembly to the rear as it is possible to separate the "C" carrier from clutch 2.***

29. Assemble the "D" carrier into the rear support with the "D" ring gear and install the rear selective thrust washer in the "D" carrier. See Figure 42.

IMPORTANT: ***If the transmission rear end play was not within specifications when checked prior to disassembly, replace the thrust washer with one of correct thickness.***

30. Position the ground speed P.T.O. drive collar in the shifter fork and move the ground speed lever so that the fork is in the forward position. Install the "D" carrier, "D" ring gear, and P.T.O. rear shaft as an assembly with the rear support and new gasket. Refer to Figure 45. Insert the P.T.O. shaft through the shifter collar and align the forward end of the P.T.O. shaft with the spline in the front shaft rear bearing adapter. Align the "D" carrier with the "D" sun gear and the P.T.O. shifter collar splines to the splines on the rear of the P.T.O. shaft.

Single Speed P.T.O.: Install the "D" carrier and the "D" ring gear as an assembly with the rear support and new gasket. Align the P.T.O. shaft with the rear support, and the "D" carrier with the "D" sun gear.

Major 4000 Tractors: Omit steps 27 through 30 and continue the assembly following step 31 through completion.

31. Install the output shaft-to-clutch housing thrust washer on the end of the mainshaft with the counterbored side over the snap ring on the end of the shaft.

32. Install the "C" ring gear and output shaft as an assembly by aligning the output shaft splines with the splined plates in clutch 3 and by aligning the ring gear with the "C" carrier pinions, Figure 62. Rotate the output shaft back and forth

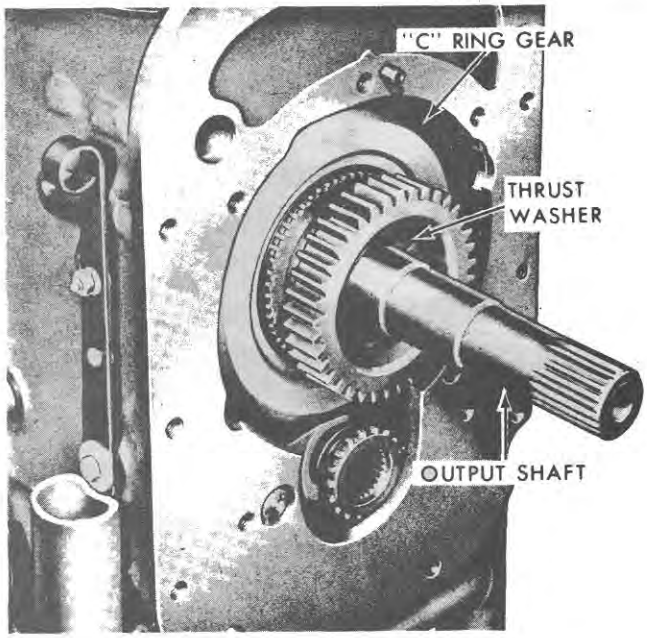

Figure 62
Installing the "C" Ring Gear and Output Shaft

while applying pressure toward the clutch assembly.

NOTE: ***Do not pull the assembly to the rear as it is possible to separate the "C" carrier from clutch 2.***

33. Install the rear selective thrust washer on the end of the output shaft. See Figure 62.

    IMPORTANT: ***If the transmission rear end play was not within specifications when checked prior to disassembly, replace the thrust washer with one of correct thickness.***

34. Position the ground speed P.T.O. drive collar in the shifter fork and move the ground speed lever so that the fork is in the forward position. See Figure 45. Install the P.T.O. rear shaft as an assembly with the rear support and a new gasket. Insert the P.T.O. shaft through the shifter collar and align the forward end of the P.T.O. shaft with the splines in the front shaft coupler. Align the P.T.O. shifter collar splines to the splines on the rear of the P.T.O. shaft and push the support into position.

Single Speed P.T.O.: Install the "D" carrier and "D" ring gear as an assembly with the rear support and new gasket (Dexta 2000 and Super Dexta 3000). Align the P.T.O. shaft with the rear support and install the support.

35. Install the four lower rear support-to-case mounting bolts. Install the bolt in top of the support and secure the ground speed interlock conduit, located on the inside of the case, with a nut and washer on the top support bolt. Tighten the bolts to the specified torque, page 83.
36. Check the transmission rear compartment end play as covered on page 37. If the end play is incorrect, it will be necessary to replace the selective washer with one of correct thickness. The end play should be 0.005 in. to 0.015 in. (0.127 to 0.381 mm).
37. Adjust the transmission bands by fully tightening the adjusting screws for bands 2 and 3. Tighten band 1 adjusting screw and back off one full turn. Tighten the lock nuts.
38. Install a new oil filter on the filter cover plate and install the filter in the transmission case. Tighten the four cover attaching bolts to the specified torque, page 83.
39. Assemble the control valve, safety starter switch, and transmission covers and controls as outlined on page 31.

SUPER MAJOR 5000

A. Separating the Center Housing from the Transmission

1. Drain the transmission oil.
2. Separate the center housing from the transmission, as covered in Part 15, "SEPARATING THE TRACTOR".

B. Transmission End Play Checks

Variable thickness selective thrust washers are used in the front and rear compartments of the transmission to permit proper end float of the components. Refer to "Specifications", page 81, for selective washer sizes. The end play checks are to be noted and recorded prior to transmission disassembly. If improper end play readings are noted, the correct selective washer must be selected and used during reassembly.

Checking Transmission Rear End Play:

1. Remove the speed selector assembly, safety starter switch, and the control valve, as covered on page 34, "Assemblies Serviced with Transmission Installed".
2. Back off the band 3 adjusting screw to completely release the band from the "C" carrier.

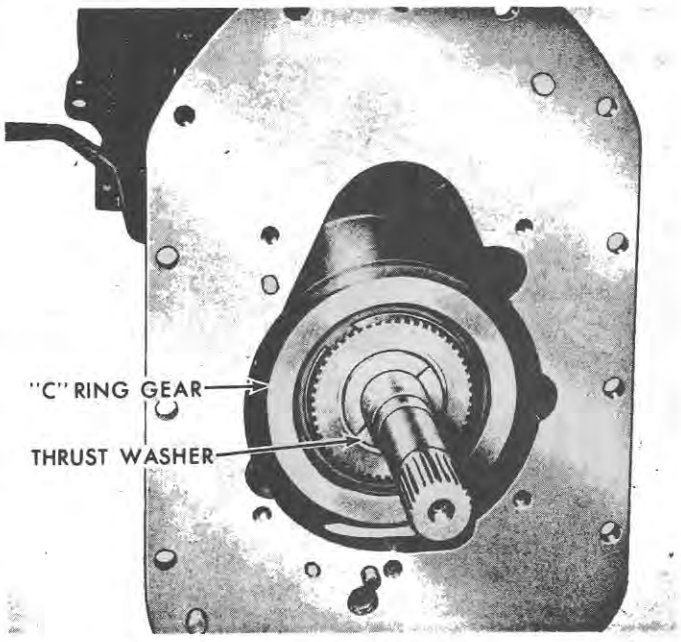

Figure 63
Installing the "C" Ring Gear and Output Shaft

3. Mount the dial indicator support tool on the rear of the transmission case and install the dial indicator on the support so that the contact rests on the end of the transmission output shaft, as shown in Figure 64.
4. Push the output shaft toward the front of the transmission and set the dial indicator to zero, while maintaining a slight pressure on the shaft.
5. Pry the output shaft rearward by inserting a screwdriver between the "C" carrier and the "C" ring gear. Record the dial indicator reading for reference during transmission assembly. Rear end play should be 0.005 in. to 0.015 in. (0.127 to 0.381 mm).
6. Remove the dial indicator and support tool from the rear of the transmission.

Checking Transmission Front End Play: To check the transmission front compartment end play, it is necessary to disassemble the transmission from the rear to the "C" sun gear. To disassemble the transmission follow steps 1 through 5 on page 46, then proceed as follows:

NOTE: ***To gain access to the front compartment, either the steering gear and fuel tank assemblies have to be raised sufficiently or the transmission has to be removed from the tractor.***

1. Mount the dial indicator on the transmission case as shown in Figure 65.
2. Loosen band 2 adjusting screw. Insert a screwdriver between the "B" carrier and "A" ring gear and pry the ring gear toward the front of the transmission.
3. Set the dial indicator on zero while maintaining slight pressure on the ring gear.
4. With the screwdriver pry toward the front of the transmission and record the dial indicator reading for reference during transmission assembly. Front end play should be 0.005 in. to 0.015 in. (0.127 to 0.381 mm).
5. Remove the dial indicator from the transmission case.

C. Transmission Components—Removal

1. Remove the speed selector assembly, bottom cover, screen, safety starter switch, and the control valve, as covered on page 34, "Assemblies Serviced with Transmission Installed". Perform the transmission end play checks, as covered in "B." above.
2. Remove the four bolts from the rear bearing retainer and remove the retainer. Refer to Figure 64.
3. Remove the five rear support attaching bolts and install two of the attaching bolts as jack screws in the rear support to separate the support from the case. See Figure 67.
4. Remove the rear support, P.T.O. shaft, output shaft, and "C" ring gear, as shown in Figure 68.
5. Loosen the No. 3 band adjusting screw and remove the clutch 2 and 3 housing, "C" carrier, and the mainshaft in one assembly as shown in Figure 69.

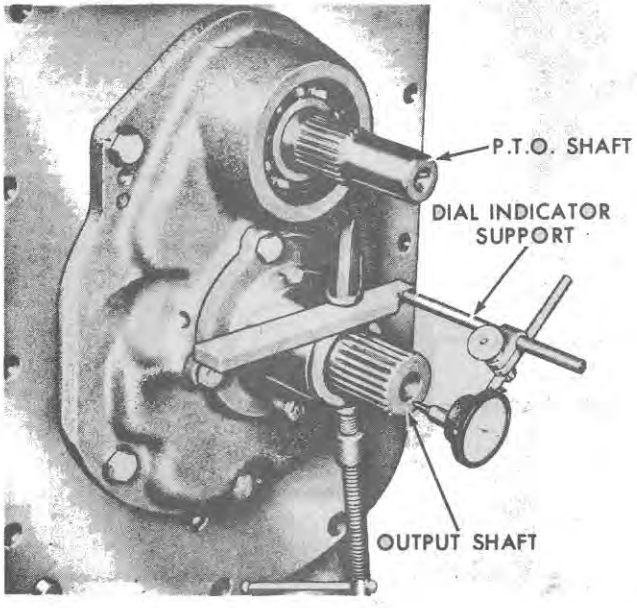

Figure 64
Checking Transmission Rear End Play

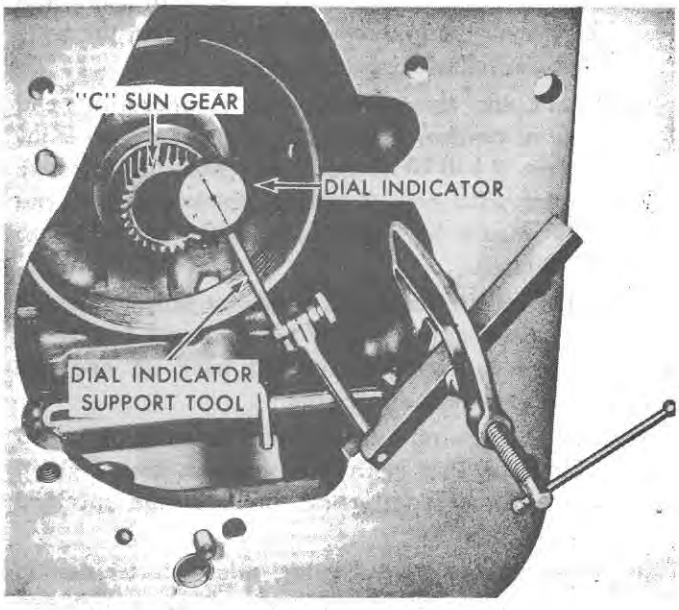

Figure 65
Checking Transmission Front End Play

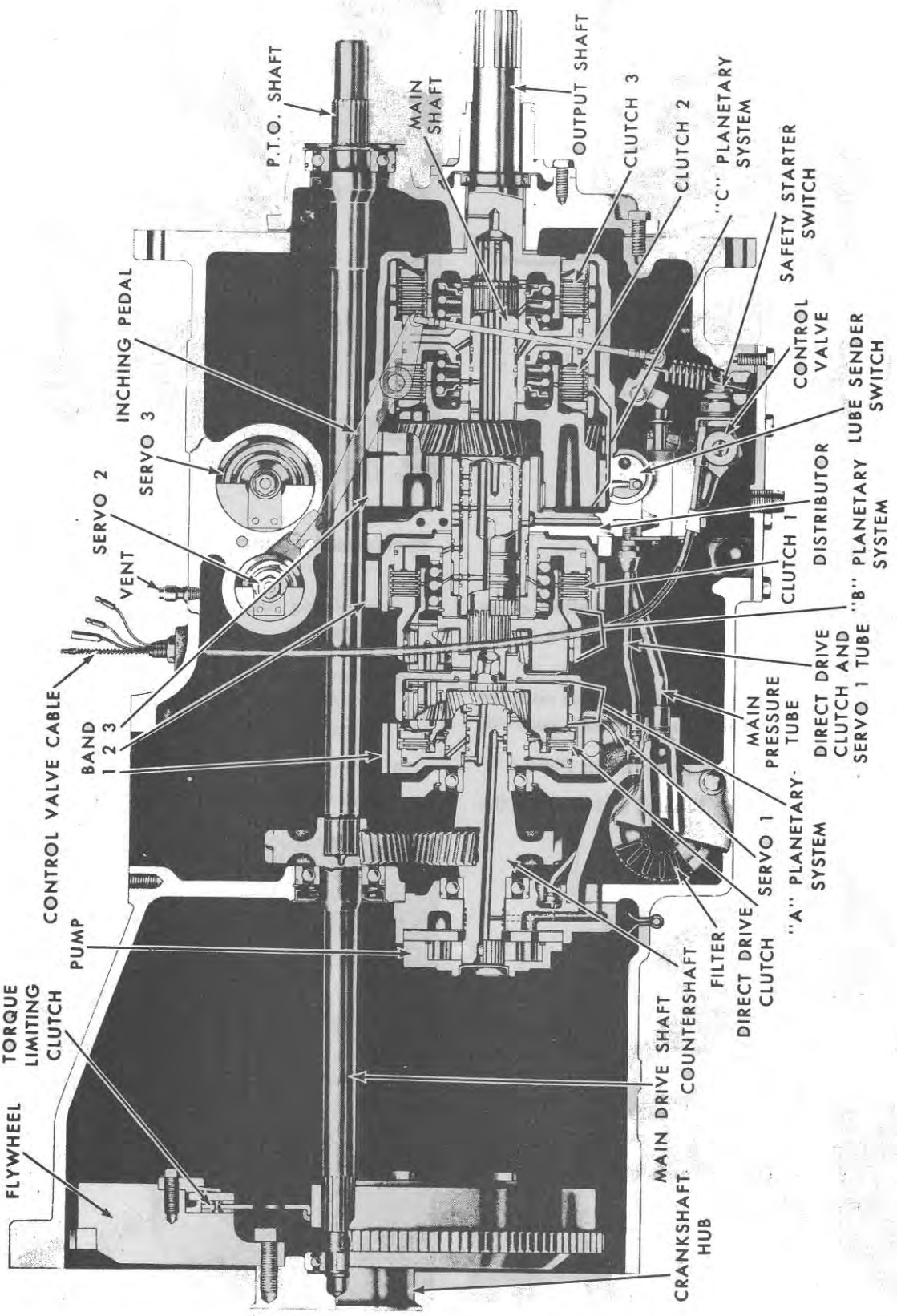

Figure 66
Super Major 5000 Select-O-Speed Transmission

© FORD MOTOR CO. 1964

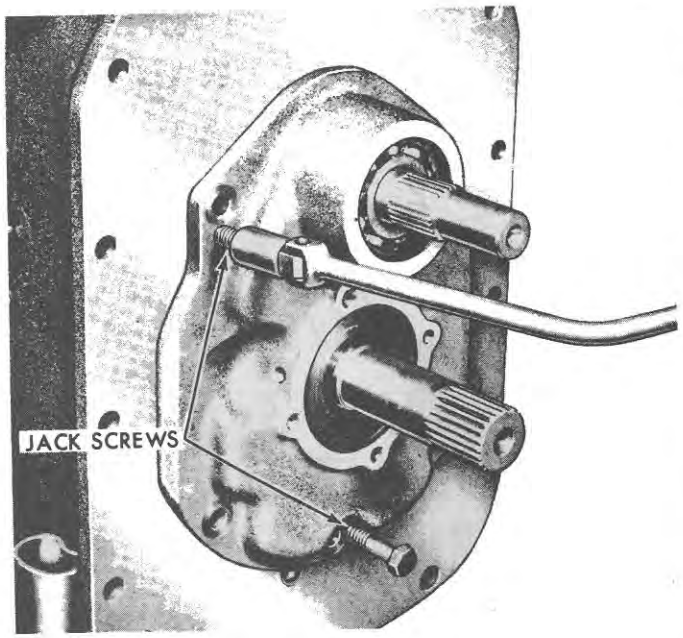

Figure 67
Rear Support Jack Screws

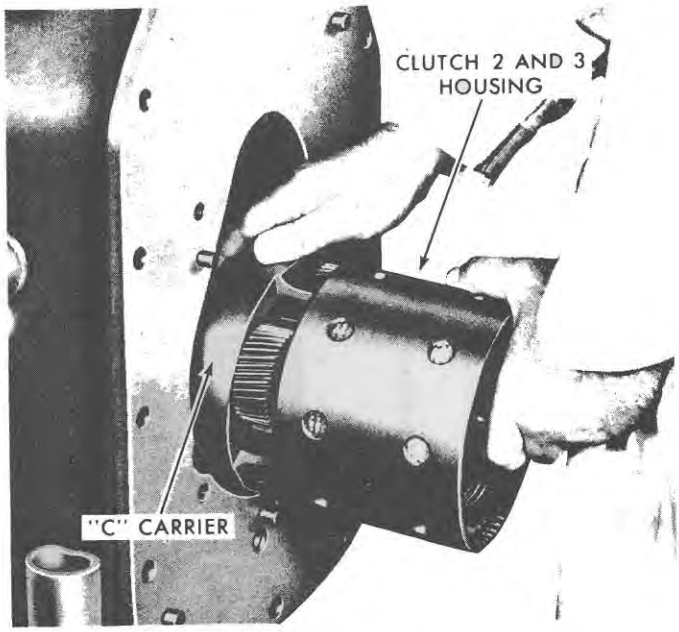

Figure 69
Removing the Clutch 2 and 3 Housing and "C" Carrier

NOTE: ***If the clutch housing is pulled away from the "C" carrier, breakage of the mainshaft seals can result.***

6. Check the transmission front end play as outlined in "B. Transmission End Play Checks", page 45.
7. Remove the "C" sun gear as shown in Figure 70.
8. Manually compress No. 3 band and remove the adjusting strut, actuating strut and the band. See Figure 71.
9. Remove the lock nut and washer from the No. 3 band adjusting screw and remove the screw by threading it through the case.
10. Remove the No. 2 band adjusting screw lock nut and washer. Remove the eight servo 2 and 3 cover

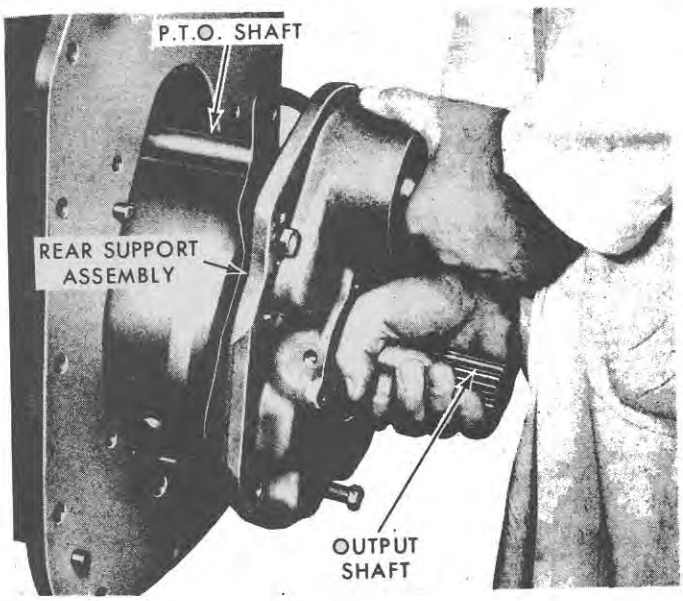

Figure 68
Removing the Rear Support

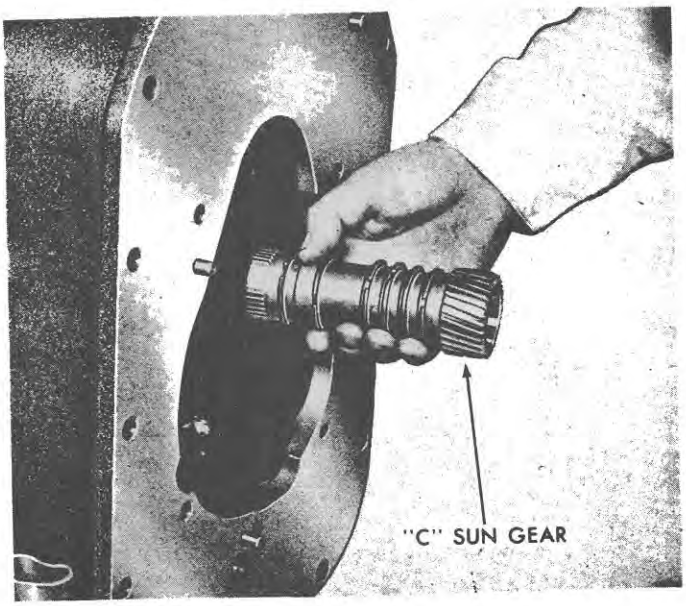

Figure 70
Removing the "C" Sun Gear

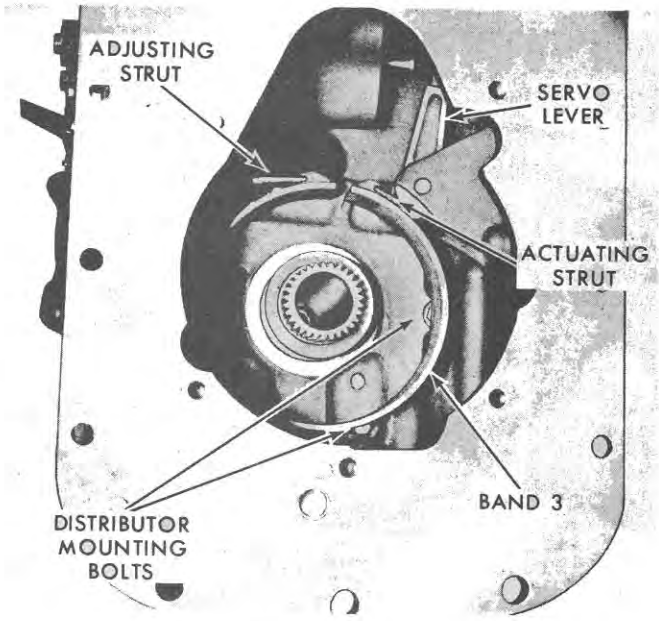

Figure 71
Band 3 Position

attaching bolts and remove the cover and gasket, shown in Figure 72.

NOTE: ***Do not allow the band 2 adjusting screw to loosen when removing the lock nut or the actuating strut may fall out.***

11. Loosen the four distributor mounting bolts shown in Figure 71, and remove the two servo tubes from the distributor (but not from the transmission case), by twisting and pulling at the same time as shown in the Insert, Figure, 72.

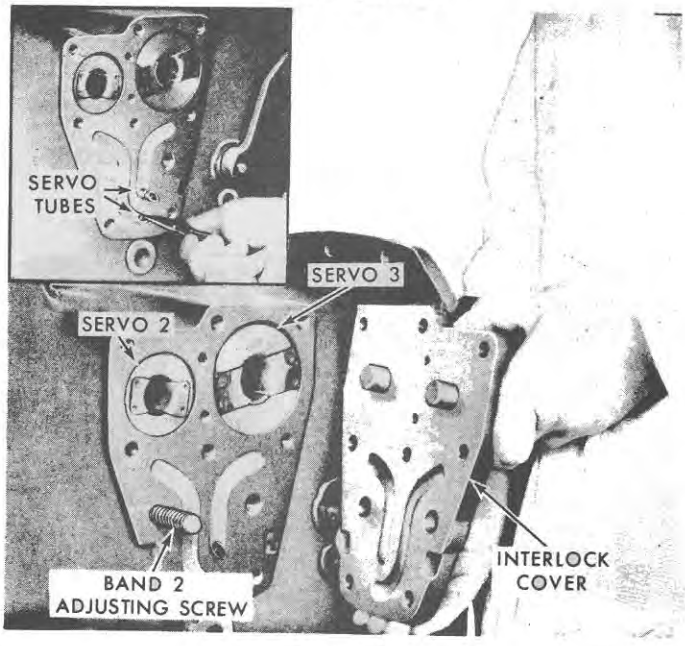

Figure 72
Removing the Servos 2 and 3 Cover

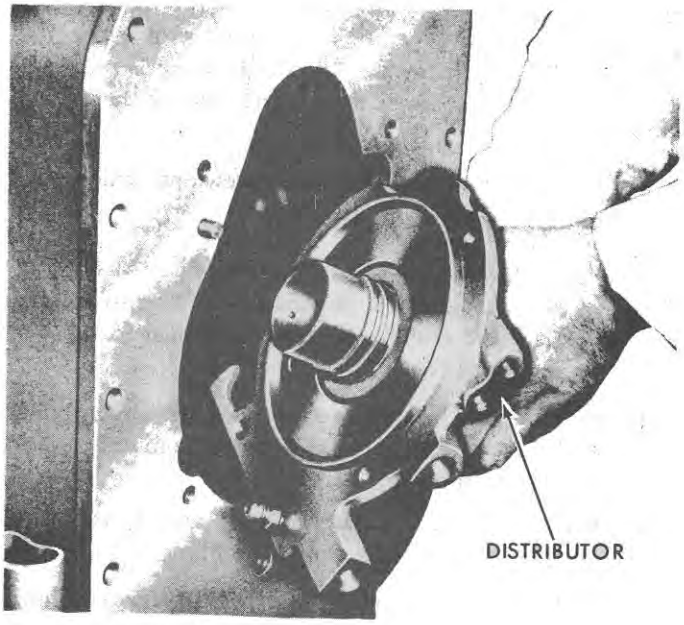

Figure 73
Removing the Distributor

12. Disconnect the fitting that attaches the servo 1 tube to the distributor. Remove the four distributor attaching bolts.

13. Remove the distributor as shown in Figure 73.

14. Remove the clutch 1, "B" ring gear, and "B" carrier as an assembly, as shown in Figure 74.

15. Tighten band 2 adjusting screw to hold the band

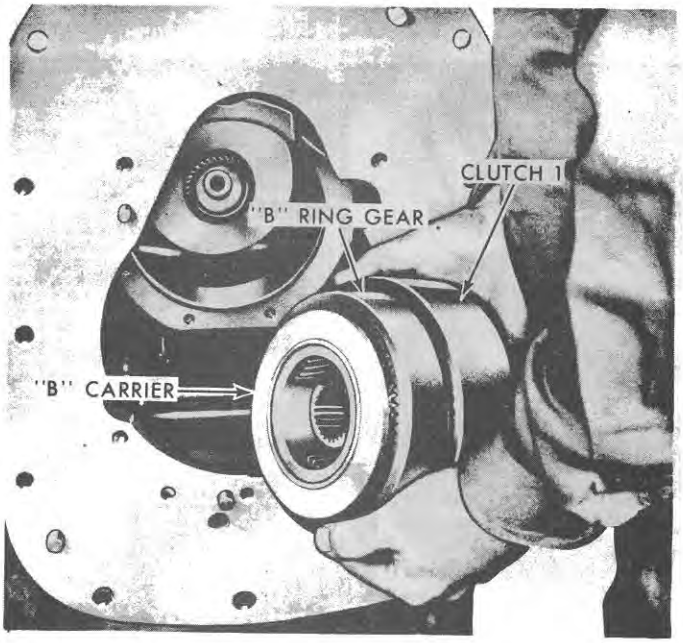

Figure 74
Removing the Clutch 1, "B" Ring Gear, and "B" Carrier

in place. Do not remove the band as it cannot be reinstalled unless the steering housing is removed permitting access through the top of the transmission.

16. Loosen the band 1 adjusting screw and remove the band and strut from the case.
17. Remove the "B" sun gear and "A" ring gear as shown in Figure 75. Remove the "A" carrier and direct drive clutch assembly as shown in the Inserts, Figure 75.
18. Remove the four servo 1 cover attaching bolts and remove the cover and servo from the transmission as shown in Figure 76.
19. Remove the servo assemblies 2 and 3 from the transmission case as shown in Figure 77.

NOTE: ***Tighten band 2 adjusting screw while removing servo 2 so that the struts and band do not fall out.***

20. Remove the four filter cover adapter plate bolts and remove the plate and filter as shown in Figure 78. Unscrew the filter from the adapter and discard the filter.
21. Remove the roll pin that secures the inching pedal to the shaft and remove the pedal. Remove the upper and lower cotter keys (split pins) and retaining clips from the inching pedal rod. See Figure 79. Remove the rod and pedal shaft from the case.
22. Remove the two snap rings from the feathering valve rocker shaft. Drive the shaft to the right until the sealing plug is out of the case. Remove the shaft from the case.

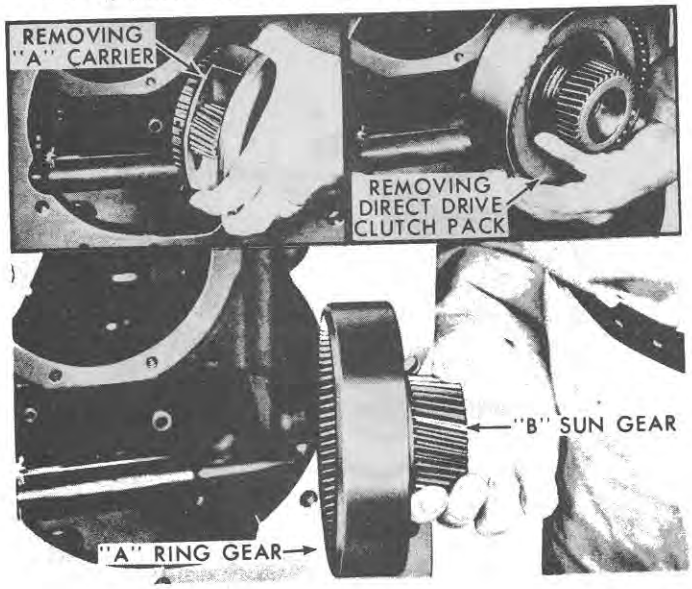

Figure 75
Removing the "B" Sun Gear and "A" Ring Gear

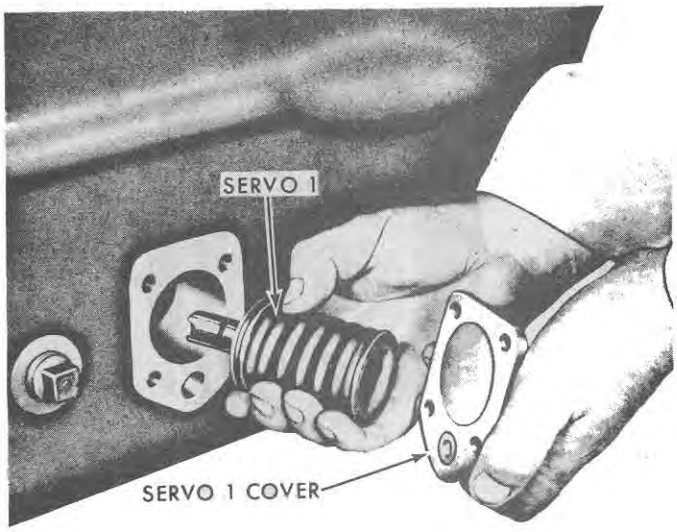

Figure 76
Removing Servo 1

D. Transmission Components—Installation

1. Install the feathering valve rocker shaft in the case; secure with two snap rings. Install two sealing plugs, assembled tight against the shaft. Refer to Figure 79.

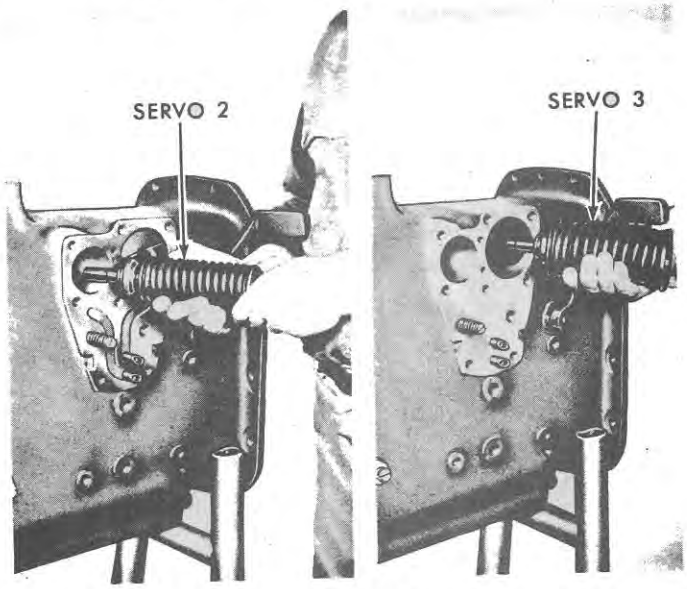

Figure 77
Removing Servos 2 and 3

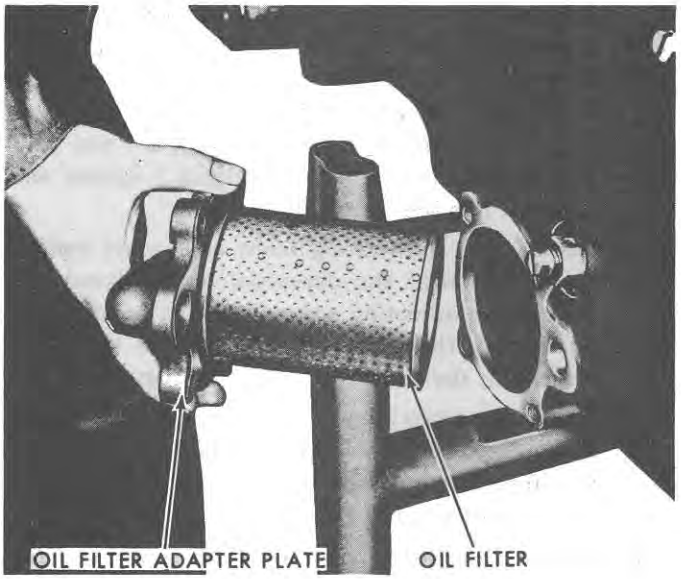

Figure 78
Removing the Filter

NOTE: ***Alignment of the feathering valve rocker is performed with the valve body installed, by driving the shaft to either left or right as required, to align the actuating lever with the center of the feathering valve spool.***

2. Install the inching pedal shaft with the O-ring in the left side of the transmission case. Install the control rod with the retainer clips and cotter keys (split pins) to the feathering valve lever shaft and to the pedal shaft. See Figure 79.

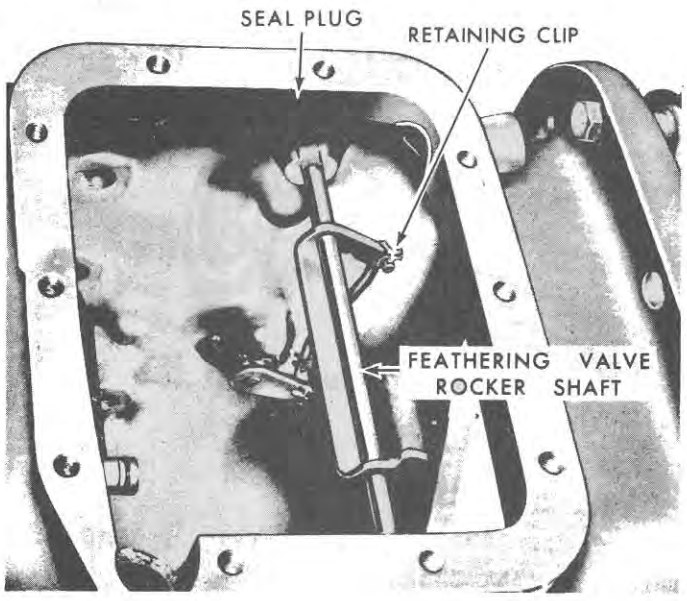

Figure 79
Feathering Linkage

3. Install the inching pedal on the shaft and secure with the roll pin.
4. Install the servo rod guides and servo assemblies 2 and 3 in the case so that the ends of the servo rods contact the actuating levers. See Figure 77.
5. Install servo 1 assembly in the case with the slot in the horizontal position, as shown in Figure 76. Install the servo cover.
6. Install the "A" sun gear front thrust washer, Figure 42, over the rear of the input shaft and against the bearing. Position the "A" sun gear rear thrust washer in the "A" carrier and install the "A" carrier in the direct drive clutch. Install the direct drive clutch and the "A" carrier as an assembly on the input shaft.

   NOTE: ***Be sure all rings are on the input shaft and position them with the open section up to reduce the possibility of breakage.***

7. Install band 1 over the direct drive clutch housing. Install band 1 adjusting screw, sealing washer and lock nut and secure the band with the adjusting screw and actuating strut, thin end toward the band.
8. Position the "A" ring-"B" sun gear thrust washer, Figure 42, over the rear of the input shaft and install the "A" ring-"B" sun gear. Then, place the "B" sun gear thrust washer in the hub of the "B" sun gear.
9. Position the clutch 1 thrust washer in place and assemble the "B" carrier into the clutch assembly, aligning the "B" carrier splines with the splines in the clutch assembly.
10. Install the "B" carrier and clutch 1 as one assembly, aligning the carrier pinions with the "B" sun gear.
11. Install the selective thrust washer, shown in Figure 42, over the distributor sleeve. Install and center the sleeve cast iron seals on the distributor, using petroleum jelly.

    NOTE: ***The seal with square joint ends is forward.***
    The seal with the step joint ends is closest to the distributor body.

    IMPORTANT: ***If the transmission front end play was not within specifications, page 81, when checked prior to disassembly, replace the selective washer with one of correct thickness.***

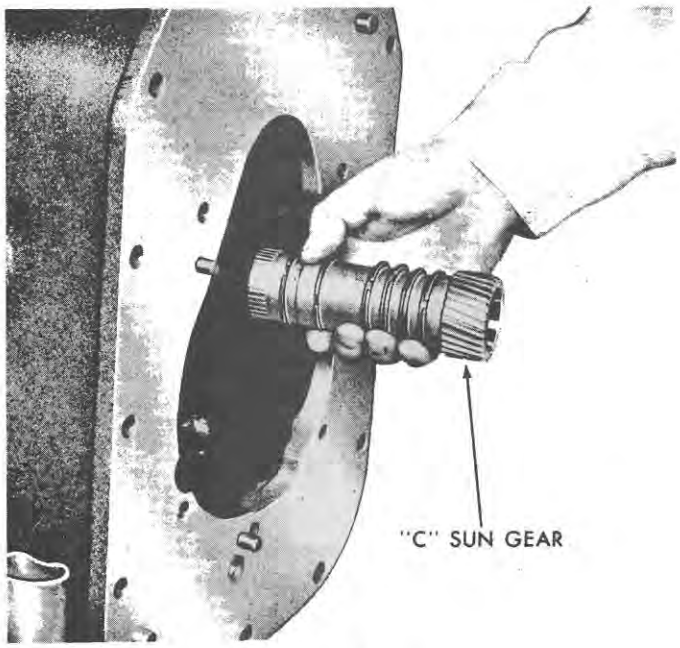

Figure 80
Installing the "C" Sun Gear

12. Install the distributor into the transmission case, inserting the sleeve with sealing rings into clutch 1.

13. Align the main pressure and band 1 servo tubes with their respective openings in the distributor. Apply pressure to the distributor so that the sealing rings enter into the clutch housing. Install the four mounting bolts, but do not tighten securely at this time.

    NOTE: ***During assembly, it is important that clutch 1 is not pulled away from the "B" carrier causing the carrier not to be fully inserted and aligned with the clutch plates.***

14. Install and properly position the band 2 and 3 servo tubes into the distributor. See Insert, Figure 72. If the tubes are not aligned with the distributor, rotate the distributor as required and insert the tubes.

15. Tighten the distributor mounting bolts to the specified torque, page 83.

16. Install the six shaft seals on the "C" sun gear. Use petroleum jelly to center the seals. Insert the gear into the distributor so the splines align with the clutch 1 housing splines. See Figure 80. Install the thrust washer on the distributor rear journal.

17. Check the transmission front compartment end play as covered on page 47. If the end play is incorrect, it will be necessary to replace the selective washer with one of correct thickness. The end play should be 0.005 in. to 0.015 in. (0.127 to 0.381 mm). Lack of end clearance can be immediately detected by inserting the "C" sun gear into the distributor and into clutch 1 splines and noting if it is free to turn.

18. Install band 3 adjusting screw and secure band 3 in position with the depression in the band end toward the adjusting screw. Join the band to the screw with the adjusting strut and to the servo lever with the actuating strut. See Figure 71.

19. Install the servo 2 and 3 cover and gasket. Install and tighten the servo cover attaching bolts to the specified torque, page 43. Install band 2 and 3 sealing washers and lock nuts.

20. Install the three rearmost shaft seals on the mainshaft. Use petroleum jelly to center the seals. Install the shaft in the clutch 2 and 3 housing as shown in Figure 81, and install the clutch housing retaining snap ring.

21. Position the "C" carrier to clutch housing thrust washer over the shaft.

22. Insert the "C" sun gear to "C" carrier thrust washer into the "C" carrier so it is positioned beneath the pinions. Install the "C" carrier over the end of the mainshaft, as shown in Figure 82. Align the "C" carrier splines with the clutch splines, rotating the carrier back and forth until

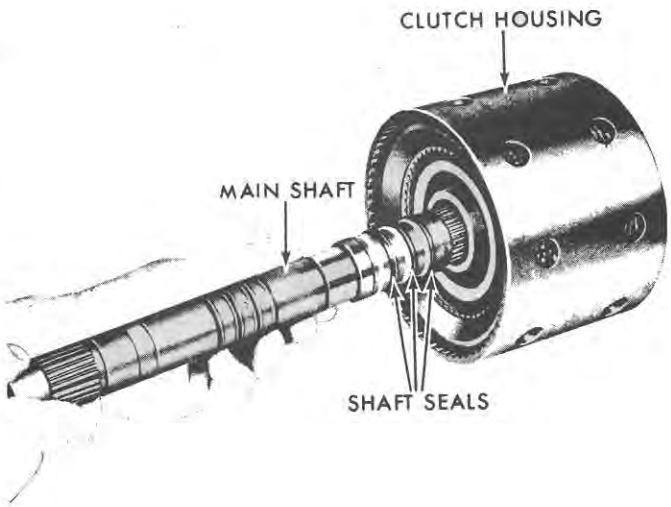

Figure 81
Installing the Mainshaft in the Clutch Housing

it drops down into the clutch housing.

23. Install the remaining four shaft seals on the mainshaft. Use petroleum jelly to center the seals.
24. Install the mainshaft, "C" carrier, and clutch 2 and 3 housing as an assembly, inserting the forward end of the mainshaft into the "C" sun gear, as shown in Figure 47. Hold the "C" carrier to the clutch housing so separation does not take place, and gently move the complete assembly forward into band 3 until the splines on the mainshaft align with the "B" carrier splines.
25. Install the output shaft-to-clutch housing thrust washer on the end of the mainshaft with the counterbored side over the snap ring end of the shaft.
26. Install the "C" ring gear and output shaft as an assembly by aligning the output shaft splines with the splined plates in clutch 3, and by aligning the ring gear with the "C" carrier pinions, Figure 83. Rotate the output shaft back and forth while applying pressure toward the clutch assembly.

NOTE: ***Do not pull the assembly to the rear as it is possible to separate the "C" carrier from clutch 2.***

27. Install the rear selective thrust washer on the end of the output shaft.

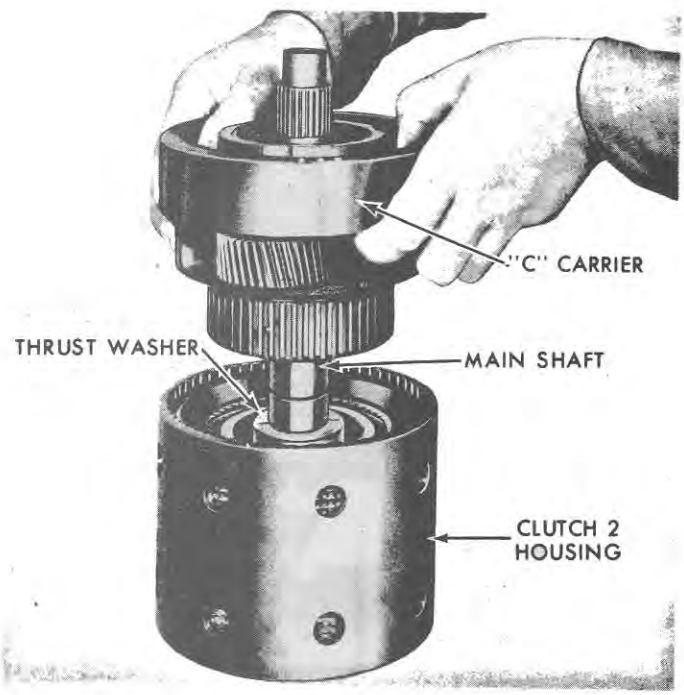

Figure 82
Installing the "C" Carrier in Clutch 2

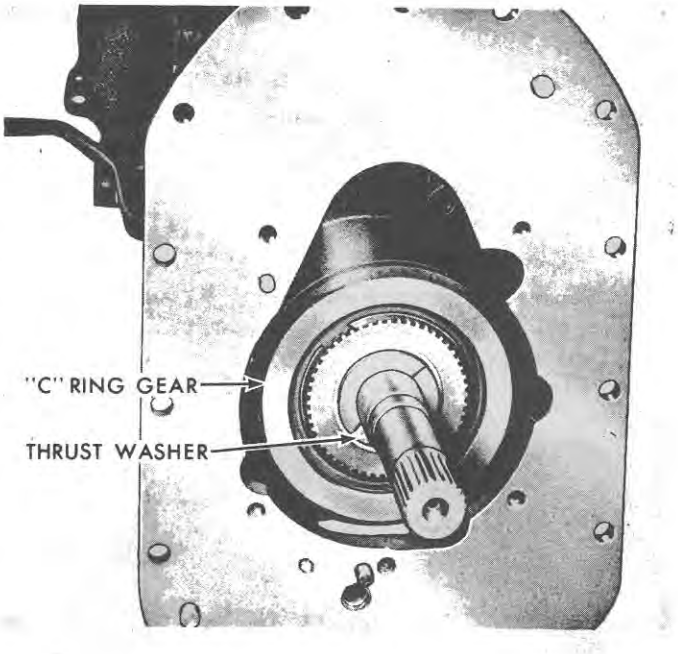

Figure 83
Installing the "C" Ring Gear

IMPORTANT: ***If the transmission rear end play was not within specifications when checked prior to disassembly, replace the thrust washer with one of correct thickness.***

28. Install the P.T.O. rear shaft as an assembly with the rear support and a new gasket. Install the five rear support attaching bolts and tighten to the specified torque, page 83.
29. Position the rear bearing retainer and gasket and install the four attaching bolts. Tighten the bolts to the specified torque, page 83.
30. Check the transmission rear compartment end play as covered on page 45. If the end play is incorrect, it will be necessary to replace the selective washer with one of correct thickness. The end play should be 0.005 to 0.015 (0.127 to 0.381 mm).
31. Adjust the transmission bands by fully tightening the adjusting screws for bands 2 and 3. Tighten band 1 adjusting screw and back off one full turn. Tighten the lock nuts.
32. Install a new oil filter on the filter cover plate and install the filter assembly, with a new gasket, in the transmission case. Tighten the four cover attaching bolts to the specified torque, page 83.
33. Assemble the control valve, safety starter switch, cover, and controls, as outlined on page 35.

6. FRONT END OVERHAUL

DEXTA 2000, SUPER DEXTA 3000, AND MAJOR 4000

A. Separating the Transmission from the Engine

1. Drain the transmission oil.
2. Separate the transmission from the engine as covered in Part Fifteen, "SEPARATING THE TRACTOR".

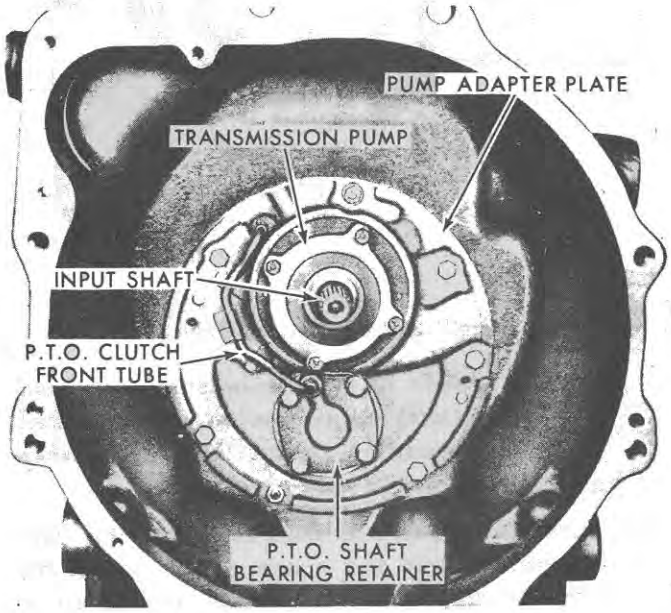

Figure 84
Front End of the Transmission

B. Transmission Components—Removal

1. Remove the pump, Figure 84, and gasket, by removing the four mounting bolts. Tap the pump with a soft-faced hammer and slide it from the input shaft.
2. Remove the two screws which secure the P.T.O. clutch front tube to the adapter plate, and remove the tube by pulling outward.
3. Remove the P.T.O. shaft bearing retainer by removing the four bolts, Figure 84. During removal, note the O-ring and the shim pack which is used to adjust P.T.O. shaft preload.
4. Remove the six bolts and one nut securing the adapter plate to the case. Remove the plate by using two retaining bolts as jack screws, shown in Figure 85.

NOTE: ***Hold the input shaft in place. It is possible to drop the thrust washer between the "A" carrier and "A" ring gear if the shaft is removed.***

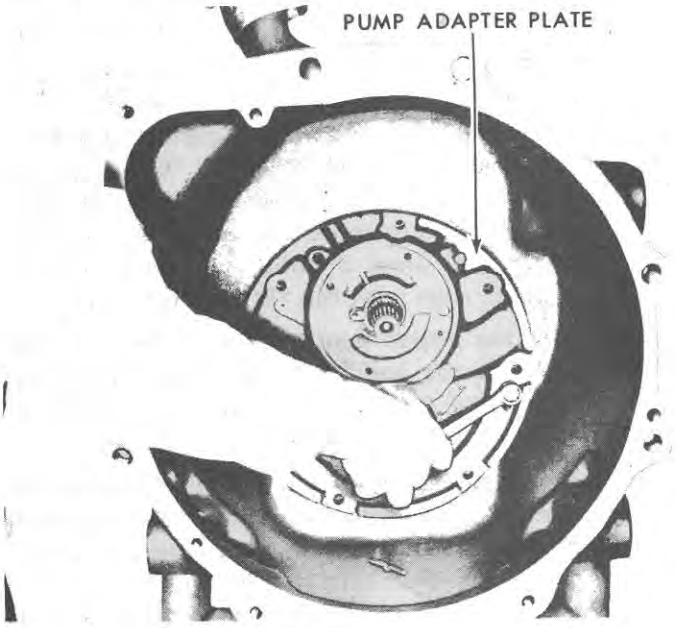

Figure 85
Removing the Pump Adapter Plate

5. Remove the front P.T.O. shaft from the P.T.O. clutch by prying between the washer and clutch housing and pulling the shaft forward, as shown in Figure 86.

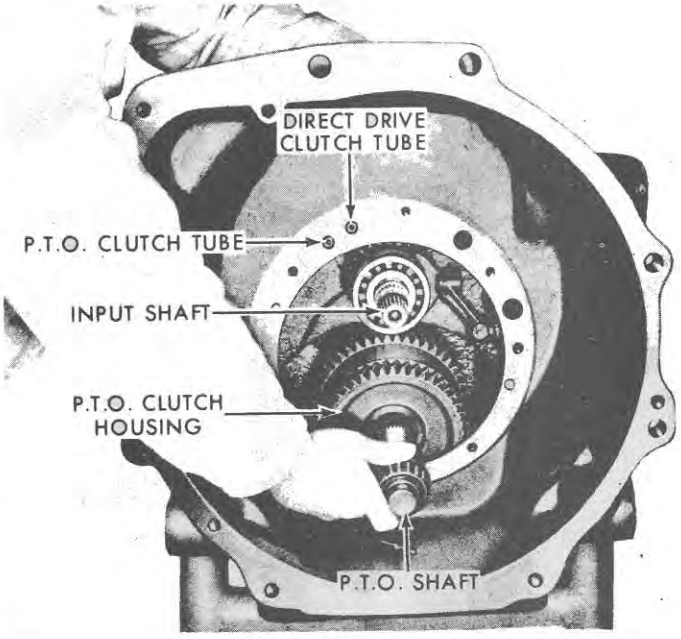

Figure 86
Removing the Front P.T.O. Shaft

6. Disconnect the P.T.O. tube fitting from the front of the distributor and remove the P.T.O. tube. Remove the direct drive clutch tube, and main pressure tube.

C. Transmission Components—Installation

1. Install new O-rings on the P.T.O., direct drive clutch and main pressure tube using petroleum jelly, and install the tubes in the case.
2. Install the shaft seals on the P.T.O. shaft and center them, using petroleum jelly. Install the shaft in the front of the clutch housing, and at the same time, hold the P.T.O. clutch hub. See Figure 86. Install the spacer and rear bearing adapter on the shaft as it is inserted through the housing.
3. Install the two front shaft seals on the input shaft and center them, using petroluem jelly. Install the pump adapter plate and gasket, as shown in Figure 87, and secure with six bolts and one nut. Tighten the bolts to the specified torque, page 83.
4. Inspect to see that the front P.T.O. bearing cup is in position. Mount the front P.T.O. bearing retainer and shims which were removed in step 3, "Transmission Components Removal". Install a new O-ring. Install and tighten the mounting bolts to the specified torque, page 83.
5. Install the pump with the gasket over the input shaft. Be careful not to damage the seal. Install and tighten the bolts to the specified torque, page 83. Install the P.T.O. clutch front tube by inserting the ends, with new O-rings, in the adapter plate and P.T.O. bearing retainer. Lightly tap the tube ends to be sure they are fully seated. Secure the tube with two screws.

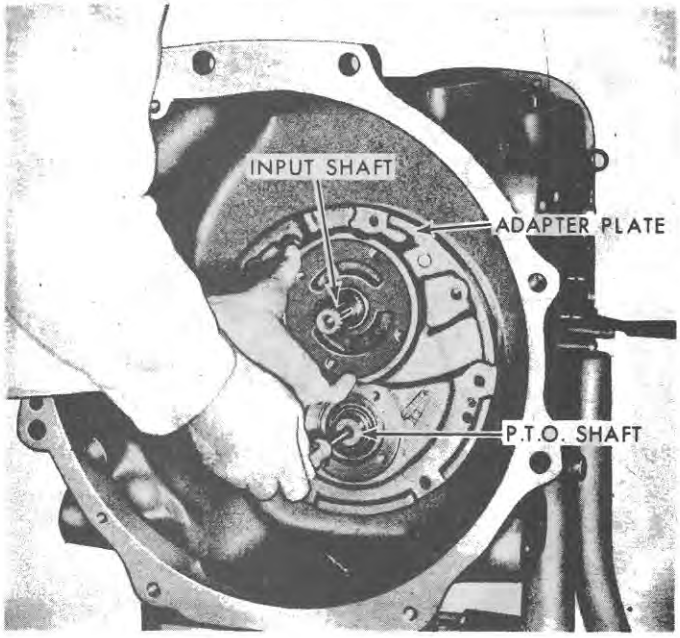

Figure 87
Installing the Adapter Plate

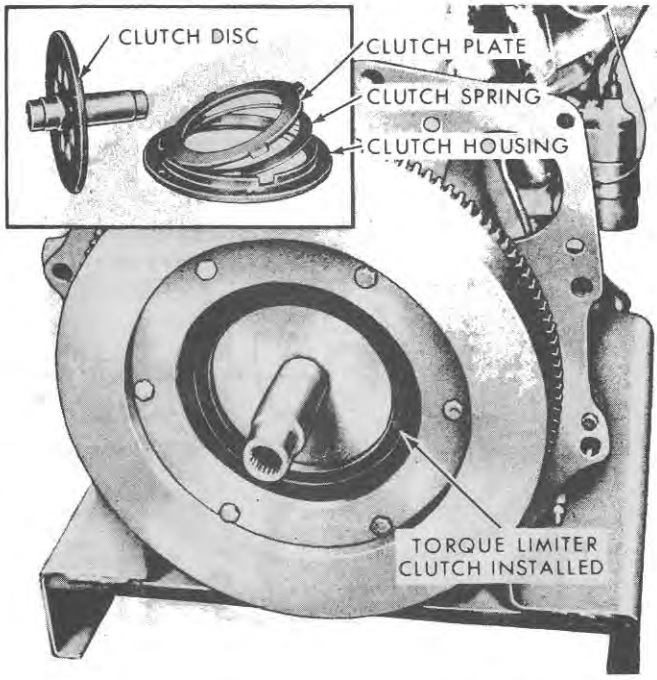

Figure 88
Torque Limiting Clutch Assembly

D. Torque Limiting Clutch—Removal and Installation

1. Remove the six bolts securing the clutch housing to the engine flywheel. Hold the housing so it does not drop from the flywheel. Refer to Figure 88.
2. Remove the clutch housing, spring washer, pressure plate, and clutch disc. See Figure 88.
3. Assemble the clutch in reverse of the above procedure, tightening the retaining bolts to the specified torque, page 83.

SUPER MAJOR 5000

A. Transmission Components—Removal

1. Remove the pump, Figure 89, and gasket by removing the four mounting bolts. Tap the pump with a soft-faced hammer and slide it from the shaft.
2. Remove the five bolts that secure the adapter plate to the case. Remove the plate by using two retaining bolts as jack screws as shown in Figure 90.

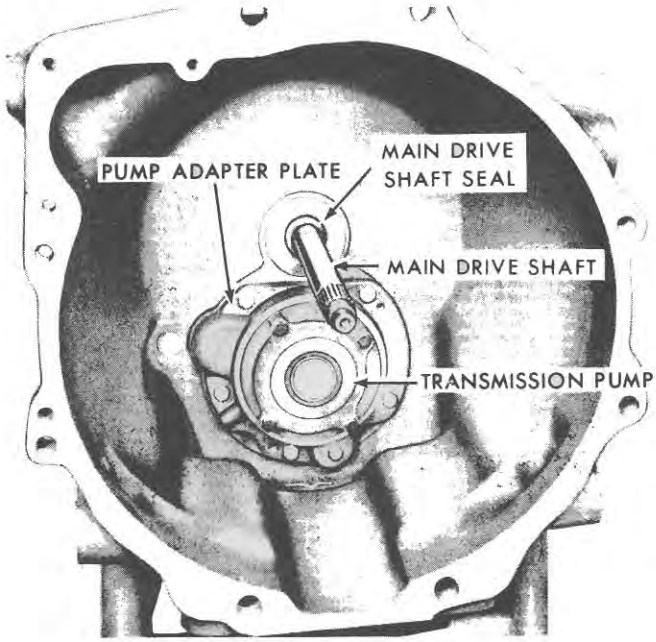

Figure 89
Front End of the Transmission

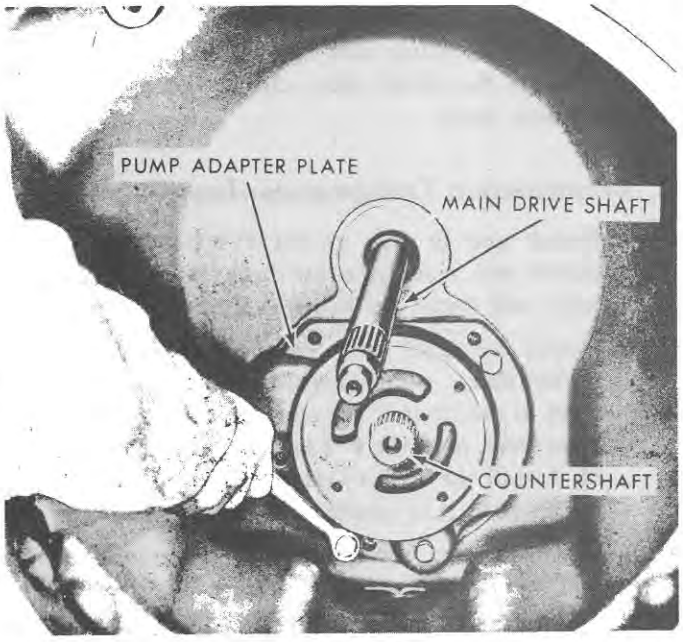

Figure 90
Removing the Pump Adapter Plate

NOTE: ***Hold the countershaft in place. It is possible to drop the thrust washer between the "A" carrier and "A" ring gear if the shaft is removed.***

3. Remove the Servo 1-D.D.C. tube from the transmission case. Remove the main drive gear oil seal.

B. Transmission Components—Installation

1. Inspect the rings on the input shaft. Replace if necessary. Position the rings with the gap at the top.
2. Install the Servo 1 tube in the transmission case and position it in the Servo 1 T-fitting.
3. Install the pump adapter plate and gasket and secure with the five attaching bolts. Tighten the bolts to the specified torque, page 83.
4. Position the pump gasket and pump on the adapter plate. Be sure the oil hole in the gasket and pump line up with the hole in the plate.
5. Secure the pump with the four attaching bolts and tighten the bolts to the specified torque, page 83. Install the main drive gear oil seal.

C. Torque Limiting Clutch—Removal and Installation

1. Remove the six bolts securing the clutch housing to the engine flywheel while, at the same time, holding the housing so it does not drop from the the flywheel. See Figure 91.
2. Remove the clutch housing, spring washer, pressure plate, and clutch disc.

NOTE: ***The hub of the disc is piloted in the flywheel for proper positioning. Note that the spring washer is assembled with the cup side forward to the pressure plate, Figure 91.***

3. Assemble the clutch in reverse of the above disassembly procedure. Use Torque Limiter Pilot No. SW-512 to align the clutch disc.

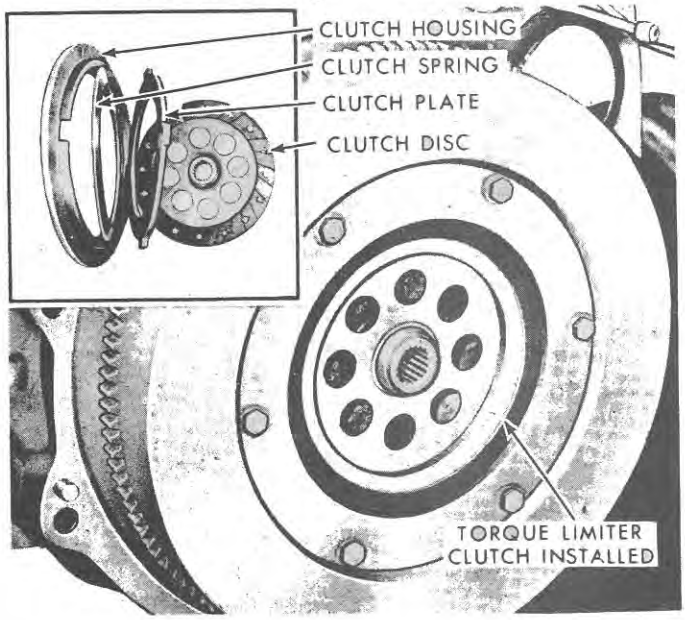

Figure 91
Torque Limiting Clutch (Super Major 5000)

7. COMPLETE OVERHAUL

DEXTA 2000, SUPER DEXTA 3000, AND MAJOR 4000

The instructions covered in this section for removing and installing the transmission components are to be used in conjunction with the removal and assembly instructions covered in the preceding sections, "Assemblies Serviced with Transmission Front End Overhaul", page 54, and "Assemblies Serviced with Transmission Rear End Overhaul", page 35.

A. Transmission Components—Removal

1. Remove the transmission components from the rear of the transmission, as covered on page 37, "C. Transmission Components Removal".
2. Remove the transmission components from the front of the transmission as covered on page 54, "B. Transmission Components Removal".
3. With the P.T.O. shift lever in the 1000 rpm position, remove the input shaft by tapping it forward. Refer to Figure 92.
4. Remove the P.T.O. clutch and shaft by lifting the assembly out of the transmission, as shown in Figure 93.

Single Speed P.T.O.: Remove the bearing from the rear of the shaft with a puller. Remove the half snap ring adjacent to the P.T.O. clutch assembly by pushing the ring off the shaft. The shaft is removed from the front of the case by pushing it through the clutch assembly.

5. Remove the P.T.O. shifter fork and the shifter lever by removing the clevis pin and cotter pin.
6. Loosen band 2 adjusting screw and remove the band 2 and the strut.
7. Remove the servo 2 and 3 actuating lever shaft from the transmission case by tapping the shaft from the rear compartment to the front compartment. Remove the actuating lever.

B. Transmission Components—Assembly

1. Position the servo 2 and 3 actuating levers and install the lever retaining shaft, starting from the front compartment of the transmission. Tap the shaft in place until the notches in the shaft solidly penetrate the case.

NOTE: ***Servo 3 actuating lever is the longest lever.***

2. Position band 2 in the case, and position the two struts. Tighten band 2 adjusting screw to hold band 2 in place during the remainder of transmission assembly.
3. Install the P.T.O. shifter lever shaft and secure with the clevis pin and cotter pin (split pin). See Figure 94. The lever must remain off until after the transmission is assembled to the engine.
4. Install the P.T.O. oil line in the case (without the O-ring) through the rear of the case and thread it into position. Push the tube through the front bulkhead and assemble the O-ring from the front. Press the tube back into position.

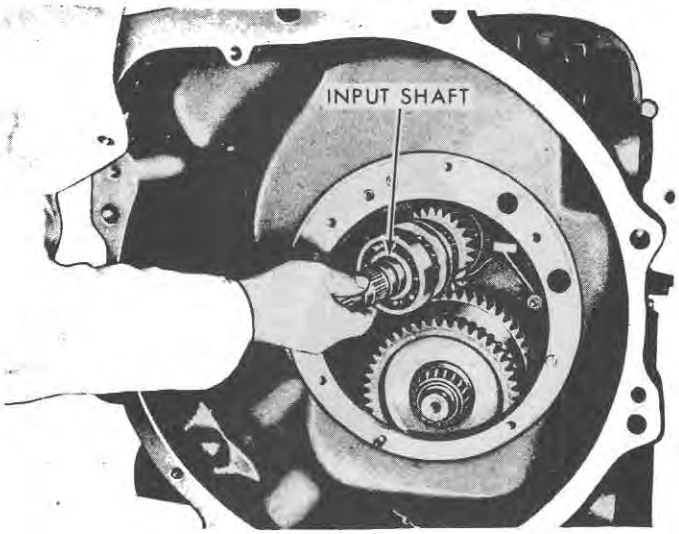

Figure 92
Removing the Input Shaft

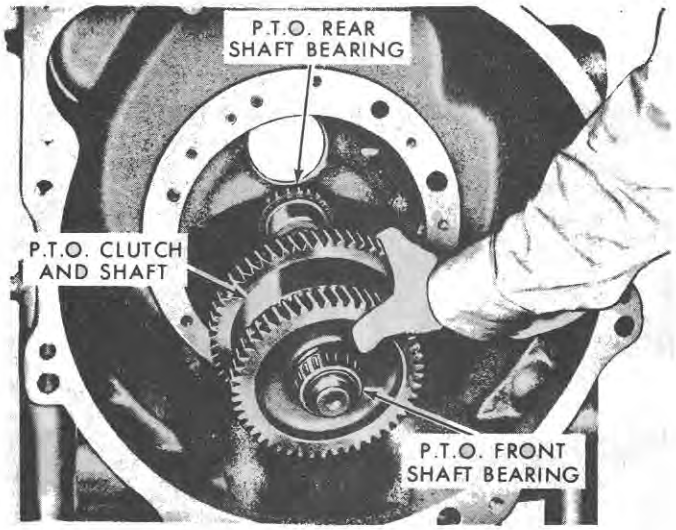

Figure 93
Removing the P.T.O. Clutch and Shaft

5. Position the thrust washer in the P.T.O. clutch and install the hub by rotating it back and forth to align the clutch plate splines.
6. Install three shaft seals on the P.T.O. shaft, centering them, using petroleum jelly. Install the shaft into the clutch housing while holding the clutch hub in position, as shown in Figure 95.
7. Install the spacer and rear bearing adapter and bearing on the shaft and install the complete assembly in the transmission case. Refer to Figure 93.

Single Speed P. T. O.: Install the clutch assembly into the transmission housing. Insert the P.T.O. shaft through the clutch, holding the clutch hub in position. Install the snap ring on the P.T.O. shaft. Assemble the washer on the rear of the shaft and drive the tapered bearing against the washer.

8. Check the P.T.O. shaft preload as covered on page 58, "P.T.O. Shaft Preload Adjustment".
9. Place the P.T.O. shifter handle in the rear position and install the fork, with the long finger up.
10. Install the four shaft sealing rings on the input shaft, centering them, using petroleum jelly. Install the input shaft in the case, aligning the shift collar with the fork. Make sure the rear bearing of the shaft is fully pressed into the case.
11. Install the pump adapter plate and gasket, holding the P.T.O. shaft up, as shown in Figure 87, and secure with six bolts and one nut. Tighten to the specified torque, page 83.
12. Inspect to see that the front P.T.O. bearing cup is in position and mount the front P.T.O. bearing retainer with the correct shim pack and O-ring. Install and tighten the mounting bolts to the specified torque, page 83.
13. Install the pump with the gasket over the input shaft. Be careful not to damage the seal. Install and tighten the bolts to the specified torque, page 83.
14. Install the P.T.O. clutch front tube by inserting the ends, with new O-rings, in the adapter plate and P.T.O. retainer. Lightly tap the tube ends to be sure that they are fully seated. Secure the tube with two screws.
15. Install the transmission rear components as covered on page 42, "D. Transmission Components Installation".

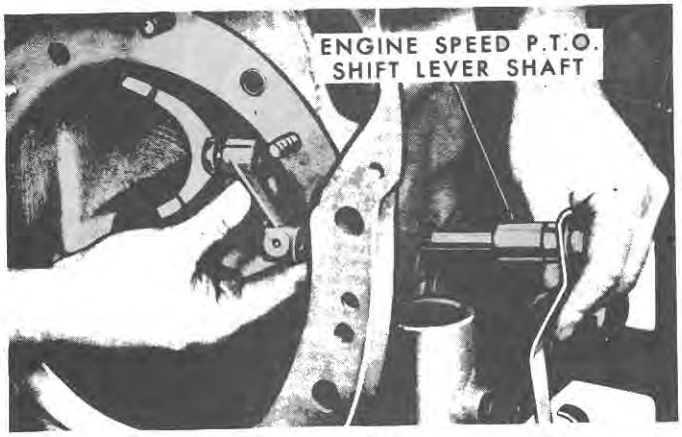

Figure 94
Installing the P.T.O. Shift Lever

C. P.T.O. Shaft Preload Adjustment

To perform the preload adjustment, the transmission must be assembled up to and including step 7, as covered in "B. Transmission Components—Assembly".

1. Install the front adapter plate (without the input shaft) and gasket on the case. Center the P.T.O. shaft with a suitable tool. Tighten the adapter plate, securing the bolts and nut to the specified torque, page 83.
2. Assemble the shim pack and O-ring on the P.T.O. front bearing retainer and mount the retainer to the adapter plate. Install and tighten the mounting bolts to the specified torque, page 83.
3. Install the rear P.T.O. shaft and rear support (single speed P.T.O.).
4. Wrap a cord around the shaft end as shown in Figure 96, and attach the end of the cord to a pull scale. The shaft should rotate under a steady pull of 18-25 lbs. (8-11.5 kg). Adjust preload as required, using the 0.002 in. (0.050 mm), 0.003 in. (0.076 mm), 0.010 in. (0.254 mm), and 0.030 in. (0.762 mm) shims which are available.
5. Remove the P.T.O. bearing retainer. Be careful to keep the shim pack together. Remove the adapter plate.

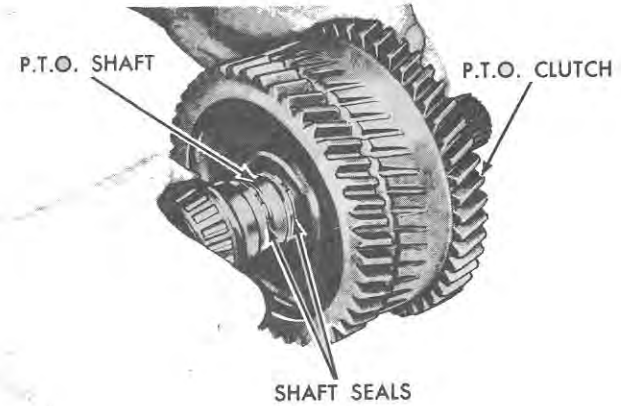

Figure 95
Installing the P.T.O. Shaft

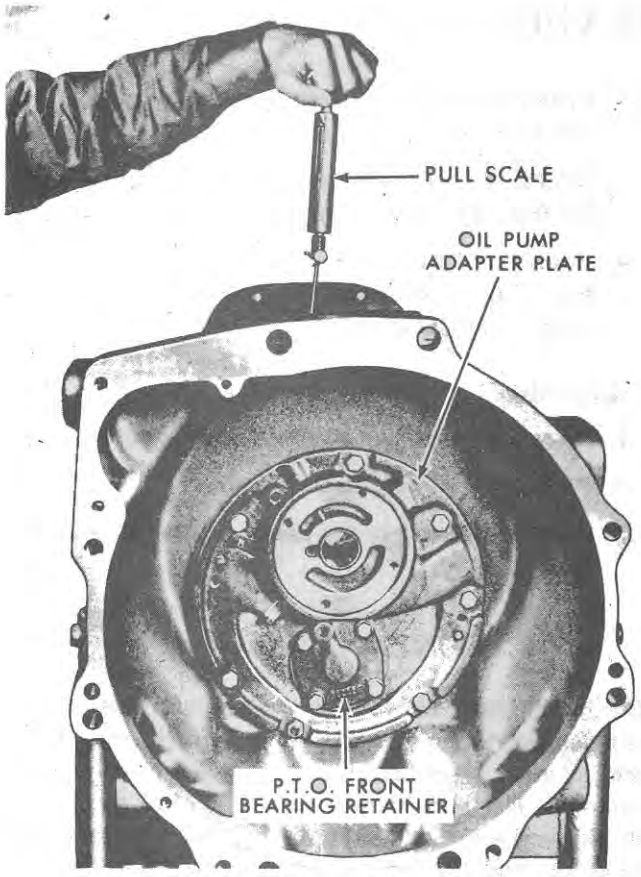

Figure 96
P.T.O. Shaft Preload

6. Install the transmission input shaft and remaining transmission components, as covered in steps 9 through 15 in "B. Transmission Components—Installation."

SUPER MAJOR 5000

The instructions covered in this section for removing and installing the transmission components are to be used in conjunction with the removal and assembly instructions covered in the preceding sections, "Assemblies Serviced with Transmission Front End Overhaul", page 54, and "Assemblies Serviced with Transmission Rear End Overhaul", page 45.

A. Transmission Components—Removal

1. Remove the transmission components from the rear of the transmission case, as covered on page 46, "C. Transmission Components—Removal".
2. Remove the transmission components from the front of the transmission as covered on page 54, "B. Transmission Components—Removal".
3. Remove the main drive shaft from the transmission case. See Figure 90.
4. Loosen band 2 adjusting screw and remove band 2 and the struts. Rotate the band around the transmission case web as shown in Figure 97, for removal.
5. Remove the servo 2 and 3 actuating lever shaft from the transmission case by tapping the shaft from the rear compartment towards the front compartment.
6. Remove the countershaft assembly.

B. Transmission Components—Installation

1. Install the countershaft assembly.
2. Position servo 2 and 3 actuating levers and install the lever retaining shaft, starting from the front compartment of the transmission. Tap the shaft in place until the notches in the shaft solidly penetrate the case.

   NOTE: ***Servo 3 actuating lever is the longest lever.***

3. Position band 2 in the case, position the two struts. Tighten band 2 adjusting screw to hold the band in place during the remainder of the transmission assembly.
4. Position the rings on the transmission countershaft and position the shaft in the transmission case.
5. Install the remainder of the transmission components as covered on page 55, "Transmission Components—Installation".

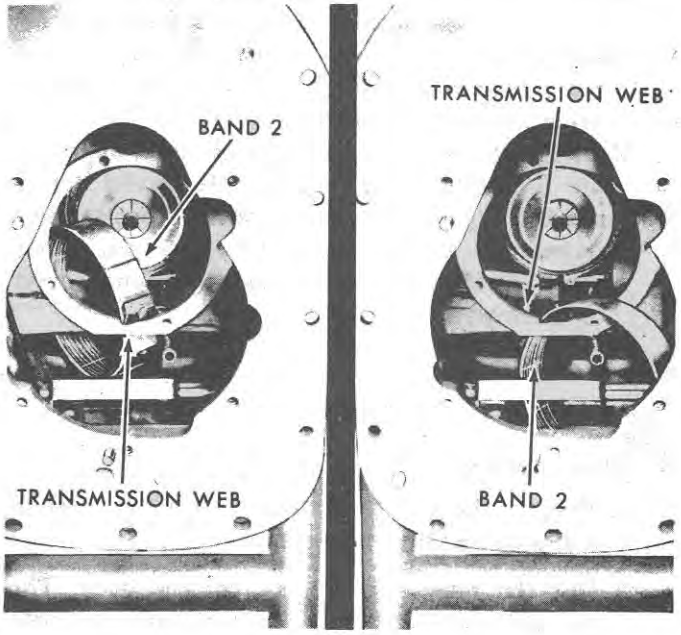

Figure 97
Removing Band 2

8. REPAIR OF THE SUB-ASSEMBLIES

This procedure covers the disassembly, inspection, and assembly of the sub-assemblies removed from the transmission. Upon disassembly, all components should be examined for wear and damage. Some general areas to consider are:

Transmission case for cracks and servo bore wear.
Transmission case linkage for wear and misalignment.
Planetary pinions for indications of heat, pinion shaft turning and seizure, and broken teeth.
End movement of the pinions should not exceed 0.028 in. (0.711 mm).
Clutch assemblies for wear, heat distortion, and piston seizure.
Brake bands for indications of overheating and wear.
Pump for scoring and wear.
Pump adapter plate for hairline cracks (pump area).
Shaft splines for wear and breakage.
Control valve for plunger action.
Condition of control valve cams.
Pressure tubes for damage and obstructions.
Bearings and bearing cups for wear and damage.
Shaft seals for wear by comparing with new parts.
Bushings for wear, indications of seizure and turning.

During the repair of assemblies, the following general instructions should be followed:

Thrust washers, shaft seals and "O" rings should be coated with petroleum jelly to facilitate assembly.
Handle all transmission parts carefully to avoid scoring or burring the bearing or mating surfaces.
Keep all parts and components clean by servicing these items with clean tools in clean surroundings, using lint-free wipers.
Remove bearings and bearing races, using appropriate bearing and gear pullers. Be careful not to damage any adjoining components. When pressing on bearings, always make sure they are fully seated.
Always lubricate pinion bearings and bushings prior to assembly.

PUMP

A. Disassembly

1. Remove the two screws that attach the cover to the body and remove the cover.
2. Lift the rotor and rollers from the body. The transmission pump is serviced only as a complete assembly. Minor burrs or scores may be removed with crocus cloth.
3. Install the seal in the pump with Step Plate No. 630-5, as shown in Figure 98.

   NOTE: ***There is no seal in the Super Major 5000 pump; instead, a sealing plug is installed.***
4. If any part of the pump body, rollers, or rotor, are found to be defective, the complete pump assembly must be discarded.

B. Assembly

1. Place the rotor and rollers in the pump housing.
2. Place a new O-ring on the housing.
3. Secure the cover to the housing with two Phillips head screws.

CONTROL VALVE

During the servicing of the control valve assembly, avoid damage to the valve ports and keep them clean. Place the valve assembly on a clean chamois or lint-free shop towel. Refer to Figures 99 and 100 for the Dexta 2000, Super Dexta 3000 and Major 4000 Tractors and Figures 101 and 102 for the Super Major 5000 Tractor.

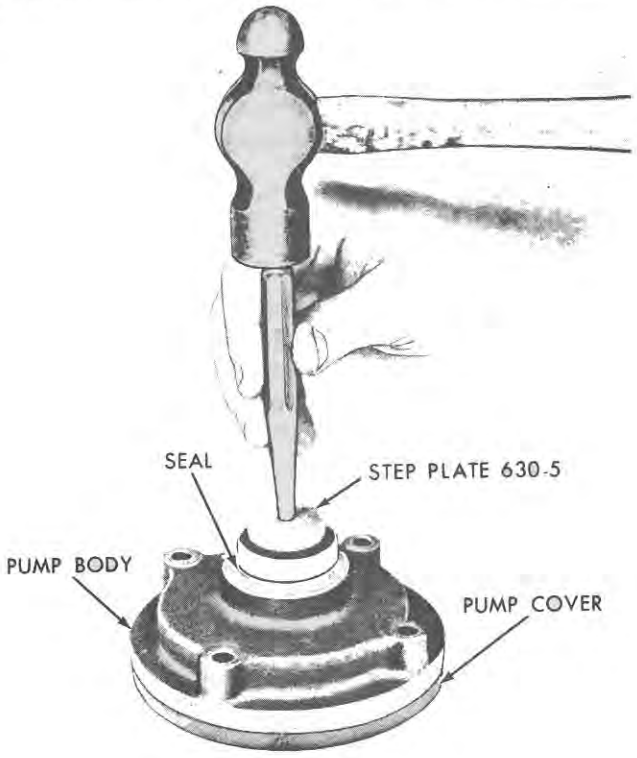

Figure 98
Servicing the Pump

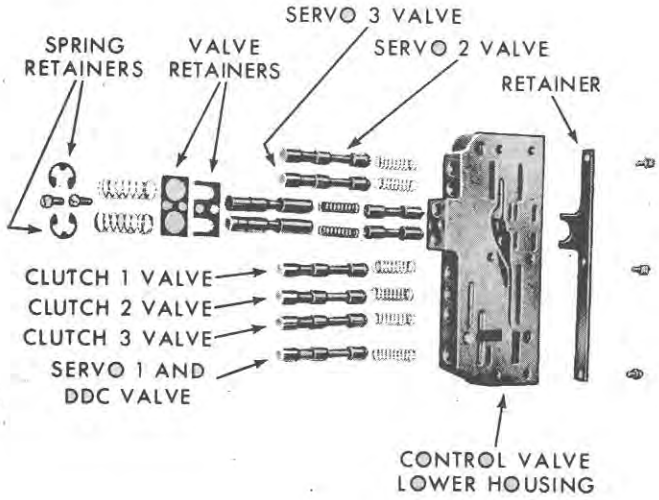

Figure 99
Control Valve Lower Housing
(Dexta 2000, Super Dexta 3000 And Major 4000)

A. Disassembly

1. Remove the bolts securing the valve assembly and separate the two valve bodies. Remove the six spool-type valves. Remove the three screws that attach the valve retainer to the lower body.
2. On Dexta 2000, Super Dexta 3000, and Major 4000, remove the two feathering valve spring retainers, two springs, spring retainer plate, feathering valve spools, and two springs, shown in Figure 99.
3. On Super Major 5000, remove the feathering valve spring retainer, spring, spring retainer plate, feathering valve retainer plate, and valve spools, shown in Figure 101. Remove the notched clutch and servo valves.
4. Remove two adjusting screw retainers, three adjusting screws, three springs, and the three plunger-type valves from the valve upper body, Figure 102.

   NOTE: ***Steps 6 through 9 would not be necessary in an ordinary inspection procedure and are to be used only when damage or breakage is evident.***

5. Remove the two snap rings from the cam follower shaft in the valve upper housing and remove the shaft, cam followers, and spacers.
6. Remove the trunnion and cable wheel assembly from the right end of the camshaft by inserting a ¼"–20 x 2" standard thread heat-treated set screw to force this assembly out of the shaft.

   IMPORTANT: ***Do not use a soft bolt for pulling this wheel as it will twist off. The threaded portion of the bolt must be at least 1¾" (44.4 mm) in length.***

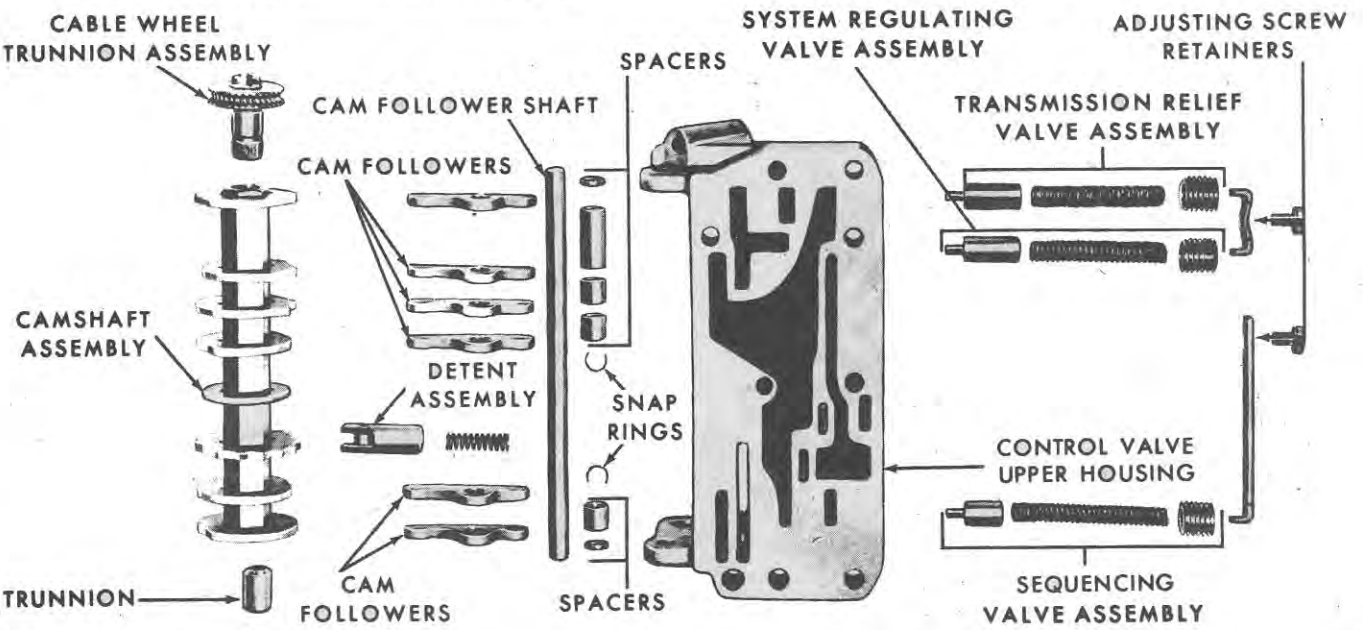

Figure 100
Control Valve Upper Housing
(Dexta 2000, Super Dexta 3000 And Major 4000)

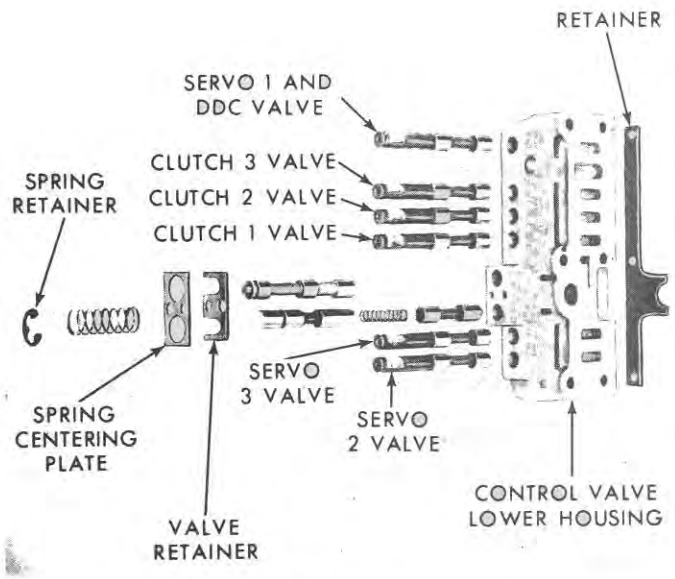

Figure 101
Control Valve Lower Housing (Super Major 5000)

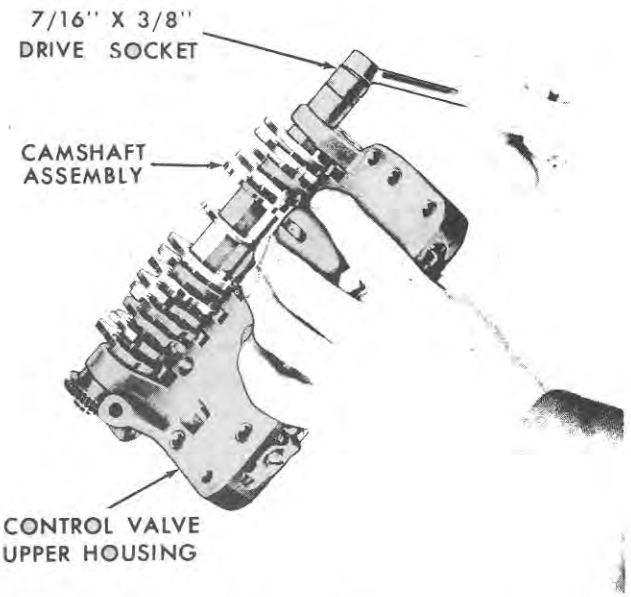

Figure 103
Removing the Camshaft Assembly (Super Major 5000)

7. To remove the trunnion from the left end of the camshaft, insert a ¼"—20 x 1⅛" coarse thread, heat-treated bolt supported by a 7/16" x ⅜" drive, socket, and flat washer, and withdraw the trunnion from the shaft, as shown in Figure 103.

8. Remove the camshaft assembly and detent assembly from the control valve upper housing.

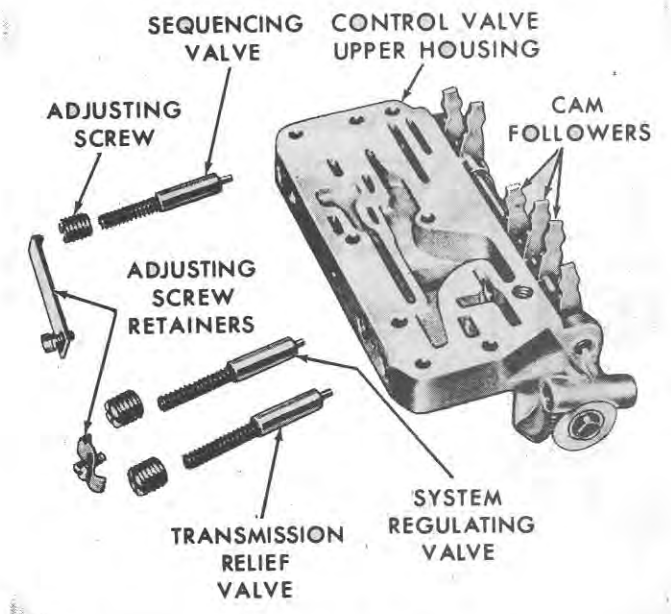

Figure 102
Control Valve Upper Housing (Super Major 5000)

B. Cleaning and Inspection

1. Clean all parts thoroughly in clean solvent, then blow dry with compressed air.

2. Inspect all valve bores for scores. Check all oil passages for obstructions. Inspect the mating surfaces for burrs or distortions. Examine the valves for burrs and scores.

   NOTE: ***Crocus cloth can be used to polish valves if care is taken to avoid rounding the sharp edges.***

3. Inspect all springs for distortion and check all of the valves for free movement in their respective bores.

C. Assembly

1. Arrange all parts in their proper position, as shown in Figures 99, 100, 101 and 102, respectively.

2. Position the camshaft assembly in the valve upper housing. Insert a ⅜" bolt into the left end of the camshaft to support the assembly while the cable wheel and trunnion assembly is being pressed into the right end, as shown in Figure 104. A clearance of 0.005-0.010 in. (0.127-0.254 mm) should be maintained between the cable wheel and valve housing, as shown. Press the trunnion into the left end of the camshaft.

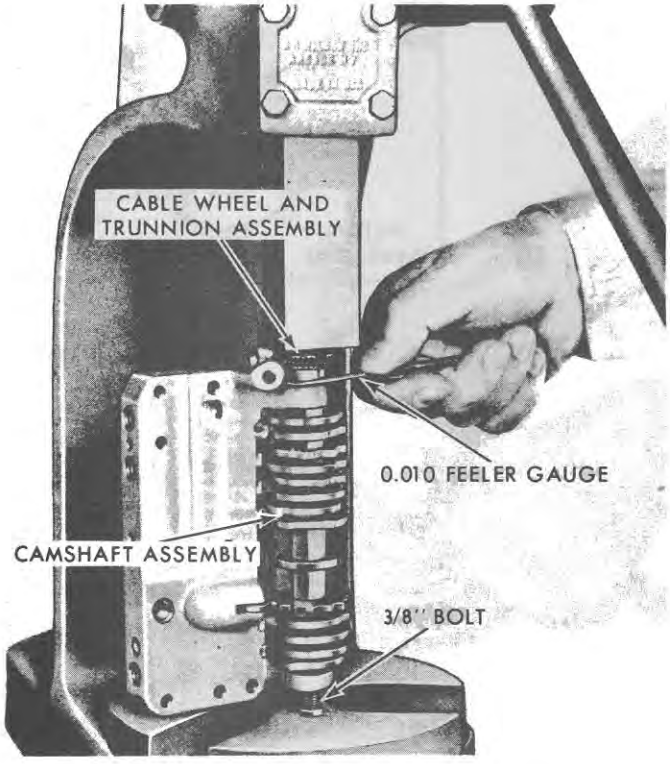

Figure 104
Installing the Camshaft Assembly

3. Install the valve springs, retainers, and all of the valves in the control valve lower housing. Rotate the valve spools when inserting them in their bores to avoid shaving the housing casting.

   NOTE: ***The clutch and servo valves used in the Super Major 5000 are notched and positively positioned, in or out, and do not use return springs.***

4. Install the plungers, valve springs, and adjusting screws in the control valve upper housing.

   NOTE: ***Turn the three valve adjusting screws into the valve housing until they are flush with the front side. These valves must be adjusted under operating conditions with the transmission installed in the tractor. Refer to page 25. Then, the control valve assembly will have to be removed to permit locking of the adjusting screws with the two retainers.***

5. Install the cam followers, spacers, and shaft in their respective positions on the valve upper housing and secure the assembly with the two snap rings.

6. Position the upper housing on the lower housing. Align the bolt holes and install the two bolts.

CLUTCH ASSEMBLIES

The following procedure pertains to all clutch assemblies in the transmission with the exception of the direct drive clutch. For purpose of illustration, the P.T.O. clutch assembly will be shown.

NOTE: ***Pressure plate snap rings on all 1, 2, and 3 clutches are tac-welded.***

A. Disassembly

1. Remove the clutch pressure plate snap ring, as shown in Figure 105.

   NOTE: ***In clutch 1, the "B" ring gear is splined to the clutch housing, secured with a snap ring, and functions as a pressure plate.***

2. Remove the pressure plate and bronze and steel plates from the clutch housing, shown in Figure 106.

3. Compress the piston return spring in a press with the Compressor No. N-775, shown in Figure 107, then remove the snap ring. Guide the spring retainer while releasing the press to prevent the retainer from entering the snap ring groove.

4. Place an air hose nozzle in the hole in the hub, as shown in Figure 108, and force the piston out of the clutch housing with air pressure.

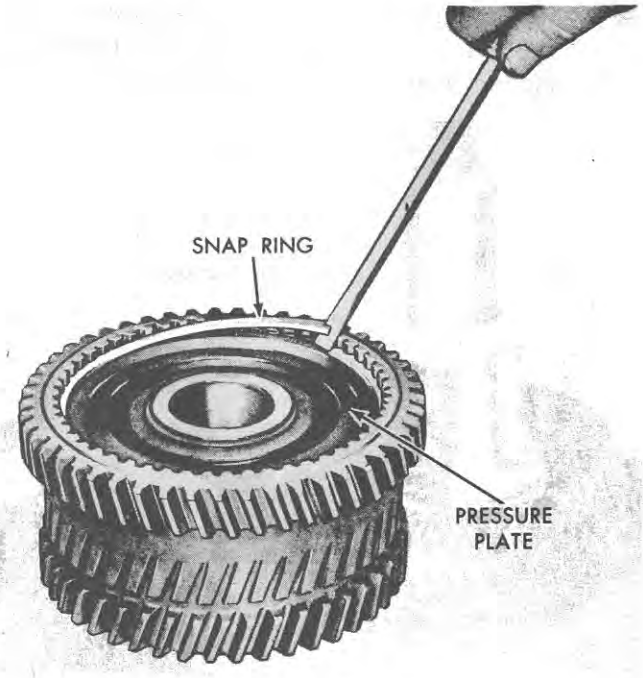

Figure 105
Clutch Snap Ring Removal

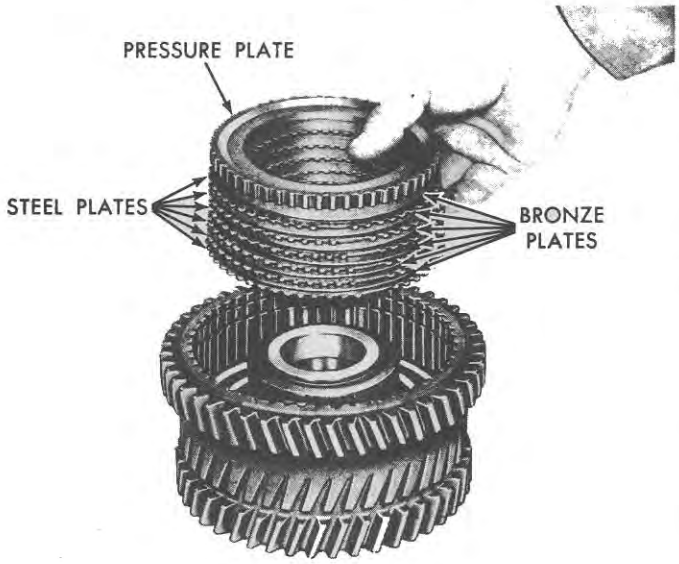

Figure 106
Removing the Clutch Plates

5. Remove the piston inner and outer seals, shown in the Insert, Figure 108.

B. Inspection

1. Inspect the clutch piston and cylinder walls for scoring. Fine emery cloth may be used to smooth the surfaces. Check the oil passages for obstructions.

2. Inspect the clutch plates for signs of overheating, distortion, wear, and scoring. Check the coning of the steel plates (P.T.O. clutch). Position the plates on a flat surface, then check the coning with a feeler gauge, as shown in Figure 109. The plates are coned to 0.015-0.020 in. (0.381-0.508 mm). Replace any of the plates with coning less than 0.015 in. (0.381 mm).

3. Using a straight edge, check the bronze plates to be sure that they are flat.

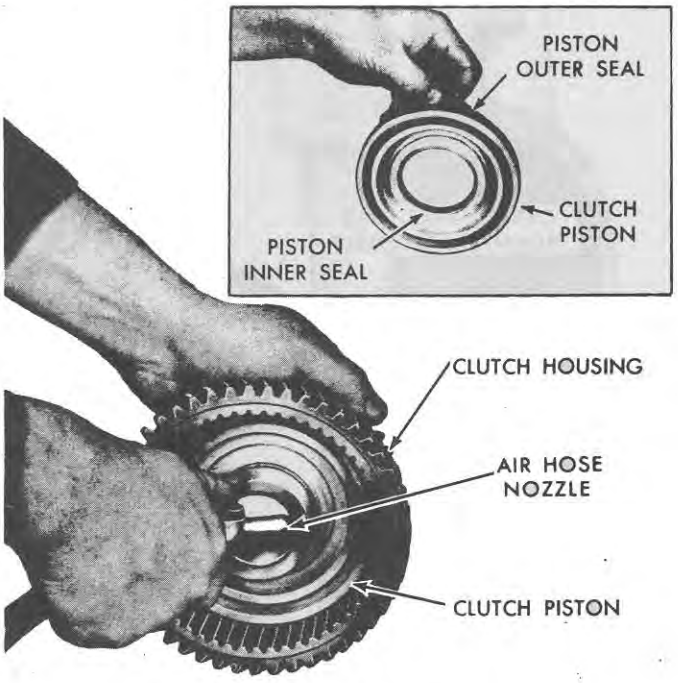

Figure 108
Clutch Piston Removal

C. Assembly

1. Install new inner and outer seals on the clutch

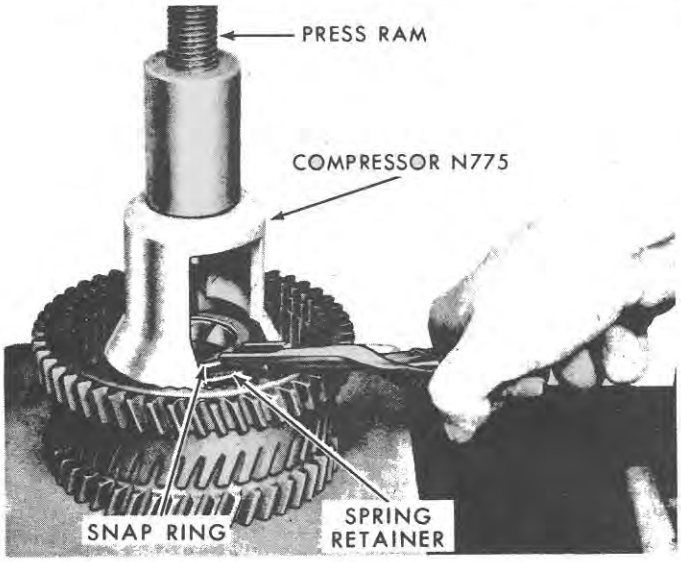

Figure 107
Clutch Snap Ring Removal

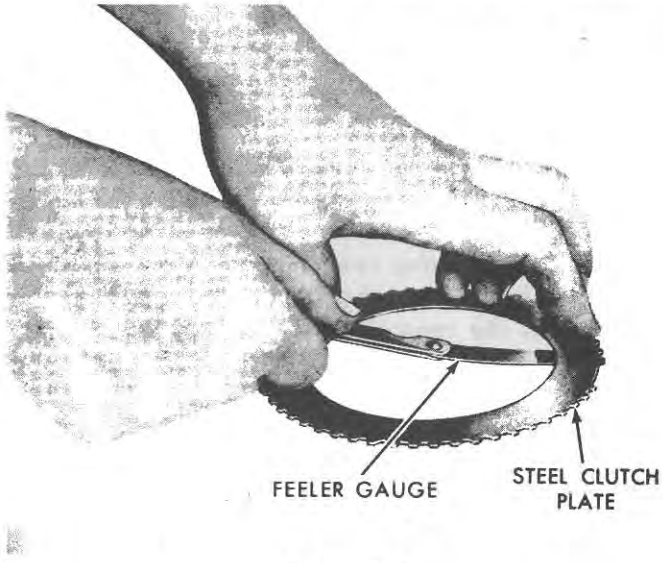

Figure 109
Checking Steel Plate Coning

piston, apply petroleum jelly to both surfaces, and install the piston in the housing.

NOTE: ***Avoid cocking of the piston and make sure the piston is pushed in until it contacts the inner rear face of the housing.***

2. Install the clutch release spring and retainer with Compressor No. N-775, as shown in Figure 107. Compress the spring in a press and install the snap ring.

   IMPORTANT: ***Make sure the snap ring is fully seated in the groove.***

3. Install the steel and bronze clutch plates alternately, starting with a steel plate next to the piston. Because of coning, all steel plates must face the same direction; all concave (hollow) sides up when the clutch is being assembled (P.T.O. clutch).

   NOTE: ***The number of steel plates and bronze plates varies according to the model transmission being worked on. See Figure 110 for model application and the correct number required.***

   IMPORTANT: ***The clutch 3 assembly in the Major 4000 and Super Major 5000 Tractors have 7 bronze plates and 6 steel plates. Two of the bronze plates are lined on one side. The unlined surfaces are to be assembled against piston and pressure plates respectively.***

4. Install the pressure plate with the machined surface toward the clutch plates.

Dexta 2000 and Super Dexta 3000	Bronze	Steel
DDC	2	2
C-1	5	5
C-2	5	5
C-3	5	5
P.T.O.	6	6
Major 4000		
DDC	2	2
C-1	5	5
C-2	6	6
C-3	7 *	6
P.T.O.	6	6
Super Major 5000		
DDC	2	2
C-1	5	5
C-2	6	6
C-3	7 *	6

* See "IMPORTANT" following step 3, above.

Figure 110
Clutch Plate Chart

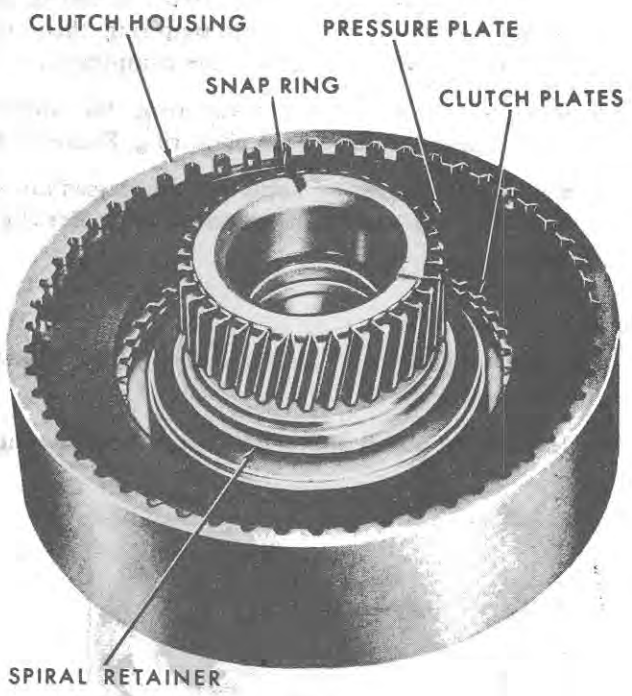

Figure 111
Direct Drive Clutch

5. Install a new snap ring. Braze the ends of the snap ring together using an AW-S-E-7018 Electrode or equivalent low hydrogen electrode.

   NOTE: ***Do not overheat the pressure plate and do not attempt to braze the ring to the pressure plate.***

DIRECT DRIVE CLUTCH

A. Disassembly

1. Remove the large snap ring from the inside of the clutch housing, Figure 111, and lift out the pressure plate and the four clutch plates.
2. Position the Spring Compressor No. N-488, in the clutch housing, as shown in the Insert, Figure 112, and install the snap ring. Make sure the snap ring ends are positioned away from the slots in the compressor.
3. Using Lever No. N-488-3 and a screwdriver, as shown in Figure 113, engage the lowest step of each stud to the snap ring. Repeat this operation for engaging the second step and then the third step of each stud. At this point, the pressure of the spring washer against the snap ring will have been eliminated and the spiral retainer can be removed.

4. Reverse the procedure used in step 3 to disengage the compressor studs from the snap ring, then pry off the snap ring and remove the compressor.
5. Remove the small wire pivot ring, the spring washer, and the large wire pivot ring, Figure 114.
6. Remove the piston by applying compressed air to the oil supply port in the clutch housing. See Figure 108.

B. Inspection

1. Clean all parts in a suitable solvent and dry with compressed air.
2. Inspect the piston and clutch housing for scoring.

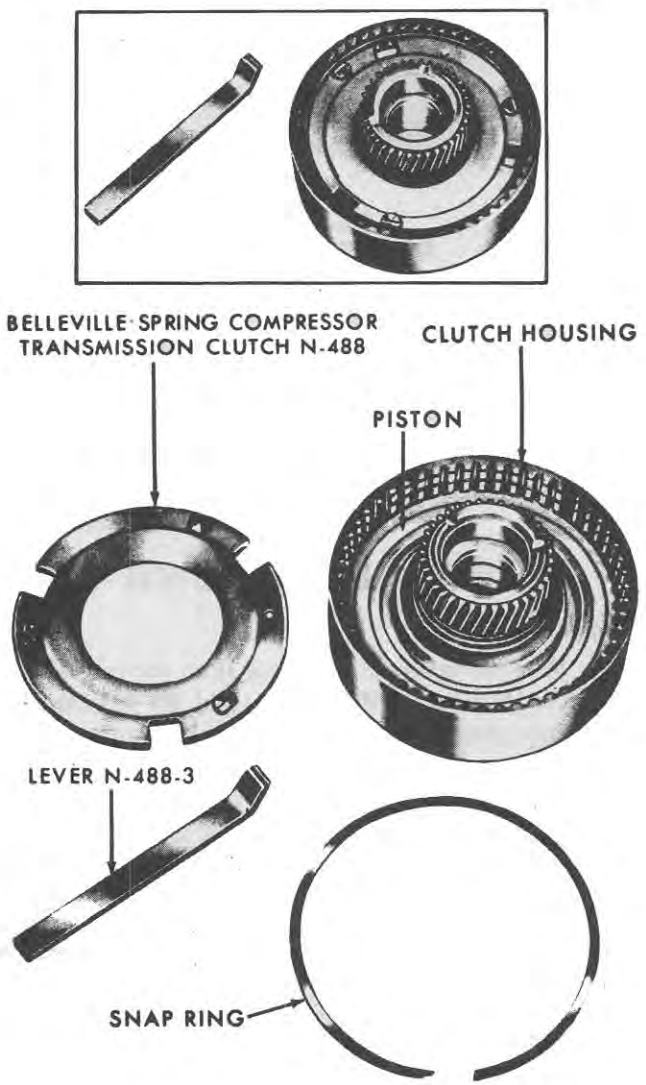

Figure 112
Special Tools for Disassembling the Direct Drive Clutch

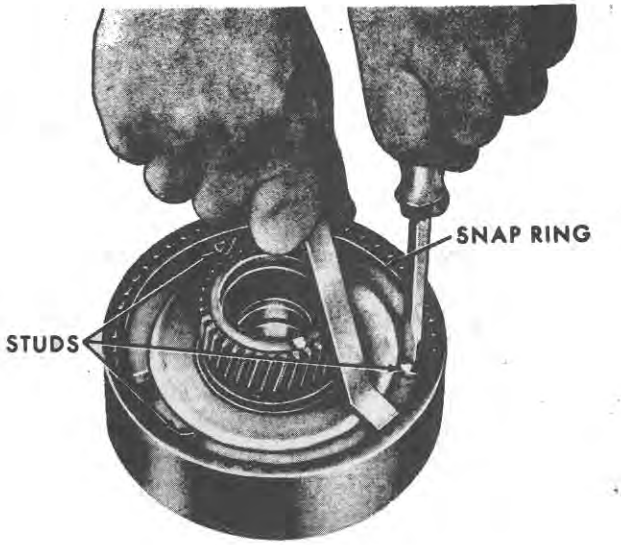

Figure 113
Compressing the Belleville Spring in the Direct Drive Clutch

Emery cloth may be used to smooth the surfaces. Check the oil passage for obstructions.

3. Inspect the clutch plates for signs of heat, distortion, wear, and scoring.
4. Use a straight edge to check both the bronze plates and the steel plates to make sure that they are flat.
5. Examine the pressure plate for scoring and the spring washer for distortion.

C. Assembly

1. Install new inner and outer seals on the clutch piston. Apply petroleum jelly to both surfaces and install the piston in the housing.

   NOTE: ***Avoid cocking of the piston and make sure that the piston is pushed in until it contacts the inner rear face of the housing.***

2. Install the large wire pivot ring, the spring washer, and the small wire pivot ring, Figure 114.
3. Position the Spring Compressor No. N-488, on the piston then install the large snap ring.
4. Using the lever and a screwdriver, as shown in Figure 113, depress the compressor and hold it in position by engaging the lowest step in each stud to the snap ring. Repeat this procedure to engage the second step and finally the third step of each stud. At this point, the spring will be sufficiently

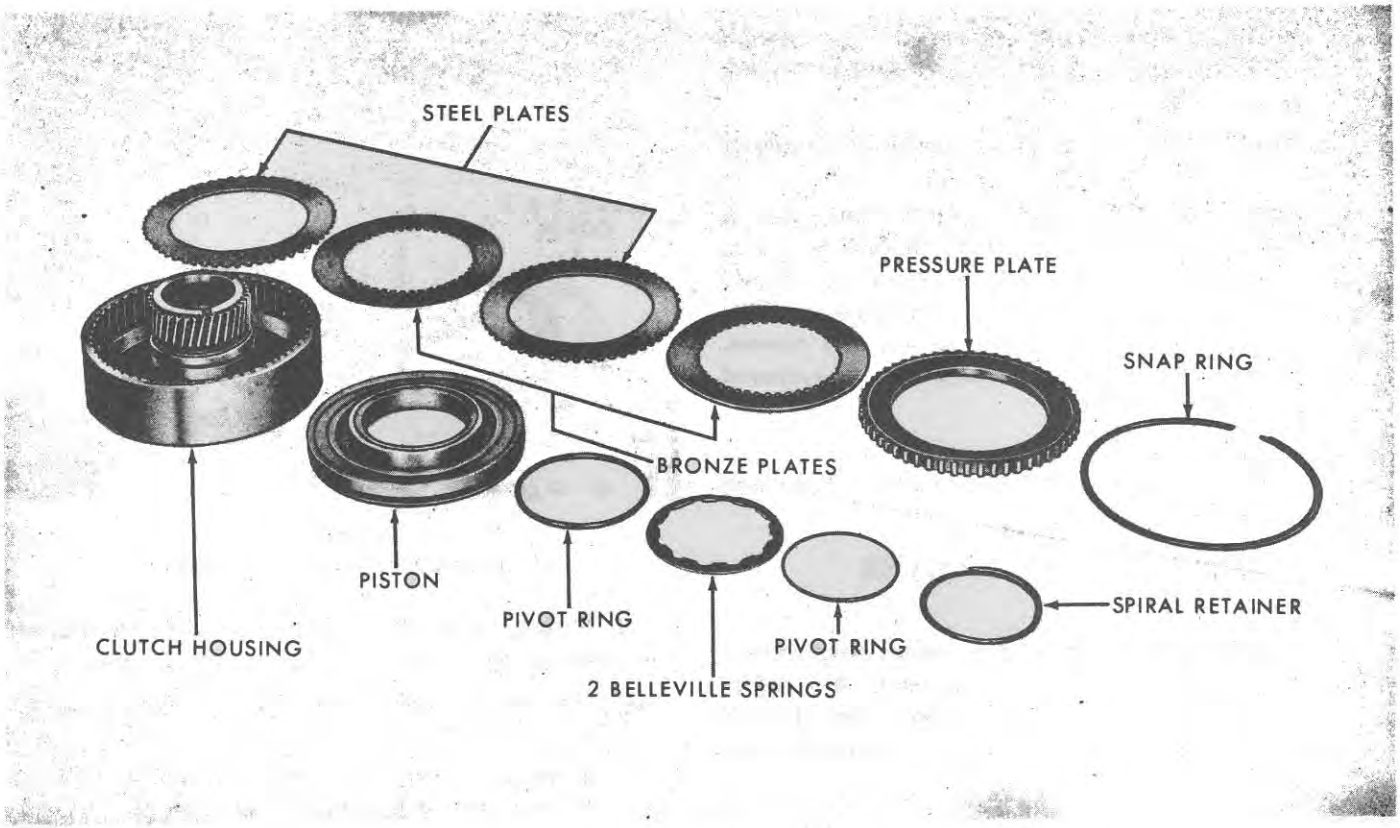

Figure 114
Direct Drive Clutch Disassembled

compressed to permit installation of the spiral retainer.

5. Reverse the procedure in step 4 to disengage the compressor from the large snap ring, then remove the large snap ring and the compressor.
6. Install the steel and bronze clutch plates alternately, starting with a steel plate next to the piston. Then, install the clutch pressure plate and secure the entire assembly with the large snap ring.

SERVOS

All three servos are spring loaded. Servo 1 is serviced as an assembly. All of the components of Servos 2 and 3 are serviced.

A. Disassembly

1. Place servos 2 or 3 in a press using a ¾" x 3" sleeve and Step Plate No. 630-1, and compress the springs sufficiently to remove the nut on the end of the piston rod. See Figure 115.

IMPORTANT: ***Do not place the press spindle or ram directly on the servo rod.***

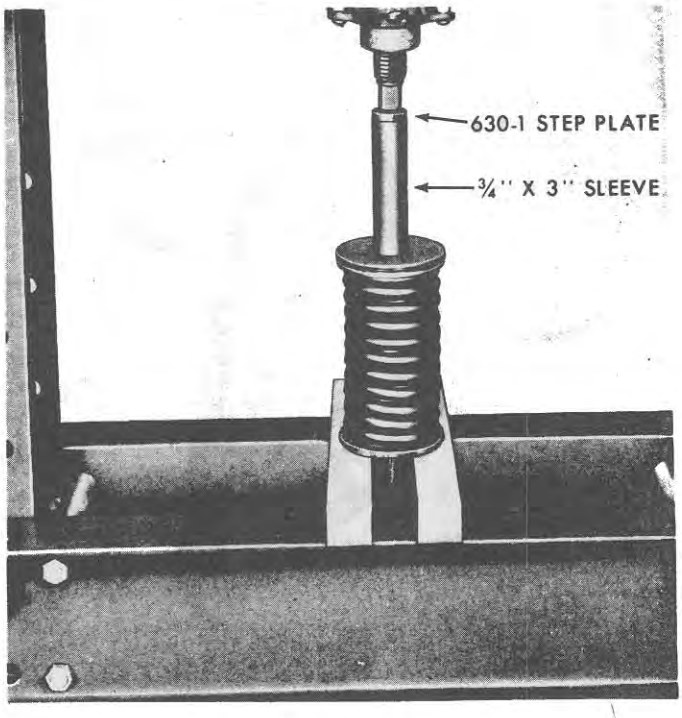

Figure 115
Servicing the Servos

NOTE: ***It is essential that the servo springs are evenly compressed to prevent damage to the parts.***

2. Slowly release the spring pressure until the springs attain their normal free length.

   CAUTION: ***If the servo piston hangs up on the rod, the servo springs should be again compressed and the burr removed. It should be noted that the springs in a compressed state possess considerable force and for this reason, the spring pressure should always be released gradually.***

B. Assembly

Compress the servo springs as described above and install the nut on the piston rod.

SERVO 2 AND 3 COVER

A. Disassembly

IMPORTANT: ***The timing valves are serviced as an assembly. The valve springs are color-coded. Refer to the following chart during assembly to be sure the correct assemblies are used.***

	Servo 2	Servo 3
Dexta 2000 and Super Dexta 3000	Blue	Red
Major 4000	Green	Green
Super Major 5000	Green	Red

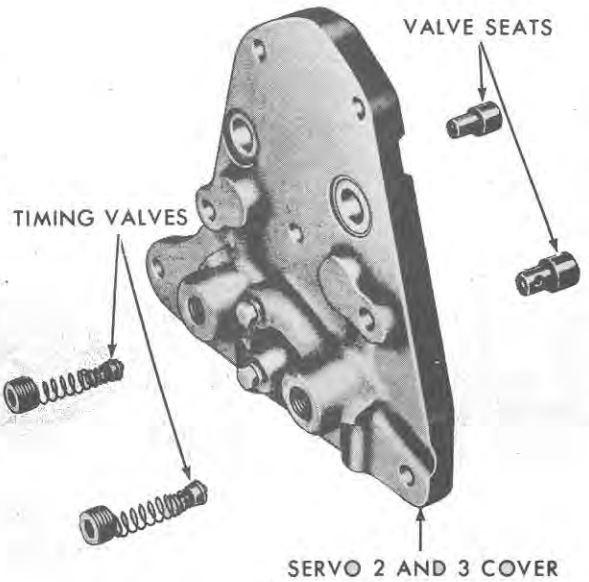

Figure 116
Servos 2 and 3 Cover Assembly



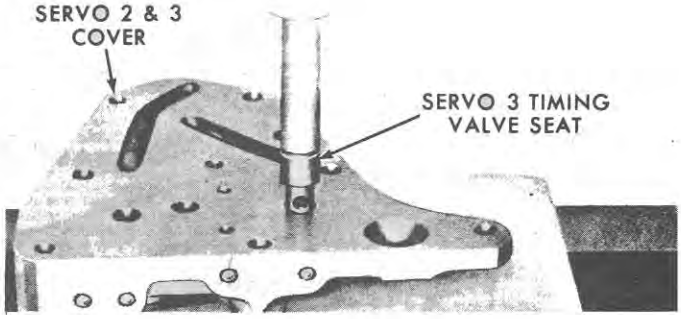

Figure 117
Installing the Timing Valve Seats

1. Remove both hex socket plugs from the outside of the servo cover.
2. Remove the springs and timing valves from the valve seats. See Figure 116.
3. Press the valve seats from the cover, using a ¼" x 3" bolt or steel rod.

   NOTE: ***Do not remove the valve seat by locating the tool on the flat seating surface.***

4. Inspect the springs, timing valves, and valve seats for damage. Discard defective parts as required. Also, inspect the oil bores in the cover for obstructions.

B. Assembly

1. Press the valve seats into the cover, as shown in Figure 117.

   NOTE: ***The seat must be installed with the "thru" hole lined up with the oil passages in the cover.***

2. Install the timing valves, springs, and hex socket plugs.

BUSHINGS AND SLEEVE

The bushings which are serviced are listed below. The first three bushings are to be removed with a cape chisel as shown in Figure 118. Extreme care must be used to be sure that the bushing bores are not damaged. The remainder of the bushings can be removed with the same tools used to install the bushings. See Insert, Figure 118. All of the service bushings are precision parts and, therefore, need not be reamed.

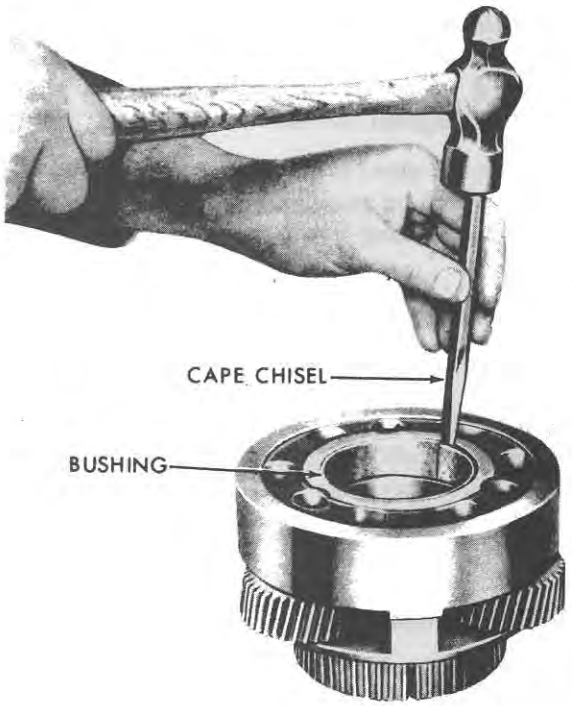

Figure 118
Bushing Removal
(Dexta 2000, Super Dexta 3000 and Major 4000)

The pump adapter plate sleeve is to be installed with the chamfered edge toward the rear (bearing side) of the plate. See Figure 119. Align the holes in the sleeve with the adapter plate holes and press the sleeve so that the chamfered end is flush with the recessed machined surface.

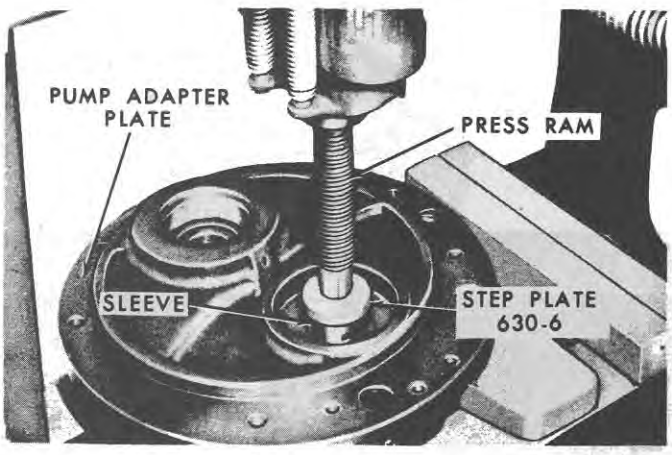

Figure 119
Servicing the Pump Adapter Plate Sleeve
(Dexta 2000, Super Dexta 3000 and Major 4000)

1. Clutch 1: To install, use Bushing Adapter No. 776.
2. P.T.O. Housing Front: To install, use Step Plate No. 630-A.
3. P.T.O. Housing Rear: To install, use Bushing Adapter No. T-811.
4. "A" Sun Gear: To install two bushings, use Bushing Adapter No. T-807.
5. Pump Adapter Plate: To install, use Step Plate No. 630-6.

SPEED SELECTOR

A. Disassembly

1. Remove the two screws retaining the side covers. Remove the two side covers, lever, spring, lever assembly, and three screws to separate the selector assembly, as shown in Figure 120.
2. Remove the hex nut from the shaft, remove the indicator assembly, and remove the snap ring and retainer plate to expose the wheel and cable assembly, shown in Figure 121. The shaft can now be withdrawn and the wheel and cable can be removed.
3. Inspect all parts of this assembly for damage and excessive wear.

B. Assembly

1. Install the shaft, cable and wheel assembly, bushing, and retainer plate and secure with the snap

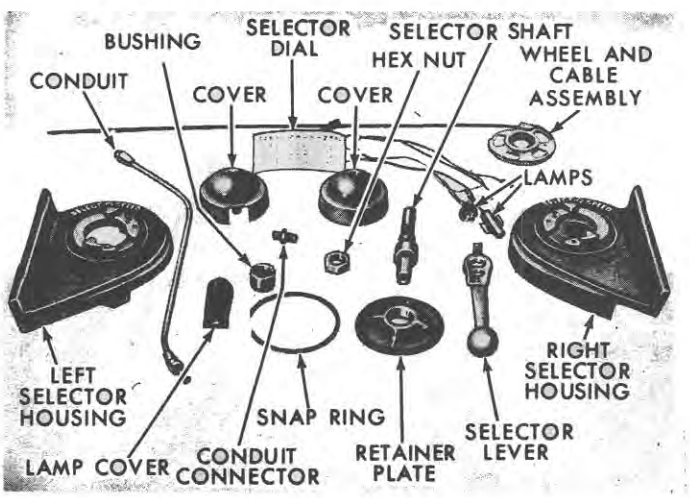

Figure 120
Selector Assembly Components

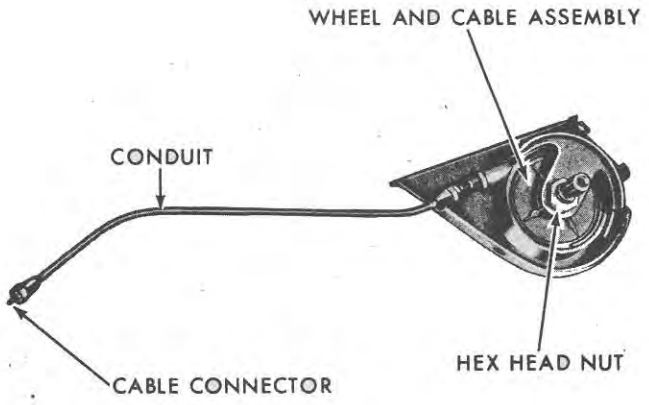

Figure 121
Servicing the Cable and Wheel Assembly

ring after being certain that the cable is engaged in the wheel.

2. Secure the conduit to the fitting and push or pull the cable until ¼ in. (6.35 mm) of the cable connector is protruding from the conduit.
3. Install the indicator assembly and loosely thread the hex nut on the shaft. Align the selector dial to the housing by placing the indicator in the tenth speed position. Tighten the nut.
4. Install the lamp cover and secure the housing halves with three screws.
5. Install the control lever, spring, and notched side cover on the right end of the shaft. Install the remaining cover on the left side of the shaft. Install and tighten the two screws.
6. Assemble the speed selector assembly on the tractor as covered on page 33. Final alignment of the dial to the housing is accomplished at that time.

BEARINGS

The bearings which are serviced are listed below along with the necessary tools for removing and installing the bearings. The tools listed are used as shown in Figures 122 and 123.

A. Super Major 5000

Input Shaft: Removal, Bearing Puller No. 951 and Step Plate No. 625-4. Installation, Step Plate No. 625-1.

P.T.O. Shaft: Removal and Installation: Step Plate No. 625-3.

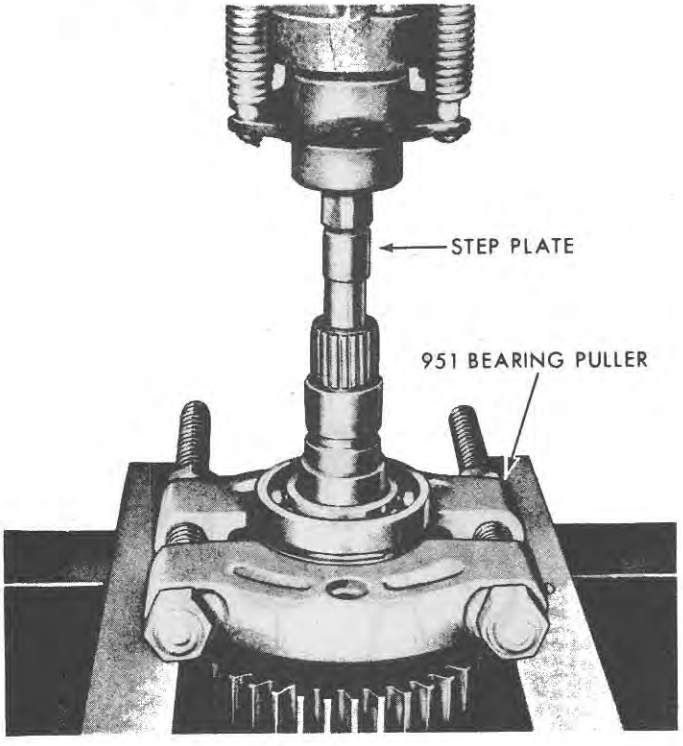

Figure 122
Removing the Roller Bearings

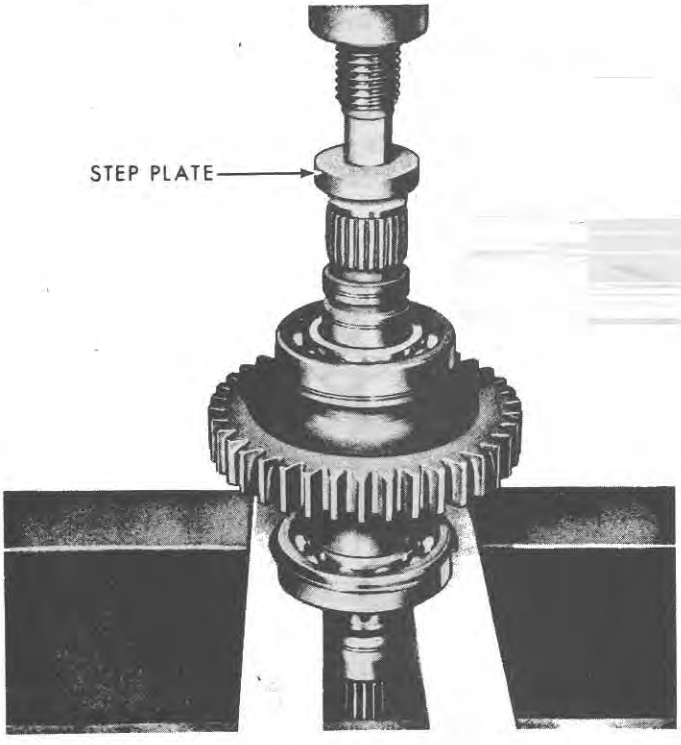

Figure 123
Installing the Roller Bearings

Pump Drive Shaft Front Bearing: Removal, Bearing Puller No. 951 and Step Plate No. 630-5. Installation, Step Plate No. 625-4.

Pump Drive Shaft Rear Bearing: Removal, Bearing Puller No. 951 and Step Plate No. 625-4. Installation, Step Plate No. 630-5. Install bearing with snap ring groove toward rear.

B. Dexta 2000, Super Dexta 3000, and Major 4000

Input Shaft Front Bearing: Removal, Bearing Puller No. 951 and Step Plate No. 630-5. Installation, Step Plate No. 625-4.

Input Shaft Rear Bearing: Removal, Bearing Puller No. 951 and Step Plate No. 630-5. Installation, Step Plate No. 625-4.

"D" Planet Gear Bearing: Removal, Bearing Puller No. 951 and Step Plate No. 630-5. Installation, Step Plate No. 625-4.

P.T.O. Intermediate Shaft Bearing: Removal, Bearing Puller No. 951 and Step Plate No. 630-5. Installation, Step Plate No. 625-4.

Part 8

SELECT-O-SPEED TRANSMISSION

Chapter 2

TROUBLE SHOOTING, SPECIFICATIONS, AND SPECIAL TOOLS

Section	Page
1. Trouble Shooting	73
2. Specifications	81
3. Special Tools	84

1. TROUBLE SHOOTING

A systematic procedure must be followed to locate the causes of an inoperative or malfunctioning transmission. The procedure consists of a series of mechanical, electrical, and operational checks, designed to locate the specific area of difficulty.

However, depending upon the condition of the transmission, the problem may be easily diagnosed by following the checks covered in the Preliminary Checks, page 73, or by using Table I of the Diagnosis Guide, page 78. Table I lists the causes of various operational difficulties which are expressed in problem form. Table II of the Diagnosis Guide, page 79, lists the possible causes of the general conditions given in Table I. The Trouble Shooting Chart, page 76, expresses in tabular form the information included in Table I. A complete explanation of the chart is given on page 76.

If the transmission problem is one of overheating, low circuit pressures, or slippage in certain gear ratios, under loaded conditions, the more thorough Diagnostic Procedure should be followed. A transmission which cannot be operated will of necessity have to be disassembled to determine the cause of difficulty.

PRELIMINARY CHECKS

The following preliminary checks should be performed before any thorough diagnosis is made. These checks are based on the operation of the transmission.

1. Oil Level
2. Drive Line Disengagement
3. Selector Alignment
4. Lube Light Operation
5. Band Adjustment

NOTE: ***It is possible for the transmission to lock up in certain gear ratios under some malfunctioning conditions. Therefore, when making pressure or operational checks, the engine speed should be 800 rpm. If a lock-up is detected, quickly depress the inching pedal or if necessary, move the selector lever to another gear ratio to prevent the engine from stalling.***

Torque Limiting Clutch Check: The torque limiting clutch mounted on the engine flywheel is designed to slip under torques encountered from impact or shock loadings. If for any reason, it is suspected that the torque limiting clutch is not transmitting engine torque, a clutch slippage check can be made. Refer first to the Diagnostic Procedure Hydraulic Condition 3.

1. Operate the tractor under load until the engine and transmission have reached the operating temperature at which the condition occurred.

© FORD MOTOR CO. 1964

2. Under a fully loaded condition, operate the tractor in 8th, 9th, or 10th gear at full throttle and quickly apply both brakes to simulate a shock loading and to slip the torque limiting clutch.

IMPORTANT: ***Never use the above procedure below 8th gear.***

a. If the engine pulls down and stalls, the clutch is holding.

b. If the brakes completely restrain the forward motion of the tractor and the engine does not lug down below 1000 rpm, torque limiting clutch slippage is indicated.

If the above preliminary checks were not effective in determining the cause of the difficulty, it will be necessary to check system pressures, as covered in the Diagnostic Procedure.

DIAGNOSTIC PROCEDURE

This procedure is concerned with diagnosing the hydraulic condition of the transmission by means of checking the pressures at the 3 servo locations. The procedure for adjusting or checking valve pressures is given on page 27. Obviously, this trouble shooting approach will not be used unless some indication of transmission malfunctioning is evident, such as inoperative gear ratios or the lube light remaining on. In the latter instance, it is recommended that the electrical circuit be checked to determine if a short or grounded circuit is the cause of difficulty before making the hydraulic checks.

The diagnostic procedure uses four hydraulic conditions at 800 rpm and one at 2400 rpm, which can be interpreted from the servo pressure readings. The first three conditions do not outline a checking procedure as such but instead provide a list of possible causes which result in the condition. In the case of hydraulic condition 4, the procedure provided is to be performed in conjunction with the pressure checks. Hydraulic condition 5 is related directly to high engine speed operation.

Hydraulic Condition 1: All servo pressures to specification at 800 rpm and lube light remains on.

1. Defective lube sender switch.
2. Low lube circuit pressure.

To further diagnose the latter condition, it will be necessary to check the lube pressure in the lube circuit as covered under "Checking Valve Pressure", page 27. If the lube pressure is below specifications, page 82, the following are possible causes:

1. Broken lube circuit shaft seals.
2. Excessive transmission end clearances.
3. Leakage from heat exchanger circuit.
4. Leakage at control valve gasket.
5. Improperly adjusted or malfunctioning relief valve.

NOTE: ***If pressures are to specification and rough shifting characteristics exist, check band adjustment, and Servo 2 and 3 timing valves.***

Hydraulic Condition 2: All servo pressures above specification at 800 rpm.

Improperly adjusted or malfunctioning system regulating valve.

Hydraulic Condition 3: All servo pressures below specification at 800 rpm.

1. Low oil level.
2. Plugged suction screen or restriction in intake passage.
3. Pump adapter plate or pump gaskets leaking.
4. Plugged filter with malfunctioning bypass valve.
5. Main pressure tube O-rings leaking.
6. Leakage between control valve body halves or at the control valve gasket.
7. Improperly adjusted or malfunctioning system regulating valve.
8. Missing valve spools D.D.C.-B-1, B-2 and B-3.
9. Improperly assembled P.T.O. feathering valve.
10. Slipping torque limiting clutch.

NOTE: ***If the pressures are below specifications only when the P.T.O. handle is out, and the handle is known to be properly adjusted, leakage is indicated in the P.T.O clutch circuit.***

Hydraulic Condition 4: Pressures below specification in certain gear ratios, lube light "ON."

1. Observe in which gear ratios low pressure readings occur.
2. Fully depress inching pedal in gear ratios where low pressure readings occur and observe lube light and pressure readings at Servos 2 and 3.

a. If pressure and lube light goes off, leakage is occuring in the transmission indirect circuit consisting of C1, C2, and C3.

b. If pressures at B-2 and B-3 Servos remain low, leakage is occurring in the direct circuit consisting of Servo 2 and Servo 3.

3. Use the Trouble Shooting Chart on page 76, and note which servos and clutches are pressurized where low pressure readings occur. A process of elimination will make evident which servo or clutch is leaking. In the case of the common circuit for band 1 servo and the direct drive clutch, it will not be possible to pinpoint leakage separately in either of these elements.

Hydraulic Condition 5: All servo pressures out of specifications at 2400 rpm.

NOTE: ***Diagnose only after Hydraulic Conditions 1 through 4 have been considered.***

Improperly adjusted or malfunctioning transmission relief valve.

TIMING VALVE–IMPROPER OPERATION

Faulty timing valve operation will be detected during the 4-5 shift or the 5-4 shift as a rough shift.

Two possible conditions can be encountered, depending on the nature of the problem.

During either shift, the tractor may go to Park or Neutral momentarily during the shift cycle.

Faulty operation during the 4-5 shift will be caused by the Servo 2 timing valve. Faulty operation during the 5-4 shift will be caused by the Servo 3 timing valve.

The possible conditions causing the transmission to go to either Park or Neutral are as follows:

Park

1. Oil leak at servo
2. Oil leak at seat-to-timing valve sleeve
3. Improper band adjustment
4. Incorrect valve spring in timing valve
5. Timing valve stuck in the fast dump position
6. Timing valve assembly stuck off its seat

Neutral

1. Incorrect band adjustment
2. Incorrect valve spring
3. Restricted timing valve orifice
4. Valve stuck in sleeve

© FORD MOTOR CO. 1964

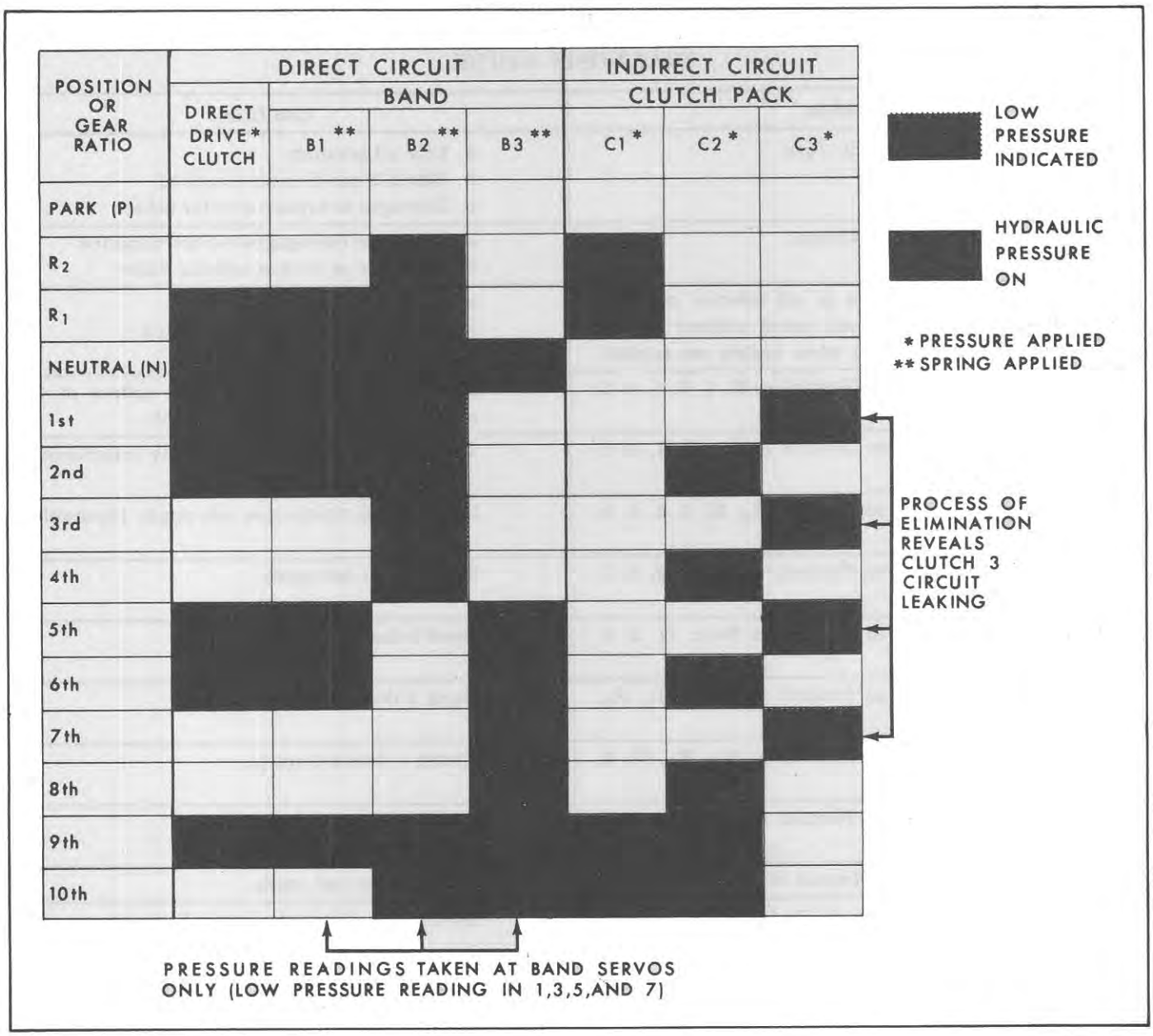

When the trouble shooting chart is used in conjunction with the pressure checks, the band or clutch columns must be approached solely from a hydraulic pressure application standpoint whether the element itself is applied or released. The pressure application on the charts are indicated by the red shaded areas. Thus, for 3rd gear ratio, hydraulic pressure is applied to band 2 servo, and clutch 3.

Since the pressure checks are made only at the band servos, it is necessary to compare the low pressure readings obtained in the various gear ratios with the shaded areas on the chart in order to form a pattern. This, of course, is done following the procedure covered in Hydraulic Condition 4 in the Diagnostic Procedure. For example, low pressure readings are noted in 1st, 3rd, 5th, and 7th.

The inching pedal is depressed in each of these ratios as covered in 2a, Hydraulic Condition 4. The pressures at B-1, B-2, and B-3, increase to specification. The leak is in the indirect circuit. Since only gear ratios 1, 3, 5, and 7 are affected, and since only the indirect circuit is involved, it is readily indicated by shaded areas on the chart that clutch 3 is the only indirect circuit clutch used in these gear ratios. Thus, it is readily determined that a pressure leak is occurring in the transmission clutch 3 circuit.

TABLE I
DIAGNOSIS GUIDE

Problem	Condition
1. Transmission remains in Park.	a. Low oil pressure. b. Bands 2 and 3 remain applied. c. Damaged or broken selector cable.
2. Transmission goes to Neutral.	a. Drive line disengagement disconnected. b. Damaged or broken selector cable.
3. Transmission functions in all selector positions but can be held in tenth speed without stalling the engine (1500 rpm) when brakes are applied.	a. Low oil pressure. b. Defective torque limiting clutch.
4. Transmission goes to Neutral in N, 1, 2, 3, 4, 5, 6, 7, 8, 9, and 10.	Mainshaft broken or damaged splines at "B" carrier, or C_2-C_3 housing assembly.
5. Transmission goes to Neutral in R_1, N, 1, 2, 5, 6, and 9.	Direct drive clutch does not apply (mechanical).
6. Transmission goes to Park in R_1, N, 1, 2, 5, 6, and 9.	Direct drive clutch does not apply (hydraulic).
7. Transmission goes to Neutral in R_2, N, 3, 4, 7, 8, and 10.	Band 1 does not apply.
8. Transmission goes to Neutral in Park, N, 5, 6, 7, and 8.	Band 2 does not apply.
9. Transmission goes to Neutral in Park, R_1, R_2, N, 1, 2, 3, and 4.	Band 3 does not apply.
10. Transmission goes to Neutral in R_1, R_2, N, 9, and 10.	Clutch 1 does not apply.
11. Transmission goes to Neutral in N, 2, 4, 6, 8, 9, and 10.	Clutch 2 does not apply.
12. Transmission goes to Neutral in N, 1, 3, 5, and 7.	Clutch 3 does not apply.
13. Transmission locks up in Park, R_2, 3, 4, 7, 8, and 10.	Direct drive clutch does not release.
14. Transmission functions in direct drive gear ratios when overdrive selections are made.	Direct drive clutch does not release (hydraulic valve spool stuck).
15. Transmission locks up in R_1, N, 1, 2, 5, 6, and 9.	Band 1 does not release (mechanical).
16. Transmission locks up in R_2, R_1, 1, 2, 3, 4, 9, 10, and goes to N in Neutral.	Band 2 does not release.
17. Transmission locks up in 5, 6, 7, 8, 9, and 10.	Band 3 does not release.
18. Transmission locks up in Park, 1, 2, 3, 4, 5, 6, 7, 8, and goes to N in Neutral.	Clutch 1 does not release.
19. Transmission locks up in Park, R_1, R_2,, 1, 3, 5, and 7.	Clutch 2 does not release.
20. Transmission locks up in Park, R_1, R_2, 2, 4, 6, 8, and goes to N in Neutral.	Clutch 3 does not release.
21. Transmission goes to Park or Neutral between 4-5 or 5-4 shift.	Timing valve malfunction.

TABLE II
DIAGNOSIS GUIDE

Condition	Possible Cause	
1. Low pump oil pressure (all gear ratios).	Refer to Hydraulic Condition 4, page 74.	
2. Direct Drive Clutch inoperative. (Does not apply.)	a. Broken input shaft seals. b. Leaking Servo 1-DDC pressure lines, O-rings, or fittings. c. Leaking DDC piston O-rings. d. Leaking sealing balls in input shaft.	e. Leaking tube or sealing balls in adapter plate. f. Leaking between valve body halves. g. Leaking valve body gasket. h. Leaking servo and servo rod O-rings. i. Scored or burred piston.
(Does not release.)	a. Sticking B1-DDC valve spool. b. Scored or burred piston.	c. Defective piston return spring. d. Warped or defective clutch discs.
3. Band 1 inoperative (Does not apply.)	a. Sticking B1-DDC valve spool. b. Improper B-1 adjustment. c. Missing band strut.	d. Defective servo spring. e. Scored or burred servo.
(Does not release.)	a. Broken input shaft seals. b. Leaking Servo 1-DDC pressure lines, O-rings or fittings. c. Leaking DDC piston O-rings. d. Leaking sealing balls in input shaft. e. Leaking tube or sealing balls in adapter plate.	f. Leaking between valve body halves. g. Leaking valve body gasket. h. Leaking servo and servo rod O-rings. i. Scored or burred servo. j. Improper band adjustment.

Condition	Possible Cause	
4. Band 2 or 3 inoperative. (Does not apply.)	a. Improper band adjustment.	d. Scored or burred servo.
	b. Missing band strut.	e. Sticking band valve spool.
	c. Broken or defective servo spring.	f. Gasket leakage between servo ports.
(Does not release.)	a. Improper band adjustment.	e. Leaking servo O-rings.
	b. Leaking valve body gasket.	f. Scored or burred servo.
	c. Leakage between valve body halves.	g. Leaking servo rod guide O-rings.
	d. Leaking pressure line O-rings.	h. Snap ring missing on servo rod.
5. Clutch 1 inoperative. (Does not apply.)	a. Leaking valve body gasket.	d. Broken "C" sun gear seals.
	b. Leaking piston O-rings.	e. Broken distributor seals.
	c. Broken mainshaft seals.	f. Scored or burred piston.
(Does not release.)	a. Sticking clutch valve spool.	c. Broken or defective piston return spring.
	b. Scored or burred piston.	d. Warped or defective clutch discs.
6. Clutch 2 or 3 inoperative. (Does not apply.)	a. Leaking valve body gasket.	e. Broken mainshaft or mainshaft splines.
	b. Leaking piston O-rings.	f. Leakage between valve body halves.
	c. Broken mainshaft seals.	g. Scored or burred piston.
	d. Broken "C" sun gear seals.	
(Does not release.)	a. Sticking clutch valve spool.	c. Broken or defective piston return spring.
	b. Scored or burred piston.	d. Warped or defective clutch plates.

2. SPECIFICATIONS

(NOTE: *The following specifications supersede the specifications in the text.*)

End Play

Front and Rear Transmission Compartment . . . . . 0.005–0.015 in. (0.127–0.381 mm)

Planet Pinion Gears . . . . . 0.010–0.028 in. (0.254–0.711 mm)
Except Ford 4000 and Ford 5000, B carrier . . . . . 0.040–0.058 in. (1.016–1.473 mm)

Preload

P.T.O. Shaft Bearings . . . . . 18–25 lbs. pull (8–11.50 kg)

Servo Bore Diameter

Servo 1 . . . . . 1.999–2.001 in. (50.77–50.82 mm)
Servo 2 . . . . . 2.125–2.127 in. (53.97–54.02 mm)
Servo 3: Ford 2000, Ford 3000, and Ford 4000 . . . . . 3.000–3.002 in. (76.20–76.25 mm)
Ford 5000 . . . . . 3.250–3.252 in. (82.55–82.60 mm)
After 5H18C . . . . . 3.000–3.002 in. (76.20–76.25 mm)

New Model Ford 5000:
Servo 1 and Servo 2 . . . . . 2.250–2.252 in. (57.15–57.20 mm)
Servo 3 . . . . . 3.000–3.002 in. (76.20–76.25 mm)

Band Adjustments

Band #1 (applied) after screw torque of 19–21 lbs. ft. (2.62–2.90 kgm) . . . . . back off 1-1/4 turns
Band #2 and #3 (released) after screw torque of 110–130 lbs. in. (126.73–149.77 kg/cm) . . . . . back off 3/4 turn
Lock Nut Torque . . . . . 20–25 lbs. ft. (2.76–3.45 kgm)

Thrust Washers

Selective Fronts:
Ford 2000, 3000, 4000, and Ford 5000 . . . . . 0.067–0.122 in. (1.702–3.099 mm)
Selective Rear:
Ford 2000 and Ford 3000 . . . . . 0.092–0.152 in. (2.336–3.861 mm)
Ford 4000 and Ford 5000 . . . . . 0.102–0.142 in. (2.591–3.607 mm)
Selective Washers are available in increments of 0.010 in. (0.254 mm)

Reservoir

Oil Specifications M-2C41

Capacity:	Ford 2000 & Ford 3000			Ford 4000			Ford 5000		
	U.S. Qts.	Imp. Qts.	Liters	U.S. Qts.	Imp. Qts.	Liters	U.S. Qts.	Imp. Qts.	Liters
Initial fill w/filter and heat exchanger . .	13.25	11.0	12.5	13.25	11.0	12.5	12.75	10.6	12.0
Initial fill w/filter less heat exchanger. .	12.0	10.0	11.3	–	–	–	–	–	–
Refill	11.0	9.2	10.4	12.25	10.2	11.6	11.75	9.8	11.1

Pump

Capacity . . . . . 4 gpm (3.33 Imp. Gals., 14.0 Liters) @ 900 rpm and 200 psi (14.0 kg/cm2) @ 120° F. (49° C.)
Type and Location . . . . . roller vane, mounted coaxially on transmission input shaft

Control Valve

Valve Spool Diameters (Clutch and Servo)
Ford 2000, Ford 3000, and Ford 4000 . . . . . 0.3738–0.3742 in. (9.4945–9.5047 mm)
Ford 5000 (and new Ford 4000) . . . . . 0.3743–0.3747 in. (9.5072–9.5174 mm)
Valve Spool Diameters (Feathering) . . . . . 0.3743–0.3747 in. (9.5072–9.5174 mm)
Bore Diameters . . . . . 0.3751–0.3758 in. (9.5275–9.5453 mm)

© FORD MOTOR COMPANY — 1968

(NOTE: ***The following specifications supersede the specifications in the text.)***

Valve Spring Lengths

	Free Length	Under Load
Feathering Valve (Transmission)		
Plunger Spring	1.40 in. (35.56 mm)	0.88 in. (22.35 mm) @ 7.8– 8.8 lbs. (3.5–4.0 kg)
Return Spring	1.22 in. (30.98 mm)	0.78 in. (19.81 mm) @ 1.9– 2.0 lbs. (0.8–0.9 kg)
Feathering Valve (P.T.O.)		
Plunger Spring	1.12 in. (28.44 mm)	0.86 in. (21.84 mm) @ 7.8– 8.8 lbs. (3.5–4.0 kg)
Return Spring	1.22 in. (30.98 mm)	0.78 in. (19.81 mm) @ 1.9– 2.0 lbs. (0.8–0.9 kg)
Detent (1)	0.75 in. (19.05 mm)	0.58 in. (14.73 mm) @ 10.0–12.0 lbs. (4.5–5.4 kg)
Valve Spools (6)	1.24 in. (31.50 mm)	0.45 in. (11.43 mm) @ 3.1– 3.5 lbs. (1.4–1.6 kg)
Transmission Relief Valve (1)	2.06 in. (52.32 mm)	1.66 in. (42.16 mm) @ 15.5–17.5 lbs. (7.0–7.9 kg)
System Regulating Valve (1)	2.47 in. (62.74 mm)	1.88 in. (47.75 mm) @ 20.0–21.0 lbs. (9.1–9.5 kg)
Sequencing Valve (1)	2.89 in. (73.41 mm)	1.98 in. (50.29 mm) @ 12.3–14.1 lbs. (5.6–6.4 kg)

Clutch Piston Return Springs

	Free Length	Under Load
Direct Drive Clutch Spring:		
Height		0.115–0.125 in. (2.92–3.17 mm)
Thickness		0.035–0.037 in. (0.88–0.93 mm)
Clutch 1, 2, and 3 Springs		
Ford 2000 and Ford 3000	2.06 in. (52.3 mm)	1.33 in. (33.8 mm) @ 200–225 lbs. (90.7–102.1 kg)
Ford 4000 and Ford 5000	2.29 in. (58.1 mm)	1.38 in. (35.0 mm) @ 305–335 lbs. (138.4–151.9 kg)
P.T.O. Clutch Spring	2.34 in. (59.4 mm)	1.188 in. (30.2 mm) @ 200–225 lbs. (90.7–102.1 kg)

Servo Springs

Ford 2000 and Ford 3000

	Free Length	Under Load
Servo 1	3.84 in. (97.5 mm)	2.16 in. (54.8 mm) @ 304–336 lbs. (137.9–152.4 kg)
Servo 2 and Servo 3 Inner	6.54 in. (166.1 mm)	4.92 in. (124.9 mm) @ 225–275 lbs. (102.1–124.7 kg)
Servo 3 Outer	9.90 in. (251.4 mm)	4.88 in. (123.9 mm) @ 467–515 lbs. (211.8–233.6 kg)

Ford 4000 and Ford 5000

	Free Length	Under Load
Servo 1	3.43 in. (87.1 mm)	2.16 in. (54.8 mm) @ 360–396 lbs. (163.3–179.6 kg)
Ford 4000 after production date code 8A19	3.33 in. (84.6 mm)	2.16 in. (54.8 mm) @ 333–367 lbs. (151.1–166.5 kg)
New Model Ford 5000	3.84 in. (97.5 mm)	2.16 in. (54.8 mm) @ 475–525 lbs. (215.5–238.1 kg)
Servo 2 and Servo 3 Inner	7.22 in. (183.3 mm)	4.36 in. (110.7 mm) @ 375–423 lbs. (170.1–191.9 kg)
Servo 3 Outer	10.31 in. (261.8 mm)	4.88 in. (123.9 mm) @ 506–556 lbs. (229.5–252.2 kg)

Hydraulic Pressures at Normal Operating Temperature

System Regulating Valve @ 800 rpm	205 psi (14.4 kg/cm^2)
Transmission Relief Valve @ 2400 rpm	
With Heat Exchanger	225 psi (15.8 kg/cm^2)
Less Heat Exchanger	215 psi (15.1 kg/cm^2)
Sequencing Valve	125 psi (8.8 kg/cm^2)

Torque Limiting Clutch Springs

	Color Code	O.D.	I.D.	Thickness	Free Height
Ford 2000 and 3000	Red	8.30 in. (210.82 mm)	6.75 in. (171.45 mm)	0.106–0.109 in. (2.69–2.77 mm)	0.175 in. (4.45 mm)
Ford 4000	Yellow	8.30 in. (210.82 mm)	6.75 in. (171.45 mm)	0.106–0.109 in. (2.69–2.77 mm)	0.189 in. (4.80 mm)
Ford 5000	Blue	8.30 in. (210.82 mm)	6.75 in. (171.45 mm)	0.111–0.114 in. (2.82–2.90 mm)	0.198 in. (5.03 mm)

(NOTE: The following specifications supersede the specifications in the text.)

Disc Thickness (with lining)
- Ford 2000, Ford 3000 and Ford 4000 ..... 0.329-0.353 in. (8.357-8.966 mm)
- Ford 5000 ..... 0.329-0.353 in. (8.357-8.966 mm)

Drive Plate Thickness
- Ford 2000, Ford 3000 and Ford 4000 ..... 0.278-0.282 in. (7.061-7.163 mm)
- Ford 5000 ..... 0.278-0.282 in. (7.061-7.163 mm)

Bushing Diameter

Clutch #1 Housing ..... 2.217-2.218 ins. (56.31-56.33 mm)
"C" Carrier (Front) ..... 3.062-3.063 ins. (77.78-77.81 mm)
(Rear) ..... 1.374-1.375 ins. (34.90-34.92 mm)
"D" Sun Gear ..... 0.999-1.000 in. (25.37-25.40 mm)

Rear Support:
- Ford 2000, Ford 3000, and Ford 5000 ..... 1.749-1.750 ins. (44.42-44.43 mm)
- Ford 4000 ..... 1.624-1.625 ins. (41.25-41.27 mm)

P.T.O. Clutch (Front) ..... 1.874-1.875 ins. (47.59-47.62 mm)
(Rear) ..... 1.624-1.625 ins. (41.24-41.27 mm)
Direct Drive Clutch (Front) ..... 1.440-1.441 ins. (36.57-36.60 mm)
(Rear) ..... 1.315-1.316 ins. (33.40-33.42 mm)

Output Shaft Speed at 1500 Engine rpm

	Ford 2000 Ford 3000	Ford 4000	Ford 5000
R_2	—173	—635	—620
R_1	—117	—428	—417
N	—	—	—
1	41	144	140
2	56	205	200
3	58	214	209
4	83	305	297
5	133	487	471
6	171	625	608
7	197	721	691
8	253	926	903
9	409	1500	1456
10	607	2206	2143

Torque Specifications

Valve Housing Mounting Bolts ..... 6-8 lbs. ft. (0.82-1.10 mkg)
P.T.O. Bearing Retainer Bolts ..... 14-17 lbs. ft. (1.93-2.35 mkg)
Pump Mounting Bolts ..... 15-18 lbs. ft. (2.07-2.48 mkg)
Pump Adapter Plate Bolts ..... 25-30 lbs. ft. (3.45-4.14 mkg)
Distributor Mounting Bolts ..... 20-25 lbs. ft. (2.76-3.45 mkg)
Rear Support Mounting Bolts ..... 35-40 lbs. ft. (4.83-5.53 mkg)
Servo 1 Cover Attaching Bolts ..... 20-25 lbs. ft. (2.76-3.45 mkg)
Torque Limiting Clutch Mounting Bolts ..... 25-30 lbs. ft. (3.45-4.14 mkg)
Transmission Cover Attaching Bolts ..... 20-23 lbs. ft. (2.76-3.17 mkg)
Filter Cover ..... 35-40 lbs. ft. (4.83-5.53 mkg)
Servos 2 and 3 Cover Attaching Bolts ..... 35-40 lbs. ft. (4.83-5.53 mkg)
Heat Exchanger Line Adapter Bolts ..... 20-25 lbs. ft. (2.76-3.45 mkg)

Timing Valves

Valve Spring Color Code	Spring Free Length
Green	0.47 in. (11.93 mm)
Red	0.45 in. (11.43 mm)
Blue	0.40 in. (10.16 mm)

3. SPECIAL TOOLS

Tool No.	Description
N-488	Belleville Spring Compressor
N-488-3	Lever
SW-512	Torque Limiter Pilot
625-1	Step Plate
625-3	Step Plate
625-4	Step Plate
630-S	Step Plate Set (Nos. 1-11)
N-774-A	Pressure Gauge
N-775	Compressor
776	Bushing Adapter
T-807	Bushing Adapter
T-811	Bushing Adapter
943	Bearing Cup Pulling Attachment
943-S	Slide Hammer
951	Bearing Puller

Part 8

SELECT-O-SPEED TRANSMISSION

Section		Page
1.	Repair Manual Revisions	1
2.	New Model Tractor Select-O-Speed Information	7
3.	New Model Tractor Select-O-Speed Transmission Trouble Shooting Without Lube Light	9

This section contains service information to update the existing repair manual to include changes made in the Select-O-Speed transmission. Parts interchangeability is covered. Service procedures which have changed are noted and included.

Read this section carefully and make notes in the repair manual text to call attention to changes.

1. REPAIR MANUAL REVISIONS

Page references are given below for specific points of change. Place an asterisk in the text margin to indicate that a change in text or added information is necessary. These marks will cue the reader to refer to this supplement for additional information. Some of the changes may be written in the text itself as indicated.

PAGE 24

Step 6, right-hand column, requires additional information describing new parts used.

When installing a new or used P.T.O. handle and slider assembly, be sure to use the additional washer and thicker jam nut put into production units from 12-65 on. Position the new flat washer between the spacer and the lock washer. Use the thicker jam nut in place of the previous thinner jam nut to secure the assembly as shown, Figure 1.

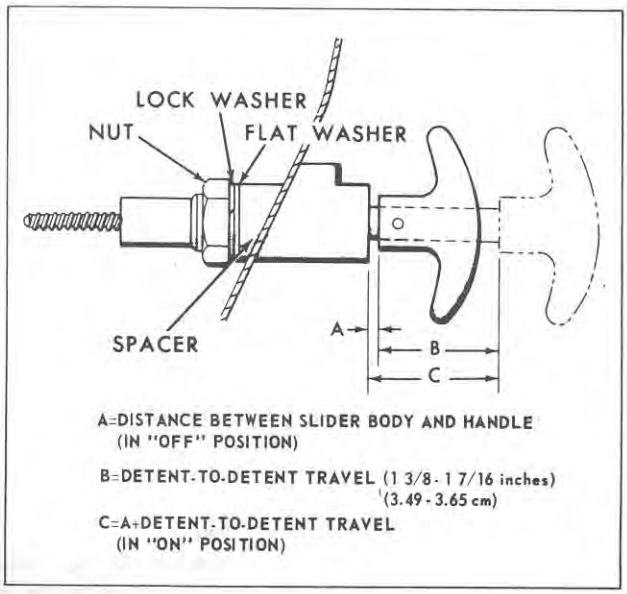

Figure 1
P.T.O. Handle and Slider Installation

PAGE 32

Step 5, left-hand column, should read: "Install the starter safety switch and bracket with the camshaft in the Park (P) position. Position the bracket correctly by placing a 0.035–0.055-inch (.89–1.40 mm) feeler gauge between the lobe on the cam and the switch. Force the switch against the feeler gauge until the ball is fully into its bore and the face of the switch contacts the feeler gauge.

NOTE: ***Tighten the bolts securing the switch bracket to the control valve while holding this condition to allow proper ball travel in the switch. Tighten to the specified torque, page 83.***

6. Install the inching pedal return spring."

PAGE 41

Step 3 requires more information for the Ford 4200 Tractor Select-O-Speed transmission:

NOTE: ***On the 4200 Tractor, adjust the length of the inching pedal rod assembly to give a gap of 0.010–0.060-inch (.25–1.52 mm) between the pedal return stop and the pedal shank. Refer to Figure 2.***

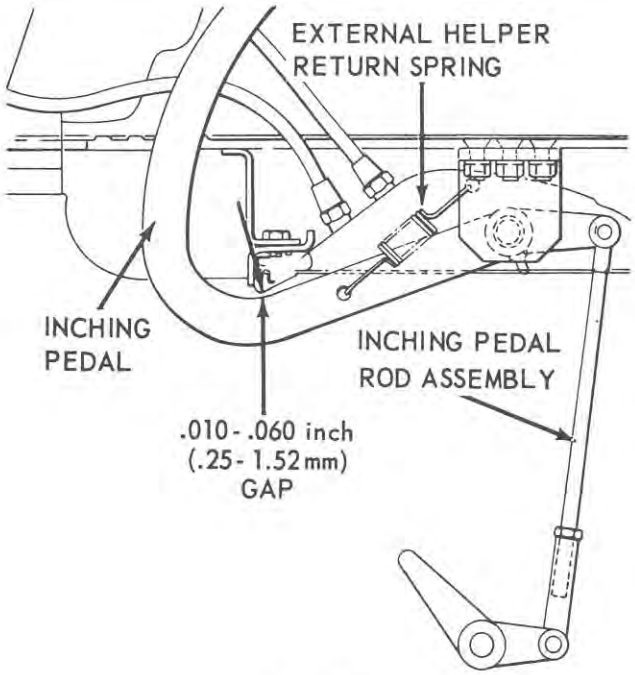

Figure 2
Ford 4200 Select-O-Speed Inching Pedal Adjustment

PAGE 42

Step 10 should also indicate that in the event of oil leakage from any band adjusting screw, or when installing a band adjusting screw, apply a non-hardening plastic lead sealer to the screw threads where the threads engage the case.

PAGE 53

Step 26 requires additional information. If the snap rings are removed from the output shaft, they must be silver soldered securely together during assembly. If a unit built prior to 1966 has the old snap rings on the output shaft, install new rings and silver solder the ends together securely. (An old ring with the wide gap appears in the text, Figure 83.)

PAGE 55

Step 3, left-hand column, requires additional information.

Improper installation of the oil pump adapter plate can contribute to misalignment of the input shaft and in turn, cause fretting corrosion of the input shaft and torque limiting clutch hub splines. Before the adapter plate is installed on the transmission, check to be sure:

1. Both gasket surfaces are clean and free of old gasket material.

2. The dowel pins are in good condition. If the pins show any evidence of material being sheared from them, replace the pins.

3. The dowel pin holes in the adapter plate are not elongated. If this condition exists, replace the plate. Then install the two front shaft seals on the input shaft and center them, using petroleum jelly. Install the pump adapter plate and gasket as shown in Figure 87, being sure the adapter plate fits snugly over the dowel pins to position the plate on the case. Check the gasket to be sure it is not creased. Install the six bolts and one nut and tighten them alternately and evenly to 25–30 lbs. ft. (3.46–4.15 kgm).

   NOTE: ***It may be necessary to tap the plate lightly with a hammer handle to locate it on the dowel pins and against the case. Do not force it.***

Step 5, left-hand column requires additional information for proper installation of the transmission pump. To reduce the possibility of damage to the transmission pump rotor use the following installation procedure:

1. Position the pump firmly against the pump gasket and adapter plate.

2. Tighten two mounting bolts 180° apart to 3–5 lbs. ft. (.41–.69 kgm). Then tighten the remaining two bolts to the same torque.

3. Apply the final specified torque of 15–18 lbs. ft. (2.07–2.49 kgm) to two mounting bolts 180° apart. Tighten the remaining two bolts to 15–18 lbs. ft. (2.07–2.49 kgm).

4. Check the installation by rotating the input shaft by hand. Any unusual load is cause for further investigation of the pump assembly.

Step 1 under "D. Torque Limiting Clutch – Removal and Installation," requires additional information.

A new torque limiting clutch and a new input shaft assembly were incorporated into tractor production effective with tractor code 8J23. The clutch and the shaft now have a ten tooth straight spline.

The new clutch assembly has no dampening springs and has a locating pilot on its flywheel end which will locate in a new crankshaft pilot bearing.

The previous shaft and the previous clutch assembly will no longer be serviced. If either the previous shaft or the previous clutch assembly is damaged, install the new shaft, clutch assembly, and pilot bearing.

PAGE 56

Add Step 6 under Step 5, left-hand column: "If oil leakage is evident at the inlet oil plug, Figure 3, in the Ford 5000 Tractor Select-O-Speed transmission, ream the hole oversize to 1.120–1.125 inches (28.448–28.675 mm) diameter. Clean the hole thoroughly and install the oversize plug, 1.135–1.137 inches (28.829–28.898 mm) diameter.

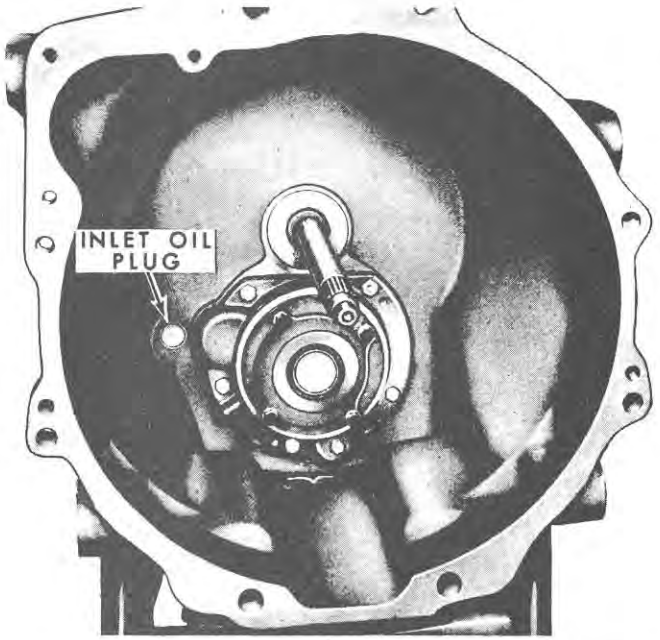

Figure 3
Ford 5000 Select-O-Speed Inlet Oil Plug Location

PAGE 58

"Single Speed P.T.O.," left-hand column requires additional information.

The new input shaft released for service for single speed P.T.O. transmissions does not have the disconnect feature. It will be necessary to remove the disconnect mechanism and plug the hole in the case on tractors produced before date code 8J23. A plug has been released for this application. Use a suitable sealer on the plug threads.

PAGE 63

The note under "Clutch Assemblies" in the right-hand column now requires additional information.

To eliminate the possibility of the 2 and 3 Clutch pack snap rings being dislocated, they are now being welded in place as follows:

1. The Clutch 2 and 3 snap rings are to be assembled with the ends straddling two teeth of the housing. The ends should then be butt welded using an AWS-312-16 Electrode. After welding, all weld spatter and excess weld should be removed from all surfaces. **Do not** weld the rings to the plates.

PAGE 64

Cross out the text of Step 2. The step should read: "Inspect the clutch plates for signs of overheating, distortion, wear, or scoring. In the Ford 2000, 3000, and 4110 Tractor Select-O-Speed transmissions, check the coning of the steel plates in the P.T.O. clutch. Position the plates on a flat surface. Check the coning as shown in Figure 109. The plates are coned to 0.015 – 0.020 inch (0.381–0.508 mm). Install new plates if the coning is less than 0.015 inch (0.381 mm).

PAGE 65

Additional information is required under "Direct Drive Clutch", right-hand column.

New direct drive clutch assemblies are available for service for all Select-O-Speed transmissions. Heavier drive plates, 0.080 inch (2.03 mm) thick as against 0.060 inch (1.52 mm) previously, are used in these improved assemblies. A slightly thinner pressure plate is used to accommodate the heavier drive plates. Do not use the 0.080 inch (2.03 mm) drive plates with the thicker pressure plate, nor the 0.060 inch (1.52 mm) drive plates with the thinner pressure plate. Refer to Figure 4 for parts identification.

If the housing is damaged, install a new direct drive clutch assembly.

Also, Select-O-Speed transmissions dated after production date code 8B01 incorporate the heavier drive plates and a new pressure plate, .266 inch (6.76 mm) thick, similar in appearance to the .304 inch (7.72 mm) thick pressure plate shown in Figure 4.

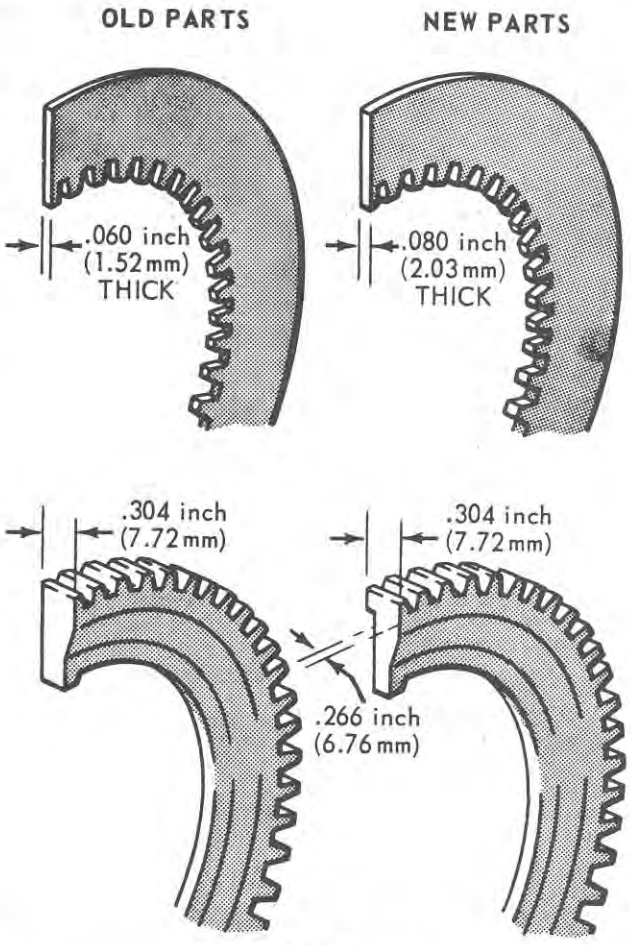

Figure 4
Drive Plate and Pressure Plate Identifying Dimensions

In addition, prior to transmission code 5H26 for the Ford 2000, 3000, and 4000 Tractor Select-O-Speed transmissions and code 5H10 for Ford 5000 Select-O-Speed, direct drive clutches use a single piston return Belleville spring. After these production points, the clutch assemblies include two piston return Belleville springs to assure a more positive release of the clutch pack. Exercise care to use the correct combination of parts for assembly.

The newer clutches have radial face grooves instead of circumferential grooves on the internal spline clutch plates. The housings and pistons are not interchangeable. Only new housings are available for service. If failure of the previous type housing or piston occurs, use a new housing piston and two piston return Belleville springs to assemble the direct drive clutch assembly. Refer to Figure 5.

If the piston outer seal is damaged, install the new piston, two piston return Belleville springs, and the new outer seal along with other new components as required to complete the assembly. (It is advisable to install a new inner seal also.) To use the new cast iron seal in an old housing, file approximately 0.005 inch (.127 mm) from each end of the seal to ensure space is available for expansion of the ring.

PAGE 68

The chart under "A. Disassembly" should be changed as follows:

Timing Valve Spring Identification

Model	Servo 2 Valve	Servo 3 Valve
Ford 2000, 3000, and 4110	Blue	Red
Ford 4000 (except 4110)	Green	Green
Ford 5000	Green	*

*1. Red with 3-1/4 inch (72.55 mm) bore prior to production code 5H18C.

2. Green with 3 inch (72.20 mm) bore from production code 5H18C.

The Ford 5000 Select-O-Speed transmission Servo 3 bore diameter has been changed from 3-1/4 inches (72.55 mm) to 3 inches (72.20 mm) to improve parts interchangeability and reduce the time required to apply and release Band 3.

The Servo 3 bore components and timing are now the same as those used in the Ford 4000 Select-O-Speed transmission (except Ford 4110).

NOTE: ***The timing valve for Servo 2 is located in line with the Servo 3 bore and the timing valve for Servo 3 is located in line with the Servo 2 bore.***

PAGE 73

The third paragraph under "1. Trouble Shooting" requires additicnal information.

If a transmission is locked up and cannot be started and pressure tested, the fault could be one of the clutches failing to release. Start the engine (and move the tractor if necessary) by carrying out the following operations:

1. Back off Band 1 adjusting screw two turns and operate the starter switch with the selector lever in park. If the engine starts, the fault is probably in the direct drive clutch. If the engine does not start, retighten Band 1 adjusting screw two turns.

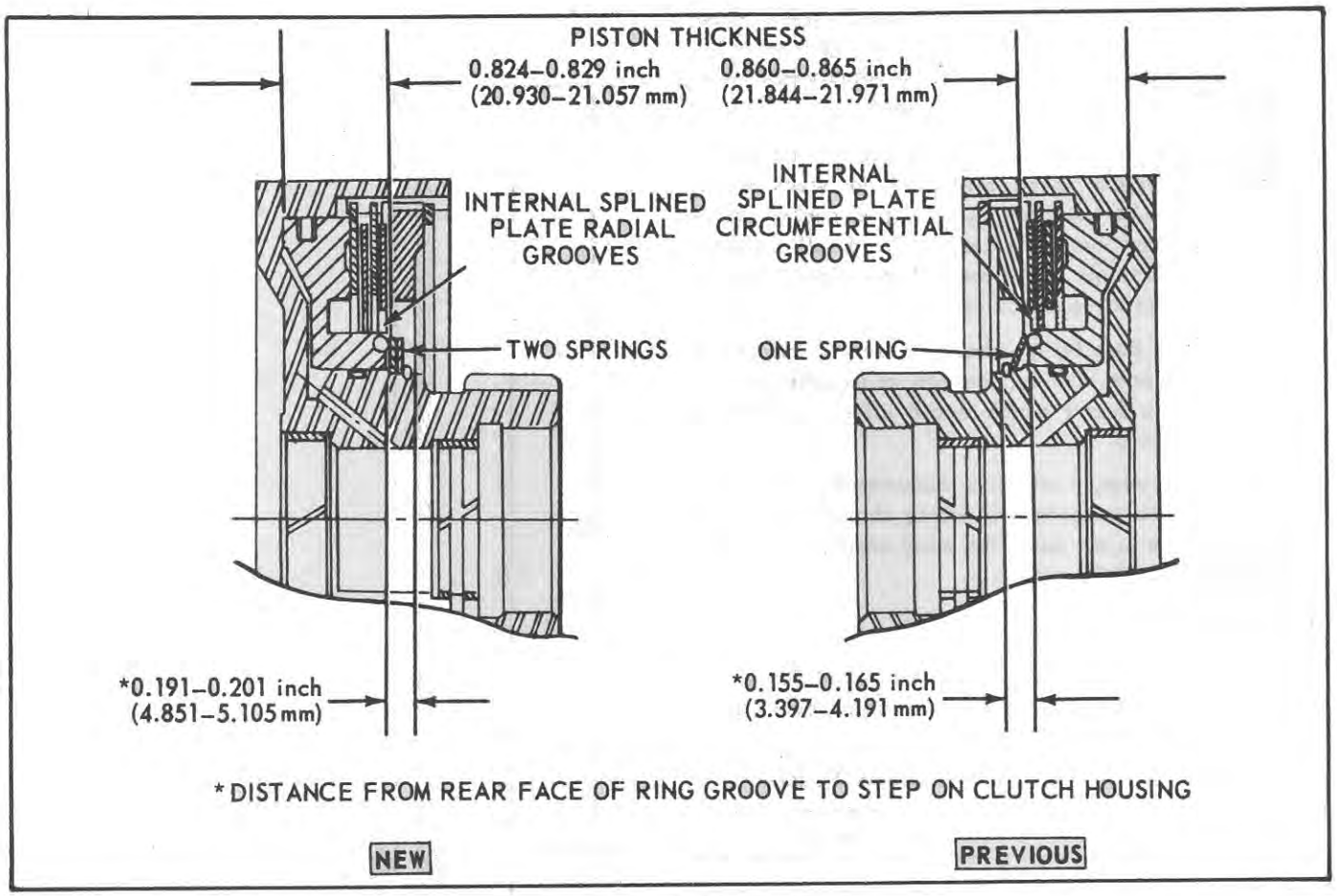

Figure 5
Direct Drive Clutch Assemblies

2. Repeat the above procedure on Band 2 adjusting screw. If the engine starts, the problem is probably in Clutch 1.

3. Repeat the procedure in Step 1 on Band 3 adjusting screw. If the engine starts with Band 3 backed off, the problem should be found in either Clutch 2 or Clutch 3.

PAGE 75

The text following "Timing Valve–Improper Operation" requires more information. If performance of the transmission during the 4–5 shift is not satisfactory, check the following:

1. Check the location of the timing valves. Note that the Servo 2 timing valve is opposite the Servo 3 bore and that the Servo 3 timing valve is opposite the Servo 2 bore. Refer to page 68 of the text for the color coding chart. If the valves are not located correctly, change them to the correct locations.

2. If the valves are located correctly, check that the valves and seats are clean and free of nicks, burrs, scratches, corrosion, or other defects that could cause the valves to bind or stick.

3. Check the band adjustments. Fine adjustment of Bands 2 and 3 may improve the shift change. Change the torques within the specified range, 110–130 lbs. in. (126.73–149.77 cmkg) to the two settings which give the smoothest change.

4. If necessary, install pressure gauges and record the readings in all gear ratios, plus park and neutral at both high and low rpm. Check the trouble shooting chart to be sure a malfunction does not exist, such as low pressure due to a leak, a sticking valve, or defective pump. Note the sequence of the timing valve action described and note and record the fluctuation in pressures at the Servo 2 and 3 gauges at the appropriate gear changes. The action of the pressure gauges should indicate the action of the timing valves.

5. If pressure buildup to Servos 2 and 3 appear slow, but in the correct sequence, check the gear selector, P.T.O. selector, and inching pedal adjustments to be sure the valves are not partially open.
6. If the preceding adjustments are correct, check the sequencing valve to be sure it is not stuck in the partially open position. Check the control valve thoroughly for foreign material. Check all pressure tubing for possible loose connections. Check Band 1 and the direct drive clutch circuit.
7. As a further possibility, check the servos and clutch packs to be sure binding, leakage, or improper assembly is not a factor which would affect the various shift sequences.
8. If dirt is present, a complete disassembly and cleaning should be performed. Cleaning should include all oil passages in the case, the pump adapter plate, the distributor, and the valve.

PAGE 79

In addition to the possible causes listed for an inoperative direct drive clutch, consider the following additional possible causes:

Trouble Shooting Direct Drive Clutch Failures

Condition	Possible Cause
Direct Drive Clutch Inoperative (Does Not Apply)	a. Incorrect or damaged servo cover gasket.
	b. Servo 1 bore not machined cleanly.
	c. Loose tube nuts, damaged O-rings, or stripped threads on tubes from oil distributor to Band 1 circuit and P.T.O. circuit.
	d. Case cleaning shot jamming valve body or piston.
	e. P.T.O. shaft seal ring broken (causing loss of pressure and Band 1 drag during P.T.O. operation).
	f. Improper selector adjustment.
	g. Improper operation.
(Does Not Release)	a. Direct drive clutch transfer tube leaking.
	b. Case cleaning shot jamming valve body or piston.

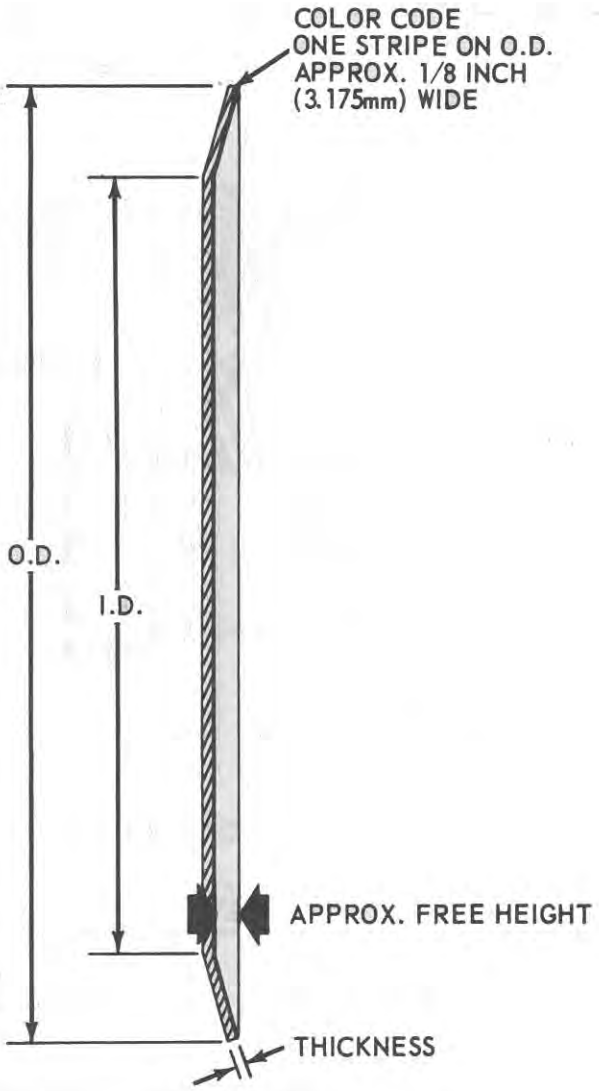

Figure 6
Torque Limiting Clutch Spring Identifying Dimensions

PAGE 82

Figure 6 supplements the data given under "Torque Limiting Clutch Springs" used to identify the torque limiting clutch springs.

ANTI-AERATION OIL BAFFLE

If oil aeration in the area of the transmission oil pump intake screen on Ford 2000, 3000, or 4000 Tractors causes excessive noise in transmissions coded before Transmission Production Code 6M16B, install an anti-aeration oil baffle as follows:

1. Remove the transmission from the tractor and disassemble to the point where the P.T.O. shaft and clutch are removed, page 57, Step 4, left-hand column.

2. Working through the front of the transmission, position the baffle with the flat portion down and the clips toward the Servo 2 boss in the transmission case, as shown in Figure 7.

   NOTE: ***Because of irregularities in the transmission case casting, it may be necessary to modify the baffle by cutting it to fit.***

3. Secure the bottom clip behind the Servo 2 boss.

4. Check the baffle to be sure it is positioned snugly against the left side of the case with the contour of the baffle matching the contour of the case.

5. Position the upper clip into the Servo 2 relief hole.

6. Insert a drift punch through the round hole in the front of the baffle and tap the lower clip to lock the assembly into position.

7. Reassembly the transmission and install it in the tractor, following the instructions in the repair manual. During reassembly, check to be sure there is no interference between the baffle and any of the transmission parts.

   NOTE: ***The oil aeration noise may persist until the transmission warms up to operating temperature. At this time, the noise will subside.***

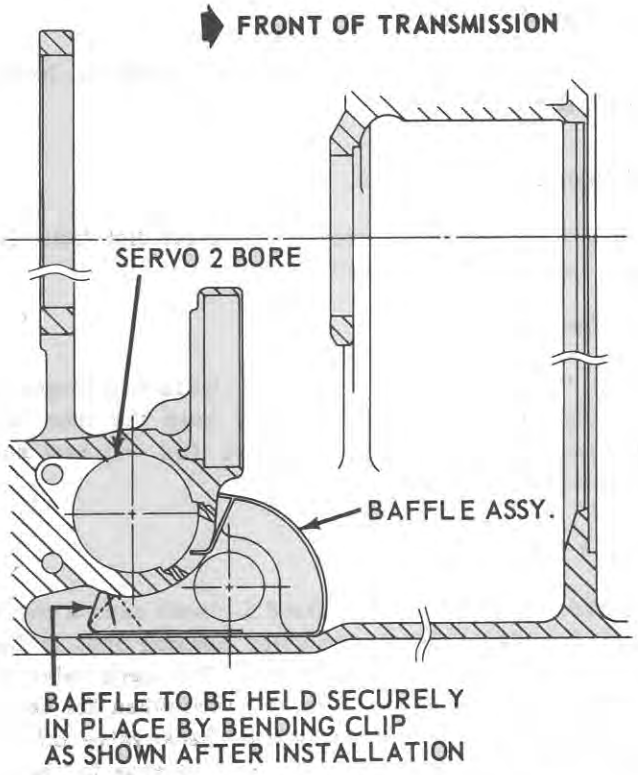

Figure 7
Anti-Aeration Oil Baffle Installation

2. NEW MODEL TRACTOR SELECT-O-SPEED INFORMATION

The new model tractor Select-O-Speed transmissions incorporate changes in addition to those made during previous model production. The 4000 Tractor will use the 5000 Tractor Select-O-Speed positive actuating control valve as a service improvement. The Select-O-Speed transmissions for the entire line will have no lube light and the hole in the distributor for the sender mechanism has been plugged.

The 5000 Tractor Select-O-Speed transmission has several changes not found in the other new model tractor Select-O-Speeds. Most of these changes help handle the higher horsepower of the new model tractor. Servicing the transmission remains essentially the same.

Countershaft	Yes	
Direct Drive Clutch	Yes	
#1 Clutch	Yes	Also as components
Oil Distributor	Yes	
"C" Sun Gear	Yes	
#2 & 3 Clutch	Yes	Also as components
Servo #1	No	
Servo #2	No	
Transmission Case	No	

PARTS INTERCHANGEABILITY

New Model Ford 5000 – Previous Model Ford 5000 Select-O-Speed

Countershaft Bearing	Not separately, but together as an assembly.
Front Adaptor Plate	

CHANGES FOR 5000 SELECT-O-SPEED

Countershaft Bearing and Adaptor Plate

The countershaft bearing is larger, with higher capacity, and the adaptor plate is changed to accept the new bearing.

Countershaft Oil Groove

The countershaft has a larger oil groove to better lubricate the direct drive clutch plates.

Oil Distributor Oil Groove

A new groove in the sleeve of the oil distributor insures better lubrication for Clutch 1.

"C" Sun Gear

The "C" Sun Gear is 0.040-inch (1.016 mm) longer to substantially reduce chucking and keep the lube and pressure holes in closer alignment. Old and new sun gears are interchangeable.

Servo 1 and Check Valve

Servo 1 is larger and the Band 1 circuit uses a check valve located in the transmission housing next to the Servo 1 bore as shown in Figure 8. The check valve is serviced by removing the Servo 1 cover. When the servo is pressurized, the oil forces the check valve off its seat and flows to the servo piston to release the band.

When the control valve Band 1 spool is opened, the oil is free to dump to sump. The servo spring forces the oil through a small passage in the check valve plunger, thereby decreasing the rate of oil flow. This reduces the possibility of the direct drive clutch and Band 1 being partially applied at the same time.

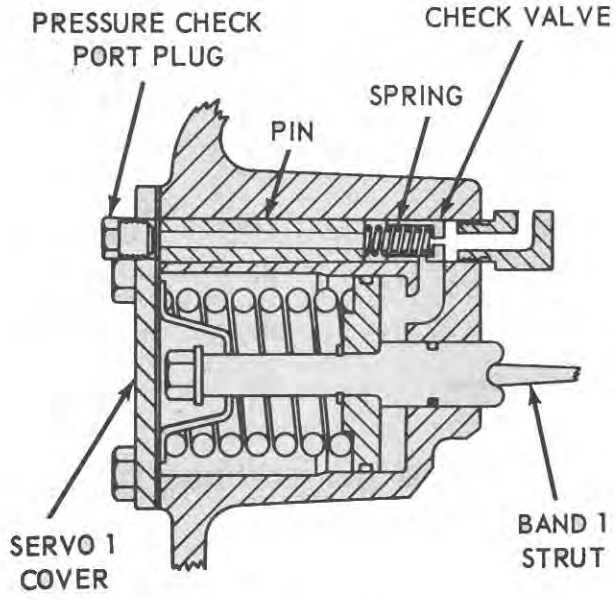

Figure 8
Servo 1 Check Valve

The pin located in the check valve bore has a passage through it to allow pressure readings at the pressure check port.

The Servo 1 bore in the case is larger; thus, the new case is not interchangeable with the previous case.

Servo 2

Servo 2 is increased in diameter and incorporates a larger spring to provide additional Band 3 holding action on the clutch housing.

Clutch Piston Through Hole

The through hole in the piston in Clutches 1, 2, and 3, is smaller and relocated. The clutch plate next to the piston now does not affect the oil bleed action through the piston when the clutch pack is applied. This provides better lubrication for the clutches and a better cushioning effect during clutch application. This also results in a more even lube pressure as it does not drop as abruptly and is maintained more evenly in the lube system.

Clutch Piston Seals

The outer piston seals on Clutches 1, 2, and 3 are of poly-acrylic material designed to withstand high temperatures. The seals are double lipped, more flexible, and less susceptible to damage during installation.

The internal O-rings in the clutch pistons are reduced in size to minimize O-ring "squeeze", flexing, and ultimate damage to the seals. The grooves are held more closely to specifications to substantially reduce leakage.

Clutch Lead Chamfer

All three clutches have more lead chamfer to ease installation of the piston into its bore and reduce damage to the seals.

Torque Limiter Clutch

Ford 5000 Tractors have aluminum spacer buttons installed in the disc assembly of the torque limiter clutch. These buttons hold the facings of the clutch away from the flywheel and pressure plate surfaces to prevent adhesion of the surfaces. After a short period of operation, the surfaces will be in full contact and burnished sufficiently to prevent adhesion.

3. NEW MODEL TRACTOR SELECT-O-SPEED TRANSMISSION TROUBLE SHOOTING WITHOUT LUBE LIGHT

Because the lube light has been eliminated on all new model tractor Select-O-Speed transmissions, some changes to the trouble shooting procedure will have to be made. The changes will affect mainly the Diagnostic Procedure, Hydraulic Conditions 1 and 4.

Hydraulic Condition #1: All servo pressures to specification at 800 rpm; lube pressure below specification.

To further diagnose this condition, it will be necessary to check the lube pressure as outlined under "Lubrication Pressure Check", below. If the lube pressure is below specification after the check, the following are possible causes:

1. Broken lube circuit shaft seals.
2. Excessive transmission end clearances.
3. Leakage from the heat exchanger circuit.
4. Leakage at the control valve gasket.
5. Improperly adjusted or malfunctioning relief valve.

NOTE: *If pressures are to specification and rough shifting characteristics exist, check band adjustments and Servo 2 and 3 timing valves.*

Hydraulic Condition #4: Pressures below specification in certain gear ratios.

1. Observe in which gear ratios low pressure readings occur.
2. Fully depress the inching pedal in gear ratios where low pressure readings occur and observe the pressure reading at Servos 2 and 3.
   a. If the pressure readings at Servos 2 and 3 go up to specification, 205 psi (14.4 kg/sq. cm) @ 800 rpm, leakage is occurring in the transmission indirect circuit consisting of Clutches 1, 2, and 3.
   b. If the pressure at Servos 2 and 3 remain low, leakage is occurring in the direct circuit consisting of Servo 2 and Servo 3.
3. Use the Trouble Shooting Chart and note which servos and clutches are pressurized where low pressure readings occur. A process of elimination will make evident which servo or clutch is leaking. In the case of the common circuit for Band 1 Servo and the direct drive clutch, it will not be possible to pinpoint leakage separately in either of these elements.

Lubrication Pressure Check

To check transmission lubrication pressure, it will be necessary to drill and tap the transmission-to-cooler fitting.

1. Drill into the head of the oil line adaptor bolt and tap for 1/4 inch (6.25 mm) pipe thread.
2. Install an N-774 Pressure Gauge in the adaptor bolt.
3. Install the adaptor bolt and gauge in the top cooler line connection on 2000, 3000, and 4000 transmissions and at the bottom connection on 5000 transmissions.
4. Start the tractor and run until the transmission oil is up to operating temperature.
5. With the traction coupler disconnected and the transmission in 9th gear, the pressure at the gauge should read 50 psi (3.5 kg/sq. cm) at 800 engine rpm and 160 psi (11.2 kg/sq. cm) at 2100 engine rpm.

   NOTE: *The above pressures will vary with tractors, depending on clearances in the lube circuit and manufacturing tolerances. Lube pressures should not be below 20 psi (1.41 kg/sq. cm) at 800 rpm.*

6. After checking the pressure to the cooler, it is advisable to check for any restriction in the cooler circuit by removing the fitting and gauge from the top connection on 2000, 3000, and 4000 transmissions and the bottom connection on 5000 transmissions, and install it in the cooler-to-transmission connection.
7. Start the tractor engine and run in 9th gear at 800 rpm. The pressure reading at the gauge should be 45 psi (3.17 kg/sq. cm) and at 2100 rpm the pressure should be 90 psi (6.33 kg/sq. cm).

   NOTE: *The pressures will vary with tractors, depending on clearances in the lube circuit and manufacturing tolerances. Lube pressures should not be below 20 psi (1.41 kg/sq. cm) at 800 rpm.*

PART 9
POWER TAKE-OFF

Part 9

POWER TAKE-OFF

Chapter 1

TRANSMISSION P.T.O. AND LIVE P.T.O.

Section		Page
1.	Description and Operation	1
2.	Power Take-Off Shaft Assembly Overhaul	2
3.	Power Take-Off Shifter Mechanism Overhaul	3
4.	P.T.O. Coupling	4

Chapter 2

INDEPENDENT P.T.O.—MAJOR 4000

Section		Page
1.	Description and Operation	5
2.	Control Valve Operating Pressure Test	8
3.	Control Valve Overhaul	10
4.	Clutch Brake Spring Replacement	12
5.	Clutch Pack and Support Overhaul	12
6.	Power Take-off Shaft Overhaul	15

© FORD MOTOR COMPANY LTD., 1965

Chapter 3

INDEPENDENT P.T.O.—SUPER MAJOR 5000

Section		Page
1.	Description and Operation	17
2.	Control Valve Operating Pressure Test	21
3.	Independent Clutch and Control Valve Overhaul	22
4.	Rear Upper Shaft and Output Shaft Overhaul	25

Chapter 4

TROUBLE SHOOTING, SPECIFICATIONS AND SPECIAL TOOLS

Section		Page
1.	Trouble Shooting	29
2.	Specifications	30
3.	Special Tools	31

Chapter 6

TWO-SPEED POWER TAKE-OFF TROUBLE SHOOTING, SPECIFICATIONS AND SPECIAL TOOLS

Section		Page
1	Trouble Shooting	49
2.	Specifications	50
3.	Special Tools	51

© FORD MOTOR COMPANY LTD. 1973

Part 9

POWER TAKE-OFF

Chapter 1

TRANSMISSION P.T.O. AND LIVE P.T.O.

Section		Page
1.	Description and Operation	1
2.	Power Take-Off Shaft Assembly Overhaul	2
3.	Power Take-Off Shifter Mechanism Overhaul	3
4.	P.T.O. Coupling	4

1. DESCRIPTION AND OPERATION

Transmission power take-off is available on Dexta 2000, Super Dexta 3000 and Major 4000 tractors. With this type of P.T.O. the drive is taken from the standard single clutch by the transmission input shaft to the transmission countershaft.

On four speed transmissions a sliding coupling connects the transmission countershaft to the P.T.O. output shaft in the rear axle centre housing. This coupling is located in an extension housing which is attached to the rear of the transmission housing, and is connected to an external lever, the operation of which enables the P.T.O. drive to be engaged or dis-engaged as required.

On six- and eight-speed transmissions a P.T.O. countershaft locates in the hollow, internally splined, centre of the transmission countershaft and carries at its rear end an internal toothed sleeve. The P.T.O. drive is, therefore, transmitted from the transmission countershaft to the P.T.O. countershaft and thence to the sleeve. An external toothed type sliding coupling on the P.T.O. output shaft is connected to a lever on the outside of the tractor and when this lever is moved rearwards the coupling engages with the sleeve on the P.T.O. countershaft.

Live power take-off is available as an option on Dexta 2000 and Super Dexta 3000 tractors with six- and eight-speed ransmissions. With this type the P.T.O. drive is taken from the power take-off disc of a special double clutch by a Live P.T.O. input shaft which runs on the outside of the transmission input shaft. From the gear on the P.T.O. input shaft the drive is taken to a gear on the P.T.O. countershaft. This shaft passes completely through the inside of the hollow transmission countershaft and carries at its rear end the same internal toothed sleeve as is used on the 'Transmission' type P.T.O. The sliding coupling, P.T.O. output shaft and operating lever arrangement are also identical with that used with the 'Transmission' type P.T.O. on six- and eight-speed transmissions.

Irrespective of whether a 'Transmission' type or a 'Live' type P.T.O. is incorporated, on tractors having six- or eight-speed transmissions the P.T.O. output shaft is supported at its front end by a spigot on the P.T.O. countershaft which locates in a bushed hole in the P.T.O. output shaft.

On tractors equipped with a four-speed transmission the P.T.O. output shaft has the spigot at its front end and the support is provided by a bushed hole in the end of the transmission countershaft.

On all P.T.O. types the rear of the P.T.O. output shaft is supported by a ball bearing in a cover housing which is attached to the rear of the rear axle centre housing. An oil seal is incorporated behind the bearing and the end of the shaft is protected by a cap which screws into the P.T.O. cover.

2. POWER TAKE-OFF SHAFT ASSEMBLY OVERHAUL

A. Disassembly

1. Drain the oil from the rear axle centre housing.
2. Move the power take-off lever rearward to the engaged position, and remove the P.T.O. cap.
3. Remove the bolts retaining the P.T.O. cover to the centre housing. On Major 4000 tractors it is necessary to disconnect the lower link check chains and remove the rear plate.
4. Withdraw the shaft and cover as an assembly from the centre housing.
5. Remove the snap ring retaining the shaft and bearing assembly in the cover.
6. Tap the rear end of the shaft with a soft headed mallet to remove the shaft and bearing assembly from the cover.
7. Remove the oil seal from the cover using Tool No. 943 and slide hammer.
8. Remove the snap ring locating the front of the power take-off shaft bearing. On Major 4000 also remove rear snap ring.
9. Using Tools Nos. 1003 and 951 pull the bearing, also the collar on Dexta 2000 and Super Dexta 3000 tractors, from the shaft, Figure 1.

B. Cleaning, Inspection and Repair

1. Clean all parts with a suitable solvent and air dry.
2. Inspect the ball bearing for excessive wear or discoloration due to overheating.
3. Inspect the bearing retaining collar for wear or scoring as it provides a bearing surface for the oil seal, and if damaged replace.
4. Inspect the power take-off shaft for worn or chipped splines and for distortion.

C. To Reassemble

1. Install a new rear snap ring on the Major 4000 power take-off shaft. Press the collar onto the Dexta 2000 and Super Dexta 3000 shaft from the front using Tools Nos. 951 and 1003.
2. Press the ball bearing onto the shaft from the front using Tools Nos. 951 and 1003 until it seats against the collar (or snap ring Major 4000), Figure 1, and install a new locating snap ring.
3. Install a new oil seal in the P.T.O. bearing retainer using step adaptor (630).
4. Install the shaft and bearing assembly into the cover taking care not to damage the oil seal.

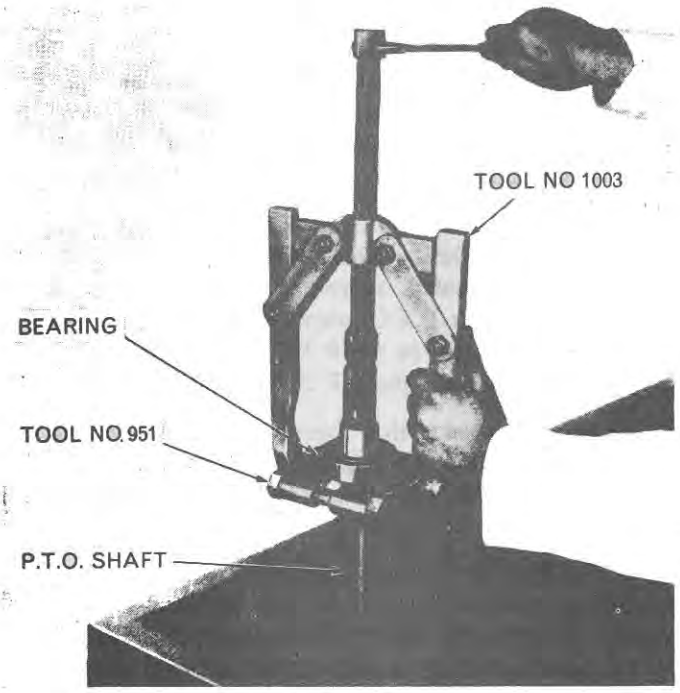

Figure 1
Removing/Installing P.T.O. Shaft Bearing

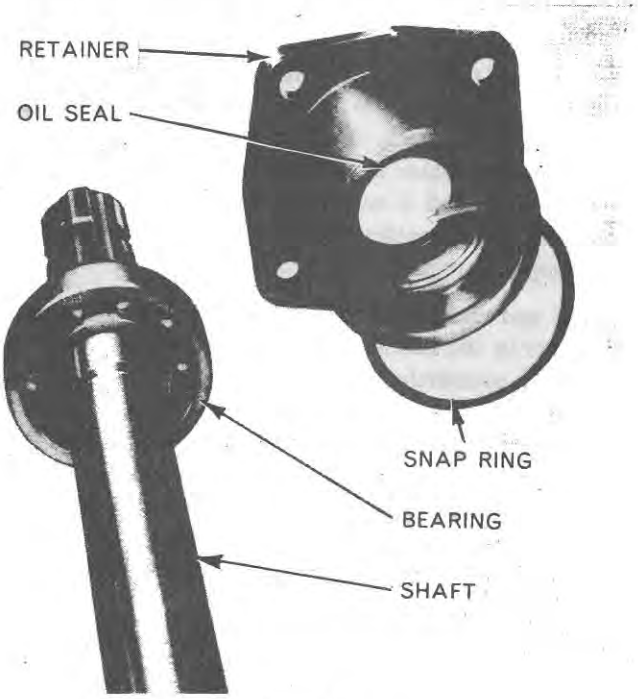

Figure 2
P.T.O. Shaft and Bearing Retainer

5. Install a new snap ring in the cover to retain the bearing.
6. Ensure that the shaft is clean and the end is free from burrs.
7. Use a new gasket between the rear face of the centre housing and the P.T.O. cover.
8. Install the shaft assembly into the rear transmission housing, engaging the splines at the forward end with the sliding coupling and the spigot with the bushed hole. On Major 4000 tractors install the rear plate.
9. Install the cover retaining bolts and tighten to the specified torque (see Specification Section). On Major 4000 Tractors reconnect the lower link check chains.
10. Install the P.T.O. cap.
11. Refill the rear axle centre housing with the specified oil to the correct level.

3. POWER TAKE-OFF SHIFTER MECHANISM OVERHAUL

A. Disassembly

1. Drain approximately half of the oil from the rear axle centre housing.
2. Remove the left hand running board, and remove the handbrake if the tractor is so equipped. Refer to the 'Overhaul of Transmission Handbrake Section' Part 10, Chapters 1 and 2.
3. Move the shifter lever to the disengaged position.
4. Unscrew the three shifter lever plate retaining screws, the upper screw can not be removed from the plate at this stage as the operating lever prevents its removal.
5. On tractors other than those equipped with a four speed transmission remove the shifter fork from the shifter arm.
6. Remove the cotter pin retaining the shifter lever clevis pin. Remove the clevis pin and the lever.
7. Remove the 'O' ring and shifter arm from the cover plate. On tractors other than those equipped with a four speed transmission remove the steel ball and spring.

B. Cleaning, Inspection and Repair

1. Inspect the shifter fork (6, 7 and 8 speed transmission) for excessive wear.
2. Inspect the shifter arm spring (6, 7 and 8 speed transmission) for breakage or weakness. Refer to the Specifications Section for spring free length.

C. Assembly

1. Install the spring and steel ball in the shifter arm, and replace the assembly in the cover plate.
2. Position the retaining bolt in the upper hole of the shifter plate, install the 'O' ring and the shifter lever and retain with a new rivet.
3. Install the shifter fork on the shifter arm (6, 7 and 8 speed transmission).
4. With a new gasket in position install the shifter mechanism on the rear axle centre housing, Figure 3, making sure that the fork is engaged with the sleeve (6, 7 and 8 speed transmission). On tractors equipped with a four speed transmission the shifter arm is engaged with the shifter rail connector.
5. Install and tighten the three retaining bolts to the specified torque.
6. Install the handbrake where fitted (Refer to the 'Overhaul of Transmission Handbrake Assembly' section, Part 10, Chapters 1 and 2), and replace the running board.
7. Refill the rear axle centre housing with the specified oil to the correct level.

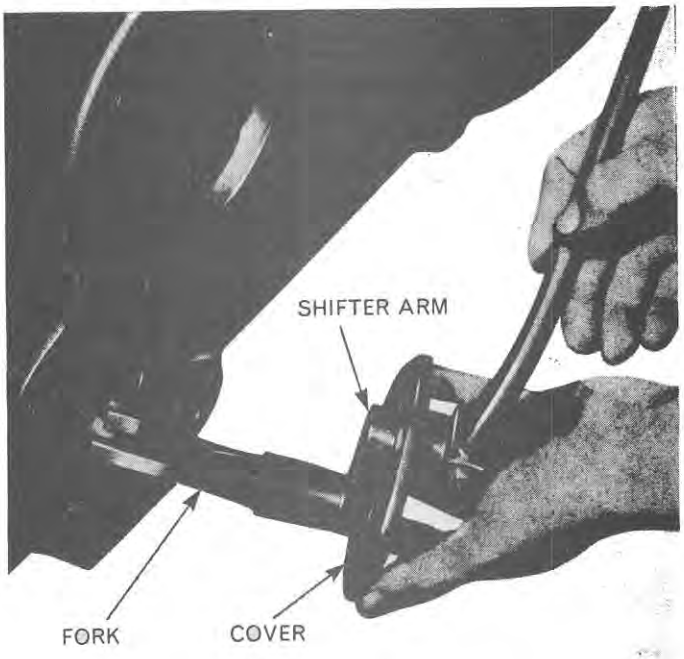

Figure 3
Installing P.T.O. Selector Mechanism

© FORD MOTOR COMPANY LTD. 1965

4. P.T.O. COUPLING

To gain access to the coupling it is necessary to separate the centre housing from the transmission. For details refer to Part 15.

On tractors equipped with a four speed transmission, refer to Part 5, Chapter 1, for details of overhauling the coupling and support assembly. Before separating the tractor it is necessary to remove the shifter mechanism.

Part 9

POWER TAKE-OFF

Chapter 2

INDEPENDENT P.T.O.—MAJOR 4000

Section		Page
1.	Description and Operation	5
2.	Control Valve Operating Pressure Test	8
3.	Control Valve Overhaul	10
4.	Clutch Brake Spring Replacement	12
5.	Clutch Pack and Support Overhaul	12
6.	Power Take-Off Shaft Overhaul	15

1. DESCRIPTION AND OPERATION

The power take-off input shaft is driven by a splined hub attached to the transmission clutch pressure plate housing. The drive is transmitted via reduction gears, at the front of the transmission, to the P.T.O. countershaft. This countershaft passes through the centre of the transmission countershaft to the rear of the transmission, and is splined at the rear end to accept a gear, which drives the hydraulic pump, and a coupling shaft which is also the hub of the independent P.T.O. clutch.

The hub is splined externally and carries six internally splined steel drive plates. Positioned alternately with these drive plates are seven phosphor bronze driven plates and these, together with a pressure plate, are splined externally to the independent P.T.O. clutch housing.

At the rear of the plates in the P.T.O. clutch housing is situated a hydraulic piston. A spring is incorporated into the clutch to hold the piston in the disengaged position.

Oil from the independent P.T.O. pump, mounted at the rear of the hydraulic power lift pump (For description and overhauling procedure refer to Part 11, Chapter 3), passes via a connecting tube to a control valve assembly which is mounted on the left-hand side of the rear axle differential centre housing.

A power take-off operating lever is mounted on the left-hand side of the centre housing in front of the control valve assembly and is connected by a link and actuating arm to the front end of the control valve plunger.

On movement of the P.T.O. lever to the engaged position the control valve plunger moves to the operating position and is positively located by a detent ball and spring. Movement of the plunger is transmitted by a spring to a control valve piston. In the operating position the piston covers the exhaust ports and oil from the independent P.T.O. pump is passed via a pipe to a support. This support encircles the rear extension on the clutch housing which is free to rotate in the support. Oil loss from the clutch housing and support is prevented by cast iron sealing rings.

From the support the oil passes into the port in the clutch housing extension and thence through a drilling to the rear of the clutch piston. Oil pressure on the clutch piston moves it forward against the piston return spring and forces the clutch plates together so transmitting the drive from the hub to the P.T.O. clutch housing.

© FORD MOTOR COMPANY LTD., 1965

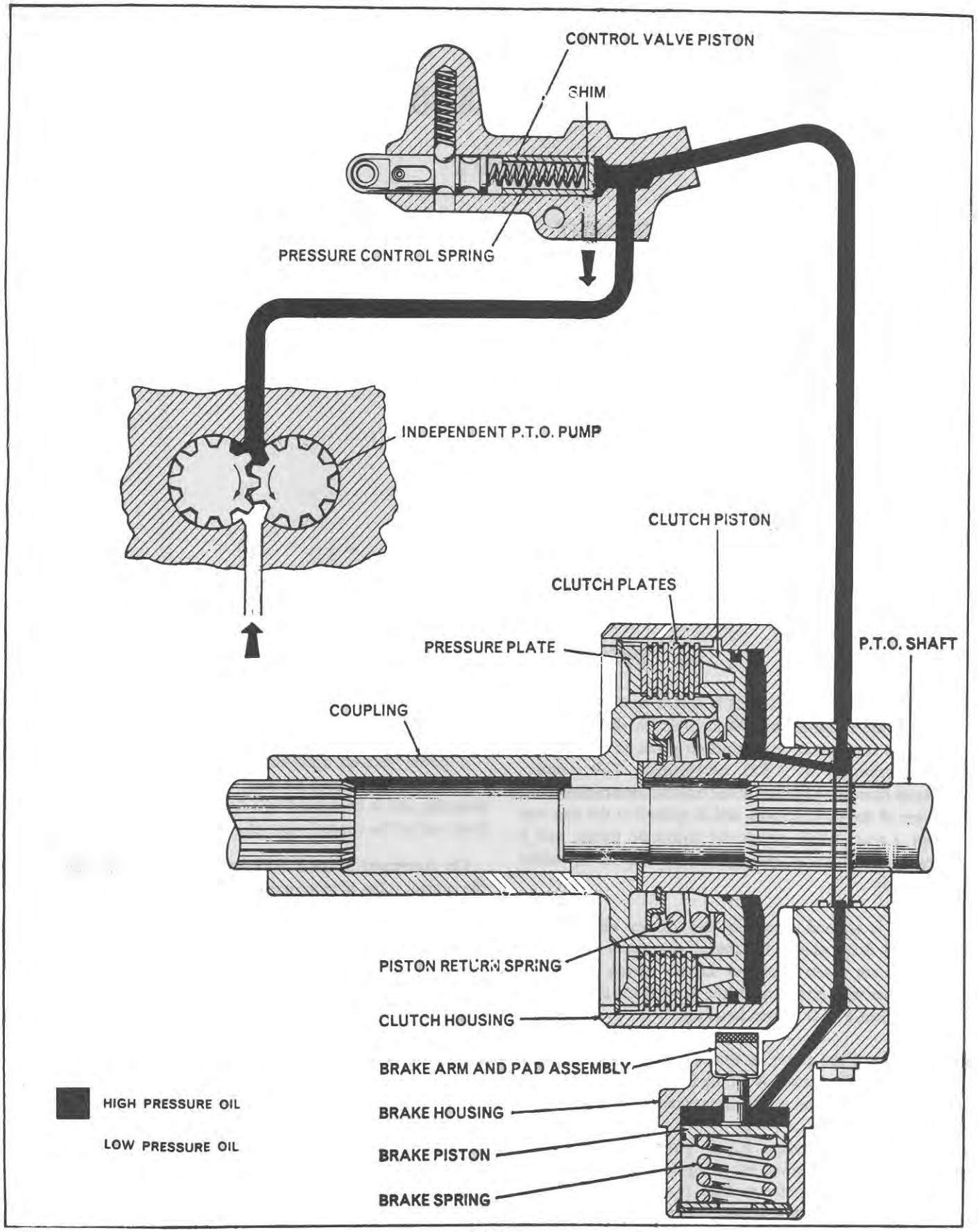

Figure 4
Oil Flow in Engaged Position

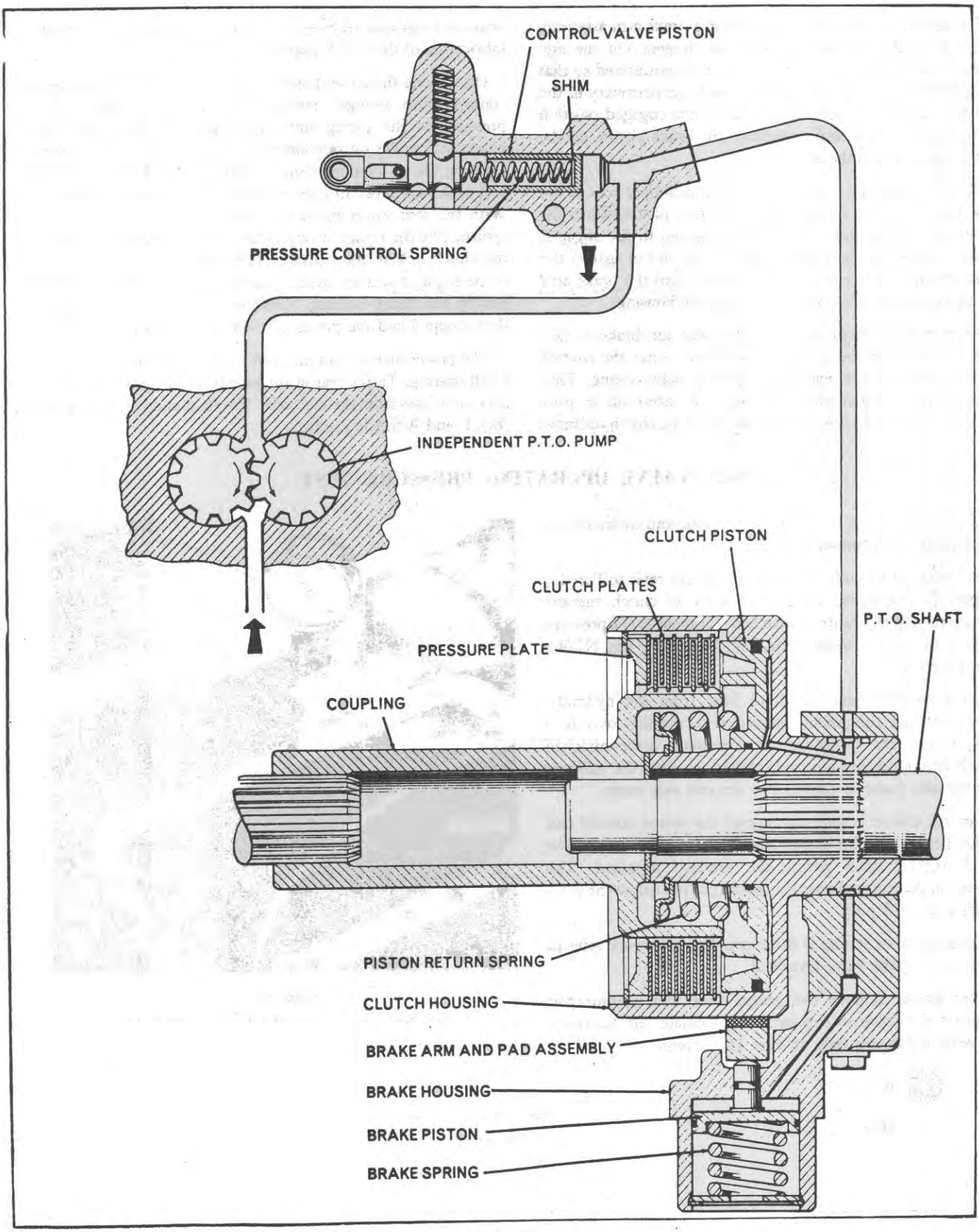

Figure 5
Oil Flow in Disengaged Position

The clutch support also incorporates a brake arm assembly that is pivoted at the upper end to the support. On one side of the arm a phosphor bronze brake pad is positioned so that on application it comes into contact with the periphery of the clutch housing. The arm is moved into the engaged position by the brake spring, acting through the brake piston, on the lower end of the brake lever.

Oil passes through a tapping from the oil supply bore in the valve housing to the clutch side of the brake piston. When the power take-off control valve piston is moved to the engaged position the oil, under pressure, moves the piston against the brake spring. This removes the pressure from the brake arm and so disengages the brake from the clutch housing.

When the clutch piston is applied and the brake is disengaged a pressure build up in the system causes the control valve piston to move against the control valve spring. This uncovers the exhaust ports allowing the excess oil to pass into the oil reservoir. The Independent P.T.O. clutch operates below the rear axle oil level, alleviating the necessity for forced lubrication of the clutch plates and bushings.

On moving the control lever to the disengaged position the control valve plunger moves forward. This releases the pressure on the spring and piston, allowing the piston to move back under oil pressure and uncover the exhaust ports allowing the oil supplied from the pump and oil in the clutch and brake assembly to pass into the oil reservoir (Figure 5). With the removal of hydraulic pressure the clutch piston is returned by the return spring. This disengages the drive from the clutch hub to the housing. The brake piston is returned to the engaged position by the brake spring, applying the brake pad on the clutch housing. Rotation of the clutch housing is then stopped and the power take-off output shaft is 'locked'.

The power take-off output shaft is supported in the rear by a ball bearing. To the rear of the bearing an oil seal is fitted to prevent oil loss from the rear axle. The shaft ends in a standard (B.S.I. and A.S.A.E.) spline.

2. CONTROL VALVE OPERATING PRESSURE TEST

Operate the tractor to bring the rear axle and hydraulic oil to operating temperature.

Remove the hydraulic lift cover, for details refer to Part 11, Chapter 1. Disconnect the control valve to clutch support housing tube at the control valve end. Connect N774 pressure gauge to the control valve using SW17/a adaptor and N774/a tube, Figure 6.

Use a suitable hose (T8503–4 hose from the hydraulic pressure testing equipment) connected to the lift cover feed tube, or use the hydraulic lift accessory cover attached directly to the centre housing in such a way that the oil from the hydraulic pump is returned to the rear axle sump.

Start the tractor engine and engage the power take-off and set the throttle to a fast engine idle. Disengage and engage the P.T.O. several times noting the pressure obtained. The pressure in the engaged position should not fall below 155 p.s.i. nor go above 195 p.s.i.

Adjust pressure setting if necessary. For procedure refer to Section 3, Control Valve Overhaul.

After testing remove the gauge, tube and adaptor and reconnect the valve to support tube. Replace the hydraulic top cover, for details refer to Part 11, Chapter 1

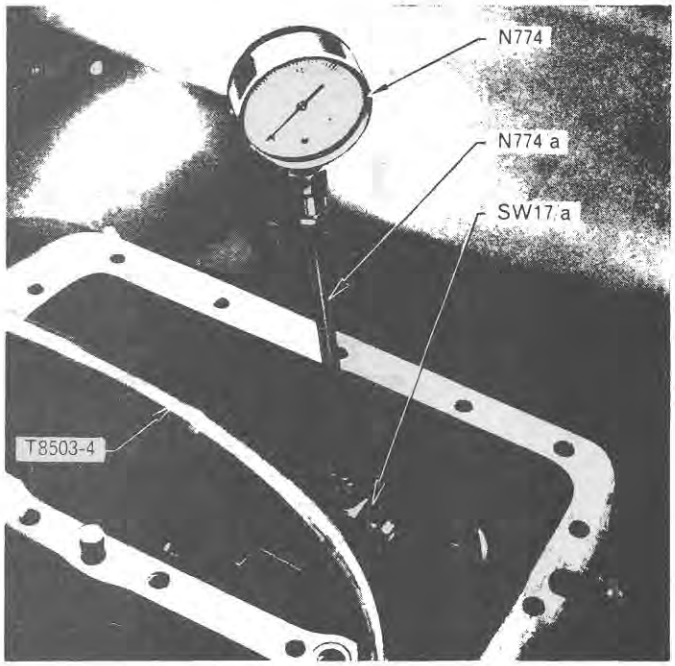

Figure 6
Control Valve Operating Pressure Test

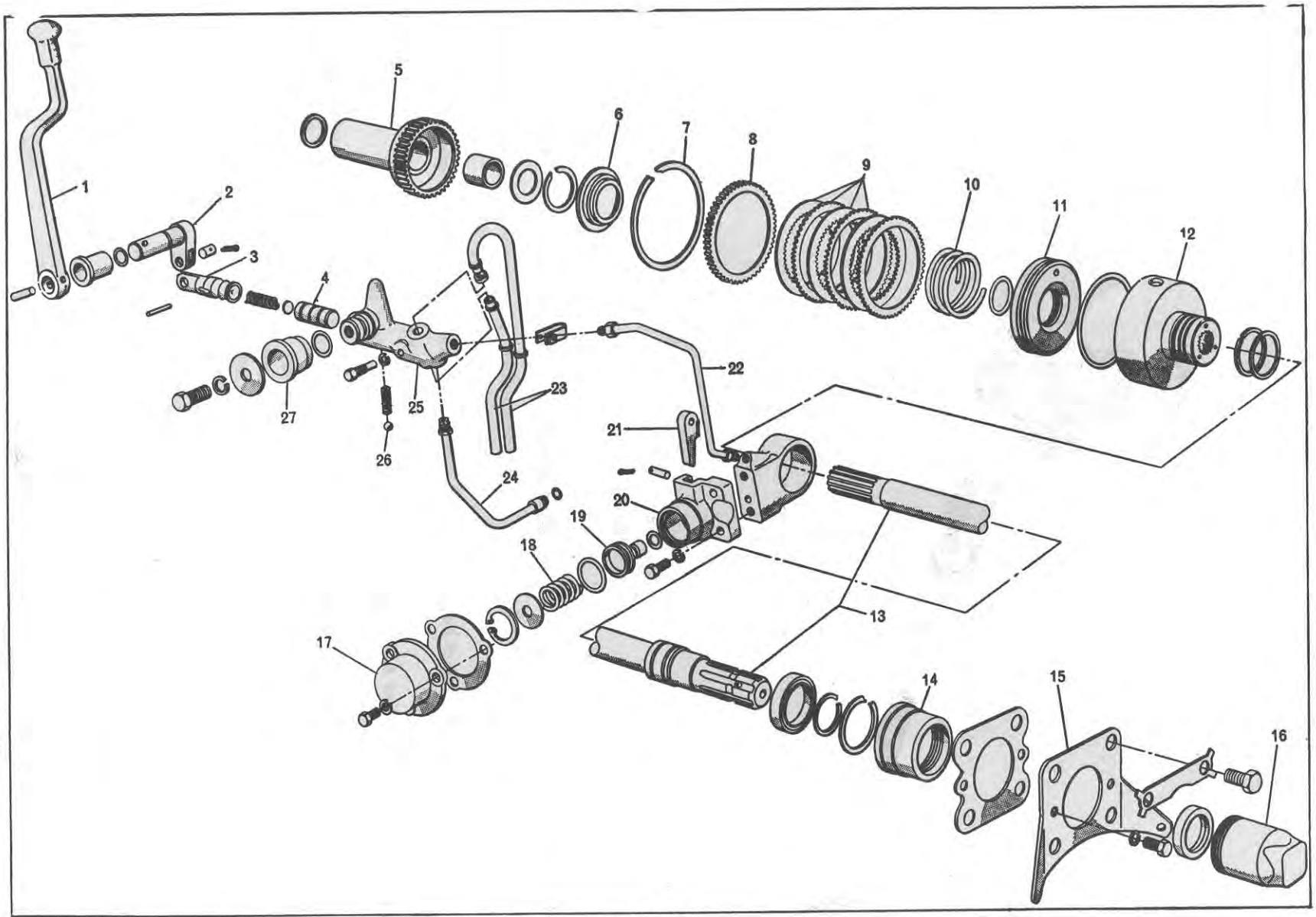

Figure 7

1. Handle
2. Link
3. Control Valve Plunger
4. Control Valve Piston
5. Coupling Shaft
6. Retainer
7. Snap Ring
8. Pressure Plate
9. Clutch Plates
10. Piston Return Spring
11. Clutch Piston
12. Clutch Housing
13. P.T.O. Shaft
14. Bearing Retainer
15. Plate
16. Cover
17. Brake Cover Plate
18. Brake Spring
19. Brake Piston
20. Support
21. Brake Arm and Pad
22. Tube (Control Valve to Support)
23. Exhaust Tubes
24. Tube (Pump to Control Valve)
25. Control Valve Housing
26. Detent Ball
27. Bush Valve Locating

© FORD MOTOR COMPANY LTD. 1965

3. CONTROL VALVE OVERHAUL

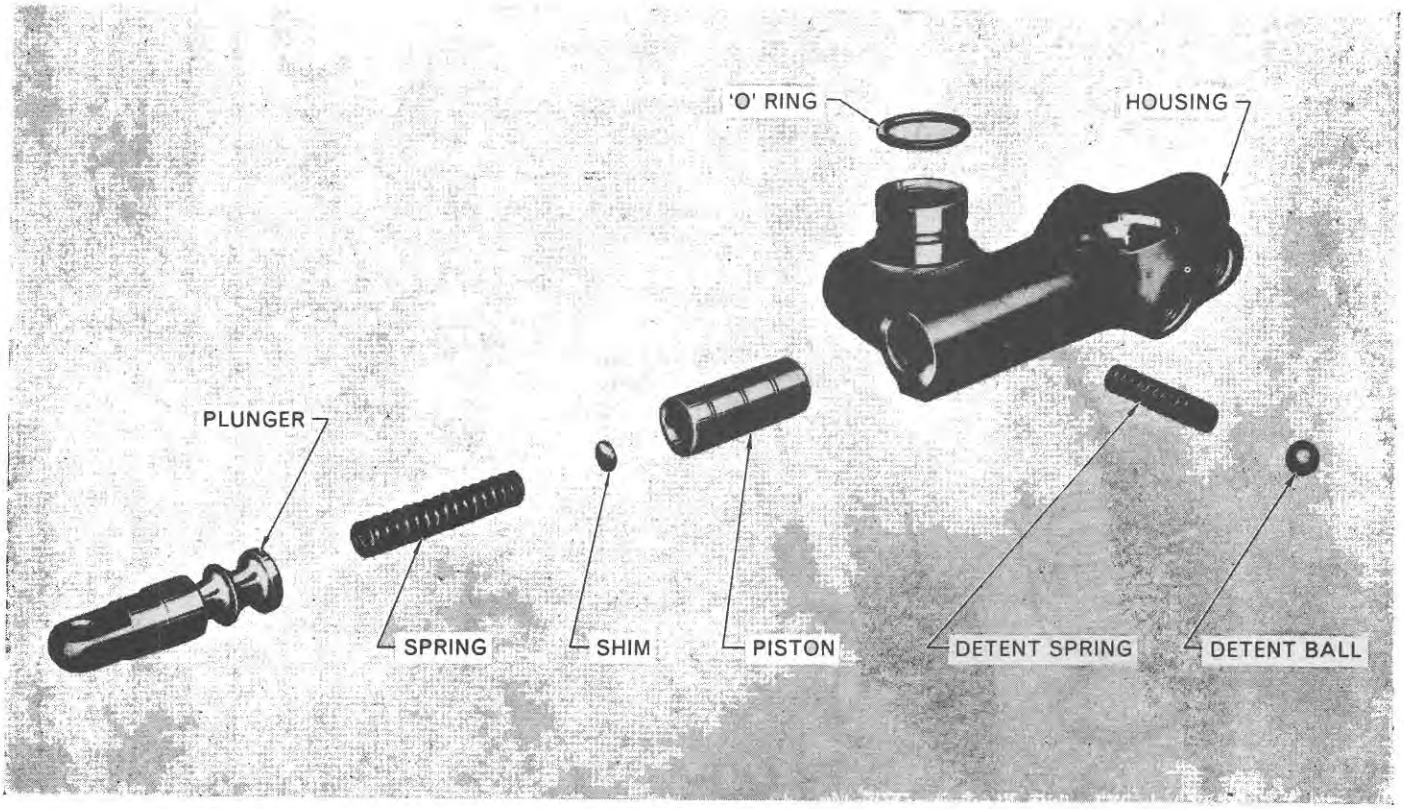

Figure 8
Control Valve

A. Control Valve Removal

1. Remove the hydraulic lift cover. For details refer to Part 11, Chapter 1.
2. Disconnect the control valve to clutch support housing tube assembly at the control valve end.
3. Disconnect the pump to control valve tube at the control valve end.
4. Remove the cotter pin retaining the link to valve plunger clevis pin.
5. Remove the clevis pin and separate the link from the plunger.
6. Remove valve spigot bolt from centre housing.
7. Remove the valve retaining bolts from the centre housing.
8. Remove the control valve and exhaust tube assembly from the tractor.
9. Remove the bolt and clamp from the exhaust tubes and remove the tubes from the control valve.

B. Control Valve Disassembly

1. Using a suitable punch remove the spring tension pin locating the control valve plunger.
2. Extract the control valve plunger, Figure 8.
3. Remove the detent ball and spring.
4. Remove the control valve spring.
5. Use a compressed air line or a footpump and an air/water tyre valve to remove the valve piston. Blow air in via the valve outlet port, Figure 9, while covering the other ports to prevent air escape. Remove shims from valve piston.

C. Cleaning, Inspection and Repair

1. Clean all parts with a suitable solvent, and air dry. Lightly oil machined surfaces.
2. Inspect valve piston for excessive wear or scoring and replace if necessary.
3. Inspect control valve spring for weakness or distortion.

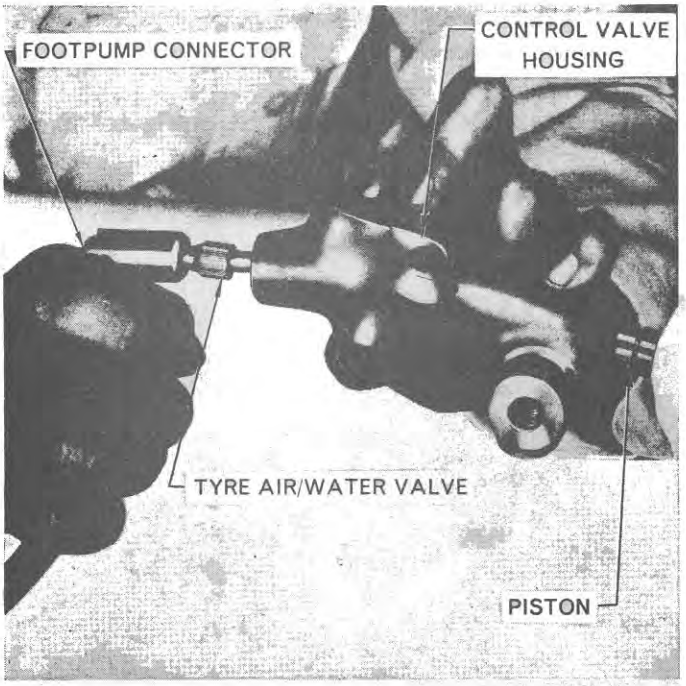

Figure 9
Removing Control Valve Piston

4. Inspect the control valve body for excessive wear or scoring in the piston bore.
5. Inspect valve plunger detent spring for weakness or breakage.

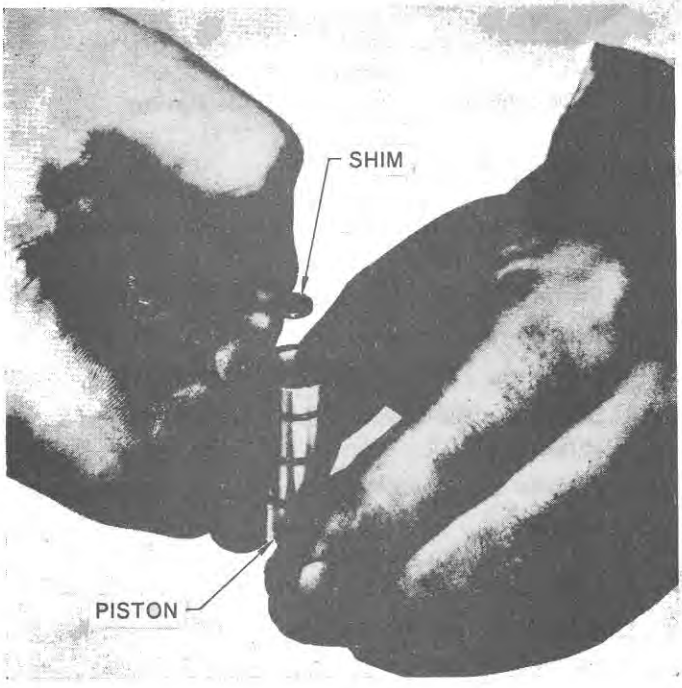

Figure 10
Installing Control Valve Shim

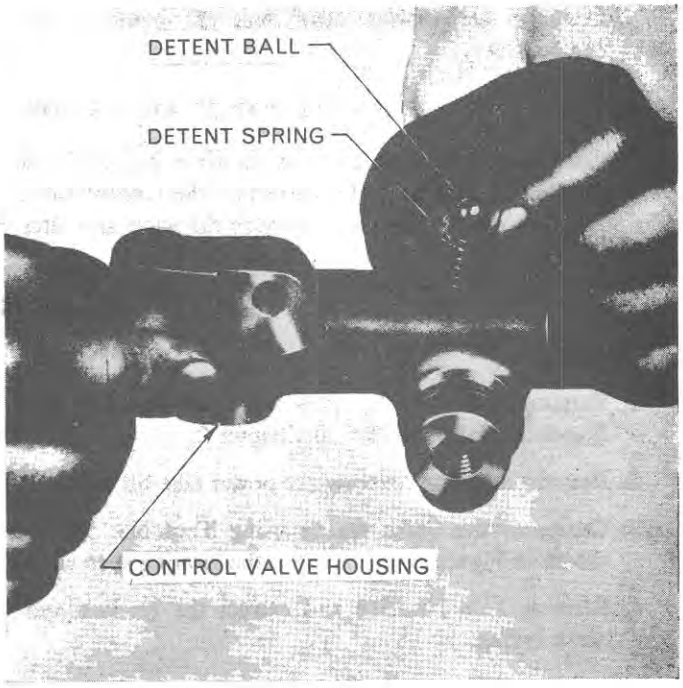

Figure 11
Installing Detent Spring

6. Loosen the clamp bolt retaining the control lever to the link and remove the link from the centre housing. Replace the 'O' ring and install the link after lubricating the 'O' ring to prevent installation damage. Install and tighten the control lever and tighten the clamp bolt.

D. Control Valve Assembly

1. Install the shims into the valve piston, Figure 10.
   NOTE: ***An increase of shims increases the valve operating pressure.***
2. Install the piston and valve spring into the control valve body.
3. Install the detent spring and ball into the control valve body, Figure 11.
4. Using a suitable object depress the detent spring and install the valve plunger.

E. Installing Control Valve

1. Connect the exhaust tubes to the control valve with new seals at the junction of the tubes and control valve body. Replace the clamp retaining the tubes together.
2. Install the control valve and exhaust tube assembly into the tractor.
3. Install the control valve retaining bolt finger tight.
4. Install the control valve spigot bolt, and tighten the control valve retaining bolt.

5. Connect the pressure tube from the pump to the control valve.
6. Connect link to plunger with clevis pin and cotter pin.
7. Connect the pressure gauge as shown in Figure 6 and detailed in Section 2. Pressure test the control valve and if pressure is incorrect remove the valve and alter the shims accordingly. When correct pressure is obtained replace the plunger locating spring pin in the control valve body.
8. Connect the valve to clutch support tube to the control valve.
9. Replace the hydraulic lift cover. Refer to Part 11, Chapter 1 for details.

4. CLUTCH BRAKE SPRING REPLACEMENT

A. Removal

1. Remove brake pedals, cross shaft and clutch pedal. For details refer to Part 10 Chapter 2.
2. Remove the plate covering the power take-off brake.
3. Compress the brake spring using Tool No. 518 as shown in Figure 12 and remove the locating snap ring.
4. Remove Tool No. 518 and extract the retainer and brake spring.

B. Installation

1. Install new brake spring.
2. Position retainer and snap ring. Using Tool No. 518 as shown in Figure 12 compress the brake spring.
3. Install the snap ring and remove Tool 518.
4. Install the brake cover plate and install the three retaining bolts. Tighten the bolts to the specified torque. (See Specifications Section.)
5. Install the clutch pedal, brake pedals and brake cross shaft. For details refer to Part 10, Chapter 2.



Figure 12
Compressing the Clutch Brake Spring

5. CLUTCH PACK AND SUPPORT OVERHAUL

A. Removal

1. Remove the hydraulic lift cover. For details refer to Part 11, Chapter 1.
2. Separate the tractor at the junction of the transmission and the rear axle centre housing. For details refer to Part 15.
3. Remove the hydraulic lift pump from the centre housing, details refer to Part 11, Chapter 4.
4. Remove the pump inlet filter retaining bolt and remove the filter and tube assembly.
5. Remove the P.T.O. coupling shaft from the clutch assembly.
6. Remove the brake pedals, brake cross shaft and clutch pedal. For details refer to Part 10, Chapter 2.
7. Remove the three brake cover retaining bolts and the brake cover plate.
8. Remove the six bolts retaining the P.T.O. rear plate.
9. Remove the rear plate.
10. Extract the P.T.O. shaft assembly from the rear.
11. Disconnect the control valve to clutch support tube at the support.
12. Remove the clutch pack and brake support as an assembly.

B. Support Disassembly

1. Remove the two bolts retaining the brake housing to the brake support, Figure 7.
2. Separate the brake housing from the clutch and support assembly.

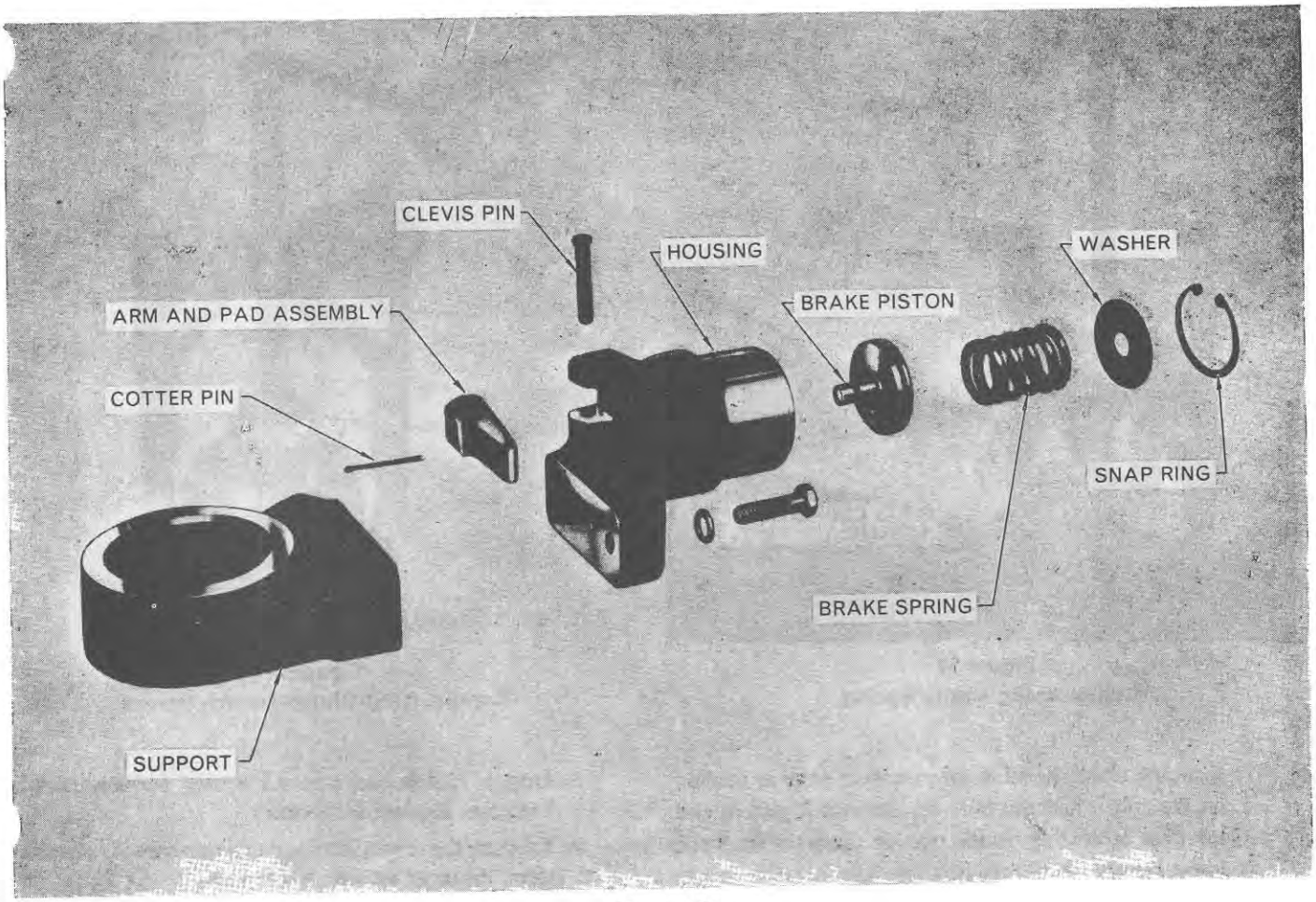

Figure 13
Brake Support and Brake

3. Separate the support from the clutch pack.
4. Remove the cotter pin from the brake arm clevis.
5. Remove the brake arm clevis from the brake arm.
6. Mount the brake housing assembly in a vice as shown in Figure 14, and compress the brake spring using 1002 puller.
7. Remove the snap ring and remove the 1002 puller.
8. Extract the washer, brake spring and the brake piston.

C. Clutch Disassembly

1. Remove the snap ring locating the pressure plate, Figure 16.
2. Remove the pressure plate, drive plates and driven plates from the clutch housing.
3. Using Tools 1003 and N775, compress the piston return spring as shown in Figure 15, and remove the retainer locating snap ring.
4. Remove the tools and extract the retainer and the piston return spring.
5. Using compressed air, or if a compressed air line is not available a footpump with an air/water tyre valve, to blow through the oil drilling and force out the clutch piston, Figure 17.
6. Remove the sealing rings from the clutch housing.

D. Cleaning, Inspection and Repair

1. Clean all parts with a suitable solvent and air dry. Lightly oil machined surfaces.
2. Inspect brake housing piston bore for excessive wear or scoring.
3. Renew brake piston 'O' rings and lubricate to prevent damage on assembly.
4. Inspect brake spring for weakness or breakage.
5. Inspect brake arm and pad assembly for excessive wear or scoring on the brake pad and replace if necessary.
6. Replace clutch piston 'O' rings. Lubricate 'O' rings to prevent damage on assembly.



Figure 14
Compressing Brake Spring

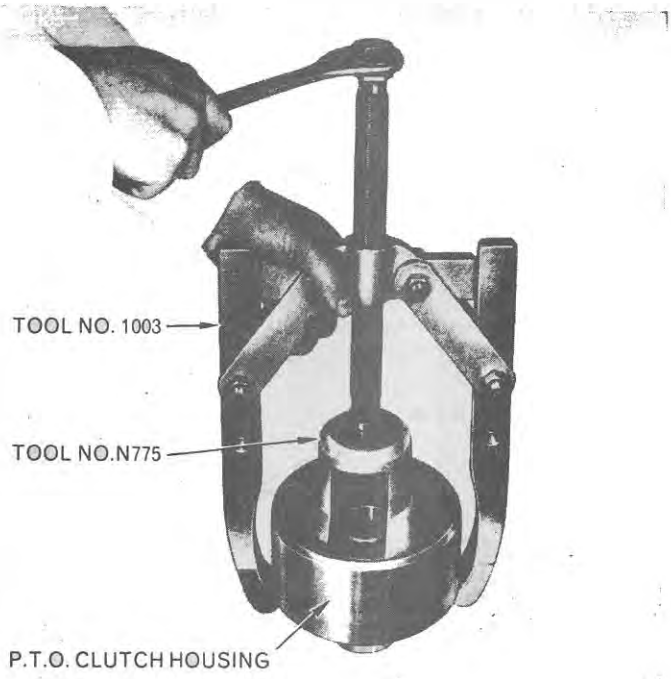

Figure 15
Compressing Clutch Return Spring

7. Examine clutch housing for excessive wear or scoring on the spigot and the bore for the clutch piston, and for wear or scoring on the outside diameter from the brake support and brake pad.
8. Inspect clutch piston return spring for weakness or breakage. Replace if necessary.
9. Examine the drive plates and driven plates for excessive wear, damaged splines or warping.

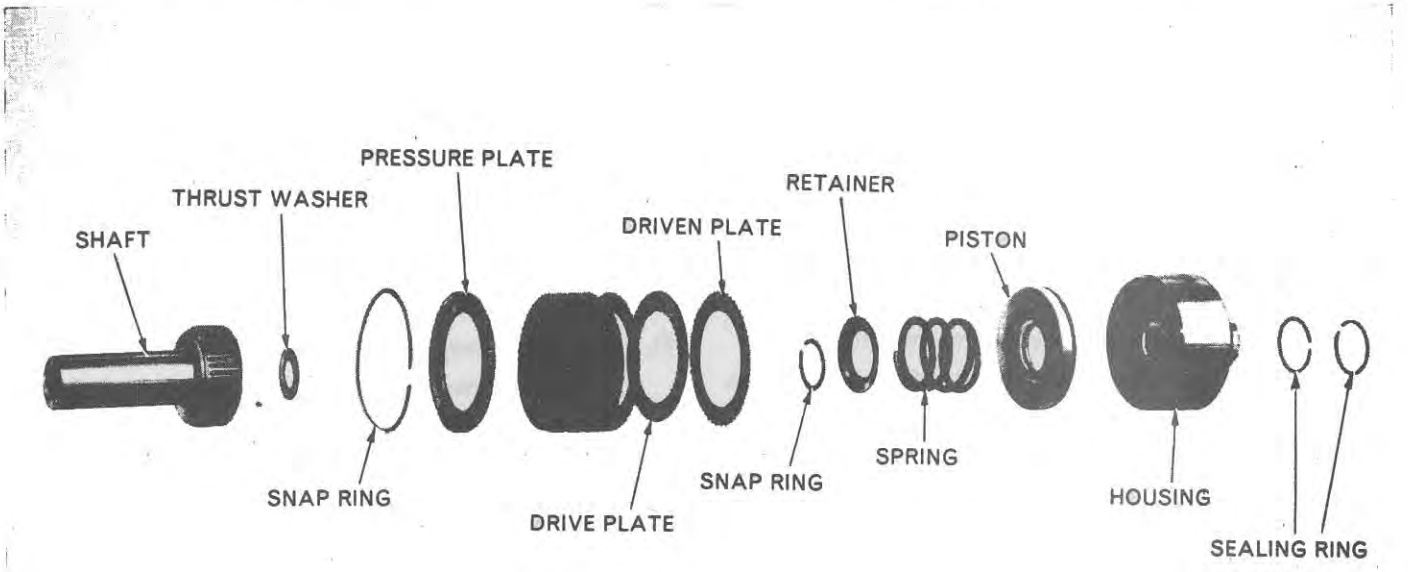

Figure 16
P.T.O. Clutch

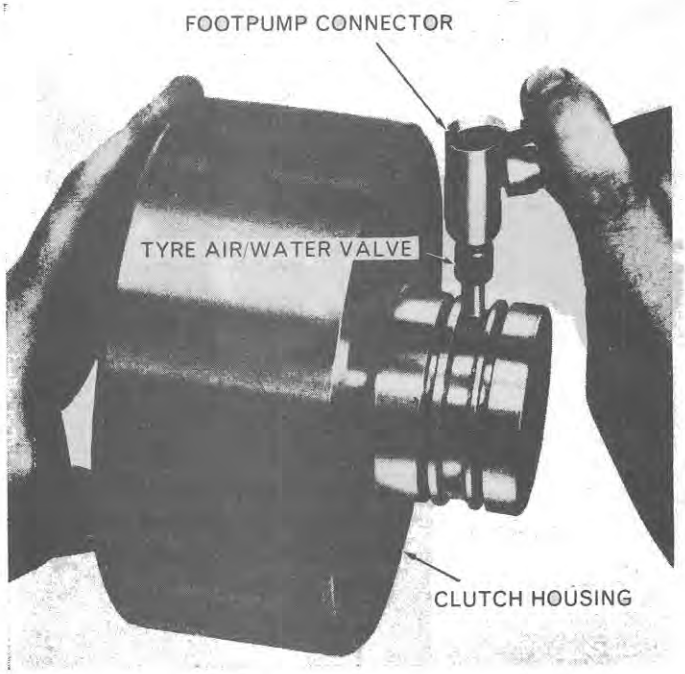

Figure 17
Removing Clutch Piston with Air Pressure

10. Inspect the two cast iron sealing rings for wear or other damage. Install new rings if necessary.

E. Clutch Assembly

1. Install the sealing rings in the grooves of the clutch housing, using petroleum jelly or equivalent for lubrication.
2. Install the clutch piston in the clutch housing.
3. Position the clutch piston spring retainer and snap ring on the clutch housing. Compress the spring using Tools 1003 and N775 and install the snap ring.

   NOTE: ***Make sure the snap ring is seated correctly in the groove.***
4. Install the clutch plates into the clutch assembly, starting with a steel plate next to the piston. Alternate the bronze plates with the steel plates making sure that the concave side of the steel plates faces the piston.
5. Install the pressure plate and the retaining snap ring.

F. Support Assembly

1. Install the brake piston, spring and washer into the brake housing.
2. Mount the housing in a vice and position the brake spring retaining snap ring. Use Tool 1002 to compress the brake spring, Figure 14.
3. Install the snap ring and remove Tool 1002 and the housing from the vice.
4. Position the brake arm and pad assembly and install the clevis pin.
5. Install the cotter pin to locate and secure the brake arm clevis.
6. Install the clutch assembly in the support housing, being careful not to damage the cast iron seals.
7. Make sure that the machined faces on the support housing and the brake housing are clean.
8. Assemble the support and clutch assembly to the brake housing assembly with the two retaining bolts. Tighten the bolts to the correct torque (see Specification Section).

G. Installation

1. Install the clutch pack and support assembly into the rear axle centre housing.
2. Install the P.T.O. shaft, locating the forward end into the P.T.O. clutch.
3. Install the P.T.O. rear plate with a new gasket in position and retain with the six bolts. Tighten the bolts to the specified torque.
4. Install the P.T.O. brake cover plate with a new gasket. Install the retaining bolts and tighten to the specified torque.
5. Install the clutch pedal, the brake cross shaft and the brake pedals. For details refer to Part 10, Chapter 2.
6. Install the thrust washer. Install the P.T.O. coupling shaft, rotating to and fro while applying light pressure to engage the hub with the clutch plates. Make sure that the shaft is fully engaged.
7. Install the hydraulic pump filter and tube and install the retaining bolt.
8. Install the hydraulic pump, for details refer to Part 11, Chapter 4.
9. Assemble the rear axle centre housing to the tractor for details refer to Part 15.
10. Install the hydraulic lift cover. For details refer to Part 11, Chapter 1.

6. POWER TAKE-OFF SHAFT OVERHAUL

A. Disassembly

1. Drain the oil from the rear axle centre housing.
2. Remove the six bolts retaining the P.T.O. rear plate and guard if fitted.
3. Withdraw the shaft assembly from the rear of the tractor.
4. Remove the locating snap ring and extract the shaft and bearing assembly from the retainer.

5. Remove the bearing locating snap rings from the shaft.
6. Using Tools 952 and 1003, remove the bearing from the shaft.
7. Remove the oil seal from the cover using Tools 943 and 943-S, Figure 18.

B. Cleaning, Inspection and Repair

1. Inspect the shaft for twisting or bending. Examine the splines for damage.
2. Inspect the bearing for excessive wear or signs of overheating.

C. Assembly

1. Install the forward bearing locating snap ring on the shaft.
2. Using Tools 924, 930-B, 930-E, 938, 951 and P-61 install the bearing, Figure 19.
3. Install the rear bearing locating snap ring.
4. Install a new oil seal using 630 step plate.
5. Install the shaft and bearing assembly into the cover.
6. Install the P.T.O. shaft assembly into the tractor.
7. Install the rear plate with a new gasket and the guard if fitted. Retain with the six bolts and tighten to the correct torque.
8. Refill rear axle centre housing to the correct level with the specified grade of oil.

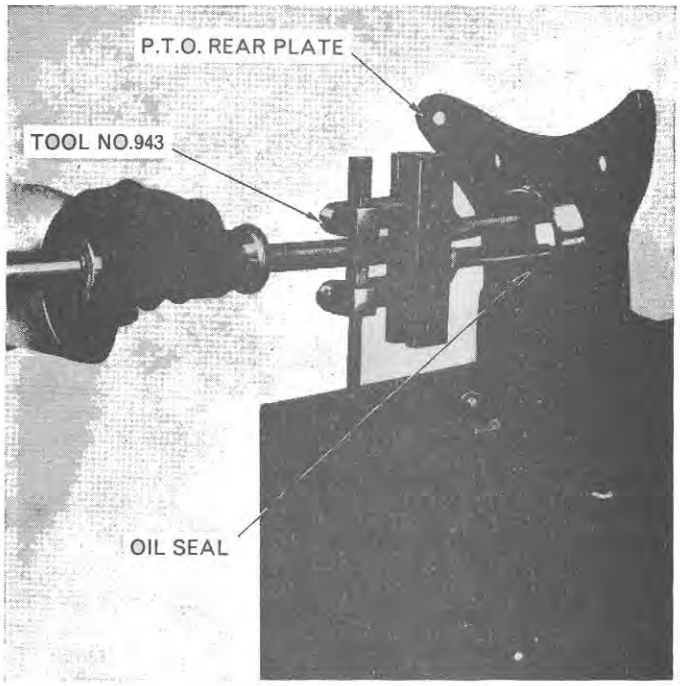

Figure 18
Removing Shaft Oil Seal

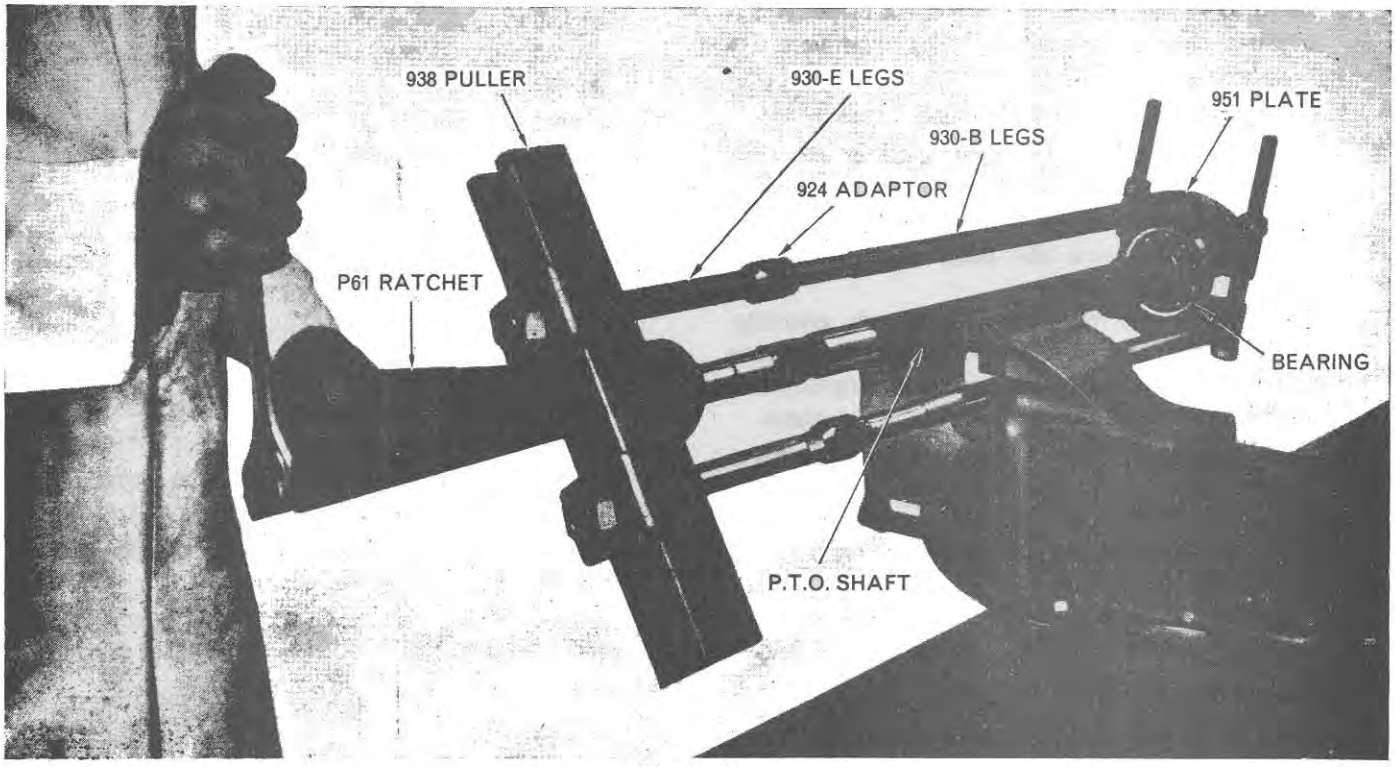

Figure 19
Installing the Shaft Rear Bearing

Part 9

POWER TAKE-OFF

Chapter 3

INDEPENDENT P.T.O.—SUPER MAJOR 5000

Section		Page
1.	Description and Operation	17
2.	Control Valve Operating Pressure Test	21
3.	Independent Clutch and Control Valve Overhaul	22
4.	Rear Upper Shaft and Output Shaft Overhaul	25

1. DESCRIPTION AND OPERATION

The power take-off input shaft is driven by a splined hub attached to the centre of the engine flywheel. The input shaft passes through the centre of the transmission upper shaft to the rear of the transmission.

Splined to the rear end of the input shaft is the independent power take-off clutch hub, Figure 20. To this hub are splined three phosphor-bronze drive plates positioned between three steel driven plates and a pressure plate that are splined externally to the clutch housing.

At the rear of the plates in the clutch housing is situated a hydraulic piston. Oil is passed from the independent power take-off pump, mounted at the rear of the hydraulic power lift pump, through connecting nylon tube to the control valve assembly, which is mounted on the left-hand side of the rear axle differential centre housing. Overhaul procedures for the pump is given in Part 11, Chapter 3.

The power take-off control lever is mounted on the left-hand side of the centre housing to the rear of the valve assembly. A shaft connects the lever to an actuating arm in contact with the rear end of the control valve which protrudes from the rear of the valve assembly. On movement of the control lever the control valve is moved to the operating position, Figure 20, by the actuating arm. A return spring incorporated in the valve housing acts on the forward end of the control valve. The oil flow is directed by the control valve through a drilling in the control valve housing and the valve support. The support encircles the rear extension on the clutch housing which is free to rotate in the support. Oil loss from the clutch housing and support is prevented by cast iron sealing rings, Figure 20. The oil from the control valve passes into the forward of the two ports in the clutch housing extension and through a drilling, to the rear of the drive clutch piston. Oil pressure on the drive clutch piston moves it forwards against the piston return spring. This compresses the clutch plates and so transmits the drive from the hub to the clutch housing. A cushioning spring is provided between the piston and rear driven plate to ensure smooth engagement of the clutch.

The control valve assembly also incorporates a brake arm assembly that is pivoted at the lower end to the valve housing. On one side of the arm a phosphor bronze brake pad is positioned so that on application it comes into contact with the periphery of the clutch housing. The arm is moved into the engaged position by the brake spring acting, through the brake piston, on the upper end of the brake lever.

A tapping from the oil supply bore in the valve housing passes oil to the clutch side of the brake piston. When the power take-off control valve is moved to the engaged position, Figure 20, the oil under pressure moves the piston against the brake spring. This removes the pressure from the brake arm and so disengages the brake from the clutch housing.

When the clutch piston is applied and the brake is disengaged a pressure build up in the system causes the pressure regulating valve to move along the control valve, against the pressure regulating spring. This uncovers the drilling through the valve housing and valve support to the rear porting

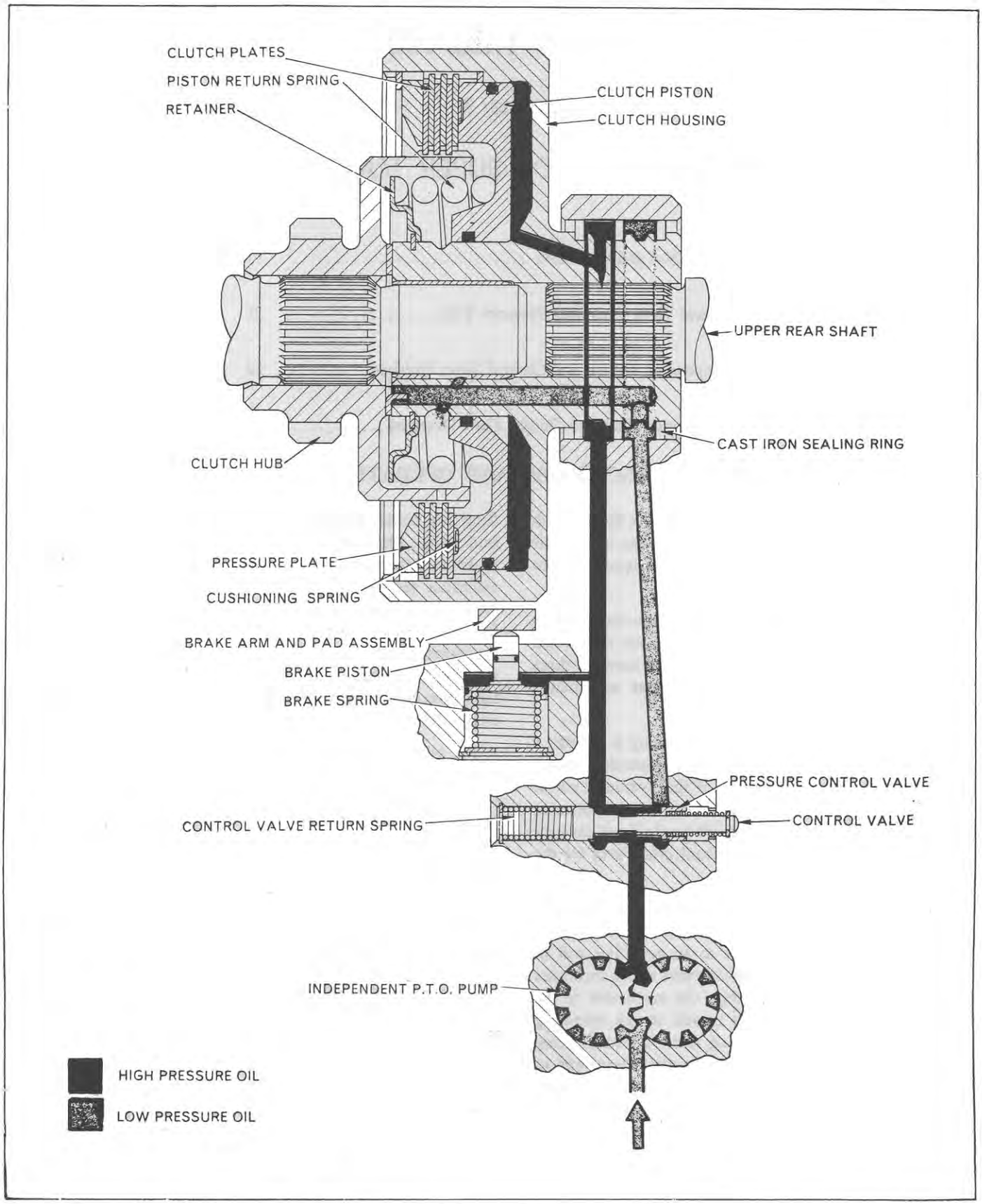

Figure 20
Oil Flow in Engaged Position

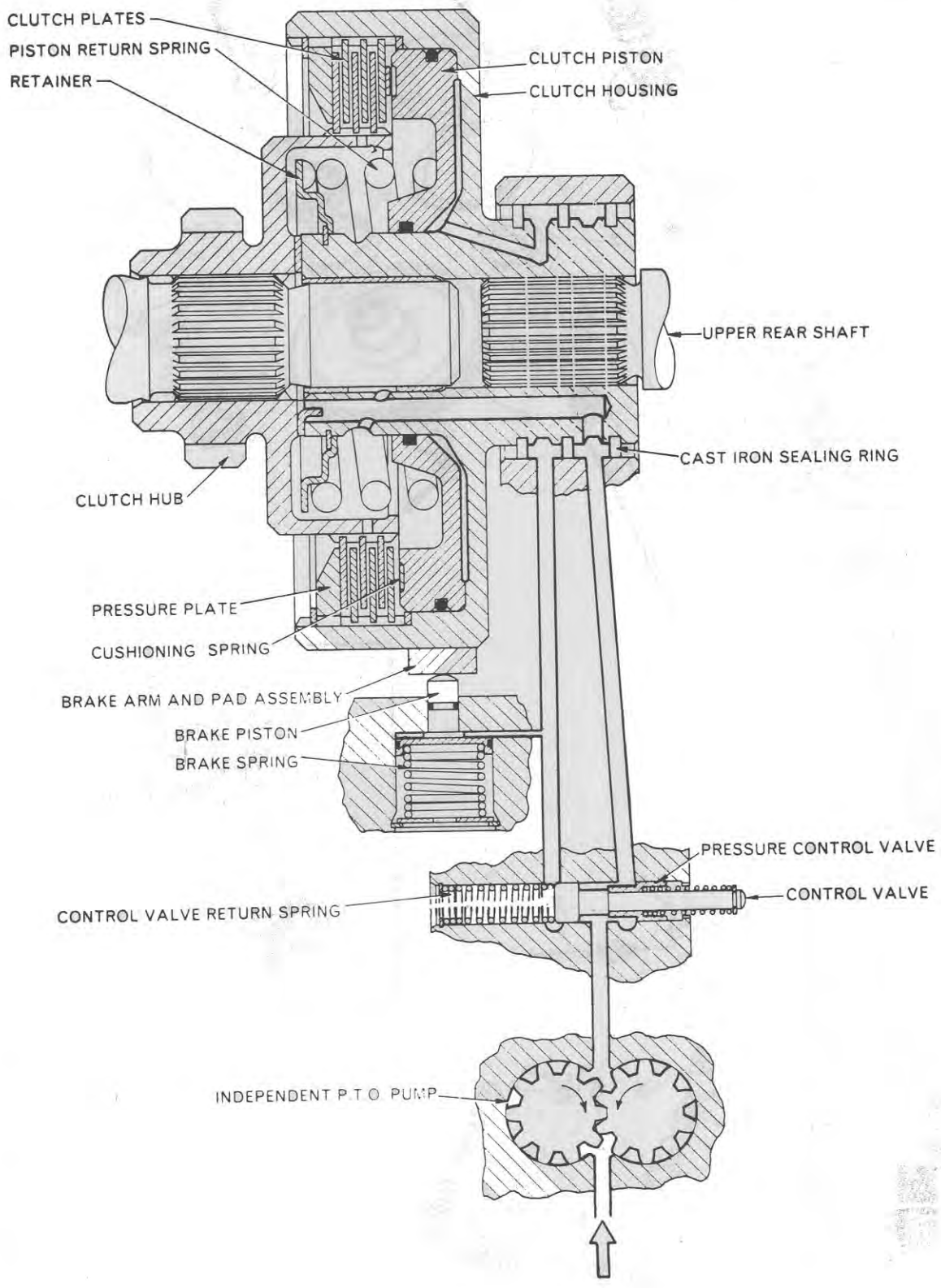

Figure 21
Oil Flow in Disengaged Position

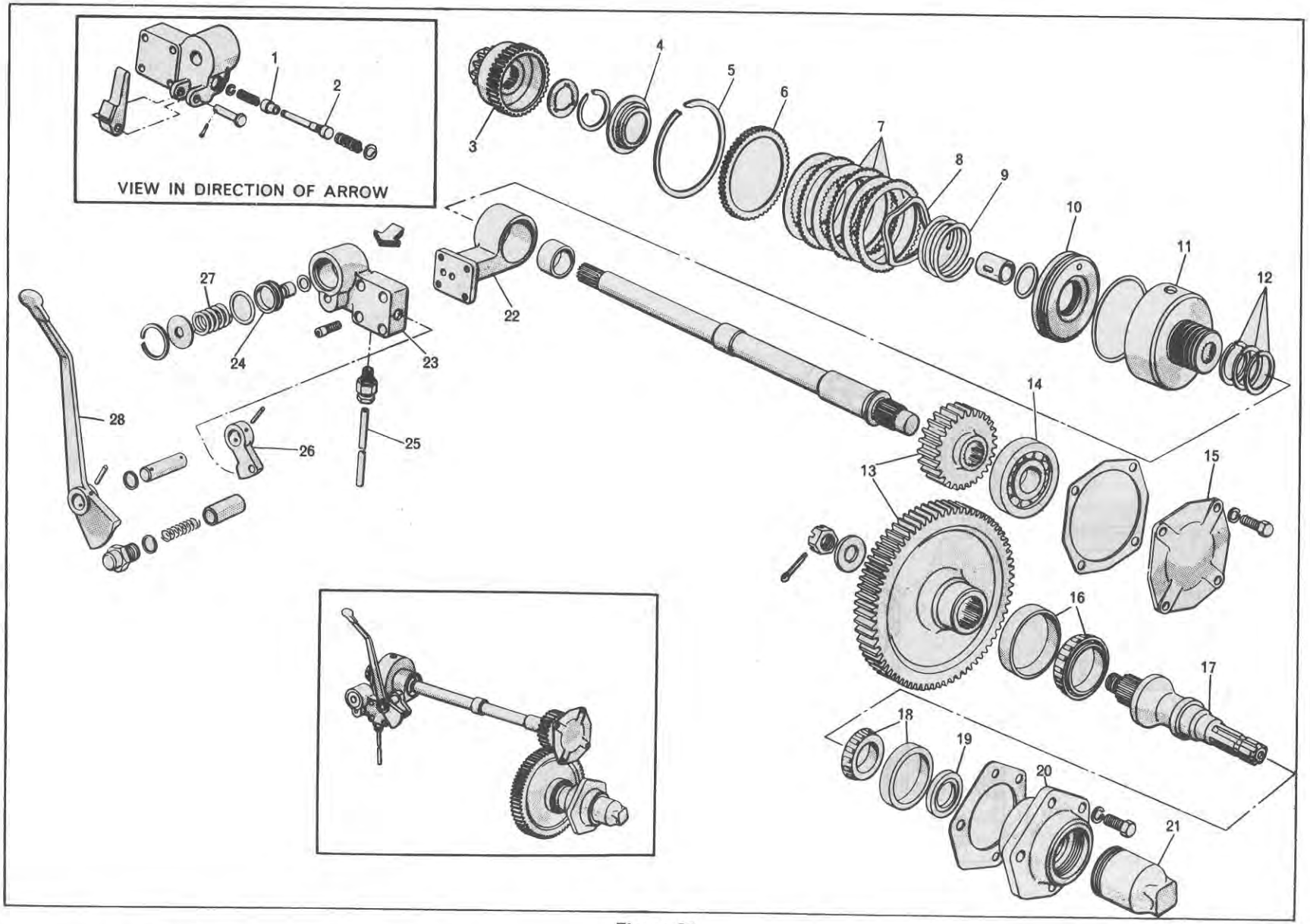

Figure 22

1. Pressure Relief Valve
2. Control Valve
3. Clutch Hub
4. Piston Spring Seat
5. Pressure Plate Retaining Ring
6. Pressure Plate
7. Clutch Plates
8. Cushioning Spring
9. Piston Return Spring
10. Piston
11. Clutch Housing
12. Sealing Rings
13. Reduction Gears
14. Upper Shaft Rear Bearing
15. Cover Plate
16. Output Shaft Front Bearing
17. Output Shaft
18. Output Shaft Rear Bearing
19. Oil Seal
20. Bearing Retainer
21. Cap
22. Clutch Support
23. Control Valve Housing
24. Brake Piston
25. Pump to Control Valve Tube
26. Actuating Arm
27. Brake Spring
28. Control Lever

in the clutch housing extension. The excess oil that passes into the rear porting is directed forward to lubricate the clutch plates, the clutch housing bearing and thrust washer.

On moving the control handle to the disengaged position the control valve is moved rearwards by the return spring, Figure 21. In this position all oil passing into the valve assembly is directed to lubricate the clutch plates, etc.

With the removal of hydraulic pressure the clutch piston is returned by the return spring. This disengages the drive from the clutch hub to the housing. The brake piston is returned to the engaged position by the brake spring applying the brake pad on the clutch housing, Figure 21. Rotation of the clutch housing is there stopped and the rear portion of the power take-off is locked.

Exhaust oil from the clutch circuit is returned through the oil drillings to the control valve bore and from there is returned to sump, Figure 21.

The clutch housing is splined onto the upper rear shaft which passes through a bushing to the rear of the centre housing where it is supported in a ball bearing.

The drive is transmitted from the upper shaft to the output shaft by two spur gears which reduce the speed and reverse the direction of motion at the output shaft. The output shaft is supported by opposed taper roller bearings and ends in a standard $1\frac{3}{8}$" (34·9 mm) (B.S.I. and A.S.A.E.) spline.

For details of overhauling the power take-off input shaft refer to Part 7, Chapter 2 and Part 8, Chapter 1 for 8 speed and 10 speed transmissions respectively.

2. CONTROL VALVE OPERATING PRESSURE TEST

Operate the tractor to bring the rear axle and hydraulic oil to operating temperature.

Remove the service tapping plug from the hydraulic power lift pump and connect the N774 pressure gauge using either the flexible pipe SW17/d or N774/a tube assembly, Figure 23a, and adaptor fitting $\frac{9}{16}$" × 18 U.N.F. × $\frac{1}{8}$" straight pipe thread, Figure 23b. Start the tractor engine and engage the power take-off and note the pressure obtained on the gauge. Disengage and engage the P.T.O. several times noting the pressure obtained. The pressure in the engaged position should not fall below 130 p.s.i. nor go above 165 p.s.i. at low engine idle speed.

If pressure obtained is incorrect refer to clutch and control valve overhaul procedure.

After testing remove the gauge, and flexible pipe or tube and adaptor if used and install the service tapping plug using a new seal.



Figure 23a

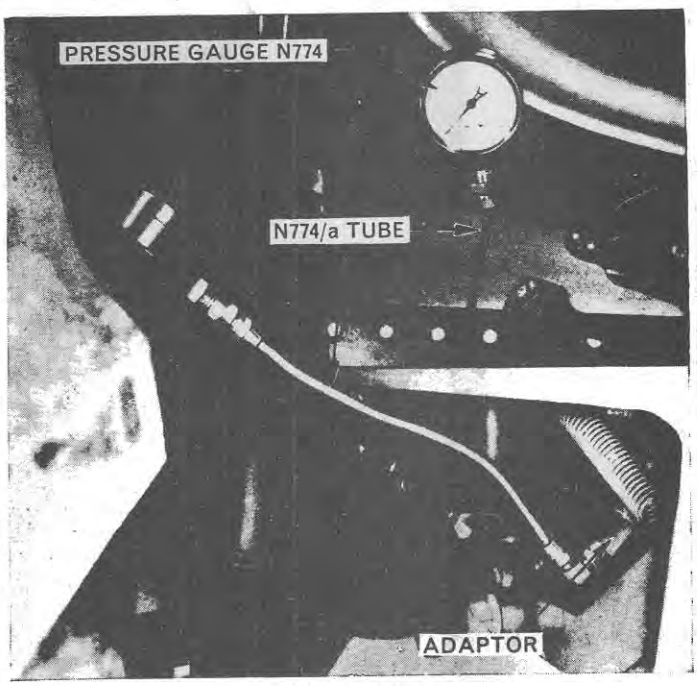

Figure 23b

Testing Control Valve Operating Pressure

3. INDEPENDENT CLUTCH AND CONTROL VALVE OVERHAUL

A. Removal

1. Remove the hydraulic lift cover. For details refer to Part 11, Chapter 2.
2. Remove the cotter pins from the hydraulic lift bracket lower clevis pin and remove the clevis pin and bracket.
3. Remove the four bolts retaining the upper rear shaft coverplate and withdraw the shaft and gear assembly.
4. Remove the P.T.O. valve locating bolt from the left-hand side of the rear axle differential centre housing.
5. Disconnect the nylon tube from the P.T.O. valve assembly.
6. Remove the P.T.O. clutch and valve assembly.

B. To dismantle

1. Remove the four allen screws retaining the valve support to the valve housing, Figure 22. Separate the support and clutch pack assembly from the valve housing.
2. Withdraw the clutch pack from the valve support.
3. Remove the control valve return spring retaining snap ring from the valve housing. Remove the valve return spring, and the control valve and pressure valve assembly.
4. Remove the pressure control valve spring retaining snap ring and remove the spring and pressure control valve, Figure 22.
5. Compress the spring in the brake valve by pressing in the rear plate using 1001 puller, Figure 24. Remove the retaining snap ring and then remove the plate, spring and brake piston from the housing.
6. Remove the snap ring retaining the clutch plates in the clutch housing and remove the pressure plate, the six clutch plates and the cushioning spring.
7. Using Tools Nos. N775, 1003 and a suitable step plate depress the piston return spring, Figure 25, and remove the retaining snap ring. Remove the spring retainer and spring.
8. By applying compressed air through the forward of the two holes in the clutch housing the piston is forced forward and can be removed. If a compressed air line is not available a foot pump can be used by inserting a tyre air/water valve into the footpump connector, Figure 26.

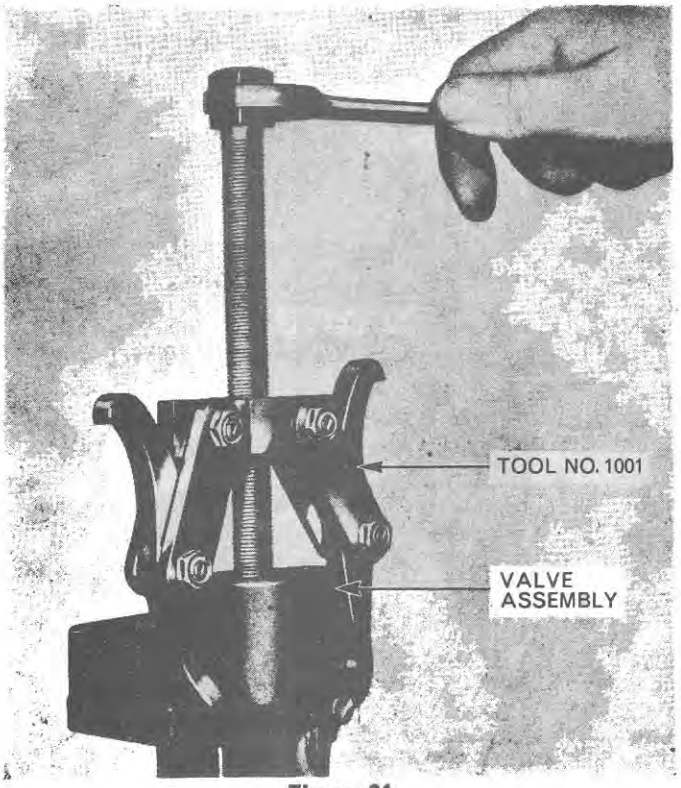

Figure 24
Compressing Brake Spring

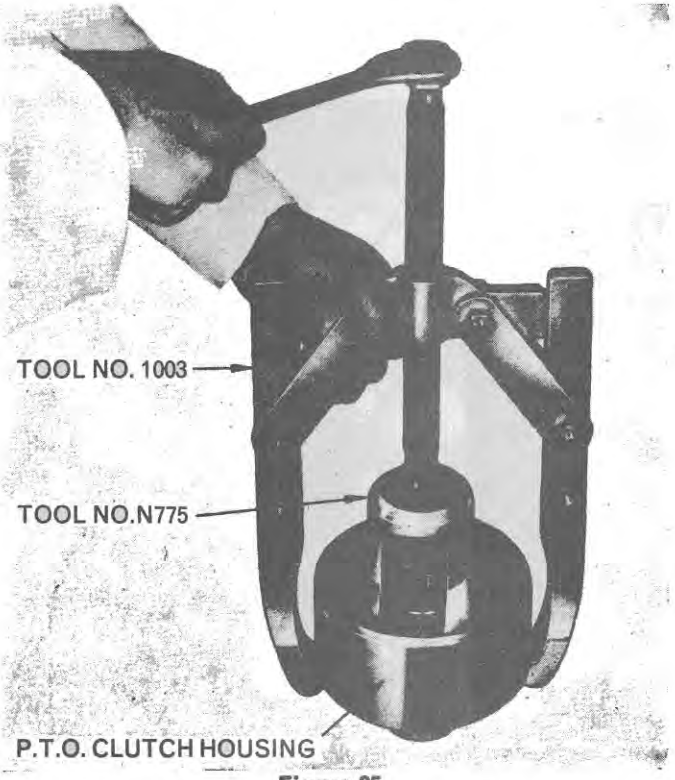

Figure 25
Compressing Clutch Piston Return Spring

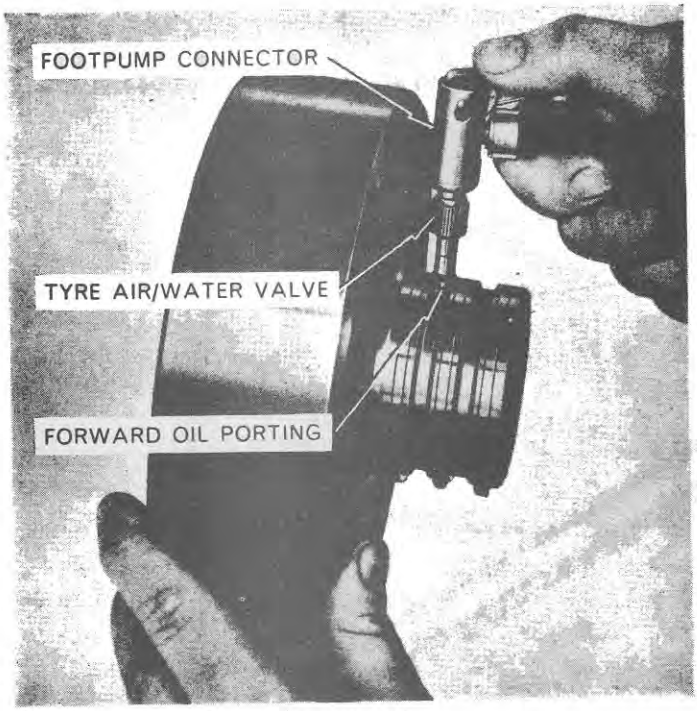

Figure 26
Removing Clutch Piston with Air Pressure

C. Cleaning, Inspection and Repair

1. Clean all parts in a suitable solvent and air dry.
2. Inspect clutch plates for excessive wear, distortion or scoring.
3. Install new 'O' rings on the clutch piston and the brake piston.
4. Examine clutch housing cast iron sealing rings for excessive wear and install new rings if necessary.
5. Examine the control valve and the pressure control valve and the housing bore for wear, burrs or scoring.
6. Inspect clutch piston and clutch housing for scoring or burrs.
7. Inspect the brake piston and housing bores for burrs or scoring.
8. Inspect the brake pad for excessive wear or scoring. If replacement is necessary remove the cotter pin and clevis pin retaining the brake arm. Remove the brake arm and install a new arm and pad assembly. Install the clevis pin and a new cotter pin.
9. Inspect P.T.O. handle, arm, shaft and detent. If replacement is necessary drive out the pin retaining the handle to the shaft. Remove the handle and shaft and arm assembly from the housing.

   Remove the stop from the housing and extract the spring and detent.

   Install the detent and spring in the centre housing and with a new seal install the stop.

   Install the shaft and arm assembly in the centre housing. Use a new oil seal on the shaft and install the handle and retain with a rolled pin.

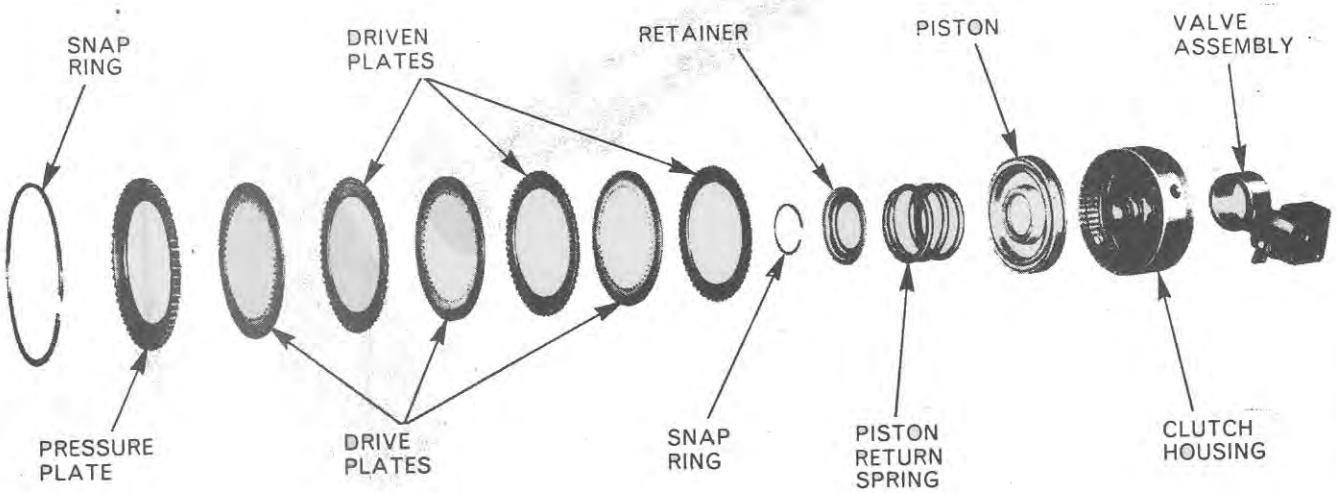

Figure 27
Clutch and Valve Assembly

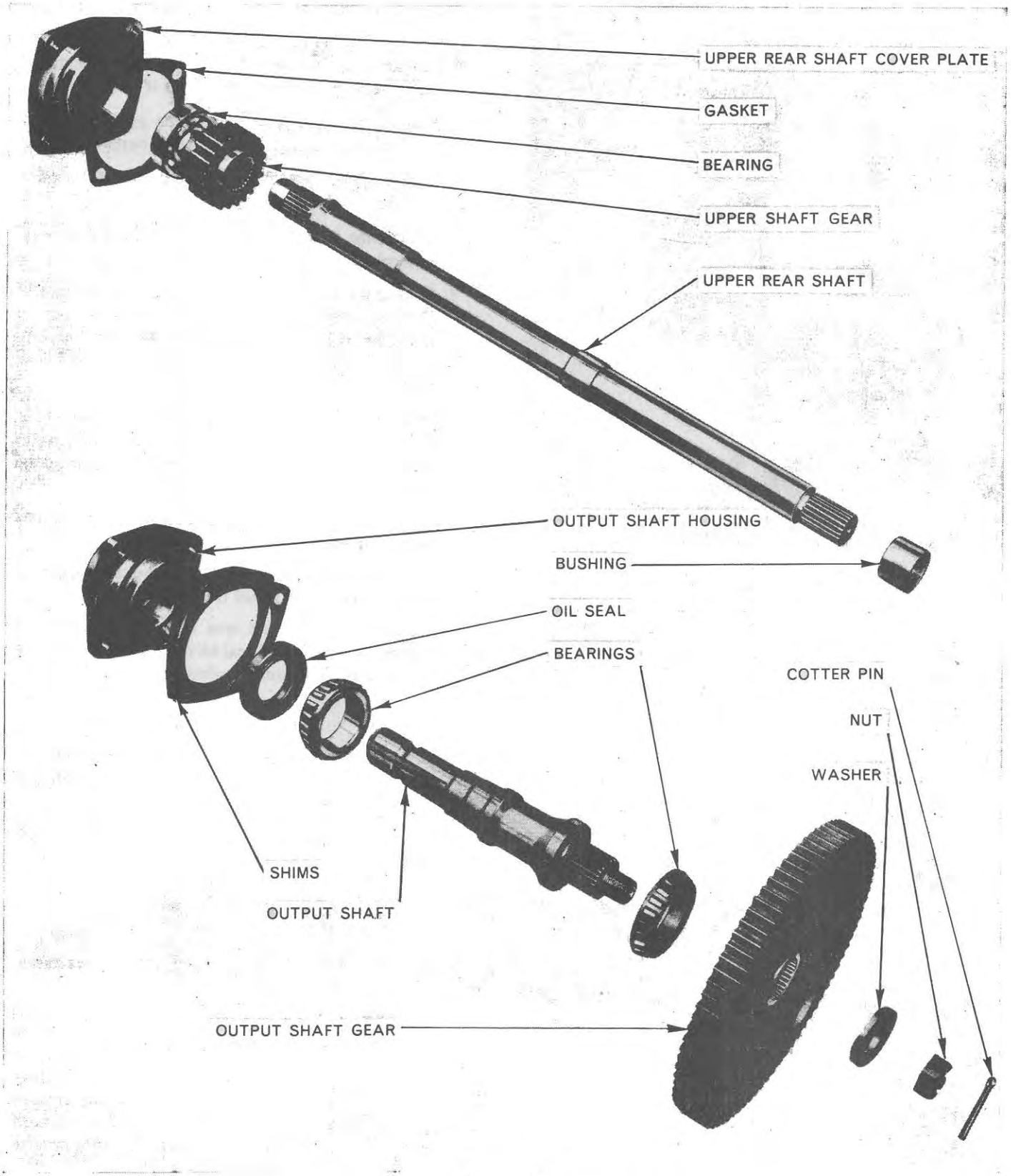

Figure 28
Upper Rear Shaft and Output Shaft

D. Assembly

1. Lubricate clutch piston 'O' rings to prevent damage, and install the piston assembly into the clutch housing. Make sure that the piston is correctly seated in the housing without being cocked.
2. Install the piston return spring and retainer. Compress the spring using Tools N775, 1003 and a suitable step plate, and install the retaining snap ring.
3. Install the cushioning spring, the six clutch plates and the pressure plate and install the retaining snap ring.
4. Lubricate the brake piston 'O' rings to prevent damage. Install the piston assembly in the housing, and the brake spring and plate. Compress the spring into the housing using 1001 puller and install the locating snap ring.
5. Install the pressure control valve on the control valve and install the spring and retaining snap ring.
6. Install the control valve assembly into the valve housing. Insert the control valve return spring and install the locating snap ring.
7. Install the clutch pack in the valve support housing, compressing the sealing rings to allow them to pass into the housing.
8. Assemble the valve housing to the valve support housing using a new gasket between them. Install and tighten the four allen screws, Figure 22, to the specified torque.

E. To Install in The Tractor

1. Position the clutch and valve assembly in the centre housing. Engage the internal splines of the clutch plates with the splines on the clutch hub which is integral with the hydraulic pump drive gear and splined to the P.T.O. countershaft, Figure 22. Make sure the thrust washer is in place with the three prongs located in the holes in the hub of the clutch housing.
2. Connect the nylon tube to the valve assembly.
3. Install the valve locating bolt in the centre housing and tighten to the specified torque. (See Specifications Section).
4. With a new cover gasket in position install the rear upper P.T.O. shaft assembly, engaging the splines with the P.T.O. clutch. Install the four cover plate retaining bolts and tighten to the specified torque.
5. Install the hydraulic lift bracket and retain with the clevis pins and new cotter pins.
6. Install the hydraulic lift cover. Refer to Part 11, Chapter 2.

4. REAR UPPER SHAFT AND OUTPUT SHAFT OVERHAUL

A. Disassembly

1. Remove the cotter pins and clevis pin retaining the hydraulic lift bracket to the centre housing.
2. Remove the four bolts retaining the upper rear shaft bearing retainer and withdraw the shaft complete with the bearing and retainer.
3. Withdraw the shaft and bearing assembly from the bearing retainer. Using Tools 951 and 1002 remove the bearing from the end of the shaft.
4. Remove the gear which is splined onto the end of the shaft.
5. Remove the right-hand rear axle assembly and the differential assembly. (Refer to Overhauling Axle Shaft Assembly Part 3, Chapter 2.)
6. Remove the cotter pin from the nut retaining the power take-off output shaft gear to the output shaft. Hold the output shaft by using half of a universal joint and a bar to prevent it from turning and remove the nut.
7. Remove the four bolts holding the output shaft bearing retainer, and withdraw the retainer and shaft together with the spacing shims, Figure 28.
8. Withdraw the shaft from the bearing retainer.
9. Remove the bearing cone and roller assembly from the output shaft gear and remove both parts from the centre housing.
10. Remove the cone and roller from the output shaft using Tools Nos. 952 and 1003, Figure 29.

B. Cleaning, Inspection and Repair

1. Clean all parts in solvent and air dry.
2. Inspect gears for cracks, chipped teeth and excessive wear.
3. Inspect bearing cone and roller assemblies for chipped rollers, wear and discoloration from overheating.
4. Inspect oil seal and bearing cup in output shaft bearing retainer. If replacement of either is necessary remove both bearing cup, and oil seal, using Tool 943 and slide hammer. Replace the oil seal in the retainer prior to replacing the bearing cup.
5. Inspect the rear upper shaft bearing, and replace with a new bearing if necessary.

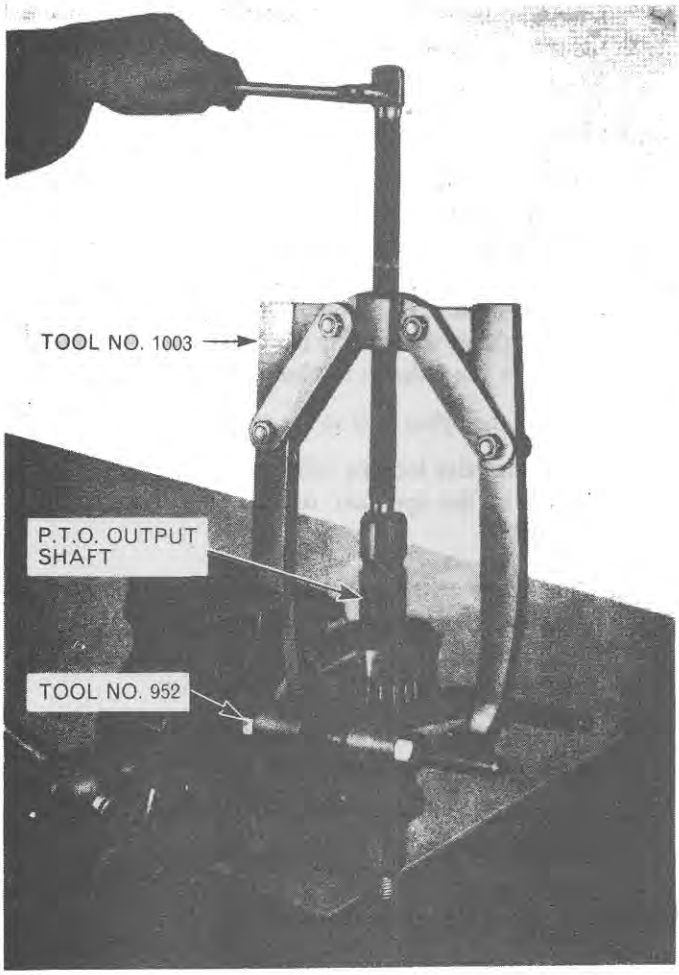

Figure 29
Removing Output Shaft Bearing

6. Inspect the rear upper shaft bushing in the centre housing for wear. If replacement is necessary remove the Hydraulic Lift Cover (refer to Part 11, Chapter 2), extract bushing from the centre housing and insert a new bushing using Tool T808 and 815 handle, Figure 30. To obviate any possibility of seizure on initial start up it is most important that the bushing is liberally coated with oil prior to assembly of the shaft.
7. Inspect the output shaft bearing cup in the centre housing for scoring and excessive wear. Install a new cup if necessary using Tool No. 943 and slide hammer for removal, and Step Adaptor 630 for replacement.

C. Power Take-off Reassembly

1. Install the rear bearing cone and roller assembly on the output shaft, using Tool Nos. 952 and 1003.
2. Retain the P.T.O. output shaft gear in position in the centre housing while installing the bearing cone and roller assembly on the gear.

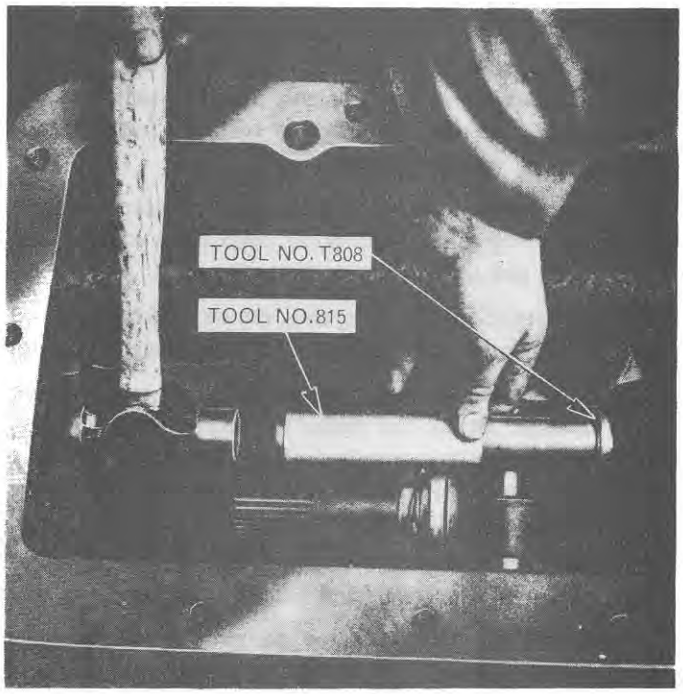

Figure 30
Installing Upper Shaft Bushing

3. Install the output shaft locating the splines in the output shaft gear. Install the washer and the castellated nut. Prevent the output shaft from turning, using the bar and half a universal joint assembly as previously described and tighten the nut to the specified torque. (See Specifications Section.) Line up the castellations in the nut with the hole through the shaft and insert a new cotter pin.
4. Install the P.T.O. output shaft bearing retainer without the spacing shims, and tighten the four retaining bolts finger tight. Rotate the shaft by hand to make sure that the bearings are correctly seated, and retighten the bolts to finger tight. Measure the gap between the output shaft housing and the centre housing with a feeler gauge, Figure 31, at various points to ensure the housing is parallel with the centre housing.

   Select a combination of shims (see Specifications, page 31) that represent in thickness the equivalent of the measured gap plus 0·005 ins. (0·127 mm.) to give the required end float. Remove the output shaft bearing retainer and install together with the shims. Tighten the bolts to the specified torque (see Specification Section), and check that there is the required end float on the shaft and the shaft turns easily by hand. If incorrect alter the thickness of shims accordingly. Apply sealing compound on final assembly and tighten the four retaining bolts to the specified torque (see Specifications Section).

5. Position the rear upper shaft gear on the rear upper shaft, and install the bearing on the shaft.
6. Press the shaft, gear and bearing assembly into the bearing retainer.
7. Install the rear upper shaft and bearing retainer assembly in the centre housing using a new gasket. Install the four bolts and lockwashers that hold the bearing retainer and tighten to the specified torque. (See Specifications Section.)
8. Install the differential assembly and the right-hand rear axle assembly. (Refer to Part 3, Chapter 2 'Overhauling Axle Shaft Assembly').
9. Position the hydraulic lift bracket and install the clevis pin and cotter pins that retain it to the centre housing.

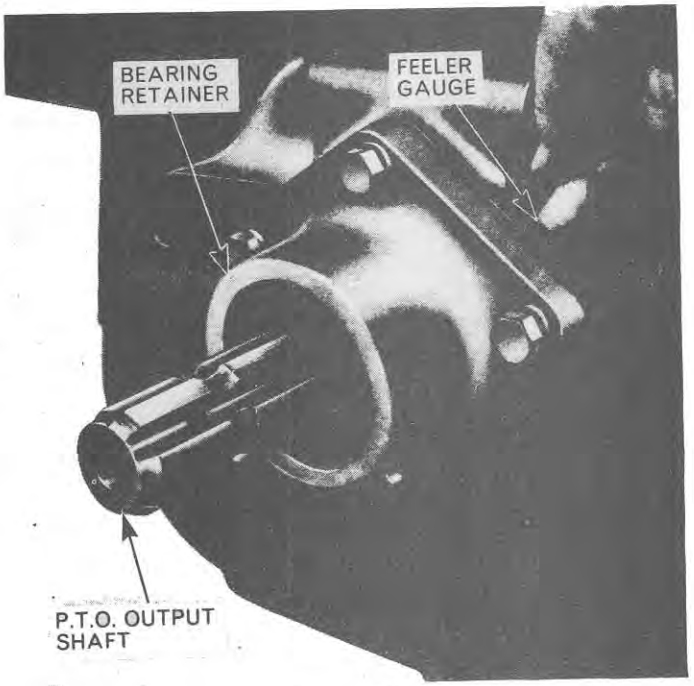

Figure 31
Measuring Shim Gap

Part 9

POWER TAKE-OFF

Chapter 4

TROUBLE SHOOTING, SPECIFICATIONS AND SPECIAL TOOLS

Section		Page
1.	Trouble Shooting	29
2.	Specifications	30
3.	Special Tools	31

1. TROUBLE SHOOTING

Trouble	Possible Cause
Independent P.T.O. Clutch does not engage or does not engage fully.	Low rear axle oil level. Failure of independent pump. Fracture of connecting pipe. Pressure relief valve stuck open. Pressure relief valve spring broken. Excessive oil lost past cast iron sealing rings. Clutch piston seals leaking.
Independent P.T.O. Clutch does not disengage.	Control valve stuck. Control valve return spring broken. Clutch piston return spring broken.
Clutch disengages but P.T.O. still turns.	Cold oil. Brake piston stuck. Brake piston return spring weak or broken. Clutch piston return spring weak or broken. Worn brake pad. Clutch plates distorted or seized. Excessive lubricating oil between clutch plates.

2. SPECIFICATIONS

FORD 2000

	4 speed Trans.	6 speed Trans.	8 speed Trans.
Ratio of engine to P.T.O. speed			
—Transmission P.T.O.	2·75 : 1	3·35 : 1	2·95 : 1
—Live P.T.O.	—	3·35 : 1	3·35 : 1
Standard P.T.O. speed			
—Transmission P.T.O.	540 @ 1500 r.p.m.	540 @ 1800 r.p.m.	540 @ 1600 r.p.m.
—Live P.T.O.	—	540 @ 1800 r.p.m.	540 @ 1800 r.p.m.
Nominal O.D. of Output Shaft Splines	1⅜ ins. (34·9 mm.)	1⅜ ins. (34·9 mm.)	1⅜ ins. (34·9 mm.)
Number of Splines	6	6	6
Selector arm spring free length	0·94 ins. (24 mm.) minimum		
Selector arm spring compressed length	0·72 ins. (18 mm.) with 22/26 lb. (10·0/11·8 kg.) load		
Cover retaining bolt torque	35/47 lbs. ft. (4·84/6·5 kg. m.)		
Selector retaining bolt torque	35/47 lbs. ft. (4·84/6·5 kg. m.)		

FORD 3000

	4 speed Trans.	8 speed Trans.
Ratio of engine to P.T.O. speed		
—Transmission P.T.O.	2·75 : 1	2·95 : 1
—Live P.T.O.	—	3·35 : 1
Standard P.T.O. speed		
—Transmission P.T.O.	540 @ 1500 r.p.m.	540 @ 1600 r.p.m.
—Live P.T.O.	—	540 @ 1800 r.p.m.
Nominal O.D. of output shaft splines	1⅜ ins. (34·9 mm.)	1⅜ ins. (34·9 mm.)
Number of splines	6	6
Selector arm spring free length	0·94 ins. (24 mm.) minimum	
Selector arm spring compressed length	0·72 ins. (18 mm.) with 22/26 lb. (10·0/11·8 kg.) load	
Cover retaining bolt torque	35/47 lbs. ft. (4·84/6·5 kg. m.)	
Selector retaining bolt torque	35/47 lbs. ft. (4·84/6·5 kg. m.)	

FORD 4000

Rate of engine to P.T.O. speed	3·35 : 1
Standard P.T.O. speed @ engine speed	540 @ 1800 r.p.m.
Nominal O.D. of output shaft splines	1⅜ ins. (34·9 mm.)
Number of splines	6
Selector arm spring free length	0·94 ins. (24 mm.) minimum
Selector arm spring compressed length	0·72 ins. (18 mm.) with 22/26 lb. (10·0/11·8 kg.) load
Piston return spring free length	2·34 ins. (59·5 mm.)
Piston return spring compressed length	1·88 ins. (47·8 mm.) with 200/225 lb. (90·7/102 kg.) load
Outer Brake spring free length	1·54 ins. (39 mm.)
Outer Brake spring compressed length	1·11 ins. (28·2 mm.) with 195/205 lb. (88·5/93 kg.) load
Inner brake spring free length	1·52 ins. (38·6 mm.)
Inner brake spring compressed length	1·11 ins. (28·2 mm.) with 95/105 lb. (43/47 kg.) load
Control valve spring free length	1·70/1·72 ins. (43·1/43·8 mm.)
Control valve spring compressed length	1·50/1·52 ins. (38·2/38·8 mm.) with 43 lb. (19·5 kg.) load
Control valve detent spring free length	1·19/1·21 ins. (30·2/30·8 mm.)
Control valve detent spring compressed length	1·09/1·11 ins. (27·8/28·2 mm.) with 18 lb. (8·2 kg.) load
Four large cover retaining bolts torque	170/200 lbs. ft. (23·5/27·6 kg. m.)
Two small cover retaining bolts torque	35/47 lbs. ft. (4·85/6·5 kg. m.)
Selector retaining bolt torque	35/47 lbs. ft. (4·85/6·5 kg. m.)

Brake cover plate bolt torque	35/47 lbs. ft. (4·85/6·5 kg. m.)
Brake housing to support bolt torque	14/17 lbs. ft. (1·94/2·35 kg. m.)

FORD 5000

Ratio of engine to P.T.O. speed	3·52 : 1
Standard P.T.O. speed @ engine speed	540 @ 1900 r.p.m.
Nominal O.D. of output shaft splines	$1\frac{3}{8}$ ins. (34·9 mm.)
Number of splines	6
P.T.O. output shaft bearing end float	·003-·005 in. (·076-·127 mm.)
Thickness of output shaft bearing shims	·002 ins. (·051 mm.), ·003 ins. (·076 mm.), ·010 ins. (·254 mm.)
Piston return spring free length	2·29 ins. (58·1 mm.) minimum
Piston return spring compressed length	1·378 ins. (35 mm.) with 305/335 lb. (138/152 kg.) load
Outer brake spring free length	1·58 ins. (40·1 mm.)
Outer Brake spring compressed length	0·78 ins. (19·9 mm.) with 76/84 lb. (34·5/38 kg.) load
Inner brake spring free length	1·10 ins. (28 mm.)
Inner brake spring compressed length	0·78 ins. with 37/43 lb. (17/19·5 kg.) load
Control valve pressure spring free length	1·48 ins. (37·6 mm.)
Control valve pressure spring compressed length	1·10 ins. (28 mm.) with 18/20 lb. (8·16/9·07 kg.) load
Control valve return spring free length	2·04 ins. (51·9 mm.)
Control valve return spring compressed length	1·56 ins. (39·7 mm.) with 2·8/3·2 lb. (1·27/1·45 kg.) load
P.T.O. upper rear shaft cover bolts torque	40–50 lbs. ft. (5·5–6·98 kg. m.)
P.T.O. output shaft gear retaining nut torque	200–250 lbs. ft. (27·7–34·5 kg. m.)
P.T.O. output shaft housing bolt torque	40–50 lbs. ft. (5·5–6·9 kg. m.)

3. SPECIAL TOOLS

SW 17/a	Flexible Tube
SW 17/d	Adaptor
P 61	Ratchet
518	Puller
630-S	Step Plates
N 774	Pressure Gauge 300 p.s.i.
N 774/a	Tube
N775	Clutch Spring Compressor
T 818	Bushing Kit
924	Adaptor
930-B	Legs
930-E	Legs
938	Puller
951	Pulling Attachment
952	Pulling Attachment
T 8503-4	Tube
1001	Puller
1002	Puller
1003	Puller

Part 9

POWER TAKE-OFF

Chapter 5

TWO-SPEED POWER TAKE-OFF – FORD 5000 AND FORD 7000

Section		*Page*
1.	Description and Operation	33
2.	Power Take-Off Clutch Overhaul	37
3.	Control Valve and Brake Overhaul	41
4.	Power Take-Off Shafts and Gears Overhaul	43

1. DESCRIPTION AND OPERATION

The two-speed independent power take-off (I.P.T.O.) input shaft is driven by a splined hub attached to the centre of the engine flywheel. The input shaft passes through the centre of the transmission upper shaft to the rear of the transmission.

Splined to the rear end of the input shaft is the I.P.T.O. clutch hub. To this hub are splined four phosphor-bronze drive plates positioned between four steel driven plates and a pressure plate that are splined externally to the clutch housing.

An hydraulic piston is situated at the rear of the plates in the clutch housing.

Hydraulic oil is passed from the I.P.T.O. pump through a connecting nylon tube to the control valve assembly.

The control valve and clutch assembly is positioned on two locating pins situated in the left-hand side of the rear axle centre housing.

The clutch housing is splined onto an upper rear shaft which passes to the rear of the centre housing.

The drive is transmitted from the upper shaft to an output shaft by a double set of reduction gears running simultaneously.

The installation of one of two interchangeable output shafts effects selection of the desired P.T.O. Speed.

Standard P.T.O. speeds are 540 ± 10 rev/min. and 1000 ± 25 rev/min. These speeds are obtained when engine rev/min., as read on the Proof-Meter, are set at the following speeds.

Engine Speed (rev/min.)	P.T.O. Speed (rev/min.)
1900	540
2060	1000

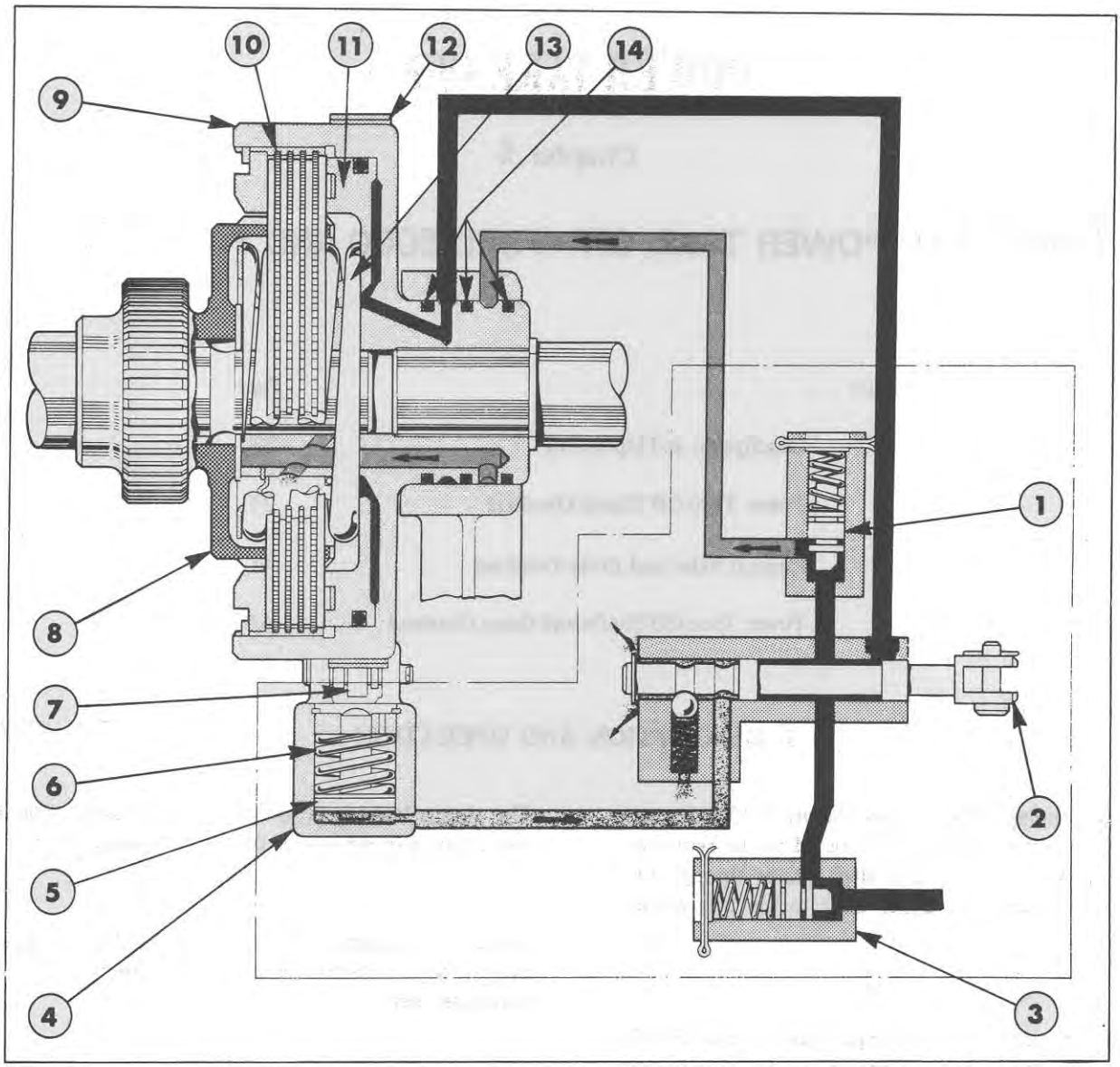

Figure 1

Oil Flow to the P.T.O. Clutch

Pressure Oil **Lubrication Oil** **Reservoir and Exhaust Oil**

1. P.T.O. Clutch Regulating Valve
2. Control Valve Spool
3. Dual Power Transmission Regulating Valve
4. Brake Piston Housing
5. Brake Piston
6. Brake Piston Return Spring
7. Brake Band Actuating Lever
8. Clutch Hub
9. Clutch Housing
10. Clutch Plates
11. Clutch Piston
12. Brake Band
13. Clutch Piston Return Spring
14. Sealing Rings

A 6-spline output shaft is used for 540 rev/min. P.T.O. operation only.

A 21-spline output shaft is used for 1000 rev/min. P.T.O. operation.

NOTE: When using the 21-spline output shaft a P.T.O. speed of 540 rev/min. is obtainable at a reduced engine speed of 1110 rev/min.

IMPORTANT: Never operate the tractor with the P.T.O. shaft removed. The shaft supports the driven gears and acts as a bearing.Operation without the shaft installed may cause severe damage.

NOTE: With the engine stopped the P.T.O. shaft may be turned by hand to facilitate attachment of equipment.

The I.P.T.O. can be engaged, operated and disengaged whether or not the tractor is in motion. The P.T.O. control lever. mounted on the left-hand side of the centre housing, is connected to the control valve and provides positive movement of the valve to the engaged and disengaged positions.

IMPORTANT: The P.T.O. control lever is moved forward to engage the P.T.O. clutch and rearward to apply the P.T.O. brake.

Oil Flow to the P.T.O. Drive Clutch

With reference to Figure 1.

Hydraulic oil from the I.P.T.C. pump, mounted at the rear of the hydraulic power lift pump and incorporating a P.T.O. system relief valve. passes to the Dual Power transmission regulating valve. This valve ensures hydraulic pressure priority for the Dual Power transmission (when installed) over the P.T.O. clutch energising and lubrication circuits.

As the system pressure increases,the Dual Power transmission regulating valve lifts off and allows oil to pass to the control valve spool.

When the P.T.O. control lever is moved forward the control valve spool is pulled out and directs oil to the P.T.O. clutch regulating valve. This valve ensures hydraulic pressure priority of the P.T.O. clutch energising circuit over the lubrication circuit. The oil also passes across the control valve spool and through a small orifice leading to the forward of the two ports in the clutch housing. A drilling leads the oil to the rear of the drive clutch piston. Oil pressure moves the piston forward against the piston return spring. The clutch plates are compressed and transmit the drive from the hub to the clutch housing.

When the oil supply requirements of the clutch piston are satisfied, the P.T.O. clutch regulating valve lifts off.

Metered oil now passes to the rearward port in the clutch housing and through a drilling to exhaust within the clutch assembly, thereby providing pressure lubrication.

Return spring pressure on the brake piston forces oil to exhaust at the front end of the control valve spool and ensure complete release of the brake band.

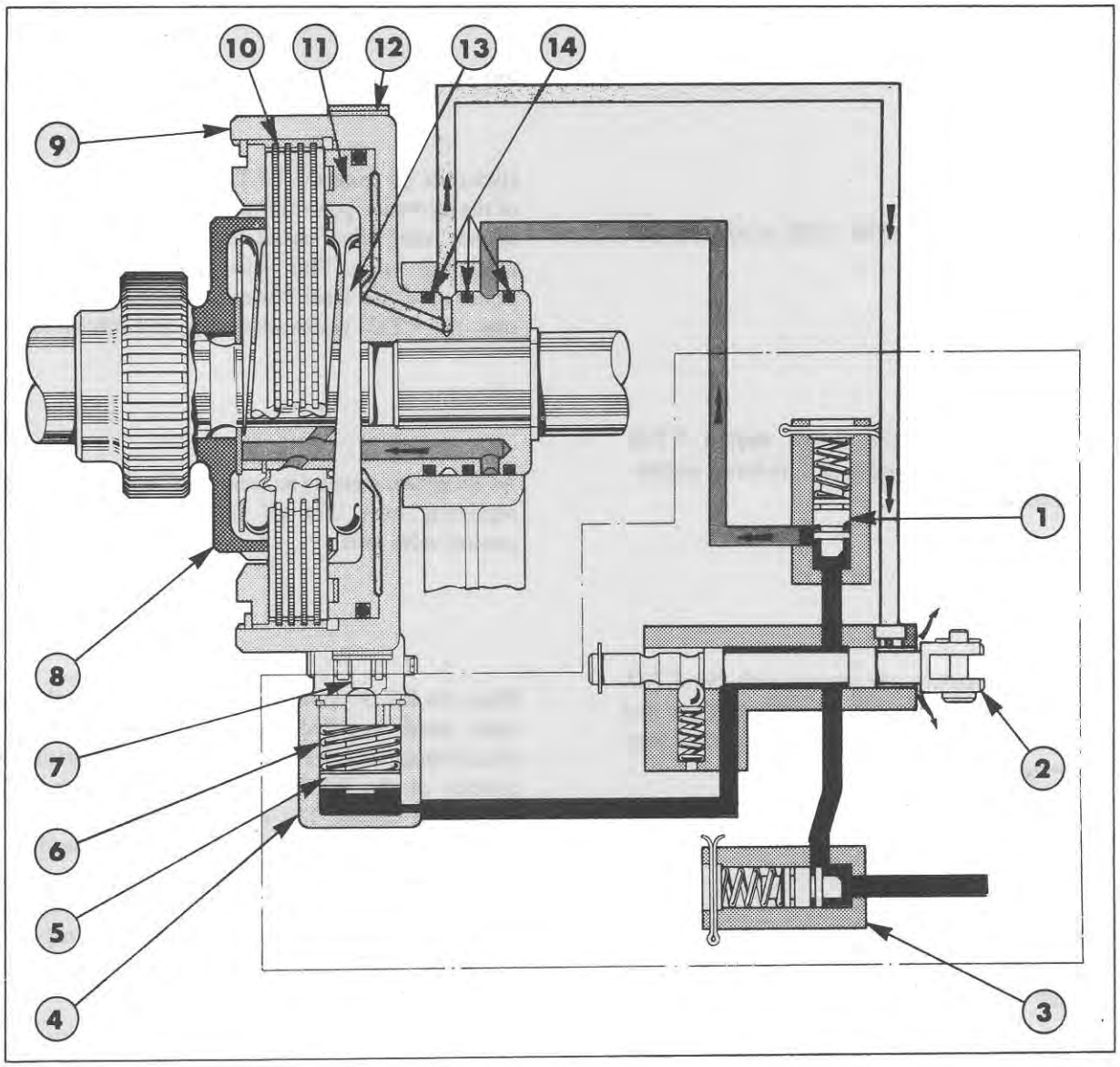

Figure 2

Oil Flow to the P.T.O. Brake

Pressure Oil

Lubrication Oil

Reservoir and Exhaust Oil

1. P.T.O. Clutch Regulating Valve
2. Control Valve Spool
3. Dual Power Transmission Regulating Valve
4. Brake Piston Housing
5. Brake Piston
6. Brake Piston Return Spring
7. Brake Band Actuating Lever
8. Clutch Hub
9. Clutch Housing
10. Clutch Plates
11. Clutch Piston
12. Brake Band
13. Clutch Piston Return Spring
14. Sealing Rings

il Flow to the P.T.O. Brake

With reference to Figure 2.

NOTE: Braking is effected by a steel band lined with friction material which encircles the P.T.O. drive clutch housing. The ends of the band are constrained by an actuating lever which is positioned over the rod end of the brake piston.

Hydraulic oil from the I.P.T.O. pump passes to the Dual Power transmission regulating valve. As the pressure increases the valve lifts off and allows oil to pass to the control valve spool. When the control lever is moved rearwards the spool is pushed in and prevents the oil flowing to the P.T.O. drive clutch.

The oil is directed to the P.T.O. clutch regulating valve and also passes across the control valve spool and out to the brake piston. Oil pressure moves the piston forward against the piston return spring. The rod end of the piston pushes against the brake band actuating lever which constricts the band around the clutch housing and thus prevents rotation.

As the system pressure increases the P.T.O. clutch regulating valve lifts off. Metered oil now passes to the rearward port in the clutch housing and through a drilling to exhaust within the clutch assembly, thereby maintaining pressure lubrication.

Return spring pressure on the P.T.O. drive clutch piston forces oil to exhaust through both the small orifice and a second, larger orifice at the rear end of the control valve spool. Complete release of the clutch plates is thus ensured.

2. POWER TAKE-OFF CLUTCH OVERHAUL

A. REMOVAL

1. Withdraw the yoke and pivot pins and remove the hydraulic lift rocker.

2. **FORD 5000 and 7000 Less Load Monitor:** Remove the hydraulic lift cover.

FORD 5000 and 7000 With Load Monitor: Separate the tractor between the transmission and rear axle.

3. Remove the P.T.O. output shaft cap and then remove the retaining ring, Figure 3. Withdraw the output shaft.

AUTION: If the rear axle oil has not been drained from the centre housing oil may spill out from the P.T.O. output shaft bearing retainer.

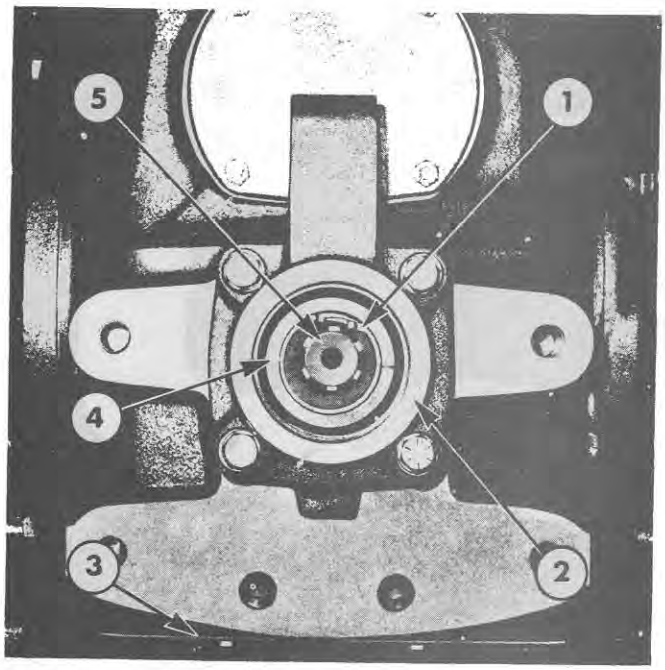

Figure 3
P.T.O. Output Shaft Installed

1. Retaining Ring
2. Rear Bearing Retainer
3. Base Plate
4. Sleeve
5. P.T.O. Output Shaft

4. Remove the bolts that secure the output shaft bearing retainer and then remove the bearing retainer.

CAUTION: The output shaft sleeve, bearing and seal may all come out of the centre housing with the retainer. In this event it is possible for the P.T.O. driven gears to drop to the bottom of the housing.

5. Disconnect the nylon tube from the P.T.O. valve assembly.

6. Remove the two P.T.O. clutch valve locating pins and locknuts from the left-hand side of the centre housing, Figure 4.

FORD 5000 and 7000 With Load Monitor: Remove the P.T.O. clutch and valve assembly from the centre housing.

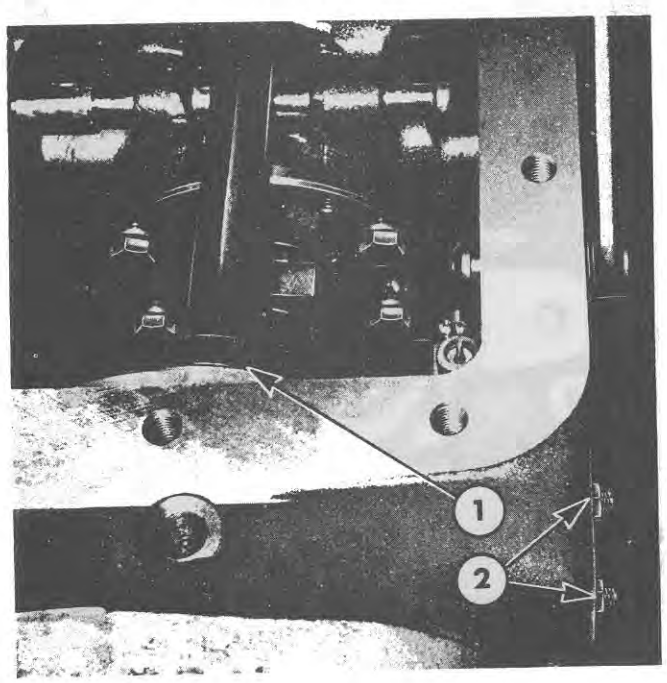

Figure 4
P.T.O. Clutch and Hub Installed

1. P.T.O. Drive Clutch
2. Locating Pins and Locknuts

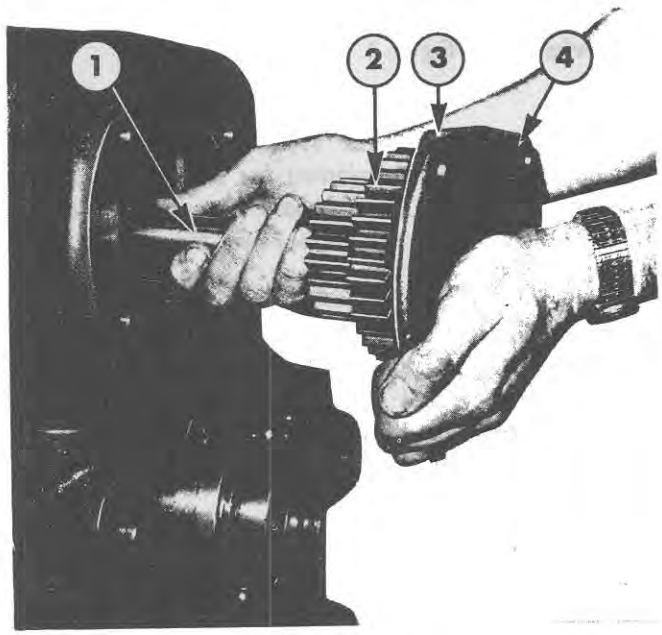

Figure 5
Removing P.T.O. Upper Shaft and Gears

1. P.T.O. Upper Shaft
2. P.T.O. Drive Gear Assembly
3. Gasket
4. Rear Bearing Retainer

7. Remove the bolts that secure the upper shaft rear bearing retainer then remove the retainer, gasket, P.T.O. drive gears, rear bearing and shaft, as shown in Figure 5.

NOTE: The front bearing will remain in the centre housing.

FORD 5000 and 7000 Less Load Monitor: Slide the P.T.O. clutch rearward off the input shaft and remove from the centre housing.

8. Separate the clutch hub from the clutch housing and remove the thrust washer.

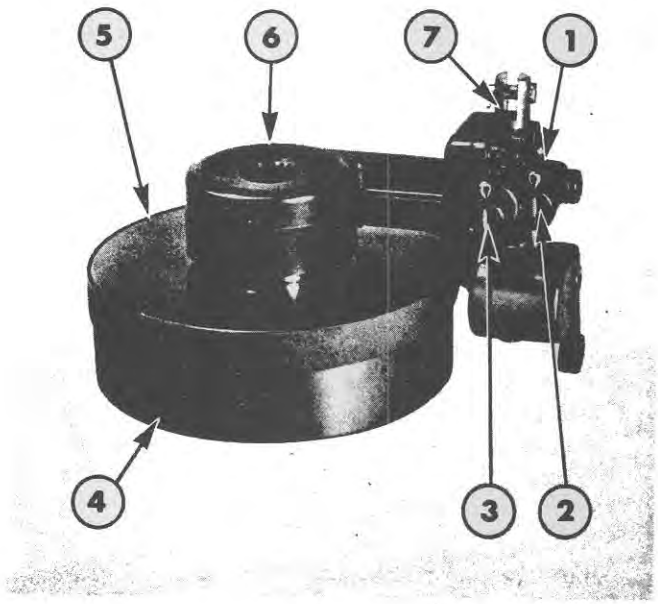

Figure 6
P.T.O. Clutch and Valve Assembly

1. Valve Assembly
2. Dual Power Transmission Regulating Valve
3. P.T.O. Clutch Regulating Valve
4. P.T.O. Clutch Housing
5. Brake Band
6. Support
7. Control Valve Spool

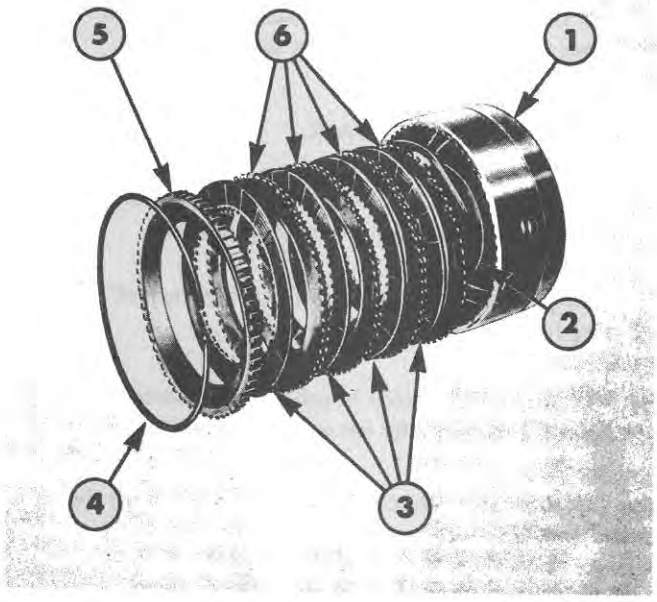

Figure 7
Drive Plates Removed from P.T.O. Clutch Housing

1. P.T.O. Clutch Housing
2. Feathering Spring
3. Internal Spline Plates
4. Snap Ring
5. Pressure Plate
6. External Spline Plates

B. DISASSEMBLY

1. With the P.T.O. clutch on a bench, remove the valve assembly and brake band from the clutch housing, Figure 6.

2. Remove the sealing rings from the rear of the clutch housing.

3. Remove the retaining snap ring, the pressure plate, four internally splined plates, the four externally splined plates and the feathering spring from the housing, see Figure 7.

IMPORTANT: Note the order in which the clutch plates were removed.

4. Remove the retaining ring by compressing the piston return spring using Tool No. N–775 and either Tool No. 1003 or a press, Figure 8. Release the pressure then remove the spring seat and the spring.

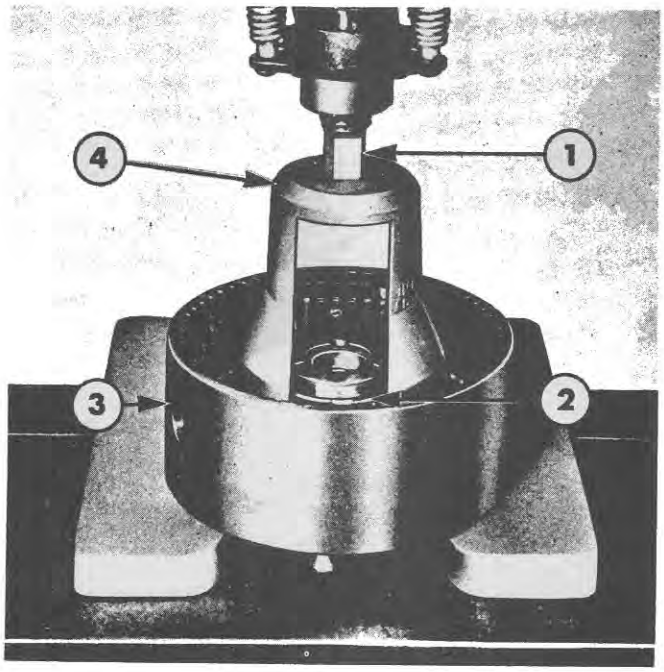

Figure 8
Compressing Clutch Spring

1. Arbor Press
2. Retaining Ring
3. P.T.O. Clutch Housing
4. Tool No. N–775

5. Remove the piston from the housing using compressed air applied to the port between the front and centre sealing ring grooves in the clutch housing hub. Remove the inner and outer 'O' rings from the piston.

C. INSPECTION AND REPAIR

1. Clean all parts in a suitable solvent and dry thoroughly with a dry, lint-free cloth or compressed air.

2. Inspect the sealing rings from the rear of the clutch housing for damage distortion or cracks.

3. Examine the clutch housing both externally for cracks or damage and internally for wear and piston scuffing.

4. Inspect the clutch piston for scoring or burrs and install new O' rings.

5. Inspect the clutch plates for excessive wear. distortion or scoring.

If damage or serious wear is present on any component part, install a replacement during re-assembly.

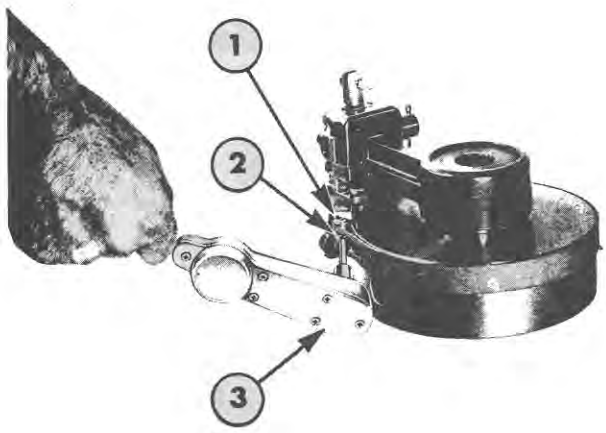

Figure 9
Adjusting P.T.O. Clutch Brake Band

1 Locknut
2. Adjuster Screw
3. Torque Wrench

D. RE-ASSEMBLY

Re-assembly of the power take-off clutch follows the disassembly procedure in reverse.

E. INSTALLATION

Installation of the power take-off clutch follows the removal procedure in reverse. Pay particular attention to the following important points:

(i) Adjust the brake band tension as follows: Loosen the locknut, Figure 9, and tighten the brake band screw to the specified torque – See Specifications, Chapter 6. Back off the screw two turns and tighten the locknut.

(ii) Use the following procedure when tightening the P.T.O. clutch locating pins and locknuts:

- Tighten the rear pin first to the specified torque See Specifications, Chapter 6. Back off the pin 45°.
- Tighten the front pin to the specified torque See Specifications. Chapter 6. Back off the pin 45°.
- Tighten both locknuts to the specified torque See Specifications, Chapter 6.

(iii) If difficulty is experienced when installing the 6–spline P.T.O. output shaft, then turn the sleeve, using a screwdriver located in one of the slots, to align the splines in the sleeve with those of the shaft.

3. CONTROL VALVE AND BRAKE OVERHAUL

A. REMOVAL

1. Remove the P.T.O. clutch and control valve assembly as detailed in Section 2 of this Chapter.

2. Working on a bench, remove the brake band and valve assembly from the P.T.O. clutch housing.

B. DISASSEMBLY

1. Remove the cotter pin and clevis pin from the valve body, Figure 10, then remove the brake band assembly.

2. Remove the socket-head screws and separate the valve body from the support, Figure 11.

3. Remove the retaining ring from the end of the control valve spool and withdraw the spool. Take care not to lose the detent ball and spring located within the valve body, Figure 12.

4. Remove the cotter pin, washer, spring and Dual Power transmission regulating valve from the valve body.

5. Remove the cotter pin, washer, spring and P.T.O. clutch regulating valve from the valve body.

IMPORTANT: Do not intermix the Dual Power and P.T.O. clutch regulating valve components.

6. Remove the retaining ring, guide, spring and brake piston from the valve body using compressed air if necess – ary.

7. Remove the 'O' ring from the brake piston.

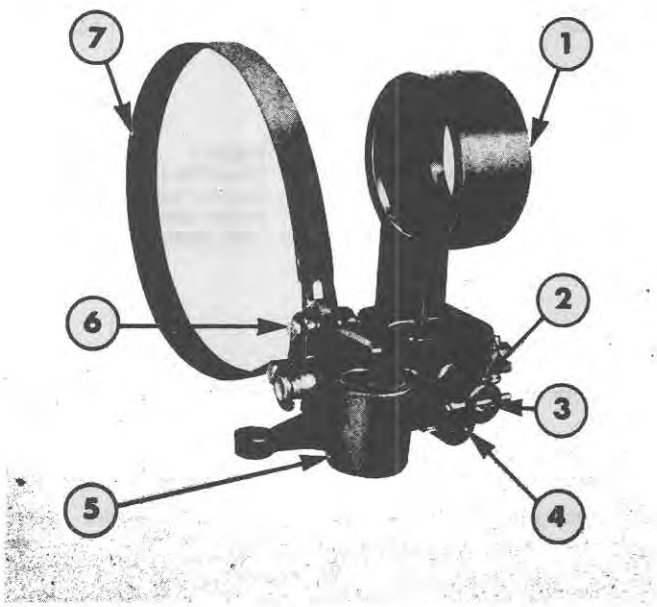

Figure 10
P.T.O. Clutch Valve and Brake Band

1. Support
2. Valve Body
3. P.T.O. Clutch Regulating Valve Assembly
4. Dual Power Transmission Regulating Valve Assembly
5. Brake Piston Housing
6. Clevis Pin and Cotter Pin
7. Brake Band

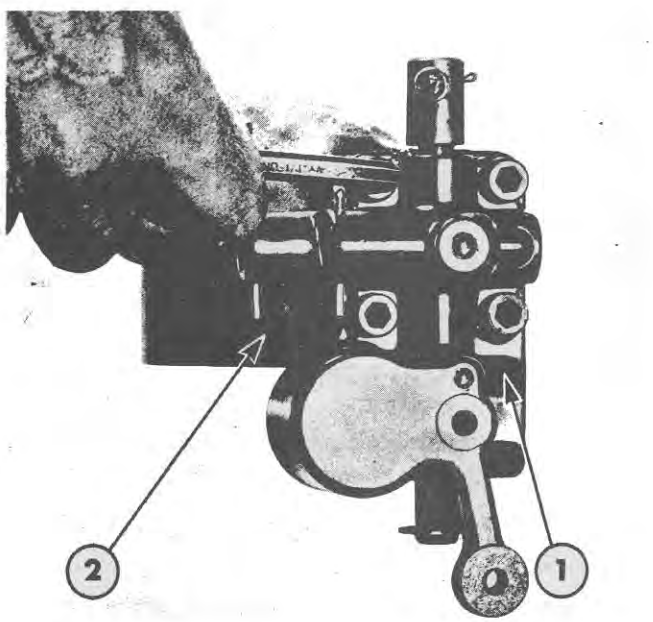

Figure 11
Disassembling P.T.O. Clutch Valve

1. P.T.O. Clutch Valve Body
2. Support

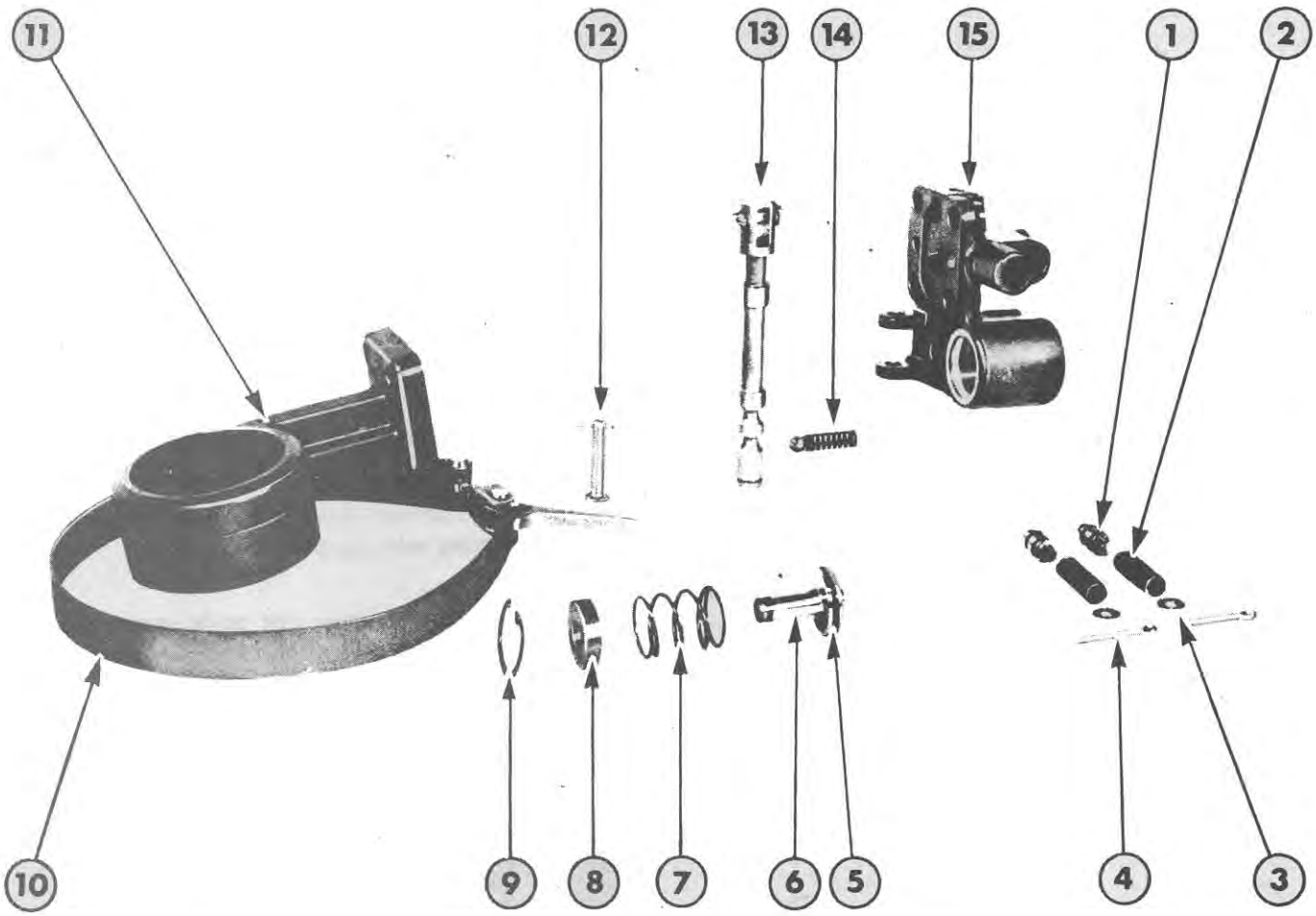

Figure 12
P.T.O. Clutch Valve and Brake Disassembled

1. Dual Power Transmission Regulating Valve
2. Spring
3. Washer
4. Cotter Pin
5. 'O' – Ring
6. Brake Piston
7. Brake Piston Return Spring
8. Brake Piston Guide
9. Retaining Ring
10. Brake Band
11. Support
12. Clevis Pin and Cotter Pin
13. Control Valve Spool
14. Detent Ball and Spring
15. Valve Body

C. INSPECTION AND REPAIR

1. Clean all parts in a suitable solvent and dry thoroughly with a dry lint-free cloth or compressed air.

2. Install a new O' ring on the brake piston.

3. Inspect the brake piston and housing bore for burrs or scoring.

4. Examine the brake band for excessive wear or scoring.

5. Inspect the control valve and housing for wear, burrs or scoring. Minor burrs or scratches may be removed with a fine abrasive material but parts must be washed and dried prior to re-assembly.

6. Examine the detent ball and spring for wear or damage.

7. Inspect the Dual Power and P.T.O. clutch regulating valve components for wear or damage and ensure the valves move freely in their respective bores.

If damage or serious wear is present on any component part, install a replacement during re-assembly.

D. RE-ASSEMBLY

1. Re-assembly of the control valve and brake follows the disassembly procedure in reverse.

E. INSTALLATION

Installation of the control valve and brake follows the removal procedure in reverse. Pay particular attention to the following important points.

(i) When a new brake band is installed the band must be pre soaked in rear axle oil for at least three minutes.

(ii) Adjust the brake band tension – See "INSTALLATION", Section 2 of this Chapter.

(iii) Adjust the P.T.O. clutch locating pins – See "INSTALLATION", Section 2 of this Chapter.

4. POWER TAKE-OFF SHAFTS AND GEARS OVERHAUL

A. REMOVAL

1. Remove the drain plug from the base plate at the rear of the centre housing, Figure 13, and drain the oil from the P.T.O. gear compartment.

2. Remove the P.T.O. output shaft cap, then remove the retaining ring, Figure 14.

Withdraw the output shaft.

3. Remove the bolts that secure the output shaft bearing retainer and remove the bearing retainer.

CAUTION: The output shaft sleeve, bearing and seal may all come out of the centre housing with the retainer. In this event it is possible for the P.T.O. driven gears to drop to the bottom of the housing.

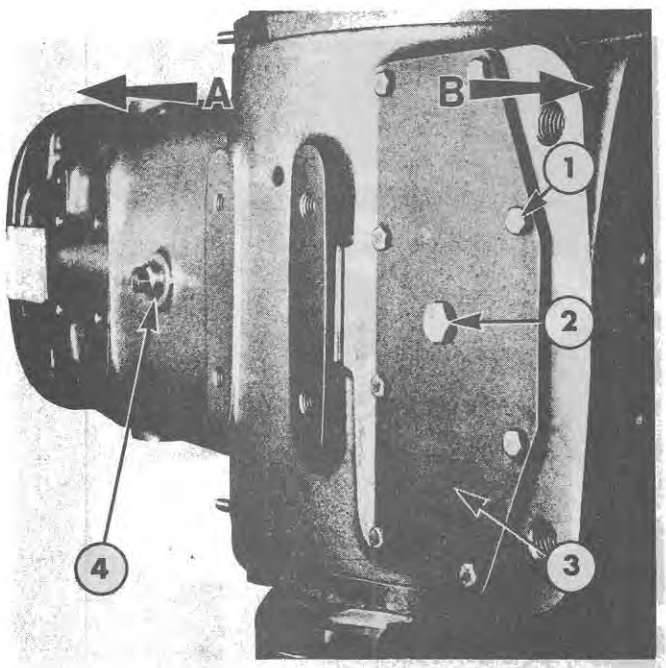

Figure 13
Drain Plug Locations

A. To Front of Tractor
1. Base Plate Bolt
2. P.T.O. Gear Compartment Drain Plug

B. To Rear of Tractor
3. Base Plate
4. Rear Axle Centre Housing Drain Plug

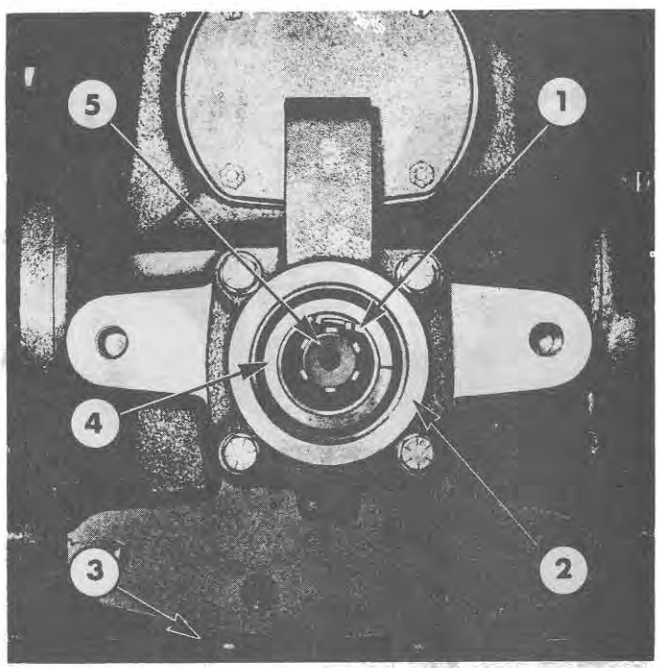

Figure 14
Removing P.T.O. Output Shaft

1. Retaining Ring
2. Rear Bearing Retainer
3. Base Plate
4. Sleeve
5. P.T.O. Output Shaft

4. Remove the bolts securing the upper shaft rear bearing retainer then remove the retainer, bearing, P.T.O. drive gear assembly and shaft, as shown in Figure 15.

NOTE: The front bearing will remain in the housing and it will be necessary to use Tool No. 943 to effect removal.

5. Remove the bolts which secure the base plate to the centre housing then remove the plate and gasket.

6. Hold the P.T.O. output shaft driven gears in position then remove the output shaft sleeve, bearing, seal and retain the thrust washer, Figure 16.

7. Remove the driven gears through the bottom of the centre housing and retain the two thrust washers.

Figure 17 shows the P.T.O. shafts, gears and sleeve removed and in their relative positions.

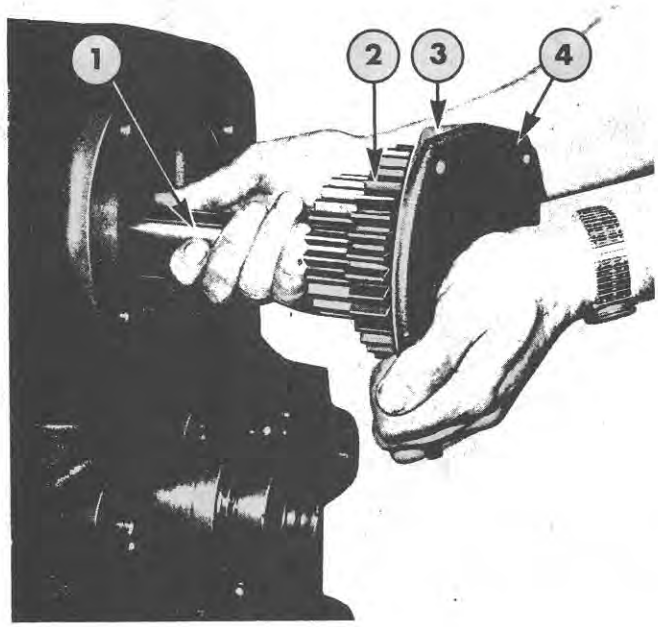

Figure 15
Removing P.T.O. Upper Shaft and Gears

1. P.T.O. Upper Shaft
2. P.T.O. Drive Gear Assembly
3. Gasket
4. Rear Bearing Retainer

B. DISASSEMBLY

1. Remove the output shaft bearing retainer seal.

2. Release the output shaft rear bearing retaining ring, Figure 18, and remove the bearing from the sleeve.

3. Remove the output shaft front bearing from the housing using Tool No. 943.

4. Remove the drive gear assembly rear bearing, as shown in Figure 19, using Tool Nos. 1002, 951 and 630S–3.

5. Remove the drive gear assembly front bearing fror the housing using Tool No. 943.

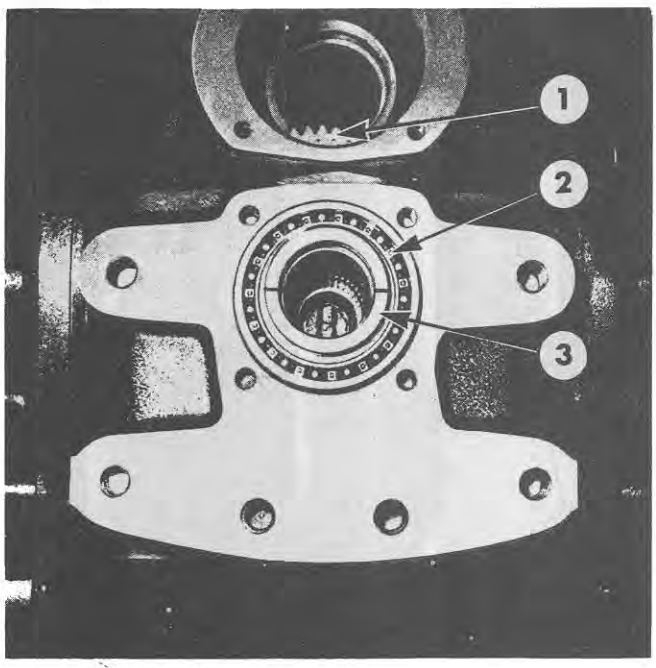

Figure 16
P.T.O. Output Shaft Sleeve and Bearing Installed

1. P.T.O. Driven Gears
2. Bearing
3. Sleeve

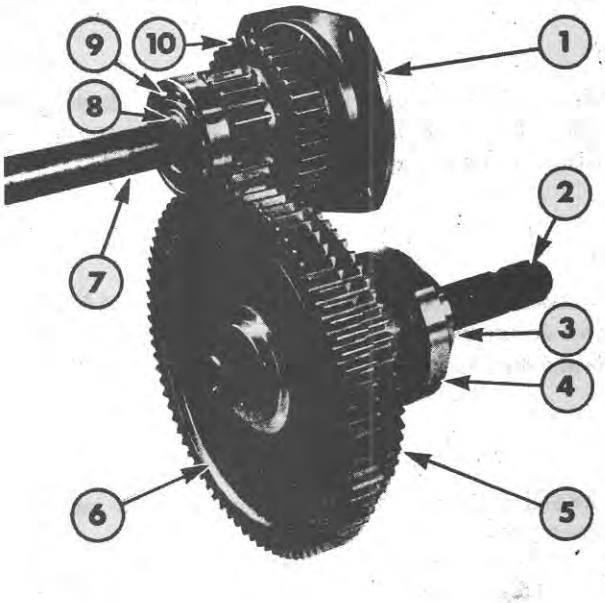

Figure 17
P.T.O. Shafts and Gears

1. Upper Shaft Rear Bearing Retainer
2. P.T.O. Output Shaft
3. Sleeve
4. Output Shaft Rear Bearing
5. 1000 rev/min. Driven Gear
6. 540 rev/min. Driven Gear
7. Upper P.T.O. Shaft
8. Shoulder Ring
9. Upper Shaft Front Bearing
10. Drive Gear Assembly.

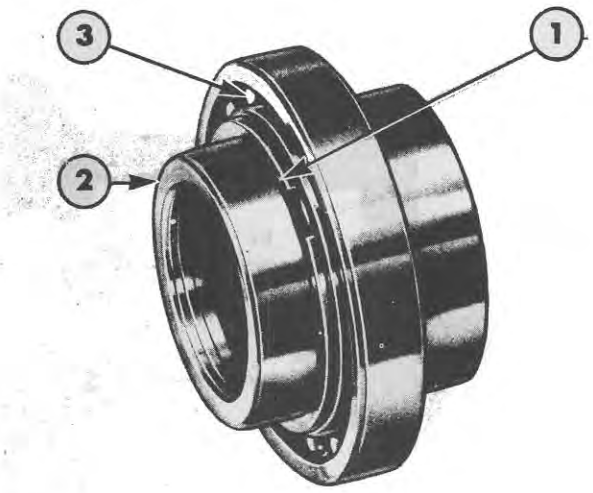

Figure 18
P.T.O. Output Shaft Sleeve and Bearing

1. Retaining Ring
2. Sleeve

C. INSPECTION AND REPAIR

1. Clean all parts in a suitable solvent and dry thoroughly with a dry lint-free cloth or compressed air.

2. Examine the P.T.O. upper shaft splines for distortion.

3. Inspect the gears for cracks. chipped teeth and excessive wear.

4. Examine the bearings for wear or damage.

5. Inspect the output shaft, sleeve, seal, rear bearing retainer and thrust washers for wear and damage.

If damage or serious wear is present on any component part install a replacement during re-assembly.

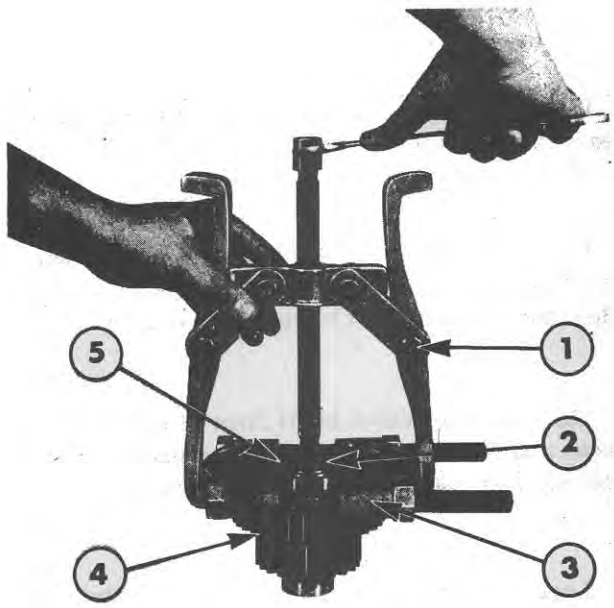

Figure 19
Removing P.T.O. Drive Gear Assembly Rear Bearing

1. Tool No. 1002
2. Tool No. 630S–3
3. Tool No. 951
4. Drive Gear Assembly
5. Rear Bearing

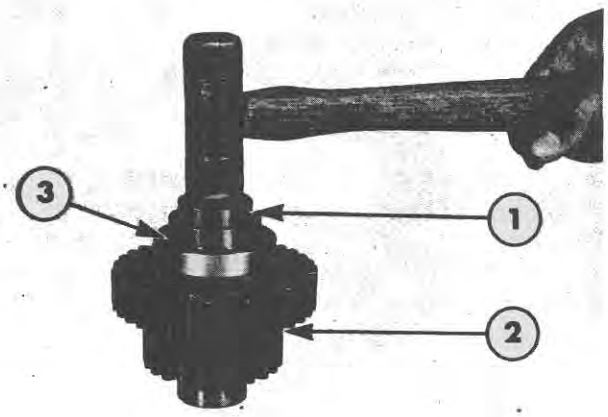

Figure 20
Installing P.T.O. Drive Gear Assembly Rear Bearing
1. Tool No. 630S–8
2. Drive Gear Assembly
3. Rear Bearing

D. RE-ASSEMBLY

1. Install the drive gear assembly rear bearing as shown in Figure 20 using Tool No. 630S–8.

2. Use a suitable sleeve of 69,9mm (2.75in.) internal diameter and 79,3mm (3.12in.) outside diameter to install the drive gear assembly front bearing in the housing.

3. Use a suitable sleeve of 41,2mm (1.62in.) internal diameter and 47,8mm (1.88in.) outside diameter to install the output shaft front bearing flush in the housing.

4. Locate the output shaft rear bearing on the sleeve and install the retaining ring.

5. Use a suitable sleeve of 82,6mm (3.25in.) internal diameter and 95,3mm (3.75in.) outside diameter to install the output shaft rear bearing retainer seal in the retainer.

E. INSTALLATION

Replace the power take-off shafts and gears by following the removal procedure in reverse and pay particular attention to the following important points:

(i) On assembly a thrust washer must be installed between the two driven gears, the 1000 rev/min. driven gear and the sleeve and the 540 rev/min. driven gear and the front bearing.

(ii) The following procedure is recommended for installing the driven gears:

(a) Insert the 1000 rev/min. driven gear through the opening in the bottom of the housing and hold rearwards. Support the gear and insert the 540 rev/min. driven gear to engage with the spigot on the front of the 1000 rev/min. gear.

(b) Push both gears forward, as an assembly, to engage the 540 rev/min. gear spigot with the recess in the front bearing housing location. Sup – port the gears.

(c) Install the rear bearing and sleeve.

(iii) Loosen the P.T.O. valve locating pins to enable the upper shaft splines to engage with the clutch. Tighten the locating pins and locknuts – See "INSTALLATION", Section 2 of this Chapter.

(iv) If difficulty is experienced when installing the 6–spline P.T.O. output shaft, turn the sleeve, using a screwdriver located in one of the slots, to align the splines in the sleeve with those of the shaft.

F. UPPER P.T.O. SHAFT END PLAY

Shimming Procedure

NOTE: This procedure must be followed whenever a new upper P.T.O. shaft bearing, gear or rear bearing retainer is installed. The end play of the shaft is governed by shims located between the drive gear assembly and the shoulder ring. For end play requirement and available shims – See Specifications, Chapter 6.

1. Remove the hydraulic lift cover.

2. Ensure the upper shaft rear bearing retainer bolts are tightened to the specified torque – See Specifications, Chapter 6.

3. Push the shaft rearward until the shoulder ring on the rear of the shaft abuts the drive gears or any shims that may be installed.

4. Using a feeler gauge, measure the gap between the shoulder ring on the front of the shaft (not shown) and the rear of the P.T.O. clutch housing.

5. If shims must be added or removed to obtain the specified gap, then remove the upper shaft and gears.

6. Install the correct amount of shims and re-assemble. Tighten the retainer bolts to the specified torque – See Specifications, Chapter 6.

7. Install the hydraulic lift cover.

Part 9
POWER TAKE-OFF
Chapter 6
TWO SPEED POWER TAKE-OFF TROUBLE SHOOTING, SPECIFICATIONS AND SPECIAL TOOLS

Section		*Page*
1.	Trouble Shooting	49
2.	Specifications	50
3.	Special Tools	51

1. TROUBLE SHOOTING

Before removing the I.P.T.O. Clutch, attempt to isolate the possible cause of the trouble, by referring to the following trouble shooting chart.

TWO-SPEED POWER TAKE-OFF TROUBLE SHOOTING CHART

TROUBLE	POSSIBLE CAUSE
1. Independent P.T.O. Clutch does not engage or disengage.	1. Low rear axle oil level. 2. I.P.T.O. pump or P.T.O. system relief valve faulty or valve stuck open. 3. Fracture of connecting tube. 4. Dual Power regulating valve jammed closed. 5. Leaking control valve spool. 6. Weak or broken P.T.O. clutch regulating valve spring or valve stuck open.
2. Independent P.T.O. Clutch does not engage or only partially engages. (Disengagement operative)	1. Control valve spool stuck. 2. Hydraulic oil leak between the valve housing and support. 3. Cracked, broken or worn sealing rings on clutch housing. 4. Damaged or leaking piston seals. 5. Broken or cracked piston. 6. Brake piston return spring weak or broken. 7. Brake piston stuck. 8. Brake band too tight.
3. Independent P.T.O. Clutch does not disengage or only partially disengages. (Engagement operative)	1. Control valve spool stuck. 2. Clutch piston return spring broken. 3. Clutch piston broken, jammed or scuffing. 4. Clutch plates distorted or seized. 5. Brake piston stuck. 6. Brake band linkage broken or out of adjustment. 7. Brake band lining worn.

2. SPECIFICATIONS

SPECIFICATIONS	FORD 5000	FORD 7000
Upper P.T.O. Shaft End Play	0,025 - 0,737 mm (0.001 - 0.029 in.)	0,025 - 0,737 mm (0.001 - 0.029 in.)
Free Play Shims Available	0,254 mm (0.010 in.)	0,254 mm (0.010 in.)
Oil Capacity		
Less Load Monitor Less Dual Power :		
Imperial Quarts	35.9	48.6
U.S. Quarts	43.6	59.0
Litres	41.2	55.8
Less Load Monitor With Dual Power:		
Imperial Quarts	51.0	51.0
U.S. Quarts	62.0	62.0
Litres	58.6	58.6
With Load Monitor Less Dual Power:		
Imperial Quarts	39.5	48.6
U.S. Quarts	48.0	59.0
Litres	45.4	55.8
With Load Monitor With Dual Power:		
Imperial Quarts	51.0	51.0
U.S. Quarts	52.0	62.0
Litres	58.6	58.6
Oil Grade: Ford Specification	ESN–M2C86–A	ESN–M2C86–A
TIGHTENING TORQUES – Nm (In. lbf. equivalents in parentheses)		
Brake Band Screw	1 - 1.2 (9 - 11)	1 - 1.2 (9 - 11)
P.T.O. Clutch Locating Pins	0.23 - 0.57 (2 - 5)	0.23 - 0.57 (2 - 5)
TIGHTENING TORQUES – Nm (Ft. lbf. equivalents in parentheses)		
P.T.O. Clutch Locating Pin Locknuts	20 - 27 (15 - 20)	20 - 27 (15 - 20)
P.T.O. Clutch Tube Connectors	11 - 14 (8 - 10)	11 - 14 (8 - 10)
Upper P.T.O. Shaft Rear Bearing Retainer Bolts	48 - 64 (35 - 47)	48 - 64 (35 - 47)
P.T.O. Output Shaft Rear Bearing Retainer Bolts	92 - 125 (68 - 92)	92 - 125 (68 - 92)
Valve Body to Support Retaining Screws	14 - 17 (10 - 23)	14 - 17 (10 - 23)
Base Plate to Centre Housing Retaining Bolts	27 - 35 (20 - 26)	27 - 35 (20 - 26)

3. SPECIAL TOOLS

Tool Number	Description
630–S3/8	Step Plate Adaptors
N–775	Clutch Spring Compressor
943	Internal/External Pulling Attachment
951	Pulling Attachment (Small)
1002	Puller-Reversible Arm (Medium)
1003	Puller-Single End Arm (Large)
***	Sleeves of Convenient Length (Listed Below):

1. 41,2mm (1.62in.) I.D. and 47,8mm (1.88in.) O.D.
2. 69,9mm (2.75in.) I.D. and 79,3mm (3.12in.) O.D.
3. 82,6mm (3.25in.) I.D. and 95,3mm (3.75in.) O.D.

PART 10
REAR AXLE AND BRAKES

Part 10

REAR AXLE AND BRAKES

Chapter 1

REAR AXLE AND BRAKES—DEXTA 2000 & SUPER DEXTA 3000

Section		Page
1.	Description and Operation	1
2.	Adjustments	4
3.	Overhaul Rear Axle Shaft Assembly	5
4.	Overhaul Differential and Differential Lock Assembly	9
5.	Overhaul Drive Pinion Assembly	13
6.	Overhaul Wheel Brakes	17
7.	Overhaul Transmission Handbrake	19
8.	Overhaul Brake Pedals and Linkage	21

Chapter 2

REAR AXLE AND BRAKES—MAJOR 4000 & SUPER MAJOR 5000

Section		Page
1.	Description and Operation	23
2.	Adjustments	25
3.	Overhaul Rear Axle Shaft Assembly	27
4.	Overhaul Planetary Gear Assembly and Axle Housing	32
5.	Overhaul Disc Brake Assembly	35
6.	Overhaul Differential and Differential Lock Assembly	36
7.	Overhaul Drive Pinion Assembly	40
8.	Overhaul Transmission Handbrake Assembly	43
9.	Overhaul Brake Pedals and Linkage	46

Chapter 3

SPECIFICATIONS AND SPECIAL TOOLS

Section		Page
1.	Specifications	47
2.	Special Tools	50

Part 10

REAR AXLE AND BRAKES

Chapter 1

REAR AXLE AND BRAKES—DEXTA 2000 & SUPER DEXTA 3000

Section		Page
1.	Description and Operation	1
2.	Adjustments	4
3.	Overhaul Rear Axle Shaft Assembly	5
4.	Overhaul Differential and Differential Lock Assembly	9
5.	Overhaul Drive Pinion Assembly	13
6.	Overhaul Wheel Brakes	17
7.	Overhaul Transmission Handbrake Assembly	19
8.	Overhaul Brake Pedals and Linkage	21

1. DESCRIPTION AND OPERATION

The drive from the transmission output shaft is transmitted by the drive shaft coupling to the spiral bevel pinion. The pinion is held by pre-loaded opposed taper roller bearings and meshes with the differential ring gear. The ring gear is riveted to the differential case which transmits the drive through a conventional 4-pinion differential to the differential side gears. The side gears are splined to the rear axle shafts which deliver the drive to the rear wheels.

The differential locking device, available in production as optional equipment, consists essentially of a sliding coupling which is mounted on the right-hand differential side gear and is connected through suitable linkage with a foot pedal. Operation of the differential lock pedal moves a fork which forces the differential lock coupling, through an adaptor, into mesh with the differential case. This action locks the right-hand side gear to the differential case, thus producing the differential lock.

Each axle shaft is supported at its outer end by a single taper roller bearing and, as the inner ends of the two shafts are in direct contact at the centre of the differential assembly, an inward loading on one axle shaft will be transmitted to the opposite axle shaft and bearing. Each axle shaft bearing will, therefore, withstand the vertical loading of the wheel it supports and any outward thrust imposed on the wheel, while any inward thrust will be transmitted through the axle shafts to the opposite bearing.

The rear axle centre housing extends forward forming a compartment which houses the hydraulic lift cylinder. A common supply of oil is used for lubricating the rear axle and differential assembly, and operating the hydraulic power lift. The differential ring gear and differential assembly is partly immersed in oil thus providing adequate lubrication for bearings and bushings.

The rear wheels of the tractor are each equipped with two-shoe internal expanding brakes operating in 14 in. (35·56 cm.) dia. drums. The brakes are operated by two pedals located on the right-hand side of the tractor through suitable linkage to the brake camshaft. It is this camshaft which, when actuated, causes the brakes shoes to expand against the brake drums thus achieving a braking effect.

The brakes may be operated independently or locked together by means of a locking pin located on the left-hand pedal. This pedal lock should always be engaged when the tractor is used on fast roadwork.

For parking purposes the brakes may be locked 'on' by a

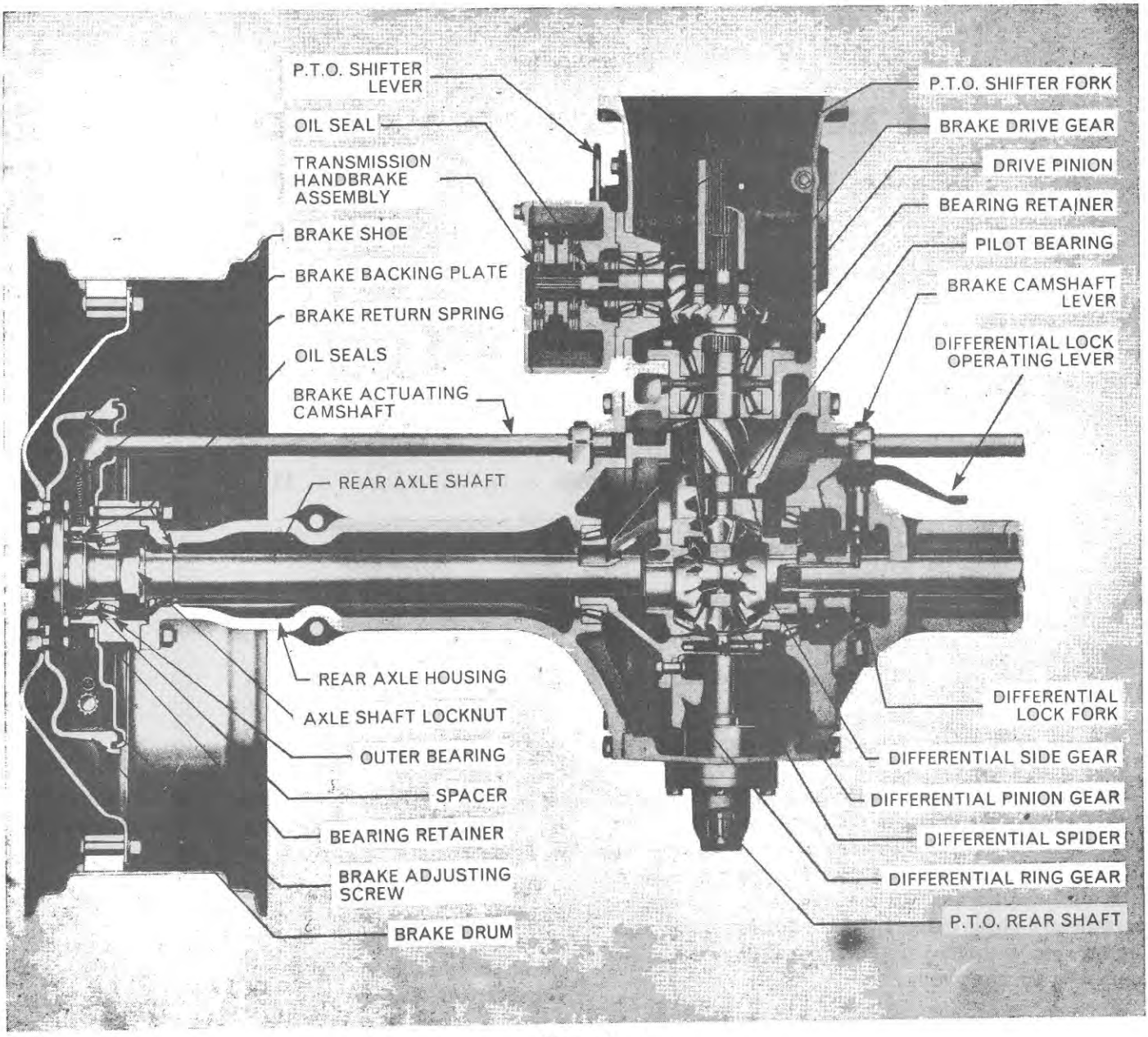

Figure 1
Sectional View of Super Dexta 3000 Rear Axle

pawl, located underneath the right-hand platform, which can be engaged, by means of a handle, with a fixed sector on the left-hand brake pedal. To lock both brakes 'on' for parking the pedal locking pin should first be engaged and then the pedals depressed while the handle is lifted until it can be turned through one quarter turn to engage the pawl in the sector.

TRANSMISSION HANDBRAKE

The transmission handbrake, if fitted, is located on the left-hand side of the rear axle centre housing.

A bevel gear, located on the drive pinion shaft, is in constant mesh with the handbrake gear, the shaft of which projects through the side of the rear axle centre housing and is supported in opposed taper roller bearings. Two brake discs are located on the splines of the handbrake driven shaft, one on either side of an actuating disc assembly. This assembly consists of two actuators with ramped 'pockets' in which are located steel balls. The actuators, held in contact with the balls by two coil springs, are connected by suitable linkage to a handbrake lever.

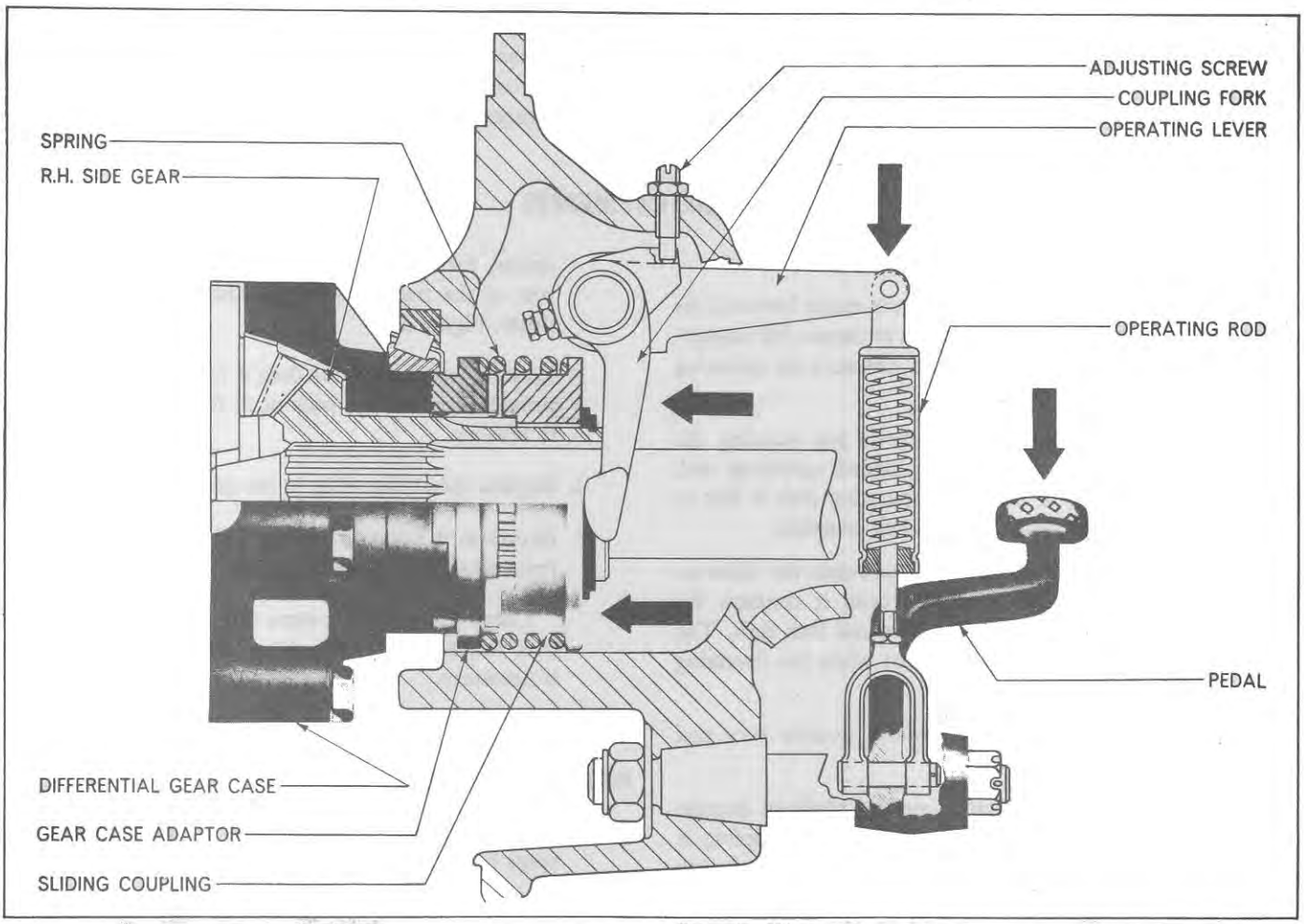

Figure 2
The Differential Lock

Operation of the handbrake lever causes the actuators to rotate and the balls to ride up the ramped 'pockets' so expanding the actuating thrust plates and forcing the brake outer disc into contact with the cover plate and the brake inner disc into contact with the inside face of the disc brake housing. This locks the drive pinion and prevents tractor movement. A parking latch is provided on the foot brake pedals on all models and 'Select-O-Speed' models are provided with a 'park' position on the speed selector.

DIFFERENTIAL LOCK OPERATION

When one rear wheel of a tractor strikes a soft patch of ground and spins, the normal type differential action allows virtually all the drive to be applied to this wheel and a little to the opposite rear wheel which may be on firm ground. The result is that the tractor is either brought to a complete halt or considerably slowed down.

When a differential lock is installed, improved traction is possible because the lock enables additional traction to be obtained from the wheel which is on firm ground, thus enabling the tractor to pull through the soft patch.

Basically, this locking device consists of a dog-type coupling which is splined to, but free to slide on, the right-hand differential side gear, and is designed to positively lock the differential side gear to the differential case. The connection is made through the differential lock adaptor which has dog teeth on both side faces, those on the inside engaging with teeth machined on the differential case and those on the outside with the differential lock coupling, Figure 2.

In operation, depression of the foot pedal will first move the sliding coupling into contact with the fixed adaptor and then compress the spring in the operating rod assembly. As the teeth of the coupling come into alignment with the tooth spaces in the fixed adaptor the operating rod spring tension will move the coupling into engagement with the adaptor. The fact that the spring supplies the final operating force prevents the possibility of damage should excessive force be applied to the foot pedal.

When full engagement has taken place (this will be noticeable by the reduced pedal pressure) the foot pedal should be released. The coupling and adaptor teeth side forces, resulting from the transfer of power from one wheel to another, will keep the coupling and adaptor teeth in mesh. As the drive becomes more equally distributed, the compressed operating spring overcomes the reduced teeth side forces and automatically disengages the differential lock.

2. ADJUSTMENTS

DIFFERENTIAL LOCK ADJUSTMENT

It is important that sufficient clearance exists between the differential lock pedal and the platform to ensure full engagement of the lock. To provide adequate clearance the following adjustments should be made.

1. Remove the cotter pin and clevis pin securing the operating lever to the spring-loaded operating rod. Depress the lever until the operating fork is felt to contact the differential lock sliding coupling.
2. Loosen the stop screw locknut and rotate the differential lock stop screw clockwise until it contacts the bottom of the slot in the differential lock fork. The point of contact can be observed when the operating lever begins to move.
3. Turn back the adjusting screw a quarter turn and tighten the locknut.
4. With the foot pedal resting on the platform depress the operating lever until the differential coupling is fully engaged. Loosen the locknut and adjust the length of the operating rod, until the clevis pin can be inserted to connect the operating rod to the lever without compressing the spring in the operating rod.
5. Remove the clevis pin and shorten the operating rod by one turn then re-insert the clevis pin. Tighten the locknut and fit the cotter pin.

BRAKE ADJUSTMENT

Wear will take place on the brake linings due to normal useage and it will be indicated by a gradual increase in pedal travel before effective braking is obtained. This will be noticed also during the initial wearing-in of the shoes. If operating conditions are such that one brake is constantly used more than the other, uneven wear will take place and the tractor will tend to pull to one side if the brakes are applied when the pedal lock is engaged.

The brake adjustment for normal lining wear should be carried out as follows:—

1. Release the parking catch and jack-up each wheel in turn to adjust.
2. Remove the rubber plug covering the adjusting aperture in the brake backing plate and, using a screwdriver, turn the notched adjuster wheel towards the rear of the tractor to expand the brake shoes in the drum, Figure 3.
3. Continue until a definite drag is felt when the wheel is turned, then slacken back until the wheel is just free to revolve.
4. Replace the rubber plug in the adjuster aperture.
5. Repeat at the opposite wheel and finally road test the tractor to check brake operation.

Check the brake for signs of pulling to one side or over heating due to the shoes 'dragging' and readjust if necessary.

BRAKE CAMSHAFT ADJUSTMENT

1. Position the brake camshaft fully outwards against the stops in the brake assembly.



Figure 3
Wheel Brake Adjustment

2. Using feeler blades, position the brake lever to give a gap of 0·030 in. (0·762 mm) to 0·060 in. (1·524 mm) between the rear of the brake lever and the rear axle centre housing.

3. Tighten the locking bolt to the specified torque (see Specification Section, Chapter 3).

TRANSMISSION HANDBRAKE ADJUSTMENT

1. Release button and lower the handbrake lever until in the off position.

2. Using a screwdriver to prevent the operating rod from turning, Figure 4, rotate the locknut in a clockwise direction until the brake becomes solid.

3. Rotate the locknut in a counter-clockwise direction two turns to provide running clearance.

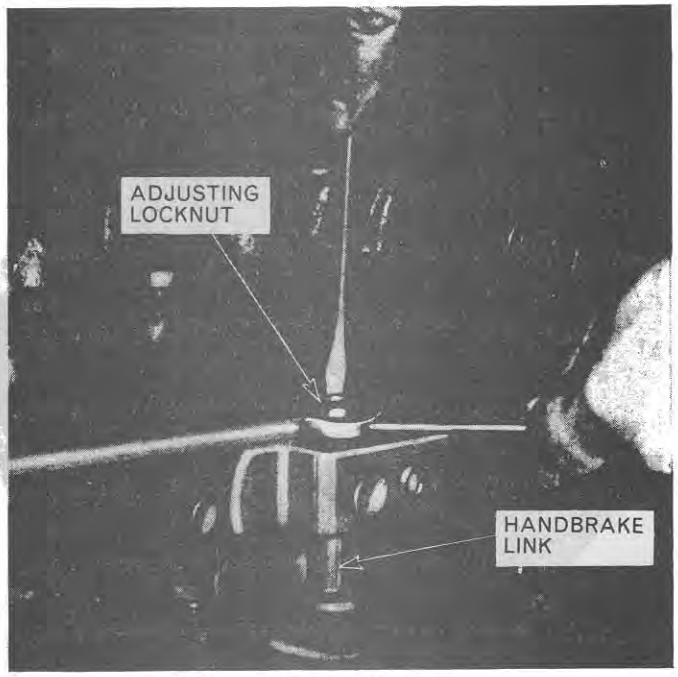

Figure 4
Transmission Handbrake Adjustment

3. OVERHAUL REAR AXLE SHAFT ASSEMBLY

Prior to disassembly of the rear axle remove wheels and fenders and disconnect electrical wiring and brake linkages to gain access to the rear axle. Drain the oil from the rear axle centre housing.

A. Disassembly

1. Remove the brake drum. The brake adjuster should be loosened if necessary to retract the brake shoes before the drum is removed. Masking tape should be applied to the brake linings to prevent damage

2. Remove the nine nuts securing the bearing retainer to the axle shaft housing and remove the axle shaft, bearing retainer, brake shoes, backing plate and brake camshaft as an assembly. Support the axle when withdrawing to prevent damage to the axle housing oil seal. After removing the assembly place in a vertical position, on a wooden block, to protect the axle stud threads.

3. Remove the shims from the bearing retainer and identify for reassembly purposes, Figure 5. Detach the brake camshaft.

Super Dexta 3000: Remove the nut retaining the axle shaft outer bearing using Wrench Tool No. T4095 or Tool No. N-4235-D.

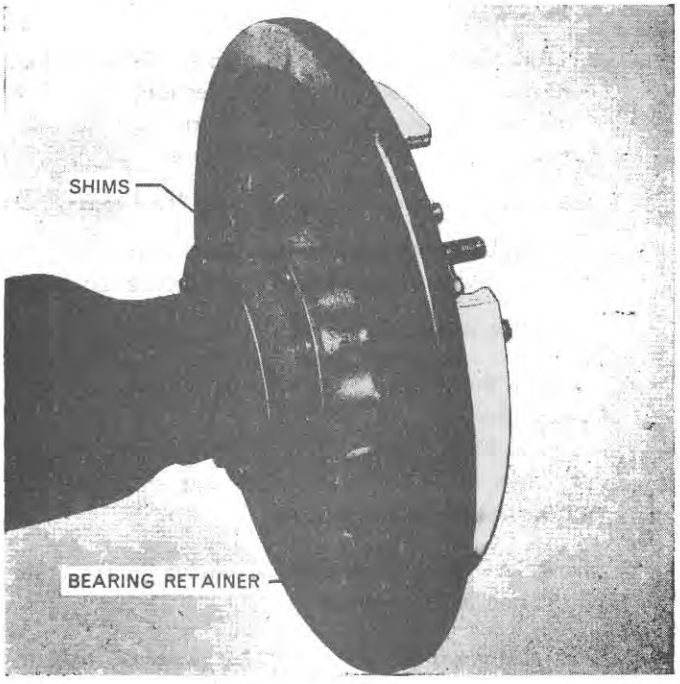

Figure 5
Location of Axle Shaft Bearing Shims

© FORD MOTOR COMPANY LTD 1984

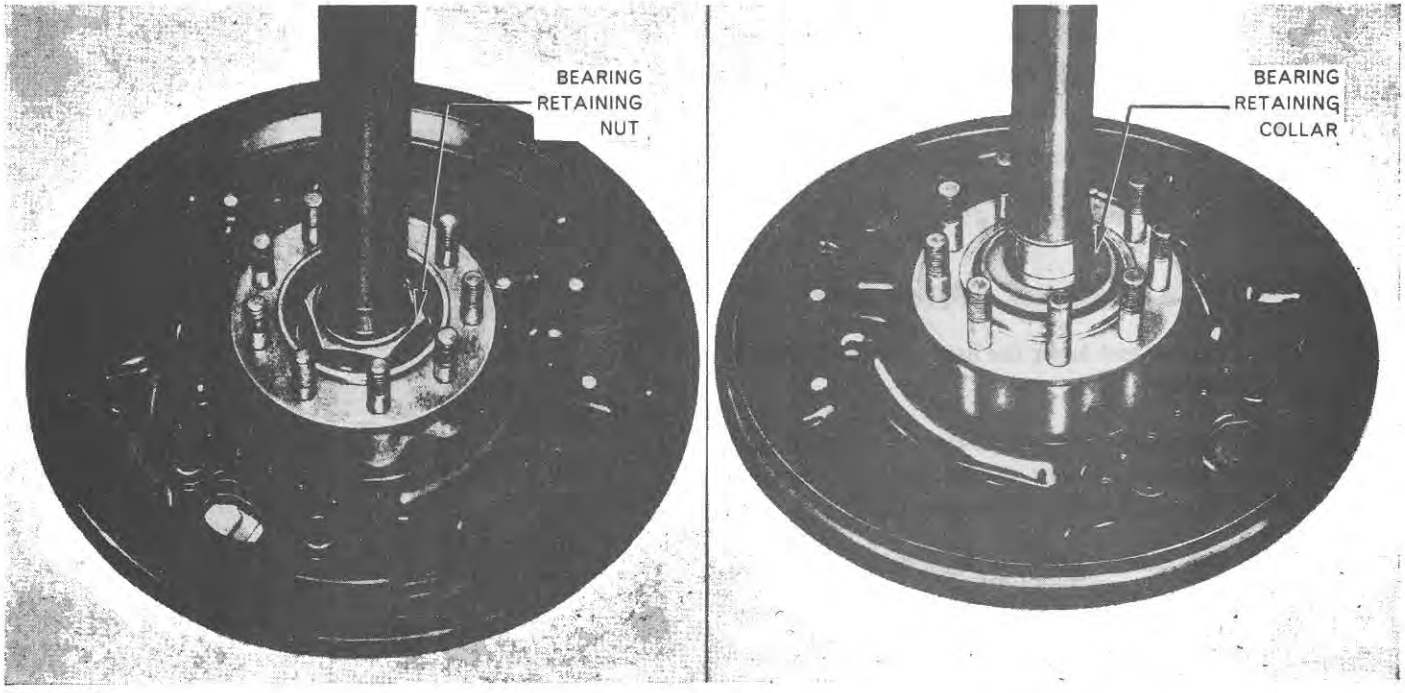

Super Dexta 3000 **Dexta 2000**

Figure 6
Axle Shaft Bearing Retension

Dexta 2000: Drill and crack the collar retaining the outer bearing using Tool No. NCA-4235 as a drilling jig, Figures 7 & 8, or if the tool is not available proceed as follows:

a. Centre punch the outer edge of the upper face of the collar.

b. Drill a $\frac{3}{8}$ in. (9·53 mm) pilot hole at this point at an angle of approx. 10° to the vertical, Figure 9. Contact of the drill with the bearing will be indicated by an increase in the drill speed.

c. Enlarge the pilot hole using $\frac{1}{2}$ in. (12·7 mm) drill.

d. Insert the point of a cracking chisel in the hole and drive in with a sharp blow, thus splitting the collar.

e. Lift the collar off the shaft.

4. Remove the bearing retainer, brake assembly and bearing from the axle shaft using Tool No. T4069-A or NCA 4235, Figures 10 & 11. The bearing spacer may then be removed from the axle shaft and the bearing cone from the retainer.

5. Using Tool Nos. 943 and 943-S remove the cup from its location in the retainer.

6. The axle shaft oil seal may be removed without removing the bearing cup by using Tool Nos. 943 and 943-S.

B. Inspection and Repair

1. Clean and inspect all parts and install new parts where worn or damaged.

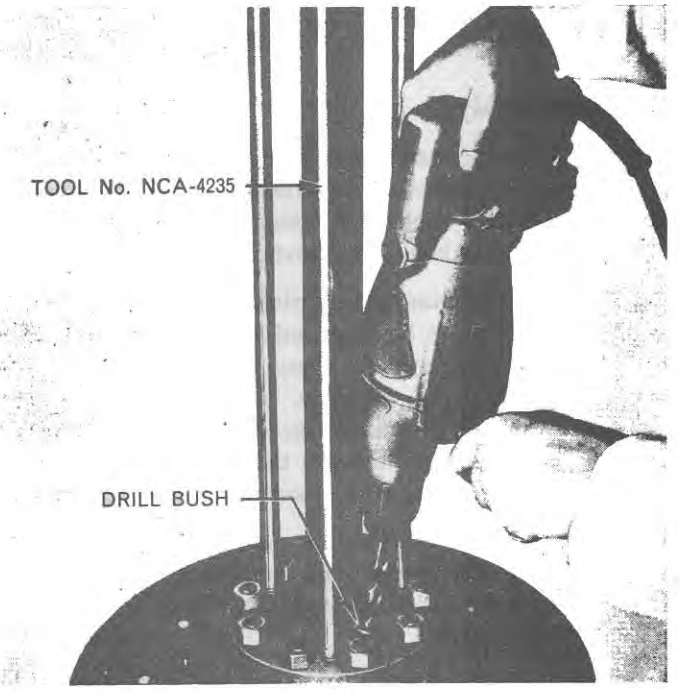

Figure 7
Drilling Axle Shaft Collar

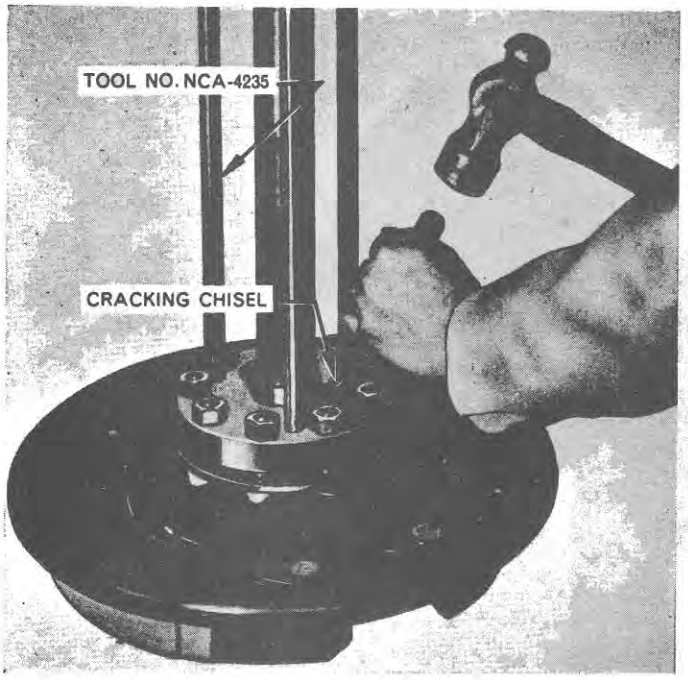

Figure 8
Splitting Axle Shaft Collar

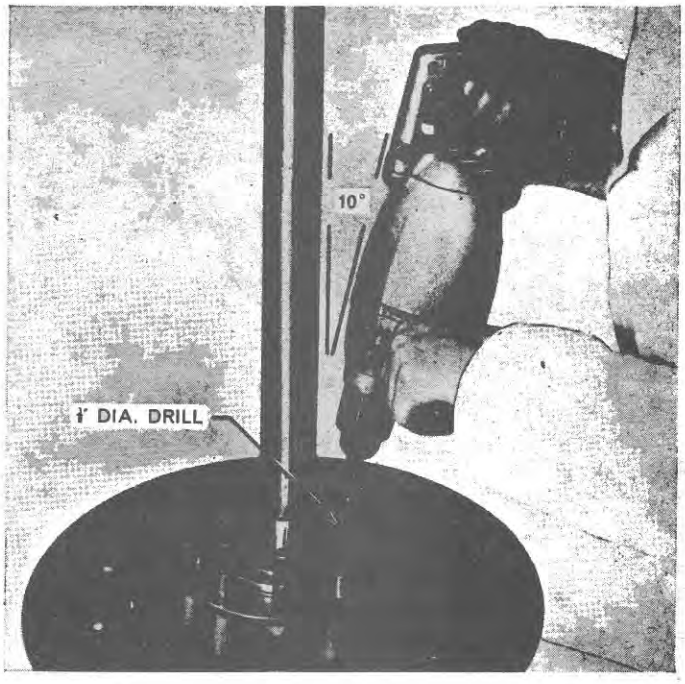

Figure 9
Drilling Axle Shaft Collar

2. A new axle housing oil seal should be installed if necessary, the old seal may be removed using Tool Nos. 943 and 943-S, Figure 12, and installed using Tool No. 630-12.

C. Assembly

1. If removed, install the bearing cup and a new oil seal in the retainer. Install the new seal, with the lip inward, using a suitable sleeve, 3 in. (76·2 mm) O.D.

2. Stand the axle shaft vertical on a block of wood to prevent damage to the studs and fit the bearing spacer with the tapered inside edge downwards, over the axle shaft.

3. Install the brake backing plate and bearing retainer over the axle shaft and pack the retainer with grease. Install the brake camshaft.

4. Use Tool No. T4069-A with adaptor plate T4069-1 bolted in position to drive the bearing on to the axle shaft.

Super Dexta 3000: Install the self-locking nut and tighten to the specified torque, see Specification Section, Use Tool No. T4095 or N-4235-D to tighten the nut, plus torque wrench to torque to specifications, Figure 13.

Dexta 2000: Place the new collar on bricks and heat slowly and evenly with an oxyacetylene torch. Use a flame setting rich in acetylene. Rub the collar occasionally with an 800°F. (425°C.) temperature indicating stick (commercially available)



Figure 10
Removing Axle Shaft Bearing and Retainer

© FORD MOTOR COMPANY LTD. 1964

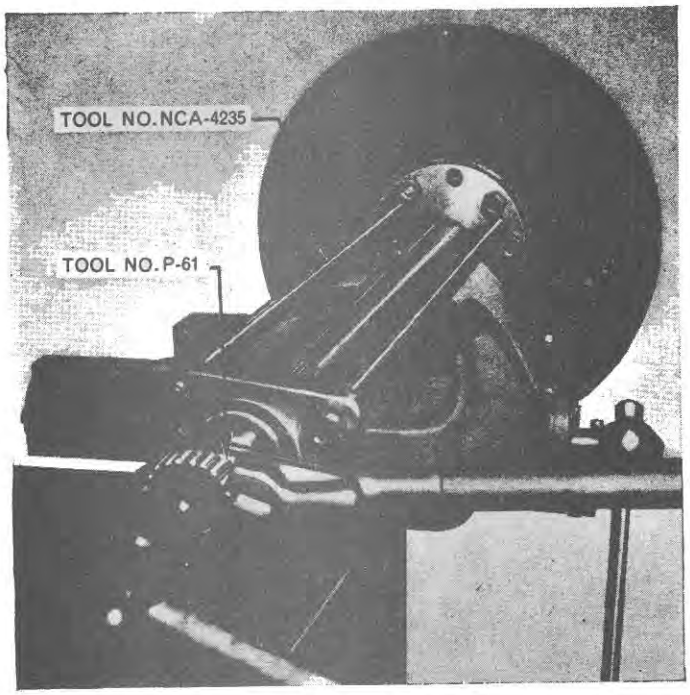

Figure 11
Removing Axle Shaft Bearing and Retainer

When the stick leaves a liquid smear on the collar surface, quickly transfer the collar to its position on the axle shaft. Drive the collar into position using Tool No. T4069-A with T4069-1 bolted in position, Figure 14. If this tool is not available, use a piece of pipe 2⅛ in. (53·98 mm) I.D. × 30 in. (762 mm) long to replace the collar.

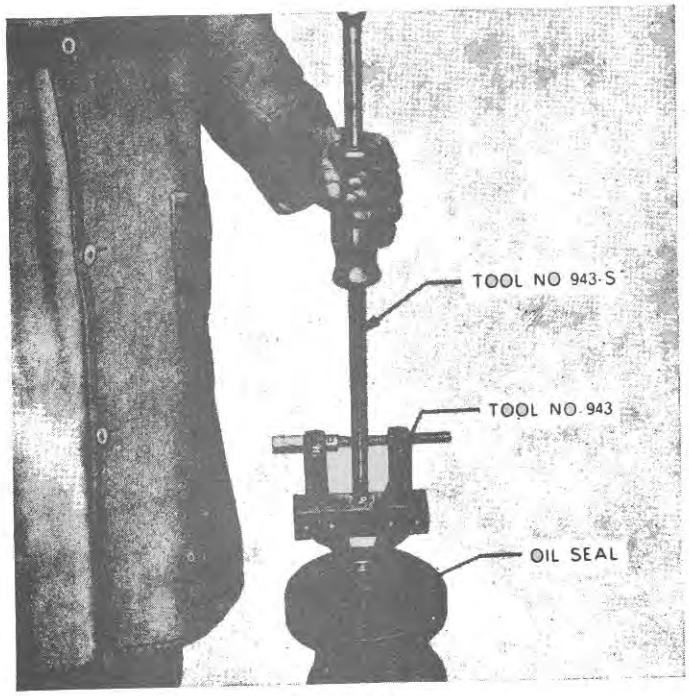

Figure 12
Removing Axle Shaft Inner Oil Seal

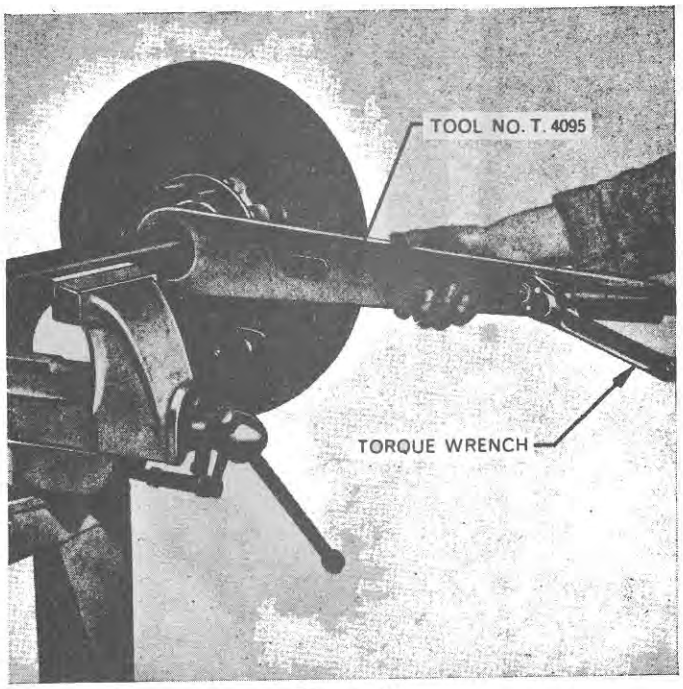

Figure 13
Tightening Axle Shaft Bearing Locknut

5. Install the shims that were removed on the retainer assembly. Place the assembly into the rear axle

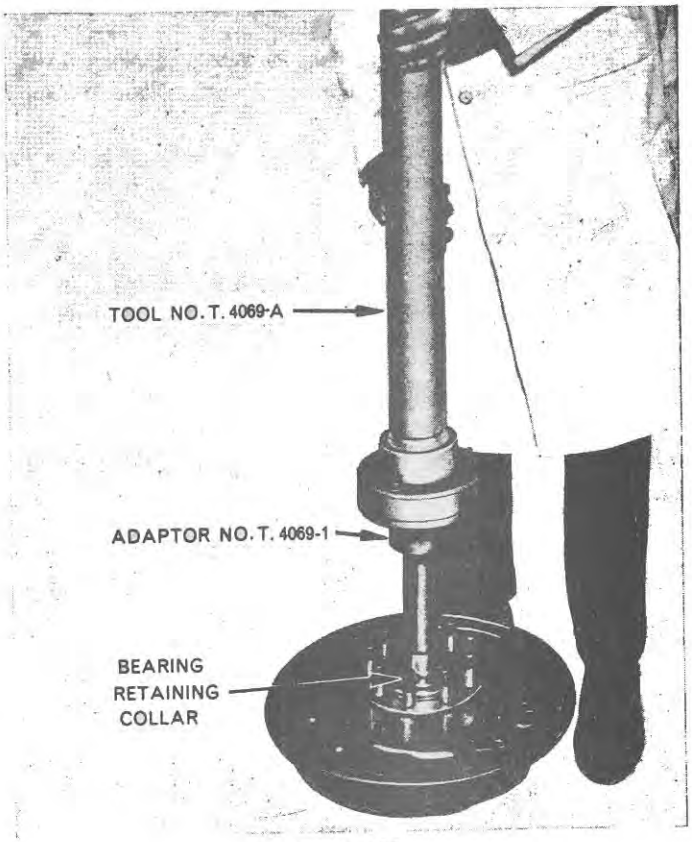

Figure 14
Replacing Axle Shaft Bearing Collar

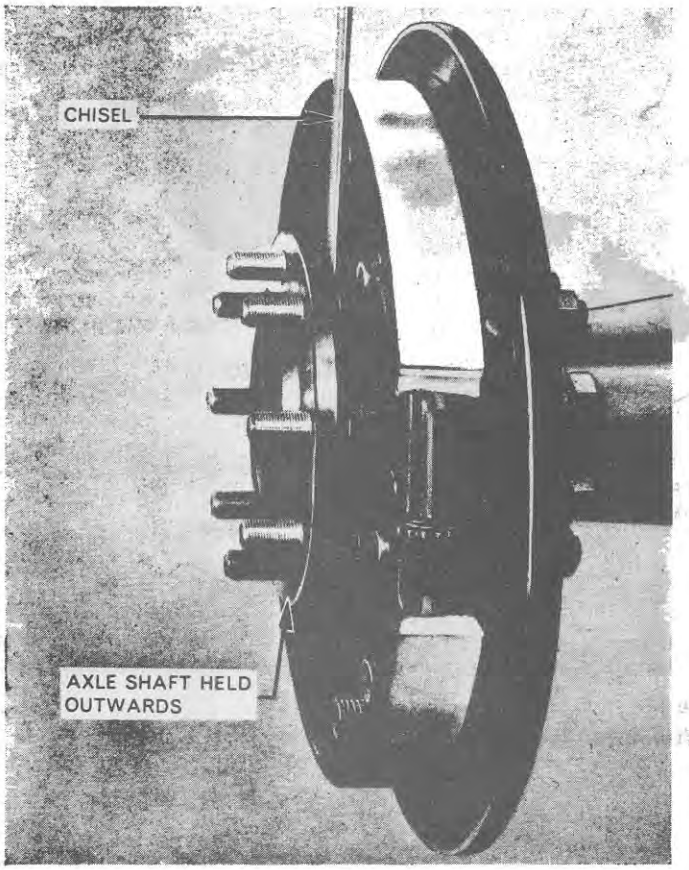

Figure 15
Wedging Axle Shaft Outwards

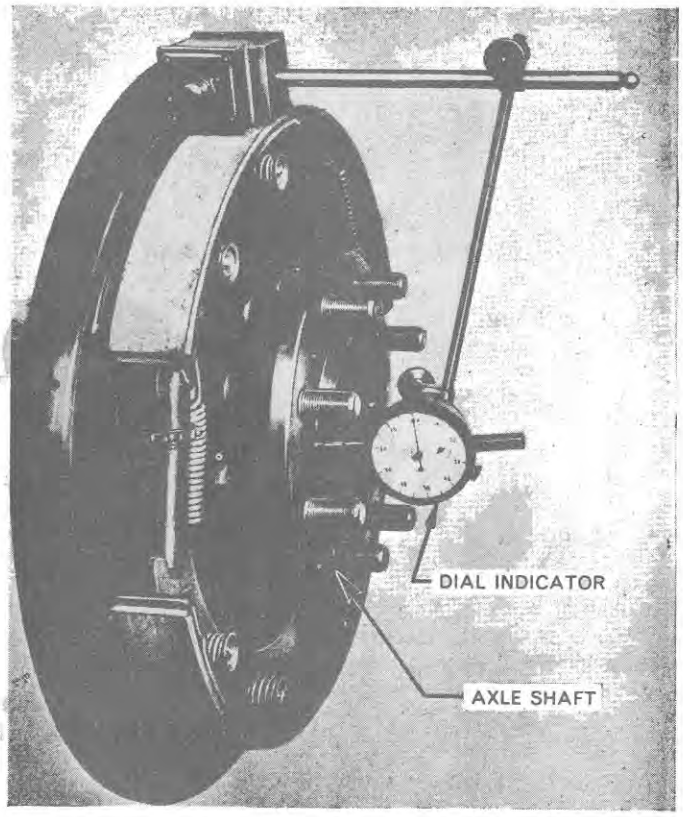

Figure 16
Measuring Axle Shaft End-play

housing, at the same time locating the brake camshaft in its support bushing. Be careful not to damage the axle housing seal during installation of the assembly. Tighten the retainer to axle housing nuts to the specified torque. See Specification Section, Chapter 3.

6. It will be necessary at this stage to check the axle shaft bearing pre-load.
   a. Using a chisel or similar tool hold the axle shaft securely outwards, so that the cone and roller is fully seated in its cup, Figure 15.
   b. Place a dial indicator on the opposite brake backing plate, Figure 16. Pull out the opposite axle (axle on which the indicator is set) to be sure the cone and roller assembly is seated. Adjust the indicator gauge to zero and push the axle inward. The reading obtained on the indicator should be between ·004 to ·012 in. (·102 to ·305 mm). If the end play is not within the prescribed limits, remove shims to decrease or add shims to increase the end play. When the proper end play has been obtained, tighten the retainer nuts to the specified torque.
7. Remove the tape from the brake shoe linings and fit the brake drum. If the brake adjuster has been loosened the brakes will need to be adjusted. (Refer to the section on 'Brake Adjustment').

Install wheels and fenders, connect brake linkages and electrical wiring, and refill the rear axle centre housing. (See Specifications Section, Chapter 3.)

4. OVERHAUL DIFFERENTIAL AND DIFFERENTIAL LOCK ASSEMBLY

Prior to disassembly of the differential remove the left-hand wheel and fender and disconnect electrical wiring and brake linkage to gain access to the rear axle. Drain the oil from the rear axle centre housing.

A. Disassembly

1. Remove the thirteen left-hand axle housing to rear axle centre housing bolts and remove the axle housing, axle shaft and brake assembly. Remove the differential

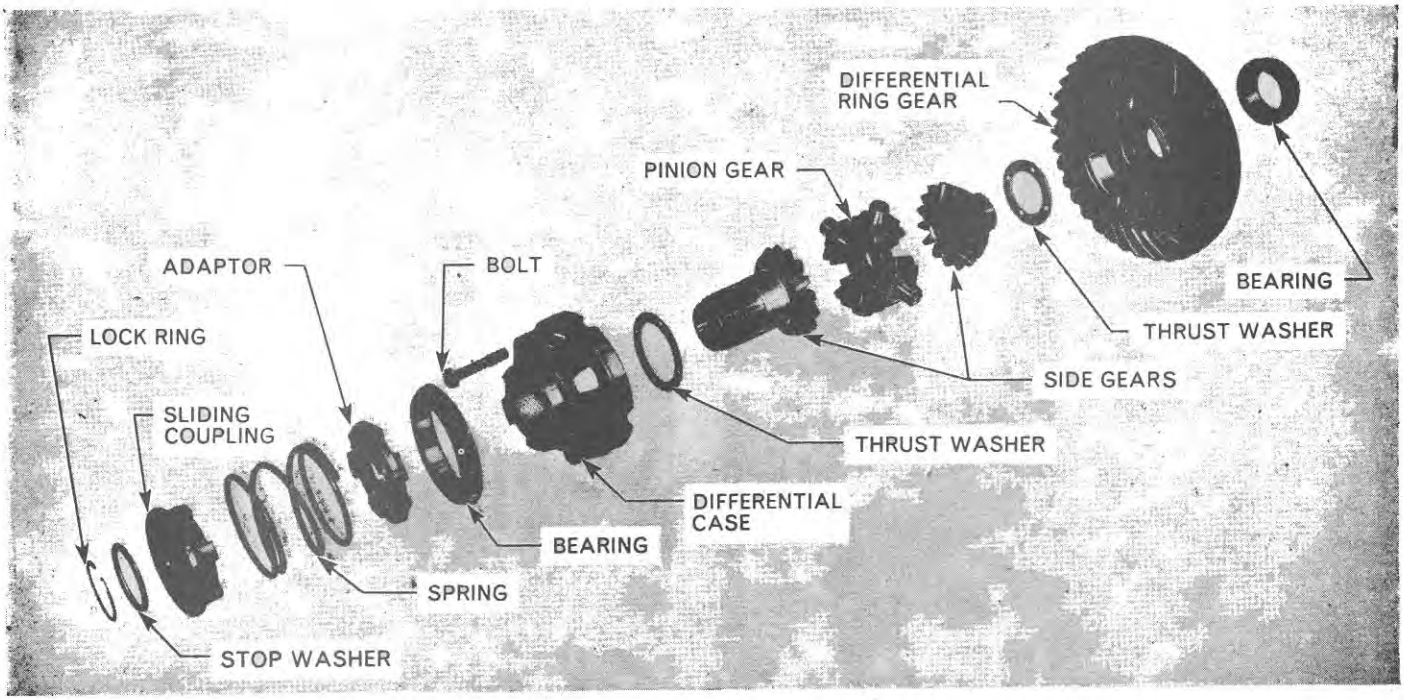

Figure 17
Exploded View of Differential Assembly

assembly from the rear axle centre housing. Be careful not to damage the gaskets that are removed.

2. If a differential lock is fitted remove the lock ring retaining the differential lock coupling to the right-hand side gear. Remove the stop washer, coupling, coupling spring and gear case adaptor, Figure 17.

3. Mark the two halves of the differential case so that they may be assembled in the same relative position, extract the lock wire and remove the bolts. If a differential lock is fitted it will be necessary to gradually remove the bolts at the same time lifting the right-hand half of the case. The bearing will prevent individual bolts from being removed.

4. Remove the right-hand half of the case from the rest of the assembly.

5. Remove the right-hand thrust washer, right-hand side gear, spider and pinion assemblies, left-hand side gear, and left-hand thrust washer.

6. If it is necessary to remove the right-hand cone and roller assembly on tractors fitted with a differential lock, Tool Nos. 952, 1003, 630-16 will be suitable, Figure 18. The left-hand cone and roller assembly on all tractors and the right-hand cone and roller assembly on tractors without differential lock may be removed using 952, 1003, 630-10. Removal is similar to that shown in Figure 18.

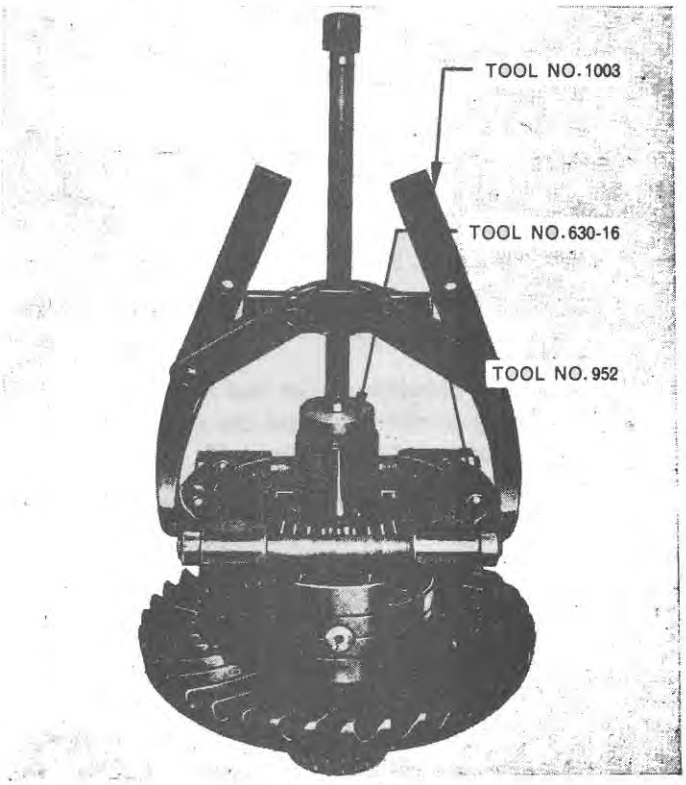

Figure 18
Removing a Differential Bearing

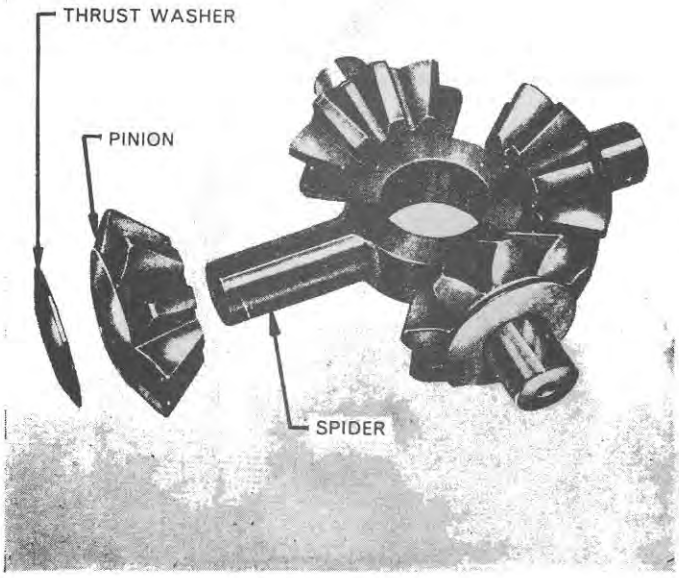

Figure 19
Differential Spider and Pinions

B. Inspection and Repair

1. Clean and inspect all parts and install new parts where worn or damaged.
2. If it is necessary to install new differential case bushings, they should be removed with a suitable drift. They can both be assembled using Tool Nos. T4087 and either 550 or 815.
3 If a new differential case and/or differential ring gear are to be installed, remove the rivets retaining the differential ring gear to the left-hand half of the differential case in the following manner.
   a. Centre punch either end of the retaining rivets (the upset end is more accessible). Be sure the hole is punched as near the centre of the rivet as possible.
   b. Use a $\frac{1}{2}$ in. (12·7 mm) drill and drill into the rivet until the upset end or head breaks free from the rivet shank.
   c. Use a suitable punch and punch out the remainder of the rivet.
   d. Assemble the new differential ring gear and/or left-hand differential case with replacement bolts and nuts. Be sure the ring gear does not cock on the differential case pilot. Tighten the nuts to torque specified in the Specification Section, Chapter 3.

NOTE: ***If a new differential ring gear has been installed a new drive pinion must also be fitted. This should be carried out as outlined in Section 5, 'Overhaul Drive Pinion Assembly'.***

4. If it is necessary to install a new bearing cup in the left- or right-hand axle housing, use Tool Nos. P61, 930-B1, FT-943, 943-10, 938 to remove the cup, Figure 20. It will be necessary to remove the axle housing and to remove the axle shaft from the axle housing to use these tools. (This should be carried out as described in Section 3A, steps 1 and 2, 'Overhaul Rear Axle Shaft Assembly'.)
5. Remove the differential lock operating fork and cross shaft, Figure 21, from the right-hand axle housing.

C. Assembly

1. Insert the eight retaining bolts in the holes in the right-hand half of the differential case then, install the right-hand cone and roller assembly. Use Tool Nos. SW 11 and 550 or SW 15 and a press for reassembling the cone and roller assembly on tractors less differential lock and Tool Nos. T4088 and 550, or SW 507 (two groove side up) with press, on tractors with differential lock, Figure 22 (A). Coat the bearings with petroleum jelly prior to installation.

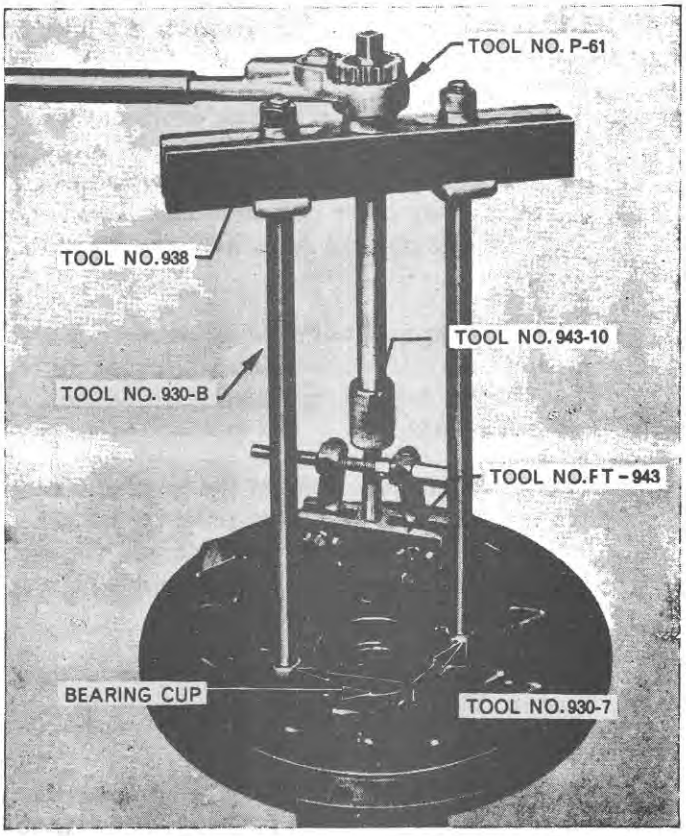

Figure 20
Removing a Differential Bearing Cup

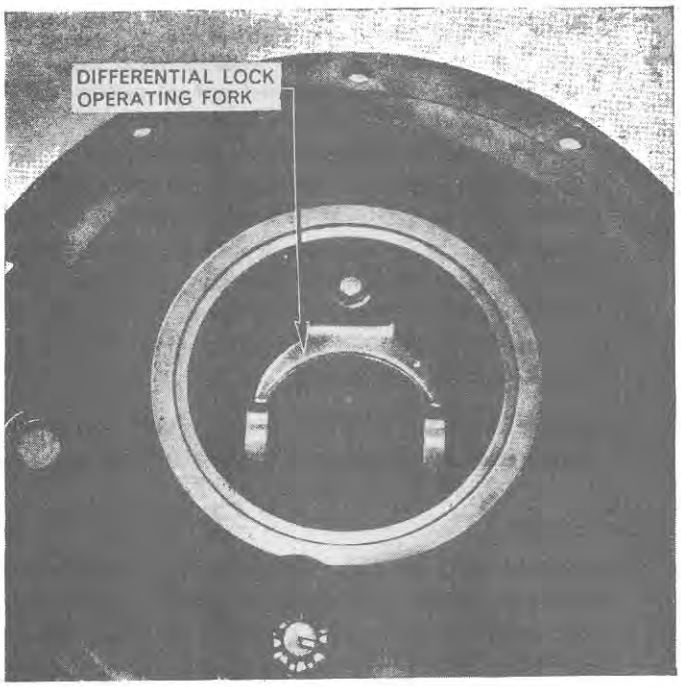

Figure 21
Operating Fork

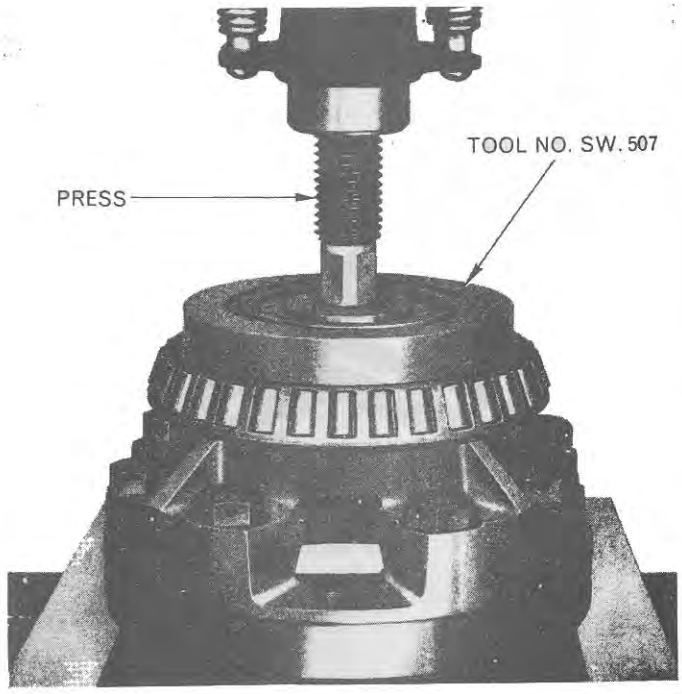

Figure 22(A)
Replacing a Differential Bearing

2. Install the left-hand cone and roller assembly using Tool Nos. SW 11 and 550 or SW 15 and a press, Figure 22(B). Coat the bearings with petroleum jelly prior to installation.

3. Place the left-hand half of the case on the bench and install a side gear thrust washer and the left-hand side gear Assemble the pinions and thrust washers to the spider and locate in the differential case. Locate the right-hand side gear and thrust washer on top of the assembly.

4. Lower the right-hand half of the differential case over the right-hand side gear and line up the mating marks, placed on the left-and right-hand halves of the case before disassembly.

5. Tighten the retaining bolts to the specified torque (see Specification Section, Chapter 3). On assemblies with a differential lock use special adaptor, Tool No. T4091 or similar crowfoot adaptor, to enable a torque wrench to be used, Figure 23.

6. Lubricate the assembly and turn the gears to check freedom of movement. Lock the heads of the bolts with wire.

7. Install the differential lock gear case adaptor, return spring, sliding coupling and thrust washer and retain with a new lock ring.

8. Install the right-hand axle housing assembly if removed.

9. Position the differential assembly in the rear axle centre housing.

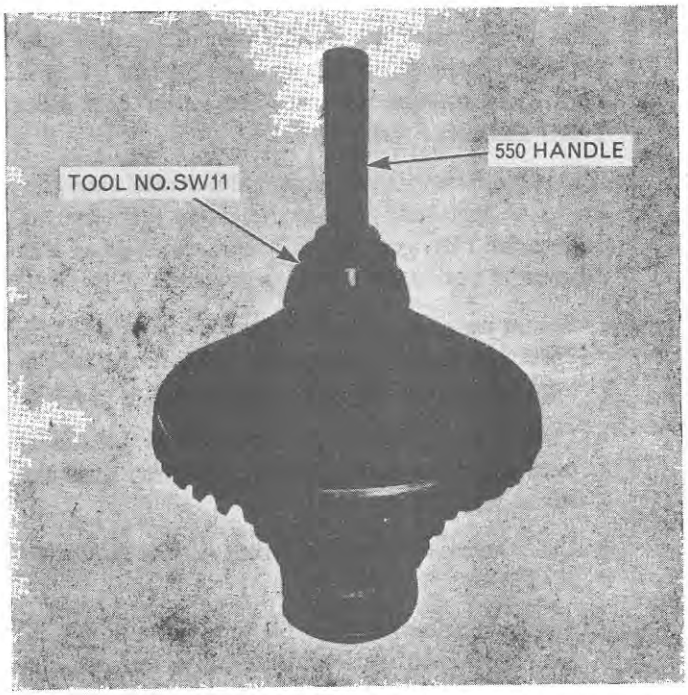

Figure 22(B)
Replacing a Differential Bearing

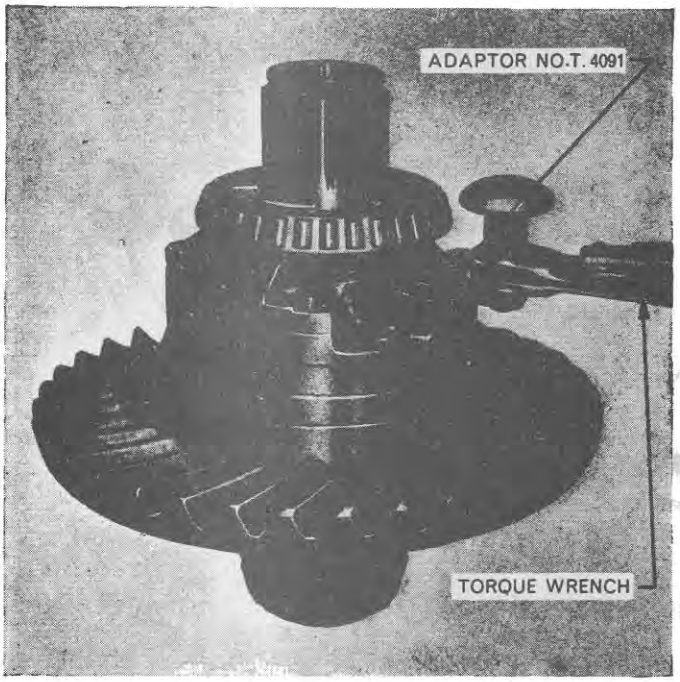

Figure 23
Tightening Differential Caes Bolts

10. Locate the left-hand axle housing using the same number of gaskets as removed during the disassembly procedure (see Note).

    Install the wheel and fender and connect the brake linkage and electrical wiring. Refill the rear axle centre housing with the correct quantity and grade of lubricant (see Specifications Section, Chapter 3.).

NOTE: ***The differential bearing pre-load must be checked if any of the following components have been damaged and new parts installed.***

A. Differential assembly (with and without differential lock).

1. Rear axle differential cone and roller assemblies.

2. Differential case.

3. Differential ring gear and drive pinion.

B. Rear axle centre housing.

C. Rear axle housings.

The differential bearing pre-load adjustment should be carried out as follows:

1. Using a new gasket, bolt the right-hand axle housing to the rear axle centre housing.
2. Rotate the rear axle centre housing until the right-hand axle housing is pointing downward. (Refer to Part 15 'Separating the Tractor' to disconnect the rear axle from the gearbox.)
3. Locate the differential assembly in the cup of the right-hand axle housing.
4. Position the left-hand axle housing over the differential assembly and rotate to ensure the bearing cones seat correctly.
5. Fit four bolts equally spaced around the axle housing and screw down finger tight.
6. With feeler gauges measure the gap between the axle housing and centre housing ensuring that it is equal at all points around the circumference. Do not tighten the nuts beyond finger-tight.
7. From the table below the correct number of gaskets required can be determined:

Width of gap	0·0055–0·013 in. (0·140–0·330 mm)	0·014–0·019 in. (0·356–0·483 mm)	0·020–0·0255 in. (0·508–0·648 mm)
Number of Gaskets required	1 off	2 off	3 off

8. Having determined the correct number of gaskets remove the left-hand axle housing and rebuild the axle as described in Section 4C 'Overhaul Differential and Differential Lock Assembly'.

NOTE: ***It is advisable always to check on re-assembly that the differential ring gear can be turned by hand and that backlash exists between the drive pinion and differential ring gear.***

5. OVERHAUL DRIVE PINION ASSEMBLY

To gain access to the drive pinion assembly it will be necessary to split the tractor. (Refer to PART 15 'Separating the Tractor'.)

NOTE: ***With 4 speed transmission the P.T.O. shifter plate assembly must be removed from the rear axle centre housing before the rear axle is split from the gear box.***

© FORD MOTOR COMPANY LTD. 1981

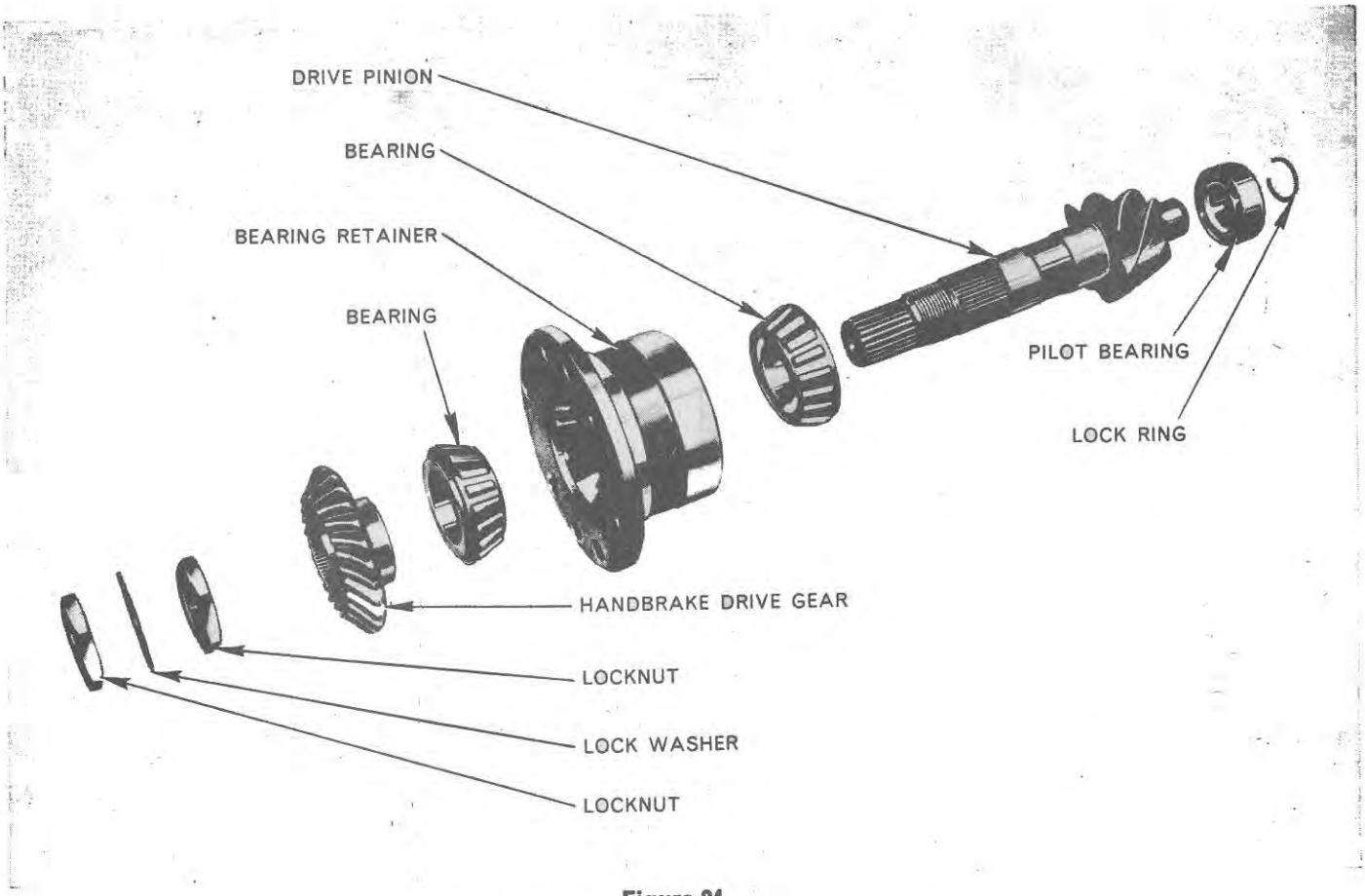

Figure 24
Exploded View of Drive Pinion Assembly

Prior to disassembling the drive pinion assembly it will be necessary to remove the differential from the rear axle centre housing. (Refer to Section 4A, 'Overhaul Differential and Differential Lock Assembly'.)

A. Disassembly

1. Remove the three bolts and lockwashers securing the P.T.O. selector lever plate to the left-hand side of the rear axle centre housing. Lift out the P.T.O. selector lever, plate and fork, Figure 25. Slide the selector ring off the splines of the P.T.O. shaft and remove the hydraulic filters. Remove the lower right-hand bolt on the drive pinion retainer, to remove the inlet filter. Remove the handbrake assembly if fitted.
2. Remove the five remaining bolts and lockwashers securing the drive pinion assembly to the rear axle centre housing and, using two $\frac{9}{16}$ in. N.C. bolts as jacking screws, remove the drive pinion assembly, Figure 26.
3. Place the drive pinion assembly in a vice. Using a

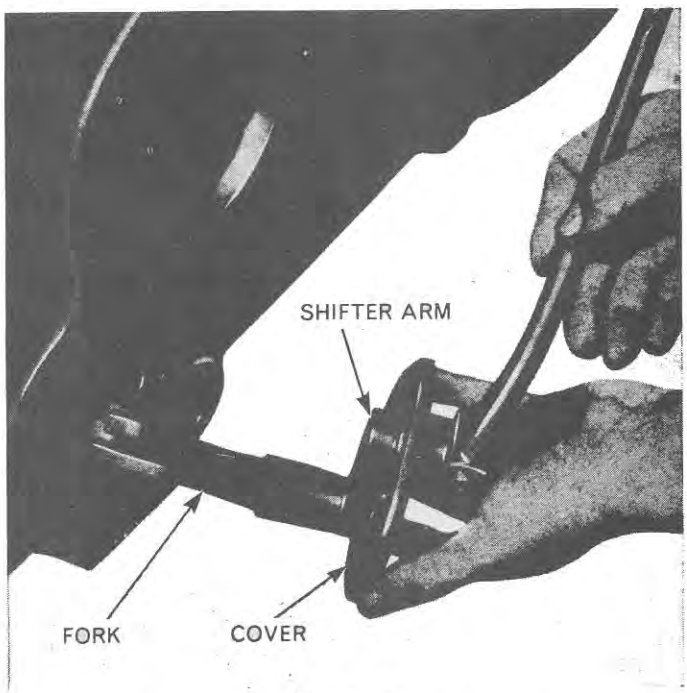

Figure 25
Removing P.T.O. Shifter Lever

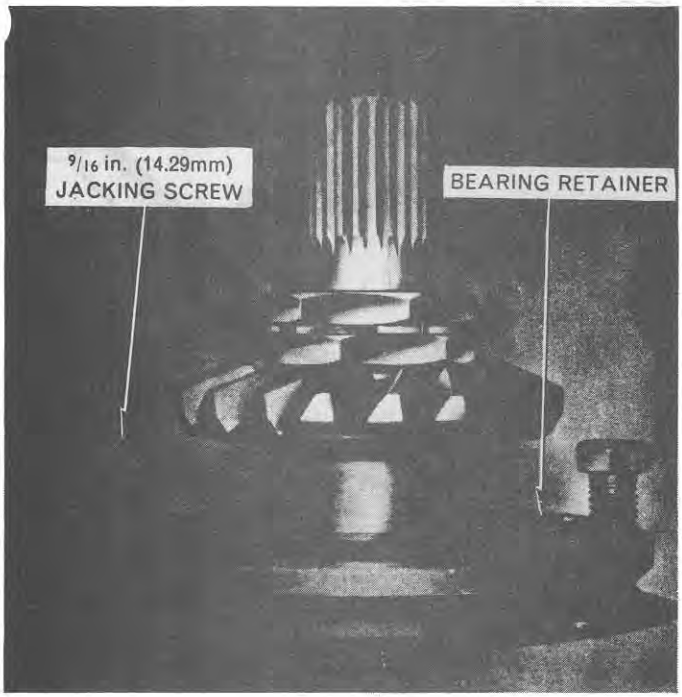

Figure 26
Removing Drive Pinion Assembly

chisel remove the lock nut washer tabs. Remove the lock nut, lock nut washer, and preload adjusting nut. Tool No. T4094 or N-4634-A or equivalent is required to remove the nuts.

4. If fitted, slide off the drive brake gear.

   NOTE: ***On tractors less handbrake a thrust washer is positioned on the pinion shaft instead of the drive brake gear.***

5. Remove the drive pinion cone and roller assemblies and pinion from the bearing retainer assembly.

6. Remove the lock ring from the rear end of the pinion gear and using Tool Nos. 1002 and 951 pull the pilot bearing off the pinion gear, Figure 27.

B. Inspection and Repair

1. Clean and inspect all parts and install new parts where worn or damaged.

2. If it is necessary to install new retainer bearing cups they may be removed from the housing using Tool Nos. 943 and 943-S.

3. If it is necessary to install a new rear pinion cone and roller assembly, the assembly may be removed using Tool Nos. 1003 and 951, Figure 28. The new cone and roller is installed using the same tools and a suitable sleeve to enable the tool to press on the inner bearing race as shown in Figure 29.

   NOTE: ***If a new drive pinion is to be installed a new differential ring gear must also be fitted. This should be carried out as outlined in Section 4B, 'Overhaul Differential and Differential Lock Assembly'.***

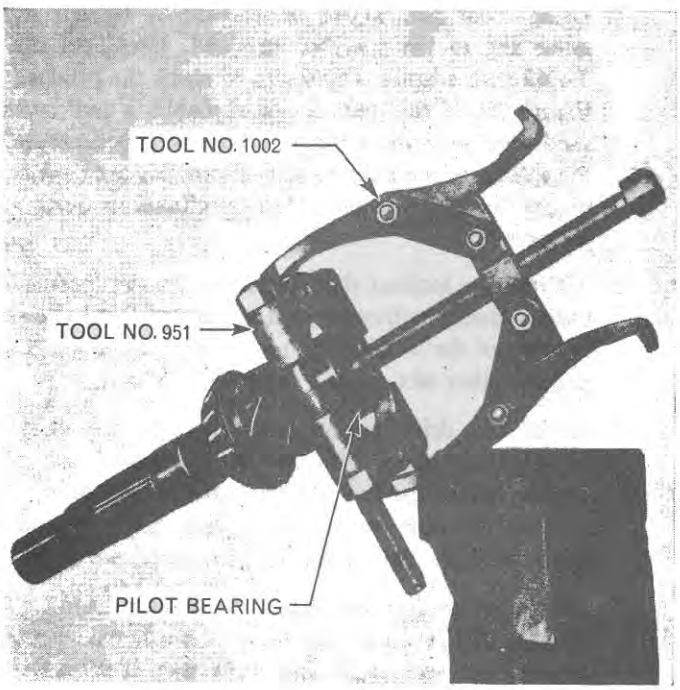

Figure 27
Removing Drive Pinion Pilot Bearing

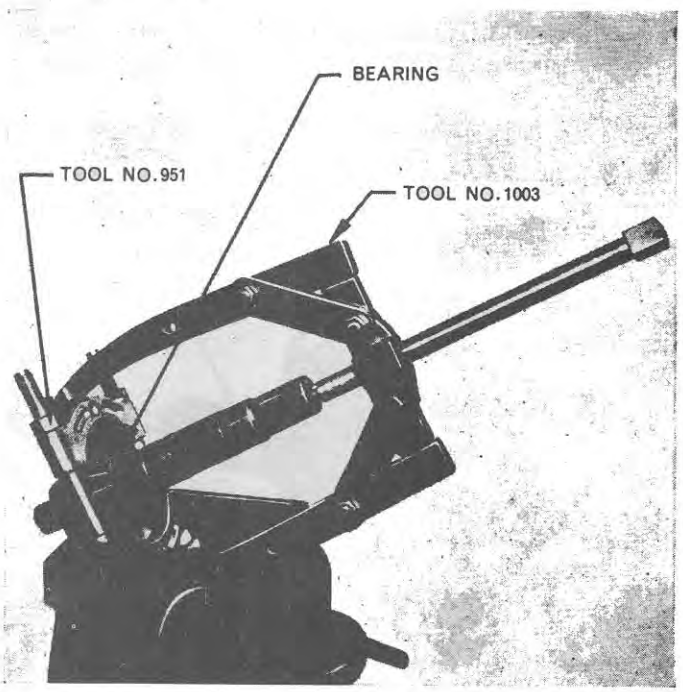

Figure 28
Removing Drive Pinion Rear Bearing

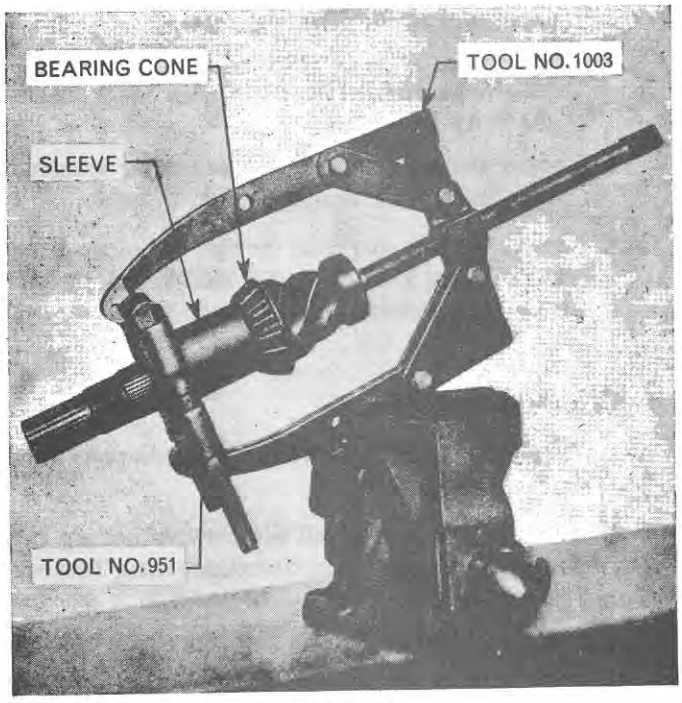

Figure 29
Replacing Drive Pinion Rear Bearing

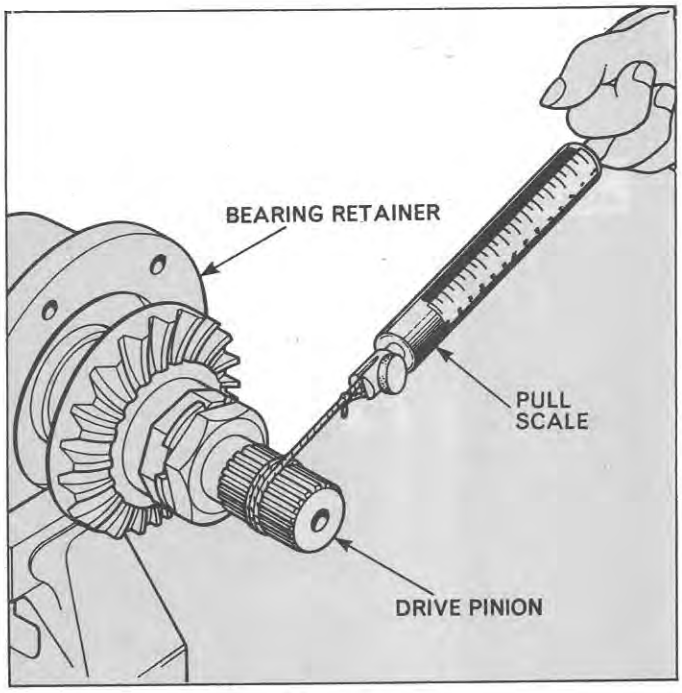

Figure 31
Checking Drive Pinion Bearing Pre-load

C. Assembly

1. Install the pilot bearing on the pinion, using a suitable hollow sleeve, and fit a new lock ring.
2. Position the pinion shaft assembly and front pinion cone and roller assembly in the retainer assembly. Install the drive brake gear or thrust washer whichever is applicable.
3. Install the pre-load adjusting nut, new lock nut washer and locknut.
4. Using Tool No. T4094 or N-4634-A, tighten the inner nut to the specified pre-load. Use Tool No. T4062 with adaptor T4062-2A, to check the pre-load, Figure 30. If this tool is not available, a pull scale used together with a piece of cord wrapped around the splines of the pinion shaft, Figure 31, can be used to give the specified pull. (See Specifications Section, Chapter 3.)
5. Tighten the locknut then check the bearing pre-load making further adjustments if necessary. Bend one of the tabs of the lock washer on to a flat on the locknut and the other tabs on to a flat on the locknut.
6. Install the drive pinion assembly into the centre housing and secure with five bolts and lockwashers. Do not secure the bolt that retains the inlet filter. It may be necessary to tap the retainer in to position with a drift if a tight assembly is encountered.
7. Fit the hydraulic filters. The lower right-hand bolt securing the retainer assembly to the rear axle centre housing also secures the hydraulic inlet filter support tab to the retainer assembly. Tighten the bolts to torque shown in Specifications Section, Chapter 3.

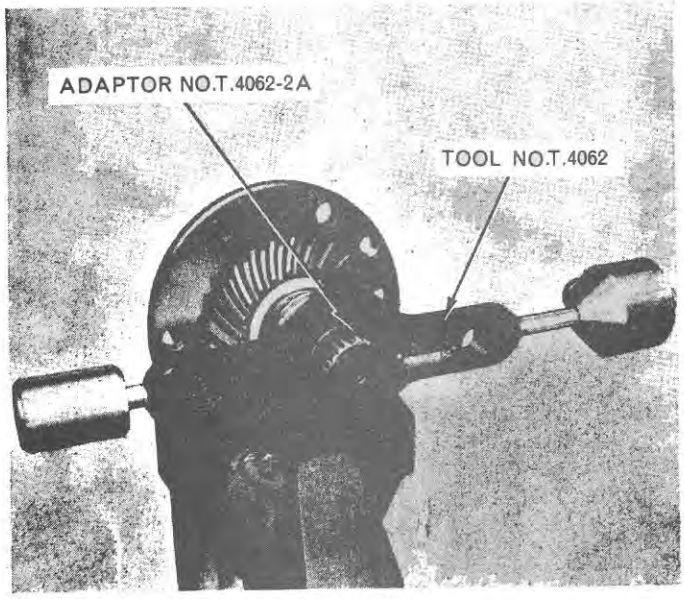

Figure 30
Checking Drive Pinion Bearing Pre-load

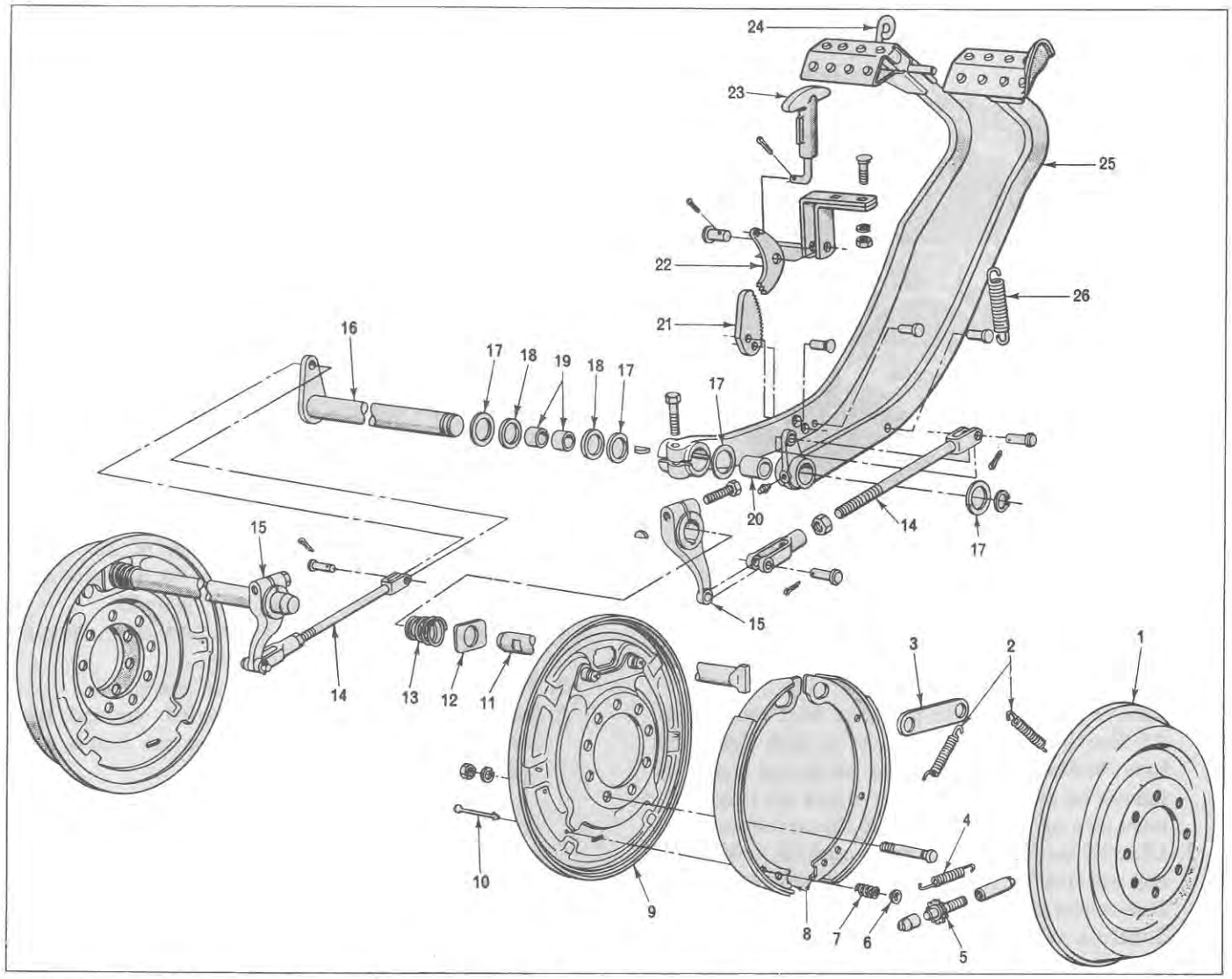

1. Brake Drum. 2. Brake Shoe Return Spring. 3. Anchor Pin Plate. 4. Adjusting Screw Spring. 5. Adjusting Screw. 6. Hold Down Spring Cup. 7. Hold Down Spring. 8. Brake Shoe and Lining Assembly. 9. Brake Backing Plate. 10. Hold Down Spring Pin. 11. Brake Actuating Camshaft. 12. Brake Camshaft Hole Cover. 13. Brake Camshaft Hole Cover Spring. 14. Brake Control Rod. 15. Brake Camshaft Lever. 16. Brake Pedal Shaft. 17. Brake Shaft Washer. 18. Brake Shaft Seal. 19. Brake Shaft Bushing. 20. Brake Pedal Bushing. 21. Brake Pedal Sector. 22. Parking Brake Lever Pawl. 23. Parking Brake Rod. 24. Brake Pedal Locking Pin. 25. Brake Pedal. 26. Brake Pedal Return Spring.

Figure 32
Exploded View of Braking System

8. Slide the selector ring on to the splines of the P.T.O. shaft and fit the selector lever, fork and plate. Secure with three bolts and lockwashers. Replace the hand brake assembly.

Replace the differential and the axle housing assembly. (Refer to Section 4C 'Overhaul Differential and Differential Lock Assembly'.)

Reconnect the tractor. (Refer to PART 15, 'Separating the Tractor'.)

6. OVERHAUL WHEEL BRAKES

A. Disassembly

1. Jack up the rear end of the tractor and remove the wheels.

NOTE: ***As the brake assemblies are the same each brake assembly should then be further disassembled as follows:-***

2. Release parking brake catch and remove the brake drum.
3. Remove the brake shoe hold down cups and springs (four cups and two springs on each shoe) by compressing the outer cup against the spring and turning through a quarter turn.
4. Using brake spring pliers, remove the brake shoe adjusting screw spring (orange) and remove the adjusting screw assembly.
5. Using brake spring pliers, remove the two brake shoe return springs (blue) from the anchor pin plate and remove the anchor pin plate, Figure 33.

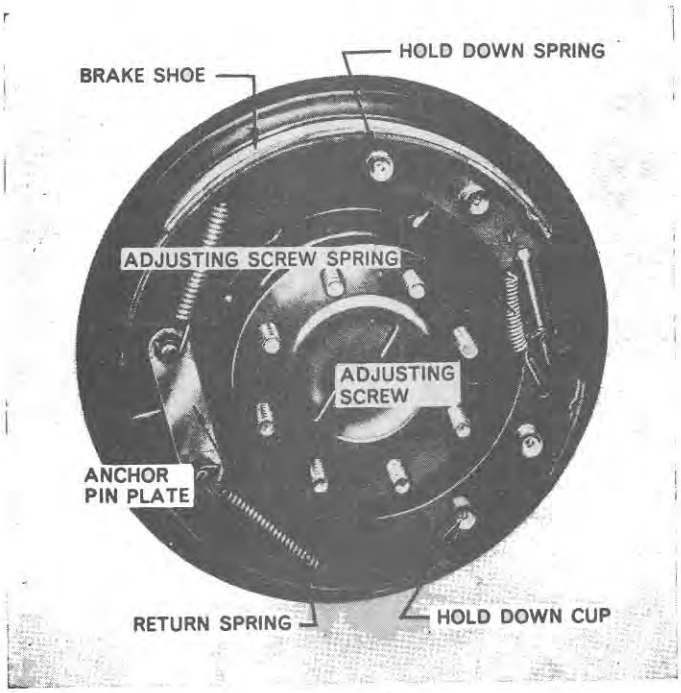

Figure 33
Brake Assembly

6. Remove the brake shoes from the fixed anchor pins. All four shoes are identical but as each lining will have 'bedded-in' to the drum, all linings should be marked on disassembly so that if they are only partly worn they can be reassembled in the correct locations.
7. Unscrew and remove the brake camshaft lever pinch bolt and slide the lever off the woodruff key and shaft. Remove the key from the keyway.
8. Slide the camshaft cover plate and retaining spring along the shaft and remove the shaft through the hole in the backing plate.

B. Inspection and Repair

1. Clean and inspect all parts and install new parts where worn or damaged.
2. If the brake shoe linings are deeply scored or badly worn new shoes should be fitted.
3. To install a new brake backing plate it is necessary to remove the axle shaft and bearing retainer from the axle housing. The procedure outlined in Section 3A, 'Overhaul Rear Axle Shaft Assembly', should be adopted for carrying out this work.
4. If it is necessary to remove any of the wheel bolts, a 'knockout' hole is located in the brake backing plate, Figure 34, to assist removal. A new rubber plug should be inserted in the 'knockout' hole after the new wheel bolt has been installed.

C. Assembly

1. On reassembly, the anchor pins, adjuster unit and the brake camshaft should be lightly lubricated with a zinc base grease. Do not use general purpose grease as it may melt under high temperatures and run onto the shoes.
2. Pass the brake camshaft through the backing plate and fit the camshaft cover and retaining spring. Slide the camshaft lever on to the key and shaft and secure by means of the pinch bolt. (Refer to 'Brake Camshaft Adjustment'.)
3. Position the brake shoes on the fixed anchor pins. Note that if the brake shoes are to be installed, without new linings they should be located in the same position from which they were removed.
4. Install the brake shoe hold down cups and springs. Pass the pins through the backing plate and shoe and install the inner cup and hold down spring. Press the outer cup inwards against the spring tension and turn through a quarter turn to lock the pin.
5. Locate the adjuster spring and install the brake adjuster unit between the rear ends of the brake shoes so that the notched wheel is in line with the adjusting slot in the backing plate, Figure 33.
6. Position the anchor pin plate over the anchor pins and fit the two brake shoe return springs.
7. Position the brake drums and install the wheels.
8. Brake adjustment should be carried out and the tractor road tested to ensure that the brakes are operating correctly.

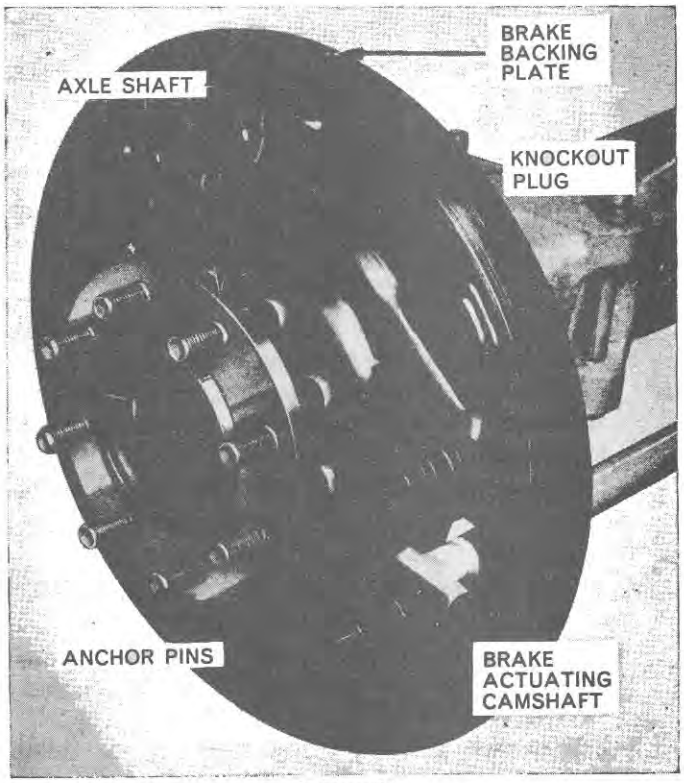

Figure 34
Brake Backing Plate

7. OVERHAUL TRANSMISSION HANDBRAKE ASSEMBLY

To gain access to the handbrake the left-hand platform should be removed. Drain the oil from the rear axle centre housing.

A. Disassembly

1. Remove the handbrake adjusting nut and spacer from the operating rod.
2. Remove the two handbrake lever bracket retaining bolts and lockwashers and lift off the handbrake lever assembly.
3. Unscrew the four handbrake housing cover plate bolts and lockwashers and remove the cover plate.
4. Remove the outer friction disc, actuating plate assembly (with rubber boot) and inner friction disc, Figure 36.
5. Unscrew the four handbrake housing bolts and lockwashers and remove the housing.
6. Remove the handbrake shaft and bearing retainer assembly noting the number of shims positioned between the bearing retainer and the rear axle centre housing.
7. Place the handbrake shaft assembly in a soft jawed vice and straighten the tabs of the locking washer.
8. Remove the locknut, locking washer and adjusting nut from the handbrake shaft. It will be necessary to use Wrench Tool No. SW 5 to remove the nuts, Figure 38.
9. Remove the outer cone and roller bearing and the inner cone and roller bearing, oil deflector and handbrake shaft assembly from the bearing retainer, Figure 35.

B. Inspection and Repair

1. Clean and inspect all parts and install new parts where worn or damaged.
2. If it is necessary to install new bearing cups in the retainer the cups may be removed using Tool Nos. 943 and 943-S.
3. If the oil seal in the handbrake housing is found to be damaged, the seal should be removed and a new seal installed, using a suitable sleeve, $1\frac{3}{4}$ in. (44·45 mm) O.D.
4. If it is necessary to install a new handbrake shaft inner cone and roller assembly remove the cone from the shaft using Tool Nos. 951 and 1003, Figure 38, and install a new cone and roller assembly using Tool Nos. 951, 1002 plus a suitable sleeve to enable the tool to press on the inner bearing race, Figure 39.

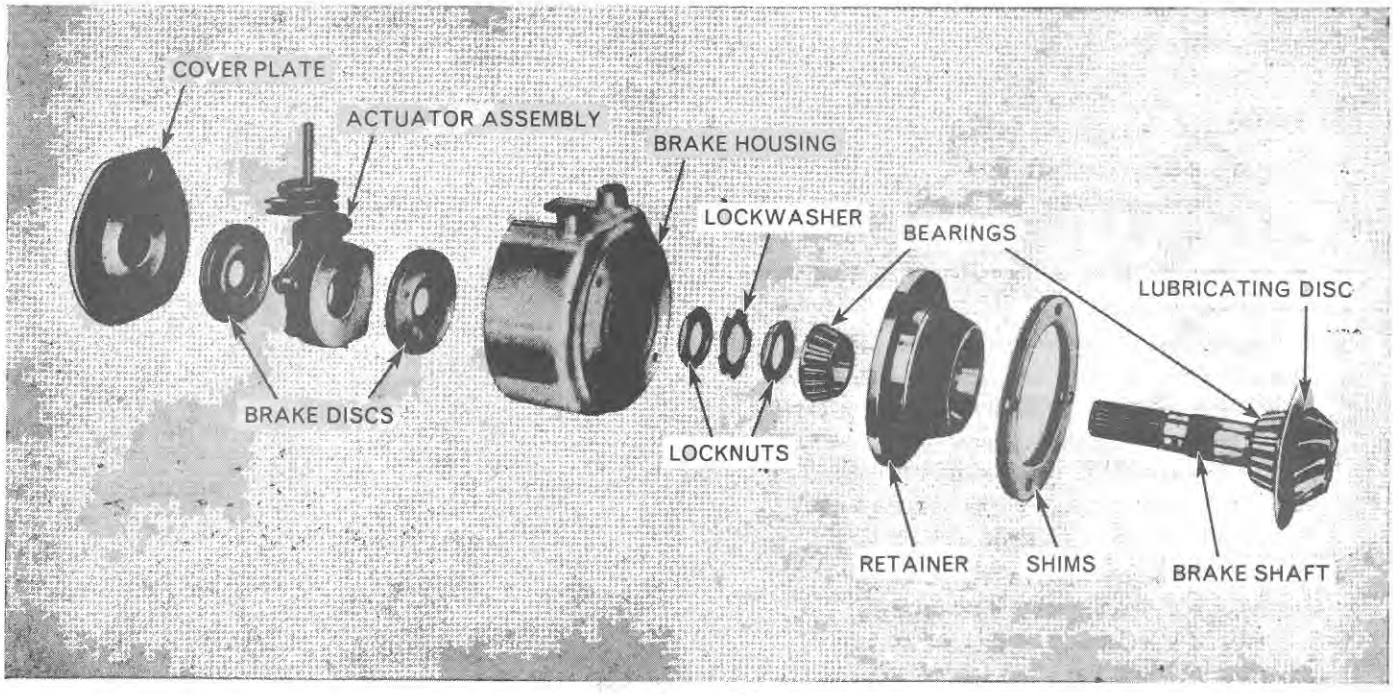

Figure 35
Exploded View of Transmission Handbrake Assembly

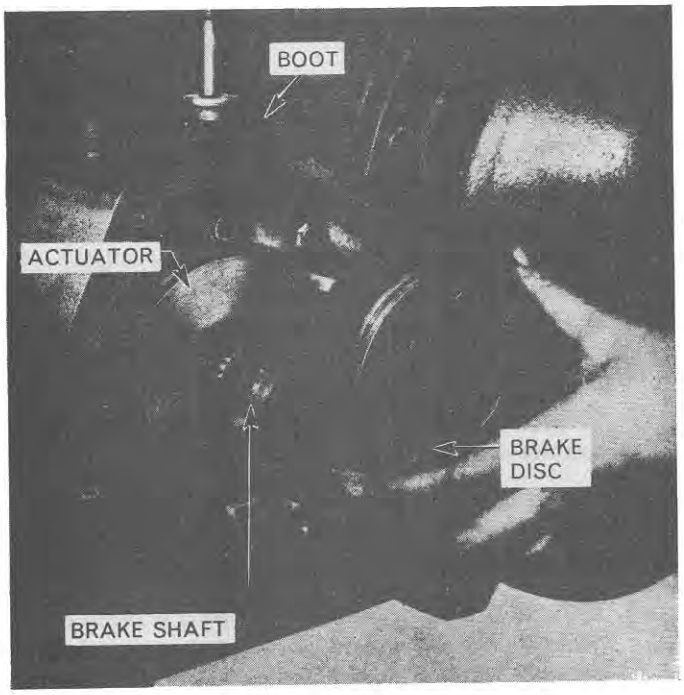

Figure 36
Removing Brake Discs

5. To overhaul the actuating plates assembly, disconnect the actuating linkage, remove the two return springs and separate the plates. Remove the four steel balls. The nuts on the actuating linkage should be staked on re-assembly.

C. Assembly

1. Place the bearing retainer in a soft jawed vice and position the bearing cones and handbrake shaft in the retainer.
2. Install the bearing adjusting nut, new locking washer and locknut.
3. Tighten the inner nut to the specified pre-load. (See Specifications Section, Chapter 3.) Use Tool No. T4062 with adaptor T4062-3 to check the pre-load. If this tool is not available a pull scale, used together with a piece of cord wrapped around the splines of the handbrake shaft, will give the specified pull. (See Specification Section, Chapter 3.)
4. Tighten the locknut then check the bearing pre-load, making further adjustments if necessary. Bend one of the tabs of the locking washer on to a flat on the adjusting nut and the other tab on to a flat on the locknut.
5. Install the handbrake shaft and bearing retainer assembly using the same number of shims between the bearing retainer and the rear axle centre housing as removed on disassembly.

NOTE: ***If new parts are installed which affect the handbrake pinion gear backlash, i.e. installation of new component parts of the handbrake shaft assembly, it will be necessary to adjust the backlash spacing shim as follows:–***

a. Locate the handbrake shaft and bearing retainer assembly, without shims fitted, in the rear axle centre housing.

b. Ensure that the handbrake pinion is fully in mesh with the handbrake gear thus giving zero backlash.

c. Using feeler blades, measure the shim gap between the bearing retainer and the rear axle centre housing.

d. A series of shims are available, i.e. 0·003 in. (0·076 mm), 0·005 in. (0·127 mm) and 0·020 in. (0·508 mm) for use in making up this shim gap pack.

Example

SHIM GAP READING=0·042″
SHIM PACK =1X 0·020″ SHIM
2X 0·005″ SHIMS
4X 0·003″ SHIMS
TOTAL 0·042″

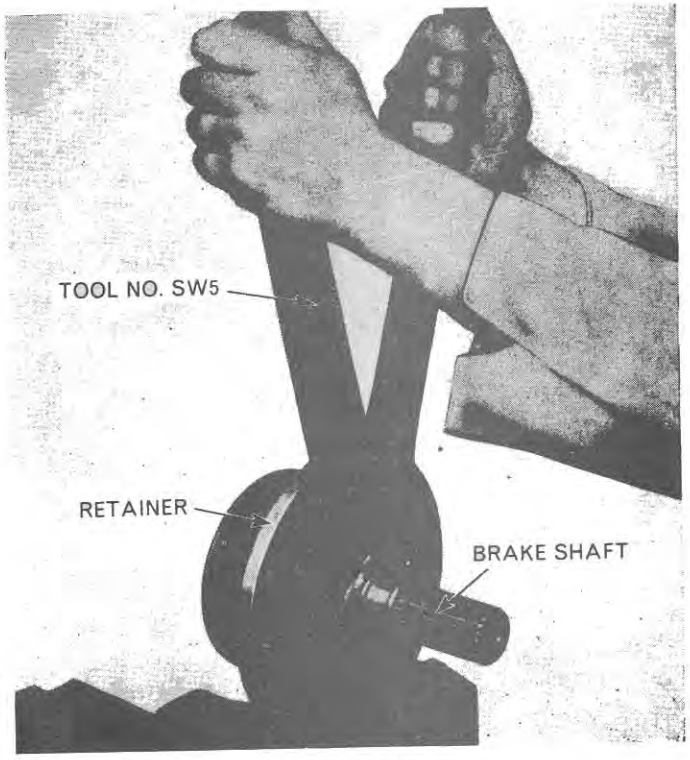

Figure 37
Tightening Brake Driven Shaft Locknuts

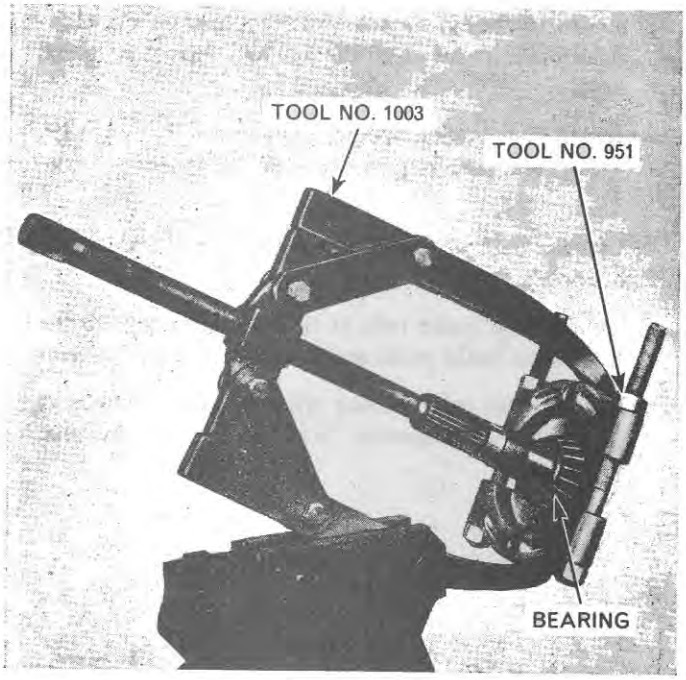

Figure 38
Removing Brake Driven Shaft Bearing

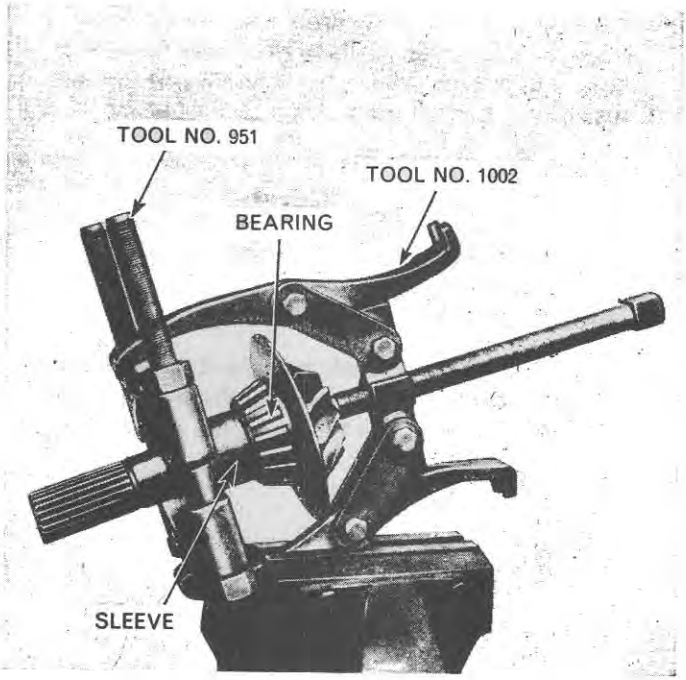

Figure 39
Replacing Brake Driven Shaft Bearing

To provide the required backlash of 0·006 in. (0·152 mm)–0·010 in. (0·254 mm) between the handbrake pinion and the handbrake gear a further 0·013 in. (0·330 mm) (2X 0·005 in. shims and 1X 0·003 in. shim) should be added to the shim pack.

6. Position the handbrake housing and secure with four bolts and lockwashers.
7. Locate the inner friction disc, actuating plate assembly and outer friction disc. Fit the rubber boot.
8. Install the handbrake housing cover plate and secure with four bolts and lockwashers.
9. Position the handbrake lever assembly and secure the bracket with two retaining bolts and lockwashers.
10. Install the handbrake adjusting nut and spacer on the operating rod. (Refer to 'Transmission Handbrake Adjustment' for the correct handbrake setting.)

Install the left-hand platform and refill the rear axle housing. (See Specifications Section, Chapter 3.)

8. OVERHAUL BRAKE PEDALS AND LINKAGE

A. Removal

1. Drain the oil from the rear axle housing.
2. Disconnect the right-and left-hand brake rods, at their forward ends, from the right-hand brake pedal and the brake cross-shaft lever respectively.
3. Release the brake pedal return springs connected to the underside of the platform.
4. Remove the snap ring and washer from the end of the cross-shaft and slide off the right-hand brake pedal and spacing washer, Figure 32.
5. Loosen the pinch bolt on the left-hand brake pedal and slide the pedal from the key and shaft.
6. Remove the key and right-hand thrust washer from the cross-shaft.
7. Ensure that the cross-shaft is free from burrs before sliding the shaft through the oil seals.

B. Inspection and Repair

1. Clean and inspect all parts and install new parts where worn or damaged.
2. To install a new bushing in the right-hand brake pedal, drive out the old bushing and fit a new bushing using Tool No. 811 with handle Tool No. 814. Ensure that the hole in the bushing is in line with the lubrication hole in the pedal.

3. If the cross-shaft oil seals are damaged they should be removed and new seals installed. Press the new oil seals into the rear axle centre housing with the steel case of the seal facing outwards.
4. Inspect the brake cross-shaft bushings and if they appear to be worn or deeply scored, remove the bushings using Tool No. 811 with handle Tool No. 814 and install the new bushings using the same tools.

C. Installation

1. Install the brake cross-shaft with the clutch pedal and left-hand thrust washer in position. Position the right-hand thrust washer with the flat on the washer facing forward.
2. Locate the key in the cross-shaft groove, slide the left-hand brake pedal on to the key and secure the pinch bolt.
3. Install the spacing washer, right-hand brake pedal, washer and snap ring on the brake cross-shaft, Figure 32.
4. Connect the brake pedal return springs to the underside of the platform.
5. Connect the brake rods at their forward ends to the right-hand brake pedal at the brake cross-shaft lever.
6. Fill the rear axle housing with the correct quantity and grade of lubricant. (See Specification Section, Chapter 3.)

Part 10

REAR AXLE AND BRAKES

Chapter 2

REAR AXLE AND BRAKES—MAJOR 4000 & SUPER MAJOR 5000

Section		Page
1.	Description and Operation	23
2.	Adjustments	25
3.	Overhaul Rear Axle Shaft Assembly	27
4.	Overhaul Planetary Gear Assembly and Axle Housing	32
5.	Overhaul Disc Brake Assembly	35
6.	Overhaul Differential and Differential Lock Assembly	36
7.	Overhaul Drive Pinion Assembly	40
8.	Overhaul Transmission Handbrake Assembly	43
9.	Overhaul Brake Pedals and Linkage	46

1. DESCRIPTION AND OPERATION

The unit contains the right angle drive, differential, brakes, final reduction gears, axle shaft, power take-off components, and as production options the differential lock (fitted as standard on the Super Major 5000), and the transmission handbrake.

Power from the transmission output shaft is taken to the pinion by the drive shaft coupling. The spiral bevel pinion is held by pre-loaded opposed taper roller bearings. The differential ring gear is riveted to the differential case and the drive from the case is transmitted through a conventional four pinion differential to two sun gear shafts which are splined into the side gears of the differential.

The differential lock sliding coupling is located on the splines of the differential side gear. This coupling has dog teeth which match with the dog teeth on the differential lock adaptor. The adaptor dog teeth are in constant mesh with similar teeth machined in the differential case.

The differential lock operating spring separates the sliding coupling and adaptor. Depressing the differential lock pedal moves the differential lock fork which forces the sliding coupling into mesh with the adaptor, thus locking the side gear to the differential housing.

The rear axle centre housing extends forward forming a compartment which houses the hydraulic lift cylinder. A common supply of oil is used for lubricating the rear axle and

© FORD MOTOR COMPANY LTD. 1964

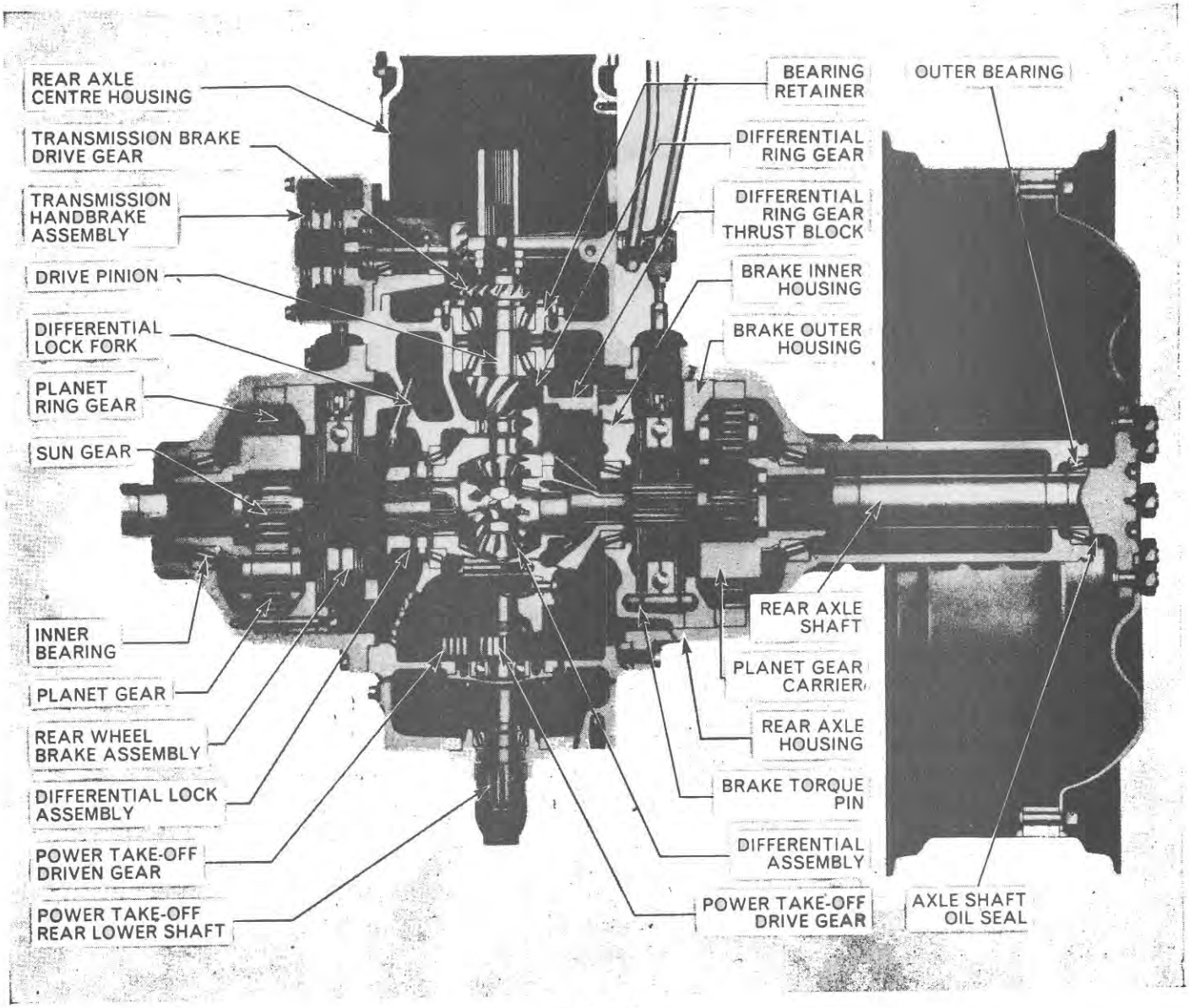

Figure 40
Sectional View of Super Major 5000 Rear Axle

differential assemblies and operating the hydraulic power lift. The differential ring gear and differential assembly is partly immersed in oil thus providing adequate lubrication for bearings and bushings.

In each rear axle assembly a shaft projects through the side gear. This shaft terminates in a spur gear which is, the sun gear of the (planetary) final reduction gear system. The planetary ring gear is pressed into the rear axle housing. The three planet gears are mounted in a carrier and are positioned around the sun gear and within the planetary ring gear.

The planet gears are mounted to the carrier by shafts and rotate on uncaged needle bearings. The carrier has internal splines into which the rear axle locates. As the sun gear is driven by the differential, the planet gears are forced to revolve inside the stationary planetary ring gear and in so doing they force the carrier to revolve at a lower speed than the sun gear.

The rear axle shaft is also held in opposed taper roller bearings and the end play is adjusted by means of selective shims held under the retaining bolts. The shaft terminates in a flange to which the rear wheel is bolted.

The disc brakes consist of a series of stationary and revolving discs the latter of which are splined to the shaft of the sun gear, located either side of an actuator assembly. This assembly consists of two thrust plates with ramped

'pockets' in which steel balls are located. The thrust plates, held in contact with the balls by four coil springs, are connected by suitable linkage with the appropriate foot-brake pedal.

Operation of the foot-brake pedal causes the rear brake actuating discs to rotate and the balls to rotate up the ramped 'pockets'. This expands the actuating discs and in so doing the actuating discs force the rear brake disc assemblies into contact with the intermediate disc, the actuating discs, and the inner and outer brake housings. Rotation of the stationary components of the brake unit is prevented by a large diameter torque pin held in the outer brake housing.

DIFFERENTIAL LOCK OPERATION

When one rear wheel of a tractor strikes a soft patch of ground and spins, the normal type differential action allows virtually all the drive to be applied to this wheel and a little to the opposite rear wheel which may be on firm ground. The result is that the tractor is either brought to a complete halt or considerably slowed down.

When a differential lock is installed, improved traction is possible because the lock enables additional traction to be obtained from the wheel which is on firm ground, thus enabling the tractor to pull through the soft patch.

Basically, this locking device consists of a dog-type coupling which is splined to, but free to slide on the differential side gear, and is designed to positively lock the differential side gear to the differential case. The connection is made through the differential lock adaptor which has dog teeth on both side faces, those on the inside engaging with teeth machined on the differential case and those on the outside with the differential lock coupling.

In operation, depression of the foot pedal will first move the coupling into contact with the adaptor and then compress the spring in the operating rod assembly. As the teeth of the coupling come into alignment with the tooth spaces in the fixed adaptor, the spring tension will move the coupling into engagement with the adaptor. The fact that the spring supplies the final operating force prevents the possibility of damage should excessive force be applied to the foot pedal.

When full engagement has taken place (this will be noticeable by the reduced pedal pressure) the foot pedal should be released. The coupling and adaptor teeth side forces, resulting from the transfer of power from one wheel to another, will keep the coupling and adaptor teeth in mesh. As the drive becomes more equally distributed, the compressed operating spring overcomes the reduced teeth side forces and automatically disengages the differential lock.

TRANSMISSION HANDBRAKE

The transmission handbrake, if fitted, is located at the left-hand side of the rear axle centre housing.

A bevel gear, located on the drive pinion shaft, is in constant mesh with the handbrake gear, the shaft of which projects through the side of the rear axle centre housing and is supported in opposed taper roller bearings. Two brake discs are located on the splines of the handbrake driven shaft, one on either side of an actuator assembly. This assembly consists of two actuator plates with ramped 'pockets' in which are located steel balls. The actuator plates are held in contact with the balls by two coil springs which are connected by suitable linkage to a handbrake lever.

Operation of the handbrake lever causes the actuator plates to rotate, and the balls to ride up the ramped 'pockets' so expanding the actuator plates and forcing the brake outer disc into contact with the cover plate and the brake inner disc into contact with the inside face of the disc brake housing. This locks the drive pinion and prevents tractor movement.

A parking latch is provided on the foot brake pedals on all models and 'Select-O-Speed' models are provided with a 'park' position on the speed selector.

2. ADJUSTMENTS

DIFFERENTIAL LOCK ADJUSTMENT—MAJOR 4000 ONLY

It is important that sufficient clearance exists between the differential lock pedal and the platform to ensure full engagement of the lock. To provide adequate clearance the following adjustments should be made:

1. With the foot pedal disconnected and resting on the platform depress the operating lever until the differential coupling is fully engaged. Loosen the locknut and adjust the length of the operating rod and clevis assembly until the clevis pin can be inserted to connect the operating rod to the lever without compressing the spring in the operating rod assembly.
2. Remove the clevis pin and shorten the operating rod assembly by one turn then re-insert the clevis pin. Tighten the locknut and fit the cotter pin.

BRAKE LINKAGE ADJUSTMENT

(For adjustment in the field an alternative method of brake adjustment is outlined in the Owners Manual.)

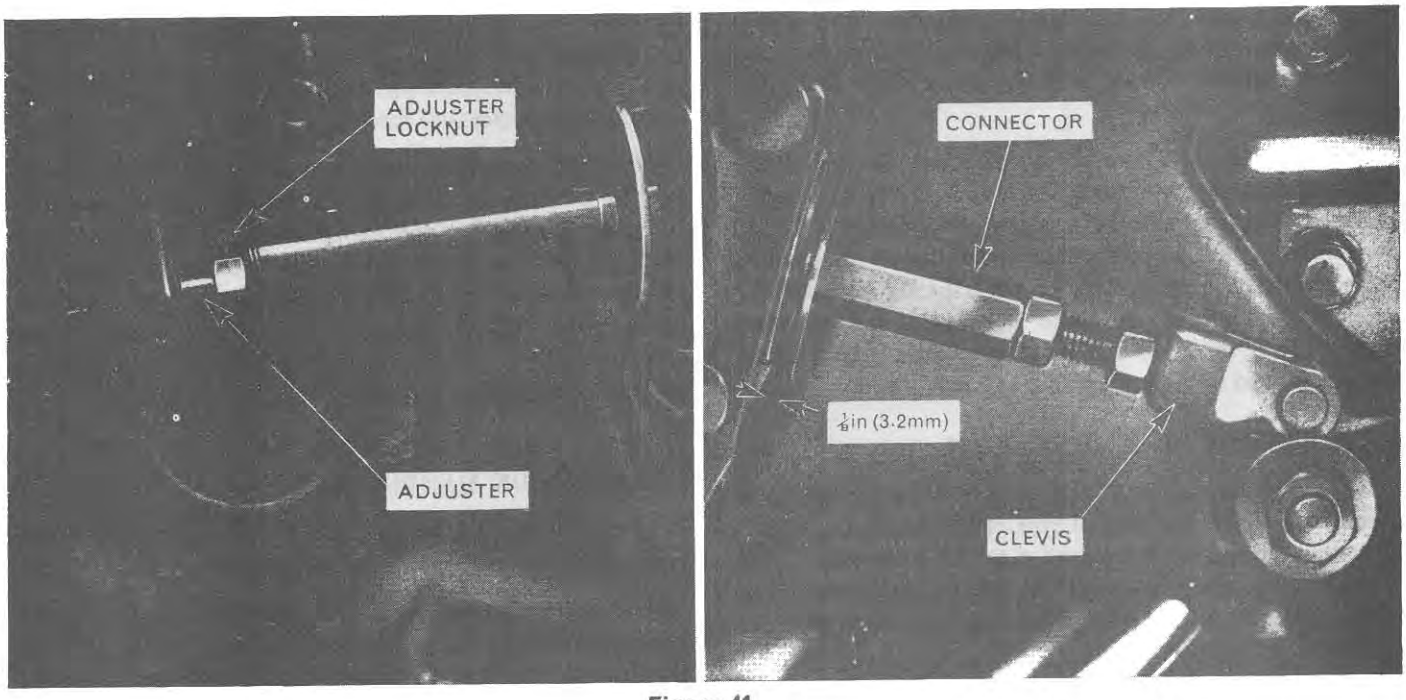

Major 4000 — Super Major 5000

Figure 41
Wheel Brake Adjustment

Super Major 5000:

1. With the pedals in the rest position, loosen the nut next to the connector and adjust the connector to position the disc on the connector ⅛ in. (3·2 mm) from the seal in the rear axle housing, Figure 41. Tighten the nut to the connector.
2. Hang a 45 pound (19·96 kg) weight on the right-hand brake pedal, loosen the nut next to the clevis and turn the connector to position the pedal 2½ in. (63·5 mm) below the left-hand pedal. Tighten the nut against the clevis.
3. Hang another 45 pound (19·96 kg) weight on the left-hand pedal and adjust the left linkage to position the left pedal level with the right pedal.

Major 4000:

1. With the pedals in the rest position, hang a 45 pound (19·96 kg) weight on the right-hand brake pedal.
2. Loosen the locknut on the pull rod and turn the adjusting nut next to the clevis, Figure 41, until the pedal is 2 in. (50·8 mm) below the left-hand pedal. Tighten the locknut.
3. Hang another 45 pound (19·96 kg) weight on the left-hand brake pedal and adjust the left linkage to position the left pedal level with the right pedal.

TRANSMISSION HANDBRAKE ADJUSTMENT

1. Release button and lower the handbrake lever until in the off position.
2. Using a screwdriver to prevent the operating rod from turning, Figure 42, rotate the locknut in a clockwise direction until the brake becomes solid.
3. Rotate the locknut in a counter-clockwise direction two turns to provide running clearance.

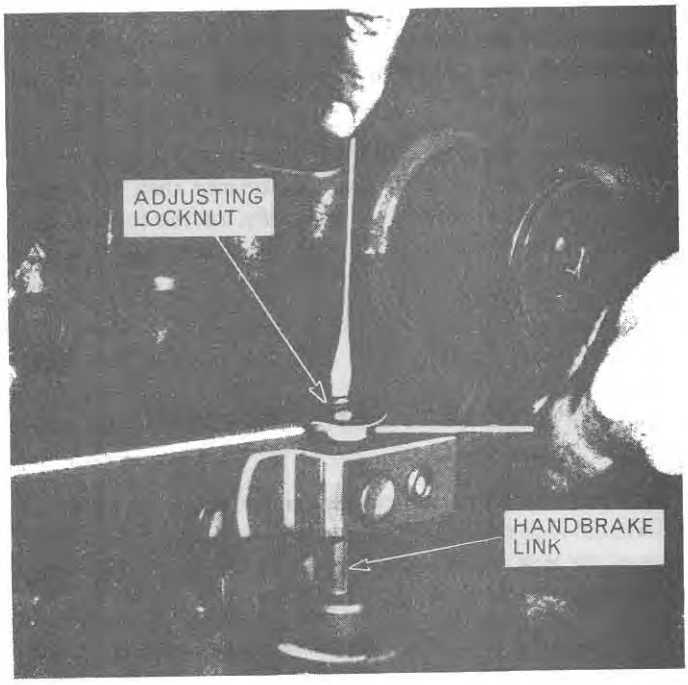

Figure 42
Transmission Handbrake Adjustment

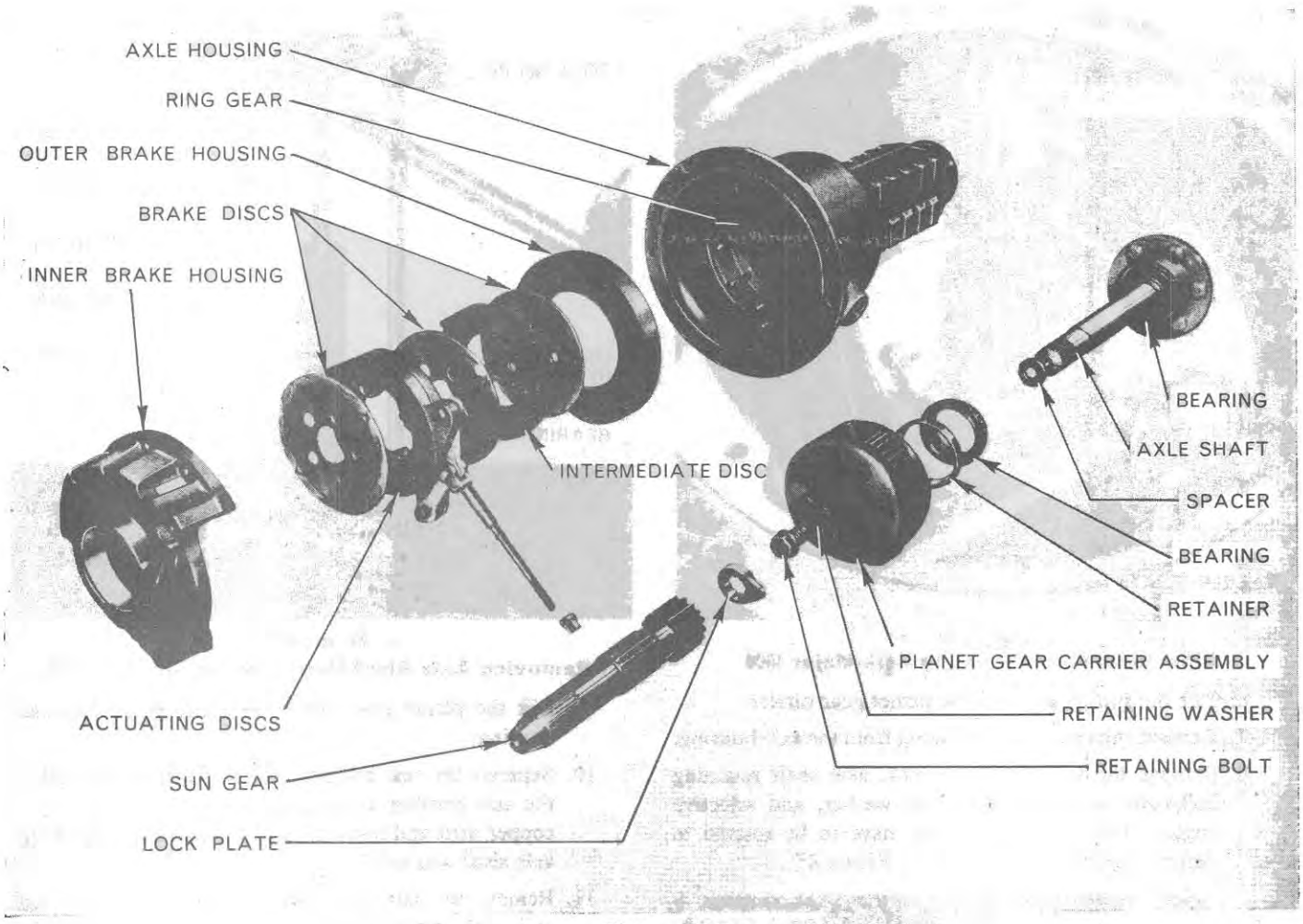

Figure 43
Exploded View of Major 4000 Axle Housing Assembly

3. OVERHAUL REAR AXLE SHAFT ASSEMBLY

To gain access to the rear axle, prior to disassembly, remove fenders and disconnect electrical wiring and brake linkages. Drain the oil from the rear axle centre housing.

A. Disassembly

1. Remove wheel weights if installed. Support the rear axle housing and remove the bolts which secure the rear axle housing to the centre housing. Separate the two assemblies and place the wheel on its side, on the floor, with the rear axle vertical. The wheel will now provide a solid base for all the rear axle work.
2. Remove the large rubber 'O' ring from the axle housing. Remove the differential assembly from the centre housing (left-hand side on Major 4000, right-hand side on Super Major 5000), to prevent the assembly falling and being damaged.
3. Remove the two bolts and lockwashers securing the differential ring gear thrust block to the axle housing and remove the thrust block.

Major 4000 only: With a differential lock installed when disassembling the right-hand axle housing, it will be necessary at this stage to remove the differential lock fork. This is done by loosening the differential lock fork screw and locknut and removing the differential lock lever shaft, Figure 44.

NOTE: ***From this stage both axle assemblies may be disassembled in similar manner.***

4. Remove the eight nuts that retain the inner disc brake housing assembly in the axle housing. Lift the brake housing out of the axle housing.
5. Remove the brake control rod fastener. Also remove the brake rod seal if damaged. To remove the seal, place a sharp tool between the seal flange and the rear axle housing and pry the seal out. Remove the brake disc assemblies, intermediate discs, and actuating disc assembly.

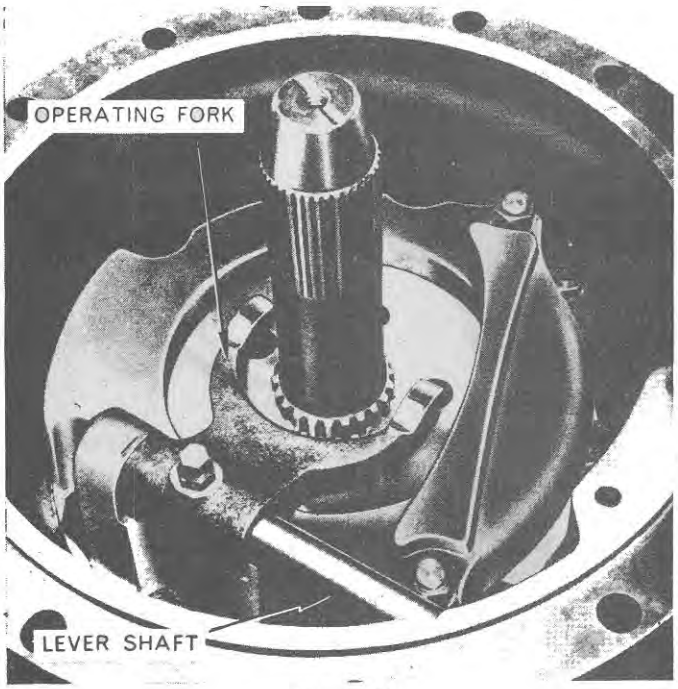

Figure 44
Differential Lock Operating Fork-Major 4000

6. Lift the sun gear out of the planet gear carrier.
7. Remove the outer brake housing from the axle housing.
8. Remove the axle shaft bolt lock, axle shaft retaining bolt/bolts, axle shaft retaining washer, and selective spacer. The planet gears may have to be rotated to permit removal of the bolt lock, Figure 45.

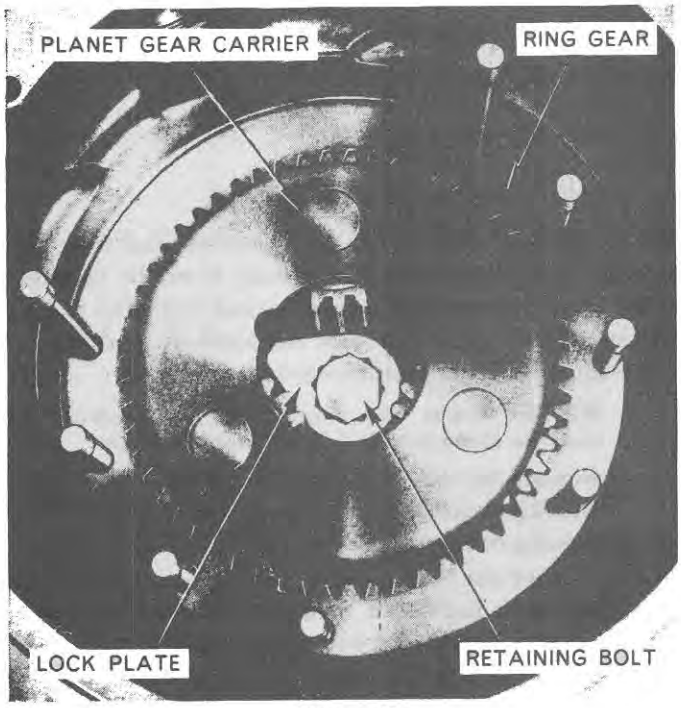

Figure 45
Axle Shaft Retaining Bolt—Major 4000

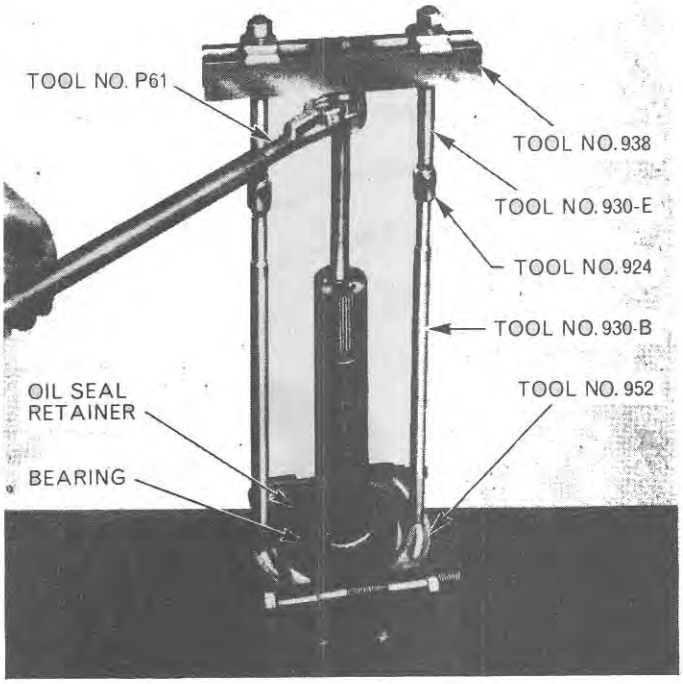

Figure 46
Removing Axle Shaft Outer Bearing and Oil Seal

9. Lift the planet gear carrier assembly out of the axle housing.
10. Separate the seal retainer, Figure 43, from the end of the axle housing, by tapping down the staking with a copper drift and hammer. Lift the axle housing off the axle shaft and wheel.
11. Remove the axle shaft cone and roller assembly, seal and seal retainer using Tool Nos. P61, 952, 938, 930 B & E, 924, Figure 46.

B. Inspection and Repair

1. Clean and inspect all parts and install new parts where worn or damaged.
2. If it is necessary to install a new axle shaft bearing cup, remove the cup from the housing using Tool Nos. 943 and 943-S, Figure 47.

C. Assembly

1. Position a new oil seal and retainer assembly on the axle shaft and place a new oil seal retainer gasket in the seal retainer. (If a new outer cone and roller assembly has to be installed, it will be necessary to remove the rear axle from the wheel assembly. After the outer cone and roller assembly has been installed, position the rear axle on the wheel.) Use a $2\frac{11}{16}$ in. (68·26 mm) I.D. and $3\frac{1}{8}$ in. (79·37 mm) O.D. sleeve of suitable length to install the new outer cone and roller assembly. Apply a coat of petroleum jelly to both the seal and cone and roller assembly prior to installation.

2. Install the axle housing on the axle shaft and, using a hammer and drift, stake the seal retainer to the housing in four equally spaced places.

3. Place the planet gear carrier assembly in the axle housing so that the planet gears mesh correctly with the planetary ring gear.

NOTE: ***It will be necessary at this stage to adjust the axle shaft bearing pre-load for which the following procedure should be adopted.***

a. Using the largest spacer available ·089 in. (2·261 mm), fit the spacer, retaining washer and tighten the axle shaft bolt/bolts.

b. Set up a dial indicator, as shown in Figure 48. It will be necessary to use an extended plunger on the dial indicator to enable a reading to be taken from the top of the axle shaft bolt/bolts.

c. Set the dial indicator to zero and lift the axle housing. This can be done by prying up against the outer surface of the axle housing. Lifting the housing will result in a reading on the dial indicator. This is the free movement between the inner and outer cone and roller assembly and their cups.

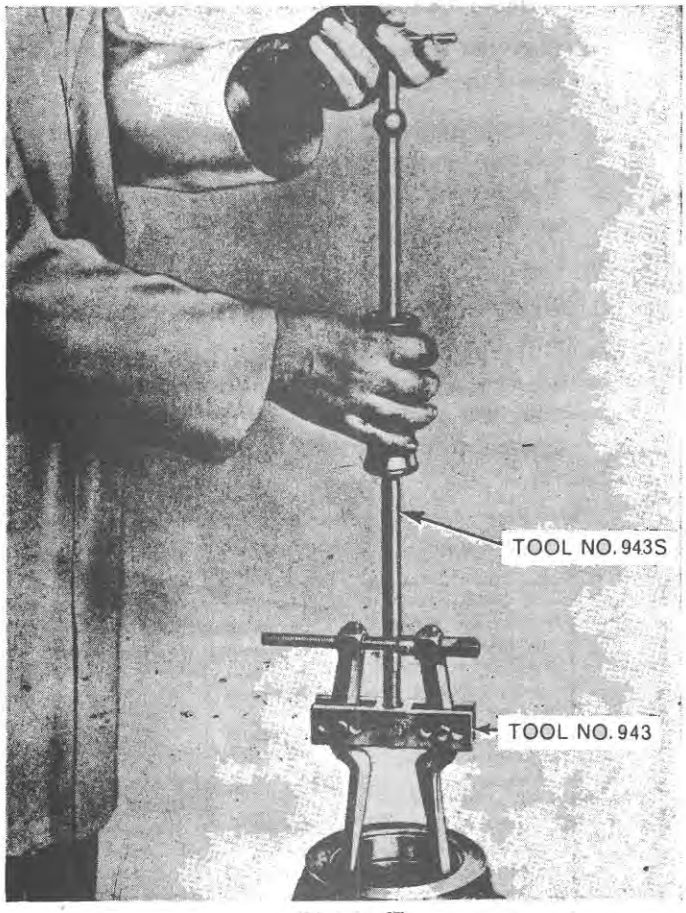

Figure 47
Removing Axle Housing Outer Bearing Cup

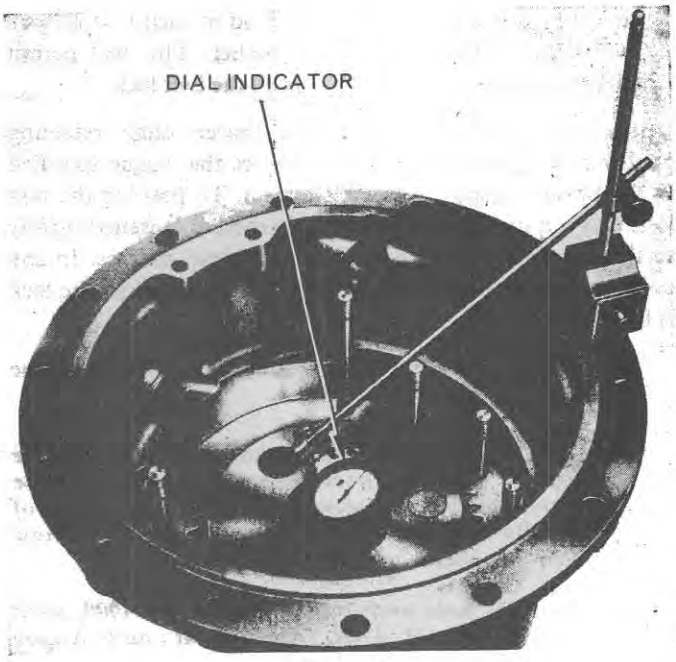

Figure 48
Checking Axle Shaft Bearing Pre-load

d. To determine the correct bearing pre-load the reading obtained should be subtracted from the spacer size fitted, i.e. 0·089 in. (2·261 mm), and with the resulting figure, from the table below, the correct spacer may be selected.

Example

SPACER FITTED 0·089 in. (2·261 mm)
READING OBTAINED 0·026 in. (0·660 mm)

RESULTANT FIGURE 0·063 in. (1·600 mm)

FROM TABLE BELOW THE CORRECT SPACER TO BE USED: 0·065 in. (1·651 mm).

RESULTANT FIGURE	SPACER TO BE FITTED
0·051–0·054 in. (1·295–1·371 mm)	0·053 in. (1·346 mm)
0·055–0·058 in. (1·397–1·472 mm)	0·057 in. (1·448 mm)
0·059–0·062 in. (1·499–1·575 mm)	0·061 in. (1·549 mm)
0·063–0·066 in. (1·600–1·676 mm)	0·065 in. (1·651 mm)
0·067–0·070 in. (1·702–1·778 mm)	0·069 in. (1·753 mm)
0·071–0·074 in. (1·803–1·880 mm)	0·073 in. (1·855 mm)
0·075–0·078 in. (1·905–1·988 mm)	0·077 in. (1·956 mm)
0·079–0·082 in. (2·007–2·083 mm)	0·081 in. (2·057 mm)
0·083–0·086 in. (2·108–2·184 mm)	0·085 in. (2·159 mm)
0·087–0·090 in. (2·210–2·286 mm)	0·089 in. (2·261 mm)

Super Major 5000: Install the selective spacer and reinstall the washer and bolts (washer should be installed with the 3 marks up). Tighten the bolts to the specified torque (see Specifications Section, Chapter 3). The bolts should be

tightened so that a point of the hex head of each bolt is lined up with one of the marks on the washer. This will permit installation of the shaft bolt lock. Install the bolt lock.

Major 4000: Position the selective spacer, shaft retaining washer and tighten the axle shaft bolt to the torque specified in the Specifications Section, Chapter 3. To position the bolt lock may require that the bolt be tightened or loosened *slightly* so that the lock notches will fit the bolt head corners. In any event make sure the bolt has the proper torque when the lock is installed.

4. Install the disc brake outer housing and brake torque pin.

NOTE: ***Prior to installing the sun gear and brake discs, it will be necessary to carry out the differential bearing pre-load adjustment if any of the following parts have been damaged and new parts installed.***

1. ***Rear axle housing (except Major 4000, with differential lock, right-hand and Super Major 5000 left-hand).***
2. ***Planetary ring gear.***
3. ***Outer brake housing.***
4. ***Inner brake housing.***
5. ***Rear axle centre housing (with and without differential lock).***

Two tools have been developed for checking the differential bearing pre-load and although these tools are similar in construction they differ slightly in application.

Depending upon the country concerned, either one or the other of these tools will be available and care should be taken to follow the correct procedure for the particular tool in use as detailed below.

IMPORTANT: ***Both tools are in fact precision finished gauges and great care should be taken not to damage or distort the component parts of the gauge as this will destroy its accurate function.***

Differential Bearing Pre-Load Adjustment using Tool No. SW 7.

Major 4000—Less Differential Lock Only: Prior to adjusting the differential bearing pre-load, it will be necessary to adjust the drive pinion to differential ring gear backlash. The adjustment should be carried out, using Tool No. SW 7, as follows:

a. Install the inner disc brake housing in the *right-hand* axle housing and secure with eight nuts.

b. Remove the differential bearing cup, together with the shim positioned behind it, from the inner disc brake housing. (Refer to Step 5, Section 6B).

c. Position the gauge ring Tool No. SW 7/b, in the inner disc brake housing ensuring that it seats correctly in the bearing cup recess.

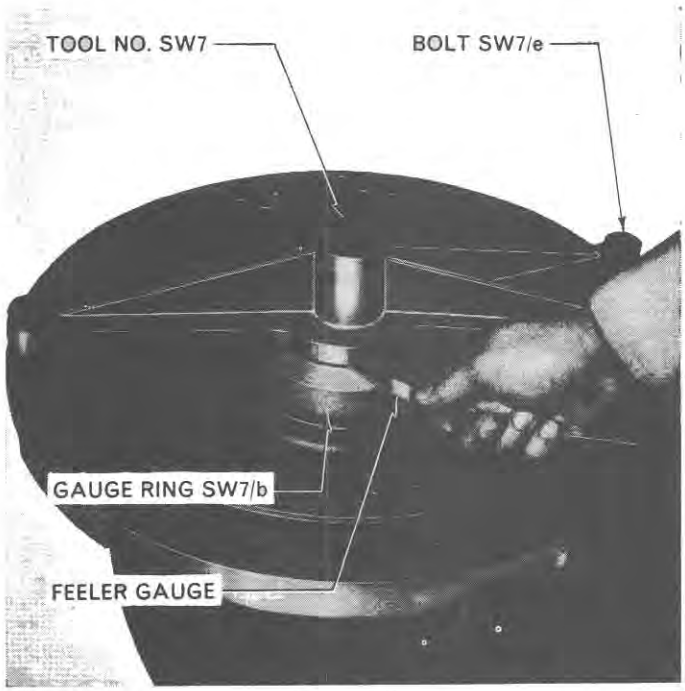

Figure 49
Checking Differential Bearing Pre-load Using Tool No. SW 7—Major 4000

d. Place the bridge bar, Tool No. SW 7/a, across the face of the axle housing.

e. Line up the pads of the bridge bar with three holes in the axle housing flange and, using the short bolts, Tool No. SW 7/e and nuts, bolt the bridge bar to the axle housing flange, Figure 49.

f. Using feeler blades measure the gap between the bridge bar and the gauge ring, Figure 49.

g. With the resulting gap reading the shim to be installed can be selected, from *table A* below. This shim will provide the required drive pinion to differential ring gear backlash.

Table A

GAP READING	PART NUMBER OF SHIM TO BE FITTED	SHIM THICKNESS
0·012–0·017 in. (0·305–0·432 mm.)	C5NN–4548–A	0·038–0·040 in. (0·965–1·016 mm.)
0·018–0·023 in. (0·457–0·584 mm.)	C5NN–4548–B	0·044–0·046 in. (1·118–1·168 mm.)
0·024–0·029 in. (0·610–0·737 mm.)	C5NN–4548–C	0·050–0·052 in. (1·270–1·321 mm.)
0·030–0·035 in. (0·762–0 889 mm.)	C5NN–4548–D	0·056–0·058 in. (1·422–1·473 mm.)
0·036–0·041 in. (0·914–1·041 mm.)	C5NN–4548–E	0·062–0·064 in. (1·575–1·626 mm.)
0·042–0·047 in. (1·067–1·194 mm.)	C5NN–4548–F	0·068–0·070 in. (1·727–1·778 mm.)
0·048–0·053 in. (1·219–1·346 mm.)	C5NN–4548–G	0·074–0·076 in. (1·880–1·930 mm.)
0·054–0·059 in. (1·372–1·499 mm.)	C5NN–4548–H	0·080–0·082 in. (2·032–2·083 mm.)

h. Remove the bridge bar and gauge ring from the axle housing.

i. Install the selected shim together with the differential bearing cup in the inner disc brake housing.

j. Remove the inner disc brake housing from the axle housing and build up the axle assembly as outlined in steps, 5, 6, 7, 8 and 9 of this section.

Differential Bearing Pre-load Adjustment—Major 4000: The procedure for using Tool No. SW 7 outlined above for the drive pinion to differential ring gear backlash, should be adopted for this adjustment. The adjustment however should be made to the shim in the *left-hand* inner disc brake housing and with the resulting gap reading the shim to be installed can be selected from *table A* above.

Differential Bearing Pre-load Adjustment— Super Major 5000: The same procedure for using Tool No. SW 7 should again be used. It will be necessary however, when bolting the bridge bar in position to use the spacers, Tool No. SW 7/d, and the long bolts, Tool No. SW 7/g to position the bridge bar at the correct height for a reading to be taken.

As differential lock is standard on the Super Major 5000 only one differential bearing, i.e. the right-hand, is shimmed. The adjustment, therefore, should be made to the shim positioned behind the cup in the *right-hand* inner disc brake housing and with the resulting gap reading the shim to be installed can be selected from *table A* above.

Differential Bearing Pre-load Adjustment using Tool No. SW 505.

Super Major 5000: Install the outer brake housing and inner brake housing making sure the mating surfaces are clean. Install and tighten the retaining nuts to the specified torque (see Specification Section, Chapter 3). Remove the differential bearing cup and shim from the inner brake housing using Bearing Cup Pulling Attachment No. 943 and Slide Hammer No. 943-S. Clean the axle housing mounting flange. Attach the three spacers to the Differential Bearing Preload Gauge No. SW 505 and position the gauge block on the tool centre post with the large diameter end down as shown in Figure 50. Place the Pre-load Gauge on the axle housing as shown in Figure 50. Measure the gap between the gauge block and tool, Figure 50, and select shim as specified in the following *table B*. Remove the tool, retaining nuts and inner brake housing. Place the selected shim in the inner brake housing and press the bearing cup into the inner brake housing against the shim.

NOTE: ***On Super Major 5000 Tractors with differential lock, the differential bearing pre-load adjustment must be completed on the right-hand axle assembly only.***

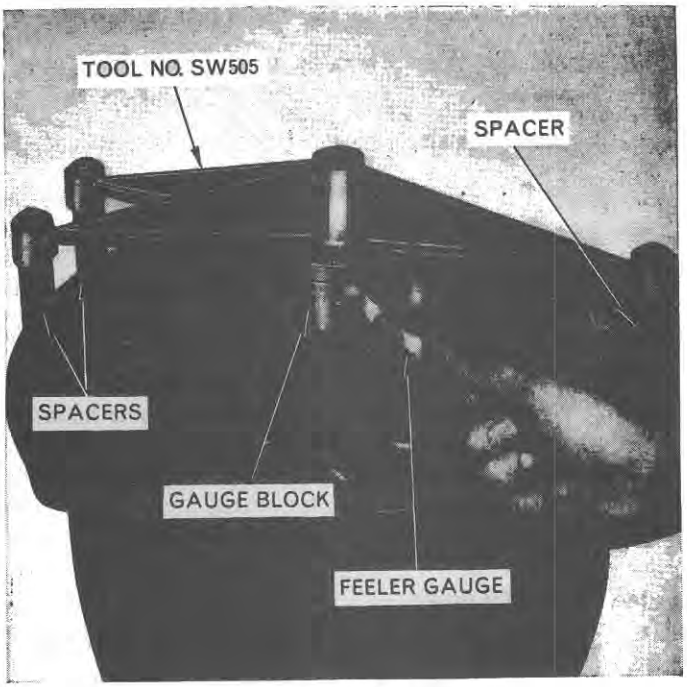

Figure 50
Checking Differential Bearing Pre-load Using Tool No. SW505—Super Major 5000

Major 4000: Follow the same procedure as for the Super Major 5000 with the following exceptions. Do not use the spacers and turn the gauge block over so the small diameter end is down.

NOTE: ***On Major 4000 Tractors less differential lock, the differential bearing pre-load adjustment must be completed on both axle assemblies. On Major 4000 Tractors with differential lock, the differential bearing pre-load adjustment must be completed on the left-hand axle assembly only.***

Table B

GAP READING	PART NUMBER OF SHIM TO BE FITTED	SHIM THICKNESS
0·037–0·042 in. (0·94–1·08 mm.)	C5NN–4548–A	0·038–0·040 in. (0·965–1·016 mm.)
0·043–0·048 in. (1·09–1·23 mm.)	C5NN–4548–B	0·044–0·046 in. (1·118–1·168 mm.)
0·049–0·054 in. (1·24–1·38 mm.)	C5NN–4548–C	0·050–0·052 in. (1·270–1·321 mm.)
0·055–0·060 in. (1·39–1·53 mm.)	C5NN–4548–D	0·056–0·058 in. (1·422–1·473 mm.)
0·061–0·066 in. (1·54–1·68 mm.)	C5NN–4548–E	0·062–0·064 in. (1·575–1·626 mm.)
0·067–0·072 in. (1·69–1·83 mm.)	C5NN–4548–F	0·068–0·070 in. (1·727–1·778 mm.)
0·073–0·078 in. (1·84–1·98 mm.)	C5NN–4548–G	0·074–0·076 in. (1·880–1·930 mm.)
0·079–0·084 in. (1·99–2·13 mm.)	C5NN–4548–H	0·080–0·082 in. (2·032–2·083 mm.)

5. Position the sun gear in the planet gear carrier.
6. Install the brake assembly in the following order, Figure 43.
   a. Brake disc assembly.
   b. Intermediate disc with notch on the torque pin.
   c. Brake disc assembly.
   d. Brake actuating disc assembly with the control rod passing through the brake control rod seal assembly. Position the notch over the torque pin. If the brake control rod seal assembly has been removed, install a new seal by tapping it into the rear axle housing and locking the seal in the annular groove on the brake control rod. Secure a new control rod fastener.
   e. Brake disc assembly.

Super Major 5000 only:

   f. Intermediate plate with notch on the torque pin.
   g. Brake disc assembly.

NOTE: ***Prior to installing the inner disc brake housing, make sure the intermediate discs and actuating disc assembly are properly centred. This will permit easier installation of the housing.***

7. Install the inner disc brake housing and secure with eight nuts and tighten the nuts to the torque indicated in the Specifications Section, Chapter 3.
8. Position the differential ring gear thrust block and secure with two bolts and lockwashers. Fit a new rubber sealing ring on the axle housing.

Major 4000 only: When reassembling the right-hand axle housing it will be necessary at this stage to fit the differential lock fork and differential lock lever. Tighten the screw and lock nut.



Figure 51

Fitting Brake Actuating Discs

9. Position the differential assembly in the rear axle centre housing, install the axle housing and wheel assembly and secure to the rear axle centre housing. See Specifications Section, Chapter 3, for bolt torque.

   Install fenders and connect electrical wiring and brake linkages. Install wheel weights if removed and fill rear axle with lubricant, to the capacity shown in the Specifications Section, Chapter 3.

4. OVERHAUL PLANETARY GEAR ASSEMBLY AND AXLE HOUSING

Complete disassembly steps 1–9 of Section 3A 'Overhaul Rear Axle Shaft Assembly'. Disassemble the planet gear carrier as follows:

A. Disassembly

1. The three planet gear shafts, the inner cone and roller assembly and the gear shaft retainer may be removed at the same time. Place the carrier and gear assembly with the bearing in the lowermost position on the press.
2. Position three pieces of metal, 1·5 in. (38·1 mm) in length and 1 in. (25·4 mm) dia., one on each gear shaft and using a suitable steel plate across the top, press out the shafts, which will in turn push off the retainer and cone and roller assembly, Figure 52.
3. Remove the gears and thrust washers from the carrier.
4. Remove the needle bearings and bearing spacers from the bores of the gears, Figure 53.

B. Inspection and Repair

1. Thoroughly clean and inspect all parts and install new parts where worn or damaged.

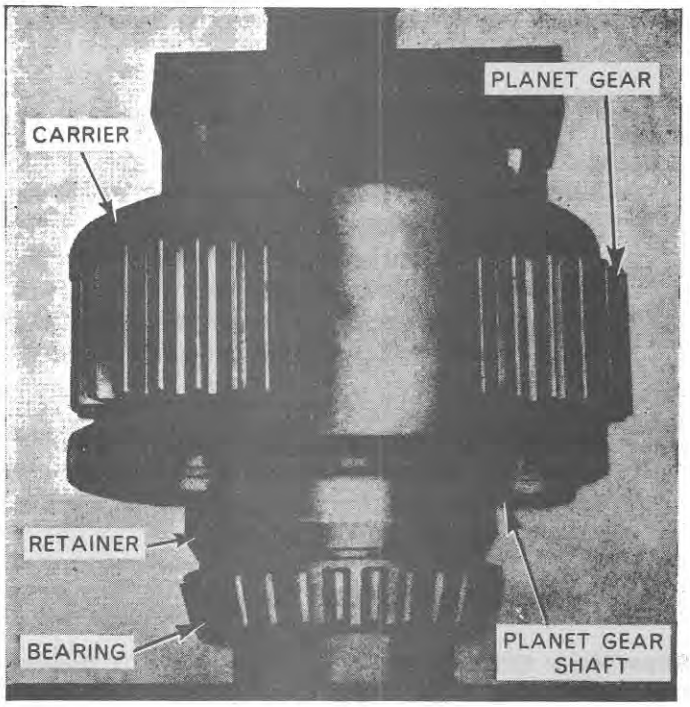

Figure 52

Removing Axle Housing Inner Bearing

2. If it is necessary to install a new inner bearing cup, remove the cup from the axle housing using Tool Nos. 943 and 943-S and install a new cup.

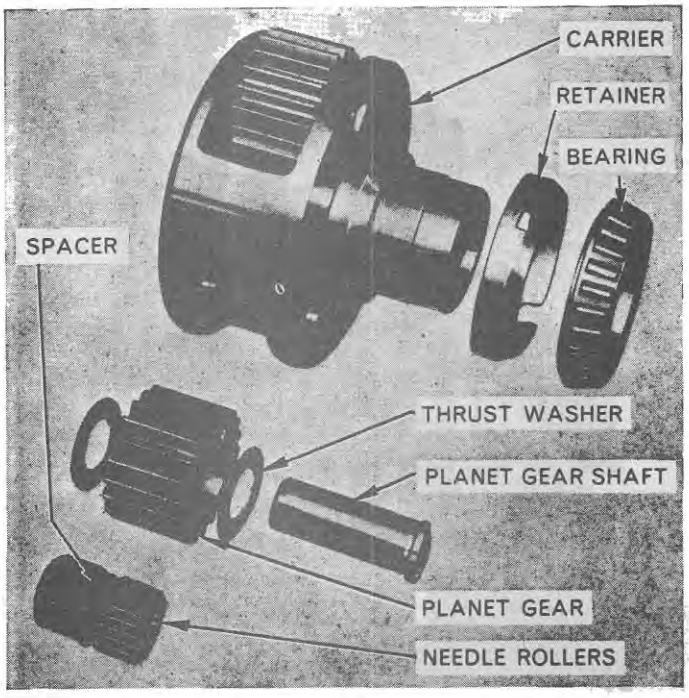

Figure 53

Exploded View of Planet Gear Carrier Assembly

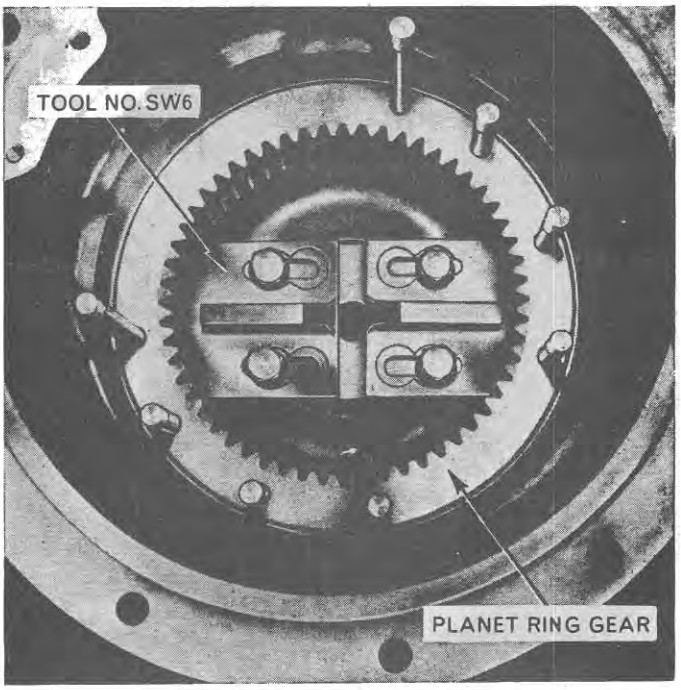

Figure 54(A)

Removing Planetary Ring Gear

3. If it is necessary to install a new planetary ring gear proceed as follows:

   a. Remove the axle housing from the axle shaft and wheel assembly. (See Section 3A, Step 10.)

   b. Position Tool No. SW 6 behind the ring gear, expand the movable plates and tighten the four locknuts, Figure 54(A), or use Tool No. SW6-48(56) behind the ring gear and tighten the retaining nuts, Figure 54(B).

   c. Place the axle housing on a press beam with the large end down. Insert a bar of suitable length into the small end of the housing and place one end of the bar against Tool No. SW 6 or SW 6-48(56). Position the other end of the bar under the press ram and press out the ring gear.

   d. Position a new ring gear in the axle housing, ensuring that the studs in the housing are aligned with the holes in the ring gear.

   e. Place the axle housing on a press beam with the large end up. Position special Tool No. SW 6 or SW 6-48(56) on the ring gear, Figure 54(C), and press the ring gear into the housing. Make sure the ring gear does not cock and that the housing shoulder and ring gear are clean.

   f. To ensure that the ring gear is seated correctly, check with a feeler blade, that there is no gap between the base of the ring gear and the axle housing shoulder.

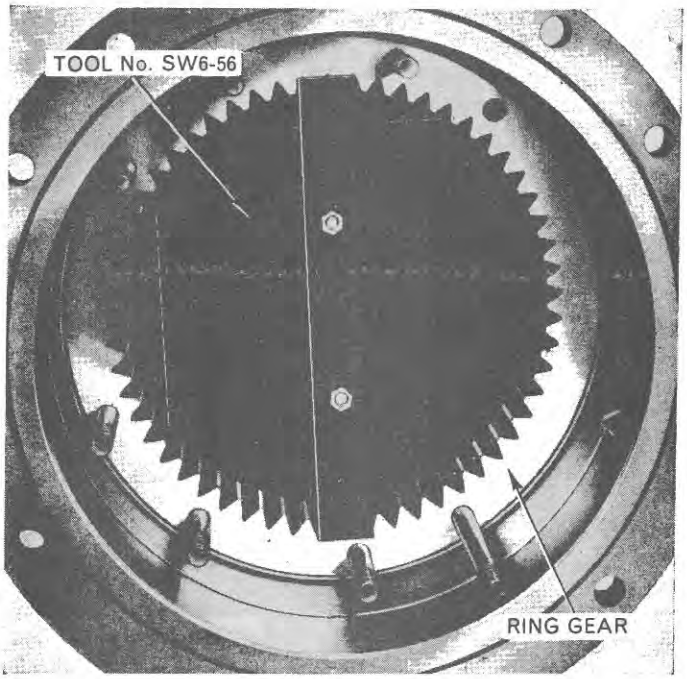

Figure 54(B)
Removing Planetary Ring Gear

C. Assembly

Super Major 5000: Coat the bores of the planet gears with grease and position twenty-nine needle bearings in one end of the bore. Install a spacer at the centre of the bore and position the remaining twenty-nine needle bearings at the other end of the bore.

Major 4000: Install sixteen needle bearings either side of the spacer.

1. Place a grease coated thrust washer on each side of the planet gear. Position the carrier housing on a flat surface with the bearing end up. Place the gear and the thrust washers in the carrier housing so that the bores of the gear and washers are in line with one of the carrier housing bores. Complete this procedure for all three planet-gears.

2. Insert all three planet gear shafts in the carrier housing bores. Make sure the flat portion of the shaft head is positioned toward the centre of the carrier housing and press in the three shafts, Figure 55.

3. Install the planet gear shaft retainer.

Super Major 5000: Using a $3\frac{13}{16}$ in. (96·83 mm) I.D. hollow sleeve of suitable length, press the inner cone and roller assembly onto the carrier.

Major 4000: Place the carrier assembly in a press and using a $3\frac{5}{16}$ in. (84·1 mm) I.D. hollow sleeve of suitable length, press the inner cone and roller assembly on the carrier housing.

Carry out steps 3–9 of Section 3C, 'Overhaul Rear Axle Shaft Assembly', to install the planet gear carrier in the tractor.

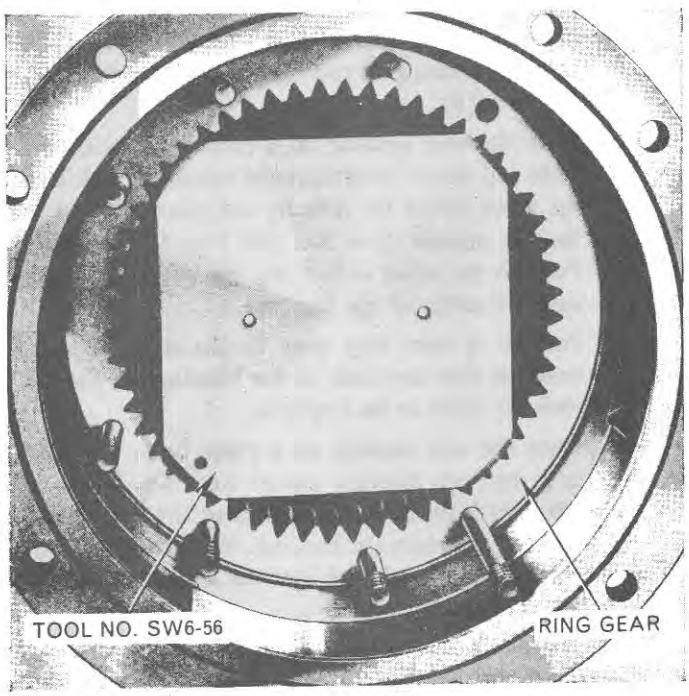

Figure 54(C)
Replacing Planetary Ring Gear

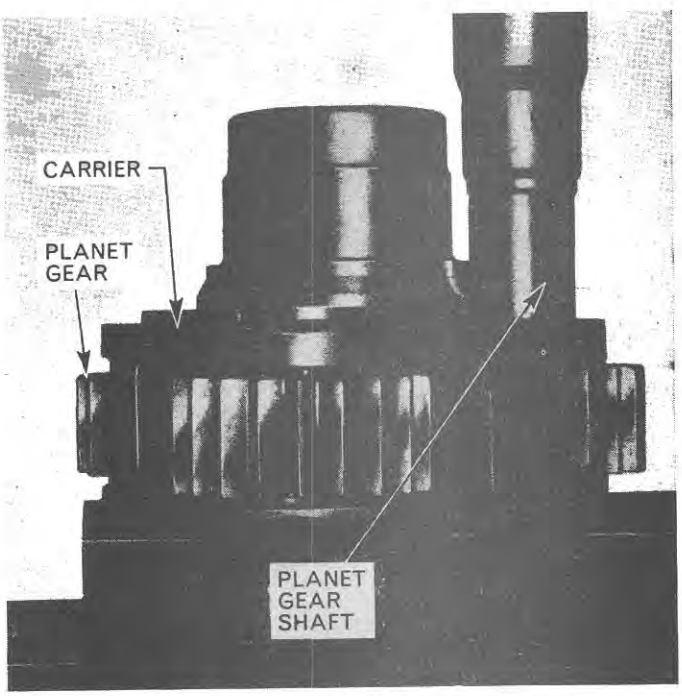

Figure 55
Fitting Planet Gear Shafts

5. OVERHAUL DISC BRAKE ASSEMBLY

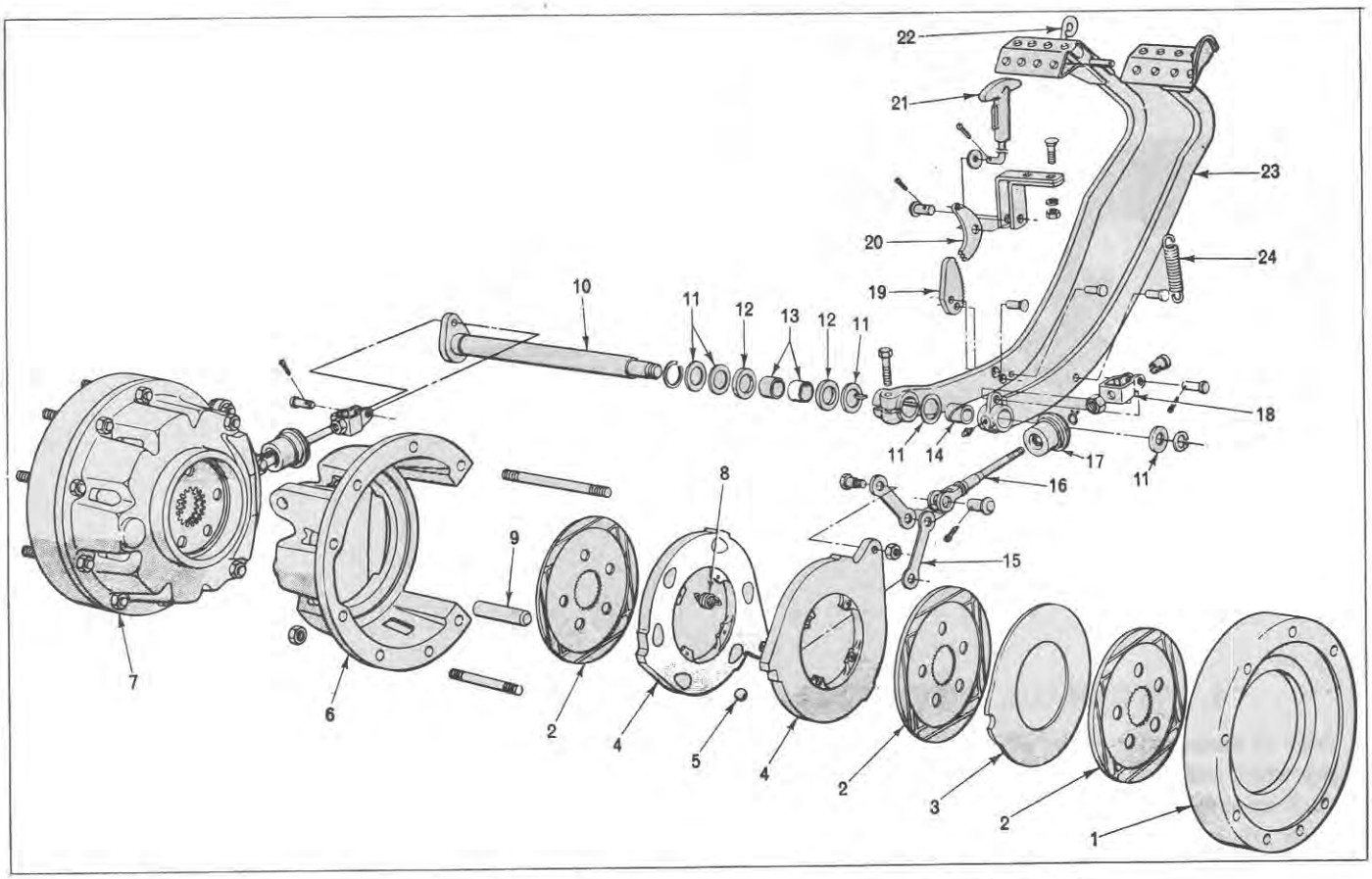

1 Brake Outer Housing
2 Brake Disc
3 Brake Intermediate Disc
4 Brake Actuating Disc
5 Actuating Disc Ball
6 Brake Inner Housing
7 Brake Assembly
8 Actuating Disc Return Spring
9 Torque Pin
10 Brake Pedal Shaft
11 Brake Shaft Washer
12 Brake Shaft Seal
13 Brake Shaft Bushing
14 Brake Pedal Bushing
15 Actuating Disc Link
16 Brake Control Rod
17 Brake Rod Seal
18 Pull Rod Clevis
19 Brake Pedal Sector
20 Parking Brake Lever Pawl
21 Parking Brake Rod
22 Brake Pedal Locking Pin
23 Brake Pedal
24 Brake Pedal Return Spring

Figure 56
Exploded View of Major 4000 Braking System

Complete steps 1–5 of Section 3A 'Overhaul Rear Axle Shaft Assembly'. Disassemble the actuating disc assembly as follows:

A. Disassembly and Inspection

1. Detach the disc brake control rod and actuating links by removing their respective cotter pins and clevis pins, Figure 56.
2. Remove the four actuating disc return springs and separate the actuating discs, Figure 57.
3. Remove the six steel balls.
4. Inspect all parts removed and install new parts if necessary. This should include the outer brake housing. Complete Steps 6 and 7 of Section 3A if the outer housing must be removed.

B. Assembly

1. To reassemble, lay one actuating disc with its inner face up and locate the steel balls in their ramped seats, Figure 57.

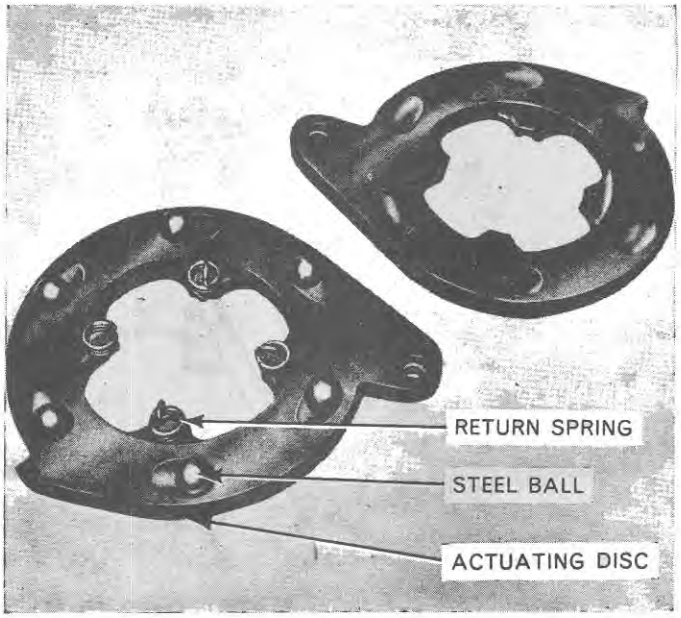

Figure 57
Brake Actuating Discs

2. Position the other actuating disc on the steel balls so that the two actuating disc lugs are approximately 1 in. (25·4 mm) apart.
3. Install the four actuating disc return springs. Be sure that they are located correctly in the lugs on the inner edge of the actuating discs.
4. Install the links and control rod using the pins new locknuts and new cotter pins. Do not over tighten the locknuts.

Complete steps 6–9 of Section 3C 'Overhaul Rear Axle Shaft Assembly'. Also complete Step 6 if the outer brake housing has been removed.

6. OVERHAUL DIFFERENTIAL AND DIFFERENTIAL LOCK ASSEMBLY

Prior to disassembly of the differential remove the appropriate wheel and fender and disconnect electrical wiring and brake linkage to gain access to the rear axle. Drain the oil from the rear axle centre housing.

A. Disassembly

Super Major 5000: Remove the right-hand axle housing from the rear axle centre housing.

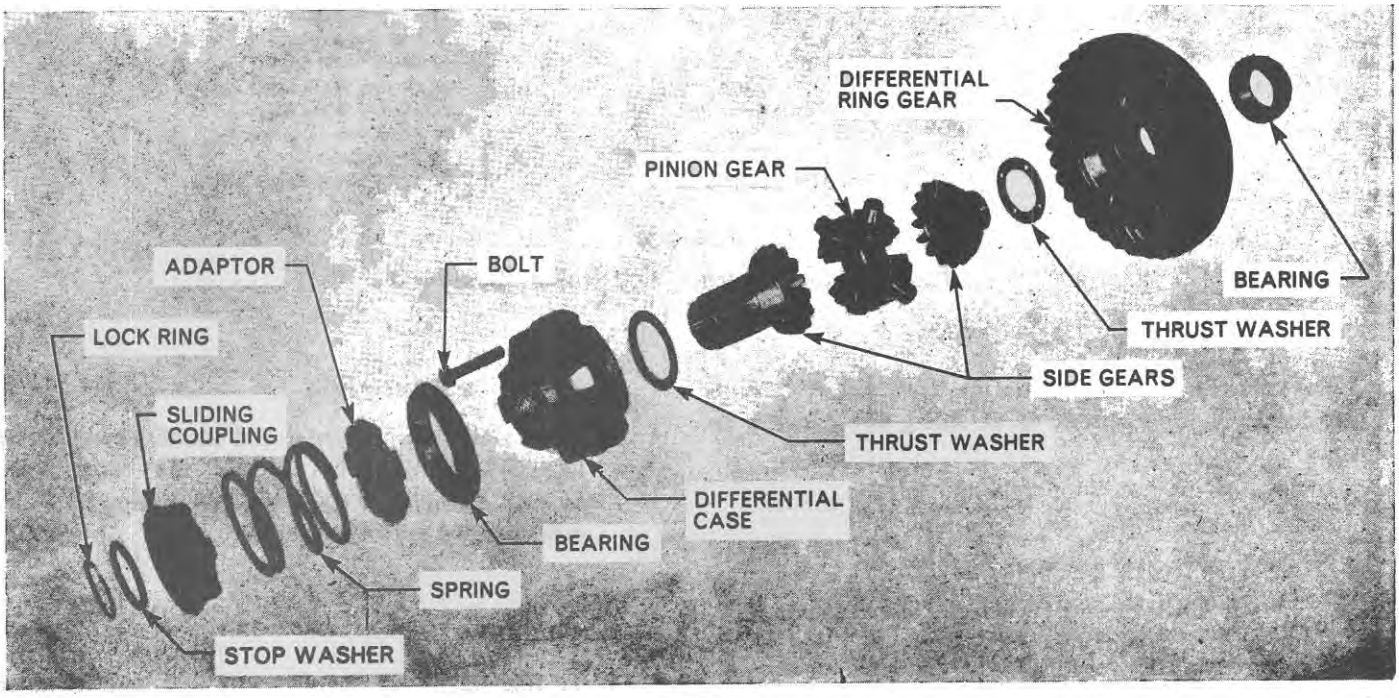

Figure 58
Exploded View of Differential Assembly

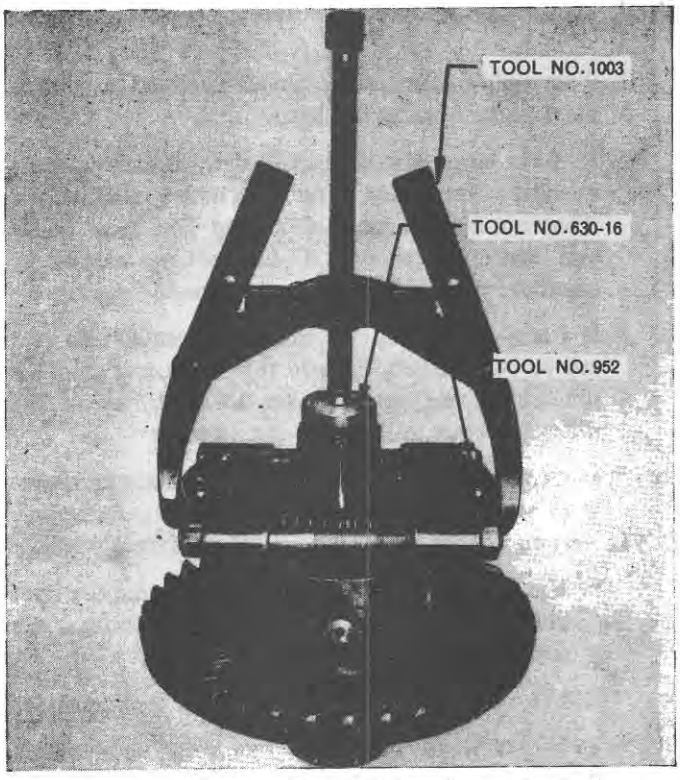

Figure 59
Removing a Differential Bearing

Major 4000: Remove the left-hand axle housing from the rear axle centre housing.

Remove the differential from the rear axle centre housing.

1. If a differential lock is fitted, remove the lock ring retaining the sliding coupling to the side gear. Remove the stop washer, sliding coupling, coupling spring and gear case adaptor, Figure 58.
2. Mark the two halves of the differential case so that they may be assembled in the same relative position, extract the lock wire and remove the bolts. If a differential lock is fitted it will be necessary to gradually remove the bolts at the same time lifting the case. The cone and roller assembly will prevent individual bolts from being removed.
3. Separate the two halves of the differential case.
4. Remove the thrust washer, side gear, spider and pinion assemblies, side gear, and thrust washer.

Super Major 5000: If it is necessary to remove the left-hand cone and roller assembly, Tool Nos. 952, 1003, 630-16 will be suitable, Figure 59.

The right-hand cone and roller assembly may be removed with Tool Nos. 952, 1003, 630-10. Removal is similar to that shown in Figure 59.

Major 4000: If it is necessary to remove the right-hand cone and roller assembly on tractors fitted with a differential lock, Tool Nos. 952, 1003, 630-16 will be suitable, Figure 59.

The left-hand cone and roller assembly on all tractors and the right-hand bearing on tractors without differential lock may be removed with Tool Nos. 952, 1003, 630-10.

Super Major 5000: To overhaul the differential lock operating linkage, proceed as follows:

a. Remove the two bolts securing the pedal and hanger assembly to the rear axle centre housing. Remove the pedal.

b. Pull the differential lock sleeve and operating rod assembly from the centre housing.

c. Remove the operating rod oil seal shield and inspect the seal. Install a new seal if damaged.

d. To inspect the differential lock operating fork it is necessary to remove the left-hand axle housing assembly. (Refer to Section 3 'Overhaul Rear Axle Shaft Assembly'.)

e. To reassemble, install the operating rod oil seal shield and replace the operating rod assembly in the rear axle centre housing.

f. Position the pedal and hanger assembly and secure with two bolts and lockwashers. Tighten to the specified torque. (See Specifications Section, Chapter 3.)

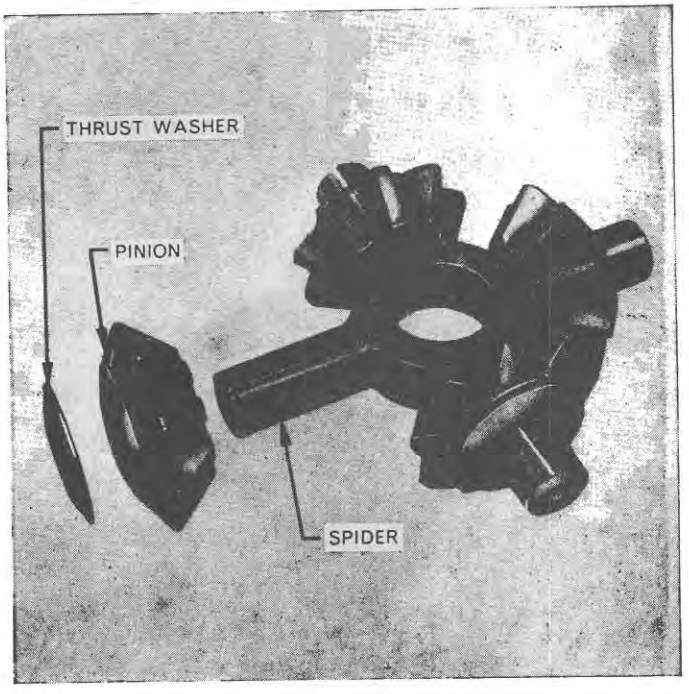

Figure 60
Differential Spider and Pinions

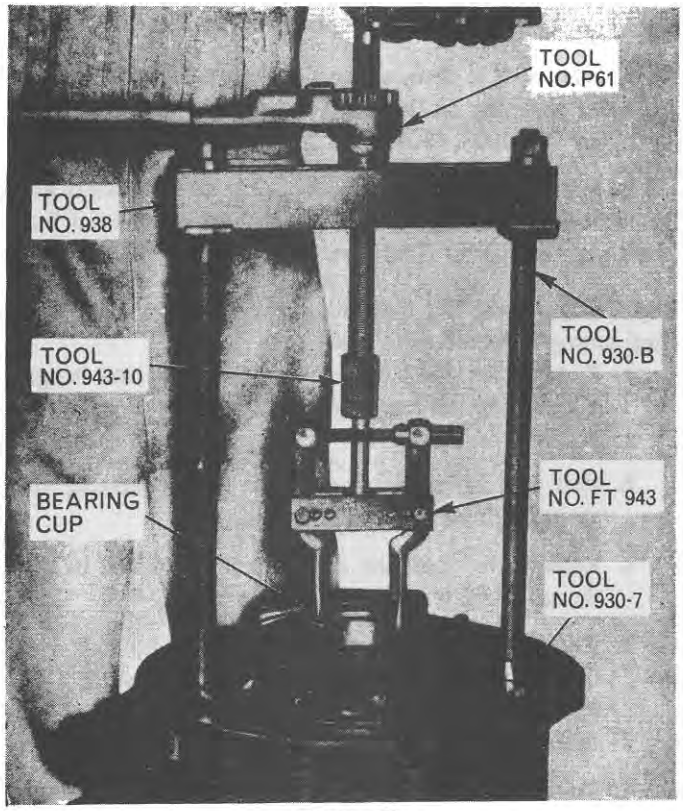

Figure 61

Removing Bearing Cup from Inner Brake Housing

B. Inspection and Repair

1. Thoroughly clean and inspect all parts and install new parts where worn or damaged.
2. If it is necessary to install new differential case bushings, they should be removed with a suitable drift. They can both be assembled using Tool Nos. T4087 and either 550 or 815. These bushings should be inserted from the inside face of the case.
3. If a new differential case and/or differential ring gear are to be installed, remove the rivets retaining the differential ring gear to the left-hand half of the differential case in the following manner:
   a. Centre punch either end of the retaining rivets. (The upset end is more accessible.) Be sure the hole is punched as near the centre of the rivet as possible.
   b. Use a $\frac{1}{2}$ in. (12·7 mm) drill and drill into the rivet until the upset end or head breaks free from the rivet shank.
   c. Use a suitable punch and punch out the remainder of the rivet.
   d. Assemble the new differential ring gear and/or left-hand differential case with replacement bolts and nuts. Be sure the ring gear does not cock on the differential case pilot. Tighten the nuts to torque specified in the Specification Section, Chapter 3.

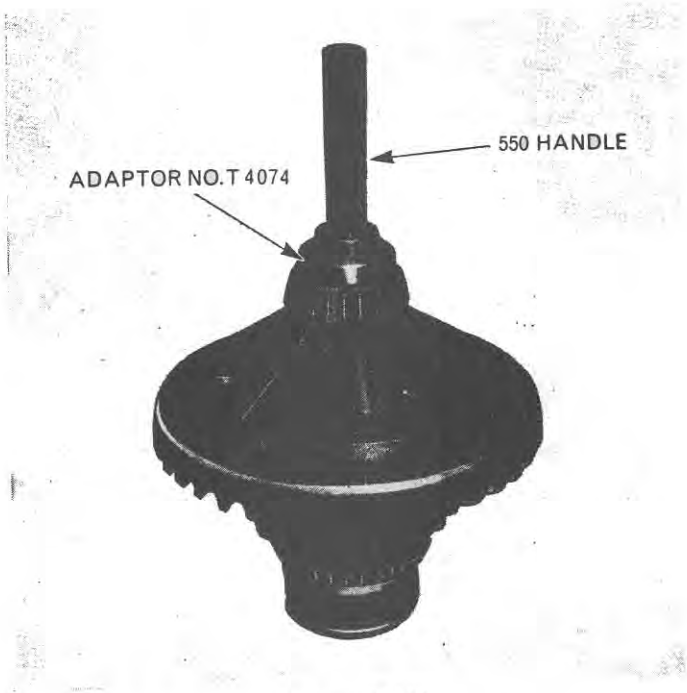

Figure 62(A)

Replacing a Differential Bearing

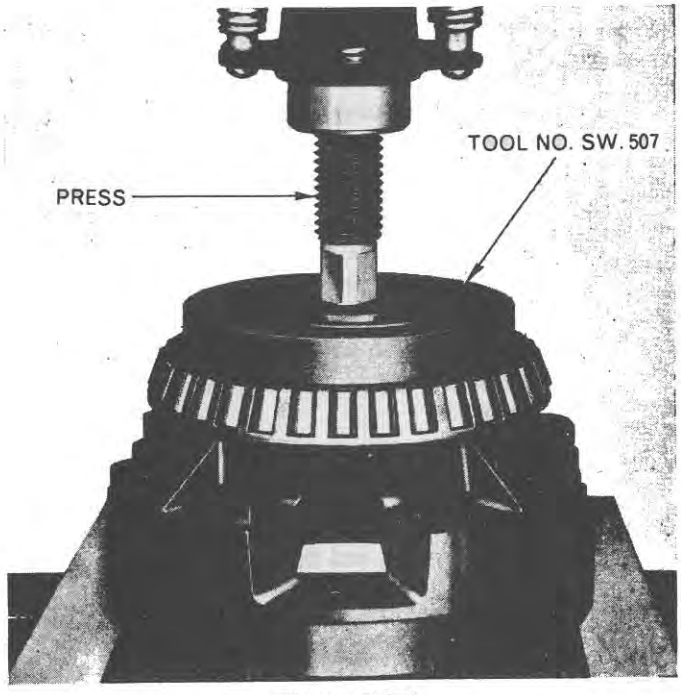

Figure 62(B)

Replacing a Differential Bearing

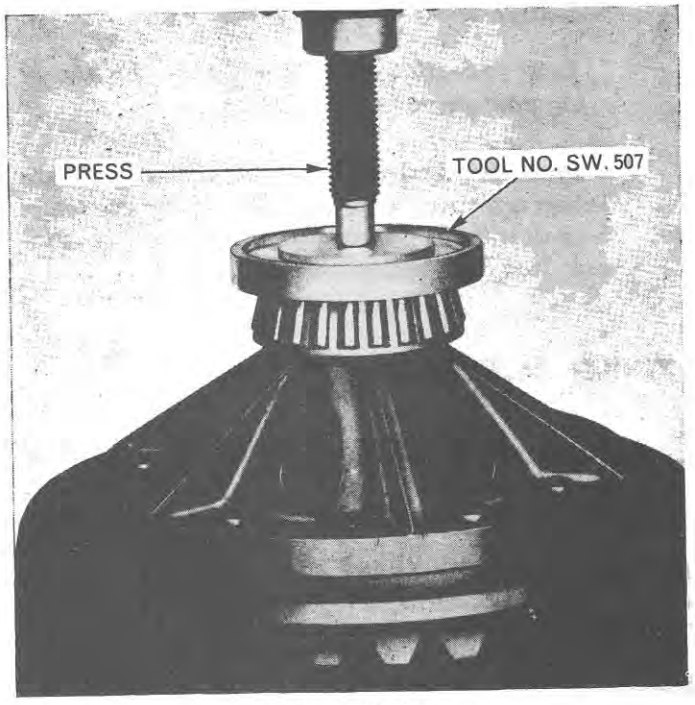

Figure 62(C)
Replacing a Differential Bearing

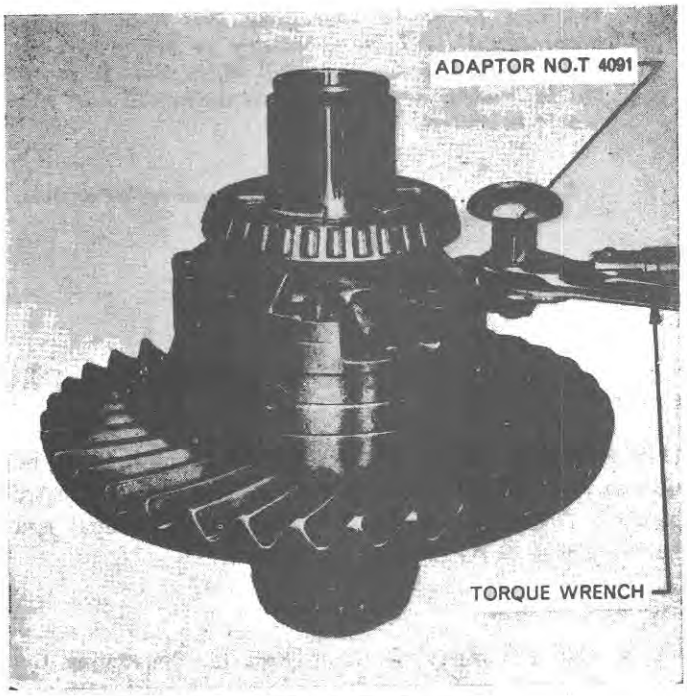

Figure 63
Tightening Differential Case Bolts

NOTE: ***If a new differential ring gear has been installed, a new drive pinion must also be fitted. This should be carried out as outlined in Section 7, 'Overhaul Drive Pinion Assembly'.***

4. When differential lock is fitted, the bearing cup in the rear axle centre housing can be removed using Tool Nos. 943 and 943-S.

5. If it is necessary to install a new bearing cup in the inner disc brake housing use Tool Nos. P.61, 930-B1, FT-943, 943-10, 938, 930-7, to remove the cup, Figure 61. It should be noted that a shim is positioned behind this cup.

C. Assembly

Super Major 5000: Insert the eight retaining bolts in the holes in the left-hand half of the differential case and install the left-hand cone and roller assembly, using Tool Nos. T4088 and 550 or SW 507 (two groove side up) with a press, Figure 62 (B).

Major 4000: Insert the eight retaining bolts in the holes in the right-hand half of the differential case and install the right-hand cone and roller assembly. Use Tool Nos. T4074 and 550 or SW 507 (single groove side up) with a press, for installing the cone and roller assembly on tractors less differential lock; use Tool Nos. T4088 and 550 or SW 507 (two groove side up) with a press, Figure 62(B), on tractors with differential lock.

Super Major 5000: Install the right-hand cone and roller assembly using Tool Nos. T4074 and 550, Figure 62(A), or SW 507 (single groove side up) with a press, Figure 62(C).

Major 4000: Install the left-hand cone and roller assembly using Tool Nos. T4074 and 550, Figure 62A, or SW 507 (single groove side up) with a press. Coat all bearings with petroleum jelly prior to installation.

1. Place the ring gear half of the case on the bench and install a side gear thrust washer and side gear. Assemble the pinions and thrust washers to the spider and locate in the differential case. Locate the remaining side gear and thrust washer on top of the assembly.

2. Assemble the two halves of the differential case lining up the mating marks placed on the left-hand and right-hand halves of the case before disassembly.

3. Tighten the retaining bolts to the specified torque. (See Specification Section, Chapter 3.) On assemblies with a differential lock use special adaptor, Tool No. T4091, or similar crow foot adaptor, to enable a torque wrench to be used with the bearing in position, Figure 63.

4. Lubricate the assembly and turn the gears to check freedom of movement. Lock the heads of the bolts with wire.

5. Install the differential lock gear case adaptor, coupling spring, sliding coupling and stop washer and retain with a new lock ring.

6. Position the differential assembly in the rear axle centre housing.

NOTE: ***Prior to installing the axle housing assembly it will be necessary to carry out the differential bearing pre-load adjustment if any of the following parts have been damaged and new parts installed.***

1. ***Rear axle differential cone and roller assemblies and cups.***
2. ***Differential cases.***
3. ***Differential ring gear and drive pinion.***

Refer to Section 3C, Step 4 (NOTE) for checking procedure.

Install the wheel and fender and connect the brake linkage and electrical wiring. Refill the rear axle centre housing with the correct quantity and grade of lubricant. (See Specifications Section, Chapter 3.)

7. OVERHAUL DRIVE PINION ASSEMBLY

Prior to disassembling the drive pinion assembly it will be necessary to remove the differential from the rear axle centre housing. (Refer to Section 6, 'Overhaul Differential and Differential Lock Assembly'.)

A. Disassembly

1. Split the tractor (refer to Part 15, 'Separating the Tractor'), and remove the hydraulic lift cover assembly. (Refer to Part 11, 'Hydraulic Systems', Chapter 1—Major 4000, Chapter 2—Super Major 5000.)
2. Remove the hydraulic pump and filter from the centre housing. (Refer to Part 11, 'Hydraulic Systems', Chapter 4.) Remove the handbrake assembly if fitted.

Major 4000—Independent P.T.O.: Remove the P.T.O. clutch housing and connecting pipes. (Refer to Part 9, 'Power Take-Off', Chapter 2.)

Major 4000—Transmission P.T.O.: Remove the P.T.O. shifter mechanism. (Refer to Part 9, 'Power Take-Off', Chapter 1.)

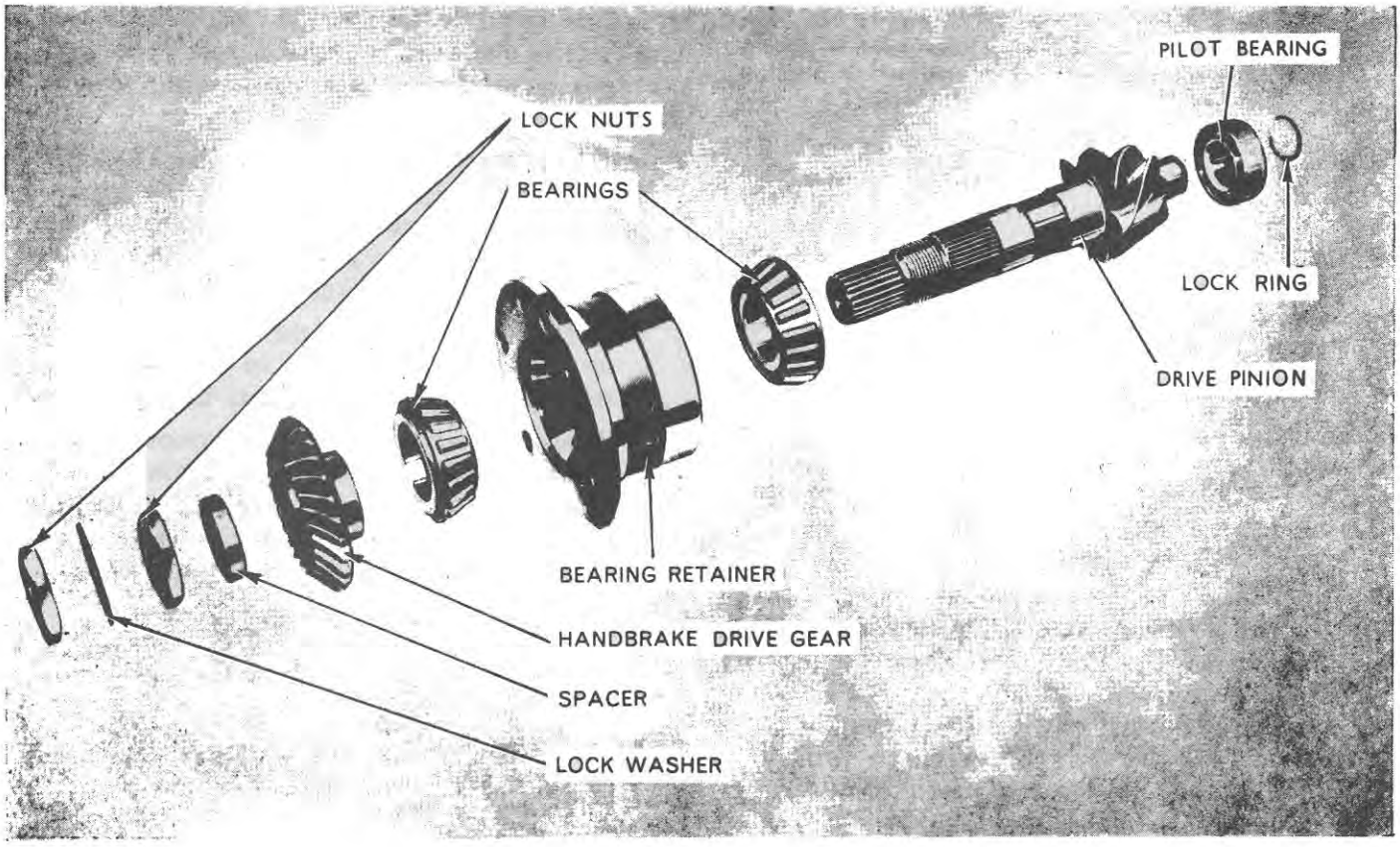

Figure 64
Exploded View of the Major 4000 Drive Pinion Assembly

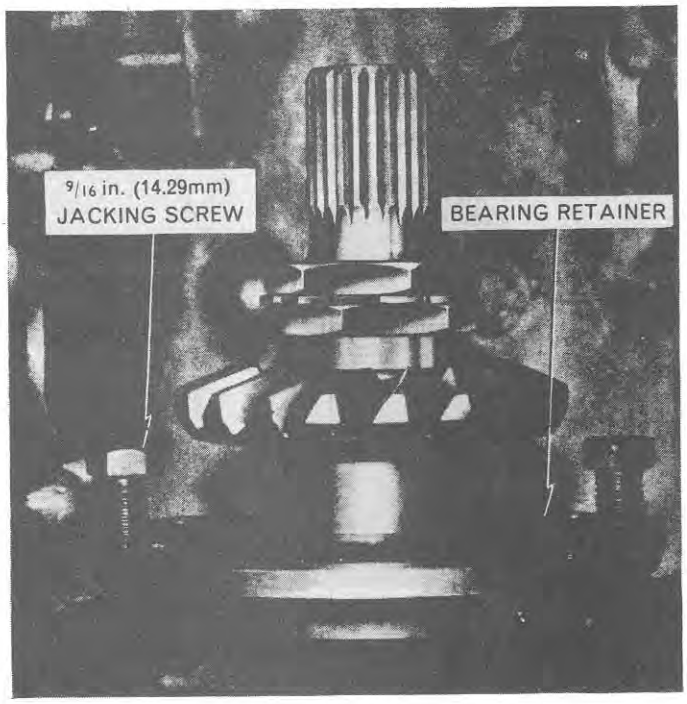

Figure 65
Removing Drive Pinion Assembly

3. Remove the six bolts and lockwashers securing the drive pinion assembly to the rear axle centre housing and using two $\frac{9}{16}$ in. N.C. bolts as jacking screws remove the drive pinion assembly, Figure 65.

4. Place the drive pinion assembly in a vice. Using a chisel, remove the lock nut washer tabs. Remove the lock nut, lock nut washer, and pre-load adjusting nut. Tool No. T4094 or N-4634-A or equivalent is required to remove the nuts.

5. Slide off, if fitted, the spacing collar and the drive brake gear.

   NOTE: ***On tractors less handbrake, a thrust washer is positioned on the pinion shaft, instead of the drive brake gear.***

6. Remove the drive pinion cone and roller assemblies and pinion from the bearing retainer assembly.

7. Remove the lock ring from the rear end of the pinion gear and using Tool Nos. 1002 and 951 pull the pilot bearing off the pinion gear, Figure 66.

B. Inspection and Repair

1. Thoroughly clean and inspect all parts and install new parts where worn or damaged.

2. If it is necessary to install a new rear pinion cone and roller assembly, the assembly may be removed using Tool Nos. 1003 and 951, Figure 67. The new cone and roller is installed using the same tools, plus a suitable sleeve, as shown in Figure 68, to enable the tool to press on the inner bearing race.

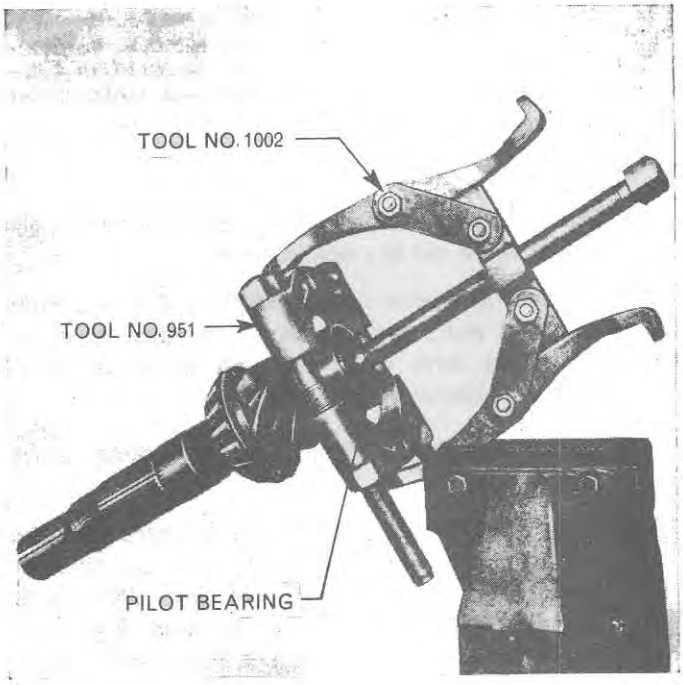

Figure 66
Removing Drive Pinion Pilot Bearing

3. If it is necessary to install new retainer bearing cups, the cups may be removed from the housing using Tool No. 943 and 943-S.

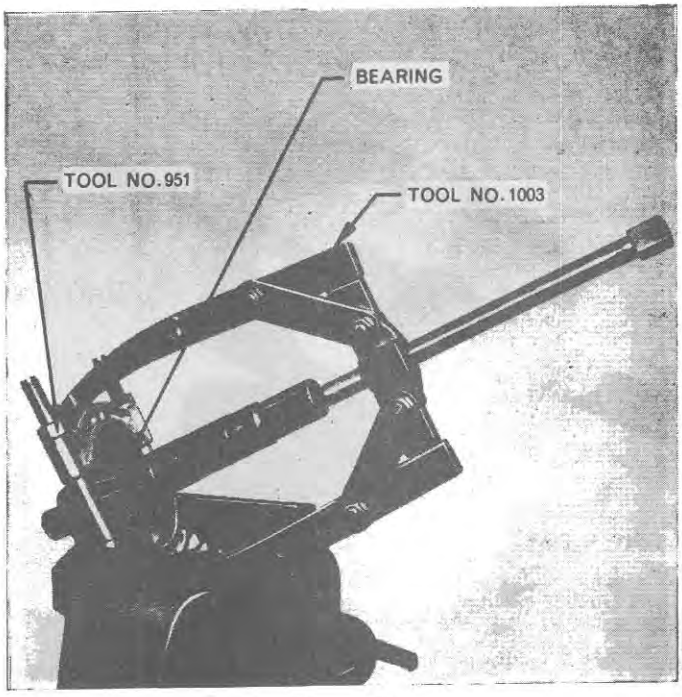

Figure 67
Removing Drive Pinion Rear Bearing

NOTE: ***If a new drive pinion is to be installed a new differential ring gear must also be fitted. This should be carried out as outlined in Section 6B, 'Overhaul Differential and Differential Lock Assembly'.***

C. Assembly

1. Install the pilot bearing on the pinion, using a suitable hollow sleeve and fit a new lock ring.
2. Position the pinion shaft assembly and front pinion cone and roller assembly in the retainer assembly. Install the drive brake gear and spacer or thrust washer whichever is applicable.
3. Install the preload adjusting nut, new locking washer and locknut.
4. Using Tool No. T4094 or N-4634-A tighten the inner nut to the specified pre-load. (See Specification Section, Chapter 3.) Use Tool No. T4062 with adaptor T4062-2A to check the pre-load, Figure 69. If this tool is not available, a pull scale, used together with a piece of cord wrapped around the splines of the pinion shaft, Figure 70, can be used to give the specified pull. (See Specifications Section, Chapter 3.)
5. Tighten the locknut then check the bearing pre-load, making further adjustments if necessary. Bend one of the tabs of the lock washer on to a flat on the adjusting nut and the other tab onto a flat on the locknut.

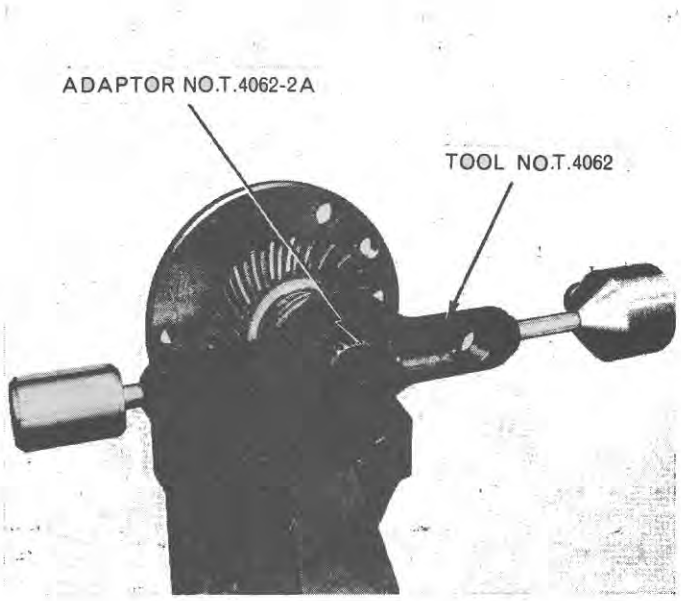

Figure 69
Checking Drive Pinion Bearing Pre-load

6. Install the drive pinion assembly in the centre housing and secure with six bolts and lockwashers. It may be necessary to tap the retainer into position with a drift if a tight assembly is encountered.

Major 4000 only Ensure that the flat on the retainer housing flange is located in the lowermost position, Figure 64.

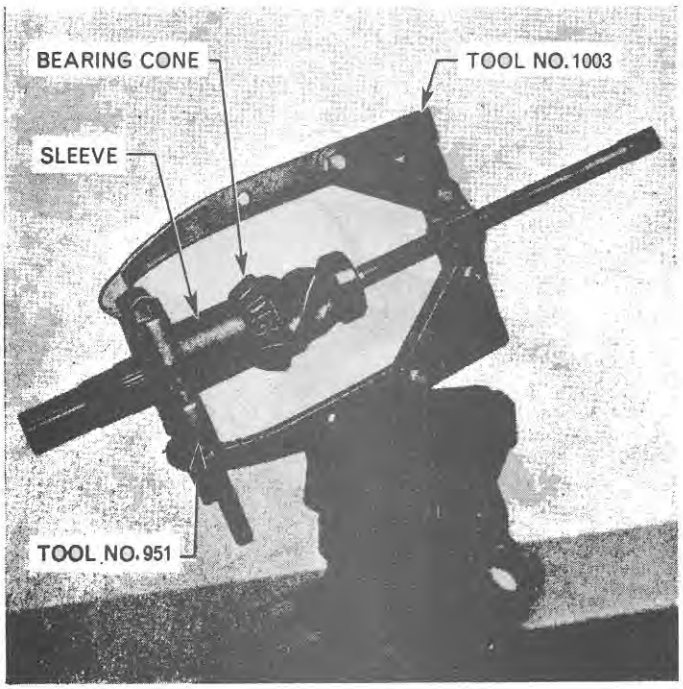

Figure 68
Replacing Drive Pinion Rear Bearing

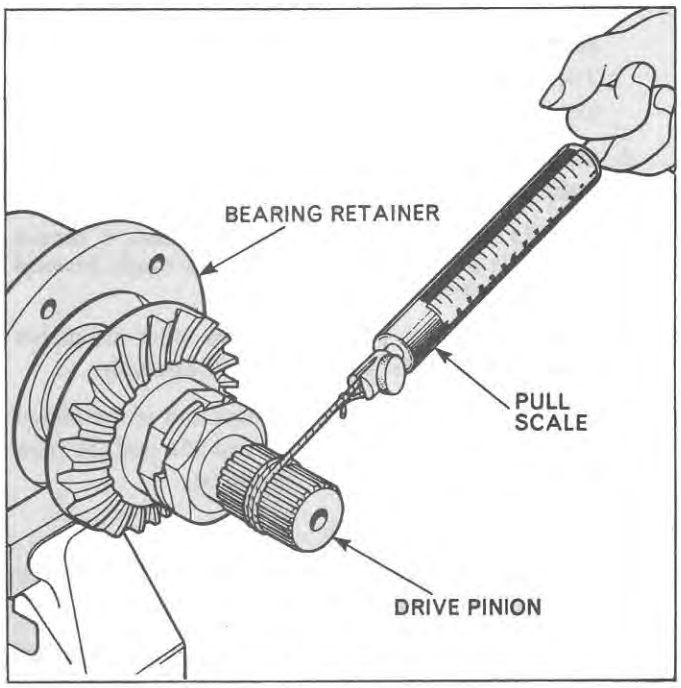

Figure 70
Checking Drive Pinion Bearing Pre-load

Major 4000—Independent P.T.O.: Install the P.T.O. clutch housing and connecting pipes. (Refer to Part 9, 'Power Take-Off', Chapter 2.)

Major 4000—Transmission P.T.O.: Install the P.T.O. shifter mechanism. (Refer to Part 9, 'Power Take-Off', Chapter 1.)

7. Install the hydraulic pump and filters in the centre housing. (Refer to Part 11, 'Hydraulic System', Chapter 4.) Install the handbrake assembly if applicable.
8. Install the hydraulic lift cover assembly (refer to Part 11, 'Hydraulic System', Chapter 1—Major 4000, Chapter 2—Super Major 5000), and reconnect the tractor. (Refer to Part 15, 'Separating the Tractor'.)

Install the differential in the centre housing. (Refer to Section 6, 'Overhaul Differential and Differential Lock Assembly'.)

8. OVERHAUL TRANSMISSION HANDBRAKE ASSEMBLY

To gain access to the handbrake the left-hand platform should be removed. Drain the oil from the rear axle centre housing.

A. Disassembly

1. Remove the handbrake adjusting nut and spacer from the operating rod.
2. Remove the two handbrake lever bracket retaining bolts and lockwashers and lift off the handbrake lever assembly.
3. Unscrew the four handbrake housing cover plate bolts and lockwashers and remove the coverplate.
4. Remove the outer friction disc, actuating plate assembly (with rubber boot) and inner friction disc, Figure 72.
5. Unscrew the four handbrake housing bolts and lockwashers and remove the housing.
6. Remove the handbrake shaft and bearing retainer assembly noting the number of shims positioned between the bearing retainer and the rear axle centre housing.
7. Place the handbrake shaft assembly in a soft jawed vice and straighten the tabs on the locking washer.
8. Remove the locknut, locking washer and adjusting nut from the handbrake shaft. It will be necessary to use wrench Tool No. SW 5 to remove the nuts, Figure 73.
9. Remove the outer cone and roller bearing and the inner cone and roller bearing, oil deflector and handbrake shaft assembly from the bearing retainer, Figure 71.

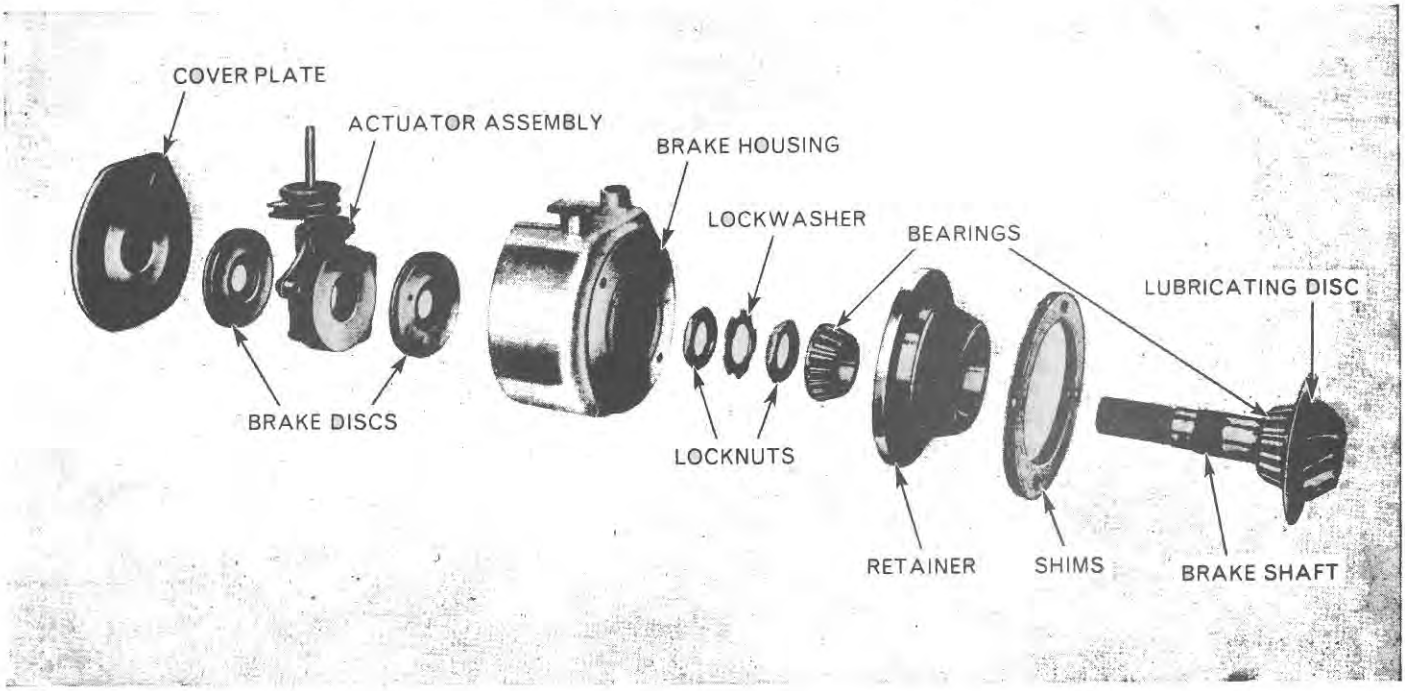

Figure 71
Exploded View of Transmission Handbrake Assembly

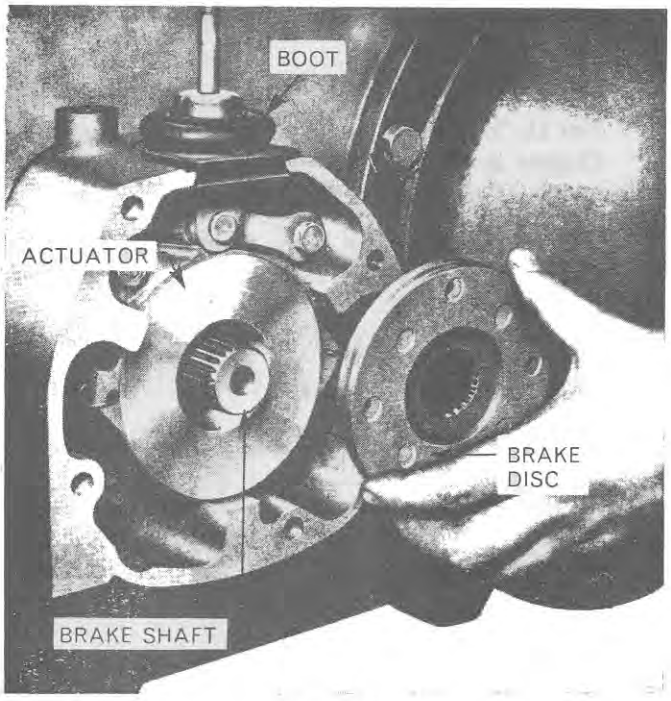

Figure 72
Removing Brake Discs

B. Inspection and Repair

1. Clean and inspect all parts and install new parts where worn or damaged.
2. If it is necessary to install new bearing cups in the retainer the cups may be removed using Tool Nos. 943 and 943-S.
3. If the oil seal in the handbrake housing is found to be damaged, the seal should be removed and a new seal installed using a suitable sleeve, $1\frac{3}{4}$ in. (44·45 mm) O.D.
4. If it is necessary to install a new handbrake shaft inner cone and roller assembly remove the cone from the shaft using Tool Nos. 951 and 1003, Figure 74, and install a new cone and roller assembly using Tool Nos. 951, 1002 plus a suitable sleeve to enable the tool to press on the inner bearing race, Figure 75.
5. To overhaul the actuating plate assembly, disconnect the actuating linkage, remove the two return springs and separate the plates. Remove the four steel balls. The nuts on the actuating linkage should be staked on assembly.

C. Assembly

1. Place the bearing retainer in a soft jawed vice and position the bearing cones and handbrake shaft in the retainer.
2. Install the bearing adjusting nut, new locking washer and locknut.
3. Tighten the inner nut to the specified pre-load. (See Specification Section, Chapter 3.) Use Tool No. T4062 with adaptor T4062-3 to check the preload. If this tool is not available a pull scale, used together with a piece of cord wrapped around the splines of the handbrake shaft, will give the specified pull. (See Specifications Section, Chapter 3.)
4. Tighten the locknut then check the bearing pre-load, making further adjustments if necessary. Bend one of the tabs of the locking washer on to a flat on the adjusting nut and the other tab on to a flat on the locknut.
5. Install the hand-brake shaft and bearing retainer assembly using the same number of shims between the bearing retainer and the rear axle centre housing as removed on disassembly.

NOTE: ***If replacements are made which affect the handbrake pinion gear backlash, i.e. replacement of component parts of the handbrake shaft assembly, it will be necessary to adjust the backlash spacing shim as follows.***

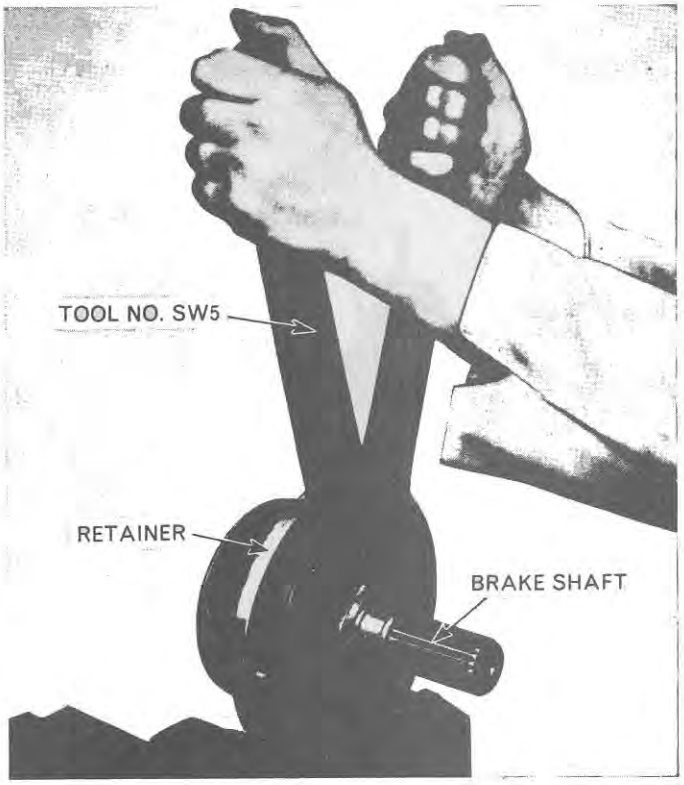

Figure 73
Tightening Brake Driven Shaft Locknuts

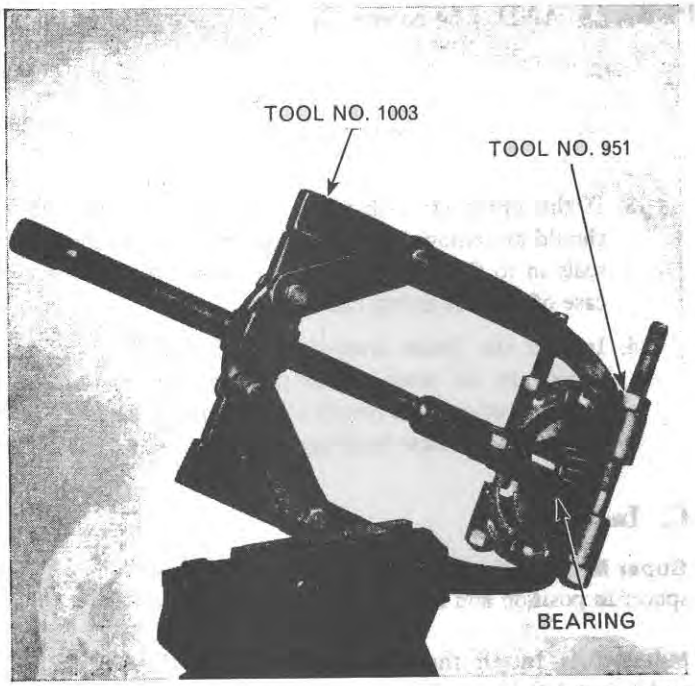

Figure 74
Removing Brake Driven Shaft Bearing

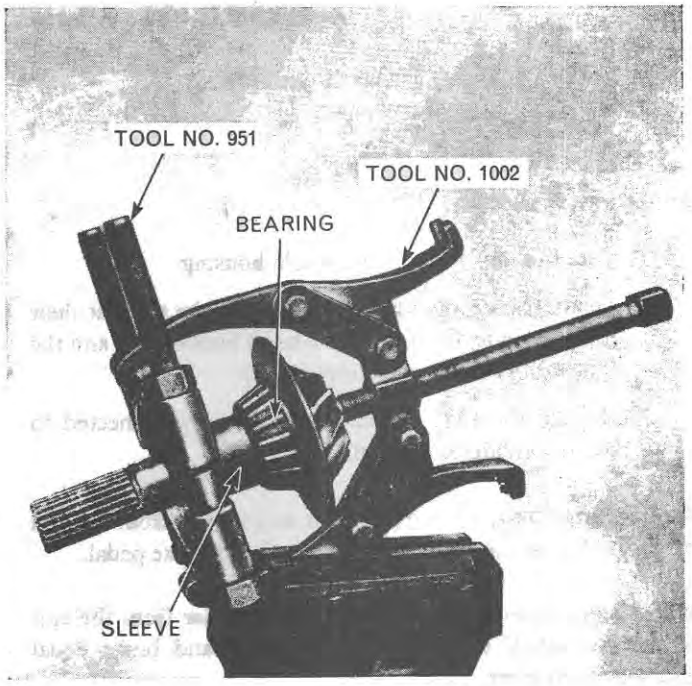

Figure 75
Removing Brake Driven Shaft Bearing

a. Locate the handbrake shaft and bearing retainer assembly, without shims fitted, in the rear axle centre housing.

b. Ensure that the handbrake pinion is fully in mesh with the handbrake gear thus giving zero backlash.

c. Using feeler blades, measure the shim gap between the bearing retainer and rear axle centre housing.

d. A series of shims are available, i.e. 0·003 in. (0·076 mm), 0·005 in. (0·127 mm) and 0·020 in. (0·508 mm), for use in making up this shim gap pack.

Example

SHIM GAP READING	=0·042″
SHIM PACK	=1X 0·020″ SHIM
	2X 0·005″ SHIMS
	4X 0·003″ SHIMS
TOTAL	0·042″

To provide the required backlash of 0·006 in. (0·152 mm)–0·010 in. (0·254 mm) between the handbrake pinion and the handbrake gear a further 0·009 in. (0·228 mm) should be added to the shim pack.

6. Position the handbrake housing and secure with four bolts and lockwashers.

7. Locate the inner friction disc, actuating plate assembly, and outer friction disc. Fit the rubber boot.

8. Install the handbrake housing cover plate and secure with four bolts and lockwashers.

9. Position the handbrake lever assembly and secure the bracket with two retaining bolts and lockwashers.

10. Replace the handbrake adjusting nut and spacer on the operating rod. (Refer to 'Transmission Handbrake Adjustment' for correct handbrake setting.)

Install the left-hand platform and refill the rear axle housing. (See Specification Section, Chapter 3.)

9. OVERHAUL BRAKE PEDALS AND LINKAGE

A. Removal

1. Drain the oil from the rear axle housing.
2. Disconnect the right and left-hand brake rods, at their forward ends, from the right-hand brake pedal and the brake cross-shaft lever respectively.
3. Release the brake pedal return springs connected to the underside of the platform.

Super Major 5000: Remove the nut and washer from the end of the cross-shaft and slide off the right-hand brake pedal.

Major 4000: Remove the snap ring and washer from the end of the cross-shaft and slide off the right-hand brake pedal and spacing washer, Figure 56.

4. Loosen the pinch bolt on the left-hand brake pedal and slide the pedal from the key and shaft.

Super Major 5000: Remove the key from the cross-shaft.

Major 4000: Remove the key and right-hand thrust washer from the cross-shaft.

5. Ensure that the cross-shaft is free from burrs before sliding the shaft through the oil seals.

B. Inspection and Repair

1. Clean and inspect all parts and install new parts where worn or damaged.
2. If the right-hand brake pedal bushing requires renewal, drive out the old bushing and install a new bushing using Tool No. 809 with handle Tool No. 814. Ensure that the drilling in the bushing is in line with the lubrication hole in the brake pedal when the bushing is fitted.
3. If the brake cross-shaft oil seals are damaged they should be removed and new seals fitted. Press the new seals in to the rear axle centre housing with the steel case of the seal facing outwards.
4. Inspect the brake cross-shaft bushings and if they appear to be worn or deeply scored, remove the bushings using Tool No. 811 with handle Tool No. 814 and install the new bushings using the same tools.

C. Installation

Super Major 5000: Install the brake cross-shaft with the shaft spacer in position and locate the key in the cross-shaft groove.

Major 4000: Install the brake cross-shaft with the clutch pedal and left-hand thrust washer in position. Install the right-hand thrust washer and locate the key in the cross-shaft groove.

1. Slide the left-hand brake pedal on the key and secure the pinch bolt.

Super Major 5000: Install the right-hand brake pedal, washer and nut on the brake cross-shaft.

Major 4000: Install the spacing washer, right-hand brake pedal, washer and snap ring on the brake cross-shaft, Figure 56.

2. Connect the brake pedal return springs to the underside of the platform.
3. Connect the brake rods at their forward ends to the right-hand brake pedal and the brake cross-shaft lever respectively.
4. Fill the rear axle housing with the correct quantity and grade of lubricant. (See Specification Section, Chapter

Part 10

REAR AXLE AND BRAKES

Chapter 3

SPECIFICATIONS AND SPECIAL TOOLS

Section		Page
1.	Specifications	47
2.	Special Tools	50

1. SPECIFICATIONS

TIGHTENING TORQUES

		FORD 2000 AND FORD 3000	FORD 4000	FORD 5000
Axle Housing Bolts	lb. ft. kg. m.	110–135 (15·21–18·59)	110–135 (15·21–18·59)	110–135 (15·21–18·59)
Axle Housing Nuts	lb. ft. kg. m.	—	130–160 (17·9–22·12)	—
Inner Disc Brake Housing Nuts	lb. ft. kg. m.	—	72–90 (9·95–12·44)	72–90 (9·95–12·44)
Axle Shaft Retaining Bolt/Bolts	lb. ft. kg. m.	—	350–440 (48·39–60·83)	95–120 (13·13–16·59)
Differential Case Bolts	lb. ft. kg. m.	65–75 (8·99–10·37)	65–75 (8·99–10·37)	65–75 (8·99–10·37)
Differential Ring Gear Nuts	lb. ft. kg. m.	40–45 (5·53–6·22)	40–45 (5·53–6·22)	40–45 (5·53–6·22)
Pinion Bearing Retainer Bolts	lb. ft. kg. m.	80–100 (11·06–13·82)	80–100 (11·06–13·82)	80–100 (11·06–13·82)
Brake Camshaft Lever Bolt	lb. ft. kg. m.	35–47 (4·84–6·50)	—	—
Axle Shaft Bearing Retainer Nuts	lb. ft. kg. m.	90–100 (12·44–13·82)	—	—
Wheel Nuts	lb. ft. kg. m.	180–240 (24·89–33·18)	304–336 (42·03–46·44)	304–336 (42·03–46·44)
*Axle Shaft Locknut (Ford 3000 only)	lb. ft. kg. m.	230–250 (31·80–34·56)	—	—

* This torque is obtained by using Tool No. T.4095 with a torque wrench set to 100 lb. ft. (13·82 kg. m.) or Tool No. N-4235-D with a torque wrench set to 115–125 lb. ft. (15·90–17·37 kg. m.).

	FORD 2000	FORD 3000	FORD 4000	FORD 5000
TYPE	Semi-floating		Double Reduction Semi-floating	
AXLE RATIO				
4, 6 or 8 Speed Transmission	6·16		15·75	23·787 (except 4 speed)
7 Speed Transmission	6·16		15·75	25·713
10 Speed Transmission	6·66		30·00	30·00
AXLE WEIGHT (Fully Fuelled)	1830 lb. (830·0 kg.)	1940 lb. (879·9 kg.)	2605 lb. (1181·5 kg.)	3424 lb. (1553·0 kg.)
OIL CAPACITY (Transmission and Live P.T.O.)	25·2 U.S. Qts. 21·0 U.K. Qts. 23·9 Litres.	25·2 U.S. Qts. 21·0 U.K. Qts. 23·9 Litres	33·6 U.S. Qts. 28·0 U.K. Qts. 31·9 Litres	—
(Independent P.T.O.)	—		32·4 U.S. Qts. 27·0 U.K. Qts. 30·7 Litres	34·8 U.S. Qts. 29·0 U.K. Qts. 32·9 Litres
Grade Ford Specification	ESEN–M 2C85–A ESN–M 2C77–A		ESEN–M 2C86–A ESN–M 2C53–A	
General Specification	SAE 80 E.P. SAE 20W/30		— —	
DIFFERENTIAL RING GEAR				
Diameter (4, 6, 7 or 8 Speed Trans.)	13·12 in. (33·33 cm)	14·00 in. (35·60 cm)	12·50 in. (31·75 cm)	13·12 in. (33·33 cm)
(10 Speed Transmission)	14·00 in. (35·60 cm)	14·00 in. (35·60 cm)	13·12 in. (33·33 cm)	13·12 in. (33·33 cm)
Number of Teeth (4, 6, or 8 Speed Trans.)	37		35	37
(7 Speed Transmission)	37		35	40
(10 Speed Transmission)	40		40	40
DRIVE PINION				
Number of Teeth (4, 6, 7 or 8 Speed Trans.)	6		10	7
(10 Speed Transmission)	6		6	6
Number of Splines	23		23	23
Pinion Bearing Pre-Load (Using Tool No. T.4062)	12–16 lb. in.	(0·138–0·184 kg. m.)	12–16 lb. in.	(0·138–0·184 kg. m.)
Pinion Bearing Pre-Load (Using Pull Scale)	16–21 lb.	(7·26–9·53 kg.)	16–21 lb.	(7·26–9·53 kg.)
AXLE SHAFTS				
Diameter at Outer Bearing	2·065 in. (52·45 mm)	2·252 in. (57·20 mm)	2·626 in. (66.702 mm)	2·877 in. (73·078 mm)
Length	31·30 in. (79·50 cm)		18·86 in. (47·90 cm)	18·84 in. (47·85 cm)
Number of Splines	38		46	54
End Play	·004–·012 in. (·102–·305 mm)		·001 in. Loose–·003 in. Tight (·025–·076 mm)	

	FORD 2000	FORD 3000	FORD 4000	FORD 5000
TRANSMISSION HAND BRAKE				
Type	Disc–dry			
Size	4 in. × 2 in. (101·60 × 50·80 mm)			
Lining Area	33·9 sq. in. (218·7 sq. cm.)			
Brake Shaft Bearing Pre-Load (Using Tool No. T.4062)	12–16 lb. in. (0·138–0·184 m. kg.)			
Brake Shaft Bearing Pre-Load (Using Pull Scale)	20–26 lb. (9·07–11·79 kg.)			
Number of Splines on Brake Shaft	41			
Number of Teeth on Brake Shaft	10		27	
WHEEL BRAKES				
Type	Drum–expanding shoe		Disc–wet	
Size	14·0 in. dia. × 1·5 in. (35·56 cm dia. × 3·81 cm)		8·0 in. × 6·80 in. (20·32 × 17·27 cm)	8·75 in. × 7·40 in. (22·23 × 18·80 cm)
Lining Area	98·46 sq. in. (635·23 sq. cm.)		59·20 sq. in. (381·94 sq. cm.)	99·31 sq. in. (640·71 sq. cm.)
WHEEL ATTACHMENT				
Bolt Circle Diameter	6·00 in. (15·24 cm)		6·50 in. (16·51 cm)	8·00 in. (20·32 cm)
Number of Bolts	8		6*	8
Size of Bolts	$\frac{5}{8}$ in. × 2·0 in. (15·88 × 50·8 mm)	$\frac{5}{8}$ in. × 2·25 in. (15·88 × 57·15 mm)	$\frac{3}{4}$ in. × 2·06 in. (19·05 × 52·32 mm)	

* The 8 bolt rear wheel attachment is optional on the Ford 4000 (data as Ford 5000).

2. SPECIAL TOOLS

Tool No.	Description
P–61	Heavy Duty Ratchet
938	Push Puller
930–B	Push Puller Legs
930–E	Push Puller Legs (Short)
930–7	Push Puller Caps
943	Internal and External Pulling Attachment
943–10	Internal and External Puller Slide Hammer Adaptor
943–S	Slide Hammer
951	Pulling Attachment (Small)
952	Pulling Attachment (Large)
1002	Puller—Reversible Arm (Medium)
1003	Puller—Single End Arm (Large)
630–S	Step Plate—Adaptors (Set of 11)
630–T	Step Plate Adaptors (Set of 6)
818	Bushing Kit (2 Handles—13 pads)
T.4095 or N–4235–D	Axle Shaft Bearing Retaining Nut Wrench
T.4069–A or NCA–4235	Axle Shaft Bearing Remover
T.4069–1	Axle Shaft Bearing Replacer Adaptor
SW 6 or SW 6–48/56	Planetary Ring Gear Remover/Replacer
T.4094 or N–4634–A	Drive Pinion Bearing Locknut Wrenches
SW 5	Handbrake Driven Shaft Bearing Locknut Wrenches
T.4062	Pre-Load Gauge
T.4062–2A	Drive Pinion Adaptor
T.4062–3	Handbrake Driven Shaft Adaptor
SW 11 or SW 515	Differential Bearing Replacer Adaptor
T.4088 or SW 507	Differential Bearing Replacer Adaptor
T.4074 or SW 507	Differential Bearing Replacer Adaptor
T.4087	Differential Case Bushing Replacer Adaptor
550 or OTC–815	Driving Handle
T.4091	Differential Case Bolt Torque Wrench Adaptor
SW 7 or SW 505	Differential Bearing Pre-load Gauge including: Bridge Bar
SW 7/a	Gauge Ring
SW 7/b	3-Spacers
SW 7/d	3-Bolts (short)
SW 7/e	3-Bolts (long)
SW 7/g	

PART 11
HYDRAULIC SYSTEMS

PART 11

PUBLIC SYSTEMS

Part 11

HYDRAULIC SYSTEMS

Chapter 1

HYDRAULIC SYSTEM– DEXTA 2000, SUPER DEXTA 3000 & MAJOR 4000

Section		Page
1.	Description and Operation	1
2.	Adjustments	13
3.	Overhaul Lift Cylinder Assembly	16
4.	Overhaul Lift Cover Assembly	22
5.	Overhaul Flow Control Valve Plate and Linkage	28

Chapter 2

HYDRAULIC SYSTEM—SUPER MAJOR 5000

Section		Page
1.	Description and Operation	31
2.	Adjustments	41
3.	Overhaul Lift Cylinder Assembly	42
4.	Overhaul Lift Cover Assembly	49

© FORD MOTOR COMPANY

Chapter 3

HYDRAULIC PUMP—PISTON TYPE

Section		Page
1.	Description and Operation	55
2.	Overhaul Hydraulic Lift Pump	56

Chapter 4

HYDRAULIC PUMP—GEAR TYPE

Section		Page
1.	Description and Operation	61
2.	Overhaul Hydraulic Lift Pump	63

Chapter 5

TROUBLE SHOOTING, SPECIFICATIONS AND SPECIAL TOOLS

Section		Page
1.	Trouble Shooting	67
2.	Specifications	75

Part 11

HYDRAULIC SYSTEMS

Chapter 1

HYDRAULIC SYSTEM—DEXTA 2000, SUPER DEXTA 3000 & MAJOR 4000

Section		Page
1.	Description and Operation	1
2.	Adjustments	13
3.	Overhaul Lift Cylinder Assembly	16
4.	Overhaul Lift Cover Assembly	22
5.	Overhaul Flow Control Valve Plate and Linkage	28

1. DESCRIPTION AND OPERATION

Figure 1 illustrates the Super Dexta 3000 hydraulic system. Various differences which exist between this system and that of the Dexta 2000 and the Major 4000 are explained throughout the chapter.

Mounted on the outside of the lift cover are the lift arms, lift control lever, selector lever and draft control main spring. The hydraulic pump is mounted on the rear left-hand side of the engine and is driven from the camshaft. The rear axle centre housing acts as a reservoir for the oil of the hydraulic system. The flow of oil is controlled by a number of valves contained in the lift cylinder assembly located on the underside of the lift cover.

To suit varying conditions it is possible to set the hydraulic system to maintain the lift linkage at a constant draft load on the tractor (Draft Control) or at a constant height relative to the tractor (Position Control).

By means of a flow control device on the Super Dexta 3000 and Major 4000 it is possible to vary the rate of lift of the implement (or external equipment) independent of movement of the lift control lever.

The Major 4000 with an 8-speed transmission can be fitted with an independent P.T.O. system. With this arrangement the hydraulic piston pump is replaced by a tandem gear type pump described under this heading in Chapter 4.

HYDRAULIC FILTERS

The suction filter, positioned horizontally at the bottom of the rear axle centre housing, is a tubular mesh-type filter which requires regular cleaning. The hydraulic pump draws oil through this filter and directs it to the lift cover. As the oil returns to the rear axle centre housing a proportion of the oil passes through a renewable paper element-type filter.

LIFT COVER ASSEMBLY

The lift cover assembly acts as a housing for the control linkage and lift cylinder assembly which alters the working depth of the implement.

LIFT CONTROL LEVER

The action of this lever determines a raise, lower or neutral position for the system by its connection through mechanical linkage with the control valve and is located on the right-hand side of the lift cover, Figure 2.

SELECTOR LEVER

The selector lever is situated on the right-hand side of the lift cover and is used to select either Position Control or Draft Control, Figure 2. With the lever in the vertical position the implement is maintained at a constant height relative to the tractor by the lift cross-shaft cam action on the control linkage and is not affected by draft forces. With the lever in the horizontal position varying forces applied to the top link by the implement are used to maintain a constant draft. These forces are called 'signals' and are relayed to the system by means of the Draft Control Main Spring.

© FORD MOTOR COMPANY LTD. 1964

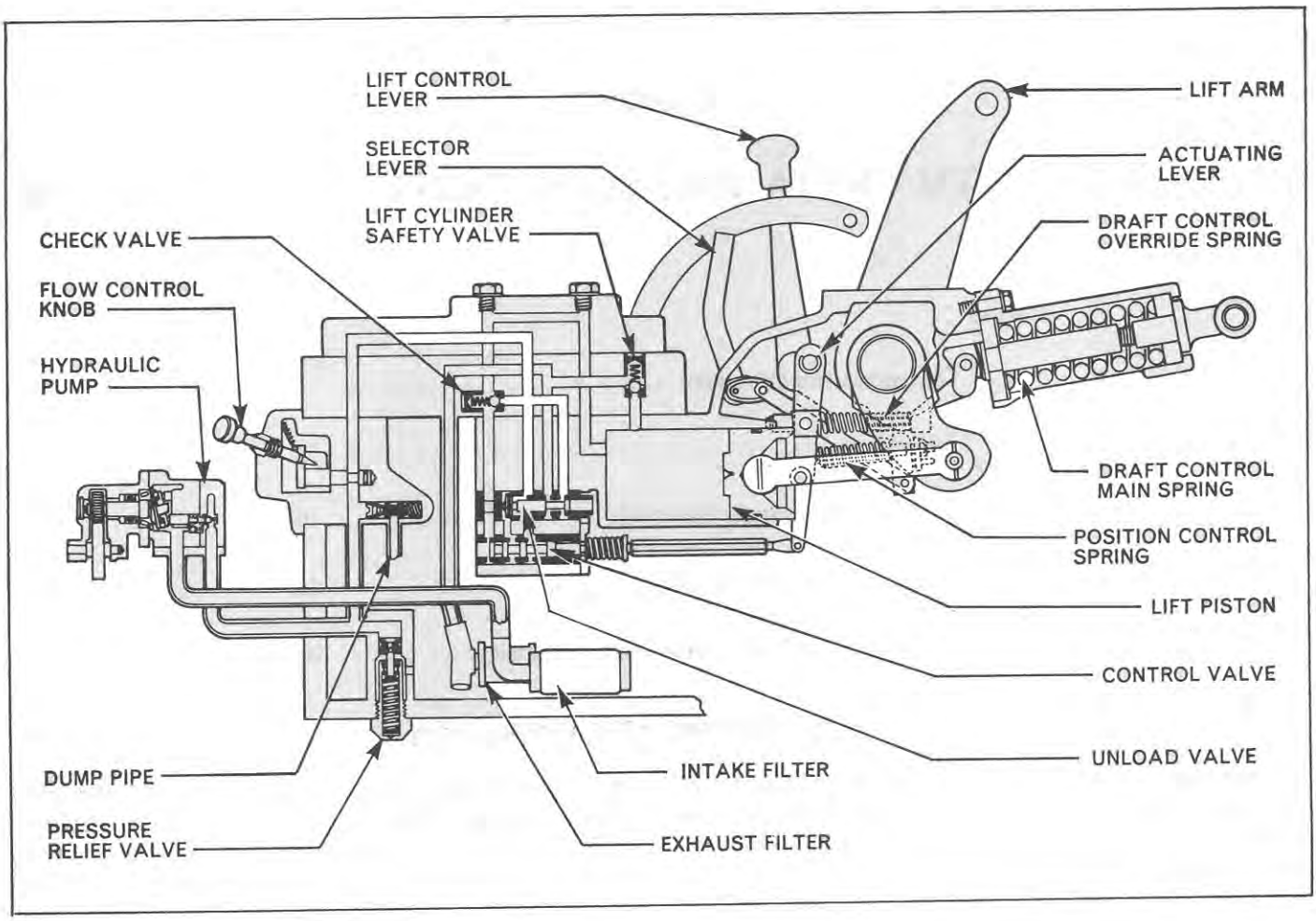

Figure 1
Super Dexta 3000 Hydraulic System—Schematic

DRAFT CONTROL MAIN SPRING

The draft control main spring, which relays the forces applied by the implement to the internal draft control linkage, is double acting on the Super Dexta 3000 and Major 4000. This ensures that draft control is effective with all implements, under all conditions irrespective of whether the implement produces compression or tension forces in the top link. As a result, greater sensitivity and more positive control under varying soil conditions is maintained.

VALVES IN THE LIFT CYLINDER ASSEMBLY

A. Flow Control Valve—Super Dexta 3000 and Major 4000

This valve controls the rate of oil to the lift cylinder or auxiliary equipment and is controlled by screwing the flow control knob, situated on the right-hand side of the rear axle centre housing, Figure 2, 'out' for minimum flow and 'in' for maximum flow. Regardless of the position at which the flow control knob is set, the rate of flow will be at maximum when the lift control lever is moved to the top of the quadrant so that a quick raise of the implement can be effected.

Flow control is incorporated in the hydraulic system for two reasons:

1. It is often desirable, when using auxiliary equipment such as front end loaders, to vary the speed of lifting.
2. When working in varying soil densities the draft control linkage will react and tend to lift the implement as it encounters heavier ground. Flow control, when set to 'S', minimises this reaction and the decrease in depth is quite small and generally unnoticeable.

B. Auxiliary Service Control

By means of a three position selector valve, fitted in place of the accessory cover, it is possible to feed oil to:

1. The Lift Cylinder.

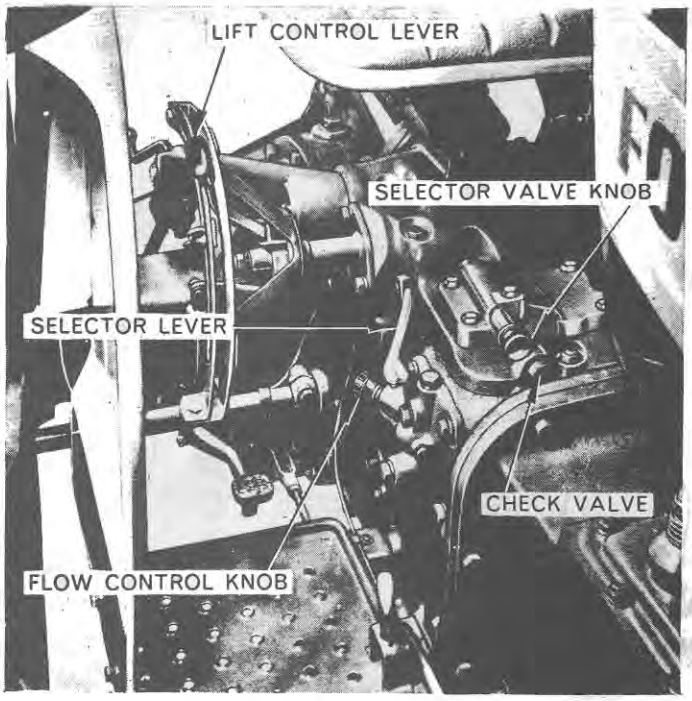

Figure 2
Hydraulic Controls

2. The Lift Cylinder and Auxiliary equipment.
3. Auxiliary Equipment.

A knob situated at the front of the lift cover, Figure 2, determines to which of these circuits the oil is directed. With the knob pushed fully in oil is directed to the lift cylinder, which raises or lowers the lift arms. Pulled out one stop, part of the oil is fed to the lift cylinder while the remainder is directed to the outlet port of the lift cover assembly for auxiliary equipment. Pulled fully out all the oil is directed to auxiliary equipment. The action of this valve is described in more detail under 'Hydraulic Oil Circuit'.

C. Control Valve

The control valve, Figure 1, is indirectly connected through an adjustable link and an actuating lever to a cross-shaft to which the lift control lever is attached. The control valve has three positions, 'neutral' at mid-travel, 'lowering' when moved to the rear and 'raising' when pushed forward. A spring is located at the rear end of the valve which returns the valve to its neutral or lowering position when permitted by the control linkage. The hydraulic valve action is described in more detail throughout the chapter, however, when moved forward a small distance, the control valve directs oil to the front face of the unload valve causing the unload valve to move rearwards shutting off the neutral passages. When moved rearwards the control valve allows oil to exhaust from the lift cylinder.

D. Unload Valve

The unload valve, Figure 1, is operated solely by oil pressure directed by a control valve and has only two positions, one for neutral and lowering, the other for lifting. In the neutral and lowering position, the valve allows the pumped oil supply to pass to exhaust. In the raise position, the oil supply is prevented from exhausting and it therefore builds up pressure, finally forcing the piston along the cylinder.

The valve has two faces, the front face being larger in area than the rear face. When equal pressure is applied to both faces the total force exerted on the larger, front face is greater than the force on the smaller, rear face. This moves the valve rearwards to the raising position.

When the control valve is in the neutral or lowering position, the pressure on the larger face of the unload valve is removed as the oil is allowed to exhaust. The valve then has pressure only on its smaller, rear face and it therefore moves forward to the neutral or lowering position. It will stay in this position until the control valve moves to the raising position.

HYDRAULIC LIFT OPERATION

It is important to remember that the hydraulic power lift is regulated both in position control and draft control by a variation in the position of the control valve. Depending upon the position of this valve the flow of oil can cause the implement to raise, lower or stay in a neutral position.

The position of the control valve can be altered either by moving the lift control lever or by a force acting on the draft control main spring when in draft control.

DRAFT CONTROL

The system of automatic implement depth control, called Draft Control, uses the top link signal for raising or lowering the implement working depth to maintain a constant draft.

A. Linkage Operation Under Draft Control

Draft control is selected by placing the selector lever, Figure 3, in the horizontal position, this action making the position control linkage inoperative. Downward movement of the lift control lever rotates the control lever shaft in a counter clockwise direction causing the actuating

© FORD MOTOR COMPANY 1964

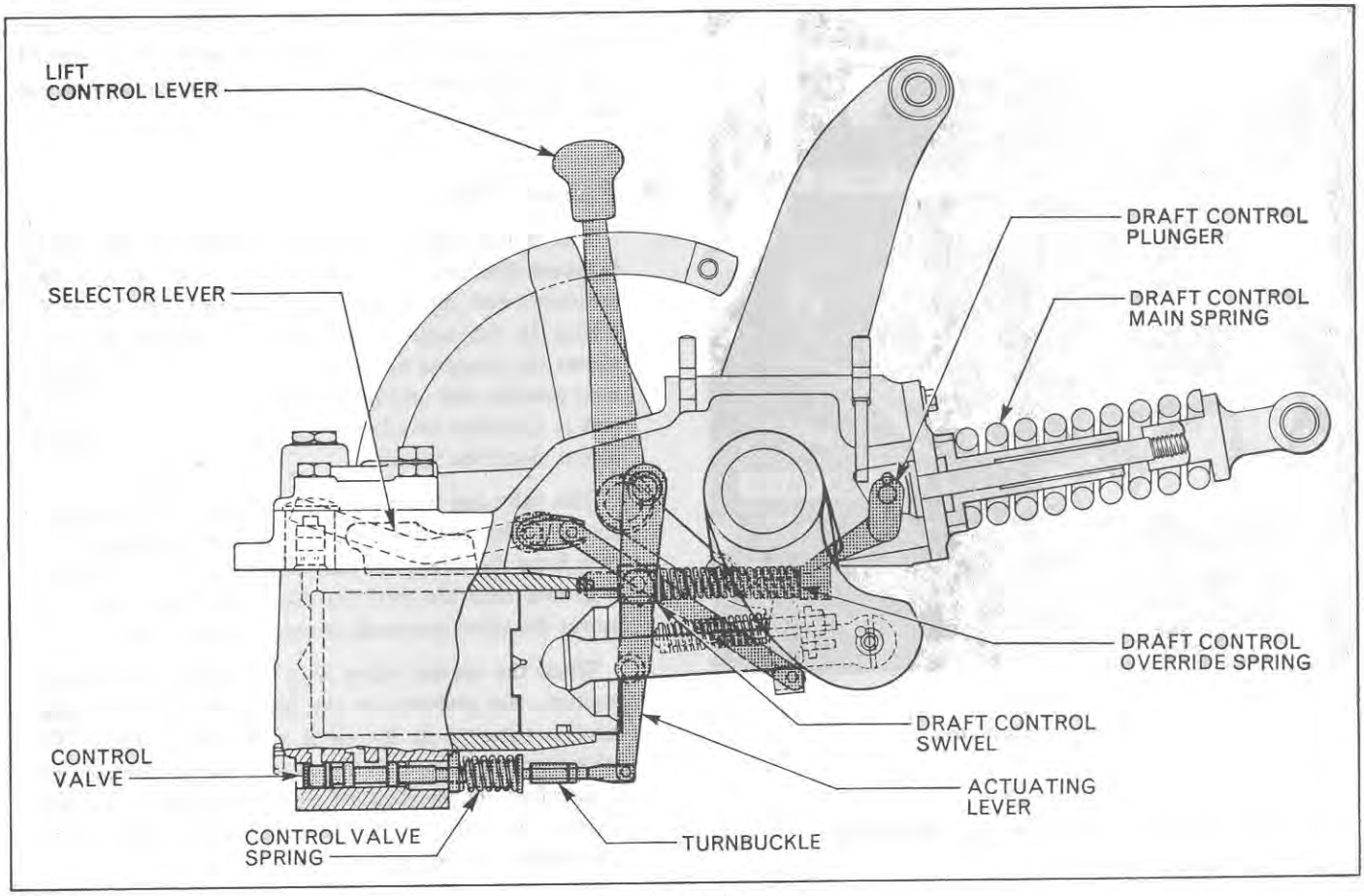

Figure 3
Draft Control Linkage—Dexta 2000

lever to pivot about the draft control swivel. This action causes the bottom of the actuating lever to move to the right, allowing the control valve spring to push the control valve into the lowering position.

Once the control valve is fully in the lowering position any further movement of the lift control lever causes the actuating lever to pivot about the turnbuckle assembly. As this happens the draft control bushing moves further out of the draft control swivel.

The implement is lowered to the ground and, as the tractor moves forward, a draft force is developed by the implement. This force is transmitted along the top link, to the draft control main spring which absorbs the majority of the force.

The draft control main spring is connected to the actuating lever through the draft control override spring and connector link assembly.

As the draft force increases the top link force increases and the draft control main spring is compressed moving the draft control bushing forward. This movement pushes the actuating lever and hence the control valve into the neutral position, i.e. to the left.

The valve will remain in this position so long as the draft remains constant.

Should the draft increase the top link force will further compress the spring and will cause the draft control bushing to move the actuating lever further to the left, moving the control valve into the raising position and result in the implement lifting. This will reduce the draft force, lessen the top link force and allow the draft control main spring to expand. This action moves the draft control bushing away from the actuating lever and allows the control valve spring to move the valve back into neutral, i.e. to the right.

Should the draft decrease then the reduced top link force allows the draft control main spring to expand and the control valve is moved by its spring into the lower position. The implement is then lowered due to its own

weight until the draft force increases sufficiently to return the control valve to neutral.

The hydraulic system therefore automatically corrects the draft of the implement. Should the operator wish to alter the depth at which the implement is to work, then he raises or lowers the lift control lever as required.

When the lever is lowered the control valve will move to the 'lower' position and the actuating lever will be moved further from the draft control bushing. This means therefore that a greater draft force is required to compress the main control spring and to develop this the implement goes deeper.

If the lift control lever is raised, the actuating lever is moved further into the draft control bushing resulting in less draft force required to neutralise the control valve. Therefore the implement depth is reduced.

It is, therefore, the balancing of compression between the draft control override spring and the control valve spring, together with the alteration of pivot point for the actuating lever by the positioning of the lift control lever, which governs the movement of the control valve and establishes a neutral position, and a working depth for the implement.

B. Double-Acting Draft Control

Any implement when it is raised clear of the ground produces tension in the top link. With comparatively light implements such as cultivators and one, two or three furrow ploughs this tension turns into compression when the implement is in the ground and the tractor is moving forward. If the implement digs into the soil, the draft, and therefore the top link force increases. This signal causes the hydraulic system to raise the implement slightly due to the connection between the top link and the control valve through the draft control override spring. At the same time, the draft and the top link force is reduced to its original value. Conversely should the working depth decrease, the top link force lessens and the lift arms lower to allow the implement to move further into work and restore its draft.

When tail heavy implements are used, such as large reversible ploughs or four furrow ploughs on the Super Dexta 3000 or Major 4000, the weight of the implement overcomes the draft force from the soil and the top link remains in tension at all times.

The double acting Draft Control system of the Super-Dexta 3000 and Major 4000 automatically adjusts for these variations as explained in the following.

C. Draft Control—Light Implements

Lowering Into Work: With the selector lever 'A', Figure 4, in the horizontal position, downward movement of the lift control lever 'B' moves the top of the actuating lever 'C' forward. The actuating lever pivots about the draft control swivel and allows the control valve spring 'D' to move the control valve 'E' into the lowering position.

Lowering stops when the implement draft compresses the draft control main spring 'F' in a forward direction a sufficient amount to overcome the pressure of the control valve spring and move the control valve into a neutral position.

Draft Producing Compression in Top Link:

1. When working in Draft Control an increase in draft at the implement will compress the draft control main spring 'F' in a forward direction, Figure 5, moving the control valve actuating lever 'C' forward. The actuating lever overcomes the pressure of the control valve spring 'D' and moves the control valve 'E' into the raising position. As the implement is raised the draft force and hence the pressure on the draft control main spring decreases to the original amount. The control valve spring will then move the control valve into the neutral position.
2. A decrease in draft at the implement will reduce the compression of the draft control main spring 'F' and hence the pressure on the actuating lever 'C'. This allows the control valve spring 'D' to push the control valve 'E' into the lowering position.

   As the implement runs deeper the draft will increase to its original amount at which time the control valve will again be returned to the neutral position.

D. Draft Control—Heavy Implements

Lowering Into Work: The following action occurs when the implement always produces tension in the top link. Downward movement of the lift lever 'B' moves the top of the actuating lever 'C' forward, Figure 4, pivoting about the draft control swivel and allowing the control valve spring 'D' to move the control valve 'E' into the lowering position. As the implement descends, the tension in the top link increases, further compressing the draft control main spring 'F' against the spring rear seat 'G'. Lowering stops when the implement draft

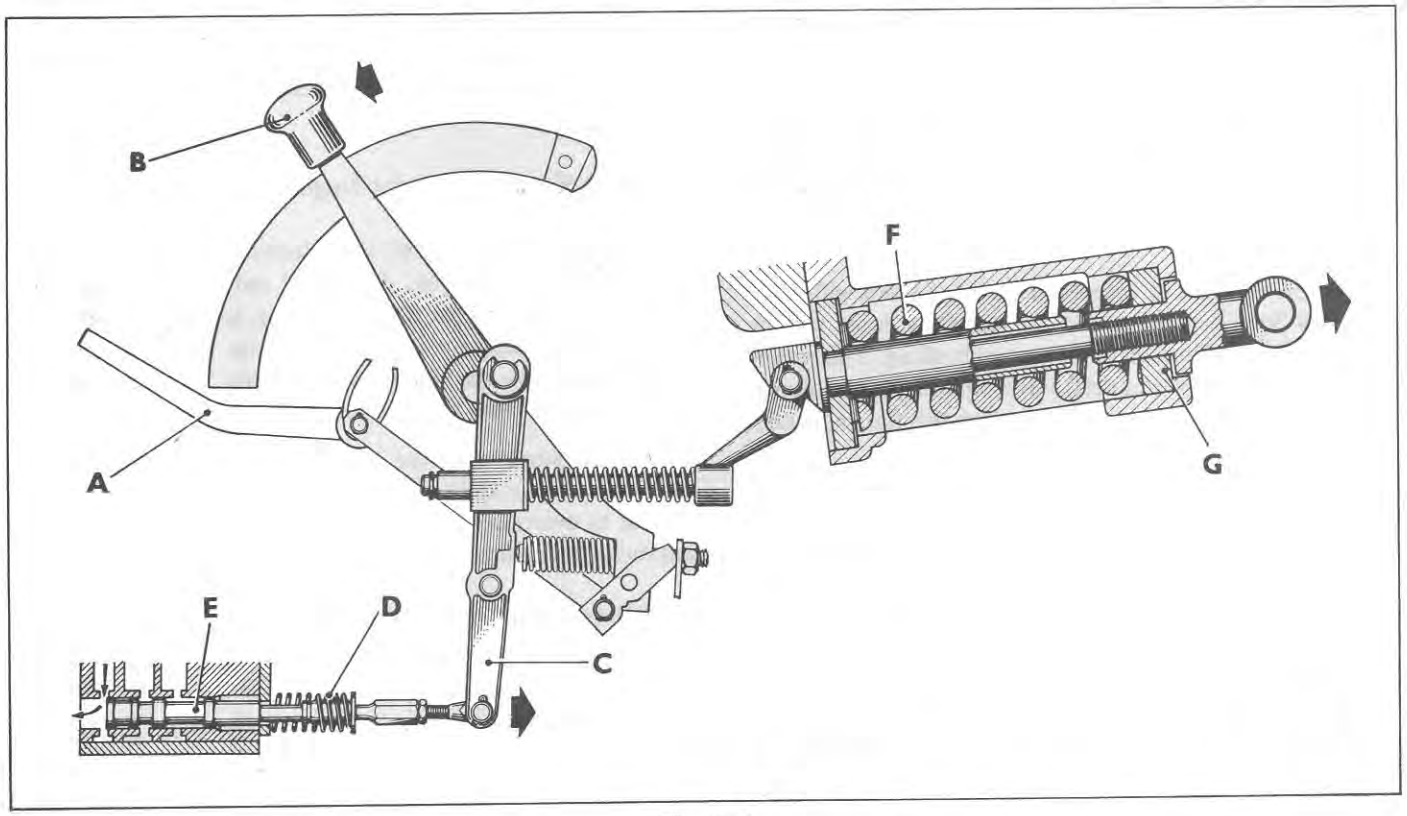

Figure 4
Draft Control—Lowering into Work

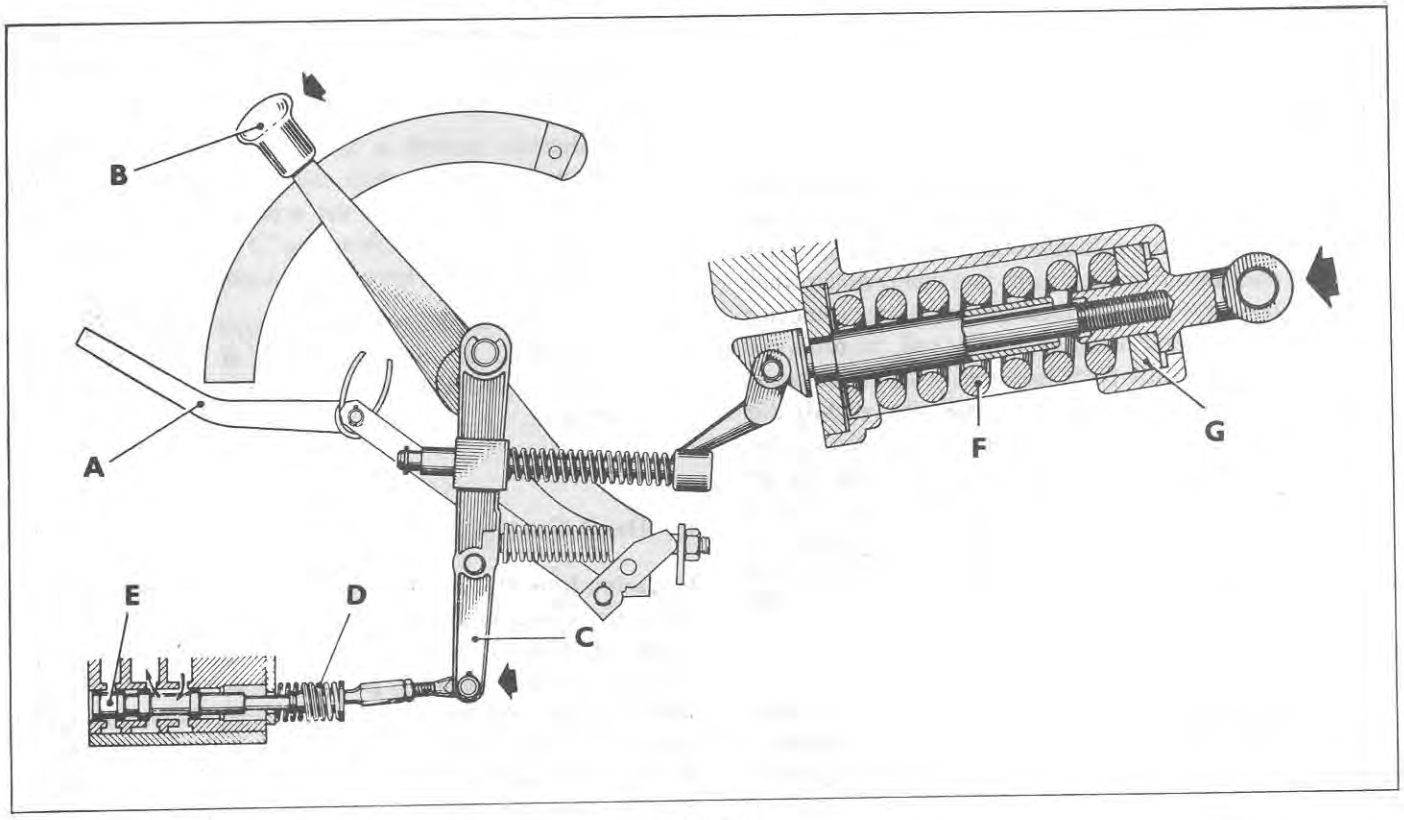

Figure 5
Draft Control—Raising in Work due to Increase in Top Link Compression

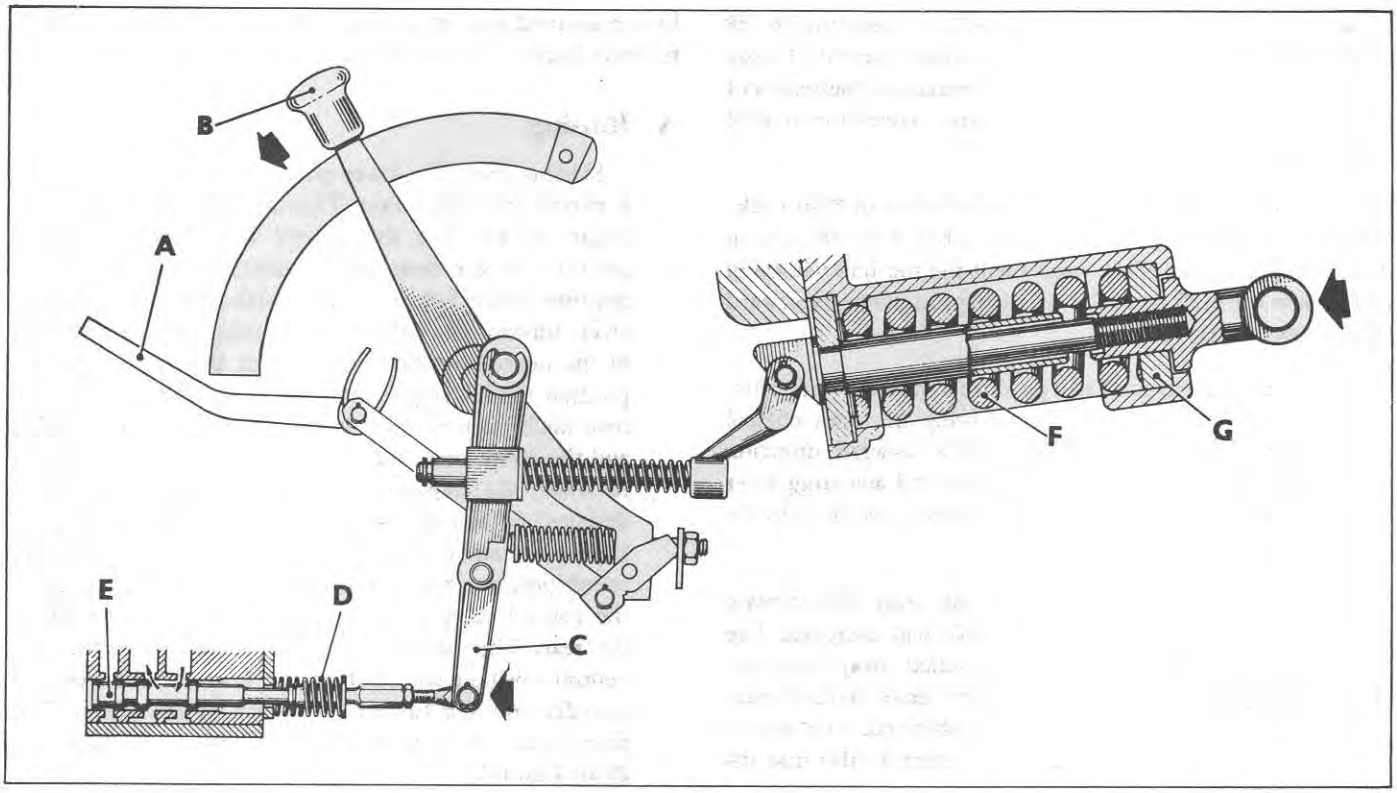

Figure 6
Draft Control—Raising in Work due to Decrease in Top Link Tension

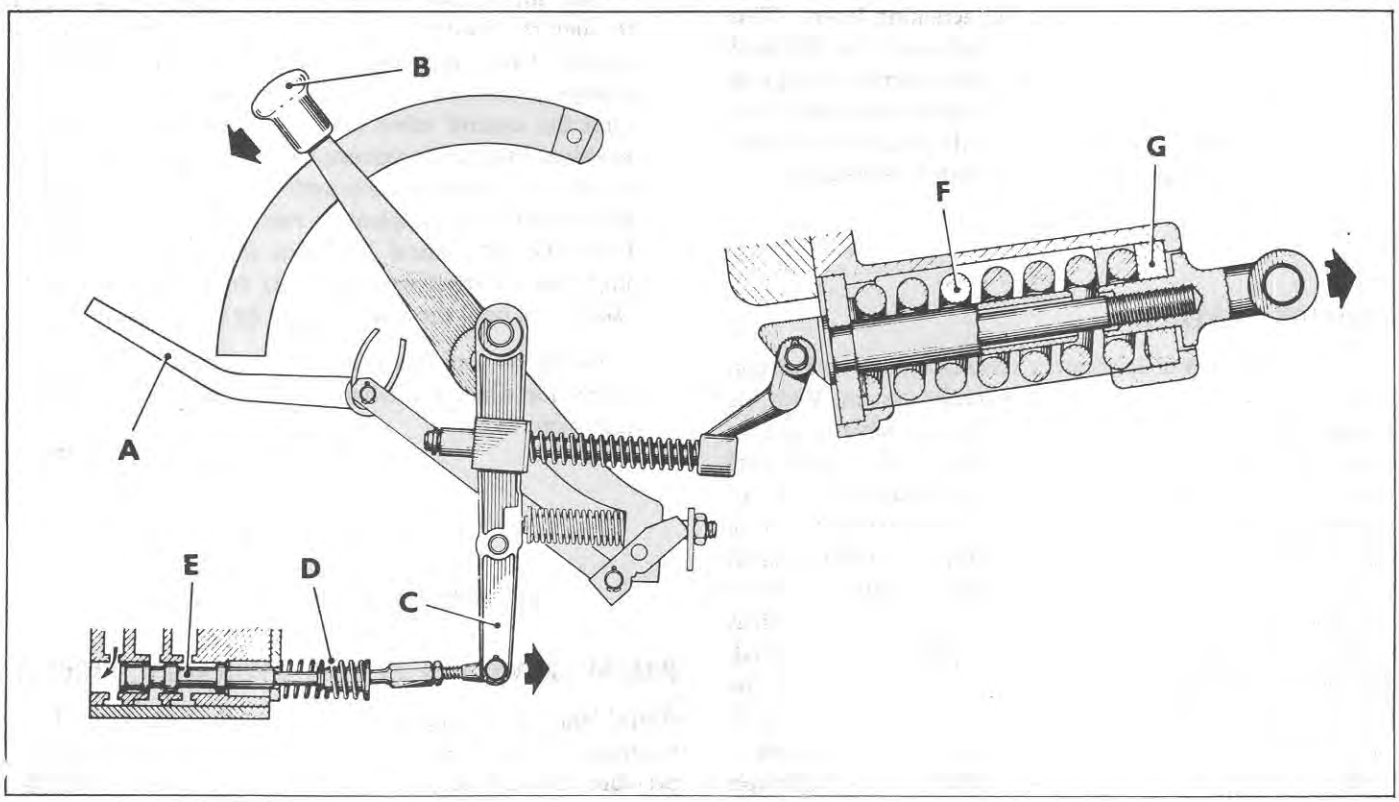

Figure 7
Draft Control—Lowering in Work due to Increase in Top Link Tension

reduces the tension in the top link a sufficient amount for the draft control main spring to push the draft control plunger and the actuating lever forward. This overcomes the rearward pressure of the control valve spring and moves the control valve into the neutral position.

Draft Insufficient to Produce Compression in Top Link: When the implement draft is constant but is insufficient to overcome the weight of the implement the top link will be in tension and the draft control main spring compressed rearward against spring seat 'G'.

1. An increase in draft will produce a decrease in tension, in the top link, Figure 6, allowing the draft control main spring 'F' to expand in a forward direction pushing the draft control linkage and actuating lever 'C' forward. This moves the control valve 'E' into the raising position.

   As the implement is raised the draft will decrease but the tension in the top link will increase. The draft control linkage will be pulled away from the actuating lever, compressing the draft control main spring until the original draft is obtained. The control valve spring will then move the control valve into the neutral position.

2. A decrease in draft will produce an increase in tension in the top link, Figure 7, and the draft control linkage will be drawn away from the actuating lever. This will increase the rearward compression on the draft control main spring and allow the control valve spring to move the control valve into the lowering position. As the implement runs deeper the draft will increase until such time as the original draft is obtained.

POSITION CONTROL

A second system of implement control, known as Position Control, is also included in the hydraulic system. With the selector lever in the vertical position it is possible to pre-set the working depth of the implement when used on fairly level ground, with no wide variations in soil resistance. For all practical purposes, accurate work at constant depth can be achieved and position control is, therefore particularly suited to implements such as weeders, steerage hoes, down the row thinners, etc. It is also suitable for implements such as sprayers which are operated at a fixed height above the ground. Placing the selector lever in the vertical position brings the special position control linkage, between the servo cam on the ram arm and the control valve actuating lever, into operation. Under these conditions the draft control swivel no longer acts as a pivot point for the actuating lever but is replaced by a machined pad adjacent to the draft control plunger, on the rear face of the actuating lever.

A. Raising

Starting from the lower position the lift control lever is moved up the quadrant. This causes the actuating lever, Figure 8, to move the control valve into the raising position. As the cross-shaft rotates, the cam allows the position control linkage to move further from the actuating lever, allowing the control valve spring to move the valve to the neutral position. As soon as the valve is in this position the lift stops. Should a further lift be required, then the lift control lever is again moved up the quadrant and the above procedure is repeated. To limit the height to which the implement can be raised, the linkage is designed so that the skirt of the piston projects slightly beyond the end of the lift cylinder. On reaching the fully raised position, the piston contacts a stop pin, fixed to the control valve actuating lever, moving it sharply to the rear. This action moves the control valve into the neutral position which stops the flow of oil to the lift cylinder and any further movement of the piston. The piston stop pin operates both in Position Control and Draft Control.

B. Lowering

The lift control lever is moved downwards and, through the Position Control linkage, the control valve is moved to the lowering position. As the cam rotates the linkage is moved towards the actuating lever by the cam until the control valve is moved back into the neutral position. Further movement of the lift control lever will cause the lift arms to drop until such time as the valve is neutralized or the implement reaches its lowest position. Once the lift control lever has been moved and the implement reaches its set height, no further movement takes place until the lever is re-set by the operator.

As can be seen this system is most suitable for implements for which the height, more than the draft, is the important factor.

HYDRAULIC OIL CIRCUIT

PRESSURE VALVES IN THE HYDRAULIC CIRCUIT

Relief Valve: This valve, positioned at the beginning of the hydraulic circuit in the rear axle centre housing, limits the pressure at which oil is fed to the system in order that the components are not overloaded.

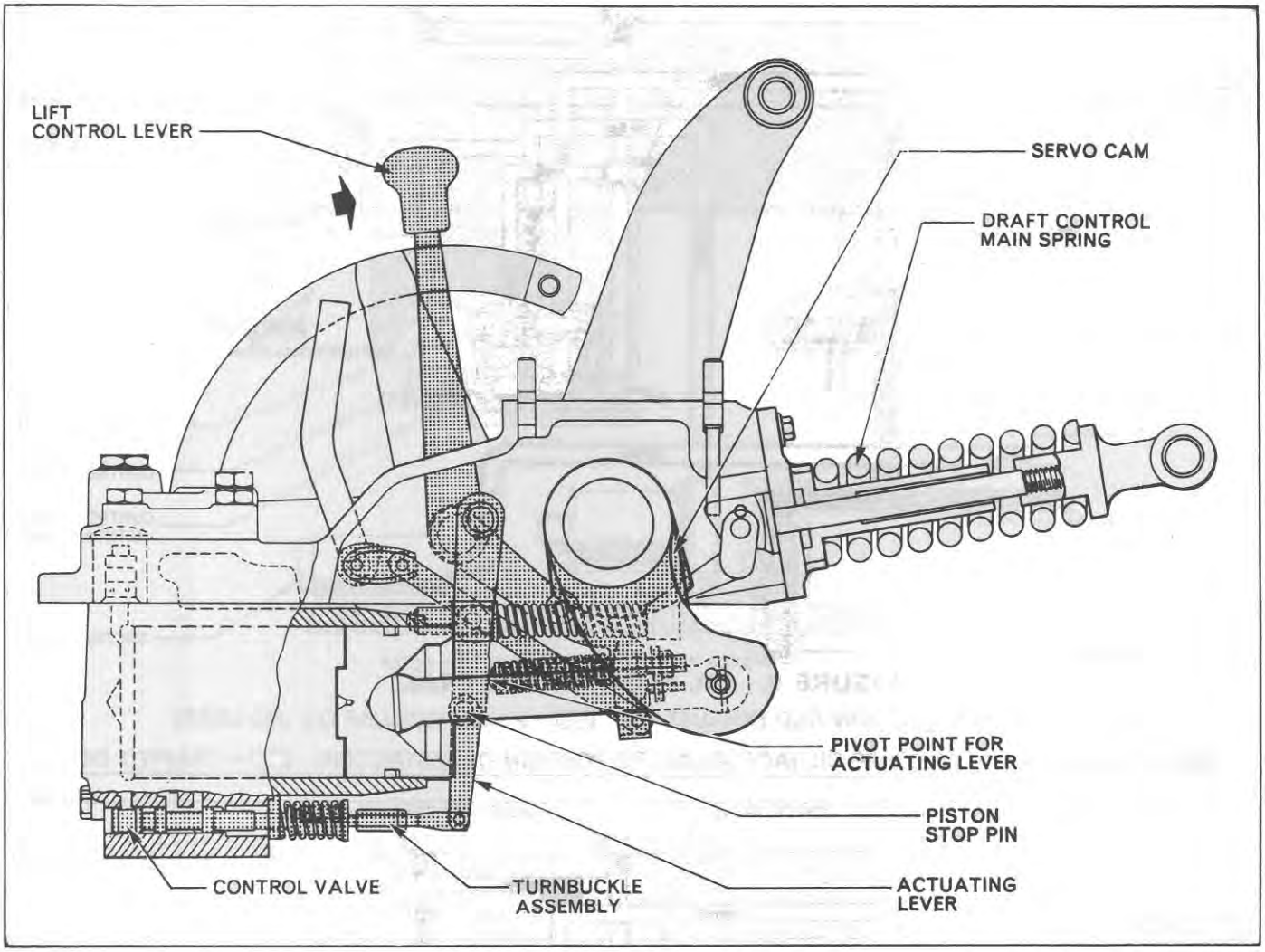

Figure 8
Position Control Linkage—Dexta 2000

Check Valve: This is a simple one-way ball valve which allows oil to pass to the lift cylinder or auxiliary equipment but will not allow it to return. A spring retains the ball on its seat.

Lift Cylinder Safety Valve: This valve, which is spring operated, is fitted directly into the lift cylinder. If shock loadings are encountered, for example when transporting heavy implements over rough ground, the lift cylinder safety valve opens to relieve the pressure and protect the system. (For opening pressure see Specifications Section—Chapter 5.)

Back Pressure Valve: Situated at the end of the return filter this spring operated valve keeps a light pressure of approximately 35 lbs./sq. in. (2·11 kg/sq. cm) in the system at all times, maintaining the correct position of the unload valve and allowing some oil to bleed through the return filter.

OIL FLOW

A. Oil Flow in Neutral

The hydraulic oil is drawn from the rear axle centre housing or reservoir by the hydraulic pump and circulated to the hydraulic system. The oil flows firstly past the relief valve, Figure 9, situated in the base of the rear axle centre housing and then vertically upwards, past the flow control valve on the Super Dexta 3000 and Major 4000, to the lift cover assembly. According to the position of the restrictor a certain percentage of oil is returned through the by-pass pipe to the oil reservoir.

The oil passes through passages in the lift cover and lift cylinder assembly to the unload valve. Due to the position

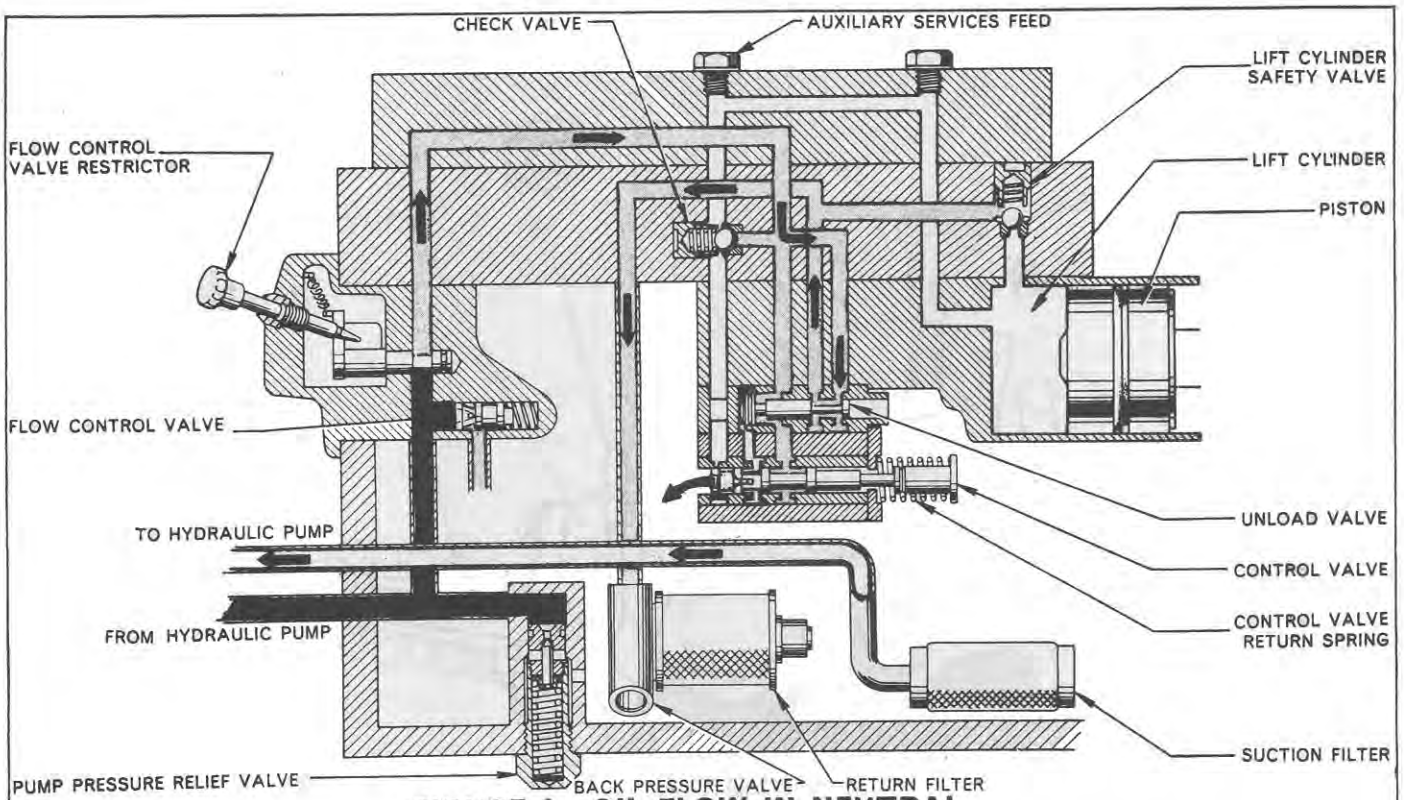

FIGURE 9. OIL FLOW IN NEUTRAL

— RESERVOIR, SUCTION AND EXHAUST OIL — PUMP PRESSURE OIL (NO LOAD)

— REDUCED PUMP PRESSURE OIL (ACCORDING TO POSITION OF RESTRICTOR) — TRAPPED OIL

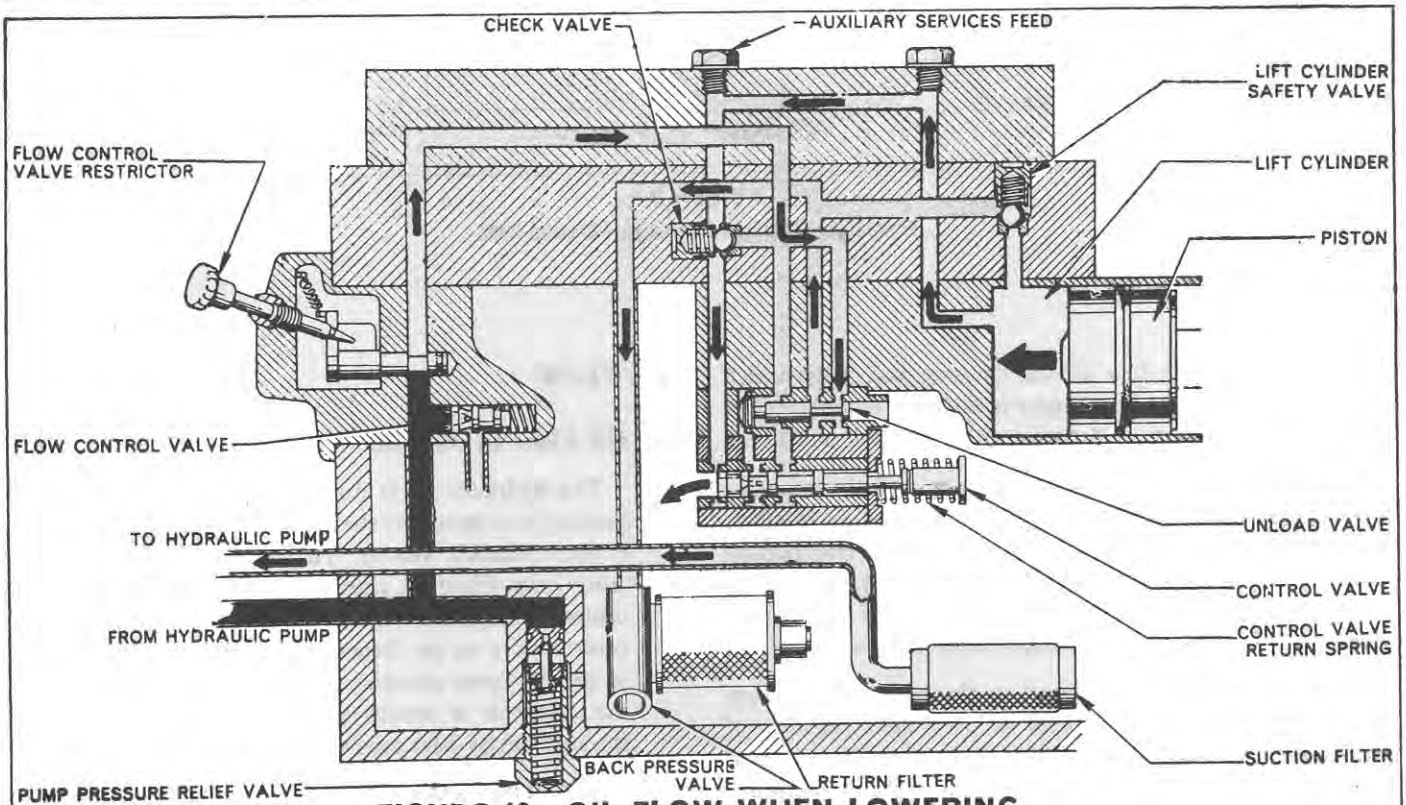

FIGURE 10. OIL FLOW WHEN LOWERING

— REDUCED PUMP PRESSURE OIL (ACCORDING TO POSITION OF RESTRICTOR)

— PUMP PRESSURE OIL (NO LOAD) — RESERVOIR, SUCTION AND EXHAUST OIL

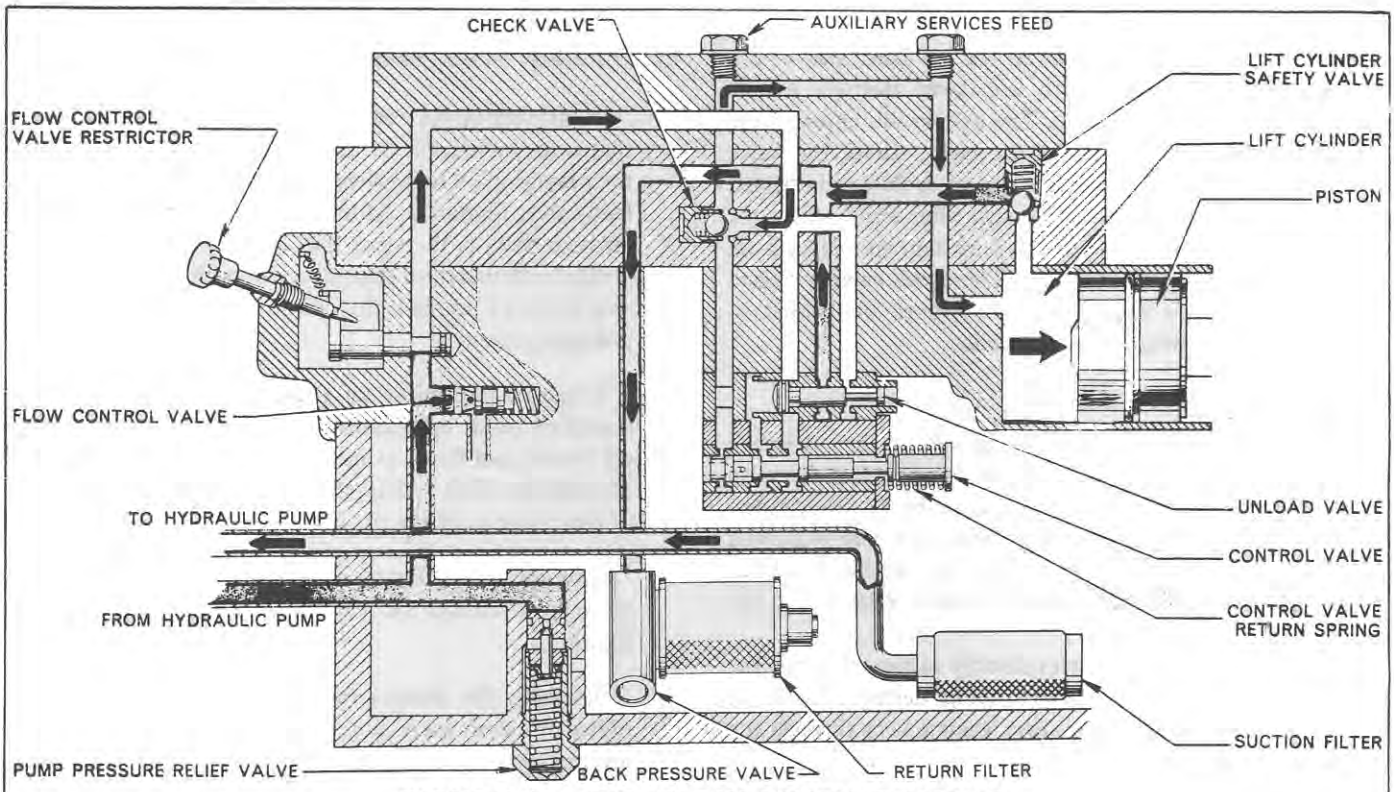

FIGURE 11. OIL FLOW WHEN RAISING

– HIGH PRESSURE OIL – RESERVOIR, SUCTION AND EXHAUST OIL

– REDUCED HIGH PRESSURE OIL (ACCORDING TO POSITION OF RESTRICTOR)

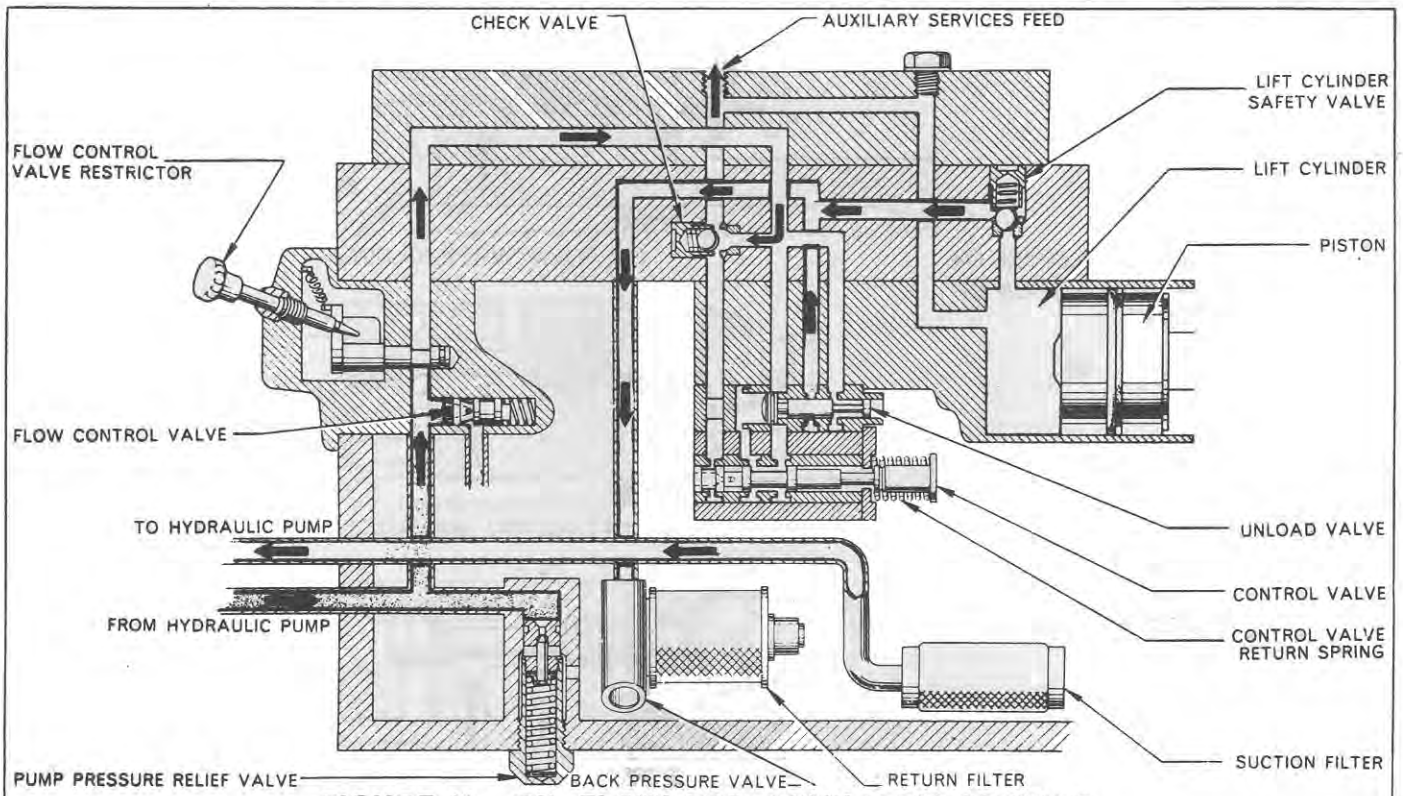

FIGURE 12. OIL FLOW FOR AUXILIARY SERVICE

– HIGH PRESSURE OIL – RESERVOIR, SUCTION AND EXHAUST OIL

– REDUCED HIGH PRESSURE OIL (ACCORDING TO POSITION OF RESTRICTOR)

of the control valve, the oil on the left hand side of the unload valve is allowed to leak away through a hole drilled in the control valve. The supply oil, entering the unload valve chamber from the right, forces the valve to the left. This action causes the oil to flow as indicated by the arrows, through the return filter and back to the reservoir. The oil flows in this direction simply because it is the easiest path to follow. The check valve, retained on its seat by a spring and the trapped oil behind it, stops the oil flowing in this direction.

B. Oil Flow when Lowering

When the control valve is moved to the lowering position, which is to the right, the front land of the valve uncovers the lowering port at the front of the lift cylinder, Figure 10. The oil in the lift cylinder therefore is allowed to flow from the cylinder, past the auxiliary service blanking plug, through the check valve chamber to the reservoir.

Oil from the pump passes directly to the reservoir, the position of the unload valve being determined, as in neutral, by oil on the front face leaking away through the control valve.

C. Oil Flow when Raising

Movement of the control valve to the raising position, that is to the left, blocks off the lowering port and allows the passage of oil to be directed to the front face of the unload valve, Figure 11. Although at this point the pressure on both faces is the same the force on the larger side is greater and therefore the valve moves in the direction of that force, i.e. to the right, and in so doing blocks off the unloading circuit.

It is now impossible for the oil to flow to exhaust. It therefore builds up pressure, forcing the check valve ball off its seat and flows, as indicated by the arrows, into the lift cylinder. This action pushes the lift piston further out of the cylinder, lifting the linkage.

This system will continue to lift until either the control valve is moved into the neutral position or the relief valve blows.

Normally the control valve will be moved to neutral either by a draft correction, a movement of the lift control lever or by the piston stop pin.

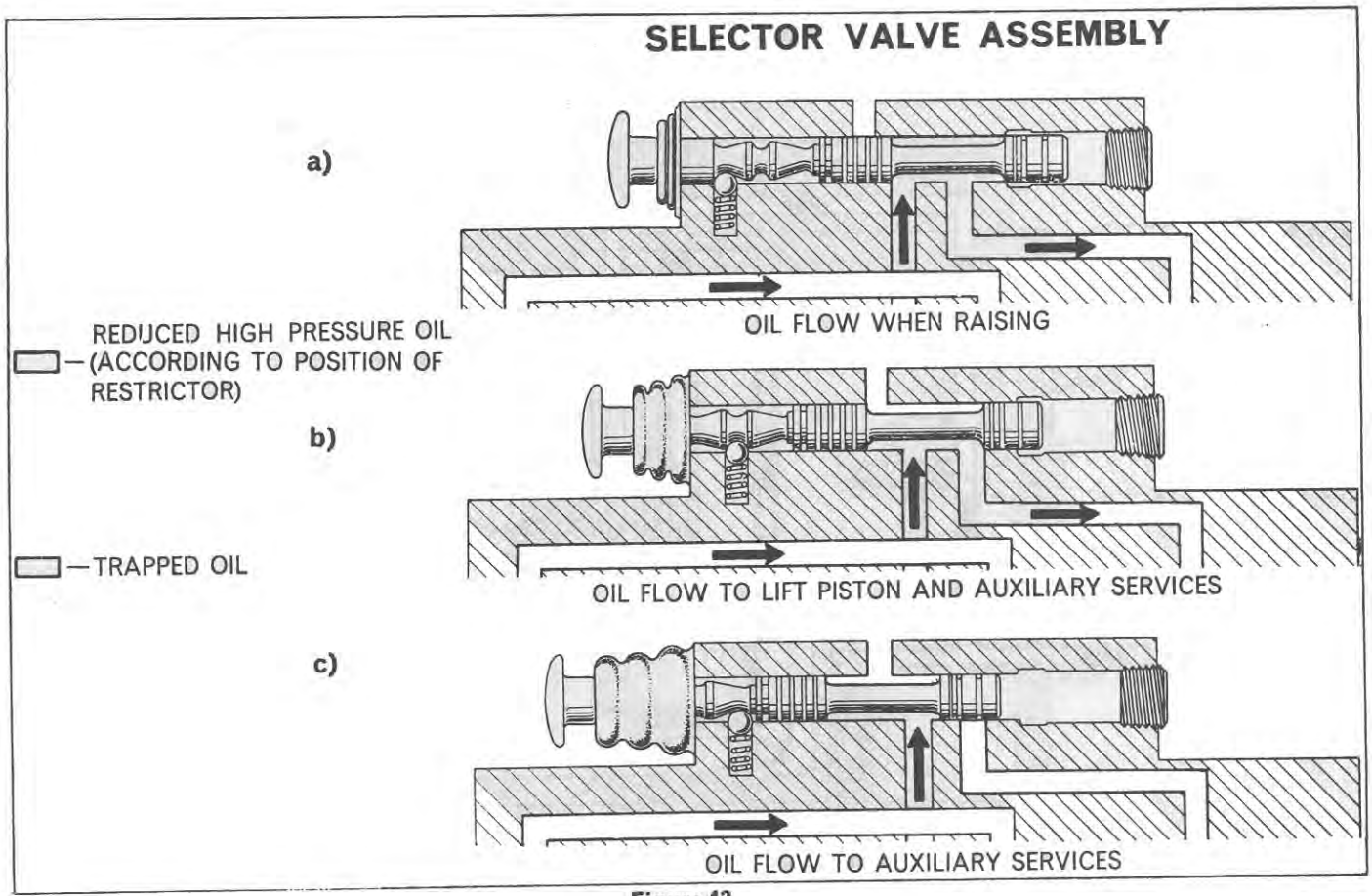

Figure 13

As soon as the control valve is in neutral, the pressure on the large face of the unload valve is allowed to leak away through the control valve drilling, reducing the pressure on this side of the unload valve. With the greater amount of pressure on the small side of the valve, the valve moves to the left. This movement opens the unloading circuit and directs the oil from the pump to exhaust, stopping the raising cycle.

D. Oil Flow for Auxiliary Service—Without Selector Valve

The positions of the control valve and unload valve remain the same as in the raising circuit but, by removing the auxiliary service plug on the accessory cover, Figure 12, oil can be directed to external equipment.

As oil is still being fed to the lift cylinder at the same time it is advisable to hold the lower links down to prevent them raising and moving the control valve into neutral. If this were to happen the oil flow to the external equipment and lift cylinder would cease. Alternatively, oil can be directed solely to the auxiliary equipment by placing the lift control lever past the quadrant top stop after tne lift arms have been fully raised.

E. Oil Flow for Auxiliary Service—With Selector Valve

When a three position selector valve is fitted in place of the accessory cover, the oil flow will remain the same as described in 'Oil Flow for Raising' but will alter slightly on reaching the valve.

With the knob pushed fully in, Figure 13 (a), the oil is directed to the lift cylinder. The valve spool blocks off the auxiliary service port.

With the knob pulled out one stop, Figure 13 (b), the valve spool allows the oil to be directed to both the lift cylinder and the auxiliary service port. The action of the lift arms with the valve in this position will depend upon, and be controlled by, the type of auxiliary equipment being used.

With the knob pulled fully out, Figure 13 (c), the valve spool blocks off the lift cylinder port and the oil is directed to the auxiliary service port.

2. ADJUSTMENTS

DRAFT CONTROL MAIN SPRING ADJUSTMENT
Dexta 2000

The draft control main spring setting for the Dexta 2000 is correct for all normal operations when there is enough compression of the spring to just allow the spring to be rotated with the finger and thumb of one hand, Figure 14.

If the spring cannot be turned in this manner, or if the pre-compression is insufficient to meet the above requirement, the spring plunger yoke should be released from its connection to the rocker and turned in a clockwise direction to increase the loading on the spring. The spring should be turned counter-clockwise to decrease the loading.

When operating under Draft Control, it may be advantageous when undertaking certain operations, to increase the spring pre-compression beyond the normal setting, i.e. in order to obtain abnormal penetration, from an earth moving implement. Before resorting to such a procedure, care must be taken to ensure that the implement itself is correctly set.

It must also be realised that with such a setting the sensitivity of the Draft Control will be reduced and care must be taken to correct the spring adjustment before resuming normal operations.

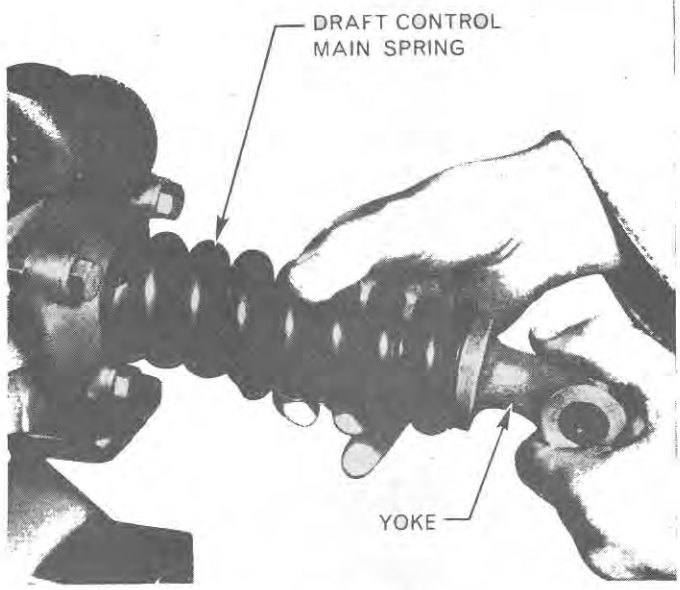

Figure 14
Draft Control Main Spring Adjustment

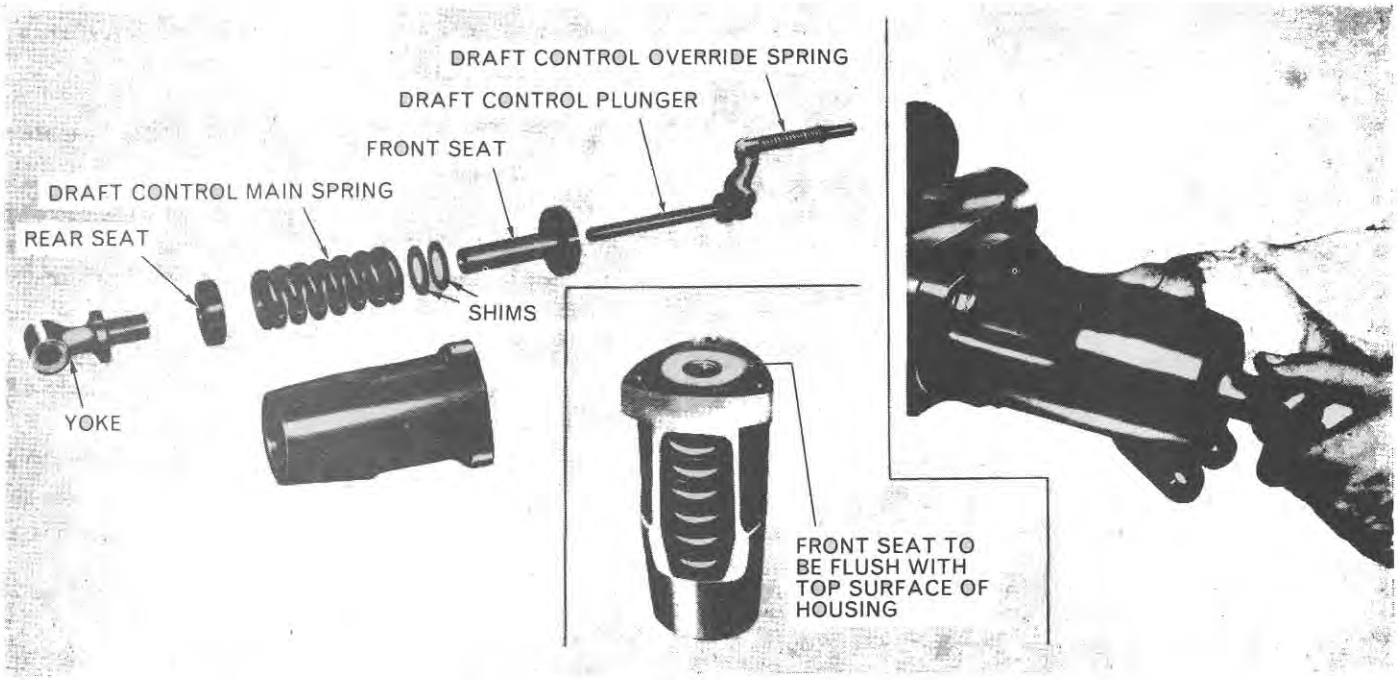

Figure 15
Draft Control Main Spring Adjustment

Super Dexta 3000 and Major 4000

1. Assemble the rear spring bearing, Figure 15, draft control main spring and front spring seat into the draft control main spring housing.
2. Note the distance between the top face of the front seat and the surface of the housing, see inset—Figure 15.
3. Add shims (see Specification Section—Chapter 5 for thicknesses) between the spring and front spring seat to bring the face of the front spring seat slightly over-flush with the housing face. The amount of front spring seat protruding above the housing face should be between 0·000 in. and 0·010 in. (0·000 mm-0·254 mm).
4. Re-assemble the housing to the lift cover assembly with the draft control spring plunger installed in the draft control main spring housing and secure with the three bolts.
5. Screw the yoke in until all free play is eliminated. Unscrew the yoke to the nearest position to bring the hole in the yoke horizontal, inset—Figure 15.

DRAFT CONTROL LINKAGE ADJUSTMENT

NOTE: ***When adjusting the control linkage it is important that Draft Control is selected and checked before Position Control.***

Super Dexta 3000 and Major 4000

1. Place the selector lever in the Draft Control position, Figure 16.
2. Place the lift control lever 3·75 in. (95·25 mm) from the quadrant top stop so that the lever may be accurately positioned for adjustment.
3. Adjust the turnbuckle to give 0·200 in. (5·08 mm) from the end of the control valve to the front face of the lift cylinder control valve bushing using Setting Gauge Tool No. SW 3. (Use the opposite end to the one with '32 D' engraved on the body of the tool) or Gauge Tool No. SW 508.

NOTE: ***The plunger in the Hydraulic Lift Control Valve Setting Gauge No. SW 508 measures 0·200 in. (5·08 mm) when the face of the plunger is flush with the inside step of the tool body. The plunger measures 0·144 in. (3·65 mm) when the face of the plunger is flush with the outside step of the tool body.***

Dexta 2000

1. Place the selector lever in Draft Control (horizontal).
2. Place the lift control lever 1·75 in. (44·45 mm) from the quadrant top stop. (Measured on the outside of the quadrant retainer.)
3. Adjust the turnbuckle to give 0·144 in. (3·65 mm) from the end of the control valve to the front cover face of

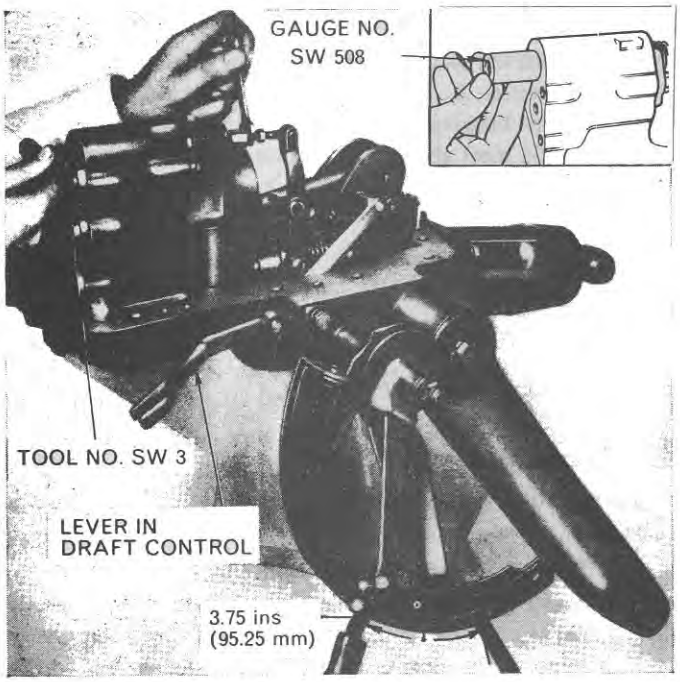

Figure 16
Draft Control Linkage Adjustment

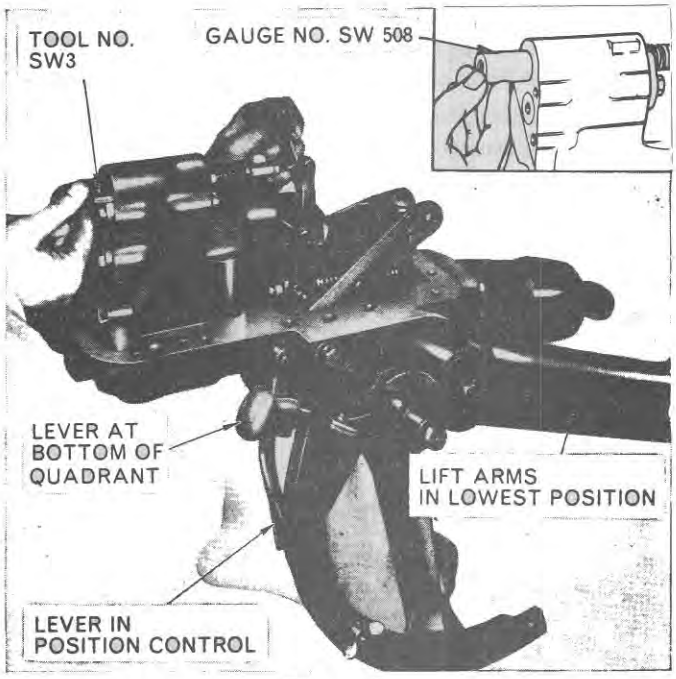

Figure 17
Position Control Linkage Adjustment

the lift cylinder, using Setting Gauge Tool No. SW 3 or SW 508 to check this dimension. (The end of the gauge to be used is identified by '32 D' engraved on the body of the tool.)

POSITION CONTROL LINKAGE ADJUSTMENT

Super Dexta 3000 and Major 4000

1. Place the selector lever in Position Control, Figure 17.
2. Place the lift arms in the extreme lower position.
3. Move the lift control lever down the quadrant until it rests against the lower end of the quadrant.
4. Adjust the length of the position control rod to obtain 0·200 in. (5·08 mm) from the end of the control valve to the front cover face of the lift cylinder, using Setting Gauge Tool No. SW 3 or SW 508 to check this dimension.

Dexta 2000

1. Place the selector lever in Position Control (vertical).
2. Place the lift arms in the extreme lower position.
3. Move the control lever down the quadrant until it rests against the stop at the bottom.
4. Adjust the length of the position control rod to give 0·200 in. (5·08 mm) from the end of the control valve to the front cover face of the lift cylinder using Setting Gauge Tool No. SW 3 or SW 508 to check this dimension.

FLOW CONTROL VALVE CAM FOLLOWER ADJUSTMENT

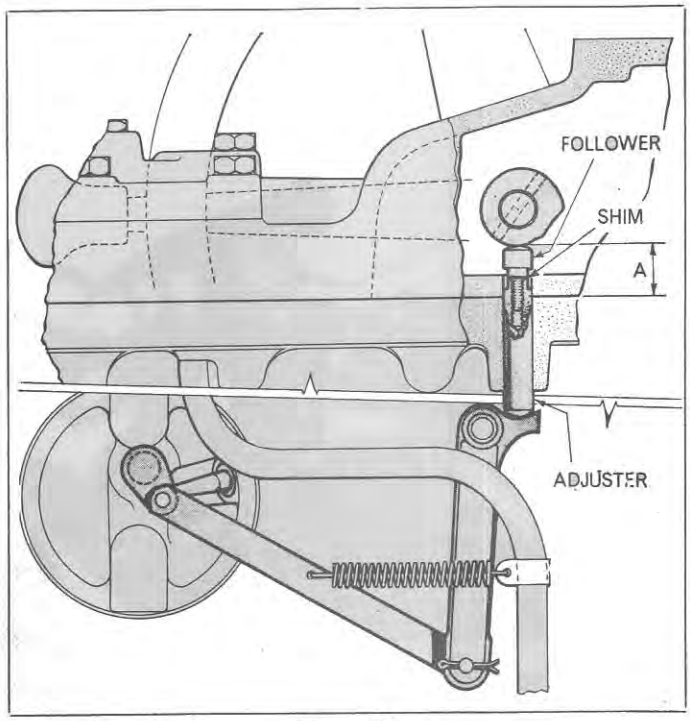

Figure 18
Flow Control Valve Override Linkage

© FORD MOTOR COMPANY LTD., 1964

Super Dexta 3000 and Major 4000

1. With the lift cover removed place the lift control lever in the lower position.
2. Measure the distance between the constant radius part of the actuating cam and the lift cover face.
3. Screw out the flow control valve spindle to its furthest position.
4. Adjust the cam follower by placing shims under it until dimension A, Figure 18, from the face of the rear axle centre housing to the top of the follower, is 0·010 in. (0·254 mm) above the distance measured between the cam and lift cover face as in 2.

3. OVERHAUL LIFT CYLINDER ASSEMBLY

A. Removal

1. Remove the hydraulic lift cover (See Chapter 1—Section 4).
2. Remove the three remaining bolts securing the accessory cover to the lift cover and remove the accessory cover.
3. Remove the cotter pin and clevis pin that secure the control valve turnbuckle clevis to the actuating lever and withdraw the turnbuckle assembly from the control valve, Figure 19.
4. Remove the four bolts that secure the lift cylinder assembly to the lift cover (one of these is recessed in the lift cover). Move the lift arms to the raised position, swing the lift piston connecting rod away from the piston and remove the lift cylinder from the lift cover.

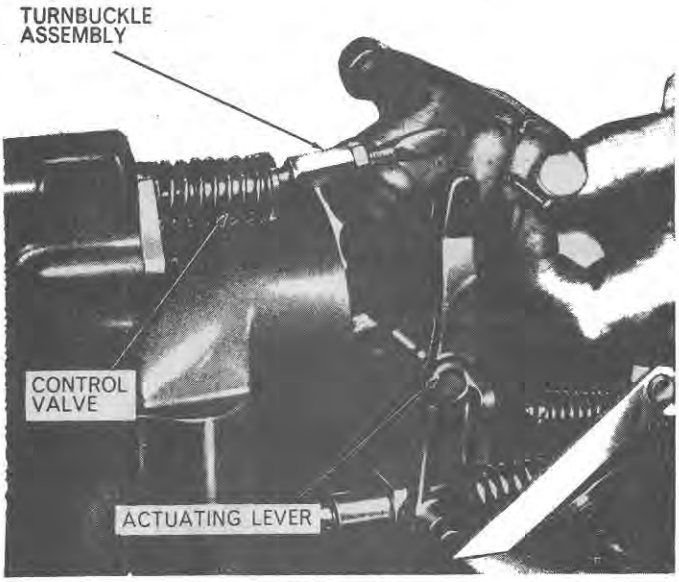

Figure 19
Removing Control Valve Turnbuckle

B. Disassembly

An exploded view of the lift cylinder assembly is shown in Figure 20.

1. Remove the cylinder safety valve by turning it counter-clockwise. Use an open-ended spanner (wrench) on the hexagon body of the valve and do not attempt to remove the centre portion. The slot in the centre portion of the valve is for adjustment purposes when the valve is originally assembled. It is set to open at a specific pressure and then sealed. (See Specification Section—Chapter 5.) No attempt should be made to break the seal, but if at any time the valve is suspected of being faulty it should be removed and replaced with a new assembly which is known to be correct.

Major 4000: The lift cylinder safety valve is positioned in the end wall of the cylinder on the Major 4000 and can be removed without first removing the lift cylinder.

2. If necessary remove the two dowel rings from the top face of the lift cylinder.
3. Discard the five 'O' rings fitted in the counterbores of the various oil passages.
4. Turn the cylinder on to its top face (or hold it in a soft jawed vice) and, to prevent damage to the machined surface if repaired on a bench, ensure that the bench top is smooth and clean.
5. Remove the three bolts securing the front cover plate, Figure 20, to the lift cylinder and remove the plate.
6. Remove the two bolts securing the rear cover plate to the lift cylinder and remove the plate together with the control valve and spring withdrawing it from the rear of the cylinder. Take great care in handling this valve to prevent damage or scoring of the lands, or distortion of the valve as a whole.
7. Attach removing Adaptor No. T.8510-1/g to the Lift Cylinder Bushing Remover and Replacer No. T.8510, screw the outer end of the Adaptor into the unload valve plug at the front end of the unload valve chamber

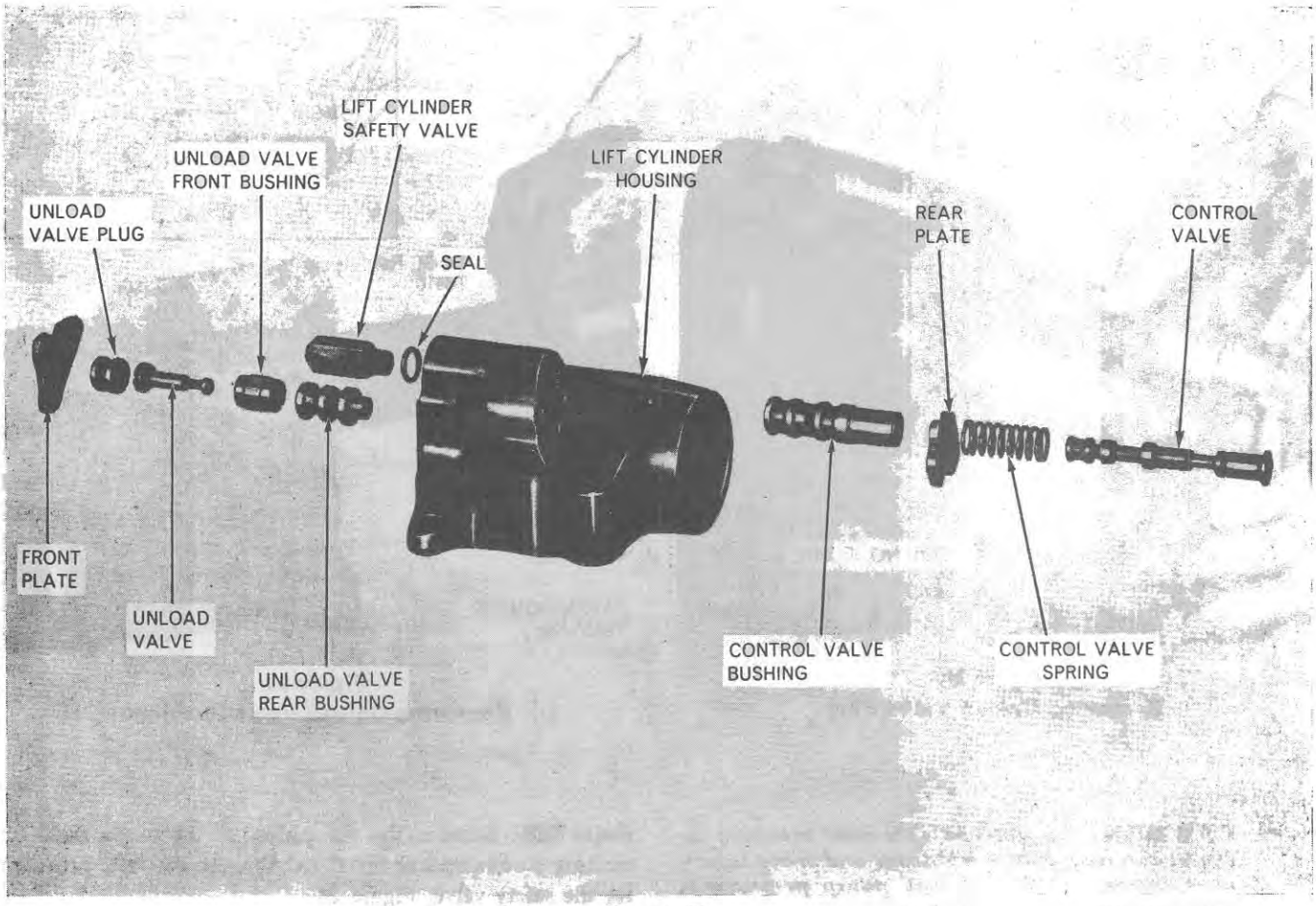

Figure 20
Lift Cylinder Assembly

(closed end of cylinder), and withdraw the plug, Figure 21. Note the annular recess in the plug which allows exhaust oil from the lift cylinder to by-pass the unload valve. It is important that care is taken to avoid damage to the external surface of the plug as a leak past this plug will affect the operation of the lift.

Alternatively use a slide hammer to remove unload valve plug.

8. Remove the unload valve from the front end of the cylinder and discard the 'O' ring fitted to the large end of the valve.

9. Attach the short threaded end of Extension No. T.8510-1/b to Lift Cylinder Bushing Remover and Replacer No. T.8510 and pass the Extension through the control valve bushing so that the main tool remains at the front end of the cylinder. Screw the Special Nut T.8510-1/h on to the rear threaded end of the extension until it locates squarely on the rear face of the control valve bushing with the small taper on the front face of the nut located within the bushing to centralize the tool, Figure 22. Operate the wing nut of the tool and withdraw the bushing. Unscrew the Special Nut and remove the bushing from the Extension.

Alternatively use Lift Cylinder Bushing Remover and Replacer No. N-508-A to remove the control valve bushing as shown in inset—Figure 22.

10. Pass the Extension No. T.8510-1/b through the unload valve bushings, attach the Nut No. T.8510-1/h, locating it squarely against the rear end of the rear bushing, and withdraw both bushings from the cylinder in one operation, Figure 23.

Alternatively use Lift Cylinder Bushing Remover and Replacer No. N-508-A to remove the unload valve bushings, inset—Figure 23.

Dexta 2000 and Super Dexta 3000: Remove the lift piston of the Dexta 2000 and the Super Dexta 3000 by applying air pressure through the safety valve hole while holding the thumb over the hole which is adjacent to it, Figure 24.

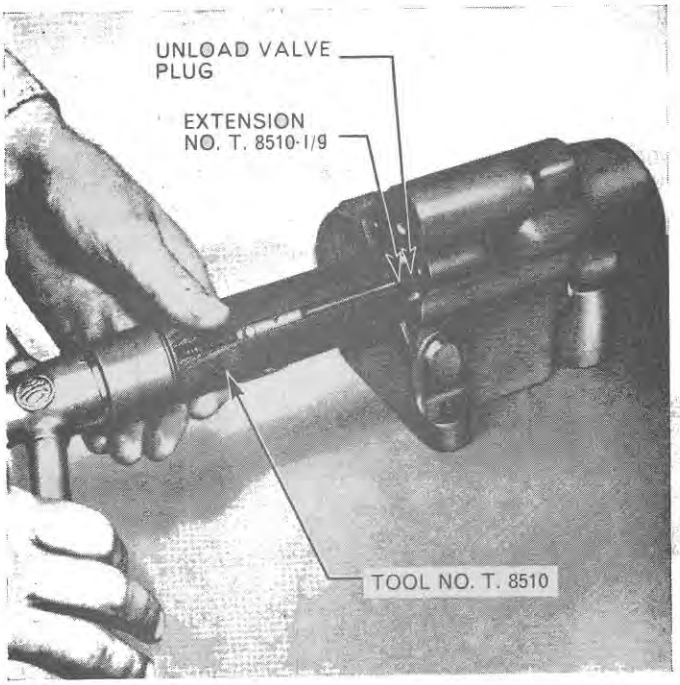

Figure 21
Removing Unload Valve Plug

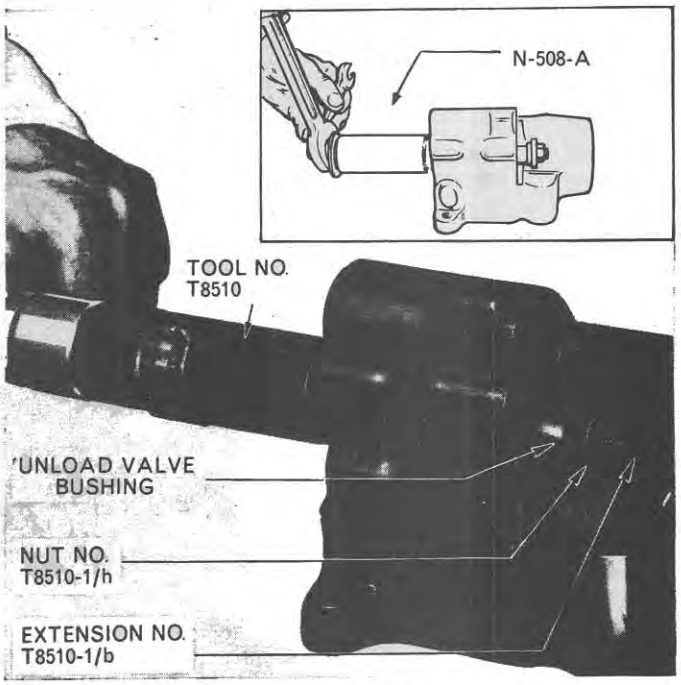

Figure 23
Removing Unload Valve Bushings

CAUTION: ***Do not use excessive pressure or the piston may fly out suddenly and cause injury or damage. Ordinary foot pump pressure is sufficient to move the piston.***

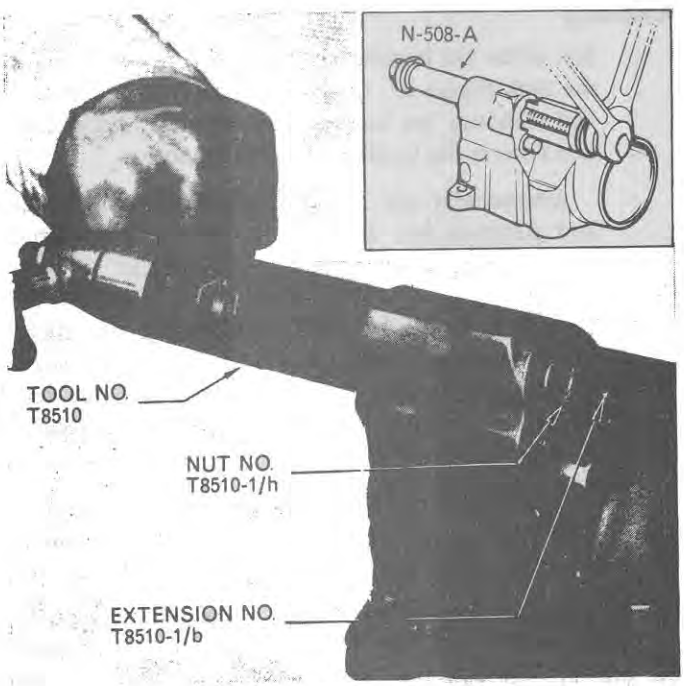

Figure 22
Removing Control Valve Bushings

Major 4000: Remove the lift piston of the Major 4000 by pushing a suitable soft metal rod through the hole provided for the safety valve, Figure 24.

11. Unless the piston gland or leather backing washer are known to be giving a perfect seal it is recommended that they are both discarded and new ones fitted on reassembly.

C. Inspection and Repair

Due to the extreme accuracy of the valves, bushings and sealing plugs used on the lift cylinder, it is important that any part which is worn, scratched or damaged in any way, should be discarded and only perfect parts fitted on assembly. Each bushing is a press fit in its respective bore in the cylinder and the control valve is a selective fit on its bushing. Install new 'O' rings and gaskets on assembly.

D. Assembly

1. Observe the colour spot on the outside of the cylinder adjacent to the front end of the unload valve chamber and select a front and a rear unload valve bushing with corresponding colour markings. (For bushing sizes see Specification Section—Chapter 5.) Attach the short threaded end of Extension T.8510-1/a to Lift Cylinder Bushing Remover and Replacer No. T.8510

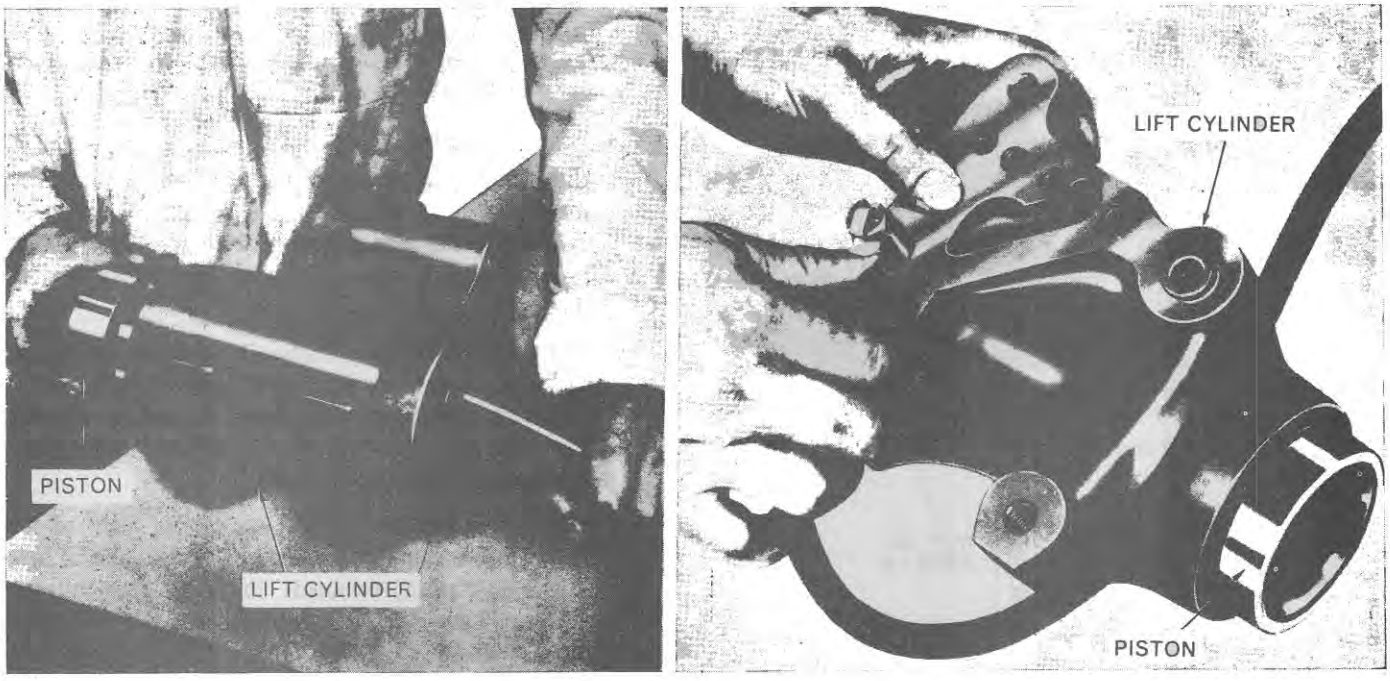

(a) **Major** *(b)* **Dexta and Super Dexta**

Figure 24
Removing the Lift Piston

and, working from the front of the cylinder, pass the Extension through the unload valve bushing bore.

2. Place the unload valve front bushing over the Extension and locate it at the entrance to the bore. The bushing has a small single notch at one end, which should face into the bore, and two large notches at the opposite end, which must locate against the rear bushing, Figure 25.

3. Place the unload valve rear bushing over the Extension, making the assembly with the long spigot end facing away from the front bushing. Screw the special Guide Nut T.8510-1/e on to the extension and locate the adjacent spigot end of the rear bushing in the counter bore in the nut, Figure 26. Lubricate the outside surfaces of both bushings and draw them into the bore until the inner end of the spigot (the back of the rear land) on the rear bushing is flush with the rear face of the cylinder. The bushings are correctly located when the front face of the guide nut touches the rear face of the cylinder. The rear bushing must be centralized correctly when making the assembly, otherwise difficulty may be experienced in obtaining entry into the bore.

NOTE: ***It is important that the bushings are correctly located, neither under- nor over-flush with the rear face of the cylinder.***

4. Release the special nut and withdraw the tool from the unload valve bushings.

   Alternatively use Lift Cylinder Bushing Remover and Replacer No. N-508-A to install the unload valve bushings, inset—Figure 26.

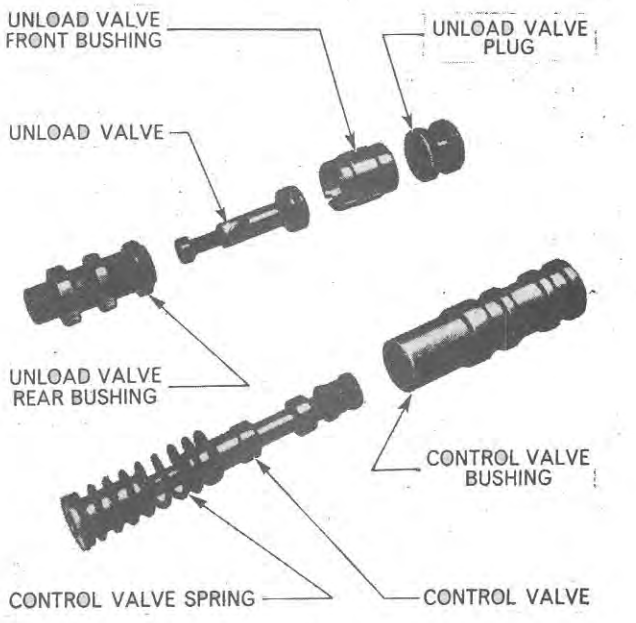

Figure 25
Control and Unload Valve Bushings

© FORD MOTOR COMPANY LTD. 1964

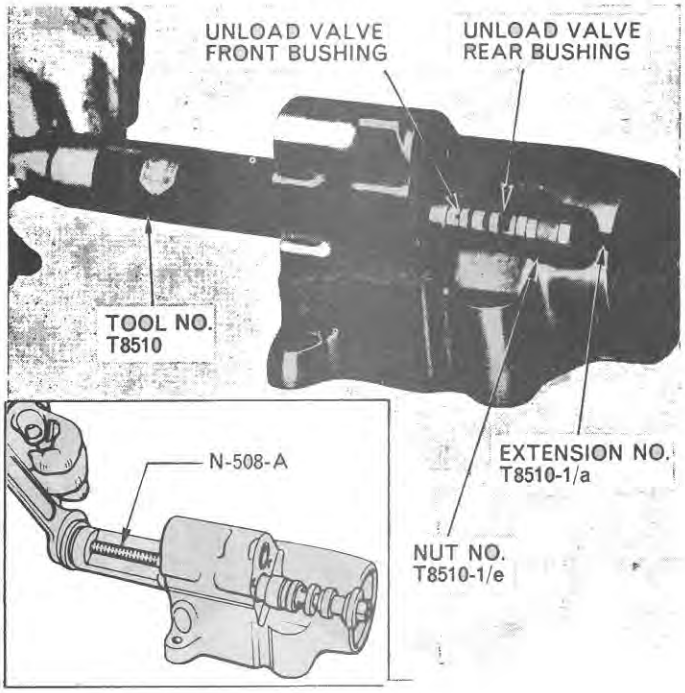

Figure 26
Installing the Unload Valve Bushings

5. Observe the colour spot on the outside of the cylinder adjacent to the control valve bushing bore. Select a control valve bushing with a similar colour marking. (For bushing sizes see Specification Section—Chapter 5.)

6. Insert the Guide and Stop Adaptor T.8510-1/k (spigot end first) into the rear of the control valve bushing bore and working from the rear of the cylinder, pass Extension No. T.8510-1/a fitted to Lift Cylinder Bushing Remover and Replacer No. T.8510 through the guide. Locate the control valve bushing over the extension. It will be noted that the lands of the bushing vary in size and should be replaced with the counter-bored end to the front of the cylinder. Lubricate the bushing and using Nut No. T.8510-1/h to retain the bushing and centralize the extension, pull the bushing into the bore until the front face of the bushing meets the inner face of the guide, Figure 27. Slacken the wing nut of the tool and reverse the guide, passing the spigot into the body of the tool so that the larger face of the guide is presented to the rear face of the cylinder. Re-tighten the wing nut of the tool and draw the control valve bushing fully into position to seat against the guide so that the front end of the bushing is flush with the front face of the cylinder.

   Alternatively use Lift Cylinder Bushing Remover and Replacer No. N-508-A to install the control valve bushing, inset—Figure 27.

NOTE: ***It is important that when finally positioned the front end of the bushing is neither over- nor under-flush with the front face of the cylinder.***

7. Install a new 'O' ring in the recess at the large end of the unload valve, lubricate the valve and 'O' ring and insert into the corresponding bushings in the lift cylinder. Make the assembly from the front of the cylinder with the large end of the valve facing towards the front.

8. The unload valve plug, Figure 25, is colour marked in the same manner as the unload valve bushing and a plug with a matching colour marking should be selected for assembly. (For plug sizes—See Specifications Section—Chapter 5.)

   Install the unload valve plug in the front of the unload valve chamber with the threaded central hole in the plug facing outwards. Press the plug into the bore until the outer face is flush with the front face of the cylinder.

9. The control valve, Figure 25, is colour marked to provide identification as to its diameter, but this should not be used as a means of selecting a valve to match the control valve bushing. When the bushing is pressed into the bore in the cylinder, the internal diameter becomes smaller in proportion to the amount of interference, between bushing and bore. When selecting a control valve, therefore, one should be chosen which,

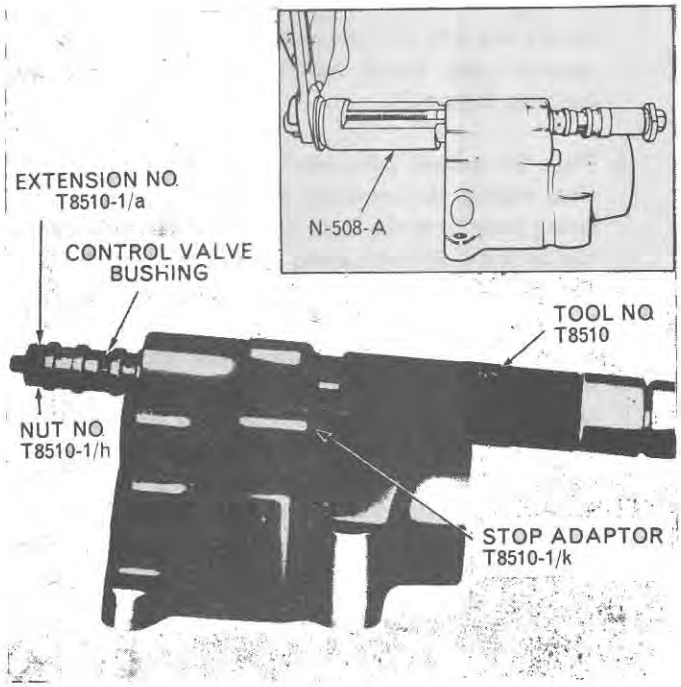

Figure 27
Installing the Control Valve Bushing

irrespective of colour markings is the largest which will operate within the bushing without binding, and one which will just fall under its own weight. (For control valve sizes see Specifications Section—Chapter 5.)

It is therefore, extremely important that both the internal surface of the bushing and the external surface of the valve lands are completely free from burrs and that care is taken when handling the valve to prevent distortion.

10. Install the proper size valve with the control valve spring. Then install the rear cover plate and secure the plate with the two bolts.

11. Install the front cover plate and retain with the three bolts.

12. Install the two ring dowels (if they have been removed) in the diagonally opposite counterbored holes in the top face of the cylinder.

13. Install a new 'O' ring and a new leather back-up seal on the lift piston with the flesh (rough) side of the seal to the 'O' ring. The 'O' ring should be placed nearest to the closed end of the piston.

NOTE: ***To facilitate installation of both the 'O' ring and the leather back-up seal, the following procedure should be adopted:***

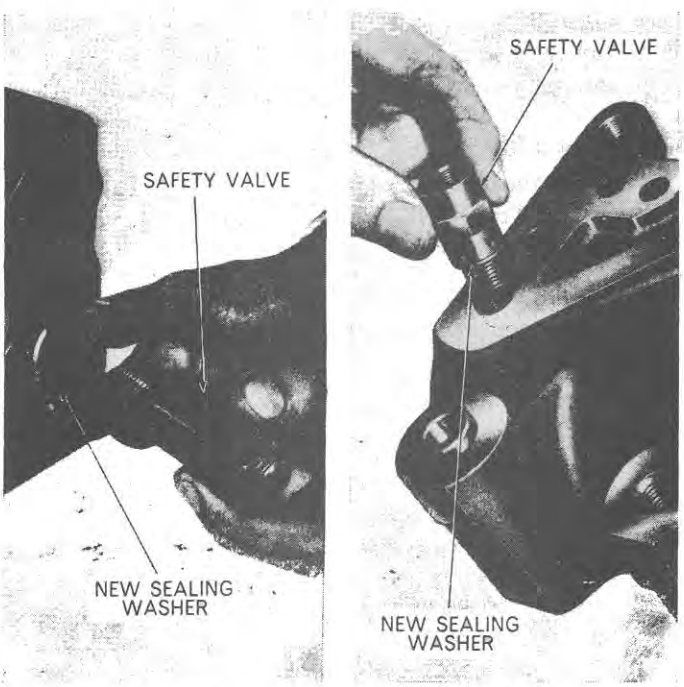

(a) **Major** *(b)* **Dexta and Super Dexta**

Figure 28
Installing the Lift Cylinder Safety Valve



Figure 29
Installing the Lift Cylinder Assembly

Soak the 'O' ring in oil for about 5 minutes and the leather back-up seal in water for a maximum time of 2 minutes. This action expands the leather seal and allows it to slide over the piston and seat in the groove. The leather seal must be allowed to contract to its original size before attempting to relocate the lift piston in the lift cylinder.

14. Lubricate the lift piston and install it in the lift cylinder.

15. Install the cylinder safety valve assembly, using a new gasket between the valve and the cylinder, Figure 28.

E. Installation

1. Make sure that the top surface of the cylinder and the mating face on the lift cover are clean and free from scores or burrs.

2. Position new 'O' rings in the counterbores of the oil passages, refit the cylinder to the cover, Figure 29, and fully tighten the retaining bolts to the correct torque. (See Specifications Section—Chapter 5.)

3. Install the control valve turnbuckle assembly securing the clevis to the rear end of the control valve actuating

lever with the appropriate cotter pin and clevis pin. Insert the forward end of the lift piston connecting rod within the piston and carry out the draft control linkage and position control adjustment as described in the section 'Adjustments'.

4. Install a new set of 'O' rings with accessory cover, Figure 30, assemble the lift cover assembly to the tractor and install the driver's seat.

NOTE: ***It is important that, while lowering the lift cover, the flow control override adjuster is supported to prevent damage to the internal linkage. It is suggested therefore, that a steel rule is placed in the groove between the cam adjuster and cam follower and resting on the rear axle centre housing while the lift cover is gently lowered. Remove the rule just before the lift cover is correctly positioned. This will make certain that the lift cover does not drop heavily onto the override adjuster and consequently knock it down.***

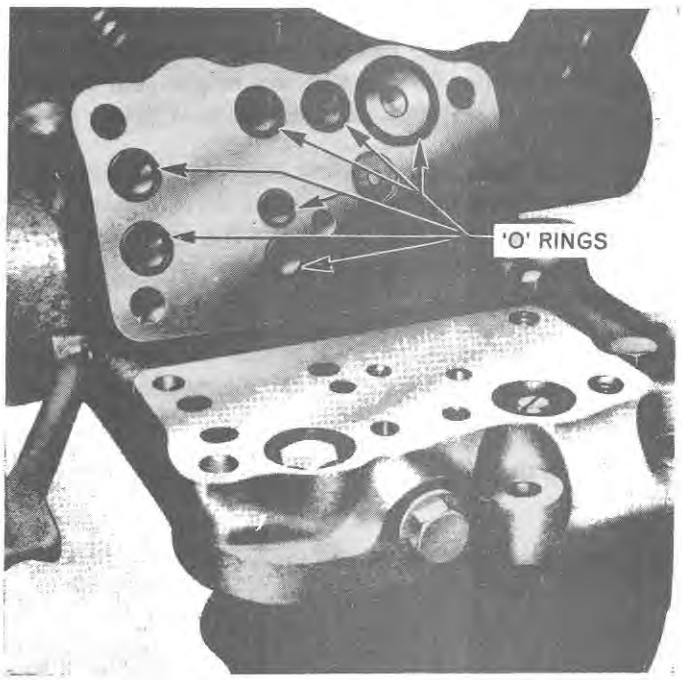

Figure 30
Accessory Cover

4. OVERHAUL LIFT COVER ASSEMBLY

A. Removal

1. Make sure that the lift arms are in their lowest position to allow the oil in the lift cylinder to be exhausted.
2. Disconnect the right and left hand lifting rods by removing the cotter pin and clevis pin from each of the lift arms.
3. Remove the cotter pin from the draft control main spring yoke and rocker and withdraw the clevis pin.
4. Swing the rocker away from the yoke.
5. Remove the seat assembly.
6. Remove the two bolts located on the right-hand side of the accessory cover which pass through both the cover and the lift cover housing.
7. Remove the remaining twelve bolts from the lift cover housing which retain the cover to the rear axle centre housing.

IMPORTANT: ***A note should be made of the position of each bolt as there are five different lengths used at the various locations.***

8. Lift the hydraulic cover assembly clear. To facilitate this removal install Lifting Bracket Tool No. T.8518.

B. Disassembly

1. Secure the lift cover assembly in a vice with the Lifting Bracket Tool No. T.8518 attached to the lift cover and secured in the jaws.
2. Remove the check valve plug from the lift cover.
3. With a pair of long nosed pliers remove the check valve spring housing complete with spring, check valve guide and ball from the lift cover. Remove the 'O' ring, Figure 31.
4. Using Adaptor No.8510-1B/n, screw the threaded portion into the check valve plug bore.

   Attach Extension No. T.8510-1/b to Lift Cylinder Bushing Remover and Replacer No. T.8510 and position the extension in the adaptor. Screw the threaded end of the extension into the threaded hole of the check valve bushing. Tighten the wingnut and remove the check valve bushing and seat.

   Alternatively use Tool No. NCA. 997-A together with the Centralising Adaptor Tool No NCA. 997-B.

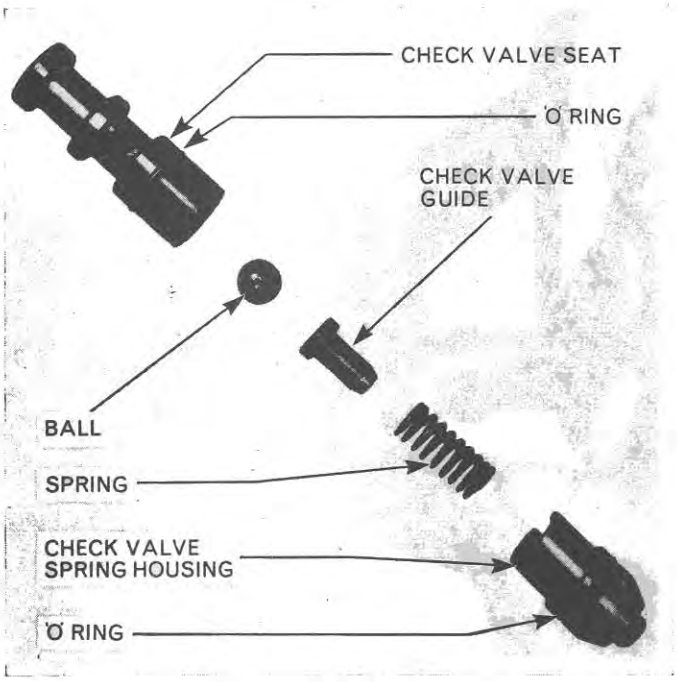

Figure 31
Check Valve Assembly

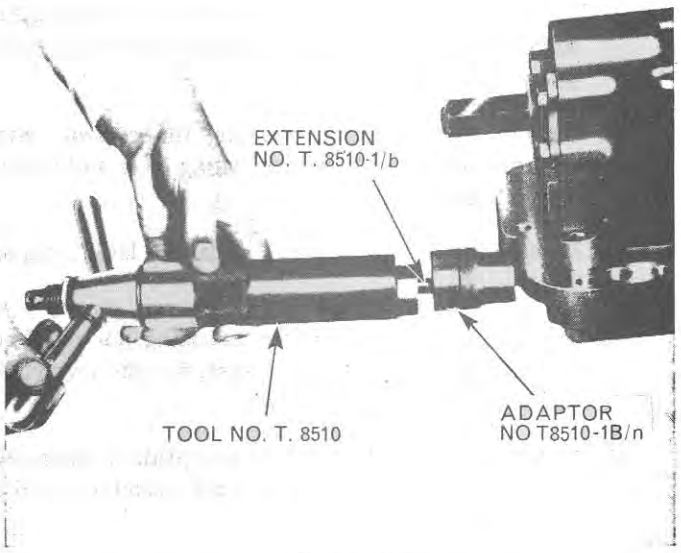

Figure 32
Removing the Check Valve Seat

5. Remove the accessory cover from the lift cover by removing the remaining three bolts.

6. Remove the cotter pin and clevis pin that secure the control valve turnbuckle clevis to the actuating lever and withdraw the turnbuckle assembly from the control valve, Figure 19.

7. Remove the four bolts that secure the lift cylinder assembly to the lift cover (one of these is recessed in the lift cover) and remove the lift cylinder from the lift cover.

8. Unscrew the yoke at the rear of the draft control main spring.

Super Dexta 3000 and Major 4000: On the Super Dexta 3000 and Major 4000, remove the three bolts securing the draft control main spring housing. Slide the housing draft control main spring, spring seat and shims over the draft control main spring plunger.

Dexta 2000: On the Dexta 2000 remove the draft control main spring and remove the three bolts securing the draft control spring seat support to the rear of the lift cover. Withdraw the seat, seat support, felt ring and plunger locking plate.

9. Lift the draft control plunger and override spring through the swivel and clear of the lift cover housing.

NOTE: ***To facilitate this removal place the lift arms in the lower position, Figure 33.***

10. Straighten the lockwasher tab and remove the bolt and flat washer retaining each lift arm to the lift cross-shaft.

11. Slide both lift arms from the lift shaft.



Figure 33
Removing the Draft Control Plunger

12. Remove the cotter pin and clevis pin retaining the lift piston connecting rod to the ram arm.

13. Remove the two lift shaft bushings, withdraw the shaft from the lift cover and remove the ram arm. Remove the thrust washer positioned on the right hand side of the ram arm.

14. Remove the snap ring retaining the control valve actuating lever and lift the actuating lever and swivel assembly from the housing.

15. Remove the two quadrant to lift control lever retainer bolts.

16. Remove the lift control lever retaining nut together with the double-coil spring washer, flat washer, woodruff key, friction disc and lever.

17. Remove the two bolts securing the quadrant assembly to the lift cover housing and slide the assembly over the control lever shaft.

18. Remove the cotter pin and clevis pin retaining the position control link to the position control linkage.

19. Remove the control lever shaft and cam assembly together with the spacer and position control linkage from the lift cover housing.



Figure 34

Installing the Position Control Linkage

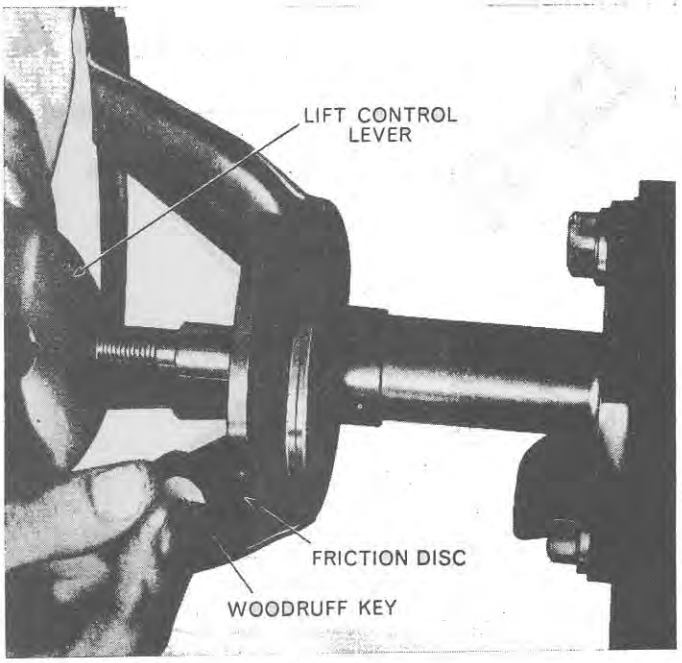

Figure 35

Installing the Lift Control Lever

NOTE: ***If necessary, drive out the tension pin and remove the cam from the control lever shaft. Slide off the position control linkage.***

20. Remove the cotter pin and washer retaining the position control link to the position control selector arm.

21. Drive out the pin securing the selector lever to the position control arm and remove the lever and arm.

C. Assembly

1. Install the position control selector arm with a new 'O' ring in its appropriate bore in the lift cover and secure the selector lever to the arm with the pin.

2. Install the position control link securing it to the position control selector arm with the washer and cotter pin.

3. If removed, slide the position control spring and arm assembly on to the control lever shaft, relocate the cam on the shaft and install the pin securing the cam to the shaft.

4. Position the control lever shaft together with the cam and position control linkage in the bore provided in the lift cover housing, Figure 34.

NOTE: ***On the Dexta 2000 a spacer is provided in place of the cam on the Super Dexta 3000 and Major 4000.***

5. Attach the rear end of the selector control link to the position control linkage and retain with the cotter pin and clevis pin, Figure 34.

6. Slide the quadrant assembly over the control lever shaft. Use a new gasket between the lift cover housing and quadrant and secure with the two bolts and two spring washers. (For correct torque See Specifications Section—Chapter 5.)

7. Position the friction disc and woodruff key on the control lever shaft, Figure 35.

8. Assemble the lift control lever over the woodruff key and retain on the control lever shaft with a flat washer, double coil spring lockwasher and the self-locking nut. Tighten the nut to the specified torque. (See Specifications Section—Chapter 5.)

9. Secure the control lever retainer to the quadrant assembly with the two bolts, Figure 36.

10. Install the control valve actuating lever and swivel assembly on the control lever shaft and secure the lever with a snap ring, Figure 37.

11. Position the ram arm in the lift cover housing together with the thrust washer and install the lift cross-shaft, aligning the master spline in the ram arm with the corresponding spline on the shaft, Figure 38.

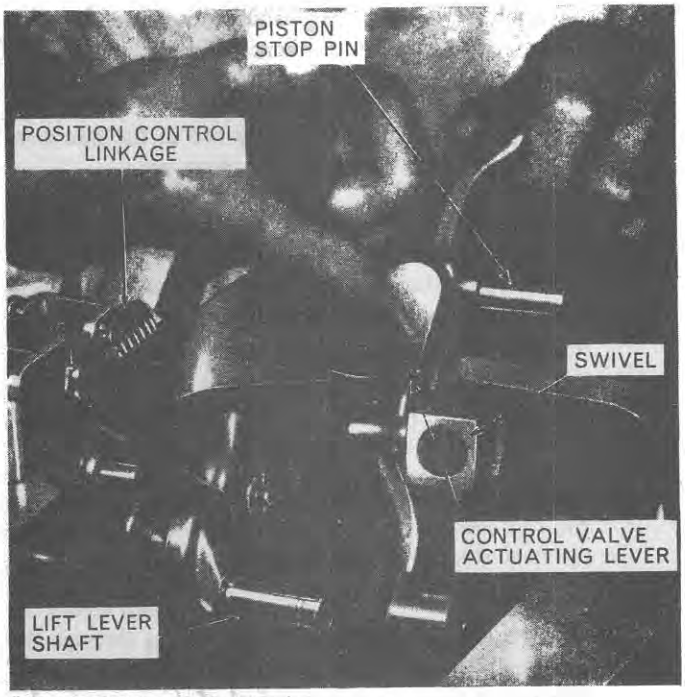

Figure 37
Installing the Control Valve Actuating Lever

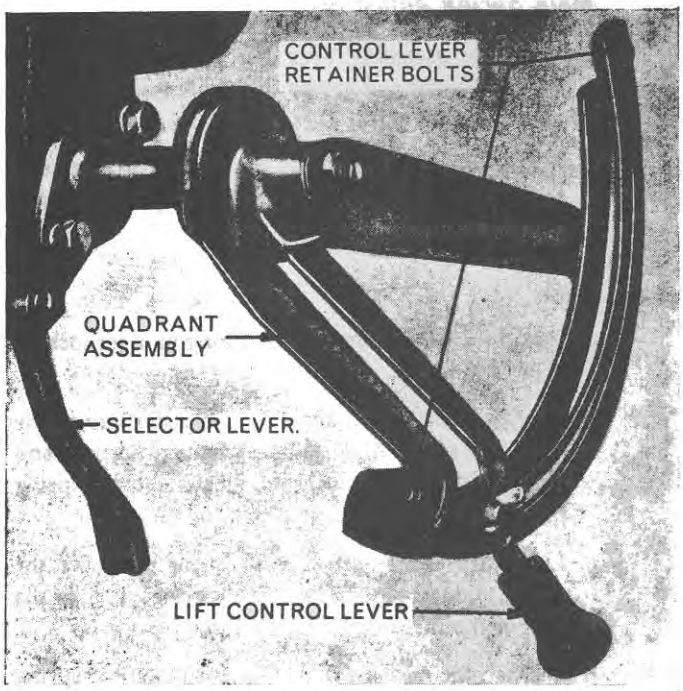

Figure 36
Installing the Control Lever Retainer



Figure 38
Installing the Lift Cross-Shaft

12. Assemble the cross-shaft bushings, one on either side of the shaft and position them flush with the side of the lift cover housing.

13. Install the lift piston connecting rod in the ram arm, securing it with a cotter pin and clevis pin.

14. Position the lift arms to the lift cross-shaft, aligning the master splines at the outer ends of the shaft, Figure 38. Install a retaining washer, lockwasher and bolt to each end of the shaft. Tighten the bolts evenly until the lift arms just drop under their own weight with no end play between the arms and the housing. Secure in this position by bending the lockwashers against the heads of the bolts.

NOTE: ***Over-tightening of the bolts will cause the lift arms to 'bind' and adversely affect the operation of the lift.***

15. Place the lift arms in the lower position and install the draft control plunger and override spring through the rear hole in the lift cover assembly. Position the override spring bushing in the swivel of the control valve actuating lever, Figure 39.

Super Dexta 3000 and Major 4000:

a. Install the draft control main spring front seat, shims, draft control main spring and rear spring bearing in the housing, Figure 15.



Figure 39
Positioning the Draft Control Bushing

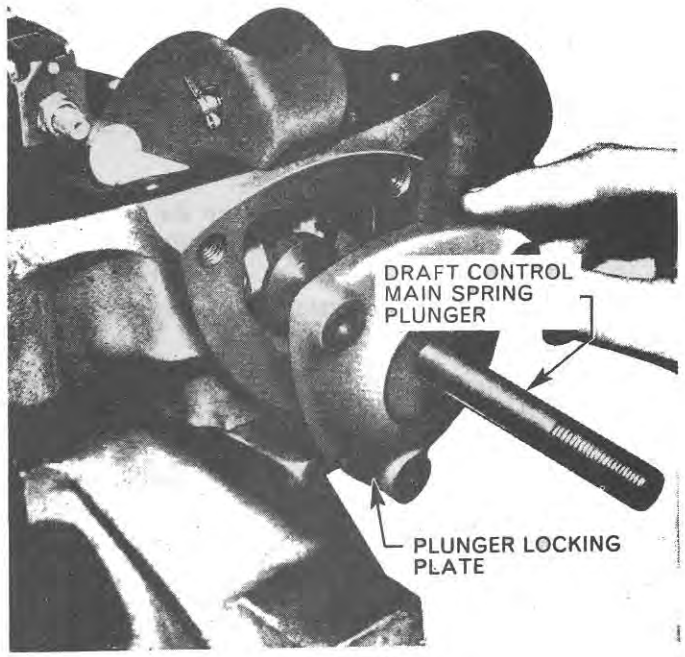

Figure 40
Installing the Draft Control Main Spring Plunger Locking Plate

NOTE: ***If new parts have been installed it will be necessary to check the gap between the front spring seat and the draft control main spring housing and the appropriate number of shims fitted upon reassembly — see 'Draft Control Main Spring Adjustment'.***

b. Slide the assembly over the draft control main spring plunger and secure to the lift cover assembly with the three bolts.

c. Install the draft control spring yoke. Do not fully tighten. (See Draft Control Main Spring Adjustment.)

Dexta 2000:

a. Install the draft control main spring plunger locking plate, Figure 40.

b. Position the new felt seal in the counterbore in the front end of the draft control main spring seat and place this assembly over the main control spring plunger.

c. Locate the draft control main spring seat over the spring plunger and secure the locking plate to the rear of the lift cover with the three set screws.

d. Position the draft control main spring on the spring seat and screw the yoke on to the plunger. Tighten the yoke until the draft control main spring may be

just rotated with the thumb and finger of one hand, Figure 14. (See Draft Control Main Spring Adjustment.)

16. Install a new set of 'O' rings in the counterbores of the lift cylinder. Make certain that the machined surfaces of the cylinder and the lift cover are clean and free from scores or burrs. Install the lift cylinder and fully tighten the retaining bolts to the specified torque. (See Specifications Section—Chapter 5.)

17. Position the turnbuckle assembly in the end of the control valve securing the rear end to the control valve actuating lever with the appropriate cotter pin.

18. Adjust the draft control and position control linkage as described under this heading. (See Adjustment Section in this Chapter.)

19. Install a new set of 'O' rings in the various counterbores of the oil passages on the underside of the accessory cover, Figure 30. Make sure that the machined faces of the accessory cover plate and lift cover are clean. Locate the accessory cover and tighten the three retaining bolts to the specified torque.

20. Examine the seat of the check valve and install a new one if worn or damaged. Install a new 'O' ring in the recess. Locate the seat on the pilot of Tool No. T.8511. Enter the seat in the check valve passage and screw the body of the tool into the threaded outer end of the passage, Figure 41. Operate the centre screw of the tool and press the check valve seat and bushing into position. Remove the tool.

    Alternatively use Check Valve Seat Remover and Replacer No. NCA-997 together with the Centralising Adaptor Tool No. NCA 997-B to install the seat.

21. Install the check valve ball, spring guide, spring and the check valve pilot with a new 'O' ring, Figure 31.

22. Install the check valve plug and tighten to the specified torque. (See Specification Section—Chapter 5.)

D. Installation

1. Install new 'O' rings at the top of the inlet pipe and on the exhaust passage in the wall of the rear axle centre housing and locate a new gasket on the top surface of the housing. The gasket must be accurately located so that it does not restrict the flow of oil to and from the lift cover assembly.

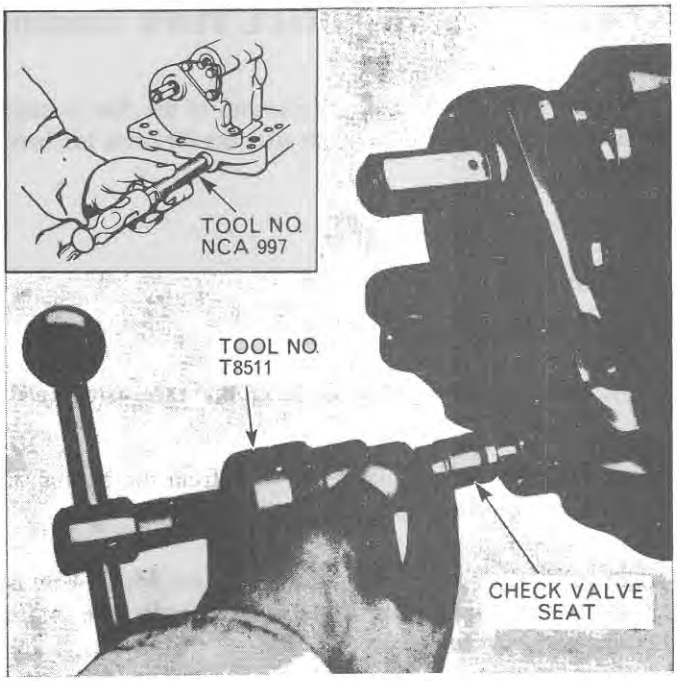

Figure 41

Installing the Check Valve Seat

2. Install the hydraulic lift cover assembly; insert and tighten the fourteen retaining bolts to the correct torque. (See Specifications Section—Chapter 5.)

    NOTE: ***It is important that while lowering the lift cover, the flow control override adjuster is supported to prevent damage to the internal linkage. It is suggested therefore, that a steel rule is placed in the groove between the cam adjuster and cam follower and resting on the rear axle centre housing while the lift cover is gently lowered. Remove the rule just before the lift cover is correctly positioned. This will make certain that the lift cover does not drop heavily onto the override adjuster and consequently knock it down.***

3. Adjust the main control spring plunger as described under 'Draft Control Main Spring Adjustment' and connect the yoke to the rocker with the appropriate cotter pin and clevis pin.

4. Install the upper link and connect the lifting rods to the lift arms.

5. Install the seat assembly and secure with the two washers and nuts.

© FORD MOTOR COMPANY LTD. 1964

5. OVERHAUL FLOW CONTROL VALVE PLATE AND LINKAGE

Repairs which necessitate the removal of the flow control valve plate can only be carried out after the lift cover has been removed.

A. Removal

1. Remove lift cover assembly.
2. Drain the hydraulic oil from the rear axle centre housing.
3. Remove the pressure relief valve from the bottom of the rear axle centre housing.

Major 4000: The pressure relief valve on the Major 4000 is situated on the lower right hand side of the rear axle centre housing and will not require removal.

4. Slacken off the four bolts retaining the flow control plate to the rear axle centre housing, Figure 42.
5. With a screwdriver, remove the lock ring retaining the lower feed pipe and push the pipe through the bottom of the rear axle centre housing, using a screwdriver on the groove in the pipe, Figure 43.

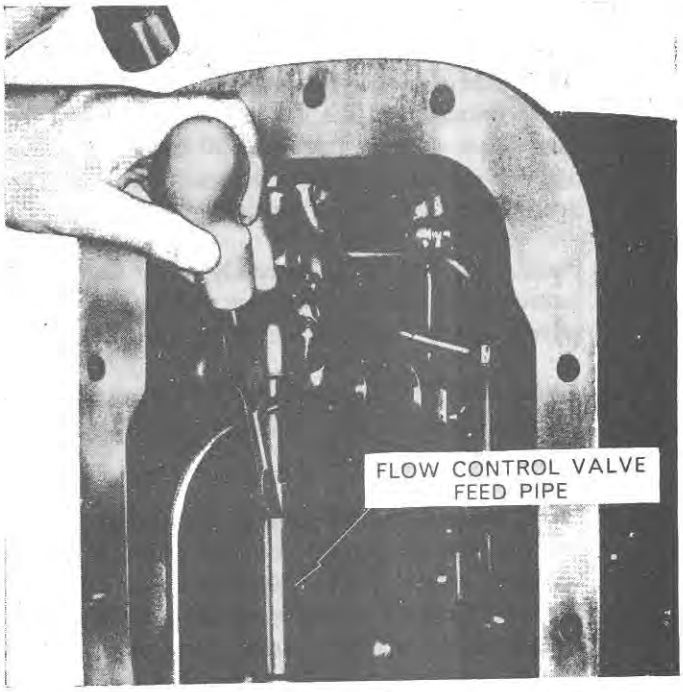

Figure 43
Removing the Flow Control Valve Feed Pipe

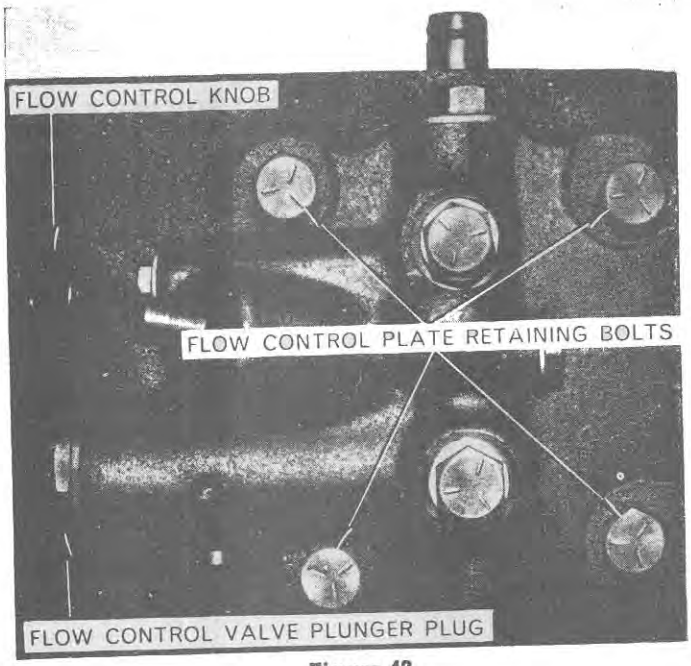

Figure 42
Flow Control Valve Plate

Major 4000 without Independent P.T.O.: The lower feed pipe of the Major 4000 without Independent P.T.O. is a smaller pipe than that of the Super Dexta 3000. The pipe is positioned between an adaptor plate, bolted to the outside of the rear axle centre housing, and the flow control valve plate. After removing the lock ring the pipe should be pushed down into the adaptor plate, just sufficiently to clear the flow control valve plate and not through the rear axle centre housing as is the case with the Super Dexta 3000.

Major 4000 with Independent P.T.O.: The lower feed pipe on the Major 4000 with Independent P.T.O. is an external pipe positioned between the hydraulic pump and the flow control valve plate. In order to remove the flow control valve plate, remove the snap ring from the groove in the feed pipe and push the pipe upwards into the flow control valve plate housing.

6. Pull the top flow control pipe up through the side wall of the rear axle centre housing.
7. Remove the flow control override adjuster and cam follower assembly, Figure 44.

8. Remove the connecting spring between the flow control connecting link and the return filter pipe.

9. Disconnect the flow control connecting link between the crank lever and flow control valve restrictor by removing the cotter pin and clevis pin.

10. Remove the snap ring securing the flow control connecting link to the flow control valve restrictor.

11. Remove the four bolts retaining the flow control plate and lift the plate away from the rear axle centre housing.

B. Inspection and Repair

Make sure that all moving parts are operating freely without binding. Inspect the return spring for cracks or bends and install new 'O' rings on the pipes. Examine the flow control valve for excessive wear or binding.

C. Installation

1. Position the flow control plate on the side of the rear axle centre housing and install the four retaining bolts. Do not fully tighten.

2. Install the flow control connecting link to the crank lever with the clevis pin and cotter pin, Figure 44, and to the flow control valve restrictor with a snap ring.

3. Install the connecting spring between the link, and the return filter pipe.

4. Position the flow control override adjuster and cam follower.

5. Adjust the flow control valve cam follower as described under this heading in 'Adjustment' Section.

6. Insert the upper and lower pipes into the rear axle centre housing and tap them securely into the flow control valve plate.

7. Position the lock ring on the lower pipe.

8. Fully tighten the flow control valve plate retaining bolts to the correct torque. (See Specifications Section — Chapter 5.)

9. Install the pressure relief valve with a new sealing washer.

10. Position a rear axle centre housing to lift cover gasket.

11. Install the lift cover.

NOTE: ***It is important that, while lowering the lift cover, the flow control override adjuster is supported to prevent damage to the internal linkage. It is suggested therefore, that a steel rule is placed in the groove between the cam adjuster and cam follower and resting on the rear axle centre housing while the lift cover is gently lowered. Remove the rule just before the lift cover is correctly positioned. This will make certain that the lift cover does not drop heavily onto the override adjuster and consequently knock it down.***

12. Fill the rear axle with the correct grade and quantity of oil. (See Specification Section — Chapter 5.)

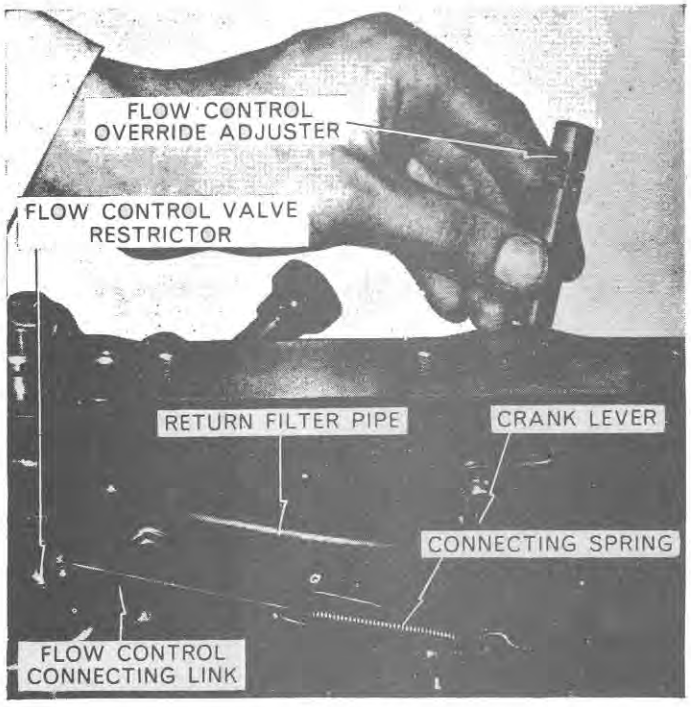

Figure 44

Removing the Flow Control Override Adjuster

Part 11

HYDRAULIC SYSTEMS

Chapter 2

HYDRAULIC SYSTEM—SUPER MAJOR 5000

Section		Page
1.	Description and Operation	31
2.	Adjustments	41
3.	Overhaul Lift Cylinder Assembly	42
4.	Overhaul Lift Cover Assembly	49

1. DESCRIPTION AND OPERATION

Figure 45 illustrates the Super Major 5000 hydraulic system. Mounted on the outside of the lift cover are the lift arms, lift control lever and selector lever. Positioned inside the rear half of the lift cover and retained by a large hexagonal nut, is the draft control main spring. The hydraulic pump is mounted in the rear axle centre housing and driven through an idler by a gear attached to the power take-off countershaft. The rear axle centre housing acts as a reservoir for the oil of the hydraulic system. The flow of oil is controlled by a number of valves contained in the lift cylinder assembly located on the underside of the lift cover.

To suit varying working conditions it is possible to set the hydraulic system to maintain the lift linkage at a constant draft load on the tractor (Draft Control) or at a constant height relative to the tractor (Position Control). By means of a flow control device it is possible to vary the rate of lift of the implement (or external equipment) independent of movement of the lift control lever.

HYDRAULIC FILTERS

The hydraulic pump draws oil from the rear axle centre housing through a pipe and fine, mesh-type filter and directs it to the lift cover. As it returns to the rear axle centre housing a proportion of the oil passes through a renewable paper element type filter.

LIFT COVER ASSEMBLY

The lift cover assembly acts as a housing for the control linkage and lift cylinder assembly which alters the working depth of the implement.

LIFT CONTROL LEVER

The action of this lever determines a raise, lower or neutral position for the system by its connection through mechanical linkage with the control valve and is located on the right-hand side of the lift cover, Figure 46.

SELECTOR LEVER

The selector lever is situated on the right-hand side of the lift cover, Figure 46, and is used to select either Position Control or Draft Control. With the lever in the vertical position the implement is maintained at a constant height relative to the tractor by the lift cross-shaft cam action on the control linkage and is not affected by draft forces. With the lever in the down position, varying forces applied to the top link by the implement are used to maintain a constant draft. These forces are called 'signals' and are relayed to the system via the Draft Control Main Spring.

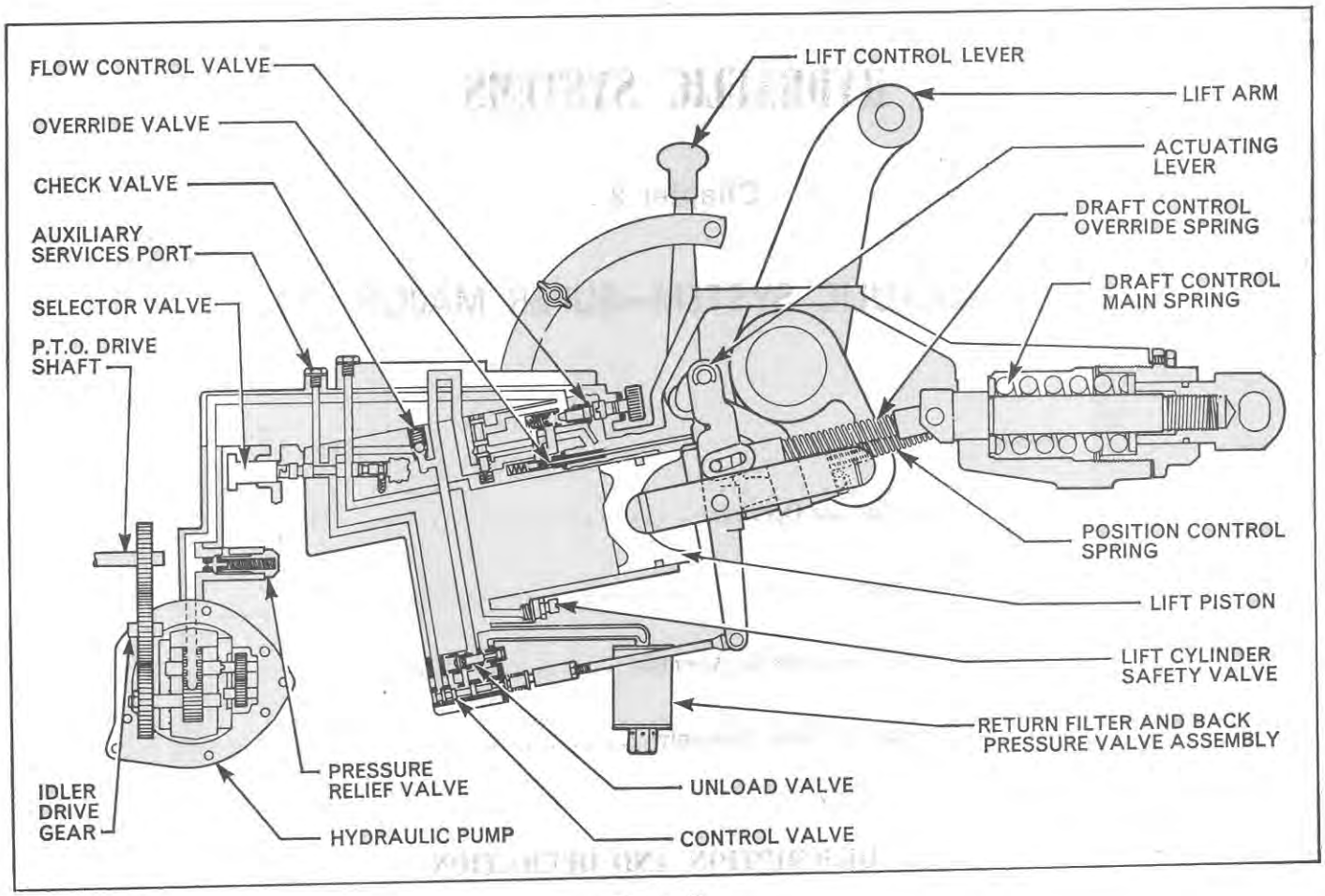

Figure 45
Super Major 5000 Hydraulic System—Schematic

DRAFT CONTROL MAIN SPRING

The draft control main spring, which relays the forces applied by the implement to the internal draft control linkage, is double acting. This ensures that draft control is effective with all implements, under all conditions irrespective of whether the implement produces compression or tension forces in the top link. As a result greater sensitivity and more positive control under varying soil conditions is maintained.

VALVES IN THE LIFT CYLINDER ASSEMBLY

A. Flow Control Valve

This valve controls the rate of oil to the lift cylinder or auxiliary equipment and is controlled by screwing the flow control knob, situated on the right-hand side of the lift cover, Figure 46, 'in' for minimum flow and 'out' for maximum flow. Regardless of the position at which the flow control knob is set, the rate of flow will be at maximum when the lift control lever is moved to the top of the quadrant so that a quick raise of the implement can be effected.

Flow control is incorporated in the hydraulic system for two reasons:

1. It is often desirable when using auxiliary equipment, such as front end loaders, to vary the speed of lifting.
2. When working in varying soil densities the draft control linkage will react and tend to lift the implement as it encounters heavier ground. Flow control, when set to 'S', minimises this reaction and the decrease in depth is quite small and generally unnoticeable.

B. Selector Valve

In order that external equipment, such as tipping trailers and front end loaders, can be operated hydraulically a special take-off point is located in front of the accessory cover plate in the lift cover, Figure 46. By means of the selector valve oil may be diverted either to the external equipment or to the lift linkage as required.

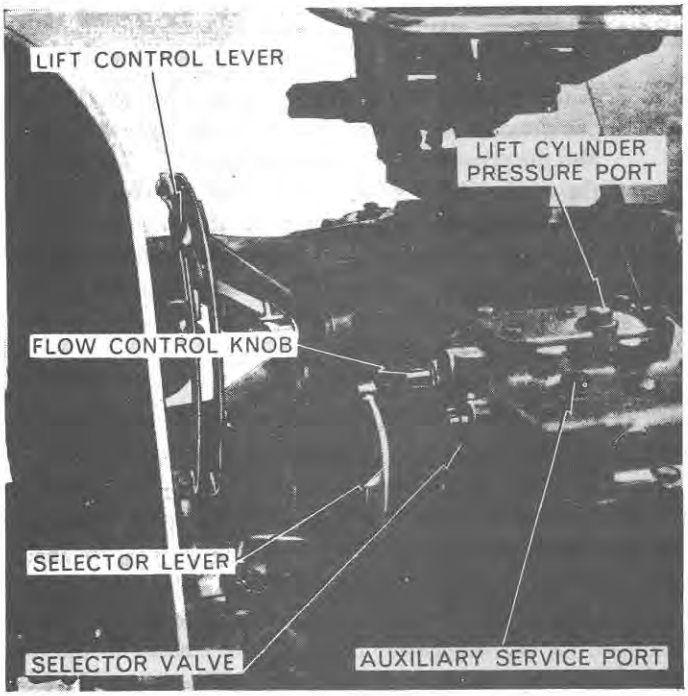

Figure 46
Hydraulic Controls

The knob for this operation is positioned on the right-hand side of the lift cover directly in front of the flow control valve, Figure 46.

C. Control Valve

The control valve, Figure 45, is indirectly connected through an adjustable link and an actuating lever to a cross-shaft to which the lift control lever is attached. The control valve has three positions, 'neutral' at mid-travel, 'lowering' when moved to the rear and 'raising' when pushed forward. A spring is located at the rear end of the valve which returns the valve to its neutral or lowering positions. The hydraulic valve action is described in more detail throughout the chapter. However, when moved forward a small distance, the control valve directs oil to the front face of the unload valve causing the unload valve to move rearwards shutting off the neutral passages. When moved rearwards the control valve allows oil to exhaust from the lift cylinder.

D. Unload Valve

The unload valve is operated solely by oil pressure directed by a control valve and has only two positions, one for neutral and lowering, the other for lifting. In the neutral and lowering position, the valve allows the pumped oil supply to pass to exhaust. In the raise position, the oil supply is prevented from exhausting and it therefore builds up pressure, finally forcing the piston along the lift cylinder.

The valve has two faces, the front face being larger in area than the rear face.

When equal pressure is applied to both faces the total force exerted on the larger front face is greater than the force on the smaller rear face. This moves the valve rearwards to the raising position.

When the control valve is in the neutral or lowering position, the pressure on the larger face of the unload valve is removed as the oil is allowed to exhaust. The valve then has pressure only on its smaller rear face and it therefore moves forward to the neutral or lowering position. It will stay in this position until the control valve moves to the raising position.

HYDRAULIC LIFT OPERATION

It is important to remember that the hydraulic power lift is regulated both in position control and draft control by a variation in the position of the control valve. Depending upon the position of this valve the flow of oil can cause the implement to raise, lower or stay in a neutral position.

The position of the control valve can be altered either by moving the lift control lever or by a force acting on the draft control main spring when in draft control.

DRAFT CONTROL

The system of automatic implement depth control, called Draft Control, uses the top link signal for raising or lowering the implement working depth to maintain a constant draft.

Any implement when it is raised clear of the ground produces a tension in the top link. With comparatively light implements such as cultivators and one, two or three furrow ploughs this tension turns into compression when the implement is in the ground and the tractor is moving forward. If the implement digs into the soil, the draft, and therefore the top link force increases. This signal causes the hydraulic system to raise the implement slightly due to the connection between the top link and the control valve. At the same time, the draft and top link force is reduced to its original value. Conversely should the working depth decrease, the top link force lessens and the lift arms lower to allow the implement to move further into work and restore its draft. When tail heavy implements are used, such as large reversible ploughs or four furrow ploughs, and even when three furrow ploughs are operated at shallow depths, the weight of the implement overcomes the draft force from the soil and the top link remains in tension at all times. The hydraulic system however automatically adjusts for these variations as explained in the following.

Light Implements

Lowering Into Work: With the selector lever 'A', Figure 47, in the position shown, downward movement of the lift control lever 'B' moves the top of the actuating lever 'C' forward. The actuating lever pivots about the draft control plunger rod connector and allows the control valve spring 'D' to move the control valve 'E' into the lowering position.

Lowering stops when the implement draft compresses the draft control main spring 'F' in a forward direction a sufficient amount to overcome the pressure of the control valve spring and move the control valve into a neutral position.

Draft Producing Compression in Top Link:

1. When working in Draft Control an increase in draft at the implement will compress the draft control main spring 'F' in a forward direction, Figure 48, moving the control valve actuating lever 'C' forward. The actuating lever overcomes the pressure of the control valve spring 'D' and moves the control valve 'E' into the raising position. As the implement is raised the draft force and hence the pressure on the draft control main spring decreases to the original amount. The control valve spring will then move the control valve into the neutral position.
2. A decrease in draft at the implement will reduce the compression of the draft control main spring 'F' and also the pressure on the actuating lever 'C'. This allows the control valve spring 'D' to push the control valve 'E' into the lowering position. As the implement runs deeper the draft will increase to its original amount and the control valve will again be returned to the neutral position.

Heavy Implements

Lowering Into Work: The following action occurs when the implement always produces tension in the top link. Downward movement of the lift lever 'B' moves the top of the actuating lever 'C' forward, Figure 47. The actuating lever pivots about the draft control plunger rod connector and allows the control valve spring 'D' to move the control valve 'E' into the lowering position. As the implement descends the tension in the top link increases, further compressing the draft control main spring 'F' against the spring rear seat 'G'. At the same time the forward pressure on the actuating lever is reduced and

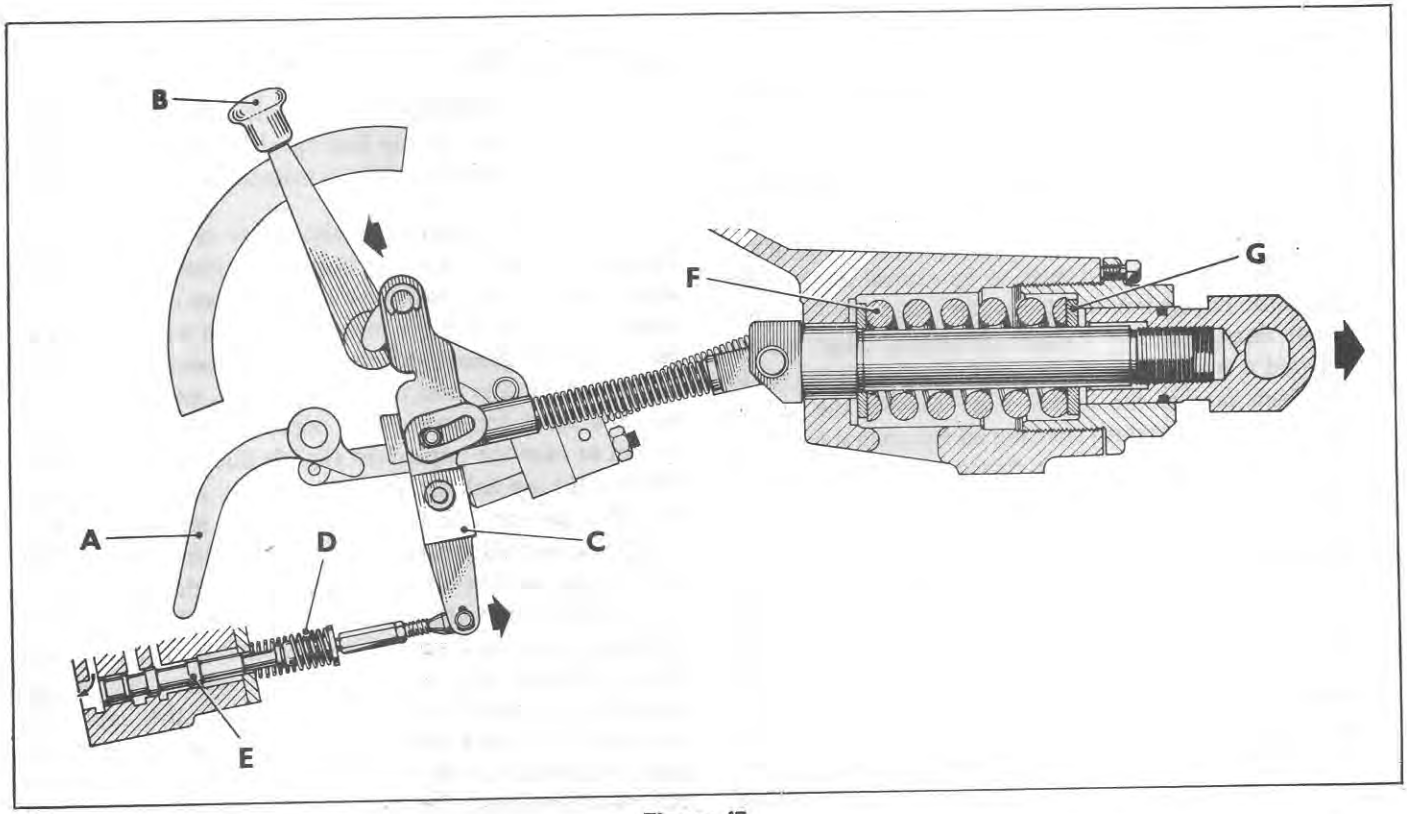

Figure 47

Draft Control—Lowering into Work

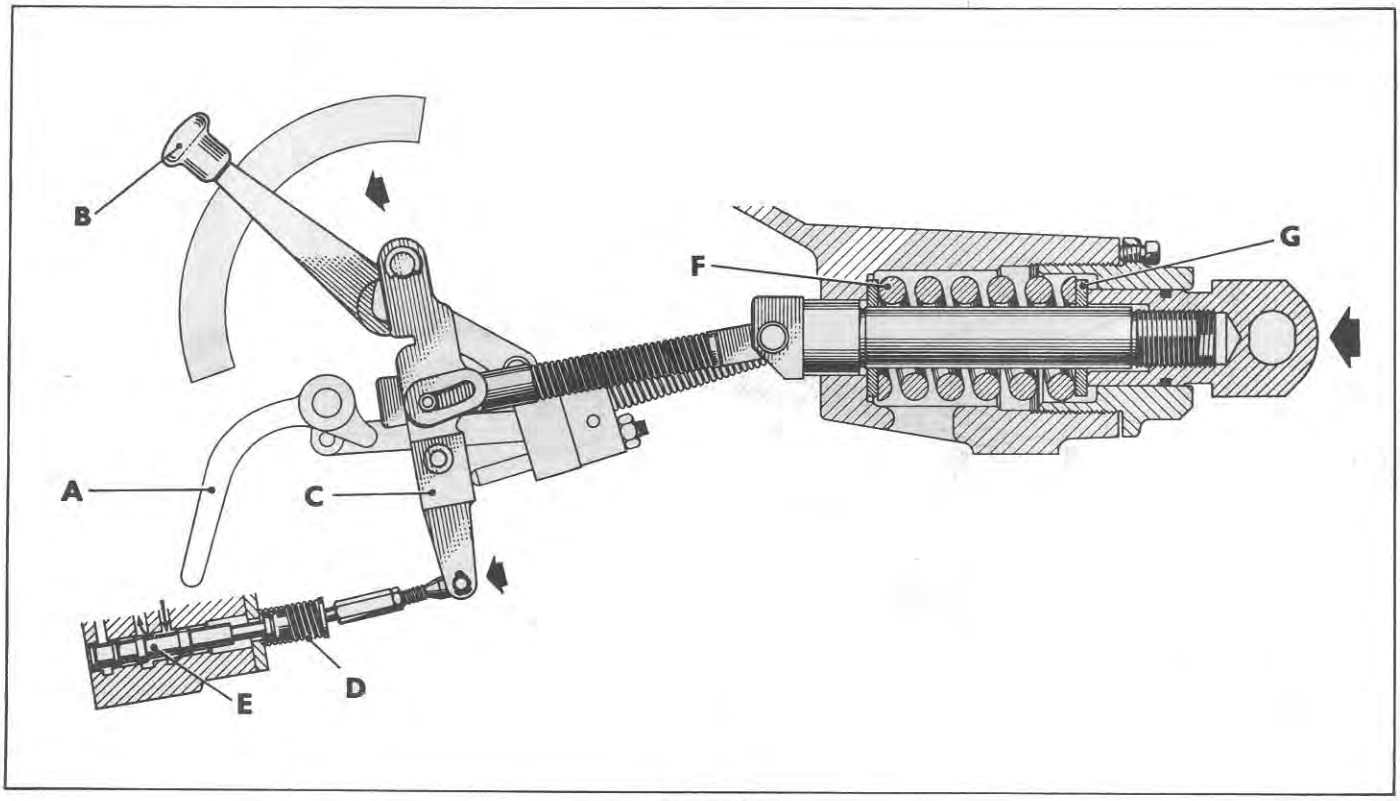

Figure 48
Draft Control—Raising in Work due to Increase in Top Link Compression

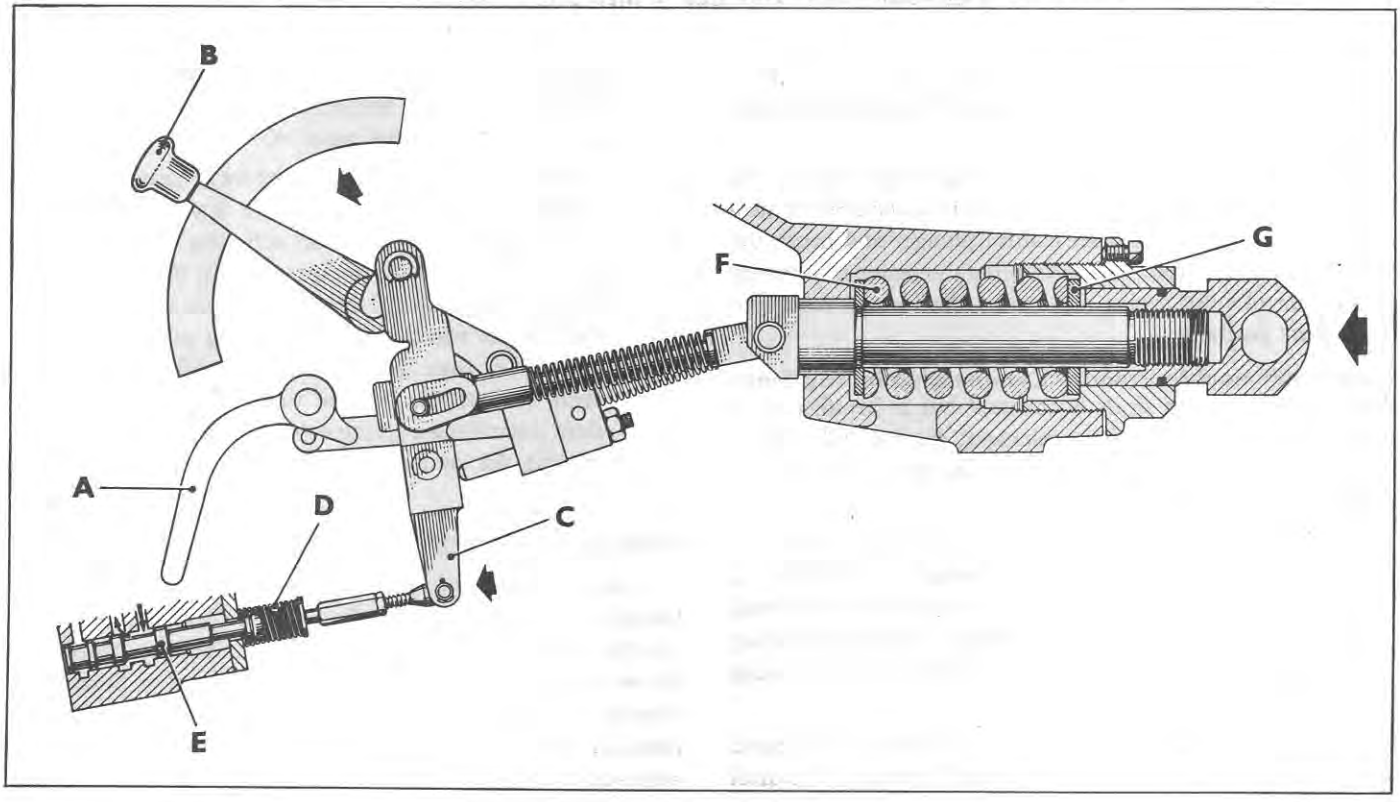

Figure 49
Draft Control—Raising in Work due to Decrease in Top Link Tension

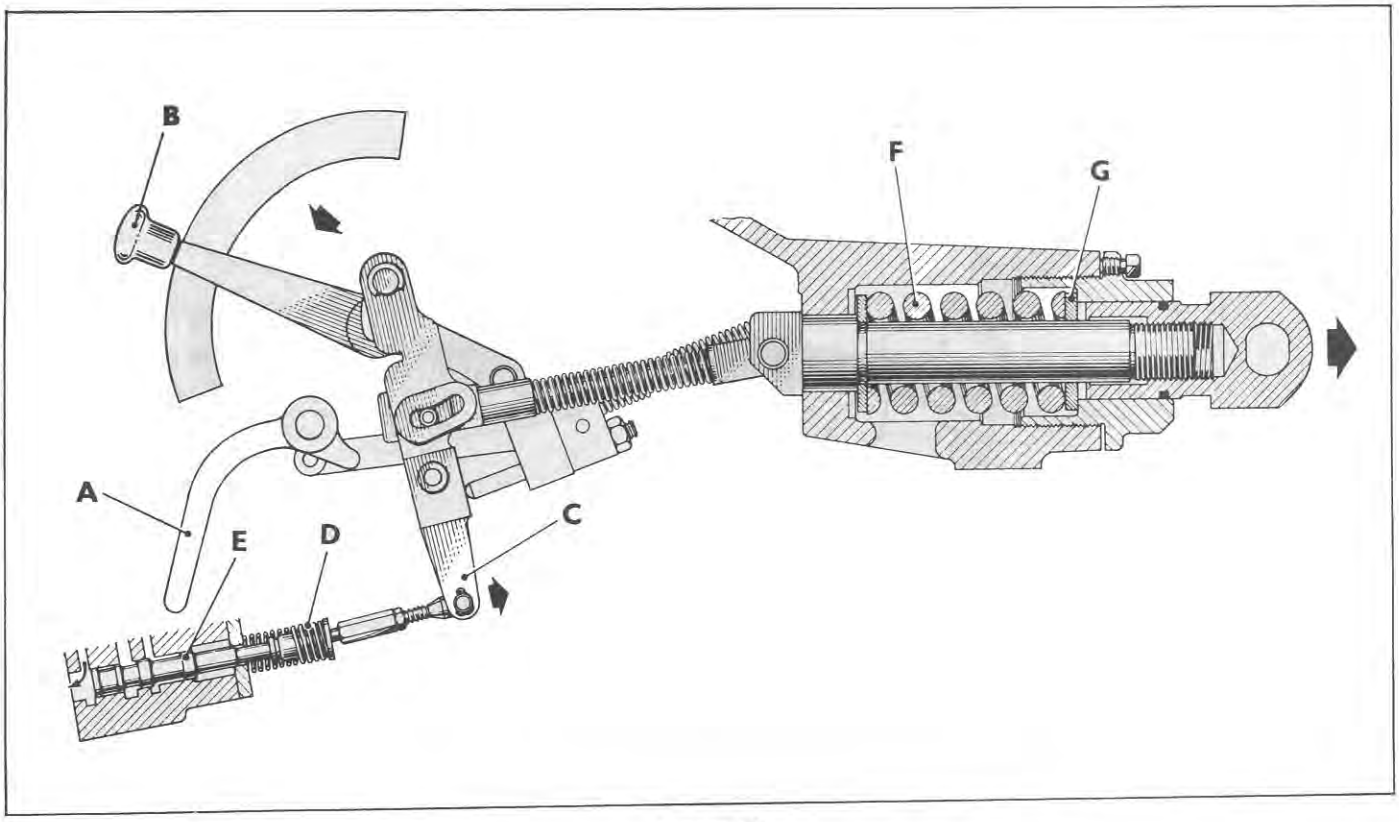

Figure 50
Draft Control-Lowering into Work due to Increase in Top Link Tension

the control valve spring is then able to move the control valve further into the lowering position thus increasing the rate of drop.

Lowering stops when the implement draft reduces the tension in the top link a sufficient amount for the draft control main spring to push the draft control plunger and hence the actuating lever forward. This overcomes the rearward pressure of the control valve spring and moves the control valve into the neutral position

Draft Insufficient to Produce Compression in Top Link: When the implement draft is constant but is insufficient to overcome the weight of the implement, the top link will be in tension and the draft control main spring compressed rearward against spring seat 'G'.

1. An increase in draft will produce a decrease in tension in the top link, Figure 49, allowing the draft control main spring 'F' to expand in a forward direction thus pushing the draft control linkage and actuating lever 'C' forward moving the control valve 'E' into the raising position.

   As the implement is raised the draft will decrease but the tension in the top link will increase. The draft control linkage will, therefore, be pulled rearwards away from the actuating lever compressing the draft control main spring until the original draft is obtained. The control valve spring will then move the control valve into the neutral position.

2. A decrease in draft will produce an increase in tension in the top link, Figure 50, and the draft control linkage will be drawn away from the actuating lever. This will increase the rearward compression on the draft control main spring allowing the control valve spring to move the control valve into the lowering position. As the implement runs deeper the draft will increase until such time as the original draft is obtained and the draft control main spring expands in a forward direction moving the control valve into the neutral position.

POSITION CONTROL

A second system of implement control known as Position Control is also included in the hydraulic system. With the selector lever in the vertical position it is possible to pre-set the working depth of the implement when used on fairly level ground, with no wide variations in soil resistance. For all practical purposes, accurate work at constant depth can be achieved and position control is, therefore, particularly suited to implements such as weeders, steerage hoes, down the row, thinners, etc. It is also suitable for implements such as

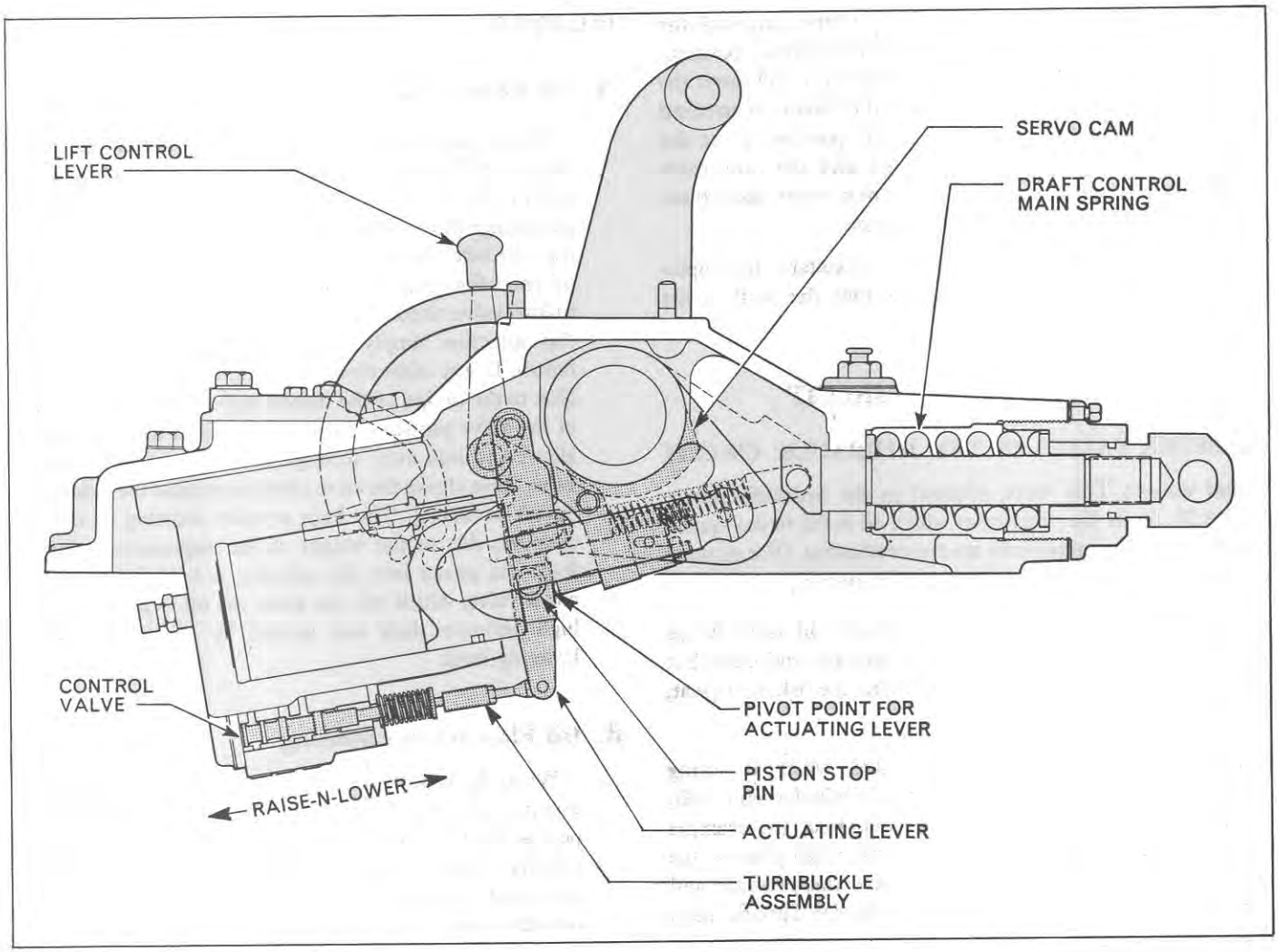

Figure 51
Position Control Linkage

sprayers which are operated at a fixed height above the ground. Placing the selector lever in the vertical position brings the special position control linkage, between the servo cam on the ram arm and the control valve actuating lever, into operation. Under these conditions the draft control plunger rod connector no longer acts as a pivot point for the actuating lever but is replaced by a machined pad, adjacent to the draft control plunger, on the rear face of the actuating lever.

A. Raising

Starting from the lower position the lift control lever is moved up the quadrant. This causes the actuating lever, Figure 51, to move the control valve into the raising position. As the lift shaft rotates, the cam allows the position control linkage to move further from the actuating lever, allowing the control valve spring to move the valve to the neutral position. As soon as the valve is in this position the lift stops. Should a further lift be required, then the lift control lever is again moved up the quadrant and the above procedure is repeated. To limit the height to which the implement can be raised, the linkage, is designed so that the skirt of the piston projects slightly beyond the end of the lift cylinder. On reaching the fully raised position, the piston contacts a stop pin, fixed to the control valve actuating lever, moving it sharply to the rear. This action moves the control valve into the neutral position which stops the flow of oil to the lift cylinder and any further movement of the piston. The piston stop pin operates both in Position Control and Draft Control.

B. Lowering

The lift control lever is moved downwards and, through the position control linkage, the control valve is moved to the lowering position. As the cam rotates, the linkage is

moved towards the actuating lever by the cam until the control valve is moved back into the neutral position. Further movement of the lift control lever will cause the lift arms to drop until such time as the valve is neutralized or the implement reaches its lowest position. Once the lift control lever has been moved and the implement reaches its set height, no further movement takes place until the lever is reset by the operator.

As can be seen this system is most suitable for implements for which the height, more than the draft, is the important factor.

HYDRAULIC OIL CIRCUIT

PRESSURE VALVES IN THE HYDRAULIC CIRCUIT

Relief Valve: This valve, situated in the hydraulic pump, Figure 52, limits the pressure at which oil is fed to the system in order that the components are not overloaded. (For opening pressure see Specifications Section—Chapter 5.)

Check Valve: This is a simple one-way ball valve which allows oil to pass to the lift cylinder or auxiliary equipment but will not allow it to return. A spring retains the ball on its seat, Figure 52.

Lift Cylinder Safety Valve: This valve, which is spring operated, is fitted directly into the lift cylinder end wall, Figure 52. If shock loadings are encountered, for example when transporting heavy implements over rough ground, the lift cylinder safety valve opens to relieve the pressure and protect the system. (For opening pressure see Specifications Section—Chapter 5.)

Back Pressure Valve: Situated at the end of the return filter, Figure 52, this spring operated valve keeps a light pressure of approximately 35 lbs/sq. in. (2·11 kg/sq. cm.) in the system at all times, maintaining the correct position of the unload valve and allowing some oil to bleed through the return filter.

By-Pass Valve: Situated adjacent to the check valve in the lift cylinder, Figure 52, this simple non-return valve allows a certain amount of oil to by-pass the circuit and return to the rear axle centre housing. The amount varies according to the position of the flow control valve.

Override Valve: This valve, Figure 52, mechanically operated by the action of the lift control lever, overrides the flow control valve. When the lift control lever is moved to the top of the quadrant an actuator, secured to the control lever cross-shaft, operates an override plunger, situated in the lift cylinder, causing the flow of oil to the lift cylinder (normally controlled by the flow control valve) to increase, resulting in a quick raise of the implement.

OIL FLOW

A. Oil Flow in Neutral

From the hydraulic pump the oil flows past the relief valve and then the flow control valve, Figure 52. According to the position of the flow control valve a certain percentage of oil is returned through the by-pass valve to the rear axle centre housing or reservoir. The remaining oil then flows, as indicated by the arrows, through the unload valve circuit back to the reservoir. The oil flows in this direction simply because it is the easiest path to follow. In any other direction, a high resistance is offered. Due to the design of the unload valve, oil on the rear face of the valve pushes it forward, the oil at the front being allowed to leak away through the drilling in the control valve. This allows the oil to circulate around the unloading circuit as shown. The high pressure existing in the lift cylinder, due to the weight of the implement trying to force the piston into the cylinder, is held firstly by the check valve, which will not allow the oil to pass from the high pressure lines and second by the control valve lowering land.

B. Oil Flow when Lowering

When the control valve is moved to the lowering position (to the right), the lowering land uncovers the lowering port at the front of the valve. Oil is therefore allowed to pass from the lift cylinder past the hydraulic lift selector valve and control valve to the reservoir, Figure 53. The rest of the circuit is exactly the same as in neutral.

C. Oil Flow when Raising

Movement of the control valve to the lift position (to the left), blocks off the lowering port and allows the passage of oil to be directed to the front face of the unload valve, Figure 54. Although the pressure on both faces is the same the force on the larger face is greater and the valve moves in the direction of that force (to the right), and in doing so blocks off the unloading circuit. It is now impossible for the oil to flow to exhaust. It therefore builds up in pressure, forces the check valve ball off its seat and flows into the lift cylinder, pushing the piston further out and thus raises the lift arms. This system will continue to lift until either the control valve is moved into the neutral position or the pressure relief valve blows. Normally the control valve will be moved to neutral either by a draft correction, and movement of the lift control lever or by the piston stop pin. As soon as this takes place, the pressure on the large face of the unload valve is allowed to leak away through the control valve drilling, reducing the pressure on this side of the unload valve. Therefore,

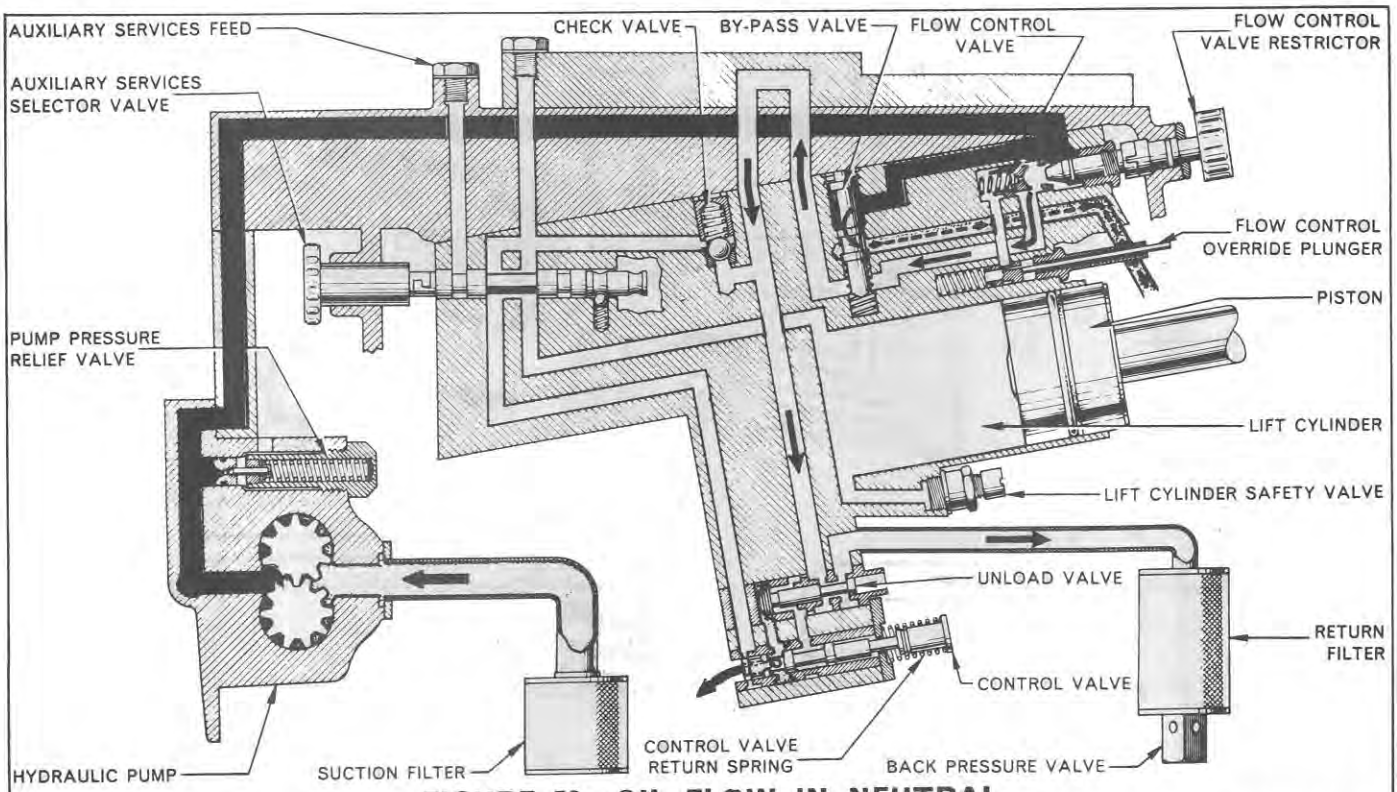

FIGURE 52. OIL FLOW IN NEUTRAL

PUMP PRESSURE OIL (NO LOAD) — REDUCED PUMP PRESSURE OIL (ACCORDING TO POSITION OF RESTRICTOR) — RESERVOIR, SUCTION AND EXHAUST OIL — TRAPPED OIL

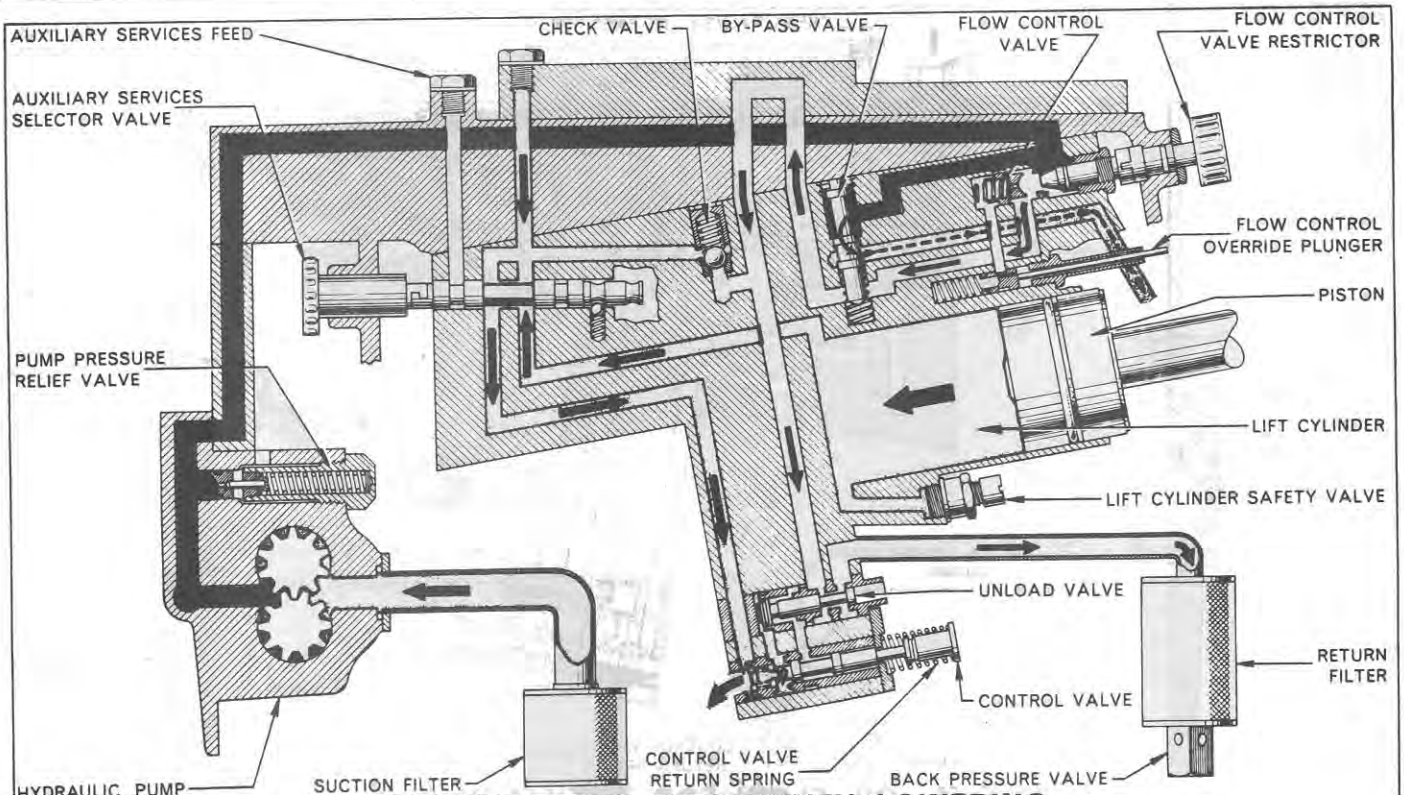

FIGURE 53. OIL FLOW WHEN LOWERING

- PUMP PRESSURE OIL (NO LOAD) — REDUCED PUMP PRESSURE OIL (ACCORDING TO POSITION OF RESTRICTOR) — RESERVOIR, SUCTION AND EXHAUST OIL

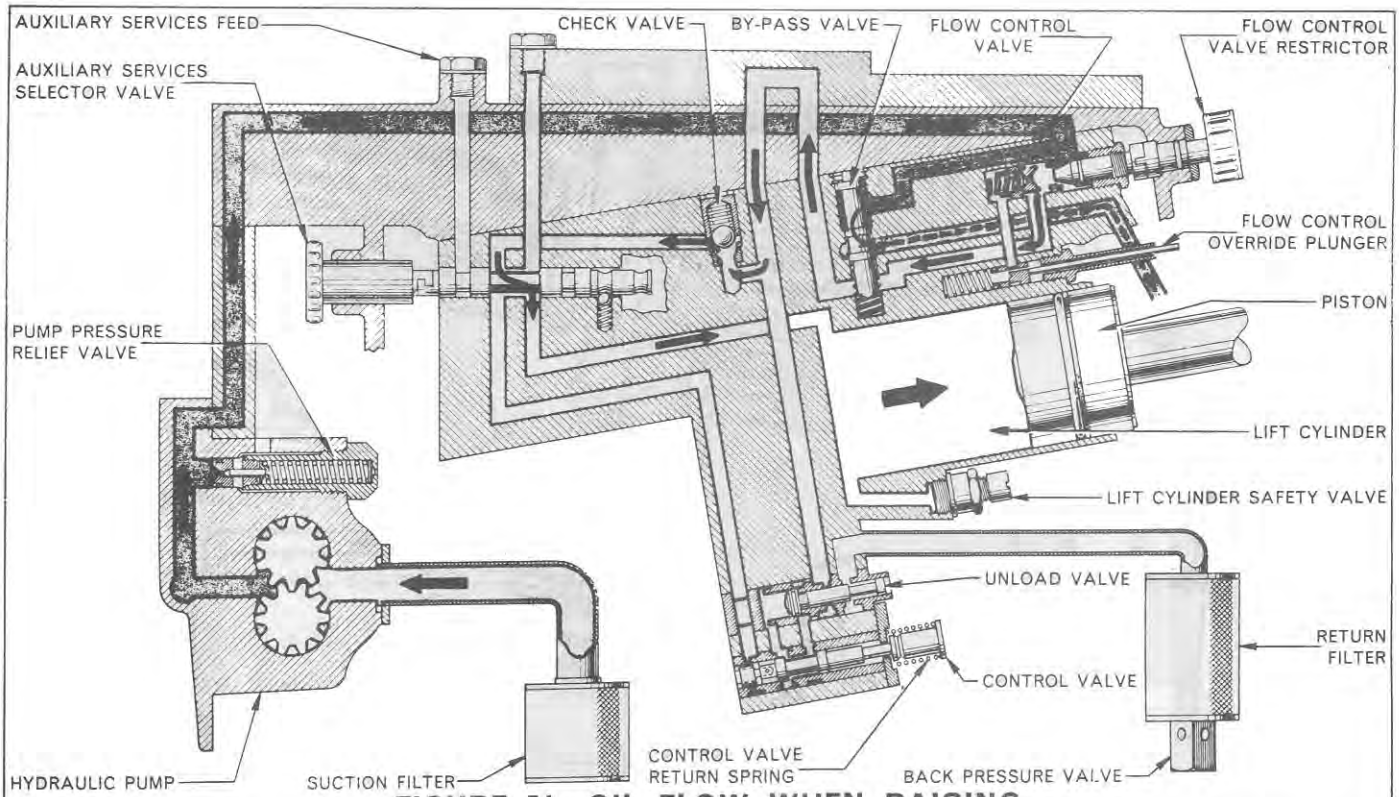

FIGURE 54. OIL FLOW WHEN RAISING

■ – HIGH PRESSURE OIL ▭ – REDUCED HIGH PRESSURE OIL (ARROW INDICATES DIRECTION OF FLOW) ▭ – RESERVOIR, SUCTION AND EXHAUST OIL

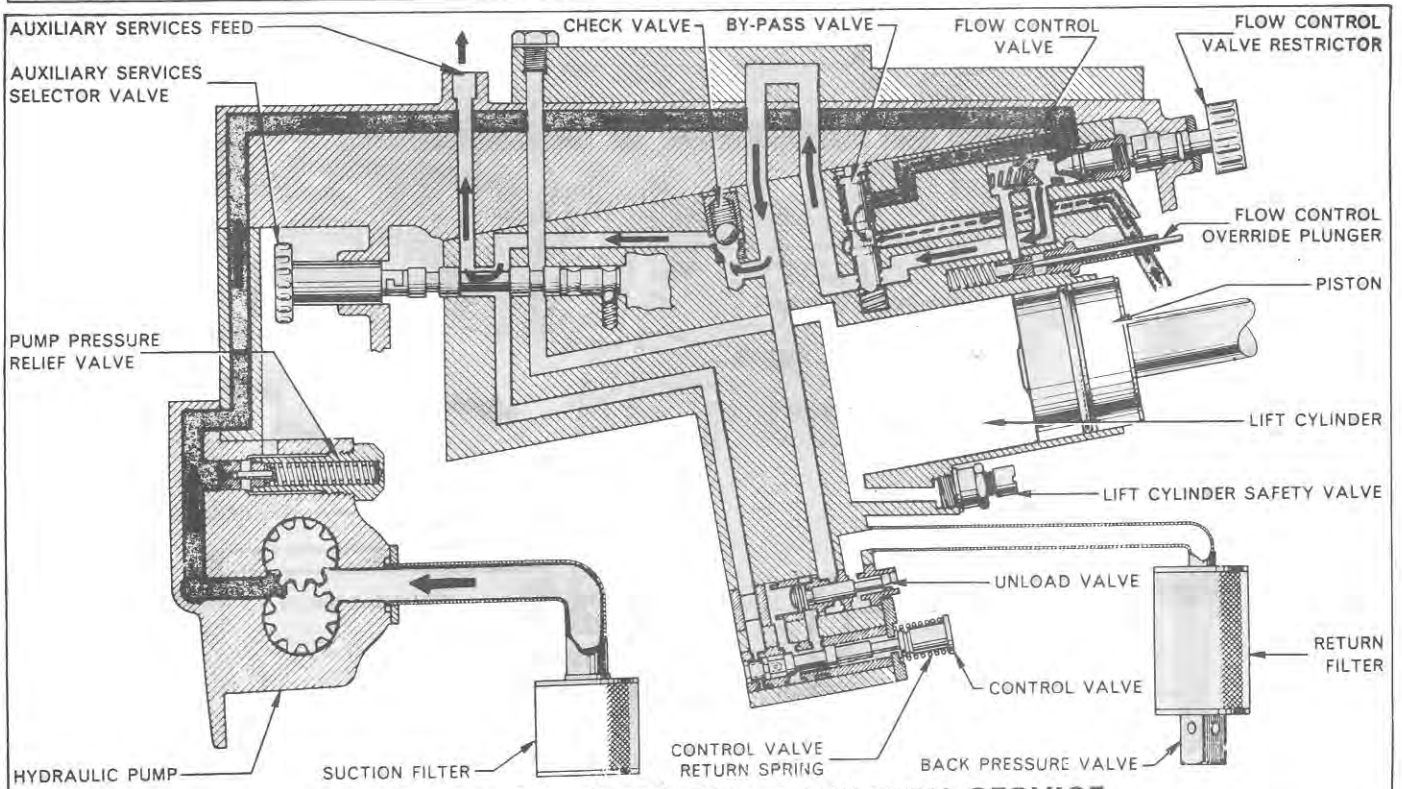

FIGURE 55. OIL FLOW FOR AUXILIARY SERVICE

■ HIGH PRESSURE OIL ▭ REDUCED HIGH PRESSURE OIL (ACCORDING TO POSITION OF RESTRICTOR) ▭ RESERVOIR, SUCTION AND EXHAUST OIL ▭ TRAPPED OIL

on the small face of the valve there is more pressure than on the large face and it moves to the left. This movement opens the unload circuit and allows the oil to exhaust, stopping the raising cycle.

D. Oil Flow for Auxiliary Services

The positions of the control valve and unload valve remain the same as in the raising circuit, but, by pulling out the selector valve, the feed of oil to the lift cylinder is cut off and directed to the outlet port for Auxiliary Service, Figure 55.

2. ADJUSTMENTS

DRAFT CONTROL MAIN SPRING ADJUSTMENT

This spring is correctly set during initial assembly but should it require adjustment the following procedure should be adopted, Figure 56.

1. With the lift control lever at the bottom of the quadrant and the lift arms fully down, loosen the set screw and turn the draft control spring retainer nut at the rear of the lift cover housing clockwise until the draft control main spring tension is felt.
2. Still with the lift arms down, screw the yoke on to the plunger until all free play is eliminated. Then turn the yoke through the smallest arc until the hole in the yoke is horizontal. Tighten the set screw in the draft control spring retainer nut.

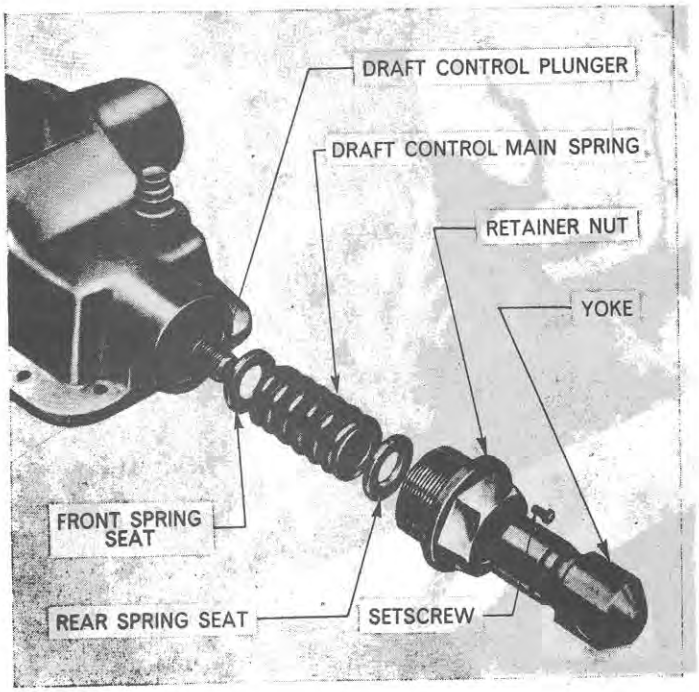

Figure 56
Draft Control Main Spring

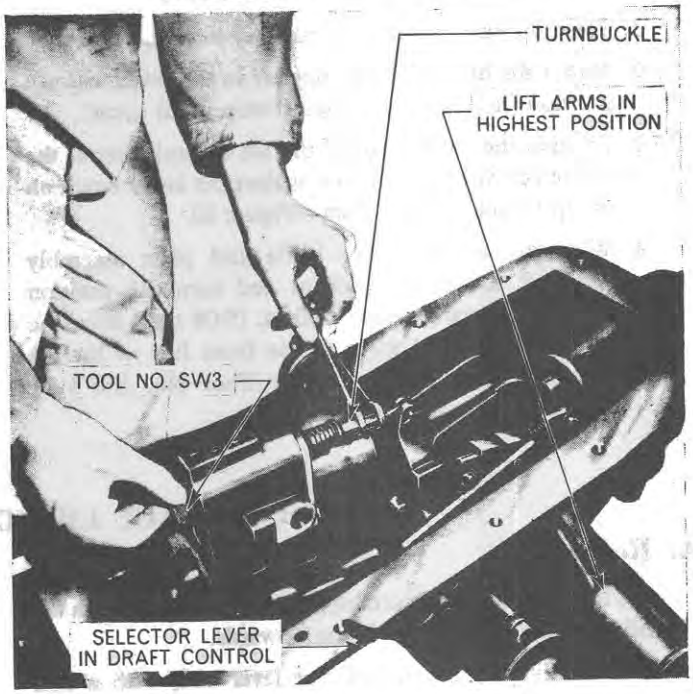

Figure 57
Draft Control Linkage Adjustment

DRAFT CONTROL LINKAGE ADJUSTMENT

NOTE: ***When adjusting the control linkage it is important that Draft Control is selected and checked before Position Control.***

1. Place the selector lever in the draft control position, Figure 57.
2. Raise the lift arms to the top of their travel.
3. Position the upper edge of the lift control lever 3·25 ins. (8·25 cms) below the top stop on the quadrant retainer.
4. Remove the control valve baffle and plate assembly from the front of the lift cylinder.

5. Adjust the turnbuckle to give 0·200 in. (5·08 mm) from the end of the control valve to the front face of the lift cylinder control valve bushing, using Setting Gauge Tool No. SW 3 or SW 508 to check this dimension.

NOTE: ***The plunger in the Hydraulic Lift Control Valve Setting Gauge No. SW 508 measures 0·200 in. (5·08 mm), when the face of the plunger is flush with the inside step of the tool body. The plunger measures 1·44 in. (3·65 mm) when the face of the plunger is flush with the outside step of the tool body.***

POSITION CONTROL LINKAGE ADJUSTMENT

1. Place the selector lever in position control, Figure 58.
2. Lower the lift arms until they are in the extreme down position (ram arm butts against stop in lift cover).
3. Position the lower edge of the lift control lever at the bottom of the quadrant slot against the lower notch on the quadrant retainer, inset—Figure 58.
4. With the control valve baffle and plate assembly removed, loosen the locknut and turn the position adjusting screw to give 0·200 in. (5·08 mm) from the end of the control valve to the front face of the lift cylinder using Setting Gauge Tool No. SW 3 or SW 508 to check this dimension.

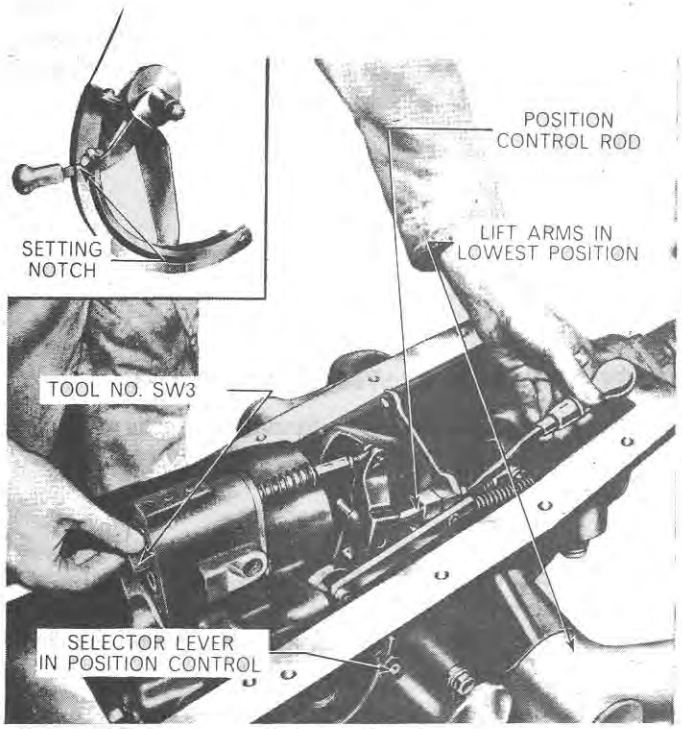

Figure 58
Position Control Linkage Adjustment

3. OVERHAUL LIFT CYLINDER ASSEMBLY

A. Removal

Place the lift cover assembly on a suitable stand with the lift cylinder and linkage facing upwards.

1. Suitably position the selector lever and, with a thin open-ended spanner (wrench), remove the flow control override guide and valve plunger situated behind the selector lever arm, Figure 59.

   NOTE: ***It is advisable at this stage to remove the small plunger spool and spring which are liable to drop out and consequently become damaged, Figure 60.***
2. Remove the selector valve knob by pulling the spool out and unscrewing the retaining screw. Pull the knob from the lift cover housing and lift the selector valve stem through the bore.
3. Remove the flow control knob and stem, by unscrewing the hexagonal locknut.
4. Remove the clevis pin and cotter pin securing the control valve turnbuckle to the actuating lever.
5. Invert the lift cover assembly on the stand until the lift cylinder is underneath.
6. Remove the accessory plate by unscrewing the five retaining bolts.



Figure 59
Removing Flow Control Override Plunger

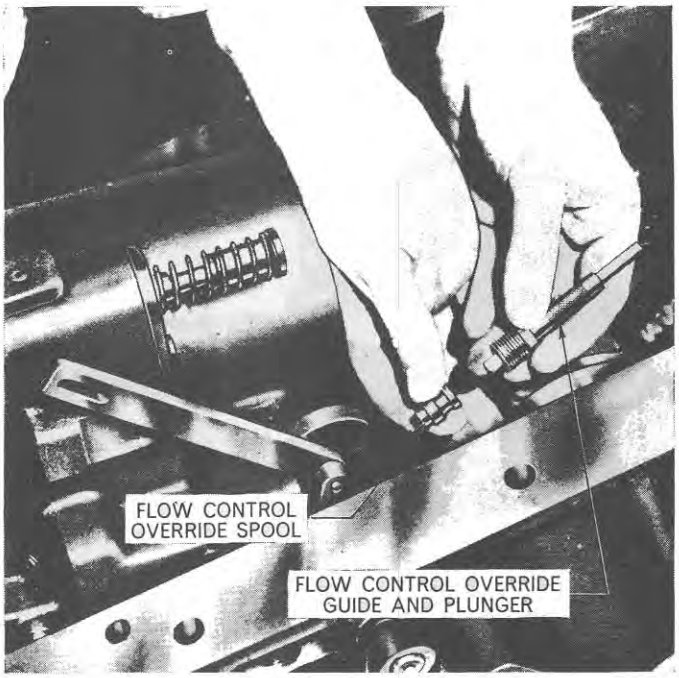

Figure 60
Flow Control Override Spool

7. Support the lift cylinder to prevent it dropping to the ground and loosen the four bolts securing the lift cylinder assembly to the lift cover housing until the lift cylinder is free.

B. Disassembly

An exploded view of the lift cylinder assembly is shown in Figure 61.

1. Remove the lift cylinder safety valve using an open ended spanner (wrench) on the hexagonal head. Do not dismantle this valve as it is set at a specific pressure. (See Specifications Section—Chapter 5.)
2. With the safety valve removed, push the lift piston out of the cylinder using a suitable soft metal rod through the hole provided for the safety valve, Figure 62.
3. Remove the two bolts securing the control valve rear cover plate, Figure 63, to the lift cylinder. Lift out the plate, control valve and control valve spring, taking care to avoid damaging the lands of the valve.
4. Remove the two bolts securing the control valve baffle and plate, Figure 63. Remove the baffle plate.
5. Attach remover Adaptor T.8510-1/g to Lift Cylinder Bushing Remover and Replacer No. T.8510 and screw the outer end of the Adaptor into the unload valve plug. The Main Tool T.8510 has a cutaway part which should be positioned on the protruding end of the cylinder so that it seats squarely. Remove the plug, Figure 64. Alternatively use Lift Cylinder Bushing Remover and Replacer No. N-508-A to remove the plug, inset—Figure 64.
6. Remove the unload valve from its bore.

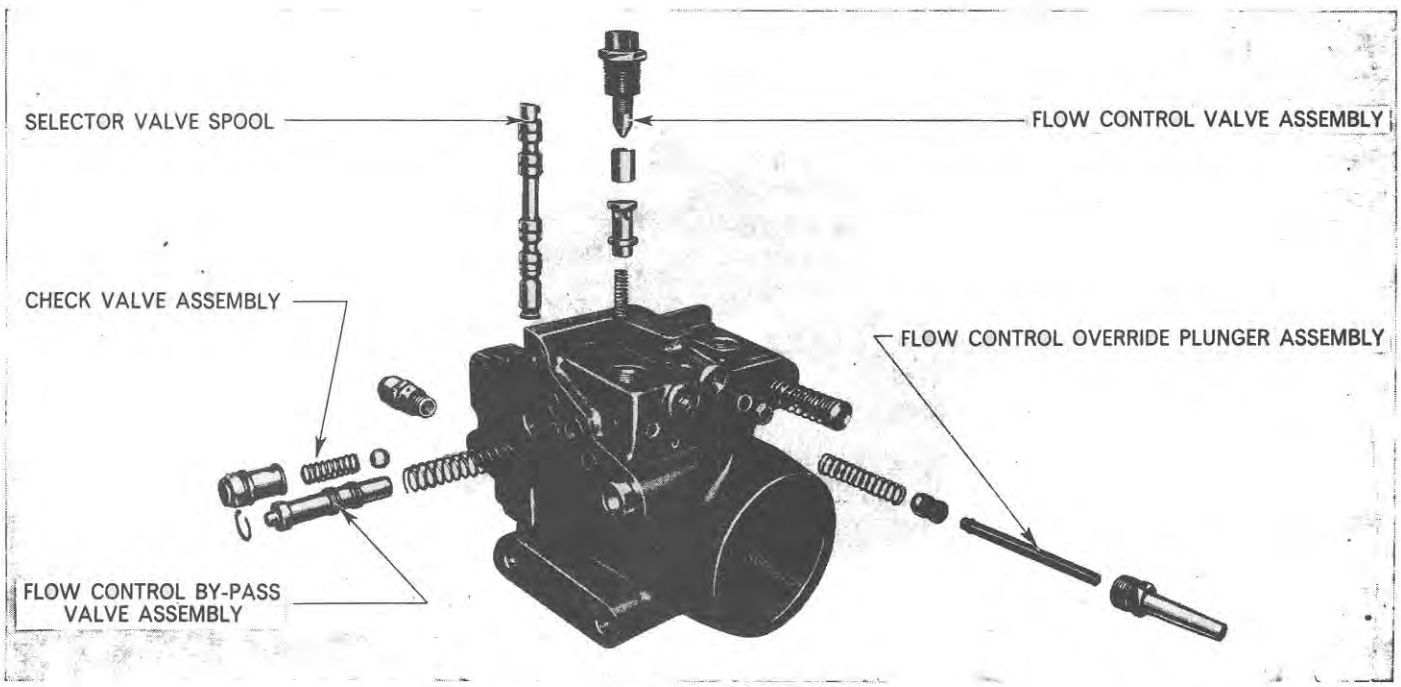

Figure 61
Lift Cylinder Assembly

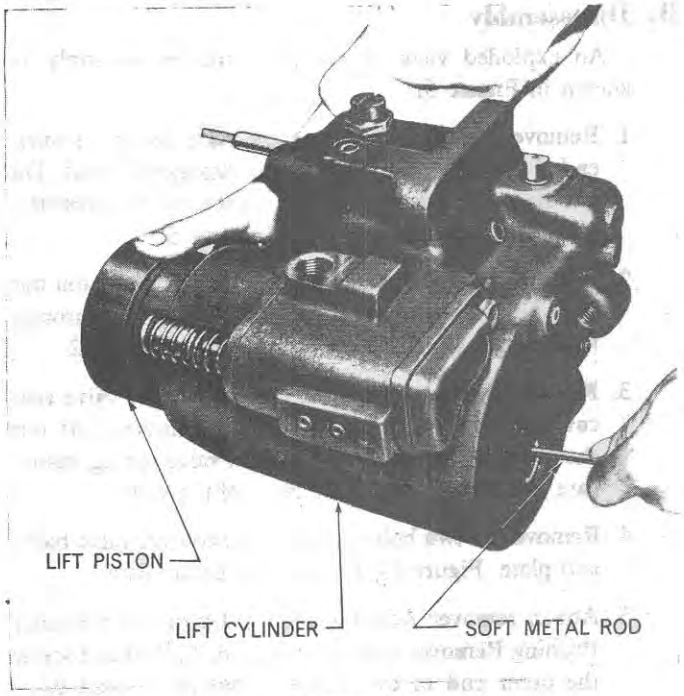

Figure 62
Removing the Lift Piston

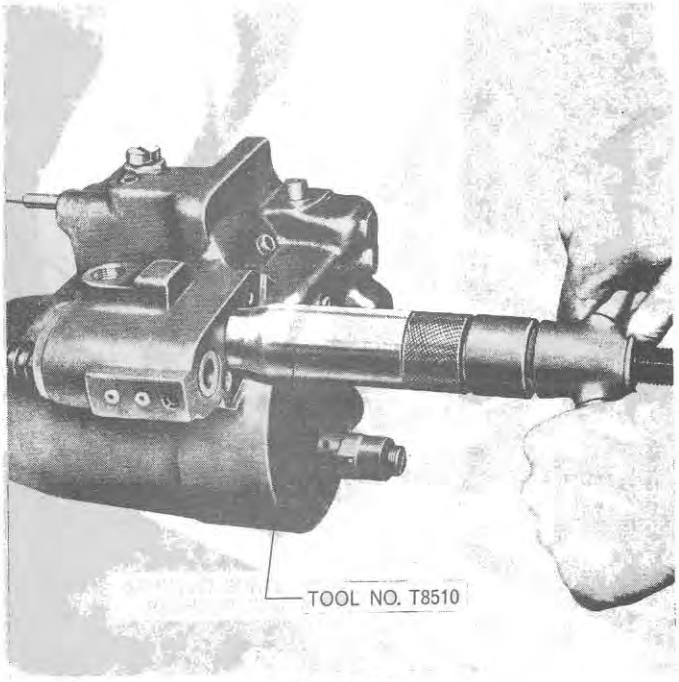

Figure 64
Removing the Unload Valve Plug

7. Attach the short threaded end of the Extension T.8510-1/b to Lift Cylinder Bushing Remover and Replacer No. T.8510 and pass the extension through the control valve bushing with the main tool at the front end of the cylinder. Screw the Special Nut, Tool No. T.8510-1/h on to the rear end of the Extension until it locates squarely against the rear face of the bushing. The small tapered portion of the nut should be located inside the bushing for centralization. Remove the bushing by turning the wing nut of the

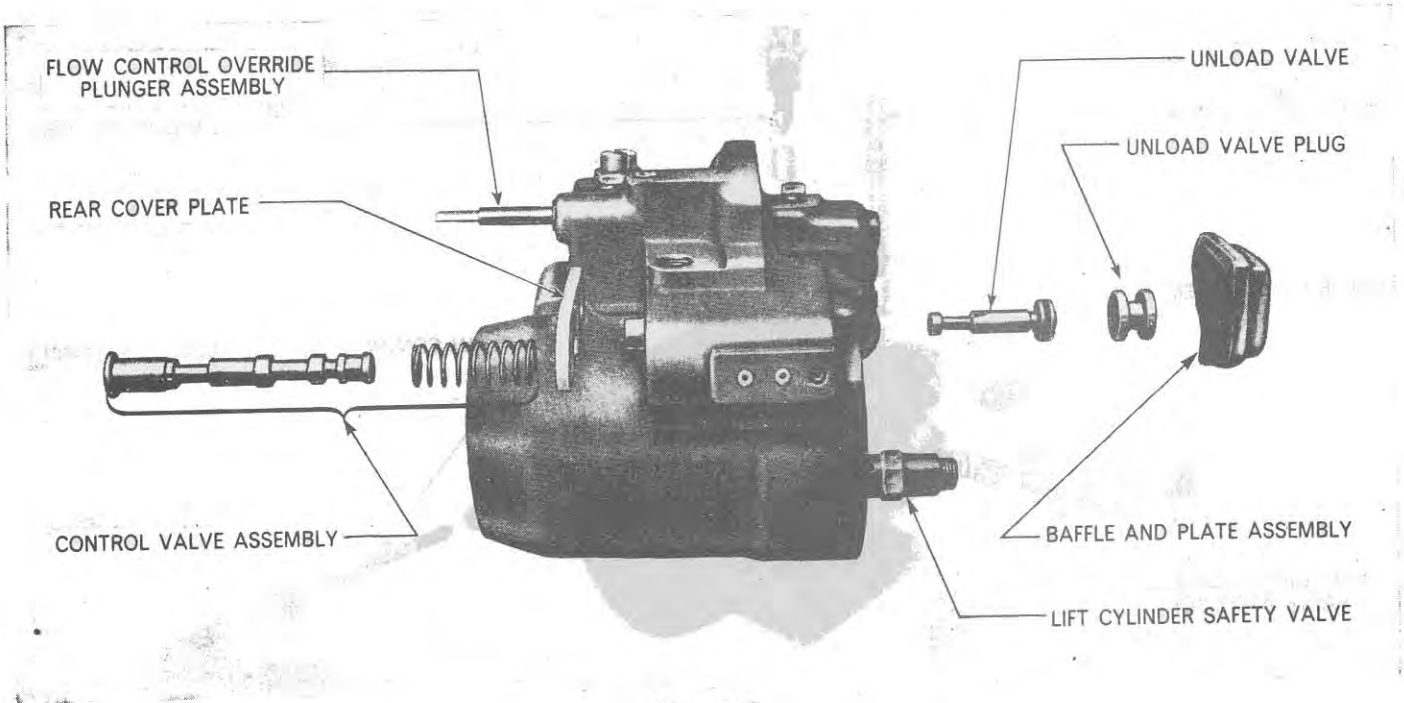

Figure 63
Control and Unload Valve Assemblies

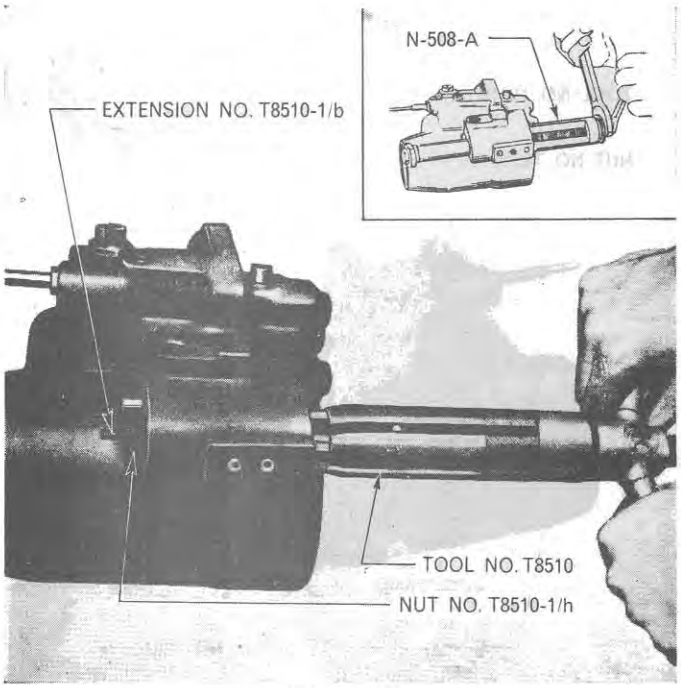

Figure 65
Removing Control Valve Bushing

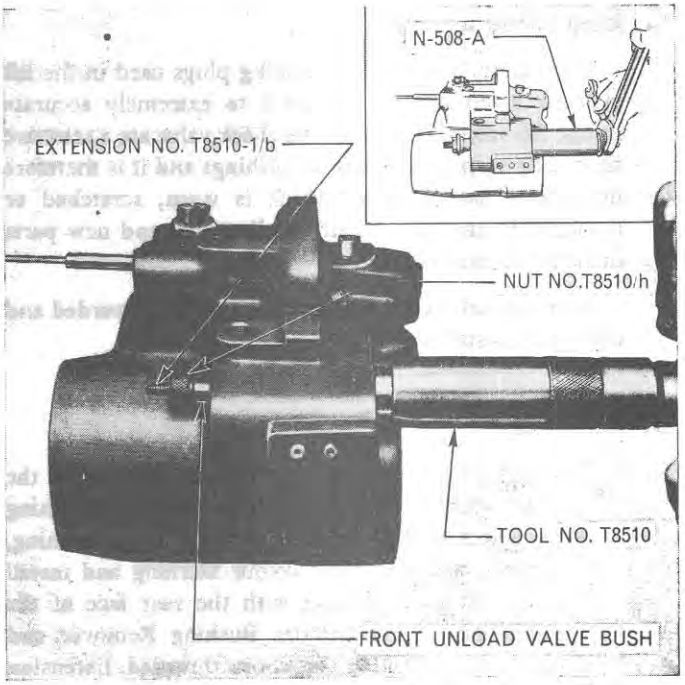

Figure 66
Removing Unload Valve Bushings

main tool, Figure 65. Alternatively use Lift Cylinder Bushing Remover and Replacer No. N-508-A, inset—Figure 65.

8. Repeat this operation for the unload valve bushings, seating the nut against the rear face of the rear bushing and withdraw both bushings at the same time, Figure 66.

9. The selector control valve spool is held in position by a spring and ball. The ball seats in either one of the two detents at the end of the spool giving the 'in' and 'out' positions. The sharp radius at the extreme end of the spool prevents it from being withdrawn from the lift cylinder. The selector control valve spool can be removed by pushing the valve fully in and installing a suitable size 'O' ring on the end detent of the spool. As the spool is pulled outwards the 'O' ring will lift the ball over the sharp radius, Figure 67.

   Remove the 'O' ring from the spool immediately after withdrawing the spool.

10. Remove the check valve, which is situated in the machined face of the lift cylinder, by hooking a piece of wire round the groove at the end of the valve. Remove also the spring and ball, Figure 61.

11. The check valve seat is retained by an 'O' ring and can be removed with a piece of wire.

12. Remove the flow control valve plunger by unscrewing the nut, Figure 61.

13. Remove the flow control by-pass valve spool, Figure 61, by removing the retaining circlip. The spring pressure should be sufficient to push the plunger out. Remove the spring.

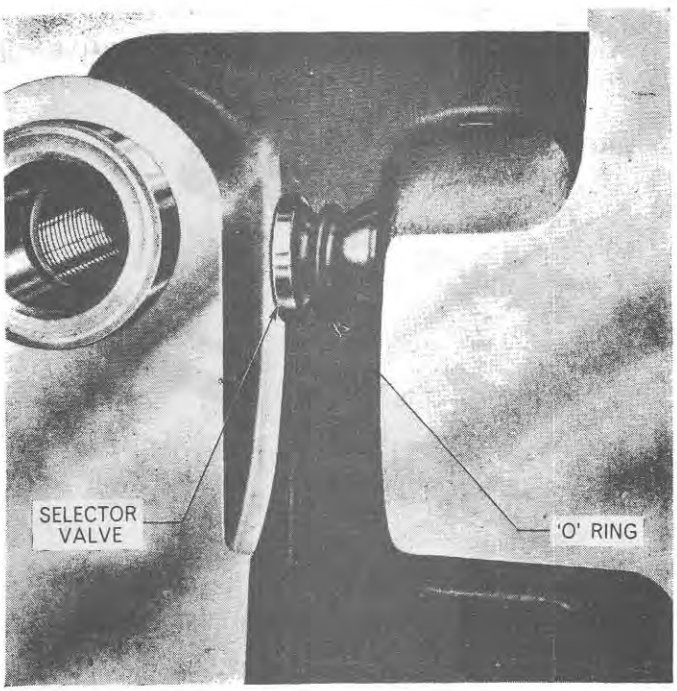

Figure 67
Removing the Selector Valve Spool

C. Inspection and Repair

The valves, bushings and sealing plugs used in the lift cylinder assembly are machined to extremely accurate limits. All valves, except for the check valve are a selective fit in their respective bores or bushings and it is therefore important that any part which is worn, scratched or damaged in any way should be discarded and new parts installed on assembly.

'O' rings, oil seals and gaskets should be discarded and new parts installed on assembly.

D. Assembly

1. The lift cylinder is marked on the outside of the cylinder with a colour spot opposite the unload bushing bore. Select a front and rear unload valve bushing, Figure 68, with the same colour marking and install these bushings until flush with the rear face of the housing using Lift Cylinder Bushing Remover and Replacer No. T.8510, the short threaded Extension T.8510-1/a Figure 69. Lubricate the bushings prior to installing.

   Alternatively use Lift Cylinder Bushing Remover and Replacer No. N-508-A, inset—Figure 69.

   (See Table 1 in Specifications Section—Chapter 5, for Unload Valve Bushing sizes.)

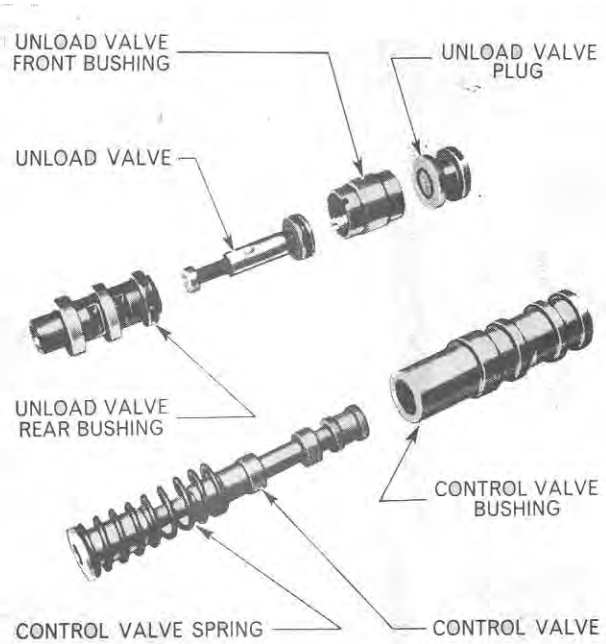

Figure 68

Control and Unload Valve Bushings

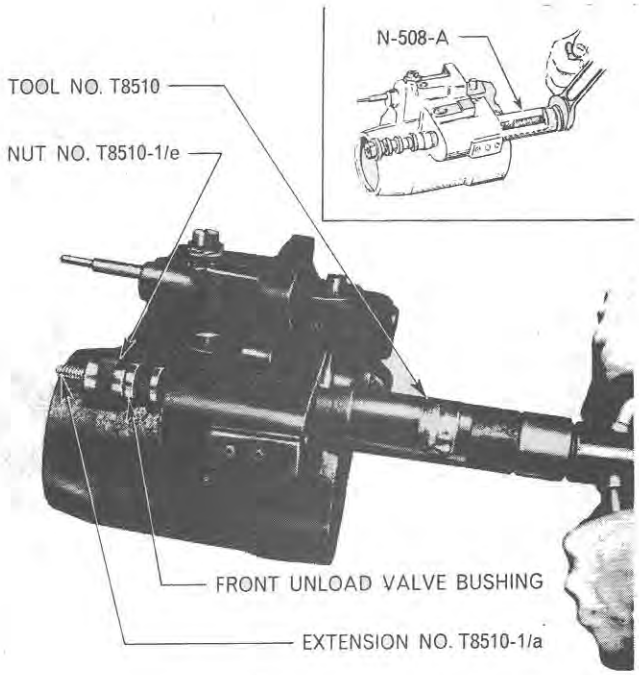

Figure 69

Installing Unload Valve Bushings

NOTE: ***The front unload valve bushing has small notches on its end periphery. The bushing should be installed in the housing with the small single notched end to the front.***

2. Observe the colour mark on the outside of the cylinder adjacent to the control valve bushing bore and select a control valve bushing with the same colour marking. (For bushing sizes see Table 3—Specifications Section —Chapter 5.)

   Insert the Guide and Stop Adaptor T.8510-1/k (spigot end first) into the rear of the control valve bushing bore, and, working from the control valve rear plate end of the cylinder, pass Extension No. T.8510-1/a fitted to Lift Cylinder Bushing Remover and Replacer No. T.8510 through the guide. Locate the control valve bushing over the extension. It will be noticed that the lands of the bushing vary in size and should be installed with the counterbored end to the front of the cylinder (the baffle and plate assembly end). Lubricate the bushing and, using Nut T.8510-1/h to retain the bushing and centralize the extension, pull the bushing into the bore until the front face of the bushing meets the inner face of the guide, Figure 70.

   Slacken the wingnut of the tool and reverse the guide passing the spigot into the body of the tool so that the larger face of the guide is presented to the control valve rear plate surface of the cylinder. Re-tighten the wing nut of the tool and draw the control valve bushing

fully into position to seat against the guide so that the front end of the bushing is flush with the front face of the cylinder (the baffle and plate assembly surface). Alternatively use Lift Cylinder Bushing Remover and Replacer No. N-508-A, inset Figure 70.

3. Lubricate the unload valve spool and insert the valve into its bushings.

4. Select an unload valve plug of a suitable size, that is one which gives an interference fit in the unload valve bore and prevents oil leakage around the plug. The size required will probably be one or two sizes larger than the one removed. Each size of plug is identified by a colour mark. (See Table 2 in Specifications Section—Chapter 5.)

   Carefully press the selected plug into the bore, with the threaded hole facing outwards, until it is flush with the machined face of the cylinder.

5. The control valve spool is colour marked to assist in identification but this should not, however, be used as a method of selecting a valve to match the bushing. The important factor when selecting the control valve spool is that it should be the largest which will operate in the bushing without binding and should just fall under its own weight. (See Table 4 in Specifications Section—Chapter 5.)

6. Having selected a suitable valve spool, lubricate and retain it in the bushing by assembling the control valve retaining plate and control valve spring, securing the plate with the two bolts. Tighten the bolts to the specified torque. (See Specifications Section—Chapter 5.)

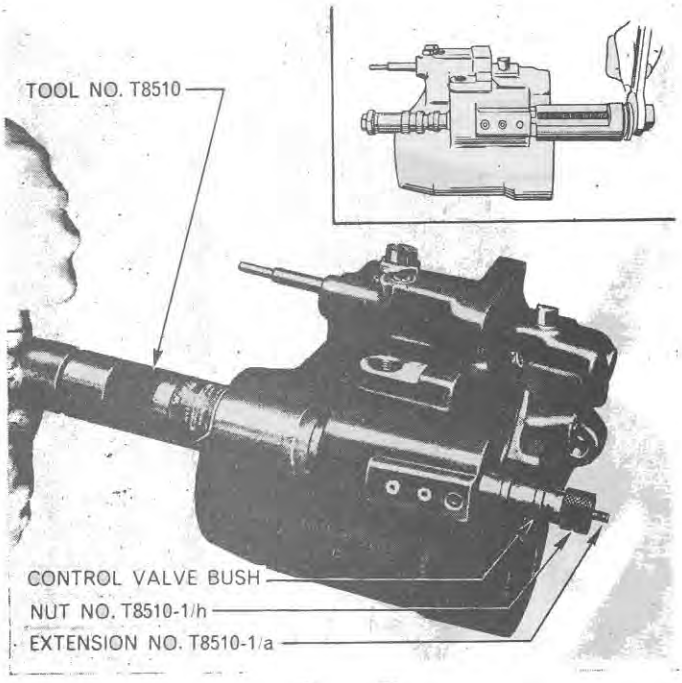

Figure 70

Installing Control Valve Bushing



Figure 71

Installing the Selector Valve Spool

7. Install the control valve baffle and plate assembly with a new gasket and retain with the two bolts. Leave bolts finger tight to facilitate control valve adjustment.

8. Install the selector valve spring and ball into the hole provided in the selector valve bore. Depress the ball and spring with a suitable thin rod, at the same time inserting the selector valve spool until the ball locates in one of the grooves at the end of the spool, Figure 71.

9. Install the check valve seat which will slide into place with finger pressure.

10. Install the check valve ball and spring and install the check valve retainer, which is held in position by the 'O' ring at the end, Figure 72.

11. Install the flow control valve spring and seat and install the valve plunger and cover. Tighten the hexagonal nut.

12. Install the spring and spool of the flow control by-pass valve and retain with a circlip.

NOTE: ***It is necessary, prior to installing a new lift piston 'O' ring or back-up seal, to soak the 'O' ring in oil for a period of about 5 minutes, while the leather back-up seal should be soaked***

in water for a maximum time of two minutes, in order to expand them and facilitate installation.

13. Install a new back-up seal to the piston with the flesh (rough) side of the seal to the 'O' ring. Install a new 'O' ring to the piston positioning the 'O' ring nearest to the closed end of the piston.

14. Lubricate the outer face of the piston and, after allowing the leather back-up seal to contract to its original size, install the piston in the lift cylinder.

15. If removed, install the two ring dowels in the appropriate diagonally opposite counterbored holes in the top faces of the lift cylinder.

16. Finally install the lift cylinder safety valve assembly using a new sealing washer between the valve and cylinder.

E. Installation

1. Invert the lift cover on the stand.

2. Install a new set of 'O' rings to the counterbores in the oil passages of the lift cylinder, Figure 73.

3. Lower the cylinder assembly onto the lift cover, Figure 74, positioning the cylinder on the two ring dowels. Install the four bolts securing the lift cylinder to the lift cover housing. Tighten the securing bolts from underneath to the specified torque. (See Specifications Section—Chapter 5.)

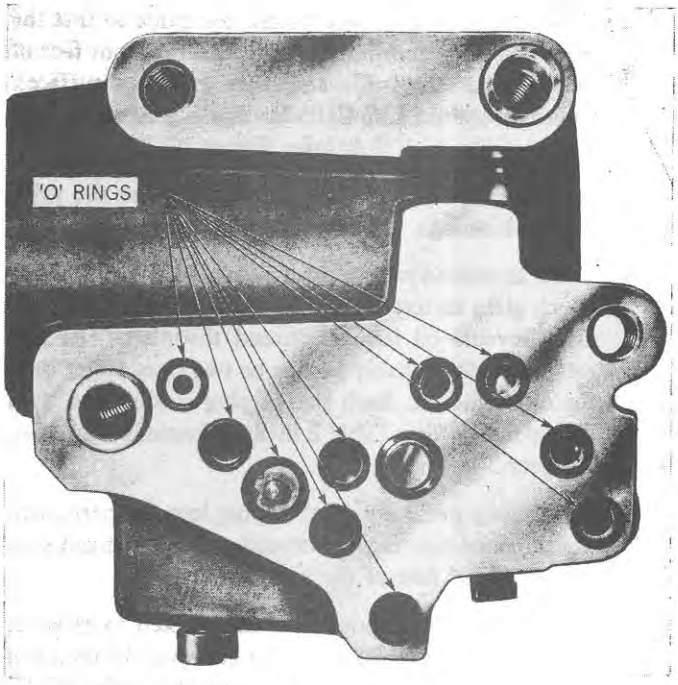

Figure 73
Lift Cylinder 'O' Ring Locations

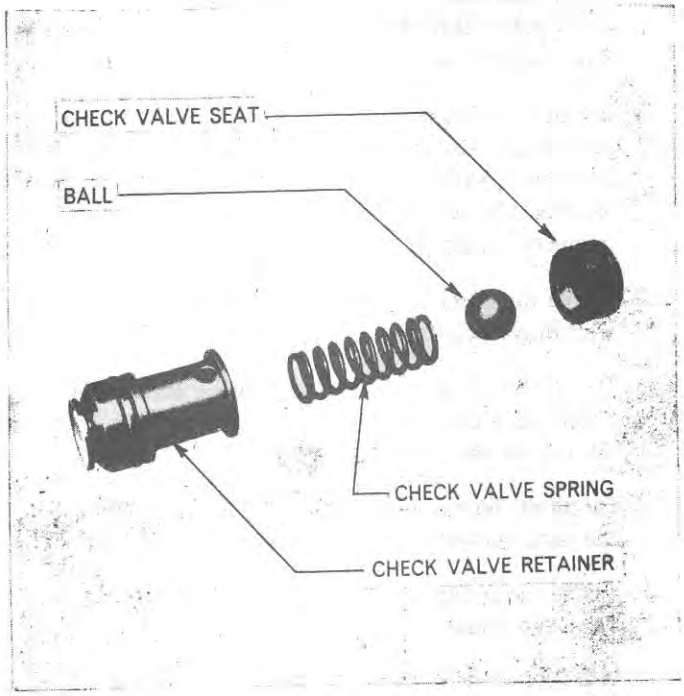

Figure 72
Check Valve Assembly



Figure 74
Installing the Lift Cylinder Assembly

4. Install the spring and spool of the flow control override device in the lift cylinder and install the flow control override guide and valve plunger. Tighten with a thin open-ended spanner (wrench).

5. Install the turnbuckle assembly and connect the rear end to the actuating lever with the cotter pin and clevis pin.

6. Position the stem and hexagonal retainer of the flow control valve aligning the lug in the stem with the slot in the valve. Tighten the retainer and secure the knob, with the screw.

7. Reconnect the selector valve stem to the selector valve spool, slide the knob over the stem and secure with the retaining screw.

8. Adjust the Draft Control and Position Control linkage (See Adjustment Section.)

4. OVERHAUL LIFT COVER ASSEMBLY

NOTE: ***It is necessary when working on lift cover assemblies that utmost cleanliness is maintained. The entry of dirt into the hydraulic system is harmful to the numerous working parts and must therefore be eliminated.***

A. Removal

1. Make sure that the lift arms are at their lowest position to exhaust the oil in the lift cylinder.

2. Remove the top link and disconnect the lift linkage by removing the cotter pin and clevis pin from each of the lift arms.

3. Remove the clevis pin securing the draft control main spring yoke plunger to the rocker and swing the rocker away from the yoke.

4. Remove the seat assembly and install the Lifting Bracket No. SW 2, to facilitate removal of the lift cover.

5. Clean the lift cover around the gasket joint and remove the fourteen bolts securing the lift cover to the rear axle centre housing. Use a suitable hoist attached to the lifting bracket and raise the lift cover assembly clear of the housing.

   NOTE: ***It is important to raise the lift cover straight upward to make sure that the oil return filter, which hangs below the lift cover, is not bent or damaged.***

6. Disconnect the oil filter and pipe assembly.

7. Place the lift cover on supports with the internal linkage facing upwards. Make sure that the assembly is not resting on the selector lever.

B. Disassembly

An exploded view of the Lift Cover Assembly is shown in Figure 75.

1. Bend back the locking tabs on the lift arm retaining bolts, unscrew the bolts and remove the lift arms.

2. Remove the two quadrant to lift control lever retainer bolts.

3. Remove the lift control lever retainer nut together with the double-coil spring washer, flat washer, woodruff key, friction disc and lever.

4. Remove the two bolts from the quadrant assembly and slide the assembly outwards and off the control lever shaft.

5. Remove the clevis pin, washer and cotter pin retaining the draft control plunger rod to the draft control plunger, Figure 75. Remove the retaining ring securing the other end of the draft control plunger rod and connector assembly to the actuating lever and lift the assembly clear.

6. Remove the clevis pin and cotter pin from the control valve turnbuckle and lift the turnbuckle assembly out of the control valve.

7. Remove the snap ring from the end of the control lever shaft and remove the control valve actuating lever.

8. Remove the snap ring retaining the upper end of the position control link.

9. Remove the cotter pin and clevis pin from the lift piston connecting rod and lift the rod clear of the cylinder.

10. Lift the position control spring assembly and control lever shaft out of the housing.

11. Tap out the tension pin securing the override valve actuator and slide the actuator and position control spring assembly off the control lever shaft.

12. By suitably positioning the selector lever and, with a thin open-ended spanner (wrench), remove the flow control override guide and valve plunger situated behind the selector lever arm, Figure 59. The guide is knurled on the outer surface to assist in this operation.

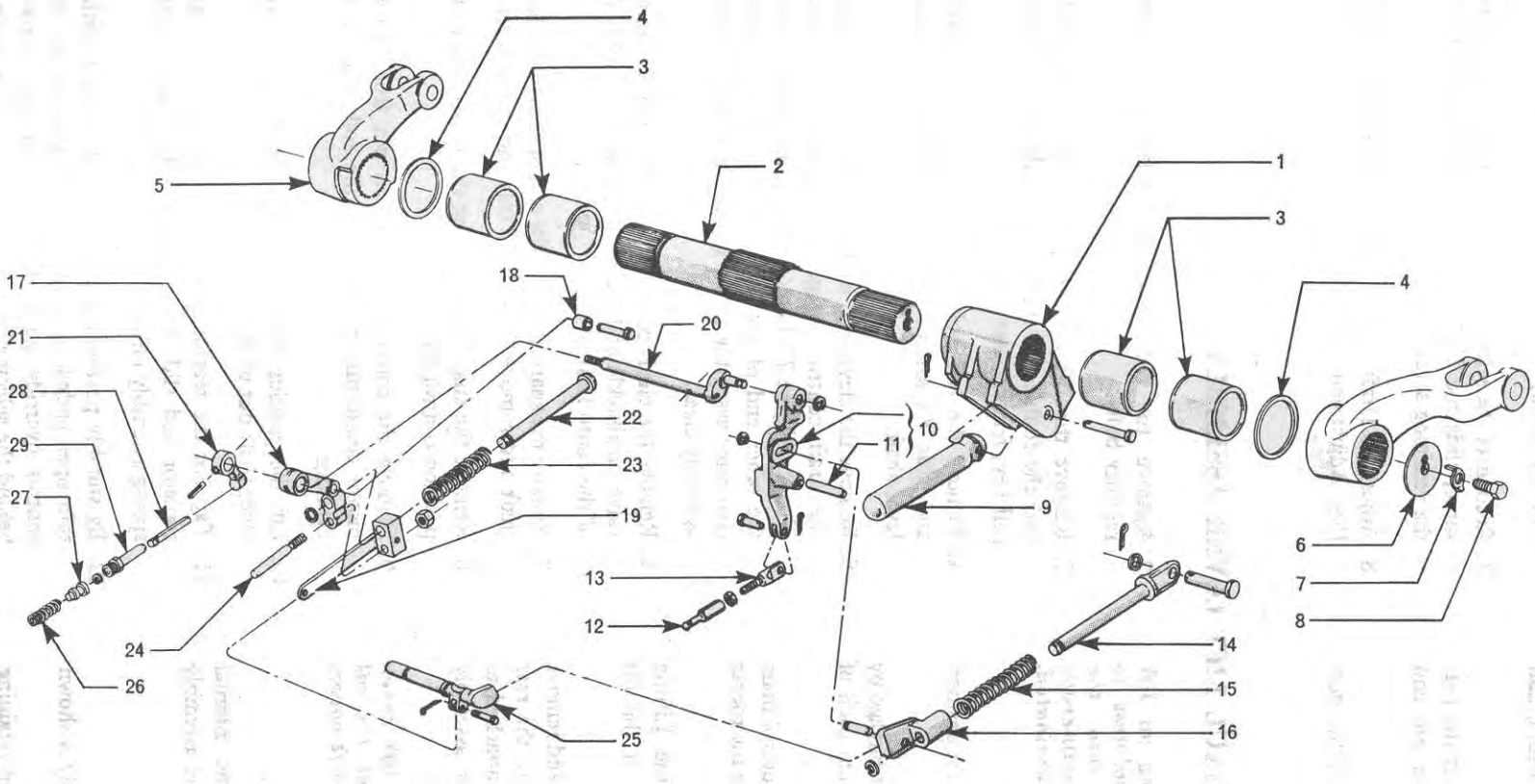

1 — RAM ARM
2 — LIFT CROSS-SHAFT
3 — LIFT SHAFT BUSHINGS
4 — DUST SEAL
5 — LIFT ARM
6 — LIFT CROSS-SHAFT WASHER
7 — LOCK WASHER
8 — RETAINING BOLT
9 — LIFT PISTON CONNECTING ROD
10 — ACTUATING LEVER
11 — PISTON STOP PIN
12 — CONTROL VALVE TURNBUCKLE
13 — CONTROL VALVE LINK
14 — DRAFT CONTROL PLUNGER ROD
15 — DRAFT CONTROL OVERRIDE SPRING
16 — PLUNGER ROD CONNECTOR
17 — POSITION CONTROL ARM
18 — POSITION CONTROL ROLLER
19 — POSITION CONTROL LINK
20 — CONTROL LEVER SHAFT
21 — FLOW CONTROL VALVE OVERRIDE ACTUATOR
22 — POSITION CONTROL ROD
23 — POSITION CONTROL SPRING
24 — POSITION CONTROL ADJUSTING SCREW
25 — POSITION CONTROL SELECTOR ARM
26 — OVERRIDE VALVE SPRING
27 — OVERRIDE VALVE SPOOL
28 — OVERRIDE VALVE PLUNGER
29 — OVERRIDE VALVE PLUNGER GUIDE

Figure 75
Internal Hydraulic Linkage

NOTE: ***It is advisable at this stage to remove the small plunger spool and spring which are liable to drop out and consequently become damaged, Figure 60.***

13. Remove the selector valve knob by pulling it out and unscrewing the retaining screw. Pull the knob from the lift cover housing and lift the selector valve stem out through the bore.

14. Remove the flow control knob and stem by unscrewing the hexagonal locknut.

15. In order to remove the lift shaft it is advisable to invert the lift cover on the stand with the lift cylinder underneath.

16. Remove the 'O' rings at either end of the lift shaft.

17. Drive the lift shaft out of the cover using a soft headed hammer, supporting the ram arm at the same time. This will in turn remove the lift shaft bushings from one end. Remove the bushings from the shaft.

18. Remove the retaining two bushings from the other side of the cover using the lift shaft and a soft headed hammer.

NOTE: ***It should not normally be necessary to interfere with the draft control main spring. However, if it is suspected of being faulty, it can be removed by unscrewing the yoke, loosening the set screw and removing the large hexagonal retaining nut at the rear of the lift cover housing, Figure 56.***

C. Assembly

Position the lift cover upright on the stand with the seat studs at the top.

1. If removed, install the draft control main spring, spring seats, plunger, hexagonal retaining nut, set screw and yoke. (For correct adjustment see 'Draft Control Main Spring Adjustment'.)

2. Position two lift shaft bushings on the lift shaft and, using the shaft as a replacing tool, install the bushings by tapping the end of the shaft with a soft headed hammer until the outer bushing is flush with the housing.

3. Remove the lift shaft and replace in the other side of the housing, slide the shaft through the housing and position the ram arm so that the master spline on the shaft corresponds to that on the ram arm. Push the shaft through the ram arm and through the bushings on the opposite side of the housing. Place one of the other bushings on the end of the shaft and, using a lift arm, gently tap the bushing into position. Carry out the same procedure for the second bushing until it is flush with the housing.

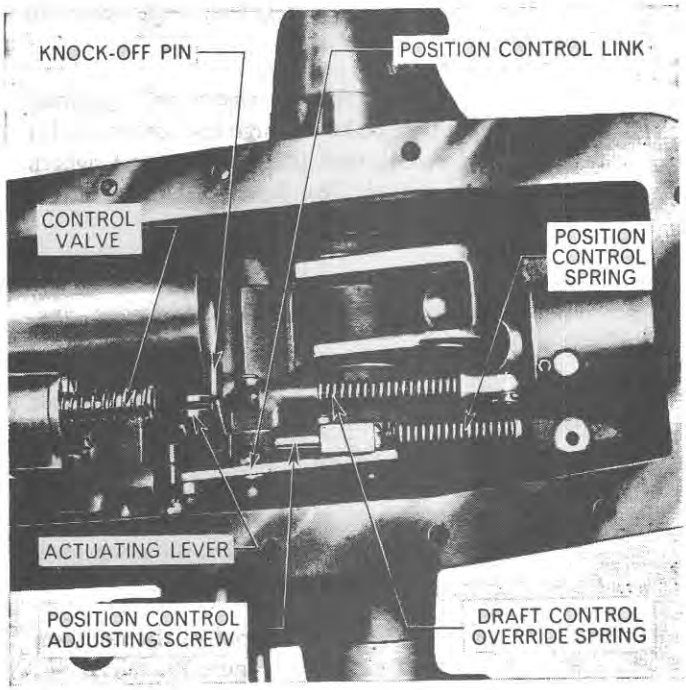

Figure 76
Position and Draft Control Linkage

4. Install a new 'O' ring on either end of the lift shaft and position the lift arms, engaging with the master spline on the shaft.

5. Position the end plates on either side, install the lock washer and tighten the bolts on either end of the lift shaft equally until the lift arms will just drop under their own weight. Lock the bolts with the lockwashers.

6. Invert the lift cover on the stand.

7. Install the override valve spring and spool. The spool is a selective fit and the colour mark on the spool should match that on the lift cylinder adjacent to the bore.

8. Install the override guide and valve plunger assembly in the lift cylinder and tighten with a thin, open-ended spanner (wrench).

9. Install the position control spring assembly on the control lever shaft. Slide the override valve actuator on to the shaft and secure with the tension pin.

10. Slide the control lever shaft and position control spring assembly in through the hole provided in the lift cover housing.

© FORD MOTOR COMPANY LTD 1964

11. Install the control valve actuating lever and retain with a snap ring.

12. Position the quadrant spacing sleeve and quadrant assembly with a new gasket through the bore in the lift cover housing. Retain with the two bolts and tighten to the specified torque. (See Specifications Section—Chapter 5.)

13. Install the draft control override spring assembly and secure to the control lever shaft with a snap ring, Figure 76.

14. Install the snap ring at the rear end of the selector control link.

15. Insert the round head of the turnbuckle assembly into the end of the control valve, securing the opposite end of the turnbuckle to the control valve actuating lever with a clevis pin and cotter pin, Figure 77.

16. Retain the lift piston connecting rod to the ram arm with a cotter pin and clevis pin, Figure 78.

17. Secure the draft control override spring to the yoke with a clevis pin and cotter pin, refer to Figure 76.

18. Install the friction pad, woodruff key and lift control lever plate, Figure 79.



Figure 78

Installing the Lift Piston Connecting Rod

19. Install the lift control lever retainer securing to the quadrant assembly with the two bolts.

20. Install the spring washer and locknut retaining the lift control lever to the cross-shaft and tighten to the

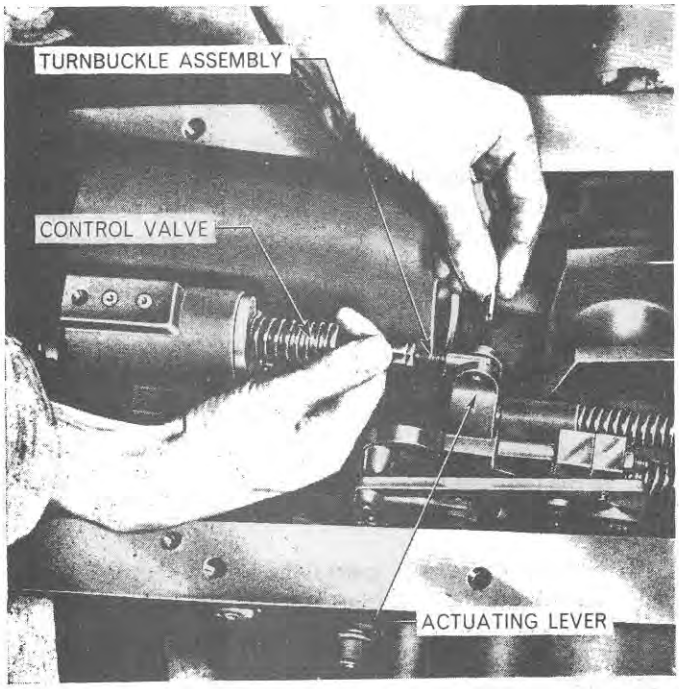

Figure 77

Installing the Control Valve Turnbuckle

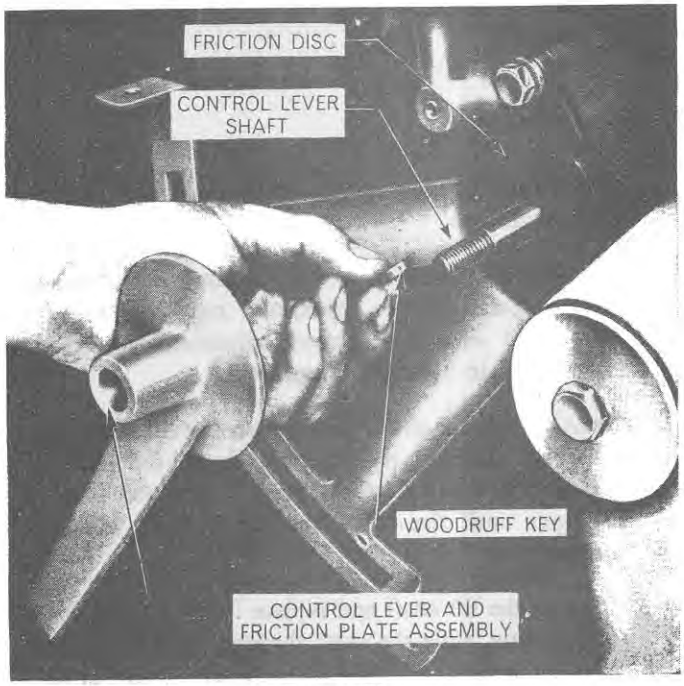

Figure 79

Installing the Lift Control Lever Plate

specified torque. (See Specifications Section—Chapter 5.)

21. Connect the selector valve knob and tighten the retaining screw.

22. Connect the flow control knob, making certain that the flow control plunger is screwed in. Tighten the hexagonal nut.

D. Installation

1. Install the exhaust oil filter and tube assembly, together with the back pressure valve. Tighten the exhaust tube 'through' bolt to the lift cylinder finger tight.

2. Secure the Lifting Bracket, Tool No. SW 2, to the lift cover and carefully lower the cover on to the rear axle centre housing using a moveable overhead hoist. To avoid damage to the exhaust filter, stop lowering when the lift cover is about four or five inches above the rear axle centre housing and suitably position the exhaust filter and tube for clearance.

3. After correctly positioning the filter and tube, raise the lift cover and tighten the retaining bolt to the specified torque. (See Specifications Section—Chapter 5.)

4. Install the lift cover and retaining bolts and tighten the bolts to the specified torque. (See Specifications Section—Chapter 5.)

5. Adjust the draft control main spring plunger as described under 'Draft Control Main Spring Adjustment'.

6. Connect the draft control main spring yoke to the rocker with the clevis pin and cotter pin.

7. Install the top link and connect the lifting rods to the lift arms with the cotter pins and clevis pins.

8. Install the seat assembly and secure with the two washers and nuts.

Part 11

HYDRAULIC SYSTEMS

Chapter 3

HYDRAULIC PUMP—PISTON TYPE

Section		Page
1.	Description and Operation	55
2.	Overhaul Hydraulic Lift Pump	56

1. DESCRIPTION AND OPERATION

Figure 80 shows a cross-section of the piston type hydraulic pump which is mounted on a machined face at the rear, left-hand side, of the engine and driven, through gears, by the camshaft giving a ratio of engine R.P.M. to pump R.P.M. of 1 : 1·067.

The pump uses 6 axial pistons, all of which complete a pumping cycle for each revolution of the pump shaft. The six pistons, which are moved back and forth in their cylinders in a horizontal plane, are actuated by a plate, offset at a fixed angle and possessing a cam action, called a wobble plate. A strong spring forces each piston against the plate thus providing a positive return at all times.

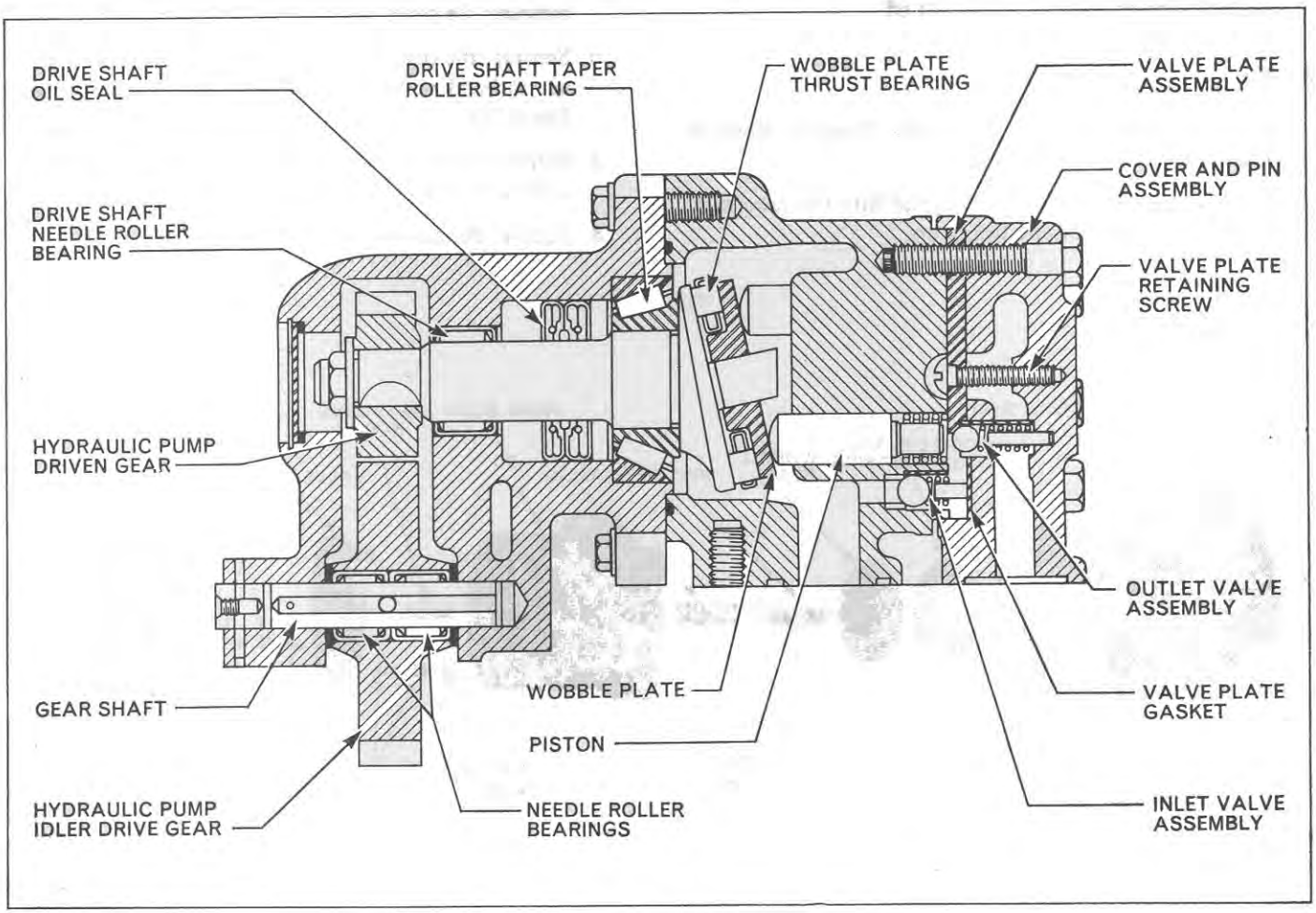

Figure 80
Cross Section of Hydraulic Piston Pump

© FORD MOTOR COMPANY LTD., 1964

Rotation of the wobble plate causes the pistons to move drawing oil from the rear axle centre housing, through a filter and along the external pipe work to the inlet manifold of the pump. The suction of the piston draws oil past the inlet valve where it remains trapped. The wobble plate is so designed that its action forces each piston in turn down its respective cylinder and against the spring, directing the trapped oil past the outlet valves.

This high pressure oil is then transmitted through external pipework to the base of the rear axle centre housing and from there, through internal passages, to the lift cover.

2. OVERHAUL HYDRAULIC LIFT PUMP

A. Removal

1. Thoroughly clean the pump at the manifold before removal.
2. Disconnect the manifold and pipe assembly, situated at the rear of the pump, by removing the three bolts. Make sure that any leakage is prevented and any dirt excluded from the system by placing a clean rag over the pipes.
3. Remove the four bolts and spring washers securing the pump to the tractor and lift off.

B. Disassembly

An exploded view of the Hydraulic Pump is shown in Figure 81.

1. Place the pump in a vice equipped with soft jaws with the drive gear housing facing up.
2. Remove the four bolts (with caution due to the pressure of the piston springs), securing the drive gear housing to the pump body and lift the drive gear housing clear. Discard the 'O' ring.
3. Lift the bearing and wobble plate out of the pump body.
4. Lift the six pistons with springs out of the cylinders in the pump body.
5. Invert the pump in the vice and remove the six bolts securing the cover assembly to the pump body.
6. Separate the cover assembly from the body taking care not to bend or damage the small inlet valve springs, Figure 82.
7. Remove the pump body from the vice and invert it to remove the six ball type inlet valves.
8. Remove the six small inlet valve springs.

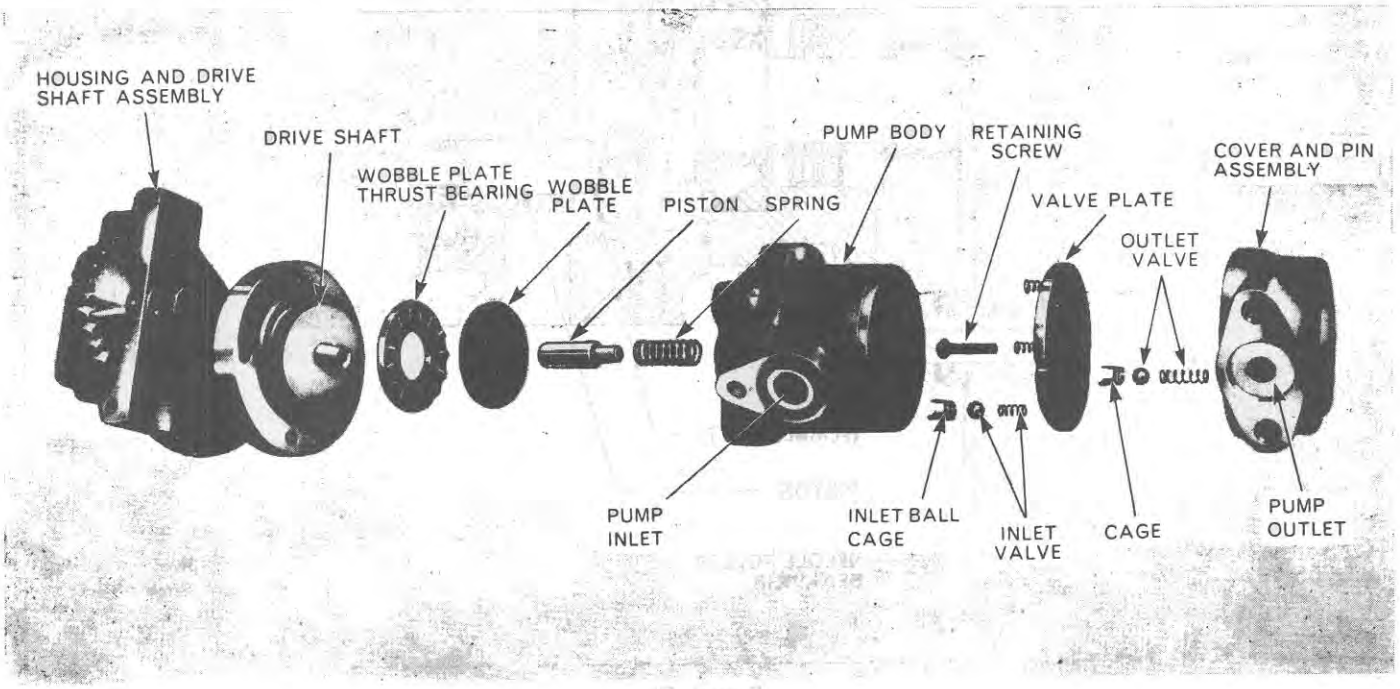

Figure 81
Hydraulic Piston Pump—Exploded



Figure 82
Removing Pump Cover from Body

9. Using a screwdriver carefully lever out the six spring and ball cage tripods.
10. Remove the inlet valve seats from the pump body using Tool No. NCA 600 G, Figure 83.



Figure 83
Removing Inlet Valve Seat



Figure 84
Removing Valve Plate

11. Remove the Phillips Head screw securing the valve plate to the cover assembly.
12. Place the cover assembly in a vice with the valve plate facing downwards and a tray underneath the cover, to prevent the loss of the balls and springs. Insert a long tapered punch through the special largest bolt hole, Figure 91, and, pressing against the valve plate, gently tap the plate downwards until it is almost free of the cover, Figure 84.
13. Remove the cover assembly from the vice and lever the valve plate from the cover using a screwdriver.
14. Remove the ball-type outlet valves and valve springs. Using a screwdriver carefully lever out the six outlet valve ball cages.
15. Remove the snap ring and plug from the end of the drive shaft housing. Discard 'O' ring. Remove nut and washer and, placing the drive gear housing in a vice as shown in Figure 85, use a long tapered punch, driving against the end of the threaded part of the shaft, to remove the shaft and bearing assembly, Figure 86.
16. Remove the pin securing the drive idler gear shaft.
17. Using a $\frac{1}{4}$ in.–20 UNC. bolt screwed into the threaded end of the gear shaft, remove the shaft.
18. Lift the two gears from the drive gear housing.



Figure 85
Removing Drive Shaft and Bearing Assembly

C. Inspection and Repair

1. Clean all parts with a suitable solvent such as trichorethylene and blow dry with air hose.
2. Inspect all springs for cracks and bends.
3. Inspect the inlet valve seats for burrs or other signs of damage at the seating face.
4. Inspect the outlet valve ball cages to be sure they are not damaged.
5. Inspect the ball type inlet and outlet valves for wear or score marks.
6. Carefully scrape the cover plate to valve plate gasket off and inspect the outlet valve plate for worn or damaged valve seats and stop pins.
7. Examine the six pistons and cylinders for signs of damage caused by foreign matter.
8. Inspect the wobble plate, bearing and bearing surface of the drive shaft for scoring, excessive wear and cracked rollers.
9. Inspect the drive shaft bearing for cracks or scoring. If the bearing is found to be defective remove it from the drive shaft using Tool Bearing Puller No. 1003 and shaft Protector No. 625-6, Figure 87.

   Press on the new bearing coated with a suitable grease using a hydraulic press and adaptors.
10. Examine the needle roller bearing in the drive shaft housing. If found to be defective:
    a. Remove the drive shaft bearing race using Pulling Attachment No. 943, and slide hammer No. 943-S.

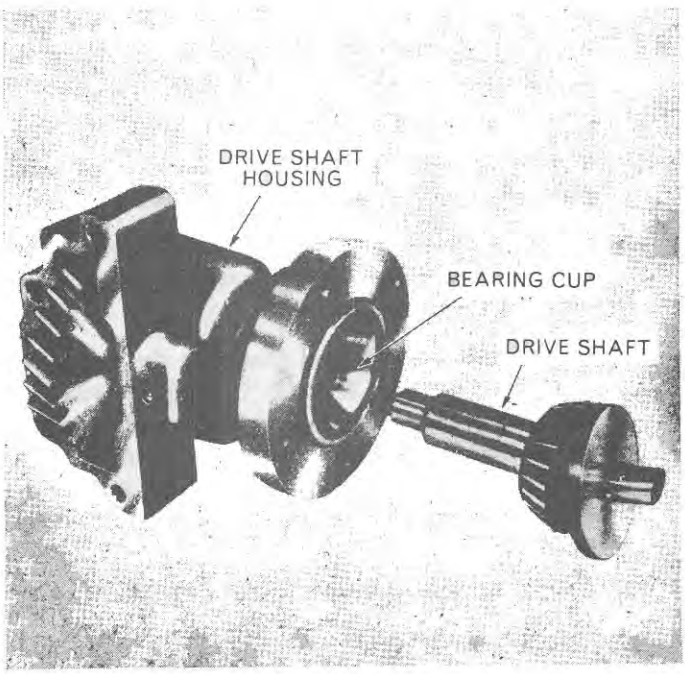

Figure 86
Drive Shaft and Housing Assembly

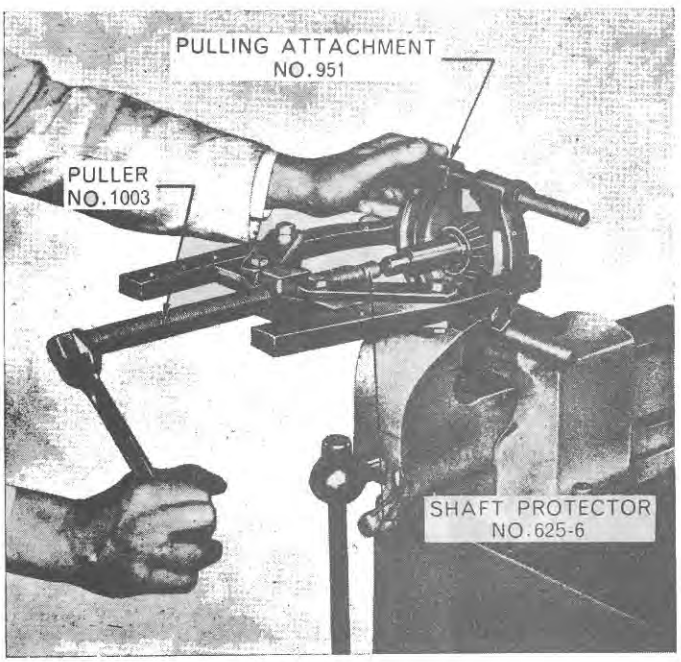

Figure 87
Removing Drive Shaft Bearing

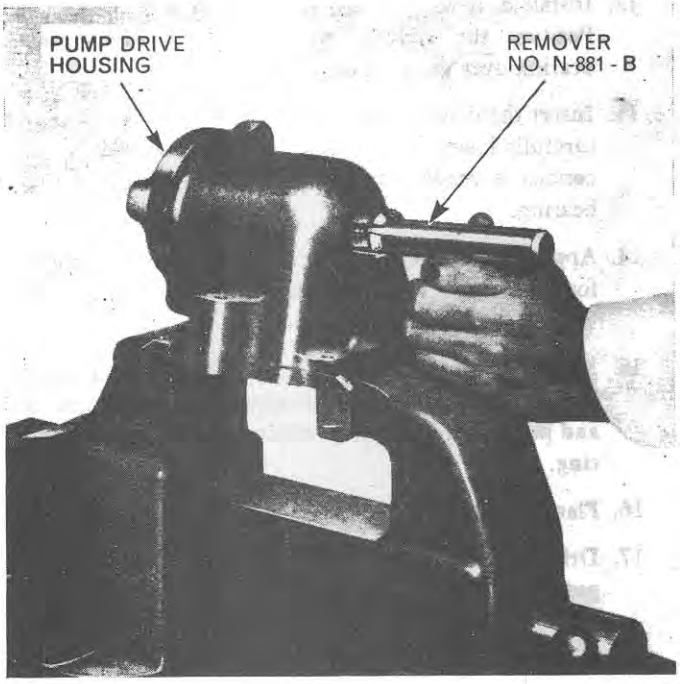

Figure 88
Removing Pump Shaft Needle Roller Bearing

b. Remove the oil seal from the housing bore and discard.

c. Using a soft headed hammer together with a suitable drift and Adaptor No. 630-3 remove the bearing. Alternatively use Remover No. N-881-B, Figure 88.

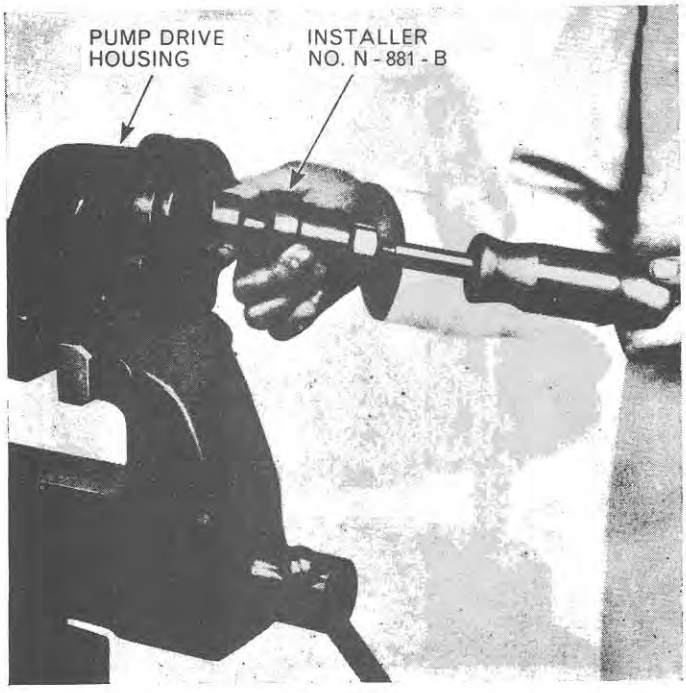

Figure 89
Installing Pump Shaft Needle Roller Bearing

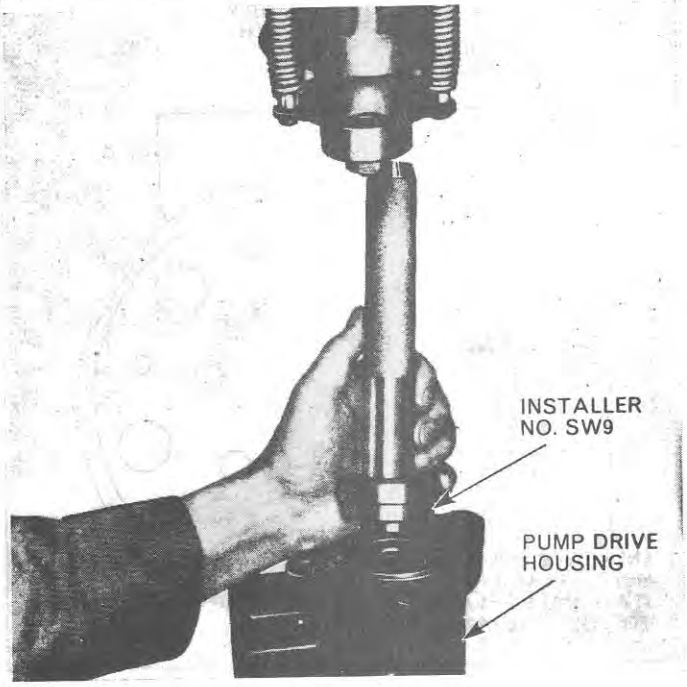

Figure 90
Installing Pump Drive Shaft Oil Seal

d. Tap the new bearing, coated with a suitable grease, into the housing using a soft headed hammer, a suitable drift and Adaptor No. 630-3. Alternatively use Installer No. N-881-B together with Slide Hammer No. 943-S, Figure 89.

NOTE: ***It is important that the bearing is installed with the adaptor located against the end of the bearing around which the name is stamped, The same end should face towards the oil seal when finally assembled.***

e. Install a new oil seal in position using Seal Driver No. SW 9 with the wide metal lip of the seal toward the outside of the housing, Figure 90. Alternatively use Oil Seal Replacer No. N-881-C together with Tool No. N-881-B which acts as a pilot when installing the oil seal.

f. Install a new race using a press and Adaptor No. 630-11.

11. All parts that are found to be defective, 'O' rings, oil seals and gaskets, must be discarded and new parts installed on assembly.

D. Assembly

1. Place the pump cover in a vice with the valve cavity upwards and install a new pump cover to valve plate gasket.
2. Position the outlet valve springs in the spring seats and place the ball-type outlet valves on the springs in the pump cover and pin assembly.
3. Place the spring and ball cage tripods into the valve plate.

© FORD MOTOR COMPANY LTD. 1964

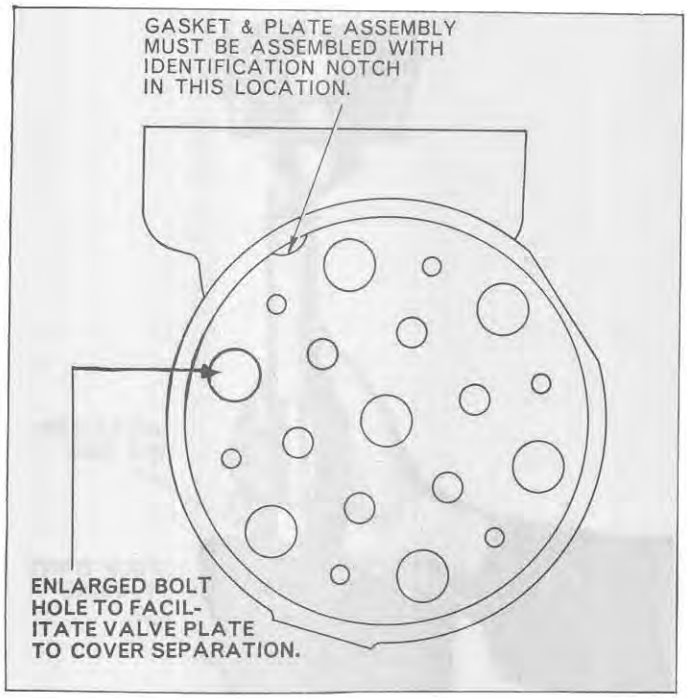

Figure 91
Correct Position of Gasket and Plate

4. Lower the valve plate carefully over the outlet valves using two cap screws to obtain proper alignment of the plate and cover, Figure 91.
5. Install the retaining screw and tighten until valve plate is fully seated.
6. Apply a small amount of grease to the plate and position a new gasket on the valve plate. Correct positioning of the gasket relative to the valve plate is important, Figure 91.
7. Place the inlet valve springs on the spring pins fixed to the valve plate and remove the cover assembly from the vice.
8. Clamp the pump body in a vice and install the valve seats using Tool Driver NCA-600-EA, Figure 92.
9. Install the six inlet valve ball cages in the pump body and place the six ball valves in the bores of the pump body.
10. Carefully lower the cover assembly onto the pump body. Check the alignment of the springs and install six bolts, tighten to the specified torque (See Specifications Section, Chapter 5.)
11. Invert the pump and install the piston springs in the cylinders. Coat the pistons with a light film of oil and lower them into the cylinders with the crowned end of the piston at the top.
12. Install a new 'O' ring in the pump body groove. Position the wobble plate and the wobble plate bearing over the pistons.
13. Insert the drive shaft into the drive shaft housing and carefully lower this assembly into the pump body until contact is made between the shaft and wobble plate bearing.
14. Apply hand pressure to the housing while starting the four cap bolts. Tighten these bolts to the specified torque (See Specifications Section, Chapter 5.)
15. Install the drive shaft nut and washer, tighten to the specified torque (see Specifications Section, Chapter 5), and position the end plug with a new 'O' ring and snap ring.
16. Place the two pump gears in the housing assembly.
17. Drive the idler gear shaft through the housing and gear.
18. Secure the shaft with a pin.

E. Installation

1. Install new 'O' rings to the manifold of the pipe assembly and mount the pump on the tractor.
2. Install the four pump retaining bolts and spring washers and tighten securely.
3. Finally position the manifold and pipe assembly securing the manifold with the three bolts.



Figure 92
Installing Inlet Valve Seats

Part 11

HYDRAULIC SYSTEMS

Chapter 4

HYDRAULIC PUMP—GEAR TYPE

Section		Page
1.	Description and Operation	61
2.	Overhaul Hydraulic Lift Pump	63

1. DESCRIPTION AND OPERATION

The hydraulic pump fitted to the Super Major 5000 as standard and Major 4000 when an 8 speed transmission with independent P.T.O. system is required, is a tandem gear type unit mounted on the right-hand side of the rear axle

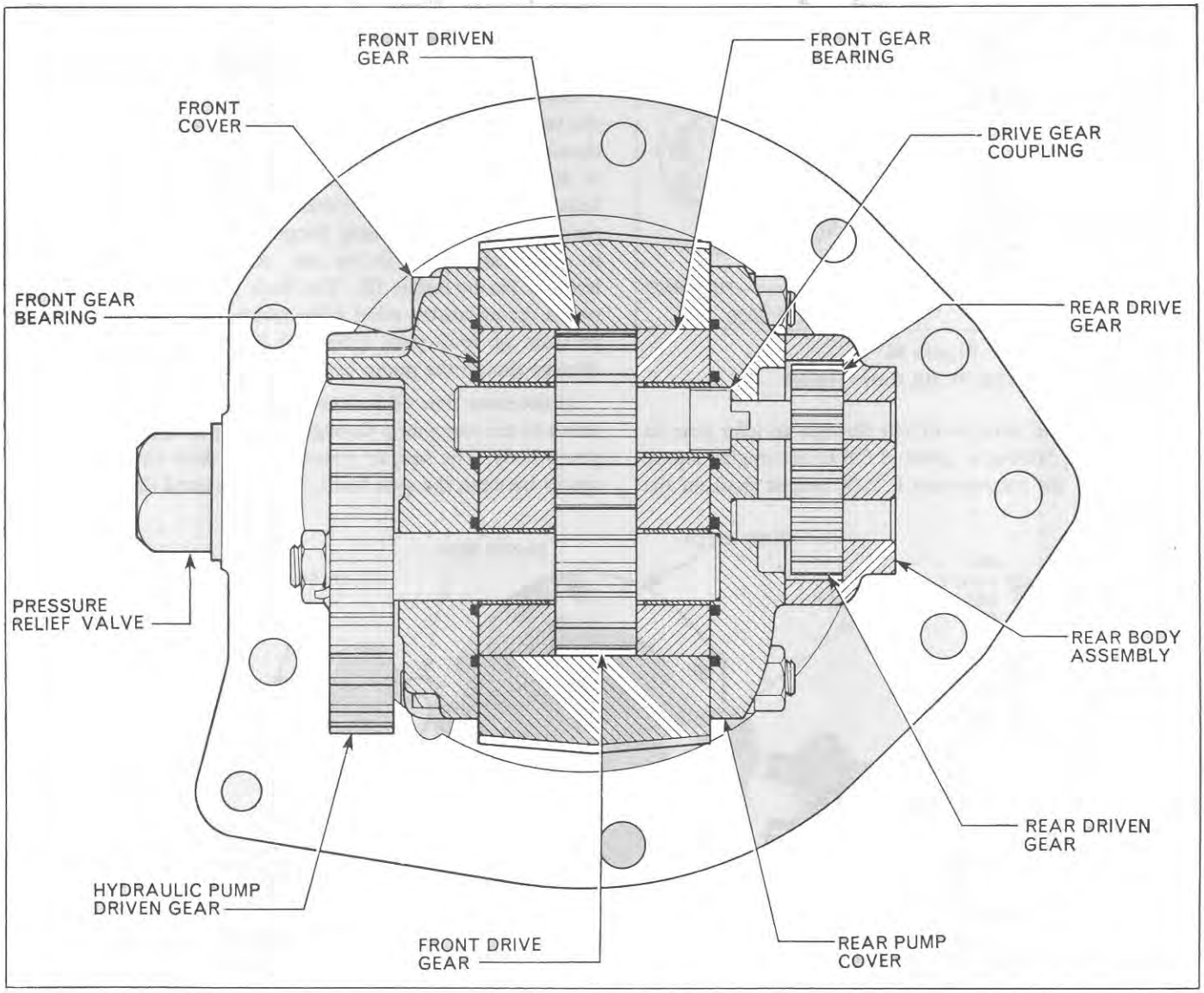

Figure 93
Cross Section of Hydraulic Gear Pump

© FORD MOTOR COMPANY LTD. 1964

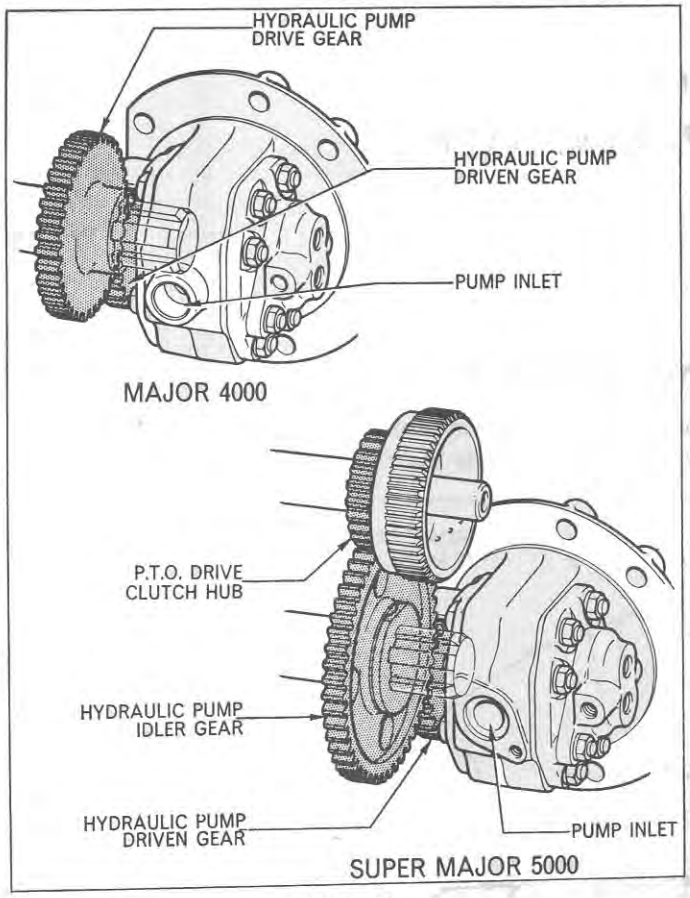

Figure 94
Hydraulic Pump Gear Trains

centre housing. The pump is driven through an idler gear on the Super Major 5000 at a speed of 0·8 of the engine r.p.m. and directly off the transmission P.T.O. output shaft on the Major 4000 at a speed of 0·69 of the engine r.p.m. Two sets of spur gears, both producing high pressure oil, are incorporated in the body of the pump, Figure 93.The larger front pump supplies oil at a maximum pressure of 2650 p.s.i. (186·3 kg./sq. cm.) to the hydraulic power lift. The rear and small pump circulates oil to the hydraulically operated multiplate P.T.O. clutch at 175 p.s.i. (12·3 kg./sq. cm.) for the Major 4000 and 100 p.s.i. (7·03 kg./sq. cm.) for the Super Major 5000. The two sets of gears, which are coupled together and revolve at the same speed, are in constant operation whenever the engine is running irrespective of whether the clutch is engaged or disengaged.

Rotation of the P.T.O. countershaft on the Major 4000 and the P.T.O. drive shaft on the Super Major 5000 drives the hydraulic pump gear, revolving the pressure gears within the pump housing, Figure 94. Oil is supplied to both pumps through a common intake port fitted with a suction tube and screen assembly.

On entering the larger pump the oil fills the spaces between the large gear teeth and is carried around the housing, by the closely fitting gears, Figure 95, to the point where the teeth in the two gears come into mesh. The oil is then thrust out between the teeth and delivered through an outlet port to a passage formed in the pump flange. This passage is connected to a vertical drilling in the rear axle centre housing which leads to the hydraulic lift. The high pressure oil is directed past a spring-loaded relief valve which is set to blow off at a pressure of 2650 p.s.i. (186·3 kg./sq. cm.) and so prevent damage should the pump be overloaded.

At the same time oil is drawn in through the inlet port and direct to the rear pump through a small passage drilled in the pump body. The smaller pressure gears draw the oil into the spaces between the gear teeth, carry it around the rear pump

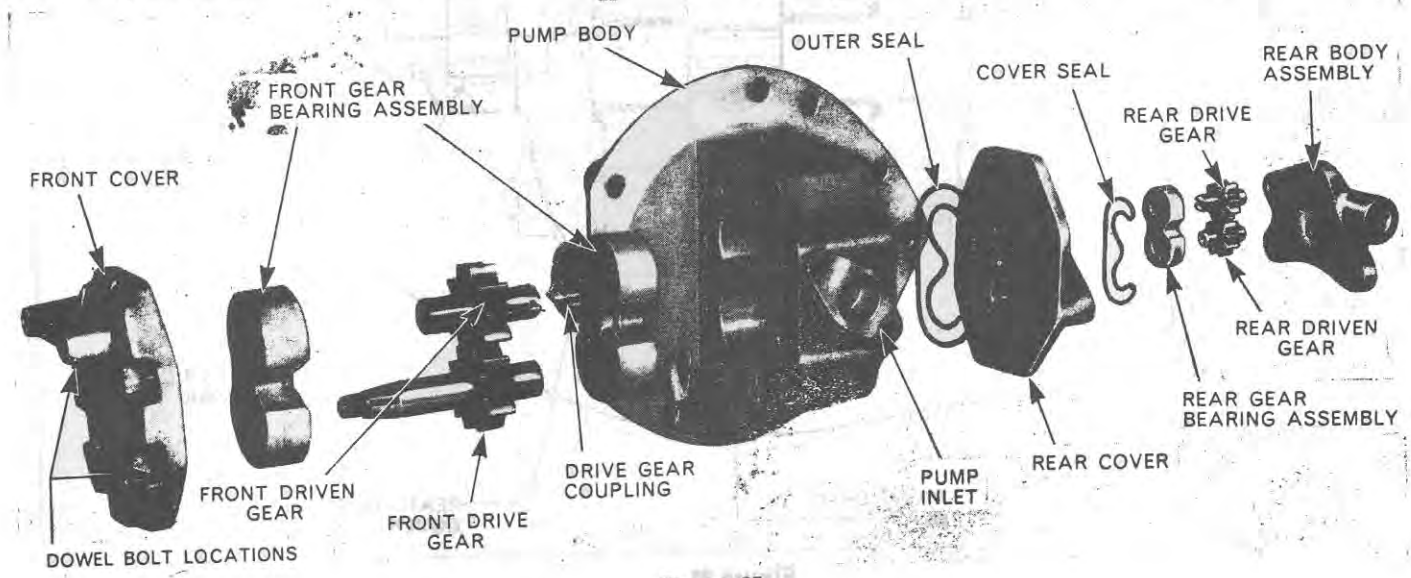

Figure 95
Hydraulic Gear Pump—Exploded

housing until it is thrust out from the teeth and delivered through the rear outlet port to the independent P.T.O. clutch via internal pipes. Oil ducts are incorporated on the high pressure side of each set of pump bearings to allow high pressure oil to be directed from the gears to the back faces of the bearings and their respective cover plates. 'O' rings are fitted in specially shaped grooves in each cover plate to ensure positive sealing between the bearing and its corresponding cover plate. The effect of this design is to pressure load the bearings towards the gears, thus keeping end-float to a minimum, providing automatic compensation for wear and obtaining maximum efficiency from each pump. On the low pressure side of each pump a duct in the bearings, together with spiral grooves in the bearing bores and small reservoirs in the cover plates, ensure a continuous flow of low pressure oil to be directed to the bearing surfaces for lubrication purposes.

2. OVERHAUL HYDRAULIC LIFT PUMP

A. Removal

1. Drain the oil from the rear axle centre housing. To facilitate this remove the rear axle filler plug.
2. Disconnect the two brake pedal return springs from the right-hand platform.
3. Remove the right-hand platform.

Major 4000: Slacken the four bolts retaining the flow control assembly on the Major 4000 and, using a screwdriver, remove the snap ring from the groove and tap the lower flow control pipe up into the flow control valve plate.

> **NOTE:** ***It is not advisable to remove the pump on the Major 4000 without first removing the hydraulic lift cover assembly. Installation of the pump is much easier when the cover is removed. In addition, to service the pump suction screen necessitates either removal of the hydraulic lift cover or splitting the rear axle centre housing away from the transmission housing.***

4. Extract the six bolts retaining the pump flange to the right-hand side of the rear axle centre housing.
5. The suction screens and exhaust filters used on the Super Major 5000 and Major 4000 are different.

Super Major 5000: The suction screen on the Super Major 5000 can be removed as a unit with the hydraulic pump. The suction screen is retained by two bolts passing through the pipe flange to the pump. It is possible to pull the pump clear of the rear axle centre housing without disturbing this connection.

Major 4000: The suction screen on the Major 4000 is retained in the pump by an 'O' ring on the outlet spigot of the suction screen pipe and to the drive pinion bearing retainer by a bolt. The pump can be removed without disturbing this bolt by pulling the pump over the opposite end of the pipe. However, as previously mentioned, installation of the pump is much easier with the lift cover and the screen bracket removed.

Super Major 5000: Lift the pump slightly away from the rear axle centre housing and unscrew the independent P.T.O. pipe at the pump housing.

Major 4000: Pull the independent P.T.O. pipe out of the pump housing.

6. Remove the pump assembly from the side of the rear axle centre housing.

> **NOTE:** ***The suction screen filter should be withdrawn, examined and cleaned whenever the hydraulic pump is removed for servicing.***

B. Disassembly

An exploded view of the hydraulic pump is shown in Figure 95.

Major 4000: Remove the two screws and lockwashers retaining the driving gear shroud to the pump front cover.

1. Straighten the locking tab and remove the nut retaining the external driven gear to the pump pressure driving gear shaft.
2. Drive off the external driven gear from the shaft.
3. Remove the Woodruff key from the pump pressure driving gear shaft.
4. Remove the nuts, spring washers and through bolts retaining the two end covers. Note that two of these bolts are dowel bolts retaining the front cover and rear body to the pump body and are machined to very fine limits. These bolts, which are identified by a letter 'D' stamped on their heads, should not be mixed with the other retaining bolts, Figure 95.
5. Remove the rear pump body and extract the rear pump gears from the rear cover. Remove the shaped 'O' sealing ring located in the groove of the rear cover.
6. Remove the front cover and, if necessary extract the circlip retaining the pressure drive gear shaft seal in the front cover housing. Remove this seal using a

© FORD MOTOR COMPANY LTD.

suitable size drift, discard the shaped 'O' ring located in the cover.

7. Slide the front pump gears and bearings from the housing, if possible as one unit. No force should be applied to the gear shafts under any circumstances.
8. Remove the small pump drive connector.

C. Inspection and Repair

1. Examine the front pump bearings for signs of seizure or scoring on the faces of the journals. Light score marking may be removed by lapping on a surface plate, using 'O' grade emery paper and paraffin. Any bearings showing excessive journal wear must be discarded. Bearings must always be fitted or installed as pairs and must not be mixed.
2. Examine the body for wear in the gear running track. If the track is worn deeper than 0·0025 in. (0·0635 mm.) on the pump inlet side, the body must be discarded (an internal micrometer can be used to check this dimension).
3. Examine the gears for damage or excessive wear on journals, faces or teeth. The maximum run-out across the gear face to the tooth edge, square to the centre line of the gear, should not exceed 0·001 in. (0·025 mm.). The gear journals may be lightly polished with 'O' grade emery paper to remove wear marks. Similarly, the gear faces may be polished by sandwiching the emery paper between the gear face and a scrap bearing and rotating the gear. The journal sizes on either side of each individual gear must be paired within 0·001 in. (0·025 mm.) of each other. The face widths of each pair of gears must be held to within 0·002 in. (0·051 mm.) of each other. This applies equally to the mixing of gears from different pumps or the installation of single gears.
4. New rubber seals, 'O' rings, etc., should be installed when servicing the pump.

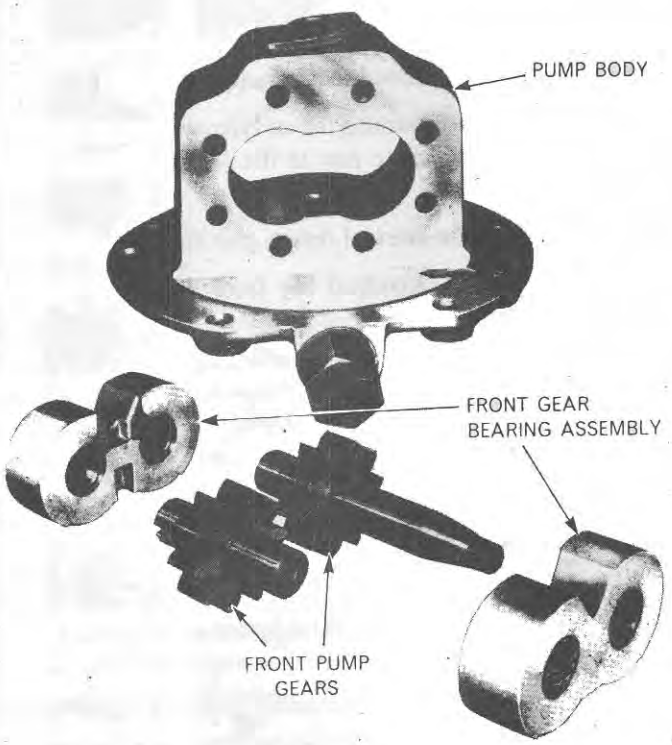

Figure 96
Front Pump Body, Gears and Bearings

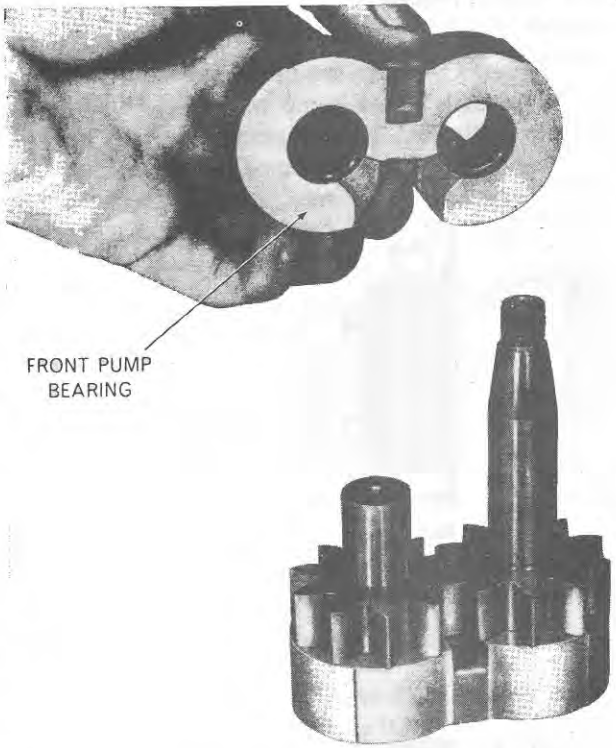

Figure 97
Assembling Gears and Bearings

D. Assembly

IMPORTANT: ***It should be noted that, on assembly of the two front pump bearings, the correct relationship between the gears, bearings and housing is maintained. The pump body should be placed on a clean bench, flange downwards, with the pressure relief valve of the Super Major 5000 pointing towards the operator and the pressure relief valve of the Major 4000 pointing to the right.***

All illustrations in the following section are taken from the Super Major 5000.

Arrange the bearings and gears as shown in Figure 96. In this position the undercut on the face of each bearing mates with the gear faces. The deepest groove in the bearings is positioned at

the top to correspond with the inlet port of the pump.

1. With the left-hand (rear) bearing in the position shown in Figure 96, assemble the pump pressure driving gear (the gear with the threaded shaft) in the right-hand bore of the bearing.
2. Assemble the drive connector end of the pressure driven gear in the left-hand bore of the rear bearing, Figure 97.
3. Place the front bearing over the gears, matching the grooves in each bearing, Figure 97.
4. Install the bearing and gear assembly in the pump body with the threaded end of the pressure driving shaft in the position shown in Figure 98, and with the deepest grooves in the bearings adjacent to the inlet port of the pump.
5. Install a new sealing ring to each cover plate and assemble the two rear pump gears into the housing.
6. Position the small pump drive connector in its correct location on the shaped end of the upper, rear pump gear, Figure 99.
7. Lightly secure the end covers, Figure 100, to the pump body with the bolts, nuts and spring washers ensuring that the two dowel bolts which pass through the outlet cover plate are correctly positioned. Tighten the nuts evenly to the specified torque (See Specifications Section, Chapter 5.)

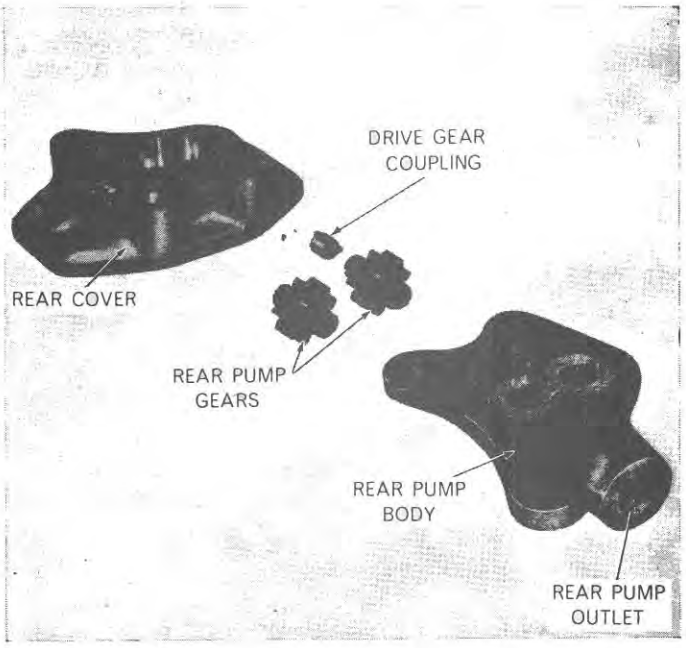

Figure 99
Rear Pump Assembly

NOTE: ***It is essential that this torque is not exceeded and an accurate torque wrench must therefore be used on this operation.***

8. Install the Woodruff key in the front pump pressure driving gear shaft and assemble the external gear to

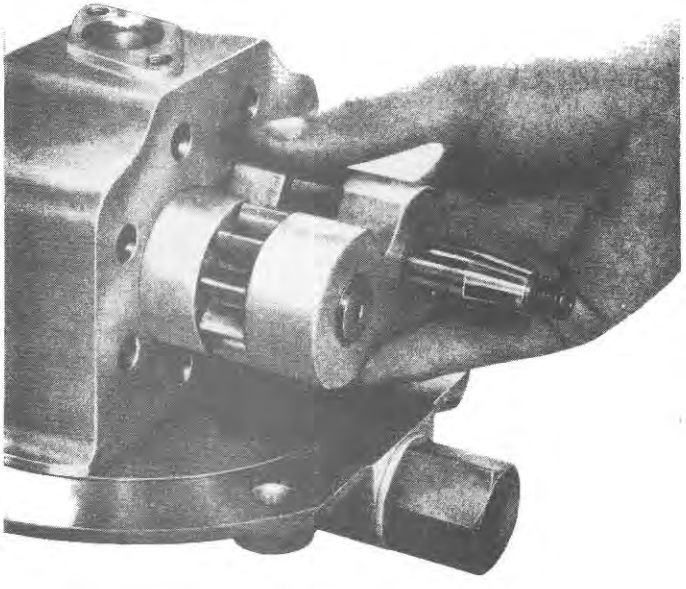

Figure 98
Assembling Gears and Bearings to Pump Body

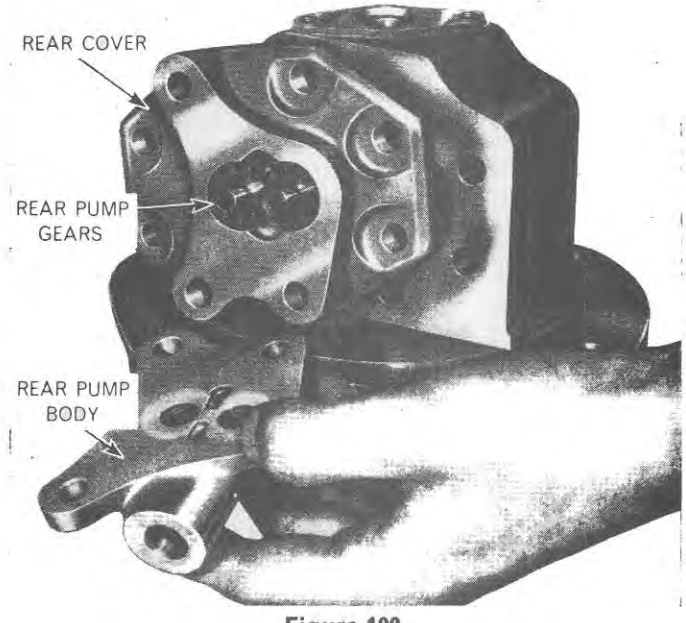

Figure 100
Installing Rear Pump Assembly

the shaft, place a new locking tab washer on the threaded end of the shaft, assemble and fully tighten the retaining nut. Turn the tab over to lock the nut in position.

Major 4000: Position the driving gear shroud on the Major 4000 and retain to the pump front cover with the two screws and locking washers.

E. Installation

Super Major 5000:

a. Install a new 'O' sealing ring on the side of the rear axle centre housing adjacent to the delivery port in the pump flange.

b. The intake filter and pipe assembly is held in position by a manifold, situated at the end of the pipe, secured to the pump housing by two bolts.

Major 4000:

a. Install a new 'O' sealing ring on the outlet spigot of the intake filter pipe. Position the filter and pipe assembly in the rear axle centre housing and locate the spigot screw through the housing and into the filter bracket.

b. Locate a new 'O' ring in the groove at the end of the P.T.O. clutch pipe on the Major 4000.

1. Pour into the pump inlet plenty of clean new oil to lubricate the pump gears and bearings during start-up.
2. Install the pump assembly using a new gasket between the pump flange and the rear axle centre housing.

Super Major 5000: As the pump is fitted the filter and pipe assembly must be positioned and the two bolts and spring washers installed to retain the pipe manifold to the pump. The P.T.O. clutch pipe is threaded and should be installed in the rear outlet port of the pump.

Major 4000: As the pump is fitted the inlet port pump on the Major 4000 should be entered over the outlet pipe of the filter assembly. Position the P.T.O. clutch pipe in the rear outlet port of the pump. The clutch pipe is a push fit into the rear outlet port and a new 'O' ring should be installed on re-assembly.

3. Make certain that the two dowels in the side of the rear axle centre housing are correctly located in the corresponding holes in the pump flange.
4. Install and tighten the pump to the rear axle centre housing securing bolts to the specified torque (See Specifications Section, Chapter 5.)
5. Install the hydraulic lift cover assembly as explained in Chapters 1 and 2 for the Major 4000 and Super Major 5000 respectively.
6. Reconnect the right-hand running board and the two brake pedal return springs.

Major 4000: Using a screwdriver and soft-headed hammer, tap the lower flow control valve pipe on the Major 4000, down into the pump assembly and reposition the snap ring in the groove. Tighten the four retaining bolts.

7. Fill the rear axle with the correct grade and quantity of oil (See Specifications Section, Chapter 5.)

Part 11

HYDRAULIC SYSTEMS

Chapter 5

TROUBLE SHOOTING, SPECIFICATIONS AND SPECIAL TOOLS

Section		Page
1.	Trouble Shooting	67
2.	Specifications	75
3.	Special Tools	78

1. TROUBLE SHOOTING

CHECK HYDRAULIC PUMP PRIME—PISTON PUMP

Remove the socket-head plug in the pump cover, pull the engine stop control out on diesel-engined tractors or remove the distributor rotor on gas-engined tractors and turn the key starter. Check the oil delivery through the socket-head plug aperture as the engine turns over and, if found to be satisfactory, install the plug before the oil stops flowing to prevent air from entering the pump. If no oil is delivered through the aperture it will be necessary to carry out the pump priming procedure outlined below.

LOSS OF PUMP PRIME OR NOISY PUMP OPERATION

This can normally be traced to air in the system. Before trying to locate a source of air leak, attempt to bleed air from the system by removing the prime plug in the piston pump cover. Pull the engine stop control out on diesel-engined tractors and remove the distributor rotor on gas-engined tractors. Turn the engine over with the starter and allow oil to escape through the pump cover. When it appears that all the air bubbles have escaped, install the prime plug before the oil stops flowing.

If the operation of the hydraulic system is not improved after the above procedure, remove the six bolts securing the cover assembly to the pump body. Separate the cover assembly from the body, taking care not to bend or damage the small inlet valve springs. Remove the inlet and outlet valves as described in steps 8–14 of Disassembly Section, Chapter 3, and inspect the components of the valves as outlined in steps 2–6 of Inspection and Repair, Chapter 3. If there are no visible signs of damage it will be necessary to remove the pump assembly from the tractor. Disassemble the pump for complete inspection. (See Hydraulic Pump—Piston Type, Chapter 3). Inspect all pump castings for cracks and all 'O' rings which may be causing a leakage. Install new parts where necessary, assemble the pump and install the pump on the tractor. Operate the hydraulic system several times and allow the tractor to stand overnight to determine if loss of prime still exists. If loss of prime is still prevalent, drain the hydraulic oil and install new 'O' rings in the manifolds on either end of the hydraulic pipes which carry the oil from the rear axle centre housing to the hydraulic pump.

PRESSURE TESTING THE HYDRAULIC PUMP

MODELS WITH PISTON TYPE PUMP

It is often difficult to separate hydraulic pump malfunction from hydraulic lift cover failure in which case it is advisable to install a substitute pump of known characteristics and the system checked.

If however, a substitute pump is not available it is possible to check the pump output pressure in the following manner.

A. Tractors Fitted with Accessory Cover

Remove the five bolts securing the accessory cover to the lift cover housing. Remove the accessory cover and turn it through 180°.

Before installing the accessory cover position gasket Part No. E189-GF-9, turned through 180°, between the lift cover housing and accessory cover. This will prevent any leak between the accessory cover and lift cover. Install the cover and tighten the four bolts. It will be necessary to position several washers on two of the bolts or install shorter bolts. (The centre bolt is off-set and

© FORD MOTOR COMPANY LTD. 1964

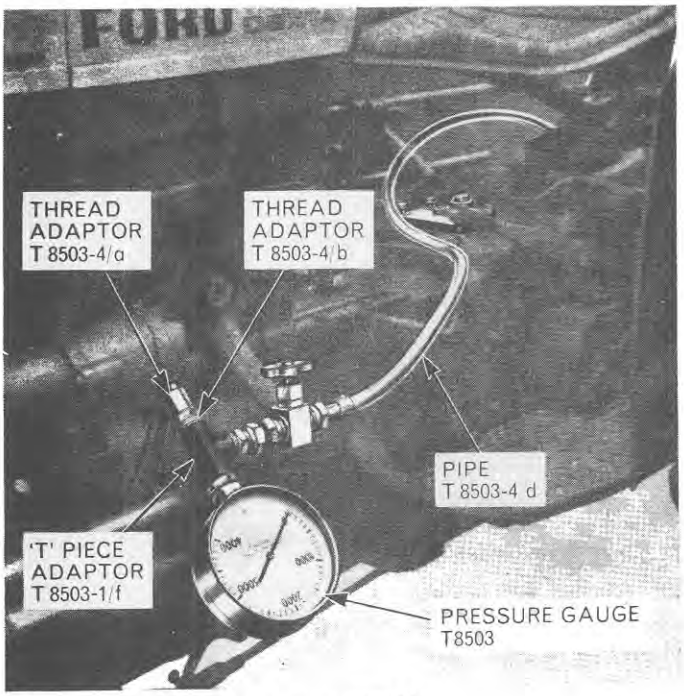

Figure 101(A)
Pressure Testing—Piston Pump

cannot be installed for pressure testing). This action will block off the pressure port and prevent the oil flowing to the lift cover.

For Dealers having T8503 Test Equipment: Remove the socket-head plug in the hydraulic pump cover, Figure 101(A), and install 'T' Adaptor Tool No. T.8503-1/f fitted with pump Thread Adaptors Tool No. T.8503-4/a and T.8503-4/b in the plug aperture. To one side of the 'T' Adaptor attach Pressure Gauge Tool No. T.8503 and to the other side install the Load Valve Tool No. T.8503-1/b and Hose Tool No. T.8503-4/d, running the hose back to the rear axle filler plug.

For Dealers having N-1100 Test Equipment: Remove the socket-head plug in the hydraulic pump cover and install a $\frac{3}{8}'' \times \frac{1}{4}''$ Reducing Fitting. Connect Hose No. N-1100-Q, 'T' Fitting No. N-1100-L, Load Valve No. N-1100-N, a $\frac{1}{4}'' \times 3''$ Pipe Nipple and a $\frac{1}{2}'' \times 57''$ Low Pressure Hose to the Reducing Fitting. From 'T' Fitting No. N-1100-L, connect Adaptor No. N-1100-H and Gauge No. N-1100-3, Figure 101(B).

B. Tractors Fitted with Auxiliary Service Selector Valve

For Dealers having T-8503 Test Equipment: Remove the socket-head plug in the hydraulic pump cover and install 'T' Adaptor Tool No. T.8503-1/f, fitted with pump Thread Adaptors Tool Nos. T.8503-4/a and T.8503-4/b in the plug aperture, Figure 101(A). To one side of the 'T' Adaptor attach Pressure Gauge Tool No. T.8503 and to the other side install the Load Valve Tool No. T8503-1/b and Hose Tool No. T.8503-4/d, running the hose back to the rear axle filler plug. Pull out the selector valve to the furthest position.

For Dealers having N-1100 Test Equipment: Remove the socket-head plug in the hydraulic pump cover and install a $\frac{3}{8}'' \times \frac{1}{4}''$ Reducing Fitting. Connect Hose No. N-1100-Q, 'T' Fitting No. N-1100-L, Load Valve No. N-1100-N, a $\frac{1}{4}'' \times 3''$ Pipe Nipple and a $\frac{1}{2}'' \times 57''$ Low Pressure Hose to the Reducing Fitting. From 'T' Fitting No. N-1100-L, connect Adaptor No. N-1100-H and Gauge No. N-1100-3, Figure 1. Pull out the selector valve to the furthest position.

NOTE: ***It is important that the accessory plug, situated at the top of the selector valve housing, is tight to prevent oil leaking around this area.***

The following procedure covers both types of tractor mentioned in steps A and B.

Fully open the loading valve, start the engine and run at 1650 r.p.m. for diesel-engined and gas-engined tractors.

Place the lift control lever in the fully raised position.
NOTE: ***Return control lever to lower position before pushing selector valve to innermost position.***

Gradually close the loading valve and observe the reading on the pressure gauge which should show a steady increase in pressure up to 2500 lbs./ sq. in. (175·8 kg./sq. cm.). At this point the relief valve should blow off and the pressure will remain constant at the above reading.

If the pressure relief valve blows off at a pressure lower than that specified, it may be that insufficient shims have

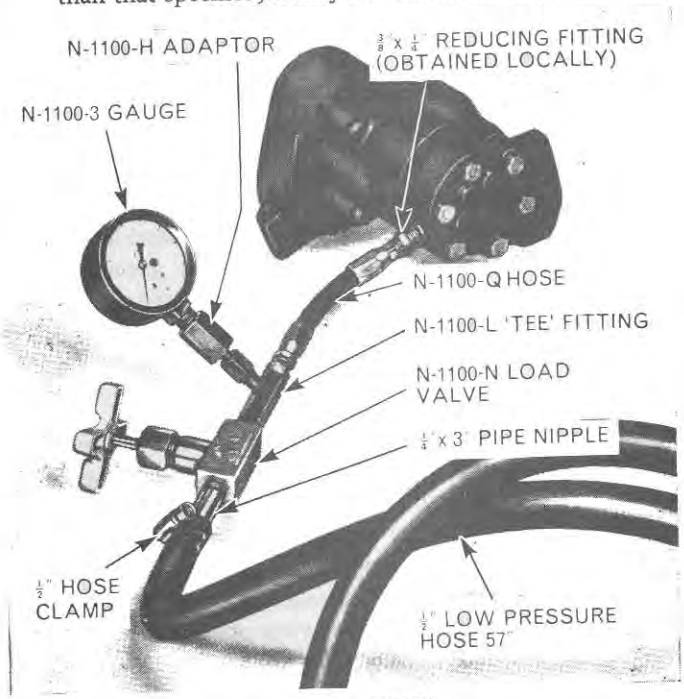

Figure 101(B)
Pressure Testing—Piston Pump

been fitted between the relief valve spring and spring retainer (a faulty relief valve spring will also produce the same symptoms). Use Tool No. SW18 to remove the relief valve seat, remove valve, spring seat and spring and install the necessary shims.

NOTE: ***When removing the pressure relief valve on the Dexta 2000 and Super Dexta 3000 situated in the base of the rear axle centre housing, it is advisable to install a plug (Part No. C5NN-4N206A is suitable for this purpose) in the threaded hole in the rear axle centre housing to prevent oil leaking through this hole.***

Shims are available in various thicknesses (see Specifications Section at the end of this Chapter), and give an increase in operating pressure of approximately 100 lbs./sq. in. (7·03 kg./sq. cm.) for each 0·01 in. (0·254 mm.) thickness of shim.

In the event of the relief valve not blowing off, either too many shims have been fitted, in which case the gauge will read more than 2500 lbs./sq. in. (175·8 kg./sq. cm.) or the pump itself may be at fault and the pressure will not reach the specified figure. If the latter is suspected the pump should either be replaced with one which is known to be correct, or dismantled to determine the cause. (See Chapter 3.)

PRESSURE TESTING THE HYDRAULIC PUMP

MODELS WITH GEAR TYPE PUMP

The pump is set to give the required delivery and pressure before leaving the factory and normally very little trouble may be anticipated in service. Should, however, the pump pressure be suspect it may be checked in the following manner.

A. Super Major 5000

For Dealers having T8503 Test Equipment: Remove the plug situated in front of the accessory cover and install the 'T' Adaptor Tool No. T.8503-1/f fitted with Thread Adaptor T.8503-4/b, Figure 102(A). Attach the Swivel Adaptor T.8503-1/g to Pressure Gauge T.8503 and install the assembly into one side of the 'T' Adaptor.

To the other side of the 'T' Adaptor install the Load Valve Tool No. T.8503-1/b and Hose Assembly T.8503-4/d, placing the Load Valve next to the 'T' Adaptor and the flexible hose running back to the rear axle filler aperture.

For Dealers having N-1100 Test Equipment: Remove the plug in the front of the accessory cover and install Fitting No. N-1100-G with a sealing washer, Hose No. N-1100-J, Fitting No. N-1100-C, Load Valve No. N-1100-N, a $\frac{1}{4}$" × 3" Pipe Nipple, and a $\frac{1}{2}$" × 57" Low Pressure Hose with a $\frac{1}{2}$" Hose Clamp. Place the end of the Low Pressure Hose into the rear axle filler opening.

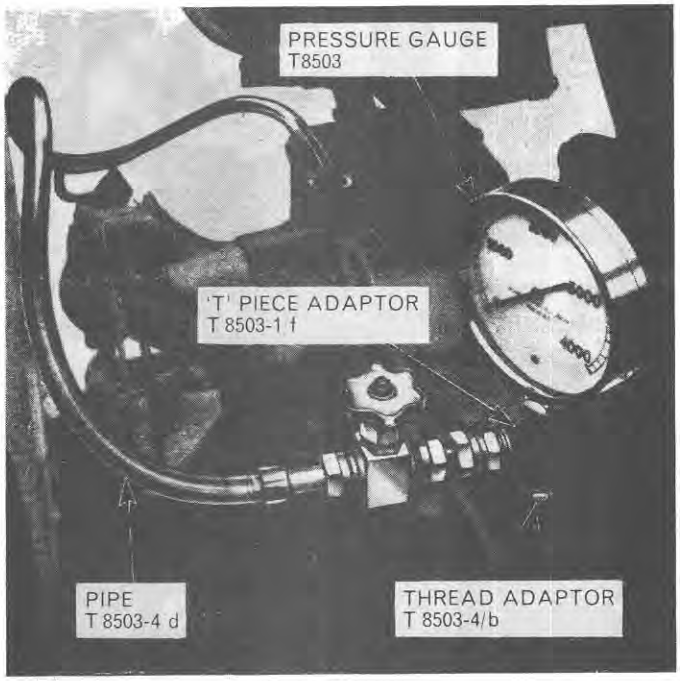

Figure 102(A)
Pressure Testing—Super Major 5000

Remove the socket-head plug from the supply passage of the lift cover and install Hose No. N-1100-Q, Fitting No. N-1100-P, Adaptor No. N-1100-H, and Gauge No. N-1100-3, Figure 102(B).

Fully open the load valve, place the lift control lever at the bottom tab of the quadrant, start the engine and run at 1650 r.p.m.

Pull the selector valve knob to the outer position and place the lift control lever in the fully raise position.

NOTE: ***Return control lever to previous position before pushing selector valve to innermost position.***

Gradually close the load valve and observe the reading on the pressure gauge which should indicate a steady rise in pressure up to about 2,500-lb./sq. in. (175·8 kg./sq. cm.). At this point the relief valve should blow off and the pressure should remain constant at the above reading.

If the relief valve blows off at a pressure lower than that specified, it may be that insufficient shims have been fitted between the relief valve spring and the spring retainer (a faulty relief valve spring will also produce the same symptoms).

Shims are available in various thicknesses (see Specifications Section at the end of this chapter), and give an increase in operating pressure of approximately 100 lbs./sq. in. (7·03 kg./sq. cm.) for each 0·01 in. (0·254 mm.) thickness of shim.

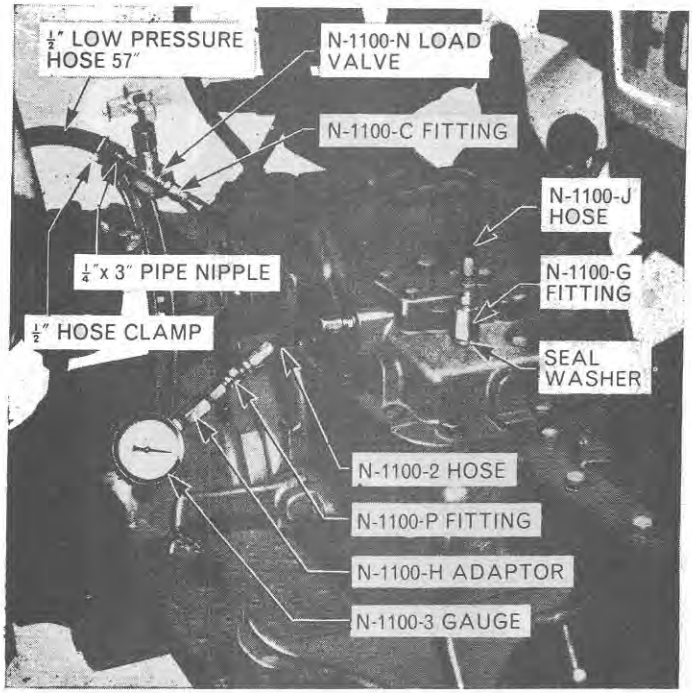

Figure 102(B)
Pressure Testing—Super Major 5000

NOTE: ***The maximum total thickness of shim permissible is 080 in. (2·03 mm). In the event of the relief valve not blowing off, either too many shims have been fitted in which case the gauge will read more than 2,500 lbs./sq. in. (175·8 kg./sq. cm.) or the pump itself may be at fault and the pressure will not reach the specified figure. If the latter is suspected the pump should either be replaced with one which is known to be correct, or disassembled to determine the cause.***

B. Major 4000

Remove the three bolts, nuts and washers securing the right-hand fender to the right-hand platform.

Disconnect the brake pedal return springs from underneath the right-hand platform. Remove the two bolts securing the platform front bracket to the transmission housing and the two bolts securing the rear end of the platform to the rear bracket. Remove the platform.

1. **When fitted with Accessory Cover:** Place the lift control lever at the bottom of the quadrant and remove the five bolts securing the accessory cover to the lift cover housing. Remove the accessory cover and turn it through 180°. Before installing the accessory cover, position gasket Part No. E189-GF-9 turned through 180°, between the lift cover housing and the accessory cover, Figure 103(A). This will prevent any leakage of oil from between the accessory cover and lift cover.

   Install the cover and tighten the four retaining bolts. It will be necessary to position several washers on two of the bolts or install shorter bolts. (The centre bolt is off-set and cannot be installed while pressure testing.)

   The above action will block off the pressure port and prevent the oil flowing to the lift cover.

   For Dealers having T-8503 Test Equipment: Remove the pump service tapping plug situated on the side of the pump and install the 'T' Adaptor Tool No. T.8503-1/f fitted with Thread Adaptor T.8503-4/b. Attach Swivel Adaptor T.8503-1/g to Pressure Gauge T.8503 and install the assembly into one side of the 'T' Adaptor, Figure 103(A).

   To the other side of the 'T' Adaptor install the Load Valve Tool No. T.8503-1/b and Hose Tool No. T.8503-4/d, placing the Load Valve next to the 'T' Adaptor and the flexible hose running back to the rear axle filler aperture.

   For Dealers having N-1100 Test Equipment: Remove the pump service plug from the side of the pump and install Fitting No. N-1100-G with a sealing washer, Hose No. N-1100-J, 'T' Fitting No. N-1100-L, Load Valve No. N-1100-N, a ¼" × 3" Pipe Nipple, and a ½" × 57" Low-

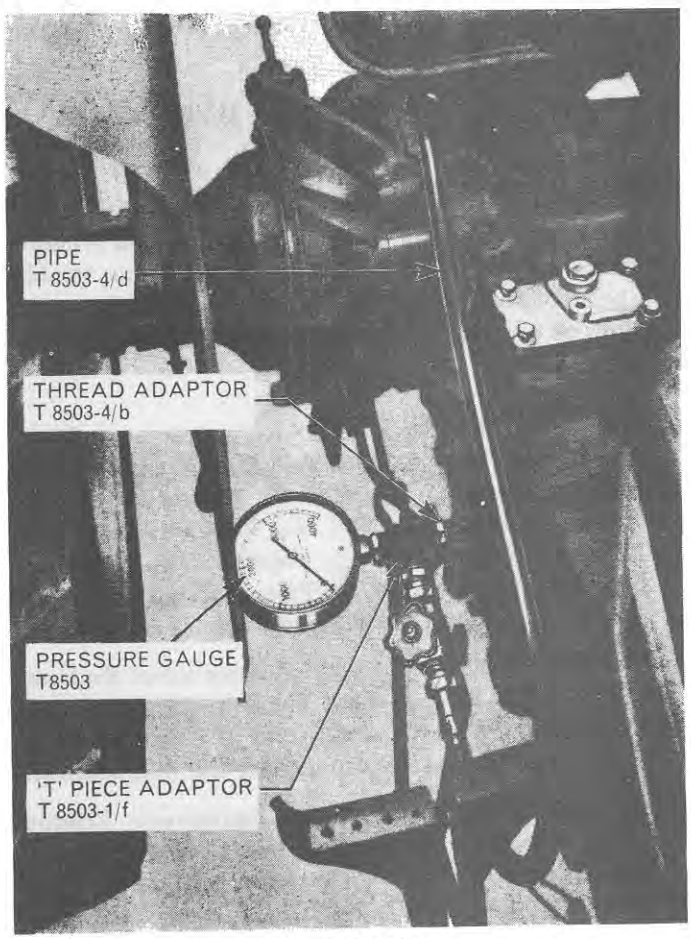

Figure 103(A)
Pressure Testing—Major 4000 with Gear Pump

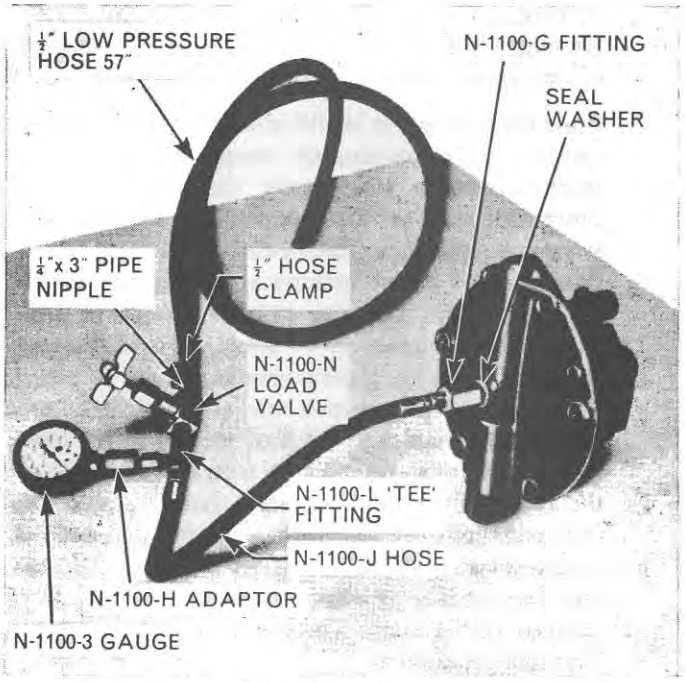

Figure 103(B)
Pressure Testing—Major 4000 with Gear Pump

Pressure Hose with a ½" Hose Clamp. Insert the end of the low pressure hose into the rear axle filler opening.

To the other side of the 'T' Fitting No. N-1100-L, connect Adaptor No. N-1100-H and Gauge No. N-1100-3, Figure 103(B).

2. **When fitted with Selector Valve:** Prior to starting the engine check that the accessory plug, situated at the top of the selector valve housing is tight to prevent oil leaking around this area. Place the lift control lever at the bottom of the quadrant and pull the selector valve out to the furthest position, Figure 104.

The following procedure covers both types of tractor mentioned in 1 and 2.

Fully open the load valve, start the engine and set to run at 1650 r.p.m. for diesel-engined and gas-engined tractors. Place the lift control lever at the top of the quadrant.

NOTE: ***Return lift control lever to bottom of quadrant before pushing selector valve to its innermost position.***

Gradually close the load valve and observe the reading on the pressure gauge which should indicate a steady rise in pressure up to about 2,500 lb./sq. in. (175·8 kg./sq. cm.). At this point the relief valve should blow off and the pressure should remain constant at the above figure. If the relief valve blows off at a pressure lower than that specified, it may be that insufficient shims have been fitted between the relief valve spring and the spring retainer (a faulty relief valve spring will also produce the same symptoms). Use Tool No. SW18 to remove the relief valve seat, remove valve, spring seat and spring and install the necessary shims.

Shims are available in various thicknesses (see specifications Section at the end of this Chapter) and give an increase in operating pressure of approximately 100 lbs./sq. in. (7·03 kg./sq. cm.) for each 0·01 in. (0·254 mm.) thickness of shim.

In the event of the relief valve not blowing off, either too many shims have been fitted in which case the gauge will read more than 2,500 lbs./sq. in. (175·8 kg./sq. cm.) or the pump itself may be at fault and the pressure will not reach the specified figure. If the latter is suspected the pump should either be replaced with one which is known to be correct, or dismantled to determine the cause. (See Chapter 4.)

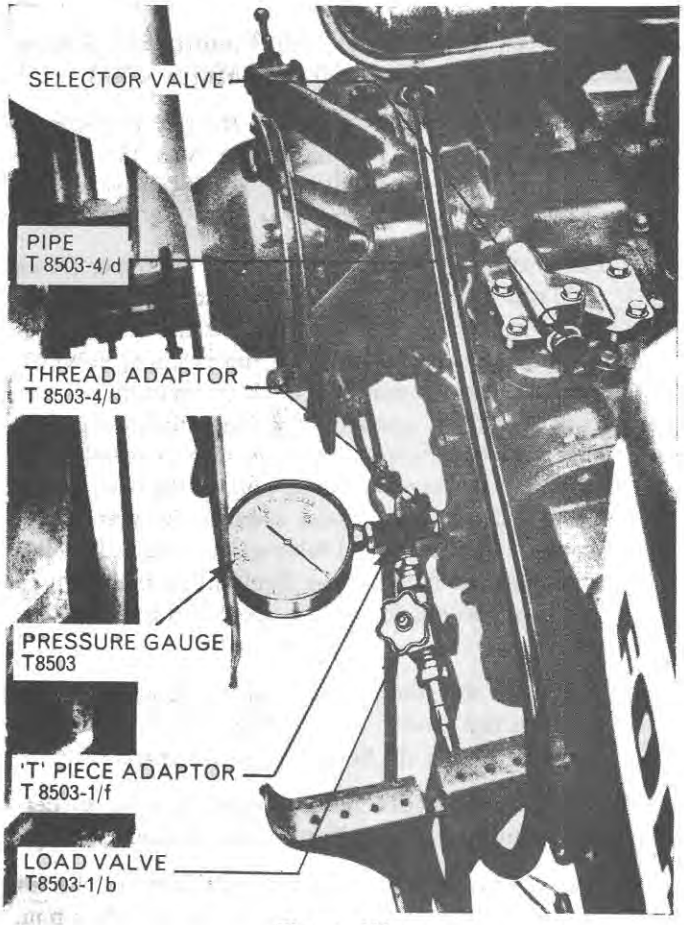

Figure 104
Pressure Testing—Major 4000 with Gear Pump and Selector Valve

FAULTY HYDRAULIC OPERATION

The most important fact to consider when attempting to trace a fault in the hydraulic system is to first determine, by observing the operation of the system, the end results or symptoms.

To assist in the diagnosis of the fault it is recommended that a logical sequence of operations is adhered to and, to ensure the minimum amount of work and duplication, the following conditions which could prevail should be noted before any repair is begun.

A. Failure to Lift Under All Conditions.

B. Failure to Lift Under Load.

C. Excessive Corrections in the Raised or Transport Position.

D. Occasional Failure to Lift (not due to Loadings).

Due to the complexity of the hydraulic system it is advisable to determine under which heading the fault lies and then to follow the repair procedure outlined in the Trouble Shooting Chart.

A. Failure to Lift Under All Conditions (Dexta 2000, Super Dexta 3000 and Major 4000)

1. Check the hydraulic oil level in the rear axle and, if found to be low, fill the system with the correct quantity and grade of oil. (See Specifications Section at the end of this Chapter.)

2. Check that the flow control valve on the Super Dexta 3000 and Major 4000 is operating freely without binding at any point. It is possible that the flow control valve could be seized in the dump position, in which case the pump supply will be continually diverted to exhaust without operating the hydraulic system. To check the operation of the valve spool it is necessary to remove the large hexagonal plug on the flow control plate assembly which faces towards the rear of the tractor. The flow control valve spool is situated behind this plug and should move freely in its bore. If this is not happening, loosen the spool and install a new one.

3. Make sure that the hydraulic piston pump is primed as described under the heading 'Check Hydraulic Pump Prime', at the beginning of this chapter.

4. Check the hydraulic pump output pressure as described under 'Pressure Testing the Hydraulic Pump'.

5. Attach suitable weights or an implement to the lift arms, start the engine and set to run at 1650 r.p.m. Select draft control and move the lift control lever to the top of the quadrant. Observe the lift arms, either by sight or by touching a lift arm and lift cover with the fingers when not more than the specified number of corrections should take place.

   Correction Rate: It is difficult to lay down a hard and fast rule concerning the maximum frequency of these corrections since many variable factors are concerned, such as the service life of the hydraulic system, the load on the linkage and the oil temperature. Over a period of two minutes approximately 30 corrections are the maximum number acceptable. Discretion should, however, be used when diagnosing hydraulic faults for, if the tractor concerned had been operating with a correction rate of say eight in two minutes and suddenly increased to twenty-five (that is, the correction rate suddenly increased), in spite of the fact that the new correction rate is within the maximum limit a definite fault would be indicated and an investigation should be carried out. If this is the case then it will be necessary to carry out the procedure outlined in 'Excessive Corrections in the Raised or Transport Position'.

6. With the weights still attached to the ends of the lower links, move the lift control lever to the bottom of the quadrant.

   Select Draft Control and raise the lift control lever to the fixed stop in the quadrant when the lift arms should raise fully.

   Select Position Control and raise the lift control lever in stages up the quadrant when the lift arms should raise in similar stages.

   If failure to lift occurs in only one of the two tests, then it will be necessary to remove the lift cover and the components and setting of the relevant linkage checked.

   If failure to lift occurs in both tests, the following points should be checked with the lift cover removed.

7. Remove the unload valve and back pressure valve. If oil is allowed to leak past the back pressure valve the pressure in the system, necessary to operate the unload valve, will be lost, causing the valve to remain in one place. This will be particularly noticeable at low engine speeds or when the oil is hot after a period of operation.

   An unload valve which is not operating freely or which has a badly worn 'O' ring will also produce these symptoms.

8. As a general check, make sure that the lift piston seals, unload valve plug and all 'O' rings are not damaged or missing. Check the lift cylinder and lift cover castings for cracks or porosity.

A. Failure to Lift Under All Conditions (Super Major 5000)

1. Check the hydraulic oil level in the rear axle and, if found to be low, fill the system with the correct quantity and grade of oil. (See Specifications Section at the end of this Chapter.)

2. After checking the oil level, remove the lift cylinder pressure testing plug (situated at the front of the accessory cover). With the stop control knob pulled fully out (or the distributor rotor removed on gas-engined tractors) and the lift control lever half way up the quadrant, turn the key starter, at which time a jet of oil should be forced out of the testing port. If little or no oil is forced out it will be necessary to check the pump drive and feed pipe.

3. Install the pressure testing plug and attach an implement or weights (approximately 1500 lbs.) to the ends of the lower links. Screw the flow control knob fully in and move the lift control lever to the bottom of the quadrant.

   Select Draft Control and raise the lift control lever to a point equal to approximately 3 ins. from the stop at the top of the quadrant when the lift arms should raise fully.

   Select Position Control and raise the lift control lever in stages up the quadrant when the lift arms should raise in similar stages.

   If failure to lift occurs in only one of the two tests then the components and setting of the relevant linkage should be checked.

   If failure to lift occurs in both tests the following points should be checked, after removing the lift cover assembly:

4. Remove and inspect the check valve assembly and if the valve ball or seat are found to be worn install new parts.

5. Check that the flow control valve is operating freely without binding at any point.

   It is possible that the flow control valve could be seized in the dump position, in which case the pump supply will be continually diverted to exhaust without operating the hydraulic system. Check the operation of the flow control valve and renew if necessary.

   If the flow control valve is found to be functioning correctly proceed with the next step and remove the unload valve and back pressure valve.

6. If oil is allowed to leak past the back pressure valve the pressure, necessary to operate the unload valve, will be lost causing the valve to remain in one place. This will be particularly noticeable at low engine speeds or when the oil is hot after a period of operation. At the same time check that the unload valve operates freely under light pressure without sticking or binding.

   Install an 'O' ring at the end of the unload valve before installing in the lift cylinder.

7. As a general check make certain that the lift cylinder seals, unload valve plug and all 'O' rings are not damaged or missing. Check the lift cylinder and lift cover castings for cracks or porosity.

B. Failure to Lift Under Load

This can normally be traced to some component in the system which is allowing oil to escape under pressure. The tractor will be capable of lifting a light load but when an attempt is made to lift a heavy load failure will occur.

1. Install the pressure testing equipment and check the pressure in the pump using the method outlined in this Chapter under the heading 'Pressure Testing the Hydraulic Pump'. If the pressure is below the normal figure it will be necessary to unscrew the hydraulic pump pressure relief valve situated at the base of the rear axle centre housing in the case of the Dexta 2000 and Super Dexta 3000. After removing this valve a plug must be installed in the threaded hole to prevent oil leakage.

   On the Major 4000 with a piston type pump the pressure relief valve is positioned on an adaptor plate situated on the right-hand side of the rear axle centre housing.

   Where a gear type hydraulic pump is fitted the pressure relief valve is situated externally in the pump housing. In order to remove the valve on the Super Major 5000 it is necessary to loosen the hydraulic pump retaining bolts just enough to allow some clearance between the valve and the rear axle centre housing to transmission housing flange.

   Exchange the valve with another which is known to be correctly set or dismantle, clean and install the existing valve in its respective position. Re-check the pressure if the existing valve has been installed and, if the pressure is still low, it is possible to raise the figure by fitting more shims. Shims are available in various thicknesses. (See Specifications Section at the end of this Chapter). It will be found that each 0·01 in. (0·254 mm.) thickness of shim will increase the pressure by approximately 100 lbs./sq. in. (7·03 kg./sq. cm.). If adding shims does not significantly raise the pressure the valve shimming should be re-adjusted to

its original setting, installed and it will be necessary to remove the lift cover before continuing the repair procedure.

2. Check all 'O' rings between the lift cylinder and lift cover and between the accessory cover (or selector valve when fitted) and lift cover. Renew any that are found to be damaged.

Major 4000: Check the 'O' ring on the feed pipe of the gear type pump fitted to the Major 4000 and the 'O' rings in the manifold and pipe assembly of the piston type pump, install new parts if found to be defective.

3. Remove the lift cylinder safety valve and install one which is known to be correct.

4. Check the lift piston seals for damage and the piston bore for wear or scoring. Any parts that are defective must be removed and new parts installed. It is possible that prior checking indicated satisfactory operation when auxiliary service was being used, but failure occurred when the lift cylinder was being used. This can often be traced to faulty lift piston seals or safety valve.

5. Finally examine all castings for cracks or porosity.

C. Excessive Corrections in the Raised or Transport Position

This is caused by oil leakage within the system and is evidenced by the hydraulic system continually correcting when left in the raised position or dropping excessively when left in the raised position with the engine stopped

The maximum permissible number of corrections is thirty in a two minute period and can be checked in the following manner.

1. With weights or a suitable implement on the lift arms, start the engine and set to run at 1650 r.p.m. Select Draft Control and move the lift control lever to the top of the quadrant. Adjust the flow control knob to give the maximum flow. Observe the lift arms, either by sight or by touching the lift arm and lift cover with the fingers, when not more than the specified number of corrections should take place. (See 'Correction Rate'—Failure to Lift under All Conditions.)

If the number is in excess of this it will be necessary to check for internal leaks. The first point to be checked should be the check valve ball and seat—whilst these will often appear satisfactory to the naked eye, small chips or scratches on the surface are often sufficient to cause an increase in the number of corrections.

2. Check the selector valve operation (except on Super Major 5000) and surface of the spool to make certain it is not worn or damaged. Install larger size spool.

The following points should also be checked for leaks after removing the lift cover:

3. Selector valve spool fitted to the Super Major 5000, particularly the inner land.
4. Unload valve plug.
5. Lift cylinder safety valve and sealing washer.
6. Lift piston oil seals.
7. Control valve front land and front end of control valve bushing.
8. 'O' rings between the accessory cover (or selector valve when fitted) and lift cover and between the lift cylinder and the lift cover.
9. Cracks or porosity in the castings.

D. Occasional Failure to Lift (Not due to Loadings)

This is a fault which can sometimes lead to serious complaint. It is sometimes found that the tractor operates satisfactorily for some time and will then fail to lift for no apparent reason. If the tractor is then left for a short while, the engine speed increased, the selector lever moved from draft control to position control or the lift control lever moved quickly up and down, the system will then operate satisfactorily although no repair has been made to the internal components.

This can usually be traced to some component which is sticking or binding slightly. Whilst the oil is cold it operates satisfactorily but when the system reaches operating temperature occasional failure occurs.

A component which often displays these symptoms is the unload valve. This is a sliding fit in its bushings and relies on oil pressure for its movement. If there is any tendency for this valve to stick it will be particularly noticeable at low engine speeds or when the oil temperature is high and is characterised by failure to raise at low engine speeds after a period of operation. Increasing the engine speed has the effect of raising the hydraulic back pressure and will often prove sufficient to move the valve. The hydraulic lift cylinder should, however, be removed and the fit of the 'O' ring and valve checked. A faulty back pressure valve will produce similar symptoms.

It is sometimes noticed on tractors fitted with a selector valve that trouble occurs only when Auxiliary Service is being used in which case the lift arms gradually creep up. This can normally be traced to a worn selector valve spool. The valve should be removed and if possible a larger valve installed in the bore to minimise leakage.

Another reason for occasional failure to lift can often be traced to air in the system when an engine mounted pump is fitted. Prime the pump as described under the heading 'Check Hydraulic Pump Prime' at the beginning of this chapter.

Trouble	Possible Causes	Remedy
FAILURE TO LIFT UNDER ALL CONDITIONS	1. Low oil level 2. Flow control valve binding 3. Hydraulic piston pump not primed 4. Hydraulic pump pressure low 5. Check valve damaged or worn 6. Draft control or position control linkage damaged 7. Unload valve or back pressure valve faulty 8. Lift piston seals damaged 9. Unload valve plug worn 10. Lift cylinder, lift cover castings cracked or porous	1. Fill system with correct grade and quantity of oil 2. Loosen or install new valve 3. Prime pump 4. Adjust pump pressure 5. Install new check valve ball and seat 6. Install new parts and adjust linkage 7. Inspect and renew if necessary 8. Install new seals 9. Install larger size plug 10. Renew defective parts
FAILURE TO LIFT UNDER LOAD	1. Hydraulic pump pressure low 2. Damaged 'O' rings between lift cylinder and lift cover or between accessory cover and lift cover 3. Damaged 'O' rings on hydraulic pump pipes 4. Damaged lift cylinder safety valve 5. Faulty lift piston seals 6. Cracked, porous lift cylinder or lift cover casting	1. Adjust pump pressure 2. Install new 'O' rings 3. Install new 'O' rings 4. Install new valve 5. Install new seals 6. Renew defective parts
EXCESSIVE CORRECTIONS IN THE RAISED OR TRANSPORT POSITION	1. Worn or damaged check valve ball or seat 2. Selector valve worn or damaged 3. Unload valve plug worn 4. Lift cylinder safety valve damaged 5. Faulty lift piston seals 6. Control valve worn 7. Damaged 'O' rings between lift cylinder and lift cover or between accessory cover and lift cover 8. Cracked, porous lift cylinder or lift cover castings	1. Install new ball and seat 2. Install larger size spool 3. Install larger size plug 4. Install new valve 5. Install new seals 6. Install new (or larger) valve 7. Install new 'O' rings 8. Renew defective parts
OCCASIONAL FAILURE TO LIFT (Not due to Loadings)	1. Worn or loose selector valve 2. Unload valve sticking 3. Faulty back pressure valve 4. Control valve incorrectly adjusted	1. Install new (or larger) valve 2. Install new valve or 'O' ring 3. Install new valve 4. Adjust valve

2. SPECIFICATIONS

REAR AXLE AND HYDRAULIC OIL

For correct grade and quantity of oil, see Specifications Section, Part 10—Rear Axle and Brakes.

LIFT CYLINDER DIAMETER		
Ford 2000	3·0010–2·9995 in.	76·225–76·187 mm.
Ford 3000	3·0010–2·9995 in.	76·225–76·187 mm.
Ford 4000	3·3135–3·3120 in.	95·275–95·237 mm.
Ford 5000	3·7510–3·7495 in.	95·275–95·237 mm.
LIFT PISTON DIAMETER		
Ford 2000	2·9991–2·9977 in.	76·162–76·137 mm.
Ford 3000	2·9991–2·9977 in.	76·162–76·137 mm.
Ford 4000	3·3115–3·3102 in.	84·099–84·074 mm.
Ford 5000	3·7491–3·7477 in.	95·213–95·187 mm.
Lift Cylinder Safety Valve Opening Pressure	2750–2850 lb./sq. in.	193–200 kg./sq. cm.
Back Pressure Valve Opening Pressure	30–40 lb./sq. in.	2·11–2·81 kg./sq. cm.
Check Valve Opening Pressure	80–120 lb./sq. in.	5·62–8·44 kg./sq. cm.

PRESSURE RELIEF VALVE

Minimum Crack-off Pressure	2100 lb./sq. in.	147·5 kg./sq. cm.
Fully Opening Pressure	2550–2650 lb./sq. in.	179·3–186·3 kg./sq. cm.
Tightening Torque	30–60 lb. ft.	4·15–8·28 m. kg.
Shim Thicknesses	0·01 in., 0·025 in.	0·254 mm., 0·635 mm.
Maximum Permissible Thickness of Shim	0·08 in.	2·03 mm.

FLOW CONTROL VALVE LINKAGE

Ford 3000 and Ford 4000 only		
Actuating Follower Shim Thickness	0·01 in.	0·254 mm.

DRAFT CONTROL MAIN SPRING

Ford 3000 and Ford 4000 only		
Draft Control Spring Shim Thicknesses	0·015 in., 0·02 in., 0·025 in.	0·381 mm., 0·508 mm., 0·635 mm.

HYDRAULIC PUMP—GEAR TYPE

Ford 5000	
Flow Capacity—Front Pump	5 Imp. galls, 6 U.S. galls, 22·7 Litres/min. @ 1680 R.P.M.
Flow Capacity—Rear Pump	0·833 Imp. galls, 1 U.S. galls, 3·78 Litres/min. @ 1680 R.P.M.
Maximum Speed of Unit	2200 R.P.M.
Ford 4000	
Flow Capacity—Front Pump	4·5 Imp. galls, 5·4 U.S. galls, 20·43 Litres/min. @ 1515 R.P.M.
Flow Capacity—Rear Pump	1·37 Imp. galls, 1·64 U.S. galls, 6·23 Litres/min. @ 1515 R.P.M.
Maximum Speed of Unit	2100 R.P.M.

HYDRAULIC PUMP—PISTON TYPE

Ford 3000 and Ford 4000	
Rated Pump Output	4·42 Imp. galls, 5·30 U.S. galls, 20·1 Litres/min. @ 2350 R.P.M. (Pump Speed)
Ford 2000	
Rated Pump Output	3·58 Imp. galls, 4·30 U.S. galls, 16·3 Litres/min. @ 2350 R.P.M. (Pump Speed)

TORQUE SPECIFICATIONS

FORD 5000

	Pounds feet	Metre -kilogram
Lift Cover retaining bolts	70–85	9·67–11·74
Lift Cylinder retaining bolts ..	155–190	21·42–26·52
Accessory Cover to Lift Cover bolts	24–31	3·31–4·28
Centre Bolt.....	14–17	1·94–2·35
Control Valve Baffle Plate and Rear Plate retaining bolts....	25–30	3·46–4·15
Quadrant assembly to Lift Cover housing bolts	20–28	2·77–3·87
Exhaust Oil Filter and Tube retaining bolt	14–17	1·94–2·35
Lift Control Lever to Control Lever Shaft nut.....	8–10*	3·63–4·54*
Hydraulic Pump to Rear Axle centre housing bolts	35–47	4·84–6·50
Hydraulic Pump through bolts	40–45	5·53–6·22
Position Control Rod Nut	15–20	2·07–2·77
Set Screw-Draft Control Nut ..	20–25	2·77–3·46
Lift Cylinder Safety Valve	75–90	10·37–12·43

*Measured at ball end of lift control lever.

FORD 2000, FORD 3000 AND FORD 4000

	Pounds feet	Metre -kilogram
Lift Cover retaining bolts	40–45	5·53–6·22
Lift Cylinder retaining bolts ..	50–55	6·91–7·60
Accessory Cover to Lift Cover bolts	40–45	5·53–6·22
Centre Bolt.....	12–15	1·70–2·07
Front and Rear Control Valve Retaining Plate bolts.....	24–30	3·31–4·15
Quadrant assembly to Lift Cover housing bolts	35–47	4·84–6·50
Check Valve Plug	45–55	6·22–7·60
Flow Control Plate retaining bolts	35–47	4·84–6·50
Lift Control Lever to Control Lever Shaft nut Ford 2000..	4– 5*	0·55–0·69
Ford 3000 and Ford 4000....	8–10*	1·11–1·38*
Hydraulic Piston Pump Cover bolts	35–40	4·84–5·53
Hydraulic Piston Pump Drive Housing bolts.....	35–45	4·84–6·22
Hydraulic Piston Pump Drive Shaft nut	25–35	3·46–4·84
Lift Cylinder Safety Valve 2/3000	45–55	6·22–7·60
Lift Cylinder Safety Valve 4000	75–90	10·37–12·43

*Measured at ball end of lift control lever.

TABLE 1—FRONT AND REAR UNLOAD VALVE BUSHINGS

(ins.)	(mm.)	
1·0016 1·0014	25·441 25·436	Red/White
1·0014 1·0012	25·436 25·431	Green/White
1·0000 1·0002	25·400 25·405	Blue/White
1·0012 1·0010	25·431 25·425	Orange
1·0010 1·0008	25·425 25·420	Green
1·0008 1·0006	25·420 25·415	Yellow
1·0006 1·0004	25·415 25·410	Blue
1·0004 1·0002	25·410 25·405	White

TABLE 2—UNLOAD VALVE PLUG GRADES

(ins.)	(mm.)	
1·0016 1·0014	25·441 25·436	Red/White
1·0014 1·0012	25·436 25·431	Green/White
1·0000 1·0002	25·400 25·405	Blue/White
1·0012 1·0010	25·431 25·425	Orange
1·0010 1·0008	25·425 25·420	Green
1·0008 1·0006	25·420 25·415	Yellow
1·0006 1·0004	25·415 25·410	Blue
1·0004 1·0002	25·410 25·405	White

TABLE 3—CONTROL VALVE BUSHING SIZES

(ins.)	(mm.)	
1·0016 1·0014	25·441 25·436	Red/White
1·0014 1·0012	25·436 25·431	Green/White
1·0000 1·0002	25·400 25·405	Blue/White
1·0012 1·0010	25·431 25·425	Orange
1·0010 1·0008	25·425 25·420	Green
1·0008 1·0006	25·420 25·415	Yellow
1·0006 1·0004	25·415 25·410	Blue
1·0004 1·0002	25·410 25·405	White

TABLE 4—CONTROL VALVE SIZES

(ins.)	(mm.)	
0·5928 0·5927	15·057 15·055	Orange
0·5926 0·5925	15·052 15·050	Green
0·5923 0·5921	15·044 15·039	Yellow
0·5921 0·5919	15·039 15·034	Blue
0·5919 0·5917	15·034 15·029	White

3. SPECIAL TOOLS

Tool No.	Description
SW2	Lifting Bracket
T.8518	Lifting Bracket
SW3	Setting Gauge
or SW 508	Setting Gauge
SW9	Seal Replacer
SW18	Pressure Relief Valve Holder
T.8503	Pressure Gauge
T.8503-1/f	'Tee' Piece Adaptor
T.8503-1/b	Load Valve
T.8503-4/a	Thread Adaptor
T.8503-4/b	Thread Adaptor
T.8503-4/d	Hose Assembly
or	
N-1100-3	Pressure Gauge
N-1100-C	Fitting
N-1100-G	Fitting
N-1100-H	Adaptor
N-1100-J	Hose Assembly
N-1100-L	'Tee' Fitting
N-1100-N	Load Valve
N-1100-P	Fitting
N-1100-Q	Hose Assembly

Tool No.	Description
T.8510	Bushing and Plug Remover and Replacer
T.8510-1/a	Extension
T.8510-1/b	Extension
T.8510-1/e	Special Nut
T.8510-1/g	Extension
T.8510-1/h	Special Nut
T.8510-1/k	Guide and Stop Adaptor
T.8510-1B/n	Adaptor
or	
N-508-A	Bushing Remover and Replacer
T.8511	Check Valve Seat Replacer
or	
NCA.997	Check Valve Seat Remover and Replacer
NCA.997-A	Adaptor
N-881-A	Needle Bearing Replacer
N-881-B	Needle Bearing Replacer
N-881-C	Oil Seal Replacer
NCA.600G	Seat Remover
NCA.600EA ..	Seat Replacer
1003.....	Puller—Single End Arm (Large)
951	Pulling Attachment/small
625-6	Shaft Protector
943	Internal/External Pulling Attachment
943-S	Slide Hammer
630-3	Step Plate Adaptor

PART 12
STEERING SYSTEMS

Part 12

STEERING SYSTEMS

Chapter 1

MANUAL STEERING GEAR - DEXTA 2000 AND SUPER DEXTA 3000

Section		Page
1.	Description and Operation	1
2.	Overhauling the Steering Gear	2

Chapter 2

STEERING GEAR - MAJOR 4000 AND SUPER MAJOR 5000

Section		Page
1.	Description and Operation	7
2.	Overhauling the Steering Gear	8

Chapter 3

POWER ASSISTED STEERING PUMP, RESERVOIR AND PIPES - ALL MODELS

Section		Page
1.	Description and Operation	13
2.	Overhauling the Power Steering Pump	16
3.	Reservoir and Hydraulic Pipes	19

© FORD MOTOR COMPANY LTD., 1965

Chapter 4

POWER ASSISTED STEERING - DEXTA 2000 AND SUPER DEXTA 3000

Section		Page
1.	Description and Operation	21
2.	Overhaul Steering Gear	24
3.	Overhaul Steering Power Cylinders	30

Chapter 5

POWER ASSISTED STEERING - MAJOR 4000

Section		Page
1.	Description and Operation	31
2.	Overhaul Power Cylinder	33

Chapter 6

POWER ASSISTED STEERING - SUPER MAJOR 5000

Section		Page
1.	Description and Operation	39
2.	To Remove the Power Cylinder Assembly	40
3.	Overhaul the Power Cylinder Assembly	41
4.	To Install the Power Cylinder Assembly	44
5.	Removing Steering Centre Arm	44
6.	To Install Steering Centre Arm	45

Chapter 7
TROUBLE SHOOTING, SPECIFICATIONS AND TOOLS

Section		*Page*
1.	Trouble Shooting	47
2.	Specifications	48
3.	Special Tools	49

Chapter 8
FORD 4200 ROW CROP

Section		Page
1.	Description and Operation	51
2.	Steering System Component Removal and Installation	57
3.	Pump, Reservoir and Lines	60
4.	Steering System Component Overhaul	60
5.	Filling the Steering System	67
6.	Trouble Shooting	67
7.	Specifications	68

Chapter 9
POWER ASSISTED STEERING (INTEGRAL UNIT) — FORD 4000 AND 5000

Section		*Page*
1.	Description and Operation	69
2.	Removal and Disassembly	73
3.	Inspection and Overhaul	75
4.	Assembly and Installation	76
5.	Trouble Shooting	78
6.	Specifications	79
7.	Special Tools	79

Part 12

STEERING SYSTEMS

Chapter 1

MANUAL STEERING GEAR - DEXTA 2000 AND SUPER DEXTA 3000

Section		Page
1.	Description and Operation	1
2.	Overhauling Steering Gear	2

1. DESCRIPTION AND OPERATION.

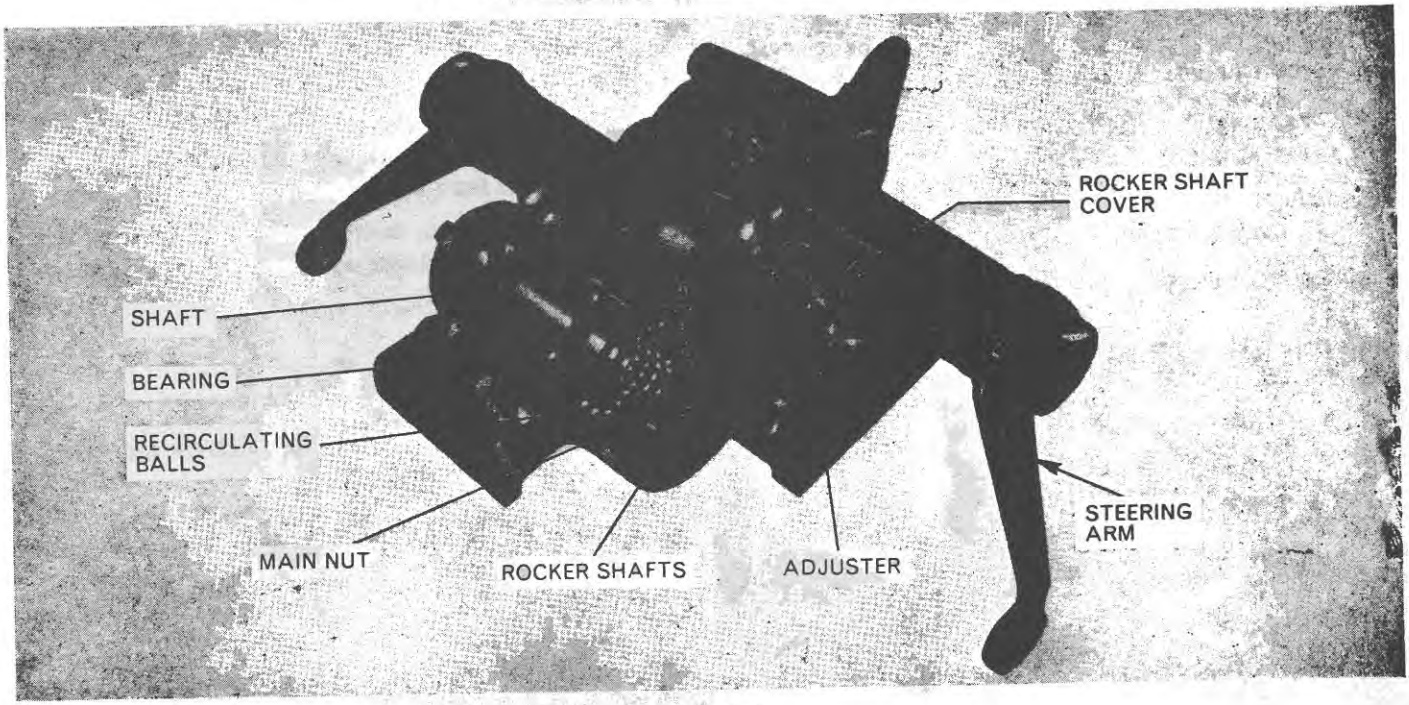

Figure 1
Sectioned Steering Gear

The steering gear is of the recirculating ball type, Figure 1. Roller bearings to take the thrust are positioned at the upper and lower ends of the worm. Preload adjustment for these bearings is provided by means of shims fitted between the steering column flange and the steering gear housing. The shaft is centred at the top of the column housing by a rubber mounted bush.

A total of sixty recirculating ball bearings are located in the main nut assembly which consists of the main nut, the two

© FORD MOTOR COMPANY LTD., 1965

transfer tubes and the transfer tubes retainer. The helical grooves in the main nut and worm correspond to form a guide for the ball bearings.

The transfer tubes are connected to the groove in the main nut in such a way to form two continuous passages in which the balls are circulated. As the shaft is turned the ball bearings are directed by the motion of the worm around this passage and only the balls in the main nut groove are in contact with the worm.

The motion of the main nut is transmitted to the rear rocker shaft by means of a 'rack and pinion' action, the nut being the rack and the rocker shaft gear the pinion. The movement is transmitted from the rear to the forward rocker shaft by direct bevel gearing engagement between the two.

The rocker shafts are each supported by three bushes, two on the steering arm side, and the other at the gear end. The gear end of the shaft has a 'T' slot machined in it, in which is located an adjuster which is screwed into the rocker shaft cover. This adjuster makes it possible to adjust the rocker shaft free play.

At the end of the rocker shaft is attached a steering arm which is located on a tapered spline. To each steering arm is connected a drag link, which is adjustable for length, and the other end of the drag link is connected to the wheel spindle arm. The action of the steering arm is such that as the right-hand steering arm moves forward the left-hand steering arm moves towards the rear. A connecting rod between the wheel spindle arms is unnecessary due to the direct gearing connection.

2. OVERHAULING THE STEERING GEAR.

A. Removal from Tractor

1. Remove the fuel tank, for details refer to the removal of fuel tank, Part 2, Chapters 1 and 2.
2. Remove the drag link to steering arm retaining nuts and using a suitable puller disconnect the drag link.
3. Remove the bolts retaining the steering gear to the transmission housing.
4. Remove the steering gear from the tractor.

B. Disassembly

1. Remove the steering arm retaining nuts and lock-washers, and remove the steering arms. If the arm is tight on the rocker shaft, use Tool No. T.3054 or Tool No. 1001, Figure 2.
2. Remove the front rocker shaft cover retaining bolts.
3. Remove the rocker shaft adjuster screw locknut, and screw adjuster clockwise until cover is free, and remove the cover, Figure 3.



Figure 2
Removing Steering Arm



Figure 3
Removing Rocker Shaft Cover

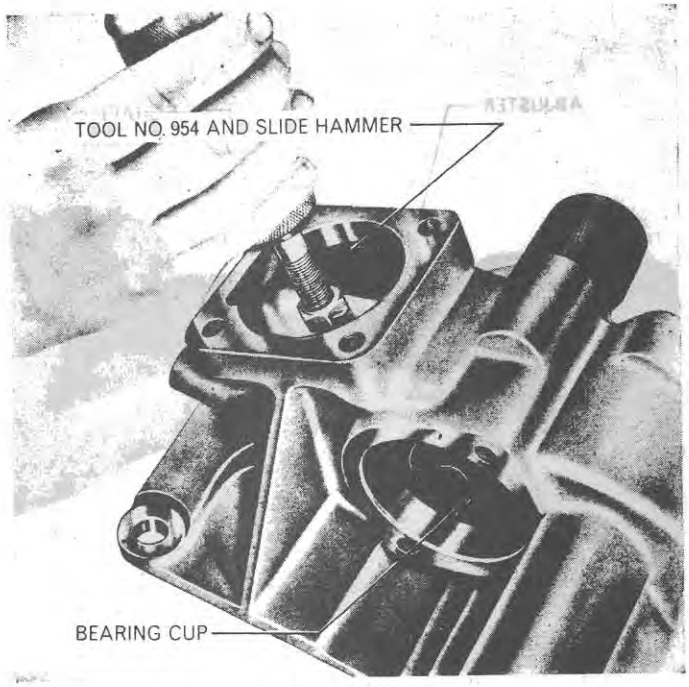

Figure 4
Removing Shaft Lower Bearing Cup



Figure 5
Removing Shaft Upper Bushing and Mount

4. Remove the rocker shaft from the housing.
5. Remove the rear rocker shaft in a similar manner to the front rocker shaft.
6. Remove the four bolts retaining the column extension housing to the housing.
7. Remove the column extension housing.
8. Withdraw the shaft and nut assembly.

C. Cleaning, Inspection and Repair

1. Clean all parts with a suitable solvent and air dry.
2. Remove the oil seals from the end of the rocker shaft bores.
3. Inspect the rocker shaft bushes in the housing for wear or scoring and if necessary replace with a new housing assembly. Install new rocker shaft oil seals using 630 step plate.
4. Inspect the rocker shaft cover bushing for wear or damage and if necessary replace the cover assembly.
5. Inspect rocker shaft gears for excessive wear or damage.
6. Examine steering shaft bearing cups for excessive wear or scoring and if necessary to replace extract the lower cup with 954 and slide hammer (it will be necessary to assemble the tool inside the housing as the shaft aperture is not of sufficient size for the puller to pass through), Figure 4.
7. Examine housing upper bushing for wear or scoring and remove complete with rubber mount using 954 and slide hammer, Figure 5, and insert new bushing and rubber assembly.
8. Install new oil seals, 'O' rings, etc., on reassembly.
9. Remove adjuster packing from rocker shaft. Install new packing after lubricating to prevent damage during installation.
10. Inspect the worm and nut assembly. If worn or damaged it must be replaced as a unit.

D. Assembly

1. Position the two bearing cage and rollers on the steering shaft and install the retainer and rivet at the lower end of the shaft.
2. Install the column extension housing on the shaft without the shims or gasket, install the retaining bolts and tighten finger tight. Measure the gap at several points with feeler gauges, Figure 6, to obtain the thickness of shims required to eliminate end-float. Remove the housing and select the appropriate shims taking into consideration the compressed thickness of



Figure 6
Shaft Bearing Shim Gap Measurement

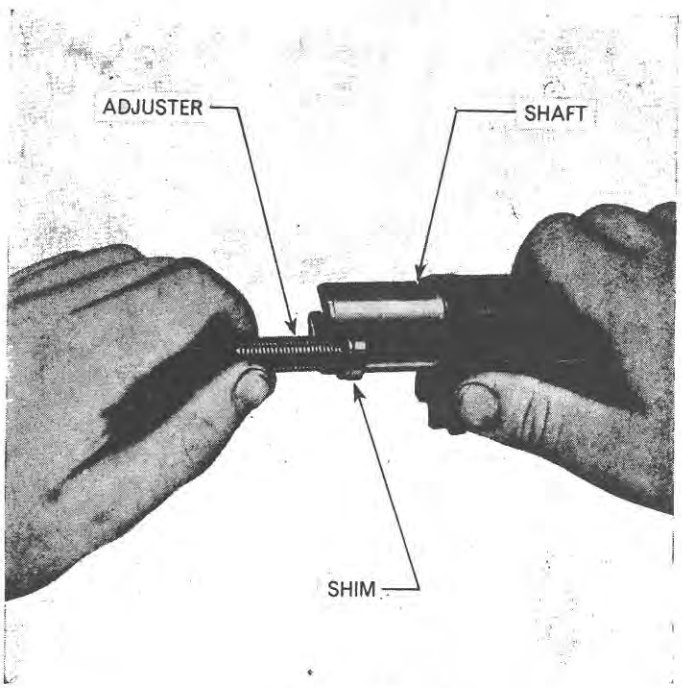

Figure 7
Rocker Shaft Adjuster and Shim

the gasket used.

Install the housing with the shims and gasket in place and tighten the retaining bolts to the correct torque. (See Specification Section.) Check that there is no end-float in the shaft and that the shaft turns freely. Remove the housing and apply sealer to the gasket. Assemble and tighten the bolts to the correct torque.

3. Select the appropriate shims for the rocker shaft adjusters to provide a clearance of 0·000 to 0·0002 in. (0·000 to 0·051 m.m.), between the adjuster head and the shaft and inside the 'T' slot, Figure 7.

4. Install the rear rocker shaft in the housing engaging the gear with the steering nut. Make sure that the centre tooth on the gear is correctly engaged between the second and third teeth on the steering unit, Figure 8.

5. Install the cover plate on the side of the housing using the adjusting screw to pull the cover into position by screwing in anti-clockwise into the cover.

6. Apply sealer to the lever cover retaining bolt and install the cover, retaining bolts and tighten to the correct torque. (See Specifications Section.)

7. Install the forward rocker shaft in a similar manner to the rear rocker shaft ensuring that the shaft gears are correctly engaged, Figure 8. The centre (fourth) tooth on the forward shaft engaged with the centre (fourth) groove in the rear shaft, Figure 9.

8. Renew the seals on the adjuster screws and install the

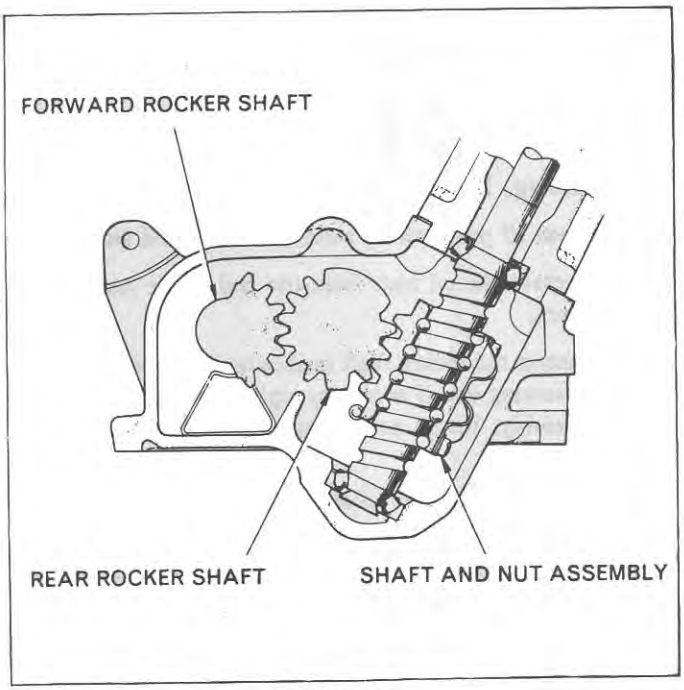

Figure 8
Nut and Rocker Shaft Tooth Engagement

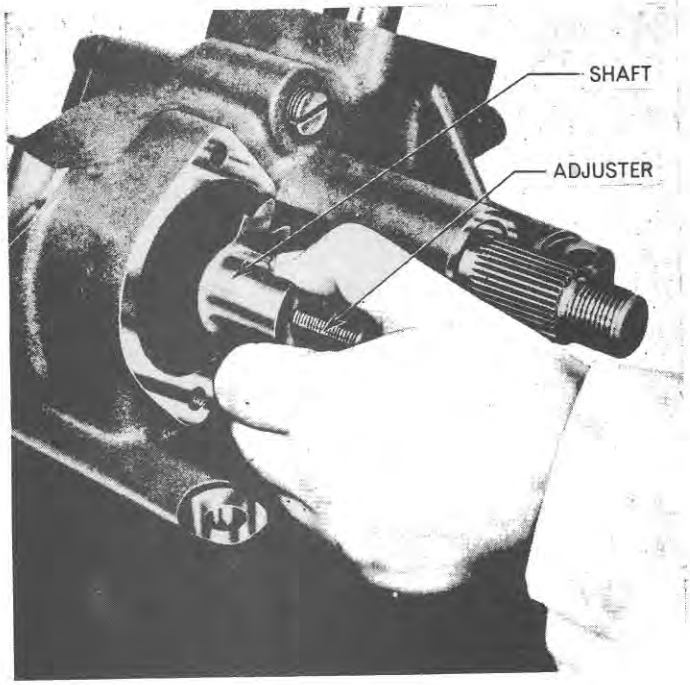

Figure 9

Installing Rocker Shaft

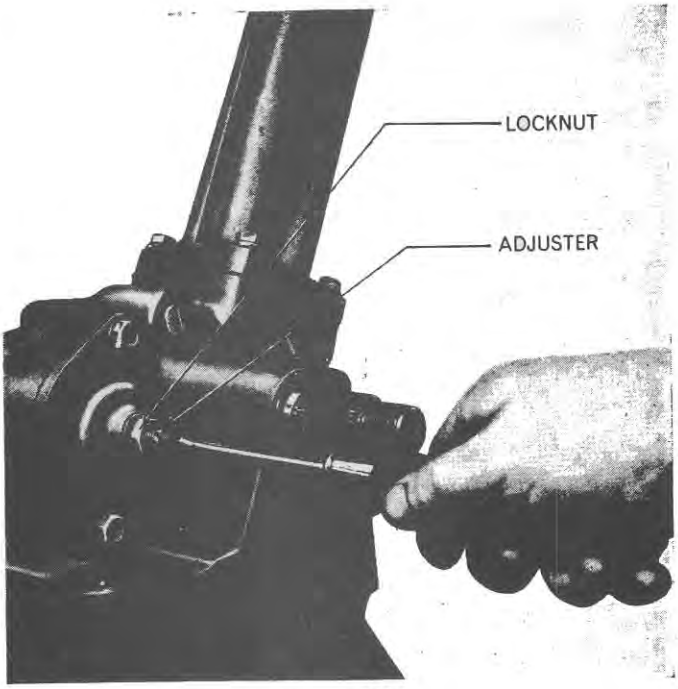

Figure 10

Rocker Shaft Free Play Adjustment

adjuster locknuts. Do not tighten the locknuts at this stage.

9. With steering gear in straight ahead position screw adjuster on forward rocker shaft anti-clockwise several turns, then screw the rear rocker shaft adjuster clockwise until there is no perceptible play in the left hand drop arm, and tighten locknut, Figure 10.

   Screw the forward rocker shaft adaptor clockwise until there is no perceptable play in the right hand drop arm, and tighten adjuster locknut.

10. Install the steering wheel temporarily. With a spring balance on the outer edge check the effort needed to operate the steering gear. It should be from 1 to 2·75 lb. (·45 to 1·25 kg.).

11. Install the steering arms on the rocker shaft with sufficient felt seals to fill the gap between the steering gear housing. Install the lockwashers and arm retaining nuts, and tighten to the specified torque.

E. Installation

1. Install the steering gear on the transmission housing. On tractors equipped with a Select-O-speed transmission install a new gasket between the steering gear and the transmission.

2. Install the retaining bolts and tighten to the specified torque.

3. Reconnect the drag links. Tighten the retaining nuts to the specified torque.

4. Install the fuel tank, for details refer to the Installing Fuel Tank, Part 2, Chapters 1 and 7.

Part 12

STEERING SYSTEMS

Chapter 2

STEERING GEAR - MAJOR 4000 AND SUPER MAJOR 5000

Section		Page
1.	Description and Operation	7
2.	Overhaul the Steering Gear	8

1. DESCRIPTION AND OPERATION

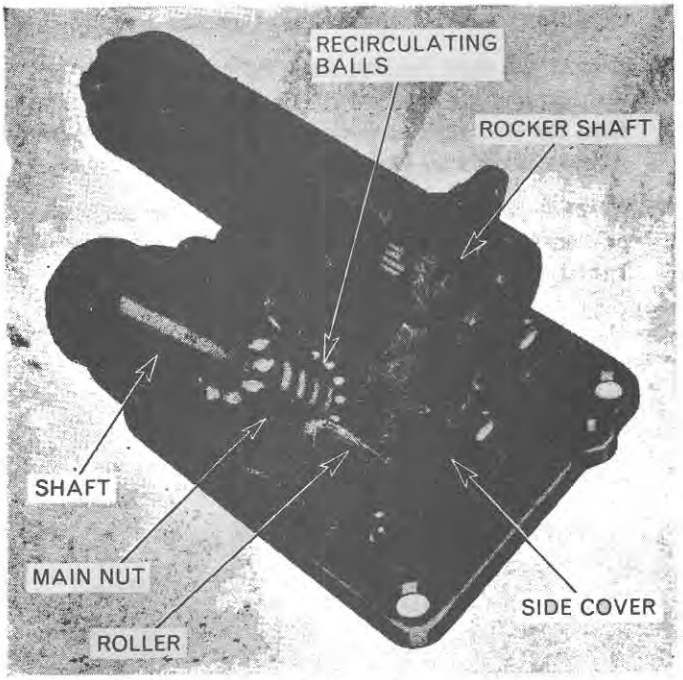

Figure 11
Sectioned Steering Gear

The steering gear is of the recirculating ball type Figure 11. Ball bearings to take the thrust are positioned at the upper and lower ends of the worm and adjustment for these bearings is provided by means of shims fitted between the steering column flange and the steering box.

Fourteen recirculating ball bearings are located in the main nut assembly which consists of the main nut and transfer tube, clamped together by the transfer tube retainer. The helical grooves in the main nut and worm correspond to form a guide for the ball bearings.

The ends of the groove in the main nut are connected by the transfer tube to provide a continuous passage in which the balls are circulated. As the shaft is turned, the ball bearings are directed by the motion of the worm around this passage and the nut moves up or down the shaft. Only the balls in the main nut groove are in contact with the worm.

The forked end of the rocker shaft accommodate the conical shoulder of the main nut. The end of the shoulder projecting through the forked end, carries the roller. This roller moves in the longitudinal slot machined in the coverplate. Shims are fitted between the coverplate and the housing to provide rocker shaft and float adjustment.

The function of the roller is to ensure that the nut reciprocates in a straight line, parallel to the axis of the shaft. This has the effect of increasing the steering ratio as the nut moves away from the straight ahead position.

© FORD MOTOR COMPANY LTD., 1965

2. OVERHAUL THE STEERING GEAR

A. Removal from Tractor

1. Remove the fuel tank, for details refer to the Removal of Fuel Tank, Part 2, Chapters 1 and 2.
2. Remove the drag link to steering arm, retaining nut and using a suitable puller disconnect the drag link.
3. Remove the bolts, retaining the steering gear to the transmission housing.
4. Remove the steering gear from the tractor.

B. Disassembly

1. Remove the steering arm retaining nut and lockwasher from the rocker shaft.
2. Remove the steering arm. If the arm is a tight fit on the rocker shaft splines use Tool No. 1001 or T.3013 and special nut to remove.
3. Unscrew the side coverplate retaining nuts, bolts and lockwashers, and detach the coverplate. Remove the shims and gaskets fitted between the coverplate and the steering gear housing.
4. Remove the roller from the main nut. Extract the rocker shaft from the steering gear housing.
5. Remove the four steering column to steering gear housing retaining nuts and lockwashers and remove the column housing. Remove the gaskets and shims fitted between the column housing and the steering gear housing.
6. Raise the shaft and main nut assembly sufficiently to permit the upper race and the ten ball bearings to be removed.
7. Withdraw the shaft and nut through the side cover aperture of the steering gear housing, Figure 12.
8. Extract the ten ball bearings.
9. Remove the main nut from the shaft by unscrewing the main nut fully when the fourteen ball bearings may be extracted from the groove and the transfer tube. The main nut may be further dismantled after the two transfer tube retaining screws have been removed.

C. Cleaning, Inspection and Repair

1. Clean parts with a suitable solvent and air dry.
2. Inspect the shaft bearing races for excessive wear or damage. Replace if necessary. Extract the bearing seat from the steering gear housing using puller and slide hammer and install new seat.
3. Examine the rocker shaft oil seal and bushes for wear or damage and remove from the housing if necessary. Install the bushes using Tool No. T-811 and handle,

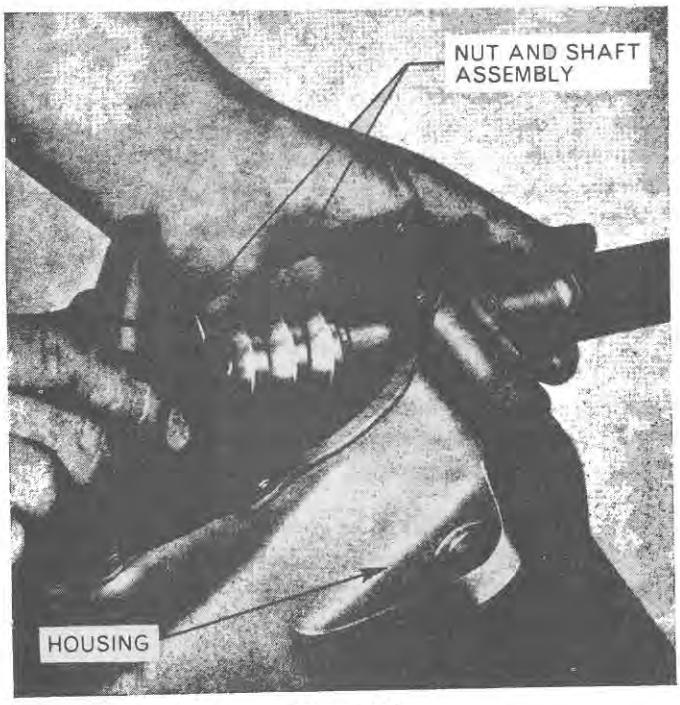

Figure 12
Removing Shaft and Nut Assembly

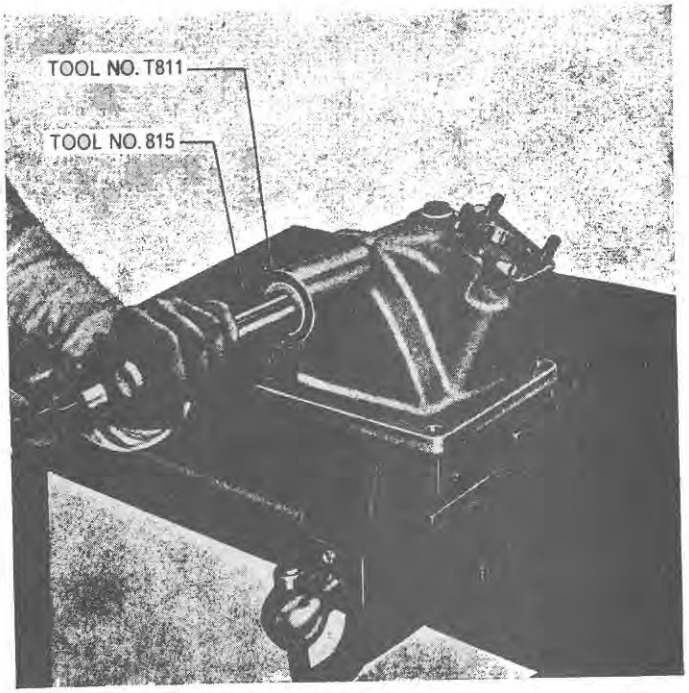

Figure 13
Installing Rocker Shaft Bushing

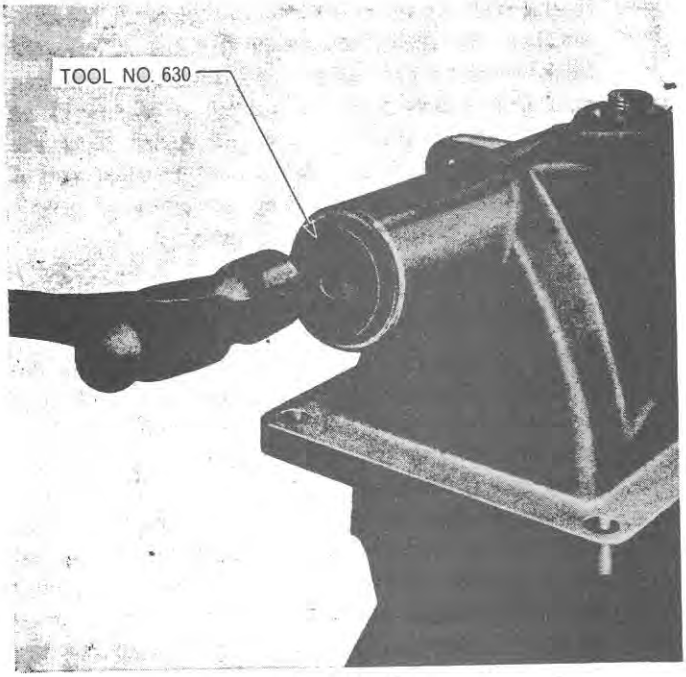

Figure 14
Installing Rocker Shaft Oil Seal

Figure 13, and insert the oil seal using Tool No. 630, Figure 14.

4. Inspect the column upper bush for excessive wear or scoring and if necessary to replace, remove complete with rubber mount using Tool No. 954, and slide hammer, Figure 15, and insert a new bush and mount assembly.

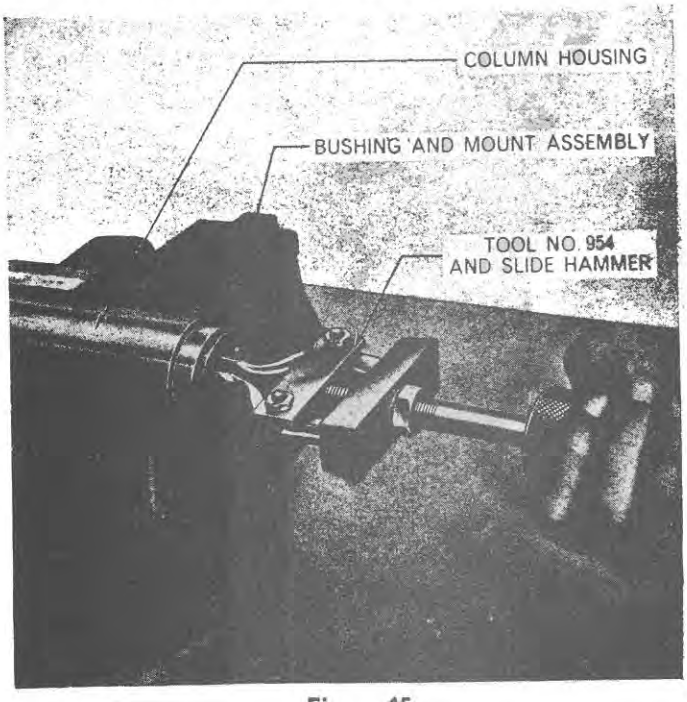

Figure 15
Removing Upper Bushing and Mount Assembly

D. Assembly

1. Assemble the transfer tube into the main nut and replace the retainer and screws. Insert the fourteen ball bearings into the tube and use clean grease to retain the balls in the groove, and assemble the nut to the steering shaft worm.
2. Install the plug and sealing washer in the base of the steering gear.
3. Install the shaft and nut assembly in the steering gear housing, inserting the assembly through the side cover aperture.
4. Locate ten ball bearings in the lower shaft race using clean grease and position the shaft so that it is seated in the ball bearings.
5. Insert the assembly taking care not to displace the ball bearings. Locate the upper ball race over the shaft and raise the race until it reaches the waisted section of the shaft below the worm. Apply grease around the race to retain the ten upper ball bearings which may now be positioned, Figure 16, then fit the race and bearings in the seating in the throat of the steering gear housing.
6. Install the steering column without the shims or gasket between it, and install the retaining nuts. Tighten the retaining nuts evenly until there is no perceptible end

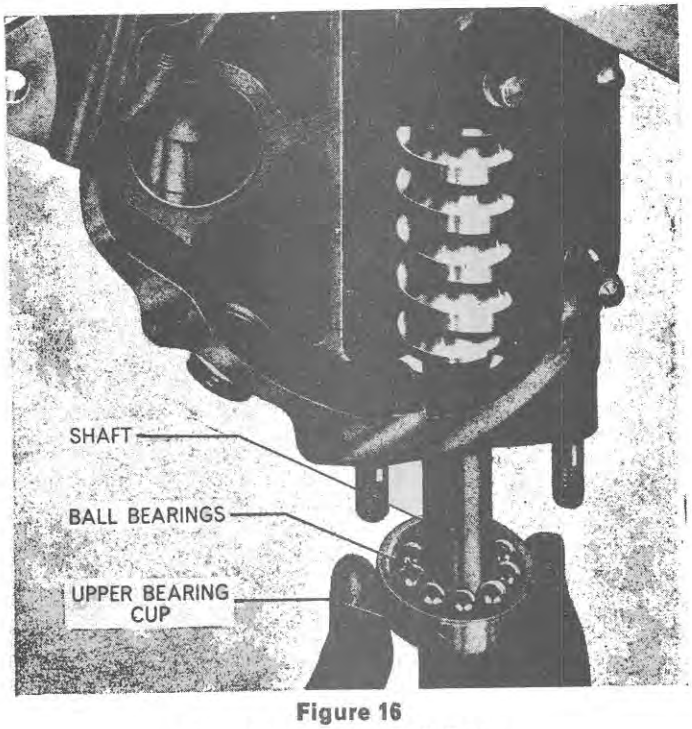

Figure 16
Installing Upper Ball Race



Figure 17
Shaft Bearing Shim Gap Measurement

float in the shaft and there is not high resistance to turning the shaft.

Check the gap between the housings with feeler gauges at several points, Figure 17, to obtain an average reading. Remove the column housing and replace with the appropriate shims to give the required thickness previously measured, less the compressed thickness of the two gaskets used. Install the retaining nuts and lockwashers and torque to the specified figure. (See Specification Section.) Again check the shaft for end-float or resistance to turning, and if incorrect adjust the shimming accordingly. Apply sealer to the gaskets on final assembly.

7. Insert the rocker shaft into the steering gear housing engaging it with the steering shaft main nut, Figure 18.
8. Install the side cover and retain in position with the nuts and bolts, and tighten them evenly until there is no perceptible end-float in the rocker shaft.
   Measure the gap between the housing and the side cover with feeler gauges at various points to obtain an average reading, Figure 19. Remove the side cover and position the roller on the shaft main nut. Install the side cover with the appropriate shims to give the required thickness previously measured less the compressed thickness of the gaskets used. Retain with the nuts, bolts and lockwashers and tighten to the specified torque. (See Specifications Section). Temporarily install the steering wheel and using a pull scale on the outer edge the resistance to turning should fall between 1 lb. (45 kg.) and 2·75 lbs. (1·5 kg.). If incorrect adjust the shims accordingly. Apply sealer to the gaskets on final assembly.
9. Install the steering arm and the retaining nut and

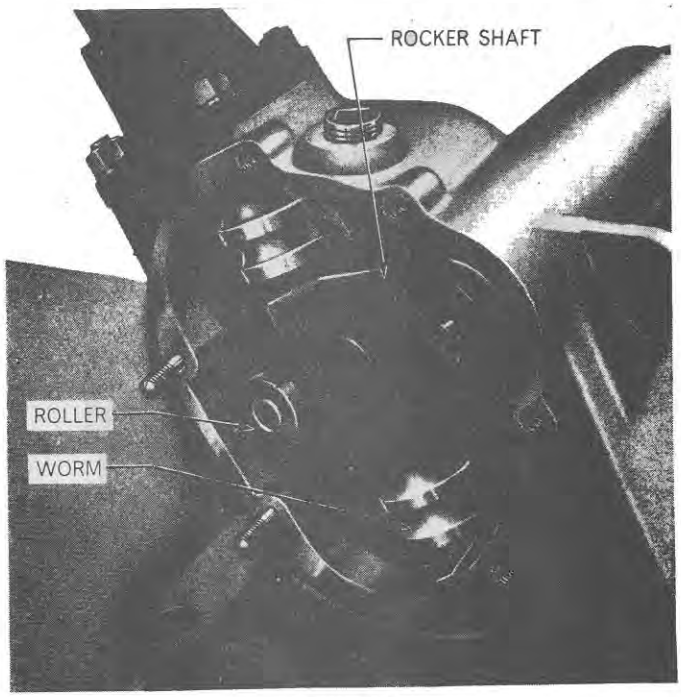

Figure 18
Rocker Shaft Installed



Figure 19
Rocker Shaft Shim Gap Measurement

lockwasher. Tighten the nut to the specified torque. (See Specifications Section).

E. Installation

1. Install the steering gear on the transmission housing.

   On tractors equipped with Select-O-speed transmission install a new gasket between the steering gear and the transmission housing.

2. Install the retaining bolts and tighten to the specified torque.

3. Reconnect the drag link. Tighten the retaining nut to the specified torque.

4. Install the fuel tank, for details refer to the Fuel Systems, Part 2, Chapters 1 and 2.

Part 12

STEERING SYSTEMS

Chapter 3

POWER ASSISTED STEERING PUMP, RESERVOIR AND PIPES - ALL MODELS

Section		Page
1.	Description and Operation	13
2.	Overhauling the Power Steering Pump	16
3.	Reservoir and Hydraulic Pipes	19

1. DESCRIPTION AND OPERATION

The power steering pump is mounted on the left hand side of the engine and is gear driven from the engine timing gears.

Two spur gears, Figure 20, producing high pressure oil for operation of the power steering, are mounted in specially designed bearing blocks, which are a precision fit in the pump housing. The pump pressure driving gear is integral with its shaft, the front of which protrudes through the pump front cover plate and is suitably tapered to accept an external gear which is keyed onto the shaft. The external gear meshes with the engine timing gears and hence whenever the engine is running the pump is in constant operation.

Rotation of the pressure gears draws oil from the reservoir tank mounted near the front of the engine under the hood on the left hand side. The oil on return passes through a paper element filter incorporated into the reservoir.

On entering the pump the oil fills the gear tooth spaces and is carried around the housing, by the closely fitting gears, to the point where the teeth in the two gears come into mesh. The oil is then thrust out from between the teeth and delivered through an outlet port to a passage in the rear end cover.

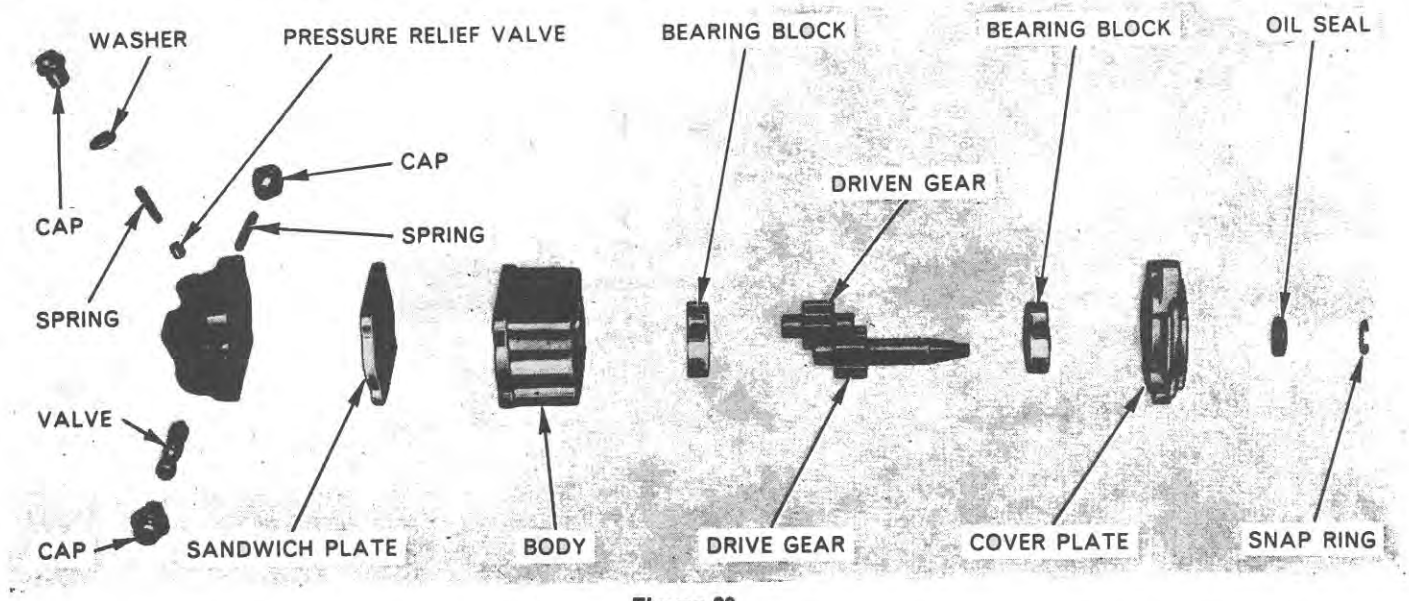

Figure 20

Power Steering Pump

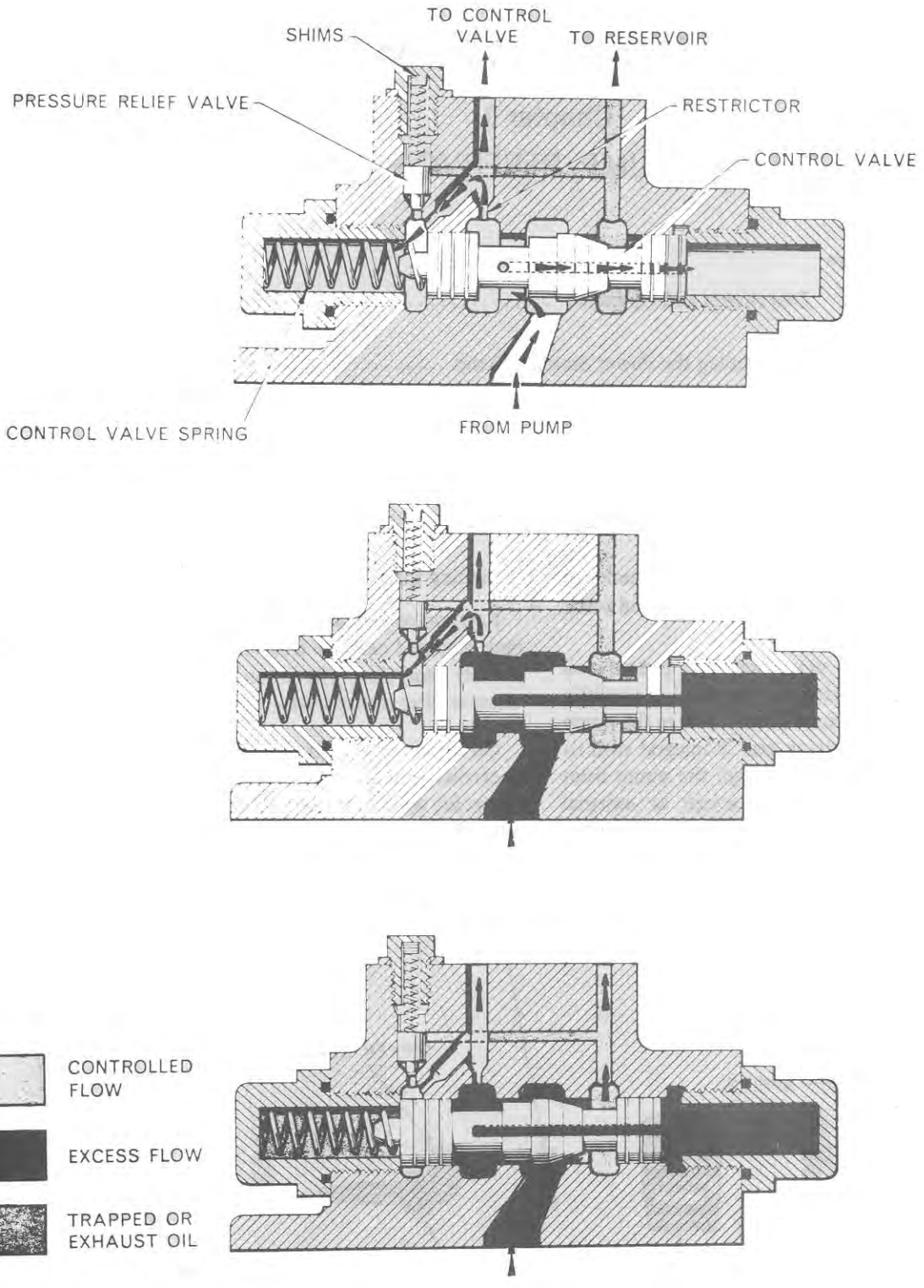

Figure 21

Flow Control Valve Operation

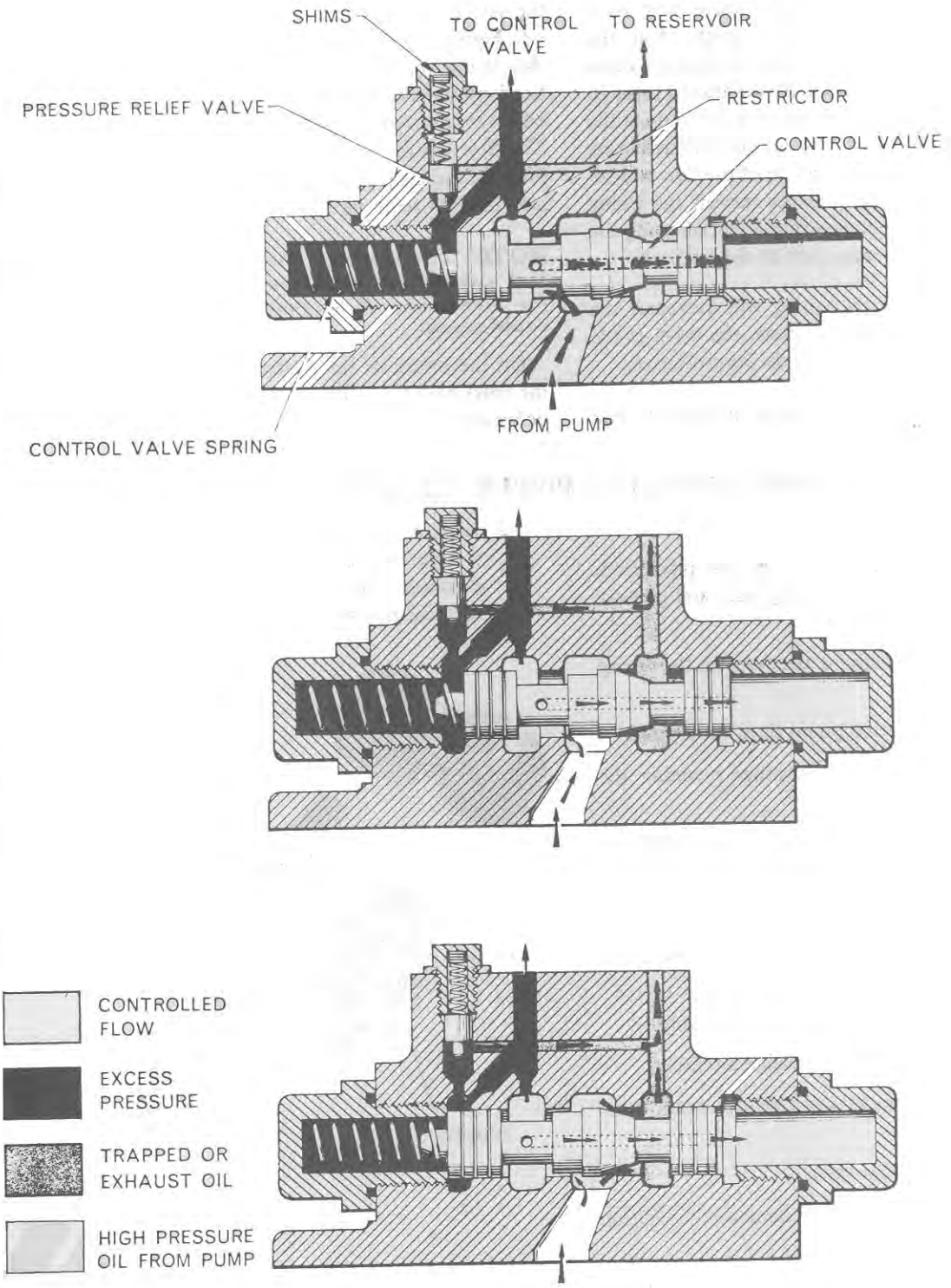

Figure 22

Pressure Relief Valve Operation

Oil from the pump gears passes through the flow control valve bore, and from there to the control valve port via a restrictor, Figure 21. If the flow of oil is greater than the amount that can pass through the restrictor, a pressure build up in the flow control valve takes place. An oil drilling through the flow control valve allows the oil pressure to build up at the left hand end of the control valve. The oil pressure acting on the left end of the valve opposes the action of the flow control valve return spring. When the oil pressure exceeds the spring pressure the flow control valve moves to the left, allowing the excess oil to pass into the oil return port to the reservoir.

With a decrease in oil flow the spring will overcome the resultant drop in oil pressure and so return the valve to the initial position where all oil is passed to the control valve.

When the tractor steering gear is held in the full lock position or the wheels are against an obstacle, the pressure in the system will increase as the pump will continue to deliver oil, Figure 22. When the oil reaches a sufficient pressure, this being set according to the tractor (see Specifications Section) the pressure relief valve is lifted from its seat and the oil flows through a drilling into the reservoir return port. The flow control valve also moves to the right because of the pressure build up allowing the oil supplied from the pump to pass into the reservoir return port.

NOTE: ***The steering should not be held in the full lock position or with the wheel against an obstacle for more than 30 seconds as damage to the system could result.***

On the return of the control valve to the neutral position the relief valve seats due to the drop in pressure, and the oil is delivered through the control valve port.

2. OVERHAULING THE POWER STEERING PUMP

A. Disassembly

1. Disconnect the inlet pressure and exhaust pipes from the power steering pump. Plug pipe ends and ports in pump to prevent dust entering.
2. Remove the two bolts retaining the pump in the timing gear casing.
3. Remove the power steering pump from the tractor.
4. Straighten the tab on the lockwasher retaining the drive gear retaining nut.
5. Undo the nut and remove the washer and drive gear (using 1002 puller and 951 Collets).
6. Remove the key from the drive gear shaft.
7. Remove the four bolts and remove the rear cover and valve assembly.
8. Remove the plate from the rear end of the body.
9. Remove the front and cover and flange assembly.
10. Remove the bearing blocks and pressure gears from the body as an assembly.
11. Remove the pressure relief valve.
12. Remove the end cover plugs and remove the control valve and spring.
13. Remove the snap ring retaining the drive shaft oil seal in the end cover, and extract the oil seal.

B. Cleaning, Inspection and Repair

1. Clean all parts in a suitable solvent and air dry. Lightly oil machined surfaces.
2. Inspect the bearing blocks, Figure 23, for signs of seizure or scoring on the face of the journals. If assembly is disassembled keep parts in relative position to facilitate assembly. Light scoring marking can be

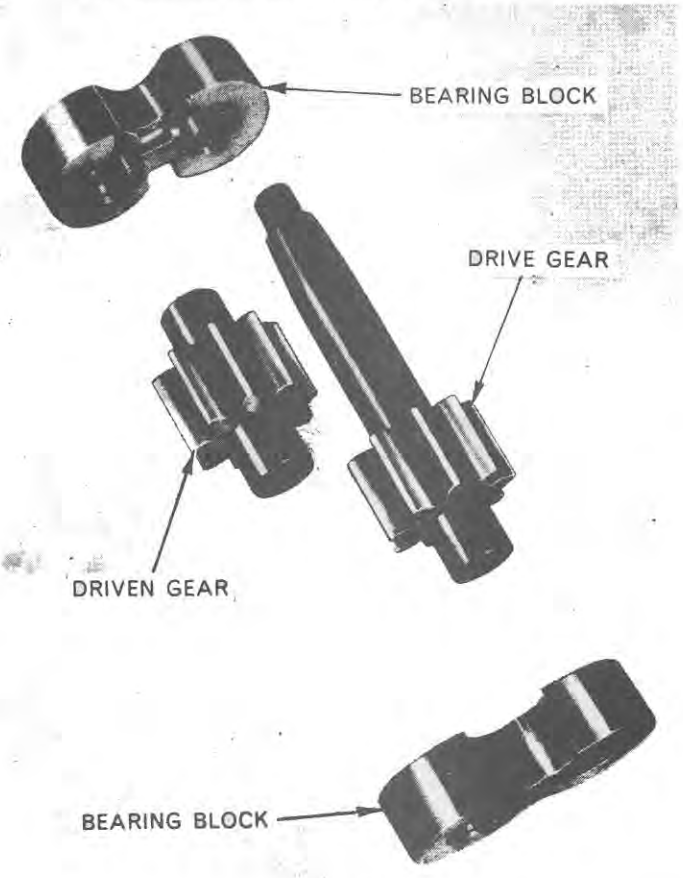

Figure 23
Pump Gears and Bearing Blocks

removed by careful lapping on a surface plate using 'O' grade emery paper and paraffin (Kerosene).

3. Examine the body for wear in the gear running track. If the track is worn deeper than 0·0025 in. (0·0635 mm.) on the inlet side, the body must be replaced.

4. Examine the pressure gears for excessive wear or damage or journals, faces or teeth. Run out across the gear face to the tooth edge should not exceed 0·001 in. (0·025 mm.). The gear journals can, if required, be lightly polished with 'O' grade emery paper to remove wear marks. The gear faces may be polished by sandwiching the emery paper between the gear and a scrap bearing block and rotating the gear.

   If new gears are fitted the journal sizes on either side of each individual gear must be paired within 0·001 in. (0·025 mm.) of each other. The face widths of each pair of gears must be held to within 0·001 in. (0·025 mm.) of each other. The gears are supplied in service as a matched set.

5. All rubber seals, 'O' rings, etc., should be replaced when servicing the pump.

C. Assembly

1. Insert a new drive shaft oil seal in the end groove, and replace the locating snap ring.

2. Install the control valve, spring and the end cover plugs, Figure 24.



Figure 24
Installing Flow Control Valve



Figure 25
Installing Pressure Relief Valve

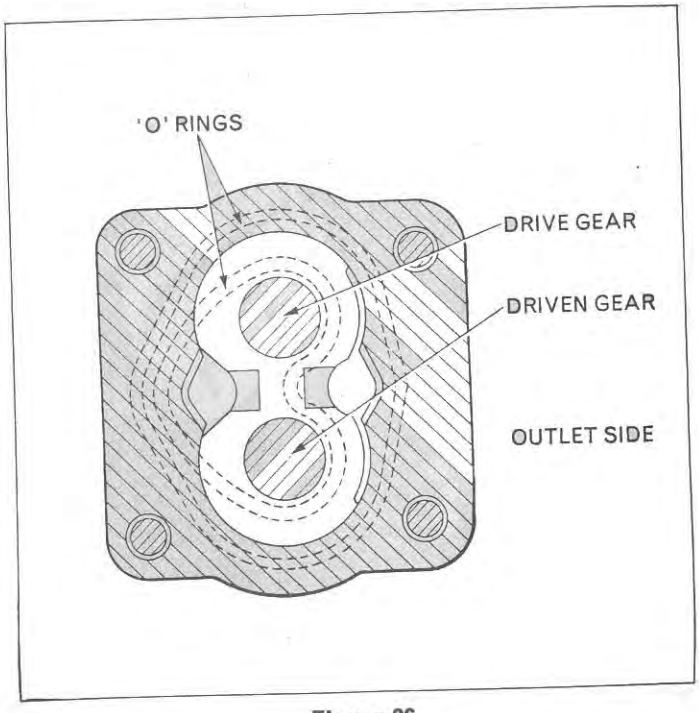

Figure 26
Correct Installation of Gears

© FORD MOTOR COMPANY LTD., 1965

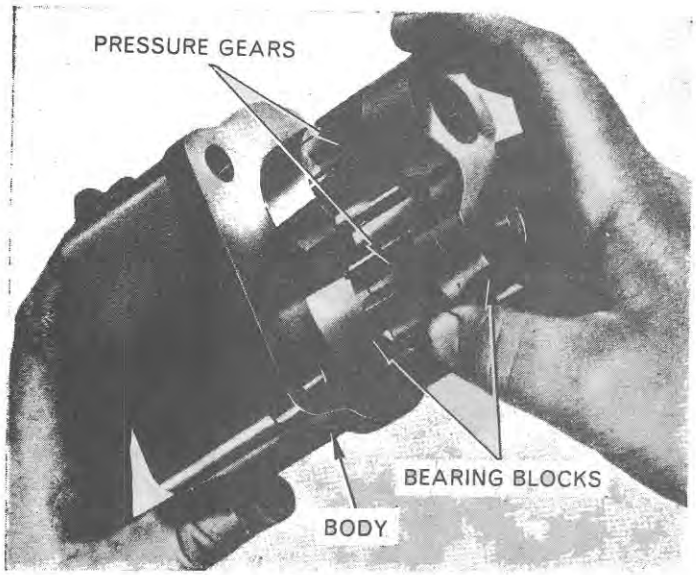

Figure 27
Installing Gears and Blocks

3. Install the pressure relief valve, spring and retaining plug (with a new seal), ensuring that all the spacing shims are in place inside the retaining plug, Figure 25.
4. Assemble the pressure gears to the bearing blocks, Figure 26, and insert them into the body, Figure 27.
5. Make sure the bolt rings are in place in the pump body and install the front end cover.
6. Position the plate at the rear end of the body.
7. Install the rear cover in position and the four through bolts and tighten to the correct torque (See Specifications Section).
8. Install the pump drive gear locating key in the drive gear shaft.
9. Install the pump drive gear on the shaft and the tabwasher and nut. Hold the gear securely and tighten the nut to the specified torque (See Specification Section), and bend the tab on the tabwasher to retain the nut.
10. Install the pump on the tractor and replace the two bolts holding it to the engine timing gear casing, and tighten to the correct torque (See Specifications Section).
11. Connect the inlet pressure and exhaust pipes to the power steering pump.
12. Top up the oil level in the power steering reservoir and operate the power steering system several times to exclude any air that entered the system.
13. Disconnect the pump pressure pipe from the pump and connect the T.8503 pressure gauge and T.8503-5, Figure 28, adaptor or use 'Imperial Brass, Female coupling (Female Flare to Male Pipe Thread) No. 664-F-$\frac{3}{8}$", $\frac{5}{8}$"-18 × $\frac{1}{4}$" with $\frac{1}{4}$" × $\frac{1}{4}$" pipe coupler and Gauge No. N-1100-3. Start the engine and obtain a reading on the gauge of the pump relief valve setting. Refer to the specifications section for the correct setting.

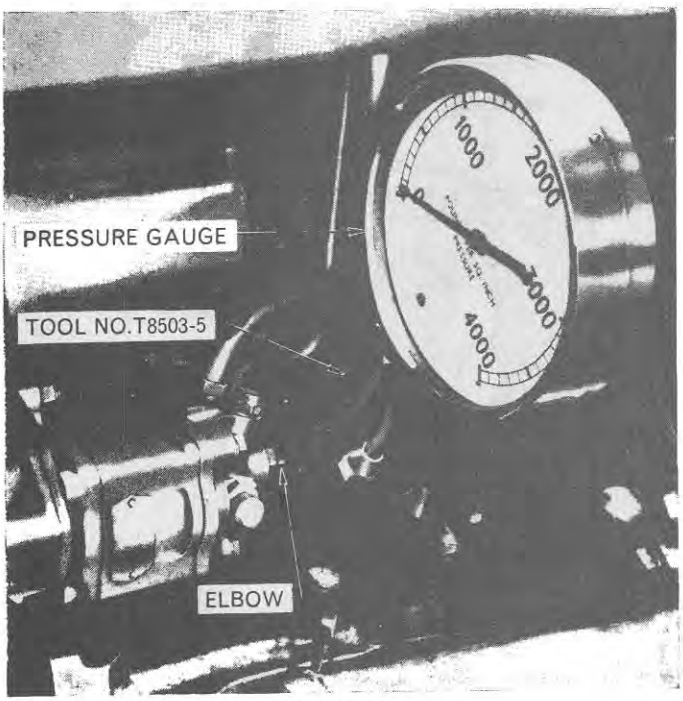

Figure 28
Pressure Testing Power Steering Pump

WARNING: ***Operate engine just long enough to obtain an accurate reading. Prolonged operation will cause overheating and damage.***

If the setting is incorrect remove the relief valve plug and adjust the shims to give the correct figure.

When the adjustment is correct remove the gauge and install the pressure pipe.

3. RESERVOIR AND HYDRAULIC PIPES

A. To Renew Filter Element

1. Remove reservoir cover retaining screw.
2. Remove the reservoir cover.
3. Remove the element spring and element, Figure 29.
4. Drain out the remaining oil in the reservoir using a suction gun.
5. Install a new filter element.
6. Install the element locating spring.
7. Inspect the cover sealing ring and replace if necessary.
8. Install the cover and sealing ring. Make sure the sealing ring is seated correctly.
9. Install the cover retaining screw.
10. Top up the reservoir to the correct level with new oil of the correct grade, Figure 30.

B. Hydraulic Pipes

1. Inspect hydraulic pipes for leakage at connections. Replace oil seals where fitted and tighten loose connections.
2. Inspect pipes for signs of fracture and renew if necessary.
3. Inspect flexible hoses for cracks, etc., and renew if necessary.

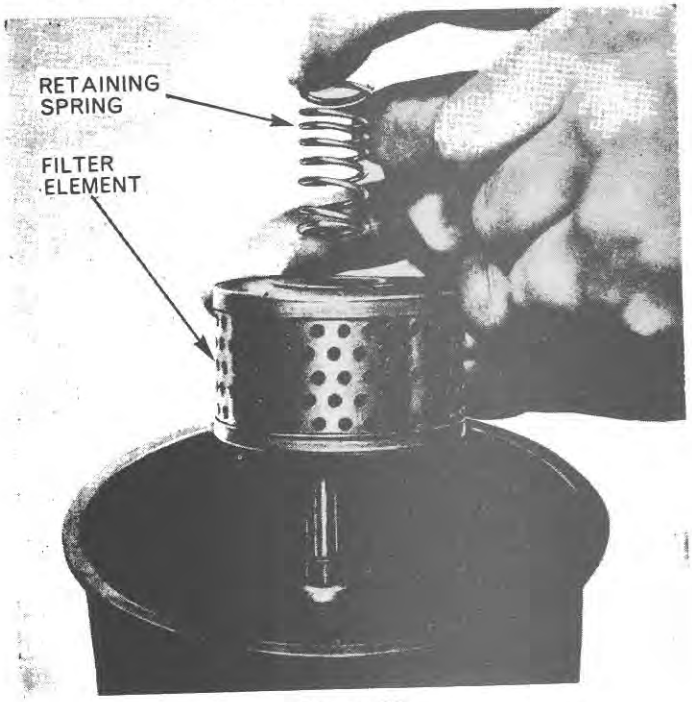

Figure 29
Installing Reservoir Filter Element

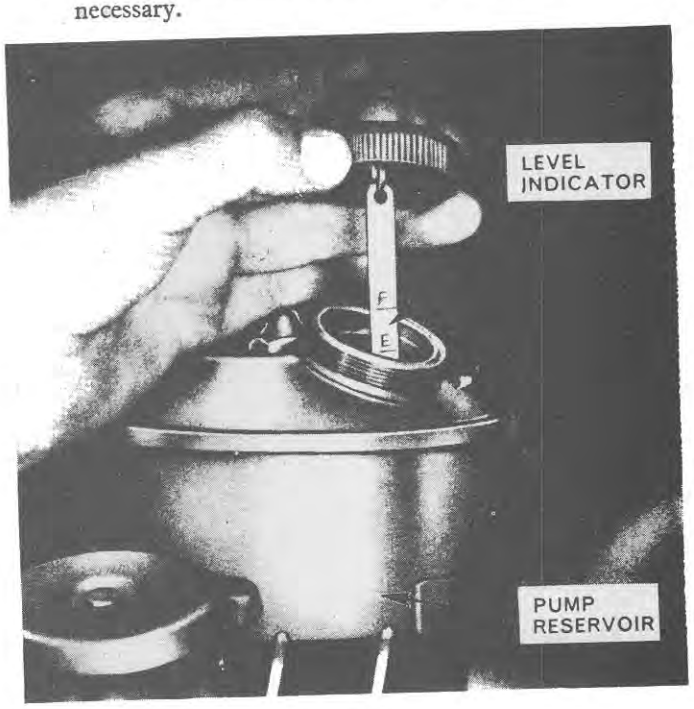

Figure 30
Oil Level Indicator

Part 12

STEERING SYSTEMS

Chapter 4

POWER ASSISTED STEERING - DEXTA 2000 AND SUPER DEXTA 3000

Section		Page
1.	Description and Operation	21
2.	Overhaul Steering Gear	24
3.	Overhaul Steering Power Cylinders	30

1. DESCRIPTION AND OPERATION

The steering mechanism comprises all the units of the tractor that have to do with directional control. These units are: steering wheel, steering column, steering gear, Pitman arms, drag links, oil pump, control valve, power cylinder and steering arm, Figure 31.

The system utilises the manual steering gear and linkage plus a hydraulic pump, a control valve, two power cylinders, and hoses and tubing to provide a power assist in all steering operations.

In the event of power assist failure, the mechanical components provide complete steering control at all times.

STEERING GEAR ASSEMBLY

The power steering gear assembly used on Dexta 2000 and Super Dexta 3000 Tractors is a recirculating ball bearing, worm and nut type, nearly identical to that used in the manual steering gear assembly.

A spool-type control valve is piloted on the steering gear shaft and located between a valve adaptor and the column assembly on the steering column. A rubber mounted bushing centres the top end of the shaft.

In the manual gear, the worm is mounted in tapered roller bearings which prevent shaft movement due to both end and side thrust. In the power steering gear assembly, these bearings are replaced with needle bearings which allow axial movement of the shaft. Ball-type thrust bearings are located at either end of the valve spool. A lock nut and spring preload washer are used to secure the valve spool and its thrust bearings against a shoulder on the shaft.

The valve spool then must move axially with the shaft, while the valve body must remain stationary as part of the steering gear column. When the steering wheel is turned, the shaft worm thrusts against the resistance of the rocker shaft sector gears. This thrust moves the shaft and control valve spool axially. The spool is slightly longer than the length of the bore in the valve body and the axial movement stops when either the upper or lower bearing race contacts the recessed faces of the valve body. When the spool is midway in its travel, the valve is in the neutral position. The correct preload of the ball-type thrust bearings is maintained by the partially compressed spring washer located between the locking nut and the upper bearing race.

The control valve housing has six external ports: one to the reservoir, one pump inlet, and a pressure and return port for each of two power cylinders.

In operation, oil under pressure is delivered from the pump to the control valve. When the steering wheel is turned, the resistance of the ball nut (engaged to the rocker shaft) to the worm will tend to move the worm, shaft, and valve up or down, depending on which way the wheel is turned. Maximum movement of the valve is 0·110 in: (2·8 mm), 0·050 to 0·055 in. (1·2 to 1·4 mm) either side of neutral. This axial movement of the valve directs oil under pressure to the power

© FORD MOTOR COMPANY LTD., 1965

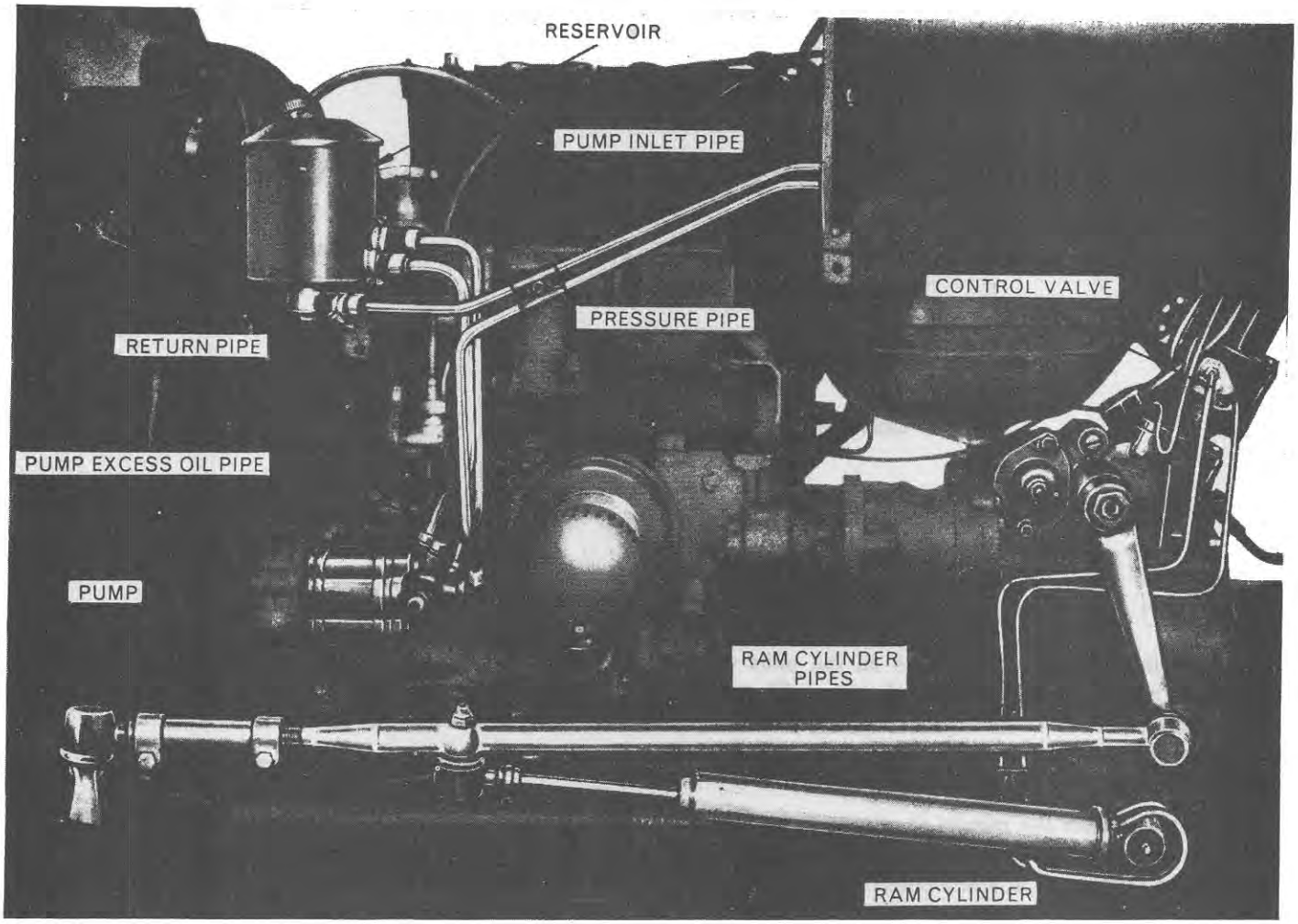

Figure 31
Power Steering Installation

cylinders. When the steering wheel turning action is stopped, the steering shaft thrust is removed. This permits the springs and plungers to return the valve to its centre or neutral position. In this position, the pump output will be recirculated in the system without doing any work, as shown in Figure 32.

There are two double acting hydraulic power cylinders—one for each front wheel. The cylinder housing is anchored to the rear section of the radius rod. The cylinder piston rod is attached to the front section of the drag link Figure 31. Both attachments are made with ball and assemblies. Two hydraulic pipe connections are located in the rear of each cylinder. Oil pressure to the cylinders is directed by the control valve in such a way that the cylinders operate in opposite directions from each other.

STRAIGHT-AHEAD DRIVING

When the tractor wheels are in the straight-ahead position, the absence of thrust on the steering column worm enables the centering springs to hold the valve in its centre or neutral position. In this position, oil entering the control valve is directed back to the reservoir without doing any work, Figure 32.

LEFT OR RIGHT TURNING

The steering power system operates in the same manner for both left and right turns except for the direction of control valve movement and oil flow. For left turns, the valve moves upward or to the right, as shown in Figure 33. When the steering wheel is turned, a thrust is developed in the steering shaft and worm. Resistance to this thrust by the steering ball nut and the sector gear creates sufficient axial force to overcome the springs in the control valve housing. This permits the steering shaft worm and the valve to move up (or down) thereby directing oil pressure to one side of the power cylinders and providing hydraulic force to the manual effort of the operator to turn the front wheels. Simultaneously, oil from the opposite side of the cylinders is directed back through the valve body to the pump reservoir. In addition, oil pressure is

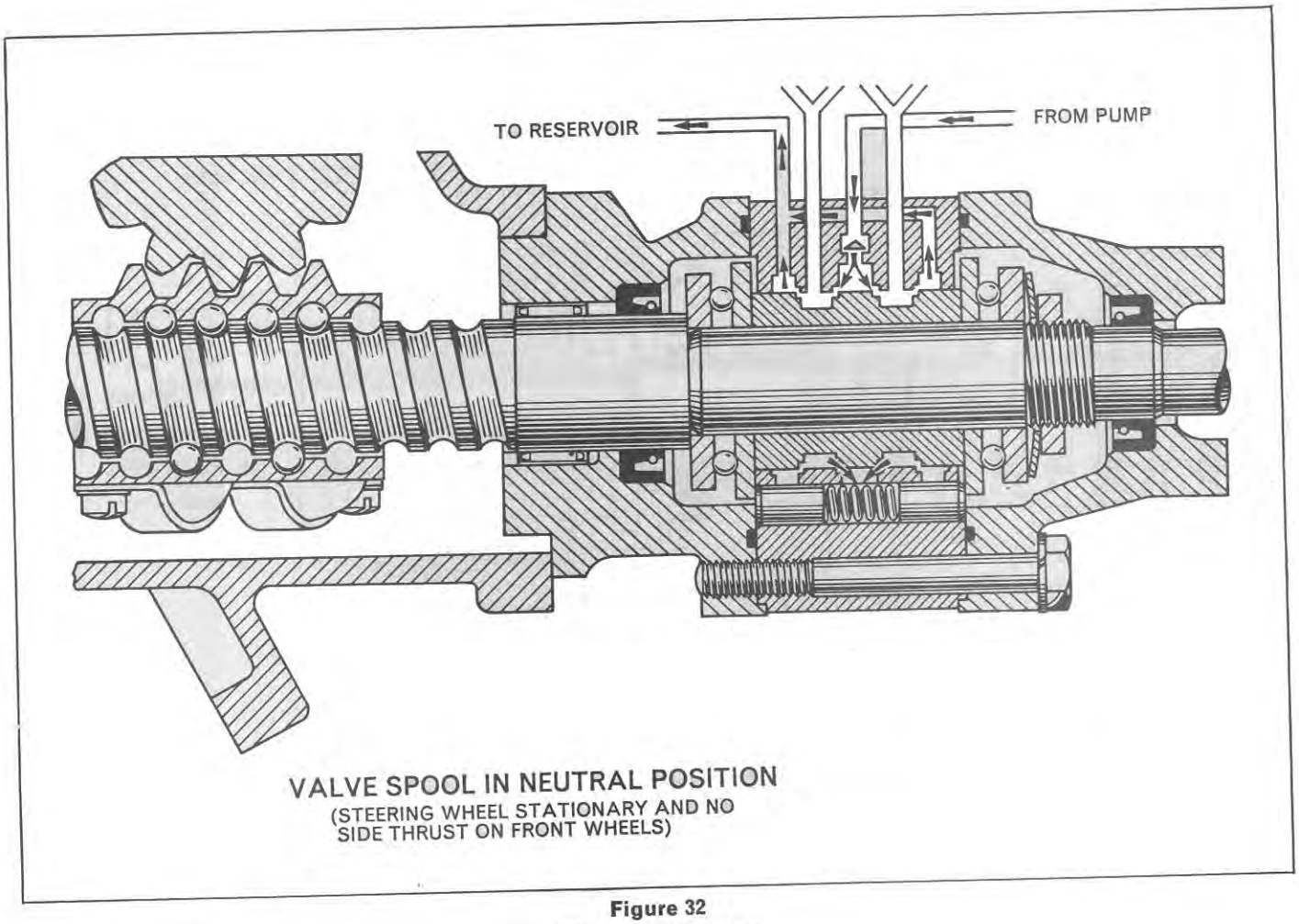

Figure 32
Oil Flow in Neutral

directed to the plungers and springs to supplement spring force in locating the control valve. This increases the force required to turn the steering wheel and gives the operator a natural feel of steering. Figure 33 shows the flow of oil during a left hand turn, and Figure 34 shows the flow of oil for a right hand turn.

OPERATION WITHOUT PRESSURE SUPPLY

If the power system should become inoperative, steering can be accomplished manually through the regular steering linkage. Cross over provisions in the control valve ports permit manual movement of the power cylinders with an increase in the steering effort.

When no oil is being delivered by the pump to the valve, the oil circulates from one end of the steering cylinders to the other end. This is accomplished by means of the check valves, Figure 42. As the front wheels turn, the piston moves within the cylinder forcing the oil out of one end of the cylinder back to the control valve. Here it flows around the annular ring of the valve, enters the port to the right hand reaction valve, moves the ball from its seat, flows into the left hand annular ring, and on into the opposite ends of the steering cylinders. Otherwise, the cylinders would have no oil in them after a few turns.

There is an additional path for the oil to follow. As it returns from the cylinders, it flows up a drilled, diagonal passage toward the reservoir. Instead of flowing to the reservoir, it enters a drilled passage containing a check ball valve. The seat for the ball is at the top of the passage. The ball permits the oil to flow through to the left-hand annular ring to the opposite end of the steering cylinder. As the piston moves in the steering cylinder, a vacuum tends to develop at one end; hence the oil in the valve flow into this area.

When the power system is operative oil pressure holds the reaction check balls on the seats.

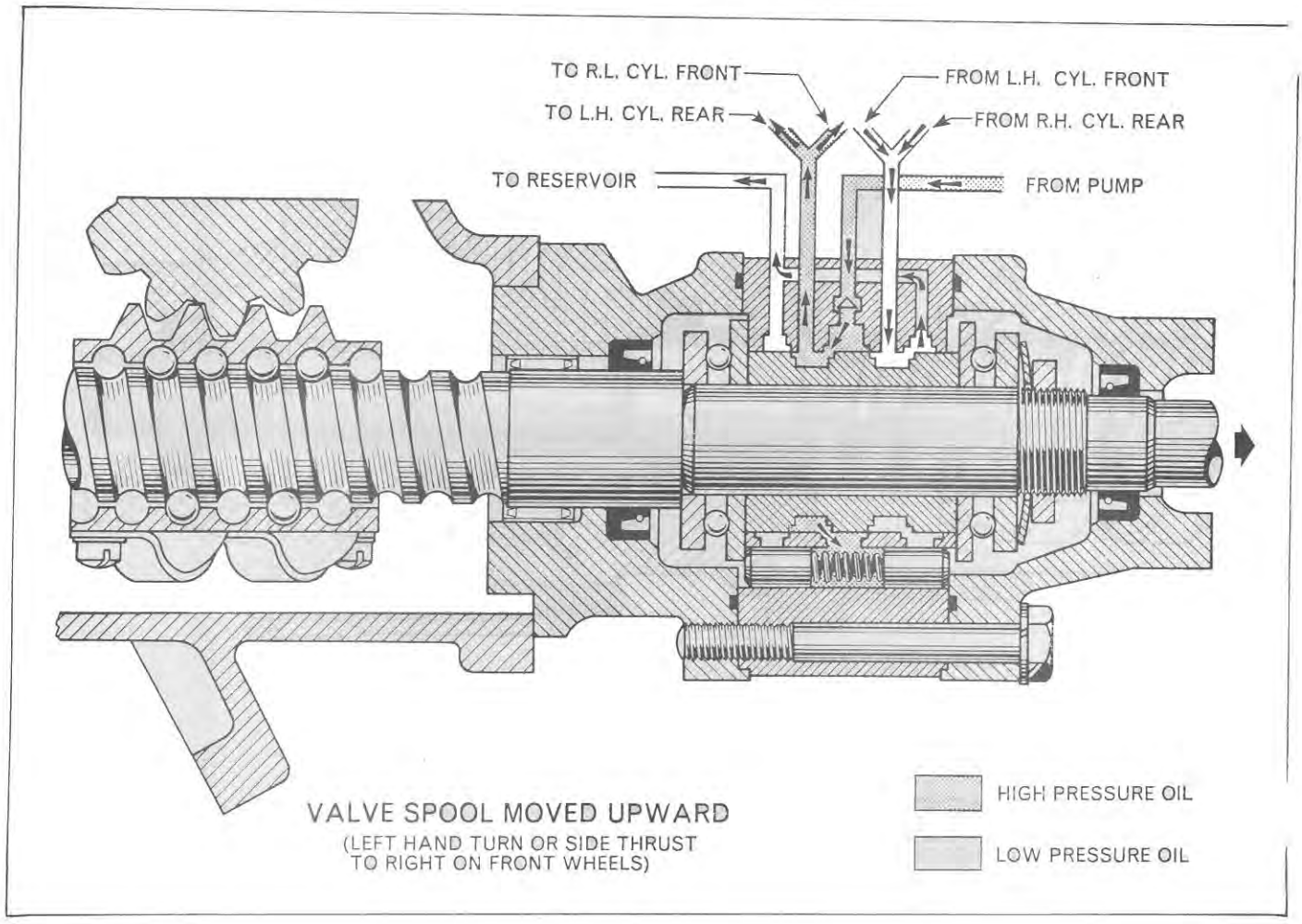

Figure 33
Oil Flow for Left-Hand Turn

2. OVERHAUL STEERING GEAR

A. Removal from Tractor

1. Remove the fuel tank, for details refer to the Fuel System, Part 2, Chapters 1 and 2, removal of fuel tank. Disconnect all pipes from the steering control valve, plugs, ports and pipe ends to prevent ingress of dirt.
2. Remove the drag link to steering arm retaining nut and using a suitable puller disconnect the drag link.
3. Remove the bolts retaining the steering gear to the transmission housing.
4. Remove the steering gear from the tractor.

B. Disassembly

1. Remove the steering arm retaining nuts and lockwashers. Remove the steering arm using T.3054 or 1001, Figure 35.
2. Remove the three bolts retaining the column housing and lift off the housing.
3. Use a fine pointed chisel to drive out the staked area of the valve spool retaining locknut.
4. Temporarily replace the steering wheel to hold the shaft in position while removing the locknut.
5. Remove the spring washer, the small bearing race, bearing and large bearing race. Keep the bearing and races together for proper reassembly.
6. Hold the steering gear with the steering shaft horizontal and remove the control valve as an assembly from the shaft. Take care so as not to allow the plungers and check valves to fall out.
7. Turn the steering shaft counterclockwise sufficient to raise the shaft and enable the lower large bearing race, bearing and small race to be removed.

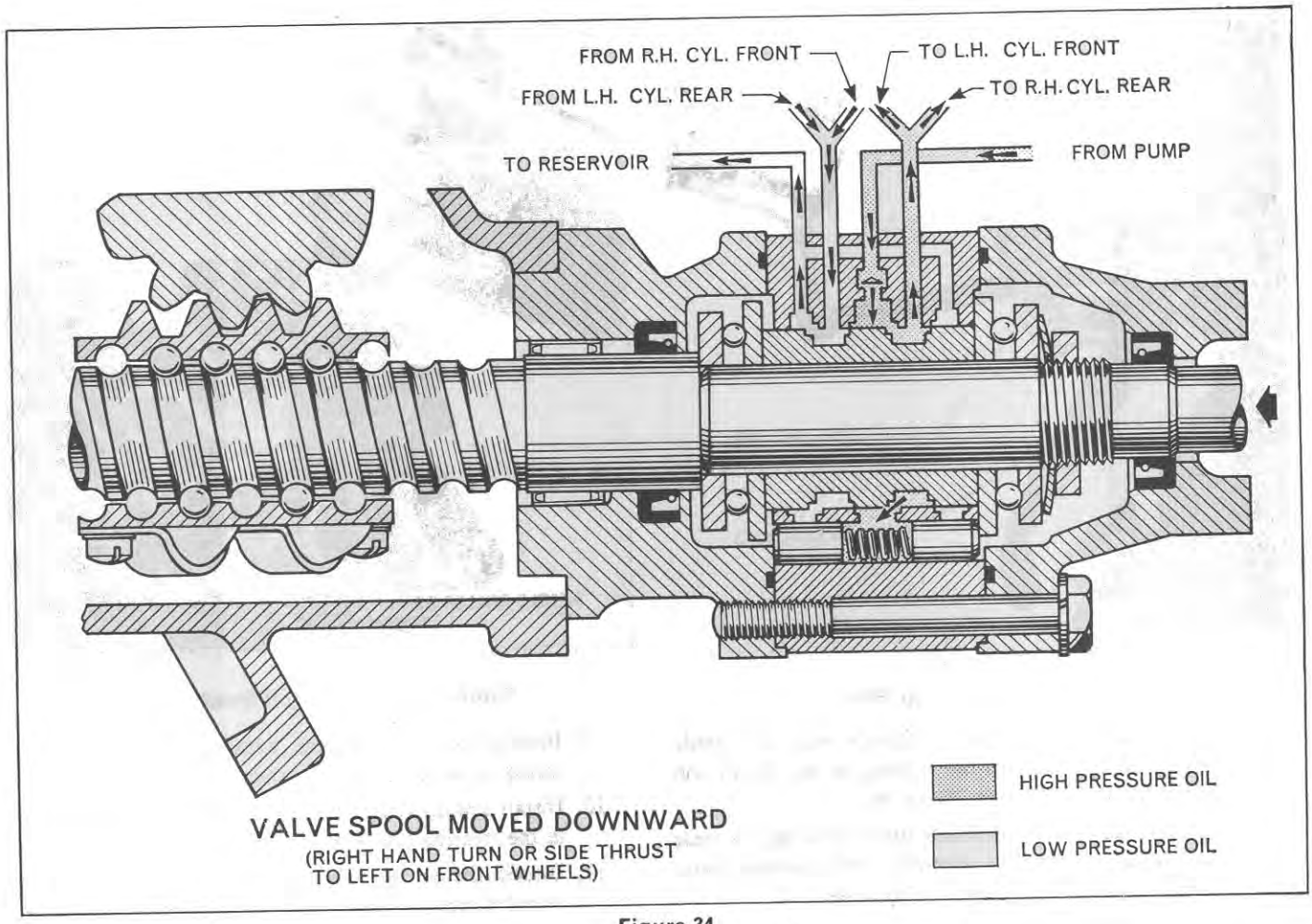

Figure 34
Oil Flow for Right-Hand Turn

8. Remove the front rocker shaft cover retaining bolts.
9. Remove the rocker shaft adjuster locknut and washer. Screw the adjuster clockwise until the cover is free, and remove the cover, Figure 36.
10. Remove the rocker shaft from the housing.
11. Remove the rear rocker shaft in a similar manner to the front rocker shaft.
12. Remove the two bolts and two nuts retaining the adaptor to the steering gear housing.
13. Remove the adaptor.
14. Remove the shaft and nut assembly from the steering.

C. Cleaning, Inspection and Repair

1. Clean components with a suitable solvent and air dry.
2. Inspect the worm and nut assembly. If worn or damaged it must be replaced as a unit.
3. Remove the oil seal from the end of the rocker shaft bores in the steering gear housing.
4. Inspect the rocker shaft bushes in the housing for wear or scoring, and if necessary replace the housing and bushings assembly.
5. Inspect rocker shaft cover bush for wear or scoring, and if necessary replace the cover and bush assembly.
6. Inspect the rocker shaft gears for excessive wear or damage. Replace if necessary.
7. Examine the needle roller bearing in the steering gear housing and the adaptor for wear or damage. Bearing rollers should be smooth, highly polished and should turn freely. If necessary to replace use Tool 954 to remove. It will be necessary to assemble the tool inside the housing to remove the lower bearing as the shaft aperture is not of sufficient size for the puller to pass through, Figures 37 and 38.

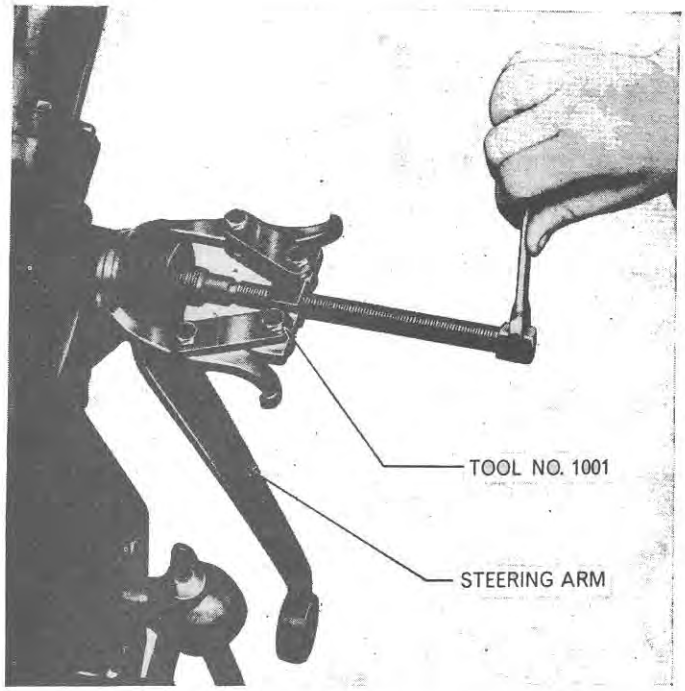

Figure 35
Removing Steering Arm

Install the needle roller bearings with the trade mark side up. Press in the bearing or use T.810 and handle to install, Figures 39 and 40.

8. Examine the column housing upper bushing for wear or scoring and remove complete with rubber mount using 954 and slide hammer, Figure 41.

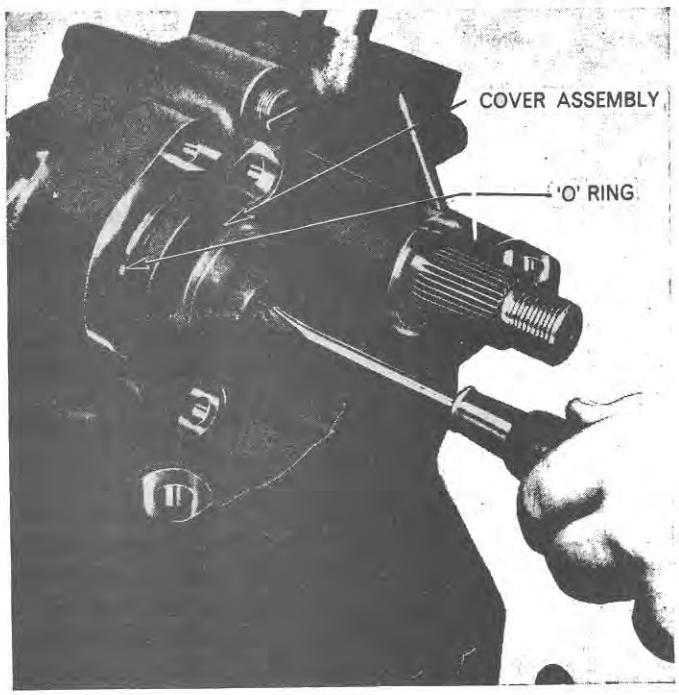

Figure 36
Removing Rocker Shaft Cover



Figure 37
Removing Lower Shaft Bearing

9. Inspect the steering gear housing and adaptor for cracks or other damage. Replace if damaged.
10. Install new oil seals in the end of the rocker shaft bores in the steering gear housing.
11. Inspect the control valve for excessive wear or scoring on valve faces, and replace valve and body if necessary.



Figure 38
Removing Adaptor Bearing

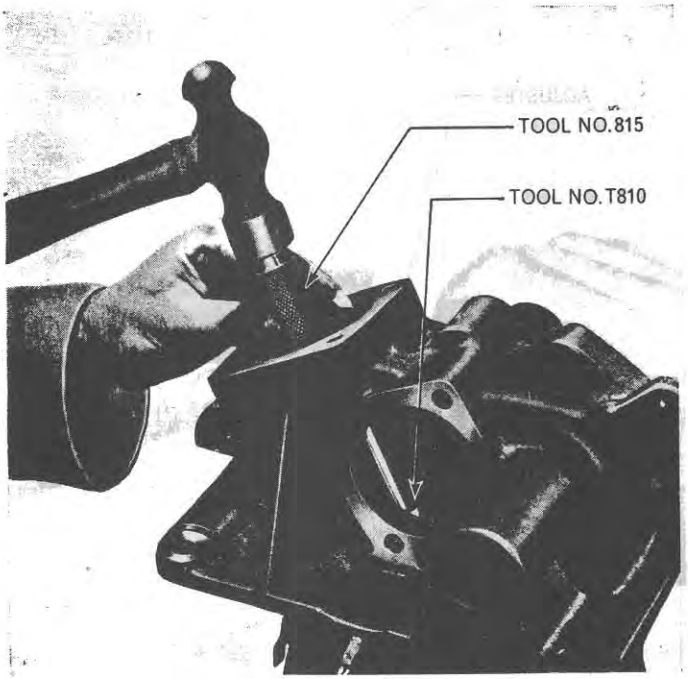

Figure 39
Installing Lower Shaft Bearing

12. Inspect the control valve, plunger springs to make sure that they are of the correct stiffness, Figure 42. Make sure that check valves and plungers are installed in the same bores in the control valve housing from which they were removed.
13. Install new oil seals and 'O' rings on reassembly.

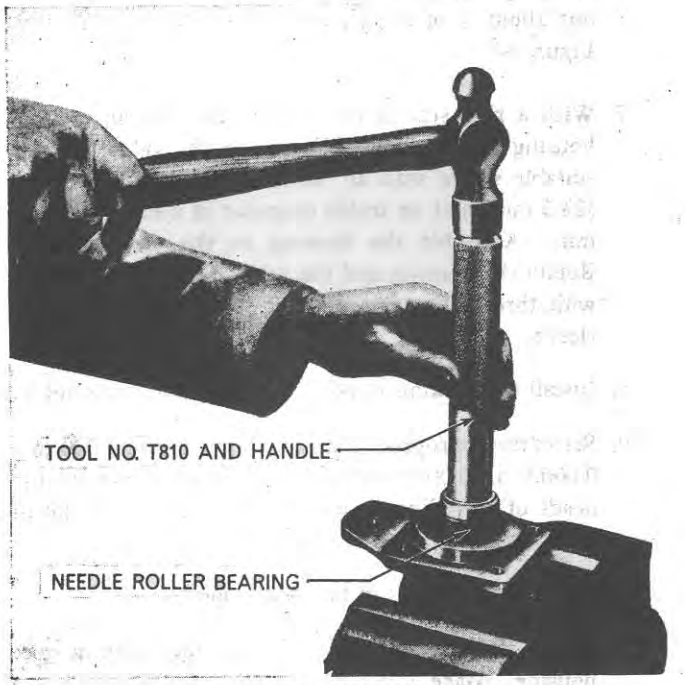

Figure 40
Installing Adaptor Bearing

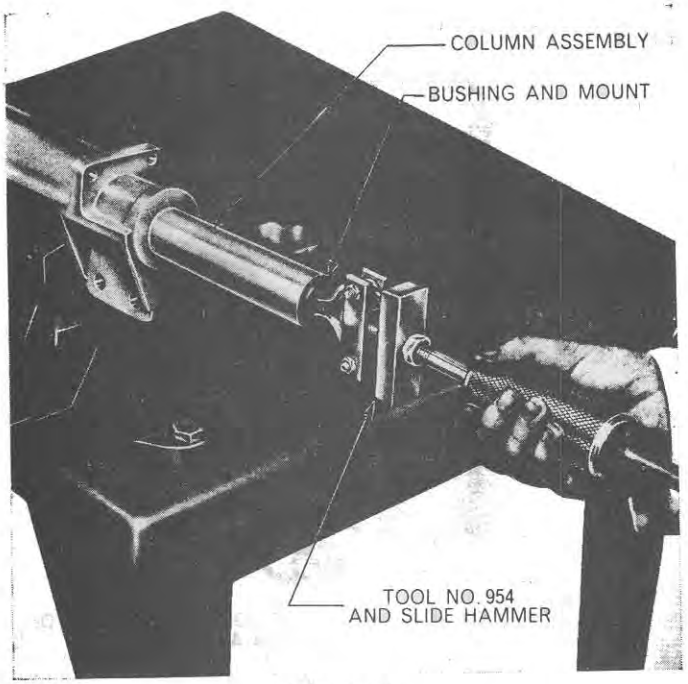

Figure 41
Removing Upper Bush and Mount

D. Assembly

1. Install the shaft and nut assembly in the steering gear housing.
2. Tape the shaft spline to protect the adaptor oil seal on assembly. Pass the adaptor housing over the shaft,

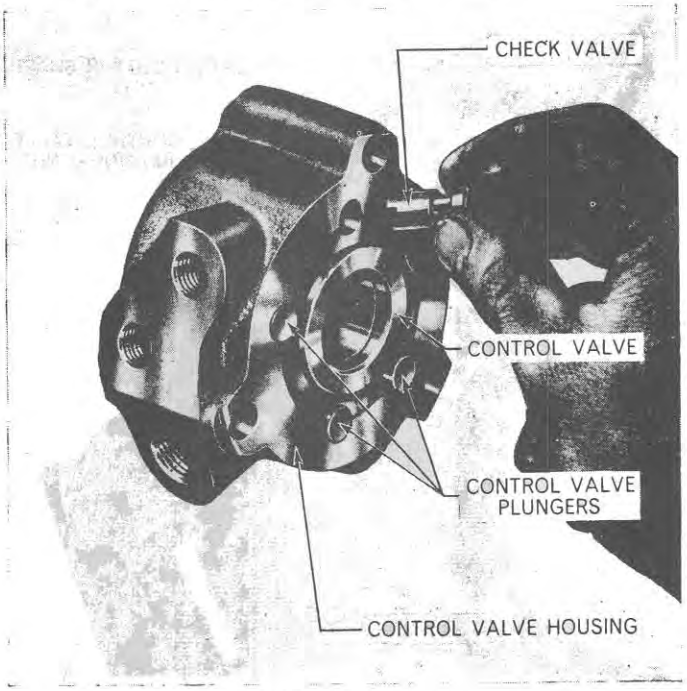

Figure 42
Control Valve, Plungers and Check Valve

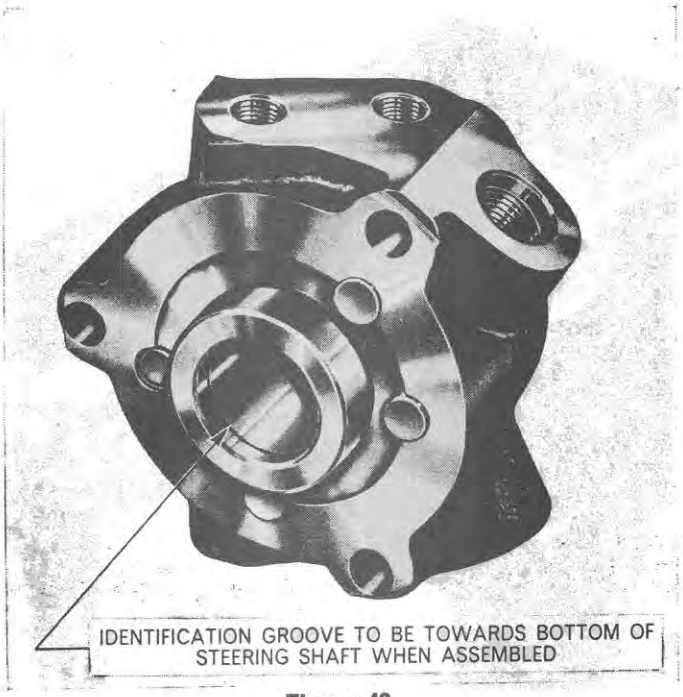

Figure 43
Valve Identification Groove

and attach to the housing using two retaining bolts and two nuts.

3. Install the lower bearing and races on the shaft.

4. Hold the steering gear with the steering shaft horizontal. With a new 'O' ring in place install the control valve

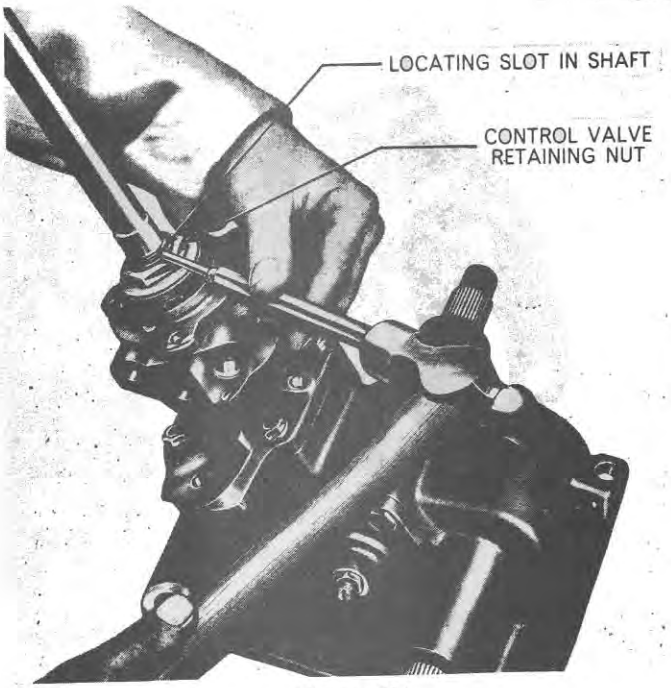

Figure 44
Locating Valve Retaining Nut

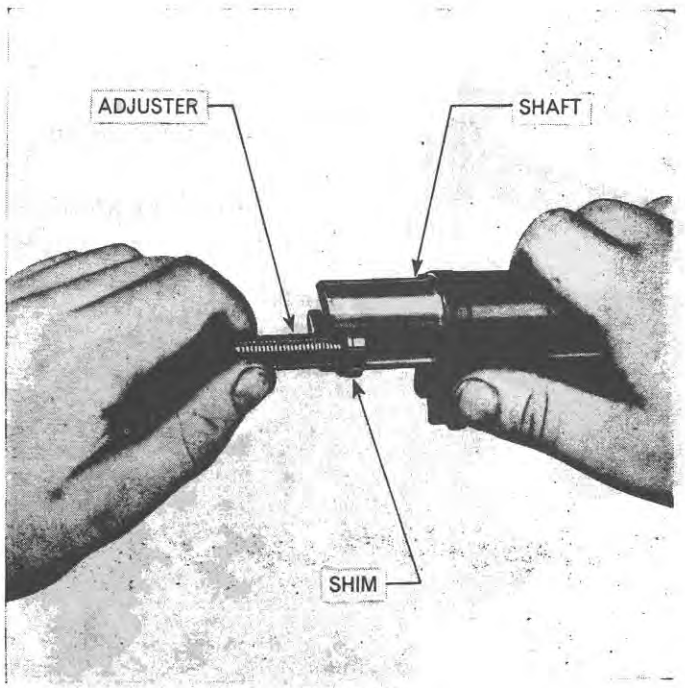

Figure 45
Rocker Shaft, Adjuster and Shim

on the shaft as an assembly. The identification groove in the valve spool is assembled towards the bottom of the shaft, Figure 43.

5. Install the upper bearing and races on the shaft.

6. With the preload washer on the shaft tighten the retaining nut until all slack is removed. Slacken the nut about $\frac{1}{6}$ of a turn and stake nut to the shaft, Figure 44.

7. With a new seal in position in the steering column housing insert sleeve SW22 into the oil seal or a suitable sleeve with an outside diameter of 0·930 in. (23·6 mm) and an inside diameter of 0·812 in. (20·64 mm). Assemble the housing to the steering gear. Retain the housing and the valve body to the adaptor with three bolts. Invert the assembly to remove the sleeve.

8. Install the column upper bush and mount assembly.

9. Select the appropriate adjuster shims to give 0·000 in.–0·0002 in. (0·0000–·0051 mm.) clearance between the heads of the adjusters and the base of the 'T' slot in the rocker shaft, Figure 45.

10. Install the adjusters in the rocker shafts.

11. Install the rear rocker shaft into the steering gear housing. Make sure that the centre tooth on the rocker shaft gear is correctly engaged between the

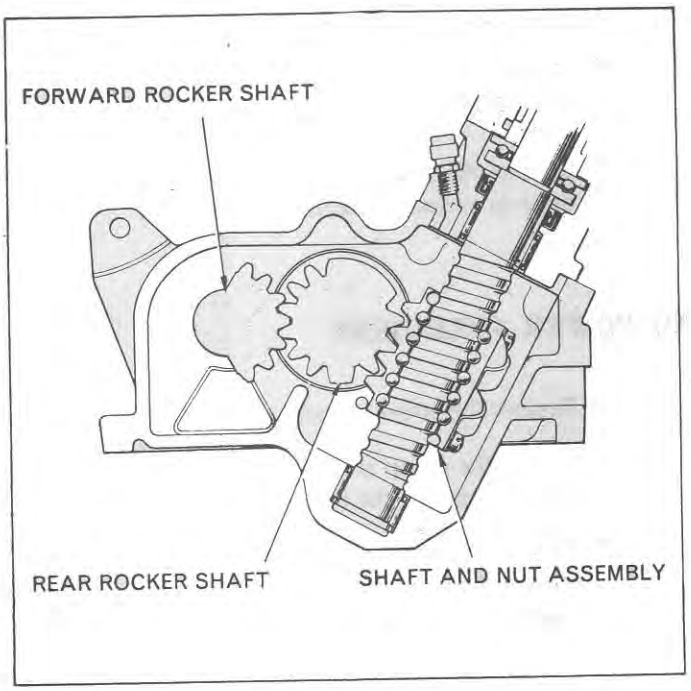

Figure 46
Nut and Rocker Shaft Tooth Engagement

second and third teeth on the steering unit, Figure 46.

12. Replace the rocker shaft cover 'O' ring and lubricate to prevent damage on assembly. Screw the adjuster into the cover to pull the cover onto the shaft.

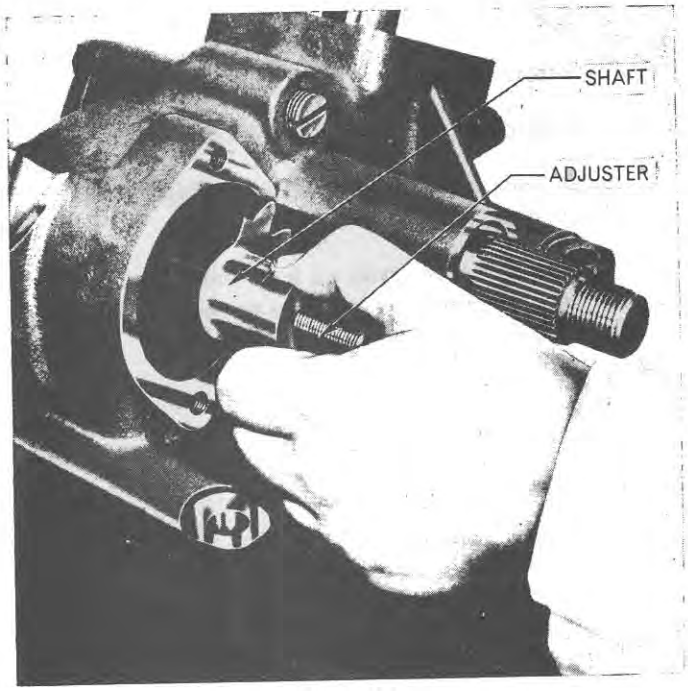

Figure 47
Installing Rocker Shaft

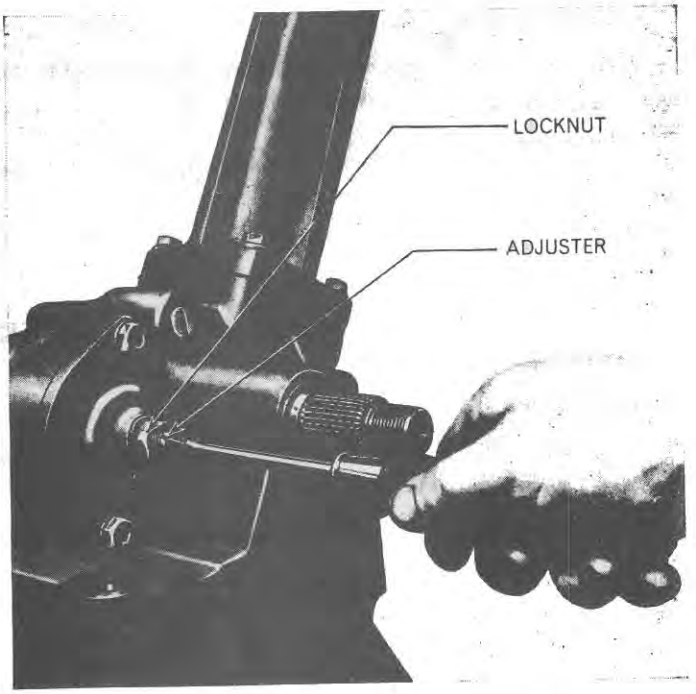

Figure 48
Rocker Shaft Free Play Adjustment

13. Install the cover retaining bolts (use sealer on the lower bolt as the bolt hole breaks through the housing wall). Tighten the bolts to the specified torque.

14. Replace the forward rocker shaft in a similar manner to the rear rocker shaft. Make sure that the centre (fourth) tooth on the forward shaft gear is engaged with the centre (fourth) groove in the rear shaft, Figure 47.

15. Install new packaging on the adjuster screws. Position the washers and locknuts on the adjusters. Do not tighten at this stage.

16. With the steering gear in the straight ahead position screw adjuster on forward rocker shaft anti-clockwise several turns. Screw the rear rocker shaft adjuster clockwise until there is no perceptible play in the left hand steering arm and tighten the locknut, Figure 48.

    Screw the forward rocker shaft adjuster clockwise until there is no perceptible play in the right hand steering arm and tighten adjuster locknut.

17. Install the steering arms with sufficient felt seals on the rocker shafts to fill the gap between the arms and the steering gear housing. Retain the arms with a nut and lockwasher. Tighten to the specified torque.

E. Installation

1. Install the steering gear on the tractor and retain to the transmission housing with four bolts.
2. Connect the drag links to the steering arms and retain with a nut.
3. Connect pipes to the steering control valve.
4. Install the fuel tank. For details refer to the Fuel Systems, Part 2, Chapters 1 and 2, Installing the Fuel Tank.
5. Operate the steering with the engine running several times to exclude all oil from the system.

3. OVERHAUL STEERING POWER CYLINDERS

A. Disassembly

1. Disconnect the oil feed and return pipes from the power cylinder.
2. Remove the cotter pins and unscrew the ball stud nuts.

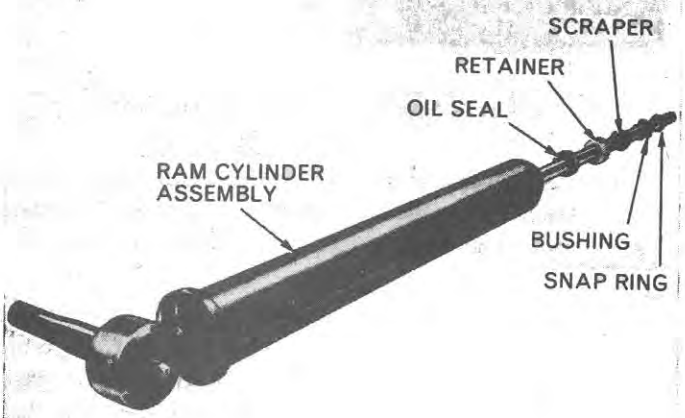

Figure 49
Power Cylinder

3. Remove the power cylinder assembly from the tractor.
4. Loosen the clamp retaining the ball end to the piston rod and unscrew the ball end assembly.
5. Remove the piston rod bush retaining snap ring and remove the scraper, outer seal, retainer and inner seal, Figure 49.

It is not possible to further dismantle the power cylinder assembly and if faulty it is replaced as a unit.

B. Assembly

1. Replace the inner seal, retainer, outer seal and scraper in the power cylinder assembly and replace the retaining snap ring.
2. Replace the ball end assembly on the piston rod and tighten the clamp assembly.
3. Replace the power cylinder assembly on the tractor.
4. Replace the ball stud nuts and locate with cotter pins.
5. Reconnect the oil feed and return pipes to the power cylinder.
6. Top up the reservoir oil level and operate the power steering system several times to exclude any air in the system.

Part 12

STEERING SYSTEMS

Chapter 5

POWER ASSISTED STEERING - MAJOR 4000

Section		Page
1.	Description and Operation	31
2.	Overhaul Power Cylinder	33

1. DESCRIPTION AND OPERATION

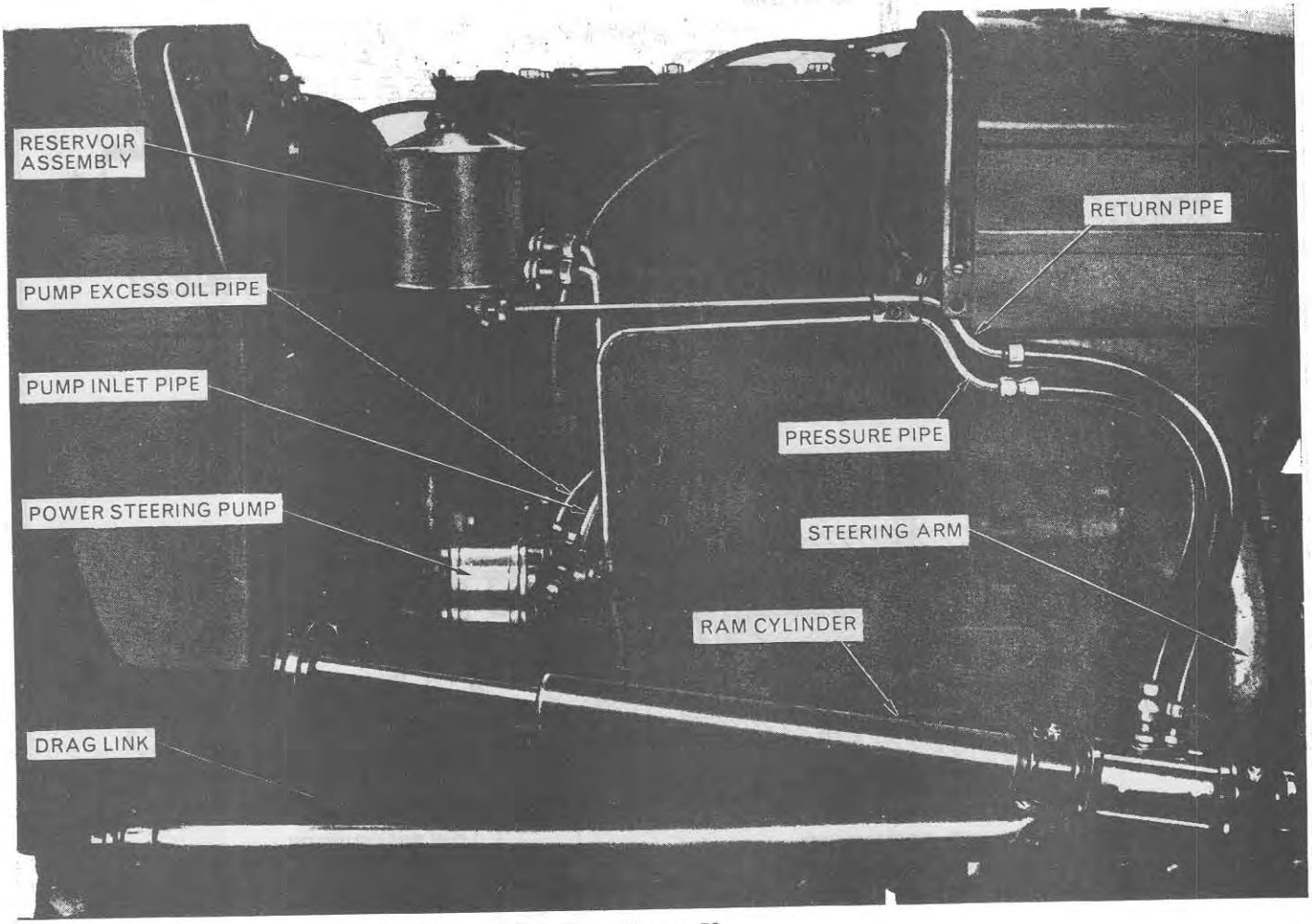

Figure 50
Power Steering Installation

© FORD MOTOR COMPANY LTD., 1965

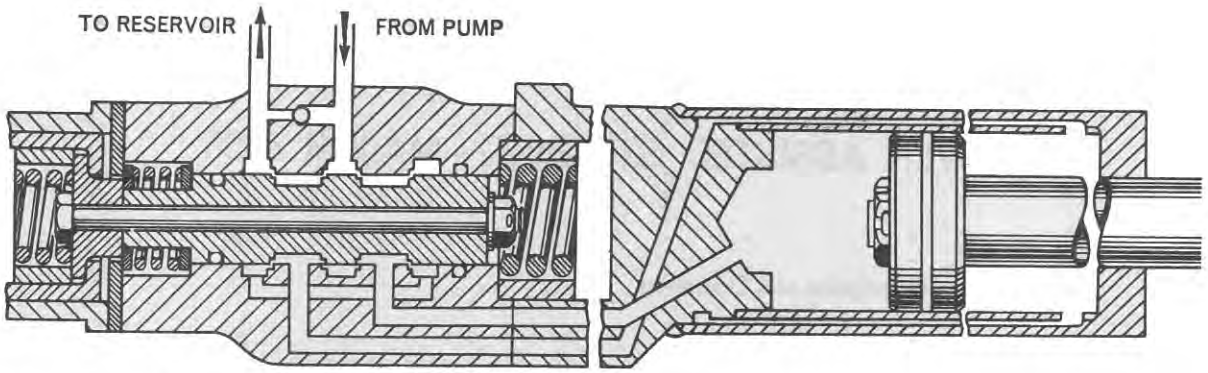

VALVE SPOOL IN NEUTRAL POSITION
(STEERING WHEEL STATIONARY AND NO SIDE THRUST ON FRONT WHEELS)

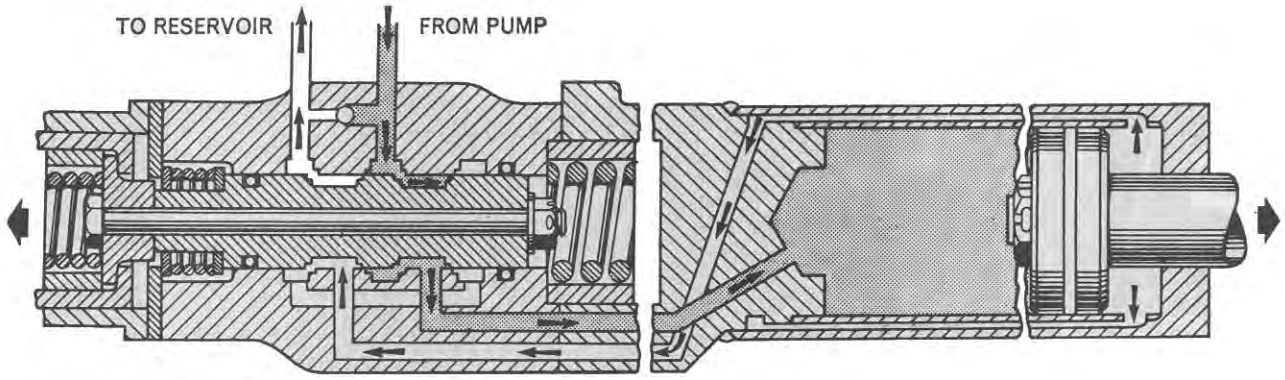

VALVE SPOOL MOVED REARWARD
(RIGHT HAND TURN OR SIDE THRUST TO LEFT ON FRONT WHEELS)

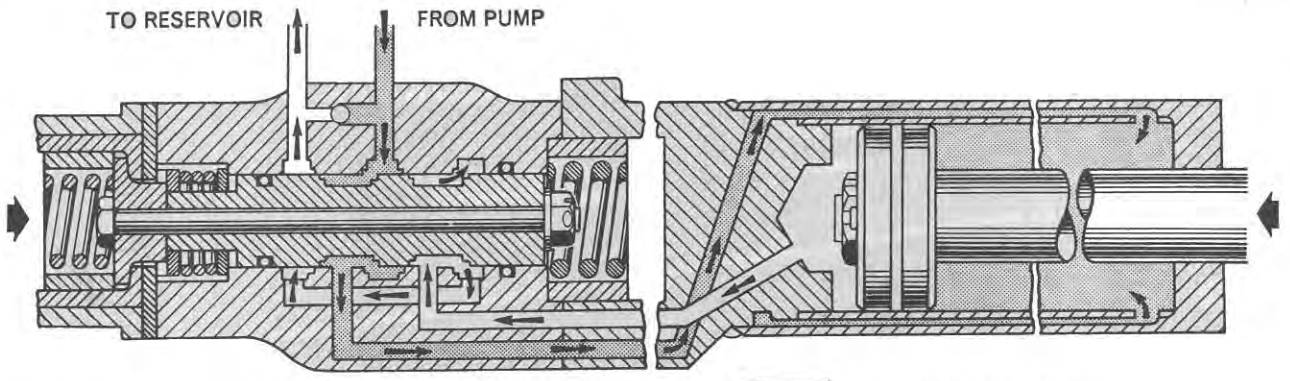

VALVE SPOOL MOVED FORWARD
(LEFT HAND TURN OR SIDE THRUST TO RIGHT ON FRONT WHEELS)

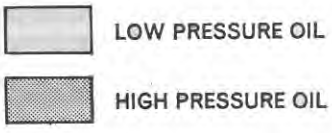

Figure 51
Power Cylinder Oil Flow

The steering gear assembly used with power assisted steering is identical to that used for manual steering on the Major 4000 tractor. For description and overhaul procedure refer to Chapter 2.

The steering linkage is similar to that used with manual steering with the exception of the drag link, which is shorter and connects to power cylinder output ball pin. The power cylinder input ball pin is connected to the steering arm.

Attached to the front axle support is a bracket to which the power cylinder piston rod is connected.

Oil is supplied to the power cylinder assembly from an engine mounted pump. (See Chapter 3 for description and details of overhaul procedure.) Exhaust oil from the power cylinder is passed to the reservoir, where it passes through a paper element filter.

With no steering effort applied from the steering gear the control valve is held in a central or neutral position by the positioning springs, Figure 51. The oil from the pump is deflected by the control valve to both sides of the power cylinder assembly. As the pressure is equal in the system the power cylinder does not operate, and oil passes into the return pipe and then to the reservoir.

When steering effort is applied to the steering gear for a right hand turn, the steering arm moves to the rear, moving the input ball pin. Movement of the input ball pin operates the control valve. The oil is deflected by the control valve to the front of the power cylinder, Figure 51. Exhaust oil from the rear of the power cylinder is passed via the control valve to the reservoir return pipe. The power cylinder moves to the rear by its action on the cylinder piston rod bracket. This movement operates the steering linkage through the drag link.

For a left-hand turn the operation is reversed, Figure 51.

In the event of failure of oil supply from the pump or the need to operate the steering mechanism without the engine running, the steering can be operated manually.

Operation of the steering gear moves the input ball pin and valve assembly to the end of its travel. With further operation of the steering gear the ball pin acts on the power cylinder assembly so moving it in the required direction.

A valve incorporated into the power cylinder control valve housing allows oil which is being forced from one end of the cylinder to pass into the inlet port.

The pressure of the exhaust oil being forced out is higher than that of the oil being drawn into the other end of the cylinder by suction, so moving the valve ball from its seat.

The valve under normal operating conditions is held against the seat by hydraulic pressure.

2. OVERHAUL POWER CYLINDER

A. Removal

1. Disconnect the oil feed and return pipe from the power cylinder assembly. Plug cylinder ports and pipe ends to prevent ingress of dirt.
2. Remove the nut, outer washer and buffer from the cylinder piston rod.
3. Remove the lock nuts from the power cylinder ball studs and remove the cylinder assembly from the tractor. Remove the buffer and inner washer from the piston rod.

B. Disassembly

1. Undo the four retaining bolts and separate the control valve assembly from the cylinder assembly.
2. Remove the spacer, spring and shim from the cylinder assembly.
3. Remove the ball stud and the two ball stud seats from the end of the cylinder.
4. Remove the dust cover from the cylinder assembly.
5. Remove the control valve housing, with care to avoid damage to the control valve spool.
6. Using a screwdriver in the slotted end of the control valve spool centre bolt to prevent it from turning, remove the retaining nut and washer, Figure 53. Remove the spool from the bolt together with the spring and washers.
7. Remove the grease nipple from the input ball pin assembly.
8. Remove the dust cover from the input ball pin assembly.
9. Remove the rear end cover from the input ball pin assembly.
10. Drive out the spring tension pin with a suitable punch.
11. Remove the spring clip locating the ball pin seat locating plug. Use a wiping cloth over the end of the sleeve to prevent the spring from flying out.

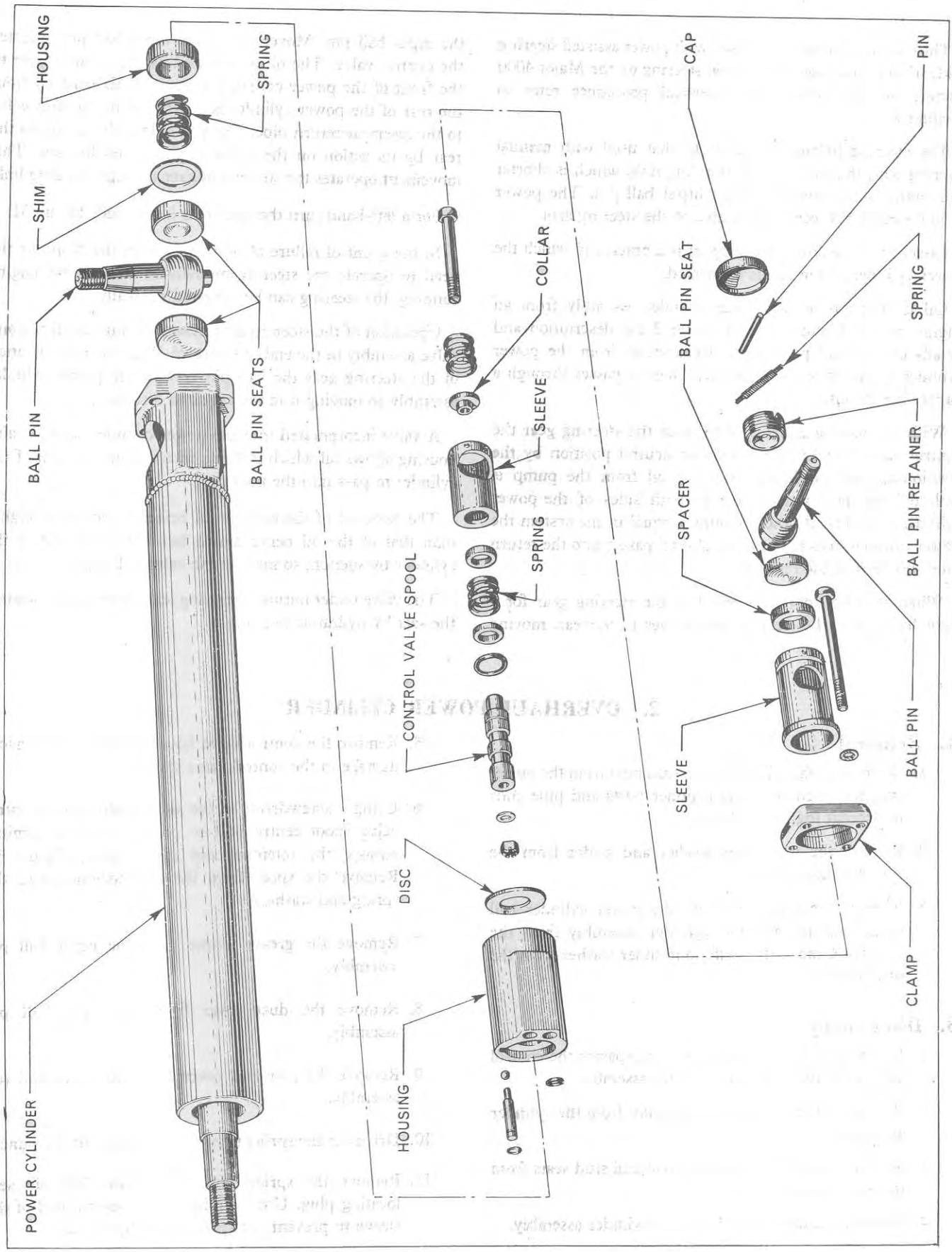

Figure 52
Power Cylinder



Figure 53
Disassembly of Control Valve Spool Assembly

12. Unscrew the ball pin seat holder using a suitable wide blade screwdriver and remove the rear seat.

13. Use a screwdriver or similar object through the smaller ball pin locating slot in the sleeve to hold the forward ball pin seat against spring pressure. Extract the ball pin from the large ball pin hole.

14. Remove the ball pin seat, spring spacer collar, control valve through bolt and operating sleeve from the input ball sleeve.

    Remove the clamp from the input ball sleeve.

C. Cleaning, Inspection and Repair

1. Clean parts in a suitable solvent and air dry.

2. Install new 'O' rings on the control valve housing and the control valve spool.

3. Inspect the control valve spool and housing for burrs or scoring and if excessive replace the spool and housing assembly.

4. Extract the relief valve locating plug from the control valve housing using a suitable length of stiff wire to prise the plug out from inside the housing. Inspect the ball bearing for flat spots, etc.

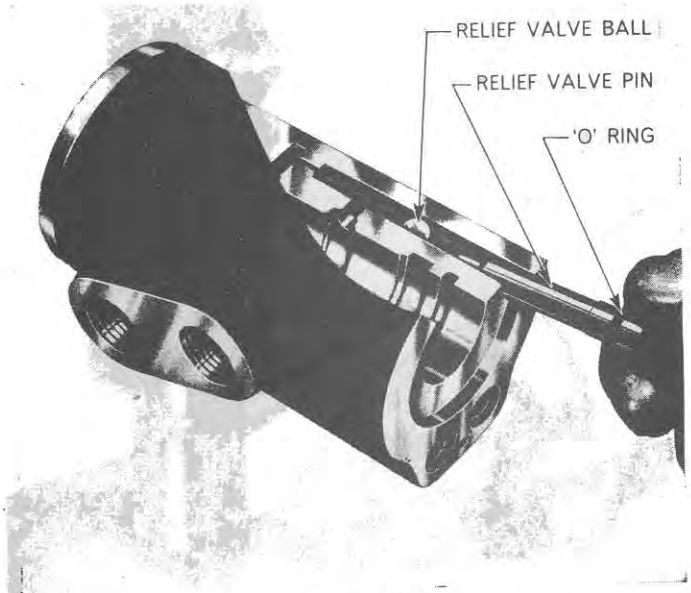

Figure 54
Installing Relief Valve Ball and Pin

Replace the ball bearing and pin in the housing using a new 'O' ring on the plug, Figure 54.

5. Inspect the scraper on the power cylinder piston rod and if necessary to replace remove the scraper. It is necessary to destroy the scraper to remove.



Figure 55
Installing Oil Scraper

© FORD MOTOR COMPANY LTD. 1965

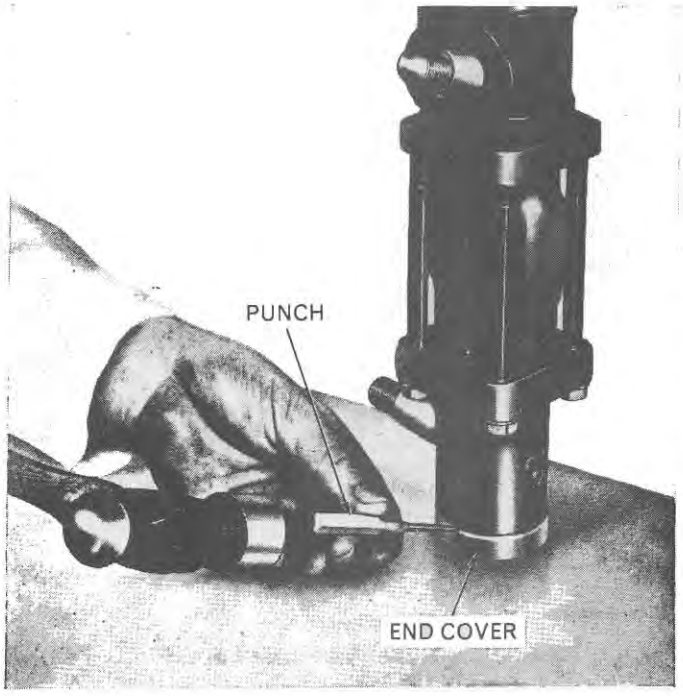

Figure 56
Installing End Cap

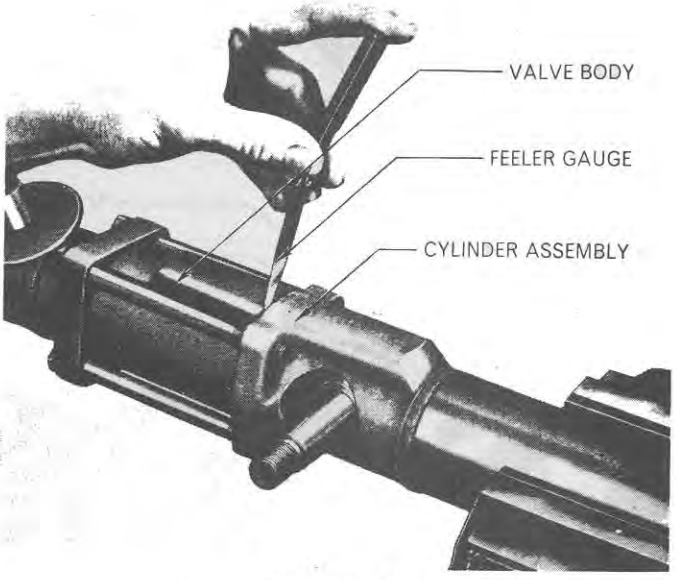

Figure 57
Ball Pin Shim Measurement

Remove the snap ring, the spacer and the oil seal. Insert a new oil seal and replace the spacer and snap ring. Use a suitable hollow sleeve with a rounded edge to drive the new scraper into position Figure 55.

6. Inspect ball stud dust covers and replace if worn or damaged.
7. Inspect the piston rod mounting on the tractor and replace the rubber if worn or damaged.
8. Inspect ball pins for excessive wear and damaged threads, replace if necessary.
9. Inspect input ball pin spring for weakness, replace if necessary.

D. Assembly

1. Install the clamp, spacing disc and dowel on the input ball sleeve.
2. Install the collar, control valve through bolt, spring, spacer and forward ball pin seat into the operating sleeve.
3. Install the operating sleeve assembly into the input ball sleeve assembly.
4. Use a screwdriver or similar object through the small ball pin locating slot to hold the forward ball pin seat against the spring pressure. Install the ball pin through the large ball pin hole.
5. Install the rear ball pin seat and holder. Tighten the holder until all ball pin play is removed and slacken off one quarter of a turn.
6. Install the holder locating spring clip.
7. Install the spring tension pin into the ball pin sleeve.
8. Install the rear ball pin rubber boot.
9. Install the input ball pin assembly grease nipple.
10. Install a new end cap and crimp the forward edge into the recess using a punch as shown in Figure 56. Crimp evenly around the cap to prevent leakage of grease.
11. Install the control valve spool and spring and washers on the centre bolt and replace the retaining nut. Use a screwdriver in the slotted end of the centre bolt to prevent it from turning while tightening the retaining nut.
12. Install the control valve housing over the control valve spool.
13. Install the ball stud and ball stud seats in the end of the power cylinder.
14. Using the largest shim or two shims of known thickness together install them together with the spacer in the end of the power cylinder. Assemble the cylinder

assembly to the control valve, etc., and retain with the four bolts. With feeler gauges measure the gap between the control valve housing and the power cylinder, Figure 57.

Dismantle the assembly and remove the shim used. Subtract the measurement taken plus ·008–·010 in. (·203–·254 mm) from the thickness of shim used to obtain the measurement. Select the shim with the resultant thickness.

15. Re-assemble with the appropriate shim, spacer and spring and tighten the four retaining bolts to the specified torque (See Specifications Section).

E. Installation

1. Install the power cylinder on the tractor and install the ball stud locknuts.
2. Locate the piston rod end in the mounting and install the nut, and use a new cotter pin to locate.
3. Reconnect the oil feed and return pipes to the ram cylinder.
4. Top up the oil level in the reservoir and operate the steering several times to extract any air that is present in the system and finally top up the oil level in the reservoir to the correct level.

Part 12

STEERING SYSTEMS

Chapter 6

POWER ASSISTED STEERING - SUPER MAJOR 5000

Section		Page
1.	Description and Operation	39
2.	To Remove the Power Cylinder Assembly	40
3.	Overhaul the Power Cylinder Assembly	41
4.	To Install the Power Cylinder Assembly	44
5.	Removing Steering Centre Arm	44
6.	To Install Steering Centre Arm	45

1. DESCRIPTION AND OPERATION

The steering gear is similar to that used for manual steering on the Super Major 5000, with the exception that the shaft and nut assembly are machined to give opposite direction of movement in the rocker shaft, as compared with the manual steering gear. For description and overhaul procedure, refer to Chapter 2.

Movement of the steering arm is transmitted to the valve actuating arm, in the front axle support, by a drag link. The drag link is adjustable for length to provide a means of equalising the steering radius in each direction. The valve operating arm, which is pivoted to the centre steering arm, is limited in movement by adjustable stops on the centre steering arm.

The power cylinder assembly is attached to the centre steering arm by an anchor pin, and the piston rod is located in the front axle support by a clevis pin.

A link connects the valve with the valve operating arm.

Oil supply from an engine driven pump (see Chapter 3 for description and overhaul), is connected to the power cylinder control valve by a tube and flexible hose. Exhaust oil is returned to the reservoir by another hose and tube assembly.

With no steering effort applied from the steering gear the control valve is held in a central or neutral position by the positioning springs, Figure 58. The oil from the pump is deflected by the control valve to both sides of the power cylinder assembly. As the pressure is equal in the system the oil passes into the return pipe and then to the reservoir.

When steering effort is applied to the steering gear for a right hand turn, the steering arm moves forward, moving the actuating arm in a clockwise rotation. This movement operates the control valve via the link. The oil is deflected by the control valve, Figure 59, to the right-hand side of the power cylinder. Exhaust oil from the left-hand end of the power cylinder is passed via the control valve to the reservoir return pipe. Excess movement of the control valve is prevented by the adjustable stops on the control valve operating arm.

For a left-hand turn the operation is reversed, Figure 60.

In the event of failure of oil supply from the pump, or the need to operate the steering mechanism without the engine running, the steering can be operated manually.

Operation of the steering gear moves the valve operating arm against the stop. With further operation of the steering

© FORD MOTOR COMPANY LTD., 1965

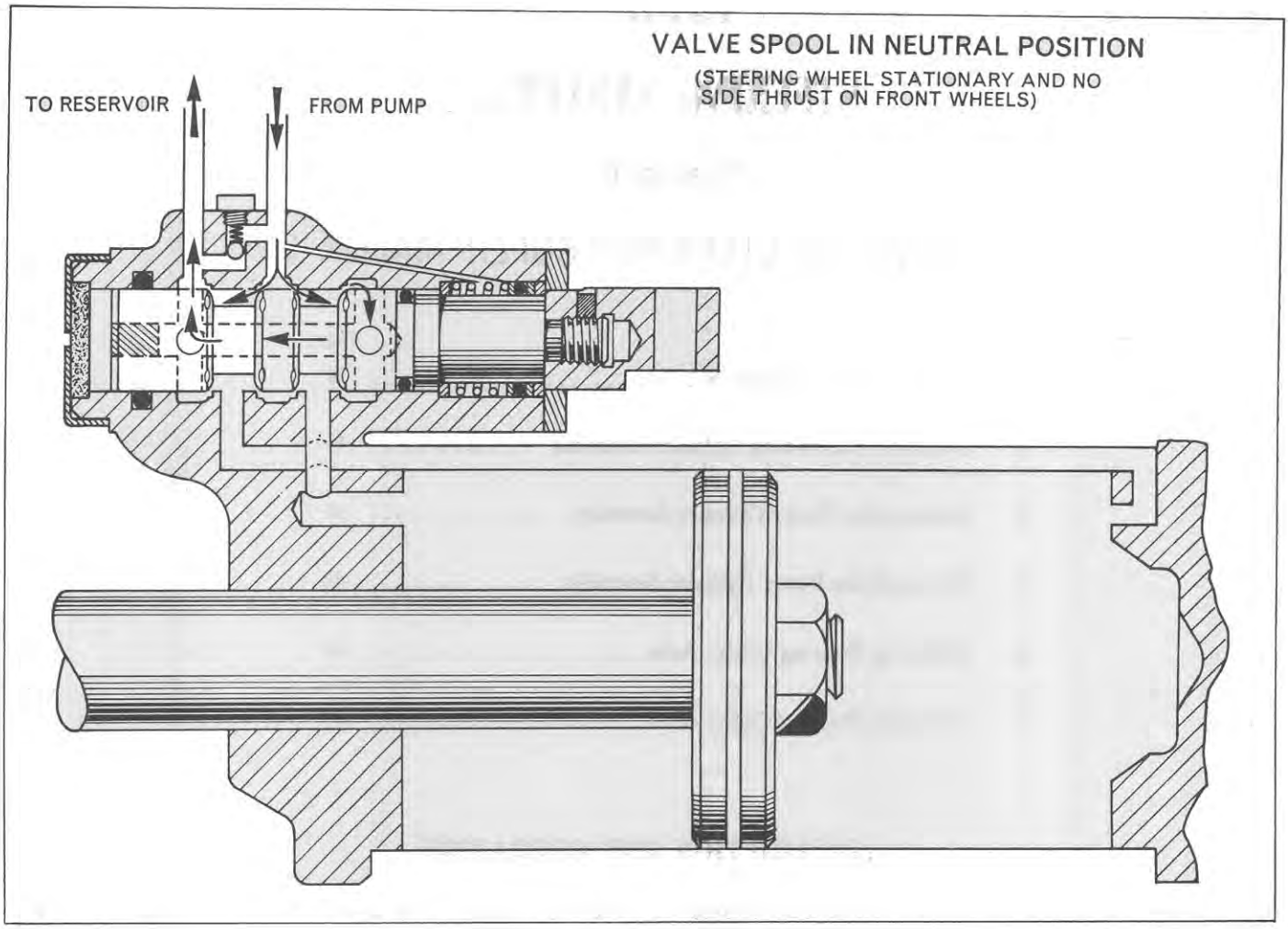

Figure 58
Power Steering Oil Flow—Neutral

gear the centre steering arm is moved by the valve operating arm acting upon it. A valve which is incorporated into the power cylinder allows oil which is being forced from one end of the cylinder to pass into the inlet port. The oil pressure of the exhaust oil being forced out is higher than that of the oil being drawn into the other end of the cylinder by suction, so moving the valve ball from its seat against light spring pressure.

The valve under normal operating conditions is held against its seat by spring and hydraulic pressure.

2. TO REMOVE THE POWER CYLINDER ASSEMBLY

1. Remove the radiator from the tractor. For details refer to 'Removing the Radiator Section, Part 1, Chapter 2'.
2. Disconnect the input and return pipes from the power cylinder assembly. Plug the ends of the pipes and the power cylinder ports to prevent the ingress of dirt.
3. Remove the cotter pin from the valve control arm to actuating link.
4. Remove the cotter pin from the valve control arm pivot clevis pin and remove the pin.
5. Remove the cotter pin from the base of the power cylinder clevis pin and remove the pin from above.
6. Remove the cotter pin from the power cylinder anchorage pin. Remove the castellated nut.

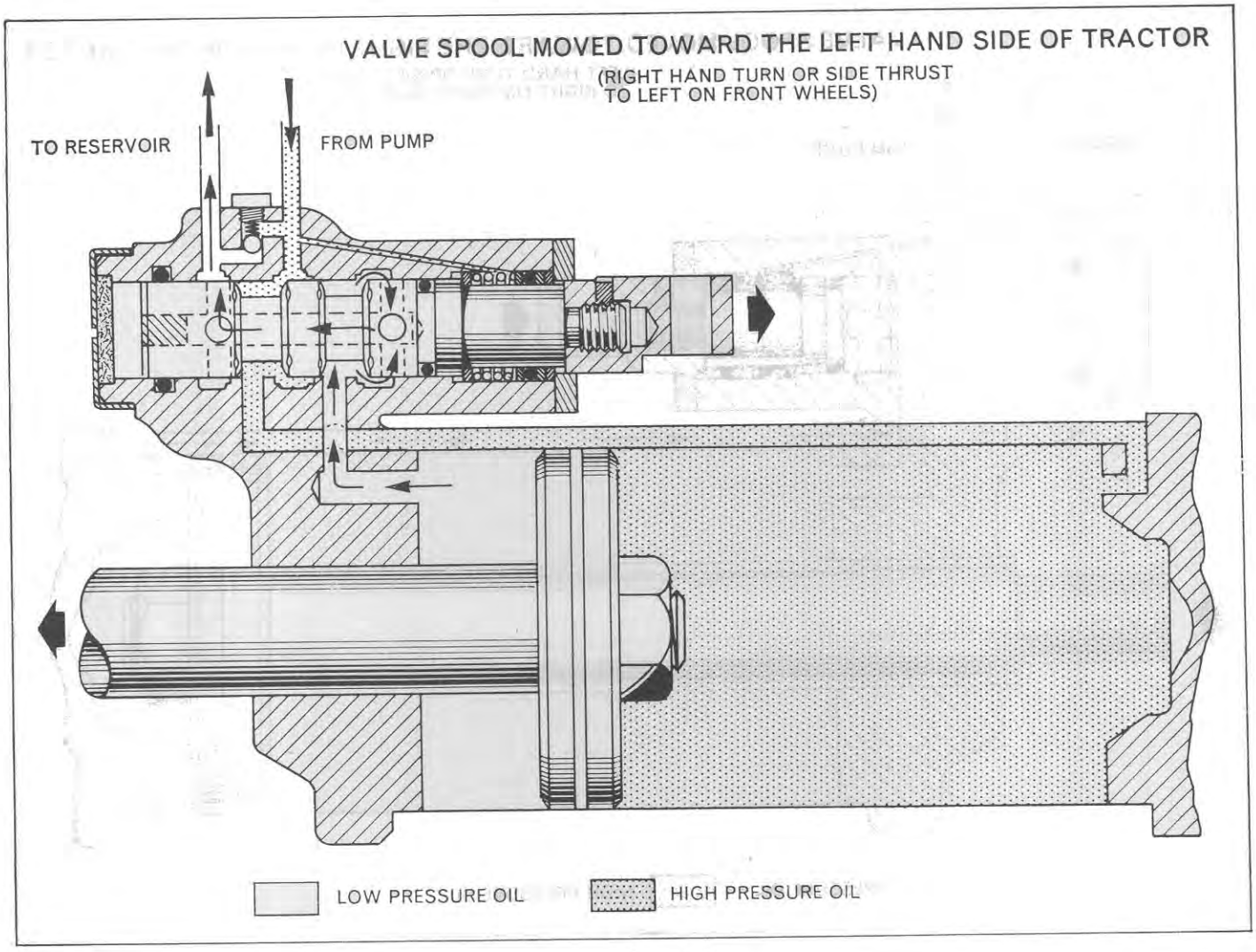

Figure 59
Power Steering Oil Flow—Right Turn

7. Move the valve actuating arm forward sufficiently to enable the anchor pin to be removed.
8. Extract the anchor pin and remove the power cylinder assembly from the tractor.

3. OVERHAUL THE POWER CYLINDER ASSEMBLY

A. Disassembly

1. Disconnect the pipe connecting the control valve with the end cover plate.
2. Remove the four retaining bolts and separate the end plate from the cylinder, extracting the piston rod from the cover plate and control valve assembly.
3. Remove the two bolts retaining the control valve and extract the control valve assembly.
4. Remove the relief valve retaining plug and remove the relief valve and spring.
5. Remove the piston rod scraper from the endplate.

B. Cleaning, Inspection and Repair

1. Clean parts in a suitable solvent and air dry.

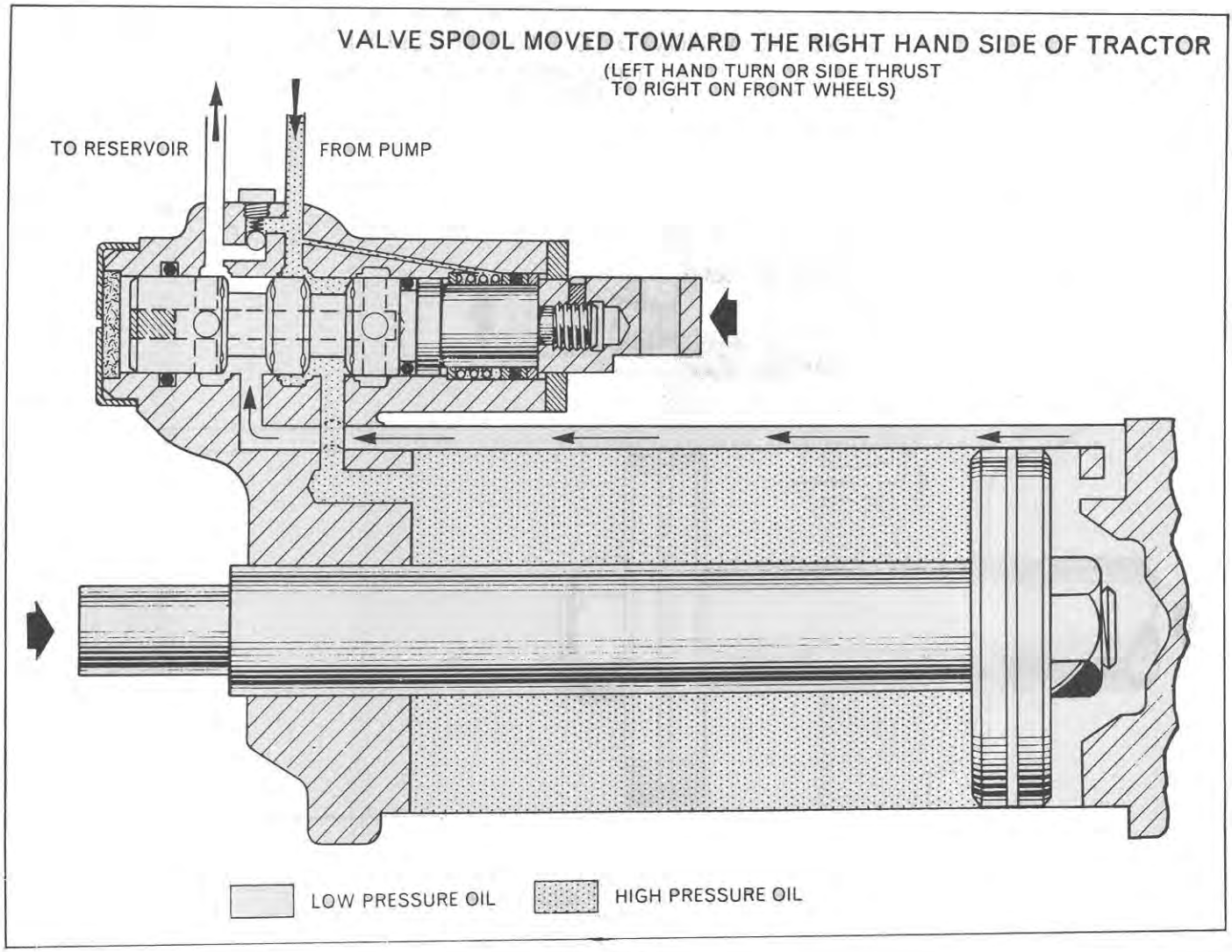

Figure 60

Power Steering Oil Flow—Left Turn

2. Examine the control valve spool assembly for burrs and scoring and inspect the centering spring for weakness. If it is necessary to dismantle the control valve spool assembly hold in a vice with soft jaws with a suitable rod through one of the oil holes in the spool and unscrew the linkage block from the spool, Figure 61. The retaining plate, centering spring and washers can then be removed.

3. Remove the piston and rod assembly from the cylinder and inspect the cylinder for scoring on the bore, and inspect the piston and ring for excessive wear or damage. Install the piston and ring assembly in the cylinder using a suitable strip of metal, as shown in Figure 62, as a piston ring compressor.

C. Assembly

1. Renew all 'O' rings on reassembly.
2. Install the relief valve into the endplate and install the spring and plug, Figure 63.
3. Install the control valve spool assembly in the endplate, Figure 64, taking care not to damage the 'O' ring on the spool. Install the two control valve retaining bolts.
4. Assemble the ram cylinder, passing the piston rod through the endplate assembly, and install the four bolts.
5. Install the connecting pipe.

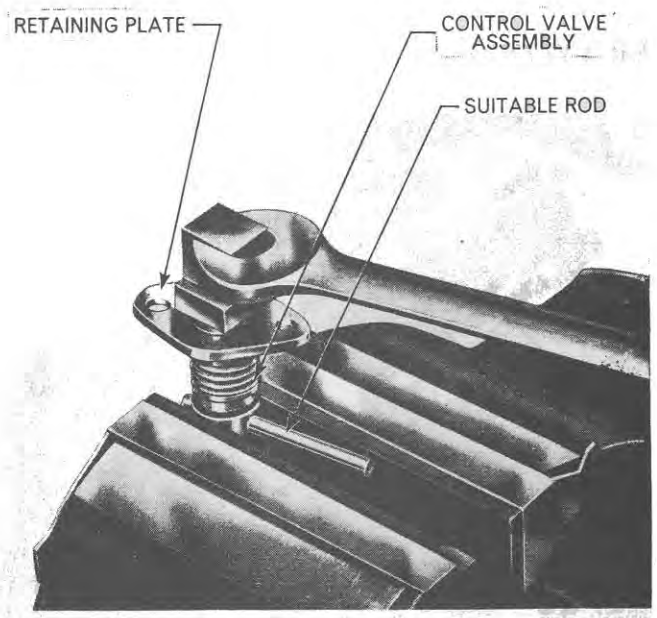

Figure 61
Removing Valve Linkage Block



Figure 63
Installing Relief Valve

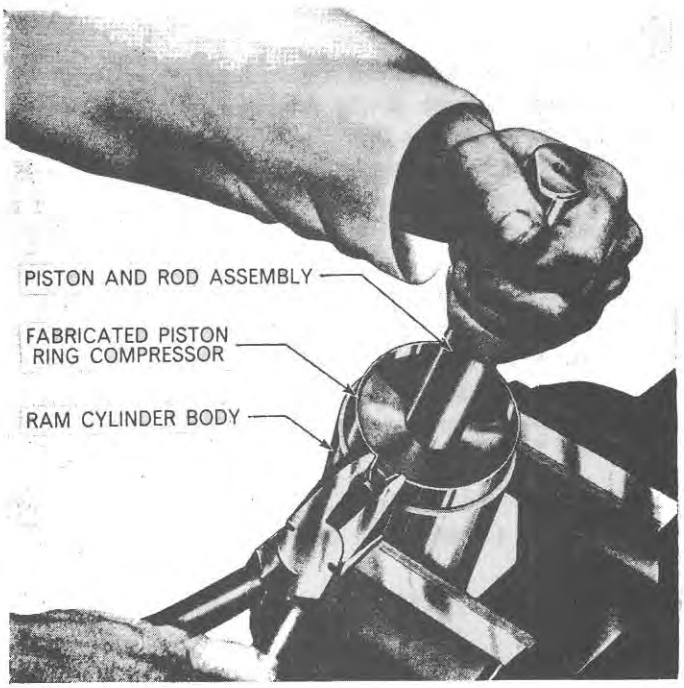

Figure 62
Installing Piston in Cylinder



Figure 64
Installing Control Valve

6. Using a suitable hollow sleeve with a rounded edge install the piston rod scraper, Figure 65.

4. TO INSTALL THE POWER CYLINDER ASSEMBLY

1. Position the power cylinder in the tractor and install the anchor pin. Liberally coat the anchor pin with a good quality grease prior to assembly.
2. Install the anchor pin retaining nut and tighten to the specified torque. (See Specifications Section). Line up the castellations in the nut with the hole in the pin and install a new cotter pin.
3. Position the power cylinder piston rod and install the clevis pin from above. Install a new cotter pin at the base of the clevis to locate.
4. Position the control valve actuating arm and install the clevis pin that retains it to the power steering centre arm. Install a new cotter pin in the clevis to retain.
5. Position the valve actuating arm so that clevis pin retaining control valve link to arm installs freely. Measure and record dimension 'A.', Figure 66.

   Adjust the stop screw after slackening the locknuts to give dimensions at 'B' of ·045–·050 in. (1·14–1·27 mm.) and 'C' of ·045–·050 in. (1·14–1·27 mm.). Check that the clevis pin moves freely and that dimension 'A' has not changed.

   Turn steering to full right-hand lock and check dimension 'A' and that it falls between ·030–·060 in. (·76–1·52 mm.) more than the measurement obtained in neutral position. If necessary to decrease dimension 'A' the forward stop screw is adjusted to give less clearance in the neutral position.

   Turn steering to full left-hand lock and check that dimension 'A' falls between ·030–·060 in. (·76–1·52 mm.) less than the first measurement obtained in neutral position. If necessary to increase dimension 'A' the rear stop screw is adjusted to give less clearance in the neutral position.
6. Install new cotter pin in arm to link clevis.
7. Install the radiator assembly. Refer to Part 1, Chapter 2, for details. Do not install the headlamps, front grille, etc. at this stage.
8. Operate steering gear with engine running several times to exclude air from the system and top up the power steering reservoir oil to the correct level.



Figure 65
Installing Oil Seal

9. Adjust the stop screws so that dimensions 'B' and 'C', Figure 66, are at the minimum setting to obtain power assistance over the steering range. This is obtained by decreasing dimensions 'B' and 'C' until power assistance is lost in both directions. Then adjust the stop screws until power assistance is just regained over the steering range. When adjustments have been completed tighten the top screw locknuts, make sure that the stop screws do not move during the operation.

   NOTE:—This adjustment must be correct as excess movement of the linkage can cause damage to the control valve.
10. Replace the headlamps, front grille, etc. Refer to Part 1., Chapter 2 for details.

5. REMOVING STEERING CENTRE ARM

1. Remove the power cylinder, etc., refer to Section 2, 'Removing Power Cylinder'.
2. Remove the locknuts and disconnect the spindle arm connecting rods from the centre arm.
3. Turn the valve operating arm so that access can be gained to the drag link ball end nut through the hole

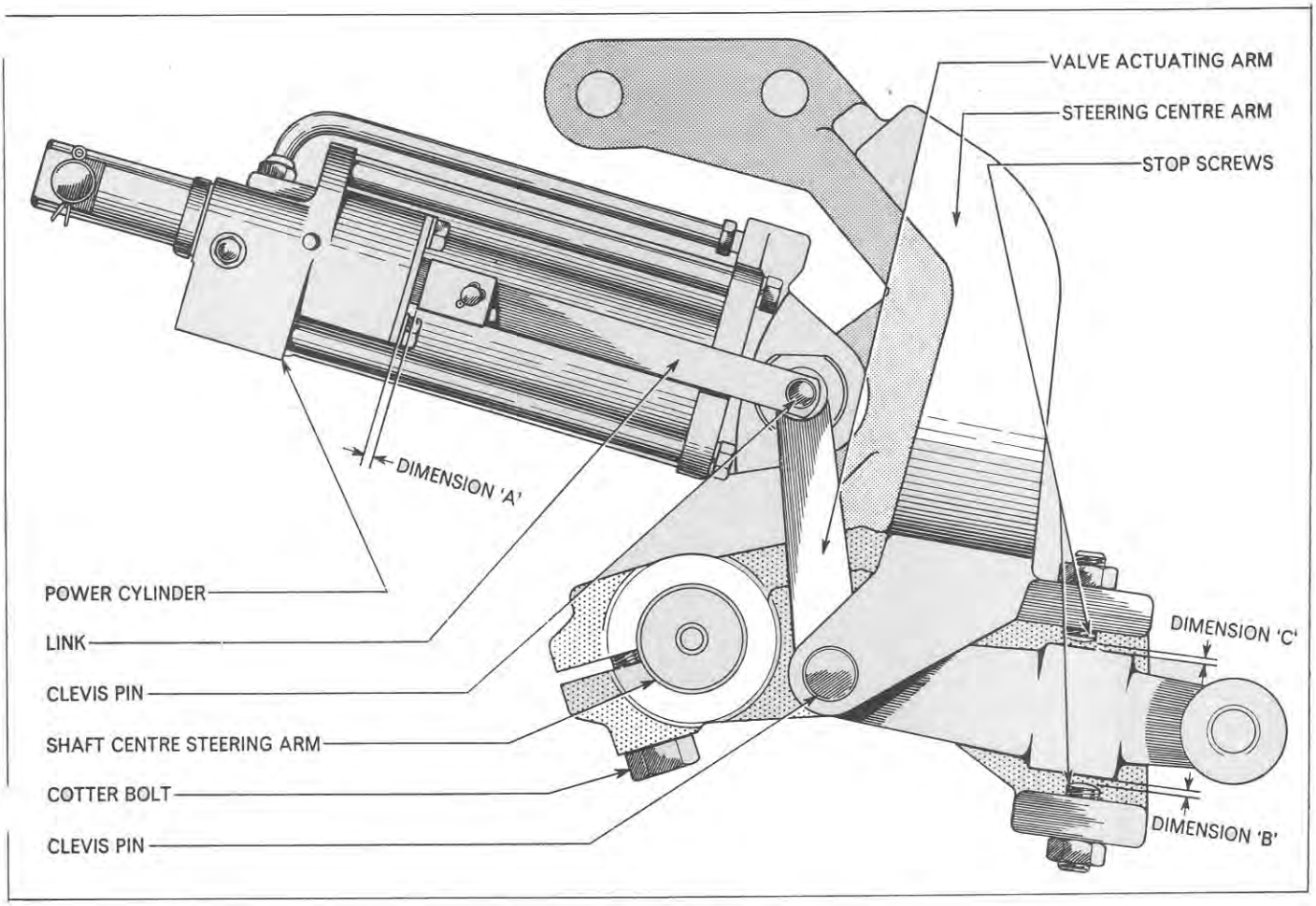

Figure 66
Power Steering Linkage Adjustment

in the front axle support. Remove the locknut and disconnect the drag link.

4. Remove the valve actuating arm.
5. Rotate the centre arm connector clockwise to gain access to the cotter bolt locating the arm to the shaft. Remove the bolt.
6. Remove the grease fitting.
7. Extract the shaft using centre shaft puller SW21 or NCA 997 with a suitable sleeve 3″ (76·2 mm) long and a large thick washer having a $\frac{3}{4}$″ (19·2 mm) hole in the centre.
8. Remove the arm from the front axle support.

6. TO INSTALL STEERING CENTRE ARM

1. Position steering centre arm in front axle support and insert shaft. Make sure cotter groove in shaft lines up with arm and insert cotter bolt, and tighten to specified torque.
2. Install the grease fitting.
3. Position the valve actuating arm, and connect the drag link. Install the locknut and tighten to the specified torque.
4. Connect the spindle arm connecting rods and install the locknuts and tighten to the specified torque.
5. Install the power cylinder, etc., refer to 'Installing the Power Cylinder', section 4.

Part 12

STEERING SYSTEMS

Chapter 7

TROUBLE SHOOTING, SPECIFICATIONS AND TOOLS

Section		Page
1.	Trouble Shooting	47
2.	Specifications	48
3.	Special Tools	49

1. TROUBLE SHOOTING

Trouble	Possible Cause
Slow Steering Action or No Steering Action.	Incorrect oil level in reservoir. Pump output low due to defective flow control valve. Pump flow control valve spring weakened or broken. Pump relief valve leaking. Pump relief valve spring weakened or broken. Worn pump pressure gears. Air in system due to loose connections or damaged tubing. Leaking power cylinder.
Pump Noisy.	Incorrect oil level in reservoir. Air in system due to loose connections or damaged tubing. Water in the power steering oil.
Loose steering (Ford 4000)	Excessive clearance between ball stud and ball stud seats.
Front wheels will not remain in straight ahead position or other position selected by operator.	Control valve spool sticking due to burrs, dirt in system, weak or broken positioning springs.
Front wheels surge when turning.	Control valve spool sticking due to burrs, dirt in system, weak or broken positioning springs. Excessive internal leakage in ram cylinder assembly.

© FORD MOTOR COMPANY LTD., 1967

2. SPECIFICATIONS

		FORD 2000 and FORD 3000	FORD 4000	FORD 5000
Steering gear oil capacity	Imp. Pint	1·6	1·12	1·4
	U.S. Quart	1·07	·66	·85
	Litre	·91	·625	·8
Steering gear oil grade		S.A.E. 90 E.P.	S.A.E. 90 E.P.	S.A.E. 90 E.P.
Steering gear oil Ford specification		ESW–M2C 28–BA or ESEN–M2C94A	ESW–M2C 28–BA or ESEN–M2C94A	ESW–M2C 28–BA or ESEN–MC294A
Power steering oil capacity	Imp. Pint	3·75	3·40	3·33
	U.S. Quart	2·31	2·05	2·00
	Litre	2·10	1·93	1·89
Power steering oil grade		S.A.E. 10 Antifoam	S.A.E. 10 Antifoam	S.A.E. 10 Antifoam
Power steering oil Ford specification		ESEN–M2C 92–A	ESEN–M2C 92–A	ESEN M2C 92–A
Steering gear ratio		15·43 : 1	24·20 : 1	32·71 : 1
Steering wheel turns (lock to lock)		4·10	4·80	6·01
Power steering pump capacities:—				
700 r.p.m.		2 Imp. Gall./Min.	2·45 U.S. Gall./Min.	9·1 Litre/Min.
Maximum r.p.m.		3·55 Imp. Gall./Min.	4·3 U.S. Gall./Min.	16·1 Litre/Min.
Pump pressure relief valve setting	lb./sq. in.	600/700	800 900	1050/1150
	kg./sq. cm.	42·0/49·2	56·2/63·3	73·8/80·9
Steering column housing retaining nut torque	lbs. ft.	25	25/35	25/35
	m. kg.	3·45	3·45/4·83	3·45/4·83
Steering column housing retaining bolt torque (power steering)	lbs. ft.	25	—	—
	m. kg.	3·45	—	—
Steering column adaptor retaining bolt torque (power steering)	lbs. ft.	25	—	—
	m. kg.	3·45	—	—
Rocker shaft cover plate retaining bolt torque	lbs. ft.	25	—	—
	m. kg.	3·45	—	—
Steering arm retaining nut torque	lbs. ft.	115/125	115/125	150/190
	m. kg.	15·9/17·3	15·9/17·3	21·0/26·0
Pump control valve plug torque	lbs. ft.	25/30	25/30	25/30
	m. kg.	3·46/4·15	3·46/4·15	3·46/4·15
Pump relief valve plug torque	lbs. ft.	15/18	15/18	15/18
	m. kg.	2·01/2·49	2·01/2·49	2·01/2·49
Pump through bolt torque	lbs. ft.	13/17	13/17	13/17
	m. kg.	1·8/2·35	1·8/2·35	1·8/2·35
Pump drive gear retaining nut torque	lbs. ft.	55/60	55/60	55/60
	m. kg.	7·6/8·3	7·6/8·3	7·6/8·3
Pump retaining bolt torque	lbs. ft.	23/29	23/29	23/29
	m. kg.	3·18/4·01	3·18/4·01	3·18/4·01

3. SPECIAL TOOLS

Tool No.	Description
SW 21 or N 997	Centre pin puller
SW 22	Sleeve Upper Oil Seal Protector
630-S	Step Plates
818	Bushing Kit
T.818	Bushing Kit
951	Pulling Attachment
954	Puller
1001	Puller
1002	Puller
T.3013	Puller
T.3054	Puller
T.8503 or N-1100-3	Pressure Gauge
T.8503-5	Adaptor

Part 12

STEERING SYSTEMS

Chapter 8

FORD 4200 ROW CROP

Section	Page
1. Description and Operation	51
2. Steering System Component Removal and Installation	57
3. Pump, Reservoir and Lines	60
4. Steering System Component Overhaul	60
5. Filling the Steering System	67
6. Trouble Shooting	67
7. Specifications	68

1. DESCRIPTION AND OPERATION

GENERAL

The Ford 4200 Row Crop Tractor steering system is a hydraulic power assisted, hydrostatic steering system. The system can be manually operated in the event of hydraulic pump failure.

Figures 67 and 68 illustrate the components related to the steering system, all of which are serviced separately. Information pertaining to the pump, reservoir, and lines are covered in Part 12, Chapter 3. Overhaul of the remainder of the system is covered in this Chapter.

STEERING COLUMN SHAFT

The steering wheel, Figure 68, is splined to the upper steering column shaft which is supported in two ball bearing assemblies in the steering column mounting jacket assembly. A universal joint connects the upper and lower shafts. The lower shaft is supported by the universal joint at the top, and the steering column lower flange at the bottom. The lower flange assembly is splined and bolted to the steering motor shaft.

STEERING MOTOR

The steering motor assembly is a rotary metering device which meters, or in some instances, pumps oil to the power steering cylinders. The assembly consists of two major sections. The upper portion is the valve body section, Figure 69, which contains the reaction valve com-

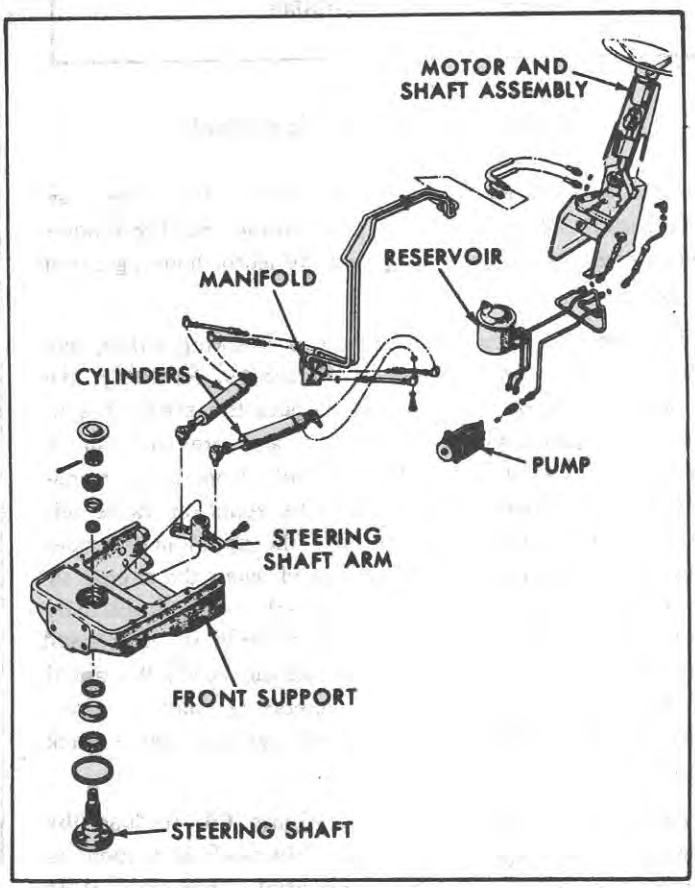

Figure 67
Steering System Components

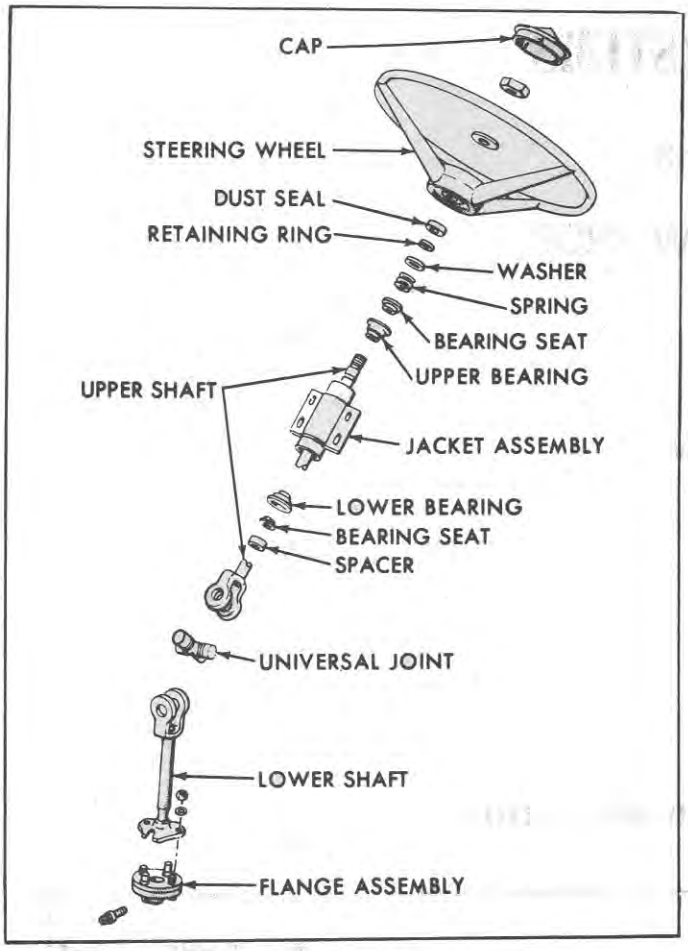

Figure 68
Steering Column Shaft Components

ponents and the main valve components. The lower portion, Figure 70, contains the base, rotor and ring assembly(referred to as the motor), and the motor housing cover assembly.

The reaction valve is basically a blocking valve, and consists of the parts shown in Figure 69. Normally, the reaction valve (or blocking valve) puts the steering system in a non-reversible condition and prevents shock loads encountered at the front wheels from being transmitted to the operator's hands. The reaction valve adjuster is a manual control to hold the spool in the open position if the tractor is to be towed when the engine is not running. The reaction valve spool is a hydraulically operated, four groove spool, which is held in the closed position by two springs. A large spring holds the spool closed when the pump is not operating, and a small, heavy spring holds the spool closed against system back pressure.

The main valve components, Figure 69, include the drive shaft and spool assembly. This shaft and spool is serviced only as a complete assembly, however, it is shown disassembled for description purposes.

The drive shaft and spool assembly is supported at the upper and lower ends by the shaft bearings. The valve spool spring prevents free play in the spool by keeping the spool in contact with the spool actuator. The outer shaft is hollow with splines on one end and four unequal splines, or "dogs", at the other end. The steering wheel drives this shaft through the upper and lower shaft. The hollow center main valve spool, which rides on the outer shaft, is a five-land spool with metering notches ground in the first and second lands. Two holes are drilled radially through the second and fifth lands to permit oil flow to (and from) the cylinders whenever the engine is running. The torsion shaft is pinned at its upper end to the outer shaft, and at its lower end to the drive shaft. The torsion shaft prevents the outer and drive shafts from separating during steering, and returns the steering wheel to its center or neutral position. The torsion shaft can twist as much as 9 degrees during steering operations and unwinds to its neutral position when steering wheel move-

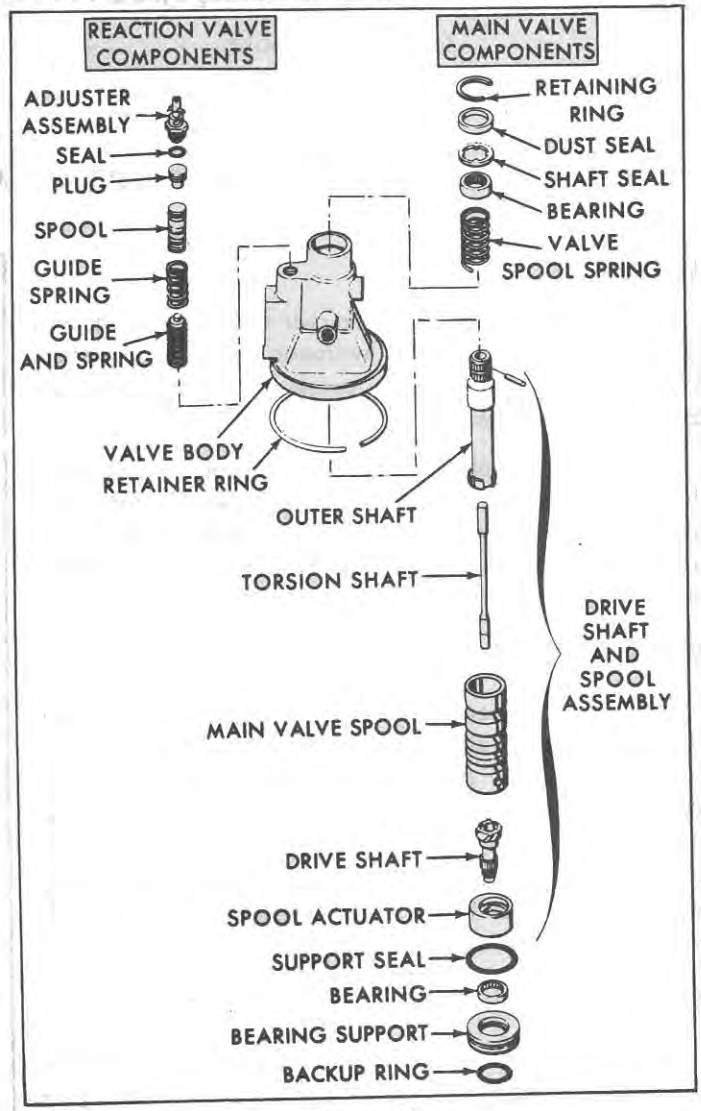

Figure 69
Valve Body and Spools

ment stops. The engagement of the "dogs" of the drive shaft limits the wind-up of the torsion shaft. The small end of the drive shaft splines into the steering motor rotor, and the four helical splines at the large end of the drive shaft "cam" the spool actuator up and down. The actuator is also splined to the outer shaft so it is not free to rotate, but is stationary in relationship to the outer shaft. A pin in the actuator engages the spool so that these two pieces move together.

The components of the motor and cover section are shown in Figure 70. The twelve vanes are spring loaded in the extended position to give positive sealing between the vanes and the cam ring. The rotor carries the vanes

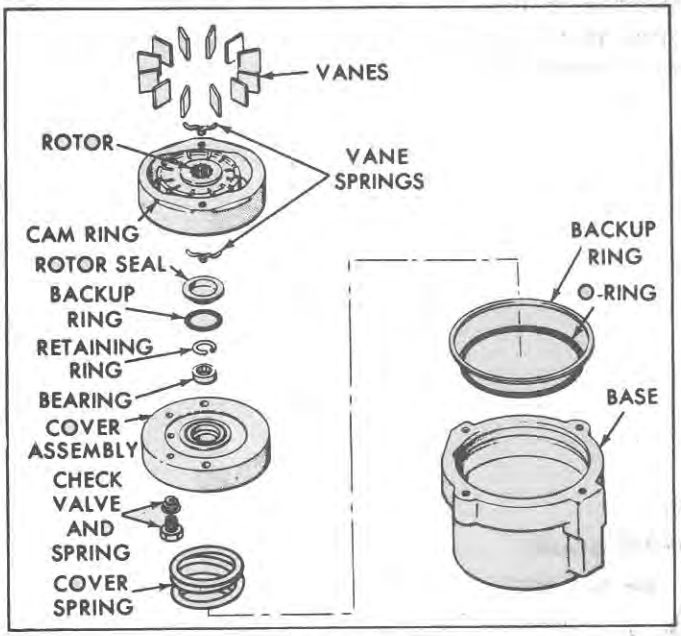

Figure 70
Steering Motor and Base

and vane springs, and is splined to the drive shaft. The cam ring has an elliptical inner surface against which the vanes run. The cover assembly seals the lower end of the cam ring, rotor and vane area, and houses the two check valves. Complete operation of these check valves is covered on page 56, under "Check Valve Operation". The cover spring holds the cover assembly in contact with the cam ring, rotor, and vanes to help maintain a good seal during low pressure operation.

In operation, as the steering wheel is manually turned, power enters the outer shaft and is directed into the drive shaft. See Figure 71. The drive shaft is splined to the rotor, forming a mechanical connection between the steering wheel and the motor rotor. A slight free-play between the "dogs" on the drive shaft and the mating slots of the outer shaft allows as much as 9 degrees (from center) of outer shaft rotation before the drive shaft is forced to turn the rotor. See Figure 71.

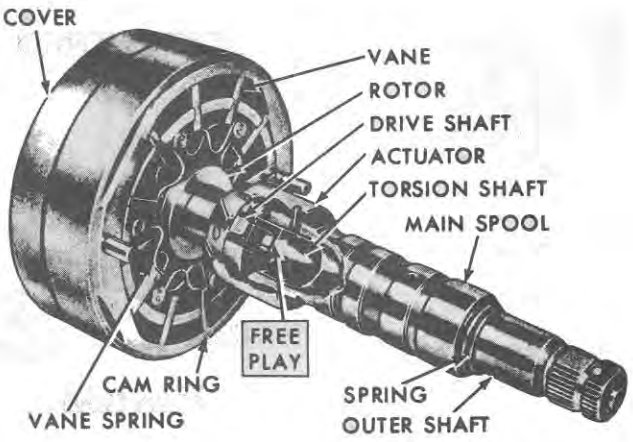

Figure 71
Steering Motor Operation

When the operator turns the steering wheel, the only resistance he feels is the twisting of the torsion shaft. The torsion shaft will twist until the "dogs" on the drive shaft contact the mating slots on the outer shaft. As the outer shaft turns through the 9 degrees from center, the actuator is forced up, or down, the helical splines on the drive shaft, depending on the direction or rotation of the outer shaft. In this way, the rotary motion is changed to axial movement. The valve spool, being pinned to the actuator, is also moved axially, positioning the spool for a right or left turn. Therefore, turning the steering wheel positions the main valve for a right or left turn.

The motor is similar to a vane pump with one exception. Vane springs have been added to assure positive engagement of the vanes with the cam ring. Each spring bears on the vanes that are positioned 90 degrees from each other. In this way, the spring does not flex as the vanes move in and out. Instead, as one vane moves in, Figure 71, the other vane is moving out, so the spring only pivots on the post.

During a right turn, as shown in Figure 72, the oil enters the valve body from the pump and is directed to the motor in two places, 180 degrees from each other, where it enters the area between the vanes. As the rotor is turned, the oil is delivered to the outlet passage and flows to the cylinders. Pump oil does not go directly to the cylinders, but must first be metered by the motor. As the oil flows to the cylinders, no resistance is encountered as it turns the rotor, thus, no pressure buildup, or drop, occurs across the motor. The rotor turns as long as the main valve is open and oil is flowing to the steering cylinders. When the operator stops turning the steering wheel, the rotor continues to turn for approximately 9 degrees. This unwinds the torsion shaft and also centers the main valve to the neutral position.

© FORD MOTOR CO. 1967

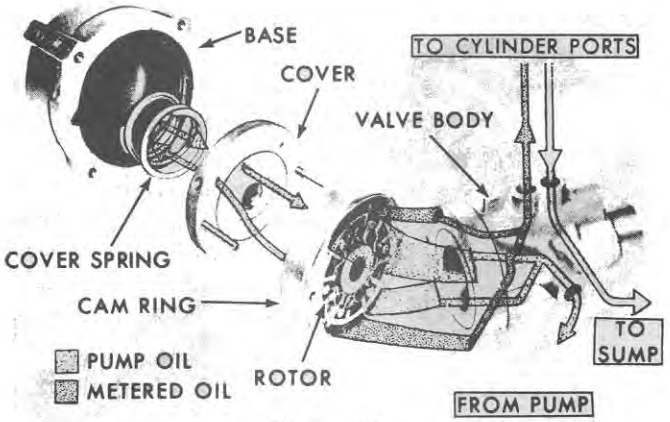

Figure 72
Steering Motor Oil Flow

Pump oil that enters the vane area also passes through the passage in the cover plate and pressurizes the motor base. This oil forces the cover plate against the cam ring, rotor, and vanes, to obtain a seal in the area. Oil is also directed through a passage in the cover to the spring chamber of the rotor where it acts on the end of the vanes. This oil under pressure helps to hold the vanes out, keeping them in firm contact with the cam ring. Oil returning from the cylinders enters the valve body and is directed back to the reservoir.

CYLINDERS

The steering cylinders, Figure 73, are similar in construction to the ones used on the Ford 2000 and Ford 3000 All Purpose Tractors. All parts are serviced sepa-

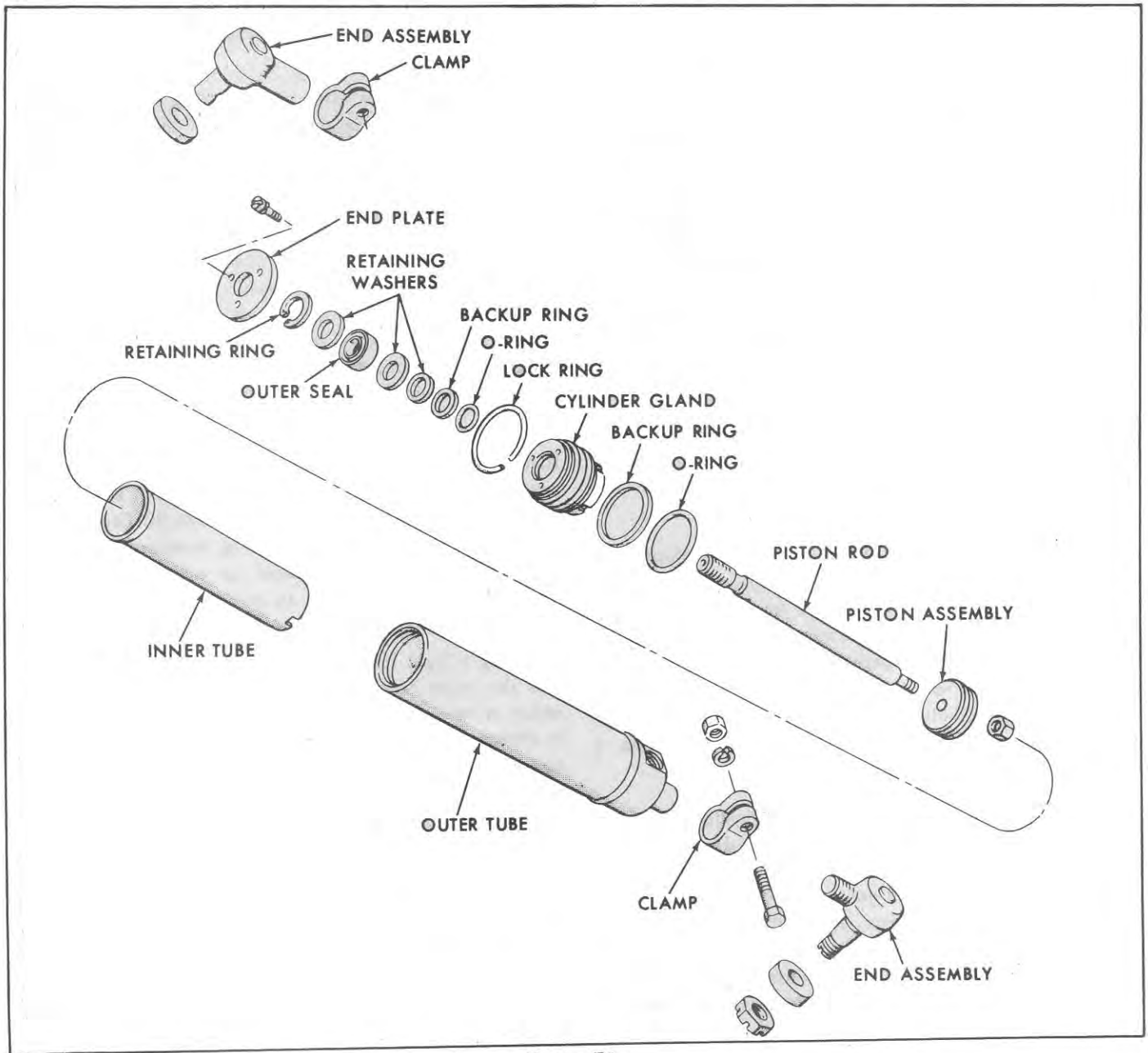

Figure 73
Power Steering Cylinder

rately. The oil enters the outer tube at the closed end and is directed between the inner and outer tubes to the gland. The oil passes through the notches in the glands and enters the piston rod area of the cylinder.

Two different cylinder end assemblies are used on these cylinders. The piston rod end is threaded to the rod and is retained in the steering shaft arm. The outer tube cylinder end is threaded to the tube and is retained in the front support assembly.

OIL FLOW

Neutral

During the neutral condition, oil is drawn from the reservoir into the pump, then flows through the high pressure line to the valve body of the valve and motor assembly. Figure 74. Pump oil is directed from the high pressure passage to the return or sump passage at the first valve groove of the main valve spool. This spool is hollow and has five lands and four grooves. There are two radially drilled holes through the second and fifth lands which act as oil passages. The normal system back pressure entering the valve holds the anti-cavitation valve ball, which is located between the high and low pressure passages in the valve body, on its seat and positions the reaction spool against the small heavy spring. Oil in the motor is trapped by the reaction spool land covering the holes in the valve body. Note that there are no annular grooves in the valve body at the reaction spool.

The reaction spool is a five-land, four-groove spool held in the closed position by two springs. The large light spring acts directly against the end of the spool to hold it in the closed position when there is no oil flow through the system. The small heavy spring starts to compress at approximately 50 psi (3.5 kg/cm^2), and is totally compressed at approximately 100 psi (7.0 kg/cm^2). As previously stated, the reaction valve is similar to a blocking valve which is hydraulically applied and spring returned.

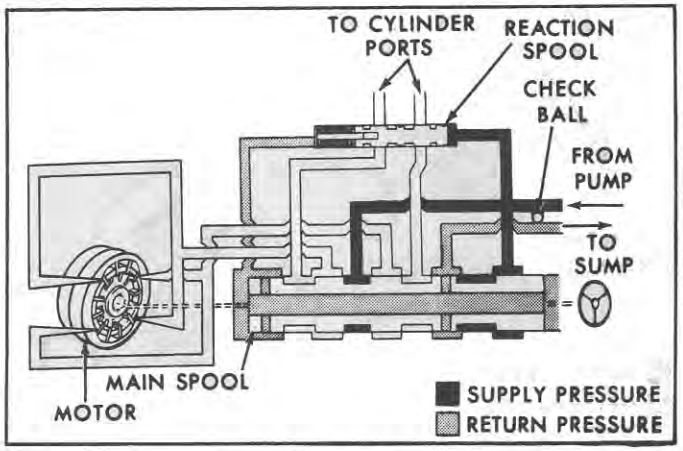

Figure 74
Oil Flow - Neutral

Power Assist Right Turn

As the steering wheel is turned to the right, Figure 75, when the engine is running, the mechanical action of the drive shaft, outer shaft, and actuator, causes the main valve to shift from the neutral position. The pump oil then enters the valve body, flows to the third land of the main spool, and on to the motor vanes. As the motor is turned, the metered oil is carried between the vanes and is forced back to the second groove on the main valve spool where it is directed to the reaction valve spool.

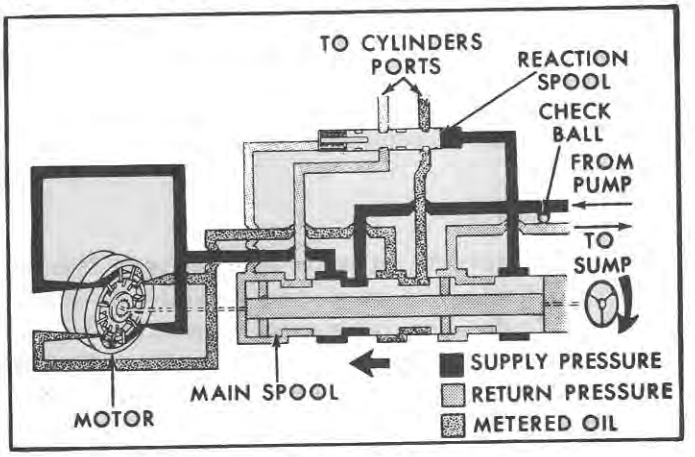

Figure 75
Oil Flow - Power Assist Right Turn

The reaction valve spool is initially held in the closed or neutral position. However, when the pump pressure builds up to approximately 50 psi (3.5 kg/cm^2), the spool is forced to the left, opening the oil passage to the cylinders.

Oil returning from the cylinders passes across the reaction valve to the fourth groove on the main valve spool. The oil is then directed through the center of the spool, out the radially drilled passage in the second land, and returns to sump.

Power Assist Left Turn

As the steering wheel is turned to the left, Figure 76,

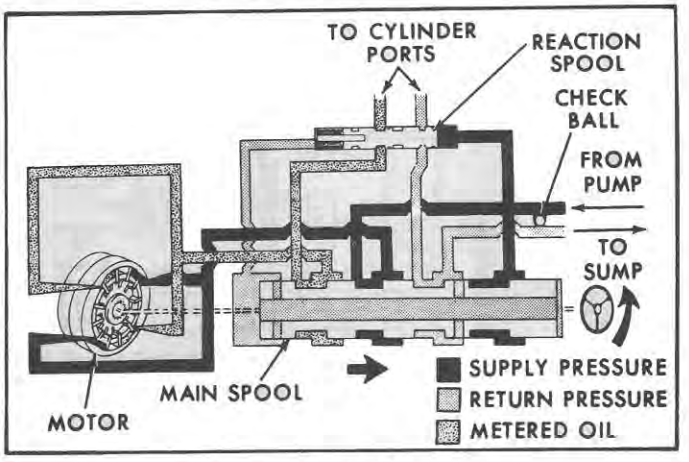

Figure 76
Oil Flow - Power Assist Left Turn

© FORD MOTOR CO. 1967

when the engine is running, the mechanical action of the drive shaft, outer shaft, and actuator causes the pump oil entering the valve body to be directed to the third groove on the main valve spool. The oil then flows to the rotor vanes and the motor is turned. The metered oil is carried between the vanes and is forced to the fourth groove on the main valve spool and is directed to the reaction valve spool. It then leaves the reaction valve spool and is directed to the cylinders.

NOTE: *The reaction spool is positioned in the same position for both the right and left turn.*

Oil returning from the cylinders passes across the reaction valve to the second groove on the main valve spool, and on to sump.

Manual Right Turn

If, for some reason, the power steering pump fails to operate, the tractor may be steered manually. As shown in Figure 77, the main valve spool is positioned for a right turn, however, no oil is delivered by the pump. As the steering wheel is turned, the motor is rotated manually, which forces the oil between the vanes out to the cylinders. The motor becomes a vane pump with the tractor operator supplying the power required. There is a change in the hydraulic oil flow in the system and a repositioning of the reaction valve.

As the rotor pumps oil to the cylinders, it draws oil from the high pressure pump circuit. This creates a partial vacuum in the high pressure pump line, and the anti-cavitation check ball lifts off its seat. This allows return oil to pass into the high pressure passage to supply the motor with oil for manual steering. At this time, the light spring, plus hydraulic pressure, holds the reaction spool against the end of the bore in the closed position. The oil in the return-to-sump passage is at a higher pressure than the oil in the high pressure passage. This difference in pressure helps to hold the valve in the closed position.

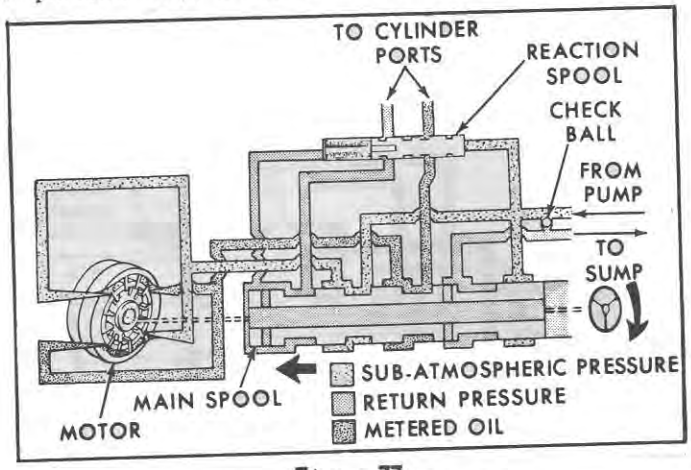

Figure 77
Oil Flow - Manual Right Turn

Manual Left Turn

During a manual left turn, as shown in Figure 78, the motor is again operating as a pump, except that it rotates in the opposite direction, and the oil flow to the power steering cylinders is reversed. The oil flow in the high and low pressure lines and the positioning of the reaction spool is the same as shown in Figure 77. It is important to understand that the metered rotor oil is the highest pressure developed in the system during manual steering.

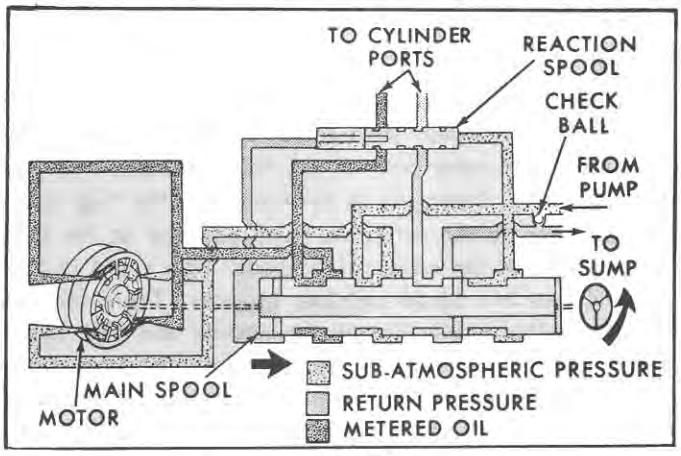

Figure 78
Oil Flow - Manual Left Turn

Check Valve Operation

There are two check valves in the cover plate which allow pump pressure oil to be applied to the back side of the cover. This pressure against the plate keeps it in contact with the rotor and vanes to help seal against internal oil leakage.

The left-hand portion of Figure 79 illustrates the check valve operation during a power assist right turn. Pump oil enters the motor and the rotor rotates clockwise. The oil also unseats the check ball and pressurizes the area under the cover. The check ball at the discharge port is held closed by spring and oil pressure.

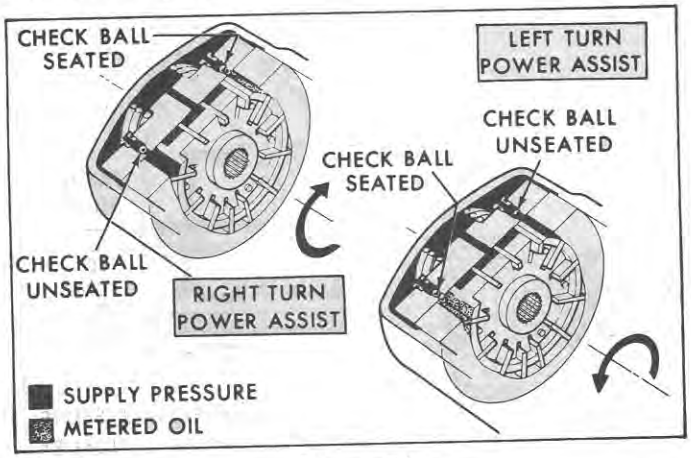

Figure 79
Check Valve Operation

Pump oil is also delivered to the back sides of the vanes to keep them in contact with the cam ring. If for some reason, the check valve sticks open, pump oil would bypass the motor. When the steering wheel is turned, opening the main valve, oil would flow directly to the cylinders until the main valve is manually centered.

As shown in the right-hand portion of Figure 79, as a power assist left turn is made, the oil flow within the motor is reversed and so is the operation of the check valve.

The operation of the check valve during a manual turn is the same as with a power assist turn except that the motor is operating as a pump. At this time, the oil at the discharge port is at a higher pressure than the oil at the inlet port. The check valve at the outlet port unseats while the check valve at the inlet port is seated. Metered oil is directed to the back side of the vanes to keep them in contact with the cam ring.

2. STEERING SYSTEM COMPONENT REMOVAL AND INSTALLATION

For instructions on the disassembly, cleaning, inspection, repair, and assembly of the steering system components, refer to Section 4 of this Chapter. The removal and installation of the components are as follows:

STEERING COLUMN SHAFT AND MOTOR

A. Removal

1. Remove the steering wheel hub cap, Figure 80, then remove the retaining nut, flat washer, and the steering wheel.

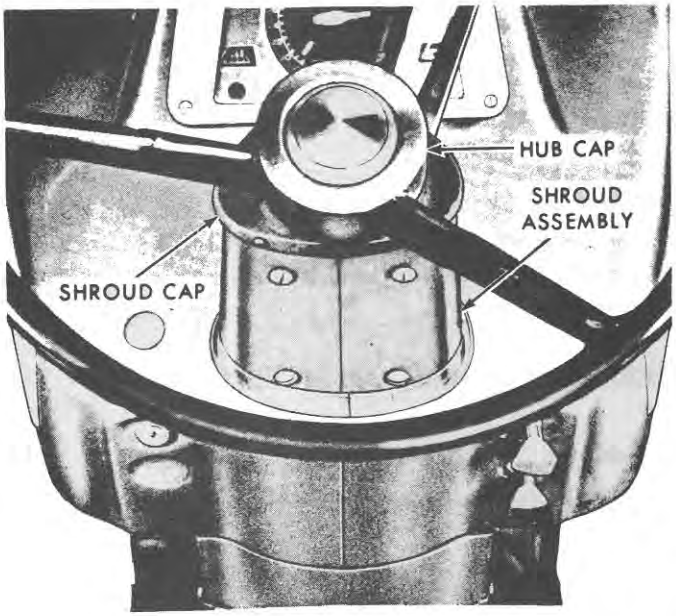

Figure 80
Steering Shroud Assembly Installed

2. Remove the three screws and remove the steering column shroud cap.
3. **8-Speed Transmission Tractors:** Remove the four screws and flat washers and remove the steering column shroud assembly and the shroud seal.
4. **Select-O-Speed Transmission Tractors:** Remove the four screws from the selector assembly. Then with the selector assembly pulled slightly rearward, lift out the shroud assembly and the shroud seal.
5. Remove the fuel tank as outlined in "Part 2, FUEL SYSTEMS, page 16".
6. Disconnect the four steering motor hydraulic lines at the fittings shown in Figure 81. Then remove the bolt and lock washer and separate the tube mounting bracket clamp from the tube bracket assembly. Remove and discard the O-rings from the end of the line fittings.

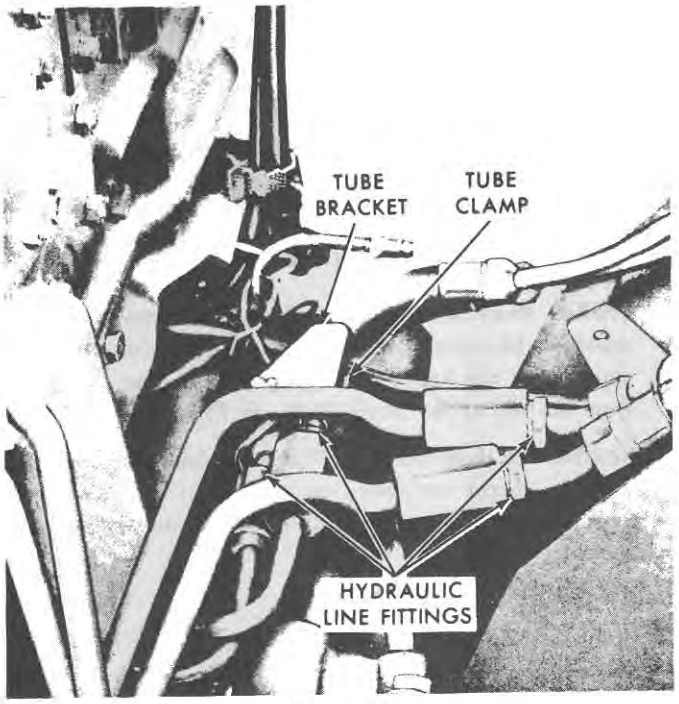

Figure 81
Hydraulic Line Connections

7. Remove the four bolts and flat washers and separate the steering column jacket assembly, Figure 82, from the motor support.
8. Remove the 3/8"-24 x 1.22" 12-point head bolt securing the steering shaft lower flange to the steering motor. Then carefully remove the steering column shaft assembly from the tractor.

© FORD MOTOR CO. 1967

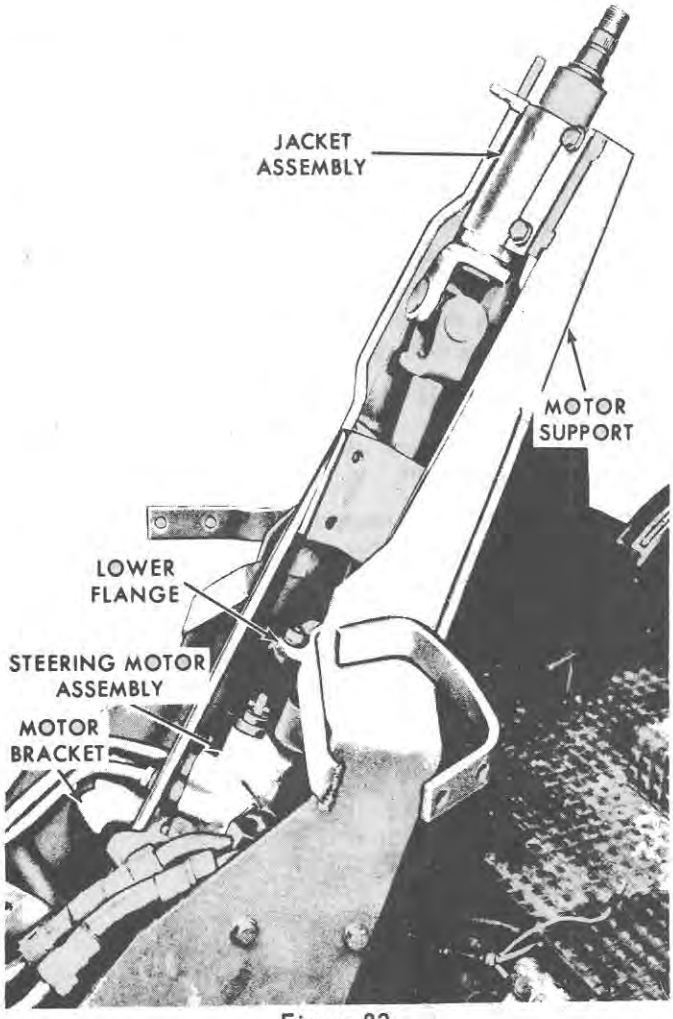

Figure 82
Steering Column Shaft and Motor Installed

NOTE: *When removing the steering column shaft assembly, be careful not to lose the steering column dust seal, the bearing seat, spring, washer, and ring from the top of the shaft. Refer to Figure 68.*

9. Remove the three bolts and lock washers securing the steering motor assembly to the motor bracket, then carefully remove the steering motor assembly from the tractor.

B. Installation

1. Position the steering motor assembly, Figure 82, against the motor bracket and install the three bolts and lock washers. Tighten the bolts to a torque of 23-30 lbs. ft. (3.18-4.14 kgm).
2. Position the steering shaft assembly in the motor support and align the hole in the lower flange with the motor drive shaft. Install the 3/8"-24 x 1.22" 12-point head bolt and tighten securely.
3. Secure the jacket assembly to the motor support with the four bolts and flat washers. Tighten the bolts to a torque of 13-17 lbs. ft. (1.79-2.34 kgm).
4. Position the right-hand hydraulic lines against the tube bracket, and secure with the tube clamp, lock washer and bolt as shown in Figure 81. Tighten the clamp bolt to a torque of 35-45 lbs. ft. (4.84-6.22 kgm).
5. Using new O-rings, connect the four hydraulic lines to their respective fitting and tighten each connection securely.
6. Install the fuel tank as outlined in "Part 2, FUEL SYSTEMS, page 16.
7. **8-Speed Transmission Tractors:** Install the steering shroud seal and the shroud assembly, Figure 80, and secure with the four screws and flat washers.
8. **Select-O-Speed Transmission Tractors:** Install the steering shroud seal, then position the shroud assembly between the selector assembly and the motor support. Secure the selector assembly and shroud with the four screws. Tighten securely.
9. Install the steering column shroud cap and secure with the three screws.
10. Be sure that the jacket upper bearing seat, spring, washer, and ring are installed on the steering shaft, Figure 2, and the dust seal is cemented to the steering wheel. Then lubricate the shaft splines and install the steering wheel.
11. Install the flat washer and retaining nut, and tighten the retaining nut to 60-80 lbs. ft. (8.30-11.10 kgm). Install the three clips and install the steering wheel hub cap.

STEERING CYLINDERS AND STEERING SHAFT

A. Removal

1. Remove the radiator as outlined in "Part 1, ENGINE SYSTEMS.
2. Disconnect the four hydraulic lines from the power steering manifold, Figure 83. Remove and discard the O-rings from the line fittings.
3. Remove the nut securing each steering cylinder to the front support, then push the steering cylinder mounting stud inward.
4. Loosen each bolt securing the front of the cylinders to the steering shaft arm, Figure 84, then remove the cylinders.
5. To remove the steering shaft assembly, first remove the front axle as outlined in "Part 13, FRONT AXLE, page 22".

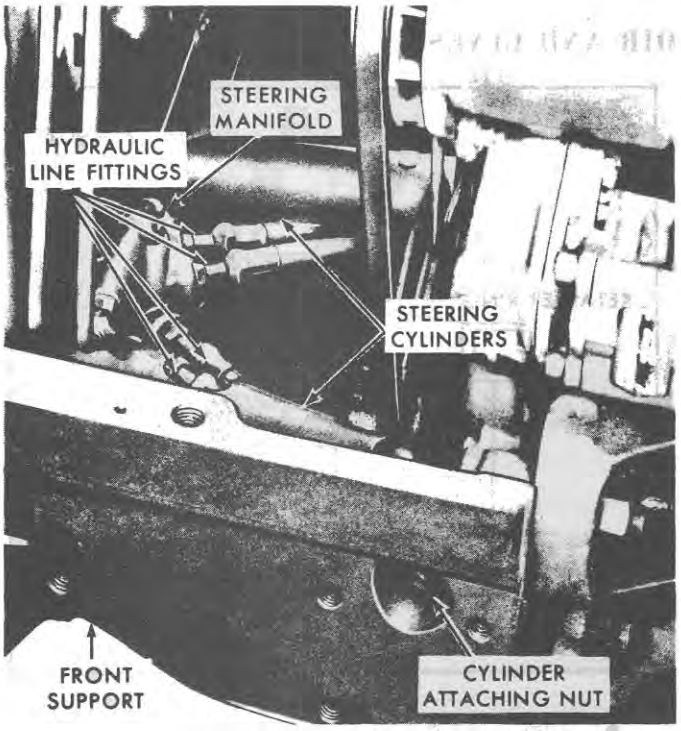

Figure 83
Hydraulic Cylinders Installed

6. Remove the steering spindle bearing cap, Figure 84.
7. Remove the cotter pin, then remove the castellated nut while supporting the steering shaft from under the front support.
8. Remove the steering shaft, the lower bearing and seals, and the upper bearing and seals.

   NOTE: *If the upper or lower bearing cups are worn or damaged they should be removed and new cups installed.*

9. Remove the steering shaft arm from inside the front support.

B. Installation

1. Align the hole of the steering shaft arm, Figure 84, with the steering shaft hole in the front support.
2. Pack the upper and lower bearings with a good grade of clean wheel bearing grease, then, install the lower seal, lower bearing cup, lower bearing, seal, and steering shaft into the hole in the front support, aligning the splines of the shaft with the splines of the steering shaft arm.
3. Support the steering shaft to prevent the component parts from falling and install the upper seal, upper bearing cup, upper bearing, and the castellated nut. Tighten the nut sufficiently to eliminate end play in the shaft, but make sure the shaft turns freely. Secure the nut with the cotter pin.
4. Install the steering spindle bearing cap.
5. Install the front axle as outlined in "Part 13, FRONT AXLE, page 22".
6. Insert the front end assembly of each steering cylinder in the steering shaft arm and tighten the clamping bolts to a torque of 90-110 lbs. ft. (12.4-15.1 kgm).
7. Insert the steering cylinder mounting studs in the holes at the sides of the front support, Figure 83, and secure with the attaching nuts. Tighten the nuts to a torque of 55-75 lbs. ft. (7.6-10.3 kgm).
8. Using new O-rings, connect the four steering cylinder hydraulic lines to their respective fittings on the manifold. Tighten each fitting securely.
9. Install the radiator as outlined in "Part 1, ENGINE SYSTEMS.

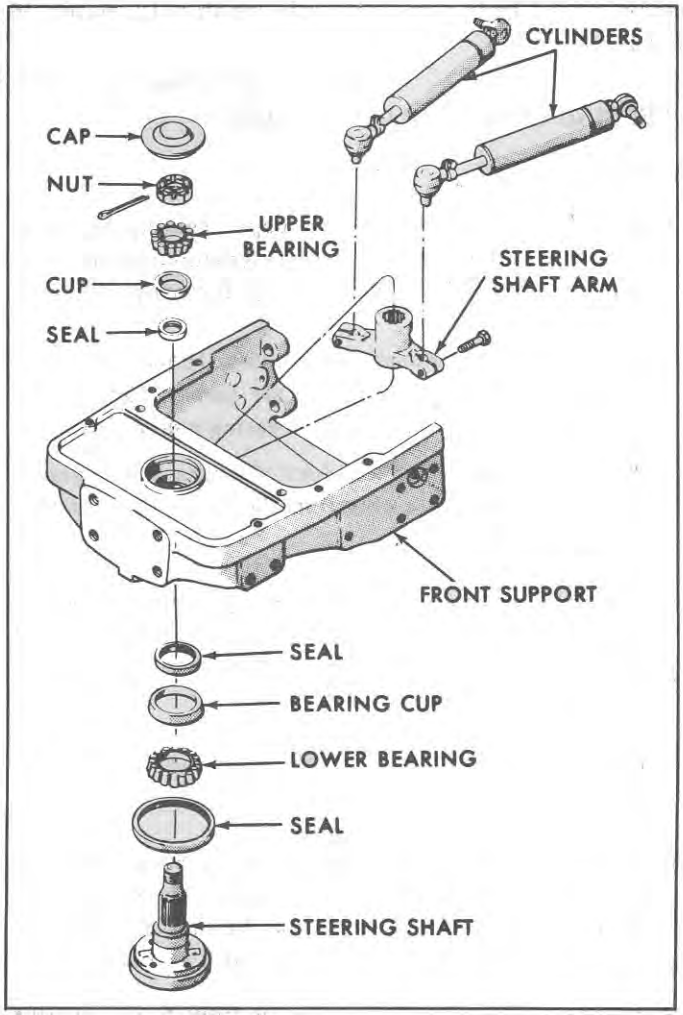

Figure 84
Steering Shaft Assembly

© FORD MOTOR CO. 1967

3. PUMP, RESERVOIR AND LINES

The power steering pump and the hydraulic reservoir used on the Ford 4200 Tractors are the same as those used on the Ford 4000 All Purpose Tractors, with the exception of the pressure and flow specifications as listed on page 68. Also, three single lip seal assemblies are used on the pump shaft as shown in Figure 85.

When assembling the steering pump, the lips of the two inner seals must face the center of the power steering pump to prevent loss of oil to the engine crankcase. The lip of the outer seal must face the drive gear end of the shaft to prevent the possibility of sucking air and/or engine oil into the power steering pump. Figure 85 illustrates the proper installation of the three seal assemblies in the pump assembly.

NOTE: ***When installing new seals, pack the cavity between the seals with a small quantity of clean grease.***

For all other information pertaining to the servicing of the pump, and for general information pertaining to the reservoir and hydraulic lines, refer to Part 12, pages 16 and 19.

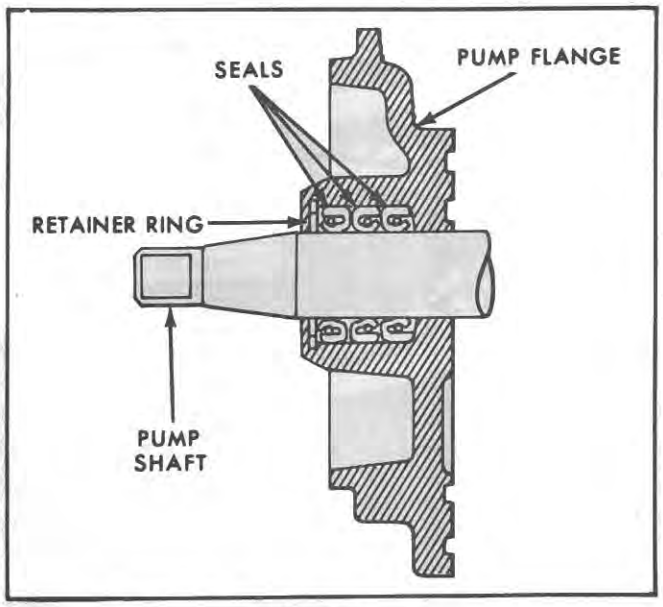

Figure 85
Power Steering Single Lip Shaft Seals Installed

4. STEERING SYSTEM COMPONENT OVERHAUL

STEERING COLUMN SHAFT ASSEMBLY

A. Disassembly

1. Remove the steering column upper bearing retaining ring, Figure 86, retainer washer, bearing spring, bearing seat, and jacket upper bearing assembly.

2. Hold the jacket assembly and carefully pull the upper column shaft assembly out of the jacket. Remove the lower spacer, seat, and lower bearing assembly.

3. Remove the two nuts and lock washers and separate the lower flange assembly from the lower shaft assembly.

4. If necessary to remove the steering column universal joint assembly, first mark the relationship of the upper shaft with the lower shaft so that they may be installed in their original positions.

5. Place the upper shaft in a soft jawed vise being careful not to damage the shaft.

6. Remove the snap rings that retain the bearings in the universal joint and the upper shaft. Then press the bearing out of the yoke. If the bearing cannot be pressed all the way out, remove it with suitable pliers.

7. Press on the universal joint to remove the bearing from the opposite side of the yoke. Separate the yoke from the universal joint.

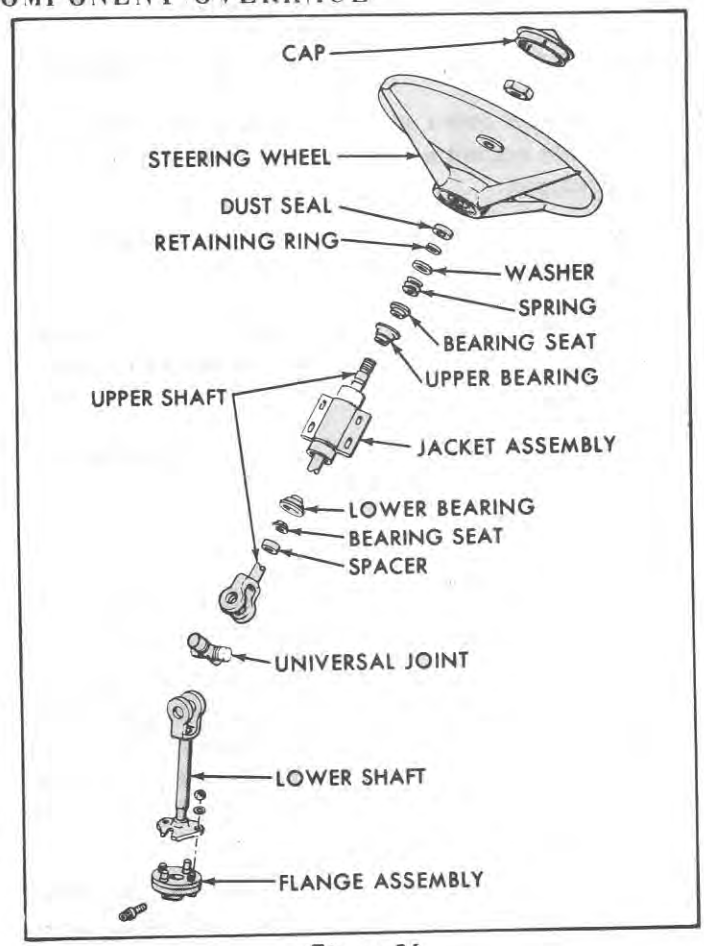

Figure 86
Steering Column Shaft Assembly

8. Remove the snap rings, bearings, and universal joint from the lower shaft in the same manner.

B. Cleaning and Inspection

1. Clean all parts in a suitable cleaning solvent being sure the yoke area at each of the shafts are free from foreign material.

2. Inspect the upper and lower jacket assembly bearings for wear or damage. Install new bearings if necessary.

3. Inspect the bearing seats for damage.

4. Inspect the upper and lower shafts for distortion.

5. Inspect the lower flange assembly for cracks and damaged threads.

C. Assembly

1. If the universal joint was removed, start a new bearing from the kit into the yoke of the lower shaft, Figure 86.

2. Position the universal joint in the yoke and press one of the bearings in sufficiently to install the snap ring. Then install the snap ring.

3. Start a new bearing into the other side of the yoke and press on the bearing until the opposite bearing contacts the snap ring. Then install the opposite snap ring.

4. Install the universal joint, bearings, and snap rings in the upper shaft in the same manner.

5. Secure the lower flange assembly to the lower shaft with the two lock washers and nuts. Tighten the nuts securely.

6. Install the jacket lower bearing assembly, lower seat, and spacer, then carefully insert the upper shaft through the jacket assembly.

7. Install the upper bearing, upper seat, spring, washer, and retaining ring.

STEERING MOTOR

A. Disassembly

Refer to the exploded view illustration, Figure 87, as an aid during the disassembly of the steering motor.

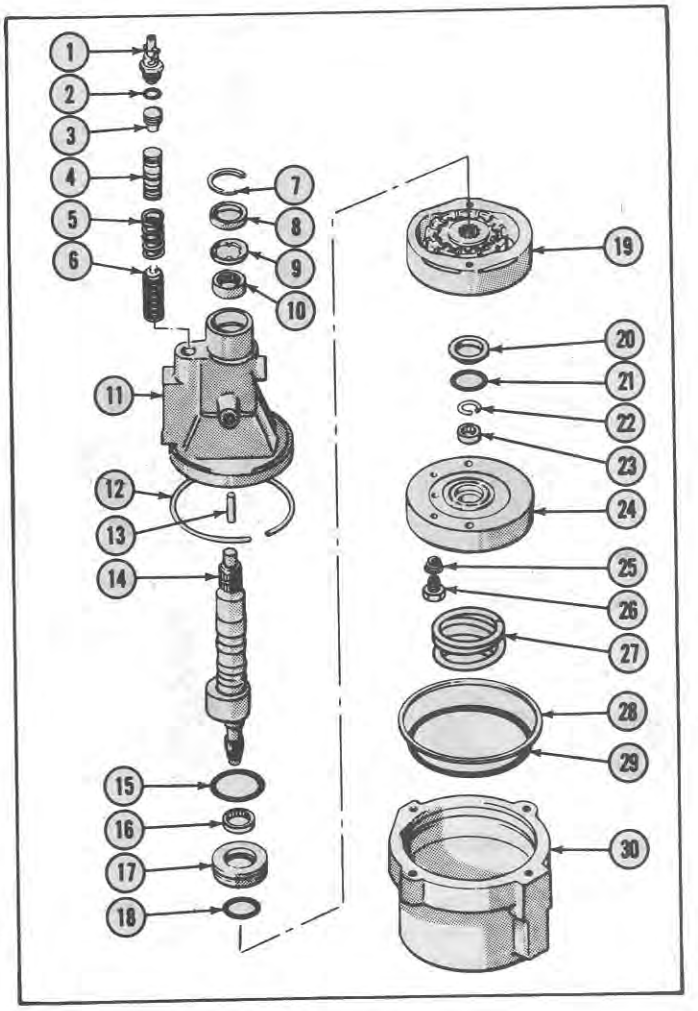

Figure 87
Steering Motor Assembly

KEY TO FIGURE 87

STEERING MOTOR ASSEMBLY

1. Adjustor Assembly
2. O-Ring Seal
3. Spool Plug
4. Reaction Spool
5. Guide Spring
6. Guide and Spring Assembly
7. Retaining Ring
8. Dust Seal
9. Shaft Seal
10. Drive Shaft Bearing
11. Valve Body Housing
12. Retainer Ring
13. Dowel Pin
14. Drive Shaft Assembly
15. Seal
16. Shaft Bearing
17. Bearing Support
18. Backup Ring
19. Rotor and Ring Assembly (Motor)
20. Seal
21. Backup Ring
22. Retaining Ring.
23. Bearing
24. Cover Assembly
25. Ball Check Spring
26. Plug
27. Cover Spring
28. Backup Ring
29. Seal
30. Motor Base

1. Insert a punch into the hole in the motor base as shown in Figure 88. Tap the punch until the retainer ring is loosened.

© FORD MOTOR CO. 1967

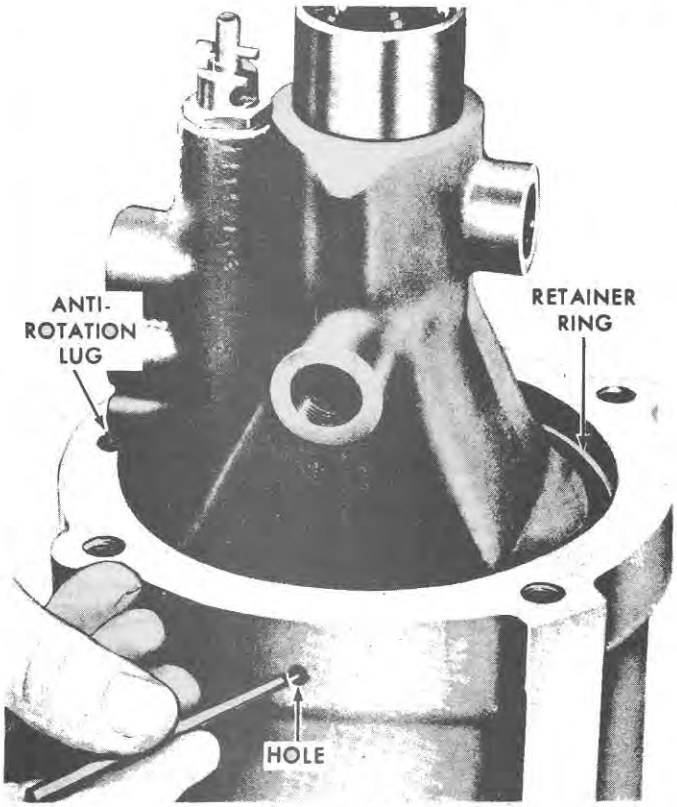

Figure 88
Loosening Base Retainer Ring

NOTE: *If the gap in the retainer ring is not within 1/8 inch (3.17 mm) of the hole, rotate the ring to this position by tapping it with the punch.*

2. Pry the retainer ring, Figure 89, upward and out of the groove with a screwdriver. Then rotate the ring out from under the anti-rotation lug, Figure 88. Remove the ring.

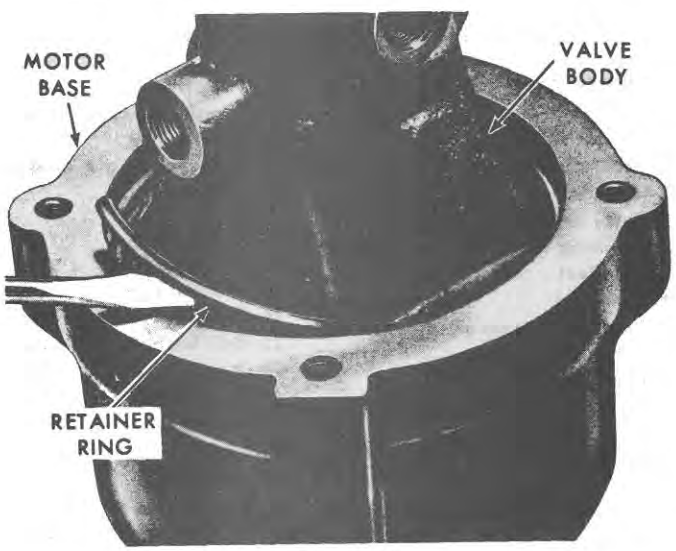

Figure 89
Removing Base Retainer Ring

3. Place the assembly in a soft-jawed vise, with the valve body downward, and separate the motor base from the valve body. If necessary, tap around the primeter of the base with a soft mallet until the spring force loosens the two sections. Remove the base by pulling it upward with a twisting motion.
4. Remove the motor cover seal and backup ring from inside the motor base.
5. Remove the motor housing cover spring.
6. Remove the cover assembly, Figure 90, by lifting it upward off of the dowel pins.
7. Remove the rotor seal and backup ring, Figure 91, from the cover assembly.
8. With a pair of snap ring pliers, remove the rotor retaining ring, Figure 92. It may be necessary to pry the retaining ring away from the drive shaft with a small screwdriver as shown.
9. Remove the two dowel pins.
10. Remove the ring and rotor assembly by pulling it upward with a slight rocking motion.
11. Separate the rotor from the cam ring, Figure 93, being careful, as the vanes are spring loaded against the cam ring. Remove the vanes.
12. Remove the bearing support, Figure 94, by tapping the end of the outer shaft with a soft mallet until the bearing support slips out of the valve body.
13. Remove the bearing support outer seal, Figure 95.
14. Remove the rotor seal and backup ring from the bearing support.
15. Remove the drive shaft and spool assembly, Figure 96, from the valve body housing. Do not use force.



Figure 90
Removing Cover Assembly

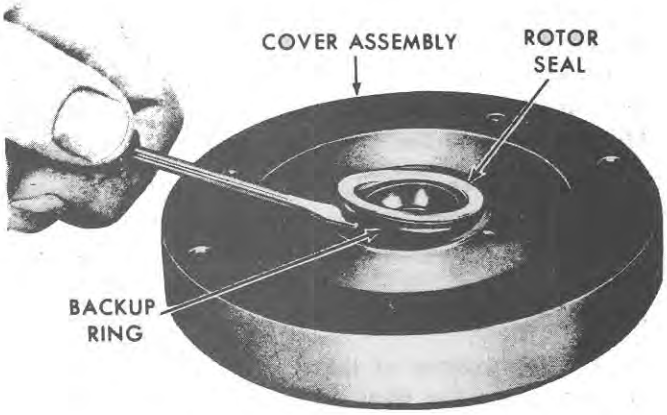

Figure 91
Removing Rotor Seal and Back-up Ring

Because of the extreme close tolerances between the spool and the bore, the spool may jam in the bore resulting in damage to the spool. If the spool sticks, push the assembly inward then again attempt removal.

16. Remove the adjustor assembly from the valve body housing. See Figure 87.

17. Remove the spool plug and reaction spool by pushing the plug into the bore then letting the spring force pop the plug out of the bore. Discard the plug seal. Remove the spool, spring, and guide and spring assembly.

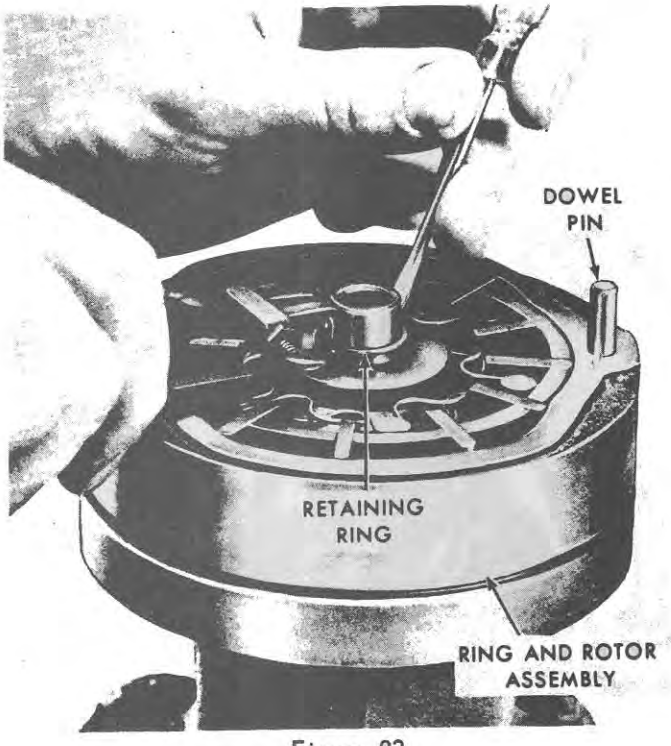

Figure 92
Removing Rotor Retaining Ring

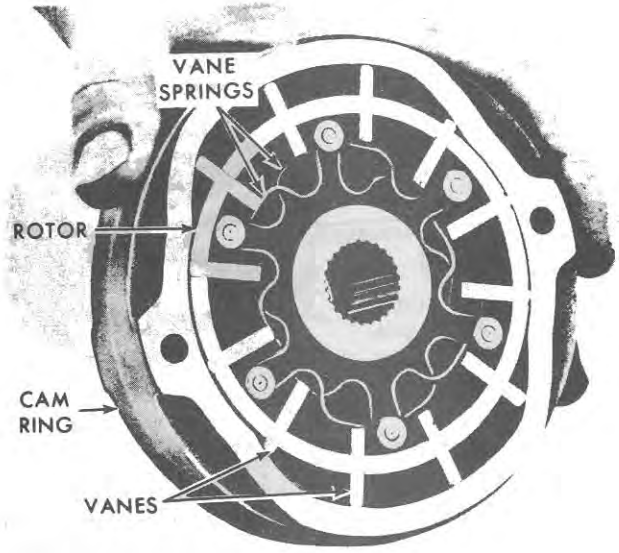

Figure 93
Cam Ring and Rotor Assembly

B. Cleaning, Inspection, and Repair

During overhaul of the steering motor assembly, it is important that all seals and backup rings be discarded and new ones installed.

1. Clean all parts in a suitable cleaning solvent and dry with compressed air, if available.

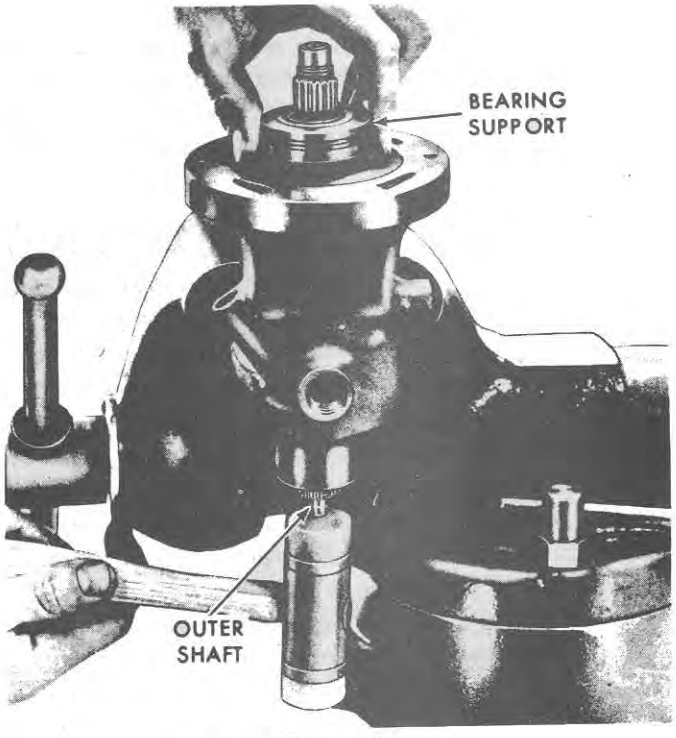

Figure 94
Removing Bearing Support

© FORD MOTOR CO. 1967

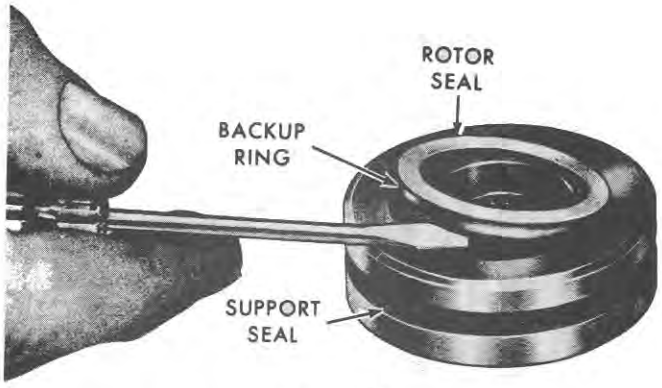

Figure 95
Bearing Support Assembly

2. Inspect the edges of the motor base retaining ring groove for nicks, burrs, or rough spots. Minor defects may be removed with a fine hone.

3. Inspect the face of the cover plate for heavy score marks or unusual wear patterns. The face of the cover plate will normally receive wear, which appears as a polished pattern of symmetrical shallow scratch marks, resulting from contact with the vanes, rotor, and vane springs. Install a new cover plate if there is evidence of extreme wear or deep scoring.

4. Inspect the inner contour of the cam ring for scratches or score marks. This surface should be highly polished with no evidence of nicks, scratches, or score marks. Inspect the rotor vanes and springs for excessive wear or damage. The vanes normally have a highly polished wear pattern on all surfaces. Inspect the rotor. The faces of the rotor are normally brightly polished and, in some cases, a circular wear pattern from the rotor seals may be present around the splined hole.

   IMPORTANT: ***The rotor shaft and spool assembly is a select fit with the valve body housing assembly. If inspection shows that either the valve body housing or the drive shaft and spool assembly is defective or excessively worn, the complete steering motor assembly must be discarded and a new one installed.***

5. Inspect the valve body housing assembly, and the drive shaft and spool assembly, for visible signs of wear or damage. Check all bearing surfaces on the drive shaft and outer shaft for excessive wear or cracks. Check the spool drive pin in the actuator to be sure it is not broken or severely worn. Check the outside of the spool for nicks, cracks, or wear spots. A polished pattern is normal on the valve surface. Check the fit of the spool in the body bore. The spool should slide freely without binding. A small burr on the spool or in the bore may usually be removed with a fine hone.

   IMPORTANT: ***The drive shaft and spool assembly is a select fit with the valve body housing assembly. If inspection shows that either the valve body housing or the drive shaft and spool assembly is defective or excessively worn, the complete steering motor assembly must be discarded and a new one installed.***

6. Inspect the drive shaft upper and lower bearings, and the cover assembly bearing for signs of damage or if the bearings are frozen. A defective bearing may be removed by pressing it out with a brass rod of the proper diameter.

7. Inspect the exterior of the reaction valve spool for nicks or excessive wear. A brightly polished pattern is normal. Check the fit of the reaction valve spool to the valve body housing bore. Insert the large spring in the bore, then insert the spool. The spool should rotate freely without binding. If the spool binds in the bore or is badly worn, a complete new steering motor assembly must be installed.

C. Assembly

Refer to the exploded view illustration, Figure 87, as an aid during the assembly of the steering motor. During assembly it is important that all new seals and backup rings be installed.

1. Install the reaction spool guide and spring assembly, Figure 87, into the housing bore. Then install the guide spring and the valve spool, hollow end first, into the bore.

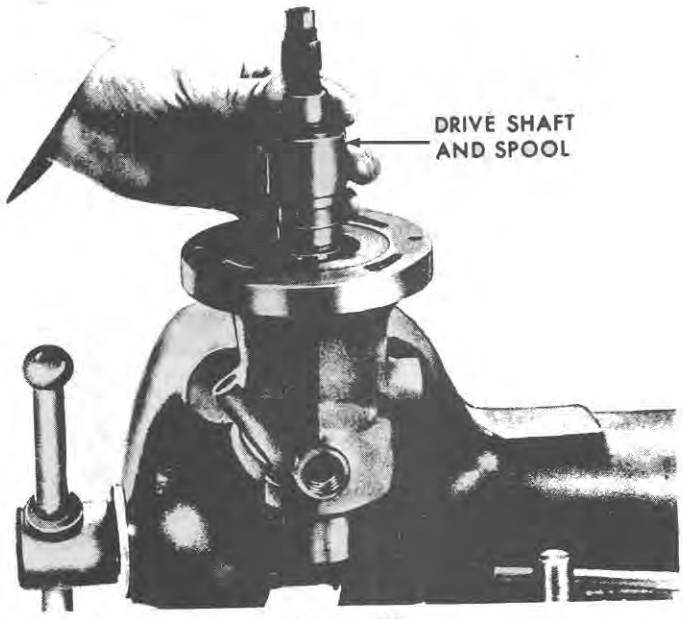

Figure 96
Removing Drive Shaft and Spool Assembly

2. Using a new O-ring seal on the valve plug, install the plug. Then install the adjuster assembly and tighten to a torque of 10-15 lbs. ft. (1.38-2.07 kgm).

   NOTE: *When installing the reaction valve adjuster assembly, the adjuster should be set to the out ("up") position.*

3. Prior to installing the drive shaft and spool assembly, check to be sure that the spool drive pin is engaged by pulling the spool away from the actuator as shown in Figure 97. If the spool separates from the actuator, relocate the pin by positioning the spool against the actuator then inserting the pin into either of the two holes in the base of the spool. Carefully insert the assembly into the housing bore.

   IMPORTANT: *Because of the close fit between the spool and the spool bore, extreme care must be exercised when installing these parts. Push the assembly into the housing evenly and slowly, with a slight rotating motion, until the spool is seated.*

4. Install a new backup ring and rotor seal, Figure 95, into the bearing support. Then install a new bearing support outer seal.

5. Place the bearing support over the end of the drive shaft, Figure 98, and push the spool and outer shaft upward until the bearing is engaged with the drive shaft. Then, push the entire assembly downward being careful that the bearing support does not bind in the bore. Use extreme care that the support seal is not damaged. Push the support downward until it is bottomed.

6. Working on a clean surface, place the rotor inside the cam ring, Figure 99.

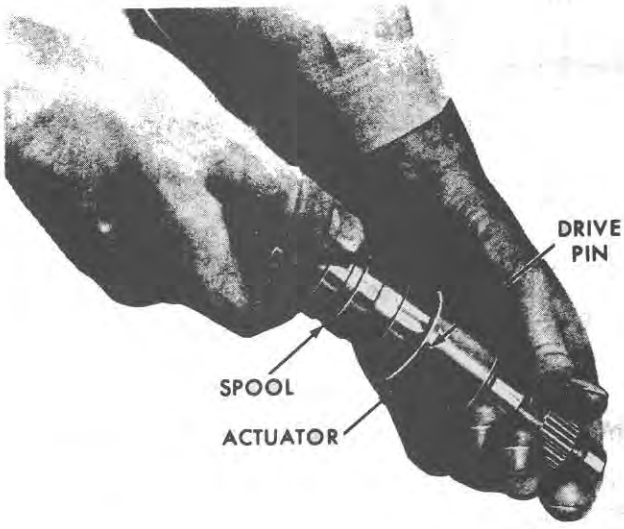

Figure 97
Checking Drive Pin Engagement

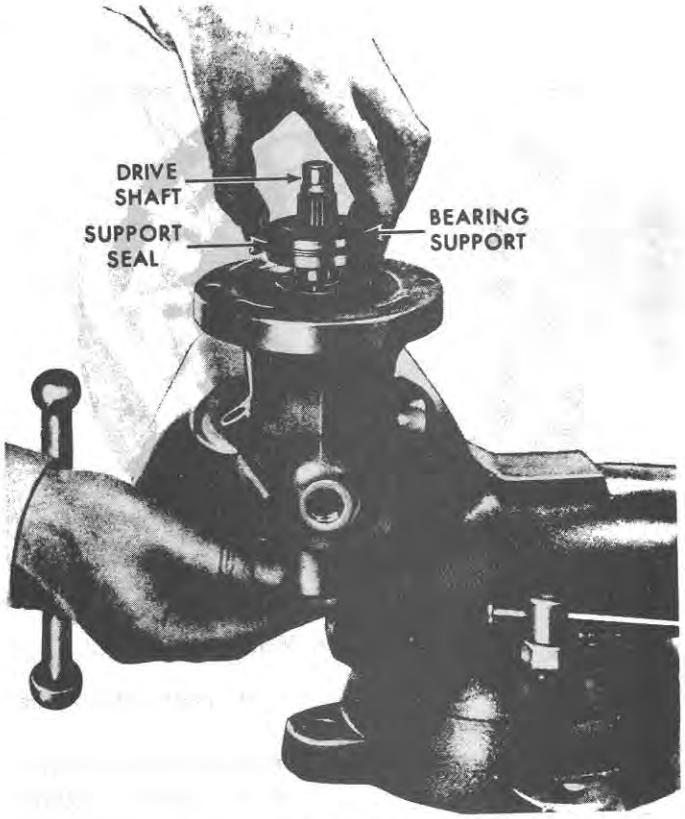

Figure 98
Installing Bearing Support

7. Place three vanes in the rotor slots in the area of each large diameter of the cam ring. Then rotate the rotor 90 degrees and install the remaining vanes. To aid in the installation of the last six vanes, use a small rod or screwdriver and compress each spring as shown in Figure 99. Then, rotate the assembly until the spring is positioned under its respective vane.

   IMPORTANT: *Carefully inspect the assembly to be sure that all vane springs are engaged properly. If the vanes and springs are not installed properly, severe internal damage to the steering motor assembly could result.*

8. Place the cam ring and rotor assembly, with the chamfer on the cam ring exterior facing away from the valve body housing onto the splined end of the drive shaft. See Figure 92. Slide the assembly downward to the face of the housing.

9. Install the two dowel pins, Figure 92, making sure the pins are engaged in the holes in the valve body housing.

10. Using snap ring pliers, install a new rotor retaining ring, Figure 92, being sure the ring is secured in the groove.

© FORD MOTOR CO. 1967

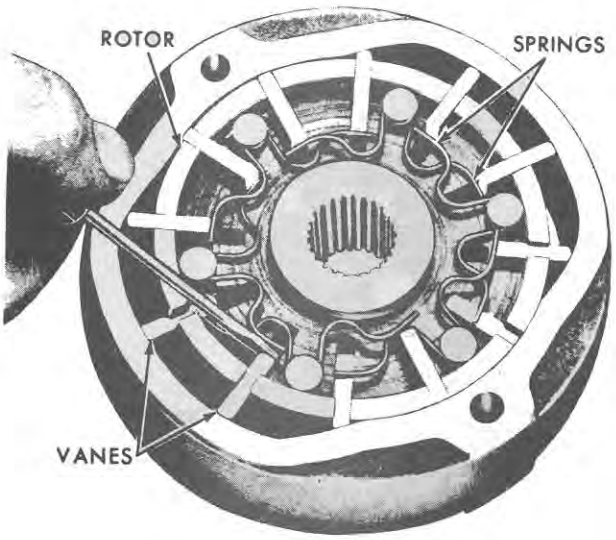

Figure 99
Installing Rotor Vanes

11. Install a new backup ring and the rotor seal in the cover assembly, Figure 91.
12. Align the cover assembly on the dowel pins and carefully slide it onto the cam ring and rotor assembly, Figure 90. When installing the cover assembly, be sure the rotor seal does not become dislodged or erratic operation will result.
13. Place the motor cover spring on top of the cover assembly so it is engaged with the hub of the cover.
14. Install a new motor base seal and backup ring inside the motor base. Then place the motor base over the assembly, aligning the notch in the base with the lug on the valve body housing. Slowly press the motor base until a slight binding is noticed as the base seal encounters the surface of the cam ring. To start the seal onto the cam ring, slowly rotate the cover in both directions while exerting a slight downward force until the base contacts the spring.

    IMPORTANT: *Do not allow the base to bind or damage to the base seal may result.*

15. Invert the assembly and place it in a press, then position a 1-11/16 inch (42.86 mm) minimum ID sleeve, approximately 2-5/8 inch (66.77 mm) long, over the outer shaft. Position the base retainer ring over the assembly.

    IMPORTANT: *A suitable sleeve must be placed over the outer shaft. Pressing on the outer shaft will cause serious damage to the shaft and will dislodge the internal components.*

16. Place the end of the retainer ring into the space under the anti-rotation lug, Figure 88, then press the valve body housing into the base until the upper edge of the housing is below the retainer ring groove. Do not allow the valve housing to bind. If the valve housing binds, do not use force. Release the press and tap the base with a soft mallet. If difficulty is encountered in this operation, keep tapping the housing as it is being pressed into the base.
17. Rotate the ring, Figure 88, until the gap in the ring is within 1/8 inch (3.17 mm) of the hole in the cover, then press the ring into the groove of the base until it is firmly seated.
18. Remove the complete assembly from the press.

STEERING CYLINDERS

A. Disassembly

1. Remove the clamp bolts, nuts and lock washers, Figure 100, and separate the two end assemblies from the cylinder. Remove the clamps.
2. Remove the three screw and washer assemblies and remove the cylinder end plate.
3. Depress the cylinder gland (10), Figure 100, and insert a punch through the hole in the side of the cyl-

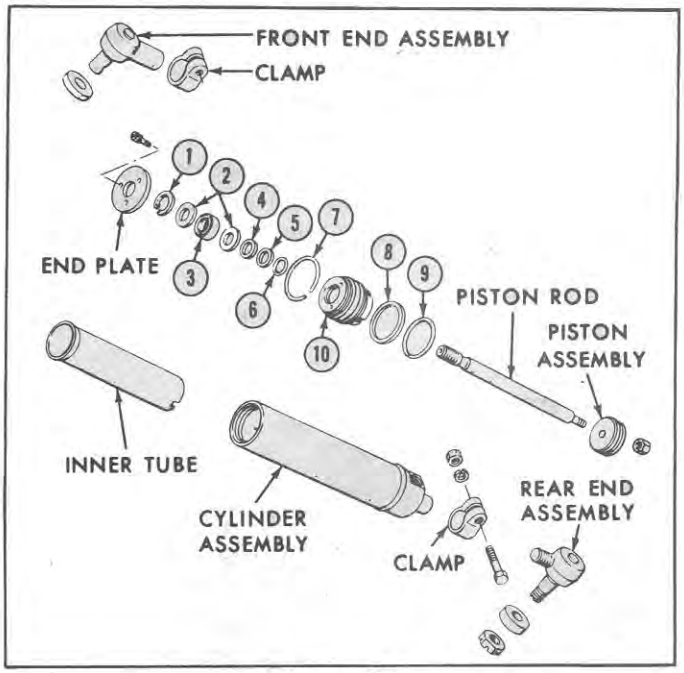

Figure 100
Power Steering Cylinder - Exploded View

KEY FOR FIGURE 100

POWER STEERING CYLINDER – EXPLODED VIEW

1. Retaining Ring
2. Washer
3. Rod Outer Seal
4. Washer
5. Piston Backup O-Ring
6. Inner O-Ring
7. Gland Lock Ring
8. Gland Backup O-Ring
9. Gland O-Ring
10. Cylinder Gland

inder to depress the gland lock ring (7). Remove the lock ring.

4. Slide the piston rod and related parts out of the cylinder assembly.
5. Remove the snap ring (1) from the piston rod and remove the washers (2), rod outer seal (3), washer (4), piston backup O-ring (5), and inner O-ring (6). Remove the hex nut and remove the piston assembly from the piston rod.

B. Cleaning, Inspection, and Repair

1. Clean all metal component parts in a suitable cleaning solvent and dry with compressed air, if available.
2. Inspect the piston assembly for defects. If defects, or evidence of leakage are disclosed, install a new piston assembly.
3. Inspect the cylinder assembly and inner tube for damage. If necessary, install new parts.
4. Inspect the cylinder gland. If there is any visible damage, or if there has been leakage past the gland, install a new gland.

   IMPORTANT: *A new cylinder seal kit should be installed whenever the cylinder is disassembled. Two seal kits are available: one which includes items (1) through (9), Figure 100; and one which includes items (1) through (10).*
5. Inspect the end assemblies for damage or worn threads. If necessary, install new parts.

C. Assembly

1. Install the piston assembly, Figure 100, on the piston rod and secure with the hex lock nut. Tighten the nut to a torque of 30-35 lbs. ft. (4.15-4.84 kgm).
2. Using a new seal kit, and if necessary, a new cylinder gland, install the items (1) through (10) onto the piston rod in the order shown in Figure 100.
3. Insert the assembled parts into the cylinder assembly.
4. Depress the cylinder gland and install the retaining ring, making sure it seats in its groove.
5. Position the cylinder end plate against the cylinder gland and secure it with the three screw and washer assemblies. Tighten securely.
6. Install the front and rear clamps and end assemblies, then secure the clamps with the bolts, lock washers and nuts. Tighten securely.

5. FILLING THE STEERING SYSTEM

If, for any reason, the oil level in the reservoir is below its specified level, or if the system was drained, fill and purge the system of air, as follows:

1. Fill the power steering reservoir to the reservoir dipstick full mark with the specified hydraulic oil, page 68.
2. Start the tractor engine. At medium idle speed, turn the steering wheel rapidly from stop to stop several times (five or more) to expel all entrapped air from the steering system.
3. Stop the tractor engine and check the oil level in the power steering reservoir. Add oil as required. If oil is added, repeat Step 2.
4. Start the tractor engine and repeat Steps 2 and 3, as required, until the front wheel(s) will turn from stop to stop.

   IMPORTANT: *After purging the system of air, make sure that the oil level in the reservoir is at its proper level and that oil leaks do not exist.*

6. TROUBLE SHOOTING

Most malfunctions can usually be traced to dirt or foreign matter in the system. Dirt can cause such things as stickiness, erratic operation, or hard steering.

CONDITION	POSSIBLE CAUSE	REMEDY
1. **Hard Steering**	Worn or damaged bearings.	Check column bearing. Check all bearings and bearing surfaces in the steering motor. Install new bearings if necessary.
	Worn or damaged rotor and cam ring assembly.	Check for damage. Install new assembly if necessary.
	Damaged valve spool causing leakage.	Install new steering motor.
	Jammed reaction spool or valve spool.	Clean thoroughly, install new steering motor if necessary.

© FORD MOTOR CO. 1967

CONDITION	POSSIBLE CAUSE	REMEDY
2. Excessive Drift	Broken reaction spool spring.	Install new spring.
	Leakage past reaction spool.	Inspect spool for wear or damage. Install new assembly if necessary.
3. Excess Slippage	Damage seals.	Inspect and install new seals, particularly rotor seals and O-rings.
4. Excessive Slippage in Only One Direction	Dirt behind steering motor cover assembly check ball.	Clean cover assembly with solvent and blow dry with air pressure. Blow each cover assembly hole clear with air pressure.
5. Noise	Hydraulic lines contacting tractor.	Wrap lines with tape.
	Broken spool spring.	Install new spring.
6. Erratic Motion of Wheels.	Damaged or sticking vanes.	Check cam ring and rotor, especially vanes, for free movement. Install new assembly if damaged.
7. Wheels Jerk From Stop to Stop With Only Slight Movement of Steering Wheel.	Jammed vane springs.	Check vane springs for proper seating. Replace any damaged parts.

7. SPECIFICATIONS

Steering Type . . . . . hydrostatic, with provisions for manual steering

Steering Wheel Turns (Lock to Lock) 3-1/2

Number of Steering Cylinders 2

Steering Cylinder Type . . . . . double acting

Cylinder Location . . . . . front pedestal

Type of Oil . . . . . ESN-M2C41 or M2C41

System Capacity . . . . . 2.5 U.S. qts. (2.08 Imp. qts., 2.36 liters)

Power Steering Pump:

Capacity at 1000 rpm . . . . . 3.5 U.S. gals. (2.80 Imp. gals., 13.24 liters)

Relief Valve Pressure . . . . . 1050-1150 psi. (73.5-80.5 kg/cm^2)

Part 12

STEERING SYSTEMS

Chapter 9
POWER ASSISTED STEERING (INTEGRAL UNIT) FORD 4000 AND 5000

Section		*Page*
1.	Description and Operation	69
2.	Removal and Disassembly	73
3.	Inspection and Overhaul	75
4.	Assembly and Installation	76
5.	Trouble Shooting	78
6.	Specifications	79
7.	Special Tools	79

1. DESCRIPTION AND OPERATION

The integral power assisted steering gear unit is similar in design for both Ford 4000 and 5000 models. This type of steering system houses the hydraulic power cylinder and control valve within the casing of the actual steering gear assembly. In the event of power assistance failure, manual steering control is always possible.

The steering gear when operated manually, functions in exactly the same way as the manual steering gear on both the Ford 4000 and 5000 models, using the worm and nut with recirculatory balls, rocker shaft, and single steering arm system.

On Ford 4000 models, the steering gear steering arm is connected to the front left-hand spindle arm by the drag link, similar to the manually steered Ford 4000, and when the steering wheel is turned anti-clockwise for a left-hand turn, the steering arm is moved forwards.

The Ford 5000 uses a system employing a centre pivot arm located within the front axle support, see Figure 1. In this case the worm and nut assembly within the power assisted steering gear is arranged so that in making a left-hand turn, the steering arm is moved rearwards, pulling the centre arm in an arc about its pivot and moving the track rods connected to the spindle arms to the left turn position.

Toe-in adjustment on the Ford 5000 is made as follows:—

1. Slacken off the locknut located on the right-hand side track rod.
2. Remove the bolt from the track adjustment clamp and rotate the track rod to achieve the desired length.
3. Replace the track adjustment clamp bolt ensuring it passes through the same track setting notch from which it was removed. Tighten the track rod locknut.

Toe-in adjustment on the Ford 4000 is unchanged as detailed in Part 13, Chapter 2.

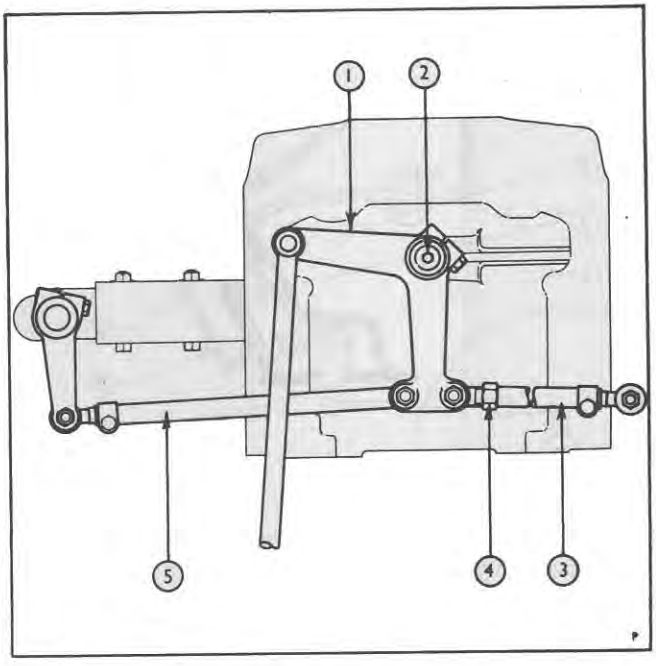

Figure 1
Ford 5000 Centre Pivot Steering Linkage

1. Centre Pivot Arm
2. Centre Pivot
3. Right-hand Track Rod
4. Track Rod Locknut
5. Left-hand Track Rod

© FORD MOTOR CO. 1970

The power assist components function in a similar way on both Ford 4000 and 5000 models. Situated within the steering column between the steering shaft and the worm and nut assembly is a rotary control valve, and around the nut is a piston which moves in a precision machined bore having its axis along the centre line of the worm and steering shaft, see Figure 2.

Hydraulic fluid which is supplied from an engine driven pump can be directed, by means of the rotary flow control valve, to the upper side of the piston via an internal feed passage, or to the underside of the piston via an external pipe, see Figure 2.

The main components of the rotary flow control valve are illustrated in Figure 3. The control valve is located in a housing between the top of the worm gear and the bottom of the steering shaft. Tapped into the valve housing are an inlet port which receives oil from the pump, an outlet port which returns oil to the reservoir, and a feed/return port which directs oil to and from the piston by an external feed/return pipe.

Pressed into the valve housing are three precision ground annular rings. These rings which have annular grooves containing diametrically opposite ports, align with the aforementioned ports in the valve housing, and ports in the control valve.

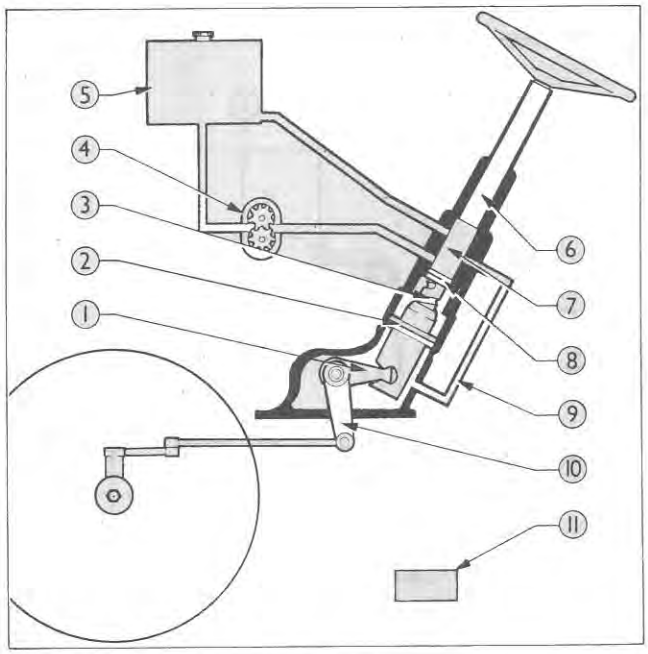

Figure 2
Integral Power Assisted Steering Unit

1. Rocker shaft
2. Piston
3. Worm Gear
4. Pump
5. Reservoir
6. Steering Shaft
7. Rotary Flow Control Valve
8. Internal Feed Passage
9. External Feed/Return Pipe
10. Drop Arm
11. Hydraulic Fluid

Situated between the annular rings are "O" ring seals, which isolate each oil circuit. A special steering shaft oil seal is positioned in the upper annular ring to prevent oil seepage to the steering shaft.

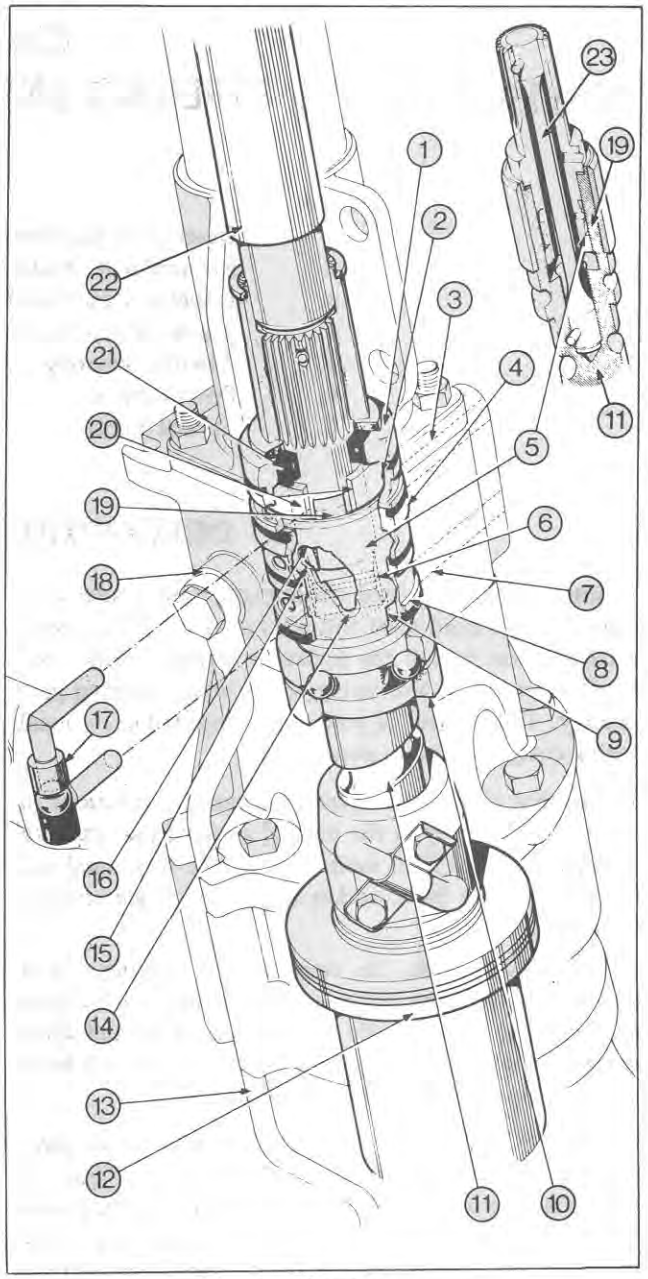

Figure 3
Rotary Flow Control Valve

1. Upper Annular Ring
2. Upper Core Port
3. Valve Housing Outlet Port
4. Centre Annular Ring
5. Valve Core
6. Lower Core Port
7. Valve Housing Inlet Port
8. Lower Annular Ring
9. Lower Barrel Slot
10. Worm Gear Bearing
11. Worm Gear
12. Piston
13. External Feed/Return Pipe
14. Lower Sleeve Port
15. Centre Sleeve Port
16. Upper Barrel Slot
17. Check Valve
18. Valve Housing Feed/ Return Port
19. Valve Barrel
20. Control Valve Barrel Stops
21. Steering Shaft Oil Seal
22. Steering Shaft
23. Torsion Bar

The control valve itself, which is located in a sleeve-like extension to the worm gear, consists of a valve barrel which is integral with the worm gear, and a valve core which rotates inside the barrel, and is splined to the steering shaft. The valve barrel and valve core are connected to each other by a torsion bar, see inset Figure 3, which controls their relative rotational movement, and automatically neutralises the valve when the steering wheel is released.

Rotation of the valve core within the barrel opens or closes certain ports which allow oil to be directed to the top or bottom of the piston depending on which direction the steering wheel is turned.

Stops are positioned on the control valve barrel to limit the relative movement of the valve core. Should power assistance fail or in the event of violent steering wheel rotation, the control valve core will abut against the stops and provide manual control, aided by the action of a check valve which is shown inset in Figure 3.

Control Valve Operation

The operation of the rotary flow control valve is described, with the relevant illustrations, for the Ford 4000 model. The principle of operation applies equally well to the Ford 5000 model with the exception that the worm gear and nut itemised in Figure 3 have an opposite helix, and the oil flows, from the control valve to the top and bottom of the piston, are correspondingly reversed.

Neutral Position

When the steering wheel is released or in the straight-ahead position, the control valve is neutralised and there is low pressure oil throughout the system, as shown in Figure 4.

Oil from the pump enters the valve housing inlet port and is fed by means of the lower annular ring through the lower sleeve ports into the control valve barrel. In addition to two oil inlet ports, the barrel also contains an upper and lower slot through which oil is fed to and returned from the piston. These slots are opened and closed by rotation of the valve core.

In the neutral position, both of these slots are half open as shown in the sectionalised inset of the valve sleeve, barrel and core, see Figure 4, and oil distributed to the top and bottom of the piston is at an equalised low pressure, so that the piston remains stationary. Further, oil from the pump now by-passes the slots and enters a port in the lower core.

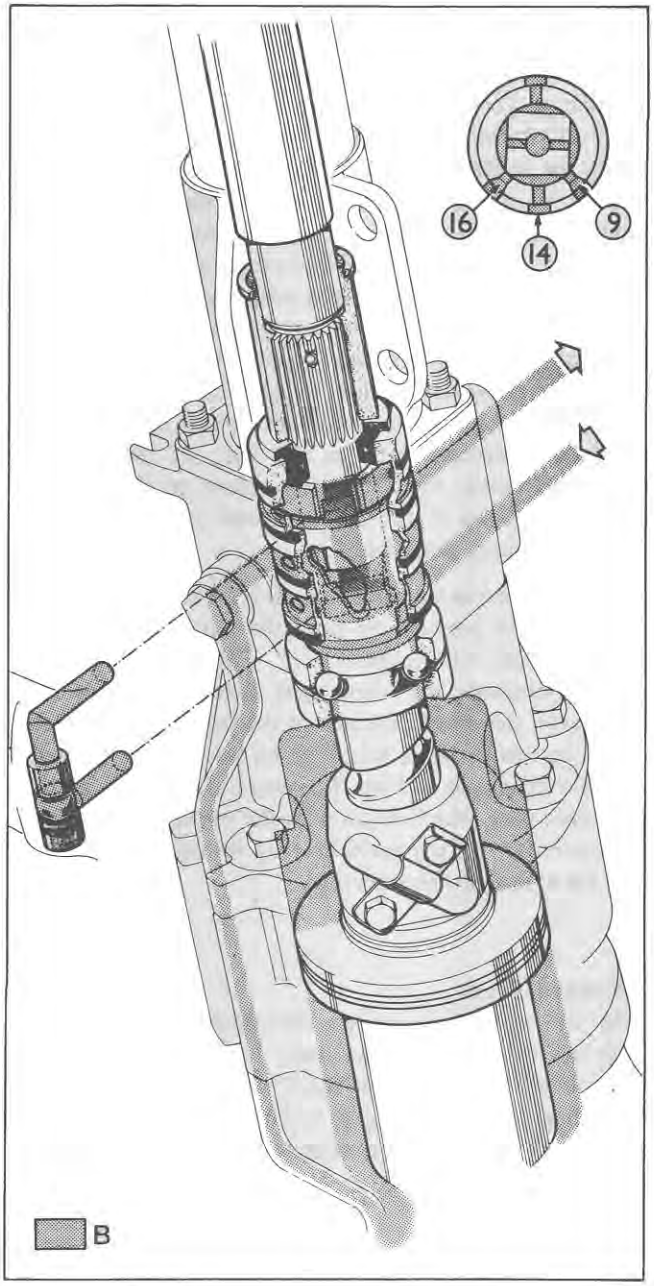

Figure 4
Control Valve Operation - Neutral Position

B. Low Pressure Oil
9. Lower Barrel Slot
14. Lower Sleeve Port
16. Upper Barrel Slot

From here, it passes up the core axial drilling to the upper core port which aligns with the upper annular ring. The outlet port in the valve housing returns the oil from here, via a pipe, to the reservoir.

Right-Hand Turn

Oil is directed to the space between the valve barrel and core as described for the neutral position. On the Ford 4000, when the steering wheel is turned in a clockwise direction as for a right-hand turn, the valve core also rotates clockwise thus opening the upper barrel slot and closing the lower barrel slot to high pressure oil as shown in the sectionalised inset of Figure 5. The oil now passes through the centre sleeve port and via the centre annular ring out of the valve housing feed/return port. From here it is directed by the external feed/return pipe to the bottom of the piston, thus forcing the nut and piston assembly up the worm gear. This action causes the worm gear to rotate in the same direction as the valve core; that is to say the valve barrel follows the valve core whilst maintaining a relative displacement between the two. If the steering wheel is released, the valve will return to the neutral position by means of the barrel to core torsion bar connection previously described.

At the same time as high pressure oil is fed to the bottom of the piston, low pressure oil from the top of the piston is being returned to the reservoir. This oil is returned internally through the worm gear bearing and into the lower barrel slot which, because of the position of the core, is open to low pressure oil. The oil now passes through the lower core port and up the centre of the core, to the upper core port, which aligns with the upper annular ring. The outlet port in the valve housing returns the oil from here, via a pipe, to the reservoir.

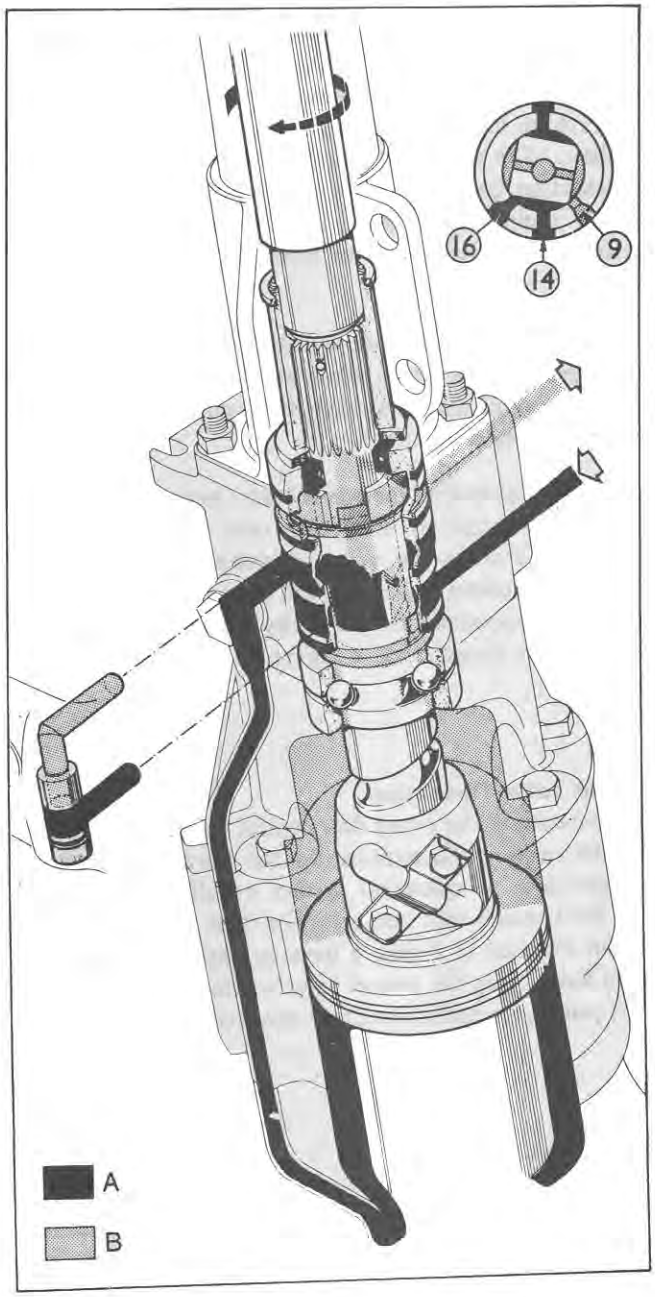

Figure 5
Control Valve Operation - Right-hand Turn

A. High Pressure Oil
B. Low Pressure Oil
9. Lower Barrel Slot
14. Lower Sleeve Port
16. Upper Barrel Slot

Left-Hand Turn

When the steering is turned anti-clockwise, the upper barrel slot is closed and the lower barrel slot opened to high pressure oil. The oil is fed directly to the top of the piston through the worm gear bearing and the piston and nut assembly is forced down the worm.

Oil from the bottom of the piston is returned to the control valve housing feed/return port by the external feed/return pipe. From here it passes through the upper valve barrel slot which is open to low pressure oil, and into the lower core port. The oil is then returned to the reservoir via the core centre, upper annular ring and valve housing outlet port as previously described.

Manual Operation

In the event of failure of oil supply from the pump or the need to operate the steering mechanism without the engine running, the steering can be operated manually due to the function of a check valve which is located in a drilling in the valve housing, connecting the upper and lower annular ring ports.

Under normal operation the ball is retained on its seat by pressurised oil but during manual operation the pressure of the exhaust oil being forced out is higher than the oil being drawn through the control valve by suction, and so the ball is lifted from its seat allowing oil to circulate from one side of the piston to the other.

2. REMOVAL AND DISASSEMBLY

A. REMOVAL FROM TRACTOR

1. Remove the fuel tank, for details refer to the Removal of Fuel Tank, Part 2, Chapters 1 and 2.

2. Remove the drag link to steering arm retaining nut, and using a suitable puller, disconnect the drag link.

3. Disconnect the pump and reservoir pressure and return pipes from the control valve housing.

4. Remove the bolts retaining the steering gear to the transmission housing.

5. Remove the steering gear from the tractor.

Before attempting to disassemble the power steering unit, as much oil as possible should be exhausted from the main housing and valve housing.

This may be achieved by slackening off the external feed/return pipe at the side cover end, and rotating the steering shaft several times from lock to lock. Oil will be exhausted from the side cover port and from the upper valve housing port.

B. DISASSEMBLY

1. Remove the steering arm retaining nut and lockwasher and remove the steering arm using Tool Number 1001.

2. Remove the external oil feed/return pipe from the valve housing and main housing side cover, see Figure 6.

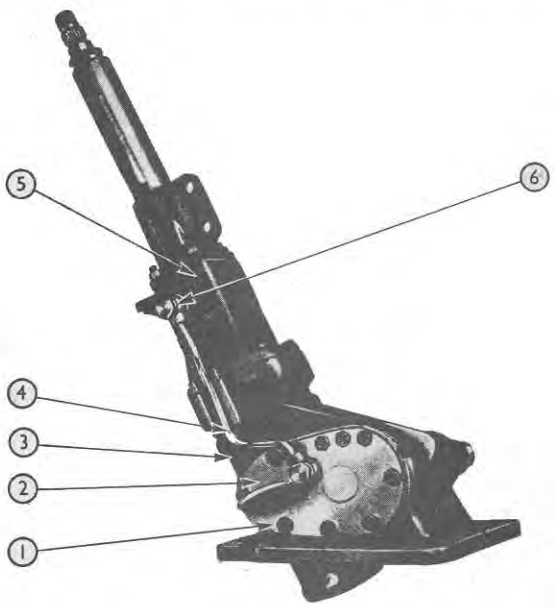

Figure 6
Integral Power Steering Unit

1. Main Housing Side Cover
2. Throttle Rod Bracket
3. Main Housing
4. Feed/Return Pipe
5. Control Valve Housing
6. Feed/Return Pipe Sealing Washer

3. Unscrew the ten bolts retaining the side cover to the main housing, Figure 6, and remove the side cover, throttle rod bracket, gasket and rocker shaft end-float shim.

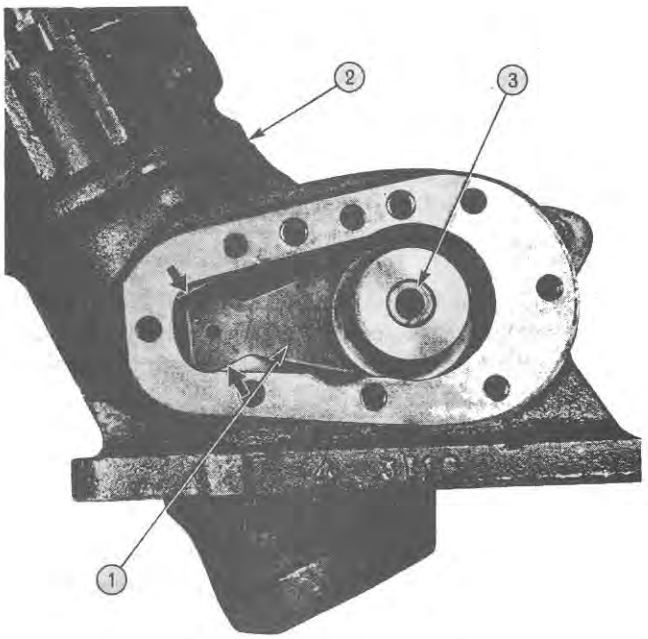

Figure 7
Rocker Shaft Removal

1. Rocker Shaft Arm
2. Main Housing
3. Locating Spring

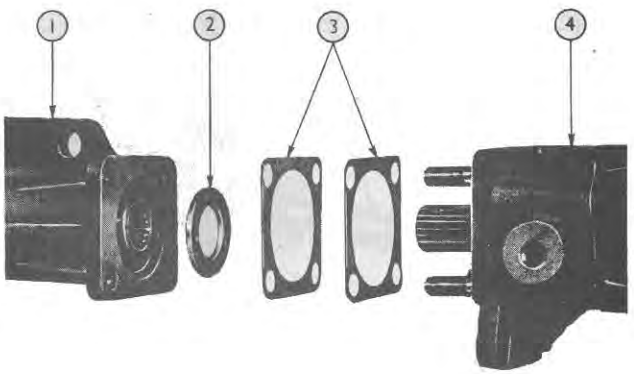

Figure 8
Steering Shaft and Housing Removal

1. Steering Shaft Housing
2. Lower Thrust Washer
3. Adjustment Shims
4. Control Valve Housing

4. Align the arm on the rocker shaft and the slot in the main nut with the main housing side opening as shown in Figure 7 by rotating the steering shaft spline, and slide the rocker shaft out of the housing.

5. Unscrew the four nuts retaining the steering shaft housing to the valve housing and remove the shaft housing, shaft assembly, adjusting shims and lower thrust washer from the valve housing as shown in Figure 8.

6. Withdraw the steering shaft, Figure 9, from the shaft housing and remove the upper thrust washer and upper bushing and mount assembly.

7. Install the oil seal protector sleeve Tool No. SW23/1 over the valve core spline and gently tap the valve housing away from the bearing housing and remove the bearing pre-load shims, see Figure 10.

8. Remove the seven bolts retaining the bearing housing to the main housing.

9. Remove the control valve and bearing housing from the main housing by rotating the control valve assembly out of the main nut.

10. Remove the control valve from the bearing housing, taking suitable precautions to ensure that none of the fifteen ball bearings are lost in the process, and remove the upper and lower bearing cups.

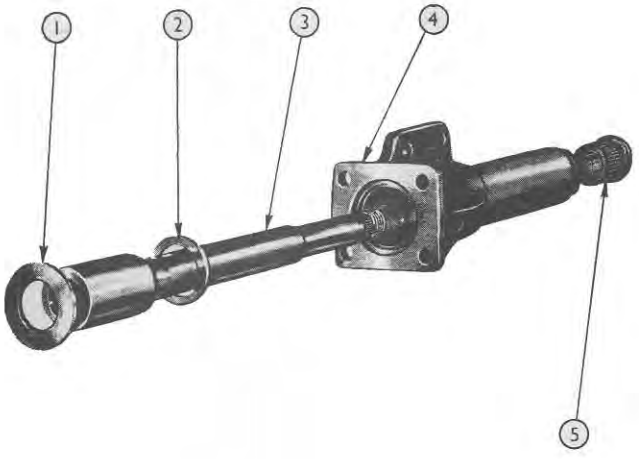

Figure 9
Steering Shaft and Housing Assembly

1. Lower Thrust Washer
2. Upper Thrust Washer
3. Steering Shaft
4. Steering Shaft Housing
5. Upper Bushing and Mount Assembly

11. Remove the nut and piston assembly and locating peg from the main housing, see Figure 11. Take care not to damage the piston rings as the assembly is withdrawn.

12. Remove the transfer tube retaining bracket, transfer tube, and piston rings from the nut and piston assembly, see Figure 11, and collect the twenty-eight ball bearings from the bottom of the main nut.

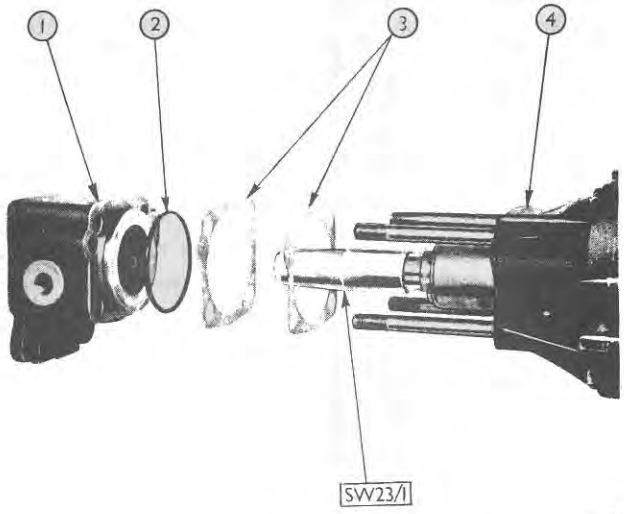

Figure 10
Control Valve Housing Removal

1. Control Valve Housing
2. "O" Ring Seal
3. Bearing Pre-load Shims
4. Bearing Housing

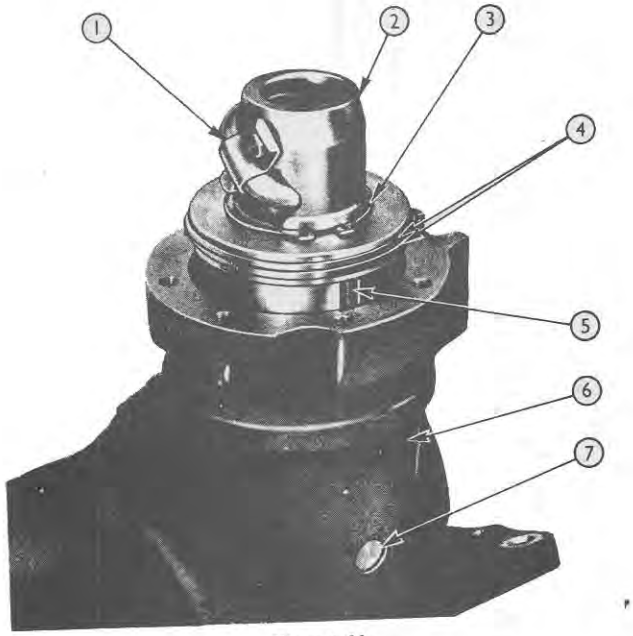

Figure 11
Nut and Piston Assembly Removal

1. Transfer Tube Retaining Bracket
2. Main Nut
3. Piston Circlip
4. Piston Rings
5. Locating Groove
6. Main Housing
7. Locating Peg

3. INSPECTION AND OVERHAUL

NOTE – Absolute cleanliness whilst handling all components of the power steering unit and, in particular, the worm and valve assembly, is essential.

1. Remove the two rocker shaft "O" ring seals, Figure 12, from the seats in the main housing and renew.

2. Inspect the rocker shaft end-float shim for distortion or uneven wear.

3. Renew the "O" ring seal on the locating peg, Figure 11, and reinstall the peg in the main housing.

4. Inspect the piston rings and renew if excessive wear is found. Replace the rings with the ring gaps located 180° apart.

5. Ensure that the piston circlip, Figure 11, is seated correctly and not cracked or distorted in any way.

6. Examine the rocker shaft actuating slot in the main nut and piston assembly for excessive wear, and inspect the ball channels in the main nut and transfer tube for scored or cracked surfaces.
NOTE – The nut and piston assembly is only serviced as part of a matched pair with the control valve assembly.

7. Examine the balls for cracks and deformation; renew if necessary.

8. Remove the locating spring, Figure 7, from the rocker shaft and examine the rocker shaft arm, spline and bearing surfaces; renew if distortion or excessive wear is found.

9. Remove the "O" ring seal from the bearing housing base and renew.

10. Examine the ball bearing cups, Figure 16, and balls for excessive wear, cracking or deformation; renew if necessary.

11. Inspect the worm gear for wear and cracks. Do **not** attempt to disassemble the control valve as this is only serviced as a complete assembly and part of a matched pair with the worm and nut assembly.

12. Remove the "O" ring seal, Figure 10, from the valve housing base and renew.

13. Remove the lower, centre and upper annular rings from the valve housing and renew all the "O" ring seals. See Figure 13.

14. Examine the control valve oil seal and, if necessary, remove and renew using Tool No. SW23 2 which is designed to locate in the groove between the oil seal inner and outer lips. The oil seal must be installed from the underside of the upper annular ring where a lead-in chamfer is machined to facilitate installation.

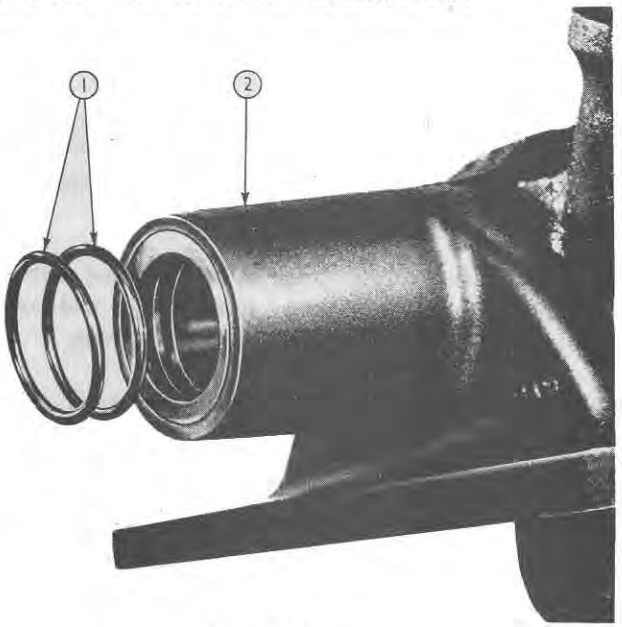

Figure 12
Main Housing "O" Ring Seals - Removal
1. Main Housing "O" Ring Seals
2. Main Housing

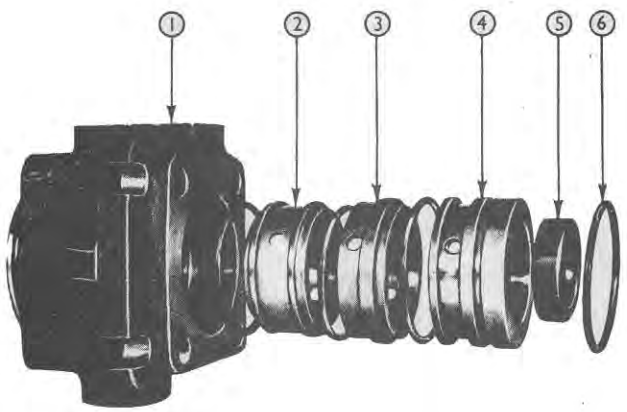

Figure 13
Control Valve Housing Assembly
1. Control Valve Housing
2. Lower Annular Ring
3. Centre Annular Ring
4. Upper Annular Ring
5. Valve Housing Oil Ring
6. "O" Ring Seals

15. Replace the "O" ring seals and annular rings in their correct order as shown in Figure 13.

16. Examine the upper and lower thrust washers and upper bushing and mount assembly for excessive wear and renew where necessary.

4. ASSEMBLY AND INSTALLATION

A. ASSEMBLY

1. Align the locating groove in the nut, Figure 11, with the locating peg and slide the nut and piston assembly into the bore using a piston ring compressor; ensure that the piston ring gaps are spaced 180° apart.

2. Position the nut and piston assembly so that the slot in the nut aligns with the main housing side opening, and install the rocker shaft in the main housing as shown in Figure 7.

3. Without the locating spring in position, and with no shim in the end cover bearing, install a new end cover gasket and bolt the end cover to the main housing.

4. Measure the rocker shaft end-float using a dial gauge as shown in Figure 14. From this value deduct 0.008 in. (0.2 mm.) and select a shim washer nearest to this value.

5. Remove the end cover and gasket and install the correct shim, and the locating spring. Replace the gasket and end cover, locate the throttle rod bracket on the end cover and bolt the assembly to the main housing to the correct torque, see specifications section.

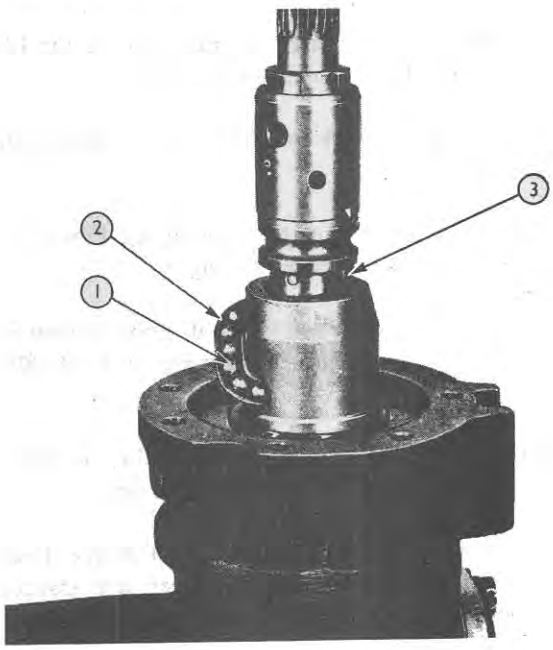

Figure 15
Worm Gear Installation

1. Ball Bearings
2. Transfer Tube
3. Worm Gear

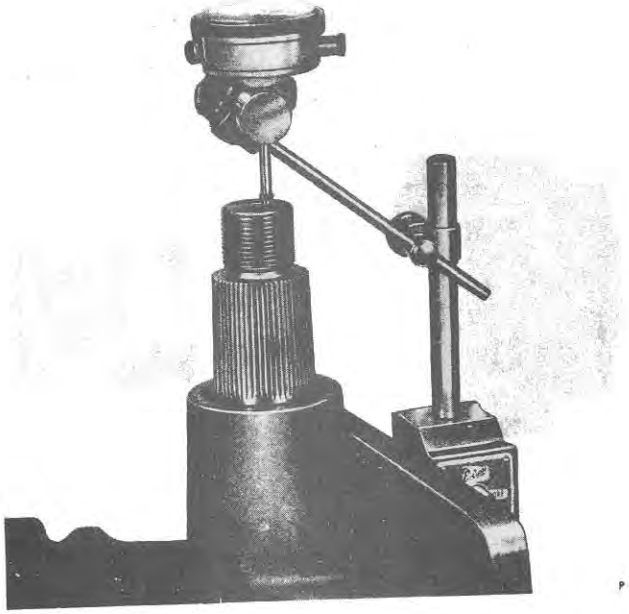

Figure 14
Checking Rocker Shaft End-float

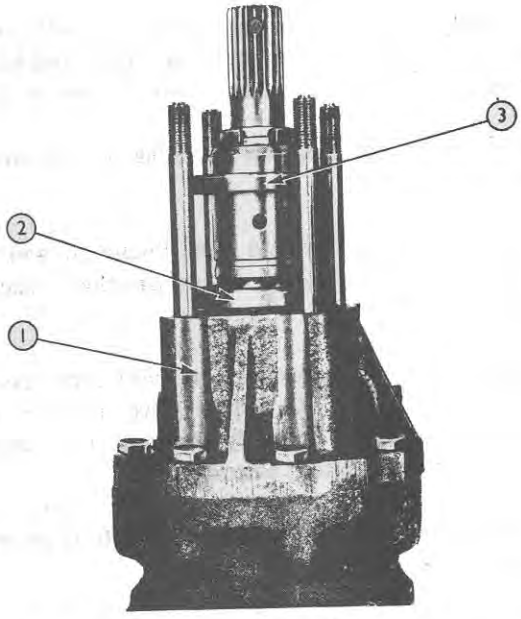

Figure 16
Control Valve and Bearing Housing Installation

1. Bearing Housing
2. Lower Bearing Cup
3. Upper Bearing Cup

6. Rotate the rocker shaft until the piston is at the top of its stroke and position the worm gear and one half of the transfer tube in the nut and piston assembly as shown in Figure 15. Feed in the 28 balls using clean grease, and install the other transfer tube half. Bolt the transfer tube retaining bracket to the nut assembly and bend over the retaining bracket tabs to lock the bolts.

7. Install the bearing housing, Figure 16, and locate the lower bearing cup in the housing.

8. Rotate the valve until the ball bearing track lines up with the lower bearing cup and install the balls with clean grease, and the upper bearing, Figure 16.

9. Install the 7 bolts retaining the bearing housing to the main housing and tighten to the correct torque – see specifications section.

10. Ensure that the three annular rings are correctly positioned in the valve housing and with no pre-load shims in position install the valve housing oil seal protector sleeve, Tool No. SW23/1 over the valve core spline. Slide the valve housing over the four bearing housing studs and lightly tap into position. Ensuring that the valve housing is correctly seated, determine the gap between the two housings with feeler gauges as shown in Figure 17. Subtract 0.003 in. (0.08 mm.) from this value and select shims to within 0.0015 in. (0.04 mm.) of the resultant value. Remove the valve housing, insert the shims, reinstall the valve housing and remove the oil seal protector sleeve.

11. Assemble the steering shaft in the shaft housing with the upper bushing and mount assembly and upper thrust washer in position.

12. Locate the lower thrust washer over the valve core spline onto the valve housing oil seal and with no shims in position, assemble the steering shaft and shaft housing to the control valve. Ensure that the shaft housing is correctly seated and determine the gap between the two housings with feeler gauges as shown in Figure 18. Add 0.005 in. (0.13 mm.) to this and select shims to within 0.0025 in. (0.064 mm.) of the resultant value.

13. Remove the steering shaft and shaft housing and install the appropriate shims; replace the shaft and shaft housing assembly and tighten the four retaining nuts to the correct torque – see specifications section.

14. Using new sealing washers, Figure 6, install the external feed/return pipe and torque the bolts to the correct value – see specifications section.

15. Install the steering arm on the rocker shaft, locate the tab washer, tighten the nut to the specified torque – see specifications section – and lock the nut with the tab washer.

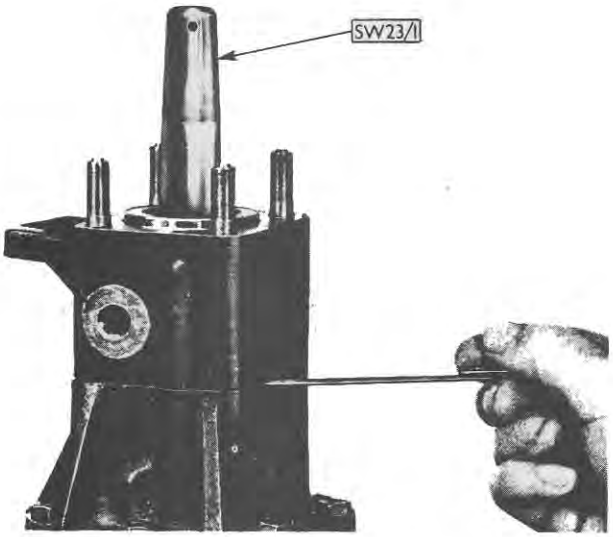

Figure 17
Valve Housing to Bearing Housing Shimming Procedure

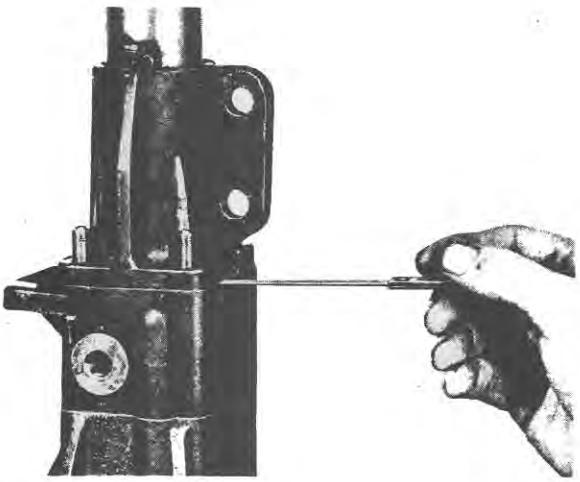

Figure 18
Steering Shaft Housing to Valve Housing Shimming Procedure

B. INSTALLATION

1. Install the steering gear on the tractor. For tractors with Select-O-Speed transmission, install a new steering gear base gasket. Install the four retaining bolts and tighten to the correct torque, see specifications section.

2. Connect the pressure and return pipes from the pump and reservoir to the valve housing.

3. Connect the drag link to the steering arm and replace the retaining nut.

4. Install the fuel tank, for details refer to Part 2, Chapters 1 and 2.

5. Top-up the oil level in the reservoir and operate the steering several times with the engine running to extract any air that is in the system and finally top-up the reservoir to the correct level. Operate the steering with the engine running and ensure that adequate power assistance is present. The effort required to turn the steering wheel should not exceed 4 lbs. measured tangentially to the steering wheel with a spring balance.

If this value is exceeded the valve housing to bearing housing shimming procedure should be checked as it will probably be necessary to increase the resultant shim value in order to reduce the pre-load on the worm gear bearing.

5. TROUBLE SHOOTING

TROUBLE	*POSSIBLE CAUSE*
Slow or jerky steering action, or no power.	Incorrect oil level in reservoir. Pump relief valve leaking. Pump relief valve spring weakened or broken. Worn pump pressure gears. Worn piston rings. Defective check valve. Control valve oil seals defective.
Pump noisy.	Incorrect oil level in reservoir. Air in system due to loose connections or damaged tubing. Water in the power steering oil.
Front wheels will not remain in straight-ahead position or other position selected by operator. High steering effort.	Control valve "O" rings seals defective. Control valve torsion bar defective.
Front wheels surge when turning. No steering wheel "feel".	Control valve torsion bar defective.
Excessive steering wheel free play.	Incorrect pre-load on worm gear bearing. Excessive wear on main nut slot and rocker shaft arm. Steering linkage ball joints worn.
Excessive pipe vibration or pipe failure.	Nylon clamps not fitted or fitted in incorrect location.

6. SPECIFICATIONS

	Ford 4000	*Ford 5000*
Power steering oil capacity—Imp. pint	3.9	3.9
—U.S. quart	2.35	2.35
—Litre	2.22	2.22
Power steering oil grade	S.A.E. 10	S.A.E. 10
Power steering oil—Ford specification	ESEN-M2C-92-A	ESEN-M2C-92-A
Steering gear ratio—Straight ahead	30.1:1	35.1:1
—Full lock	25.3:1	21.2:1
Steering wheel turns (Lock to lock)	4.4	4.4
For pump delivery capacities and torque values relating to the power steering pump, see specifications for the external ram type power steering unit.		
Pump pressure relief valve setting	1050 to 1150 lb./sq. in. (73.8 to 80.9 kg./sq. cm.)	1050 to 1150 lb./sq. in. (73.8 to 80.9 kg./sq. cm.)
Side cover to main housing retaining bolt	35 to 45 lb. ft. (4.85 to 6.23 kg.m.)	35 to 45 lb. ft. (4.85 to 6.23 kg.m.)
Steering column housing to valve housing retaining nut torque	25 to 30 lb. ft. (3.46 to 4.15 kg.m.)	25 to 30 lb. ft. (3.46 to 4.15 kg.m.)
Bearing housing to main housing retaining bolt torque	15 to 20 lb. ft. (1.08 to 2.76 kg.m.)	15 to 20 lb. ft. (1.08 to 2.76 kg.m.)
External feed/return pipe to valve housing and side cover retaining bolt torque	25 to 30 lb. ft. (3.46 to 4.15 kg.m.)	25 to 30 lb. ft. (3.46 to 4.15 kg.m.)
Power steering unit base to transmission housing retaining bolts torque	80 to 100 lb. ft. (11.1 to 13.8 kg.m.)	135 to 165 lb. ft. (18.6 to 22.8 kg.m.)
Steering wheel to steering shaft retaining nut torque	60 to 80 lb. ft. (8.3 to 11.1 kg.m.)	60 to 80 lb. ft. (8.3 to 11.1 kg.m.)
Steering arm to rocker shaft retaining nut torque	200 to 250 lb. ft. (27.6 to 34.6 kg.m.)	300 to 350 lb. ft. (41.3 to 48.4 kg.m.)

7. SPECIAL TOOLS

Tool Number	*Description*
1001	Puller
SW23/1	Oil seal protector sleeve
SW23/2	Oil seal driver

PART 13
FRONT AXLE

Part 13

FRONT AXLE

Chapter 1

FORD 2000 AND FORD 3000

Section		Page
1.	Description	1
2.	Adjustments	1
3.	Front Wheel Spindle Overhaul	2
4.	Radius Rod and Ball Cap Overhaul	4
5.	Front Axle and Support Overhaul	5

Chapter 2

FORD 4000

Section		Page
1.	Description	7
2.	Front Wheel Track Adjustment	7
3.	Front Wheel Spindle Overhaul	8
4.	Front Axle Overhaul	9

Chapter 3

FORD 5000

Section		Page
1.	Description	11
2.	Front Wheel Track Adjustment	11
3.	Front Wheel Spindle Overhaul	12
4.	Front Axle Overhaul	14

Chapter 4

SPECIFICATIONS AND SPECIAL TOOLS

Section		Page
1.	Specifications	17
2.	Special Tools	18

© FORD MOTOR COMPANY LTD., 1966

Chapter 5

FORD 4200 ROW CROP

Section		Page
1.	Description	19
2.	Adjustments	20
3.	Front Wheel Spindle Overhaul	22
4.	Front Axle and Support Overhaul	22
5.	Specifications	26

Part 13

FRONT AXLE

Chapter 1

FORD 2000 AND FORD 3000

Section		Page
1.	Description	1
2.	Adjustments	1
3.	Front Wheel Spindle Overhaul	2
4.	Radius Rod and Ball Cap Overhaul	4
5.	Front Axle and Support Overhaul	5

1. DESCRIPTION

The front axle consists of a centre axle assembly, mounted centrally to the engine front support by means of a front axle support pin. This pin allows a certain amount of articulation about the centre point. To provide the rigidity for the axle a radius rod, at either side of the axle, is connected from the axle to the transmission housing. The radius rod also has the effect of limiting the axle to a radial movement, which is itself limited by the engine front support.

The axle sections are attached to the centre axle by means of two bolts, nuts, etc. on each side. The holes used are positioned in such a way that the track of the axle can be varied in 4 in. (101·6 mm) steps between 52 in. (132 cm) and 76 in. (193 cm).

The outer end of the axle sections accept the front wheel spindles. These spindles are located by bushings in the axle section and at the lower end a thrust bearing is used to support the vertical thrust of the spindle on the axle section. The spindle itself acts as the king pin and hence the king pin inclination remains constant in relation to the axle beam. The top of each wheel spindle has a keyway to locate a steering arm, which is connected at the other end to the relative steering gear steering arm by means of a drag link.

The wheel hub is supported on the wheel spindle by two opposed taper roller bearings, a nut on the spindle is used to retain the outer cone and roller assembly. This nut provides an adjustment for the bearing preload.

2. ADJUSTMENTS

A. Front Track Adjustment

The track of the front axle is adjustable from 52 in. (132 cm) to 76 in. (193 cm). To obtain a front wheel track setting of 80 in. (203 cm) it is necessary to adjust the axle setting to a track of 72 in. (183 cm) and reverse the dish of the front wheels to give the required increase. It is not recommended that the wheels are reversed in the 76 in. (193 cm) axle setting to obtain 84 in. (214 cm) wheel track as undue strain can be placed on components under load and shock effect.

To adjust the track setting raise the front of the tractor, with a suitable jack, sufficiently to enable the front wheels to move freely. Work on one side of the tractor at a time. Remove the axle section to left hand axle assembly retaining bolts and nuts and move the axle section to the required position. Install the retaining bolts in the appropriate holes, as indicated in Figure 1. Install the axle section retaining nuts and tighten to the specified torque.

Slacken the two clamp bolts on the left hand drag link. Adjust the steering to line up the toe-in marks, on the right hand side of the axle. Adjust the left hand drag link length, by turning the adjusting sleeve to bring the alignment marks on the left hand side of the tractor into line. Make sure the steering gear is not moved from the initial position during this process. After adjustment tighten the drag link clamp bolts.

Adjust the right hand side of the axle to the required track setting in the same manner as the left hand side. To adjust the toe-in use the alignment marks on the left hand side

© FORD MOTOR COMPANY LTD 1966

previously adjusted as the reference for the straight ahead position.

In the 52 in. (132 cm) and 56 in. (142 cm) track settings the radius rods are located in the inner of the radius rod positions on the centre axle assembly, Figure 1. For other settings the outer locating holes for the radius rods are used, Figure 1.

Remove the jack from the tractor.

B. Toe-in Adjustment

The toe-in of the front wheels may be adjusted to within the specified limits by adjusting the length of the drag links. The correct toe-in is set during the production of the tractor. The axle sections, and their respective steering spindle arms are marked to identify the correct position of the wheels, with the steering in the straight ahead position.

If the new axle sections or steering spindle arms are installed it will be necessary to re-align the wheels and mark the components for future reference. When the marking has been retained at one side of the tractor this mark is used as a reference to find the centre point of the steering. Adjust the length of the drag link on the side to be marked, to bring the wheel toe-in to within specifications. Mark the wheel spindle arm and axle sections with a chisel accordingly to indicate the correct position.

Where it is not possible to use existing markings to determine the straight ahead position of the steering it will be necessary to find the centre point of steering gear movement.

Disconnect the drag links from the steering gear arms. Turn the steering gear from lock to lock counting the number of turns required. Turn the steering half the number of turns from either lock to give the mid-point of steering movement.

Position the wheels in the straight ahead position.

Install the drag links into the steering gear arms without moving the steering gear from its determined mid-point.

Adjust the length of the drag links to obtain the specified toe-in. Mark the steering spindle arms and axle sections with a chisel to indicate the correct position.

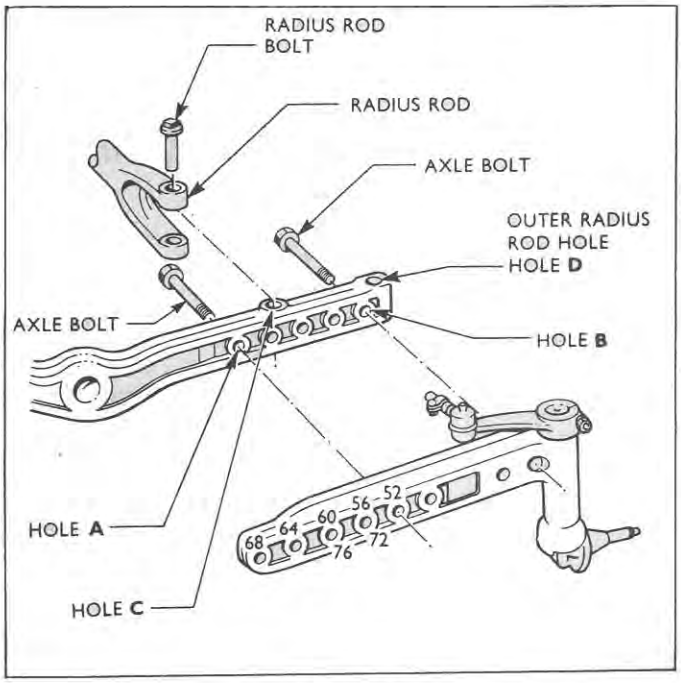

Figure 1
Front Wheel Track Adjustment

For Wheel Track		Line up Hole 'A' and Hole Number	Line up Hole 'B' and Hole Number	Space Bolts Apart		Set Radius Rod to Hole
In.	Cm.			In.	Cm.	
52	132	52		8½	21·5	C
56	142	56		8½	21·5	C
60	152	60		6⅜	16·1	D*
64	163	64		8½	21·5	D
68	173	68		8½	21·5	D
72	183		72	6⅜	16·1	D
76	193		76	4¼	10·8	D

*Use hole C for power assisted steering.

3. FRONT WHEEL SPINDLE OVERHAUL

A. Disassembly

1. Use a suitable jack or hoist to support the front end of the tractor.
2. Remove the six wheel retaining nuts and remove the wheel and tyre assembly.
3. Unscrew the front hub grease retaining cap.
4. Remove the cotter pin locating the castellated nut retaining the wheel hub.
5. Remove the nut and the hub retaining washer.
6. Remove the front wheel hub assembly and the outer cone and roller assembly from the front wheel spindle.
7. Remove the inner cone and roller assembly from the wheel spindle. Remove the grease retainer.
8. Remove the arm to spindle bolt and nut retaining the steering spindle arm to the wheel spindle.
9. Remove the steering spindle arm from the wheel spindle. If arm is tight on the spindle use Tools 1002, 951 and 625 to remove. Figure 2.
10. Extract the woodruff key from the spindle and remove the rubber dust seal.
11. Extract the wheel spindle and thrust bearing from the axle extension.

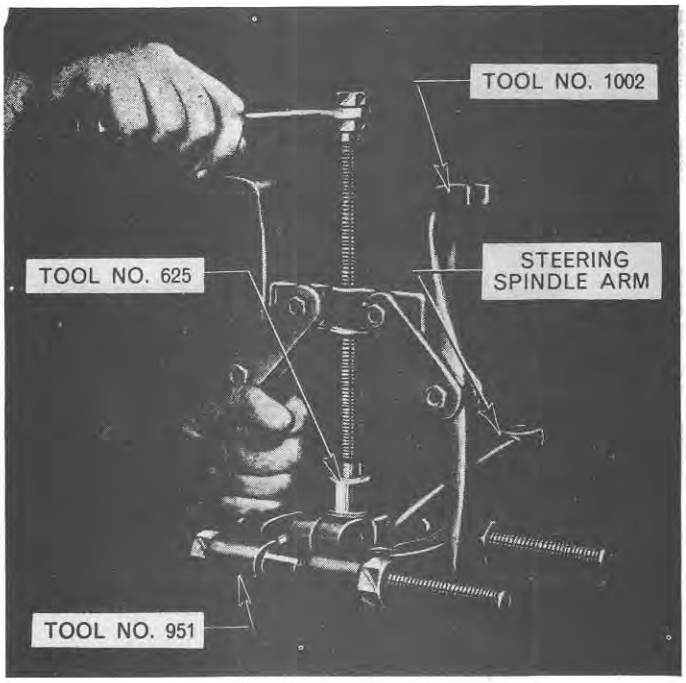

Figure 2
Removing Wheel Spindle Steering Arm

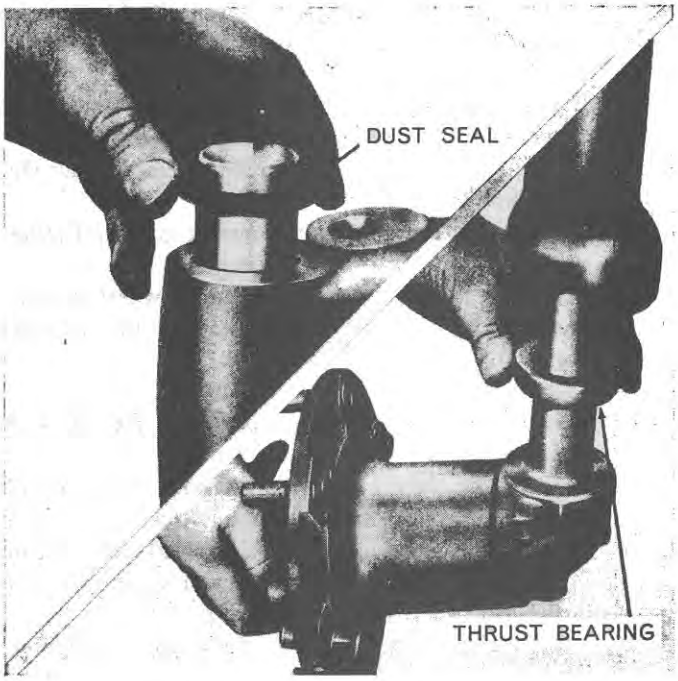

Figure 3
Installing Front Wheel Spindle

B. Inspection and Repair

1. Clean components with a suitable solvent and air dry. Lightly lubricate machined surfaces.
2. Inspect roller bearing cones, rollers and cups for signs of excessive wear, or damage. Renew if necessary. Remove bearing cups from the wheel hub using Tool Nos. 943, 943-S. Install new cups in hub, make sure that they are seated correctly against the shoulder.
3. Inspect spindle bushings in the axle extension housings for wear or scoring. If necessary to renew remove the axle extension from the tractor by removing the two retaining bolts and their associated nuts and lockwashers. Remove the bushings making sure that the bores are not damaged and install new bushings in the bore using Tools T815 and T807 for the upper bushing, and T815 and T808 for the lower bushing.
4. Inspect the spindle thrust bearing for correct operation. Renew if necessary.
5. Inspect the wheel spindle bearing surfaces for scoring or excessive wear.

C. Assembly

1. Pack the wheel spindle thrust bearing and install on the wheel spindle. Make sure that the shroud is to the top, this is indicated on the bearing by the Manufacturer's reference stamped on this face, and in some instances the word 'Top', Figure 3.
2. Install the wheel spindle into the axle section housing, make sure that it rotates in the bushings freely.
3. Install a new wheel spindle dust seal with the groove in the periphery of the seal nearest the base, Figure 3.
4. Install the woodruff key in the wheel spindle. Install the spindle steering arm on the wheel spindle locating by the woodruff key. Make sure the arm to spindle bolt hole in the arm is in line with the recess in the wheel spindle. Install the arm to spindle bolt, lock-



Figure 4
Installing Wheel Hub Grease Retainer

washer and nut and tighten to the specified torque.
5. Install the wheel hub grease retainer on the wheel spindle. Install as shown in Figure 4.
6. Install the front wheel inner bearing cone and roller assembly on the front wheel spindle, Figure 5.
7. Pack the wheel hub with a suitable grease. Install the wheel hub on the wheel spindle.
8. Install the front wheel outer bearing cone and roller assembly on the front wheel spindle.
9. Install the hub retaining washer on the wheel spindle, locating the tab with the keyway in the spindle. Figure 6.
10. Install the wheel hub retaining nut.
11. Install the wheel and tyre assembly on the hub and retain with the six nuts.
12. Tighten the slotted retaining nut to a torque of 45 to 55 lbs. ft. (6 to 8 mkg.) and then slacken off 2 to 3 slots to give an end float of 0·002 to 0·010 inch (0·05 to 0·25 mm.). Install a new cotter pin to locate the nut. Install the hub grease retaining cap.
13. Remove the jack or hoist from the tractor and tighten the wheel retaining nuts.

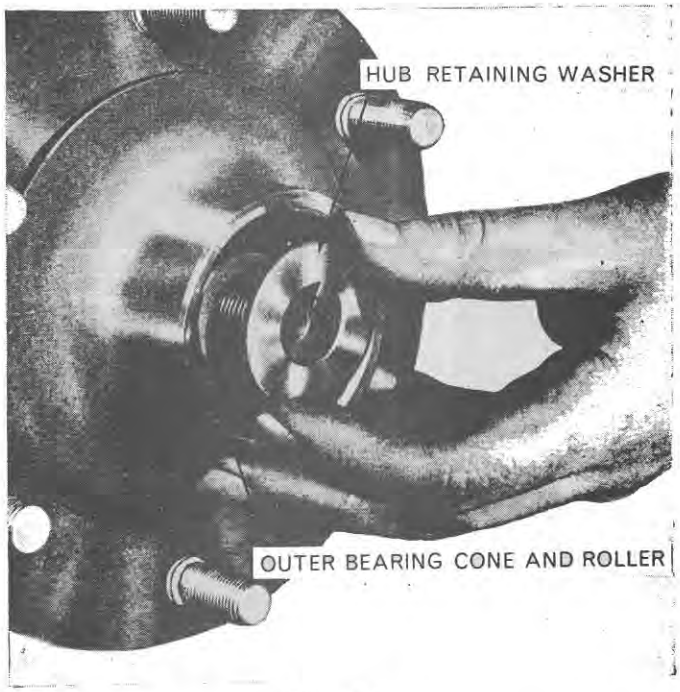

Figure 5
Installing Front Wheel Hub Retaining Washer

4. RADIUS ROD AND BALL CAP OVERHAUL

A. Disassembly

1. On tractors equipped with power assisted steering disconnect the control valve to power cylinder tubes at the power cylinder end. Plug the power cylinder ports to prevent ingress of dirt. Remove the nut retaining the power cylinder to the radius rod. Remove the power cylinder from the radius rod and suitably support from the drag link.
2. Remove the nut from the radius rod foot bolt and remove the bolt.
3. Remove the nut from the radius rod ball cap studs.
4. Support the radius rod and remove the ball cap.
5. Remove the radius rod from the tractor.

B. Inspection and Repair

1. Inspect the radius rod for straightness and fractures. Inspect the ball end for wear or damage. Renew the radius rod if necessary.
2. Inspect the radius rod ball caps for wear or scoring. Renew if necessary.

C. Assembly

1. Install the radius rod on the tractor.
2. Install the ball cap and the retaining nuts and lockwashers. Tighten the nuts to the specified torque.
3. Install the radius rod foot bolt and install the nut. Tighten to the specified torque.
4. On tractors equipped with power assisted steering, attach the power cylinder to the radius rod and install the retaining nut and tighten to the specified torque. Remove the plugs from the power cylinder ports. Connect the power assisted steering control valve to power cylinder tubes to the power cylinder. Operate the steering several times, with the engine running, to exclude any air that may be present in the system. Top up the reservoir oil level as required.

5. FRONT AXLE AND SUPPORT OVERHAUL

A. Disassembly

1. Remove the radiator as outlined in Part 1, Chapter 2.
2. Support the tractor at the front end with a suitable jack or hoist.
3. Remove drag link front end assembly retaining nut and disconnect the drag links from their respective steering spindle arms.
4. Remove the bolts and nuts retaining the axle sections to the centre axle assembly and remove the axle sections.

5. Remove the radius rod foot bolt and nut. Move the radius rods away from the axle assembly to permit its removal.
6. Remove the bolt retaining the front axle support pin flange to the front axle support. Remove the front axle pin flange.
7. Unscrew the front axle support pin from the front axle support. Remove the front centre axle assembly and spacer from the front axle support.

B. Inspection and Repair

1. Inspect the front centre axle bushing for excessive wear or scoring. If necessary, remove the bushing and inspect the bore in the axle beam for damage. Install a new bushing using Tool No. 630-S.
2. Examine the front axle support pin and support spacer for excessive wear or scoring.
3. Examine the front axle support for fractures. To renew front axle support remove the four bolts and nuts retaining the support to the engine cylinder block. Install the new front support and retain to the cylinder block with the four bolts and nuts. Tighten the nuts to the specified torque.

C. Assembly

1. Select the longest front axle support pin spacer that will install freely in the front axle support.
2. Install the selected spacer into the front centre axle assembly. Position the axle assembly and spacer in the front axle support and install the front axle support pin.
3. Tighten the front axle support pin to the specified torque and install the front axle pin flange and retaining bolt, Figure 6.
4. Position the radius rods on the front centre axle assembly and install the foot bolts and nuts. Tighten the nut to the specified torque.
5. Install the axle extensions and retain them to the centre axle assembly with the bolts and nuts. Tighten to the specified torque.
6. Connect the drag links to their respective wheel spindle arms.
7. Remove the jack or hoist supporting the tractor.
8. Install the radiator and associated sheet metal work as detailed in Part 1, Chapter 2.

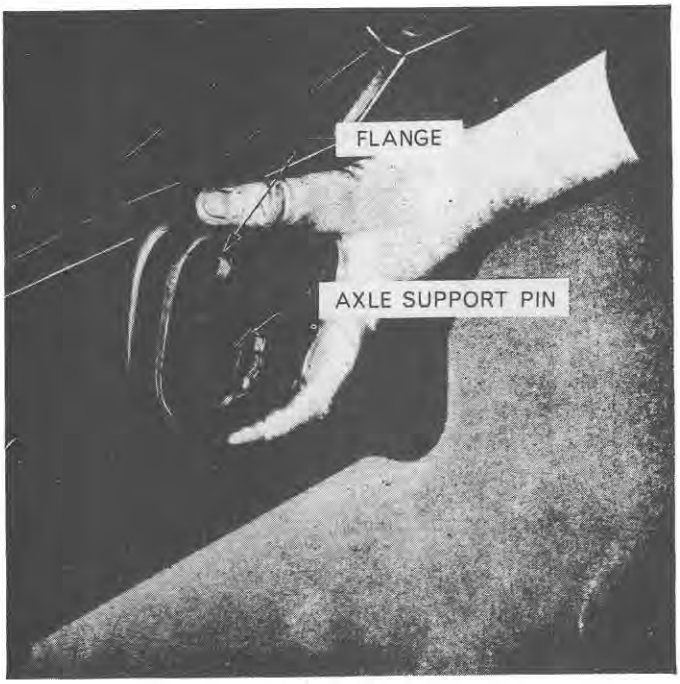

Figure 6
Installing Front Axle Support Pin Flange

Part 13

FRONT AXLE

Chapter 2

FORD 4000

Section		Page
1.	Description	7
2.	Front Wheel Track Adjustment	7
3.	Front Wheel Spindle Overhaul	8
4.	Front Axle Overhaul	9

1. DESCRIPTION

The front axle consists of an inverted 'U' section centre axle assembly that is mounted centrally to the engine front support. The method of mounting utilizes a front axle support pin attached to the front of the centre axle assembly and a similar support pin attached to the rear of the centre axle assembly by an extension, on the same axis. The rear axle support pin locates in a bushing in the front axle support. The front axle support pin bushing is incorporated into a bracket that is attached to the front axle support.

The method of mounting limits the axle assembly to a radial movement about the support pin axis. This obviates the necessity of radius rods to locate the axle. The radial movement of the axle assembly is itself limited by the front axle support.

Axle sections, consisting of an inverted 'U' section with a tube to accept the wheel spindle welded to the outer end, are installed into the open ends of the centre axle assembly. The centre axle assembly and the axle sections are machined to provide a series of holes that will allow the track of the axle to be varied in 4 in. (101·6 mm) steps between 52 in. (132 cm) and 76 in. (193 cm).

The outer end of the axle section accepts the front wheel spindle. The spindle is located in the axle section by bushings and at the lower end a thrust bearing is used to support the vertical thrust of the spindle on the axle section. The spindle itself acts as the king pin and hence the king pin inclination remains constant in relation to the axle assembly. The top of each wheel spindle is keyed to locate a steering spindle arm.

The left hand steering spindle arm is connected to the steering gear arm by means of a drag link. The left hand steering spindle arm also incorporates another arm which is connected to the right hand steering spindle arm by means of a spindle connecting rod.

2. FRONT WHEEL TRACK ADJUSTMENT

The track of the front wheels is adjustable from 52 to 76 in. (132 to 193 cm) in approximately 4 in. (10·2 cm) increments. To obtain a front wheel track setting of 80 in. (203 cm) it is necessary to reverse the dish of the front wheels at an axle setting of 72 in. (183 cm). It is not recommended that the wheels be reversed in the 76 in. (193 cm) axle setting to give a resultant 84 in. (214 cm) track as undue strain can be placed on components under load and shock effect.

To adjust the axle track setting raise the front of the ractor, with a suitable jack or hoist, sufficiently to enable the wheels to turn freely. Remove the axle section retaining bolts and the spindle arm connecting rod clamp bolts. Adjust the axle to the required track setting and install the axle section retaining bolts. Line up the nearest notch in the spindle arms connecting rod end with the clamp and install the clamp bolt.

Remove the drag link clamp bolt and adjust the length of the drag link to suit the axle track. The length of the drag link is at its minimum setting for the 52 and 56 in. (132 and 142 cm) track setting, for each 4 in. (10·2 cm) increment above this the drag link length should be increased by one step e.g., with a track setting of 64 in. (163 cm) the drag link should be adjusted to the third position.

© FORD MOTOR COMPANY LTD., 1966

3. FRONT WHEEL SPINDLE OVERHAUL



Figure 7
Remove Front Wheel Spindle Steering Arm

A. Disassembly

1. Use a suitable jack or hoist to support the front end of the tractor.
2. Remove the six wheel retaining nuts and remove the wheel and tyre assembly.
3. Unscrew the front hub grease retaining cap.
4. Remove the cotter pin locating the castellated nut retaining the wheel hub.
5. Remove the nut and the hub retaining washer.
6. Remove the front wheel hub assembly and the outer cone and roller assembly from the front wheel spindle.
7. Remove the inner cone and roller assembly from the wheel spindle. Remove the grease retainer.
8. Remove the bolt clamping the steering spindle arm to the wheel spindle.
9. Remove the steering spindle arm from the wheel spindle. If arm is tight on the spindle use Tools 1002, 951 and 625 to remove, Figure 7.
10. Extract the woodruff key from the spindle and remove the rubber dust seal.
11. Extract the wheel spindle and thrust bearing from the axle extension.

B. Inspection and Repair

1. Clean components with a suitable solvent and air dry. Lightly lubricate machined surfaces.
2. Inspect roller bearing cones, rollers and cups for signs of excessive wear or damage. Renew if necessary. Remove the bearing cups from the wheel hub using Tools No. 943 and 943-S. Install new cups in the wheel hub, make sure that they are seated correctly against the shoulder.
3. Inspect the wheel spindle for scoring of the grease retainer surface. If slight marking is evident polish with a crocus cloth. Renew the wheel spindle if scoring of the surface is excessive.
4. Inspect spindle bushings in the axle section housing for wear or scoring. If necessary to renew, remove the axle section from the tractor by removing the two retaining bolts and their associated nuts and lockwashers. Mount the axle section assembly in a vice and extract the bushings. Make sure that the bores are not damaged. Install new bushings in the bore using Tools T815 and T807 for the upper bushing and T815 and T809 for the lower bushing.
5. Inspect the spindle thrust bearing for correct operation. Renew if necessary.

C. Assembly

1. Pack the wheel spindle thrust bearing with grease and install on the wheel spindle. Make sure that the shroud is to the top, this is indicated on the bearing by the manufacturer's reference stamped on this face and in some instances the word 'Top', Figure 8.

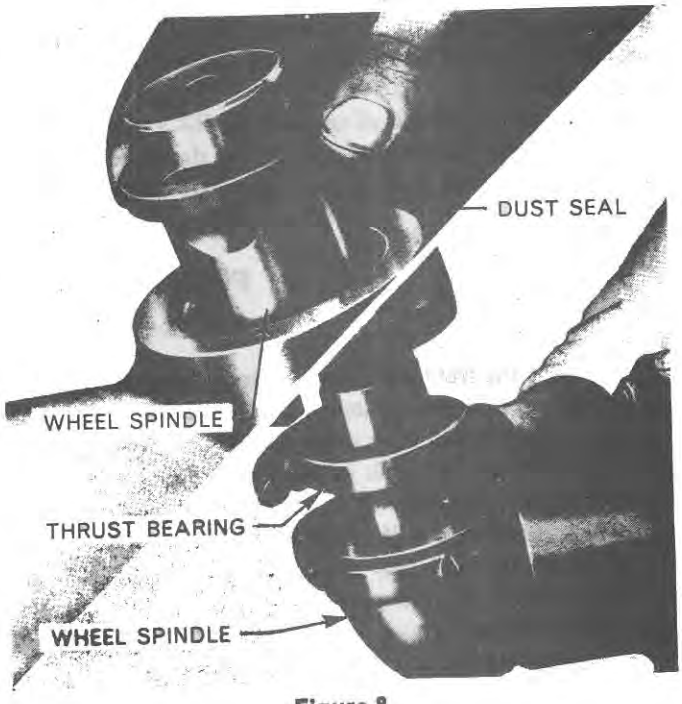

Figure 8
Installing Front Wheel Spindle



Figure 9

Installing Wheel Hub Grease Retainer

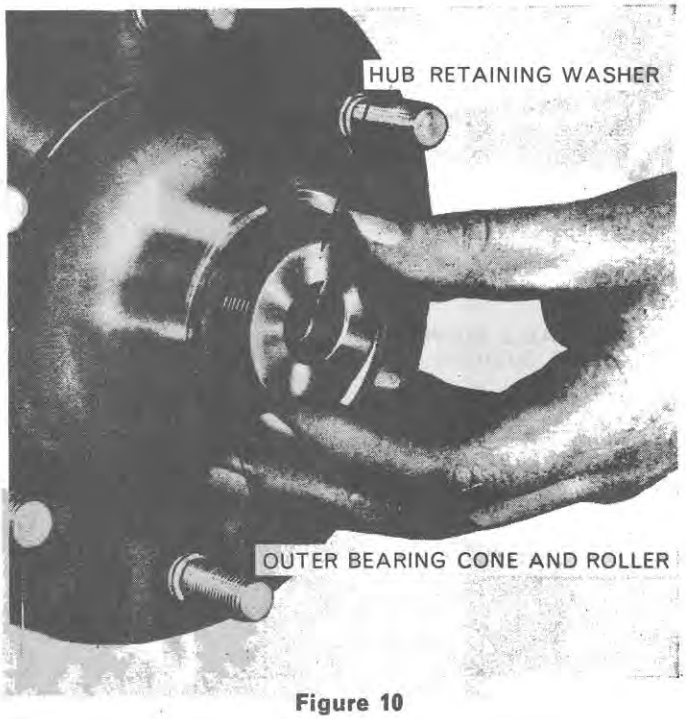

Figure 10

Installing Front Wheel Hub Retaining Washer

2. Install the wheel spindle into the axle section housing, make sure that it rotates in the bushings freely.
3. Install a new wheel spindle dust seal with the groove in the periphery of the seal nearest the base, Figure 8.
4. Install the woodruff key in the wheel spindle. Install the spindle steering arm on the wheel spindle, locating in the correct position by the woodruff key.
5. Install the spindle steering arm clamping bolt and tighten to the specified torque.
6. Install the wheel hub grease retainer on the wheel spindle. Install as shown in Figure 9.
7. Install the front wheel bearing cone and roller assembly on the front wheel spindle.
8. Pack the wheel hub with a suitable grease. Install the wheel hub on the wheel spindle.
9. Install the front wheel outer bearing cone and roller assembly on the front wheel spindle.
10. Install the hub retaining washer on the wheel spindle, locating the tab with the keyway in the spindle, Figure 10.
11. Install the wheel hub retaining nut.
12. Install the wheel and tyre assembly on the hub and retain with the six nuts.
13. Tighten the slotted retaining nut to a torque of 45 to 55 lbs. ft (6 to 8 mkg.) and then slacken off 2 to 3 slots to give an end float of 0·002 to 0·010 inch (0·05 to 0·25 mm). Install a new cotter pin to locate the nut. Install the hub grease retaining cap.
14. Remove the jack or hoist from the tractor and tighten the wheel retaining nuts.

4. FRONT AXLE OVERHAUL

A. Disassembly

1. Use a suitable jack or hoist to support the front end of the tractor.
2. Remove the drag link front end assembly retaining nut and disconnect the drag link from the wheel steering spindle arm.
3. Remove the wheel steering spindle arm connecting rcd end retaining nuts and remove the connecting rod.
4. Remove the axle section retaining bolts and nuts. Remove the sections from the centre axle.
5. Support the front centre axle assembly so as to remove its weight from the front support pin bracket.
6. Remove the locking wire from the front axle support pin bracket retaining bolts. Remove the bolts.
7. Remove the front axle support pin bracket, shims and thrust washer.
8. Remove the centre axle assembly from the tractor by moving it forward to disengage the rear support pin from the front axle support assembly. Remove the thrust washer from the rear support pin.

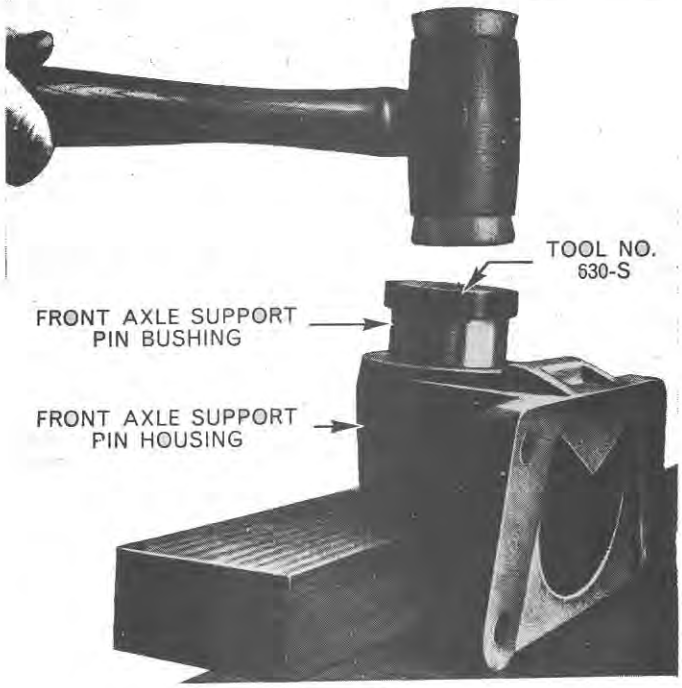

Figure 11

Installing Front Support Pin Bushing

B. Inspection and Repair

1. Inspect front axle support pin bushing for excessive wear or damage. If necessary to renew, drift out the grease retaining plug. Extract the bushing using Tool No. 630-S and install a new bushing using Tool No. 630-S, Figure 11.
2. Inspect the rear axle support pin bushing in the front axle support housing. Extract the bushing if it is necessary to renew. Take care not to damage the housing bore. Install a new bush using Tool Nos. T815 and T809.
3. Inspect axle support pins for excessive wear or scoring. If the wear is excessive or the pins are distorted renew the axle assembly.
4. Inspect the front axle support for signs of fractures. If necessary to renew, remove the radiator shell, headlamps, radiator, etc. Remove the four front support to engine retaining bolts and nuts while supporting the front support housing. Remove the housing from the tractor. Install a new support housing on the tractor, support in position while installing the retaining bolts and nuts. Tighten the retaining bolts to the specified torque.

   Install the radiator, headlamps, radiator shell, etc.

C. Assembly

1. Install a new thrust washer on the rear front axle support pin.
2. Install the rear front axle support pin in the front axle support pin rear bushing and support the centre axle assembly in position.
3. Install the thrust washer on the front support pin. Install the front support pin bracket and tighten the retaining bolts. Use feeler gauges to obtain a measurement of the gap between the front face of the front support pin thrust washer and the front support pin bracket. Remove the front support pin bracket retaining bolts and the bracket.

   Select an appropriate number of shims that will give a minimum end-float on the axle of 0·010 in. (0·254 mm). Install the shims on the support pin and install the support pin bracket. Retain the bracket to the front support with the four bolts and tighten to the specified torque. Make sure that the centre axle assembly end float does not fall below the specified end float and that it rotates on the support pins without binding.
4. Install locking wire through the heads of the support pin bracket retaining bolts.
5. Install the axle sections into the centre axle assembly. Install the retaining bolts in the respective holes to obtain the required track setting. Install the nuts and tighten the bolts to the specified torque.
6. Adjust the spindle arm connecting rod to the required setting and install it on the tractor. Install the end assembly nuts and tighten to the specified torque.
7. Connect the drag link to the left hand steering spindle arm and install the retaining nut. Tighten the nut to the specified torque.
8. Remove the jack or hoist from the tractor.

Part 13

FRONT AXLE

Chapter 3

FORD 5000

Section		Page
1.	Description	11
2.	Front Wheel Track Adjustment	11
3.	Front Wheel Spindle Overhaul	12
4.	Front Axle Overhaul	14

1. DESCRIPTION

The front axle consists of an inverted 'U' section centre beam that is mounted centrally to the front axle support, by an axle support pin. A rearward extension on the centre axle assembly is located by a support pin, on the same axis as that for the centre axle assembly, to the engine oil pan.

Movement of the axle, is restricted by this method, to that of radial about the support pins, which is itself limited by the front axle support. Into each of the open ends of the centre axle assembly is installed an axle section.

The axle section consists of an inverted 'U' section beam with a tube to accept the wheel spindle welded to the outer end. The centre axle assembly and the axle sections are machined to provide a series of holes that will allow the track of the axle to be varied in 4 in. (101·6 mm) steps between 52 in. (132 cm) and 76 in. (193 cm).

The outer end of the axle section accepts the front wheel spindle. The spindle is located in the axle section by bushings and at the lower end a thrust bearing is used to support the vertical thrust of the spindle on the axle section. The spindle itself acts as the king pin and hence the king pin inclination remains constant in relation to the axle beam.

The centre line of the wheel spindle is offset to the rear in relation to the centre line of the king pin. This gives a trailing effect on the front wheels which alleviates the need for a castor angle.

The upper portion of each wheel spindle is keyed to locate a steering spindle arm. The left hand steering spindle arm on manual steering tractors is connected to the steering gear arm by a drag link. The steering spindle arm also incorporates another arm which is connected directly to the right hand steering spindle arm by means of a spindle connecting rod.

On tractors equipped with power assisted steering the steering spindle arms are connected to the steering centre arm in the front axle support by connecting rods.

2. FRONT WHEEL TRACK ADJUSTMENT

The track of the front wheels is adjustable from 52 to 76 in. (132 to 193 cm) in approximately 4 in. (10·2 cm) increments. To obtain a front wheel track setting of 80 in. (203 cm) it is necessary to reverse the dish of the front wheels at an axle setting of 72 in. (183 cm). It is not recommended that the wheel be reversed in the 76 in. (193 cm) axle setting to give a resultant 84 in. (214 cm) track as undue strain can be placed on components under load and shock effect.

To adjust the axle setting raise the front of the tractor, with a suitable jack or hoist, sufficiently to enable the wheels to turn freely. Remove the axle section retaining bolts and the spindle arm connecting rod clamp bolts. Adjust the axle to the required track setting, Figure 12, and install the axle section retaining bolts. Line up the nearest notch in the spindle arms connecting rod with the clamp and install the clamp bolt.

Loosen the clamping nuts at either end of the drag link sleeve. Adjust the length of the drag link, by turning the adjusting sleeve, so that the alignment marks on the steering gear housing and the steering arm are in line at the same time as the wheel spindle arm and axle section marks are in line. Tighten the drag link adjusting sleeve clamping nuts.

© FORD MOTOR COMPANY LTD., 1966

3. FRONT WHEEL SPINDLE OVERHAUL

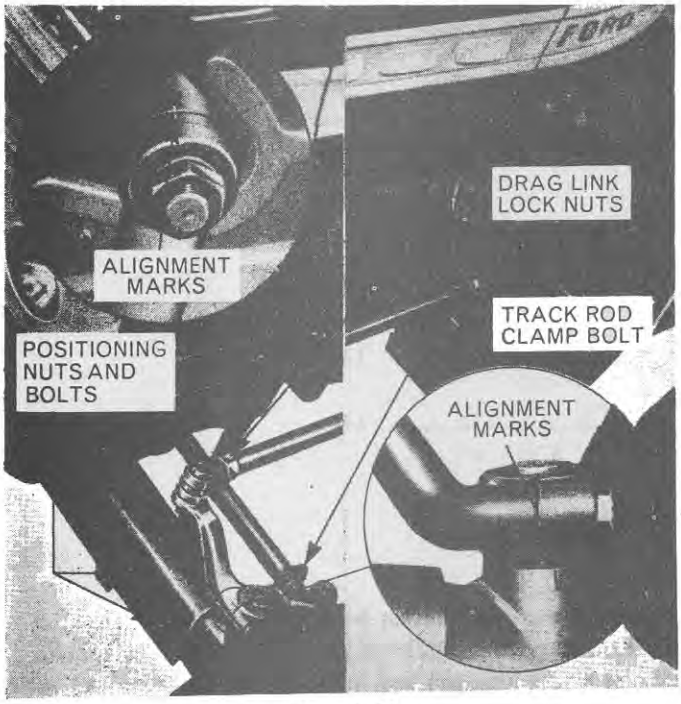

Figure 12
Steering Alignment Marks

A. Disassembly

1. Use a suitable jack or hoist to support the front end of the tractor.
2. Remove the six wheel retaining nuts and remove the wheel and tyre assembly.
3. Unscrew the front hub grease retaining cap.
4. Remove the cotter pin locating the castellated nut retaining the wheel hub.
5. Remove the nut and the hub retaining washer.
6. Remove the front wheel hub assembly and the outer cone and roller assembly from the front wheel spindle.
7. Remove the inner cone and roller assembly and hub grease retainer from the wheel spindle.
8. Remove the bolt clamping the steering spindle arm to the wheel spindle.
9. Remove the steering spindle arm from the wheel spindle. If the arm is tight on the spindle use Tools 1002, 951 and 625 to remove, Figure 13.
10. Extract the woodruff key from the wheel spindle and remove the rubber dust seal.
11. Extract the wheel spindle and thrust bearing from the axle extension.

B. Inspection and Repair

1. Clean components with a suitable solvent and air dry. Lightly lubricate machined surfaces.
2. Inspect roller bearing cones, rollers and cups for signs of excessive wear or damage. Renew if necessary. Remove the bearing cups from the wheel hub using Tool No. 943 and 943-S. Install new cups in the wheel hub, make sure that they are seated correctly against the shoulder.
3. Inspect the wheel spindle for scoring of the grease retainer surface. If slight marking is evident polish with a crocus cloth. Renew the wheel spindle if scoring of the surface is excessive.
4. Inspect spindle bushings in the axle section housing for wear or scoring. If necessary to renew, remove the axle section from the tractor by removing the two retaining bolts and their associated nuts and lockwashers. Mount the axle section assembly in a vice and extract the bushings. Make sure that the bores are not damaged. Install new bushings in the bore using Tools T815 and T811 for the upper bushing and 630-S for the lower bushing.
5. Inspect the spindle thrust bearing for correct operation. Renew if necessary.

C. Assembly

1. Pack the wheel spindle thrust bearing with grease and install on the wheel spindle. Make sure that the shroud is to the top, this is indicated on the bearing by the manufacturer's reference stamped on this face and in some instances the word 'Top', Figure 14.
2. Install the wheel spindle into the axle section housing, make sure that it rotates in the bushings freely.

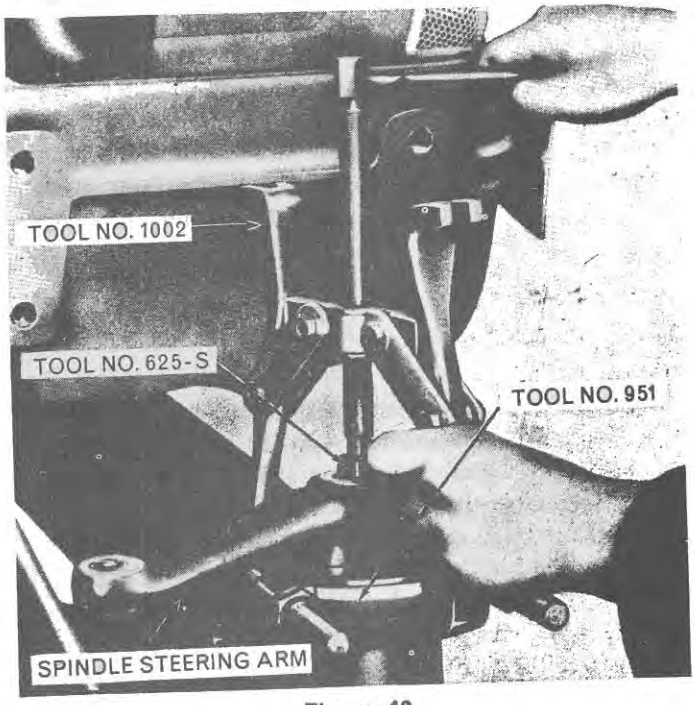

Figure 13
Removing Wheel Spindle Steering Arm

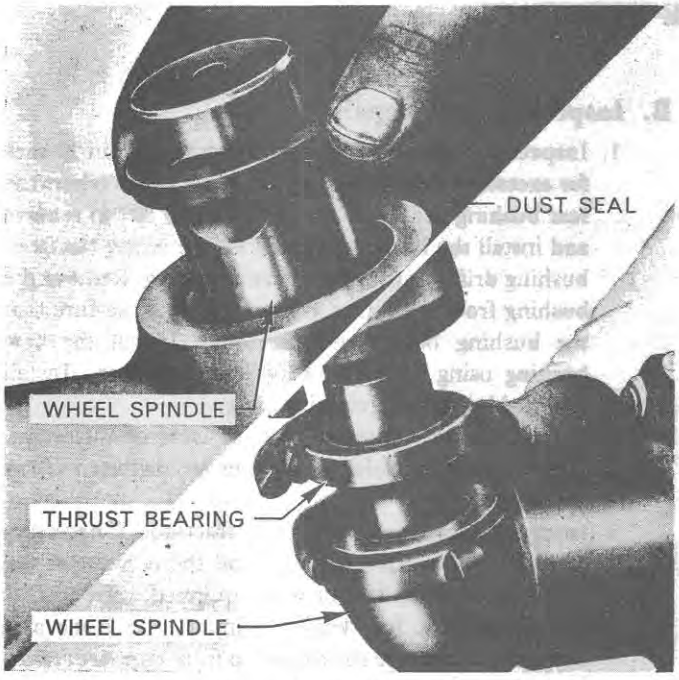

Figure 14

Installing Front Wheel Spindle

3. Install a new wheel spindle dust seal, Figure 14.
4. Install the woodruff key in the wheel spindle. Install the spindle steering arm on the wheel spindle locating in the correct position by the woodruff key.
5. Install the spindle steering arm clamping bolt and tighten to the specified torque.



Figure 15

Installing Wheel Hub Grease Retainer

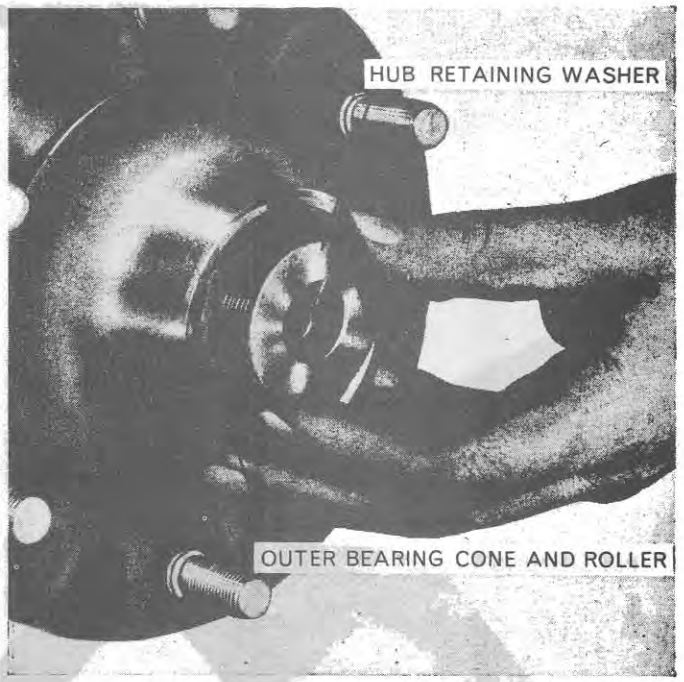

Figure 16

Installing Front Wheel Hub Retaining Washer

6. Install the wheel hub grease retainer on the wheel spindle, with the metal side away from the tractor as shown in Figure 16.
7. Install the front wheel bearing cone and roller assembly on the front wheel spindle.
8. Pack the wheel hub with a suitable grease. Install the wheel hub on the wheel spindle.
9. Install the front wheel hub outer bearing cone and roller assembly on the front wheel spindle.
10. Install the hub retaining washer on the wheel spindle, locating the tab with the keyway in the spindle, Figure 17.
11. Install the wheel hub retaining nut.
12. Install the wheel and tyre assembly on the hub and retain with the six nuts.
13. Tighten the slotted retaining nut to a torque of 45 to 55 lbs. ft. (6 to 8 mkg.) and then slacken off 2 to 3 slots to give an end float of 0·002 to 0·010 inch (0·05 to 0·25 mm). Install a new cotter pin to locate the nut. Install the hub grease retaining cap.
14. Remove the jack or hoist from the tractor and tighten the wheel retaining nuts.

4. FRONT AXLE OVERHAUL

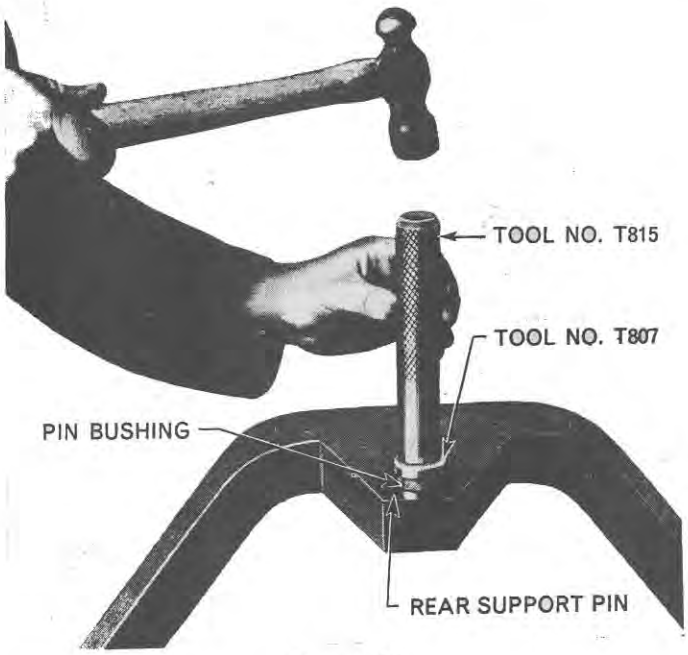

Figure 17

Installing Rear Support Pin Bushing

A. Disassembly

1. Use a suitable jack or hoist to support the front end of the tractor.
2. Remove the drag link front end retaining nut on manual steering tractor, and disconnect the drag link from the steering spindle arm.
3. Remove the wheel steering spindle arm connecting rod end retaining nuts, and disconnect from the spindle steering arm. Remove the wheel spindle arm connecting rod from tractors equipped with manual steering.
4. Remove the axle section retaining bolts and nuts. Remove the section and wheel assemblies from the centre axle assembly.
5. Support the front centre axle assembly so as to remove its weight from the axle support pins.
6. Straighten the locking tabs on the axle support pin anchors.
7. Remove the axle support pin retaining bolts and anchors.
8. Use a suitable rod in each of the support pins cross drillings to ease out the support pins sufficiently to enable a purchase to be made on the retaining bolt flange, to remove the pins.
9. Remove the thrust washer and the centre axle assembly from the tractor.

B. Inspection and Repair

1. Inspect the centre axle assembly support pin bushes for excessive wear or scoring. If necessary to renew the rear bushing use Tool Nos. T815 and T807 to remove and install the bushing, Figure 17. To renew the front bushing drift out the grease retaining plug. Remove the bushing from the centre axle assembly, make sure that the bushing bore is not damaged. Install the new bushing using Tool No. 630–S step adaptor. Install the bushing grease retaining plug.
2. Inspect the axle support pins for wear or distortion. If the wear is excessive or the pins are distorted renew the support pins.
3. Inspect the front axle support for fractures. If necessary to renew remove the radiator, and the power steering components if the tractor is so equipped, refer to Part 12, Chapter 6, for details. Support the front axle support and remove the engine to front support retaining bolts and nuts. Remove the front support from the tractor. Install the new front axle support and retain to the engine using the six retaining bolts and nuts. Insert the spacer shims between the engine oil pan and the front axle support prior to installing the two lower bolts. If the tractor is equipped with power assisted steering install the components into the front axle support as detailed in Part 12, Chapter 6, and install the radiator, etc.

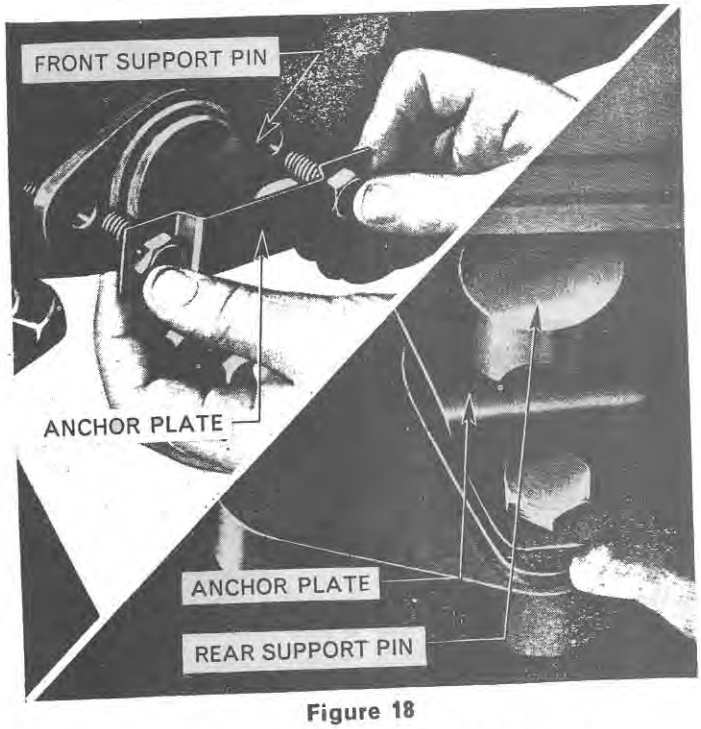

Figure 18

Installing Support Pins and Anchors

C. Assembly

1. Lubricate the front centre axle assembly support pin bushings with a suitable grease.
2. Install the front centre axle assembly into position on the tractor. Install the front support pin into the front axle support to locate the centre axle assembly.
3. Position the rear support pin thrust washer and install the rear support pin. Install the anchor and retaining bolts for each support pin, Figure 18. Tighten the bolts to the specified torque and bend the anchor locking tabs to locate.
4. Install the axle section and wheel assemblies into the centre axle assembly. Install the retaining bolts in the respective holes to obtain the required track setting. Install the nuts and tighten to the specified torque.
5. Adjust the spindle arm connecting rod (manual steering) or the two connecting rods (power assisted steering) to the required track setting. Install the connecting rod end assemblies into the wheel spindle arms and install the retaining nuts, and tighten to the specified torque.
6. On manual steering tractors install the drag link front end assembly into the left-hand steering spindle arm. Install the retaining nut and tighten to the specified torque.
7. Remove the jack or hoist from the tractor.

© FORD MOTOR COMPANY LTD. 1966

Part 13

FRONT AXLE

Chapter 4

SPECIFICATIONS AND SPECIAL TOOLS

Section		Page
1.	Specifications	17
2.	Special Tools	18

1. SPECIFICATION

	FORD 2000 AND FORD 3000	FORD 4000	FORD 5000
Wheel track adjustment*	52 in. (132 cm) to 76 in. (193 cm) in 4 in. (10·16 cm steps).		
*A wheel track of 80 in. (203 cm) may be obtained in the 72 in. (183 cm) track setting by reversing the dish of the front wheel.			
Axle articulation	18°	21°	22°
Camber angle	2°	2°	3°
Castor angle	5°	4° 16	Nil
King Pin inclination	9°	9°	8°
Toe-in	0·00 in. (0·00 mm) /0·50 in. (12·7 mm)	0·00 in. (0·00 mm) /0·88 in. (22·4 mm) non-adjustable	Manual steering: 0·00 in. (0·00 mm) /0·88 in. (22·4 mm) non-adjustable Power-assisted steering: 0·12 in. (3·00 mm) /0·62 in. (15·7 mm)
Turning circle:			
without steering brakes	21 ft 6 in. (6·6 m)	23 ft (7·0 m)	†24 ft 6 in. (7·5 m)
with steering brakes	19 ft 6 in. (5·9 m)	20 ft (6·1 m)	†20 ft (6·1 m)

Tightening torques:—

Spindle arm clamping bolt	45–50 lbs ft (6–7 m kg)	72–90 lbs ft (10–12 m kg)	150–180 lbs ft (21–25 m kg)
Axle section bolt	130–160 lbs ft (18–22 m kg)	110–135 lbs ft (15–19 m kg)	110–135 lbs ft (15–19 m kg)
Support pin	100–350 lbs ft (14–48 m kg)	—	—
Support pin locking plate bolt	75 lbs ft (10 m kg)	55–75 lbs ft (8–10 m kg)	35–47 lbs ft (5–6 m kg)
Radius rod foot bolt	130–160 lbs ft (18–22 m kg)	—	—

†Manual steering, for power assisted steering equipped tractors the relative dimensions are:—
23 ft 6 in. (7·16 m) without steering brakes.
19 ft 6 in. (5·95 m) with steering brakes.

© FORD MOTOR COMPANY LTD., 1967

	FORD 2000 AND FORD 3000	FORD 4000	FORD 5000
Radius rod ball cap bolts	40–45 lbs ft (5·5–6 m kg)	—	—
Front axle support to engine	250–270 lbs ft (34–37 m kg)	250–270 lbs ft (34–37 m kg)	250–270 lbs ft (34–37 m kg)
Drag link ball pin nuts	35–45 lbs ft (5–6 m kg)	35–45 lbs ft (5–6 m kg)	80–100 lbs ft (11–14 m kg)
Spindle arm connecting rod ball pin nuts	—	35–45 lbs ft (5–6 m kg)	80–100 lbs ft (11–14 m kg)
Drag link adjusting clamp bolts	30–55 lbs ft (4–8 m kg)	55–75 lbs ft (8–10 m kg)	100–125 lbs ft (14–15 m kg)
Spindle arm connecting rod adjusting clamp bolts			
Manual Steering	—	55–75 lbs ft (8–10 m kg)	55–75 lbs ft (8–10 m kg)
Power assisted steering	—	—	25–35 lbs ft (3·5–5·0 m kg)
Power cylinder ball pin nuts	45–55 lbs ft (5·5–6·0 m kg)	85–90 lbs ft (12 m kg)	—

2. SPECIAL TOOLS

Tool No.	Description
630-T	Step plate adaptors (set of six)
T.818	Bushing kit
943	Internal pulling attachment
943-S	Slide hammer
951	Pulling attachment
1002	Puller—reversible arms (medium)

Part 13

FRONT AXLE

Chapter 5

FORD 4200 ROW CROP

Section		Page
1.	Description	19
2.	Adjustments	20
3.	Front Wheel Spindle Overhaul	22
4.	Front Axle and Support Overhaul	22
5.	Specifications	26

1. DESCRIPTION

Three interchangeable front axles are available for the Ford 4200 Row Crop Tractors, as shown in Figure 19. These axle assemblies are the dual wheel front axle the single wheel front axle, and the wide adjustable front axle.

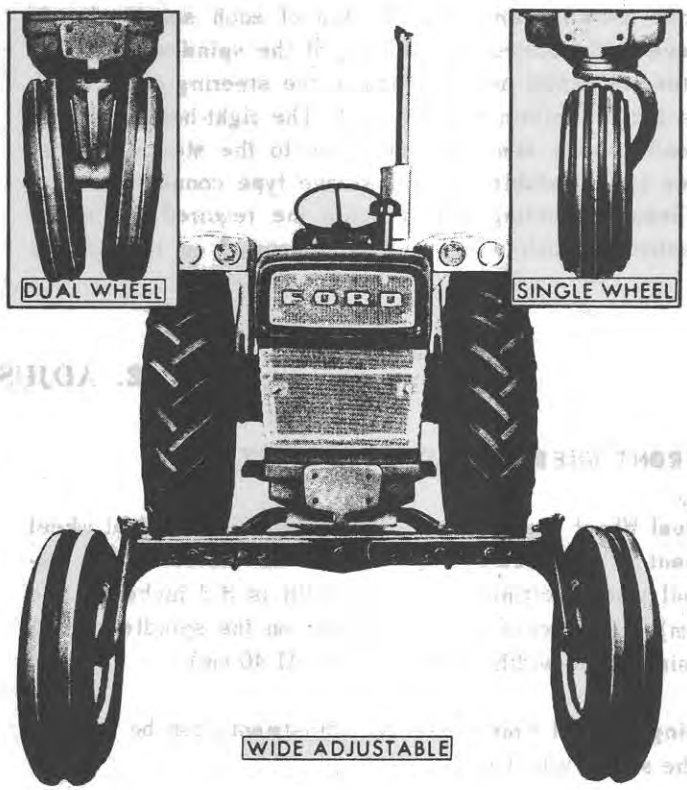

Figure 19
Row Crop Front Axle Assemblies

DUAL OR SINGLE WHEEL FRONT AXLE

The dual wheel or single wheel front axles, shown in the Insert, Figure 20, are an integral part of their respective spindle assemblies. The axles are mounted directly to the steering shaft assembly located in the bottom of the front support (pedestal). Each wheel hub is supported on the wheel spindle assembly by two opposed tapered roller bearings. The bearing preload is adjustable by means of the wheel spindle lock nut.

WIDE ADJUSTABLE FRONT AXLE

The tread width of the wide adjustable front axle can be adjusted from 56 to 88 inches (142.2 to 223.5 cm), in four inch (10.2 cm) increments. The major components of the wide adjustable front axle are listed on page 20.

© FORD MOTOR CO. 1967

- Center axle
- Right- and left-hand axles
- Front support
- Radius rod
- Spindles
- Spindle arms
- Spindle connecting rods
- Steering center arm
- Rear support

The front support, Figure 20, which is centrally mounted to the pedestal, is secured to the center axle by an axle pin. The radius rod is attached to the center axle at two points by bolts, and is secured to the rear support by a pin. The rear support is bolted to the rear of the pedestal. The right- and left-hand axle sections bolt to the center axle. The spindles, located at the end of each outer axle section, contain bushings at the upper and lower ends. A bearing is located at the lower end to support the vertical thrust of the spindles. The spindles function as king pins, therefore, the inclination with respect to the axle remains constant. The top of each spindle has a keyway for correct positioning of the spindle arms. The steering center arm attaches to the steering shaft which is located within the pedestal. The right-hand and left-hand spindle arms are connected to the steering center arm by adjustable rod and sleeve type connecting rods. These connecting rods provide the required toe-in adjustment. Each wheel hub is supported on the spindle assembly by two opposed tapered roller bearings. The bearing preload is adjustable by means of the spindle lock nut.

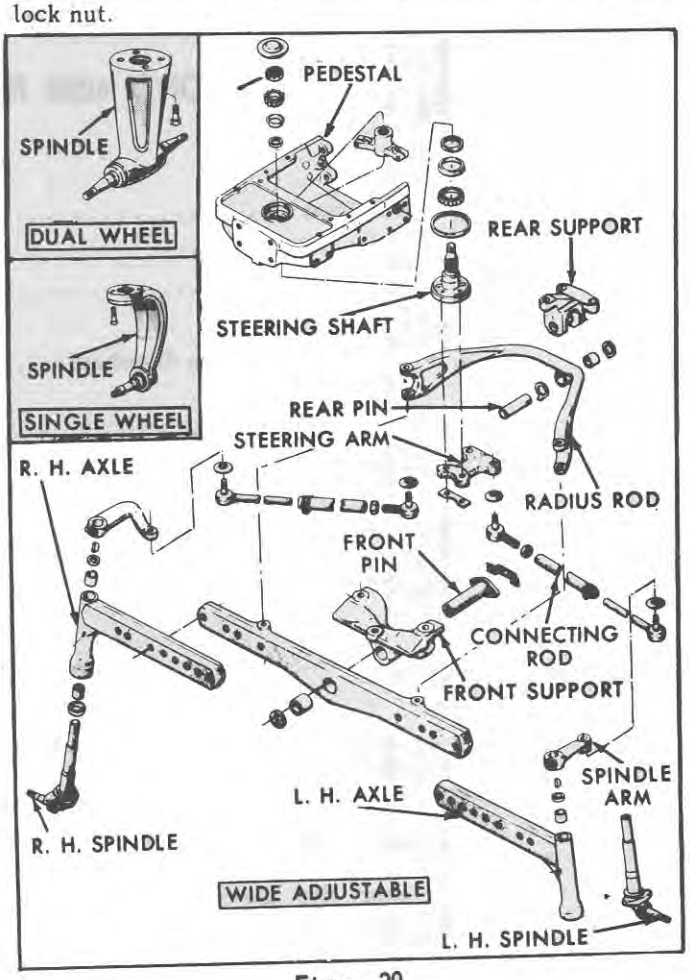

Figure 20
Front Axle Component Parts

2. ADJUSTMENTS

FRONT WHEEL TREAD ADJUSTMENT

Dual Wheel Front Axle: The tread width of the dual wheel front axle can be set at either of two widths. In the normal wheel setting, the tread width is 8.3 inches (21.08 cm). The wheels can be reversed on the spindles to obtain a tread width of 16.3 inches (41.40 cm).

Single Wheel Front Axle: No adjustments can be made on the single wheel front axle.

Wide Adjustable Front Axle: The tread width of the wide adjustable front axle is adjustable from 56 to 88 inches (142.2 to 223.5 cm), in approximately 4 inch (10.1 cm) increments. See Figure 21.

To change the tread width, raise the front end of the tractor with a suitable jack sufficiently to enable the front wheels of the tractor to move freely. Work on one side of the tractor at a time, and proceed as follows:

1. Remove the bolts, nuts, and flat washers securing the outer axle sections to the center axle section, Figure 21.

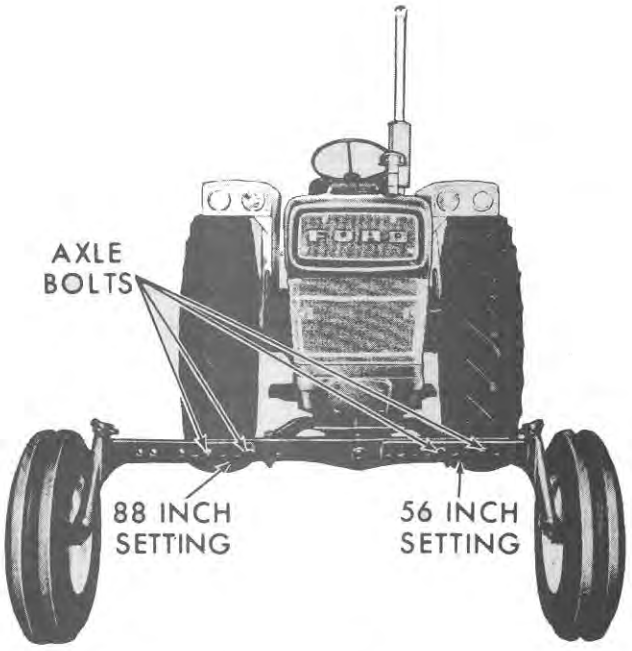

Figure 21
Wide Adjustable Front Axle Components

2. Remove the bolt, nut, lock washer and flat washer from the clamp on the connecting rod sleeve, Figure 22. This will allow the notched end assembly to be free to slide in the connecting rod sleeve.

3. Position the axle to obtain the desired tread width setting and install the axle bolts in the appropriate holes, as indicated in Figure 23.

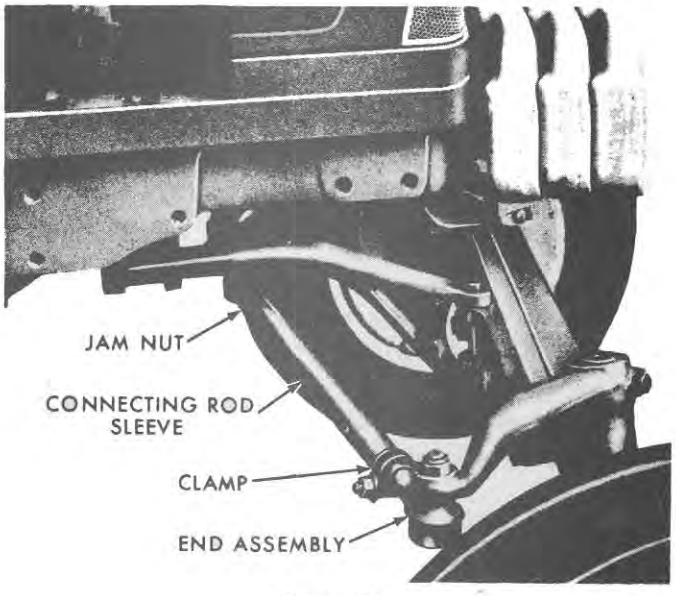

Figure 22
Connecting Rod Adjustment

IMPORTANT: *Make sure there are at least two bolt holes between the inner and outer axle bolts after the axle is secured in place. However, when the axle is set to the 88 inch (223.5 cm) setting, only one hole will be between the bolts.*

4. Install the flat washers and nuts, and tighten the nuts to a torque of 437 to 483 lbs. ft. (60.4 to 66.8 kgm).

NOTE: *When securing the axle to the 76 inch (193 cm) tread width setting, the inner two bolts should be installed with the washers against the bolt heads.*

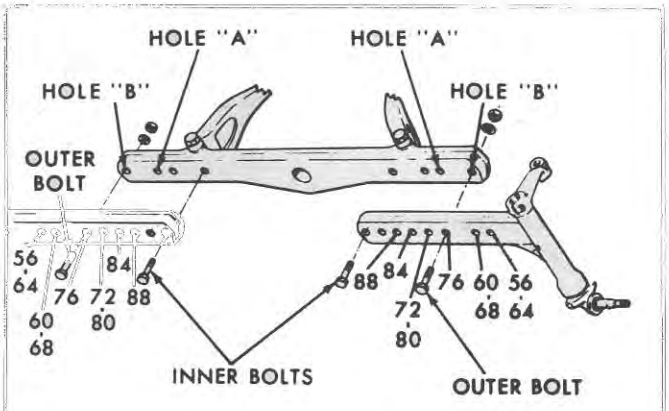

To obtain tread width setting of:		Line up hole "A" and hole No.:	Line up hole "B" and hole No.:
In.	(cm)		
56	(142.2)	56	
60	(152.4)	60	
64	(162.5)		64
68	(172.7)		68
72	(182.8)	72	
76	(193.0)		76
80	(203.2)		80
84	(213.3)		84
88	(223.5)		88

Figure 23
Wide Adjustable Axle Tread Width Settings

5. Position the front wheels in the straight ahead position and align the hole in each connecting rod sleeve clamp with the nearest groove in the end assemblies.

6. Insert the bolt through the clamp, then install the flat washer, lock washer, and nut. Tighten the nut securely.

TOE-IN ADJUSTMENT

Wide Adjustable Front Axle: The front wheel toe-in may be adjusted to the specified limits by adjusting the length of the connecting rods. The correct toe-in was set

© FORD MOTOR CO. 1967

during the production of the tractor, and the axle sections and spindle arms were marked to identify the correct position of the wheels for straight-ahead travel. If new axle sections or steering spindle arms are installed, it will be necessary to realign the wheels and mark the components for future reference. Where it is not possible to use the existing markings to determine the straight-ahead position, it will be necessary to align the center point of the steering center arm with the center line of the tractor, then position the front wheels in the straight-ahead position.

To set the front wheels in their correct positions to obtain the specified toe-in, proceed as follows:

1. Align the steering center arm with the center line of the tractor.
2. Remove the nut, bolt, lock washer and flat washer from the clamp on each connecting rod sleeve, Figure 22.
3. Loosen the jam nut at the inner end of each connecting rod sleeve.
4. Set the front wheels in their straight-ahead position so that the rear of the tires, as measured at hub height, are 1/8 to 1/4 inch (3.18 to 6.35 mm) further apart than the front of the tires.
5. Adjust the length of the connecting rods to fit this distance by turning the sleeves in or out, as necessary, until the clamp bolt hole aligns with the corresponding notch in the end assemblies.
6. Insert the bolt through the clamp, then install the flat washer, lock washer, and nut. Tighten the nut securely.
7. After the proper adjustment has been obtained, tighten the sleeve jam nuts to a torque of 100 to 125 lbs. ft. (13.8 to 17.3 kgm).
8. If aligning marks are not present on the spindle arms and axle sections, mark the components with a chisel to indicate the correct position.

3. FRONT WHEEL SPINDLE OVERHAUL

The front wheel spindles of the dual wheel axle and the single wheel axle each are an integral part of their respective axle assembly. For information pertaining to the front wheel spindle overhaul on the wide adjustable front axle, and to wheel bearing overhaul for the dual wheel axle, single wheel axle, and the wide adjustable axle, refer to Part 13, Chapter 2, page 8.

4. FRONT AXLE AND SUPPORT OVERHAUL

DUAL OR SINGLE WHEEL FRONT AXLES

The dual and the single wheel front axles are removed in the same manner except that on the single wheel axle, the wheel and tire assembly must be removed to provide access to the mounting bolts.

A. Removal

1. Use a suitable jack or hoist to support the front end of the tractor.
2. Position the steering wheel so the tractor is in the straight-ahead position.
3. Remove the four bolts securing the spindle assembly to the steering shaft assembly. See Figures 24 and 25.

B. Cleaning and Inspection

1. Clean the spindle assembly with a suitable cleaning solvent and dry with compressed air, if available.

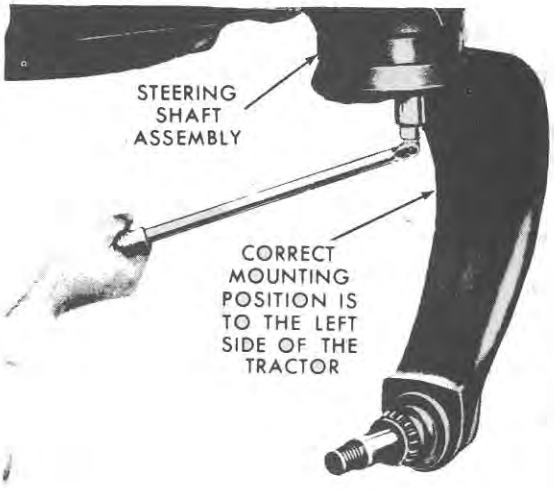

Figure 24
Dual Wheel Front Axle

2. Inspect the machine surface of the wheel spindle for scoring or other damage. If slight markings are evident they can be polished with a fine crocus cloth. Install a new spindle assembly if the score marks are excessive.

3. Inspect the steering shaft for defective bolt hole threads or other damage. If damage is evident, install a new steering shaft as outlined in Part 12, Chapter 8, Section 2.

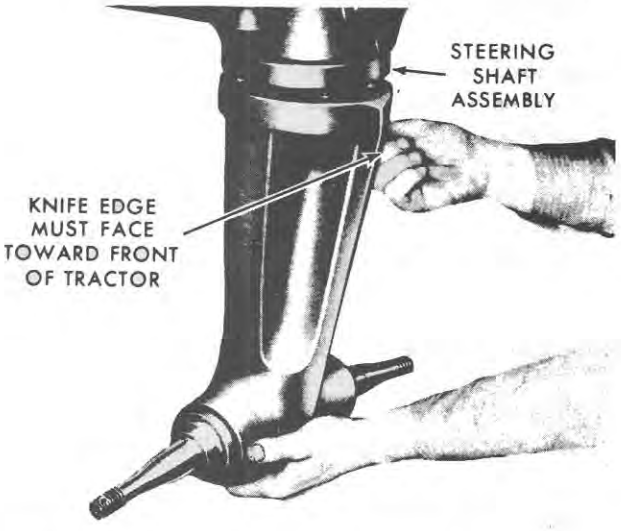

Figure 25
Single Wheel Front Axle

4. After inspection, lightly lubricate the machine surface of the spindle assembly with a clean grease.

C. Installation

1. Align the holes in the spindle assembly with the holes in the steering shaft assembly, with the spindle in the correct position as shown in Figure 24 or 25, then install the four mounting bolts. Tighten the mounting bolts to a torque of 209 to 231 lbs. ft. (28.9 to 31.9 kgm).

   IMPORTANT: *Be extremely careful that the spindle assembly is not installed in the reversed position.*

2. Install the wheel and tire assembly as outlined in Part 13, Chapter 2, page 9.

3. Remove the jack or hoist from the tractor.

WIDE ADJUSTABLE FRONT AXLE

Refer to the exploded view illustration, Figure 26, as an aid during the overhaul of the wide adjustable front axle.

A. Removal and Disassembly

1. Use a suitable jack or hoist to support the front end of the tractor so the front wheels are clear of the ground. Support the front of the tractor with jack stands so the tractor will remain stable after the axle has been removed.

2. Use a suitable jack and support the front axle assembly.

3. Remove the two bolts and lock washers securing the front axle retaining washer, Figure 27, to the axle front pin. Remove the retaining washer.

4. Bend the corners of the steering arm anchor, Figure 28, away from the bolt heads and remove the steering center arm-to-steering-shaft bolts and anchor.

5. Remove the retaining nut and bolt securing the rear pin to the rear support.

6. Separate the radius rod from the rear support by driving out the rear pin. Remove the two thrust washers.

© FORD MOTOR CO. 1967

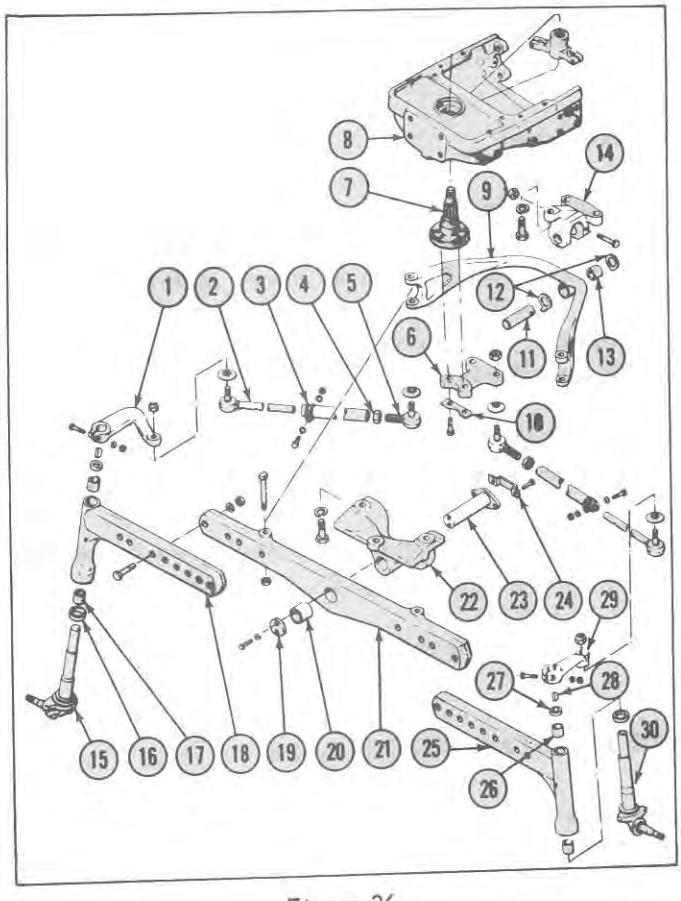

Figure 26
Wide Adjustable Front Axle – Exploded View

KEY FOR FIGURE 26

WIDE ADJUSTABLE FRONT AXLE – EXPLODED VIEW

1. Right-Hand Spindle Arm
2. End Assembly (Notched)
3. Sleeve
4. Jam Nut
5. End Assembly (Threaded)
6. Steering Center Arm
7. Steering Shaft
8. Pedestal (Front Support)
9. Radius Rod
10. Center Arm Bolt Anchor
11. Rear Pin
12. Thrust Washer
13. Bushing
14. Rear Support
15. Right-Hand Spindle
16. Lower Bearing
17. Lower Bushing
18. Right-Hand Axle
19. Retaining Washer
20. Bushing
21. Center Axle
22. Axle Front Support
23. Front Pin
24. Pin Anchor
25. Left-Hand Axle
26. Upper Bushing
27. Seal
28. Woodruff Key
29. Left-Hand Spindle Arm
30. Left-Hand Spindle

7. Bend the corners of the front pin anchor away from the bolt heads and remove the bolts and the pin anchor.

8. Check to be sure the front axle is adequately supported, then remove the front pin by driving it out the rear of the front support. Remove the axle assembly from under the tractor.

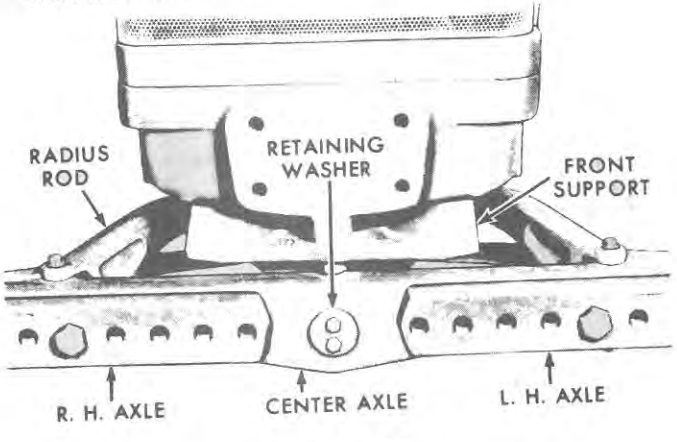

Figure 27
Axle Assembly and Front Support

9. Remove the three bolts and lock washers and separate the front support from the pedestal.

10. Remove the three bolts and lock washers and separate the rear support from the pedestal.

11. Remove the wheel and tire assemblies and remove the wheel bearings.

12. Remove the nut securing each connecting rod to the spindle arms. Remove the dust seals from the connecting rod end assemblies.

13. Remove the nut securing each connecting rod to the steering center arm, Figure 27. Remove the dust seals from the connecting rod end assemblies.

14. Remove the bolts, nuts, and flat washers securing each outer axle section to the center axle section. See Figure 21.

15. Remove the nuts and bolts securing the radius rod to the center axle section, Figure 27. Remove the radius rod.

B. Cleaning, Inspection, and Repair

1. Clean all parts in a suitable cleaning solvent and dry with compressed air, if available.

2. Inspect the bushing (20), Figure 26, in the center axle section for wear or score marks. If the bushing is damaged, remove it and install a new one being careful not to damage the bushing bore.

3. Inspect the bushing (13), Figure 26, in the radius rod for wear or score marks. If the bushing is damaged, remove it and install a new one being careful not to damage the bushing bore.

4. Inspect the front and rear axle support pins for wear or damage. If the pins appear to be worn or distorted, check the bore in the front and rear support for damage. The bore in the supports can be checked by using new pins and being sure the pins fit snugly. Install new pins or new supports, or both, if necessary.

5. Inspect the connecting rod assemblies for damage. Install new rods if necessary.

C. Assembly and Installation

1. Align the holes in the radius rod with the holes in the axle center section and install the two bolts and lock nuts. Tighten the nuts to a torque of 130 to 160 lbs. ft. (17.9 to 22.0 kgm).

2. Position the axle outer sections against the front of the axle center section, aligning the proper holes to obtain the required tread width setting, and install the four bolts, flat washers, and nuts. See Figure 23. Tighten the nuts to a torque of 437 to 483 lbs. ft. (60.4 to 66.8 kgm).

   IMPORTANT: *Make sure there are at least two bolt holes between the inner and outer axle bolts after the axle is secured in place. However, when the axle is set to the 88 inch (223.5 cm) setting, only one hole will be between the bolts.*

   NOTE: *When securing the axle to the 76 inch (193 cm) tread width setting, the inner two bolts should be installed with the washers against the bolt head.*

3. Place the dust seals on the threaded ends of the connecting rod assemblies and secure each connecting rod to the rear holes of the steering center arm, Figure 28. Install the nuts and tighten to a torque of 130 to 160 lbs. ft. (17.9 to 22.0 kgm).

4. Place the dust seals on the notched ends of the connecting rods and secure each connecting rod to the spindle arms. Install the nuts and tighten to a torque of 130 to 160 lbs. ft. (17.9 to 22.1 kgm).

5. Install the wheel bearings, and the wheel and tire assemblies as outlined in Part 13, Chapter 2, page 9.

6. Secure the rear support, Figure 28, to the pedestal with the three lock washers and bolts. Tighten the bolts to a torque of 200 to 250 lbs. ft. (27.7 to 34.6 kgm).

7. Secure the front support to the pedestal with the three lock washers and bolts. Tighten the bolts to a torque of 200 to 250 lbs. ft. (27.7 to 34.6 kgm).

8. Position the axle assembly under the tractor, aligning the pin hole in the center axle with the hole in the front support, and the pin hole in the radius rod aligned with the holes in the rear support, Figure 28.

9. Install the axle front pin through the front support, Figure 28, and the center axle. Position the front pin anchor and install the two bolts. Tighten the bolts to a torque of 35 to 47 lbs. ft. (4.8 to 6.5 kgm). Bend the corners of the pin anchor against the bolt heads, as shown, to secure the bolts.

10. Position the two thrust washers between the radius rod and the flanges of the rear support as shown in Figure 28. Install the rear pin aligning the hole in the pin with the holes in the rear support. Secure the pin by installing the bolt and nut. Tighten the nut to a torque of 23 to 29 lbs. ft. (3.1 to 4.0 kgm).

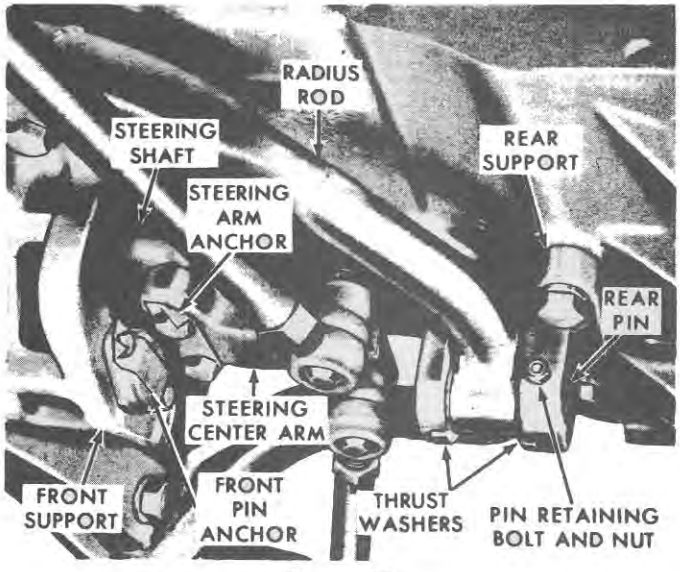

Figure 28
Steering Linkage

© FORD MOTOR CO. 1967

11. Align the holes in the steering center arm with the holes in the steering shaft and secure the steering center arm and the anchor with the two bolts. Tighten the bolts to a torque of 228 to 252 lbs. ft. (31.5 to 34.8 kgm). Bend the corners of the anchor against the bolt heads as shown in Figure 28, to secure the bolts.

12. Position the retaining washer, Figure 27, over the front pin and secure with the two lock washers and bolts. Tighten the bolts to a torque of 35 to 47 lbs. ft. (4.8 to 6.5 kgm).

13. Adjust the front wheel toe-in as outlined on page 21.

14. Remove the jack stands and lower the tractor to the ground.

5. SPECIFICATIONS

Wheel Tread Setting:	
Dual Wheel Axle	8.3 to 16.3 inches (21.08 to 41.40 cm)
Wide Adjustable Axle	56 to 88 inches (142.24 to 223.52 cm)
Axle Articulation	20°
Camber Angle	3°
Caster Angle	3° 30'
King Pin Inclination	10°
Toe-In	1/8 to 1/4 inch (3.18 to 6.35 mm)
Front Axle Clearance	24 inches (60.96 cm)

Turning Radius:	*Adjustable Axle*	*Dual and Single Wheel*
With Brakes	12 feet 2 inches (370.84 cm)	8 feet 7 inches (261.62 cm)
Without Brakes	13 feet 6 inches (411.48 cm)	9 feet 4 inches (284.48 cm)

PART 14
WHEELS AND TYRES

Part 14

WHEELS AND TYRES

Chapter 1

REAR WHEEL TRACK ADJUSTMENT

Section		Page
1.	Manual Rear Wheel Adjustment	1
2.	Power Adjusted Rear Wheels	2
3.	Changing Rear Wheel Disc	4
4.	Tyre Replacement	4

Chapter 2

TRACTOR WEIGHTING

Section		Page
1.	Cast Iron Attaching Weights	7
2.	Liquid Ballasting of Tyres	8

Chapter 3

SPECIFICATIONS

Section		Page
1.	Specifications	9

© FORD MOTOR COMPANY LTD., 1967

Part 14

WHEELS AND TYRES

Chapter 1

REAR WHEEL TRACK ADJUSTMENT

Section		Page
1.	Manual Rear Wheel Adjustment	1
2.	Power Adjusted Rear Wheels	2
3.	Changing Rear Wheel Disc	4
4.	Tyre Replacement	4

1. REAR WHEEL TRACK ADJUSTMENT

The rear wheel track is adjustable in 4 inch (10·2 cm) steps by the positioning of the wheel rim relative to the wheel disc and the interchanging of wheel assemblies on the rear axle.

The rear wheel track on a Ford 2000 may be adjusted from 48 inch (122 cm) to 76 inch (193 cm), and the Ford 3000 from 52 inch (132 cm) to 76 inch (193 cm). Refer to Figure 1 for wheel rim and disc positions to obtain the required track settings for the Ford 2000 and Ford 3000 tractors.

The rear wheel track of Ford 4000 and Ford 5000 tractors with full cover fenders, are adjustable from 56 inch (142 cm) to 80 inch (203 cm). On tractors equipped with part cover fenders the rear wheel track is adjustable from 52 inch (132 cm) to 80 inch (203 cm).

NOTE: ***Tractors equipped with 16·9/14×30 tyres are not adjustable and can only be mounted to give a track width of 64 inches (163 cm).***

Refer to Figure 2 for the wheel rim and disc positions to obtain the required track setting for the Ford 4000 and Ford 5000 tractors.

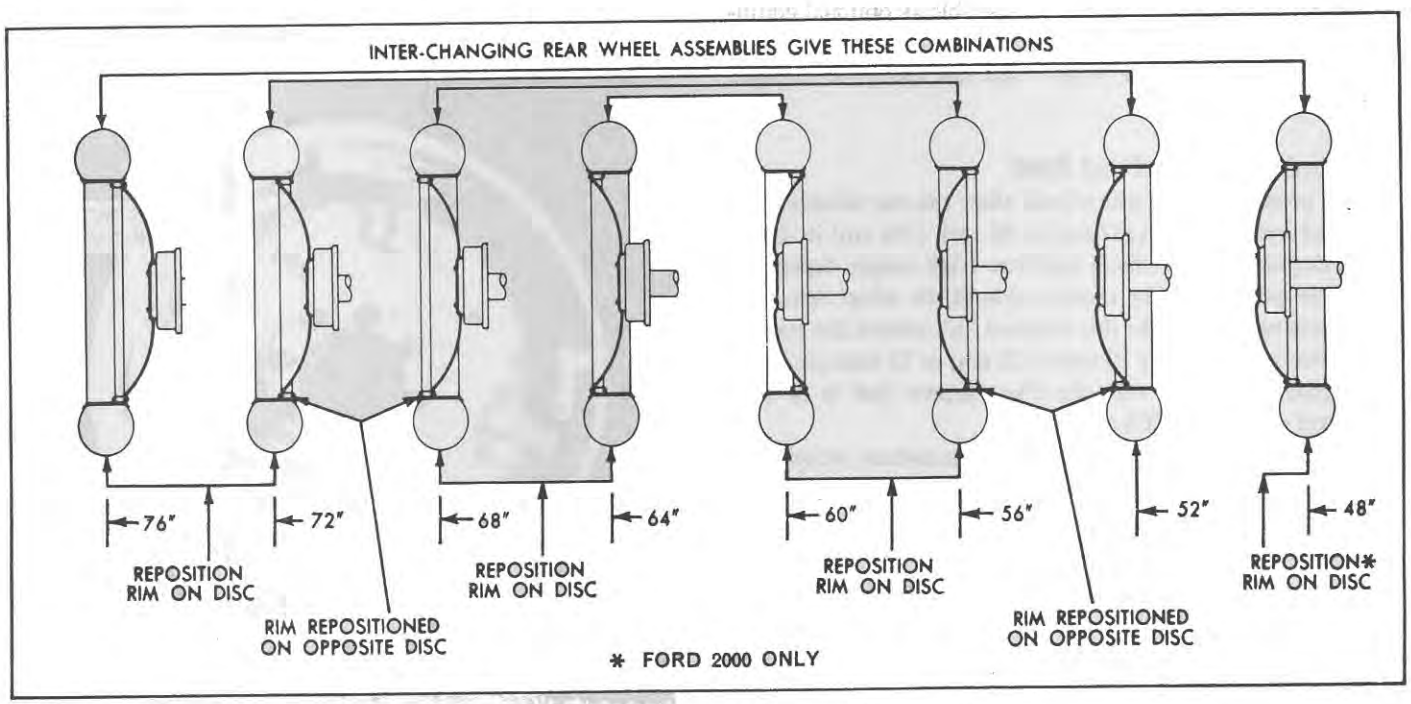

Figure 1
Rear Wheel Track Adjustment—Ford 2000 and Ford 3000

© FORD MOTOR COMPANY LTD., 1967

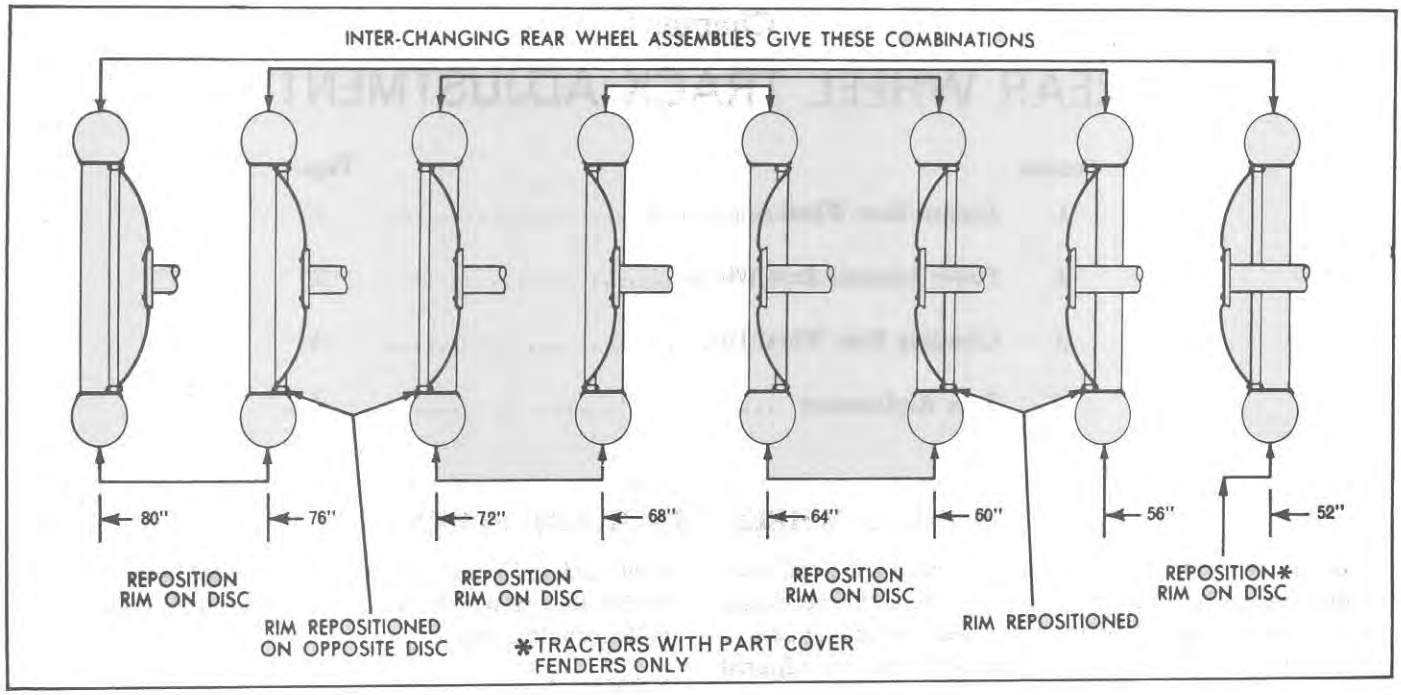

Figure 2
Rear Wheel Track Adjustment—Ford 4000 and Ford 5000

2. POWER ADJUSTED REAR WHEELS

A. Description

Power adjusted rear wheels are available as optional equipment on all agricultural model tractors. With the power adjusted wheels the rear wheel track can easily be changed using engine power.

B. Ford 2000 and Ford 3000

The power adjusted rear wheels allow the rear wheels to be adjusted from 52 inch (132 cm) to 80 inch (203 cm) in 4 inch (10·2 cm) steps. The wheels have two track ranges depending upon the position of the concave side of the wheel disc. The minimum range with the disc concave 'in', toward the tractor, as shown in Figure 3, is 52 inch (132 cm) to 72 inch (183 cm). The maximum range with the disc concave 'out' is 60 inch (152 cm) to 80 inch (203 cm).

To change from the minimum to the maximum wheel track range, or vice versa, the wheels should be removed and interchanged, i.e. the left-hand wheel fitted on the right-hand side and the right onto the left. The wheel assembly to be installed with the tyre tread in the correct direction, with the 'Vee' at the top pointing forward.

To change the rear wheel width within one of the two ranges:—

1. Unscrew four jack screw locking nuts equally until they are free.
2. Remove the stop lug bolt and the stop lug from the rail



Figure 3
Power Adjusted Rear Wheels—Ford 2000 and Ford 3000.

on the side of the jack screw to which the jack screw is to be moved. Position the stop lug to the desired setting and secure this with the bolt.

NOTE: ***Each hole in the rail represents a 2 inch (5·1 cm) change in the track setting, i.e. 4 inch (10·2 cm) change in track, when applied to both wheels.***

3. To move the left-hand wheel out, start the tractor, depress the clutch or inching pedal and select low forward gear ratio. Depress and hold down the right-hand brake pedal and with the engine at idling speed move the tyre outwards by gradually engaging the clutch. Disengage the clutch immediately the jack screw strikes the stop lug.

4. To move the right-hand wheel out repeat the above procedure but select low reverse and hold down the left-hand brake pedal.

NOTE: ***To move the wheels inwards select the opposite gear ratio, i.e. low reverse for the left-hand wheel and low forward for the right-hand wheel.***

5. Install the second lug at the opposite side of the jack screw as in Figure 3.

6. Tighten the four jack screw locking nuts progressively in small steps until a torque of 200 to 250 lbs. ft. (27·65 to 34·56 m.kg.) is achieved on all four jack screws. Make sure that all four jack screws are tightened evenly, all exposed jack screw thread lengths outside the nuts should be the same to ensure the rim is centred on the disc.

The torque of 200 to 250 lb. ft. (27·65 to 34·56 m.kg.) can be obtained by applying normal maximum tightening effort using a 19 inch (48·3 cm) long spanner.

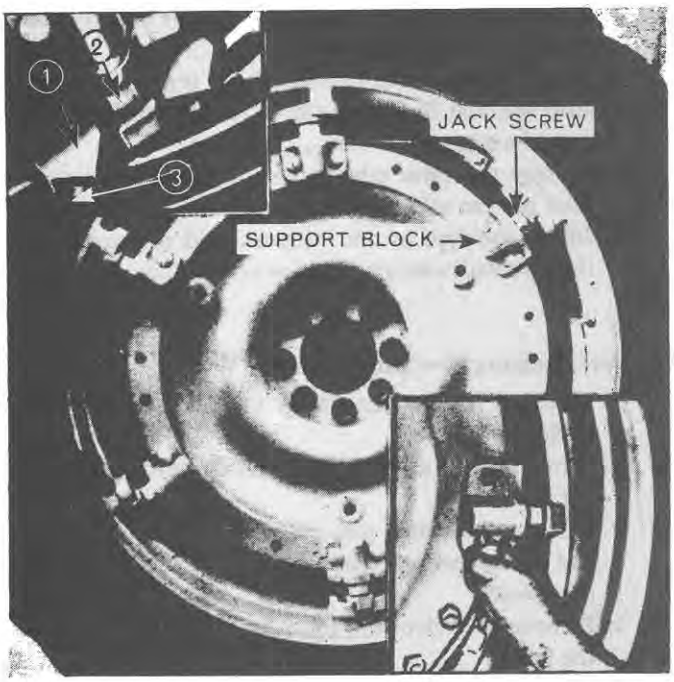

Figure 4
Power Adjusted Rear Wheels—Ford 4000 and Ford 5000

IMPORTANT: ***If for any reason the adaptor between the wheel and half shaft is removed and refitted, the wheel should be removed and the bolts retaining the adaptor to the half shaft should be retightened after a short period of work.***

After a short period of work the jack screws should be checked for tightness, retightening if necessary.

C. Ford 4000 and Ford 5000

The power adjusted wheels allow the rear wheels to be adjusted from 56 inch (142 cm) to 90 inch (229 cm) by using tractor power. The rear wheels have two width ranges depending on the position of the support blocks, Figure 4. With the blocks on the outside, as shown, the range is 66 inch (168 cm) to 90 inch (229 cm). With the blocks reversed (inside the wheel disc) the range is 56 inch (142 cm) to 80 inch (203 cm).

To change the rear wheel width within one of the two ranges:—

1. Loosen the locking nut, (2), inset, Figure 4, on the four upper jack screws. Identify the four blocks with a chalk or pencil mark (this will enable the correct blocks to be selected for tightening after the wheels are spaced).

2. Remove the bolt (3), inset, Figure 4, from the stop lug (1) on the side to which the wheel will be moved. Position the stop lug to the desired setting (each hole in the bar represents a 2 inch (5·08 cm) change in track per wheel) and secure it with the bolt.

3. To move the left wheel out, start the tractor, depress the clutch or inching pedal and select a forward gear ratio. Depress and hold the right brake pedal. Ease the clutch or inching pedal up and then immediately push it down when the wheel strikes against the stop lug.

4. To move the right wheel out, select reverse, depress and hold the left brake pedal. Ease the clutch or inching pedal up and then immediately push it down when the wheel strikes against the stop lug.

5. Move the tractor so the support blocks which are not marked are on the bottom.

6. Install the other stop lug (1) inset, Figure 4, to secure the wheel adjustment. Tighten the locking nut on the four jack screws to 100 lb. ft. (13·8 m.kg.), then, uniformly increase their tightness (25 lb. ft. (3·46 m.kg.) at a time) until each has been torqued to 200 lb. ft. (27·6 m.kg.).

7. Check the exposed thread lengths outside the locking nuts. The lengths must all be equal to make sure that the wheel is centred on the axle.

To change to a different wheel width range, it is necessary to reposition the support blocks as follows:—

1. Loosen the locking nut (2), inset, Figure 4, on the four upper jack screws. Identify the four blocks with a chalk or pencil mark.

2. Remove one block at a time, see the inset, Figure 4, and position it on the bolts to 125–150 lb. ft. (17·3–20·7 m.kg.).

Check the blocks to make sure that they are tight against the disc face and edge. If they are not seated properly, the jack screws may loosen during operation.

3. After the top four blocks are positioned, move the tractor so the bottom blocks are on top. Position these two blocks on the opposite side of the wheel and tighten the nuts to 125–150 lb. ft. (17·3–20·7 m.kg.).

NOTE: ***Position the stop lugs for the desired wheel setting and power adjust.***

4. Move the tractor so the support blocks, which are not marked, are on the bottom.

5. Tighten the locking nut on the four marked jack screws to 100 lb. ft. (13·8 m.kg.), then, uniformly increase their tightness (25 lb. ft. (3·46 m.kg.) at a time) until each has been torqued to 200 lb. ft. (27·6 m.kg.).

6. Check the exposed thread lengths outside the locking nuts. The lengths must all be equal to make sure that the wheel is centred on the axle.

3. CHANGING THE REAR WHEEL DISC

Removal

1. Remove the rear wheel from the tractor, as follows:
   a. Support the tractor with a floor jack and jack stands.
   b. Attach a suitable hoist to the wheel rim.
   c. Loosen the eight hex nuts that hold the wheel disc to the axle shaft, and remove the wheel assembly from the tractor.
2. Lay the wheel and disc assembly on its side on blocks.
3. Power Adjusted Wheels: Loosen the adjusting nuts, then remove the carriage bolts, lock washers and nuts that secure the wheel disc to the adjusting screw retainers and remove the disc from the rim with the hoist.
   Standard Wheels: Remove the six carriage bolts, lock washers and nuts that secure the wheel disc to the rim and remove the disc with the hoist.

Installation

1. Power Adjusted Wheels: Position the wheel disc in the centre of the rim, then install the adjusting screws and retainers and secure the disc with the twelve carriage bolts, lock washers and nuts. Tighten the nuts to 125–135 lbs. ft. (17·2–18·6 m.kg.).
   Standard Wheels: Position the wheel disc on the rim and secure it with the six carriage bolts, lock washers and nuts. Tighten the nuts to 130–160 lbs. ft. (17·9–22 m.kg.).
2. Install the rear wheel and disc assembly on the axle shaft and secure it with the eight hex nuts. Tighten the nuts to 380–420 lbs. ft. (52·4–57·9 m.kg.).

4. TYRE REPLACEMENT

A. Tyre Removal—Excluding Single Front Wheel

1. Support the axle of the tractor with a suitable hoist or jack. Remove the wheel from the tractor and deflate the inner tube completely.
2. Press the valve through the valve hole, toward the inside of the tyre.
3. Loosen both tyre beads from the wheel rim, with a tyre iron and a heavy mallet.
4. With the wheel lying flat, stand on the tyre with your feet about 15 inches apart, opposite the valve, then force the bead seat into the drop centre of the rim.
5. Insert two tyre irons, about 8 inches apart, between the tyre bead and the wheel rim near the valve, then pry the bead over the wheel rim.
6. Leave one tyre iron in position, then follow around the wheel rim with the other tyre iron to remove the remainder of the bead. Remove the inner tube.
7. Turn the wheel over and block the rim up off the floor. Pry the wheel out of the tyre, starting with a small section and following around the wheel.

B. Tyre Installation—Excluding Single Front Wheel

1. Place the wheel and rim on the floor in a flat position.
2. Inflate the inner tube until it is barely rounded out, then install the tube in the tyre.
3. Coat the inside and outside of the tyre beads with a soap solution to protect the bead, then pry one bead over the edge of the rim.
4. Be sure the valve extends through the rim properly, then pry the other bead over the rim.
5. Inflate the tyre to the recommended pressure or fill the tyre with calcium chloride solution, as desired.

C. Tyre Removal—Single Front Wheel

1. Raise the front of the tractor until the wheel is clear of the floor.
2. Turn the dust cap counterclockwise until it is free of the hub.
3. Remove the cotter pin, castellated nut, flat washer, and outer bearing. Carefully remove the wheel from the spindle.
4. Remove the valve core from the inner tube to deflate the tyre.

CAUTION: ***Failure to remove all the air before disassembling the wheel could result in personal injury due to the rim halves flying apart.***

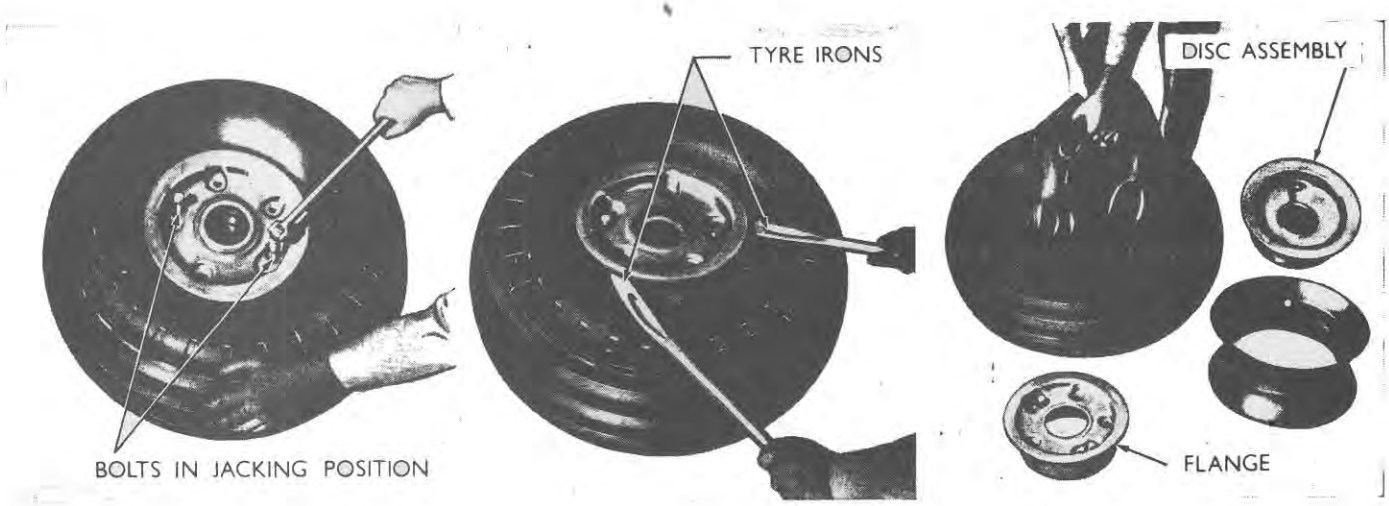

Figure 5
Single Front Wheel Tyre Replacement

5. Remove the five bolts from the wheel and thread two of the bolts in the opposite side of the wheel. Turn the bolts in until the flange is free of the hub as shown in 'A', Figure 5.
6. Remove the flange from the tyre with tyre irons.
7. Lift the tyre off the hub and remove the tube flap and tube as shown in 'C', Figure 5.
8. Remove the two bolts from the flange.

D. Tyre Installation—Single Front Wheel

1. Install the valve core in the inner tube. Inflate the tube until it just starts to round out.
2. Install the inner tube and tube flap in the tyre. Place the hub in the tyre while guiding the valve stem through the hole provided in the hub.
3. Install the flange in the tyre and rotate it as necessary to align the five bolt holes.
4. Install the five flange attaching bolts. Tighten the five bolts evenly and alternately to 85–105 ft. lbs. (11·2–14·5 m.kg.).
5. Bend the valve stem outward for easy accessibility. Inflate the tube to 44 p.s.i. (3·09 kg.sq.cm:) pressure.
6. Position the wheel on the spindle being careful not to get dirt on the shaft or bearing. Install the outer bearing, flat washer, and castellated nut.
7. Tighten the nut until a slight drag is felt while rotating the wheel, then back the nut off one castellation (1/6 to 1/4 turn).
8. Install a cotter pin. The cotter pin ends must be flattened against the nut and spindle end. Install the dust cap. Remove the jack.

Part 14

WHEELS AND TYRES

Chapter 2

TRACTOR WEIGHTING

Section		Page
1.	Cast Iron Attaching Weights	7
2.	Liquid Ballasting of Tyres	8

1. CAST IRON ATTACHING WEIGHTS

To obtain sufficient traction for maximum performance in heavy draft operations, and to counterbalance heavy implements, weight should be added to the tractor.

For this purpose cast iron weights are available for attaching to the front of the tractor, and also cast iron wheel weights may be attached to the appropriate wheel disc.

A. Front End Weights

To attach front end weights to Ford 2000 and Ford 3000 tractors it is first necessary to install a front bumper and weight brace, Figure 6.

Cast iron weights may be clamped to the front bumper and weight brace. The maximum number of weights that may be attached to the weight brace is two. Each weighs 100 lb. (45·4 kg.) approximately, giving a maximum front end weight of 200 lbs. (90·7 kg.).

Front end weights for the Ford 4000 and Ford 5000 tractors may be attached by installing the four studs, supplied with the weight kit, into the four holes in the front mounting pad on the front axle support housing.

Locate the weights on the four studs with the handling recess at the rear lower edge to facilitate removal. Retain with the washers and nuts provided.

B. Front and Rear Wheel Weights

Four holes are provided in the front wheel disc to enable front wheel weights to be attached to the wheel. These weights are to be mounted on the inside (concave) surface of the wheel disc, using the bolts supplied to retain them. Each weight has an approximate weight of 45 lb. (20 kg.) and a quantity of two weights are fitted to each wheel.

Holes are provided in the rear wheel discs for mounting wheel weights.

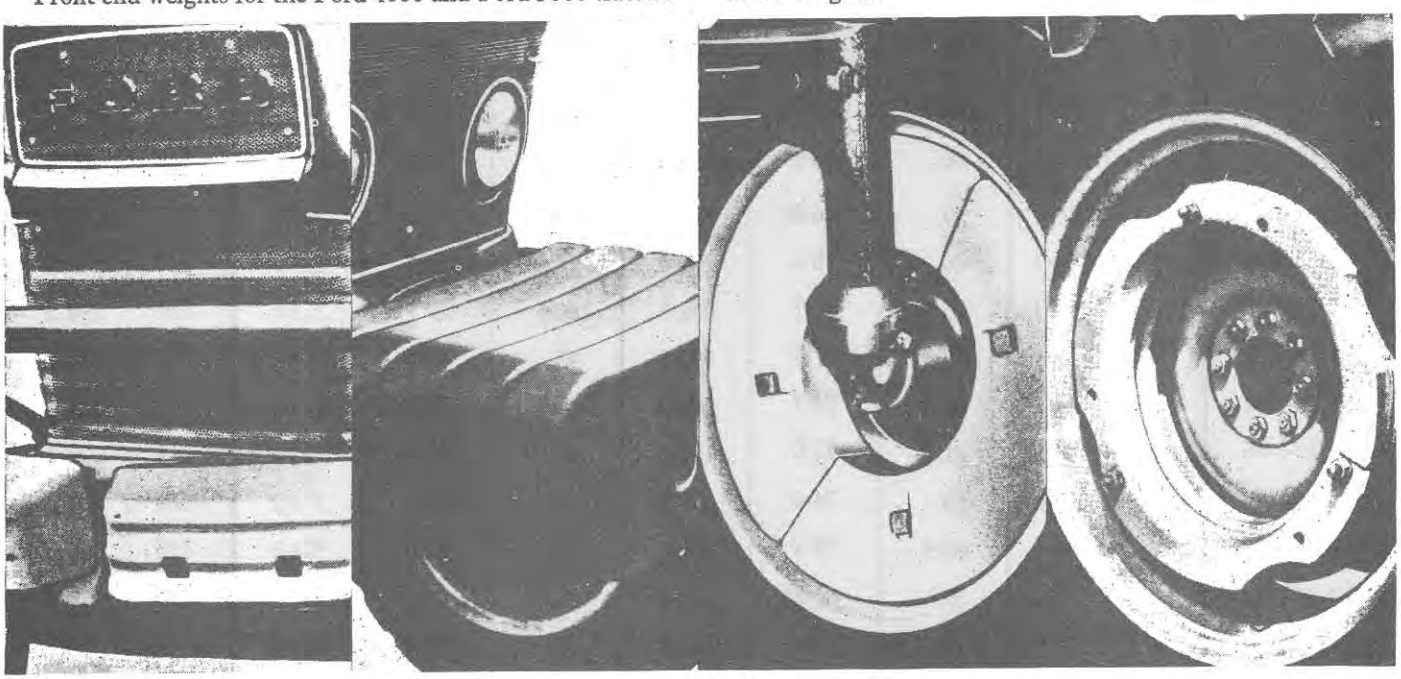

Figure 6
Cast Iron Attaching Weights

© FORD MOTOR COMPANY LTD., 1967

2. LIQUID BALLASTING OF TYRES

Water may be used as an inexpensive, but effective, weight for the tractor rear wheels. In territories where the ambient temperature may fall to or below the freezing point of water, Calcium Chloride should be added to the water, as a protection against freezing. Calcium Chloride should be added to the water in the proportion of 2 lbs. (1 kg.) to 1 gallon (5 litres) water.

As a guide the table below gives the quantity of Calcium Chloride to be added to the water for a specific tyre size to give adequate protection against freezing.

NOTE: *Calcium Chloride should be added slowly to the water. NEVER add water to Calcium Chloride. Allow solution to cool before filling tyre.*

To fill the tyre with the water, or solution, a special adaptor is required that allows the air to be expelled from the tyre while filling with the liquid. When filling the tyre the valve should be positioned at the top of the wheel, and the tractor weight supported on a suitable support. When the tyre has been filled with the maximum capacity of liquid, surplus is ejected through the air outlet in the adaptor.

After disconnecting the liquid supply, the adaptor is removed and the tyre valve installed. The tyre pressure is then adjusted in the normal manner.

Always use a tyre pressure gauge specifically designed for liquid ballasted tyres, as normal gauges may corrode.

Tyre Size	Calcium Chloride		Gallons of Water to use with Calcium Chloride			Approx. capacity of Tyre in Gallons			Approx. Total Weight of Solution	
	lbs.	kg.	*IMP. GALLS.*	*U.S. GALLS.*	*LITRES*	*IMP. GALLS.*	*U.S. GALLS.*	*LITRES*	lbs.	kg.
8·3/8 —24	25·5	11·6	13·0	15·65	59	14	16·82	63·6	148	66·2
9·5/9 —28	50	22·7	25·5	30·65	116	28	33·65	127·3	305	138·3
11·2/10—28	52·5	23·8	26·5	31·85	120·5	29	34·85	131·8	312	141·5
12·4/11—28	68·5	31·1	34·5	41·45	157	37·5	45·1	170·5	405	183·7
12·4/11—36	82·5	37·4	41·5	49·85	188·7	45	54·1	204·6	488	221·4
12·4/11—38	86·5	39·2	41	49·3	186·4	43·5	52·3	197·7	510	231·3
13·6/12—24	82	37·2	46	55·3	209·1	47	56·5	213·7	490	222·3
13·6/12—28	88	39·9	44	52·9	200	48	57·6	218·2	521	236·3
13·6/12—36	107·5	48·8	54	64·9	245·5	59	70·9	268·2	638	289·4
13·6/12—38	90	40·8	39	46·85	177·3	46·5	55·9	211·4	487	220·9
14·9/13—24	92	41·7	46	55·3	209·1	50·5	60·7	229·6	545	247·2
14·9/13—30	111	50·3	55·5	66·7	252·3	60·5	72·7	275·0	658	298·2
15·5/14—38	85	38·6	42·5	51·0	193·2	45	54·1	204·6	525	238·1
16·9/14—24	91	41·3	45·5	54·7	204·8	49·5	59·5	225·0	540	244·9
16·9/14—26	85	38·6	42·5	51·0	193·2	45	54·1	204·6	525	238·1
16·9/14—28	128	58·1	64	76·9	290·9	70	84·1	318·2	768	348·4
16·9/14—30	131	59·4	65·5	78·7	297·8	71·5	86·0	324·9	776	352·0
18·4/15—16	75	34·0	39	46·85	177·3	41	49·3	186·4	465	210·9
18·4/15—26	157	50·8	78·5	94·3	356·9	86	103·3	391·0	932	422·7
18·4/15—30	180·5	81·9	90·5	108·8	411·4	99	119·0	450·0	1076	488·1

Based on tyres 90% full and gives a protection against freezing to 19°F (—7·22°C)

Part 14

WHEELS AND TYRES

Chapter 3

SPECIFICATIONS

Front Wheel and Tyre Options—Production Code 'A'

All Purpose				V'Yard		Narrow		Industrial		Description
2000	3000	4000	5000	2000	3000	2000	3000	3000	4000	
S										Wheel 3·00D × 19 (Tyre 4·00 × 19 4 Ply)
O	S			O	O	S	S			Wheel 4·00E × 16 (Tyre 5·50 × 16 4 Ply)
	O	S	S							Wheel 4·00E × 16 (Tyre 6·00 × 16 4 Ply)
								S		Wheel 5·50F × 16 (Tyre 6·50 × 16 6 Ply I1)
O	O	O								Wheel 4·00E × 16 (Tyre 6·00 × 16 6 Ply)
		O	O							Wheel 5·50 × 16 (Tyre 7·50 × 16 6 Ply)
								O	S	Wheel 5·50 × 16 (Tyre 7·50 × 16 6 Ply I1)
								O	O	Wheel 5·50 × 16 (Tyre 7·50 × 16 6 Ply Truck)
								O	O	Wheel 5·50 × 16 (Tyre 7·50 × 16 8 Ply I1)
								O	O	Wheel 5·50 × 16 (Tyre 7·50 × 16 8 Ply Truck)
				S	S					Wheel 3·25 × 16 (Tyre 4·50 × 16 4 Ply)
O	O									Wheel 4·00E × 16 (Tyre 5·50 × 16 6 Ply)

Front Wheel and Tyre Options—Production Code 'B'

All Purpose				H'way		Rice	Narrow		Industrial	Description
2000	3000	4000	5000	2000	3000	3000	2000	3000	4000	
S				S			S			Wheel 3·00D × 19 (Tyre 4·00 × 19 4 Ply)
O	S			O	S	S	O	S		Wheel 4·00E × 16 (Tyre 5·50 × 16 4 Ply)
	O	S	S							Wheel 4·00E × 16 (Tyre 6·00 × 16 4 Ply)
	O	O	O		O	O				Wheel 4·00E × 16 (Tyre 6·00 × 16 6 Ply)
		O	O							Wheel 5·50F × 16 (Tyre 7·50 × 16 6 Ply)
		O	O							Wheel 5·50F × 16 (Tyre 7·50 × 16 8 Ply)
									S	Wheel 5·50 × 16 (Tyre 7·50 × 16 8 Ply I1)
									O	Wheel 5·50 × 16 (Tyre 7·50 × 16 8 Ply Truck)
O	O			O	O					Wheel 4·00E × 16 (Tyre 5·50 × 16 6 Ply)

© FORD MOTOR COMPANY LTD., 1967

Front Wheel and Tyre Options—Production Code 'C'

All Purpose				L.C.G.		R'Crop	Industrial		Description
2000	3000	4000	5000	2000	4000	4000	3000	4000	
							S		Wheel 5·50 × 16 (Tyre 6·50 × 16 6 Ply I1)
				O*	O*	S	O	O	Wheel 4·00 × 16 (Tyre 6·00 × 16 4 Ply I1)
							O	S	Wheel 5·50 × 16 (Tyre 7·50 × 16 6 Ply I1)
								O	Wheel 5·50 × 16 (Tyre 7·50 × 16 8 Ply I1)
								O	Wheel 5·50 × 16 (Tyre 7·50 × 16 6 Ply Truck)
								O	Wheel 5·50 × 16 (Tyre 7·50 × 16 8 Ply Truck)
				S†	S†				Wheel 4·50 × 13 (Tyre 6·50 × 13 4 Ply)
O	S								Wheel 4·00 × 16 (Tyre 5·50 × 16 4 Ply)
	O	S	S						Wheel 4·00 × 16 (Tyre 6·00 × 16 4 Ply)
	O								Wheel 4·00 × 16 (Tyre 6·00 × 16 6 Ply)
		O	O						Wheel 5·50 × 16 (Tyre 7·50 × 16 6 Ply)
O	O								Wheel 4·00E × 16 (Tyre 5·50 × 16 6 Ply)
		O	O						Wheel 4·00E × 16 (Tyre 6·00 × 16 6 Ply)
		O	O						Wheel 5·50 × 16 (Tyre 6·00 × 16 4 Ply)
		O	O						Wheel 5·50 × 16 (Tyre 6·00 × 16 3 Ply)
						O			Wheel 6·00 × 15 (Tyre 7·50 × 15 6 Ply)
						O			Wheel 9·00 × 10 (Tyre 9·00 × 10 8 Ply)
S									Wheel 3·00E × 19 (Tyre 4·00 × 19 4 Ply)
			O*						Wheel 6·00 × 10 (Tyre 9·00 × 10 4 Ply I1)

† Use only with 8·30/7 × 24 Rear Wheel and Tyre

* Use only with 18·4/16 × 16 Rear Wheel and Tyre

Rear Wheel and Tyre Options—Production Code 'A'

All Purpose				V'Yard		Narrow		Industrial		Description
2000	3000	4000	5000	2000	3000	2000	3000	3000	4000	
S						S	S			Wheel W10 × 28 (Tyre 11·2 × 28 4 Ply)
O	S				O	O	O	S		Wheel W11 × 28 (Tyre 12·4 × 28 4 Ply)
		S	S							Wheel W11 × 36 (Tyre 12·4 × 36 4 Ply)
O										Wheel W 8 × 32 (Tyre 9·5 × 32 6 Ply)
	O									Wheel W12 × 28 (Tyre 13·6 × 28 4 Ply)
	O							O	S	Wheel W12 × 24 (Tyre 14·9 × 24 6 Ply)
		O	O							Wheel W12 × 36 (Tyre 13·6 × 36 6 Ply)
			O							Wheel W12 × 38 (Tyre 13·6 × 38 6 Ply)
									O	Wheel W12 × 24 (Tyre 16·9 × 24 6 Ply)
				S						Wheel W 9 × 28 (Tyre 9·50 × 28 4 Ply)
				O	S					Wheel W 9 × 28 (Tyre 11·2 × 28 4 Ply)
O	O						O			Wheel W11 × 28 (Tyre 12·4 × 28 6 Ply)
	O									Wheel W12 × 28 (Tyre 13·6 × 28 6 Ply)
		O	O							Wheel W11 × 36 (Tyre 12·4 × 36 6 Ply)
			O							Wheel W12 × 24 (Tyre 16·9 × 24 8 Ply)
		O†	O							Wheel W14L × 30 (Tyre 16·9 × 30 6 Ply)
			O							Wheel W14L × 30 (Tyre 16·9 × 30 8 Ply)

Rear Wheel and Tyre Options—Production Code 'B'

All Purpose				H'Way		Rice	Narrow		Industrial	Description
2000	3000	4000	5000	2000	3000	3000	2000	3000	4000	
S	O			S	O		S	S		Wheel W10 × 28 (Tyre 11·2 × 28 4 Ply)
O	S				S	S		O		Wheel W11 × 28 (Tyre 12·4 × 28 4 Ply)
		S	S							Wheel W11 × 36 (Tyre 12·4 × 36 4 Ply)
	O									Wheel W12 × 28 (Tyre 13·6 × 28 4 Ply)
	O									Wheel W12 × 24 (Tyre 14·9 × 24 6 Ply)
		O	O							Wheel W12 × 36 (Tyre 13·6 × 36 6 Ply)
O	O			O	O					Wheel W10 × 28 (Tyre 11·2 × 28 6 Ply)
		O	O							Wheel W12 × 38 (Tyre 13·6 × 38 6 Ply)
O	O				O					Wheel W11 × 28 (Tyre 12·4 × 28 6 Ply)
	O									Wheel W12 × 28 (Tyre 13·6 × 28 6 Ply)
		O	O							Wheel W11 × 36 (Tyre 12·4 × 36 6 Ply)
		O†	O							Wheel W14L × 30 (Tyre 16·9 × 30 6 Ply)
			O							Wheel W14L × 30 (Tyre 16·9 × 30 8 Ply)
			O							Wheel W14L × 30 (Tyre 18·4 × 30 6 Ply)
			O							Wheel W15 × 30 (Tyre 18·4 × 30 6 Ply)
									S	Wheel W14L × 28 (Tyre 16·9 × 28 8 Ply R1)
									O	Wheel W14L × 28 (Tyre 16·9 × 28 8 Ply R4)

† Used with Rear Axle equipped with eight stud wheel fixing

Rear Wheel and Tyre Options—Production Code 'C'

All Purpose				L.C.G.		R'Crop	Industrial		Description
2000	3000	4000	5000	2000	3000	4000	3000	4000	
S	O								Wheel W10 × 28 (Tyre 11·2 × 28 4 Ply)
O	S						S		Wheel W11 × 28 (Tyre 12·4 × 28 4 Ply)
		S	S						Wheel W11 × 36 (Tyre 12·4 × 36 4 Ply)
O									Wheel W12 × 24 (Tyre 13·6 × 24 4 Ply)
	O						O		Wheel W12 × 28 (Tyre 13·6 × 28 4 Ply)
	O						O	S	Wheel WI2 × 24 (Tyre 14·9 × 24 6 Ply)
		O	O						Wheel W12 × 36 (Tyre 13·6 × 36 4 Ply)
		O	O			O			Wheel DW12 × 38 (Tyre 13·6 × 38 6 Ply)
			O						Wheel DW14 × 38 (Tyre 15·5 × 38 6 Ply)
	O								Wheel W16 × 28 (Tyre 11·2 × 28 6 Ply)
O	O								Wheel W11 × 28 (Tyre 12·4 × 28 6 Ply)
		O	O						Wheel DW16 × 26 (Tyre 18·4 × 26 6 Ply)
	O								Wheel W12 × 28 (Tyre 13·6 × 28 6 Ply)
	O							O	Wheel W12 × 24 (Tyre 14·9 × 24 4 Ply)
		O	O						Wheel W11 × 36 (Tyre 12·4 × 36 6 Ply)
		O	O			S			Wheel DW11 × 38 (Tyre 12·4 × 38 4 Ply)
		O	O			O			Wheel DW12 × 38 (Tyre 13·6 × 38 4 Ply)
			O						Wheel 14 × 38 (Tyre 15·5 × 38 4 Ply)
		O	O						Wheel W15 × 30 (Tyre 16·9 × 30 6 Ply)
			O						Wheel 15 × 30 (Tyre 16·9 × 30 8 Ply)
		O				O			Wheel 13 × 30 (Tyre 14·9 × 30 6 Ply)
			O						Wheel W15 × 30 (Tyre 18·4 × 30 6 Ply) Canadian
	O						O		Wheel W15L × 24 (Tyre 16·9 × 24 6 Ply)
	O	O							Wheel DW14 × 26 (Tyre 16·9 × 26 6 Ply)
							O	O	Wheel W12 × 24 (Tyre 16·9 × 24 6 Ply)
				S†	S†				Wheel W7 × 24 (Tyre 8·30 × 24 4 Ply)
				O†	O†				Wheel W7 × 24 (Tyre 8·30 × 24 4 Ply) Dual
				O*	O*				Wheel W16–16 16 Rim (Tyre 18·4 × 16 6 Ply)

† Use only with 6·50 × 13 Front Wheel and Tyre

* Use only with 6·00 × 16 Front Wheel and Tyre

Rear Wheel and Tyre (Power Adj.)—Production Code 'A'

All Purpose				V'Yard		Narrow		Description
2000	3000	4000	5000	2000	3000	2000	3000	
O	O							Wheel W11 × 28 PWR ADJ (Tyre 12·4 × 28 4 Ply)
O	O							Wheel W11 × 28 PWR ADJ (Tyre 12·4 × 28 6 Ply)
	O							Wheel W12 × 28 PWR ADJ (Tyre 13·6 × 28 4 Ply)
	O							Wheel W12 × 28 PWR ADJ (Tyre 13·6 × 28 6 Ply)
		O†	O					Wheel W12 × 38 PWR ADJ (Tyre 13·6 × 38 4 Ply)
		O†	O					Wheel W12 × 38 PWR ADJ (Tyre 13·6 × 38 6 Ply)
				O	O	O	O	Wheel W 9 × 28 PWR ADJ (Tyre 11·2 × 28 4 Ply)

Rear Wheel and Tyre (Power Adj.)—Production Code 'B'

All Purpose				Description
2000	3000	4000	5000	
O	O			Wheel W11 × 28 PWR ADJ (Tyre 12·4 × 28 4 Ply)
O	O			Wheel W11 × 28 PWR ADJ (Tyre 12·4 × 28 6 Ply)
	O			Wheel W12 × 28 PWR ADJ (Tyre 13·6 × 28 4 Ply)
	O			Wheel W12 × 28 PWR ADJ (Tyre 13·6 × 28 6 Ply)
		O†	O	Wheel W12 × 38 PWR ADJ (Tyre 13·6 × 28 4 Ply)
		O†	O	Wheel W12 × 38 PWR ADJ (Tyre 13·6 × 28 6 Ply)

Rear Wheel and Tyre (Power Adj.)—Production Code 'C'

All Purpose				R'Crop	Description
2000	3000	4000	5000	4000	
		O	O	O	Wheel W12 × 38 PWR ADJ (Tyre 13·6 × 38 4 Ply)
		O	O	O	Wheel W12 × 38 PWR ADJ (Tyre 13·6 × 38 6 Ply)
			O		Wheel W14 × 38 PWR ADJ (Tyre 15·5 × 38 6 Ply)
O	O				Wheel W11 × 28 PWR ADJ (Tyre 12·4 × 28 4 Ply)
O	O				Wheel W11 × 28 PWR ADJ (Tyre 12·4 × 28 6 Ply)
	O				Wheel W12 × 28 PWR ADJ (Tyre 13·6 × 28 4 Ply)
	O				Wheel W12 × 28 PWR ADJ (Tyre 13·6 × 28 6 Ply)

† Must be used with rear axle equipped with eight stud wheel fixing

PART 15
SEPARATING THE TRACTOR

Part 15

SEPARATING THE TRACTOR

Chapter 1

FORD 2000 AND FORD 3000

Section		Page
1.	To separate the Engine and Front Axle Assembly from the Transmission and Rear Axle Assembly.....	1
2.	To reconnect the Engine and Front Axle Assembly to the Transmission and Rear Axle Assembly	4
3.	To separate the Rear Axle Assembly from the Transmission and Engine Assembly	5
4.	To reconnect the Rear Axle Assembly to the Transmission and Engine Assembly	5
5.	To separate the Front Axle Assembly from the Engine, Transmission and Rear Axle Assembly	6
6.	To reconnect the Front Axle Assembly to the Engine, Transmission and Rear Axle Assembly	7

Chapter 2

FORD 4000 AND FORD 5000

Section		Page
1.	To separate the Engine and Front Axle Assembly from the Transmission and Rear Axle Assembly	9
2.	To reconnect the Engine and Front Axle Assembly to the Transmission and Rear Axle Assembly	12
3.	To separate the Rear Axle Assembly from the Transmission and Engine Assembly	13
4.	To reconnect the Rear Axle Assembly to the Transmission and Engine Assembly	13
5.	To separate the Front Axle Assembly from the Engine, Transmission and Rear Axle Assembly—Ford 4000 ..	15
6.	To reconnect the Front Axle Assembly to the Engine, Transmission and Rear Axle Assembly—Ford 4000 ..	15
7.	To separate the Front Axle Assembly from the Engine, Transmission and Rear Axle Assembly—Ford 5000 ..	17
8.	To reconnect the Front Axle Assembly to the Engine, Transmission and Rear Axle Assembly—Ford 5000 ..	17

© FORD MOTOR COMPANY LTD., 1966

SPECIFICATIONS

Section		Page
1.	Specifications	19

Part 15
SEPARATING THE TRACTOR
Chapter 1
FORD 2000 AND FORD 3000

Section		Page
1.	To separate the Engine and Front Axle Assembly from the Transmission and Rear Axle Assembly	1
2.	To reconnect the Engine and Front Axle Assembly to the Transmission and Rear Axle Assembly	4
3.	To separate the Rear Axle Assembly from the Transmission and Engine Assembly	5
4.	To reconnect the Rear Axle Assembly to the Transmission and Engine Assembly	5
5.	To separate the Front Axle Assembly from the Engine, Transmission and Rear Axle Assembly	6
6.	To reconnect the Front Axle Assembly to the Engine, Transmission and Rear Axle Assembly	7

1. TO SEPARATE THE ENGINE AND FRONT AXLE ASSEMBLY FROM THE TRANSMISSION AND REAR AXLE ASSEMBLY

1. Disconnect the battery leads at the battery terminals.
2. Remove the vertical exhaust muffler (where installed).
3. Disconnect the wiring harness from the two support clips situated under the centre of the hood assembly.
4. Remove the four screws securing the hood assembly. Lift the hood clear of the tractor.
5. Disconnect the proofmeter drive cable from the rear of the generator, Figure 1.
6. Remove the six screws retaining the left-hand front and rear steering gear covers, Figure 1.
7. Remove the remaining three screws securing the right-hand front and rear steering gear covers.

   NOTE: ***To assist in the removal of the steering gear covers it is advisable to turn the front wheels to the full lock position.***

8. **Ford 2000 and Ford 3000—with manual steering.**
   Remove the two lock nuts securing the left-hand and right-hand steering drag link, Figure 1, to the respective steering gear arm. Force the tapered pin from the tapered bore in the arm using a suitable separator.
   Remove the left-hand and right-hand radius rod rear securing nuts and caps and swing the radius rods outwards.
9. **Ford 2000 and Ford 3000—with power steering.**
   Remove the left-hand and right-hand radius rod foot securing nut and bolt. Disconnect the power steering return tube at the power steering reservoir assembly and disconnect the pressure tube from the rear of the power steering pump assembly. Remove the two lock nuts securing the front end of the left-hand and right-hand drag links to the respective steering spindle arm. Force the tapered pin from the tapered bore in the respective arms using a suitable separator.
10. Disconnect the centre and left-hand rear hood assembly support struts by removing the respective nuts, bolts and washers, Figure 2.
11. Remove the two nuts, bolts and washers supporting the front end of the fuel tank.
12. Remove the two nuts, bolts and washers which secure the battery support bracket to the rear hood panel assembly, Figure 2.
13. Remove the three bolts which retain the starter motor splash shield and slide the shield from under the fuel filters and install the fuel filter securing bolts to support the filters.
14. Disconnect the lead between the starter relay switch, Figure 2, and the starter motor at the switch.

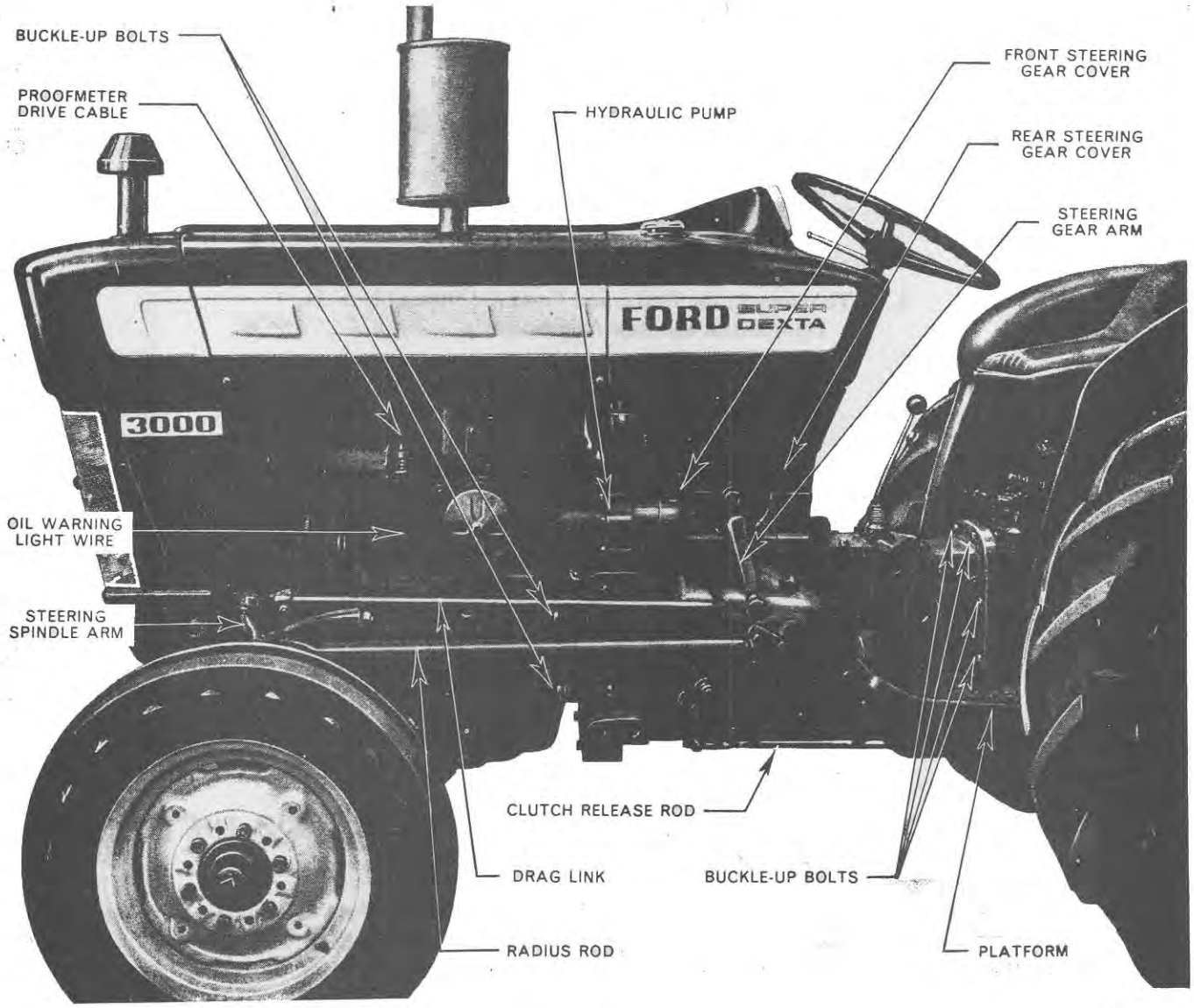

Figure 1
Components to be Disconnected Before Separation

15. Remove the three bolts and spring washers securing the starter motor assembly and lift the starter away from the engine.

    NOTE: ***On earlier tractors the battery earth lead is connected to one of these starter motor retaining bolts.***

16. Disconnect the remaining three wiring leads from the starter relay terminals. (See item 20 regarding tractors with 'C' prefix.)
17. Remove the spring clip from the horizontal throttle rod, Figure 2, and disconnect the rod from underneath the fuel tank.
18. Disconnect the fuel shut-off cable, Figure 2, at the arm on the fuel injection pump. (Choke control on gasolene engines.)
19. Disconnect the fuel leak-off tube, Figure 2, by loosening the screw clamp situated above the fuel tank.
20. **NOTE:** ***On tractors with a 'C' prefix to the serial number it is only necessary to pull apart the multiple snap connector located in front of the fuel tank in order to separate the two halves of the main wiring harness.***

    On tractors with an 'A' or 'B' prefix to the serial number, disconnect the wiring to the generator (at the generator terminals), the engine oil pressure switch, the front lights (snap connectors positioned in front of the radiator), the temperature gauge (if installed, at the sender assembly terminal), and the horn (if installed).

21. Disconnect the wiring to the terminals on the regulator. (See item 20 regarding tractors with 'C' prefix.)
22. Turn the fuel tap, Figure 2, to the 'off' position and disconnect the fuel tank to fuel filter pipe at the fuel tap.

23. Remove the three bolts and spring washers securing the external pump manifold to the engine driven hydraulic pump.

    NOTE: ***To avoid the entry of oil into the clutch assembly it is advisable to remove the hydraulic pump.***

24. Place a suitable support under the transmission housing, install lifting tackle on the engine, and, using a moveable overhead hoist or floor crane, take the weight of the engine.
25. Insert wooden wedges between the front centre axle and front axle support.

Ford 2000 and Ford 3000—with horizontal exhaust. Remove the horizontal exhaust support bracket and bolt positioned underneath the left-hand platform. Loosen the exhaust pipe clamp positioned in front of the muffler and slide out the rear part of the exhaust pipe.

26. Remove the screw securing the flywheel access cover to the engine mounting plate.
27. Remove the eight bolts retaining the engine to the transmission housing and withdraw the engine, radiator and front axle as an assembly, moving the assembly forward until clear of the transmission housing.

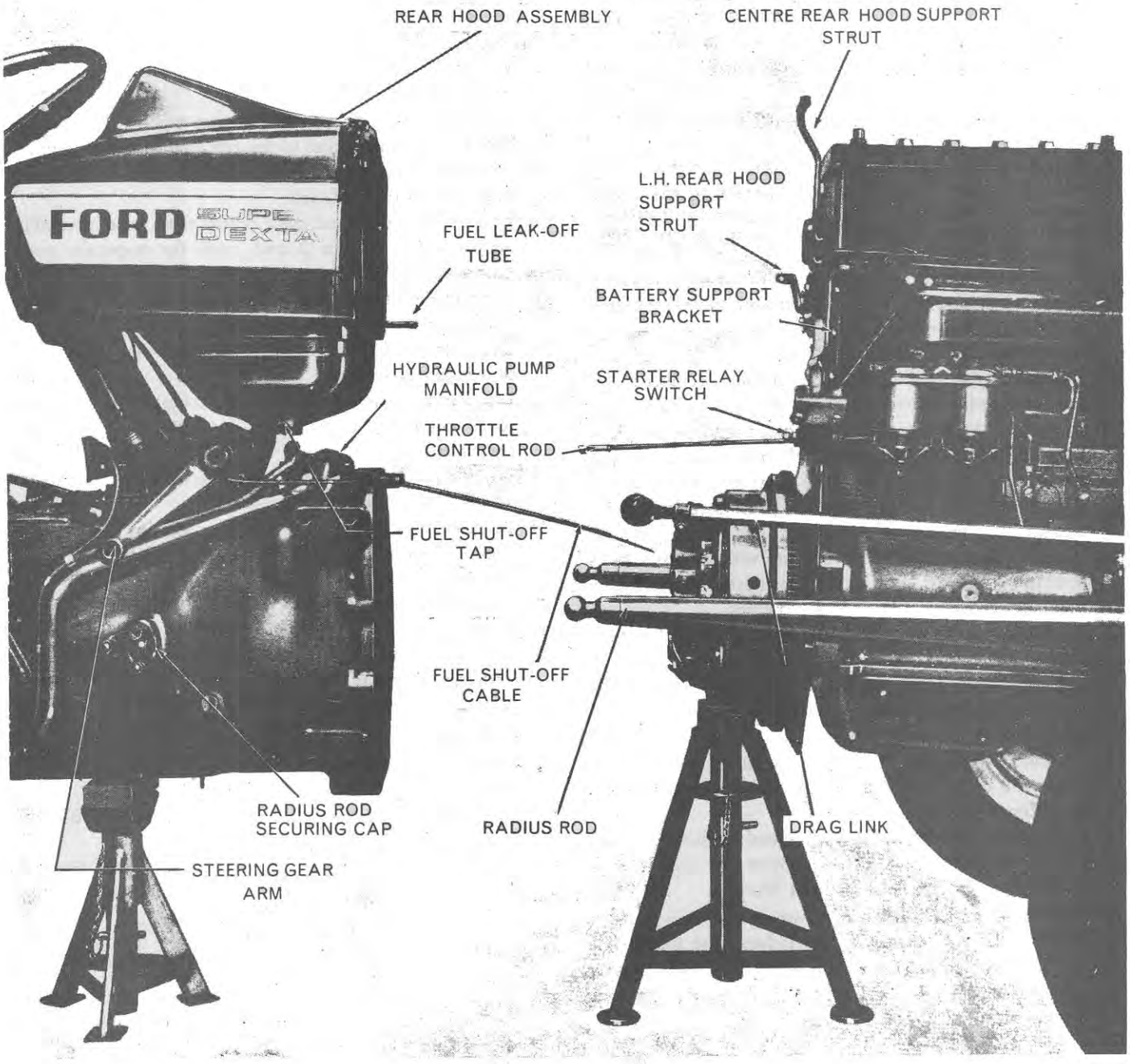

Figure 2
Transmission Separation

2. TO RECONNECT THE ENGINE AND FRONT AXLE ASSEMBLY TO THE TRANSMISSION AND REAR AXLE ASSEMBLY

1. Move the engine, radiator and front axle assembly towards the transmission housing. Accurate alignment of the clutch driven plate or plates is important. If removed, the clutch should be correctly aligned before installation (see Part 4, Chapters 1 and 2).
2. Install the eight bolts retaining the engine assembly to the transmission housing. Two of these bolts are located at the bottom of engine assembly and secure the engine mounting plate to the transmission housing. Tighten the bolts to the specified torque (see Specification Section).
3. Position the flywheel access cover and install the screw and washer assembly.
4. Remove the wooden wedges inserted between the front centre axle and front axle support.
5. Remove the lifting tackle and supports.
6. **NOTE:** ***On tractors with a 'C' prefix to the serial number it is only necessary to rejoin the multiple snap connector in order to reconnect the two halves of the main wiring harness.***
   On tractors with an 'A' or 'B' prefix to the serial number, reconnect the wiring to the generator, the oil pressure switch, the temperature gauge sender (if installed), the horn (if installed), and the front lights.
7. Reconnect the wiring to the regulator terminals (see item 6 regarding tractors with 'C' prefix).
8. Reconnect the engine shut-off cable, Figure 2, on diesel engined tractors, to the arm on the fuel injection pump. Allow approximately $\frac{1}{4}$ in. (6·35 mm) free movement of of the cable at the control panel. (Reconnect the choke control cable on gasolene engines.)
9. Position the starter motor and secure with the three bolts and spring washers. The battery earth cable is held by the top, outer retaining bolt on earlier tractors.
10. Reconnect the fuel tank to fuel filter pipe at the fuel tank tap.
11. Reposition and install the starter motor splash shield by removing the fuel filter bolts and sliding the shield behind the filters and installing the bolts.
12. Reconnect the starter relay switch to starter motor lead.
13. Reconnect the proofmeter drive to the rear of the generator, Figure 1.
14. Position the left-hand and right-hand radius rods and install the securing caps and tighten the nuts to the specified torque (see Specifications Section).
15. **Ford 2000 and Ford 3000—with manual steering.**
    Position the tapered pin of the left-hand and right-hand steering drag link in the tapered bore of the steering gear arm and secure with the locknut. Tighten to the specified torque (see Specifications Section).

    Ford 2000 and Ford 3000—with power steering.
    Install the left-hand and right-hand radius rod foot securing bolt and nut. Reconnect the power steering return tube at the power steering reservoir assembly and reconnect the pressure tube from the rear of the power steering pump assembly. Install the front end of the left-hand and right-hand drag links to the respective steering spindle arms and install the securing locknuts. Tighten to the specified torque (see Specifications Section).
16. Reconnect the horizontal throttle control rod, Figure 2, to the relay cross-shaft situated on the right-hand side underneath the fuel tank.
17. Install the two nuts, bolts and spring washers securing the battery support bracket to the rear hood panel assembly.
18. Install the two nuts, bolts and washers that support the front end of the fuel tank.
19. Position the left-hand and centre rear hood assembly support struts, Figure 2, and install the respective nuts, bolts and washers.
20. Connect the three wiring leads to the respective terminals on the starter relay switch.
21. Install the hydraulic pump (if removed) and tighten the four retaining bolts.
22. Position the hydraulic pump pipe manifold with a new set of 'O' rings on the pump and install the three bolts and spring washers.
23. Position the right-hand front and rear steering gear covers and install the retaining screws.
24. Position the left-hand front and rear steering gear covers, Figure 1. Install the retaining screws.
25. Reconnect the battery leads.
26. Position the hood assembly and install the four retaining screws.
27. Support the wiring harness with the two clips situated under the centre of the hood assembly.
28. Install the vertical muffler (where fitted).

    Ford 2000 and Ford 3000—with horizontal exhaust.
    Slide the rear section of the exhaust pipe and muffler assembly into the front section, tighten the clamp. Install the retaining nut, bolt and washer between the left-hand platform and muffler bracket.
29. Turn the fuel tap to the 'on' position and bleed the fuel system at the fuel filters and injection pump (refer to Part 2, Chapter 2, for bleeding the fuel system).
30. Bleed the hydraulic pump (refer to Part 2, Chapter 5).

3. SEPARATE THE REAR AXLE ASSEMBLY FROM THE TRANSMISSION AND ENGINE ASSEMBLY

1. Disconnect the battery leads from the battery terminals.
2. Drain the oil from the rear axle centre housing.
3. Disconnect the rear light wiring at the connector underneath the right-hand platform.
4. Release the two brake pedal return springs connected to the underside of the right-hand platform.
5. Unscrew the three fender to platform screws on both sides of the tractor.
6. Remove the four bolts in each of the left- and right-hand platforms and remove the platforms from the rear axle centre housing, Figure 1.
7. Remove the cotter pin and clevis pin from the clutch release arm and disconnect the clutch operating rod, Figure 1.

Horizontal exhaust only.
Remove the exhaust pipe support bracket, located underneath the left-hand platform, loosen the muffler clamp and slide the muffler assembly from the exhaust pipe.

8. Remove the three bolts securing the rear manifold of the external pipework for the engine driven hydraulic pump.
9. Install a suitable jack or stands underneath the engine and transmission assembly and support the rear axle assembly on a moveable overhead hoist or floor crane.
10. Remove the ten bolts securing the rear axle to the transmission and separate the two assemblies by withdrawing the rear axle.

4. RECONNECT THE REAR AXLE ASSEMBLY TO THE TRANSMISSION AND ENGINE ASSEMBLY

NOTE: ***When reconnecting the rear axle to the transmission and engine assembly take care to align the splines of the transmission output shaft with those of the drive shaft coupling located on the drive pinion, Figure 3. The P.T.O. coupling should be in the disengaged position.***

1. Install a new transmission to rear axle gasket and locate the ten bolts which secure the transmission to the rear axle housing. Reconnect the two assemblies and tighten the bolts to the torque specified in the Specifications Section.
2. Position the rear manifold of the external pipework for the engine driven hydraulic pump, having checked 'O' rings and renewed if damaged, and secure with three bolts.
3. Align the clutch operating rod clevis with the clutch release arm and install the cotter pin and clevis pin, Figure 1.

Horizontal exhaust only.
Slide the muffler assembly onto the exhaust pipe, tighten the clamp and secure the exhaust pipe support bracket underneath the left-hand platform.

4. Install the left- and right-hand platform with four bolts at each side and secure the platform to fender screws, three at each side, Figure 1. The right-hand platform should be checked for maximum parking brake ratchet engagement.
5. Connect the two brake pedal return springs to the underside of the right-hand platform.
6. Connect the rear light wiring at the connector located underneath the right-hand platform.
7. Refill the rear axle centre housing with the correct quantity and grade of lubricant. (Refer to the Specifications Section, Part 10, Chapter 3.)
8. Connect the battery leads and remove the jacks and stands supporting the rear axle and transmission.

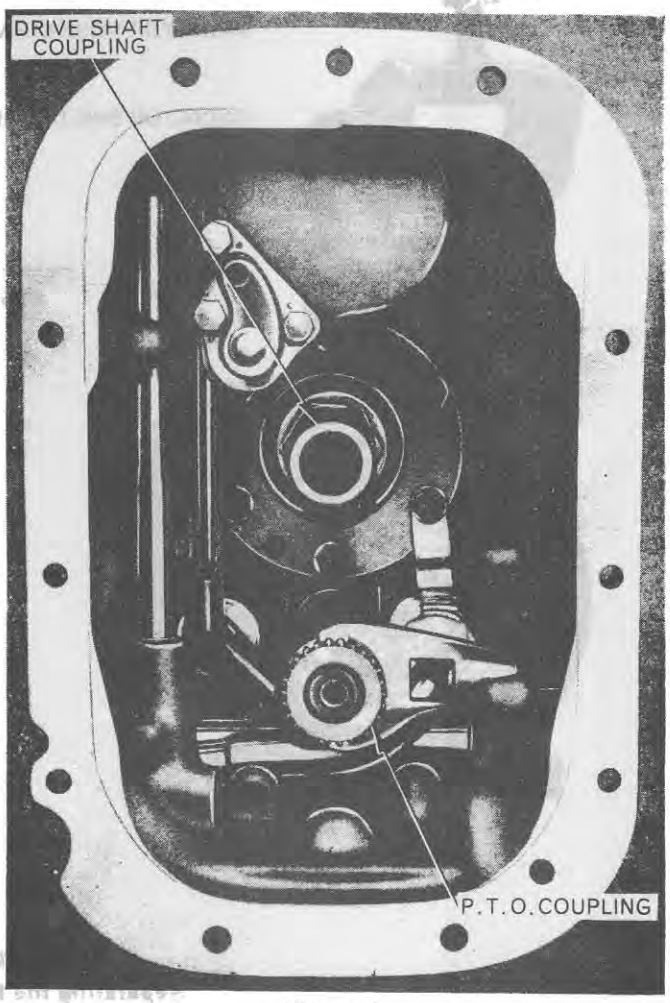

Figure 3
Transmission to Rear Axle Alignment

© FORD MOTOR COMPANY LTD., 1966

5. TO SEPARATE THE FRONT AXLE ASSEMBLY FROM THE ENGINE, TRANSMISSION AND REAR AXLE ASSEMBLY

1. Disconnect the battery leads at the terminals.
2. Remove the vertical exhaust muffler (where installed).
3. Disconnect the wiring harness from the two support clips situated under the left-hand hood assembly.
4. Remove the four screws securing the hood assembly. Lift the hood clear of the tractor.
5. Remove the radiator chaff screen from the radiator shell.
6. Drain the radiator of coolant.
7. Disconnect the front lamp wires at the connections in front of the radiator. Unclip the wire from the radiator, and feed the wire back between the radiator and the radiator shell. If the tractor is equipped with a horn, disconnect the wires at the horn terminals.
8. Loosen the radiator hose clamps and disconnect the hoses from the radiator. Loosen the air cleaner hose clamps, Figure 4.
9. Insert the wooden wedges between the front axle support to prevent movement between the radiator, front axle support, etc., and the front axle assembly.

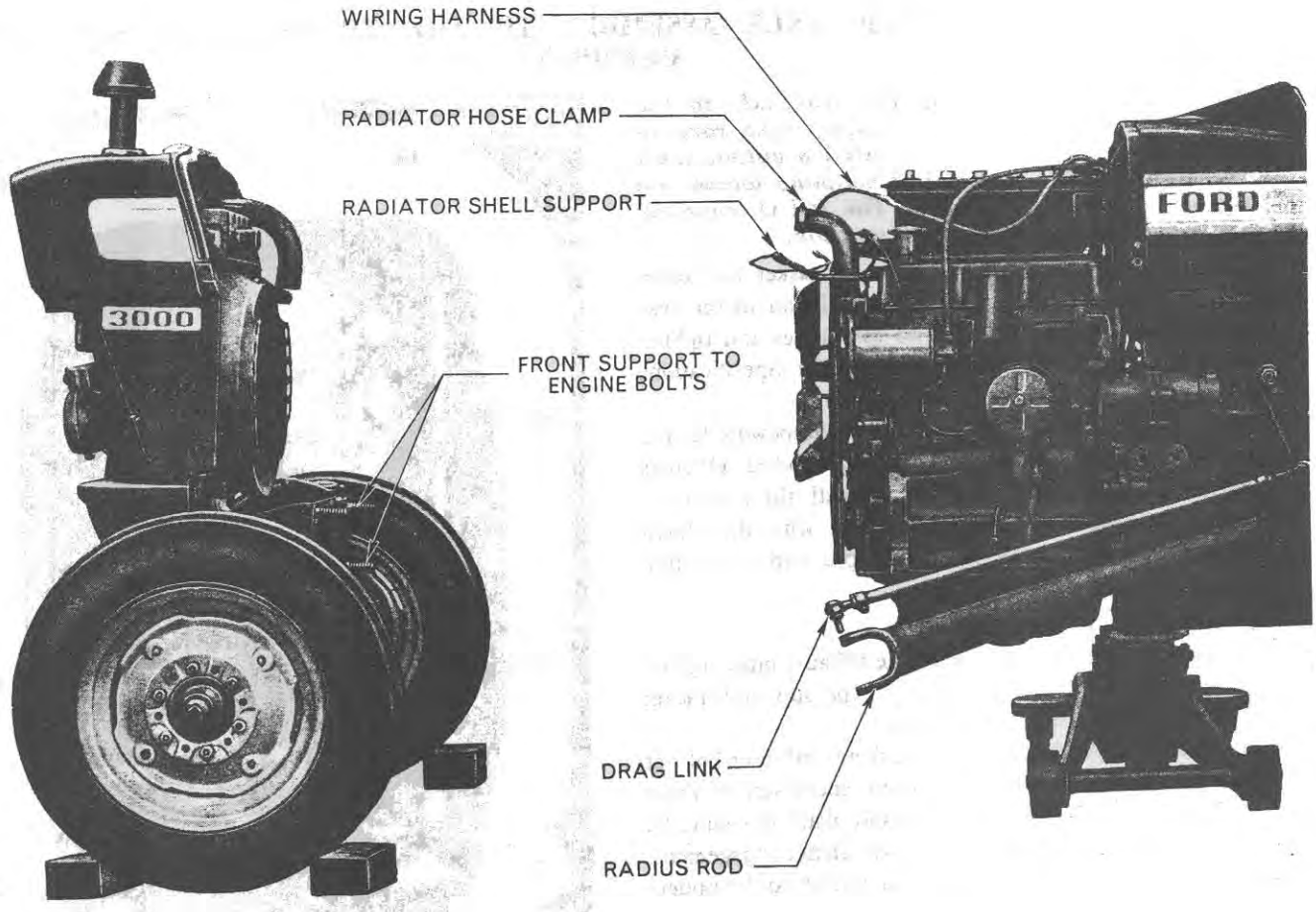

Figure 4
Separating the Front Axle Assembly

10. Remove the bolts and nuts retaining the radiator shell to the radiator shell support.
11. Remove the two locknuts securing the left hand and right-hand front draglink ball pin to the respective steering gear arm. Force the tapered pin from the tapered bore in the arm using a suitable separator.
12. Remove the left-hand and right-hand radius rod front securing nut and bolt.
13. Support the engine, transmission, and rear axle assembly. Use a hoist to support the front axle and radiator assembly.
14. Remove the four front axle support to engine bolts and nuts. Separate the front axle and radiator as an assembly from the engine, etc.

6. TO RECONNECT THE FRONT AXLE ASSEMBLY TO THE ENGINE, TRANSMISSION AND REAR AXLE ASSEMBLY

1. Move the front axle and radiator assembly into position at the front of the engine, transmission and rear axle assembly. Install the four front axle support to engine bolts and nuts and tighten to the specified torque.
2. Remove the support and hoist from the tractor.
3. Position the radius rod forks on the front axle and install the foot securing bolts and nuts in each radius rod. Tighten to the specified torque.
4. With the steering gear and the front wheels in the straight ahead position connect the left-hand and right-hand drag link front ball pin into the respective steering arms. Install the ball pin locknuts and tighten to the specified torque.
5. Install the bolts and nuts retaining the radiator shell to the radiator shell support.
6. Remove the wooden wedges from between the front axle and the front axle support.
7. Connect the radiator hoses to the radiator, position and tighten the hose clamps. Position and tighten the air cleaner hose clamps.
8. Pass the front lamp wire between the radiator and the radiator shell. Retain the wire in position by the clips at the side of the radiator.
9. Reconnect the front lamp wire to the front lamps by means of the connectors. Reconnect the wire to the horn (if installed on the tractor).
10. Refill the radiator with coolant to the correct level.
11. Install the radiator chaff screen into the radiator shell.
12. Position the hood on the tractor and retain with the four screws, nuts, etc.
13. Retain the wiring harness under the left-hand hood with the two support clips.
14. Install the vertical exhaust muffler (if the tractor is so equipped).
15. Connect the battery leads at the terminals.

SEPARATING THE TRACTOR

Chapter 2

FORD 4000 AND FORD 5000

Section		Page
1.	To separate the Engine and Front Axle Assembly from the Transmission and Rear Axle Assembly	9
2.	To reconnect the Engine and Front Axle Assembly to the Transmission and Rear Axle Assembly	12
3.	To separate the Rear Axle Assembly from the Transmission and Engine Assembly	13
4.	To reconnect the Rear Axle Assembly to the Transmission and Engine Assembly	13
5.	To separate the Front Axle Assembly from the Engine, Transmission and Rear Axle Assembly—Ford 4000 ..	15
6.	To reconnect the Front Axle Assembly to the Engine, Transmission and Rear Axle Assembly—Ford 4000 ..	15
7.	To separate the Front Axle Assembly from the Engine, Transmission and Rear Axle Assembly—Ford 5000 ..	17
8.	To reconnect the Front Axle Assembly to the Engine, Transmission and Rear Axle Assembly—Ford 5000 ..	17

1. TO SEPARATE THE ENGINE AND FRONT AXLE ASSEMBLY FROM THE TRANSMISSION AND REAR AXLE ASSEMBLY

1. Disconnect the battery leads at the battery terminals before separating the tractor.
2. Remove the vertical exhaust muffler (where installed).
3. Disconnect the wiring harness from the two support clips situated under the centre of the hood assembly.
4. Remove the four screws securing the hood assembly. Lift the hood clear of the tractor.
5. Disconnect the proofmeter drive cable from the rear of the generator.
6. Remove the four screws retaining the right-hand steering gear side covers.
7. Remove the screw retaining the left-hand steering gear side cover, Figure 5.
8. Remove the locknut securing the steering drag link to the steering gear arm, Figure 5, and force the tapered pin from the tapered bore in the arm using a suitable separator.

NOTE: ***Do not attempt to separate the drag link from the steering gear arm while the front wheels are in any position other than straight ahead.***

9. Remove the two nuts, bolts and spring washers supporting the front end of the fuel tank.
10. Disconnect the centre and left-hand, rear hood assembly support struts, Figure 6, by removing the respective nuts, bolts and washers.
11. Remove the two nuts, bolts and washers which secure the battery support bracket, Figure 6, to the rear hood panel assembly.
12. Remove the three bolts which retain the starter motor splash shield and slide the shield from under the fuel filters and install the fuel filter securing bolts.

© FORD MOTOR COMPANY LTD., 1966

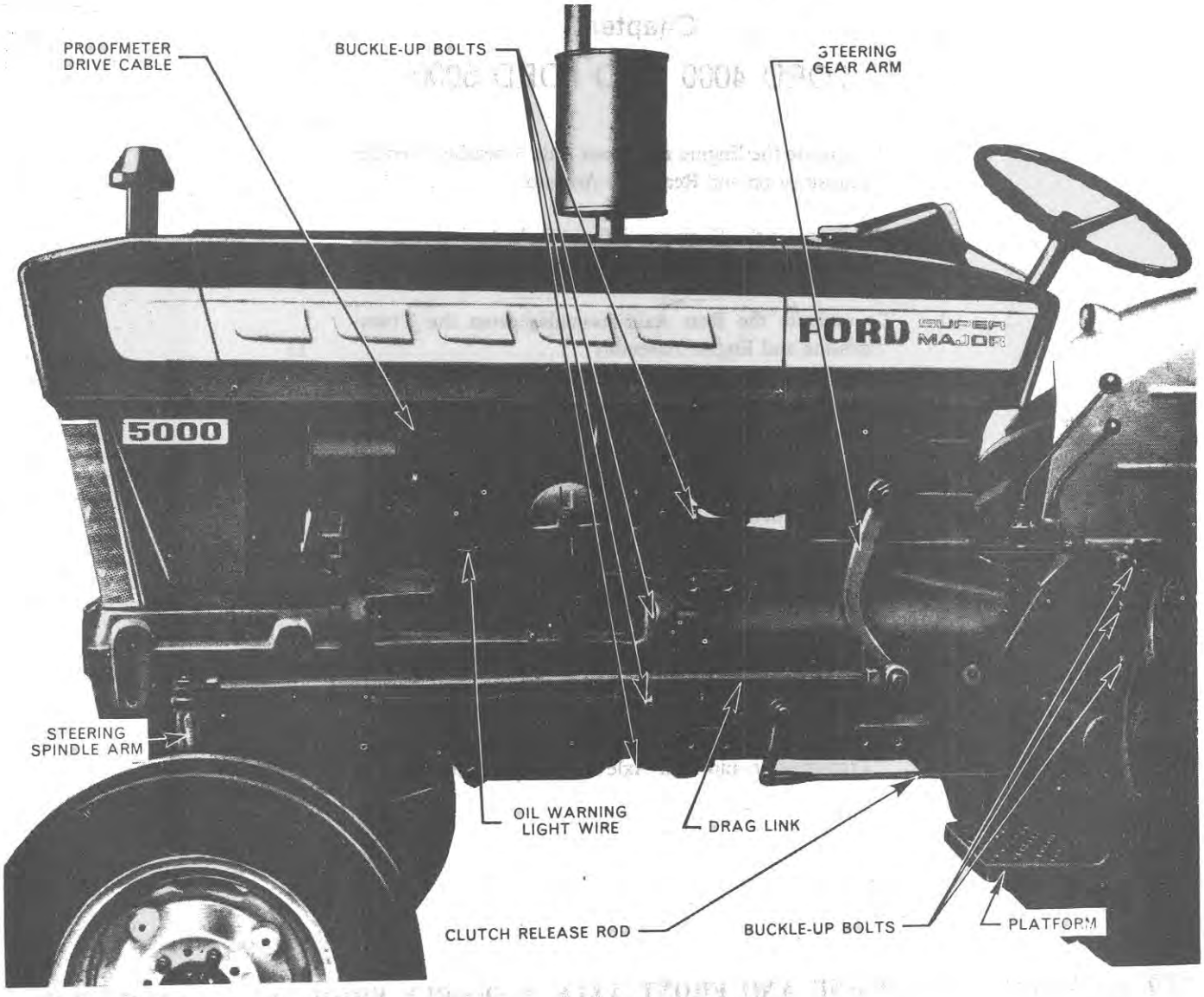

Figure 5

Components to be Disconnected Before Separation

13. Disconnect the lead between the starter relay switch and the starter motor at the switch.
14. Remove the three bolts and washers securing the starter motor assembly and lift the starter away from the engine.

    NOTE: ***On earlier tractors the battery earth lead is connected to one of these starter motor retaining bolts.***
15. Disconnect the remaining three wiring leads from the starter relay terminals. (See item 19 regarding tractors with 'C' prefix.)
16. Remove the spring clip and disconnect the horizontal throttle control rod, Figure 6, from underneath the fuel tank.
17. Disconnect the fuel shut-off cable, Figure 6, at the arm on the fuel injection pump. Choke control on gasolene engines.
18. Disconnect the fuel leak-off tube by loosening the screw clamp, situated above the fuel tank.

    NOTE: ***On tractors with a 'C' prefix to the serial number it is only necessary to pull apart the multiple snap connector located in front of the fuel tank in order to separate the two halves of the main wiring harness.***

    On tractors with an 'A' or 'B' prefix to the serial number, disconnect the wiring to the generator (at the generator terminals), the oil pressure switch (at the switch), the front lights (snap connectors positioned in front of the radiator), the temperature gauge (if installed, at the sender assembly terminal), and the horn (if installed).
19. Disconnect the wiring to the terminals on the regulator (see item 19 regarding tractors with 'C' prefix).

21. Remove the screw securing the flywheel access cover to the engine mounting plate.
22. Turn the fuel tap to the 'off' position and disconnect the fuel tank to the fuel lift pump pipe at the fuel tap.

Ford 4000.
Disconnect the fuel tank to fuel filter pipe at the fuel tap.

23. Place a suitable support under the transmission housing, install lifting tackle on the engine, and, using a moveable overhead hoist or floor crane, take the weight of the engine.
24. Insert wooden wedges between the front axle centre beam and front cross-member to prevent movement between the engine and front axle assembly.

Ford 4000—with standard P.T.O.
Remove the three bolts and spring washers securing the external pump manifold to the engine driven hydraulic pump. Remove the pump from the tractor to avoid the possibility of oil entering the clutch assembly.

Ford 4000 and Ford 5000—with horizontal exhaust.
Remove the horizontal exhaust support bracket bolt positioned underneath the left-hand platform. Loosen the exhaust pipe clamp positioned in front of the muffler and slide out the rear part of the exhaust pipe.

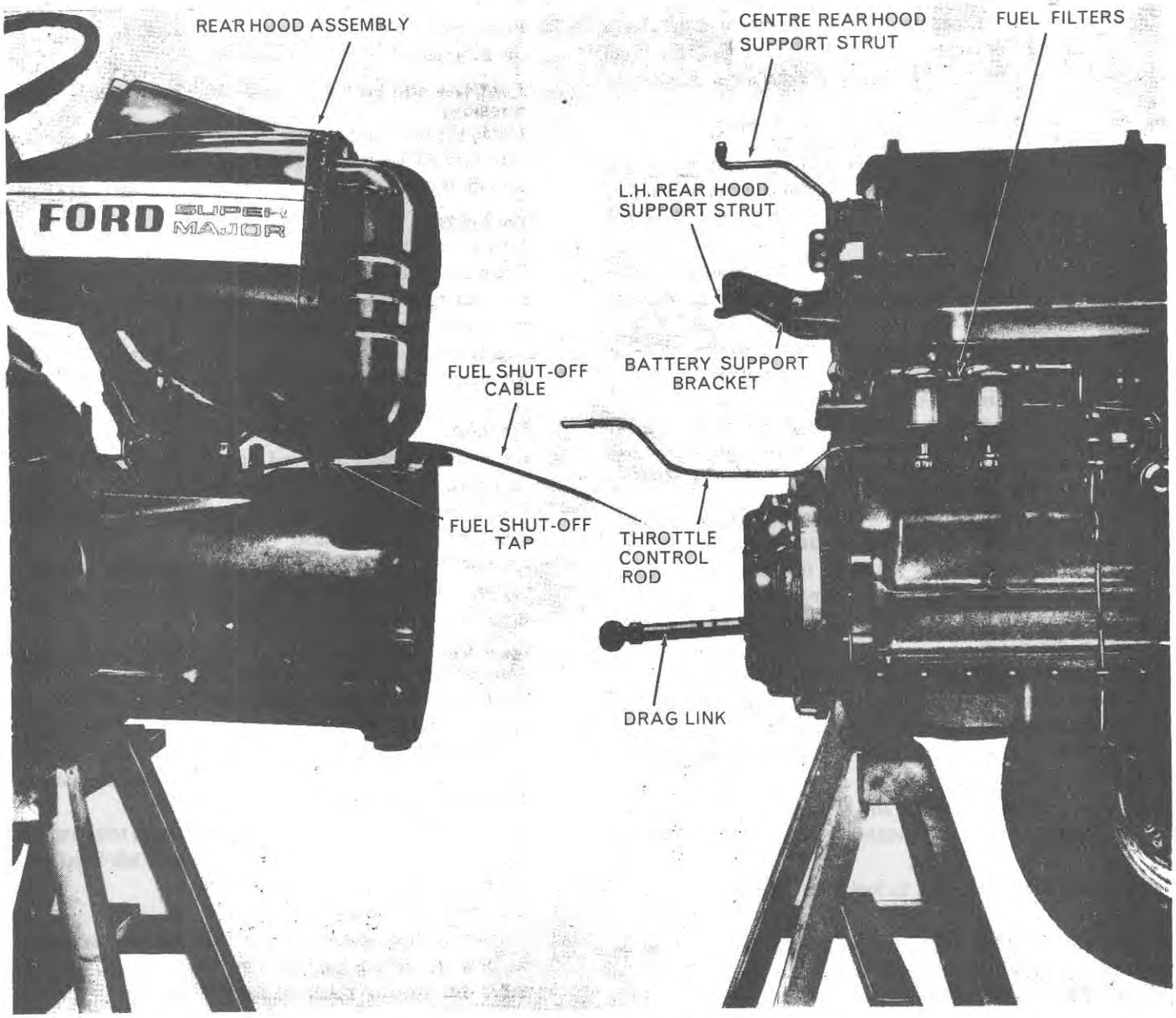

Figure 6
Transmission Separation

Ford 4000 and Ford 5000—with Select-O-Speed transmission.

Remove the two transmission oil tube adaptor bolts securing the inlet and outlet oil cooler tubes to the transmission housing. The tubes are situated on the left-hand side on the Ford 5000 and on the right-hand side on the Ford 4000. Remove the steering gear arm on the Ford 4000 to provide clearance for the transmission oil tubes.

25. Remove the eight bolts retaining the engine to the transmission housing and withdraw the engine, radiator and front axle as an assembly, moving the assembly forward until clear of the transmission housing.

2. TO RECONNECT THE ENGINE AND FRONT AXLE ASSEMBLY TO THE TRANSMISSION AND REAR AXLE ASSEMBLY

1. Move the engine, radiator and front axle assembly towards the transmission housing. Accurate alignment of the clutch driven plate, or plates is important. If removed, the clutch should be correctly aligned before installation (see Part 4, Chapter 1).

Ford 5000.

The P.T.O. drive shaft is splined to the rear end of the crankshaft and may provide some difficulty in alignment. Slight rotation of the P.T.O. drive shaft will allow the splines to mesh.

2. Install the eight bolts retaining the engine to the transmission housing and tighten to the specified torque (see Specifications Section).
3. Remove the wooden wedges inserted between the front axle centre beam and the front cross-member.
4. Remove the lifting tackle and supports.
5. **NOTE:** ***On tractors with a 'C' prefix to the serial number it is only necessary to rejoin the multiple snap connector in order to reconnect the two halves of the main wiring harness.***

   On tractors with an 'A' or 'B' prefix to the serial number, reconnect the wiring to the generator, the oil pressure switch, the temperature gauge (if installed), the horn (if installed), the front lights and the regulator terminals.
6. Reconnect the fuel leak-off pipe, Figure 6, and tighten the screw clamp.
7. Reconnect the engine shut-off cable, Figure 6, on diesel engined tractors, to the arm on the fuel injection pump. Allow approximately $\frac{1}{4}$ in. (6·35 mm) free movement of the cable at the control panel. Reconnect choke cable on gasolene engines.
8. Position the starter motor and secure with the three bolts and spring washers. The battery earth cable is held by the top, outer retaining bolt.
9. Reconnect the fuel tank to fuel filter pipe at the fuel tank tap.
10. Reposition and install the starter motor splash shield by removing the fuel filter bolts and sliding the shield behind the filters and installing the bolts.
11. Reconnect the starter relay switch to starter motor lead.
12. Reconnect the proofmeter drive, Figure 5, to the rear of the generator.
13. **Ford 4000 and Ford 5000—with Select-O-Speed transmission.**

    Install the two transmission oil tube adaptor bolts together with new 'O' rings and tighten to the specified torque (see Specifications Sections).

    Ford 4000.

    Install the steering gear arm.
14. Reconnect the left-hand steering drag link, Figure 5, to the steering gear arm. Tap the tapered pin into the tapered bore of the steering gear arm and secure with the locknut. Tighten to the specified torque (see Specifications Section).
15. Reconnect the horizontal throttle control rod to the relay cross-shaft situated on the right-hand side underneath the fuel tank.
16. Install the two nuts, bolts and washers securing the battery support bracket, Figure 6, to the rear hood panel assembly.
17. Install the two nuts, bolts and washers that support the front end of the fuel tank.
18. Position the left-hand and centre rear hood assembly support struts and install the respective nut, bolt and washers.

    Ford 4000—with standard P.T.O., less P.T.O. and Select-O-Speed transmission only.

    Install new 'O' rings in the counterbores of the external hydraulic pump manifold, install the pump on the tractor and secure the manifold to the pump with the three bolts and spring washers. Tighten to the specified torque (see Specifications Section).
19. Connect the three wiring leads to the starter relay switch.
20. Position the steering gear right-hand and left-hand side covers and secure with the five screws.
21. Reconnect the battery leads.
22. Position the hood assembly and install the four screws.
23. Support the wiring harness with the two clips situated under the centre of the hood assembly.

24. Install the vertical muffler (where fitted).

Ford 4000 and Ford 5000—with horizontal exhaust.
Slide the rear section of the exhaust pipe and muffler assembly into the front section, tighten the clamp and install the retaining bolt, nut and washer, between the left-hand platform and muffler bracket.

25. Turn fuel tap to 'on' position and bleed the fuel system at the fuel filters and injection pump (refer to Part 2, Chapter 2, for bleeding the fuel system).

Ford 4000 with standard P.T.O.
Bleed hydraulic piston pump (refer to Part 2, Chapter 5).

3. SEPARATE THE REAR AXLE ASSEMBLY FROM THE TRANSMISSION AND ENGINE ASSEMBLY

1. Disconnect the battery leads from the battery terminals.
2. Drain the oil from the rear axle centre housing.
3. Disconnect the rear light wiring at the connector underneath the left-hand platform (right-hand platform on Ford 4000).
4. Release the two brake pedal return springs connected to the underside of the right-hand platform.
5. Remove brake rod clevis and cotter pins right- and left-hand.

Ford 5000 only.
Remove the cotter pin from the parking brake rod, underneath the right-hand platform, and remove the T-handle from the platform.

6. Remove the three fender to platform screws on both sides of the tractor.
7. Remove the five bolts (four bolts on the Ford 4000), in each of the left-hand and right-hand platforms and remove the platforms from the rear axle centre housing, Figure 5.

Horizontal exhaust only.
Remove the exhaust pipe support bracket, located underneath the left-hand platform, loosen the muffler clamp and slide the muffler assembly from the exhaust pipe.

8. Remove the cotter pin and clevis pin from the clutch release arm and disconnect the clutch operating rod, Figure 5.

Ford 4000 with standard P.T.O., less P.T.O. and Select-O-Speed transmission only.
Remove the four bolts securing the rear manifold of the external pipework for the engine driven hydraulic pump.

9. Install a suitable jack or stands under the engine and transmission assembly and support the rear axle assembly on a moveable overhead hoist or floor crane.
10. Remove the fourteen bolts (ten bolts on the Ford 4000), securing the rear axle to the transmission and separate the two assemblies by withdrawing the rear axle assembly.

4. RECONNECT THE REAR AXLE ASSEMBLY TO THE TRANSMISSION AND ENGINE ASSEMBLY

Important.
Prior to reconnecting the transmission to the rear axle assembly it will be necessary to remove the hydraulic lift cover. (Refer to Part 2, Chapter 1, Section 4, Ford 4000; and Part 2, Chapter 2, Section 4, Ford 5000.)

Ford 5000.
Place the independent P.T.O. drive clutch hub into the P.T.O. clutch pack making sure that the splines of the hub are fully meshed with the plates of the clutch pack, Figure 7. When reconnecting the transmission and rear axle assemblies care should be taken to make sure that the gear on the P.T.O. drive clutch hub meshes correctly with the hydraulic pump idler gear and also that the idler gear meshes correctly with the hydraulic pump driven gear. Access to these gears may be obtained after the hydraulic lift cover has been removed from the rear axle centre housing.

Ford 4000.
When reconnecting the transmission and rear axle assemblies care should be taken to make sure that the hydraulic pump drive gear meshes correctly with the pump driven gear.

1. Install a new transmission to rear axle gasket and locate the fourteen bolts (ten bolts on the Ford 4000), which secure the transmission to the rear axle centre housing. Reconnect the two assemblies and tighten the bolts to the torque specified in the Specifications Section.

NOTE: Ford 4000 with independent P.T.O. only.
If new parts have been installed which affect the shim between the hydraulic pump drive gear lock ring and the independent P.T.O. clutch shaft it will be necessary to adjust the shim installed. This adjustment should be carried out as follows:—

(*a*) The tractor should be reconnected omitting the shim previously installed.
(*b*) Remove the hydraulic pump (refer to Chapter 2, Part 2).
(*c*) Through the hydraulic pump opening in the rear axle centre housing use feeler blades to measure the gap between the hydraulic pump drive gear lock ring and the independent P.T.O. shaft, Figure 8.
(*d*) The correct shimming for the gap reading obtained can be selected from the table below.
(*e*) When the gap has been measured it will be necessary to separate the transmission from the rear axle to install the correct shimming.
(*f*) Install the hydraulic pump (refer to Chapter 2, Part 2).

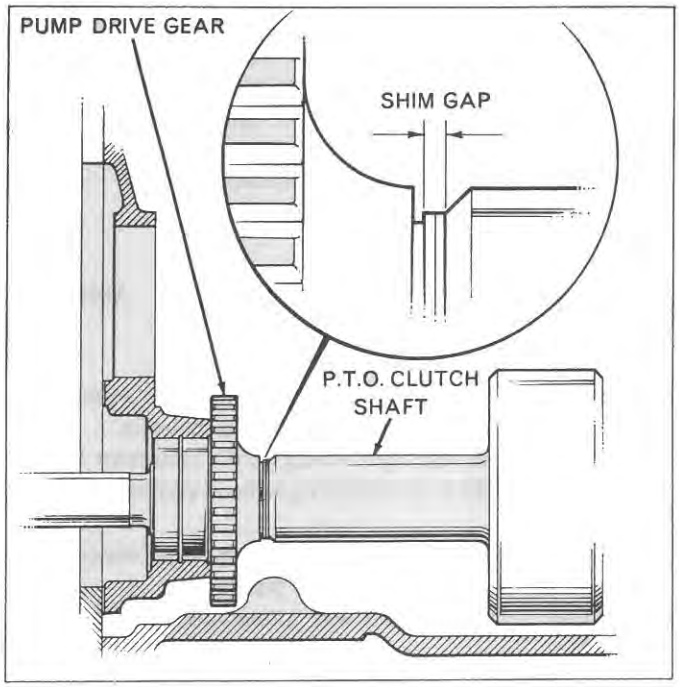

Figure 8
Checking Shim Gap

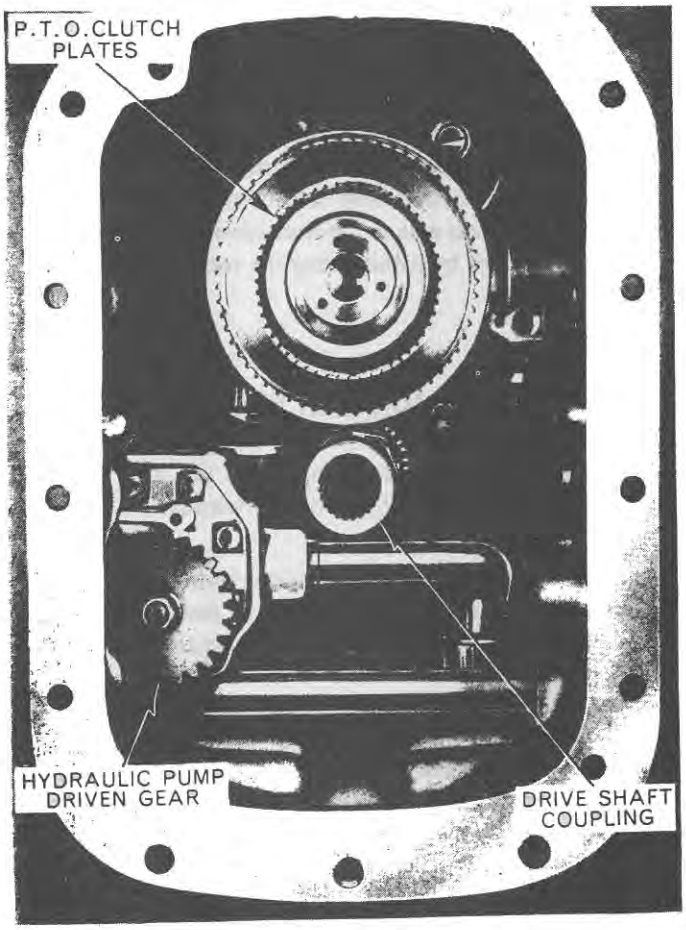

Figure 7
Transmission to Rear Axle Alignment

Reading Obtained	Shimming to be Installed	Reading Obtained	Shimming to be Installed
0·000 in. (0·00 mm) 0·025 in. (0·635 mm)	—	0·076 in. (1·930 mm) 0·085 in. (2·159 mm)	0·060 in. 1·524 mm
0·026 in. (0·660 mm) 0·035 in. (0·889 mm)	0·010 in. 0·254 mm	0·086 in. (2·184 mm) 0·095 in. (2·413 mm)	0·070 in. 1·778 mm
0·036 in. (0·914 mm) 0·045 in. (1·143 mm)	0·020 in. 0·508 mm	0·096 in. (2·438 mm) 0·105 in. (2·667 mm)	0·080 in. 2·032 mm
0·046 in. (1·168 mm) 0·055 in. (1·397 mm)	0·030 in. 0·762 mm	0·106 in. (2·692 mm) 0·115 in. (2·921 mm)	0·090 in. 2·286 mm
0·056 in. (1·422 mm) 0·065 in. (1·651 mm)	0·040 in. 1·016 mm	0·116 in. (2·946 mm) 0·125 in. (3·175 mm)	0·100 in. 2·54 mm
0·066 in. (1·676 mm) 0·075 in. (1·905 mm)	0·050 in. 1·270 mm	0·126 in. (3·200 mm) 0·135 in. (3·429 mm)	0·110 in. 2·794 mm

NOTE: Two shims are available, i.e. 0·010 in. (0·254 mm) and 0·030 in. (0·762 mm) for obtaining the necessary shimming.

Ford 4000 with standard P.T.O., less P.T.O. and Select-O-Speed transmission only.
Position the rear manifold of the external pipework for the engine driven hydraulic pump, having checked 'O' rings and renewed if damaged, and secure with four bolts.

Horizontal exhaust only.

1. Slide the muffler assembly onto the exhaust pipe, tighten the clamp and secure the exhaust pipe support bracket underneath the left-hand platform.
2. Align the clutch operating rod clevis with the clutch release arm and install the cotter pin and clevis pin, Figure 5.
3. Locate the right- and left-hand platforms and secure with five bolts (four bolts on the Ford 4000), at each platform, Figure 5. Install the three fender to platform screws at each side of the tractor.
4. Install brake rod clevis and cotter pins.

Ford 5000 only.

Fit the parking brake T-handle to the right-hand platform and secure the parking brake rod with a cotter pin.

5. Connect the two brake pedal return springs to the underside of the right-hand platform.
6. Connect the rear light wiring at the connector underneath the left-hand platform (right-hand platform on Ford 4000).
7. Refill the rear axle centre housing with the correct quantity and grade of lubricant (refer to Specifications Section, Part 10, Chapter 3).
8. Connect the battery leads and remove the jacks and stand supporting the rear axle and transmission.

5. TO SEPARATE THE FRONT AXLE ASSEMBLY FROM THE ENGINE, TRANSMISSION AND REAR AXLE ASSEMBLY—FORD 4000

1. Disconnect the battery leads at the terminals.
2. Remove the vertical exhaust muffler (where installed).
3. Disconnect the wiring harness from the two support clips situated under the left-hand hood assembly.
4. Remove the four screws, nuts and washers securing the hood assembly—lift the hood clear of the tractor.
5. Remove the radiator chaff screen from the radiator shell.
6. Drain the radiator of coolant.
7. Disconnect the front lamp wires at the connections in front of the radiator. Unclip the wire from the radiator, and feed the wire back between the radiator and the radiator shell. Disconnect the wire from the horn, if the tractor is so equipped.
8. Loosen the radiator hose clamps and disconnect them from the radiator. Loosen the air cleaner hose clamp, Figure 9.
9. Insert wooden wedges between the front axle support to prevent movement between the radiator, front axle support, etc., and the front axle assembly.
10. Remove the bolts and nuts retaining the radiator shell to the radiator shell support.
11. Remove the locknut securing the drag link front ball pin to the left-hand steering gear arm, and force the tapered pin from the tapered bore in the arm .using a suitable separator.
12. If the tractor is equipped with power assisted steering remove the two bolts retaining the power assisted steering power cylinder support bracket to the front axle support.
13. If the tractor is equipped with a Select-O-Speed transmission disconnect the transmission oil cooler tubes from the radiator lower tank.
14. Support the engine, transmission, and rear axle assembly. Use a hoist to support the front axle and radiator assembly.
15. Remove the four front axle support to engine bolts and nuts.
16. Remove axle and radiator as an assembly from the engine, etc.

6. TO RECONNECT THE FRONT AXLE ASSEMBLY TO THE ENGINE, TRANSMISSION AND REAR AXLE ASSEMBLY—FORD 4000

1. Position the front axle and radiator assembly against the engine, transmission and rear axle assembly. Install the four front axle support to engine bolts and nuts; tighten to the specified torque.
2. Remove the hoist from the front axle and radiator assembly, and the support from the engine, transmission and rear axle assembly.
3. If the tractor is equipped with Select-O-Speed transmission connect the transmission oil cooler tubes to the radiator lower tank.
4. If the tractor is equipped with power assisted steering position the power cylinder support bracket and retain to the front axle support with the two bolts. Tighten the bolts to the specified torque.
5. Reconnect the drag link to the left-hand steering arm and retain the ball pin with the locknut tightened to the correct torque.
6. Install the bolts and nuts to retain the radiator shell to the radiator shell support.
7. Remove the wooden wedges from between the front axle and the front axle support.
8. Reconnect the radiator and air cleaner hoses and tighten the clamps.

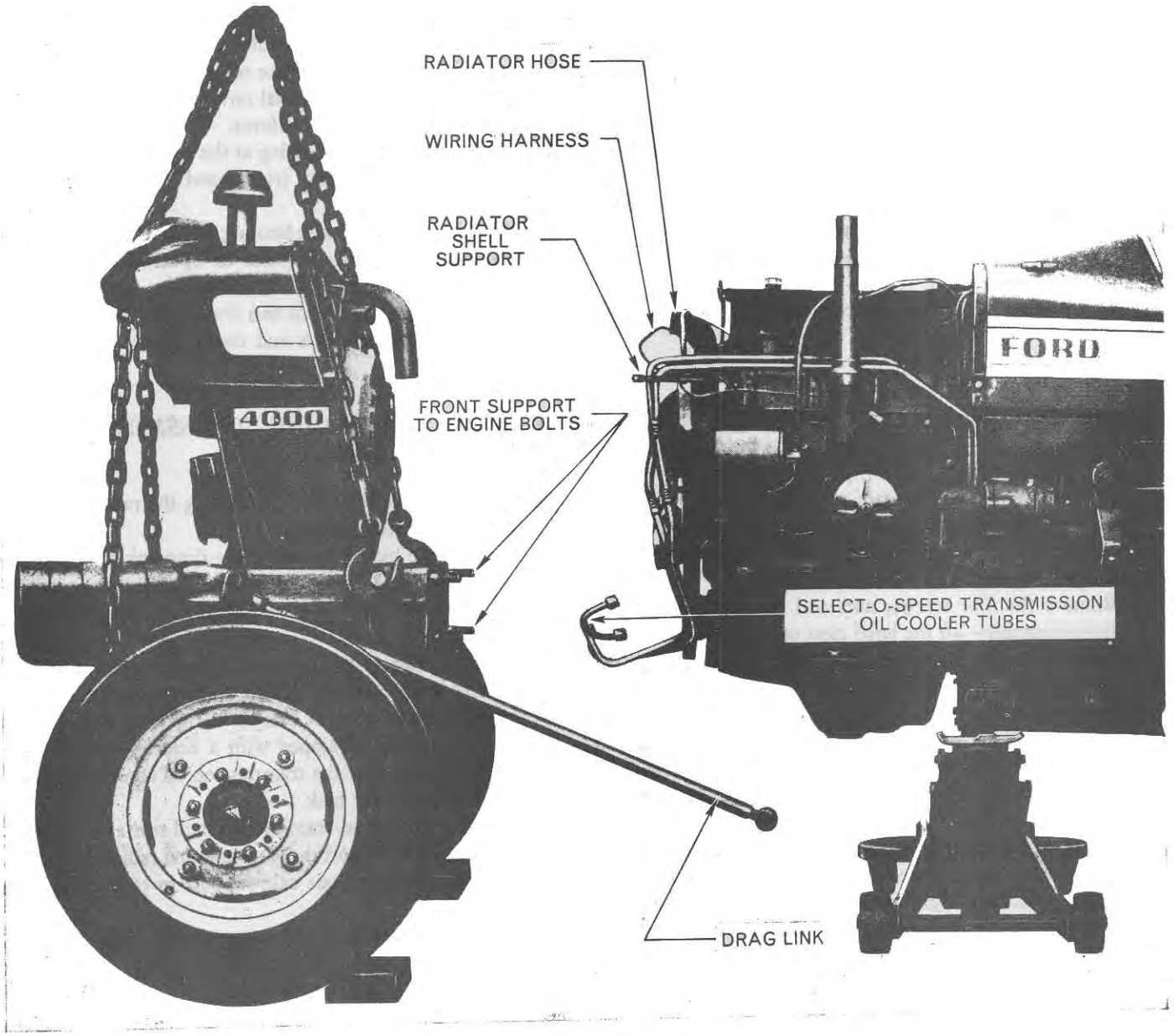

Figure 9
Front Axle Separation

9. Feed the front lamp wire between the radiator and the radiator shell. Reconnect to the appropriate wires from the front lamps, and retain the wire in position by means of the clips at the right-hand side of the radiator. If the tractor is equipped with a horn reconnect the arm to the horn terminals.
10. Refill the radiator with coolant to the correct level.
11. Install the radiator chaff screen into the radiator shell.
12. Position the hood on the tractor and install the retaining bolts, nuts and washers.
13. Retain the wiring harness to the hood by means of the two support clips under the left-hand hood assembly.
14. Install the vertical muffler assembly (where installed).

7. TO SEPARATE THE FRONT AXLE ASSEMBLY FROM THE ENGINE, TRANSMISSION AND REAR AXLE ASSEMBLY—FORD 5000

1. Disconnect the battery leads at the terminals.
2. Remove the vertical exhaust muffler (where installed).
3. Disconnect the wiring harness from the two support clips situated under the left-hand hood assembly.
4. Remove the four screws, nuts and washers securing the hood assembly. Lift the hood clear of the tractor.
5. Remove the radiator chaff screen from the radiator shell.
6. Drain the radiator of coolant.
7. Disconnect the front lamp wires at the connections in front of the radiator. Unclip the wire from the radiator, and feed the wire back between the radiator and the radiator shell. Disconnect the wire from the horn, if the tractor is so equipped.
8. Loosen the radiator hose clamps and disconnect them from the radiator. Loosen the air cleaner hose clamps, Figure 10.
9. Raise the tractor on a jack sufficiently to remove the weight of the tractor from the front axle support pins.
10. Remove the bolts and nuts retaining the radiator shell to the radiator shell support.
11. Remove the locknut retaining the drag link ball pin, to the left-hand steering arm—manual steering tractor, or to the steering gear arm—power assisted steering tractor. Force the ball pin from the bore in the arm with a suitable separator.
12. On tractors equipped with power assisted steering remove the locknuts retaining the spindle arm connecting rods to the steering arms, and force the ball pins from the bore in their respective steering arms, with a suitable separator.
13. Disconnect the power assisted steering power cylinder feed tube from the rear of the power assisted steering pump, and the oil return tube from the power assisted steering oil reservoir.
14. Straighten the front axle support pin retaining bolt locking tabs and remove the retaining bolts.
15. Remove the front axle support pins and the thrust washer. Raise the tractor on a jack sufficiently to enable the front axle assembly to be moved away from the tractor.
16. Support the front axle support and radiator assembly. Remove the six bolts and nuts retaining the front axle support to engine. If the tractor is equipped with a Select-O-Speed transmission separate the support from the engine sufficiently to enable the transmission oil cooler tubes to be disconnected from the radiator.
17. Separate the front axle support and radiator assembly from the tractor.
18. Remove the spacers from the engine oil pan to front axle support bolt lugs.

8. TO RECONNECT THE FRONT AXLE ASSEMBLY TO THE ENGINE, TRANSMISSION AND REAR AXLE ASSEMBLY—FORD 5000

1. Position the front axle support and radiator assembly against the engine, transmission and rear axle assembly. If the tractor is equipped with Select-O-Speed transmission connect the transmission oil cooler pipes.
2. Install the four front axle support to engine cylinder block bolts and nuts. If either the engine cylinder block or oil pan have been replaced it is necessary to measure the gap between the engine oil pan lugs and the front axle support as follows:—

   Tighten the four support retaining bolts and measure the gap between the support and the oil pan with feeler blades. Select the appropriate spacer. Loosen the four retaining bolts.
3. Position the front axle support to engine oil pan spacers and install the two retaining bolts and nuts. Tighten the six bolts and nuts to the specified torque.
4. Move the front axle assembly into position and lower the tractor on the jack to line up the front axle support pin holes. Install the front support pin. Position the rear support pin thrust washer and install the rear support pin.
5. Position the support pin retaining bolts locking tabs and install the bolts. Tighten the bolts to the specified torque and bend the locking tabs to retain the bolts.
6. If the tractor is equipped with power assisted steering connect the power assisted steering oil return tube to the reservoir, and the power assisted steering power cylinder feed tube to the rear of the power assisted steering pump.
7. On tractors equipped with power assisted steering connect the spindle arm connecting rods to their respective steering arms. Install the retaining locknuts and tighten to the specified torque.
8. Connect the drag link to the left-hand steering arm—manual steering tractor, or to the steering gear arm—power assisted steering tractor. Install the locknut and tighten to the specified torque.
9. Remove the jack from the tractor.
10. Install the bolts and nuts to retain the radiator shell to the radiator shell support.
11. Reconnect the radiator and air cleaner hoses and tighten the clamps.

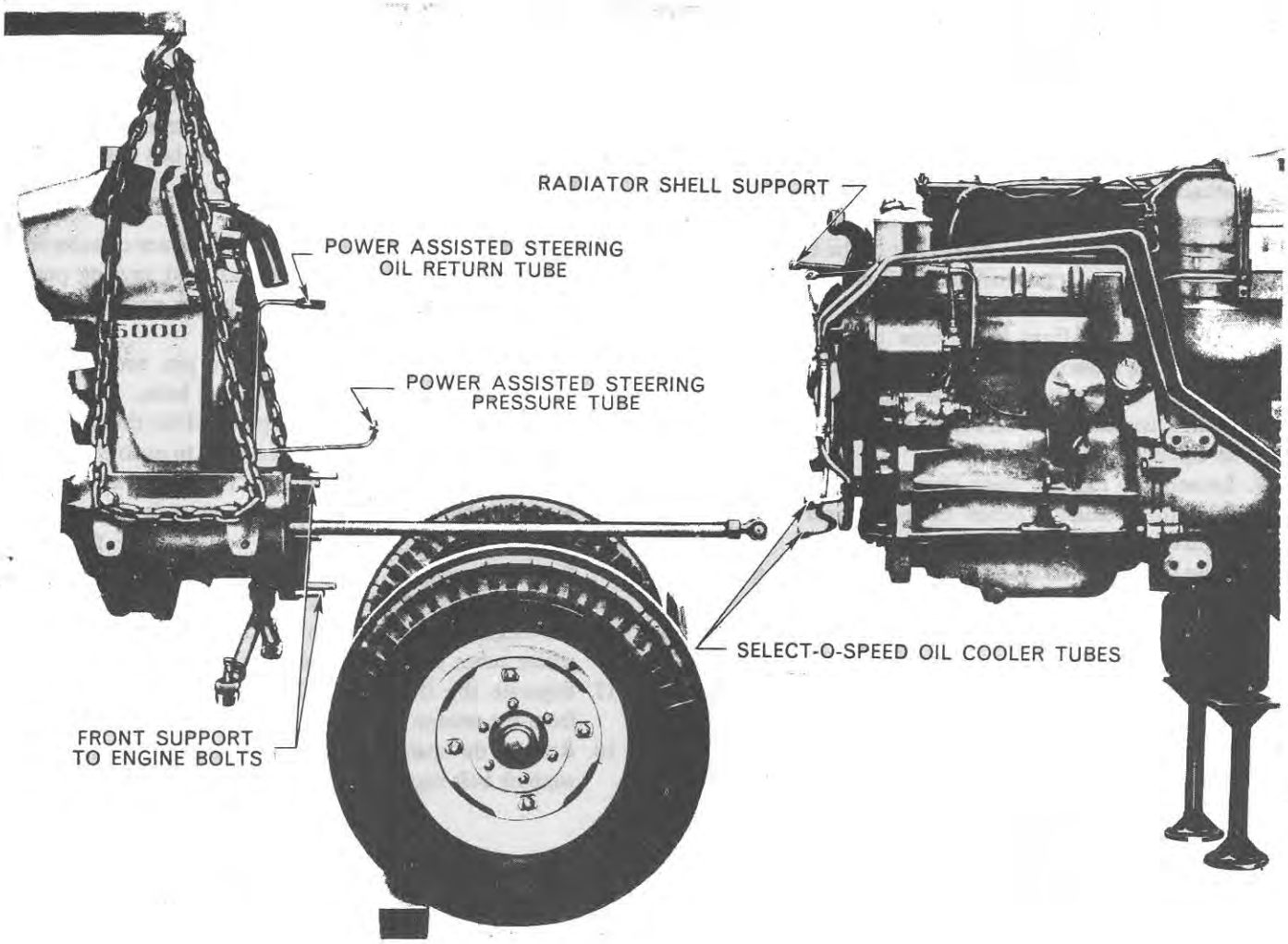

Figure 10

Front Axle Separation

12. Feed the front lamp wire between the radiator and the radiator shell. Reconnect the wire to the front lamps and retain the wire in position by the clips at the right-hand side of the radiator. Reconnect the wire to the horn, where installed.
13. Refill the radiator with coolant to the correct level.
14. Install the radiator chaff screen into the radiator shell.
15. Position the hood on the tractor and install the retaining bolts, nuts and washers.
16. Retain the wiring harness to the hood by means of the two support clips under the left-hand hood assembly.
17. Install the vertical muffler assembly, where the tractor is so equipped.

Part 15

SEPARATING THE TRACTOR

Chapter 3

SPECIFICATIONS

TIGHTENING TORQUES

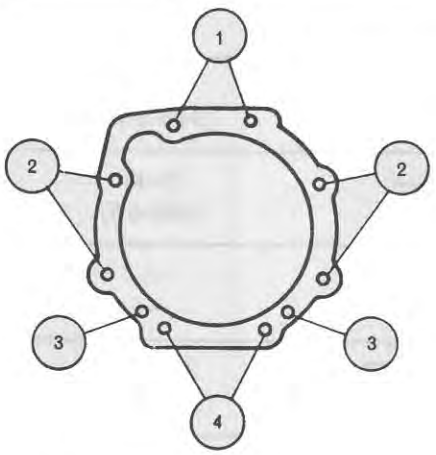

ENGINE TO FRONT TRANSMISSION

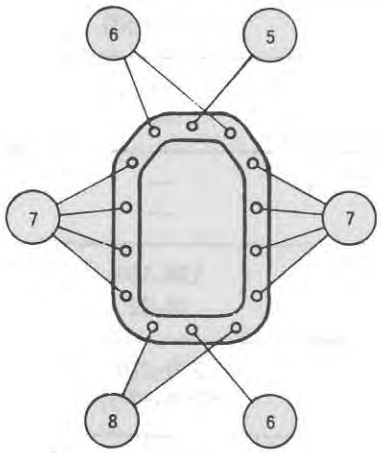

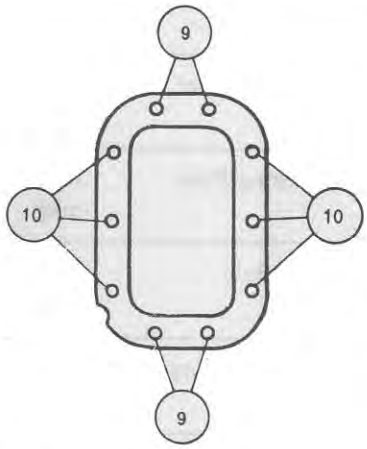

FRONT TRANSMISSION TO REAR AXLE

	FORD 2000 AND FORD 3000			FORD 4000			FORD 5000		
Location	No. of	Torque Specification lb ft	Torque Specification mkg	No. of	Torque Specification lb ft	Torque Specification mkg	No. of	Torque Specification lb ft	Torque Specification mkg
1	2	220–300	30–41	2	220–300	30–41	2	220–300	30–41
2	4	125–140	17–19	4	125–140	17–19	4	125–140	17–19
3	2	35– 50	5– 7	2	35– 50	5– 7			
4							2	220–300	30–41
5							1	55– 75	8–10
6							3	110–135	15–19
7							8	65– 86	9–12
8							2	130–160	18–22
9	4	65– 86	9–12	4	65– 86	9–12			
10	6	40– 55	6– 8	6	40– 55	6– 8			

© FORD MOTOR COMPANY LTD. 1966

		FORD 2000 AND FORD 3000	FORD 4000	FORD 5000
Radius Rod Cup Nuts	lb ft	44–55	—	—
	mkg	(6·08–7·61)	—	—
Engine Driven Hydraulic Pump Bolts	lb ft	23–29	23–29	—
	mkg	(3·18–4·00)	(3·18–4·00)	—
External Hydraulic Pipe Manifold Bolts	lb ft	35–47	35–47	—
	mkg	(4·84–6·50)	(4·84–6·50)	—
Select-O-Speed Oil Cooler Pipe Bolts	lb ft	—	35–47	22–27
	mkg	—	(4·84–6·50)	(3·04–3·73)
Support Pin Locking Plate Bolt	lb ft	—	—	35–47
	mkg	—	—	(4·84–6·5)
Radius Rod Foot Bolt	lb ft	130–160	—	—
	mkg	18–22	—	—
Front Axle Support to Engine	lb ft	250–270	250–270	250–270
	mkg	(34·5–37·3)	(34·5–37·3)	(34·5–37·3)
Drag Link Ball Pin Nuts	lb ft	55–65	55–65	80–100
	mkg	(7·6–9·0)	(7·6–9·0)	(11·1–13·8)
Spindle Arm Connecting Rod Ball Pin Nuts	lb ft	—	55–65	80–100
	mkg	—	(7·6–9·0)	(11·1–13·8)
Power Assisted Steering Bracket Retaining Bolts	lb ft	—	200–250	—
	mkg	—	(27·6–34·6)	—

PART 16
ACCESSORIES AND GENERAL

Part 16
ACCESSORIES AND GENERAL

Chapter 1
BELT PULLEY AND GUARD

Section		Page
1.	Belt Pulley for Ford 2000 and 3000 Tractors	1
2.	Belt Pulley for Ford 4000 and 5000 Tractors	5
3.	Specifications and Special Tools	9

Chapter 2
REMOTE CONTROL VALVES

Section		Page
1.	Description and Operation	1
2.	Servicing the Control Valve	5
3.	Pressure Tests and adjustments	14
4.	Specifications	16
5.	Special Tools	16

© FORD MOTOR COMPANY LTD., 1966.

Part 16

ACCESSORIES AND GENERAL

Chapter 1

BELT PULLEY AND GUARD

Section		Page
1.	Belt Pulley for Ford 2000 and 3000 Tractors	1
2.	Belt Pulley for Ford 4000 and 5000 Tractors	5
3.	Specifications and Special Tools	9

1. BELT PULLEY FOR FORD 2000 AND 3000 TRACTORS

DESCRIPTION AND OPERATION

The belt pulley assembly is available as an accessory, or may be specified as original equipment with the tractor in certain territories. The belt pulley assembly is designed to be installed with the belt pulley horizontally to the left of the drive gear assembly. In this position the belt pulley has a clockwise rotation to conform to the standards laid down for belt-driven implements (British Standard or American Standards Association). The belt pulley may also be installed with the pulley to the right or downward when required for certain applications.

To install the belt pulley assembly remove the power take-off output shaft safety cap and guard. Remove the four bolts retaining the check chain anchor brackets, and allow the chains to hang from the hydraulic lower links. Position the belt pulley on the P.T.O. output shaft with the pulley horizontally to the left and secure with the four bolts supplied. If the belt pulley is being mounted to the right or downward, it may be necessary to remove the drawbar if installed.

A standard has been established for belt speed operation of 3,000 to 3,200 feet per minute (915 to 976 metres per minute) which should be utilised to obtain the best performance from stationary belt-driven machinery. The standard belt speed is obtained at an engine speed of 2000 r.p.m. when using the appropriate pulley for the type of transmission as listed in table 1.

Belt-driven implements are not, however, always designed to be operated at the standard speed, and in such circumstances an implement driven pulley should be selected which will enable the implement to be operated at the manufacturer's recommended speed while still maintaining the standard speed of the tractor pulley. The following procedure gives suitable belt pulley sizes.

To determine the engine speed required to drive an implement at the recommended r.p.m., the diameter of the tractor pulley and the diameter of the implement pulley must be determined. When these measurements have been determined apply the proper formula—

Model	Transmission	Pulley Diameter (C)	Factor (D)
Ford 2000 & Ford 3000	4-speed Transmission P.T.O.	9·00 inch (22·8 cm.)	6·12 (15·51)
Ford 2000 & Ford 3000	6-speed Live P.T.O.	10·25 inch (26·0 cm.)	5·57 (14·44)
Ford 2000 & Ford 3000	8-speed Transmission P.T.O.	9·00 inch (22·8 cm.)	5·80 (15·03)
Ford 2000 & Ford 3000	8-speed Live P.T.O.	10·25 inch (26·0 cm.)	5·57 (14·44)
Ford 2000 & Ford 3000	Select-O-Speed (540 R.P.M. position)	10·25 inch (26·0 cm.)	5·57 (14·44)

Table 1

A Desired implement r.p.m. (Refer to Implement Owners Manual).
B Diameter of implement pulley.
C Diameter of tractor pulley (determine factor used).
D Factor (tractor pulley r.p.m. in relation to engine r.p.m.).

Formula:

$$\frac{\text{Desired implement r.p.m. (A)} \times \text{Diameter of implement pulley (B)}}{\text{Divided by factor (D)}} = \text{Required Engine speed}$$

$$\frac{A \times B}{D} = \text{Required Engine speed}$$

Example:

Type of transmission —8-speed live P.T.O. Factor 5·57 (14·44)
Desired implement speed —1200 r.p.m.
Required engine speed —2000 r.p.m.
Diameter of pulley on tractor—10·25 inch (26 cm.)

© FORD MOTOR COMPANY LTD. 1966

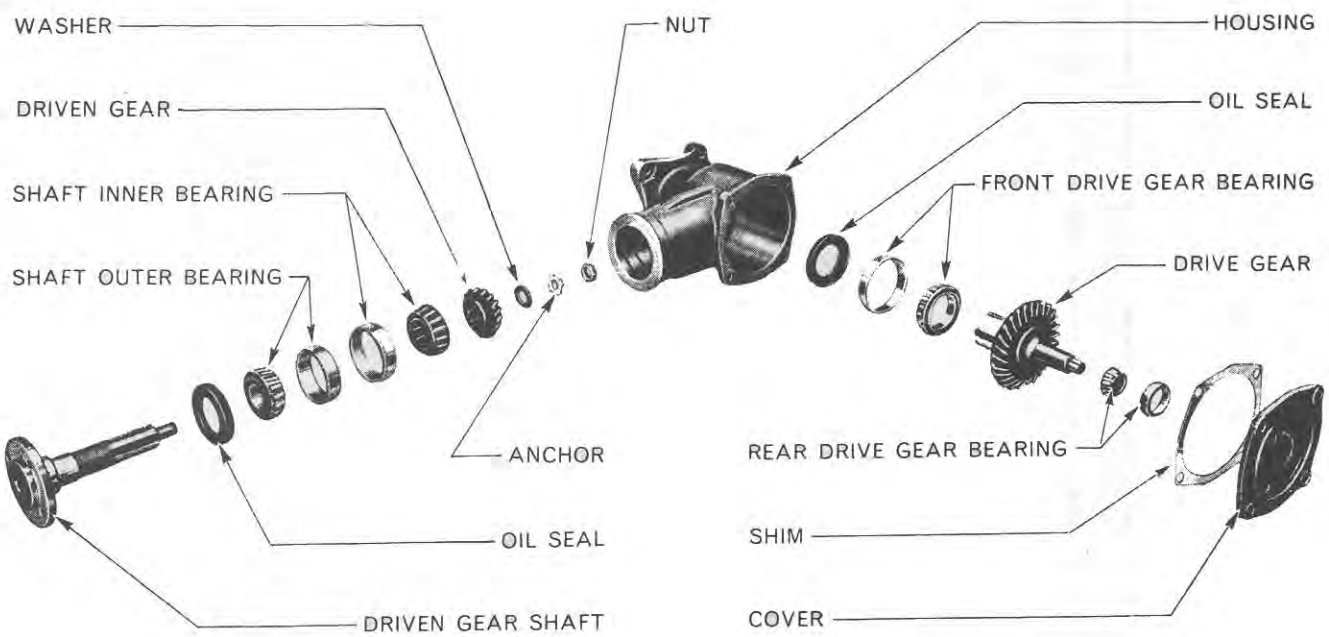

Figure 1. Belt Pulley Gear Assembly

$$\frac{1200 \times B}{5{\cdot}57\ (14{\cdot}44)} = 2000 \text{ engine r.p.m.}$$

$$B = \frac{2000 \times 5{\cdot}57\ (14{\cdot}44)}{1200} = 9{\cdot}28 \text{ in. } (24{\cdot}1 \text{ cm})$$ Required diameter of implement pulley

NOTE: ***The choice of pulley size on the driven implement should be such that the desired driven pulley r.p.m. can be achieved with the engine running at 2000 r.p.m. Peak engine torques are achieved at somewhat less than rated engine speed.***

OPERATING THE BELT PULLEY

Start the tractor engine, fully raise the hydraulic lower links and secure them clear of the pulley. Line up the tractor with the belt, which must have full width contact on both pulleys without contacting any other part of the tractor. With the tractor correctly positioned apply the parking brake to hold the tractor.

If a large proportion of the available tractor P.T.O. horsepower is required to drive the implement, or it is required to use an excessively long belt, it is also advisable to chock the tractor wheels to prevent movement of the tractor caused by vibration from the belt.

Oil or grease on the belt may cause slip and any attempt to overcome this by tensioning the belt would cause excessive loading on the belt pulley bearings.

When the tractor is equipped with live P.T.O. the clutch pedal must be connected for operation of both clutches, so that in an emergency the drive to the pulley may be disconnected quickly by fully depressing the clutch pedal. On tractors equipped with a de-luxe Select-O-Speed transmission, make sure that the P.T.O. speed selector lever is in the forward (540 r.p.m.) position.

As the tractor tyres form a good insulation between the tractor and the ground, a considerable charge of static electricity may be built up under certain conditions. It is therefore advisable to earth (ground) the tractor during belt pulley operations as a sudden discharge of static electricity may ignite any inflammable material close to the tractor.

BELT PULLEY ASSEMBLY—OVERHAUL

A. Disassembly

1. Remove the belt pulley guard (if installed) and remove the belt pulley assembly from the tractor.
2. Remove the four bolts retaining the belt pulley to the drive gear assembly and remove the pulley.
3. Remove the pulley gear oil level filler plug and drain the oil from the pulley gear assembly.
4. Remove the four bolts retaining the rear end cover plate and remove the cover plate and shims.
5. Straighten the tabs of the drive gear shaft nut retaining lockwasher. Remove the nut, lockwasher and flat washer.
6. Extract the output shaft assembly from the gear assembly.
7. Remove the drive gear and shaft inner bearing from the gear assembly.
8. Remove the drive gear assembly from the housing.
9. Remove the drive gear shaft oil seal from the pulley

gear housing.

10. Remove the output shaft outer bearing using Tools Nos. 1003, 951 and 625-3, Figure 2. Remove the oil seal from the shaft.

B. Inspection and Repair

1. Clean components in a suitable solvent and air dry. Lightly lubricate machine surfaces.
2. Inspect the drive gear bearing cones and rollers for excessive wear or damage. Renew if necessary. Remove using Tools Nos: 1002, 951 and adaptor plate 630-3 for the forward end, Figure 3, or adaptor 625-3 for the rear end. Use suitable sleeves to install the new bearing cone and roller assemblies.
3. Inspect the output shaft bearing cone and roller assemblies for excessive wear or damage. Renew if necessary.
4. Inspect the bearing cups in the pulley gear housing for wear or damage. Remove the output shaft outer bearing cup using Tool No. 954 and slide hammer. Drift out the remaining bearing cups where necessary. Install new bearing cups using Tool No. 630-S adaptor plate, of a suitable size.
5. Inspect the input shaft rear bearing cup in the cover plate assembly for wear or damage. Extract the bearing cup if necessary using Tool No. 954 and slide hammer and install a new bearing cup.
6. Inspect the drive gears for excessive wear or chipped teeth. Renew if necessary as a matched pair.

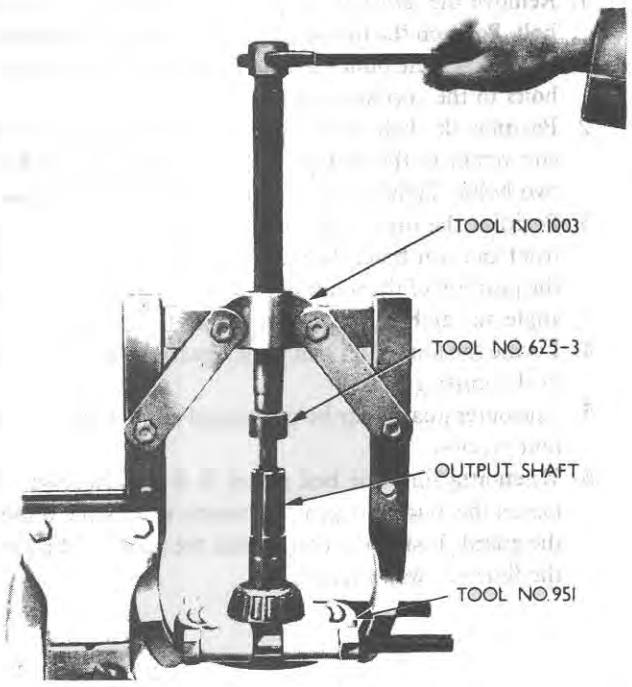

Figure 2
Removing output Shaft Bearing

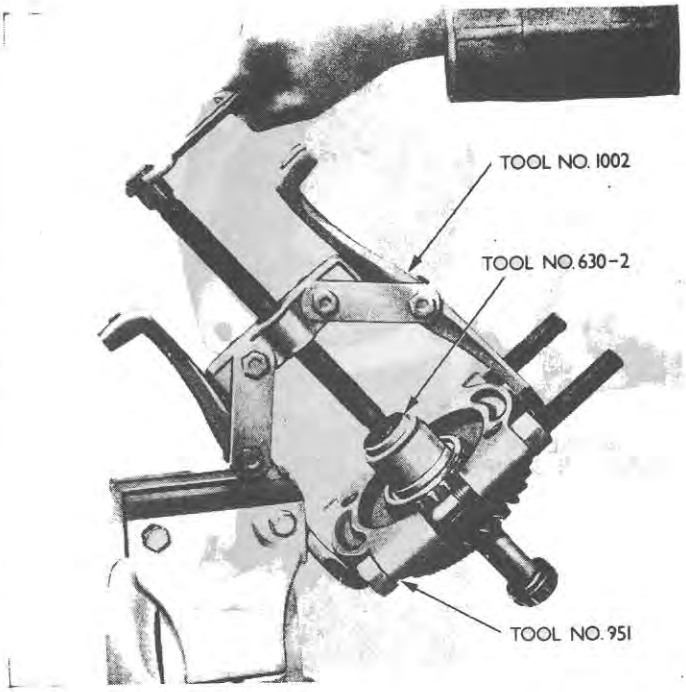

Figure 3
Removing Input Shaft Bearing

C. Assembly

1. Install a new input shaft oil seal in the pulley gear housing.
2. Position a new oil seal on the output shaft and install the output shaft outer bearing cone and roller assembly using Tools Nos. 1002, 951 and a suitable sleeve.
3. Install the input shaft assembly into the housing.
4. Install the output shaft into the housing assembly and position two strips of metal or wood of equal thickness (approximately 0·375 in. [35 mm.]) between the pulley mounting flange and the output shaft oil seal. Install the inner cone and roller assembly, flat washer, and the retaining nut, Figure 4.
   Tighten the nut until the strips, pressing the oil seal into the housing, abut the face of the housing. Slacken the nut to allow the removal of the strips used to install the oil seal. Install the locking washer and the lock nut. Tighten the nut so that free play in the output shaft bearings is barely perceptible and that the shaft rotates freely. Tighten the lock nut while making sure that the retaining nut is not disturbed. Bend the locking washer tabs to locate the nuts.
5. Install the rear cover plate without spacing shims and finger tighten the four retaining bolts evenly, until all free play has been removed from the input shaft bearings. Use feeler blades to check the resultant gap between the cover plate and the pulley gear housing, at several points to obtain an average of the measurements Select the required number of shims to give the pre-

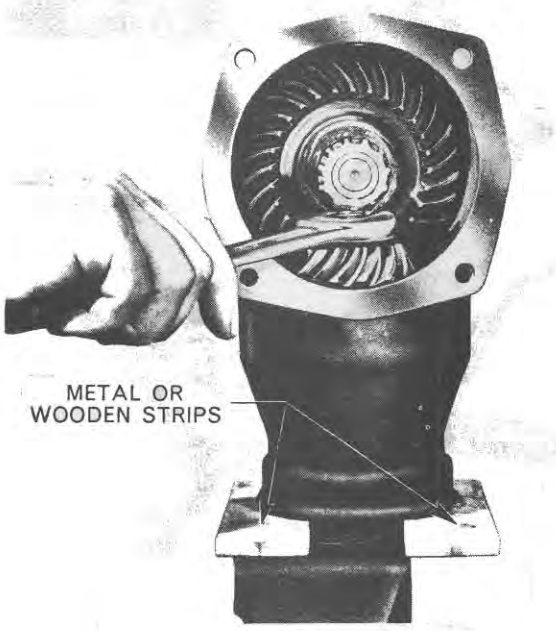

Figure 4
Installing Output Shaft Oil Seal

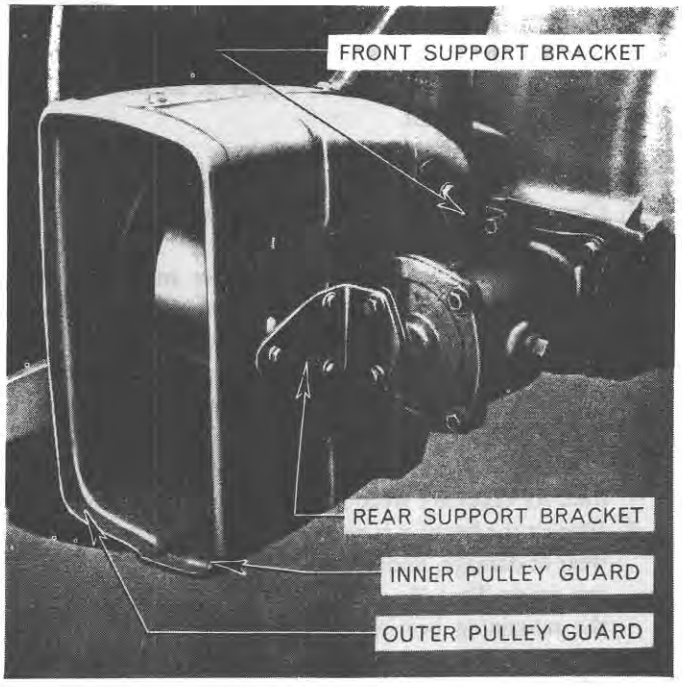

Figure 5
Belt Pulley Guard Installation

viously obtained measurement together with an additional 0·002 in. (0·05 mm.). The additional allowance will give the required endfloat on the input shaft bearings.

6. Remove the cover plate and install with the shims previously selected. Install and tighten the four retaining bolts to the correct torque. Check that the input shaft turns freely and that there is no excessive free play.
7. Fill the pulley gear assembly with the correct quantity of oil and install the level/filler plug.
8. Install the pulley to the pulley gear assembly and retain with the four bolts.
9. Install the belt pulley assembly on the tractor and retain with the four bolts. Install the belt pulley guard (if equipped).

BELT PULLEY GUARD

In certain territories a belt pulley guard is a legal requirement for all belt pulley operations. A belt pulley guard is available for the Ford 2000 and Ford 3000 tractors in these territories and complies with the legal requirements.

Belt pulley assemblies designed to accept a belt pulley guard incorporates a mounting pad and two tapped holes in the rear cover plate.

Installation

1. Remove the left-hand upper belt pulley gear retaining bolt. Position the forward belt pulley guard bracket and install the belt pulley gear retaining bolt. Tighten the bolts to the specified torque.
2. Position the belt pulley guard rear mounting bracket and retain to the belt pulley rear cover plate with the two bolts. Tighten the bolts to the specified torque.
3. Position the inner belt pulley guard and retain to the front and rear brackets with four bolts and nuts. Adjust the position of the inner belt pulley guard to the correct angle and tighten the retaining bolts.
4. Locate the four outer belt pulley guard retaining screws in the inner guard.
5. The outer guard may be positioned and retained by the four screws.
6. When attaching the belt pulley it is only necessary to loosen the four outer guard retaining screws and remove the guard. Install the belt, install the guard and tighten the four screws to retain.

2. BELT PULLEY FOR FORD 4000 AND 5000 TRACTORS

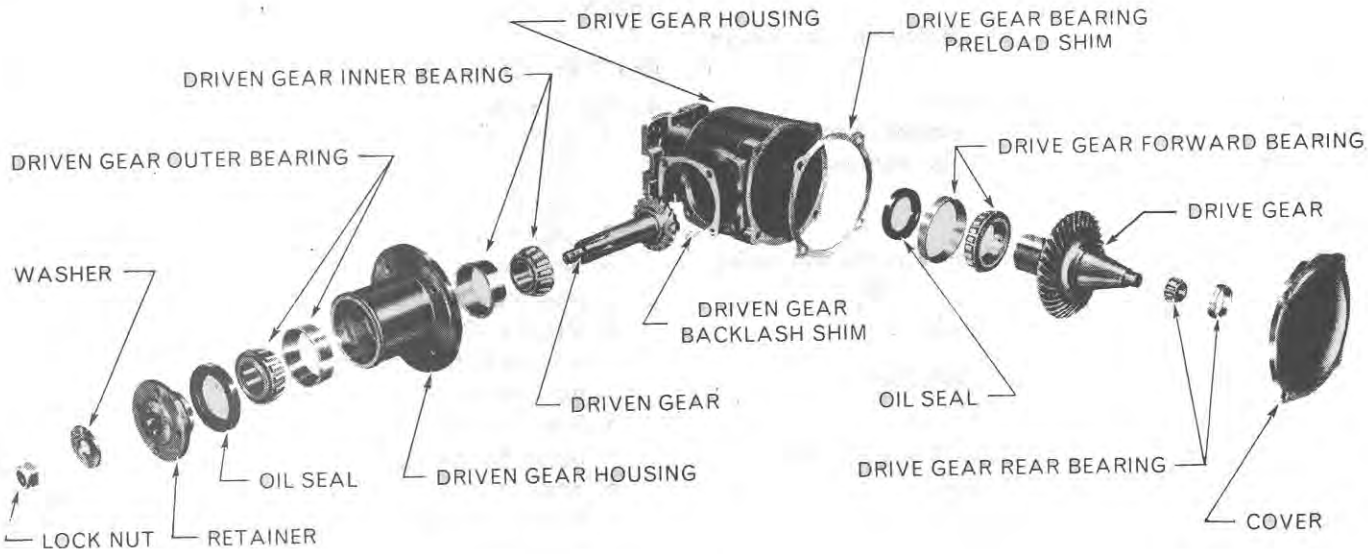

Figure 6
Belt Pulley Gear Assembly

DESCRIPTION AND INSTALLATION

The belt pulley assembly is available as an accessory or may be specified as original equipment with the tractor. The belt pulley assembly is designed to be installed with the belt pulley horizontally to the left of the drive gear assembly. In this position the belt pulley has a clockwise rotation to conform to the standards laid down for belt driven implements (British Standard or American Standards Association). The belt pulley for the Ford 4000 may also be mounted horizontally to the right or downward.

To install the belt pulley assembly on a Ford 4000 remove the power take-off output shaft safety cap and guard from the tractor. Remove the four large bolts retaining the check chain anchor bracket to the rear axle centre housing. Position the belt pulley assembly on the power take-off output shaft. If the belt pulley assembly will not pass freely over the power take-off output shaft oil seal retainer, remove any surplus paint from the oil seal retainer.

Retain the belt pulley assembly with the four bolts supplied.

To install the belt pulley assembly on a Ford 5000 remove the power take-off output shaft safety cap and guard from the tractor.

Remove the hydraulic lower link check chain anchor bracket. Position the belt pulley assembly on the power take-off shaft and secure in position with the four bolts supplied.

A standard has been established for belt speed operation of 3,000 to 3,200 feet per minute (915 to 976 metres per minute), which should be utilised to obtain the best performance from stationary belt driven machinery. The standard belt speed is obtained at an engine speed of 2000 r.p.m. when using the appropriate pulley for the tractor is listed in *table* 2.

Belt driven implements are not, however, always designed to be operated at the standard speed, and in such cricumstances an implement driven pulley should be selected which will enable the implement to be operated at the manufacturer's recommended speed while still maintaining the standard speed of the tractor pulley. The following procedure gives suitable belt pulley sizes.

Model	Pulley Diameter	Factor
Ford 4000	10·25 in. (26 cm.)	5·63 (14·3)
Ford 5000	11·00 in. (27·9 cm.)	5·75 (14·6)

Table 2

To determine the engine speed required to drive an implement at the recommended r.p.m. the diameter of the tractor pulley and the diameter of the implement pulley must be determined. When these measurements have been determined apply the proper formula:

A Desired implement r.p.m. (Refer to Implement Owners Manual).
B Diameter of the implement pulley.
C Diameter of tractor pulley (determine factor used).
D Factor (tractor pulley r.p.m. in relation to engine r.p.m.).

Formula:

$$\frac{\text{Desired implement r.p.m. (A)} \times \text{Diameter if implement pulley (B)}}{\text{Divided by factor (D)}}$$

$$\frac{A \times B}{D} = \text{Required Engine speed}$$

Example:

Tractor Ford 5000 —Factor 5·75 in. (14·6 cm.)
Desired implement speed —1600 r.p.m.
Diameter of pulley on tractor—11·00 in. (26 cm.)
Required engine speed —2200 r.p.m.

$$\frac{A \times B}{D} \text{ or } \frac{1600 \times B}{5{\cdot}75\ (14{\cdot}6)} = 2200 \text{ engine r.p.m.}$$

$$B = \frac{2200 \times 5{\cdot}75\ (14{\cdot}6)}{1600} = 7{\cdot}9 \text{ in. (20 cm)}$$ diameter of implement pulley required

NOTE: ***The choice of pulley size on the driven implement should be such that the desired driven pulley r.p.m. can be achieved with the engine running at 2200 on the Ford 4000 and 2100 on the Ford 5000. Peak engine torque is achieved at somewhat less than rated engine speed.***

OPERATING THE BELT PULLEY

Start the tractor engine, fully raise the hydraulic lower links and secure them clear of the pulley. Line up the tractor with the belt, which must have full width contact on both pulleys without contacting any other part of the tractor. With the tractor correctly positioned apply the parking brake to hold the tractor.

If a large proportion of the available tractor power take-off horsepower is required to drive the implement, or it is required to use an excessively long belt, it is also advisable to chock the tractor wheels to prevent movement of the tractor caused by vibration from the belt.

Oil or grease on the belt may cause slip and any attempt to overcome this by tensioning the belt would cause excessive loading on the belt pulley bearings.

When a Ford 4000 tractor is equipped with a de-luxe Select-O-Speed transmission make sure that the power take-off speed selector lever is in the forward (540 r.p.m.) position.

As the tractor tyres form a good insulation between the tractor and the ground, a considerable charge of static electricity may be built up under certain conditions. It is therefore advisable to earth (ground) the tractor during belt pulley operations, as a sudden discharge of static electricity may ignite any inflammable material close to the tractor.

BELT PULLEY ASSEMBLY—OVERHAUL

A. Disassembly

1. Remove the belt pulley outer guard (if installed) and remove the belt pulley from the pulley gear assembly. Remove the belt pulley inner guard.
2. Remove the belt pulley gear assembly from the tractor.
3. Remove the oil level filler plug from the pulley gear assembly and drain the oil from the assembly.
4. Remove the four bolts retaining the output shaft housing to the pulley gear housing. Remove the housing assembly.
5. Remove the output shaft locknut, the flat washer and the pulley mounting flange.
6. Remove the oil seal from the output shaft housing.
7. Remove the output shaft from the housing using Tools Nos. 1003 and 625-3 shaft protector, Figure 7.
8. Remove the four bolts retaining the pulley gear housing rear cover plate. Remove the cover plate assembly and shims.
9. Remove the input shaft assembly from the pulley gear housing.
10. Remove the input shaft oil seal from the pulley gear housing.

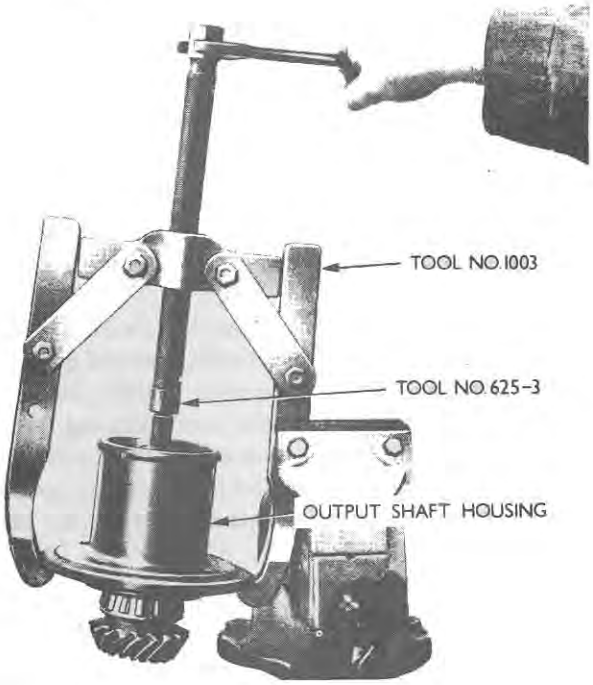

Figure 7
Removing Output Shaft Assembly

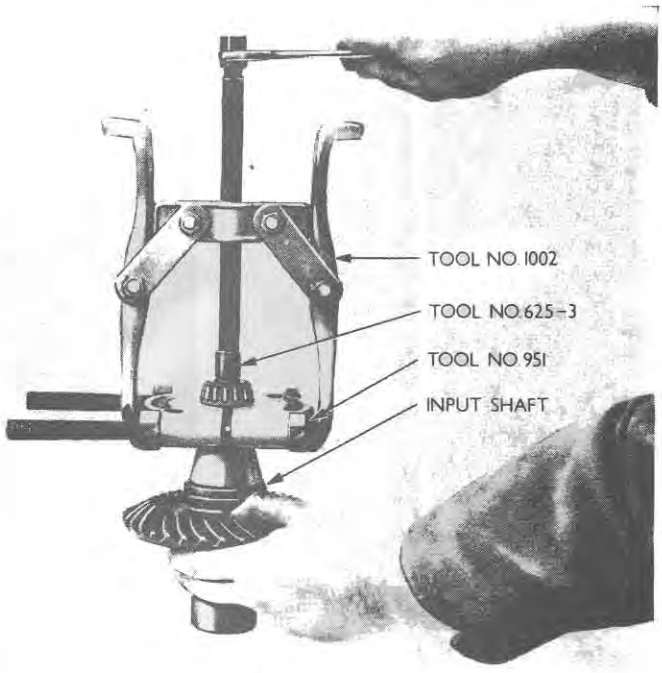

Figure 8
Removing Input Shaft Bearing

B. Inspection and Repair

1. Clean components in a suitable solvent and air dry. Lightly lubricate machined surfaces.
2. Inspect input shaft bearing cone and roller assemblies for excessive wear or damage. Renew if necessary using Tools Nos. 951 and 1002 to remove the bearings, Figure 8. Adaptor 630-3 will be required in addition to remove the forward bearing. Install the bearings using a suitable sleeve.
3. Inspect the input shaft bearing cups for excessive wear or damage and renew if necessary. Remove the bearing cup with a suitable puller and slide hammer.
4. Inspect the output shaft bearing cone and roller assemblies for excessive wear or damage. Renew if necessary. Remove the inner bearing cone and roller assembly using Tools Nos. 951, 1002 and 625-3, Figure 9. Install using Tools Nos. 951, 1003, 625-3 and a suitable sleeve.
5. Inspect the output shaft bearing cups for excessive wear or damage. Renew if necessary using Tools Nos. 943, and 943-S to extract the bearing cups.
6. Inspect the drive gears for excessive wear or for chipped teeth. If necessary to renew, install both gears as a matched pair.

C. Assembly

1. Install a new input shaft oil seal into the pulley gear housing.
2. Install the input shaft assembly into the pulley gear housing.
3. Install the pulley gear housing rear cover plate, without shims, and retain with the four bolts. Tighten the bolts evenly until finger tight, check that all free play is removed from the bearings and the input shaft rotates freely. Measure the gap between the pulley gear housing and the cover plate, with feeler blades, at several points to obtain a mean reading. Select the appropriate shim to give the measurement obtained plus 0·003 in. (0·076 mm.). Remove the cover plate assembly.
4. Install the cover plate assembly with the selected shims and tighten the retaining bolts to the correct torque. Check the shaft for free rotation.
5. Install the output shaft and bearing assembly in the output shaft housing. Position the output shaft outer bearing and pulley mounting flange. Install the retaining nut and tighten to press the outer bearing cone and roller assembly onto the output shaft.
6. Remove the retaining nut and the pulley mounting flange. Install a new output shaft oil seal.
7. Install the pulley mounting flange and the retaining nut.
8. Tighten the retaining nut to give the specified end float on the shaft bearings.
9. Assemble the output shaft assembly to the pulley gear housing and adjust the thickness of the shims between to give the specified free play between the gears.

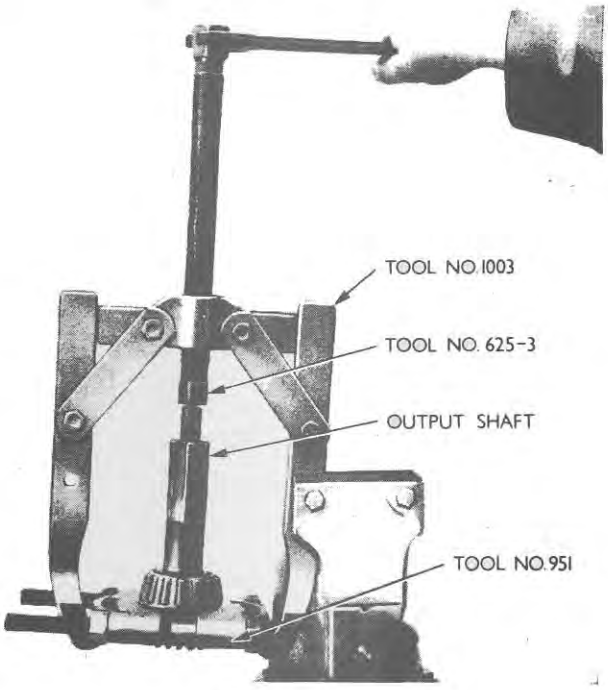

Figure 9
Removing Output Shaft Bearing

© FORD MOTOR COMPANY LTD. 1966

Tighten the retaining bolt to the specified torque.

10. Install the belt pulley gear on the tractor and retain with the four bolts. Tighten to the specified torque.
11. Install the belt pulley inner guard (if the tractor is so equipped). Install the belt pulley and retain with the four bolts. Tighten to the specified torque. Install the belt pulley outer guard (if so equipped).

BELT PULLEY GUARD

In certain territories a belt pulley guard is a legal requirement for all belt pulley operations. A belt pulley guard is available for the Ford 4000 and Ford 5000 tractors in these territories and complies with the legal requirements.

Belt pulley assemblies designed to accept a belt pulley guard incorporates a flange around the output shaft housing.

Installation

1. Remove the four bolts retaining the belt pulley and remove the pulley.
2. Position the belt pulley inner guard against the belt pulley output shaft housing flange and install the three bolts and bracket assemblies from the left-hand side. Install the flat washers and nuts on the bolt so that a lamp is formed on the housing flange. Tighten the nuts evenly after aligning the inner guard.
3. Install the belt pulley and tighten the retaining bolts to the specified torque.
4. Locate the four belt pulley outer guard retaining screws in the inner guard.
5. The outer guard may be positioned and retained by the four screws.
6. When attaching the belt pulley it is only necessary to loosen the four outer guard retaining screws and remove the guard. Install the belt, install the guard and tighten the screws to retain.

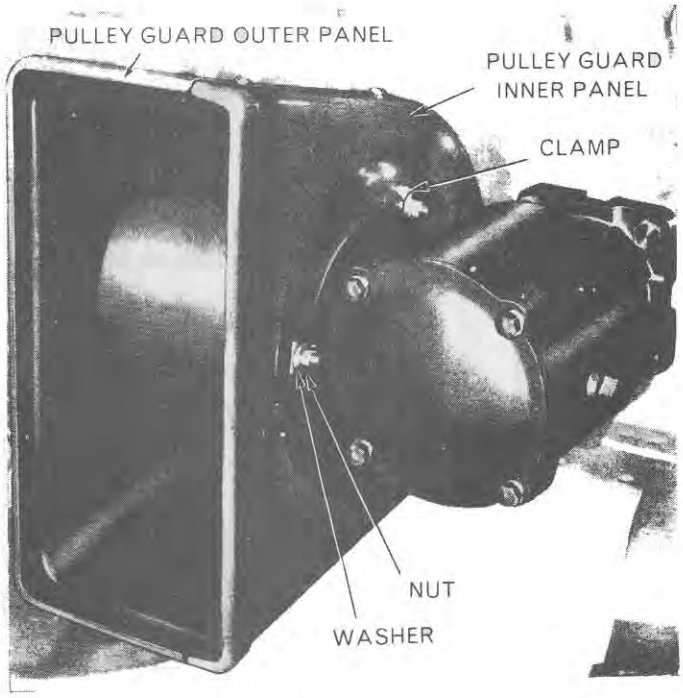

Figure 10
Belt Pulley Guard Installation

Specifications

3. SPECIFICATIONS AND SPECIAL TOOLS

	FORD 2000 and 3000	FORD 4000	FORD 5000
Belt Pulley Oil Capacity (Imp. Pints)	1	2	2
Belt Pulley Oil Capacity (U.S. Quarts)	0·6	1·2	1·2
Belt Pulley Oil Capacity (Litre)	0·57	1·14	1·14
Belt Pulley Oil Grade	SAE 80 EP or SAE 20W/30	SAE 80 EP or SAE 20W/30	SAE 80 EP or SAE 20W/30
Belt Pulley Oil Ford Specification	ESEN-M2C85-A or ESN-M2C77-A	ESEN-M2C85-A or ESN-M2C77-A	ESEN-M2C85-A or ESN-M2C77-A
Gear Ratio	1·87:1	1·84:1	1·84:1
Input Shaft Gear	28	35	35
Output Shaft Gear	15	19	19
Input Shaft Bearing Endfloat	0·002/3 inch	0·002/3 inch	0·002/3 inch
Output Shaft Bearing Endfloat	0·002/3 inch	0·002/3 inch	0·002/3 inch
Gear Backlash	—	0·004/0·12 inch At pulley retaining bolts	0·004/0·12 inch At pulley retaining bolts
TORQUE SPECIFICATIONS			
Pulley Gear Retaining Bolts	170–200 lbs. ft. (23–28 m.kg.)	170–200 lbs. ft. (23–28 m.kg.)	200–220 lbs. ft. (28–30 m.kg.)
Cover Plate Retaining Bolts	35–40 lbs. ft. (5–5·5 m.kg.)	40–50 lbs. ft. (5·5–7 m.kg.)	40–50 lbs. ft. (5·5–7 m.kg.)
Output Shaft Housing Bolts	—	40–50 lbs. ft. (5·5–7 m.kg.)	40–50 lbs. ft. (5·5–7 m.kg.)
Pulley Retaining Bolts	40–45 lbs. ft. (5·5–6·25 m.kg.)	40–45 lbs. ft. (5·5–6·25 m.kg.)	40–45 lbs. ft. (5·5–6·25 m.kg.)

Special Tools

Tool No.	Description
625-S	Shaft protectors
630-S	Step plate adaptors
943	Puller
943-10	Adaptor
943-S	Slide Hammer
951	Pulling attachment—small
954	Puller
1002	Puller reversible arm—medium
1002	Puller single end arm—large

Part 16

ACCESSORIES AND GENERAL

Chapter 2
REMOTE CONTROL VALVES

Section		Page
1.	Description and Operation	1
2.	Servicing the Control Valve	5
3.	Pressure Tests and Adjustments	14
4.	Specifications	16
5.	Special Tools	16

1. DESCRIPTION AND OPERATION

GENERAL

The Ford Remote Control Valves are all of the same basic design and construction. As shown in Figure 1, the valves differ in appearance according to the number of valve spools and whether or not they contain detents. Figures 2 and 3 illustrate flow schematics for the two types of valves.

The service procedures outlined in this chapter apply to the following control valves:

Single Spool Valves	Double Spool Valves
309623	309675 w/detents
309674 w/detents	309706
309723 w/detents	309724 w/detents
309725	309727 w/detents
309726 w/detents	

As the valves are similar, several service procedures have been combined. Where differences in the valves exist, they are treated individually. All valve assemblies bolt to the accessory pad of the tractor hydraulic lift cover, except on the Ford 4000 Row Crop Tractor where a manifold is used to locate the control valve over the rear axle housing.

The components of the valves are shown in Figures 6, 7, 12, and 13. Reference to side, top, or bottom should be interpreted in relation to the valve installed on the tractor and viewed from the tractor seat.

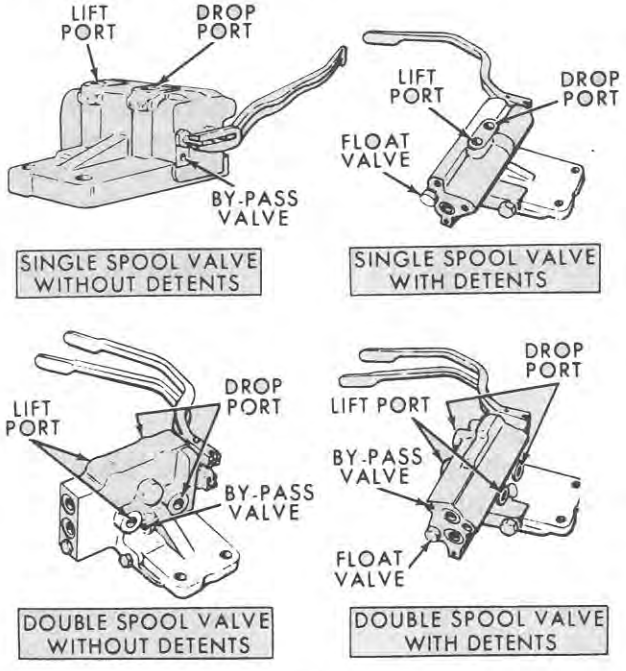

Figure 1
Remote Control Valves

© FORD MOTOR CO. 1966

The parts shown in Figures 6, 7, 12, and 13 are serviceable except for the matched spools and valve bodies. Defects in the spools or the spool bores in the valve require installing a new valve assembly. The valve assemblies do not contain relief valves as such. Excessive pressure protection is provided by the tractor hydraulic system relief valve.

SINGLE SPOOL CONTROL VALVES

The single spool control valves, except for the 309723 Valve, are designed for use on all Ford Tractors with three-point hydraulic lift linkage except: the Ford 6000; NAA and earlier U.S. models; Fordson Major Diesel; and Fordson Power Major. The 309723 single spool valve is designed for use on the Ford 4000 Row Crop Tractor. A single- or double-acting cylinder can be used with a single spool valve. The float valve must be "out" when using a single-acting cylinder. When using a double-acting cylinder, the float valve must be "in" to have both "lift" pressure and "drop" pressure. When the float valve is "out" there is no "drop" pressure, and the cylinder is said to "float". As the float valve is turned "in", drop pressure increases until the cylinder is completely double acting when the float valve is turned completely "in".

When the control valve with detents is actuated, the spool is held in the forward or rearward position by the detent until released by the pressure surge when the remote cylinder reaches the end of its stroke.

An additional single-acting cylinder may be used, except with the Ford 4000 Row Crop Tractor, by removing the auxiliary service plug in the lower portion of the valve and installing the cylinder hose in the port. A Hydraulic Lift Arm Hold-Down Kit, Part No. 309600, must be installed to prevent the lift arms from raising. The cylinder can then be operated with the hydraulic lift control lever.

DOUBLE SPOOL CONTROL VALVES

The double spool control valves, except for the 309724 Valve, are designed for use on all Ford Tractors with three-point hydraulic lift linkage except: the Ford 6000; NAA and earlier U.S. models; Fordson Major Diesel; and Fordson Power Major. The 309724 Double Spool Valve is designed for use on the Ford 4000 Row Crop Tractor.

The double spool control valve without detents has a bypass valve, Figure 2, on the lower spool. The double spool valve with detents has a float valve on the lower spool, and a bypass valve on the upper spool, as shown in Figure 3. The float valve and the bypass valve perform basically the same function. The use of "float" is recommended for the bottom spool because of the convenient control knob.

When the control valve with detents is actuated, the spools are held in the forward or rearward position by the detent mechanism.

NOTE: ***Detent "hold" is released when the fluid pressure reaches a predetermined setting (see "Detent Regulating Valve", page 5).***

Single- or double-acting cylinders can be used with a double spool control valve, and can be used in various combinations.

CYLINDER COMBINATIONS

One Single-Acting Cylinder: Connect the cylinder hose to the left front "lift" port. Plug the left rear "drop" port and the two right side ports. Adjust the valve as follows:

- Control Valve without detents — Bypass Valve "OUT"
- Control Valve with detents — Float Valve "OUT"

One Double-Acting Cylinder: Connect the cylinder hoses to the left front "lift" port and the left rear "drop" port. Plug both right side ports and adjust the valve as follows:

- Control Valve without detents
  - "Lift" and "Drop" pressure — Bypass Valve "IN"
  - "Lift" and "Float" — Bypass Valve "OUT"
- Control Valve with detents
  - "Lift" and "Drop" pressure — Float Valve "IN"
  - "Lift" and "Float" — Float Valve "OUT"

One Double- and One Single-Acting Cylinder: Connect the single-acting cylinder hose to the left front "lift" port and plug the left rear "drop" port. Connect the double-acting cylinder hoses to the right side ports and adjust the valve as follows:

- Control Valve without detents — Bypass Valve "OUT"
- Control Valve with detents — Bypass Valve "IN"; Float Valve "OUT"

Two Double-Acting Cylinders: Connect the hoses from one cylinder to the left side ports, and the hoses from the other cylinder to the right side ports. Adjust the valve as follows:

• Control Valve without detents	Bypass Valve "IN"
Lower Spool "Float"	Bypass Valve "OUT"
• Control Valve with detents	Bypass Valve "IN"
	Float Valve "IN"
Both Spools "Float"	Bypass Valve "OUT"
	Float Valve "OUT"

NOTE: *When turning the bypass valve "in" (clockwise), make sure it seats. Two or three counterclockwise turns are sufficient to reset the valve to the "out" position.*

Two Single-Acting Cylinders: This combination may be accomplished with a control valve with detents only. Connect one cylinder hose to the left front "lift" port and the other hose to the right front "lift" port. Turn the float valve "out" for single-acting operation of the bottom spool. Turn the bypass valve "out" for single-acting operation of the top spool.

Auxiliary Service Plug: An additional single-acting cylinder may be used with either valve, except on the Ford 4000 Row Crop Tractor, by removing the auxiliary service plug in the lower portion of the valve, Figure 1, and installing the hose from the cylinder to the port. A Hydraulic Lift Arm Hold-Down Kit, Part No. 309600, must be installed to prevent the lift arms from raising. The cylinder can then be operated with the hydraulic lift control lever.

CONTROL VALVE SPOOLS (DOUBLE SPOOL VALVE)

Control Valve without Detents: The valve spools are held in neutral by centering springs. In neutral, oil continuously circulates through the valve. Oil is pumped from the reservoir, passes between the spool lands, and flows into the tractor hydraulic system. Movement of the spools allows oil to flow across the spool lands to or from passages leading to remote cylinders, Figure 2.

When the spool is moved to the "lift" position, oil displaces a check valve and flows out through the "lift" port. Oil that is returned from hydraulic cylinders flows back into sump.

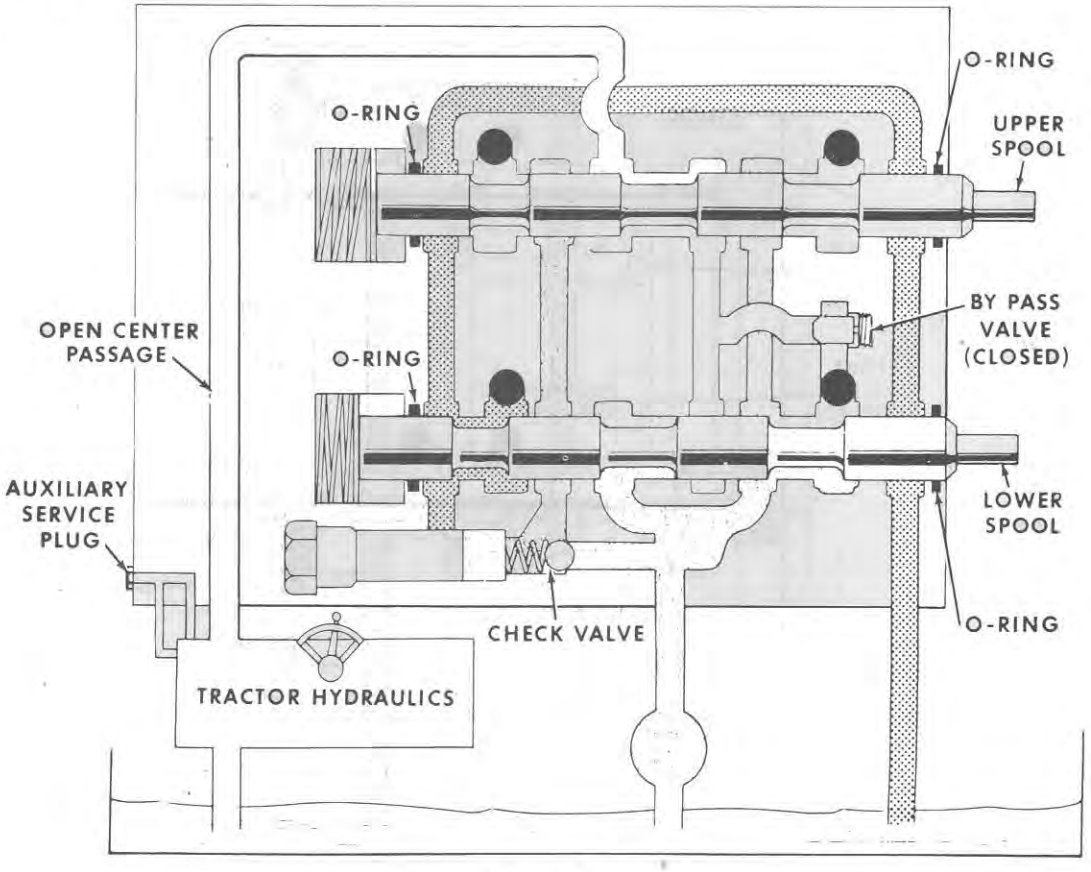

Figure 2
Double Spool Valve without Detents

© FORD MOTOR CO. 1966

Plugging the "drop" port and turning the float valve "out" permits use of a single-acting cylinder. In the "drop" position, the float valve provides an escape for high pressure oil which otherwise would dead end at the plugged "drop" port and be forced through the tractor hydraulic system relief valve. In the "drop" position, oil flows back to sump when the remote cylinder returns to its retracted position.

BYPASS VALVE (TOP SPOOL ONLY)

Turning the bypass valve "in" permits use of a double-acting cylinder. In the "lift" position, pumped oil displaces the check valve and flows out the "lift" port to the remote cylinder. In the "drop" position, oil is backed up to the bypass valve, but is blocked and directed out the "drop" port to the remote cylinder. Oil that is returned from the cylinder is directed back to sump. Plugging the "drop" port and turning the bypass valve "out" permits use of a single-acting cylinder. In the "lift" position, pumped oil displaces the check valve and flows out the "lift" port to the remote cylinder. In the "drop" position, oil is returned back through the "lift" port and returned to sump. Oil is blocked from flowing out the "drop" port, but flows past the open bypass valve and into the tractor hydraulic system.

DETENT REGULATING VALVE

The detent regulating valve is pressurized at all times, as shown in Figure 3. It has a preset pressure of 2000-2100 psi (140-147 kg/cm²). When the pressure in the system exceeds this setting, the valve is "popped" off its seat and pressurized oil is directed to the detents. The detents are forced out of their holding positions, allowing the spools to be automatically returned to the neutral position by the centering springs. As soon as the pressure is relieved, the regulating valve reseats and the detents return to position. A small passage allows oil to drain out of the detent areas and back to sump.

CONTROL VALVE SPOOL (SINGLE SPOOL VALVE)

The instructions for the operation of the lower spool of the double spool valve apply to the operation of the single spool valve.

2. SERVICING THE CONTROL VALVE

A. Removal

The procedure for removing the valve assemblies applies to both single and double spool valves.

1. Clean the remote hose(s) and the valve housing adjacent to the hoses thoroughly.

   NOTE: ***To gain access to the control valve, it will be necessary to remove the support and door assembly on the Ford 4000 Row Crop Tractor.***

2. With the tractor engine stopped, relieve the pressure in the remote control valve and hoses by moving the valve handle(s). Disconnect the hose(s) at the valve. Disconnect the control handle linkage on the Ford 4000 Row Crop Tractor.

3. Remove the four valve-to-cover retaining bolts and lock washers. See Figure 4. Place them aside for later installation.

4. Lift the valve assembly from the tractor. Dispose of the valve-to-cover sealing rings.

5. Clean the valve body. Use a clean work area to perform the service operation. Handle parts carefully to avoid nicks or scratches on machined surfaces.

B. Installation

1. Thoroughly clean the underside of the valve and the valve mounting surface to make sure they are free from all foreign matter.

2. Install new lubricated sealing O-rings as shown in Figure 5.

3. Install the valve on the tractor lift cover (control valve manifold on the Ford 4000 Row Crop Tractor).

   NOTE: ***Set the bypass valve to the desired position before installing the valve on the tractor. Although the adjustment can be made with the valve installed, it is easier to accomplish with the valve removed.***

4. Check the oil level in the tractor hydraulic system. Add oil as required.

© FORD MOTOR CO. 1966

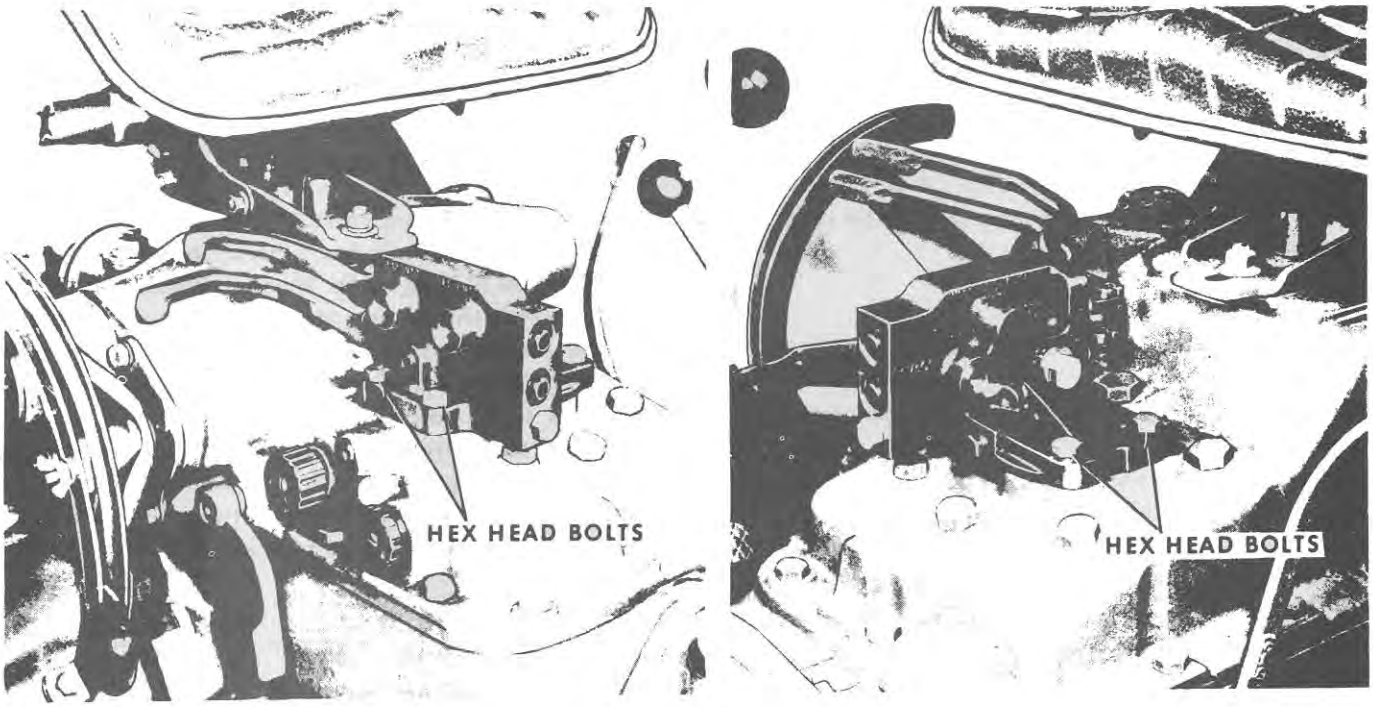

Figure 4
Control Valve Attached to Tractor Hydraulic Lift Cover

CONTROL VALVE WITHOUT DETENTS

A. Disassembly, Inspection, and Repair

Before starting to disassemble the valve, study the exploded views carefully. Study the parts and their locations to simplify servicing the valves. See Figure 6 (Double Spool Valves) and Figure 7 (Single Spool Valves).

Valve Spool(s):

1. Place the control valve assembly face down on a clean work area.
2. Remove the cotter pin(s) from the handle clevis pin(s), Figure 8. Pull the clevis pin(s) out and remove the handle(s).
3. Place the valve assembly in a soft-jawed vise and remove the spool retaining spiral snap ring(s) and centering spring cap(s).
4. Gently tap the spool(s) on the handle end and remove through the centering spring end.

   NOTE: ***Tag each spool for its correct bore as each is of selected fit.***

5. Withdraw the metal seal retainer(s) from the spool bore(s) with Remover No. 954, Figure 9. Remove and discard the front and rear valve-to-spool sealing O-rings.
6. Remove the centering spring retainer screw(s) and separate the washers, retainers, and spring from the spool(s).

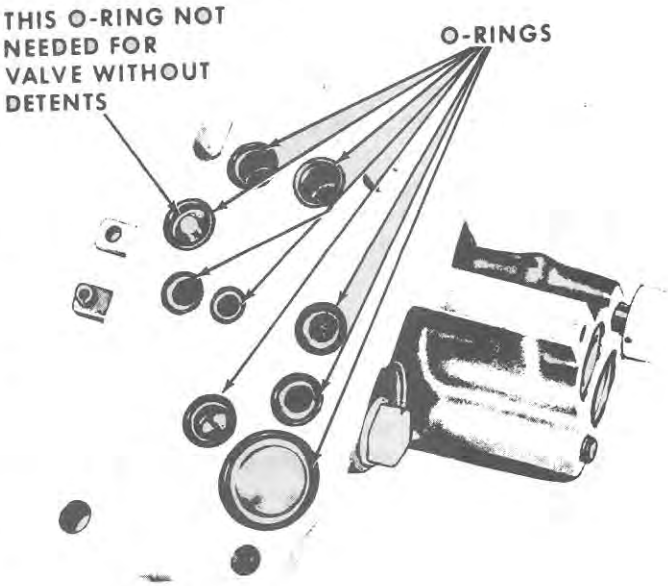

Figure 5
O-Ring Installation

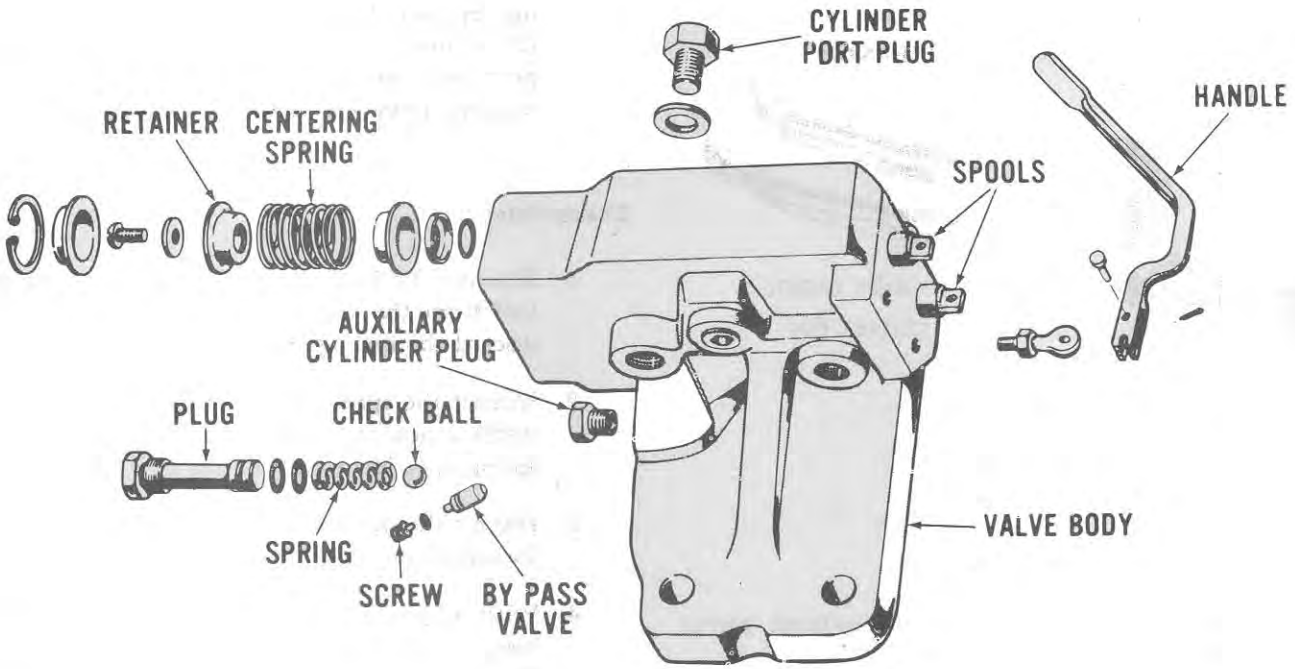

Figure 6
Exploded View (309706 Valve)

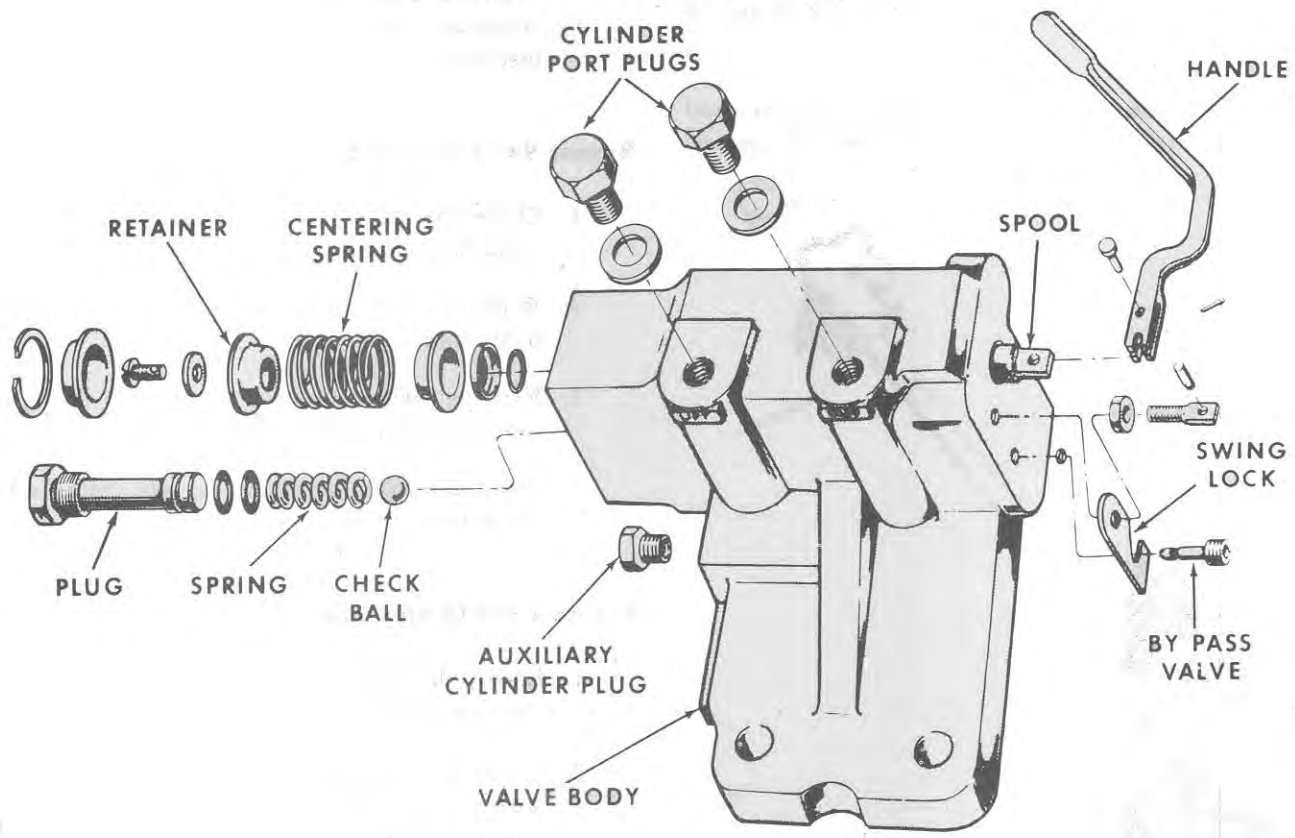

Figure 7
Exploded View (309673 and 309725 Valves)

© FORD MOTOR CO. 1966

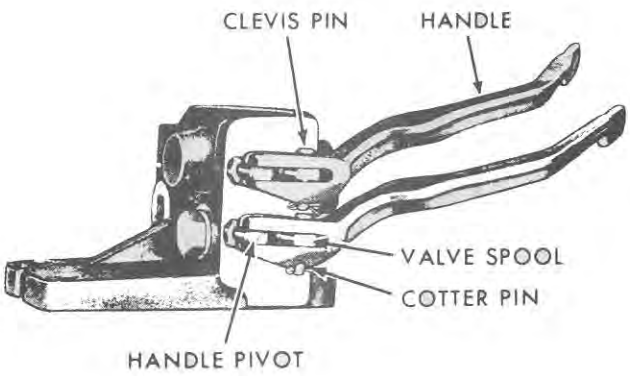

Figure 8
Handle Removal

7. Clean the spool(s) and attaching parts thoroughly.

8. Inspect the spool(s) and spool bore(s) for pits and deep scoring. If inspection discloses severe defects, a new control valve assembly should be installed.

9. Check the centering spring(s), retainers, and washer(s) for cracks and distortion. The centering springs have approximately a $1\frac{1}{8}$ inch (28.57 mm) free length. If a spring has taken a permanent set and fails to return the spool to neutral, a new spring should be installed.

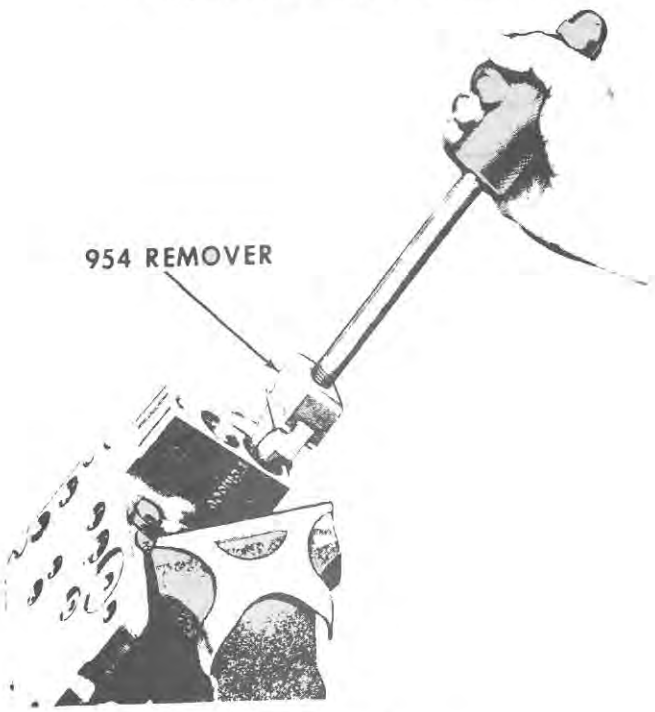

Figure 9
Removing Seal Retainers

Check Valve:

1. Remove the long check valve plug, spring and ball from the valve bore. Clean all parts and discard the sealing O-ring.

2. Inspect the spring for defects and, if necessary, install a new one. The normal free length of the spring is $\frac{7}{8}$ inches (22.22 mm).

3. Inspect the check ball for pitting or deep scoring. Install a new check ball if necessary.

4. With a light, inspect the check ball seat in the body bore for pits, deep scoring, or other damage. The seat is an integral part of the body and cannot be removed. The seat can often be satisfactorily reformed by lightly tapping a slightly oversized ball against it. If the seat cannot be reformed, a new control valve assembly must be installed.

Bypass Valve (Double Spool Valve):

1. Drive the set screw retaining roll pin into the body bore. Remove the pin.

2. Remove the bypass valve set screw from the body bore.

3. Remove the bypass valve poppet by tilting and tapping the assembly. Discard the sealing O-ring.

4. Clean and examine the valve, and install a new one if there is visible damage.

Bypass Valve (Single Spool Valve):

1. Loosen the jam nut, Figure 7, sufficiently to allow the swing lock to be removed.

2. Turn the one-piece bypass valve entirely out with a hex wrench. Remove and discard the sealing O-ring.

3. Clean and examine the valve. Install a new one if there is visible damage.

B. Assembly

Valve Spool(s):

1. Insert lubricated spool(s) part way into the matching valve bore(s) from the centering spring end.

   NOTE: *Do not attempt to interchange the spools in the double spool valve as they are of select fit.*

2. Continue to push the spool until the spool end aligns with the O-ring groove.

3. Dip new O-ring(s) in hydraulic oil and install in the rear counterbore groove(s), Figure 10.

   IMPORTANT: *Follow Step 2 closely to prevent the O-ring(s) from accidentally falling into an internal valve passage during the O-ring installation. It is possible, but extremely difficult, to recover O-rings from internal passages by using air pressure and/or a thin wire.*

4. Push the handle end of the spool(s) approximately 3/4 inch (19.05 mm) out of the rear of the valve body to permit the installation of the front O-ring(s) and retainer(s), Figure 11.

5. Lubricate and install the front O-ring(s) and metal seal retainer(s) with a suitable driver.

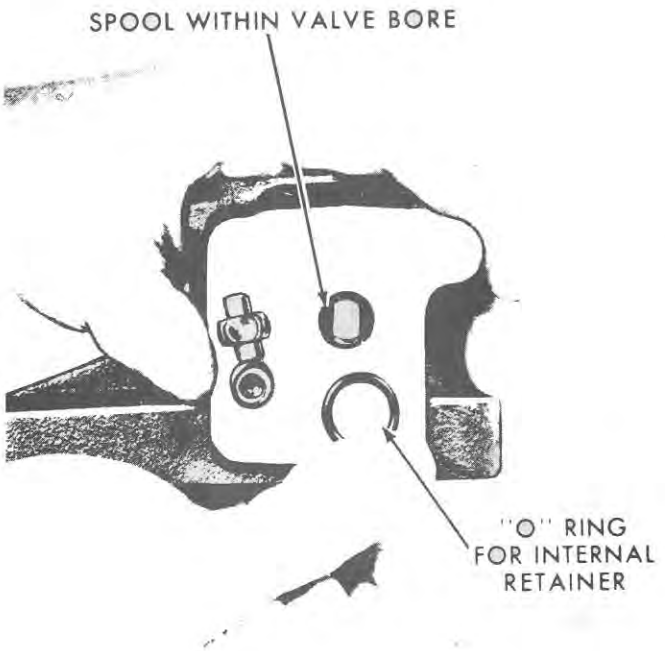

Figure 10
Rear O-Ring Installation

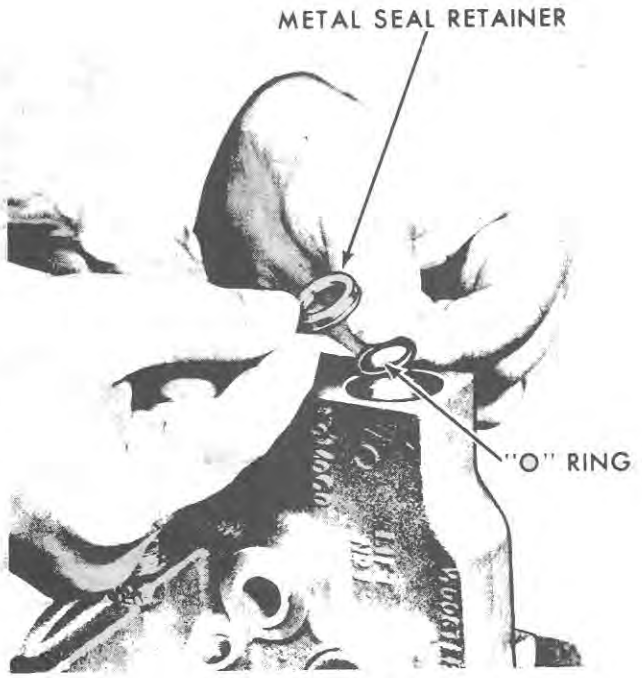

Figure 11
Front O-Ring Installation

6. Position the centering spring(s) and retainer(s) on the spool(s) and secure them with the retainer screw(s) and washer(s). Install the centering spring cap(s) and spiral snap ring(s).

Check Valve:

1. Lubricate new sealing O-rings and place them on the check valve plug.
2. Slide the check ball and compression spring into the valve bore.
3. Turn and slide the check valve plug into the valve bore being careful not to damage the O-rings. Tighten the plug.

Bypass Valve (Double Spool Valve):

1. Lubricate and install a new sealing O-ring on the valve and insert the valve into the body bore.
2. Install the valve set screw.
3. Adjust the valve to the desired setting, and drive the retaining roll pin into place. Install the valve handles with the clevis pins and secure the clevis pins with the cotter pins.

Bypass Valve (Single Spool Valve):

1. Install a new lubricated O-ring on the valve.
2. Turn the bypass valve assembly into the body bore until the desired setting is reached.
3. Reposition the swing lock over the bypass valve and tighten the jam nut to secure the swing lock and control handle pivot.

© FORD MOTOR CO. 1966

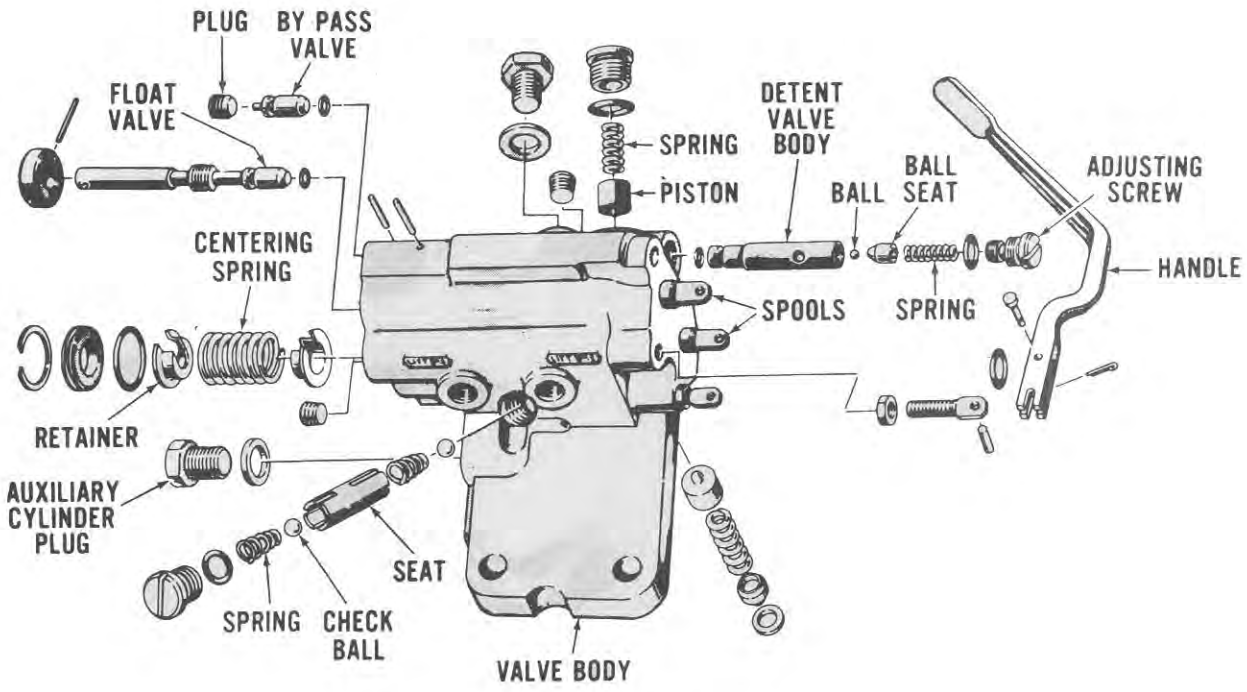

Figure 12
Exploded View (309675, 309724 and 309727 Valves)

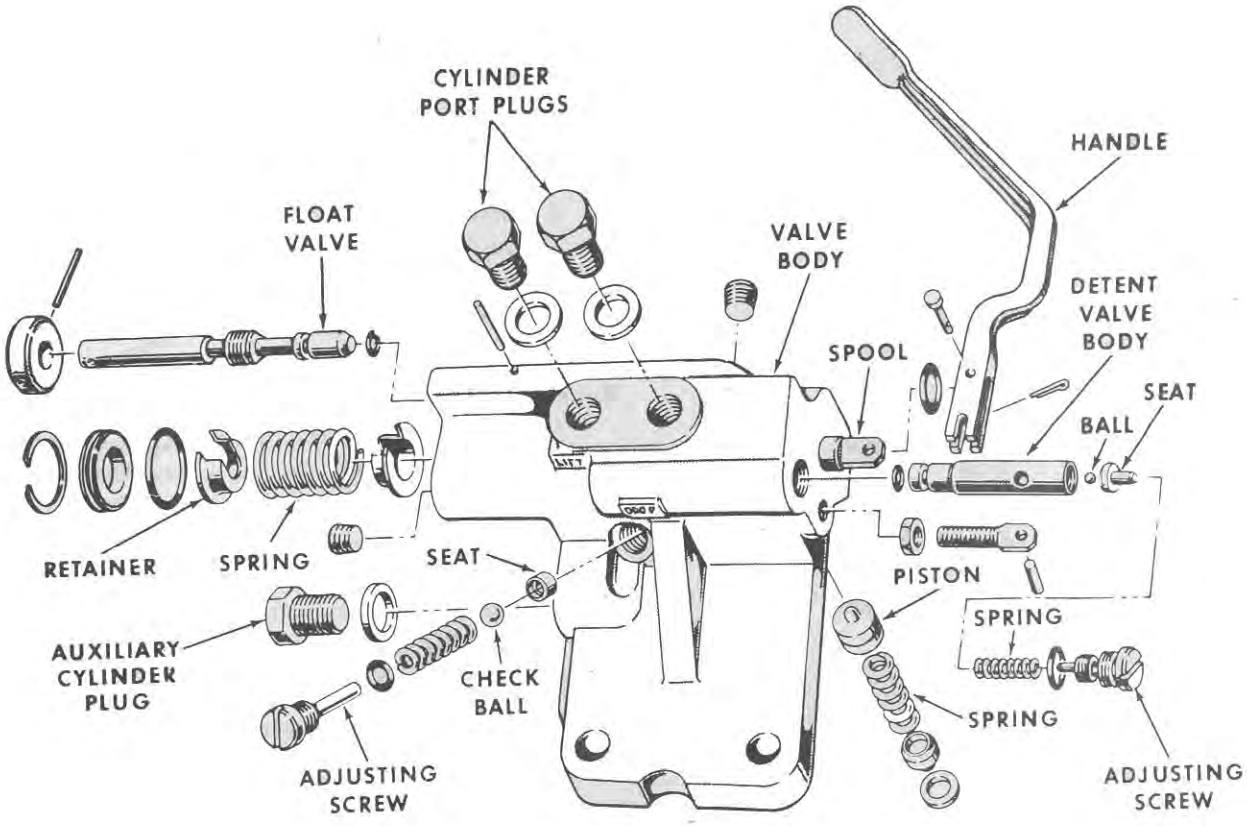

Figure 13
Exploded View (309674, 309723 and 309726 Valves)

CONTROL VALVE WITH DETENTS

A. Disassembly, Inspection, and Repair

Before starting to disassemble the valve, study the exploded views carefully. Study the parts and their respective locations to simplify servicing the valves. See Figure 12 (Double Spool Valves) and Figure 13 (Single Spool Valves).

Valve Detent(s):

1. Remove the cotter pin(s) from the handle clevis pin(s), Figure 8. Pull the clevis pins out and remove the handle(s).

2. Place the control valve face down on a clean work area.

3. Remove the top detent assembly by removing the detent plug, O-ring, and spring. With a magnet, remove the piston as shown in Figure 14 (Double Spool Valve only).

4. Remove the bottom detent assembly by removing the snap ring, spring retainer, spring, and piston, as shown in Figure 15.

5. Check the spring for cracks, distortion, and variance from its normal free length of 1 1/8 inches (28.57 mm). Install a new spring if necessary.

NOTE: ***Single spool valves with detents contain only the bottom detent assembly. Therefore, Step 3 does not apply to single spool valves with detents.***

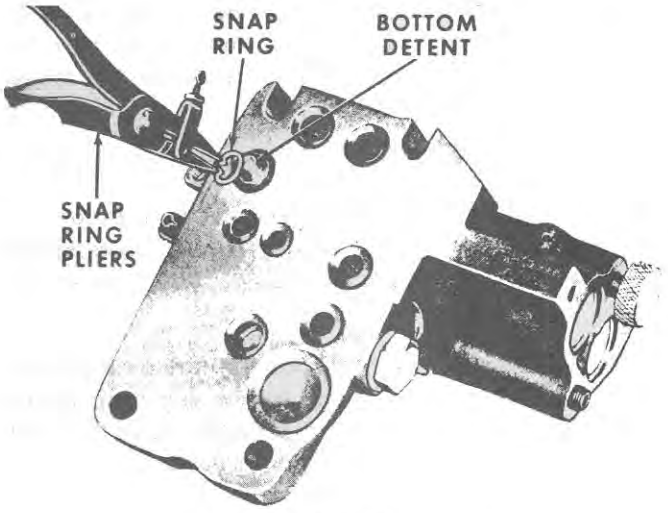

Figure 15
Bottom Detent Removal

Valve Spool(s):

1. Place the valve assembly in a soft-jawed vise and remove the spool cap retaining spiral ring(s).

2. Tap the spool(s) on the handle end to force out the valve end cap(s). See Figure 16. Remove the spool(s) through the front of the valve body. Tag each spool for its correct bore as each is of selected fit.

3. Remove and discard the sealing O-ring(s) from the valve end cap(s). Remove and discard the rear valve-to-spool sealing O-ring(s).

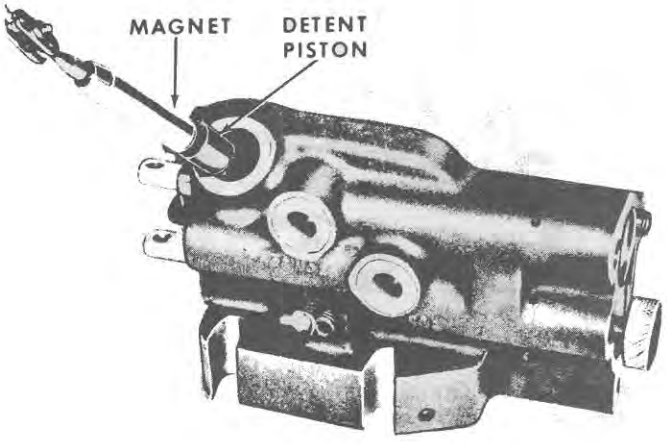

Figure 14
Top Detent Removal

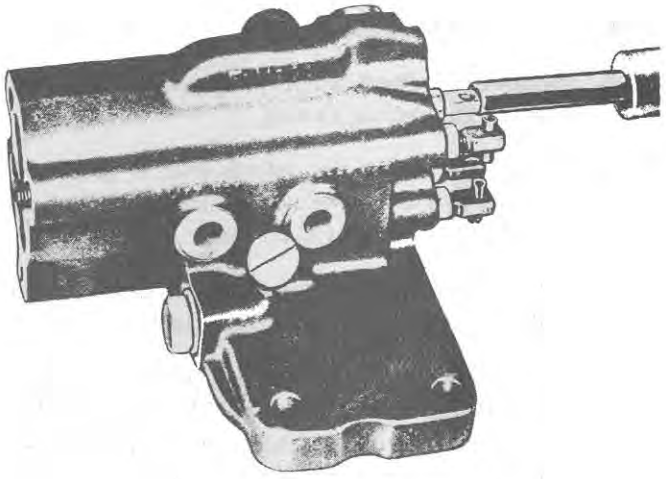

Figure 16
Valve Spool Removal

4. Remove the centering spring retainer(s) from the valve spool(s) using a suitable spring compressing tool. Separate the retainers and spring from the spool(s).

5. Clean the spool(s) and attaching parts thoroughly.

6. Inspect the spool(s) and spool bore(s) for pits and deep scoring. If inspection discloses severe defects, a new control valve assembly should be installed.

7. Check the centering spring(s) and retainers for cracks and distortion. A new centering spring should be installed if the length varies from the normal free length of 1 1/8 inches (28.57 mm).

Check Valve (Double Spool Valve):

1. Remove the check valve plug, spring, ball, seat, spring, and ball. Discard the sealing O-ring.

   NOTE: ***Two check valves are located in the same port on double spool valves.***

2. Inspect the springs for defects and, if necessary, install new springs. The normal free length of the springs is 5/8 inch (15.87 mm).

3. Inspect the check balls for pitting or deep scoring. Install new check balls if necessary.

4. Inspect the check seat for pits, deep scoring, or other damage. If the seat is damaged, and cannot be reformed by lightly tapping a slightly oversized ball against it, install a new one.

Check Valve (Single Spool Valve):

1. Remove the check valve plug, spring, and ball. Discard the sealing O-ring.

2. Inspect the spring for defects and, if necessary, install a new one. The normal free length of the spring is 1 5/16 inches (33.34 mm).

3. Inspect the check ball for pitting or deep scoring. Install a new check ball if necessary.

4. With a light, inspect the check ball seat for pits, deep scoring, or other damage. The seat can often be reformed by lightly tapping a slightly oversized ball against it. If the seat is damaged and cannot be repaired, a new valve assembly must be installed.

Float Valve:

1. Remove the float valve by driving the retaining spring pin out of the valve body. See Figure 17.

2. Remove the float valve stem and discard the O-ring.

3. Inspect the valve stem for scoring, pitting, distortion, or other damage. If necessary, install a new valve stem.

Bypass Valve (Double Spool Valve Only): Bypass valves are found only in double spool valves. Remove the bypass valve as follows:

1. Drive the retaining spring pin out of the valve body.

2. Remove the bypass plug with a hex wrench. Remove the bypass valve and discard the sealing O-ring.

3. Inspect the bypass valve for pits, burrs, or scores. If necessary, install a new valve.

4. With a light, inspect the bypass valve seat within the valve body for pits, burrs, or scores. As the seat is an integral part of the valve body, a new control valve assembly must be installed if the seat is damaged and cannot be reformed by lightly tapping a slightly oversized ball against it.

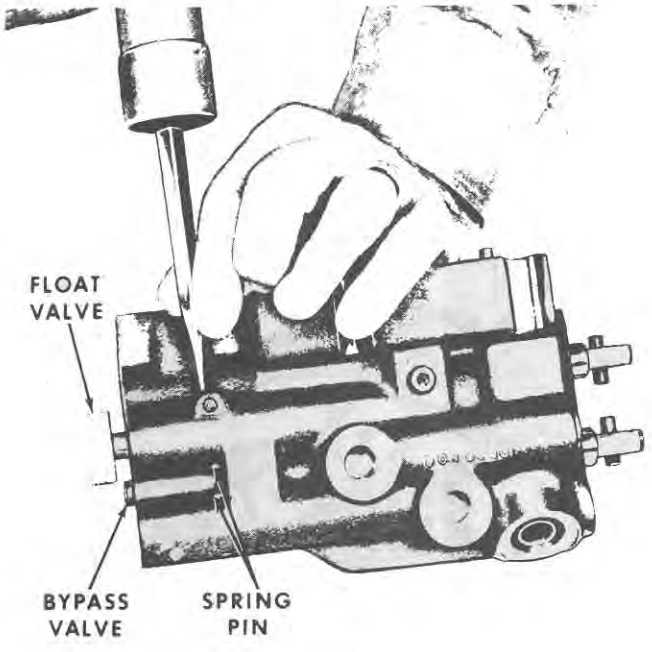

Figure 17
Spring Pin Removal

Detent Regulating Valve:

1. Remove the regulating valve plug and assembly from the valve body. Remove and discard the sealing O-rings.

2. Remove the screw plug, spring, seat, and ball from the regulating valve body.

3. Inspect the spring for cracks, distortion and variance from its normal free length of 7/8 inch (22.22 mm), and if necessary, install a new spring.

4. Inspect the ball seat for pits, burrs, or scores and install a new seat if necessary.

5. Inspect the ball for pits, scores, or other damage and install a new ball if necessary.

B. Assembly

Valve Spool(s):

1. Insert new rear valve-to-spool sealing O-ring(s) in the spool bore groove(s).

2. Install the spring retainer and spring on the valve spool(s). With a spring compressing tool, compress the centering spring and install the end spring retainer.

3. Insert lubricated spool(s) into the matching valve bore(s) from the front.

   NOTE: *Do not attempt to interchange the spools in the double spool valve, as they are of select fit.*

4. Install new lubricated O-ring(s) on the valve end cap(s) and gently tap the end cap(s) into the front of the valve bore.

5. Install the valve handle(s) in reverse of removal.

Valve Detent(s):

1. Install the top detent assembly by sliding the piston and spring into the body bore. Place a new lubricated O-ring on the detent plug and install the plug.

   NOTE: *Step 1 pertains to double spool valves only.*

2. Install the bottom detent assembly by sliding the piston and spring into the body bore. Install the spring retainer and snap ring.

Check Valve (Double Spool Valve):

1. Install the check ball, spring, seat, ball, and spring into the body bore.

2. Place a new sealing O-ring on the plug and install the plug.

Check Valve (Single Spool Valve): Slide the check ball and spring into the body bore. Place a new sealing O-ring on the plug and install the plug.

Float Valve: Place a new O-Ring on the float valve stem and install the valve stem into the body bore. Drive the retaining spring pin into the valve body.

Bypass Valve (Double Spool Only): Install a new sealing O-ring on the bypass valve. Slide the bypass valve into the body bore and drive the retaining spring pin into the valve body.

Detent Regulating Valve:

1. Install the regulating valve ball, seat, spring, and screw plug in the regulating valve assembly.

2. Install a new O-ring on the regulating valve and slide it into the body bore.

3. Place a new O-ring on the regulating valve plug and install the plug.

NOTE: *The detent regulating valve pressure must be reset after the detent valve is reinstalled. Instructions for the pressure check are found on page 14.*

3. PRESSURE TESTS AND ADJUSTMENTS

PRESSURE TESTS

Detent Regulating Valve: It may be necessary to adjust the pressure setting of the detent regulating valve due to wear of the moving parts or after servicing the valve. The test is performed as follows:

1. Attach a pressure gauge and fittings to the remote control valve "lift" port as shown in Figure 18 or 18(A), (Double Spool Valve illustrated).

   NOTE: *The remaining port(s) must be plugged or have remote cylinder hose(s) installed.*

2. Remove the oil filler plug from the reservoir and place the hose from the globe (load) valve in the reservoir. Secure the hose in the tractor reservoir as extreme pressure and oil flow will expel the hose from the filler port.

3. Open the globe (load) valve to the full open position.

4. Start the tractor and set the tractor engine at 1700 rpm as indicated on the tractor Proof-Meter. Operate the hydraulic system until the oil is warmed to normal operating temperature.

5. Pull the lift control lever of the spool to which the tester kit is installed and hold. At this point, oil is passing through the tester kit and into the tractor reservoir.

6. Slowly turn the globe (load) valve closed until an approximate reading of 2000-2100 psi (140-147 kg/cm^2) is obtained on the pressure gauge. At this point, a noticeable fluctuation should occur in needle movement to indicate the pressure relief valve of the detent regulator is functioning.

Tractor Hydraulic System Relief Valve: A pressure check of the tractor hydraulic system relief valve should also be made, after control valve installation, according to the following procedure. This procedure may be used with any one of the remote control valves.

NOTE: *The hydraulic fitting setup and test procedure used for the detent regulating valve pressure test may also be used for the tractor relief valve pressure test. Close the globe (load) valve completely and observe the reading. A reading of 2400-2500 psi (168-175 kg/cm^2) should be obtained.*

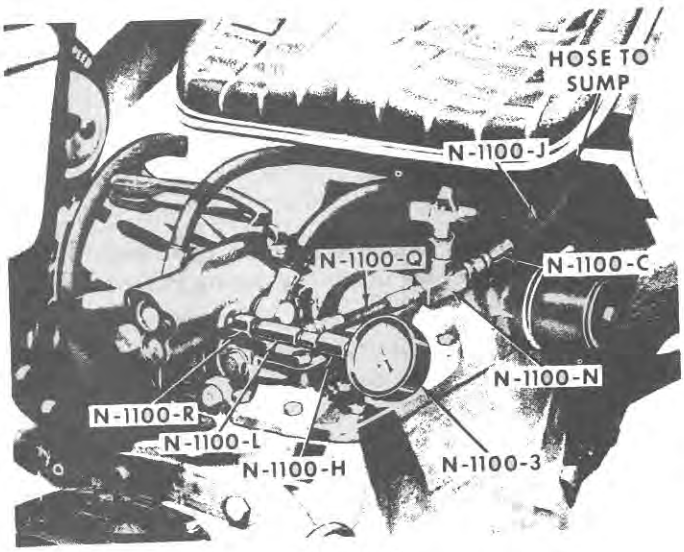

Figure 18
Detent Regulating Valve Pressure Check

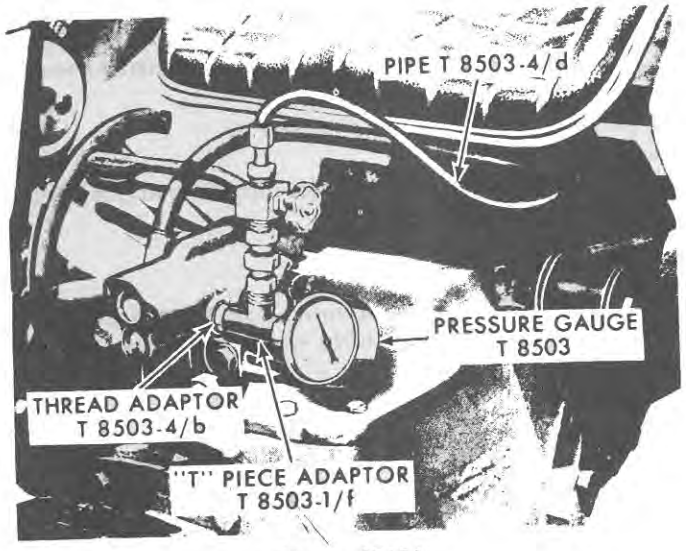

Figure 18(A)
Detent Regulating Valve Pressure Check

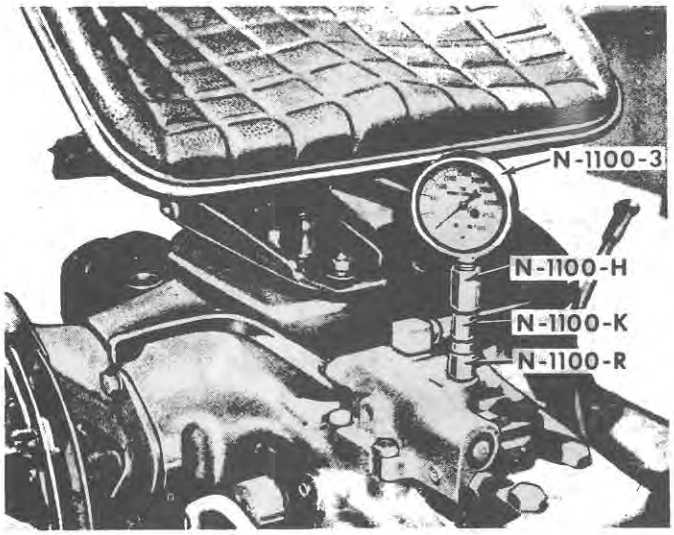

Figure 19
Tractor Hydraulic System Relief Pressure Check

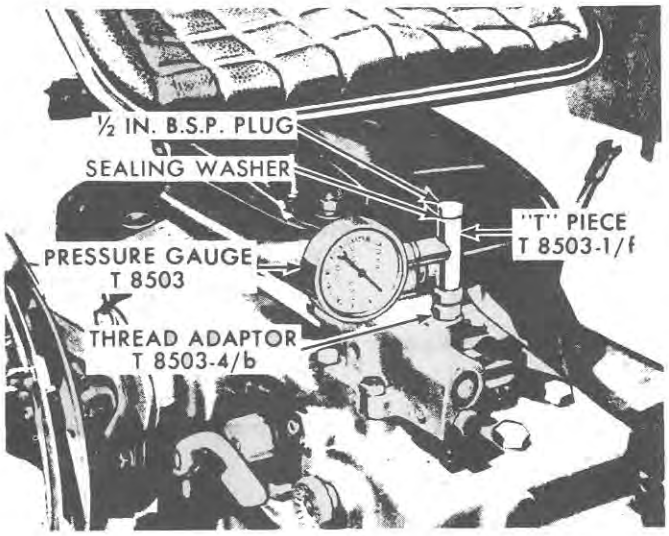

Figure 19(A)
Tractor Hydraulic System Relief Pressure Check

1. Attach a pressure gauge and fitting to the remote control valve "lift" port as shown in Figure 19 or 19(A), (Single Spool Valve illustrated). The N-1100-K fitting may be used in place of the N-1100-L and N-1100-M fittings.

   NOTE: ***The remaining port(s) must be plugged or have remote cylinder hose(s) installed.***

2. Start the engine and set the throttle at 2000-2100 engine rpm.

3. After the hydraulic oil has warmed in the tractor system, pull the No. 1 control valve handle back and observe the pressure gauge reading. It will be necessary to hold the handle back to force oil through the system relief valve. A pressure of 2400-2500 psi (168-175 kg/cm^2) should be obtained. For accuracy, repeat the procedure. If this reading is not obtained, refer to "Part 11, Hydraulic Systems", for adjustment.

4. After completing the test, remove the pressure gauge, adapters, and plug in the reverse order of installation.

ADJUSTMENTS

Detent Regulating Valve:

1. To adjust the detent regulating valve, it will be necessary to remove the handle(s) from the valve body.

2. To increase the pressure, turn the screw plug "in" (clockwise). Turning the screw "in" one turn will increase the pressure approximately 650 psi (45.5 kg/cm^2).

3. After the correct setting is obtained, remove the pressure gauge, adapters, and plug from the valve body.

IMPORTANT: ***The pressure setting of the detent regulating valve should not exceed 2100 psi (147 kg/cm^2) to prevent unnecessary blowing of the tractor hydraulic system relief valve.***

4. Install the control valve handles.

MAKING DETENTS INOPERATIVE

For certain implement operations, such as loaders, it may be desirable to remove the detent mechanisms as shown in Figure 20. The detents are removed as follows:

© FORD MOTOR CO. 1966

Detent on Top Spool:

1. Remove the detent plug, O-ring, spring, and piston.

2. Install the detent piston, O-ring and plug just removed.

Detent on Bottom Spool:

1. Remove the snap ring, spring retainer, spring, and piston.

2. Install the piston, spring retainer and snap ring just removed.

IMPORTANT: *The detent piston must be reinstalled to minimize the amount of oil returning through the detent area to sump.*

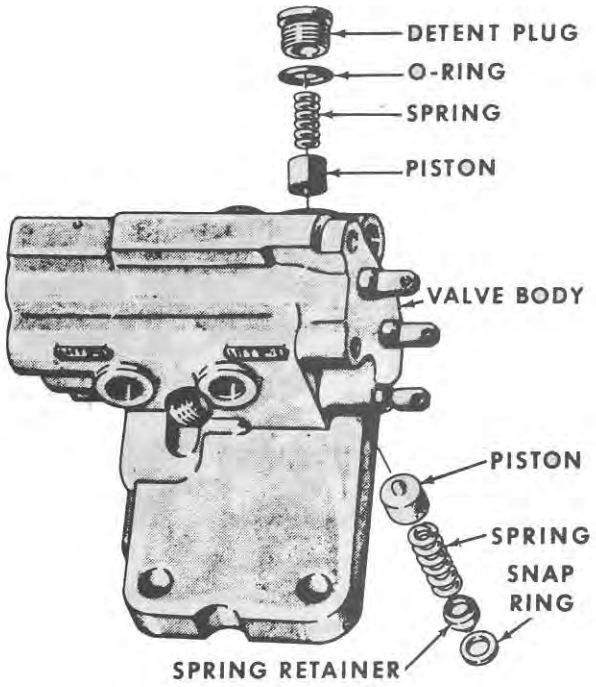

Figure 20
Detent Removal

4. SPECIFICATIONS

Detent Regulating Valve Pressure	2000-2100 psi (140-147 kg/cm²)
Tractor Hydraulic System Relief Pressure	2400-2500 psi (168-175 kg/cm²)

5. SPECIAL TOOLS

Tool Number	Description
954	Pilot Bearing Puller
N-1100-3	Pressure Gauge (0-5000 psi)
N-1100-C	Adapter
N-1100-H	Adapter
N-1100-J	Hose (20" x 1/4")
N-1100-K	Hose Connector
N-1100-L	"Tee" Fitting
N-1100-N	Globe Valve
N-1100-Q	Hose (6" x 1/4")
N-1100-R	Adapter
T-8503	Pressure Gauge (0-4000 psi)
T-8503-1/b	Load Valve
T-8503-4/b	Thread Adapter
T-8503-4/d	Hose
T-8503-1/f	"T" Piece
T-8503-1/g	Swivel Adapter

PART 17
TRACTOR MAINTENANCE SCHEDULE

Part 17

TRACTOR MAINTENANCE SCHEDULE

REFER TO YOUR TRACTOR
OPERATORS MANUAL FOR
THE CORRECT MAINTENANCE
SCHEDULE FOR YOUR TRACTOR.

© FORD MOTOR CO. 1964

MEMO

MEMO

MEMO