RUTHZIL TRATOR COMERCIAL DE PEÇAS LTDA 11 97083-6812 ROLANDO

FORD

Service Manual

JANEIRO 1965

Tractor Series
2000, 3000, 4000, 5000, 7000
3400, 3500, 3550, 4400, 4500,
5500, and 5550

Part 4 – Clutches
Part 5 – Four-Speed Transmission
Part 6 – Six-Speed Transmission
Part 7 – Seven and Eight-Speed Transmission
Part 8 – Select-O-Speed Transmission
Part 9 – Power Take-Off

1965 – 1975

Vol. 2

40200050

Reprinted

PART 4
CLUTCHES

Part 4
CLUTCHES

Chapter 1
SINGLE CLUTCHES

Section		*Page*
1.	Description and Operation	1
2.	Important Changes	2
3.	Adjustments	9
4.	Single Clutch Removal and Installation.. ..	9
5.	Overhaul the Single Clutch Pressure Plate and Cover Assemblies	11

Chapter 2
DOUBLE CLUTCHES

Section		*Page*
1.	Description and Operation	25
2.	Important Changes	28
3.	Adjustments	29
4.	Double Clutch Removal and Installation ..	30
5.	Overhaul Double Clutch Assembly	32

Chapter 3
SERVICING CLUTCH ASSOCIATED PARTS

Section		*Page*
1.	Clutch Pilot Bearing	41
2.	Clutch Release Bearing	42
3.	Clutch Release Cross-shaft Bushings	44
4.	Clutch Pedal Bushings	45

Chapter 4
SPECIFICATIONS AND SPECIAL TOOLS

Section		*Page*
1.	Specifications	47
2.	Special Tools	50

© FORD MOTOR COMPANY LTD., 1970

Part 4
CLUTCHES
Chapter 1
SINGLE CLUTCHES

Section		*Page*
1.	Description and Operation	1
2.	Important Changes	2
3.	Adjustments	9
4.	Single Clutch Removal and Installation.. ..	9
5.	Overhaul the Single Clutch Pressure Plate and Cover Assemblies	11

1. DESCRIPTION AND OPERATION

All tractors with manual gearchange transmissions utilise a single plate clutch, the disc of which incorporates either friction linings or cerametallic friction buttons on each side and a splined hub which locates the disc on the splines of the transmission input shaft. The disc is installed between the flywheel and a pressure plate assembly which is itself attached to the flywheel.

In the clutch "engaged" position the spring loaded pressure plate presses the clutch disc into contact with the engine flywheel and the drive from the engine is transmitted to the transmission by the friction between the linings, or cerametallic buttons, of the disc and the surfaces of the flywheel and pressure plate.

A clutch pedal is connected by a rod to a lever and cross-shaft assembly on which is mounted a fork. This fork engages a sliding release bearing and hub assembly, the bearing of which contacts the ends of release levers in the pressure plate assembly.

Depression of the clutch pedal causes the cross-shaft and fork to move the release bearing forward and depress the pressure plate release levers thus drawing the pressure plate away from the clutch disc and releasing the disc from contact with the flywheel. The frictional drive to the transmission is thereby disconnected to enable gearchanging to take place.

After a gearchange is made and the clutch pedal is released, a spring returns the pedal to its free position and the release bearing is drawn away from the release levers of the pressure plate assembly.

The main springs of the pressure plate assembly then reassert pressure on the plate moving it forward to press the clutch disc into contact with the flywheel and re-establish the drive to the transmission.

NOTE – The pressure plate assembly of the Ford 4000 with Independent P.T.O. differs from the others in that it incorporates a splined hub, Figure 1, which is rivetted to the pressure plate cover. The P.T.O. input shaft locates in this hub thus the drive to the P.T.O. is transmitted direct from the engine flywheel and is independent of the normal transmission clutch.
Independent P.T.O. drive on the Ford 5000 is achieved in a different manner. Here the P.T.O. input shaft, Figure 2, passes through the inside of the transmission main drive input shaft and is splined into a drive plate which is bolted to the engine crankshaft.

© FORD MOTOR COMPANY LTD., 1970

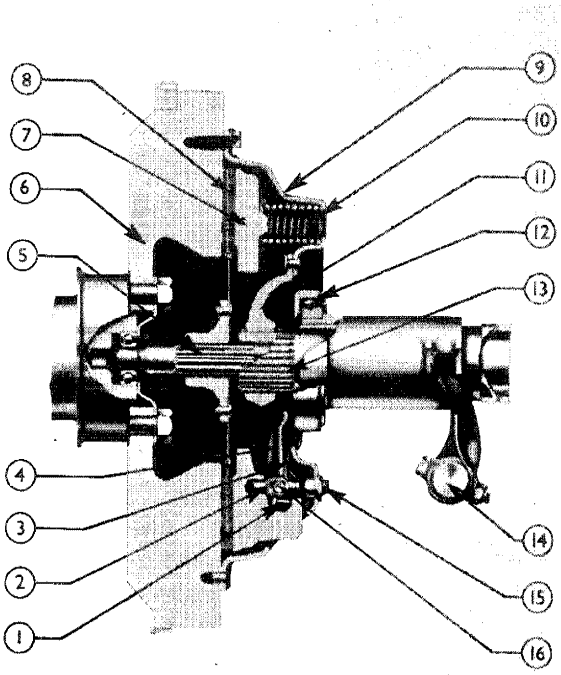

Figure 1
Ford 4000 Clutch with Independent P.T.O. Drive (Previous Type)

1. Strut
2. Eyebolt
3. Anti-rattle Spring
4. Release Lever
5. Transmission Input Shaft
6. Flywheel
7. Pressure Plate
8. Clutch Disc
9. Clutch Cover
10. Pressure Plate Springs
11. P.T.O. Drive Hub
12. Release Bearing
13. P.T.O. Input Shaft
14. Cross-shaft
15. Nut
16. Pivot Pin

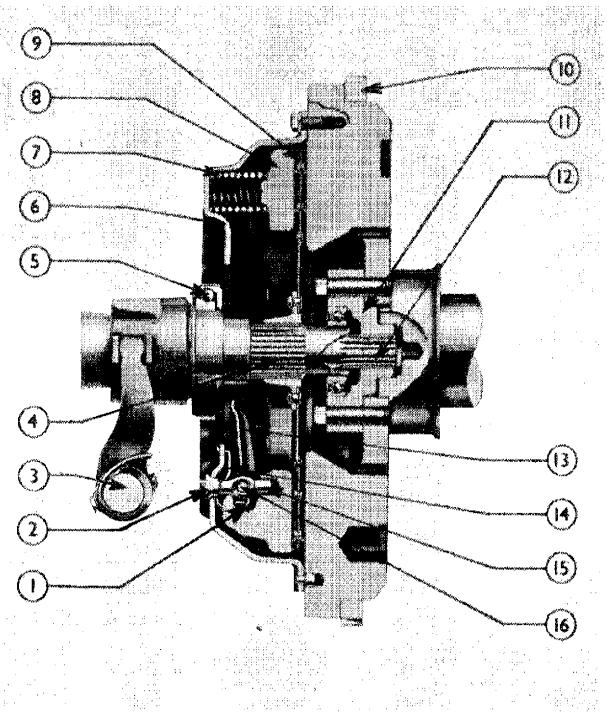

Figure 2
Ford 5000 Clutch with Independent P.T.O. Drive (Previous Type)

1. Strut
2. Nut
3. Cross-shaft
4. Transmission Input Shaft
5. Release Bearing
6. Cover
7. Pressure Plate Springs
8. Pressure Plate
9. Clutch Disc
10. Flywheel
11. P.T.O. Drive Plate
12. P.T.O. Input Shaft
13. Release Lever
14. Anti-rattle Spring
15. Eyebolt
16. Pivot Pin

2. IMPORTANT CHANGES

The type of clutch disc and pressure plate assembly used depends upon the tractor model concerned and when it was manufactured. Two distinct basic designs have been used and they are not interchangeable. The dates when the change was made from the previous to the current design varies for different models and different Assembly Plants, but a tractor may be identified externally as having a current design clutch if it has an external clutch pedal return spring as shown in Figure 3.

NOTE – Tractors with a previous design clutch had a clutch pedal return spring located inside the front compartment of the front transmission.

Clutch Discs (Previous Design)

Previous design clutch discs had continuous band linings of pressed or woven organic material and various types were used. Irrespective of the type used in original production the disc which should be installed in service on tractors where the pressure plate assembly is secured to the

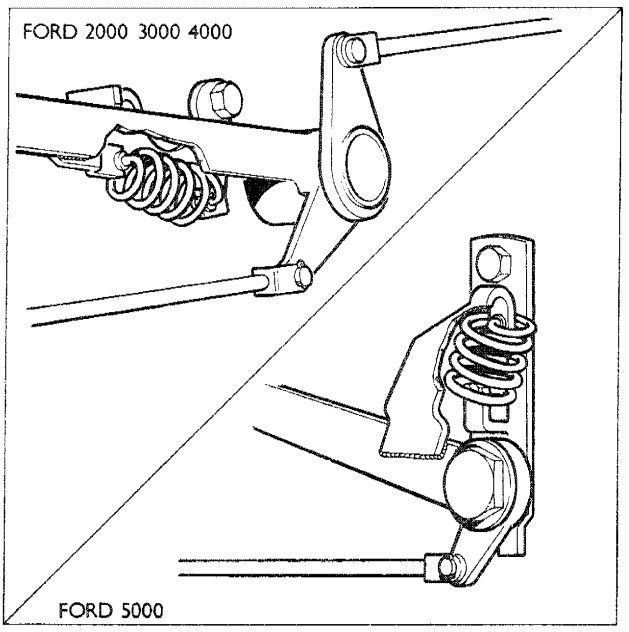

Figure 3
Clutch Pedal Return Springs (Current Tractors)

flywheel by eight bolts is the one which incorporates a torsion damped hub and grooved facings. Figure 4 illustrates two typical discs of this type, but it should be noted that the disc diameter and the build-up of the hub relative to the centre plate varies in accordance with the model concerned.

The following table shows the part numbers of these clutch discs.

Part Number	*Diameter*	*Model Usage*
C7NN-7550-V	11 in. (27.9 cm.)	2000/3000/4000 with Trans. P.T.O. and Less P.T.O.
C7NN-7550-AA	11 in. (27.9 cm.)	4000 with Independent P.T.O.
C7NN-7550-Z	12 in. (30.5 cm.)	5000 Standard
C5NN-7550-AV	13 in. (33.0 cm.)	5000 Heavy Duty

Points to note when installing a torsion damped hub type of disc as a replacement for a non-torsion hub type are:

1. Where a 12 in. (30.5 cm.) diameter disc is being installed on a Ford 5000, the two washers under the heads of the bolts which retain the pilot bearing in the P.T.O. drive plate should be changed to a thinner type, Part Number C7NN-7N424-A. These washers have a thickness of 0.04 in. (1.02 mm.) as compared to the original washers which had a thickness of 0.07 in. (1.78 mm.). Tighten these bolts to a torque of 100 to 110 lb. ft. (13.8 to 15.2 m.kg.) on re-installation.

As the torsion damped hub type of disc is thicker than the previous type disc, four spacers, Part Number C7NN-7C596-A, which have a thickness of 0.07 to 0.08 in. (1.8 to 2.0 mm.), must be installed between the cover of the pressure plate assembly and the flywheel. It will be necessary to also use longer fixing bolts, Part Number 304684-S8, to secure the cover to the flywheel. These bolts have a length of 1 in. (25.4 mm.) as compared to the original bolts which had a length of 0.875 in. (22.2 mm.).

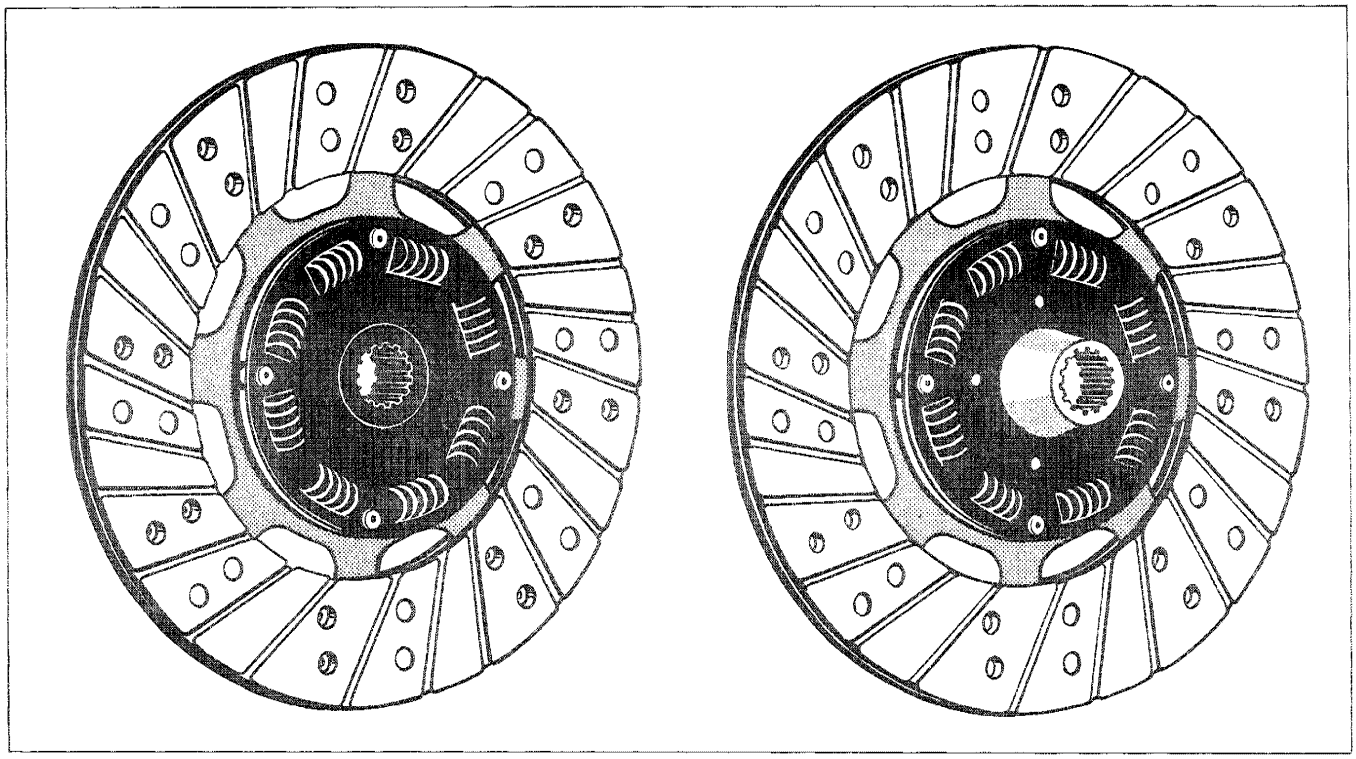

Ford 4000 with Independent P.T.O. **Ford 3000**

Figure 4
Typical Torsion Damped Hub Type Clutch Discs

© FORD MOTOR COMPANY LTD., 1970

2. Where a 13 in. (33 cm.) diameter torsion damped hub type of disc is being installed in place of an earlier 13 in. (33 cm.) heavy duty disc it will not be necessary to change the pilot bearing retaining washers but the spacers fitted originally between the pressure plate cover and the flywheel should be changed to a **thinner** type, Part Number C5NN-7N596-B. These have a thickness of 0.09 to 0.10 in. (2.3 to 2.5 mm.).

3. In all cases a check should be made after setting the correct clutch pedal free play that there is sufficient total travel of the clutch pedal to fully release the clutch disc when the pedal is depressed. On early models it may be necessary to increase the pedal total travel in order to obtain sufficient release.

On the Ford 5000 additional total travel may be obtained by removing metal from the bottom of the slot where the pedal passes through the foot-platform, Figure 5. On other models additional pedal travel may be obtained by removing metal from the upper stop on the platform, Figure 6.

Clutch Discs (Current Design)

The current types of clutch discs are illustrated in Figure 7. Two discs cover the complete range of current 2000, 3000, 4000 and 5000 agricultural tractors and both have a diameter of 11 in. (27.9 cm.). Both incorporate cera-metallic friction buttons on both sides of the disc. The disc used in the Ford 5000 has four pairs of buttons while the disc used in Ford 2000, 3000 and 4000 models has three pairs of buttons. The same disc is used in the Ford 5000 for standard and heavy duty applications.

These discs are not interchangeable with those used previously, i.e., they are only suitable for use where the pressure plate assembly is secured to the flywheel by six dowel bolts.

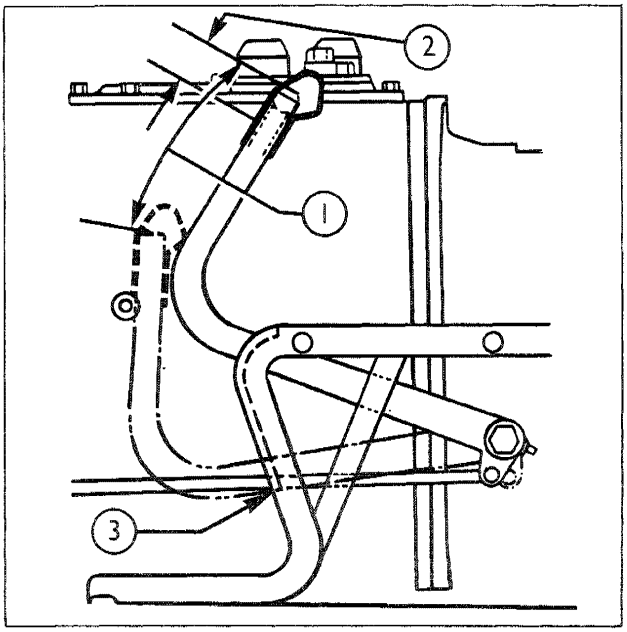

Figure 5
Clutch Pedal Total Travel – Ford 5000

1. Total Travel
2. Free Play
3. Pedal Lower Stop (Slot in platform)

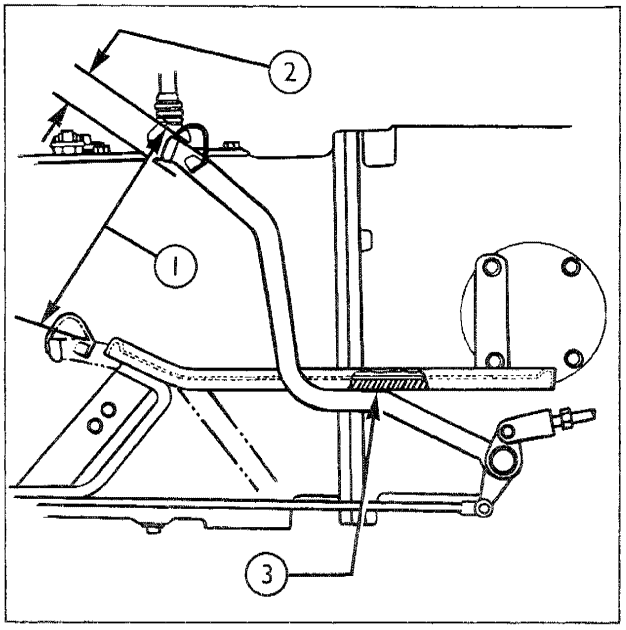

Figure 6
Clutch Pedal Total Travel – Ford 2000, 3000, 4000

1. Total Travel
2. Free Play
3. Pedal Upper Stop

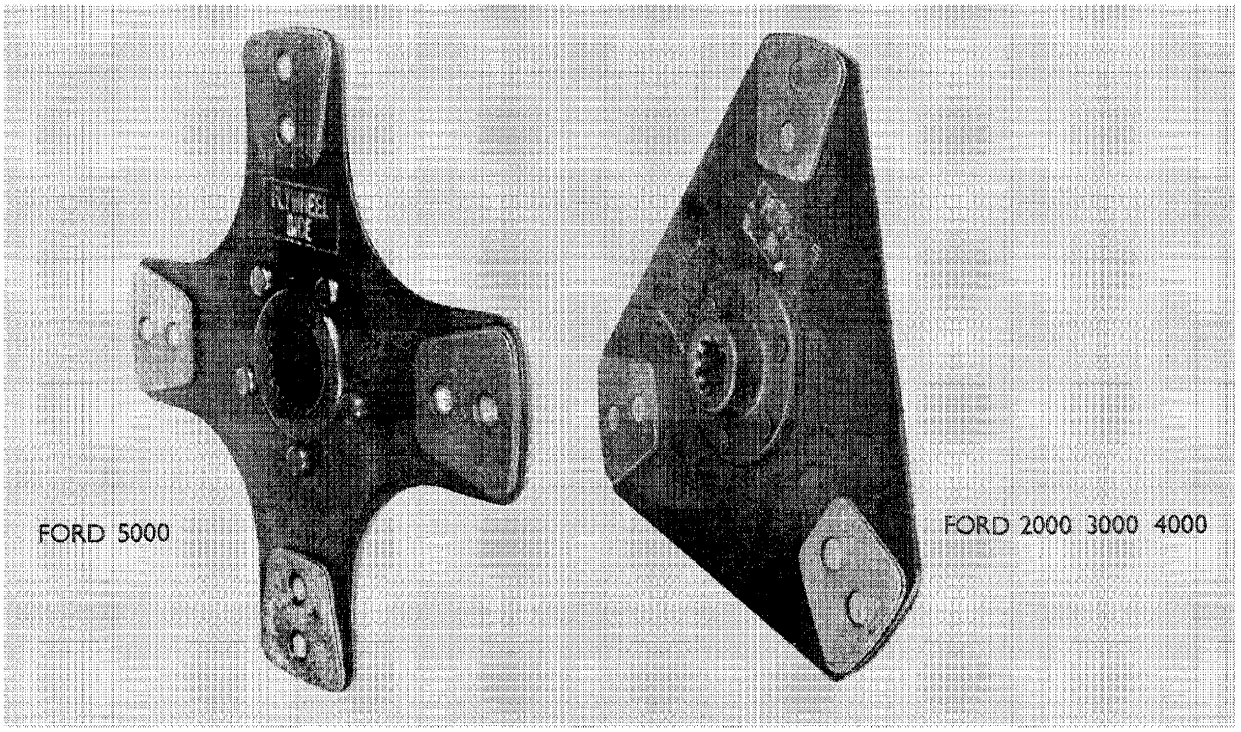

Figure 7
Cerametallic Button Type Clutch Discs

Clutch Pressure Plate Assemblies (Previous Design)
Typical previous design pressure plate assemblies are illustrated in Figures 8, 9, 10 and 11. They all comprise a pressed steel cover and a cast iron pressure plate loaded by coil springs which vary in number and specification in accordance with the size of clutch and the model concerned. Mounted on the pressure plate are release levers which pivot on floating pins, Figures 1 and 2. The pins are located in eyebolts which are fixed to the pressure plate and pass through the cover to which they are retained by adjustment nuts. Struts are interposed between lugs on the pressure plate and the outer ends of the release levers and anti-rattle springs are incorporated between the levers and the cover.

The standard and heavy duty pressure plate assemblies of the Ford 5000 differ from the assemblies used on other models in the method of transmitting the drive from the cover to the pressure plate, i.e., torque on a Ford 5000 clutch is transmitted through four sets of spring steel straps which are rivetted to the cover at one end and bolted to the pressure plate at the other, Figure 21. On the other clutches the drive is transmitted by lugs on the pressure plate which pass through slots in the cover, Figure 8.

All previous design pressure plate assemblies are located on the flywheel by two dowels and secured by eight fixing bolts. It should be noted that the dowels used with the 13 in. (33 cm.) heavy duty assembly are of unequal diameters and this pressure plate assembly can, therefore, only be installed in one position relative to the flywheel.

The 13 in. (33 cm.) heavy duty assembly also includes a release lever thrust plate which is held to the release levers by springs, Figure 11. Such a thrust plate is not used on the other assemblies.

Clutch Pressure Plate Assemblies (Current Design)
All current design pressure plate assemblies have a diameter of 11 in. (27.9 cm.) and all are secured to the flywheel by six dowel bolts. Four assemblies cover the complete range of Ford 2000, 3000, 4000 and 5000 tractors and their derivatives. The assembly used on the Ford 4000 with Independent P.T.O. differs from the others in that it incorporates a splined hub to transmit the drive to the P.T.O. input shaft. The other three assemblies differ only in the pressure ratifig of the main coil springs, see "SPECIFICATIONS", Chapter 4.

© FORD MOTOR COMPANY LTD., 1970

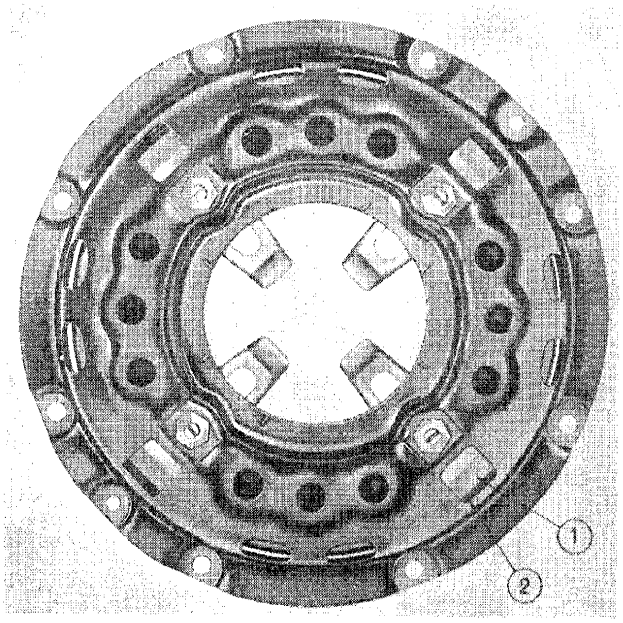

Figure 8
Previous Pressure Plate Assembly – Ford 3000
1. Pressure Plate Driving Lug 2. Cover Driving Slot

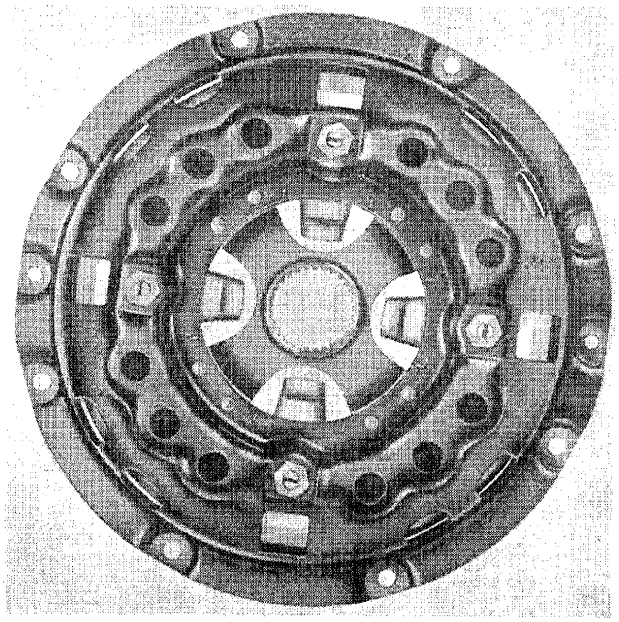

Figure 9
Previous Pressure Plate Assembly – Ford 4000 with Independent P.T.O.

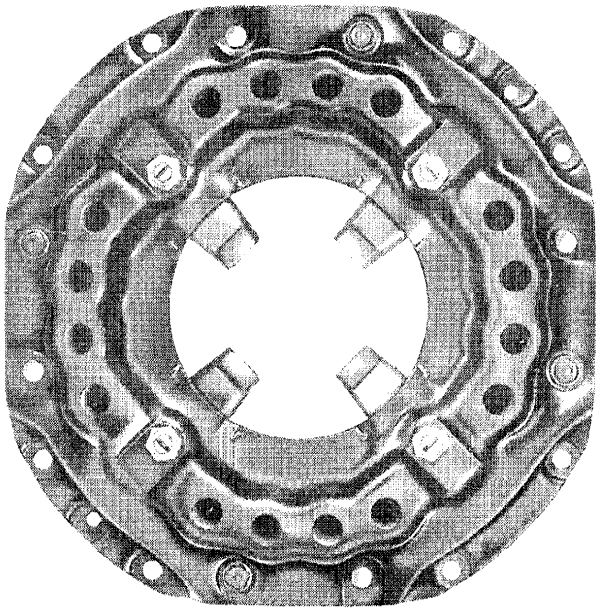

Figure 10
Previous Pressure Plate Assembly – Ford 5000 (Standard)

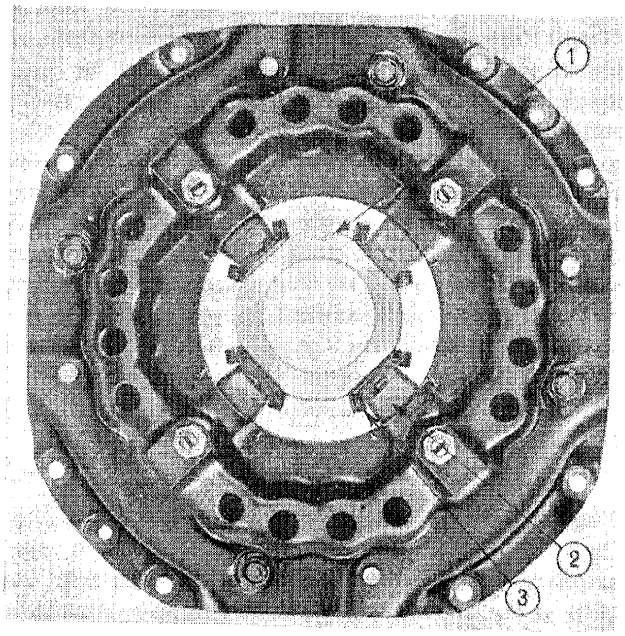

Figure 11
Previous Pressure Plate Assembly – Ford 5000 (Heavy Duty)
1. Release Lever Thrust Plate 3. Release Lever Spring
2. Release Lever

The following points should be noted in respect of these springs:—

1. Current clutches are manufactured at two different locations and colour marking on the springs vary

(*a*) in accordance with the source of manufacture

(*b*) in accordance with the model concerned.

It is not permissible to mix springs of differing colour marking in a pressure plate assembly.

2. Some pressure plate assemblies used in production on the Ford 5000 have spacers under the springs. If these springs are removed from the assembly during service overhaul and are subsequently re-installed, the spacers must also be reinstalled. The spacers will not be supplied for service and they must not be used where new service springs are being installed.

Figures 12 and 13 illustrate typical pressure plate assemblies, Figure 14 is a diagrammatic illustration of how the clutch operates and Figure 24 shows the component parts.

It will be noted that the main coil springs are not in direct contact with the pressure plate but are located between the pressure plate cover and a spring retainer which is connected by angle links to the release levers. As shown by diagram "A" Figure 14, in the "clutch engaged" position pressure from the springs is applied to the spring retainer which pulls on the angle links and draws the inner ends of the release levers rearwards. The outer ends of the release levers are in contact with adjusting screws which are threaded into the pressure plate and thus the pull on the inner ends of the release levers causes them to rotate around the pivot pins forcing the pressure plate forward to hold the clutch disc in contact with the flywheel.

Diagram "B", Figure 14, shows the condition when the clutch pedal is depressed. The inner ends of the release levers have now moved forward and the outer ends rearward. "C" shaped clips connect the outer ends of the release levers to the underside of the heads of the adjusting screws in the pressure plate and thus the rearward movement of the outer ends of the levers has pulled the pressure plate away from the clutch disc and released the clutch disc from the flywheel.

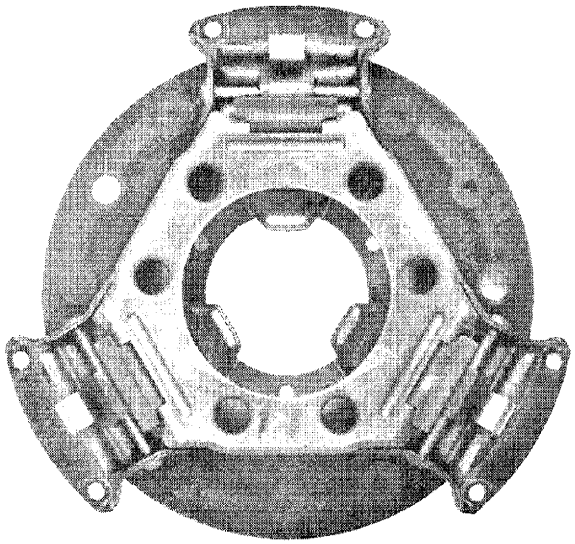

Figure 12
Current Pressure Plate Assembly
(Except Ford 4000 with Independent P.T.O.)

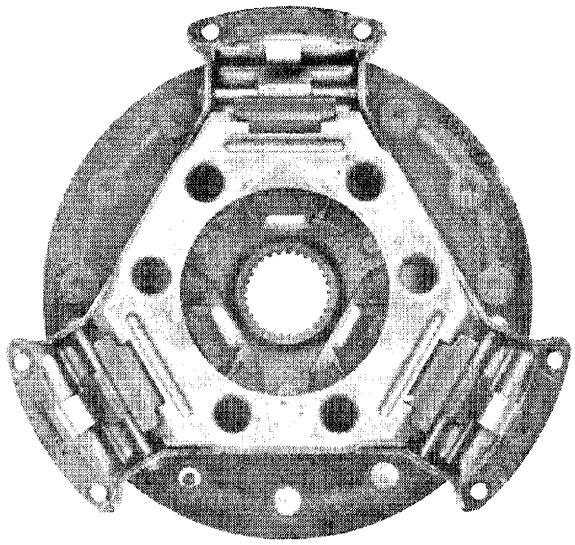

Figure 13
Current Pressure Plate Assembly
(Ford 4000 with Independent P.T.O.)

© FORD MOTOR COMPANY LTD., 1970

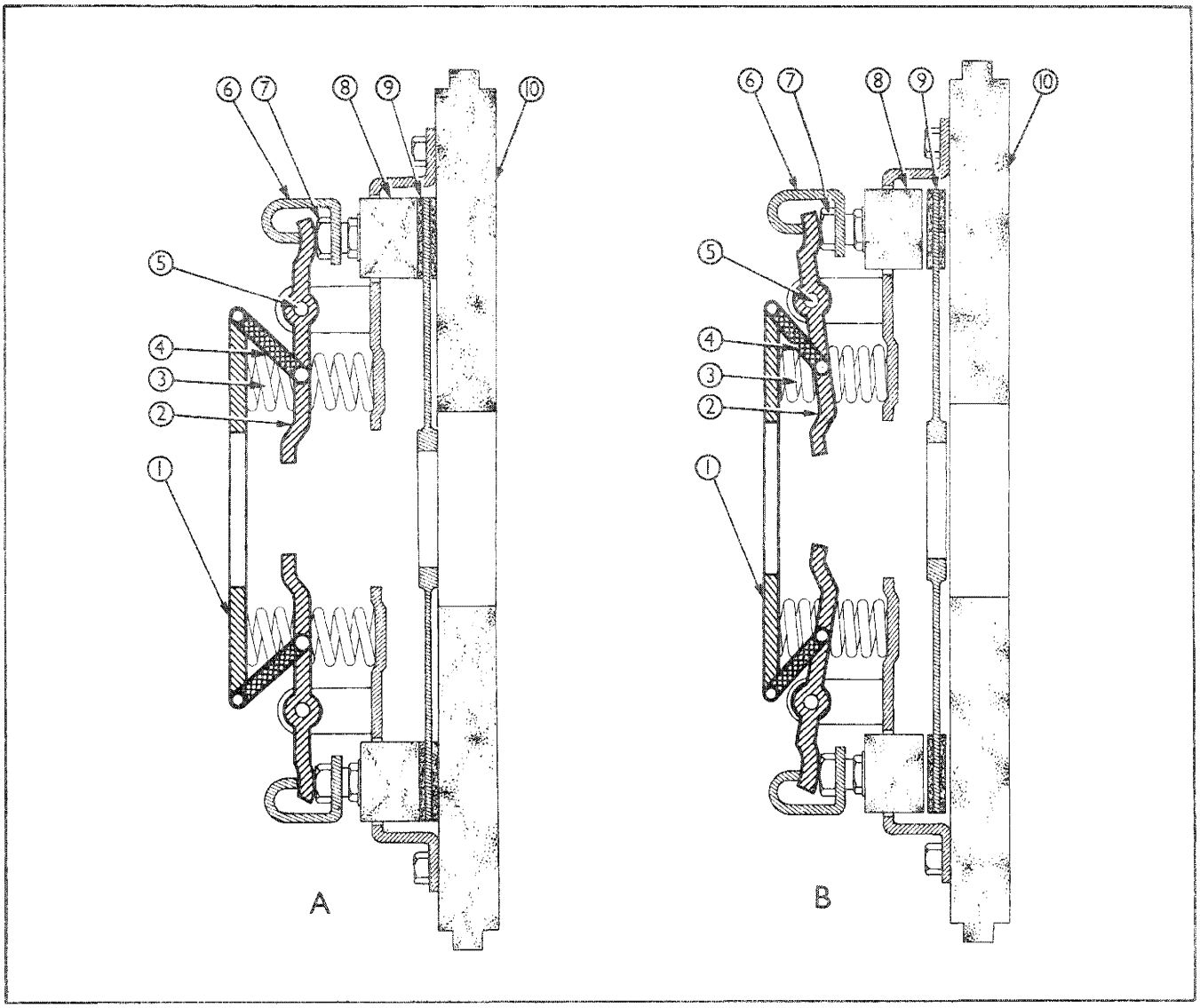

Clutch Engaged **Clutch Released**

Figure 14
Current Clutch Pressure Plate Assembly and Disc
(Diagramatic)

1. Spring Retainer
2. Release Lever
3. Pressure Plate Spring
4. Angle Link
5. Pivot Pin
6. Release Lever Retainer Clip
7. Adjusting Screw
8. Pressure Plate
9. Clutch Disc
10. Flywheel

3. ADJUSTMENTS

The only routine adjustment required is to check and, where necessary, adjust the clutch pedal free travel every 50 operating hours. The exact amount of free travel is listed under "SPECIFICATIONS", Chapter 4, and it should be noted that it varies in accordance with the model concerned and whether a previous or a current type clutch is incorporated. Clutch pedal free travel is the amount of movement from the fully released position of the pedal to the point where resistance is just felt – dimension "X", Figure 15.

To adjust the pedal free travel:

1. Remove the split pin, Figure 15, loosen the locknut and then remove the clevis pin.

2. Turn the clevis to increase or decrease the effective overall length of the release rod. Increasing the effective length will give greater free travel – reducing the length will give less free travel.

3. Re-connect the clevis to the clutch cross-shaft lever, Figure 15, and check the pedal free travel. Repeat the adjustment as necessary until the correct free travel is obtained then tighten the locknut and install a new split pin to retain the clevis pin.

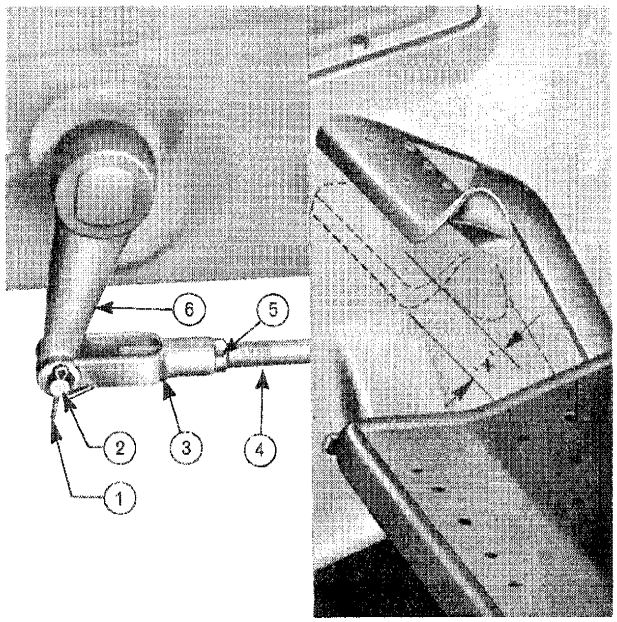

Figure 15
Clutch Pedal Adjustment
"X" – Clutch Pedal Free Travel

1. Split Pin
2. Clevis Pin
3. Clevis
4. Release Rod
5. Locknut
6. Cross-shaft Lever

4. SINGLE CLUTCH REMOVAL AND INSTALLATION

A. REMOVAL

1. Separate the front axle and engine as an assembly from the front transmission.

2. Remove the bolts securing the clutch pressure plate and cover assembly to the flywheel, and remove the pressure plate assembly and the clutch disc. Care should be taken to slacken the bolts progressively across the clutch to avoid distortion of the cover plate.

B. INSPECTION

Previous Type Clutch Disc and Pressure Plate

1. Inspect the clutch disc to make sure that the linings are not loose, cracked, worn or oil soaked, and that the rivets are secure. The disc should be discarded and a new one installed if there are signs of overheating due to clutch slippage or excessive wear, or if the friction faces are contaminated with oil. Investigate the source of any oil or grease on the facings and rectify before installing a new disc. Examine the pressure plate assembly to make sure the release levers are free to operate smoothly, and that the pressure plate and springs are not discoloured due to overheating. Check the face of the pressure plate for cracks, scoring and distortion.

Current Type Clutch Disc, Pressure Plate and Release Lever Assembly, and Flywheel

1. Inspect the cerametallic buttons of the clutch disc. If they are oil saturated, but abnormal wear is not present, they should be washed in a suitable solvent and the disc may then be reinstalled. It is a characteristic of this type of clutch disc for some signs of flaking and grooving of the buttons to be apparent immediately it is put to use. This is not detrimental to future operation of the disc providing the amount of wear and depth of grooving is not excessive. Only where the buttons are worn to within 0.010 in. (0.25 mm.) of the heads of the rivets will it be necessary to discard the disc and install a new one. Figure 16 illustrates

© FORD MOTOR COMPANY LTD., 1970

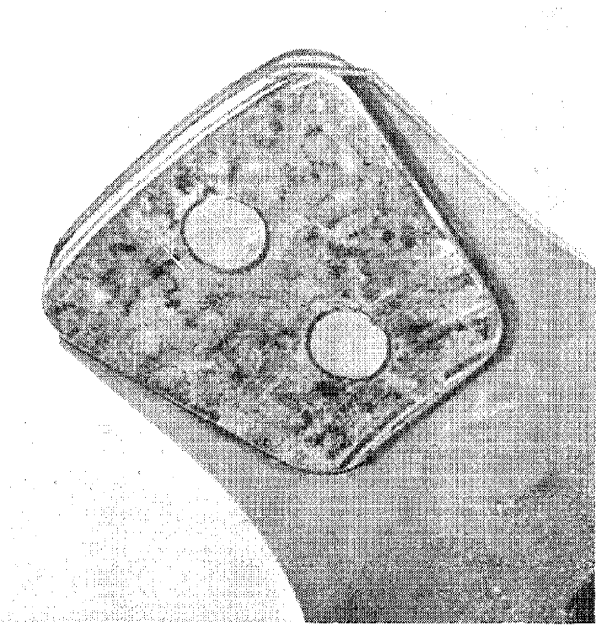

Figure 16
Clutch Disc Button – Partially Worn

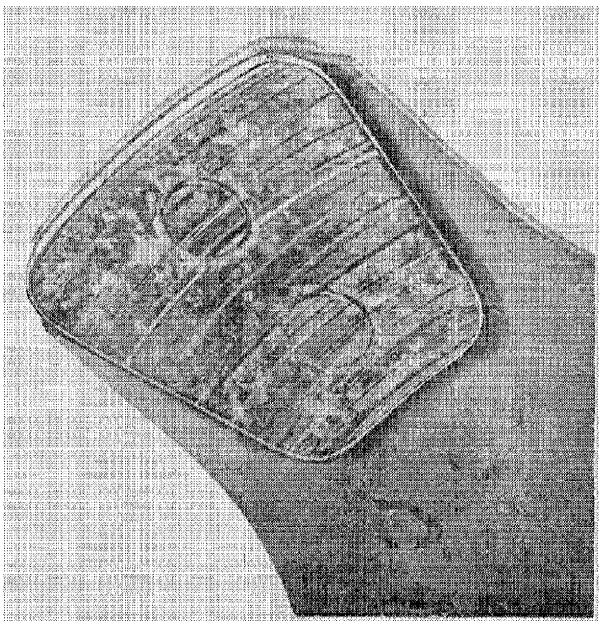

Figure 17
Clutch Disc Button – Excessively Worn and Scored

a cerametallic button of a disc which although showing signs of wear is still suitable for further use. Figure 17 shows one which has worn to the point where both the rivet heads and the sides of the cups containing the cerametallic material have contacted the pressure plate, and such a disc should not be re-installed.

It should be noted that it is normal for the buttons of a used clutch disc to have a dark blue appearance and a disc should not be discarded because of this.

2. Inspect the surfaces of the pressure plate and flywheel for grooving, cracking or distortion.

Grooving of the pressure plate is not considered to be detrimental unless the depth of the grooves exceeds 0.025 in. (0.64 mm.) in which case the pressure plate and release lever assembly should be discarded and a new assembly installed. Figure 18, for example, illustrates a pressure plate which although grooved is perfectly suitable for further use.

Similarly, grooving of the flywheel is not considered to be detrimental unless the depth of the grooves exceeds 0.025 in. (0.64 mm.). Where groove depth exceeds this amount the flywheel may be refaced providing that not more than 0.080 in. (2.03 mm.) of material is removed.

Short heat cracks on the pressure plate and flywheel surfaces are of no consequence providing they are not more than $\frac{3}{8}$ in. (9.5 mm.) in length and do not extend to the outside or the inside edges of the pressure plate or flywheel.

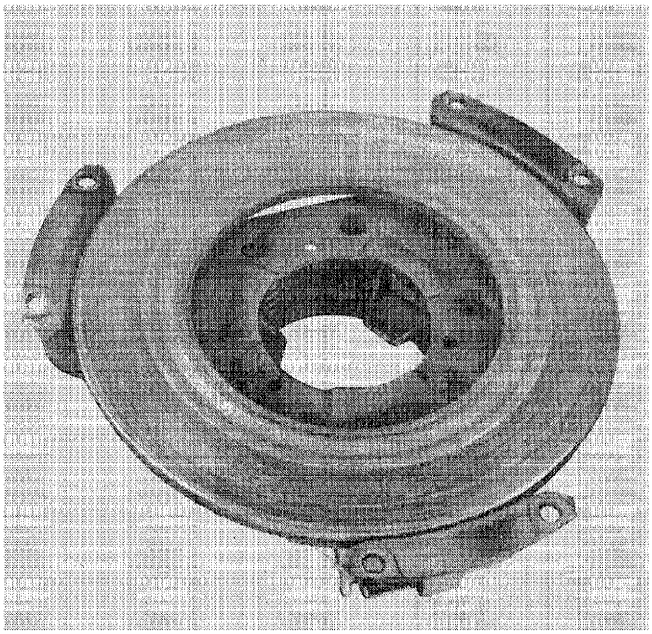

Figure 18
Pressure Plate – Scored but suitable for further use

C. INSTALLATION

It is important that all new pressure plate and clutch assemblies be checked and, if necessary, adjusted prior to installation in the tractor. Do not attempt to disassemble, assemble or adjust the clutch assembly without using the recommended service tools.

NOTE – If any adjustment is found to be necessary to the release levers of a current type pressure plate and cover assembly it will be necessary to remove the "C" shaped clips linking the release levers to the adjusting screws. Ensure that these clips are replaced correctly after adjustment with the lower end of each clip around the adjusting screw and seating under the head of the screw.

Where a new pressure plate and cover assembly is drawn from stock, the friction face of the pressure plate should be wiped with a rag which has been dipped in white spirit (Stoddard's solvent). The white spirit removes the preserving film of lanolin which would contaminate the disc facings if not removed.

Lightly lubricate the hub splines of the input shaft with a silicon grease prior to installing the clutch disc.

1. Position the clutch disc on the flywheel, centralizing it with a clutch locator tool, Figure 19, – see "SPECIAL TOOLS", Chapter 4, for clutch disc locator tool numbers and usage.

NOTE – Where a previous type clutch disc is being installed the side with the longer hub protrusion must face the pressure plate, except in the case of a Ford 4000 with Independent P.T.O. when the side with the longer hub protrusion must face the flywheel.

Where a current cermetallic button type of clutch disc is being installed on a Ford 2000, 3000 or 4000 tractor, the side with the longer hub protrusion should face towards the flywheel but on a Ford 5000 the side with the longer hub protrusion should face towards the pressure plate.

2. Locate the pressure plate assembly on the flywheel and install the locating bolts and lockwashers. Tighten the bolts evenly to the specified torque as listed under "SPECIFICATIONS", Chapter 4, then remove the disc locator tool.

NOTE – Where a 13 in. (33 cm.) diameter clutch disc, and also where a 12 in. (30.5 cm.) diameter torsion damped hub type of clutch disc, is installed on a Ford 5000 tractor, spacers are used between the clutch cover and the flywheel – for details see "IMPORTANT CHANGES", Section 2.

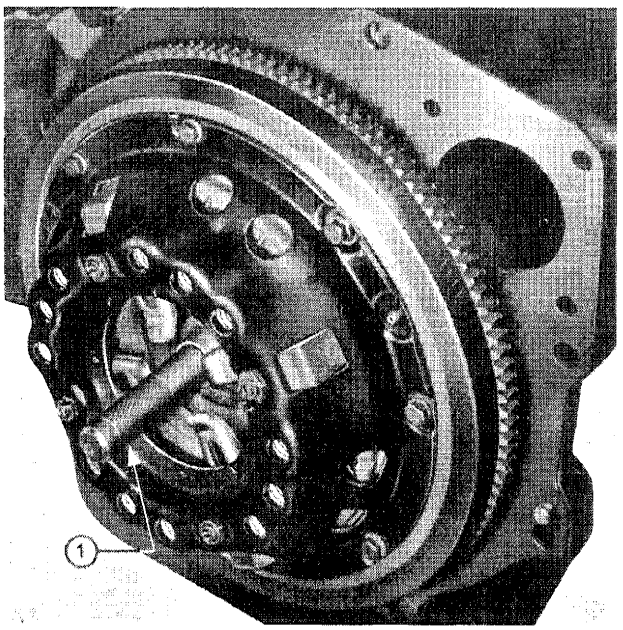

Figure 19
Installing Previous Type Clutch

1. Clutch Disc Locator Tool

3. Re-connect the front axle and engine assembly to the front transmission.

4. Check and adjust the clutch pedal free play. The amount of free play varies in accordance with the model concerned – see "SPECIFICATIONS", Chapter 4.

5. Check that there is sufficient total travel of the clutch pedal to ensure total release of the clutch when the pedal is fully depressed.

NOTE – Where a torsion damped hub type of disc is being installed as a replacement for a non-torsion damped type it may be necessary to modify the pedal stops on the foot platform – see "IMPORTANT CHANGES", Section 2.

5. OVERHAUL OF SINGLE CLUTCH PRESSURE PLATE ASSEMBLIES

Two clutch pressure plate overhaul and adjustment fixture tools have been developed. One of these, Tool Number SW12B, is available for all territories except the U.S.A. The other is available in the U.S.A. only and consists of a basic tool SW510, an adaptor kit SW511, and a spacer gauge SW510–5K.

Overhaul procedures using Tool SW12B are detailed in the following sub-sections A1 and B1, while those applicable when using tools SW510, SW511 and SW510–5K are detailed in sub-section A2 and B2.

© FORD MOTOR COMPANY LTD., 1970

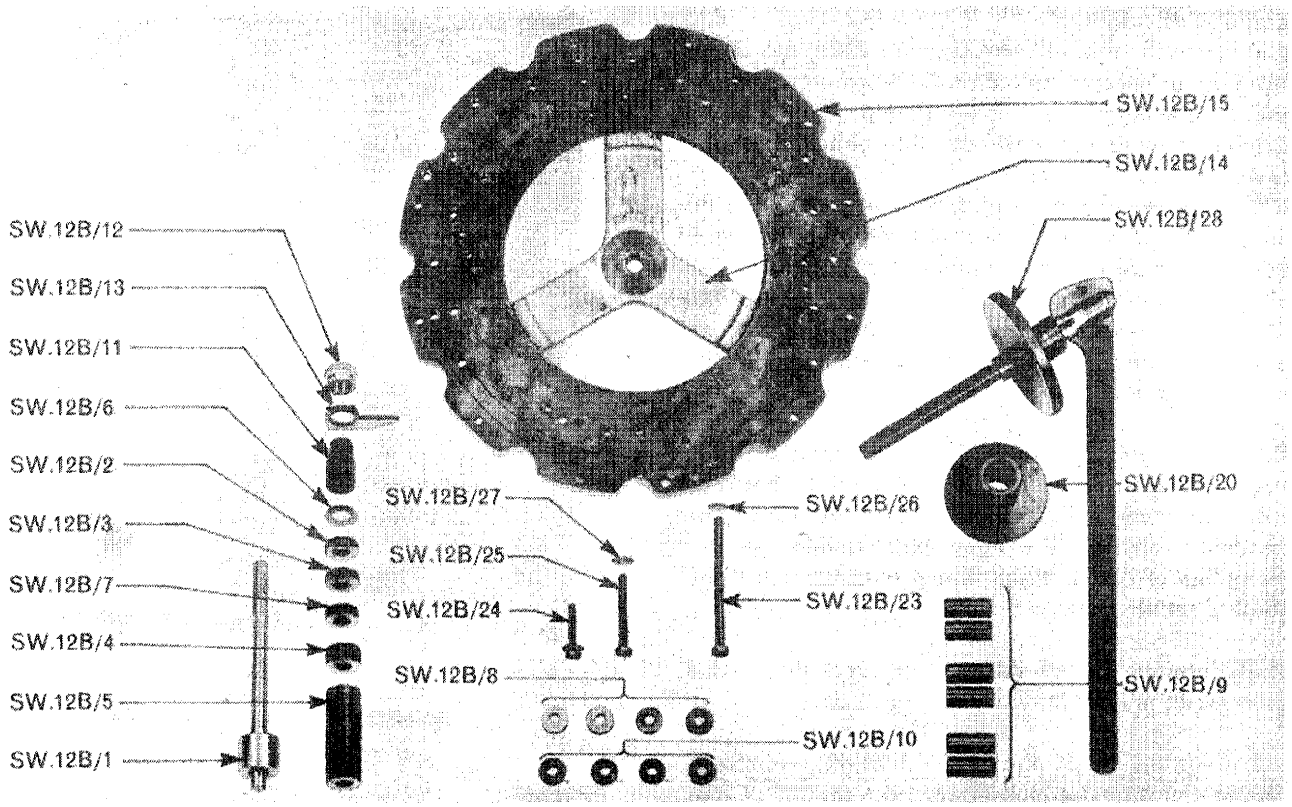

Figure 20
Clutch Pressure Plate Assembly Overhaul and Adjustment Tool No. SW12B

Component No.	*Description*	*Quantity*
SW12B/1	Pillar Spacer	1
SW12B/2	Centre Spacer	1
SW12B/3	Centre Spacer	1
SW12B/4	Centre Spacer	1
*SW12B/5	Centre Spacer	1
SW12B/6	Centre Spacer	1
SW12B/7	Centre Spacer	1
SW12B/8	Disc Spacers	4
*SW12B/9	Riser Spacer	6
SW12B/10	Disc Spacers	4
SW12B/11	Gauge Finger Body	1

Component No.	*Description*	*Quantity*
SW12B/12	Locknut	1
SW12B/13	Gauge Finger	1
SW12B/14	Bridge Spider	1
SW12B/15	Base Plate	1
SW12B/20	Actuator Cam Platform Extension	1
*SW12B/23	Bolt – $\frac{5}{16}$ in. Whit. × 5 in.	6
SW12B/24	Bolt – $\frac{5}{16}$ in. Whit. × 2 in.	8
SW12B/25	Bolt – $\frac{3}{8}$ in. Whit. × 3 in.	8
SW12B/26	$\frac{5}{16}$ in. Washers	8
SW12B/27	$\frac{3}{8}$ in. Washers	8
SW12B/28	Actuator Assembly	1

*For use in double clutch overhaul.

A1. DISASSEMBLY – Using Tool Number SW12B

Previous Type Clutches

1. Clean the pressure plate and cover assembly thoroughly then locate the assembly centrally on the base plate, Figure 21, with the four clutch disc spacers, SW12B/8 or SW12B/10 between the pressure plate and the base of the tool. Spacers SW12B/8 are for use when handling an 11 in. (27.9 cm.) clutch – spacers SW12B/10 when handling 12 in. (30.5 cm.) and 13 in. (33 cm.) clutches.

2. Secure the assembly to the base plate with the eight special tool bolts, Figure 21. Use special bolts SW12B/24

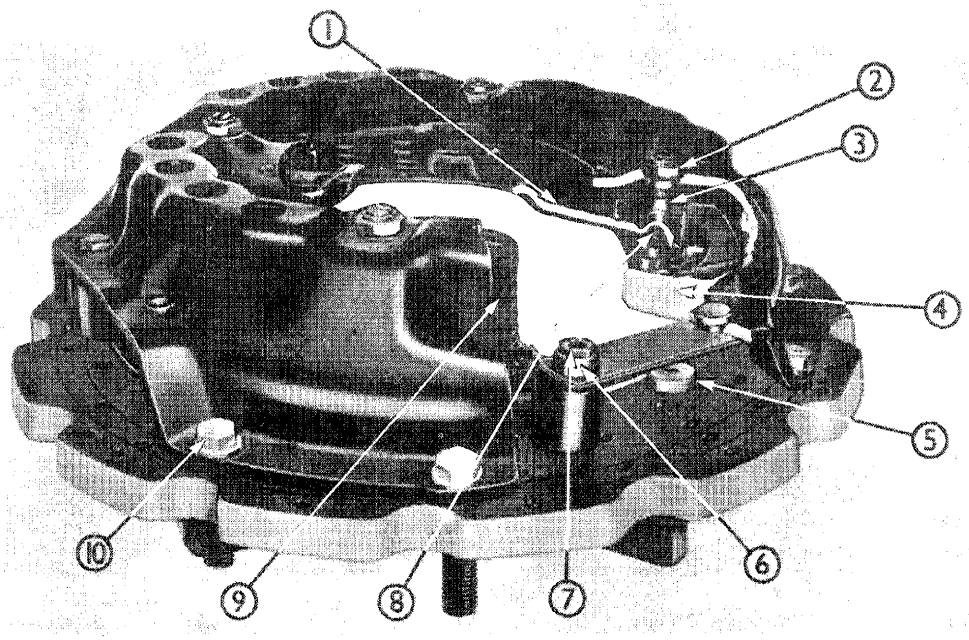

Figure 21
Cut-Away View of Previous 12 in. (30.5 cm.) Clutch on Base Plate of Tool No. SW12/B

1. Release Lever
2. Eyebolt Nut
3. Eyebolt
4. Pressure Plate
5. Tool Spacers (SW12B/10)
6. Ferrule
7. Drive Strap Bolt
8. Pivot Pin
9. Spring
10. Tool Bolts (SW12B/25)

with an 11 in. (27.9 cm.) clutch – bolts SW12B/25 with 12 in. (30.5 cm.) and 13 in. (33 cm.) clutches. Tighten the bolts evenly and diagonally across the clutch.

3. On 12 in. (30.5 cm.) and 13 in. (33 cm.) clutch assemblies, punch the ferrules, Figure 21, clear of the drive strap bolt heads and remove the bolts, using a socket through the holes in the cover.
On 13 in. (33 cm.) cover assemblies remove the release lever thrust plate and retaining springs, Figure 11.

4. Unscrew and remove the four nuts, Figure 21, which are staked to the release lever eyebolts.

5. Gradually slacken off the bolts retaining the pressure plate cover to the base plate of the tool until all spring pressure is released, then remove the bolts and the pressure plate cover.
NOTE – The bolts must be slackened evenly and diagonally across the clutch to prevent distortion of the cover.

6. Remove the coil springs from their locations on the pressure plate, Figure 21.

7. Hold the inner ends of the release levers, Figure 22, upwards against the eyebolts and move the struts until the eyebolts and release levers can be removed from the pressure plate.

8. Withdraw the eyebolts from the release levers and remove the pivot pins, Figure 21.

Current Type Clutches

1. Locate the pressure plate and cover assembly on the base plate of the tool and secure with six bolts SW12B/24. Disc spacers are not required between the pressure plate and the base plate of the tool during disassembly.

2. Remove the "C" shaped retaining clips, Figure 24, from the release levers using a screwdriver to press down the lower slotted end of each clip and thin nose pliers to pull it free from its location under the head of the release lever adjusting screw. Discard and renew on assembly.

3. Slacken the adjusting screw locknuts, Figure 24, and screw the adjusting screws into the pressure plate to allow the release levers greater movement.

4. Install actuator assembly SW12B/28 by screwing it into the bridge spider of the base plate until depressing the actuator lever fully produces a gap of 0·25 in. (6·4 mm.) between the corner of the spring retainer and the cover, see Figure 23.

CAUTION—The cam of the actuator lever must go "over-centre". Failure to observe this precaution could result in the lever being tripped upwards with considerable force.

© FORD MOTOR COMPANY LTD., 1970

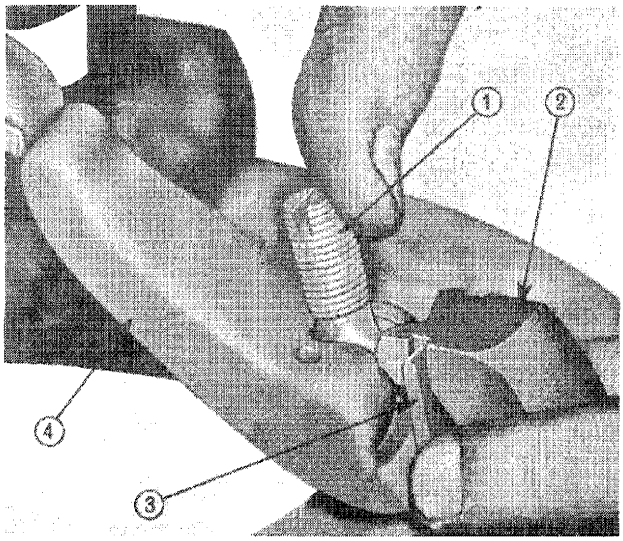

Figure 22
Removing Release Lever – Previous Clutch
1. Eyebolt
2. Pressure Plate
3. Strut
4. Release Lever

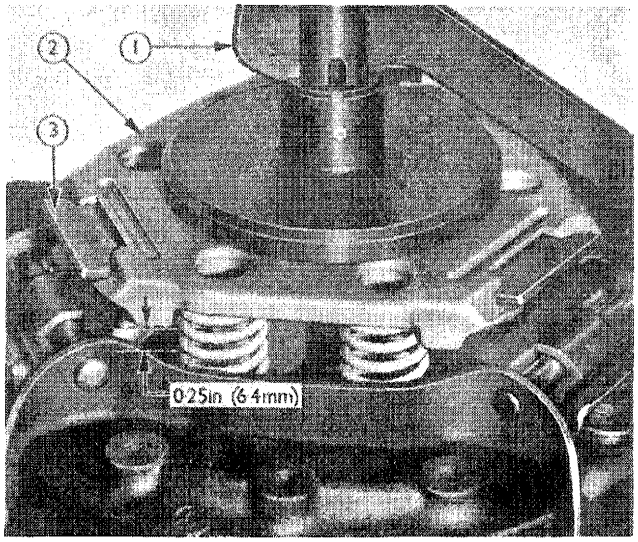

Figure 23
Removing Angle Link – Current Clutch
1. Actuator Cam
2. Spring Retainer
3. Angle Link

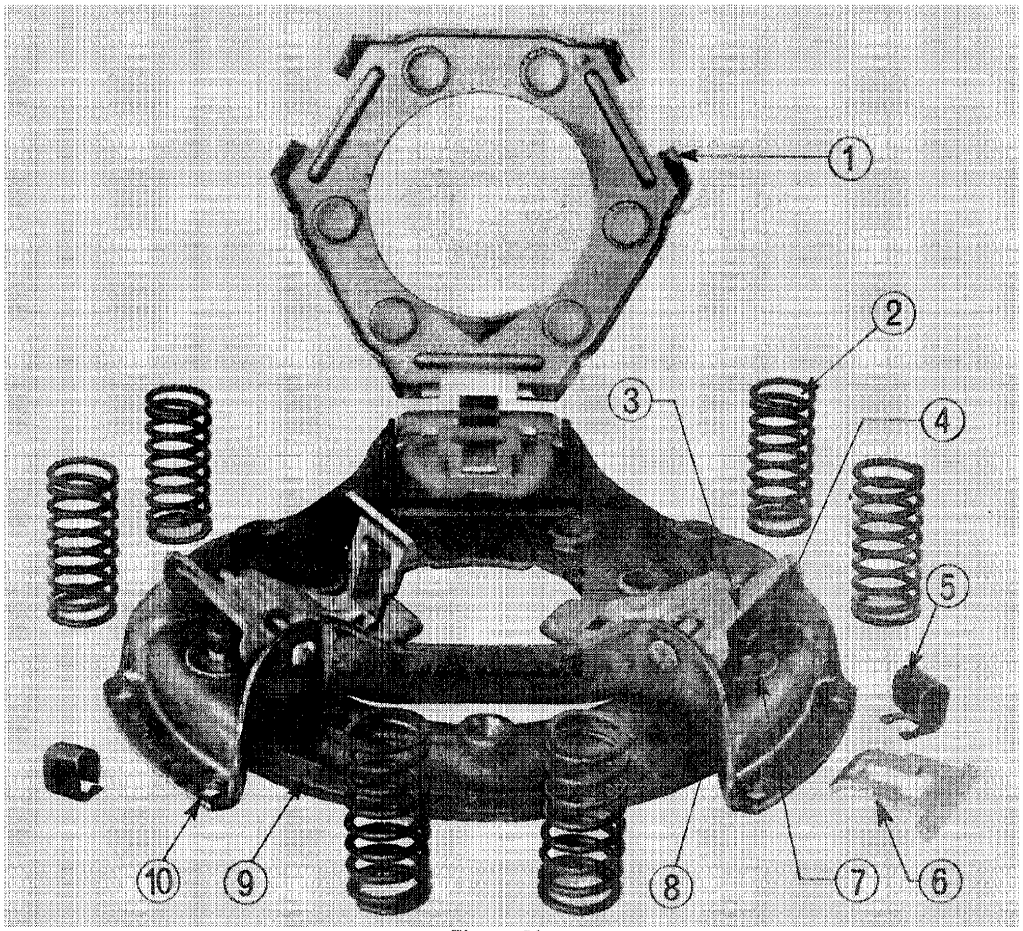

Figure 24
Pressure Plate Assembly Components (Current Type)
1. Spring Retainer
2. Spring
3. Release Lever
4. Locking Nut
5. Release Lever Retainer Clip
6. Angle Links
7. Washer
8. Adjusting Screw
9. Pressure Plate
10. Pressure Plate Cover

5. Push the angle links, Figure 23, from their location in the spring retainer. It may be necessary to release the actuator and screw it further into, or out of, the base plate spider in order to obtain the position which will completely free the angle links from the spring retainer.

6. Move the actuator lever upwards to its free position and remove it from the base of the tool.

7. Remove the spring retainer, Figure 24, the coil springs and the angle links.

8. Remove the adjusting screws, locknuts and washers, Figure 24, then separate the cover and release lever assembly from the pressure plate by removing the cover to tool base plate retaining bolts.
NOTE – Do not remove the release lever pivot pins and the release levers from the pressure plate cover. Absolute accuracy is necessary when installing these pins, and for this reason the pins, levers and cover are supplied for service as an assembly.

B1. ASSEMBLY—Using Tool Number SW12B
Previous Type Clutches
After overhaul the following parts should be lightly coated with silicon grease prior to re-assembly:—The plain end of the eyebolts, the eyebolt nut seats in the cover, the overall length of the release lever pivot pins, the contact edges of the release lever struts, the drive lug sides of the pressure plate of 11 in. (27.9 cm.) clutches, and the tips of the release levers where a release lever thrust plate is installed.

1. Position the pivot pins in the eyebolts and pass the threaded ends of the eyebolts through the release levers.

2. Place the struts in position under the lugs on the pressure plate end, holding the inner ends of the release levers towards the eyebolts, place the plain ends of the eyebolts in their locations in the pressure plate.

3. Position the coil springs on the bosses of the pressure plate.

4. Place the cover over the pressure plate making sure that the anti-rattle springs are correctly engaged in the cover and located over the release levers, Figure 21.

5. Position four of the appropriate disc spacers, Figure 21, on the base plate of the tool, one opposite each pair of mounting bolt holes. Use disc spacers SW12B/8 with an 11 in. (27.9 cm.) clutch and SW12B/10 with 12 in. (30.5 cm.) and 13 in. (33 cm.) clutches. Place the cover and pressure plate assembly on the spacers so that the holes in the cover line up with the appropriate holes in the base plate of the tool.

6. Install the eight special tool bolts, Figure 21, and tighten them down evenly until the cover meets the base plate. Use special bolts SW12B/25 with 12 in. (30.5 cm.) and 13 in. (33 cm.) clutches – use bolts SW12B/24 with an 11 in. (27.9 cm.) clutch.

7. Install new nuts onto the eyebolts. Screw each nut down until it is level with the top of the thread of the eyebolt.

8. On 12 in. (30.5 cm.) and 13 in. (33 cm.) assemblies, place new locking ferrules and drive bolts, Figure 21, into the drive straps and tighten to the specified torque (see "SPECIFICATIONS", Chapter 4) making sure that the ferrules are correctly located in the straps and pressure plate. Punch the ferrules over against the bolt heads to lock them in position.

9. Locate the actuator cam platform extension, SW12B/20, on the threaded pillar of the actuator with the flange of the extension facing downwards. Screw the actuator into the spider, SW12B/14, of the tool base until the flange of the extension contacts the clutch release levers, Figure 25.

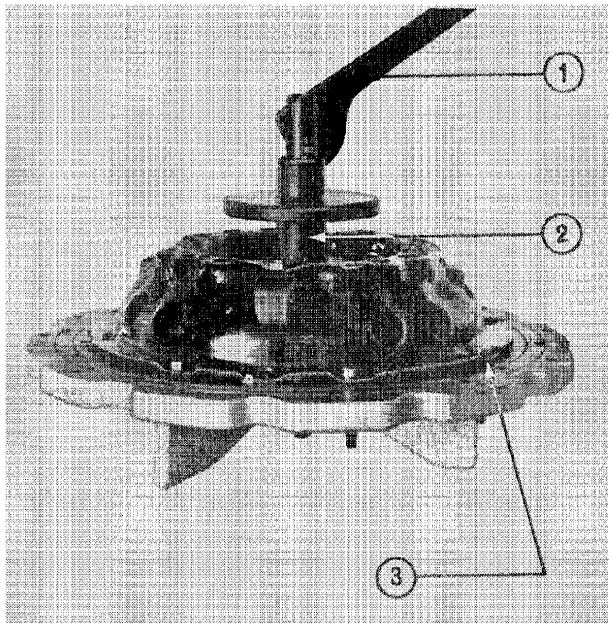

Figure 25
Setting Previous Type Clutch Mechanism
1. Actuator
2. Actuator Cam Platform Extension
3. Special Fixing Bolts

© FORD MOTOR COMPANY LTD., 1970

Operate the handle of the actuator to depress the clutch release levers and repeat several times to settle the clutch mechanism. Remove the actuator and extension.

10. Locate the pillar spacer, SW12B/1, in the bridge spider, SW12B/14, of the tool base and position the appropriate centre spacer over the pillar.

Figure 26 shows the spacer SW12B/4 which is used when adjusting a 12 in. (30.5 cm.) clutch. Different centre spacers are used with other clutches as indicated below.

Type of Clutch	*Tool Centre Spacer to be used*
11 in. (27.9 cm.) – Ford 4000 with Ind. P.T.O. ..	SW12B/2
11 in. (27.9 cm.) – except Ford 4000 with Ind. P.T.O.	SW12B/3
12 in. (30.5 cm.) – Ford 5000 standard	SW12B/4
13 in. (33.0 cm.) – Ford 5000 heavy duty	SW12B/6

Place the gauge finger body, SW12B/11, over the pillar and install the gauge finger SW12B/13, with ground side of finger facing downwards. Secure with tool locknut SW12B/12 as shown in Figure 26.

11. Rotate the finger over each release lever in turn and where necessary adjust the eyebolt nut until each release lever just touches the gauge finger. Remove the centre pillar spacer and finger gauge assembly.

12. Lock the eyebolt nuts of the clutch by staking the cylindrical portion of the nut into the slot in the eyebolt.

13. On the 13 in. (33 cm.) clutch install the release lever thrust plate and retaining springs.

14. Remove the cover to base plate retaining bolts and lift the pressure plate and cover assembly from the base plate. The pressure plate and cover assembly is now ready for installing in the engine.

Current Type Clutches

1. After overhaul the following parts should be lightly coated with silicon grease prior to re-assembly:
All contact points between the angle links and the spring retainer and between the angle links and the release levers.
The sides of the pressure plate driving lugs.
The release lever pivot pins.

2. Locate the pressure plate cover and release lever assembly over the pressure plate. Assemble the adjusting screw locknut to each adjusting screw and thread it up to the reduced section of the screw.

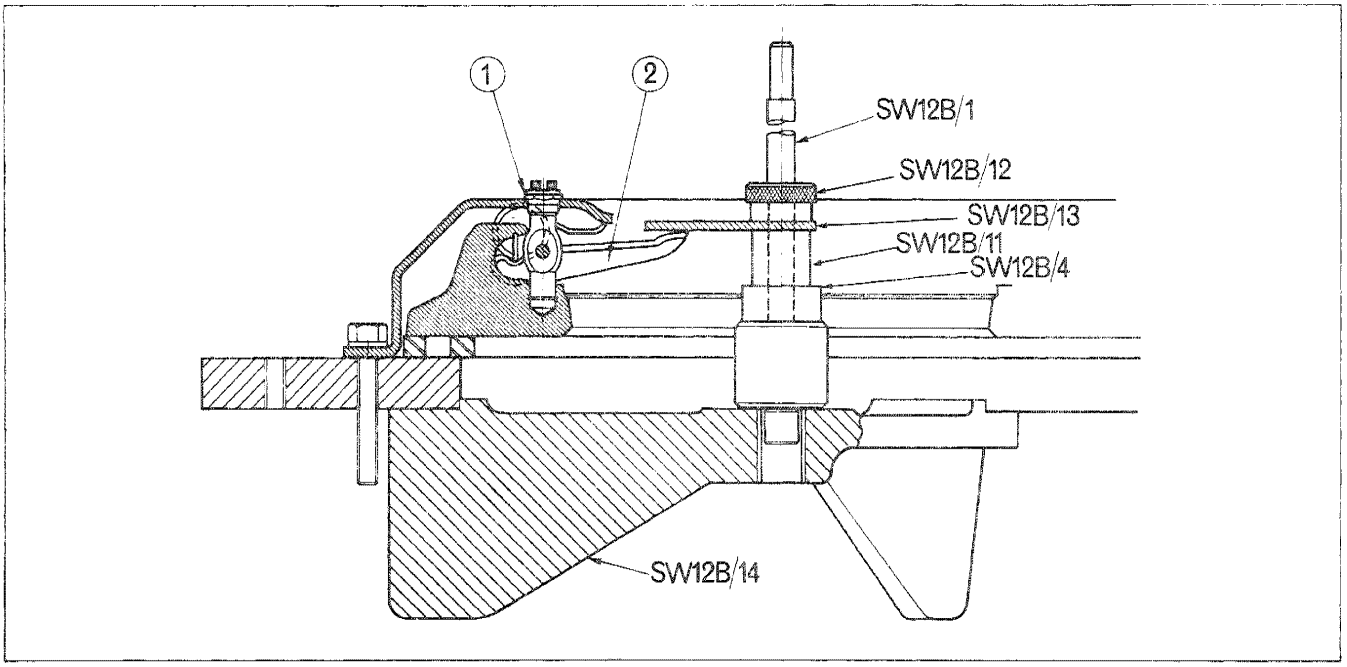

Figure 26
Adjusting Previous Clutch Pressure Plate Release Levers
1. Eyebolt Nut 2. Release Lever

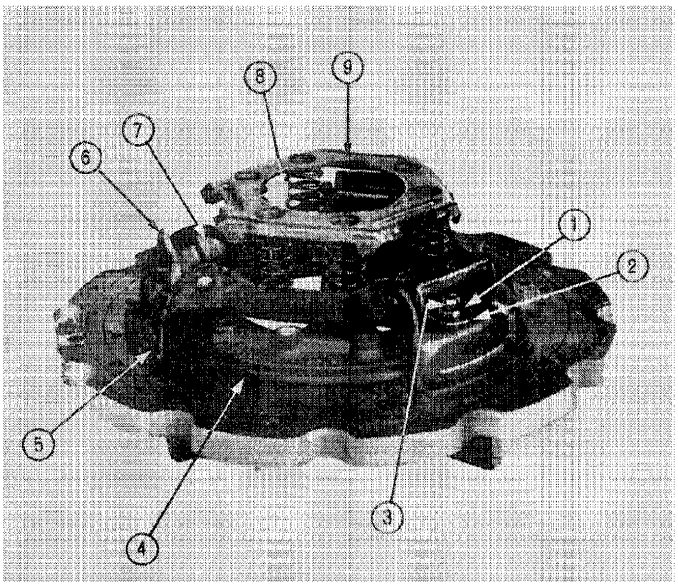

Figure 27
Current Clutch Pressure Plate Components

1. Locknut
2. Washer
3. Adjusting Screw
4. Pressure Plate
5. Cover
6. Release Lever
7. Angle Link
8. Coil Spring
9. Retainer

Place the appropriate washer on each screw and install the screws through the cover and into the pressure plate, Figure 27. Each adjusting screw must be fully screwed into the pressure plate to ensure adequate movement of the release levers during subsequent installation of the angle links.

3. Place the cover and pressure plate assembly on the base plate of tool SW12B. Install the special bolts, SW12B 24, to secure the cover to the base plate of the tool, but do not tighten at this stage.

4. Install the angle links, Figure 27, in the release levers.

5. Place the clutch coil springs in the cover and locate the spring retainer on the upper ends of the springs, Figure 27.

6. Install the actuator, SW12B/28, by screwing it into the bridge of the tool base, then pull the actuator lever down to compress the springs.

7. Lift the outer end of each angle link and locate it in the spring retainer.
Gradually release the actuator at the same time making sure that the angle links do not slip from their locations in the spring retainer. Remove the actuator.

8. Slacken the special tool bolts, SW12B 24, lift the clutch assembly and insert four disc spacers, SW12B/8,

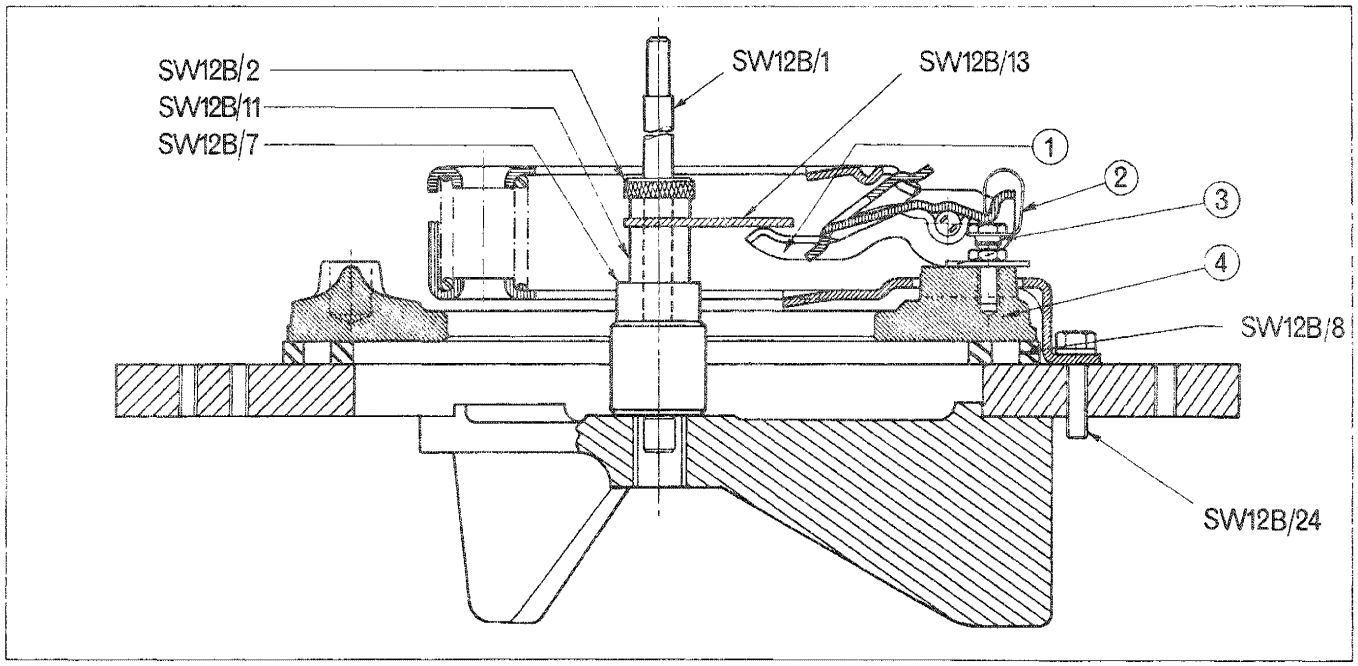

Figure 28
Adjusting the Release Lever Height - Current Clutch

1. Release Lever
2. Release Lever Retainer Clip
3. Adjusting Screw
4. Pressure Plate

© FORD MOTOR COMPANY LTD., 1970

between the pressure plate and the base of the tool, Figure 28. Fully tighten the cover to base plate securing bolts SW12B/24.

9. Install the pillar spacer SW12B/1, centre spacer SW12B/7, gauge finger body SW12B/11, gauge finger SW12B/13 and locknut SW12B/12. The ground side of the gauge finger must point downwards.

10. Move the gauge finger over the inner end of each release lever, Figure 28, and adjust the height of each release lever so that it just touches the gauge finger. As the adjusting screws, Figure 28, were screwed fully into the pressure plate during initial assembly, it will now be necessary to screw them back in order to bring the release levers up to the gauge finger.

11. After adjustment tighten the adjusting screw locknuts and recheck the height of the release levers then remove the gauge finger and pillar spacer assembly from the tool.

12. Install one of the "C" shaped release lever retainer clips over the outer end of each release lever and at the same time push the slotted end of the clip down and move it inward to locate around the adjusting screw. Ensure that the clip seats correctly on the underside of the screw head, Figure 28.

13. Remove the cover to base plate securing bolts and lift the pressure plate and cover assembly from the base plate.

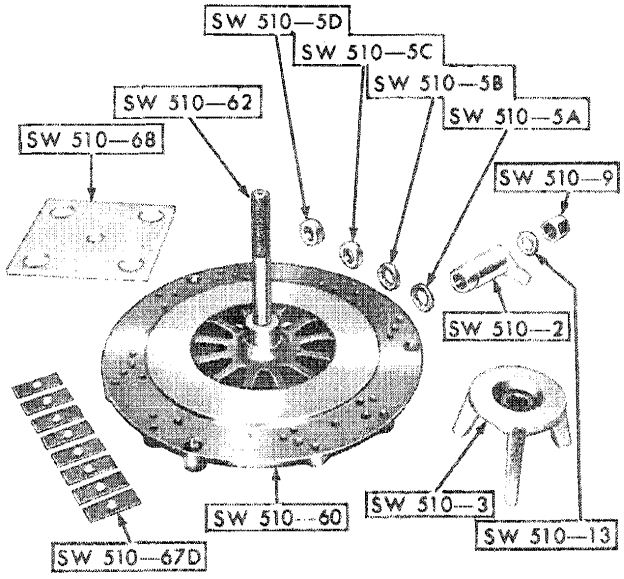

Figure 29
Tool No. SW510 Universal Clutch Fixture (Single Clutch Application)

A2. DISASSEMBLY—Using Universal Clutch Fixture SW510, Adaptor Kit SW511 and Gauge Spacer SW510-5K

Universal Clutch Fixture Tool SW510 contains all the necessary components to disassemble, assemble and adjust previous type single clutches and all double clutches.

NOTE – An additional tool Adapter Kit SW511 and Spacer Gauge SW510-5K are available for use with the SW510 tool when overhauling current type clutches.

Previous Type Clutches

Listed below and illustrated in Figure 29 are those component parts of Universal Clutch Fixture Tool SW510 which are used when overhauling previous type single clutches.

Component No.	*Description*	*Quantity*
SW510-60	Base Fixture	1
SW510-68	Plate–Adapter	1
SW510-3	Bridge–Spring Compressor	1
SW510-62	Spindle–Fixture	1
(1) SW510-5D	Spacer–Gauge	1
(2) SW510-5C	Spacer–Gauge	1
(3) SW510-5B	Spacer–Gauge	1
(4) SW510-5A	Spacer–Gauge	1
SW510-2	Gauge–Release Lever	1
SW510-13	Washer–Amplex Thrust	1
SW510-9	Nut–Spindle	1
(5) SW510-67D	Spacer–Shim	8
SW510-65	Nut–Jam (Not Shown)	1
SW510-66	Washer–(Not Shown)	1

(1) Used when adjusting the 12 in. (30.5 cm.) clutch.
(2) Used when adjusting the 13 in. (33.0 cm.) clutch.
(3) Used when adjusting the 11 in. (27.9 cm.) clutch.
(4) Used when adjusting the 11 in. (27.9 cm.) independent P.T.O. clutch.
(5) Used when adjusting the 12 in. (30.5 cm.) and 13 in. (33.0 cm.) clutch.

1. Insert the serrated end of the Fixture Spindle, Tool No. SW510-62, Figure 29, into the hub of the Fixture Base, Tool No. SW510-60. Position the fixture base on edge and install the Washer, Tool No. SW510-66 (not shown) and Jam Nut, Tool No. SW510-65 (not shown) on the end of the spindle that protrudes from the bottom of the base. Tighten the nut until the spindle bottoms in the hub.

2. Bolt the assembled Fixture Base, Tool No. SW510-60, Figure 29, to a work bench.
IMPORTANT – It is essential that the mounting area be level and the mounting bolts be torqued equally to eliminate the possibility of warping the fixture. It is also essential that the mating surfaces on the fixture base, and fixture components, be kept clean.

3. Thoroughly clean the mating surfaces on the clutch pressure plate and cover assembly in addition to cleaning the fixture base.

4. Place the assembled clutch pressure plate and cover assembly on the fixture base. Install the adapter plate, the bridge, the thrust washer, and the spindle nut as shown in Figure 30. Relieve the spring tension on the release levers by tightening the spindle nut until the clutch cover is drawn to the fixture base. During disassembly it will not be necessary to install the clutch cover-to-flywheel bolts, although they are shown installed. To prevent distorting the top of the clutch cover, do not overtighten the spindle nut.
NOTE – The step on the base of the fixture substitutes for the clutch disc assembly, therefore the disc is not required when using the Universal Clutch Fixture.

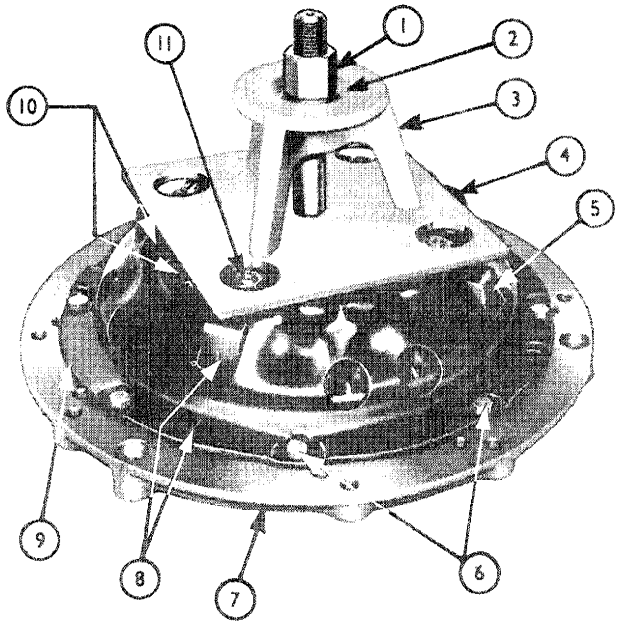

Figure 30
Servicing a Previous 11 in. (27.9 cm.) Clutch Using Fixture Tool No. SW510

1. Spindle Nut
2. Thrust Washer
3. Bridge
4. Adaptor Plate
5. Pressure Plate Lug
6. Cover to Flywheel Bolts
7. Fixture Base
8. Identification Marks
9. Cover
10. Spring Cups
11. Release Lever Eyebolt Nut

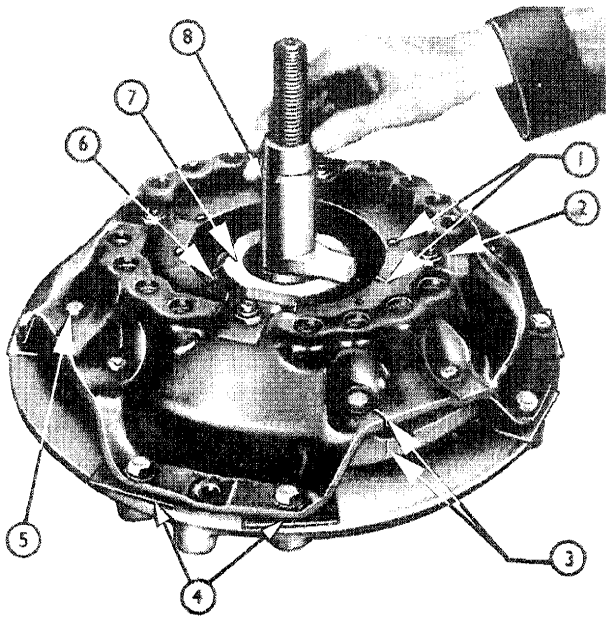

Figure 31
Adjusting Release Levers on a 13 in. (33.0 cm.) Clutch Using Tool No. SW510

1. Anti-rattle Spring
2. Release Lever Eyebolt Nut
3. Identification Marks
4. Shim Spacers
5. Drive Strap Locking Ferrule Bolt
6. Retaining Spring
7. Release Lever Plate
8. Release Lever Gauge

5. Remove the four release lever eyebolt nuts, Figure 30, after first "cleaning" the staked portion of the nuts from the slot in each eyebolt. Failure to "clean" the slots may result in stripped threads. On the 12 in. (30.5 cm.) and 13 in. (33 cm.) clutch, it will be necessary to remove the drive strap locking ferrule bolts, shown in Figure 31, in addition to removing the eyebolt nuts. Remove the locking ferrule bolts before removing the eyebolt nuts.

NOTE – It is suggested that the clutch cover, the clutch pressure plate, and the release levers be marked for identification purposes before the clutch is taken apart. Doing this will enable the parts to be re-installed in their original position and will maintain the balance built into the clutch.

6. Separate the clutch cover from the pressure plate by removing the spindle nut, the thrust washer, the bridge, and the adapter plate, Figure 30.

7. Remove the clutch pressure release springs from the pressure plate, then remove the release lever struts, the eyebolts, and the release levers by applying pressure to the levers and eyebolts as shown in Figure 22. Remove the eyebolts from the levers, and the pivot pins from the eyebolts.

© FORD MOTOR COMPANY LTD., 1970

Current Type Clutches

Listed below and illustrated in Figure 32 are the components of Adapter Kit SW511, Gauge Spacer SW510-5K and the detail parts of Universal Clutch Fixture SW510 which are used to overhaul the current type single clutches.

Component No.	*Description*	*Quantity*
SW510-60	Fixture Base	1
SW510-62	Fixture Spindle	1
SW510-65	Spindle Jam Nut (not shown)	1
SW510-66	Spindle Washer (not shown)	1
SW510-2	Release Lever Gauge	1
SW510-3	Spring Compressor Bridge	1
SW510-9	Spindle Nut	1
SW510-13	Thrust Washer	1
SW510-5K	Gauge Spacer 0.300 in.	1
SW511	Clutch Adapter Kit (consists of)	
SW510-69	Spacer Clamp	3
SW510-70	Clamp Bolts	3
SW510-71	Heavy Nut – $\frac{3}{8}$ in. × 16	3
SW510-72	$\frac{7}{16}$ in. S.A.E. Washer	6

1. Insert the serrated end of the Fixture Spindle, SW510-62, Figure 32, into the hub of the Fixture Base, SW510-60. Place the fixture base on edge and install the Washer, SW510-66 (not shown) and the Jam Nut, SW510-65 (not shown) on the end of the spindle protruding from the bottom of the fixture base. Tighten the nut until the spindle bottoms firmly in the hub.

2. Thoroughly clean the mating surfaces on the clutch pressure plate and cover assembly, in addition to cleaning the fixture base.

3. Install the three Bolts, SW510-70, with three Washers, SW510-72, through the bottom of the fixture base and position the Spacer Clamps, SW510-69, with the flat side downward, as shown in Figure 33.

4. Place the assembled clutch pressure plate and cover assembly on the fixture and center the assembly on the three Spacer Clamps, SW510-69.

5. Remove the three "C" shaped release lever retainer clips using two screwdrivers as shown in Figure 35. Discard and renew on assembly.

6. Install the Spring Compressor Bridge, SW510-3, Washer, SW510-13, and the Spindle Nut, SW510-9, as shown in Figure 34.

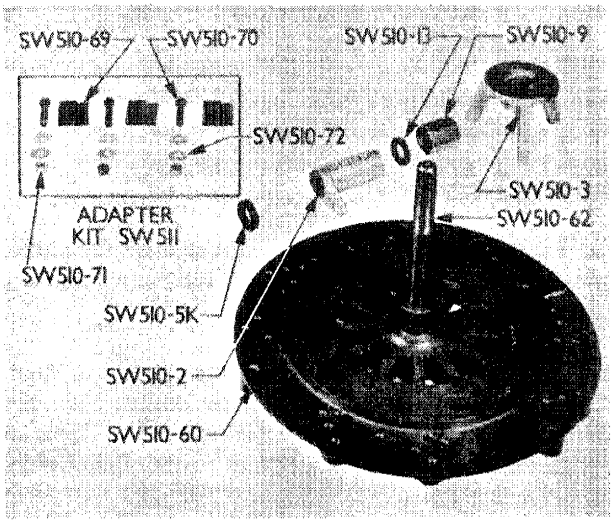

Figure 32
Universal Clutch Fixture, SW510, and Adaptor Kit, SW511

7. Slacken the adjusting screw locknuts and screw the adjusting screws into the pressure plate to allow the release levers greater movement.

8. Tighten the spindle nut to compress the springs until a gap of approximately $\frac{1}{4}$ in. (6 mm.) is produced between the corner of the spring retainer and the cover, see Figure 34, when the links may be disengaged from the spring retainer.

9. Be certain that all three release lever links are disengaged, then carefully loosen the spindle nut and remove the spring compressor bridge. Remove the spring retainer.

10. Remove the six pressure springs and the three release lever links, Figure 36.

11. Separate the cover assembly from the pressure plate by removing the three adjuster screws, locknuts, and flat washers.

B2. ASSEMBLY

Previous Type Clutches

The following parts should be lightly coated with a silicon grease prior to reassembly:—the plain end of the eyebolts, the eyebolt nut seats in the cover, the overall length of the release lever pivot pins, the contact edges of the release lever struts, the drive lug sides of the pressure plate of 11 in. (27.9 cm.) clutches and the release lever tips when release lever thrust plate is installed.

1. Insert the pivot pins in the eyebolts, then insert the threaded end of the eyebolts up through the release levers.

2. Place the release levers, eyebolts, and struts in position under the pressure plate lugs as shown in Figure 22. Apply

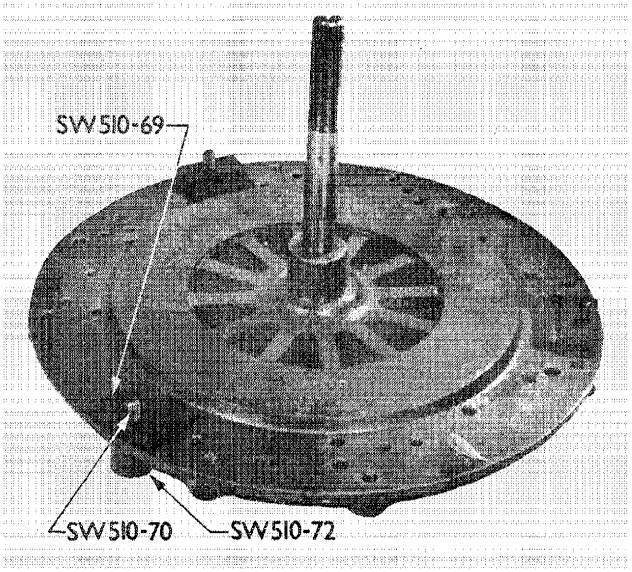

Figure 33
Spacer Clamps Positioned for Current Clutch Disassembly and Assembly

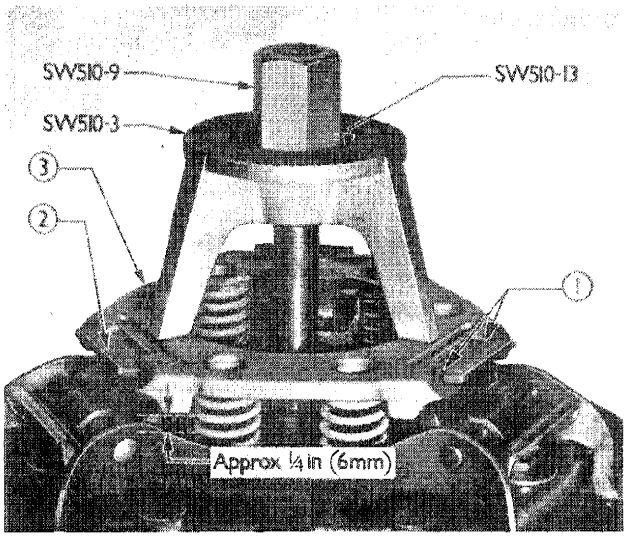

Figure 34
Removing Spring Retainer

1. "Notches"
2. Release Lever Links
3. Spring Retainer

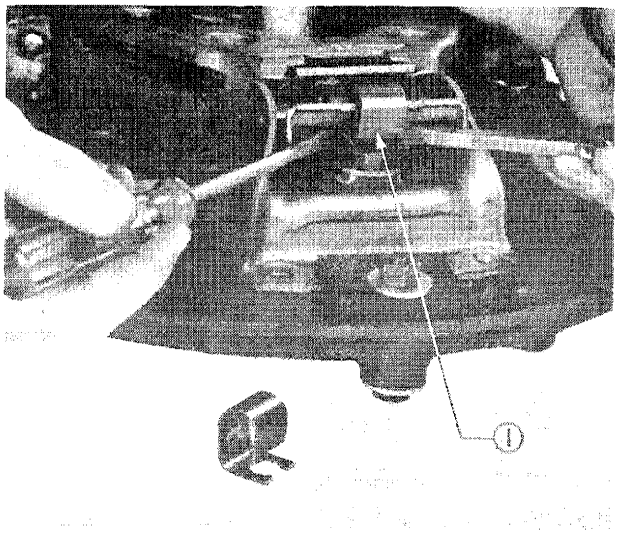

Figure 35
Removing Release Lever Retainer Clips

1. Clip

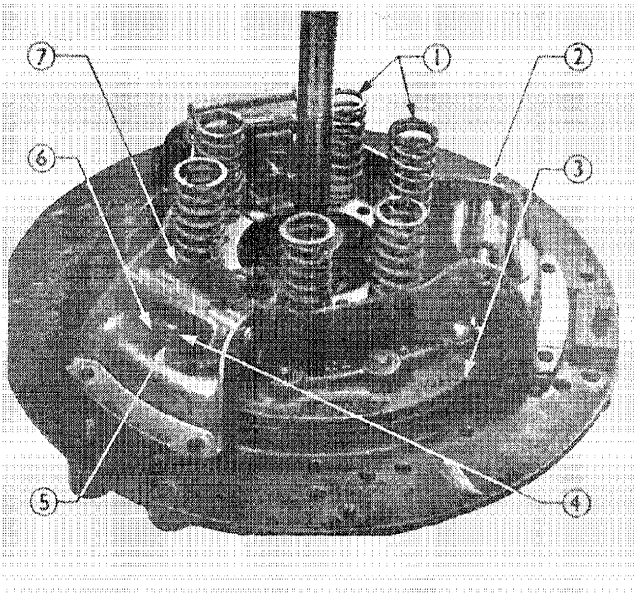

Figure 36
Pressure Springs and Release Lever Links

1. Pressure Springs
2. Cover Assembly
3. Pressure Plate
4. Adjuster Screw
5. Locknut
6. Flat Washer
7. Release Lever Link

© FORD MOTOR COMPANY LTD., 1970

pressure to the levers and eyebolts as shown, then slip the struts into place.

3. Place the assembled clutch pressure plate on the Fixture Base, Tool No. SW510-60, then position the clutch pressure release springs on the bosses of the plate. Position the clutch cover over the eyebolts and springs so the eyebolts pass through the holes in the cover and so the springs are seated in the "cups" of the cover, Figure 30. Check the anti-rattle springs, Figure 31, to see that they are seated against the release levers.

4. Rotate the assembly on the fixture base until the bolt holes in the clutch cover are in line with the mating holes in the fixture base, then drop the clutch cover-to-flywheel bolts, Figure 30, into place. The bolts are to be used as guides during this stage of assembly and need not be tightened. On the 12 in. (30.5 cm.) and 13 in. (33 cm.) clutches, it will be necessary to install one Shim Spacer, Tool No. SW510-67D under the clutch cover at the location of each clutch cover-to-flywheel bolt, as shown in Figure 31, before dropping the bolts into place. The drive strap locking ferrules as well as the ferrule bolts should also be installed, but not tightened.

5. Install the adapter plate, the bridge, the thrust washer, and the spindle nut, as shown in Figure 30. Slowly draw the clutch cover down over the pressure plate by tightening the spindle nut until the cover contacts the fixture base. Exercise care to prevent the lugs on the pressure plate, Figure 30, from catching on the cover. To prevent distorting the top of the clutch cover, do not overtighten the spindle nut.

6. After the clutch cover has made contact with the fixture base, complete the installation of the clutch cover-to-flywheel bolts, Figure 30, by torquing the bolts equally in a diagonally staggered manner. On the 12 in. (30.5 cm.) and 13 in. (33 cm.) clutches, torque the drive strap locking ferrule bolts, Figure 31, in the same manner. See Specifications Section, Chapter 4, for torque values.

7. After torquing the bolts, remove the spindle nut, the thrust washer, and the bridge, Figure 30. Install the applicable gauge spacer (see following listing) and the release lever gauge as shown in Figure 37. Install the gauge spacer so the identifying number is "up".

Component No.	*Clutch Application*
SW510-5A 0.200 in. (5.1 mm.)	11 in. (27.9 cm.) Independent P.T.O. Clutch
SW510-5B 0.255 in. (6.5 mm.)	11 in. (27.9 cm.) Clutch
SW510-5C 0.467 in. (11.9 mm.)	13 in. (33.0 cm.) Clutch
SW510-5D 0.550 in. (14.0 mm.)	12 in. (30.5 cm.) Clutch

8. Install the release lever eyebolt nuts, Figure 37. Raise the release levers by adjusting each eyebolt nut until a slight drag can be felt when the "foot" of the release lever gauge is rotated across the levers. Apply light pressure to the gauge to obtain an equal "feel" on each lever. When adjusting the 13 in. (33 cm.) clutch, be sure that the release lever plate, Figure 31, is attached to the release levers as shown. The "feel" on this clutch should be the same all the way around the release lever plate.

9. After the levers are adjusted, stake the cylindrical portion of each eyebolt nut into the slot of each eyebolt. Recheck the "feel" after staking, and if necessary, readjust the nuts until the "feel" is the same on each lever.

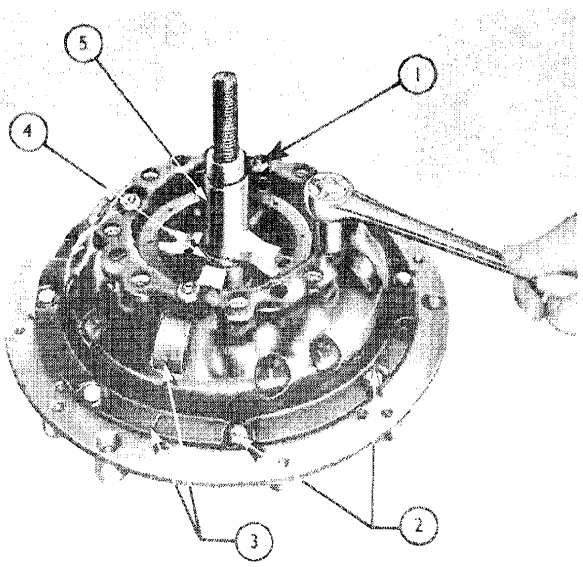

Figure 37
Adjusting Release Levers on an 11 in. (27.9 cm.) Clutch Using Tool No. SW510

1. Release Lever Eyebolt Nut
2. Clutch Cover to Flywheel Bolts
3. Identification Marks
4. Gauge Spacer
5. Release Lever Gauge

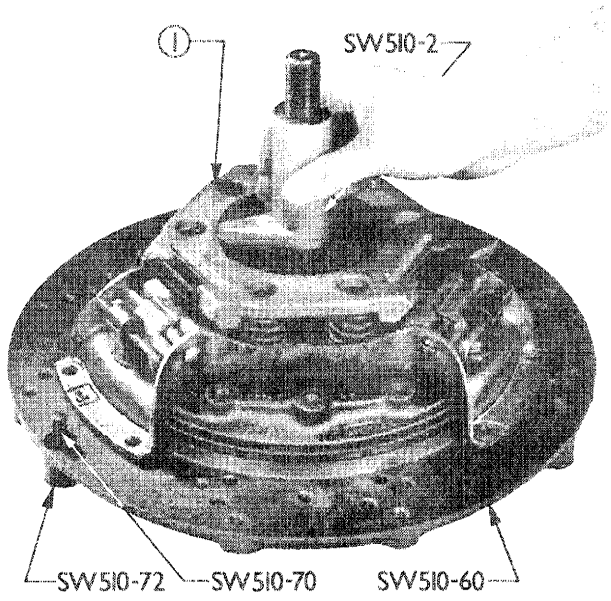

Figure 38
Centering Clutch Assembly on Fixture Base
1. Spring Retainer

10. Remove the release lever gauge and the gauge spacer, Figure 37. Re-install the adapter plate, bridge, thrust washer, and the spindle nut as shown in Figure 30. Tighten the spindle nut fingertight, then remove the clutch cover-to-flywheel bolts. After removing the bolts, remove the clutch from the fixture by removing the spindle nut, the thrust washer, the bridge, and the adapter plate. The clutch is now ready for installation on the flywheel.

Current Type Clutches

Before assembly the following parts should be lightly coated with silicon grease –

All contact points between the angle links and the spring retainer and between the angle links and the release levers.

The sides of the pressure plate driving lugs.

The release lever pivot pins.

1. Install the three Bolts, SW510-70, with Washer SW510-72, through the bottom of the Fixture Base, SW510-60, and position the Spacer Clamps, SW510-69, with the flat side downward as shown in Figure 33.

2. Place the pressure plate on the fixture base and secure the cover assembly to the pressure plate with the three adjusting screws, flat washers, and locknuts, Figure 36, Tighten the locknuts fingertight.

NOTE – When attaching the cover assembly to the pressure plate be certain that the square bosses on the plate engage with the three square holes in the cover assembly.

3. Position the three release lever links on the release levers as shown in Figure 36, and install the six pressure springs.

4. Position the spring retainer on the pressure springs being sure the springs are centered in the spring seats, Figure 34.

5. Install the Spring Compressor Bridge, SW510-3, Washer SW 510-13, and the Spindle Nut, SW510-9. Tighten the spindle nut, compressing the pressure springs until the release lever links may be engaged in the notches of the spring retainer.

NOTE – When compressing the springs, make certain that the spring retainer does not bind on the cover assembly. Clearance must be maintained between the plate and the cover at all sides.

6. Making sure the release lever links remain engaged, loosen the spindle nut to release the tension of the pressure springs.

CAUTION – Extreme care must be exercised to assure that the release lever links are engaged with the spring retainer prior to loosening the spindle nut.

7. Lift the pressure plate and cover assembly from the fixture and remove the nuts SW510-71, washer SW510-72 and spacer clamps SW510-69. Leave the bolts SW510-70 in position in the fixture base.

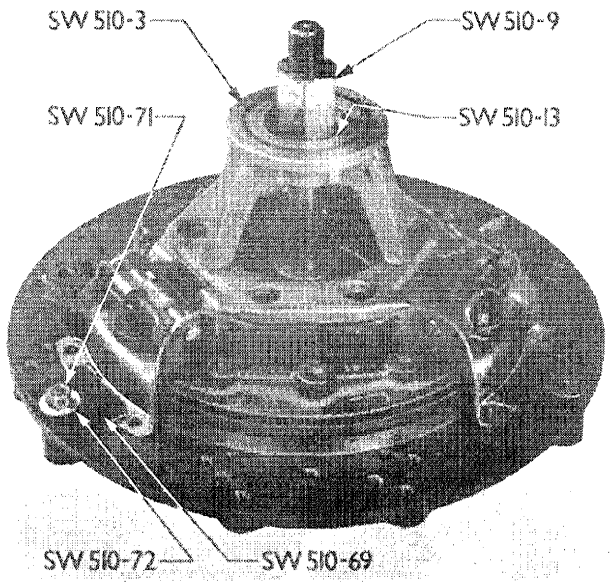

Figure 39
Securing Clutch Assembly to Fixture Base

© FORD MOTOR COMPANY LTD., 1970

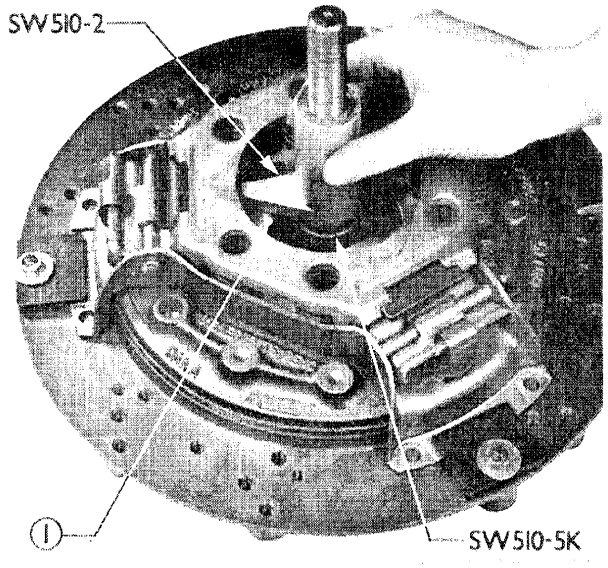

Figure 40
Checking Release Lever Height
1. Release Lever

8. Lower the pressure plate and cover assembly onto the fixture, and using Release Lever Gauge SW510-2 as shown in Figure 38, center the assembly on the fixture by rotating the gauge completely around the inside of the spring retainer. After the clutch is centered on the fixture base remove the release lever gauge.

9. Install the Spring Compressor Bridge, SW510-3, Washer, SW510-13, and the Spindle Nut, SW510-9, as shown in Figure 39.

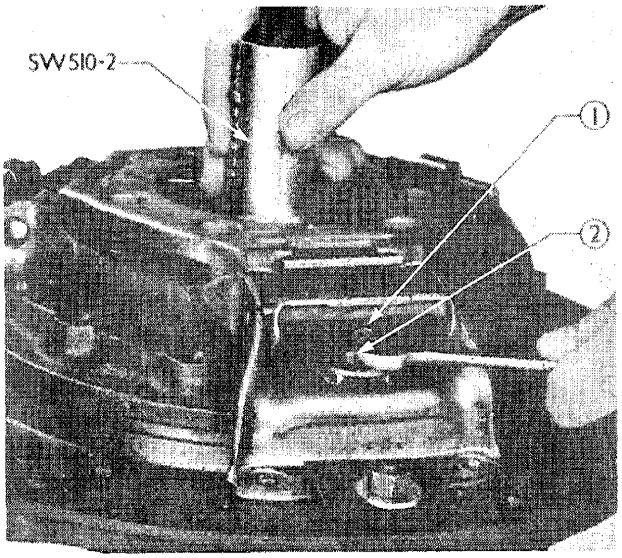

Figure 41
Adjusting Release Lever Height
1. Adjuster Screw 2. Locknut

10. Compress the clutch mechanism by tightening the spindle nut until the clutch cover contacts the fixture base, then install the three Spacer Clamps, SW510-69, Washers, SW510-72, and Nuts, SW510-71, as shown in Figure 39. Tighten the nuts securely. Remove the spindle nut, washer, and spring compressor bridge.

11. Place the Gauge Spacer, SW510-5K, on the spindle and install the Release Lever Gauge, SW510-2, as shown in Figure 40. Check the height of each of the three release levers by rotating the Release Lever Gauge, SW510-2, over each lever. A slight drag should be felt when the foot of the gauge is rotated across each release lever end.

12. Where a release lever requires adjustment loosen the locknut as shown in Figure 41, and raise or lower the release lever by turning the adjuster screw, while rotating the Release Lever Gauge, SW510-2, across the release lever end. Retighten the adjuster locknut.

13. Depress each release lever several times, then recheck the settings and readjust if necessary.

14. Install the release lever retainer clip using long-nose pliers, as shown in Figure 42. Make certain that each retainer clip is fully seated on the adjuster screw.

15. Install the spring compressor bridge, washer, and spindle nut, as shown in Figure 39, and fully compress the clutch mechanism.

16. Remove the three nuts, washers, and spacer clamps, then remove the spindle nut and spring compressor gauge, and remove the clutch assembly from the fixture base.

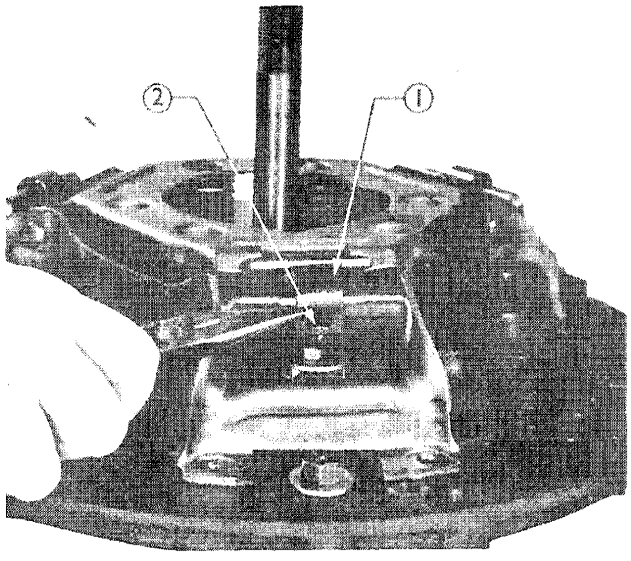

Figure 42
Installing Release Lever Retainer Clips
1. Release Lever Retainer Clip 2. Adjuster Screw

Part 4
CLUTCHES

Chapter 2
DOUBLE CLUTCHES

Section		*Page*
1.	Description and Operation	25
2.	Important Changes	28
3.	Adjustments	29
4.	Double Clutch Removal and Installation ..	30
5.	Overhaul Double Clutch Assembly	32

1. DESCRIPTION AND OPERATION

A. DESCRIPTION

A feature of the double clutch, which is available as an option in Ford 2000 tractors with 6-speed transmission and in Ford 2000 and 3000 tractors with 7-speed and 8-speed transmissions, is that it provides Live P.T.O. operation, thus permitting the drive to be disconnected from the main transmission, for gear changing purposes, without stopping the drive to the P.T.O.

As supplied for service, the double clutch assembly is comprised of one fixed and two movable pressure plates, a P.T.O. clutch disc, two sets of coil springs, three release levers, and three sets of linkage connecting the release levers to the pressure plate, all of which are enclosed in one cover. A transmission clutch disc is supplied separately for service and is installed between the double clutch assembly and the engine flywheel.

The transmission clutch disc, which has a diameter of 11 in. (27.9 cm.), transmits the drive from the engine to the transmission input shaft while the P.T.O. clutch disc, which has a diameter of 8.5 in. (21.6 cm.), transmits the drive to the P.T.O. input shaft.

Figure 43 illustrates the component parts of the double clutch together with the current type transmission clutch disc, and Figure 44 shows the installation on the engine flywheel.

The double clutch is attached to a recessed flywheel, Figure 44, by six dowel bolts and lock-washers. These bolts pass through both the cover and the intermediate pressure plate. Torque is transmitted to the transmission clutch pressure plate by three lugs on the plate which engage in slots in the intermediate pressure plate. Torque is transmitted to the P.T.O. clutch pressure plate by three lugs which engage in slots in the pressed steel cover.

Three release levers pivot on knife-edged fulcrum brackets which are attached to the pressed steel cover by rivets, one of which is extended upwards to act as a position post for the release levers. The release levers actuate the transmission pressure plate through struts and pairs of links which are attached by pins to the drive lugs of the transmission pressure plate.

The P.T.O. pressure plate connecting links are located between the transmission plate links and are attached to the P.T.O. pressure plate by pins which pass through slotted holes in the transmission plate links. The release lever struts bear on adjustable, socket-headed (Allen) screws in the tops of the P.T.O. pressure plate links.

Hardened spherical-headed screws, located at the inner ends of the release levers, provide adjustment for the levers. Adjusting the socket-headed (Allen) screws alters the gap between their hardened ends and the release lever struts. This gap determines how far the release levers travel before they actuate the P.T.O. clutch pressure plate.

© FORD MOTOR COMPANY LTD., 1970

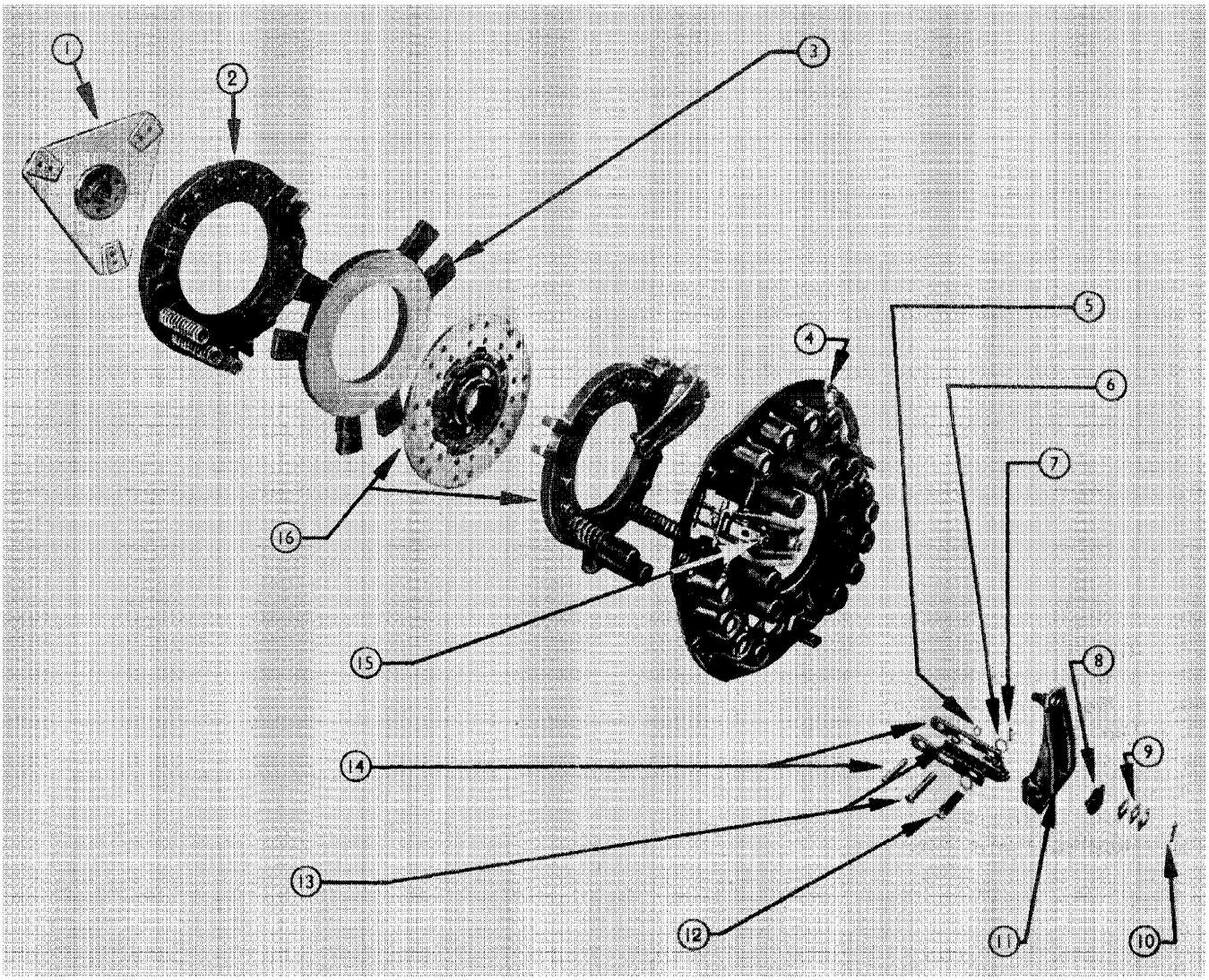

Figure 43
Double Clutch Components and Transmission Clutch Disc

1. Transmission Clutch Disc
2. Transmission Pressure Plate
3. Intermediate Pressure Plate
4. Cover
5. Snap Ring
6. Spacer
7. Cotter Pin
8. Clip
9. Shims
10. Cotter Pin
11. Release Lever
12. Strut
13. P.T.O. Pressure Plate Connecting Pin and Link
14. Transmission Pressure Plate Connecting Pin and Links
15. Socket Head Adjusting Screw
16. P.T.O. Clutch Disc and Pressure Plate

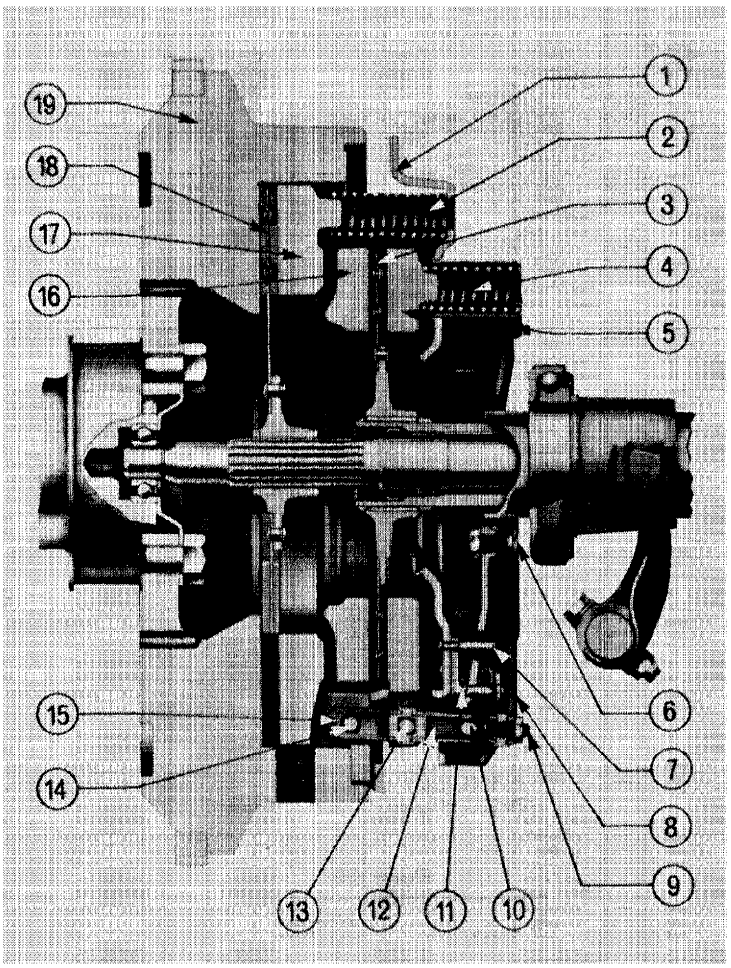

Figure 44
Double Clutch Installation

1. Cover
2. Transmission Clutch Spring
3. P.T.O. Clutch Disc
4. P.T.O. Clutch Spring
5. P.T.O. Pressure Plate
6. Release Lever Adjusting Screw
7. Position Post
8. Release Lever
9. Socket-Headed Adjusting Screw
10. Strut
11. Fulcrum Bracket
12. P.T.O. Pressure Plate Link
13. P.T.O. Pressure Plate Link Pin
14. Transmission Pressure Plate Link Pin
15. Transmission Pressure Plate Link
16. Intermediate Pressure Plate
17. Transmission Pressure Plate
18. Transmission Clutch Disc
19. Flywheel

B. OPERATION

When both clutches are engaged, Figure 45 (view "A"), the drive from the engine is transmitted to both the transmission input shaft and the P.T.O. input shaft. By depressing the clutch pedal through approximately half its total travel the transmission clutch pressure plate is withdrawn, Figure 45 (view "B"). This releases the transmission clutch disc from the flywheel and disconnects the drive to the transmission. The P.T.O. clutch will still be engaged thus maintaining the drive to the P.T.O. while transmission gear changes are being made.

By depressing the clutch pedal through the remainder of its travel, the P.T.O. pressure plate is also withdrawn, Figure 45 (view "C"), releasing both the transmission disc and the P.T.O. disc and disconnecting the drive to the transmission and P.T.O.

NOTE – The clevis between the clutch operating rod and the clutch cross-shaft lever of current production tractors has only one pair of holes for the connecting pin. On earlier tractors the clevis had two pairs of holes, and for normal operation requiring movement of the tractor and operation of the P.T.O., the connecting pin is inserted through the rear holes in the clevis. Where, however, the P.T.O. is not required for the field operation being undertaken, the connection is made through the front holes in the clevis thus limiting the total amount of pedal travel so that only the transmission clutch is released when the clutch pedal is fully depressed.

Where a two position clevis is incorporated, the connection to the clutch release cross-shaft lever should always be made through the rear holes in the clevis when the P.T.O. is being used. This will ensure that the P.T.O. may be readily stopped in an emergency by merely depressing the clutch pedal through the whole of its travel.

© FORD MOTOR COMPANY LTD., 1970

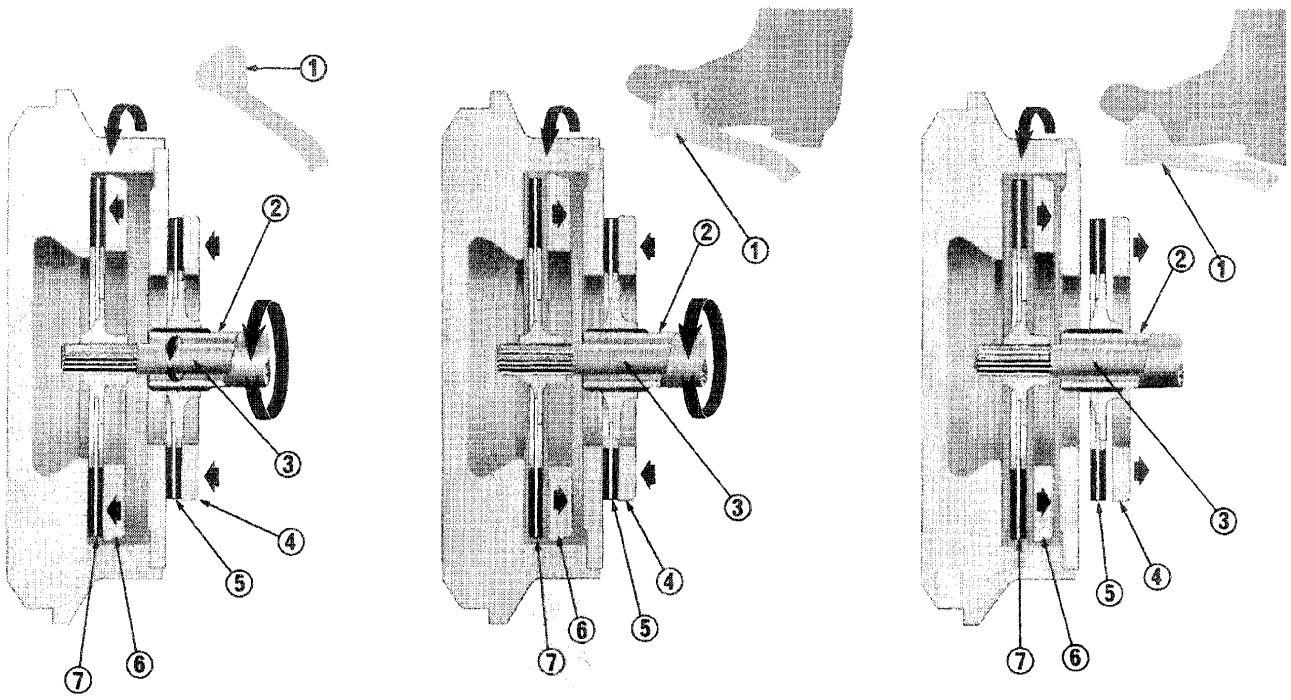

A
Both Clutches Engaged

B
P.T.O. Clutch Engaged
Transmission Clutch Disengaged

C
Both Clutches Disengaged

Figure 45
Power Flow Through the Double Clutch

1. Clutch Pedal
2. P.T.O. Input Shaft
3. Transmission Input Shaft
4. P.T.O. Pressure Plate
5. P.T.O. Clutch Disc
6. Transmission Clutch Pressure Plate
7. Transmission Clutch Disc

2. IMPORTANT CHANGES

Transmission Clutch Disc

The current transmission clutch disc of the double clutch has three pairs of cerametallic buttons and is the same disc as is used on Ford 2000, 3000 and 4000 tractors with Transmission P.T.O., Figure 7.

Prior to the introduction of the current disc, various types of discs were used, all of which had continuous band organic linings but culminating in one which also had a torsion damped hub similar to those shown in Figure 4. This is the only disc which is now being supplied for service use with the double clutch of tractors built prior to the introduction of the cerametallic button type of disc. It is not interchangeable with the current clutch disc.

Transmission Clutch Springs

Early production transmission clutch springs, painted light blue for identification purposes, have been superseded for service by lighter load springs which are painted yellow. The yellow springs are the only ones which are supplied for use in service on double clutches of tractors built prior to the introduction of the cerametallic button type of transmission clutch disc. They should be used in sets where it is necessary to renew the light blue springs of an early clutch.

Where the cerametallic button type of transmission clutch disc is installed a different linkage to the clutch pedal is used and the transmission clutch springs differ from those used previously. These springs are coloured dark blue and they are not suitable for use in an earlier type clutch.

P.T.O. Clutch Springs

The double clutch used in early production had 12 P.T.O. clutch springs but this was subsequently reduced to 9. When servicing a double clutch which originally incorporated 12 P.T.O. clutch springs, three of the springs may be removed together with the corresponding spring cups in the cover but the remaining 9 springs should be disposed as shown in Figure 46.

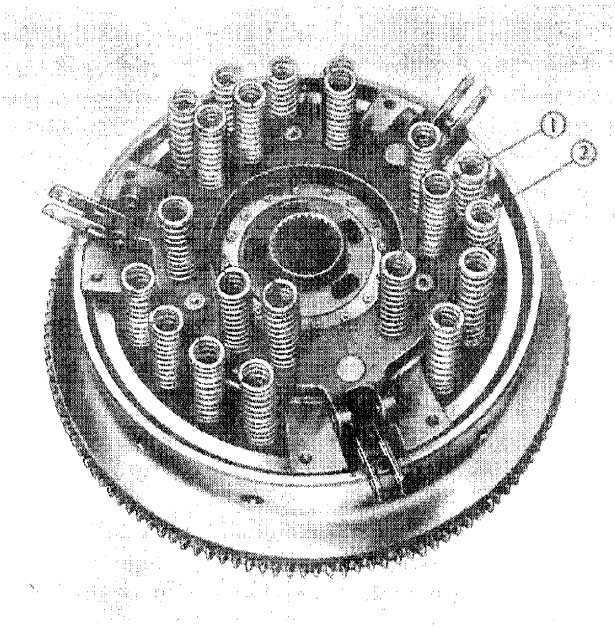

Figure 46
Disposition of P.T.O. Clutch Springs

1. P.T.O. Clutch Springs
2. Transmission Clutch Springs

Double Clutch Assembly Adjustment

Two double clutch assemblies are currently available through service. One is for use in current tractors which have an external clutch pedal return spring. The other is for previous tractors where the spring is fitted internally in the front compartment of the front transmission housing.

The gap between each socket-headed (Allen) screw and the corresponding release lever strut of the double clutch for current tractors is set at 0.050 to 0.054 in. (1.27 to 1.37 mm.) as specified for these models.

The corresponding gaps on the other service clutch is set at 0.070 to 0.074 in. (1.78 to 1.88 mm.), and this clutch is suitable for use without alteration in tractors which have an internal **leaf** type of pedal return spring as shown in Figure 65. If, however, this clutch is being installed in a tractor with an internal **coil** type of pedal return spring as shown in Figure 64, the gaps should be re-adjusted at the time of installation to 0.050 to 0.054 in. (1.27 to 1.37 mm.).

3. ADJUSTMENTS

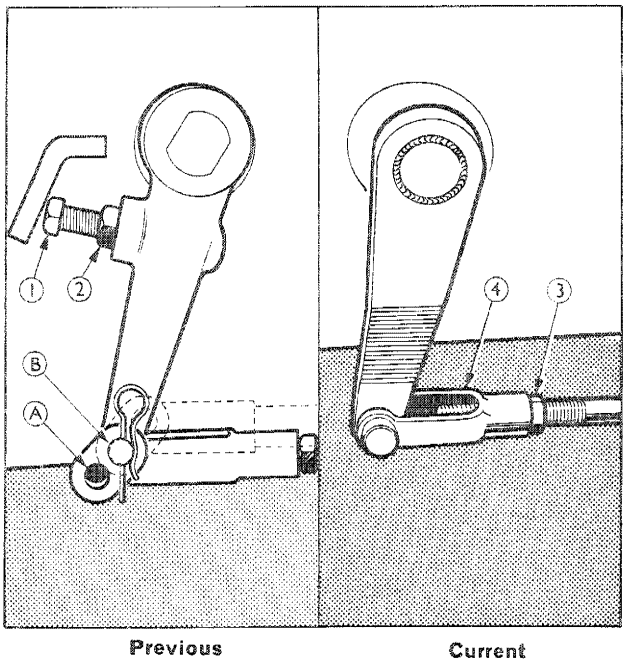

Figure 47
Clutch Pedal Linkage Adjustment

1. Stop Screw
2. Stop Screw Locknut
3. Clevis Locknut
4. Clevis

A. PEDAL FREE TRAVEL

In service, the clutch pedal free travel, measured at the centre of the pedal pad, should be maintained at the dimension listed in "SPECIFICATIONS", Chapter 4.

It is recommended that the pedal free travel be checked and adjusted every 50 operating hours, but it should be noted that the method of adjustment on current tractors differs from the method for adjustment on previous tractors.

Previous Tractors

On these tractors the pedal upper stop is provided by an adjustable stop screw in the clutch release cross-shaft lever which abuts a stop cast on the side of the front transmission housing, Figure 47. To adjust the pedal free travel loosen the locknut on the stop screw and move the screw into the lever to increase the free travel and out of the lever to decrease the free travel. Do not attempt to adjust pedal free travel on these tractors by adjusting the length of the release rod.

Current Tractors

On current tractors the foot platform acts as the upper stop for the clutch pedal and no stop screw is provided in the clutch release cross-shaft lever.

© FORD MOTOR COMPANY LTD., 1970

To adjust the pedal free travel on these tractors loosen the clutch release rod clevis locknut, Figure 47, and remove the pin connecting the clevis to the clutch release cross-shaft lever. Rotate the clevis on the release rod to increase or decrease its overall effective length and so adjust the free travel of the pedal. Lengthening the rod will give greater free travel – reducing the length will give less free travel.

Tighten the locknut and install a new split pin in the clevis pin after completing the adjustment.

B. CLUTCH PEDAL LINKAGE ADJUSTMENT

On current tractors no linkage adjustment is required apart from that necessary to maintain the free play at the pedal.

On previous tractors the length of the clutch release rod, which is correctly set at initial assembly, will normally not require adjustment. If, however, the rod is disturbed during other servicing operations, or if the clutches fail to disengage when the pedal is depressed and the pedal free play adjustment is correct, then the following adjustment to the release rod may be necessary.

1. Connect the release rod clevis to the cross-shaft lever using the rear holes in the clevis (Connection "B", Figure 47).

2. Start the engine, engage the P.T.O. shifter lever and check that the P.T.O. shaft stops revolving just before the clutch pedal, when depressed, touches the platform.

3. If the P.T.O. shaft does not stop, disconnect the clevis from the cross-shaft lever and screw the clevis further onto the release rod. Reconnect to the cross-shaft lever and re-check in line with Step 2. Repeat the adjustment as necessary until the correct condition is obtained.
NOTE – Do not screw the clevis onto the rod to such an extent that the total release movement of the clutch is taken up before the clutch pedal contacts the platform. If the clevis has been screwed on too far, the clutch mechanism will "bottom" before the pedal meets the platform. This point can be felt if the pedal is slowly depressed and movement of the pedal beyond this point may cause damage to the clutch. Under such circumstances the clutch and its associated parts should be removed for examination to determine why over-adjustment of the release rod has been necessary.

4. Change the connection of the release rod to the release lever by inserting the pin through the front holes in the clevis (Connection "A", Figure 47).

5. Again depress the clutch pedal until it contacts the platform, at which point the transmission clutch should be completely disengaged. This can be verified by engaging and disengaging a gear.

If necessary, re-adjust the release rod by screwing the clevis onto the rod until the clutch disengages when the pedal is fully depressed.
NOTE – If re-adjustment of the release rod has been necessary, connect the rear holes in the release rod clevis to the release arm and make sure that the clutch pedal, when depressed, contacts the platform before the total clutch release travel is expended.

6. With the release rod adjustment completed, move the P.T.O. lever into the disengaged position and stop the engine.

7. Tighten the release rod clevis locknut, then, with the release rod connected to the release arm to give the required pedal operation, insert the spring retaining pin in the clevis pin.

8. If necessary, adjust the stop screw projecting from the front of the release lever until there is the required pedal free travel and tighten the locknut.

4. DOUBLE CLUTCH REMOVAL AND INSTALLATION

A. REMOVAL

1. Treating the engine and front axle as an assembly, split the tractor at the engine front transmission housing flanges and move the engine and front axle assembly away from the front transmission.

2. Where available, use Compressor Tool SW13/b to depress each release lever of the double clutch and install a release lever hold-down clip on each lever.
NOTE – These clips are supplied in assembly with all service double clutches. For convenience they are also included in Tool Kit SW13A (not available in U.S.A.) and were in previous Tool Kit SW13.

3. Support the double clutch and then remove the clutch to flywheel retaining bolts. Lift the double clutch assembly and the transmission clutch disc away from the flywheel.

B. INSTALLATION

1. If a new double assembly is to be installed, the friction face of the transmission clutch pressure plate should be cleaned with white spirit (Stoddard's Solvent) to remove the anti-rust film which would otherwise contaminate the disc.

2. To ensure easy sliding of the disc on the splines of the transmission and P.T.O. input shafts, lightly smear the

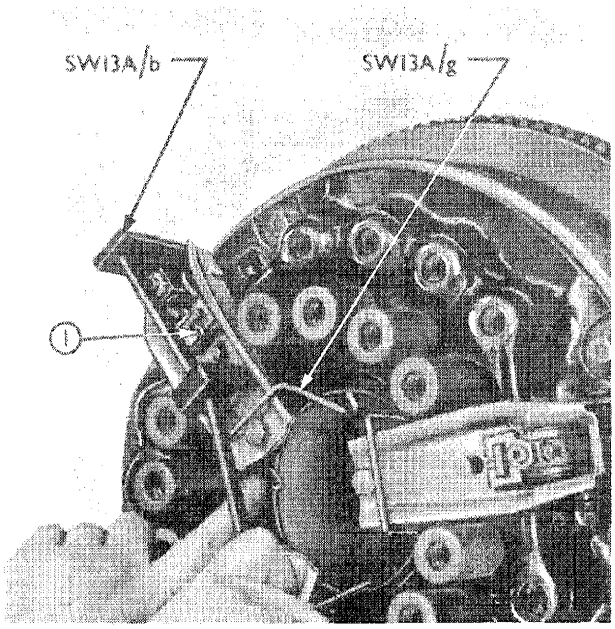

Figure 48
Installation of Release Lever Hold-Down Clips
1. Cotter Pin

splines in the hubs of the discs with silicon grease prior to assembly of the double clutch to the engine flywheel.

3. Locate the transmission clutch disc on the flywheel, centralizing it with a clutch locator tool, Figure 49. Where a current cerametallic button clutch disc is being installed, the side with the longer hub protrusion must face the flywheel, but where a previous organic friction lined disc is being installed the longer hub protrusion must face the double clutch assembly.
NOTE – Figure 49 illustrates disc locator, Tool Number SW13-1 (not available in U.S.A.) which is suitable for both current and previous transmission clutch discs used with double clutch assemblies.
Two similar tools are available in the U.S.A. under Tool Number SW509 (for previous type discs) and SW509A (for current cerametallic button type discs).

4. Install the double clutch assembly on the engine flywheel passing it over the clutch locator tool and secure with the correct dowel bolts and lockwashers. Tighten the bolts to the torque listed in "SPECIFICATIONS", Chapter 4.

5. Remove the clutch disc locator tool and the three release lever hold-down clips.

6. If a new double clutch assembly is being installed in a tractor with an internal coil type clutch pedal return spring, Figure 64, re-adjust the gap between the socket-headed adjusting screw of each release lever and the corresponding strut to 0.050 to 0.054 in. (1.27 to 1.37 mm.) – see "IMPORTANT CHANGES", Section 2 of this Chapter. The shank of a Number 55 drill may be used as a gauge when setting this gap.

NOTE – No re-adjustment is necessary when installing a new double clutch assembly in a current tractor or when installing a new one in a previous tractor with a leaf-type pedal return spring, Figure 65.

7. Re-connect the engine and front axle assembly to the front transmission, connect the clutch pedal linkage to the clutch cross-shaft lever and carry out the clutch pedal "Free Travel" and "Linkage" adjustments as detailed in Section 3 of this Chapter.

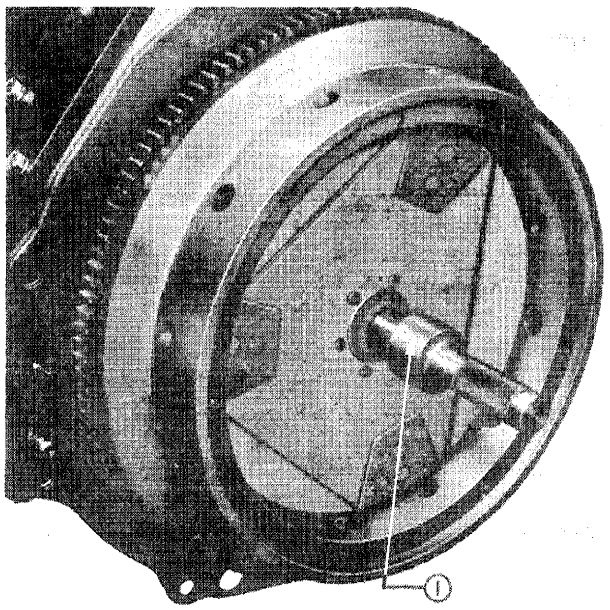

Figure 49
Installing Transmission Clutch Disc
1. Clutch Disc Locator Tool

© FORD MOTOR COMPANY LTD., 1970

5. OVERHAUL DOUBLE CLUTCH ASSEMBLY

It is recommended that no attempt is made to overhaul a double clutch without using the specialized tools which have been developed for the purpose. Basically these are the same tools with the addition of adaptors which are used when overhauling the single clutches as described in Chapter 1, Section 4.

Tool Number SW12B, available for all countries except the U.S.A., includes all the necessary adaptors to suit both the single and double clutches of Ford 2000, 3000, 4000 and 5000 tractors. Overhaul procedures using this tool are detailed in the following sub-sections A1, B1 and C1.

Tool Number SW510 is the equivalent tool available in the U.S.A., and overhaul procedures using this tool are detailed in sub-sections A2, B2 and C2.

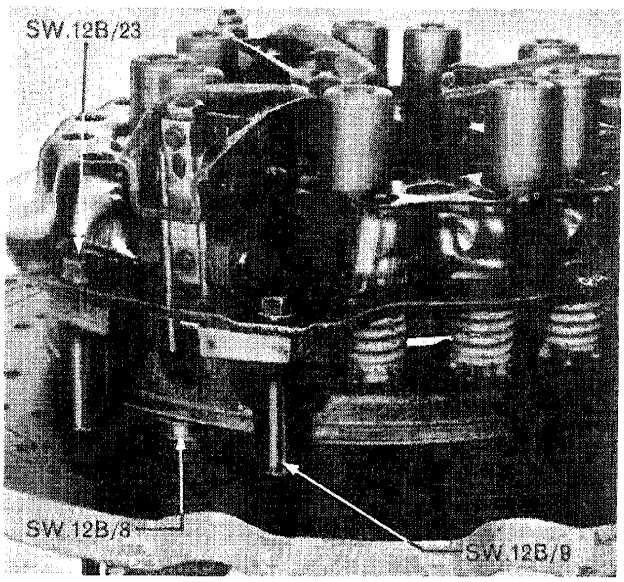

Figure 50
Double Clutch Tool Disc Spacers, Riser Spacers and Fixing Bolts

A1. DISASSEMBLY – Using Tool SW12B

The following procedures are applicable when using Tool Number SW12B, the detail parts of which are illustrated in Figure 20, Chapter 1.

1. Clean the clutch assembly and the tool thoroughly, and mark the three pressure plates and the cover relative to each other so that, should they prove subsequently to be suitable for further use, they may be reassembled in the same relative positions and so maintain the balance of the double clutch assembly.

2. Place three transmission disc spacers, Tool Number SW12B/8, on the base plate, SW12B/15, of the tool. Locate a spacer adjacent to each pair of fixing bolt holes, Figure 50.

3. Install the double clutch assembly on the spacers and insert riser spacers, SW12B/9, between the intermediate pressure plate and the base plate of the tool, positioning one at each of the fixing bolt locations, Figure 50.

4. Centralize the clutch on the base plate of the tool and insert the special fixing bolts SW12B/23 passing them through the clutch cover and the riser spacers, and screwing them into the appropriate threaded holes in the base of the tool. Tighten the bolts and then remove the lever hold-down clips.

5. Remove the cotter pin, Figure 48, and extract the shims and release lever retaining clip from each release lever fulcrum bracket.

6. Remove one of the cotter pins from each release lever strut and withdraw the strut from the other side, Figure 52, then remove the release levers and spacers.

7. Slowly release the spring pressure by gradually and evenly unscrewing each of the six SW12B/23 bolts holding the clutch to the tool.

8. Lift off the cover and remove the springs from their locations on the P.T.O. and transmission pressure plates.

9. Remove one of the snap rings from the P.T.O. pressure plate connecting pins and push out the pins. Withdraw the P.T.O. pressure plate connecting links from their location between the transmission plate connecting links.

10. Remove the P.T.O. pressure plate and the P.T.O. disc followed by the intermediate pressure plate.

11. Push out the pins retaining the transmission pressure plate links to the transmission plate and remove the links.

12. Lift the transmission pressure plate from the tool.
NOTE – It will only be necessary to remove the socket-headed adjusting screws from the P.T.O. pressure plate links, or the adjusting screws and nuts from the release levers, if these parts require to be renewed.

B1. INSPECTION

1. Examine the organic linings of previous type clutch disc assemblies for loose rivets and ensure that the linings are not excessively worn or scored. Any disc of this type with oil contaminated linings should also be renewed.

Refer to Chapter 1, Section 4 "SINGLE CLUTCH REMOVAL AND INSTALLATION", and note the information regarding inspection of the current cera-metallic button type clutch disc and the friction surfaces of the pressure plate and flywheel. This information applies equally to the transmission clutch disc and transmission pressure plate of the current double clutch, and to the flywheel.

It should, however, be noted that where this type of flywheel is to be re-faced the same thickness of material must be removed from the clutch fixing bolt circle surface (on which the clutch cover locates) as is removed from the friction surface of the flywheel. A maximum of 0.030 in. (0.7 mm.) may be removed from the flywheel before the double clutch fixing dowel bolts bottom in the threaded holes but up to 0.090 in. (2.29 mm.) may be removed providing washers of equivalent thickness are used under the heads of the double clutch fixing bolts.

2. Examine the release lever connecting links, pins and struts of the double clutch and renew if they exhibit signs of excessive wear.

3. The following parts should be lightly coated with a silicon grease prior to re-assembly:

- the drive lug sides of the transmission pressure plate and the P.T.O. pressure plate
- the contact edges of the release lever fulcrum brackets
- the full length of the release lever position posts
- the overall length of the release lever struts
- the transmission and P.T.O. pressure plate connecting links and pins.

C1. ASSEMBLY - Using Tool SW12B

1. Install the transmission plate connecting links between the lugs of the plate, and retain them by inserting the appropriate pins through the holes in the lugs and the square shaped holes in the end of the links.

2. Using the base plate and bridge spider of Tool Number SW12B, position the three spacers SW12B/8 equidistant apart on the base plate SW12B/15. Locate the transmission pressure plate on the spacers, Figure 51, with the smooth surface of the plate facing downwards.

3. Position the intermediate pressure plate, smooth side facing upwards, on the transmission pressure plate with the lugs of the transmission plate locating inside the slotted arms of the intermediate plate and with the marks, made on both plates during disassembly, in line.

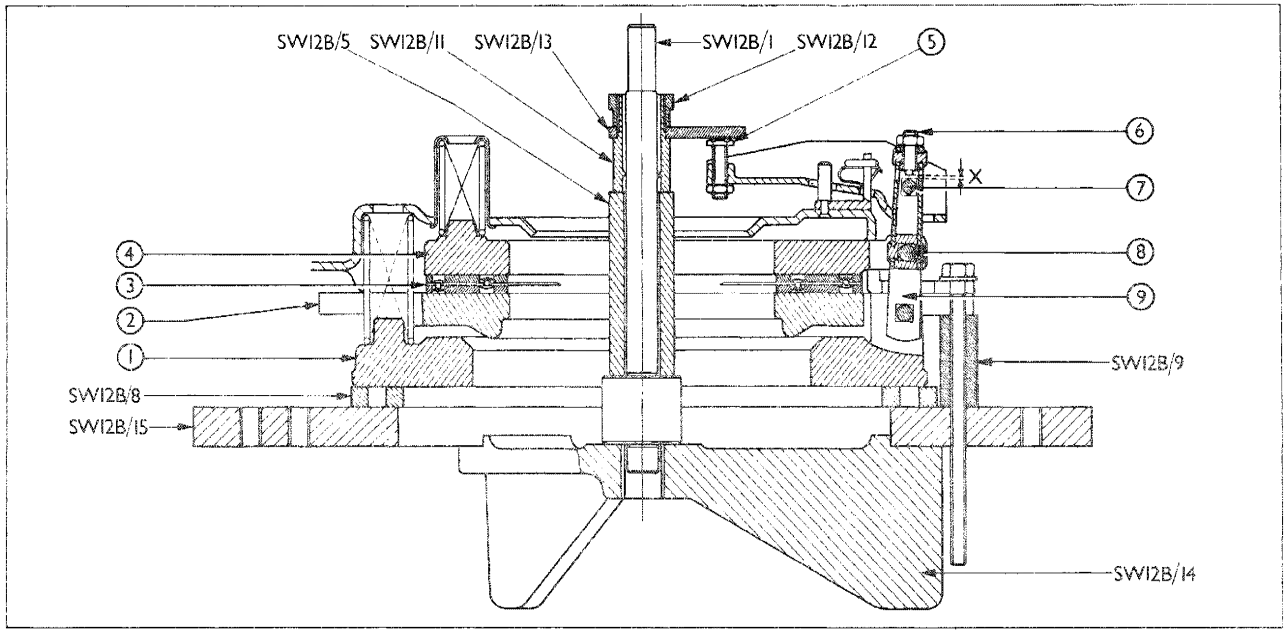

Figure 51
Double Clutch Assembly Adjustment

1. Transmission Clutch Pressure Plate
2. Intermediate Pressure Plate
3. P.T.O. Clutch Disc
4. P.T.O. Clutch Pressure Plate
5. Release Lever Adjusting Screw
6. Socket-Headed Adjusting Screw
7. Strut
8. P.T.O. Pressure Plate Connecting Link Pin
9. Transmission Pressure Plate Connecting Link

© FORD MOTOR COMPANY LTD., 1970

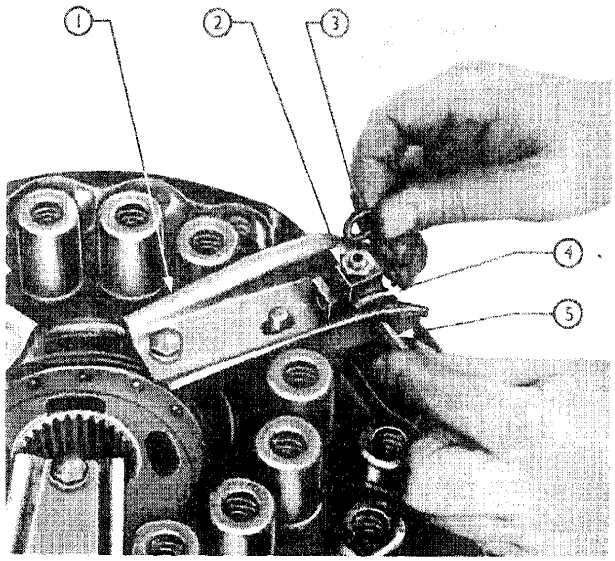

Figure 52
Installing Clutch Release Levers

1. Release Lever
2. P.T.O. Pressure Plate Connecting Links
3. Spacer
4. Transmission Pressure Plate Connecting Links
5. Strut

4. Place the P.T.O. clutch disc on the intermediate pressure plate, with the long end of the hub of the disc facing upwards and centralize it on the plate.

5. Place the P.T.O. pressure plate on the P.T.O. clutch disc with the lugs on the plate straddling the transmission plate connecting links. Make sure that the mark made on the P.T.O. pressure plate during disassembly lines up with the marks on the other two pressure plates.

6. Install the twelve transmission clutch springs and the nine P.T.O. clutch springs on the location bosses in their respective pressure plates. See "IMPORTANT CHANGES", Section 2.

7. Locate the clutch cover, with spring seat cups in place, over the springs. Make sure that the three sets of transmission pressure plate connecting links pass through the openings provided in the cover.

8. Install a P.T.O. pressure plate connecting link between each pair of transmission plate connecting links and retain by inserting the appropriate connecting pins through the holes in the lugs of the P.T.O. pressure plate, the slotted holes in the transmission pressure plate links and the square holes in the P.T.O. pressure plate links. Secure the pins with new snap rings at each end.

9. Insert riser spacers SW12B/9, Figure 51, between the intermediate pressure plate and the base of the tool, locating a riser spacer at each securing bolt hole. Pass special tool bolts SW12B/23 through cover, intermediate plate and riser spacers and screw them into the threaded holes provided in the base plate of the tool.

10. Make sure that the cover is correctly positioned to slide down past the lugs on the P.T.O. pressure plate, then tighten each SW12B/23 bolt a little at a time, working in turn on diagonally opposite bolts, to draw the clutch cover down evenly until it meets the intermediate plate.

11. Install the release levers, locating each lever over one of the connecting link assemblies. Position two spacers between each connecting link assembly and the inside of the corresponding release lever (one spacer each side of the link assembly), Figure 52. Insert a release lever strut through the holes in each release lever, spacer and connecting link assembly. Retain with new cotter pins on each end of the strut.

12. Install the release lever retaining clips over the fulcrum brackets of the clutch cover then install shims, Figure 55, above the clips and retain by inserting new cotter pins, Figure 53. Check that sufficient shims have been installed to eliminate any up and down free play of the clip. If necessary add shims until a slight preload exists when the cotter pin is installed.

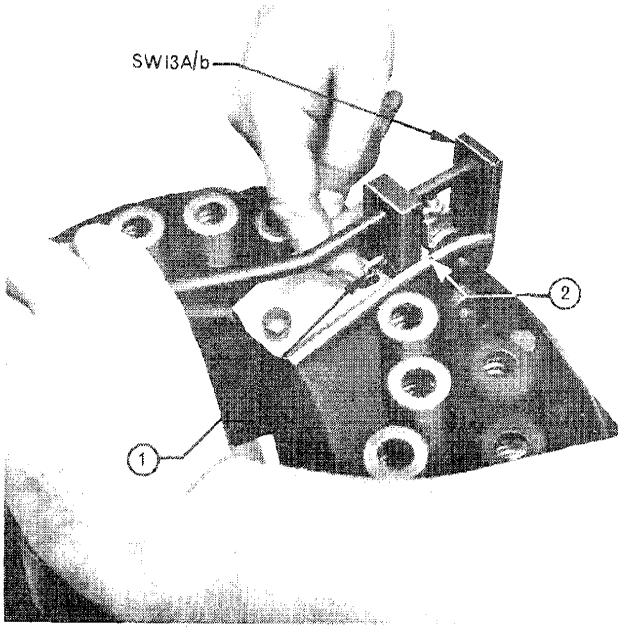

Figure 53
Installing Release Lever Retainer Clip Cotter Pin

1. Cotter Pin
2. Shims

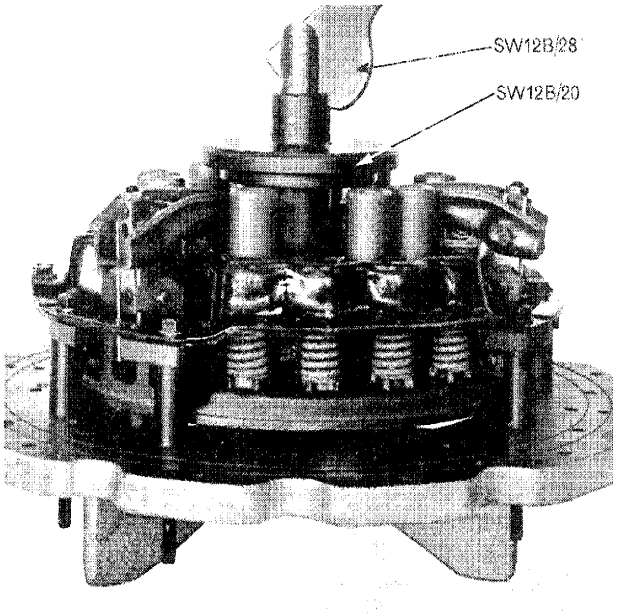

Figure 54
Settling the Double Clutch Linkage

13. Locate tool actuator cam platform extension, SW12B/20, on the threaded pillar of the actuator, SW12B/28, with the flange of the extension against the cam platform of the actuator, Figure 54.

14. Screw the actuator pillar into the bridge spider, SW12B/14, of the tool base until the platform extension contacts the adjusting screws of the release levers then operate the actuator lever several times to "settle" the clutch linkage.

15. Remove the cam actuator and platform extension assembly and install pillar spacer SW12B/1 in the bridge spider SW12B/14. Locate centre spacer SW12B/5, finger body SW12B/11 and gauge finger SW12B/13 with the ground side of the finger facing downwards. Secure with tool locknut SW12B/12, Figure 51.
Rotate the gauge finger, SW12B/13, over each release lever adjusting screw in turn, adjusting each screw until it just touches the underside of the finger gauge, Figures 51 and 55. Tighten the adjusting screw locknut when adjustment is completed.

16. With the pressure plate connecting link held centrally and using the shank of a suitable sized drill as a gauge, set the gap, "X", Figure 51, between the lower end of each socket headed adjusting screw and the corresponding connecting link strut by inserting the drill shank in the gap, loosening the socket-headed screw locknut and turning the screw until it just touches the drill. Tighten the locknuts after adjustment.

NOTE – The specified gap differs according to when the tractor was produced and details of this are given under "IMPORTANT CHANGES", Section 2, of this Chapter. The following drills are suitable for establishing the correct gap.

Specified Gap	*Drill Number*
0.050 to 0.054 in. (1.27 to 1.37 mm.)	55
0.070 to 0.074 in. (1.78 to 1.88 mm.)	50

17. Remove the pillar spacer and gauge finger assembly, then, while the clutch is still attached to the tool, attach hold-down clips, Figure 48, to the release levers.

18. Remove the six special tool bolts SW12B/23 and lift the double clutch assembly from the tool.

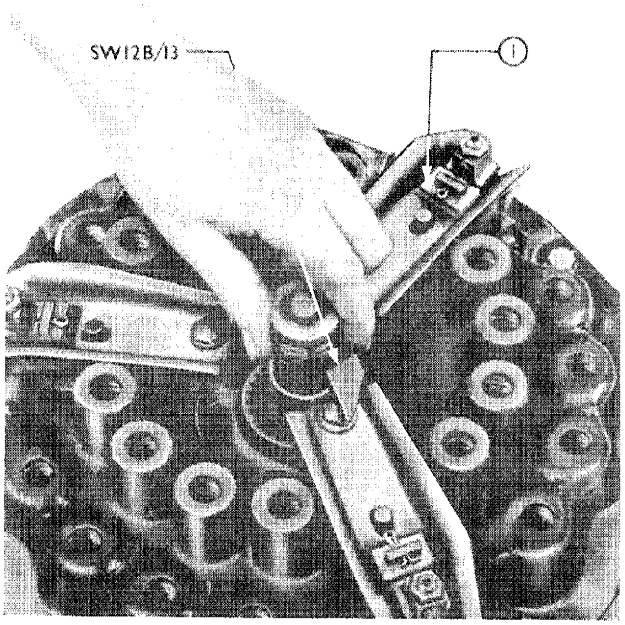

Figure 55
Checking Height of Release Lever Adjusting Screws
1. Release Lever Retaining Clip Shims

© FORD MOTOR COMPANY LTD., 1970

A2. DISASSEMBLY – Using Tool SW510

Listed below, and illustrated in Figure 56, are the detail parts of Universal Clutch Fixture, Tool Number SW510, which are used to disassemble, assemble and adjust the double clutch.

Component No.	*Description*	*Quantity*
SW510-61A	Block–Riser	3
SW510-60	Base–Fixture	1
SW510-3	Bridge–Spring Compressor	1
SW510-62	Spindle–Fixture	1
SW510-5B	Spacer–Gauge	1
SW510-2	Gauge–Release Lever	1
SW510-13	Washer–Amplex Thrust	1
SW510-9	Nut–Spindle	1
SW510-7	Pin–Gauge	1
SW510-6	Spacer Assembly–Gauge	3
SW510-12	Pin–Guide	1
SW510-63B	Screw–Long Cap	6
SW510-64C	Screw–Short Cap	3
SW510-65	Nut–Jam (Not Shown)	1
SW510-66	Washer (Not Shown)	1

NOTE – Additional components other than those shown, or listed, are supplied with the fixture for performing maintenance on single clutches. Use of the fixture for this purpose is described and illustrated in Chapter 1 "Single Clutches".

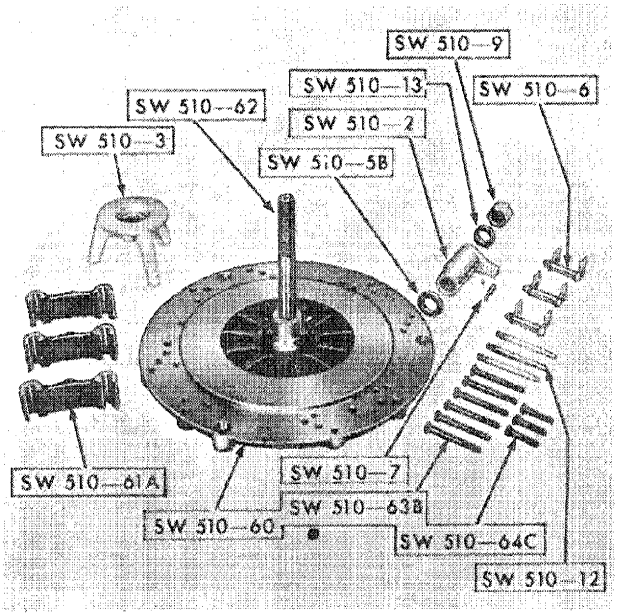

Figure 56
Universal Clutch Fixture SW510
(Double Clutch Application)

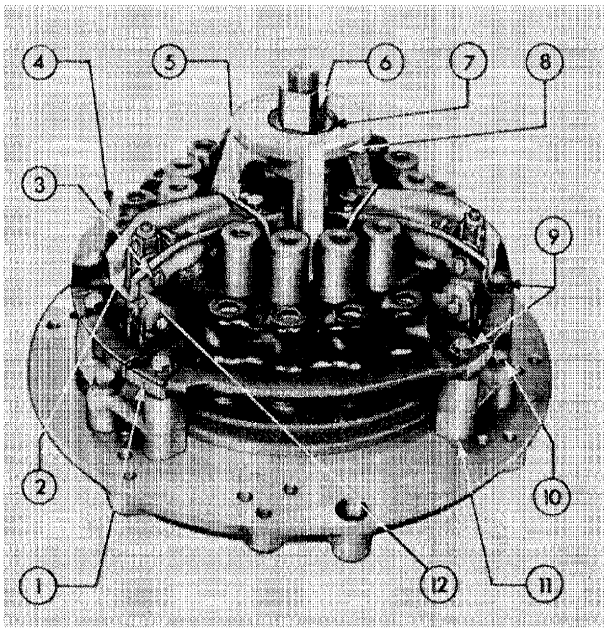

Figure 57
Preparation for Disassembly of Double Clutch

1. Intermediate Pressure Plate
2. Spacer
3. Strut
4. Clutch Cover Assembly
5. Release Lever Hold-down Clip
6. Spindle Nut
7. Thrust Washer
8. Bridge
9. Long Cap Screws
10. Short Cap Screw
11. Riser Block
12. Identification Marks

1. Insert the serrated end of the Fixture Spindle, Tool No. SW510-62, Figure 56, into the hub of the Fixture Base, Tool No. SW510-60. Position the fixture base on edge and install the Washer, Tool No. SW510-66 (not shown) and Jam Nut, Tool No. SW510-65 (not shown) on the end of the spindle that protrudes from the bottom of the base. Tighten the nut until the spindle bottoms in the hub.

2. Bolt the assembled Fixture Base, Tool No. SW510-60, Figure 56, to a work bench.
IMPORTANT – It is essential that the mounting area be level and the mounting bolts be torqued equally to eliminate the possibility of warping the fixture. It is also essential that the mating surfaces on the fixture base, and fixture components, be kept clean.

3. Thoroughly clean the mating surfaces on the clutch pressure plate and cover assembly in addition to cleaning the fixture base.

4. Attach the riser blocks to the fixture base by installing one short cap screw in each block. Figure 57 illustrates two of the blocks installed. Be sure to torque the cap screws equally.

5. Place the assembled clutch pressure plate and cover assembly on the fixture. Align the mounting holes in the clutch cover assembly with the holes in the riser blocks, and install one guide pin and one long cap screw in each block as shown in Figure 57. Do not tighten the long cap screws at this time.
NOTE – The step on the base of the fixture substitutes for the transmission clutch disc assembly, therefore, this disc is not required when using the Universal Clutch Fixture.

6. Install the bridge, the thrust washer, and the spindle nut as shown in Figure 57. Be sure that the legs of the bridge are positioned at the center of each row of spring cups as shown.

7. Relieve the spring tension on the release levers by tightening the spindle nut until the clutch cover assembly is drawn down to the intermediate pressure plate. To prevent distorting the top of the cover assembly, do not overtighten the nut.

8. After relieving spring tension on the release levers, tighten the long cap screws finger tight, then remove the release lever hold-down clips, Figure 57.

9. Remove the release lever retaining clip shims and clips, Figure 58, after first removing the cotter pins that hold them in place.

NOTE – It is suggested that the clutch cover assembly, the clutch pressure plates, and the release levers be marked for identification purposes before the clutch is taken apart. Doing this will enable the parts to be reinstalled in their original position and will maintain the balance built into the clutch. Figure 58 illustrates a good practice of keeping the parts in groups, while Figure 57 illustrates identification of parts.

10. Remove one cotter pin from one end of each strut, Figure 58, then remove the release levers by removing the struts. When removing the struts, exercise care to prevent losing the spacers.

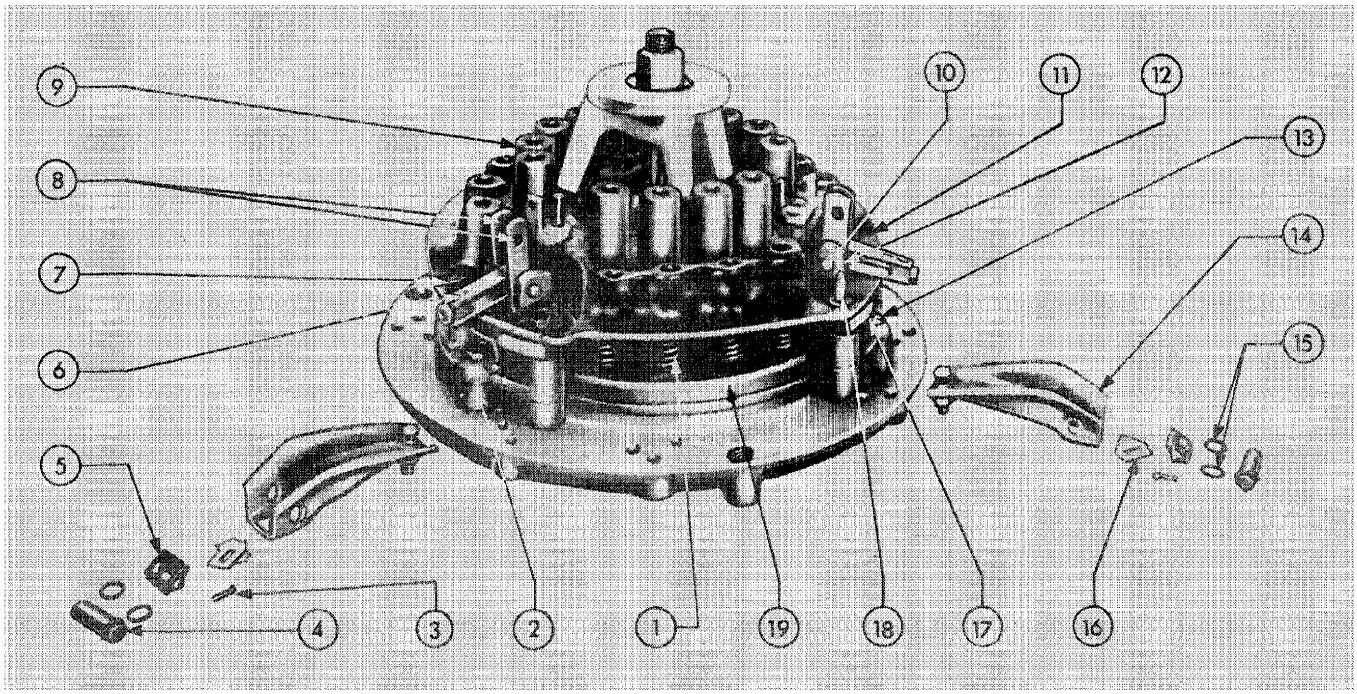

Figure 58
Assembly and Disassembly of the Double Clutch

1. Transmission Clutch Spring
2. Riser Block
3. Cotter Pin
4. Strut
5. Release Lever Retaining Clip
6. P.T.O. Pressure Plate Connecting Link
7. Long Cap Screw
8. Transmission Pressure Plate Connecting Links
9. P.T.O. Clutch Spring and Cup
10. P.T.O. Pressure Plate Connecting Pin
11. Clutch Cover Assembly
12. P.T.O. Pressure Plate
13. Short Cap Screw
14. Release Lever
15. Spacers
16. Clip Shims
17. Intermediate Pressure Plate
18. Guide Pin
19. Transmission Pressure Plate

© FORD MOTOR COMPANY LTD., 1970

11. Remove one snap ring from one end of each P.T.O. pressure plate connecting pin, Figure 58, then remove the P.T.O. pressure plate connecting links by removing the pins.

12. Remove the guide pins, Figure 58, and the long cap screws, then back off the spindle nut. Remove the nut, thrust washer, and bridge, then lift the clutch cover assembly from the clutch. Remove the P.T.O. clutch springs and cups, and the transmission clutch springs. Lift the P.T.O. clutch pressure plate, and clutch disc (not shown) from the clutch.

13. Lift the intermediate pressure plate, Figure 58, from the riser blocks, then remove the transmission pressure plate connecting links by removing the connecting pins (not shown). Lift the transmission clutch pressure plate from the fixture base.

NOTE – It will not be necessary to remove the adjusting screw nuts and adjusting screws from the P.T.O. pressure plate connecting links, or the hexagon nuts and adjusting screws from the release levers, unless the parts are being replaced.

B1. INSPECTION

1. Examine the organic linings of previous type clutch disc assemblies for loose rivets, and ensure that the linings are not excessively worn or scored. Any disc of this type with oil contaminated linings should also be renewed.

Refer to Chapter 1, Section 4 "SINGLE CLUTCH REMOVAL AND INSTALLATION", and note the information regarding inspection of the current cera-metallic button type clutch disc and the friction surfaces of the pressure plate and flywheel. This information applies equally to the transmission clutch disc and transmission pressure plate of the current double clutch, and to the current flywheel.

It should, however, be noted that where this type of flywheel is to be re-faced the same thickness of material must be removed from the clutch fixing bolt circle surface (on which the clutch cover locates) as is removed from the friction surface of the flywheel. A maximum of 0.030 in. (0.7 mm.) may be removed from the flywheel before the double clutch fixing dowel bolts bottom in the threaded holes but up to 0.090 in. (2.29 mm.) may be removed providing washers of equivalent thickness are used under the heads of the double clutch fixing bolts.

2. Examine the release lever connecting links, pins and struts of the double clutch and renew if they exhibit signs of excessive wear.

3. The following parts should be lightly coated with a silicon grease prior to re-assembly:
- the drive lug sides of the transmission pressure plate and the P.T.O. pressure plate
- the contact edges of the release lever fulcrum brackets
- the full length of the release lever position posts
- the overall length of the release lever struts
- the transmission and P.T.O. pressure plate connecting links and pins.

C2. ASSEMBLY – Using Tool SW510

1. Attach the riser blocks to the fixture base by installing one short cap screw in each block. Figure 57 illustrates the blocks installed. Be sure to torque the cap screws equally.

2. Place the transmission clutch pressure plate, Figure 58, smooth side "down", on the fixture base so the lugs on the plate are centered at each riser block. Install two transmission pressure plate connecting links between the lugs on the plate and retain them in place by installing the connecting pins (not shown). Position the pins so each end is flush with the lugs.

3. Place the intermediate pressure plate, Figure 58, smooth side "up", over the transmission clutch pressure plate so the "ears" of the intermediate plate straddle the lugs on the transmission plate.

4. Center the P.T.O. clutch disc over the intermediate pressure plate, Figure 58, then install the P.T.O. clutch pressure plate so the lugs on the plate straddle the transmission pressure plate connecting links. Be sure to install the clutch so the long end of the disc hub is "up".

5. Place the twelve transmission clutch springs, Figure 58, on the bosses of the transmission clutch pressure plate and nine P.T.O. clutch springs and cups, on the bosses of the P.T.O. clutch pressure plate. See "IMPORTANT CHANGES" in Section 2 of this Chapter.

6. Install one guide pin, Figure 58, in each riser block, then install the clutch cover assembly over the partially assembled clutch so the spring cups and transmission pressure plate connecting links pass through the openings of the cover assembly. Check the transmission clutch springs to see that they are properly seated in the "cups" of the cover assembly.

7. Drop one long cap screw, Figure 58, into place at each riser block, but do not tighten at this time. Install the bridge, thrust washer, and spindle nut as shown in Figure 58. Be sure that the legs of the bridge are positioned at the center of each row of spring cups as shown.

8. Slowly draw the clutch cover assembly down over the lugs on the P.T.O. clutch pressure plate, Figure 58, by tightening the spindle nut until the cover assembly contacts the intermediate clutch pressure plate. Exercise care to prevent the guide from catching on the cover. To prevent distorting the top of the cover, do not overtighten the spindle nut.

9. After the cover has made contact with the intermediate pressure plate, remove the guide pins, Figure 58, and replace them with the long cap screws. Torque the screws equally in a diagonally staggered manner. See Chapter 4, "SPECIFICATIONS", for torque values.

10. After torquing the screws, remove the spindle nut, the thrust washer, and the bridge, Figure 58.

11. Install the P.T.O. pressure plate connecting links, Figure 58, between the transmission pressure plate connecting links and retain them in place by installing the connecting pins. Retain the pins in place by installing the snap rings. Be sure the snap rings are seated in the grooves of the pins.

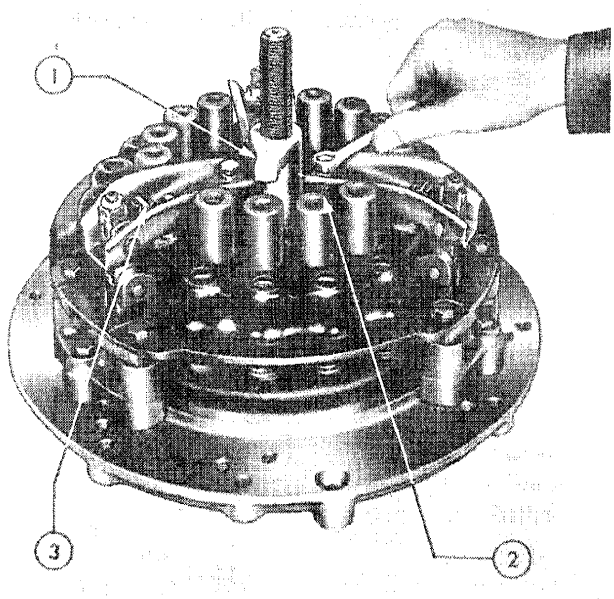

Figure 59

1. Release Lever Gauge
2. Hexagon Nut
3. Cotter Pin

12. Position the P.T.O. pressure plate connecting links, Figure 58, so they are parallel with the transmission pressure plate connecting links, then install the release levers. Retain the levers in place by installing the struts. Be sure one spacer is positioned between each transmission pressure plate connecting link and the inner walls of the release levers before installing the struts. Retain the struts in place by installing new cotter pins. Figure 57 illustrates one of the spacers and struts properly installed.

13. Install the release lever retaining clips, Figure 58, over the fulcrum brackets of the clutch cover assembly then place the release lever retaining clip shims over the clips. Be sure the clips are installed so the flat side is "up" and so the closed end is towards the center of the clutch assembly. Retain the shims and clips in place by installing new cotter pins. Figure 59 illustrates proper installation of the cotter pins.

NOTE – After installing the cotter pins, check the clips, Figure 58, and shims for "up and down" end play. If end play exists, remove the cotter pins and add additional shims. The shimming should be such that a slight pre-load is established when the cotter pins are installed.

14. Install the Gauge Spacer, Tool No. SW510-5B, over the fixture spindle so the identifying number is "up", then install the release lever gauge as shown in Figure 59.

15. Loosen the hexagon nuts on the underside of the release levers then adjust the adjusting screws, as shown in Figure 59, until a slight drag can be felt when the "foot" of the release lever gauge is rotated across the levers. Apply light pressure to the gauge to obtain an equal "feel" on each lever.

16. After the levers are adjusted, lock the adjusting screws by tightening the hexagon nuts on the underside of the release levers. Re-check the "feel" after locking the screws, and if necessary, re-adjust the screws until the "feel" is the same on each lever.

17. Remove the release lever gauge, Figure 59, then install the bridge, the thrust washer, and the spindle as shown in Figure 60. Raise the clutch pressure plate by tightening the

© FORD MOTOR COMPANY LTD., 1970

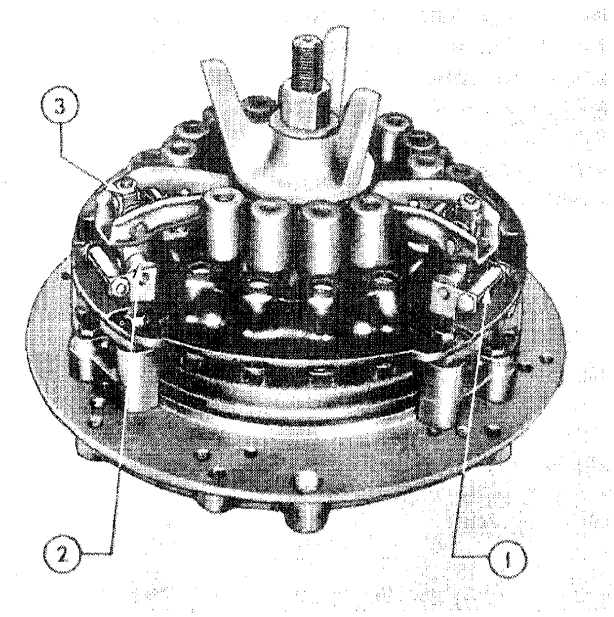

Figure 60
Preparation for Adjustment of the P.T.O. Pressure Plate Connecting Links

1. Gauge Spacer Assembly
2. P.T.O. Pressure Plate
3. P.T.O. Pressure Plate Connecting Link

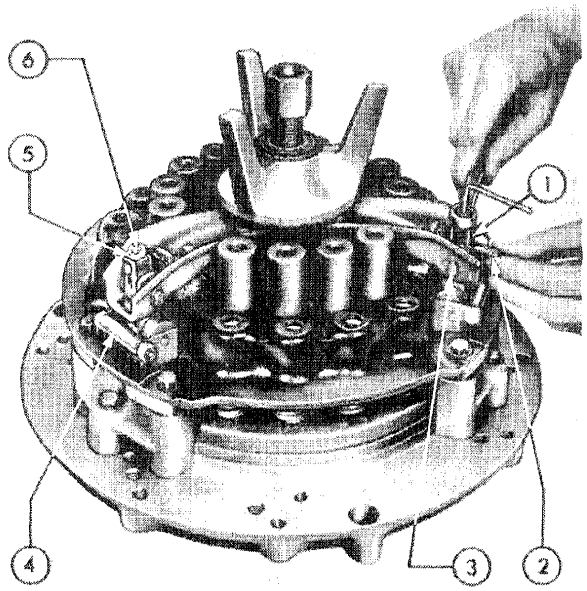

Figure 61
Adjusting the P.T.O. Clutch Gap

1. P.T.O. Pressure Plate Connecting Link
2. Gauge Pin
3. Strut
4. Gauge Spacer Assembly
5. Adjusting Screw

spindle nut until the Gauge Spacer Assemblies, Tool No. SW510-6, can be installed as shown in Figure 60. Adjust the nut on the spacer assemblies so the spacers are held in place as shown.

IMPORTANT – Do not tighten the spindle nut more than is necessary to install the gauge spacer assemblies, as damage to the release levers may result.

18. Being sure that the gauge spacer assemblies are in position, back off the spindle nut until it clears the thrust washer as shown in Figure 61. Position the center link so the adjusting screw in the top of the link is centered over the strut, then insert the Gauge Pin Tool No. SW510-7, through the link as shown. Loosen the adjusting screw nut, and turn the adjusting screw as required until a slight drag is felt on the gauge pin when the pin is rotated. Do not obtain the "feel" by pushing or pulling on the gauge pin. The "feel" between the strut and adjusting screw should be equal on each link.

19. Lock the adjusting screws, Figure 61, in place with the adjusting screw nuts and re-check the "feel". If necessary, re-adjust until the "feel" is the same on each link.

20. After the links are adjusted, tighten the spindle nut, Figure 61, just enough to relieve the tension on the spacer assemblies. Remove the spacers, then remove the spindle nut, the thrust washer, and the bridge.

21. Install the release lever hold-down clips, Figure 57, then remove the long cap screws that secure the clutch assembly to the riser blocks. The clutch is now ready for installation on the flywheel as outlined in Section 4, "B. Installation".

Part 4
CLUTCHES

Chapter 3
SERVICING CLUTCH ASSOCIATED PARTS

Section		*Page*
1.	Clutch Pilot Bearing	41
2.	Clutch Release Bearing	42
3.	Clutch Release Cross-shaft Bushings	44
4.	Clutch Pedal Bushings	45

1. CLUTCH PILOT BEARING

The same pre-lubricated ball bearing is used on all models except the Ford 5000 which uses one of a larger diameter. On all models, the space behind the bearing should be packed with a suitable high melting point grease whenever overhaul or installation is carried out.

A. REMOVAL

1. Remove the clutch following the procedures detailed in Section 4, Chapter 1 (Single Clutches) or Section 4, Chapter 2 (Double Clutches).

2. **Ford 2000, 3000 and 4000.** Remove the pilot bearing retainer and the flywheel, and extract the bearing from the crankshaft using Tools Number 954 and 955-14 as shown in Figure 62.

Ford 5000. Remove the two P.T.O. drive plate retaining bolts which have a washer under the bolt head and extract the bearing from the P.T.O. drive plate using Tools Number 943-S and FT943.

B. INSTALLATION

1. Lightly tap the bearing, baffle side facing outwards, into the flywheel or P.T.O. drive plate. Tool Number 630-5 used with the larger diameter against the bearing, Figure 63, is suitable for use on Ford 2000, 3000 and

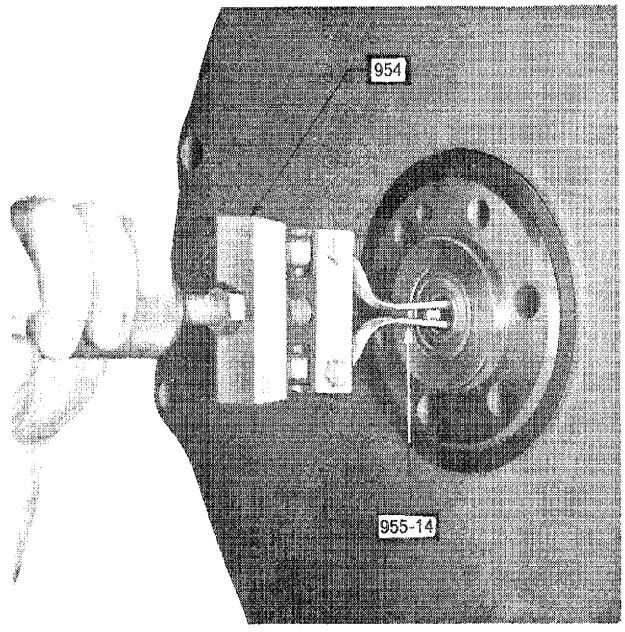

Figure 62
Removing the Clutch Pilot Bearing from Crankshaft

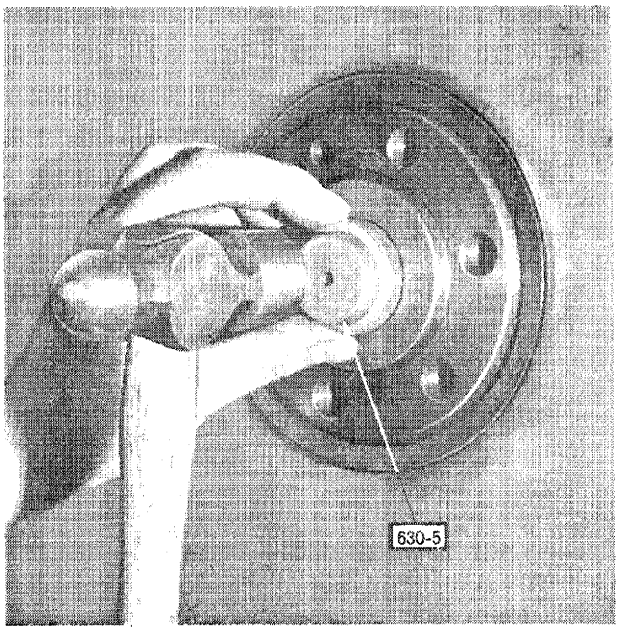

Figure 63
Installing Clutch Pilot Bearing

© FORD MOTOR COMPANY LTD., 1970

4000 tractors, and Tool Number 630-12 for use on a Ford 5000.

2. **Ford 2000, 3000 and 4000.** Re-install the flywheel and pilot bearing retainer, tightening the securing bolts to the specified torque – see "SPECIFICATIONS", Chapter 4.

Ford 5000. Re-install the two P.T.O. drive plate retaining bolts ensuring that the appropriate washer is installed under the head of each bolt to retain the pilot bearing. Tighten the two bolts to the specified torque – see "SPECIFICATIONS", Chapter 4.

3. Re-install the clutch assembly following the procedures detailed in Section 4, Chapter 1 (Single Clutches) or Section 4, Chapter 2 (Double Clutches).

2. CLUTCH RELEASE BEARING

Standard agricultural models incorporate pre-lubricated clutch release bearings mounted on a sliding hub. An optional build of the Ford 5000 is, however, available on request with a heavy duty clutch release bearing and hub assembly and an external greaser. In this case the hub is drilled to feed grease to the bearing through the medium of a flexible connection from the external greaser.

Tractors with three types of clutch pedal return spring may be encountered depending upon the production date of the tractor and the procedure for removing the release bearing varies in accordance with the type of spring incorporated.

A. REMOVAL

1. Separate the engine and front axle, as an assembly, from the front transmission.

2. Disconnect the rod between the clutch pedal and the clutch release cross-shaft lever by removing the clevis pin at the lever end.

3. Where an external greaser is fitted, disconnect the flexible connection from the release bearing hub.

4a. **Models with Internal Coil Return Spring (Figure 64)**

Disengage the spring from the fork, rotate the fork towards the front of the housing and draw the bearing and hub assembly off the hub support.

4b. **Models with Internal Leaf Type Return Spring (Figure 65)**

Slacken off the two bolts retaining the leaf spring bracket to the hub support plate and release the upper end of the leaf spring from the support bracket.

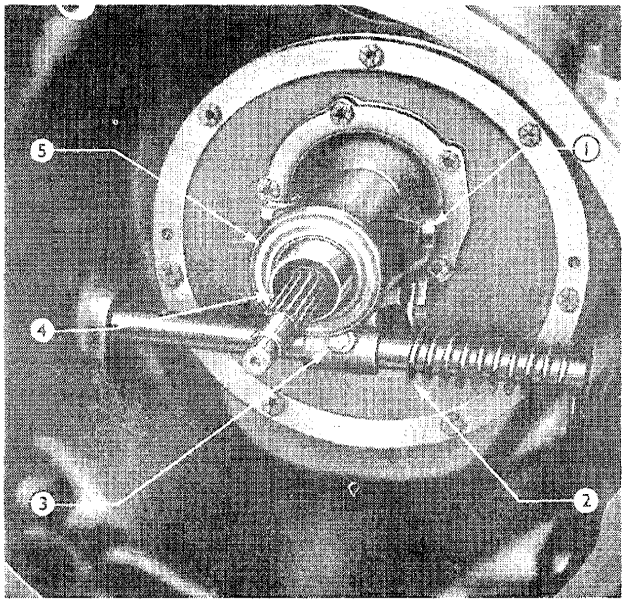

Figure 64
Clutch Release Bearing and Internal Coil Return Spring

1. Release Fork
2. Return Spring
3. Bolt (Fork to Cross-shaft)
4. Release Bearing Hub Support
5. Release Bearing

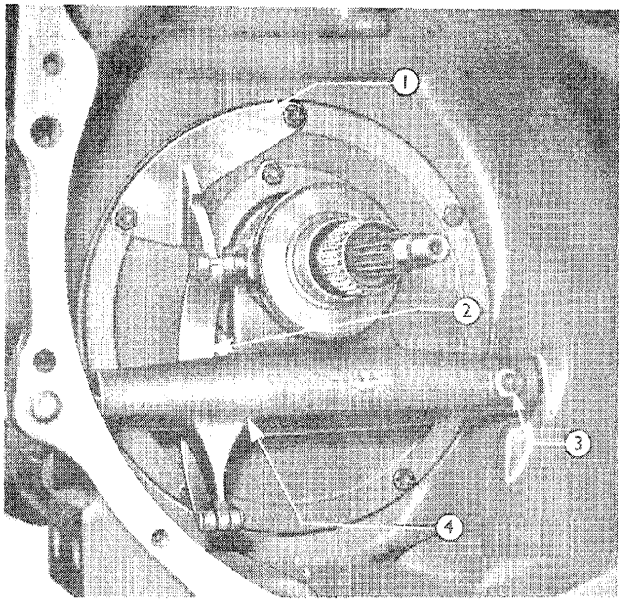

Figure 65
Clutch Release Bearing and Internal "Leaf" Type Return Spring

1. Spring Bracket
2. Leaf Spring
3. Fork Retaining Pin
4. Fork

Remove the retaining nut from the inner threaded end of the tapered pin retaining the release fork to the cross-shaft and install the nut on the threaded outer end of the pin. Tighten the nut to draw the tapered pin out of the fork. Support the fork and remove the cross-shaft then withdraw the release bearing assembly, and the fork and spring assembly.

4c. **Models with an External Return Spring (Figures 66 and 67)**

Remove the bolt and nut at the base of the fork, support the fork and withdraw the cross-shaft. Remove the fork and the release bearing assembly.

5. Where no greaser is incorporated, remove the release bearing from the hub using Tools Number 951, 1002, and the appropriate step plate, Figure 68.

Where a greaser is incorporated do not remove the bearing from the hub as both hub and bearing are serviced as an assembly.

B. INSTALLATION

1. Gently tap the release bearing onto the hub making sure that the thrust face of the bearing faces away from the shoulder on the hub.

2. Pack the recess in the bearing hub bore with a good quality, high melting point grease.

3a. **Models with Internal Coil Return Spring (Figure 64)**

Locate the bearing and hub assembly on the hub support and engage the arms of the fork with the slots in the hub. Pull the inner end of the coil spring forward and engage it in the groove in the hub.

3b. **Models with Internal Leaf Type Return Spring (Figure 65)**

Install the bearing and hub assembly on the hub support, locate the fork and spring engaging the fork with the slots in the hub and install the clutch release cross-shaft picking up the fork on the shaft.

Align the hole in the shaft with the hole in the fork and install the tapered pin. Secure with a locknut on the threaded inside end of the pin, tightening the locknut to draw the pin into position.

Check that not less than four threads of the leaf spring support bracket bolts are engaged in the threaded holes of the front transmission housing then lift the upper end of the spring into the notch in the support bracket.

Tighten the spring support bracket bolts to a torque of 23 to 29 lb. ft. (3.2 to 4.0 m.kg.).

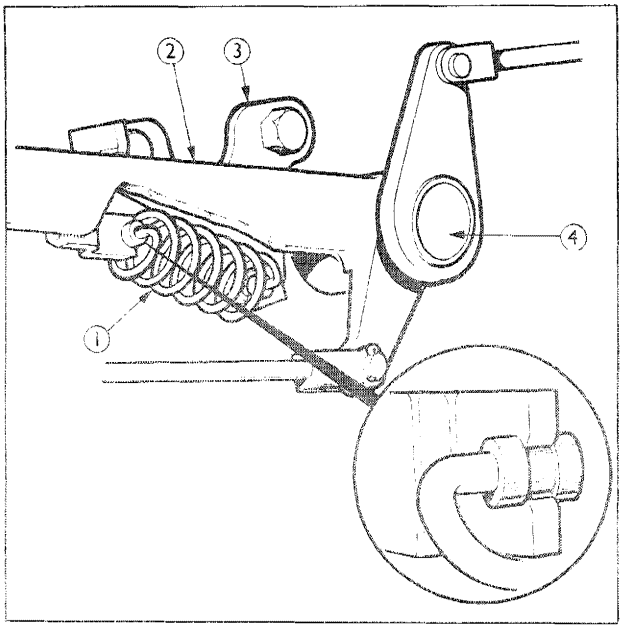

Figure 66
Clutch Pedal External Return Spring
(Ford 2000, 3000 and 4000)

1. Return Spring
2. Clutch Pedal
3. Retaining Bracket
4. Brake Cross-shaft

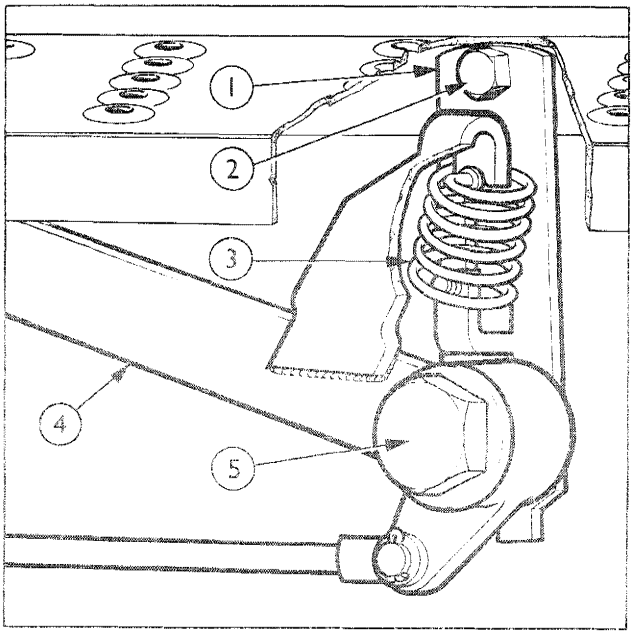

Figure 67
Clutch Pedal External Return Spring
(Ford 5000)

1. Spring Retaining Bracket
2. Spring Retaining Bracket Bolt
3. Return Spring
4. Clutch Pedal
5. Pivot Bolt

© FORD MOTOR COMPANY LTD., 1970

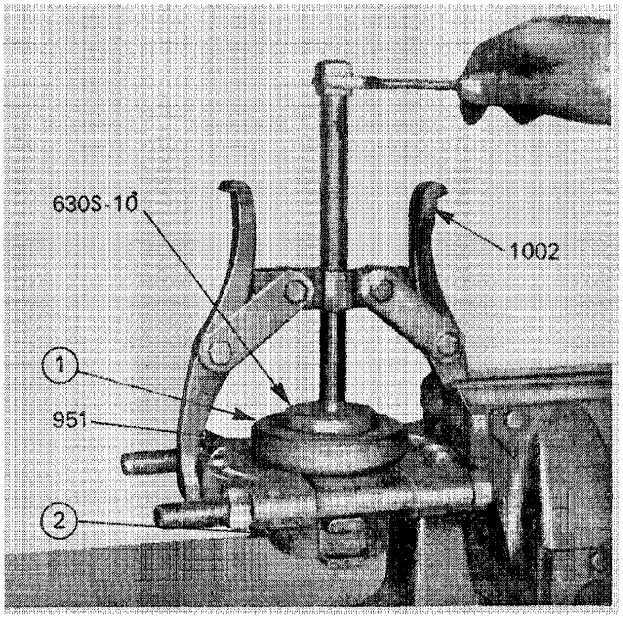

Figure 68
Removing Clutch Release Bearing from Hub
1. Bearing
2. Hub

3c. **Models with an External Return Spring (Figures 66 and 67)**

Install the bearing and hub assembly on the hub support. Engage the release fork in the slots in the release bearing hub and install the cross-shaft picking up with the fork on the shaft.

Align the groove in the cross-shaft with the holes in the split lower portion of the fork. Install the pinch bolt and nut and tighten securely.

4. Where an external greaser is fitted, attach the flexible connection to the threaded hole in the release bearing hub.

5. Reconnect the release rod to the clutch release cross-shaft lever and operate the clutch pedal to check that the bearing and hub assembly slides freely on the hub support.

6. Reconnect the engine and front axle assembly to the front transmission then check, and adjust where necessary, the clutch pedal free play.

7. Start the engine and check that the clutch is operating correctly making any necessary re-adjustments to the pedal linkage as detailed in "Adjustments", Chapters 1 and 2.

3. CLUTCH RELEASE CROSS-SHAFT BUSHINGS

1. Follow the same procedure for removing the clutch release bearing and hub assembly, release fork, cross-shaft and lever assembly and clutch pedal return spring (where applicable) as detailed in Section 2 of this Chapter.

Where the return spring is an internal coil type, the fork and cross-shaft may be removed from a Ford 2000, 3000 or 4000 tractor after removal of the release bearing and hub, by extracting the bolt and nut retaining the fork to the cross-shaft and withdrawing the cross-shaft from the housing. On a Ford 5000 two pins and split pins retain the fork to the shaft instead of the bolt and nut.

2. Drive, or cut, out the two bushings from the front transmission housing and install new bushings with the chamfered end towards the inside of the transmission housing. Drive the new bushings into the housing until they are flush with the outside edge of the hole.

NOTE – Bushings for Ford 2000, 3000 and 4000 tractors built prior to the introduction of the cerametallic button clutch disc were smaller than those used on the Ford 5000. With the current cerametallic button clutch disc the bushings for the Ford 2000, 3000 and 4000 are the same size as those used on the Ford 5000.

Driver, Tool Number 808 used in conjunction with handle Tool Number 814, is suitable for removing and installing the smaller bushings. Driver, Tool Number 811 used with handle Tool Number 814, is suitable for the larger bushings.

3. Re-install the cross-shaft, return spring, release fork and the bearing and hub assembly as detailed in Section 2 of this Chapter and rejoin the engine and front axle assembly to the front transmission.

4. CLUTCH PEDAL BUSHINGS

A. REMOVAL

1. Disconnect the clutch release rod from the clutch pedal.

2a. **Tractors without an External Clutch Pedal Return Spring.**

Ford 2000, 3000 and 4000. Drain the oil from the rear transmission then remove the brake pedals, brake pedal cross-shaft and clutch pedal.

Ford 5000. Unscrew the clutch pedal pivot bolt (left-hand thread) from the rear transmission housing and remove the pedal, clutch pedal shaft and washer.

2b. **Tractors with an External Clutch Pedal Return Spring (Figures 66 and 67)**

Ford 2000, 3000 and 4000. Remove the left-hand platform and fender and drain the oil from the rear transmission.
Remove the brake pedals and withdraw the brake cross-shaft approximately 1.0 in. (25.4 mm.) but do not remove it completely from the rear transmission housing at this stage.
Relieve the compression of the clutch pedal return spring by depressing the pedal past the boss on the transmission housing so that the spring goes "over centre" then remove the spring from the locating "U" slots in pedal and spring retaining bracket.
Fully remove the brake cross-shaft and the clutch pedal.

Ford 5000. Remove the bolt securing the top end of the spring retaining bracket to the rear transmission housing, Figure 67. Slowly unscrew the pivot bolt (left-hand thread) while allowing the spring retaining bracket to pivot and relieve the spring compression then remove the pivot bolt completely.
Remove the spring and spring retaining bracket from the pedal and withdraw the pedal through the slot in the foot-platform.

3. Remove the bushings from the pedal. Driver handle Tool Number 814 with driver 810 is suitable for removing the bushings of Ford 2000, 3000 and 4000 clutch pedals. Driver handle 814 with driver 808 is suitable for the Ford 5000 clutch pedal.

B. ASSEMBLY

1. Position a new bushing in one side of the pedal, chamfered end of the bushing inwards, and tap the bushing into the bushing bore in the pedal until it is flush with the pedal boss. Driver handle Tool Number 814 with driver 811 is suitable for Ford 2000, 3000 and 4000 clutch pedals. Driver handle 814 with driver 809 is suitable for the Ford 5000 clutch pedal.

Turn the pedal over and install the second bushing in a similar manner.

2a. **Tractors without an External Clutch Pedal Return Spring.**

Ford 2000, 3000 and 4000. Assemble the clutch pedal to the brake cross-shaft then install the cross-shaft in the rear transmission housing. Install the brake pedals and re-connect the brake and clutch pedal linkages.
Refill the rear transmission with the correct lubricant.

Ford 5000. Install the clutch pedal shaft and the pivot bolt in the clutch pedal with the appropriate washer between the head of the pivot bolt and the pedal. Screw the pivot bolt into the rear transmission housing (left-hand thread) and tighten to the specified torque – see "SPECIFICATIONS", Chapter 4.

2b. **Tractors with an External Clutch Pedal Return Spring (Figures 66 and 67)**

Ford 2000, 3000 and 4000. Assemble the clutch pedal to the brake pedal cross-shaft and insert the shaft in the rear transmission housing.
Locate the left-hand brake pedal key in its keyway in the brake pedal cross-shaft and install the left-hand brake pedal on the shaft but do not tighten the bolt securing the pedal to the shaft at this stage.

Depress the clutch pedal below the boss on the transmission housing and locate the clutch pedal return spring between the "U" slots in the pedal and spring retaining bracket, see inset Figure 66. Raise the clutch pedal so that the spring goes "over centre" and is thereby retained in compression in the "U" slots of pedal and bracket. Fully assemble the left-hand brake pedal and tighten the pedal to cross-shaft retaining bolt then install the right-hand brake pedal and reconnect the brake linkage.
Re-install the platform and fender and refill the rear transmission with the correct lubricant.

© FORD MOTOR COMPANY LTD., 1970

Ford 5000. Insert the clutch pedal through the opening in the platform and assemble the pedal shaft and pivot bolt with a washer between the head of the bolt and the pedal.
Locate the spring retaining bracket on the bolt then locate the return spring in the "U" slots of the retaining bracket and pedal. Support this assembly and screw the left-hand threaded pivot bolt into the rear transmission housing but do not tighten the bolt at this stage. Pivot the retaining bracket to an upright position, install the retaining bolt through the top hole in the bracket and screw it into the rear transmission housing.
Tighten the pivot bolt to the specified torque – see "SPECIFICATIONS", Chapter 4.

3. Re-connect the clutch release rod to the clutch pedal with the appropriate clevis pin and cotter pin.

Part 4
CLUTCHES

Chapter 4

SPECIFICATIONS AND SPECIAL TOOLS

Section		*Page*
1.	Specifications	47
2.	Special Tools	50

1. SPECIFICATIONS

Where the word "previous" is used in the following specifications it refers to clutches used prior to the introduction of the current cerametallic button type of clutch disc.

Single Clutches

DISC ASSEMBLY

Diameter

Ford 2000, 3000 and 4000—current and previous	11 in. (27.9 cm.)
Ford 5000—current	11 in. (27.9 cm.)
—previous (standard)	12 in. (30.5 cm.)
—previous (heavy duty)	13 in. (33.0 cm.)

Type of Hub Splines

Ford 2000, 3000 and 4000—current	Square cut
—previous	Involute.
Ford 5000—current and previous	Involute

Friction Material

Ford 2000, 3000 and 4000—current	3 pairs cerametallic buttons
Ford 5000—current	4 pairs cerametallic buttons
All models—previous	Continuous band organic

Total Friction Area (both sides of disc)

Ford 2000, 3000 and 4000—current	22.8 in.^{2} (147 cm.^{2})
—previous	111.0 in.^{2} (716 cm.^{2})
Ford 5000—current	30.4 in.^{2} (196 cm.^{2})
—previous (standard)	128.0 in.^{2} (825 cm.^{2})
—previous (heavy duty)	162.0 in.^{2} (1045 cm.^{2})

© FORD MOTOR COMPANY LTD., 1970

Single Clutches *continued* —

PRESSURE PLATE AND COVER ASSEMBLIES

Pressure Plate Diameter

Ford 2000, 3000 and 4000—current and previous	11 in. (27.9 cm.)
Ford 5000—current	11 in. (27.9 cm.)
—previous (standard)	12 in. (30.5 cm.)
—previous (heavy duty)	13 in. (33.0 cm.)

Springs	*Number*	*Spring Load at Compressed Length of 1.69 in. (42.9 mm.)*
Ford 2000/3000—current	6	53 lb. (24.0 kg.)
Ford 4000—current	6	66 lb. (29.9 kg.)
Ford 5000—current	6	85 lb. (38.6 kg.)
Ford 2000—previous	8	145 lb. (65.8 kg.)
Ford 3000—previous	12	112 lb. (50.8 kg.)
Ford 4000—previous	12	155 lb. (70.3 kg.)
Ford 5000—previous (standard)	16	125 lb. (56.7 kg.)
Ford 5000—previous (heavy duty)	16	140 lb. (63.5 kg.)

CLUTCH LINKAGE

Clutch Pedal Free Travel

Ford 2000, 3000, 4000 and 5000—current	1.25 in. (32 mm.)
Ford 4200—current	1.375 in. (35 mm.)
Ford 2000 and 3000 with Transmission P.T.O.—previous	1.25 in. (32 mm.)
Ford 4000 with Transmission P.T.O.—previous	1.375 in. (35 mm.)
Ford 4000 with Independent P.T.O.—previous	1.75 in. (44 mm.)
Ford 5000—previous	1.375 in. (35 mm.)

TIGHTENING TORQUES

Clutch Cover to Flywheel Bolts	23 to 29 lb. ft. (3.2 to 4.0 m.kg.)
Clutch Pedal Pivot Bolt—Ford 5000	130 to 160 lb. ft. (18 to 22 m.kg.)
Pressure Plate Drive Strap Locking Ferrule Bolts—Ford 5000—previous	20 to 25 lb. ft. (2.8 to 3.5 m.kg.)
Flywheel to Crankshaft Bolts	100 to 110 lb. ft. (13.8 to 15.2 m.kg.)
Leaf Type Clutch Pedal Return Spring Bracket Bolts	23 to 29 lb. ft. (3.2 to 4.0 m.kg.)

CLUTCH RELEASE BEARING

Lubricant—Ford 5000 Heavy Duty with Greaser	Non-fibrous, lithium base

Double Clutch

DISC ASSEMBLIES

Diameter

Transmission Disc—current and previous	11 in. (27.9 cm.)
P.T.O. Disc	8.5 in. (21.6 cm.)

Type of Hub Splines

Transmission Disc—current	square cut
—previous	Involute
P.T.O. Disc	Involute

Friction Material

Transmission Disc—current	3 pairs cerametallic buttons
—previous	Continuous band organic
P.T.O. Disc	Continuous band organic

Total Friction Area (both sides of disc)

Transmission Disc—current	22.8 in.^{2} (147 cm.^{2})
—previous	111.0 in.^{2} (716 cm.^{2})
P.T.O. Disc	64.0 in.^{2} (413 cm.^{2})

PRESSURE PLATE AND COVER ASSEMBLIES

Diameter

Transmission Pressure Plate	11.2 in. (28.5 cm.)
P.T.O. Pressure Plate	8.6 in. (21.8 cm.)

Transmission Clutch Springs	*Number*	*Spring Load at Compressed Length of 2.27 in. (57.7 mm.)*
Current	12	81 lb. (36.7 kg.)
Previous	12	97 lb. (44.0 kg.)

P.T.O. Clutch Springs	*Number*	*Spring Load at Compressed Length of 1.95 in. (49.5 mm.)*
Current	9	115 lb. (52.2 kg.)

Gap—Socket-headed Screw to Release Lever Strut

Tractors with External Clutch Pedal Return Spring	0.050 to 0.054 in. (1.27 to 1.37 mm.)
Tractors with Internal Leaf Type Clutch Pedal Return Spring	0.070 to 0.074 in. (1.78 to 1.88 mm.)
Tractors with Internal Coil Type Clutch Pedal Return Spring	0.050 to 0.054 in. (1.27 to 1.37 mm.)

CLUTCH LINKAGE

Clutch Pedal Free Travel

Current	1.25 in. (32 mm.)
Previous	1.5 in. (38 mm.)

TIGHTENING TORQUES

Clutch Cover to Flywheel	13 to 15 lb. ft. (1.8 to 2.1 m.kg.)
P.T.O. Drive Plate and Flywheel to Crankshaft Bolts	100 to 110 lb. ft. (13.8 to 15.2 m.kg.)
Leaf Type Clutch Pedal Return Spring Bracket Bolts	23 to 29 lb. ft. (3.2 to 4.0 m.kg.)

© FORD MOTOR COMPANY LTD., 1970

2. SPECIAL TOOLS

Tool Number	*Description*
‡SW510	Universal Clutch Fixture
‡SW511	Universal Clutch Fixture Adaptor Kit
‡SW510-5K	Universal Clutch Fixture Gauge Spacer
*SW12B	Single and Double Clutch Overhaul and Adjustment Fixture
*SW13	Double Clutch Release Lever Clip Compressor and Hold-down Clips
*SW13-1	Clutch Disc Locator—Double Clutch and 11 in. (27.9 cm.) Single Clutches
*SW14	Clutch Disc Locator—12 in. (30.5 cm.) and 13 in. (33.0 cm.) Clutches
‡SW509	Clutch Disc Locator—previous type Ford 2000, 3000 and 4000 Clutches, also all previous and current Ford 5000 Clutches
‡SW509A	Clutch Disc Locator—current type Ford 2000, 3000 and 4000 Clutches
954	Pilot Bearing Puller
955-14	Puller Adaptors (Set of two)
943-S	Slide Hammer
FT943	Internal Puller Adaptors (Set of two)
630-S	Step Plate (Set of eleven)
630-T	Step Plate Adaptors (Set of six)
951	Puller Attachment (Small)
1002	Puller—Reversible Arm (Medium)
818	Bushing Kit

‡U.S.A. only.

*Except U.S.A.

PART 5
FOUR-SPEED TRANSMISSION

Part 5

FOUR-SPEED TRANSMISSION

Chapter 1

SERVICING THE TRANSMISSION

Section		Page
1.	Description and Operation	1
2.	Overhaul Shifter Cover	1
3.	Overhaul Front End	4
4.	Overhaul Rear End	8
5.	Complete Overhaul	9

Chapter 2

SPECIFICATIONS AND SPECIAL TOOLS

Section		Page
1.	Specifications	15
2.	Special Tools	15

© FORD MOTOR CO. 1964

Part 5

FOUR-SPEED TRANSMISSION

Chapter 1

SERVICING THE TRANSMISSION

Section	Page
1. Description and Operation	1
2. Overhaul Shifter Cover	1
3. Overhaul Front End	4
4. Overhaul Rear End	8
5. Complete Overhaul	9

1. DESCRIPTION AND OPERATION

The four-speed transmission, Figure 1, is equipped with constant mesh, helical gears in all forward speeds. Input shaft, output shaft and countershaft are supported by tapered roller bearings. Pre-load on these bearings is obtained through the use of metal shims located at the rear bearing retainers. A safety-type starter switch is located on top of the transmission cover assembly. As a safety feature, the starter switch will not allow the engine to start until the gearshift lever is placed in the neutral position.

Reverse gear is obtained through a combination of spur and helical gearing. Sliding splined couplings are used with connectors to engage the gears. The couplings are splined internally to the connectors and slide over the engaging teeth on the side of each gear when the gearshift lever is moved. This locks the gear to the shaft through the coupling and connector. Transmission power flows for the four-speed transmission are illustrated in Figures 2 through 6.

2. OVERHAUL SHIFTER COVER

A. Removal and Disassembly

1. Disconnect the safety starter switch wire.
2. Remove the nine bolts that attach the shift cover assembly to the transmission case and lift the cover off the case.
3. Remove the safety starter switch and plunger, Figure 7.
4. Compress the gearshift lever spring and remove the spring seat as shown in Figure 8.
5. Loosen the shift lever dust seal from the cover and remove the shift lever from the cover, Figure 7.
6. Inspect and repair or install new parts as required.

B. Assembly

1. Insert the shift lever in the cover and reposition the dust seal.
2. Install the gearshift lever spring and spring seat, Figure 8. Move the lever to check for proper seat position. A clicking noise will indicate that the spring seat is improperly positioned.
3. Install the safety starter switch and plunger.
4. Position a new cover gasket on the case. Place the cover gasket on the case, with the gearshift lever properly located in the gearshift plates. Install the nine cover bolts and tighten them securely.
5. Connect the safety starter switch wire.

© FORD MOTOR CO. 1964

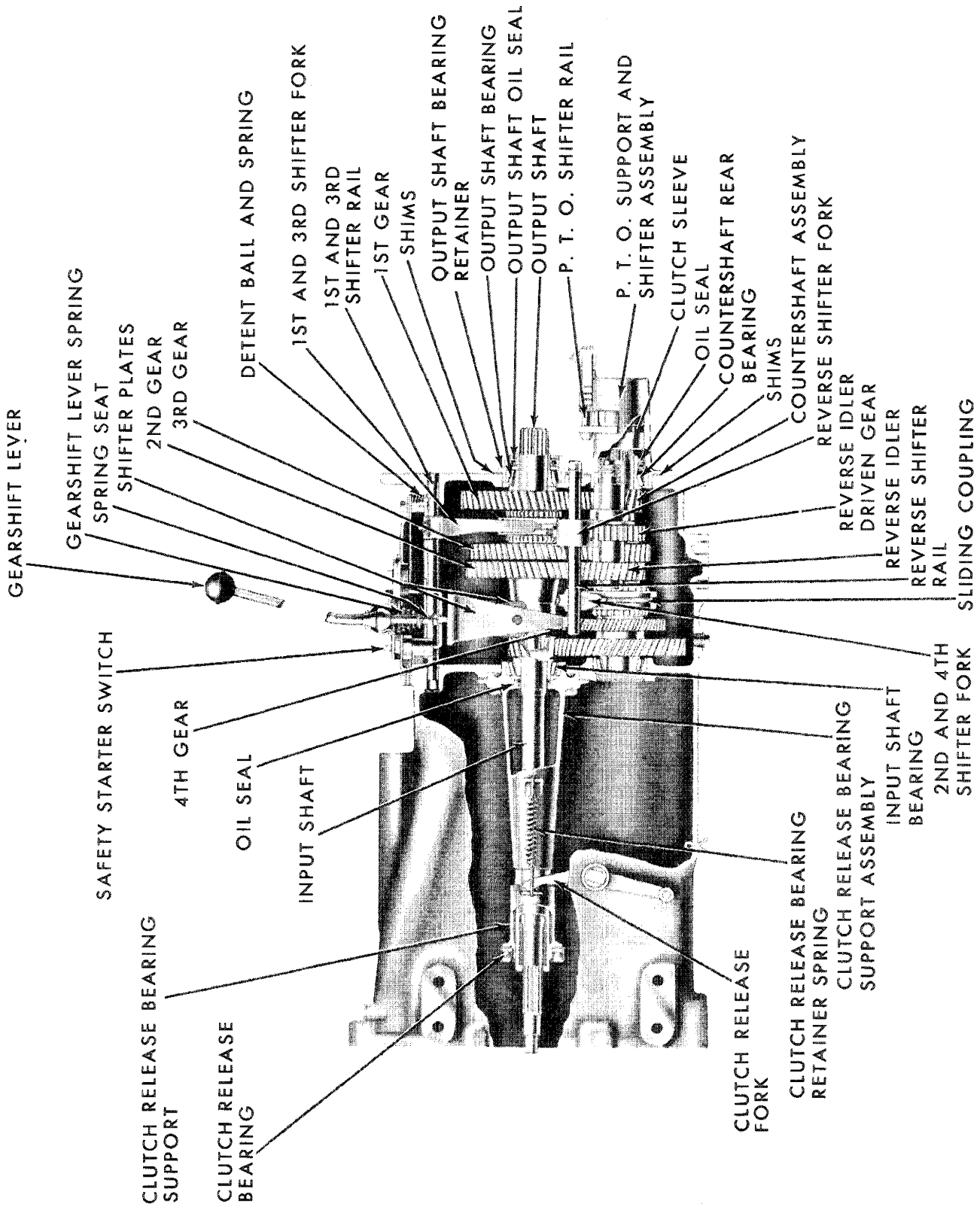

Figure 1
Four Speed Transmission

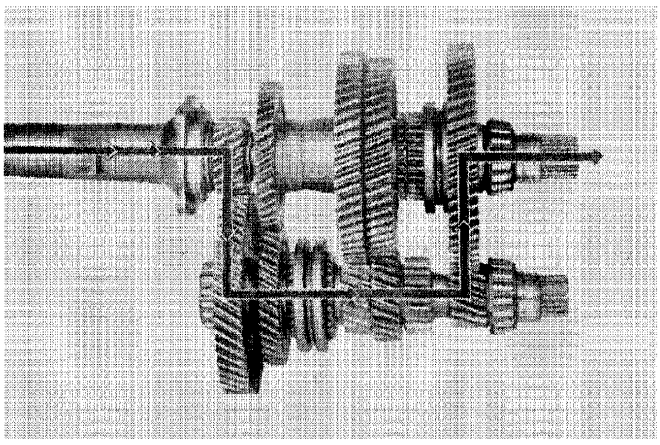

Figure 2
Power Flow—First Gear

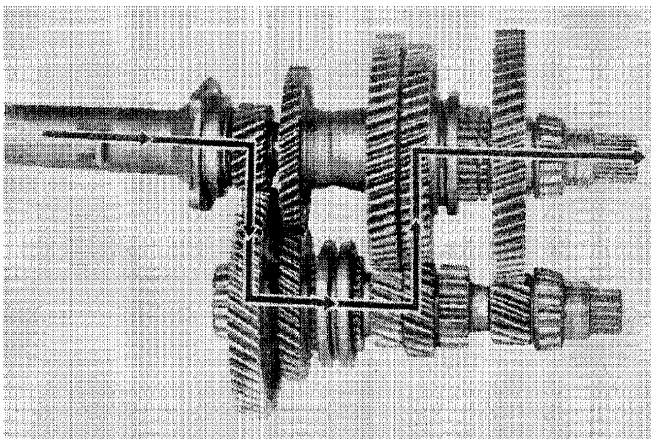

Figure 4
Power Flow—Third Gear

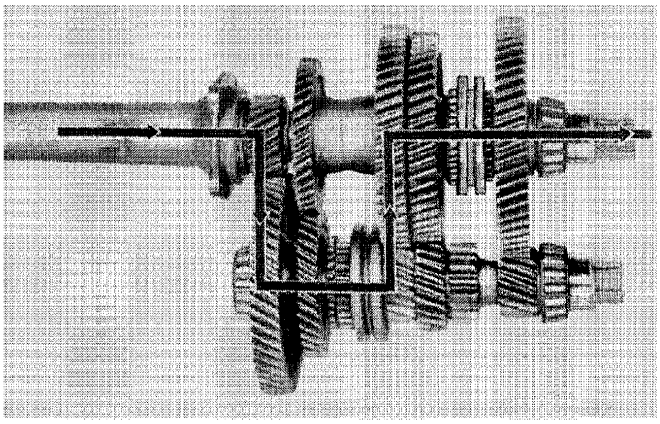

Figure 3
Power Flow—Second Gear

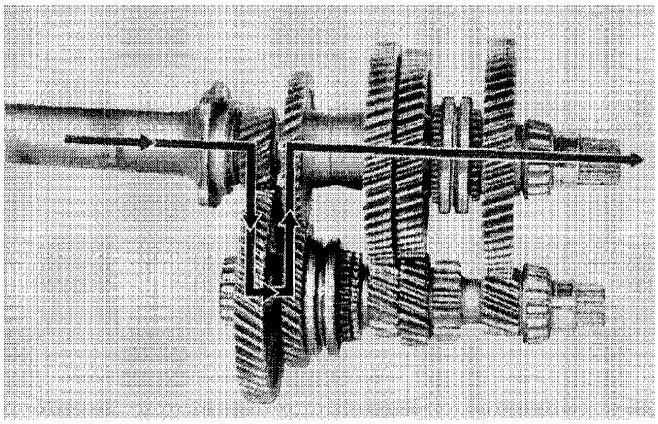

Figure 5
Power Flow—Fourth Gear

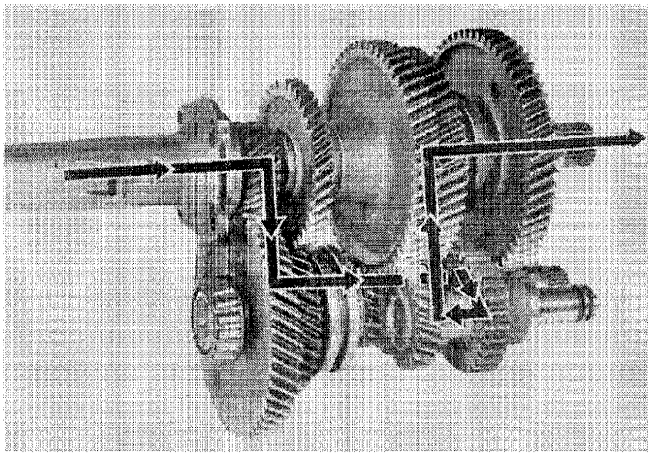

Figure 6
Power Flow—Reverse Gear

© FORD MOTOR CO. 1964

3. OVERHAUL FRONT END

Separate the tractor between the engine and transmission as described in Part 15, "SEPARATING THE TRACTOR".

CLUTCH PEDAL BUSHING:

A. Removal and Disassembly

1. Remove the clutch pedal and place it in a vise to facilitate bushing removal.
2. Using Driver No. 810 and Handle No. 814, drive the bushing out of the pedal.

B. Assembly

1. Position a new bushing with the chamfered end started in the bore of the pedal.
2. Using Driver No. 811 and Handle No. 814, install the bushing so that the end of the bushing is flush with the linkage side of the pedal.

CLUTCH RELEASE SHAFT BUSHING:

A. Removal and Disassembly

1. Disconnect the clutch release bearing retainer springs and remove the bearing and hub assembly.
2. Remove the bolt that retains the clutch release fork to the clutch release shaft and withdraw the shaft and release shaft fork from the transmission case.
3. Using Driver No. 808 and Handle No. 814, drive the clutch release shaft bushings out of the transmission case.

B. Assembly

1. Position a new bushing with the chamfered end started in the bore of the transmission case. Then, using Step Plate No. 630-3, drive the bushing into the bore until the end of the bushing is flush with the counter bore. Install the other bushing in the same manner.
2. Install the clutch release fork and clutch release shaft in the transmission case. Be sure the shaft moves without binding. Align the bore in the shoulder of the release fork with the bore in the shaft and install a new retaining bolt.
3. Install the clutch release bearing and hub assembly. Position the release fork on the hub and install the clutch release bearing springs.

CLUTCH RELEASE BEARING:

A. Removal and Disassembly

1. Disconnect the clutch release bearing retainer springs and remove the bearing and hub assembly.
2. Hold the clutch release bearing and tap the hub out of the bearing with a soft hammer. Inspect the bearing to determine if it has been turning on the hub. If score marks are present on the hub, install a new bearing and hub.

B. Assembly

1. Place the hub and bearing in a vise using soft jaws and press the bearing on the hub being careful to keep the bearing aligned.
2. Thoroughly clean the portion of the clutch release bearing support on which the hub slides.
3. Install the release bearing and hub assembly. Position the release fork on the hub and install the clutch release bearing springs.

INPUT SHAFT AND SUPPORT ASSEMBLY:

A. Removal and Disassembly

1. Disconnect the clutch release bearing springs and remove the bearing and hub assembly, Figure 9.
2. Remove the four bolts and lock washers that attach the clutch release bearing support assembly, Figure 11, to the transmission case. Remove the input shaft and support assembly as a unit.
3. Slip the input shaft out of the bearing support.
4. Remove the input shaft bearing with Puller No. 951, Extension No. 930-B, Puller No. 938, and Wrench No. P-61 as illustrated in Figure 10. Remove the bearing cup from the support with Bearing Cup Pulling Attachment No. 943 and Slide Hammer No. 943-S. Remove the oil seal using Puller No. 956-2 and Slide Hammer.
5. Inspect and repair or install new parts as required.

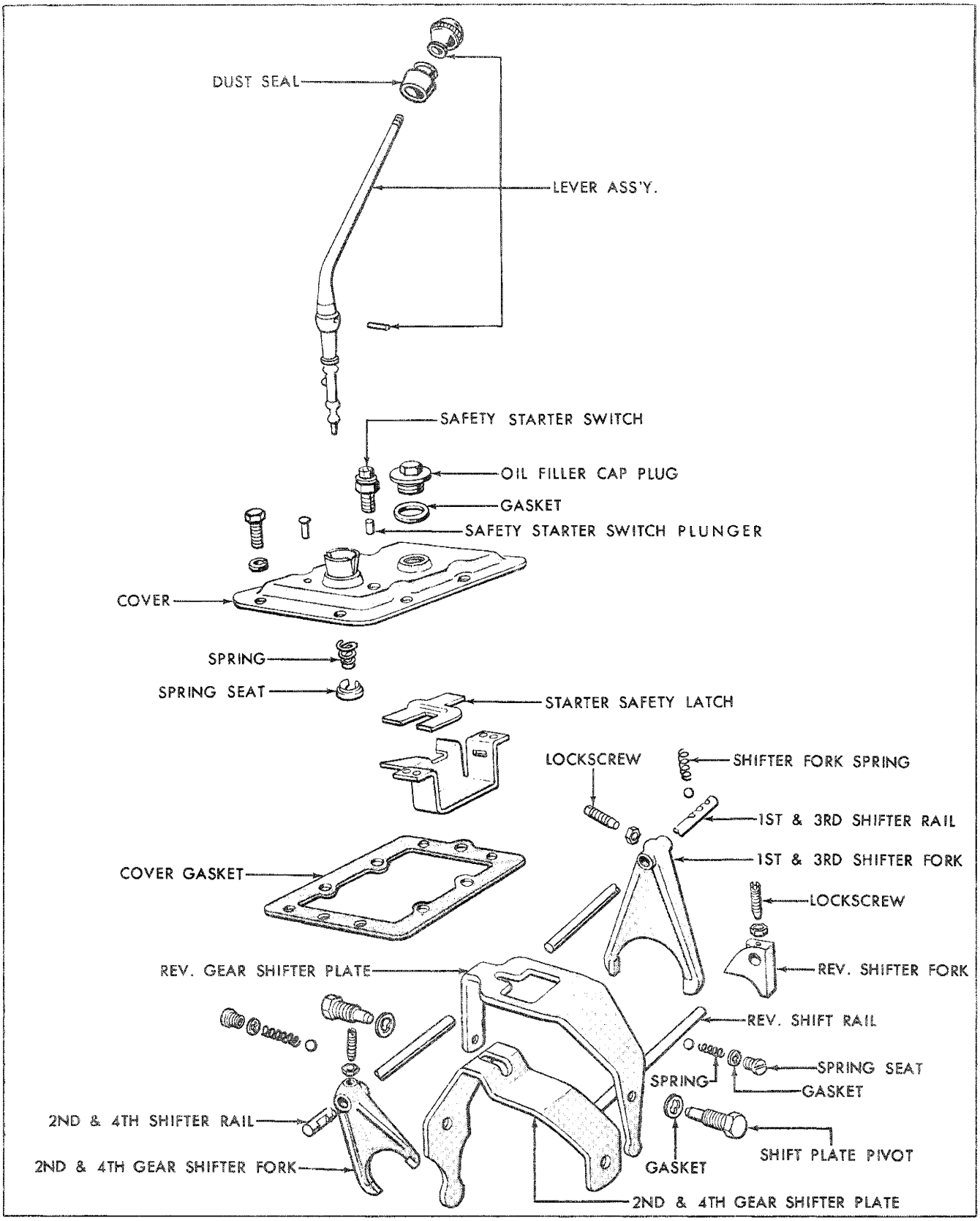

Figure 7
Shifting Mechanism—Disassembled

© FORD MOTOR CO. 1964

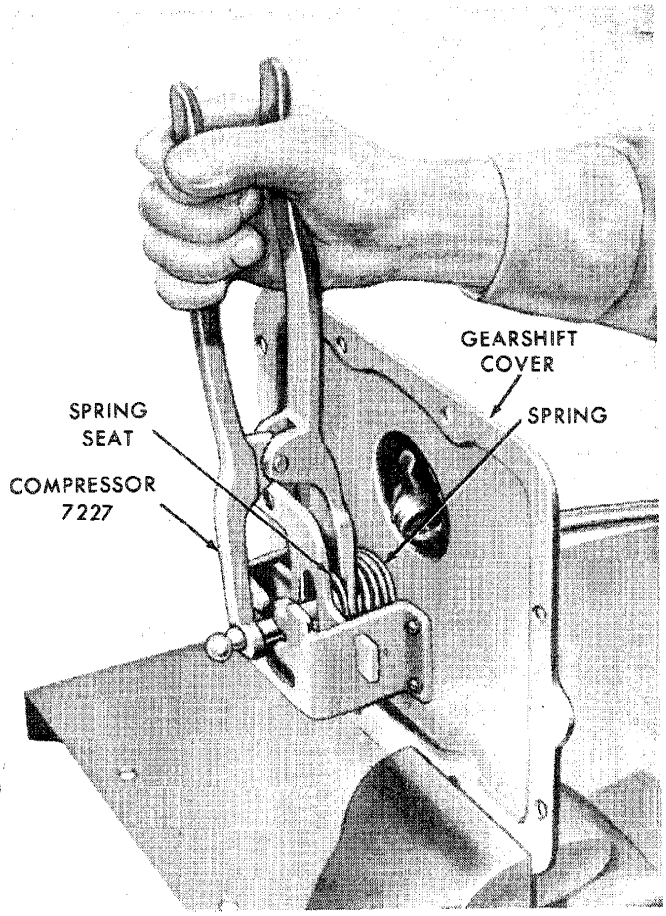

Figure 8
Removing Shift Lever Spring

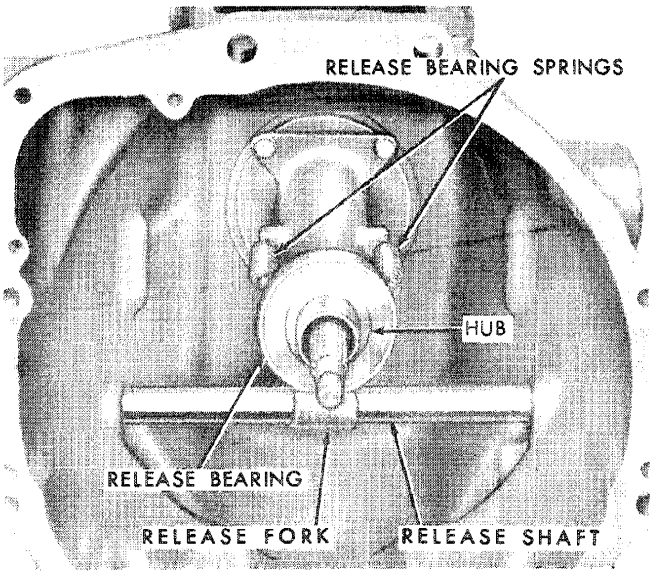

Figure 9
Removing Clutch Release Bearing

B. Assembly

1. Place a 1⅜ in. (34.925mm) I.D. x 3 in. (76.199mm) long sleeve on two arbor press split plates. Place the bearing in position on the input shaft and insert the splined end of the shaft through the sleeve until the inner race of the bearing rests on top of the sleeve. Place a suitable driver on the face of the shaft, then press the shaft into the bearing until the bearing bottoms on the shaft.
2. With Driver No. 630-9, install a new oil seal in the retainer with the lip of the seal facing toward the rear. Coat the sealing surface of the seal with grease. With Driver No. 630-15, install the bearing cup into the retainer.
3. Coat the splines of the input shaft with grease and slide the shaft assembly into the bearing support. Rotate the shaft during assembly to prevent damage to the oil seal.

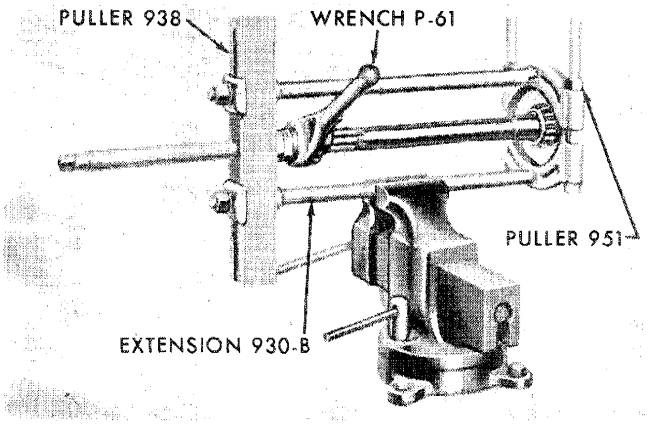

Figure 10
Removing Input Shaft Bearing

4. Position the input shaft and support assembly at the front end of the case and install the four bolts and lock washers. Tighten the bolts to the specified torque, page 15.
5. Install the clutch release bearing and hub assembly, and connect the clutch release bearing springs.

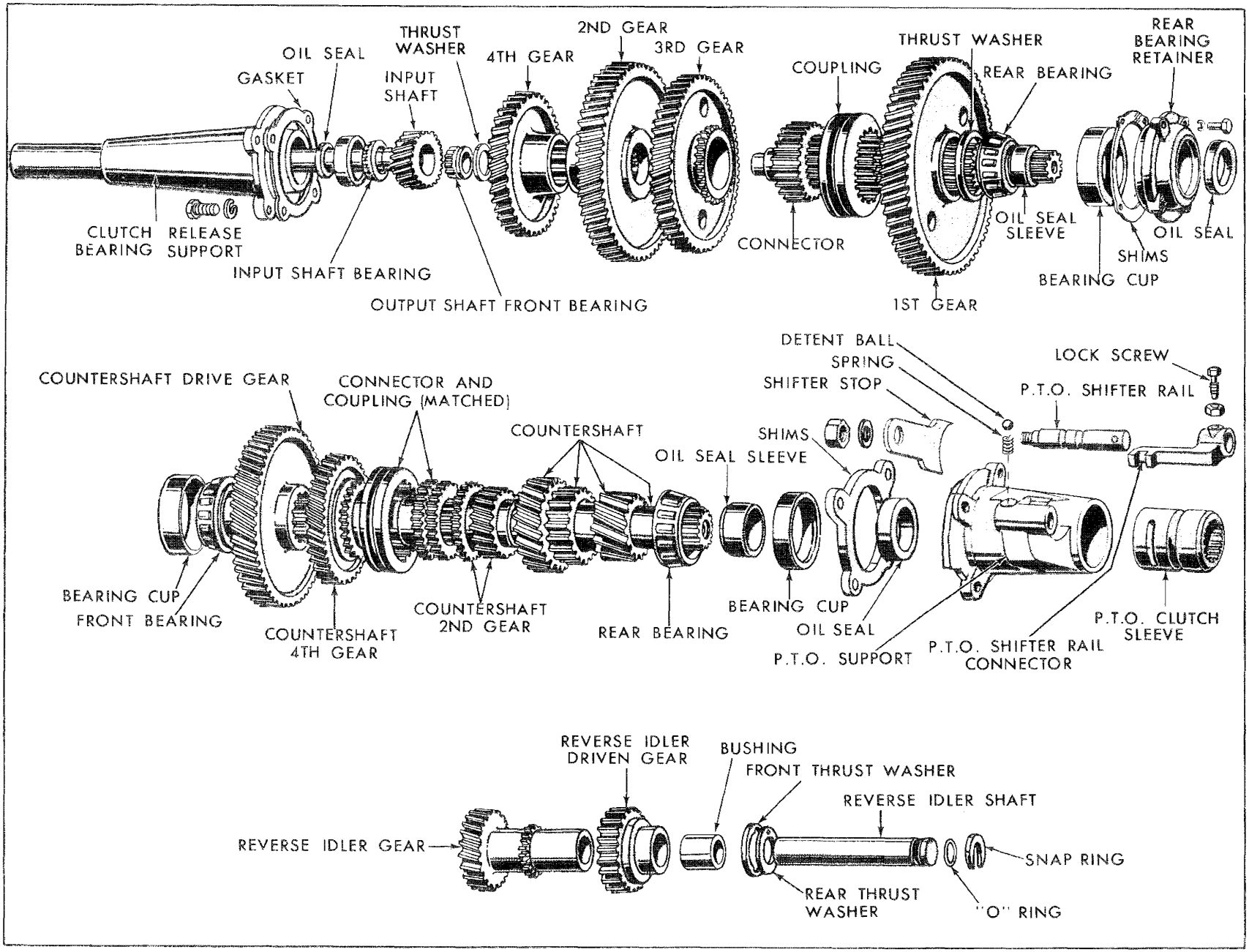

Figure 11
Transmission—Disassembled

© FORD MOTOR CO. 1964

4. OVERHAUL REAR END

Separate the tractor at the rear of the transmission as described in Part 15, "SEPARATING THE TRACTOR."

OUTPUT SHAFT OIL SEAL:

A. Removal and Disassembly

1. Remove the four bolts and lock washers holding the output shaft bearing retainer, Figure 11, to the case and remove the retainer. Keep the shims together to facilitate assembly.
2. With Bearing Cup Pulling Attachment No. 943 and Slide Hammer No. 943-S, remove the oil seal from the retainer.

B. Assembly

1. Press a new seal in the bearing retainer with a $2^{9}/_{16}$ in. (65.086mm) O.D. x 3 in. (76.199mm) long sleeve. Coat the seal contact surface with a light film of grease.
2. Place the shims and retainer assembly in the rear of the transmission case and install the four bolts and lock washers. Tighten the bolts to the specified torque, page 15.

P.T.O. SHIFTER ASSEMBLY:

A. Removal and Disassembly

1. Remove the four bolts and lock washers that attach the P.T.O. support and shifter assembly, Figure 11, to the rear of the transmission case. Remove the assembly and keep the shims together to permit proper assembly.
2. Remove the nut and lock washer that retains the P.T.O. shifter stop to the shift rail and remove the shifter stop from its location in the P.T.O. clutch sleeve, Figure 11.
3. Remove the shift rail, detent ball and detent spring from the support housing.
4. Remove the clutch sleeve from the assembly.
5. The bearing cup must be removed in order to install the oil seal. The cup and seal can be removed with Bearing Cup Pulling Attachment No. 943 and Slide Hammer No. 943-S.
6. Inspect and repair or install new parts as required.

B. Assembly

1. Install a new oil seal and the bearing cup in the support housing using an arbor press and Step Plates No. 630-12 and No. 630-15, respectively. Coat the sealing surface of the seal with grease.
2. Place the P.T.O. clutch sleeve in the support housing with the wide land end of the sleeve facing toward the bearing cup end of the support.
3. Install the shift rail detent spring and ball, Figure 11. Push the ball down far enough to permit partial insertion of the shifter rail into the housing. Then, place the shifter stop in the groove in the clutch sleeve and push the shifter rail into the shifter stop. Install the lock washer and nut and tighten the nut securely.
4. Place the P.T.O. support and shifter assembly in position at the rear of the transmission case. Be sure the shims are located between the support assembly and case. Install the four bolts and lock washers and tighten to the specified torque, page 15.

5. COMPLETE OVERHAUL

Remove the transmission from the tractor as described in Part 15, "SEPARATING THE TRACTOR."

A. Disassembly

1. Remove the nine bolts that attach the cover assembly to the transmission case and lift the cover off the case.
2. Remove the shifter fork spring and the detent ball, Figure 7, that are held in place by the cover.
3. Disconnect the clutch release bearing springs and remove the bearing and hub assembly, Figure 9.
4. Remove the four bolts and lock washers that attach the clutch release bearing support assembly, Figure 11, to the transmission case. Remove the input shaft and support assembly as a unit.
5. Loosen the lock nut on the lock screw in the 1st and 3rd gear shifter fork, Figure 7. Back off the screw and slide the shifter rail out of the transmission case. Remove the shifter fork from its position in the output shaft connector coupling.
6. Remove the shifter plate pivots and gaskets, Figure 7, from each side of the housing and lift the plates out of the case.
7. Remove the four bolts and lock washers holding the output shaft bearing retainer, Figure 11, to the case and remove the retainer. Keep the shims together to facilitate assembly.
8. Lift the output shaft gear assembly out of the case. It may be necessary to push the reverse gear shifter fork and 2nd and 4th gear shifter fork, Figure 7, toward the front of the case to provide clearance for removing the output shaft.
9. Remove the shifter rail spring seat, gasket, spring and detent ball from the right side of the transmission case. Loosen the lock nut on the lock screw in the 2nd and 4th gear shifter fork, Figure 7, and back off the screw. Remove the shifter rail cap plug from the rear of the transmission case and pull the shifter rail out of the case. Remove the shifter fork from its position in the countershaft connector coupling.
10. Remove the four bolts and lock washers that attach the P.T.O. support and shifter assembly, Figure 11, to the rear of the transmission case. Remove the assembly and keep the shims together to permit proper assembly.
11. Slide the countershaft assembly, Figure 11, to the rear and lift it out of the case.
12. Remove the reverse shifter rail spring seat, gasket, spring and detent ball from the left side of the transmission case, Figure 7.
13. Loosen the lock nut on the lock screw in the reverse gearshift fork, Figure 7, and back off the lock screw. Remove the shifter rail cap plug from the rear of the transmission case and pull the reverse gearshift rail out of the housing. Remove the shifter fork from its position on the reverse idler driven gear, Figure 7.
14. Pull the reverse idler shaft from its bore in the case and lift the gears and thrust washers out of the transmission.
15. Remove the snap ring and O-ring from the reverse idler shaft, Figure 11.

B. Repair of Sub-Assemblies

After the sub-assemblies have been removed from the transmission and disassembled, it will be necessary to follow the cleaning and inspection procedure as required below prior to repairing or installing the components as detailed in this section.

1. Clean all old lubricant and dirt from the parts with a suitable cleaning solvent.
2. To clean the bearings, rotate the bearings in cleaning solvent until all of the old lubricant has been removed. Dry the bearings with compressed air, being careful not to spin them. Slowly turn the bearings by hand while directing the air at right angles, to prevent them from spinning.
3. Inspect all bearings for wear, scores, discoloration from overheating or for missing rollers. Check bearing cups for wear, cracks, or scores. Check bearings for worn or bent retainers. Discard all defective bearings and cups.

© FORD MOTOR CO. 1964

4. After inspecting the bearings, lubricate them thoroughly, and wrap each bearing in a clean, lint-free cloth until ready for use.
5. Inspect the transmission case for cracks, worn bearing bores, damaged threads, or other damage. Install a new case if any of these conditions are evident.
6. Discard all gears, couplings, and connectors that are worn, chipped, broken or otherwise damaged. Small nicks or burrs should be removed with a fine grinding stone.
7. Inspect all shift lever forks, rails, and shift gates for wear and damage. Discard all defective parts as required.
8. Install all new oil seals and gaskets at time of assembly.

Output Shaft: The following procedure covers the disassembly and assembly of the output shaft and output shaft bearing retainer.

1. With Bearing Cup Pulling Attachment No. 943 and Slide Hammer No. 943-S, remove the rear bearing cup and oil seal from the retainer, Figure 11.
2. Remove the 4th gear, thrust washer, and front bearing with Gear Puller No. 1002, as shown in "A", Figure 12.

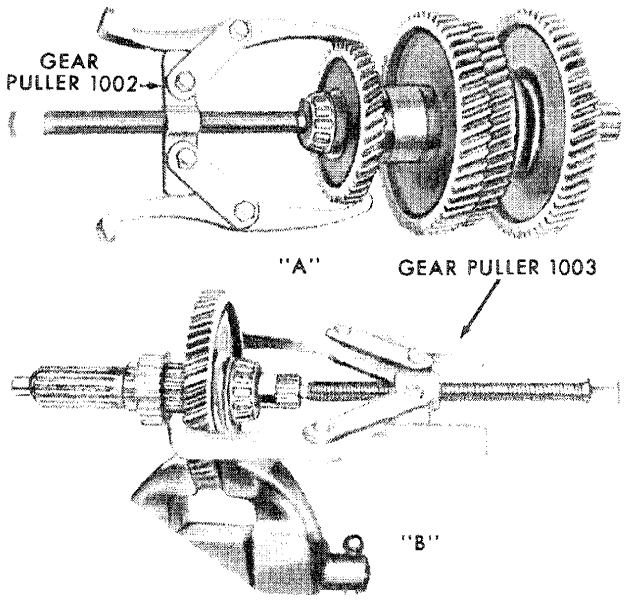

Figure 12
Removing Output Shaft Gears and Bearings

3. Slide the 2nd gear off the shaft.
4. Remove the 1st gear, thrust washer, rear bearing and oil seal sleeve with Gear Puller No. 1003, as shown in "B", Figure 12.
5. Slide the coupling, the connector, and 3rd gear off the output shaft.
6. Inspect and repair or install new parts as required.
7. Place the 2nd gear, 4th gear and thrust washer on the front of the output shaft.
8. With an arbor press and a 7/8 in. (22.225mm) I.D. x 3 in. (76.199mm) long sleeve, press the output shaft front bearing on the output shaft.
9. Place the 3rd gear, 1st and 3rd gear connector and coupling, and the 1st gear and thrust washer on the rear of the shaft.
10. Press the rear bearing and oil seal sleeve on the output shaft using an arbor press and a 1½ in. (38.100mm) I.D. x 3 in. (76.199mm) long sleeve.

Countershaft: The following procedure covers the disassembly and assembly of the countershaft.

1. Remove the countershaft front bearing cup from the transmission housing with Bearing Cup Pulling Attachment No. 943 and Slide Hammer No. 943-S as shown in Figure 13.

   NOTE: ***It is not necessary to remove the expansion plug when removing the countershaft front bearing cup.***

2. With Bearing puller No. 951 and Gear Puller No. 1002, as shown in "A", Figure 14, pull the countershaft rear bearing and oil seal sleeve off the countershaft.
3. With Gear Puller No. 1003, as shown in "B", Figure 14, pull the countershaft drive gear and front bearing off the countershaft.
4. Slide the countershaft 4th gear, 2nd and 4th gear connector and coupling off the countershaft. Slide the countershaft 2nd gear off the shaft.

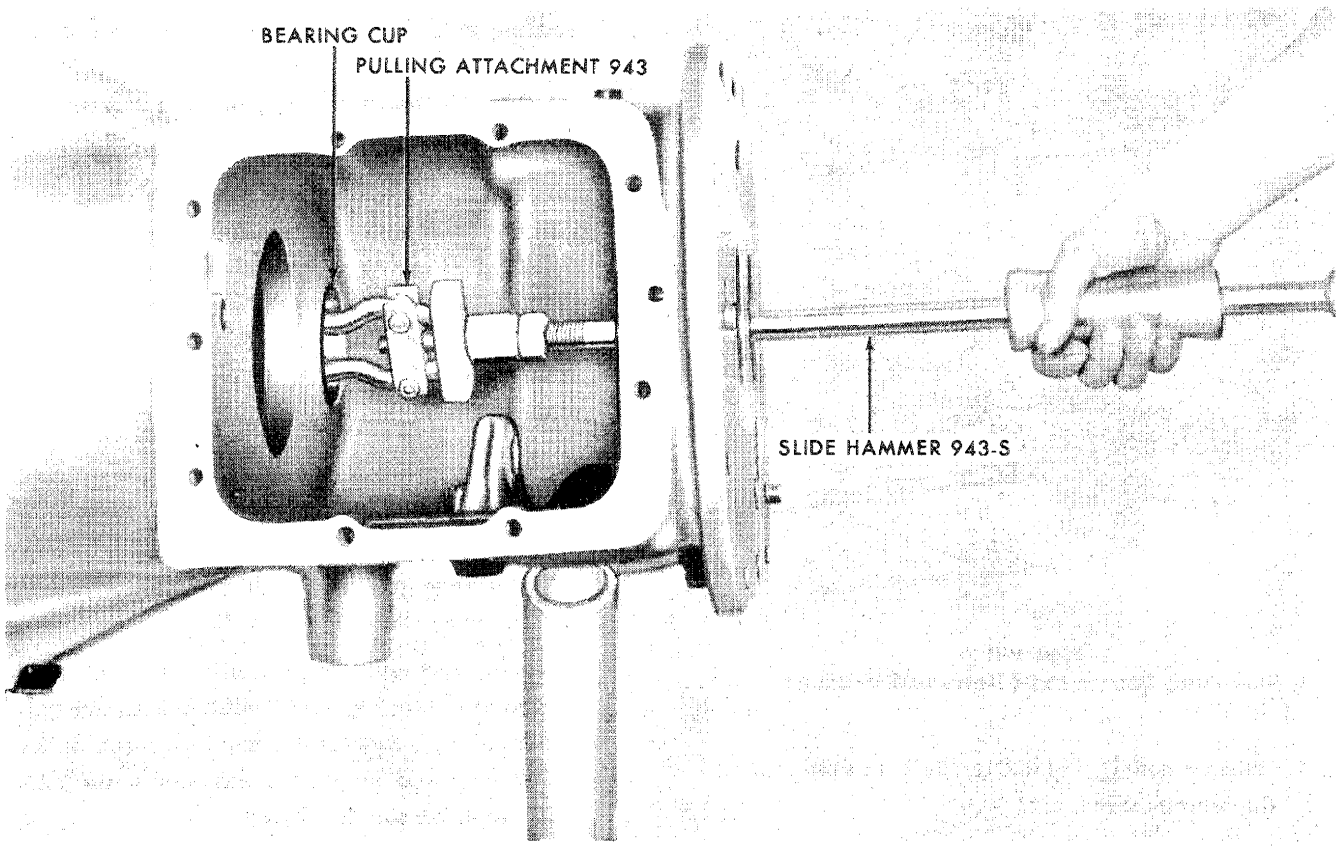

Figure 13
Removing Countershaft Front Bearing Cup

5. Inspect and repair or install new parts as required.

6. Install the front bearing cup in the transmission housing with Step Plate No. 630-15.

7. Install in order on the countershaft, the countershaft 2nd gear, 2nd and 4th gear connector and coupling, countershaft 4th gear and countershaft drive gear.

8. With an arbor press and a 1½ in. (38.100mm) I.D. x 3 in. (76.199mm) long sleeve, press the countershaft front bearing on the countershaft.

9. Press the rear bearing and oil seal sleeve on the countershaft using an arbor press and a 1⅜ in. (34.925mm) I.D. x 3 in. (76.199mm) long sleeve.

C. Assembly

Before beginning a complete buildup, the output shaft preload must be checked. This is accomplished by installing the output shaft in the case as detailed in Steps 12 through 17 of the following procedure. Check the output shaft preload with a cord and pull scale in the same manner as for the countershaft, illustrated in Figure 15. Preload should be checked when the lower gear forks are in neutral and with the top gear forks not installed, with the gears and bearings lightly oiled. Add or remove shims as required to provide specified preload. After establishing the correct preload, remove the output shaft from the transmission case and begin the complete buildup. Lubricate all gears and bearings with the transmission lubricant before installing them in the case.

© FORD MOTOR CO. 1964

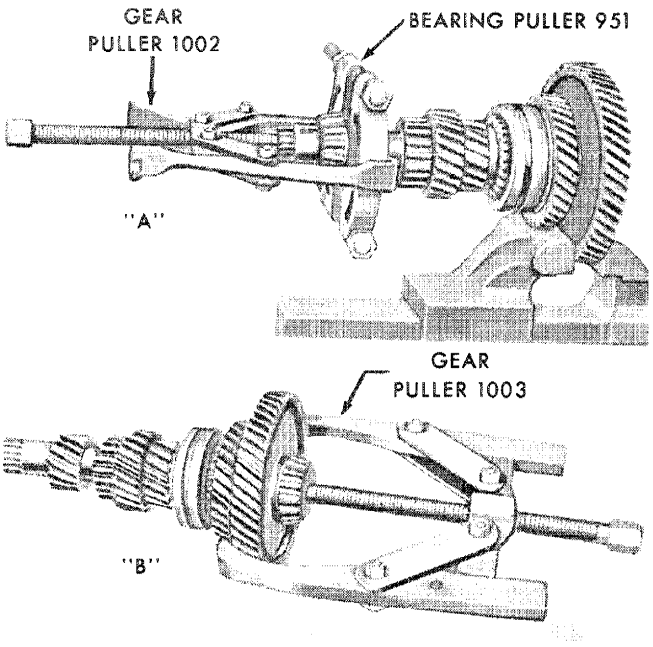

Figure 14
Removing Countershaft Gears and Bearings

1. Install a new O-ring and circlip type snap ring on the reverse idler shaft.

2. Position the reverse idler gear, reverse idler driven gear and thrust washers in the transmission case. Figure 8 shows their relative position in the transmission case. The oil grooves in the front thrust washer must face the rear thrust washer and the tang on the back face of the rear washer must be located in the groove cast in the transmission case.

3. Start the reverse idler shaft in the bore in the case. Align the washers and gears and slide the shaft into place.

4. Position the shifter fork over the reverse idler driven gear and install the shifter rail in the housing and fork. Install the lock screw in the shifter fork and secure the screw with a lock nut. Install the reverse shifter rail cap.

5. Install the detent ball, spring, gasket and shifter rail spring seat in the left side of the case.

6. Position the countershaft assembly in the transmission case.

7. Place the P.T.O. support and shifter assembly in position at the rear of the case. Be sure the shims are located between the support assembly and case. Install the four bolts and lock washers and tighten to the specified torque, page 15.

8. At this time, check the countershaft preload with the cord and pull scale, as shown in Figure 15. A stub shaft can be used as shown, or the P.T.O. shaft can be used if properly supported. The preload should be checked with the bearings and gears lightly lubricated. Add or remove shims as required to obtain the specified preload, page 15.

NOTE: ***The reverse idler gear assembly should be in place (shifter not engaged) when the countershaft preload is checked. If the output shaft preload is on the low side, the countershaft preload should be on the low side also.***

9. Place the 2nd and 4th gear shifter fork in position in the coupling and install the shifter rail in the case and fork. Install the lock screw in the shifter fork and secure the screw with the lock nut. Install the shifter rail cap.

10. Install the detent ball, spring, gasket, and shifter rail spring seat in the right side of the transmission case.

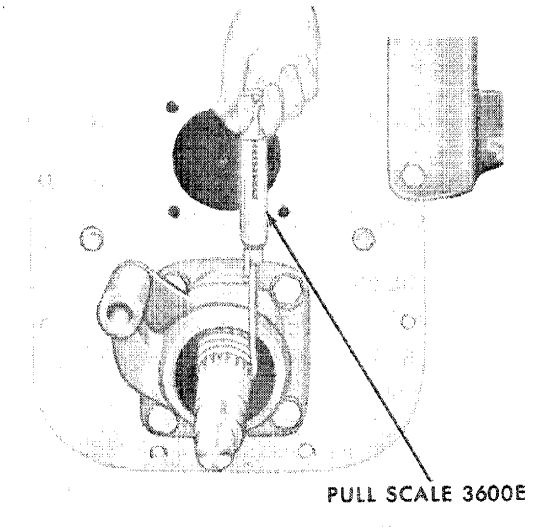

Figure 15
Checking Countershaft Bearing Preload

11. Position the output shaft gear assembly in the transmission case.
12. Press a new oil seal in the rear bearing retainer with a 2 9/16 in. (65.087mm) O.D. x 3 in. (76.199mm) long sleeve. Coat the seal contact surface with a light film of grease. Press the bearing cup in the retainer with a 2 7/8 in. (73.024mm) O.D. x 3 in. (76.199mm) long sleeve.
13. Place the correct shims and retainer assembly in the rear of the transmission case and install the four bolts and lock washers. Tighten the bolts to the specified torque, page 15.
14. Position the input shaft and support assembly at the front end of the case and install four bolts and lock washers. Tighten the bolts to the specified torque, page 15.
15. Position the shift plates in the case with the finger of each plate located in the shifter rails. Install the gaskets and shifter plate pivots in the side of the case.
16. Position the 1st and 3rd gear shift fork in the output shaft connector coupling. Slide the first and third shifter rail into the case and shifter fork. Install the lock screw in the shift fork and secure the screw with a lock nut.
17. Place the shifter rail detent ball and spring in location in the case. Position a new cover gasket on the case.
18. Place the cover assembly on the case with the gearshift lever properly located in the gearshift plates. Install the nine bolts and tighten them securely.

© FORD MOTOR CO. 1964

Part 5

FOUR-SPEED TRANSMISSION

Chapter 2

SPECIFICATIONS AND SPECIAL TOOLS

Section	Page
1. Specifications	15
2. Special Tools	15

1. SPECIFICATIONS

(NOTE: The following specifications supersede the specifications in the text.)

Gear Ratios

1st	11.0:1
2nd	9.06:1
3rd	6.22:1
4th	2.98:1
Rev.	10.50:1

Lubricant

Oil Type	M4864A or M2C85-A
Oil Capacity	6.6 U.S. Quarts 5.5 Imperial Quarts 6.2 Liters

Torque

P.T.O. Support and Shifter Assembly Bolts	23-30 lbs. ft. (3.18—4.14 mkg)
Output Shaft Rear Bearing Retainer Bolts	23-30 lbs. ft. (3.18—4.14 mkg)
Clutch Release Bearing Support Bolts	40-50 lbs. ft. (5.53—6.91 mkg)
Gearshift Cover Assembly Bolts	23-29 lbs. ft. (3.18—4.00 mkg)
Shifter Fork Lock Nut	23-29 lbs. ft. (3.18—4.00 mkg)

Preload

Output Shaft	27-47 lbs. pull (12.25—21.32 kg)
Countershaft	22-44 lbs. pull (10.00—20.00 kg)

2. SPECIAL TOOLS

Tool No.	Description
P-61	Ratchet Wrench
630-3	Step Plate
630-9	Step Plate
630-12	Step Plate
630-15	Step Plate
930-B	Extension
938	Push Puller
943	Bearing Cup Pulling Attachment
943-S	Slide Hammer
951	Bearing Pulling Attachment
954	Pilot Bearing Puller
1002	Puller
1003	Puller
3600-E	Pull Scale
7227	Shift Lever Spring Compressor
808	Driver
810	Driver
811	Driver
814	Handle

© FORD MOTOR CO. 1966

PART 6
SIX-SPEED TRANSMISSION

Part 6

SIX-SPEED TRANSMISSION

Chapter 1

SERVICING THE TRANSMISSION

Section		Page
1.	Description and Operation	1
2.	Shift Levers and Cover Overhaul	1
3.	Front End Overhaul	5
4.	Rear End Overhaul	9
5.	Complete Overhaul	15

Chapter 2

SPECIFICATIONS AND SPECIAL TOOLS

Section		Page
1.	Specifications	21
2.	Special Tools	22

© FORD MOTOR COMPANY LTD., 1964

Part 6

SIX-SPEED TRANSMISSION

Chapter 1

SERVICING THE TRANSMISSION

Section		Page
1.	Description and Operation	1
2.	Shift Levers and Cover Overhaul	1
3.	Front End Overhaul	3
4.	Rear End Overhaul	9
5.	Complete Overhaul	15

1. DESCRIPTION AND OPERATION

This constant mesh type transmission, Figure 1, provides six forward and two reverse gear ratios selected by two levers mounted on the top cover plate. The longer (main) lever selects three forward and one reverse ratio, while the shorter (secondary) lever provides a High and a Low range in each gear, Figure 4.

A safety feature incorporated in the top cover is an electrical switch which is connected in series with the starting circuit and allows the starter motor to be operated only when the main gear lever is in the neutral position.

With the exception of the helical gear drive to the P.T.O. and main countershafts, the gears are of the spur type, all the gears being in constant mesh and the gear train connections being made by sliding the couplings and connectors.

Two types of Six-Speed Transmission are available, one with conventional transmission P.T.O. and the other with Live P.T.O. The components which differ in the two assemblies are illustrated in Figure 2.

The main countershaft on the transmission P.T.O. version is splined internally to accept the external splines of a short P.T.O. countershaft. In the live P.T.O. version, an extra pair of constant mesh helical gears transmit the drive from the P.T.O. clutch to the P.T.O. countershaft.

One of these gears is integral with the P.T.O. input shaft and revolves around the outside of the main drive input shaft. The other helical gear is splined onto the forward end of the P.T.O. countershaft where it is driven by the P.T.O. input shaft.

The normal engineering procedure of making the bearings a press fit on the shafts and a push fit in the housing has been employed and, unless it is necessary to replace the bearings, or to gain access to other components, it is recommended that they are not removed from the shafts.

2. SHIFT LEVERS AND COVER OVERHAUL

A. Disassembly

1. Remove the rubber cover and disconnect the wires from the starter safety switch. Unscrew the nine retaining bolts and spring washers from the cover and remove the cover and levers as an assembly.
2. Unscrew the safety switch from the top of the cover. Remove the two self-locking bolts retaining the roller support plate to the switch retainer. Remove the plate, the actuating connector, the roller and the plunger from their locations, Figure 3.

NOTE: ***No attempt should be made to remove the main shift lever stop plate or the switch retainer, Figure 3, which are riveted onto the***

© FORD MOTOR COMPANY LTD., 1964

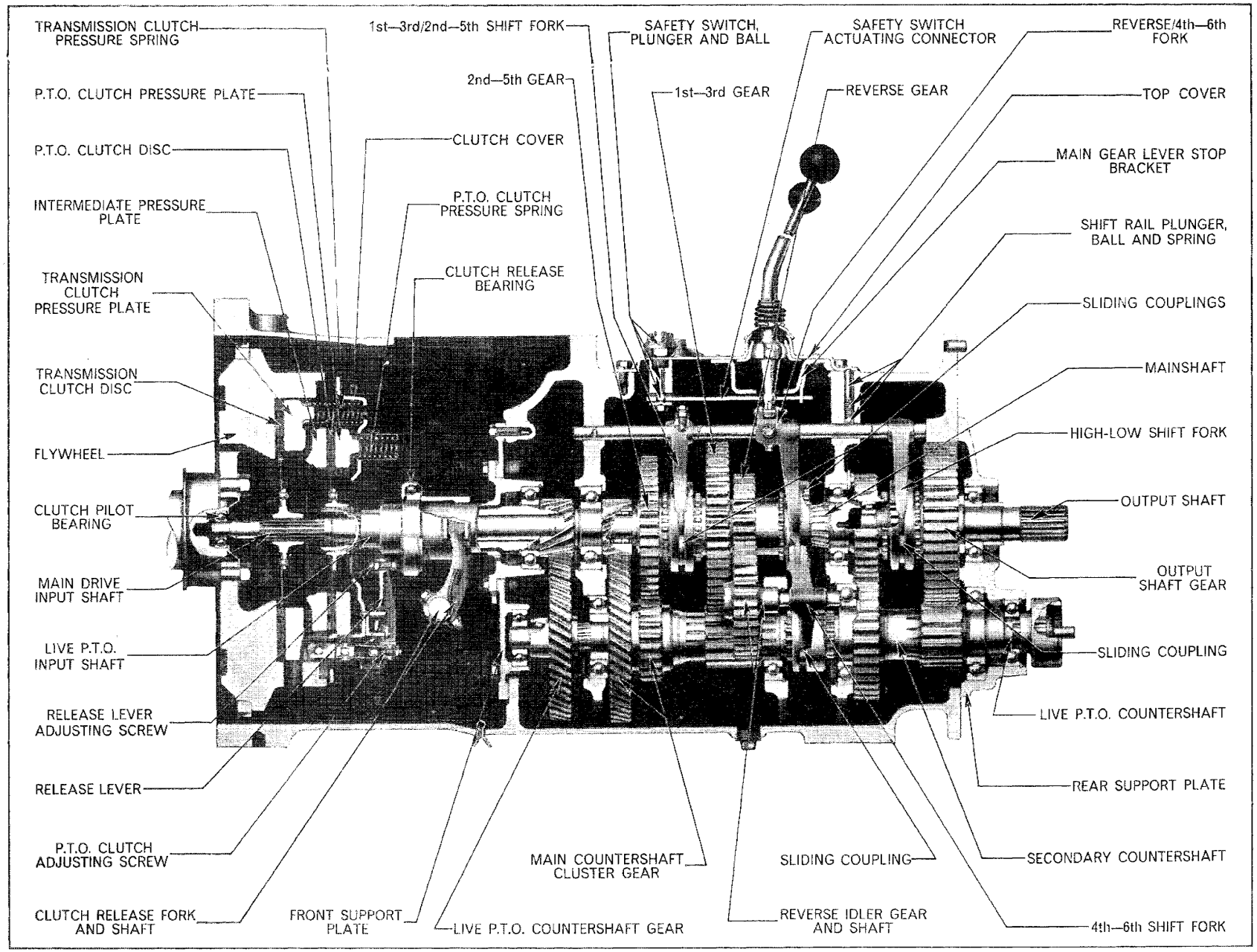

Figure 1
Six-Speed Transmission (Live P.T.O.)

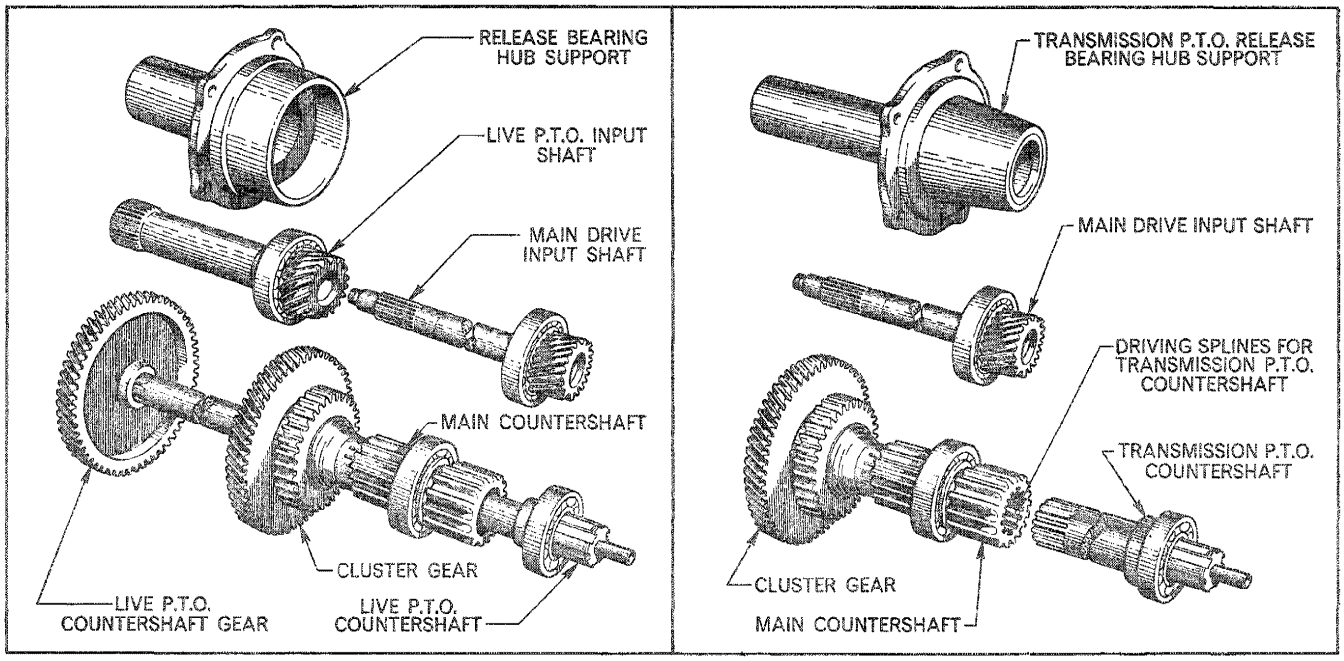

Figure 2
Live and Transmission P.T.O. Components

cover, as these parts are serviced as an assembly with the cover.

Using a file or hacksaw, partially cut through the gear shift lever spring retaining clips, completing the cut with a hammer and chisel. Having first removed the shift lever balls, withdraw the levers through the cover.

B. Inspection and Repair

1. Using a suitable test bulb, wires and battery, Figure 5, test the starter safety switch for correct operation by depressing the operating button which should close the circuit and light the test bulb. On releasing the operating button the test bulb should be extinguished. If the switch is faulty install a new part.
2. Check the rivets retaining the safety switch components for tightness.
3. Inspect gear shift lever ends and all sliding parts for wear or damage and install new parts as necessary.

C. Assembly

1. Pass the gear shift levers through the cover, installing the retainers and springs. Compress the springs and secure with new spring retaining clips. Screw the balls onto the gear shift levers.

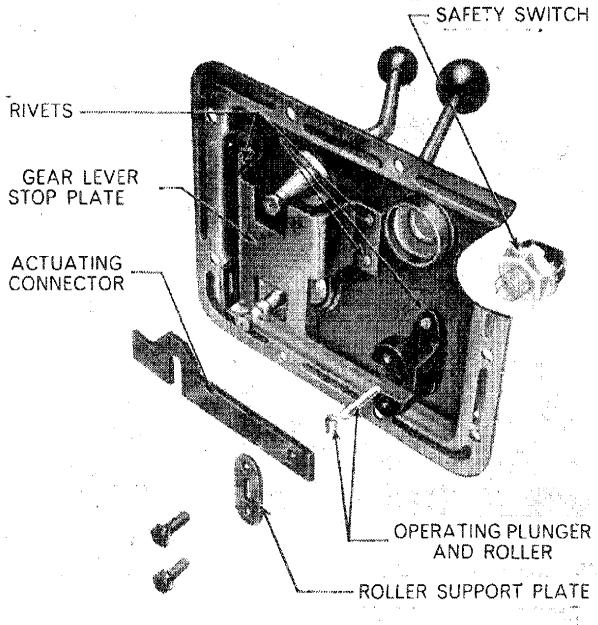

Figure 3
Safety Switch Operating Components

2. Screw the safety switch into the switch retainer. Position the safety switch actuating connector and install the plunger, operating roller and roller retaining plate, Figure 3. Screw in the two self-locking retaining bolts.

© FORD MOTOR COMPANY LTD., 1964

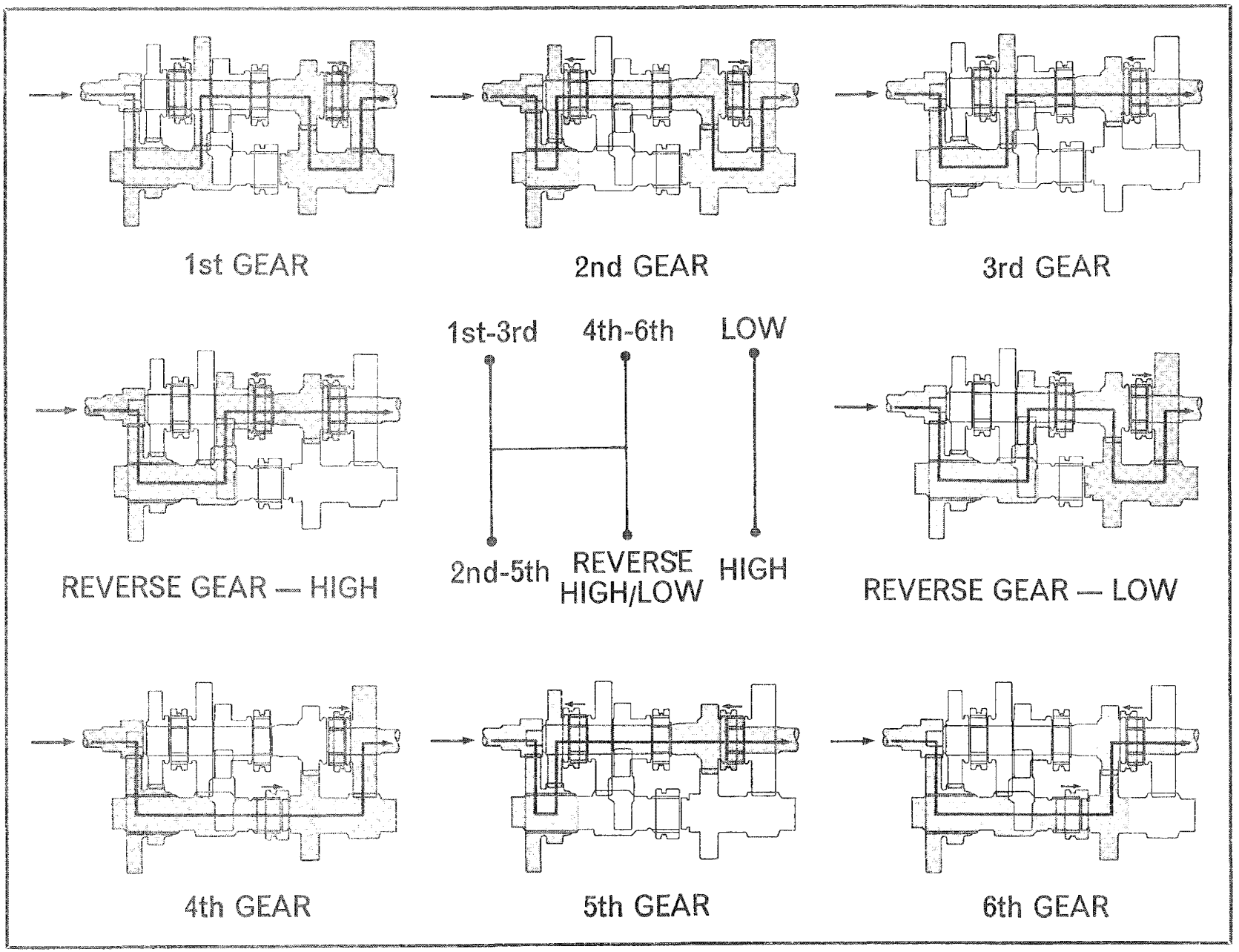

Figure 4
Power Flow and Shift Pattern Diagrams

Tighten the bolts to the specified torque. (See Specifications, Chapter 2.)

3. Using a new gasket, position the gear shift lever and cover assembly and screw in the nine retaining bolts and spring washers. Tighten the bolts to the specified torque. (See Specification, Chapter 2.) Reconnect the wires to the safety switch and install the rubber cover.

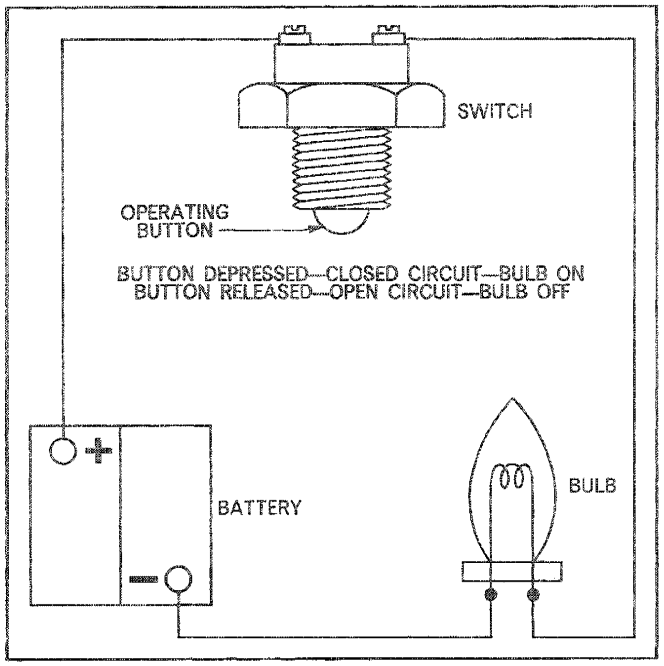

Figure 5
Safety Switch Test Circuit

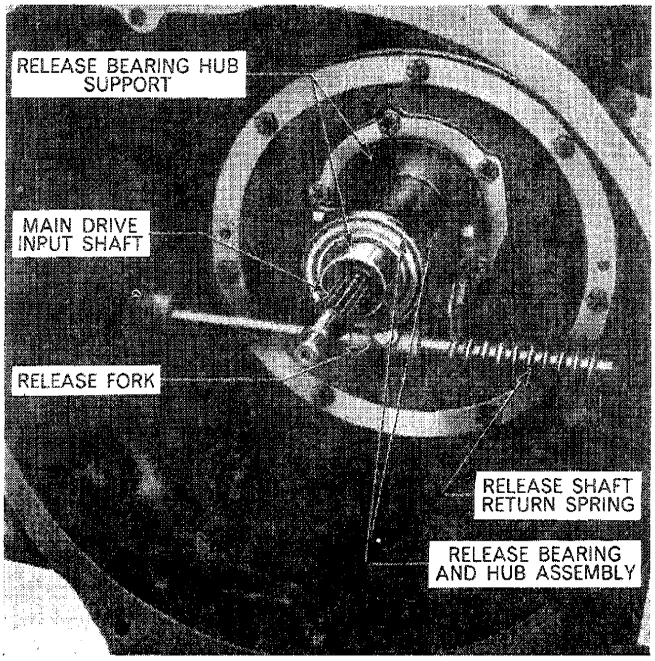

Figure 6
Clutch Operating Linkage

3. FRONT END OVERHAUL

A. Disassembly

1. Remove the plug, Figure 13, and drain the transmission oil.
2. Separate the engine and front axle assembly from the transmission (See Part 15).
3. Remove the clevis pin securing the clutch release rod clevis to the clutch release shaft arm.
4. Lever the release shaft return spring off the cast lug on the inside of the front end of the transmission housing, Figure 6.
5. Unscrew the self-locking nut from the bolt securing the clutch release fork to the release shaft and withdraw the shaft from the housing.
6. Remove the release fork and return spring followed by the release bearing and hub assembly.
7. Remove the five bolts retaining the clutch release bearing hub support and remove the hub support assembly.

Live P.T.O. Transmission

Remove the Live P.T.O. input shaft and release bearing hub support as an assembly.

8. Remove the seven self-locking retaining bolts and withdraw the front support plate.

Live P.T.O. Transmission

a. As the front bearing on the Live P.T.O. countershaft is housed in the bottom of the plate, take care to withdraw the plate squarely.

b. Use Tools Nos. T.7072 and T.7077, Figure 14(A), or Tools Nos. SW.501 and SW.501-2, Figure14 (B), to remove the Live P.T.O. countershaft front bearing.

© FORD MOTOR COMPANY LTD., 1964

c. Refer to Part 15 to separate the transmission from the rear axle assembly.

d. Remove the snap ring from the rear of the Live P.T.O. countershaft and slide off the coupling sleeve.

e. Remove the snap ring retaining the Live P.T.O. countershaft to the rear support plate and drive the countershaft rearward until the Live P.T.O. countershaft gear can be removed at the front.

9. Remove the snap ring retaining the main drive input shaft and bearing assembly in the transmission casing, and withdraw the shaft and bearing assembly forwards.

B. Inspection and Repair

Clutch Release Bearing Hub Support Assembly

1. Inspect the main drive input shaft oil seal in the hub support for wear or damage. If necessary remove the seal using Tools Nos. 943, 943-S and F.T.943, Figure 7. Install a new seal using Tool No. 630-9 and a suitable driver.

Live P.T.O. Transmission

a. Remove the large snap ring at the rear of the hub support and drive the P.T.O. input shaft and rear bearing assembly out of the hub support.

b. Inspect the rear oil seal in the hub support and if worn or damaged remove the seal using Tools Nos. 943, 943-S and F.T.943 in a similar manner to that shown in Figure 7.

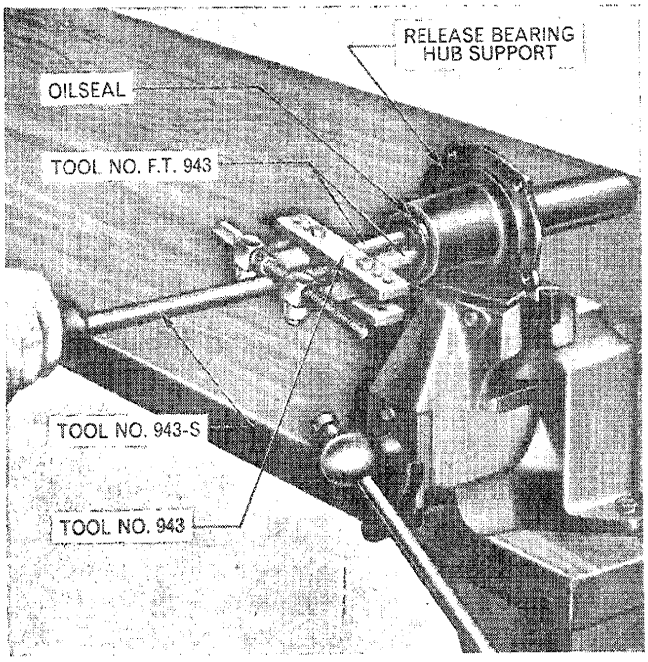

Figure 7
Removing Input Shaft Oil Seal (Trans. P.T.O.)

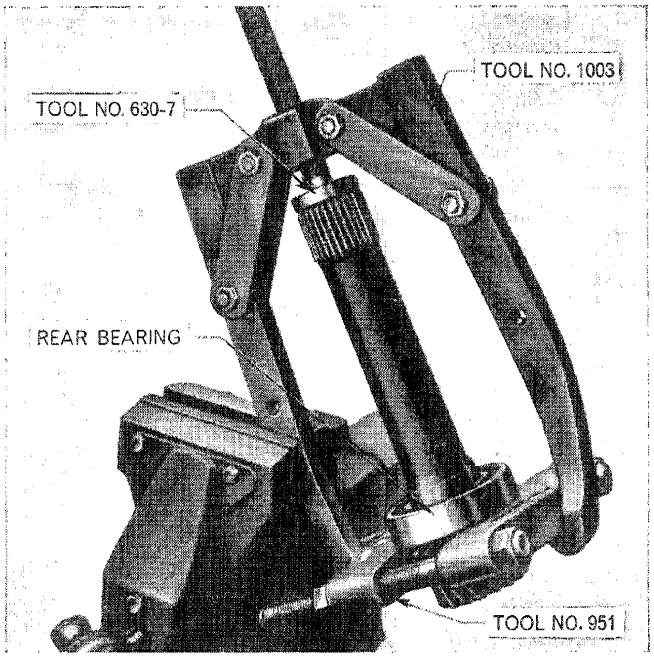

Figure 8
Removing Live P.T.O. Input Shaft Rear Bearing

c. Lightly grease the new seal and install making sure that the sealing lip faces to the rear. Tool No. 630-15 reversed will provide a suitable flat surface to locate against the seal when driving it into position.

d. Inspect the gear teeth and the oil seal journals on the Live P.T.O. input shaft for damage or excessive wear and check the rear bearing for wear or damage. If necessary, remove the snap ring from the shaft and withdraw the rear bearing using Tools Nos. 1003, 951 and 630-7, Figure 8.

e. Install the bearing onto the shaft using Tools Nos. 1003, 951, 630-4 and 625-3. Secure the bearing to the shaft with the appropriate snap ring.

f. If necessary, remove the front oil seal and needle roller bearing from the Live P.T.O. input shaft, withdrawing seal and bearing in one operation, using Tools Nos. 954 and 955-14, Figure 9.

g. When installing a new needle roller bearing, make sure that the manufacturers name, which is stamped on the bearing shell, faces outwards. Use Tool No. 630-3 with a hammer and drift to drive the bearing into the input shaft. Make sure the bearing seats against the shoulder in the bore of the input shaft. Lightly grease the oil seal and locate it on the spigot of Tool No. 630-4. Use a hammer and small punch

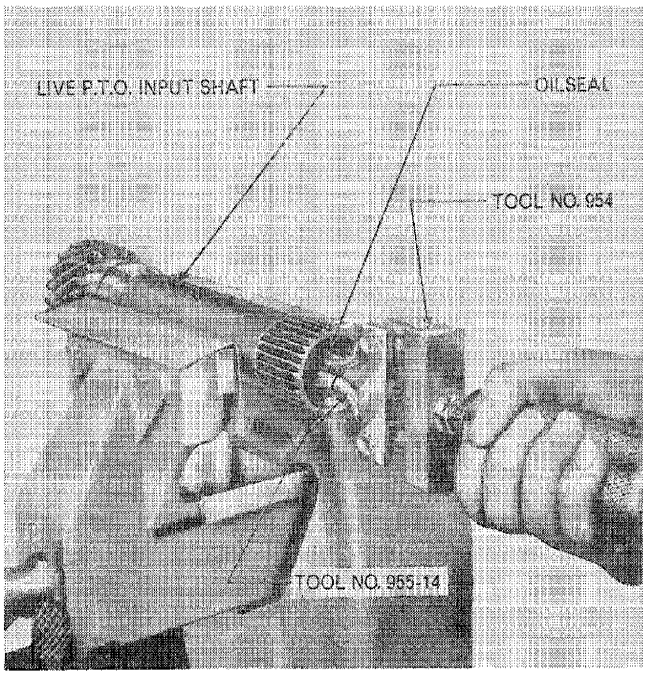

Figure 9
Removing Live P.T.O. Input Shaft Front Oil Seal and Roller Bearing

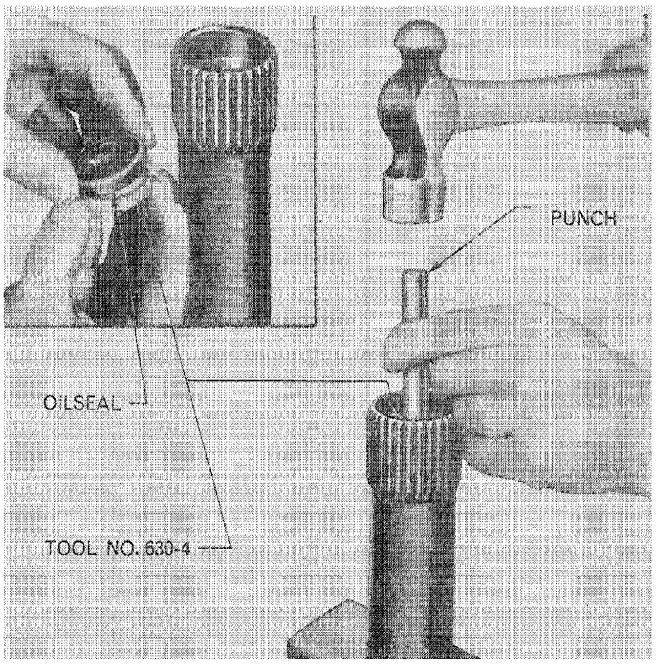

Figure 10
Installing Live P.T.O. Input Shaft Front Oil Seal

to punch the seal into position against the shoulder in the shaft, Figure 10.

NOTE: ***Make sure that Tool No. 630-4 is free from burrs or sharp edges to avoid damage to the seal.***

h. Drive the Live P.T.O. input shaft and bearing assembly into the hub support and secure with the appropriate snap ring.

Main Drive Input Shaft Assembly

1. Remove the needle roller bearing, which is a loose fit in the bore at the gear end of the input shaft, Figure 11. Check the bearing and the bore in the shaft for wear and install new parts if necessary.
2. Inspect the oil seal journals and the gear teeth of the shaft for excessive wear or damage. Check the ball bearings for wear or damage. If necessary, remove the snap ring and draw the bearing off the shaft using Tools Nos. 952, 930B, 930E, 938, P61 and 924, Figure 12.

NOTE: ***If a hydraulic press is available, only Tool No. 952 is required.***

Press the bearing onto the shaft using tools 952, 1002 and 630-5 until it is seated firmly against the gear. Secure with the appropriate snap ring.

Clutch Operating Components

1. Inspect the release bearing and hub, the release fork, the return spring, and the release shaft and bushings, and if any part requires servicing, refer to Part 4, Clutches.

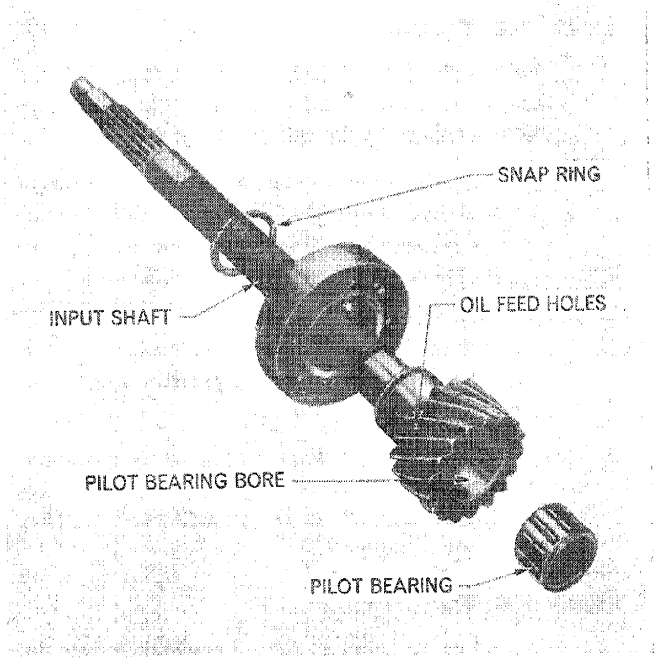

Figure 11
Main Drive Input Shaft Components

© FORD MOTOR COMPANY LTD., 1964

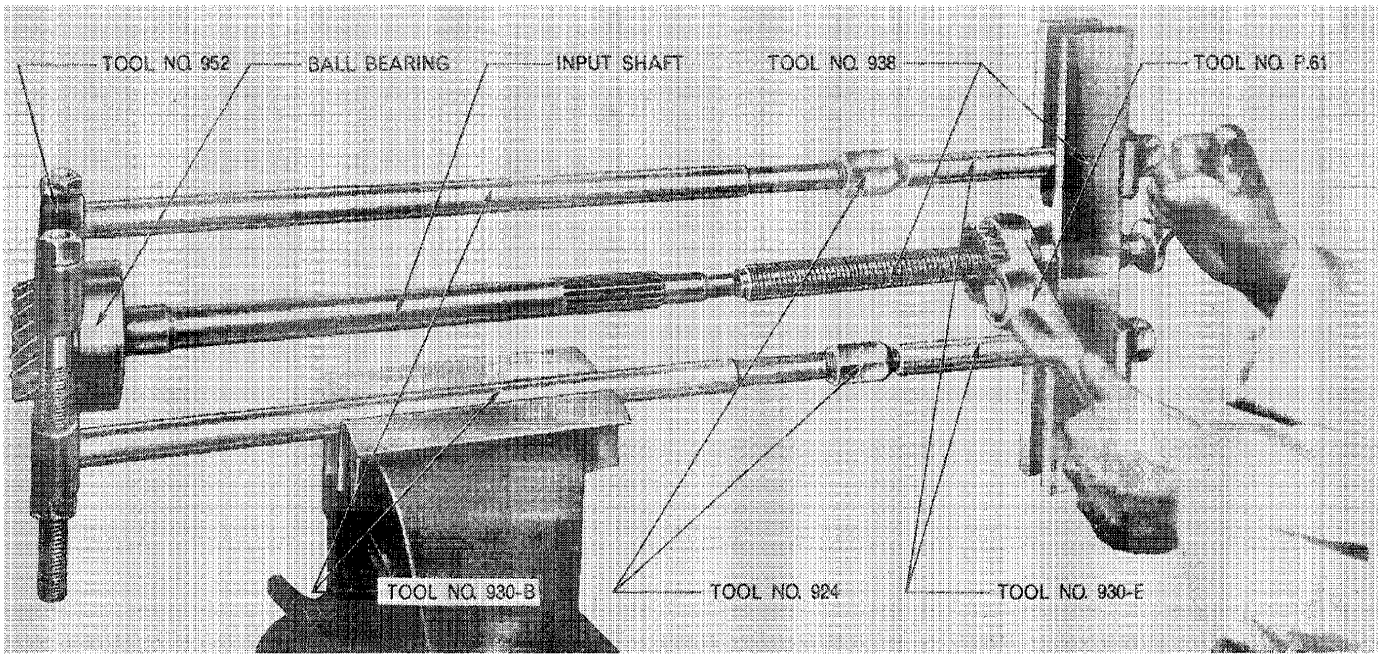

Figure 12
Removing Main Drive Input Shaft Rear Bearing

C. Assembly

1. Install the main drive input shaft and bearing assembly in the transmission case and secure with the appropriate snap ring.

Live P.T.O. Transmission

a. Position the Live P.T.O. countershaft gear in the front compartment, and push the countershaft forward to engage in the splines of the gear.

b. Protect the spigot at the rear of the P.T.O. Countershaft and drive it into the rear support plate. Secure the P.T.O. countershaft rear bearing to the rear support plate with the appropriate snap ring.

c. Use a convenient length sleeve 1 in (25.4 mm) I.D. and 1⅜ in (34.9 mm) O.D. to drive the Live P.T.O. countershaft front bearing into position against the gear.

2. Using a new gasket, position the support plate into the transmission case and screw in the seven self-locking bolts. Tighten the bolts to the specified torque. (See Specifications, Chapter 2.)

Live P.T.O. Transmission

Proceed as described in Step 2 above, but note the front support plate houses the P.T.O. countershaft front bearing and therefore must be tapped in a sufficient amount at the bottom to allow the seven retaining bolts to be screwed in. The plate may then be drawn evenly into position by tightening these bolts a little at a time.

3. Position a new gasket on the release bearing hub support then slide the support assembly over the main drive input shaft, taking care not to damage the oil seal. Screw in the five retaining bolts and tighten to the specified torque. (See Specifications, Chapter 2.)

Live P.T.O. Transmission

Locate a new gasket on the clutch release bearing hub support, slide the P.T.O. input shaft and hub support assembly over the main drive shaft and secure to the front support plate in a similar manner to that detailed in Step 3.

4. Position the clutch release bearing and hub assembly on the release bearing hub support.

5. Pass the release shaft through the left hand side bushing in the transmission case enough to install the release shaft return spring, Figure 6.

6. Locate the release fork arms in the slots in the release bearing hub, then push the release shaft through the bore in the fork. Install the bolt and locknut to secure the fork to the shaft, and tighten to the specified torque. (See Specifications, Chapter 2.)

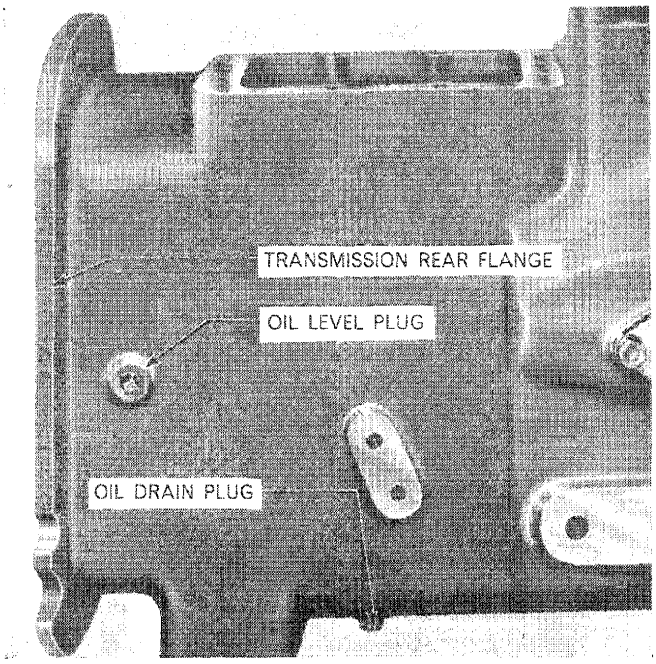

Figure 13
Level Plug and Drain Plug

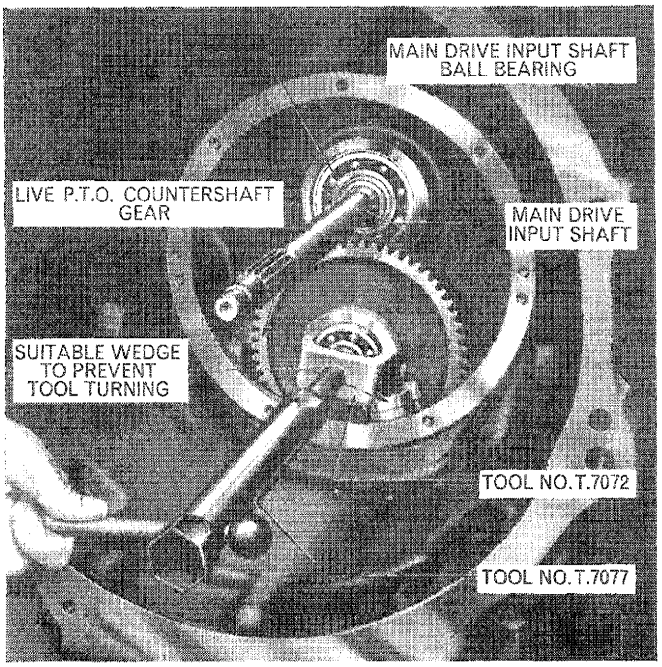

Figure 14(A)
Removing Live P.T.O. Countershaft Front Bearing

7. Place the outer end of the return spring on the lug cast on the inside of the transmission housing and lever the other end onto the web of the release fork, Figure 6.

NOTE: ***Make sure the release fork is not binding in the slots in the release bearing hub.***

8. Join the engine and front axle assembly to the transmission (See Part 15).
9. Install the drain plug and remove the transmission level plug, Figure 13. Fill the transmission to the level plug hole with oil of the specified grade (See Specifications, Chapter 2). Install and tighten the level plug.

4. REAR END OVERHAUL

A. Disassembly

1. Separate the tractor at the transmission to rear axle centre housing flange (See Part 15).

Live P.T.O. Transmission

a. Suitably support the transmission assembly and separate the tractor at the transmission to engine flange (See Part 15).

b. Remove the clutch release bearing and hub, fork, spring, release shaft, hub support and front support plate as detailed in Section 3A.

c. Remove the P.T.O. countershaft front bearing using Tools Nos. T.7072 and T.7077, or Tools Nos. SW.501 and SW.501-2, Figures 14(A) and (B). Make sure that the sliding pegs of Tool No. T.7072 locate in the clearance slots in the P.T.O. countershaft gear, Figure 14.

2. Remove the snap ring and coupling sleeve from the rear of the P.T.O. countershaft, then remove the locking wire and the ten bolts securing the rear support plate.
3. Remove the rear support plate and P.T.O. countershaft as an assembly, Figure 16.

NOTE: ***The plate may be a tight fit on its dowelled location on the rear face of the transmission, in which case it will be necessary to lever it away.***

Live P.T.O. Transmission

Support the Live P.T.O. countershaft gear, and drive the countershaft rearwards until the rear support plate assembly is free from its dowelled location in the housing. Remove the Live P.T.O. countershaft gear, then withdraw completely the rear support plate and Live P.T.O. countershaft as

© FORD MOTOR COMPANY LTD., 1964

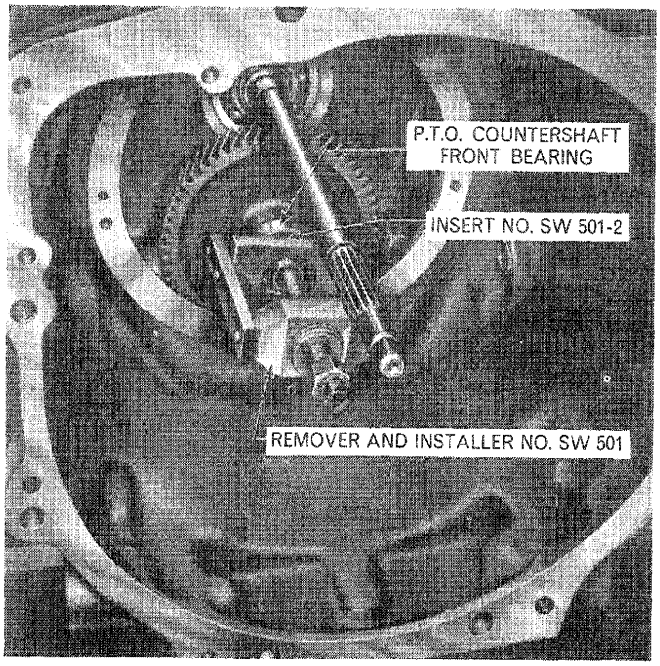

Figure 14(B)
Removing P.T.O. Countershaft Front Bearing

an assembly, as indicated in Step 3 above.

4. Partially withdraw the secondary countershaft assembly until the front bearing is out of its location. Rest the assembly on the bottom of the rear compartment and withdraw the output shaft immediately above it. The secondary countershaft assembly can then be lifted out, Figure 15.

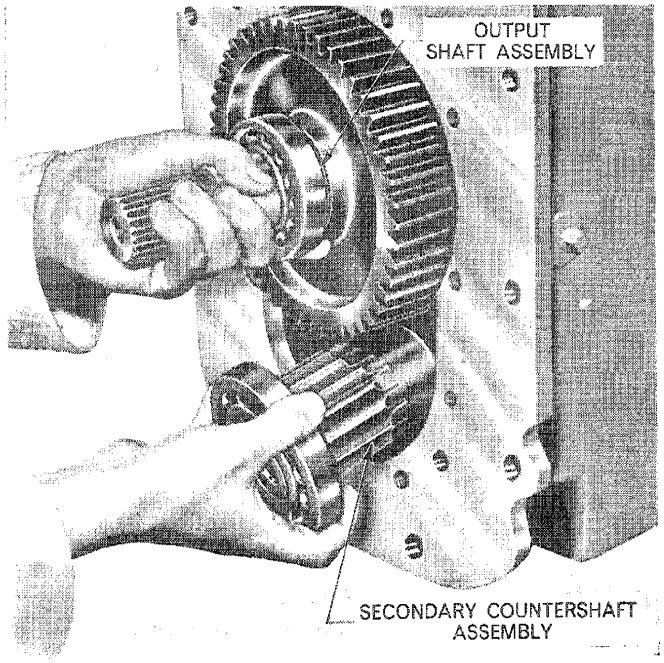

Figure 15
Removing Output Shaft

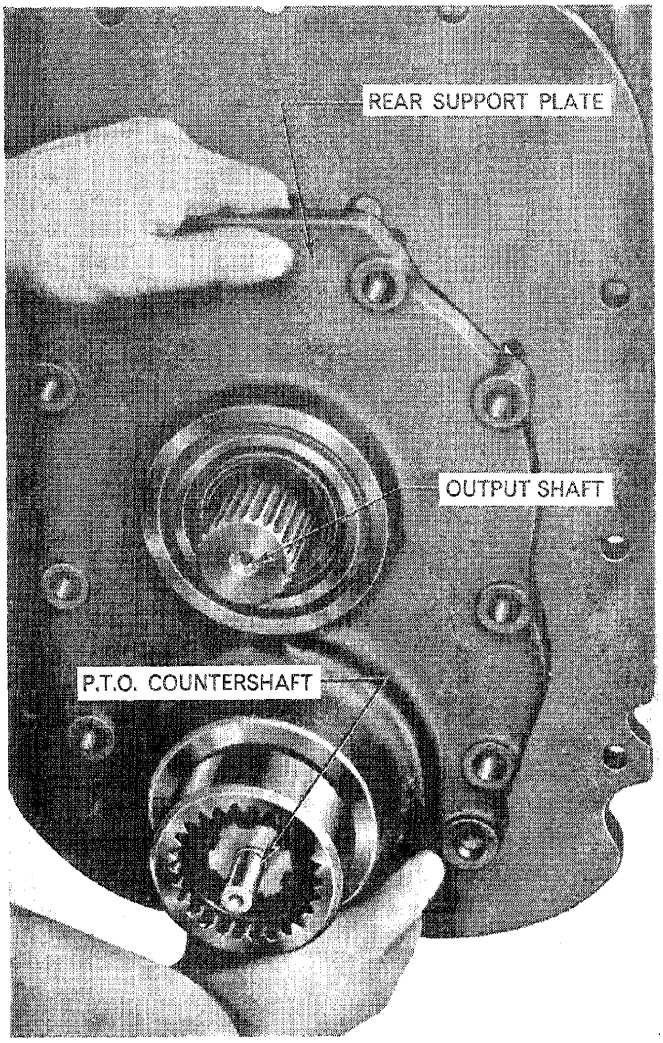

Figure 16
Removing Rear Support Plate

5. Remove the High/Low sliding coupling from the rear of the mainshaft, Figure 17.

B. Inspection and Repair

P.T.O. Countershaft Assembly

1. Remove the snap ring retaining the P.T.O. countershaft rear bearing and push the shaft and rear bearing rearwards out of the support plate.
2. Inspect the countershaft and the rear bearing and, if necessary, pull the bearing off the shaft using Tools Nos. 1002, 951 and 625-6, Figure 18.

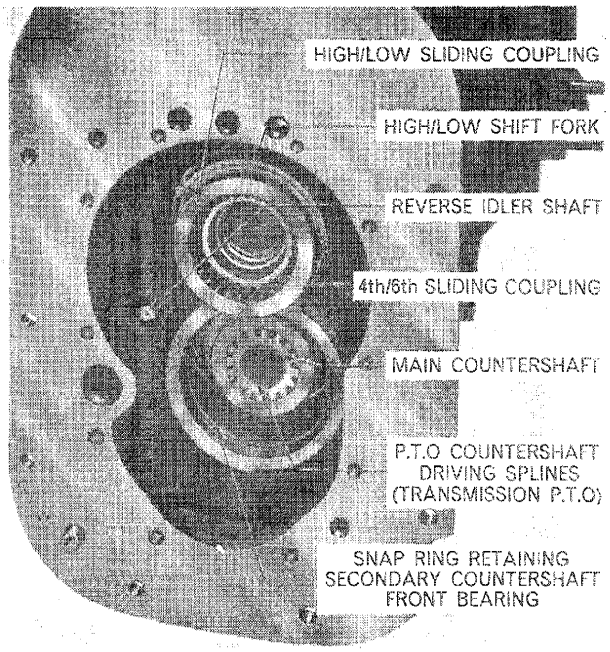

Figure 17
Transmission Rear Compartment

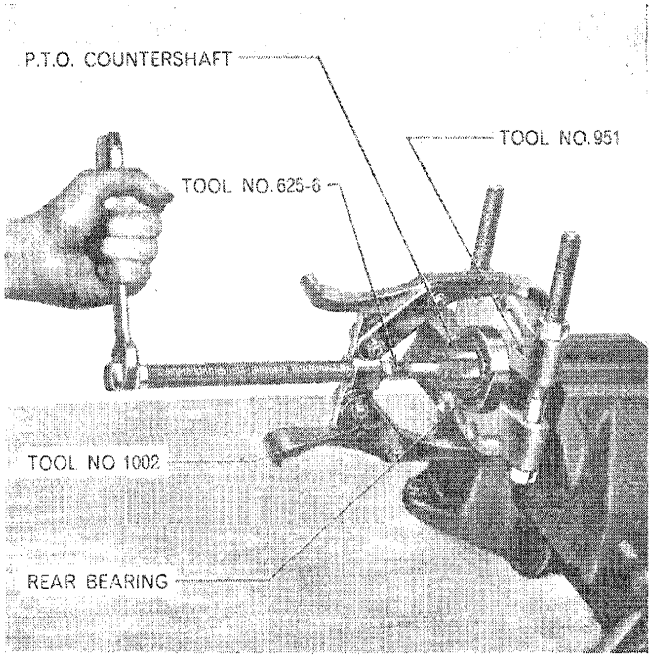

Figure 18
Removing P.T.O. Countershaft Rear Bearing

3. Drive a new rear bearing onto the P.T.O. countershaft using a convenient length sleeve $1\frac{7}{16}$ in (36·5 mm) I.D. and $1\frac{3}{4}$ in (44·4 mm) O.D. and a hammer, Figure 19.
4. Inspect the Live P.T.O. countershaft gear and front bearing and, if necessary, install new parts.

Rear Support Plate

1. Inspect the rear support plate for distortion, cracks or other damage, and if necessary use a new part on assembly.
2. Inspect the P.T.O. countershaft oil seal in the rear support plate and if necessary remove the snap ring, and drive the seal forwards out of the plate with a suitable drift. Assemble a new oil seal to the rear support plate using Tool No. 630-13 with a suitable driver and secure with the appropriate snap ring.
3. Inspect the output shaft oil seal and if necessary drive the seal from the rear support plate using a suitable drift. Assemble a new output shaft oil seal using Tool No. 630-16 and a suitable driver.

NOTE: ***Make sure that the sealing lips on both oil seals are lightly greased before assembly.***

Output Shaft Assembly

1. Inspect the output shaft rear bearing and, if necessary, draw off the output shaft gear, thrust washer, rear bearing and oil seal sleeve in one operation using Tools Nos. 1003 and 625-1, Figure 21.

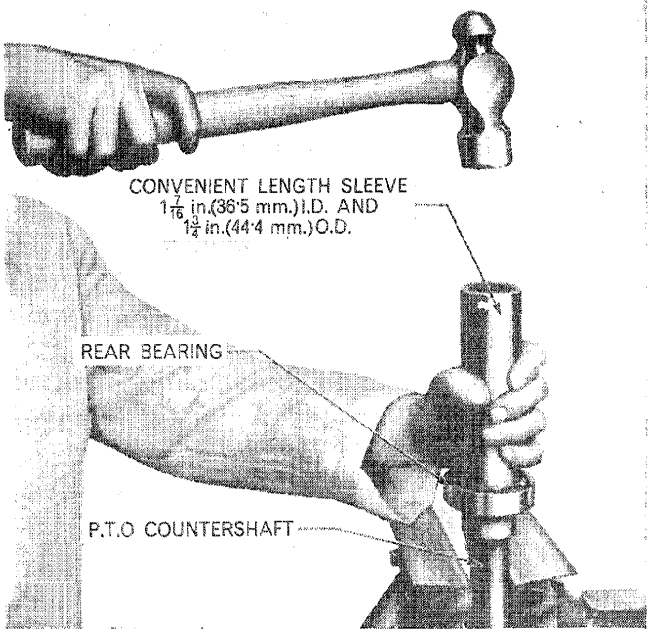

Figure 19
Installing P.T.O. Countershaft Rear Bearing

© FORD MOTOR COMPANY LTD., 1964

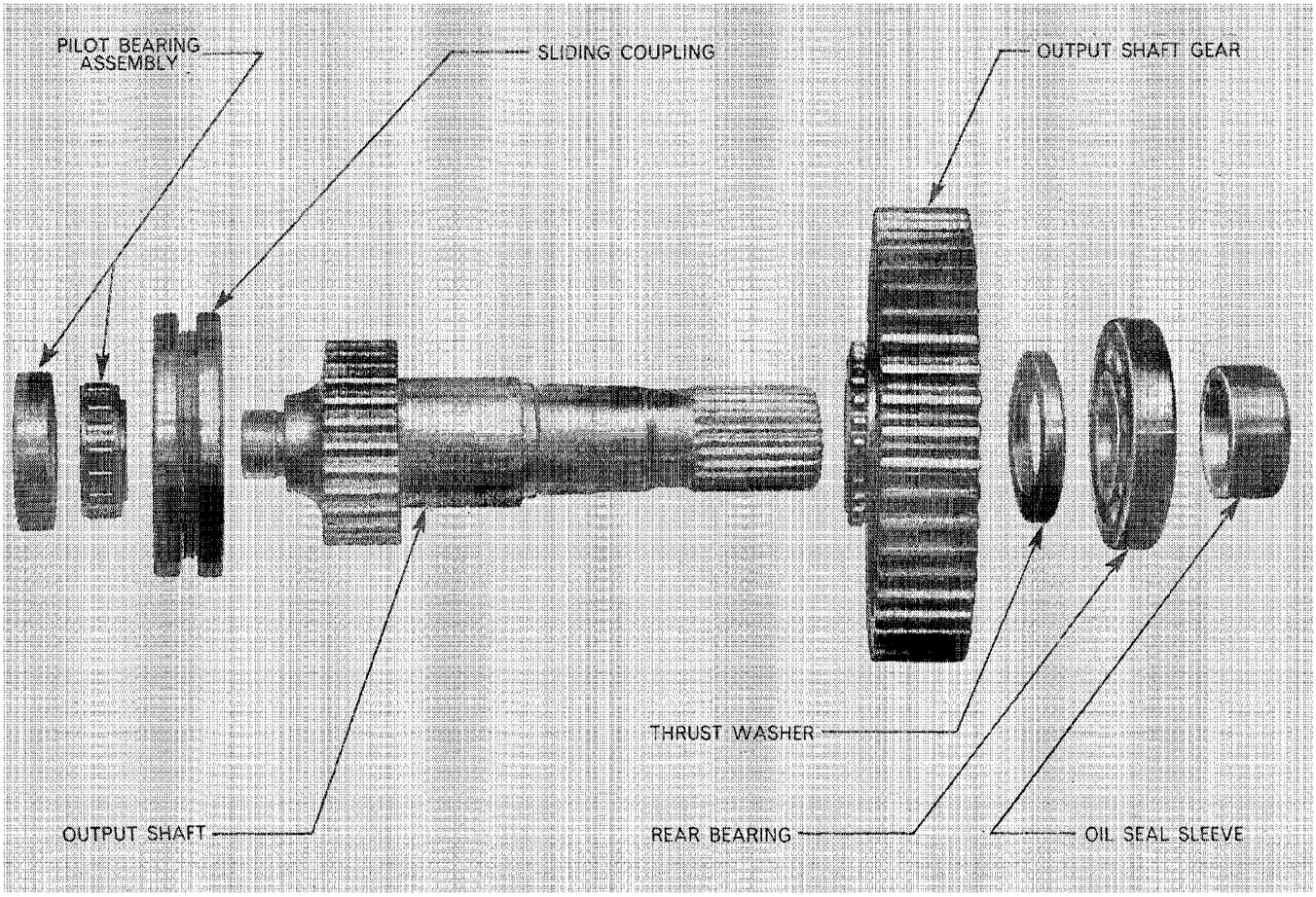

Figure 20
Exploded view of Output Shaft Components

2. Inspect the bushing in the output shaft gear, and the location on the output shaft where the gear runs. Mate the shaft and gear and check for free play. Replace any damaged or worn parts (See Note below).

   NOTE: ***The output shaft gear and bush, and also the output shaft and sliding coupling, are serviced as matched assemblies.***

3. The output shaft oil seal sleeve, Figure 20, should be examined and, unless in good condition, a new part installed. (See Step 5 below.)

4. Inspect the High/Low sliding coupling, and the connecting splines on the output shaft, for wear or damage and install a new shaft and coupling (matched) assembly if required.

5. Position the output shaft gear on the shaft so that the dog-teeth on the gear adjoin the dog-teeth integral with the shaft, Figure 20. Assemble the thrust washer, aligning the flats on the washer with the flats on the shaft, and install the rear bearing and the oil seal sleeve, making sure the chamfered end of the sleeve faces away from the bearing. Draw the bearing and oil seal sleeve into position using Tools Nos. 1003, 952, 625-2, Figure 22.

6. Inspect the output shaft pilot bearing and if necessary remove the pilot bearing from the output shaft using Tools Nos. 1002, 951 and 625-2, Figure 23.

   NOTE: ***In order to obtain sufficient grip on the pilot bearing inner track, the rollers can be easily pulled from the bearing inner track assembly using a pair of pliers. Tool No. 951 is then mounted on the inner track groove. (See Figure 23).***

7. Drive a new pilot bearing inner track assembly into position on the output shaft using a sleeve, 1 in (25·4 mm) I.D. and 1⅜ in (34·9 mm) O.D. of con-

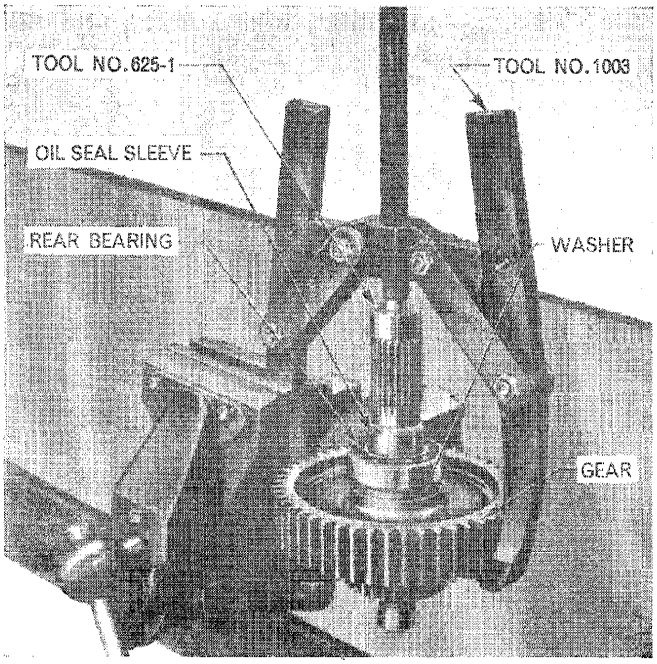

Figure 21
Removing Output Shaft Rear Bearing and Oil Seal Sleeve

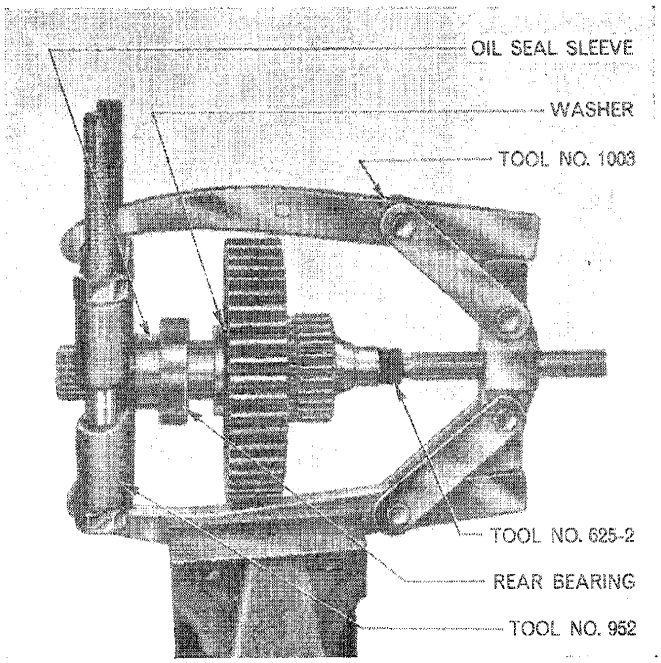

Figure 22
Installing Output Shaft Rear Bearing and Oil Seal Sleeve

venient length, and a hammer.

NOTE: ***If a new pilot bearing inner track and roller assembly is installed, a new outer track must be installed in the mainshaft, as inner and outer tracks are serviced as a matched assembly.***

Secondary Countershaft Assembly

1. Inspect the secondary countershaft rear bearing and if necessary remove using Tools Nos. 1003, 951, 630-5 and 625-2. Use the same tools to install the new bearing.

2. Similarly inspect the secondary countershaft front bearing and, if necessary, remove using Tools Nos. 1003, 951, 630-5, 625-2 and two pieces of steel rod $\frac{3}{16}$ in (4·8 mm) diameter and 2 in (50·8 mm) long. The two pieces of steel rod are inserted through the driving holes in the gear, Figure 24, to contact the bearing. The assembly is then mounted in the tools indicated above, so that the rods push the bearing off, Figure 25. Use the same tools as in Step 1 above to install the new front bearing.

C. Assembly

NOTE: ***Bearings, bushings, and all sliding surfaces should be lightly lubricated on assembly.***

1. Make certain that the High/Low sliding coupling is engaging the dog-teeth on the rear of the mainshaft and that the High/Low shift fork is located in the groove of the 4th/6th sliding coupling, Figure 17.

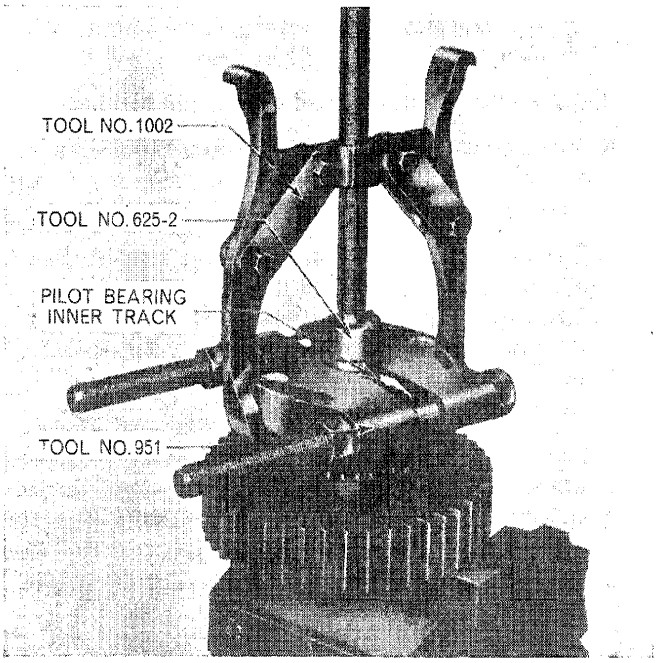

Figure 23
Removing Output Shaft Pilot Bearing

© FORD MOTOR COMPANY LTD., 1964



Figure 24
Positioning Steel Rods in Secondary Countershaft

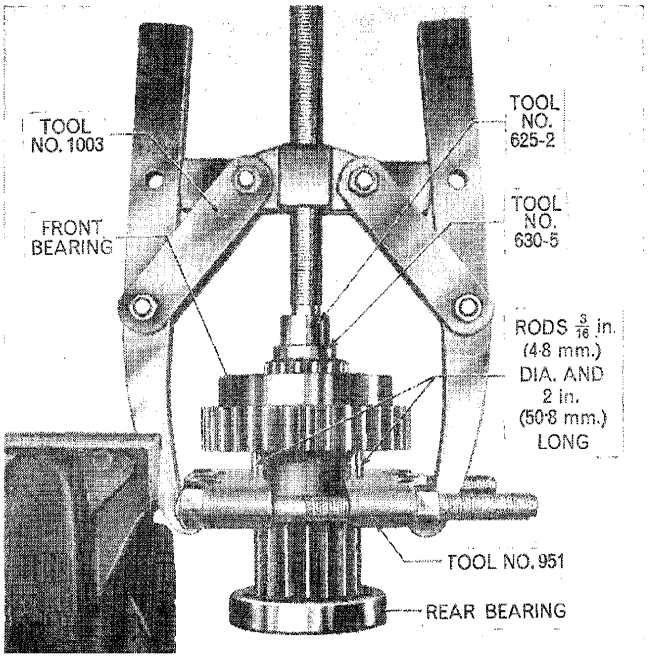

Figure 25
Removing Secondary Countershaft Front Bearing

2. Make sure the snap ring, located immediately in front of the secondary countershaft front bearing in the transmission case, Figure 17, is in position before proceeding.
3. Place the secondary countershaft assembly in its approximate location, but resting on the bottom of the compartment.
4. Locate the output shaft and push it into position.
5. Tap the secondary countershaft forward squarely until the front bearing is felt to seat on the snap ring in the transmission case.
6. Using a new gasket, locate the rear support plate, aligning the two dowels on the rear face of the transmission and tap the support plate into position. Install the ten retaining bolts and tighten to the specified torque (See Specifications, Chapter 2 of this Part) and secure with suitable locking wire.
7. Pass the P.T.O. countershaft and bearing assembly through the secondary countershaft and locate it in the splines in the main countershaft. Protect the spigot with a suitable sleeve and tap the P.T.O. countershaft and bearing into the rear support plate and secure with the appropriate snap ring.

Live P.T.O. Transmission

a. The P.T.O. countershaft gear (which is splined onto the front of the Live P.T.O. countershaft) must be placed in position in the front compartment, and the Live P.T.O. countershaft pushed through the rear to engage the splines in this gear, Figure 3. Install the retaining snap ring in the rear support plate.

NOTE: ***If a new Live P.T.O. countershaft gear is being installed the small thrust washer and snap ring must be positioned inside the hub at the front of the gear prior to installation.***

b. Using a sleeve 1 in (25·4 mm) I.D. and $1\frac{3}{8}$ in (34·9 mm) O.D. of convenient length, drive the front bearing onto the Live P.T.O. countershaft to seat firmly against the countershaft gear.

8. Install the P.T.O. coupling sleeve onto the rear of the P.T.O. countershaft and secure with the appropriate snap ring.
9. Refer to Part 15, for instructions for joining the tractor at the transmission to rear axle centre housing flange.

Live P.T.O. Transmission

a. See Section 3C for instructions for installing the front support plate, the release bearing hub support, the release bearing and hub assembly, the release fork, return spring, release shaft, and release rod.

b. See Part 15 for instructions on rejoining the tractor at the transmission to engine flange.

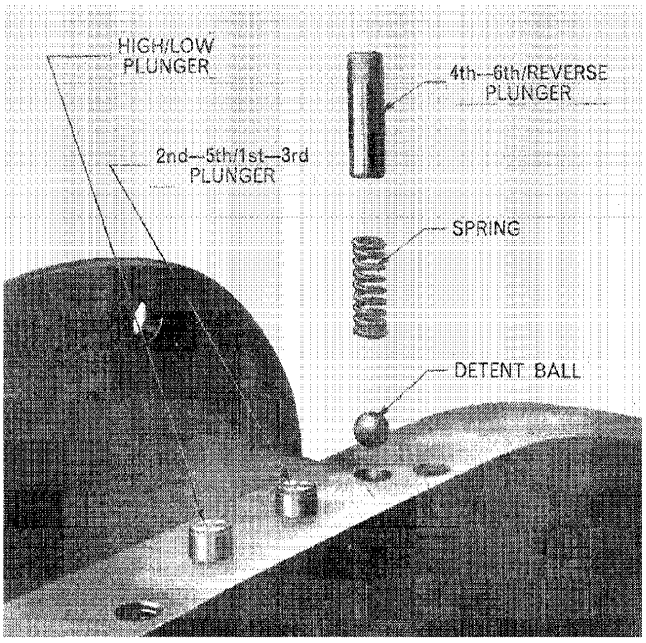

Figure 26
Detent Plungers, Spring and Ball

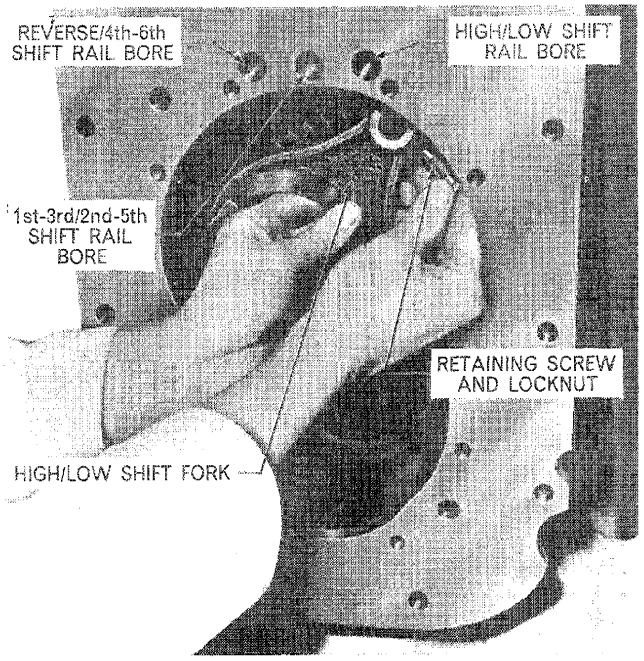

Figure 27
Removing/Installing High/Low Shift Fork

5. COMPLETE OVERHAUL

A. Disassembly

1. Refer to Part 15 for separating the tractor at the engine and at the rear axle, thus removing the transmission as an assembly.
2. Refer to Section 2A of this Part for removing the gear shift levers and cover assembly.
3. Refer to Section 3A for removing the clutch operating components, the clutch release hub support and the front support plate.
4. Refer to Section 4A for removing the rear support plate assembly, the secondary countershaft, and the output shaft.

Gear Shift Mechanism

1. Extract the three shift rail plungers and springs from their bores, Figure 26. Pull the High/Low shift fork rearward and remove the sliding coupling. Loosen the locknut, remove the screw retaining the High/Low fork, Figure 27, and remove the fork to the rear. Rotate the High/Low rail until the screw and locknut retaining the shift connector are uppermost. Loosen the locknut, remove the screw and slide the rail out to the rear, removing the shift connector.

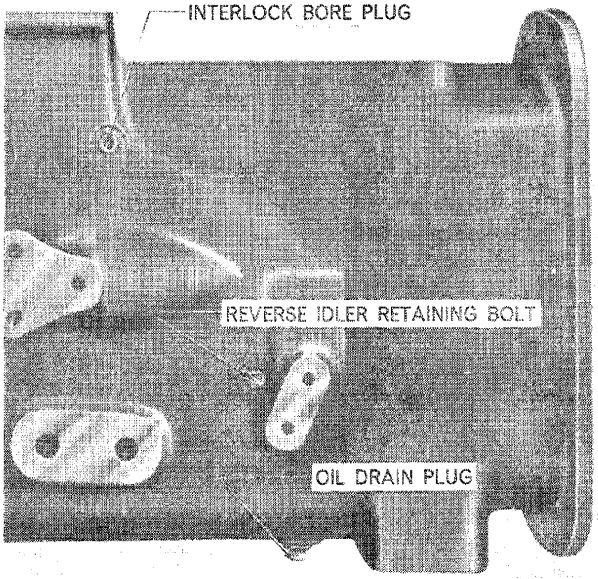

Figure 28
Left-hand side of Transmission

© FORD MOTOR COMPANY LTD., 1964

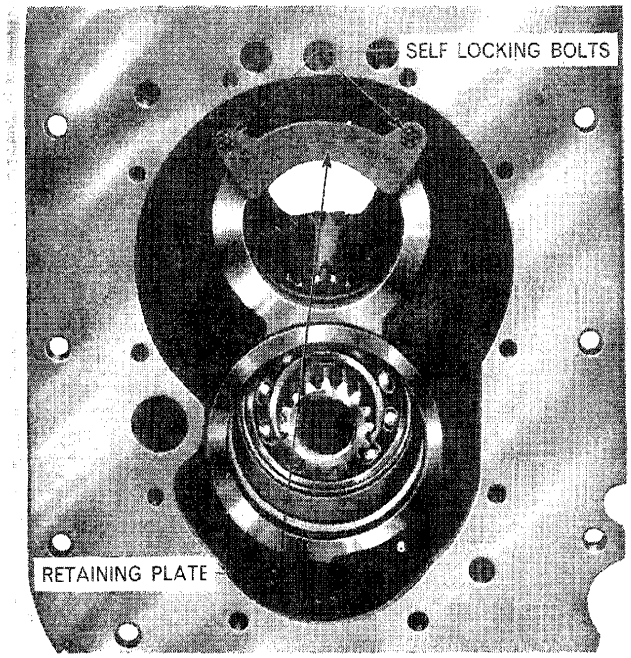

Figure 29
Mainshaft Rear Bearing Retaining Plate

NOTE: ***As each shift rail is removed, be sure that each of the three shift rail detent balls is collected from the rail support bores.***

2. Loosen the locknuts and remove the retaining screws from the remaining shift forks and connectors. Remove the forks and connectors as each rail is withdrawn rearwards.

   NOTE: ***The 4th/6th shift fork is removed at a later operation due to its inaccessibility at this stage.***

3. If necessary extract the screwed plug from the left-hand side of the transmission case, Figure 28, and remove the interlock plunger from the bore.

Mainshaft Assembly

1. Remove the two self-locking bolts, Figure 29, holding the mainshaft rear bearing retaining plate onto the transmission case, and remove the retaining plate.
2. Using suitable snap ring pliers, remove the snap ring from the forward end of the mainshaft.
3. Withdraw the mainshaft rearwards removing the gears, sliding couplings, connectors and thrust washers one by one.

   NOTE: ***Keep the respective sliding couplings and connectors in pairs, as they are matched assemblies.***

Reverse Idler Assembly

1. Unscrew the reverse idler shaft retaining screw situated on the outside of the transmission case, Figure 28. Push the idler shaft forwards and lift out the 4th/6th shift fork.
2. Withdraw the 4th/6th coupling to the rear. Push the reverse idler shaft out to the rear, and lift out the reverse idler gear.

Main Countershaft Assembly

1. Remove the snap ring, retaining the main countershaft rear bearing, from the transmission case. Using Tool No. 630-4 (or 630-5 for Live P.T.O. Transmissions) and a suitable drift, drive the countershaft rearwards until both bearings are out of their locations in the transmission case and the assembly is loose in the bottom of the transmission.
2. Place suitable wooden blocks behind the cluster gear so that the shaft can be driven rearwards through the cluster gear and front bearing. Withdraw the countershaft through the rear compartment and remove the cluster gear and front bearing from the main transmission compartment.

B. Inspection and Repair

Transmission Case

1. When the transmission has been completely disassembled, the case should be thoroughly cleaned inside to prevent small particles of metal or dirt causing subsequent damage to bearings, oil seals, and gears.
2. Inspect the case for cracks or other damage and, if beyond repair, use a new case on assembly.

Mainshaft Assembly

1. The mainshaft should be carefully examined for excessive wear or damage, and if necessary a new part used on assembly.
2. The mainshaft gears must be checked for wear or chipping, and if necessary new gears used on assembly.
3. Inspect the reverse and the 1st-3rd/2nd-5th sliding couplings and connectors, making sure the couplings slide freely on the connectors. If installing new sliding couplings, or their respective connectors, make sure the couplings and connectors are installed as matched assemblies.
4. Examine the mainshaft rear ball bearing and if necessary, remove the two snap rings from the mainshaft and use Tools Nos. 1003, 951 and 625-2 to draw the bearing off, Figure 30.

5. Install a new mainshaft rear bearing using Tools Nos. 1003, 951 and 630-11. Position the snap ring to retain the ball bearing.

6. The output shaft pilot bearing outer track can be removed from the mainshaft by means of a hammer and a suitable small punch located in the two holes provided through the mainshaft gear.

   NOTE: ***The output shaft pilot bearing outer track cannot be removed from the mainshaft until the mainshaft rear bearing is drawn off. If a new outer track is installed the inner race on the output shaft must also be installed as the pilot bearing is serviced as a matched assembly.***

7. Press the output shaft pilot bearing outer track into the rear of the mainshaft using Tools Nos. 1002 and 630-8, Figure 31.

Main Countershaft

1. Examine the main countershaft for wear or damage and if necessary use a new part on assembly.

2. Examine the main countershaft rear bearing, and remove, if necessary, using Tools Nos. 1003, 952 and 630-4. Use Tools 952, 1003 and 630-5 to press on the new bearing.

Live P.T.O. Transmission

On Live P.T.O. transmissions the main countershaft is not internally splined and Tool No. 630-5 is more suitable than Tool No. 630-4 for removing the rear bearing in Step 2 above.

Reverse Idler Assembly

1. Mate the reverse idler shaft and gear and check for free play, also examine the teeth on the gear. If necessary, use new parts on assembly.

   NOTE: ***No attempt should be made to install the reverse idler gear bushing alone, as it is serviced as an assembly with the gear.***

Gear Shift Mechanism

1. Examine the shift forks and connectors for wear or distortion and use new parts, if necessary, on assembly.

2. Examine the detents on the gear shift rails for wear, and check the rails for straightness by rolling them on a flat surface. Renew any damaged parts on assembly.

3. Make sure the detent balls and plungers are not sticking in their bores. If necessary, use a fine abrasive paper to clean the plungers and balls. Lubricate the parts on assembly.

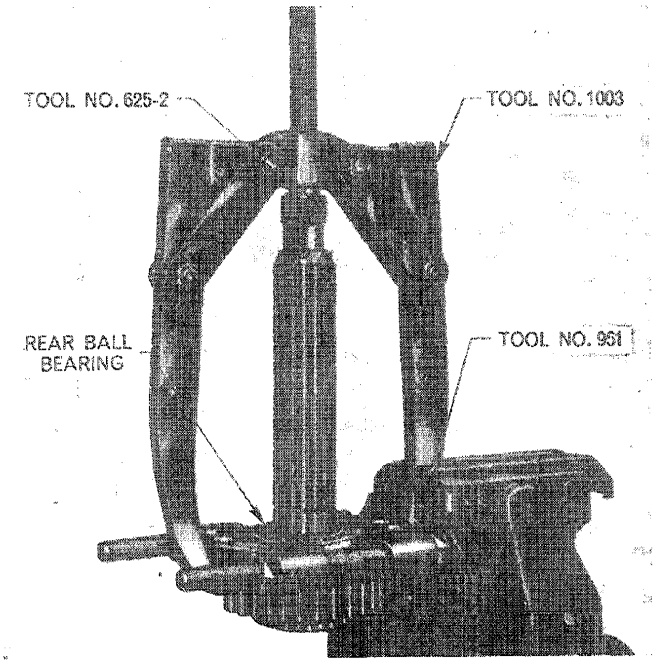

Figure 30
Removing Mainshaft Rear Bearing

C. Assembly

NOTE: ***Clean all components thoroughly in a gasoline or kerosene bath before installation. Bearings, bushings, and all sliding surfaces should be lightly lubricated on assembly.***

Main Countershaft

1. Tap the main countershaft front bearing into the transmission case to seat against the snap ring.

2. Rest the cluster gear in the bottom of the main compartment, with the large helical gear to the front.

3. Pass the main countershaft and rear bearing assembly in from the rear compartment to engage in the internal splines of the cluster gear.

4. Use Tool No. 630-4 (630-5 for Live P.T.O. Transmission) and a suitable drift and hammer to drive the main countershaft assembly forward into the front bearing. When in position, retain with the snap ring behind the rear bearing.

5. Install the 4th-6th coupling onto the rear of the main countershaft with the shift fork groove to the front, Figure 17.

Reverse Idler Assembly

1. Insert the reverse idler shaft through the rear compartment, larger diameter forward, into the main

© FORD MOTOR COMPANY LTD., 1964

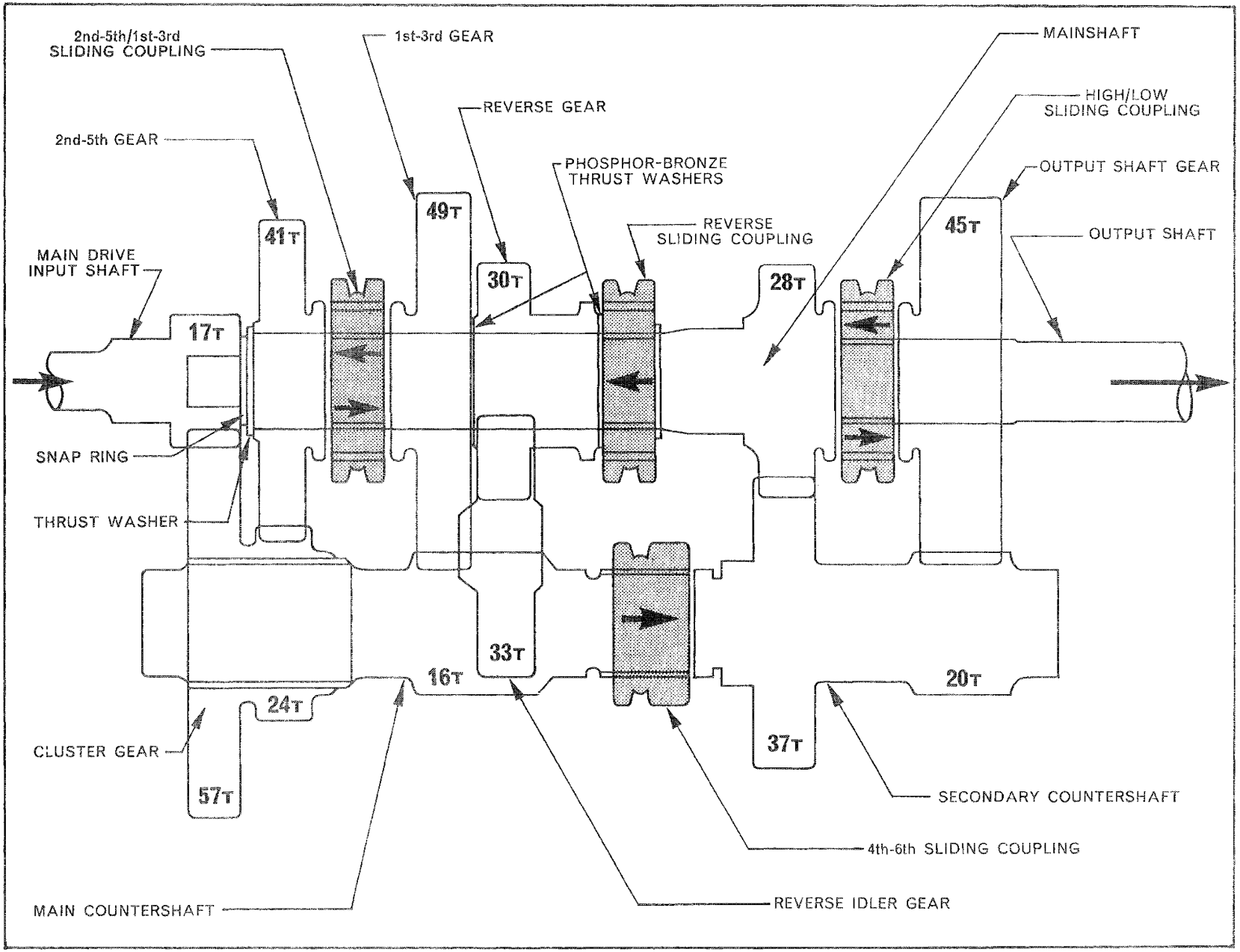

Figure 31
Gear Identification Diagram

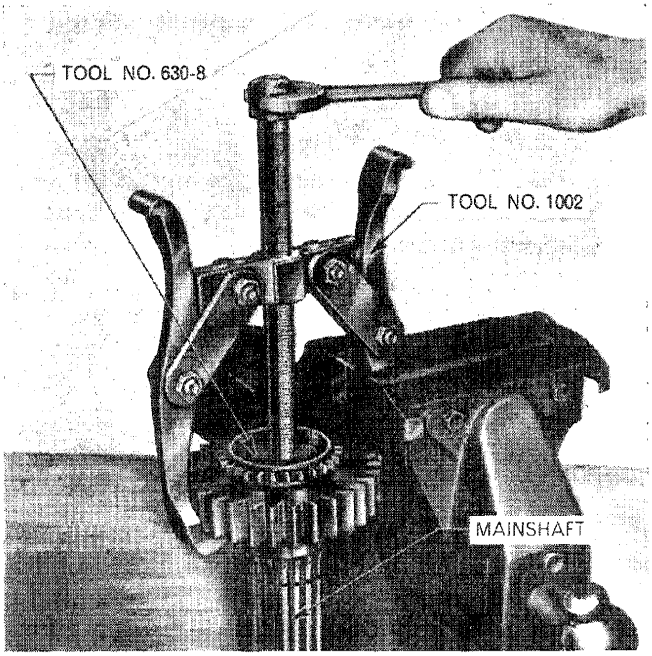

Figure 32
Installing Output Shaft Pilot Bearing Outer Track

compartment. Hold the reverse idler gear in position with the hub of the gear facing forward, and push the shaft through the gear.

2. Push the shaft forward enough to allow the 4th-6th shift fork to be mounted on the small diameter of the shaft, making sure the fork is located in the groove in the 4th/6th sliding coupling, Figure 17.
3. Secure the shaft with the retaining screw and rubber coated sealing washer located through the left-hand side of the transmission case, Figure 28.

Mainshaft Assembly

1. Pass the mainshaft through the rear compartment assembling the gears to the shaft in the following sequence, Figure 31.
   a. Snap ring.
   b. Reverse sliding coupling and connector assembly.
   c. Phosphor-bronze thrust washer.
   d. Reverse gear (dog-teeth rearward).
   e. Phosphor-bronze thrust washer.
   f. 1st-3rd gear (dog-teeth forward).
   g. 1st-3rd/2nd-5th sliding coupling and connector assembly.
   h. 2nd-5th gear (dog-teeth rearward).
   i. Thrust washer.
   j. Snap ring.
2. Position the mainshaft rear bearing retaining plate, secure with the two self-locking bolts, Figure 29, and tighten to the specified torque. (See Specifications, Chapter 2.)

Gear Shift Mechanism

1. If necessary, insert the interlock plunger into the bore on the left-hand side of the housing and replace the screwed plug, Figure 28.
2. Pass the 4th-6th shift rail into the shift rail bore on the left-hand side of the transmission face with the single detent to the front.
3. Assemble the Reverse shift fork onto the rail so that the operating tongue is located in the slot in the 4th-6th shift fork mounted on the reverse idler shaft.
4. Slide the rail forward until it locates in the front support bore. Screw in the shift connector retaining screw and locknut and tighten to the specified torque. (See Specifications, Chapter 2.)

   NOTE: ***Before installing the 1st-3rd/2nd-5th shift rail, make sure that the 4th-6th/Reverse shift rail is in the neutral position because otherwise the interlock plunger will prevent the 1st-3rd/2nd-5th rail from entering the front support bore.***

5. Assemble the 1st-3rd/2nd-5th shift rail into the second bore from the left-hand side of the housing, with the three detents to the rear, and position the 1st-3rd/2nd-5th shift fork and the shift connector on the rail.
6. Slide the rail forward until it locates in the front support bore. Screw in the shift fork and connector retaining screws and locknuts, and tighten to the specified torque. (See Specifications, Chapter 2.)
7. Install the High/Low shift rail into the right hand bore. Assemble the shift connector onto the extreme forward end of the rail, and also the High/Low fork to the rear end of the rail in the rear compartment, Figure 27.
8. Screw in the respective retaining screws and locknuts and tighten to the specified torque. (See Specification, Chapter 2.)
9. Locate the High/Low sliding coupling, positioning it on the dog-teeth at the rear of the mainshaft, Figure 17.
10. Lightly lubricate and position the three shift rail detent balls, springs and plungers in their bores, Figure 26.

© FORD MOTOR COMPANY LTD., 1964

Remaining Assemblies

1. Install the secondary countershaft, output shaft and rear support plate assembly as described in Section 4C.
2. Install the front support plate, the release bearing hub-support, and the clutch operating components as described in Section 3C.
3. Make sure that all gears and shafts rotate freely, and that the sliding couplings will engage with their respective gears.
4. Install the gear shift levers and cover assembly, as described in Section 2C.
5. Rejoin the tractor at the transmission to engine flange, and also at the transmission to rear axle centre housing flange as described in Part 15.

Part 6

SIX-SPEED TRANSMISSION

Chapter 2

SPECIFICATIONS AND SPECIAL TOOLS

Section		Page
1.	Specifications	21
2.	Special Tools	22

1. SPECIFICATIONS

Number of Speeds, Forward ..... Six
Number of Speeds, Reverse ..... Two
Type of Drive Line ..... In Line
Main Drive Input Gear Ratio ..... 17/57 (Helical)
Live P.T.O. Input Gear Ratio ..... 17/57 (Helical)
Oil Capacity:
(11·0 Qts. U.K.) (13·2 Qts. U.S.) (12·5 Ltrs.)

Oil Grade:	Ford Specification.	General Specification.
	ESEN-M2C85-A or ESN-M2C77-A	(S.A.E. 80 E.P.) or (S.A.E. 20W/30)

Number of Shift Levers ..... Two
Bearing Types:
Shaft ..... Ball
Pilot ..... Straight Roller
Reverse Idler and Output Shaft Gear Phosphor-Bronze Bushing
P.T.O. Speed:
(Live and Transmission) ..... 540 r.p.m. at 1810 Engine r.p.m.

Ground Speed Chart:

Gear	Ratios		Ground Speed*											
			Engine r.p.m. 1000		1250		1500		1750		1900		Diesel only 2000	
	Transmission	Final	m.p.h.	k.p.h.	m.p.h.	k.p.h.	m.p.h.	k.p.h.	m.p.h.	k.p.h.	m.p.h.	k.p.h.	m.p.h.	k.p.h.
1st	30·53	188·27	0·69	1·11	0·86	1·39	1·04	1·67	1·21	1·94	1·31	2·11	1·38	2·22
2nd	17·03	105·02	1·24	2·00	1·55	2·49	1·86	2·99	2·17	3·49	2·36	3·79	2·48	3·99
3rd	10·27	63·33	2·06	3·32	2·58	4·14	3·09	4·97	3·61	5·80	3·91	6·30	4·12	6·63
4th	7·54	46·50	2·80	4·51	3·50	5·63	4·20	6·76	4·90	7·88	5·32	8·56	5·60	9·01
5th	5·73	35·33	3·69	5·94	4·61	7·43	5·54	8·91	6·46	10·40	7·44	11·29	7·38	11·88
6th	2·54	15·66	8·33	13·41	10·41	16·76	12·50	20·11	14·58	23·46	15·83	25·47	16·66	26·81
Reverse Low	18·69	115·25	1·13	1·82	1·41	2·28	1·69	2·73	1·98	3·19	2·15	3·46	2·26	3·64
Reverse High	6·29	38·79	3·36	5·41	4·20	6·76	5·04	8·11	5·88	9·46	6·38	10·27	6·72	10·81

*Ground Speeds Based on 6·17:1. Rear Axle Ratio and 11·2/10–28 Rear Tyres

© FORD MOTOR COMPANY LTD., 1967

Tightening Torques	Pounds. Feet	Metre-Kilograms
Rear Support Plate Assembly Retaining Bolts	23–29	3·18–4·00
Main Shaft Rear Bearing Retainer Plate Bolts	6–8 (72–96 lbs. in.)	0·83–1·10
Front Support Plate Retaining Bolts	23–29	3·18–4·00
Clutch Release Bearing Hub Support Retaining Bolts (Live and Transmission P.T.O.)	23–29	3·18–4·00
Clutch Release Fork Retaining Bolt and Locknut	23–30	3·18–4·15
Gear Shift Fork Retaining Screws and Locknuts	20–25	2·76–3 45
Reverse Idler Retaining Bolt	15–19	2·07–2·63
Shift Levers and Cover Assembly Retaining Bolts	23–29	3·18–4·00

2. SPECIAL TOOLS

Tool No.	Description
1003	Puller—Single end arm/Large
1002	Puller—Reversible arm/Medium
952.....	Pulling Attachment/Large
951.....	Pulling Attachment/Small
630-S.....	Step Plate Adaptors (Set of Eleven)
630-T	Step Plate Adaptors (Set of Six)
625-A	Shaft Protectors (Set of Six)
943.....	Internal/External Pulling attachment
943-S.....	Slide Hammer
FT.943	Internal Pulling Adaptors (Set of Two)
955-14	Puller Adaptors (Set of Two)
954.....	Pilot Bearing Puller
T.7072	Special Bearing Puller
T.7077	Tubular Spanner
P.61	Heavy Duty Ratchet
938.....	Push-Puller
930-B	Push-Puller Legs (Set of Two)
930-E	Short Legs (Set of Two)
924.....	Female Threaded Adaptors (Set of Two)
Steel Rods ..	$\frac{3}{16}$ in. (4·8 mm.) Dia. and 2 in. (50·8 mm.) Long (Two Pieces)
Sleeve	1 in. (25·4 mm.) I.D. and $1\frac{3}{8}$ in. (34·9 mm.) O.D. of suitable length
Sleeve	$1\frac{7}{16}$ in. (36·5 mm.) I.D. and $1\frac{3}{4}$ in. (44·4 mm.) O.D. of suitable length

PART 7
SEVEN
AND
EIGHT-SPEED
TRANSMISSION

Part 7
SEVEN AND EIGHT-SPEED TRANSMISSION

Chapter 1
DEXTA 2000, SUPER DEXTA 3000 AND MAJOR 4000

Section		Page
1.	Description and Operation	1
2.	Shift Levers and Cover Overhaul	6
3.	Front End Overhaul	7
4.	Rear End Overhaul	16
5.	Complete Overhaul	22
6.	Seven-Speed Transmission	30

Chapter 2
SUPER MAJOR 5000

Section		Page
1.	Description and Operation	33
2.	Shift Levers and Cover Overhaul	33
3.	Front End Overhaul	37
4.	Rear End Overhaul	39
5.	Complete Overhaul	44
6.	Seven-Speed Transmission	50

Chapter 3
SPECIFICATIONS AND SPECIAL TOOLS

Section		Page
1.	Specifications	53
2.	Special Tools	58

© FORD MOTOR COMPANY LTD., 1965

Chapter 4

DUAL POWER TRANSMISSION—FORD 5000 AND 7000

Section		Page
1.	Description and Operation	65
2.	Planetary Gear Set Overhaul	69
3.	Pressure Testing	80

Chapter 5

DUAL POWER TRANSMISSION TROUBLE SHOOTING, SPECIFICATIONS AND SPECIAL TOOLS

Section		Page
1.	Trouble Shooting	83
2.	Specifications	85
3.	Special Tools	87

Part 7

SEVEN AND EIGHT-SPEED TRANSMISSION

Chapter 1

DEXTA 2000, SUPER DEXTA 3000, AND MAJOR 4000

Section		Page
1.	Description and Operation	1
2.	Shift Levers and Cover Overhaul	6
3.	Front End Overhaul	7
4.	Rear End Overhaul	16
5.	Complete Overhaul	22
6.	Seven-Speed Transmission	30

1. DESCRIPTION AND OPERATION

Dexta 2000 and Super Dexta 3000

This constant mesh type transmission, Figure 1, provides eight forward and two reverse gear ratios selected by two levers mounted on the top cover plate. The longer (main) lever selects four forward and one reverse ratio, while the shorter (secondary) lever provides a High and a Low range in each gear, Figure 3.

A safety feature incorporated in the top cover is an electrical switch which is connected in series with the starting circuit and allows the starter motor to be operated only when the main gear lever is in the neutral position.

With the exception of the helical gear drive to the P.T.O. and main countershafts, the gears are of the spur type, all the gears being in constant mesh and the gear train connections being made by sliding couplings and connectors.

Two types of this transmission are available, one with conventional transmission P.T.O. and the other with Live P.T.O. The components which differ in the two assemblies are illustrated together in Figure 4.

The main countershaft on the transmission P.T.O. version is splined internally to accept the external splines of a short P.T.O. countershaft. In the live P.T.O. version an extra pair of constant mesh helical gears transmit the drive from the P.T.O. clutch to the P.T.O. countershaft. One of these gears is integral with the P.T.O. input shaft and revolves around the outside of the main drive input shaft. The other helical gear is splined onto the forward end of the P.T.O. countershaft where it is driven by the P.T.O. input shaft.

Major 4000

The eight-speed transmission on the Major 4000, Figure 2, is available with either Independent P.T.O., Transmission P.T.O. or Less P.T.O. For all P.T.O. types, the main and secondary compartments are identical in layout to the Dexta 2000/Super Dexta 3000 eight-speed transmission, many of the components being interchangeable.

The Major 4000 transmission, however, differs in the main drive and P.T.O. input components and in the mainshaft and mainshaft gears. The main differences are as follows:

All P.T.O. Types

1. The gear shift lever cover is made of cast iron instead of pressed steel. The layout and components, however, differ only slightly from the pressed steel type, Figures 6 and 7.
2. The mainshaft has three different working diameters, Figure 5, and is only splined in two locations to accept the gear shift connectors. The gears supported by the mainshaft have internal bushings.

© FORD MOTOR COMPANY LTD., 1965

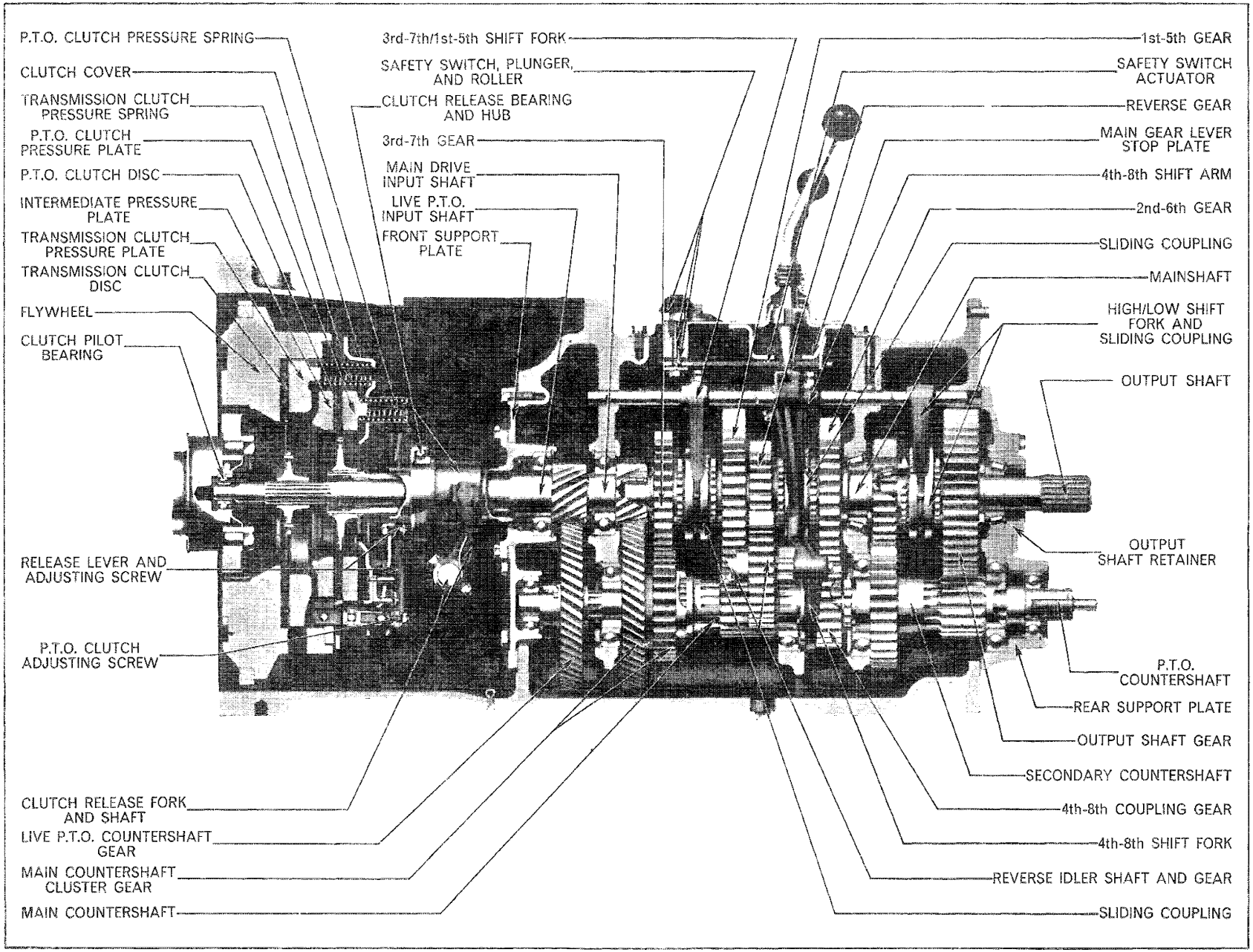

Figure 1
Dexta 2000, Super Dexta 3000 Transmission

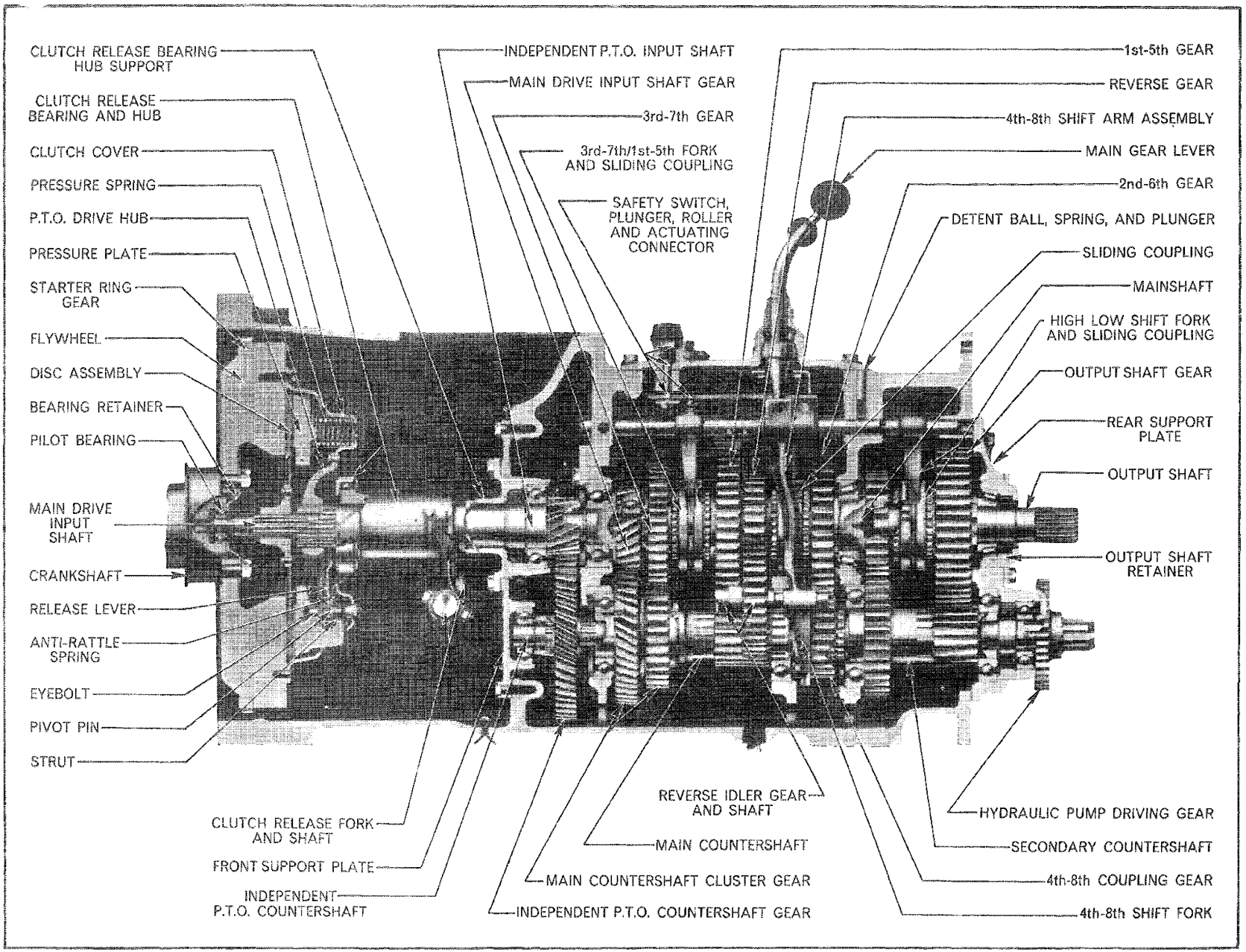

Figure 2
Major 4000 Transmission

© FORD MOTOR COMPANY LTD., 1965

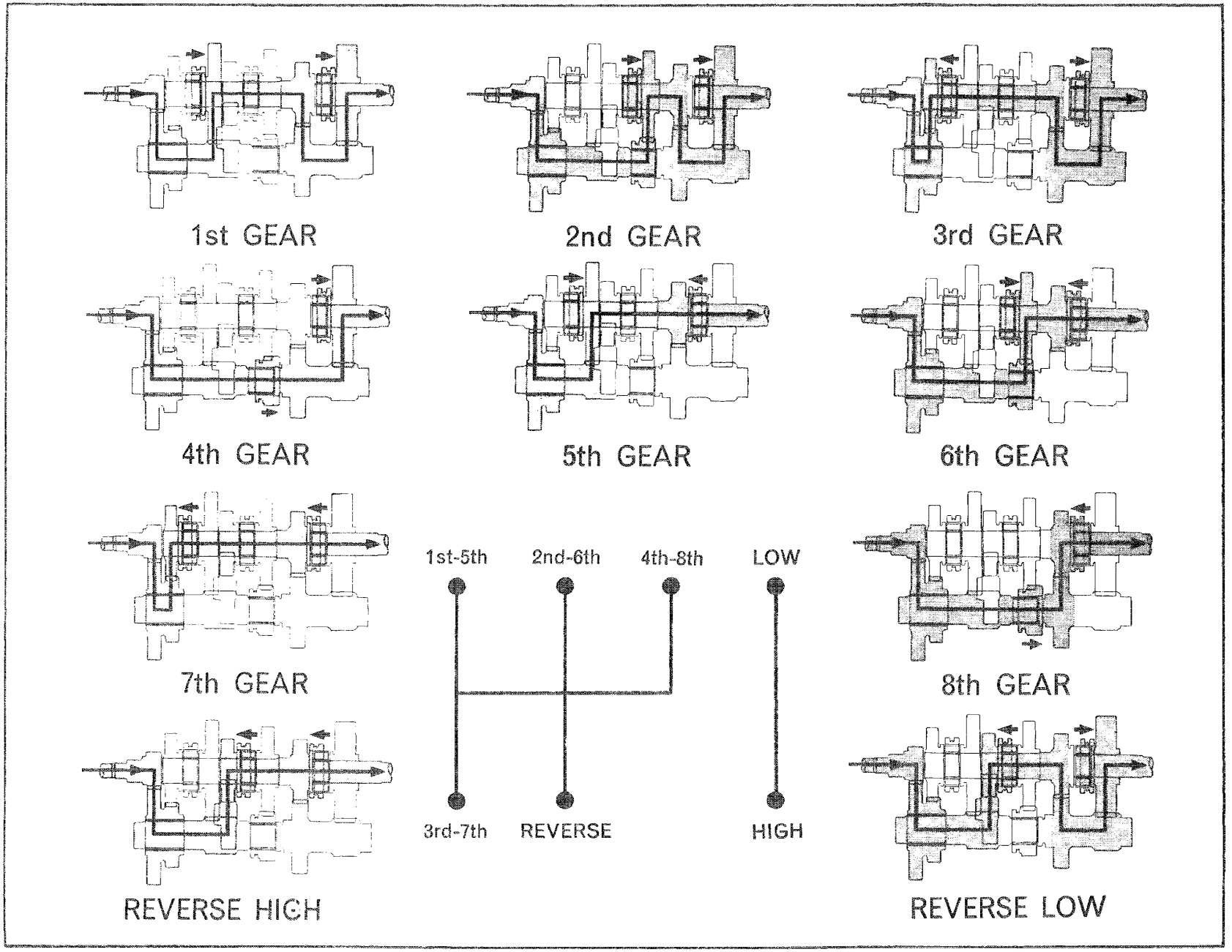

Figure 3
Power Flow and Shift Pattern Diagrams

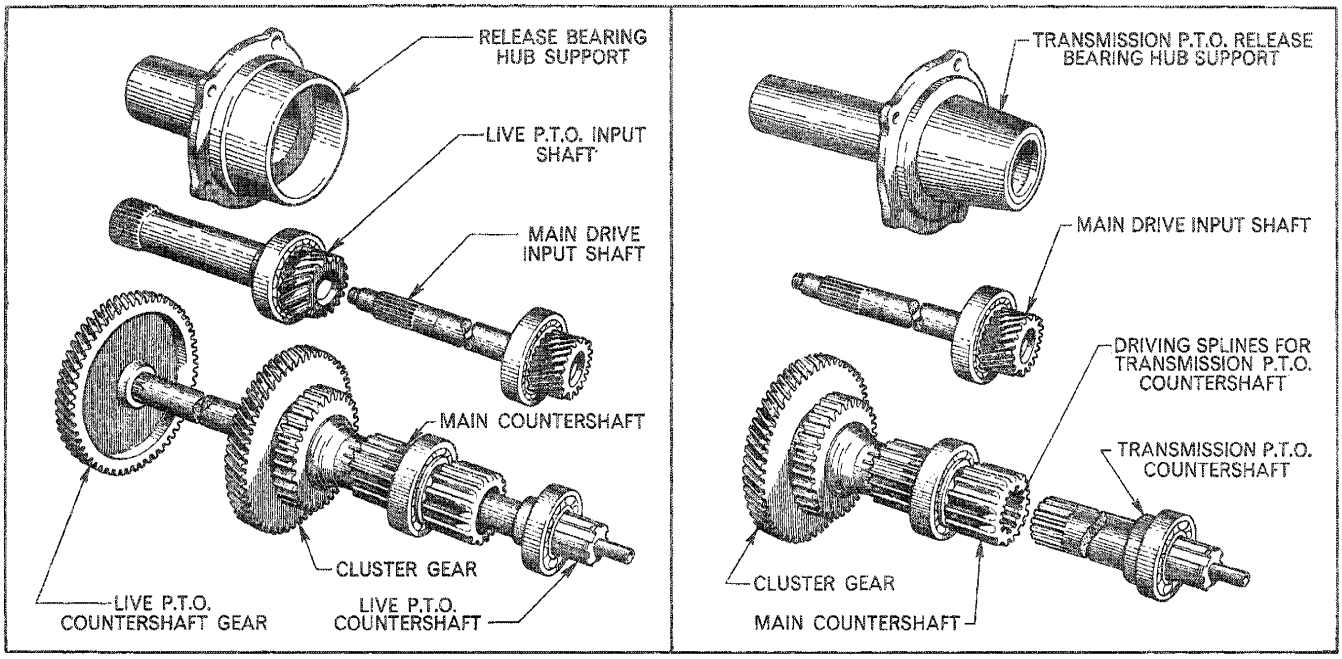

Figure 4
Live and Transmission P.T.O. Components—Dexta 2000, Super Dexta 3000

3. The main drive input shaft has a bigger gear compared with the Dexta/Super Dexta. (See Specifications, Chapter 3.) This necessitates a bearing retaining plate, Figure 11, to allow assembly and disassembly of the input shaft. The front half of the main countershaft cluster gear, Figure 50, is correspondingly smaller than that in the Dexta/Super Dexta transmission, Figure 49.

4. The Independent P.T.O. input shaft has no front bearing and the oil seal is located internally at the rear. The forward end of the shaft is splined direct into the clutch cover, providing a constant drive.

Transmission P.T.O. Type

5. The P.T.O. input gear is splined on to the main drive input shaft providing a drive to the P.T.O. countershaft only when the clutch is engaged. The main drive input shaft is composed of two pieces splined together. This allows the P.T.O. input gear and front bearing to be removed and installed, Figure 11.

Less P.T.O. Type

6. Transmissions less P.T.O. are virtually identical to models with Transmission P.T.O. but all the P.T.O. components are removed and a sealing plug is located in the rear support plate where the P.T.O. countershaft would otherwise pass through.

The normal engineering procedure of making the bearings a press fit on the shafts and a push fit in the housing has been employed, and unless it is necessary to install new bearings, or to gain access to other components, it is recommended that they are not removed from the shafts.

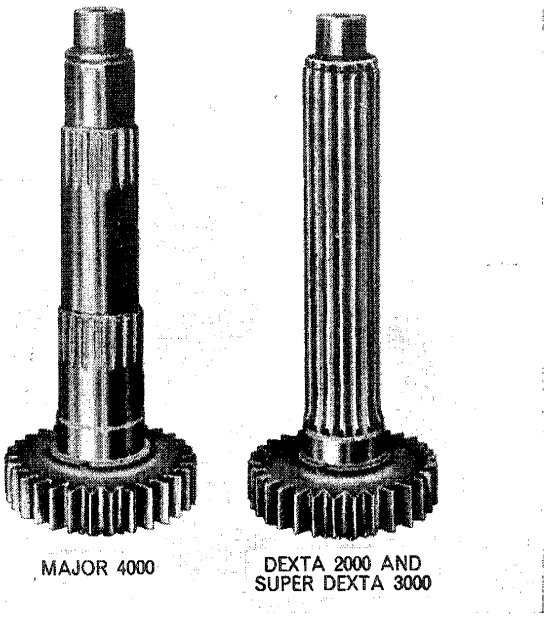

Figure 5
Mainshaft Types

© FORD MOTOR COMPANY LTD., 1965

2. SHIFT LEVERS AND COVER OVERHAUL

A. Disassembly

1. Remove the rubber cover and disconnect the wires from the starter safety switch. Unscrew the nine retaining bolts and spring washers from the cover and remove the cover and levers as an assembly.

Dexta 2000 and Super Dexta 3000 Only

2. Remove the two self-locking bolts retaining the roller support plate to the switch retainer. Remove the plate, the actuating connector, the roller and the plunger from their locations, Figure 6.

NOTE: *No attempt should be made to remove the main shift lever stop plate or the switch retainer, which are riveted to the cover as these parts are serviced as an assembly with the cover.*

Major 4000 Only

a. Remove the two self-locking bolts retaining the roller support plate and the switch retainer to the cover, Figure 7. Remove the roller support plate, the switch retainer, the actuating connector, the roller and the plunger.

b. Unscrew the four self-locking bolts and remove the gear lever stop plate from the cover.

3. Using a file or hacksaw, partially cut through the gear shift lever spring retaining clips, completing the cut with a hammer and chisel. Having first removed the shift lever balls, withdraw the levers through the cover.

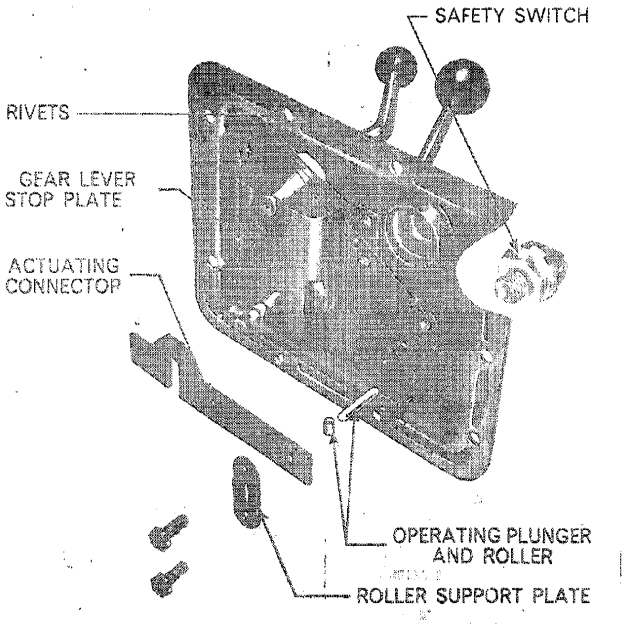

Figure 6
Safety Switch Operating Components

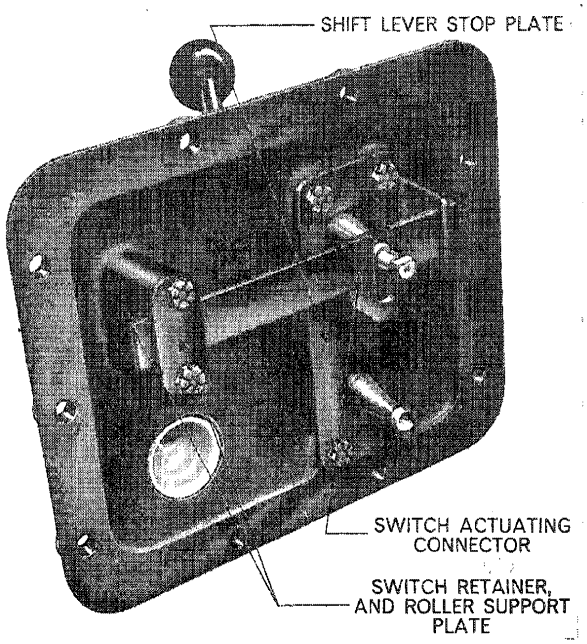

Figure 7
Safety Switch Operating Components (4000)

B. Inspection and Repair

1. Using a suitable test bulb, wires and battery, Figure 8, test the starter safety switch for correct operation by depressing the operating button. This should close the circuit and light the test bulb. On releasing the operating button the test bulb should be extinguished. If the switch is faulty, install a new part.

2. Inspect the cover for cracks or other damage, and if necessary, use a new part on assembly.

Dexta 2000 and Super Dexta 3000

3. a. Check the two locating dowels, one in each gear lever, for excessive wear or looseness.

b. If necessary remove the dowels and drive new parts into each lever.

Major 4000

a. Inspect the two locating dowels, one in each shift lever socket and if necessary drive them from the cover with a suitable punch.

b. Install new dowels prior to assembling the levers.

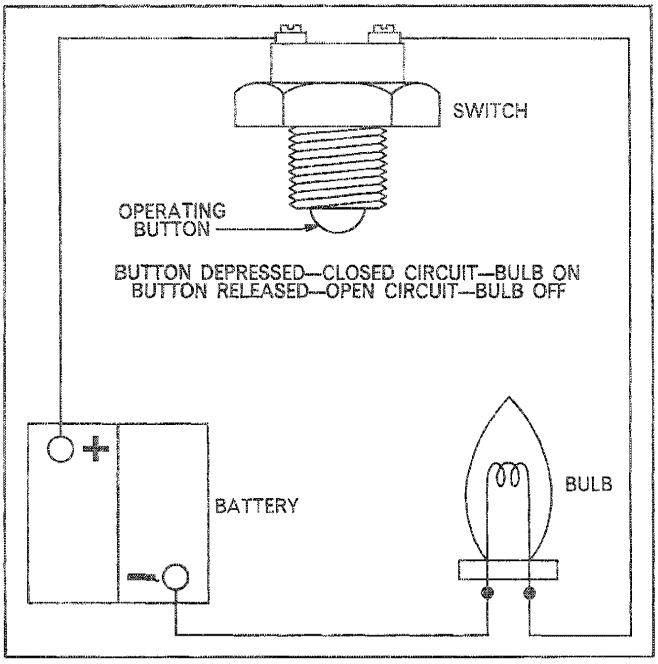

Figure 8
Safety Switch Test Circuit

4. Inspect the gear shift lever ends and all sliding parts for wear or damage and install new parts as necessary.

C. Assembly

1. Pass the gear shift levers through the cover, installing the retainer and springs. Compress the springs and secure with new spring retaining clips. Screw the balls onto the gear shift levers.

Dexta 2000 and Super Dexta 3000

2. a. Screw the starter safety switch into the switch retainer.

   b. Position the switch actuating connector and install the operating plunger, roller, and roller support plate, Figure 6.

   c. Install the two self-locking bolts to the retainer and tighten to the specified torque. (See Specifications, Chapter 3.)

Major 4000

   a. Screw the safety switch into the top of the shift cover.

   b. Position the shift lever stop plate, Figure 7, and install the four self-locking screws. Tighten the screws to the specified torque. (See Specifications, Chapter 3.)

   c. Position the switch retainer, the actuating connector, the operating plunger, the operating roller and the roller support plate, Figure 7.

   d. Install the two self-locking retaining screws and tighten to the specified torque. (See Specifications Chapter 3.)

3. Using a new gasket, position the gear shift lever and cover assembly on the case, and screw in the nine retaining bolts and spring washers. Tighten the bolts to the specified torque. (See Specifications, Chapter 3.)

4. Reconnect the wires to the safety switch, and install the rubber cover.

3. FRONT END OVERHAUL

A. Disassembly

1. Remove the drain plug, Figure 26, and drain the transmission oil.

2. Separate the engine and front axle assembly from the transmission (See Part 15.)

3. Remove the clevis pin securing the external clutch release rod clevis to the clutch release shaft arm.

4. Lever the release shaft return spring off the cast lug on the inside of the front end of the transmission case, Figure 9.

5. Unscrew the self-locking nut from the bolt securing the clutch release fork to the release shaft and withdraw the shaft from the housing.

6. Remove the release fork and return spring followed by the release bearing and hub assembly.

7. Remove the five bolts retaining the clutch release bearing hub support and pull the hub support out forwards.

Dexta 2000 and Super Dexta 3000–Live P.T.O. Only

Remove the Live P.T.O. input shaft and release bearing hub support as an assembly.

Major 4000–Independent P.T.O. Only

Remove the Independent P.T.O. input shaft and release bearing hub support as an assembly.

8. Remove the seven self-locking retaining bolts and withdraw the front support plate.

Dexta 2000, Super Dexta 3000–Live P.T.O.; and Major 4000–Independent P.T.O. and Transmission P.T.O.

© FORD MOTOR COMPANY LTD., 1965

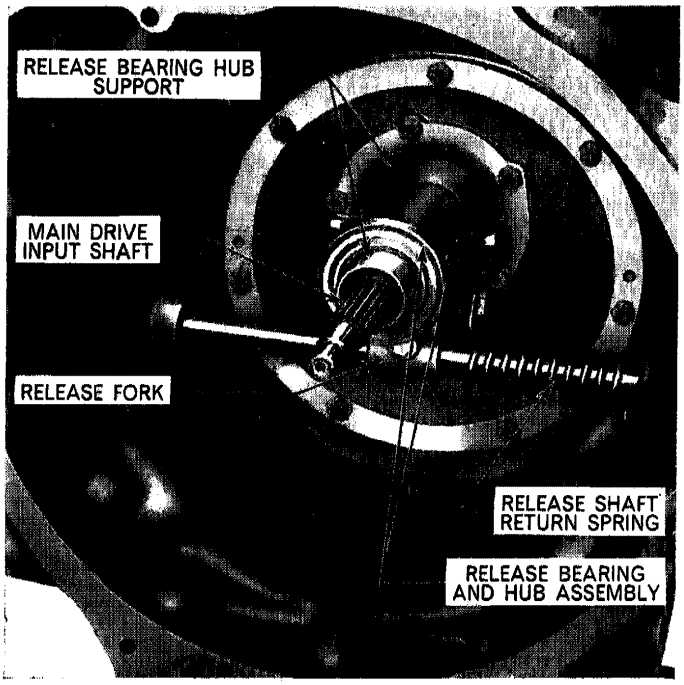

Figure 9

Clutch Operating Linkage

The P.T.O. countershaft front bearing is located in the front support plate so care must be taken to withdraw the plate squarely.

Dexta 2000, Super Dexta 3000, Transmission P.T.O. and Live P.T.O.

9. Remove the snap ring retaining the main drive input shaft and bearing assembly in the transmission case and withdraw the shaft and bearing assembly forwards.

Dexta 2000, Super Dexta 3000–Live P.T.O.; and All Major 4000 transmissions

NOTE: ***For transmission less P.T.O. ignore steps a, b, c, d, and e.***

a. Use Tools Nos. T.7072 and T.7077 (or Tool No. SW-501-2) to remove the P.T.O. countershaft front bearing as shown for the Dexta 2000, Super Dexta 3000, in Figures 10(A) and 10(B).

b. Separate the tractor at the transmission to rear axle centre housing. (See Part 15.)

c. Remove the snap ring, which retains the coupling sleeve to the P.T.O. countershaft and remove the sleeve.

NOTE: ***The Major 4000 with Independent P.T.O. has an hydraulic pump driving gear instead of a coupling sleeve. This gear is enclosed by a steel shroud. Remove the shroud by cutting the locking wire and removing the two retaining bolts. Remove the circlip, and slide off the hydraulic pump driving gear.***

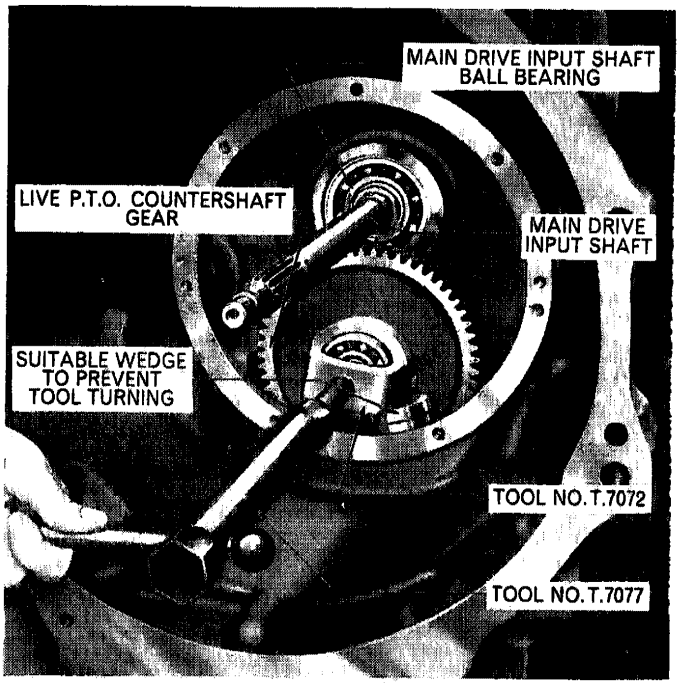

Figure 10(A)

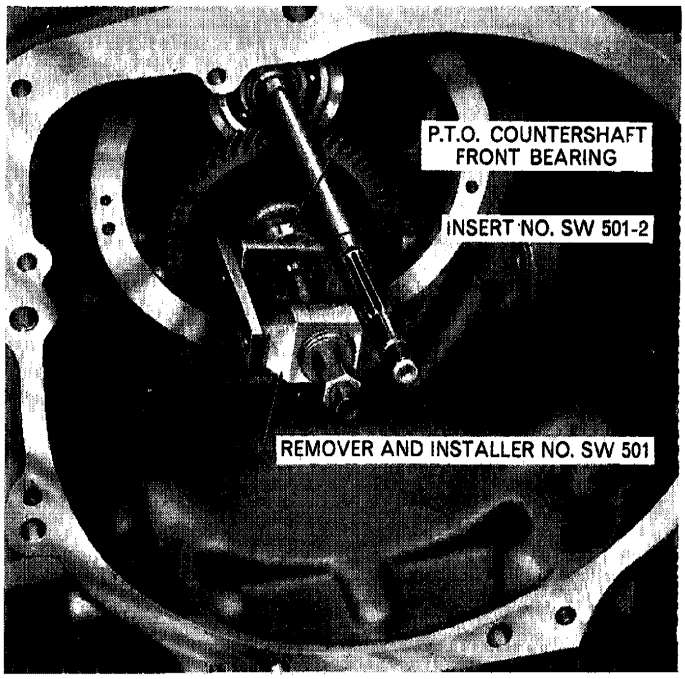

Figure 10(B)

Removing Live P.T.O., Countershaft Front Bearing

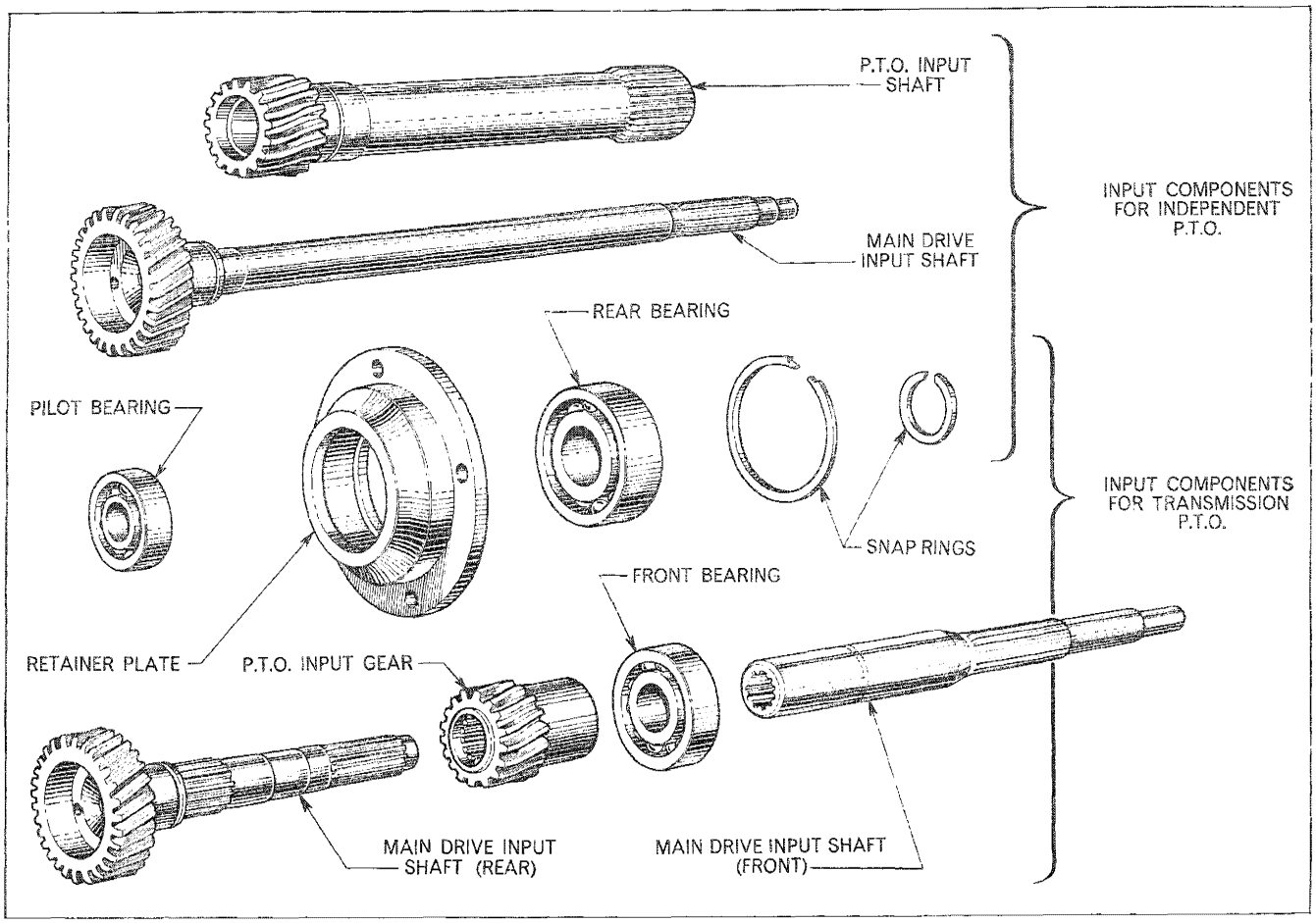

Figure 11
Transmission and Independent P.T.O. Input Shaft Assemblies (Major 4000)

d. Remove the snap ring retaining the P.T.O. countershaft rear bearing, and drive the countershaft rearwards out of the transmission.

e. Remove the P.T.O. countershaft gear which is now loose in the transmission front compartment.

f. Remove the four self-locking bolts and withdraw the input shaft, retainer plate and bearing, Figure 11, as an assembly. The Dexta/Super Dexta has no retainer plate and the input shaft is removed as described in Step 9.

NOTE: ***On Transmission P.T.O. (Major 4000), the input shaft consists of two sections splined together, Figure 11. The rear section of the shaft has the P.T.O. input gear splined to it, the gear being retained by a ball bearing located in the hub support. The front section usually remains in the clutch assembly when the tractor is separated.***

B. Inspection and Repair

Clutch Release Bearing Hub Support-Dexta 2000, Super Dexta 3000-Transmission P.T.O.; Major 4000 -Transmission P.T.O. and Less P.T.O.

1. Inspect the main drive input shaft oil seal in the hub support for wear or damage. If necessary remove the seal using Tool Nos. 943, 943-S and FT.943, Figure 12.

2. Install a new seal using Tool No. 630-9 (reversed) and a suitable driver.

Dexta 2000, Super Dexta 3000-Live P.T.O. Only

1. Remove the large snap ring at the rear of the hub support and drive the P.T.O. input shaft and rear bearing assembly out of the hub support.

2. Inspect the oil seal in the hub support and if worn or damaged remove the seal using Tools Nos. 943, 943-S and FT.943 in a similar manner to that shown in Figure 12.

© FORD MOTOR COMPANY LTD., 1965

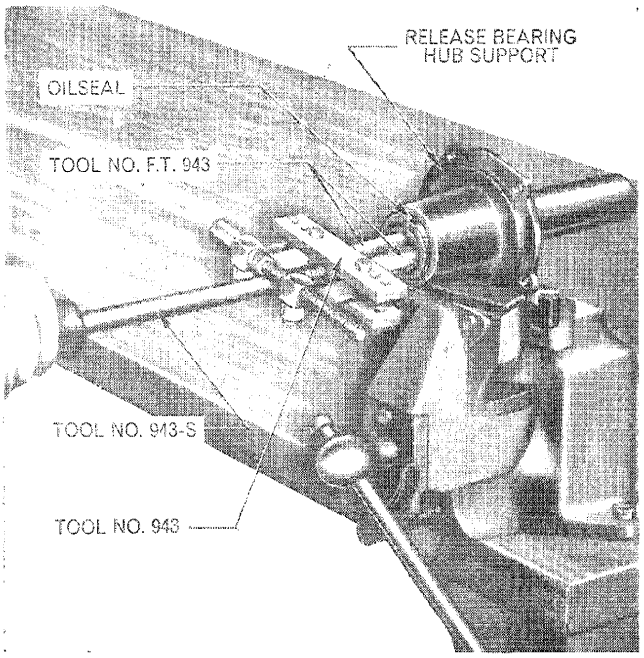

Figure 12
Removing Input Shaft Oil Seal (Trans. P.T.O.)

3. Lightly grease the new seal and install, making sure that the sealing lip faces to the rear. Tool No. 630-15 (reversed) will provide a suitable flat surface to locate against the seal when driving it into position.

4. Inspect the gear teeth and the oil seal journals on the Live P.T.O. input shaft for damage or excessive wear, and check the rear bearing for wear or damage. If necessary, remove the snap ring from the shaft and withdraw the rear bearing using Tools Nos. 1003, 951 and 630-7, Figure 13.

5. Install the bearing onto the shaft using Tools Nos. 1003, 951, 630-4 and 625-3. Secure the bearing to the shaft with the appropriate snap ring.

6. If necessary, remove the front oil seal and needle roller bearing from the Live P.T.O. input shaft, withdrawing seal and bearing in one operation, using Tools Nos. 954 and 955-14, Figure 14.

7. When installing a new needle roller bearing, make sure that the manufacturers name, which is stamped on the bearing shell, faces outwards. Use Tool No. 630-3 with a hammer and drift to drive the bearing into the input shaft. Make sure the bearing seats against the shoulder in the bore of the input shaft. Lightly grease the oil seal and locate it on the spigot of Tool No. 630-4. Use a hammer and small punch to drive the seal into position against the shoulder in the shaft, Figure 15.

   NOTE: ***Make sure that Tool No. 630-4 is free from burrs or sharp edges to avoid damage to the seal.***

8. Drive the Live P.T.O. input shaft and bearing assembly into the hub support and secure with the appropriate snap ring.

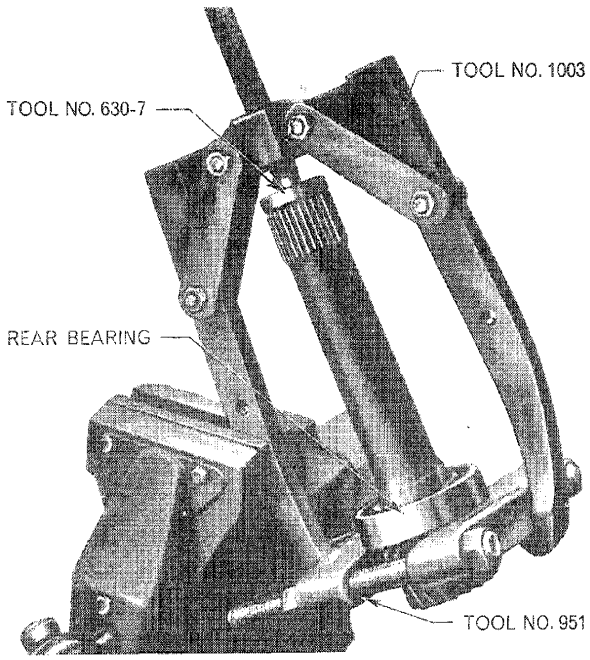

Figure 13
Removing Live P.T.O. Input Shaft Rear Bearing

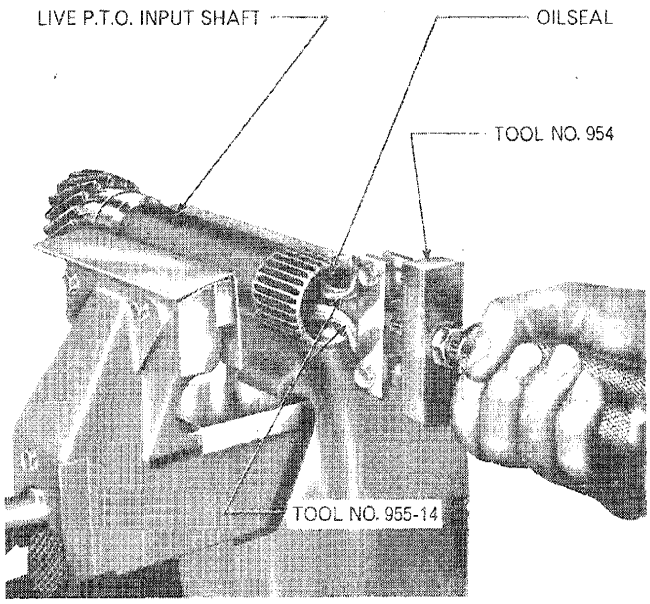

Figure 14
Removing Live P.T.O. Input Shaft Front Oil Seal and Roller Bearing

Major 4000–Independent P.T.O.

1. Remove the snap ring retaining the Independent P.T.O. input shaft rear bearing and drive the shaft and rear bearing out of the hub support.
2. Inspect the oil seal in the hub support and if necessary use Tools Nos. 943, 943-S, and FT.943, to remove the seal.
3. Make sure the new seal is lightly greased and install it to the hub support, with the sealing lip facing rearwards, using Tool No. 630-15 (reversed).
4. Examine the oil seal at the rear of the P.T.O. input shaft, and if necessary lever out the seal with a suitable screwdriver.

   NOTE: ***Do not install a new oil seal until the rear bearing has been pressed on, otherwise Tool No. 630-3 cannot be used when installing the rear bearing. (See Step 6).***
5. Inspect the input shaft and rear bearing for wear or damage and if necessary remove the bearing using Tools Nos. 952, 930-B (pair), 630-4, 938, and P 61, Figure 16.
6. Press a new bearing into position against the input shaft gear, using Tools Nos. 1003, 951, 630-3, 938 and 625-4.
7. The oil seal at the rear of the P.T.O. input shaft can now be assembled using Tool No. 630-4 (reversed) and a soft faced mallet.

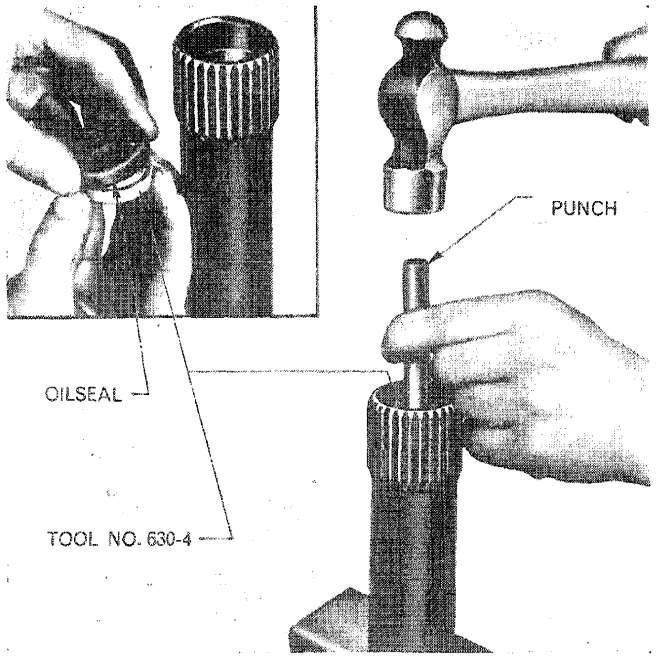

Figure 15
Installing Live P.T.O. Input Shaft Front Oil Seal

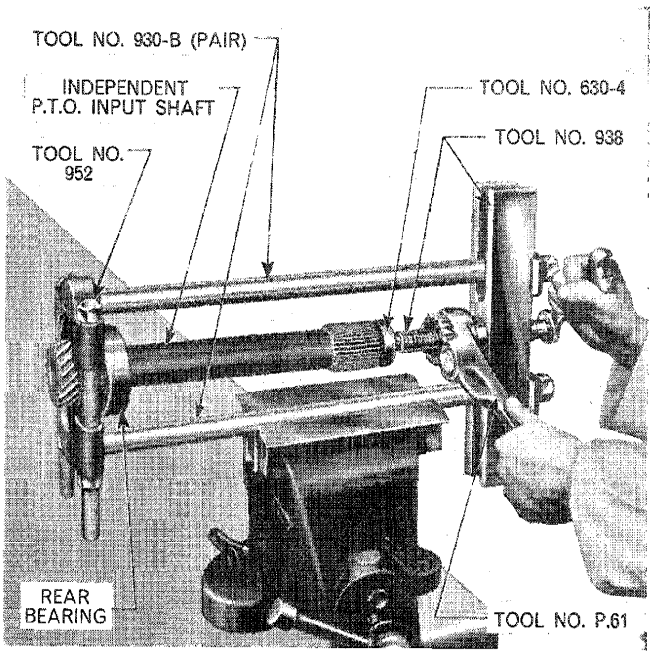

Figure 16
Removing Independent P.T.O. Input Shaft Rear Bearing

8. Assemble the input shaft to the hub support and secure with the appropriate snap ring.

Main Drive Input Shaft Assembly–Major 4000, Independent P.T.O. and Less P.T.O.

1. Examine the input shaft for wear or damage. If

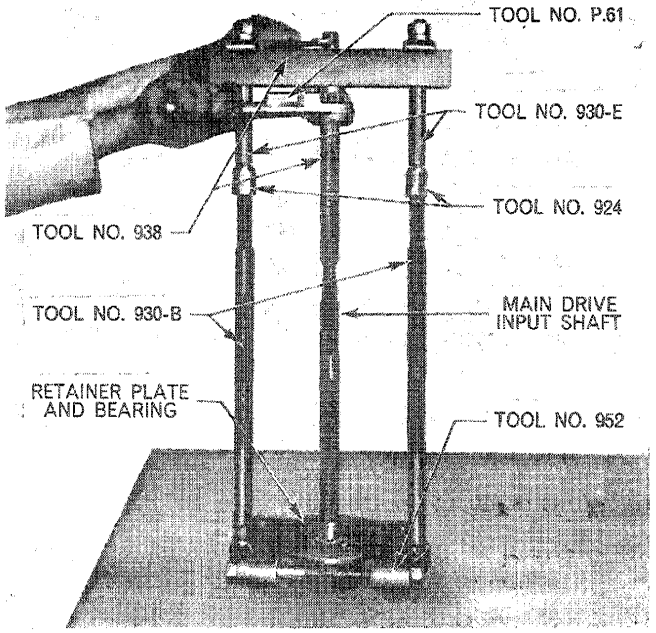

Figure 17
Removing Main Drive Input Shaft from Retainer Plate (Major 4000, Ind. P.T.O.)

© FORD MOTOR COMPANY LTD., 1965

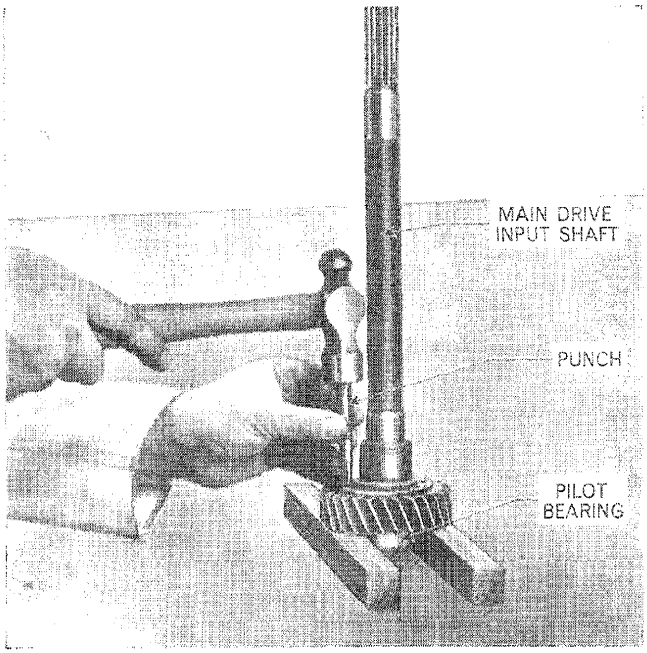

Figure 18
Removing Pilot Bearing from Main Drive Input Shaft

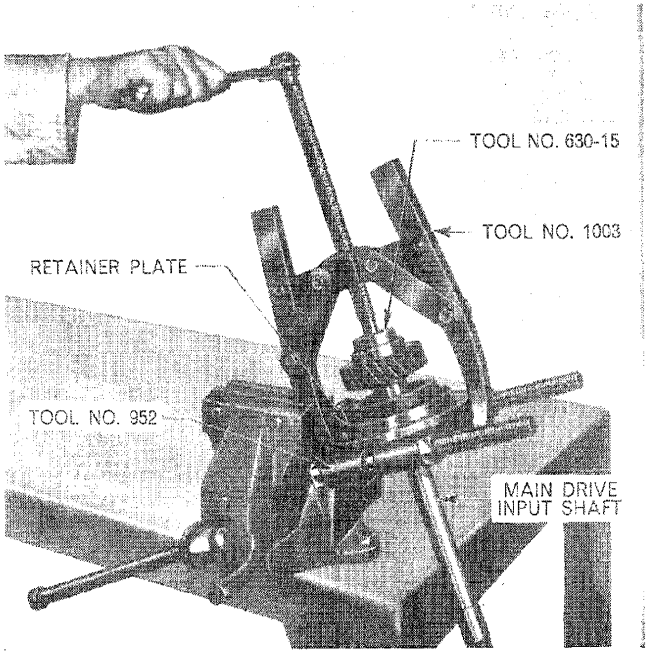

Figure 19
Installing Main Drive Input Shaft to Retainer Plate

necessary remove the inner snap ring from the input shaft and press the shaft out of the bearing and plate assembly, using Tools Nos. 952, P.61, 930-B (pair), 930-E (pair), 924 (pair), and 938, Figure 17.

2. Examine the retainer plate and bearing and if necessary remove the outer snap ring from the plate and use Tool No. 630-15 (reversed) and a soft faced mallet to drive the bearing from the retainer plate.
3. Examine the pilot bearing, Figure 11, and if necessary locate a small punch in the holes through the gear, Figure 18, and drive the bearing from its location.
4. Position a new bearing in the retainer plate and use Tool No. 630-17 to drive it into position. Install the outer snap ring to the retainer plate.
5. Pass the input shaft through the retainer plate and mount the assembly in Tools Nos. 1003, 952 and 630-15, Figure 19.
6. Press the bearing and plate assembly onto the input shaft and install the inner snap ring to the shaft.

Major 4000-Transmission P.T.O.

1. Inspect the front shaft and sleeve assembly, especially the weld joining the shaft and sleeve. If necessary use a new part on assembly.
2. Inspect the rear shaft, P.T.O. input gear, the retainer plate and the bearings, Figure 11. If necessary remove the front bearing (which retains the P.T.O. input gear) using Tools Nos. 1002, and 951, Figure 20.
3. Slide the P.T.O. input gear from the shaft and remove the inner snap ring retaining the rear bearing to the shaft.

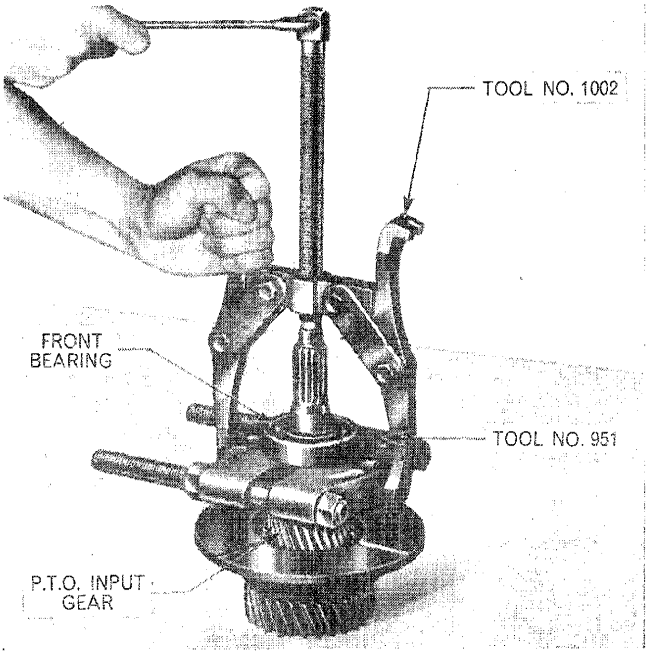

Figure 20
Removing Main Drive Input Shaft Front Bearing—Major, Trans. P.T.O.

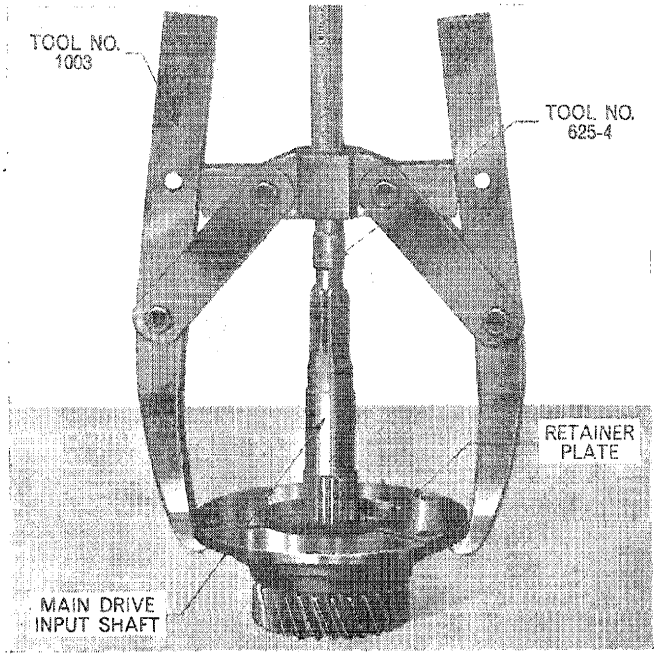

Figure 21
Pressing Input Shaft out of Retainer Plate

4. Use Tools Nos. 1003 and 625-4, Figure 21, to remove the rear bearing and retainer plate assembly.
5. Remove the outer snap ring retaining the rear bearing to the retainer plate. Use Tool No. 630-15 (reversed) and a soft faced mallet to drive the bearing from the plate.

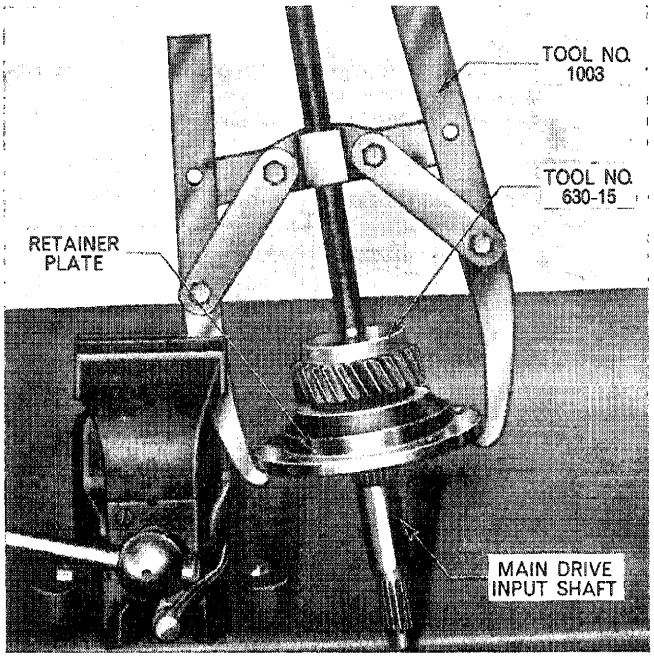

Figure 22
Installing Main Drive Input Shaft to Retainer Plate

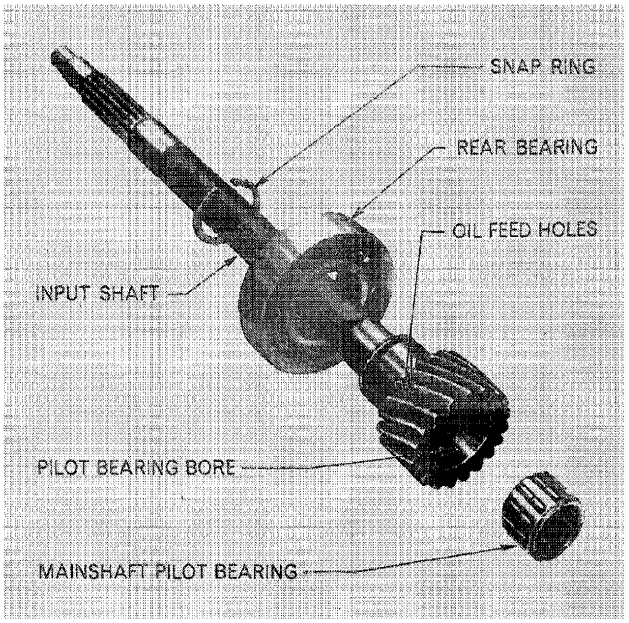

Figure 23
Main Drive Input Components—Dexta, Super Dexta

6. If necessary, locate a small punch in the holes through the gear and drive out the pilot bearing in the same manner as that illustrated for the Independent P.T.O. transmission, Figure 18.
7. Drive the rear bearing into the retainer using Tool No. 630-17 (reversed) and a soft faced mallet. Secure the bearing to the plate with the appropriate snap ring.
8. Pass the main drive input shaft through the retainer plate and bearing, Figure 22, and press the shaft into position using Tools Nos. 1003, 630-15.
9. Locate the P.T.O. input gear onto its splined location on the main drive input shaft, making sure the teeth are facing the retainer plate. Locate the front bearing, and drive it into position with a sleeve, $1\frac{3}{16}$ in. (30·2 mm) I.D. and $1\frac{3}{4}$ in. (44·4 mm) O.D. of convenient length.

Dexta 2000, Super Dexta 3000–Live and Transmission P.T.O.

1. Remove the needle roller pilot bearing, which is a loose fit in the bore at the gear end of the input shaft, Figure 23. Check the bearing, and the bore in the shaft, for wear and install new parts if necessary.
2. Inspect the oil seal journals and the gear teeth of the shaft for excessive wear or damage. Check the rear

© FORD MOTOR COMPANY LTD., 1965

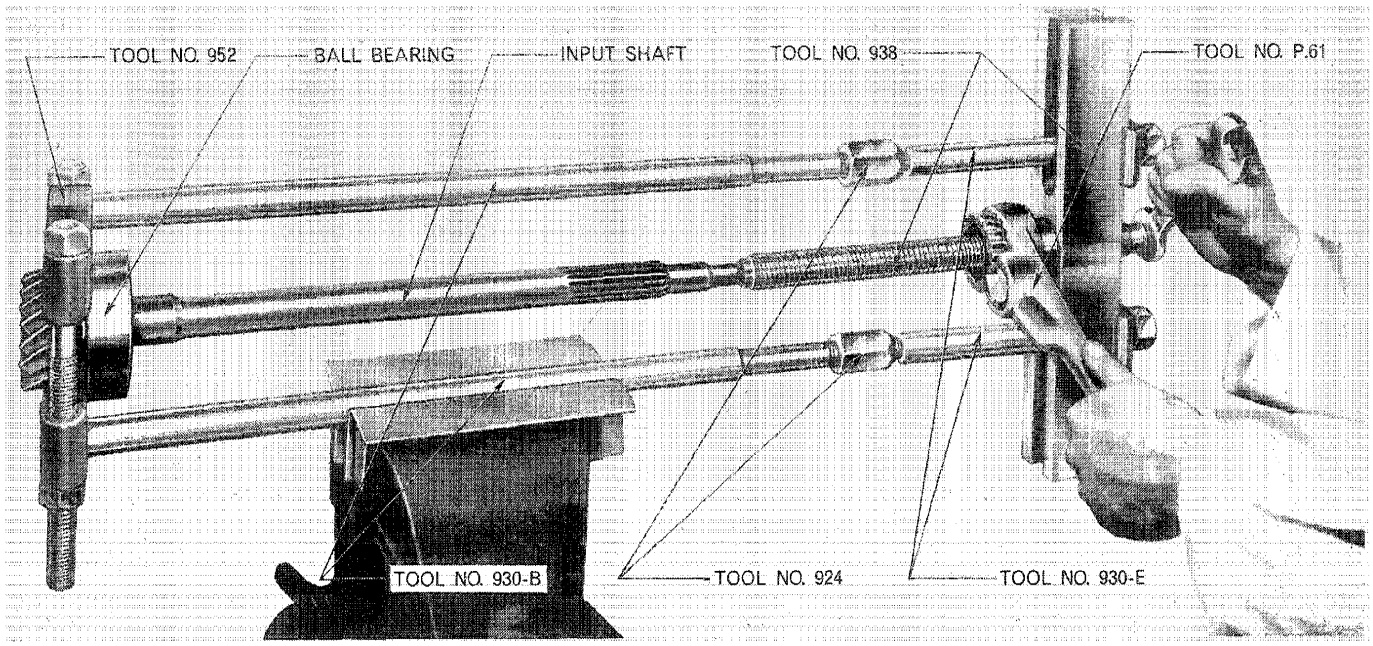

Figure 24
Removing Main Drive Input Shaft Rear Bearing—Dexta, Super Dexta

bearing for wear or damage. If necessary, remove the snap ring and draw the bearing off the shaft using Tools Nos. 952, 930-B (pair), 930-E (pair), 938, P 61, and 924 (pair), Figure 24.

NOTE: ***If a hydraulic press is available only Tool No. 952 is required.***

3. Press a new bearing onto the shaft using Tools 952, 1002 and 630-5 until it is seated firmly against the gear. Secure with the appropriate snap ring.

Clutch Operating Components

1. Inspect the release bearing and hub, the release fork, the return spring, the release shaft and bushings, and if any part requires servicing, refer to Part 4, "Clutches".

C. Assembly

Main Drive Input Shaft Assembly-All Major 4000 Transmissions

1. Assemble the main drive input shaft assembly into the transmission case, using a new gasket, and making sure the mainshaft spigot locates in the pilot bearing situated inside the input shaft gear.
2. Tap the input shaft rearwards until the retainer plate is flush against the case, Figure 25.
3. Install the four self-locking bolts and tighten to the specified torque. (See Specifications, Chapter 3.)

NOTE: ***Ignore steps 4, 5, 6, 8a, 8b, and 9 when servicing transmissions less P.T.O.***

4. Position the P.T.O. countershaft gear in the front compartment.

NOTE: ***If a new gear is being used, make sure the small thrust washer and snap ring are in position inside the hub of the gear.***

5. Pass the P.T.O. countershaft and rear bearing assembly through the transmission to locate in the countershaft gear. Tap the rear of the P.T.O. countershaft to seat the bearing, and install the snap ring.
6. Drive the front bearing onto the P.T.O. countershaft, immediately in front of the countershaft gear, using a sleeve of suitable length and 1 in. (25·4 mm) I.D. and $1\frac{3}{8}$ in. (34·9 mm) O.D.
7. Using a new gasket, locate the front support plate and install the seven self-locking retaining bolts. Tighten the bolts to the specified torque. (See Specifications, Chapter 3.)

8. a. With Transmission P.T.O., the coupling sleeve at the rear of the P.T.O. countershaft must be installed and secured with the appropriate snap ring.



Figure 25
Main Drive Input Shaft Installed—Major 4000

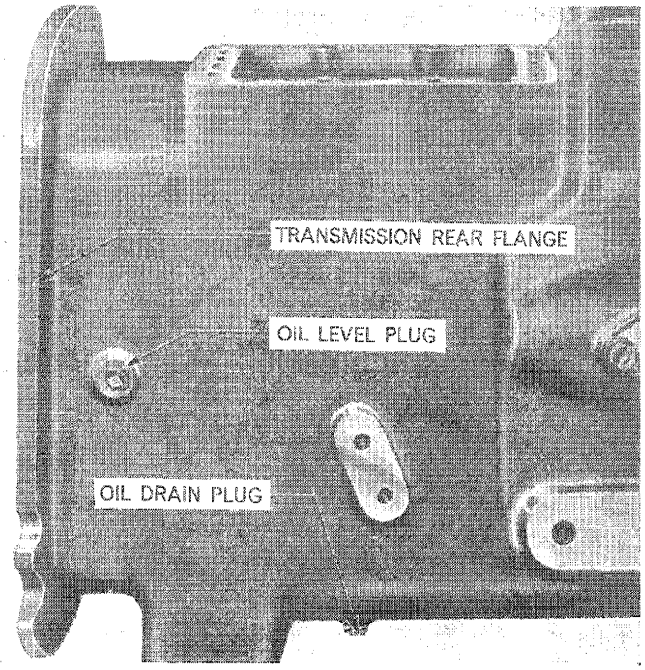

Figure 26
Level Plug and Drain Plug

b. With Independent P.T.O., the hydraulic pump driving gear must be installed, in place of the coupling sleeve mentioned above, and secured with the appropriate snap ring. Also install the drive gear shroud with two rear support plate retaining bolts. Tighten to the specified torque, (See Specifications, Chapter 3), and install new locking wire to all the rear support plate bolts.

9. See Part 15 for details on joining the transmission to the rear axle centre housing.

Dexta 2000, Super Dexta 3000–Live and Transmission P.T.O.

1. Assemble the main drive input shaft assembly to the transmission case, and secure with the appropriate snap ring.

NOTE: *Ignore steps 2, 3, and 4, when servicing Dexta 2000, Super Dexta 3000, Transmission P.T.O.*

2. Position the P.T.O. countershaft gear in the front compartment, and pass the P.T.O. countershaft through the transmission from the rear to locate in the countershaft gear.

3. Tap the P.T.O. countershaft forward to seat the rear bearing and retain with the appropriate snap ring.

4. Assemble the coupling sleeve to the rear of the P.T.O. countershaft and install the appropriate snap ring.

5. See Part 15 for details on joining the transmission to the rear axle centre housing.

6. Drive the front bearing onto P.T.O. countershaft to locate against the gear, using a convenient length sleeve 1 in. (25·4 mm) I.D. and $1\frac{3}{8}$ in. (34·9 mm) O.D.

7. Using a new gasket locate the front support plate and install the seven self-locking retaining bolts. Tighten the bolts to the specified torque. (See Specifications, Chapter 3.)

NOTE: *When servicing Live P.T.O. transmissions, note that the P.T.O. countershaft front bearing is housed in the front support plate which must, therefore, be tapped in a sufficient amount at the bottom to allow the seven retaining bolts to be screwed in. The plate may then be drawn evenly into position by tightening these bolts a little at a time.*

8. Position a new gasket on the release bearing hub support, then slide the support assembly over the main drive input shaft, taking care not to damage the oil seal. Install the five retaining bolts and tighten to the specified torque. (See Specifications, Chapter 3.)

NOTE: *When servicing Major 4000, Transmission P.T.O. make certain the front shaft and sleeve assembly, Figure 11, of the main drive input shaft has been installed. If it has not, install it before proceeding further.*

© FORD MOTOR COMPANY LTD., 1965

Clutch Operating Components

1. Position the clutch release bearing and hub assembly on the release bearing hub support.
2. Pass the release shaft through the left-hand side bushing in the transmission case enough to install the clutch release return spring, Figure 9.
3. Locate the release fork arms in the slots in the release bearing hub, then push the release shaft through the bore in the fork to locate in the bushing in the right-hand side of the case. Install the bolt and locknut to secure the fork to the shaft, and tighten to the specified torque. (See Specifications, Chapter 3.)
4. Place the outer end of the return spring on the lug cast on the inside of the transmission housing and lever the other end onto the web of the release fork, Figure 9.

   NOTE: ***Make sure the release fork is not binding in the slots in the release bearing hub.***
5. Install the transmission oil drain plug and remove the oil level plug, Figure 26. Fill the transmission with oil of the specified grade (see Specifications, Chapter 3), up to the level plug hole. Install and tighten the level plug.
6. Join the engine and front axle assembly to the transmission. (See Part 15.)

4. REAR END OVERHAUL

A. Disassembly

1. Separate the tractor at the transmission to rear axle centre housing flange. (See Part 15.)

Dexta 2000, Super Dexta 3000–Live P.T.O.; Major 4000–Independent and Transmission P.T.O.

a. Suitably support the transmission assembly and separate the tractor at the transmission to engine flange. (See Part 15.)

b. Remove the clutch release bearing and hub, shaft, fork, spring, hub support assembly, and front support plate as detailed in Section 3.

c. Remove the P.T.O. countershaft front bearing using Tools Nos. T.7072 and T.7077 (or Tool No. SW-501-2), Figures 10(A) and 10(B). Make sure that the sliding pegs of Tool No. T.7072 locate in the clearance slots in the P.T.O. countershaft gear, Figure 10(A).

Dexta 2000, Super Dexta 3000–Transmission P.T.O.; Major 4000–Less P.T.O.

2. Remove the locking wire and the ten bolts securing the rear support plate. Lever the support plate assembly off the transmission rear face, and remove the plate, and the P.T.O. countershaft (if applicable), as an assembly, Figure 27.

Major 4000–Independent P.T.O. Only

Cut the locking wire and remove the ten bolts retaining the rear support plate. Lift off the shroud from round the hydraulic pump drive gear.

Dexta 2000, Super Dexta 3000–Live P.T.O.; Major 4000–Independent and Transmission P.T.O.

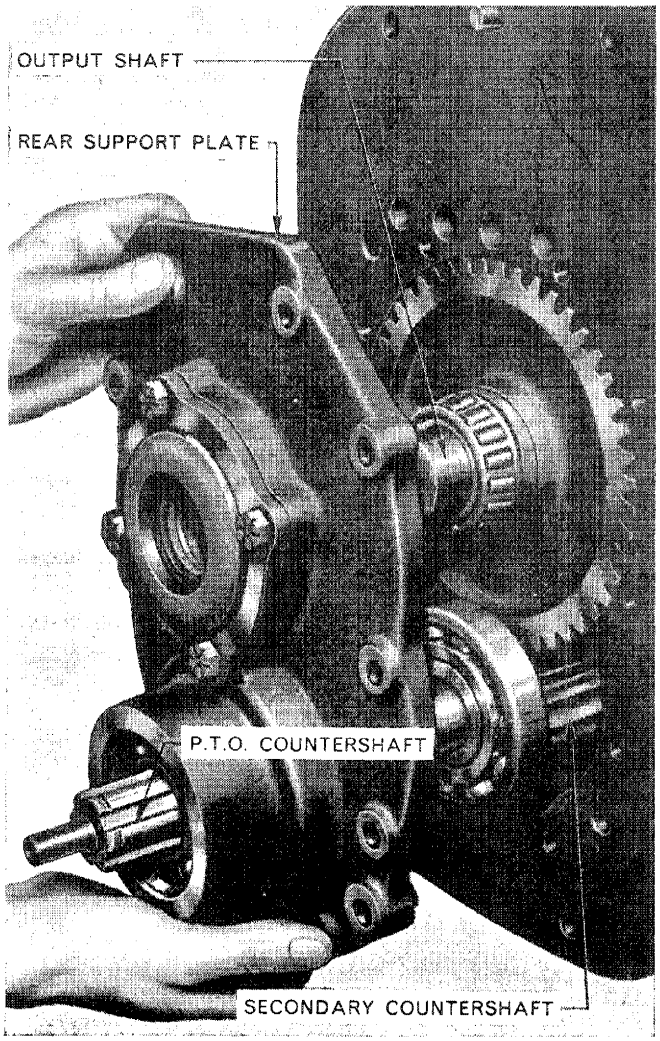

Figure 27
Removing Rear Support Plate Assembly

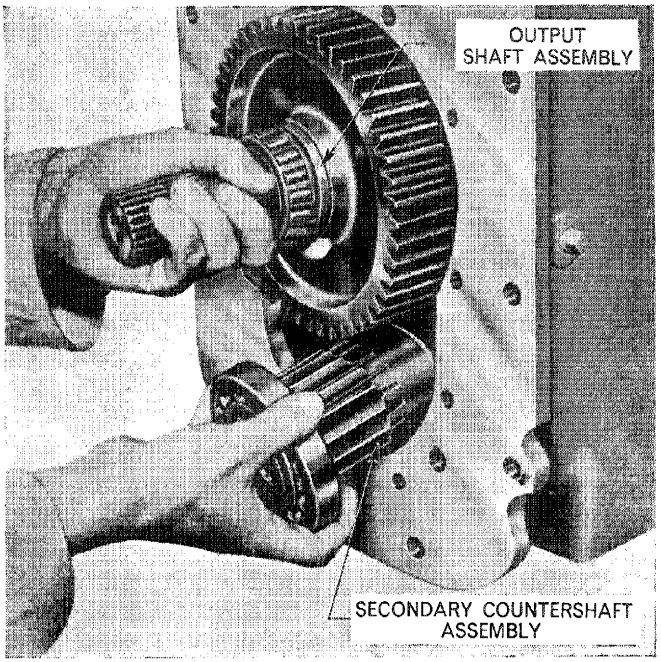

Figure 28
Removing Output Shaft Assembly

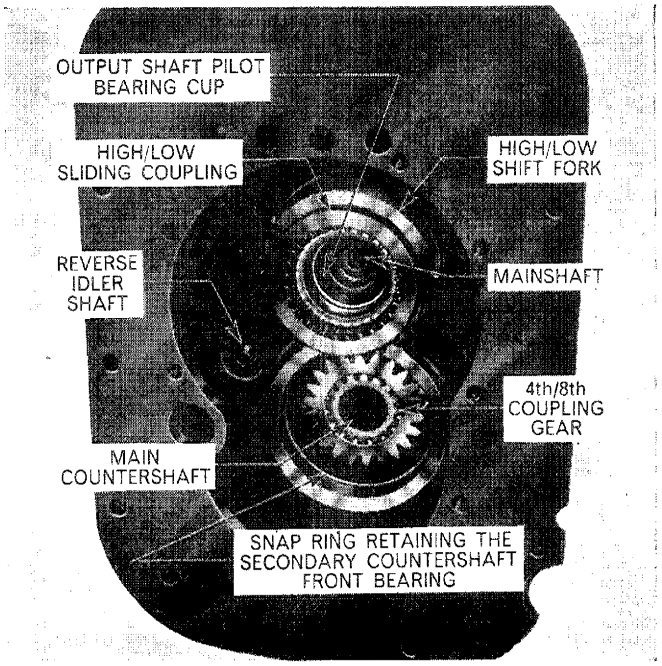

Figure 29
Transmission Rear Compartment

Drive the P.T.O. countershaft rearwards (from the front compartment) with a soft faced mallet, and withdraw the rear support plate and P.T.O. countershaft as an assembly, Figure 27.

3. Unscrew the four self-locking bolts and remove the output shaft retainer and shims from the rear support plate.
4. Partially withdraw the secondary countershaft until the front bearing is out of its location. Rest the assembly on the bottom of the rear compartment, and withdraw the output shaft immediately above it, Figure 28. The secondary countershaft can then be lifted out.
5. Remove the High/Low sliding coupling from the rear of the mainshaft, Figure 29.

B. Inspection and Repair

P.T.O. Countershaft Assembly

1. Inspect the P.T.O. countershaft and rear bearing for wear or damage. If necessary remove the snap ring retaining the coupling sleeve to the rear of the P.T.O. countershaft and slide the sleeve from the countershaft.

Major 4000-Independent P.T.O. Only

Remove the snap ring retaining the hydraulic pump driving gear and remove the gear from the countershaft.

2. Remove the snap ring which retains the P.T.O. countershaft rear bearing to the rear support plate.
3. Use a soft faced mallet to drive the P.T.O. countershaft and rear bearing rearward, out of the support plate.

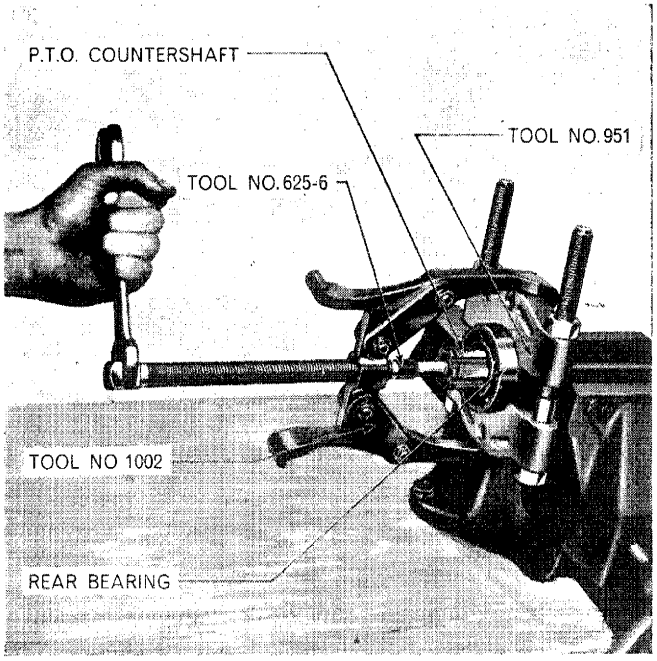

Figure 30
Removing P.T.O. Countershaft Rear Bearing

© FORD MOTOR COMPANY LTD., 1965

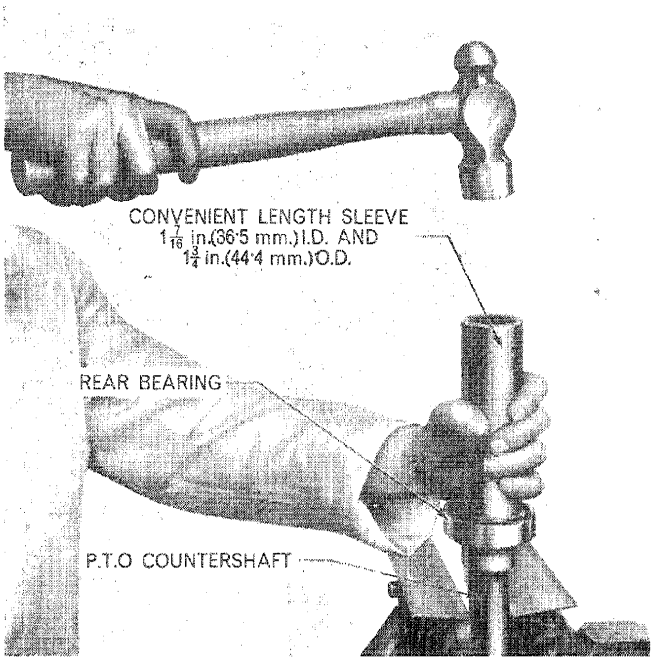

Figure 31
Installing P.T.O. Countershaft Rear Bearing

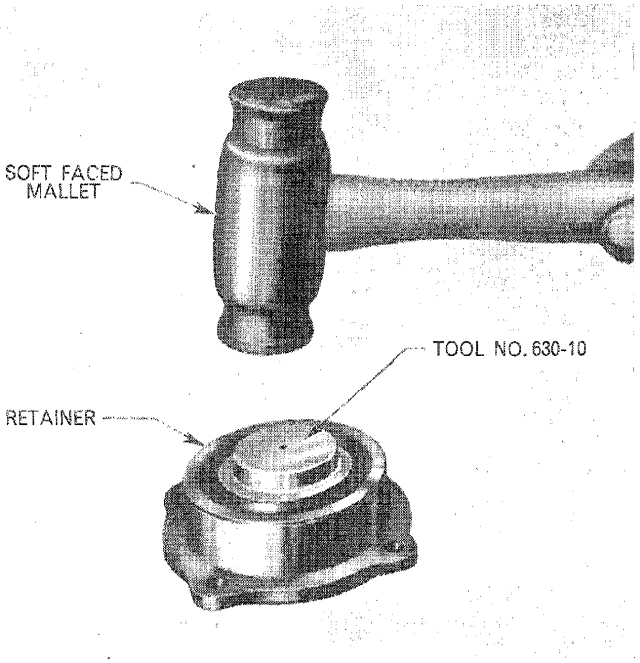

Figure 33
Installing Output Shaft Oil Seal

4. Remove the rear bearing, Figure 30, using Tools Nos. 1002, 951 and 625-6 (625-2 for Major-Independent P.T.O.).
5. Install a new rear bearing to the countershaft using a convenient length sleeve $1\frac{7}{16}$ in. (36·5 mm) I.D. and $1\frac{3}{4}$ in. (44·4 mm) O.D., Figure 31.

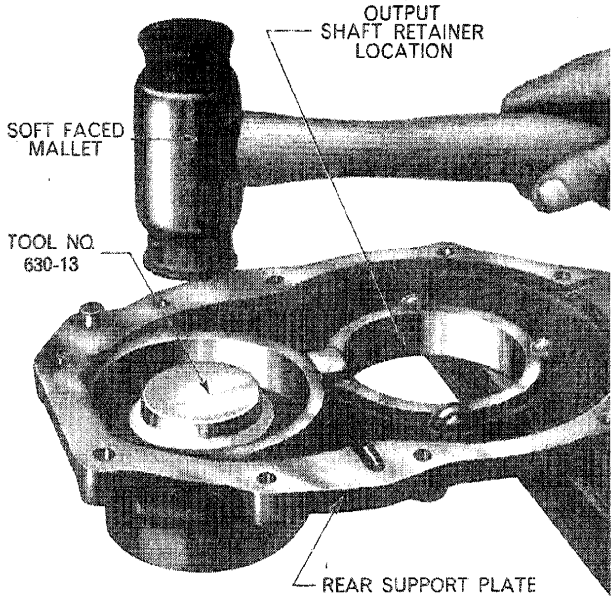

Figure 32
Installing P.T.O. Countershaft Oil Seal

Rear Support Plate

1. Inspect the rear support plate for wear or other damage and if necessary use a new part on assembly.
2. Examine the P.T.O. countershaft oil seal and install a new part unless in perfect condition. If necessary remove the seal with a suitable punch.
3. Install a new P.T.O. countershaft seal to the rear support plate using Tool No. 630-13 (reversed) and a soft faced mallet, Figure 32.

Output Shaft Retainer

1. Inspect the output shaft retainer, oil seal and bearing cup assembly. If any new parts are required, remove first the oil seal, then the bearing cup with a suitable punch.
2. Install a new oil seal to the output shaft retainer with Tool No. 630-10 (reversed) and a suitable driver, Figure 33. The oil seal must be installed before the bearing cup. Install the bearing cup in the same manner using Tool No. 630-15.

Output Shaft

1. Examine the output shaft assembly, Figure 34, for wear or damage. To renew any defective parts, use

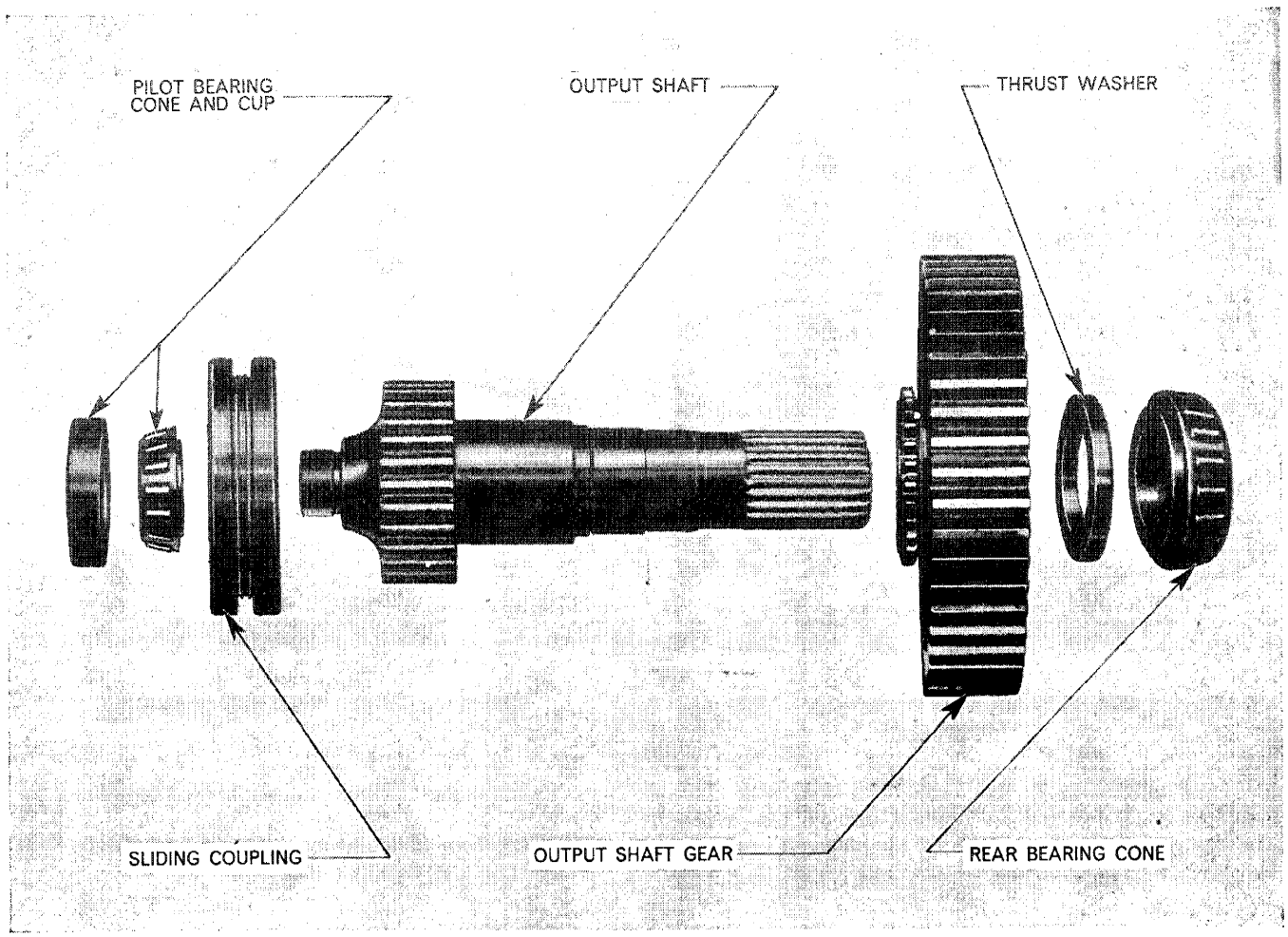

Figure 34
Exploded View of Output Shaft Components

Tools Nos. 1003 and 625-1, to draw off the gear, bearing cone and roller assembly, and thrust washer in one operation, Figure 35.

2. If necessary remove the pilot bearing cone and roller assembly using Tools Nos. 1002, 951 and 625-4, Figure 37.

3. Assemble the output shaft gear so that the dog-teeth on the gear adjoin the dog-teeth integral with the shaft, Figure 34. Install the steel thrust washer aligning the flats on the washer with those on the output shaft. Pull the bearing into position using Tools Nos. 1003, 952, 625-2 and suitable sleeve 1 $\frac{9}{16}$ in. (39·7 mm) I.D. and 2 $\frac{1}{16}$ in. (52·4 mm) O.D. of convenient length, Figure 36.

NOTE: ***The output shaft gear and bushing, and also the output shaft and High/Low sliding coupling, are serviced as matched assemblies.***

4. Drive a new pilot bearing into position on the output shaft with a sleeve 1 $\frac{1}{16}$ in. (26·9 mm) I.D. and 1 $\frac{1}{4}$ in. (31·7 mm) O.D. of convenient length and a hammer.

NOTE: ***If any bearing cone and roller assembly is found to be damaged the mating bearing cup must be carefully inspected as it is also likely to be damaged. The reverse will also apply if a bearing cup is found to be damaged. If however, only the cone, or only the cup is to be renewed, the new part must bear the same manufacturer's name as the damaged part.***

Secondary Countershaft

1. Check the secondary countershaft assembly for wear or damage and if necessary the rear bearing can be pulled off using Tools 1003, 952, 630-5, and 625-2. The front bearing is removed using Tools Nos. 1003, 951, 630-5, 625-2, also two pieces of steel rod $\frac{3}{16}$ in.

© FORD MOTOR COMPANY LTD., 1965

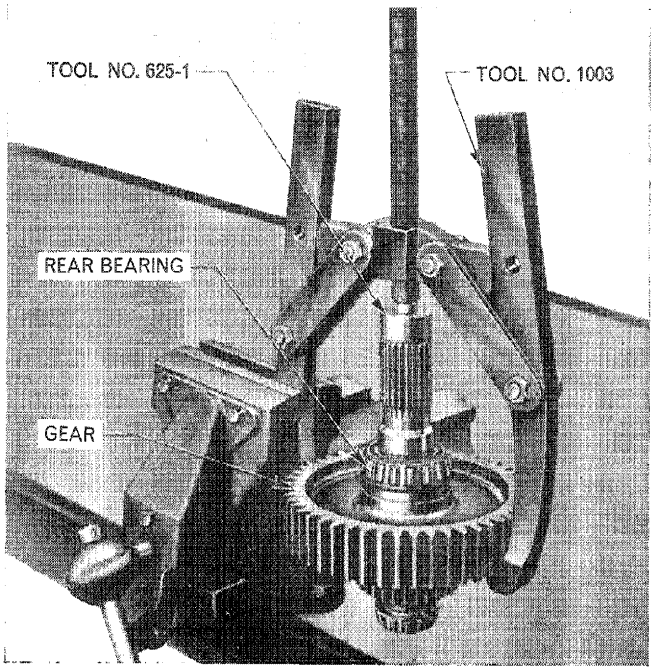

Figure 35
Removing Output Shaft, Rear Bearing, and Thrust Washer

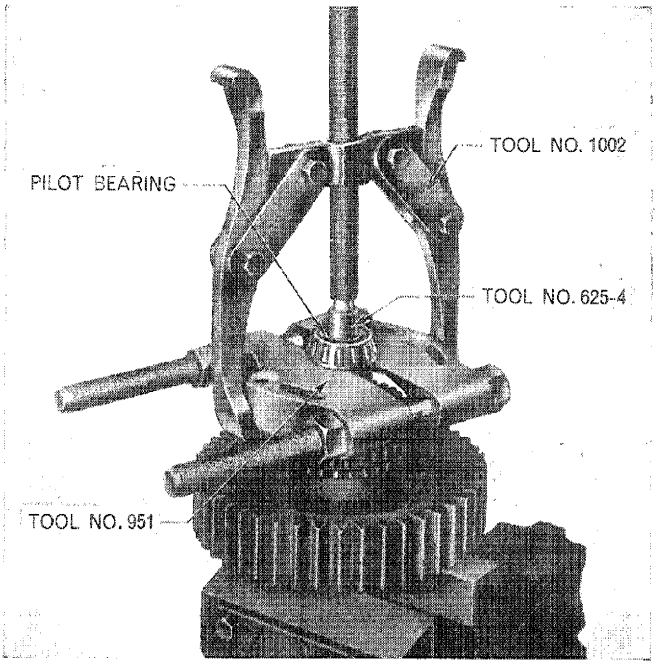

Figure 37
Removing Output Shaft Pilot Bearing

(4·8 mm) diameter and 2 in. (50·8 mm) long. Two pieces of steel rod are inserted through the driving holes in the gear, Figure 38, to contact the bearing. The assembly is then placed in the tools indicated above, so that the rods push the bearing off, Figure 39.

2. Install both front and rear bearings using Tools Nos. 1003, 951, 625-2 and 630-5.

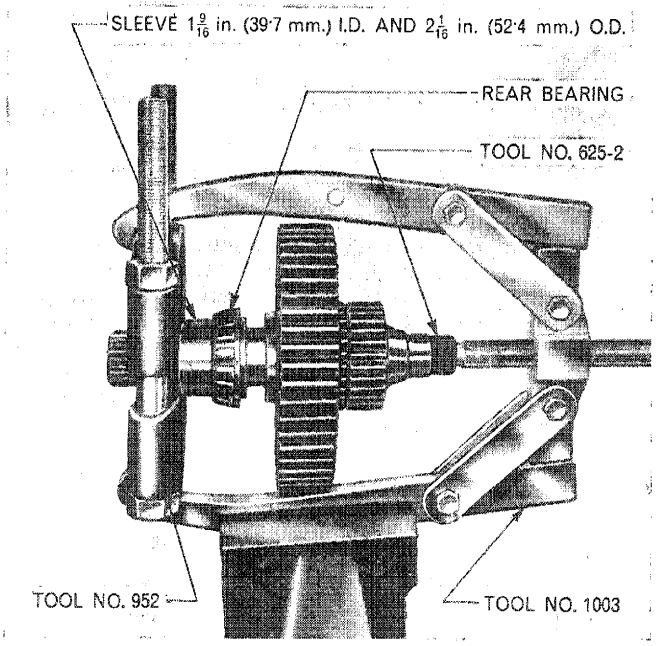

Figure 36
Installing Output Shaft Rear Bearing

C. Assembly

NOTE: ***Bearings, bushings, and all sliding surfaces should be lubricated on assembly. Oil seals should be lightly greased.***

1. Make certain that the High/Low sliding coupling is engaging the dog-teeth on the rear of the mainshaft, Figure 29, and that the High/Low shift fork is located in the groove of the sliding coupling.

2. Make sure the snap ring, located immediately in front of the secondary countershaft front bearing, in the transmission case, Figure 29, is in position before proceeding.

3. Place the secondary countershaft assembly in its approximate location, but resting on the bottom of the compartment.

4. Locate the output shaft above the secondary countershaft and push it into position.

5. Tap the secondary countershaft forward squarely until the front bearing is felt to seat on the snap ring in the transmission case.

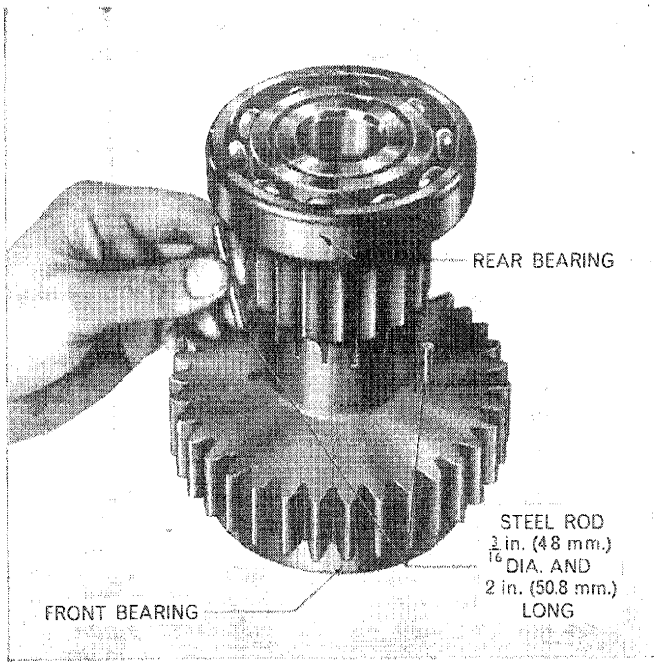

Figure 38
Positioning Steel Rods in Secondary Countershaft

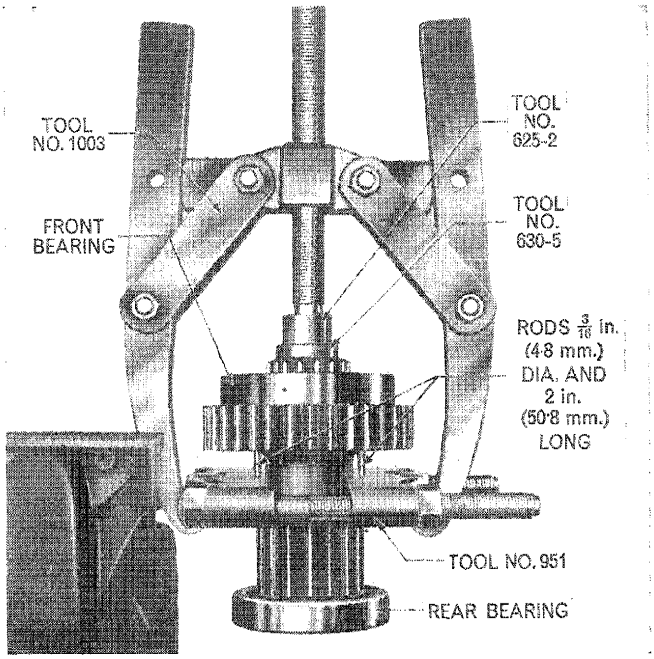

Figure 39
Removing Secondary Countershaft Front Bearing

6. Using a new gasket, locate the rear support plate (less the output shaft retainer assembly) on the transmission rear face by means of the two dowels located in the support plate, and tap the plate into position. Install and tighten the ten retaining bolts to the specified torque. (See Specifications, Chapter 3.) Secure the ten bolts with suitable locking wire.

Major 4000–Independent P.T.O. Only

Install and tighten eight of the retaining bolts, leaving out the ones each side of the P.T.O. countershaft. These two bolts retain the hydraulic pump gear shroud, which is installed in Step 8a, below. Do not install the locking wire at this stage.

Dexta 2000, Super Dexta 3000–Transmission P.T.O. Only

7. Pass the P.T.O. countershaft and bearing assembly through the secondary countershaft to locate in the splines in the main countershaft.

Dexta 2000, Super Dexta 3000–Live P.T.O. and Major 4000–Independent and Transmission P.T.O.

a. Position the P.T.O. countershaft gear in the front compartment and pass the P.T.O. countershaft through the transmission from the rear to engage in the splines in the gear. Protect the spigot and drive the P.T.O. countershaft forward to seat the rear bearing. Secure the bearing with the appropriate snap ring.

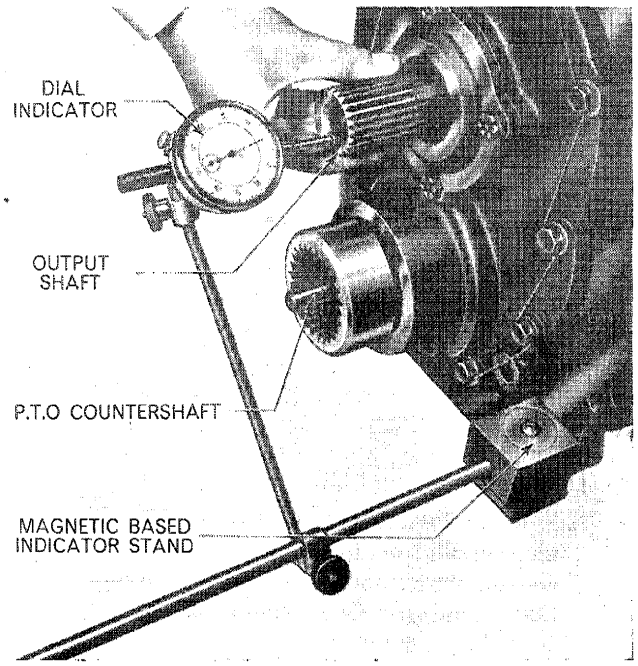

Figure 40
Measuring Output Shaft End-float

© FORD MOTOR COMPANY LTD., 1965

NOTE: *If a new P.T.O. countershaft gear is being installed, the small thrust washer and snap ring must be positioned inside the hub, at the front of the gear prior to installation.*

b. Using a sleeve 1 in. (25·4 mm) I.D. and 1⅜ in. (34·9 mm) O.D. of convenient length drive the front bearing onto the P.T.O. countershaft to seat firmly against the countershaft gear in the front compartment.

8. Install the P.T.O. coupling sleeve onto the rear of the P.T.O. countershaft and secure with the appropriate snap ring.

Major 4000–Independent P.T.O. Only

a. Install the hydraulic pump driving gear to the P.T.O. countershaft and secure with the appropriate snap ring.

b. Install the shroud round the gear, retaining it with the two support plate retaining bolts, one on either side of the P.T.O. countershaft.

c. Tighten the two bolts to the same torque as the other eight rear support plate retaining bolts. (See Specifications, Chapter 3.) Secure all ten bolts with suitable locking wire.

NOTE: *When servicing Major 4000 transmissions–Less P.T.O., ignore Steps 7, 7a, 7b, 8, 8a, 8b, and 8c.*

Output Shaft and Mainshaft End-float Elimination

9. It is necessary to eliminate all end-float in the mainshaft and output shaft taper roller bearings. This is effected by installing shims of appropriate thickness between the rear support plate and the output shaft retainer, using the following procedure:—

a. Locate the output shaft retainer assembly in the rear support plate, installing shims totalling approximately 0·060 in. (1·58 mm).

b. Install the four self-locking retaining bolts and tighten to the specified torque. (See Specifications, Chapter 3.)

c. Using a standard dial indicator, calibrated in 0·001 in., or 0·01 mm divisions, Figure 40, set the indicator plunger against the end face of the output shaft. Move the shaft in and out, noting the end-float reading on the indicator.

d. Remove the indicator, and the four self-locking retainer bolts. Withdraw the retainer and shims.

e. Remove a number of shims whose total thickness corresponds with the reading obtained on the dial indicator.

NOTE: *The total thickness of shims removed can be up to 0.002 in. (0.0508 mm) more than the reading obtained on the indicator, (i.e. 0.002 in. (0.0508 mm) pre-load is achieved), but must not be less than the reading obtained on the indicator. Shims are available in thicknesses of 0.003 in., 0.005 in., and 0.012 in., (0.076 mm, 0.127 mm, and 0.305 mm).*

f. Having selected the correct shims, install the retainer, shims and four self-locking bolts. Tighten the bolts to the specified torque. (See Specifications, Chapter 3.) Reposition the indicator and recheck for end-float.

10. Refer to Part 15, for instructions for joining the tractor at the transmission to rear axle centre housing flange.

Major 4000–Independent and Transmission P.T.O.; Dexta 2000, Super Dexta 3000–Live P.T.O.

a. Install front support plate, the release bearing hub support assembly, and the clutch operating linkage, as previously detailed in Section 3C.

b. Refer to Part 15 for instructions on joining the transmission to the engine and front axle assembly.

5. COMPLETE OVERHAUL

A. Disassembly

1. Refer to Part 15 for instructions on separating the transmission from the engine and front axle assembly, and also for separating the transmission from the rear axle assembly, thus removing the transmission assembly from the tractor.

2. Remove the shift levers and cover assembly as detailed in Section 2A, Step 1.

3. See Section 3A to remove the clutch operating components, the release bearing hub support assembly, the front support plate , the P.T.O. countershaft front bearing and gear (where applicable), and the main drive input shaft assembly.

4. See Section 4A to remove the rear support plate assembly, the output shaft assembly, and the secondary countershaft assembly.

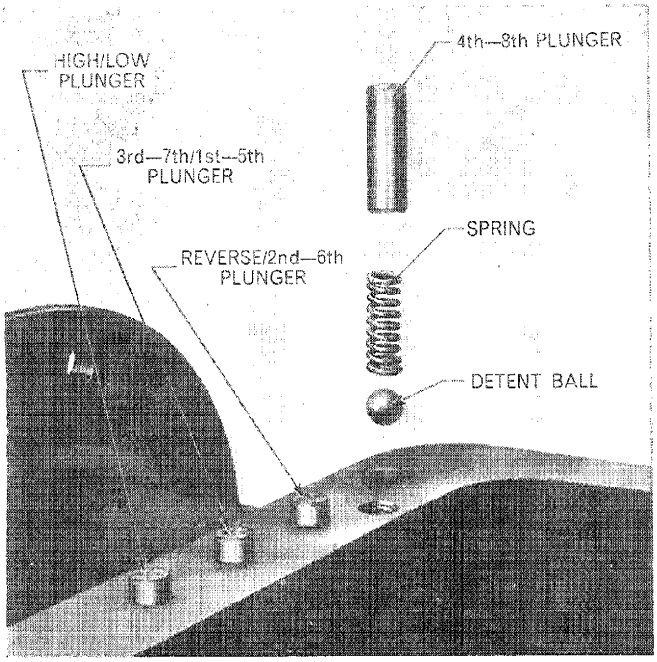

Figure 41
Detent Plungers, Spring, and Ball

Gear Shift Mechanism

NOTE: *See Section 6, for Seven-Speed Transmission.*

1. Extract the four shift rail plungers and springs from their bores, Figure 41. Pull the High/Low shift fork rearwards, and remove the sliding coupling. Loosen the locknut and remove the screw retaining the fork. Remove the fork to the rear, Figure 42.
2. Rotate the High/Low rail until the screw and locknut, retaining the shift connector, are uppermost. Loosen the locknut, remove the screw, and slide the rail out to the rear, removing the shift connector.

   NOTE: *As each shift rail is removed, make sure that all four shift rail detent balls are collected from rear rail support bores.*

3. Loosen the locknuts and remove the retaining screws from the remaining shift forks and connectors. Remove the forks and connectors as each rail is withdrawn rearwards.

   NOTE: *The 4th/8th shift fork is removed at a later operation due to its inaccessibility at this stage.*

4. If necessary remove the threaded plug from the left-hand side of the transmission case, Figure 43, and remove the two interlock plungers from the bore.

Mainshaft Assembly

NOTE: *On Major transmissions, the mainshaft pilot bearing should have been withdrawn inside the main drive input shaft gear. If, however, due to excess wear or other damage, the bearing is found to have remained on the mainshaft, it must be removed using Tool Nos. T.7072 and T.7077.*

1. Using suitable snap ring pliers, remove the snap ring retaining the mainshaft gears at the front of the mainshaft.
2. Carefully withdraw the mainshaft rearwards, through the secondary compartment, removing the gears, sliding couplings, connectors, and thrust washers, one by one, as they become free.

   NOTE: *Although the mainshafts in each of the two basic transmissions are of different design, Figure 5, the disassembly procedure is identical.*

Reverse Idler Assembly

1. Unscrew the reverse idler shaft retaining bolt situated on the outside of the transmission case, Figure 43. Push the idler shaft forwards and remove the 4th/8th shift fork.
2. Withdraw the 4th/8th coupling gear to the rear.
3. Push the reverse idler shaft out to the rear and lift out the reverse idler gear.

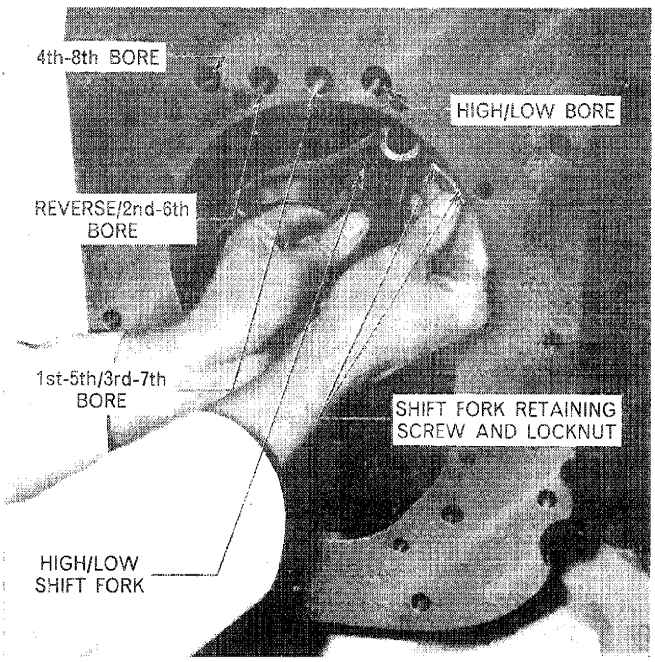

Figure 42
Removing Installing High Low Shift Fork

© FORD MOTOR COMPANY LTD., 1965

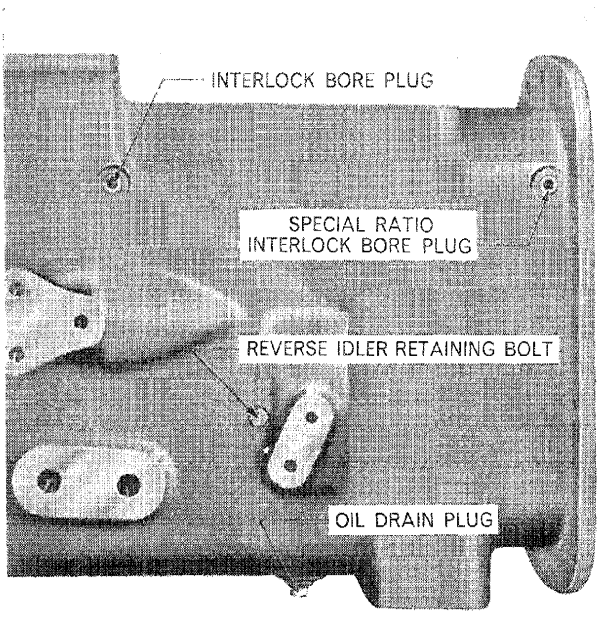

Figure 43
Left-hand side of Transmission

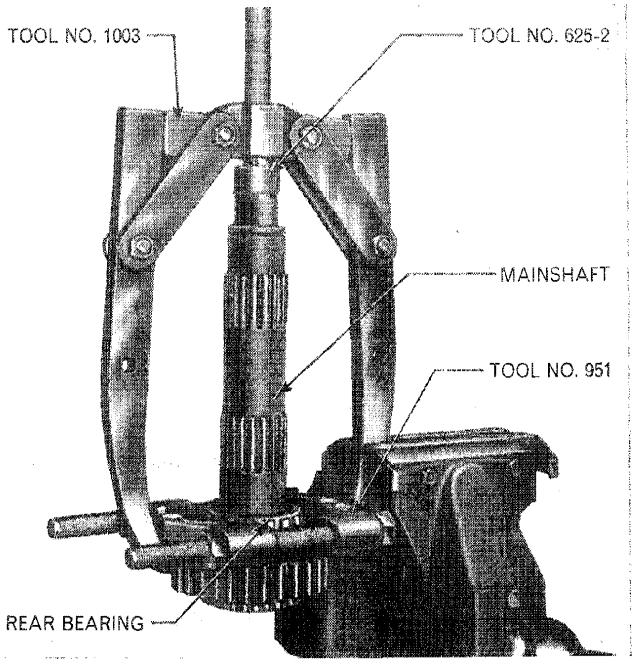

Figure 44
Removing Mainshaft Rear Bearing—Major 4000

Main Countershaft Assembly

1. Remove from the transmission case, the snap ring retaining the main countershaft rear bearing. Using Tool 630-5 and a suitable drift, drive the countershaft rearwards until both front and rear bearings are out of their locations and the main countershaft assembly is loose in the bottom of the transmission.

2. Place suitable wooden or copper blocks behind the cluster gear so that the main countershaft can be driven rearwards through the front bearing and cluster gear.

3. Withdraw the main countershaft through the rear compartment and remove the cluster gear and front bearing from the main transmission compartment.

B. Inspection and Repair

Transmission Case

1. When the transmission has been completely disassembled, the case should be thoroughly cleaned inside to prevent small particles of metal or dirt causing subsequent damage to bearings, oil seals, and gears.

2. Inspect the case for cracks or other damage, and if beyond repair, use a new case on assembly.

Mainshaft Assembly

1. The mainshaft assembly should be carefully examined for excessive wear or damage and any damaged parts renewed.

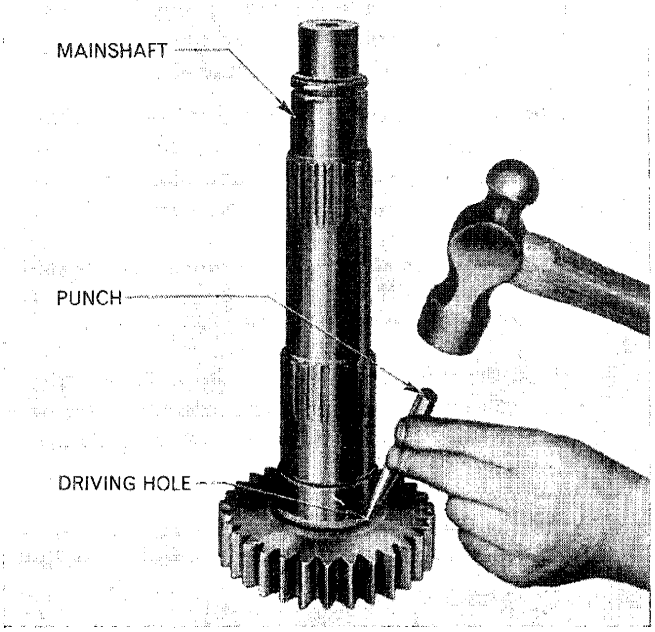

Figure 45
Removing Output Shaft Pilot Bearing Cup

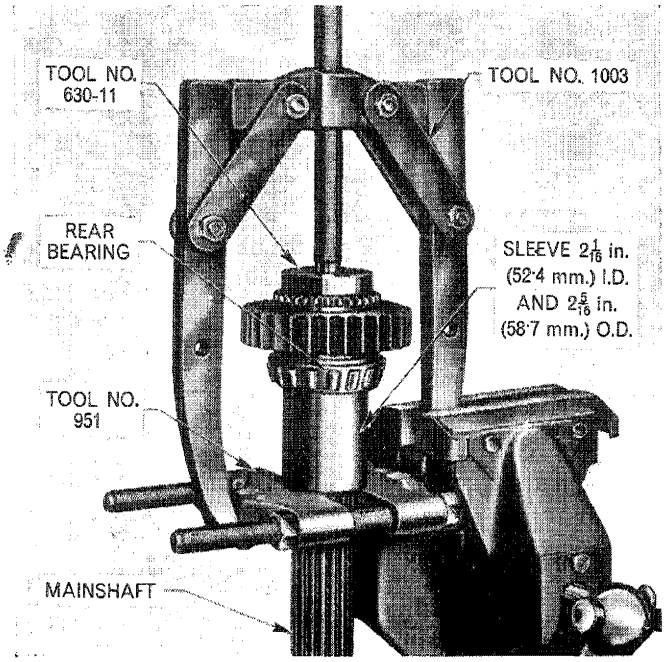

Figure 46

Installing Mainshaft Rear Bearing—Dexta and Super Dexta

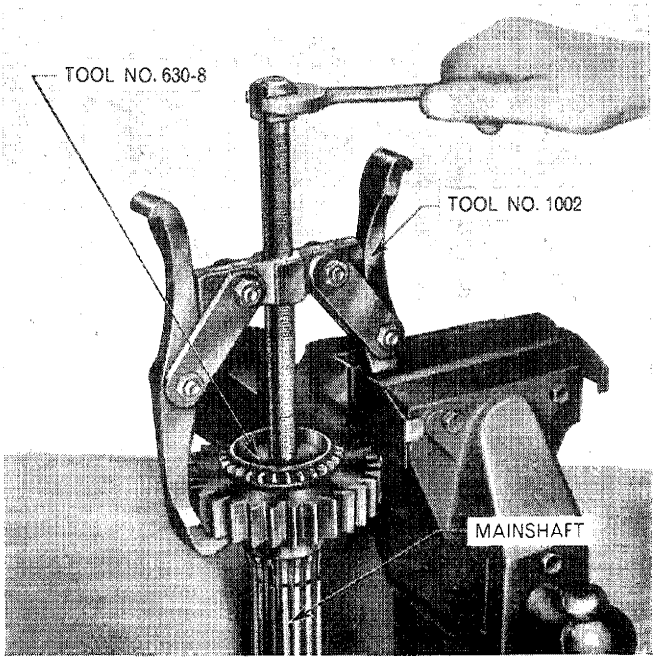

Figure 47

Installing Output Shaft Pilot Bearing Cup

2. If necessary remove the mainshaft rear bearing using Tools Nos. 1003, 951 and 625-2, Figure 44.

3. If necessary remove the output shaft pilot bearing cup from the mainshaft. Use a suitable small punch located through the holes provided in the mainshaft gear, Figure 45, and drive the cup from its location with a hammer.

NOTE: ***The output shaft pilot bearing cup can only be removed from the mainshaft after the mainshaft rear bearing has been removed. If the pilot bearing cup has to be renewed, it must bear the same manufacturer's name as the cone and roller assembly on the output shaft.***

Dexta 2000 and Super Dexta 3000

4. Install the mainshaft rear bearing using Tools Nos. 1003, 951, and 630-11 and hollow sleeve of suitable length; 2 1/16 in. (52·4 mm) I.D. and 2 5/16 in. (58·7 mm) O.D., Figure 46.

Major 4000 Only

Install the mainshaft rear bearing with the same tools as detailed in Step 3 above, but use a larger sleeve, 2 3/16 in. (55·6 mm) I.D. and 2 5/8 in. (66·7 mm) O.D. of convenient length.

5. Install a new pilot bearing cup in the mainshaft using Tools Nos. 1002, and 630-8, Figure 47.

6. If necessary remove the mainshaft rear bearing cup from the transmission case, using Tools 943 and 943-S, Figure 48.

Dexta 2000 and Super Dexta 3000

7. Use Tool No. 630-17, with a suitable drift and hammer, to install the mainshaft rear bearing cup in the transmission case.

Major 4000

Drive the mainshaft rear bearing cup into position with a suitable soft metal drift.

Dexta 2000, Super Dexta 3000

8. Carefully examine the mainshaft gears for excess tooth wear or chipping, and use new parts where necessary on assembly.

Major 4000

Mount the mainshaft gears on the mainshaft and check for excess wear on the bushings in the gears. Also examine the gear teeth, and the dog-teeth with which the sliding couplings engage. Install new gear and bushing assemblies where necessary.

NOTE: ***All mainshaft gears and bushings are serviced as assemblies and must be installed as such.***

© FORD MOTOR COMPANY LTD., 1965

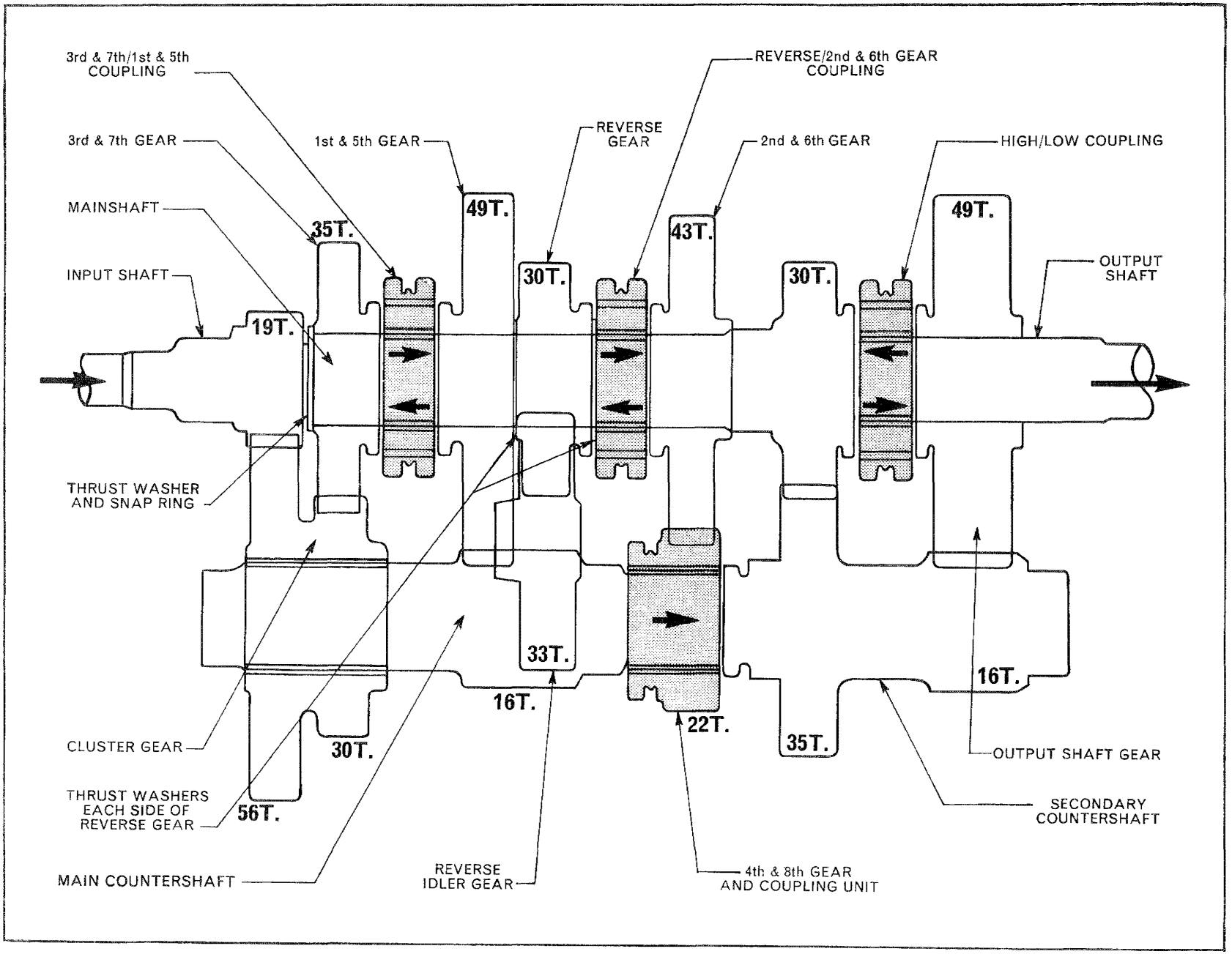

Figure 49
Gear Identification Diagram– Dexta 2000, Super Dexta 3000

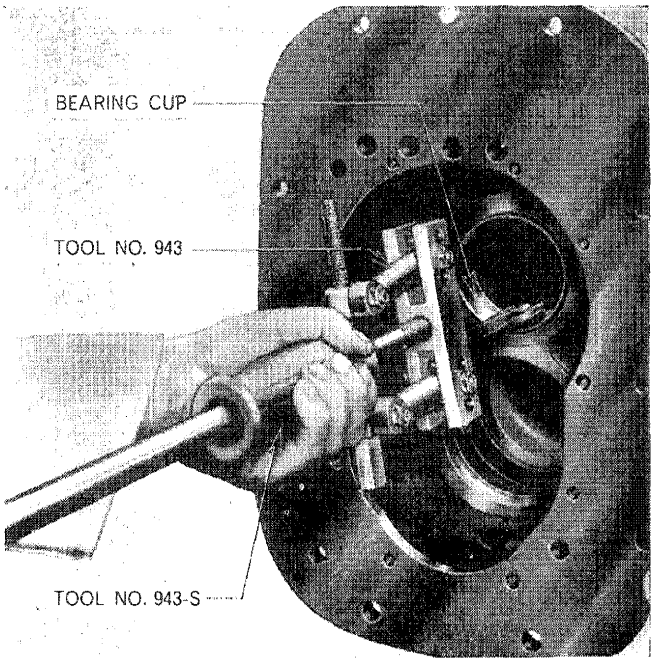

Figure 48
Removing Mainshaft Rear Bearing Cup

Main Countershaft Assembly

1. Check the main countershaft for wear or other damage and if necessary use a new part on assembly.
2. Examine the main countershaft front bearing and if necessary use a new part on assembly.
3. Examine the main countershaft cluster gear and if necessary use a new part on assembly.
4. Examine the main countershaft rear bearing and if necessary remove, using Tools Nos. 1003, 951 and 630-5.

Dexta 2000, Super Dexta 3000–Transmission P.T.O. Only

Use Tool No. 630-4 instead of 630-5. This is due to the internal splines, Figure 4, inside this countershaft causing a reduction in diameter.

Reverse Idler Assembly

1. Mate the reverse idler shaft and gear, and check for free play between bushing and shaft.
2. Examine the idler gear teeth for excessive wear or chipping.
3. Mount the 4th/8th shift fork on the small diameter of the idler shaft and make sure the fork slides freely, but without any wobble, or binding, due to wear.
4. Make sure the sealing washer, on the bolt retaining the reverse idler shaft, is not damaged.
5. Renew any defective parts on assembly.

NOTE: ***No attempt should be made to install the reverse idler gear bushing alone, as it is serviced as an assembly with the gear.***

Gear Shift Mechanism

1. Examine the shift forks, couplings and connectors for wear or distortion. Special care must be taken to see that the 4th/8th fork and coupling gear are sliding freely and not affected by wear. Excessive wear would cause these particular parts to bind more easily than the other forks and couplings.
2. Examine the detents on the four shift rails for wear, and check the rails for straightness by rolling them on a flat surface. Renew any damaged parts on assembly.
3. Make sure the detent balls, springs and plungers are not sticking in their bores. If necessary, use a fine abrasive paper to clean the plungers. Renew any badly damaged parts.

C. Assembly

NOTE: ***Clean all components thoroughly in a gasoline or kerosene bath before installation. Bearings, bushings and all sliding surfaces should be lubricated on assembly.***

Main Countershaft

1. Make sure the snap ring, located immediately in front of the main countershaft front bearing in the case, is in position before proceeding.
2. Tap the main countershaft front bearing into the transmission case to seat against the snap ring mentioned in Step 1 above.
3. Rest the main countershaft cluster gear in the bottom of the main compartment, with the larger helical gear to the front.
4. Pass the main countershaft and rear bearing assembly in from the rear compartment to engage in the internal splines of the cluster gear.
5. Use Tool No. 630-5 and a suitable drift and hammer to drive the main countershaft assembly forward into the front bearing. When in position, retain with the snap ring behind the rear bearing.

Dexta 2000, Super Dexta 3000–Transmission P.T.O. Only

Proceed as outlined in Step 5 (above) but use Tool No. 630-4 instead of 630-5.

© FORD MOTOR COMPANY LTD., 1965

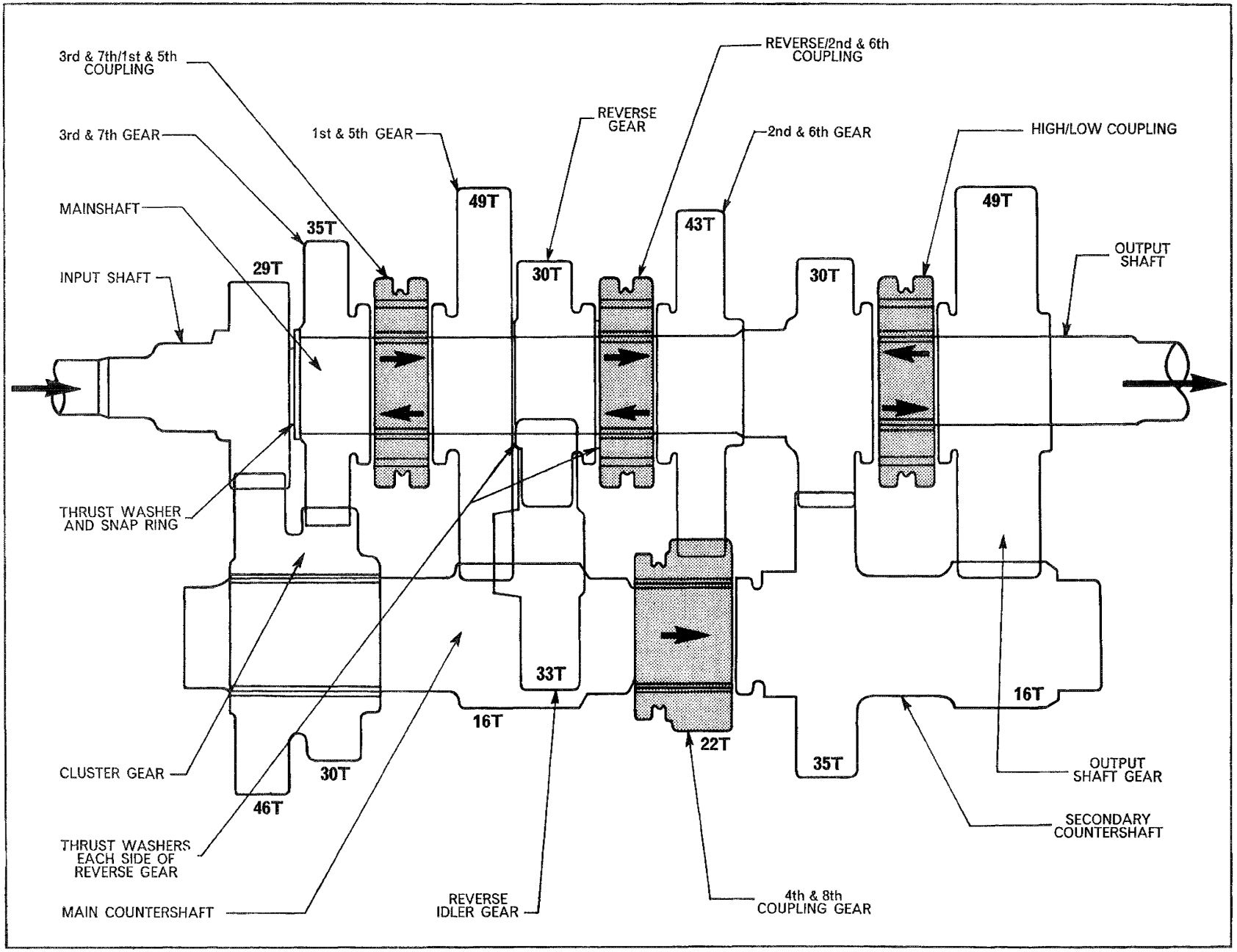

Figure 50
Gear Identification Diagram—Major 4000

6. Install the 4th/8th coupling gear onto the rear of the main countershaft, Figure 29, with the shift fork groove to the front.

Reverse Idler Assembly

1. Insert the reverse idler shaft through the rear compartment, larger diameter forward, into the main compartment. Hold the reverse idler gear in position with the hub of the gear facing forward, and push the shaft through the gear.
2. Push the shaft forward enough to allow the 4th/8th shift fork to be mounted on the small diameter of the shaft, making sure the fork is located in the groove in the 4th/8th sliding coupling.
3. Secure the shaft with the locking bolt and rubber-coated sealing washer located in the left-hand side of the transmission case, Figure 43.

Mainshaft Assembly

1. Pass the mainshaft and rear bearing assembly through the rear compartment assembling the gears to the shaft in the following sequence, Figures 49 and 50.
   a. 2nd-6th gear (dog-teeth forward)
   b. Reverse/2nd-6th sliding coupling and connector
   c. Phosphor-bronze thrust washer
   d. Reverse gear (dog-teeth rearwards)
   e. Phosphor-bronze thrust washer
   f. 1st-5th gear (dog-teeth forward)
   g. 3rd-7th/1st-5th sliding coupling and connector
   h. 3rd-7th gear (dog-teeth rearward)
   i. Steel thrust washer
   j. Snap ring.

Gear Shift Mechanism

NOTE: ***See Section 6, for Seven-Speed Transmission.***

1. If necessary, install the two interlock plungers in the bore from the left-hand side of the transmission case and replace the threaded plug, Figure 43.
2. Pass the 4th-8th shift rail, Figure 51, into the rear of the bore nearest the left-hand side of the casing with the single detent to the front. Assemble the 4th/8th shift arm assembly onto the rail, so that the operating arm is located in the hole in the 4th-8th shift fork mounted on the reverse idler shaft.
3. Slide the rail forwards until it locates in the front support bore. Install the shift arm retaining screw and locknut and tighten to the specified torque. (See Specifications, Chapter 3.)

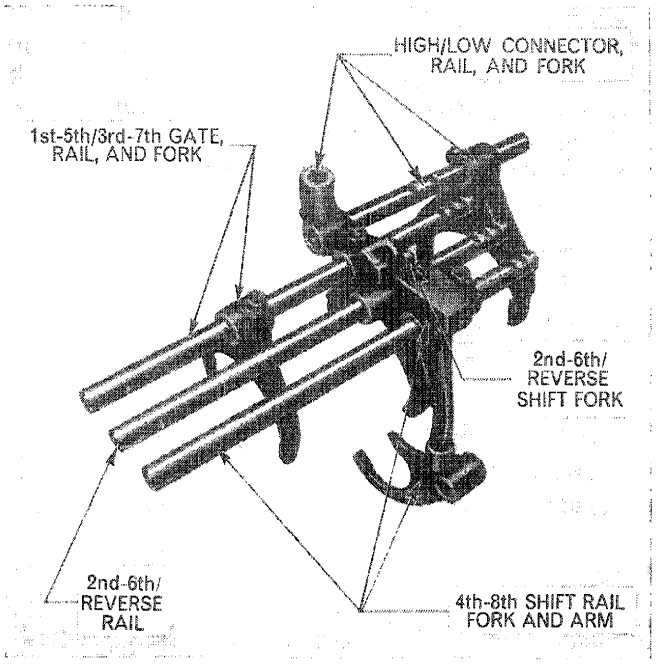

Figure 51
Shift Mechanism Components

NOTE: ***When installing the remaining shift rails, make sure that the rails already in place are in the neutral position, because otherwise the interlock plunger will prevent the rail about to be installed from entering the front support bore.***

4. Install the Reverse/2nd-6th shift rail into the second bore, Figure 42, from the left-hand side of the transmission, with the three detents to the rear, and assemble the Reverse/2nd-6th shift fork onto the rail.
5. Slide the rail forwards until it locates in the front support bore. Install the shift fork retaining screw and locknut (see Note below), and tighten to the specified torque. (See Specifications, Chapter 3.)

NOTE: ***This locknut must be tightened at this stage as it becomes inaccessible when the next rail is fitted.***

6. Install the 3rd-7th/1st-5th rail, single detent forward, into the third bore, Figure 42, from the left-hand side of the transmission. Assemble the shift gate, and the shift fork onto the rail and push the rail forward into the front support bore.
7. Install the respective retaining screws and locknuts and tighten to the specified torque. (See Specifications, Chapter 3.)
8. Install the High/Low rail into the extreme right-hand

© FORD MOTOR COMPANY LTD., 1965

bore and assemble the shift connector onto the forward end. Assemble the High/Low fork to the rear end of the rail in the secondary compartment, Figure 42. Install the respective retaining screws and locknuts and tighten to the specified torque. (See Specifications, Chapter 3.)

9. Locate the High/Low shift fork on the High/Low sliding coupling and position the coupling on the dog-teeth at the rear of the mainshaft, Figure 29.
10. Install the four shift rail detent balls, springs and plungers, Figure 41.

Remaining Assemblies

1. Refer to Section 4C to install the output shaft, the secondary countershaft, the rear support plate assembly, and to carry out the mainshaft and output shaft end-float adjustment.
2. Refer to Section 3C to install the main drive input shaft, the P.T.O. countershaft gear (where applicable), the front support plate, the clutch release hub support assembly, and the clutch operating components.
3. Carry out a functional check, before proceeding further, by making sure all gears and shafts will rotate without binding, and that the sliding couplings will freely engage with their respective gears.
4. Refer to Section 2C for installing the gear shift levers and cover assembly.
5. Join the transmission to the engine and front axle assembly, and to the rear axle assembly as detailed in Part 15.

6. SEVEN-SPEED TRANSMISSION

Legal requirements in certain territories call for a road speed limit for tractors. Using an eight-speed transmission the Dexta, Super Dexta, and Major tractors can exceed this speed limit in 8th gear. To prevent this, a seven-speed transmission is available for these territories. The seven-speed transmission is identical to the eight-speed, with the following exceptions:

1. A special interlock plunger is located between the High/Low shift rail, and the 4th/8th shift rail, Figure 52. This plunger prevents the 4th/8th shift rail moving into the engaged (rearward) position when the High/Low rail is in the High position, Figure 53. Conversely, it prevents the High-Low shift rail moving into the High position when the 4th/8th rail is in the engaged (rearward) position. Hence, 8th gear is locked out without interfering with the rest of the shift mechanism. This interlock system involves only three parts which are different to the eight-speed transmission. These are an extended 4th shift rail with an extra detent; a High/Low shift rail with an extra detent; and the interlock plunger itself, Figure 52. This system is identical in both the Dexta/Super Dexta, and the Major, seven-speed transmissions.
2. These seven-speed transmissions have slightly lower input gear ratios than the eight-speed versions. (See Specifications, Chapter 3.) This of course necessitates a different main drive input shaft and main countershaft cluster gear on both the Dexta/Super Dexta, and the Major transmissions.

Servicing procedure is affected only when removing or installing the shift rails. Details are given below to cover the removal and installation of the interlock plunger. Note that the shift rails are removed in the reverse order to those in the eight-speed transmission.

Disassembly

1. Refer to Section 2A, Step 1, to remove the gear shift levers and cover assembly.

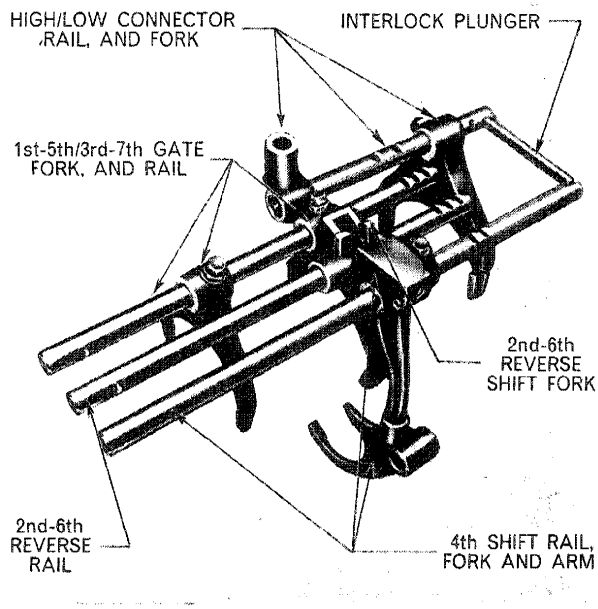

Figure 52
Shift Mechanism Components—7-Speed

2. Refer to Section 4A to remove the rear support plate assembly, and also the output shaft and secondary countershaft assemblies.
3. Make sure the High/Low shift rail is in the Low position (rearward). Remove the locknut and retaining screw from the 4th shift arm assembly, Figure 52.
4. Slide out the 4th shift rail rearwards, removing the shift arm assembly.
5. Remove the threaded plug from the interlock bore on the left-hand side of the transmission, Figures 43 and 53.
6. Insert a small screwdriver through the rear of one of the shift rail bores, and move the special interlock plunger to the left until it can be removed from the end of the bore.
7. The remaining rails and associated parts are removed as detailed in Section 5A, "Gear Shift Mechanism".

Assembly

NOTE: ***The shift rails are installed in the reverse order to those on the eight-speed transmission.***

1. Install the High/Low shift rail to the right-hand shift rail bore, Figure 42, assembling the shift fork and the connector. Install the respective retaining screws and locknuts, and tighten to the specified torque. (See Specifications, Chapter 3.)
2. Install the 1st-5th/3rd-7th shift rail, Figure 52, in the second bore from the right-hand side, assembling the gate and fork, and installing the retaining screws and locknuts. Tighten the screws and locknuts to the specified torque. (See Specifications, Chapter 3.)
3. Install the reverse/2nd-6th shift rail, assembling the shift fork. Install the retaining screw and locknut, and tighten to the specified torque. (See Specifications, Chapter 3.)
4. Insert the special interlock plunger into the bore from the left-hand side of the casing. Install and tighten the threaded plug, Figure 43.
5. Install the 4th shift rail into the left-hand shift rail bore, assembling the 4th shift arm assembly. Make sure the bottom of the arm is located in the 4th shift fork, Figure 52, and install the retaining screw and locknut. Tighten the screw and locknut to the specified torque, (See Specifications, Chapter 3.)
6. From this stage on, all assembly details are identical to the eight-speed. (See Section 5C, "Gear Shift Mechanism".)

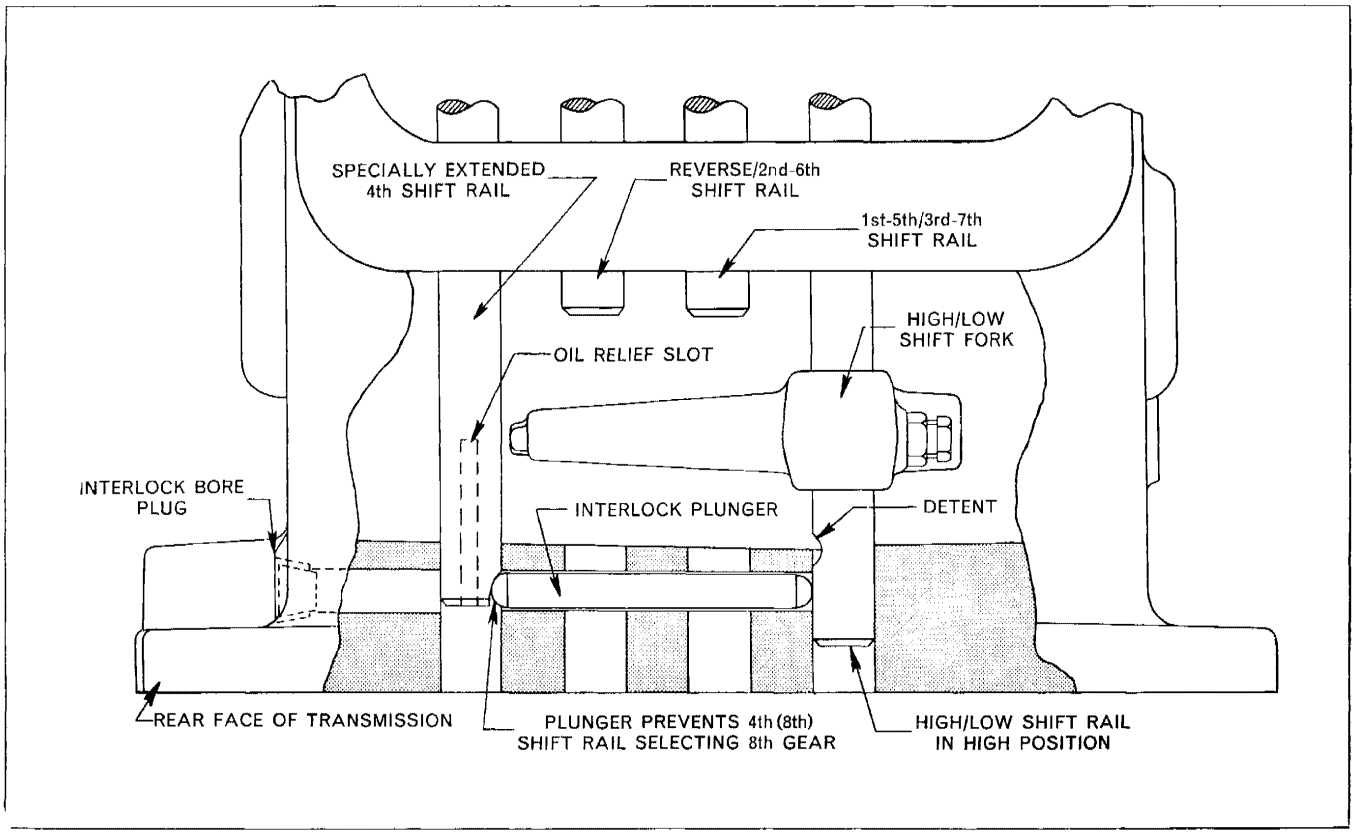

Figure 53. 7-Speed Interlock Plunger Diagram

© FORD MOTOR COMPANY LTD., 1965

Part 7

SEVEN AND EIGHT-SPEED TRANSMISSION

Chapter 2

SUPER MAJOR 5000

Section		Page
1.	Description and Operation	33
2.	Shift Levers and Cover Overhaul	33
3.	Front End Overhaul	37
4.	Rear End Overhaul	39
5.	Complete Overhaul	44
6.	Seven-Speed Transmission	50

1. DESCRIPTION AND OPERATION

This transmission is of constant mesh design and provides eight forward and two reverse speeds, Figure 57. The (longer) main lever selects four forward and one reverse basic ratios, the (shorter) secondary lever giving a high and low range in each basic ratio.

Incorporated in the transmission top cover assembly is a starter safety switch to make sure the starter can be operated only when the main gear lever is in the neutral position.

The gears are all of the spur type and the gear connections are made by sliding couplings and connectors. In contrast to the eight-speed transmissions covered in Chapter 1, this transmission has an inverted layout, i.e. the mainshaft becomes the main countershaft and is located in the bottom drive line, and the main countershaft becomes the mainshaft in the top drive line, Figure 54. Similarly the output shaft and the secondary countershaft are inverted in location, but retain the same component titles as the other eight-speed equivalents.

This transmission is available only with Independent P.T.O. The Independent P.T.O. drive shaft is a single component which is splined into the engine flywheel and transmits the drive right through the top drive line of the transmission to engage in the Independent P.T.O. clutch pack situated in the rear axle centre housing.

NOTE: ***The normal engineering procedure of making the bearings a press fit on the shafts and a push fit in the housings has been employed in this transmission and, unless it is necessary to install new bearings, or gain access to other components, it is recommended that they are not removed from the shafts.***

Refer to Section 6 of this Chapter for details of the Seven-Speed Transmission.

2. SHIFT LEVERS AND COVER OVERHAUL

A. Disassembly

1. Remove the metal and rubber cover, disconnecting the wires from the starter safety switch and unscrew the thirteen bolts and spring washers retaining the gear levers and cover, and remove as an assembly.
2. Unscrew the starter safety switch from the top of the cover. Remove the two self-locking bolts retaining the roller support plate and the switch retainer to the cover. Remove the roller support plate, the roller, the plunger, and the switch retainer from their locations, Figure 55.
3. Remove the three self-locking bolts retaining the main gear lever stop plate and actuating connector assembly. Remove the assembly from the cover.
4. Remove the two self-locking bolts retaining the secon-

© FORD MOTOR COMPANY LTD., 1965

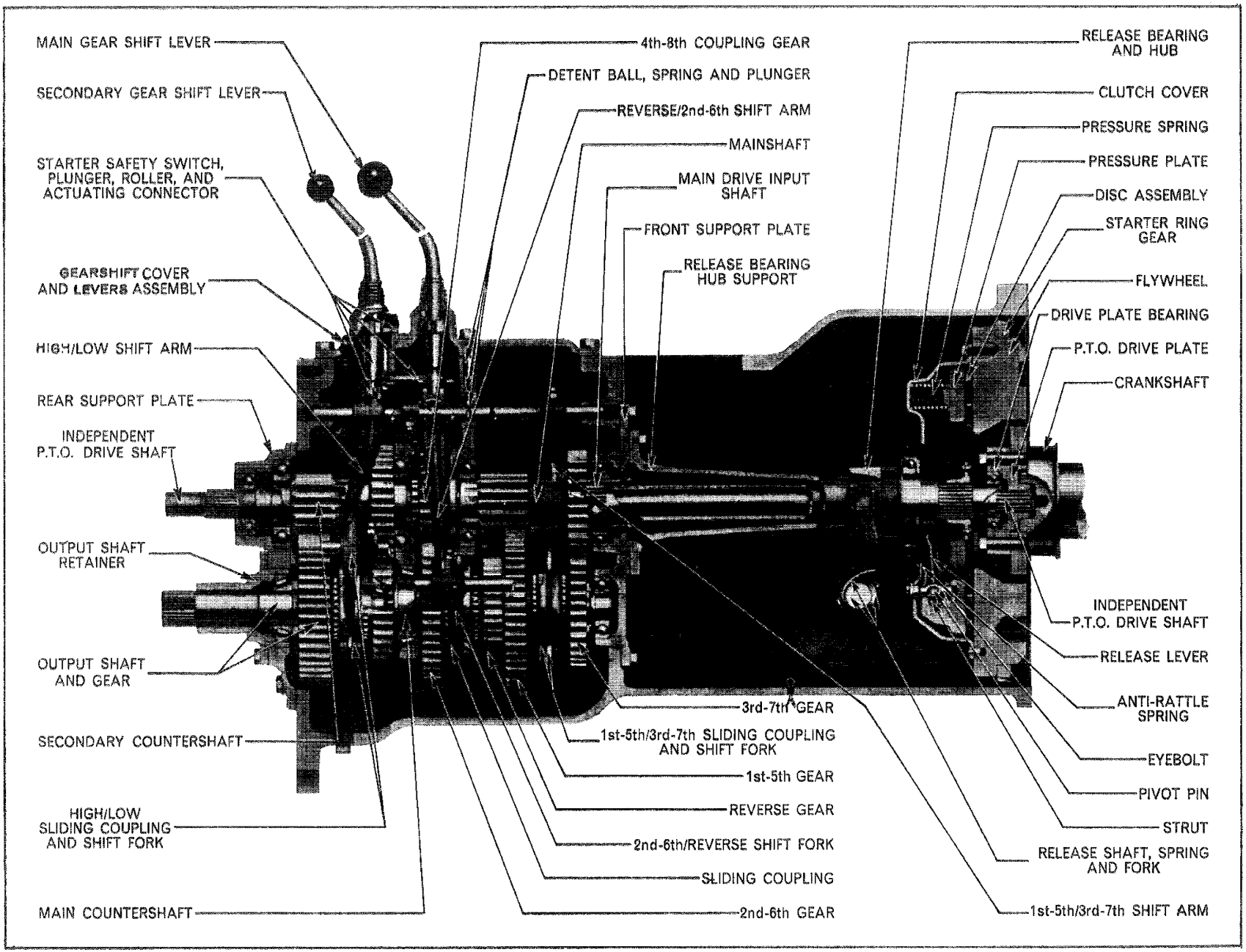

Figure 54
Super Major 5000 Eight-Speed Transmission

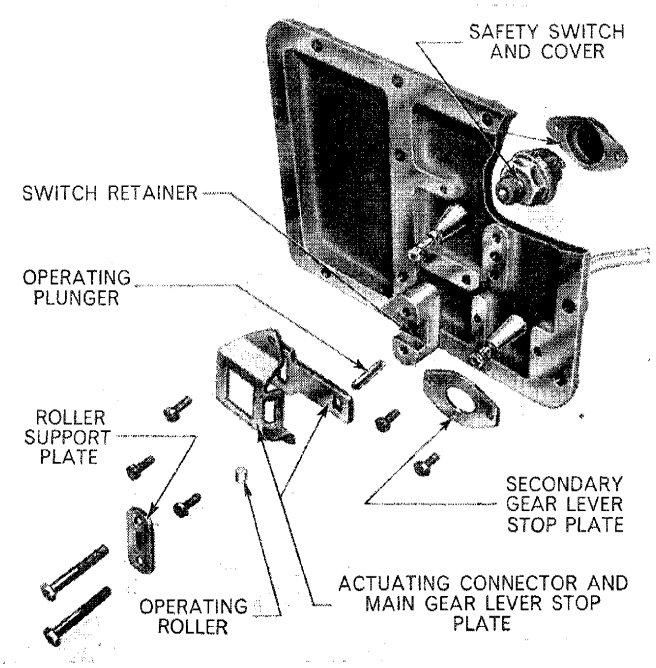

Figure 55
Safety Switch Operating Components

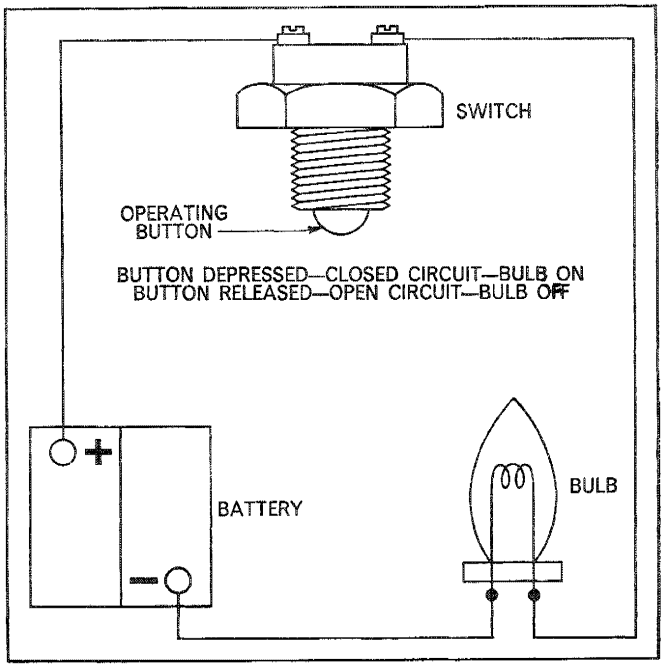

Figure 56
Safety Switch Test Circuit

dary gear lever stop plate, Figure 55, and remove the plate.

5. Using a file or hacksaw, partially cut through the gear lever spring retaining clips, completing the cut with a hammer and small chisel. Having first removed the balls, withdraw the levers through the cover, removing the springs and retainers.

6. If worn or damaged, or a new cover is to be installed, the two small dowels, which prevent the gear levers from rotating in the sockets in the cover, may be punched out from the exterior of the cover.

B. Inspection and Repair

1. Using a suitable test bulb, wires, and battery, Figure 56, test the starter safety switch for correct operation by depressing the operating ball, which should close the circuit and light the test bulb. On releasing the operating ball, the test bulb should be extinguished. If the switch is faulty, a new part should be installed.

2. Inspect the gear lever ends, and all other sliding parts, for wear or damage. Install new parts as necessary.

C. Assembly

1. If necessary, install the two small dowels to the inside of the gear lever sockets.

2. Pass the levers through the cover from underneath, positioning the retainers and springs. Compress the springs and secure with two new spring retaining clips. Install the gear lever balls.

3. Install the secondary gear lever stop plate, and screw in the two self-locking bolts. Tighten the bolts to the specified torque. (See Specifications, Chapter 3.)

4. Position the main gear lever stop plate and actuating connector, installing the three self-locking bolts. Tighten the bolts to the specified torque. (See Specifications, Chapter 3.)

5. Install the switch retainer, the plunger, the roller and the roller support plate, in that order. Secure them with two self-locking bolts. Tighten the bolts to the specified torque. (See Specifications, Chapter 3.)

6. Screw the starter safety switch into the cover.

7. Position the cover and levers assembly on top of the transmission, together with a new gasket and screw in the thirteen bolts and spring washers. Tighten the bolts to the specified torque. (See Specifications, Chapter 3.) Reconnect the wires to the terminals of the starter safety switch and install the metal and rubber cover.

© FORD MOTOR COMPANY LTD., 1965

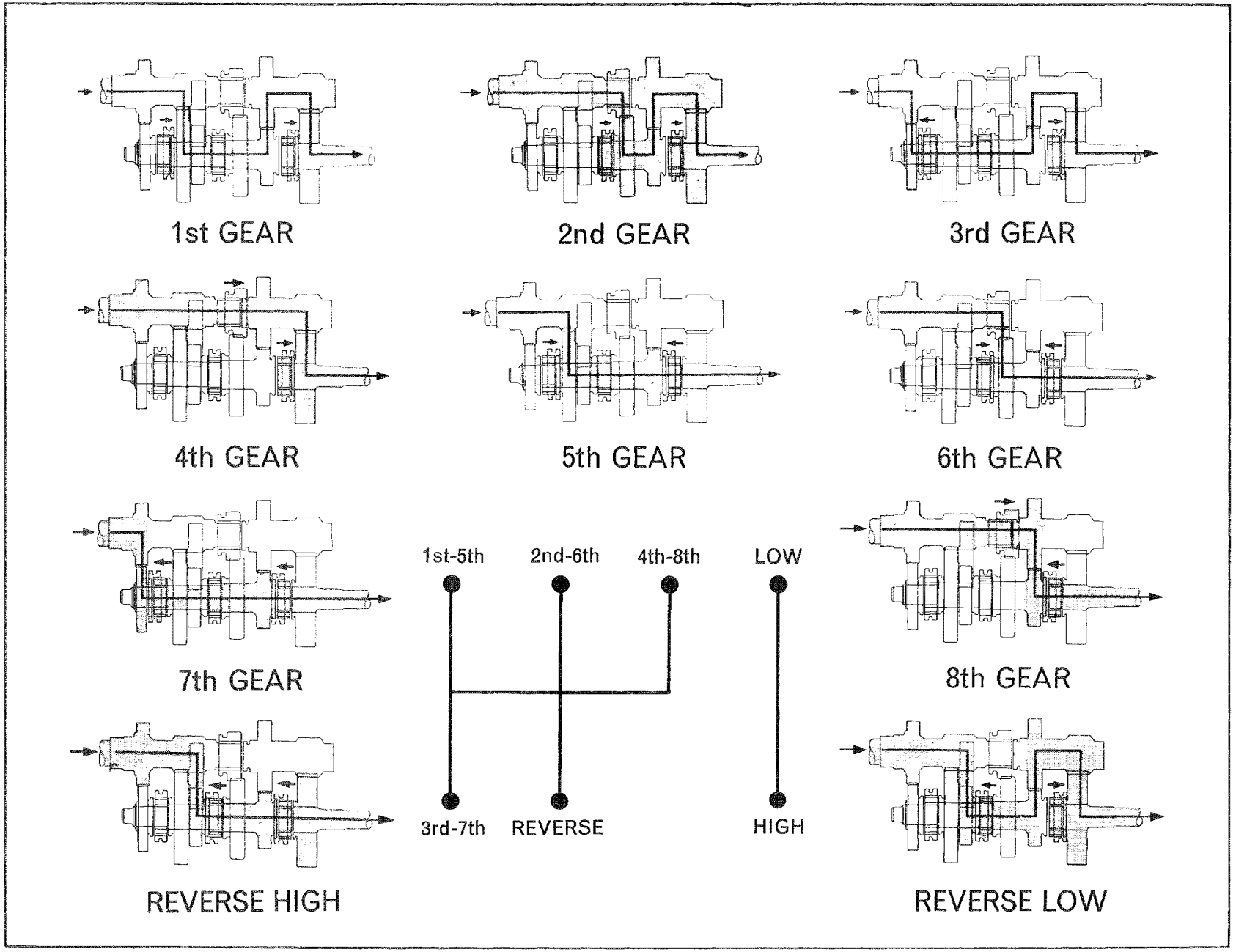

Figure 57
Power Flow Diagram

3. FRONT END OVERHAUL

A. Disassembly

1. See Part 15 for instructions on separating the engine and front axle assembly from the transmission.
2. Lever the release shaft return spring off the stop inside the transmission case, remove the cotter pins from the two clevis pins securing the clutch release fork to the release shaft. Withdraw the shaft from the case, removing the clutch release fork and return spring, Figure 58.
3. Slide the clutch release bearing and hub from the clutch release hub support.
4. Drain the oil from the transmission by removing the drain plug situated in the bottom of the compartment, Figure 59.
5. Unscrew the five self-locking retaining bolts. Lift out the clutch release bearing hub support.
6. Remove the snap ring retaining the main drive input shaft to the mainshaft, Figure 60, and pull the shaft out forwards.
7. Unscrew the seven self-locking retaining bolts and pull the front support plate from the housing. If it is tight, a suitable drift can be inserted into the main transmission compartment, and the plate carefully driven out forwards.

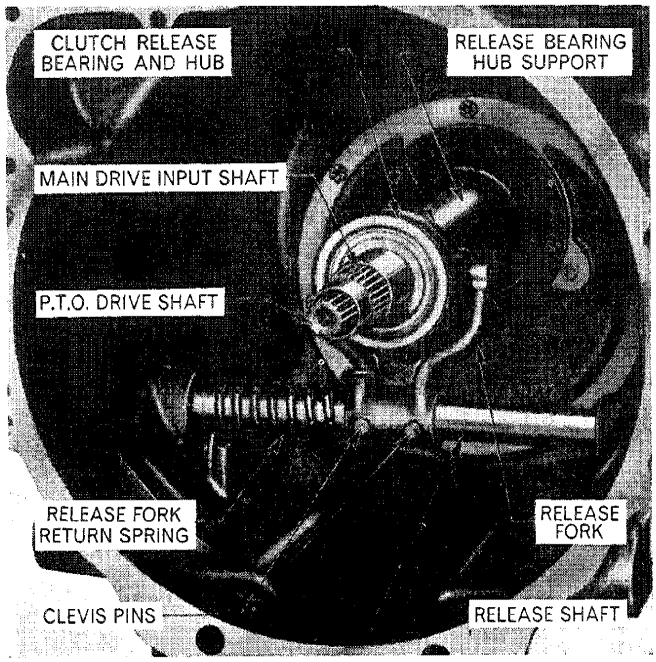

Figure 58
Clutch Operating Linkage

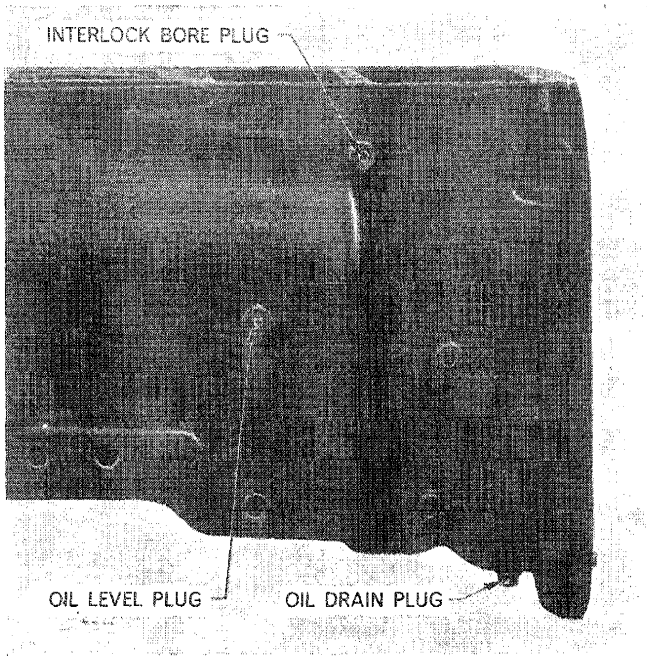

Figure 59
Left-hand Side of Transmission

B. Inspection and Repair

1. Examine the clutch operating components for wear or damage and if necessary refer to Part 4 for servicing the individual components.
2. Inspect the mainshaft front oil seal located in the clutch release bearing hub support and if necessary remove the seal using Tools Nos. 943 and 943-S, Figure 61.
3. Install a new oil seal into the hub support, making sure the sealing lip faces to the rear, using Tool No. 630-11 and a sleeve 2 in. (50·8 mm) I.D. and $2\frac{3}{8}$ in. (60·3 mm) O.D. of suitable length. Lightly smear the sealing lip with a suitable grease, before installing the oil seal.
4. Check the plug sealing the 1st-5th/3rd-7th bottom shift rail bore, Figure 62, for leaks and make certain that it is firmly staked round the edge.

   NOTE: ***The plug sealing the 1st-5th/3rd-7th top shift rail bore must also be checked for leaks but is not to be staked as it is retained by the front support plate, Figure 62.***

5. Make sure the main drive input shaft and retaining snap ring are in good condition and install new parts if necessary, on reassembly.
6. Examine the main countershaft front bearing and if

© FORD MOTOR COMPANY LTD., 1965

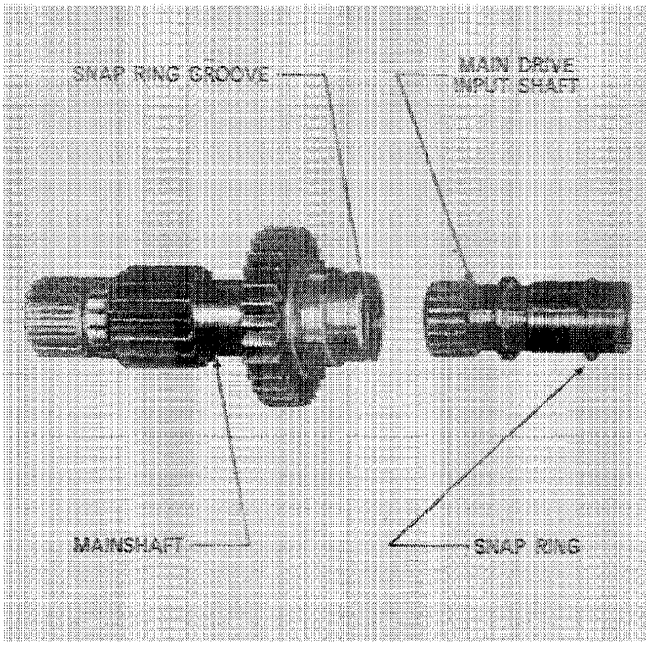

Figure 60
Main Drive Input Shaft and Snap Ring

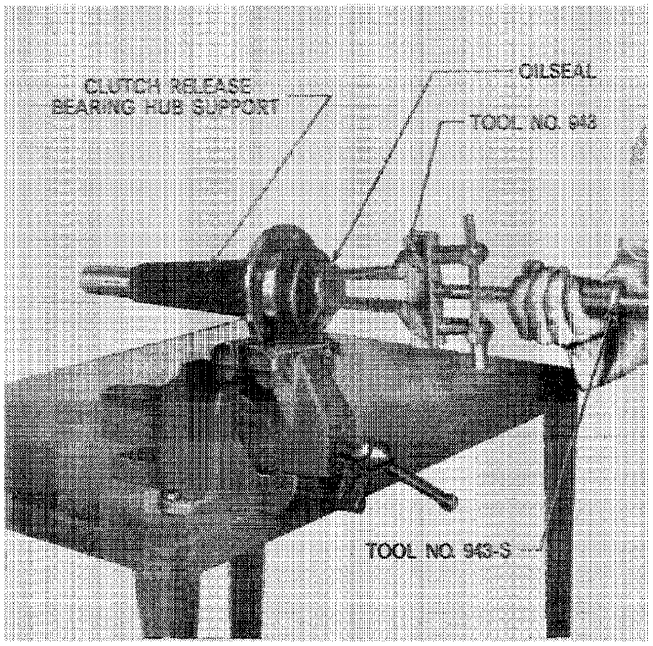

Figure 61
Removing Mainshaft Front Oilseal

worn or damaged remove it from the shaft using Tools Nos. T.7077 and SW.4, Figure 63(A) (or SW.501 and SW.501-3, Figure 63(B).

Drive a new main countershaft front bearing into position with a convenient length sleeve 1⅛ in. (31·7 mm) I.D. and 1⅝ in. (41·3 mm) O.D., and a hammer.

C. Assembly

1. Using a new gasket, install the front support plate to the transmission case. It may be necessary to lift the mainshaft and main countershaft to line up the main countershaft front bearing and thus facilitate its location in the front support plate. Screw in the seven self-locking bolts and tighten to the specified torque. (See Specifications, Chapter 3.)
2. Push the main drive input shaft into the forward end of the mainshaft and secure with the snap ring, Figure 60.
3. Using a new gasket, slide the clutch release hub support over the input shaft, taking care not to damage the oil seal. Tap the hub support into the front support plate, with the drain hole downwards.
4. Screw in the five self-locking retaining bolts and tighten the bolts to the specified torque. (See Specifications, Chapter 3.)
5. Refill the transmission with oil of the specified grade (See Specifications, Chapter 3) until up to the level plug hole situated on the left-hand side of the transmission case, Figure 59.

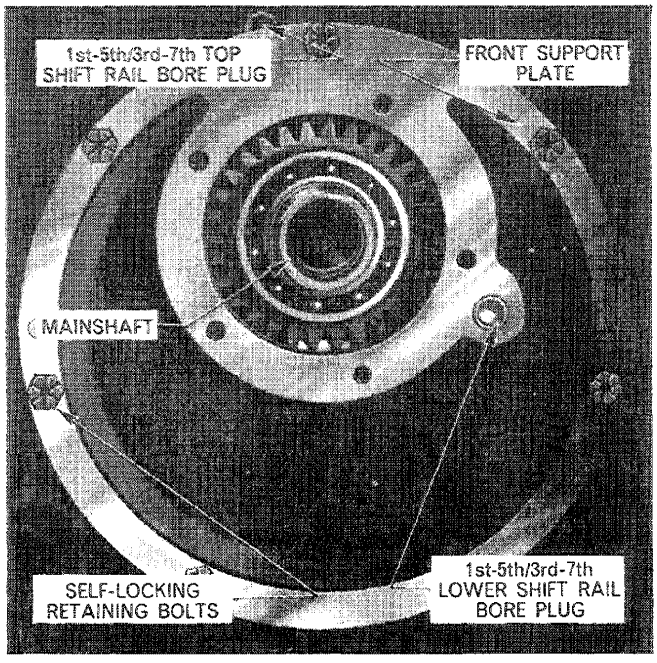

Figure 62
Front Support Plate

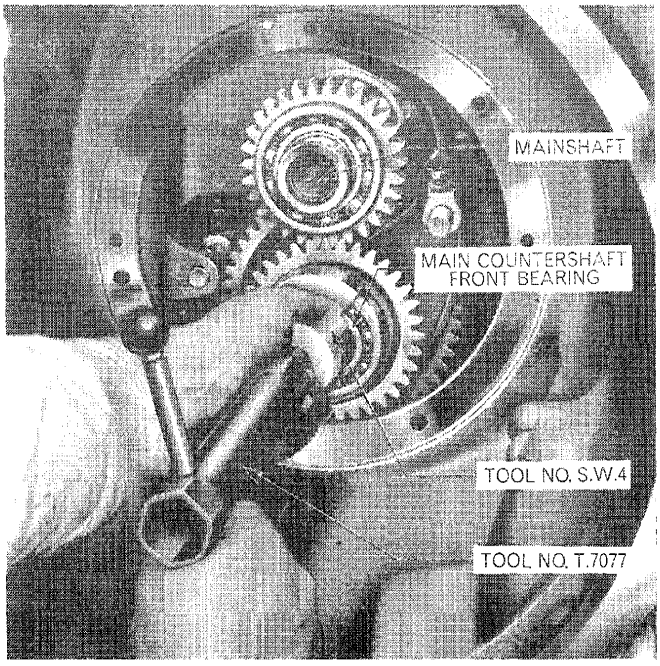

Figure 63 (A)
Removing Main Countershaft Front Bearing

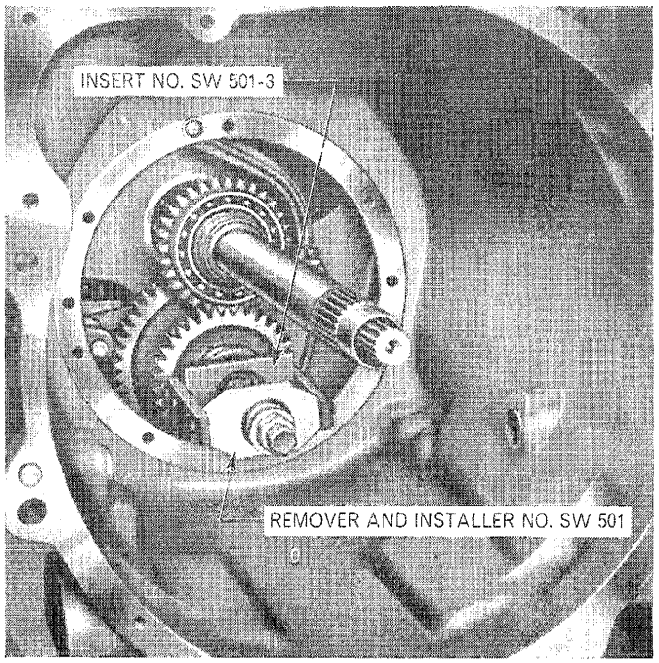

Figure 63 (B)
Removing Main Countershaft Front Bearing

6. Assemble the release bearing and hub assembly to the hub support.
7. Locate the release fork fingers in the slots in the release hub and pass the release shaft through the left hand side of the casing, through the fork and return spring, and into the bushing at the right-hand side. Install the two clevis pins and cotters securing the release fork to the shaft. Place one end of the return spring on the web of the release fork and lever the other end up and onto the lug cast immediately underneath the right-hand release shaft bushing, Figure 58.
8. Refer to Part 15 for instructions on rejoining the engine and front axle assembly to the transmission.

4. REAR END OVERHAUL

A. Disassembly

1. Refer to Part 15 for separating the tractor at the engine and at the rear axle, thus removing the transmission as a unit. Remove the clutch operating linkage, the clutch release hub support, the front support plate, and the main drive input shaft assembly as previously described in Section 3A.
2. Remove the snap ring, the hydraulic pump idler gear, the retaining washer, and the two thrust washers, located on the output shaft retainer, Figure 64.
3. Cut and remove the locking wire and unscrew the ten bolts retaining the rear support plate.
4. Use a soft faced mallet to drive the forward end of the P.T.O. drive shaft rearward, and withdraw the rear support plate and P.T.O. drive shaft as an assembly.
5. Remove the snap ring retaining the P.T.O. drive shaft rear bearing and drive the shaft and rear bearing out of the support plate rearwards.
6. Remove the four self-locking bolts retaining the output shaft retainer, Figure 64, and withdraw the retainer and shims from the rear support plate.
7. Partially withdraw the secondary countershaft assembly until the front bearing is out of its location. Pull out slightly and lift up the secondary countershaft, thereby allowing the output shaft assembly to be lifted out, Figure 65, followed by the secondary countershaft.

B. Inspection and Repair

Rear Support Plate Assembly

1. Inspect the P.T.O. drive shaft and bearing assembly

© FORD MOTOR COMPANY LTD., 1965

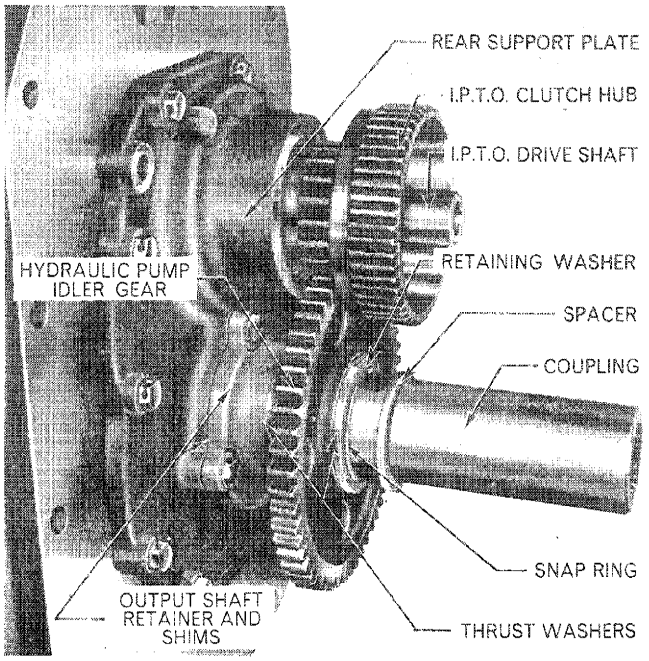

Figure 64
Rear Support Plate in Position

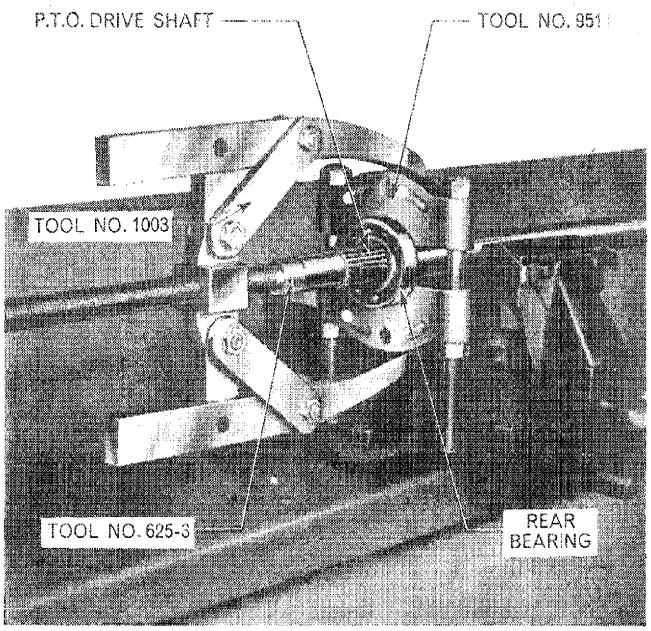

Figure 66
Removing P.T.O. Drive Shaft Rear Bearing

and, if necessary, pull the bearing off the drive shaft using Tools Nos. 1003, 951, and 625-3, Figure 66. Using the necessary new parts, drive the bearing onto the shaft using a sleeve $1\frac{7}{16}$ in. (36·5 mm) I.D. and $1\frac{3}{4}$ in. (44·4 mm) O.D. of convenient length and a hammer, Figure 67.

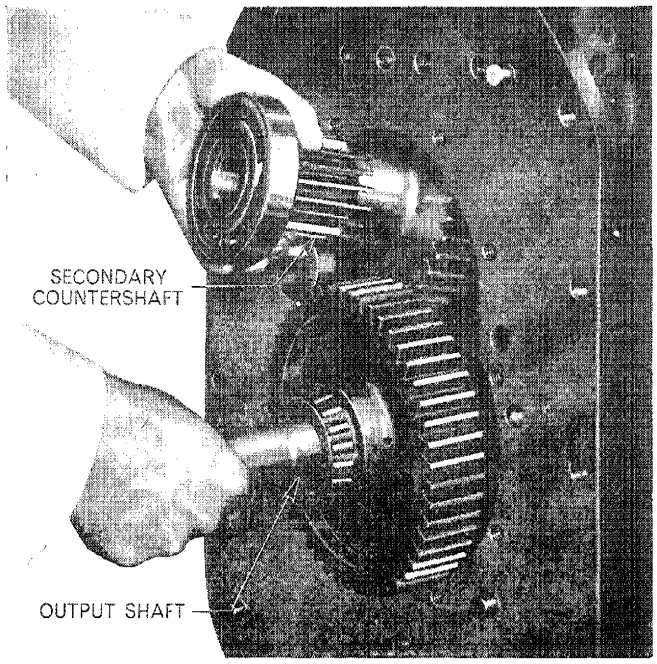

Figure 65
Removing/Installing Output Shaft

2. Examine the rear support plate and the P.T.O. drive shaft rear oil seal and if necessary remove the seal using Tool No. 630-13 (reversed) and a soft faced mallet. Install a new oil seal after lightly greasing the sealing lip, with the same Tool, Figure 68, and secure with the snap ring.
3. Check the output shaft retainer, rear bearing cup, and oil seal for wear or damage. If necessary remove the oil seal and cup from the retainer with a suitable punch and hammer.

   NOTE: *The oil seal must be removed before the bearing cup.*
4. Install a new oil seal and bearing cup with Tool No. 630-14 and a suitable driver. Lightly grease the sealing lip and install the oil seal before the bearing cup.

Output Shaft Assembly

1. Examine the output shaft assembly for wear or damage. Renew any defective parts by using Tools Nos. 1003 and 625-1 to draw off the gear, bearing cone and roller assembly, and thrust washer in one operation, Figure 69.
2. If necessary remove the pilot bearing cone and roller assembly using Tools Nos. 1002, 951 and 625-4.
3. Assemble the output shaft gear so that the dog-teeth

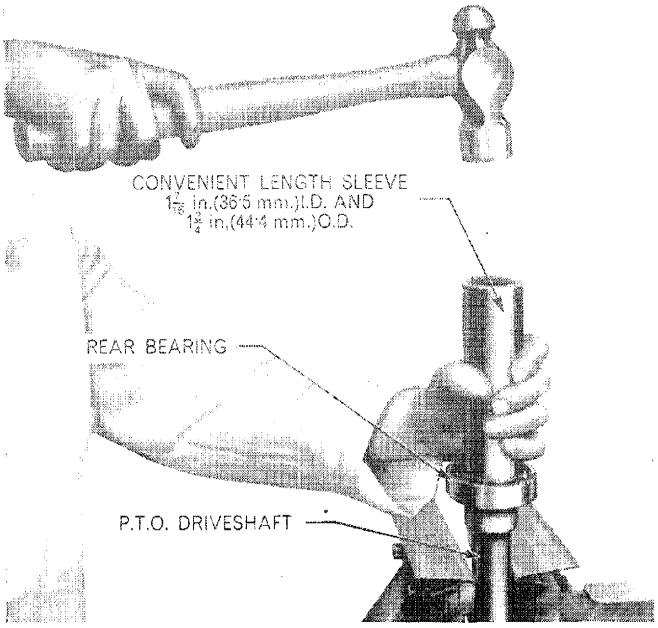

Figure 67
Installing P.T.O. Drive Shaft Rear Bearing

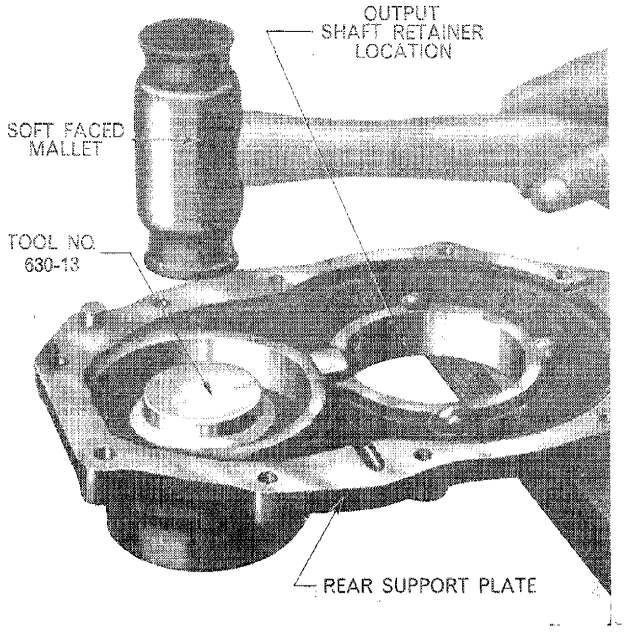

Figure 68
Installing P.T.O. Drive Shaft Rear Oilseal

on the gear adjoin the dog-teeth integral with the shaft, Figure 70.

4. Install the steel thrust washer aligning the flats on the washer with those on the shaft, and position the rear bearing on the output shaft. Pull the bearing into position using Tools Nos. 1003, 952, 625-2 and suitable sleeve $1\frac{9}{16}$ in. (39·7 mm) I.D. and $2\frac{1}{16}$ in. (52·4 mm) O.D. of convenient length, Figure 71.

5. Drive the pilot bearing into position on the output shaft with a sleeve $1\frac{1}{16}$ in. (26·9 mm) I.D. and $1\frac{1}{4}$ in. (31·7 mm) O.D. of convenient length and a hammer.

Secondary Countershaft Assembly

1. Check the secondary countershaft assembly for wear or damage. If necessary the rear bearing can be pulled off using Tools 1003, 952, 630-5 and 625-2.

2. The front bearing is removed using Tools Nos. 1003, 951, 630-5, 625-2, also two pieces of steel rod $\frac{3}{16}$ in. (4·8 mm) diameter and 2 in. (50·8 mm) long. Two pieces of steel rod are inserted through the driving holes in the gear, Figure 72, to contact the bearing. The assembly is then placed in the Tools indicated above, so that the rods push the bearing off, Figure 73.

3. Install both front and rear bearings, using Tools Nos. 1003, 951, 625-2, and 630-5.

NOTE: ***If any bearing cone and roller assembly is found to be damaged, the mating bearing cup must be carefully inspected as it is also likely to be damaged. The reverse will also apply if a bearing cup is found to be damaged. If however***

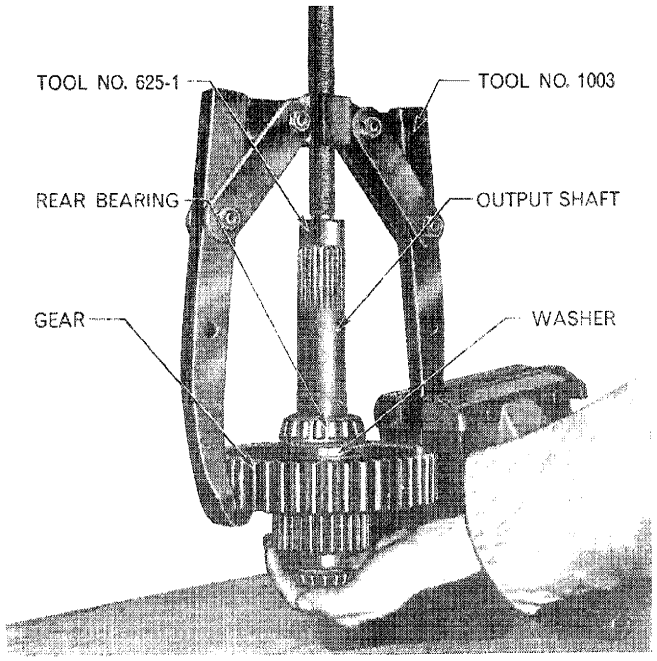

Figure 69
Removing Output Shaft Rear Bearing

© FORD MOTOR COMPANY LTD., 1965

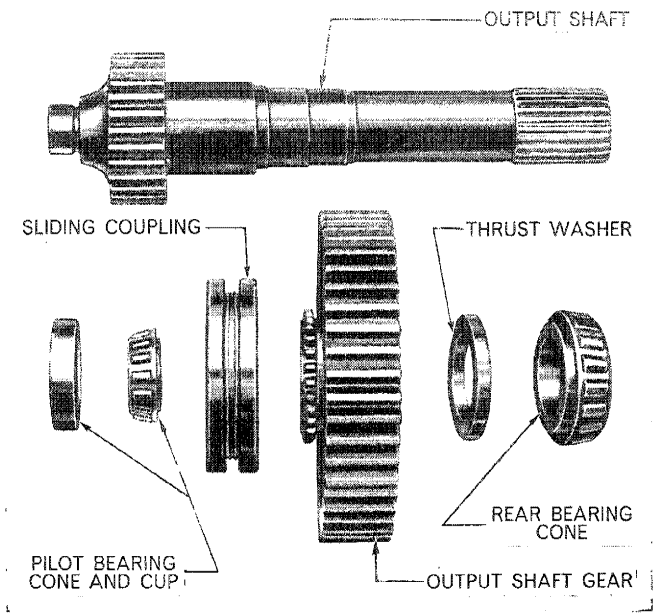

Figure 70
Output Shaft Components

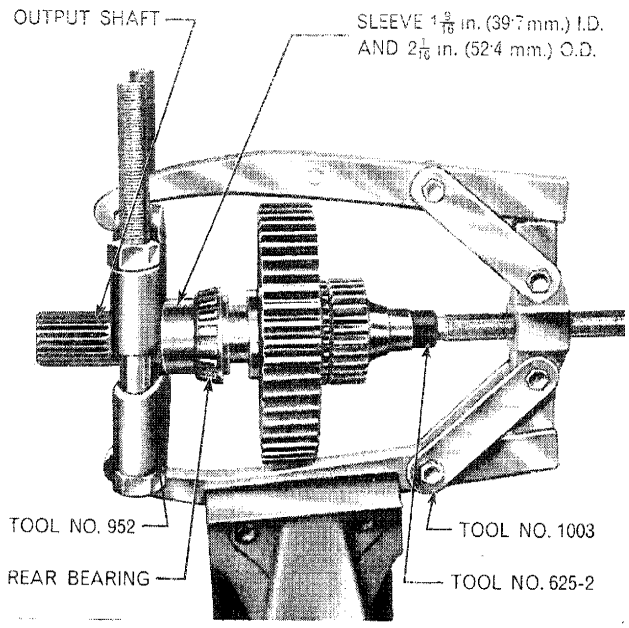

Figure 71
Installing Output Shaft Rear Bearing

only the cone, or only the cup is to be renewed, the new parts must bear the same manufacturer's name as the damaged part.

C. Assembly

1. Make certain that the High/Low sliding coupling is engaging the dog-teeth on the rear of the main countershaft and that the High/Low shift fork is located in the sliding coupling groove, Figure 74.
2. Make sure the snap ring located immediately in front of the secondary countershaft front bearing in the rear compartment is in position. Place the secondary countershaft assembly in its approximate location and hold it at the top of the compartment while the output shaft assembly is installed, Figure 65. Align the secondary countershaft and drive forwards until the front bearing is felt to seat against the snap ring in the transmission case.
3. Using a new gasket, locate the rear support plate (less the output shaft retainer assembly) on the transmission rear face by means of the two dowels located in the support plate, and tap the plate into position. Install and tighten the ten retaining bolts to the specified torque. (See Specifications, Chapter 3.)
4. Pass the P.T.O. drive shaft and rear bearing through the transmission from the rear. Using a soft faced mallet, drive the shaft and bearing forward into the rear support plate and secure with the appropriate snap ring.
5. Carry out the main countershaft and output shaft end-float elimination procedure as detailed below, Step 6.

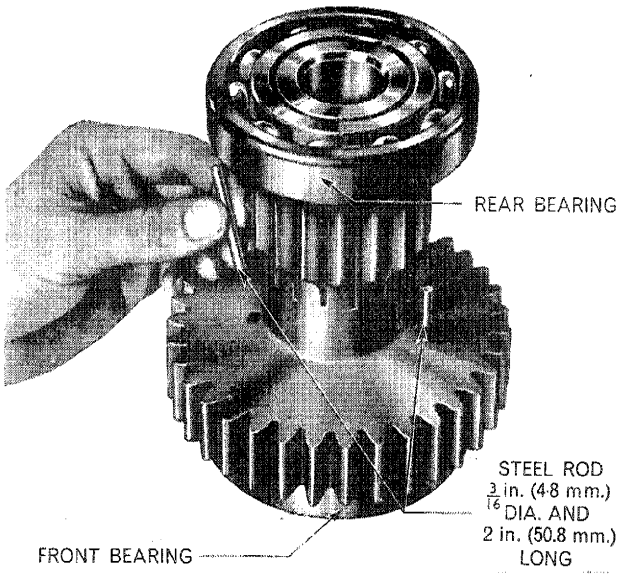

Figure 72
Positioning Rods in Secondary Counter Shaft

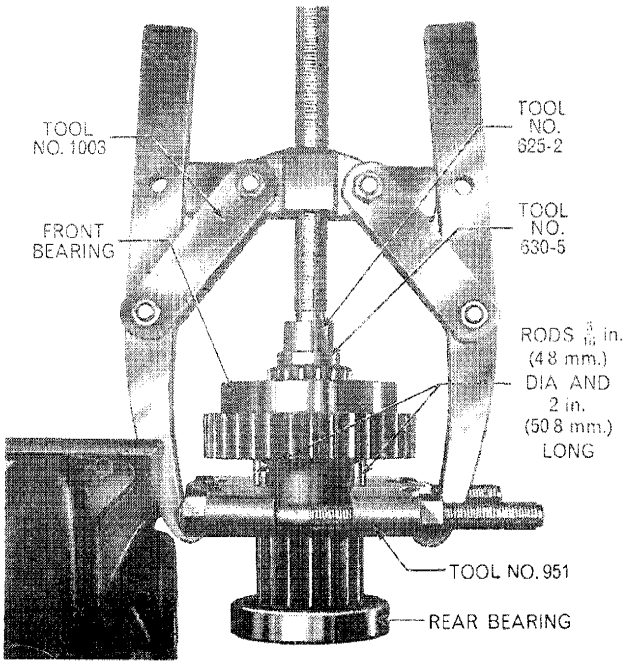

Figure 73
Removing Secondary Countershaft Front Bearing

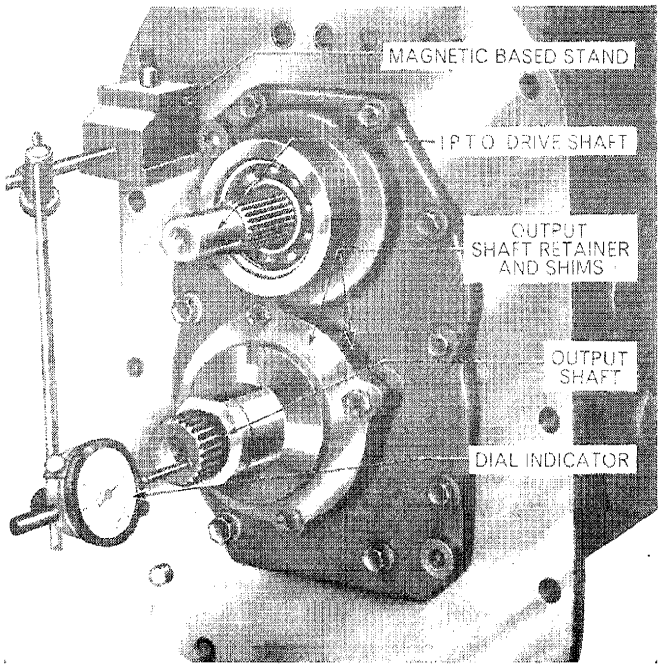

Figure 75
Measuring Output Shaft End-Float

6. Output Shaft and Main Countershaft End-float Elimination:

It is necessary to eliminate all end-float in the main countershaft and output shaft taper roller bearings.

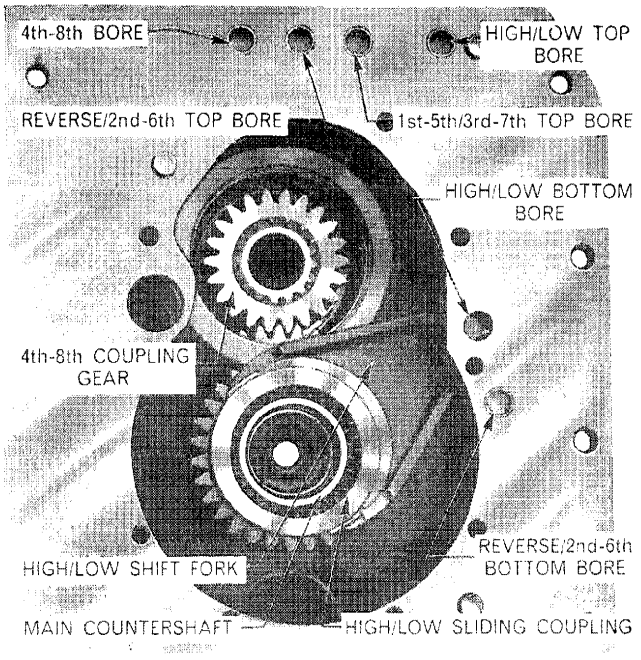

Figure 74
Transmission Rear Compartment

This is effected by installing shims of appropriate thickness between the rear support plate and the output shaft retainer, using the following procedure:—

a. Locate the output shaft retainer assembly in the rear support plate, installing shims totalling approximately 0·060 in. (1·58 mm).

b. Install the four self-locking retaining bolts and tighten to the specified torque. (See Specifications, Chapter 3.)

c. Using a standard dial indicator, calibrated in 0·001 in. or 0·01 mm divisions, Figure 75, set the indicator plunger against the end face of the output shaft. Move the shaft in and out, noting the end-float reading on the indicator.

d. Remove the indicator and the four self-locking retainer bolts. Withdraw the retainer and shims.

e. Remove a number of shims whose total thickness corresponds with the reading obtained on the dial indicator.

IMPORTANT: ***The total thickness of shims removed can be up to 0·002 in. (0·0508 mm) more than the reading obtained on the indicator, (i.e. 0.002 in. (0·0508 mm) pre-load is achieved), but must not be less than the reading obtained on the indicator. Shims are available in thicknesses of 0·003 in, 0·005 in, and 0·012 in (0·076 mm, 0·127 mm, and 0·305 mm respectively).***

© FORD MOTOR COMPANY LTD., 1965

f. Having selected the correct shims, install the retainer, shims, and four self-locking bolts. Tighten the bolts to the specified torque. (See Specifications Chapter 3.) Reposition the indicator and recheck for end-float.

7. Install the hydraulic pump idler gear and the two thrust washers to the output shaft retainer assembly, and secure with the retaining washer and snap ring, Figure 64.

8. Install locking wire to the ten bolts retaining the rear support plate.

9. Refer to Part 15 for joining the tractor at the rear axle centre housing. See Section 3C for the installation of the main drive input shaft assembly, front support plate, clutch release hub support, and the clutch operating linkage. See Part 15 for joining the tractor at the engine flange.

5. COMPLETE OVERHAUL

A. Disassembly

1. Refer to Part 15 for separating the tractor at the engine and at the rear axle centre housing, thus removing the transmission as a unit.

2. Remove the clutch operating linkage, the clutch release hub support, the front support plate, the main drive input shaft, the rear support plate, the P.T.O. drive shaft, the output shaft and secondary countershaft assemblies, and the shift levers and cover assembly, as previously described in Sections 2A, 3A, and 4A.

Gear Shift Mechanism

1. Unscrew the locknut and retaining screw from the High/Low shift arm, Figure 76, and remove the top shift rail rearward, pushing the sealing plug out with the end of the rail.

2. Remove the locknut and retaining screw from the 1st-5th/3rd-7th shift connector at the rear of the top shift rail, and also from the shift arm at the front of the rail, Figure 76.

3. Remove the connector and arm and slide the rail out to the front, pushing the front sealing plug out with the end of the rail. If necessary remove the rear sealing plug from the bore, Figure 74.

NOTE: ***See Section 6 for removing Seven-Speed Transmission special interlock plunger.***

4. Unscrew the locknut and remove the screw retaining the Reverse/2nd-6th shift arm to the Reverse/2nd-6th top rail. Slide the rail rearward, removing the arm and pushing out the sealing plug with the end of the rail.

5. Remove the locknut and retaining screw from the 4th-8th shift fork and slide the top rail out rearwards removing the fork and pushing out the sealing plug with the end of the rail.

6. Remove the four shift rail detent balls, springs and plungers from their locations, Figure 77.

7. Remove the High/Low coupling from the rear of the main countershaft. Unscrew the locknut and retaining screw from the High/Low bottom fork, withdraw the rail rearward and remove the fork.

NOTE: ***There is no sealing plug in the High/Low bottom shift rail bore because the rear support plate and gasket act as a seal, Figure 75.***

8. Unscrew the locknut and retaining screw from the

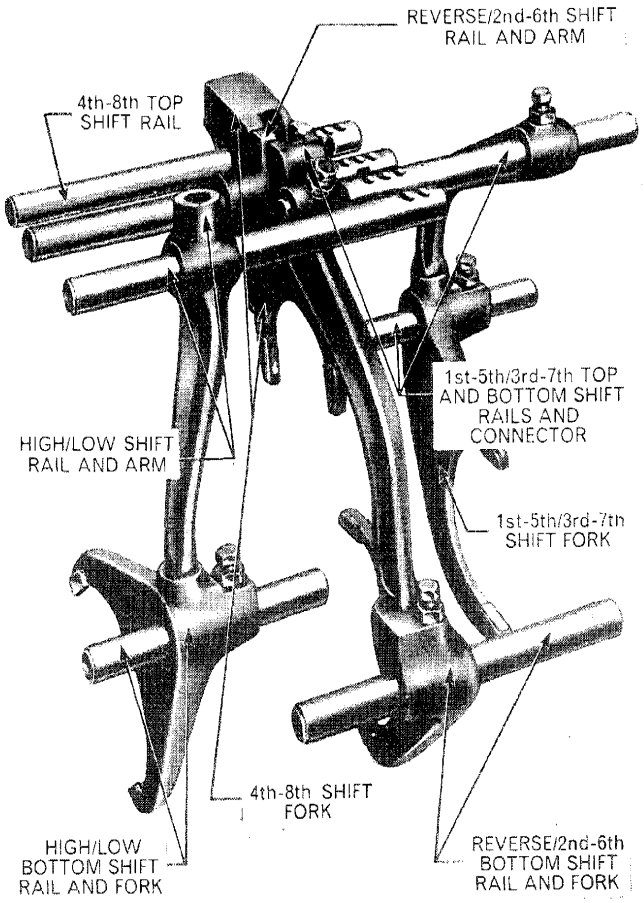

Figure 76
Gear Shift Mechanism

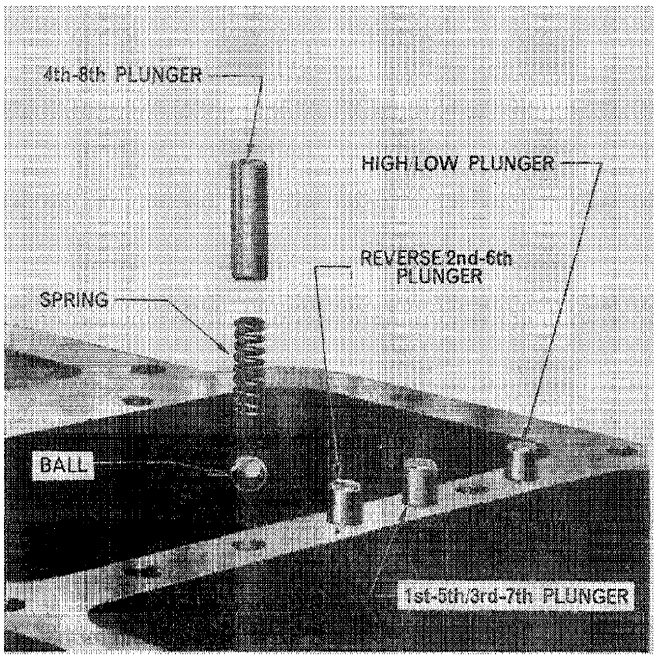

Figure 77
Detent Ball, Spring, and Plungers

Reverse/2nd-6th shift fork and slide the bottom rail out rearwards, pushing out the sealing plug. Remove the Reverse/2nd-6th shift fork.

9. Unscrew the locknut and retaining screw holding the shift fork to the 1st-5th/3rd-7th bottom rail and remove the rail forwards lifting out the fork.
10. If necessary, remove the interlock bore plug situated on the left-hand side of the transmission case, Figure 59, and remove the two interlock plungers.

Reverse Idler Assembly

1. Bend down the locktab and remove the bolt, Figure 78, retaining the reverse idler shaft.
2. Drive the shaft out forwards and lift out the reverse idler gear.

Mainshaft Assembly

1. Position Tool No. 630-5 in the bore at the rear of the mainshaft.
2. Use a suitable drift to drive the shaft out forwards, removing the 4th-8th coupling gear, Figure 74.

Main Countershaft Assembly

1. Use Tool No. SW.4 (or Tools Nos. SW.501 and SW.501-3) to remove the main countershaft front bearing, Figures 63(A) and 63(B).
2. Remove the snap ring immediately behind the bearing with suitable snap ring pliers and remove the thrust washer.
3. Pull the main countershaft out rearwards removing the gears, couplings and thrust washers one by one.

B. Inspection and Repair

Transmission Case

1. When the transmission is completely disassembled, the case should be thoroughly washed out inside to prevent small particles of metal or dirt causing subsequent damage to bearings, oil seals and gears.
2. Inspect the case for cracks or other damage and if beyond repair, use a new case on assembly.

Mainshaft Assembly

1. Inspect the mainshaft, the front and rear bearings and the P.T.O. drive shaft front oil seal located inside the forward end of the shaft.
2. If necessary, remove the mainshaft rear bearing using Tools 1003, 630-5, and 952, Figure 79. If necessary remove the front bearing using Tools 1003, 951, 630-5, 625-2 and two pieces of steel $\frac{3}{16}$ in. (4·8 mm) diameter and 2 in. (50·8 mm) long, as described for removing the secondary countershaft front bearing in Section 4A.
5. Use a suitably hooked piece of rod to extract the P.T.O. drive shaft oil seal located in the bore at the front end of the mainshaft.

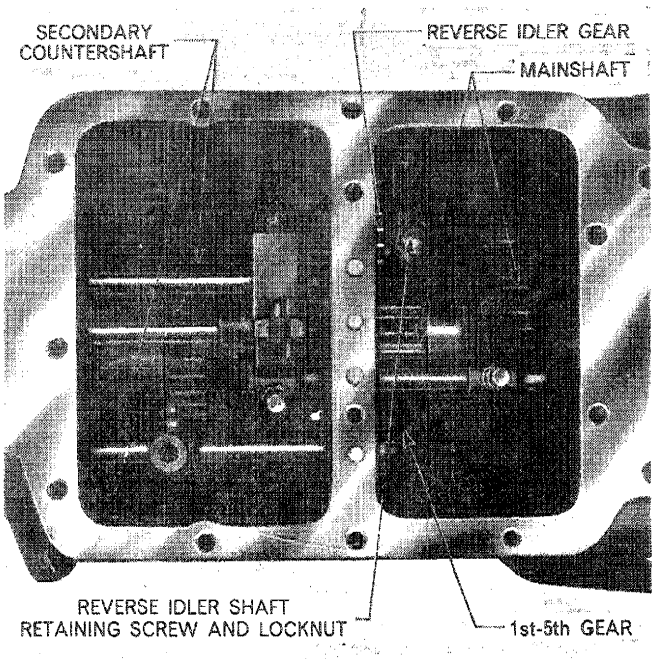

Figure 78
Transmission Main Compartment

© FORD MOTOR COMPANY LTD., 1965

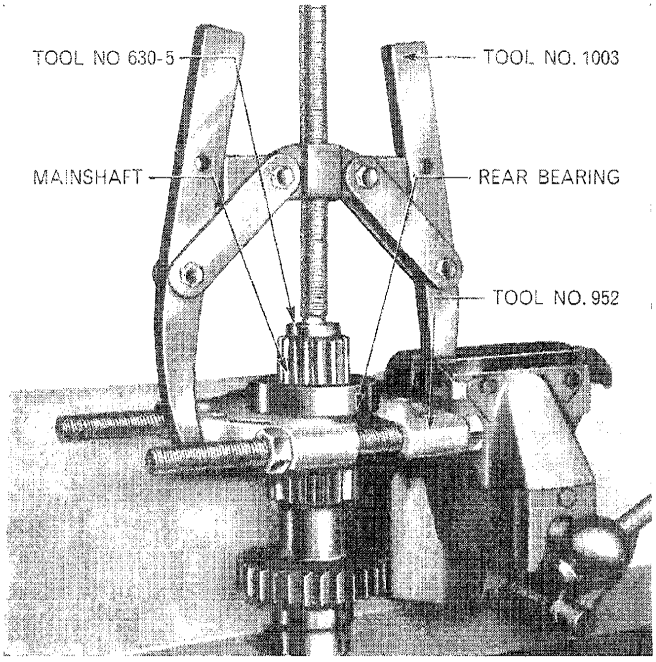

Figure 79
Removing Mainshaft Rear Bearing

6. If necessary, install the mainshaft rear bearing using Tools Nos. 1003, 952, and 630-10, and also the front bearing using a sleeve 2½ in. (63·5 mm) I.D. and 3 in. (76·2 mm) O.D. of convenient length.

7. If necessary, install a new P.T.O. drive shaft oil seal (after lightly greasing the sealing lip) in the forward end of the mainshaft, with the sealing lip facing rearwards, using Tool No. 630-5 (reversed) and sleeve 1¼ in. (31·8 mm) I.D. and 1⅝ in. (41·3 mm) O.D. of convenient length, Figure 80.

Main Countershaft Assembly

1. Carefully examine the main countershaft and, if necessary, pull the rear bearing from the countershaft using Tools Nos. 951, 1003, 625-2, Figure 81.

2. If necessary, the output shaft pilot bearing cup can then be driven out of the main countershaft with a suitable punch through the two holes provided in the gear, Figure 82.

3. If necessary, install the output shaft pilot bearing cup in the rear of the main countershaft using Tools Nos. 630-8 and 1002.

4. If necessary, install the rear bearing on the main countershaft using Tools Nos. 1003, 952, 630-11 and a sleeve 2 1/16 in. (52·4 mm) I.D. and 2 5/16 in. (58·7 mm) O.D. of convenient length, Figure 83.

5. The teeth on all the gears which revolve on the main countershaft must be carefully inspected for damage or excessive wear. Assemble the gears to the main countershaft and check the bushings for free play. If any gear or bushing is defective, a new gear and bushing assembly must be used on installation. Similarly examine the reverse idler gear and bushing assembly. If either gear or bushing are defective, a new gear and bushing assembly must be used on installation.

6. Inspect the main countershaft rear bearing cup situated in the transmission case. If damaged, remove using Tools Nos. 943 and 943-S, Figure 84. Install a new bearing cup using Tool No. 630-17 and a suitable drift and hammer.

7. Check the main countershaft front bearing and, if worn or damaged, use a new part on assembly.

8. All gear teeth and components with internal and external splines not previously mentioned, must be carefully examined for signs of wear or other damage and, if required, new parts used on assembly.

Gear Shift Mechanism

1. Gear shift forks, rails, arms and connectors must all be checked for wear and distortion. The detents on the shift rails should be examined because, if worn, jumping out of gear could result.

2. Renew any damaged parts as necessary.

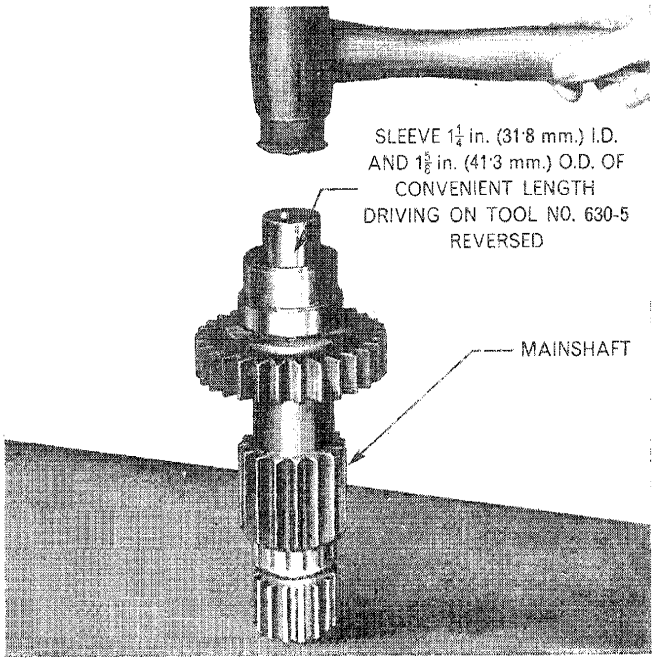

Figure 80
Installing P.T.O. Drive Shaft Oil Seal

NOTE: *Wash all components thoroughly in a gasoline or kerosene bath before installation.*

C. Assembly

Main Countershaft Assembly

1. Pass the main countershaft through the rear compartment assembling the gears in the following sequence, Figure 85:—
   a. 2nd-6th gear (dog-teeth forward).
   b. Reverse/2nd-6th sliding coupling and connector.*
   c. Phosphor-bronze thrust washer.
   d. Reverse gear (dog-teeth rearward).
   e. Phosphor-bronze thrust washer.
   f. 1st-5th gear (dog-teeth forward).
   g. 3rd-7th/1st-5th sliding coupling and connector.*
   h. 3rd-7th gear (dog-teeth rearward).
   i. Thrust washer.
   j. Snap ring.

*__NOTE:__ *These connectors have a chamfer on one side on the inside diameter. This chamfer must be facing the rear of the transmission, to allow the connector to seat correctly on the splines of the main countershaft.*

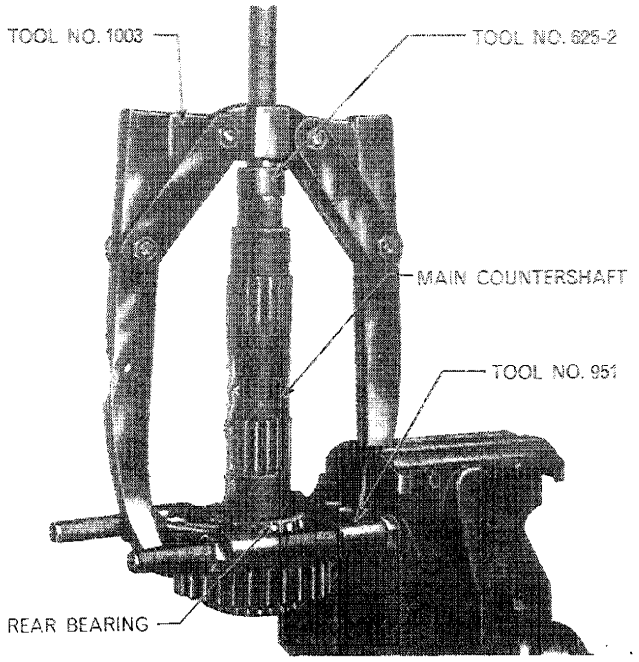

Figure 81
Removing Main Countershaft Rear Bearing

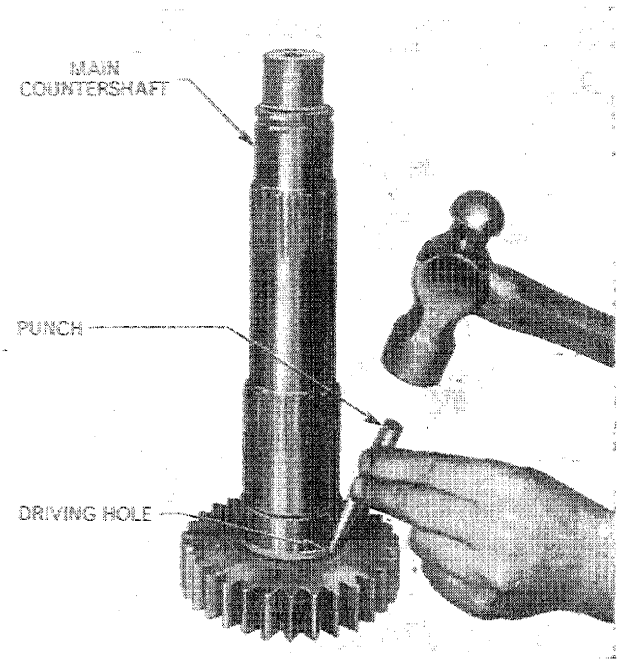

Figure 82
Removing Output Shaft Pilot Bearing Outer Track

Mainshaft Assembly

1. Make sure the snap ring retaining the mainshaft rear bearing is in position in the transmission housing.
2. Install the 4th-8th coupling gear on the rear of the mainshaft with the shift fork groove to the front.
3. Position the mainshaft assembly and tap rearward until the rear bearing seats on the snap ring.

Reverse Idler Assembly

1. Position the reverse idler gear between its supporting lugs, Figure 78, with the extended hub of the gear forward.
2. Pass the reverse idler shaft in from the rear compartment with the retaining bolt hole forwards. Install the retaining bolt and locktab, tighten the bolt to the specified torque, (See Specifications, Chapter 3) and bend up the locktab.

Gear Shift Mechanism

1. Position the 1st-5th/3rd-7th shift fork Figure 76, on its appropriate sliding coupling, and pass the 1st-5th/3rd-7th bottom shift rail through the fork to locate in the bore of the reverse idler shaft. Make sure the oil relief groove on the shift rail is facing forwards.
2. Locate the Reverse/2nd-6th shift fork on its appropriate

© FORD MOTOR COMPANY LTD., 1965

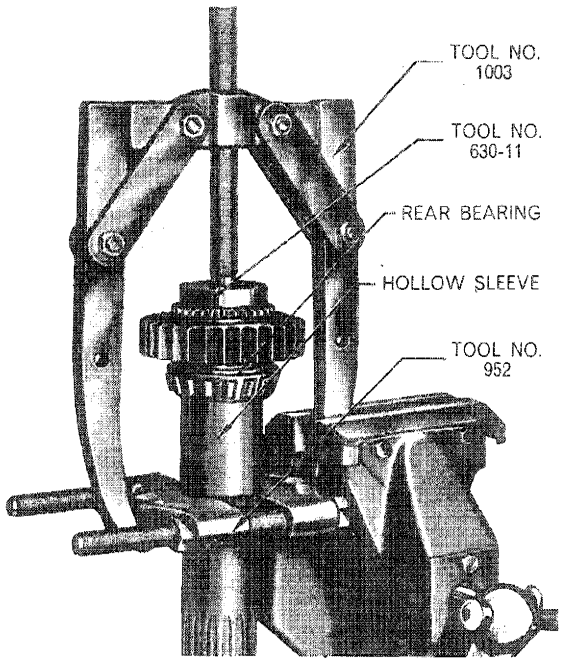

Figure 83
Installing Main Countershaft Rear Bearing

sliding coupling and pass the Reverse/2nd-6th bottom rail through from the rear with the fork retaining hole to the rear of the shift rail. Install the retaining screw and locknut to the fork and tighten to the specified torque. (See Specifications, Chapter 3.) Drive the sealing plug into the rear of the bore, but do not stake the plug as it is retained by the rear support plate, Figure 75.

3. Position the High/Low shift fork and pass the High/Low bottom shift rail through the rear compartment, with the oil relief groove to the rear, so that the rail locates in the fork. Install the retaining screw and locknut and tighten to the specified torque. (See Specifications, Chapter 3.)

NOTE: *No sealing plug is fitted to the High/Low bottom shift rail bore, as the bore is covered and sealed by the rear support plate and gasket, Figure 74.*

4. If necessary, insert the two interlock plungers into the bore from the left-hand side of the transmission case and install the screwed plug, Figure 59.

5. Pass the 4th-8th top shift rail in from the rear with the oil relief groove rearward and install the 4th-8th shift fork. Install the retaining screw and locknut and tighten to the specified torque. (See Specifications, Chapter 3.) Drive in the sealing plug, Figure 74, and stake round the edge to secure.

NOTE: *When installing the remaining top shift rails, make sure that the rails already in place are in the neutral position because otherwise the interlock plungers will prevent the rail about to be installed from entering the front support bore. See Section 6 for installing Seven-Speed Transmission special interlock plunger.*

6. Pass the Reverse/2nd-6th top shift rail in from the rear, the oil relief groove rearward and assemble the Reverse/2nd-6th shift arm so that the bottom of the arm locates in the corresponding hole in the Reverse/2nd-6th shift fork. Install the retaining screw and locknut and tighten to the specified torque. (See Specifications, Chapter 3.) Drive the sealing plug into the bore and secure by staking round the edge.

7. Pass the 1st-5th/3rd-7th top rail into the bore from the front of the transmission with the oil relief groove forwards, assembling the connector to the rear end of the rail and the arm to the forward end, making sure the arm locates in the 1st-5th/3rd-7th fork. Install the respective retaining screws and locknuts and tighten to the specified torque. (See Specifications, Chapter 3.) Install the sealing plug,* Figure 62, at the front of the transmission, but do not stake as the plug is retained by the front support plate. If necessary, install the rear sealing plug and stake securely round the edge.

***NOTE:** *There are a total of seven shift rail bore sealing plugs in this transmission. Five are located in the rear face of the transmission, Figure 74, one in the front support plate and one behind*

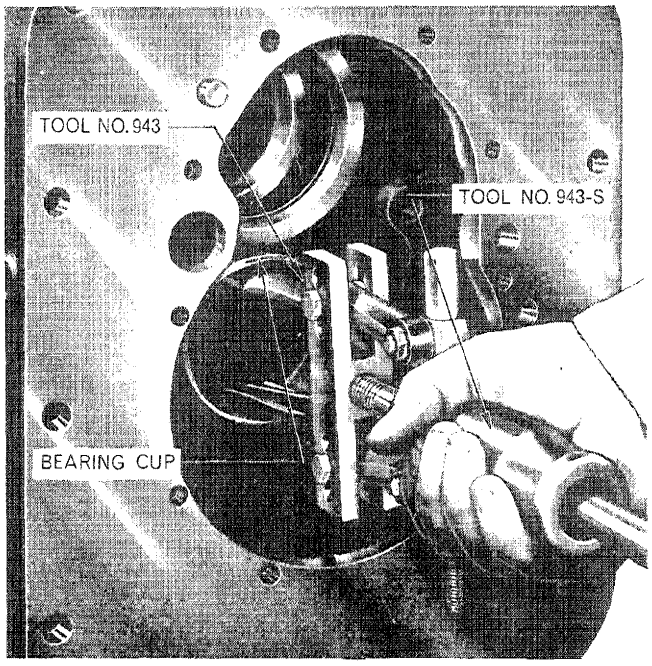

Figure 84
Removing Main Countershaft Rear Bearing Cup

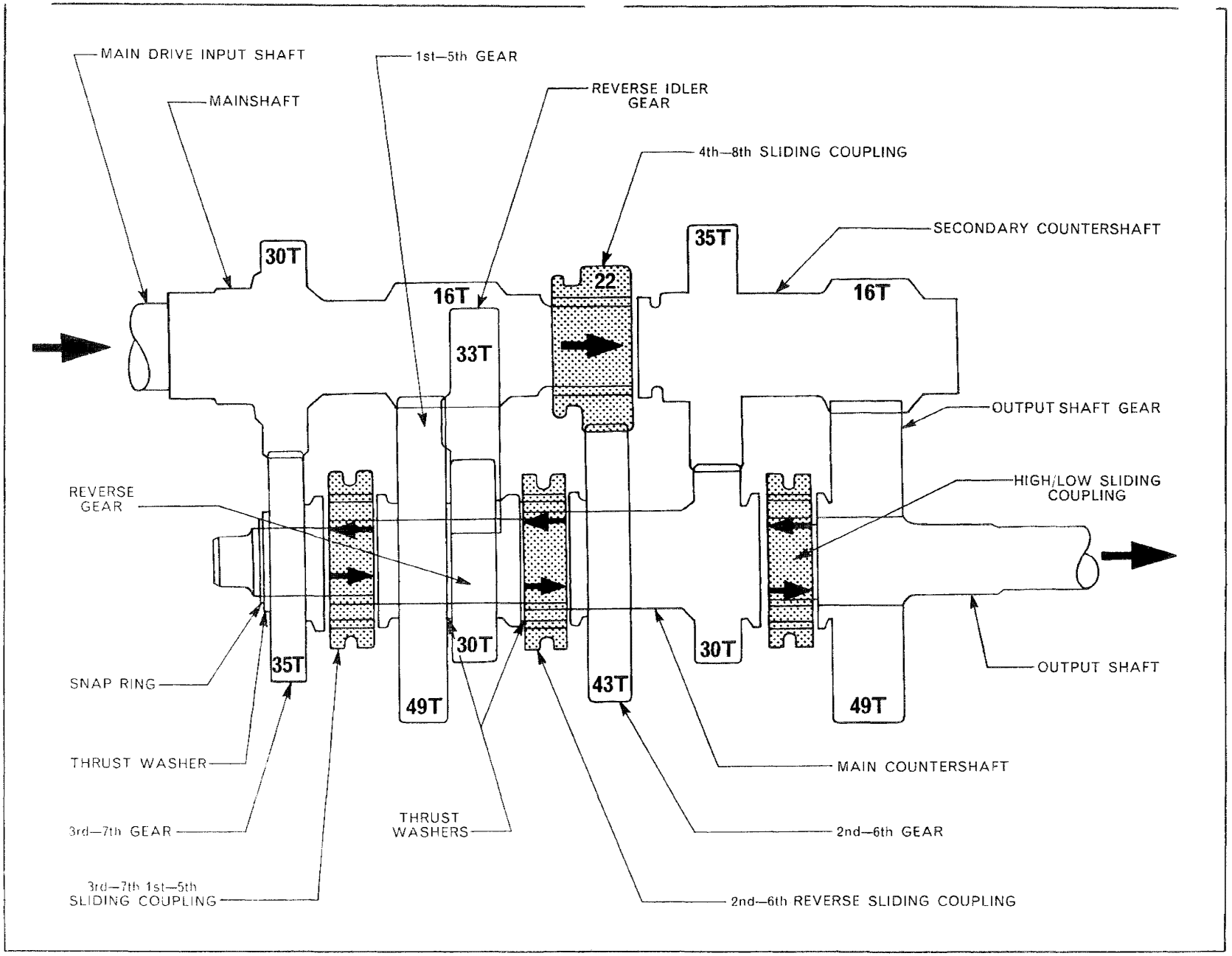

Figure 85
Gear Identification Diagram

© FORD MOTOR COMPANY LTD., 1965

the upper edge of the front support plate, See Figure 62. Six of these seven plugs are identical and are $\frac{5}{16}$ in. (7.94 mm) deep and $\frac{5}{8}$ in. (15.88 mm) diameter. The remaining plug is that which seals the 1st-5th/3rd-7th bottom shift rail bore at the front of the transmission, and is the same diameter as the other six, but is only $\frac{1}{4}$ in. (6.35 mm) deep.

8. Pass the High/Low top shift rail in from the rear of the transmission with the oil relief groove rearward. Assemble the High/Low shift arm and make sure the arm locates in the corresponding hole in the High/Low shift fork, Figure 76. Install the retaining screw and locknut, and tighten to the specified torque. (See Specifications, Chapter 3.) Drive the sealing plug into the bore and secure by staking round the edge.
9. Install the four shift rail detent balls, springs and plungers, Figure 77, making sure the balls and plungers slide freely into their bores.
10. Make sure that all shafts and gears will rotate freely, and that all sliding couplings will engage their respective gears.

Remaining Assemblies

1. Refer to Section 4C for installing the secondary countershaft, the output shaft, and the rear support plate assemblies.
2. Refer to Section 3C to install the main drive input shaft, the front support plate, the clutch release hub support, and the clutch operating linkage.
3. Refer to Section 2C for installing the gear shift levers and cover assembly.
4. Refer to Part 15 for instructions to rejoin the transmission to the engine and front axle assembly, and also to the rear axle assembly.

6. SEVEN-SPEED TRANSMISSION

In certain territories, the local legal requirements call for a certain road speed limit for tractors. This is less than the maximum speed possible in 8th gear on the Super Major 5000. For these territories a special interlock has been devised to prevent 8th gear being selected, Figure 87. Except for this interlock plunger and three modified top shift rails (2nd-6th/Reverse; High/Low; and 4th), Figure 86, the transmission is identical to the eight-speed. Servicing procedure is only affected during disassembly and installation of the special interlock plunger and disassembly and installation instructions are as follows:—

A. Disassembly

1. Refer to Section 2A to remove the shift levers and cover assembly; and to Section 4A to remove the rear support plate, output shaft and secondary countershaft assemblies.
2. Make sure the 4th shift rail is in the forward (engaged) position and remove the retaining screw and locknut from the High/Low shift connector arm, Figure 87, and slide the rail out to the rear, pushing the sealing plug out with the end of the rail.
3. Remove the locknut and retaining screw from the Reverse/2nd-6th shift fork and move the rail forward enough to allow the rear of the rail to clear the rear support bore.
4. Remove the special interlock bore plug, Figure 87, from the right hand side of the transmission and use a suitable piece of wire to push the interlock plunger out of the bore.

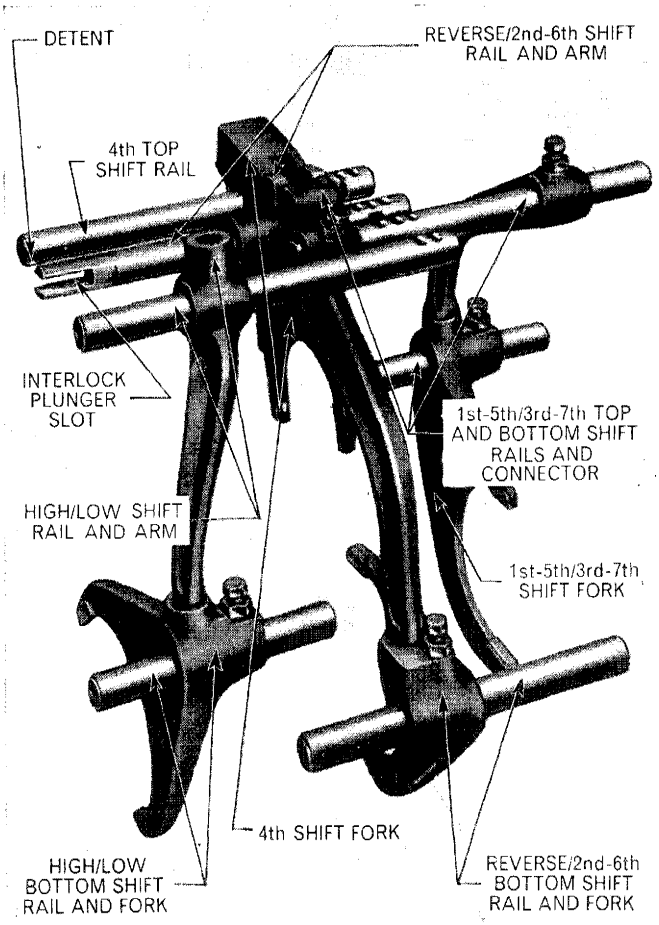

Figure 86
7-Speed Shift Mechanism Components

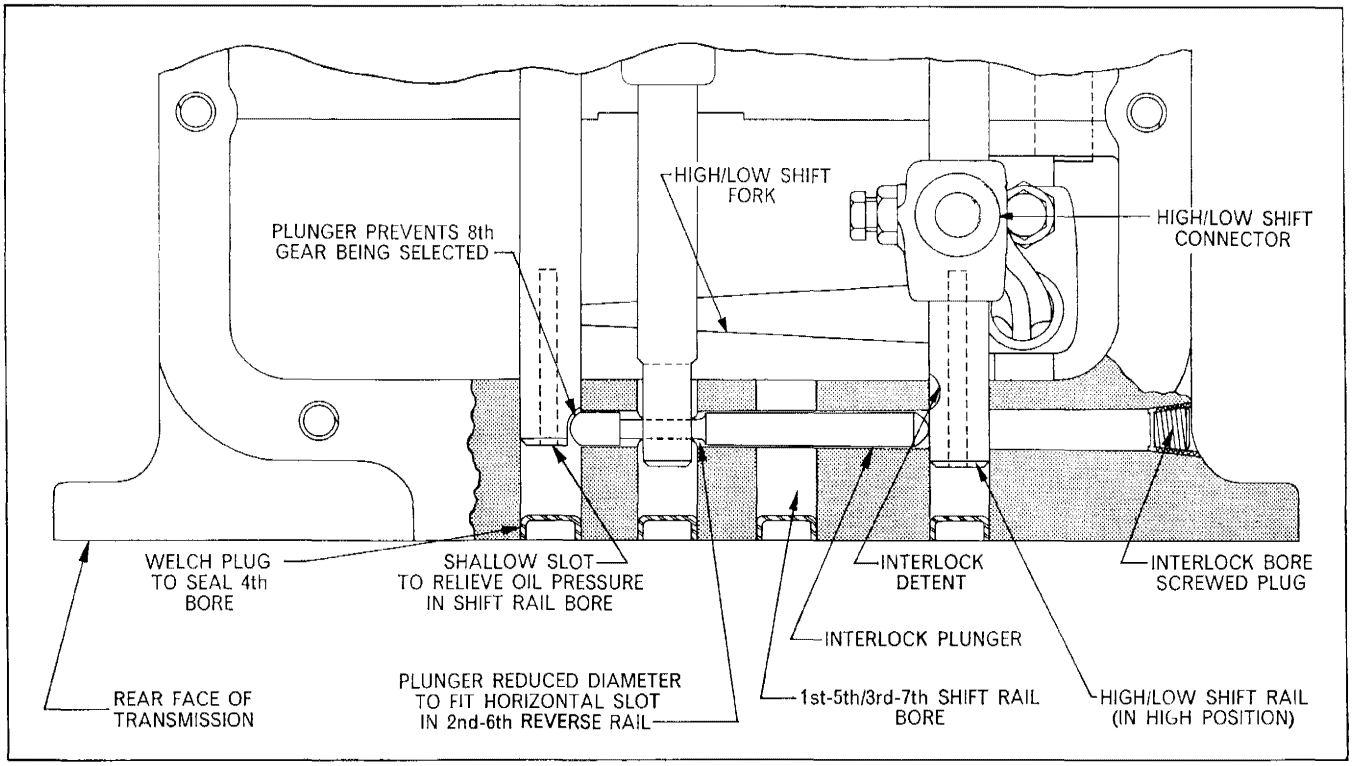

Figure 87

7-Speed Interlock Plunger Diagram

5. Proceed with disassembly as described for the eight-speed transmission in Section 5A.

B. Assembly

1. Pass the 4th top shift rail into the bore from the rear, with the oil groove and detent rearwards and install the 4th fork. Install the retaining screw and locknut to the fork and tighten to the specified torque. (See Specifications, Chapter 3.) Drive in the sealing plug and stake round the edge to secure.
2. Pass the Reverse/2nd-6th shift rail in from the rear with the slotted end rearwards and assemble the shift arm so that the bottom of the arm locates in the corresponding hole in the Reverse/2nd-6th shift fork, Figure 86. Push the rail forward enough to allow the slotted end to clear the rear support bore.
3. Insert the special interlock plunger, the reduced diameter section foremost, until it contacts the 4th shift rail.
4. Slide the Reverse/2nd-6th rail rearward locating the slotted end onto the reduced diameter of the special interlock plunger. Install the shift fork retaining screw and locknut.
5. Drive the Reverse/2nd-6th bore sealing plug into position and secure by staking round the edge. Screw in the plug sealing the special interlock bore and securely tighten.
6. Proceed with assembly as described for the eight-speed transmission in Section 5C.

© FORD MOTOR COMPANY LTD., 1965

Part 7

SEVEN AND EIGHT-SPEED TRANSMISSION

Chapter 3

SPECIFICATIONS AND SPECIAL TOOLS

Section		Page
1.	Specifications	53
2.	Special Tools	60

1. SPECIFICATIONS

SPECIFICATIONS	FORD 2000 AND FORD 3000	FORD 4000	FORD 5000
Number of Speeds:			
Forward		Eight (or Seven)	
Reverse		Two	
Type of Drive Line	In Line	In Line	Stepped
Main Drive Input Ratio:			
Eight Speed	19 : 56	29 : 46	Direct
Seven Speed	17 : 57	27 : 48	Direct
Number of Shift Levers	Two	Two	Two
Bearing Types	Ball, Taper and Straight Roller	Ball and Taper Roller	
Gear Bushings	Reverse Idler Gear, Output Shaft Gear	All Mainshaft Gears, Output Shaft Gear, Reverse Idler Gear	All Main Countershaft Gears, Output Shaft Gear, Reverse Idler Gear
Output Shaft End Float	Nil	Nil	Nil
	Maximum Permissible Pre-load 0·002 in. (0·0508 mm.)		
End Float Shims Available	(All 7 and 8-Speed Transmissions) 0·003 in. (0·076 mm.) 0·005 in. (0·127 mm.) 0·012 in. (0·305 mm.)		
P.T.O. Output Shaft Speed/Engine Speed	Trans. P.T.O. 540 r.p.m. at 1600 r.p.m. Live P.T.O. 540 r.p.m. at 1810 r.p.m.	Ind. and Trans. P.T.O. 540 r.p.m. at 1810 r.p.m.	Ind. P.T.O. 540 r.p.m. at 1900 r.p.m.
Oil Capacity:	Trans. and Live P.T.O.	Trans. and Ind. P.T.O.	Ind. P.T.O.
Imperial Quarts	11·0	11·0	12·5
U.S. Quarts	13·2	13·2	15·0
Litres	12·5	12·5	14·2
Oil Grade:	Ford Specification ESEN-M2C85-A or		General Specification SAE 80 EP or
(All 7 and 8-Speed Transmissions)	ESN-M2C77-A		SAE 20W/30

© FORD MOTOR COMPANY LTD., 1967

GROUND SPEED CHARTS

FORD 2000 and FORD 3000 (8-Speed) (Prior to September 1965)

Gear	Ratios		Ground Speeds* Engine r.p.m. 1000		1250		1500		1750		1900		2000		† 2100	
	Front Trans.	Final	mph	kph	mph	kph	mph	kph	mph	kph	mph	kph	mph	kph	mph	kph
1st	32·25	198·85	0·66	1·06	0·82	1·32	0·98	1·58	1·15	1·85	1·24	2·00	1·31	2·11	1·38	2·22
2nd	20·58	126·89	1·03	1·66	1·28	2·06	1·54	2·48	1·79	2·88	1·95	3·14	2·05	3·30	2·15	3·46
3rd	12·29	75·78	1·72	2·77	2·15	3·46	2·58	4·15	3·01	4·85	3·27	5·26	3·44	5·54	3·61	5·81
4th	9·03	55·68	2·34	3·77	2·93	4·72	3·51	5·65	4·10	6·60	4·45	7·16	4·68	7·53	4·91	7·91
5th	9·03	55·68	2·34	3·77	2·93	4·72	3·51	5·65	4·10	6·60	4·45	7·16	4·68	7·53	4·91	7·91
6th	5·76	35·52	3·67	5·91	4·59	7·39	5·23	8·42	6·42	10·34	6·97	11·22	7·34	11·81	7·71	12·41
7th	3·44	21·21	6·15	9·90	7·68	12·36	9·22	14·84	10·75	17·31	11·68	18·80	12·29	19·79	12·90	20·77
8th	2·53	15·60	8·37	13·48	10·46	16·84	12·55	20·2	14·64	23·57	15·89	25·58	16·73	26·94	17·57	28·29
Low Reverse	19·73	121·66	1·07	1·72	1·34	2·16	1·61	2·59	1·87	3·01	2·03	3·27	2·14	3·44	2·25	3·62
High Reverse	5·53	34·10	3·83	6·17	4·78	7·70	5·74	9·24	6·69	10·77	7·27	11·70	7·65	12·32	8·03	12·93

FORD 2000 and FORD 3000 (8-Speed) (After September 1965)

Gear	Ratios		Ground Speeds* Engine r.p.m. 1000		1250		1500		1750		1900		2000		† 2100	
	Front Trans.	Final	mph	kph	mph	kph	mph	kph	mph	kph	mph	kph	mph	khp	mph	kph
1st	26·91	165·94	0·79	1·27	0·98	1·58	1·18	1·90	1·37	2·21	1·49	2·40	1·57	2·53	1·65	2·66
2nd	21·56	132·95	0·98	1·58	1·23	1·97	1·47	2·36	1·72	2·76	1·86	2·99	1·96	3·15	2·06	3·31
3rd	12·29	75·79	1·72	2·77	2·15	3·46	2·58	4·16	3·01	4·85	3·27	5·26	3·44	5·54	3·61	5·82
4th	9·03	55·68	2·34	3·77	2·92	4·71	3·51	5·66	4·10	6·59	4·45	7·15	4·68	7·53	4·91	7·91
5th	7·54	46·50	2·81	4·51	3·51	5·64	4·21	6·77	4·91	7·89	5·33	8·57	5·61	9·02	5·89	9·47
6th	6·03	37·18	3·51	5·64	4·38	7·04	5·26	8·45	6·13	9·86	6·66	10·71	7·01	11·27	7·36	11·83
7th	3·44	21·21	6·15	9·88	7·68	12·36	9·22	14·84	10·75	17·31	11·68	18·79	12·29	19·78	12·90	20·77
8th	2·53	15·60	8·37	13·46	10·46	16·83	12·55	20·19	14·64	23·56	15·89	25·57	16·73	26·92	17·57	28·27
Low Reverse	18·72	115·44	1·13	1·82	1·41	2·27	1·70	2·72	1·98	3·18	2·15	3·45	2·26	3·63	2·37	3·81
High Reverse	5·24	32·31	4·04	6·49	5·04	8·11	6·05	9·74	7·06	11·36	7·67	12·33	8·07	12·98	8·47	13·63

* Ground Speeds Based on 6·17:1. Rear Axle Ratio and 11·2/10–28 Rear Tyres
† Only Ford 3000—Gasoline

FORD 2000 and FORD 3000 (7-Speed) (Prior to September 1965)

Gear	Ratios		Ground Speeds* Engine r.p.m.				
			1000	1250	1500	1750	2000
	Front Trans.	Final	kph	kph	kph	kph	kph
1st	36·69	226·23	0·96	1·20	1·44	1·68	1·92
2nd	23·42	144·40	1·50	1·87	2·24	2·62	2·99
3rd	13·98	86·20	2·51	3·14	3·76	4·39	5·02
4th	10·27	63·32	3·42	4·28	5·13	5·99	6·84
5th	10·27	63·32	3·42	4·28	5·13	5·99	6·84
6th	6·55	40·39	5·36	6·70	8·04	9·38	10·72
7th	3·91	24·11	8·97	11·21	11·78	15·70	17·94
Low Reverse	22·46	138·49	1·56	1·95	2·34	2·73	3·12
High Reverse	6·29	38·78	5·58	6·97	8·36	9·76	11·15

FORD 2000 and FORD 3000 (7-Speed) (After September 1965)

Gear	Ratios		Ground Speeds* Engine r.p.m.				
			1000	1250	1500	1750	2000
	Front Trans.	Final	kph	kph	kph	kph	kph
1st	36·69	226·25	0·96	1·20	1·44	1·68	1·92
2nd	24·53	151·27	1·43	1·79	2·15	2·50	2·86
3rd	13·98	86·21	2·51	3·14	3·77	4·39	5·02
4th	10·27	63·33	3·42	4·28	5·13	5·99	6·84
5th	10·27	63·33	3·42	4·28	5·13	5·99	6·84
6th	6·87	42·36	5·11	6·39	7·67	8·94	10·22
7th	3·91	24·11	8·97	11·21	13·46	15·70	17·94
Low Reverse	22·46	138·50	1·56	1·95	2·34	2·73	3·12
High Reverse	6·29	38·79	5·58	6·97	8·36	9·76	11·15

* Ground Speeds Based on 6·17:1 Rear Axle Ratio, and 11·2/10–28 Rear Tyres

© FORD MOTOR COMPANY LTD., 1967

FORD 4000 (8-Speed) (Prior to September 1965)

Gear	Ratios		Ground Speeds* Engine r.p.m. 1000		1250		1500		1750		2000		2200	
	Front Trans.	Final	mph	kph	mph	kph	mph	kph	mph	kph	mph	kph	mph	kph
1st	17·36	273·42	0·58	0·93	0·73	1·18	0·87	1·40	1·02	1·64	1·16	1·87	1·28	2·06
2nd	11·08	174·51	0·91	1·47	1·14	1·84	1·37	2·21	1·60	2·58	1·83	2·95	2·01	3·24
3rd	6·61	104·11	1·53	2·46	1·91	2·49	2·30	3·70	2·68	4·32	3·06	4·93	3·37	5·43
4th	4·86	76·55	2·08	3·35	2·61	4·20	3·13	5·04	3·65	5·88	4·17	6·72	4·59	7·39
5th	4·86	76·55	2·08	3·35	2·61	4·20	3·13	5·04	3·65	5·88	4·17	6·72	4·59	7·39
6th	3·10	48·83	3·26	5·25	4·07	6·55	4·89	7·88	5·71	9·20	6·53	10·51	7·18	11·56
7th	1·85	29·14	5·47	8·81	6·84	11·01	8·21	13·22	9·57	15·41	10·94	17·62	12·04	19·39
8th	1·36	21·42	7·44	11·98	9·30	14·98	11·17	17·99	13·02	20·97	14·89	23·98	16·38	26·38
Low Reverse	10·63	167·42	0·95	1·54	1·19	1·92	1·43	2·30	1·67	2·69	1·90	3·06	2·10	3·38
High Reverse	2·97	46·77	3·40	5·47	4·25	6·84	5·11	8·23	5·95	9·58	6·80	10·95	7·49	12·06

FORD 4000 (8-Speed) (After September 1965)

Gear	Ratios		Ground Speeds* Engine r.p.m. 1000		1250		1500		1750		2000		2200	
	Front Trans.	Final	mph	kph	mph	kph	mph	kph	mph	kph	mph	kph	mph	kph
1st	14·49	228·22	0·70	1·12	0·87	1·40	1·04	1·68	1·22	1·96	1·39	2·25	1·53	2·47
2nd	11·61	182·86	0·87	1·40	1·09	1·75	1·31	2·10	1·53	2·45	1·75	2·80	1·92	3·08
3rd	6·61	104·11	1·53	2·46	1·91	3·08	2·30	3·70	2·68	4·31	3·06	4·93	3·37	5·42
4th	4·86	76·55	2·09	3·36	2·61	4·30	3·13	5·04	3·65	5·88	4·17	6·72	4·59	7·39
5th	4·06	63·95	2·50	4·03	3·13	5·03	3·75	6·04	4·37	7·05	5·00	8·05	5·50	8·86
6th	3·25	58·19	3·11	5·01	3·89	6·27	4·67	7·52	5·45	8·77	6·23	10·03	6·85	11·03
7th	1·85	29·14	5·47	8·81	6·84	11·01	8·21	13·21	9·58	15·42	10·95	17·62	12·04	19·38
8th	1·36	21·42	7·44	11·98	9·31	14·98	11·17	17·97	13·03	20·97	14·89	23·96	16·38	26·36
Low Reverse	10·08	158·76	1·00	1·62	1·26	2·02	1·51	2·43	1·76	2·83	2·01	3·24	2·21	3·56
High Reverse	2·82	44·42	3·59	5·78	4·49	7·22	5·39	8·67	6·28	10·11	7·18	11·55	7·90	12·71

* Ground Speeds Based on 15·75:1 Rear Axle Ratio, and 12·4/11–36 Rear Tyres.

FORD 4000 (7-Speed) (Prior to September 1965)

Gear	Ratios		Ground Speeds* Engine r.p.m.					
			1000	1250	1500	1750	2000	2200
	Front Trans.	Final	kph	kph	kph	kph	kph	kph
1st	19·45	306·34	0·86	1·08	1·30	1·51	1·73	1·90
2nd	12·41	195·46	1·35	1·68	2·02	2·35	2·69	2·96
3rd	7·41	116·71	2·25	2·82	3·38	3·95	4·51	4·96
4th	5·45	85·84	3·06	3·83	4·60	5·36	6·13	6·74
5th	5·45	85·84	3·06	3·83	4·60	5·36	6·13	6·74
6th	3·48	54·81	4·80	6·00	7·21	8·41	9·61	10·57
7th	2·07	32·60	8·08	10·09	12·12	14·13	16·15	17·77
Low Reverse	11·91	187·58	1·40	1·76	2·11	2·46	2·81	3·09
High Reverse	3·33	52·45	5·02	6·27	7·53	8·78	10·04	11·04

FORD 4000 (7-Speed) (After September 1965)

Gear	Ratios		Ground Speeds* Engine r.p.m.					
			1000	1250	1500	1750	2000	2200
	Front Trans.	Final	kph	kph	kph	kph	kph	kph
1st	19·45	306·34	0·86	1·08	1·30	1·51	1·73	1·90
2nd	13·01	204·91	1·29	1·61	1·93	2·25	2·57	2·83
3rd	7·41	116·71	2·25	2·82	3·38	3·95	4·51	4·96
4th	5·45	85·84	3·06	3·83	4·60	5·36	6·13	6·74
5th	5·45	85·84	3·06	3·83	4·60	5·36	6·13	6·74
6th	3·64	57·33	4·59	5·74	6·89	8·03	9·18	10·10
7th	2·07	32·60	8·08	10·10	12·12	14·13	16·15	17·77
Low Reverse	11·91	187·58	1·40	1·76	2·11	2·46	2·81	3·09
High Reverse	3·33	52·45	5·02	6·27	7·53	8·78	10·04	11·04

* Ground Speeds Based on 15·75:1 Rear Axle Ratio, and 12·4/11–36 Rear Tyres.

© FORD MOTOR COMPANY LTD., 1967

FORD 5000 (8-Speed) (Prior to September 1965)

Gear	Ratios		Ground Speeds* Engine r.p.m. 1000		1250		1500		1750		2000		2100	
	Front Trans.	Final	mph	kph	mph	kph	mph	kph	mph	kph	mph	kph	mph	kph
1st	10·93	259·99	0·61	0·98	0·76	1·22	0·92	1·48	1·07	1·72	1·23	1·98	1·29	2·08
2nd	6·98	166·03	0·96	1·55	1·20	1·93	1·44	2·32	1·68	2·70	1·92	3·09	2·02	3·25
3rd	4·17	99·19	1·61	2·59	2·01	3·23	2·41	3·88	2·82	4·54	3·22	5·18	3·38	5·44
4th	3·06	72·79	2·19	3·53	2·74	4.41	3·29	5·30	3·83	6·17	4·38	7·05	4·60	7·41
5th	3·06	72·79	2·19	3·53	2·74	4·41	3·29	5·30	3·83	6·17	4·38	7·05	4·60	7·41
6th	1·96	46·62	3·43	5·52	4·28	6·89	5·14	8·27	6·00	9·60	6·85	11·03	7·20	11·59
7th	1·17	27·83	5·75	9·26	7·18	11·56	8·62	13·88	10·06	16·20	11·49	18·50	12·07	19·43
8th	0·86	20·46	7·82	12·60	9·77	15·73	11·74	18·90	13·68	22·02	15·63	25·16	16·42	26·44
Low Reverse	6·71	159·61	1·00	1·61	1·25	2·01	1·50	2·42	1·75	2·82	2·00	3·22	2·10	3·38
High Reverse	1·88	44·72	3·57	5·75	4·47	7·20	5·37	8·65	6·26	10·08	7·15	11·51	7·51	12·05

* Ground Speeds Based on 23·787:1 Rear Axle Ratio and 12·4/11–36 Rear Tyres.

FORD 5000 (8-Speed) (After September 1965)

Gear	Ratios		Ground Speeds* Engine r.p.m. 1000		1250		1500		1750		2000		2100	
	Front Trans.	Final	mph	kph	mph	kph	mph	kph	mph	kph	mph	kph	mph	kph
1st	9·13	217·18	0·78	1·26	0·98	1·57	1·17	1·89	1·37	2·20	1·56	2·51	1·64	2·64
2nd	7·32	174·12	0·98	1·57	1·22	1·96	1·46	2·36	1·71	2·75	1·95	3·14	2·05	3·30
3rd	4·17	99·19	1·71	2·75	2·14	3·44	2·57	4·13	3·00	4·82	3·43	5·50	3·60	5·78
4th	3·06	72·79	2·33	3·74	2·91	4·68	3·49	5·61	4·07	6·55	4·66	7·49	4·89	7·86
5th	2·54	60·42	2·79	4·49	3·49	5·61	4·19	6·73	4·88	7·85	5·58	8·97	5·86	9·42
6th	2·05	48·76	3·48	5·60	4·35	6·99	5·22	8·39	6·09	9·79	6·96	11·19	7·31	11·75
7th	1·17	27·83	6·12	9·56	7·65	11·95	9·18	14·34	10·71	17·23	12·24	19·11	12·85	20·07
8th	0·86	20·46	8·32	13·38	10·40	16·73	12·49	20·07	14·57	23·42	16·65	26·76	17·48	28·10
Low Reverse	6·36	151·29	1·12	1·80	1·40	2·25	1·68	2·70	1·96	3·15	2·24	3·60	2·35	3·78
High Reverse	1·78	42·34	4·01	6·45	5·01	8·07	6·01	9·68	7·02	11·29	8·02	12·90	8·42	13·55

* Ground Speeds Based on 23·787:1 Rear Axle Ratio, and 13·6/12–38 Rear Tyres.

FORD 5000 (7-Speed) (Prior to September 1965)

Gear	Ratios		Ground Speeds* Engine r.p.m.					
			1000	1250	1500	1750	2000	2100
	Front Trans.	Final	kph	kph	kph	kph	kph	kph
1st	10·94	281·30	1·00	1·26	1·51	1·76	2·01	2·11
2nd	6·98	179·48	1·57	1·96	2·36	2·75	3·14	3·30
3rd	4·17	107·22	2·64	3·30	3·96	4·62	5·28	5·54
4th	3·06	78·68	3·59	4·48	5·38	6·27	7·17	7·53
5th	3·06	78·68	3·59	4·48	5·38	6·27	7·17	7·53
6th	1·96	50·40	5·60	7·00	8·40	8·00	11·20	11·76
7th	1·17	30·08	9·38	11·73	14·08	16·42	18·77	19·71
Low Reverse	6·70	172·28	1·64	2·05	2·46	2·87	3·28	3·44
High Reverse	1·88	48·34	5·85	7·31	8·77	10·23	11·69	12·28

FORD 5000 (7-Speed) (After September 1965)

Gear	Ratios		Ground Speeds* Engine r.p.m.					
			1000	1250	1500	1750	2000	2100
	Front Trans.	Final	kph	kph	kph	kph	kph	kph
1st	10·94	281·30	1·00	1·26	1·51	1·76	2·01	2·11
2nd	7·32	188·21	1·50	1·87	2·25	2·62	3·00	3·15
3rd	4·17	107·22	2·64	3·30	3·96	4·62	5·28	5·54
4th	3·06	78·68	3·59	4·48	5·38	6·27	7·17	7·53
5th	3·06	78·68	3·59	4·48	5·38	6·27	7·17	7·53
6th	2·05	52·71	5·37	6·71	8·05	9·39	10·73	11·27
7th	1·17	30·08	9·39	11·73	14·08	16·42	18·77	19·71
Low Reverse	6·70	172·28	1·64	2·05	2·46	2·87	3·28	3·44
High Reverse	1·88	48·34	5·85	7·31	8·77	10·23	11·70	12·28

* Ground Speeds Based on 25·713:1 Rear Axle Ratio, and 13·6/12–38 Rear Tyres.

© FORD MOTOR COMPANY LTD., 1967

TIGHTENING TORQUES—lb. ft. (m.kg., equivalents in parentheses)	FORD 2000 AND FORD 3000	FORD 4000	FORD 5000
Release Bearing Hub Support Bolts	23–29 (3·18–4·00)	23–29 (3·18–4·00)	35–47 (4·84–6·50)
Clutch Release Fork (bolt and locknut)	Refer to Part 4, Clutches, Specification Section.		Not Applicable
Front Support Plate Bolts	23–29 (3·18–4·00)	23–29 (3·18–4·00)	23–29 (3·18–4·00)
Gear Shift Cover Assembly Bolts	23–29 (3·18–4·00)	23–29 (3·18–4·00)	35–47 (4·84–6·50)
Gear Shift Forks (bolts and locknuts)	20–25 (2·76–3·46)	20–25 (2·76–3·46)	20–25 (2·76–3·46)
Shift Lever Stop Plate(s) Bolts/Nuts	14–17 (1·94–2·35)	14–17 (1·94–2·35)	14–17 (1·94–2·35)
Safety Switch Operating Roller Support Plate/Switch Retainer Bolts	14–17 (1·94–2·35)	14–17 (1·94–2·35)	14–17 (1·94–2·35)
Output Shaft Retainer Bolts	23–30 (3·18–4·15)	23–30 (3·18–4·15)	24–30 (3·31–4·15)
Rear Support Plate Bolts	24–30 (3·31–4·15)	24–30 (3·31–4·15)	24–30 (3·31–4·15)
Reverse Idler Shaft Retaining Bolt	15–18 (2·07–2·49)	15–18 (2·07–2·49)	15–18 (2·07–2·49)
Main Drive Input Shaft Bearing Retainer Plate Bolts	Not Applicable	40–50 (5·53–6·91)	Not Applicable

2. SPECIAL TOOLS

Tool Number	Description
1002	Puller—Reversible Arm (Medium).
1003	Puller—Single End Arm (Large).
951	Pulling Attachment (Small).
952	Pulling Attachment (Large).
625-A	Shaft Protectors (Set of Six).
630-S	Step Plate Adaptors (Set of Eleven).
630-T	Step Plate Adaptors (Set of Six).
943	Internal/External Pulling Attachment.
943-S	Slide Hammer.
FT.943	Internal Pulling Adaptors (Set of Two).
SW.4	Main Countershaft Front Bearing Remover.
SW.501-2	Main Countershaft Front Bearing Remover.
T.7077	Tube Spanner.

T.7072	P.T.O. Countershaft Front Bearing Remover.
SW.501-3	P.T.O. Countershaft Front Bearing Remover.
954	Pilot Bearing Puller.
955-14	Puller Adaptors (Set of Two).
P.61	Heavy Duty Ratchet.
938	Push-Puller.
930-B	Push-Puller Legs (Set of Two).
930-E	Push-Puller Legs (Set of Two).
924	Female Threaded Adaptors (Set of Two).
* * *	Steel Rods—$\frac{3}{16}$ in. (4·8 mm.) dia., and 2 in. (50·8 mm.) long.
* * *	Sleeves of Convenient Length (Listed below):

1. 2 in. (50·8 mm.) I.D. and $2\frac{3}{8}$ in. (60·3 mm.) O.D.
2. $1\frac{1}{4}$ in. (31·8 mm.) I.D. and $1\frac{5}{8}$ in. (41·3 mm.) O.D.
3. $1\frac{7}{16}$ in. (36·5 mm.) I.D. and $1\frac{3}{4}$ in. (44·4 mm.) O.D.
4. $1\frac{1}{16}$ in. (26·9 mm.) I.D. and $1\frac{1}{4}$ in. (31·7 mm.) O.D.
5. $1\frac{9}{16}$ in. (39·7 mm.) I.D. and $2\frac{1}{16}$ in. (52·4 mm.) O.D.
6. $2\frac{1}{16}$ in. (52·4 mm.) I.D. and $2\frac{5}{16}$ in. (58·7 mm.) O.D.
7. $2\frac{1}{2}$ in. (63·5 mm.) I.D. and 3 in. (76.2 mm.) O.D.
8. 1 in. (25·4 mm.) I.D. and $1\frac{3}{8}$ in. (34·9 mm.) O.D.

© FORD MOTOR COMPANY LTD., 1967

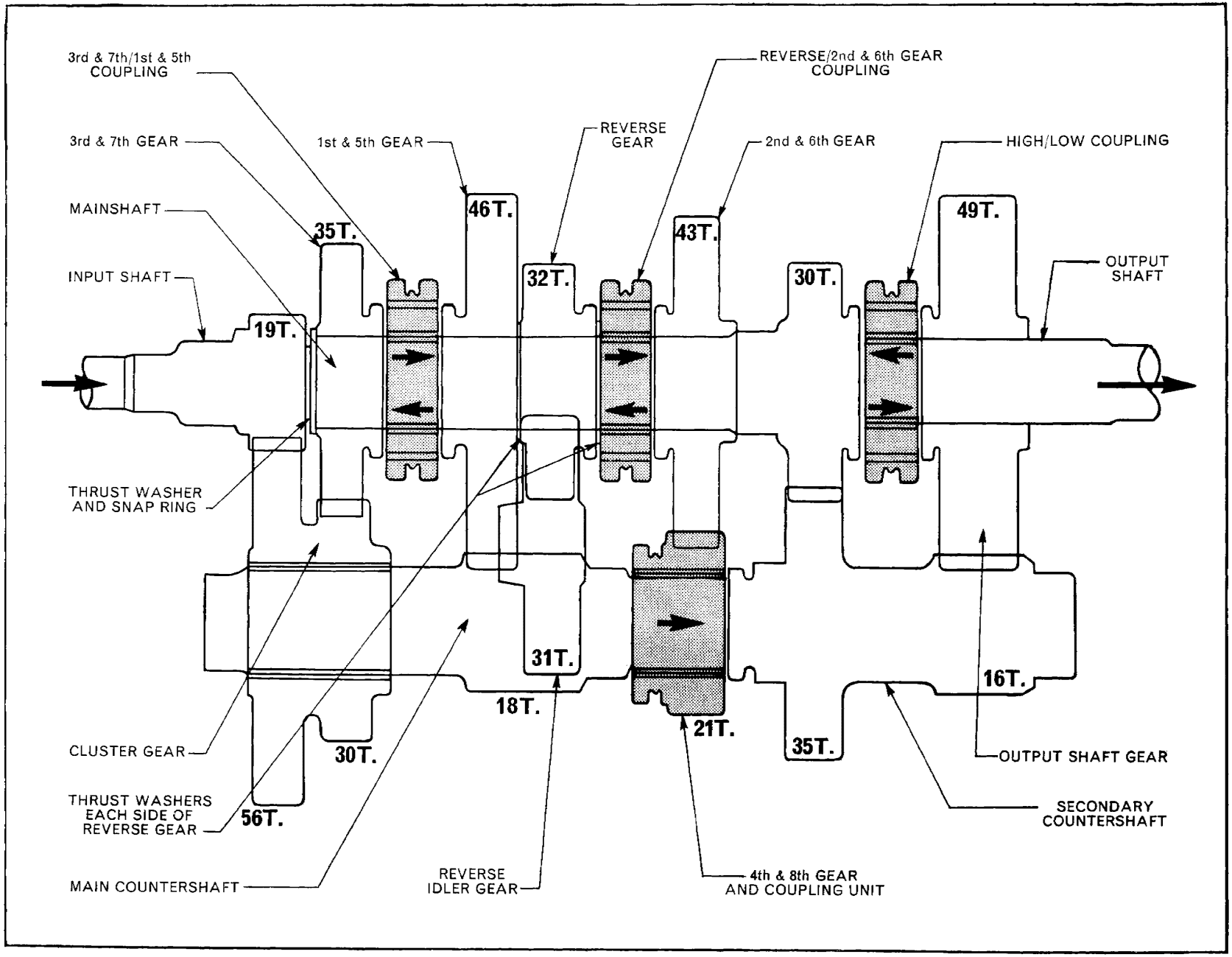

FORD 2000, FORD 3000 — Gear Identification Diagram (Current Ratios)

For previous ratio gears see Page 26

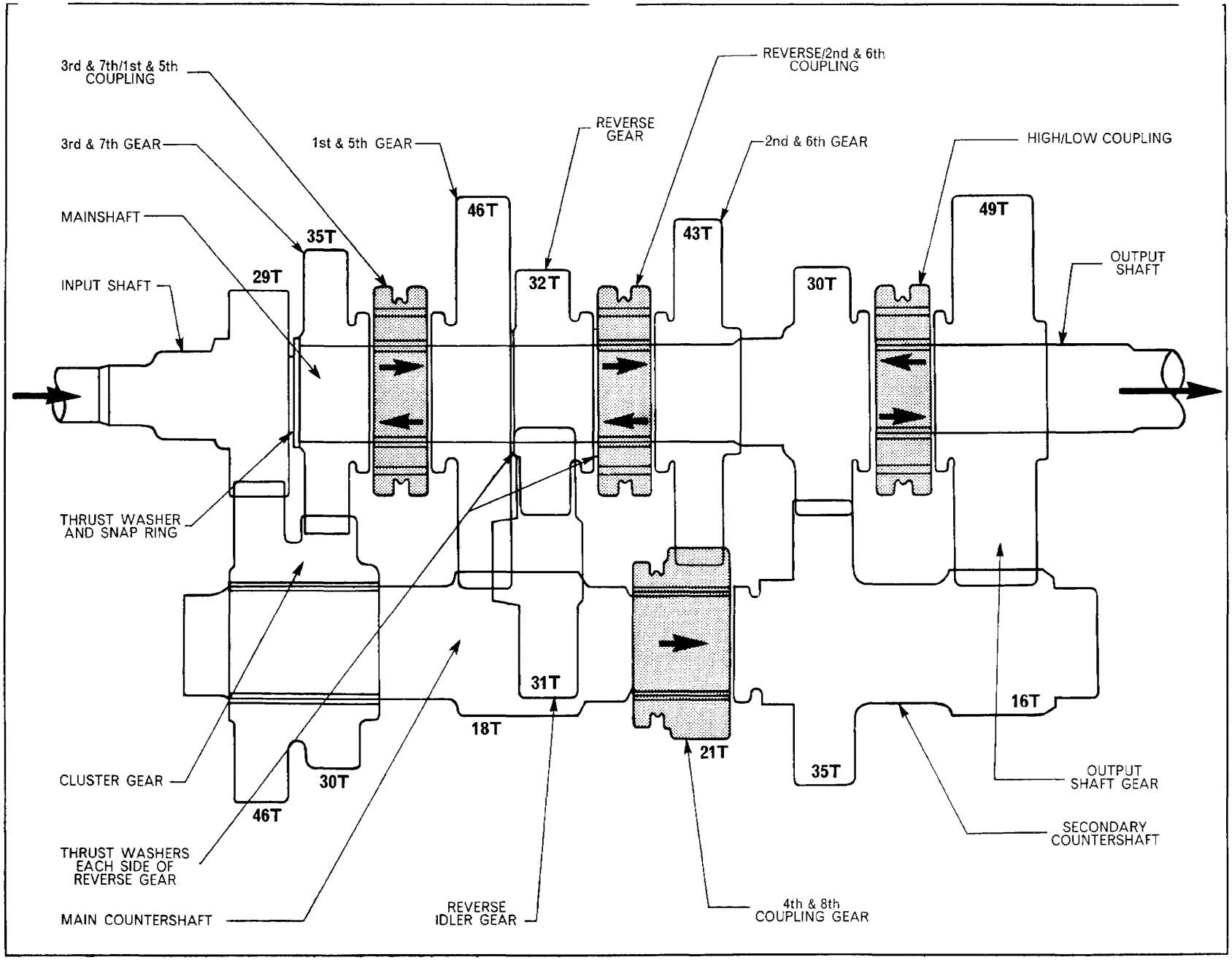

FORD 4000 — Gear Identification Diagram (Current Ratios)

For previous ratio gears see Page 28

© FORD MOTOR COMPANY LTD., 1967

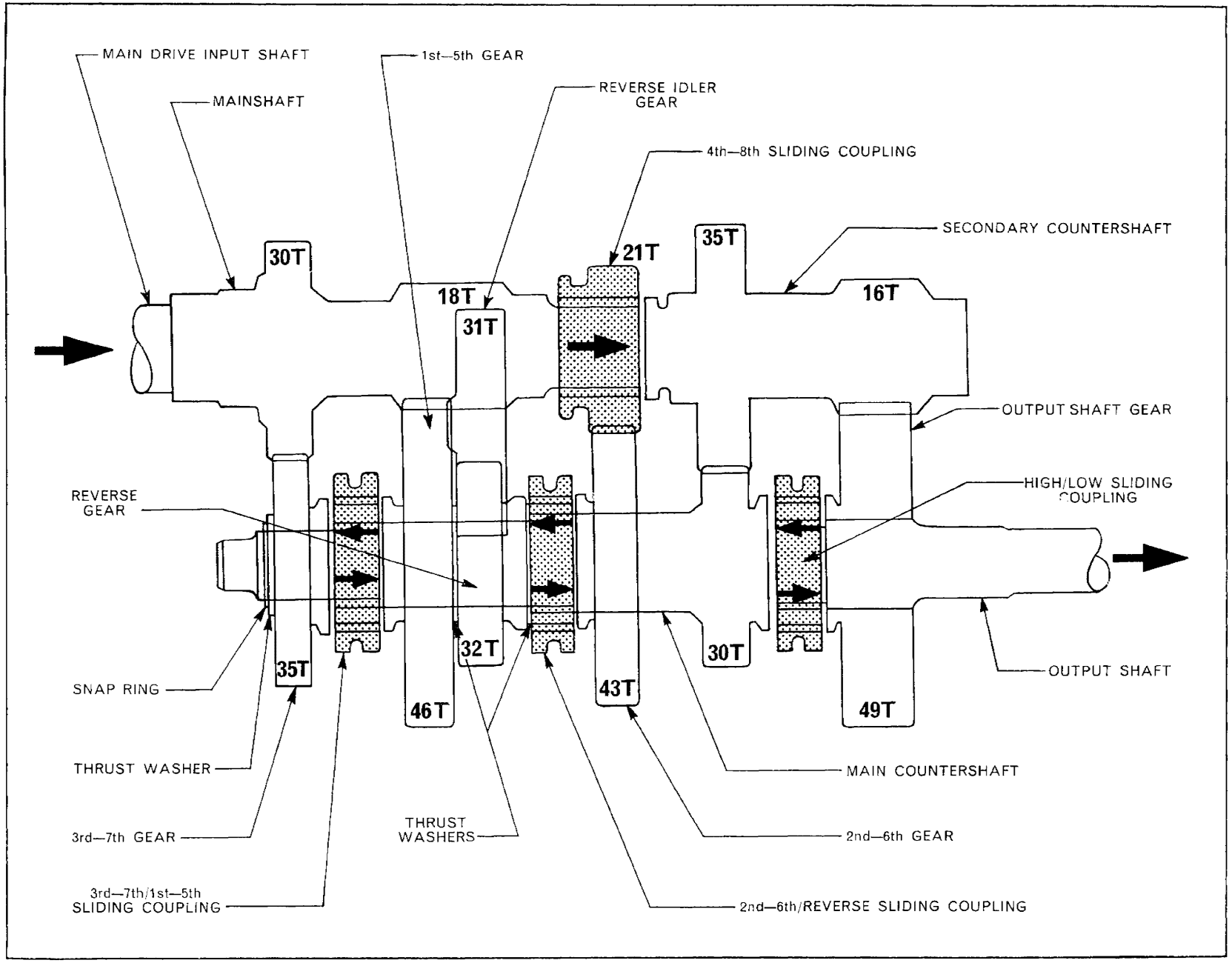

FORD 5000 — Gear Identification Diagram (Current Ratios)
For previous ratio gears see Page 49

Part 7

SEVEN AND EIGHT SPEED TRANSMISSION

Chapter 4

DUAL POWER TRANSMISSION — FORD 5000 AND 7000

Section		*Page*
1.	Description and Operation	65
2.	Planetary Gear Set Overhaul	69
3.	Pressure Testing	80

1. DESCRIPTION AND OPERATION

The Dual Power transmission consists of a planetary gear set installed directly between the clutch and the input shaft of the transmission.

The planetary gear set incorporates two hydraulically operated clutches which lock an element or elements of the planetary gear system together to produce either a normal direct drive to the transmission or a power underdrive which lowers the speed but increases the torque.

Normal Direct Drive
With reference to Figure 1.

Locking any two members of a planetary gear system together results in a direct drive with no change in speed or direction of rotation.

Compressing the direct drive clutch plates locks the sun gear to the planetary carrier which is the output member of the system. Applying power to the ring gear results in a normal direct drive.

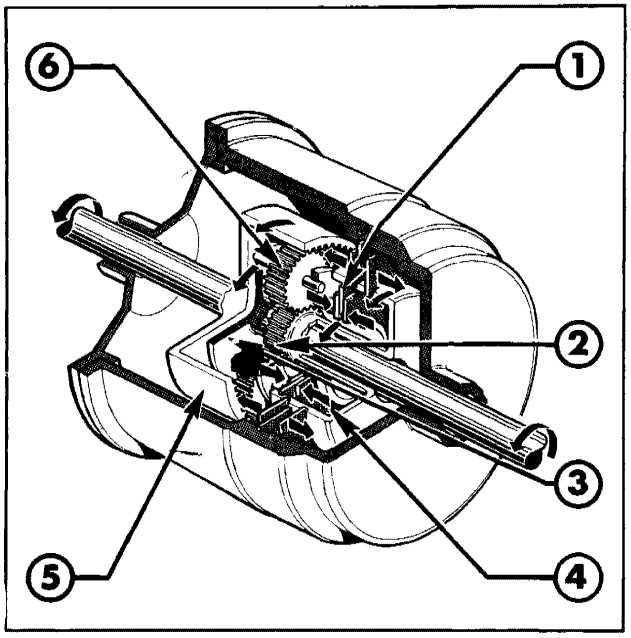

Figure 1
Dual Power Planetary Gear Set-
Normal Direct Drive Operation

1. Direct Drive Clutch Plates
2. Sun Gear
3. Planetary Carrier
4. Direct Drive Clutch Piston Pressure
5. Ring Gear
6. Pinion

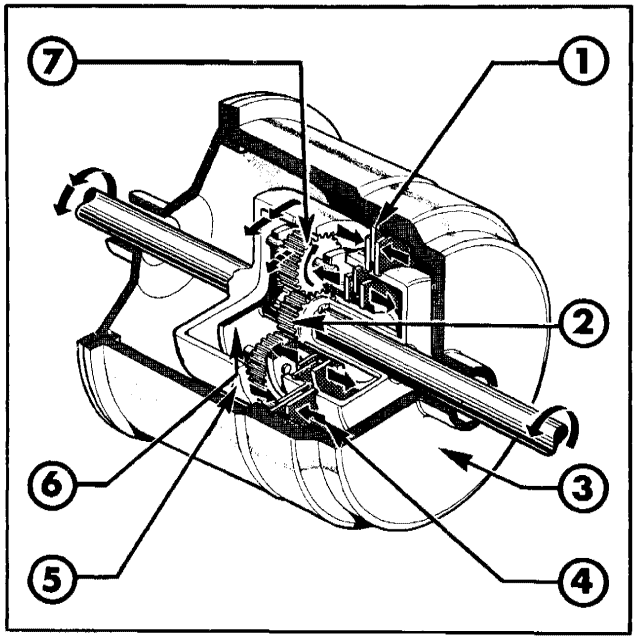

Figure 2
Dual Power Planetary Gear Set-
Power Underdrive Operation

1. Underdrive Clutch Plates
2. Sun Gear
3. Planetary Housing
4. Underdrive Clutch Piston Pressure
5. Ring Gear
6. Planetary Carrier
7. Pinion

© FORD MOTOR COMPANY LTD., 1973

Power Underdrive

With reference to Figure 2.

Compressing the underdrive clutch plates, locks the sun gear to the planetary housing. Applying power to the ring gear forces the pinions to rotate on their own axes and 'walk' around the sun gear, taking the planetary carrier with them. The planetary carrier is the output member of the system and turns in the same direction as the ring gear but at a lower speed with a resultant increase in torque. This condition produces a power underdrive.

The Dual Power transmission is operated by a two-position control valve, located on the side of the planetary gear set housing, which directs hydraulic oil from the independent power take-off (I.P.T.O.) pump to engage either the direct drive or the underdrive clutch assembly. The hydraulic oil pressure is controlled by a Dual Power regulating valve located in the P.T.O. drive clutch valve assembly.

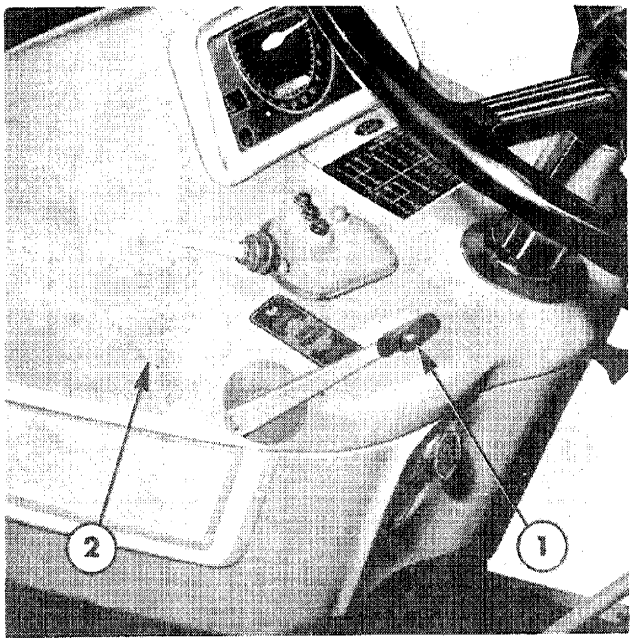

Figure 3
Dual Power Control Lever Location
1. Dual Power Control Lever 2. Fuel Tank Shroud

The control valve, which has no neutral position, is connected through an adjustable cable and linkage to a hand lever on the left-hand side of the fuel tank shroud, see Figure 3. The lever is pulled rearward to select power drive and is pushed forward to return the transmission to a normal direct drive.

The ground speeds in normal direct drive are unchanged from the previous 8-speed transmission ground speeds.

The Dual Power transmission ratios and corresponding gear shift lever positions are shown in Specifications, Chapter 5.

Oil Flow to the Direct Drive Clutch

With reference to Figure 4.

When the Dual Power control lever is pushed forward to the normal position, the control valve spool is moved downwards and the hydraulic oil from the I.P.T.O. pump enters the control valve housing at 'A'. The oil flows across the spool and is directed through a drilled passage in the planetary housing to pass between the second and third sealing rings on the direct drive clutch hub and then through a drilled passage to the direct drive clutch piston. The pressure moves the piston, compresses the piston return spring and locks the direct drive clutch plates together so engaging the direct drive clutch.

Hydraulic oil from the rear of the underdrive clutch piston is exhausted and eventually returns to sump via the control valve and the planetary housing. Exhaust oil in the control valve also returns to the planetary housing via a connecting passage in the control valve housing.

Engaging the direct drive clutch locks the planetary carrier to the sun gear, which is splined to the direct drive clutch housing. When any two members of the planetary assembly are locked together a direct drive results with no change in speed or direction of rotation. Therefore, as the planetary carrier and the sun gear are locked together, power input at the ring gear is passed directly to the planetary carrier which is splined via a connecting shaft to the input shaft of the transmission

Oil Flow to the Underdrive Clutch

With reference to Figure 5.

When the Dual Power control lever is pulled rearwards to the power position, the control valve spool is moved upwards. Hydraulic oil flows across the spool and is directed through a drilled passage in the planetary housing to the underdrive clutch piston. The pressure moves the piston, compresses the piston return springs and locks the underdrive clutch plates together so engaging the underdrive clutch.

Hydraulic oil from the rear of the direct drive clutch piston is exhausted and eventually returns to sump via the control valve and the planetary housing. Exhaust oil in the control valve also returns to the planetary housing via a connecting passage in the control valve housing.

Engaging the underdrive clutch locks the direct drive clutch housing to the planetary housing. As the sun gear is splined to the inner hub of the direct drive clutch assembly, it is also locked to the planetary housing. Applying power to the ring gear and holding the sun gear, causes the pinions of the planetary carrier to rotate on their own axes and 'walk' around the sun gear taking the carrier with them. The carrier, being the output member of the system, turns in the same direction but at a slower speed than the ring gear thereby producing an underdrive with a resultant decrease in speed and increase in torque.

Lubrication Oil Flow

Lubrication oil is supplied at low pressure from the external hydraulic oil filter manifold. This oil is directed via tubing through a transmission oil cooler, before entering a passage in the control valve body shown schematically at 'B' in Figures 4 and 5.

The oil passes through a drilled passage in the planetary housing between the first and second sealing rings on the direct drive clutch hub and through a drilled passage in line with the direct drive clutch plates. The oil flows around the clutch plates and through the planetary assembly. As the members of the planetary assembly rotate, oil is thrown off to lubricate the bearings and other components in the housing. Oil in the bottom of the housing is directed through a tube connecting the housing with the main countershaft bearing in the hub support plate.

Excess oil in the housing flows directly into the transmission case to lubricate the transmission gears and bearings. Oil entering the hub support plate flows into the centre passages of the countershaft and output shaft and lubricates the bearings and gears through cross drillings in the two shafts. As the components on the countershaft and output shaft revolve, oil is carried to the input shaft and secondary countershaft to lubricate the upper gears and bearings in the transmission case.

Oil collected in the transmission case is allowed to flow into the rear axle centre housing, with which it forms a common oil reservoir, through passages in the transmission output shaft retainer.

2. PLANETARY GEAR SET OVERHAUL

A. REMOVAL

1. Drain the oil from the transmission and rear axle centre housings.

2. Disconnect the oil cooler feed tube from the hydraulic oil filter manifold.

 © FORD MOTOR COMPANY LTD 1973

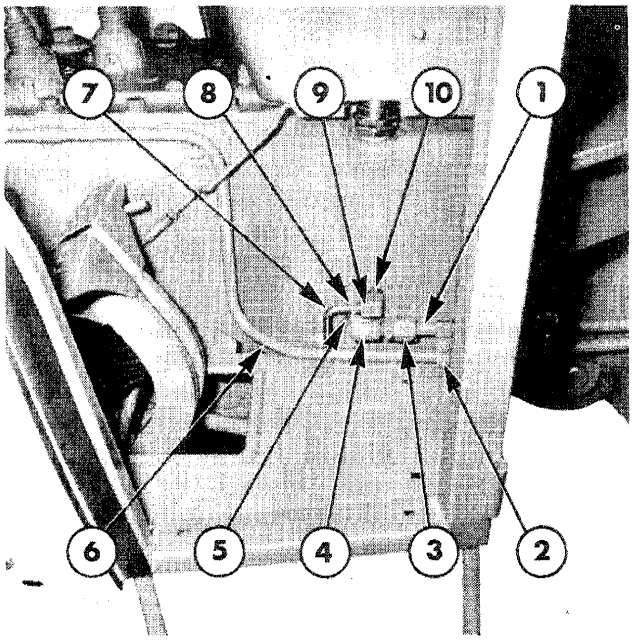

Figure 6
Dual Power Lubrication and Pressure Line Control Tube Connections

1. Transmission Lubrication Tube
2. Clamp
3. Connector
4. Elbow
5. Nipple
6. Oil Cooler Feed Tube
7. Pressure Line Control Tube
8. Connector
9. Elbow
10. Nipple

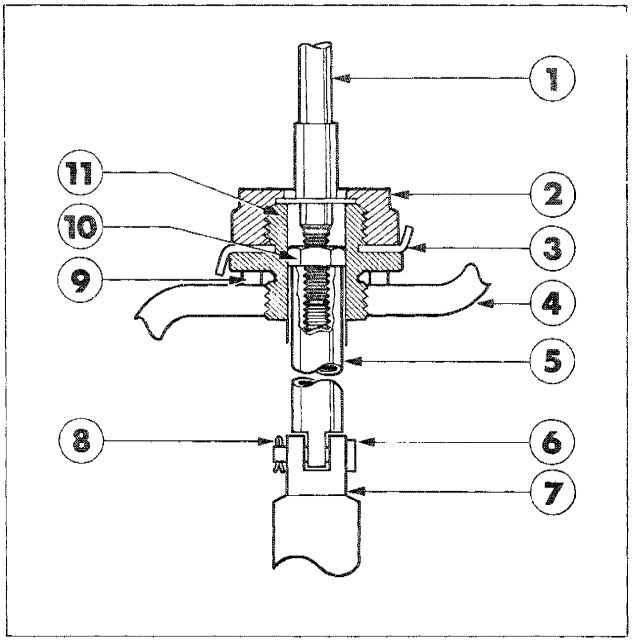

Figure 7
Dual Power Control Linkage Assembly

1. Dual Power Control Cable
2. Retaining Nut
3. Tab Washer
4. Transmission Housing
5. Control Valve Extension Rod
6. Clevis Pin
7. Control Valve Spool
8. Cotter Pin
9. Lockwasher
10. Internal Locknut
11. Connector

3. Remove the clamps and disconnect the lubrication and pressure line control tubes from the control valve, Figure 6, and remove the elbows and connecting nipples.

4. Separate the engine from the transmission.

5. Disconnect the dual power control valve extension rod from the valve spool by removing the cotter pin and clevis pin, see Figure 7.

6. Remove the retaining nut, tab washer, connector and lock washer from the transmission housing and withdraw the dual power control cable and valve extension rod.

7. Disconnect the rod between the clutch pedal and the clutch release cross-shaft lever by removing the clevis pin at the lever end.

8. Remove the hexagon headed bolt and nut at the base of the fork, Figure 8, support the fork and withdraw the clutch release cross-shaft.

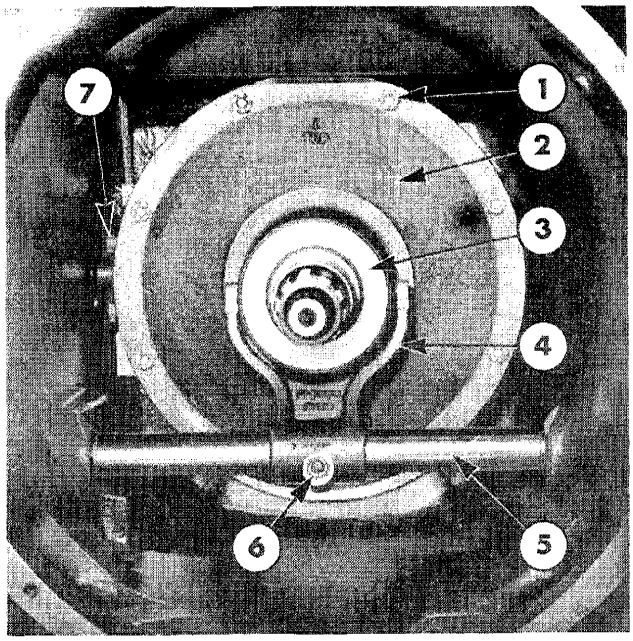

Figure 8
Dual Power Planetary Gear Set Installed

1. Retaining Bolts
2. Planetary Cover
3. Clutch Release Bearing
4. Clutch Release Fork
5. Clutch Release Cross-Shaft
6. Hexagon Headed Bolt and Nut
7. Control Valve

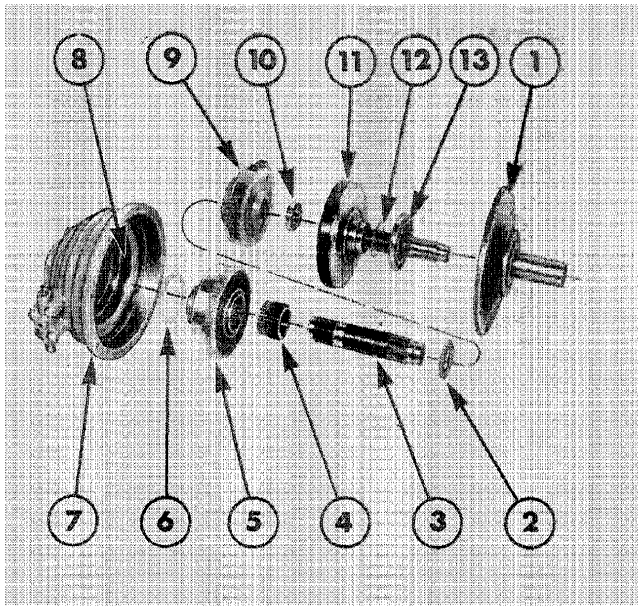

Figure 9
Planetary Gear Set Components - Exploded View

1. Cover
2. Thrust Washer
3. Shaft
4. Sun Gear
5. Direct Drive Clutch
6. Thrust Washer
7. Planetary Housing
8. Underdrive Clutch Assembly
9. Planetary Carrier
10. Pilot Bearing
11. Ring Gear and Shaft Assembly
12. Shim
13. Ring Gear Bearing

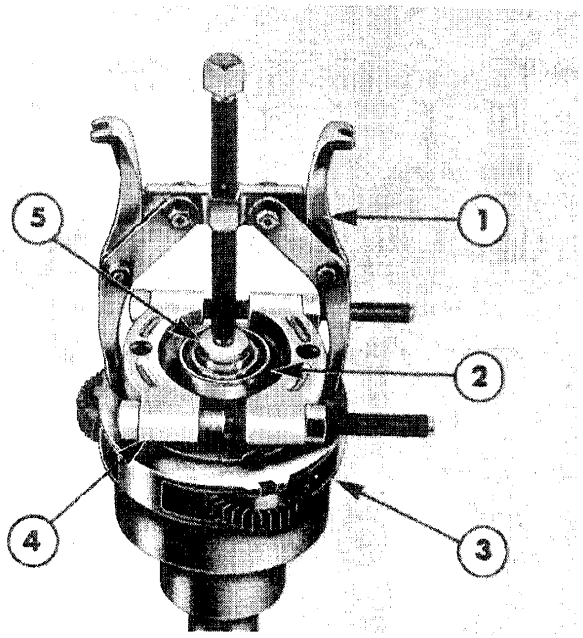

Figure 10
Removing Pilot Bearing from Planetary Shaft

1. Tool No. 1002
2. Pilot Bearing
3. Planetary Carrier
4. Tool No. 951
5. Tool No. 630 - S/4

9. Remove the fork and the release bearing assembly.

10. Remove the bolts from the planetary cover.

11. Carefully remove the cover from the planetary housing.

12. Remove the gasket from the cover.

13. Remove the ring gear and shaft assembly, Figure 9, from the housing.

14. Carefully remove the planetary carrier, shaft, sun gear and direct drive clutch assembly as a complete unit.

15. Remove the pilot bearing from the shaft using Tool Nos. 1002, 630S/4 and 951, as shown in Figure 10.

16. Remove the shaft and separate the planetary carrier from the direct drive clutch assembly.

17. Remove the sun gear from the inner splines of the direct drive clutch assembly.

18. Carefully remove the bolts securing the planetary housing to the transmission case, Figure 11.

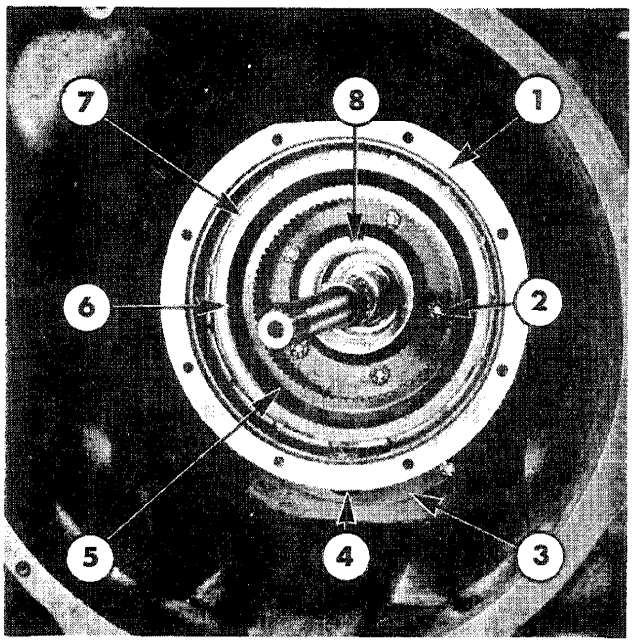

Figure 11
Underdrive Clutch Assembly Installed

1. Planetary Housing
2. Retaining Bolts
3. Hub Support Plate
4. Lubrication Supply Tube
5. Friction Plate
6. Pressure Plate
7. Snap Ring
8. Thrust Washer

© FORD MOTOR COMPANY LTD., 1973

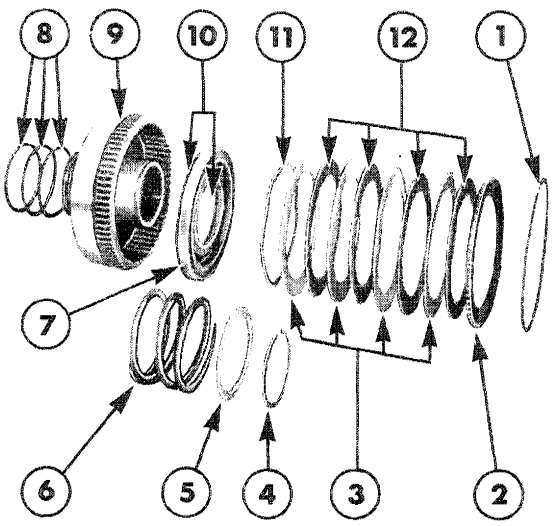

Figure 12
Direct Drive Clutch Assembly - Exploded View

1. Snap Ring
2. Pressure Plate
3. Steel Plates
4. Snap Ring
5. Spring Retainer
6. Piston Return Spring
7. Piston
8. Sealing Rings
9. Direct Drive Clutch Housing
10. Piston Seals
11. Feathering Spring
12. Friction Plates

19. Remove the planetary housing from the case.

FORD 5000: Remove and discard the gasket and 'O' ring seal on the rear hub of the planetary housing.

FORD 7000: Remove and retain the shim (s) but discard the 'O' ring seal on the rear hub of the planetary housing.

20. Remove the lubrication supply tube from the hub support plate.

21. Remove the 'O' ring from each end of the tube.

B. DISASSEMBLY

Direct Drive Clutch

1. Remove the sealing rings, Figure 12, from the rear hub of the direct drive clutch housing.

2. Depress the piston return spring and remove the snap ring from the inner hub using Tool No. N-775 and either Tool No. 1003 or a press, Figure 13.

3. Release the pressure and ensure the spring retainer does not enter the snap ring groove.

4. Remove the spring retainer and spring.

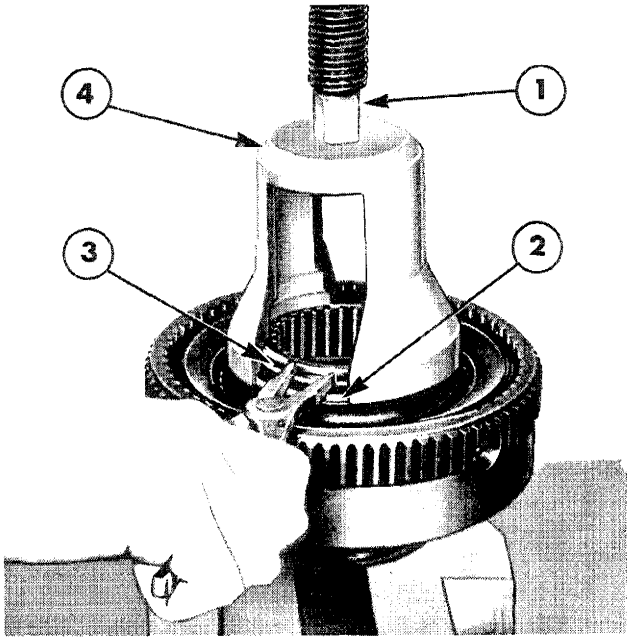

Figure 13
Direct Drive Clutch Piston Return Spring Snap Ring - Removal and Installation

1. Press Ram
2. Spring Retainer
3. Snap Ring
4. Tool No. N-775

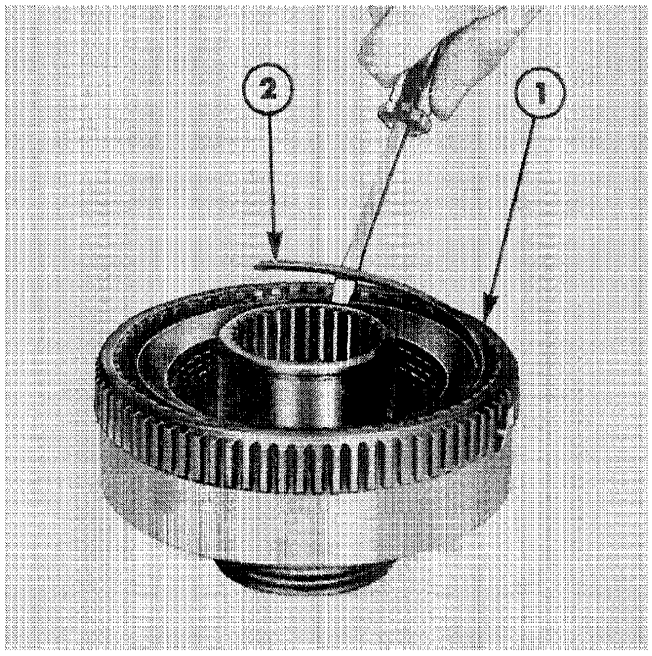

Figure 14
Direct Drive Clutch Pressure Plate Snap Ring - Removal and Installation
1. Direct Drive Clutch Housing
2. Pressure Plate Snap Ring

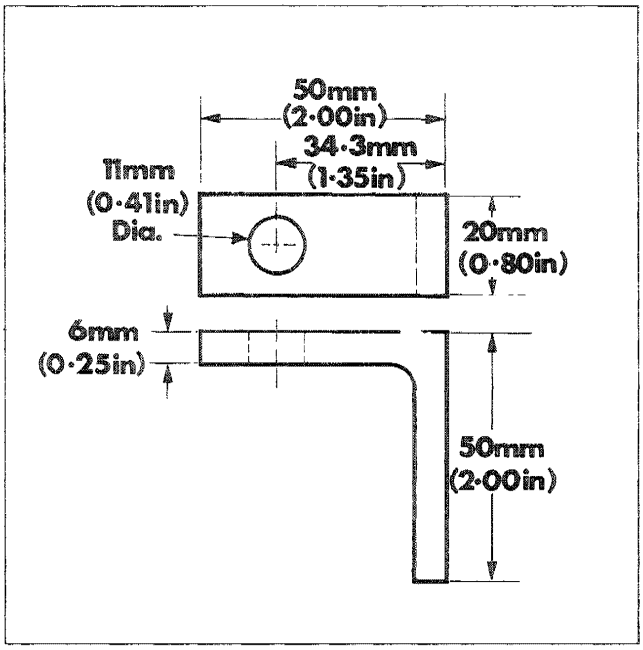

Figure 15
Restraining Clamp for Removal of Underdrive Clutch Snap Ring

5. Remove the clutch pressure plate snap ring as shown in Figure 14.

6. Remove the pressure plate, the friction and steel plates from the clutch housing.

IMPORTANT: Note the order in which the clutch plates were removed.

7. Remove the feathering spring from the face of the piston.

8. Place an air hose nozzle in the hole between the middle and rear sealing ring grooves in the clutch housing hub and blow out the piston.

9. Remove the piston inner and outer seals.

Underdrive Clutch

1. Remove the large snap ring from the inner surface of the planetary housing.

NOTE - To remove the snap ring it is recommended that four restraining clamps be made as shown in Figure 15. Equispace the four clamps, Figure 16, around the rim of the planetary housing and secure with the housing bolts.

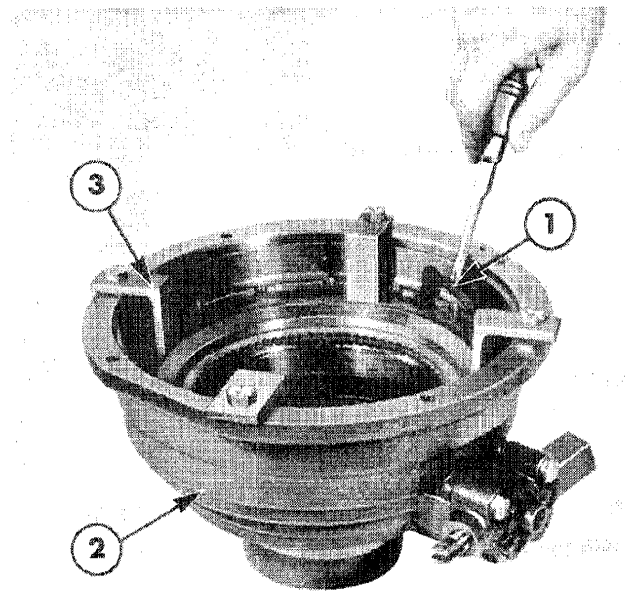

Figure 16
Underdrive Clutch Snap Ring - Removal and Installation
1. Snap Ring
2. Planetary Housing
3. Restraining Clamp

© FORD MOTOR COMPANY LTD., 1973

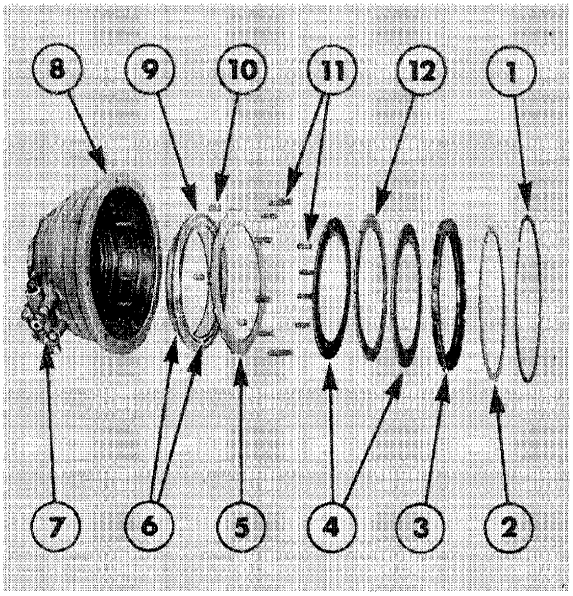

Figure 17
Underdrive Clutch Assembly - Exploded View

1. Snap Ring
2. Spring Retainer
3. Pressure Plate
4. Friction Plates
5. Rear Plate
6. Piston Seals
7. Control Valve Body
8. Planetary Housing
9. Piston
10. Dowel Pins
11. Piston Return Springs
12. Spacer Plate

2. After removing the snap ring, gradually release the restraining clamps.

With reference to Figure 17:

3. Remove the spring retainer, the pressure plate and the four clutch plates.

IMPORTANT: Note the order in which the clutch plates were removed.

4. Remove the piston return springs and the locating dowel pins.

5. Remove the clutch piston.

6. Remove the inner and outer seals from the piston.

Control Valve

With reference to Figure 18:

1. Pull the valve spool to the full out position and slacken the sleeve at the valve body.

2. Remove the bolts securing the valve body to the planetary housing.

3. Remove the gasket from the valve body.

4. Remove the sleeve from the valve body and pull the sleeve from the spool, taking care not to lose the two detent cups and the spring located within the spool.

5. Remove the detent cups and spring.

6. Remove the valve spool.

7. Remove the 'O' ring seal from the valve spool bore.

8. Remove the sleeve 'O' ring seal from the valve body.

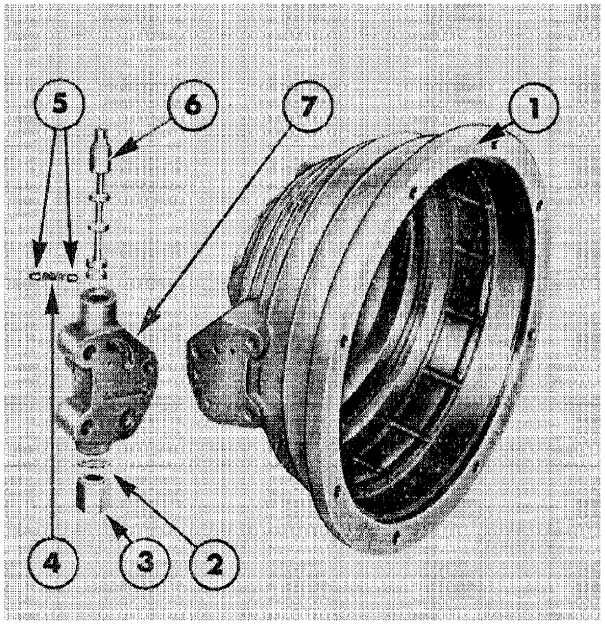

Figure 18
Control Valve and Planetary Housing - Exploded View

1. Planetary Housing
2. 'O' Ring Seal
3. Sleeve
4. Detent Spring
5. Detent Cups
6. Valve Spool
7. Valve Body

C. INSPECTION AND REPAIR

1. Clean all parts in a suitable solvent and dry thoroughly with a dry, lint-free cloth or compressed air.

2. Examine the lubrication inlet tube, the pressure inlet tube and the lubrication supply tube for damage or distortion. Discard any defective tubes.

3. Examine the control cable and linkage assembly for damage or binding. Inspect the control lever pivot to ensure freedom of operation. If any part of the control system is found to be defective, discard and replace.

4. Examine the clutch release hub and bearing for excessive wear or damage. If necessary, remove the bearing from the hub with Tool Nos. 951, 630 S/10 and either a press or Tool No. 1002, see Figure 19. Press a new bearing onto the hub ensuring the thrust face of the bearing faces away from the shoulder on the hub.

5. Pack the recess in the bearing hub bore with a high melting point grease.

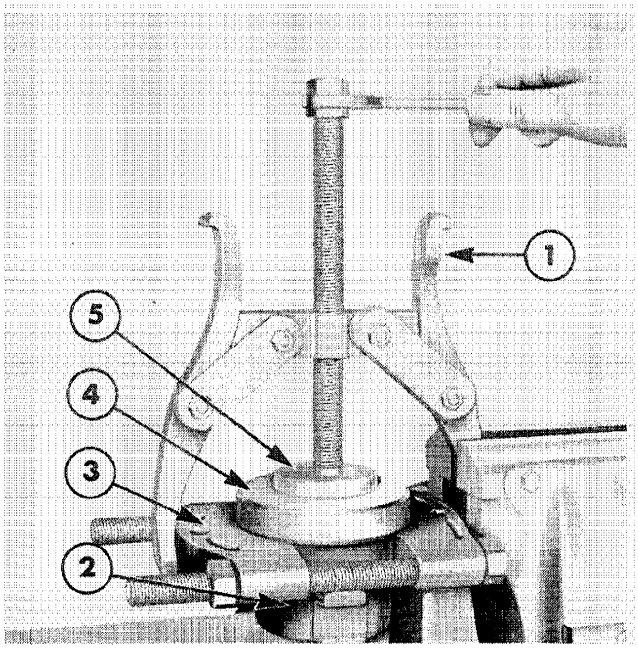

Figure 19
Removing Clutch Release Bearing From Hub

1. Tool No. 1002
2. Hub
3. Tool No. 951
4. Release Bearing
5. Tool No. 630-S/10

6. Inspect the clutch release fork, for cracks or excessive wear and replace as necessary.

7. Examine the cross-shaft and lever for distortion or excessive wear and install a new assembly, if damage is evident. Inspect the shaft bushings for excessive wear and replace if found to be defective. Bushings should be driven into the housing until they are flush with the outside edges of the cross-shaft locating bores.

8. Inspect the planetary cover for damage or distortion. Check the face of the cover and the mating surface for nicks or burrs and remove any imperfections with an abrasive stone.

9. Inspect the planetary carrier and gears, planetary shaft, pilot bearing and thrust washer for damage or wear. Install new parts where necessary.

10. Inspect the sun gear for excessive wear or damaged teeth.

11. Inspect the sealing rings from the rear hub of the direct drive clutch assembly for damage, distortion or cracks.

12. Examine the direct drive clutch housing both externally for cracks or damage and internally for wear and piston scuffing. Inspect the housing external splines for cracked, broken or missing teeth.

13. Inspect the direct drive clutch piston, feathering spring, friction plates, steel plates, pressure plate and snap ring and install new piston seals. Any defective parts must be replaced during re-assembly.

14. Examine the direct drive clutch piston return spring, spring retainer and snap ring for damage.

15. Examine the thrust washer for damage or distortion.

© FORD MOTOR COMPANY LTD., 1973

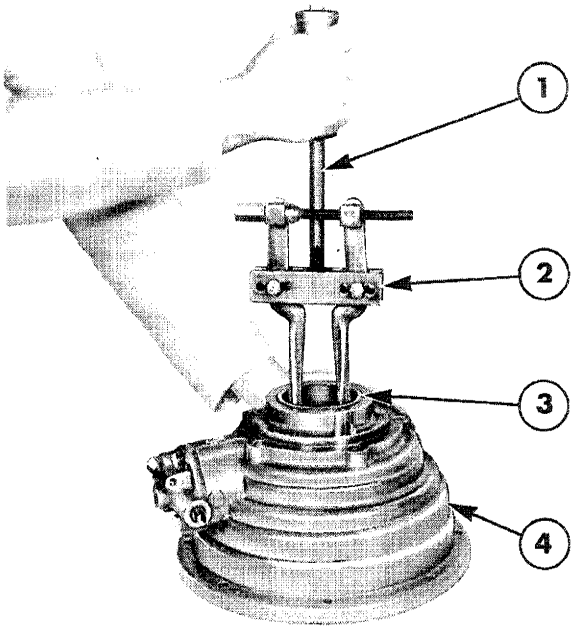

Figure 20
Transmission Input Shaft Bearing Cup Removal

1. Tool No. 943-S
2. Tool No. 943
3. Input Shaft Bearing Cup
4. Planetary Housing

16. Inspect the planetary housing for cracks or damage. Examine the underdrive clutch piston, locating dowel pins, springs, rear plate, friction plates, spacer plate, pressure plate, spring retainer and snap ring and install new piston seals. Discard and replace any cracked, damaged or badly worn parts.

17. **FORD 5000**: Examine the transmission input shaft front bearing for excessive damage or wear. Replace if necessary.

FORD 7000: Examine the transmission input shaft front bearing cup in the hub of the planetary housing and the cone and roller assembly on the input shaft, for excessive damage or wear. Remove the cup, if necessary, using Tool Nos. 943 and 943-S, as shown in Figure 20. Press a new cone and roller assembly on the input shaft.

IMPORTANT: During re-assembly check and adjust the preload of the transmission input shaft front bearing assembly. Refer to "FORD 7000 Transmission Input Shaft Bearing Preload Check" in this Chapter.

18. Examine the sleeve in the hub of the planetary housing, Figure 21, for excessive damage or wear. Remove the sleeve, if necessary, with a press and suitable step plate. Press a new sleeve into the housing.

IMPORTANT: The sleeve must be pressed flush with the front face of the locating bore and ensure the holes in the sleeve align with the holes in the housing.

19. Inspect the ring gear and shaft assembly for damage or wear. Inspect the shaft splines for damage. If necessary, install a new ring gear and shaft assembly.

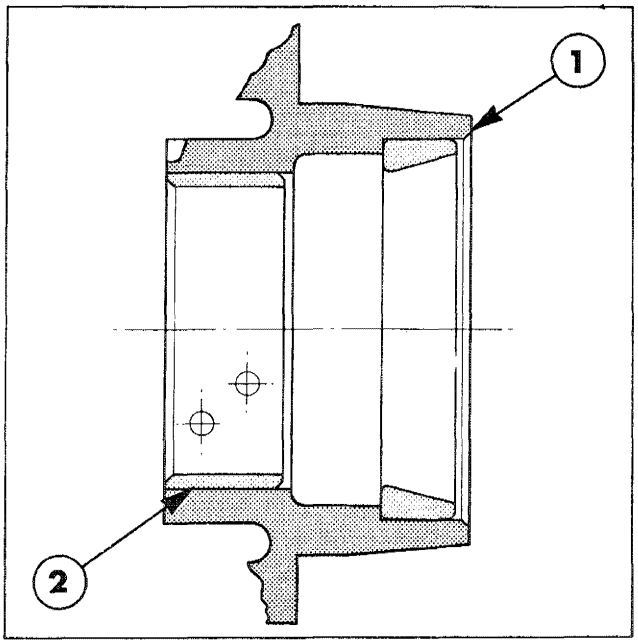

Figure 21
Planetary Housing Sleeve Location

1. Planetary Housing
2. Sleeve

20. Examine the ring gear bearing for wear or damage. If necessary remove the bearing with Tool Nos. 930–B, 938, 952 and 630–S4 as shown in Figure 22. Take care not to damage the shim located behind the bearing. Ensure the shim is placed against the step on the ring gear shaft and then press the new bearing onto the shaft, using a convenient length sleeve of 82,6mm (3.25 in) internal diameter and 95,3 mm (3.75 in.) external diameter.

IMPORTANT: The shim located behind the ring gear bearing governs the planetary gear set end play. If any of the major components of the planetary gear set are changed, refer to "Planetary Gear Set Shimming Procedure" in this Chapter, to determine the correct size shim to be installed.

21. Examine the valve spool bore in the valve body for damage or wear.

22. Inspect the valve spool lands for scratches, wear or other damage. Minor burrs or scratches may be removed with a fine abrasive material but parts must be washed and dried prior to re-assembly.

23. Examine the two detent cups, the spring and the sleeve for wear or damage.
If damage or serious wear is present on any component part, install a replacement during re-assembly.

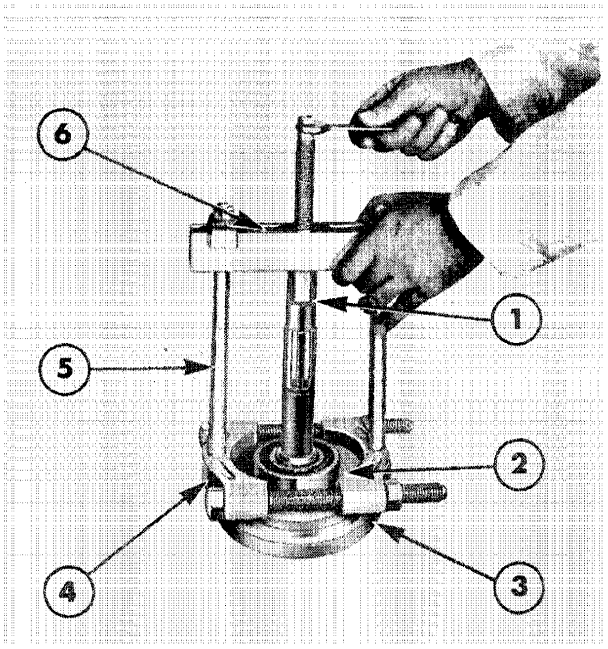

Figure 22
Ring Gear Bearing Removal

1. Tool No. 630-S/4
2. Bearing
3. Ring Gear and Shaft Assembly
4. Tool No. 952
5. Tool No. 930-B
6. Tool No. 938

D. RE-ASSEMBLY

Re-assembly of the direct drive clutch, the underdrive clutch and control valve follows the disassembly procedure in reverse.

E. PLANETARY GEAR SET SHIMMING PROCEDURE

IMPORTANT: This procedure must be followed whenever a new cover, bearing, ring gear, planetary carrier, sun gear, direct drive clutch or planetary housing is installed.

Free play among the components of the planetary housing is governed by means of a shim located between the bearing and the step on the ring gear shaft.
For free play requirement and available shims - See Specifications Chapter 5.
Determine the shim required to give the specified free play as follows:

1. Position the planetary housing (with underdrive clutch installed) on a bench.

2. Place the thrust washer in the housing with the tab up and towards the rear of the transmission.

3. Install and ensure the direct drive clutch assembly is fully seated in the housing.

4. Insert the planetary carrier in order to align the internal splines of the direct drive clutch plates.

 © FORD MOTOR COMPANY LTD., 1973

5. Remove the planetary carrier and carefully install the sun gear in the inner splines of the direct drive clutch assembly.

6. Install the thrust washer in the planetary carrier and align the splines.

7. Install the planetary carrier and thrust washer onto the sun gear and ensure the unit is fully seated within the direct drive clutch assembly.

8. Hold the components tightly together and install the planetary shaft from the rear. Tap the shaft, if necessary, to ensure full engagement.

9. Press the pilot bearing onto the shaft using a sleeve of 41,2mm (1.62in.) internal diameter and 47,8 mm (1.88in.) external diameter.

10. Install the ring gear and shaft assembly (without the ring gear bearing or shim) in the housing. Place the ring gauge, Tool No. SW-523, on the step of the ring gear shaft.

11. Position the cover on the planetary housing.

IMPORTANT: Ensure all components are properly seated in the housing.

12. Measure the distance between the face of the cover and the face of the housing at three conveniently spaced intervals. Average the three measurements. For correct shimming gap – See Specifications Chapter 5. If the average measurement is within specification the free play is within the required limits and no shims are necessary.

13. If the average measurement is less than the range stated, determine the shim thickness required by referring to the relevant chart in Specifications Chapter 5.

14. Remove the cover and the ring gear and shaft assembly from the planetary housing. Remove the ring gauge and place the appropriate shim(s) on the step of the ring gear shaft. Press the bearing onto the ring gear using a convenient length sleeve of 82,6mm (3.25in.) internal diameter and 95,3mm (3.75in.) external diameter.

15. Remove the components from the planetary housing and retain in order for final installation.

FORD 7000 TRANSMISSION INPUT SHAFT BEARING PRELOAD CHECK AND SHIMMING PROCEDURE

IMPORTANT: This procedure must be followed whenever a new planetary housing or transmission input shaft front bearing assembly is installed in a FORD 7000 Tractor with Dual Power Transmission.

Preload on the input shaft bearing is governed by shims located between the mating surfaces of the planetary housing and the support plate in the transmission case.

Preload is determined by recording the torque required to rotate the input shaft.

NOTE: To rotate the input shaft, it is recommended that a simple extension tube be made from thin wall tubing 4,45mm (1.75in.) internal diameter and 46cm (18in.) in length. Make four equispaced lateral cuts, approximately 50mm (2in.) in length, at each end of the extension tube and install two adjustable band clamps.

Check and adjust the preload of the input shaft bearing as follows:

1. Install two 0,3mm (0.012in.) shims on the rear hub of the planetary housing.

2. Position the planetary housing in the transmission case and install the housing retaining bolts. Tighten the bolts diagonally and evenly to the specified torque – See Specifications, Chapter 5.

3. Position the extension tube over the planetary shaft and secure with the band clamp.

4. Locate the combined extension tube and planetary shaft in the transmission shaft.

5. Insert a socket of suitable size into the end of the extension tube and secure with the band clamp.

6. Install a torque wrench on the socket using adaptors if necessary.

7. Ensure the transmission is in neutral.

8. Using the torque wrench, steadily rotate the input shaft clockwise until the torque reading stabilises. Record the stabilised reading.

9. Loosen off the housing retaining bolts until they are finger tight.

10. Steadily rotate the input shaft with the torque wrench until the torque reading stabilises. Record the stabilised reading.

11. Subtract the stabilised torque reading obtained in Step 10 from the stabilised torque reading obtained in Step 8. The resultant torque should be within the limits stated in Specifications, Chapter 5.

12. If the resultant torque is above or below the specified range, add or subtract shims until the correct preload is obtained.

13. When the required preload has been obtained, add an additional shim as stated in Specifications, Chapter 5.

14. Remove and dismantle the extension tube and planetary shaft.

G. INSTALLATION

NOTE: **FORD 5000 & 7000.** *If it is necessary to install a new cover, bearing, ring gear, planetary carrier, sun gear, direct drive clutch or planetary housing, refer to "Planetary Gear Set Shimming Procedure" in this Chapter, before installing the planetary components in the transmission case.*

FORD 7000: *If it is necessary to install a new planetary housing or transmission input shaft front bearing assembly, refer to "FORD 7000 Transmission Input Shaft Bearing Preload Check" in this Chapter before installing the planetary components in the transmission case.*

Installation of the planetary gear set follows the removal procedure in reverse. Pay particular attention to the following important points:

(i) If all components are correctly installed, the cover should easily seat in the housing. Any need for force indicates incorrect re-assembly.

(ii) Coat all tube joints with a proprietary sealing compound.

(iii) Ensure the thread end of the control cable bottoms in the valve extension rod. Tighten the internal locknut to the specified torque. See Specifications, Chapter 5.

 © FORD MOTOR COMPANY LTD., 1973

3. PRESSURE TESTING

For the following tests ensure the tractor hydraulic oil is at operating temperature, the transmission and hydraulic system are in neutral and the independent power take-off is disengaged.

DUAL POWER SYSTEM PRESSURE TEST

NOTE: To perform this test it will first be necessary to make a special tool by drilling and tapping a 1/8 Dry Seal NPTF or 1/8 BSP female thread in the top face of a pressure control tube elbow. This modified tube elbow facilitates installation of a pressure gauge in the pressure control circuit, as shown in Figure 23.

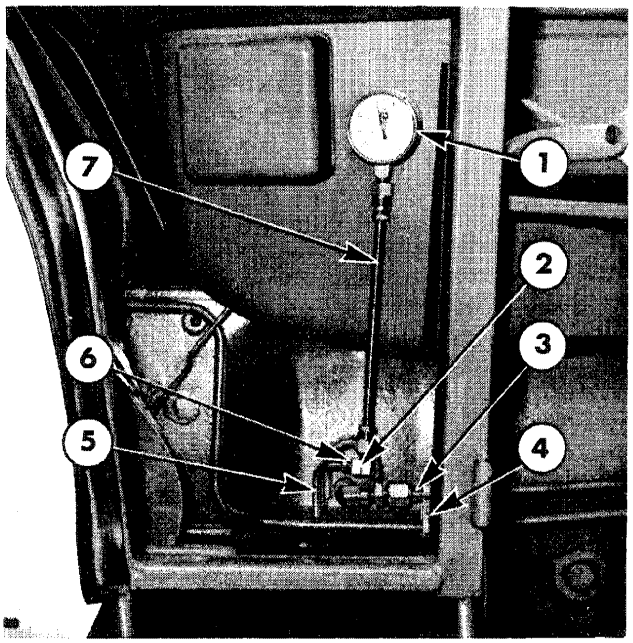

Figure 23
Dual Power System Pressure Test

1. N–774 Pressure Gauge
2. Modified Elbow
3. Transmission Lubrication Tube
4. Clamp
5. Pressure Line Control Tube
6. Nipple
7. Pressure Gauge Tube

1. With the engine stopped, slacken the transmission oil cooler feed and return tube clamps.

2. Disconnect the transmission lubrication and pressure line control tubes at the transmission housing.

3. Remove the pressure control tube elbow and replace with the modified elbow.

4. Reconnect the transmission lubrication and pressure line control tubes at the transmission housing.

5. Connect an N–774 pressure gauge and tube into the modified elbow.

6. Start the engine and set the speed at 1000 rev/min.

7. Engage and disengage the normal drive and power drive several times noting the pressures recorded. The pressure gauge reading should be 10,3–12,4 bar (150–180 lbf/in^2) in normal drive and 10,7–12.8 bar (155–185 lbf/in^2) in power drive. The difference between readings should not exceed 0,69 bar (10 lbf/in^2). If the readings are above or below the specified figures, refer to Dual Power Trouble Shooting, Chapter 5, for possible causes.

IMPORTANT: At completion of this test coat all tube threads with a proprietary sealing compound.

TRANSMISSION LUBRICATION PRESSURE TEST

NOTE: To perform this pressure test it will first be necessary to make a special tool by drilling and tapping a 1/8 Dry Seal NPTF or 1/8 BSP female thread in the end of a lubrication tube elbow. This modified tube elbow facilitates installation of a pressure gauge in the lubrication circuit, as shown in Figure 24.

1. With the engine stopped, slacken the transmission oil cooler feed and return tube clamps.

2. Disconnect the transmission lubrication and pressure line control tubes at the transmission housing.

3. Remove the lubrication tube elbow and replace with the modified elbow.

4. Reconnect the transmission lubrication and pressure line control tubes at the transmission housing.

5. Connect an N–774 pressure gauge and tube into the modified elbow.

6 Start the engine and set the speed at 1000 rev/min.

7. The pressure gauge reading should be 0,69–1,38 bar (10–20 lbf/in^2). If the reading is above or below the specified figures, refer to Dual Power Trouble Shooting Chapter 5, for possible causes.

IMPORTANT: At completion of this test coat all tube threads with a proprietary sealing compound.

NOTE: Both of these pressure tests can be conducted simultaneously using two pressure gauges If only one pressure gauge is available then both the modified elbows can still be installed and the tests performed individually. However, in this case the circuit elbow not being utilised must be plugged with an adaptor plug, Part No. 87650–S8.

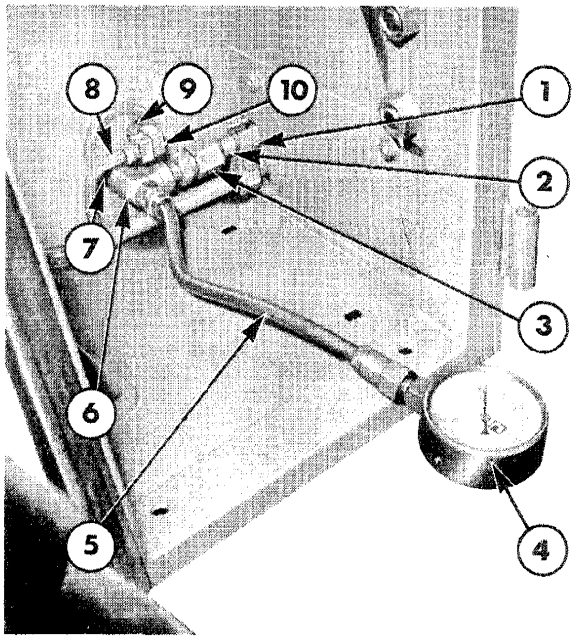

Figure 24
Transmission Lubrication Pressure Test

1. Clamp
2. Transmission Lubrication Tube
3. Connector
4. N-774 Pressure Gauge
5. Pressure Gauge Tube
6. Modified Elbow
7. Nipple
8. Pressure Line Control Tube
9. Nipple
10. Elbow

© FORD MOTOR COMPANY LTD., 1973

Part 7
SEVEN AND EIGHT SPEED TRANSMISSION
Chapter 5
DUAL POWER TRANSMISSION TROUBLE SHOOTING, SPECIFICATIONS AND SPECIAL TOOLS

Section		*Page*
1.	Trouble Shooting	83
2.	Specifications	85
3.	Special Tools	87

1. TROUBLE SHOOTING

Before removing the Planetary Gear Set from the transmission, attempt to isolate the possible cause of the trouble referring to the following trouble shooting chart.

DUAL POWER TROUBLE SHOOTING CHART

TROUBLE	POSSIBLE CAUSE
1. Dual Power system pressure too low in normal drive only (internal leakage).	1. Leaking valve spool. 2. Damaged or leaking gasket between control valve body and planetary gear set. 3. Cracked, broken or worn seal rings on direct drive clutch housing hub or worn sleeve. 4. Damaged or leaking seals on direct drive clutch piston-inner or outer. 5. Broken or cracked direct drive clutch piston.
2. Dual Power system pressure too low in power drive only (internal leakage).	1. Leaking valve spool. 2. Damaged or leaking gasket between control valve body and planetary gear set housing. 3. Damaged or leaking seals on underdrive clutch piston-inner or outer. 4. Broken or cracked underdrive clutch piston.
3. Dual Power system pressure too low in both normal drive and power drive.	1. Low rear axle oil level. 2. Hydraulic pump or P.T.O. system relief valve faulty or valve stuck open. 3. Weak or broken Dual Power and P.T.O. regulating valve springs or valves stuck open.
4. Dual Power system pressure too high in both normal drive and power drive.	1. Extremely cold oil in rear axle centre housing. 2. Incorrect Dual Power regulating valve spring (spring too stiff), or valve stuck closed.

©FORD MOTOR COMPANY LTD., 1973

TROUBLE	POSSIBLE CAUSE
5. No power to rear wheels when normal drive engaged (power drive operative).	1. Low Dual Power system pressure in direct drive clutch circuit. 2. Scored, burred or binding direct drive clutch piston. 3. Control rod linkage disconnected at valve spool and/or valve spool jammed in underdrive position. 4. Worn or defective direct drive clutch plates. 5. Direct drive clutch pressure plate snap ring out of groove or broken. 6. Damaged or broken direct drive clutch pressure plate.
6. No power to rear wheels when power drive engaged (normal drive operative).	1. Low Dual Power system pressure in underdrive clutch circuit. 2. Scored, burred or binding underdrive clutch piston. 3. Control rod linkage disconnected at valve spool and /or valve spool jammed in direct drive position. 4. Worn or defective underdrive clutch plates. 5. Underdrive clutch pressure plate snap ring out of groove. 6. Damaged or broken underdrive clutch pressure plate.
7. No power to rear wheels when Dual Power engaged in normal drive or power drive.	1. Low Dual Power system pressure. 2. Defective planetary gear set ring gear, planetary carrier, sun gear, shaft or mainshaft splines. 3. Transmission problem. 4. Clutch problem.
8. Engine stalls or lugs when shifting from power drive to normal drive.	1. Scored, burred or binding underdrive clutch piston. 2. Broken or defective underdrive clutch piston return springs. 3. Warped or defective underdrive clutch plates.
9. Engine stalls or lugs when shifting from normal drive to power drive.	1. Scored, burred or binding direct drive clutch piston. 2. Broken or defective direct drive clutch piston return spring. 3. Warped or defective direct drive clutch plates.
10. Lubrication pressure too low.	1. Weak or broken back pressure valve spring, or valve stuck open. 2. Blocked or restricted oil cooler.
11. Lubrication pressure too high.	1. Incorrect back pressure valve spring (spring too stiff) or valve stuck closed. 2. Blocked or restricted hydraulic oil filter.

2. SPECIFICATIONS

SPECIFICATIONS	FORD 5000	FORD 7000
Planetary Gear Set Free Play	0,10 - 0,51 mm (0.004 - 0.020 in.)	0,10 - 0,51 mm (0.004 - 0.020 in.)
Planetary Gear Set Free Play Shims Available	0,28 - 0,38 mm (0.011 - 0.015 in.) 0,76 - 0,86 mm (0.030 - 0.034 in.)	0,28 - 0,38 mm (0.011 - 0.015 in.) 0,76 - 0,86 mm (0.030 - 0.034 in.)
Planetary Cover to Housing Shimming Gap	1,17 - 1,52 mm (0.046 - 0.060 in.)	1,17 - 1,52 mm (0.046 - 0.060 in.)

FORD 5000 & 7000	Average Planetary Cover to Housing Shimming Gap	Shim Thickness To be Added
Planetary Gear Set Free Play Shimming Chart	0,025 - 0,33 mm (0.001 - 0.013 in.)	1,04 - 1,24 mm (0.041 - 0.049 in.)
	0,35 - 0,66 mm (0.014 - 0.026 in.)	0,76 - 0,86 mm (0.030 - 0.034 in.)
	0,68 - 0,81 mm (0.027 - 0.032 in.)	0,56 - 0,76 mm (0.022 - 0.030 in.)
	0,84 - 1,14 mm (0.033 - 0.045 in.)	0,28 - 0,38 mm (0.011 - 0.015 in.)
	1,17 - 1,52 mm (0.046 - 0.060 in.)	NONE

Transmission Input Shaft Bearing Preload Torque	—	1,1 - 2,3 Nm (10 - 20 in.lbf.)
Transmission Input Shaft Bearing Preload Shims Available	— — —	0,076 mm (0.003 in.) 0,127 mm (0.005 in.) 0,305 mm (0.012 in.)
Additional Transmission Input Shaft Bearing Preload Shim	—	0,127 mm (0.005 in.)
Oil Capacity		
Single Speed P.T.O.		
Imperial Quarts	47.5	47.5
U.S. Quarts	58.0	58.0
Litres	54.8	54.8
2-Speed P.T.O:		
Imperial Quarts	50.8	50.8
U.S. Quarts	62.0	62.0
Litres	58.6	58.6
Oil Grade:		
Ford Specification	ESN–M2C86–A	ESN–M2C86–A

©FORD MOTOR COMPANY LTD., 1973

TRANSMISSION RATIOS

GEAR	TRANSMISSION RATIO		SELECTOR LEVER POSITIONS		
	FORD 5000	FORD 7000	DUAL POWER	MAIN GEAR	HIGH/LOW GEAR
1	11.74	11.80	POWER	1	L
2	9.41	9.45	POWER	2	L
3	9.13	9.18	NORMAL	1	L
4	7.32	7.35	NORMAL	2	L
5	5.36	5.41	POWER	3	L
6	4.17	4.21	NORMAL	3	L
7	3.94	3.94	POWER	4	L
8	3.29	3.29	POWER	5	H
9	3.06	3.06	NORMAL	4	L
10	2.63	2.63	POWER	6	H
11	2.56	2.56	NORMAL	5	H
12	2.05	2.05	NORMAL	6	H
13	1.50	1.51	POWER	7	H
14	1.17	1.17	NORMAL	7	H
15	1.10	1.10	POWER	8	H
16	0.86	0.85	NORMAL	8	H
R1	8.17	8.21	POWER	R	L
R2	6.35	6.38	NORMAL	R	L
R3	2.29	2.29	POWER	R	H
R4	1.78	1.78	NORMAL	R	H

NOTE: Slight variations in transmission ratios between the FORD 5000 and 7000 Tractors are due to helical gears being installed in the FORD 7000 Tractor transmission.

TIGHTENING TORQUES - Nm (Ft.lbf. equivalents in parentheses)	FORD 5000	FORD 7000
Control Valve Body Retaining Bolts	27 - 37 (20 - 27)	27 - 37 (20 - 27)
Control Valve Spool Sleeve	34 - 41 (25 - 30)	34 - 41 (25 - 30)
Planetary Housing Retaining Bolts	68 - 81 (50 - 60)	68 - 81 (50 - 60)
Planetary Cover Retaining Bolts	30 - 37 (22 - 27)	30 - 37 (22 - 27)
Lubrication Tube Connector	41 - 54 (30 - 40)	41 - 54 (30 - 40)
Lubrication Tube Elbow	11 - 16 (8 - 12)	11 - 16 (8 - 12)
Lubrication Tube Nipple	11 - 16 (8 - 12)	11 - 16 (8 - 12)
Pressure Line Control Tube Connector	14 - 20 (10 - 15)	14 - 20 (10 - 15)
Pressure Line Control Tube Elbow	11 - 16 (8 - 12)	11 - 16 (8 - 12)
Pressure Line Control Tube Nipple	11 - 16 (8 - 12)	11 - 16 (8 - 12)
Control Cable Retaining Nut	34 - 41 (25 - 30)	34 - 41 (25 - 30)
Control Cable Connector	34 - 41 (25 - 30)	34 - 41 (25 - 30)
Control Cable Locknut	7 - 12 (5 - 9)	7 - 12 (5 - 9)

3. SPECIAL TOOLS

Tool Number	Description
SW–523	Spacer Gauge
630-S4/10	Step Plate Adaptors
N-774	Pressure Gauge and Tube Assembly
N-775	Compressor
930 - B	Push - Puller Legs (Set of Two)
938	Push - Puller
943	Internal/External Pulling Attachment
943 - S	Slide Hammer
951	Pulling Attachment (Small)
952	Pulling Attachment (Large)
1002	Puller-Reversible Arm (Medium)
1003	Puller-Single End Arm (Large)
***	Modified Pressure Control Tube Elbow
***	Modified Lubrication Tube Elbow
***	Underdrive Clutch Snap Ring Restraining Clamp (Set of Four)
***	Preload Torque Extension Tube - 44,5 mm (1.75 in.) I.D. and 46 cm (18 in.) long.
***	Sleeves of Convenient Length (Listed Below):
1. 82,6 mm (3.25 in.) I.D. and 95,3 mm (3.75 in.) O.D.	2. 41,2 mm (1.62 in.) I.D. and 47,8 mm (1.88 in.) O.D.

© FORD MOTOR COMPANY LTD., 1973

PART 8
SELECT-O-SPEED TRANSMISSION

Part 8

SELECT-O-SPEED TRANSMISSION

Chapter 1

SERVICING THE TRANSMISSION

Section		Page
1.	Description and Operation	1
2.	Adjustments	21
3.	Introduction to Servicing the Transmission	29
4.	Assemblies Serviced with the Transmission Installed	30
5.	Rear End Overhaul	35
6.	Front End Overhaul	54
7.	Complete Overhaul	57
8.	Repair of the Sub-Assemblies	60

Chapter 2

TROUBLE SHOOTING, SPECIFICATIONS, AND SPECIAL TOOLS

Section		Page
1.	Trouble Shooting	73
2.	Specifications	81
3.	Special Tools	84

© FORD MOTOR CO. 1964

Part 8

SELECT-O-SPEED TRANSMISSION

Chapter 1

SERVICING THE TRANSMISSION

Section		Page
1.	Description and Operation	1
2.	Adjustments	21
3.	Introduction to Servicing the Transmission	29
4.	Assemblies Serviced with the Transmission Installed	30
5.	Rear End Overhaul	35
6.	Front End Overhaul	54
7.	Complete Overhaul	57
8.	Repair of the Sub-Assemblies	60

1. DESCRIPTION AND OPERATION

The Select-O-Speed transmission is available in three models. The basic operation of the transmission is the same for all models.

NOTE: ***This manual relates to the deluxe transmission except where otherwise specified.***

There are also three P.T.O. options available with the Select-O-Speed transmission for the Dexta 2000, Super Dexta 3000, and Major 4000 Tractors. They are:

No P.T.O.
Single speed independent engine driven P.T.O.
Deluxe two speed independent engine-driven P.T.O. with proportional ground speed P.T.O.

The Super Major 5000 Tractors with Select-O-Speed transmission are available only with the independent engine-driven 540 rpm P.T.O.

The transmission provides for ease of control and high efficiency in the utilization of engine power and engine fuel. It is a manually selected, hydraulically controlled system, which transmits power from the engine through the planetary gear sets, providing the ten forward speed ratios and two reverse speed ratios to the final drive of the tractor. Park and neutral positions are also provided. A brief description and the principles of operation of the major assemblies in the transmission are discussed in this section. All design and operational differences between the transmission models are fully explained.

PLANETARY GEAR TRAIN

For purposes of identification, the planetary gear or epicyclic systems used in the transmissions have been labeled from front to rear, "A", "B", "C", and "D", as shown in Figure 1. The "D" planetary is used in the Dexta 2000 and Super Dexta 3000 tractors only. The ten forward and two reverse speeds are obtained by controlling the movement of the elements within the planetary gear systems.

Each of the planetary gear systems is comprised of three elements; a sun gear, a carrier with three pinions, and a ring gear, as shown in Figure 2. The three pinions are mounted within the carrier frame and rotate on needle bearings around pinion shafts, which are secured to the carrier frame. The sun gear, which is centered between the pinions, has external teeth. The ring gear, which encompasses the pinions, has internal teeth. All of the gears in the planetary system are constantly in mesh.

© FORD MOTOR CO. 1964

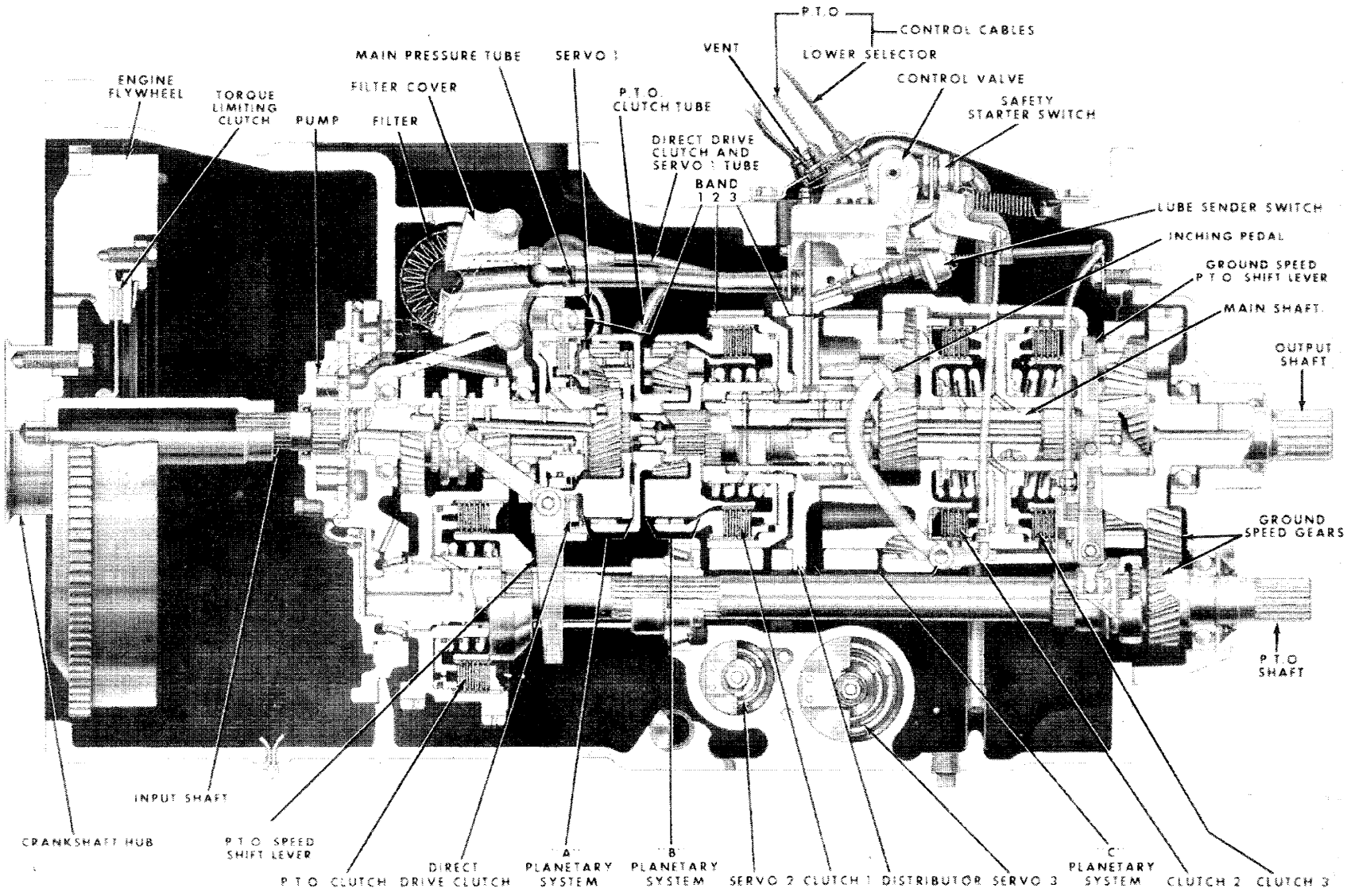

Figure 1
Select-O-Speed Transmission
Dexta 2000 and Super Dexta 3000

CONTROL VALVE ASSEMBLY

The control valve assembly is mounted directly on the distributor, as shown in Figures 1 and 15, and consists of upper and lower housing assemblies. The control valve is actuated by a flexible cable extending from the selector assembly. As the selector handle is moved, the cable wheel and camshaft assembly attached to the valve upper housing rotates to select the individual gear ratios. Cam followers operate the six spool valves in the lower housing which control the oil flow to three clutch pistons and three band servos. A safety switch mounted on the control valve permits the tractor engine to be started only when the selector lever is in the park (P) position. This switch is actuated by the camshaft assembly. As the selector is moved to park (P), the cam closes the switch completing the circuit to the tractor starter switch. Three adjustable spring-loaded, plunger-type valves are incorporated in the valve upper housing to control and regulate system pressure. In addition, feathering valves are incorporated in the valve lower housing to control the oil flow to clutches 1, 2, and 3 and the P.T.O. clutch for feathering control.

SYSTEM CIRCUITS

The control valve separates the hydraulic system into the following direct and indirect circuits. See Figure 13.

A. Direct Transmission Circuit

Servos 1, 2, and 3, and the direct drive clutch with their respective valve spools and the P.T.O. clutch with its feathering valve are in a direct circuit with the pump.

B. Indirect Transmission Circuit

Clutch assemblies 1, 2, and 3 are in an indirect circuit with the pump, as their respective valve spools and the transmission feathering valve are separated from the pump by the transmission sequencing valve.

C. Indirect Lubrication Circuit

The transmission lubrication circuit is separated from the pump by the system regulating valve.

VALVE OPERATION

The operation of the valves is as follows:

A. System Regulating Valve

The system regulating valve located in the upper valve housing, regulates and controls the oil pressure in the transmission hydraulic system. The regulating valve pressure is adjusted to 205 $\pm$5 psi (14.35 $\pm$0.35 kg/cm^2) at 800 engine rpm with 100° F. (38° C.) oil.

When the pressure exceeds this setting, the valve opens and the excess oil passes over the valve into the cooling and lubrication circuit.

B. Transmission Relief Valve

The transmission relief valve is located in the upper valve housing and limits the maximum oil pressure in the transmission circuit. The relief valve functions only at high engine rpm, as it is adjusted to bypass oil when the pressure exceeds 225 psi (15.8 kg/cm^2). The bypassed oil flows from a port on top of the upper valve housing through a flange and tubing to sump.

The lubrication circuit consists of a passage from the control valve, through the distributor to the lube passage in the transmission mainshaft, as shown in Figure 14. In the case of transmissions with the heat exchanger option, the oil enters the distributor and is bypassed to the cooler. From the cooler it flows back to the distributor and onto the mainshaft. Cast iron sealing rings are used on the mainshaft to direct the oil flow. Lubrication is accomplished by controlled bleeding along the mainshaft to the bearing and thrust surfaces, clutch plates, etc. At the rear end of the mainshaft, the lube oil passes through an orifice to lubricate the rear mainshaft journal and rear support components. Oil flows from the front port of the mainshaft into a gallery in the input shaft to lubricate the P.T.O. gears as well as other bearing surfaces. Oil bleeding past the rear end of the input shaft flows into a collector ring on the "A" carrier for lubricating the pinion shaft bearings. A sender switch is tapped into the lube passage at the rear of the distributor. The switch controls a warning light on the instrument panel. At any time the lubrication pressure is below the specified pressure, the switch closes the electrical circuit and the lube light illuminates. The warning light will come on when the starter key switch is on and the engine is not running. In addition, the light may momentarily flash on when shifting between 4 and 5 gear ratio. In the case of tractors with ground speed P.T.O., the ground speed driven gear is pressure lubricated from the distributor lube passage.

NOTE: ***Two different lube sender switches are used as follows: One with a pressure setting of 13 $\pm$1¼ psi (0.91 $\pm$0.07 kg/cm^2) used in transmissions less heat exchanger and one with a pressure setting of 20 $\pm$2 psi (1.40 $\pm$0.14 kg/cm^2) used in transmissions with heat exchanger.***

© FORD MOTOR CO. 1964

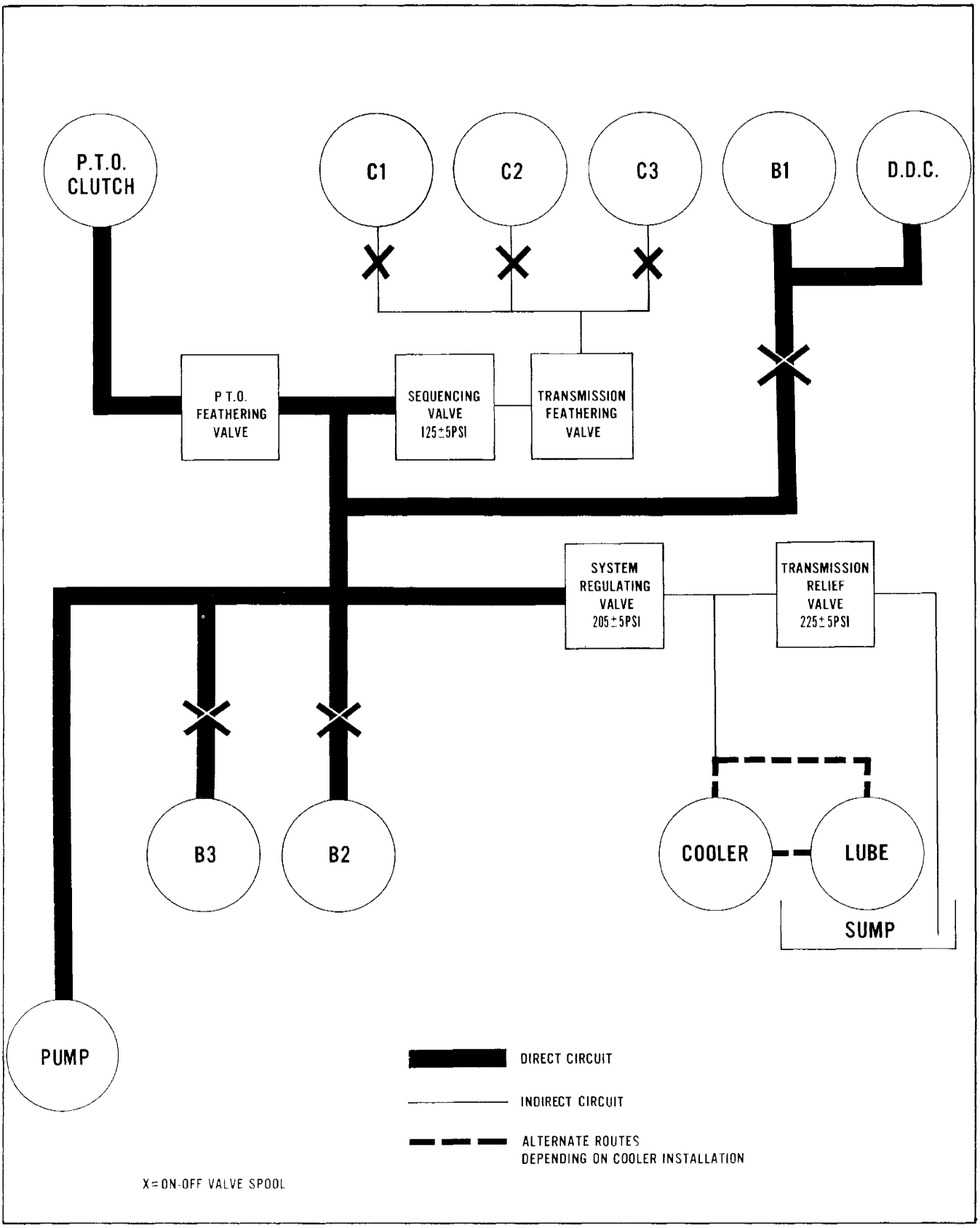

Figure 13
Hydraulic Circuits

the feathering valve. Above 90 psi (6.3 Kg/cm²), the clutch assemblies are applied or locked up and therefore, feathering action is not possible.

E. P.T.O. Feathering Valve

In the P.T.O. model transmissions, except the Super Major 5000, the P.T.O. feathering valve is actuated by a T-handle and cable assembly mounted on the lower right side of the instrument cluster on the hood. The P.T.O. feathering valve, located in the control valve lower housing, directs and controls the oil pressure in the P.T.O. circuit. The feathering valve operation is identical to the transmission feathering valve. The valve positions with respect to the "T" handle positions are shown in Figure 16. The P.T.O. clutch is feathered in by slowly pulling the "T" handle outward.

F. Valve Spools

Six interchangeable spring-loaded, off-and-on valve spools direct oil pressure to three clutch assemblies in the indirect circuit and the three servos and 1 clutch in the direct circuit. The spools are located in the control valve lower body and are controlled by the six cam followers. As combinations of valve spools are moved into the control valve body, oil pressure is directed to the specific clutch pistons, and/or band servos to obtain the various speed ratios. Refer to Figure 13. When the force is removed from the cam follower, the spool automatically returns to the "OUT" position by spring action, and the clutch or band servo oil is dumped to sump through the return ports in the valve body.

In the case of control valves used in Super Major 5000 Tractors, the valve spools are notched and positively positioned, in or out, and do not use return springs.

HEAT EXCHANGER

Transmissions with the heat exchanger circulate the transmission oil from the lubrication circuit to the tractor radiator and back. Two ports located on the right-hand side of the transmission case connect internally with ports in the distributor, and externally with tubing which channels the oil to and from the lower tank of the radiator. The oil is cooled by passing through a heat exchanger around which radiator cool liquid circulates.

TIMING VALVES

Two timing valve assemblies are incorporated in the servo 2 and 3 cover assembly, Figure 17, to provide, primarily, for gradual application of bands 2 and 3. This function promotes smooth shifting characteristics during the 4-5 and 5-4 shift cycles when one of the bands is releasing and the other band is applying. Each valve assembly is located in its respective servo circuit in a bore of the servo cover. The assembly consists of a valve, valve spring, sleeve, and retaining snap ring. A valve return spring holds the valve assembly against a pressed-in valve seat. The valve assembly is free to move in the bore and is held in the closed position against the seat by the return spring. The retaining snap ring limits the travel of the valve with respect to the sleeve. The valve spring is positioned between the sleeve and the valve shoulder holding the sleeve against the snap ring.

The valve has four radially positioned ports extending into the centrally drilled passage. At the shoulder end of the valve is a small metering orifice. The machined surface on the flat end of the sleeve mates with the valve seat.

The valves are hydraulically actuated to control the flow of oil from each servo during the dump cycle to ease the band application.

When the servo is pressurized to release the band, the flow of oil enters the valve chamber through the center of the seat and moves the valve assembly off the seat, compressing the return spring. The hydraulic oil is then free to flow to the servo to release the band. This sequence is shown in Figure 17.

When the servo piston reaches the end of its stroke, the flow of oil stops, resulting in the valve return spring seating the valve assembly against the seat.

During the servo-dumping cycle, when the flow of oil to the servo is stopped and the valve spool in the transmission control valve assembly permits the servo oil to dump to sump and the band to apply, the oil is passed through the timing valve in three sequenced operations.

1. The initial return pressure created by the force of the servo spring against the piston, forces the valve assembly against its seat. The valve is acted upon by this hydraulic pressure and in turn, is forced against the sleeve compressing the valve

© FORD MOTOR CO. 1964

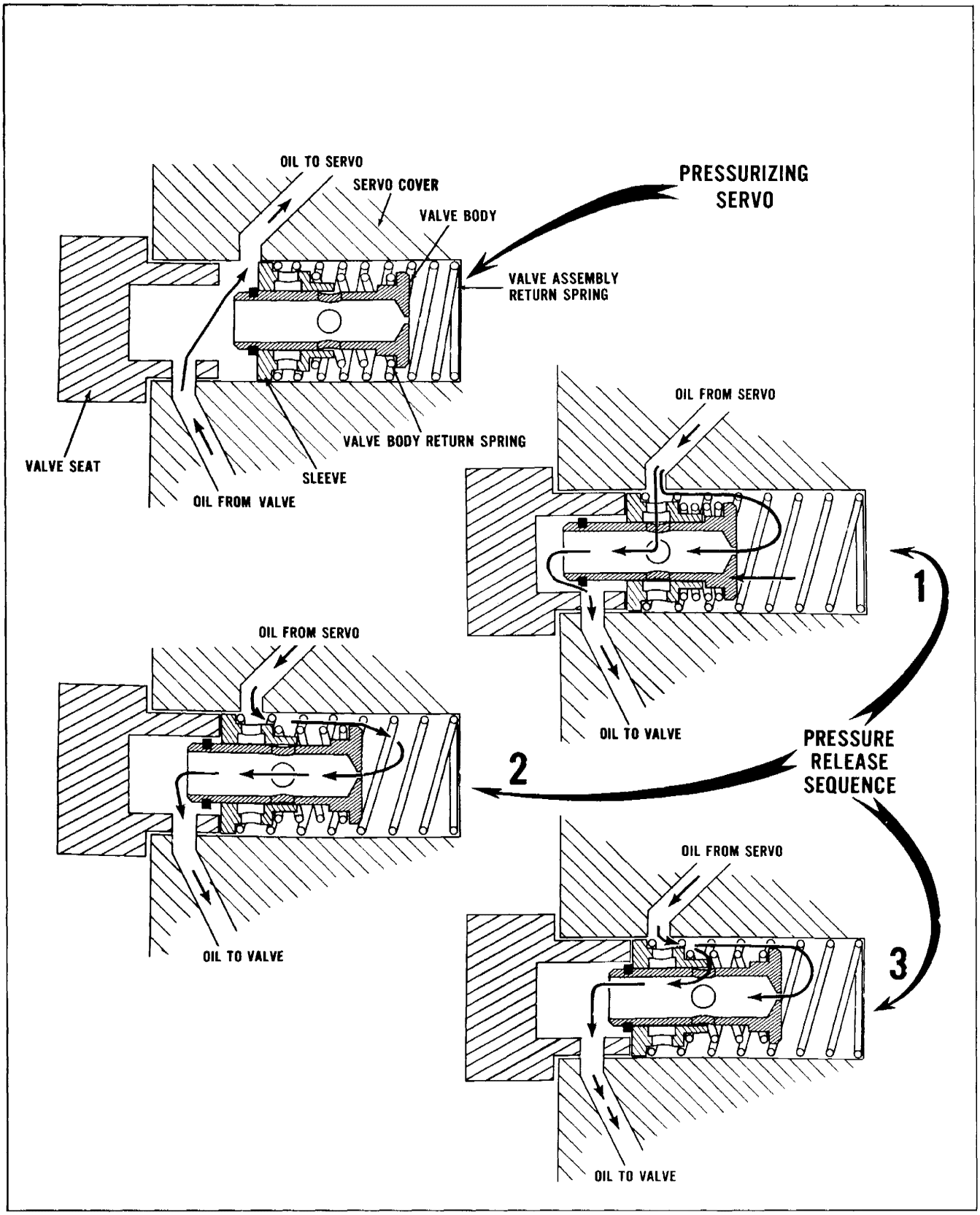

Figure 17
Timing Valves in Servo 2 and 3 Cover

spring. The radial ports and the inside annular groove of the sleeve are then indexed with the radial ports of the valve permitting the return oil to pass through the sleeve and valve ports to the central passage of the assembly and on to sump. This operation is shown in Figure 17.

2. As the pressure is reduced in the servo, the valve spring returns the valve blocking the radial ports, shutting off the flow of return oil. At this point, the oil then flows through the orifice in the end of the valve, to the control valve and then to sump. This is illustrated in Figure 17.

3. As the oil pressure continues to drop, the valve spring further extends the valve, with respect to the sleeve, until the radial ports of the valve are opened through which the remainder of the oil is passed to sump as shown in Figure 17.

The sequence of the dumping action thus provides:

A fast initial pressure drop to begin band application.

A relatively slow continued pressure drop permitting gradual band application.

A final dumping of oil to assure that the servo spring has completely applied the band.

HYDRAULIC CIRCUIT OIL FLOWS

Oil flow to individual clutch assemblies and servos is determined by the on-off type valve spools as well as the proper operation of the various pressure valves in the control valve body. Since the proper oil flow to these components is an essential part of transmission operation, the individual circuit flows are covered below.

A. Band 1 Servo and Direct Drive Clutch

One valve spool is used to control oil flow to both band 1 servo and the direct drive clutch. Thus, a common passage is used for both of these elements. From the control valve and distributor, the oil flows through tubing to a T-fitting installed in the transmission case band 1 servo opening. The direct drive clutch tube directs oil from the fitting to the pump adapter plate. Drilled passages joined by a short length of tubing in the pressure kidney part of the plate carries the oil to a drilled passage in the transmission input shaft. The front of the shaft is sealed by a steel ball. Cast iron sealing rings are used on the input shaft at both the adapter plate and direct drive clutch locations to seal the oil flow between rotating components, Figure 14.

B. Clutch 1

The oil to clutch 1 flows from its passage in the distributor to the "C" sun gear. Cast iron sealing rings seal the rotating sun gear from the distributor bore and channel the oil into a forward passage in the distributor which leads to the clutch 1 housing. Cast iron sealing rings on the front distributor sleeve, seal the rotating clutch housing from the sleeve and direct the oil into the clutch assembly.

C. Clutches 2 and 3

The oil to clutches 2 and 3 flows from their respective passages in the bore of the rear distributor sleeve to the "C" sun gear and onto drilled passages in the transmission mainshaft. Cast iron sealing rings seal the rotating sun gear and mainshaft and channel the oil to the correct passages in the mainshaft. At the clutch 2 and 3 location on the mainshaft, cast iron sealing rings are used to direct the oil to the clutch assemblies. Steel balls are pressed into the clutch 2 and clutch 3 passages at the rear of the shaft to seal the drilled openings.

D. P.T.O.

The oil to the power take-off clutch flows from the distributor through tubing to the pump adaptor plate. The front P.T.O. tube connects the adaptor plate to the front P.T.O. cover where the oil is channeled to a drilled passage in the end of the P.T.O. shaft. The drilled passage extends through the shaft to the P.T.O. clutch location where the oil is directed into the clutch assembly. Cast iron sealing rings are used at the front of the shaft and at the P.T.O. clutch location to seal the components.

© FORD MOTOR CO. 1964

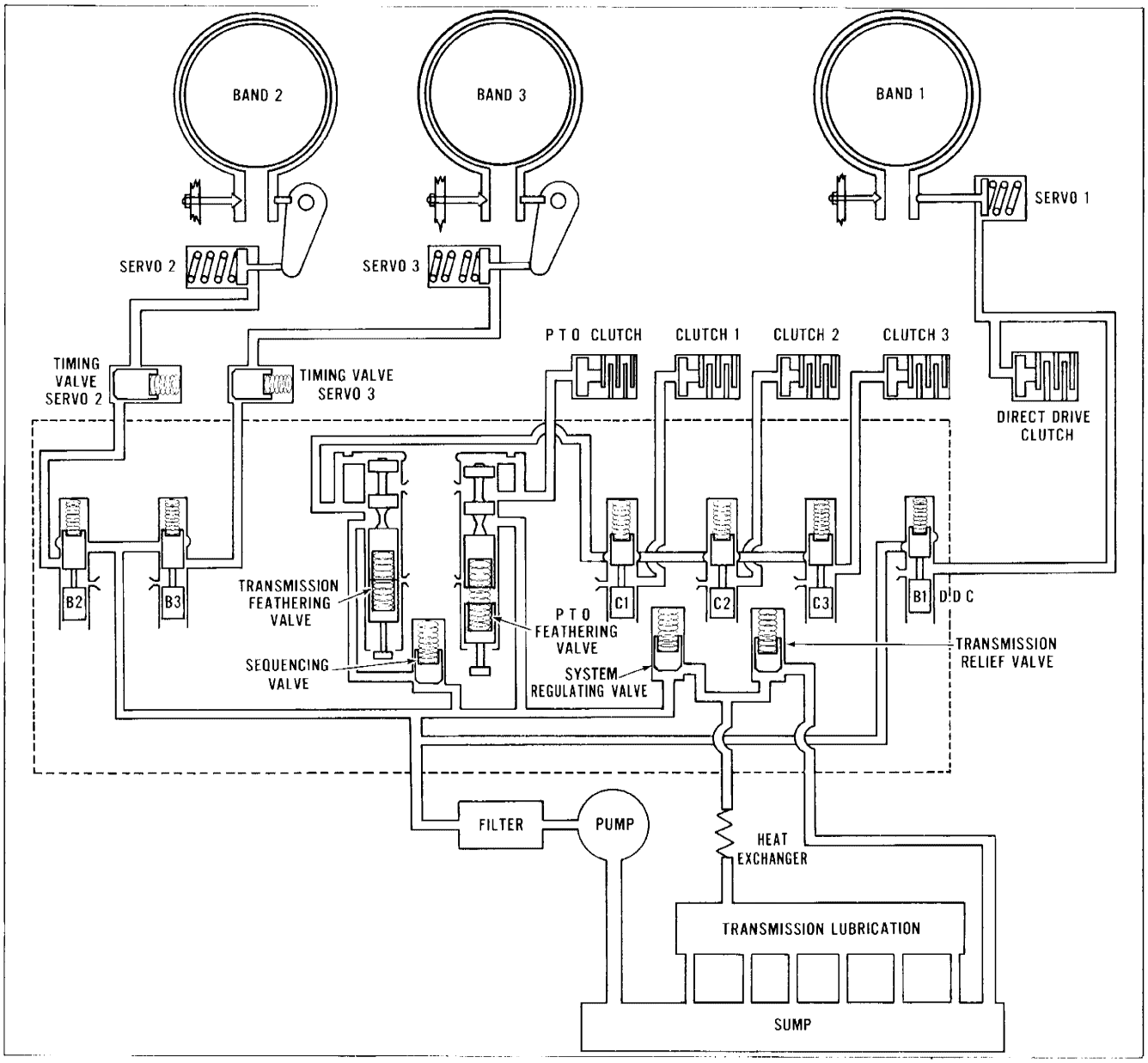

Figure 18
Transmission Circuits

GEAR RATIO OIL FLOWS

In addition to the items listed under "HYDRAULIC CIRCUIT OIL FLOWS", the details covering transmission control operation in each gear ratio are provided.

A. Park Position

When the selector lever is in park (P), the six valve spools in the control valve lower housing are in the "OFF" position and there is no delivery of oil pressure past the control valve assembly other than lubrication. Bands 2 and 3 are mechanically applied to hold the "C" planetary system and prevent any movement of the rear wheels. Figure 18 illustrates in schematic form the hydraulic system in park (P) position.

B. Reverse Speed Ratios

In the basic reverse speed ratio (R_1), the direct drive clutch-B-1 valve spool is moved inward and pump pressure is directed to apply the direct drive clutch and

hydraulically release B-1. The valve spools B-2 and C-1 are moved inward and oil pressure is directed to apply C-1 and release B-2. B-3 remains mechanically applied.

The overdrive reverse ratio (R_2) is obtained when valve spool D.D.C.-B-1 is closed to shut-off oil pressure to the direct drive clutch and servo-1. This permits the oil in the elements to return to sump releasing the direct drive clutch while at the same time permitting B-1 to mechanically apply.

C. Neutral

In the neutral position, the direct drive clutch B-1 valve spool is moved inward and pump pressure is directed to apply the direct drive clutch and hydraulically release B-1. The valve spools B-2 and B-3 are moved inward and oil pressure is directed to servos 2 and 3, hydraulically releasing B-2 and B-3. Power cannot be transmitted to the rear wheels; however, the tractor is free to roll forward or backward.

D. First and Third Speed Ratios

In the first speed ratio, the direct drive clutch B-1 valve spool is moved inward and pump pressure is directed to apply the direct drive clutch and hydraulically release B-1. The valve spools B-2 and C-3, which control the oil passages to Servo-2 and clutch-3 are moved inward. Hydraulic pressure releases B-2 and applies C-3 which, combined with B-3, being mechanically applied, gives this forward speed.

The third speed ratio (overdrive of first speed) is obtained when the D.D.C.-B-1 valve spool is closed to shut off oil pressure to the direct drive clutch and servo 1. This permits the oil in the elements to return to sump releasing the direct drive clutch while at the same time permitting B-1 to mechanically apply.

E. Second and Fourth Speed Ratios

In the second speed ratio the direct drive clutch B-1 valve spool is moved inward and pump pressure is directed to apply the direct drive clutch and hydraulically release Band 1. The valve spools B-2 and C-2 are moved inward to permit hydraulic pressure to reach clutch 2 and servo 2. Band 2 is now hydraulically released. Clutch 2 is hydraulically applied and band 3 is mechanically applied to establish this forward speed.

The fourth speed ratio (overdrive of second speed) is obtained when the D.D.C.-B-1 valve spool is closed to shut off oil pressure to the direct drive clutch and servo 1. This permits the oil in the elements to return to sump releasing the direct drive clutch while at the same time permitting band 1 to mechanically apply.

F. Fifth and Seventh Speed Ratios

In the fifth speed ratio, the D.D.C.-B-1 valve spool is moved inward and pump pressure is directed to apply the direct drive clutch and hydraulically release Band 1. The valve spools B-3 and C-3 in the control valve lower body are moved inward to open the passages to clutch 3 and servo 3. Now band 3 is hydraulically released, band 2 is mechanically applied and clutch 3 is hydraulically applied to give this forward speed.

The seventh speed ratio (overdrive of fifth) is obtained when the D.D.C.-B-1 valve spool is closed to shut off oil pressure to the direct drive clutch and servo 1. This permits the oil in the elements to return to sump releasing the direct drive clutch while at the same time permitting band 1 to mechanically apply.

G. Sixth and Eighth Speed Ratios

In the sixth speed ratio, the direct drive clutch B-1 valve spool is moved inward and pump pressure is directed to apply the direct drive clutch and hydraulically release band 1. The valve spools B-3 and C-2 which control the passages to servo 3 and clutch 2 are moved inward. Band 3 is hydraulically released, clutch 2 is hydraulically applied, and band 2 is mechanically applied to give this forward speed.

The eighth speed ratio (overdrive of sixth) is obtained when he D.D.C.-B-1 valve spool is closed to shut off oil pressure to the direct drive clutch and servo 1. This permits the oil in the elements to return to sump releasing the direct drive clutch while at the same time permitting band 1 to mechanically apply.

H. Ninth and Tenth Speed Ratios

In the ninth speed ratio, the direct drive clutch B-1 valve spool is moved inward and pump pressure is directed to apply the direct clutch and hydraulically release band 1. The valve spools B-2, B-3, and C-1, and C-2, are moved inward, allowing hydraulic pressure to actuate servos 2 and 3, and clutches 1 and 2. With bands 2 and 3 hydraulically released, this forward speed is obtained by the application of clutches 1 and 2.

The tenth speed ratio (overdrive of ninth) is obtained when the D.D.C.-B-1 valve spool is closed to shut off oil pressure to the direct drive clutch and servo 1. This permits the oil in the elements to return to sump releasing the direct drive clutch while at the same time permitting band 1 to mechanically apply.

© FORD MOTOR CO. 1964

TRANSMISSION CONTROLS

TRANSMISSION CONTROL SELECTOR ASSEMBLY

The selector assembly, shown in Figure 19, mechanically transmits the speed selections through a flexible cable to the control valve in the Select-O-Speed Transmission. A wheel attached to the camshaft on the control valve rotates as the selector extends or retracts the cable. The camshaft is accurately indexed for each transmission gear ratio by a detent which engages notches in a detent cam on the camshaft.

A selector indicator is fixed to and rotates with the selector lever shaft. The corresponding ground speeds in each gear ratio at given engine rpm are shown on a chart located on the tractor dash. A lamp is installed in the top of the selector assembly to illuminate the dial whenever the tractor key is "ON". In addition, the transmission lube light is located at the top of the Selector Assembly.

The selector assembly permits shuttle-type operation as screw stops can be installed in the R_1, R_2, 3rd, 5th, or 7th gear selections as desired. Refer to Figure 20.

Also, a bypass shuttle plate is available to permit the selector lever to over-ride the neutral notch. The selector lever and notched cover may be installed on either side of the assembly for right-hand or left-hand operation.

P.T.O. CONTROL HANDLE ASSEMBLY

The P.T.O. control assembly located on the right rear hood panel, shown in Figure 19, operates the P.T.O. clutch assembly in the transmission. The control consists of a slider mechanism and T-handle attached to a flexible cable. The cable, which is enclosed in a conduit, is threaded into a slider assembly in the transmission cover. The slider, in turn, is linked to the feathering valve rocker assembly. When the T-handle is pulled out, the rocker contacts and forces the P.T.O. feathering valve spool into the control valve upper body. The handle mid-position is the feathering point which permits P.T.O. clutch slippage by bleeding oil past the valve for easing into loads. In the full "OUT" position, the feathering valve directs all the P.T.O. clutch circuit oil to apply the clutch assembly. This does not apply to the Super Major 5000.

P.T.O. SPEED SHIFT LEVER

In the deluxe transmissions, either 540 or 1000 rpm A.S.A.E. standard P.T.O. speeds can be obtained at 1800 (540) and 1950 (1000) engine rpm. This is accomplished by a sliding coupling arrangement on the transmission input shaft, as shown in Figure 1. The P.T.O. speed shift lever, when in the forward position as illustrated in Figure 21, selects the 540 rpm speed by sliding the shifter collar rearward on the shaft which causes the rear input

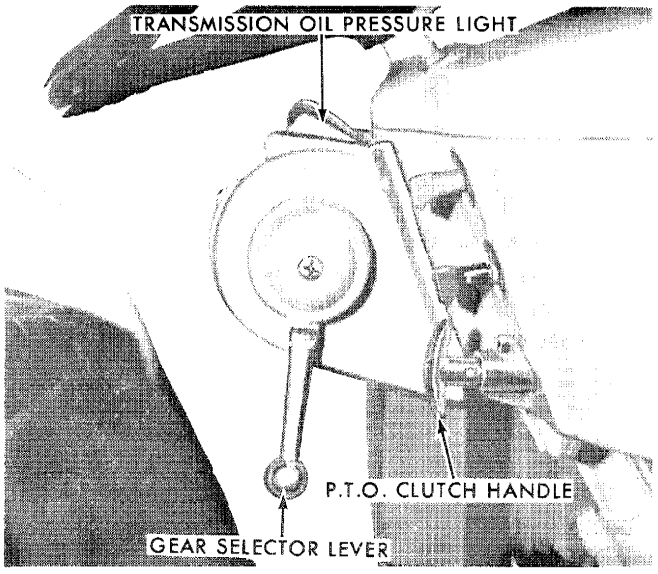

Figure 19
Speed Selector Assembly

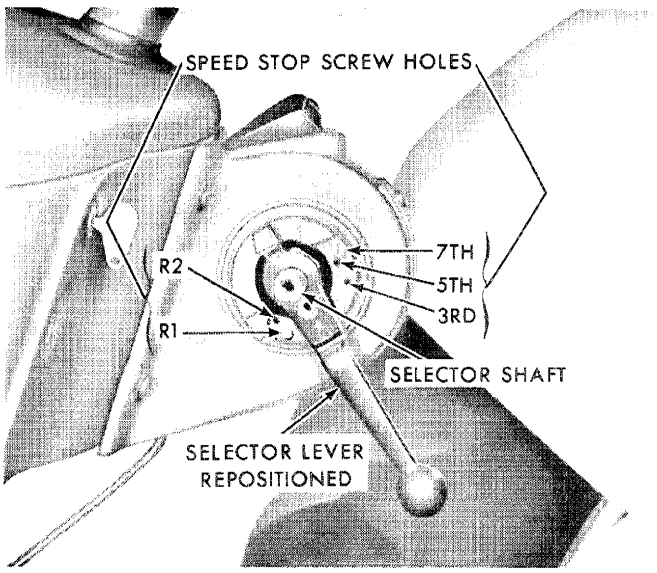

Figure 20
Repositioning the Selector Lever

shaft gear to drive the P.T.O. clutch housing. The 1000 rpm speed is obtained by moving the lever to the rear and selecting the forward set of gears. A neutral, or middle, position disengages the gears and should be used when operating the tractor without P.T.O. equipment, Figure 21. P.T.O. power flows are illustrated in Figure 22. This is not available in the Super Major 5000.

GROUND SPEED P.T.O. SHIFT LEVER

In the deluxe transmissions, a P.T.O. speed proportional to the tractor forward travel, is obtained by driving the P.T.O. shaft from the output shaft of the transmission. Figure 1 illustrates the P.T.O. drive gear mounted on the "D" carrier which is integral with the output shaft through a sliding coupling arrangement. The coupling is moved by a shifter fork connected to the ground speed shift lever. This is not available in the Super Major 5000.

Figure 21 shows the ground speed P.T.O. shift lever in the disengaged position.

An interlock arrangement, shown in Figure 31, prevents both engine and ground speed P.T.O. drives from being engaged at the same time.

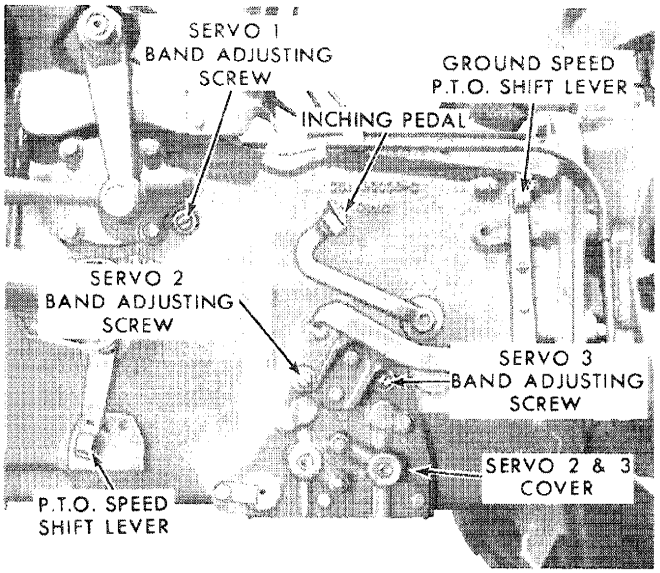

Figure 21
Left Side of Transmission Case

DRIVE LINE DISENGAGEMENT

The transmission output shaft incorporates a coupling which can be shifted to disengage the power from the differential pinion shaft. It will be necessary to disengage the coupling whenever the tractor is to be moved without the engine running as bands 2 and 3 mechanically apply to hold the rear wheels. It is also recommended that the coupling be disengaged before any servicing or adjusting of the transmission or of the complete tractor is undertaken with the engine running.

The coupling is manually disengaged by the drive line disengagement lever which is located on the right-hand side of the tractor center-housing. When the lever is in the "Down" position, the coupling is engaged. When the lever is in the "Up" position, the coupling is disengaged (Dexta 2000, Super Dexta 3000 and Major 4000). When the lever is in the "Up" position, the coupling is engaged. In the "Down" position, the coupling is disengaged.

2. ADJUSTMENTS

BAND ADJUSTMENTS

The three brake bands should be adjusted during predelivery and again at the 50-hour inspection. Thereafter, the bands should be adjusted after each 600 hours of operation. Before adjusting the bands, make certain the oil in the transmission is at the proper level. The bands are adjusted as follows:

1. Disconnect the drive line disengagement making sure it is in the disengaged position.
2. Operate the tractor until the transmission reaches normal operating temperature: 80-120°F. (27-49°C.) Set the engine speed so that 205 psi (14.35 Kg/cm²) at the servos is reached.
3. Refer to the chart on page 23 and move the gear selector lever to apply the desired band. Hold the band adjusting screw as shown in Figure 23, and loosen the lock nut two full turns.
4. Adjust Band 2 and Band 3. Refer to the chart and select the correct released gear ratio for the band involved. Tighten the adjusting screw to the torque specified and back the screw off the proper number of turns. Refer to Figure 24.
5. Tighten Band 2 and Band 3 lock nuts by selecting the gear ratio to apply the band involved to prevent the adjusting screw from turning. Tighten the lock nuts while holding the adjusting screws.
6. Adjust B-1 with the tractor engine "OFF", so that the band is applied. When tightening the lock nut, make sure the adjusting screw does not turn.

© FORD MOTOR CO. 1964

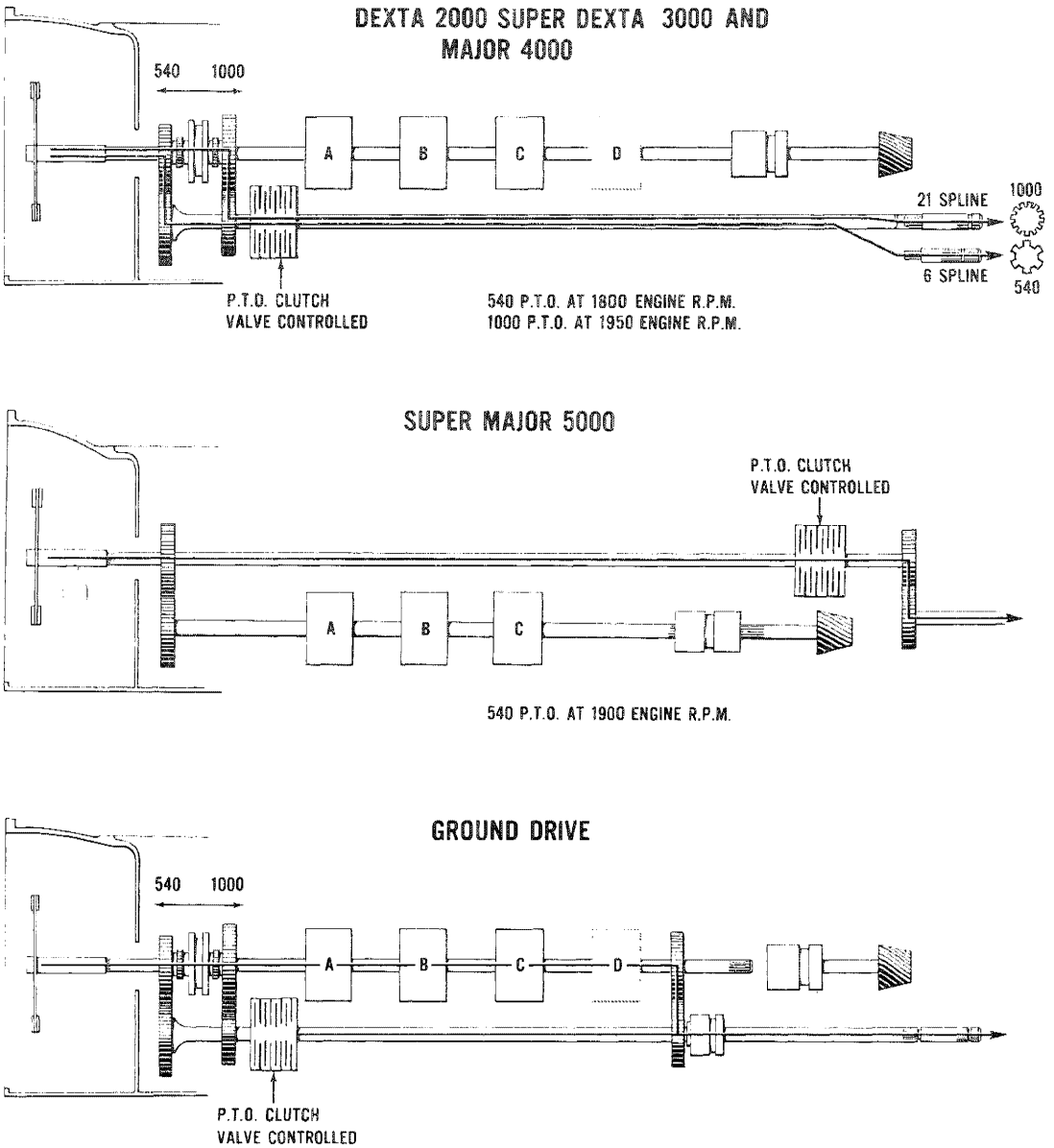

DEXTA 2000 AND SUPER DEXTA 3000
1 REVOLUTION OF THE P.T.O. SHAFT=7 ins.(17.78 cm.)OF FORWARD TRACTOR TRAVEL · 540 P.T.O. R.P.M.=3.7 M.P.H. (5.95 K.M.H.)

MAJOR 4000
1 REVOLUTION OF THE P.T.O SHAFT=6 ins. (15.24 cm.) FORWARD TRAVEL
540 P.T.O. R.P.M.=3.0 M.P.H. (4.82 K.M.H.)

Figure 22
P.T.O. Power Flows

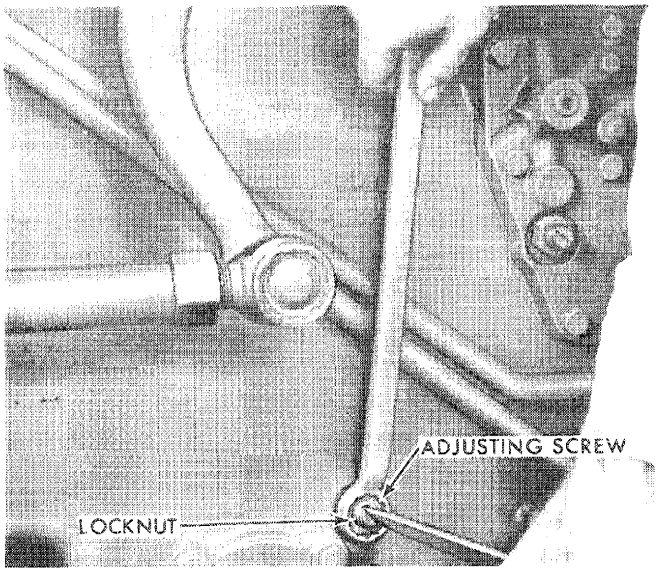

Figure 23
Loosening the Adjusting Screw Lock Nut

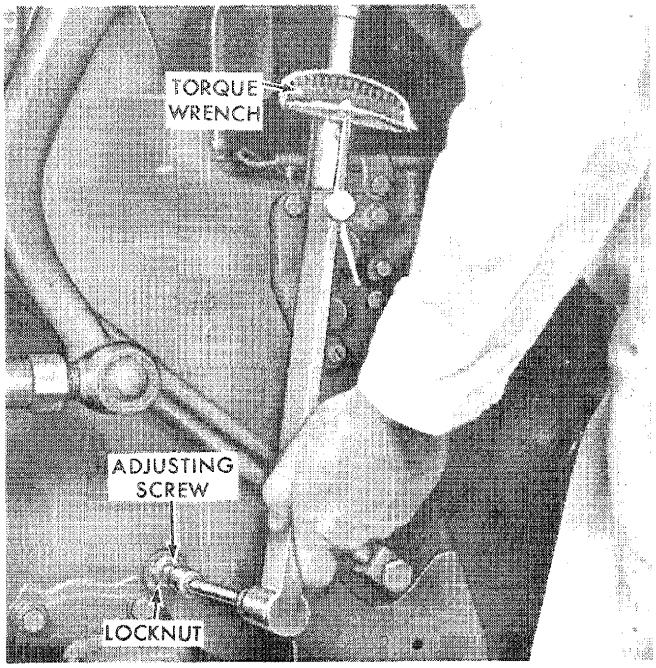

Figure 24
Adjusting the Bands

SELECTOR LEVER ALIGNMENT

For positive identification of speed selections, selector alignment is important. The individual speed identifications on the dial should always register with the pointers in the selector housing. The following adjustment makes it possible to compensate for normal wear in the selector assembly and for slight wear of the flexible selector cable.

1. Remove the left-hand selector shaft cover to expose the shaft and hex nut as shown in Figure 25.

   NOTE: ***If the selector lever is on the left side, remove it and mount it on the right side while making the adjustment.***

2. Move the selector lever to the neutral position and, with a suitable wrench, such as a deep well socket, loosen the nut while holding the lever securely in the detent, as shown in the insert, Figure 25.
3. The dial can now be moved in either direction as required, to register the dial with the pointers without changing the relationship of the flexible cable with the control valve assembly.
4. With the dial in the proper position, hold the lever and tighten the hex nut to the specified torque, page 23.
5. Check for proper dial registration adjustment in all speed selections and install the shaft cover.

   NOTE: ***If the selector is difficult to operate, binding at the transmission cover may exist. This can be overcome by loosening the cover mounting bolts and tapping the cover to reposition it.***

BAND ADJUSTMENT

Band	Released Gear Ratio	Screw Torque	Turns Backed Off	Applied Gear Ratio	Lock Nut Torque
1	*	19-21 lbs. ft. (2.62-2.90 mkg)	1¼	*	20-25 lbs. ft. (2.76-3.45 mkg)
2	Neutral	110-130 lbs. in. (126.73-149.77 cmkg)	¾	Park	20-25 lbs. ft. (2.76-3.45 mkg)
3	Neutral	110-130 lbs. in. (126.73-149.77 cmkg)	¾	Park	20-25 lbs. ft. (2.76-3.45 mkg)

*Adjusted with engine off.

© FORD MOTOR CO. 1964

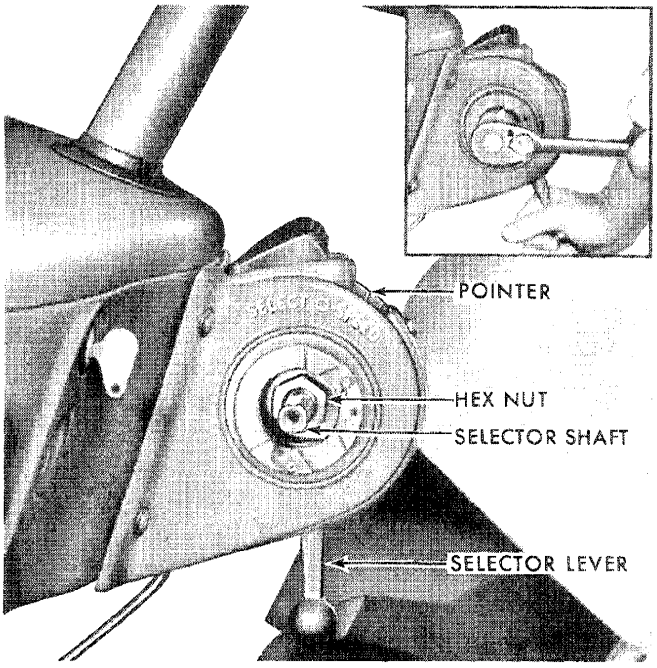

Figure 25
Adjustment of the Selector Assembly

P.T.O. CONTROL HANDLE ADJUSTMENT

Correct P.T.O. handle travel is essential for proper P.T.O. operation and transmission functioning. If the handle is improperly adjusted, handle travel will be affected and it is possible to continually feather the P.T.O. clutch in the handle engaged and disengaged positions. This procedure does not apply to the Super Major 5000.

If improper P.T.O. control handle adjustment is indicated:

1. Pull the P.T.O. handle to its out position.
2. Disconnect the lower P.T.O. conduit fitting and the upper fitting behind the tractor hood. See Figure 33.
3. Remove the upper jam nut and washer and push the control assembly through the opening.
4. Turn the P.T.O. handle clockwise until the lower end of the conduit can be raised above the fitting on the transmission cover. Pull the handle to make sure it is fully out.
5. Turn the P.T.O. handle counterclockwise until the lower end of the conduit just contacts the fitting on the cover. To obtain a vertical, readable handle position, turn the handle clockwise as required, but not exceeding one full turn.
6. Position the spacer, washer, and jam nut on the P.T.O. control assembly behind the instrument panel and tighten the nut securely.
7. Securely tighten the conduit nut. The lower end of the conduit must seat freely on the transmission cover P.T.O. fitting.
8. With the handle remaining in the "OUT" detent, force the conduit lower end away from the transmission cover. A separation of $\frac{3}{32}$ in. (0-2.54 mm) between the conduit and transmission cover P.T.O. fitting must result.

   NOTE: ***This check, combined with step 10, should be carried out whenever incorrect P.T.O. handle adjustment is suspected.***
9. Securely tighten the conduit lower nut on the transmission cover fitting.
10. Place the handle in the "IN" detent position. Using a scale or other suitable measuring tool, measure the distance the handle travels from detent to detent or from the full "IN" to the "OUT" position. This distance must be within $1\frac{3}{8}$-$1\frac{7}{16}$ in. (35.0-36.5 mm). If the measurement obtained is not within specifications, readjust the handle until the correct measurement is obtained. See Figure 26.

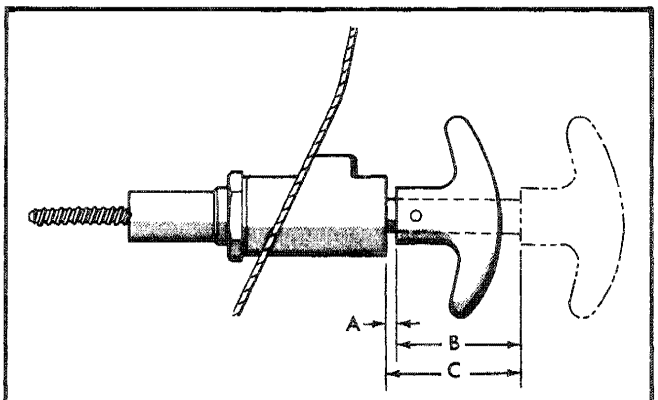

Figure 26
P.T.O. Handle Adjustment

CONTROL VALVE ADJUSTMENT

NOTE: ***The control valve on the Super Major 5000 cannot be adjusted in the tractor due to the valve location. To adjust the Super Major 5000 control valve install it in either the Dexta 2000, Super Dexta 3000 or Major 4000.***

Valve Adjustment: Valve adjustment is to be performed when:

1. The transmission pressures have been checked and it has been determined that valve adjustment is required.
2. The valve body has been reassembled after servicing, so that the correct pressure settings can be made.

Valve Adjustment Purposes: The procedure for adjusting the valve and checking valve pressures in this section is also effective for trouble shooting purposes to determine:

1. The condition of the transmission hydraulic system.
2. If transmission malfunctioning is the result of incorrect pressure settings or other circuit difficulties.

A. Adjusting the Control Valve (Dexta 2000, Super Dexta 3000 and Major 4000)

1. Disconnect the drive line disengagement.
2. Remove the hex head plugs from Servos 1, 2, and 3, and install the pressure gauges. See Figures 27 and 28.
3. Start the tractor engine and warm up the transmission oil to 80-120°F. (27-49°C.).

NOTE: ***It is essential that the engine is operating properly so that accurate pressure readings are obtained. To get an accurate adjustment of the transmission relief valve, it is important that the transmission oil temperature does not exceed 120° F. (49° C.).***

4. Remove the transmission cover and control valve, as covered on page 31.

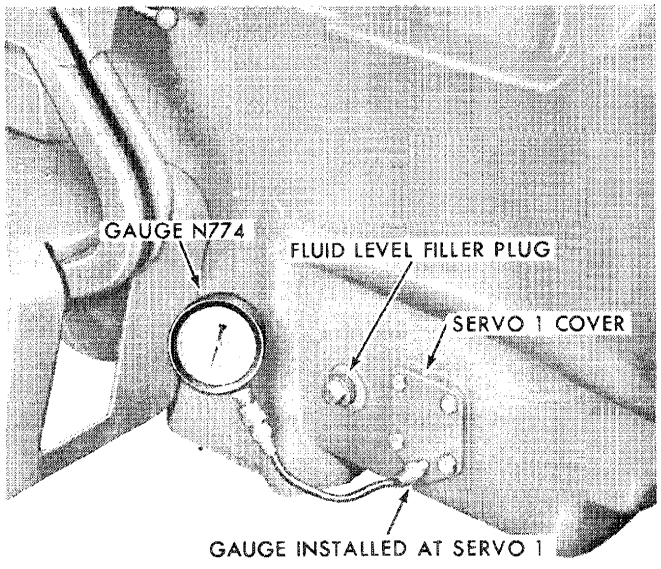

Figure 27
Gauge Installed in Servo 1

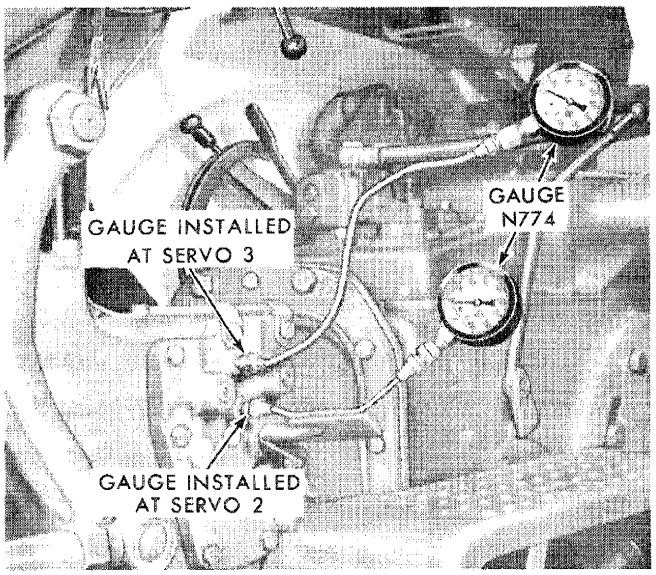

Figure 28
Gauge Installed in Servos 2 and 3

© FORD MOTOR CO. 1964

5. Remove the screws which secure the retainers to the upper valve body and remove the retainers.

   NOTE: ***If the spring adjusting screws have been removed, the adjusting screw heads should initially set flush with the valve body.***

6. Remount the valve assembly on the distributor and secure the discharge tube to the valve.

7. With the valve in park (P) position, start the engine by grounding the safety starter switch wire. Operate the engine at 800 rpm.

8. Referring to the chart on page 27, use an offset screwdriver or a retainer removed in step 5 and adjust the control valve. The procedure is detailed under "Checking Valve Pressures" on page 26.

9. When the control valve has been properly adjusted, remove the control valve and install the retainers removed in step 5. If necessary, turn the adjusting screws inward so that the slots in the screws will align with the retainers.

10. Install the valve body and transmission cover as outlined on pages 31 and 32.

B. Checking Valve Pressures

The procedure for checking valve pressures requires following steps 1 through 3 on page 25, "Adjusting the Control Valve" and following the specific instructions under each heading below. It should be noted that the chart on page 28 summarizes this checking procedure and therefore may be referred to after the procedure is understood.

System Regulating Valve Pressure: Set the engine speed at 800 rpm and shift the selector lever to neutral and note the pressure readings at the three servo locations. If the servos are pressurized at 205 psi (14.35 kg/cm^2), the system regulating valve is functioning properly. If the pressures are out of specification, adjust the valve. If the pressure check is used to diagnose transmission malfunctioning and the servo readings in any of the gear ratios as shown in the chart on page 28 vary more than 3 psi (0.21 Kg/cm^2), refer to page 74, Hydraulic Condition #4.

Transmission Relief Valve Pressure: After the system regulating valve pressure has been checked and adjusted, set the engine at 2400 rpm and shift the selector lever to neutral. Note the pressure readings at each servo. If the pressure reading is not to specifications as shown in the chart below, adjust the valve. If the pressure check is used to diagnose transmission malfunctioning and the valve cannot be adjusted to specifications refer to page 75, Hydraulic Condition #5.

Transmission Equipped:	Transmission Relief Valve Pressure
With Heat Exchanger	225 psi (15.8 Kg/cm^2)
Without Heat Exchanger	215 psi (15.1 Kg/cm^2)

If the pressure checks are used to diagnose transmission malfunctioning, proceed as follows:

1. Record the pressure readings and compare them with the "Hydraulic Conditions" covered in Trouble Shooting.

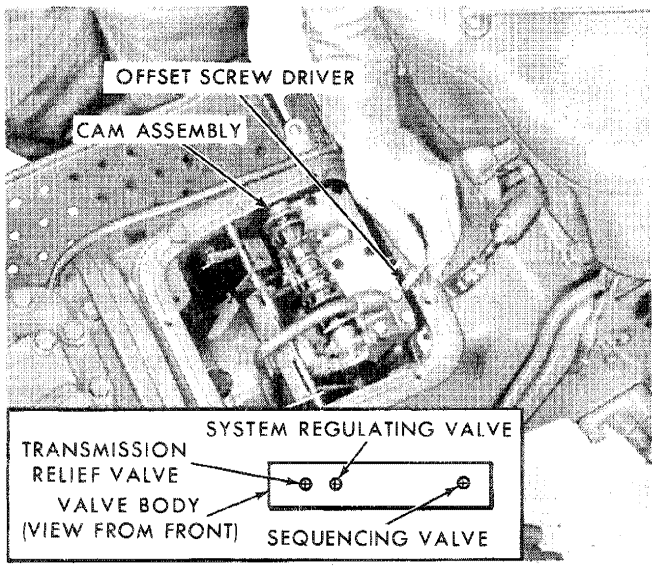

Figure 29
Adjusting Valve Pressure

2. If a pressure differential of more than 3 psi (0.21 kg/cm²) between servo readings, refer to "Hydraulic Conditions" covered in Trouble Shooting on page 74.

3. Pull the P.T.O. handle out. If the pressure drops, a leak is occuring in the P.T.O. clutch circuit. This step does not apply to the Super Major 5000.

Lubrication Pressure: If the lube light comes on while the transmission is operating and malfunctioning in the lubrication circuit or sender switch is thought to exist, the lubrication pressure should be checked as follows:

1. On transmissions not having an external heat exchanger, the transmission top cover must be removed as covered on page 30. Remove the sender switch and install a pressure gauge.

NOTE: ***On transmissions having an external heat exchanger, drill into the head of an oil line adapter bolt, which is located at the banjo fittings on the transmission case and thread for a ¼ inch pipe plug. Install the adapter bolt into the banjo fitting where the oil leaves the transmission and goes forward to the heat exchanger. This is the top connection on the Dexta 2000, Super Dexta 3000 and Major 4000 Tractors. It is the bottom connection on the Super Major 5000 Tractors. Install pressure gauge in the adapter bolt.***

VALVE PRESSURE SETTINGS

Valve	Gears	Inching Pedal	P.T.O. Handle	Servo 1	Servo 2	Servo 3	RPM
System Regulating Valve	Neutral	up or down	in or out	205 ±5	205 ±5	205 ±5	800
Transmission Relief Valve (Oil Temperature not to Exceed 80-120°F., 27-49°C.)	*Neutral	up	in	225 ±5	225 ±5	225 ±5	2400
Sequencing Valve		Valve screw to be flush with face of valve body.					

NOTE: All pressure readings should be within 5 psi (0.35 kg/cm²) of each other.

(205 psi=14.35 kg/cm²)
(5 psi= 0.35 kg/cm²)
*(225 psi= 15.8 kg/cm² with heat exchanger)
*(215 psi= 15.1 kg/cm² without heat exchanger)

© FORD MOTOR CO. 1964

PRESSURE GAUGE READINGS

System Regulating Valve

Gear Ratio	Band 1 Servo	Band 2 Servo	Band 3 Servo
P			
R^2		205	
R^1	205	205	
N	205	205	205
1	205	205	
2	205	205	
3		205	
4		205	
5	205		205
6	205		205
7			205
8			205
9	205	205	205
10		205	205

NOTE: All readings should be within ± 5 psi (0.35 Kg/cm²) of figures shown above.

205 psi=14.35 kg/cm²)
(5 psi = 0.35 kg/cm²)

2. Operate the engine at 800 rpm and note the pressure reading.
   a. If the specified pressure is exceeded, the sender is malfunctioning and should be discarded.
   b. If the pressure is less than that specified, excessive leakage is occurring in the lube circuit. Refer to "Hydraulic Condition #1" on page 74.

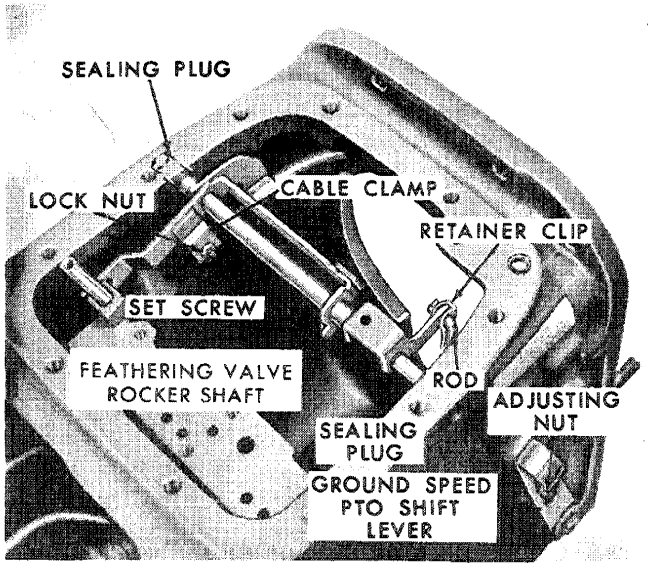

Figure 30
Feathering Linkage

GROUND SPEED P.T.O. INTERLOCK ADJUSTMENT

To prevent engaging both the ground speed P.T.O. and the engine P.T.O. at the same time, an interlock is provided, Figures 30 and 31. The interlock consists of a flexible cable, enclosed in a conduit. The cable connects the P.T.O. feathering valve rocker assembly and a plunger and bracket arrangement at the ground speed P.T.O. lever.

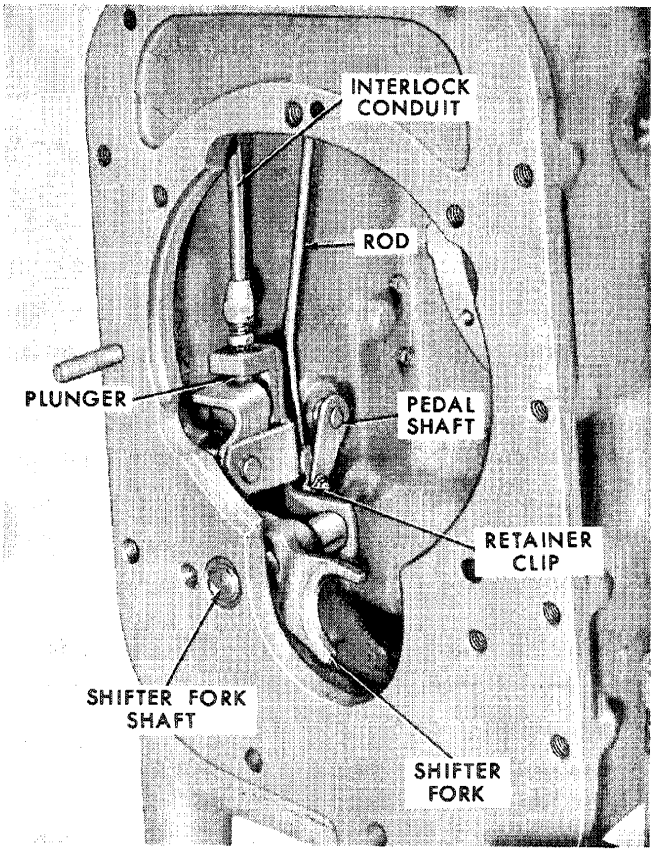

Figure 31
P.T.O. Interlock Linkage

With the P.T.O. clutch disengaged, the cable is completely extended through to ground speed shift lever so that the plunger is below the forked bracket. When the ground speed lever is moved forward to engage ground speed P.T.O., the fork moves to surround the cable. In this position, the plunger cannot be raised by the cable to engage the P.T.O. clutch.

When the P.T.O. clutch is engaged, the cable is pulled up so that the feathering valve rocker lever depresses

the valve spool into the valve body. In this position, the plunger lies in the path of the forked bracket so that the ground speed P.T.O. cannot be engaged.

Adjust the interlock mechanism as follows:

1. Remove the transmission cover as covered on page 30.
2. Position the ground speed shift lever in the forward notch to engage the ground speed P.T.O. If sufficient lever travel is not available, loosen the adjusting nut on the lever and reposition the lever plate. See Figure 30.
3. Loosen the lock nut and set screw in the cable clamp, shown in Figure 30.
4. Pull all the excess cable through the clamp until the plunger is firm against the ground speed shift lever.
5. With the P.T.O. feathering valve plunger in the out position, secure the cable clamp so that 0.005-0.015 in. (0.127-0.381 mm.) clearance exists between the end of the plunger and the P.T.O. feathering valve lever.
6. Engage the ground speed P.T.O. lever and pull up on the cable connector. The feathering valve rocker lever should not move the feathering valve plunger.
7. Disengage the ground speed P.T.O. and pull up on the P.T.O. control cable connector to depress the feathering valve. Now check to be certain the ground speed P.T.O. can not be engaged.

3. INTRODUCTION TO SERVICING THE TRANSMISSION

The arrangement of the procedures in this chapter permits servicing the transmission with minimum disassembly. Transmission disassembly and assembly are separated into four groupings, as covered below. Each grouping includes those operations which can be performed or assemblies which can be serviced under the conditions established. In the case of Condition 4, Section 7, it is necessary to follow the procedures in each of the preceding groupings to completely disassemble the transmission. In the case of 3, it is necessary to follow the procedures in Condition 1. A 5th grouping, covering detailed service procedures for the repair of sub-assemblies is also included.

CONDITION 1

Assemblies Serviced With Transmission Installed: On Dexta 2000, Super Dexta 3000, and Major 4000, refer to page 30. On Super Major 5000, refer to page 34.

P.T.O. Cable Assembly (except Super Major 5000)
Speed Selector Assembly
Transmission Cover
Filter
Safety Starter Switch
Lubrication Sender Switch
Servo Covers
Servo Assemblies
Oil Inlet Screen
Control Valve

CONDITION 2

Assemblies Serviced With Transmission Rear End Overhaul: On Dexta 2000, Super Dexta 3000, and for Major 4000, refer to page 35. On Super Major 5000, refer to page 45.

Rear Support
Planetary Assemblies A, B, C and D*
Clutch Assemblies Direct Drive, 1, 2, and 3
Oil Distributor
Brake Bands 1, 2 and 3
Feathering Linkage
Ground Speed P.T.O. Linkage**
Servo Assemblies 1, 2, and 3
Main Pressure Tube
*Dexta 2000 and Super Dexta 3000.
**Dexta 2000, Super Dexta 3000 and Major 4000.

CONDITION 3

Assemblies Serviced With Transmission Front End Overhaul: On Dexta 2000, Super Dexta 3000, and Major 4000, refer to page 54. On Super Major 5000, refer to page 55.

Transmission Oil Pump
Pump Adapter Plate
Servo 1 Tube
Torque Limiting Clutch
Front P.T.O. Clutch Pressure Tube*
Front Direct Drive Clutch Tube

© FORD MOTOR CO. 1964

Input Shaft Front Seals
P.T.O. Front Shaft (with 540 and 1000 rpm*)
P.T.O. Shaft Front Seal*
*Dexta 2000, Super Dexta 3000 and Major 4000.

CONDITION 4

Assemblies Serviced With a Complete Overhaul: On Dexta 2000, Super Dexta 3000, and Major 4000, page 57. On Super Major 5000, page 59.

Input Shaft
Band 2
Servo 2 and 3 Levers
P.T.O. Clutch Assembly and Shaft*
P.T.O. Pressure Tube
P.T.O. Shifter Linkage*
P.T.O. Shaft**

*Dexta 2000, Super Dexta 3000, and Major 4000.
**Super Major 5000.

CONDITION 5

Repair of Sub-assemblies: See page 60 for all models. When disassembling the transmission, work in clean surroundings with clean tools. Thoroughly clean the transmission case to prevent dirt entry. Use only lint-free towels when wiping your hands or the parts. Lay cleaned parts out on new paper so that a thorough inspection can be made.

When assembling the transmission components, care must be exercised not to use force. If the parts do not assemble freely, examine them for the cause of difficulty. The following general instructions should be followed.

Always install new gaskets and seals.

Compare the shaft sealing rings with new ones or install new ones.

Use petroleum jelly on the shaft sealing rings to center them on the shafts and on the gaskets and thrust washers so that they remain in position.

Care should be exercised when installing tubes with assembled O-rings so that the sealing surfaces are not damaged. Always install the O-rings in the chamfered end of the bore and use petroleum jelly to facilitate assembly.

Refer to Figure 42 for the proper location of the thrust washers.

Always check front and rear compartment end play.

4. ASSEMBLIES SERVICED WITH TRANSMISSION INSTALLED

DEXTA 2000, SUPER DEXTA 3000, AND MAJOR 4000

A. Speed Selector Assembly—Removal

1. Remove the four housing-to-sheet metal retaining screws.
2. Place the selector lever in park (P) and loosen the conduit nut at the transmission cover.
3. Move the selector lever to the tenth speed position, allowing the complete assembly to move away from the transmission cover, as shown in Figure 32.
4. Separate the upper cable from the lower cable, disconnect the selector lamp wires and remove the selector assembly by lifting it out of the tractor sheet metal.

B. P.T.O. Cable Assembly—Removal

1. Remove the metal attaching screws from the right-hand steering gear cover and remove the cover. Pull the control handle all the way out and completely loosen the conduit nut, Figure 33, at the transmission cover.
2. Loosen the nut securing the conduit to the control handle and the rod assembly at the back of the instrument panel.
3. Completely loosen the jam nut which secures the unit to the instrument panel.
4. Turn the P.T.O. handle clockwise until the cable disengages from the P.T.O. connector in the transmission.

C. Transmission Cover—Removal

1. Disconnect the P.T.O. cable assembly and remove the speed selector assembly as covered under A and B, above.
2. Remove the lower selector cable by turning it clockwise to thread it from the control valve assembly.
3. Remove the ten cover-securing bolts, and lift the cover sufficiently from the case to detach the

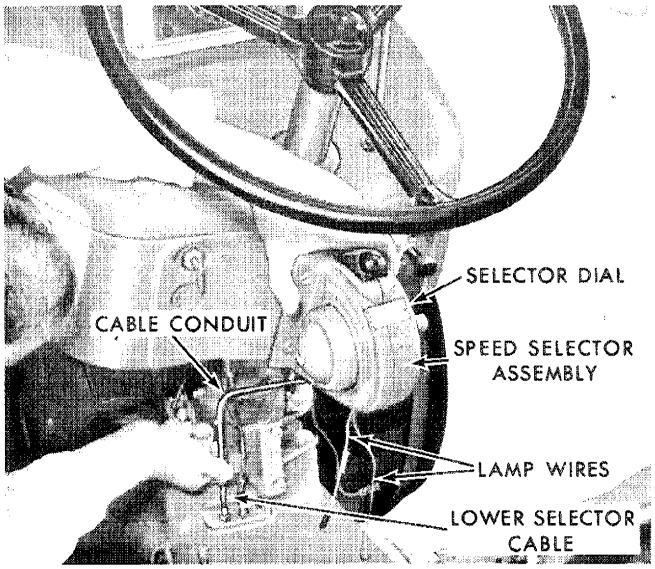

Figure 32
Removing Speed Selector

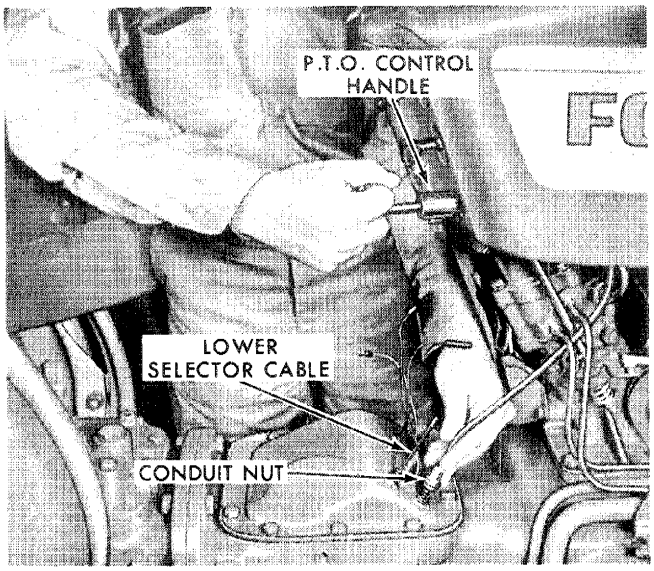

Figure 33
P.T.O. Control Removal

safety starter switch wire and the lube light switch wire. See Figure 15. Remove the cover.

D. Oil Discharge Tube, Safety Starter Switch, and Control Valve—Removal

1. Disconnect the P.T.O. cable and remove the speed selector, and transmission cover as covered under A, B, and C, above.

2. Remove the three bolts which secure the tube manifold to the top of the control valve, Figure 15. Remove the inching pedal return spring.

3. Lift out the manifold and tube as an assembly by lifting and threading the lower end of the tube from around the "C" ring gear assembly. Refer to Figure 34.

   NOTE: ***The oil discharge tube or the pedal return spring need not be removed to remove the control valve. The upper manifold portion can be swung up and back to provide adequate clearance.***

4. Remove the two bolts that secure the safety starter switch bracket to the control valve, and remove the switch and bracket.

5. Remove the remaining mounting bolts at the left front of the control valve.

   NOTE: ***Do not loosen the two bolts that hold the two halves of the control valve together.***

6. Depress the inching pedal and remove the control valve as shown in Figure 35.

   NOTE: ***It may be necessary to gently pry the valve body to free the gasket sealing surface.***

E. Oil Discharge Tube, Safety Starter Switch and Control Valve—Installation

1. Lower the oil discharge tube through the opening at the rear of the transmission adjacent to the

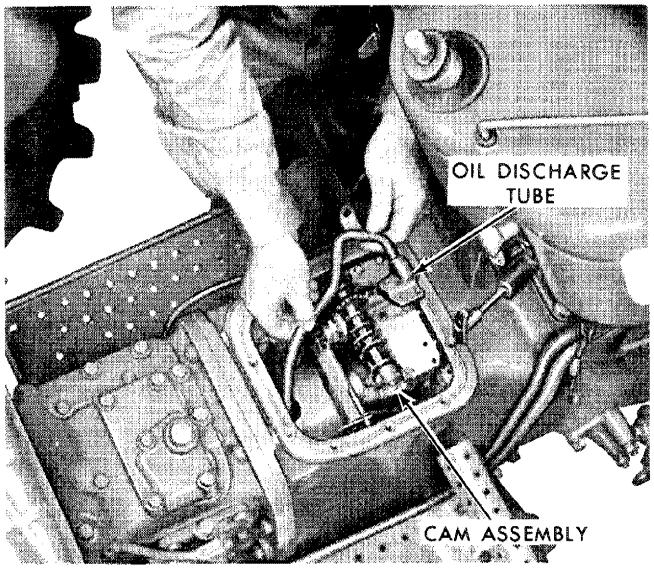

Figure 34
Oil Discharge Tube Removal

© FORD MOTOR CO. 1964

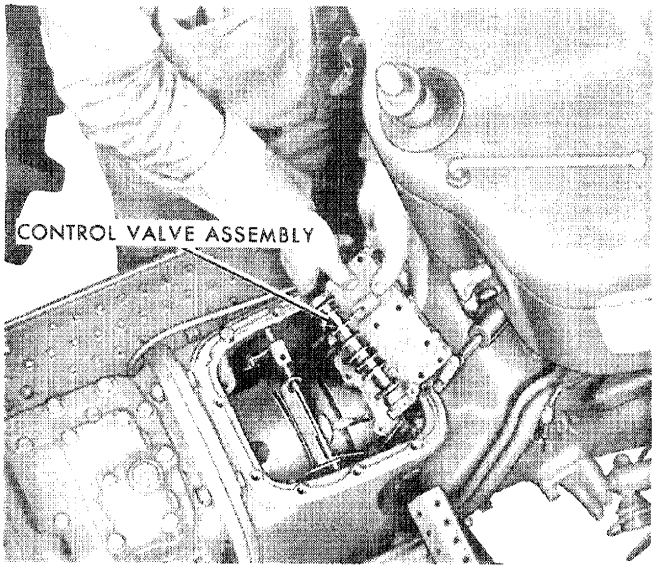

Figure 35
Removing Control Valve

"C"-ring gear. The tube is positioned between the "C"-ring gear and the right-hand wall of the transmission case.

2. Locate the web in the bottom of the transmission case by moving the lower end of the tube forward and back. After locating the web, seat the clip at the lower end of the tube, as near as possible to the center of the transmission but still maintaining sufficient clearance between the outlet tube and "C"-ring gear.

3. Depress the inching pedal and install the gasket control valve on the distributor.

NOTE: ***If the control valve pressures are to be adjusted, the valve is to be installed with the valve spring adjusting screw retainers left off. The pressure adjusting procedure is covered on page 25.***

4. Position a new manifold tube gasket on the control valve upper body. Align the holes in the inlet tube flange with those in the control valve. Install the two longer ¼" bolts in the right side of the flange and the shorter ¼" bolt in the remaining hole.

5. Install the safety starter switch bracket with the camshaft in the Park (P) position. The switch is to be held against the boss on the cam for positive switch actuation. Install the remaining two bolts and tighten all bolts to the specified torque, page 83. Install the inching pedal return spring.

NOTE: ***If the control valve pressures are to be adjusted, the safety starter switch need not be installed. Instead, install and tighten the switch mounting bolts in the valve body. After the pressures have been adjusted, remove the discharge tubes and the control valve. Install the adjusting screw retainers and reinstall the control valve, discharge tubes and safety starter switch.***

F. Transmission Cover—Installation

1. Check the control valve to make sure it is in Park (P). In park, all of the six valve spools are in the "OUT" position.
2. Thread the lower selector cable into the P.T.O. cable slider assembly.
3. Lower the cover over the case and thread the cover wires under the valve camshaft and attach them to the safety starter switch, and connect the lube light switch wire to its terminal.
4. Insert the lower selector cable (being used as a guide tool) into the slider assembly a few turns.
5. Install the slider assembly and guide in the cover and move the cable through the guide.
6. Align the cover bolt holes with the case and install and loosely tighten the bolts and lock washers.
7. Slide the cable up and down to be sure the cable slider assembly is free to move and then remove the cable.
8. Install the selector cable through the cover in the camshaft cable wheel and note if the cable is easy to turn.

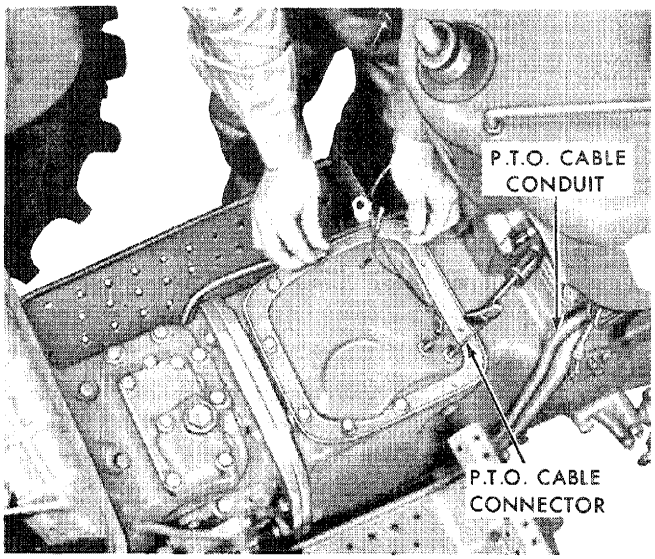

Figure 36
Transmission Cover Installation

NOTE: ***If binding in either steps 6 or 7 is encountered, it will be necessary to reposition the cover with respect to the case by tapping the cover as required.***

9. Tighten the cover bolts to the specified torque, page 83.

G. P.T.O. Control Assembly—Installation

1. Install the P.T.O. control assembly in the tractor sheet metal, placing the spacer, washer, and jam nut loosely on the assembly behind the sheet metal. Carefully push the cable through the conduit and loosely install the conduit upper nut. Refer to Figure 33.

   NOTE: ***If the P.T.O. control assembly has not been removed for servicing, disregard step 1.***

2. Lift the lower end of the conduit and insert the end of the cable in the cover fitting.

3. Permit the cable to go into the fitting until it contacts the P.T.O. cable connector and turn the P.T.O. handle counterclockwise to thread the cable into the connector.

   NOTE: ***Do not exert excessive down pressure on the connector as it is possible to force the connector from the pilot, necessitating cover removal.***

4. Pull the handle to the "OUT" position and continue to turn the P.T.O. cable by turning the handle counterclockwise until the lower end of the conduit is drawn up to the top of the cover fitting (approximately 25 turns). To obtain a vertical, readable handle position, turn the handle clockwise as required, but not exceeding one full turn.

5. Position the spacer, washer, and jam nut on the P.T.O. control assembly behind the instrument panel and tighten the nut securely.

6. Securely tighten the conduit nut. The lower end of the conduit must now seat freely on the transmission cover P.T.O. fitting.

7. With the handle remaining in the "OUT" detent, force the conduit lower end away from the transmission cover. A separation of from $\frac{3}{32}$ in. (2.54 mm) between the conduit and transmission cover P.T.O. fitting must result.

   NOTE: ***This check, combined with step 9, should be carried out whenever incorrect P.T.O. handle adjustment is suspected.***

8. Securely tighten the conduit lower nut on the transmission cover fitting.

9. Place the handle in the "IN" detent position. Using a scale or other suitable measuring tool, measure the distance the handle travels from detent to detent or from the full "IN" to the full "OUT" position. This distance must be within $1\frac{3}{8}$ to $1\frac{7}{16}$ ins. (35.0 to 36.5 mm). If the measurement obtained is not within specification, readjust the handle until the correct measurement is obtained. See Figure 26.

10. Attach the right-hand steering gear cover with the metal attaching screws.

H. Speed Selector Assembly—Installation

1. Thread the lower selector cable into the cover to obtain a protruding length of $2\frac{3}{4}$ ins. (70.00 mm) as shown in Figure 37. The distance is determined from the top of the fitting to the upper side of the notch. This dimension synchronizes the selector to the control valve when the valve is in the park (P) position.

2. Insert the end of the selector conduit through the opening in the sheet metal and install the bullet connectors for the dial lamp.

3. Shift the selector to tenth speed so that the cable extends through the conduit.

4. Connect the selector cable to the lower cable extending from the cover and shift the selector lever to park (P) to bring the conduit to the fitting on the cover.

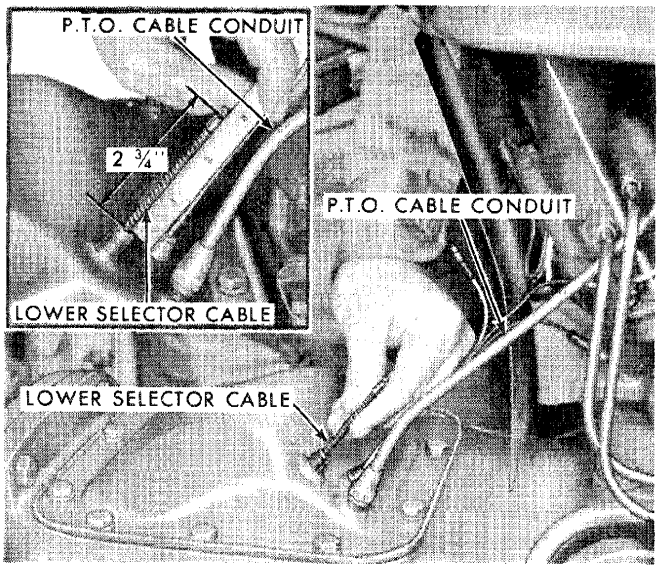

Figure 37
Installation of Lower Selector Cable

© FORD MOTOR CO. 1964

5. Tighten the lower conduit nut and secure the speed selector assembly to the hood with the four screws.
6. Shift the selector to Neutral and note if the dial is aligned with the housing. If misalignment is evident, align the selector as covered on page 23.
7. When the transmission can be operated, check the operation of the selector assembly in all gear ratios.

I. Servos 2 and 3 Assemblies, O-Ring—Installation

1. Drain the transmission oil.
2. Loosen Band 2 and 3 adjusting screws to relieve the tension from the Servos, and remove the Servo 2 and 3 cover assembly.
3. Tighten the band adjusting screws to remove the free travel in the band linkage.
4. Remove the servos from the case and remove the piston rod guides out of the servo bores, Figures 38 and 39.
5. Install the O-rings, (three in each servo) assemble the rod guides over the servo rods and install the servos in the bores.
6. Reassemble the removed components, install the oil, adjust the bands, and pressure-check the transmission.

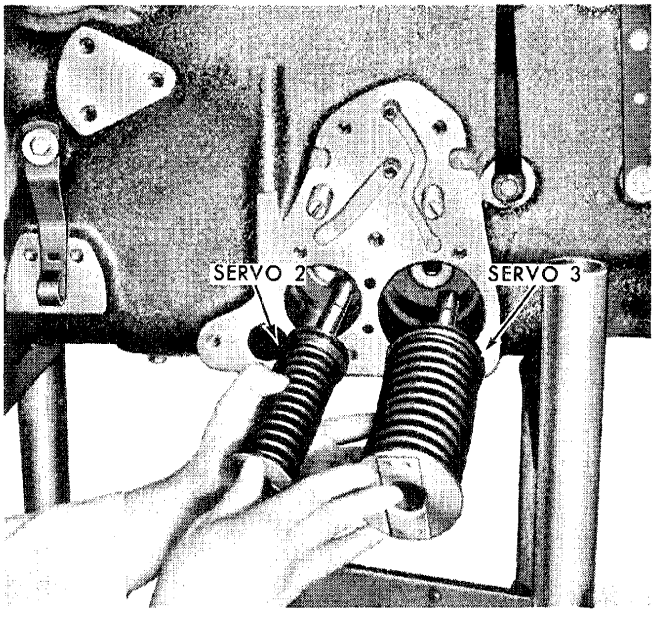

Figure 38
Removing Servos 2 and 3

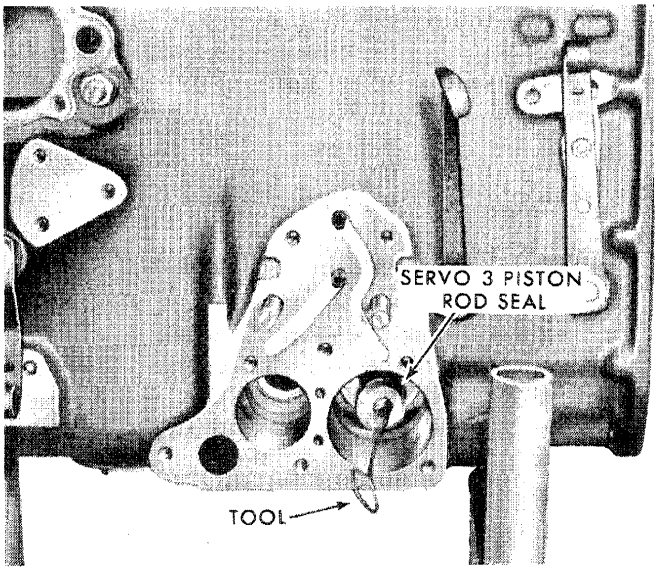

Figure 39
Removing Servo 2 and 3 Piston Rod Seal

SUPER MAJOR 5000

A. Speed Selector Assembly—Removal

Remove the speed selector assembly as outlined on page 30, "A. Speed Selector Assembly—Removal".

B. Bottom Cover, Oil Inlet Screen, Safety Starter Switch, and Control Valve—Removal

1. Remove the bottom cover retaining bolts and remove the cover.
2. Remove the oil inlet screen, shown in Figure 40.
3. Disconnect the inching pedal return spring.
4. Thread the control selector cable out of the cable wheel and withdraw the cable, Figure 41.
5. Disconnect the two wires from the safety starter switch. Remove the two bolts that secure the safety starter switch bracket to the control valve, and remove the switch and bracket.
6. Remove the mounting bolt and selector cable conduit bolt at the left and the remaining two bolts at the right of the control valve, and remove the control valve.

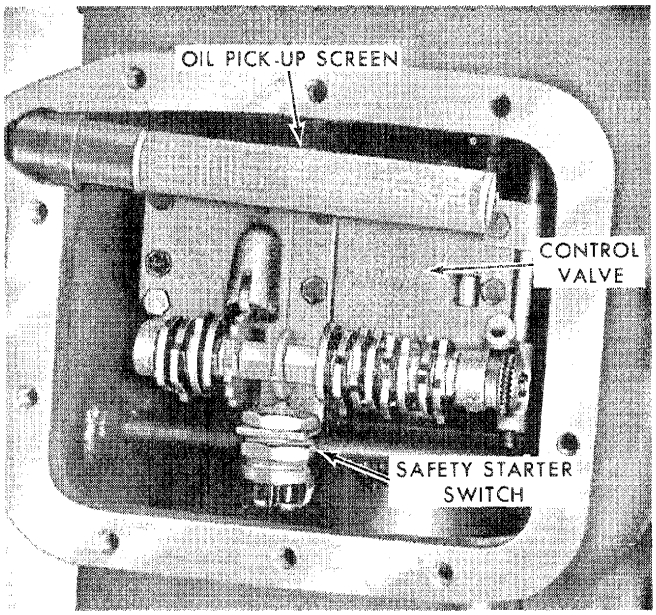

Figure 40
Bottom Cover Removal

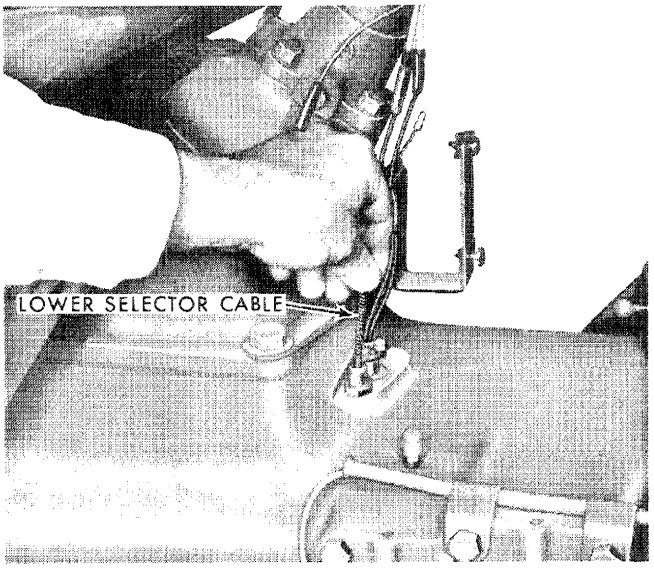

Figure 41
Installing Lower Selector Cable

C. Bottom Cover, Oil Inlet Screen, Safety Starter Switch, and Control Valve—Installation

1. Position a new gasket on the distributor, using petroleum jelly, and install the control valve.
2. Install the safety starter switch with the camshaft in the park (P) position. Tighten the bolts to the specified torque, page 83. Connect the two wires to the safety starter switch.
3. Install the mounting bolt at the left and right of the control valve.
4. Install the selector cable conduit retaining bolt but do not tighten.
5. Insert the control selector cable into the conduit and thread the cable into the cable wheel. Align the cable so there is no binding and tighten the conduit retaining bolt, Figure 41.
6. Install the inching pedal return spring and oil inlet screen.
7. Install the bottom cover using a new gasket.

D. Speed Selector Assembly—Installation

Install the speed selector assembly as outlined on page 33, "H.Speed Selector Assembly—Installation".

E. Servos 2 and 3 Assemblies, O-Ring—Installation

Install the servo O-rings as outlined on page 34, "I. Servos 2 and 3 assemblies, O-ring-Installation".

5. REAR END OVERHAUL

DEXTA 2000, SUPER DEXTA 3000, AND MAJOR 4000

A. Separating the Rear Axle Center Housing from the Transmission

1. Drain the transmission oil.
2. Separate the rear axle center housing from the transmission as covered in Part 15, "SEPARATING THE TRACTOR".

B. Transmission End Play Checks

Variable thickness selective thrust washers, Figure 42, are used in the front and rear compartments of the transmission to permit proper end float of the components. Refer to Specifications, page 81, for selective washer sizes.

The rear compartment end play check should be made before the transmission is disassembled.

The front compartment end play check is made with the transmission disassembled from the rear to the "C" sun gear.

If improper end play readings are noted, the correct selective washer can be installed during reassembly.

© FORD MOTOR CO. 1964

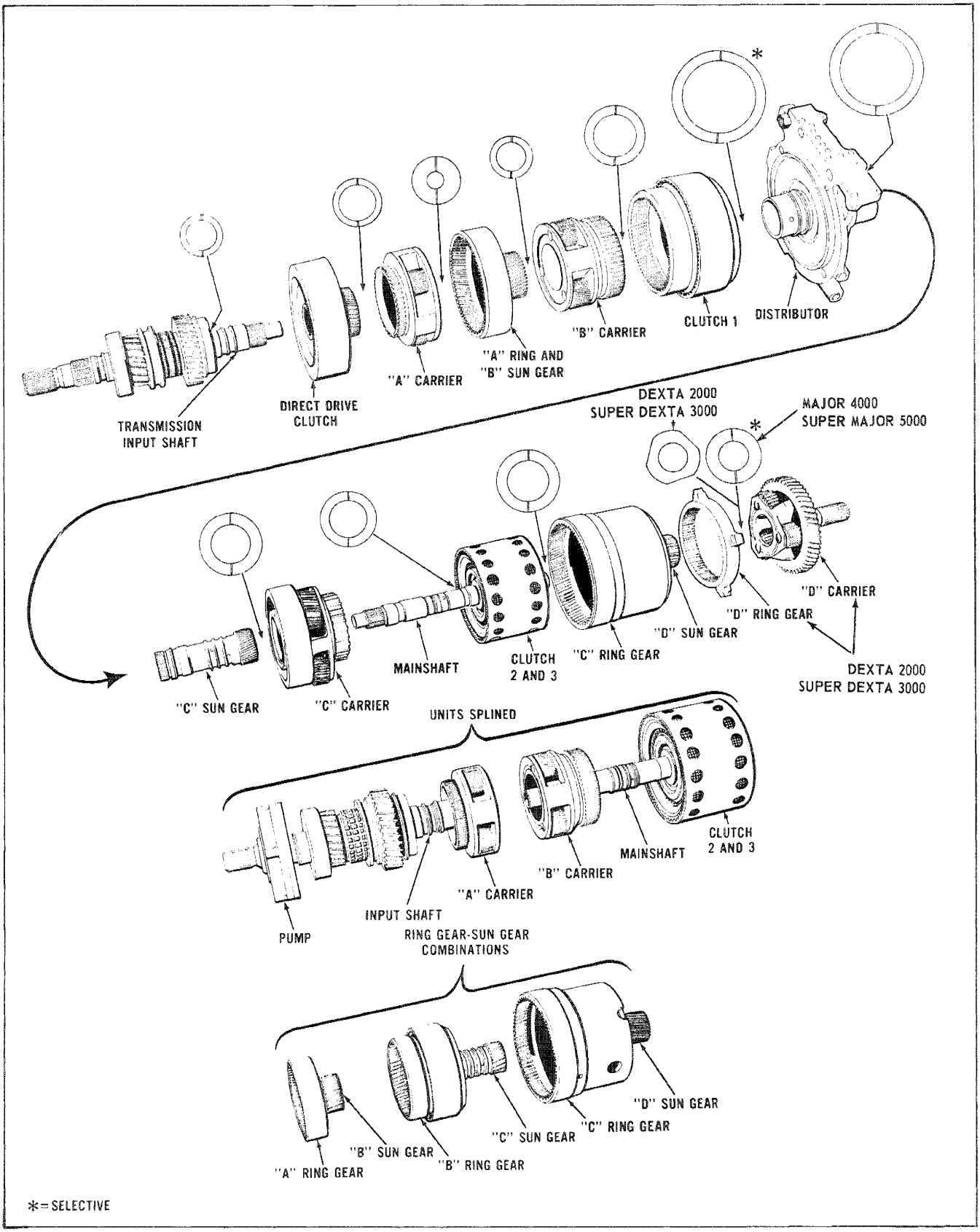

Figure 42
Transmission Components

Checking Transmission Rear End Play:

1. Back off the band 3 adjusting screw to completely release the band from the "C" carrier.
2. Mount the dial indicator support tool on the rear of the transmission case and install the dial indicator on the support so that the contact rests on the end of the transmission output shaft, Figure 43.
3. Push the output shaft toward the front of the transmission and set the dial indicator to zero, as shown in Figure 43, while maintaining a slight pressure on the shaft.
4. Pry the output shaft rearward by inserting a screwdriver between the "C" carrier and the "C" ring gear. Record the dial indicator reading for reference during transmission assembly. The output shaft end play should be from 0.005 in. to 0.015 in. (0.127 to 0.381 mm).
5. Remove the dial indicator and support tool from the rear of the transmission.

Checking Transmission Front End Play: Remove the speed selector assembly, transmission cover, safety starter switch and the control valve as covered on page 30. Disassemble the transmission from the rear to the "C" sun gear and proceed as follows:

1. Mount the dial indicator on the transmission case as shown in Figure 44.

   NOTE: ***To gain access to the front compartment, remove the four steering gear retaining bolts and raise the steering gear assembly and fuel tank until a long screwdriver can be inserted between the "B" carrier and "A" ring gear.***

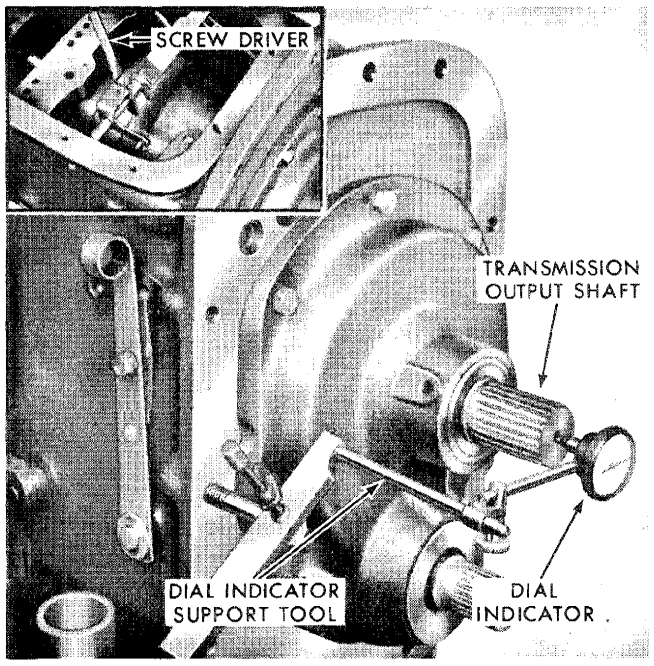

Figure 43
Checking Transmission Rear End Play

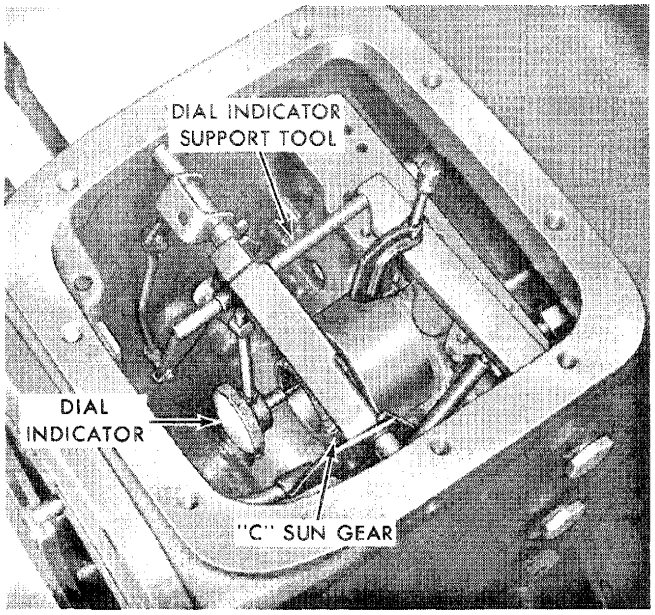

Figure 44
Checking Transmission Front End Play

2. Loosen band 2 adjusting screw. Insert a screwdriver between the "B" carrier and "A" ring gear and pry the ring gear toward the front of the transmission.
3. Set the dial indicator on zero while maintaining a slight pressure on the ring gear. See Figure 44.
4. With the screwdriver pry towards the front of the transmission and record the dial indicator reading for reference during transmission assembly. Front end play should be 0.005 in. to 0.015 in. (0.127 to 0.381 mm).
5. Remove the dial indicator from the transmission case.

C. Transmission Components—Removal

1. Separate the center housing from the transmission and check transmission rear end play, as covered in "A." and "B." above.
2. Remove the five rear support bolts. Before removing the upper bolt, remove the nut and washer on the inside of the case which secure the interlock linkage to the bolt.
3. Separate the rear support from the transmission case by using the two jack screws. Remove the rear support with the P.T.O. shaft as shown in Figure 45.

© FORD MOTOR CO. 1964

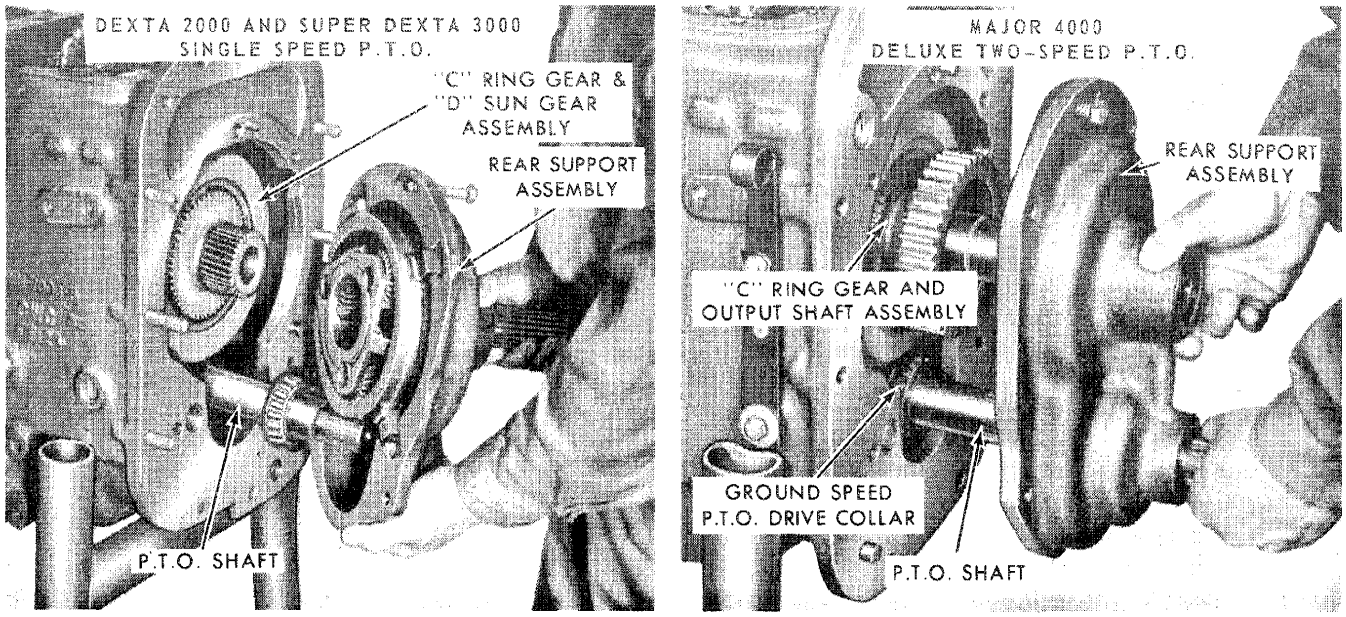

Figure 45
Removing the Rear Support

NOTE: ***In the case of the single speed P.T.O. models, the P.T.O. shaft remains in the transmission. See Figure 45.***

4. Remove the "C" ring gear, output shaft, and ground speed drive gear from the rear support. Remove the snap ring from the output shaft and remove the gear (Major 4000). Remove the "D" carrier and ground speed drive gear from the rear support (Dexta 2000 and Super Dexta 3000).

5. Remove the ground speed P.T.O. drive collar, shown in Figure 45, from the shifter fork.

6. Move the ground speed P.T.O. shift lever as required to locate the drive collar shifter fork in its lower position. Remove the "C" ring gear assembly, as shown in Figure 46.

7. Loosen the No. 3 band adjusting screw and remove the clutch 2 and 3 housing, "C" carrier, and the mainshaft in one assembly, as shown in Figure 47.

NOTE: ***If the clutch housing is pulled away from the "C" carrier, breakage of the mainshaft seals can result.***

8. Check the transmission front compartment end play as outlined in "B. Transmission End Play Check".

9. Remove the "C" sun gear as shown in Figure 48.

NOTE: ***At this point, the inching pedal shaft and P.T.O. interlock linkage can be removed.***

10. Manually compress No. 3 band, shown in Figure 49, while holding the adjusting strut and actuating strut. Remove the band and two struts from the case.

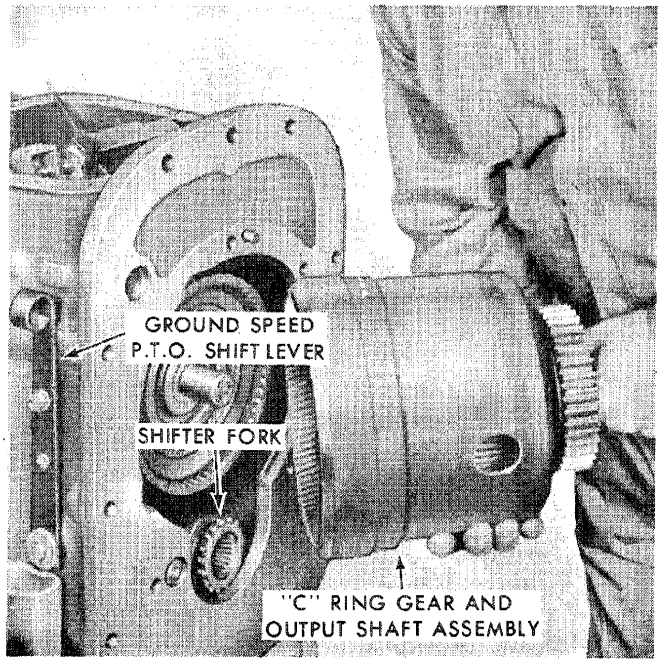

Figure 46
Removing the "C" Ring Gear and Output Shaft

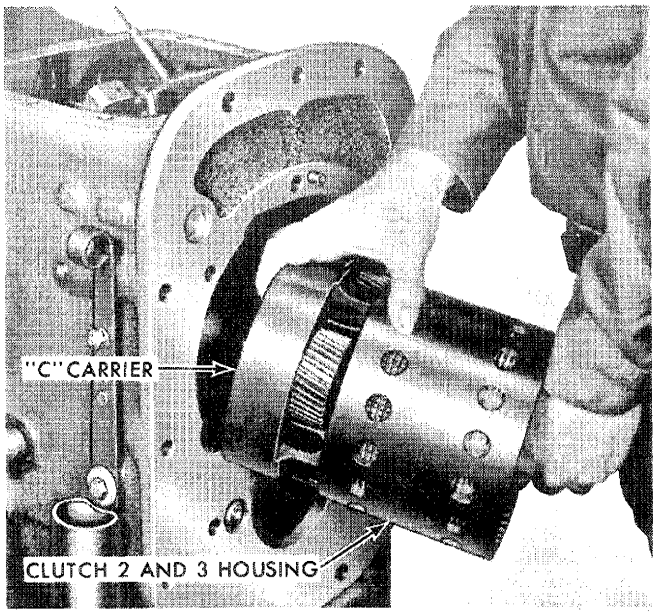

Figure 47
Removing Clutch 2 and 3 Housing and "C" Carrier

11. Remove the band 3 adjusting screw by threading it in through the case.
12. Remove the band 2 adjusting screw lock nut and washer and loosen the adjusting screw.
13. Remove the eight servo 2 and 3 cover attaching bolts and remove the cover and gasket. See Figure 50.
14. Loosen the four distributor mounting bolts, shown in Figure 49, and remove the two servo hydraulic oil tubes from the distributor (but not from the transmission case) by twisting and pulling at the same time, as shown in the Insert, Figure 50.
15. Disconnect the fitting that attaches the P.T.O. hydraulic oil line to the distributor. Refer to Figure 51.

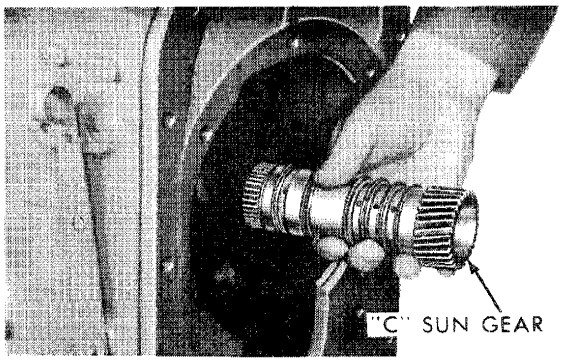

Figure 48
Removing the "C" Sun Gear

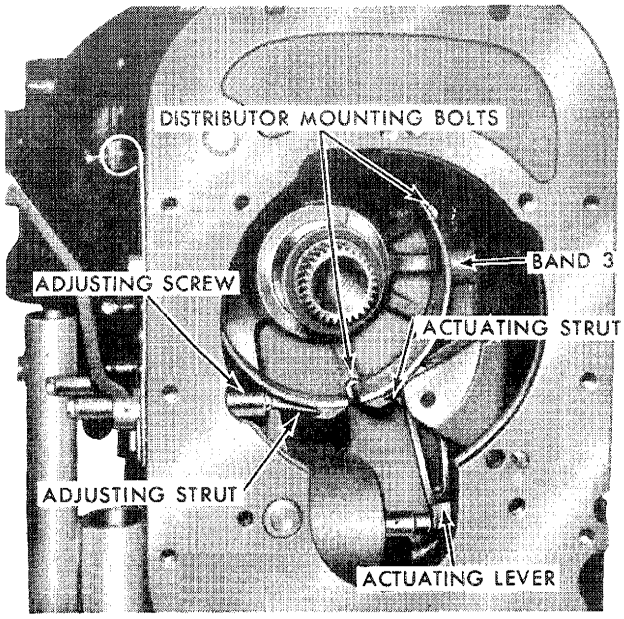

Figure 49
Band 3 in Position

16. On tractors fitted with heat exchangers, remove the two heat exchanger line adapter bolts from the distributor. See Figure 51.
17. Remove the distributor, clutch 1, "B" ring gear, and "B" carrier as an assembly. The distributor can also be removed separately prior to the removal to the clutch 1 and "B" carrier assembly. Refer to Figures 52 and 53. Remove band 2.
18. Remove the "B" sun gear and "A" ring gear,

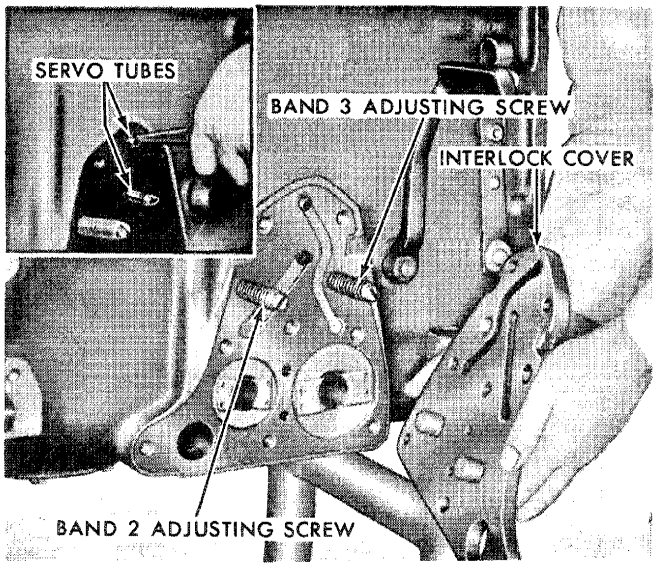

Figure 50
Removing the Servo 2 and 3 Cover

© FORD MOTOR CO. 1964

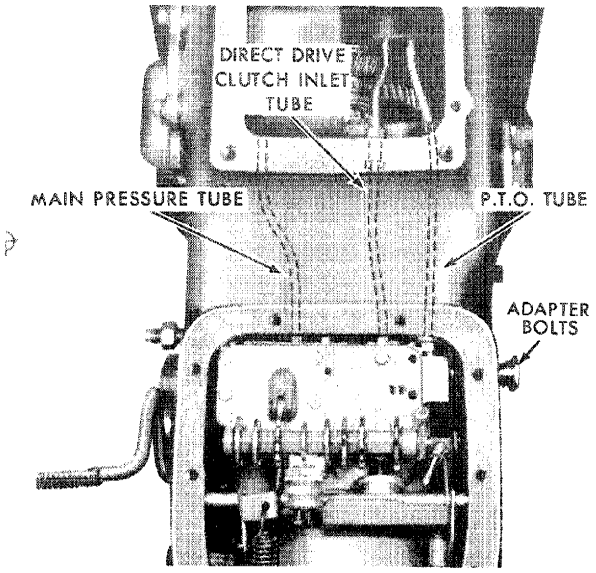

Figure 51
Oil Lines to Distributor

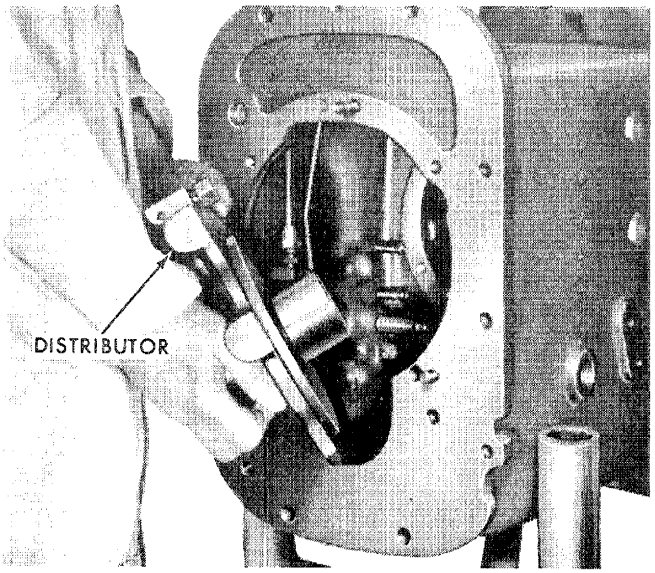

Figure 53
Removing the Distributor

shown in Figure 54. The "A" carrier can now be removed from the transmission input shaft.

19. Loosen the No. 1 band adjusting screw and remove the direct drive clutch. Compress the band while holding the actuating strut, and remove the band and strut from the case.

20. Remove the four servo 1 cover attaching bolts and remove the cover. Remove the servo from the transmission, as shown in Figure 55.

21. Remove the servos 2 and 3 from the left side of the transmission case. See Figure 38.

22. Remove the servo rod guides from the 2 and 3 servo bores, pulling them out with a suitable hooked tool as shown in Figure 39.

23. Remove the four filter cover plate bolts and remove the plate and filter as shown in Figure 56. Unscrew the filter from the adapter plate and discard the filter.

24. Remove the roll pin that secures the inching pedal to the shaft and remove the pedal. Remove the upper and lower cotter keys and retaining clips from the inching pedal rod. See Figures 57 and

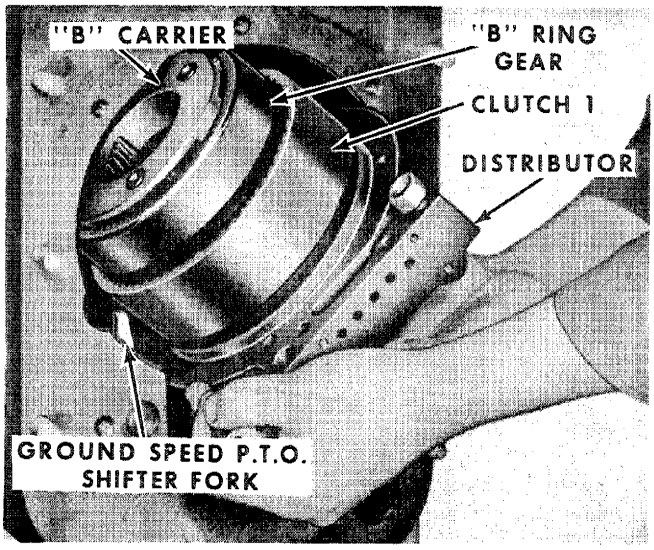

Figure 52
Removing the Distributor, Clutch 1, "B" Ring Gear, and "B" Carrier

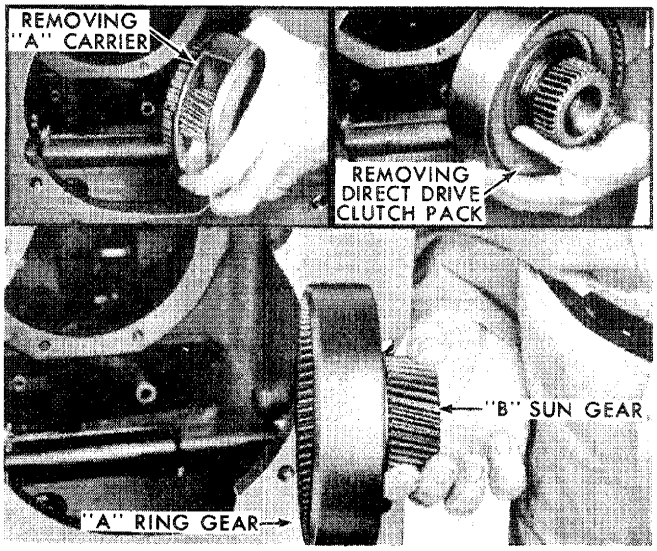

Figure 54
Removing the "B" Sun Gear and "A" Ring Gear

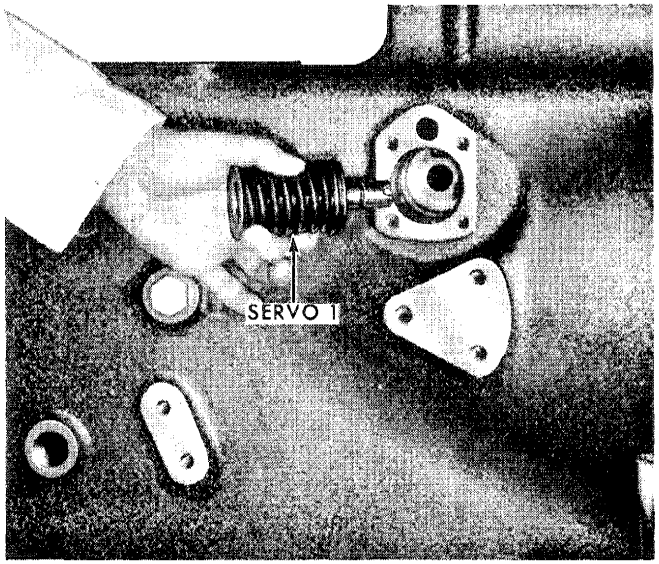

Figure 55
Removing Servo 1

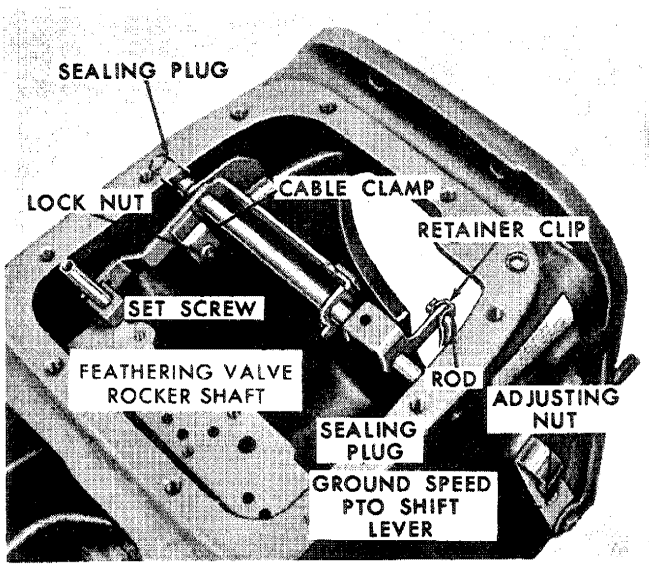

Figure 57
Feathering Linkage

58. Remove the rod and the pedal shaft assembly from the case.

25. Remove the two snap rings from the feathering valve rocker shaft. Drive the shaft to the right until the sealing plug is out of the case. For ground speed P.T.O. transmissions, it will also be necessary to loosen the interlock cable clamp.

26. Remove the P.T.O. interlock mechanism, ground speed P.T.O. shift lever, and the shifter fork by removing the snap rings from the lever and fork shafts.

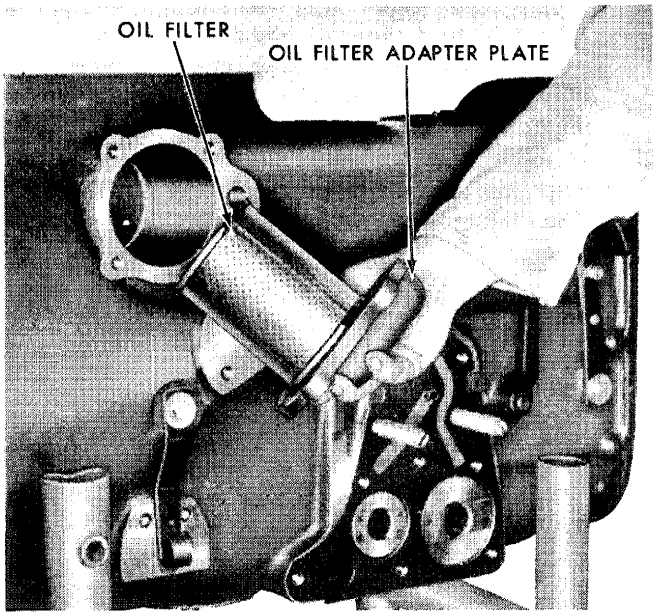

Figure 56
Removing the Oil Filter

D. Transmission Components—Installation

1. Install the feathering valve rocker shaft in the case with the transmission spacer, P.T.O. feathering control rocker, and P.T.O. interlock assemblies. Secure with two snap rings. Install two sealing plugs, assembled tight against the shaft.

   NOTE: ***Alignment of the feathering levers is performed with the valve body installed. Drive the shaft and sealing plugs to align the levers with the center of the feathering valve spools.***

2. Install the inching pedal shaft with O-ring in the left side of the transmission case. Install the control rod with the retainer clips and cotter keys. Refer to Figures 57 and 58.

3. Install the pedal on the shaft and secure with the roll pin.

4. Install the ground speed P.T.O. shift and shifter fork securing the shafts with snap rings.

5. Install the P.T.O. interlock cable and conduit in the case, inserting the top through the clamp in the P.T.O. feathering valve rocker assembly. The plunger on the bottom of the cable is installed in the shift-shaft lever. Secure the conduit fitting to the lever. See Figure 58.

6. The P.T.O. interlock cable must be adjusted after the control valve is positioned on the distributor.

© FORD MOTOR CO. 1964

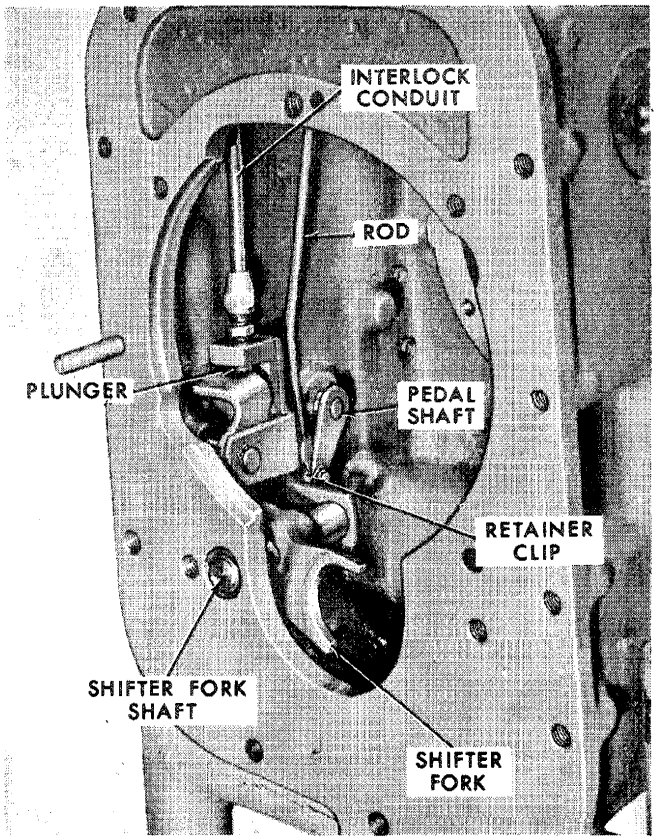

Figure 58
P.T.O. Interlock Linkage

See "Ground Speed P.T.O. Interlock Adjustment", page 28.

7. Install new O-rings on the servo 2 and 3 rod guides and pistons and install the servos in the case, as shown in Figure 38.

8. Install servo 1 in the bore with the slot in the horizontal position, as shown in Figure 55. Install the servo 1 cover.

9. Install the "A" sun gear front thrust washer over the rear of the input shaft and against the bearing. Position the "A" sun gear rear thrust washer onto the "A" sun gear and the "A" carrier and install the "A" carrier in the direct drive clutch. Install the direct drive clutch and the "A" carrier as an assembly on the input shaft. Transmission components and thrust washers are shown in Figure 42.

10. Install band 1 over the direct drive clutch housing. Install the band 1 actuating strut, thin end toward the band, and tighten the adjusting screw to hold the band and strut in position.

11. Position the "A" ring, "B" sun gear thrust washer, Figure 42, over the rear of the input shaft and install the "A" ring, and "B" sun gear. Then, place the "B" sun gear thrust washer in the hub of the "B" sun gear.

12. Position the clutch 1 thrust washer in place and assemble the "B" carrier into the clutch 1 assembly, aligning the "B" carrier splines with the splines in the clutch assembly. Install band 2 with the depression in the band end toward the adjusting screw.

13. Install the "B" carrier and clutch 1 as an assembly, aligning the carrier pinions with the "B" sun gear.

    NOTE: ***At this point, the front end play is determined by comparing the thickness of the thrust washer with the reading prior to disassembly. If the end play measured previously is not to specification, select a new thrust washer of such thickness that the correct end play is obtained.***

14. Install the selective thrust washer, shown in Figure 42, over the distributor sleeve. Install and center the sleeve cast iron seals on the distributor using petroleum jelly.

    NOTE: ***The seal with the square joint ends is forward. The seal with the step joint end is closest to the distributor body.***

15. Install the distributor into the transmission case, inserting the sleeve with sealing rings into clutch 1.

16. Align the main pressure, direct drive clutch, and band 1 servo tubes with their respective openings in the distributor, and align the P.T.O. tube with the fitting in the distributor, Figure 51. Apply presure to the distributor so that the sealing rings enter into the clutch housing. Install the four mounting bolts but do not tighten securely at this time.

    NOTE: ***During assembly, it is important that clutch 1 is not pulled away from the "B" carrier. If this should occur, the carrier cannot be fully inserted and aligned with the clutch plates.***

17. Install and properly position the band 2 and 3 servo tubes into the distributor. See Figure 51. If the tubes are not aligned with the distributor, rotate the distributor as required, and insert the tubes.

    NOTE: ***The leading chamfer for inserting the tubes with O-rings is on the outside of the case.***

18. Tighten the distributor mounting bolts to the specified torque, page 83. Attach the P.T.O. hydraulic line to the distributor fitting.

    NOTE: ***An alternate way of installing the distributor is to first install clutch 1 and the "B" carrier as an assembly on the distributor, as shown in Figure 59. After the distributor is installed in the case, align the tubes.***

19. Install the six shaft seals on the "C" sun gear. Use petroleum jelly to center the seals. Insert the gear into the distributor so the splines align with the clutch 1 housing splines. See Figure 48. Install the thrust washer on the distributor rear journal.

    NOTE: ***Do not use force when installing the "C" sun gear. Breakage of the cast iron seals may result.***

20. Check the transmission front components end play as covered on page 37. If the end play is incorrect, it will be necessary to replace the selective washer with one of correct thickness. The end play should be 0.005 in. to 0.015 in. (0.127-0.381 mm). Lack of end clearance can be immediately detected by inserting the "C" sun gear into the distributor and clutch 1 splines and noting if it is free to turn.

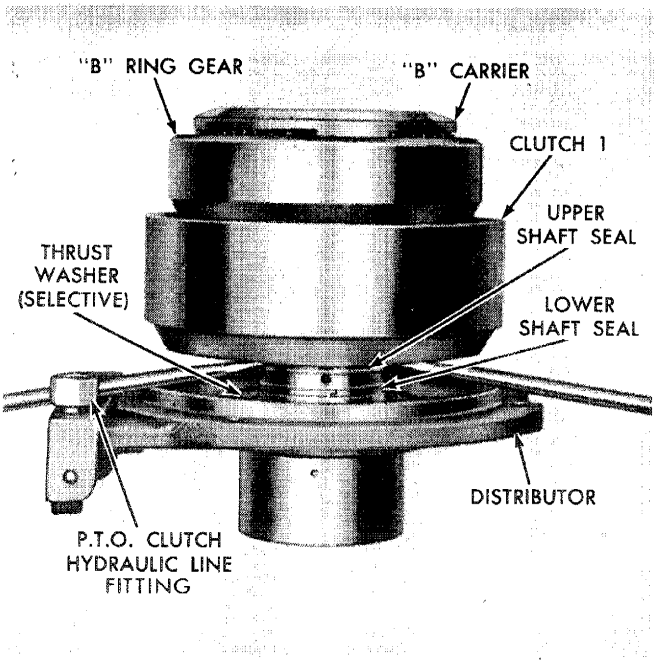

Figure 59
Installing the Distributor Shaft in Clutch 1

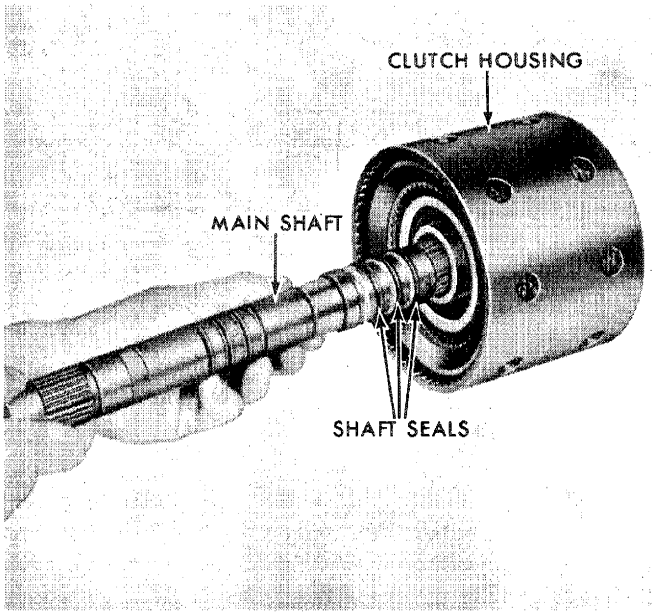

Figure 60
Installing the Mainshaft in the Clutch Housing

21. Install band 3 adjusting screw and secure band 3 in position with the depression in the band end toward the adjusting screw. Join the band to the screw with the adjusting strut and to the servo lever with the actuating strut. See Figure 49.

22. Install the servo 2 and 3 cover and gasket. See Figure 50. Install the oil inlet screen assembly. Install and tighten the servo cover attaching bolts evenly to the specified torque, page 83. Install bands 2 and 3 sealing washers and lock nuts.

23. Install the three rearmost shaft seals on the mainshaft. Use petroleum jelly to center the seals. Install the shaft in the clutch 2 and 3 housing, as shown in Figure 60. Install the clutch housing retaining snap ring (circlip) and position the "C" carrier-to-housing thrust washer over the shaft.

24. Insert the "C" sun gear-to-carrier thrust washer into the "C" carrier so it is positioned beneath the planetary pinions. Install the "C" carrier over the end of the mainshaft, as shown in Figure 61. Align the "C" carrier splines with the clutch assembly rotating the carrier back and forth so it drops down into the clutch assembly.

25. Install the remaining four shaft seals on the mainshaft. Use petroleum jelly to center the seals.

26. Install the mainshaft, "C" carrier, and clutch 2 and 3 housing as an assembly, inserting the forward end of the mainshaft into the "C" sun gear. Hold the "C" carrier to the clutch housing so

© FORD MOTOR CO. 1964

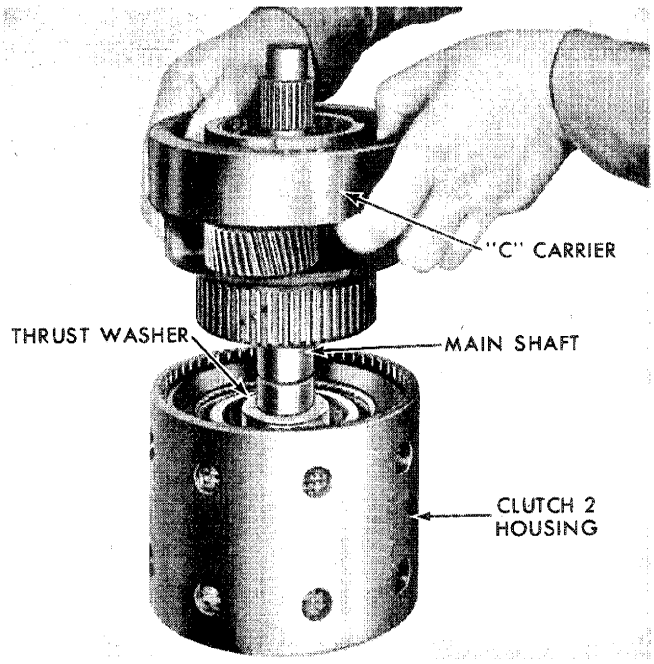

Figure 61
Installing the "C" Carrier in Clutch 2

separation does not take place, and gently force the complete assembly forward into band 3 until the splines on the mainshaft align with the "B" carrier splines.

Dexta 2000 and Super Dexta 3000 Tractors: Follow steps 27 through 30 to complete the assembly. Omit steps 31 through 35.

27. Install the "D" sun gear-to-housing thrust washer on the end of the mainshaft with the counterbored side over the snap ring on the end of the shaft.

28. Install the "C" ring—"D" sun gear over the clutch 2 and 3 housing assembly, first aligning the ring gear with the "C" carrier pinions and the mainshaft with the bushing in the "D" sun gear. At the same time, align the splines with the spline plates in clutch 3, rotating the "D" sun gear back and forth while applying pressure toward the clutch assembly.

    NOTE: ***Do not pull the assembly to the rear as it is possible to separate the "C" carrier from clutch 2.***

29. Assemble the "D" carrier into the rear support with the "D" ring gear and install the rear selective thrust washer in the "D" carrier. See Figure 42.

    IMPORTANT: ***If the transmission rear end play was not within specifications when checked prior to disassembly, replace the thrust washer with one of correct thickness.***

30. Position the ground speed P.T.O. drive collar in the shifter fork and move the ground speed lever so that the fork is in the forward position. Install the "D" carrier, "D" ring gear, and P.T.O. rear shaft as an assembly with the rear support and new gasket. Refer to Figure 45. Insert the P.T.O. shaft through the shifter collar and align the forward end of the P.T.O. shaft with the spline in the front shaft rear bearing adapter. Align the "D" carrier with the "D" sun gear and the P.T.O. shifter collar splines to the splines on the rear of the P.T.O. shaft.

Single Speed P.T.O.: Install the "D" carrier and the "D" ring gear as an assembly with the rear support and new gasket. Align the P.T.O. shaft with the rear support, and the "D" carrier with the "D" sun gear.

Major 4000 Tractors: Omit steps 27 through 30 and continue the assembly following step 31 through completion.

31. Install the output shaft-to-clutch housing thrust washer on the end of the mainshaft with the counterbored side over the snap ring on the end of the shaft.

32. Install the "C" ring gear and output shaft as an assembly by aligning the output shaft splines with the splined plates in clutch 3 and by aligning the ring gear with the "C" carrier pinions, Figure 62. Rotate the output shaft back and forth

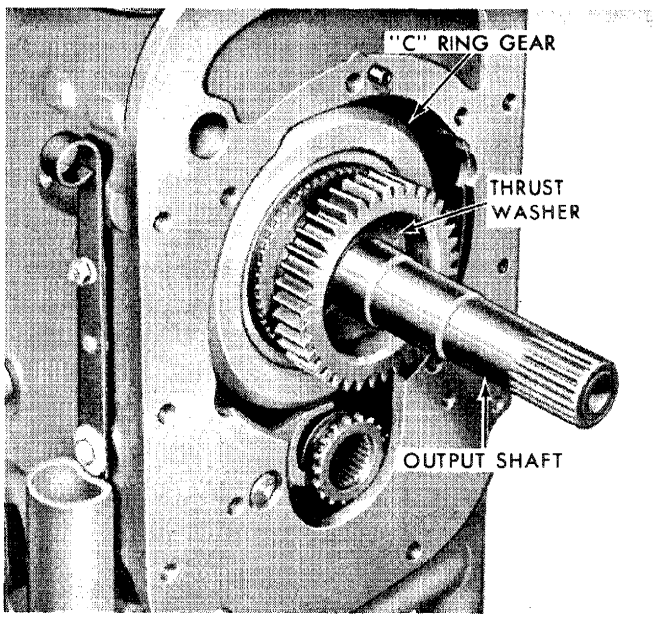

Figure 62
Installing the "C" Ring Gear and Output Shaft

while applying pressure toward the clutch assembly.

NOTE: ***Do not pull the assembly to the rear as it is possible to separate the "C" carrier from clutch 2.***

33. Install the rear selective thrust washer on the end of the output shaft. See Figure 62.

    IMPORTANT: ***If the transmission rear end play was not within specifications when checked prior to disassembly, replace the thrust washer with one of correct thickness.***

34. Position the ground speed P.T.O. drive collar in the shifter fork and move the ground speed lever so that the fork is in the forward position. See Figure 45. Install the P.T.O. rear shaft as an assembly with the rear support and a new gasket. Insert the P.T.O. shaft through the shifter collar and align the forward end of the P.T.O. shaft with the splines in the front shaft coupler. Align the P.T.O. shifter collar splines to the splines on the rear of the P.T.O. shaft and push the support into position.

Single Speed P.T.O.: Install the "D" carrier and "D" ring gear as an assembly with the rear support and new gasket (Dexta 2000 and Super Dexta 3000). Align the P.T.O. shaft with the rear support and install the support.

35. Install the four lower rear support-to-case mounting bolts. Install the bolt in top of the support and secure the ground speed interlock conduit, located on the inside of the case, with a nut and washer on the top support bolt. Tighten the bolts to the specified torque, page 83.
36. Check the transmission rear compartment end play as covered on page 37. If the end play is incorrect, it will be necessary to replace the selective washer with one of correct thickness. The end play should be 0.005 in. to 0.015 in. (0.127 to 0.381 mm).
37. Adjust the transmission bands by fully tightening the adjusting screws for bands 2 and 3. Tighten band 1 adjusting screw and back off one full turn. Tighten the lock nuts.
38. Install a new oil filter on the filter cover plate and install the filter in the transmission case. Tighten the four cover attaching bolts to the specified torque, page 83.
39. Assemble the control valve, safety starter switch, and transmission covers and controls as outlined on page 31.

SUPER MAJOR 5000

A. Separating the Center Housing from the Transmission

1. Drain the transmission oil.
2. Separate the center housing from the transmission, as covered in Part 15, "SEPARATING THE TRACTOR".

B. Transmission End Play Checks

Variable thickness selective thrust washers are used in the front and rear compartments of the transmission to permit proper end float of the components. Refer to "Specifications", page 81, for selective washer sizes. The end play checks are to be noted and recorded prior to transmission disassembly. If improper end play readings are noted, the correct selective washer must be selected and used during reassembly.

Checking Transmission Rear End Play:

1. Remove the speed selector assembly, safety starter switch, and the control valve, as covered on page 34, "Assemblies Serviced with Transmission Installed".
2. Back off the band 3 adjusting screw to completely release the band from the "C" carrier.

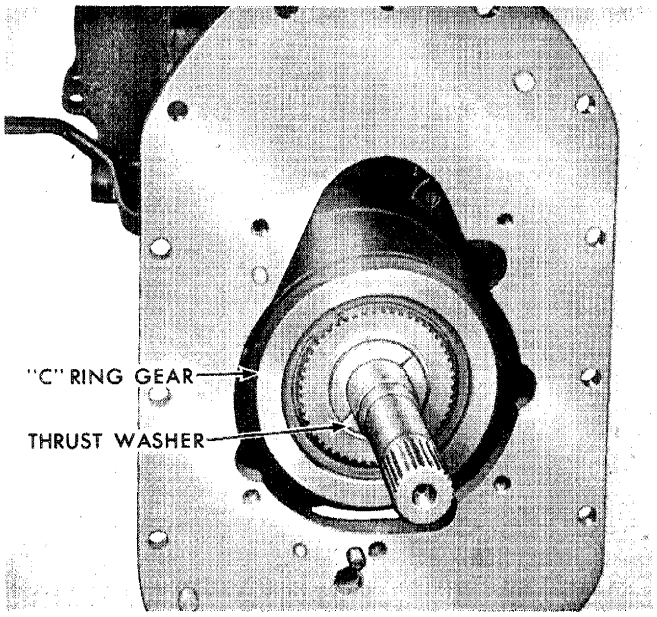

Figure 63
Installing the "C" Ring Gear and Output Shaft

© FORD MOTOR CO. 1964

3. Mount the dial indicator support tool on the rear of the transmission case and install the dial indicator on the support so that the contact rests on the end of the transmission output shaft, as shown in Figure 64.
4. Push the output shaft toward the front of the transmission and set the dial indicator to zero, while maintaining a slight pressure on the shaft.
5. Pry the output shaft rearward by inserting a screwdriver between the "C" carrier and the "C" ring gear. Record the dial indicator reading for reference during transmission assembly. Rear end play should be 0.005 in. to 0.015 in. (0.127 to 0.381 mm).
6. Remove the dial indicator and support tool from the rear of the transmission.

Checking Transmission Front End Play: To check the transmission front compartment end play, it is necessary to disassemble the transmission from the rear to the "C" sun gear. To disassemble the transmission follow steps 1 through 5 on page 46, then proceed as follows:

NOTE: ***To gain access to the front compartment, either the steering gear and fuel tank assemblies have to be raised sufficiently or the transmission has to be removed from the tractor.***

1. Mount the dial indicator on the transmission case as shown in Figure 65.
2. Loosen band 2 adjusting screw. Insert a screwdriver between the "B" carrier and "A" ring gear and pry the ring gear toward the front of the transmission.
3. Set the dial indicator on zero while maintaining slight pressure on the ring gear.
4. With the screwdriver pry toward the front of the transmission and record the dial indicator reading for reference during transmission assembly. Front end play should be 0.005 in. to 0.015 in. (0.127 to 0.381 mm).
5. Remove the dial indicator from the transmission case.

C. Transmission Components—Removal

1. Remove the speed selector assembly, bottom cover, screen, safety starter switch, and the control valve, as covered on page 34, "Assemblies Serviced with Transmission Installed". Perform the transmission end play checks, as covered in "B." above.
2. Remove the four bolts from the rear bearing retainer and remove the retainer. Refer to Figure 64.
3. Remove the five rear support attaching bolts and install two of the attaching bolts as jack screws in the rear support to separate the support from the case. See Figure 67.
4. Remove the rear support, P.T.O. shaft, output shaft, and "C" ring gear, as shown in Figure 68.
5. Loosen the No. 3 band adjusting screw and remove the clutch 2 and 3 housing, "C" carrier, and the mainshaft in one assembly as shown in Figure 69.

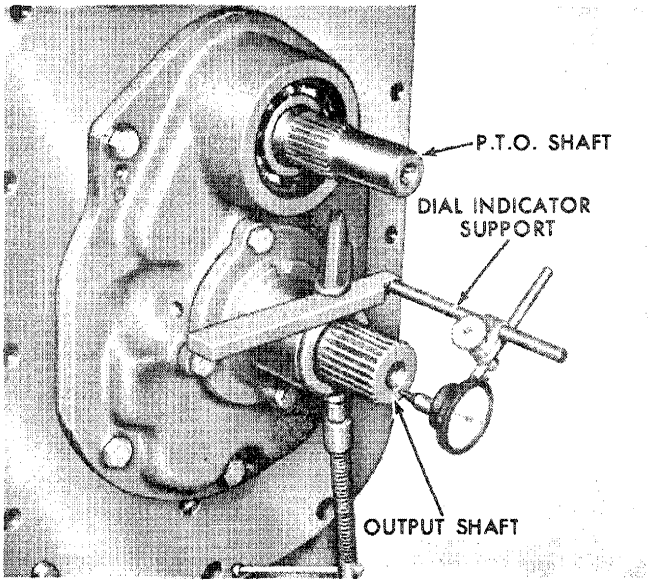

Figure 64
Checking Transmission Rear End Play

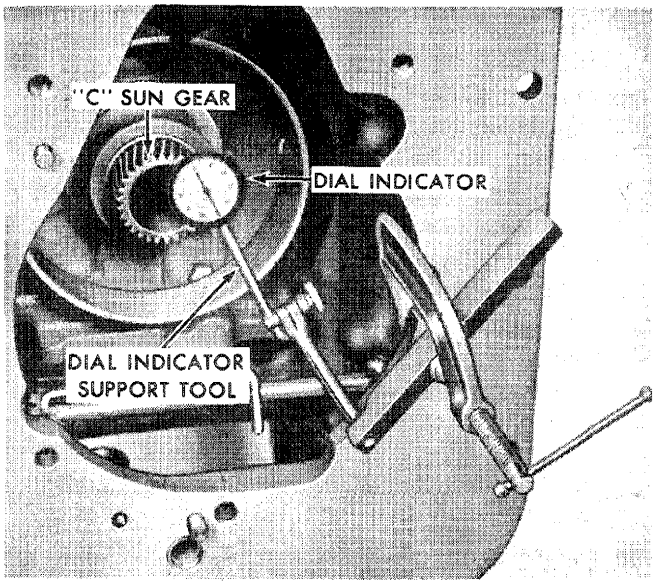

Figure 65
Checking Transmission Front End Play

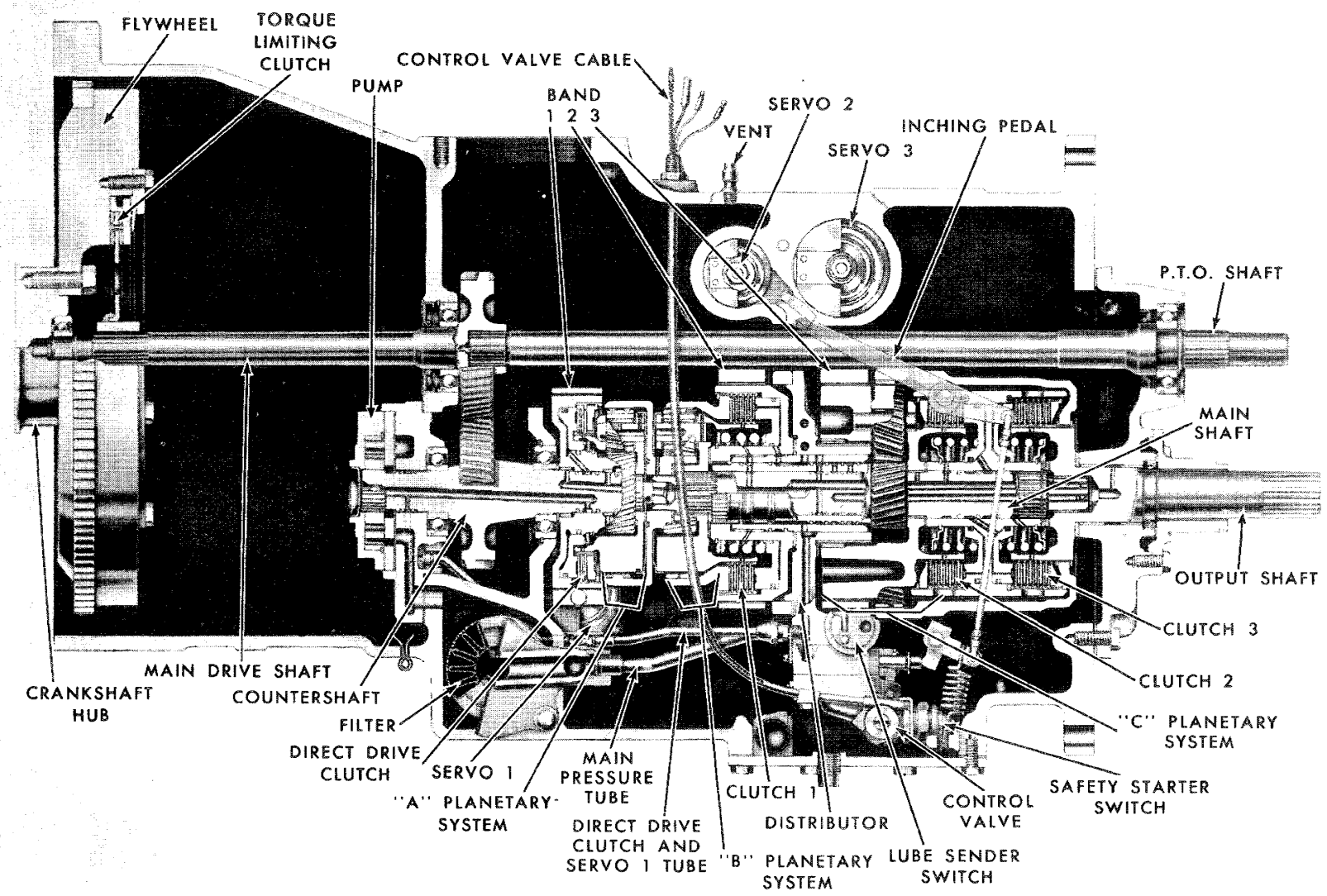

Figure 66
Super Major 5000 Select-O-Speed Transmission

© FORD MOTOR CO. 1964

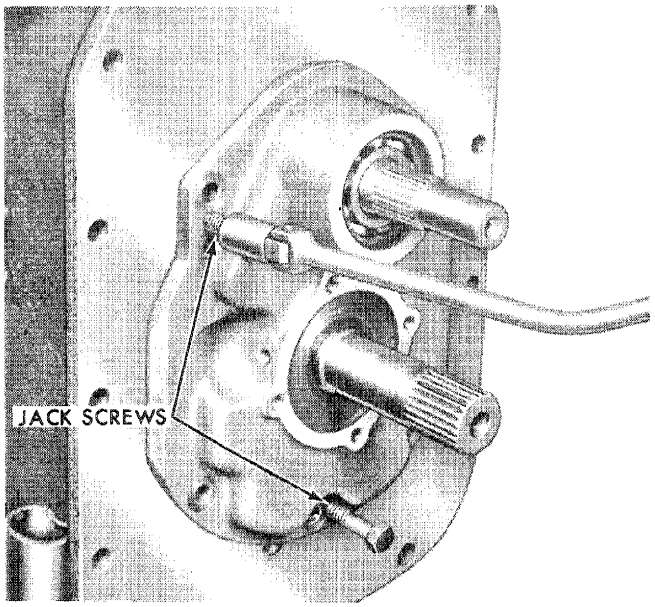

Figure 67
Rear Support Jack Screws

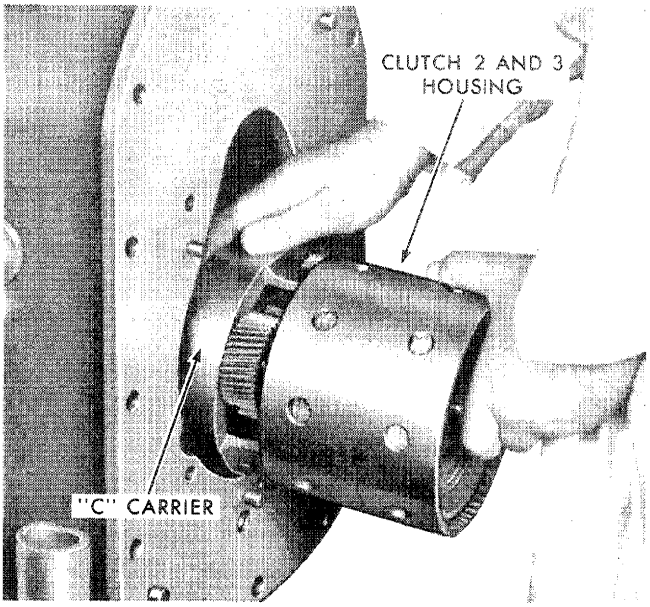

Figure 69
Removing the Clutch 2 and 3 Housing and "C" Carrier

NOTE: ***If the clutch housing is pulled away from the "C" carrier, breakage of the mainshaft seals can result.***

6. Check the transmission front end play as outlined in "B. Transmission End Play Checks", page 45.
7. Remove the "C" sun gear as shown in Figure 70.
8. Manually compress No. 3 band and remove the adjusting strut, actuating strut and the band. See Figure 71.
9. Remove the lock nut and washer from the No. 3 band adjusting screw and remove the screw by threading it through the case.
10. Remove the No. 2 band adjusting screw lock nut and washer. Remove the eight servo 2 and 3 cover

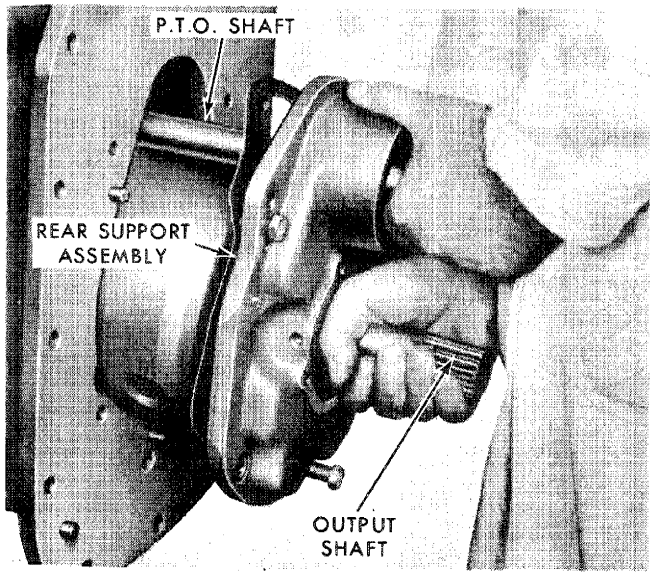

Figure 68
Removing the Rear Support

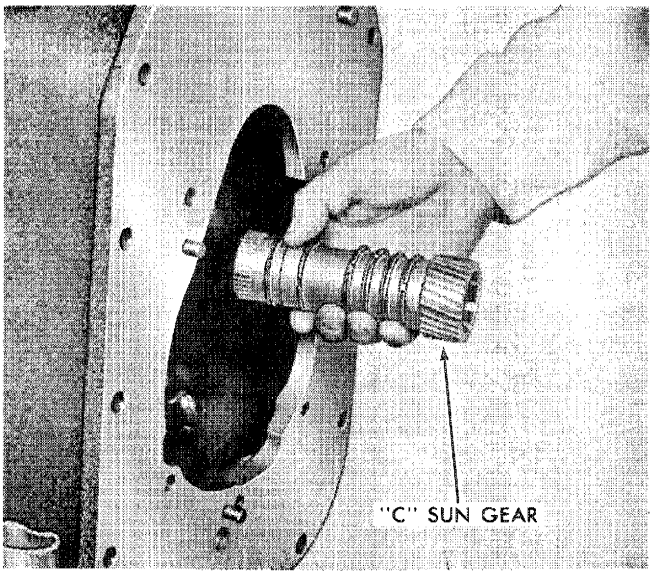

Figure 70
Removing the "C" Sun Gear

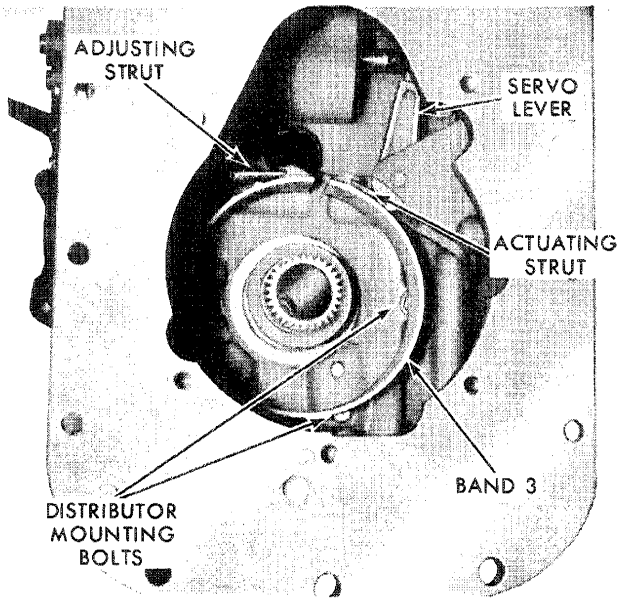

Figure 71
Band 3 Position

attaching bolts and remove the cover and gasket, shown in Figure 72.

NOTE: ***Do not allow the band 2 adjusting screw to loosen when removing the lock nut or the actuating strut may fall out.***

11. Loosen the four distributor mounting bolts shown in Figure 71, and remove the two servo tubes from the distributor (but not from the transmission case), by twisting and pulling at the same time as shown in the Insert, Figure, 72.

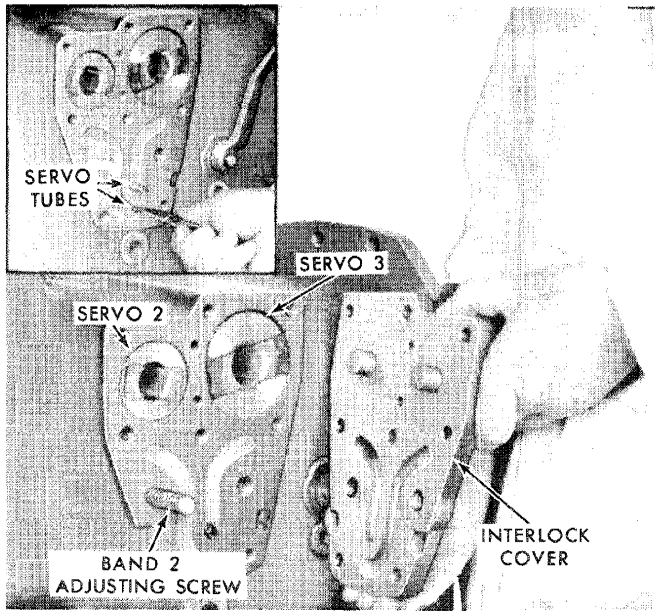

Figure 72
Removing the Servos 2 and 3 Cover

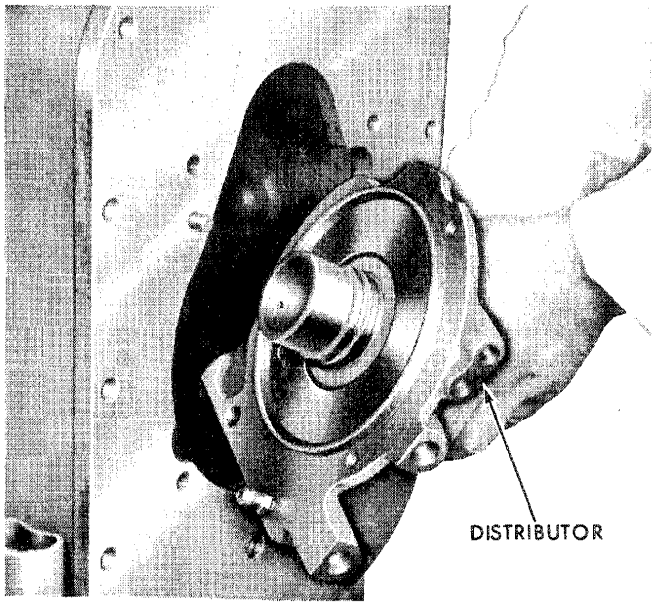

Figure 73
Removing the Distributor

12. Disconnect the fitting that attaches the servo 1 tube to the distributor. Remove the four distributor attaching bolts.

13. Remove the distributor as shown in Figure 73.

14. Remove the clutch 1, "B" ring gear, and "B" carrier as an assembly, as shown in Figure 74.

15. Tighten band 2 adjusting screw to hold the band

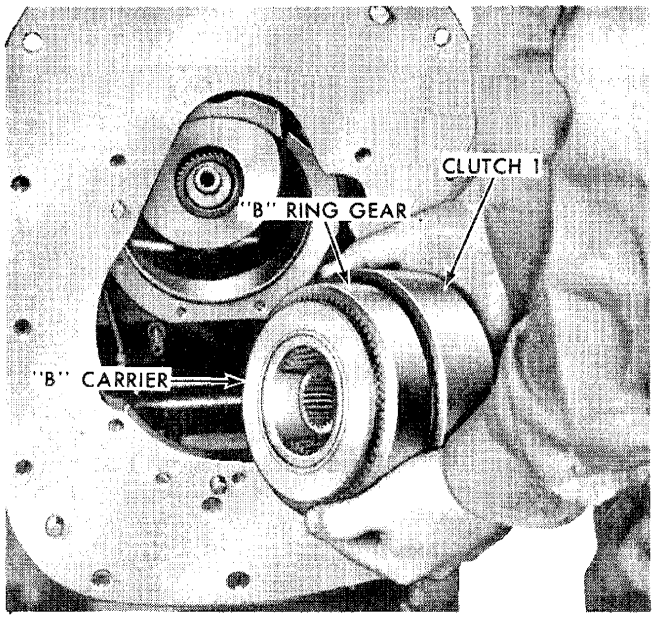

Figure 74
Removing the Clutch 1, "B" Ring Gear, and "B" Carrier

© FORD MOTOR CO. 1964

in place. Do not remove the band as it cannot be reinstalled unless the steering housing is removed permitting access through the top of the transmission.

16. Loosen the band 1 adjusting screw and remove the band and strut from the case.
17. Remove the "B" sun gear and "A" ring gear as shown in Figure 75. Remove the "A" carrier and direct drive clutch assembly as shown in the Inserts, Figure 75.
18. Remove the four servo 1 cover attaching bolts and remove the cover and servo from the transmission as shown in Figure 76.
19. Remove the servo assemblies 2 and 3 from the transmission case as shown in Figure 77.

NOTE: ***Tighten band 2 adjusting screw while removing servo 2 so that the struts and band do not fall out.***

20. Remove the four filter cover adapter plate bolts and remove the plate and filter as shown in Figure 78. Unscrew the filter from the adapter and discard the filter.
21. Remove the roll pin that secures the inching pedal to the shaft and remove the pedal. Remove the upper and lower cotter keys (split pins) and retaining clips from the inching pedal rod. See Figure 79. Remove the rod and pedal shaft from the case.
22. Remove the two snap rings from the feathering valve rocker shaft. Drive the shaft to the right until the sealing plug is out of the case. Remove the shaft from the case.

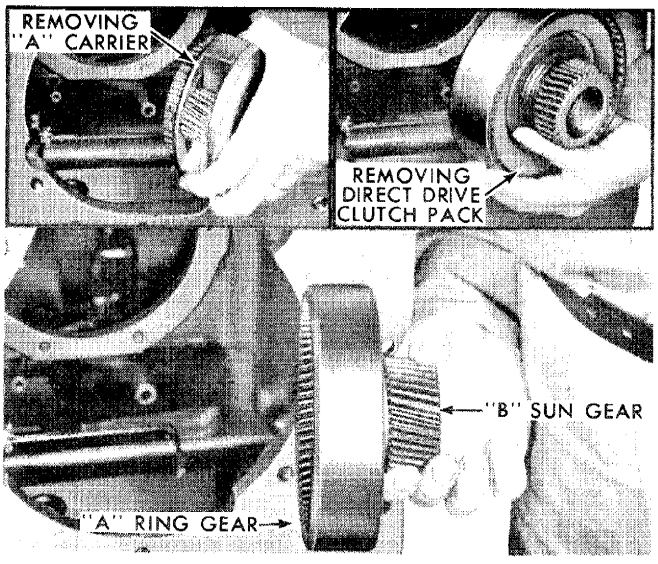

Figure 75
Removing the "B" Sun Gear and "A" Ring Gear

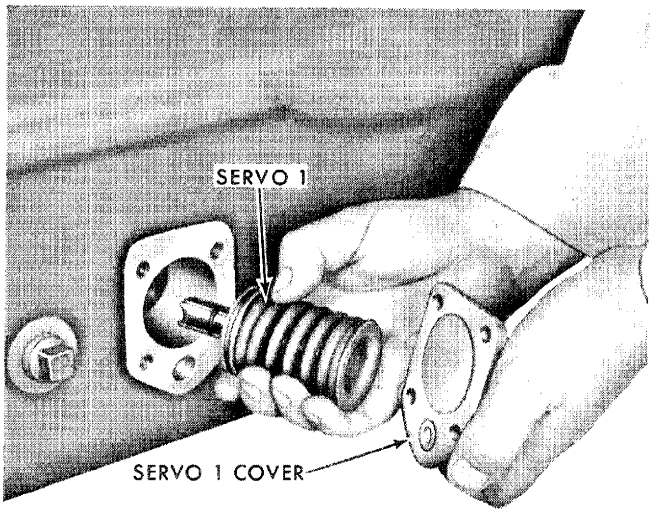

Figure 76
Removing Servo 1

D. Transmission Components—Installation

1. Install the feathering valve rocker shaft in the case; secure with two snap rings. Install two sealing plugs, assembled tight against the shaft. Refer to Figure 79.

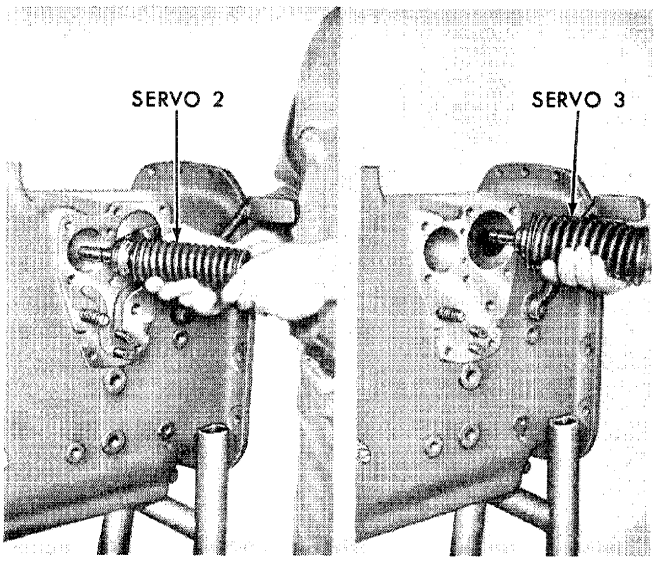

Figure 77
Removing Servos 2 and 3

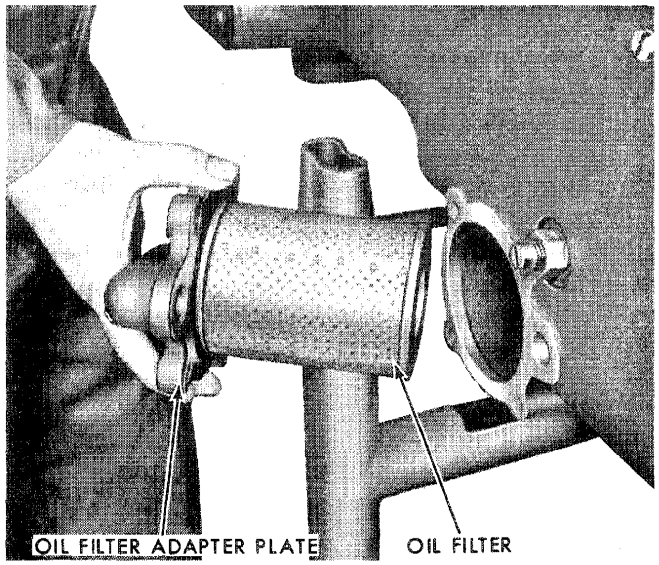

Figure 78
Removing the Filter

NOTE: ***Alignment of the feathering valve rocker is performed with the valve body installed, by driving the shaft to either left or right as required, to align the actuating lever with the center of the feathering valve spool.***

2. Install the inching pedal shaft with the O-ring in the left side of the transmission case. Install the control rod with the retainer clips and cotter keys (split pins) to the feathering valve lever shaft and to the pedal shaft. See Figure 79.

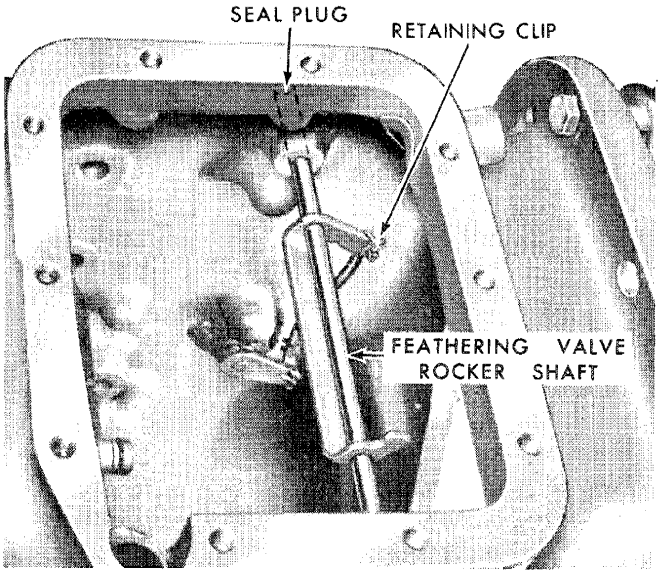

Figure 79
Feathering Linkage

3. Install the inching pedal on the shaft and secure with the roll pin.
4. Install the servo rod guides and servo assemblies 2 and 3 in the case so that the ends of the servo rods contact the actuating levers. See Figure 77.
5. Install servo 1 assembly in the case with the slot in the horizontal position, as shown in Figure 76. Install the servo cover.
6. Install the "A" sun gear front thrust washer, Figure 42, over the rear of the input shaft and against the bearing. Position the "A" sun gear rear thrust washer in the "A" carrier and install the "A" carrier in the direct drive clutch. Install the direct drive clutch and the "A" carrier as an assembly on the input shaft.

   NOTE: ***Be sure all rings are on the input shaft and position them with the open section up to reduce the possibility of breakage.***
7. Install band 1 over the direct drive clutch housing. Install band 1 adjusting screw, sealing washer and lock nut and secure the band with the adjusting screw and actuating strut, thin end toward the band.
8. Position the "A" ring-"B" sun gear thrust washer, Figure 42, over the rear of the input shaft and install the "A" ring-"B" sun gear. Then, place the "B" sun gear thrust washer in the hub of the "B" sun gear.
9. Position the clutch 1 thrust washer in place and assemble the "B" carrier into the clutch assembly, aligning the "B" carrier splines with the splines in the clutch assembly.
10. Install the "B" carrier and clutch 1 as one assembly, aligning the carrier pinions with the "B" sun gear.
11. Install the selective thrust washer, shown in Figure 42, over the distributor sleeve. Install and center the sleeve cast iron seals on the distributor, using petroleum jelly.

    NOTE: ***The seal with square joint ends is forward.***
    The seal with the step joint ends is closest to the distributor body.

    IMPORTANT: ***If the transmission front end play was not within specifications, page 81, when checked prior to disassembly, replace the selective washer with one of correct thickness.***

© FORD MOTOR CO. 1964

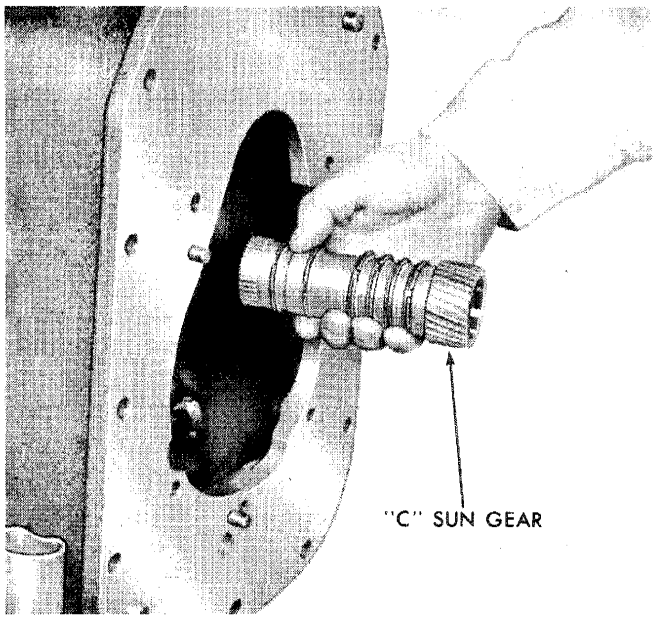

Figure 80
Installing the "C" Sun Gear

12. Install the distributor into the transmission case, inserting the sleeve with sealing rings into clutch 1.
13. Align the main pressure and band 1 servo tubes with their respective openings in the distributor. Apply pressure to the distributor so that the sealing rings enter into the clutch housing. Install the four mounting bolts, but do not tighten securely at this time.

    NOTE: ***During assembly, it is important that clutch 1 is not pulled away from the "B" carrier causing the carrier not to be fully inserted and aligned with the clutch plates.***

14. Install and properly position the band 2 and 3 servo tubes into the distributor. See Insert, Figure 72. If the tubes are not aligned with the distributor, rotate the distributor as required and insert the tubes.
15. Tighten the distributor mounting bolts to the specified torque, page 83.
16. Install the six shaft seals on the "C" sun gear. Use petroleum jelly to center the seals. Insert the gear into the distributor so the splines align with the clutch 1 housing splines. See Figure 80. Install the thrust washer on the distributor rear journal.
17. Check the transmission front compartment end play as covered on page 47. If the end play is incorrect, it will be necessary to replace the selective washer with one of correct thickness. The end play should be 0.005 in. to 0.015 in. (0.127 to 0.381 mm). Lack of end clearance can be immediately detected by inserting the "C" sun gear into the distributor and into clutch 1 splines and noting if it is free to turn.
18. Install band 3 adjusting screw and secure band 3 in position with the depression in the band end toward the adjusting screw. Join the band to the screw with the adjusting strut and to the servo lever with the actuating strut. See Figure 71.
19. Install the servo 2 and 3 cover and gasket. Install and tighten the servo cover attaching bolts to the specified torque, page 43. Install band 2 and 3 sealing washers and lock nuts.
20. Install the three rearmost shaft seals on the mainshaft. Use petroleum jelly to center the seals. Install the shaft in the clutch 2 and 3 housing as shown in Figure 81, and install the clutch housing retaining snap ring.
21. Position the "C" carrier to clutch housing thrust washer over the shaft.
22. Insert the "C" sun gear to "C" carrier thrust washer into the "C" carrier so it is positioned beneath the pinions. Install the "C" carrier over the end of the mainshaft, as shown in Figure 82. Align the "C" carrier splines with the clutch splines, rotating the carrier back and forth until

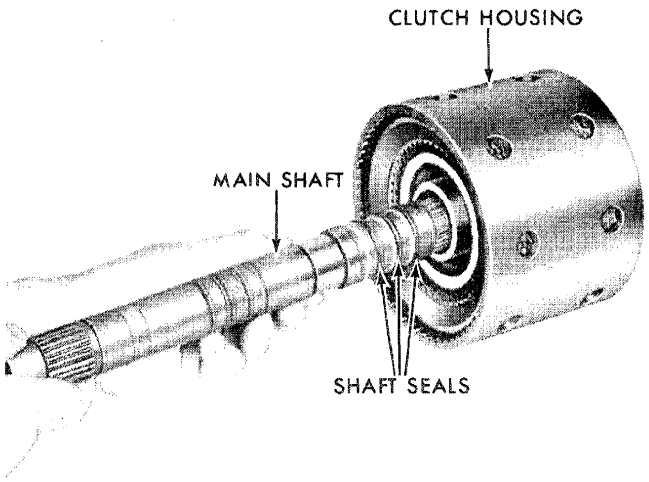

Figure 81
Installing the Mainshaft in the Clutch Housing

it drops down into the clutch housing.

23. Install the remaining four shaft seals on the mainshaft. Use petroleum jelly to center the seals.
24. Install the mainshaft, "C" carrier, and clutch 2 and 3 housing as an assembly, inserting the forward end of the mainshaft into the "C" sun gear, as shown in Figure 47. Hold the "C" carrier to the clutch housing so separation does not take place, and gently move the complete assembly forward into band 3 until the splines on the mainshaft align with the "B" carrier splines.
25. Install the output shaft-to-clutch housing thrust washer on the end of the mainshaft with the counterbored side over the snap ring end of the shaft.
26. Install the "C" ring gear and output shaft as an assembly by aligning the output shaft splines with the splined plates in clutch 3, and by aligning the ring gear with the "C" carrier pinions, Figure 83. Rotate the output shaft back and forth while applying pressure toward the clutch assembly.

NOTE: ***Do not pull the assembly to the rear as it is possible to separate the "C" carrier from clutch 2.***

27. Install the rear selective thrust washer on the end of the output shaft.

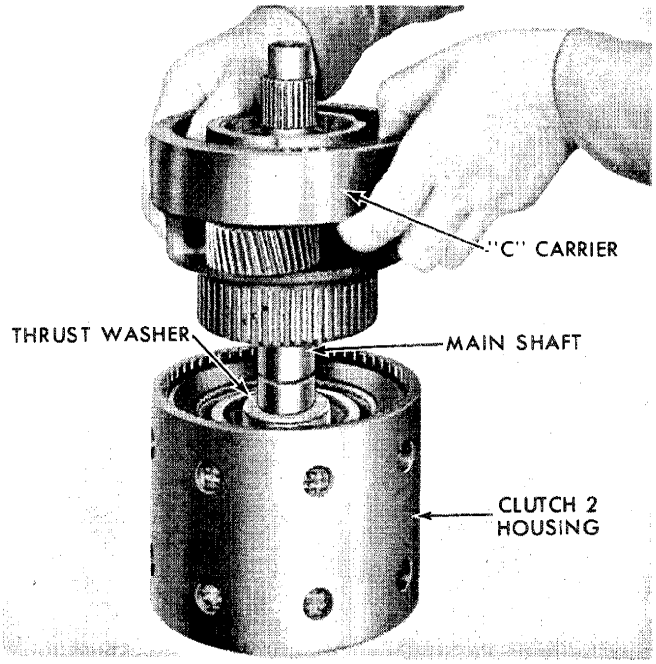

Figure 82
Installing the "C" Carrier in Clutch 2

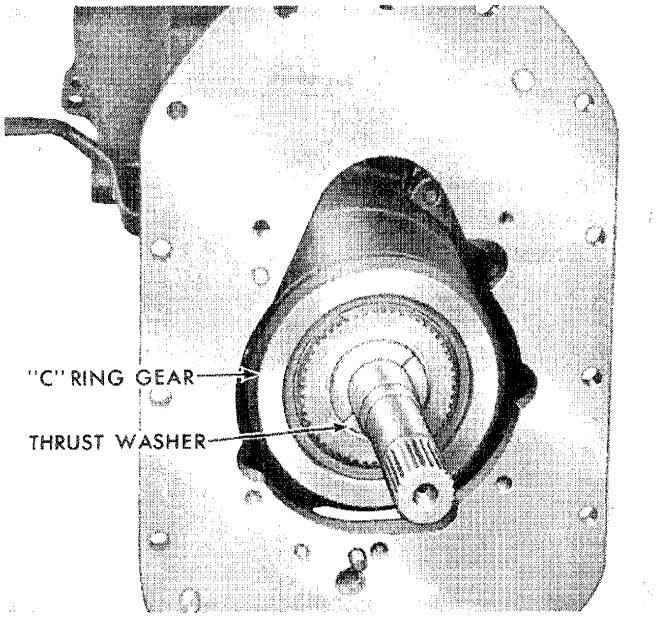

Figure 83
Installing the "C" Ring Gear

IMPORTANT: ***If the transmission rear end play was not within specifications when checked prior to disassembly, replace the thrust washer with one of correct thickness.***

28. Install the P.T.O. rear shaft as an assembly with the rear support and a new gasket. Install the five rear support attaching bolts and tighten to the specified torque, page 83.
29. Position the rear bearing retainer and gasket and install the four attaching bolts. Tighten the bolts to the specified torque, page 83.
30. Check the transmission rear compartment end play as covered on page 45. If the end play is incorrect, it will be necessary to replace the selective washer with one of correct thickness. The end play should be 0.005 to 0.015 (0.127 to 0.381 mm).
31. Adjust the transmission bands by fully tightening the adjusting screws for bands 2 and 3. Tighten band 1 adjusting screw and back off one full turn. Tighten the lock nuts.
32. Install a new oil filter on the filter cover plate and install the filter assembly, with a new gasket, in the transmission case. Tighten the four cover attaching bolts to the specified torque, page 83.
33. Assemble the control valve, safety starter switch, cover, and controls, as outlined on page 35.

© FORD MOTOR CO. 1964

6. FRONT END OVERHAUL

DEXTA 2000, SUPER DEXTA 3000, AND MAJOR 4000

A. Separating the Transmission from the Engine

1. Drain the transmission oil.
2. Separate the transmission from the engine as covered in Part Fifteen, "SEPARATING THE TRACTOR".

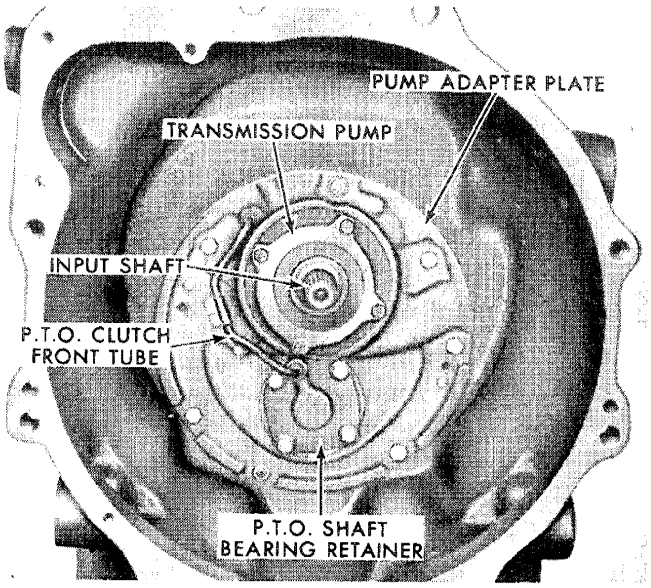

Figure 84
Front End of the Transmission

B. Transmission Components—Removal

1. Remove the pump, Figure 84, and gasket, by removing the four mounting bolts. Tap the pump with a soft-faced hammer and slide it from the input shaft.
2. Remove the two screws which secure the P.T.O. clutch front tube to the adapter plate, and remove the tube by pulling outward.
3. Remove the P.T.O. shaft bearing retainer by removing the four bolts, Figure 84. During removal, note the O-ring and the shim pack which is used to adjust P.T.O. shaft preload.
4. Remove the six bolts and one nut securing the adapter plate to the case. Remove the plate by using two retaining bolts as jack screws, shown in Figure 85.

NOTE: ***Hold the input shaft in place. It is possible to drop the thrust washer between the "A" carrier and "A" ring gear if the shaft is removed.***

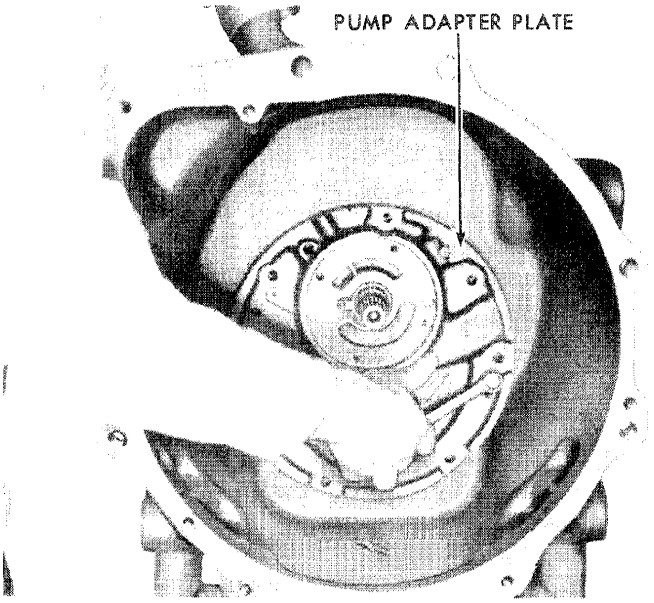

Figure 85
Removing the Pump Adapter Plate

5. Remove the front P.T.O. shaft from the P.T.O. clutch by prying between the washer and clutch housing and pulling the shaft forward, as shown in Figure 86.

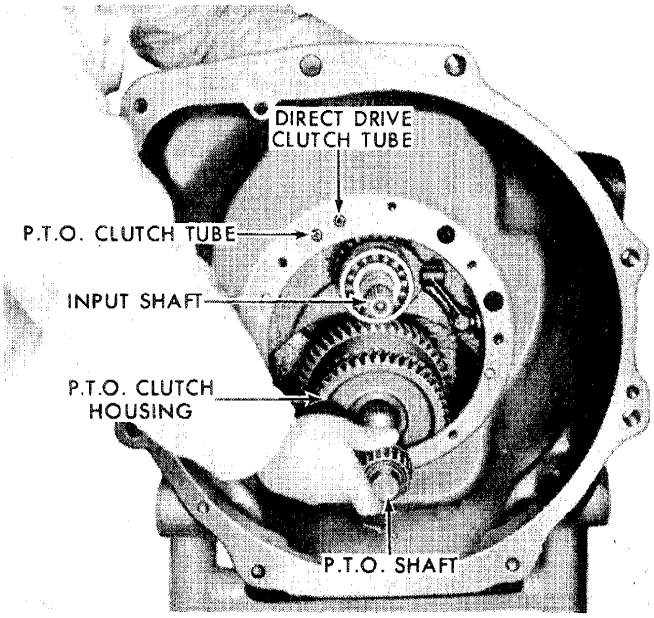

Figure 86
Removing the Front P.T.O. Shaft

6. Disconnect the P.T.O. tube fitting from the front of the distributor and remove the P.T.O. tube. Remove the direct drive clutch tube, and main pressure tube.

C. Transmission Components—Installation

1. Install new O-rings on the P.T.O., direct drive clutch and main pressure tube using petroleum jelly, and install the tubes in the case.
2. Install the shaft seals on the P.T.O. shaft and center them, using petroleum jelly. Install the shaft in the front of the clutch housing, and at the same time, hold the P.T.O. clutch hub. See Figure 86. Install the spacer and rear bearing adapter on the shaft as it is inserted through the housing.
3. Install the two front shaft seals on the input shaft and center them, using petroluem jelly. Install the pump adapter plate and gasket, as shown in Figure 87, and secure with six bolts and one nut. Tighten the bolts to the specified torque, page 83.
4. Inspect to see that the front P.T.O. bearing cup is in position. Mount the front P.T.O. bearing retainer and shims which were removed in step 3, "Transmission Components Removal". Install a new O-ring. Install and tighten the mounting bolts to the specified torque, page 83.
5. Install the pump with the gasket over the input shaft. Be careful not to damage the seal. Install and tighten the bolts to the specified torque, page 83.

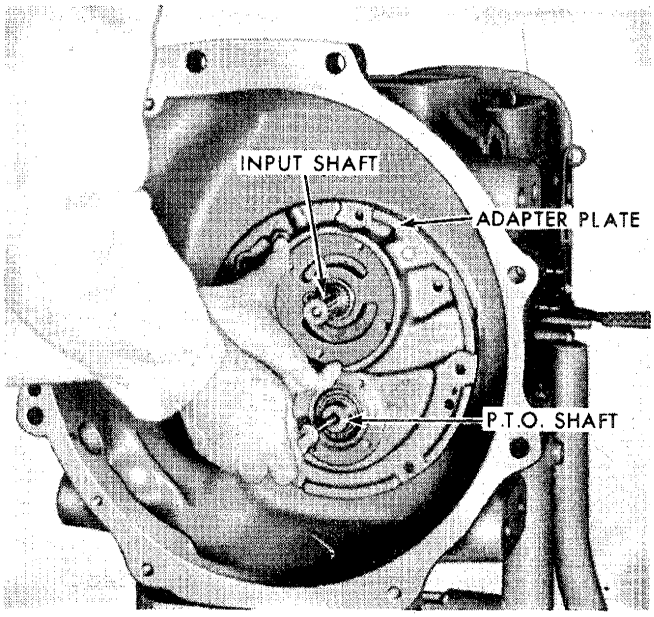

Figure 87
Installing the Adapter Plate

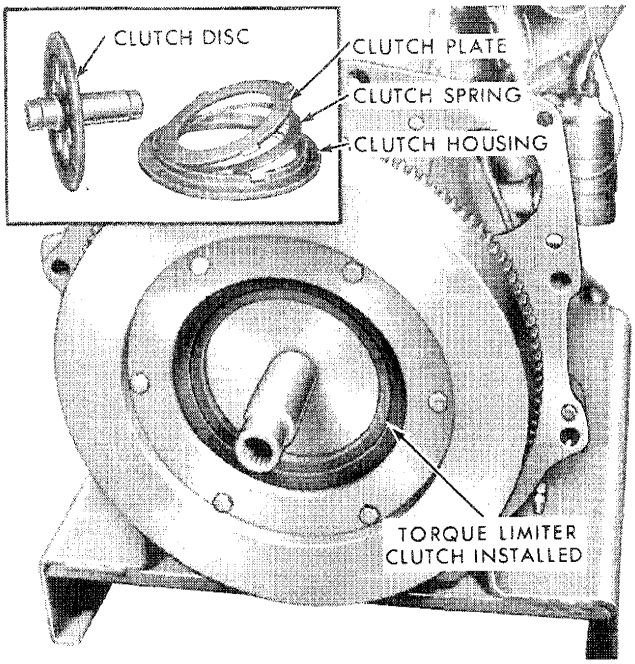

Figure 88
Torque Limiting Clutch Assembly

6. Install the P.T.O. clutch front tube by inserting the ends, with new O-rings, in the adapter plate and P.T.O. bearing retainer. Lightly tap the tube ends to be sure they are fully seated. Secure the tube with two screws.

D. Torque Limiting Clutch—Removal and Installation

1. Remove the six bolts securing the clutch housing to the engine flywheel. Hold the housing so it does not drop from the flywheel. Refer to Figure 88.
2. Remove the clutch housing, spring washer, pressure plate, and clutch disc. See Figure 88.
3. Assemble the clutch in reverse of the above procedure, tightening the retaining bolts to the specified torque, page 83.

SUPER MAJOR 5000

A. Transmission Components—Removal

1. Remove the pump, Figure 89, and gasket by removing the four mounting bolts. Tap the pump with a soft-faced hammer and slide it from the shaft.
2. Remove the five bolts that secure the adapter plate to the case. Remove the plate by using two retaining bolts as jack screws as shown in Figure 90.

© FORD MOTOR CO. 1964

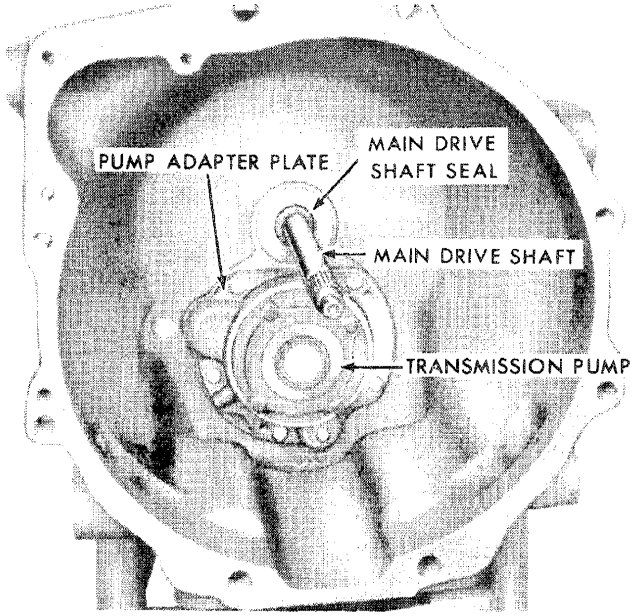

Figure 89
Front End of the Transmission

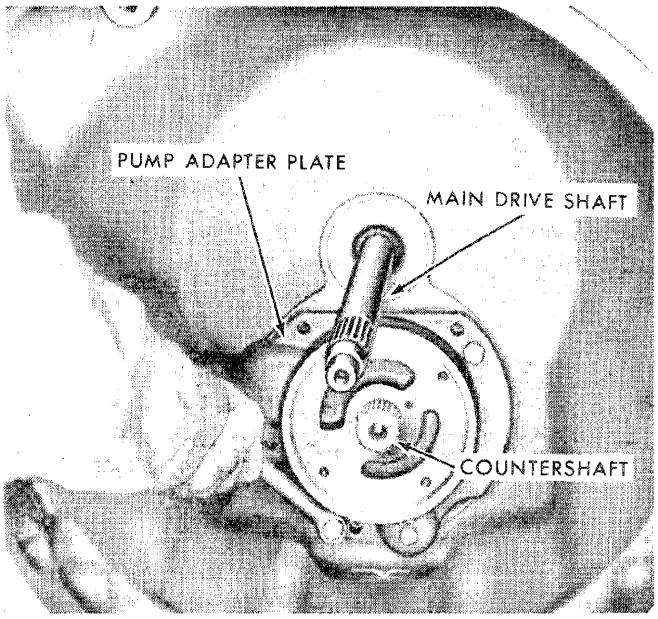

Figure 90
Removing the Pump Adapter Plate

NOTE: ***Hold the countershaft in place. It is possible to drop the thrust washer between the "A" carrier and "A" ring gear if the shaft is removed.***

3. Remove the Servo 1-D.D.C. tube from the transmission case. Remove the main drive gear oil seal.

B. Transmission Components—Installation

1. Inspect the rings on the input shaft. Replace if necessary. Position the rings with the gap at the top.
2. Install the Servo 1 tube in the transmission case and position it in the Servo 1 T-fitting.
3. Install the pump adapter plate and gasket and secure with the five attaching bolts. Tighten the bolts to the specified torque, page 83.
4. Position the pump gasket and pump on the adapter plate. Be sure the oil hole in the gasket and pump line up with the hole in the plate.
5. Secure the pump with the four attaching bolts and tighten the bolts to the specified torque, page 83. Install the main drive gear oil seal.

C. Torque Limiting Clutch—Removal and Installation

1. Remove the six bolts securing the clutch housing to the engine flywheel while, at the same time, holding the housing so it does not drop from the the flywheel. See Figure 91.
2. Remove the clutch housing, spring washer, pressure plate, and clutch disc.

NOTE: ***The hub of the disc is piloted in the flywheel for proper positioning. Note that the spring washer is assembled with the cup side forward to the pressure plate, Figure 91.***

3. Assemble the clutch in reverse of the above disassembly procedure. Use Torque Limiter Pilot No. SW-512 to align the clutch disc.

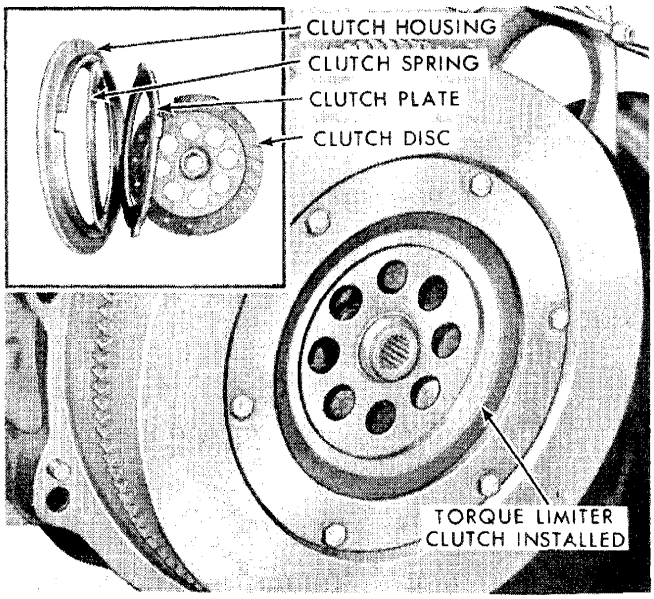

Figure 91
Torque Limiting Clutch (Super Major 5000)

7. COMPLETE OVERHAUL

DEXTA 2000, SUPER DEXTA 3000, AND MAJOR 4000

The instructions covered in this section for removing and installing the transmission components are to be used in conjunction with the removal and assembly instructions covered in the preceding sections, "Assemblies Serviced with Transmission Front End Overhaul", page 54, and "Assemblies Serviced with Transmission Rear End Overhaul", page 35.

A. Transmission Components—Removal

1. Remove the transmission components from the rear of the transmission, as covered on page 37, "C. Transmission Components Removal".
2. Remove the transmission components from the front of the transmission as covered on page 54, "B. Transmission Components Removal".
3. With the P.T.O. shift lever in the 1000 rpm position, remove the input shaft by tapping it forward. Refer to Figure 92.
4. Remove the P.T.O. clutch and shaft by lifting the assembly out of the transmission, as shown in Figure 93.

Single Speed P.T.O.: Remove the bearing from the rear of the shaft with a puller. Remove the half snap ring adjacent to the P.T.O. clutch assembly by pushing the ring off the shaft. The shaft is removed from the front of the case by pushing it through the clutch assembly.

5. Remove the P.T.O. shifter fork and the shifter lever by removing the clevis pin and cotter pin.
6. Loosen band 2 adjusting screw and remove the band 2 and the strut.
7. Remove the servo 2 and 3 actuating lever shaft from the transmission case by tapping the shaft from the rear compartment to the front compartment. Remove the actuating lever.

B. Transmission Components—Assembly

1. Position the servo 2 and 3 actuating levers and install the lever retaining shaft, starting from the front compartment of the transmission. Tap the shaft in place until the notches in the shaft solidly penetrate the case.

NOTE: ***Servo 3 actuating lever is the longest lever.***

2. Position band 2 in the case, and position the two struts. Tighten band 2 adjusting screw to hold band 2 in place during the remainder of transmission assembly.
3. Install the P.T.O. shifter lever shaft and secure with the clevis pin and cotter pin (split pin). See Figure 94. The lever must remain off until after the transmission is assembled to the engine.
4. Install the P.T.O. oil line in the case (without the O-ring) through the rear of the case and thread it into position. Push the tube through the front bulkhead and assemble the O-ring from the front. Press the tube back into position.

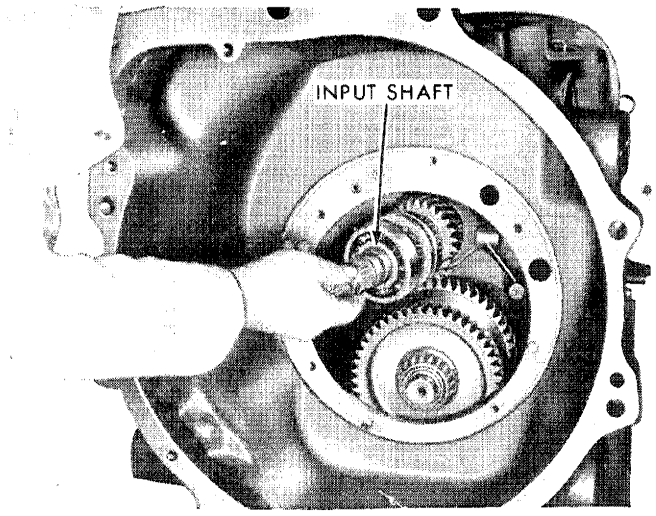

Figure 92
Removing the Input Shaft

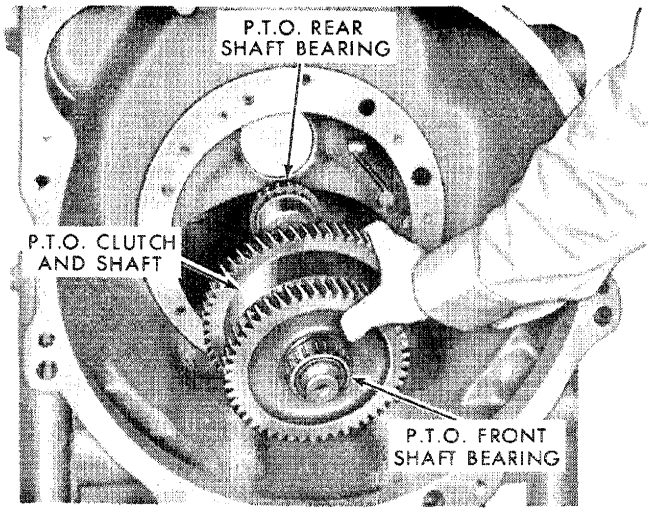

Figure 93
Removing the P.T.O. Clutch and Shaft

© FORD MOTOR CO. 1964

5. Position the thrust washer in the P.T.O. clutch and install the hub by rotating it back and forth to align the clutch plate splines.
6. Install three shaft seals on the P.T.O. shaft, centering them, using petroleum jelly. Install the shaft into the clutch housing while holding the clutch hub in position, as shown in Figure 95.
7. Install the spacer and rear bearing adapter and bearing on the shaft and install the complete assembly in the transmission case. Refer to Figure 93.

Single Speed P. T. O.: Install the clutch assembly into the transmission housing. Insert the P.T.O. shaft through the clutch, holding the clutch hub in position. Install the snap ring on the P.T.O. shaft. Assemble the washer on the rear of the shaft and drive the tapered bearing against the washer.

8. Check the P.T.O. shaft preload as covered on page 58, "P.T.O. Shaft Preload Adjustment".
9. Place the P.T.O. shifter handle in the rear position and install the fork, with the long finger up.
10. Install the four shaft sealing rings on the input shaft, centering them, using petroleum jelly. Install the input shaft in the case, aligning the shift collar with the fork. Make sure the rear bearing of the shaft is fully pressed into the case.
11. Install the pump adapter plate and gasket, holding the P.T.O. shaft up, as shown in Figure 87, and secure with six bolts and one nut. Tighten to the specified torque, page 83.
12. Inspect to see that the front P.T.O. bearing cup is in position and mount the front P.T.O. bearing retainer with the correct shim pack and O-ring. Install and tighten the mounting bolts to the specified torque, page 83.
13. Install the pump with the gasket over the input shaft. Be careful not to damage the seal. Install and tighten the bolts to the specified torque, page 83.
14. Install the P.T.O. clutch front tube by inserting the ends, with new O-rings, in the adapter plate and P.T.O. retainer. Lightly tap the tube ends to be sure that they are fully seated. Secure the tube with two screws.
15. Install the transmission rear components as covered on page 42, "D. Transmission Components Installation".

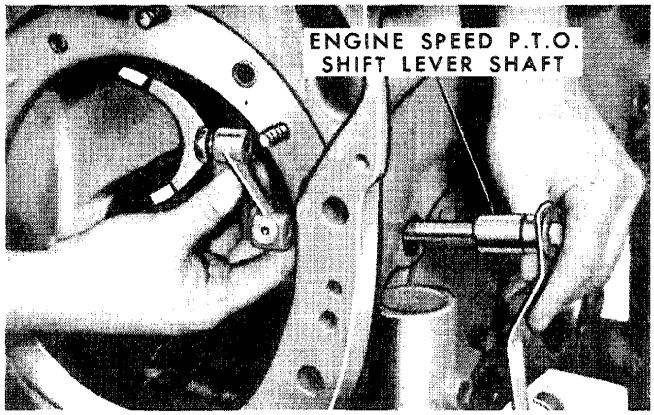

Figure 94
Installing the P.T.O. Shift Lever

C. P.T.O. Shaft Preload Adjustment

To perform the preload adjustment, the transmission must be assembled up to and including step 7, as covered in "B. Transmission Components—Assembly".

1. Install the front adapter plate (without the input shaft) and gasket on the case. Center the P.T.O. shaft with a suitable tool. Tighten the adapter plate, securing the bolts and nut to the specified torque, page 83.
2. Assemble the shim pack and O-ring on the P.T.O. front bearing retainer and mount the retainer to the adapter plate. Install and tighten the mounting bolts to the specified torque, page 83.
3. Install the rear P.T.O. shaft and rear support (single speed P.T.O.).
4. Wrap a cord around the shaft end as shown in Figure 96, and attach the end of the cord to a pull scale. The shaft should rotate under a steady pull of 18-25 lbs. (8-11.5 kg). Adjust preload as required, using the 0.002 in. (0.050 mm), 0.003 in. (0.076 mm), 0.010 in. (0.254 mm), and 0.030 in. (0.762 mm) shims which are available.
5. Remove the P.T.O. bearing retainer. Be careful to keep the shim pack together. Remove the adapter plate.

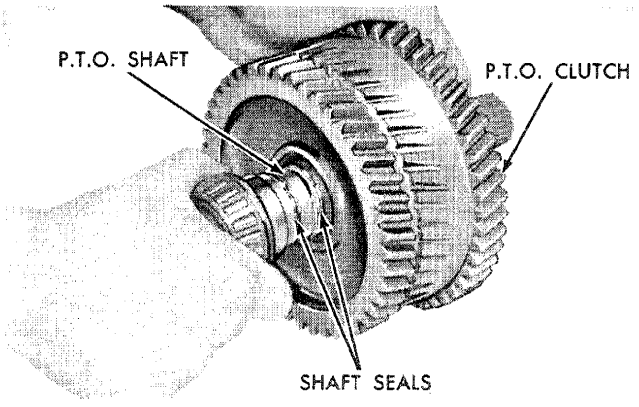

Figure 95
Installing the P.T.O. Shaft

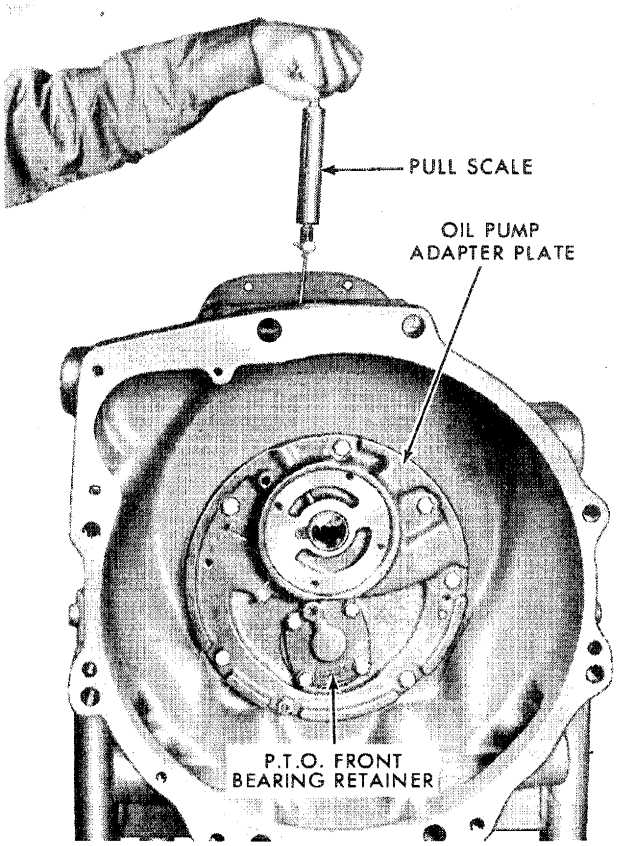

Figure 96
P.T.O. Shaft Preload

6. Install the transmission input shaft and remaining transmission components, as covered in steps 9 through 15 in "B. Transmission Components—Installation."

SUPER MAJOR 5000

The instructions covered in this section for removing and installing the transmission components are to be used in conjunction with the removal and assembly instructions covered in the preceding sections, "Assemblies Serviced with Transmission Front End Overhaul", page 54, and "Assemblies Serviced with Transmission Rear End Overhaul", page 45.

A. Transmission Components—Removal

1. Remove the transmission components from the rear of the transmission case, as covered on page 46, "C. Transmission Components—Removal".
2. Remove the transmission components from the front of the transmission as covered on page 54, "B. Transmission Components—Removal".
3. Remove the main drive shaft from the transmission case. See Figure 90.
4. Loosen band 2 adjusting screw and remove band 2 and the struts. Rotate the band around the transmission case web as shown in Figure 97, for removal.
5. Remove the servo 2 and 3 actuating lever shaft from the transmission case by tapping the shaft from the rear compartment towards the front compartment.
6. Remove the countershaft assembly.

B. Transmission Components—Installation

1. Install the countershaft assembly.
2. Position servo 2 and 3 actuating levers and install the lever retaining shaft, starting from the front compartment of the transmission. Tap the shaft in place until the notches in the shaft solidly penetrate the case.

   NOTE: ***Servo 3 actuating lever is the longest lever.***

3. Position band 2 in the case, position the two struts. Tighten band 2 adjusting screw to hold the band in place during the remainder of the transmission assembly.
4. Position the rings on the transmission countershaft and position the shaft in the transmission case.
5. Install the remainder of the transmission components as covered on page 55, "Transmission Components—Installation".

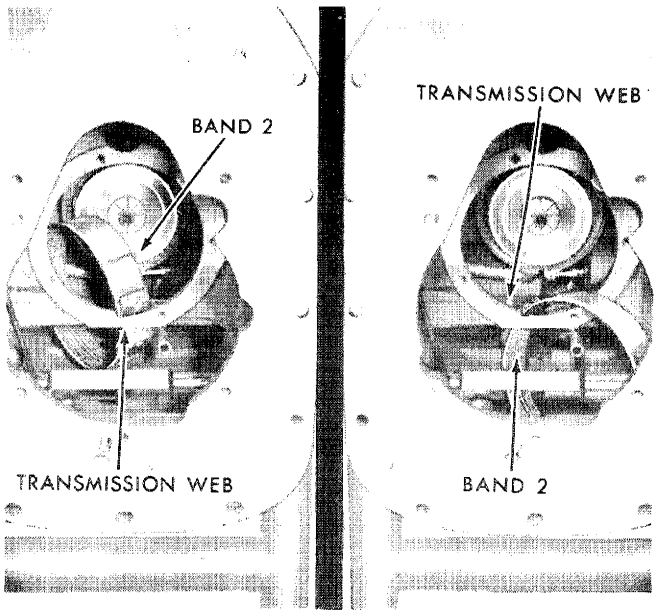

Figure 97
Removing Band 2

© FORD MOTOR CO. 1964

8. REPAIR OF THE SUB-ASSEMBLIES

This procedure covers the disassembly, inspection, and assembly of the sub-assemblies removed from the transmission. Upon disassembly, all components should be examined for wear and damage. Some general areas to consider are:

Transmission case for cracks and servo bore wear.
Transmission case linkage for wear and misalignment.
Planetary pinions for indications of heat, pinion shaft turning and seizure, and broken teeth.
End movement of the pinions should not exceed 0.028 in. (0.711 mm).
Clutch assemblies for wear, heat distortion, and piston seizure.
Brake bands for indications of overheating and wear.
Pump for scoring and wear.
Pump adapter plate for hairline cracks (pump area).
Shaft splines for wear and breakage.
Control valve for plunger action.
Condition of control valve cams.
Pressure tubes for damage and obstructions.
Bearings and bearing cups for wear and damage.
Shaft seals for wear by comparing with new parts.
Bushings for wear, indications of seizure and turning.

During the repair of assemblies, the following general instructions should be followed:

Thrust washers, shaft seals and "O" rings should be coated with petroleum jelly to facilitate assembly.
Handle all transmission parts carefully to avoid scoring or burring the bearing or mating surfaces.
Keep all parts and components clean by servicing these items with clean tools in clean surroundings, using lint-free wipers.
Remove bearings and bearing races, using appropriate bearing and gear pullers. Be careful not to damage any adjoining components. When pressing on bearings, always make sure they are fully seated.
Always lubricate pinion bearings and bushings prior to assembly.

PUMP

A. Disassembly

1. Remove the two screws that attach the cover to the body and remove the cover.
2. Lift the rotor and rollers from the body. The transmission pump is serviced only as a complete assembly. Minor burrs or scores may be removed with crocus cloth.
3. Install the seal in the pump with Step Plate No. 630-5, as shown in Figure 98.

   NOTE: ***There is no seal in the Super Major 5000 pump; instead, a sealing plug is installed.***
4. If any part of the pump body, rollers, or rotor, are found to be defective, the complete pump assembly must be discarded.

B. Assembly

1. Place the rotor and rollers in the pump housing.
2. Place a new O-ring on the housing.
3. Secure the cover to the housing with two Phillips head screws.

CONTROL VALVE

During the servicing of the control valve assembly, avoid damage to the valve ports and keep them clean. Place the valve assembly on a clean chamois or lint-free shop towel. Refer to Figures 99 and 100 for the Dexta 2000, Super Dexta 3000 and Major 4000 Tractors and Figures 101 and 102 for the Super Major 5000 Tractor.

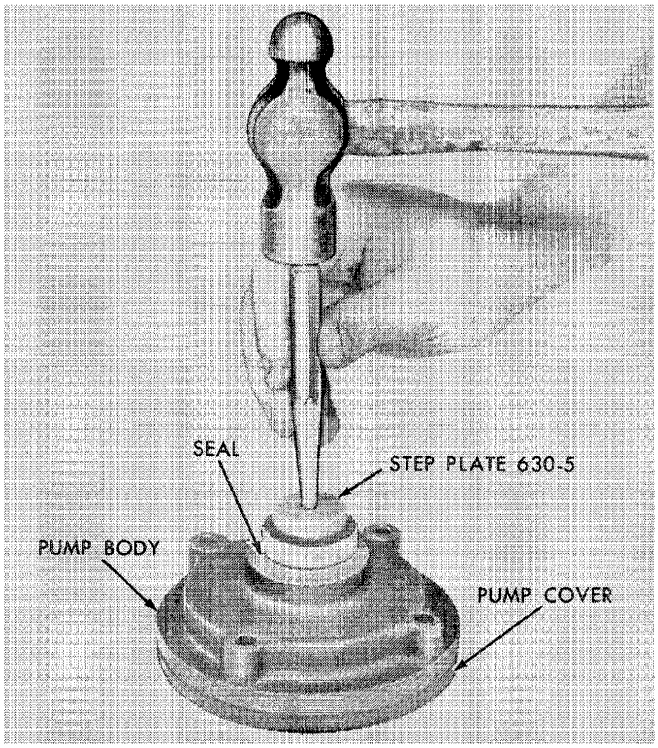

Figure 98
Servicing the Pump

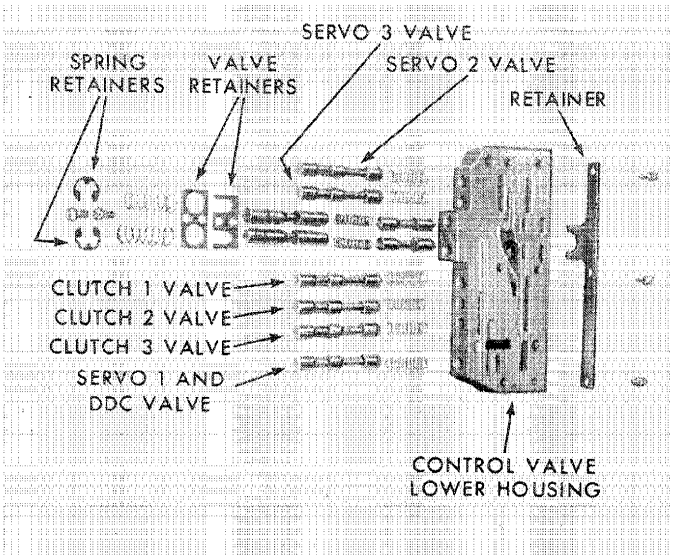

Figure 99
Control Valve Lower Housing
(Dexta 2000, Super Dexta 3000 And Major 4000)

A. Disassembly

1. Remove the bolts securing the valve assembly and separate the two valve bodies. Remove the six spool-type valves. Remove the three screws that attach the valve retainer to the lower body.
2. On Dexta 2000, Super Dexta 3000, and Major 4000, remove the two feathering valve spring retainers, two springs, spring retainer plate, feathering valve spools, and two springs, shown in Figure 99.
3. On Super Major 5000, remove the feathering valve spring retainer, spring, spring retainer plate, feathering valve retainer plate, and valve spools, shown in Figure 101. Remove the notched clutch and servo valves.
4. Remove two adjusting screw retainers, three adjusting screws, three springs, and the three plunger-type valves from the valve upper body, Figure 102.

NOTE: ***Steps 6 through 9 would not be necessary in an ordinary inspection procedure and are to be used only when damage or breakage is evident.***

5. Remove the two snap rings from the cam follower shaft in the valve upper housing and remove the shaft, cam followers, and spacers.
6. Remove the trunnion and cable wheel assembly from the right end of the camshaft by inserting a ¼"–20 x 2" standard thread heat-treated set screw to force this assembly out of the shaft.

IMPORTANT: ***Do not use a soft bolt for pulling this wheel as it will twist off. The threaded portion of the bolt must be at least 1¾" (44.4 mm) in length.***

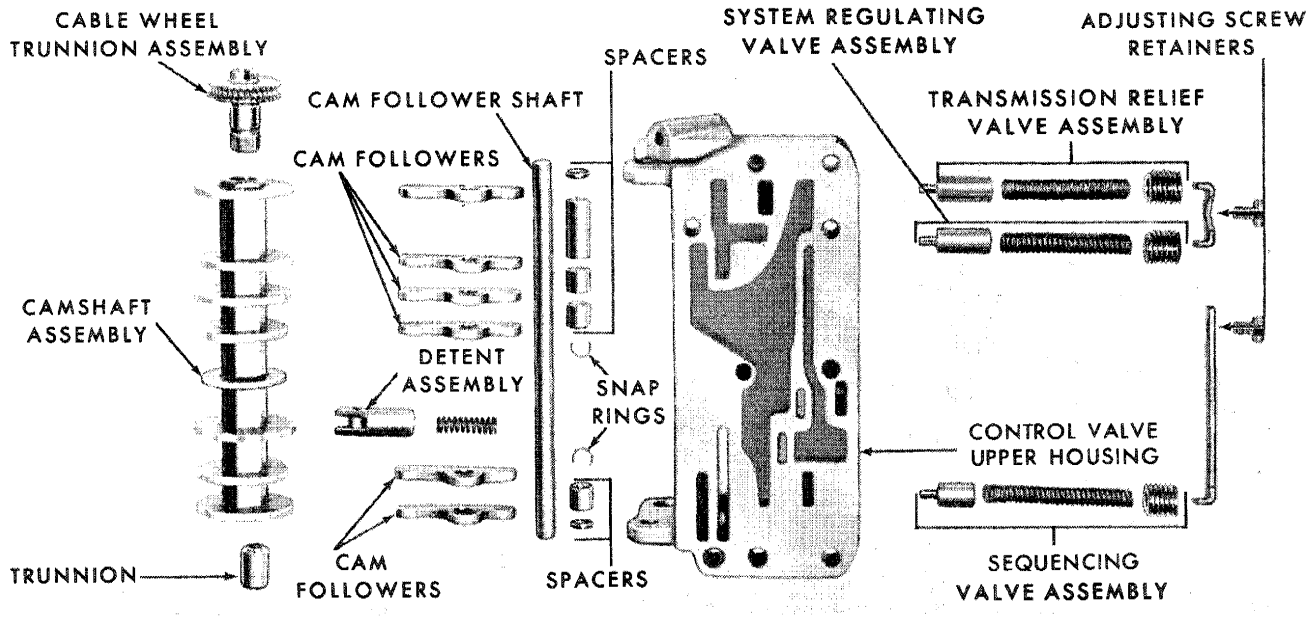

Figure 100
Control Valve Upper Housing
(Dexta 2000, Super Dexta 3000 And Major 4000)

© FORD MOTOR CO. 1964

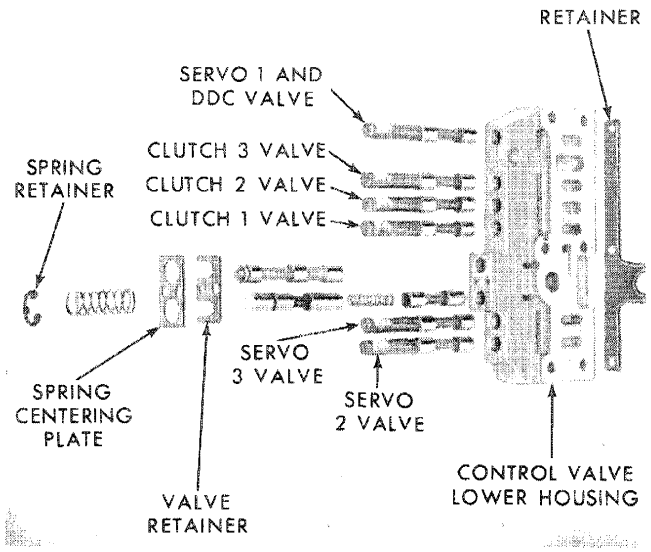

Figure 101
Control Valve Lower Housing (Super Major 5000)

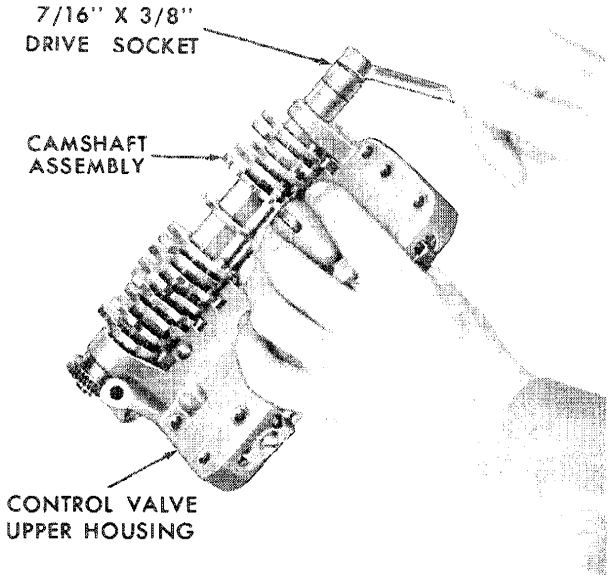

Figure 103
Removing the Camshaft Assembly (Super Major 5000)

7. To remove the trunnion from the left end of the camshaft, insert a ¼"—20 x 1⅛" coarse thread, heat-treated bolt supported by a 7/16" x ⅜" drive, socket, and flat washer, and withdraw the trunnion from the shaft, as shown in Figure 103.
8. Remove the camshaft assembly and detent assembly from the control valve upper housing.

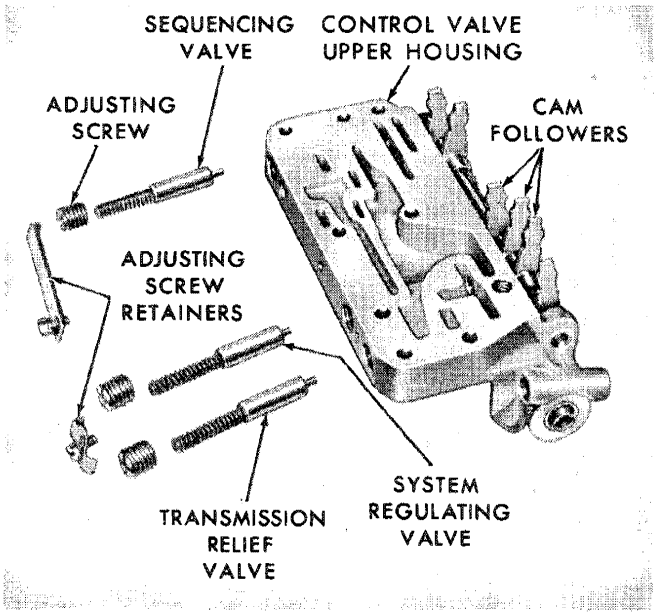

Figure 102
Control Valve Upper Housing (Super Major 5000)

B. Cleaning and Inspection

1. Clean all parts thoroughly in clean solvent, then blow dry with compressed air.
2. Inspect all valve bores for scores. Check all oil passages for obstructions. Inspect the mating surfaces for burrs or distortions. Examine the valves for burrs and scores.

   NOTE: ***Crocus cloth can be used to polish valves if care is taken to avoid rounding the sharp edges.***
3. Inspect all springs for distortion and check all of the valves for free movement in their respective bores.

C. Assembly

1. Arrange all parts in their proper position, as shown in Figures 99, 100, 101 and 102, respectively.
2. Position the camshaft assembly in the valve upper housing. Insert a ⅜" bolt into the left end of the camshaft to support the assembly while the cable wheel and trunnion assembly is being pressed into the right end, as shown in Figure 104. A clearance of 0.005-0.010 in. (0.127-0.254 mm) should be maintained between the cable wheel and valve housing, as shown. Press the trunnion into the left end of the camshaft.

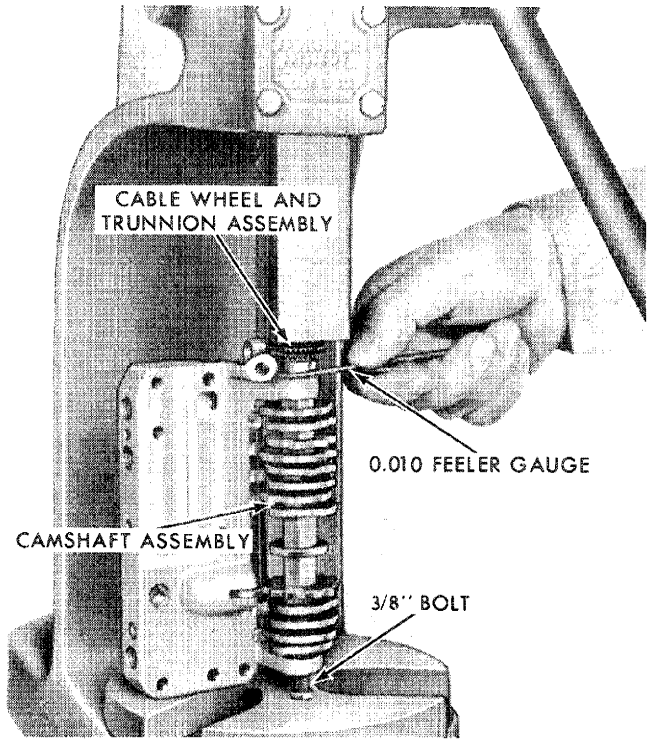

Figure 104
Installing the Camshaft Assembly

3. Install the valve springs, retainers, and all of the valves in the control valve lower housing. Rotate the valve spools when inserting them in their bores to avoid shaving the housing casting.

   NOTE: ***The clutch and servo valves used in the Super Major 5000 are notched and positively positioned, in or out, and do not use return springs.***

4. Install the plungers, valve springs, and adjusting screws in the control valve upper housing.

   NOTE: ***Turn the three valve adjusting screws into the valve housing until they are flush with the front side. These valves must be adjusted under operating conditions with the transmission installed in the tractor. Refer to page 25. Then, the control valve assembly will have to be removed to permit locking of the adjusting screws with the two retainers.***

5. Install the cam followers, spacers, and shaft in their respective positions on the valve upper housing and secure the assembly with the two snap rings.

6. Position the upper housing on the lower housing. Align the bolt holes and install the two bolts.

CLUTCH ASSEMBLIES

The following procedure pertains to all clutch assemblies in the transmission with the exception of the direct drive clutch. For purpose of illustration, the P.T.O. clutch assembly will be shown.

NOTE: ***Pressure plate snap rings on all 1, 2, and 3 clutches are tac-welded.***

A. Disassembly

1. Remove the clutch pressure plate snap ring, as shown in Figure 105.

   NOTE: ***In clutch 1, the "B" ring gear is splined to the clutch housing, secured with a snap ring, and functions as a pressure plate.***

2. Remove the pressure plate and bronze and steel plates from the clutch housing, shown in Figure 106.

3. Compress the piston return spring in a press with the Compressor No. N-775, shown in Figure 107, then remove the snap ring. Guide the spring retainer while releasing the press to prevent the retainer from entering the snap ring groove.

4. Place an air hose nozzle in the hole in the hub, as shown in Figure 108, and force the piston out of the clutch housing with air pressure.

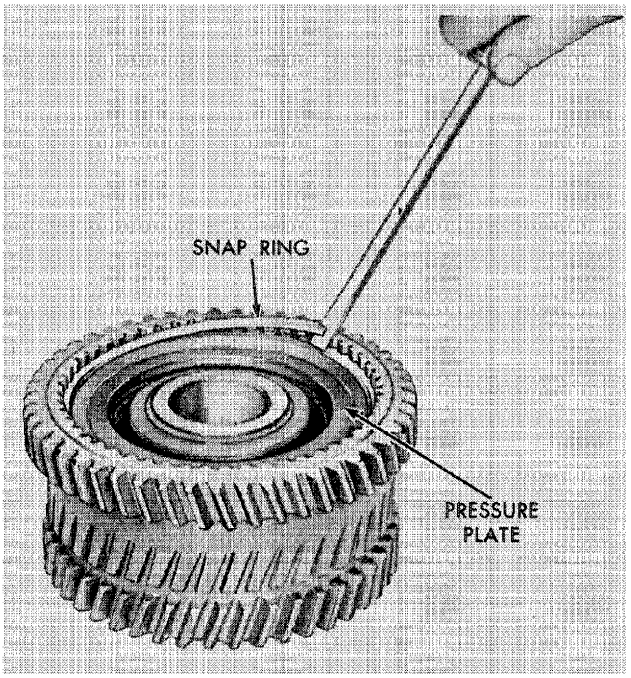

Figure 105
Clutch Snap Ring Removal

© FORD MOTOR CO. 1964

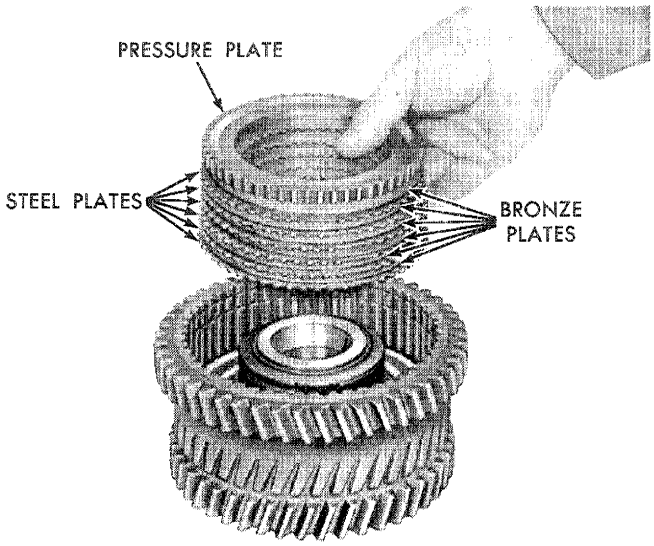

Figure 106
Removing the Clutch Plates

5. Remove the piston inner and outer seals, shown in the Insert, Figure 108.

B. Inspection

1. Inspect the clutch piston and cylinder walls for scoring. Fine emery cloth may be used to smooth the surfaces. Check the oil passages for obstructions.

2. Inspect the clutch plates for signs of overheating, distortion, wear, and scoring. Check the coning of the steel plates (P.T.O. clutch). Position the plates on a flat surface, then check the coning with a feeler gauge, as shown in Figure 109. The plates are coned to 0.015-0.020 in. (0.381-0.508 mm). Replace any of the plates with coning less than 0.015 in. (0.381 mm).

3. Using a straight edge, check the bronze plates to be sure that they are flat.

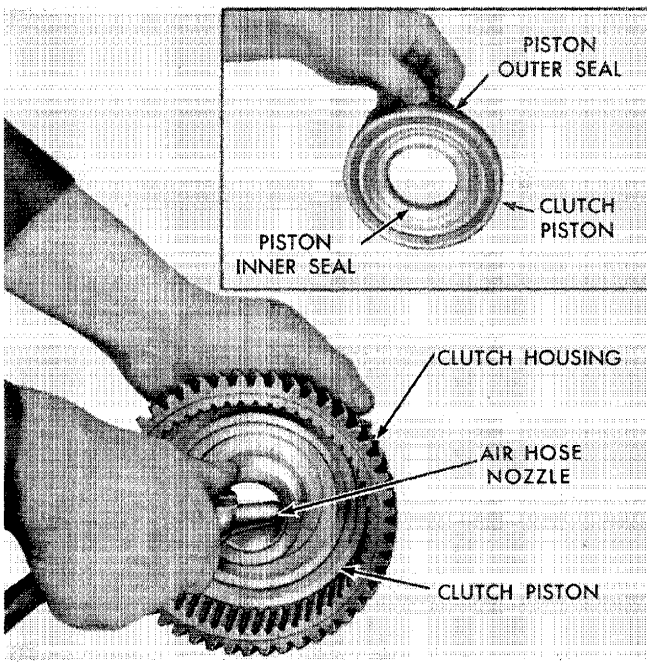

Figure 108
Clutch Piston Removal

C. Assembly

1. Install new inner and outer seals on the clutch

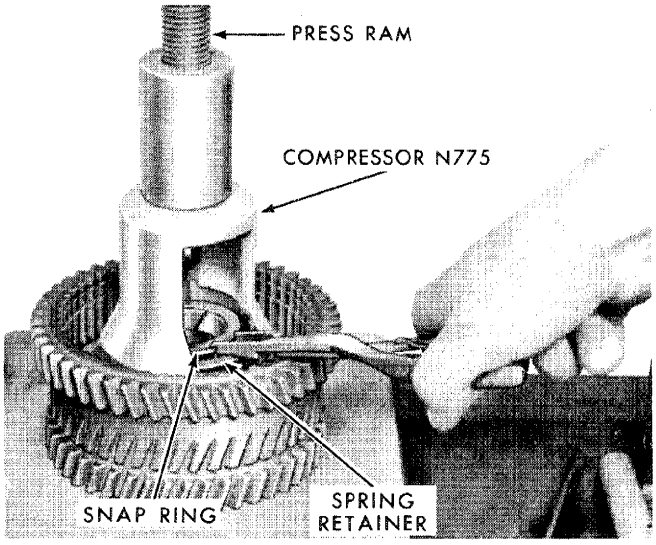

Figure 107
Clutch Snap Ring Removal

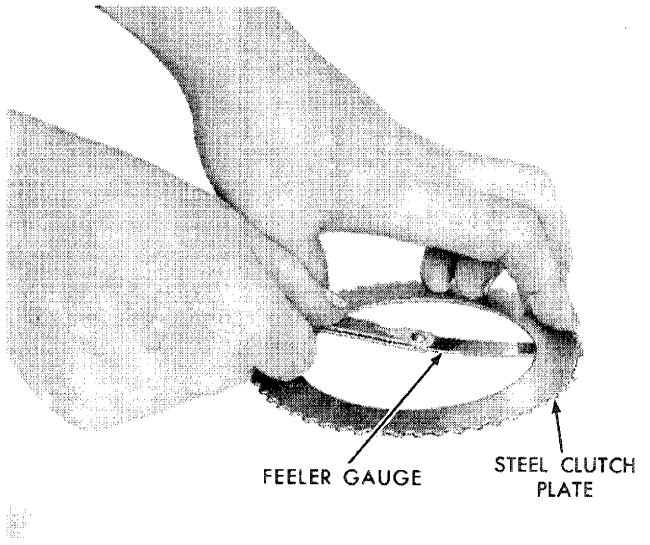

Figure 109
Checking Steel Plate Coning

piston, apply petroleum jelly to both surfaces, and install the piston in the housing.

NOTE: ***Avoid cocking of the piston and make sure the piston is pushed in until it contacts the inner rear face of the housing.***

2. Install the clutch release spring and retainer with Compressor No. N-775, as shown in Figure 107. Compress the spring in a press and install the snap ring.

   IMPORTANT: ***Make sure the snap ring is fully seated in the groove.***

3. Install the steel and bronze clutch plates alternately, starting with a steel plate next to the piston. Because of coning, all steel plates must face the same direction; all concave (hollow) sides up when the clutch is being assembled (P.T.O. clutch).

   NOTE: ***The number of steel plates and bronze plates varies according to the model transmission being worked on. See Figure 110 for model application and the correct number required.***

   IMPORTANT: ***The clutch 3 assembly in the Major 4000 and Super Major 5000 Tractors have 7 bronze plates and 6 steel plates. Two of the bronze plates are lined on one side. The unlined surfaces are to be assembled against piston and pressure plates respectively.***

4. Install the pressure plate with the machined surface toward the clutch plates.

	Bronze	Steel
Dexta 2000 and Super Dexta 3000		
DDC	2	2
C-1	5	5
C-2	5	5
C-3	5	5
P.T.O.	6	6
Major 4000		
DDC	2	2
C-1	5	5
C-2	6	6
C-3	7 *	6
P.T.O.	6	6
Super Major 5000		
DDC	2	2
C-1	5	5
C-2	6	6
C-3	7 *	6

* See "IMPORTANT" following step 3, above.

Figure 110
Clutch Plate Chart

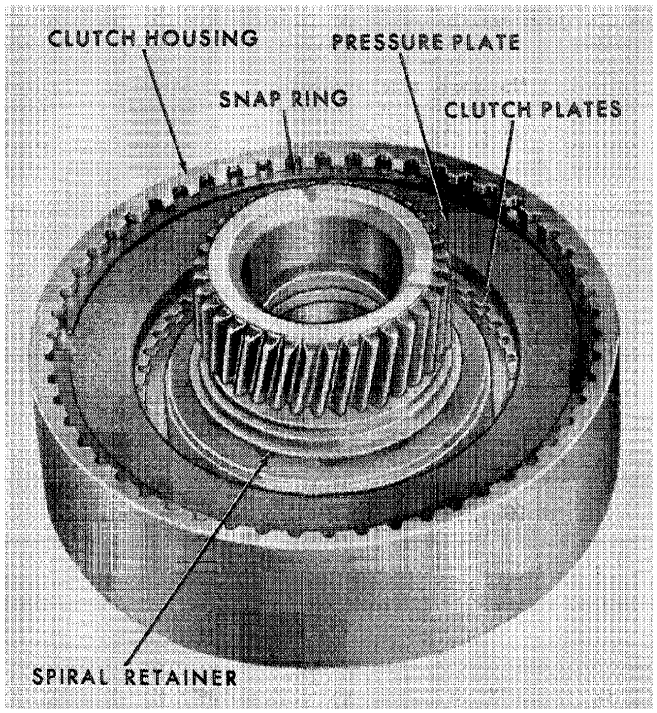

Figure 111
Direct Drive Clutch

5. Install a new snap ring. Braze the ends of the snap ring together using an AW-S-E-7018 Electrode or equivalent low hydrogen electrode.

   NOTE: ***Do not overheat the pressure plate and do not attempt to braze the ring to the pressure plate.***

DIRECT DRIVE CLUTCH

A. Disassembly

1. Remove the large snap ring from the inside of the clutch housing, Figure 111, and lift out the pressure plate and the four clutch plates.
2. Position the Spring Compressor No. N-488, in the clutch housing, as shown in the Insert, Figure 112, and install the snap ring. Make sure the snap ring ends are positioned away from the slots in the compressor.
3. Using Lever No. N-488-3 and a screwdriver, as shown in Figure 113, engage the lowest step of each stud to the snap ring. Repeat this operation for engaging the second step and then the third step of each stud. At this point, the pressure of the spring washer against the snap ring will have been eliminated and the spiral retainer can be removed.

© FORD MOTOR CO. 1964

4. Reverse the procedure used in step 3 to disengage the compressor studs from the snap ring, then pry off the snap ring and remove the compressor.
5. Remove the small wire pivot ring, the spring washer, and the large wire pivot ring, Figure 114.
6. Remove the piston by applying compressed air to the oil supply port in the clutch housing. See Figure 108.

B. Inspection

1. Clean all parts in a suitable solvent and dry with compressed air.
2. Inspect the piston and clutch housing for scoring.

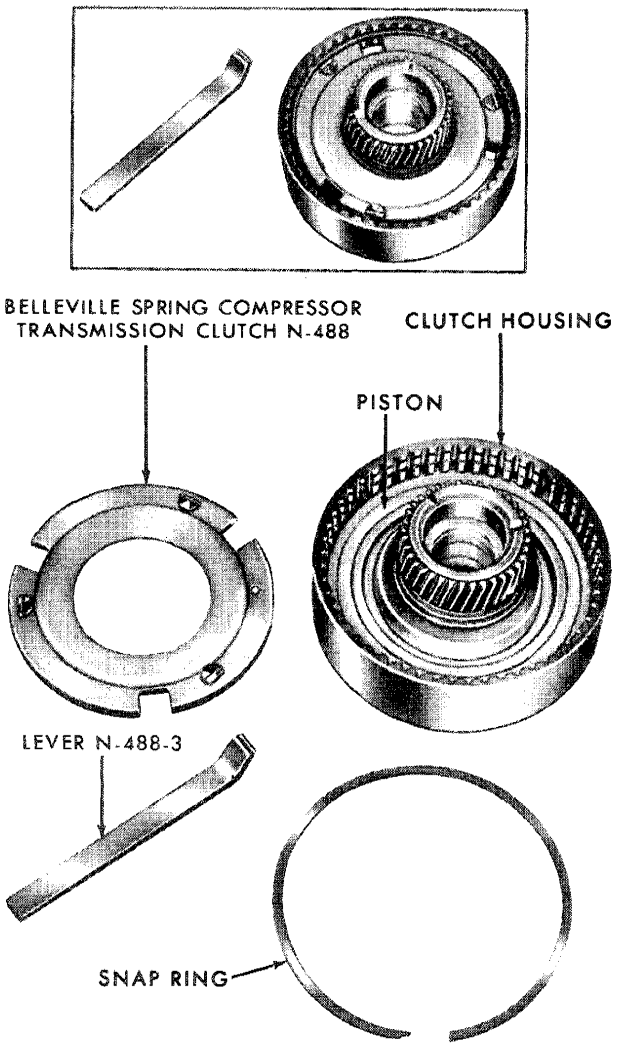

Figure 112
Special Tools for Disassembling the Direct Drive Clutch

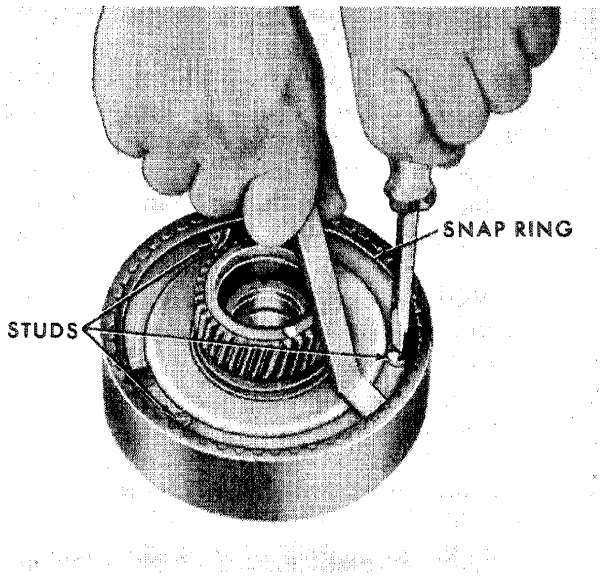

Figure 113
Compressing the Belleville Spring in the Direct Drive Clutch

Emery cloth may be used to smooth the surfaces. Check the oil passage for obstructions.

3. Inspect the clutch plates for signs of heat, distortion, wear, and scoring.
4. Use a straight edge to check both the bronze plates and the steel plates to make sure that they are flat.
5. Examine the pressure plate for scoring and the spring washer for distortion.

C. Assembly

1. Install new inner and outer seals on the clutch piston. Apply petroleum jelly to both surfaces and install the piston in the housing.

   NOTE: ***Avoid cocking of the piston and make sure that the piston is pushed in until it contacts the inner rear face of the housing.***

2. Install the large wire pivot ring, the spring washer, and the small wire pivot ring, Figure 114.
3. Position the Spring Compressor No. N-488, on the piston then install the large snap ring.
4. Using the lever and a screwdriver, as shown in Figure 113, depress the compressor and hold it in position by engaging the lowest step in each stud to the snap ring. Repeat this procedure to engage the second step and finally the third step of each stud. At this point, the spring will be sufficiently

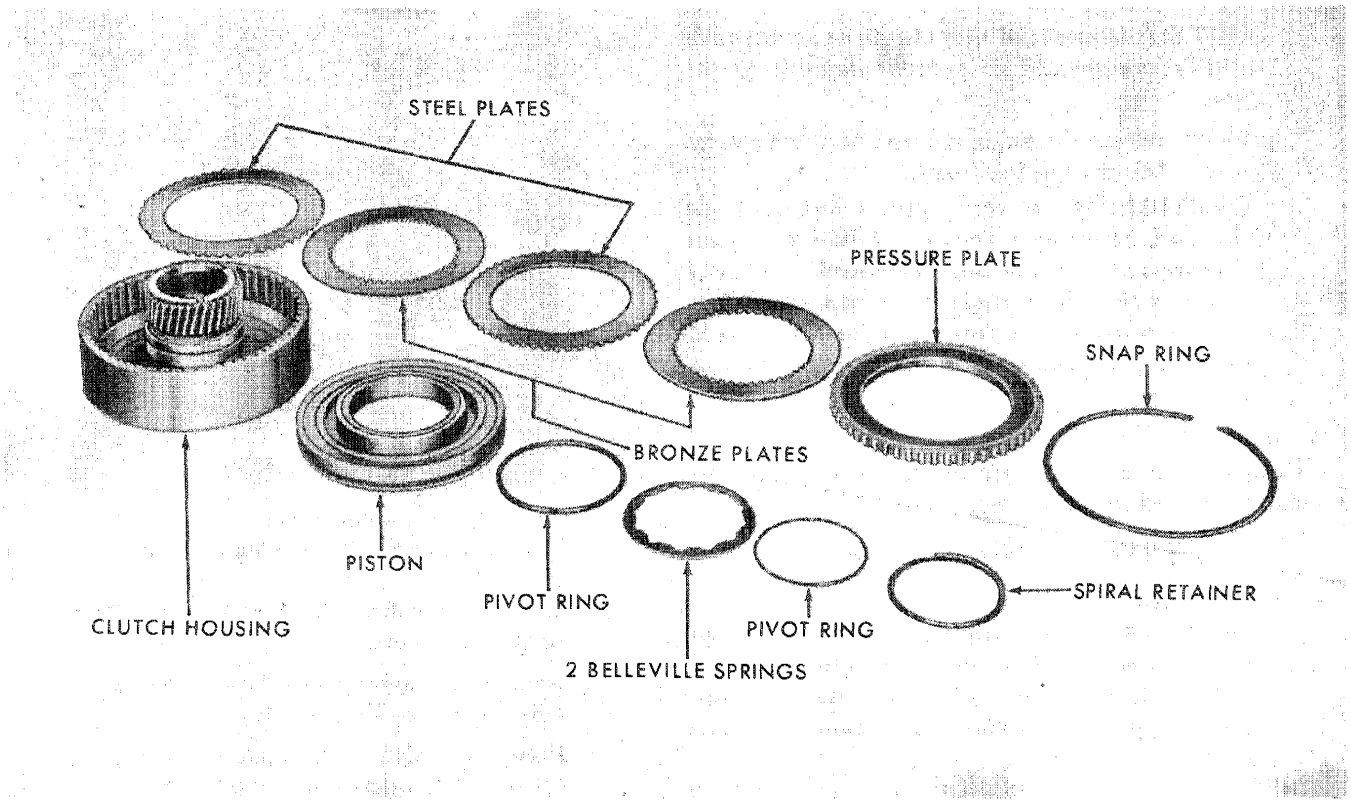

Figure 114
Direct Drive Clutch Disassembled

compressed to permit installation of the spiral retainer.

5. Reverse the procedure in step 4 to disengage the compressor from the large snap ring, then remove the large snap ring and the compressor.
6. Install the steel and bronze clutch plates alternately, starting with a steel plate next to the piston. Then, install the clutch pressure plate and secure the entire assembly with the large snap ring.

SERVOS

All three servos are spring loaded. Servo 1 is serviced as an assembly. All of the components of Servos 2 and 3 are serviced.

A. Disassembly

1. Place servos 2 or 3 in a press using a 3/4" x 3" sleeve and Step Plate No. 630-1, and compress the springs sufficiently to remove the nut on the end of the piston rod. See Figure 115.

IMPORTANT: ***Do not place the press spindle or ram directly on the servo rod.***

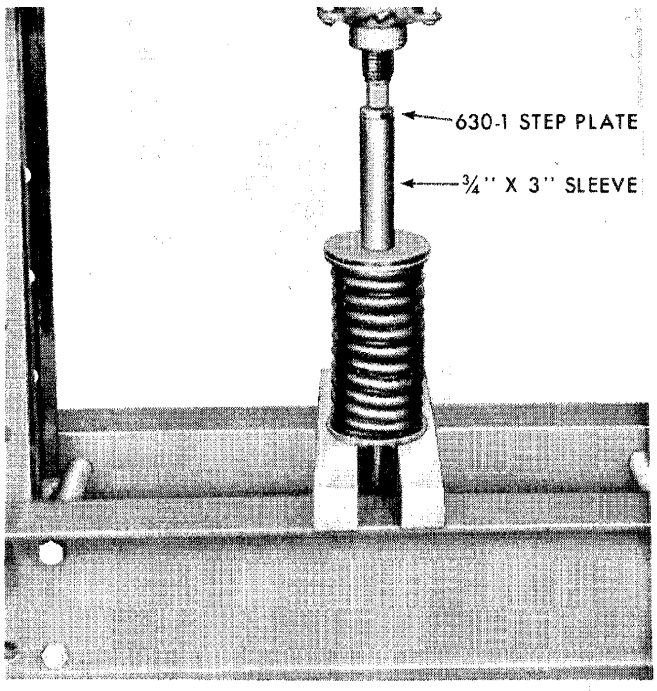

Figure 115
Servicing the Servos

© FORD MOTOR CO. 1964

NOTE: ***It is essential that the servo springs are evenly compressed to prevent damage to the parts.***

2. Slowly release the spring pressure until the springs attain their normal free length.

   CAUTION: ***If the servo piston hangs up on the rod, the servo springs should be again compressed and the burr removed. It should be noted that the springs in a compressed state possess considerable force and for this reason, the spring pressure should always be released gradually.***

B. Assembly

Compress the servo springs as described above and install the nut on the piston rod.

SERVO 2 AND 3 COVER

A. Disassembly

IMPORTANT: ***The timing valves are serviced as an assembly. The valve springs are color-coded. Refer to the following chart during assembly to be sure the correct assemblies are used.***

	Servo 2	Servo 3
Dexta 2000 and Super Dexta 3000	Blue	Red
Major 4000	Green	Green
Super Major 5000	Green	Red

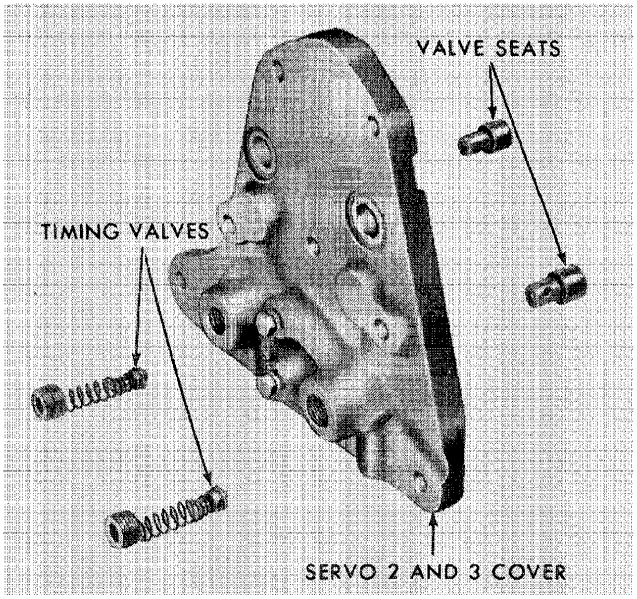

Figure 116
Servos 2 and 3 Cover Assembly

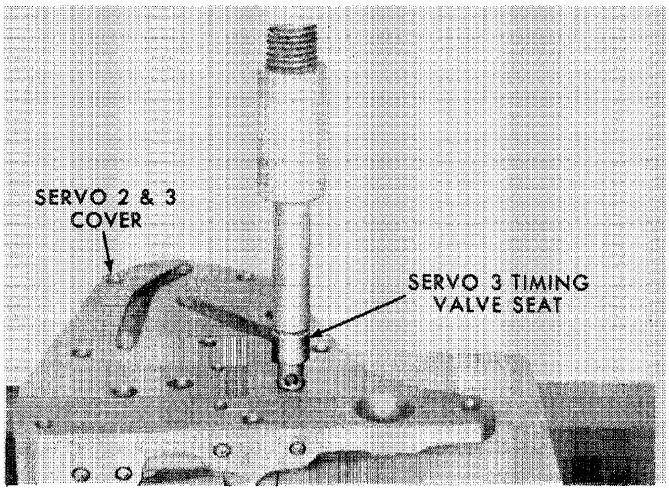

Figure 117
Installing the Timing Valve Seats

1. Remove both hex socket plugs from the outside of the servo cover.
2. Remove the springs and timing valves from the valve seats. See Figure 116.
3. Press the valve seats from the cover, using a ¼" x 3" bolt or steel rod.

   NOTE: ***Do not remove the valve seat by locating the tool on the flat seating surface.***

4. Inspect the springs, timing valves, and valve seats for damage. Discard defective parts as required. Also, inspect the oil bores in the cover for obstructions.

B. Assembly

1. Press the valve seats into the cover, as shown in Figure 117.

   NOTE: ***The seat must be installed with the "thru" hole lined up with the oil passages in the cover.***

2. Install the timing valves, springs, and hex socket plugs.

BUSHINGS AND SLEEVE

The bushings which are serviced are listed below. The first three bushings are to be removed with a cape chisel as shown in Figure 118. Extreme care must be used to be sure that the bushing bores are not damaged. The remainder of the bushings can be removed with the same tools used to install the bushings. See Insert, Figure 118. All of the service bushings are precision parts and, therefore, need not be reamed.

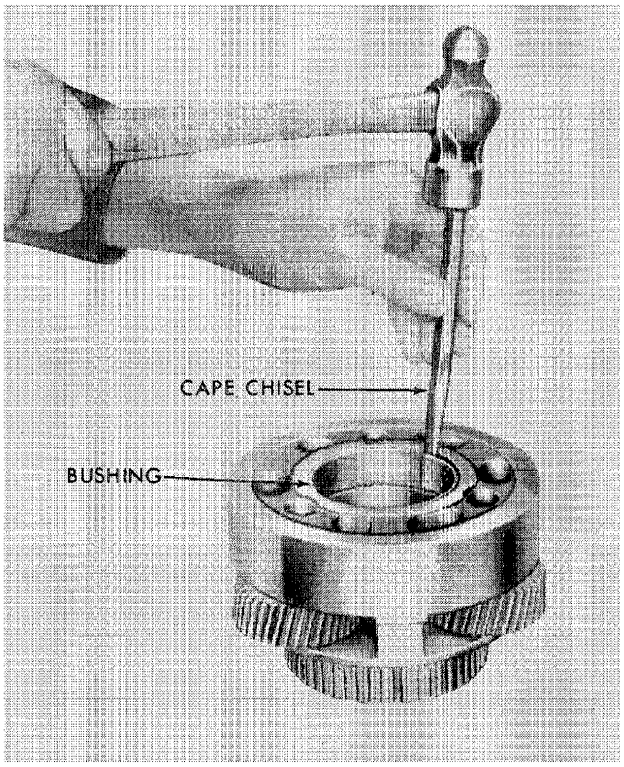

Figure 118
Bushing Removal
(Dexta 2000, Super Dexta 3000 and Major 4000)

The pump adapter plate sleeve is to be installed with the chamfered edge toward the rear (bearing side) of the plate. See Figure 119. Align the holes in the sleeve with the adapter plate holes and press the sleeve so that the chamfered end is flush with the recessed machined surface.

1. Clutch 1: To install, use Bushing Adapter No. 776.
2. P.T.O. Housing Front: To install, use Step Plate No. 630-A.
3. P.T.O. Housing Rear: To install, use Bushing Adapter No. T-811.
4. "A" Sun Gear: To install two bushings, use Bushing Adapter No. T-807.
5. Pump Adapter Plate: To install, use Step Plate No. 630-6.

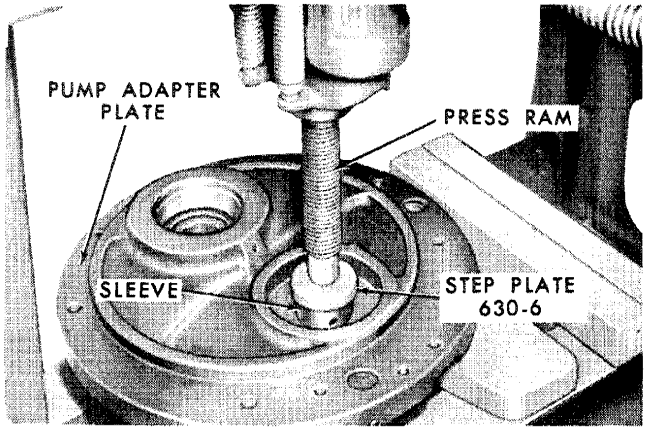

Figure 119
Servicing the Pump Adapter Plate Sleeve
(Dexta 2000, Super Dexta 3000 and Major 4000)

SPEED SELECTOR

A. Disassembly

1. Remove the two screws retaining the side covers. Remove the two side covers, lever, spring, lever assembly, and three screws to separate the selector assembly, as shown in Figure 120.
2. Remove the hex nut from the shaft, remove the indicator assembly, and remove the snap ring and retainer plate to expose the wheel and cable assembly, shown in Figure 121. The shaft can now be withdrawn and the wheel and cable can be removed.
3. Inspect all parts of this assembly for damage and excessive wear.

B. Assembly

1. Install the shaft, cable and wheel assembly, bushing, and retainer plate and secure with the snap

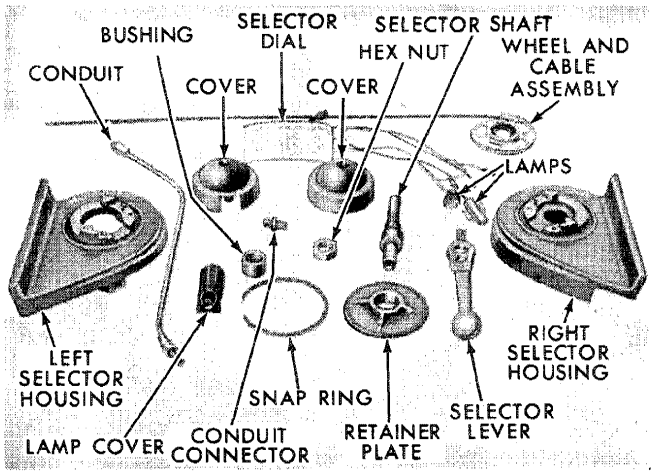

Figure 120
Selector Assembly Components

© FORD MOTOR CO. 1964

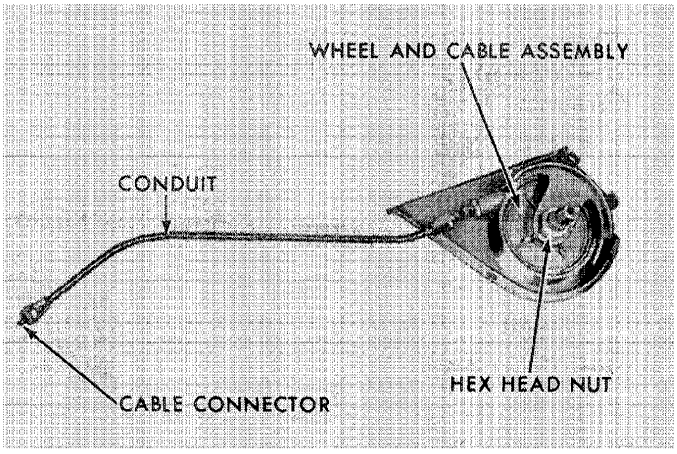

Figure 121
Servicing the Cable and Wheel Assembly

ring after being certain that the cable is engaged in the wheel.

2. Secure the conduit to the fitting and push or pull the cable until ¼ in. (6.35 mm) of the cable connector is protruding from the conduit.
3. Install the indicator assembly and loosely thread the hex nut on the shaft. Align the selector dial to the housing by placing the indicator in the tenth speed position. Tighten the nut.
4. Install the lamp cover and secure the housing halves with three screws.
5. Install the control lever, spring, and notched side cover on the right end of the shaft. Install the remaining cover on the left side of the shaft. Install and tighten the two screws.
6. Assemble the speed selector assembly on the tractor as covered on page 33. Final alignment of the dial to the housing is accomplished at that time.

BEARINGS

The bearings which are serviced are listed below along with the necessary tools for removing and installing the bearings. The tools listed are used as shown in Figures 122 and 123.

A. Super Major 5000

Input Shaft: Removal, Bearing Puller No. 951 and Step Plate No. 625-4. Installation, Step Plate No. 625-1.

P.T.O. Shaft: Removal and Installation: Step Plate No. 625-3.

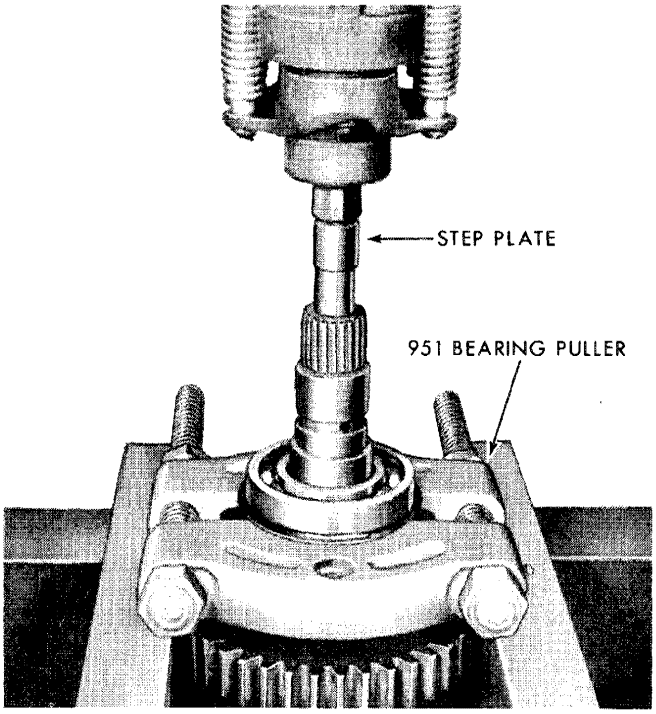

Figure 122
Removing the Roller Bearings

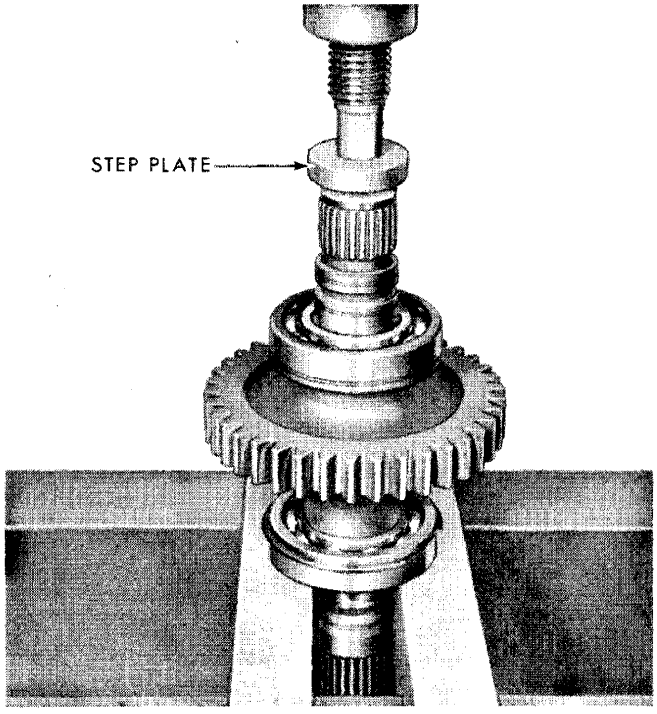

Figure 123
Installing the Roller Bearings

Pump Drive Shaft Front Bearing: Removal, Bearing Puller No. 951 and Step Plate No. 630-5. Installation, Step Plate No. 625-4.

Pump Drive Shaft Rear Bearing: Removal, Bearing Puller No. 951 and Step Plate No. 625-4. Installation, Step Plate No. 630-5. Install bearing with snap ring groove toward rear.

B. Dexta 2000, Super Dexta 3000, and Major 4000

Input Shaft Front Bearing: Removal, Bearing Puller No. 951 and Step Plate No. 630-5. Installation, Step Plate No. 625-4.

Input Shaft Rear Bearing: Removal, Bearing Puller No. 951 and Step Plate No. 630-5. Installation, Step Plate No. 625-4.

"D" Planet Gear Bearing: Removal, Bearing Puller No. 951 and Step Plate No. 630-5. Installation, Step Plate No. 625-4.

P.T.O. Intermediate Shaft Bearing: Removal, Bearing Puller No. 951 and Step Plate No. 630-5. Installation, Step Plate No. 625-4.

© FORD MOTOR CO. 1964

Part 8

SELECT-O-SPEED TRANSMISSION

Chapter 2

TROUBLE SHOOTING, SPECIFICATIONS, AND SPECIAL TOOLS

Section	Page
1. Trouble Shooting	73
2. Specifications	81
3. Special Tools	84

1. TROUBLE SHOOTING

A systematic procedure must be followed to locate the causes of an inoperative or malfunctioning transmission. The procedure consists of a series of mechanical, electrical, and operational checks, designed to locate the specific area of difficulty.

However, depending upon the condition of the transmission, the problem may be easily diagnosed by following the checks covered in the Preliminary Checks, page 73, or by using Table I of the Diagnosis Guide, page 78. Table I lists the causes of various operational difficulties which are expressed in problem form. Table II of the Diagnosis Guide, page 79, lists the possible causes of the general conditions given in Table I. The Trouble Shooting Chart, page 76, expresses in tabular form the information included in Table I. A complete explanation of the chart is given on page 76.

If the transmission problem is one of overheating, low circuit pressures, or slippage in certain gear ratios, under loaded conditions, the more thorough Diagnostic Procedure should be followed. A transmission which cannot be operated will of necessity have to be disassembled to determine the cause of difficulty.

PRELIMINARY CHECKS

The following preliminary checks should be performed before any thorough diagnosis is made. These checks are based on the operation of the transmission.

1. Oil Level
2. Drive Line Disengagement
3. Selector Alignment
4. Lube Light Operation
5. Band Adjustment

NOTE: ***It is possible for the transmission to lock up in certain gear ratios under some malfunctioning conditions. Therefore, when making pressure or operational checks, the engine speed should be 800 rpm. If a lock-up is detected, quickly depress the inching pedal or if necessary, move the selector lever to another gear ratio to prevent the engine from stalling.***

Torque Limiting Clutch Check: The torque limiting clutch mounted on the engine flywheel is designed to slip under torques encountered from impact or shock loadings. If for any reason, it is suspected that the torque limiting clutch is not transmitting engine torque, a clutch slippage check can be made. Refer first to the Diagnostic Procedure Hydraulic Condition 3.

1. Operate the tractor under load until the engine and transmission have reached the operating temperature at which the condition occurred.

© FORD MOTOR CO. 1964

2. Under a fully loaded condition, operate the tractor in 8th, 9th, or 10th gear at full throttle and quickly apply both brakes to simulate a shock loading and to slip the torque limiting clutch.

   IMPORTANT: ***Never use the above procedure below 8th gear.***

   a. If the engine pulls down and stalls, the clutch is holding.

   b. If the brakes completely restrain the forward motion of the tractor and the engine does not lug down below 1000 rpm, torque limiting clutch slippage is indicated.

If the above preliminary checks were not effective in determining the cause of the difficulty, it will be necessary to check system pressures, as covered in the Diagnostic Procedure.

DIAGNOSTIC PROCEDURE

This procedure is concerned with diagnosing the hydraulic condition of the transmission by means of checking the pressures at the 3 servo locations. The procedure for adjusting or checking valve pressures is given on page 27. Obviously, this trouble shooting approach will not be used unless some indication of transmission malfunctioning is evident, such as inoperative gear ratios or the lube light remaining on. In the latter instance, it is recommended that the electrical circuit be checked to determine if a short or grounded circuit is the cause of difficulty before making the hydraulic checks.

The diagnostic procedure uses four hydraulic conditions at 800 rpm and one at 2400 rpm, which can be interpreted from the servo pressure readings. The first three conditions do not outline a checking procedure as such but instead provide a list of possible causes which result in the condition. In the case of hydraulic condition 4, the procedure provided is to be performed in conjunction with the pressure checks. Hydraulic condition 5 is related directly to high engine speed operation.

Hydraulic Condition 1: All servo pressures to specification at 800 rpm and lube light remains on.

1. Defective lube sender switch.
2. Low lube circuit pressure.

To further diagnose the latter condition, it will be necessary to check the lube pressure in the lube circuit as covered under "Checking Valve Pressure", page 27. If the lube pressure is below specifications, page 82, the following are possible causes:

1. Broken lube circuit shaft seals.
2. Excessive transmission end clearances.
3. Leakage from heat exchanger circuit.
4. Leakage at control valve gasket.
5. Improperly adjusted or malfunctioning relief valve.

   NOTE: ***If pressures are to specification and rough shifting characteristics exist, check band adjustment, and Servo 2 and 3 timing valves.***

Hydraulic Condition 2: All servo pressures above specification at 800 rpm.

Improperly adjusted or malfunctioning system regulating valve.

Hydraulic Condition 3: All servo pressures below specification at 800 rpm.

1. Low oil level.
2. Plugged suction screen or restriction in intake passage.
3. Pump adapter plate or pump gaskets leaking.
4. Plugged filter with malfunctioning bypass valve.
5. Main pressure tube O-rings leaking.
6. Leakage between control valve body halves or at the control valve gasket.
7. Improperly adjusted or malfunctioning system regulating valve.
8. Missing valve spools D.D.C.-B-1, B-2 and B-3.
9. Improperly assembled P.T.O. feathering valve.
10. Slipping torque limiting clutch.

    NOTE: ***If the pressures are below specifications only when the P.T.O. handle is out, and the handle is known to be properly adjusted, leakage is indicated in the P.T.O clutch circuit.***

Hydraulic Condition 4: Pressures below specification in certain gear ratios, lube light "ON."

1. Observe in which gear ratios low pressure readings occur.
2. Fully depress inching pedal in gear ratios where low pressure readings occur and observe lube light and pressure readings at Servos 2 and 3.

TABLE II
DIAGNOSIS GUIDE

Condition	Possible Cause
1. Low pump oil pressure (all gear ratios).	Refer to Hydraulic Condition 4, page 74.
2. Direct Drive Clutch inoperative. (Does not apply.)	a. Broken input shaft seals. b. Leaking Servo 1-DDC pressure lines, O-rings, or fittings. c. Leaking DDC piston O-rings. d. Leaking sealing balls in input shaft. e. Leaking tube or sealing balls in adapter plate. f. Leaking between valve body halves. g. Leaking valve body gasket. h. Leaking servo and servo rod O-rings. i. Scored or burred piston.
(Does not release.)	a. Sticking B1-DDC valve spool. b. Scored or burred piston. c. Defective piston return spring. d. Warped or defective clutch discs.
3. Band 1 inoperative (Does not apply.)	a. Sticking B1-DDC valve spool. b. Improper B-1 adjustment. c. Missing band strut. d. Defective servo spring. e. Scored or burred servo.
(Does not release.)	a. Broken input shaft seals. b. Leaking Servo 1-DDC pressure lines, O-rings or fittings. c. Leaking DDC piston O-rings. d. Leaking sealing balls in input shaft. e. Leaking tube or sealing balls in adapter plate. f. Leaking between valve body halves. g. Leaking valve body gasket. h. Leaking servo and servo rod O-rings. i. Scored or burred servo. j. Improper band adjustment.

© FORD MOTOR CO. 1964

Condition	Possible Cause	
4. Band 2 or 3 inoperative. (Does not apply.)	a. Improper band adjustment. b. Missing band strut. c. Broken or defective servo spring.	d. Scored or burred servo. e. Sticking band valve spool. f. Gasket leakage between servo ports.
(Does not release.)	a. Improper band adjustment. b. Leaking valve body gasket. c. Leakage between valve body halves. d. Leaking pressure line O-rings.	e. Leaking servo O-rings. f. Scored or burred servo. g. Leaking servo rod guide O-rings. h. Snap ring missing on servo rod.
5. Clutch 1 inoperative. (Does not apply.)	a. Leaking valve body gasket. b. Leaking piston O-rings. c. Broken mainshaft seals.	d. Broken "C" sun gear seals. e. Broken distributor seals. f. Scored or burred piston.
(Does not release.)	a. Sticking clutch valve spool. b. Scored or burred piston.	c. Broken or defective piston return spring. d. Warped or defective clutch discs.
6. Clutch 2 or 3 inoperative. (Does not apply.)	a. Leaking valve body gasket. b. Leaking piston O-rings. c. Broken mainshaft seals. d. Broken "C" sun gear seals.	e. Broken mainshaft or mainshaft splines. f. Leakage between valve body halves. g. Scored or burred piston.
(Does not release.)	a. Sticking clutch valve spool. b. Scored or burred piston.	c. Broken or defective piston return spring. d. Warped or defective clutch plates.

2. SPECIFICATIONS

(NOTE: *The following specifications supersede the specifications in the text.)*

End Play

Front and Rear Transmission Compartment . . . . . 0.005–0.015 in. (0.127–0.381 mm)

Planet Pinion Gears . . . . . 0.010–0.028 in. (0.254–0.711 mm)
Except Ford 4000 and Ford 5000, B carrier . . . . . 0.040–0.058 in. (1.016–1.473 mm)

Preload

P.T.O. Shaft Bearings . . . . . 18–25 lbs. pull (8–11.50 kg)

Servo Bore Diameter

Servo 1 . . . . . 1.999–2.001 in. (50.77–50.82 mm)
Servo 2 . . . . . 2.125–2.127 in. (53.97–54.02 mm)
Servo 3: Ford 2000, Ford 3000, and Ford 4000 . . . . . 3.000–3.002 in. (76.20–76.25 mm)
Ford 5000 . . . . . 3.250–3.252 in. (82.55–82.60 mm)
After 5H18C . . . . . 3.000–3.002 in. (76.20–76.25 mm)

New Model Ford 5000:
Servo 1 and Servo 2 . . . . . 2.250–2.252 in. (57.15–57.20 mm)
Servo 3 . . . . . 3.000–3.002 in. (76.20–76.25 mm)

Band Adjustments

Band #1 (applied) after screw torque of 19–21 lbs. ft. (2.62–2.90 kgm) . . . . . back off 1-1/4 turns
Band #2 and #3 (released) after screw torque of 110–130 lbs. in. (126.73–149.77 kg/cm) . . . . . back off 3/4 turn
Lock Nut Torque . . . . . 20–25 lbs. ft. (2.76–3.45 kgm)

Thrust Washers

Selective Fronts:
Ford 2000, 3000, 4000, and Ford 5000 . . . . . 0.067–0.122 in. (1.702–3.099 mm)
Selective Rear:
Ford 2000 and Ford 3000 . . . . . 0.092–0.152 in. (2.336–3.861 mm)
Ford 4000 and Ford 5000 . . . . . 0.102–0.142 in. (2.591–3.607 mm)
Selective Washers are available in increments of 0.010 in. (0.254 mm)

Reservoir

Oil Specifications M-2C41

Capacity:	Ford 2000 & Ford 3000			Ford 4000			Ford 5000		
	U.S. Qts.	Imp. Qts.	Liters	U.S. Qts.	Imp. Qts.	Liters	U.S. Qts.	Imp. Qts.	Liters
Initial fill w/filter and heat exchanger . .	13.25	11.0	12.5	13.25	11.0	12.5	12.75	10.6	12.0
Initial fill w/filter less heat exchanger. .	12.0	10.0	11.3	–	–	–	–	–	–
Refill	11.0	9.2	10.4	12.25	10.2	11.6	11.75	9.8	11.1

Pump

Capacity . . . . . 4 gpm (3.33 Imp. Gals., 14.0 Liters) @ 900 rpm and 200 psi (14.0 kg/cm2) @ 120°F. (49°C.)
Type and Location . . . . . roller vane, mounted coaxially on transmission input shaft

Control Valve

Valve Spool Diameters (Clutch and Servo)
Ford 2000, Ford 3000, and Ford 4000 . . . . . 0.3738–0.3742 in. (9.4945–9.5047 mm)
Ford 5000 (and new Ford 4000) . . . . . 0.3743–0.3747 in. (9.5072–9.5174 mm)
Valve Spool Diameters (Feathering) . . . . . 0.3743–0.3747 in. (9.5072–9.5174 mm)
Bore Diameters . . . . . 0.3751–0.3758 in. (9.5275–9.5453 mm)

© FORD MOTOR COMPANY – 1968

(NOTE: *The following specifications supersede the specifications in the text.)*

Valve Spring Lengths

	Free Length	Under Load
Feathering Valve (Transmission)		
Plunger Spring	1.40 in. (35.56 mm)	0.88 in. (22.35 mm) @ 7.8– 8.8 lbs. (3.5–4.0 kg)
Return Spring	1.22 in. (30.98 mm)	0.78 in. (19.81 mm) @ 1.9– 2.0 lbs. (0.8–0.9 kg)
Feathering Valve (P.T.O.)		
Plunger Spring	1.12 in. (28.44 mm)	0.86 in. (21.84 mm) @ 7.8– 8.8 lbs. (3.5–4.0 kg)
Return Spring	1.22 in. (30.98 mm)	0.78 in. (19.81 mm) @ 1.9– 2.0 lbs. (0.8–0.9 kg)
Detent (1)	0.75 in. (19.05 mm)	0.58 in. (14.73 mm) @ 10.0–12.0 lbs. (4.5–5.4 kg)
Valve Spools (6)	1.24 in. (31.50 mm)	0.45 in. (11.43 mm) @ 3.1– 3.5 lbs. (1.4–1.6 kg)
Transmission Relief Valve (1)	2.06 in. (52.32 mm)	1.66 in. (42.16 mm) @ 15.5–17.5 lbs. (7.0–7.9 kg)
System Regulating Valve (1)	2.47 in. (62.74 mm)	1.88 in. (47.75 mm) @ 20.0–21.0 lbs. (9.1–9.5 kg)
Sequencing Valve (1)	2.89 in. (73.41 mm)	1.98 in. (50.29 mm) @ 12.3–14.1 lbs. (5.6–6.4 kg)

Clutch Piston Return Springs

	Free Length	Under Load
Direct Drive Clutch Spring:		
Height		0.115–0.125 in. (2.92–3.17 mm)
Thickness		0.035–0.037 in. (0.88–0.93 mm)
Clutch 1, 2, and 3 Springs		
Ford 2000 and Ford 3000	2.06 in. (52.3 mm)	1.33 in. (33.8 mm) @ 200–225 lbs. (90.7–102.1 kg)
Ford 4000 and Ford 5000	2.29 in. (58.1 mm)	1.38 in. (35.0 mm) @ 305–335 lbs. (138.4–151.9 kg)
P.T.O. Clutch Spring	2.34 in. (59.4 mm)	1.188 in. (30.2 mm) @ 200–225 lbs. (90.7–102.1 kg)

Servo Springs

Ford 2000 and Ford 3000

	Free Length	Under Load
Servo 1	3.84 in. (97.5 mm)	2.16 in. (54.8 mm) @ 304–336 lbs. (137.9–152.4 kg)
Servo 2 and Servo 3 Inner	6.54 in. (166.1 mm)	4.92 in. (124.9 mm) @ 225–275 lbs. (102.1–124.7 kg)
Servo 3 Outer	9.90 in. (251.4 mm)	4.88 in. (123.9 mm) @ 467–515 lbs. (211.8–233.6 kg)

Ford 4000 and Ford 5000

	Free Length	Under Load
Servo 1	3.43 in. (87.1 mm)	2.16 in. (54.8 mm) @ 360–396 lbs. (163.3–179.6 kg)
Ford 4000 after production date code 8A19	3.33 in. (84.6 mm)	2.16 in. (54.8 mm) @ 333–367 lbs. (151.1–166.5 kg)
New Model Ford 5000	3.84 in. (97.5 mm)	2.16 in. (54.8 mm) @ 475–525 lbs. (215.5–238.1 kg)
Servo 2 and Servo 3 Inner	7.22 in. (183.3 mm)	4.36 in. (110.7 mm) @ 375–423 lbs. (170.1–191.9 kg)
Servo 3 Outer	10.31 in. (261.8 mm)	4.88 in. (123.9 mm) @ 506–556 lbs. (229.5–252.2 kg)

Hydraulic Pressures at Normal Operating Temperature

System Regulating Valve @ 800 rpm	205 psi (14.4 kg/cm²)
Transmission Relief Valve @ 2400 rpm	
With Heat Exchanger	225 psi (15.8 kg/cm²)
Less Heat Exchanger	215 psi (15.1 kg/cm²)
Sequencing Valve	125 psi (8.8 kg/cm²)

Torque Limiting Clutch Springs

	Color Code	O.D.	I.D.	Thickness	Free Height
Ford 2000 and 3000	Red	8.30 in. (210.82 mm)	6.75 in. (171.45 mm)	0.106–0.109 in. (2.69–2.77 mm)	0.175 in. (4.45 mm)
Ford 4000	Yellow	8.30 in. (210.82 mm)	6.75 in. (171.45 mm)	0.106–0.109 in. (2.69–2.77 mm)	0.189 in. (4.80 mm)
Ford 5000	Blue	8.30 in. (210.82 mm)	6.75 in. (171.45 mm)	0.111–0.114 in. (2.82–2.90 mm)	0.198 in. (5.03 mm)

(NOTE: The following specifications supersede the specifications in the text.)

Disc Thickness (with lining)	
Ford 2000, Ford 3000 and Ford 4000	0.329-0.353 in. (8.357-8.966 mm)
Ford 5000	0.329-0.353 in. (8.357-8.966 mm)
Drive Plate Thickness	
Ford 2000, Ford 3000 and Ford 4000	0.278-0.282 in. (7.061-7.163 mm)
Ford 5000	0.278-0.282 in. (7.061-7.163 mm)

Bushing Diameter

Clutch #1 Housing	2.217-2.218 ins. (56.31-56.33 mm)
"C" Carrier (Front)	3.062-3.063 ins. (77.78-77.81 mm)
(Rear)	1.374-1.375 ins. (34.90-34.92 mm)
"D" Sun Gear	0.999-1.000 in. (25.37-25.40 mm)
Rear Support:	
Ford 2000, Ford 3000, and Ford 5000	1.749-1.750 ins. (44.42-44.43 mm)
Ford 4000	1.624-1.625 ins. (41.25-41.27 mm)
P.T.O. Clutch (Front)	1.874-1.875 ins. (47.59-47.62 mm)
(Rear)	1.624-1.625 ins. (41.24-41.27 mm)
Direct Drive Clutch (Front)	1.440-1.441 ins. (36.57-36.60 mm)
(Rear)	1.315-1.316 ins. (33.40-33.42 mm)

Output Shaft Speed at 1500 Engine rpm

	Ford 2000 Ford 3000	Ford 4000	Ford 5000
R_2	—173	—635	—620
R_1	—117	—428	—417
N	—	—	—
1	41	144	140
2	56	205	200
3	58	214	209
4	83	305	297
5	133	487	471
6	171	625	608
7	197	721	691
8	253	926	903
9	409	1500	1456
10	607	2206	2143

Torque Specifications

Valve Housing Mounting Bolts	6-8 lbs. ft. (0.82-1.10 mkg)
P.T.O. Bearing Retainer Bolts	14-17 lbs. ft. (1.93-2.35 mkg)
Pump Mounting Bolts	15-18 lbs. ft. (2.07-2.48 mkg)
Pump Adapter Plate Bolts	25-30 lbs. ft. (3.45-4.14 mkg)
Distributor Mounting Bolts	20-25 lbs. ft. (2.76-3.45 mkg)
Rear Support Mounting Bolts	35-40 lbs. ft. (4.83-5.53 mkg)
Servo 1 Cover Attaching Bolts	20-25 lbs. ft. (2.76-3.45 mkg)
Torque Limiting Clutch Mounting Bolts	25-30 lbs. ft. (3.45-4.14 mkg)
Transmission Cover Attaching Bolts	20-23 lbs. ft. (2.76-3.17 mkg)
Filter Cover	35-40 lbs. ft. (4.83-5.53 mkg)
Servos 2 and 3 Cover Attaching Bolts	35-40 lbs. ft. (4.83-5.53 mkg)
Heat Exchanger Line Adapter Bolts	20-25 lbs. ft. (2.76-3.45 mkg)

© FORD MOTOR CO. 1966

Timing Valves

Valve Spring Color Code	Spring Free Length
Green	0.47 in. (11.93 mm)
Red	0.45 in. (11.43 mm)
Blue	0.40 in. (10.16 mm)

3. SPECIAL TOOLS

Tool No.	Description
N-488	Belleville Spring Compressor
N-488-3	Lever
SW-512	Torque Limiter Pilot
625-1	Step Plate
625-3	Step Plate
625-4	Step Plate
630-S	Step Plate Set (Nos. 1-11)
N-774-A	Pressure Gauge
N-775	Compressor
776	Bushing Adapter
T-807	Bushing Adapter
T-811	Bushing Adapter
943	Bearing Cup Pulling Attachment
943-S	Slide Hammer
951	Bearing Puller

Part 8

SELECT-O-SPEED TRANSMISSION

Section		Page
1.	Repair Manual Revisions	1
2.	New Model Tractor Select-O-Speed Information	7
3.	New Model Tractor Select-O-Speed Transmission Trouble Shooting Without Lube Light	9

This section contains service information to update the existing repair manual to include changes made in the Select-O-Speed transmission. Parts interchangeability is covered. Service procedures which have changed are noted and included.

Read this section carefully and make notes in the repair manual text to call attention to changes.

1. REPAIR MANUAL REVISIONS

Page references are given below for specific points of change. Place an asterisk in the text margin to indicate that a change in text or added information is necessary. These marks will cue the reader to refer to this supplement for additional information. Some of the changes may be written in the text itself as indicated.

PAGE 24

Step 6, right-hand column, requires additional information describing new parts used.

When installing a new or used P.T.O. handle and slider assembly, be sure to use the additional washer and thicker jam nut put into production units from 12-65 on. Position the new flat washer between the spacer and the lock washer. Use the thicker jam nut in place of the previous thinner jam nut to secure the assembly as shown, Figure 1.

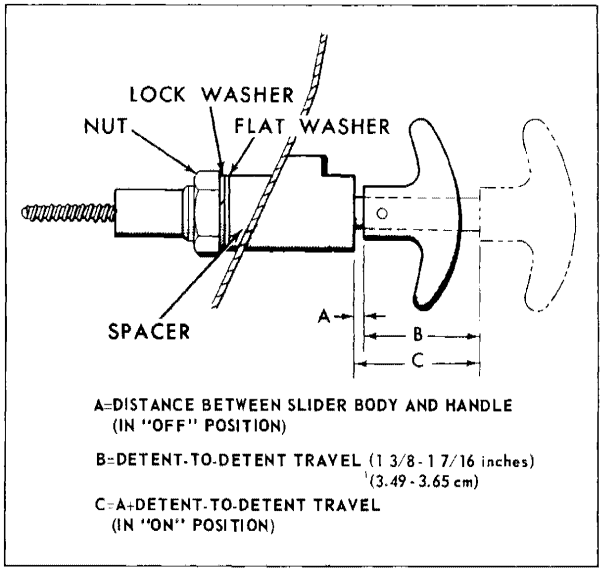

Figure 1
P.T.O. Handle and Slider Installation

PAGE 32

Step 5, left-hand column, should read: "Install the starter safety switch and bracket with the camshaft in the Park (P) position. Position the bracket correctly by placing a 0.035–0.055-inch (.89–1.40 mm) feeler gauge between the lobe on the cam and the switch. Force the switch against the feeler gauge until the ball is fully into its bore and the face of the switch contacts the feeler gauge.

NOTE: ***Tighten the bolts securing the switch bracket to the control valve while holding this condition to allow proper ball travel in the switch. Tighten to the specified torque, page 83.***

6. Install the inching pedal return spring."

© FORD MOTOR COMPANY-1968

PAGE 41

Step 3 requires more information for the Ford 4200 Tractor Select-O-Speed transmission:

NOTE: ***On the 4200 Tractor, adjust the length of the inching pedal rod assembly to give a gap of 0.010–0.060-inch (.25–1.52 mm) between the pedal return stop and the pedal shank. Refer to Figure 2.***

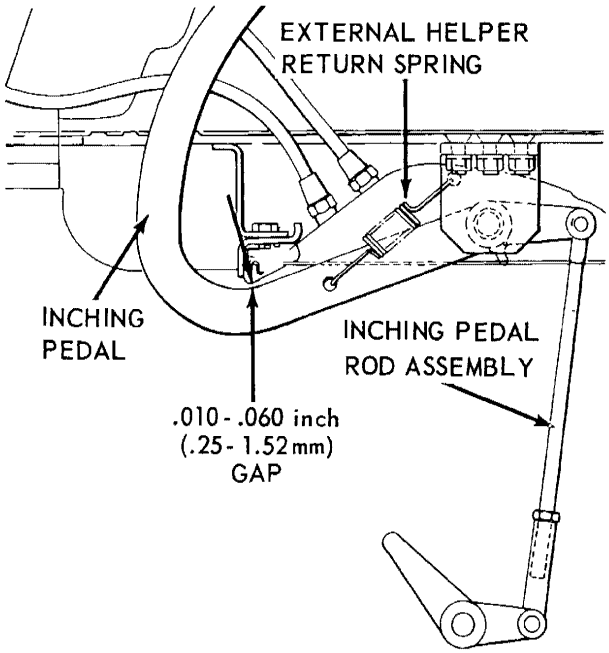

Figure 2
Ford 4200 Select-O-Speed Inching Pedal Adjustment

PAGE 42

Step 10 should also indicate that in the event of oil leakage from any band adjusting screw, or when installing a band adjusting screw, apply a non-hardening plastic lead sealer to the screw threads where the threads engage the case.

PAGE 53

Step 26 requires additional information. If the snap rings are removed from the output shaft, they must be silver soldered securely together during assembly. If a unit built prior to 1966 has the old snap rings on the output shaft, install new rings and silver solder the ends together securely. (An old ring with the wide gap appears in the text, Figure 83.)

PAGE 55

Step 3, left-hand column, requires additional information.

Improper installation of the oil pump adapter plate can contribute to misalignment of the input shaft and in turn, cause fretting corrosion of the input shaft and torque limiting clutch hub splines. Before the adapter plate is installed on the transmission, check to be sure:

1. Both gasket surfaces are clean and free of old gasket material.

2. The dowel pins are in good condition. If the pins show any evidence of material being sheared from them, replace the pins.

3. The dowel pin holes in the adapter plate are not elongated. If this condition exists, replace the plate. Then install the two front shaft seals on the input shaft and center them, using petroleum jelly. Install the pump adapter plate and gasket as shown in Figure 87, being sure the adapter plate fits snugly over the dowel pins to position the plate on the case. Check the gasket to be sure it is not creased. Install the six bolts and one nut and tighten them alternately and evenly to 25–30 lbs. ft. (3.46–4.15 kgm).

   NOTE: ***It may be necessary to tap the plate lightly with a hammer handle to locate it on the dowel pins and against the case. Do not force it.***

Step 5, left-hand column requires additional information for proper installation of the transmission pump. To reduce the possibility of damage to the transmission pump rotor use the following installation procedure:

1. Position the pump firmly against the pump gasket and adapter plate.

2. Tighten two mounting bolts 180° apart to 3–5 lbs. ft. (.41–.69 kgm). Then tighten the remaining two bolts to the same torque.

3. Apply the final specified torque of 15–18 lbs. ft. (2.07–2.49 kgm) to two mounting bolts 180° apart. Tighten the remaining two bolts to 15–18 lbs. ft. (2.07–2.49 kgm).

4. Check the installation by rotating the input shaft by hand. Any unusual load is cause for further investigation of the pump assembly.

Step 1 under "D. Torque Limiting Clutch – Removal and Installation," requires additional information.

A new torque limiting clutch and a new input shaft assembly were incorporated into tractor production effective with tractor code 8J23. The clutch and the shaft now have a ten tooth straight spline.

The new clutch assembly has no dampening springs and has a locating pilot on its flywheel end which will locate in a new crankshaft pilot bearing.

The previous shaft and the previous clutch assembly will no longer be serviced. If either the previous shaft or the previous clutch assembly is damaged, install the new shaft, clutch assembly, and pilot bearing.

PAGE 56

Add Step 6 under Step 5, left-hand column: "If oil leakage is evident at the inlet oil plug, Figure 3, in the Ford 5000 Tractor Select-O-Speed transmission, ream the hole oversize to 1.120–1.125 inches (28.448–28.675 mm) diameter. Clean the hole thoroughly and install the oversize plug, 1.135–1.137 inches (28.829–28.898 mm) diameter.

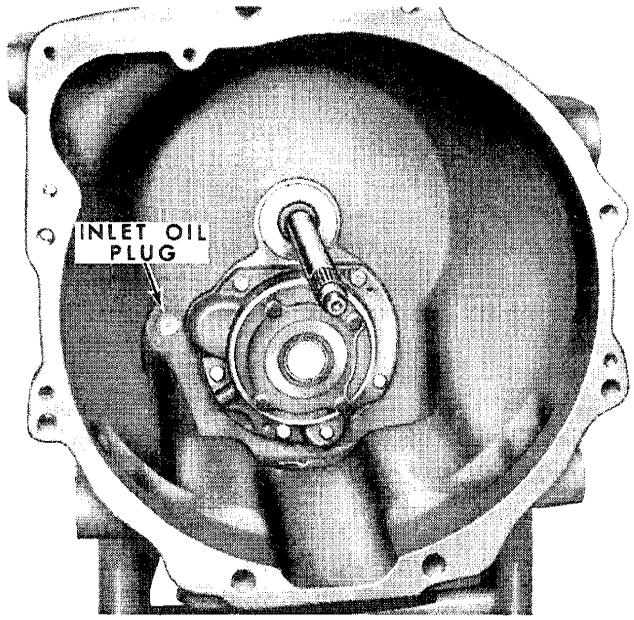

Figure 3
Ford 5000 Select-O-Speed Inlet Oil Plug Location

PAGE 58

"Single Speed P.T.O.," left-hand column requires additional information.

The new input shaft released for service for single speed P.T.O. transmissions does not have the disconnect feature. It will be necessary to remove the disconnect mechanism and plug the hole in the case on tractors produced before date code 8J23. A plug has been released for this application. Use a suitable sealer on the plug threads.

PAGE 63

The note under "Clutch Assemblies" in the right-hand column now requires additional information.

To eliminate the possibility of the 2 and 3 Clutch pack snap rings being dislocated, they are now being welded in place as follows:

1. The Clutch 2 and 3 snap rings are to be assembled with the ends straddling two teeth of the housing. The ends should then be butt welded using an AWS-312-16 Electrode. After welding, all weld spatter and excess weld should be removed from all surfaces. **Do not** weld the rings to the plates.

PAGE 64

Cross out the text of Step 2. The step should read: "Inspect the clutch plates for signs of overheating, distortion, wear, or scoring. In the Ford 2000, 3000, and 4110 Tractor Select-O-Speed transmissions, check the coning of the steel plates in the P.T.O. clutch. Position the plates on a flat surface. Check the coning as shown in Figure 109. The plates are coned to 0.015 – 0.020 inch (0.381–0.508 mm). Install new plates if the coning is less than 0.015 inch (0.381 mm).

PAGE 65

Additional information is required under "Direct Drive Clutch", right-hand column.

New direct drive clutch assemblies are available for service for all Select-O-Speed transmissions. Heavier drive plates, 0.080 inch (2.03 mm) thick as against 0.060 inch (1.52 mm) previously, are used in these improved assemblies. A slightly thinner pressure plate is used to accommodate the heavier drive plates. Do not use the 0.080 inch (2.03 mm) drive plates with the thicker pressure plate, nor the 0.060 inch (1.52 mm) drive plates with the thinner pressure plate. Refer to Figure 4 for parts identification.

If the housing is damaged, install a new direct drive clutch assembly.

Also, Select-O-Speed transmissions dated after production date code 8B01 incorporate the heavier drive plates and a new pressure plate, .266 inch (6.76 mm) thick, similar in appearance to the .304 inch (7.72 mm) thick pressure plate shown in Figure 4.

 ©FORD MOTOR COMPANY-1968

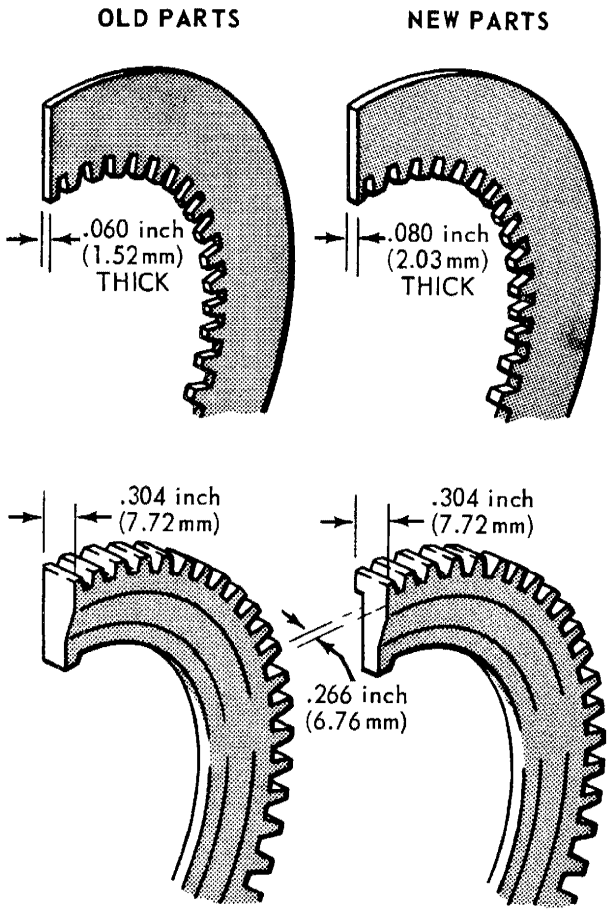

Figure 4
Drive Plate and Pressure Plate Identifying Dimensions

In addition, prior to transmission code 5H26 for the Ford 2000, 3000, and 4000 Tractor Select-O-Speed transmissions and code 5H10 for Ford 5000 Select-O-Speed, direct drive clutches use a single piston return Belleville spring. After these production points, the clutch assemblies include two piston return Belleville springs to assure a more positive release of the clutch pack. Exercise care to use the correct combination of parts for assembly.

The newer clutches have radial face grooves instead of circumferential grooves on the internal spline clutch plates. The housings and pistons are not interchangeable. Only new housings are available for service. If failure of the previous type housing or piston occurs, use a new housing piston and two piston return Belleville springs to assemble the direct drive clutch assembly. Refer to Figure 5.

If the piston outer seal is damaged, install the new piston, two piston return Belleville springs, and the new outer seal along with other new components as required to complete the assembly. (It is advisable to install a new inner seal also.) To use the new cast iron seal in an old housing, file approximately 0.005 inch (.127 mm) from each end of the seal to ensure space is available for expansion of the ring.

PAGE 68

The chart under "A. Disassembly" should be changed as follows:

Timing Valve Spring Identification

Model	Servo 2 Valve	Servo 3 Valve
Ford 2000, 3000, and 4110	Blue	Red
Ford 4000 (except 4110)	Green	Green
Ford 5000	Green	*

*1. Red with 3-1/4 inch (72.55 mm) bore prior to production code 5H18C.

2. Green with 3 inch (72.20 mm) bore from production code 5H18C.

The Ford 5000 Select-O-Speed transmission Servo 3 bore diameter has been changed from 3-1/4 inches (72.55 mm) to 3 inches (72.20 mm) to improve parts interchangeability and reduce the time required to apply and release Band 3.

The Servo 3 bore components and timing are now the same as those used in the Ford 4000 Select-O-Speed transmission (except Ford 4110).

NOTE: ***The timing valve for Servo 2 is located in line with the Servo 3 bore and the timing valve for Servo 3 is located in line with the Servo 2 bore.***

PAGE 73

The third paragraph under "1. Trouble Shooting" requires additional information.

If a transmission is locked up and cannot be started and pressure tested, the fault could be one of the clutches failing to release. Start the engine (and move the tractor if necessary) by carrying out the following operations:

1. Back off Band 1 adjusting screw two turns and operate the starter switch with the selector lever in park. If the engine starts, the fault is probably in the direct drive clutch. If the engine does not start, retighten Band 1 adjusting screw two turns.

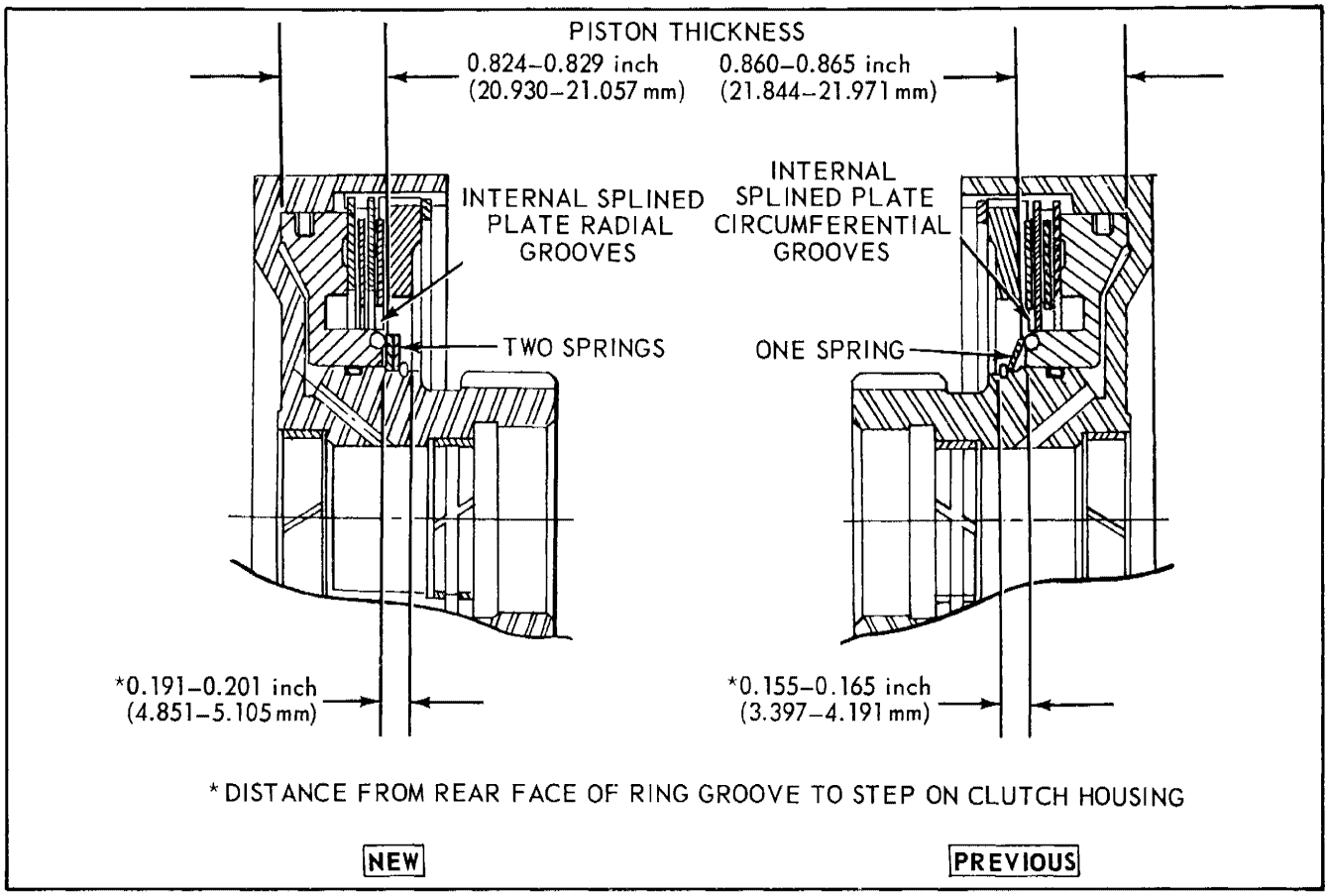

Figure 5
Direct Drive Clutch Assemblies

2. Repeat the above procedure on Band 2 adjusting screw. If the engine starts, the problem is probably in Clutch 1.

3. Repeat the procedure in Step 1 on Band 3 adjusting screw. If the engine starts with Band 3 backed off, the problem should be found in either Clutch 2 or Clutch 3.

PAGE 75

The text following "Timing Valve–Improper Operation" requires more information. If performance of the transmission during the 4–5 shift is not satisfactory, check the following:

1. Check the location of the timing valves. Note that the Servo 2 timing valve is opposite the Servo 3 bore and that the Servo 3 timing valve is opposite the Servo 2 bore. Refer to page 68 of the text for the color coding chart. If the valves are not located correctly, change them to the correct locations.

2. If the valves are located correctly, check that the valves and seats are clean and free of nicks, burrs, scratches, corrosion, or other defects that could cause the valves to bind or stick.

3. Check the band adjustments. Fine adjustment of Bands 2 and 3 may improve the shift change. Change the torques within the specified range, 110–130 lbs. in. (126.73–149.77 cmkg) to the two settings which give the smoothest change.

4. If necessary, install pressure gauges and record the readings in all gear ratios, plus park and neutral at both high and low rpm. Check the trouble shooting chart to be sure a malfunction does not exist, such as low pressure due to a leak, a sticking valve, or defective pump. Note the sequence of the timing valve action described and note and record the fluctuation in pressures at the Servo 2 and 3 gauges at the appropriate gear changes. The action of the pressure gauges should indicate the action of the timing valves.

 © FORD MOTOR COMPANY-1968

5. If pressure buildup to Servos 2 and 3 appear slow, but in the correct sequence, check the gear selector, P.T.O. selector, and inching pedal adjustments to be sure the valves are not partially open.
6. If the preceding adjustments are correct, check the sequencing valve to be sure it is not stuck in the partially open position. Check the control valve thoroughly for foreign material. Check all pressure tubing for possible loose connections. Check Band 1 and the direct drive clutch circuit.
7. As a further possibility, check the servos and clutch packs to be sure binding, leakage, or improper assembly is not a factor which would affect the various shift sequences.
8. If dirt is present, a complete disassembly and cleaning should be performed. Cleaning should include all oil passages in the case, the pump adapter plate, the distributor, and the valve.

PAGE 79

In addition to the possible causes listed for an inoperative direct drive clutch, consider the following additional possible causes:

Trouble Shooting Direct Drive Clutch Failures

Condition	Possible Cause
Direct Drive Clutch Inoperative (Does Not Apply)	a. Incorrect or damaged servo cover gasket.
	b. Servo 1 bore not machined cleanly.
	c. Loose tube nuts, damaged O-rings, or stripped threads on tubes from oil distributor to Band 1 circuit and P.T.O. circuit.
	d. Case cleaning shot jamming valve body or piston.
	e. P.T.O. shaft seal ring broken (causing loss of pressure and Band 1 drag during P.T.O. operation).
	f. Improper selector adjustment.
	g. Improper operation.
(Does Not Release)	a. Direct drive clutch transfer tube leaking.
	b. Case cleaning shot jamming valve body or piston.

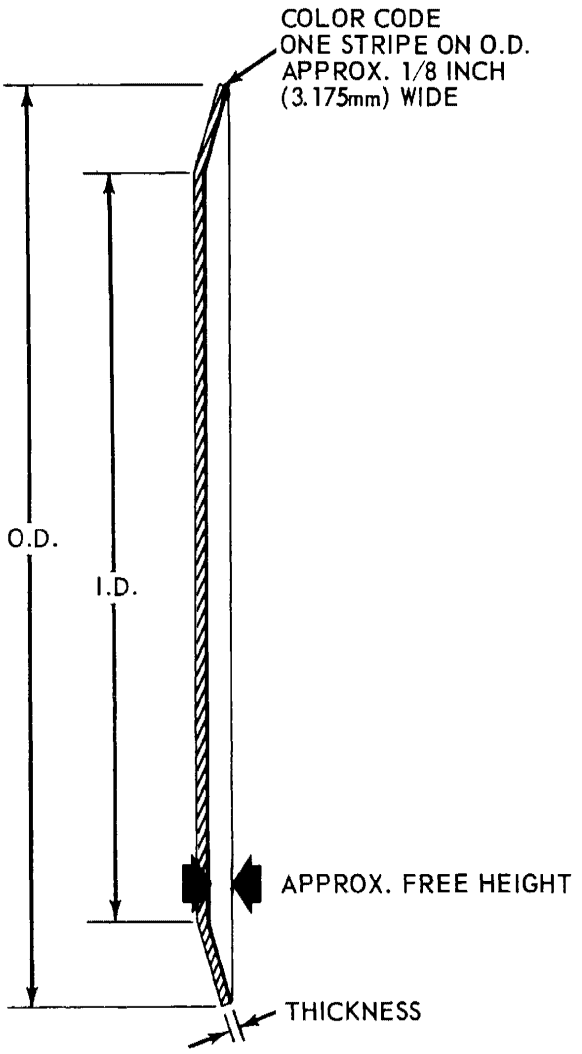

Figure 6
Torque Limiting Clutch Spring Identifying Dimensions

PAGE 82

Figure 6 supplements the data given under "Torque Limiting Clutch Springs" used to identify the torque limiting clutch springs.

ANTI-AERATION OIL BAFFLE

If oil aeration in the area of the transmission oil pump intake screen on Ford 2000, 3000, or 4000 Tractors causes excessive noise in transmissions coded before Transmission Production Code 6M16B, install an anti-aeration oil baffle as follows:

1. Remove the transmission from the tractor and disassemble to the point where the P.T.O. shaft and clutch are removed, page 57, Step 4, left-hand column.

2. Working through the front of the transmission, position the baffle with the flat portion down and the clips toward the Servo 2 boss in the transmission case, as shown in Figure 7.

   NOTE: ***Because of irregularities in the transmission case casting, it may be necessary to modify the baffle by cutting it to fit.***

3. Secure the bottom clip behind the Servo 2 boss.

4. Check the baffle to be sure it is positioned snugly against the left side of the case with the contour of the baffle matching the contour of the case.

5. Position the upper clip into the Servo 2 relief hole.

6. Insert a drift punch through the round hole in the front of the baffle and tap the lower clip to lock the assembly into position.

7. Reassembly the transmission and install it in the tractor, following the instructions in the repair manual. During reassembly, check to be sure there is no interference between the baffle and any of the transmission parts.

   NOTE: ***The oil aeration noise may persist until the transmission warms up to operating temperature. At this time, the noise will subside.***

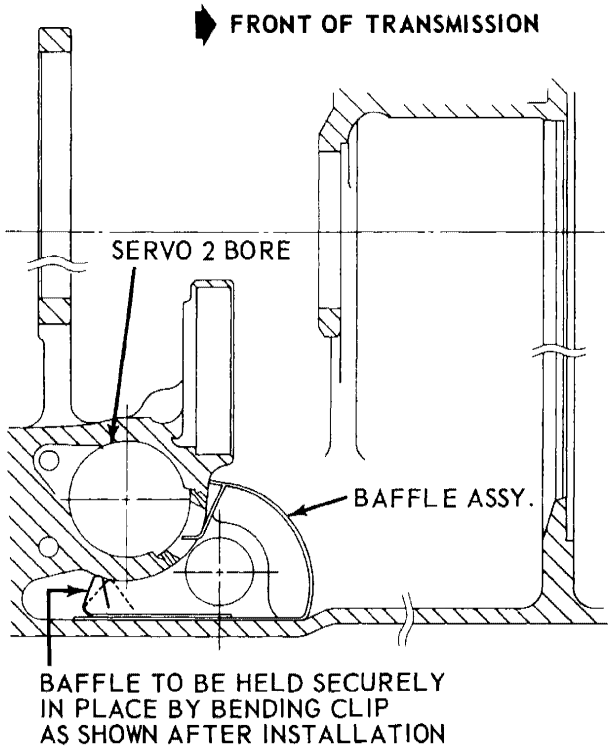

Figure 7
Anti-Aeration Oil Baffle Installation

2. NEW MODEL TRACTOR SELECT-O-SPEED INFORMATION

The new model tractor Select-O-Speed transmissions incorporate changes in addition to those made during previous model production. The 4000 Tractor will use the 5000 Tractor Select-O-Speed positive actuating control valve as a service improvement. The Select-O-Speed transmissions for the entire line will have no lube light and the hole in the distributor for the sender mechanism has been plugged.

The 5000 Tractor Select-O-Speed transmission has several changes not found in the other new model tractor Select-O-Speeds. Most of these changes help handle the higher horsepower of the new model tractor. Servicing the transmission remains essentially the same.

Countershaft	Yes	
Direct Drive Clutch	Yes	
#1 Clutch	Yes	Also as components
Oil Distributor	Yes	
"C" Sun Gear	Yes	
#2 & 3 Clutch	Yes	Also as components
Servo #1	No	
Servo #2	No	
Transmission Case	No	

PARTS INTERCHANGEABILITY

New Model Ford 5000 – Previous Model Ford 5000 Select-O-Speed

Countershaft Bearing	Not separately, but
Front Adaptor Plate	together as an assembly.

CHANGES FOR 5000 SELECT-O-SPEED

Countershaft Bearing and Adaptor Plate

The countershaft bearing is larger, with higher capacity, and the adaptor plate is changed to accept the new bearing.

© FORD MOTOR COMPANY-1968

Countershaft Oil Groove

The countershaft has a larger oil groove to better lubricate the direct drive clutch plates.

Oil Distributor Oil Groove

A new groove in the sleeve of the oil distributor insures better lubrication for Clutch 1.

"C" Sun Gear

The "C" Sun Gear is 0.040-inch (1.016 mm) longer to substantially reduce chucking and keep the lube and pressure holes in closer alignment. Old and new sun gears are interchangeable.

Servo 1 and Check Valve

Servo 1 is larger and the Band 1 circuit uses a check valve located in the transmission housing next to the Servo 1 bore as shown in Figure 8. The check valve is serviced by removing the Servo 1 cover. When the servo is pressurized, the oil forces the check valve off its seat and flows to the servo piston to release the band.

When the control valve Band 1 spool is opened, the oil is free to dump to sump. The servo spring forces the oil through a small passage in the check valve plunger, thereby decreasing the rate of oil flow. This reduces the possibility of the direct drive clutch and Band 1 being partially applied at the same time.

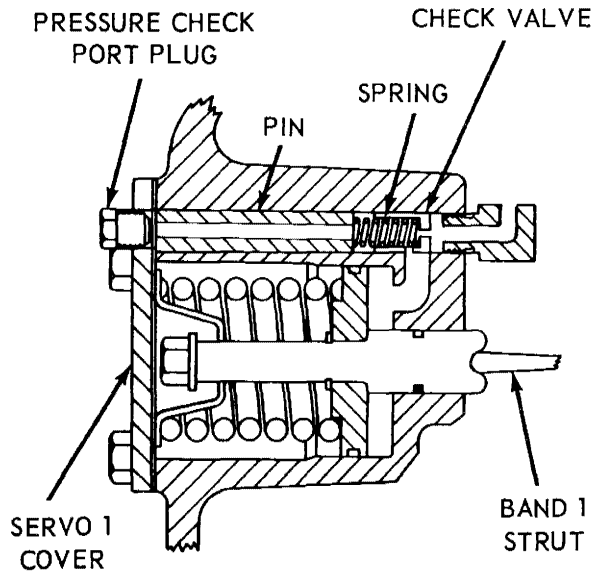

Figure 8
Servo 1 Check Valve

The pin located in the check valve bore has a passage through it to allow pressure readings at the pressure check port.

The Servo 1 bore in the case is larger; thus, the new case is not interchangeable with the previous case.

Servo 2

Servo 2 is increased in diameter and incorporates a larger spring to provide additional Band 3 holding action on the clutch housing.

Clutch Piston Through Hole

The through hole in the piston in Clutches 1, 2, and 3, is smaller and relocated. The clutch plate next to the piston now does not affect the oil bleed action through the piston when the clutch pack is applied. This provides better lubrication for the clutches and a better cushioning effect during clutch application. This also results in a more even lube pressure as it does not drop as abruptly and is maintained more evenly in the lube system.

Clutch Piston Seals

The outer piston seals on Clutches 1, 2, and 3 are of poly-acrylic material designed to withstand high temperatures. The seals are double lipped, more flexible, and less susceptible to damage during installation.

The internal O-rings in the clutch pistons are reduced in size to minimize O-ring "squeeze", flexing, and ultimate damage to the seals. The grooves are held more closely to specifications to substantially reduce leakage.

Clutch Lead Chamfer

All three clutches have more lead chamfer to ease installation of the piston into its bore and reduce damage to the seals.

Torque Limiter Clutch

Ford 5000 Tractors have aluminum spacer buttons installed in the disc assembly of the torque limiter clutch. These buttons hold the facings of the clutch away from the flywheel and pressure plate surfaces to prevent adhesion of the surfaces. After a short period of operation, the surfaces will be in full contact and burnished sufficiently to prevent adhesion.

3. NEW MODEL TRACTOR SELECT-O-SPEED TRANSMISSION TROUBLE SHOOTING WITHOUT LUBE LIGHT

Because the lube light has been eliminated on all new model tractor Select-O-Speed transmissions, some changes to the trouble shooting procedure will have to be made. The changes will affect mainly the Diagnostic Procedure, Hydraulic Conditions 1 and 4.

Hydraulic Condition #1: All servo pressures to specification at 800 rpm; lube pressure below specification.

To further diagnose this condition, it will be necessary to check the lube pressure as outlined under "Lubrication Pressure Check", below. If the lube pressure is below specification after the check, the following are possible causes:

1. Broken lube circuit shaft seals.
2. Excessive transmission end clearances.
3. Leakage from the heat exchanger circuit.
4. Leakage at the control valve gasket.
5. Improperly adjusted or malfunctioning relief valve.

NOTE: ***If pressures are to specification and rough shifting characteristics exist, check band adjustments and Servo 2 and 3 timing valves.***

Hydraulic Condition #4: Pressures below specification in certain gear ratios.

1. Observe in which gear ratios low pressure readings occur.
2. Fully depress the inching pedal in gear ratios where low pressure readings occur and observe the pressure reading at Servos 2 and 3.
   a. If the pressure readings at Servos 2 and 3 go up to specification, 205 psi (14.4 kg/sq. cm) @ 800 rpm, leakage is occurring in the transmission indirect circuit consisting of Clutches 1, 2, and 3.
   b. If the pressure at Servos 2 and 3 remain low, leakage is occurring in the direct circuit consisting of Servo 2 and Servo 3.
3. Use the Trouble Shooting Chart and note which servos and clutches are pressurized where low pressure readings occur. A process of elimination will make evident which servo or clutch is leaking. In the case of the common circuit for Band 1 Servo and the direct drive clutch, it will not be possible to pinpoint leakage separately in either of these elements.

Lubrication Pressure Check

To check transmission lubrication pressure, it will be necessary to drill and tap the transmission-to-cooler fitting.

1. Drill into the head of the oil line adaptor bolt and tap for 1/4 inch (6.25 mm) pipe thread.
2. Install an N-774 Pressure Gauge in the adaptor bolt.
3. Install the adaptor bolt and gauge in the top cooler line connection on 2000, 3000, and 4000 transmissions and at the bottom connection on 5000 transmissions.
4. Start the tractor and run until the transmission oil is up to operating temperature.
5. With the traction coupler disconnected and the transmission in 9th gear, the pressure at the gauge should read 50 psi (3.5 kg/sq. cm) at 800 engine rpm and 160 psi (11.2 kg/sq. cm) at 2100 engine rpm.

   NOTE: ***The above pressures will vary with tractors, depending on clearances in the lube circuit and manufacturing tolerances. Lube pressures should not be below 20 psi (1.41 kg/sq. cm) at 800 rpm.***

6. After checking the pressure to the cooler, it is advisable to check for any restriction in the cooler circuit by removing the fitting and gauge from the top connection on 2000, 3000, and 4000 transmissions and the bottom connection on 5000 transmissions, and install it in the cooler-to-transmission connection.
7. Start the tractor engine and run in 9th gear at 800 rpm. The pressure reading at the gauge should be 45 psi (3.17 kg/sq. cm) and at 2100 rpm the pressure should be 90 psi (6.33 kg/sq. cm).

   NOTE: ***The pressures will vary with tractors, depending on clearances in the lube circuit and manufacturing tolerances. Lube pressures should not be below 20 psi (1.41 kg/sq. cm) at 800 rpm.***

© FORD MOTOR COMPANY – 1968

PART 9
POWER TAKE-OFF

Part 9

POWER TAKE-OFF

Chapter 1

TRANSMISSION P.T.O. AND LIVE P.T.O.

Section		Page
1.	Description and Operation	1
2.	Power Take-Off Shaft Assembly Overhaul	2
3.	Power Take-Off Shifter Mechanism Overhaul	3
4.	P.T.O. Coupling	4

Chapter 2

INDEPENDENT P.T.O.—MAJOR 4000

Section		Page
1.	Description and Operation	5
2.	Control Valve Operating Pressure Test	8
3.	Control Valve Overhaul	10
4.	Clutch Brake Spring Replacement	12
5.	Clutch Pack and Support Overhaul	12
6.	Power Take-off Shaft Overhaul	15

© FORD MOTOR COMPANY LTD., 1965

Chapter 3

INDEPENDENT P.T.O.—SUPER MAJOR 5000

Section		Page
1.	Description and Operation	17
2.	Control Valve Operating Pressure Test	21
3.	Independent Clutch and Control Valve Overhaul	22
4.	Rear Upper Shaft and Output Shaft Overhaul	25

Chapter 4

TROUBLE SHOOTING, SPECIFICATIONS AND SPECIAL TOOLS

Section		Page
1.	Trouble Shooting	29
2.	Specifications	30
3.	Special Tools	31

Chapter 6

TWO-SPEED POWER TAKE-OFF TROUBLE SHOOTING, SPECIFICATIONS AND SPECIAL TOOLS

Section		Page
1	Trouble Shooting	49
2.	Specifications	50
3.	Special Tools	51

 © FORD MOTOR COMPANY LTD., 1973

Part 9

POWER TAKE-OFF

Chapter 1

TRANSMISSION P.T.O. AND LIVE P.T.O.

Section		Page
1.	Description and Operation	1
2.	Power Take-Off Shaft Assembly Overhaul	2
3.	Power Take-Off Shifter Mechanism Overhaul	3
4.	P.T.O. Coupling	4

1. DESCRIPTION AND OPERATION

Transmission power take-off is available on Dexta 2000, Super Dexta 3000 and Major 4000 tractors. With this type of P.T.O. the drive is taken from the standard single clutch by the transmission input shaft to the transmission countershaft.

On four speed transmissions a sliding coupling connects the transmission countershaft to the P.T.O. output shaft in the rear axle centre housing. This coupling is located in an extension housing which is attached to the rear of the transmission housing, and is connected to an external lever, the operation of which enables the P.T.O. drive to be engaged or dis-engaged as required.

On six- and eight-speed transmissions a P.T.O. countershaft locates in the hollow, internally splined, centre of the transmission countershaft and carries at its rear end an internal toothed sleeve. The P.T.O. drive is, therefore, transmitted from the transmission countershaft to the P.T.O. countershaft and thence to the sleeve. An external toothed type sliding coupling on the P.T.O. output shaft is connected to a lever on the outside of the tractor and when this lever is moved rearwards the coupling engages with the sleeve on the P.T.O. countershaft.

Live power take-off is available as an option on Dexta 2000 and Super Dexta 3000 tractors with six- and eight-speed transmissions. With this type the P.T.O. drive is taken from the power take-off disc of a special double clutch by a Live P.T.O. input shaft which runs on the outside of the transmission input shaft. From the gear on the P.T.O. input shaft the drive is taken to a gear on the P.T.O. countershaft. This shaft passes completely through the inside of the hollow transmission countershaft and carries at its rear end the same internal toothed sleeve as is used on the 'Transmission' type P.T.O. The sliding coupling, P.T.O. output shaft and operating lever arrangement are also identical with that used with the 'Transmission' type P.T.O. on six- and eight-speed transmissions.

Irrespective of whether a 'Transmission' type or a 'Live' type P.T.O. is incorporated, on tractors having six- or eight-speed transmissions the P.T.O. output shaft is supported at its front end by a spigot on the P.T.O. countershaft which locates in a bushed hole in the P.T.O. output shaft.

On tractors equipped with a four-speed transmission the P.T.O. output shaft has the spigot at its front end and the support is provided by a bushed hole in the end of the transmission countershaft.

On all P.T.O. types the rear of the P.T.O. output shaft is supported by a ball bearing in a cover housing which is attached to the rear of the rear axle centre housing. An oil seal is incorporated behind the bearing and the end of the shaft is protected by a cap which screws into the P.T.O. cover.

© FORD MOTOR COMPANY LTD., 1965

2. POWER TAKE-OFF SHAFT ASSEMBLY OVERHAUL

A. Disassembly

1. Drain the oil from the rear axle centre housing.
2. Move the power take-off lever rearward to the engaged position, and remove the P.T.O. cap.
3. Remove the bolts retaining the P.T.O. cover to the centre housing. On Major 4000 tractors it is necessary to disconnect the lower link check chains and remove the rear plate.
4. Withdraw the shaft and cover as an assembly from the centre housing.
5. Remove the snap ring retaining the shaft and bearing assembly in the cover.
6. Tap the rear end of the shaft with a soft headed mallet to remove the shaft and bearing assembly from the cover.
7. Remove the oil seal from the cover using Tool No. 943 and slide hammer.
8. Remove the snap ring locating the front of the power take-off shaft bearing. On Major 4000 also remove rear snap ring.
9. Using Tools Nos. 1003 and 951 pull the bearing, also the collar on Dexta 2000 and Super Dexta 3000 tractors, from the shaft, Figure 1.

B. Cleaning, Inspection and Repair

1. Clean all parts with a suitable solvent and air dry.
2. Inspect the ball bearing for excessive wear or discoloration due to overheating.
3. Inspect the bearing retaining collar for wear or scoring as it provides a bearing surface for the oil seal, and if damaged replace.
4. Inspect the power take-off shaft for worn or chipped splines and for distortion.

C. To Reassemble

1. Install a new rear snap ring on the Major 4000 power take-off shaft. Press the collar onto the Dexta 2000 and Super Dexta 3000 shaft from the front using Tools Nos. 951 and 1003.
2. Press the ball bearing onto the shaft from the front using Tools Nos. 951 and 1003 until it seats against the collar (or snap ring Major 4000), Figure 1, and install a new locating snap ring.
3. Install a new oil seal in the P.T.O. bearing retainer using step adaptor (630).
4. Install the shaft and bearing assembly into the cover taking care not to damage the oil seal.

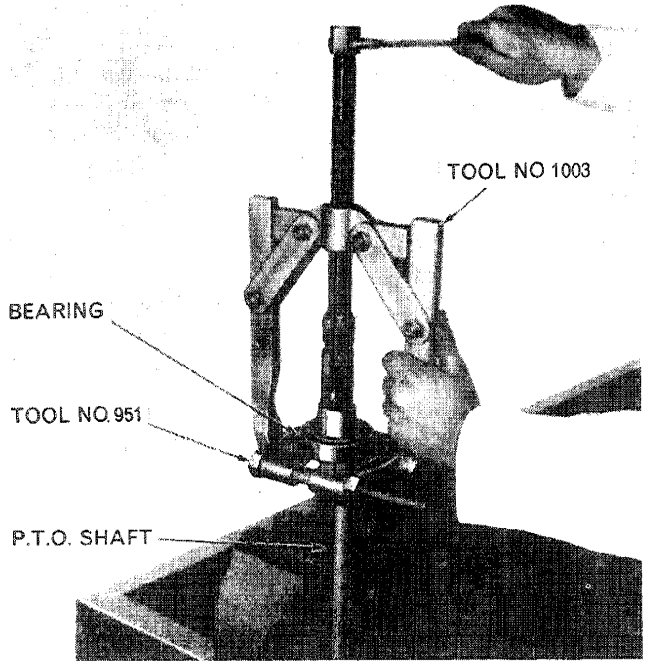

Figure 1
Removing/Installing P.T.O. Shaft Bearing

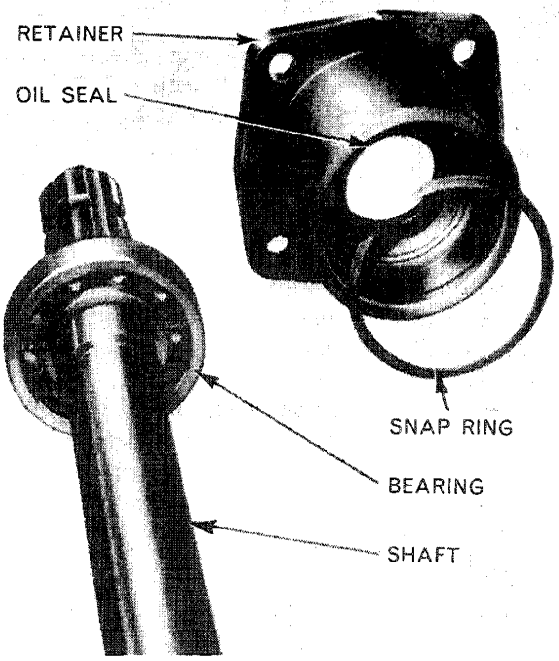

Figure 2
P.T.O. Shaft and Bearing Retainer

5. Install a new snap ring in the cover to retain the bearing.
6. Ensure that the shaft is clean and the end is free from burrs.
7. Use a new gasket between the rear face of the centre housing and the P.T.O. cover.
8. Install the shaft assembly into the rear transmission housing, engaging the splines at the forward end with the sliding coupling and the spigot with the bushed hole. On Major 4000 tractors install the rear plate.
9. Install the cover retaining bolts and tighten to the specified torque (see Specification Section). On Major 4000 Tractors reconnect the lower link check chains.
10. Install the P.T.O. cap.
11. Refill the rear axle centre housing with the specified oil to the correct level.

3. POWER TAKE-OFF SHIFTER MECHANISM OVERHAUL

A. Disassembly

1. Drain approximately half of the oil from the rear axle centre housing.
2. Remove the left hand running board, and remove the handbrake if the tractor is so equipped. Refer to the 'Overhaul of Transmission Handbrake Section' Part 10, Chapters 1 and 2.
3. Move the shifter lever to the disengaged position.
4. Unscrew the three shifter lever plate retaining screws, the upper screw can not be removed from the plate at this stage as the operating lever prevents its removal.
5. On tractors other than those equipped with a four speed transmission remove the shifter fork from the shifter arm.
6. Remove the cotter pin retaining the shifter lever clevis pin. Remove the clevis pin and the lever.
7. Remove the 'O' ring and shifter arm from the cover plate. On tractors other than those equipped with a four speed transmission remove the steel ball and spring.

B. Cleaning, Inspection and Repair

1. Inspect the shifter fork (6, 7 and 8 speed transmission) for excessive wear.
2. Inspect the shifter arm spring (6, 7 and 8 speed transmission) for breakage or weakness. Refer to the Specifications Section for spring free length.

C. Assembly

1. Install the spring and steel ball in the shifter arm, and replace the assembly in the cover plate.
2. Position the retaining bolt in the upper hole of the shifter plate, install the 'O' ring and the shifter lever and retain with a new rivet.
3. Install the shifter fork on the shifter arm (6, 7 and 8 speed transmission).
4. With a new gasket in position install the shifter mechanism on the rear axle centre housing, Figure 3, making sure that the fork is engaged with the sleeve (6, 7 and 8 speed transmission). On tractors equipped with a four speed transmission the shifter arm is engaged with the shifter rail connector.
5. Install and tighten the three retaining bolts to the specified torque.
6. Install the handbrake where fitted (Refer to the 'Overhaul of Transmission Handbrake Assembly' section, Part 10, Chapters 1 and 2), and replace the running board.
7. Refill the rear axle centre housing with the specified oil to the correct level.

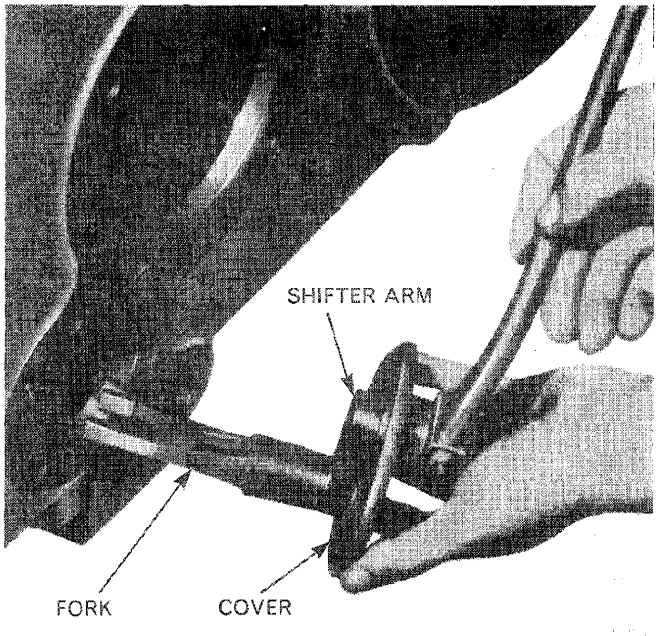

Figure 3
Installing P.T.O. Selector Mechanism

© FORD MOTOR COMPANY LTD., 1965

4. P.T.O. COUPLING

To gain access to the coupling it is necessary to separate the centre housing from the transmission. For details refer to Part 15.

On tractors equipped with a four speed transmission, refer to Part 5, Chapter 1, for details of overhauling the coupling and support assembly. Before separating the tractor it is necessary to remove the shifter mechanism.

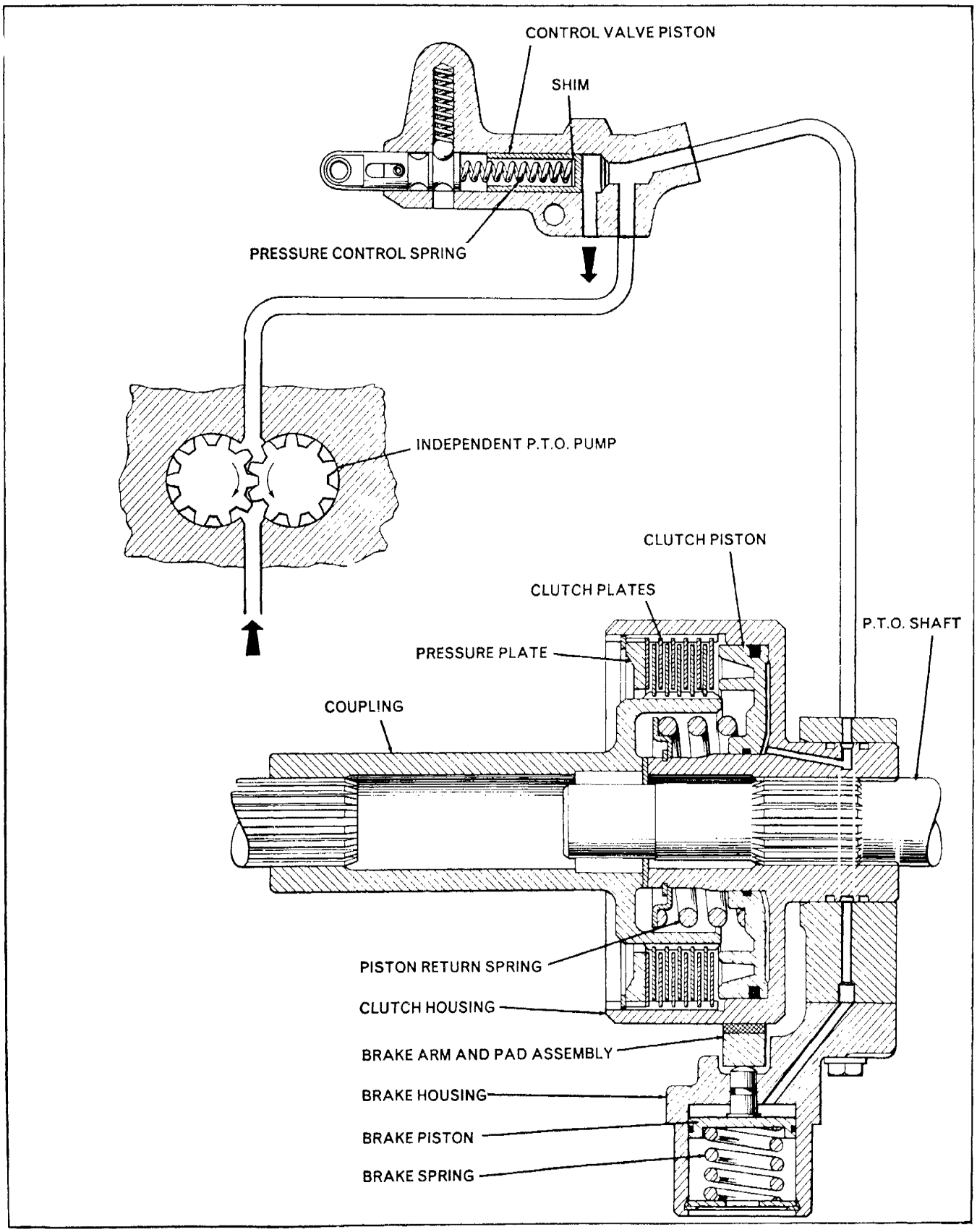

Figure 5
Oil Flow in Disengaged Position

© FORD MOTOR COMPANY LTD., 1965

The clutch support also incorporates a brake arm assembly that is pivoted at the upper end to the support. On one side of the arm a phosphor bronze brake pad is positioned so that on application it comes into contact with the periphery of the clutch housing. The arm is moved into the engaged position by the brake spring, acting through the brake piston, on the lower end of the brake lever.

Oil passes through a tapping from the oil supply bore in the valve housing to the clutch side of the brake piston. When the power take-off control valve piston is moved to the engaged position the oil, under pressure, moves the piston against the brake spring. This removes the pressure from the brake arm and so disengages the brake from the clutch housing.

When the clutch piston is applied and the brake is disengaged a pressure build up in the system causes the control valve piston to move against the control valve spring. This uncovers the exhaust ports allowing the excess oil to pass into the oil reservoir. The Independent P.T.O. clutch operates below the rear axle oil level, alleviating the necessity for forced lubrication of the clutch plates and bushings.

On moving the control lever to the disengaged position the control valve plunger moves forward. This releases the pressure on the spring and piston, allowing the piston to move back under oil pressure and uncover the exhaust ports allowing the oil supplied from the pump and oil in the clutch and brake assembly to pass into the oil reservoir (Figure 5). With the removal of hydraulic pressure the clutch piston is returned by the return spring. This disengages the drive from the clutch hub to the housing. The brake piston is returned to the engaged position by the brake spring, applying the brake pad on the clutch housing. Rotation of the clutch housing is then stopped and the power take-off output shaft is 'locked'.

The power take-off output shaft is supported in the rear by a ball bearing. To the rear of the bearing an oil seal is fitted to prevent oil loss from the rear axle. The shaft ends in a standard (B.S.I. and A.S.A.E.) spline.

2. CONTROL VALVE OPERATING PRESSURE TEST

Operate the tractor to bring the rear axle and hydraulic oil to operating temperature.

Remove the hydraulic lift cover, for details refer to Part 11, Chapter 1. Disconnect the control valve to clutch support housing tube at the control valve end. Connect N774 pressure gauge to the control valve using SW17/a adaptor and N774/a tube, Figure 6.

Use a suitable hose (T8503–4 hose from the hydraulic pressure testing equipment) connected to the lift cover feed tube, or use the hydraulic lift accessory cover attached directly to the centre housing in such a way that the oil from the hydraulic pump is returned to the rear axle sump.

Start the tractor engine and engage the power take-off and set the throttle to a fast engine idle. Disengage and engage the P.T.O. several times noting the pressure obtained. The pressure in the engaged position should not fall below 155 p.s.i. nor go above 195 p.s.i.

Adjust pressure setting if necessary. For procedure refer to Section 3, Control Valve Overhaul.

After testing remove the gauge, tube and adaptor and reconnect the valve to support tube. Replace the hydraulic top cover, for details refer to Part 11, Chapter 1

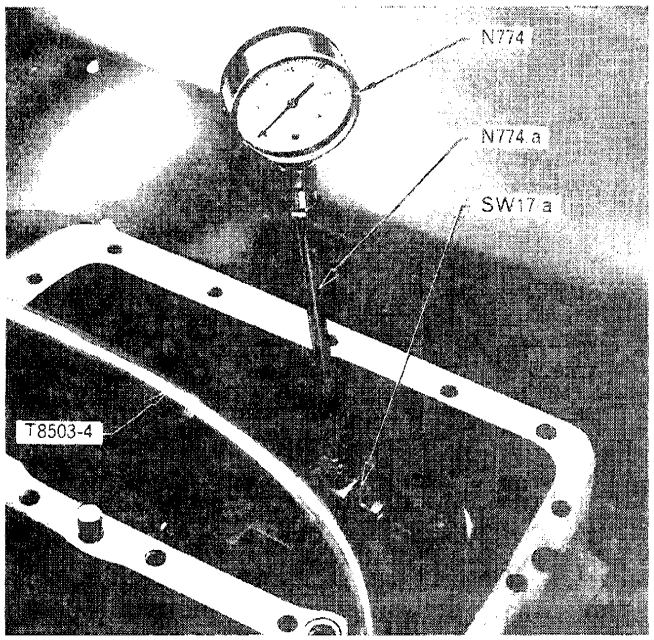

Figure 6
Control Valve Operating Pressure Test

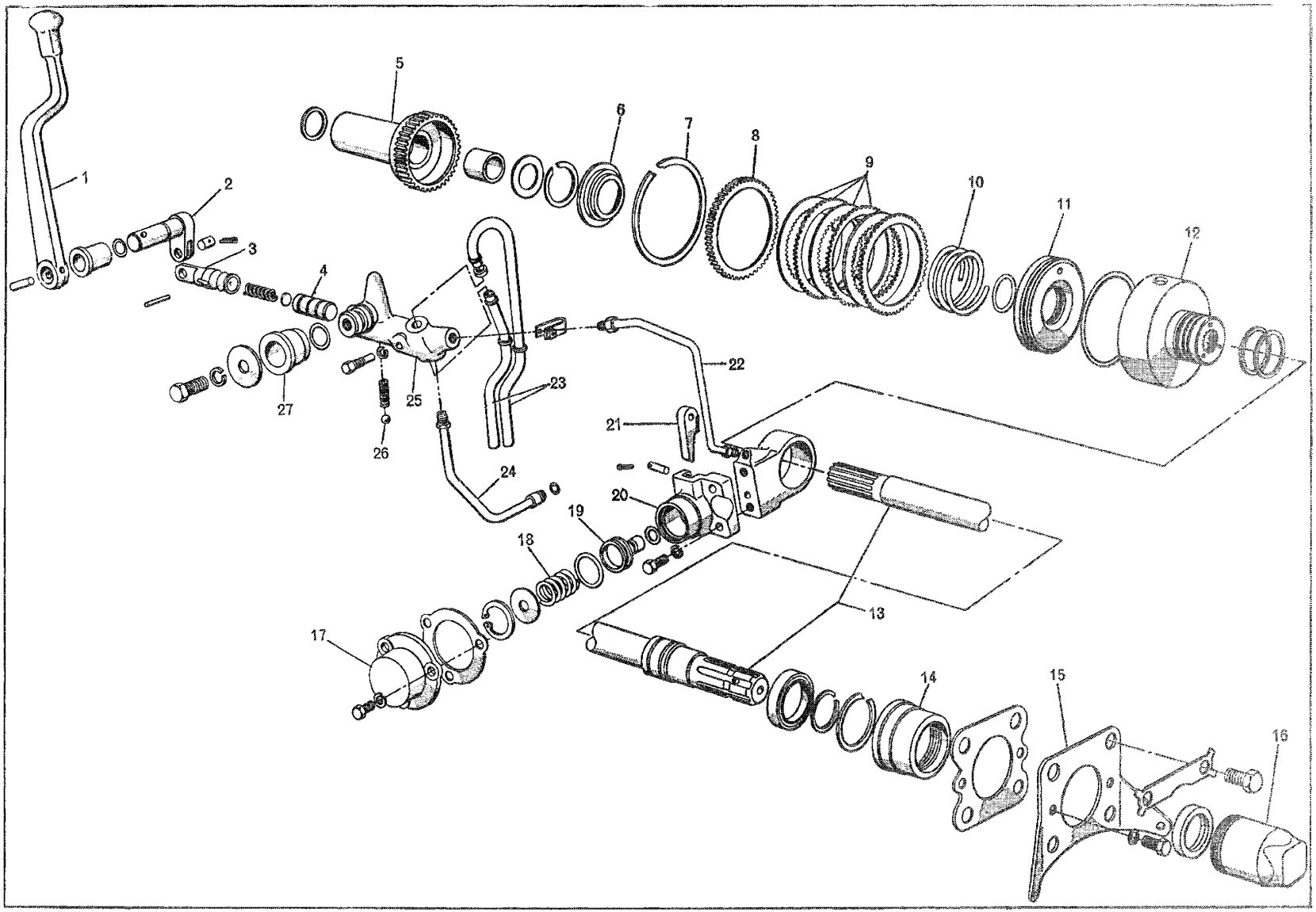

Figure 7

1. Handle
2. Link
3. Control Valve Plunger
4. Control Valve Piston
5. Coupling Shaft
6. Retainer
7. Snap Ring
8. Pressure Plate
9. Clutch Plates
10. Piston Return Spring
11. Clutch Piston
12. Clutch Housing
13. P.T.O. Shaft
14. Bearing Retainer
15. Plate
16. Cover
17. Brake Cover Plate
18. Brake Spring
19. Brake Piston
20. Support
21. Brake Arm and Pad
22. Tube (Control Valve to Support)
23. Exhaust Tubes
24. Tube (Pump to Control Valve)
25. Control Valve Housing
26. Detent Ball
27. Bush Valve Locating

© FORD MOTOR COMPANY LTD., 1965

3. CONTROL VALVE OVERHAUL

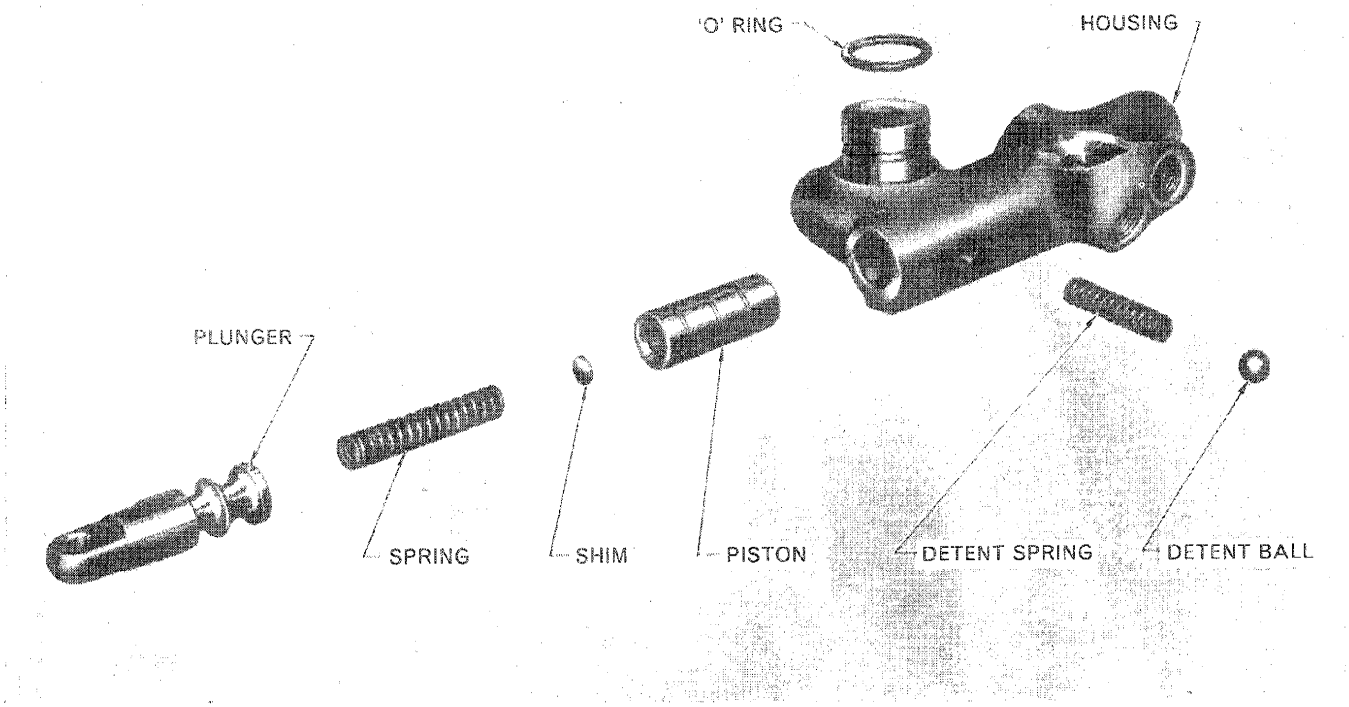

Figure 8
Control Valve

A. Control Valve Removal

1. Remove the hydraulic lift cover. For details refer to Part 11, Chapter 1.
2. Disconnect the control valve to clutch support housing tube assembly at the control valve end.
3. Disconnect the pump to control valve tube at the control valve end.
4. Remove the cotter pin retaining the link to valve plunger clevis pin.
5. Remove the clevis pin and separate the link from the plunger.
6. Remove valve spigot bolt from centre housing.
7. Remove the valve retaining bolts from the centre housing.
8. Remove the control valve and exhaust tube assembly from the tractor.
9. Remove the bolt and clamp from the exhaust tubes and remove the tubes from the control valve.

B. Control Valve Disassembly

1. Using a suitable punch remove the spring tension pin locating the control valve plunger.
2. Extract the control valve plunger, Figure 8.
3. Remove the detent ball and spring.
4. Remove the control valve spring.
5. Use a compressed air line or a footpump and an air/water tyre valve to remove the valve piston. Blow air in via the valve outlet port, Figure 9, while covering the other ports to prevent air escape. Remove shims from valve piston.

C. Cleaning, Inspection and Repair

1. Clean all parts with a suitable solvent, and air dry. Lightly oil machined surfaces.
2. Inspect valve piston for excessive wear or scoring and replace if necessary.
3. Inspect control valve spring for weakness or distortion.

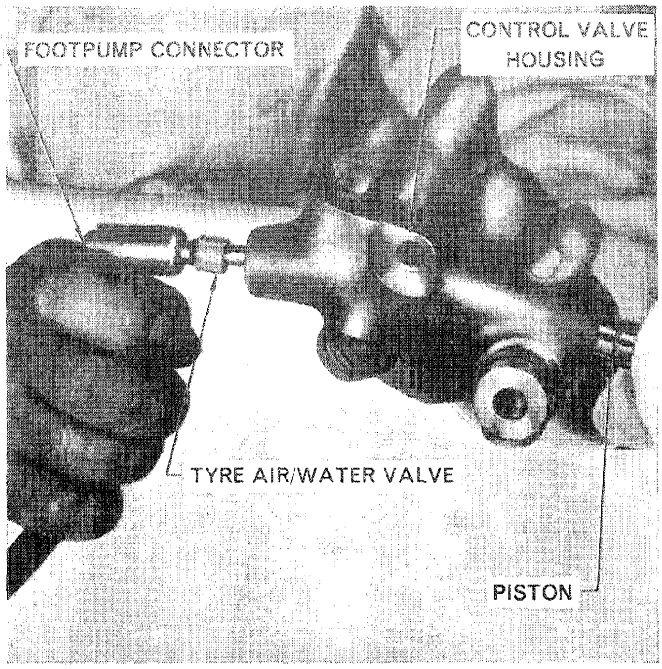

Figure 9
Removing Control Valve Piston

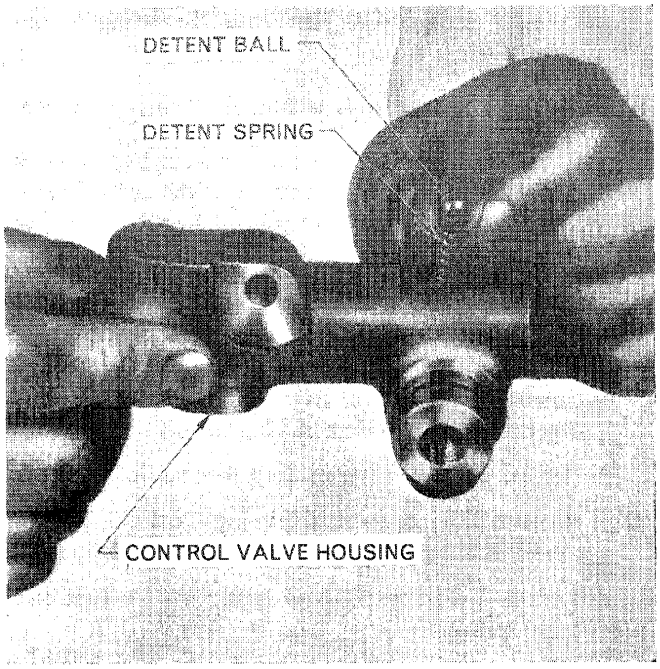

Figure 11
Installing Detent Spring

4. Inspect the control valve body for excessive wear or scoring in the piston bore.
5. Inspect valve plunger detent spring for weakness or breakage.

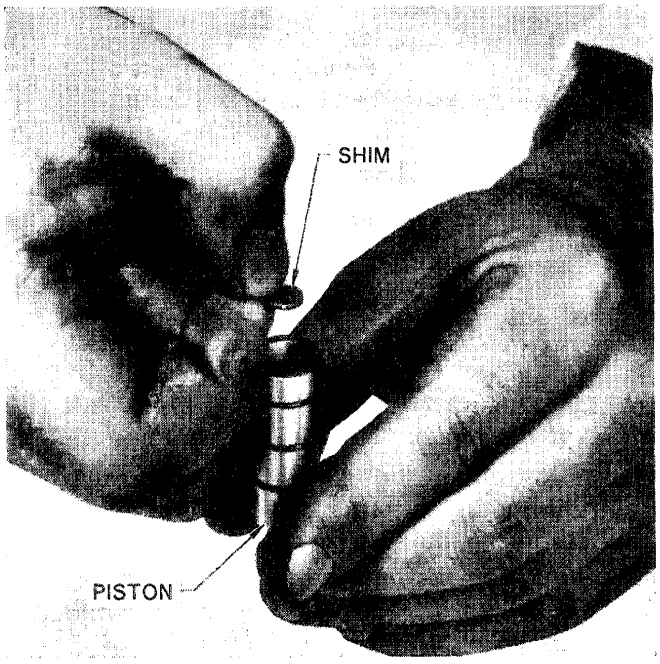

Figure 10
Installing Control Valve Shim

6. Loosen the clamp bolt retaining the control lever to the link and remove the link from the centre housing. Replace the 'O' ring and install the link after lubricating the 'O' ring to prevent installation damage. Install and tighten the control lever and tighten the clamp bolt.

D. Control Valve Assembly

1. Install the shims into the valve piston, Figure 10.
   NOTE: ***An increase of shims increases the valve operating pressure.***
2. Install the piston and valve spring into the control valve body.
3. Install the detent spring and ball into the control valve body, Figure 11.
4. Using a suitable object depress the detent spring and install the valve plunger.

E. Installing Control Valve

1. Connect the exhaust tubes to the control valve with new seals at the junction of the tubes and control valve body. Replace the clamp retaining the tubes together.
2. Install the control valve and exhaust tube assembly into the tractor.
3. Install the control valve retaining bolt finger tight.
4. Install the control valve spigot bolt, and tighten the control valve retaining bolt.

© FORD MOTOR COMPANY LTD., 1965

5. Connect the pressure tube from the pump to the control valve.
6. Connect link to plunger with clevis pin and cotter pin.
7. Connect the pressure gauge as shown in Figure 6 and detailed in Section 2. Pressure test the control valve and if pressure is incorrect remove the valve and alter the shims accordingly. When correct pressure is obtained replace the plunger locating spring pin in the control valve body.
8. Connect the valve to clutch support tube to the control valve.
9. Replace the hydraulic lift cover. Refer to Part 11, Chapter 1 for details.

4. CLUTCH BRAKE SPRING REPLACEMENT

A. Removal

1. Remove brake pedals, cross shaft and clutch pedal. For details refer to Part 10 Chapter 2.
2. Remove the plate covering the power take-off brake.
3. Compress the brake spring using Tool No. 518 as shown in Figure 12 and remove the locating snap ring.
4. Remove Tool No. 518 and extract the retainer and brake spring.

B. Installation

1. Install new brake spring.
2. Position retainer and snap ring. Using Tool No. 518 as shown in Figure 12 compress the brake spring.
3. Install the snap ring and remove Tool 518.
4. Install the brake cover plate and install the three retaining bolts. Tighten the bolts to the specified torque. (See Specifications Section.)
5. Install the clutch pedal, brake pedals and brake cross shaft. For details refer to Part 10, Chapter 2.

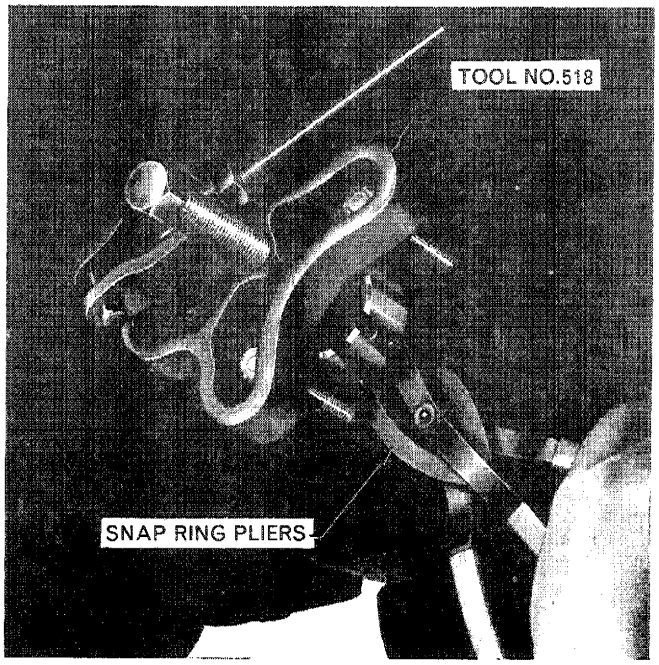

Figure 12
Compressing the Clutch Brake Spring

5. CLUTCH PACK AND SUPPORT OVERHAUL

A. Removal

1. Remove the hydraulic lift cover. For details refer to Part 11, Chapter 1.
2. Separate the tractor at the junction of the transmission and the rear axle centre housing. For details refer to Part 15.
3. Remove the hydraulic lift pump from the centre housing, details refer to Part 11, Chapter 4.
4. Remove the pump inlet filter retaining bolt and remove the filter and tube assembly.
5. Remove the P.T.O. coupling shaft from the clutch assembly.
6. Remove the brake pedals, brake cross shaft and clutch pedal. For details refer to Part 10, Chapter 2.
7. Remove the three brake cover retaining bolts and the brake cover plate.
8. Remove the six bolts retaining the P.T.O. rear plate.
9. Remove the rear plate.
10. Extract the P.T.O. shaft assembly from the rear.
11. Disconnect the control valve to clutch support tube at the support.
12. Remove the clutch pack and brake support as an assembly.

B. Support Disassembly

1. Remove the two bolts retaining the brake housing to the brake support, Figure 7.
2. Separate the brake housing from the clutch and support assembly.

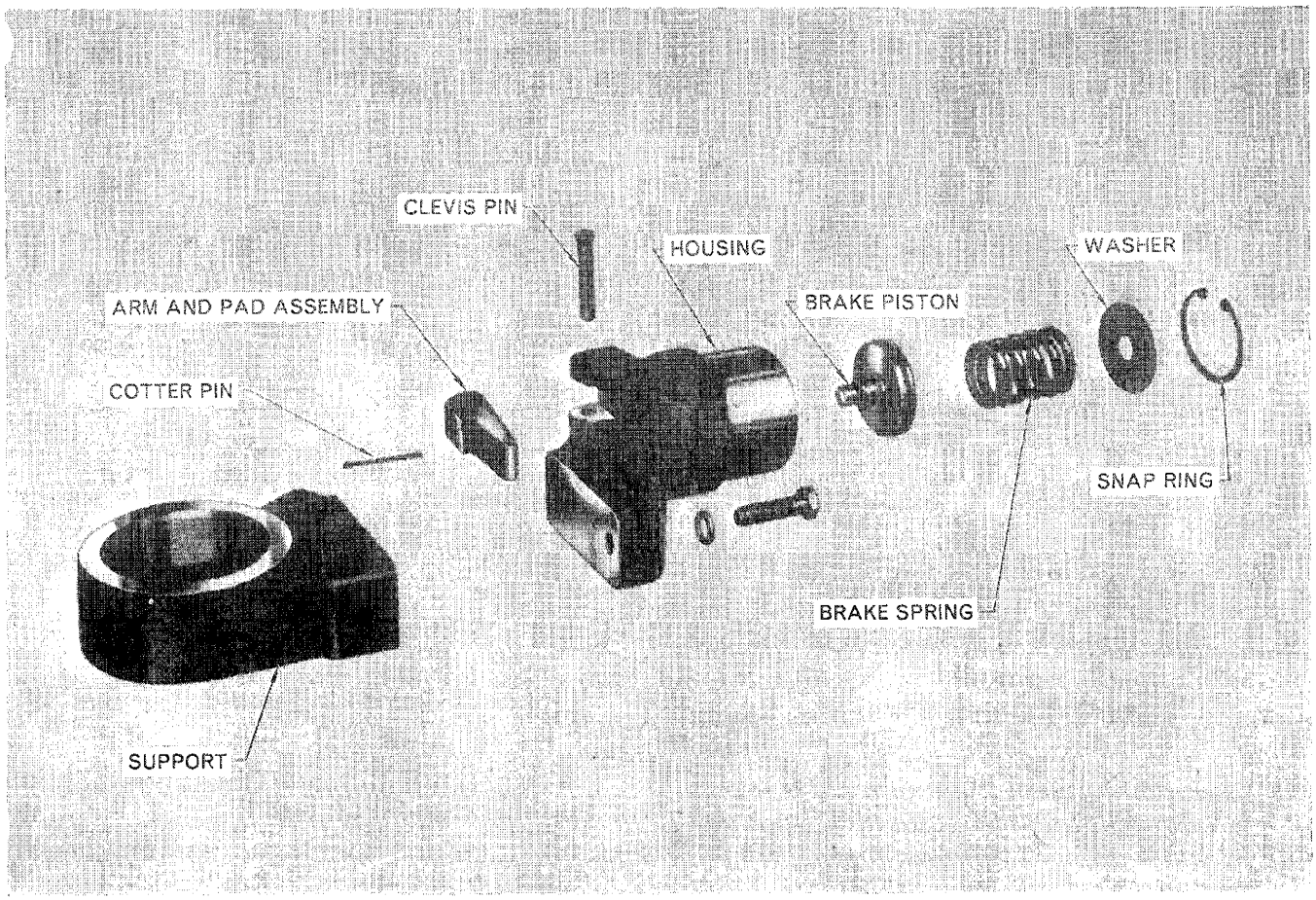

Figure 13
Brake Support and Brake

3. Separate the support from the clutch pack.
4. Remove the cotter pin from the brake arm clevis.
5. Remove the brake arm clevis from the brake arm.
6. Mount the brake housing assembly in a vice as shown in Figure 14, and compress the brake spring using 1002 puller.
7. Remove the snap ring and remove the 1002 puller.
8. Extract the washer, brake spring and the brake piston.

C. Clutch Disassembly

1. Remove the snap ring locating the pressure plate, Figure 16.
2. Remove the pressure plate, drive plates and driven plates from the clutch housing.
3. Using Tools 1003 and N775, compress the piston return spring as shown in Figure 15, and remove the retainer locating snap ring.
4. Remove the tools and extract the retainer and the piston return spring.
5. Using compressed air, or if a compressed air line is not available a footpump with an air/water tyre valve, to blow through the oil drilling and force out the clutch piston, Figure 17.
6. Remove the sealing rings from the clutch housing.

D. Cleaning, Inspection and Repair

1. Clean all parts with a suitable solvent and air dry. Lightly oil machined surfaces.
2. Inspect brake housing piston bore for excessive wear or scoring.
3. Renew brake piston 'O' rings and lubricate to prevent damage on assembly.
4. Inspect brake spring for weakness or breakage.
5. Inspect brake arm and pad assembly for excessive wear or scoring on the brake pad and replace if necessary.
6. Replace clutch piston 'O' rings. Lubricate 'O' rings to prevent damage on assembly.

© FORD MOTOR COMPANY LTD., 1965

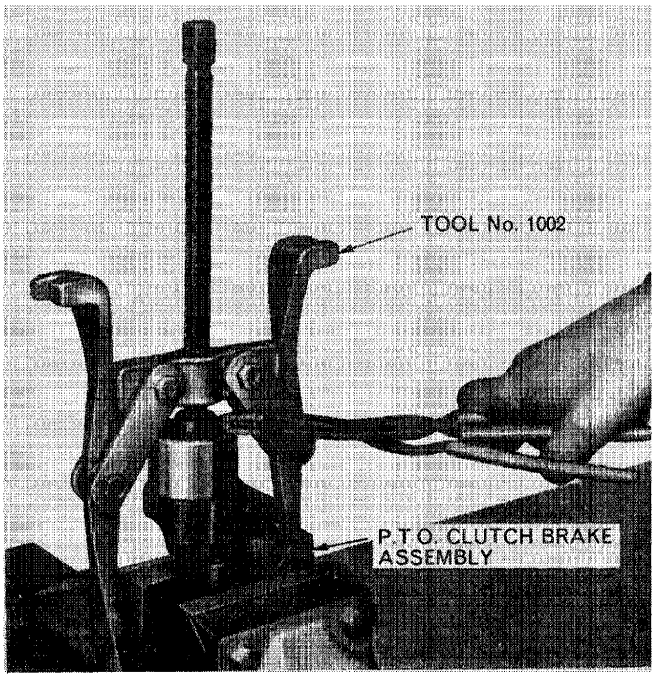

Figure 14
Compressing Brake Spring

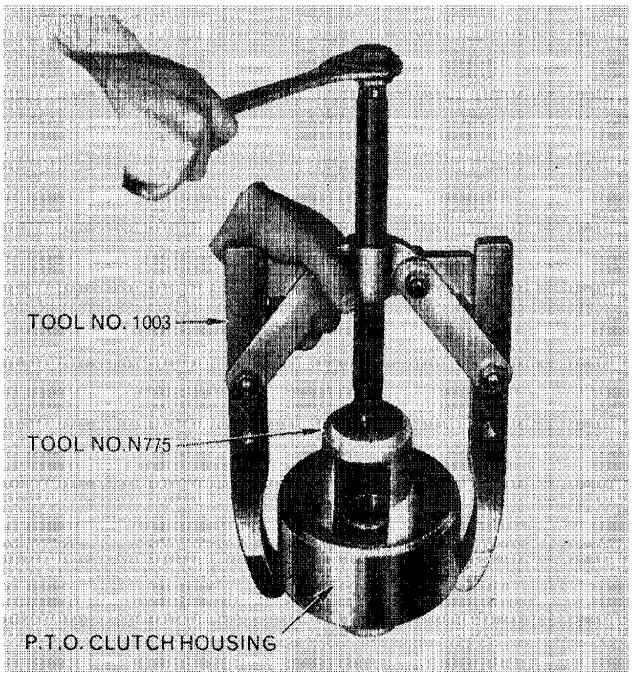

Figure 15
Compressing Clutch Return Spring

7. Examine clutch housing for excessive wear or scoring on the spigot and the bore for the clutch piston, and for wear or scoring on the outside diameter from the brake support and brake pad.
8. Inspect clutch piston return spring for weakness or breakage. Replace if necessary.
9. Examine the drive plates and driven plates for excessive wear, damaged splines or warping.

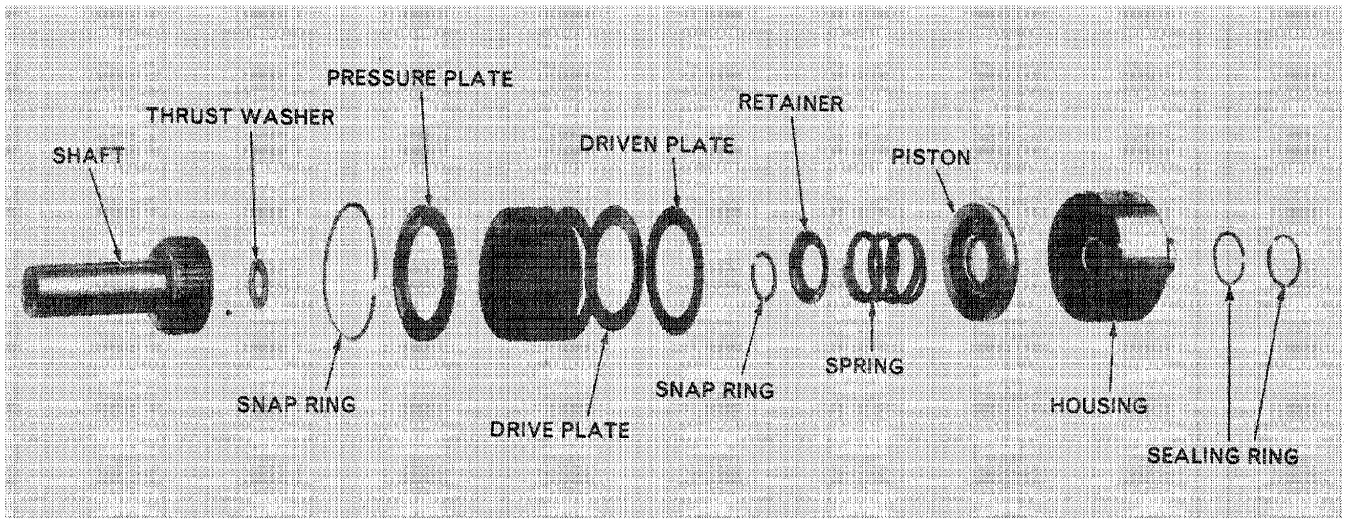

Figure 16
P.T.O. Clutch

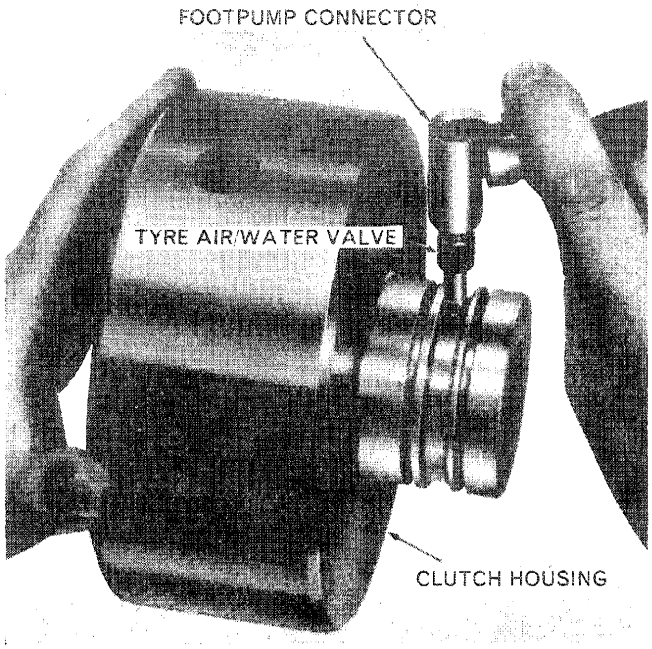

Figure 17
Removing Clutch Piston with Air Pressure

10. Inspect the two cast iron sealing rings for wear or other damage. Install new rings if necessary.

E. Clutch Assembly

1. Install the sealing rings in the grooves of the clutch housing, using petroleum jelly or equivalent for lubrication.
2. Install the clutch piston in the clutch housing.
3. Position the clutch piston spring retainer and snap ring on the clutch housing. Compress the spring using Tools 1003 and N775 and install the snap ring.

   NOTE: ***Make sure the snap ring is seated correctly in the groove.***
4. Install the clutch plates into the clutch assembly, starting with a steel plate next to the piston. Alternate the bronze plates with the steel plates making sure that the concave side of the steel plates faces the piston.
5. Install the pressure plate and the retaining snap ring.

F. Support Assembly

1. Install the brake piston, spring and washer into the brake housing.
2. Mount the housing in a vice and position the brake spring retaining snap ring. Use Tool 1002 to compress the brake spring, Figure 14.
3. Install the snap ring and remove Tool 1002 and the housing from the vice.
4. Position the brake arm and pad assembly and install the clevis pin.
5. Install the cotter pin to locate and secure the brake arm clevis.
6. Install the clutch assembly in the support housing, being careful not to damage the cast iron seals.
7. Make sure that the machined faces on the support housing and the brake housing are clean.
8. Assemble the support and clutch assembly to the brake housing assembly with the two retaining bolts. Tighten the bolts to the correct torque (see Specification Section).

G. Installation

1. Install the clutch pack and support assembly into the rear axle centre housing.
2. Install the P.T.O. shaft, locating the forward end into the P.T.O. clutch.
3. Install the P.T.O. rear plate with a new gasket in position and retain with the six bolts. Tighten the bolts to the specified torque.
4. Install the P.T.O. brake cover plate with a new gasket. Install the retaining bolts and tighten to the specified torque.
5. Install the clutch pedal, the brake cross shaft and the brake pedals. For details refer to Part 10, Chapter 2.
6. Install the thrust washer. Install the P.T.O. coupling shaft, rotating to and fro while applying light pressure to engage the hub with the clutch plates. Make sure that the shaft is fully engaged.
7. Install the hydraulic pump filter and tube and install the retaining bolt.
8. Install the hydraulic pump, for details refer to Part 11, Chapter 4.
9. Assemble the rear axle centre housing to the tractor for details refer to Part 15.
10. Install the hydraulic lift cover. For details refer to Part 11, Chapter 1.

6. POWER TAKE-OFF SHAFT OVERHAUL

A. Disassembly

1. Drain the oil from the rear axle centre housing.
2. Remove the six bolts retaining the P.T.O. rear plate and guard if fitted.
3. Withdraw the shaft assembly from the rear of the tractor.
4. Remove the locating snap ring and extract the shaft and bearing assembly from the retainer.

© FORD MOTOR COMPANY LTD., 1965

5. Remove the bearing locating snap rings from the shaft.
6. Using Tools 952 and 1003, remove the bearing from the shaft.
7. Remove the oil seal from the cover using Tools 943 and 943-S, Figure 18.

B. Cleaning, Inspection and Repair

1. Inspect the shaft for twisting or bending. Examine the splines for damage.
2. Inspect the bearing for excessive wear or signs of overheating.

C. Assembly

1. Install the forward bearing locating snap ring on the shaft.
2. Using Tools 924, 930-B, 930-E, 938, 951 and P-61 install the bearing, Figure 19.
3. Install the rear bearing locating snap ring.
4. Install a new oil seal using 630 step plate.
5. Install the shaft and bearing assembly into the cover.
6. Install the P.T.O. shaft assembly into the tractor.
7. Install the rear plate with a new gasket and the guard if fitted. Retain with the six bolts and tighten to the correct torque.
8. Refill rear axle centre housing to the correct level with the specified grade of oil.

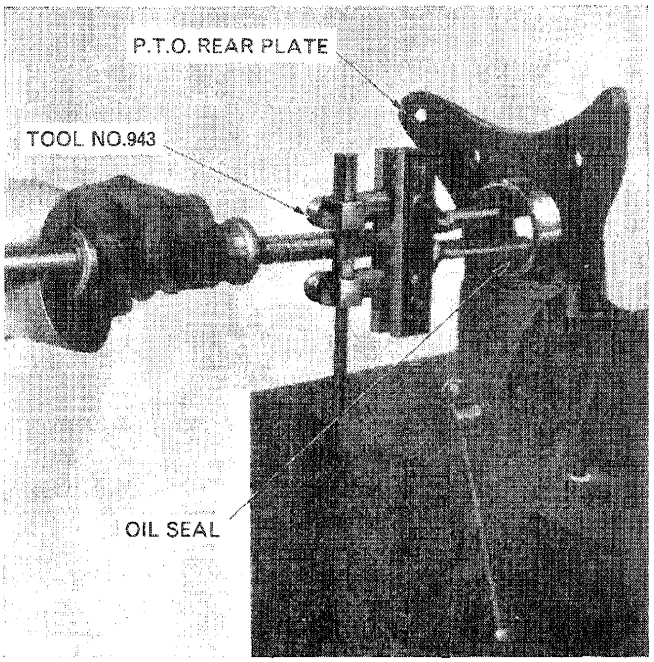

Figure 18
Removing Shaft Oil Seal

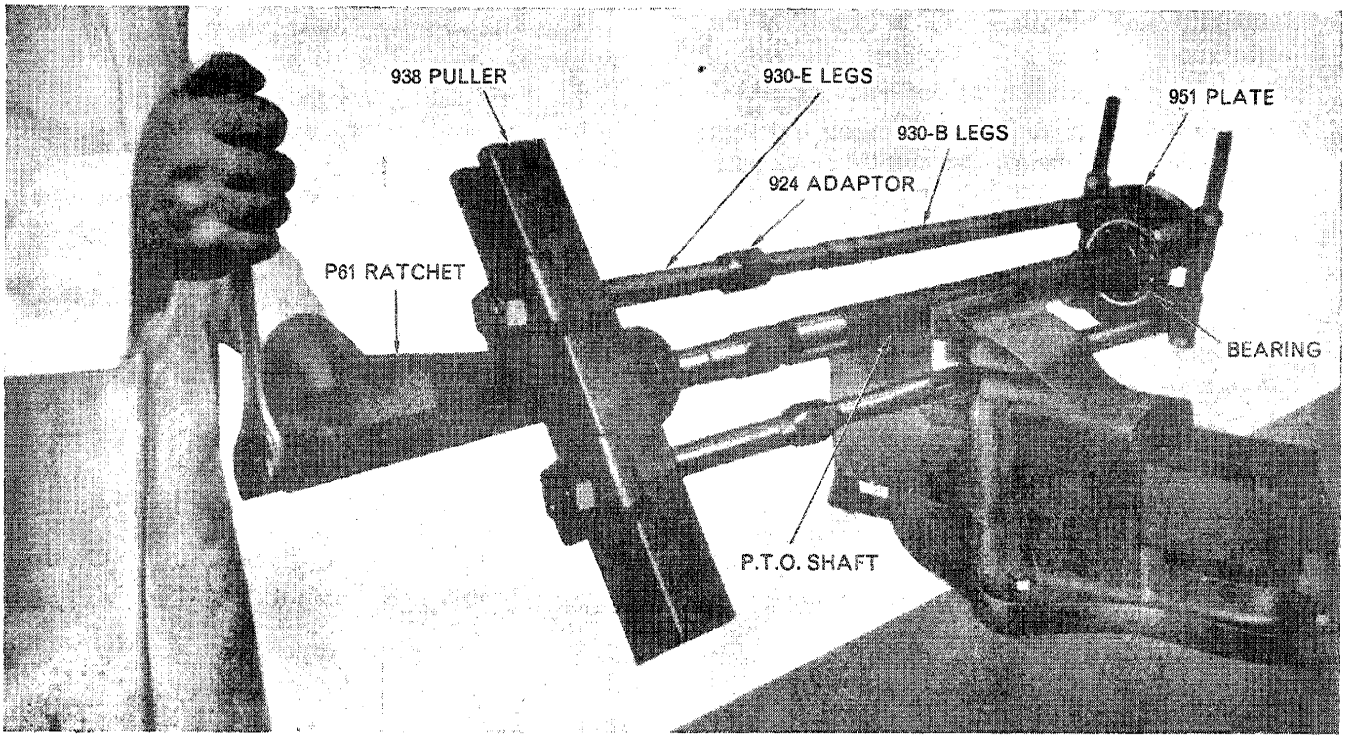

Figure 19
Installing the Shaft Rear Bearing

in the clutch housing extension. The excess oil that passes into the rear porting is directed forward to lubricate the clutch plates, the clutch housing bearing and thrust washer.

On moving the control handle to the disengaged position the control valve is moved rearwards by the return spring, Figure 21. In this position all oil passing into the valve assembly is directed to lubricate the clutch plates, etc.

With the removal of hydraulic pressure the clutch piston is returned by the return spring. This disengages the drive from the clutch hub to the housing. The brake piston is returned to the engaged position by the brake spring applying the brake pad on the clutch housing, Figure 21. Rotation of the clutch housing is there stopped and the rear portion of the power take-off is locked.

Exhaust oil from the clutch circuit is returned through the oil drillings to the control valve bore and from there is returned to sump, Figure 21.

The clutch housing is splined onto the upper rear shaft which passes through a bushing to the rear of the centre housing where it is supported in a ball bearing.

The drive is transmitted from the upper shaft to the output shaft by two spur gears which reduce the speed and reverse the direction of motion at the output shaft. The output shaft is supported by opposed taper roller bearings and ends in a standard $1\frac{3}{8}$" (34·9 mm) (B.S.I. and A.S.A.E.) spline.

For details of overhauling the power take-off input shaft refer to Part 7, Chapter 2 and Part 8, Chapter 1 for 8 speed and 10 speed transmissions respectively.

2. CONTROL VALVE OPERATING PRESSURE TEST

Operate the tractor to bring the rear axle and hydraulic oil to operating temperature.

Remove the service tapping plug from the hydraulic power lift pump and connect the N774 pressure gauge using either the flexible pipe SW17/d or N774/a tube assembly, Figure 23a, and adaptor fitting $\frac{9}{16}$" × 18 U.N.F. × $\frac{1}{8}$" straight pipe thread, Figure 23b. Start the tractor engine and engage the power take-off and note the pressure obtained on the gauge. Disengage and engage the P.T.O. several times noting the pressure obtained. The pressure in the engaged position should not fall below 130 p.s.i. nor go above 165 p.s.i. at low engine idle speed.

If pressure obtained is incorrect refer to clutch and control valve overhaul procedure.

After testing remove the gauge, and flexible pipe or tube and adaptor if used and install the service tapping plug using a new seal.

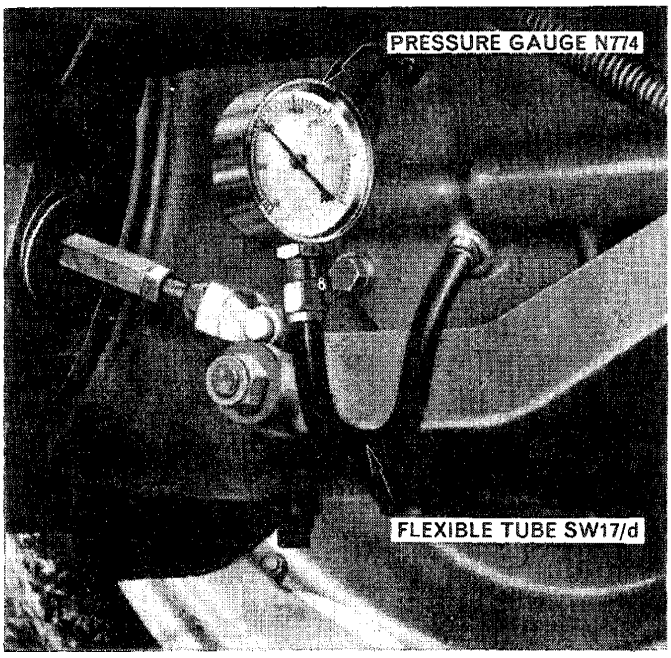

Figure 23a

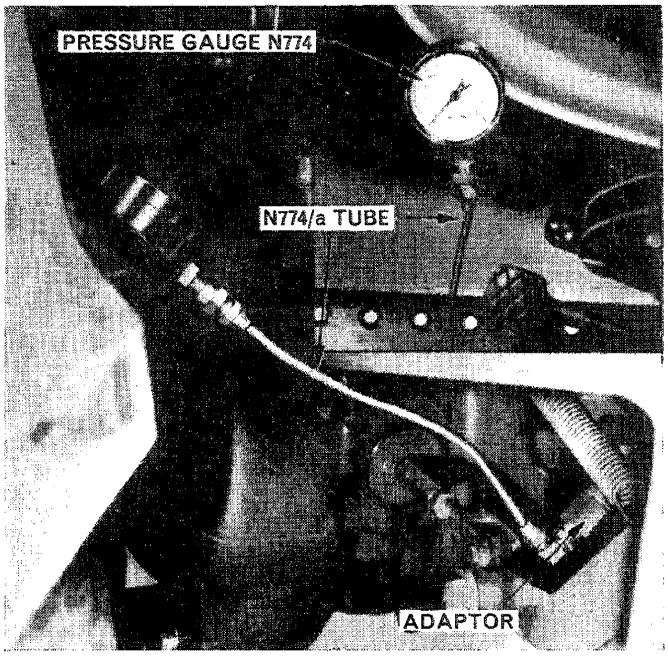

Figure 23b

Testing Control Valve Operating Pressure

© FORD MOTOR COMPANY LTD. 1965

3. INDEPENDENT CLUTCH AND CONTROL VALVE OVERHAUL

A. Removal

1. Remove the hydraulic lift cover. For details refer to Part 11, Chapter 2.
2. Remove the cotter pins from the hydraulic lift bracket lower clevis pin and remove the clevis pin and bracket.
3. Remove the four bolts retaining the upper rear shaft coverplate and withdraw the shaft and gear assembly.
4. Remove the P.T.O. valve locating bolt from the left-hand side of the rear axle differential centre housing.
5. Disconnect the nylon tube from the P.T.O. valve assembly.
6. Remove the P.T.O. clutch and valve assembly.

B. To dismantle

1. Remove the four allen screws retaining the valve support to the valve housing, Figure 22. Separate the support and clutch pack assembly from the valve housing.
2. Withdraw the clutch pack from the valve support.
3. Remove the control valve return spring retaining snap ring from the valve housing. Remove the valve return spring, and the control valve and pressure valve assembly.
4. Remove the pressure control valve spring retaining snap ring and remove the spring and pressure control valve, Figure 22.
5. Compress the spring in the brake valve by pressing in the rear plate using 1001 puller, Figure 24. Remove the retaining snap ring and then remove the plate, spring and brake piston from the housing.
6. Remove the snap ring retaining the clutch plates in the clutch housing and remove the pressure plate, the six clutch plates and the cushioning spring.
7. Using Tools Nos. N775, 1003 and a suitable step plate depress the piston return spring, Figure 25, and remove the retaining snap ring. Remove the spring retainer and spring.
8. By applying compressed air through the forward of the two holes in the clutch housing the piston is forced forward and can be removed. If a compressed air line is not available a foot pump can be used by inserting a tyre air/water valve into the footpump connector, Figure 26.

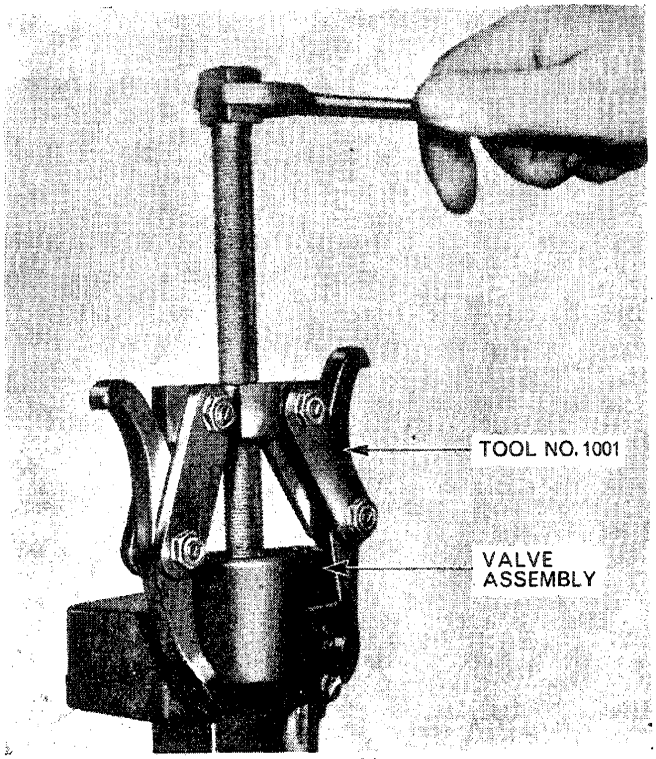

Figure 24
Compressing Brake Spring

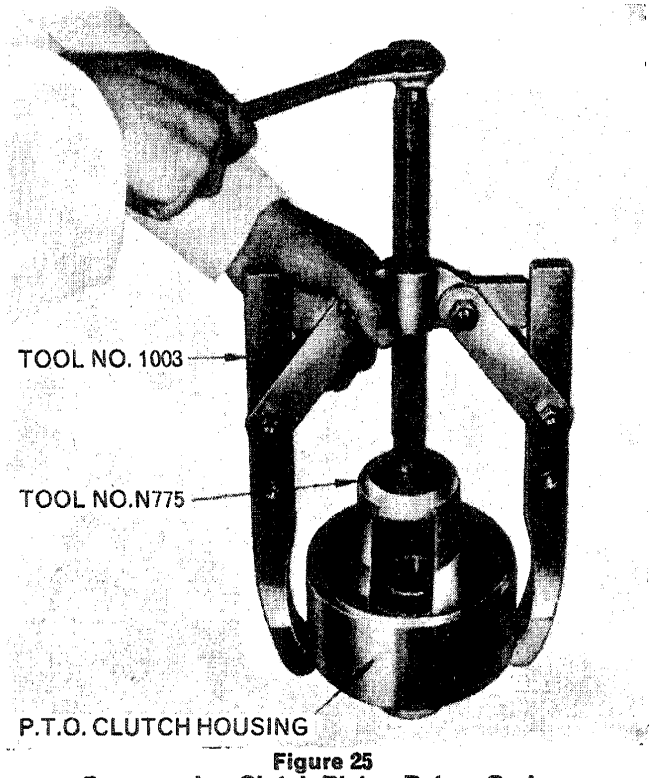

Figure 25
Compressing Clutch Piston Return Spring

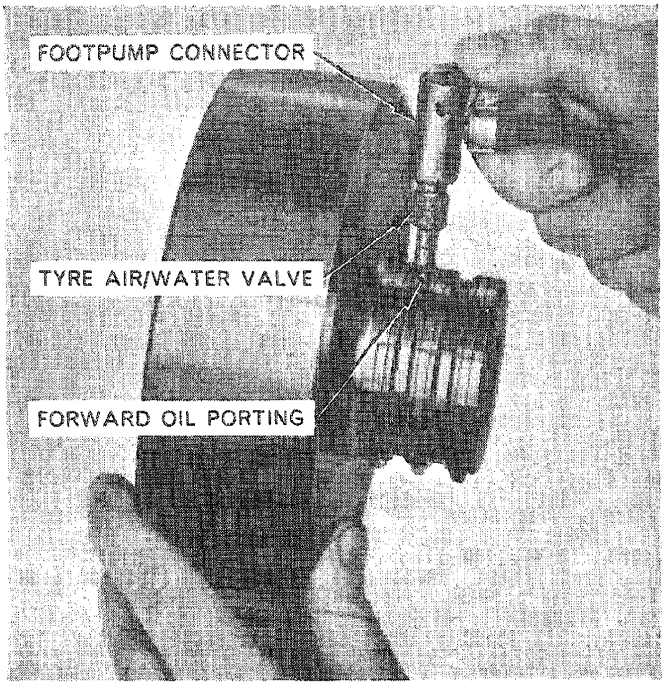

Figure 26
Removing Clutch Piston with Air Pressure

C. Cleaning, Inspection and Repair

1. Clean all parts in a suitable solvent and air dry.
2. Inspect clutch plates for excessive wear, distortion or scoring.
3. Install new 'O' rings on the clutch piston and the brake piston.
4. Examine clutch housing cast iron sealing rings for excessive wear and install new rings if necessary.
5. Examine the control valve and the pressure control valve and the housing bore for wear, burrs or scoring.
6. Inspect clutch piston and clutch housing for scoring or burrs.
7. Inspect the brake piston and housing bores for burrs or scoring.
8. Inspect the brake pad for excessive wear or scoring. If replacement is necessary remove the cotter pin and clevis pin retaining the brake arm. Remove the brake arm and install a new arm and pad assembly. Install the clevis pin and a new cotter pin.
9. Inspect P.T.O. handle, arm, shaft and detent. If replacement is necessary drive out the pin retaining the handle to the shaft. Remove the handle and shaft and arm assembly from the housing.

   Remove the stop from the housing and extract the spring and detent.

   Install the detent and spring in the centre housing and with a new seal install the stop.

   Install the shaft and arm assembly in the centre housing. Use a new oil seal on the shaft and install the handle and retain with a rolled pin.

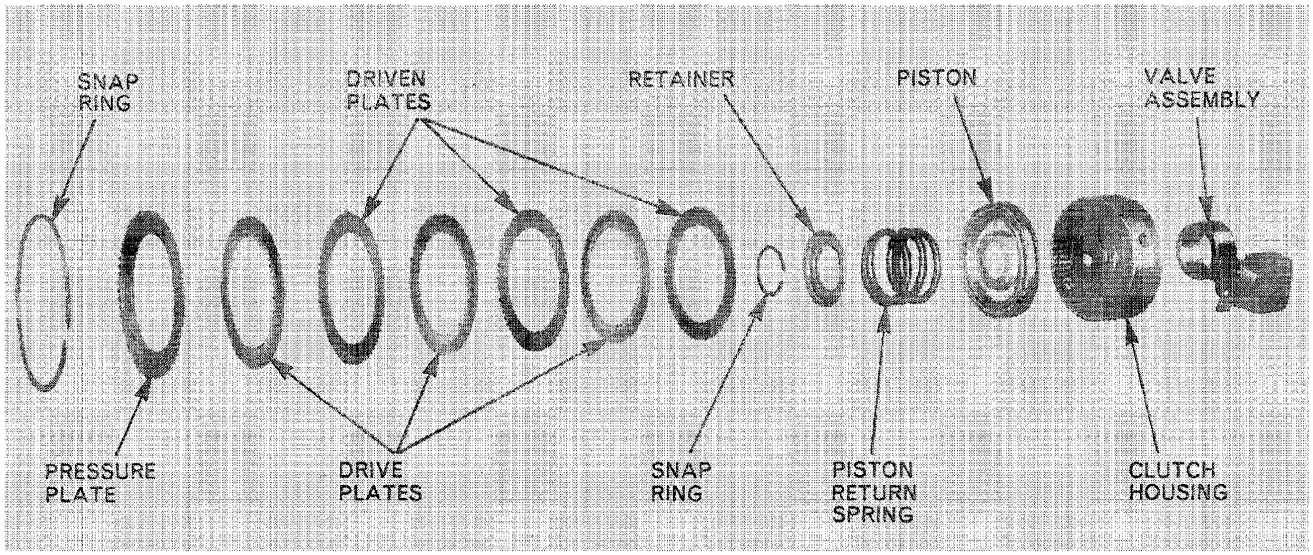

Figure 27
Clutch and Valve Assembly

© FORD MOTOR COMPANY LTD., 1965

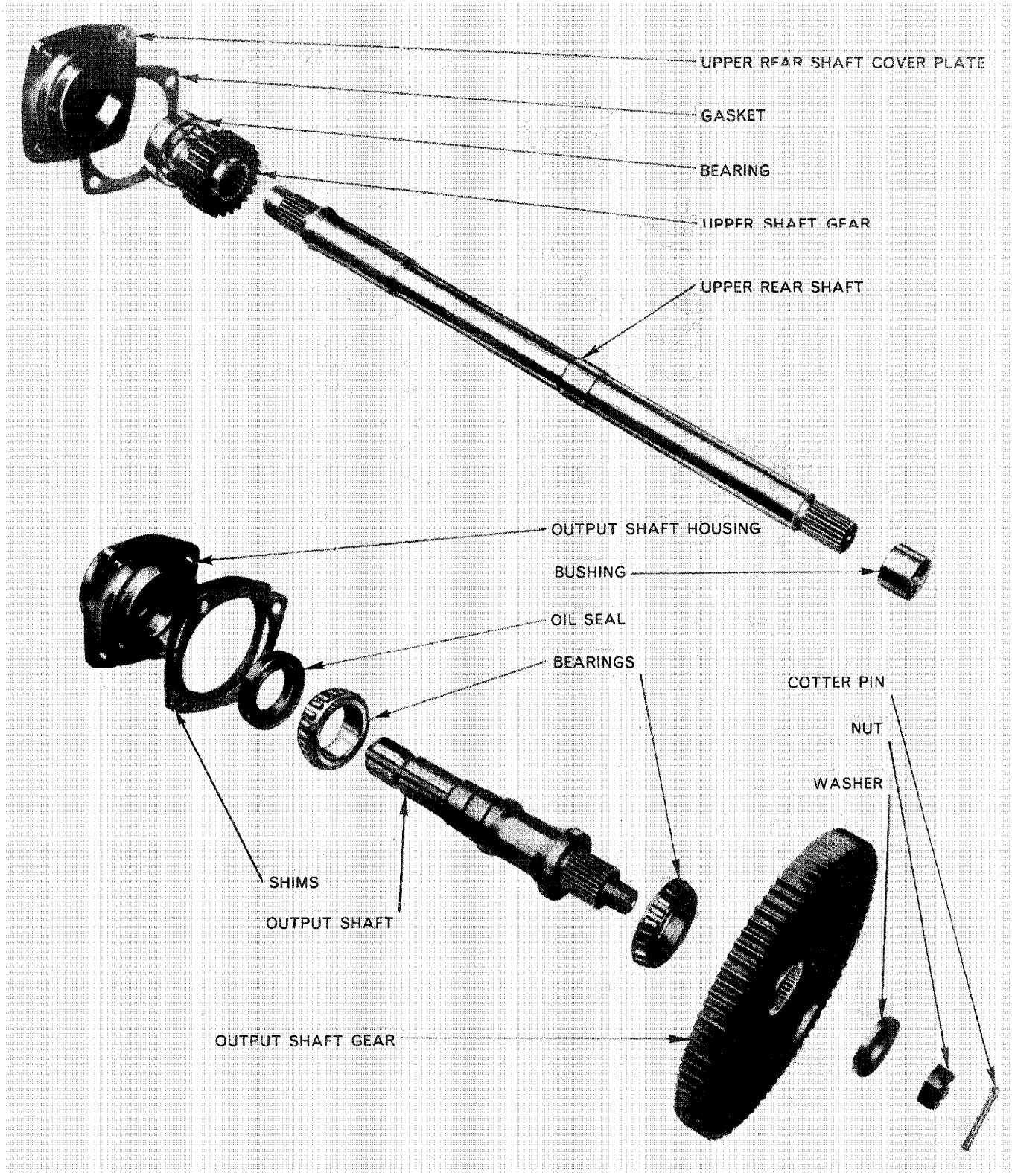

Figure 28
Upper Rear Shaft and Output Shaft

D. Assembly

1. Lubricate clutch piston 'O' rings to prevent damage, and install the piston assembly into the clutch housing. Make sure that the piston is correctly seated in the housing without being cocked.
2. Install the piston return spring and retainer. Compress the spring using Tools N775, 1003 and a suitable step plate, and install the retaining snap ring.
3. Install the cushioning spring, the six clutch plates and the pressure plate and install the retaining snap ring.
4. Lubricate the brake piston 'O' ring to prevent damage. Install the piston assembly in the housing, and the brake spring and plate. Compress the spring into the housing using 1001 puller and install the locating snap ring.
5. Install the pressure control valve on the control valve and install the spring and retaining snap ring.
6. Install the control valve assembly into the valve housing. Insert the control valve return spring and install the locating snap ring.
7. Install the clutch pack in the valve support housing, compressing the sealing rings to allow them to pass into the housing.
8. Assemble the valve housing to the valve support housing using a new gasket between them. Install and tighten the four allen screws, Figure 22, to the specified torque.

E. To Install in The Tractor

1. Position the clutch and valve assembly in the centre housing. Engage the internal splines of the clutch plates with the splines on the clutch hub which is integral with the hydraulic pump drive gear and splined to the P.T.O. countershaft, Figure 22. Make sure the thrust washer is in place with the three prongs located in the holes in the hub of the clutch housing.
2. Connect the nylon tube to the valve assembly.
3. Install the valve locating bolt in the centre housing and tighten to the specified torque. (See Specifications Section).
4. With a new cover gasket in position install the rear upper P.T.O. shaft assembly, engaging the splines with the P.T.O. clutch. Install the four cover plate retaining bolts and tighten to the specified torque.
5. Install the hydraulic lift bracket and retain with the clevis pins and new cotter pins.
6. Install the hydraulic lift cover. Refer to Part 11, Chapter 2.

4. REAR UPPER SHAFT AND OUTPUT SHAFT OVERHAUL

A. Disassembly

1. Remove the cotter pins and clevis pin retaining the hydraulic lift bracket to the centre housing.
2. Remove the four bolts retaining the upper rear shaft bearing retainer and withdraw the shaft complete with the bearing and retainer.
3. Withdraw the shaft and bearing assembly from the bearing retainer. Using Tools 951 and 1002 remove the bearing from the end of the shaft.
4. Remove the gear which is splined onto the end of the shaft.
5. Remove the right-hand rear axle assembly and the differential assembly. (Refer to Overhauling Axle Shaft Assembly Part 3, Chapter 2.)
6. Remove the cotter pin from the nut retaining the power take-off output shaft gear to the output shaft. Hold the output shaft by using half of a universal joint and a bar to prevent it from turning and remove the nut.
7. Remove the four bolts holding the output shaft bearing retainer, and withdraw the retainer and shaft together with the spacing shims, Figure 28.
8. Withdraw the shaft from the bearing retainer.
9. Remove the bearing cone and roller assembly from the output shaft gear and remove both parts from the centre housing.
10. Remove the cone and roller from the output shaft using Tools Nos. 952 and 1003, Figure 29.

B. Cleaning, Inspection and Repair

1. Clean all parts in solvent and air dry.
2. Inspect gears for cracks, chipped teeth and excessive wear.
3. Inspect bearing cone and roller assemblies for chipped rollers, wear and discoloration from overheating.
4. Inspect oil seal and bearing cup in output shaft bearing retainer. If replacement of either is necessary remove both bearing cup, and oil seal, using Tool 943 and slide hammer. Replace the oil seal in the retainer prior to replacing the bearing cup.
5. Inspect the rear upper shaft bearing, and replace with a new bearing if necessary.

© FORD MOTOR COMPANY LTD., 1965

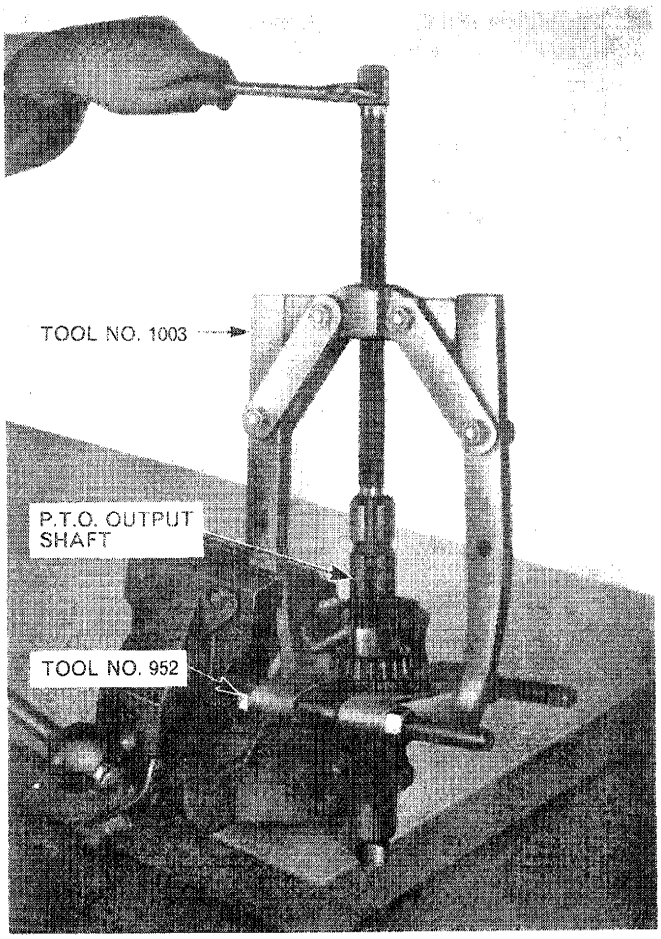

Figure 29
Removing Output Shaft Bearing

6. Inspect the rear upper shaft bushing in the centre housing for wear. If replacement is necessary remove the Hydraulic Lift Cover (refer to Part 11, Chapter 2), extract bushing from the centre housing and insert a new bushing using Tool T808 and 815 handle, Figure 30. To obviate any possibility of seizure on initial start up it is most important that the bushing is liberally coated with oil prior to assembly of the shaft.

7. Inspect the output shaft bearing cup in the centre housing for scoring and excessive wear. Install a new cup if necessary using Tool No. 943 and slide hammer for removal, and Step Adaptor 630 for replacement.

C. Power Take-off Reassembly

1. Install the rear bearing cone and roller assembly on the output shaft, using Tool Nos. 952 and 1003.

2. Retain the P.T.O. output shaft gear in position in the centre housing while installing the bearing cone and roller assembly on the gear.

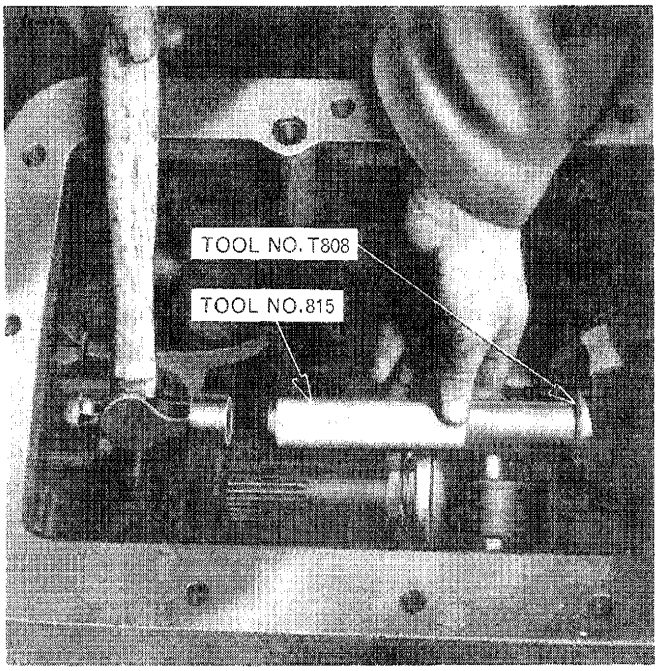

Figure 30
Installing Upper Shaft Bushing

3. Install the output shaft locating the splines in the output shaft gear. Install the washer and the castellated nut. Prevent the output shaft from turning, using the bar and half a universal joint assembly as previously described and tighten the nut to the specified torque. (See Specifications Section.) Line up the castellations in the nut with the hole through the shaft and insert a new cotter pin.

4. Install the P.T.O. output shaft bearing retainer without the spacing shims, and tighten the four retaining bolts finger tight. Rotate the shaft by hand to make sure that the bearings are correctly seated, and retighten the bolts to finger tight. Measure the gap between the output shaft housing and the centre housing with a feeler gauge, Figure 31, at various points to ensure the housing is parallel with the centre housing.

   Select a combination of shims (see Specifications, page 31) that represent in thickness the equivalent of the measured gap plus 0·005 ins. (0·127 mm.) to give the required end float. Remove the output shaft bearing retainer and install together with the shims. Tighten the bolts to the specified torque (see Specification Section), and check that there is the required end float on the shaft and the shaft turns easily by hand. If incorrect alter the thickness of shims accordingly. Apply sealing compound on final assembly and tighten the four retaining bolts to the specified torque (see Specifications Section).

5. Position the rear upper shaft gear on the rear upper shaft, and install the bearing on the shaft.
6. Press the shaft, gear and bearing assembly into the bearing retainer.
7. Install the rear upper shaft and bearing retainer assembly in the centre housing using a new gasket. Install the four bolts and lockwashers that hold the bearing retainer and tighten to the specified torque. (See Specifications Section.)
8. Install the differential assembly and the right-hand rear axle assembly. (Refer to Part 3, Chapter 2 'Overhauling Axle Shaft Assembly').
9. Position the hydraulic lift bracket and install the clevis pin and cotter pins that retain it to the centre housing.

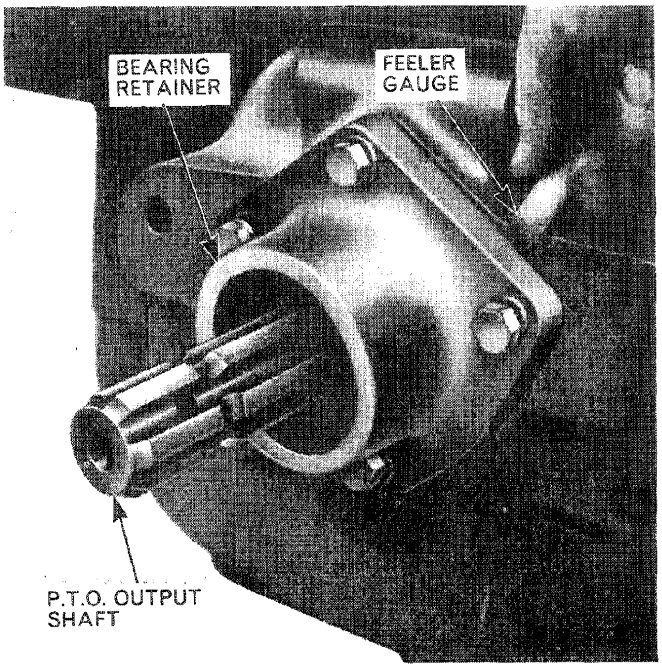

Figure 31
Measuring Shim Gap

© FORD MOTOR COMPANY LTD., 1965

Part 9

POWER TAKE-OFF

Chapter 4

TROUBLE SHOOTING, SPECIFICATIONS AND SPECIAL TOOLS

Section		Page
1.	Trouble Shooting	29
2.	Specifications	30
3.	Special Tools	31

1. TROUBLE SHOOTING

Trouble	Possible Cause
Independent P.T.O. Clutch does not engage or does not engage fully.	Low rear axle oil level. Failure of independent pump. Fracture of connecting pipe. Pressure relief valve stuck open. Pressure relief valve spring broken. Excessive oil lost past cast iron sealing rings. Clutch piston seals leaking.
Independent P.T.O. Clutch does not disengage.	Control valve stuck. Control valve return spring broken. Clutch piston return spring broken.
Clutch disengages but P.T.O. still turns.	Cold oil. Brake piston stuck. Brake piston return spring weak or broken. Clutch piston return spring weak or broken. Worn brake pad. Clutch plates distorted or seized. Excessive lubricating oil between clutch plates.

© FORD MOTOR COMPANY LTD., 1967

2. SPECIFICATIONS

FORD 2000

	4 speed Trans.	6 speed Trans.	8 speed Trans.
Ratio of engine to P.T.O. speed			
—Transmission P.T.O.	2·75 : 1	3·35 : 1	2·95 : 1
—Live P.T.O.	—	3·35 : 1	3·35 : 1
Standard P.T.O. speed			
—Transmission P.T.O.	540 @ 1500 r.p.m.	540 @ 1800 r.p.m.	540 @ 1600 r.p.m.
—Live P.T.O.	—	540 @ 1800 r.p.m.	540 @ 1800 r.p.m.
Nominal O.D. of Output Shaft Splines	$1\frac{3}{8}$ ins. (34·9 mm.)	$1\frac{3}{8}$ ins. (34·9 mm.)	$1\frac{3}{8}$ ins. (34·9 mm.)
Number of Splines	6	6	6
Selector arm spring free length	0·94 ins. (24 mm.) minimum		
Selector arm spring compressed length	0·72 ins. (18 mm.) with 22/26 lb. (10·0/11·8 kg.) load		
Cover retaining bolt torque	35/47 lbs. ft. (4·84/6·5 kg. m.)		
Selector retaining bolt torque	35/47 lbs. ft. (4·84/6·5 kg. m.)		

FORD 3000

	4 speed Trans.	8 speed Trans.
Ratio of engine to P.T.O. speed		
—Transmission P.T.O.	2·75 : 1	2·95 : 1
—Live P.T.O.	—	3·35 : 1
Standard P.T.O. speed		
—Transmission P.T.O.	540 @ 1500 r.p.m.	540 @ 1600 r.p.m.
—Live P.T.O.	—	540 @ 1800 r.p.m.
Nominal O.D. of output shaft splines	$1\frac{3}{8}$ ins. (34·9 mm.)	$1\frac{3}{8}$ ins. (34·9 mm.)
Number of splines	6	6
Selector arm spring free length	0·94 ins. (24 mm.) minimum	
Selector arm spring compressed length	0·72 ins. (18 mm.) with 22/26 lb. (10·0/11·8 kg.) load	
Cover retaining bolt torque	35/47 lbs. ft. (4·84/6·5 kg. m.)	
Selector retaining bolt torque	35/47 lbs. ft. (4·84/6·5 kg. m.)	

FORD 4000

Rate of engine to P.T.O. speed	3·35 : 1
Standard P.T.O. speed @ engine speed	540 @ 1800 r.p.m.
Nominal O.D. of output shaft splines	$1\frac{3}{8}$ ins. (34·9 mm.)
Number of splines	6
Selector arm spring free length	0·94 ins. (24 mm.) minimum
Selector arm spring compressed length	0·72 ins. (18 mm.) with 22/26 lb. (10·0/11·8 kg.) load
Piston return spring free length	2·34 ins. (59·5 mm.)
Piston return spring compressed length	1·88 ins. (47·8 mm.) with 200/225 lb. (90·7/102 kg.) load
Outer Brake spring free length	1·54 ins. (39 mm.)
Outer Brake spring compressed length	1·11 ins. (28·2 mm.) with 195/205 lb. (88·5/93 kg.) load
Inner brake spring free length	1·52 ins. (38·6 mm.)
Inner brake spring compressed length	1·11 ins. (28·2 mm.) with 95/105 lb. (43/47 kg.) load
Control valve spring free length	1·70/1·72 ins. (43·1/43·8 mm.)
Control valve spring compressed length	1·50/1·52 ins. (38·2/38·8 mm.) with 43 lb. (19·5 kg.) load
Control valve detent spring free length	1·19/1·21 ins. (30·2/30·8 mm.)
Control valve detent spring compressed length	1·09/1·11 ins. (27·8/28·2 mm.) with 18 lb. (8·2 kg.) load
Four large cover retaining bolts torque	170/200 lbs. ft. (23·5/27·6 kg. m.)
Two small cover retaining bolts torque	35/47 lbs. ft. (4·85/6·5 kg. m.)
Selector retaining bolt torque	35/47 lbs. ft. (4·85/6·5 kg. m.)

Brake cover plate bolt torque	35/47 lbs. ft. (4·85/6·5 kg. m.)
Brake housing to support bolt torque	14/17 lbs. ft. (1·94/2·35 kg. m.)

FORD 5000

Ratio of engine to P.T.O. speed	3·52 : 1
Standard P.T.O. speed @ engine speed	540 @ 1900 r.p.m.
Nominal O.D. of output shaft splines	$1\frac{3}{8}$ ins. (34·9 mm.)
Number of splines	6
P.T.O. output shaft bearing end float	·003-·005 in. (·076-·127 mm.)
Thickness of output shaft bearing shims	·002 ins. (·051 mm.), ·003 ins. (·076 mm.), ·010 ins. (·254 mm.)
Piston return spring free length	2·29 ins. (58·1 mm.) minimum
Piston return spring compressed length	1·378 ins. (35 mm.) with 305/335 lb. (138/152 kg.) load
Outer brake spring free length	1·58 ins. (40·1 mm.)
Outer Brake spring compressed length	0·78 ins. (19·9 mm.) with 76/84 lb. (34·5/38 kg.) load
Inner brake spring free length	1·10 ins. (28 mm.)
Inner brake spring compressed length	0·78 ins. with 37/43 lb. (17/19·5 kg.) load
Control valve pressure spring free length	1·48 ins. (37·6 mm.)
Control valve pressure spring compressed length	1·10 ins. (28 mm.) with 18/20 lb. (8·16/9·07 kg.) load
Control valve return spring free length	2·04 ins. (51·9 mm.)
Control valve return spring compressed length	1·56 ins. (39·7 mm.) with 2·8/3·2 lb. (1·27/1·45 kg.) load
P.T.O. upper rear shaft cover bolts torque	40–50 lbs. ft. (5·5–6·98 kg. m.)
P.T.O. output shaft gear retaining nut torque	200–250 lbs. ft. (27·7–34·5 kg. m.)
P.T.O. output shaft housing bolt torque	40–50 lbs. ft. (5·5–6·9 kg. m.)

3. SPECIAL TOOLS

SW 17/a	Flexible Tube	930-B	Legs
SW 17/d	Adaptor	930-E	Legs
P 61	Ratchet	938	Puller
518	Puller	951	Pulling Attachment
630-S	Step Plates	952	Pulling Attachment
N 774	Pressure Gauge 300 p.s.i.	T 8503-4	Tube
N 774/a	Tube	1001	Puller
N775	Clutch Spring Compressor	1002	Puller
T 818	Bushing Kit	1003	Puller
924	Adaptor		

© FORD MOTOR COMPANY LTD., 1967

Oil Flow to the P.T.O. Brake

With reference to Figure 2.

NOTE: Braking is effected by a steel band lined with friction material which encircles the P.T.O. drive clutch housing. The ends of the band are constrained by an actuating lever which is positioned over the rod end of the brake piston.

Hydraulic oil from the I.P.T.O. pump passes to the Dual Power transmission regulating valve. As the pressure increases the valve lifts off and allows oil to pass to the control valve spool. When the control lever is moved rearwards the spool is pushed in and prevents the oil flowing to the P.T.O. drive clutch.

The oil is directed to the P.T.O. clutch regulating valve and also passes across the control valve spool and out to the brake piston. Oil pressure moves the piston forward against the piston return spring. The rod end of the piston pushes against the brake band actuating lever which constricts the band around the clutch housing and thus prevents rotation.

As the system pressure increases the P.T.O. clutch regulating valve lifts off. Metered oil now passes to the rearward port in the clutch housing and through a drilling to exhaust within the clutch assembly, thereby maintaining pressure lubrication.

Return spring pressure on the P.T.O. drive clutch piston forces oil to exhaust through both the small orifice and a second, larger orifice at the rear end of the control valve spool. Complete release of the clutch plates is thus ensured.

2. POWER TAKE-OFF CLUTCH OVERHAUL

A. REMOVAL

1. Withdraw the yoke and pivot pins and remove the hydraulic lift rocker.

2. **FORD 5000 and 7000 Less Load Monitor:** Remove the hydraulic lift cover.

FORD 5000 and 7000 With Load Monitor: Separate the tractor between the transmission and rear axle.

3. Remove the P.T.O. output shaft cap and then remove the retaining ring, Figure 3. Withdraw the output shaft.

CAUTION: If the rear axle oil has not been drained from the centre housing oil may spill out from the P.T.O. output shaft bearing retainer.

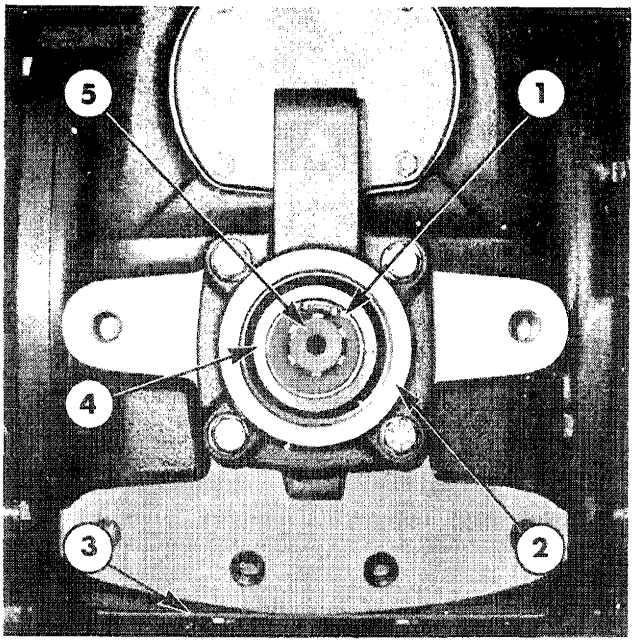

Figure 3
P.T.O. Output Shaft Installed

1. Retaining Ring
2. Rear Bearing Retainer
3. Base Plate
4. Sleeve
5. P.T.O. Output Shaft

©FORD MOTOR COMPANY LTD., 1973

4. Remove the bolts that secure the output shaft bearing retainer and then remove the bearing retainer.

CAUTION: The output shaft sleeve, bearing and seal may all come out of the centre housing with the retainer. In this event it is possible for the P.T.O. driven gears to drop to the bottom of the housing.

5. Disconnect the nylon tube from the P.T.O. valve assembly.

6. Remove the two P.T.O. clutch valve locating pins and locknuts from the left-hand side of the centre housing, Figure 4.

FORD 5000 and 7000 With Load Monitor: Remove the P.T.O. clutch and valve assembly from the centre housing.

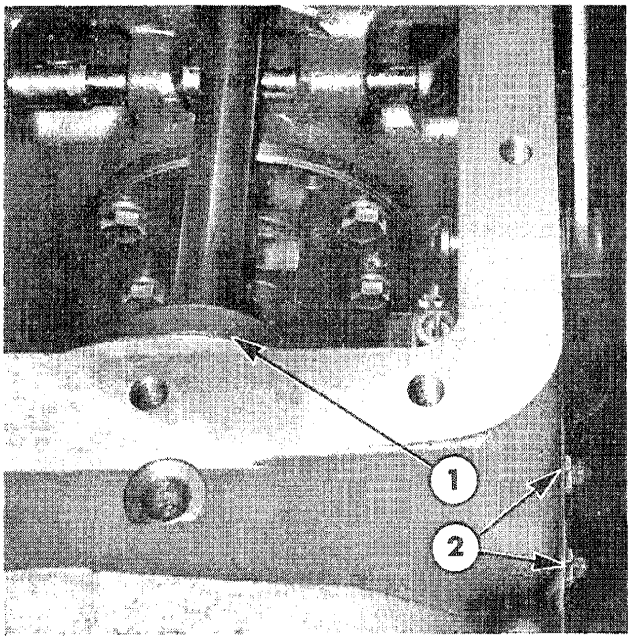

Figure 4
P.T.O. Clutch and Hub Installed

1. P.T.O. Drive Clutch
2. Locating Pins and Locknuts

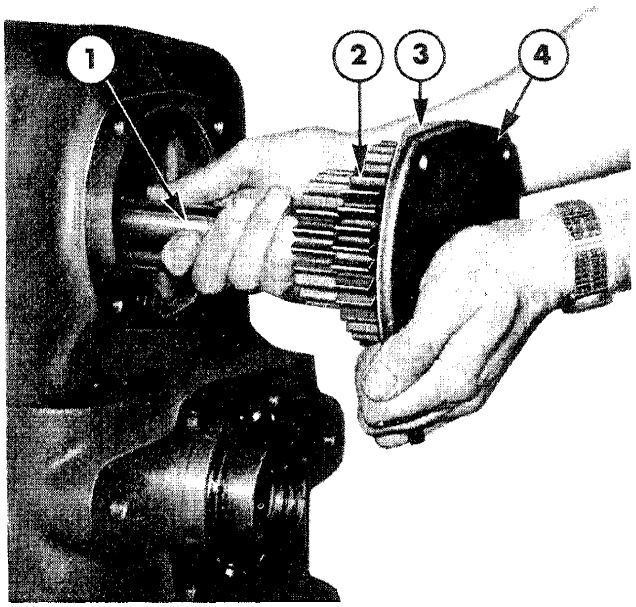

Figure 5
Removing P.T.O. Upper Shaft and Gears

1. P.T.O. Upper Shaft
2. P.T.O. Drive Gear Assembly
3. Gasket
4. Rear Bearing Retainer

7. Remove the bolts that secure the upper shaft rear bearing retainer then remove the retainer, gasket, P.T.O. drive gears, rear bearing and shaft, as shown in Figure 5.

NOTE: The front bearing will remain in the centre housing.

FORD 5000 and 7000 Less Load Monitor: Slide the P.T.O. clutch rearward off the input shaft and remove from the centre housing.

8. Separate the clutch hub from the clutch housing and remove the thrust washer.

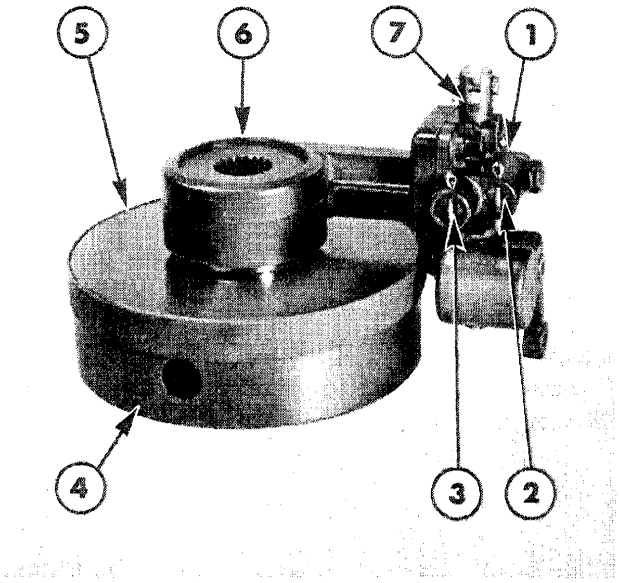

Figure 6
P.T.O. Clutch and Valve Assembly

1. Valve Assembly
2. Dual Power Transmission Regulating Valve
3. P.T.O. Clutch Regulating Valve
4. P.T.O. Clutch Housing
5. Brake Band
6. Support
7. Control Valve Spool

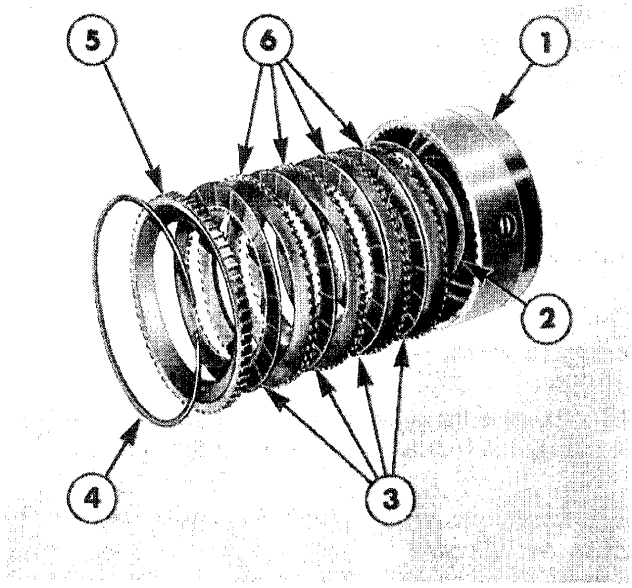

Figure 7
Drive Plates Removed from P.T.O. Clutch Housing

1. P.T.O. Clutch Housing
2. Feathering Spring
3. Internal Spline Plates
4. Snap Ring
5. Pressure Plate
6. External Spline Plates

B. DISASSEMBLY

1. With the P.T.O. clutch on a bench, remove the valve assembly and brake band from the clutch housing, Figure 6.

2. Remove the sealing rings from the rear of the clutch housing.

3. Remove the retaining snap ring, the pressure plate, four internally splined plates, the four externally splined plates and the feathering spring from the housing, see Figure 7.

IMPORTANT: Note the order in which the clutch plates were removed.

4. Remove the retaining ring by compressing the piston return spring using Tool No. N–775 and either Tool No. 1003 or a press, Figure 8. Release the pressure then remove the spring seat and the spring.

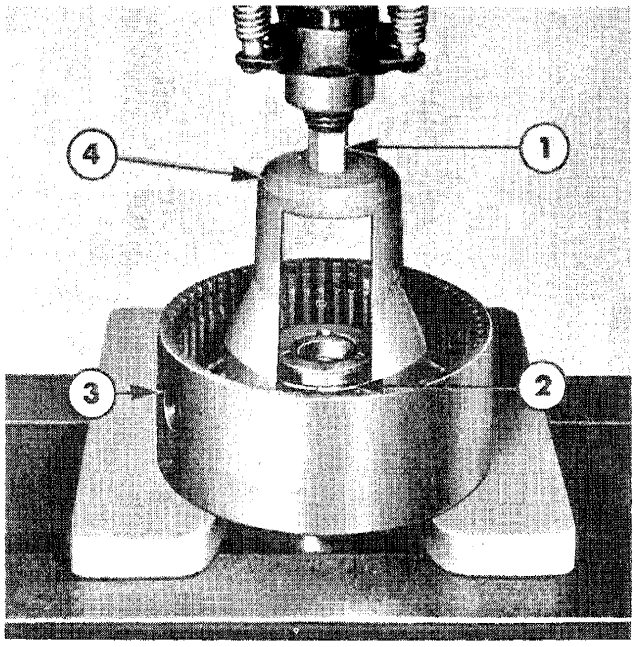

Figure 8
Compressing Clutch Spring

1. Arbor Press
2. Retaining Ring
3. P.T.O. Clutch Housing
4. Tool No. N–775

© FORD MOTOR COMPANY LTD., 1973

5. Remove the piston from the housing using compressed air applied to the port between the front and centre sealing ring grooves in the clutch housing hub. Remove the inner and outer 'O' rings from the piston.

C. INSPECTION AND REPAIR

1. Clean all parts in a suitable solvent and dry thoroughly with a dry, lint-free cloth or compressed air.

2. Inspect the sealing rings from the rear of the clutch housing for damage distortion or cracks.

3. Examine the clutch housing both externally for cracks or damage and internally for wear and piston scuffing.

4. Inspect the clutch piston for scoring or burrs and install new O' rings.

5. Inspect the clutch plates for excessive wear. distortion or scoring.

If damage or serious wear is present on any component part, install a replacement during re-assembly.

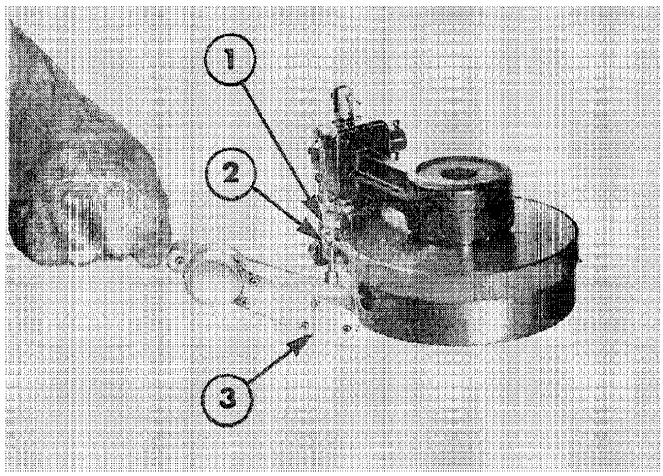

Figure 9
Adjusting P.T.O. Clutch Brake Band

1 Locknut
2. Adjuster Screw
3. Torque Wrench

D. RE-ASSEMBLY

Re-assembly of the power take-off clutch follows the disassembly procedure in reverse.

E. INSTALLATION

Installation of the power take-off clutch follows the removal procedure in reverse. Pay particular attention to the following important points:

(i) Adjust the brake band tension as follows: Loosen the locknut, Figure 9, and tighten the brake band screw to the specified torque – See Specifications, Chapter 6. Back off the screw two turns and tighten the locknut.

(ii) Use the following procedure when tightening the P.T.O. clutch locating pins and locknuts:

- Tighten the rear pin first to the specified torque See Specifications, Chapter 6. Back off the pin 45°.
- Tighten the front pin to the specified torque See Specifications. Chapter 6. Back off the pin 45°.
- Tighten both locknuts to the specified torque See Specifications, Chapter 6.

(iii) If difficulty is experienced when installing the 6–spline P.T.O. output shaft, then turn the sleeve, using a screwdriver located in one of the slots, to align the splines in the sleeve with those of the shaft.

3. CONTROL VALVE AND BRAKE OVERHAUL

A. REMOVAL

1. Remove the P.T.O. clutch and control valve assembly as detailed in Section 2 of this Chapter.

2. Working on a bench, remove the brake band and valve assembly from the P.T.O. clutch housing.

B. DISASSEMBLY

1. Remove the cotter pin and clevis pin from the valve body, Figure 10, then remove the brake band assembly.

2. Remove the socket-head screws and separate the valve body from the support, Figure 11.

3. Remove the retaining ring from the end of the control valve spool and withdraw the spool. Take care not to lose the detent ball and spring located within the valve body, Figure 12.

4. Remove the cotter pin, washer, spring and Dual Power transmission regulating valve from the valve body.

5. Remove the cotter pin, washer, spring and P.T.O. clutch regulating valve from the valve body.

IMPORTANT: Do not intermix the Dual Power and P.T.O. clutch regulating valve components.

6. Remove the retaining ring, guide, spring and brake piston from the valve body using compressed air if necessary.

7. Remove the 'O' ring from the brake piston.

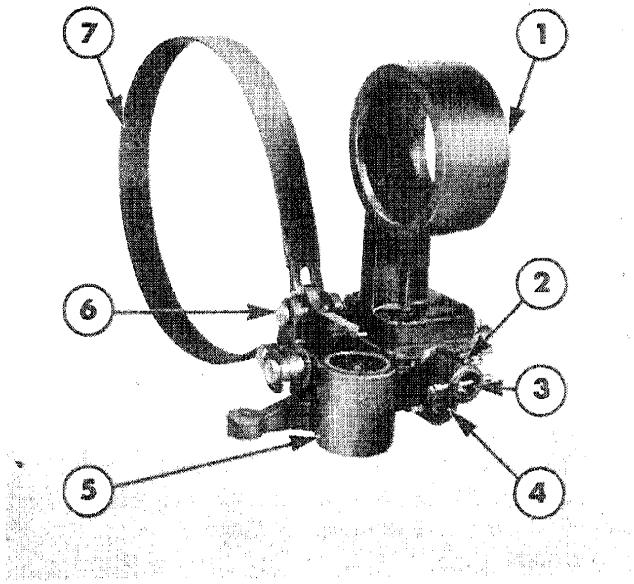

Figure 10
P.T.O. Clutch Valve and Brake Band

1. Support
2. Valve Body
3. P.T.O. Clutch Regulating Valve Assembly
4. Dual Power Transmission Regulating Valve Assembly
5. Brake Piston Housing
6. Clevis Pin and Cotter Pin
7. Brake Band

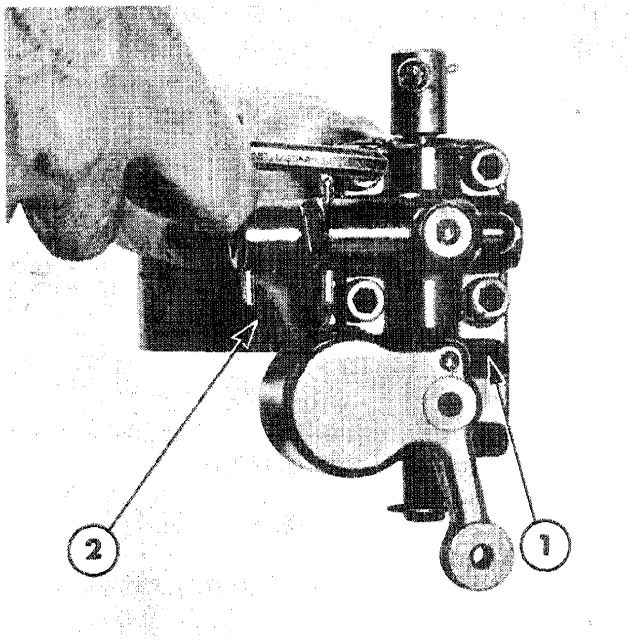

Figure 11
Disassembling P.T.O. Clutch Valve

1. P.T.O. Clutch Valve Body
2. Support

© FORD MOTOR COMPANY LTD., 1973

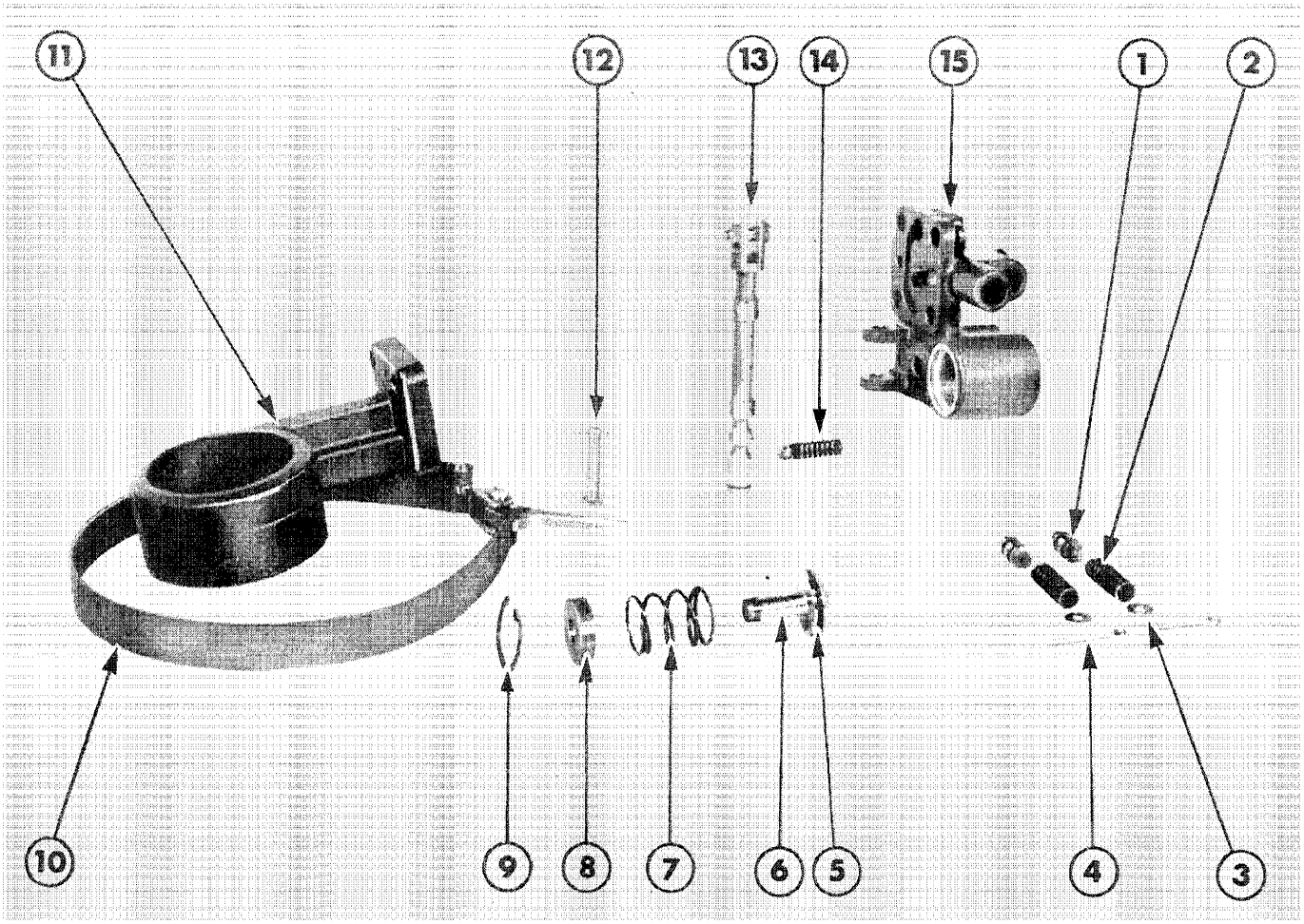

Figure 12
P.T.O. Clutch Valve and Brake Disassembled

1. Dual Power Transmission Regulating Valve
2. Spring
3. Washer
4. Cotter Pin
5. 'O' – Ring
6. Brake Piston
7. Brake Piston Return Spring
8. Brake Piston Guide
9. Retaining Ring
10. Brake Band
11. Support
12. Clevis Pin and Cotter Pin
13. Control Valve Spool
14. Detent Ball and Spring
15. Valve Body

C. INSPECTION AND REPAIR

1. Clean all parts in a suitable solvent and dry thoroughly with a dry lint-free cloth or compressed air.

2. Install a new O' ring on the brake piston.

3. Inspect the brake piston and housing bore for burrs or scoring.

4. Examine the brake band for excessive wear or scoring.

5. Inspect the control valve and housing for wear, burrs or scoring. Minor burrs or scratches may be removed with a fine abrasive material but parts must be washed and dried prior to re-assembly.

6. Examine the detent ball and spring for wear or damage.

7. Inspect the Dual Power and P.T.O. clutch regulating valve components for wear or damage and ensure the valves move freely in their respective bores.

If damage or serious wear is present on any component part, install a replacement during re-assembly.

D. RE-ASSEMBLY

1. Re-assembly of the control valve and brake follows the disassembly procedure in reverse.

E. INSTALLATION

Installation of the control valve and brake follows the removal procedure in reverse. Pay particular attention to the following important points.

(i) When a new brake band is installed the band must be pre soaked in rear axle oil for at least three minutes.

(ii) Adjust the brake band tension – See "INSTALLATION", Section 2 of this Chapter.

(iii) Adjust the P.T.O. clutch locating pins – See "INSTALLATION", Section 2 of this Chapter.

4. POWER TAKE-OFF SHAFTS AND GEARS OVERHAUL

A. REMOVAL

1. Remove the drain plug from the base plate at the rear of the centre housing, Figure 13, and drain the oil from the P.T.O. gear compartment.

2. Remove the P.T.O. output shaft cap, then remove the retaining ring, Figure 14.

Withdraw the output shaft.

3. Remove the bolts that secure the output shaft bearing retainer and remove the bearing retainer.

CAUTION: The output shaft sleeve, bearing and seal may all come out of the centre housing with the retainer. In this event it is possible for the P.T.O. driven gears to drop to the bottom of the housing.

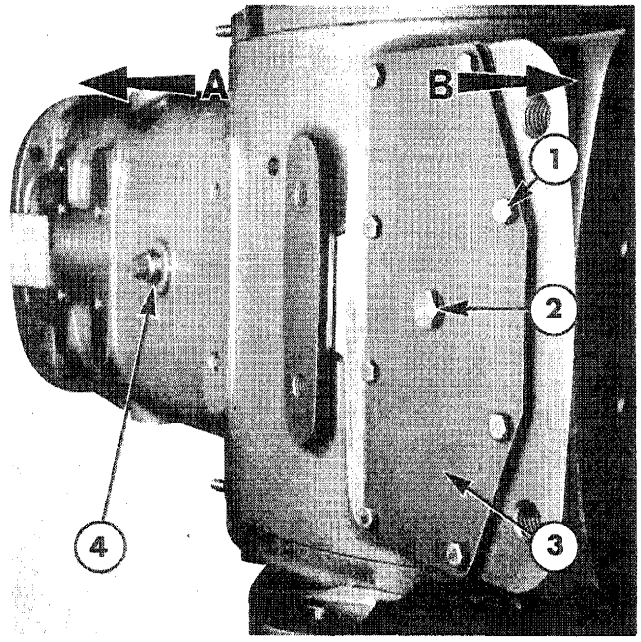

Figure 13
Drain Plug Locations

A. To Front of Tractor
1. Base Plate Bolt
2. P.T.O. Gear Compartment Drain Plug

B. To Rear of Tractor
3. Base Plate
4. Rear Axle Centre Housing Drain Plug

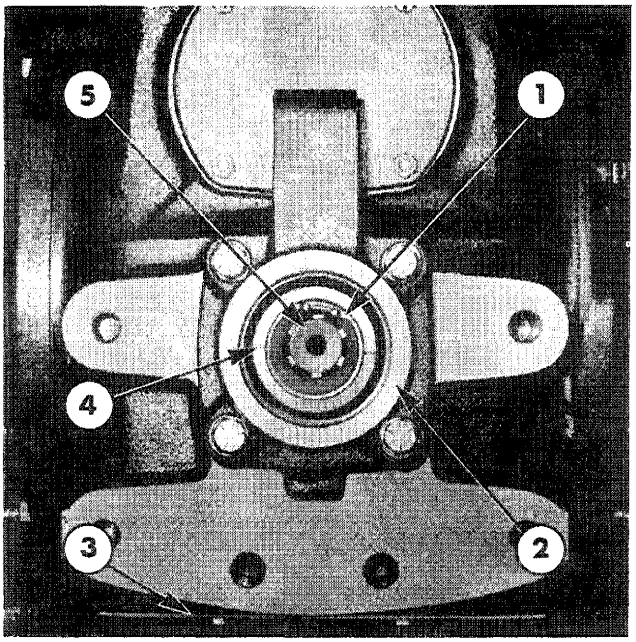

Figure 14
Removing P.T.O. Output Shaft

1. Retaining Ring
2. Rear Bearing Retainer
3. Base Plate
4. Sleeve
5. P.T.O. Output Shaft

© FORD MOTOR COMPANY LTD., 1973

4. Remove the bolts securing the upper shaft rear bearing retainer then remove the retainer, bearing, P.T.O. drive gear assembly and shaft, as shown in Figure 15.

NOTE: The front bearing will remain in the housing and it will be necessary to use Tool No. 943 to effect removal.

5. Remove the bolts which secure the base plate to the centre housing then remove the plate and gasket.

6. Hold the P.T.O. output shaft driven gears in position then remove the output shaft sleeve, bearing, seal and retain the thrust washer, Figure 16.

7. Remove the driven gears through the bottom of the centre housing and retain the two thrust washers.

Figure 17 shows the P.T.O. shafts, gears and sleeve removed and in their relative positions.

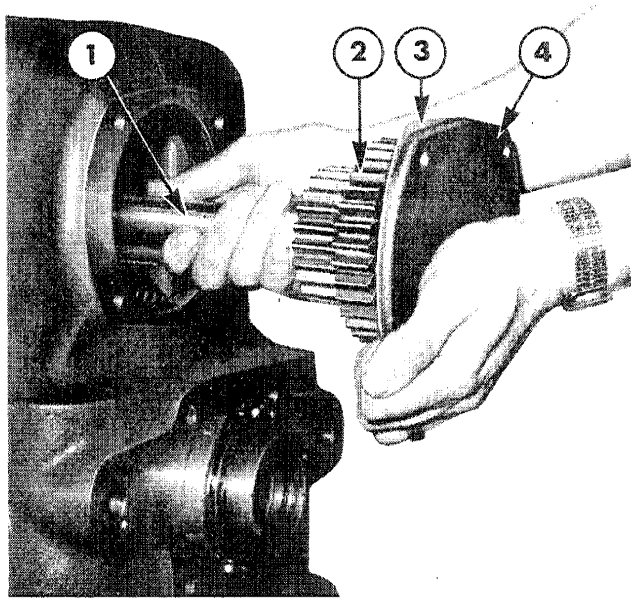

Figure 15
Removing P.T.O. Upper Shaft and Gears

1. P.T.O. Upper Shaft
2. P.T.O. Drive Gear Assembly
3. Gasket
4. Rear Bearing Retainer

B. DISASSEMBLY

1. Remove the output shaft bearing retainer seal.

2. Release the output shaft rear bearing retaining ring, Figure 18, and remove the bearing from the sleeve.

3. Remove the output shaft front bearing from the housing using Tool No. 943.

4. Remove the drive gear assembly rear bearing, as shown in Figure 19, using Tool Nos. 1002, 951 and 630S–3.

5. Remove the drive gear assembly front bearing from the housing using Tool No. 943.

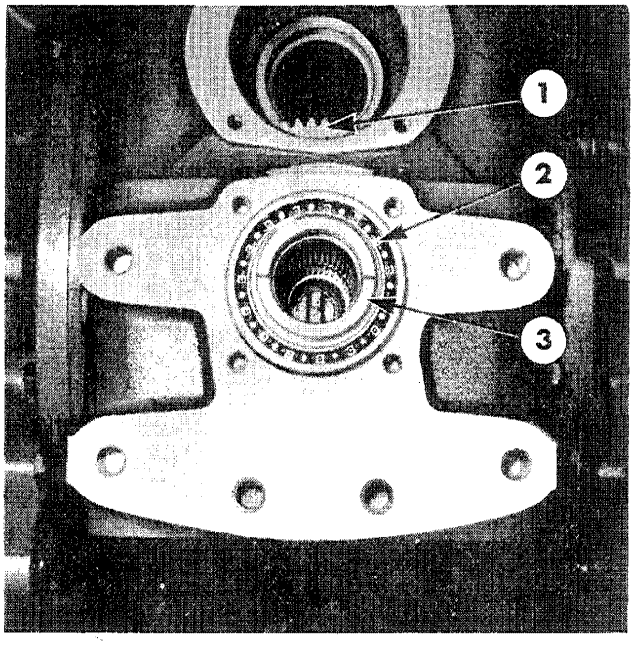

Figure 16
P.T.O. Output Shaft Sleeve and Bearing Installed

1. P.T.O. Driven Gears
2. Bearing
3. Sleeve

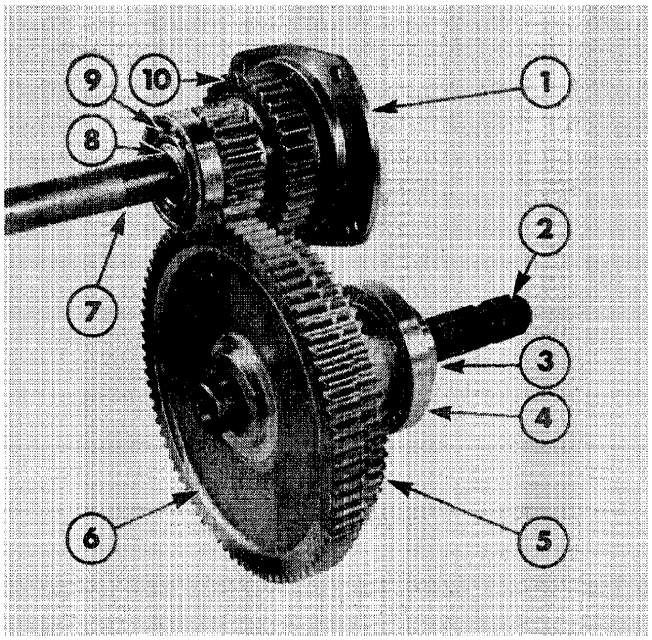

Figure 17
P.T.O. Shafts and Gears

1. Upper Shaft Rear Bearing Retainer
2. P.T.O. Output Shaft
3. Sleeve
4. Output Shaft Rear Bearing
5. 1000 rev/min. Driven Gear
6. 540 rev/min. Driven Gear
7. Upper P.T.O. Shaft
8. Shoulder Ring
9. Upper Shaft Front Bearing
10. Drive Gear Assembly.

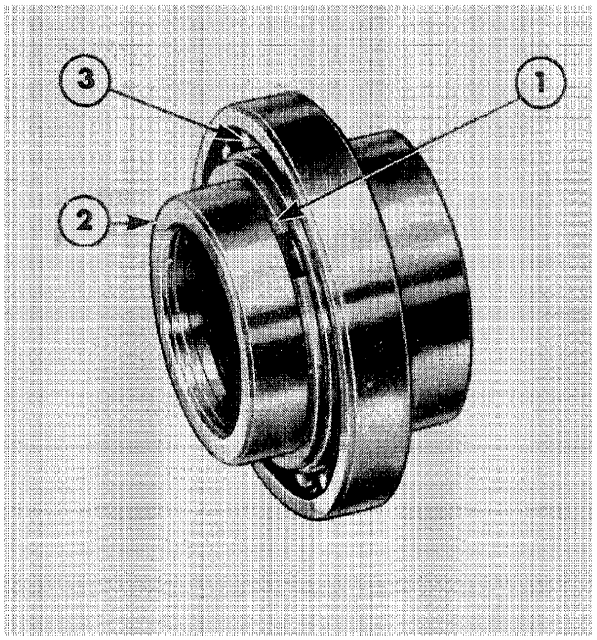

Figure 18
P.T.O. Output Shaft Sleeve and Bearing

1. Retaining Ring
2. Sleeve

C. INSPECTION AND REPAIR

1. Clean all parts in a suitable solvent and dry thoroughly with a dry lint-free cloth or compressed air.

2. Examine the P.T.O. upper shaft splines for distortion.

3. Inspect the gears for cracks. chipped teeth and excessive wear.

4. Examine the bearings for wear or damage.

5. Inspect the output shaft, sleeve, seal, rear bearing retainer and thrust washers for wear and damage.

If damage or serious wear is present on any component part install a replacement during re-assembly.

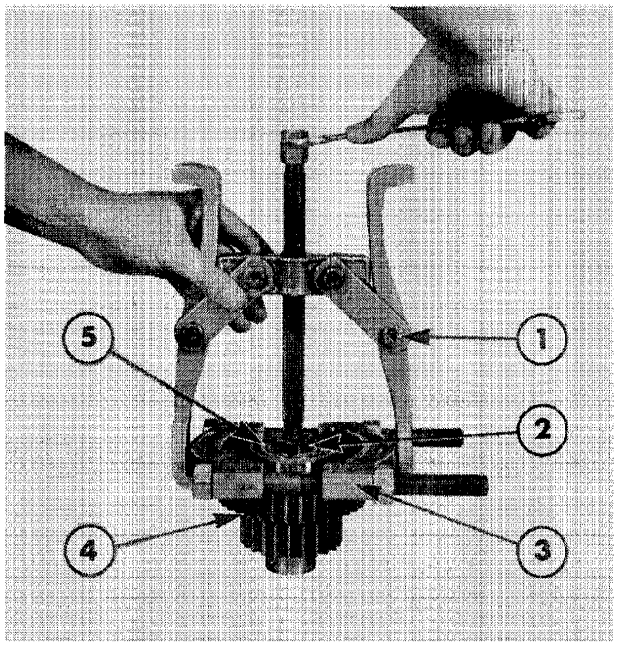

Figure 19
Removing P.T.O. Drive Gear Assembly Rear Bearing

1. Tool No. 1002
2. Tool No. 630S–3
3. Tool No. 951
4. Drive Gear Assembly
5. Rear Bearing

© FORD MOTOR COMPANY LTD., 1973

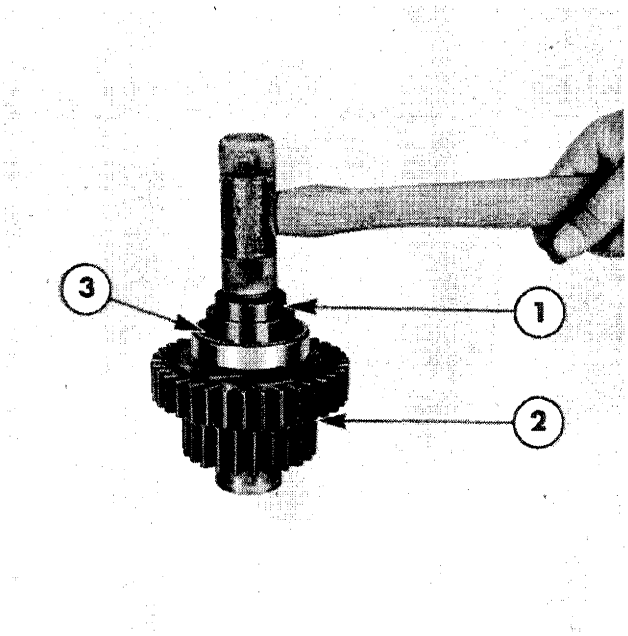

Figure 20
Installing P.T.O. Drive Gear Assembly Rear Bearing
1. Tool No. 630S–8
2. Drive Gear Assembly
3. Rear Bearing

D. RE-ASSEMBLY

1. Install the drive gear assembly rear bearing as shown in Figure 20 using Tool No. 630S–8.

2. Use a suitable sleeve of 69,9mm (2.75in.) internal diameter and 79,3mm (3.12in.) outside diameter to install the drive gear assembly front bearing in the housing.

3. Use a suitable sleeve of 41,2mm (1.62in.) internal diameter and 47,8mm (1.88in.) outside diameter to install the output shaft front bearing flush in the housing.

4. Locate the output shaft rear bearing on the sleeve and install the retaining ring.

5. Use a suitable sleeve of 82,6mm (3.25in.) internal diameter and 95,3mm (3.75in.) outside diameter to install the output shaft rear bearing retainer seal in the retainer.

E. INSTALLATION

Replace the power take-off shafts and gears by following the removal procedure in reverse and pay particular attention to the following important points:

(i) On assembly a thrust washer must be installed between the two driven gears, the 1000 rev/min. driven gear and the sleeve and the 540 rev/min. driven gear and the front bearing.

(ii) The following procedure is recommended for installing the driven gears:

(a) Insert the 1000 rev/min. driven gear through the opening in the bottom of the housing and hold rearwards. Support the gear and insert the 540 rev/min. driven gear to engage with the spigot on the front of the 1000 rev/min. gear.

(b) Push both gears forward, as an assembly, to engage the 540 rev/min. gear spigot with the recess in the front bearing housing location. Support the gears.

(c) Install the rear bearing and sleeve.

(iii) Loosen the P.T.O. valve locating pins to enable the upper shaft splines to engage with the clutch. Tighten the locating pins and locknuts – See "INSTALLATION", Section 2 of this Chapter.

(iv) If difficulty is experienced when installing the 6–spline P.T.O. output shaft, turn the sleeve, using a screwdriver located in one of the slots, to align the splines in the sleeve with those of the shaft.

F. UPPER P.T.O. SHAFT END PLAY

Shimming Procedure

NOTE: This procedure must be followed whenever a new upper P.T.O. shaft bearing, gear or rear bearing retainer is installed. The end play of the shaft is governed by shims located between the drive gear assembly and the shoulder ring. For end play requirement and available shims – See Specifications. Chapter 6.

1. Remove the hydraulic lift cover.

2. Ensure the upper shaft rear bearing retainer bolts are tightened to the specified torque – See Specifications, Chapter 6.

3. Push the shaft rearward until the shoulder ring on the rear of the shaft abuts the drive gears or any shims that may be installed.

4. Using a feeler gauge, measure the gap between the shoulder ring on the front of the shaft (not shown) and the rear of the P.T.O. clutch housing.

5. If shims must be added or removed to obtain the specified gap, then remove the upper shaft and gears.

6. Install the correct amount of shims and re-assemble. Tighten the retainer bolts to the specified torque – See Specifications, Chapter 6.

7. Install the hydraulic lift cover.

©FORD MOTOR COMPANY LTD., 1973

Part 9
POWER TAKE-OFF
Chapter 6
TWO SPEED POWER TAKE-OFF TROUBLE SHOOTING, SPECIFICATIONS AND SPECIAL TOOLS

Section		*Page*
1.	Trouble Shooting	49
2.	Specifications	50
3.	Special Tools	51

1. TROUBLE SHOOTING

Before removing the I.P.T.O. Clutch, attempt to isolate the possible cause of the trouble, by referring to the following trouble shooting chart.

TWO-SPEED POWER TAKE-OFF TROUBLE SHOOTING CHART

TROUBLE	POSSIBLE CAUSE
1. Independent P.T.O. Clutch does not engage or disengage.	1. Low rear axle oil level. 2. I.P.T.O. pump or P.T.O. system relief valve faulty or valve stuck open. 3. Fracture of connecting tube. 4. Dual Power regulating valve jammed closed. 5. Leaking control valve spool. 6. Weak or broken P.T.O. clutch regulating valve spring or valve stuck open.
2. Independent P.T.O. Clutch does not engage or only partially engages. (Disengagement operative)	1. Control valve spool stuck. 2. Hydraulic oil leak between the valve housing and support. 3. Cracked, broken or worn sealing rings on clutch housing. 4. Damaged or leaking piston seals. 5. Broken or cracked piston. 6. Brake piston return spring weak or broken. 7. Brake piston stuck. 8. Brake band too tight.
3. Independent P.T.O. Clutch does not disengage or only partially disengages. (Engagement operative)	1. Control valve spool stuck. 2. Clutch piston return spring broken. 3. Clutch piston broken, jammed or scuffing. 4. Clutch plates distorted or seized. 5. Brake piston stuck. 6. Brake band linkage broken or out of adjustment. 7. Brake band lining worn.

©FORD MOTOR COMPANY LTD., 1973

2. SPECIFICATIONS

SPECIFICATIONS	FORD 5000	FORD 7000
Upper P.T.O. Shaft End Play	0,025 - 0,737 mm (0.001 - 0.029 in.)	0,025 - 0,737 mm (0.001 - 0.029 in.)
Free Play Shims Available	0,254 mm (0.010 in.)	0,254 mm (0.010 in.)
Oil Capacity		
Less Load Monitor Less Dual Power :		
Imperial Quarts	35.9	48.6
U.S. Quarts	43.6	59.0
Litres	41.2	55.8
Less Load Monitor With Dual Power:		
Imperial Quarts	51.0	51.0
U.S. Quarts	62.0	62.0
Litres	58.6	58.6
With Load Monitor Less Dual Power:		
Imperial Quarts	39.5	48.6
U.S. Quarts	48.0	59.0
Litres	45.4	55.8
With Load Monitor With Dual Power:		
Imperial Quarts	51.0	51.0
U.S. Quarts	52.0	62.0
Litres	58.6	58.6
Oil Grade: Ford Specification	ESN–M2C86–A	ESN–M2C86–A
TIGHTENING TORQUES – Nm (In. lbf. equivalents in parentheses)		
Brake Band Screw	1 - 1.2 (9 - 11)	1 - 1.2 (9 - 11)
P.T.O. Clutch Locating Pins	0.23 - 0.57 (2 - 5)	0.23 - 0.57 (2 - 5)
TIGHTENING TORQUES – Nm (Ft. lbf. equivalents in parentheses)		
P.T.O. Clutch Locating Pin Locknuts	20 - 27 (15 - 20)	20 - 27 (15 - 20)
P.T.O. Clutch Tube Connectors	11 - 14 (8 - 10)	11 - 14 (8 - 10)
Upper P.T.O. Shaft Rear Bearing Retainer Bolts	48 - 64 (35 - 47)	48 - 64 (35 - 47)
P.T.O. Output Shaft Rear Bearing Retainer Bolts	92 - 125 (68 - 92)	92 - 125 (68 - 92)
Valve Body to Support Retaining Screws	14 - 17 (10 - 23)	14 - 17 (10 - 23)
Base Plate to Centre Housing Retaining Bolts	27 - 35 (20 - 26)	27 - 35 (20 - 26)

3. SPECIAL TOOLS

Tool Number	Description
630–S3/8	Step Plate Adaptors
N–775	Clutch Spring Compressor
943	Internal/External Pulling Attachment
951	Pulling Attachment (Small)
1002	Puller-Reversible Arm (Medium)
1003	Puller-Single End Arm (Large)
***	Sleeves of Convenient Length (Listed Below):

1. 41,2mm (1.62in.) I.D. and 47,8mm (1.88in.) O.D.
2. 69,9mm (2.75in.) I.D. and 79,3mm (3.12in.) O.D.
3. 82,6mm (3.25in.) I.D. and 95,3mm (3.75in.) O.D.

© FORD MOTOR COMPANY LTD., 1973

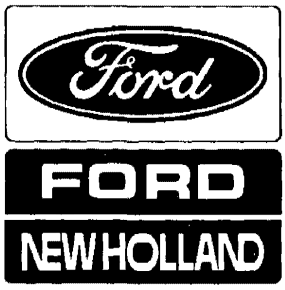
Ford
FORD
NEW HOLLAND