INTRODUCTION AND CUSTOMER INFORMATION

T148419B -UN-21NOV01

RUTHZIL TRATOR COMERCIAL DE PEÇAS LTDA 11 97083-6812 ROLANDO



RIGHT-HAND SIDE VIEW OF JOHN DEERE 200C LC EXCAVATOR
(MANUFACTURED 2002-)

TO THE CUSTOMER

THE PART NUMBERS IN THIS PARTS CATALOG WERE CORRECT AT THE TIME YOUR CATALOG WAS PUBLISHED. IT IS OUR POLICY TO CONSTANTLY IMPROVE OUR MACHINES AND, THEREFORE, PART NUMBERS MAY CHANGE. WHEN ORDERING PARTS, VERIFY PART NUMBERS THROUGH YOUR DEALER.

(SPECIFICATIONS AND DESIGN SUBJECT TO CHANGE WITHOUT NOTICE.)

COPYRIGHT © 2004 DEERE & COMPANY Moline, Illinois All rights reserved

SERIAL NUMBER LOCATIONS

EACH 200C LC EXCAVATOR HAS SEVEN SERIAL NUMBER PLATES:

A PRODUCT IDENTIFICATION NUMBER PLATE, AN ENGINE SERIAL NUMBER PLATE, A HYDRAULIC PUMP SERIAL NUMBER PLATE, A LEFT-HAND PROPEL MOTOR SERIAL NUMBER PLATE, A RIGHT-HAND PROPEL MOTOR SERIAL NUMBER PLATE, A SWING MOTOR SERIAL NUMBER PLATE AND A CONTROL VALVE SERIAL NUMBER PLATE.

THE PRODUCT IDENTIFICATION PLATE IS LOCATED ON THE RIGHT-HAND SIDE FRAME NEAR THE FRONT SUPPORT.

THE ENGINE SERIAL NUMBER PLATE IS LOCATED ON THE RIGHT SIDE OF THE CYLINDER BLOCK NEAR THE FUEL PUMP.

THE HYDRAULIC PUMP SERIAL NUMBER PLATE IS LOCATED NEAR THE FRONT OF THE HYDRAULIC PUMP.

THE SWING MOTOR SERIAL NUMBER PLATE IS LOCATED ON THE TOP OF THE SWING MOTOR.

THE PROPEL MOTOR SERIAL NUMBER PLATE IS LOCATED ON THE REAR OF THE PROPEL MOTOR.

THE CONTROL VALVE SERIAL NUMBER PLATE IS LOCATED ON THE UPPER LEFT-HAND SIDE OF THE CONTROL VALVE.

LEFT SIDE, RIGHT SIDE, FRONT AND REAR OF THE EXCAVATOR ARE VIEWED BY FACING IN THE DIRECTION OF THE EXCAVATOR FORWARD TRAVEL.

IF PRODUCT IDENTIFICATION NUMBERS OR SERIAL NUMBERS ARE REQUIRED FOR WARRANTY CLAIMS OR CORRESPONDENSE PERTAINING TO THIS PRODUCT. IT IS EXTREMELY IMPORTANT THAT ALL CHARACTERS BE FURNISHED. THIS POINT CANNOT BE OVEREMPHASIZED.

PRODUCT IDENTIFICATION NUMBER

T149014 -UN-07DEC01

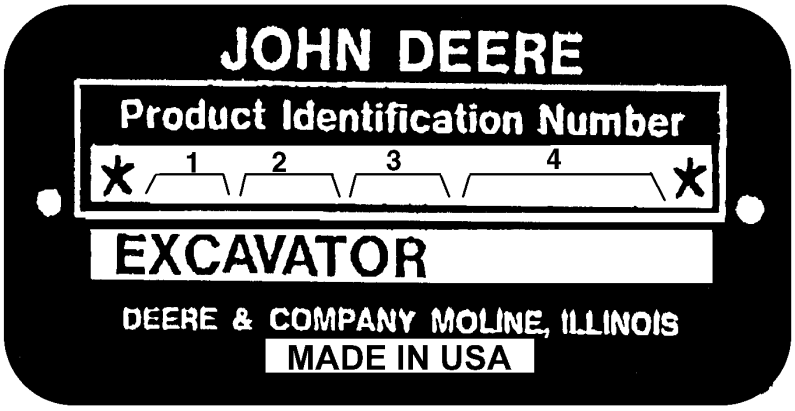

T149014

1. DESIGNATES EXCAVATOR MANUFACTURER	FF - JOHN DEERE-HITACHI
2. DESIGNATES EXCAVATOR MODEL	200C LC
3. DESIGNATES EXCAVATOR CONFIGURATION	
4. DESIGNATES EXCAVATOR SERIAL NUMBER	000000

ENGINE SERIAL NUMBER PLATE

T137422 -UN-16JAN01

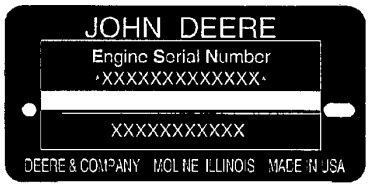

T137422

PE - TORREONE, MEXICO — ENGINE MANFACTURING LOCATION
6 — NUMBER OF CYLINDERS
068 (6.8 LITERS)
H - AIR-TO-AIR AFTERCOOLED — ASPIRATION TYPE
123456 — ENGINE SERIAL NUMBER
FACTORY USER
(ENGINE SERIAL NUMBER -254350)
6. DESIGNATES THE ENGINE APPLICATION AND FACTORY USER (BOSCH VP-44 FUEL INJECTION) (ENGINE SERIAL NUMBER 254351-) -PE6068HT053
6. DESIGNATES THE ENGINE APPLICATION AND FACTORY USER (STANADYNE DE-10) (INCLUDES ENGINES 243651-243660) -PE6068HT059

SERIAL NUMBER LISTING INFORMATION

SERIAL NUMBER INFORMATION IS LISTED TO SHOW ON WHICH MACHINES EACH PART CAN BE USED; FOR EXAMPLE:

-	THE PART CAN BE USED ON ALL MACHINES.
000000-	THE PART CAN BE USED ON ALL MACHINES BEGINNING WITH THE SERIAL NUMBER LISTED.
-000000	THE PART CAN BE USED ON ALL MACHINES UP TO AND INCLUDING THE SERIAL NUMBER LISTED.
000000-000000	THE PART CAN BE USED ON ALL MACHINES BETWEEN AND INCLUDING THE SERIAL NUMBERS LISTED.

WHEN XXXXXX'S ARE LISTED IN PLACE OF A SERIAL NUMBER, A SERIAL NUMBER CHANGE WAS MADE BUT THE EXACT SERIAL NUMBER WAS NOT AVAILABLE WHEN THE CATALOG WAS PRODUCED.

DIRECTION ARROW

ARROWS ARE USED WITH ILLUSTRATIONS TO INDICATE THE FRONT OF THE UNIT. "RIGHT-HAND" AND "LEFT-HAND" SIDES ARE DETERMINED BY FACING IN THE DIRECTION OF MACHINE FORWARD TRAVEL.

BOX-ENCLOSED ILLUSTRATIONS

A KEY NUMBER, SHOWN IN THE PARTS LIST, IS ASSIGNED TO A BOX ENCLOSING ALL PARTS SOLD AS A SERVICE ASSEMBLY.

COMPLETE GOODS LISTINGS

COMPLETE GOODS ARE LISTED IN BOLD FACE TYPE. ORDER SEPARATELY. DO NOT INCLUDE ON REPLACEMENT PARTS ORDER.

SI UNITS OF MEASURE

METRIC DIMENSIONS ARE GIVEN, WHERE APPLICABLE, THROUGHOUT THIS PARTS CATALOG.

CHANGE INDICATOR LINE

CHANGES AFFECTING THE ORDERING OF PARTS ARE IDENTIFIED BY VERTICAL LINES MARKED IN THE LEFT-HAND MARGIN OF REVISED PARTS LISTING IMAGES. A LINE IS ALSO AT THE LEFT-HAND EDGE OF THE SAME PART NUMBER IN THE NUMERICAL INDEX TO SHOW THE LOCATION OF REVISED INFORMATION.

ALPHABETICAL INDEX

GRID		PAGE
	A	
2D9	A/C CIRCULATION FAN	1830 - 6
2D21	A/C CIRCULATION FAN	1830 - 18
2D9	A/C FAN MOTOR	1830 - 6
2D21	A/C FAN MOTOR	1830 - 18
1C20	ACCESS COVER, INJECTION PUMP GEAR	0402 - 4
1E1	ADAPTER, ENGINE COOLANT	0419 - 2
2C17	ADJUSTER,SEAT	1821 - 2
1B5	ADJUSTER,TRACK	0130 - 8
1F18	AIR CLEANER	0520 - 2
1F18	AIR CLEANER FILTER ELEMENT	0520 - 2
1F20	AIR CLEANER HOSE	0520 - 4
1F20	AIR CLEANER PIPE	0520 - 4
1F18	AIR CLEANER RESTRICTION SENSOR	0520 - 2
1F22	AIR CLEANER SUPPORT	0520 - 6
2D1	AIR CONDITIONER	1830 - 2
2D3	AIR CONDITIONER AND HEATER BLOWER MOTOR	1830 - 3A
2D5	AIR CONDITIONER AND HEATER BLOWER MOTOR	1830 - 3C
2D3	AIR CONDITIONER AND HEATER COMPONENTS	1830 - 3A
2D5	AIR CONDITIONER AND HEATER COMPONENTS	1830 - 3C
2D3	AIR CONDITIONER AND HEATER ELECTRIC MOTOR	1830 - 3A
2D5	AIR CONDITIONER AND HEATER ELECTRIC MOTOR	1830 - 3C
2D3	AIR CONDITIONER AND HEATER RELAY	1830 - 3A
2D5	AIR CONDITIONER AND HEATER RELAY	1830 - 3C
2D3	AIR CONDITIONER AND HEATER SWITCH	1830 - 3A
2D5	AIR CONDITIONER AND HEATER SWITCH	1830 - 3C
2D3	AIR CONDITIONER AND HEATER TRANSISTOR	1830 - 3A
2D5	AIR CONDITIONER AND HEATER TRANSISTOR	1830 - 3C
2D3	AIR CONDITIONER CASE	1830 - 3A
2D5	AIR CONDITIONER CASE	1830 - 3C
2D11	AIR CONDITIONER COMPONENTS	1830 - 8
2D11	AIR CONDITIONER COMPRESSOR	1830 - 8
2D11	AIR CONDITIONER CONDENSER	1830 - 8
2D1	AIR CONDITIONER DUCT	1830 - 2
2D15	AIR CONDITIONER DUCT AND FILTER	1830 - 12
2D3	AIR CONDITIONER EVAPORATOR	1830 - 3A
2D5	AIR CONDITIONER EVAPORATOR	1830 - 3C
2D7	AIR CONDITIONER HOSES	1830 - 4
2D7	AIR CONDITIONER REFRIGERANT HOSES	1830 - 4
2D11	AIR CONDITIONER SENSOR	1830 - 8
2D7	AIR CONDITIONER SYSTEM (ENGINE)	1830 - 4
2D1	AIR DUCT, AIR CONDITIONER	1830 - 2
1D19	AIR INTAKE GASKET	0414 - 2
1D19	AIR INTAKE SYSTEM	0414 - 2
1D19	AIR INTAKE TEMPERATURE SENSOR	0414 - 2
2F10	ALARM, MOTION	2004 - 4
2F10	ALARM, MOTION, WIRE HARNESS	2004 - 4
1G22	ALTERNATOR	1672 - 2
1G22	ALTERNATOR FAN	1672 - 2
1E16	ALTERNATOR MOUNTING BRACKET	0423 - 2
1E16	ALTERNATOR MOUNTING STRAP	0423 - 2
1G22	ALTERNATOR PULLEY	1672 - 2
2B8	ANTENNA, RADIO	1810 - 6
2B8	ANTENNA,RADIO	1810 - 6
3F7	ANTI-DRIFT KIT, ARM	3360 - 24
3F9	ANTI-DRIFT KIT, BOOM	3360 - 26
3F7	ANTI-DRIFT VALVE	3360 - 24
3F9	ANTI-DRIFT VALVE	3360 - 26
3F7	ARM ANTI-DRIFT KIT	3360 - 24
3F5	ARM AUXILIARY HOSE (FACTORY INSTALLED)	3360 - 22
3F5	ARM AUXILIARY LINE (FACTORY INSTALLED)	3360 - 22
3F5	ARM AUXILIARY PLUMBING VALVE (FACTORY INSTALLED)	3360 - 22
3L5	ARM CYLINDER	3365 - 12
3J23	ARM CYLINDER COMPONENTS, SUPER LONG	3363 - 51C
3L5	ARM CYLINDER SEAL KIT	3365 - 12
3F11	ARM CYLINDER TO BOOM LINE HOSE	3360 - 50
3E3	ARM CYLINDER TO BOOM PIN, SUPER LONG FRONT	3344 - 3A
3L3	ARM CYLINDER WITH BUSHINGS	3365 - 10
3D22	ARM CYLINDER-TO-ARM PIN, LONG FRONT	3340 - 6
3L3	ARM CYLINDER, WITH BUSHINGS	3365 - 10
3K3	ARM PIPINGS - THIRD FUNCTION	3363 - 54
3D22	ARM PIVOT PIN BUSHING, LONG FRONT	3340 - 6
1C22	ARM, ROCKER	0402 - 6
3D20	ARM, SHORT, 2.22M	3340 - 4
3D18	ARM, STANDARD, 2.91M	3340 - 2
3D22	ARM, SUPER LONG FRONT	3340 - 6
2C17	ARMREST,SEAT	1821 - 2
3F5	AUXILIARY ARM PLUMBING (FACTORY INSTALLED)	3360 - 22
3F3	AUXILIARY BOOM PLUMBING (FACTORY INSTALLED)	3360 - 20
3E13	AUXILIARY ELECTRIC FOOT SWITCH	3360 - 8
3E17	AUXILIARY ELECTRIC HAND CONTROLLER	3360 - 12
3D14	AUXILIARY FOOT PEDAL CONTROL	3315 - 12
3E21	AUXILIARY HYDRAULIC PLUMBING (FIELD KIT)	3360 - 16
3F1	AUXILIARY MAIN HYDRAULIC PLUMBING (FACTORY INSTALLED)	3360 - 18
3F1	AUXILIARY RETURN HOSE (FACTORY INSTALLED)	3360 - 18
3K11	AUXILIARY SOLENOID AND FLOW CONTROL VALVE KIT (1-WAY)	3363 - 64
1C24	AUXILLARY DRIVE COVER (PE6068HT053 -248520)	0404 - 1
1C25	AUXILLARY DRIVE COVER (PE6068HT059 243651-)	0404 - 1A
	B	
2C23	BASE, SEAT	1821 - 8
1G20	BATTERY	1671 - 2
1G20	BATTERY RELAY	1671 - 2
1G20	BATTERY TERMINAL CLAMP	1671 - 2
1G20	BATTERY WIRE HARNESS	1671 - 2
1D1	BEARING CAP, MAIN	0404 - 2
1C17	BEARING, CRANKSHAFT THRUST	0401 - 1
1C23	BEARING, C0NNECTING ROD	0403 - 2
1C17	BEARING, MAIN	0401 - 1
1I8	BEARING,SWING	1740 - 8
1E20	BELT IDLER TENSIONER	0429 - 4
2D7	BELT, DRIVE COMPRESSOR	1830 - 4
2C21	BELT, SEAT	1821 - 6
2C19	BELT, SEAT (3.00 INCH)	1821 - 4
1E22	BELT,FAN DRIVE (PE6068HT053)	0429 - 6
1E24	BELT,FAN DRIVE (PE6068HT059) (MACHINE SSN 504001-)	0429 - 8
1F11	BLADE, FAN	0510 - 2
1D1	BLOCK, CYLINDER	0404 - 2
1D3	BLOCK, ENGINE SHORT	0404 - 4
1A23	BLOCK, TRACK CHAIN SLIDE	0130 - 2
2D3	BLOWER MOTOR, HEATER AND AIR CONDITIONER	1830 - 3A
2D5	BLOWER MOTOR, HEATER AND AIR CONDITIONER	1830 - 3C
3E1	BOOM	3344 - 2
3F9	BOOM ANTI-DRIFT KIT	3360 - 26
3K9	BOOM ANTI-DRIFT KIT	3363 - 62

ALPHABETICAL INDEX - CONTINUED

GRID		PAGE
3F3	BOOM AUXILIARY HOSE (FACTORY INSTALLED)	3360 - 20
3F3	BOOM AUXILIARY LINE (FACTORY INSTALLED)	3360 - 20
3I9	BOOM BOTTOM PIPINGS	3363 - 20
3I11	BOOM BOTTOM PIPINGS	3363 - 21A
3I1	BOOM BOTTOM PIPINGS TO BOOM CYLINDER	3363 - 12
3I1	BOOM CYLINDER PIPINGS TO BOOM BOTTOM PIPINGS	3363 - 12
3I1	BOOM CYLINDER PIPINGS TO CONTROL VALVE	3363 - 12
3E3	BOOM CYLINDER TO BOOM PIN, SUPER LONG FRONT	3344 - 3A
3E3	BOOM CYLINDER TO MAINFRAME PIN, SUPER LONG FRONT	3344 - 3A
3K23	BOOM CYLINDER, LEFT	3365 - 8
3L1	BOOM CYLINDER, LEFT (LONG BOOM)	3365 - 9A
3K21	BOOM CYLINDER, LEFT, WITH BUSHINGS	3365 - 6
3K17	BOOM CYLINDER, RIGHT	3365 - 4
3K19	BOOM CYLINDER, RIGHT (LONG BOOM)	3365 - 5A
3K15	BOOM CYLINDER, RIGHT, WITH BUSHINGS	3365 - 2
1I4	BOOM FOOT PIN	1740 - 4
1G23	BOOM LIGHT	1674 - 2
1H23	BOOM LIGHT WIRE HARNESS	1674 - 18
3F11	BOOM LINE (TO ARM AND BUCKET CYLINDER)	3360 - 50
3F11	BOOM LINE TO ARM CYLINDER HOSE	3360 - 50
3E1	BOOM PIN	3344 - 2
3K1	BOOM PIPINGS - THIRD FUNCTION	3363 - 52
3K9	BOOM REDUCED DRIFT KIT	3363 - 62
3E3	BOOM TO MAINFRAME PIN	3344 - 3A
3E3	BOOM, SUPER LONG FRONT	3344 - 3A
3D4	BOOT, CONTROL LEVER	3315 - 2
2E23	BOTTOM PROTECTION COVER	1910 - 22
2E21	BOX,TOOL	1910 - 20
1E16	BRACKET, ALTERNATOR MOUNTING	0423 - 2
2C7	BRACKET, CAB FLOOR	1810 - 28
1D10	BRACKET, ENGINE VENTILATOR HOSE	0408 - 1
1E20	BRACKET, FAN BELT TENSIONER	0429 - 4
1E3	BRACKET, FINAL FUEL FILTER	0420 - 2
1E5	BRACKET, FUEL FILTER (PE6068HT059)	0420 - 4
1H3	BRACKET, KEY SWITCH	1674 - 6
1F24	BRACKET, MUFFLER	0530 - 2
3D8	BRACKET, PILOT SYSTEM CONTROL LEVER	3315 - 6
2C23	BRACKET, SEAT BASE	1821 - 8
2C21	BRACKET, SEAT BELT	1821 - 6
1G1	BRACKET,ENGINE SUPPORT	0540 - 2
2B14	BRACKETS,CAB WINDSHIELD	1810 - 12
1C9	BRAKE VALVE	0267 - 2
1C5	BRAKE VALVE COMPONENTS	0262 - 2
1C5	BRAKE VALVE,PROPEL MOTOR	0262 - 2
3L9	BUCKET CYLINDER (SERIAL NUMBER -503594)	3365 - 16
3L11	BUCKET CYLINDER (SERIAL NUMBER 503595-)	3365 - 17A
3L9	BUCKET CYLINDER SEAL KIT (SERIAL NUMBER -503594)	3365 - 16
3L11	BUCKET CYLINDER SEAL KIT (SERIAL NUMBER 503595-)	3365 - 17A
3L7	BUCKET CYLINDER WITH BUSHINGS	3365 - 14
3D22	BUCKET CYLINDER-TO-ARM PIN, LONG FRONT	3340 - 6
3L7	BUCKET CYLINDER, WITH BUSHINGS	3365 - 14
3D3	BUCKET DATA SHEET	3302 - 42
3C1	BUCKET KIT, ROADBUILDER	3302 - 16
3C3	BUCKET KIT, ROADBUILDER	3302 - 18
3D24	BUCKET LINK	3340 - 8
3E5	BUCKET LINK	3344 - 4
3D22	BUCKET LINKAGE BUSHING, LONG FRONT	3340 - 6
3D22	BUCKET LINKAGE, LONG FRONT	3340 - 6
3C19	BUCKET TOOTH ASSEMBLY	3302 - 34
3D22	BUCKET-TO-ARM PIN, LONG FRONT	3340 - 6
3B21	BUCKET, DITCHING	3302 - 12
3B23	BUCKET, GENERAL PURPOSE	3302 - 14
3B11	BUCKET, GENERAL PURPOSE, HIGH CAPACITY	3302 - 2
3C21	BUCKET, SEVERE DUTY PLATE LIP TOOTH ASSEMBLY	3302 - 36
3C23	BUCKET, TOOTH ASSEMBLY	3302 - 38
3D1	BUCKET, TOOTH ASSEMBLY	3302 - 40
3C7	BUCKET, TOOTH ASSEMBLY, HIGH CAPACITY	3302 - 22
3C9	BUCKET, TOOTH ASSEMBLY, HIGH CAPACITY	3302 - 24
3C11	BUCKET, TOOTH ASSEMBLY, HIGH CAPACITY	3302 - 26
3C13	BUCKET, TOOTH ASSEMBLY, HIGH CAPACITY	3302 - 28
3C15	BUCKET, TOOTH ASSEMBLY, HIGH CAPACITY	3302 - 30
3C17	BUCKET, TOOTH ASSEMBLY, HIGH CAPACITY	3302 - 32
3B13	BUCKETS, HEAVY-DUTY	3302 - 4
3B15	BUCKETS, HEAVY-DUTY	3302 - 6
3B13	BUCKETS, HEAVY-DUTY HIGH CAPACITY	3302 - 4
3B15	BUCKETS, HEAVY-DUTY HIGH CAPACITY	3302 - 6
3B17	BUCKETS, SEVERE DUTY, CAST-LIP	3302 - 8
3B19	BUCKETS, SEVERE DUTY, PLATE LIP	3302 - 10
3D22	BUSHING, ARM PIVOT PINS, LONG FRONT	3340 - 6
3D22	BUSHING, BUCKET LINKAGE, LONG FRONT	3340 - 6
1D1	BUSHING, CAMSHAFT	0404 - 2
1D1	BUSHING, OIL PRESSURE REGULATING	0404 - 2

C

2B18	CAB COMPONENTS (TOP HATCH)	1810 - 16
2C11	CAB CONSOLE	1810 - 32
2C13	CAB CONSOLE COVER	1810 - 34
2B8	CAB DOME LIGHT	1810 - 6
2B12	CAB DOOR	1810 - 10
2B20	CAB DOOR HANDLE	1810 - 18
2B20	CAB DOOR HANDLE CATCH	1810 - 18
2B12	CAB DOOR LOCK	1810 - 10
2B12	CAB DOOR WEATHERSTRIP	1810 - 10
2B12	CAB DOOR WINDOW GLASS	1810 - 10
1H3	CAB ELECTRICAL COMPONENTS	1674 - 6
2C7	CAB FLOOR BRACKET	1810 - 28
2C7	CAB FLOOR COMPONENTS	1810 - 28
2C7	CAB FLOOR MAT	1810 - 28
2C9	CAB FLOOR PAN	1810 - 30
2C7	CAB FLOOR SUPPORT	1810 - 28
2B10	CAB HEADLINER	1810 - 8
2B24	CAB INSIDE LEFT COVER WITHOUT RADIO	1810 - 22
2C3	CAB INSIDE LEFT COVER WITHOUT RADIO	1810 - 25A
2C1	CAB INSIDE R.H. SIDE COVER	1810 - 24
2B4	CAB MOUNT	1810 - 2
2B4	CAB MOUNT ISOLATOR	1810 - 2
2B16	CAB RIGHT WINDOW	1810 - 14
2B16	CAB RIGHT WINDOW GLASS	1810 - 14
2B16	CAB RIGHT WINDOW GLASS GUARD	1810 - 14
2B22	CAB SECONDARY EXIT KIT	1810 - 20
2B10	CAB WINDOW GLASS	1810 - 8
2B10	CAB WINDOW SEALS	1810 - 8
2B14	CAB WINDSHIELD	1810 - 12
2B14	CAB WINDSHIELD BRACKETS	1810 - 12
2B14	CAB WINDSHIELD WEATHER STRIP	1810 - 12
2B8	CAB WIPER ARMS	1810 - 6
2B8	CAB WIPER BLADES	1810 - 6
2B8	CAB WIPER MOTORS	1810 - 6
1H3	CAB WIRING HARNESS	1674 - 6
2B6	CAB,COMPLETE	1810 - 4
1H7	CABLE, MIC (WITH MIC CONTROLLER)	1674 - 7C

ALPHABETICAL INDEX - CONTINUED

GRID		PAGE
1C18	CAMSHAFT	0402 - 2
1C18	CAMSHAFT GEAR	0402 - 2
1C19	CAP, ENGINE OIL FILL	0402 - 3
1G3	CAP, FUEL TANK	0560 - 2
1F12	CAP,ENGINE COOLANT RECOVERY TANK	0510 - 4
1D1	CAP,MAIN BEARING	0404 - 2
2D3	CASE, AIR CONDITIONER	1830 - 3A
2D5	CASE, AIR CONDITIONER	1830 - 3C
3B17	CAST-LIP SEVERE DUTY BUCKETS	3302 - 8
2B20	CATCH,CAB DOOR HANDLE	1810 - 18
2E19	CATCH,ENGINE COMPARTMENT COVER	1910 - 18
1B23	CENTER JOINT	0260 - 6
1B17	CENTER JOINT COVER	0260 - 2
3I7	CENTER JOINT PIPINGS TO CONTROL VALVE	3363 - 18
3H23	CENTER JOINT PIPINGS TO RETURN PIPINGS	3363 - 10
1C1	CENTER JOINT PIPINGS TO TRAVEL DEVICE	0260 - 8
1C7	CENTER JOINT PIPINGS TO TRAVEL DEVICE	0263 - 2
1G16	CENTRAL LUBRICATION TUBES, SUPER LONG FRONT BOOM	1370 - 4
1A23	CHAIN SLIDE BLOCK	0130 - 2
1F18	CLEANER, AIR	0520 - 2
1F22	CLEANER, AIR, SUPPORT	0520 - 6
1F8	COLD WEATHER STARTING AID	0505 - 2
1F8	COLD WEATHER STARTING AID SWITCH	0505 - 2
2E15	COMPARTMENT COVER DOORS	1910 - 14
2E15	COMPARTMENT DOOR LOCK	1910 - 14
2E9	COMPARTMENT INTERIOR PANEL	1910 - 8
2E11	COMPARTMENT INTERIOR PANEL SUPPORT	1910 - 10
2E17	COMPARTMENT TOP COVER WEATHER STRIP	1910 - 16
2E11	COMPARTMENT TOP GRILLE	1910 - 10
2E7	COMPATMENT TOP COVER	1910 - 6
2B6	COMPLETE CAB	1810 - 4
3D6	COMPONENTS, DIG AND SWING PILOT CONTROLLER	3315 - 4
3D12	COMPONENTS,HYD/PILOT CONTROL VALVE	3315 - 10
2D7	COMPRESSOR DRIVE BELT	1830 - 4
2D11	COMPRESSOR, AIR CONDITIONER	1830 - 8
2D11	CONDENSER, AIR CONDTIONER	1830 - 8
1C23	CONNECTING ROD	0403 - 2
1C23	CONNECTING ROD BEARING	0403 - 2
2C13	CONSOLE COVER,CAB	1810 - 34
2C11	CONSOLE,CAB	1810 - 32
3D4	CONTROL LEVER	3315 - 2
3D4	CONTROL LEVER BOOT	3315 - 2
3D4	CONTROL LEVER GRIP	3315 - 2
3E19	CONTROL PATTERN SELECTOR KIT	3360 - 14
1H13	CONTROL UNIT,ENGINE (VEHICLE S.N. -504000)	1674 - 12
3E7	CONTROL VALVE	3360 - 2
3G5	CONTROL VALVE (COMPONENTS)	3362 - 6
3G7	CONTROL VALVE (COMPONENTS)	3362 - 8
3G9	CONTROL VALVE (COMPONENTS)	3362 - 10
3G11	CONTROL VALVE (COMPONENTS)	3362 - 12
3G13	CONTROL VALVE (COMPONENTS)	3362 - 14
3G15	CONTROL VALVE (COMPONENTS)	3362 - 16
3D14	CONTROL VALVE FITTINGS TO PILOT SIGNAL MANIFOLD (FOOT CONTROL, PILOT SYSTEM)	3315 - 12
3D14	CONTROL VALVE HOSE TO PILOT SIGNAL MANIFOLD (FOOT CONTROL,PILOT SYSTEM)	3315 - 12
3E15	CONTROL VALVE HOSE TO PILOT SIGNAL MANIFOLD (PILOT SYSTEM)	3360 - 10
3H17	CONTROL VALVE HYD.HOSES	3363 - 4
3J13	CONTROL VALVE LINES TO OIL TANK	3363 - 44
3J19	CONTROL VALVE LINES TO OIL TANK	3363 - 48
3J15	CONTROL VALVE LINES TO OIL TANK (SERIAL NUMBER 503486-)	3363 - 45A
3J19	CONTROL VALVE LINES TO PILOT SHUTOFF VALVE	3363 - 48
3J13	CONTROL VALVE LINES TO SOLENOID VALVE (SERIAL NUMBER -503485)	3363 - 44
3J15	CONTROL VALVE LINES TO SOLENOID VALVE (SERIAL NUMBER 503486-)	3363 - 45A
3J17	CONTROL VALVE PIPING TO OIL FILTER	3363 - 46
3I7	CONTROL VALVE PIPINGS TO CENTER JOINT	3363 - 18
3I3	CONTROL VALVE PIPINGS TO FRONT PIPINGS	3363 - 14
3I9	CONTROL VALVE PIPINGS TO MAIN PIPINGS	3363 - 20
3I11	CONTROL VALVE PIPINGS TO MAIN PIPINGS	3363 - 21A
3H19	CONTROL VALVE PIPINGS TO OIL TANK	3363 - 6
3J17	CONTROL VALVE PIPINGS TO OIL TANK	3363 - 46
3H21	CONTROL VALVE PIPINGS TO RADIATOR	3363 - 8
3J1	CONTROL VALVE PIPINGS TO SHUTTLE VALVE	3363 - 32
3J3	CONTROL VALVE PIPINGS TO SHUTTLE VALVE	3363 - 34
3H23	CONTROL VALVE PIPINGS TO SWING DEVICE	3363 - 10
3I5	CONTROL VALVE PIPINGS TO SWING DEVICE	3363 - 16
3J1	CONTROL VALVE PRESSURE SENSOR	3363 - 32
3J3	CONTROL VALVE PRESSURE SENSOR	3363 - 34
3H9	CONTROL VALVE SIDE, PILOT SIGNAL MANIFOLD (SERIAL NUMBER -503485)	3362 - 32
3H11	CONTROL VALVE SIDE, PILOT SIGNAL MANIFOLD (SERIAL NUMBER 503486-)	3362 - 33A
3E9	CONTROL VALVE SUPPORT	3360 - 4
3I1	CONTROL VALVE TO BOOM CYLINDER PIPINGS	3363 - 12
3K11	CONTROL VALVE TO HYDRAULIC RESERVOIR HOSE (AUXILIARY SOLENOID/FLOW CONTROL)	3363 - 64
3K11	CONTROL VALVE TO SIGNAL MANIFOLD HOSE (AUXILIARY SOLENOID/FLOW CONTROL)	3363 - 64
2D1	CONTROLLER, AIR CONDITIONER	1830 - 2
2D1	CONTROLLER, HEATER	1830 - 2
1H5	CONTROLLER, MIC	1674 - 7A
3D6	CONTROLLER, PILOT (COMPONENTS) (DIG AND SWING)	3315 - 4
1H3	CONTROLLER, VEHICLE	1674 - 6
1H11	CONVERTER (24-VOLT TO 12-VOLT)	1674 - 10
1G1	COOLANT TEMPERATURE SWITCH, ENGINE	0540 - 2
1F16	COOLER, FUEL	0510 - 8
1F16	COOLER, OIL	0510 - 8
2F1	COOLING PACKAGE AND HYDRAULIC PUMP COMPARTMENT DOORS (VENTED)	1910 - 24
2F1	COOLING PACKAGE COMPARTMENT DOOR (VENTED)	1910 - 24
2F1	COOLING PACKAGE COMPARTMENT DOOR LATCH (VENTED)	1910 - 24
1I6	COUNTERWEIGHT	1740 - 6
2E5	COVER (CAB TOP FRONT LEFT SIDE)	1910 - 4
1C20	COVER, ACCESS, INJECTION PUMP GEAR	0402 - 4
1C24	COVER, AUXILLARY DRIVE (PE6068HT053 -248520)	0404 - 1
1C25	COVER, AUXILLARY DRIVE (PE6068HT059 243651-)	0404 - 1A
1G20	COVER, BATTERY	1671 - 2
2B24	COVER, CAB INSIDE LEFT WITHOUT RADIO	1810 - 22
2C3	COVER, CAB INSIDE LEFT WITHOUT RADIO	1810 - 25A
2D17	COVER, CAB INTERIOR REAR	1830 - 14
2C1	COVER, CAB R.H. INSIDE	1810 - 24
1H15	COVER, ENGINE CONTROL UNIT (VEHICLE S.N. 504001-)	1674 - 13A
1D23	COVER, ENGINE THERMOSTAT HOUSING	0418 - 2
1E11	COVER, FUEL TRANSFER PUMP	0421 - 2
1D5	COVER, OIL FILLER OPENING	0407 - 1
2E11	COVER, REAR LEFT SIDE	1910 - 10
1C19	COVER, ROCKER ARM	0402 - 3

ALPHABETICAL INDEX - CONTINUED

GRID		PAGE
1C20	COVER, TIMING GEAR	0402 - 4
2E21	COVER, TOOL BOX	1910 - 20
2F1	COVER, TROPICAL	1910 - 24
2C15	COVER, WINDOW	1810 - 36
2E23	COVER,BOTTOM PROTECTION	1910 - 22
1B17	COVER,CENTER JOINT	0260 - 2
2E13	COVER,R.H COMPARTMENT	1910 - 12
1C3	COVER,TRAVEL PROPEL MOTOR	0260 - 10
1C17	CRANKSHAFT	0401 - 1
1E18	CRANKSHAFT DAMPER	0429 - 2
1E19	CRANKSHAFT DAMPER PULLEY (WITH AIR CONDITIONING)	0429 - 3
1C17	CRANKSHAFT GEAR	0401 - 1
1E18	CRANKSHAFT PULLEY	0429 - 2
1C17	CRANKSHAFT SPEED SENSOR	0401 - 1
1C20	CRANKSHAFT SPEED SENSOR	0402 - 4
1C17	CRANKSHAFT THRUST BEARING	0401 - 1
2C17	CUSHION,SEAT	1821 - 2
3C5	CUTTING EDGE,ESCO BUCKET	3302 - 20
1D1	CYLINDER BLOCK	0404 - 2
1D11	CYLINDER HEAD	0409 - 2
1D11	CYLINDER HEAD GASKET	0409 - 2
1F3	CYLINDER HEAD REMOVAL GASKET SET	0452 - 1
1C23	CYLINDER LINER	0403 - 2
1C23	CYLINDER LINER O-RING KIT	0403 - 2
3L5	CYLINDER, ARM	3365 - 12
3L3	CYLINDER, ARM, WITH BUSHINGS	3365 - 10
3L1	CYLINDER, BOOM, LEFT (LONG BOOM)	3365 - 9A
3L9	CYLINDER, BUCKET (SERIAL NUMBER -503594)	3365 - 16
3L11	CYLINDER, BUCKET (SERIAL NUMBER 503595-)	3365 - 17A
3L7	CYLINDER, BUCKET, WITH BUSHINGS	3365 - 14
3K23	CYLINDER, LEFT BOOM	3365 - 8
3K21	CYLINDER, LEFT BOOM, WITH BUSHINGS	3365 - 6
3K17	CYLINDER, RIGHT BOOM	3365 - 4
3K19	CYLINDER, RIGHT BOOM (LONG BOOM)	3365 - 5A
3K15	CYLINDER, RIGHT BOOM, WITH BUSHINGS	3365 - 2
3J23	CYLINDER, SUPER LONG ARM COMPONENTS	3363 - 51C
2E21	CYLINDER,TOOL BOX COVER	1910 - 20

D

1E18	DAMPER, CRANKSHAFT	0429 - 2
1H13	DDU (DIAGNOSTIC DISPLAY UNIT) (VEHICLE S.N. -504000)	1674 - 12
3E13	DECAL, AUXILIARY CONTROL	3360 - 8
2C13	DECAL, HYDRAULIC LOCKOUT	1810 - 34
2F10	DECAL, MOTION ALARM	2004 - 4
1G12	DECAL, PATTERN CHANGER	1322 - 2
2C13	DECAL,IGNITION SWITCH	1810 - 34
1G12	DECALS	1322 - 2
2D9	DEFROST FAN	1830 - 6
2D21	DEFROST FAN	1830 - 18
1H13	DIAGNOSTIC DISPLAY UNIT (VEHICLE S.N. -504000)	1674 - 12
1H15	DIAGNOSTIC DISPLAY UNIT (VEHICLE S.N. 504001-)	1674 - 13A
3D6	DIG AND SWING PILOT CONTROLLER COMPONENTS	3315 - 4
1H9	DIODES	1674 - 8
1D6	DIPSTICK, ENGINE OIL	0407 - 2
3F15	DIPSTICK,HYD.PUMP	3361 - 4
3B21	DITCHING BUCKET	3302 - 12
2B8	DOME LIGHT WIRE HARNESS	1810 - 6
2B8	DOME LIGHT,CAB	1810 - 6
2F1	DOOR LATCH, COOLING PACKAGE AND HYDRAULIC PUMP COMPARTMENT (VENTED)	1910 - 24
2F1	DOOR LATCH, RADIATOR COMPARTMENT (VENTED)	1910 - 24
2F1	DOOR, COOLING PACKAGE COMPARTMENT (VENTED)	1910 - 24
2F1	DOOR, HYDRAULIC PUMP COMPARTMENT (VENTED)	1910 - 24
2F1	DOOR, RADIATOR COMPARTMENT (VENTED)	1910 - 24
2B12	DOOR,CAB	1810 - 10
2E3	DOOR,L.H.COMPARTMENT	1910 - 2
2E15	DOORS,COMPARTMENT COVER	1910 - 14
3H23	DRAIN PIPINGS (CENTER JOINT, SWING DEVICE, CONTROL VALVE)	3363 - 10
1F16	DRAIN PLUG, RADIATOR	0510 - 8
1D1	DRAIN VALVE, BLOCK	0404 - 2
1B15	DRIVE SPROCKET,TRAVEL PROPEL MOTOR	0250 - 2
1E20	DRIVE, FAN	0429 - 4
1E14	DRIVE, STARTER MOTOR CLUTCH(24V)(DENS0)	0422 - 2
3E17	DUAL CONTROL HANDLE WITH WIRING	3360 - 12
2D1	DUCT, AIR CONDITIONER	1830 - 2
2D15	DUCT, AIR CONDITIONER	1830 - 12
2D1	DUCT, HEATER	1830 - 2
2D17	DUCT, REAR TRAY	1830 - 14

E

1D10	ELBOW,ENGINE VENTILATOR HOSE	0408 - 1
1G20	ELECTRIC PARTS (BATTERY)	1671 - 2
1H3	ELECTRICAL COMPONENTS (CAB)	1674 - 6
1E7	ELEMENT,FINAL FUEL FILTER(BOSCH VP-44) (PE6068HT053 -254350)(S.N.-500400)	0420 - 6
1E9	ELEMENT,FINAL FUEL FILTER(S.N.504001-) (PE6068HT059 243651-)(STANADYNE DE10)	0420 - 8
2E19	ENGINE COMPARTMENT COVER CATCH	1910 - 18
2E19	ENGINE COMPARTMENT COVER HOOD	1910 - 18
1H13	ENGINE CONTROL UNIT (VEHICLE S.N. -504000)	1674 - 12
1H15	ENGINE CONTROL UNIT (VEHICLE S.N. 504001-)	1674 - 13A
1H15	ENGINE CONTROL UNIT COVER (VEHICLE S.N. 504001-)	1674 - 13A
1H13	ENGINE CONTROL UNIT GAUGE (VEHICLE S.N. -504000)	1674 - 12
1H15	ENGINE CONTROL UNIT GAUGE (VEHICLE S.N. 504001-)	1674 - 13A
1H15	ENGINE CONTROL UNIT MOUNTING (VEHICLE S.N. 504001-)	1674 - 13A
1H13	ENGINE CONTROL UNIT RELAY (VEHICLE S.N. -504000)	1674 - 12
1H17	ENGINE CONTROL UNIT WIRING HARNESS (VEHICLE S.N. -504000)	1674 - 14
1H15	ENGINE CONTROL UNIT WIRING HARNESS (VEHICLE S.N. 504001-)	1674 - 13A
1H21	ENGINE CONTROL, SWITCH BOX	1674 - 17A
1E1	ENGINE COOLANT ADAPTER	0419 - 2
1F12	ENGINE COOLANT RECOVERY TANK	0510 - 4
1F12	ENGINE COOLANT RECOVERY TANK CAP	0510 - 4
1F12	ENGINE COOLANT RECOVERY TANK SENSOR	0510 - 4
1D23	ENGINE COOLANT TEMPERATURE SENSOR	0418 - 2
1F10	ENGINE COOLANT, HEATER	0505 - 4
1F1	ENGINE FLYWHEEL	0433 - 2
1F2	ENGINE FLYWHEEL HOUSING	0433 - 3
1C24	ENGINE FRONT PLATE (PE6068HT053 -248520)	0404 - 1

ALPHABETICAL INDEX - CONTINUED

GRID		PAGE
1C25	ENGINE FRONT PLATE (PE6068HT059 243651-)	0404 - 1A
1F4	ENGINE MAJOR OVERHAUL GASKET SET	0452 - 2
1G1	ENGINE MOUNTING BRACKET	0540 - 2
1E1	ENGINE OIL COOLER	0419 - 2
1D6	ENGINE OIL DIPSTICK	0407 - 2
1D6	ENGINE OIL DIPSTICK TUBE	0407 - 2
1D9	ENGINE OIL DRAIN VALVE	0407 - 5
1C19	ENGINE OIL FILL CAP	0402 - 3
1D8	ENGINE OIL FILTER ELEMENT	0407 - 4
1D8	ENGINE OIL FILTER HEADER	0407 - 4
1D9	ENGINE OIL PAN	0407 - 5
1D9	ENGINE OIL PAN GASKET	0407 - 5
1D1	ENGINE OIL PRESSURE SWITCH	0404 - 2
1D7	ENGINE OIL PUMP	0407 - 3
1D7	ENGINE OIL PUMP GEAR	0407 - 3
1D7	ENGINE OIL PUMP HOUSING	0407 - 3
1D7	ENGINE OIL PUMP INTAKE	0407 - 3
1F4	ENGINE OVERHAUL KIT	0452 - 2
1D11	ENGINE OVERHEAT SWITCH	0409 - 2
1C23	ENGINE PISTON	0403 - 2
1D3	ENGINE SHORT BLOCK	0404 - 4
3F15	ENGINE SPEED SENSOR,HYD.PUMP	3361 - 4
1D23	ENGINE THERMOSTAT	0418 - 2
1D23	ENGINE THERMOSTAT HOUSING	0418 - 2
1D23	ENGINE THERMOSTAT HOUSING COVER	0418 - 2
1D10	ENGINE VENTILATOR HOSE	0408 - 1
1D10	ENGINE VENTILATOR HOSE BRACKET	0408 - 1
1H19	ENGINE WIRING HARNESS	1674 - 16
3C5	ESCO BUCKET CUTTING EDGE	3302 - 20
3C5	ESCO BUCKET TEETH	3302 - 20
1F8	ETHER START AID KIT	0505 - 2
1F8	ETHER START FLUID CYLINDER	0505 - 2
2D3	EVAPORATOR, AIR CONDITIONER	1830 - 3A
2D5	EVAPORATOR, AIR CONDITIONER	1830 - 3C
1D13	EXHAUST MANIFOLD	0410 - 2
1D13	EXHAUST MANIFOLD GASKET	0410 - 2
1F24	EXHAUST PIPE	0530 - 2
1D11	EXHAUST VALVE	0409 - 2

F

1E22	FAN BELT IDLER PULLEY (PE6068HT053)	0429 - 6
1E24	FAN BELT IDLER PULLEY (PE6068HT059) (MACHINE SSN 504001-)	0429 - 8
1F11	FAN BLADE	0510 - 2
1F11	FAN BLADE SPACER	0510 - 2
1E20	FAN DRIVE	0429 - 4
1E22	FAN DRIVE BELT (PE6068HT053)	0429 - 6
1E24	FAN DRIVE BELT (PE6068HT059 (MACHINE SSN 504001-)	0429 - 8
1E20	FAN DRIVE HOUSING	0429 - 4
1E20	FAN DRIVE HUB	0429 - 4
1E20	FAN DRIVE PULLEY	0429 - 4
1G22	FAN, ALTERNATOR	1672 - 2
2D9	FAN, DEFROST	1830 - 6
2D21	FAN, DEFROST	1830 - 18
2D9	FAN,A/C CIRCULATION	1830 - 6
2D21	FAN,A/C CIRCULATION	1830 - 18
2D9	FAN,HEATER	1830 - 6
2D21	FAN,HEATER	1830 - 18
3K13	FILTER ELEMENT, HYDRAULIC RESERVOIR	3364 - 2
1E7	FILTER ELEMENT, PRIMARY FUEL(BOSCH VP-44 (PE6068HT053 -254350)(S.N.-500400)	0420 - 6
1F18	FILTER ELEMENT,AIR CLEANER	0520 - 2
1E9	FILTER ELEMENT,PRIMARY FUEL(S.N.504001-) (PE6068HT059 243651-)(STANADYNE DE10)	0420 - 8
2D15	FILTER, AIR CONDITIONER	1830 - 12
3I15	FILTER, PILOT	3363 - 24
3J7	FILTER, PILOT SHUTOFF VALVE TO PROPEL PILOT CONTROLLER VALVE	3363 - 38
3J7	FILTER, PROPEL PILOT CONTROLLER VALVE TO PILOT SHUTOFF VALVE	3363 - 38
1G3	FILTER,FUEL TANK	0560 - 2
1E5	FINAL FUEL FILTER (PE6068HT059)	0420 - 4
1E3	FINAL FUEL FILTER BRACKET	0420 - 2
1E7	FINAL FUEL FILTER ELEMENT(BOSCH VP-44) (PE6068HT053 -254350)(S.N.-500400)	0420 - 6
1E9	FINAL FUEL FILTER ELEMENT(S.N.504001-) (PE6068HT059 243651-)(STANADYNE DE10)	0420 - 8
1E3	FINAL FUEL FILTER FUEL LINES	0420 - 2
1E3	FINAL FUEL FILTER HEADER	0420 - 2
3J9	FITTINGS FROM LEFT PILOT CONTROLLER TO SHUTOFF VALVE (PILOT SYSTEM)	3363 - 40
3E19	FITTINGS, CONTROL PATTERN SELECTOR KIT	3360 - 14
3D14	FITTINGS, FROM CONTROL VALVE TO PILOT SIGNAL MANIFOLD (FOOT CONTROL, PILOT)	3315 - 12
3D14	FITTINGS, FROM FOOT PEDAL CONTROL TO PILOT SHUTOFF VALVE (PILOT SYSTEM)	3315 - 12
3D14	FITTINGS, FROM FOOT PEDAL CONTROL TO PILOT SIGNAL MANIFOLD (PILOT SYSTEM)	3315 - 12
3J9	FITTINGS, FROM LEFT PILOT CONTROLLER TO PILOT SIGNAL MANIFOLD (PILOT SYSTEM)	3363 - 40
3D14	FITTINGS, FROM PILOT SHUTOFF VALVE TO FOOT PEDAL CONTROL (PILOT SYSTEM)	3315 - 12
3D14	FITTINGS, FROM PILOT SIGNAL MANIFOLD TO CONTROL VALVE (FOOT CONTROL,PILOT SYS)	3315 - 12
3D14	FITTINGS, FROM PILOT SIGNAL MANIFOLD TO FOOT PEDAL CONTROL (PILOT SYSTEM)	3315 - 12
3J9	FITTINGS, FROM PILOT SIGNAL MANIFOLD TO LEFT PILOT CONTROLLER (PILOT SYSTEM)	3363 - 40
3J11	FITTINGS, FROM PILOT SIGNAL MANIFOLD TO RIGHT PILOT CONTROLLER (PILOT SYSTEM)	3363 - 42
3J11	FITTINGS, FROM RIGHT PILOT CONTROLLER TO PILOT SIGNAL MANIFOLD (PILOT SYSTEM)	3363 - 42
3J11	FITTINGS, FROM RIGHT PILOT CONTROLLER TO SHUTOFF VALVE (PILOT SYSTEM)	3363 - 42
3J9	FITTINGS, FROM SHUTOFF VALVE TO LEFT PILOT CONTROLLER (PILOT SYSTEM)	3363 - 40
3J11	FITTINGS, FROM SHUTOFF VALVE TO RIGHT PILOT CONTROLLER (PILOT SYSTEM)	3363 - 42
1E12	FITTINGS, FUEL TRANSFER PUMP	0421 - 4
3F15	FLEX COUPLING,HYD.PUMP	3361 - 4
1G3	FLOAT, FUEL TANK	0560 - 2
2C7	FLOOR MAT	1810 - 28
2C9	FLOOR PLATE,CAB	1810 - 30
3K11	FLOW REGULATOR TO SIGNAL MANIFOLD HOSE (AUXILIARY SOLENOID/FLOW CONTROL)	3363 - 64
1F2	FLYWHEEL HOUSING, ENGINE	0433 - 3
1F1	FLYWHEEL RING GEAR	0433 - 2
1F1	FLYWHEEL, ENGINE	0433 - 2
3D14	FOOT PEDAL CONTROL, HYDRAULIC (2-WAY) (AUXILIARY)	3315 - 12
3D10	FOOT PEDALS,PROPEL PILOT CONTROLLER	3315 - 8
3E13	FOOT SWITCH, AUXILIARY ELECTRIC	3360 - 8
1I2	FRAME, MAIN	1740 - 2
1I4	FRAME, MAIN, BOOM FOOT PIN	1740 - 4
1A23	FRAME, TRACK	0130 - 2
1B3	FRONT IDLER	0130 - 6
1B3	FRONT IDLER SHAFT	0130 - 6
2F1	FRONT PANEL, COOLING PACKAGE COMPARTMENT (VENTED)	1910 - 24

ALPHABETICAL INDEX - CONTINUED

GRID		PAGE
2F1	FRONT PANEL, HYDRAULIC PUMP COMPARTMENT (VENTED)	1910 - 24
3I3	FRONT PIPINGS TO CONTROL VALVE	3363 - 14
3J21	FRONT PIPINGS, SUPER LONG BOOM	3363 - 51A
1C24	FRONT PLATE, ENGINE (PE6068HT053 -248520)	0404 - 1
1C25	FRONT PLATE, ENGINE (PE6068HT059 243651-)	0404 - 1A
1F16	FUEL COOLER	0510 - 8
1E5	FUEL FILTER BRACKET (PE6068HT059)	0420 - 4
1E7	FUEL FILTER SERVICE KIT(BOSCH VP-44) (PE6068HT053 -254350)(S.N.-500400)	0420 - 6
1E9	FUEL FILTER SERVICE KIT(S.N.504001-) (PE6068HT059 243651-)(STANADYNE DE10)	0420 - 8
1E3	FUEL FILTER, FINAL	0420 - 2
1E5	FUEL FILTER, FINAL (PE6068HT059)	0420 - 4
1G7	FUEL HOSE (SERIAL NUMBER -504000)	0560 - 6
1G9	FUEL HOSE (SERIAL NUMBER 504001-)	0560 - 7A
1D15	FUEL INJECTION LINE (PE6068HT053 -254350) (BOSCH VP44)	0413 - 2
1D17	FUEL INJECTION LINE (PE6068HT059 254351-)(STANADYNE DE-10)	0413 - 4
1D14	FUEL INJECTION NOZZLE	0413 - 1
1D15	FUEL INJECTION PUMP (PE6068HT053 -254350) (BOSCH VP44)	0413 - 2
1D17	FUEL INJECTION PUMP (PE6068HT059 254351-)(STANADYNE DE-10)	0413 - 4
1D15	FUEL INJECTION PUMP SPEED SENSOR (PE6068HT053 -254350) (BOSCH VP44)	0413 - 2
1D15	FUEL INJECTION SYSTEM (PE6068HT053 -254350) (BOSCH VP44)	0413 - 2
1D17	FUEL INJECTION SYSTEM (PE6068HT059 254351-)(STANADYNE DE-10)	0413 - 4
1E6	FUEL LINES LOW PRESSURE (PE6068053)	0420 - 5
1E3	FUEL LINES,FINAL FUEL FILTER	0420 - 2
1G7	FUEL SYSTEM HOSES (SERIAL NUMBER -504000)	0560 - 6
1G9	FUEL SYSTEM HOSES (SERIAL NUMBER 504001-)	0560 - 7A
1G3	FUEL TANK	0560 - 2
1G3	FUEL TANK CAP	0560 - 2
1G3	FUEL TANK FILTER	0560 - 2
1G3	FUEL TANK FUEL CAP KEY	0560 - 2
1G3	FUEL TANK FUEL LEVEL FLOAT	0560 - 2
1G5	FUEL TANK MOUNT HARDWARE	0560 - 4
1E12	FUEL TRANSFER PUMP	0421 - 4
1E11	FUEL TRANSFER PUMP COVER	0421 - 2
1E12	FUEL TRANSFER PUMP FITTINGS	0421 - 4
1E12	FUEL TRANSFER PUMP WIRING HARNESS	0421 - 4
1H3	FUSE	1674 - 6

G

1F3	GASKET SET, CYLINDER HEAD REMOVAL	0452 - 1
1F4	GASKET SET, ENGINE MAJOR OVERHAUL	0452 - 2
1F3	GASKET SET, IN CHASSIS OVERHAUL	0452 - 1
1D19	GASKET, AIR INTAKE	0414 - 2
1D11	GASKET, CYLINDER HEAD	0409 - 2
1D9	GASKET, ENGINE OIL PAN	0407 - 5
1D13	GASKET, EXHAUST MANIFOLD	0410 - 2
1C19	GASKET, ROCKER ARM COVER	0402 - 3
1C20	GASKET, TIMING GEAR COVER	0402 - 4
1H15	GAUGE, ENGINE CONTROL UNIT (VEHICLE S.N. 504001-)	1674 - 13A
3K13	GAUGE, LEVEL, OIL TANK	3364 - 2
1H13	GAUGE,ENGINE CONTROL UNIT (VEHICLE S.N. -504000)	1674 - 12
1C18	GEAR, CAMSHAFT	0402 - 2
1C17	GEAR, CRANKSHAFT	0401 - 1
1D7	GEAR, ENGINE OIL PUMP	0407 - 3
1F1	GEAR, FLYWHEEL RING	0433 - 2
3F23	GEAR, PUMP	3361 - 12
3B23	GENERAL PURPOSE BUCKET	3302 - 14
3B11	GENERAL PURPOSE BUCKET, HIGH CAPACITY	3302 - 2
2B16	GLASS,CAB RIGHT WINDOW	1810 - 14
2B10	GLASS,CAB WINDOW	1810 - 8
2E11	GRILLE,COMPARTMENT TOP	1910 - 10
2E13	GRILLE,R.H.COMPARTMENT TOP	1910 - 12
3D4	GRIP, CONTROL LEVER	3315 - 2
3D8	GRIP, PILOT SYSTEM CONTROL LEVER	3315 - 6
3D10	GRIP,PROPEL PILOT CONTROL LEVER	3315 - 8
2C15	GUARD KIT, VANDAL	1810 - 36
1B1	GUARD, TRACK	0130 - 4
2B16	GUARD,CAB RIGHT WINDOW GLASS	1810 - 14
2C15	GUARDS, WINDOW	1810 - 36

H

2B8	HAMMER, ESCAPE	1810 - 6
2E21	HANDHOLD, RIGHT SIDE	1910 - 20
3E17	HANDLE, PILOT DUAL CONTROL	3360 - 12
2B22	HANDLE, SECONDARY EXIT	1810 - 20
2B20	HANDLE,CAB DOOR	1810 - 18
1G5	HARDWARE,FUEL TANK MOUNT	0560 - 4
1I10	HARDWARE,SWING BEARING	1740 - 10
1H3	HARNESS, CAB WIRING	1674 - 6
1H17	HARNESS, ENGINE CONTROL UNIT WIRING (VEHICLE S.N. -504000)	1674 - 14
1H15	HARNESS, ENGINE CONTROL UNIT WIRING (VEHICLE S.N. 504001-)	1674 - 13A
1H19	HARNESS, ENGINE WIRING	1674 - 16
1E12	HARNESS, FUEL TRANSFER PUMP WIRING	0421 - 4
3E17	HARNESS, SOLENOID VALVE DUAL CONTROL	3360 - 12
1H23	HARNESS, WIRE, BOOM LIGHT	1674 - 18
3E13	HARNESS, WIRE, FOOT SWITCH	3360 - 8
1H9	HARNESS, WIRE, MONITOR	1674 - 8
2F10	HARNESS, WIRE, MOTION ALARM	2004 - 4
1G20	HARNESS, WIRE, STARTER	1671 - 2
1G23	HARNESS, WIRING, BOOM LIGHT	1674 - 2
2B18	HATCH, CAB TOP	1810 - 16
1D11	HEAD, CYLINDER	0409 - 2
1D8	HEADER,ENGINE OIL FILTER	0407 - 4
2B10	HEADLINER,CAB	1810 - 8
2D1	HEATER	1830 - 2
2D3	HEATER	1830 - 3A
2D5	HEATER	1830 - 3C
2D3	HEATER AND AIR CONDITIONER BLOWER MOTOR	1830 - 3A
2D5	HEATER AND AIR CONDITIONER BLOWER MOTOR	1830 - 3C
2D3	HEATER AND AIR CONDITIONER ELECTRIC MOTOR	1830 - 3A
2D5	HEATER AND AIR CONDITIONER ELECTRIC MOTOR	1830 - 3C
2D3	HEATER AND AIR CONDITIONER RELAY	1830 - 3A
2D5	HEATER AND AIR CONDITIONER RELAY	1830 - 3C
2D3	HEATER AND AIR CONDITIONER SWITCH	1830 - 3A
2D5	HEATER AND AIR CONDITIONER SWITCH	1830 - 3C
2D3	HEATER AND AIR CONDITIONER TRANSISTOR	1830 - 3A
2D5	HEATER AND AIR CONDITIONER TRANSISTOR	1830 - 3C
1D21	HEATER DRAIN VALVE	0417 - 2
2D1	HEATER DUCT	1830 - 2
2D9	HEATER FAN	1830 - 6

ALPHABETICAL INDEX - CONTINUED

GRID		PAGE
2D21	HEATER FAN	1830 - 18
2D9	HEATER FAN MOTOR	1830 - 6
2D21	HEATER FAN MOTOR	1830 - 18
2D13	HEATER HOSES	1830 - 10
1D21	HEATER VALVE, DRAIN	0417 - 2
1F10	HEATER, ENGINE COOLANT	0505 - 4
3B13	HEAVY-DUTY BUCKETS	3302 - 4
3B15	HEAVY-DUTY BUCKETS	3302 - 6
3B15	HEAVY-DUTY, HIGH CAPACITY BUCKETS	3302 - 6
3B11	HIGH CAPACITY BUCKET, GENERAL PURPOSE	3302 - 2
3B13	HIGH CAPACITY HEAVY-DUTY BUCKETS	3302 - 4
3B15	HIGH CAPACITY HEAVY-DUTY BUCKETS	3302 - 6
2E19	HOOD,ENGINE COMPARTMENT COVER	1910 - 18
2F8	HORN	2004 - 2
2F8	HORN, WIRE HARNESS	2004 - 2
3F5	HOSE, ARM AUXILIARY (FACTORY INSTALLED)	3360 - 22
3F11	HOSE, ARM CYLINDER TO BOOM LINE	3360 - 50
3F1	HOSE, AUXILIARY RETURN (FACTORY INSTALLED)	3360 - 18
3F3	HOSE, BOOM AUXILIARY (FACTORY INSTALLED)	3360 - 20
3E23	HOSE, BOOM AUXILIARY LINE TO RETURN LINE (AUXILIARY HYDRAULIC OPTIONAL RETURN)	3360 - 17A
3I1	HOSE, BOOM BOTTOM TO BOOM CYLINDER	3363 - 12
3I1	HOSE, BOOM CYLINDER TO BOOM BOTTOM PIPINGS	3363 - 12
3I1	HOSE, BOOM CYLINDER TO CONTROL VALVE	3363 - 12
3F11	HOSE, BOOM LINE TO ARM CYLINDER	3360 - 50
3I7	HOSE, CENTER JOINT TO CONTROL VALVE	3363 - 18
3H23	HOSE, CENTER JOINT TO RETURN PIPINGS	3363 - 10
1C1	HOSE, CENTER JOINT TO TRAVEL DEVICE	0260 - 8
1C7	HOSE, CENTER JOINT TO TRAVEL DEVICE	0263 - 2
3E19	HOSE, CONTROL PATTERN SELECTOR KIT	3360 - 14
3I1	HOSE, CONTROL VALVE TO BOOM CYLINDER	3363 - 12
3I7	HOSE, CONTROL VALVE TO CENTER JOINT	3363 - 18
3I3	HOSE, CONTROL VALVE TO FRONT PIPINGS	3363 - 14
3I9	HOSE, CONTROL VALVE TO MAIN PIPINGS	3363 - 20
3I11	HOSE, CONTROL VALVE TO MAIN PIPINGS	3363 - 21A
3J17	HOSE, CONTROL VALVE TO OIL FILTER	3363 - 46
3J17	HOSE, CONTROL VALVE TO OIL TANK	3363 - 46
3J19	HOSE, CONTROL VALVE TO OIL TANK	3363 - 48
3J13	HOSE, CONTROL VALVE TO OIL TANK (SERIAL NUMBER -503485)	3363 - 44
3J15	HOSE, CONTROL VALVE TO OIL TANK (SERIAL NUMBER 503486-)	3363 - 45A
3J19	HOSE, CONTROL VALVE TO PILOT SHUTOFF VALVE	3363 - 48
3E15	HOSE, CONTROL VALVE TO PILOT SIGNAL MANIFOLD (PILOT SYSTEM)	3360 - 10
3K11	HOSE, CONTROL VALVE TO RESERVOIR (AUX SOLENOID AND FLOW CONTROL)(1-WAY)	3363 - 64
3J1	HOSE, CONTROL VALVE TO SHUTTLE VALVE	3363 - 32
3J3	HOSE, CONTROL VALVE TO SHUTTLE VALVE	3363 - 34
3K11	HOSE, CONTROL VALVE TO SIGNAL MANIFOLD (AUXILIARY SOLENOID/FLOW CONTROL)	3363 - 64
3J13	HOSE, CONTROL VALVE TO SOLENOID VALVE (SERIAL NUMBER -503485)	3363 - 44
3J15	HOSE, CONTROL VALVE TO SOLENOID VALVE (SERIAL NUMBER 503486-)	3363 - 45A
3H23	HOSE, CONTROL VALVE TO SWING DEVICE	3363 - 10
3I5	HOSE, CONTROL VALVE TO SWING DEVICE	3363 - 16
1D10	HOSE, ENGINE VENTILATOR	0408 - 1
3K11	HOSE, FLOW REGULATOR TO SIGNAL MANIFOLD (AUXILIARY SOLENOID/FLOW CONTROL)	3363 - 64
3F1	HOSE, FROM CONTROL VALVE (FACTORY INSTALLED AUXILIARY PLUMBING)	3360 - 18
3D14	HOSE, FROM CONTROL VALVE TO PILOT SIGNAL MANIFOLD (FOOT CONTROL,PILOT SYSTEM)	3315 - 12
1G7	HOSE, FROM FILTER TO FUEL TANK (SERIAL NUMBER -504000)	0560 - 6
1G9	HOSE, FROM FILTER TO FUEL TANK (SERIAL NUMBER 504001-)	0560 - 7A
1G7	HOSE, FROM FILTER TO TRANSFER PUMP (SERIAL NUMBER -504000)	0560 - 6
1G9	HOSE, FROM FILTER TO TRANSFER PUMP (SERIAL NUMBER 504001-)	0560 - 7A
1G7	HOSE, FROM FINAL FUEL FILTER TO FUEL COOLER (SERIAL NUMBER -504000)	0560 - 6
1G9	HOSE, FROM FINAL FUEL FILTER TO FUEL COOLER (SERIAL NUMBER 504001-)	0560 - 7A
3D14	HOSE, FROM FOOT PEDAL CONTROL TO PILOT SHUTOFF VALVE (PILOT SYSTEM)	3315 - 12
3D14	HOSE, FROM FOOT PEDAL CONTROL TO PILOT SIGNAL MANIFOLD (PILOT SYSTEM)	3315 - 12
1G7	HOSE, FROM FUEL COOLER TO FINAL FUEL FILTER (SERIAL NUMBER -504000)	0560 - 6
1G9	HOSE, FROM FUEL COOLER TO FINAL FUEL FILTER (SERIAL NUMBER 504001-)	0560 - 7A
1G7	HOSE, FROM FUEL COOLER TO TRANSFER PUMP (SERIAL NUMBER -504000)	0560 - 6
1G9	HOSE, FROM FUEL COOLER TO TRANSFER PUMP (SERIAL NUMBER 504001-)	0560 - 7A
1G7	HOSE, FROM FUEL TANK TO FILTER (SERIAL NUMBER -504000)	0560 - 6
1G9	HOSE, FROM FUEL TANK TO FILTER (SERIAL NUMBER 504001-)	0560 - 7A
1G7	HOSE, FROM FUEL TANK TO INJECTION PUMP (SERIAL NUMBER -504000)	0560 - 6
1G9	HOSE, FROM FUEL TANK TO LEAK OFF (SERIAL NUMBER 504001-)	0560 - 7A
1G7	HOSE, FROM INJECTION PUMP TO FUEL TANK (SERIAL NUMBER -504000)	0560 - 6
1G9	HOSE, FROM LEAK OFF TO FUEL TANK (SERIAL NUMBER 504001-)	0560 - 7A
3J9	HOSE, FROM LEFT PILOT CONTROLLER TO PILOT SIGNAL MANIFOLD (PILOT SYSTEM)	3363 - 40
3J9	HOSE, FROM LEFT PILOT CONTROLLER TO SHUTOFF VALVE (PILOT SYSTEM)	3363 - 40
3E15	HOSE, FROM PILOT SHUT-OFF VALVE TO SOLENOID (PILOT SYSTEM)	3360 - 10
3D14	HOSE, FROM PILOT SHUTOFF VALVE TO FOOT PEDAL CONTROL (PILOT SYSTEM)	3315 - 12
3D14	HOSE, FROM PILOT SIGNAL MANIFOLD TO CONTROL VALVE (FOOT CONTROL,PILOT SYS)	3315 - 12
3D14	HOSE, FROM PILOT SIGNAL MANIFOLD TO FOOT PEDAL CONTROL (PILOT SYSTEM)	3315 - 12
3J9	HOSE, FROM PILOT SIGNAL MANIFOLD TO LEFT PILOT CONTROLLER (PILOT SYSTEM)	3363 - 40
3J11	HOSE, FROM PILOT SIGNAL MANIFOLD TO RIGHT PILOT CONTROLLER (PILOT SYSTEM)	3363 - 42
3E19	HOSE, FROM PILOT SIGNAL MANIFOLDTO SOLENOID VALVE	3360 - 14
3J11	HOSE, FROM RIGHT PILOT CONTROLLER TO PILOT SIGNAL MANIFOLD (PILOT SYSTEM)	3363 - 42
3J11	HOSE, FROM RIGHT PILOT CONTROLLER TO SHUTOFF VALVE (PILOT SYSTEM)	3363 - 42
3J9	HOSE, FROM SHUTOFF VALVE TO LEFT PILOT CONTROLLER (PILOT SYSTEM)	3363 - 40
3J11	HOSE, FROM SHUTOFF VALVE TO RIGHT PILOT CONTROLLER (PILOT CONTROLLER)	3363 - 42
3E15	HOSE, FROM SOLENOID TO PILOT SHUT-OFF VALVE (PILOT SYSTEM)	3360 - 10

ALPHABETICAL INDEX - CONTINUED

GRID		PAGE
3E19	HOSE, FROM SOLENOID VALVE TO PILOT SIGNAL MANIFOLD	3360 - 14
1G7	HOSE, FROM TRANSFER PUMP TO FILTER (SERIAL NUMBER -504000)	0560 - 6
1G9	HOSE, FROM TRANSFER PUMP TO FILTER (SERIAL NUMBER 504001-)	0560 - 7A
1G7	HOSE, FROM TRANSFER PUMP TO FUEL COOLER (SERIAL NUMBER -504000)	0560 - 6
1G9	HOSE, FROM TRANSFER PUMP TO FUEL COOLER (SERIAL NUMBER 504001-)	0560 - 7A
3I3	HOSE, FRONT TO CONTROL VALVE	3363 - 14
1G7	HOSE, FUEL (SERIAL NUMBER -504000)	0560 - 6
1G9	HOSE, FUEL (SERIAL NUMBER 504001-)	0560 - 7A
3I15	HOSE, HYDRAULIC PUMP TO OIL FILTER	3363 - 24
3I15	HOSE, HYDRAULIC PUMP TO SOLENOID VALVE	3363 - 24
3E15	HOSE, HYDRAULIC RESERVOIR TO SOLENOID (PILOT SYSTEM)	3360 - 10
3I9	HOSE, MAIN TO CONTROL VALVE	3363 - 20
3I11	HOSE, MAIN TO CONTROL VALVE	3363 - 21A
3J17	HOSE, OIL FILTER TO CONTROL VALVE	3363 - 46
3I15	HOSE, OIL FILTER TO HYDRAULIC PUMP	3363 - 24
3I17	HOSE, OIL FILTER TO HYDRAULIC PUMP	3363 - 26
3J17	HOSE, OIL TANK TO CONTROL VALVE	3363 - 46
3J13	HOSE, OIL TANK TO CONTROL VALVE (SERIAL NUMBER -503485)	3363 - 44
3J15	HOSE, OIL TANK TO CONTROL VALVE (SERIAL NUMBER 503486-)	3363 - 45A
3I15	HOSE, OIL TANK TO SOLENOID VALVE	3363 - 24
3J7	HOSE, PILOT SHUTOFF VALVE TO PROPEL PILOT CONTROLLER VALVE	3363 - 38
3K11	HOSE, PILOT SIG. MAN. TO CONTROL VALVE (AUXILIARY SOLENOID/FLOW CONTROL)	3363 - 64
3K11	HOSE, PILOT SIG. MAN. TO SOLENOID VALVE (AUXILIARY SOLENOID/FLOW CONTROL)	3363 - 64
3E15	HOSE, PILOT SIGNAL MANIFOLD TO CONTROL VALVE (PILOT SYSTEM)	3360 - 10
3J5	HOSE, PILOT SIGNAL MANIFOLD TO PROPEL PILOT CONTROLLER VALVE	3363 - 36
3E15	HOSE, PILOT SIGNAL MANIFOLD TO SOLENOID (PILOT SYSTEM)	3360 - 10
3J7	HOSE, PROPEL PILOT CONTROLLER VALVE TO PILOT SHUTOFF VALVE	3363 - 38
3J5	HOSE, PROPEL PILOT CONTROLLER VALVE TO PILOT SIGNAL MANIFOLD	3363 - 36
3I17	HOSE, PUMP TO OIL FILTER	3363 - 26
3I17	HOSE, PUMP TO SHUTTLE VALVE	3363 - 26
1F16	HOSE, RADIATOR DRAIN	0510 - 8
3K11	HOSE, RESERVOIR TO CONTROL VALVE (AUX SOLENOID AND FLOW CONTROL)(1-WAY)	3363 - 64
3K11	HOSE, RESERVOIR TO SOLENOID VALVE (AUXILIARY SOLENOID/FLOW CONTROL)	3363 - 64
3E23	HOSE, RETURN LINE TO BOOM AUXILIARY LINE (AUXILIARY HYDRAULIC OPTIONAL RETURN)	3360 - 17A
3E23	HOSE, RETURN LINE TO SHUTOFF VALVE (AUXILIARY HYDRAULIC OPTIONAL RETURN)	3360 - 17A
3H23	HOSE, RETURN TO SWING DEVICE	3363 - 10
1C1	HOSE, ROTARY MANIFOLD TO TRAVEL DEVICE	0260 - 8
1C7	HOSE, ROTARY MANIFOLD TO TRAVEL DEVICE	0263 - 2
3K11	HOSE, SHUT-OFF VALVE TO SOLENOID VALVE (AUXILIARY SOLENOID/FLOW CONTROL)	3363 - 64
3E23	HOSE, SHUTOFF VALVE TO RETURN LINE (AUXILIARY HYDRAULIC OPTIONAL RETURN)	3360 - 17A
3J1	HOSE, SHUTTLE VALVE TO CONTROL VALVE	3363 - 32
3J3	HOSE, SHUTTLE VALVE TO CONTROL VALVE	3363 - 34
3I17	HOSE, SHUTTLE VALVE TO HYDRAULIC PUMP	3363 - 26
3I23	HOSE, SHUTTLE VALVE TO SWING MOTOR	3363 - 30
3K11	HOSE, SIGNAL MANIFOLD TO FLOW REGULATOR (AUXILIARY SOLENOID/FLOW CONTROL)	3363 - 64
3E15	HOSE, SOLENOID TO HYDRAULIC RESERVOIR (PILOT SYSTEM)	3360 - 10
3E15	HOSE, SOLENOID TO PILOT SIGNAL MANIFOLD (PILOT SYSTEM)	3360 - 10
3J13	HOSE, SOLENOID VALVE TO CONTROL VALVE (SERIAL NUMBER -503485)	3363 - 44
3J15	HOSE, SOLENOID VALVE TO CONTROL VALVE (SERIAL NUMBER 503486-)	3363 - 45A
3I15	HOSE, SOLENOID VALVE TO HYDRAULIC PUMP	3363 - 24
3I15	HOSE, SOLENOID VALVE TO OIL TANK	3363 - 24
3K11	HOSE, SOLENOID VALVE TO RESERVOIR (AUXILIARY SOLENOID/FLOW CONTROL)	3363 - 64
3K11	HOSE, SOLENOID VALVE TO SHUT-OFF VALVE (AUXILIARY SOLENOID/FLOW CONTROL)	3363 - 64
3K11	HOSE, SOLENOID VALVE TO SIGNAL MANIFOLD (AUXILIARY SOLENOID/FLOW CONTROL)	3363 - 64
3H23	HOSE, SWING DEVICE TO CONTROL VALVE	3363 - 10
3I5	HOSE, SWING DEVICE TO CONTROL VALVE	3363 - 16
3H23	HOSE, SWING DEVICE TO RETURN PIPINGS	3363 - 10
3I23	HOSE, SWING MOTOR TO SHUTTLE VALVE	3363 - 30
1C1	HOSE, TRAVEL DEVICE TO CENTER JOINT	0260 - 8
1C7	HOSE, TRAVEL DEVICE TO CENTER JOINT	0263 - 2
1C1	HOSE, TRAVEL DEVICE TO ROTARY MANIFOLD	0260 - 8
1C7	HOSE, TRAVEL DEVICE TO ROTARY MANIFOLD	0263 - 2
2B8	HOSE, WINDSHIELD WASHER	1810 - 6
1F20	HOSE,AIR CLEANER	0520 - 4
1F14	HOSE,RADIATOR	0510 - 6
2D7	HOSES, AIR CONDITIONER	1830 - 4
3I19	HOSES, PILOT(CONTROL VALVE TO ROTARY AND SIGNAL MANIFOLD (SERIAL NO. -503485)	3363 - 28
3I21	HOSES, PILOT(CONTROL VALVE TO ROTARY AND SIGNAL MANIFOLD (SERIAL NO. 503486-)	3363 - 29A
3H23	HOSES, RETURN TO CENTER JOINT	3363 - 10
1G7	HOSES,FUEL SYSTEM (SERIAL NUMBER -504000)	0560 - 6
1G9	HOSES,FUEL SYSTEM (SERIAL NUMBER 504001-)	0560 - 7A
2D13	HOSES,HEATER	1830 - 10
3H17	HOSES,MAIN HYD.PUMP	3363 - 4
3H3	HOUSING AND GASKETS, PILOT SIGNAL MANIFOLD	3362 - 26
1F2	HOUSING, ENGINE FLYWHEEL	0433 - 3
1D7	HOUSING, ENGINE OIL PUMP	0407 - 3
1D23	HOUSING, ENGINE THERMOSTAT	0418 - 2
1E20	HOUSING, FAN DRIVE	0429 - 4
1D22	HOUSING, WATER PUMP	0417 - 3
3F17	HOUSING,MAIN HYD.PUMP	3361 - 6
1E20	HUB, FAN DRIVE	0429 - 4
3H17	HYD.HOSE,HYD.PUMP TO CONTROL VALVE	3363 - 4
3H17	HYD.HOSES,CONTROL VALVE	3363 - 4
3D20	HYD.HOSES,SHORT ARM 2.22M	3340 - 4
3E11	HYD.HOSES,SIDE BRANCH	3360 - 6
3D16	HYD.HOSES,SINGLE PEDAL KIT	3315 - 14
3D18	HYD.HOSES,STANDARD ARM 2.91M	3340 - 2
1C1	HYD.HOSES,TRAVEL PROPEL MOTOR	0260 - 8
1C7	HYD.HOSES,TRAVEL PROPEL MOTOR	0263 - 2
3H15	HYD.OIL RESERVOIR SUCTION LINES	3363 - 2
3H19	HYD.OIL RETURN LINES,RESERVOIR	3363 - 6
3F23	HYD.PUMP DRIVE MOTOR	3361 - 12
3F23	HYD.PUMP DRIVE MOTOR SEAL KIT	3361 - 12
3F15	HYD.PUMP FLEX COUPLING	3361 - 4
3F15	HYD.PUMP SEAL KIT	3361 - 4
3D12	HYDR./PILOT CONTROL VALVE COMPONENTS	3315 - 10
3D14	HYDRAULIC FOOT PEDAL CONTROL (2-WAY)	3315 - 12

ALPHABETICAL INDEX - CONTINUED

GRID		PAGE
3J13	HYDRAULIC LINES, PILOT (CONTROL VALVE TO OIL TANK)(SERIAL NUMBER -503485)	3363 - 44
3J15	HYDRAULIC LINES, PILOT (CONTROL VALVE TO OIL TANK)(SERIAL NUMBER 503486-)	3363 - 45A
3J19	HYDRAULIC LINES, PILOT (CONTROL VALVE, OIL TANK, PILOT SHUTOFF VALVE)	3363 - 48
3J7	HYDRAULIC LINES, PILOT (PROPEL PILOT CONTROLLER VALVE TO SHUTOFF VALVE)	3363 - 38
3J7	HYDRAULIC LINES, PILOT SHUTOFF VALVE TO PROPEL PILOT CONTROLLER VALVE	3363 - 38
3J5	HYDRAULIC LINES, PILOT SIGNAL MANIFOLD TO PROPEL PILOT CONTROLLER VALVE	3363 - 36
3J5	HYDRAULIC LINES, PROPEL PILOT CONTROLLER VALVE TO PILOT SIGNAL MANIFOLD	3363 - 36
3I23	HYDRAULIC LINES, SHUTTLE VALVE TO SWING MOTOR	3363 - 30
3I23	HYDRAULIC LINES, SWING MOTOR TO SHUTTLE VALVE	3363 - 30
2C13	HYDRAULIC LOCKOUT DECAL	1810 - 34
3I15	HYDRAULIC OIL FILTER	3363 - 24
3K13	HYDRAULIC OIL TEMPERATURE SENSOR	3364 - 2
3F13	HYDRAULIC PUMP	3361 - 2
2F1	HYDRAULIC PUMP COMPARTMENT DOOR (VENTED)	1910 - 24
2F1	HYDRAULIC PUMP COMPARTMENT DOOR LATCH (VENTED)	1910 - 24
3I15	HYDRAULIC PUMP PIPINGS TO OIL FILTER	3363 - 24
3I13	HYDRAULIC PUMP SIDE BRANCH PIPING	3363 - 22
3F15	HYDRAULIC PUMP,MAIN	3361 - 4
3K13	HYDRAULIC RESERVOIR	3364 - 2
3K13	HYDRAULIC RESERVOIR FILTER ELEMENT	3364 - 2
3E15	HYDRAULIC RESERVOIR HOSE TO SOLENOID (PILOT SYSTEM)	3360 - 10
3K11	HYDRAULIC RESERVOIR TO CONTROL VALVE HOSE (AUXILIARY SOLENOID/FLOW CONTROL)	3363 - 64
3K11	HYDRAULIC RESERVOIR TO SOLENOID VALVE HOSE (AUXILIARY SOLENOID/FLOW CONTROL)	3363 - 64

I

1B3	IDLER SPROCKET	0130 - 6
1B3	IDLER,FRONT	0130 - 6
2C13	IGNITION SWITCH DECAL	1810 - 34
1D22	IMPELLER, WATER PUMP	0417 - 3
1F3	IN CHASSIS OVERHAUL GASKET SET	0452 - 1
1D21	INLET, WATER PUMP	0417 - 2
1D19	INTAKE SYSTEM, AIR	0414 - 2
1D11	INTAKE VALVE	0409 - 2
1D7	INTAKE, ENGINE OIL PUMP	0407 - 3
2B4	ISOLATOR,CAB MOUNT	1810 - 2

J

1B23	JOINT, CENTER	0260 - 6

K

1H3	KEY	1674 - 6
1H3	KEY SWITCH	1674 - 6
1H3	KEY SWITCH BRACKET	1674 - 6
1G3	KEY,FUEL TANK CAP	0560 - 2
3F7	KIT, ANTI-DRIFT ARM	3360 - 24
3F9	KIT, ANTI-DRIFT BOOM	3360 - 26
3K9	KIT, BOOM REDUCED DRIFT	3363 - 62
3E19	KIT, CONTROL PATTERN SELECTOR	3360 - 14
1C23	KIT, CYLINDER LINER O-RING	0403 - 2
1F4	KIT, ENGINE OVERHAUL	0452 - 2
3D22	KIT, LONG FRONT	3340 - 6
3E3	KIT, LONG FRONT	3344 - 3A
3I11	KIT, LONG FRONT	3363 - 21A
3J21	KIT, LONG FRONT	3363 - 51A
1G16	KIT, LONG FRONT ASSEMBLY	1370 - 4
1H7	KIT, MIC CUSTOMER (WITH MIC CONTROLLER)	1674 - 7C
1G14	KIT, O-RING, METRIC	1369 - 2
1E9	KIT, PRIMARY FUEL FILTER SERVICE (PE6068HT059 243651-)(STANADYNE DE10)	0420 - 8
1E7	KIT, PRIMARY FUEL FILTER SERVICE(BOSCH) (PE6068HT053 -254350)(S.N.-500400)	0420 - 6
3C1	KIT, ROADBUILDER BUCKET	3302 - 16
3C3	KIT, ROADBUILDER BUCKET	3302 - 18
3L5	KIT, SEAL, ARM CYLINDER	3365 - 12
3L9	KIT, SEAL, ARM CYLINDER (SERIAL NUMBER -503594)	3365 - 16
3L11	KIT, SEAL, ARM CYLINDER (SERIAL NUMBER 503595-)	3365 - 17A
3K23	KIT, SEAL, LEFT BOOM CYLINDER	3365 - 8
3K17	KIT, SEAL, RIGHT BOOM CYLINDER	3365 - 4
2C17	KIT, SEAT LUMBAR	1821 - 2
2C23	KIT, SEAT SLIDE TRACK	1821 - 8
3D16	KIT, SINGLE PEDAL CONTROL	3315 - 14
3K11	KIT, SOLENOID CONTROL AND FLOW CONTROL (1-WAY)	3363 - 64
2C15	KIT, VANDAL PROTECTION	1810 - 36
1D22	KIT, WATER PUMP REPAIR	0417 - 3
2C15	KIT, WINDOW GUARDS	1810 - 36
2C19	KIT, 3.00 INCH SEAT BELT	1821 - 4
1E7	KIT,FUEL FILTER SERVICE(BOSCH VP-44) (PE6068HT053 -254350)(S.N.-500400)	0420 - 6
1E9	KIT,FUEL FILTER SERVICE(S.N.504001-) (PE6068HT059 243651-)(STANADYNE DE10)	0420 - 8
3F21	KIT,MAIN HYD.PUMP L.H. REGULATOR	3361 - 10
3F19	KIT,MAIN HYD.PUMP R.H.REGULATOR	3361 - 8
3F17	KIT,MAIN HYD.PUMP REPAIR	3361 - 6
2F4	KIT,RADIO	2001 - 2
3E15	KIT,SOLENOID VALVE, 1WAY/2WAY, WITHOUT PRESSURE SWITCH	3360 - 10
1B11	KIT,TRACK CHAIN	0130 - 14

L

2F6	L.H REAR VIEW MIRROR	2002 - 2
2E3	L.H.COMPARTMENT DOOR	1910 - 2
3F21	L.H.MAIN HYD.PUMP REGULATOR KIT	3361 - 10
3E13	LABEL, AUXILIARY CONTROL	3360 - 8
2C13	LABEL, HYDRAULIC LOCKOUT	1810 - 34
2F10	LABEL, MOTION ALARM	2004 - 4
3E19	LABEL, PILOT CONTROL LEVER	3360 - 14
2B22	LABEL, SECONDARY EXIT	1810 - 20
1G12	LABELS	1322 - 2
2F1	LATCH, COOLING PACKAGE COMPARTMENT DOOR (VENTED)	1910 - 24
2F1	LATCH, HYDRAULIC PUMP COMPARTMENT DOOR (VENTED)	1910 - 24
2F1	LATCH, RADIATOR COMPARTMENT DOOR (VENTED)	1910 - 24
3K23	LEFT BOOM CYLINDER	3365 - 8
3L1	LEFT BOOM CYLINDER (LONG BOOM)	3365 - 9A
3K23	LEFT BOOM CYLINDER SEAL KIT	3365 - 8
3L1	LEFT BOOM CYLINDER SEAL KIT (LONG BOOM)	3365 - 9A

ALPHABETICAL INDEX - CONTINUED

GRID		PAGE
3K21	LEFT BOOM CYLINDER WITH BUSHINGS	3365 - 6
3K13	LEVEL GAUGE, HYDRAULIC RESERVOIR	3364 - 2
3D4	LEVER, CONTROL	3315 - 2
3D8	LEVER, PILOT SYSTEM SHUTOFF	3315 - 6
3D10	LEVER,PROPEL PILOT CONTROLLER	3315 - 8
1G23	LIGHT, BOOM	1674 - 2
1G23	LIGHT, WORK	1674 - 2
2D17	LIGHTER, REAR TRAY	1830 - 14
3F5	LINE, ARM AUXILIARY (FACTORY INSTALLED)	3360 - 22
3F11	LINE, BOOM (TO ARM AND BUCKET CYLINDER)	3360 - 50
3F3	LINE, BOOM AUXILIARY (FACTORY INSTALLED)	3360 - 20
3I1	LINE, BOOM BOTTOM TO BOOM CYLINDER	3363 - 12
3I1	LINE, BOOM CYLINDER TO BOOM BOTTOM PIPINGS	3363 - 12
3I1	LINE, BOOM CYLINDER TO CONTROL VALVE	3363 - 12
3I7	LINE, CENTER JOINT TO CONTROL VALVE	3363 - 18
3H23	LINE, CENTER JOINT TO RETURN PIPINGS	3363 - 10
1C1	LINE, CENTER JOINT TO TRAVEL DEVICE	0260 - 8
1C7	LINE, CENTER JOINT TO TRAVEL DEVICE	0263 - 2
3I1	LINE, CONTROL VALVE TO BOOM CYLINDER	3363 - 12
3I7	LINE, CONTROL VALVE TO CENTER JOINT	3363 - 18
3I3	LINE, CONTROL VALVE TO FRONT PIPINGS	3363 - 14
3I9	LINE, CONTROL VALVE TO MAIN PIPINGS	3363 - 20
3I11	LINE, CONTROL VALVE TO MAIN PIPINGS	3363 - 21A
3J17	LINE, CONTROL VALVE TO OIL FILTER	3363 - 46
3H19	LINE, CONTROL VALVE TO OIL TANK	3363 - 6
3J17	LINE, CONTROL VALVE TO OIL TANK	3363 - 46
3H21	LINE, CONTROL VALVE TO RADIATOR	3363 - 8
3J1	LINE, CONTROL VALVE TO SHUTTLE VALVE	3363 - 32
3J3	LINE, CONTROL VALVE TO SHUTTLE VALVE	3363 - 34
3H23	LINE, CONTROL VALVE TO SWING DEVICE	3363 - 10
3I5	LINE, CONTROL VALVE TO SWING DEVICE	3363 - 16
3I3	LINE, FRONT TO CONTROL VALVE	3363 - 14
1D15	LINE, FUEL INJECTION (PE6068HT053 -254350) (BOSCH VP44)	0413 - 2
1D17	LINE, FUEL INJECTION (PE6068HT059 254351-)(STANADYNE DE-10)	0413 - 4
3I15	LINE, HYDRAULIC PUMP TO OIL FILTER	3363 - 24
3I15	LINE, HYDRAULIC PUMP TO SOLELNOID VALVE	3363 - 24
3I9	LINE, MAIN TO CONTROL VALVE	3363 - 20
3I11	LINE, MAIN TO CONTROL VALVE	3363 - 21A
3I15	LINE, OIL FILTER TO HYDRAULIC PUMP	3363 - 24
3I17	LINE, OIL FILTER TO HYDRAULIC PUMP	3363 - 26
3H19	LINE, OIL TANK TO CONTROL VALVE	3363 - 6
3J17	LINE, OIL TANK TO CONTROL VALVE	3363 - 46
3H19	LINE, OIL TANK TO RADIATOR	3363 - 6
3I15	LINE, OIL TANK TO SOLENOID VALVE	3363 - 24
3I17	LINE, PUMP TO OIL FILTER	3363 - 26
3I17	LINE, PUMP TO SHUTTLE VALVE	3363 - 26
3H21	LINE, RADIATOR TO CONTROL VALVE	3363 - 8
3H19	LINE, RADIATOR TO OIL TANK	3363 - 6
3H23	LINE, RETURN TO CENTER JOINT	3363 - 10
3H23	LINE, RETURN TO SWING DEVICE	3363 - 10
1C1	LINE, ROTARY MANIFOLD TO TRAVEL DEVICE	0260 - 8
1C7	LINE, ROTARY MANIFOLD TO TRAVEL DEVICE	0263 - 2
3J1	LINE, SHUTTLE VALVE TO CONTROL VALVE	3363 - 32
3J3	LINE, SHUTTLE VALVE TO CONTROL VALVE	3363 - 34
3I17	LINE, SHUTTLE VALVE TO HYDRAULIC PUMP	3363 - 26
3J17	LINE, SOLENOID VALVE TO CONROL VALVE	3363 - 46
3I15	LINE, SOLENOID VALVE TO HYDRAULIC PUMP	3363 - 24
3I15	LINE, SOLENOID VALVE TO OIL TANK	3363 - 24
3H23	LINE, SWING DEVICE TO CONTROL VALVE	3363 - 10
3I5	LINE, SWING DEVICE TO CONTROL VALVE	3363 - 16
3H23	LINE, SWING DEVICE TO RETURN PIPINGS	3363 - 10
1C1	LINE, TRAVEL DEVICE TO CENTER JOINT	0260 - 8
1C7	LINE, TRAVEL DEVICE TO CENTER JOINT	0263 - 2
1C1	LINE, TRAVEL DEVICE TO ROTARY MANIFOLD	0260 - 8
1C7	LINE, TRAVEL DEVICE TO ROTARY MANIFOLD	0263 - 2
1C23	LINER, CYLINDER	0403 - 2
3J19	LINES, CONTROL VALVE TO OIL TANK	3363 - 48
3J13	LINES, CONTROL VALVE TO OIL TANK (SERIAL NUMBER -503485)	3363 - 44
3J15	LINES, CONTROL VALVE TO OIL TANK (SERIAL NUMBER 503486-)	3363 - 45A
3J19	LINES, CONTROL VALVE TO PILOT SHUTOFF VALVE	3363 - 48
3J13	LINES, CONTROL VALVE TO SOLENOID VALVE (SERIAL NUMBER -503485)	3363 - 44
3J15	LINES, CONTROL VALVE TO SOLENOID VALVE (SERIAL NUMBER 503486-)	3363 - 45A
3J13	LINES, OIL TANK TO CONTROL VALVE (SERIAL NUMBER -503485)	3363 - 44
3J15	LINES, OIL TANK TO CONTROL VALVE (SERIAL NUMBER 503486-)	3363 - 45A
3J7	LINES, PILOT SHUTOFF VALVE TO PROPEL PILOT CONTROLLER VALVE	3363 - 38
3J5	LINES, PILOT SIGNAL MANIFOLD TO PROPEL PILOT CONTROLLER VALVE	3363 - 36
3I19	LINES, PILOT(CONTROL VALVE TO ROTARY AND SIGNAL MANIFOLD (SERIAL NO. -503485)	3363 - 28
3I21	LINES, PILOT(CONTROL VALVE TO ROTARY AND SIGNAL MANIFOLD (SERIAL NO. 503486-)	3363 - 29A
3J7	LINES, PROPEL PILOT CONTROLLER VALVE TO PILOT SHUTOFF VALVE	3363 - 38
3J5	LINES, PROPEL PILOT CONTROLLER VALVE TO PILOT SIGNAL MANIFOLD	3363 - 36
3I23	LINES, SHUTTLE VALVE TO SWING MOTOR	3363 - 30
3J13	LINES, SOLENOID VALVE TO CONTROL VALVE (SERIAL NUMBER -503485)	3363 - 44
3J15	LINES, SOLENOID VALVE TO CONTROL VALVE (SERIAL NUMBER 503486-)	3363 - 45A
3I23	LINES, SWING MOTOR TO SHUTTLE VALVE	3363 - 30
3D24	LINK, BUCKET	3340 - 8
3E5	LINK, BUCKET	3344 - 4
1B11	LINK,TRACK CHAIN	0130 - 14
3D22	LINKAGE-TO-ARM PIN, LONG FRONT	3340 - 6
3D22	LINKAGE-TO-BUCKET PIN, LONG FRONT	3340 - 6
3D22	LINKAGE, BUCKET, LONG FRONT	3340 - 6
3G17	LOCK VALVE	3362 - 18
2B18	LOCK, CAB TOP HATCH	1810 - 16
2B12	LOCK,CAB DOOR	1810 - 10
2E15	LOCK,COMPARTMENT DOOR	1910 - 14
1G16	LONG FRONT ASSEMBLY KIT	1370 - 4
3D22	LONG FRONT ASSEMBLY KIT	3340 - 6
3E3	LONG FRONT ASSEMBLY KIT	3344 - 3A
3I11	LONG FRONT ASSEMBLY KIT	3363 - 21A
3J21	LONG FRONT ASSEMBLY KIT	3363 - 51A
1E6	LOW PRESSURE FUEL LINES (PE6068053)	0420 - 5
1B9	LOWER ROLLER,TRACK FRAME	0130 - 12
3K7	LUBRICATE PIPINGS	3363 - 58
1G16	LUBRICATION, SUPER LONG FRONT BOOM CENTRAL	1370 - 4

M

3F19	MAIN HYD.PUMP R.H REGULATOR	3361 - 8
1C17	MAIN BEARING	0401 - 1
1D1	MAIN BEARING CAP	0404 - 2
1I2	MAIN FRAME	1740 - 2
1I4	MAIN FRAME BOOM FOOT PIN	1740 - 4

ALPHABETICAL INDEX - CONTINUED

GRID		PAGE
3H17	MAIN HYD.PUMP HOSES	3363 - 4
3F17	MAIN HYD.PUMP HOUSING	3361 - 6
3F21	MAIN HYD.PUMP L.H. REGULATOR	3361 - 10
3F19	MAIN HYD.PUMP R.H REGULATOR KIT	3361 - 8
3F17	MAIN HYD.PUMP REGULATOR	3361 - 6
3F17	MAIN HYD.PUMP REPAIR KIT	3361 - 6
3F17	MAIN HYD.PUMP SENSOR	3361 - 6
3F13	MAIN HYDRAULIC PUMP	3361 - 2
3F15	MAIN HYDRAULIC PUMP	3361 - 4
3I1	MAIN PIPINGS (CONTROL VALVE TO BOOM CYLINDERS)	3363 - 12
3I7	MAIN PIPINGS (CONTROL VALVE TO CENTER JOINT)	3363 - 18
3I3	MAIN PIPINGS (CONTROL VALVE TO FRONT PIPINGS)	3363 - 14
3I5	MAIN PIPINGS (CONTROL VALVE TO SWING DEVICE)	3363 - 16
3K5	MAIN PIPINGS - THIRD FUNCTION	3363 - 56
3I9	MAIN PIPINGS TO CONTROL VALVE	3363 - 20
3I11	MAIN PIPINGS TO CONTROL VALVE	3363 - 21A
1H1	MAIN WIRE HARNESS	1674 - 4
1D13	MANIFOLD, EXHAUST	0410 - 2
1B23	MANIFOLD, ROTARY	0260 - 6
1B17	MANIFOLD, ROTARY, COVER AND STOP	0260 - 2
1H21	MANUAL ENGINE CONTROL SWITCH BOX	1674 - 17A
2C7	MAT, CAB FLOOR	1810 - 28
1G14	METRIC O-RING KIT	1369 - 2
1H7	MIC CABLE (WITH MIC CONTROLLER)	1674 - 7C
1H5	MIC CONTROLLER	1674 - 7A
1H7	MIC CUSTOMER KIT (WITH MIC CONTROLLER)	1674 - 7C
2F6	MIRROR, LEFT REAR VIEW	2002 - 2
2E21	MIRROR, REAR VIEW, RIGHT	1910 - 20
2E21	MIRROR, TOOL BOX	1910 - 20
3E17	MODUAL RELAY FOR DUAL AUXILIARY CONTROL	3360 - 12
1H9	MONITOR	1674 - 8
2F10	MOTION ALARM WIRE HARNESS	2004 - 4
1B15	MOTOR, PROPEL	0250 - 2
1C9	MOTOR, PROPEL, COMPONENTS	0267 - 2
1E14	MOTOR, STARTER(24V)(DENS0)	0422 - 2
3L14	MOTOR, SWING DEVICE	4360 - 2
3L18	MOTOR, SWING, COMPONENTS	4360 - 6
1C9	MOTOR, TRAVEL, COMPONENTS	0267 - 2
2D9	MOTOR,A/C FAN	1830 - 6
2D21	MOTOR,A/C FAN	1830 - 18
2D9	MOTOR,HEATER FAN	1830 - 6
2D21	MOTOR,HEATER FAN	1830 - 18
2B4	MOUNT,CAB	1810 - 2
1B21	MOUNT,TRAVEL PROPEL MOUNT	0260 - 4
1E16	MOUNTING STRAP, ALTERNATOR	0423 - 2
1H15	MOUNTING, ENGINE CONTROL UNIT (VEHICLE S.N. 504001-)	1674 - 13A
1F24	MUFFLER	0530 - 2
1F24	MUFFLER BRACKET	0530 - 2

N

1D14	NOZZLE, FUEL INJECTION	0413 - 1

O

1G14	O-RING KIT, METRIC	1369 - 2
1F16	OIL COOLER	0510 - 8
1E1	OIL COOLER, ENGINE	0419 - 2
1D5	OIL FILLER OPENING COVER	0407 - 1
1D8	OIL FILTER ELEMENT,ENGINE	0407 - 4
3J17	OIL FILTER PIPING TO CONTROL VALVE	3363 - 46
3I15	OIL FILTER PIPINGS TO HYDRAULIC PUMP	3363 - 24
3I17	OIL FILTER PIPINGS TO HYDRAULIC PUMP	3363 - 26
3I15	OIL FILTER,HYDRAULIC OIL	3363 - 24
1D9	OIL LEVEL SENSOR, ENGINE	0407 - 5
1D20	OIL LINE,TURBOCHARGER	0416 - 2
1D9	OIL PAN PLUG	0407 - 5
1D9	OIL PAN, ENGINE	0407 - 5
1D1	OIL PRESSURE REGULATING BUSHING	0404 - 2
1D1	OIL PRESSURE REGULATING SPRING	0404 - 2
1D1	OIL PRESSURE REGULATING VALVE	0404 - 2
3K13	OIL STRAINER	3364 - 2
3J13	OIL TANK LINES TO CONTROL VALVE (SERIAL NUMBER -503485)	3363 - 44
3J15	OIL TANK LINES TO CONTROL VALVE (SERIAL NUMBER 503486-)	3363 - 45A
3H19	OIL TANK PIPINGS TO CONTROL VALVE	3363 - 6
3J17	OIL TANK PIPINGS TO CONTROL VALVE	3363 - 46
3H19	OIL TANK PIPINGS TO RADIATOR	3363 - 6
3I15	OIL TANK PIPINGS TO SOLENOID VALVE	3363 - 24
3E15	ONEWAY/2WAY SOLENOID VALVE KIT, WITHOUT PRESSURE SWITCH	3360 - 10

P

1D9	PAN, ENGINE OIL	0407 - 5
2F1	PANEL, FRONT, COOLING PACKAGE COMPARTMENT (VENTED)	1910 - 24
2E9	PANEL,COMPARTMENT INTERIOR	1910 - 8
2F1	PANEL,FRONT, HYDRAULIC PUMP COMPARTMENT (VENTED)	1910 - 24
1G12	PATTERN CHANGER DECAL	1322 - 2
3E19	PATTERN SELECTOR CONTROL KIT	3360 - 14
3D14	PEDAL CONTROL, HYDRAULIC FOOT (2-WAY)	3315 - 12
3E19	PILOT CONTROL LEVER LABEL	3360 - 14
3J9	PILOT CONTROLLER HOSE (LEFT)	3363 - 40
3J11	PILOT CONTROLLER HOSE (RIGHT)	3363 - 42
3H7	PILOT CONTROLLER SIDE, PILOT SIGNAL MANIFOLD	3362 - 30
3D6	PILOT CONTROLLER VALVE COMPONENTS (DIG AND SWING)	3315 - 4
3E17	PILOT DUAL CONTROL HANDLE	3360 - 12
3I15	PILOT FILTER	3363 - 24
3I19	PILOT HOSES,(CONTROL VALVE TO ROTARY AND SIGNAL MANIFOLD(SER. NO. -503485)	3363 - 28
3I21	PILOT HOSES,(CONTROL VALVE TO ROTARY AND SIGNAL MANIFOLD(SER. NO. 503486-)	3363 - 29A
3J13	PILOT HYDRAULIC LINES (CONTROL VALVE TO OIL TANK)(SERIAL NUMBER -503485)	3363 - 44
3J15	PILOT HYDRAULIC LINES (CONTROL VALVE TO OIL TANK)(SERIAL NUMBER 503486-)	3363 - 45A
3J19	PILOT HYDRAULIC LINES (CONTROL VALVE, OIL TANK, PILOT SHUTOFF VALVE)	3363 - 48
3J5	PILOT HYDRAULIC LINES (PILOT SIGNAL MANIFOLD TO PROPEL PILOT CONTROLLER)	3363 - 36
3J7	PILOT HYDRAULIC LINES (PROPEL PILOT CONTROLLER VALVE TO SHUTOFF VALVE)	3363 - 38
3I23	PILOT HYDRAULIC LINES (SHUTTLE VALVE,	3363 - 30
3J3	PILOT LINES (PILOT SIGNAL MANIFOLD TO CONTROL VALVE)	3363 - 34
3J17	PILOT PIPINGS (CONTROL VALVE TO OIL TANK)	3363 - 46
3J1	PILOT PIPINGS (CONTROL VALVE TO SHUTTLE VALVE)	3363 - 32

ALPHABETICAL INDEX - CONTINUED

GRID		PAGE
3J3	PILOT PIPINGS (CONTROL VALVE TO SHUTTLE VALVE)	3363 - 34
3I15	PILOT PIPINGS (OIL TANK, SOLENOID VALVE, PUMP, FILTER)	3363 - 24
3I17	PILOT PIPINGS, AUTO ENGINE CONTROL (PUMP TO SHUTTLE VALVE)	3363 - 26
3E15	PILOT SHUT-OFF VALVE HOSE TO SOLENOID (PILOT SYSTEM)	3360 - 10
3D14	PILOT SHUTOFF VALVE FITTINGS TO FOOT PEDAL CONTROL (PILOT SYSTEM)	3315 - 12
3D14	PILOT SHUTOFF VALVE HOSE TO FOOT PEDAL CONTROL (PILOT SYSTEM)	3315 - 12
3K11	PILOT SIG. MAN. TO CONTROL VALVE HOSE (AUXILIARY SOLENOID/FLOW CONTROL)	3363 - 64
3K11	PILOT SIG. MAN. TO FLOW REGULATOR HOSE (AUXILIARY SOLENOID/FLOW CONTROL)	3363 - 64
3K11	PILOT SIG. MAN. TO SOLENOID VALVE HOSE (AUXILIARY SOLENOID/FLOW CONTROL)	3363 - 64
3H9	PILOT SIGNAL MANIFOLD (CONTROL VALVE SIDE) (SERIAL NUMBER -503485)	3362 - 32
3H11	PILOT SIGNAL MANIFOLD (CONTROL VALVE SIDE) (SERIAL NUMBER 503486-)	3362 - 33A
3H3	PILOT SIGNAL MANIFOLD (HOUSING AND GASKETS)	3362 - 26
3H7	PILOT SIGNAL MANIFOLD (PILOT CONTROLLER SIDE)	3362 - 30
3H5	PILOT SIGNAL MANIFOLD (VALVE SECTION)	3362 - 28
3D14	PILOT SIGNAL MANIFOLD FITTINGS TO FOOT PEDAL CONTROL (PILOT SYSTEM)	3315 - 12
3J9	PILOT SIGNAL MANIFOLD FITTINGS TO LEFT PILOT CONTROLLER (PILOT SYSTEM)	3363 - 40
3J11	PILOT SIGNAL MANIFOLD FITTINGS TO RIGHT PILOT CONTROLLER (PILOT SYSTEM)	3363 - 42
3E15	PILOT SIGNAL MANIFOLD HOSE TO CONTROL VALVE (PILOT SYSTEM)	3360 - 10
3D14	PILOT SIGNAL MANIFOLD HOSE TO FOOT PEDAL CONTROL (PILOT SYSTEM)	3315 - 12
3J9	PILOT SIGNAL MANIFOLD HOSE TO LEFT PILOT CONTROLLER (PILOT SYSTEM)	3363 - 40
3J11	PILOT SIGNAL MANIFOLD HOSE TO RIGHT PILOT CONTROLLER (PILOT SYSTEM)	3363 - 42
3E15	PILOT SIGNAL MANIFOLD HOSE TO SOLENOID (PILOT SYSTEM)	3360 - 10
3H13	PILOT SIGNAL MANIFOLD VALVES	3362 - 34
3D8	PILOT SYSTEM CONTROL LEVER BRACKET	3315 - 6
3D8	PILOT SYSTEM CONTROL LEVER GRIP	3315 - 6
3D8	PILOT SYSTEM SHUTOFF LEVER	3315 - 6
3D4	PILOT VALVE	3315 - 2
3E3	PIN, ARM CYLINDER TO BOOM, SUPER LONG FRONT	3344 - 3A
3D22	PIN, ARM CYLINDER-TO-ARM, LONG FRONT	3340 - 6
3E3	PIN, BOOM CYLINDER TO BOOM, SUPER LONG FRONT	3344 - 3A
3E3	PIN, BOOM CYLINDER TO MAINFRAME, SUPER LONG FRONT	3344 - 3A
1I4	PIN, BOOM FOOT	1740 - 4
3E3	PIN, BOOM TO MAIN FRAME, SUPER LONG FRONT	3344 - 3A
3D22	PIN, BUCKET CYLINDER-TO-ARM, LONG FRONT	3340 - 6
3D22	PIN, BUCKET-TO-ARM, LONG FRONT	3340 - 6
3D22	PIN, LINKAGE-TO-ARM, LONG FRONT	3340 - 6
3D22	PIN, LINKAGE-TO-BUCKET, LONG FRONT	3340 - 6
3E1	PIN,BOOM	3344 - 2
1F24	PIPE, EXHAUST	0530 - 2
1F20	PIPE,AIR CLEANER	0520 - 4
2D1	PIPING, AIR CONDITIONER	1830 - 2
3I9	PIPING, BOOM BOTTOM	3363 - 20
3I11	PIPING, BOOM BOTTOM	3363 - 21A
3I1	PIPING, BOOM BOTTOM TO BOOM CYLINDER	3363 - 12
3I1	PIPING, BOOM CYLINDER TO BOOM BOTTOM PIPINGS	3363 - 12
3I1	PIPING, BOOM CYLINDER TO CONTROL VALVE	3363 - 12
3I7	PIPING, CENTER JOINT TO CONTROL VALVE	3363 - 18
3H23	PIPING, CENTER JOINT TO RETURN PIPINGS	3363 - 10
1C1	PIPING, CENTER JOINT TO TRAVEL DEVICE	0260 - 8
1C7	PIPING, CENTER JOINT TO TRAVEL DEVICE	0263 - 2
3I1	PIPING, CONTROL VALVE TO BOOM CYLINDER	3363 - 12
3I7	PIPING, CONTROL VALVE TO CENTER JOINT	3363 - 18
3I3	PIPING, CONTROL VALVE TO FRONT PIPINGS	3363 - 14
3I9	PIPING, CONTROL VALVE TO MAIN PIPINGS	3363 - 20
3I11	PIPING, CONTROL VALVE TO MAIN PIPINGS	3363 - 21A
3J17	PIPING, CONTROL VALVE TO OIL FILTER	3363 - 46
3H19	PIPING, CONTROL VALVE TO OIL TANK	3363 - 6
3J17	PIPING, CONTROL VALVE TO OIL TANK	3363 - 46
3H21	PIPING, CONTROL VALVE TO RADIATOR	3363 - 8
3J1	PIPING, CONTROL VALVE TO SHUTTLE VALVE	3363 - 32
3J3	PIPING, CONTROL VALVE TO SHUTTLE VALVE	3363 - 34
3H23	PIPING, CONTROL VALVE TO SWING DEVICE	3363 - 10
3I5	PIPING, CONTROL VALVE TO SWING DEVICE	3363 - 16
3I3	PIPING, FRONT TO CONTROL VALVE	3363 - 14
3I15	PIPING, HYDRAULIC PUMP TO OIL FILTER	3363 - 24
3I15	PIPING, HYDRAULIC PUMP TO SOLENOID VALVE	3363 - 24
3I9	PIPING, MAIN TO CONTROL VALVE	3363 - 20
3I11	PIPING, MAIN TO CONTROL VALVE	3363 - 21A
3J17	PIPING, OIL FILTER TO CONTROL VALVE	3363 - 46
3I15	PIPING, OIL FILTER TO HYDRAULIC PUMP	3363 - 24
3I17	PIPING, OIL FILTER TO HYDRAULIC PUMP	3363 - 26
3H19	PIPING, OIL TANK TO CONTROL VALVE	3363 - 6
3J17	PIPING, OIL TANK TO CONTROL VALVE	3363 - 46
3H19	PIPING, OIL TANK TO RADIATOR	3363 - 6
3I15	PIPING, OIL TANK TO SOLENOID VALVE	3363 - 24
3I17	PIPING, PUMP TO OIL FILTER	3363 - 26
3I17	PIPING, PUMP TO SHUTTLE VALVE	3363 - 26
3H21	PIPING, RADIATOR TO CONTROL VALVE	3363 - 8
3H19	PIPING, RADIATOR TO OIL TANK	3363 - 6
3H23	PIPING, RETURN TO CENTER JOINT	3363 - 10
3H23	PIPING, RETURN TO SWING DEVICE	3363 - 10
1C1	PIPING, ROTARY MANIFOLD TO TRAVEL DEVICE	0260 - 8
1C7	PIPING, ROTARY MANIFOLD TO TRAVEL DEVICE	0263 - 2
3J1	PIPING, SHUTTLE VALVE TO CONTROL VALVE	3363 - 32
3J3	PIPING, SHUTTLE VALVE TO CONTROL VALVE	3363 - 34
3I17	PIPING, SHUTTLE VALVE TO HYDRAULIC PUMP	3363 - 26
3I13	PIPING, SIDE BRANCH	3363 - 22
3I15	PIPING, SOLENOID VALVE TO HYDRAULIC PUMP	3363 - 24
3I15	PIPING, SOLENOID VALVE TO OIL TANK	3363 - 24
3H23	PIPING, SWING DEVICE TO CONTROL VALVE	3363 - 10
3I5	PIPING, SWING DEVICE TO CONTROL VALVE	3363 - 16
3H23	PIPING, SWING DEVICE TO RETURN PIPINGS	3363 - 10
1C1	PIPING, TRAVEL DEVICE TO CENTER JOINT	0260 - 8
1C7	PIPING, TRAVEL DEVICE TO CENTER JOINT	0263 - 2
1C1	PIPING, TRAVEL DEVICE TO ROTARY MANIFOLD	0260 - 8
1C7	PIPING, TRAVEL DEVICE TO ROTARY MANIFOLD	0263 - 2
3K3	PIPINGS, ARM - THIRD FUNCTION	3363 - 54
3E21	PIPINGS, AUXILIARY HYDRAULIC (FIELD KIT)	3360 - 16
3K1	PIPINGS, BOOM - THIRD FUNCTION	3363 - 52

ALPHABETICAL INDEX - CONTINUED

GRID		PAGE
3H23	PIPINGS, DRAIN (CENTER JOINT, SWING DEVICE, CONTROL VALVE)	3363 - 10
3K7	PIPINGS, LUBRICATE	3363 - 58
3I1	PIPINGS, MAIN (CONTROL VALVE TO BOOM CYLINDERS)	3363 - 12
3I7	PIPINGS, MAIN (CONTROL VALVE TO CENTER JOINT)	3363 - 18
3I3	PIPINGS, MAIN (CONTROL VALVE TO FRONT PIPINGS)	3363 - 14
3I5	PIPINGS, MAIN (CONTROL VALVE TO SWING DEVICE)	3363 - 16
3K5	PIPINGS, MAIN - THIRD FUNCTION	3363 - 56
3J17	PIPINGS, PILOT (CONTROL VALVE TO OIL TANK)	3363 - 46
3J1	PIPINGS, PILOT (CONTROL VALVE TO SHUTTLE VALVE)	3363 - 32
3J3	PIPINGS, PILOT (CONTROL VALVE TO SHUTTLE VALVE)	3363 - 34
3I15	PIPINGS, PILOT (OIL TANK, SOLENOID VALVE, PUMP, FILTER)	3363 - 24
3I17	PIPINGS, PILOT, AUTO ENGINE CONTROL (PUMP TO SHUTTLE VALVE	3363 - 26
3H21	PIPINGS, RETURN (CONTROL VALVE TO RADIATOR)	3363 - 8
3J21	PIPINGS, SUPER LONG BOOM	3363 - 51A
1C23	PISTON RING	0403 - 2
1C23	PISTON, ENGINE	0403 - 2
1C9	PISTON, SERVO	0267 - 2
3G3	PISTON, SERVO	3362 - 4
3B19	PLATE LIP SEVERE DUTY BUCKET	3302 - 10
1D9	PLUG, OIL PAN	0407 - 5
1F16	PLUG, RADIATOR	0510 - 8
3F5	PLUMBING, AUXILIARY ARM (FACTORY INSTALLED)	3360 - 22
3F3	PLUMBING, AUXILIARY BOOM (FACTORY INSTALLED)	3360 - 20
3E21	PLUMBING, AUXILIARY HYDRAULIC (FIELD KIT)	3360 - 16
3F1	PLUMBING, AUXILIARY MAIN HYDRAULIC (FACTORY INSTALLED)	3360 - 18
2D19	POWER SUPPLY, 12V	1830 - 16
3J1	PRESSURE SENSOR, CONTROL VALVE	3363 - 32
3J3	PRESSURE SENSOR, CONTROL VALVE	3363 - 34
1E7	PRIMARY FUEL FILTER ELEMENT(BOSCH VP-44) (PE6068HT053 -254350)(S.N.-500400)	0420 - 6
1E9	PRIMARY FUEL FILTER ELEMENT(S.N.504001-) (PE6068HT059 243651-)(STANADYNE DE10)	0420 - 8
1E9	PRIMARY FUEL FILTER SERVICE KIT (PE6068HT059 243651-)(STANADYNE DE10)	0420 - 8
1E7	PRIMARY FUEL FILTER SERVICE KIT(BOSCH) (PE6068HT053 -254350)(S.N.-500400)	0420 - 6
1B15	PROPEL MOTOR	0250 - 2
1C11	PROPEL MOTOR BRAKE RELIEF VALVE	0267 - 4
1C5	PROPEL MOTOR BRAKE VALVE	0262 - 2
1C9	PROPEL MOTOR COMPONENTS	0267 - 2
3D10	PROPEL PILOT CONTROL LEVER GRIP	3315 - 8
3D10	PROPEL PILOT CONTROLLER FOOT PEDALS	3315 - 8
3D10	PROPEL PILOT CONTROLLER LEVER	3315 - 8
3D10	PROPEL PILOT CONTROLLER PEDAL	3315 - 8
1E18	PULLEY, CRANKSHAFT	0429 - 2
1E19	PULLEY, CRANKSHAFT DAMPER (WITH AIR CONDITIONING)	0429 - 3
1E22	PULLEY, FAN BELT IDLER (PE6068HT053)	0429 - 6
1E24	PULLEY, FAN BELT IDLER (PE6068HT059) (MACHINE SSN 504001-)	0429 - 8
1E20	PULLEY, FAN BELT TENSIONER	0429 - 4
1E20	PULLEY, FAN DRIVE	0429 - 4
1D21	PULLEY, WATER PUMP	0417 - 2
1G22	PULLEY,ALTERNATOR	1672 - 2
3I17	PUMP PIPING TO OIL FILTER	3363 - 26
3I15	PUMP PIPINGS TO OIL FILTER	3363 - 24
3I17	PUMP PIPINGS TO SHUTTLE VALVE	3363 - 26
3I15	PUMP PIPINGS TO SOLENOID VALVE	3363 - 24
1D7	PUMP, ENGINE OIL	0407 - 3
1D15	PUMP, FUEL INJECTION (PE6068HT053 -254350) (BOSCH VP44)	0413 - 2
1D17	PUMP, FUEL INJECTION (PE6068HT059 254351-)(STANADYNE DE-10)	0413 - 4
1E12	PUMP, FUEL TRANSFER	0421 - 4
3F13	PUMP, HYDRAULIC	3361 - 2
3I13	PUMP, HYDRAULIC PIPING, SIDE BRANCH	3363 - 22
1D22	PUMP, WATER	0417 - 3
2C5	PUMP,WINDOW WASHER RESERVOIR	1810 - 26
1C22	PUSH ROD	0402 - 6

R

2E13	R.H.COMPARTMENT COVER	1910 - 12
2E13	R.H.COMPARTMENT TOP GRILLE	1910 - 12
1F16	RADIATOR	0510 - 8
2F1	RADIATOR COMPARTMENT DOOR (VENTED)	1910 - 24
2F1	RADIATOR DOOR, TROPICAL	1910 - 24
1F16	RADIATOR DRAIN HOSE	0510 - 8
1F14	RADIATOR HOSE	0510 - 6
3H21	RADIATOR PIPINGS TO CONTROL VALVE	3363 - 8
3H19	RADIATOR PIPINGS TO OIL TANK	3363 - 6
1F14	RADIATOR SUPPORT	0510 - 6
2F4	RADIO	2001 - 2
2F4	RADIO KIT	2001 - 2
2B8	RADIO SPEAKER	1810 - 6
2B8	RADIO SPEAKER WIRE HARNESS	1810 - 6
2F4	RADIO WIRE HARNESS	2001 - 2
2D17	REAR TRAY	1830 - 14
2E21	REAR VIEW MIRROR, RIGHT	1910 - 20
2F6	REAR VIEW MIRROR,L.H.	2002 - 2
3K9	REDUCED DRIFT KIT, BOOM	3363 - 62
3F21	REGULATOR,HYD.PUMP L.H.	3361 - 10
3F17	REGULATOR,MAIN HYD.PUMP	3361 - 6
3F19	REGULATOR,MAIN HYD.PUMP R.H.	3361 - 8
1G20	RELAY, BATTERY	1671 - 2
2D3	RELAY, HEATER AND AIR CONDITIONER	1830 - 3A
2D5	RELAY, HEATER AND AIR CONDITIONER	1830 - 3C
3E17	RELAY, MODUAL FOR DUAL AUXILIARY CONTROL	3360 - 12
1H13	RELAY,ENGINE CONTROL UNIT (VEHICLE S.N. -504000)	1674 - 12
3G1	RELIEF VALVE	3362 - 2
1C11	RELIEF VALVE, PROPEL MOTOR BRAKE	0267 - 4
3H19	RESERVOIR HYD.OIL RETURN LINES	3363 - 6
3K13	RESERVOIR, HYDRAULIC	3364 - 2
2C5	RESERVOIR,WINDOW WASHER	1810 - 26
3E23	RETURN LINE TO SHUTOFF VALVE HOSE (AUXILIARY HYDRAULIC OPTIONAL RETURN)	3360 - 17A
3H21	RETURN PIPINGS (CONTROL VALVE TO RADIATOR)	3363 - 8
3H23	RETURN PIPINGS TO CENTER JOINT	3363 - 10
3H23	RETURN PIPINGS TO SWING DEVICE	3363 - 10
3K17	RIGHT BOOM CYLINDER	3365 - 4
3K19	RIGHT BOOM CYLINDER (LONG BOOM)	3365 - 5A
3K17	RIGHT BOOM CYLINDER SEAL KIT	3365 - 4
3K19	RIGHT BOOM CYLINDER SEAL KIT (LONG BOOM)	3365 - 5A
3K15	RIGHT BOOM CYLINDER WITH BUSHINGS	3365 - 2

ALPHABETICAL INDEX - CONTINUED

GRID		PAGE
2E21	RIGHT REAR VIEW MIRROR	1910 - 20
2B16	RIGHT WINDOW,CAB	1810 - 14
1F1	RING GEAR, FLYWHEEL	0433 - 2
1C23	RING, PISTON	0403 - 2
3C1	ROADBUILDER BUCKET KIT	3302 - 16
3C3	ROADBUILDER BUCKET KIT	3302 - 18
1C22	ROCKER ARM	0402 - 6
1C19	ROCKER ARM COVER	0402 - 3
1C19	ROCKER ARM COVER GASKET	0402 - 3
1C22	ROCKER ARM SHAFT	0402 - 6
1C23	ROD, CONNECTING	0403 - 2
1C22	ROD, PUSH	0402 - 6
1B23	ROTARY MANIFOLD	0260 - 6
1B17	ROTARY MANIFOLD COVER AND STOP	0260 - 2
1C1	ROTARY MANIFOLD PIPINGS TO TRAVEL DEVICE	0260 - 8
1C7	ROTARY MANIFOLD PIPINGS TO TRAVEL DEVICE	0263 - 2
1B19	ROTARY MANIFOLD SEAL	0260 - 3A

S

3L5	SEAL KIT, ARM CYLINDER	3365 - 12
3L9	SEAL KIT, BUCKET CYLINDER (SERIAL NUMBER -503594)	3365 - 16
3L11	SEAL KIT, BUCKET CYLINDER (SERIAL NUMBER 503595-)	3365 - 17A
3K23	SEAL KIT, LEFT BOOM CYLINDER	3365 - 8
3K17	SEAL KIT, RIGHT BOOM CYLINDER	3365 - 4
3F15	SEAL KIT,HYD.PUMP	3361 - 4
3F23	SEAL KIT,HYD.PUMP DRIVE MOTOR	3361 - 12
1B19	SEAL, ROTARY MANIFOLD	0260 - 3A
1B19	SEAL, TRACK FRAME	0260 - 3A
1B19	SEAL, UNDERCARRIAGE	0260 - 3A
1I12	SEAL,SWING BEARING	1740 - 12
2C17	SEAT	1821 - 2
2C17	SEAT ADJUSTER	1821 - 2
2C23	SEAT BASE	1821 - 8
2C23	SEAT BASE BRACKET	1821 - 8
2C21	SEAT BELT	1821 - 6
2C19	SEAT BELT (3.00 INCH)	1821 - 4
2C21	SEAT BELT BRACKET	1821 - 6
2C19	SEAT BELT KIT, (3.00 INCH)	1821 - 4
2C17	SEAT CUSHION	1821 - 2
2C17	SEAT LUMBAR KIT	1821 - 2
2C23	SEAT SLIDE TRACK KIT	1821 - 8
2C17	SEAT SUSPENSION	1821 - 2
2B22	SECONDARY EXIT HANDLE	1810 - 20
2B22	SECONDARY EXIT KIT,CAB	1810 - 20
2B22	SECONDARY EXIT LABEL	1810 - 20
3G19	SELECTOR VALVE	3362 - 20
1F12	SENDER,ENGINE COOLANT RECOVERY TANK	0510 - 4
2D11	SENSOR, AIR CONDITIONER	1830 - 8
1D19	SENSOR, AIR INTAKE TEMPERATURE	0414 - 2
1G1	SENSOR, COOLANT, ENGINE	0540 - 2
1C17	SENSOR, CRANKSHAFT SPEED	0401 - 1
1C20	SENSOR, CRANKSHAFT SPEED	0402 - 4
1D9	SENSOR, ENGINE OIL LEVEL	0407 - 5
3F15	SENSOR, ENGINE SPEED	3361 - 4
1D15	SENSOR, FUEL INJECTION PUMP SPEED (PE6068HT053 -254350)(BOSCH VP44)	0413 - 2
3K13	SENSOR, HYDRAULIC OIL TEMPERATURE	3364 - 2
3J1	SENSOR, PRESSURE, CONTROL VALVE	3363 - 32
3J3	SENSOR, PRESSURE, CONTROL VALVE	3363 - 34
1G1	SENSOR, TEMPERATURE, ENGINE	0540 - 2
1G1	SENSOR, THERMOSTAT HOUSING TEMPERATURE	0540 - 2
1F18	SENSOR,AIR CLEANER RESTRICTION	0520 - 2
1D23	SENSOR,ENGINE COOLANT TEMPERATURE	0418 - 2
3F17	SENSOR,MAIN HYD.PUMP	3361 - 6
1C9	SERVO PISTON	0267 - 2
3G3	SERVO PISTON	3362 - 4
3C21	SEVERE DUTY PLATE LIP BUCKET TOOTH ASSEMBLY	3302 - 36
3B17	SEVERE DUTY, CAST-LIP BUCKETS	3302 - 8
3B19	SEVERE DUTY, PLATE LIP BUCKET	3302 - 10
1C22	SHAFT, ROCKER ARM	0402 - 6
1B3	SHAFT,FRONT IDLER	0130 - 6
3C23	SHANK, BUCKET TOOTH	3302 - 38
3D1	SHANK, BUCKET TOOTH	3302 - 40
3C21	SHANK, SEVERE DUTY PLATE LIP BUCKET	3302 - 36
3D3	SHEET,BUCKET DATA	3302 - 42
1B11	SHOE,TRACK CHAIN	0130 - 14
3D20	SHORT ARM HYD.HOSES 2.22M	3340 - 4
3D20	SHORT ARM 2.22M	3340 - 4
1D3	SHORT BLOCK, ENGINE	0404 - 4
3E23	SHUT-OFF VALVE (AUXILIARY HYDRAULIC OPTIONAL RETURN)	3360 - 17A
3K11	SHUT-OFF VALVE TO SOLENOID VALVE HOSE (AUXILIARY SOLENOID/FLOW CONTROL)	3363 - 64
3J9	SHUTOFF VALVE FITTINGS TO LEFT PILOT CONTROLLER(PILOT SYSTEM)	3363 - 40
3J11	SHUTOFF VALVE FITTINGS TO RIGHT PILOT CONTROLLER (PILOT SYSTEM)	3363 - 42
3J9	SHUTOFF VALVE HOSE TO LEFT PILOT CONTROLLER(PILOT SYSTEM)	3363 - 40
3J11	SHUTOFF VALVE HOSE TO RIGHT PILOT CONTROLLER (PILOT SYSTEM)	3363 - 42
3E23	SHUTOFF VALVE TO RETURN LINE HOSE (AUXILIARY HYDRAULIC OPTIONAL RETURN)	3360 - 17A
3J1	SHUTTLE VALVE PIPINGS TO CONTROL VALVE	3363 - 32
3J3	SHUTTLE VALVE PIPINGS TO CONTROL VALVE	3363 - 34
3I17	SHUTTLE VALVE PIPINGS TO HYDRAULIC PUMP	3363 - 26
3E11	SIDE BRANCH HYD.HOSES	3360 - 6
3I13	SIDE BRANCH PIPING	3363 - 22
3D16	SINGLE PEDAL CONTROL KIT	3315 - 14
3D16	SINGLE PEDAL CONTROL KIT HYD.HOSES	3315 - 14
3K11	SOLENOID CONTROL AND FLOW CONTROL KIT (1-WAY)	3363 - 64
3K11	SOLENOID CONTROL VALVE, AUXILIARY (1-WAY)	3363 - 64
3E15	SOLENOID HOSE TO HYDRAULIC RESERVOIR (PILOT SYSTEM)	3360 - 10
3E15	SOLENOID HOSE TO PILOT SHUT-OFF VALVE (PILOT SYSTEM)	3360 - 10
3E15	SOLENOID HOSE TO PILOT SIGNAL MANIFOLD (PILOT SYSTEM)	3360 - 10
3H1	SOLENOID VALVE	3362 - 24
3G21	SOLENOID VALVE (SERIAL NO. -503485)	3362 - 22
3G23	SOLENOID VALVE (SERIAL NO. 503486-)	3362 - 23A
3E17	SOLENOID VALVE DUAL CONTROL HARNESS	3360 - 12
3E15	SOLENOID VALVE KIT, 1WAY/2WAY, WITHOUT PRESSURE SWITCH	3360 - 10
3J13	SOLENOID VALVE LINES TO CONTRO VALVE (SERIAL NUMBER -503485)	3363 - 44
3J15	SOLENOID VALVE LINES TO CONTRO VALVE (SERIAL NUMBER 503486-)	3363 - 45A
3I15	SOLENOID VALVE PIPINGS TO HYDRAULIC PUMP	3363 - 24
3I15	SOLENOID VALVE PIPINGS TO OIL TANK	3363 - 24
3K11	SOLENOID VALVE TO HYDRAULIC RESERVOIR HOSE (AUXILIARY SOLENOID/FLOW CONTROL)	3363 - 64
3K11	SOLENOID VALVE TO SHUT-OFF VALVE HOSE (AUXILIARY SOLENOID/FLOW CONTROL)	3363 - 64

ALPHABETICAL INDEX - CONTINUED

GRID		PAGE
3K11	SOLENOID VALVE TO SIGNAL MANIFOLD HOSE (AUXILIARY SOLENOID/FLOW CONTROL)	3363 - 64
3E19	SOLENOID VALVE, CONTROL PATTERN SELECTOR KIT	3360 - 14
1F11	SPACER, FAN BLADE	0510 - 2
2B8	SPEAKER, RADIO	1810 - 6
1C20	SPEED SENSOR, CRANKSHAFT	0402 - 4
3F15	SPEED SENSOR, ENGINE	3361 - 4
1B5	SPRING,TRACK ADJUSTER	0130 - 8
3D18	STANDARD ARM HYD.HOSES 2.91M	3340 - 2
3D18	STANDARD ARM 2.91M	3340 - 2
1F8	START AID, ETHER	0505 - 2
1E14	STARTER MOTOR CLUTCH DRIVE(24V)(DENSO)	0422 - 2
1E14	STARTER MOTOR SWITCH(24V)(DENSO)	0422 - 2
1E14	STARTER MOTOR(24V)(DENSO)	0422 - 2
1G20	STARTER WIRE HARNESS	1671 - 2
1F8	STARTING AID, COLD WEATHER	0505 - 2
3K13	STRAINER, OIL	3364 - 2
1E16	STRAP, ALTERNATOR MOUNTING	0423 - 2
3H15	SUCTION LINES,HYD.OIL RESERVOIR	3363 - 2
3J23	SUPER LONG ARM CYLINDER COMPONENTS	3363 - 51C
3D22	SUPER LONG FRONT ARM	3340 - 6
3E3	SUPER LONG FRONT ARM TO BOOM PIN	3344 - 3A
3E3	SUPER LONG FRONT BOOM	3344 - 3A
2C7	SUPPORT, CAB FLOOR	1810 - 28
2E11	SUPPORT,COMPARTMENT INTERIOR PANEL	1910 - 10
3E9	SUPPORT,CONTROL VALVE	3360 - 4
1F14	SUPPORT,RADIATOR	0510 - 6
3L16	SUPPORT,SWING DEVICE	4360 - 4
2C17	SUSPENSION, SEAT	1821 - 2
1I8	SWING BEARING	1740 - 8
1I10	SWING BEARING HARDWARE	1740 - 10
1I12	SWING BEARING SEAL	1740 - 12
3L14	SWING DEVICE	4360 - 2
3H23	SWING DEVICE PIPINGS TO CONTROL VALVE	3363 - 10
3I5	SWING DEVICE PIPINGS TO CONTROL VALVE	3363 - 16
3H23	SWING DEVICE PIPINGS TO RETURN PIPINGS	3363 - 10
3L16	SWING DEVICE SUPPORT	4360 - 4
3L18	SWING MOTOR COMPONENTS	4360 - 6
3I23	SWING MOTOR)	3363 - 30
1H21	SWITCH BOX, MANUAL ENGINE CONTROL	1674 - 17A
1G1	SWITCH, COOLANT, ENGINE	0540 - 2
1D1	SWITCH, ENGINE OIL PRESSURE	0404 - 2
1D11	SWITCH, ENGINE OVERHEAT	0409 - 2
3E13	SWITCH, FOOT, AUXILIARY ELECTRIC	3360 - 8
2D3	SWITCH, HEATER AND AIR CONDITIONER	1830 - 3A
2D5	SWITCH, HEATER AND AIR CONDITIONER	1830 - 3C
1H3	SWITCH, KEY	1674 - 6
2F10	SWITCH, MOTION ALARM	2004 - 4
1E14	SWITCH, STARTER MOTOR(24V)(DENSO)	0422 - 2
1G1	SWITCH, TEMPERATURE, ENGINE	0540 - 2
1G1	SWITCH, THERMOSTAT HOUSING TEMPERATURE	0540 - 2
1F8	SWITCH,COLD WEATHER STARING AID	0505 - 2
1D15	SYSTEM, FUEL INJECTION (PE6068HT053 -254350) (BOSCH VP44)	0413 - 2
1D17	SYSTEM, FUEL INJECTION (PE6068HT059 254351-)(STANADYNE DE-10)	0413 - 4

T

1G3	TANK, FUEL	0560 - 2
1F12	TANK,ENGINE COOLANT RECOVERY	0510 - 4
3C23	TEETH, BUCKET	3302 - 38
3D1	TEETH, BUCKET	3302 - 40
3C7	TEETH, BUCKET, HICH CAPACITY	3302 - 22
3C9	TEETH, BUCKET, HICH CAPACITY	3302 - 24
3C11	TEETH, BUCKET, HICH CAPACITY	3302 - 26
3C13	TEETH, BUCKET, HICH CAPACITY	3302 - 28
3C15	TEETH, BUCKET, HICH CAPACITY	3302 - 30
3C17	TEETH, BUCKET, HICH CAPACITY	3302 - 32
3C19	TEETH, SEVERE DUTY CAST LIP BUCKET	3302 - 34
3C21	TEETH, SEVERE DUTY PLATE LIP BUCKET	3302 - 36
3C5	TEETH,ESCO BUCKET	3302 - 20
1G1	TEMPERATURE SWITCH, ENGINE	0540 - 2
1E20	TENSIONER, BELT IDLER	0429 - 4
1G20	TERMINAL, BATTERY CLAMP	1671 - 2
1G1	THERMOSTAT HOUSING TEMPERATURE SENSOR	0540 - 2
1D23	THERMOSTAT, ENGINE	0418 - 2
3K3	THIRD FUNCTION ARM PIPINGS	3363 - 54
3K1	THIRD FUNCTION BOOM PIPINGS	3363 - 52
3K5	THIRD FUNCTION MAIN PIPINGS	3363 - 56
1C20	TIMING GEAR COVER	0402 - 4
2E21	TOOL BOX	1910 - 20
2E21	TOOL BOX COVER	1910 - 20
2E21	TOOL BOX COVER CYLINDER	1910 - 20
2E21	TOOL BOX WEATHERSTRIP	1910 - 20
3C23	TOOTH ASSEMBLY	3302 - 38
3D1	TOOTH ASSEMBLY	3302 - 40
3C7	TOOTH ASSEMBLY, HIGH CAPACITY BUCKET	3302 - 22
3C9	TOOTH ASSEMBLY, HIGH CAPACITY BUCKET	3302 - 24
3C11	TOOTH ASSEMBLY, HIGH CAPACITY BUCKET	3302 - 26
3C13	TOOTH ASSEMBLY, HIGH CAPACITY BUCKET	3302 - 28
3C15	TOOTH ASSEMBLY, HIGH CAPACITY BUCKET	3302 - 30
3C17	TOOTH ASSEMBLY, HIGH CAPACITY BUCKET	3302 - 32
3C19	TOOTH, SEVERE DUTY CAST LIP BUCKET	3302 - 34
3C21	TOOTH, SEVERE DUTY PLATE LIP BUCKET	3302 - 36
2E7	TOP COVER,COMPARTMENT	1910 - 6
1B5	TRACK ADJUSTER	0130 - 8
1B5	TRACK ADJUSTER SPRING	0130 - 8
1B11	TRACK CHAIN KIT	0130 - 14
1B11	TRACK CHAIN LINK	0130 - 14
1B11	TRACK CHAIN SHOE	0130 - 14
1A23	TRACK CHAIN SLIDE BLOCK	0130 - 2
1A23	TRACK FRAME	0130 - 2
1B9	TRACK FRAME LOWER ROLLER	0130 - 12
1B19	TRACK FRAME SEAL	0260 - 3A
1B7	TRACK FRAME UPPER ROLLER	0130 - 10
1B1	TRACK GUARD	0130 - 4
2D3	TRANSISTOR, HEATER AND AIR CONDITIONER	1830 - 3A
2D5	TRANSISTOR, HEATER AND AIR CONDITIONER	1830 - 3C
1B15	TRAVEL DEVICE	0250 - 2
1C1	TRAVEL DEVICE PIPINGS TO CENTER JOINT	0260 - 8
1C7	TRAVEL DEVICE PIPINGS TO CENTER JOINT	0263 - 2
1C1	TRAVEL DEVICE PIPINGS TO ROTARY MANIFOLD	0260 - 8
1C7	TRAVEL DEVICE PIPINGS TO ROTARY MANIFOLD	0263 - 2
2F10	TRAVEL MOTION ALARM	2004 - 4
1C5	TRAVEL MOTOR BRAKE VALVE	0262 - 2
1C9	TRAVEL MOTOR COMPONENTS	0267 - 2
1C3	TRAVEL PROPEL MOTOR COVER	0260 - 10
1B15	TRAVEL PROPEL MOTOR DRIVE SPROCKET	0250 - 2
1C1	TRAVEL PROPEL MOTOR HYD.HOSES	0260 - 8
1C7	TRAVEL PROPEL MOTOR HYD.HOSES	0263 - 2
1B21	TRAVEL PROPEL MOTOR MOUNT	0260 - 4
2D17	TRAY, REAR	1830 - 14
2F1	TROPICAL COVER	1910 - 24
2F1	TROPICAL DOOR	1910 - 24
1D6	TUBE, ENGINE OIL DIPSTICK	0407 - 2
1G16	TUBES, SUPER LONG FRONT CENTRAL LUBRICATION	1370 - 4
1D20	TURBOCHARGER	0416 - 2
1D20	TURBOCHARGER OIL LINE	0416 - 2

ALPHABETICAL INDEX - CONTINUED

GRID		PAGE
	U	
1B19	UNDERCARRIAGE SEAL	0260 - 3A
1B7	UPPER ROLLER,TRACK FRAME	0130 - 10
	V	
3D6	VALVE COMPONENTS, PILOT CONTROLLER (DIG AND SWING)	3315 - 4
3E15	VALVE KIT,SOLENOID, 1WAY/2WAY, WITHOUT PRESSURE SWITCH	3360 - 10
3H5	VALVE SECTION, PILOT SIGNAL MANIFOLD	3362 - 28
3F7	VALVE, ANTI-DRIFT	3360 - 24
3F9	VALVE, ANTI-DRIFT	3360 - 26
3F5	VALVE, ARM AUXILIARY PLUMBING (FACTORY INSTALLED)	3360 - 22
1C9	VALVE, BRAKE	0267 - 2
1C5	VALVE, BRAKE, COMPONENTS	0262 - 2
3E7	VALVE, CONTROL	3360 - 2
3G5	VALVE, CONTROL (COMPONENTS)	3362 - 6
3G7	VALVE, CONTROL (COMPONENTS)	3362 - 8
3G9	VALVE, CONTROL (COMPONENTS)	3362 - 10
3G11	VALVE, CONTROL (COMPONENTS)	3362 - 12
3G13	VALVE, CONTROL (COMPONENTS)	3362 - 14
3G15	VALVE, CONTROL (COMPONENTS)	3362 - 16
1D1	VALVE, ENGINE OIL BY-PASS	0404 - 2
1D9	VALVE, ENGINE OIL DRAIN	0407 - 5
1D11	VALVE, EXHAUST	0409 - 2
1D11	VALVE, INTAKE	0409 - 2
3G17	VALVE, LOCK	3362 - 18
1D1	VALVE, OIL PRESSURE REGULATING	0404 - 2
3D4	VALVE, PILOT	3315 - 2
3G1	VALVE, RELIEF	3362 - 2
1C11	VALVE, RELIEF, PROPEL MOTOR BRAKE	0267 - 4
3G19	VALVE, SELECTOR	3362 - 20
3E23	VALVE, SHUT-OFF (AUXILIARY HYDRAULIC OPTIONAL RETURN)	3360 - 17A
3H1	VALVE, SOLENOID	3362 - 24
3G21	VALVE, SOLENOID (SERIAL NO. -503485)	3362 - 22
3G23	VALVE, SOLENOID (SERIAL NO. 503486-)	3362 - 23A
3E19	VALVE, SOLENOID (CONTROL PATTERN SELECTOR KIT)	3360 - 14
3H13	VALVES, PILOT SIGNAL MANIFOLD	3362 - 34
2C15	VANDAL COVER KIT	1810 - 36
2C15	VANDAL GUARD KIT	1810 - 36
2C15	VANDAL PROTECTION	1810 - 36
1H3	VEHICLE CONTROLLER	1674 - 6
2F1	VENTED MACHINE DOORS	1910 - 24
	W	
1D22	WATER PUMP	0417 - 3
1D22	WATER PUMP HOUSING	0417 - 3
1D22	WATER PUMP IMPELLER	0417 - 3
1D21	WATER PUMP INLET	0417 - 2
1D21	WATER PUMP PULLEY	0417 - 2
1D22	WATER PUMP REPAIR KIT	0417 - 3
2B14	WEATHER STRIP,CAB WINDSHIELD	1810 - 12
2B18	WEATHERSTRIP, CAB TOP HATCH	1810 - 16
2E21	WEATHERSTRIP, TOOL BOX	1910 - 20
2B12	WEATHERSTRIP,CAB DOOR	1810 - 10
2E17	WEATHERSTRIP,COMPARTMENT TOP COVER	1910 - 16
2B12	WINDOW GLASS,CAB DOOR	1810 - 10
2C15	WINDOW GUARDS	1810 - 36
2B10	WINDOW SEALS,CAB	1810 - 8
2C5	WINDOW WASHER RESERVOIR	1810 - 26
2B8	WINDSHIELD WASHER HOSE	1810 - 6
2B8	WINDSHIELD WASHER NOZZLE	1810 - 6
2C5	WINDSHIELD WASHER RESERVOIR PUMP	1810 - 26
2B14	WINDSHIELD,CAB	1810 - 12
2B8	WIPER ARMS,CAB	1810 - 6
2B8	WIPER BLADES,CAB	1810 - 6
2B8	WIPER MOTORS,CAB	1810 - 6
1H23	WIRE HARNES, BOOM LIGHT	1674 - 18
2D1	WIRE HARNESS, AIR CONDITIONER	1830 - 2
1G20	WIRE HARNESS, BATTERY	1671 - 2
1G23	WIRE HARNESS, BOOM LIGHT	1674 - 2
2D17	WIRE HARNESS, CIGAR LIGHTER	1830 - 14
2B8	WIRE HARNESS, DOME LIGHT	1810 - 6
3E13	WIRE HARNESS, FOOT SWITCH	3360 - 8
2F8	WIRE HARNESS, HORN	2004 - 2
1H1	WIRE HARNESS, MAIN	1674 - 4
1H9	WIRE HARNESS, MONITOR	1674 - 8
2F10	WIRE HARNESS, MOTION ALARM	2004 - 4
2F4	WIRE HARNESS, RADIO	2001 - 2
2B8	WIRE HARNESS, RADIO SPEAKER	1810 - 6
1G20	WIRE HARNESS, STARTER	1671 - 2
1H19	WIRING HARNESS, ENGINE	1674 - 16
1H17	WIRING HARNESS, ENGINE CONTROL UNIT (VEHICLE S.N. -504000)	1674 - 14
1H15	WIRING HARNESS, ENGINE CONTROL UNIT (VEHICLE S.N. 504001-)	1674 - 13A
1E12	WIRING HARNESS, FUEL TRANSFER PUMP	0421 - 4
1G23	WORK LIGHT	1674 - 2

MEMORANDA

TRACK FRAME

T146657 -UN-22OCT01

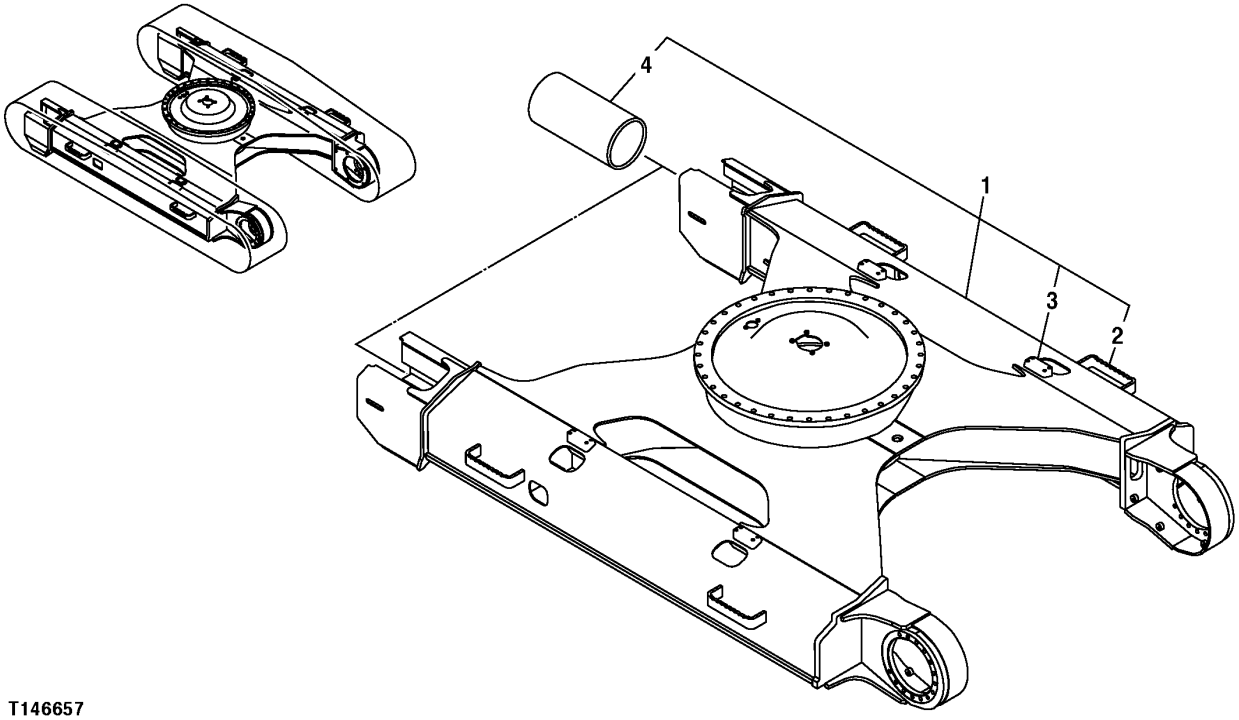

T146657

TRACK FRAME

KEY	PART NO.	PART NAME	QTY	SERIAL NO.	REMARKS
1	5006846	FRAME	1		(SUB FOR TH5006846)
2	.....	BRACKET	4		(P63343 NOT AVAILABLE FOR SERVICE)
3	3087108	BRACKET	2		(SUB FOR TH3087108)
4	DH400450	GUIDE	2		

TRACK GUARD

T143305 -UN-28JUN01

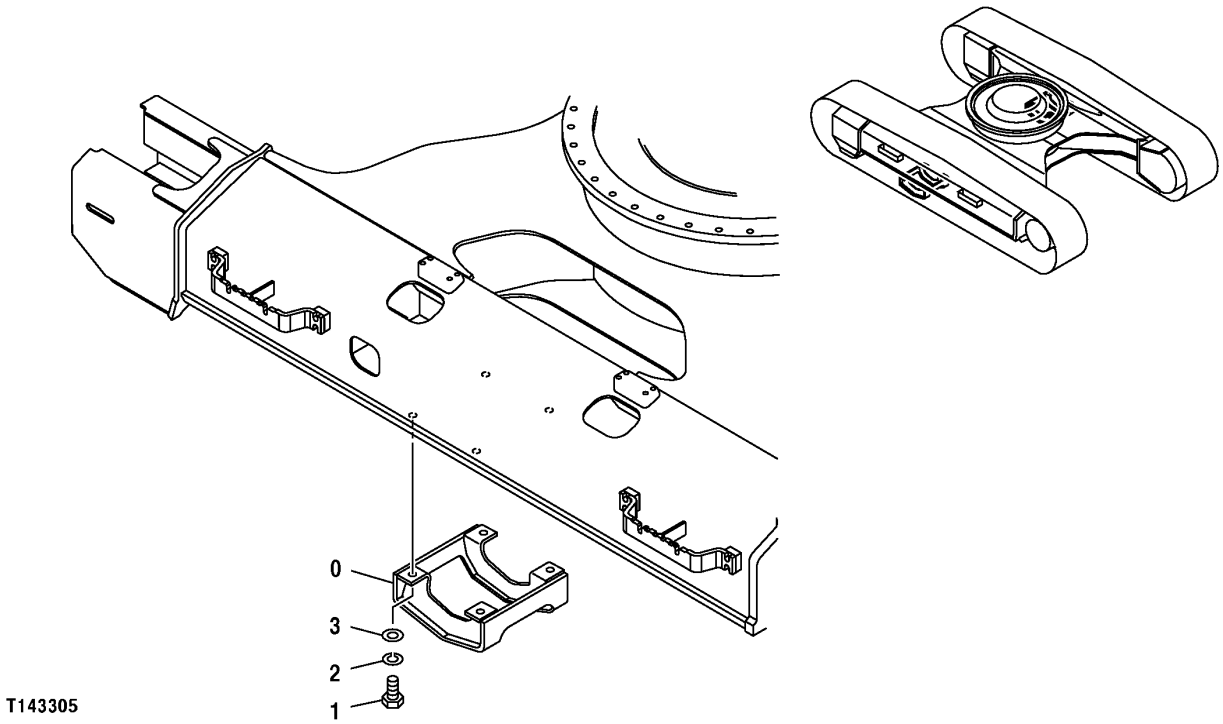

TRACK GUARD

KEY	PART NO.	PART NAME	QTY	SERIAL NO.	REMARKS
0	8052020	COVER	1		(SUB FOR AT154841)
1	19M8232	CAP SCREW	4		M18 X 50
2	12H236	LOCK WASHER	4		19.050 MM (3/4")
3	24M7353	WASHER	4		20 X 34 X 3 MM (0.787" X 1.339" X 0.118")

FRONT IDLER

T163601 -UN-08JAN03

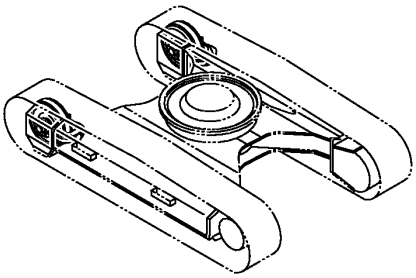

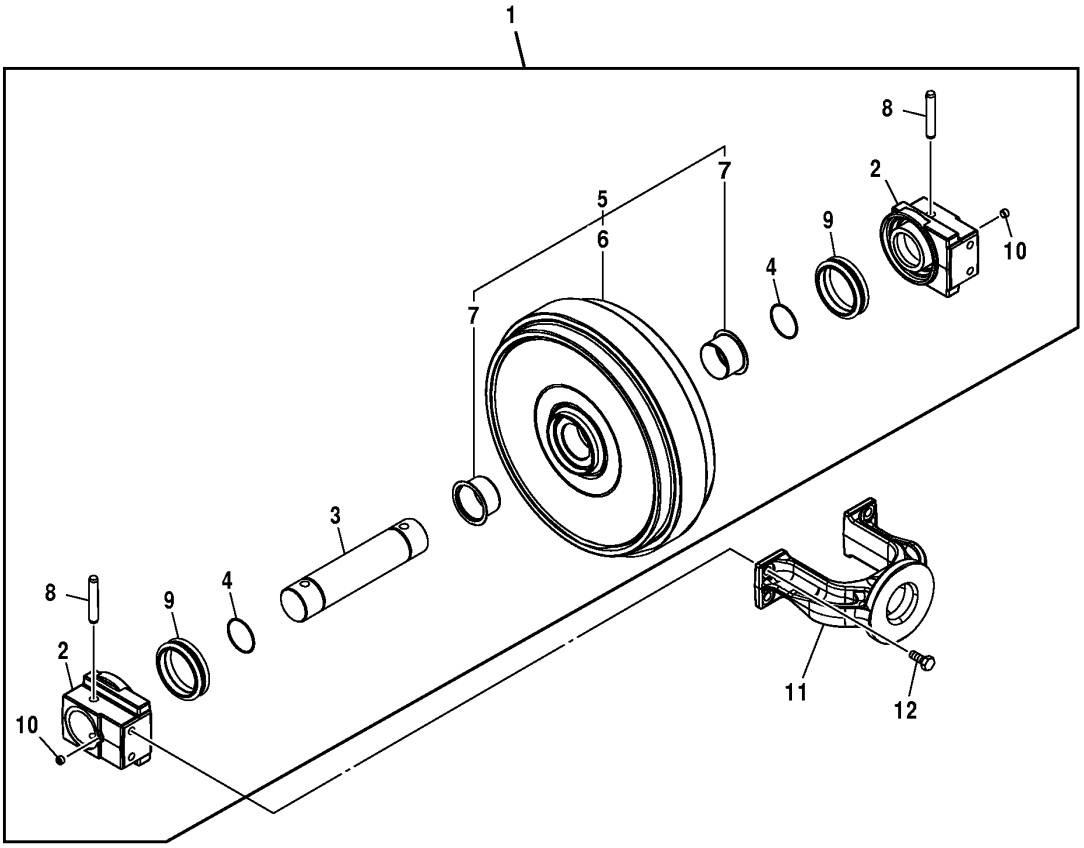

T163601

FRONT IDLER

KEY	PART NO.	PART NAME	QTY	SERIAL NO.	REMARKS
1	AT301568	IDLER SPROCKET	1		
2	DH100030	BEARING	2		(SUB FOR THDH100030)
3	AT180022	SHAFT	1		
4	AT180019	O-RING	2		69.400 X 3.100 MM (2.732" X 0.122")
5	AT180020	ROLLER	1		
6	DH100001	IDLER SPROCKET	1		(SUB FOR THDH100001)
7	AT180021	BUSHING	2		75 X 79 X 48.500 MM (2.953" X 3.110" X 1.909")
8	AT180015	PIN FASTENER	2		20.500 X 107 MM (0.807" X 4.213")
9	AT180017	SEAL	2		
10	AT180007	FITTING PLUG	2		
11	DH100029	YOKE	1		(SUB FOR THDH100029)
12	19M8035	CAP SCREW	4		M16 X 35

ADJUSTER

T159313 -UN-12SEP02

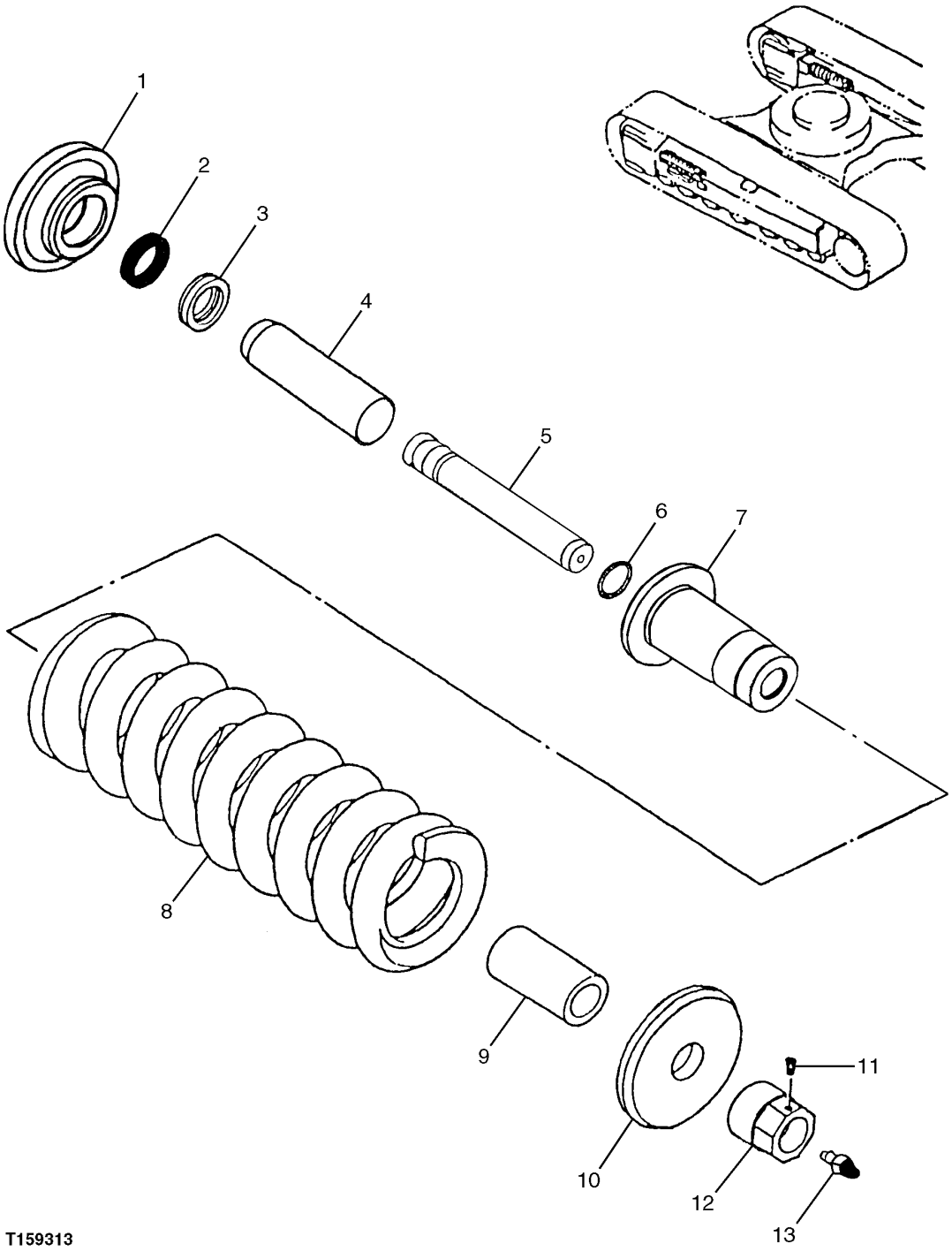

T159313

ADJUSTER

KEY	PART NO.	PART NAME	QTY	SERIAL NO.	REMARKS
1	DH400366	FLANGE	1		(SUB FOR THDH400366)
2	T177864	BEARING CONE	1		
3	T177865	BEARING CONE	1		
4	DH300088	PISTON	1		(SUB FOR THDH300088)
5	DH200029	ROD	1		(SUB FOR THDH200029)
6	AT180042	RING	1		61.910 X 3.530 MM (2.437" X 0.139")
7	DH200028	CYLINDER	1		(SUB FOR THDH200028)
8	DH300085	SPRING	1		(SUB FOR THDH300085)
9	DH400320	SPACER	1		(SUB FOR THDH400320)
10	DH300089	FLANGE	1		(SUB FOR THDH300089)
11	AT180047	FITTING PLUG	1		
12	AT180046	NUT	1		
13	AT280814	CHECK VALVE	1		

TRACK FRAME UPPER ROLLER

T158549 -UN-16AUG02

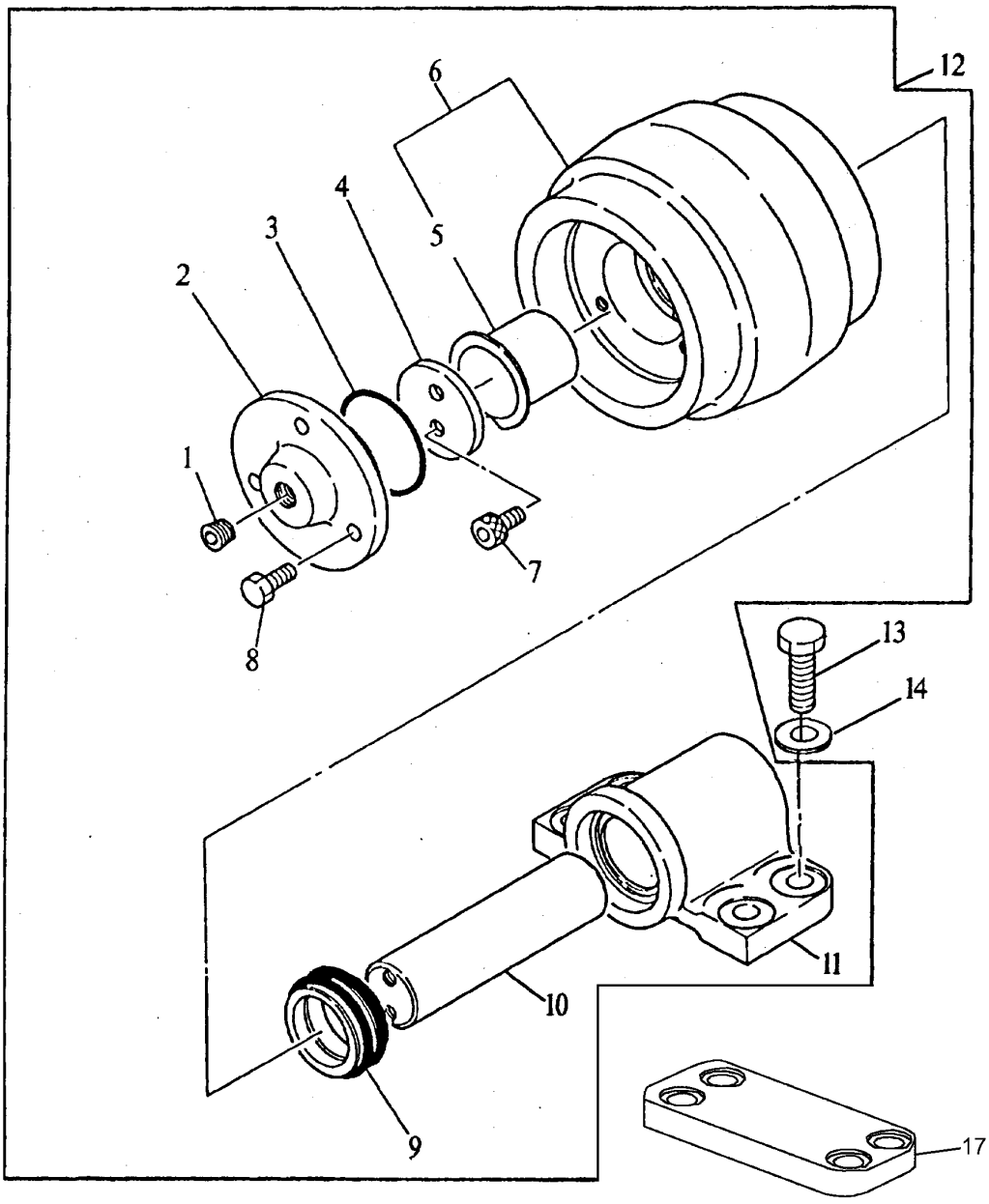

T158549

TRACK FRAME UPPER ROLLER

KEY	PART NO.	PART NAME	QTY	SERIAL NO.	REMARKS
1	AT180007	FITTING PLUG	1		
2	.....	COVER	1		(NOT AVAILABLE FOR SERVICE)
3	.....	O-RING	1		(NOT AVAILABLE FOR SERVICE)
4	AT180005	WASHER	1		
5	AT180004	BUSHING	1		40 X 44 X 61.500 MM (1.575" X 1.732" X 2.421")
6	.....	ROLLER	1		(AP34255 NOT AVAILABLE FOR SERVICE)
7	AT180006	SCREW	2		M10 X 18
8	.....	CAP SCREW	4		(NOT AVAILABLE FOR SERVICE)
9	AT180008	SEAL	1		
10	.....	SHAFT	1		
11	.....	SUPPORT	1		
12	AP34667	ROLLER	4		(ALSO ORDER 4334245 AND (4) 19M8295)
13	19M8295	CAP SCREW	16		M16 X 55
14	.....	WASHER	16		(NOT AVAILABLE FOR SERVICE)
15	4334245	SPACER	4		

TRACK FRAME LOWER ROLLER

TP40127 -UN-01JAN94

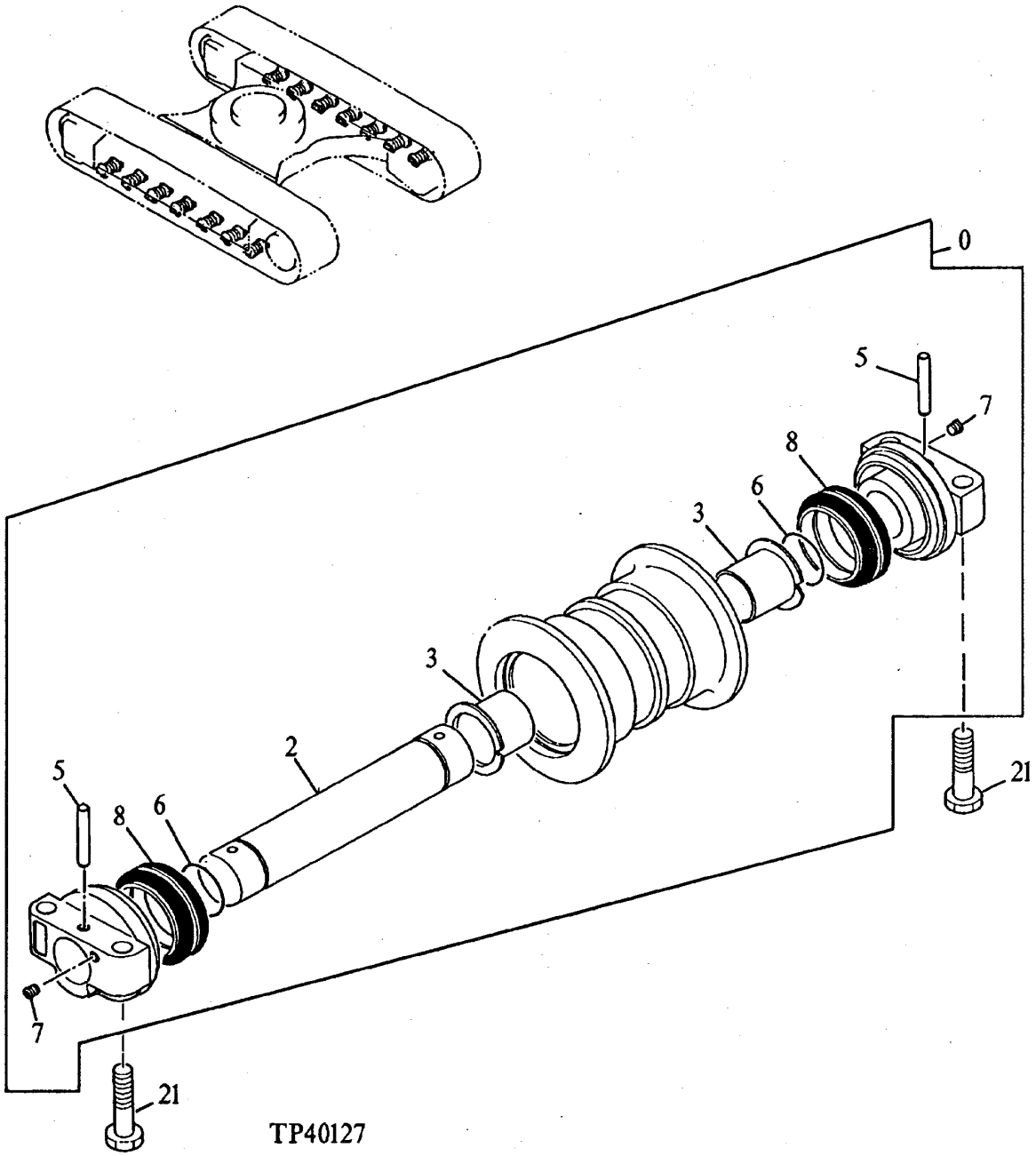

TRACK FRAME LOWER ROLLER

KEY	PART NO.	PART NAME	QTY	SERIAL NO.	REMARKS
0	AP34666	ROLLER	16		
2	.....	SHAFT	1		(NOT AVAILABLE FOR SERVICE)
3	AT180013	BUSHING	2		65 X 69 X 64.500 MM (2.559" X 2.717" X 2.539")
5	AT180009	PIN FASTENER	2		
6	AT180012	O-RING	2		59.400 X 3.100 MM (2.339" X 0.122")
7	AT180007	FITTING PLUG	2		
8	AT180011	SEAL	2		
21	4331851	CAP SCREW	56		(SUB FOR AT213839)

TRACK CHAIN LINKS AND SHOES
(WITH "M" SEAL)

T159314 -UN-12SEP02

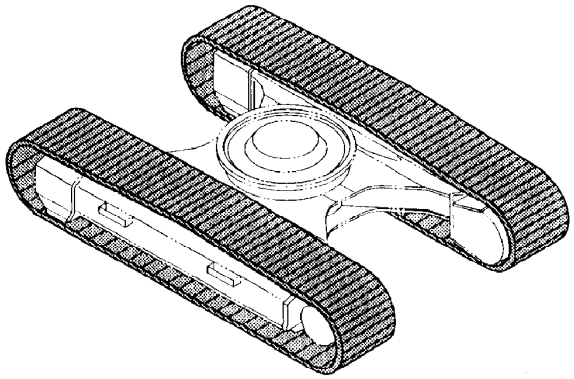

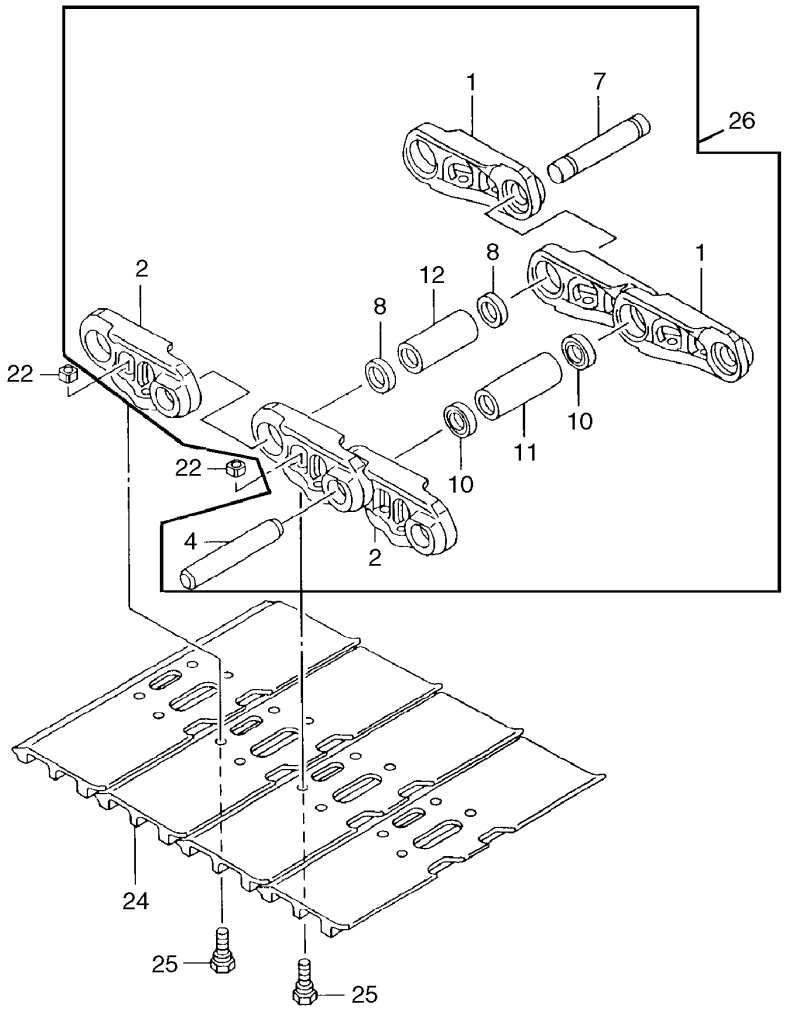

T159314

TRACK CHAIN LINKS AND SHOES
(WITH "M" SEAL)

KEY	PART NO.	PART NAME	QTY	SERIAL NO.	REMARKS
1	AT180025	LINK	49		
2	AT180027	LINK	49		
4	AT180028	PIN FASTENER	50		(A) 38 X 212 MM (1.496" X 8.346")
7	AT180030	PIN FASTENER	1		(A) (MASTER PIN)
8	AT219471	SPACER	2		(A)
10	AT186161	SEAL	100		(A)
11	AT186162	BUSHING	50		(A)
12	AT219468	BUSHING	1		(A) (MASTER)
13	AT187185	PIN & BUSHING KIT	1		(INCLUDES PARTS MARKED (A))
22	AT180048	NUT	196		(EACH SIDE OF UNIT)
24	AT180034	OPEN CENTER 3 BAR SHOE	49		(600 MM) (EACH SIDE OF UNIT)
	AT180035	OPEN CENTER 3 BAR SHOE	49		(700 MM) (EACH SIDE OF UNIT)
	AT219470	OPEN CENTER 3 BAR SHOE	49		(800 MM) (EACH SIDE OF UNIT)
25	AT180036	TRACK BOLT	196		(EACH SIDE OF UNIT)
26	AT219478	TRACK CHAIN W/O SHOES	2		(QUANTITY OF 1 EACH SIDE OF UNIT)

TRAVEL DEVICE

T143610 -UN-09JUL01

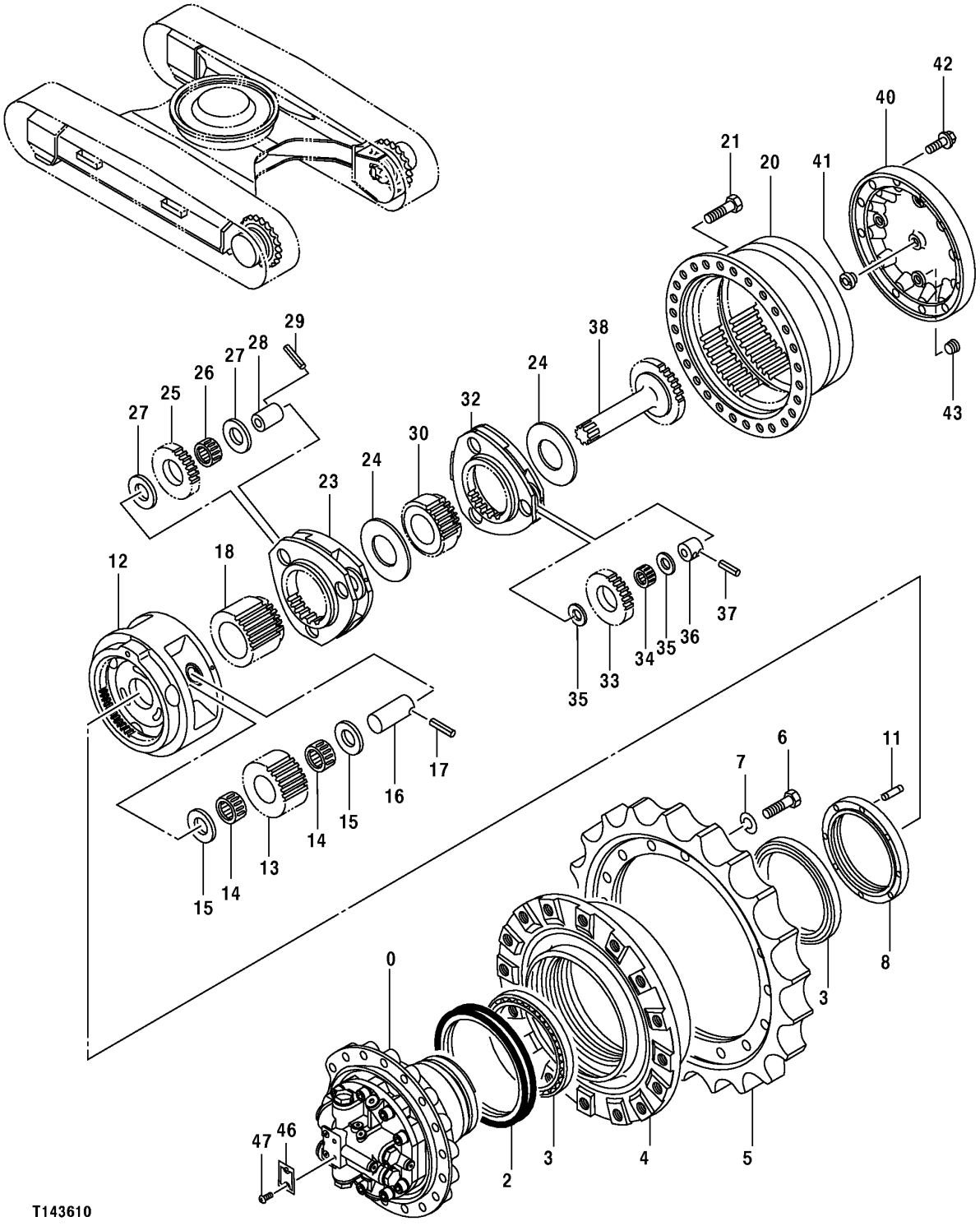

TRAVEL DEVICE

KEY	PART NO.	PART NAME	QTY	SERIAL NO.	REMARKS
0	TH9200288	HYDRAULIC MOTOR	1		(PROPEL) (SEE SEPARATE PAGE FOR DETAIL)
2	AT154697	SEAL	1		
3	AT130941	TAPERED ROLLER BEARING	2		
4	1027152	DRUM	1		(SUB FOR TH1027152)
5	1010203	DRIVE SPROCKET	1		(SUB FOR TH109726)
6	J932055	CAP SCREW	16		
7	12M7070	LOCK WASHER	16		
8	3086531	RING	1		(SUB FOR TH3086531)
11	4436242	PIN FASTENER	1		(SUB FOR TH4436242)
12	1026779	CARRIER ROLLER	1		(SUB FOR TH1026779)
13	3085966	GEAR	3		(SUB FOR TH3085966)
14	4445531	NEEDLE BEARING	6		(SUB FOR TH4445531)
15	4284521	SHIM	6		(SUB FOR AT204941)
16	4139975	PIN FASTENER	3		(SUB FOR T107729)
17	34M7133	SPRING PIN	3		8 X 70 MM (0.315" X 2.756")
18	3085927	SUN GEAR	1		(SUB FOR TH3085927)
20	1027158	RING GEAR	1		(SUB FOR TH1027158)
21	19M7488	CAP SCREW	28		M16 X 40
23	1027161	CARRIER ROLLER	1		(SUB FOR TH1027161)
24	4401293	SPACER	2		(SUB FOR TH4401293)
25	3085985	GEAR	3		(SUB FOR TH3085985)
26	4445529	NEEDLE BEARING	3		(SUB FOR TH4445529)
27	4210851	PLATE	6		(SUB FOR TH4210851)
28	TH4309995	SPACER	3		
29	4246358	PIN FASTENER	3		(SUB FOR TH4246358)
30	3085941	SUN GEAR	1		(SUB FOR TH3085941)
32	1027160	CARRIER ROLLER	1		(SUB FOR TH1027160)
33	3086006	GEAR	3		(SUB FOR TH3086006)
34	4406589	NEEDLE BEARING	3		(SUB FOR TH4406589)
35	4192910	PLATE	6		(SUB FOR TH108847)
36	4210853	SPACER	3		(SUB FOR AT154702)
37	4173093	SPRING PIN	3		(SUB FOR TH108841)
38	2043851	UNIVERSAL DRIVESHAFT	1		(SUB FOR TH2043851)
40	2043868	COVER	1		(SUB FOR TH2043868)
41	4285323	PIN	1		(SUB FOR AT154798)
42	19M8011	CAP SCREW	12		M12 X 30
43	94-2013	FITTING PLUG	3		(SUB FOR TH100648)
46	.....	IDENTIFICATION PLATE	1		
47	.....	SCREW	2		

ROTARY MANIFOLD COVER AND STOP

T143225 -UN-28JUN01

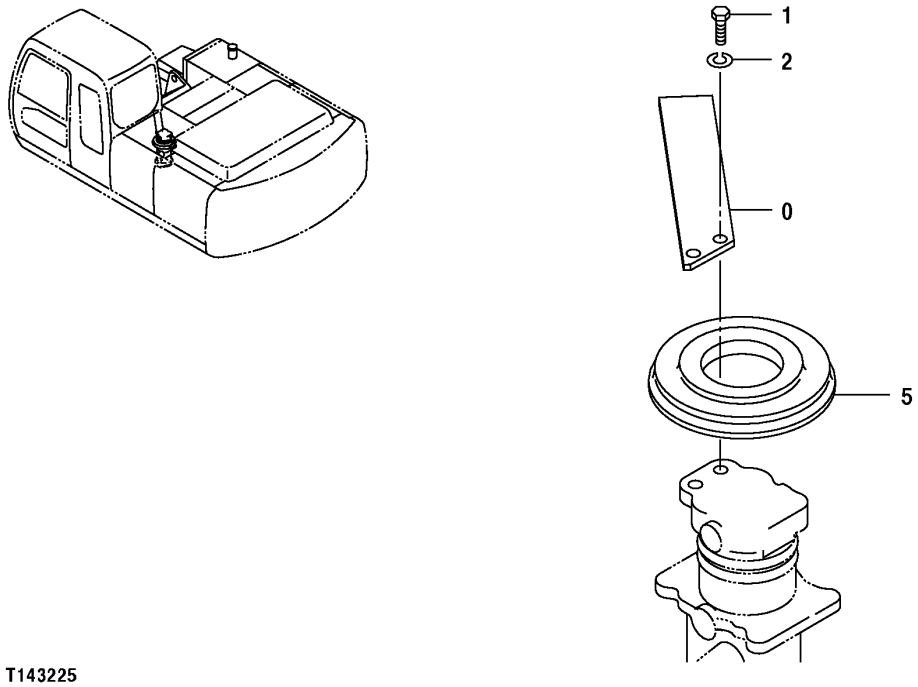

T143225

ROTARY MANIFOLD COVER AND STOP

KEY	PART NO.	PART NAME	QTY	SERIAL NO.	REMARKS
0	4274282	STOP	1		(SUB FOR AT155305)
1	19M6332	CAP SCREW	2		M14 X 35
2	12H317	LOCK WASHER	2		14.288 MM (9/16")
5	4428007	COVER	1		(SUB FOR T138508)

ROTARY MANIFOLD (TRACK FRAME) SEAL

T192733 -UN-07JUL03

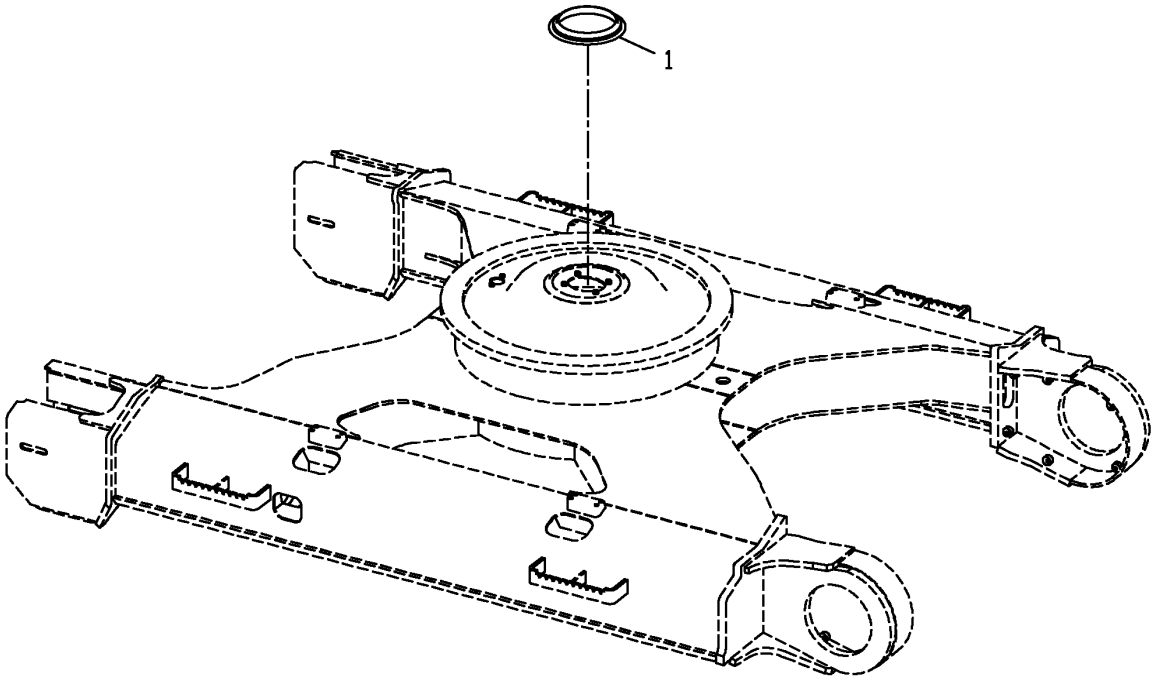

T192733

ROTARY MANIFOLD (TRACK FRAME) SEAL

KEY	PART NO.	PART NAME	QTY	SERIAL NO.	REMARKS
1	9229187	SEAL	1		

TRAVEL DEVICE SUPPORT

T143310 -UN-28JUN01

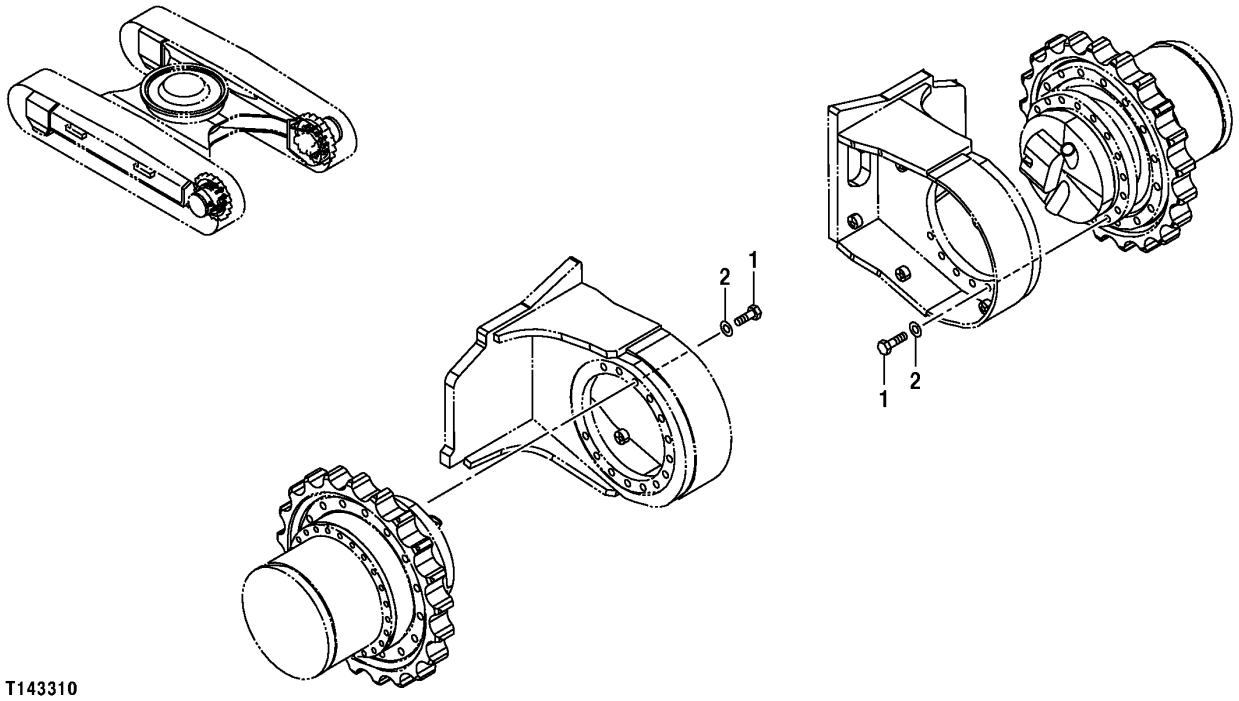

TRAVEL DEVICE SUPPORT

KEY	PART NO.	PART NAME	QTY	SERIAL NO.	REMARKS
1	4258061	BOLT	14		(SUB FOR AT154757)
2	N231749	WASHER	14		20.625 X 38.100 X 6.350 MM (13/16" X 1-1/2" X 1/4")

ROTARY MANIFOLD

T149021 -UN-08DEC01

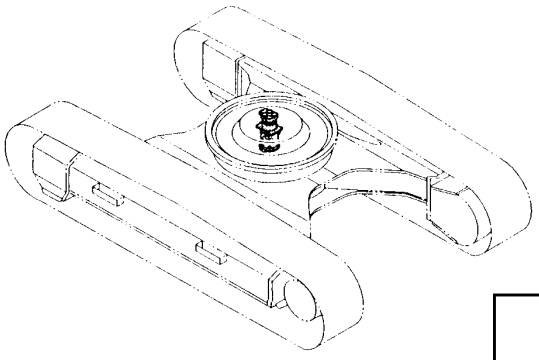

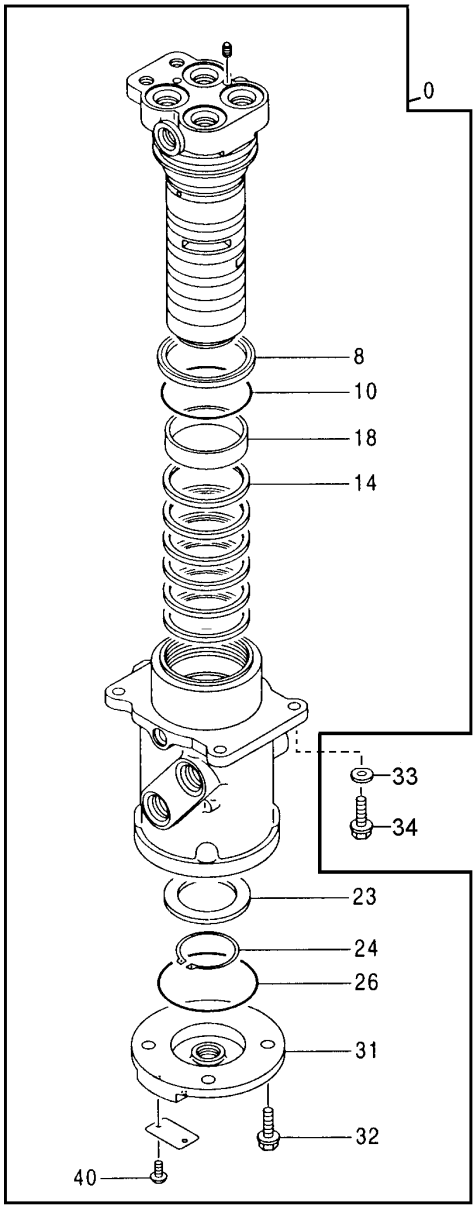

T149021

ROTARY MANIFOLD

KEY	PART NO.	PART NAME	QTY	SERIAL NO.	REMARKS
0	9107265EX	MANIFOLD	1		(SUB FOR AT154528) (SUB FOR AT182278)
8	AT154321	SEAL	1		(SUB FOR 4272803)
10	AT264418	O-RING	1		(SUB FOR 4367664, U46155)
14	AT154162	SEAL	6		
18	4241780	BUSHING	1		(SUB FOR AT154173)
23	3070250	RING	1		(SUB FOR AT203646)
24	40M7048	SNAP RING	1		
26	CH16109	PACKING	1		
31	2034607	COVER	1		(SUB FOR AT170452)
32	12M7066	LOCK WASHER	4		10 MM (0.394")
	19M7662	CAP SCREW	4		M10 X 30
33	12H301	LOCK WASHER	4		12.700 MM (1/2")
34	19M7403	CAP SCREW	4		M12 X 35
40	37H99	SCREW	2		2.540 X 6.350 MM (0.100" X 1/4")

TRAVEL PROPEL MOTOR HYDRAULIC HOSES

T150163 -UN-17JAN02

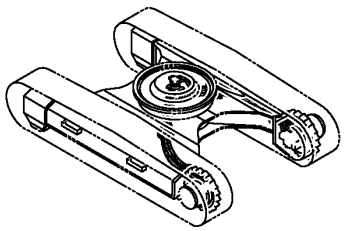

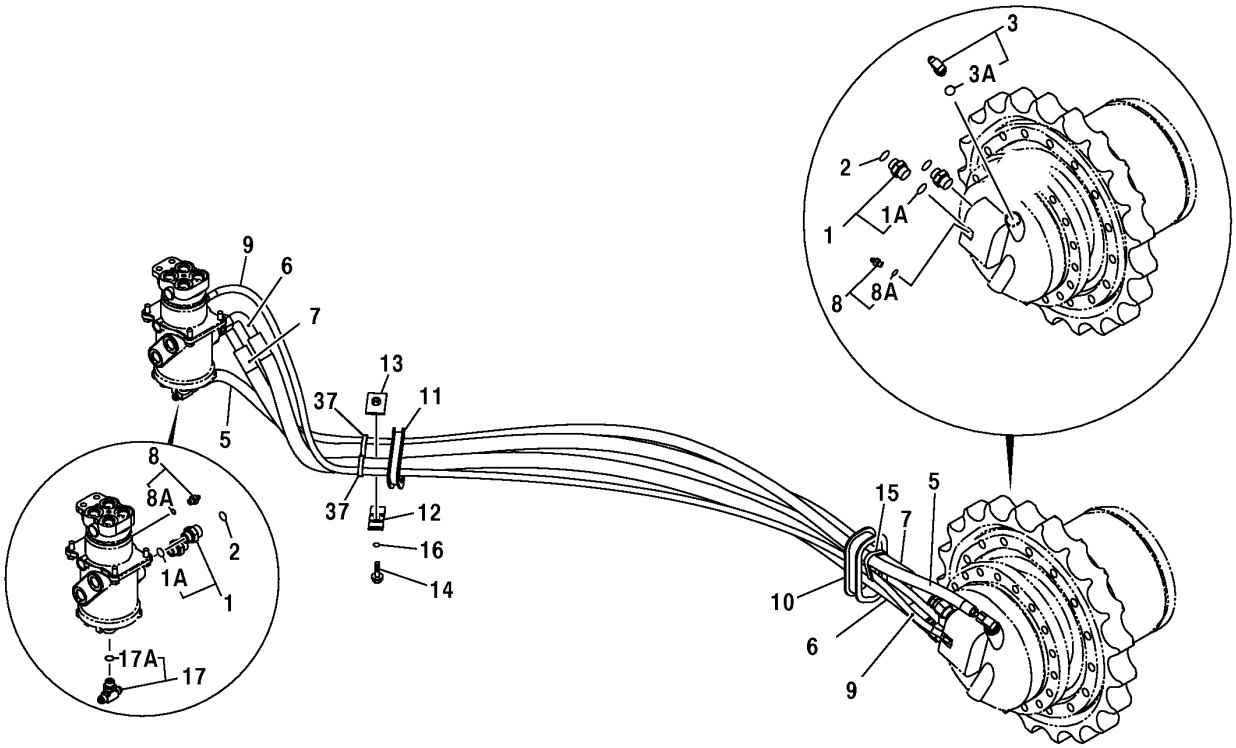

T150163

TRAVEL PROPEL MOTOR HYDRAULIC HOSES

KEY	PART NO.	PART NAME	QTY	SERIAL NO.	REMARKS
1	A853166	ADAPTER	8		(SUB FOR THA853166)
1A	4506424	O-RING	1		23.700 X 3.500 MM (0.933" X 0.138") (SUB FOR TH100055)
2	T77858	O-RING	8		18.771 X 1.778 MM (0.739" X 0.070")
3	A852344	ELBOW FITTING	2		
3A	4506418	O-RING	1		(SUB FOR U46489)
5	4267667	HYDRAULIC HOSE - FABRICATE	2		(SUB FOR TH4267667)
6	AT215497	HYDRAULIC HOSE - FABRICATE	2		1-3/16" X 2 200 MM (86-1/2") X 1-3/16"
7	AT215498	HYDRAULIC HOSE - FABRICATE	2		1-3/16" X 2 200 MM (86-1/2") X 1-3/16"
8	P67968	ADAPTER	4		
8A	M800650	PACKING	1		
9	4449378	HYDRAULIC HOSE - FABRICATE	2		(SUB FOR TH4449378)
10	4437525	GROMMET	2		(SUB FOR TH4437525)
11	4428098	GROMMET	2		(SUB FOR TH4428098)
12	4202103	CLAMP	2		(SUB FOR TH108302)
13	9727822	CLAMP	2		(SUB FOR TH109556)
14	19M7361	CAP SCREW	2		M12 X 50
15	H77698	TIE BAND	6		
16	12H301	LOCK WASHER	2		12.700 MM (1/2")
17	A852544	TEE FITTING	1		(SUB FOR THA852544)
17A	4506418	O-RING	1		(SUB FOR U46489)
37	H77698	TIE BAND	3		

TRAVEL PROPEL MOTOR COVERS

T148951 -UN-06DEC01

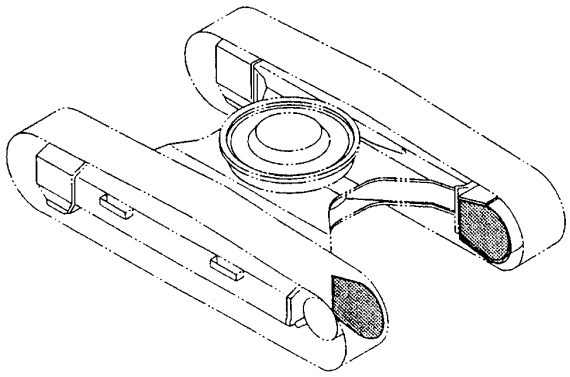

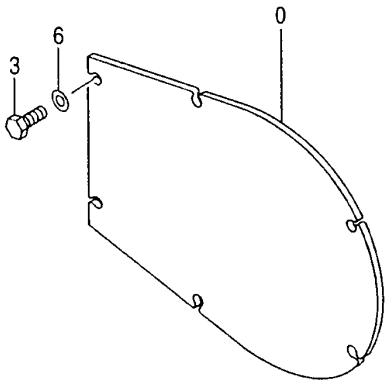

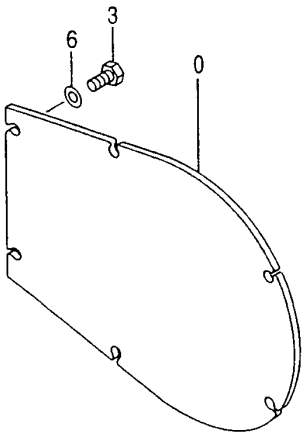

T148951

TRAVEL PROPEL MOTOR COVERS

KEY	PART NO.	PART NAME	QTY	SERIAL NO.	REMARKS
0	3087256	COVER	2		(SUB FOR TH3087256)
3	19M6332	CAP SCREW	12		M14 X 35
6	J222014	WASHER	12		(SUB FOR AT200011)

TRAVEL PROPEL MOTOR BRAKE VALVE

T147887 -UN-06NOV01

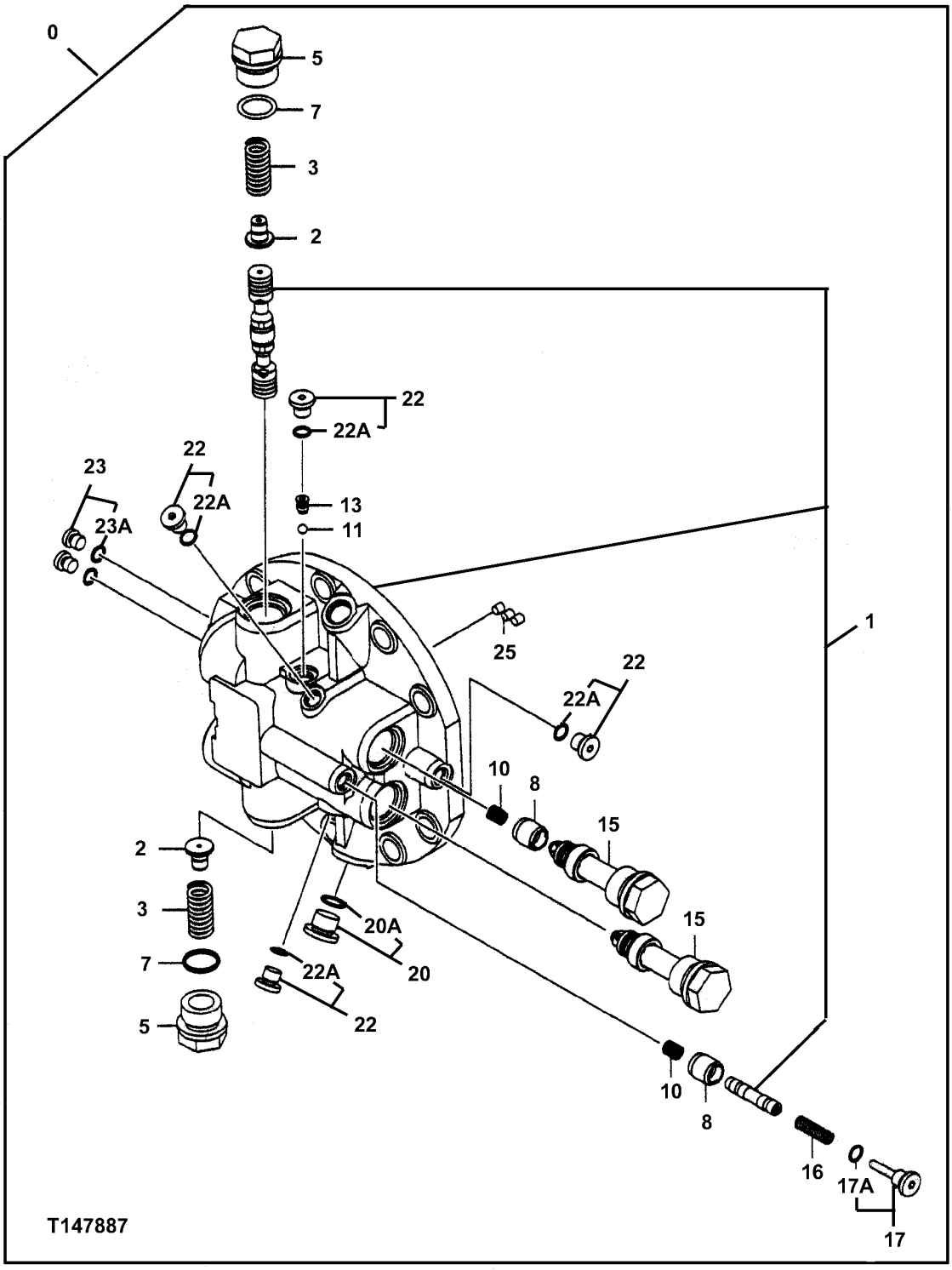

TRAVEL PROPEL MOTOR BRAKE VALVE

KEY	PART NO.	PART NAME	QTY	SERIAL NO.	REMARKS
0	9195450	FLOW CONTROL HYD. VALVE	1		(PROPEL MOTOR BRAKE VALVE)
1	.....	HOUSING	1		(TH8071211 NOT AVAILABLE)
2	4397021	STOP	2		(SUB FOR TH4397021)
3	4409389	SPRING	2		(SUB FOR TH4409389)
5	4229631	DRAIN PLUG	2		(SUB FOR TH112085)
7	TH101926	O-RING	2		28.700 X 3.500 MM (1.130" X 0.138")
8	4397022	POPPET	2		(SUB FOR TH4397022)
10	4396771	SPRING	2		(SUB FOR TH4396771)
11	R26552	BALL	1		7.938 MM (5/16")
13	4398281	SEAT	1		(SUB FOR TH4398281)
15	9185757	RELIEF VALVE	2		
16	4297257	COMPRESSION SPRING	1		(SUB FOR AT159500)
17	9167977	PIPE PLUG	1		(SUB FOR TH9167977)
17A	M800650	PACKING	1		
20	9134112	FITTING PLUG	1		(SUB FOR AT203657)
20A	4506418	O-RING	1		(SUB FOR U46489)
22	9134110	PIPE PLUG	4		(SUB FOR AT203649)
22A	M800650	PACKING	1		
23	9134109	DRAIN PLUG	2		(SUB FOR AT203656)
23A	4506408	O-RING	1		7.800 X 1.900 MM (0.307" X 0.075") (SUB FOR TH101490)
25	15H560	PIPE PLUG	4		1.575 MM (1/16")

TRAVEL PROPEL MOTOR HYDRAULIC HOSES

T150163 -UN-17JAN02

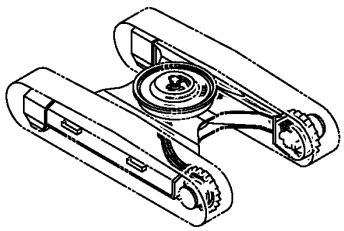

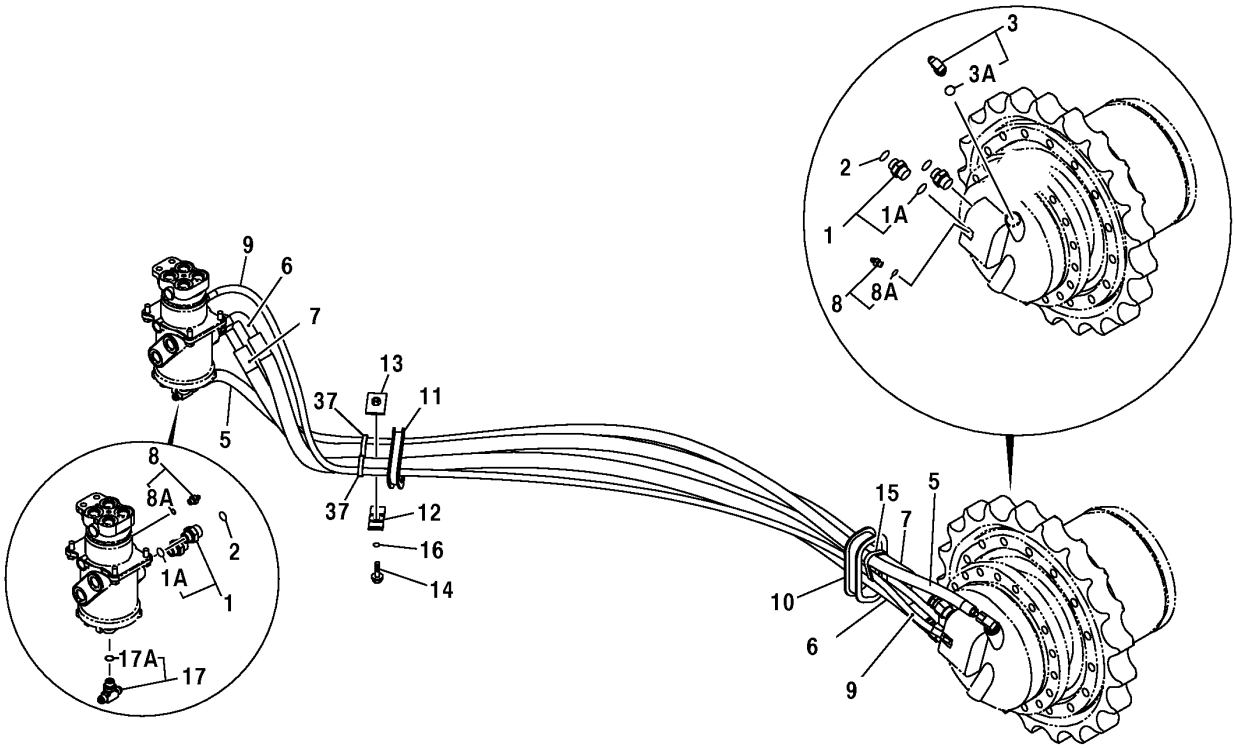

T150163

TRAVEL PROPEL MOTOR HYDRAULIC HOSES

KEY	PART NO.	PART NAME	QTY	SERIAL NO.	REMARKS
1	A853166	ADAPTER	8		(SUB FOR THA853166)
1A	4506424	O-RING	1		23.700 X 3.500 MM (0.933" X 0.138") (SUB FOR TH100055)
2	T77858	O-RING	8		18.771 X 1.778 MM (0.739" X 0.070")
3	A852344	ELBOW FITTING	2		
3A	4506418	O-RING	1		(SUB FOR U46489)
5	4267667	HYDRAULIC HOSE - FABRICATE	2		(SUB FOR TH4267667)
6	AT215497	HYDRAULIC HOSE - FABRICATE	2		1-3/16" X 2 200 MM (86-1/2") X 1-3/16"
7	AT215498	HYDRAULIC HOSE - FABRICATE	2		1-3/16" X 2 200 MM (86-1/2") X 1-3/16"
8	P67968	ADAPTER	4		
8A	M800650	PACKING	1		
9	4449378	HYDRAULIC HOSE - FABRICATE	2		(SUB FOR TH4449378)
10	4437525	GROMMET	2		(SUB FOR TH4437525)
11	4428098	GROMMET	2		(SUB FOR TH4428098)
12	4202103	CLAMP	2		(SUB FOR TH108302)
13	9727822	CLAMP	2		(SUB FOR TH109556)
14	19M7361	CAP SCREW	2		M12 X 50
15	H77698	TIE BAND	6		
16	12H301	LOCK WASHER	2		12.700 MM (1/2")
17	A852544	TEE FITTING	1		(SUB FOR THA852544)
17A	4506418	O-RING	1		(SUB FOR U46489)
37	H77698	TIE BAND	3		

TRAVEL PROPEL MOTOR

T147881 -UN-06NOV01

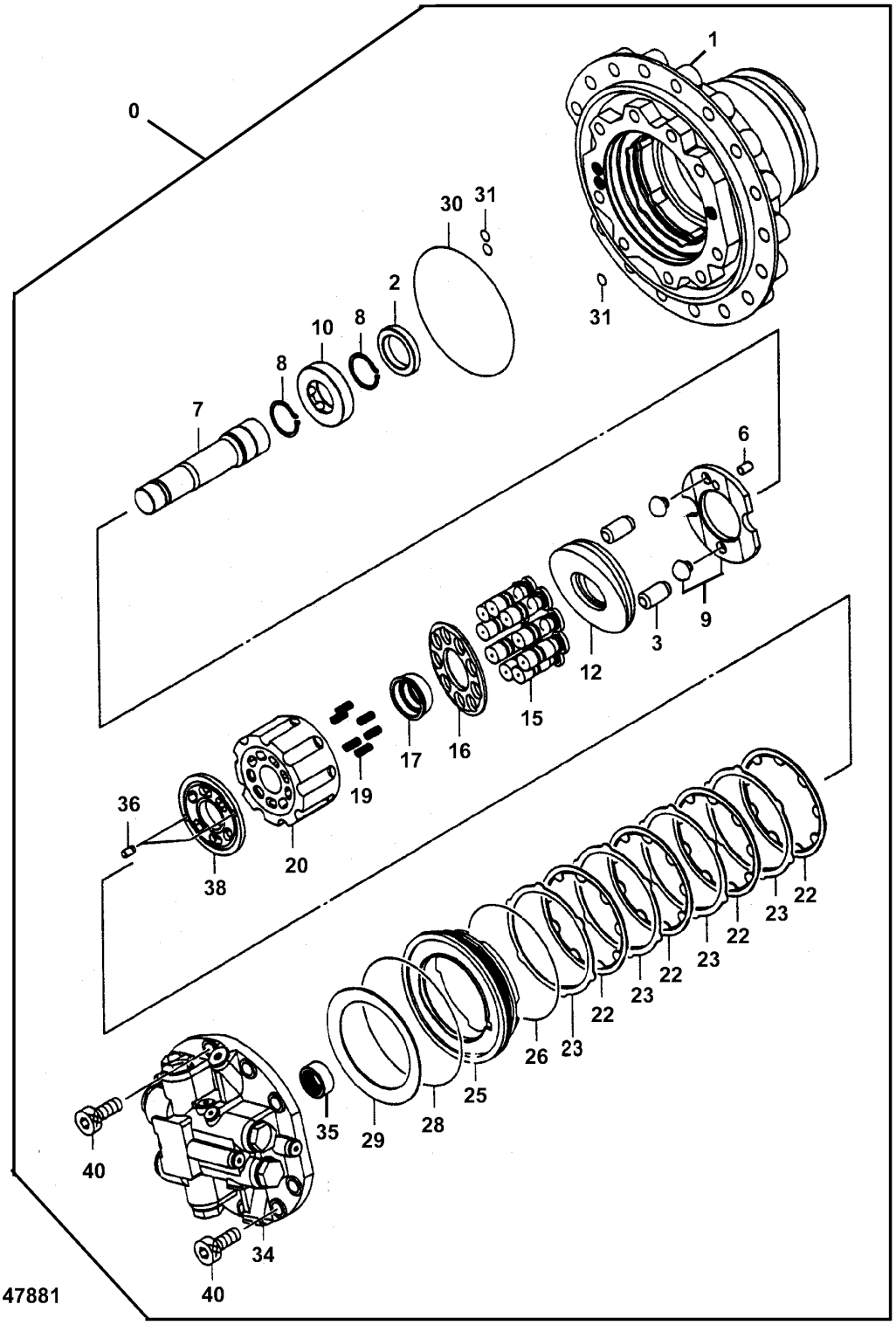

TRAVEL PROPEL MOTOR

KEY	PART NO.	PART NAME	QTY	SERIAL NO.	REMARKS
0	TH9200288	HYDRAULIC MOTOR	1		
1	1025878	HOUSING	1		(SUB FOR TH1025878)
2	4396696	SEAL	1		(SUB FOR TH4396696)
3	4417431	PISTON	2		(SUB FOR TH4417431)
6	4409640	PIN FASTENER	1		(SUB FOR TH4409640)
7	2042080	SHAFT	1		(SUB FOR TH2042080)
8	40M7166	SNAP RING	2		
9	9181133	PLATE	1		
10	4396755	CYLINDRICAL ROLLER BEARING	1		(SUB FOR TH4396755)
12	3085485	PLATE	1		(SUB FOR TH3085485)
15	8075190	PISTON	9		(SUB FOR TH8075190)
16	3081570	RETAINER	1		(SUB FOR TH3081570)
17	4397757	BUSHING	1		(SUB FOR TH4397757)
19	4396747	SPRING	6		(SUB FOR TH4396747)
20	2042060	HOUSING	1		(SUB FOR TH2042060)
22	3081593	PLATE	4		(SUB FOR TH3081593)
23	3081592	PLATE	4		(SUB FOR TH3081592)
25	3081595	PISTON	1		(SUB FOR TH3081595)
26	4396775	O-RING	1		(SUB FOR TH4396775)
28	4396774	O-RING	1		(SUB FOR TH4396774)
29	3081594	SPRING	1		(SUB FOR TH3081594)
30	4420958	O-RING	1		(SUB FOR TH4420958)
31	T111819	O-RING	3		14.800 X 2.400 MM (0.583" X 0.094")
34	9195450	FLOW CONTROL HYD. VALVE	1		
35	4396759	NEEDLE BEARING	1		(SUB FOR TH4396759)
36	4422627	PIN FASTENER	2		(SUB FOR TH4422627)
38	3101081	PLATE	1		(SUB FOR TH3081568, 3081568)
40	M341850	BOLT	9		(SUB FOR AT131557)

BRAKE VALVE RELIEF VALVE

T147904 -UN-06NOV01

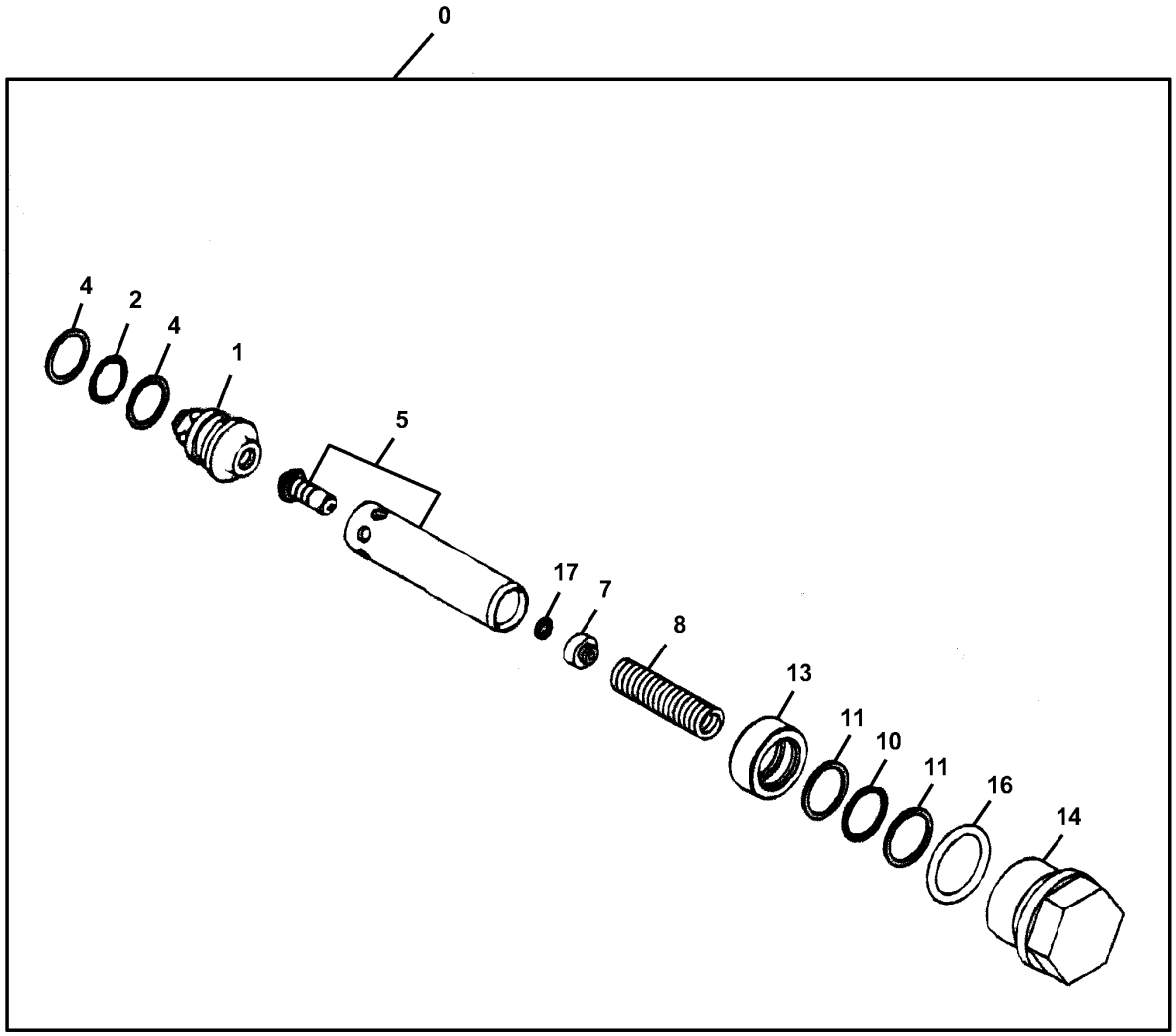

T147904

BRAKE VALVE RELIEF VALVE

KEY	PART NO.	PART NAME	QTY	SERIAL NO.	REMARKS
0	9185757	RELIEF VALVE	1		(PROPEL MOTOR BRAKE VALVE)
1	.....	SLEEVE	1		(TH3086417 NOT AVAILABLE)
2	4506418	O-RING	1		(SUB FOR U46489)
4	4033725	BACK-UP RING	2		(SUB FOR TH103576)
5	.....	VALVE	1		(TH9753750 NOT AVAILABLE)
7	.....	GUIDE	1		(TH4396955 NOT AVAILABLE)
8	.....	SPRING	1		(TH4396836 NOT AVAILABLE)
10	CH12329	PACKING	1		
11	4027959	BACK-UP RING	2		(SUB FOR TH100771)
13	.....	PISTON	1		(TH4396950 NOT AVAILABLE)
14	4397029	PIPE PLUG	1		(SUB FOR TH4397029)
16	TH101926	O-RING	1		28.700 X 3.500 MM (1.130" X 0.138")
17	24M7029	SHIM	1		0.500 MM (0.020")

MEMORANDA

CRANKSHAFT, CRANKSHAFT GEAR, AND MAIN BEARINGS

T145420 -UN-14SEP01

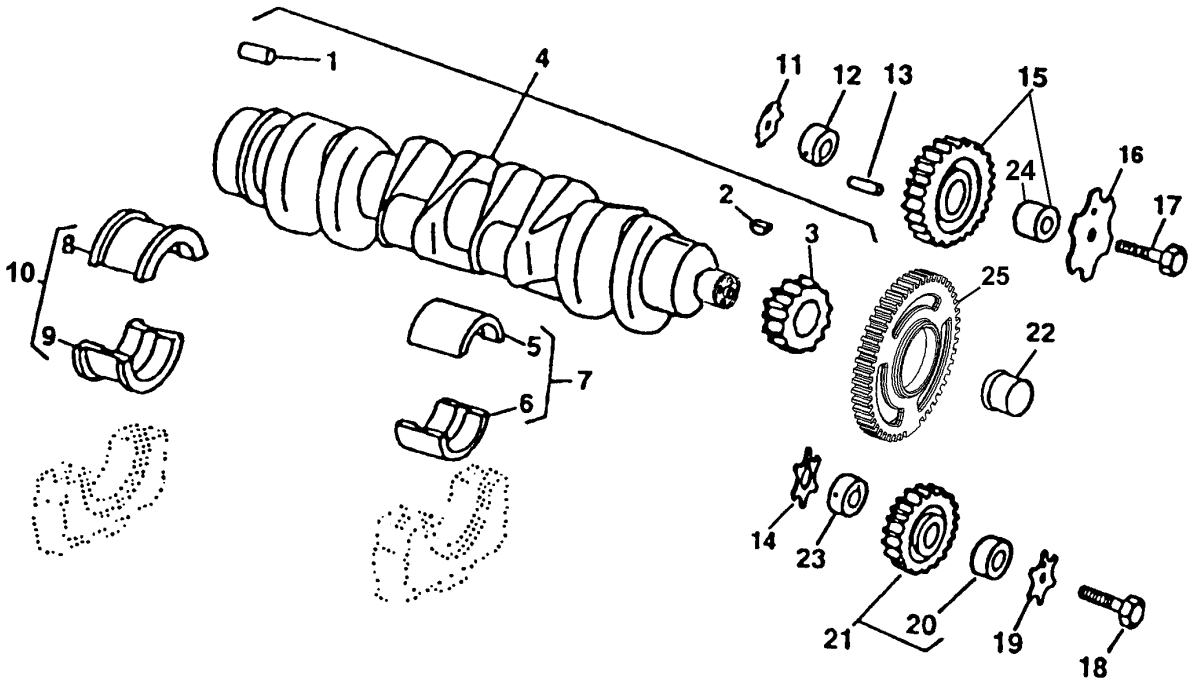

T145420

KEY	PART NO.	PART NAME	QTY	ENGINE SERIAL NO.	REMARKS
1	R48685	DOWEL PIN	1		12.700 X 28.448 MM (1/2" X 1.120")
2	R133303	SHAFT KEY	1		
3	R120631	GEAR	1		(30 TEETH)
4	RE504639	CRANKSHAFT	1		(MARKED R502654)
5	.....	BEARING	6		STANDARD UPPER, (MARKED R123561)
	.....	BEARING	6		UNDERSIZE UPPER .254 MM, (MARKED R130576)
6	.....	BEARING	6		STANDARD LOWER, (MARKED R123562)
	.....	BEARING	6		UNDERSIZE LOWER .254 MM, (MARKED R130577)
7	RE65165	BEARING KIT	6		STANDARD
	RE65911	BEARING	6		UNDERSIZE .254 MM
8	.....	BEARING	1		STANDARD UPPER, (MARKED R123563)
	.....	BEARING	1		UNDERSIZE UPPER .254 MM, (MARKED R130574)
9	.....	BEARING	1		STANDARD LOWER, (MARKED R123564)
	.....	BEARING	1		UNDERSIZE LOWER .254 MM, (MARKED R130575)
10	RE65168	BEARING KIT	1		STANDARD
	RE65912	THRUST BEARING	1		UNDERSIZE .254 MM
11	R123174	LOCK WASHER	1		
12	R120641	SHAFT	1		
13	34H288	SPRING PIN	1		4.775 X 44.450 MM (3/16" X 1-3/4")
14	R101225	THRUST WASHER	1		
15	RE56313	GEAR	1		
16	R131206	THRUST WASHER	1		
17	19M8997	SCREW	1		M10 X 65
18	19M8966	SCREW	1		M10 X 50
19	R131283	THRUST WASHER	1		
20	R114193	BUSHING	1		
21	RE56369	GEAR	1		
22	RE59811	SLEEVE	1		WITH INSTALLATION TOOL
23	R114194	SHAFT	1		
24	.....	BUSHING	1		
25	R501489	WHEEL SPEED SENSOR	1		(CRANKSHAFT SPEED)

THIS PARTS LISTING IS CONTINUED

CAMSHAFT

T144825 -UN-22AUG01

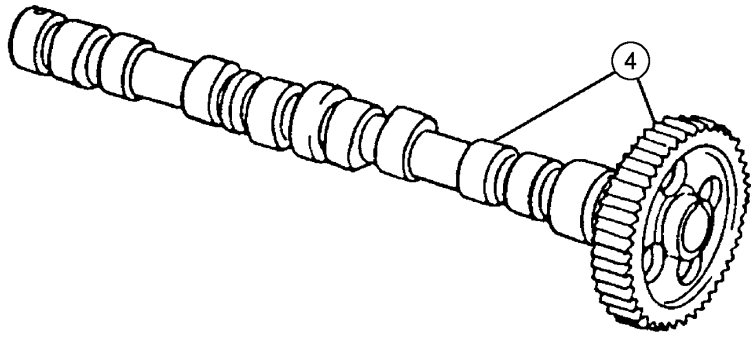

KEY	T144825 PART NO.	PART NAME	QTY	ENGINE SERIAL NO.	REMARKS
4	RE507149	CAMSHAFT	1		(WITH GEAR AND KEY) (MARKED R504535)

ROCKER ARM COVER AND ENGINE OIL FILL CAP

T144856 -UN-29AUG01

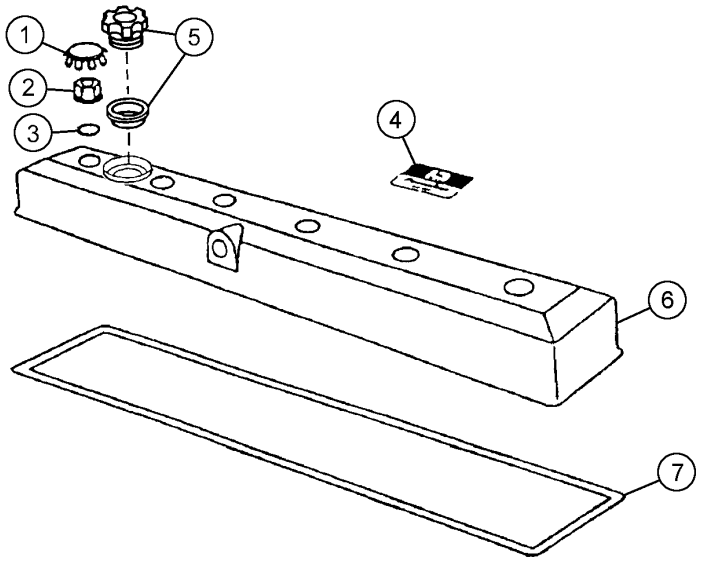

T144856

KEY	PART NO.	PART NAME	QTY	ENGINE SERIAL NO.	REMARKS
1	H23125	PLUG	6		
2	R123574	NUT	6		
3	R123575	O-RING	6		
4	R121674	MEDALLION	1		
5	RE500005	FILLER CAP	1		ENGINE OIL FILL
6	RE502986	VALVE COVER	1		
7	R123543	GASKET	1		

TIMING GEAR COVER AND GASKET

T149652 -UN-07JAN02

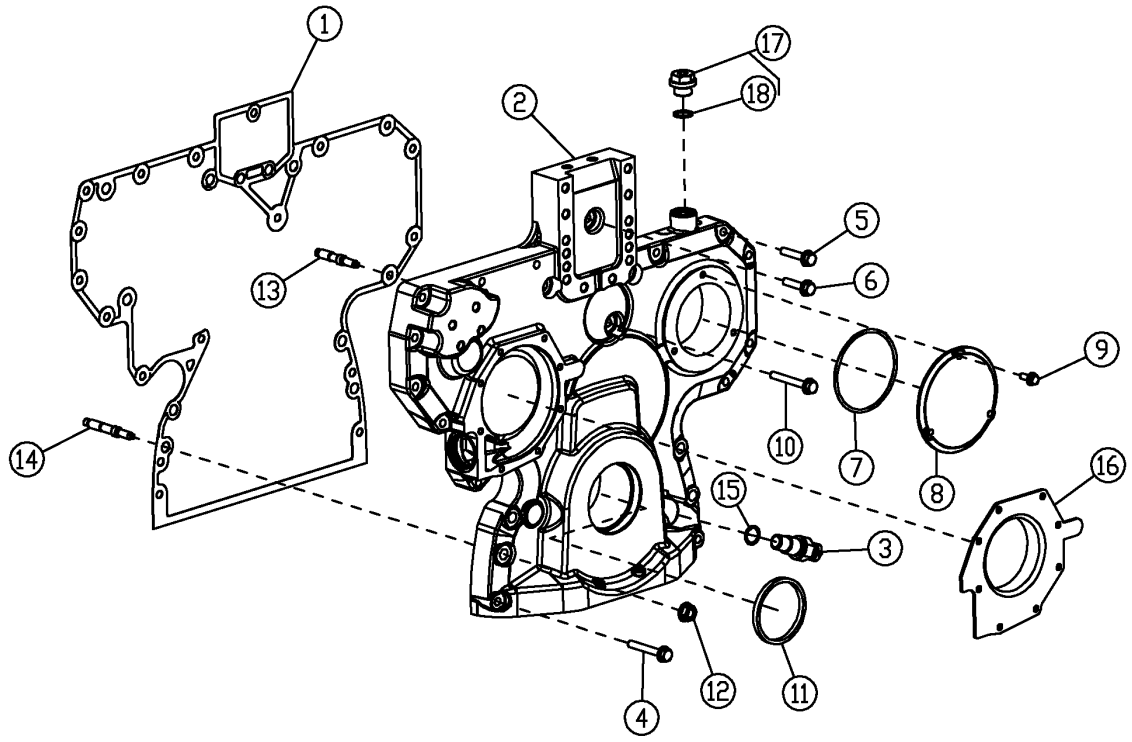

T149652

TIMING GEAR COVER AND GASKET

KEY	PART NO.	PART NAME	QTY	ENGINE SERIAL NO.	REMARKS
1	R136515	GASKET	1		
2	R504724	COVER	1		
3	RE508195	SENSOR	1		CRANKSHAFT SPEED
4	19M7979	SCREW	1		M8 X 55
5	19M8317	SCREW	10		M8 X 40
	RE67239	SCREW	1		
6	19M8291	SCREW	1		M8 X 35
7	R121424	O-RING	1		
8	R121411	COVER	1		
9	19M7775	SCREW	3		M6 X 16
10	19M7801	SCREW	1		M8 X 60
11	RE59810	SEAL	1		
12	14M7296	FLANGE NUT	6		
13	R134518	STUD	2		UPPER
14	R123584	STUD	4		LOWER
15	51M7044	O-RING	1		17.300 X 2.200 MM
16	RE508566	KIT	1		(WATER PUMP INSERT REPAIR)
17	RE501938	PLUG	1		
18	51M7044	O-RING	1		

ROCKER ARM SHAFT, PUSH RODS, AND ROCKER ARMS

TP49263 -UN-20JUN95

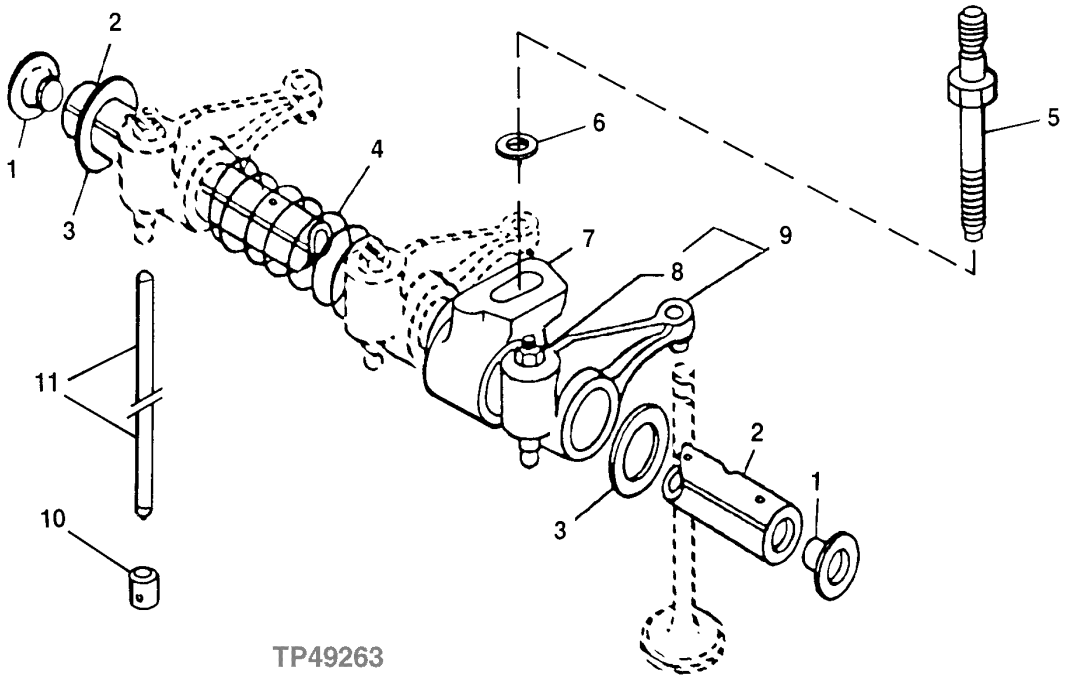

KEY	PART NO.	PART NAME	QTY	ENGINE SERIAL NO.	REMARKS
1	R54565	PLUG	2		
2	R123514	ROCKER ARM SHAFT	1		
3	T20316	WASHER	2		
4	T20314	SPRING	5		
5	R123271	STUD	6		
6	R42729	WASHER	6		
7	R123161	SUPPORT	6		
8	14M7148	NUT	1		M10
9	RE68695	ROCKER ARM	12		
10	R123565	FOLLOWER	12		
11	R107731	PUSH ROD	12		

MEMORANDA

CONNECTING ROD, BEARINGS, PISTONS AND CYLINDER LINER KIT

TP49283 -UN-17JUL95

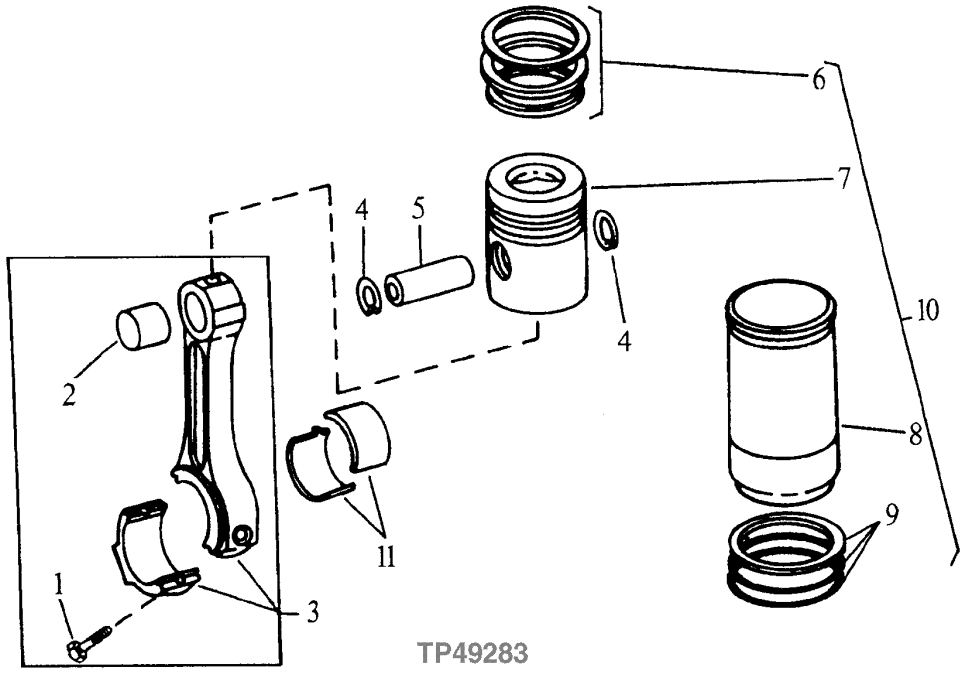

KEY	PART NO.	PART NAME	QTY	ENGINE SERIAL NO.	REMARKS
1	R501124	SCREW	12		
2	R114082	BUSHING	12		
3	RE500608	CONNECTING ROD	6		(MARKED R500335)
4	R54114	SNAP RING	12		
5	R123177	PISTON PIN	6		
6	RE507852	PISTON RING KIT	6		
7	.....	PISTON	6		
8	.....	CYLINDER LINER	6		
9	AR65507	O-RING KIT	6		CYLINDER LINER
10	RE507850	PISTON-LINER KIT	6		PISTON WITH LINER
11	RE65908	BEARING	6		STANDARD
	RE65909	BEARING	6		.010" UNDERSIZE

ENGINE FRONT PLATE AND AUXILLARY DRIVE COVER (PE6068HT053 -248520)

T145113 -UN-28AUG01

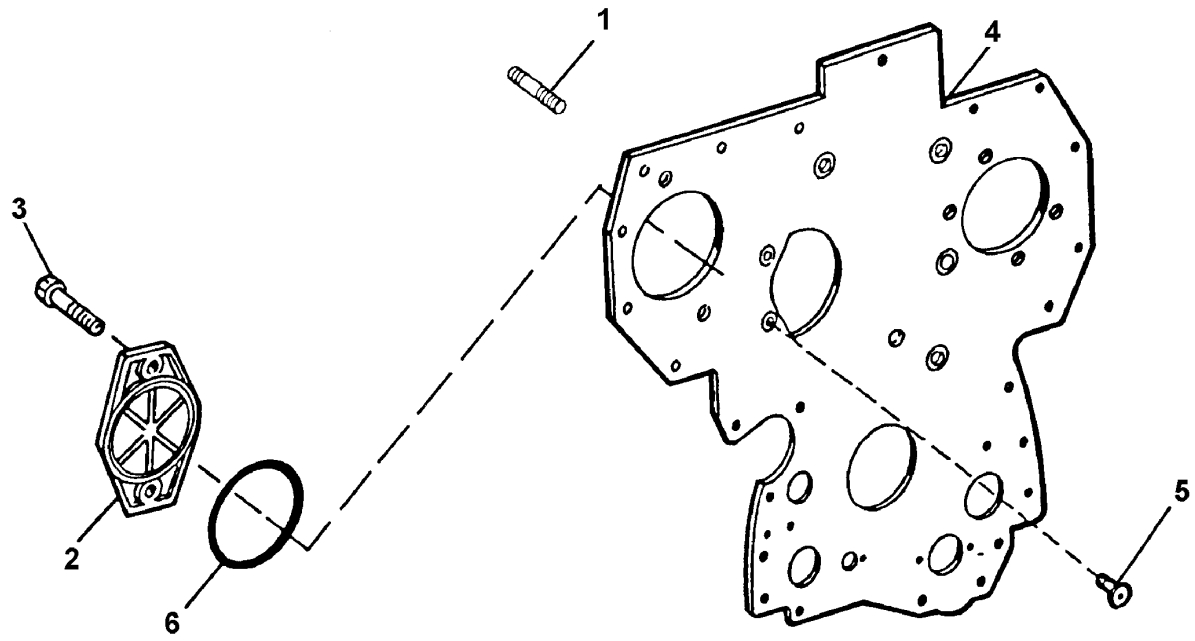

T145113

KEY	PART NO.	PART NAME	QTY	ENGINE SERIAL NO.	REMARKS
1	R122226	STUD	2		
2	R135757	COVER	1		
3	19M7790	SCREW	2		
4	R503550	PLATE	1		
5	R136475	SCREW	4		
6	T20758	O-RING	1		107.620 X 2.616 MM (4.237" X 0.103")

ENGINE FRONT PLATE AND AUXILLARY DRIVE COVER (PE6068HT059)
RE58179PCDA -UN-13JAN03

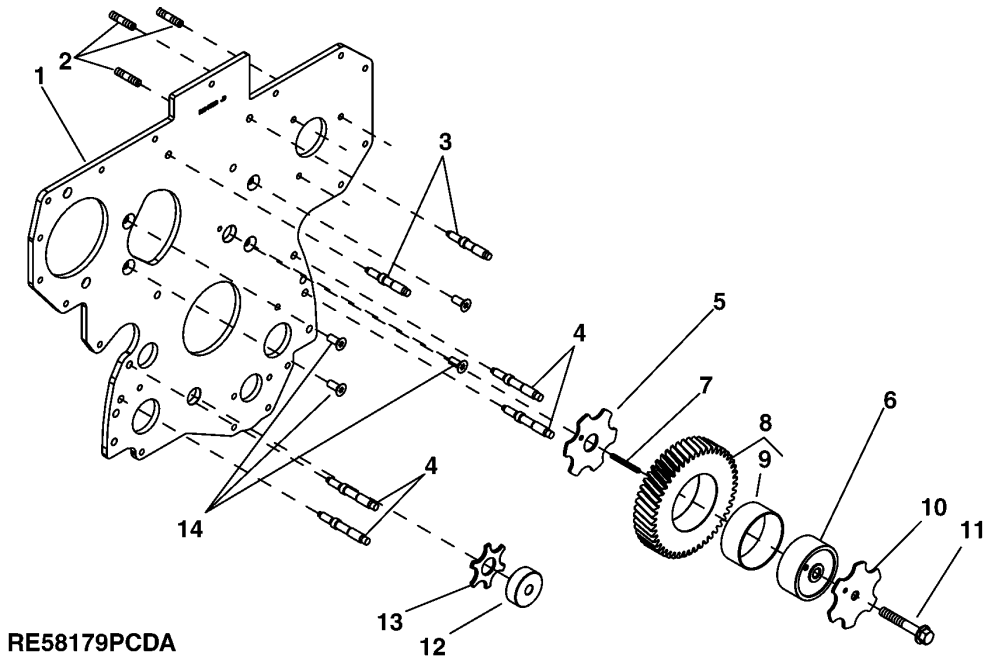

KEY	PART NO.	PART NAME	QTY	ENGINE SERIAL NO.	REMARKS
1	R134526	PLATE	1		
2	R116386	STUD	3		
3	R134518	STUD	2		
4	R123584	STUD	4		
5	R123174	LOCK WASHER	1		
6	R120641	SHAFT	1		UPPER, (USE WITH 34H288)
7	34H288	SPRING PIN	1		4.775 X 44.450 MM (3/16" X 1-3/4")
8	RE56313	GEAR	1		UPPER IDLER, (MARKED R120635)
9	.....	BUSHING	1		
10	R131206	THRUST WASHER	1		
11	19M8997	SCREW	1		M10 X 65
12	R114194	SHAFT	1		LOWER
13	R101225	THRUST WASHER	1		
14	R136475	SCREW	4		

MEMORANDA

CYLINDER BLOCK AND MAIN BEARING CAPS

T144826 -UN-30AUG01

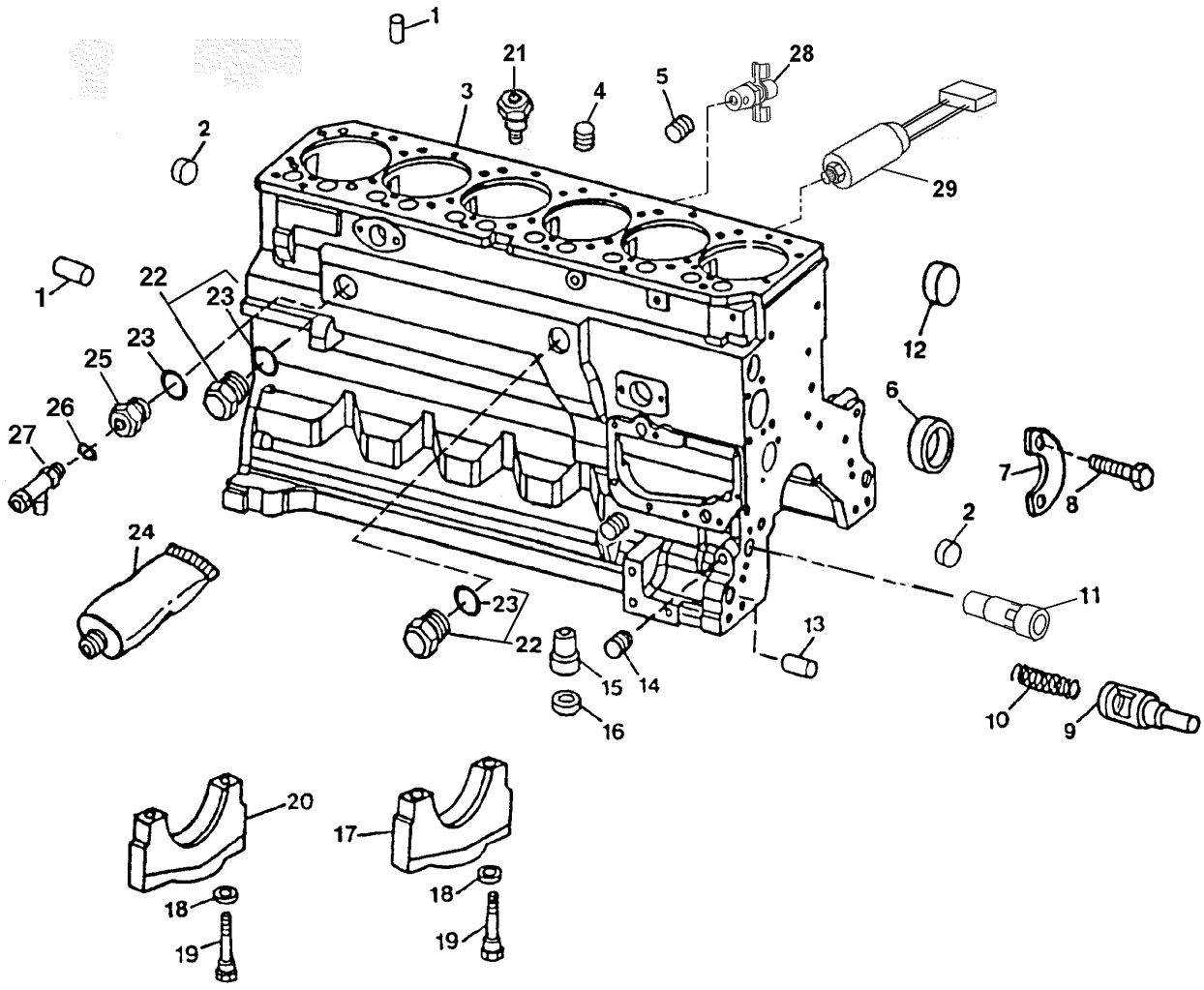

T144826

CYLINDER BLOCK AND MAIN BEARING CAPS

KEY	PART NO.	PART NAME	QTY	ENGINE SERIAL NO.	REMARKS
1	R48685	DOWEL PIN	4		
2	T18891	PLUG	2		
3	.....	CYLINDER BLOCK	1		(MARKED R119565) (ORDER RE507643)
4	15H624	PIPE PLUG	1		1/2", WITHOUT TURBOCHARGER
5	R104592	PIPE PLUG	6		
6	R119874	BUSHING	1		CAMSHAFT
7	R132518	PLATE	1		
8	19M8999	SCREW	2		M8 X 25
9	R121043	FLOW CONTROL HYD. VALVE	1		ENGINE OIL BY-PASS
10	R111137	SPRING	1		
11	RE505501	BLEED VALVE	1		OIL PRESSURE REGULATING
12	R116466	PLUG	1		
13	R26650	DOWEL PIN	2		
14	15H623	PIPE PLUG	1		3/8"
15	R115390	BUSHING	1		
16	R75892	O-RING	1		
17	R114241	BEARING CAP	6		MAIN BEARING
18	T20168	WASHER	14		
19	T23474	CAP SCREW	14		
20	R132186	BEARING CAP	1		MAIN THRUST BEARING
21	R131182	ORIFICE	6		
22	RE508185	DRAIN PLUG	2		(WITHOUT CAB HEAT)
23	U13639	O-RING	2		37.465 X 2.997 MM (1.475" X 0.118")
24	T43514	GASKET	1		(PLASTIC GASKET)
25	R123616	PLUG	1		WITH CAB HEAT
26	51M7043	O-RING	1		15.300 X 2.200 MM, (WITH CAB HEAT)
27	RE507952	DRAIN VALVE	1		HEATER (WITH CAB HEAT)
28	AT13740	DRAIN VALVE	1		
29	RE55145	SWITCH	1		(OIL PRESSURE)

ENGINE SHORT BLOCK

T146131 -UN-09OCT01

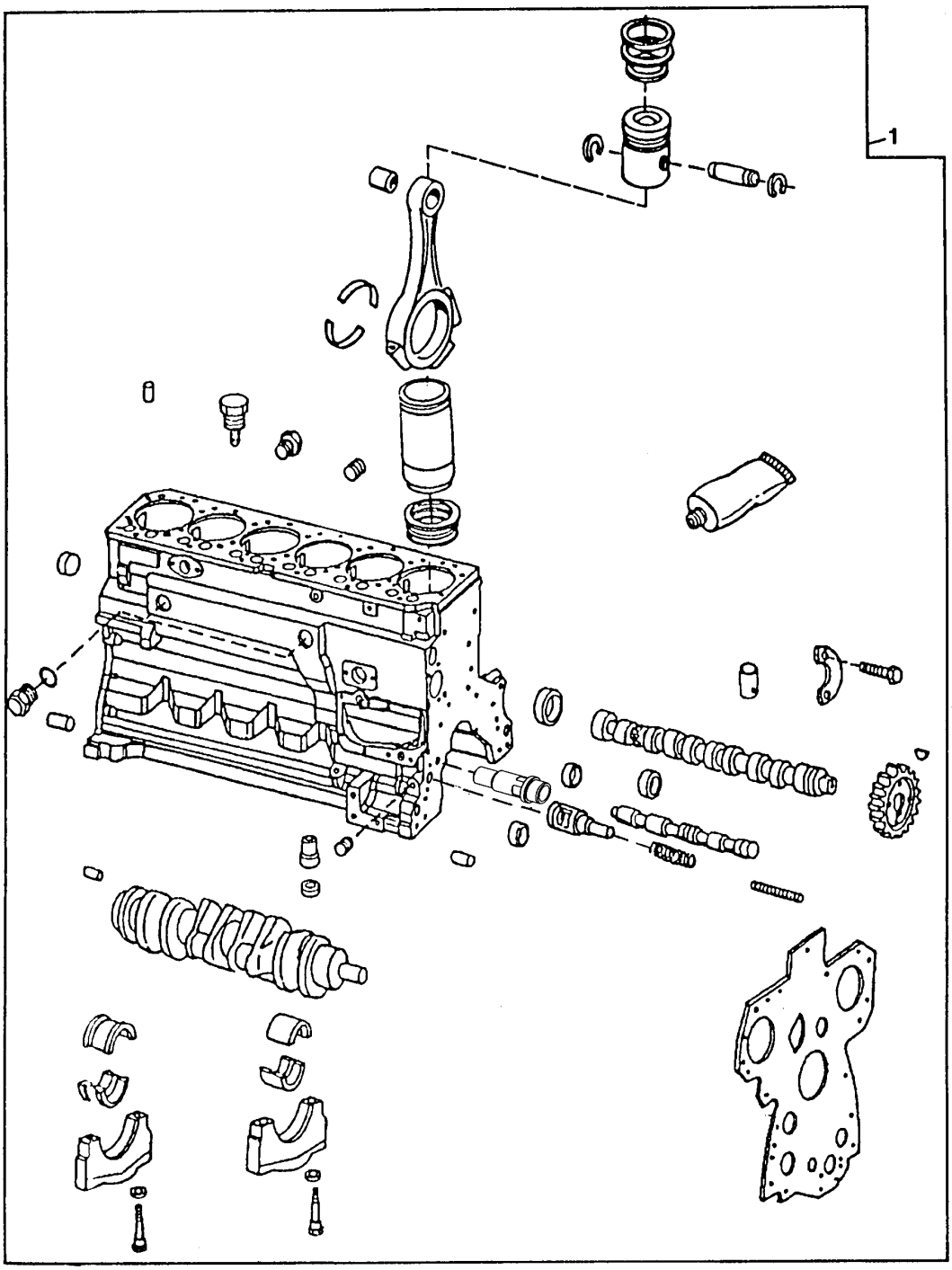

T146131

ENGINE SHORT BLOCK

KEY	PART NO.	PART NAME	QTY	ENGINE SERIAL NO.	REMARKS
1	RE507643	SHORT BLOCK ASSEMBLY	1		(MARKED R119565)

MEMORANDA

ENGINE OIL FILLER INLET COVER

TP62061 -UN-30APR99

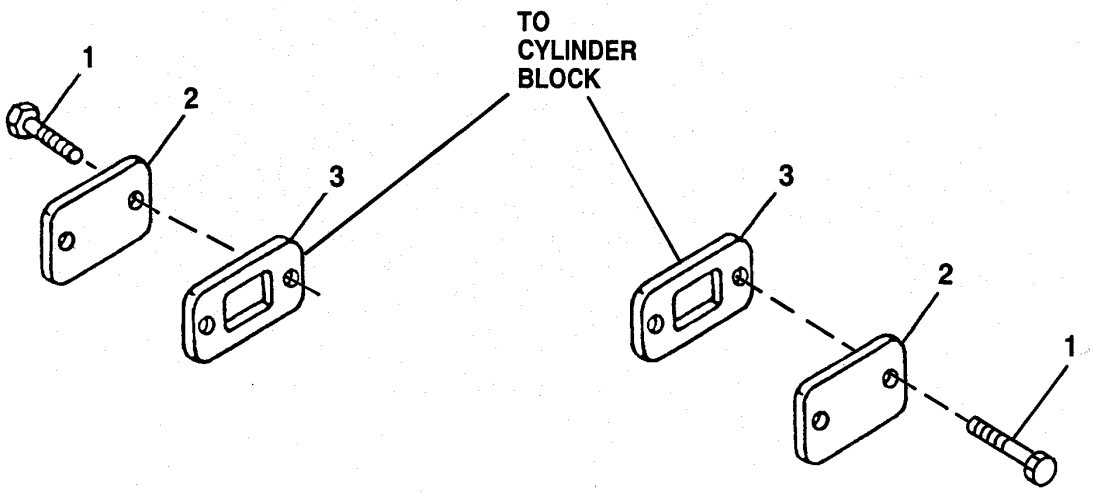

TP62061

KEY	PART NO.	PART NAME	QTY	ENGINE SERIAL NO.	REMARKS
1	RE67238	SCREW	4		M8 X 20 (WITH PRE-APPLIED SEALANT)
2	R116296	COVER	2		
3	R136495	GASKET	2		

ENGINE OIL DIPSTICK

TP69502 -UN-02MAY00

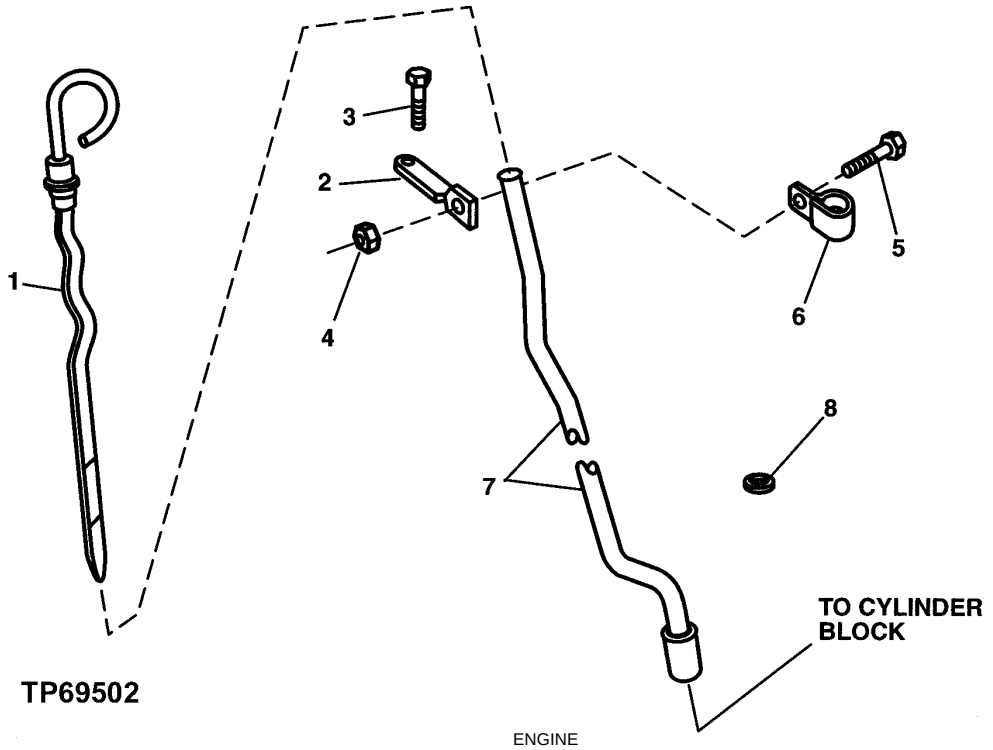

KEY	PART NO.	PART NAME	QTY	ENGINE SERIAL NO.	REMARKS
1	RE66178	DIPSTICK	1		
2	R134552	BRACKET	1		
3	19M7784	SCREW	1		M10 X 20
4	14M7298	FLANGE NUT	1		M8
5	19M7866	SCREW	1		M8 X 20
6	T28862	CLAMP	1		
7	R502465	DIPSTICK TUBE	1		
8	R502725	PLUG	1		

ENGINE OIL PUMP AND OIL INTAKE TUBE

TP53327 -UN-11SEP96

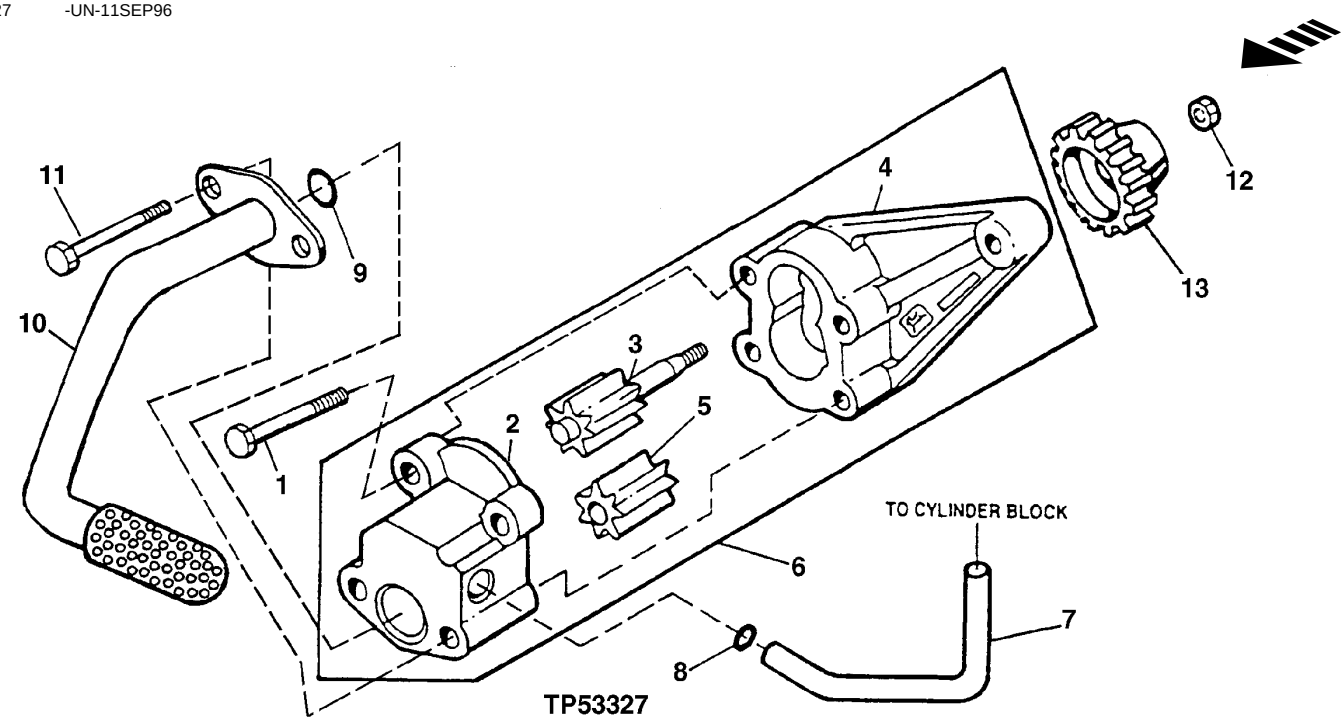

KEY	PART NO.	PART NAME	QTY	ENGINE SERIAL NO.	REMARKS
1	19M8987	SCREW	2		M8 X 65
2	.....	COVER	1		
3	.....	GEAR	1		
4	.....	HOUSING	1		
5	.....	GEAR	1		
6	RE504914	OIL PUMP	1		(MARKED R502687)
7	R121376	STRUCTURAL TUBING	1		
8	R97185	O-RING	1		
9	R61871	O-RING	1		
10	RE69898	OIL PUMP INTAKE	1		
11	19M8986	SCREW	2		M8 X 100
12	14M7066	NUT	1		M12
13	R120638	GEAR	1		(30 TEETH)

ENGINE OIL FILTER HEADER AND FILTER ELEMENT

T145377 -UN-14SEP01

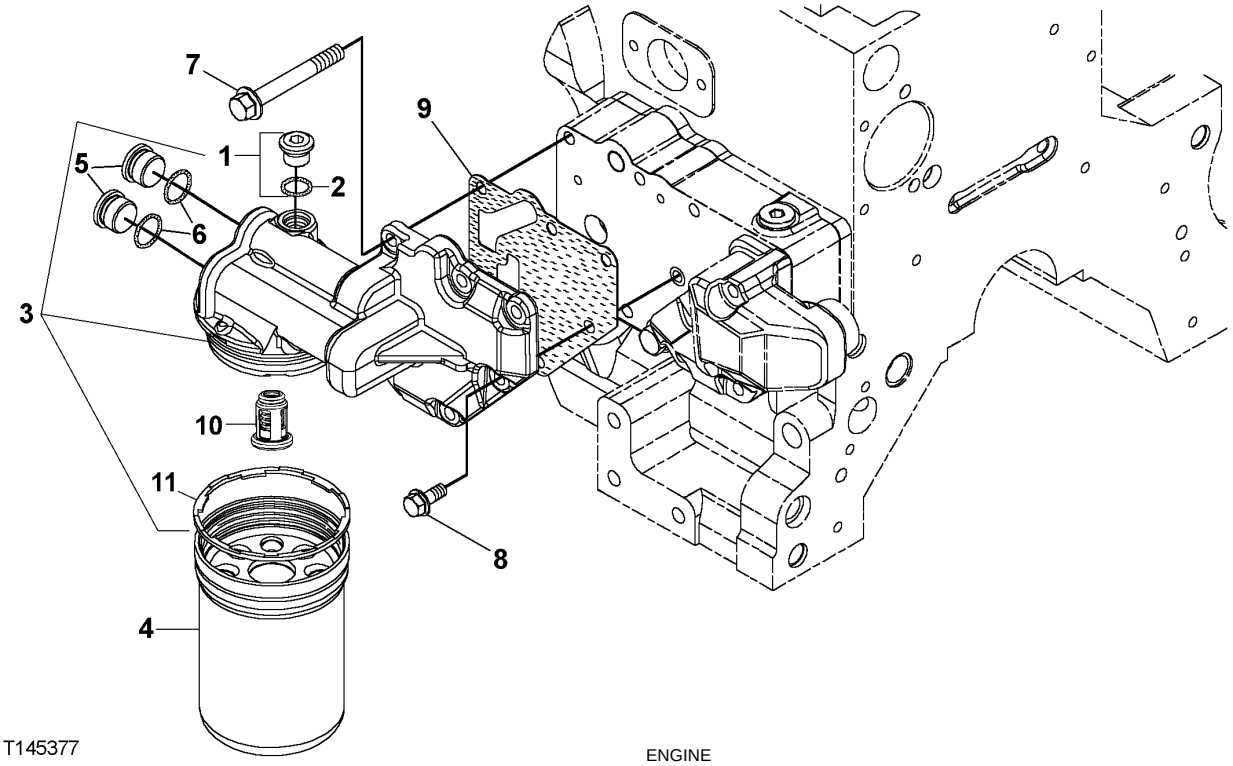

T145377

KEY	PART NO.	PART NAME	QTY	ENGINE SERIAL NO.	REMARKS
1	RE52242	DRAIN PLUG	1		M16 X 1.5
2	51M7042	O-RING	1		13.300 X 2.200 MM
3	RE504564	FILTER HEAD	1		(MARKED R502505)
4	RE504836	OIL FILTER	1		(ALSO ORDER R502513)
5	R116115	FITTING	2		
6	51M7045	O-RING	2		19.300 X 2.200 MM
7	19M7802	SCREW	5		M8 X 65
8	RE67238	SCREW	1		M22 X 1.5
9	R500374	GASKET	1		
10	RE504543	FLOW CONTROL HYD. VALVE	1		
11	R502513	SEAL	1		

ENGINE OIL PAN AND OIL LEVEL SENSOR

T144844 -UN-05SEP01

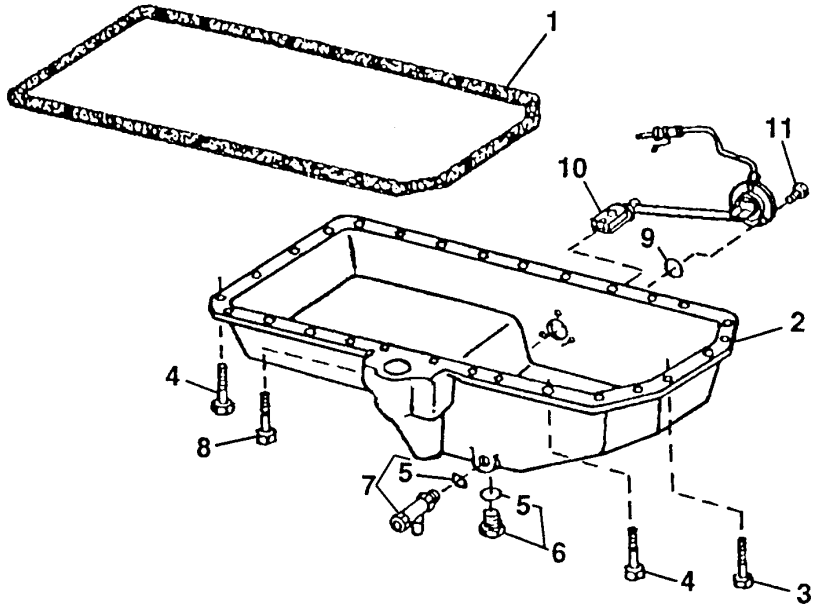

KEY	T144844 PART NO.	PART NAME	QTY	ENGINE SERIAL NO.	REMARKS
1	R123354	GASKET	1		
2	R515307	OIL PAN	1		
3	19M7868	SCREW	6		M8 X 30
4	19M7867	SCREW	26		M8 X 25
5	51M7043	O-RING	2		15.300 X 2.200 MM
6	RE46685	PLUG	1		
7	RE507952	DRAIN VALVE	1		(SUB FOR RE59579, THIS APPLICATION)
8	19M7799	SCREW	4		M8 X 45
9	R47154	O-RING	1		25.070 X 2.616 MM (0.987" X 0.103")
10	RE16223	SENSOR	1		OIL LEVEL
11	19M8425	CAP SCREW	3		M6 X 16

MEMORANDA

ENGINE VENTILATOR HOSE

T144930 -UN-22AUG01

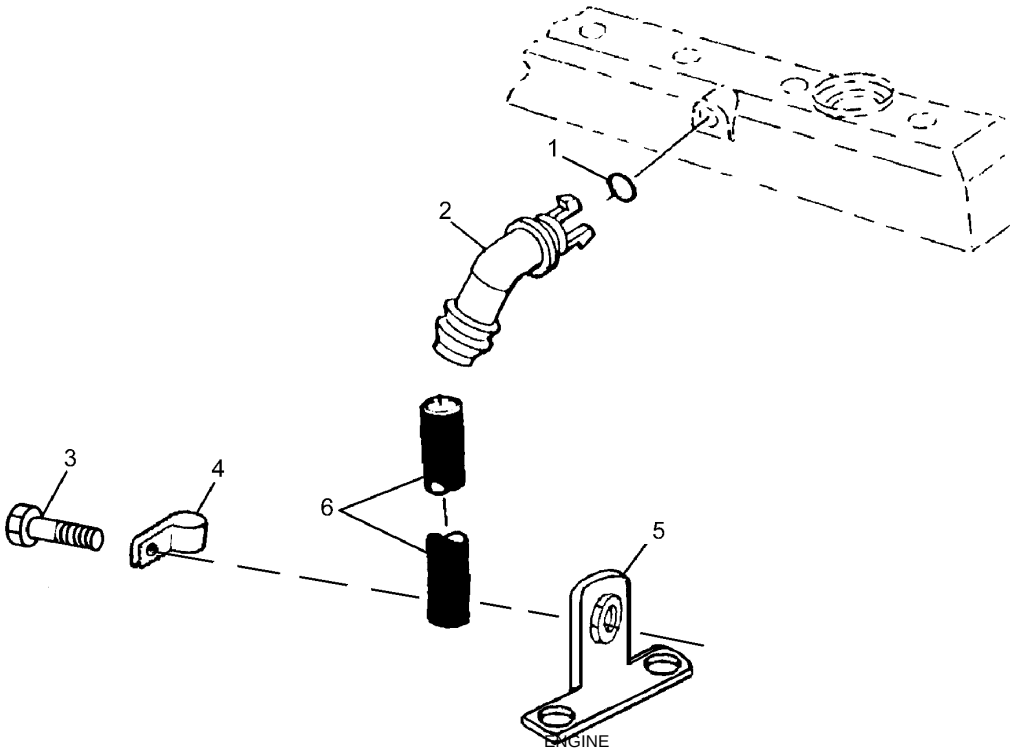

KEY	T144930 PART NO.	PART NAME	QTY	ENGINE SERIAL NO.	REMARKS
1	R72328	O-RING	1		18.720 X 2.616 MM
2	R123586	ELBOW FITTING	1		
3	19M7783	SCREW	1		
4	R72659	CLAMP	1		
5	RE506871	BRACKET	1		
6	.....	HOSE	1		(54" LONG)(MAKE FROM TY22450 BULK MATERIAL)

CYLINDER HEAD, HEAD GASKET AND VALVES

T145175 -UN-04SEP01

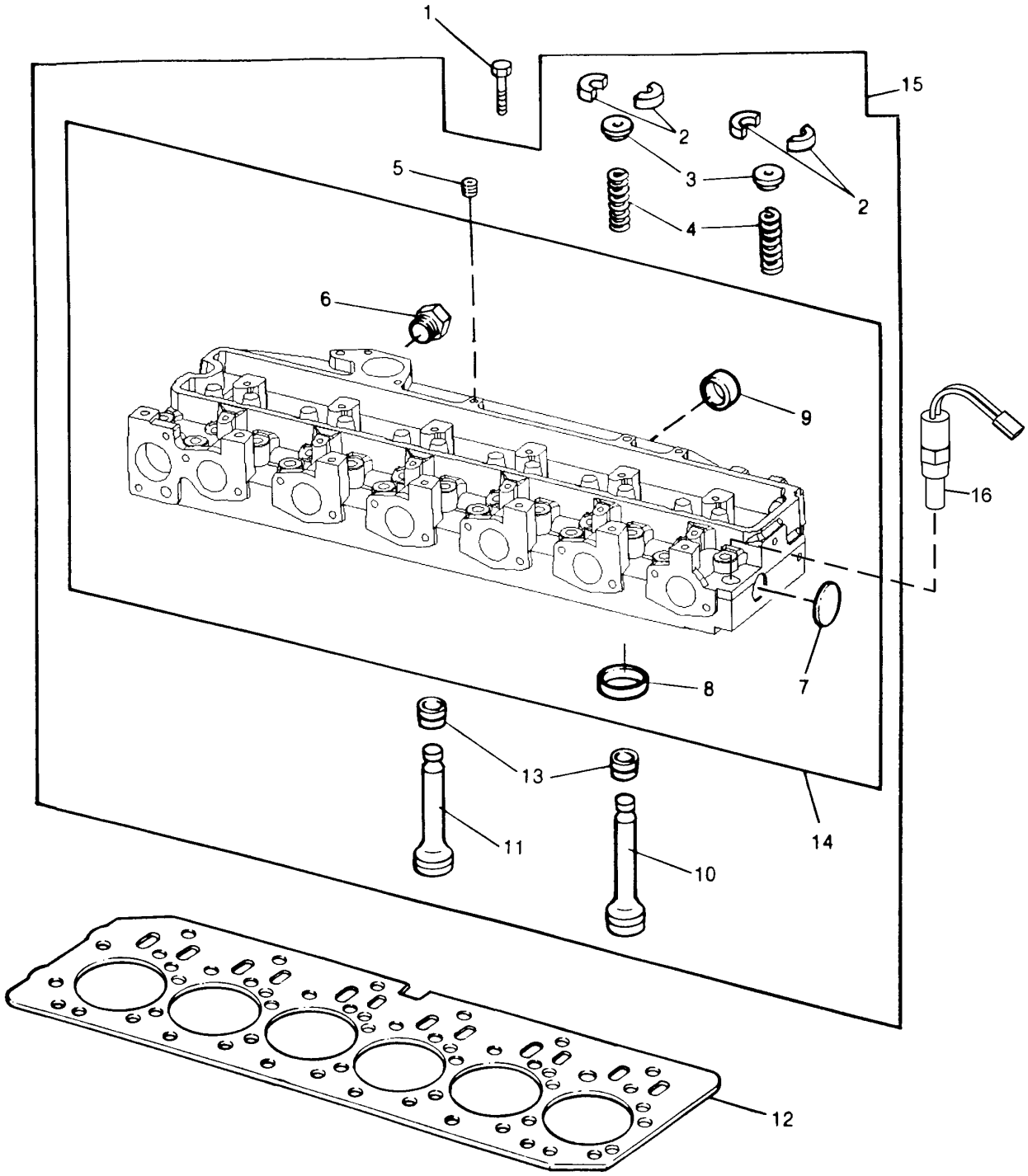

T145175

CYLINDER HEAD, HEAD GASKET AND VALVES

KEY	PART NO.	PART NAME	QTY	ENGINE SERIAL NO.	REMARKS
1	R85363	CAP SCREW	26		
2	R91889	RETAINER	24		
3	RE60005	ROTATOR	12		
4	R26125	SPRING	12		
5	R104592	PIPE PLUG	1		
6	T58477	FITTING	1		
	R26906	O-RING	1		
7	CD16284	PLUG	1		
8	R98063	VALVE SEAT INSERT	6		STANDARD SIZE INTAKE VALVE
	R98335	VALVE SEAT INSERT	6		OVERSIZE INTAKE VALVE
	R85687	VALVE SEAT INSERT	6		STANDARD SIZE EXHAUST VALVE
	R93910	VALVE SEAT INSERT	6		OVERSIZE EXHAUST VALVE
9	R43409	PLUG	3		
10	R90692	EXHAUST VALVE	6		STANDARD
11	R98062	INTAKE VALVE	6		STANDARD
12	R116516	ENGINE CYLINDER HEAD GASKET	1		
13	RE31617	SEAL	12		
14	.....	CYLINDER HEAD	1		(MARKED R121608)
15	RE57489	CYLINDER HEAD	1		(MARKED R121608)
16	AT174989	SWITCH	1		(ENGINE OVERHEAT SWITCH)

EXHAUST MANIFOLD

TP53335 -UN-11SEP96

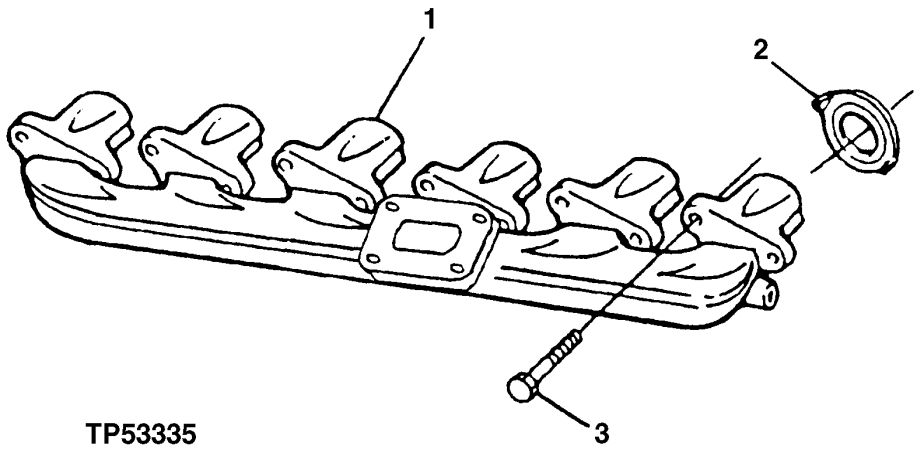

TP53335

KEY	PART NO.	PART NAME	QTY	ENGINE SERIAL NO.	REMARKS
1	R132462	EXHAUST MANIFOLD	1		
2	R90658	GASKET	6		
3	19M7810	SCREW	12		M10 X 80

FUEL INJECTION NOZZLE

T160589 -UN-17OCT02

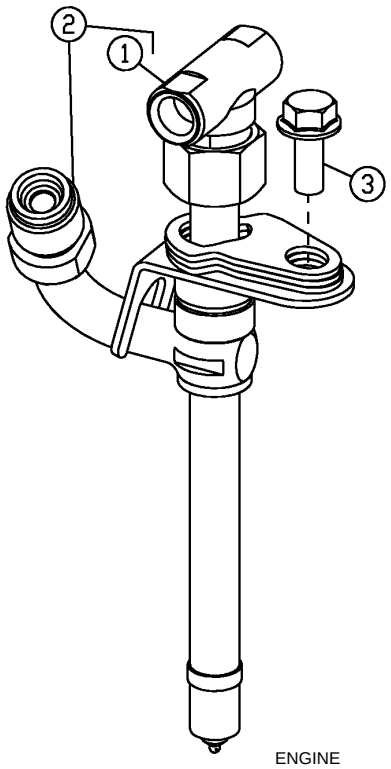

T160589

KEY	PART NO.	PART NAME	QTY	ENGINE SERIAL NO.	REMARKS
1	R71963	TEE FITTING	1		
2	RE506688	INJECTION NOZZLE	1		
3	R116366	SCREW	1		

FUEL INJECTION SYSTEM (PE6068HT053 -254350)(BOSCH VP-44)

T192674 -UN-07JUL03

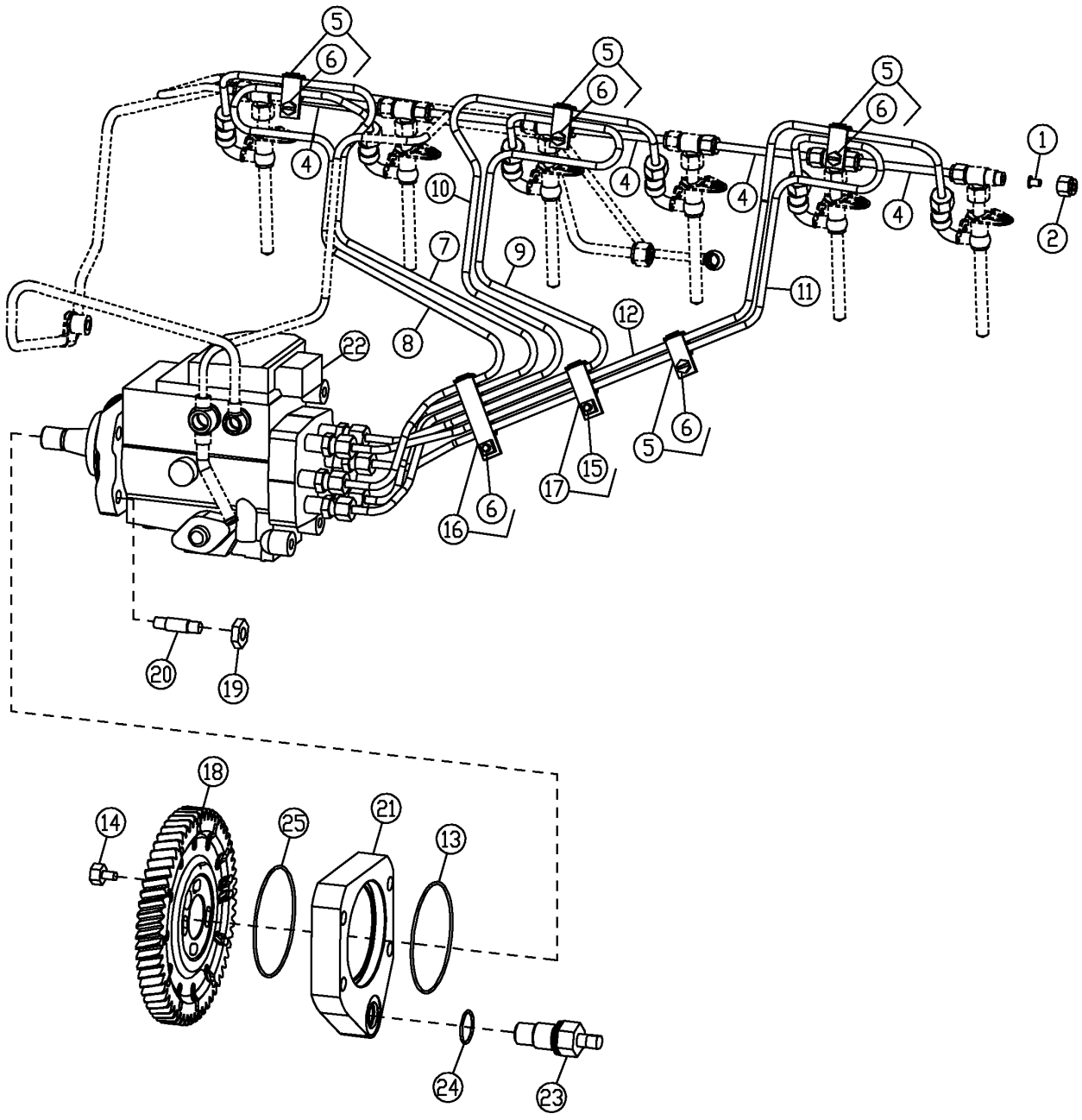

T192674

FUEL INJECTION SYSTEM (PE6068HT053 -254350)(BOSCH VP-44)

KEY	PART NO.	PART NAME	QTY	SERIAL NO.	REMARKS
1	AR85519	PLUG	1		
2	R123593	TUBE NUT	1		
4	RE68748	TUBE	4		
5	RE19797	CLAMP	4		(FUEL LINE NO. 1-2, 3-4, 5-6)
6	19M7923	CAP SCREW	5		M6 X 12
7	RE507653	FUEL LINE	1		NO. 1
8	RE507654	FUEL LINE	1		NO. 2
9	RE507655	FUEL LINE	1		NO. 3
10	RE507656	FUEL LINE	1		NO. 4
11	RE507657	FUEL LINE	1		NO. 5
12	RE507658	FUEL LINE	1		NO. 6
13	R54873	O-RING	1		
14	R504798	SCREW	1		
15	19M8560	CAP SCREW	1		M6 X 12
16	RE19800	CLAMP	1		(FUEL LINE NO. 1,2,3,4,5,6)
17	RE20901	CLAMP	1		(FUEL LINE. NO. 4-6)
18	R515150	GEAR	1		
19	14M7276	NUT	4		M16
20	R134212	STUD	4		
21	R501039	ADAPTER	1		
22	RE506681	FUEL INJECTION PUMP	1		(ROBERT BOSCH-VP44)
23	RE508195	SENSOR	1		(PUMP SPEED)
24	51M7044	O-RING	1		17.300 X 2.200 MM
25	R123295	O-RING	1		

FUEL INJECTION SYSTEM(PE6068HT059 254351-)(STANADYNE DE-10)

RE519750PCDA -UN-13JAN03

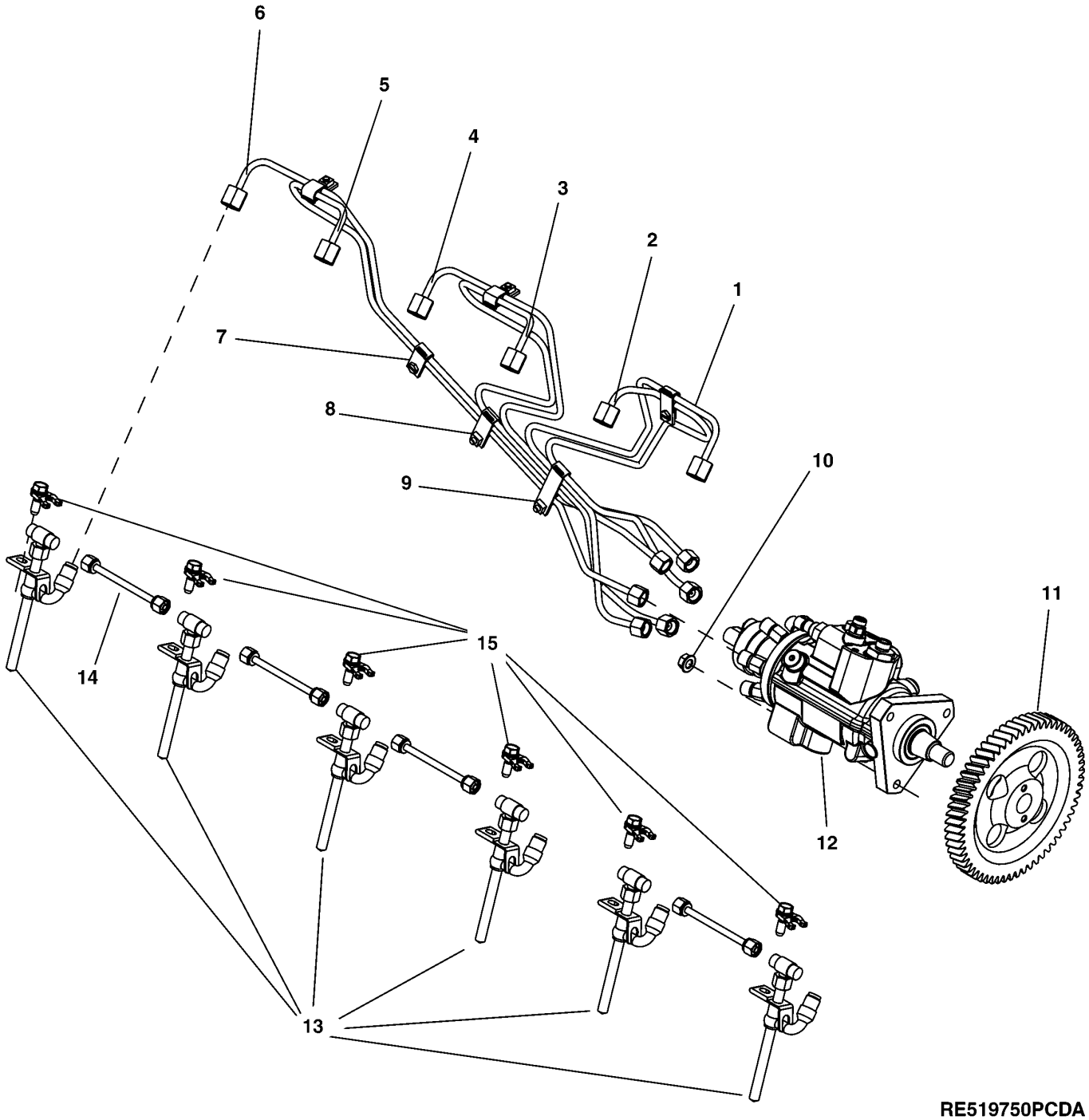

FUEL INJECTION SYSTEM (PE6068HT059 254351-)(STANADYNE DE-10)

KEY	PART NO.	PART NAME	QTY	SERIAL NO.	REMARKS
1	RE515228	FUEL LINE	1		NO. 1
2	RE515229	FUEL LINE	1		NO. 2
3	RE515230	FUEL LINE	1		NO. 3
4	RE515231	FUEL LINE	1		NO. 4
5	RE515232	FUEL LINE	1		NO. 5
6	RE515233	FUEL LINE	1		NO. 6
7	RE19797	CLAMP	4		
8	RE20901	CLAMP	1		
9	RE19800	CLAMP	1		
10	14M7298	FLANGE NUT	3		
11	R505472	GEAR	1		
12	RE518088	FUEL INJECTION PUMP	1		(STANADYNE DE-10)
13	RE507766	INJECTION NOZZLE	6		
14	RE68748	TUBE	4		
15	RE508716	CLAMP	6		

AIR INTAKE SYSTEM

T144949 -UN-30AUG01

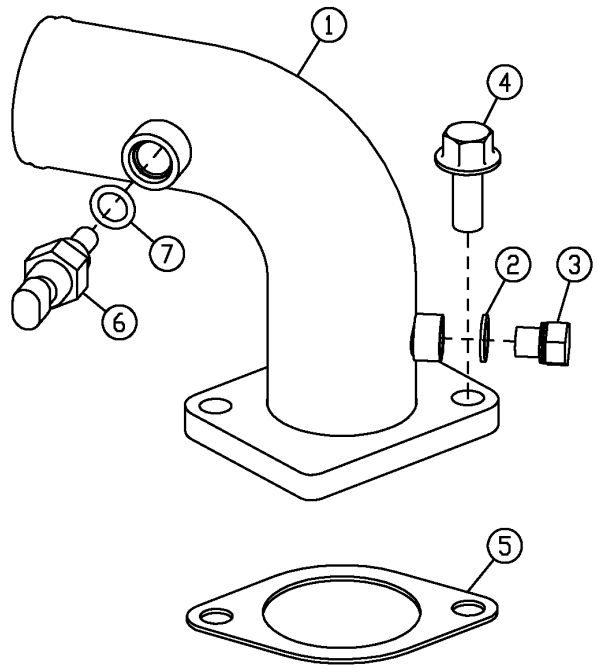

T144949

KEY	PART NO.	PART NAME	QTY	ENGINE SERIAL NO.	REMARKS
1	RE506991	AIR INTAKE	1		
2	51M7039	O-RING	1		8.100 X 1.600 MM
3	RE60071	FITTING	1		
4	19M7786	SCREW	2		M10 X 30
5	R81275	GASKET	1		
6	RE61812	SENSOR	1		(AIR TEMPERATURE SENSOR)
7	51M7041	O-RING	1		11.300 X 2.200 MM

MEMORANDA

TURBOCHARGER AND OIL LINES

T144911 -UN-04DEC01

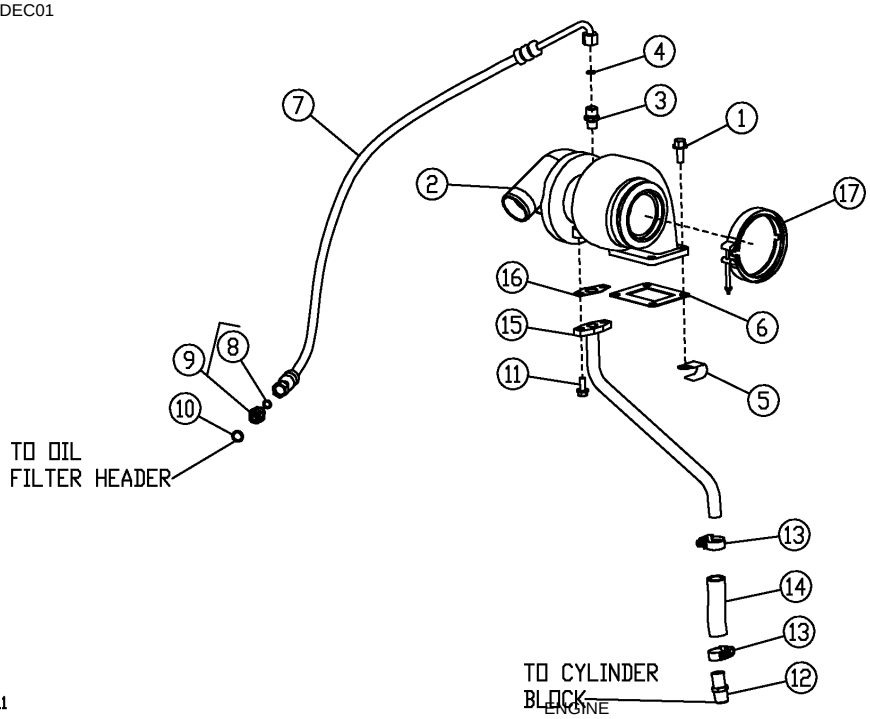

T144911
ENGINE

KEY	PART NO.	PART NAME	QTY	SERIAL NO.	REMARKS
1	19M7785	SCREW	4		M10 X 25
2	RE508719	TURBOCHARGER	1		(MARKED RE508657)
3	M87733	ADAPTER	1		ALSO ORDER M87733 & R63548
	R63548	O-RING	1		
4	R63548	O-RING	1		
5	R72853	CLAMP	4		
6	R123572	GASKET	1		
7	RE503211	OIL LINE	1		
8	T77613	O-RING	1		
9	38H5037	ADAPTER	1		
10	51M7042	O-RING	2		
11	19M7866	SCREW	2		
12	RE54885	HOSE FITTING	1		
13	RE65978	CLAMP	2		
14	R115138	HOSE	1		
15	RE59992	OIL LINE	1		
16	R123570	GASKET	1		
17	RE40048	CLAMP	1		

MEMORANDA

WATER PUMP INLET AND PULLEY

T144824 -UN-27AUG01

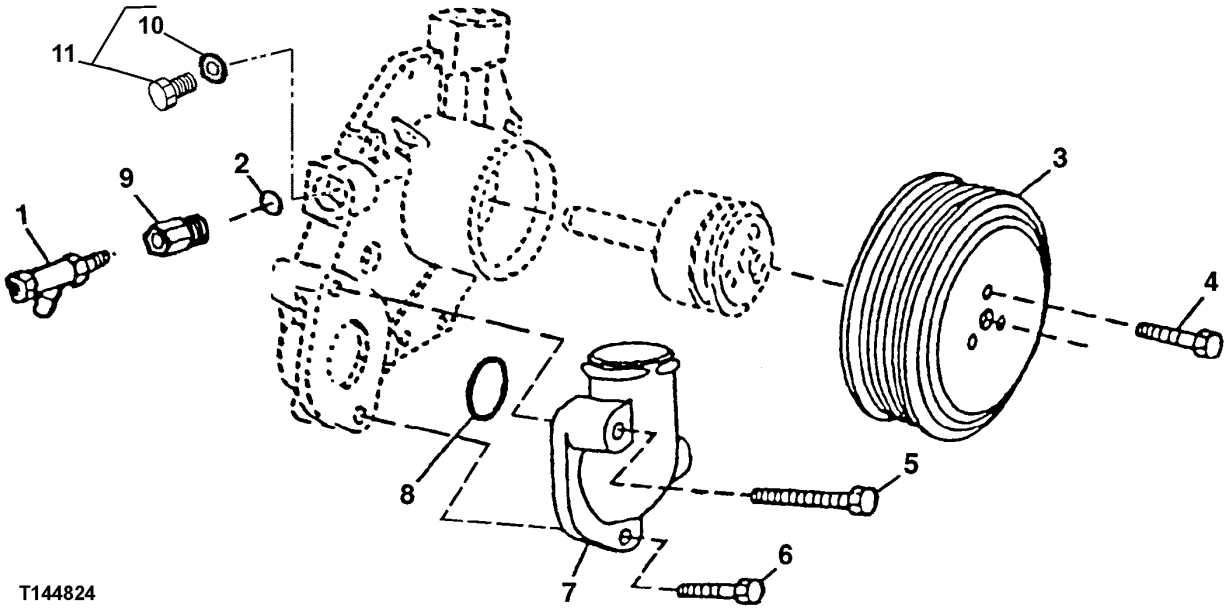

KEY	PART NO.	PART NAME	QTY	ENGINE SERIAL NO.	REMARKS
1	RE507952	DRAIN VALVE	1		WITH CAB HEAT
2	51M7043	O-RING	1		15.300 X 2.200 MM, WITH CAB HEAT
3	R115250	PULLEY	1		
4	19M7774	SCREW	3		M6 X 12
5	19M7802	SCREW	1		M8 X 65
6	19M7867	SCREW	1		M8 X 25
7	R121635	ELBOW FITTING	1		
8	R89944	O-RING	1		50.394 X 3.531 MM (1-63/64" X 0.139")
9	RE68908	ADAPTER	1		WITH CAB HEAT
10	51M7043	O-RING	1		15.300 X 2.200 MM, WITHOUT CAB HEAT
11	RE46685	PLUG	1		WITHOUT CAB HEAT

WATER PUMP ASSEMBLY AND REPAIR KIT

T158422 -UN-13AUG02

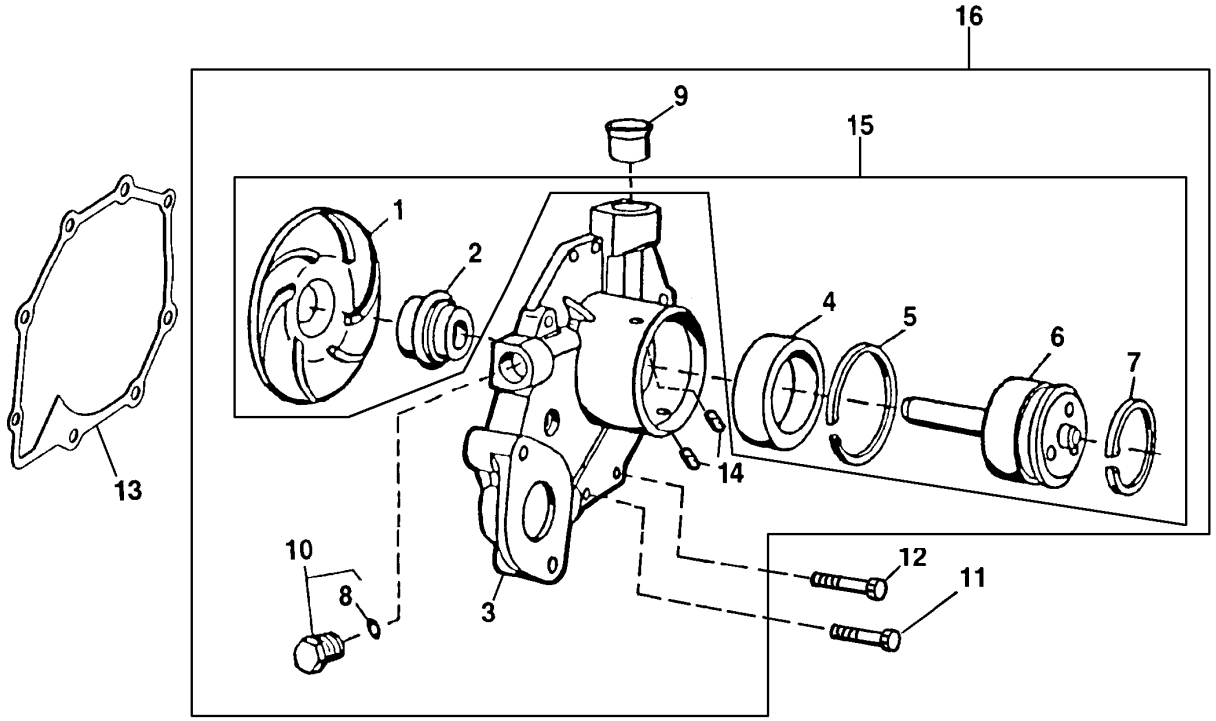

KEY	T158422 PART NO.	PART NAME	QTY	ENGINE SERIAL NO.	REMARKS
1	.....	IMPELLER	1		(MARKED R123395)
2	.....	SEAL	1		(MARKED R503509)
3	.....	HOUSING	1		
4	.....	BALL BEARING	1		
5	.....	RING	1		
6	.....	SHAFT	1		
7	A364R	SNAP RING	1		
8	51M7043	O-RING	1		15.300 X 2.200 MM
9	R123226	SEAL	1		
10	RE46685	PLUG	1		
11	19M7863	SCREW	5		M6 X 25
12	19M7796	SCREW	3		M6 X 30
13	R123417	GASKET	1		
14	R100369	FILTER	2		
15	RE70962	KIT	1		
16	RE505980	WATER PUMP	1		

THERMOSTAT, THERMOSTAT HOUSING, AND COVER

RGP9753 -UN-05JUN03

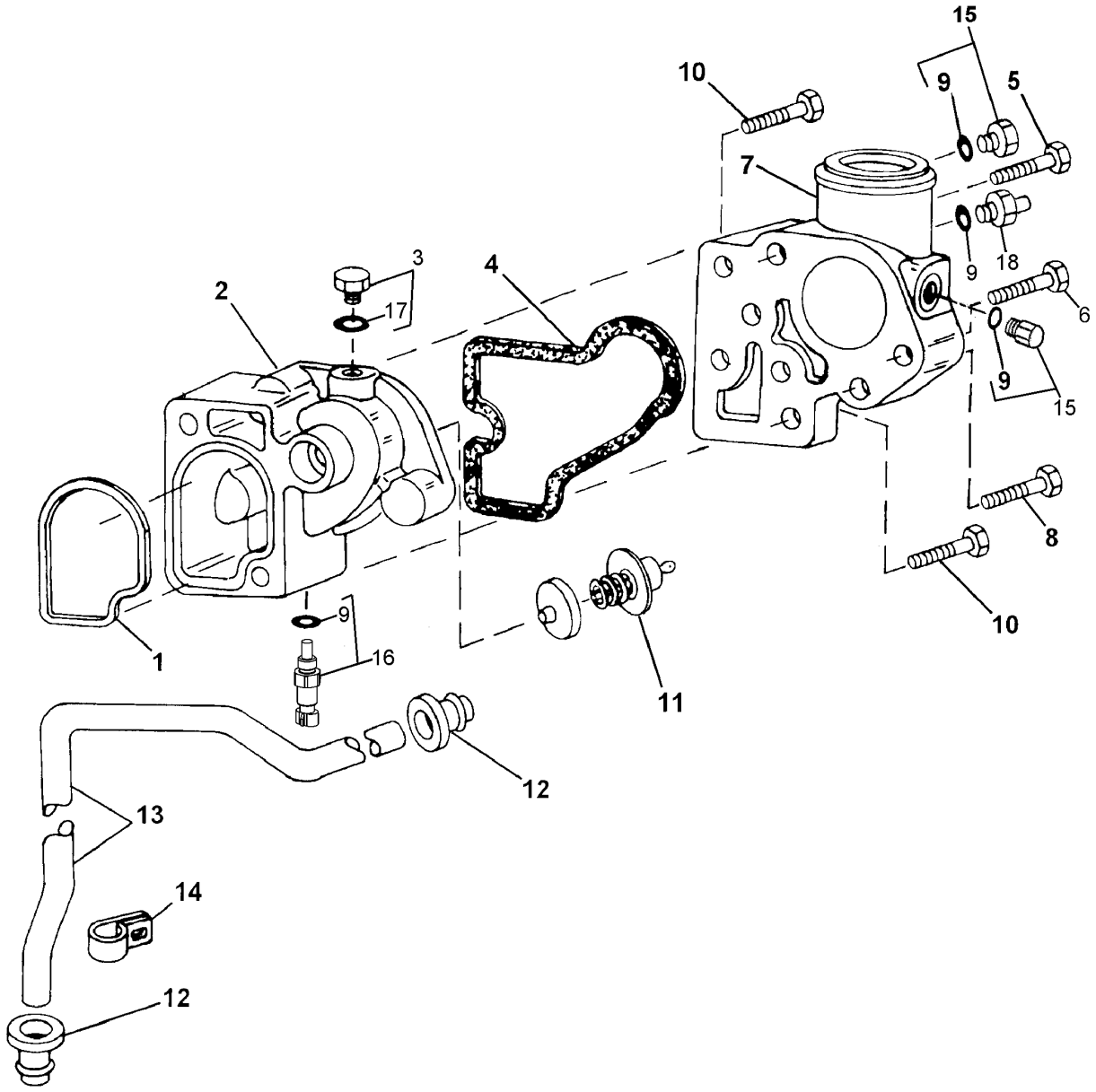

RGP9753

THERMOSTAT, THERMOSTAT HOUSING, AND COVER

KEY	PART NO.	PART NAME	QTY	ENGINE SERIAL NO.	REMARKS
1	R501228	SEAL	1		
2	R500471	HOUSING	1		
3	RE46686	PLUG	1		
4	R501227	SEAL	1		
5	19M7810	SCREW	1		M10 X 80
6	19M7785	SCREW	1		M10 X 25
7	R500472	COVER	1		
8	19M7809	SCREW	1		M10 X 70
9	51M7041	O-RING	4		
10	19M7811	SCREW	2		M10 X 90
11	RE520831	THERMOSTAT	1		
12	R123226	SEAL	1		
13	R500704	TUBE	1		BY-PASS TUBE
14	R123324	CLAMP	1		
15	RE46684	PLUG	3		
16	RE52722	SENSOR	1		(COOLANT TEMP FOR ECU)
17	51M7040	O-RING	1		9.300 X 2.200 MM
18	4456798	SENSOR	1		(TEMPERATURE GAUAGE SENSOR)

ENGINE OIL COOLER AND ADAPTER

T144984 -UN-31AUG01

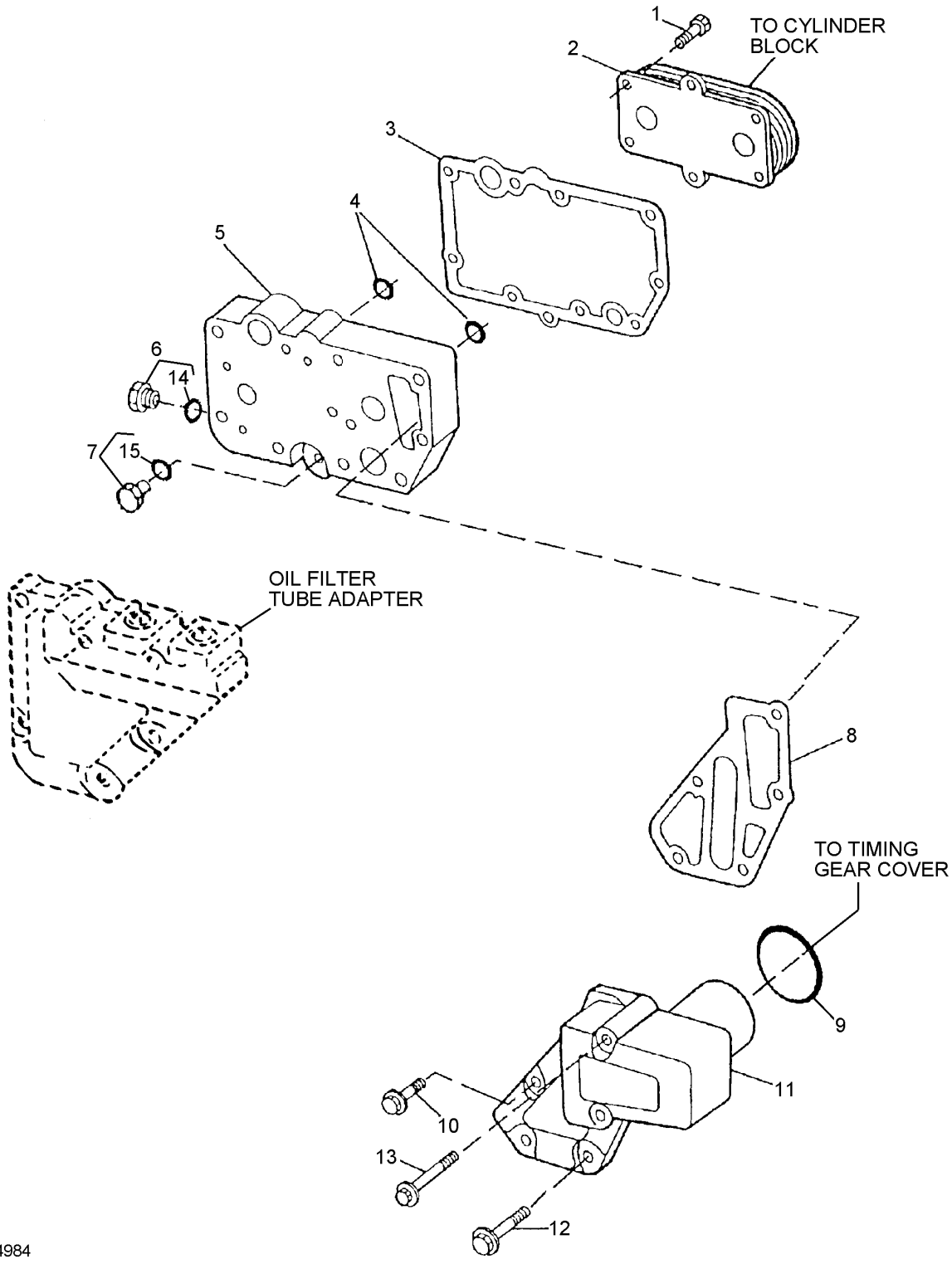

T144984

ENGINE OIL COOLER AND ADAPTER

KEY	PART NO.	PART NAME	QTY	ENGINE SERIAL NO.	REMARKS
1	RE67231	SCREW	6		M6 X 16 (WITH PRE-APPLIED SEALANT)
2	RE56690	OIL COOLER	1		(7 PLATE)
3	R123501	GASKET	1		
4	T122075	O-RING	2		1.174" X 0.103"
5	R123471	HOUSING	1		
6	RE46685	PLUG	1		
7	RE46686	PLUG	1		
8	R501428	GASKET	1		
9	R504734	O-RING	1		
10	19M7802	SCREW	2		M8 X 65
11	R502811	ADAPTER	1		
12	19M7970	SCREW	2		M8 X 100
13	RE67238	SCREW	1		M8 X 20 (WITH PRE-APPLIED SEALANT)
14	51M7043	O-RING	1		15.300 X 2.200 MM
15	51M7040	O-RING	1		9.300 X 2.200 MM

FINAL FUEL FILTER FUEL LINES AND BRACKET

T151707 -UN-20FEB02

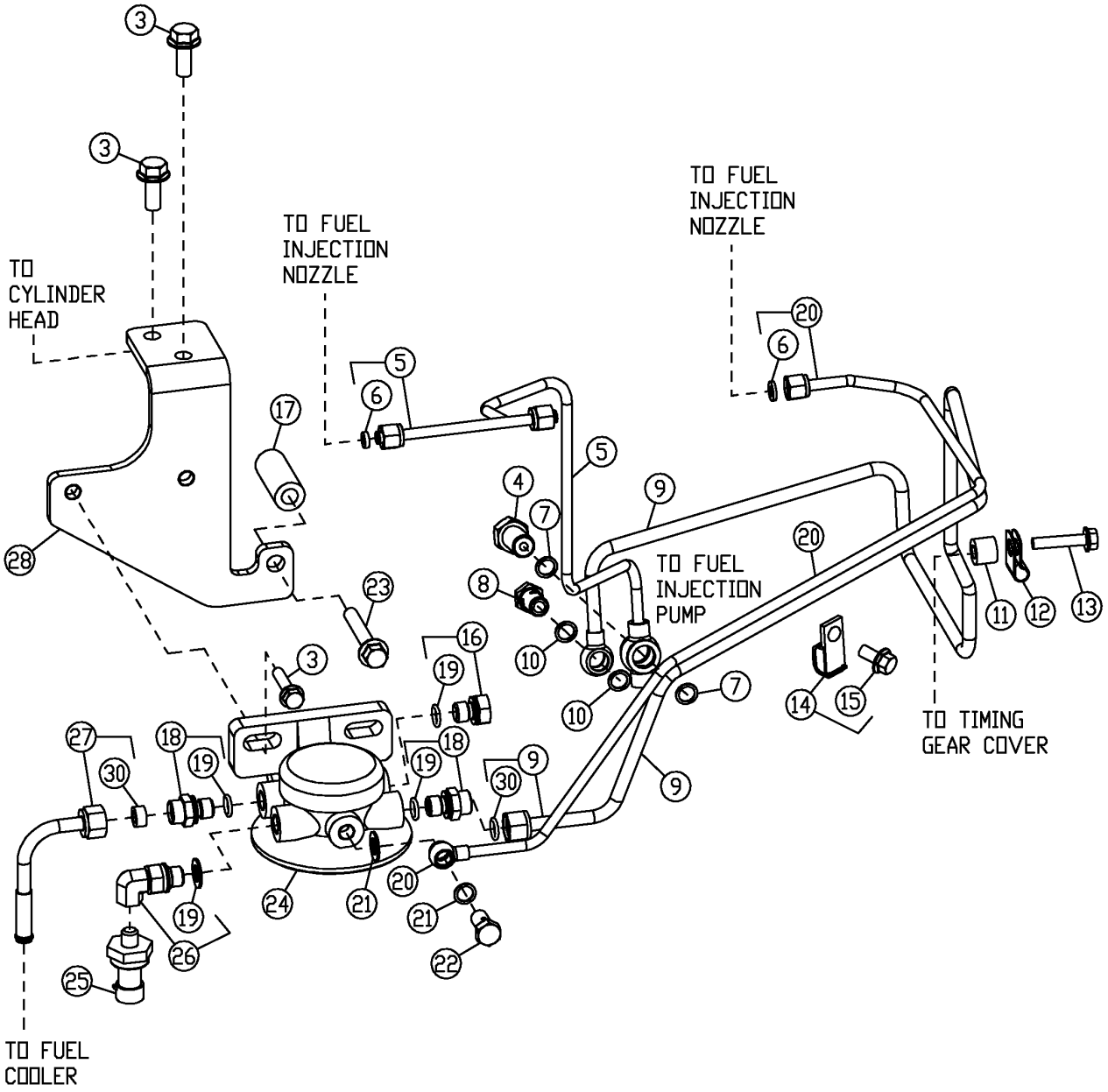

T151707

FINAL FUEL FILTER FUEL LINES AND BRACKET

KEY	PART NO.	PART NAME	QTY	ENGINE SERIAL NO.	REMARKS
3	19M7784	SCREW	4		M10 X 20
4	RE505227	FITTING	1		
5	RE506118	FUEL LINE	1		
6	R51936	SEALING WASHER	3		
7	R64857	WASHER	2		
8	38M6640	HOLLOW SCREW	1		
9	RE506116	FUEL LINE	1		
10	R504067	WASHER	2		
11	R55599	SLEEVE	1		
12	R504605	CLAMP	1		
13	19M8317	SCREW	1		M8 X 40
14	RE19797	CLAMP	2		
15	19M7923	CAP SCREW	2		M6 X 12, (SUB FOR 19M6614)
16	RE46686	PLUG	1		
17	R80670	SPACER	1		10.310 X 19.050 X 46 MM
18	RE60029	ADAPTER	2		
19	51M7040	O-RING	4		
20	RE506117	FUEL LINE	1		
21	R62107	WASHER	2		
22	38M7009	HOLLOW SCREW	1		
23	19M7808	SCREW	1		M10 X 65
24	.....	FILTER HEAD	1		(ORDER RE508985)
25	RE167207	SENSOR	1		(FUEL PRESSURE)
26	RE504969	HOSE FITTING	1		
27	RE60242	FUEL LINE	1		
28	R505143	BRACKET	1		
30	R74012	SEALING WASHER	2		

FINAL FUEL FILTER AND BRACKET
(PE6068HT059)

RE519760PCDA -UN-13JAN03

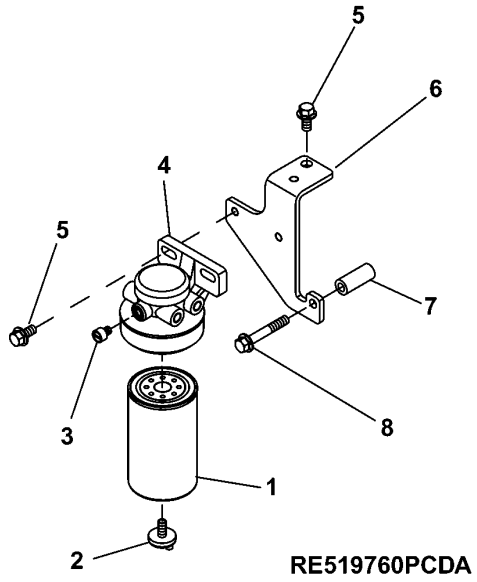

KEY	PART NO.	PART NAME	QTY	ENGINE SERIAL NO.	REMARKS
1	RE509032	FILTER ELEMENT	1		
2	RE60854	KIT	1		
3	RE51649	SEAL KIT	1		
4	RE509794	KIT	1		
5	19M7784	SCREW	3		
6	R505143	BRACKET	1		
7	R80670	SPACER	1		
8	19M7808	SCREW	1		

LOW PRESSURE FUEL LINES
(PE6068HT059)

RE519824PCDA -UN-13JAN03

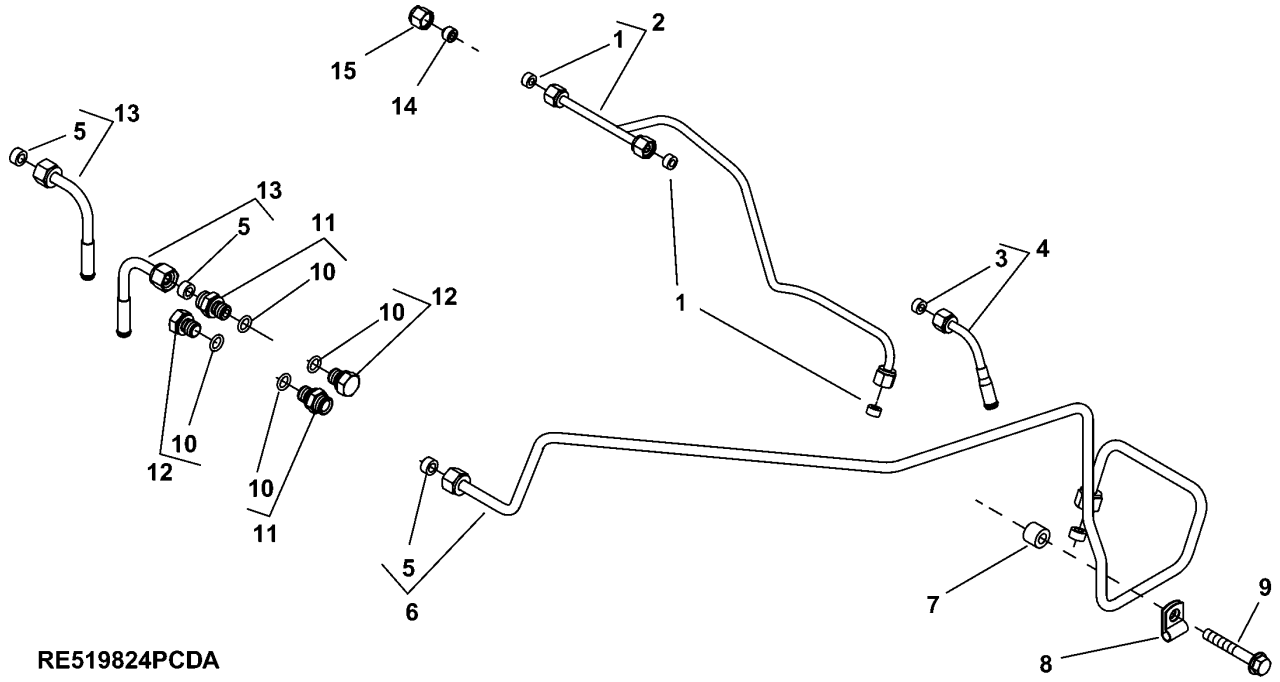

RE519824PCDA

KEY	PART NO.	PART NAME	QTY	ENGINE SERIAL NO.	REMARKS
1	R51936	SEALING WASHER	3		
2	RE507598	FUEL LINE	1		
3	R51936	SEALING WASHER	1		
4	RE16142	FUEL LINE	1		
5	R51936	SEALING WASHER	3		
6	RE519825	FUEL LINE	1		
7	R55599	SLEEVE	1		
8	R504605	CLAMP	1		
9	19M7979	SCREW	1		M8 X 55
10	51M7040	O-RING	4		
11	RE60029	ADAPTER	2		
12	RE46686	PLUG	2		
13	RE60242	FUEL LINE	2		
14	AR85519	PLUG	1		
15	R123593	TUBE NUT	1		

PRIMARY AND FINAL FUEL FILTER ELEMENTS & ERVICE KITS(PE6068HT053(-254350)BOSCH VP-44)(S.N.-504000)

T152609 -UN-13MAR02

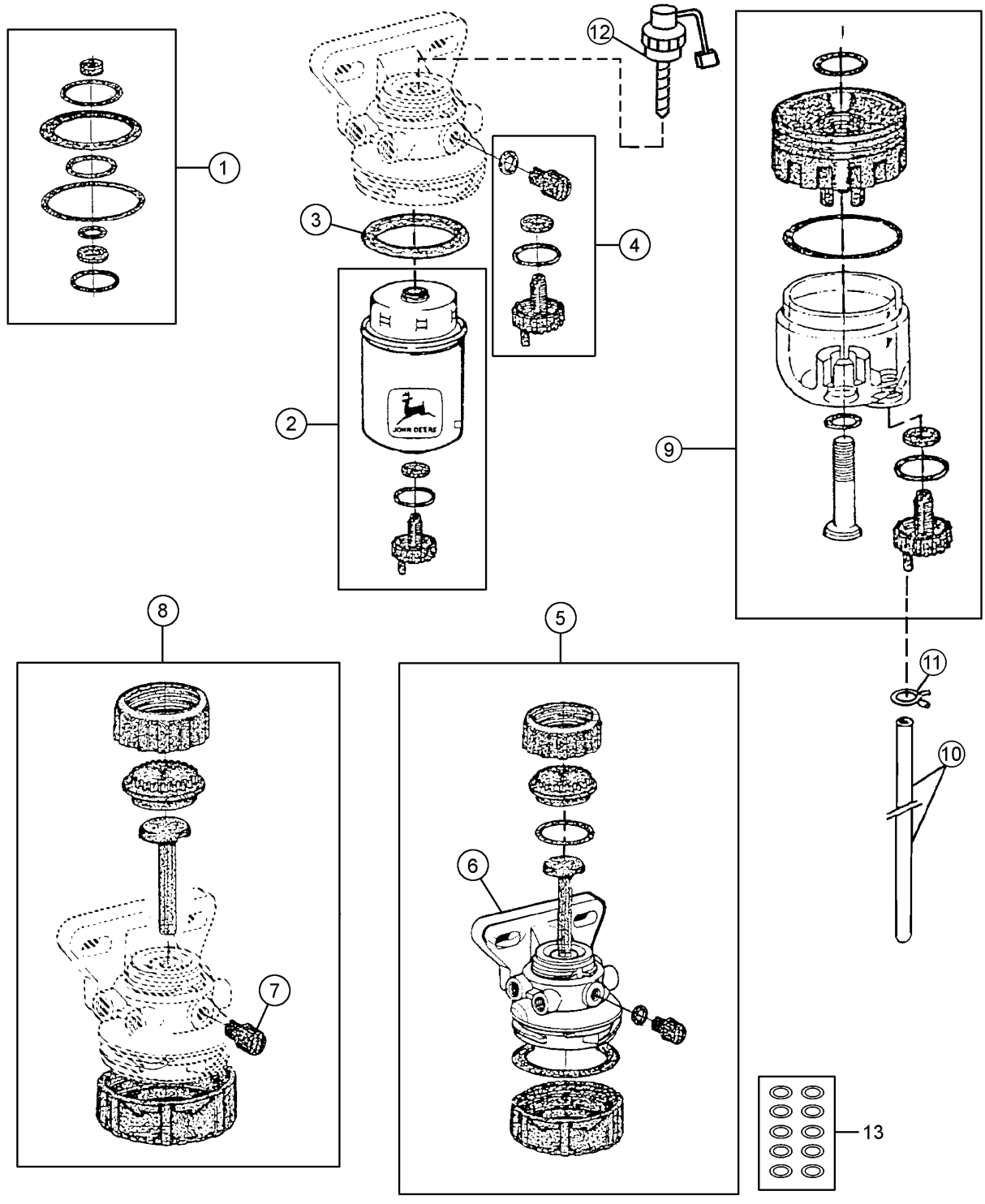

T152609

PRIMARY AND FINAL FUEL FILTER ELEMENTS & ERVICE KITS(PE6068HT053(-254350)BOSCH VP-44)(S.N.-504000)

KEY	PART NO.	PART NAME	QTY	ENGINE SERIAL NO.	REMARKS
1	RE516553	KIT	1		(SUB FOR RE50752)
2	RE67901	FILTER ELEMENT	1		FINAL FUEL FILTER (BOSCH VP-44)
	RE509036	FUEL FILTER	1		PRIMARY FUEL FILTER (BOSCH VP-44)
3	R113565	SEAL	1		
4	RE60854	KIT	1		
5	RE508985	SEAL KIT	1		FINAL FUEL FILTER
	RE508847	FILTER HEAD	1		PRIMARY FUEL FILTER
6	.....	FILTER HEAD	2		(ORDER RE508985 FOR FINAL FILTER) (ORDER RE508847 FOR PRIMARY FILTER)
7	R113563	DRAIN PLUG	1		
8	RE51649	SEAL KIT	1		
9	RE51650	SEDIMENT BOWL	1		PRIMARY FUEL FILTER
10	R126086	HOSE	1		PRIMARY FUEL FILTER
11	T13254	CLAMP	1		PRIMARY FUEL FILTER
12	RE504134	KIT	1		FUEL HEATER (24-VOLT) (PRIMARY FUEL FILTER)
13	RE516513	KIT	1		(WITH HAND PRIMER) (CONTAINS 10 O-RINGS)
	RE516512	KIT	1		(WITHOUT HAND PRIMER) (CONTAINS 10 O-RINGS)

PRIMARY AND FINAL FUEL FILTER AND SERVICE KITS (PE6068HT059 254351-)(STANADYNE DE-10)(S.N.504001-)

RGP9295 -UN-16DEC02

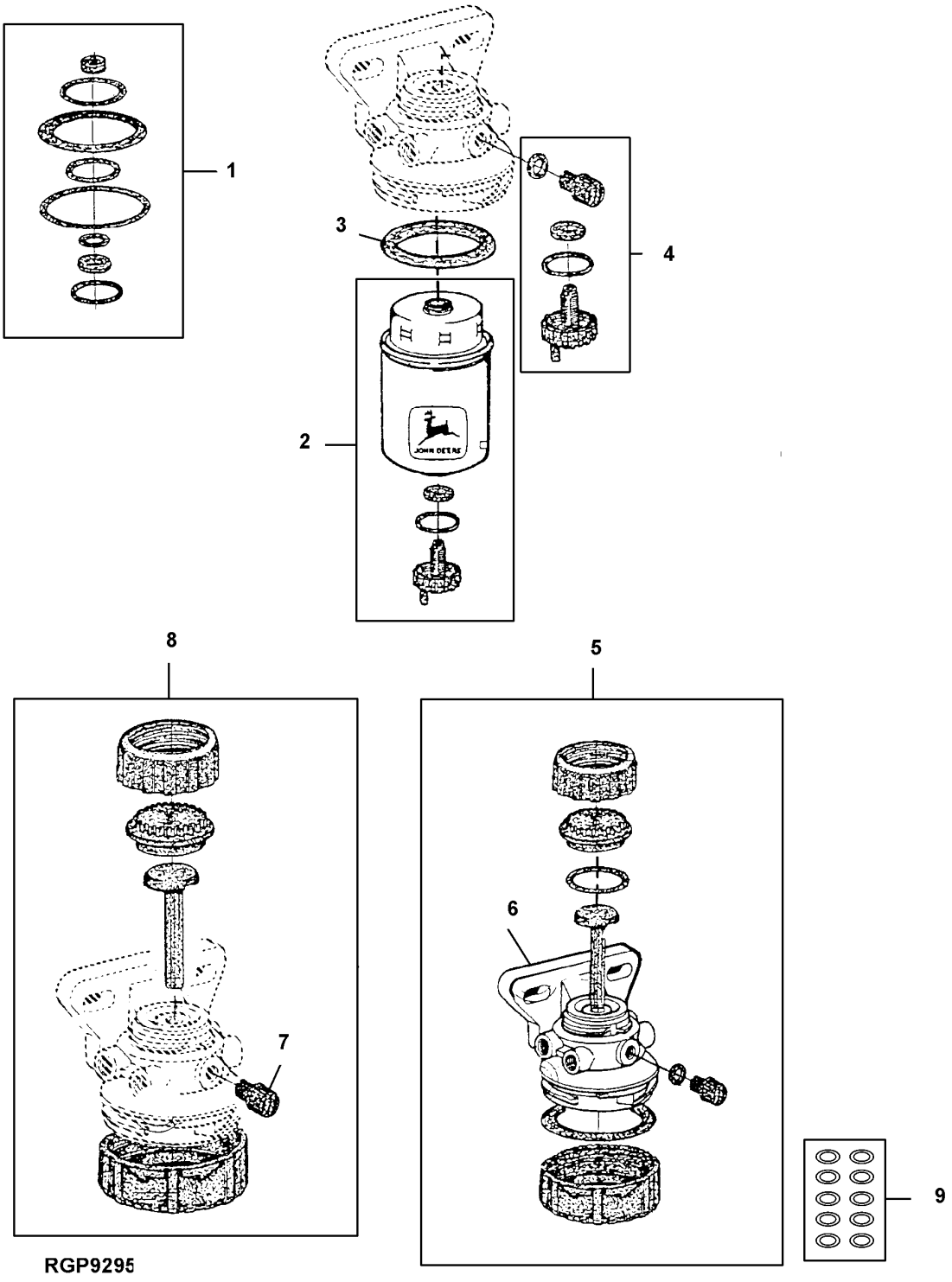

PRIMARY AND FINAL FUEL FILTER AND SERVICE KITS (PE6068HT059 254351-)(STANADYNE DE-10)(S.N.504001-)

KEY	PART NO.	PART NAME	QTY	ENGINE SERIAL NO.	REMARKS
1	RE516553	KIT	1		(SUB FOR RE50752)
2	RE509032	FILTER ELEMENT	1		FINAL FUEL FILTER (STANADYNE DE10)
	RE517180	FILTER	1		(ELEMENT) PRIMARY FUEL FILTER (STANADYNE DE10)
3	R113565	SEAL	1		
4	RE60854	KIT	1		
5	RE509794	KIT	1		FINAL FUEL FILTER
	RE508847	FILTER HEAD	1		(KIT) PRIMARY FUEL FILTER KIT
6	.....	FILTER HEAD	2		(ORDER RE508985 FOR FINAL FILTER) (ORDER RE508847 FOR PRIMARY FILTER)
7	R113563	DRAIN PLUG	1		
8	RE51649	SEAL KIT	1		
9	RE516512	KIT	1		(WITHOUT HAND PRIMER) (CONTAINS 10 O-RINGS)

FUEL TRANSFER PUMP COVER

TP53340 -UN-12SEP96

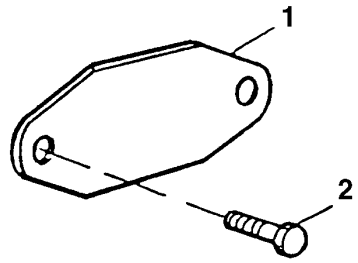

TP53340

KEY	PART NO.	PART NAME	QTY	ENGINE SERIAL NO.	REMARKS
1	R123396	COVER	1		
2	RE66334	SCREW	2		

MEMORANDA

FUEL TRANSFER PUMP, WIRING HARNESS, AND FITTINGS

T148187 -UN-15NOV01

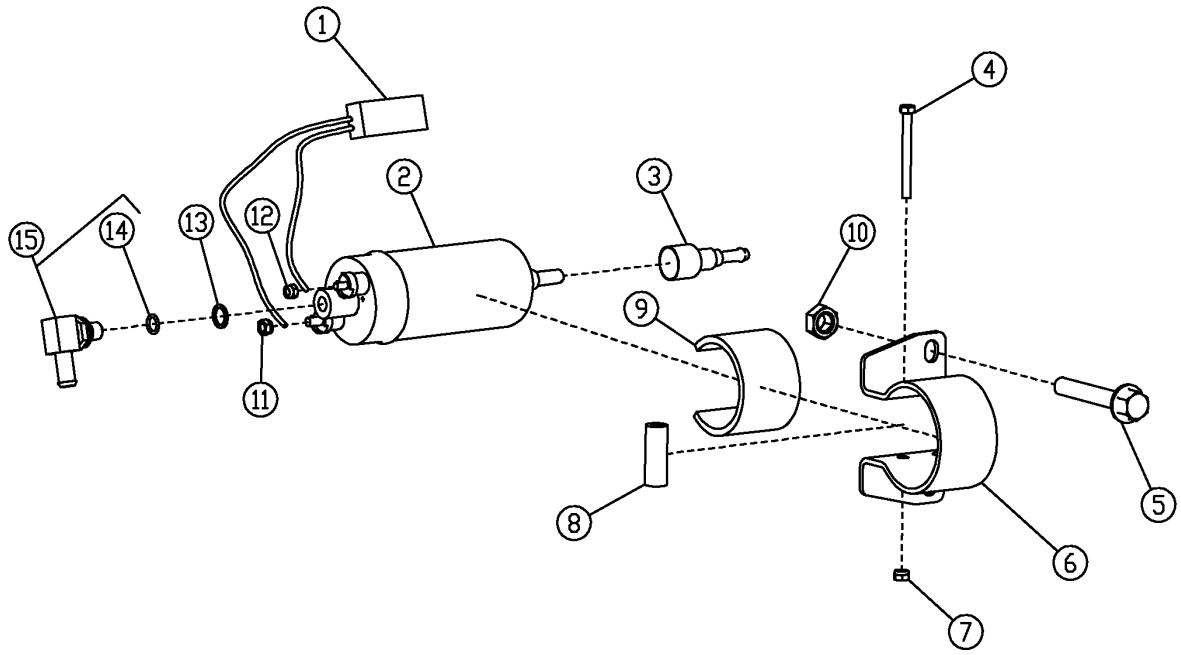

T148187

FUEL TRANSFER PUMP, WIRING HARNESS, AND FITTINGS

KEY	PART NO.	PART NAME	QTY	ENGINE SERIAL NO.	REMARKS
1	RE515326	WIRING HARNESS	1		
2	RE515718	PUMP	1		
3	RE515341	ADAPTER	1		
4	19M7986	CAP SCREW	1		M5 X 50
5	19M7139	CAP SCREW	2		
6	R515460	FILTER HEAD	1		
7	14M7265	LOCK NUT	1		M5
8	R515736	SPACER	1		
9	R515461	TOOL HOLDER	1		
10	.....	LOCK NUT	2		(NOT REQUIRED THIS APPLICATION)
11	14M7265	LOCK NUT	1		M5
12	14M7264	LOCK NUT	1		M4
13	R62107	WASHER	1		
14	51M7039	O-RING	1		8.100 X 1.600 MM
15	AT196563	ADAPTER	1		

STARTER MOTOR (24 VOLT)
(DENSO NO.228000-7011A)

T144800 -UN-14AUG01

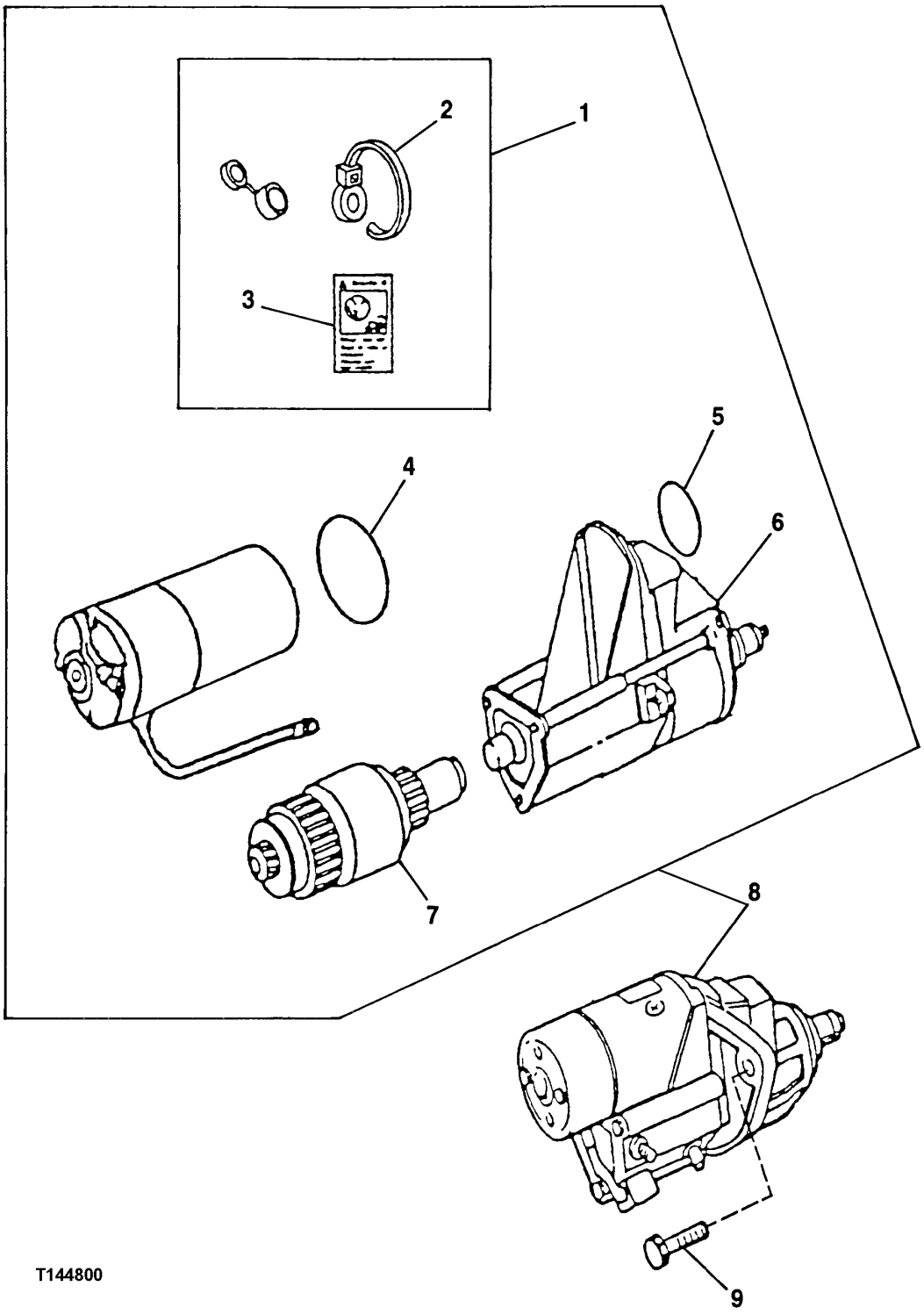

STARTING MOTOR (24 VOLT)
(DENSO NO.228000-7011A)

KEY	PART NO.	PART NAME	QTY	ENGINE SERIAL NO.	REMARKS
1	RE70756	KIT	1		BYPASS START
2	R96703	TIE BAND	1		
3	T146102	LABEL	1		BYPASS START
4	R135509	SEAL	1		
5	R135510	O-RING	1		
6	RE70681	SWITCH	1		
7	RE70487	CLUTCH	1		
8	RE500345	STARTER MOTOR	1		24-VOLT (DENSO NO.228000-7011A)
9	19M7786	SCREW	3		M10 X 30

ALTERNATOR MOUNTING BRACKETS

T144842 -UN-31AUG01

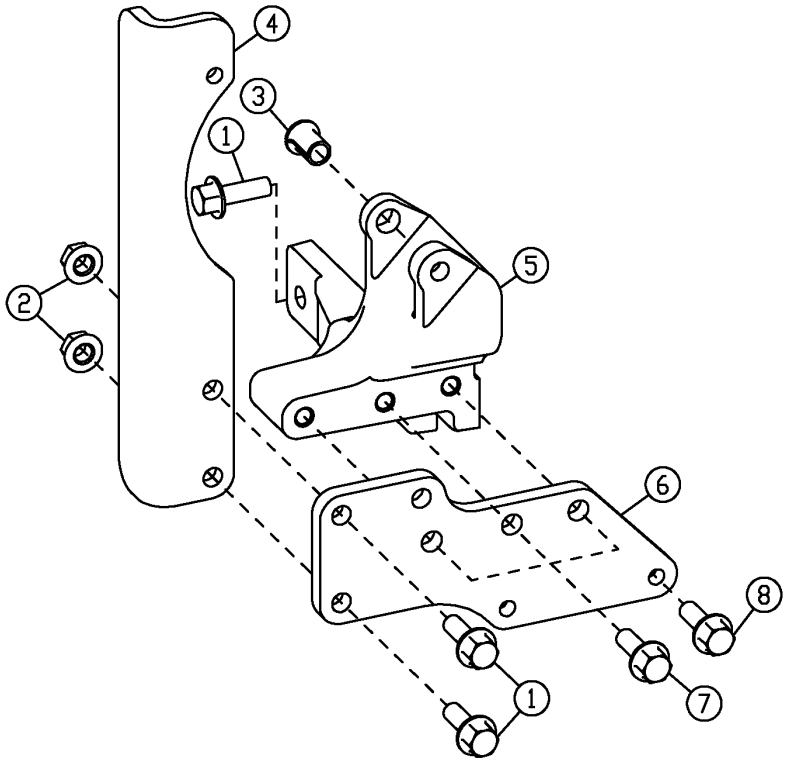

T144842

ALTERNATOR MOUNTING BRACKETS

KEY	PART NO.	PART NAME	QTY	ENGINE SERIAL NO.	REMARKS
1	19M7786	SCREW	2		M10 X 30
2	14M7296	FLANGE NUT	2		M10
3	R100377	BUSHING	1		
4	R500531	STRAP	1		
5	R132166	BRACKET	1		
6	R132913	SUPPORT	1		
7	19M7785	SCREW	3		M10 X 25
8	19M7801	SCREW	2		M8 X 60

CRANKSHAFT PULLEY AND DAMPER

TP53318 -UN-21AUG96

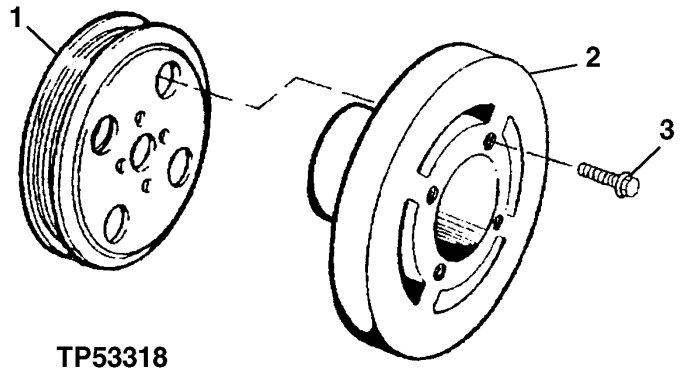

TP53318

KEY	PART NO.	PART NAME	QTY	ENGINE SERIAL NO.	REMARKS
1	R133295	PULLEY	1		
2	RE59355	TORSIONAL DAMPER	1		
3	R121897	SCREW	4		

CRANKSHAFT DAMPER PULLEY
(WITH AIR CONDITIONING)

TP53330 -UN-05SEP96

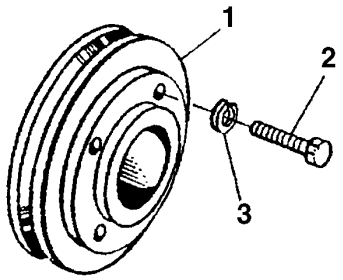

TP53330

KEY	PART NO.	PART NAME	QTY	ENGINE SERIAL NO.	REMARKS
1	R504762	PULLEY	1		
2	19H2633	CAP SCREW	1		3/8" X 1-1/2"
3	12H304	LOCK WASHER	2		3/8"

FAN DRIVE, PULLEYS, AND BELT TENSIONERS

T145192 -UN-30AUG01

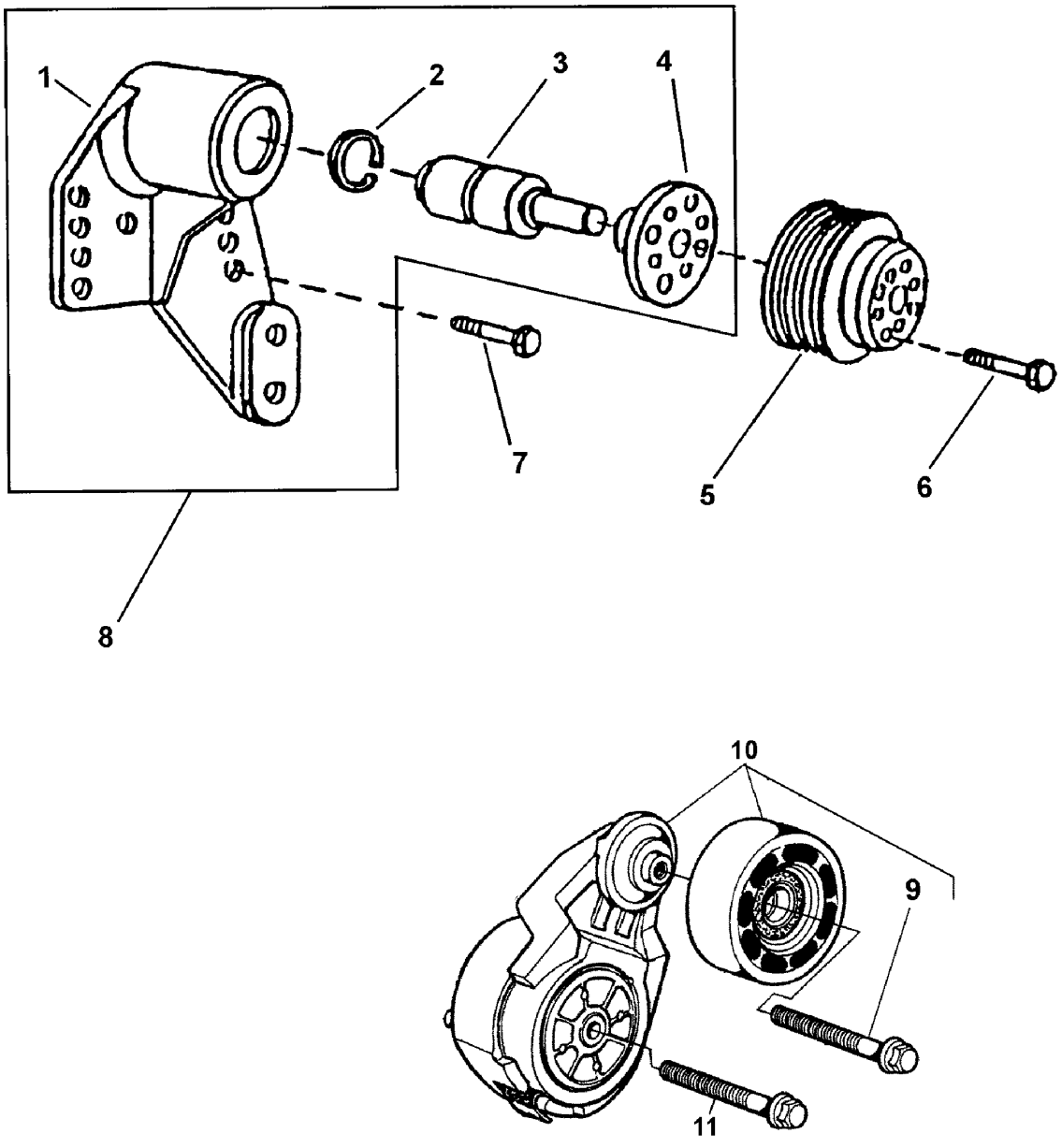

T145192

FAN DRIVE, PULLEYS, AND BELT TENSIONERS

KEY	PART NO.	PART NAME	QTY	ENGINE SERIAL NO.	REMARKS
1	.....	BEARING HOUSING W/ BEARING	1		
2	E1343FN	SNAP RING	1		
3	.....	SHAFT	1		SHAFT/BEARINGS
4	.....	HUB	1		(MARKED R123284)
5	R128660	PULLEY	1	-504000	
	R128662	PULLEY	1	504001-	
6	19M7784	SCREW	4		M10 X 20
7	19M7835	SCREW	4		M10 X 35
8	RE503664	SUPPORT	1		(MARKED R502014)
9	R503813	BOLT	1		LEFT HAND THREAD
10	RE70536	PULLEY	1		
11	19M8131	SCREW	1		M10 X 70

FAN BELT AND PULLEY (PE6068HT053 -248520)

TP58352 -UN-28OCT98

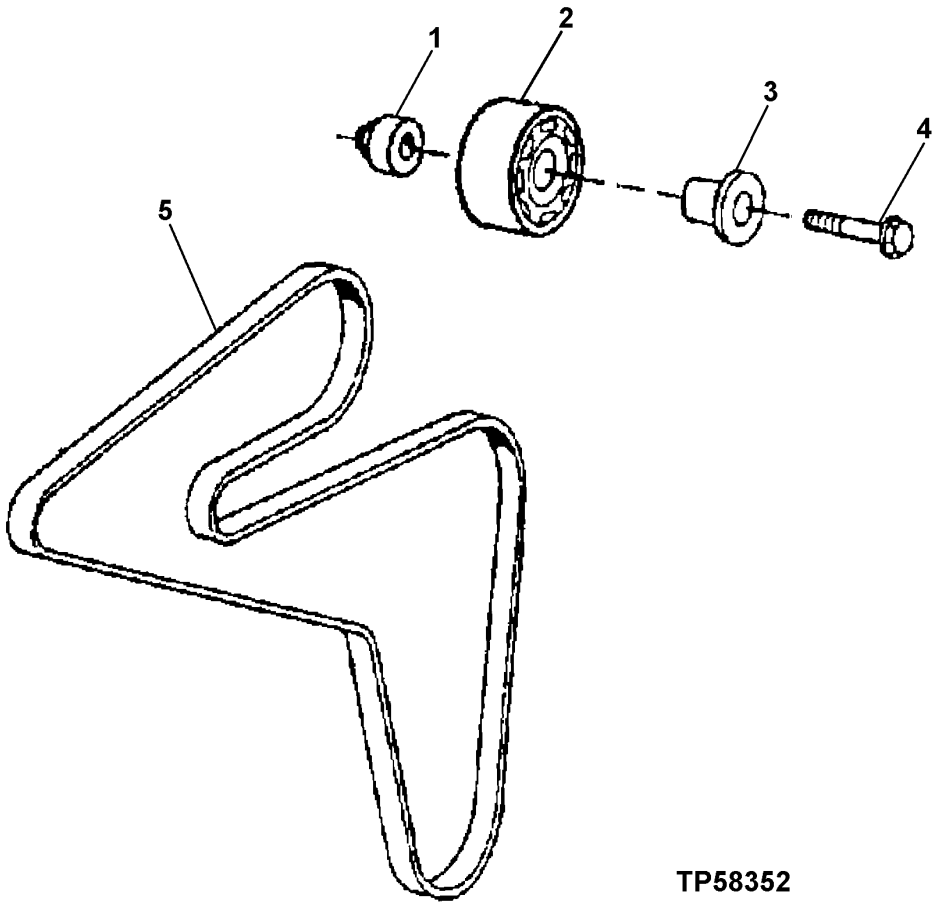

FAN BELT AND PULLEY (PE6068HT053 -248520)

KEY	PART NO.	PART NAME	QTY	ENGINE SERIAL NO.	REMARKS
1	R500320	SPACER	1		
2	RE505264	IDLER	1		
3	R502079	SLEEVE	1		
4	19M7808	SCREW	1		M10 X 65
5	R504963	V-BELT	1		

FAN BELT AND PULLEY (PE6068HT059 243651-)(MACH.SN 504001-)

TP58352 -UN-28OCT98

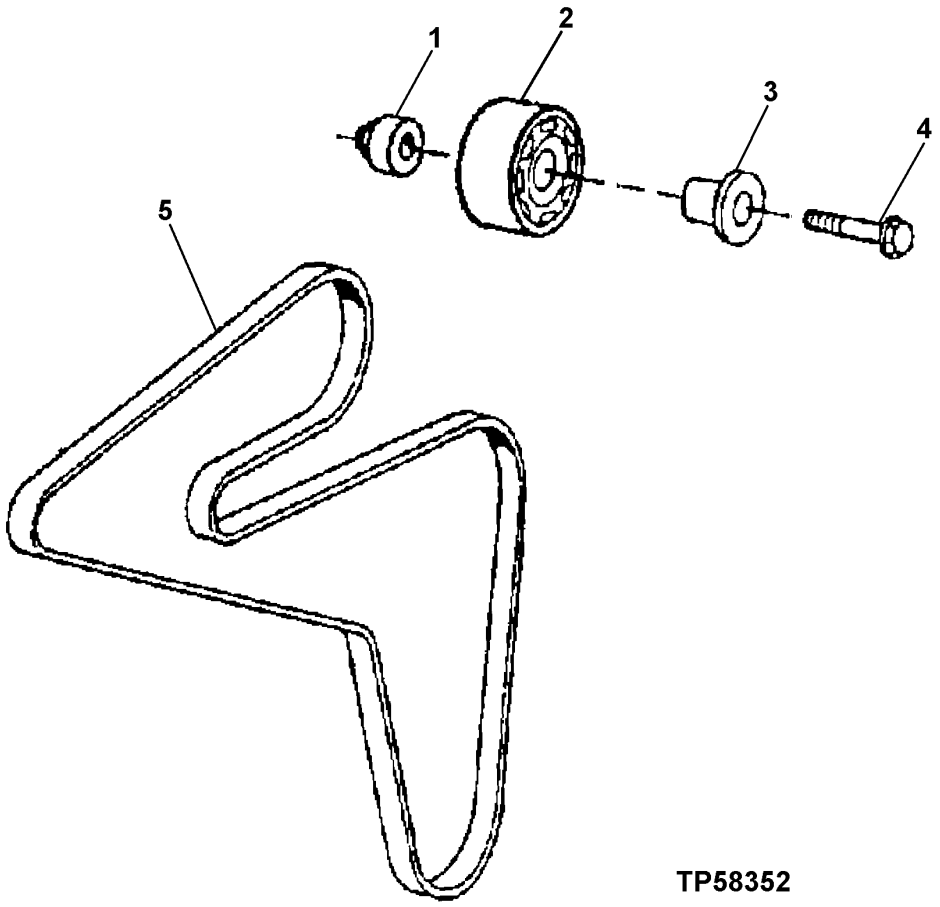

FAN BELT AND PULLEY (PE6068HT059 243651-)(MACH.SN 504001-)

KEY	PART NO.	PART NAME	QTY	ENGINE SERIAL NO.	REMARKS
1	R500320	SPACER	1		
2	RE505264	IDLER	1		
3	R502079	SLEEVE	1		
4	19M7808	SCREW	1		M10 X 65
5	R500242	V-BELT	1		

ENGINE FLYWHEEL

TP49557 -UN-05FEB97

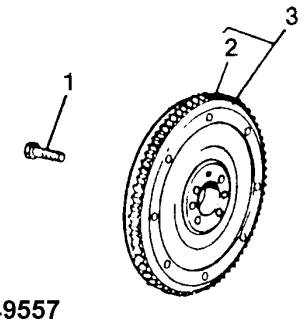

TP49557

KEY	PART NO.	PART NAME	QTY	ENGINE SERIAL NO.	REMARKS
1	R135918	BOLT	6		
2	R28811	RING GEAR	1		(129 TEETH)
3	RE500527	FLYWHEEL	1		

ENGINE FLYWHEEL HOUSING

T144896 -UN-22AUG01

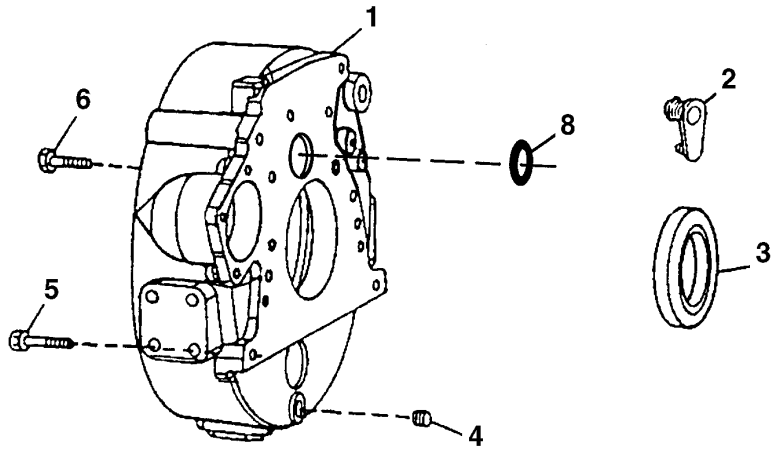

T144896

KEY	PART NO.	PART NAME	QTY	ENGINE SERIAL NO.	REMARKS
1	R503444	HOUSING	1		
2	R131768	PLUG	1		
3	RE44574	SEAL	1		
4	15H624	PIPE PLUG	1		1/2"
5	19M8306	SCREW	4		M12 X 50
6	R135918	BOLT	8		
8	R61467	O-RING	1		

MEMORANDA

CYLINDER HEAD REMOVAL AND IN VEHICLE OVERHAUL GASKET SETS

TP49294 -UN-28SEP95

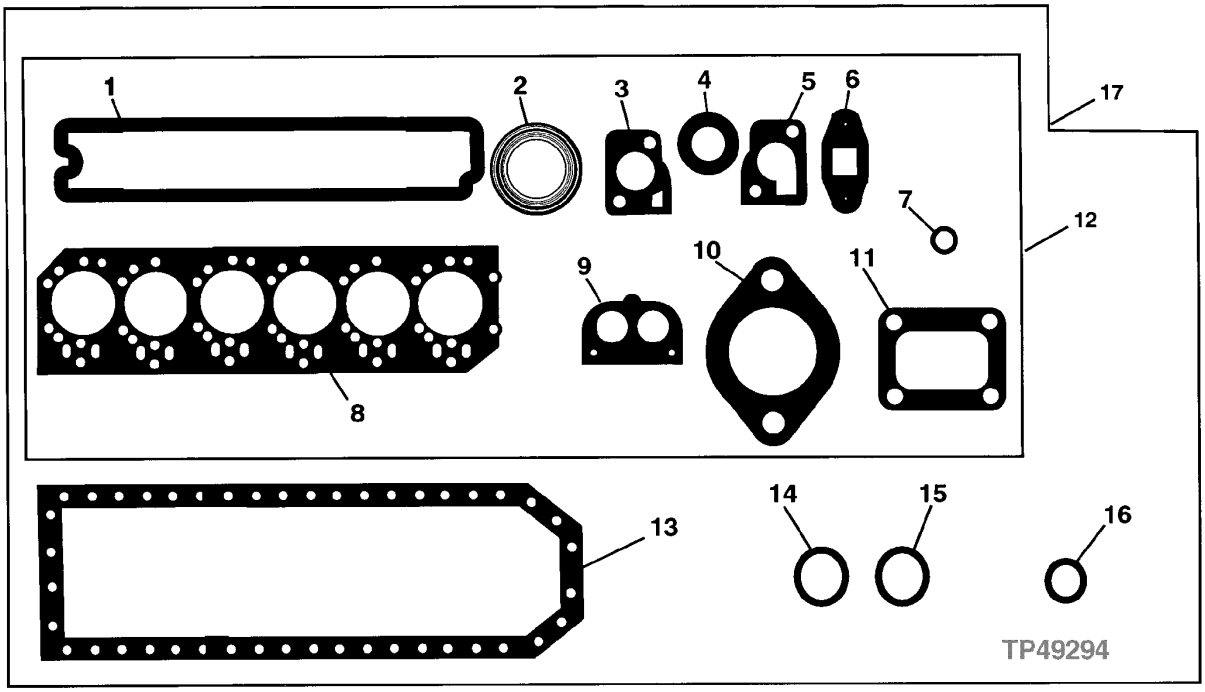

KEY	PART NO.	PART NAME	QTY	ENGINE SERIAL NO.	REMARKS
1	R123543	GASKET	1		ROCKER ARM COVER
2	R90658	GASKET	6		EXHAUST MANIFOLD
3	R502814	GASKET	1		THERMOSTAT COVER
4	R123226	SEAL	2		WATER BY-PASS TUBE
5	R123345	GASKET	1		THERMOSTAT HOUSING
6	R123570	GASKET	1		TURBOCHARGER OIL OUTLET LINE
7	R123575	O-RING	6		ROCKER ARM COVER HOLD DOWN STUD
8	R116516	ENGINE CYLINDER HEAD GASKET	1		CYLINDER HEAD
9	R501373	GASKET	1		THERMOSTAT COVER
10	R81275	GASKET	1		AIR INLET
11	R123572	GASKET	1		TURBOCHARGER TO EXHAUST MANIFOLD
12	RE66083	GASKET KIT	1		CYLINDER HEAD REMOVAL
13	R123354	GASKET	1		ENGINE OIL PAN
14	R75892	GASKET	1		OIL PUMP TUBE CONNECTOR
15	R97185	O-RING	1		OIL PUMP OUTLET TUBE TO COVER
16	R61871	O-RING	1		OIL PUMP INTAKE TUBE TO COVER
17	RE66085	GASKET KIT	1		IN CHASSIS OVERHAUL

ENGINE MAJOR OVERHAUL GASKET SET AND ENGINE OVERHAUL KIT

TP58369 -UN-08FEB99

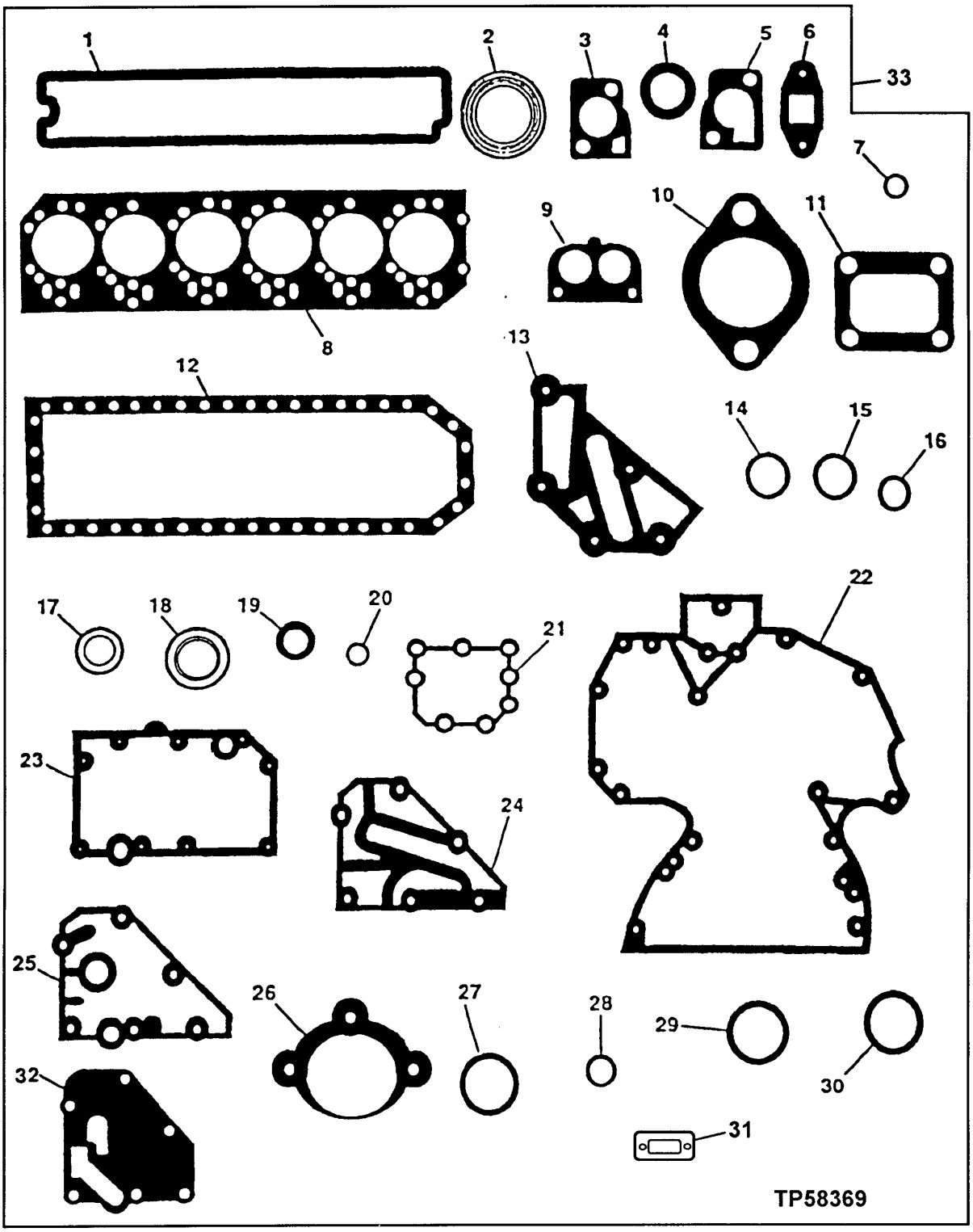

ENGINE MAJOR OVERHAUL GASKET SET AND ENGINE OVERHAUL KIT

KEY	PART NO.	PART NAME	QTY	ENGINE SERIAL NO.	REMARKS
1	R123543	GASKET	1		ROCKER ARM COVER
2	R90658	GASKET	6		EXHAUST MANIFOLD
3	R502814	GASKET	1		THERMOSTAT COVER
4	R123226	GASKET	2		WATER BY-PASS TUBE
5	R123345	GASKET	1		THERMOSTAT HOUSING
6	R123570	GASKET	1		TURBOCHARGER OIL OUTLET TUBE
7	R123575	GASKET	4		ROCKER ARM COVER HOLD DOWN STUD
8	R116516	GASKET	1		CYLINDER HEAD
9	R501373	GASKET	1		THERMOSTAT COVER
10	R81275	GASKET	1		AIR INLET
11	R123572	GASKET	1		TURBOCHARGER TO EXHAUST MANIFOLD
12	R123354	GASKET	1		ENGINE OIL PAN
13	R501428	GASKET	1		COOLANT PASSAGE ADAPTER
14	R75892	O-RING	1		OIL PUMP TUBE CONNECTOR
15	R97185	O-RING	1		OIL PUMP OUTLET TUBE TO COVER
16	R61871	O-RING	1		OIL PUMP INTAKE TUBE
17	A4827R	WASHER	1		OIL PRESSURE REGULATOR PLUG
18	RE44574	SEAL	1		REAR OIL SEAL
19	RE59810	SEAL KIT	1		FRONT OIL SEAL
20	R123273	O-RING	1		FUEL TRANSFER PUMP
21	R123417	GASKET	1		WATER PUMP
22	R136516	GASKET	1		TIMING GEAR COVER
	R136515	GASKET	1		TIMING GEAR COVER FOR AUXILIARY DRIVE (NOT ILLUSTRATED)
23	R123501	GASKET	1		OIL COOLER HOUSING
24	R502864	GASKET	1		REMOTE OIL FILTER ADAPTER
25	R123525	GASKET	AR		OIL FILTER HEADER
26	R53108	GASKET	1		STARTING MOTOR
27	R72328	O-RING	4		REMOTE OIL FILTER TUBES
28	R89944	O-RING	1		WATER PUMP INLET
29	R61105	O-RING	2		CONNECTOR TUBE TO TIMING GEAR COVER
30	T122075	O-RING	2		OIL COOLER TO HOUSING
31	R136495	GASKET	2		OIL FILL COVER
32	R500374	GASKET	1		OIL FILTER HEADER
33	RE501456	GASKET KIT	1		ENGINE MAJOR OVERHAUL
	RE507864	ENGINE OVERHAUL KIT	1		(NOT ILLUSTRATED) (INCLUDES ENGINE MAJOR OVERHAUL GASKET SET,ENGINE CONNECTING ROD BEARINGS,ENGINE MAIN BEARINGS,AND PISTON AND CYLINDER LINER KITS)(ORDER ONE KIT PER ENGINE)

COLD WEATHER STARTING AID

T146933 -UN-22OCT01

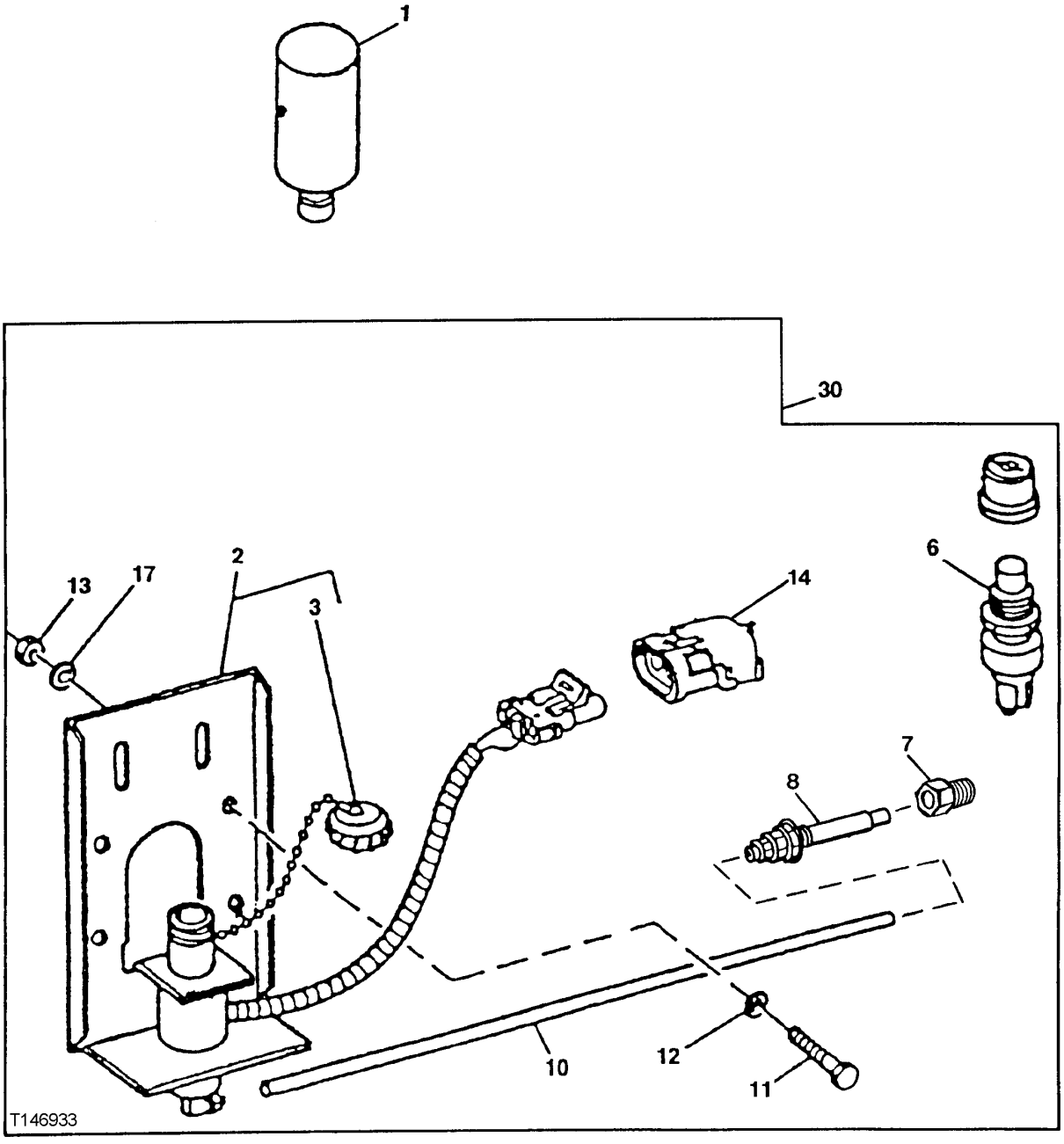

COLD WEATHER STARTING AID

KEY	PART NO.	PART NAME	QTY	SERIAL NO.	REMARKS
1	AT171162	STARTING FLUID	1		
2	AT170759	SOLENOID	1		
3	AT171539	CAP (HAT)	1		
6	4384759	SWITCH	1		(SUB FOR AT178893)
7	T175293	ADAPTER	1		
8	AT183222	NOZZLE	1		
10	.....	TUBE	1		(CUT TO LENGTH FROM T78593 BULK MATERIAL)
11	19M7407	CAP SCREW	4		M8 X 25
12	12M7056	LOCK WASHER	4		8 MM (0.315") (SUB FOR 12M7065)
13	14M7273	NUT	4		M8
14	.....	CONNECTOR	1		(AL2976T NO LONGER REQUIRED)
17	24M7055	WASHER	4		8.400 X 16 X 1.600 MM (0.331" X 0.630" X 0.063")
30	**AT178845**	**STARTING AID**	**1**		**WHOLEGOODS**

ENGINE COOLANT HEATER

TP15727 -UN-01JAN94

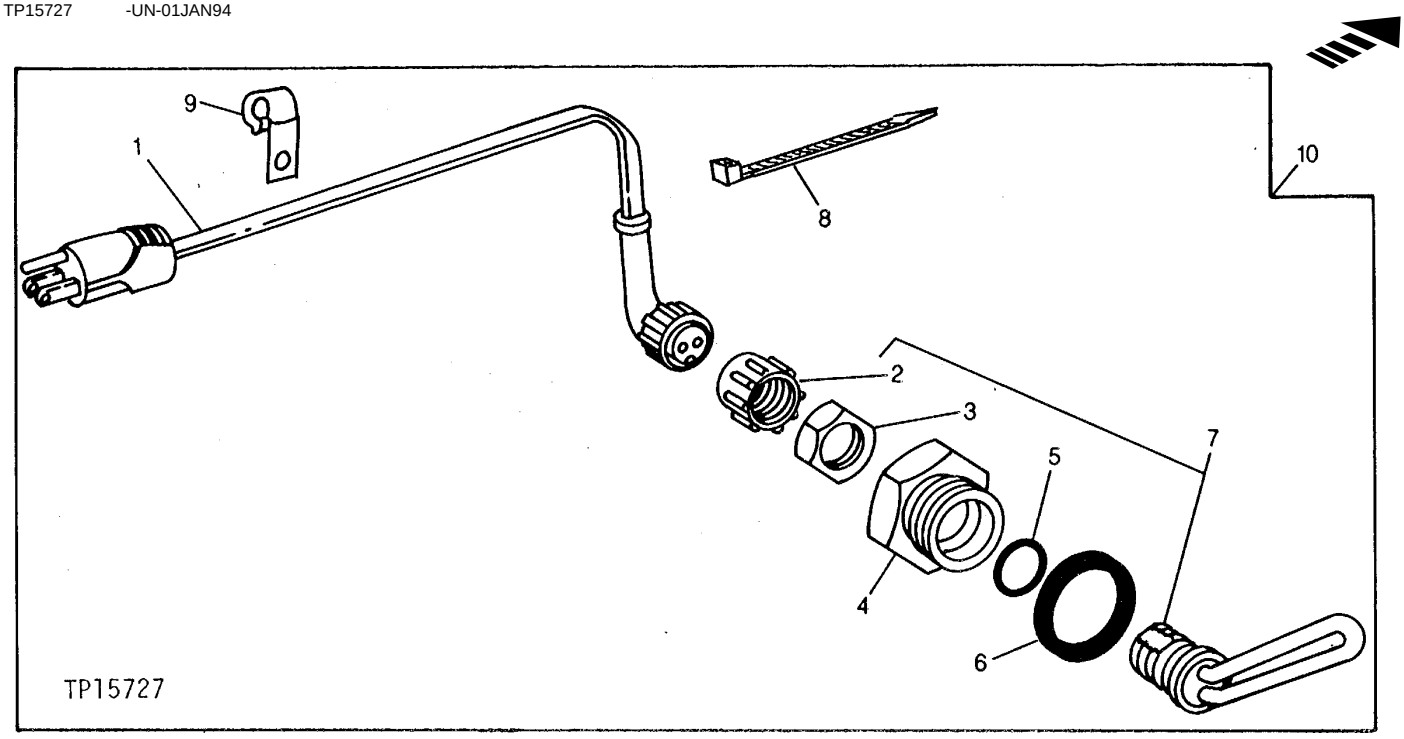

KEY	PART NO.	PART NAME	QTY	SERIAL NO.	REMARKS
1	AT73296	POWER CORD	1		
2	.....	CAP	1		(R54510 NO LONGER AVAILABLE)
3	.....	NUT	1		(R54511 NO LONGER AVAILABLE)
4	R54123	ADAPTER	1		
5	R47693	GASKET	1		
6	U13639	O-RING	1		37.465 X 2.997 MM (1.475" X 0.118")
7	RE42139	HEATING ELEMENT	1		
8	H77698	TIE BAND	1		
9	T19935	CLAMP	1		
10	AT74940	COOLANT HEATER	1		WHOLEGOODS

MEMORANDA

FAN BLADE AND SPACER

T144839 -UN-22AUG01

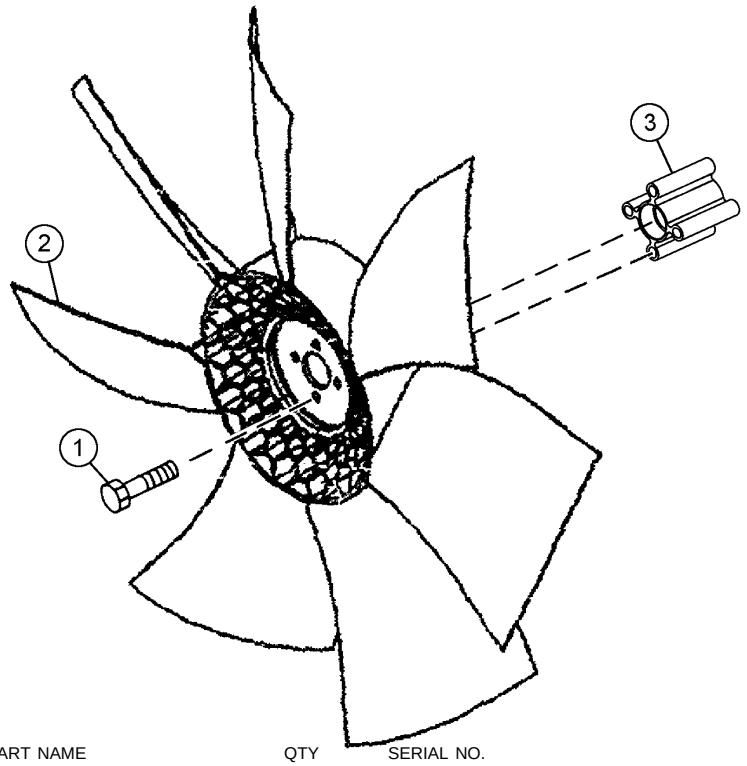

T144839

KEY	PART NO.	PART NAME	QTY	SERIAL NO.	REMARKS
1	19M7836	SCREW	4		M10 X 110
2	AT190882	FAN	1		
3	R81876	HUB	1		

MEMORANDA

RESERVE WATER TANK

T148536 -UN-08DEC01

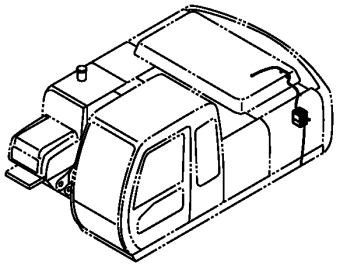

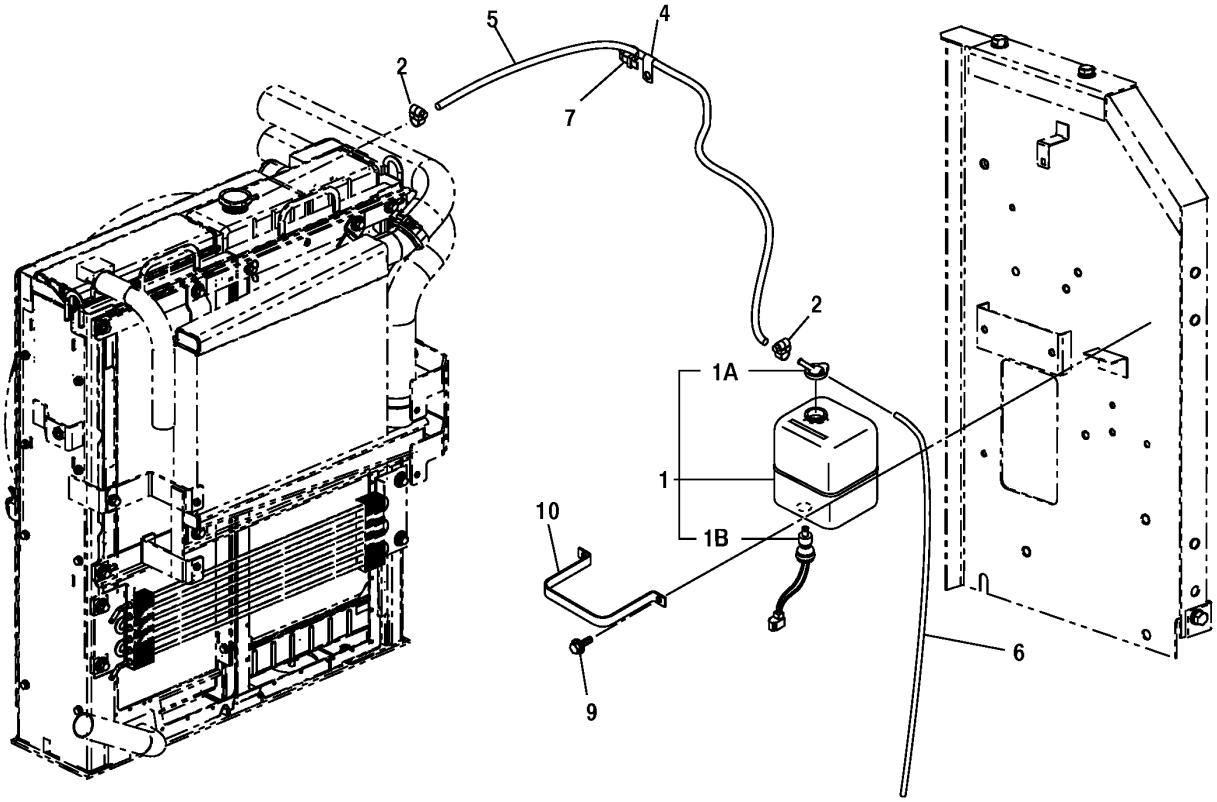

T148536

RESERVE WATER TANK

KEY	PART NO.	PART NAME	QTY	VEHICLE SERIAL NO.	REMARKS
1	4206452	TANK	1		(SUB FOR AT147301)
1A	4396809	CAP	1		(SUB FOR TH102933)
1B	4153251	SENDER	1		(SUB FOR TH102932)
2	TY22462	CLAMP	3		(SUB FOR AR48236)
4	4284094	CLAMP	1		(SUB FOR AT155337)
5	.....	HOSE	1		(FURNISH T79477 BULK MATERIAL CUT TO LENGTH) (AT154952 NOT AVAILABLE FOR SERVICE)
6	.....	HOSE	1		(FURNISH T79477 BULK MATERIAL CUT TO LENGTH)
7	H77698	TIE BAND	1		
9	19M7881	SCREW	2		M8 X 20
	12M7056	LOCK WASHER	2		8 MM (0.315") (SUB FOR 12M7065)
	24M7055	WASHER	2		8.400 X 16 X 1.600 MM (0.331" X 0.630" X 0.063")
10	4180555	BRACKET	1		(SUB FOR TH108579)

RADIATOR HOSES AND SUPPORTS

T194859 -UN-24SEP03

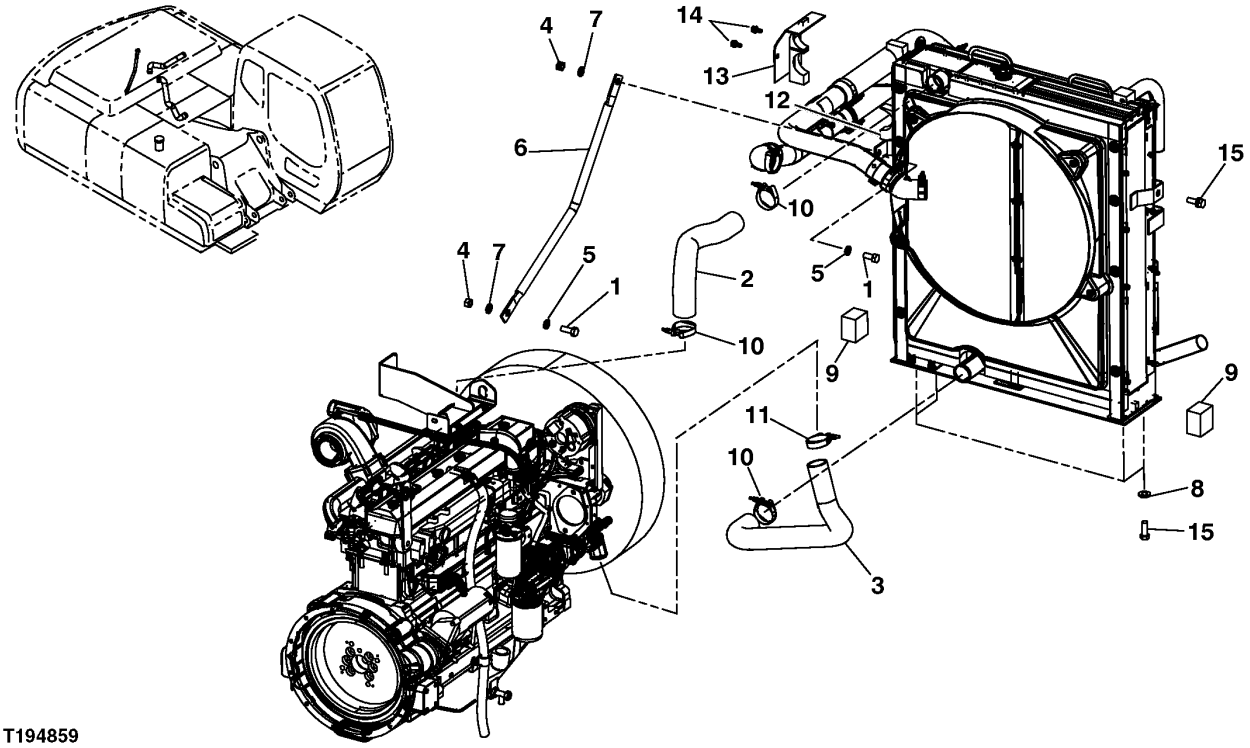

T194859

RADIATOR HOSES AND SUPPORT

KEY	PART NO.	PART NAME	QTY	SERIAL NO.	REMARKS
1	19M8035	CAP SCREW	2		M16 X 35
2	DH700038	RADIATOR HOSE	1		(SUB FOR THDH700038)
3	DH200027	RADIATOR HOSE	1		(SUB FOR THDH200027)
4	14M7276	NUT	2		M16
5	12H294	LOCK WASHER	2		15.875 MM (5/8")
6	3079124	BRACKET	1		(SUB FOR AT218151)
7	24M7053	WASHER	2		17 X 30 X 3 MM (0.669" X 1.181" X 0.118")
8	4087197	WASHER	4		(SUB FOR TH101734)
9	DH400418	ISOLATOR	2		(SUB FOR THDH400418)
10	TY22472	CLAMP	3		(SUB FOR THDH400103)
11	TY22470	CLAMP	1		(SUB FOR THDH400102)
12	DH400433	ISOLATOR	1		(SUB FOR THDH400433)
13	DH800060	COVER	1		(SUB FOR THDH800060)
14	19M7402	CAP SCREW	2		M10 X 25
	12M7066	LOCK WASHER	2		10 MM (0.394")
	24M7028	WASHER	2		10.500 X 20 X 2 MM (0.413" X 0.787" X 0.079")
15	19M7489	CAP SCREW	4		M16 X 45

RADIATOR AND OIL COOLER

T158428 -UN-28AUG02

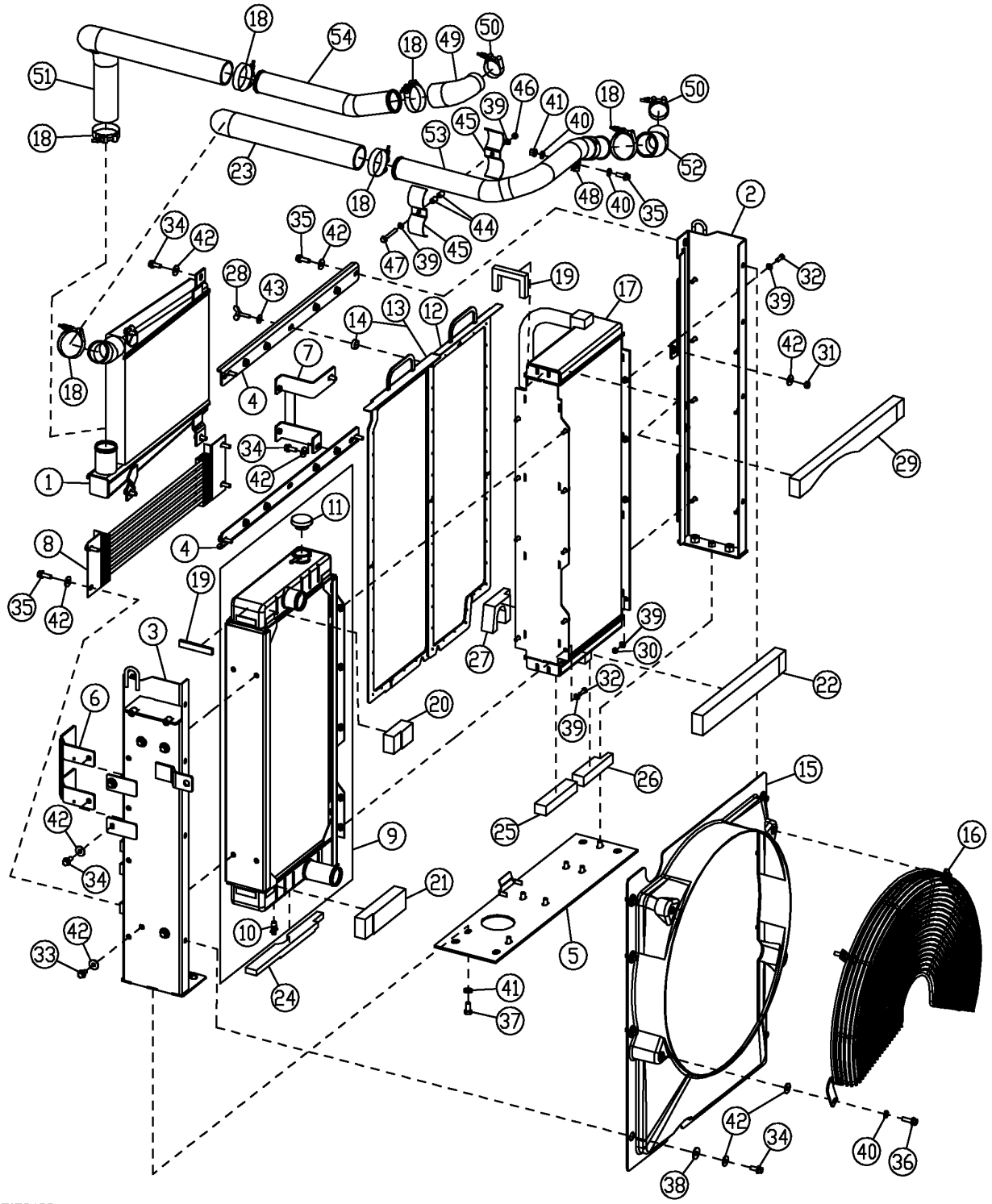

RADIATOR AND OIL COOLER

KEY	PART NO.	PART NAME	QTY	SERIAL NO.	REMARKS
1	AT176949	AIR COOLER	1		
2	AT183510	SUPPORT	1		
3	AT183511	SUPPORT	1		
4	AT183512	BRACKET	1		
5	AT183514	SUPPORT	1		
6	AT183529	BRACKET	1		
7	AT183531	BRACKET	1		
8	AT189613	OIL COOLER	1		
9	AT191168	RADIATOR	1		
10	AT13740	DRAIN VALVE	1		
11	AT173610	FILLER CAP	1		
12	AT191263	SCREEN	1		
13	AT191264	SCREEN	1		
14	28H1572	WASHER	1		
15	AT193968	SHROUD	1		
16	AT193969	GUARD	1		
17	AT197818	OIL COOLER	1		(SUB FOR AT191169)
18	AT198270	CLAMP	6		(SUB FOR AT39141)
19	AT66778	WEATHERSTRIP	1		
20	T160103	ISOLATOR	1		
21	T160105	ISOLATOR	1		
22	T160106	ISOLATOR	1		
23	T160124	HOSE	1		
24	T160598	PAD	1		
25	T160599	PAD	1		
26	T160600	PAD	1		
27	T164167	ISOLATOR	1		
28	T186158	WING SCREW	1		
29	T187951	ISOLATOR	1		
30	14M7273	NUT	8		M8
31	14M7274	NUT	1		M10
32	19M7407	CAP SCREW	17		M8 X 25
33	19M7784	SCREW	4		M10 X 20
34	19M7785	SCREW	16		M10 X 25
35	19M7786	SCREW	9		M10 X 30
36	19M7835	SCREW	4		M10 X 35
37	19M7872	CAP SCREW	7		M12 X 25
38	24H1330	WASHER	8		15/32" X 1-3/8" X 7/64"
39	24M7238	WASHER	17		8.700 X 17 X 2 MM
40	24M7239	WASHER	6		10.700 X 21 X 2.500 MM
41	24M7240	WASHER	7		13 X 25 X 3 MM
42	24M7296	WASHER	29		10.500 X 30 X 2.500 MM
43	24M7298	WASHER	1		8.400 X 25 X 2 MM
44	T161816	SPACER	2		
45	T162091	STRAP	2		
46	14M7166	LOCK NUT	1		M8
47	19M7803	SCREW	1		M8 X 70
48	F1451R	CLAMP	1		
49	T190408	HOSE	1		
50	AT105289	CLAMP	2		
51	T190409	HYDRAULIC HOSE	1		
52	T160123	RADIATOR HOSE	1		
53	T184989	TUBE	1		
54	T184990	TUBE	1		

AIR CLEANER

TP54425 -UN-14NOV96

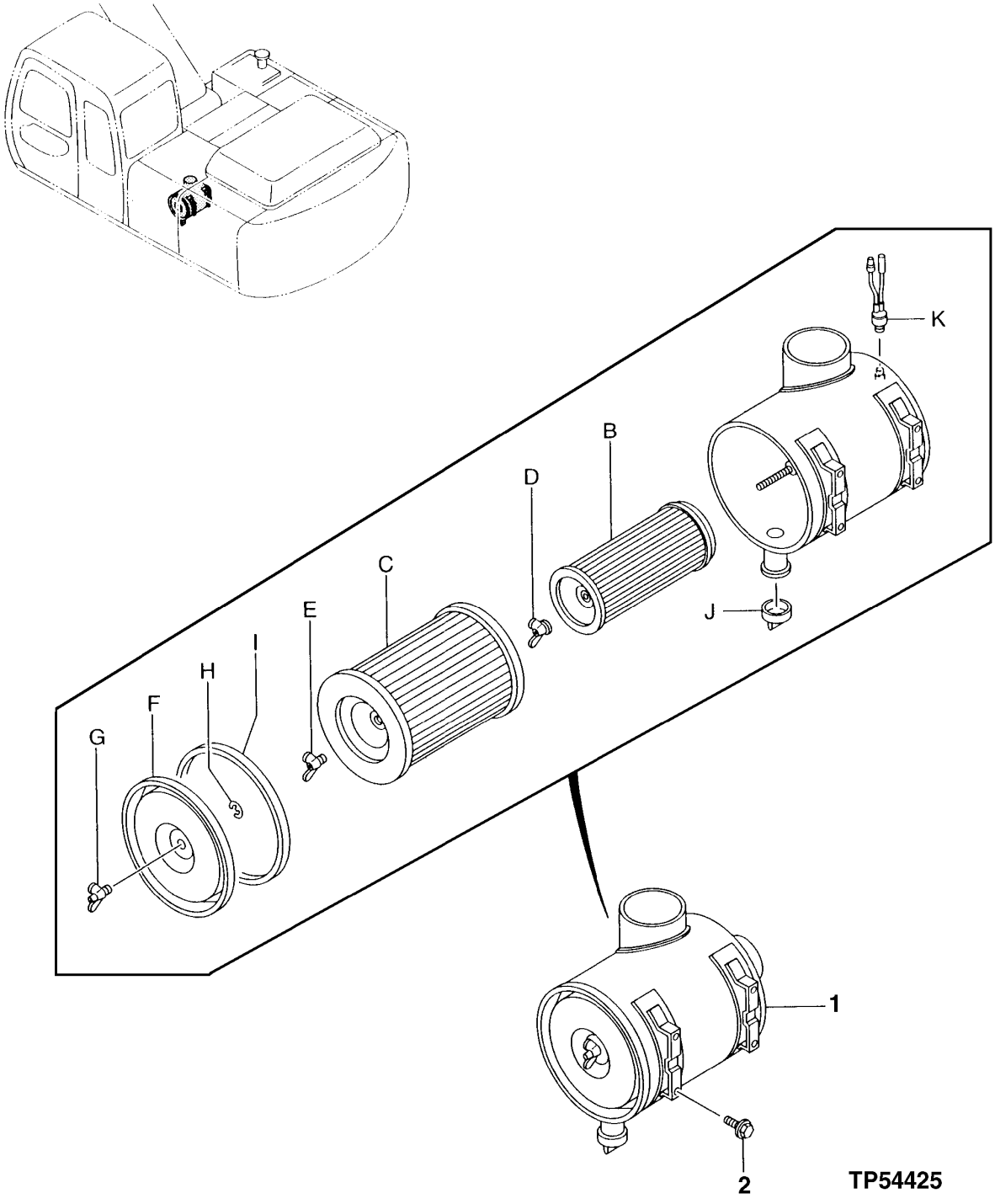

AIR CLEANER

KEY	PART NO.	PART NAME	QTY	SERIAL NO.	REMARKS
1	4288047	AIR CLEANER	1		(SUB FOR AT155622)
1B	T52224	AIR FILTER	1		
1C	T52223	AIR FILTER	1		
1D	AH20849	WING NUT	1		
1E	AR73234	WING NUT	1		11.125 MM (7/16")
1F	AT50529	COVER	1		
1G	AR73234	WING NUT	1		11.125 MM (7/16")
1H	P46402	SNAP RING	1		
1I	2030811	GASKET	1		(SUB FOR T52222)
1J	4152863	VALVE	1		(SUB FOR TH111700)
1K	4419601	INDICATOR	1		(SUB FOR AT131922)
2	19M7662	CAP SCREW	4		M10 X 30
	12M7066	LOCK WASHER	4		10 MM (0.394")
	24M7028	WASHER	4		10.500 X 20 X 2 MM (0.413" X 0.787" X 0.079")

AIR CLEANER HOSES AND PIPE

T143234 -UN-01OCT01

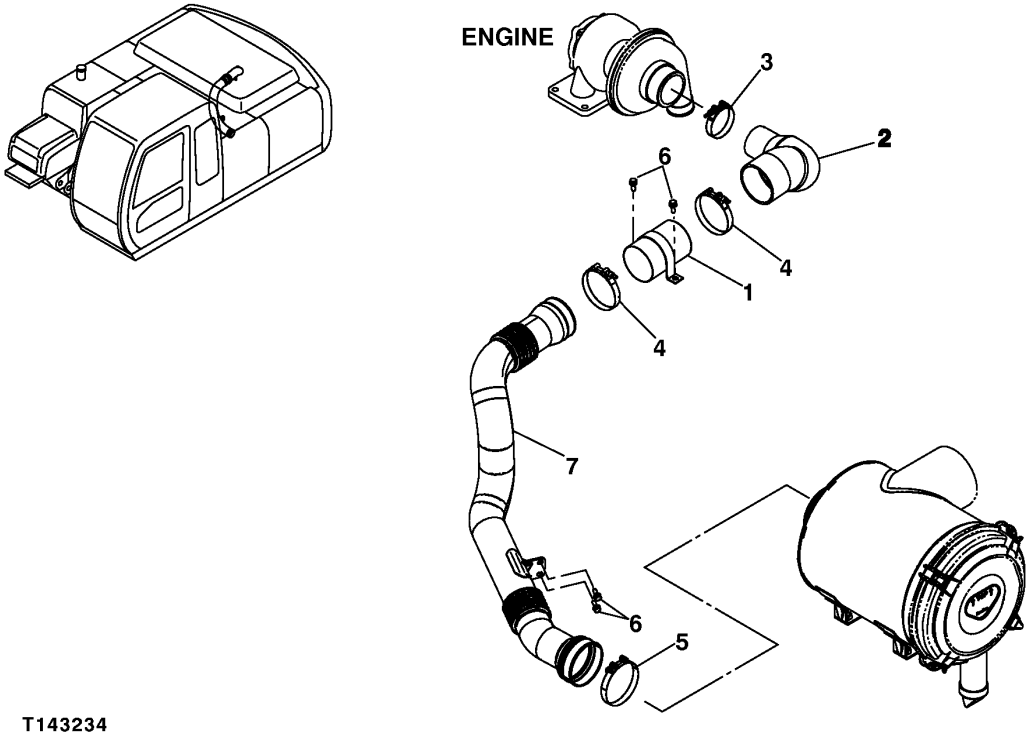

T143234

AIR CLEANER HOSES AND PIPE

KEY	PART NO.	PART NAME	QTY	SERIAL NO.	REMARKS
1	8067675	PIPE	1		
2	3079135	HOSE	1		(SUB FOR AT218159)
3	AT50923	HOSE CLAMP	1		
4	4282489	HOSE CLAMP	2		(SUB FOR AT215499)
5	AT39390	HOSE CLAMP	1		(SUB FOR AT53439)
6	19M7662	CAP SCREW	4		M10 X 30, (AT157059 NOT AVAILABLE FOR SERVICE)
	12M7066	LOCK WASHER	4		10 MM (0.394")
	24M7028	WASHER	4		10.500 X 20 X 2 MM (0.413" X 0.787" X 0.079")
7	4460662	AIR DUCT	1		(SUB FOR TH4460662)

AIR CLEANER SUPPORT

T148742 -UN-05DEC01

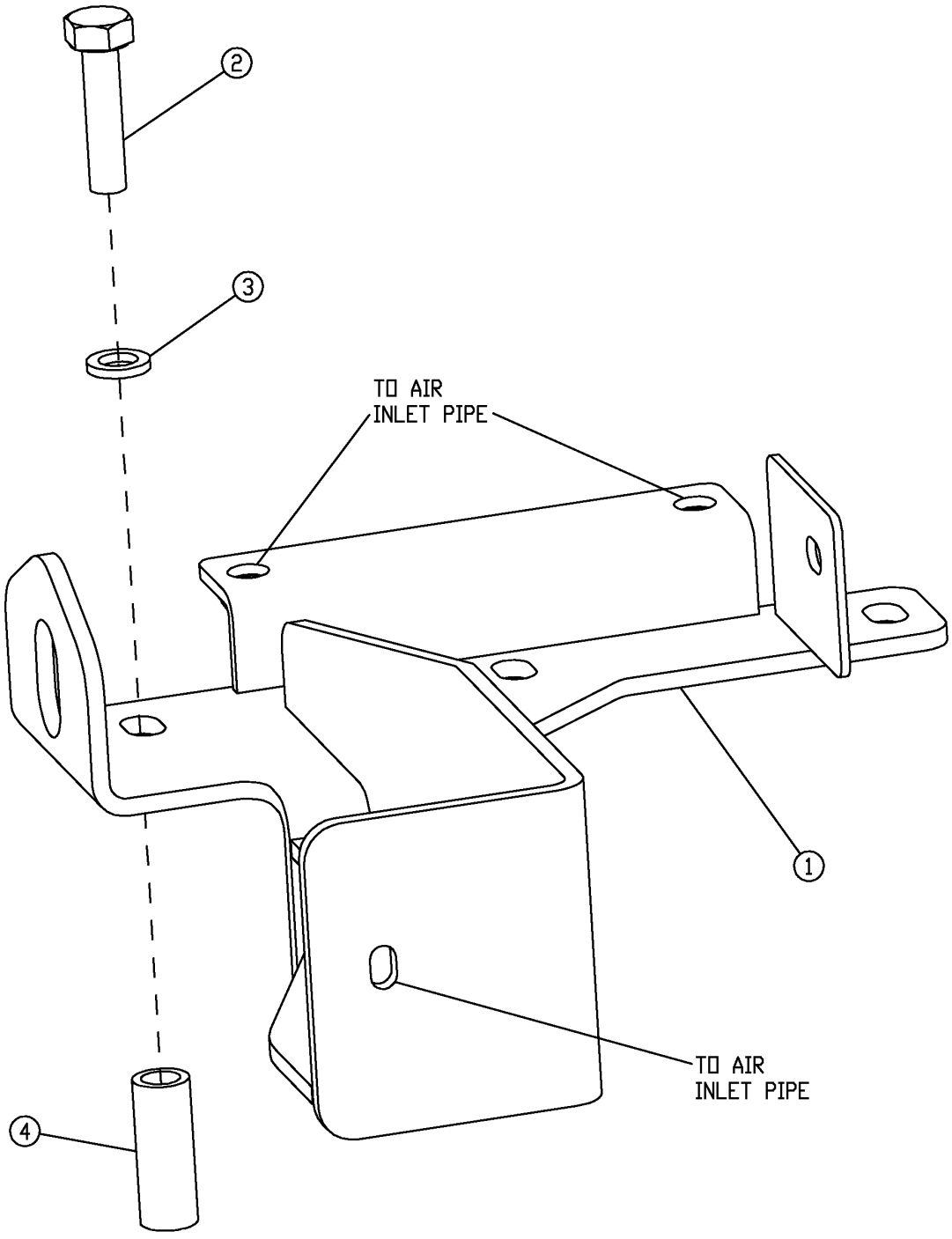

AIR CLEANER SUPPORT

KEY	PART NO.	PART NAME	QTY	SERIAL NO.	REMARKS
1	AT189991	BRACKET	1		
2	19M7820	SCREW	3		M12 X 100
3	24M7240	WASHER	3		13 X 25 X 3 MM
4	T161818	BUSHING	3		

MUFFLER

T145936 -UN-24SEP01

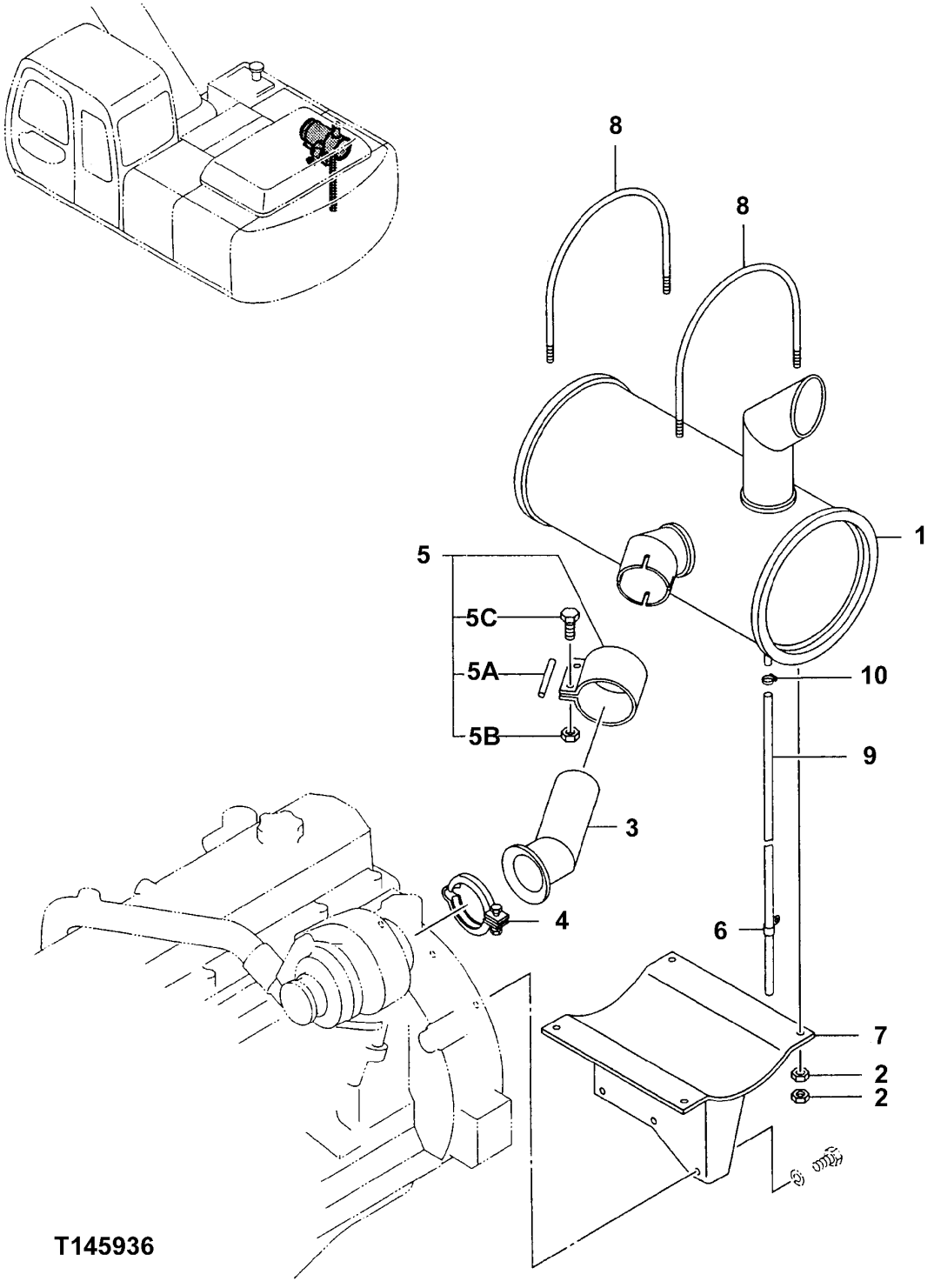

MUFFLER

KEY	PART NO.	PART NAME	QTY	SERIAL NO.	REMARKS
1	4383156	MUFFLER	1		(SUB FOR AT218160)
2	14M7274	NUT	8		M10
3	DH300084	EXHAUST PIPE	1		
4	RE40048	CLAMP	1		
5	4283787	CLAMP	1		(SUB FOR AT154968)
5A	T130341	GASKET	1		
5B	H80440	LOCK NUT	2		11.125 MM (7/16")
5C	4162836	BOLT	2		(SUB FOR AT154914)
6	4344303	CLIP	1		(SUB FOR AT215520)
7	DH700013	BRACKET	1		
8	4420083	U-BOLT	2		(SUB FOR TH4420083)
9	DH400304	PIPE	1		
10	TY22462	CLAMP	1		(SUB FOR AR48236)

ENGINE MOUNTING BRACKETS

T143228 -UN-30OCT01

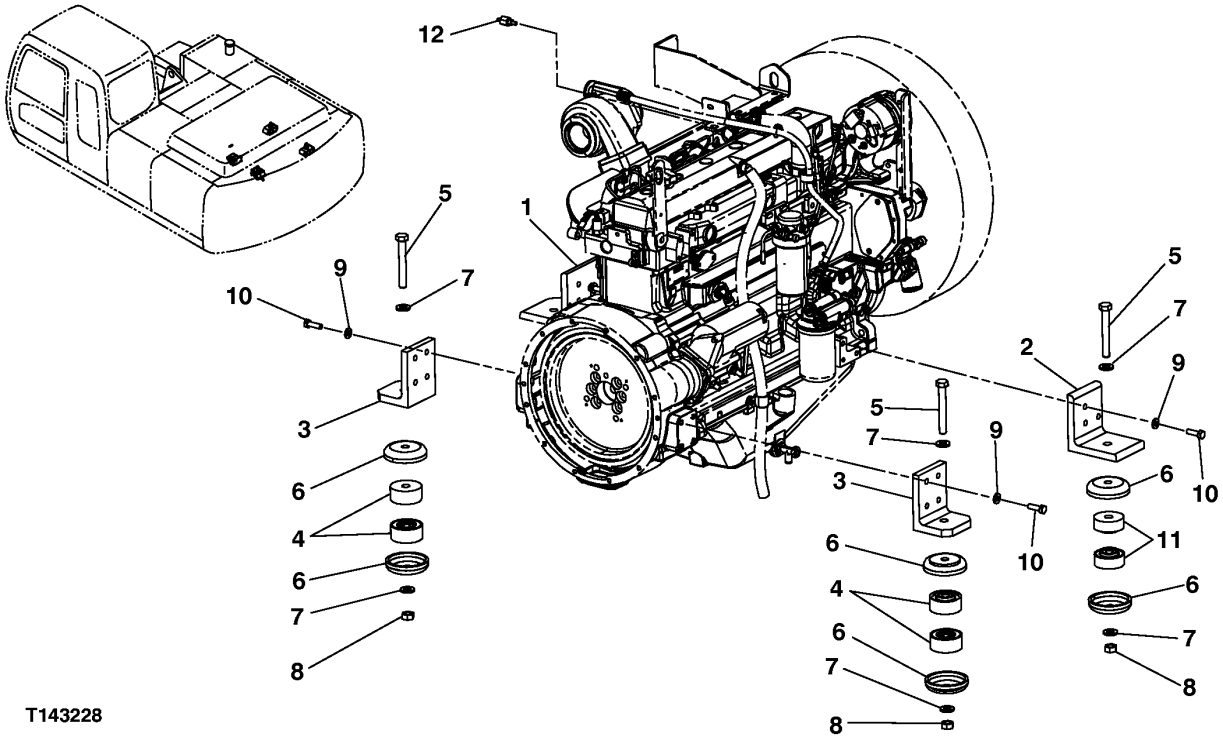

T143228

ENGINE MOUNTING BRACKETS

KEY	PART NO.	PART NAME	QTY	SERIAL NO.	REMARKS
1	3075901	BRACKET	1		(SUB FOR AT215091)
2	3075902	ANGLE	1		(SUB FOR AT215089)
3	3075899	ANGLE	2		(SUB FOR AT215088)
4	4188649	ISOLATOR	4		(SUB FOR AT155249)
5	J921806	CAP SCREW	4		(SUB FOR AT217704)
6	4189018	STOP	8		(SUB FOR TH109410)
7	24M7353	WASHER	8		20 X 34 X 3 MM (0.787" X 1.339" X 0.118")
8	J950018	NUT	4		(SUB FOR AT217708)
9	24M7345	WASHER	14		13.500 X 24 X 2.500 MM (0.531" X 0.945" X 0.098")
10	J921240	CAP SCREW	14		(SUB FOR AT215474)
11	4256314	ISOLATOR	4		(SUB FOR AT200995)
12	4456798	SENSOR	1		(SUB FOR TH4456798) (COOLANT TEMPERATURE SENSOR)

FUEL TANK

T148169 -UN-19NOV01

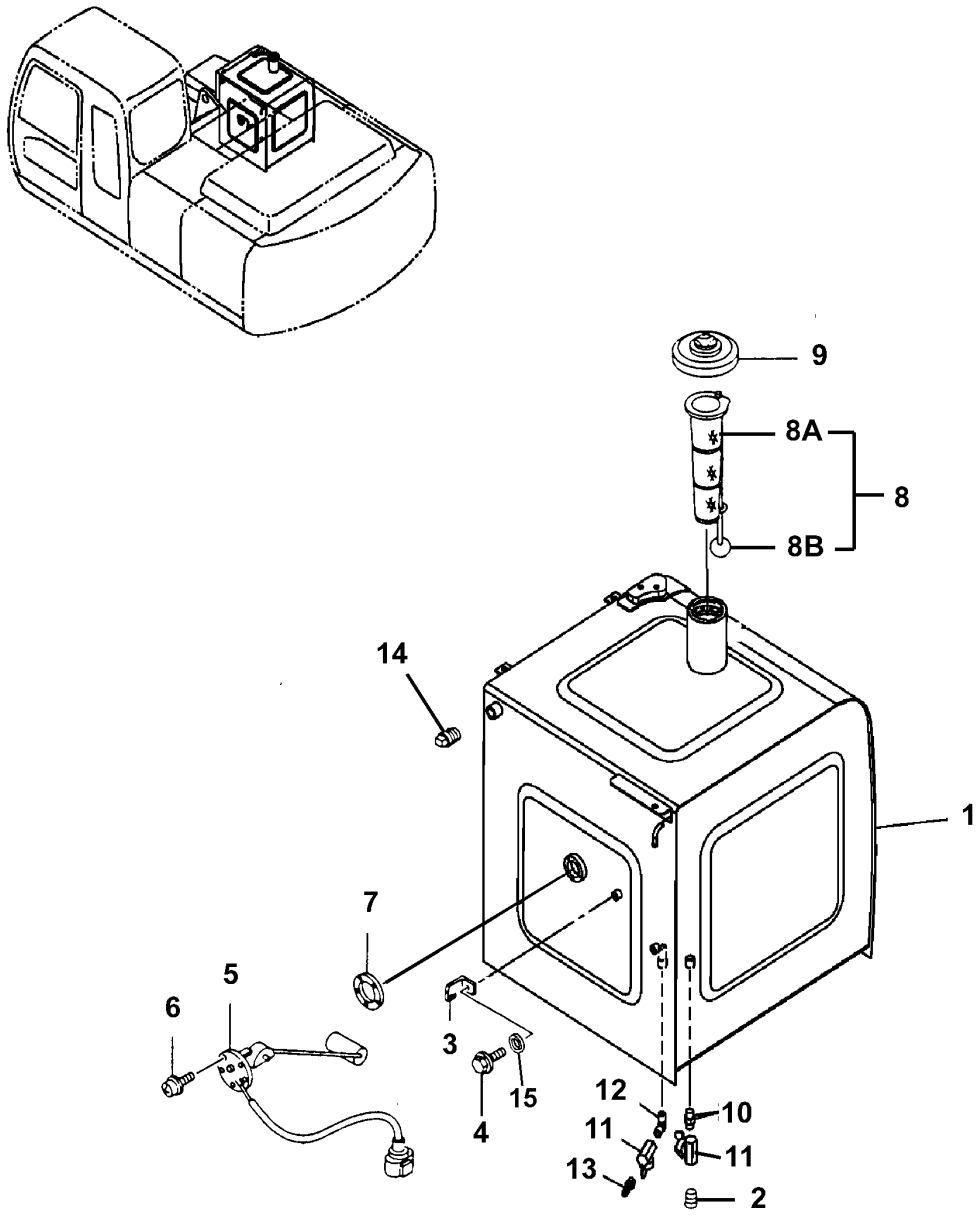

T148169

FUEL TANK

KEY	PART NO.	PART NAME	QTY	SERIAL NO.	REMARKS
1	5006215J	FUEL TANK	1		(SUB FOR TH5006215J)
2	94-2011	FITTING PLUG	1		(SUB FOR TH100434)
3	4257159	BRACKET	1		(SUB FOR AT154243)
4	19M8324	CAP SCREW	1		M10 X 16, (AT153802 NOT AVAILABLE FOR SERVICE)
	12M7058	LOCK WASHER	1		12 MM (0.472") (SUB FOR 12M7067)
5	4257128	FLOAT	1		(SUB FOR AT154239)
6	21M7278	SCREW	5		M5 X 10
7	U42323	GASKET	1		
8	4353560	STRAINER	1		(SUB FOR AT213970)
8A	4121496	FUEL FILTER	1		(SUB FOR TH100509)
8B	.....	FLOAT	1		
9	4361638	FILLER CAP	1		(SUB FOR AT175989)
	AT194969	KEY	1		(SUB FOR AT147803) (H800) (NOT ILLUSTRATED)
10	T116057	FITTING	1		
11	4374265	DRAIN VALVE	2		(SUB FOR AT177419)
12	4449361	ELBOW FITTING	1		(SUB FOR TH4449361)
13	4449362	ADAPTER	1		(SUB FOR TH4449362)
14	94-2013	FITTING PLUG	1		(SUB FOR TH100648)
15	24M7028	WASHER	1		10.500 X 20 X 2 MM (0.413" X 0.787" X 0.079")

FUEL TANK MOUNTING HARDWARE

T143237 -UN-28JUN01

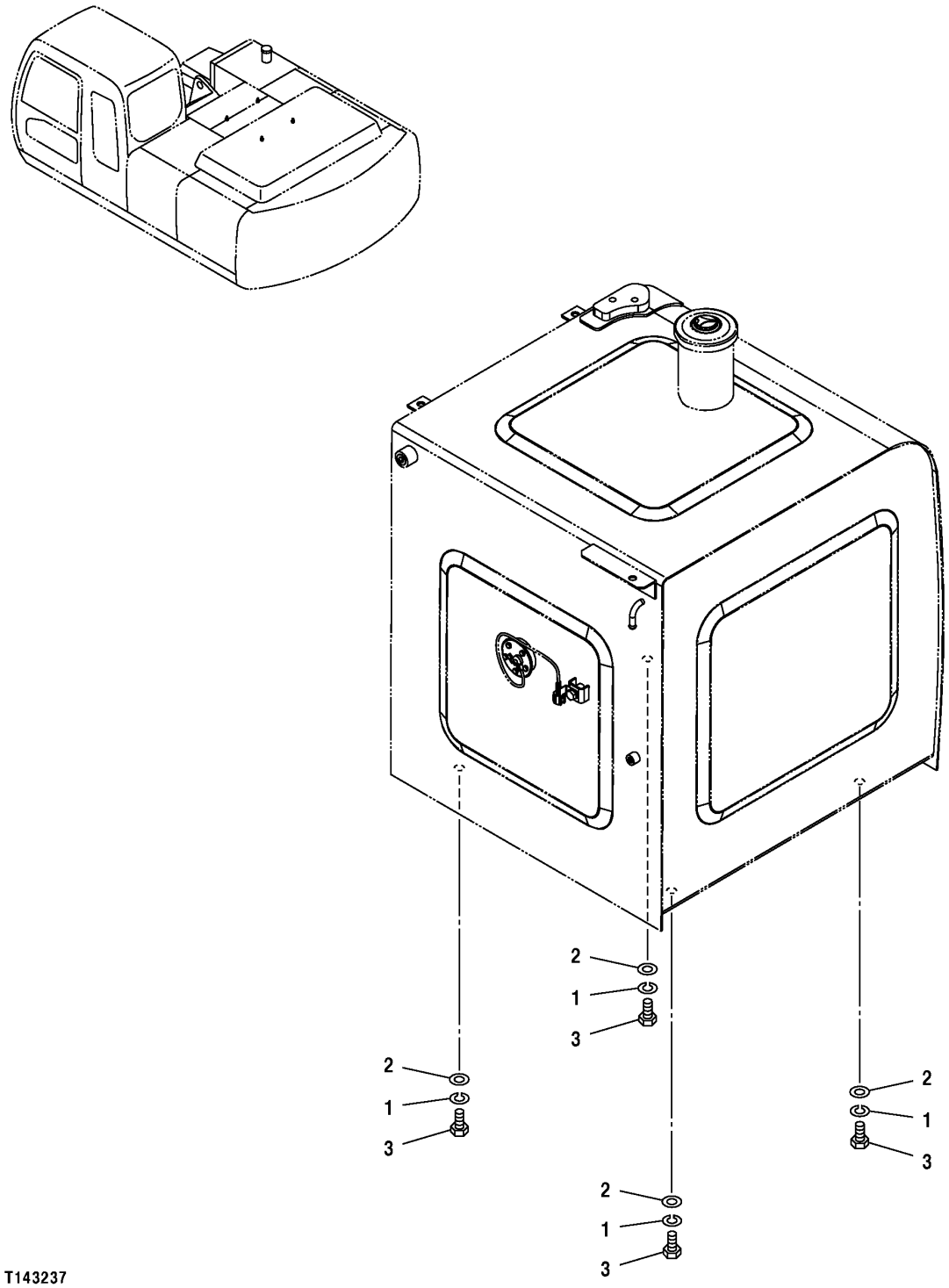

FUEL TANK MOUNTING HARDWARE

KEY	PART NO.	PART NAME	QTY	SERIAL NO.	REMARKS
1	12H294	LOCK WASHER	4		15.875 MM (5/8")
2	24M7338	WASHER	4		17 X 30 X 3 MM (0.669" X 1.181" X 0.118")
3	19M8035	CAP SCREW	4		M16 X 35

FUEL HOSES AND FITTINGS (SERIAL NUMBER -504000)

T147625 -UN-04DEC01

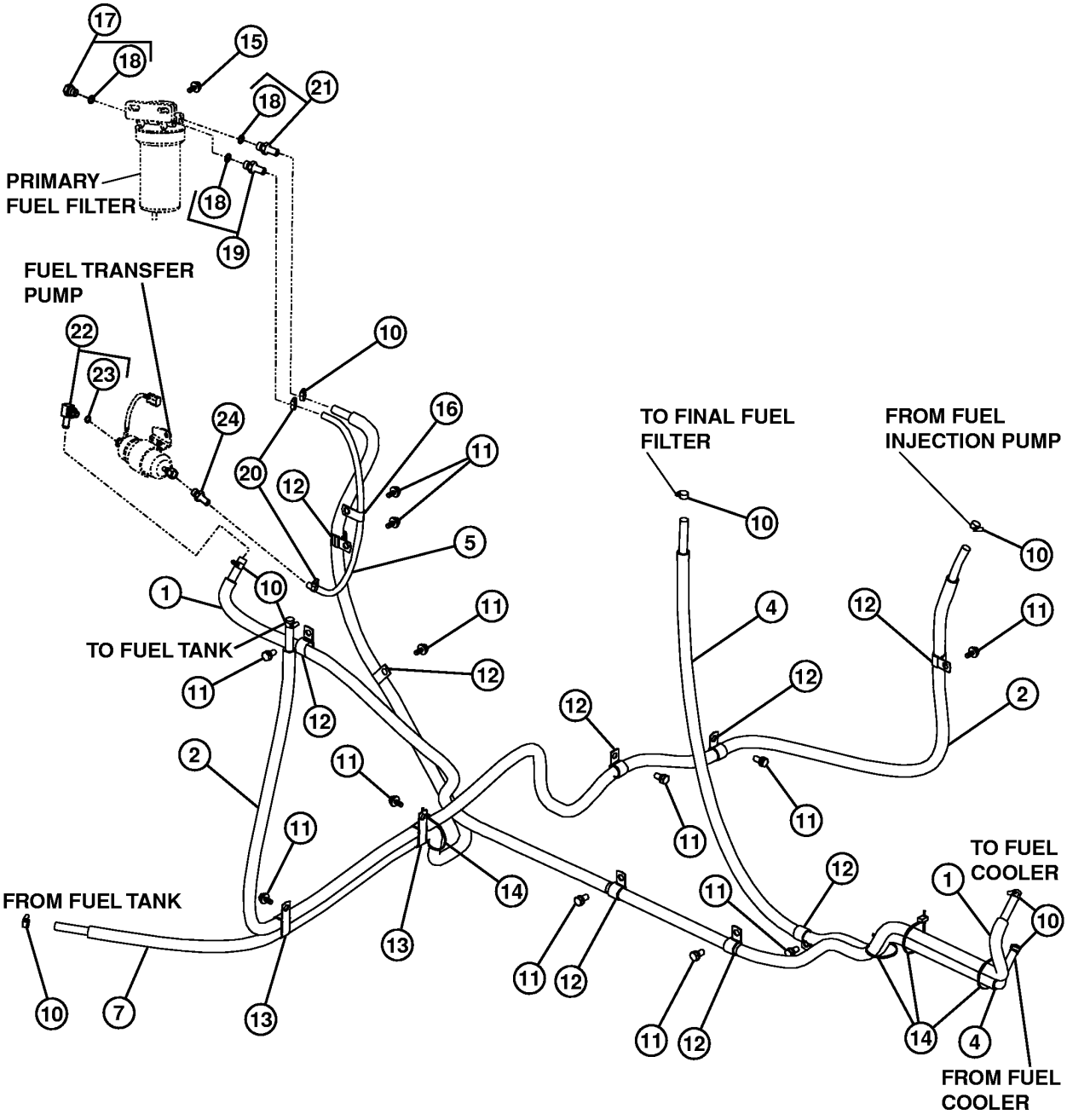

T147625

FUEL HOSES AND FITTINGS (SERIAL NUMBER -504000)

KEY	PART NO.	PART NAME	QTY	SERIAL NO.	REMARKS
1	.....	BULK HOSE	1		(THDH900133 NOT AVAILABLE FOR SERVICE) (FURNISH TY24398 BULK MATERIAL CUT TO 2720MM) (HOSE AND COVER ASSEMBLY)
	DH400217	STRUCTURAL TUBING	1		(HOSE COVER)
2	.....	BULK HOSE	1		(THDH900163 NOT AVAILABLE FOR SERVICE) (FURNISH TY24398 BULK MATERIAL CUT TO 3350MM) (HOSE AND COVER ASSEMBLY)
	DH400248	SLEEVE	1		(HOSE COVER)
4	.....	BULK HOSE	2		(THDH900286 NOT AVAILABLE FOR SERVICE) (FURNISH TY24398 BULK MATERIAL CUT TO 1800MM)
5	R515462	FUEL LINE	1		
7	.....	BULK HOSE	1		(THDH900134 NOT AVAILABLE FOR SERVICE) (FURNISH TY24398 BULK MATERIAL CUT TO 2500MM)
10	TY22464	CLAMP	8		(SUB FOR AR21836)
11	19M7938	CAP SCREW	8		M10 X 20
	12M7066	LOCK WASHER	8		10 MM (0.394")
12	T24432	CLAMP	8		
13	4190266	CLIP	2		(SUB FOR TH108793)
14	H77698	TIE BAND	4		
15	19M7923	CAP SCREW	2		M6 X 12
	12M7006	LOCK WASHER	2		6 MM
	24M7054	WASHER	2		6.400 X 12 X 1.600 MM
16	4344303	CLIP	1		(SUB FOR AT215520)
17	RE46686	PLUG	2		
18	51M7040	O-RING	2		9.300 X 2.200 MM
19	AT196589	ADAPTER	1		
20	TY22462	CLAMP	2		(SUB FOR AR48236)
21	RE500576	ADAPTER	1		
22	AT196563	ADAPTER	1		
23	51M7039	O-RING	1		8.100 X 1.600 MM
24	RE515341	ADAPTER	1		

FUEL HOSES AND FITTINGS (SERIAL NUMBER 504001-)

T164303 -UN-24JAN03

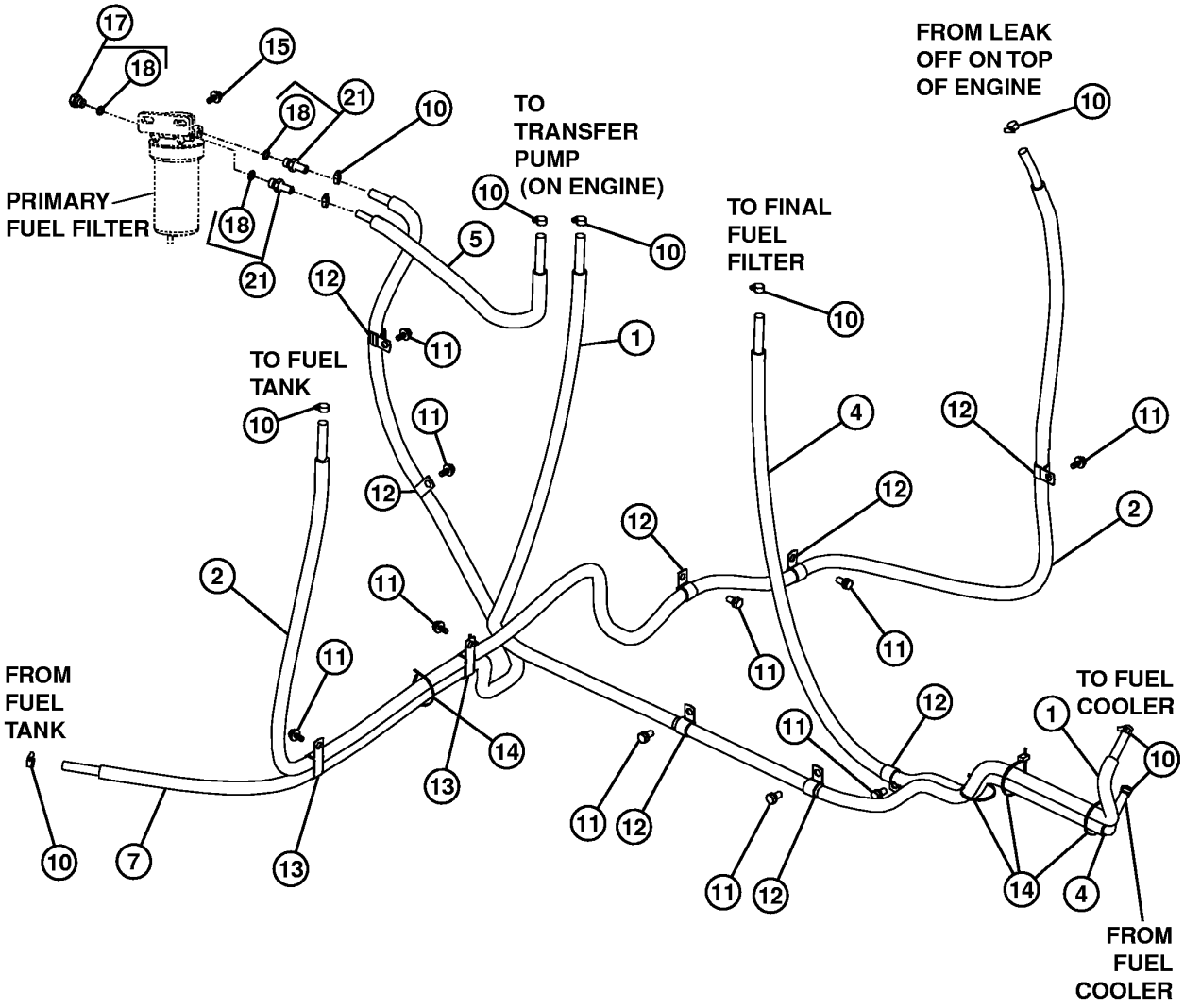

T164303

FUEL HOSES AND FITTINGS (SERIAL NUMBER 504001-)

KEY	PART NO.	PART NAME	QTY	SERIAL NO.	REMARKS
1	.....	BULK HOSE	1		(THDH900133 NOT AVAILABLE FOR SERVICE) (FURNISH TY24398 BULK MATERIAL CUT TO 2720MM) (HOSE AND COVER ASSEMBLY)
	DH400217	STRUCTURAL TUBING	1		(HOSE COVER)
2	.....	BULK HOSE	1		(THDH900163 NOT AVAILABLE FOR SERVICE) (FURNISH TY24398 BULK MATERIAL CUT TO 3350MM) (HOSE AND COVER ASSEMBLY)
	DH400248	SLEEVE	1		(HOSE COVER)
4	.....	BULK HOSE	2		(THDH900286 NOT AVAILABLE FOR SERVICE) (FURNISH TY24398 BULK MATERIAL CUT TO 1800MM)
5	R515462	FUEL LINE	1		
6	.....	BULK HOSE	1		(FURNISH TY24398 BULK MATERIAL CUT TO LENGTH)
7	.....	BULK HOSE	1		(THDH900134 NOT AVAILABLE FOR SERVICE) (FURNISH TY24398 BULK MATERIAL CUT TO 2500MM)
10	TY22464	CLAMP	8		(SUB FOR AR21836)
11	19M7938	CAP SCREW	8		M10 X 20
	12M7066	LOCK WASHER	8		10 MM (0.394")
12	T24432	CLAMP	8		
13	4190266	CLIP	2		(SUB FOR TH108793)
14	H77698	TIE BAND	4		
15	19M7923	CAP SCREW	2		M6 X 12
	12M7006	LOCK WASHER	2		6 MM
	24M7054	WASHER	2		6.400 X 12 X 1.600 MM
16	4344303	CLIP	1		(SUB FOR AT215520)
17	RE46686	PLUG	2		
18	51M7040	O-RING	2		9.300 X 2.200 MM
21	RE500576	ADAPTER	1		

LABELS AND DECALS

T188917 -UN-01APR03

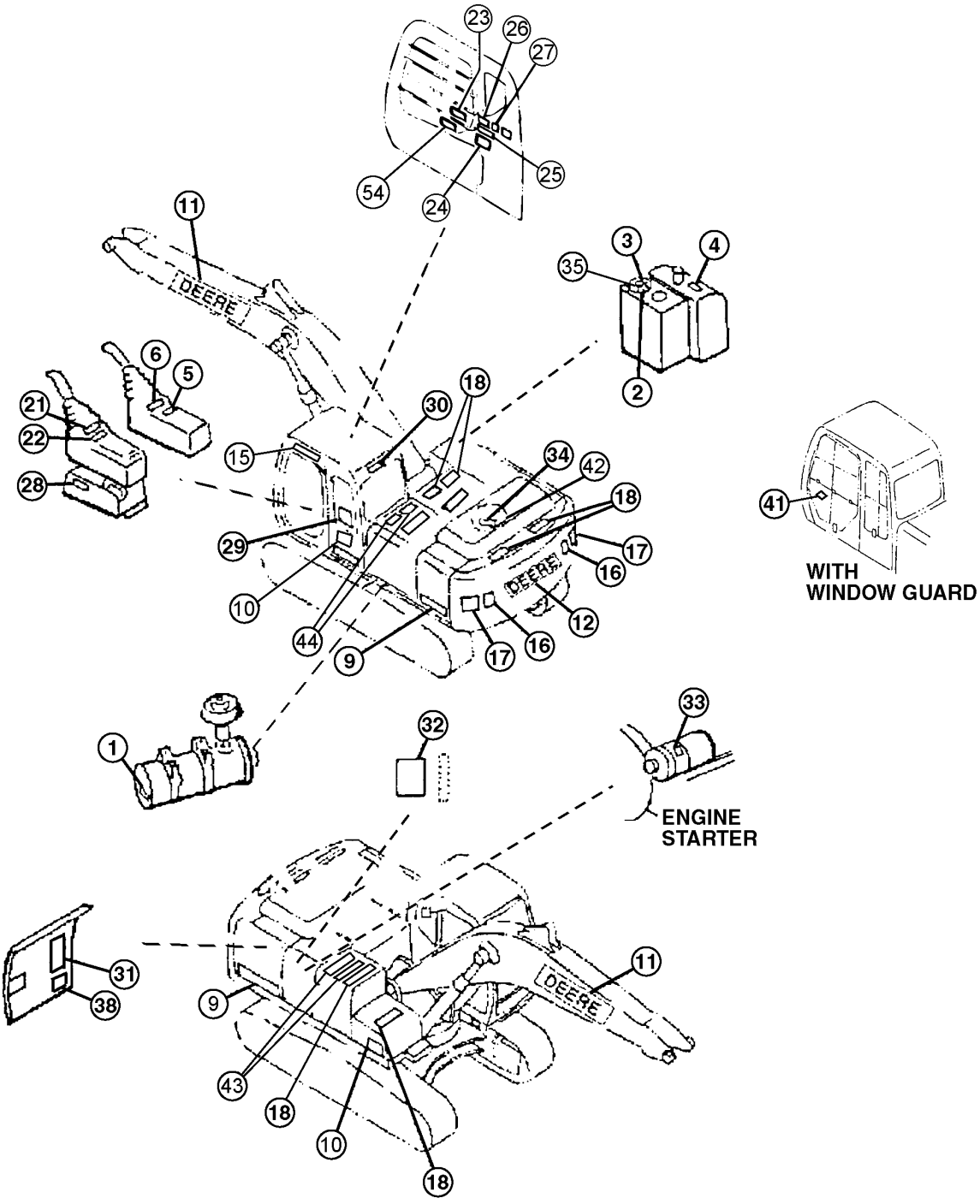

T188917

LABELS AND DECALS

KEY	PART NO.	PART NAME	QTY	SERIAL NO.	REMARKS
1	R56902	LABEL	1		(DRY AIR CLEANER)
2	P63448	LABEL	1		(PUMP BLEED INFORMATION)
3	T101942	LABEL	1		(HYDRAULIC OIL)
4	T79632	LABEL	1		(DIESEL ONLY)
5	4264805	LABEL	1		(IGNITION KEY SWITCH)
6	.....	LABEL	1		(SUB T201519) (SUB FOR T159842, THIS APPLICATION) (RIGHT CONTROL LEVER - SAE PATTERN) (WHITE BACKGROUND)
	T159843	LABEL	1		(RIGHT CONTROL LEVER - JOHN DEERE PATTERN) (YELLOW BACKGROUND)
9	T188882	LABEL	2		(200CLC)
10	JD5760	LABEL	2		(LEAPING DEER)
11	T184023	LABEL	2		(DEERE - ON BOOM)
12	T184759	LABEL	1		(DEERE - ON COUNTERWEIGHT)
15	T187642	STOP	1		(DOOR STOP)
16	JD5909	REFLECTOR	2		(RED REFLECTOR TAPE) (CUT TO LENGTH FROM JD5909 BULK MATERIAL) (T160910 NOT AVAILABLE FOR SERVICE)
17	T190310	SAFETY SIGN	2		(WARNING - STAY CLEAR)
18	H21259	MAT	5		(ANTI-SKID)
21	.....	LABEL	1		(SUB T201519) (SUB FOR T159841, THIS APPLICATION) (LEFT CONTROL LEVER - SAE PATTERN) (WHITE BACKGROUND)
	T159844	LABEL	1		(LEFT CONTROL LEVER - JOHN DEERE PATTERN) (YELLOW BACKGROUND)
22	4288971	LABEL	1		(ETHER AID - MOTION CANCEL)
23	T188862	LABEL	1		ENGLISH (OPERATIONAL - START STOP)
24	T159887	SAFETY SIGN	1		ENGLISH (CAUTION)
25	T146668	SAFETY SIGN	1		(WARNING - AVOID CRUSHING)
26	T146667	SAFETY SIGN	1		(DANGER - ELECTROCUTION)
27	T190393	LABEL	1		(IMPORTANT - BREAK WINDOW FOR SECONDARY EXIT)
28	4299059	LABEL	1		(HYDRAULIC LOCKOUT)
29	T188881	LABEL	1		ENGLISH (LIFT CAPACITY)
30	T187535	LABEL	1		(CAUTION WINDOW LOCK - INSIDE CAB)
	T190799	SAFETY SIGN	1		(CAUTION-FRONT WINDOW LOCK FRENCH)
	T190803	LABEL	1		(CAUTION-FRONT WINDOW LOCK SPANISH)
31	T188566	LABEL	1		ENGLISH (PERIODIC MAINTENANCE)
32	T149983	LABEL	1		(IMPORTANT - OIL LEVEL) (INSIDE RIGHT PUMP COMPARTMENT)
33	T146102	LABEL	1		(BYPASS START)
34	T152657	SAFETY SIGN	1		(IMPORTANT - RADIATOR)
35	T187710	LABEL	1		(RESERVOIR COVER)
	T190801	LABEL	1		(HYDRAULIC RESERVOIR CAP FRENCH)
	T190802	LABEL	1		(HYDRAULIC RESERVOIR CAP SPANISH)
38	.....	LABEL	1		(NOT REQUIRED THIS APPLICATION)
41	T188737	LABEL	1		(WINDOW GUARD INSTALLATION)
42	T146671	SAFETY SIGN	1		(CAUTION) (LOCATED ON RADIATOR CAP)
43	4121128	MAT	2		(ANTI-SKID)
44	T25838	MAT	2		(ANTI-SKID)
54	T201519	LABEL	1		(PATTERN CHANGER DECAL) (SUB FOR T159842, T159841)

METRIC O-RING KIT

TP70402 -UN-13JUL00

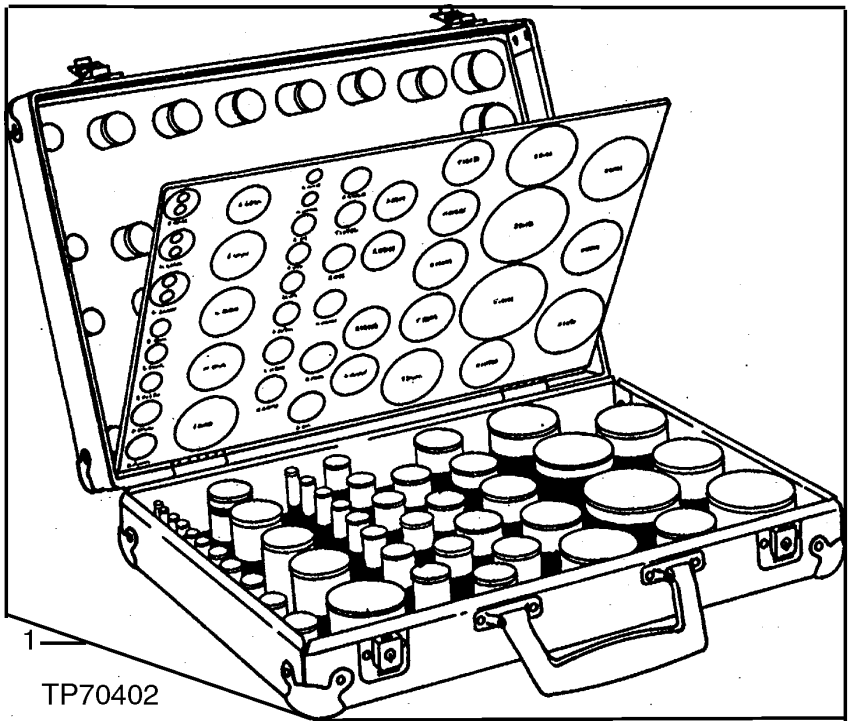

METRIC O-RING KIT

KEY	PART NO.	PART NAME	QTY	SERIAL NO.	REMARKS
1	AT130157	O-RING KIT	1		(CONTAINS ALL ITEMS LISTED BELOW)
..	CH11436	O-RING	5		49.400 X 3.100 MM (1.945" X 0.122")
..	CH11569	PACKING	5		
..	CH11570	O-RING	5		13.800 X 2.400 MM (0.543" X 0.094")
..	CH11571	PACKING	5		
..	CH11572	PACKING	2		
..	CH12329	PACKING	5		
..	CH14634	O-RING	5		17.800 X 2.400 MM (0.701" X 0.094")
..	CH14701	O-RING	5		39.400 X 3.100 MM (1.551" X 0.122")
..	CH17167	O-RING	2		9.800 X 1.900 MM (0.386" X 0.075")
..	CH19111	O-RING	5		7.645 X 1.778 MM (0.301" X 0.070")
..	M800650	PACKING	10		
..	M800893	PACKING	5		
..	AT264324	O-RING	5		(SUB FOR TH100044)
..	4506424	O-RING	10		23.700 X 3.500 MM (0.933" X 0.138") (SUB FOR TH100055)
..	AT264347	O-RING	5		(SUB FOR TH100136, 4506428)
..	A811030	O-RING	5		29.400 X 3.100 MM (1.157" X 0.122") (SUB FOR TH101300)
..	4506408	O-RING	2		7.800 X 1.900 MM (0.307" X 0.075") (SUB FOR TH101490)
..	TH101926	O-RING	5		28.700 X 3.500 MM (1.130" X 0.138")
..	957474	O-RING	2		39.700 X 3.500 MM (1.563" X 0.138") (SUB FOR TH102706)
..	A811040	O-RING	2		39.400 X 3.100 MM (1.551" X 0.122") (SUB FOR TH102992)
..	4153084	O-RING	2		3.800 X 1.900 MM (0.150" X 0.075") (SUB FOR TH103446)
..	AT264354	O-RING	5		(SUB FOR TH103574)
..	970860	O-RING	2		37.700 X 3.500 MM (1.484" X 0.138") (SUB FOR TH104634)
..	AT264360	O-RING	2		(SUB FOR TH104930, 4506430)
..	T110590	PACKING	5		
..	T110593	PACKING	5		
..	T59014	O-RING	5		24.994 X 3.531 MM (63/64" X 0.139")
..	A811045	O-RING	5		(SUB FOR T74492)
..	U10778	O-RING	5		16.358 X 2.210 MM (0.644" X 0.087")
..	U17409	O-RING	5		26.619 X 2.946 MM (1.048" X 0.116")
..	4506418	O-RING	10		(SUB FOR U46489)

SUPER LONG FRONT BOOM CENTRAL LUBRICATION LINES

TP67420 -UN-06SEP00

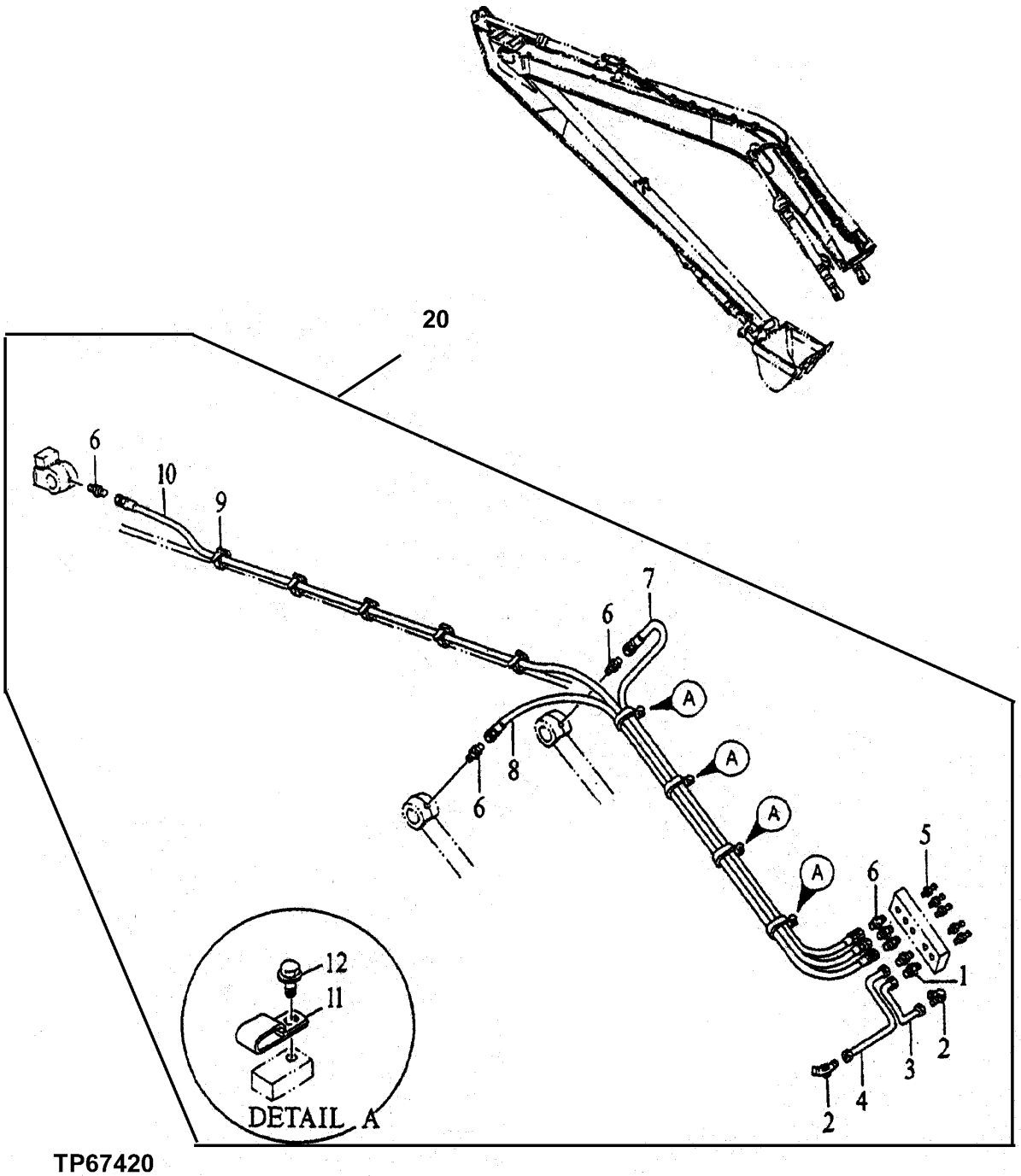

TP67420

SUPER LONG FRONT BOOM CENTRAL LUBRICATION LINES

KEY	PART NO.	PART NAME	QTY	SERIAL NO.	REMARKS
1	4360981	ADAPTER	2		(SUB FOR AT176256)
2	4130174	FITTING	2		(SUB FOR TH103262)
3	4361000	OIL LINE	1		(SUB FOR AT213994)
4	4370555	PIPE	1		(SUB FOR AT186467)
5	TH100364	LUBRICATION FITTING	5		
6	X0103-4-4	ADAPTER	6		(SUB FOR TH100963)
7	AT160890	HYDRAULIC HOSE - FABRICATE	1		
8	AT160892	HYDRAULIC HOSE - FABRICATE	1		
9	H77698	TIE BAND	5		(SUB FOR M88199)
10	4287958	HOSE	1		(SUB FOR AT160891)
11	T152608	CLAMP	4		(SUB FOR AT154207)
12	19M8324	CAP SCREW	4		
	12M7058	LOCK WASHER	4		(SUB FOR 12M7067)
20	.....	KIT	1		WHOLEGOODS (AT186457 NO LONGER AVAILABLE) (LONG FRONT ASSEMBLY KIT) (ALSO ORDER T190565, T153672, T153673 DECALS, AH165671 AND AH165673 CYLINDERS) (CONTAINS ALL ITEMS ON THIS PAGE - ADDITIONAL COMPONENTS LISTED ON SEPARATE PAGES)

ELECTRIC PARTS

T149656 -UN-04JAN02

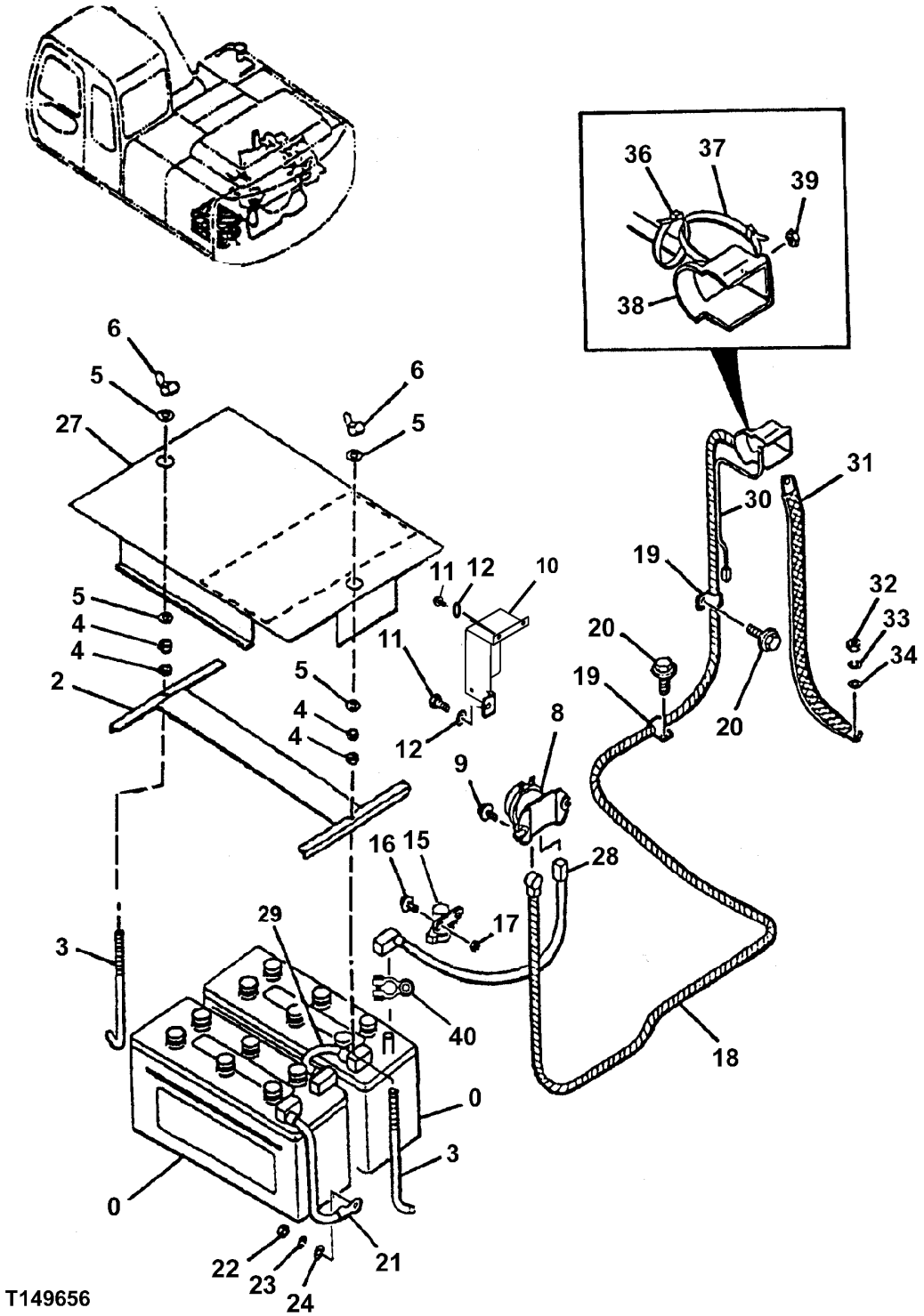

ELECTRIC PARTS

KEY	PART NO.	PART NAME	QTY	SERIAL NO.	REMARKS
0	TY21709	DRY CHARGED BATTERY	2		(ALSO ORDER (2) TY15733) (12 VOLT)
2	AT219489	SUPPORT	1		
3	4257034	HOOK BOLT	2		(SUB FOR AT155273)
4	14M7274	NUT	4		M10
5	24M7028	WASHER	4		10.500 X 20 X 2 MM (0.413" X 0.787" X 0.079")
6	14M7025	WING NUT	2		M10
8	4255762	RELAY	1		(SUB FOR AT154229) (BATTERY)
9	21M7288	SCREW	2		M6 X 10
10	3087816	COVER	1		(SUB FOR TH3087816)
11	19M7932	CAP SCREW	3		M8 X 16
12	24M7055	WASHER	3		8.400 X 16 X 1.600 MM (0.331" X 0.630" X 0.063")
15	AT145341	RELAY	1		
16	19M7077	CAP SCREW	2		M6 X 20
	12M7006	LOCK WASHER	2		6 MM (0.236")
	24M7293	WASHER	2		6.500 X 13 X 1.600 MM (0.256" X 0.512" X 0.063")
17	14M7272	NUT	2		M6
18	4448296	WIRING HARNESS	1		(SUB FOR AT155617) (STARTER TO BATTERY RELAY)
19	4190273	CLIP	2		(SUB FOR TH108460)
20	19M7938	CAP SCREW	2		M10 X 20
	12M7066	LOCK WASHER	2		10 MM (0.394")
21	AR45925	BATTERY CABLE	1		482.600 MM (19") (GROUND STRAP)
22	14M7274	NUT	1		M10
23	12M7066	LOCK WASHER	1		10 MM (0.394")
24	24M7028	WASHER	1		10.500 X 20 X 2 MM (0.413" X 0.787" X 0.079")
27	DH800054	COVER	1		(SUB FOR THDH800054)
28	4350735	BATTERY CABLE	1		(SUB FOR AT213947) (BATTERY TO BATTERY RELAY)
29	4350736	BATTERY CABLE	1		(SUB FOR AT213948) (BATTERY TO BATTERY)
30	4448296	WIRING HARNESS	1		(SUB FOR AT155617) (STARTER)
31	4397839	WIRE	1		(SUB FOR AT218179)
32	14M7274	NUT	1		M10
33	12M7066	LOCK WASHER	1		10 MM (0.394")
34	12M7066	LOCK WASHER	1		10 MM (0.394")
36	H77698	TIE BAND	1		
37	H77698	TIE BAND	1		
38	.....	COVER	1		(STARTER)
39	.....	NUT	1		
40	AT219485	ELEC. CONNECTOR TERMINAL	4		(ON BATTERY TERMINALS)

ALTERNATOR

T157204 -UN-15JUL02

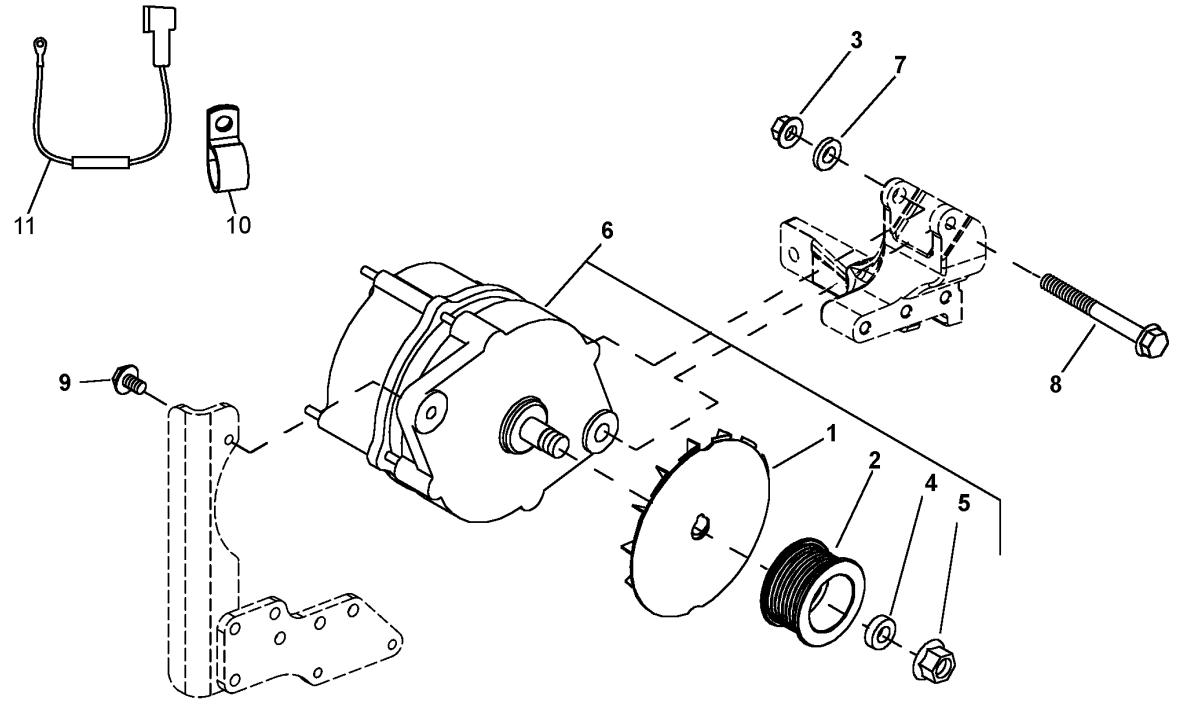

KEY	T157204 PART NO.	PART NAME	QTY	ENGINE SERIAL NO.	REMARKS
1	T158584	FAN	1		
2	R501486	PULLEY	1		
3	14M7296	FLANGE NUT	1		M10
4	R48808	WASHER	1		
5	14M7296	FLANGE NUT	1		M10
6	TY24322	ALTERNATOR	1		24V, 45 AMP, (SUB FOR AT185696) (NEW CONVENIENCE ASSEMBLY)
	TY24322	ALTERNATOR	1		(REMANUFACTURED)
7	R64525	THRUST WASHER	1		
8	19M7812	SCREW	1		M10 X 100
9	19M7867	SCREW	1		M8 X 25
10	T190303	CLAMP	1		
11	AT197149	WIRING HARNESS	1		

MEMORANDA

BOOM LIGHTS AND WORK LIGHTS

T146493 -UN-08OCT01

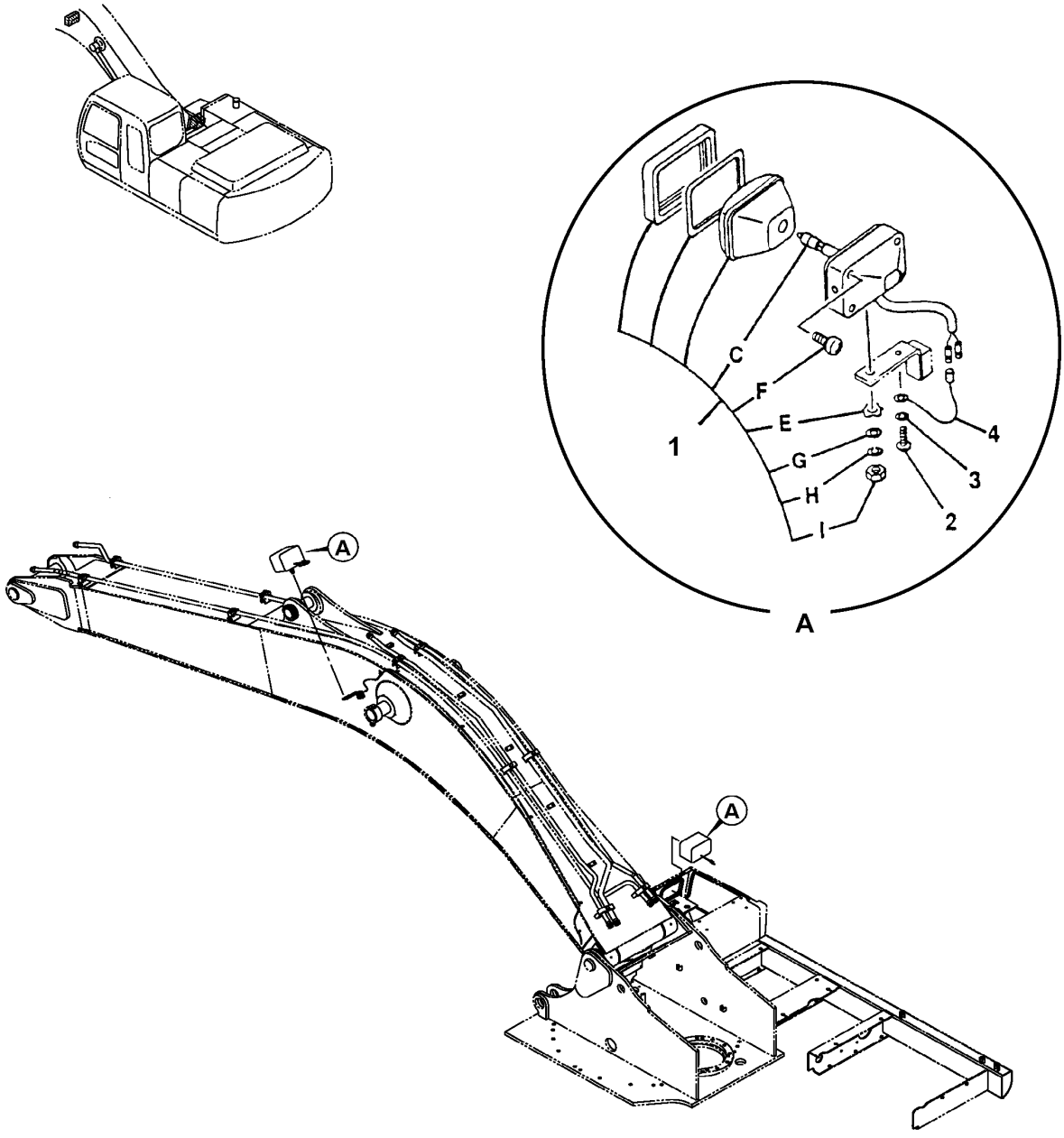

T146493

BOOM LIGHTS AND WORK LIGHTS

KEY	PART NO.	PART NAME	QTY	SERIAL NO.	REMARKS
1	4336570	LAMP	2		
1C	AT135758	BULB	1		
1E	4307026	WASHER	1		(SUB FOR T144361)
1F	4307027	SCREW	1		(SUB FOR T144362)
1G	24M7085	WASHER	1		15 X 28 X 2.500 MM (0.591" X 1.102" X 0.098")
1H	12H317	LOCK WASHER	1		14.288 MM (9/16")
1I	J952014	NUT	1		(SUB FOR TH103791)
2	21M7285	SCREW	1		M6 X 12
3	12M7006	LOCK WASHER	1		6 MM (0.236")
4	4254604	WIRING HARNESS	1		(SUB FOR AT154214)

MAIN WIRING HARNESS

T158064 -UN-05AUG02

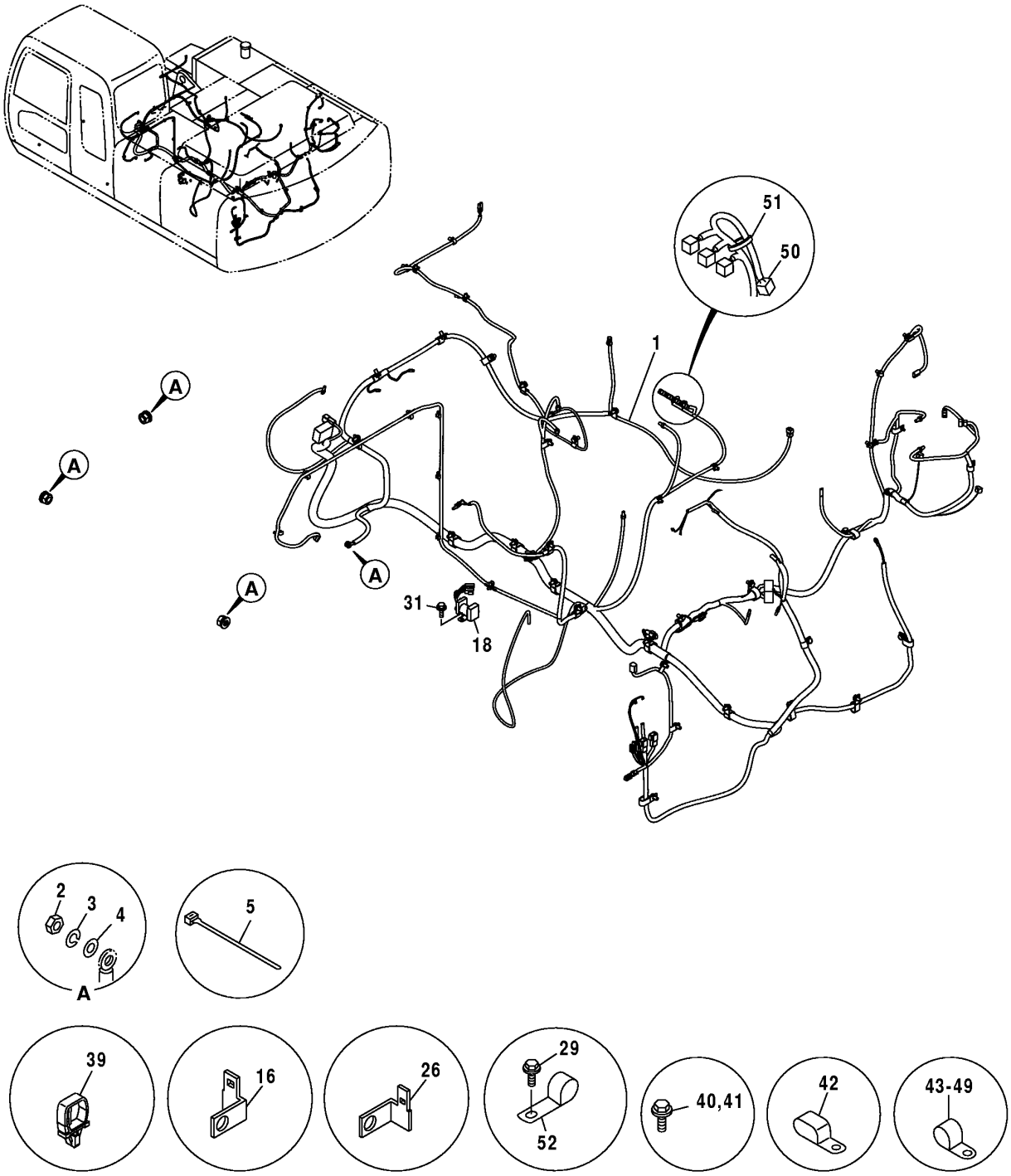

T158064

MAIN WIRING HARNESS

KEY	PART NO.	PART NAME	QTY	SERIAL NO.	REMARKS
1	.....	WIRING HARNESS	1		(0004070 NO LONGER AVAILABLE - FURNISH 0004911 AND 4487830 FOR SERVICE)
	4487830	WIRING HARNESS	1		(GROUND TO FRAME, CONNECT TO ENGINE OIL LEVEL SENSOR CONNECTOR ON MACHINE HARNESS) (NOT ILLUSTRATED)
	0004911	WIRING HARNESS	1		
1A	4270554	FUSE	2		(SUB FOR AT160982) (FUSIBLE LINK - 40 AMP - GREEN)
1B	4287670	FUSE	1		(SUB FOR AT200499) (FUSIBLE LINK - 60 AMP - YELLOW) (NOT ILLUSTRATED)
1C	4315323	LINK	1		(SUB FOR AT172435) (FUSIBLE LINK - 45 AMP) (NOT ILLUSTRATED)
1D	4315324	LINK	1		(SUB FOR AT172436) (FUSIBLE LINK - 75 AMP) (NOT ILLUSTRATED)
2	14M7274	NUT	4		M10
3	12M7066	LOCK WASHER	4		10 MM (0.394")
4	24M7028	WASHER	4		10.500 X 20 X 2 MM (0.413" X 0.787" X 0.079")
5	H77698	TIE BAND	13		(SUB FOR M88199)
16	4257159	BRACKET	1		(SUB FOR AT154243)
26	4418301	BRACKET	1		(SUB FOR TH4418301)
29	12M7006	LOCK WASHER	3		6 MM (0.236")
	19M8425	CAP SCREW	3		M6 X 16, (SUB FOR 19M7560)
31	19M7932	CAP SCREW	2		M8 X 16
	12M7056	LOCK WASHER	2		8 MM (0.315") (SUB FOR 12M7065)
39	4449250	CLIP	7		(SUB FOR TH4449250)
40	19M7662	CAP SCREW	1		M10 X 30
	12M7066	LOCK WASHER	1		10 MM (0.394")
41	19M7938	CAP SCREW	25		M10 X 20
	12M7066	LOCK WASHER	25		10 MM (0.394")
42	T32854	CLAMP	4		
43	4190261	CLIP	5		(SUB FOR TH109649)
44	4190273	CLIP	7		(SUB FOR TH108460) (NOT ILLUSTRATED)
45	4190275	CLIP	1		(SUB FOR TH108598) (NOT ILLUSTRATED)
46	4235654	CLIP	1		(SUB FOR AT122384) (NOT ILLUSTRATED)
49	AT121321	HOSE CLAMP	5		
52	4450494	CLIP	3		(SUB FOR TH4450494)

ELECTRICAL COMPONENTS (CAB)

T161608 -UN-13NOV02

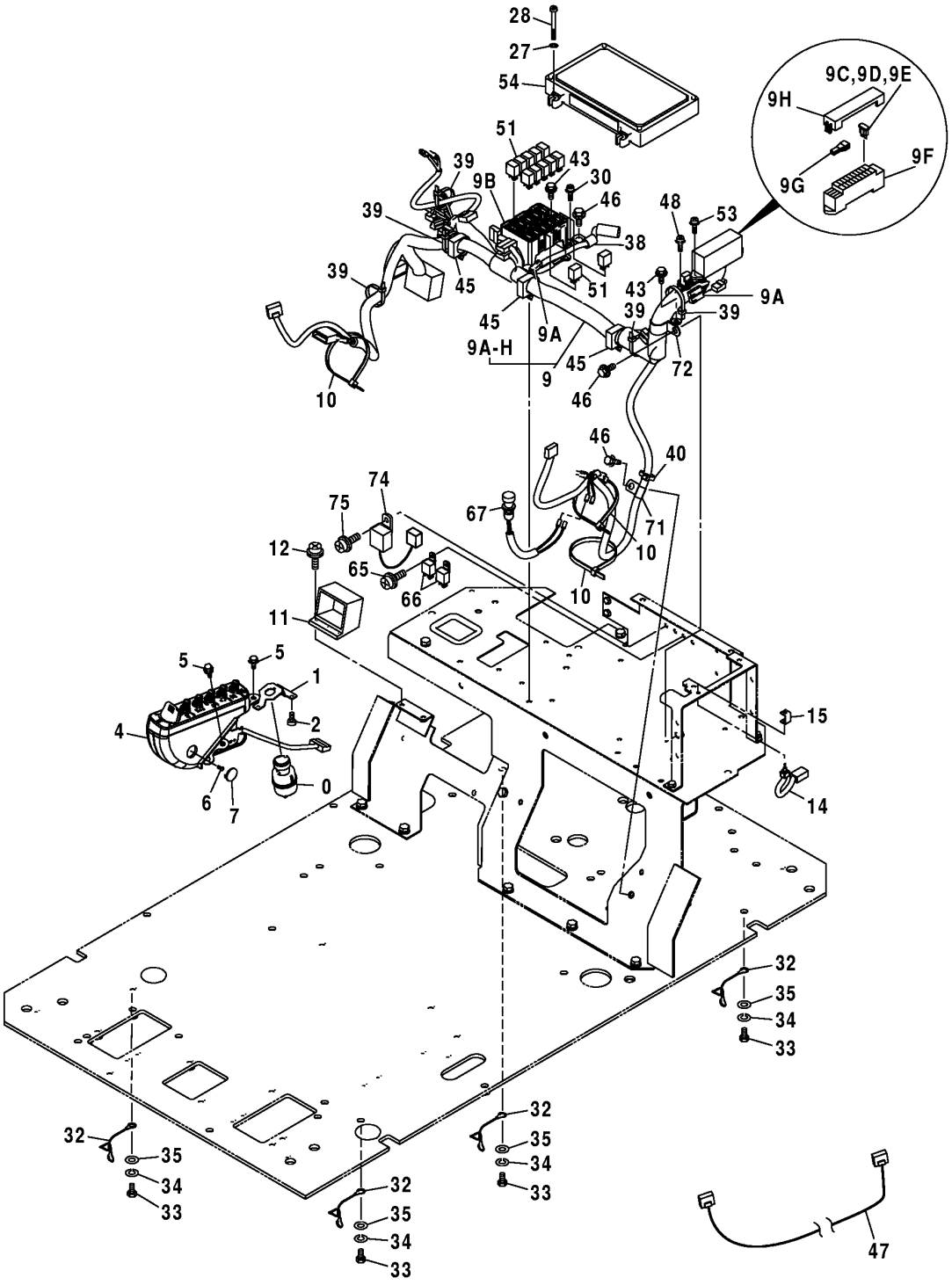

T161608

ELECTRICAL COMPONENTS (CAB)

KEY	PART NO.	PART NAME	QTY	SERIAL NO.	REMARKS
0	4477373	SWITCH	1		(SUB FOR TH4469337)
	AT194969	KEY	1		(SUB FOR AT147803)
1	3087882	BRACKET	1		(SUB FOR TH3087882)
2	4361800	SCREW	3		(SUB FOR AT214011)
4	4454518	CONTROL CONSOLE	1		(SUB FOR TH4454518)
5	J010814	SCREW WITH WASHER	3		(SUB FOR AT132457)
6	4381572	SCREW	1		(SUB FOR TH4381572)
7	4426354	CAP	1		
9	0004616	WIRING HARNESS	1		(SUB FOR TH4468558) (WITHOUT MIC CONTROLLER)
	0004069	WIRING HARNESS	1		(WITH MIC CONTROLLER)
9A	4456778	DIODE	6		(SUB FOR TH4456778)
9B	4427429	CIRCUIT BOX	1		(SUB FOR TH4427429)
9C	57M7688	FUSE	8		
9D	57M7689	FUSE	8		
9E	57M7691	FUSE	4		
9F	4456735	FUSE HOLDER	1		(SUB FOR TH4456735) (WITHOUT MIC CONTROLLER)
	4460037	FUSE BOX	1		(WITH MIC CONTROLLER)
9G	.....	SPECIAL SERVICE TOOL	1		(TH4436737 NOT AVAILABLE)
9H	4468530	COVER	1		(SUB FOR TH4468530)
10	H77698	TIE BAND	3		
11	4431090	ELECTRICAL CONNECTOR ASSY	1		(SUB FOR TH4431090)
12	J460620	SCREW WITH WASHER	2		(SUB FOR AT200012)
14	4359384	SWITCH	1		(SUB FOR AT213984)
15	4367375	BRACKET	1		(SUB FOR AT214036)
27	24M7054	WASHER	4		6.400 X 12 X 1.600 MM
28	M430630	SCREW	2		(SUB FOR THM430630)
30	J460620	SCREW WITH WASHER	4		(SUB FOR AT200012)
32	4281293	GROUND CABLE	4		(SUB FOR AT154961)
33	19M8324	CAP SCREW	4		M10 X 16
34	12M7066	LOCK WASHER	4		10 MM
35	24M7028	WASHER	4		10.500 X 20 X 2 MM
38	4190253	CLIP	1		(SUB FOR TH108597)
39	H77698	TIE BAND	5		
40	H77698	TIE BAND	1		
43	19M7932	CAP SCREW	2		M8 X 16
	12M7056	LOCK WASHER	2		8 MM, (SUB FOR 12M7065)
45	4449019	CLIP	3		(SUB FOR TH4449019)
46	19M7938	CAP SCREW	3		M10 X 20
	12M7066	LOCK WASHER	3		10 MM
47	2048203	WIRING HARNESS	1		(2.75M EXTENSION) (SUB FOR TH2048203)
	2048184	WIRING HARNESS	1		(4.6M EXTENSION) (SUB FOR TH2048184)
48	J460310	SCREW	4		(SUB FOR AT156974)
51	4436534	RELAY	11		(SUB FOR TH4436534)
53	J460620	SCREW WITH WASHER	2		(SUB FOR AT200012)
54	4487330	VEHICLE CONTROLLER	1	-503485	(SUB FOR 4449504)
	9226759	VEHICLE CONTROLLER	1	503486-	
65	19M8425	CAP SCREW	1		M6 X 16
	12M7006	LOCK WASHER	1		6 MM
	24M7293	WASHER	1		6.500 X 13 X 1.600 MM
66	4414207	RELAY	2		(SUB FOR AT186647)
67	4384758	SWITCH	1		(TRAVEL ALARM SWITCH) (SUB FOR AT215573)
71	4190275	CLIP	1		(SUB FOR TH108598)
72	AT121321	HOSE CLAMP	1		
74	AT195741	WIRING HARNESS	1		(WITH RELAY, ALTERNATOR)
75	.....	CAP SCREW	1		(THM460616 NOT AVAILABLE)

MIC CONTROLLER

T151219 -UN-11FEB02

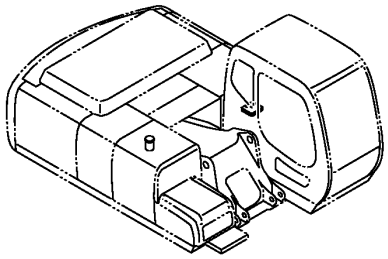

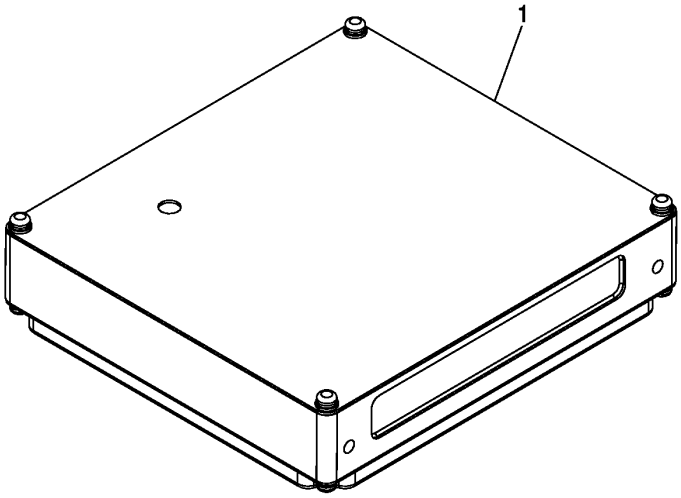

T151219

MIC CONTROLLER

KEY	PART NO.	PART NAME	QTY	SERIAL NO.	REMARKS
1	9212078	VEHICLE CONTROLLER	1		

MIC CUSTOMER KIT AND CABLE (WITH MIC CONTROLLER)

T192372A -UN-19JUN03

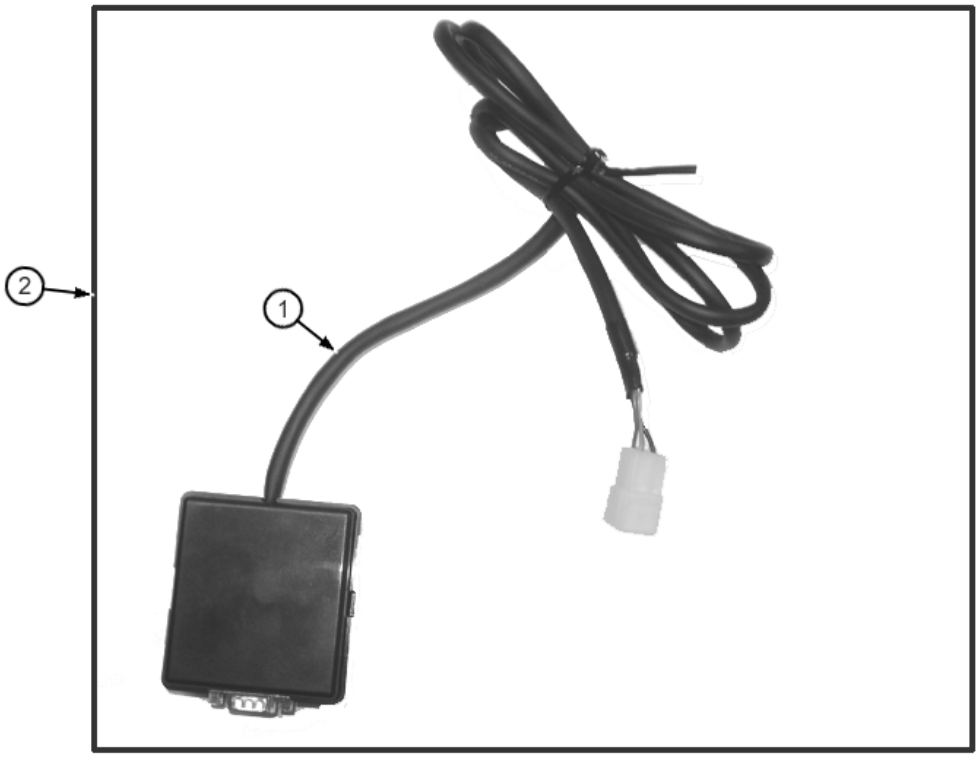

MIC CUSTOMER KIT AND CABLE (WITH MIC CONTROLLER)

KEY	PART NO.	PART NAME	QTY	SERIAL NO.	REMARKS
1	TH3100010	CABLE	1		
2	AT301723	KIT	1		(WHOLEGOODS)(MIC CUSTOMER KIT)(INCLUDES SOFTWARE AND CABLE)

MONITOR

T143273 -UN-28JUN01

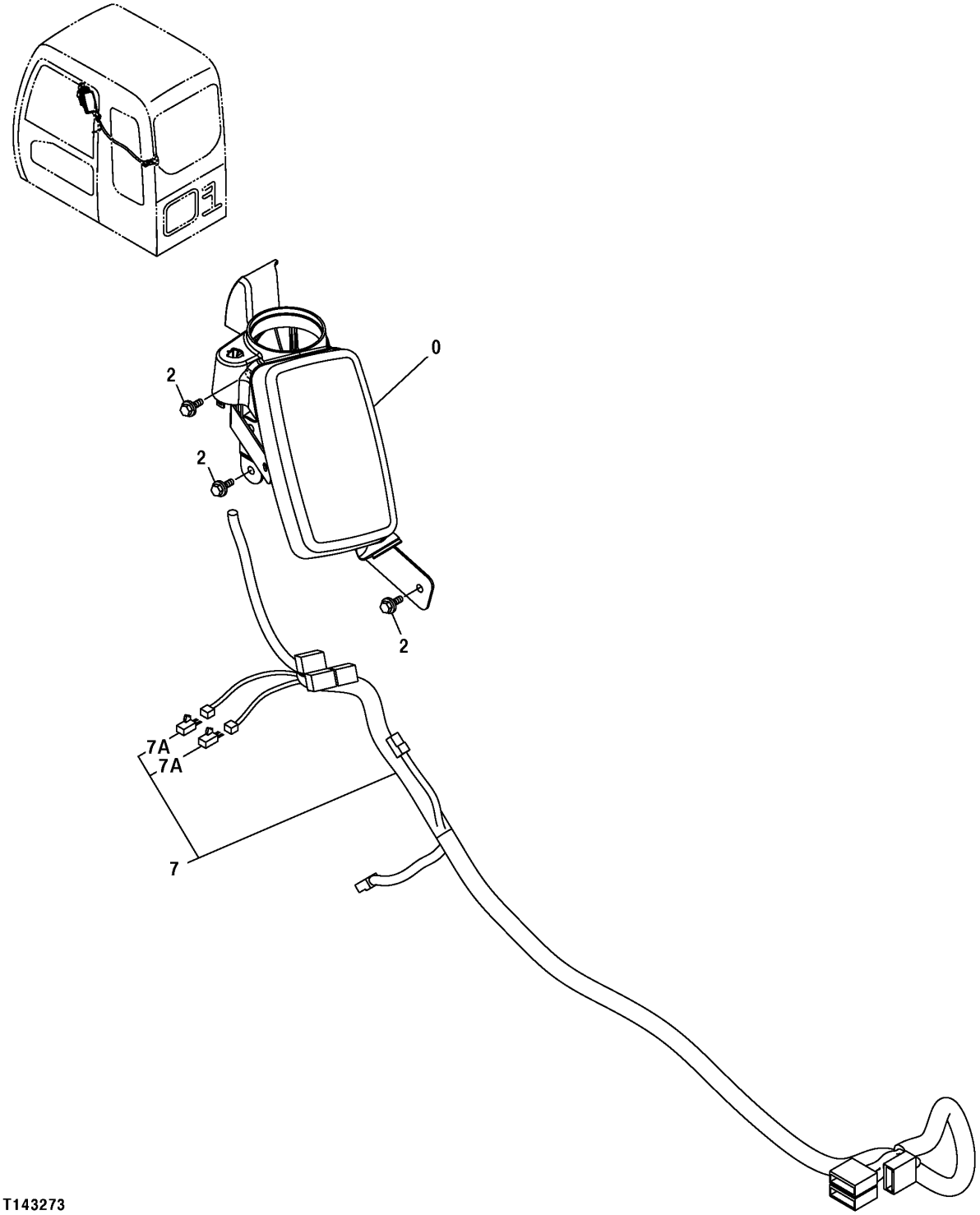

MONITOR

KEY	PART NO.	PART NAME	QTY	SERIAL NO.	REMARKS
0	4454519	MONITOR	1		
2	19M7932	CAP SCREW	3		M8 X 16
	12M7056	LOCK WASHER	3		8 MM (0.315") (SUB FOR 12M7065)
7	1027579	WIRING HARNESS	1		
7A	4456778	DIODE	2		(SUB FOR TH4456778)

CONVERTER
(24-VOLT TO 12-VOLT)

T146946 -UN-22OCT01

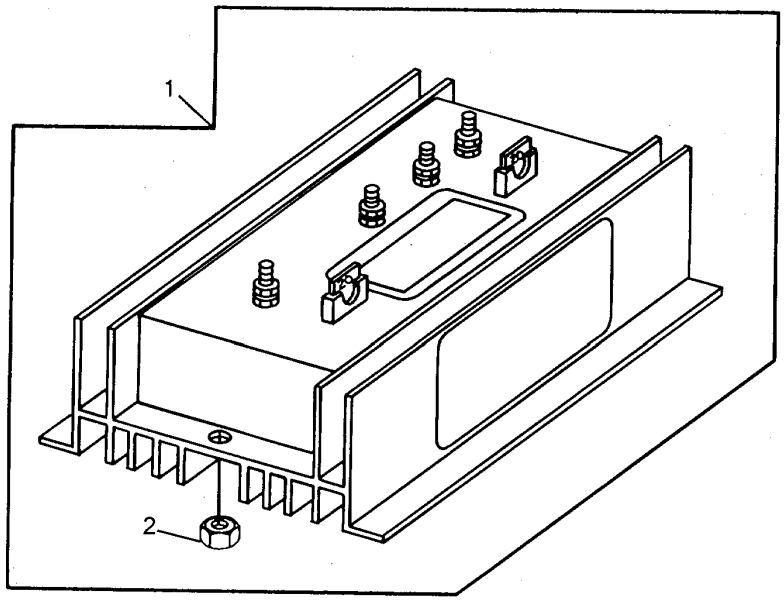

T146946

1H12

CONVERTER
(24-VOLT TO 12-VOLT)

KEY	PART NO.	PART NAME	QTY	SERIAL NO.	REMARKS
1	AT142288	CONVERTER	1		(10/20 AMP - 24/12 VOLT)
	14H786	NUT	2		1/4", (NOT ILLUSTRATED)
2	T141022	NUT	2		

ENGINE CONTROL UNIT ASSEMBLY (VEHICLE S.N. -504000)

T151980 -UN-27FEB02

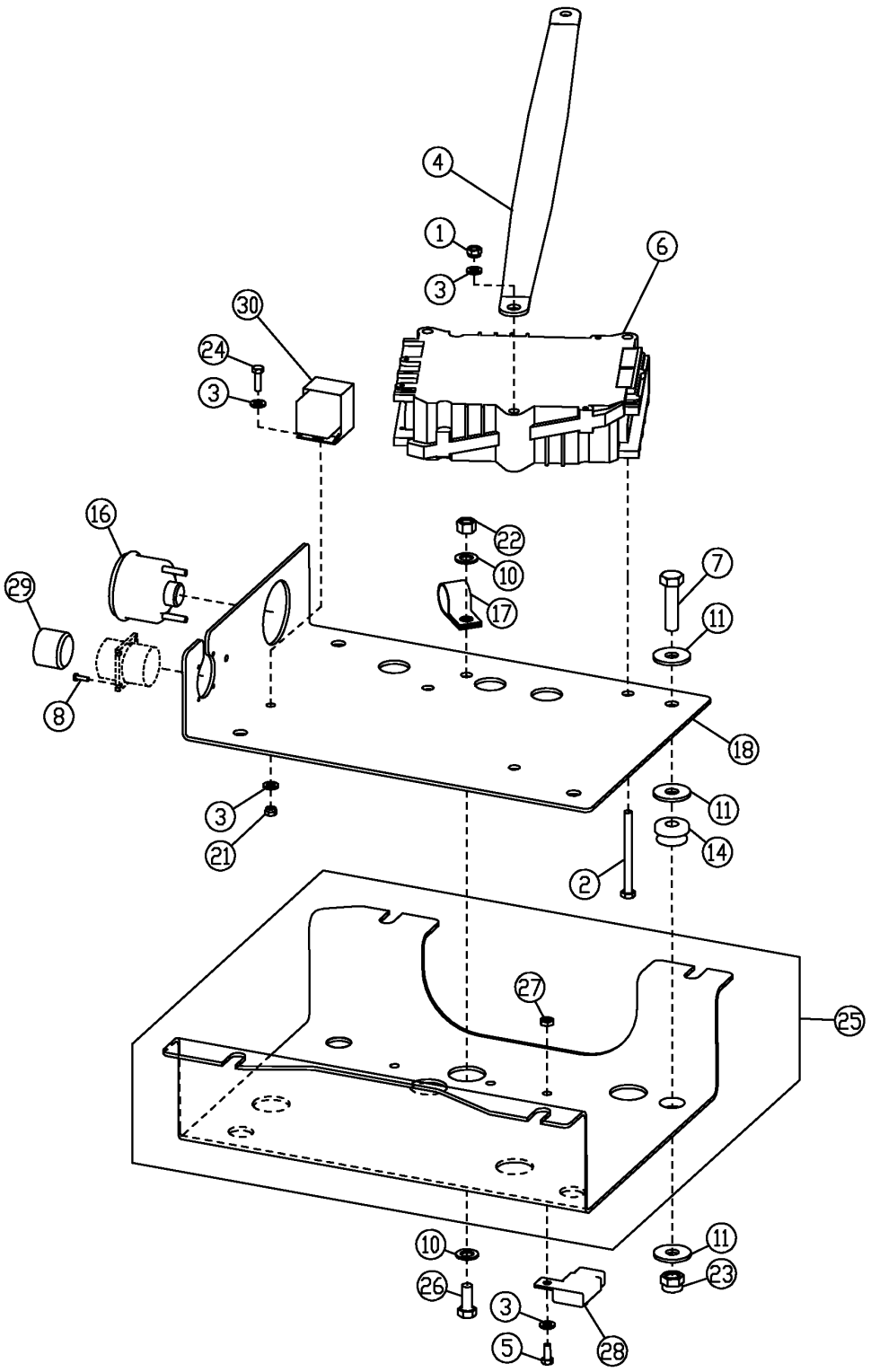

ENGINE CONTROL UNIT ASSEMBLY (VEHICLE S.N. -504000)

KEY	PART NO.	PART NAME	QTY	SERIAL NO.	REMARKS
1	14M7165	LOCK NUT	3		M6
2	19M8786	SCREW	3		M6 X 70
3	24M7088	WASHER	8		6.600 X 12 X 1.600 MM
4	AT180705	GROUND CABLE	1		
5	19M7640	CAP SCREW	3		M5 X 12
6	RE506665	ELECTRONIC CONTROL UNIT	1		
7	19M8637	CAP SCREW	4		M10 X 40
8	21M7394	SCREW	4		M3 X 10
10	24M7096	WASHER	2		10.500 X 18 X 1.600 MM
11	24M7296	WASHER	12		10.500 X 30 X 2.500 MM
14	AT116162	ISOLATOR	4		
16	RE68155	GAUGE	1		DIAGNOSTIC DISPLAY UNIT
17	T78787	CLAMP	2		
18	T184964	PLATE	1		
21	14M7265	LOCK NUT	4		M5
22	14M7327	LOCK NUT	1		M8
23	14M7517	LOCK NUT	4		M10
24	19M7372	CAP SCREW	1		M5 X 16
25	AT197101	COVER	1		
26	19M7881	SCREW	1		M8 X 20
27	14M7442	NUT	3		M5
28	99M7065	FUSE	3		
29	57M7477	ELECTRICAL CONNECTOR ASSY	1		
30	AT162863	RELAY	1		

ENGINE CONTROL UNIT ASSEMBLY (VEHICLE S.N. 504001-)

T161511 -UN-25NOV02

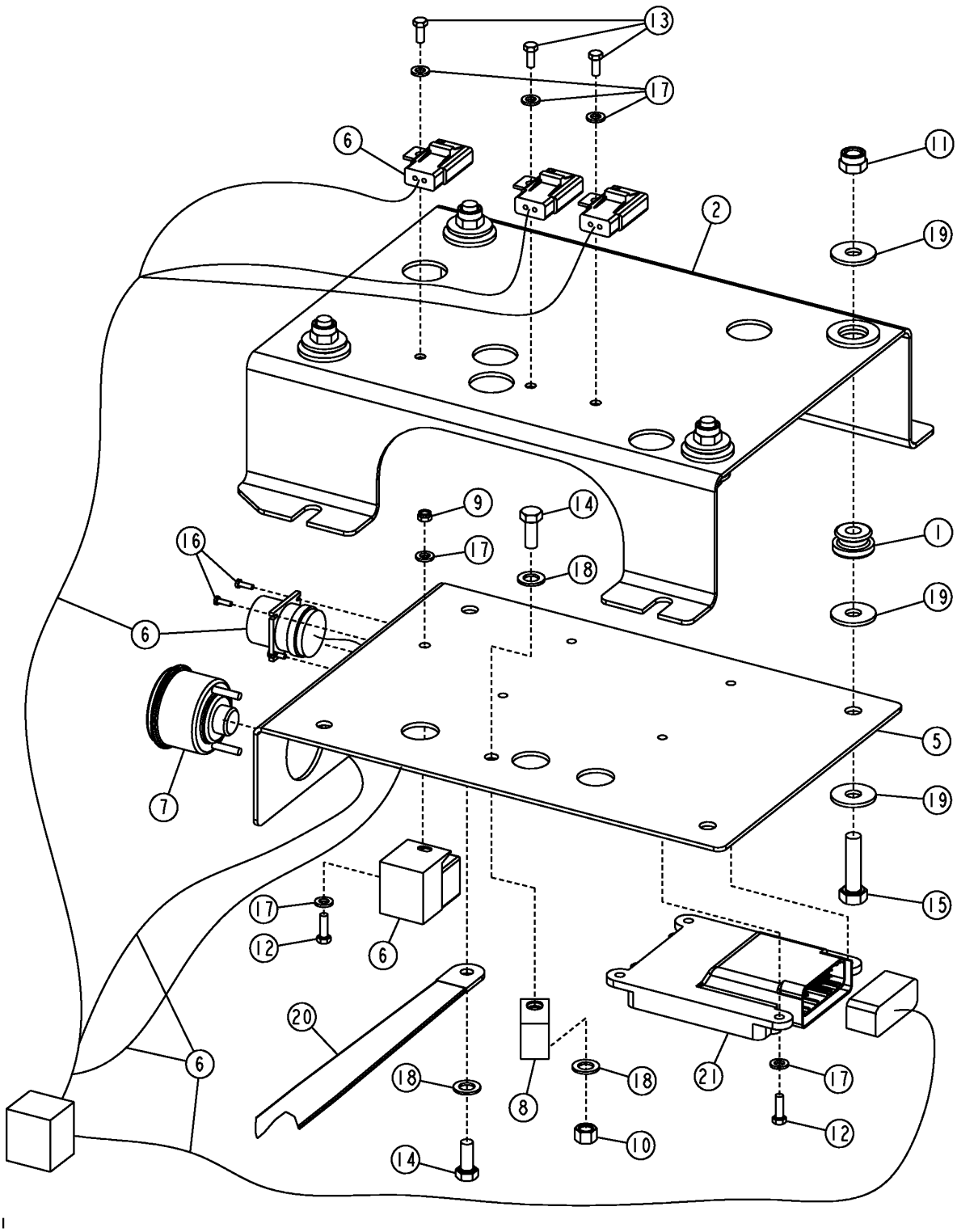

ENGINE CONTROL UNIT ASSEMBLY (VEHICLE S.N. 504001-)

KEY	PART NO.	PART NAME	QTY	SERIAL NO.	REMARKS
1	AT116162	ISOLATOR	4		
2	AT197101	COVER	1		
5	AT199340	ANGLE	1		
6	AT199497	WIRING HARNESS	1		
7	RE68155	GAUGE	1		
8	T78787	CLAMP	1		
9	14M7265	LOCK NUT	1		M5
10	14M7327	LOCK NUT	1		M8
11	14M7517	LOCK NUT	4		M10
12	19M7372	CAP SCREW	5		M5 X 16
13	19M7640	CAP SCREW	3		M5 X 12
14	19M7881	SCREW	2		M8 X 20
15	19M8637	CAP SCREW	4		M10 X 40
16	21M7394	SCREW	4		M3 X 10
17	24M7088	WASHER	9		6.600 X 12 X 1.600 MM
18	24M7096	WASHER	3		10.500 X 18 X 1.600 MM
19	24M7296	WASHER	12		10.500 X 30 X 2.500 MM
20	AT180705	GROUND CABLE	1		
21	RE518177	ENGINE CONTROLLER	1		(BLANK ECU)(MUST DOWNLOAD SOFTWARE ACCORDING TO ENGINE SERIAL NUMBER)

ENGINE CONTROL UNIT WIRING HARNESS (VEHICLE S.N. -504000)

T159315 -UN-11SEP02

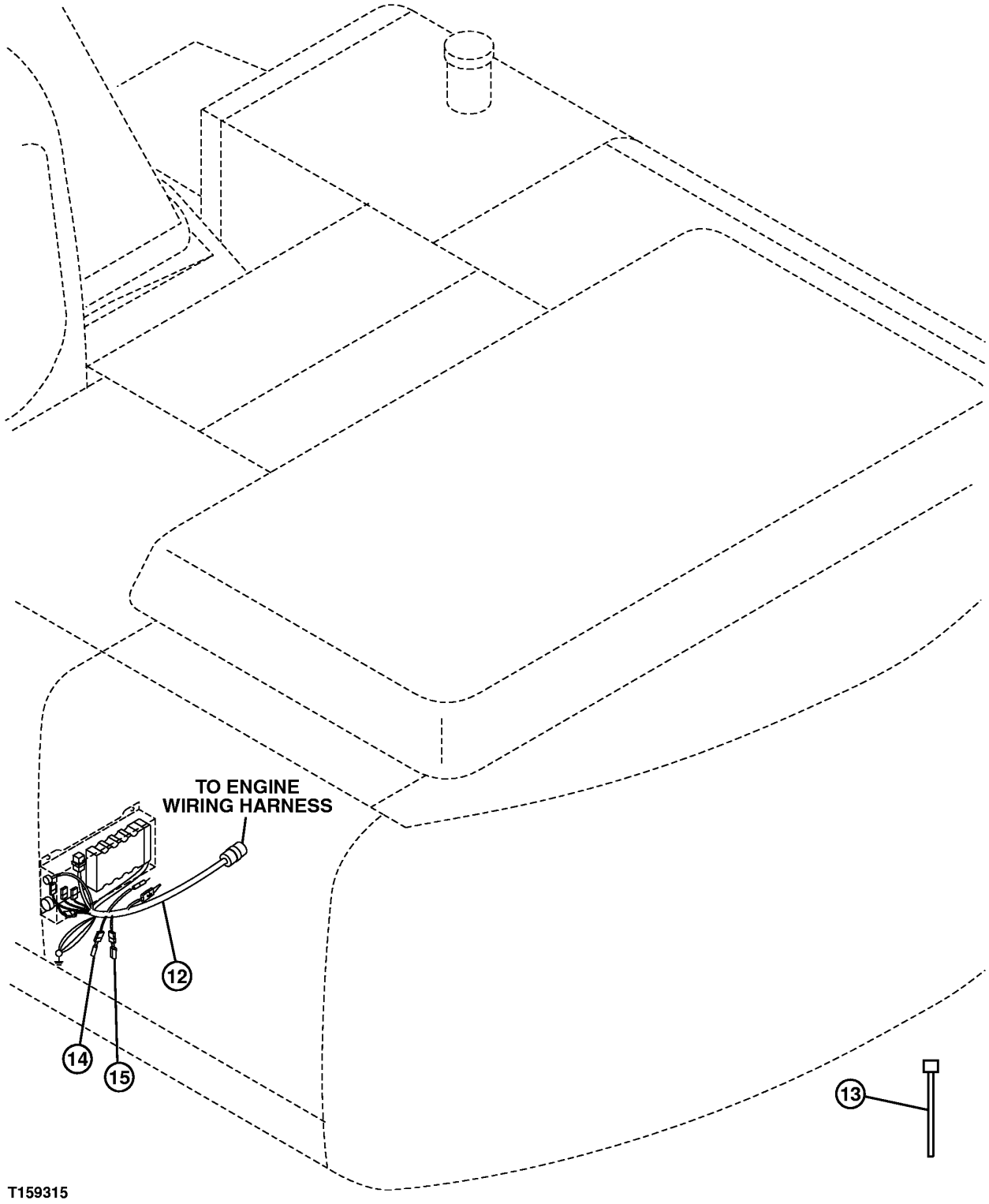

ENGINE CONTROL UNIT WIRING HARNESS (VEHICLE S.N. -504000)

KEY	PART NO.	PART NAME	QTY	SERIAL NO.	REMARKS
12	AT191028	WIRING HARNESS	1		
13	H77698	TIE BAND	AR		
14	AT202778	WIRING HARNESS	1		(TERMINATION NODE)
15	AT190929	RESISTOR	1		

ENGINE WIRING HARNESS

T161702 -UN-15NOV02

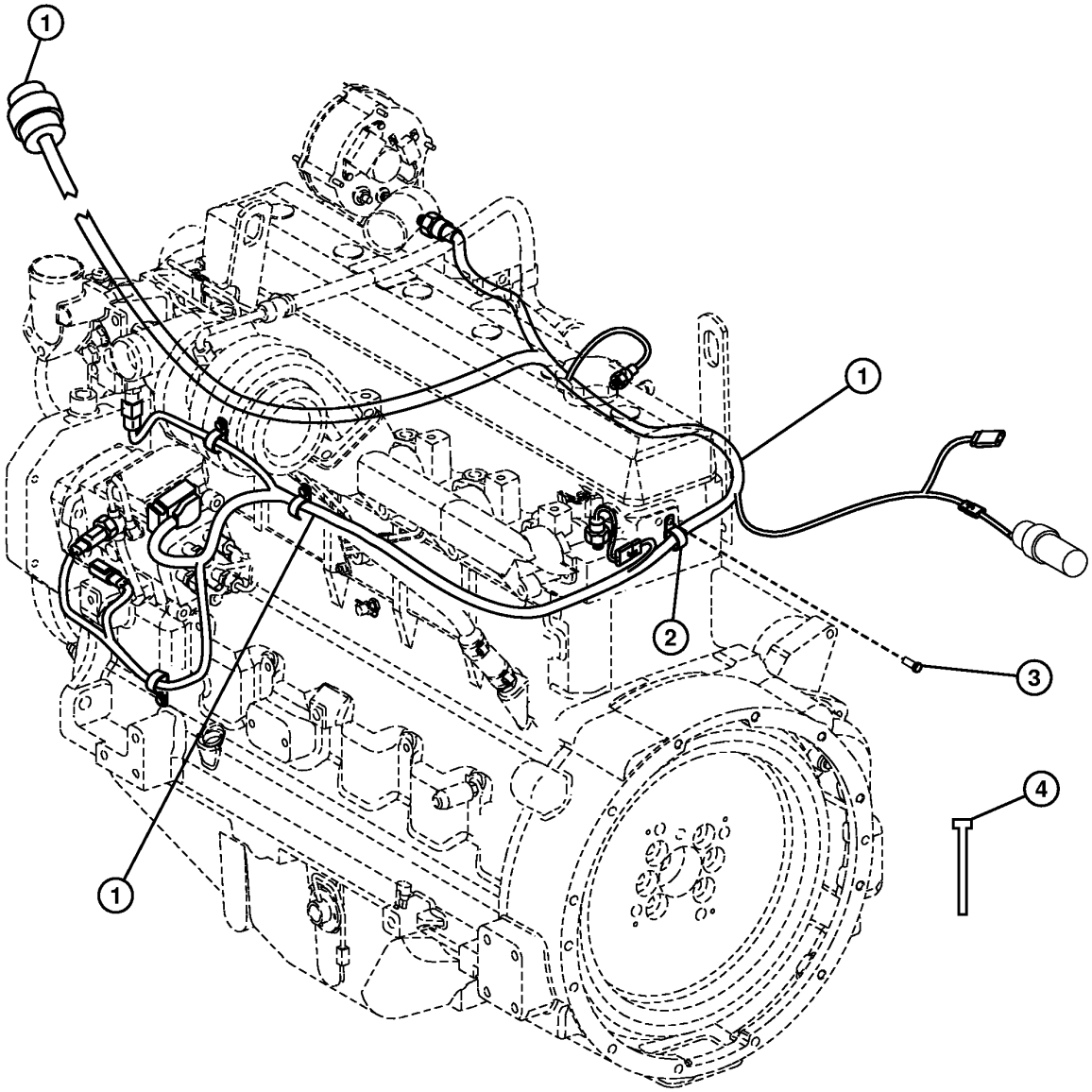

T161702

ENGINE WIRING HARNESS

KEY	PART NO.	PART NAME	QTY	VEHICLE SERIAL NO.	REMARKS
1	AT191027	WIRING HARNESS	1	-504000	
	AT199498	WIRING HARNESS	1	504001-	
2	T75197	CLAMP	4		
3	19M7783	SCREW	4		M10 X 16
4	R44302	TIE BAND	8		

MANUAL ENGINE CONTROL SWITCH BOX

T197096 -UN-07JAN04

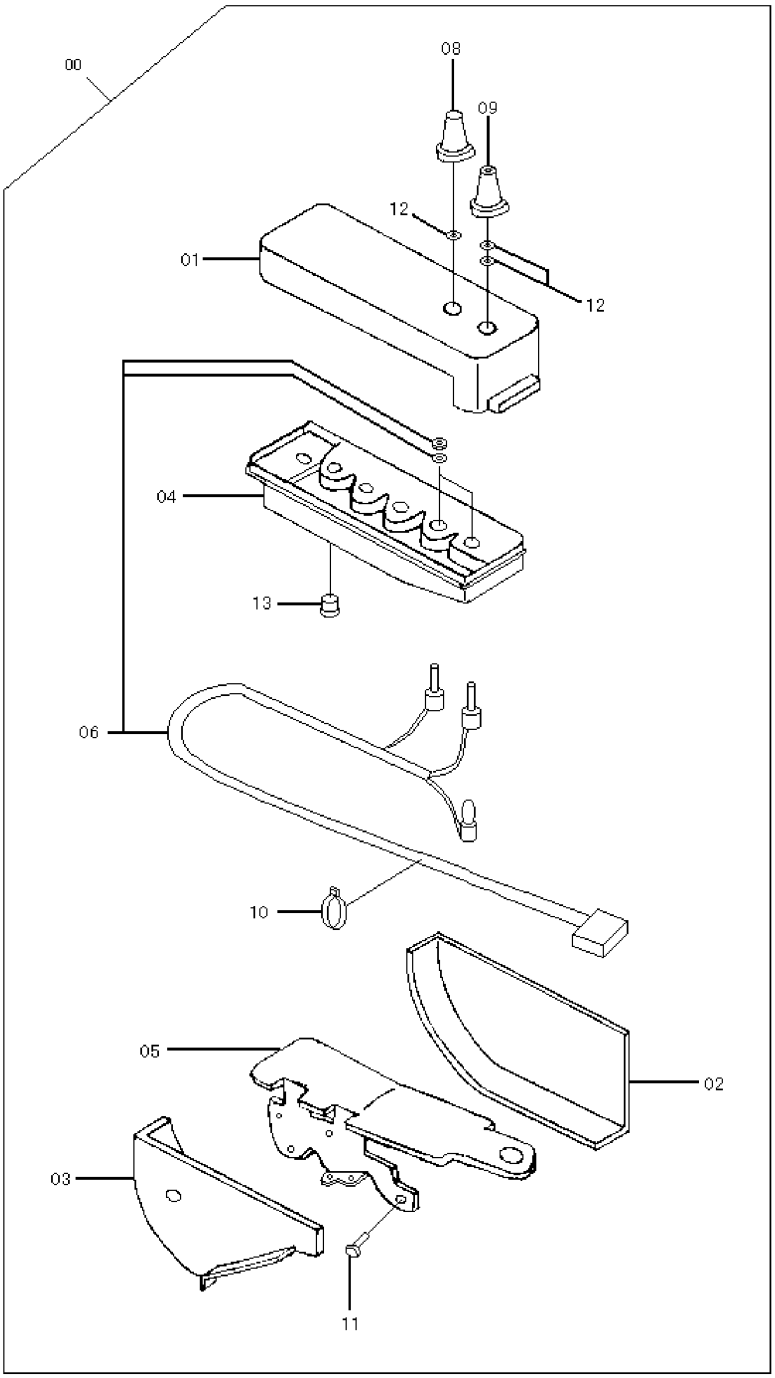

T197096

MANUAL ENGINE CONTROL SWITCH BOX

KEY	PART NO.	PART NAME	QTY	SERIAL NO.	REMARKS
0	4451764	SWITCH	1		
1	4483282	CASE	1		
2	4483202	COVER	1		
3	4483203	COVER	1		
4	4483204	CIRCUIT BOARD	1		
5	4483205	BRACKET	1		
6	4483283	SWITCH	1		
8	4483208	DIAL KNOB	4		
9	4483209	DIAL KNOB	1		
10	4426700	CLAMP	1		
11	4381572	SCREW	7		
12	4485825	O-RING	3		
13	4288796	CAP	1		

BOOM LIGHT WIRE HARNESS

T143274 -UN-28JUN01

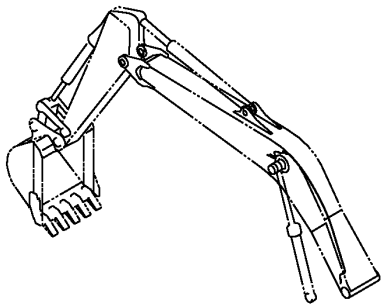

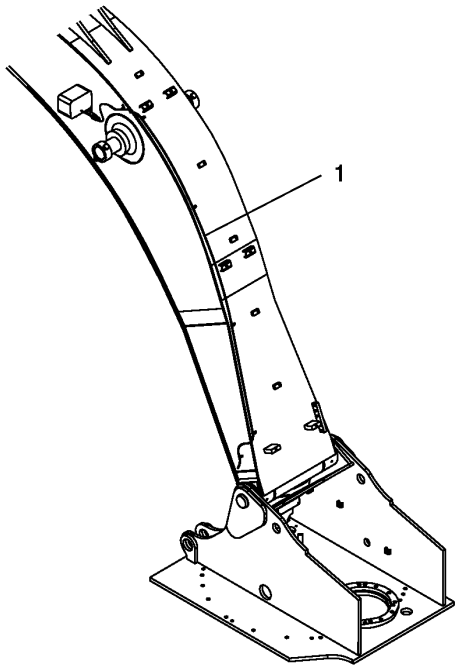

T143274

BOOM LIGHT WIRE HARNESS

KEY	PART NO.	PART NAME	QTY	SERIAL NO.	REMARKS
1	4429938	WIRING HARNESS	1		(SUB FOR TH4429938)

MAIN FRAME

T148094 -UN-19NOV01

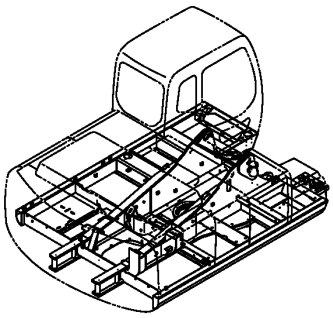

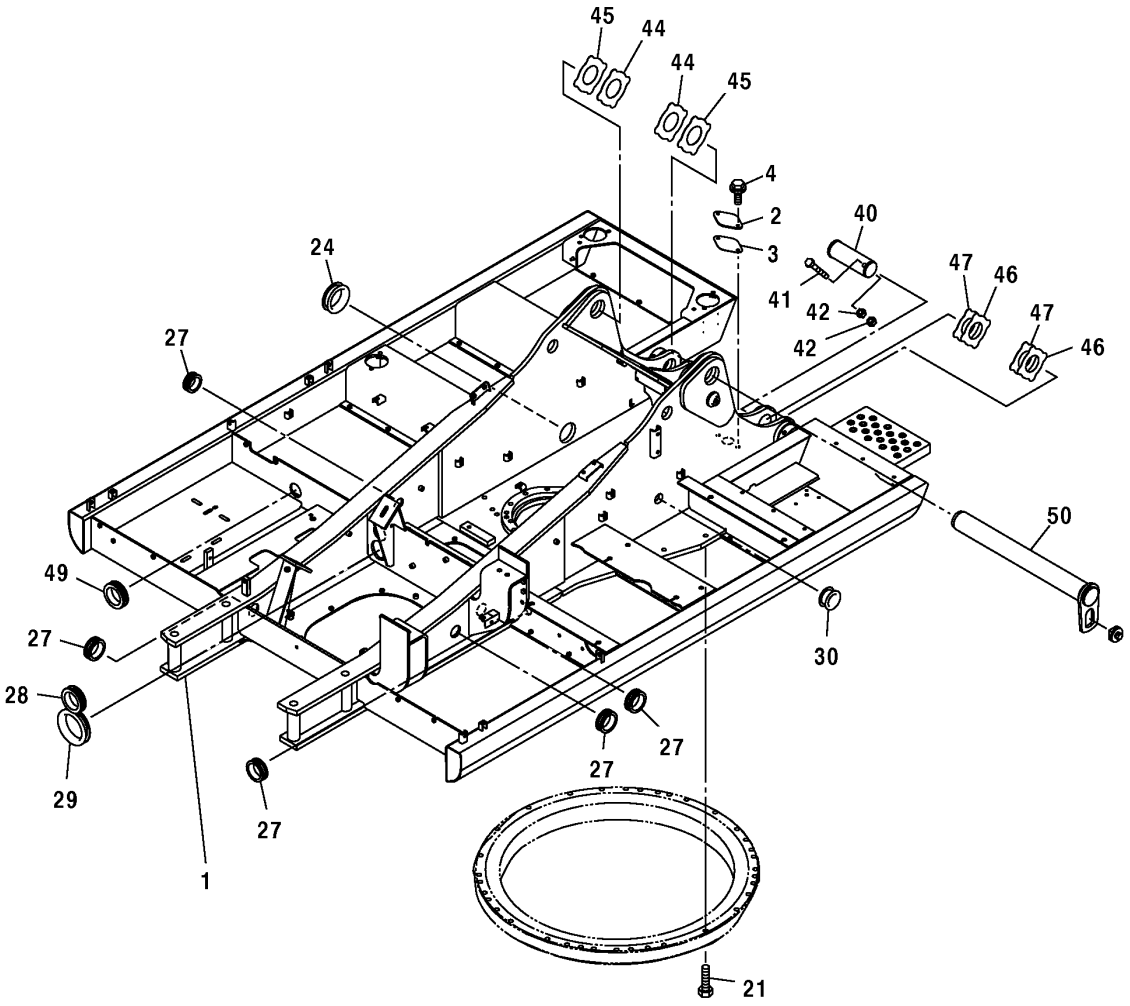

T148094

MAIN FRAME

KEY	PART NO.	PART NAME	QTY	SERIAL NO.	REMARKS
1	DH500008	FRAME	1		(SUB FOR THDH500008)
2	4255799	COVER	1		(SUB FOR AT154929)
3	4161735	GASKET	1		(SUB FOR AT130379)
4	12M7066	LOCK WASHER	2		10 MM (0.394")
	24M7028	WASHER	2		10.500 X 20 X 2 MM (0.413" X 0.787" X 0.079")
	19M7402	CAP SCREW	2		M10 X 25
21	J922095	CAP SCREW	32		(SUB FOR AT213621)
24	4191977	GROMMET	1		(SUB FOR TH109399)
27	4201749	GROMMET	5		(SUB FOR TH108205)
28	4208279	GROMMET	1		(SUB FOR AT131854)
29	4345810	BUSHING	3		(SUB FOR AT217099)
30	4257181	GROMMET	1		(SUB FOR AT155274)
40	3088573	PIN FASTENER	2		(SUB FOR TH3088573)
41	4435129	PIN FASTENER	2		(SUB FOR TH4435129)
42	14M7276	NUT	4		M16
44	4470743	THRUST WASHER	2		(SUB FOR 4444284)
45	4444285	THRUST WASHER	2		(SUB FOR TH4444285) (2.0)
46	4444286	THRUST WASHER	4		(SUB FOR TH4444286) (1.0)
47	4444287	THRUST WASHER	4		(SUB FOR TH4444287) (2.0)
49	4255567	BUSHING	2		(SUB FOR AT155271, 4255530)
50	.....	PIN FASTENER	1		(SEE FOLLOWING PAGE FOR DETAIL)

MAIN FRAME BOOM FOOT PIN

T143224 -UN-28JUN01

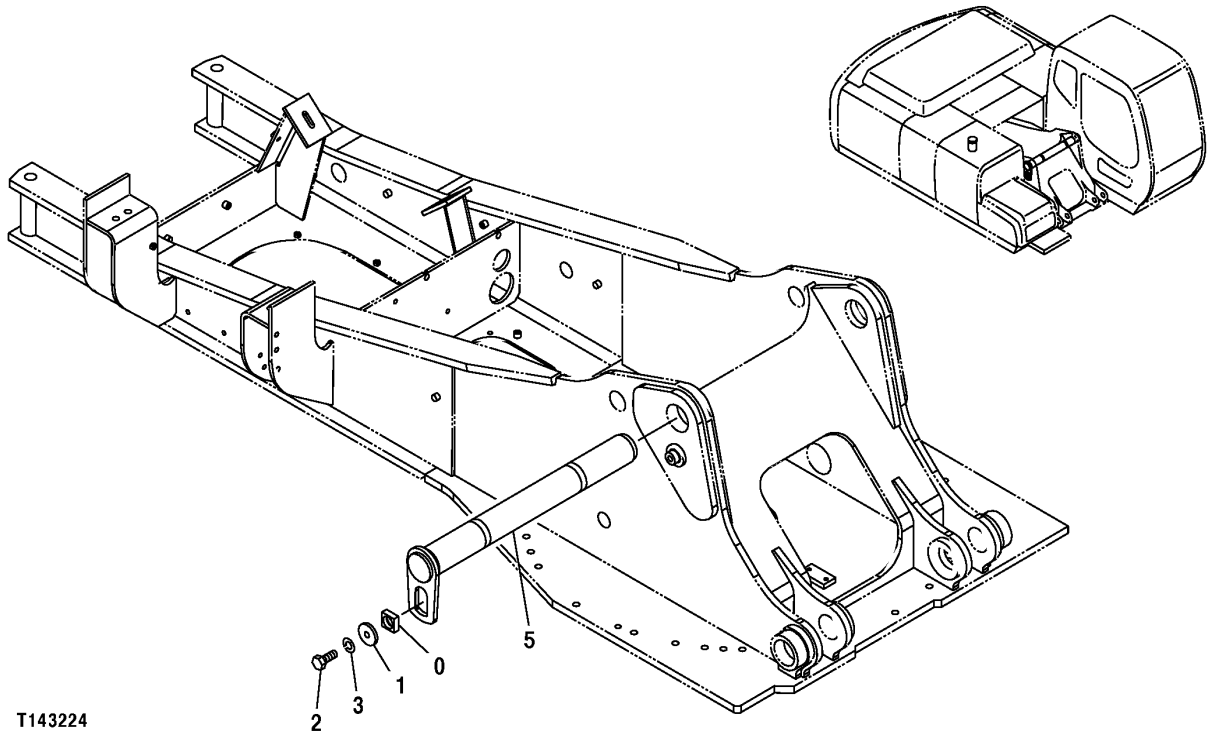

MAIN FRAME BOOM FOOT PIN

KEY	PART NO.	PART NAME	QTY	SERIAL NO.	REMARKS
0	4424425	MANIFOLD	1		(SUB FOR TH4424425)
1	4426128	WASHER	1		(SUB FOR TH4426128)
2	T116332	BOLT	1		M18 X 40, (SUB FOR THJ921840)
3	J257218	LOCK WASHER	1		(SUB FOR AT250277)
5	8081448	PIN FASTENER	1		(SUB FOR TH8081448)

COUNTERWEIGHT

T145901 -UN-11OCT01

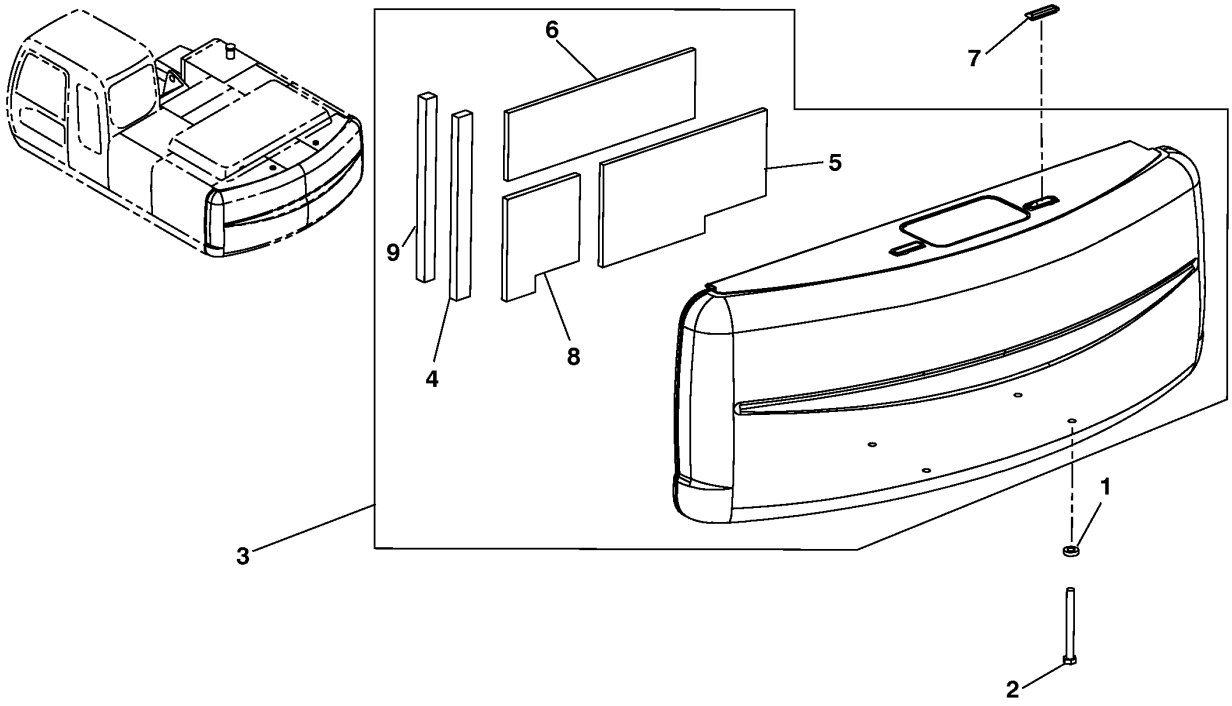

T145901

COUNTERWEIGHT

KEY	PART NO.	PART NAME	QTY	SERIAL NO.	REMARKS
1	4174859	BUSHING	4		(SUB FOR TH103498)
2	J823025	BOLT	4		(SUB FOR THJ823025)
3	5006958	COUNTERWEIGHT	1		(SUB FOR TH5006958)
4	DH400355	ISOLATOR	1		(SUB FOR THDH400355)
5	DH400417	ISOLATOR	1		(SUB FOR THDH400417)
6	DH400352	ISOLATOR	1		(SUB FOR THDH400352)
7	DH400360	CAP	2		(SUB FOR THDH400360)
8	4414759	ISOLATOR	1		(SUB FOR TH4414759)
9	4430649	ISOLATOR	1		(SUB FOR TH4430649)

SWING BEARING

T145807 -UN-19SEP01

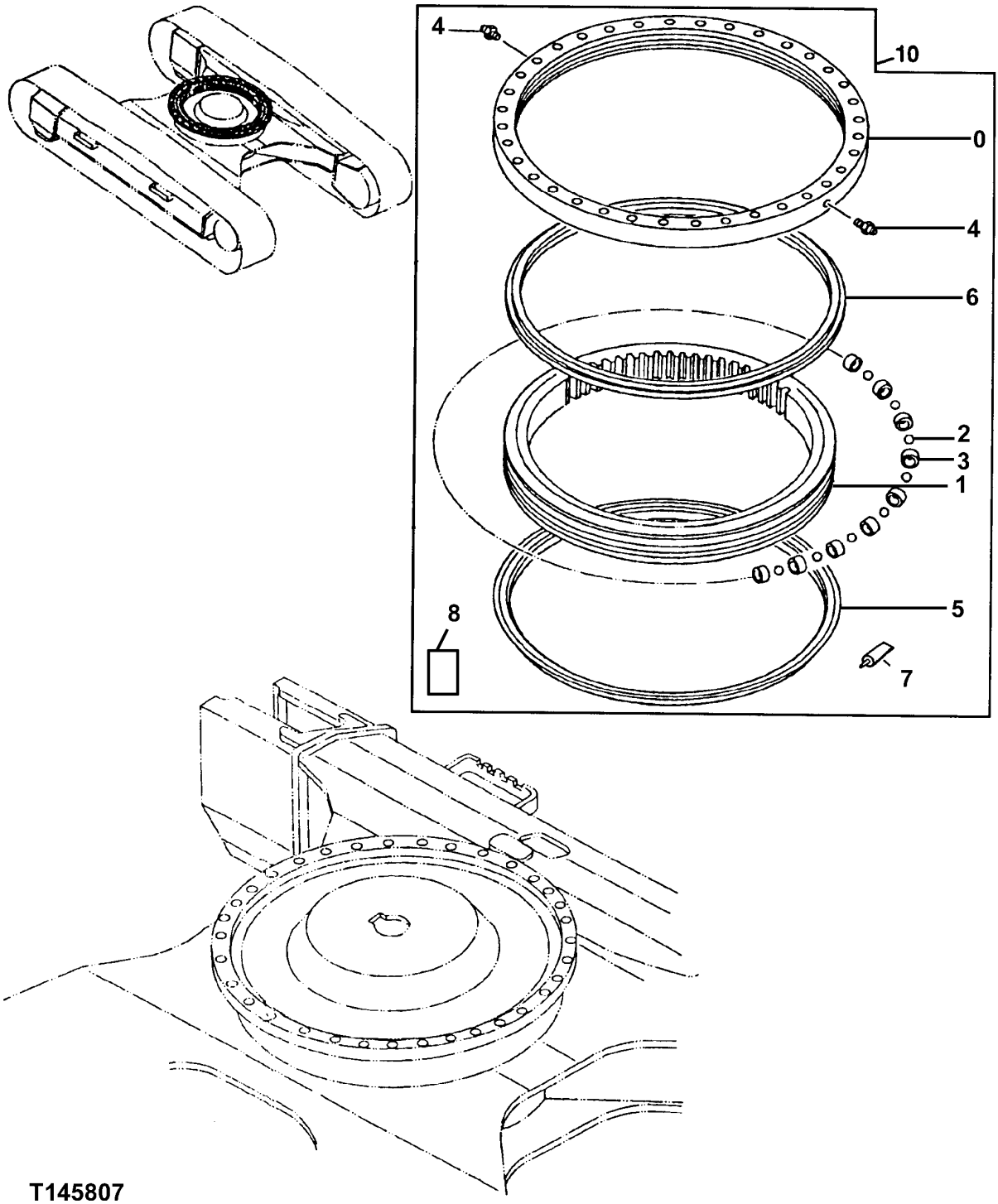

SWING BEARING

KEY	PART NO.	PART NAME	QTY	SERIAL NO.	REMARKS
0	.....	BEARING RACE	1		
1	.....	BEARING RACE	1		
2	4428919	BALL	121		(SUB FOR AT174888)
3	4127708	SPACER	121		(SUB FOR TH104232)
4	TH100074	LUBRICATION FITTING	2		
5	T203958	SEAL	1		(LOWER OUTER SEAL) (ALSO ORDER TY21517 ADHESIVE AND AT66866 CLEANING SOLVENT) (SUB FOR AT131732, AT213800 AND T191211) (SUB FOR 4199645)
6	T203958	SEAL	1		(UPPER INNER SEAL) (ALSO ORDER TY21517 ADHESIVE AND AT66866 CLEANING SOLVENT) (SUB FOR AT131732, AT213801 AND T191211) (SUB FOR 4199645)
7	TY21517	ADHESIVE	1		
8	AT66866	FLUID	1		
10	9169646	SWING BEARING	1		

SWING BEARING ATTACHMENTS

T143307 -UN-28JUN01

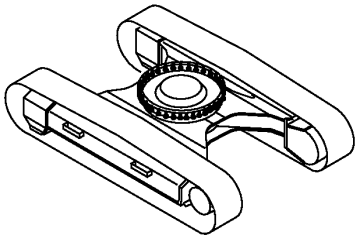

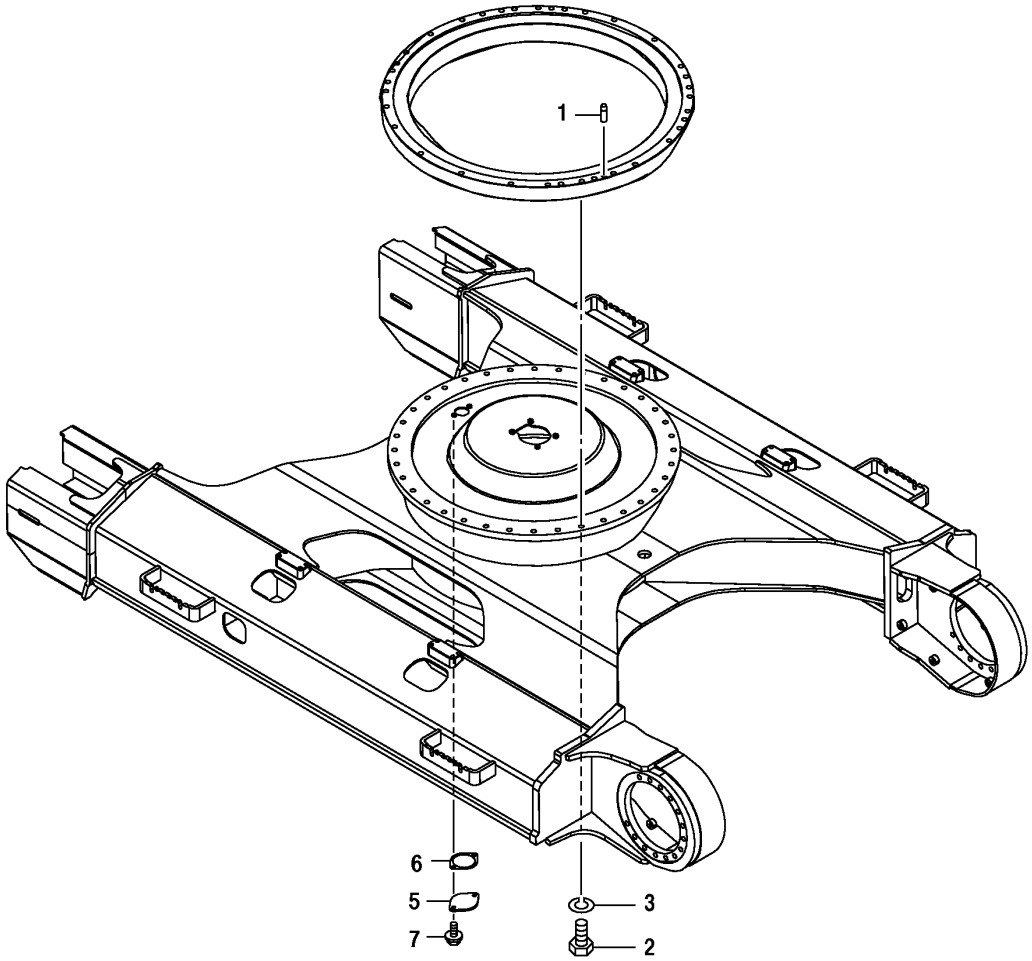

T143307

SWING BEARING ATTACHMENTS

KEY	PART NO.	PART NAME	QTY	SERIAL NO.	REMARKS
1	4425980	PIN FASTENER	1		(SUB FOR TH4425980)
2	4348589	CAP SCREW	36		(SUB FOR AT213921)
3	J257220	SPRING WASHER	36		(SUB FOR AT213605)
5	4128863	PLATE	1		(SUB FOR TH102264)
6	4272297	GASKET	1		(SUB FOR TH110612 AND 4211149)
7	19M7402	CAP SCREW	2		M10 X 25

SWING BEARING SEAL

T196887 -UN-08JAN04

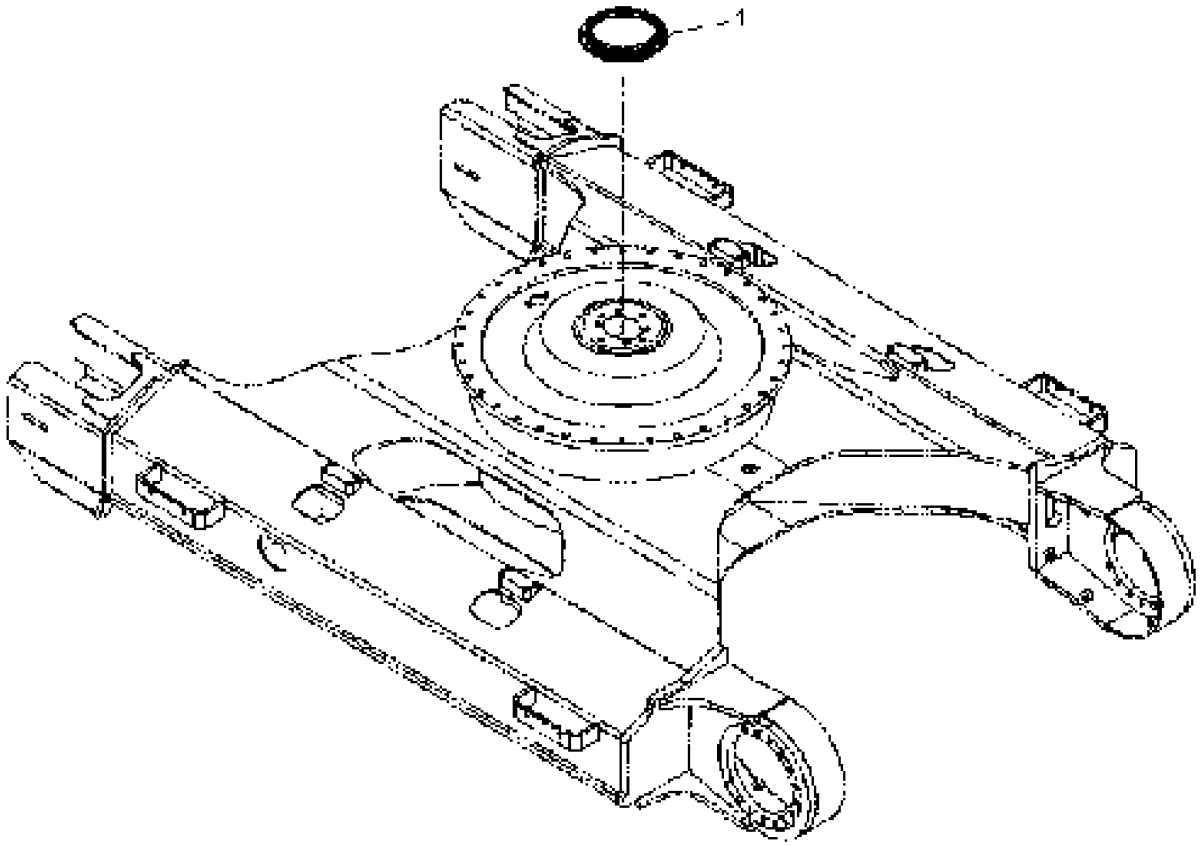

T196887

SWING BEARING SEAL

KEY	PART NO.	PART NAME	QTY	SERIAL NO.	REMARKS
1	4483676	SEAL	1	106375-	

CAB MOUNTING

T150989 -UN-06FEB02

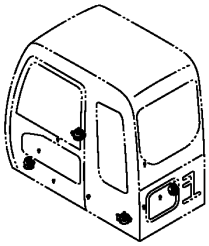

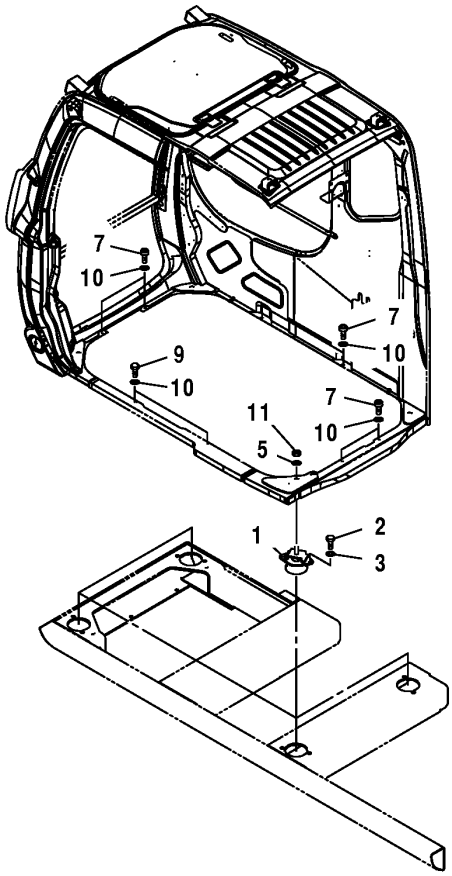

T150989

CAB MOUNTING

KEY	PART NO.	PART NAME	QTY	SERIAL NO.	REMARKS
1	4409999	ISOLATOR	4		(SUB FOR TH4409999)
2	19M7403	CAP SCREW	8		(SUB FOR 4330785)
3	12H301	LOCK WASHER	8		12.700 MM (1/2")
5	24M7338	WASHER	4		17 X 30 X 3 MM (0.669" X 1.181" X 0.118")
7	19M8337	SCREW	4		M10 X 30
9	19M7662	CAP SCREW	5		M10 X 30
10	24M7346	WASHER	4		11 X 20 X 2 MM (0.433" X 0.787" X 0.079")
11	14M7328	LOCK NUT	4		M16

CAB

T150990 -UN-06FEB02

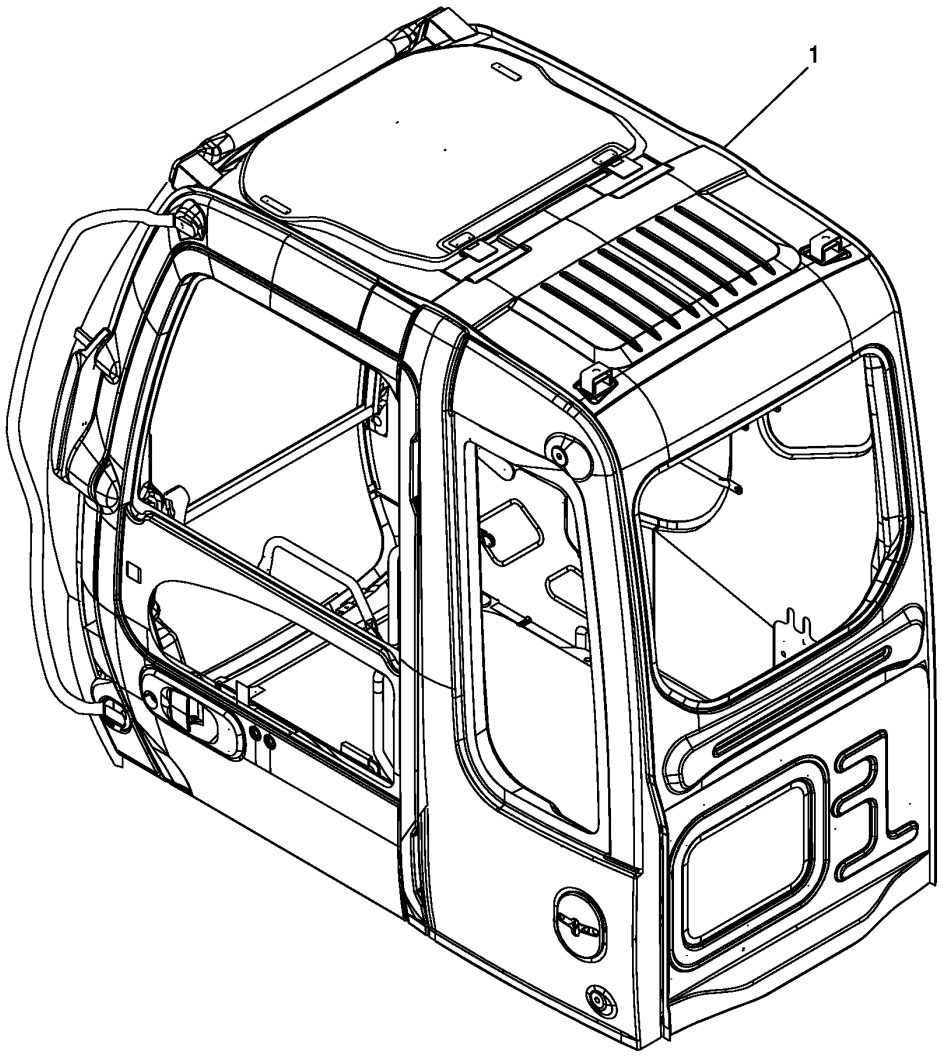

T150990

CAB

KEY	PART NO.	PART NAME	QTY	SERIAL NO.	REMARKS
1	4602549	CAB	1		(SUB FOR 4474296) (SEE FOLLOWING PAGES FOR COMPONENTS)

CAB COMPONENTS

T196845 -UN-19DEC03

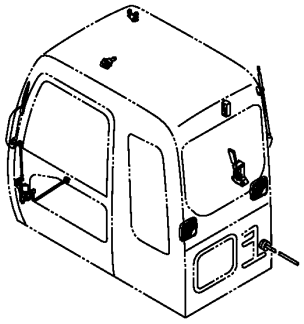

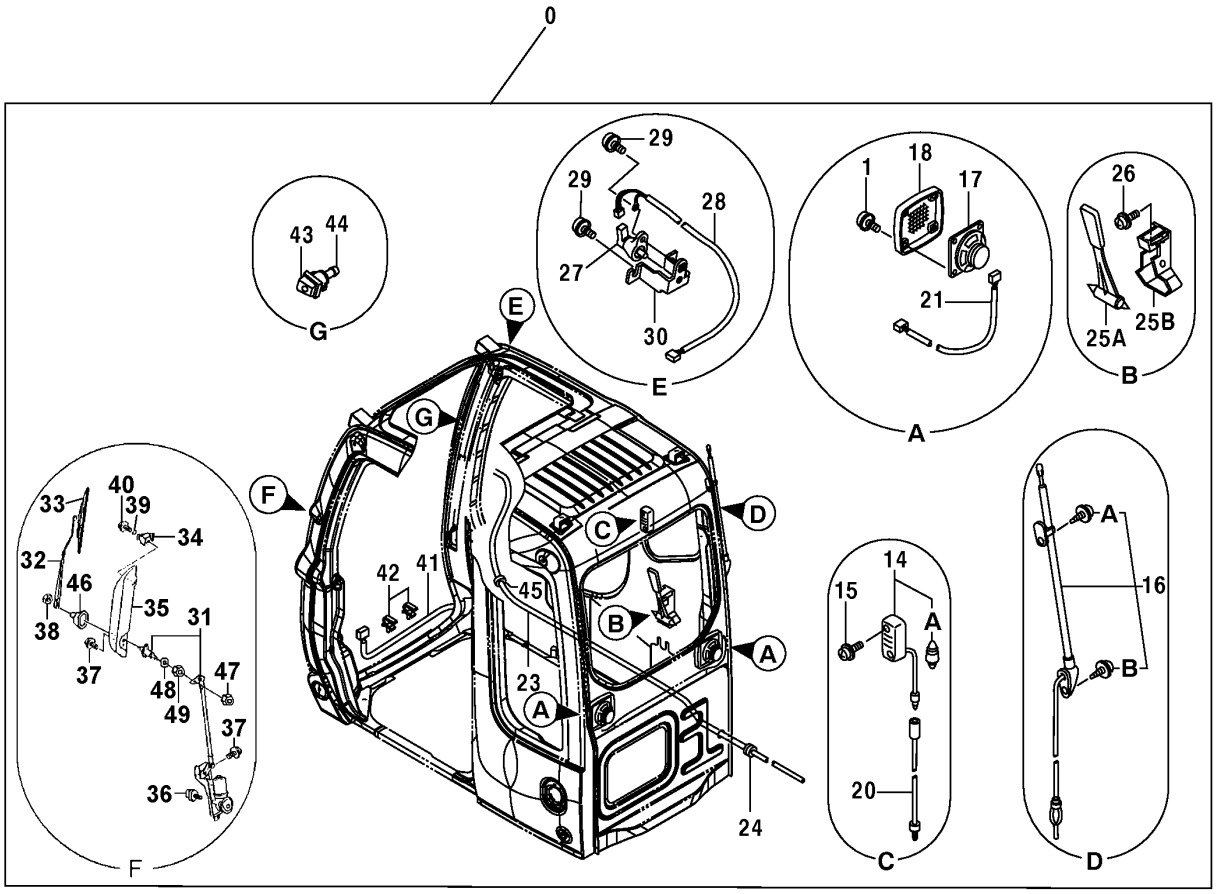

T196845

CAB COMPONENTS

KEY	PART NO.	PART NAME	QTY	SERIAL NO.	REMARKS
0	4602549	CAB	1		(SUB FOR 4474296) (CONTAINS ALL PARTS LISTED ON THIS PAGE - ADDITIONAL COMPONENTS LISTED ON FOLLOWING PAGES)
1	4456427	SCREW	8		(SUB FOR TH4456427)
14	4187082	LAMP	1		(SUB FOR TH108567)
14A	4187083	BULB	1		(SUB FOR TH108568)
15	4456428	SCREW	2		(SUB FOR TH4456428)
16	4123177	ANTENNA	1		(SUB FOR AT131697)
16A	4210412	SCREW	1		(SUB FOR AT131864)
16B	4210413	SCREW	1		(SUB FOR AT131865)
17	4361302	SPEAKER	2		(SUB FOR AT214007)
18	4364504	GRILLE	2		(SUB FOR AT214017)
20	4260369	WIRING HARNESS	1		(SUB FOR AT154278)
21	4369547	WIRING HARNESS	2		(SUB FOR AT214061)
23	4369549	HOSE	1		(SUB FOR AT214063)
24	4287903	GROMMET	1		(SUB FOR AT154413)
25A	4362700	HAMMER	1		(SUB FOR T158020)
25B	2038764	BRACKET	1		(SUB FOR T158021)
26	4456428	SCREW	2		(SUB FOR TH4456428)
27	4387837	SWITCH	1		(SUB FOR AT182625)
28	4402476	WIRING HARNESS	1		(SUB FOR AT182626)
29	.....	SCREW	3		(TH4456456 NOT AVAILABLE FOR SERVICE)
30	4456429	BRACKET	1		(SUB FOR TH4456429)
31	4453690	WIPER MOTOR	1		(SUB FOR TH4453690)
32	4453687	WIPER ARM	1		(SUB FOR TH4453687)
33	4453686	WIPER BLADE	1		(SUB FOR TH4453686)
34	4456433	HOLDER	1		(SUB FOR TH4456433)
35	4456434	GUARD	1		(SUB FOR TH4456434)
36	19M7881	SCREW	3		M8 X 20
	12M7056	LOCK WASHER	3		8 MM (0.315") (SUB FOR 12M7065)
	24M7055	WASHER	3		8.400 X 16 X 1.600 MM (0.331" X 0.630" X 0.063")
37	4456238	BOLT	4		(SUB FOR TH4456238)
38	14M7273	NUT	1		M8
39	4092111	O-RING	1		(SUB FOR AT154150)
40	4456458	BOLT	1		(SUB FOR TH4456458)
41	4456435	WIRING HARNESS	1		(SUB FOR TH4456435)
42	4456436	CLIP	2		(SUB FOR TH4456436)
43	4456450	NOZZLE	1		(SUB FOR TH4456450)
44	4367481	VALVE	1		
45	4369569	GROMMET	1		(SUB FOR AT214079)
46	4603011	CAP	1		
47	4603012	NUT	1		
48	4603013	WASHER	1		
49	4431859	NUT	1		

CAB COMPONENTS

T196844 -UN-19DEC03

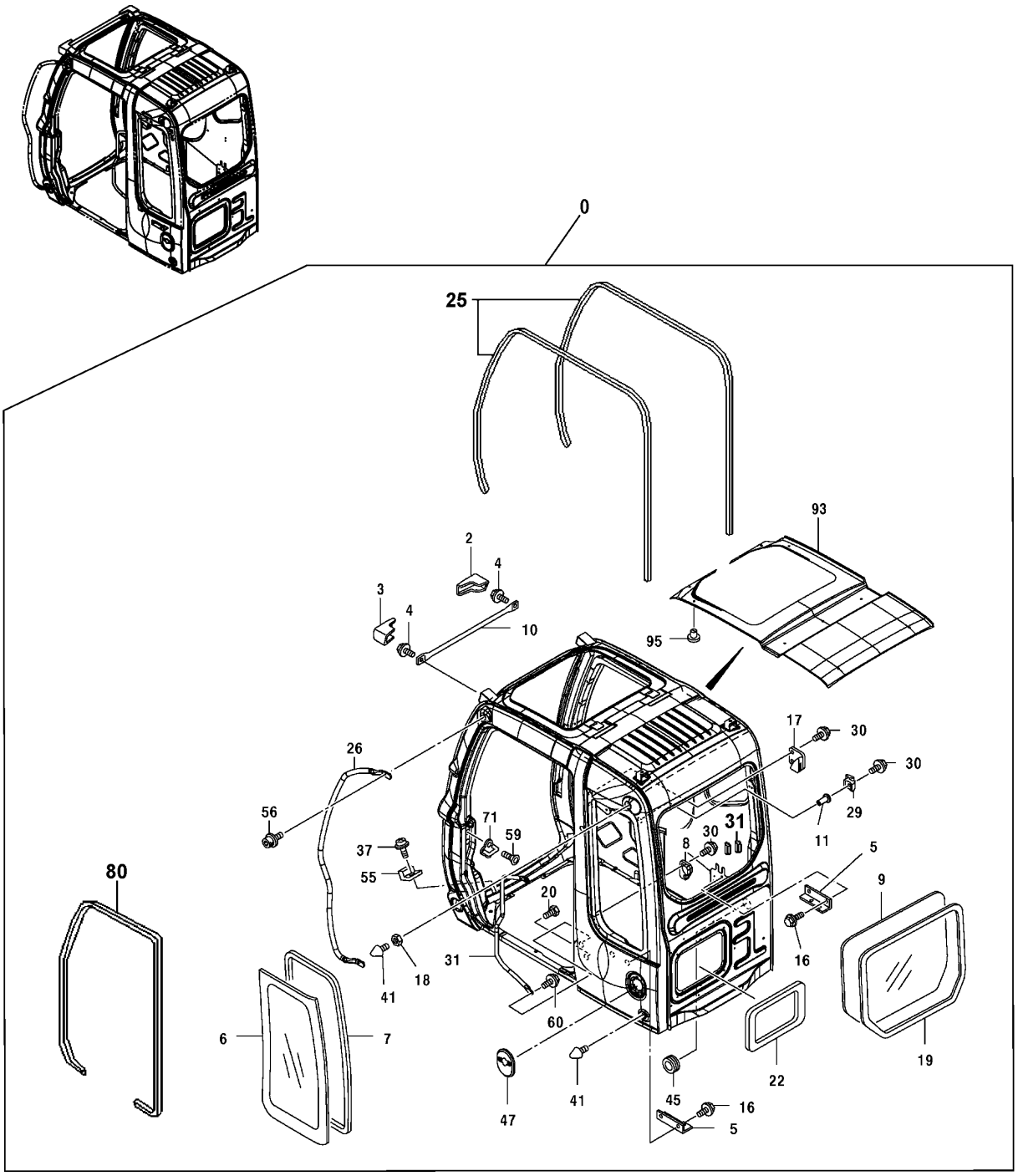

T196844

CAB COMPONENTS

KEY	PART NO.	PART NAME	QTY	SERIAL NO.	REMARKS
0	4602549	CAB	1		(SUB FOR 4474296) (CONTAINS ALL ITEMS ON THIS PAGE - ADDITIONAL COMPONENTS LISTED ON PREVIOUS AND FOLLOWING PAGES)
2	4456177	COVER	1		(SUB FOR TH4456177)
3	4456178	COVER	1		(SUB FOR TH4456178)
4	4456179	BOLT	2		(SUB FOR TH4456179)
5	4456181	BRACKET	2		(SUB FOR TH4456181)
6	4448311	WINDOWPANE	1		(BRONZE) (SUB FOR 4468944 AND TH4468944)
	4602567	WINDOWPANE	1		(GREEN)
7	4400079	SEAL	1		(SUB FOR AT218190)
8	4456183	ISOLATOR	1		(SUB FOR TH4456183)
9	4448314	WINDOWPANE	1		(BRONZE) (SUB FOR TH4448314)
	4602569	WINDOWPANE	1		(GREEN)
10	4474300	PIPE	1		
11	4456185	NUT	1		(SUB FOR TH4456185)
13	4603008	ISOLATOR	2		
16	19M7402	CAP SCREW	4		M10 X 25
	12M7066	LOCK WASHER	4		10 MM (0.394")
	24M7028	WASHER	4		10.500 X 20 X 2 MM (0.413" X 0.787" X 0.079")
17	4456182	ISOLATOR	1		(SUB FOR TH4456182)
18	4414857	NUT	1		(SUB FOR AT157068)
19	4448319	ISOLATOR	1		(USE WITH 4448314) (SUB FOR TH4448319)
	4602577	ISOLATOR	1		(USE WITH 4602569)
20	19M8425	CAP SCREW	1		M6 X 16
	24H1287	WASHER	1		7.137 X 15.875 X 1.651 MM (9/32" X 5/8" X 0.065")
	12M7006	LOCK WASHER	1		6 MM (0.236")
22	4453667	ISOLATOR	1		(SUB FOR TH4453667)
25	4456175	ISOLATOR	2		(SUB FOR TH4456175)
26	4474298	HANDRAIL	1		
29	4456184	ISOLATOR	1		(SUB FOR TH4456184)
30	4372224	SCREW WITH WASHER	5		(SUB FOR AT214310)
31	4453663	HANDRAIL	1		(SUB FOR TH4453663)
37	21M7246	SCREW	2		M6 X 16
	12M7006	LOCK WASHER	2		6 MM
	24M7293	WASHER	2		6.500 X 13 X 1.600 MM
41	4304827	BUMPER	2		(SUB FOR AT156970)
45	4369568	GROMMET	1		(SUB FOR AT214078)
47	4474299	COVER	1		
55	4369675	ISOLATOR	2		(SUB FOR AT214173)
56	19M7550	CAP SCREW	2		M10 X 35
	24H1305	WASHER	2		10.312 X 20.625 X 1.651 MM (13/32" X 13/16" X 0.065")
	12M7066	LOCK WASHER	2		10 MM (0.394")
59	4320163	SCREW	2		(SUB FOR AT200584)
60	4372219	SCREW WITH WASHER	2		(SUB FOR AT214305)
71	4369627	STRIKER	1		(SUB FOR AT214129)
80	4453672	ISOLATOR	1		
93	4453665	SHEET	1		(SUB FOR TH4453665)
95	4453666	CLIP	14		(SUB FOR TH4453666)

CAB DOOR AND WINDOW

T146539 -UN-12OCT01

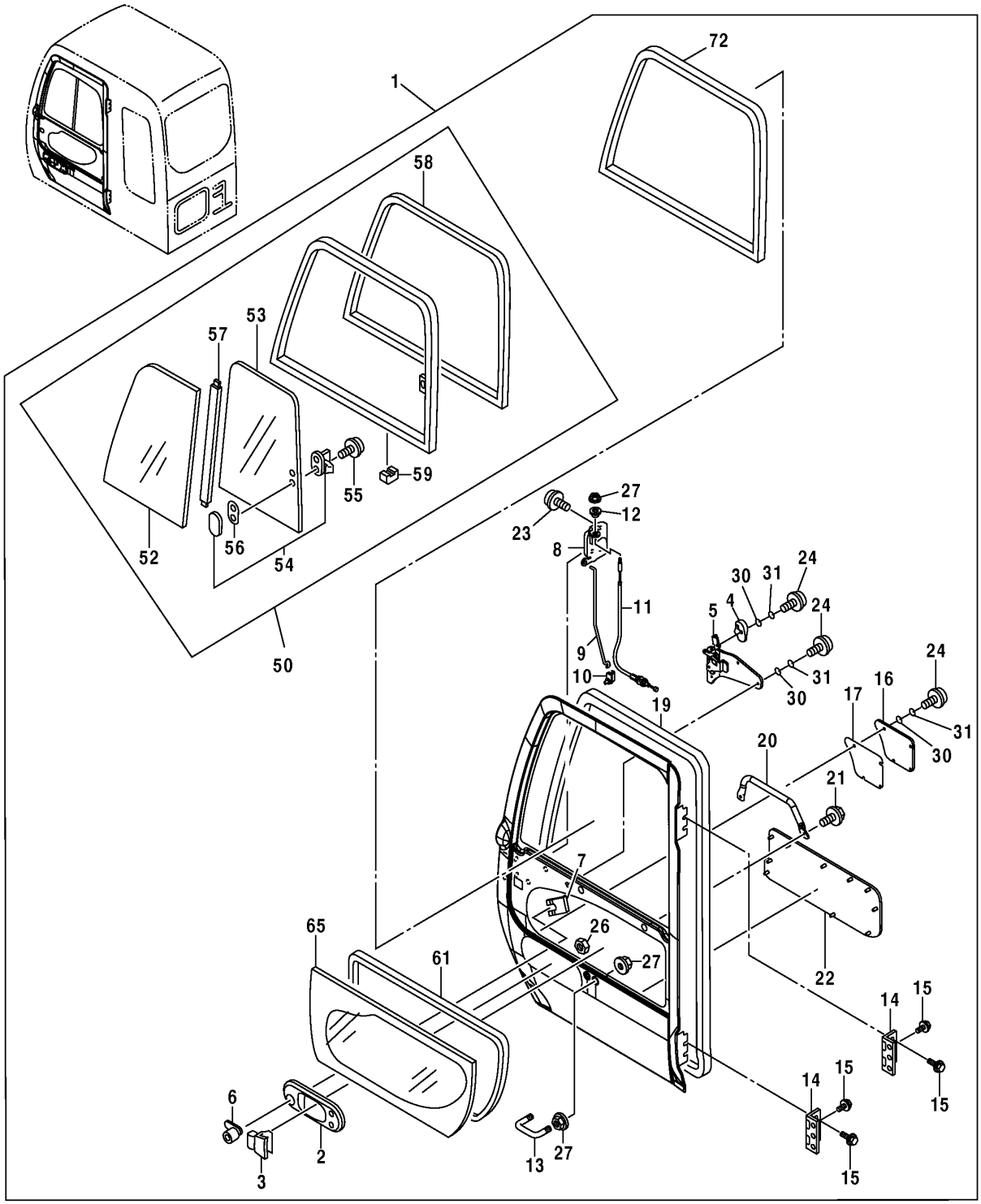

T146539

2B13

CAB DOOR AND WINDOW

KEY	PART NO.	PART NAME	QTY	SERIAL NO.	REMARKS
0	4602549	CAB	1		(SUB FOR 4474296) (NOT ILLUSTRATED) (CONTAINS ALL ITEMS ON THIS PAGE - ADDITIONAL COMPONENTS LISTED ON PREVIOUS AND FOLLOWING PAGES)
1	4474301	DOOR	1		
2	4455979	COVER	1		(SUB FOR TH4455979)
3	4369645	HANDLE	1		(SUB FOR AT214145)
4	4455975	HANDLE	1		(SUB FOR TH4455975)
5	4456173	HANDLE	1		(SUB FOR 4474302)
6	4362135	LOCK	1		(SUB FOR AT176789)
	AT194969	KEY	1		(H800) (NOT ILLUSTRATED)
7	4372091	CLIP	1		(SUB FOR AT214290)
8	4455982	LOCK	1		(SUB FOR TH4455982)
9	4455983	ROD	1		(SUB FOR TH4455983)
10	4444664	HOLDER	1		(SUB FOR TH4444664)
11	4456171	WIRE	1		(SUB FOR TH4456171)
12	4455981	BUSHING	1		(SUB FOR TH4455981)
13	4369661	U-BOLT	1		(SUB FOR AT214160)
14	4474303	HINGE	2		
15	4356695	BOLT	6		(SUB FOR AT214313, 4372261)
16	4474304	COVER	1		
17	4455977	ISOLATOR	1		(SUB FOR TH4455977)
19	4455978	WEATHERSTRIP	1		(SUB FOR TH4455978)
20	4453670	HANDRAIL	1		(SUB FOR TH4453670)
21	4372212	SCREW WITH WASHER	2		(SUB FOR AT214299)
22	4453671	SHEET	1		(SUB FOR TH4453671)
23	4382885	BOLT	3		(SUB FOR AT213624, M470625)
	4372560	WASHER	3		(SUB FOR AT214314)
24	21M7285	SCREW	8		M6 X 12, (SUB FOR 21M7246)
26	4456172	NUT	1		(SUB FOR TH4456172)
27	4414857	NUT	4		(SUB FOR AT157068)
30	12M7006	LOCK WASHER	8		6 MM (0.236")
31	24M7293	WASHER	8		6.500 X 13 X 1.600 MM (0.256" X 0.512" X 0.063")
50	4453676	WINDOW	1		(BRONZE) (SUB FOR TH4453676)
	4602582	WINDOW	1		(GREEN)
52	4448308	WINDOWPANE	1		(BRONZE) (SUB FOR TH4448308)
	4602564	WINDOWPANE	1		(GREEN)
53	4448309	WINDOWPANE	1		(BRONZE) (SUB FOR TH4448309)
	4602565	WINDOWPANE	1		(GREEN)
54	4369653	LOCK	1		(SUB FOR AT214152)
55	J680410	SCREW WITH WASHER	2		(SUB FOR AT213608)
56	4420531	SPACER	1		(SUB FOR AT214292, 4372093)
57	4453675	ISOLATOR	1		(SUB FOR TH4453675)
58	4453674	WINDOW	1		(SUB FOR TH4453674)
59	4147896	SPACER	3		(SUB FOR TH108646)
61	4400087	SEAL	1		(SUB FOR AT218141)
65	4448310	WINDOWPANE	1		(BRONZE) (SUB FOR TH4468943, 4468943)
	4602566	WINDOWPANE	1		(GREEN)
72	4448315	ISOLATOR	1		(SUB FOR TH4448315)

CAB WINDSHIELD

T146541 -UN-17OCT01

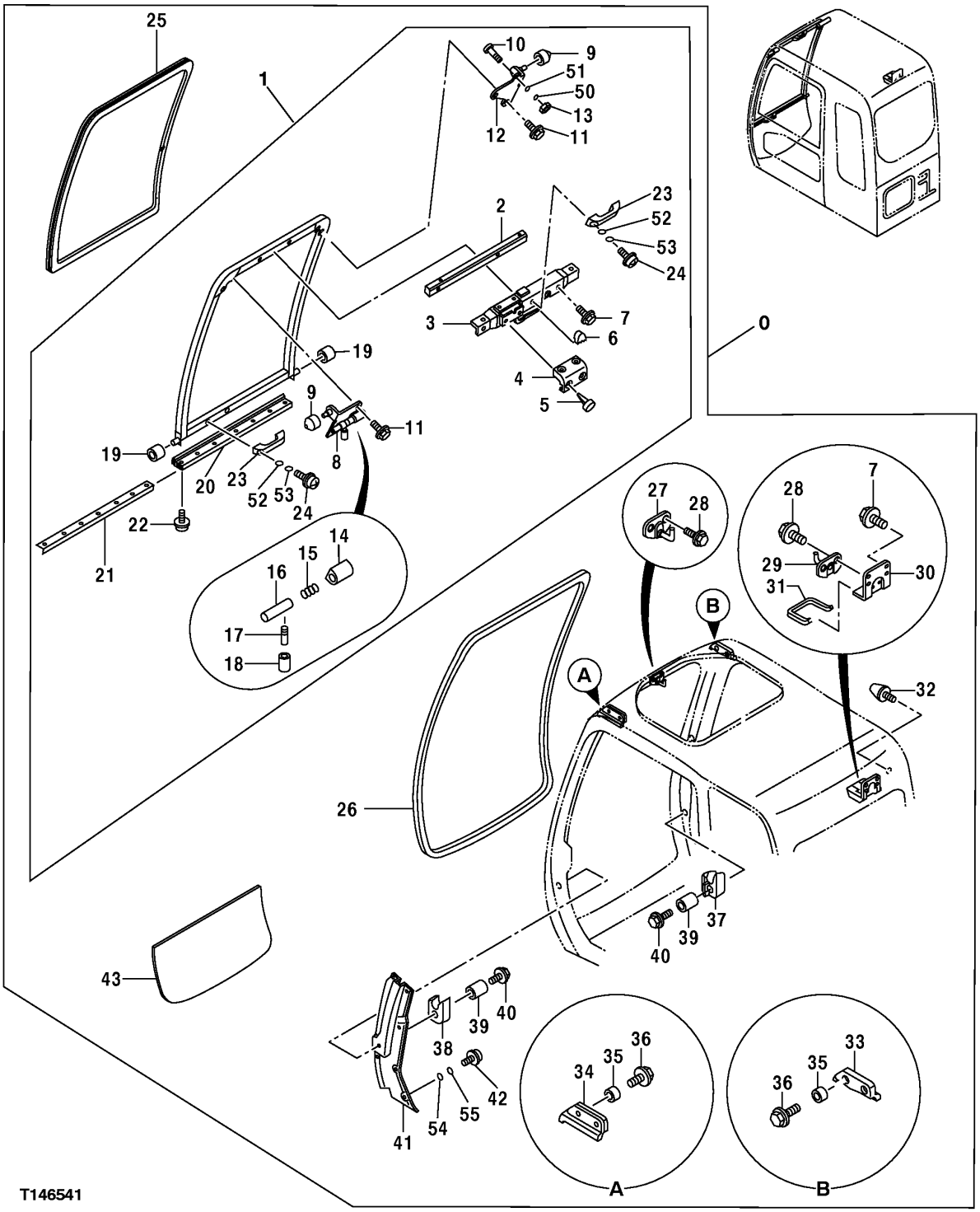

CAB WINDSHIELD

KEY	PART NO.	PART NAME	QTY	SERIAL NO.	REMARKS
0	4602549	CAB	1		(SUB FOR 4474296) (CONTAINS ALL ITEMS ON THIS PAGE - ADDITIONAL COMPONENTS LISTED ON PREVIOUS AND FOLLOWING PAGES)
1	4453689	WINDOW	1		(SUB FOR TH4453689)
2	4456218	WELD NUT	1		(SUB FOR TH4456218)
3	4456219	LOCK	1		(SUB FOR TH4456219)
4	4456220	COVER	1		(SUB FOR TH4456220)
5	4456221	CLIP	4		(SUB FOR TH4456221)
6	4456222	COVER	1		(SUB FOR TH4456222)
7	4372225	SCREW WITH WASHER	4		(SUB FOR AT214311)
8	4456223	BRACKET	1		(SUB FOR TH4456223)
9	4456224	ROLLER	2		(SUB FOR TH4456224)
10	4456225	SCREW	1		(SUB FOR TH4456225)
11	4372219	SCREW WITH WASHER	4		(SUB FOR AT214305)
12	4456226	BRACKET	1		(SUB FOR TH4456226)
13	19M7361	CAP SCREW	1		M12 X 50
14	4456227	COVER	1		(SUB FOR TH4456227)
15	494918	SPRING	1		(SUB FOR TH106783)
16	4403327	UNIVERSAL DRIVESHAFT	1		(SUB FOR AT214104, 4369599)
17	4295480	LEVER	1		(SUB FOR AT156993)
18	4295876	COVER	1		(SUB FOR AT156994)
19	4204558	ROLLER	2		(SUB FOR TH108638)
20	4456228	ISOLATOR	1		(SUB FOR TH4456228)
21	4456229	PLATE	1		(SUB FOR TH4456229)
22	4372214	SCREW	4		(SUB FOR AT214301)
23	4204579	HANDLE	2		(SUB FOR TH108661)
24	19M8425	CAP SCREW	4		M6 X 16
25	4448306	WINDOWPANE	1		(BRONZE) (SUB FOR 4474531)
	4602562	WINDOWPANE	1		(GREEN)
26	4456230	ISOLATOR	1		(SUB FOR TH4456230)
27	4456231	STRIKER	1		(SUB FOR TH4456231)
28	4372210	SCREW WITH WASHER	4		(SUB FOR AT214297)
29	4456232	STRIKER	1		(SUB FOR TH4456232)
30	4456233	BRACKET	1		(SUB FOR TH4456233)
31	4456234	ISOLATOR	1		(SUB FOR TH4456234)
32	4204586	STOP	1		(SUB FOR TH108668)
33	4456235	ISOLATOR	1		(SUB FOR TH4456235)
34	4456236	ISOLATOR	1		(SUB FOR TH4456236)
35	4456237	BUSHING	4		(SUB FOR TH4456237)
36	4456238	BOLT	4		(SUB FOR TH4456238)
37	4456239	STOP	1		(SUB FOR TH4456239)
38	4456240	STOP	1		(SUB FOR TH4456240)
39	4456241	BUSHING	2		(SUB FOR TH4456241)
40	4456242	BOLT	2		(SUB FOR TH4456242)
41	4474532	COVER	1		
42	21M7246	SCREW	6		M6 X 16
43	4448307	WINDOWPANE	1		(BRONZE) (SUB FOR TH4448307)
	4602563	ISOLATOR	1		(GREEN)
50	12M7068	LOCK WASHER	1		14 MM (0.551")
51	24M7047	WASHER	1		13 X 24 X 2.500 MM (0.512" X 0.945" X 0.098")
52	12M7006	LOCK WASHER	4		6 MM (0.236")
53	24M7293	WASHER	4		6.500 X 13 X 1.600 MM (0.256" X 0.512" X 0.063")
54	12M7006	LOCK WASHER	6		6 MM (0.236")
55	24M7293	WASHER	6		6.500 X 13 X 1.600 MM (0.256" X 0.512" X 0.063")

CAB RIGHT WINDOW

T158509 -UN-20AUG02

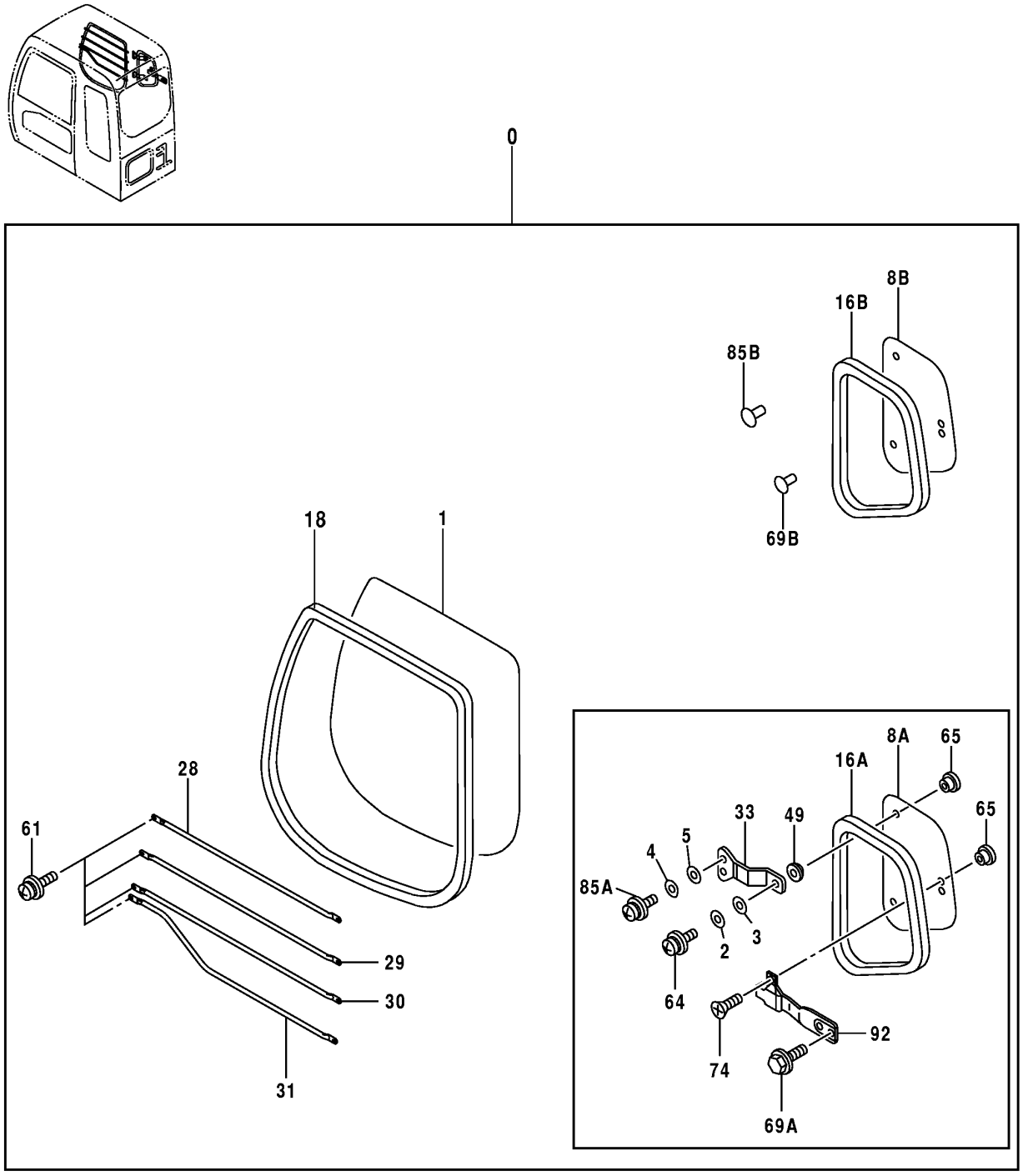

T158509

CAB COMPONENTS (RIGHT WINDOW)

KEY	PART NO.	PART NAME	QTY	SERIAL NO.	REMARKS
0	4602549	CAB	1		(SUB FOR 4474296) (CONTAINS ALL ITEMS ON THIS PAGE - ADDITIONAL COMPONENTS LISTED ON PREVIOUS AND FOLLOWING PAGES)
1	4448312	WINDOWPANE	1	-XXXXXX	(BRONZE TINT)
	4602568	WINDOWPANE	1	XXXXXX-	(GREEN TINT)
2	12M7064	LOCK WASHER	2		5 MM
3	24M7348	WASHER	2		5.500 X 10 X 1 MM
4	12M7006	LOCK WASHER	4		6 MM
5	24M7293	WASHER	4		6.500 X 13 X 1.600 MM
8A	4448313	WINDOWPANE	1	-XXXXXX	(BRONZE TINT)
8B	4602570	WINDOWPANE	1	XXXXXX-	(GREEN TINT)
16A	4463390	ISOLATOR	1	-XXXXXX	(SUB FOR 4453680)
16B	4602576	ISOLATOR	1	XXXXXX-	
18	4448318	ISOLATOR	1		(SUB FOR TH4448318)
28	4463391	GUARD	1		(SUB FOR 4453681)
29	4463392	GUARD	1		(SUB FOR 4453682 AND TH4453682)
30	4463393	GUARD	1		(SUB FOR TH4453683 AND 4453683)
31	4463394	GUARD	1		(SUB FOR TH4453684 AND 4453684)
33	4369670	BRACKET	2	-XXXXXX	(SUB FOR AT214169)
49	4369671	BUSHING	2	-XXXXXX	(SUB FOR AT214170)
61	4372212	SCREW WITH WASHER	8		(SUB FOR AT214299)
64	21M7271	SCREW	2	-XXXXXX	M5 X 16, (SUB FOR 21M6070)
65	4369674	BUSHING	4	-XXXXXX	(SUB FOR AT214172)
69A	4372223	SCREW WITH WASHER	2	-XXXXXX	(SUB FOR AT214309)
69B	4377817	CLIP	2	XXXXXX-	
74	4372213	SCREW	2	-XXXXXX	(SUB FOR AT214300)
85A	21M7246	SCREW	4	-XXXXXX	
85B	4372088	CLIP	4	XXXXXX-	
92	4369672	LOCK	1	-XXXXXX	(SUB FOR AT214171)

CAB COMPONENTS

T188477 -UN-13MAR03

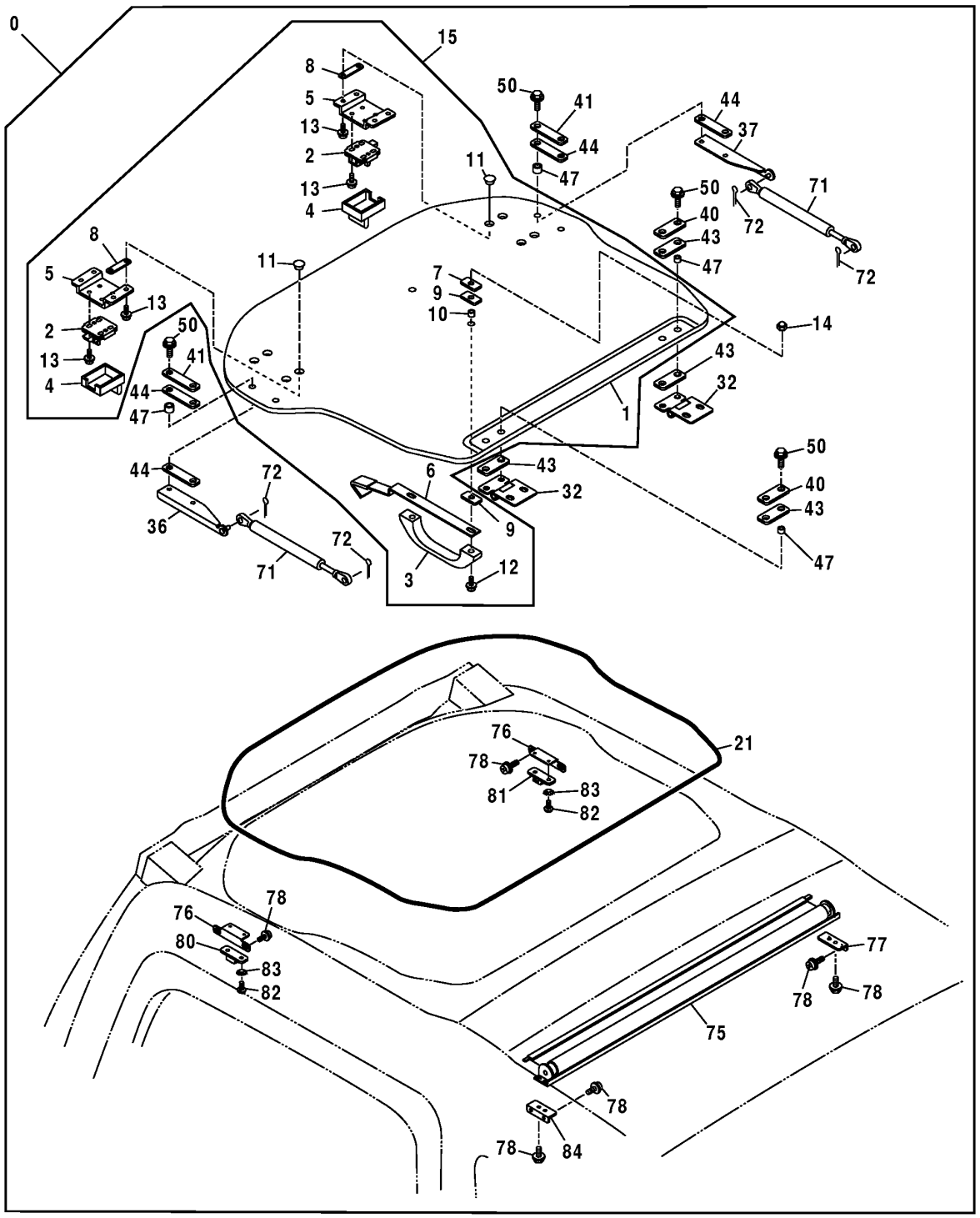

T188477

CAB COMPONENTS

KEY	PART NO.	PART NAME	QTY	SERIAL NO.	REMARKS
0	4602549	CAB	1		(SUB FOR 4474296) (CONTAINS ALL ITEMS ON THIS PAGE - ADDITIONAL COMPONENTS LISTED ON PREVIOUS AND FOLLOWING PAGES)
1	4460405	WINDOW	1		
2	4369615	LOCK	2		(SUB FOR (2) AT214118)
3	4204579	HANDLE	1		(SUB FOR 4411821)
4	4369616	COVER	2		(SUB FOR (2) AT214119)
5	4474479	BRACKET	2		
6	4474498	BRACKET	1		
7	4386452	PLATE	2		
8	4474480	PACKING	4		
9	4386450	PACKING	4		
10	4474494	BUSHING	2		
11	4369674	BUSHING	8		(SUB FOR (8) AT214172)
12	J680630	SCREW	2		
13	J680514	SCREW WITH WASHER	16		(SUB FOR (16) AT213610)
14	4474493	NUT	2		
15	.....	ROOF	1		KIT(ROOF ASSEMBLY) (4456952 NOT AVAILABLE)
21	4474515	ISOLATOR	1		
32	4474478	HINGE	2		
36	4477219	BRACKET	1		
37	4477218	BRACKET	1		
40	4474477	PLATE	2		
41	4477217	PLATE	2		
43	4474476	PACKING	4		
44	4477216	PACKING	4		
47	4474482	BUSHING	8		
50	19M7162	CAP SCREW	8		(SUB FOR (8) AT214307)
	12M7065	LOCK WASHER	8		
	24M1136	WASHER	8		
71	4369619	CYLINDER	2		(SUB FOR (2) AT214122)
72	H132922	COTTER PIN	4		
75	4474499	ROLLER	1		
76	4474514	BRACKET	2		
77	4609477	BRACKET	1		(SUB FOR 4474513) (RIGHT BRACKET)
	4609479	SCREW	1		
	4609480	ISOLATOR	1		
78	4444634	SCREW	12		
80	4474518	STOP	1		
81	4474517	STOP	1		
82	21M7258	SCREW	4		
83	4459249	WASHER	4		
84	4609478	BRACKET	1		(SUB FOR 4474513)
	4609479	SCREW	1		
	4609480	ISOLATOR	1		

CAB DOOR HANDLE AND CATCH

T142617 -UN-14JUN01

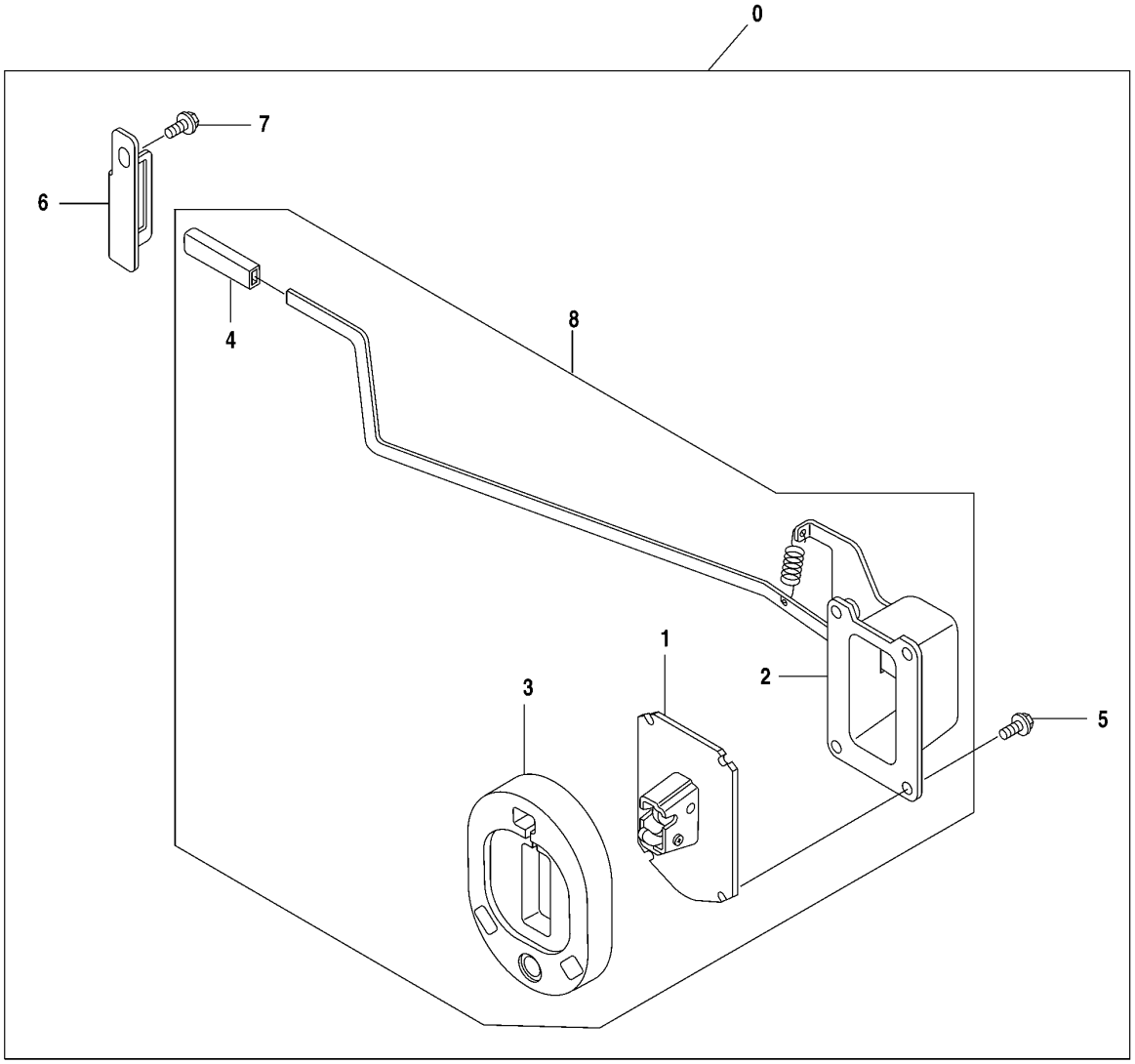

T142617

CAB DOOR HANDLE AND CATCH

KEY	PART NO.	PART NAME	QTY	SERIAL NO.	REMARKS
0	4602549	CAB	1		(CONTAINS ALL ITEMS ON THIS PAGE - ADDITIONAL COMPONENTS ON PREVIOUS PAGES) (SUB FOR 4474296)
1	4456245	CATCH	1		(ALSO ORDER 4456246, 4456247, 4089012)
2	4456246	CASE	1		(SUB FOR TH4456246)
3	4456247	STOP	1		(SUB FOR TH4456247)
4	4089012	CAP	4		
5	19M7881	SCREW	4		M8 X 20
	12M7056	LOCK WASHER	4		8 MM, (SUB FOR 12M7065)
6	4456248	STOP	1		(SUB FOR TH4456248)
7	19M7402	CAP SCREW	1		M10 X 25
	12M7066	LOCK WASHER	1		10 MM
	24M7028	WASHER	1		10.500 X 20 X 2 MM
8	.....	CATCH	1		DOOR CATCH ASSEMBLY (4456244 NOT AVAILABLE)

CAB SECONDARY EXIT KIT

T150988 -UN-06FEB02

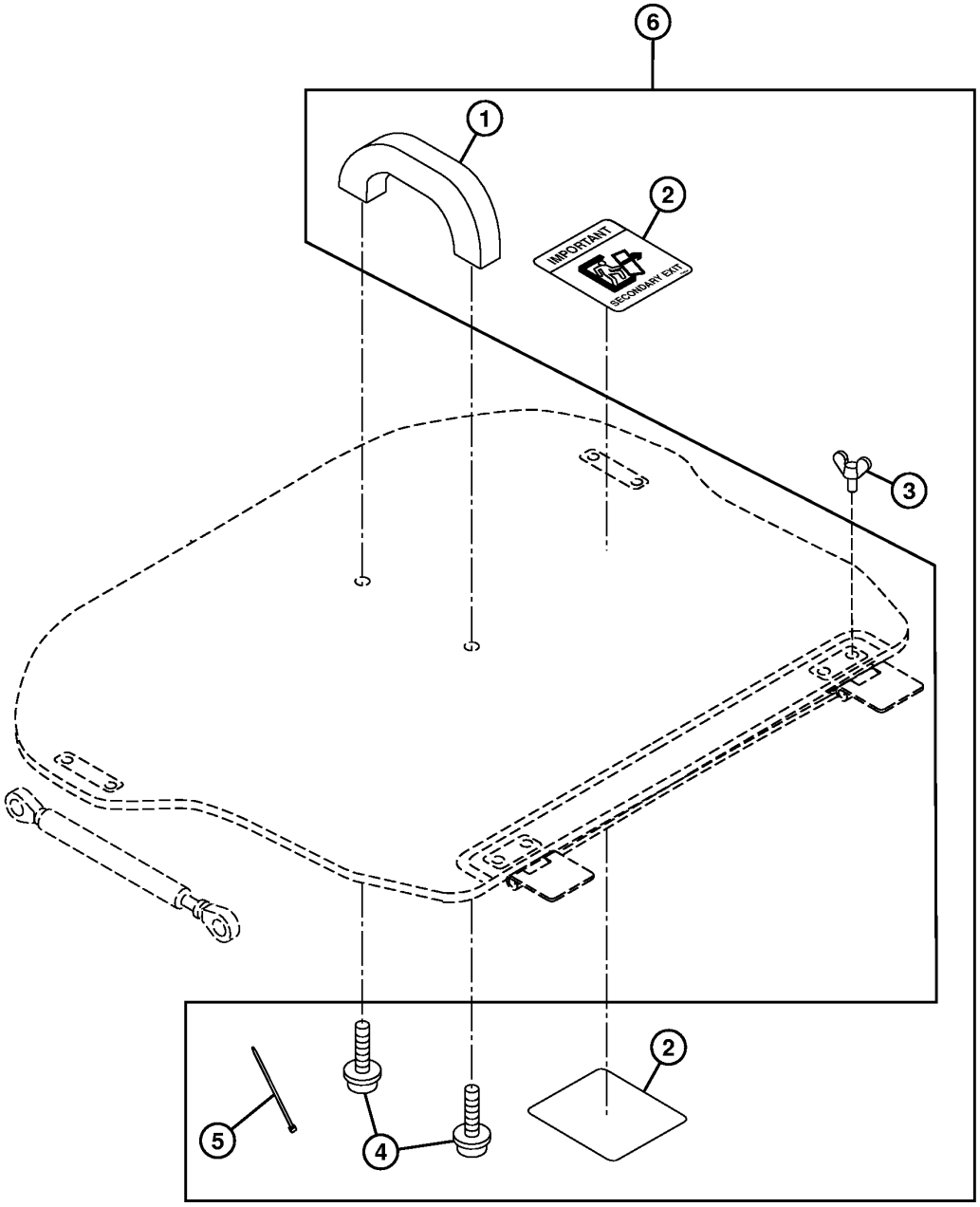

T150988

2B23

CAB SECONDARY EXIT KIT

KEY	PART NO.	PART NAME	QTY	SERIAL NO.	REMARKS
1	4204579	HANDLE	1		(SUB FOR TH108661)
2	T167256	LABEL	2		
3	21M7243	WING SCREW	4		M8 X 16
4	21M7085	SCREW	2		M6 X 20, (SUB FOR 21M7322)
5	R44302	TIE BAND	2		
6	**AT196567**	**KIT**	**1**		**(WHOLEGOODS) (SECONDARY EXIT KIT)**

CAB INSIDE LEFT COVER
(FOR USE WITHOUT RADIO)

T146240 -UN-11OCT01

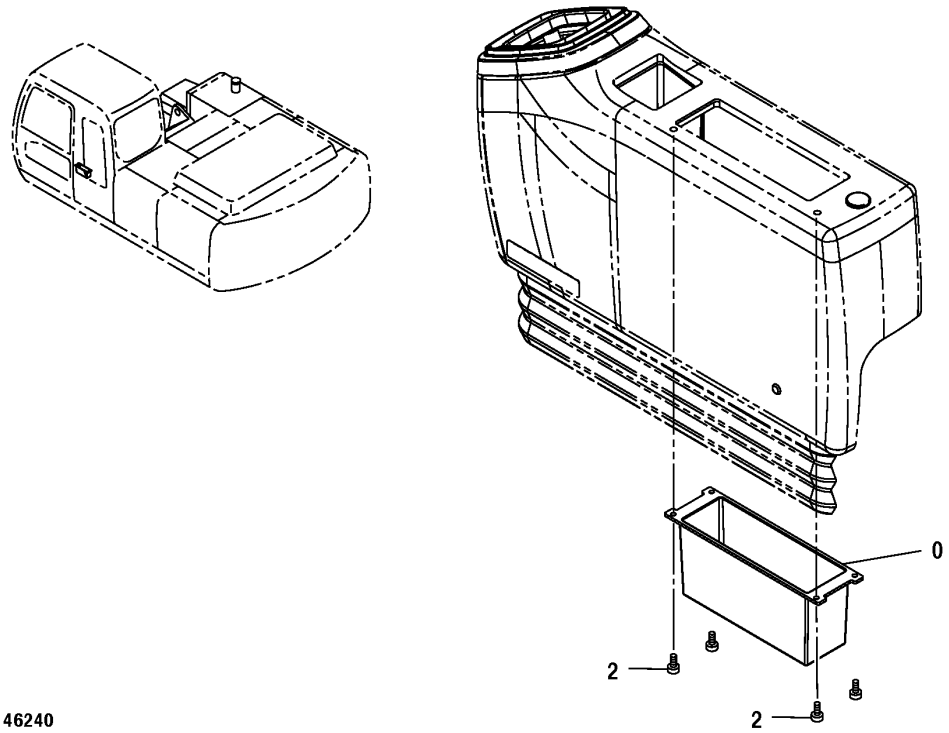

T146240

2B25

CAB INSIDE LEFT COVER
(FOR USE WITHOUT RADIO)

KEY	PART NO.	PART NAME	QTY	SERIAL NO.	REMARKS
0	3090025	HOLDER	1		(SUB FOR TH3090025)
2	4361800	SCREW	4		(SUB FOR AT214011)

CAB INSIDE RIGHT COVER

T143269 -UN-28JUN01

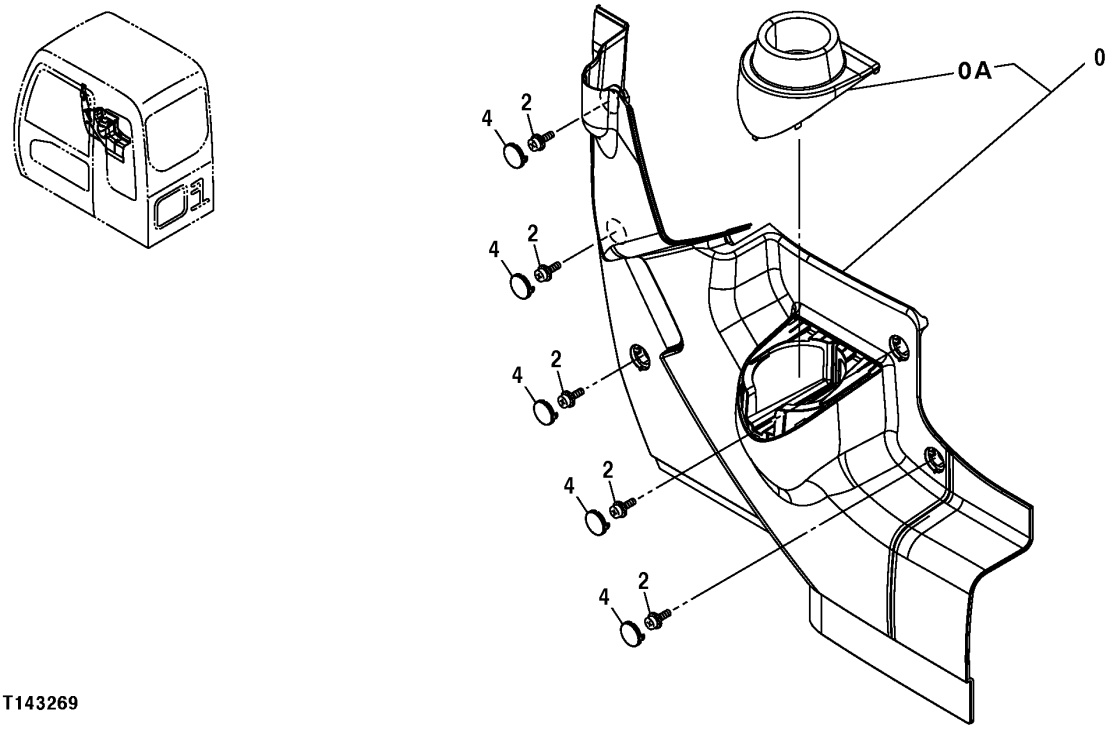

T143269

CAB INSIDE RIGHT COVER

KEY	PART NO.	PART NAME	QTY	SERIAL NO.	REMARKS
0	4445917	COVER	1		(SUB FOR 4426352)
0A	4445932	HOLDER	1		(SUB FOR 4445919)
2	19M8425	CAP SCREW	5		M6 X 16
	12M7006	LOCK WASHER	5		6 MM (0.236")
	24M7293	WASHER	5		6.500 X 13 X 1.600 MM (0.256" X 0.512" X 0.063")
4	4426354	CAP	5		(SUB FOR TH4426354)

CAB INSIDE LEFT COVER
(FOR USE WITHOUT RADIO)

T146240 -UN-11OCT01

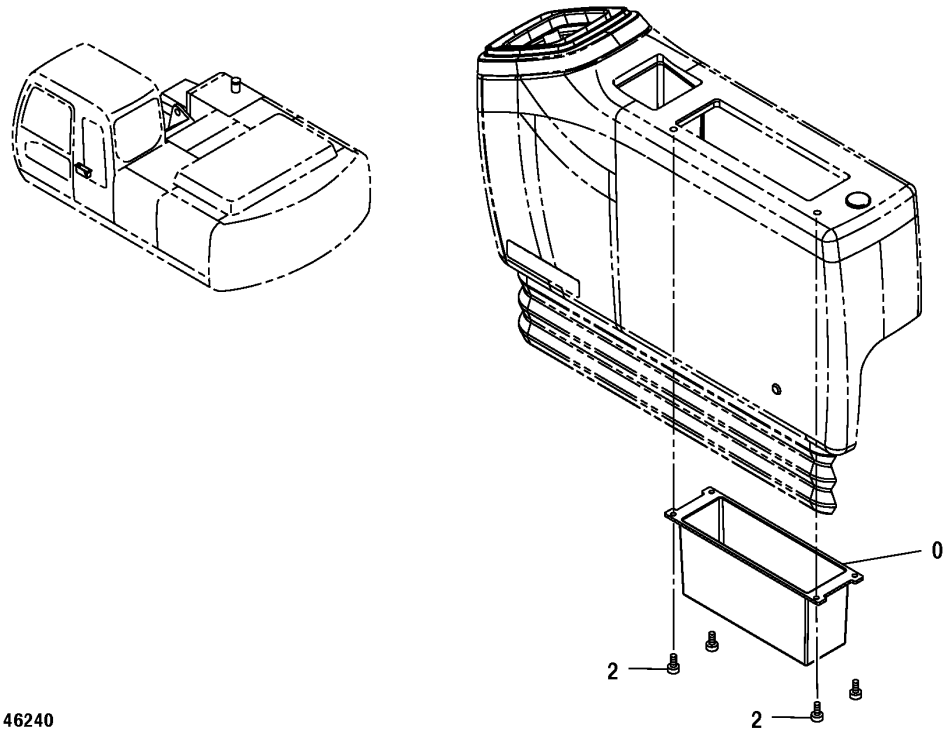

T146240

CAB INSIDE LEFT COVER
(FOR USE WITHOUT RADIO)

KEY	PART NO.	PART NAME	QTY	SERIAL NO.	REMARKS
0	3090025	HOLDER	1		(SUB FOR TH3090025)
2	4361800	SCREW	4		(SUB FOR AT214011)

WINDOW WASHER RESERVOIR AND PUMP

T143286 -UN-28JUN01

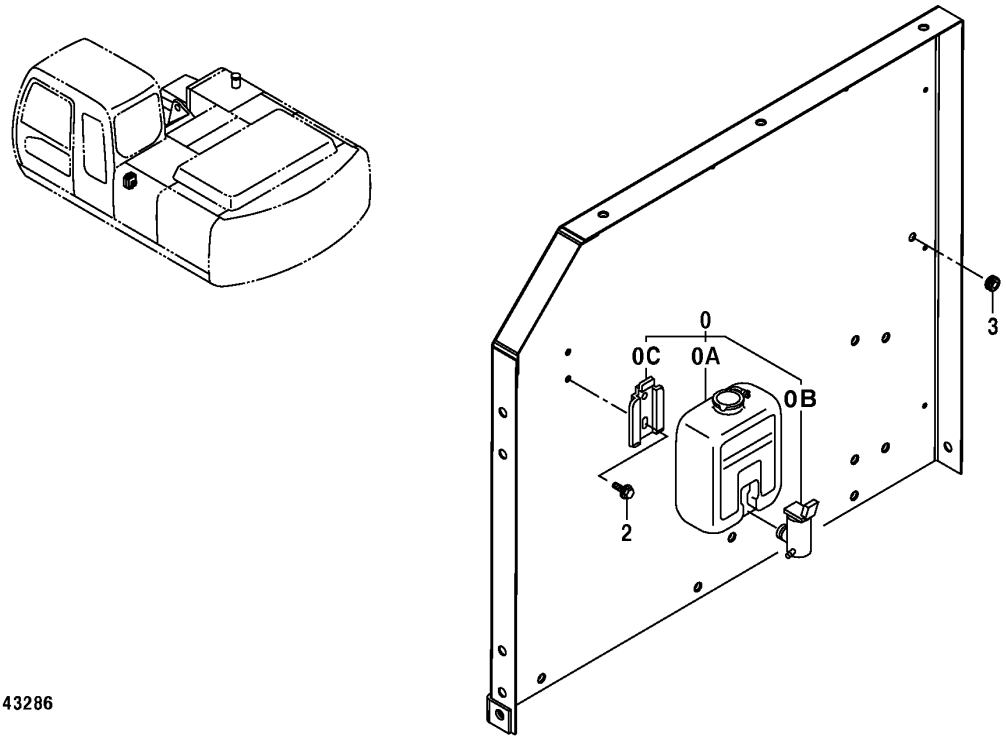

T143286

WINDOW WASHER RESERVOIR AND PUMP

KEY	PART NO.	PART NAME	QTY	SERIAL NO.	REMARKS
0	4333185	WINDSHIELD WASHER	1		(SUB FOR AT177804)
0A	4369472	RESERVOIR	1		(SUB FOR AT177805)
0B	AT106365	PUMP	1		
0C	4338974	BRACKET	1		(SUB FOR AT177806)
2	19M7923	CAP SCREW	2		M6 X 12
	24M7054	WASHER	2		6.400 X 12 X 1.600 MM (0.252" X 0.472" X 0.063")
	12M7006	LOCK WASHER	2		6 MM (0.236")
3	94-2817	GROMMET	1		(SUB FOR TH102171)

CAB FLOOR PARTS

T142627 -UN-14JUN01

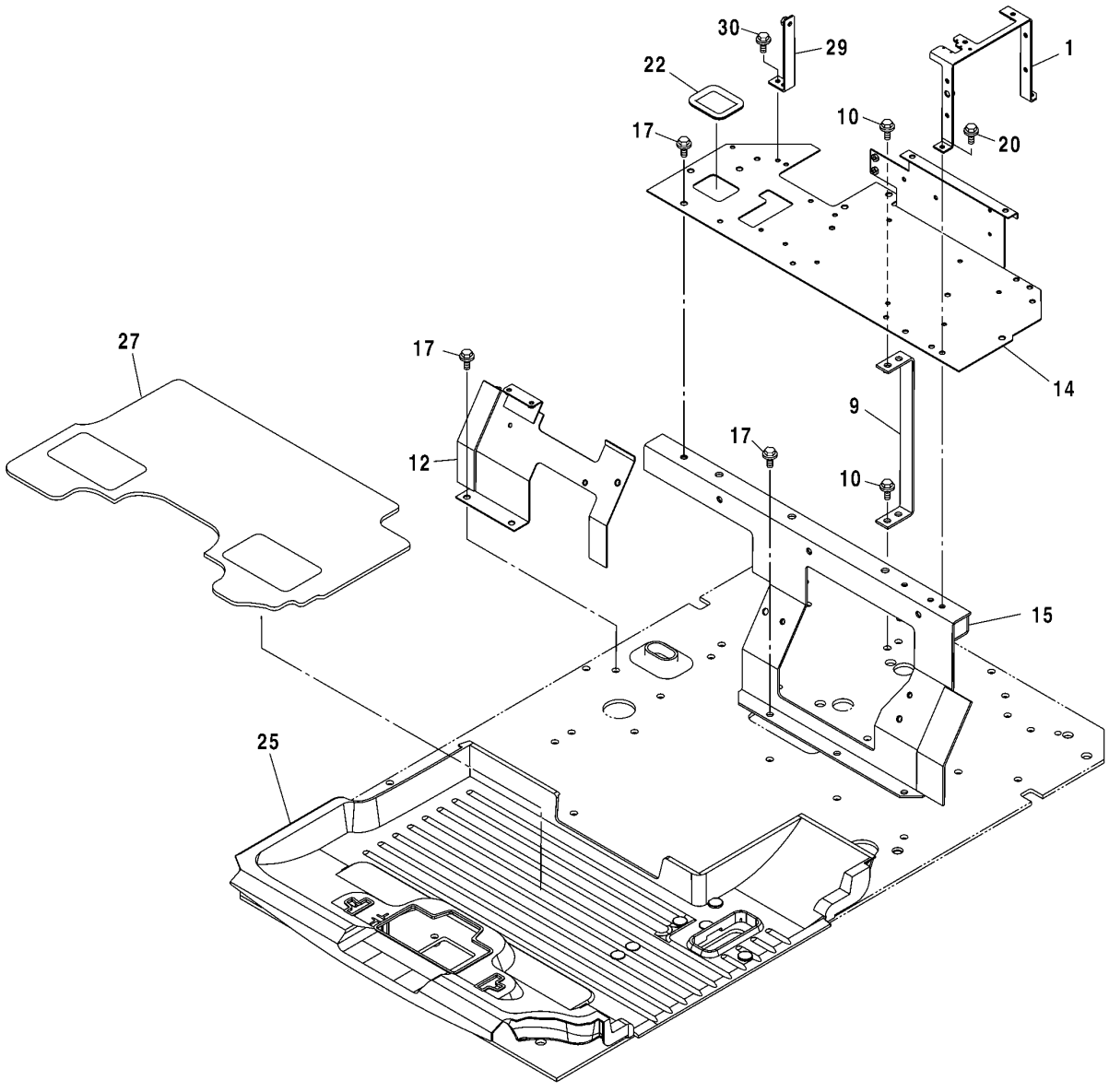

T142627

CAB FLOOR PARTS

KEY	PART NO.	PART NAME	QTY	SERIAL NO.	REMARKS
1	7039389	BRACKET	1		(SUB FOR TH7039389)
9	8076619	SUPPORT	1		(SUB FOR TH8076619)
10	19M7402	CAP SCREW	3		M10 X 25
	12M7066	LOCK WASHER	3		10 MM
12	6019838	BRACKET	1		(SUB FOR TH6019838)
14	6019252	BRACKET	1		(SUB FOR TH6019252)
15	5007342	BRACKET	1		(SUB FOR TH5007342)
17	19M7402	CAP SCREW	7		M10 X 25
	12M7066	LOCK WASHER	7		10 MM
	24M7028	WASHER	7		10.500 X 20 X 2 MM
20	19M7881	SCREW	2		M8 X 20
	12M7056	LOCK WASHER	2		8 MM, (SUB FOR 12M7065)
22	4445220	BUSHING	1		(SUB FOR TH4445220)
25	0003929	MAT	1		(SUB FOR TH0003929)
27	4448601	MAT	1		(SUB FOR TH4448601)
29	9757192	BRACKET	1		(SUB FOR TH9757192)
30	19M8425	CAP SCREW	2		M6 X 16
	12M7006	LOCK WASHER	2		6 MM
	24M7293	WASHER	2		6.500 X 13 X 1.600 MM

CAB FLOOR PLATE

T146603 -UN-17OCT01

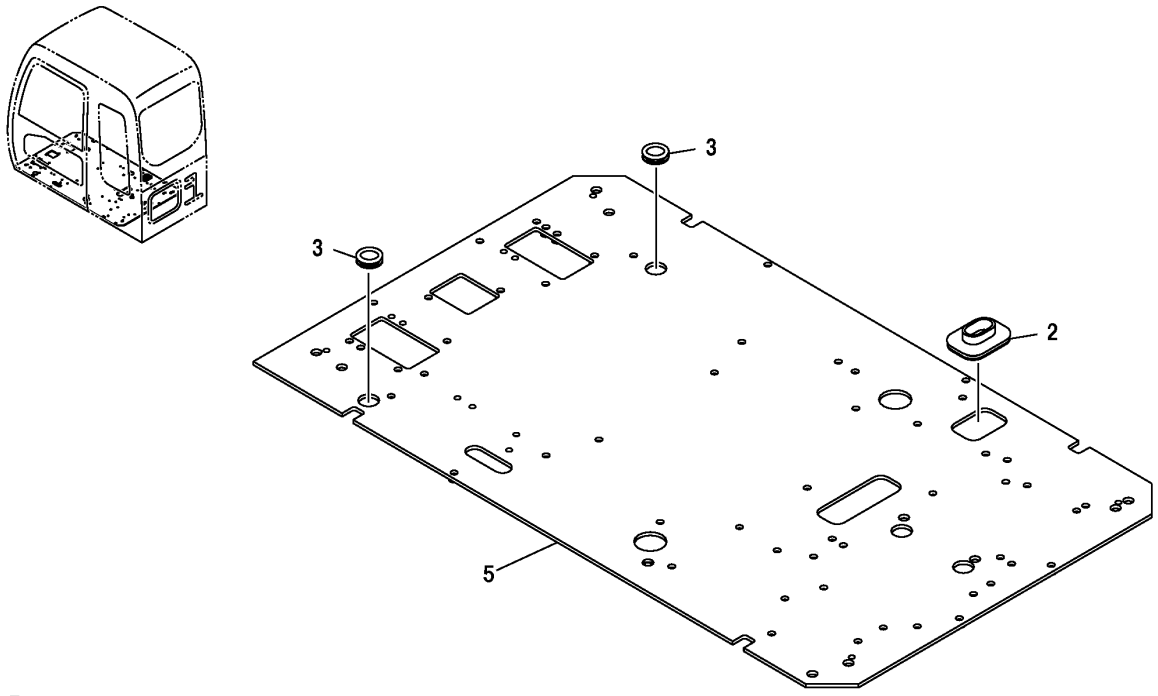

T146603

CAB FLOOR PLATE

KEY	PART NO.	PART NAME	QTY	SERIAL NO.	REMARKS
2	4351011	GROMMET	1		(SUB FOR AT213954)
3	4205084	GROMMET	2		(SUB FOR TH108616)
5	6017975	PLATE	1		(SUB FOR TH6017975)

CAB CONSOLE

T142593 -UN-14JUN01

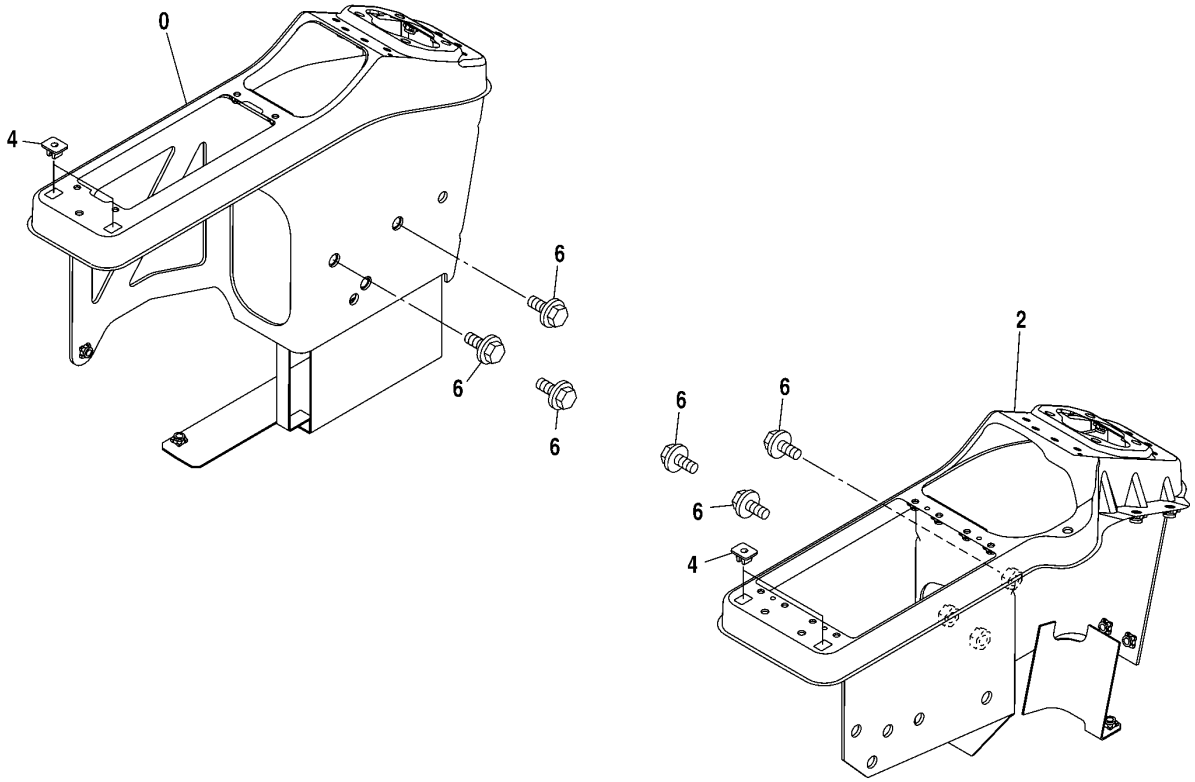

T142593

2C12

CAB CONSOLE

KEY	PART NO.	PART NAME	QTY	SERIAL NO.	REMARKS
0	7036594	CONSOLE	1		(SUB FOR TH7036594) LEFT
2	7036595	CONSOLE	1		(SUB FOR TH7036595) RIGHT
4	4351255	CLIP	4		(SUB FOR AT213958)
6	19M7402	CAP SCREW	6		M10 X 25
	24M7096	WASHER	6		10.500 X 18 X 1.600 MM
	12M7066	LOCK WASHER	6		10 MM

CONSOLE COVERS

T142594 -UN-14JUN01

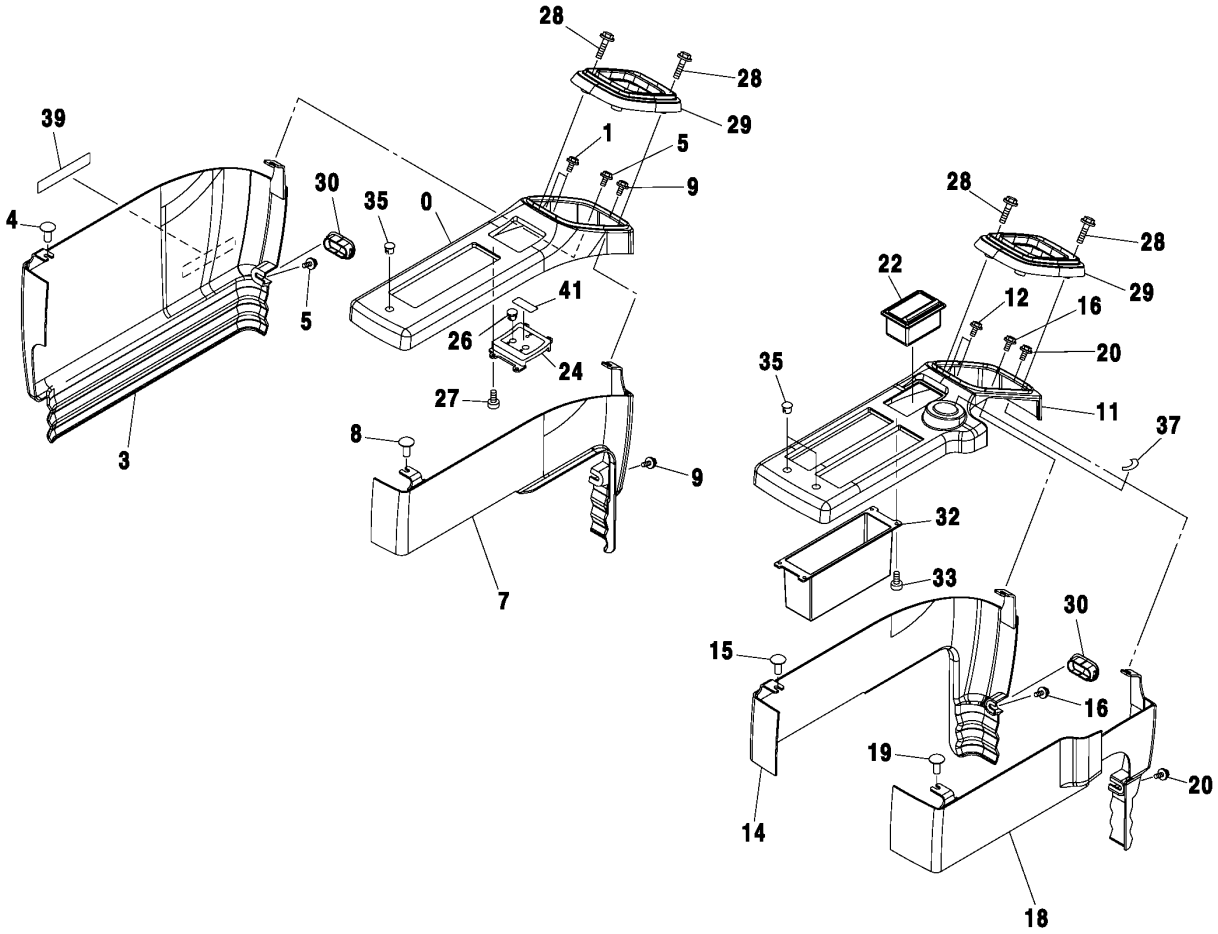

T142594

2C14

CONSOLE COVERS

KEY	PART NO.	PART NAME	QTY	SERIAL NO.	REMARKS
0	4420875	COVER	1		(SUB FOR TH4420875)
1	21M7246	SCREW	3		M6 X 16
	12M7006	LOCK WASHER	3		6 MM
	24M7105	WASHER	3		6 X 12 X 1.600 MM
3	4420876	COVER	1		(SUB FOR TH4420876)
4	4361802	SCREW	1		(SUB FOR AT214012)
5	21M7246	SCREW	5		M6 X 16
	12M7006	LOCK WASHER	5		6 MM
	24M7105	WASHER	5		6 X 12 X 1.600 MM
7	4420877	COVER	1		(SUB FOR TH4420877)
8	4361802	SCREW	1		(SUB FOR AT214012)
9	21M7246	SCREW	2		M6 X 16
	12M7006	LOCK WASHER	2		6 MM
	24M7105	WASHER	2		6 X 12 X 1.600 MM
11	4420878	COVER	1		(SUB FOR TH4420878)
12	21M7246	SCREW	4		M6 X 16
	12M7006	LOCK WASHER	4		6 MM
	24M7105	WASHER	4		6 X 12 X 1.600 MM
14	4420879	COVER	1		(SUB FOR TH4420879)
15	4361802	SCREW	1		(SUB FOR AT214012)
16	21M7246	SCREW	2		M6 X 16
	12M7006	LOCK WASHER	2		6 MM
	24M7105	WASHER	2		6 X 12 X 1.600 MM
18	4420880	COVER	1		(SUB FOR TH4420880)
19	4361802	SCREW	1		(SUB FOR AT214012)
20	21M7246	SCREW	2		M6 X 16
	12M7006	LOCK WASHER	2		6 MM
	24M7105	WASHER	2		6 X 12 X 1.600 MM
22	4415024	ASHTRAY	1		(SUB FOR TH4415024)
24	3091842	PANEL	1		(SUB FOR TH3091842)
26	4294437	CAP	1		(SUB FOR AT215503)
27	4452613	SCREW	4		(SUB FOR TH4452613)
28	19M7177	CAP SCREW	8		M6 X 35
	12M7006	LOCK WASHER	8		6 MM
	24M7293	WASHER	8		6.500 X 13 X 1.600 MM
29	2045509	COVER	2		(SUB FOR TH2045509)
30	4441117	CAP	2		(SUB FOR TH4441117)
32	3090025	HOLDER	1		(SUB FOR TH3090024)
33	4361800	SCREW	4		(SUB FOR AT214011)
35	4448990	CAP	3		(SUB FOR TH4448990)
37	4264805	LABEL	1		(SUB FOR AT155730)
39	4299059	LABEL	1		(SUB FOR T138886)
41	.....	PLATE	1		(TH4459435 NOT AVAILABLE)

WINDOW GUARDS

T150991 -UN-06FEB02

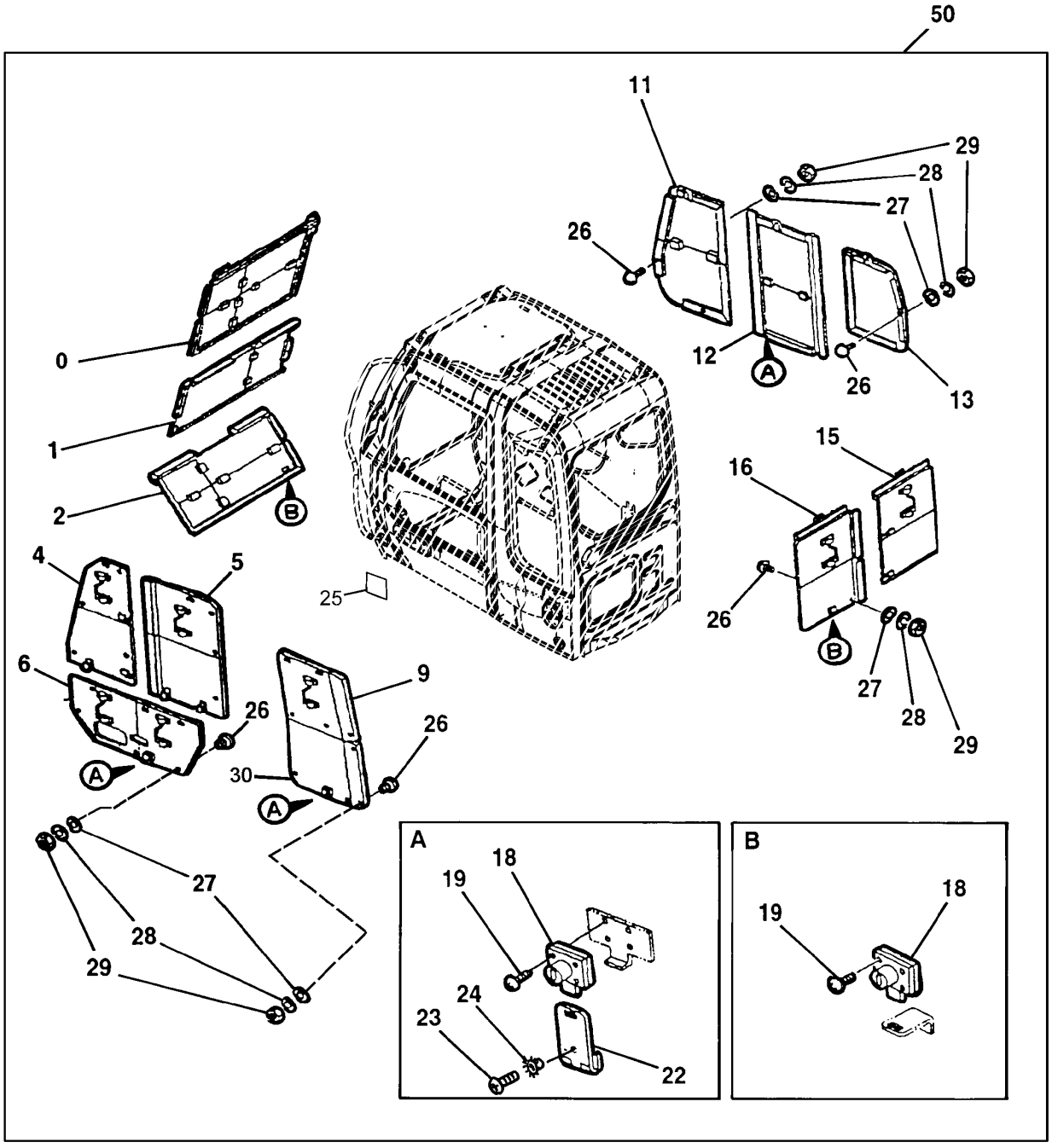

T150991

WINDOW GUARDS

KEY	PART NO.	PART NAME	QTY	SERIAL NO.	REMARKS
0	AP38748	COVER	1		
1	AP38749	COVER	1		
2	AP38750	COVER	1		
4	AP38751	COVER	1		
5	AP38752	COVER	1		
6	AP38753	COVER	1		
9	AP38754	COVER	1		
11	AP38756	COVER	1		
12	AP38757	COVER	1		
13	AP38758	COVER	1		
15	AP38760	COVER	1		
16	AP38759	COVER	1		
18	4361601	LOCK	5		(SUB FOR AT176636)
18A	AT194969	KEY	1		(SUB FOR AT147803) (H800) (NOT ILLUSTRATED)
19	21M7022	SCREW	20		M5 X 20
	12M7064	LOCK WASHER	20		5 MM (0.197")
22	TH108983	HINGE	3		
23	21M7249	SCREW	6		M5 X 10
24	T205218	WASHER	6		(SUB FOR TH111908, 4107762)
25	T188737	LABEL	1		
26	9738682	STOP	33		(SUB FOR AT155189)
27	24M7027	WASHER	33		5.300 X 10 X 1 MM
28	12M7064	LOCK WASHER	33		5 MM
29	14M7297	NUT	33		M5
30	AP38755	COVER	1		
50	**AP38763**	**KIT**	**1**		**WHOLEGOODS (VANDAL PROTECTION)**

SEAT AND SEAT SUSPENSION

T196825 -UN-15DEC03

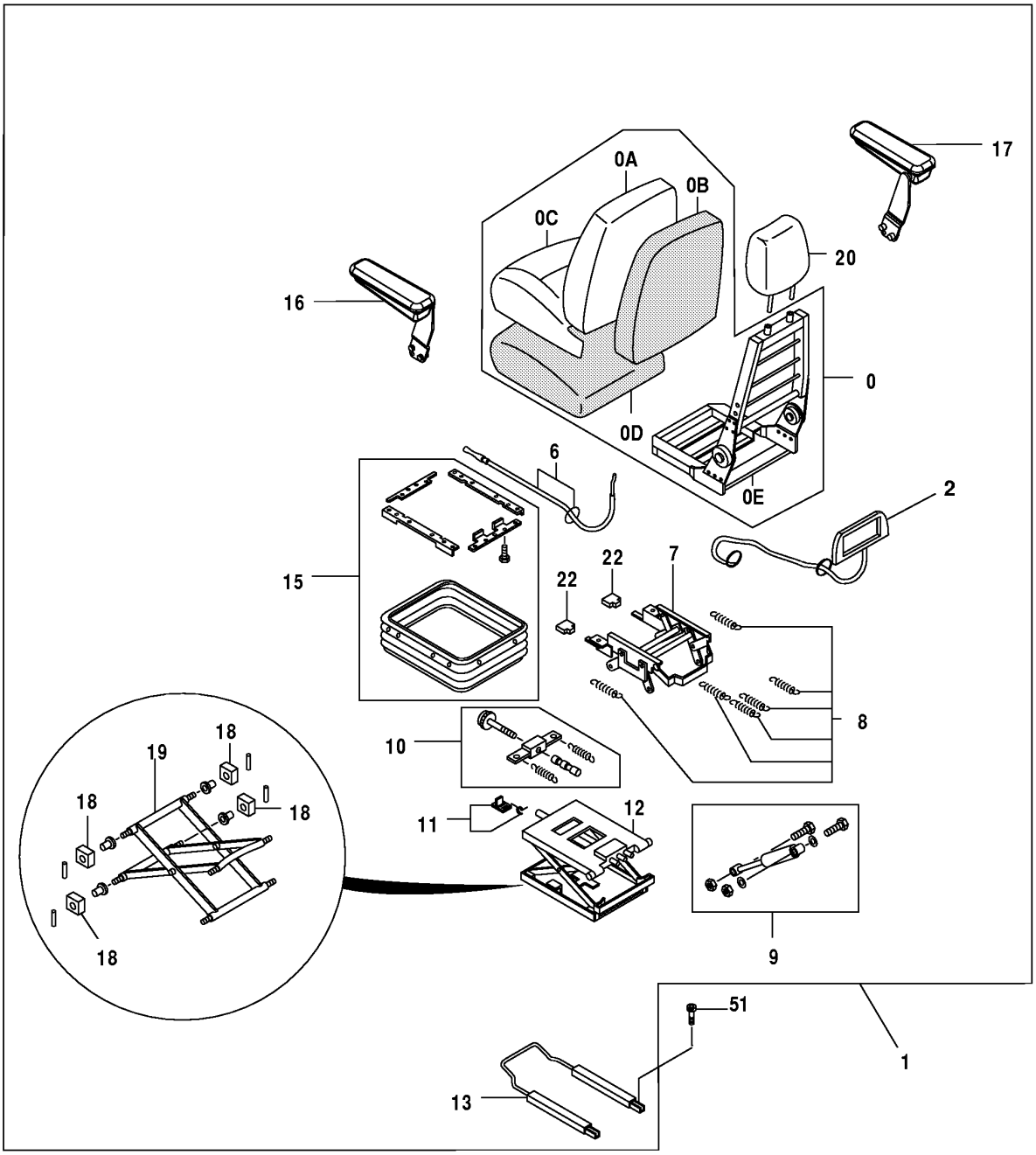

T196825

SEAT AND SEAT SUSPENSION

KEY	PART NO.	PART NAME	QTY	SERIAL NO.	REMARKS
0	AT195286	SEAT BACK	1		SEAT UPPER KIT
0A	AT309263	CUSHION COVER	1		
0B	AT309264	PAD	1		
0C	AT195278	CUSHION	1		(FABRIC)
0D	AT195279	PAD	1		(SEAT)
0E	.....	FRAME	1		
1	AT193964	SEAT	1		FABRIC
2	AT195284	KIT	1		(AIR LUMBAR KIT)
6	AT216522	CABLE	1		
7	4392801	STAND	1		(SUB FOR AT180971) RECLINER CABLE KIT
8	AT195287	SPRING	1		
9	4392803	TORSIONAL DAMPER	1		(KIT) (SUB FOR AT180973)
10	4392804	ADJUSTER	1		(SUB FOR AT180974) HEIGHT RISER SPRING
11	4392805	STOP	1		(SUB FOR AT180975)
12	4392806	SEAT SUSPENSION	1		(SUB FOR AT180976)
13	4392807	ADJUSTER	1		(SUB FOR AT180977)
15	4392809	COVER	1		(SUB FOR AT180978) (SUSPENSION COVER KIT)
16	AT199748	ARMREST KIT	1		(SUB FOR AT195282) LEFT
17	AT199749	ARMREST KIT	1		(SUB FOR AT195283) RIGHT
18	4392812	BUSHING	1		KIT, (SUB FOR AT180979)
19	4392813	LINK	1		LEVER/CENTER PIVOT KIT, (SUB FOR AT180980)
20	AT195280	HEAD RESTRAINT	1		
21	AT216532	KIT	1	-105632	
	4610640	HANDLE	1	105633-	
22	AT216532	KIT	1	-105632	
	4610641	HANDLE	1	105633-	
51	19M7647	SCREW	4		M8 X 16

3.00 INCH SEAT BELT KIT

T144006 -UN-13JUL01

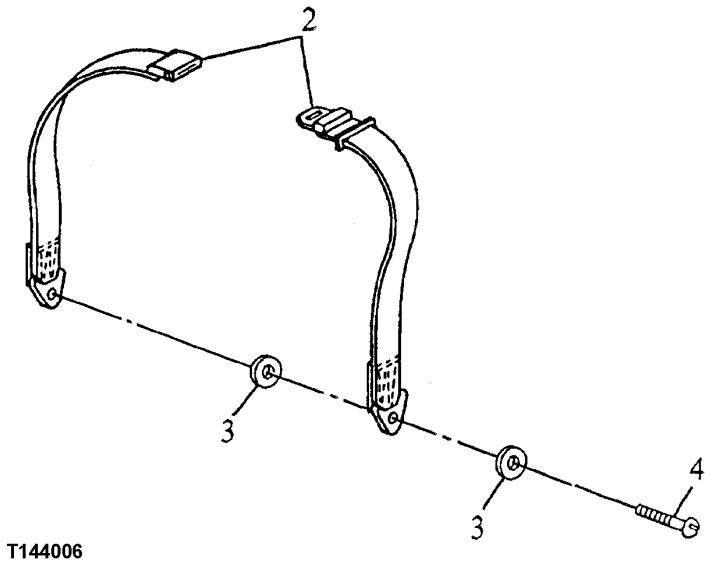

T144006

3.00 INCH SEAT BELT KIT

KEY	PART NO.	PART NAME	QTY	SERIAL NO.	REMARKS
2	**AT173678**	**SEAT BELT**	**1**		**WHOLEGOODS (INCLUDES HARDWARE)**
	T157779	FLANGE NUT	2		7/16" (NOT ILLUSTRATED)
3	T105740	WASHER	4		
4	R41778	BOLT	2		11.125 X 31.750 MM

SEAT BELT

T188984 -UN-26MAR03

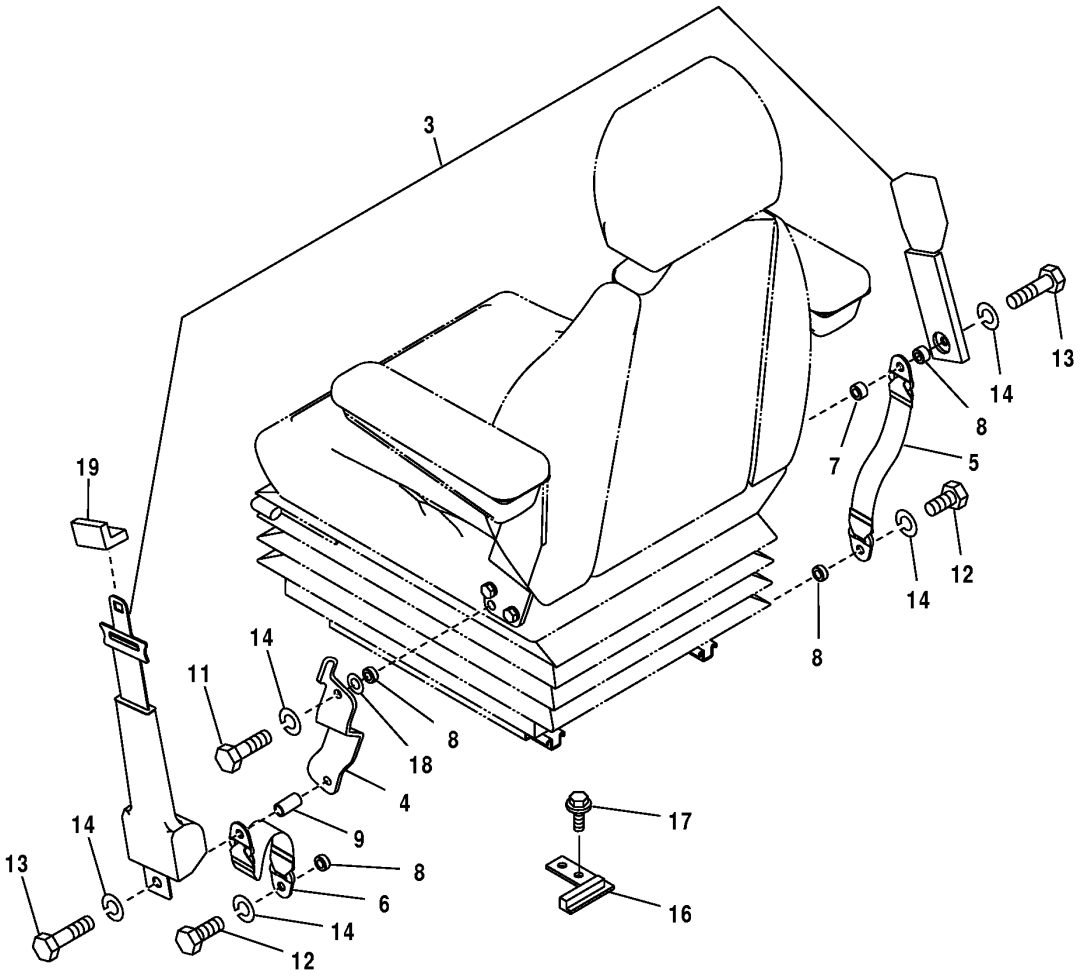

T188984

SEAT BELT

KEY	PART NO.	PART NAME	QTY	SERIAL NO.	REMARKS
3	4384239	SEAT BELT	1		
4	7042657	BRACKET	1		
5	4382410	SEAT BELT	1		
6	4453869	SEAT BELT	1		
7	4453874	SPACER	1		
8	4372200	SPACER	3		(SUB FOR P60915)
9	4382432	SLEEVE	1		
11	4333835	BOLT	2		
12	19H3187	CAP SCREW	2		7/16" X 1-1/2", (SUB FOR 4235232)
13	4380534	CAP SCREW	2		
14	J219167	SPRING WASHER	5		
16	9756736	BRACKET	1		
17	19M7402	CAP SCREW	2		M10 X 25
	12M7066	LOCK WASHER	2		10 MM
18	24M7047	WASHER	1		13 X 24 X 2.500 MM
19	3097862	BUSHING	1		

SEAT BASE

T142631 -UN-28JUN01

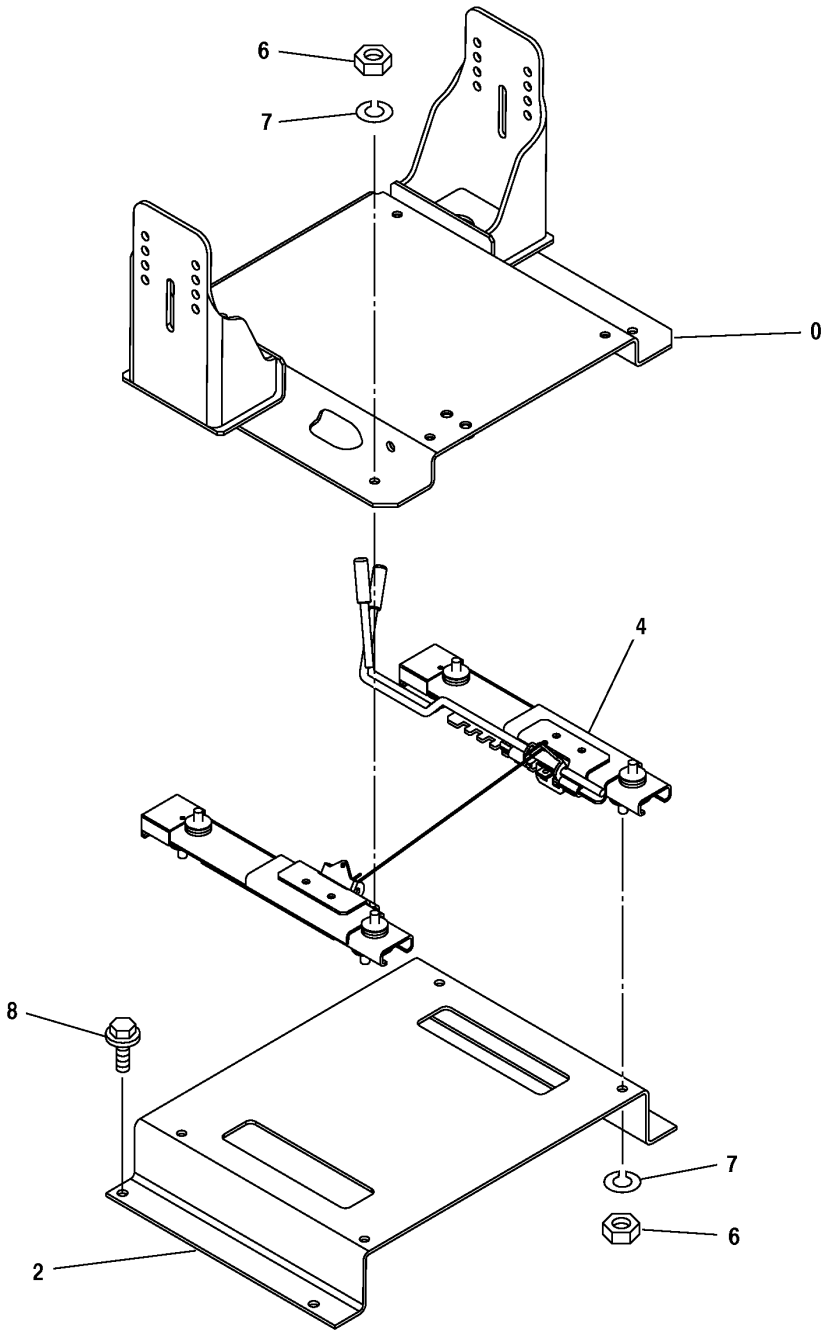

T142631

SEAT BASE

KEY	PART NO.	PART NAME	QTY	SERIAL NO.	REMARKS
0	6020125	BRACKET	1		(SUB FOR TH6020171)
2	3089486	BRACKET	1		(SUB FOR TH3089486)
4	4405128	SEAT SLIDE TRACK KIT	1		(SUB FOR TH4405128)
6	J952010	NUT	8		(SUB FOR TH104196)
7	12M7066	LOCK WASHER	8		10 MM
8	19M7402	CAP SCREW	4		M10 X 25

HEATER AND AIR CONDITIONER

T146498 -UN-12OCT01

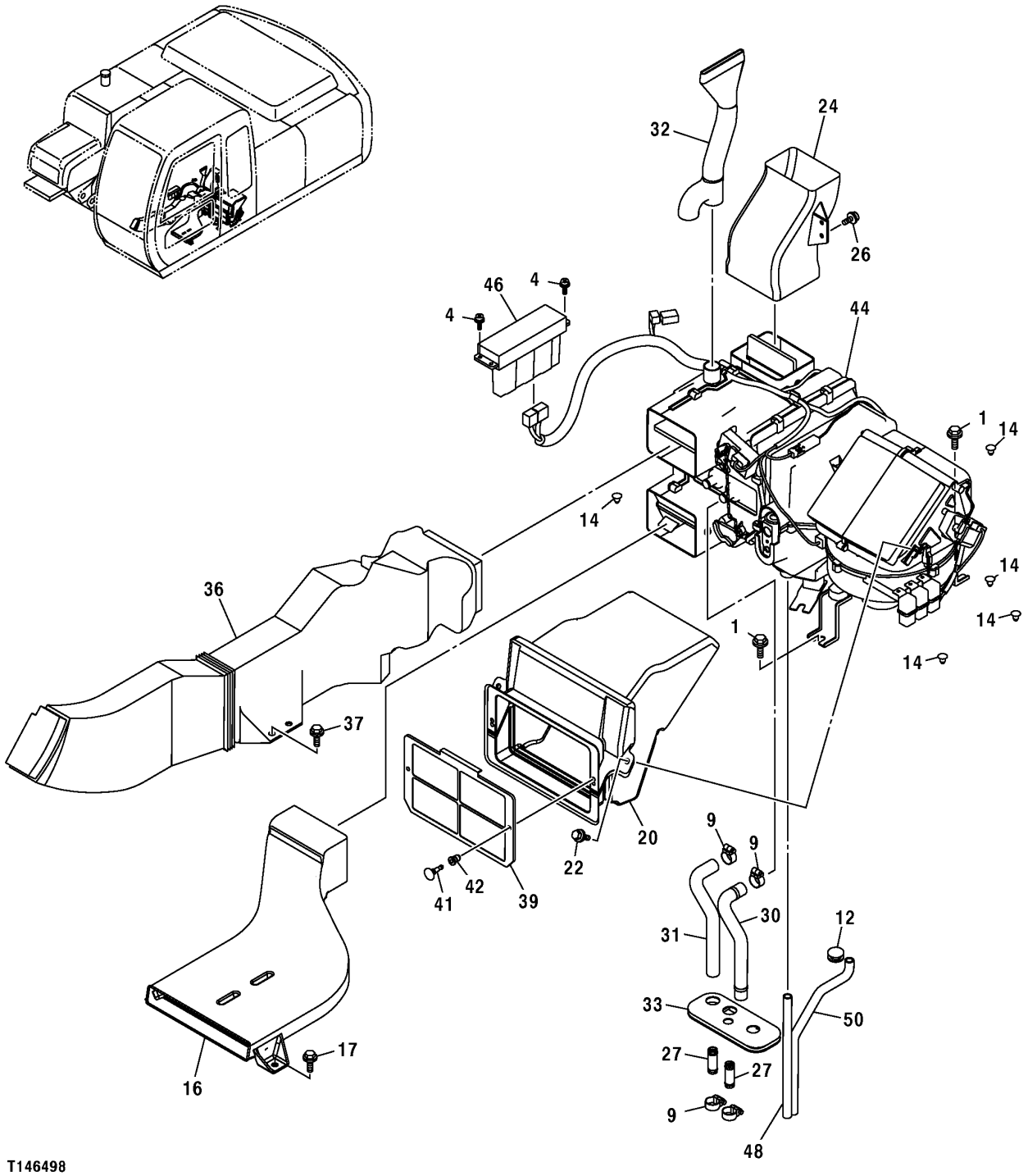

HEATER AND AIR CONDITIONER

KEY	PART NO.	PART NAME	QTY	SERIAL NO.	REMARKS
1	19M7402	CAP SCREW	6		M10 X 25
	12M7066	LOCK WASHER	6		10 MM (0.394")
	24M7028	WASHER	6		10.500 X 20 X 2 MM (0.413" X 0.787" X 0.079")
4	21M7265	SCREW	4		M5 X 12
9	WZ2141223	HOSE CLAMP	4		(SUB FOR AA34965)
12	4205084	GROMMET	2		(SUB FOR TH108616)
14	4280359	PLUG	6		(SUB FOR AT154351)
16	4426155	AIR DUCT	1		(SUB FOR TH4426155)
17	19M7662	CAP SCREW	2		M10 X 30
	12M7066	LOCK WASHER	2		10 MM (0.394")
	24M7028	WASHER	2		10.500 X 20 X 2 MM (0.413" X 0.787" X 0.079")
20	4426162	AIR DUCT	1		(SUB FOR TH4426162)
22	19M7881	SCREW	2		M8 X 20
	12M7056	LOCK WASHER	2		8 MM (0.315") (SUB FOR 12M7065)
	24M7055	WASHER	2		8.400 X 16 X 1.600 MM (0.331" X 0.630" X 0.063")
24	4426157	AIR DUCT	1		(SUB FOR TH4426157)
26	19M8425	CAP SCREW	2		M6 X 16
	12M7006	LOCK WASHER	2		6 MM (0.236")
	24M7293	WASHER	2		6.500 X 13 X 1.600 MM (0.256" X 0.512" X 0.063")
27	4347396	FITTING	2		(SUB FOR TH4347396)
30	.....	RADIATOR HOSE	1		(4430873 NO LONGER AVAILABLE) (SUB 4430872)
31	4430872	RADIATOR HOSE	1		
32	4436441	AIR DUCT	1		(SUB FOR TH4436441)
33	2044922	BUSHING	1		(SUB FOR TH2044922)
36	4426158	AIR DUCT	1		(SUB FOR TH4426158)
37	19M7662	CAP SCREW	2		M10 X 30
	12M7066	LOCK WASHER	2		10 MM (0.394")
	24M7028	WASHER	2		10.500 X 20 X 2 MM (0.413" X 0.787" X 0.079")
39	4441139	GRILLE	1		(SUB FOR TH4441139)
41	4441059	CLIP	2		(SUB FOR TH4441059)
42	4441061	CLIP	2		(SUB FOR TH4441061)
44	4426047	AIR CONDITIONER	1		(SUB FOR TH4426047)
	4609676	HEATER	1		(SUB FOR TH4450707, 4450707) (ALSO ORDER 4610412)
45	4610412	WIRING HARNESS	1		(NOT ILLUSTRATED)
46	4426048	AIR HEATER CONTROLLER	1		(SUB FOR TH4426048) (AIR CONDITIONER)
	4450708	AIR HEATER CONTROLLER	1		(SUB FOR TH4450708) (HEATER)
48	4430870	HYDRAULIC HOSE	1		(SUB FOR TH4430870) (FOR USE WITH AIR CONDITIONER)
50	4430871	HYDRAULIC HOSE	1		(SUB FOR TH4430871) (FOR USE WITH AIR CONDITIONER)

AIR CONDITIONER AND HEATER COMPONENTS

T147527 -UN-06NOV01

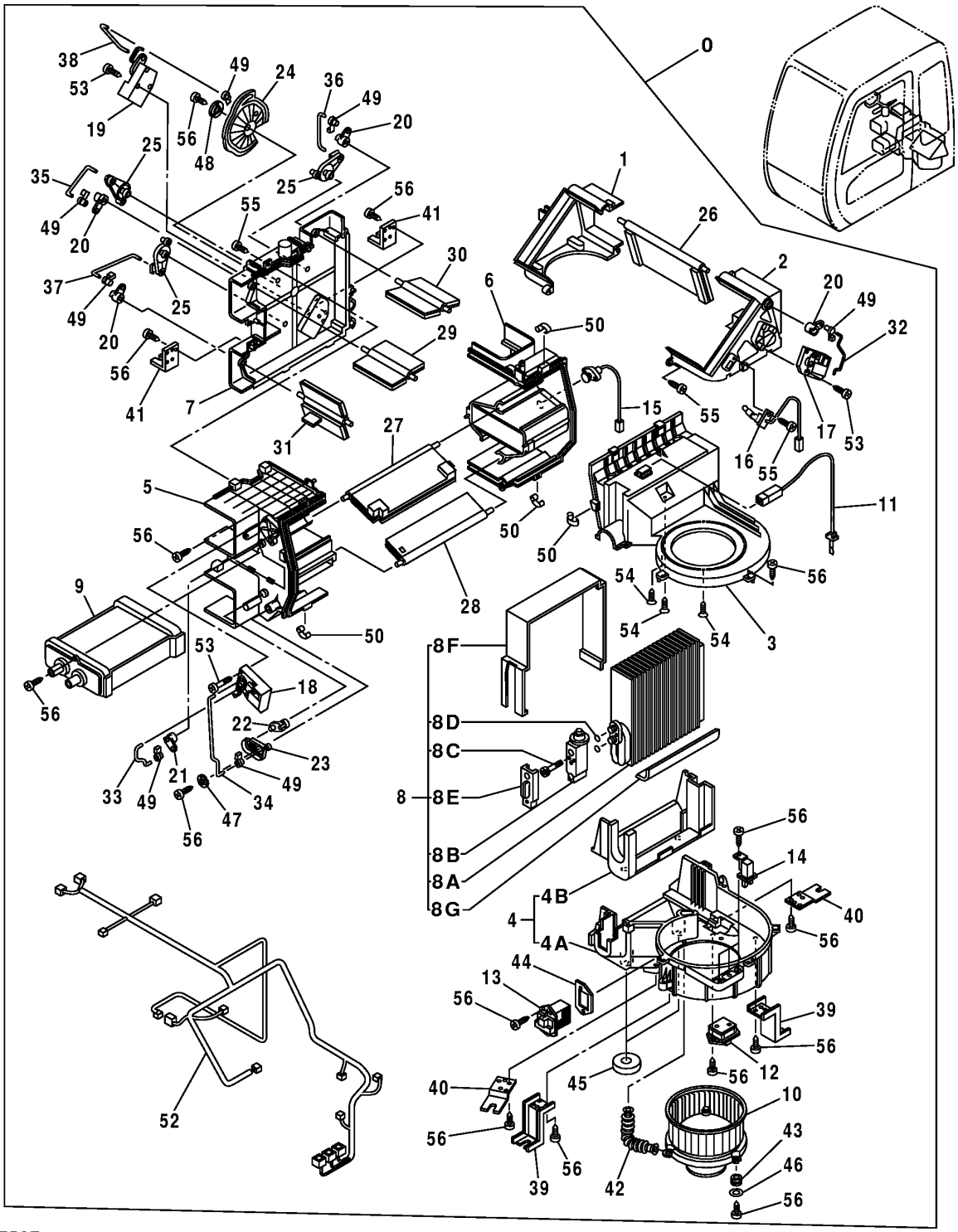

T147527

AIR CONDITIONER AND HEATER COMPONENTS

KEY	PART NO.	PART NAME	QTY	SERIAL NO.	REMARKS
0	4426047	AIR CONDITIONER	1		(SUB FOR TH4426047)
	4450707	HEATER	1		
1	4464341	CASE	1		(SUB FOR TH4464341)
2	4464342	CASE	1		(SUB FOR TH4464342)
3	4464343	CASE	1		(SUB FOR TH4464343)
4	.....	CASE	1		(4464344 NO LONGER AVAILABLE) (SUB FOR TH4464344)
4A	4464345	CASE	1		
4B	4464346	LINING	1		
5	4464347	CASE	1		(SUB FOR TH4464347)
6	4464349	CASE	1		(SUB FOR TH4464349)
7	4464350	CASE	1		(SUB FOR TH4464350)
8	4464352	EVAPORATOR	1		(SUB FOR TH4464352)
8A	.....	EVAPORATOR	1		(TH4464353 NOT AVAILABLE)
8B	4464354	VALVE	1		(SUB FOR TH4464354)
8C	4464355	BOLT	2		(SUB FOR TH4464355)
8D	4370249	O-RING	2		
8E	4464356	CAP	1		(SUB FOR TH4464356)
8F	.....	ISOLATOR	1		(TH4464357 NOT AVAILABLE)
8G	.....	PLATE	1		(TH4464274 NOT AVAILABLE)
9	4464275	HEATER	1		(SUB FOR TH4464275)
10	4464276	ELECTRIC MOTOR	1		(SUB FOR TH4464276)
11	4464277	SWITCH	1		(SUB FOR TH4464277)
12	4464278	RESISTOR	1		(SUB FOR TH4464278)
13	4464279	TRANSISTOR	1		(SUB FOR TH4464279)
14	4370269	RELAY	3		
15	4464280	SENSOR	1		(SUB FOR TH4464280)
16	4448925	SENSOR	1		(SUB FOR TH4448925)
17	4464281	ELECTRIC MOTOR	1		(SUB FOR TH4464281)
18	4464282	ELECTRIC MOTOR	1		(SUB FOR TH4464282)
19	4464283	ELECTRIC MOTOR	1		(SUB FOR TH4464283)
20	4464284	LEVER	4		(SUB FOR TH4464284)
21	4464285	LEVER	1		(SUB FOR TH4464285)
22	4464286	LEVER	1		(SUB FOR TH4464286)
23	4464287	LEVER	1		(SUB FOR TH4464287)
24	4464288	LEVER	1		(SUB FOR TH4464288)
25	4464450	LEVER	3		(SUB FOR TH4464450)
26	4464451	DOOR	1		(SUB FOR TH4464451)
27	4464452	DOOR	1		(SUB FOR TH4464452)
28	4464453	DOOR	1		(SUB FOR TH4464453)
29	4464454	DOOR	1		(SUB FOR TH4464454)
30	4464455	DOOR	1		(SUB FOR TH4464455)

CAB HEATER UNIT COMPONENTS, CONTINUED (HEAT ONLY)

T147527 -UN-06NOV01

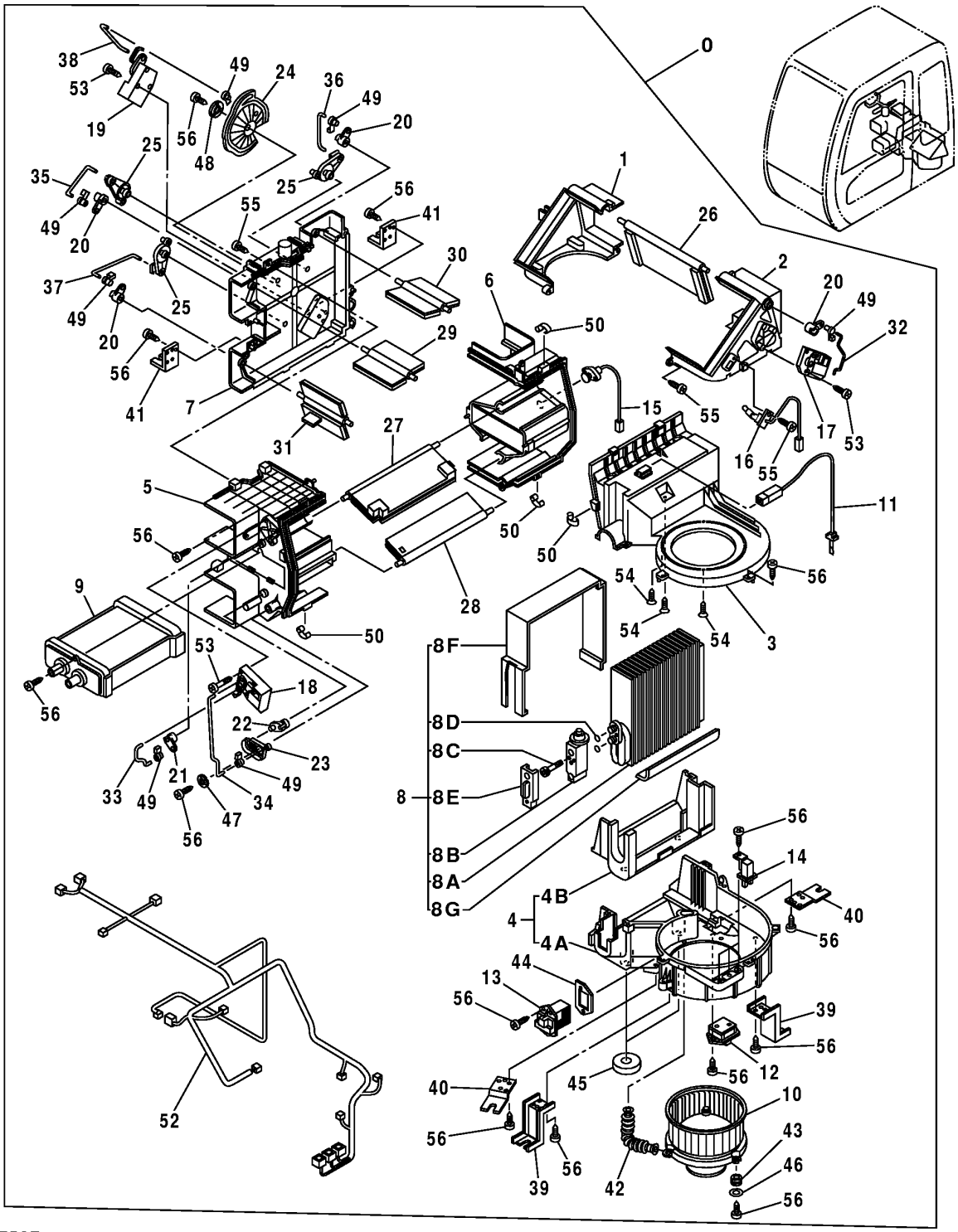

T147527

CAB HEATER UNIT COMPONENTS, CONTINUED (HEAT ONLY)

KEY	PART NO.	PART NAME	QTY	SERIAL NO.	REMARKS
31	4464456	DOOR	1		(SUB FOR TH4464456)
32	4464457	ROD	1		(SUB FOR TH4464457)
33	4464458	ROD	1		(SUB FOR TH4464458)
34	4464459	ROD	2		(SUB FOR TH4464459)
35	4464460	ROD	1		(SUB FOR TH4464460)
36	4464461	ROD	1		(SUB FOR TH4464461)
37	4464462	ROD	1		(SUB FOR TH4464462)
38	4464463	ROD	1		(SUB FOR TH4464463)
39	4370296	BRACKET	2		
40	4464465	BRACKET	2		(SUB FOR TH4464465)
41	4464466	BRACKET	2		(SUB FOR TH4464466)
42	4464473	HOSE	1		(SUB FOR TH4464473)
43	4370267	ISOLATOR	3		(SUB FOR AT214213)
44	4464474	SEAL	1		(SUB FOR TH4464474)
45	4464475	ISOLATOR	2		(SUB FOR TH4464475)
46	4370299	WASHER	3		(SUB FOR AT214245)
47	4464476	WASHER	1		(SUB FOR TH4464476)
48	4370298	WASHER	1		
49	4464477	CLIP	7		(SUB FOR TH4464477)
50	4464478	CLIP	12		(SUB FOR TH4464478)
52	4464479	WIRING HARNESS	1		(SUB FOR TH4464479)
53	4370308	SCREW	9		
54	4464480	SCREW	5		(SUB FOR TH4464480)
55	4370309	SCREW	17		
56	4464483	SCREW	32		(SUB FOR TH4464483)

AIR CONDITIONER REFRIGERANT HOSES AND COMPRESSOR DRIVE BELT

T195450 -UN-13OCT03

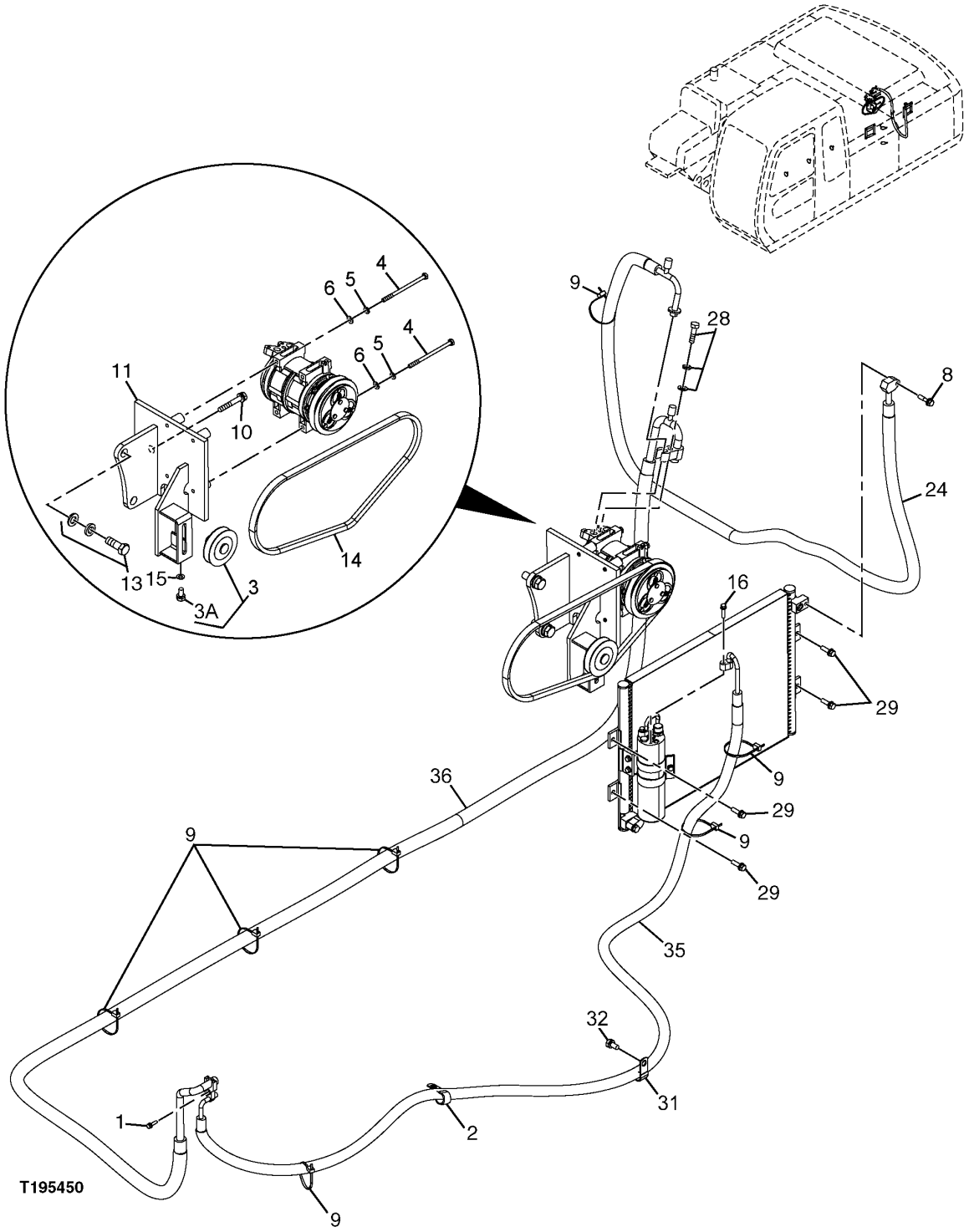

AIR CONDITIONER REFRIGERANT HOSES AND COMPRESSOR DRIVE BELT

KEY	PART NO.	PART NAME	QTY	SERIAL NO.	REMARKS
1	19M7286	CAP SCREW	1		M6 X 25
2	T24432	CLAMP	1		
3	4346770	PULLEY	1		(SUB FOR AT213915)
3A	4451204	BOLT	1		
4	19M8404	CAP SCREW	4		M8 X 130
5	12M7056	LOCK WASHER	4		8 MM (0.315") (SUB FOR 12M7065)
6	24M7055	WASHER	4		8.400 X 16 X 1.600 MM (0.331" X 0.630" X 0.063")
8	19M8008	CAP SCREW	1		M8 X 35
	24M7055	WASHER	1		8.400 X 16 X 1.600 MM (0.331" X 0.630" X 0.063")
	12M7056	LOCK WASHER	1		8 MM (0.315") (SUB FOR 12M7065)
9	H77698	TIE BAND	8		
10	THM111060	BOLT	1		
	24M7028	WASHER	1		10.500 X 20 X 2 MM
	12M7066	LOCK WASHER	1		10 MM
11	DH700012	BRACKET	1		(SUB FOR THDH700012)
13	T116333	BOLT	2		(SUB FOR THM111030)
	24M7028	WASHER	2		10.500 X 20 X 2 MM (0.413" X 0.787" X 0.079")
	12M7066	LOCK WASHER	2		10 MM (0.394")
14	DH400223	V-BELT	1		(SUB FOR THDH400223)
15	24M7055	WASHER	1		8.400 X 16 X 1.600 MM (0.331" X 0.630" X 0.063")
16	19M7874	CAP SCREW	1		M6 X 30
	24M7054	WASHER	1		6.400 X 12 X 1.600 MM (0.252" X 0.472" X 0.063")
	12H302	LOCK WASHER	1		6.350 MM (1/4")
24	4448284	REFRIGERANT HOSE	1		
28	19M8260	CAP SCREW	1		M10 X 40
	24M7028	WASHER	1		10.500 X 20 X 2 MM
	12M7066	LOCK WASHER	1		10 MM
29	19M7139	CAP SCREW	4		M8 X 20
	12M7056	LOCK WASHER	4		8 MM, (SUB FOR 12M7065)
	24M7055	WASHER	4		8.400 X 16 X 1.600 MM
31	T24432	CLAMP	1		
32	19M7938	CAP SCREW	1		M10 X 20
	12M7066	LOCK WASHER	1		
35	4448285	REFRIGERANT HOSE	1		
36	4448286	REFRIGERANT HOSE	1		

DEFROSTER/AIR CIRCULATION FAN

T144798 -UN-14AUG01

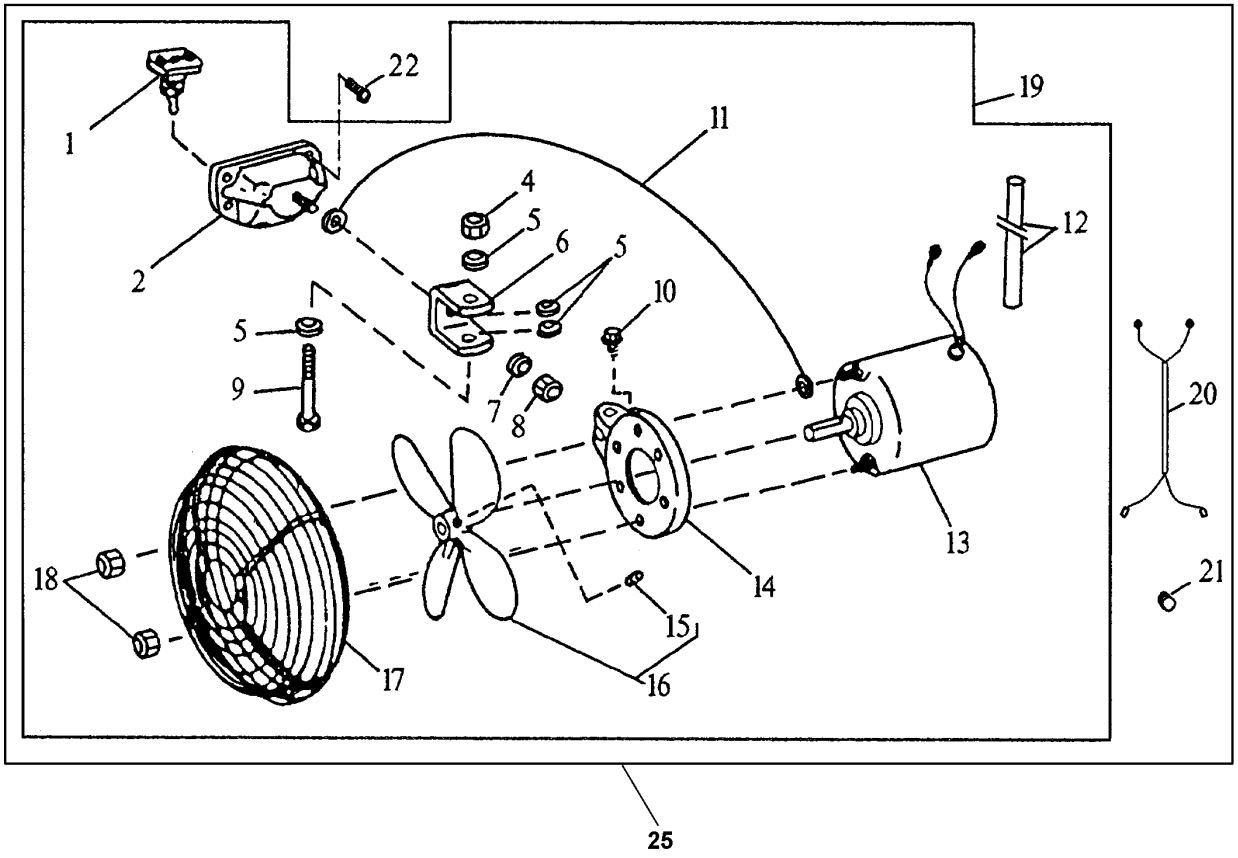

T144798

DEFROSTER/AIR CIRCULATION FAN

KEY	PART NO.	PART NAME	QTY	SERIAL NO.	REMARKS
1	T55564	TOGGLE SWITCH	1		
2	.....	BASE	1		(NOT AVAILABLE)
4	.....	LOCK NUT	1		(USE E19700 IF AVAILABLE)
5	T27860	WASHER	4		
6	.....	BRACKET	1		
7	24H1136	WASHER	2		11/32" X 11/16" X 0.065"
8	.....	LOCK NUT	1		
9	19H2650	CAP SCREW	1		1/4" X 2"
10	N162946	SCREW	1		
11	.....	WIRING LEAD	1		(MAKE FROM PM797NA WIRE KIT)
12	T105943	CONDUIT	1		
13	.....	MOTOR	1		
14	.....	BRACKET	1		
15	.....	SET SCREW	1		
16	AT101945	FAN BLADE	1		
17	AT101944	GUARD	1		
18	.....	LOCK NUT	2		
19	AT84953	FAN	1		
20	AT159804	WIRING HARNESS	1		
21	R26409	GROMMET	1		
22	37H129	SCREW	4		
25	AT161192	KIT	1		(AIR CIRCULATION FAN)

AIR CONDITIONER COMPONENTS

T159761 -UN-24SEP02

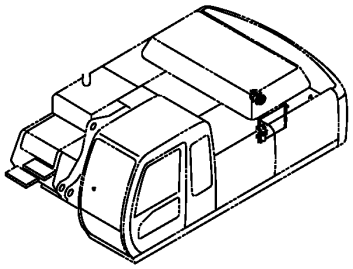

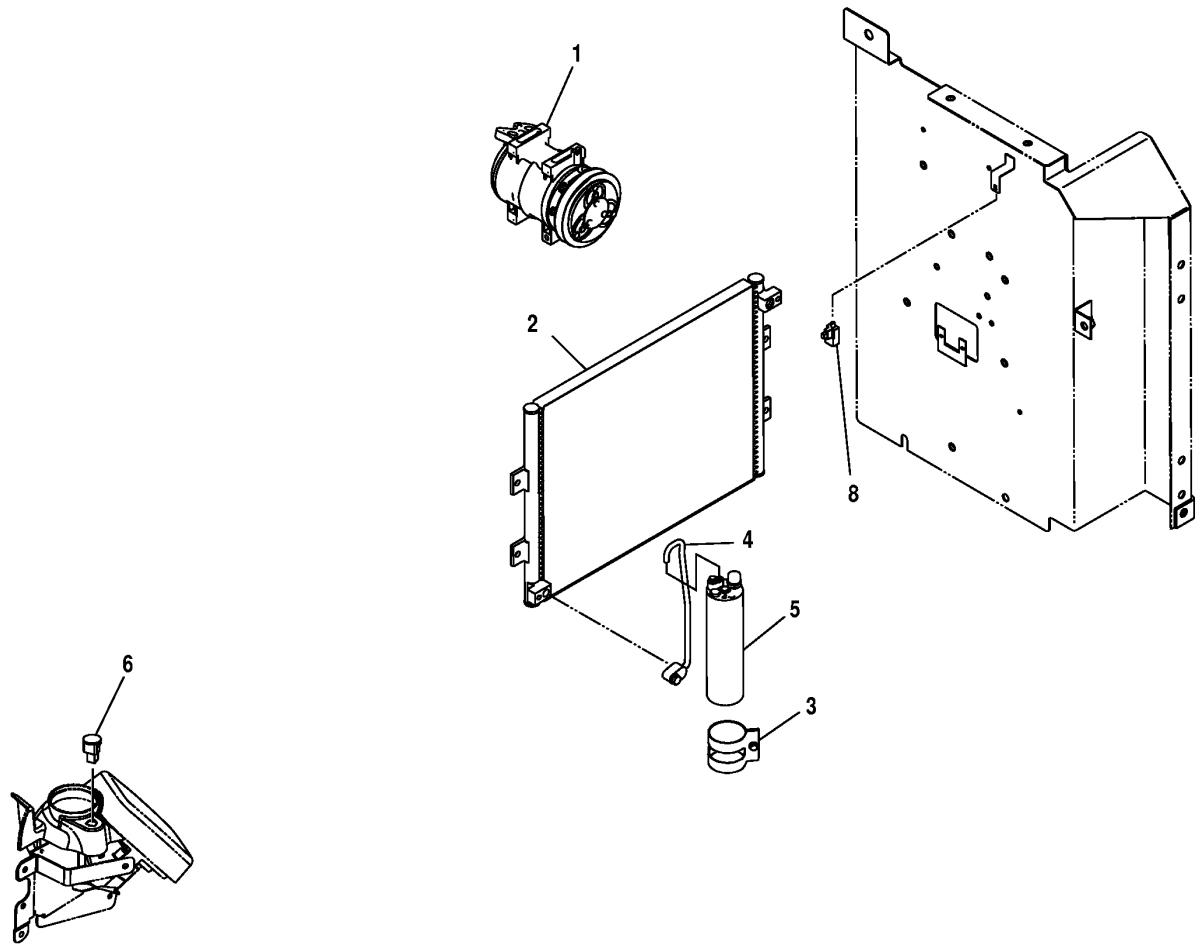

T159761

AIR CONDITIONER COMPONENTS

KEY	PART NO.	PART NAME	QTY	SERIAL NO.	REMARKS
1	4456130	COMPRESSOR	1		(SUB FOR TH4456130)
	4623638	CLUTCH	1		(MAGNETIC CLUTCH)
2	4602578	VAPOR CONDENSER	1		(SUB FOR TH4426046)
	J020835	BOLT	1		
	19M7077	CAP SCREW	4		M6 X 20
	19M7874	CAP SCREW	1		M6 X 30, (SUB FOR J020630)
	24M7054	WASHER	1		6.400 X 12 X 1.600 MM
	12H302	LOCK WASHER	1		1/4"
3	4460399	BRACKET	1		
4	4477526	PIPE	1		
5	4448179	RECEIVER-DRYER	1		
6	4405166	SENSOR	1		(SUB FOR TH4405166)
8	4405164	SENSOR	1		(SUB FOR TH4405164)

HEATER HOSES

T147490 -UN-19NOV01

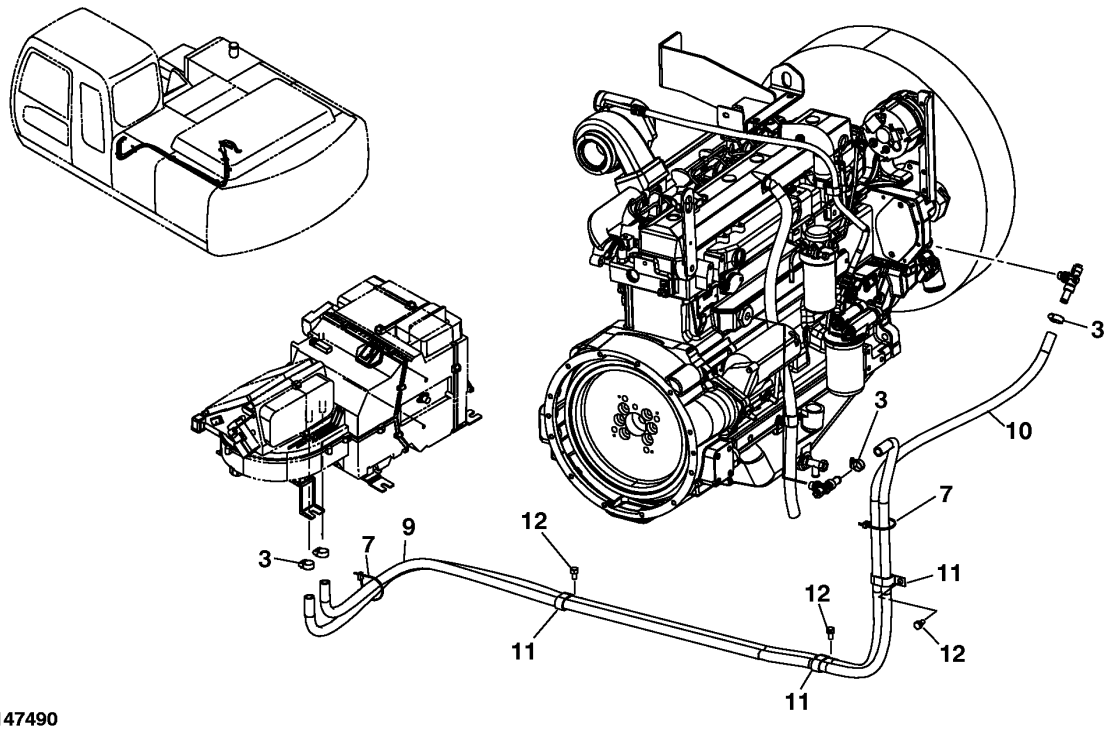

T147490

HEATER HOSES

KEY	PART NO.	PART NAME	QTY	SERIAL NO.	REMARKS
3	WZ2141223	HOSE CLAMP	4		(SUB FOR AA34965)
7	H77698	TIE BAND	2		
9	.....	BULK HOSE	1		(P63188 NOT AVAILABLE FOR SERVICE) (FURNISH TY22328 - CUT TO LENGTH 2750MM) (4374282 NO LONGER AVAILABLE)
10	.....	HOSE	1		(AT219667 NOT AVAILABLE FOR SERVICE) (FURNISH TY22328 BULK MATERIAL CUT TO LENGTH)
11	4192034	CLIP	3		(SUB FOR TH109445)
12	19M7402	CAP SCREW	3		M10 X 25
	12M7066	LOCK WASHER	3		10 MM (0.394")
	24M7028	WASHER	3		

AIR CONDITIONER DUCT AND FILTER

T147810 -UN-07JAN02

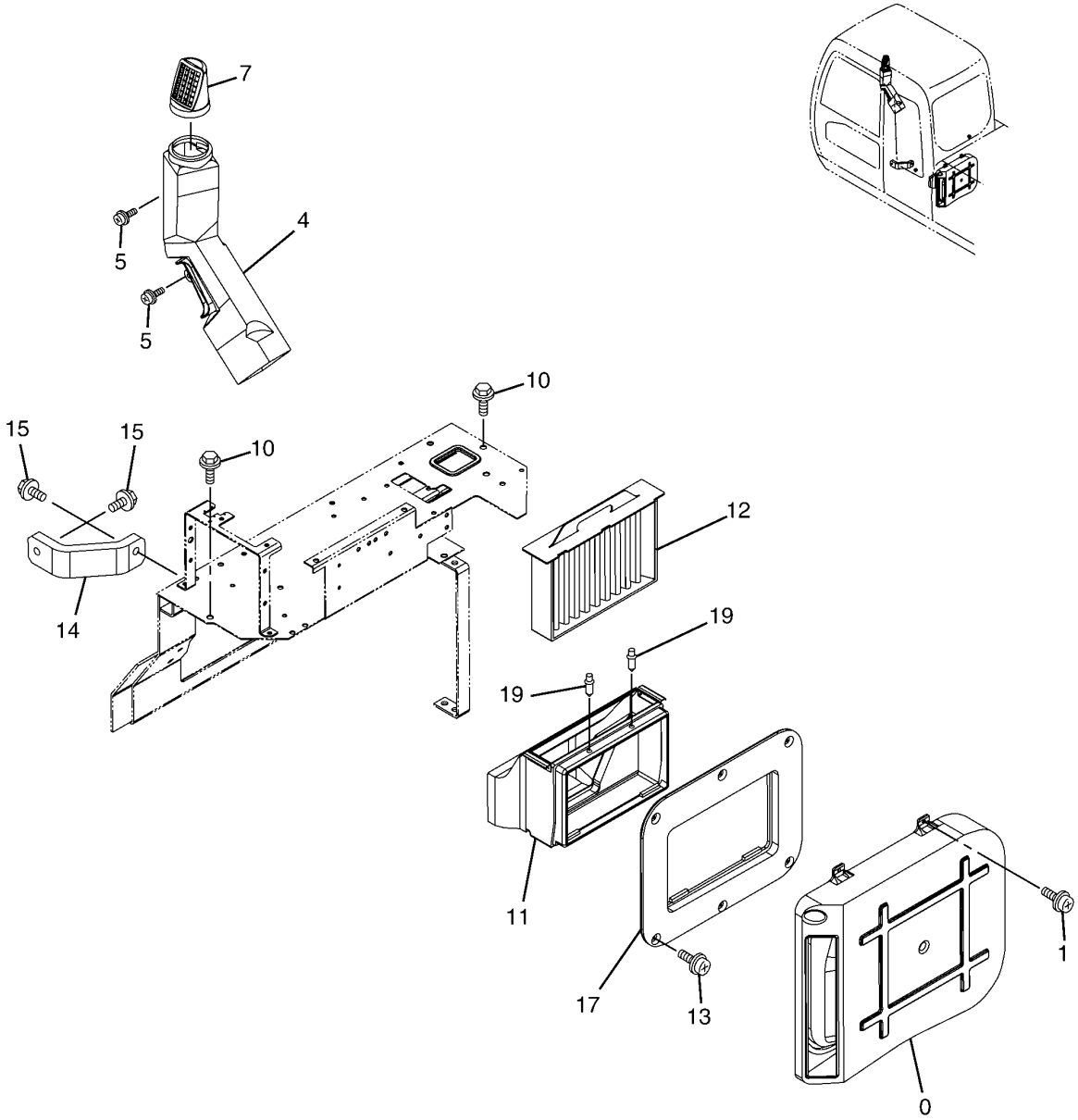

T147810

AIR CONDITIONER DUCT AND FILTER

KEY	PART NO.	PART NAME	QTY	SERIAL NO.	REMARKS
0	P68233		1		
1	19M8425	CAP SCREW	6		M6 X 16
	12M7006	LOCK WASHER	6		6 MM
	24M7293	WASHER	6		6.500 X 13 X 1.600 MM
4	4426159	AIR DUCT	1		
5	19M8425	CAP SCREW	2		M6 X 16
	12M7006	LOCK WASHER	2		6 MM
	24M7293	WASHER	2		6.500 X 13 X 1.600 MM
7	4449068	AIR DUCT	1		
10	19M7402	CAP SCREW	2		M10 X 25
	12M7058	LOCK WASHER	2		12 MM, (SUB FOR 12M7067)
	24M7346	WASHER	2		11 X 20 X 2 MM
11	4426161	AIR DUCT	1		(SUB FOR TH4426161)
12	4350249	FILTER ELEMENT	1		(SUB FOR AT213943)
13	19M8425	CAP SCREW	6		M6 X 16
	12M7006	LOCK WASHER	6		6 MM
	24M7293	WASHER	6		6.500 X 13 X 1.600 MM
14	P68229	SUPPORT	1		
15	J031045	BOLT	2		(SUB FOR AT200010)
17	4449348	AIR DUCT	1		
19	4445916	CLIP	2		(SUB FOR FFSB110372)

COVER(12 VOLT POWER SUPPLY)

T196517 -UN-21NOV03

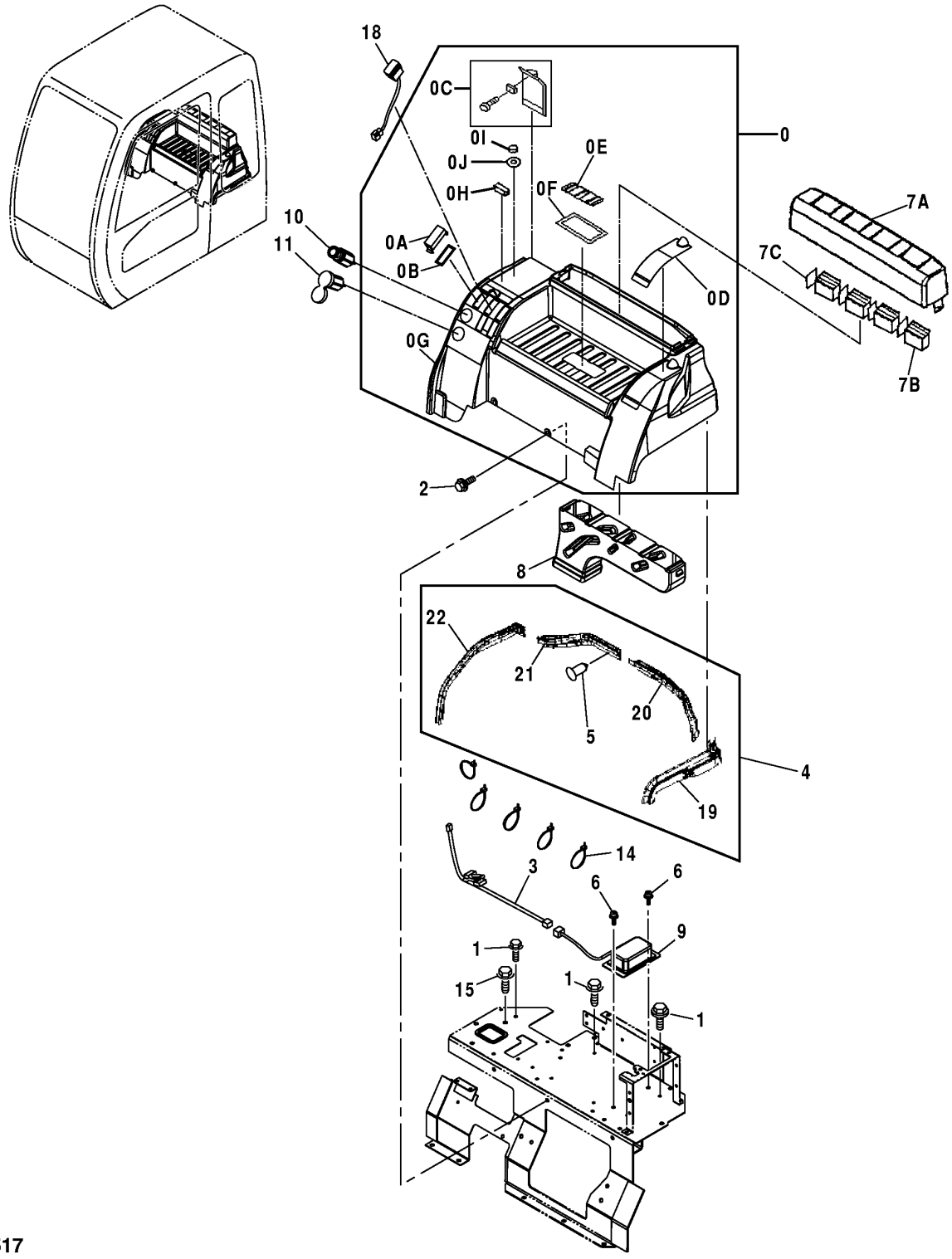

T196517

COVER (12V POWER SUPPLY)

KEY	PART NO.	PART NAME	QTY	SERIAL NO.	REMARKS
0	4433793	TRAY	1		(SUB FOR TH4433793)
0A	4456725	COVER	5		(SUB FOR TH4456725)
0B	4456723	ISOLATOR	5		(SUB FOR TH4456723)
0C	4458228	COVER	1		(RELAY)
0D	4458230	COVER	1		(FUSE)
0E	4458231	COVER	1		(CENTER)
0F	4458232	SEAL	1		
0G	4458227	TRAY	1		
0H	4458229	MAGNET	1		
0I	4458233	COVER	1		
0J	4458234	SEAL	1		
1	J050820	SCREW WITH WASHER	3		(SUB FOR AT213603)
2	19M7402	CAP SCREW	2		M10 X 25
	12M7066	LOCK WASHER	2		10 MM
	24M7028	WASHER	2		10.500 X 20 X 2 MM
3	3091204	WIRING HARNESS	1		(SUB FOR TH3091204)
4	.....	ISOLATOR	1		(4436132 NO LONGER AVAILABLE - FURNISH 4458238, 4458239, 4458240 AND 4458241)
5	4425573	CLIP	13		(SUB FOR TH4425573)
6	19M8425	CAP SCREW	2		M6 X 16
	12M7006	LOCK WASHER	2		6 MM
	24M7293	WASHER	2		6.500 X 13 X 1.600 MM
7	4433794	COVER	1		(SUB FOR TH4433794)
7A	4458235	COVER	1		
7B	4458236	LOUVER	4		
7C	4458237	BRACKET	4		
8	4426156	AIR DUCT	1		(SUB FOR TH4426156)
9	4450008	POWER SUPPLY	1		(SUB FOR TH4450008)
10	AR60937	ELECTRICAL LIGHTER	1		(12 VOLT)
	AU42809	RESISTOR	1		(12 VOLT)
	AT78634	WIRING LEAD	1		(12 VOLT)
	AT78633	HOUSING	1		(12 VOLT)
	.....	ELECTRICAL LIGHTER	1		(4357862 NO LONGER AVAILABLE) (SUB FOR AT190190) (24 VOLT)
11	4432965	ELEC. CONNECTOR TERMINAL	1		(SUB FOR TH4432965)
14	H77698	TIE BAND	5		
15	19M7938	CAP SCREW	1		M10 X 20
	12M7066	LOCK WASHER	1		10 MM
18	4352947	SWITCH	2		(SUB FOR TH4352947) (FOR USE WITH AUXILIARY FUNCTIONS)
19	4458238	SEAL	1		
20	4458239	SEAL	1		
21	4458240	SEAL	1		
22	4458241	SEAL	1		

POWER SUPPLY - 12V

T147839 -UN-07JAN02

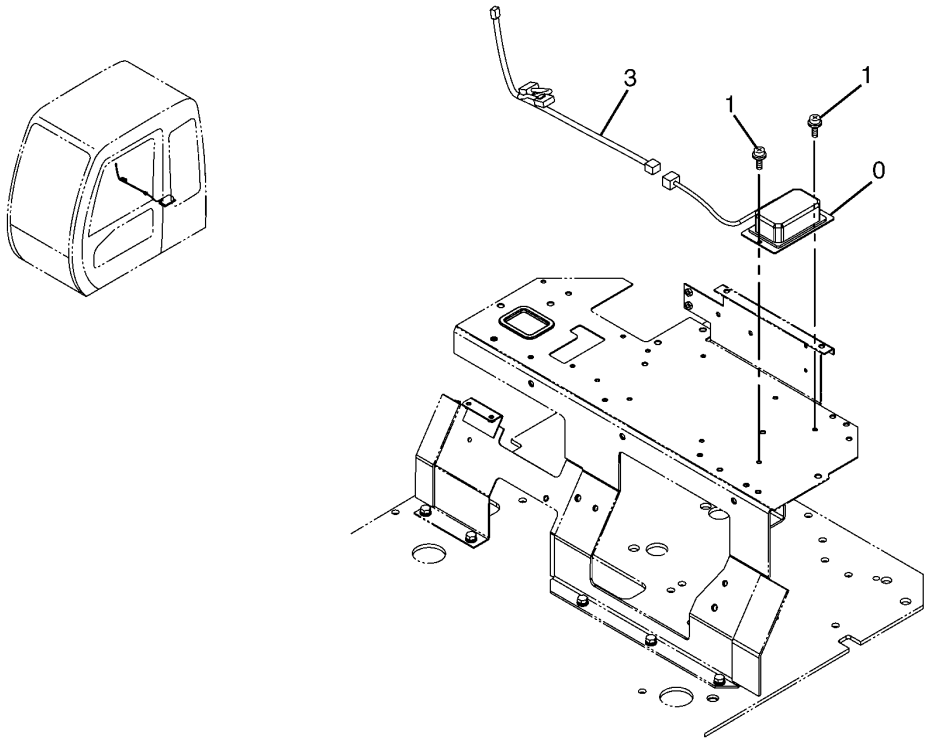

T147839

POWER SUPPLY - 12V

KEY	PART NO.	PART NAME	QTY	SERIAL NO.	REMARKS
0	4450008	POWER SUPPLY	1		(SUB FOR TH4450008)
1	19M8425	CAP SCREW	2		M6 X 16
	12M7006	LOCK WASHER	2		6 MM
	24M7293	WASHER	2		6.500 X 13 X 1.600 MM
3	3091204	WIRING HARNESS	1		(SUB FOR TH3091204)

DEFROSTER/AIR CIRCULATION FAN

T144798 -UN-14AUG01

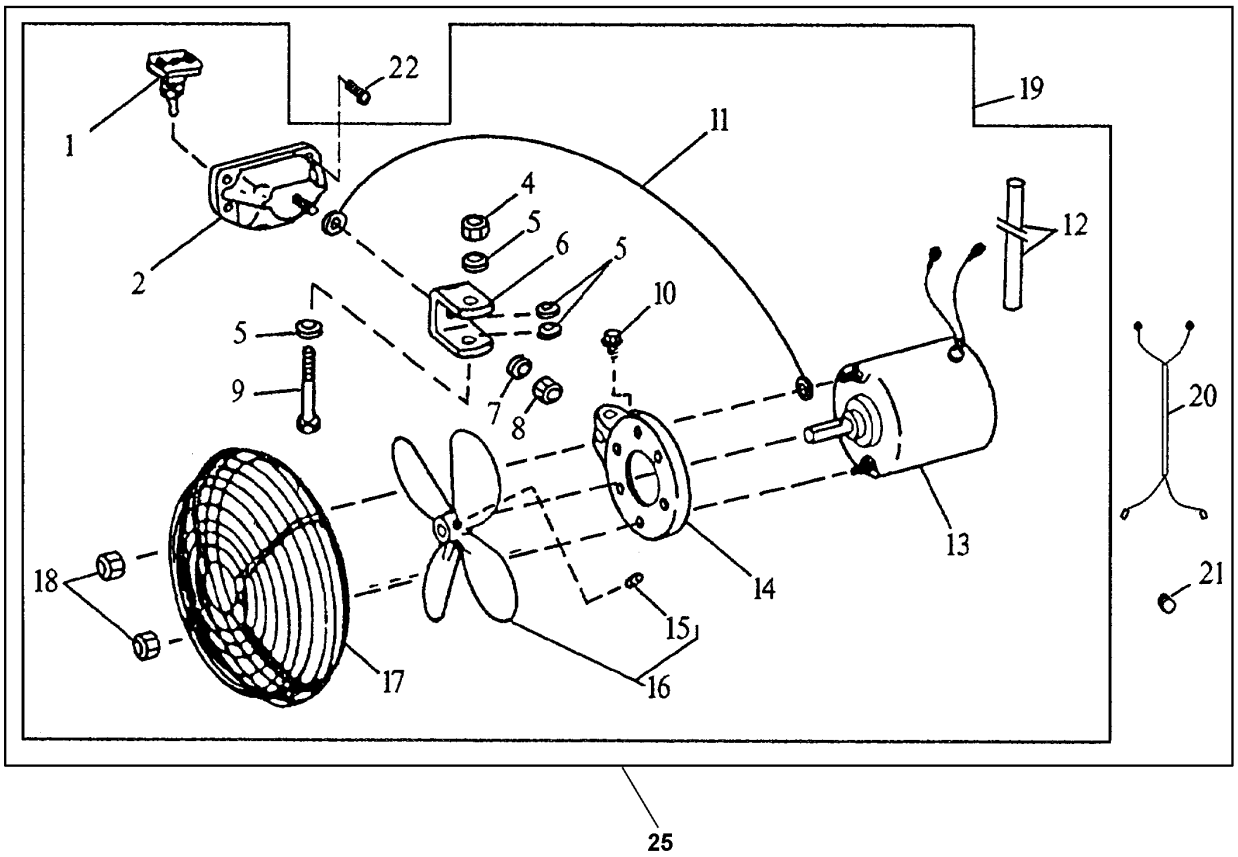

T144798

2D22

DEFROSTER/AIR CIRCULATION FAN

KEY	PART NO.	PART NAME	QTY	SERIAL NO.	REMARKS
1	T55564	TOGGLE SWITCH	1		
2	.....	BASE	1		(NOT AVAILABLE)
4	.....	LOCK NUT	1		(USE E19700 IF AVAILABLE)
5	T27860	WASHER	4		
6	.....	BRACKET	1		
7	24H1136	WASHER	2		11/32" X 11/16" X 0.065"
8	.....	LOCK NUT	1		
9	19H2650	CAP SCREW	1		1/4" X 2"
10	N162946	SCREW	1		
11	.....	WIRING LEAD	1		(MAKE FROM PM797NA WIRE KIT)
12	T105943	CONDUIT	1		
13	.....	MOTOR	1		
14	.....	BRACKET	1		
15	.....	SET SCREW	1		
16	AT101945	FAN BLADE	1		
17	AT101944	GUARD	1		
18	.....	LOCK NUT	2		
19	AT84953	FAN	1		
20	AT159804	WIRING HARNESS	1		
21	R26409	GROMMET	1		
22	37H129	SCREW	4		
25	AT161192	KIT	1		(AIR CIRCULATION FAN)

COVER

T154727 -UN-09MAY02

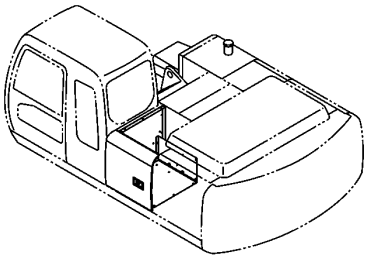

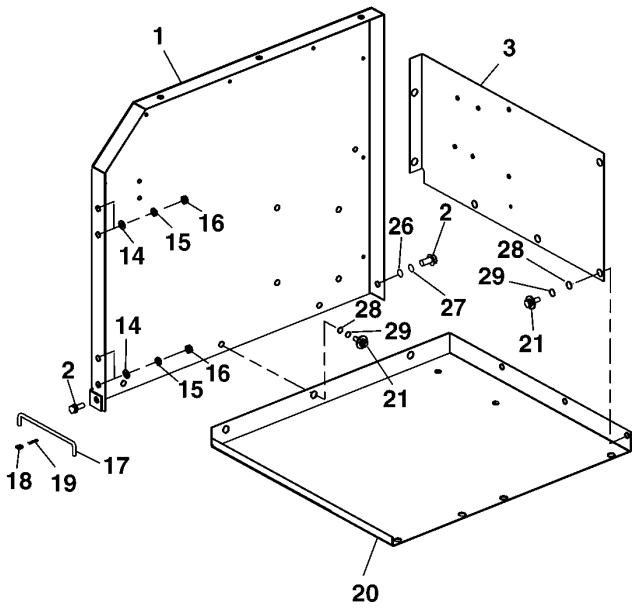

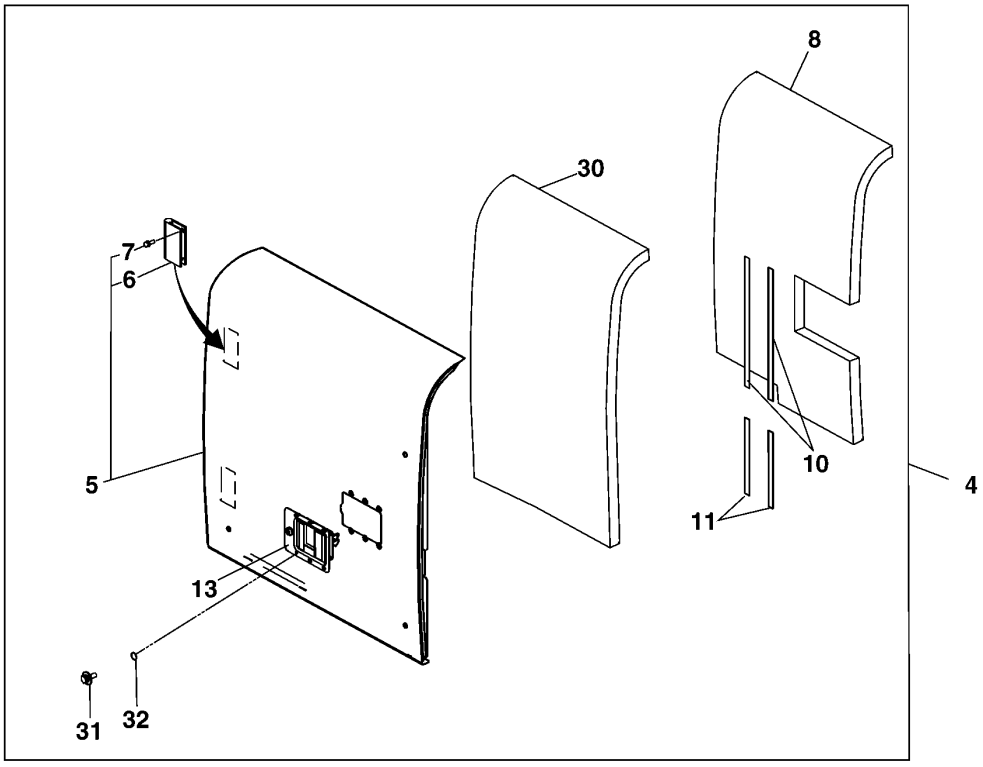

T154727

COVER

KEY	PART NO.	PART NAME	QTY	SERIAL NO.	REMARKS
1	7035539	COVER	1		(SUB FOR TH7035539)
2	19M7662	CAP SCREW	2		M10 X 30
3	8081829	COVER	1		(SUB FOR TH8081829)
4	DH700042J	DOOR	1		(SUB FOR THDH700042J)
5	DH500020J	DOOR	1		(SUB FOR THDH500020J)
6	.....	HINGE	2		(TH3072015 NOT AVAILABLE FOR SERVICE)
7	19M7402	CAP SCREW	4		M10 X 25
8	4412572	ISOLATOR	1		(SUB FOR TH4412572)
9	DH400331	ISOLATOR	1		(SUB FOR THDH400331)
10	DH400348	ISOLATOR	2		(SUB FOR THDH400348)
11	DH400349	ISOLATOR	2		(SUB FOR THDH400349)
12	DH400332	ISOLATOR	1		(SUB FOR THDH400332)
13	DH400030	LOCK	1		(SUB FOR THDH400030)
14	24M7028	WASHER	4		10.500 X 20 X 2 MM (0.413" X 0.787" X 0.079")
15	12M7066	LOCK WASHER	4		10 MM (0.394")
16	14M7274	NUT	4		M10
17	4341788	ROD	1		(SUB FOR AT213884)
18	24M7055	WASHER	1		8.400 X 16 X 1.600 MM (0.331" X 0.630" X 0.063")
19	H132922	COTTER PIN	1		
20	7035543	COVER	1		(SUB FOR TH7035543)
21	19M7662	CAP SCREW	6		M10 X 30
26	12M7066	LOCK WASHER	2		10 MM (0.394")
27	24M7028	WASHER	2		10.500 X 20 X 2 MM (0.413" X 0.787" X 0.079")
28	12M7058	LOCK WASHER	6		12 MM (0.472") (SUB FOR 12M7067)
29	24M7346	WASHER	6		11 X 20 X 2 MM (0.433" X 0.787" X 0.079")

COVER

T143292 -UN-28JUN01

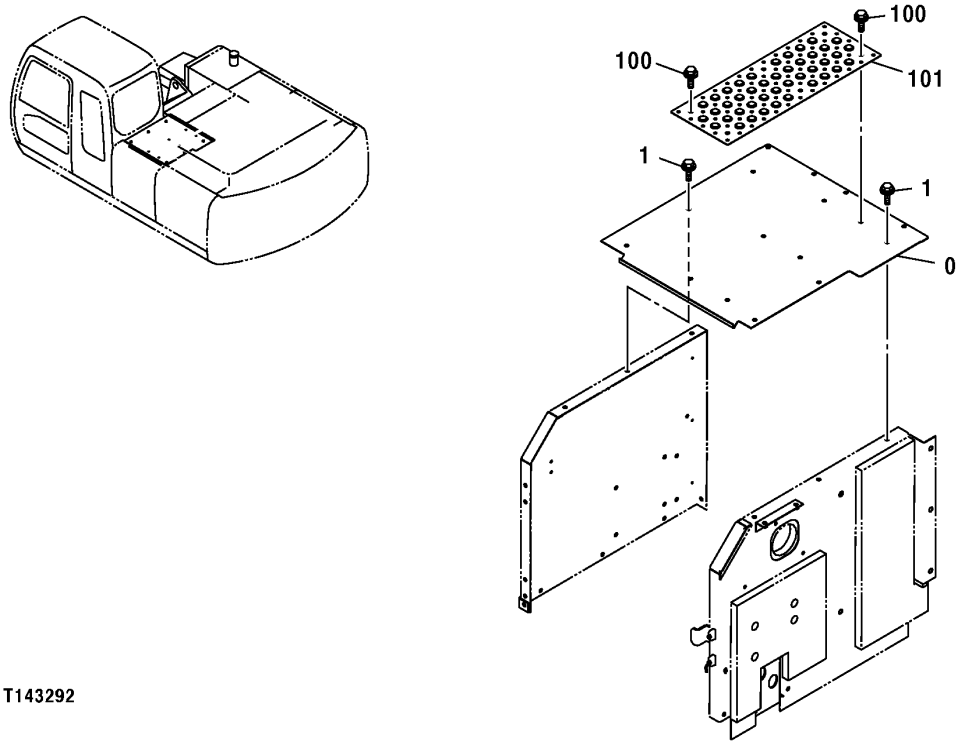

T143292

COVER

KEY	PART NO.	PART NAME	QTY	SERIAL NO.	REMARKS
2	DH700037	COVER	1		(SUB FOR THDH700037)
3	19M7662	CAP SCREW	6		M10 X 30
	12M7066	LOCK WASHER	6		10 MM (0.394")
	24M7028	WASHER	6		10.500 X 20 X 2 MM (0.413" X 0.787" X 0.079")
4	19M7402	CAP SCREW	4		M10 X 25
	12M7058	LOCK WASHER	6		12 MM (0.472") (SUB FOR 12M7067)
	24M7346	WASHER	6		11 X 20 X 2 MM (0.433" X 0.787" X 0.079")
5	DH700045	COVER	1		(SUB FOR THDH700045)
6	9196161	COVER	1		(SUB FOR TH9196161)
7	19M7662	CAP SCREW	6		M10 X 30
	12M7066	LOCK WASHER	6		10 MM (0.394")
	24M7028	WASHER	6		10.500 X 20 X 2 MM (0.413" X 0.787" X 0.079")
8	3091338	COVER	1		(SUB FOR TH3091338)

COVER

T147419 -UN-30OCT01

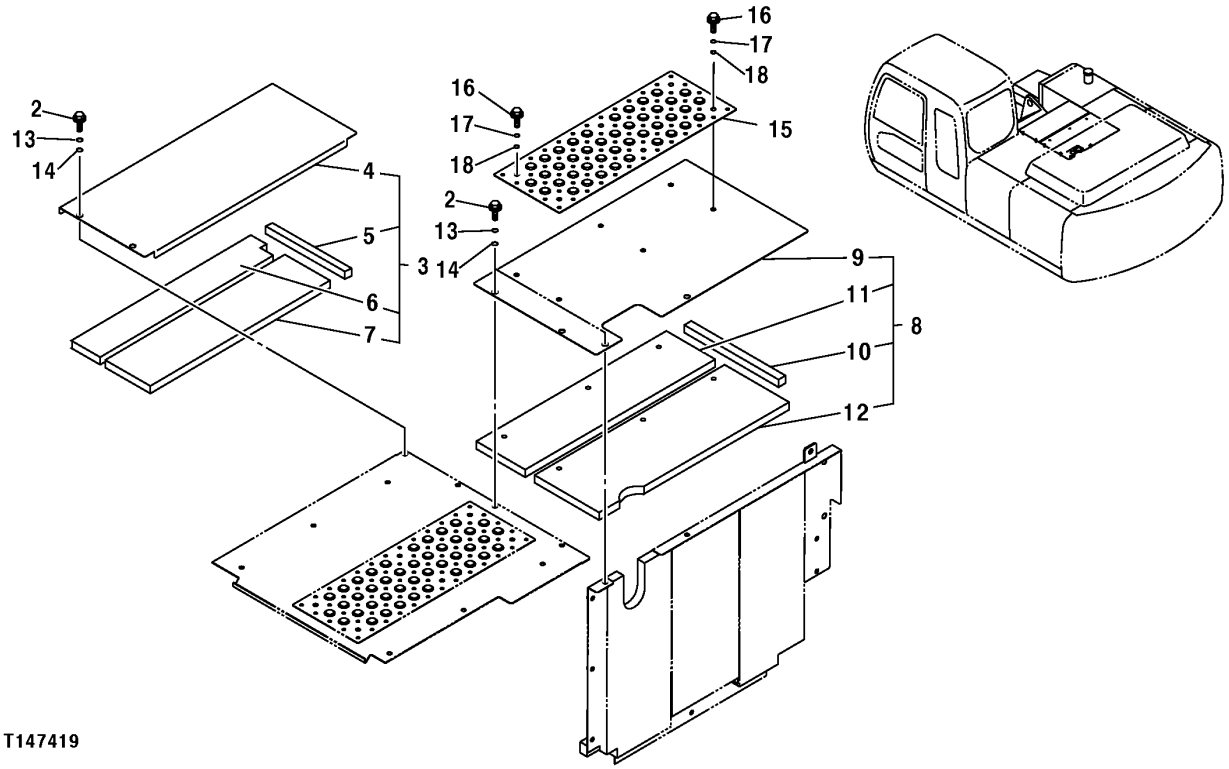

COVER

KEY	PART NO.	PART NAME	QTY	SERIAL NO.	REMARKS
2	19M7662	CAP SCREW	6		M10 X 30
3	.....	COVER	1		(8076444J OR TH8076444J NOT AVAILABLE FOR SERVICE)
4	DH800076J	COVER	1		(SUB FOR 8074160, 8074160J OR TH8074160)
5	4420609	ISOLATOR	1		(SUB FOR TH4420609)
6	4452740	ISOLATOR	1		(SUB FOR TH4452740)
7	4452741	ISOLATOR	1		(SUB FOR TH4452741)
8	DH800072	COVER	1		(SUB FOR 8076445, 8076445J OR TH8076445J)
9	DH800074J	COVER	1		(SUB FOR 8074159 OR TH8074159)
10	4380814	ISOLATOR	1		(SUB FOR TH4380814)
11	4452742	ISOLATOR	1		(SUB FOR TH4452742)
12	DH400499	ISOLATOR	1		(SUB FOR 4452743 OR TH4452743)
13	12M7058	LOCK WASHER	6		12 MM (0.472") (SUB FOR 12M7067)
14	24M7346	WASHER	6		11 X 20 X 2 MM (0.433" X 0.787" X 0.079")
15	3091338	COVER	1		(SUB FOR TH3091338)
16	19M7662	CAP SCREW	6		M10 X 30
17	12M7066	LOCK WASHER	6		10 MM (0.394")
18	24M7028	WASHER	6		10.500 X 20 X 2 MM (0.413" X 0.787" X 0.079")

COMPARTMENT INTERIOR PANELS

T191052 -UN-15MAY03

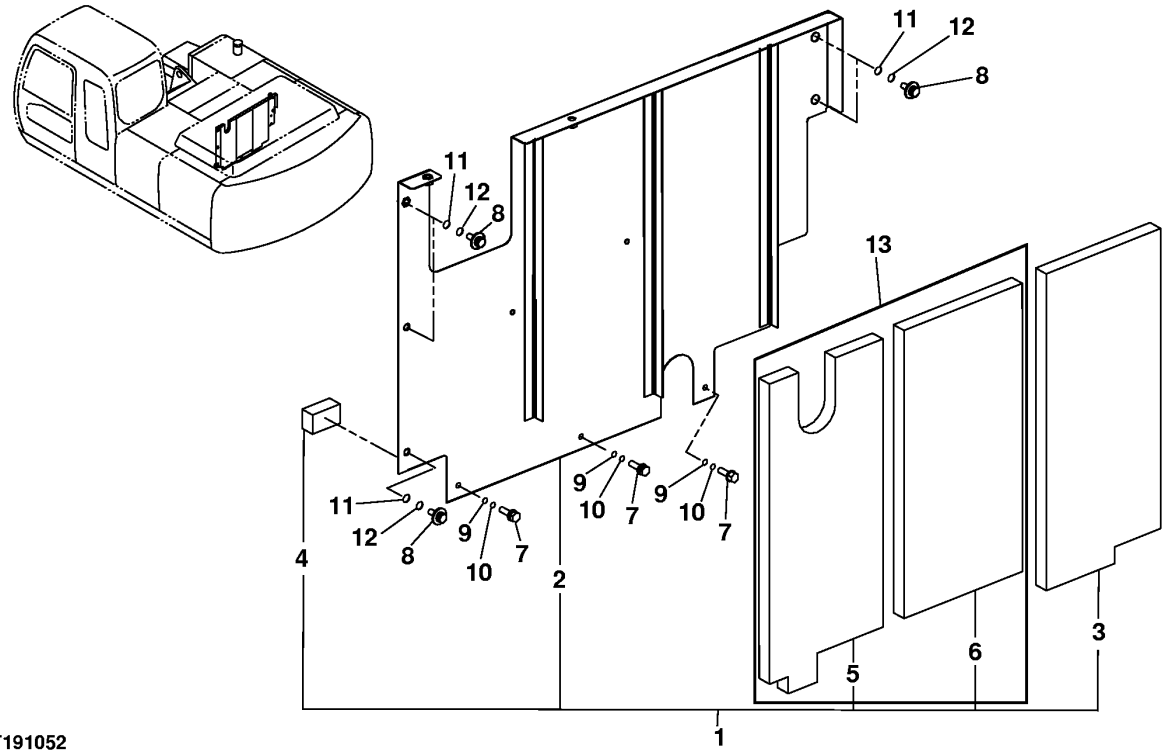

T191052

COMPARTMENT INTERIOR PANELS

KEY	PART NO.	PART NAME	QTY	SERIAL NO.	REMARKS
1	DH700021	COVER	1		(SUB FOR THDH700021)
2	DH700022	COVER	1		(SUB FOR THDH700022)
3	4414901	ISOLATOR	1		(SUB FOR TH4414901)
4	4417881	ISOLATOR	1		(SUB FOR TH4417881)
5	.....	ISOLATOR	1		(DH400322 AND THDH400322 NO LONGER AVAILABLE) (FURNISH DH700021F)
6	.....	ISOLATOR	1		(DH400323 AND THDH400323 NO LONGER AVAILABLE) (FURNISH DH700021F)
7	19M7550	CAP SCREW	3		M10 X 35
8	19M7662	CAP SCREW	5		M10 X 30
9	12M7066	LOCK WASHER	3		10 MM
10	24M7346	WASHER	3		11 X 20 X 2 MM
11	12M7058	LOCK WASHER	5		12 MM (0.472") (SUB FOR 12M7067)
12	24M7346	WASHER	5		11 X 20 X 2 MM (0.433" X 0.787" X 0.079")
13	DH700021F	ISOLATOR	1		

COMPARTMENT INTERIOR PANEL AND COVER

T191054 -UN-15MAY03

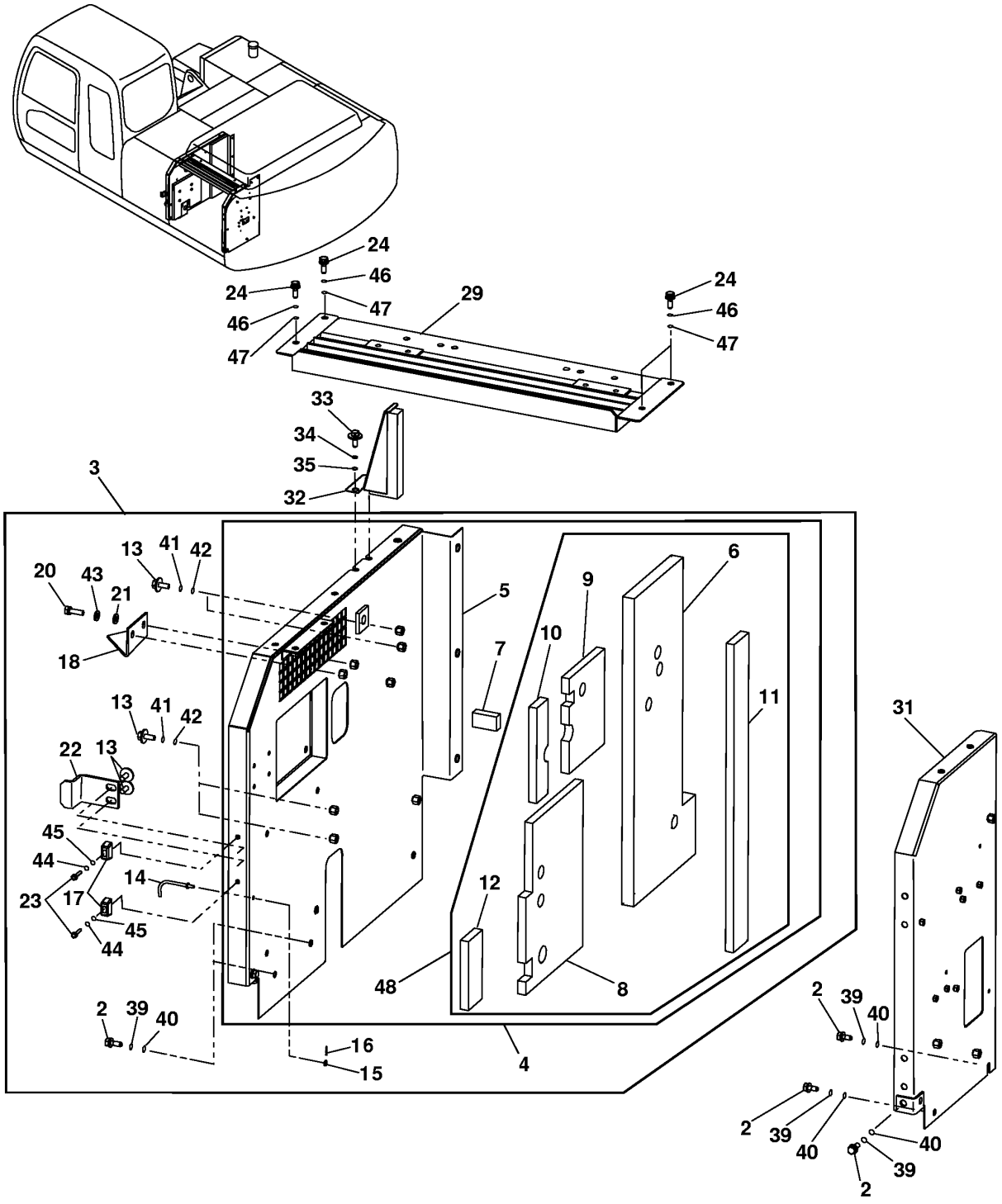

T191054

COMPARTMENT INTERIOR PANEL AND COVER

KEY	PART NO.	PART NAME	QTY	SERIAL NO.	REMARKS
2	19M7662	CAP SCREW	5		M10 X 30
3	.....	SUPPORT	1		(DH900150 NO LONGER AVAILABLE) (SUB FOR THDH900150)
4	DH700015	SUPPORT	1		(SUB FOR THDH700015)
5	DH600004	SUPPORT	1		(SUB FOR THDH600004)
6	4415013	ISOLATOR	1		(SUB FOR TH4415013)
7	4425577	ISOLATOR	1		(SUB FOR TH4425577)
8	.....	ISOLATOR	1		(DH400292 AND THDH400292 NO LONGER AVAILABLE)
9	.....	ISOLATOR	1		(DH400293 AND THDH400293 NO LONGER AVAILABLE)
10	.....	ISOLATOR	1		(DH400294 AND THDH400294 NO LONGER AVAILABLE)
11	.....	ISOLATOR	1		(DH400295 AND THDH400295 NO LONGER AVAILABLE)
12	.....	ISOLATOR	1		(DH400296 AND THDH400296 NO LONGER AVAILABLE)
13	19M7662	CAP SCREW	4		M10 X 30
14	9751797	LATCH	1		(SUB FOR TH9751797)
15	24M7054	WASHER	1		6.400 X 12 X 1.600 MM (0.252" X 0.472" X 0.063")
16	M800051	PIN	1		(SUB FOR CH10542)
17	4424157	STOP	2		(SUB FOR TH4424157)
19	DH300080	BRACKET	1		(SUB FOR THDH300080)
20	19M7550	CAP SCREW	2		M10 X 35
21	24M7346	WASHER	2		11 X 20 X 2 MM (0.433" X 0.787" X 0.079")
22	4431357	STOP	1		(SUB FOR TH4431357)
23	19M7177	CAP SCREW	2		M6 X 35
24	19M7662	CAP SCREW	4		M10 X 30
25	19M7489	CAP SCREW	1		M16 X 45
26	12H294	LOCK WASHER	1		15.875 MM (5/8")
27	24M7053	WASHER	1		17 X 30 X 3 MM (0.669" X 1.181" X 0.118")
28	19M7662	CAP SCREW	4		M10 X 30
	12M7066	LOCK WASHER	4		10 MM (0.394")
	24M7028	WASHER	4		10.500 X 20 X 2 MM (0.413" X 0.787" X 0.079")
29	DH700014	COVER	1		(SUB FOR THDH700014)
30	19M7662	CAP SCREW	1		M10 X 30
	12M7058	LOCK WASHER	1		12 MM (0.472") (SUB FOR 12M7067)
	24M7346	WASHER	1		11 X 20 X 2 MM (0.433" X 0.787" X 0.079")
31	DH700035	COVER	1		(SUB FOR THDH700035)
32	DH700028	COVER	1		(SUB FOR THDH700028)
33	19M7662	CAP SCREW	2		M10 X 30
34	12M7058	LOCK WASHER	2		12 MM (0.472") (SUB FOR 12M7067)
35	24M7346	WASHER	2		11 X 20 X 2 MM (0.433" X 0.787" X 0.079")
39	12M7066	LOCK WASHER	5		10 MM (0.394")
40	24M7028	WASHER	5		10.500 X 20 X 2 MM (0.413" X 0.787" X 0.079")
41	12M7058	LOCK WASHER	4		12 MM (0.472") (SUB FOR 12M7067)
42	24M7346	WASHER	4		11 X 20 X 2 MM (0.433" X 0.787" X 0.079")
43	12M7066	LOCK WASHER	2		10 MM (0.394")
44	24M7054	WASHER	2		6.400 X 12 X 1.600 MM (0.252" X 0.472" X 0.063")
45	12M7012	LOCK WASHER	2		6 MM (0.236")
46	12M7066	LOCK WASHER	4		10 MM (0.394")
47	24M7028	WASHER	4		10.500 X 20 X 2 MM (0.413" X 0.787" X 0.079")
48	.....	ISOLATOR	1		(DH700015F NO LONGER AVAILABLE)

RIGHT SIDE COVER AND TOP GRILLE

T158029 -UN-05AUG02

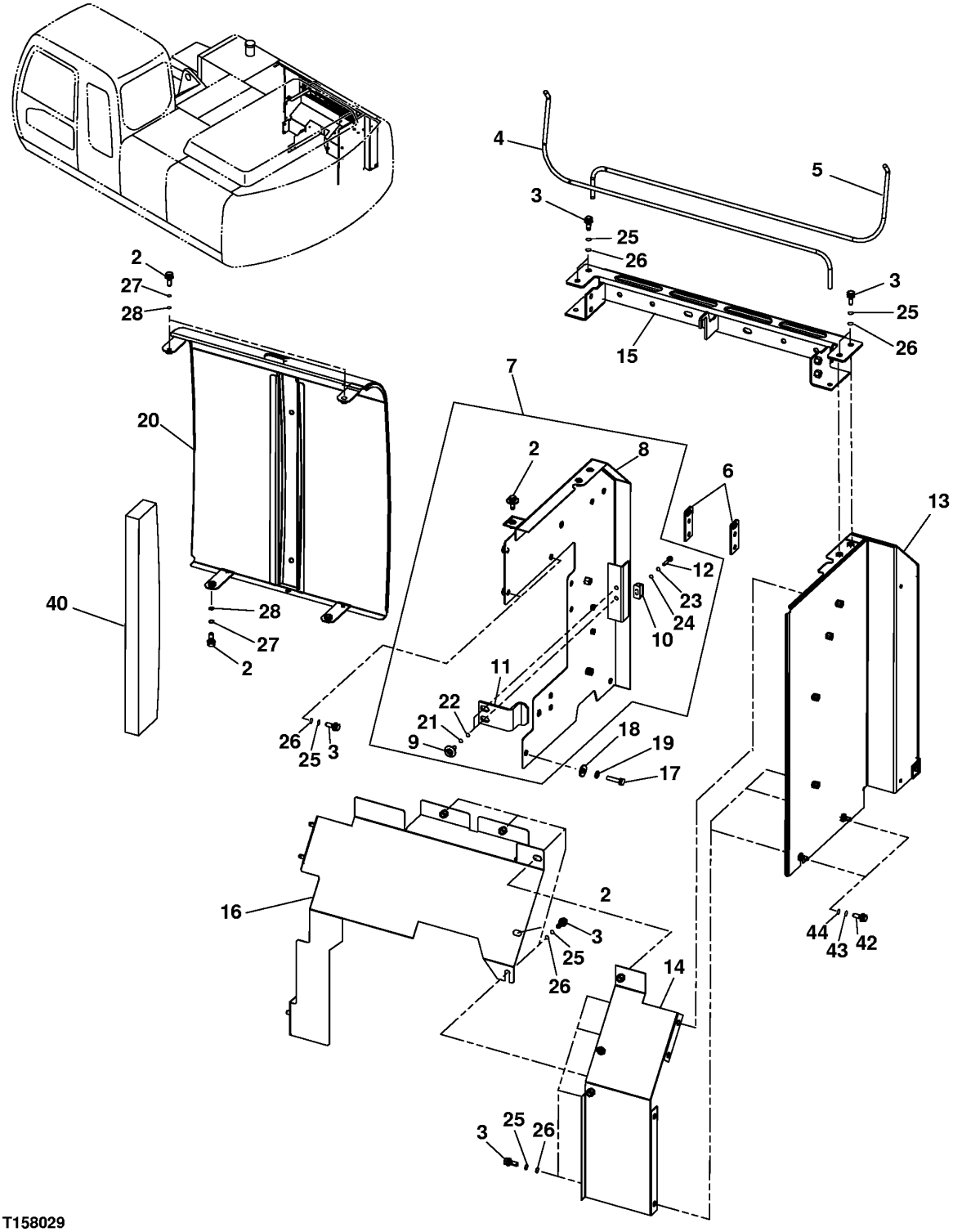

RIGHT SIDE COVER AND TOP GRILLE

KEY	PART NO.	PART NAME	QTY	SERIAL NO.	REMARKS
2	19M7662	CAP SCREW	4		M10 X 30
3	19M7662	CAP SCREW	21		M10 X 30
4	DH300075	BRACKET	1		(SUB FOR THDH300075)
5	DH300076	BRACKET	1		(SUB FOR THDH300076)
6	4261669	BRACKET	2		(SUB FOR AT155284)
7	.....	COVER	1		(DH900127 NO LONGER NEEDED) (SUB FOR THDH900127)
8	DH600002	COVER	1		(SUB FOR THDH600002)
9	19M7662	CAP SCREW	2		M10 X 30
10	4424157	STOP	1		(SUB FOR TH4424157)
11	4431357	STOP	1		(SUB FOR TH4431357)
12	19M7177	CAP SCREW	1		M6 X 35
13	DH700020	COVER	1		(SUB FOR THDH700020)
14	DH800030	COVER	1		(SUB FOR THDH800030) (MUFFLER COVER)
15	DH800028	COVER	1		(SUB FOR THDH800028) (PUMP COVER)
16	DH700023	COVER	1		(SUB FOR THDH700023) (MUFFLER COVER)
17	.....	BOLT	1		(TH101815 NOT AVAILABLE FOR SERVICE)
18	24H1748	WASHER	1		12.700 X 31.750 X 2.667 MM (1/2" X 1-1/4" X 0.105")
19	12M7066	LOCK WASHER	1		10 MM (0.394")
20	DH600006J	COVER	1		(SUB FOR THDH600006J)
21	12M7058	LOCK WASHER	2		12 MM (0.472") (SUB FOR 12M7067)
22	24M7346	WASHER	2		11 X 20 X 2 MM (0.433" X 0.787" X 0.079")
23	24M7054	WASHER	1		6.400 X 12 X 1.600 MM (0.252" X 0.472" X 0.063")
24	12M7012	LOCK WASHER	1		6 MM (0.236")
25	12M7066	LOCK WASHER	21		10 MM (0.394")
26	24M7028	WASHER	21		10.500 X 20 X 2 MM (0.413" X 0.787" X 0.079")
27	12M7058	LOCK WASHER	4		12 MM (0.472") (SUB FOR 12M7067)
28	24M7346	WASHER	4		11 X 20 X 2 MM (0.433" X 0.787" X 0.079")
40	DH400422	ISOLATOR	1		(SUB FOR THDH400422)
42	19M7402	CAP SCREW	2		M10 X 25
43	12M7066	LOCK WASHER	1		
44	24M7028	WASHER	1		

COMPARTMENT COVER DOORS

T154726 -UN-09MAY02

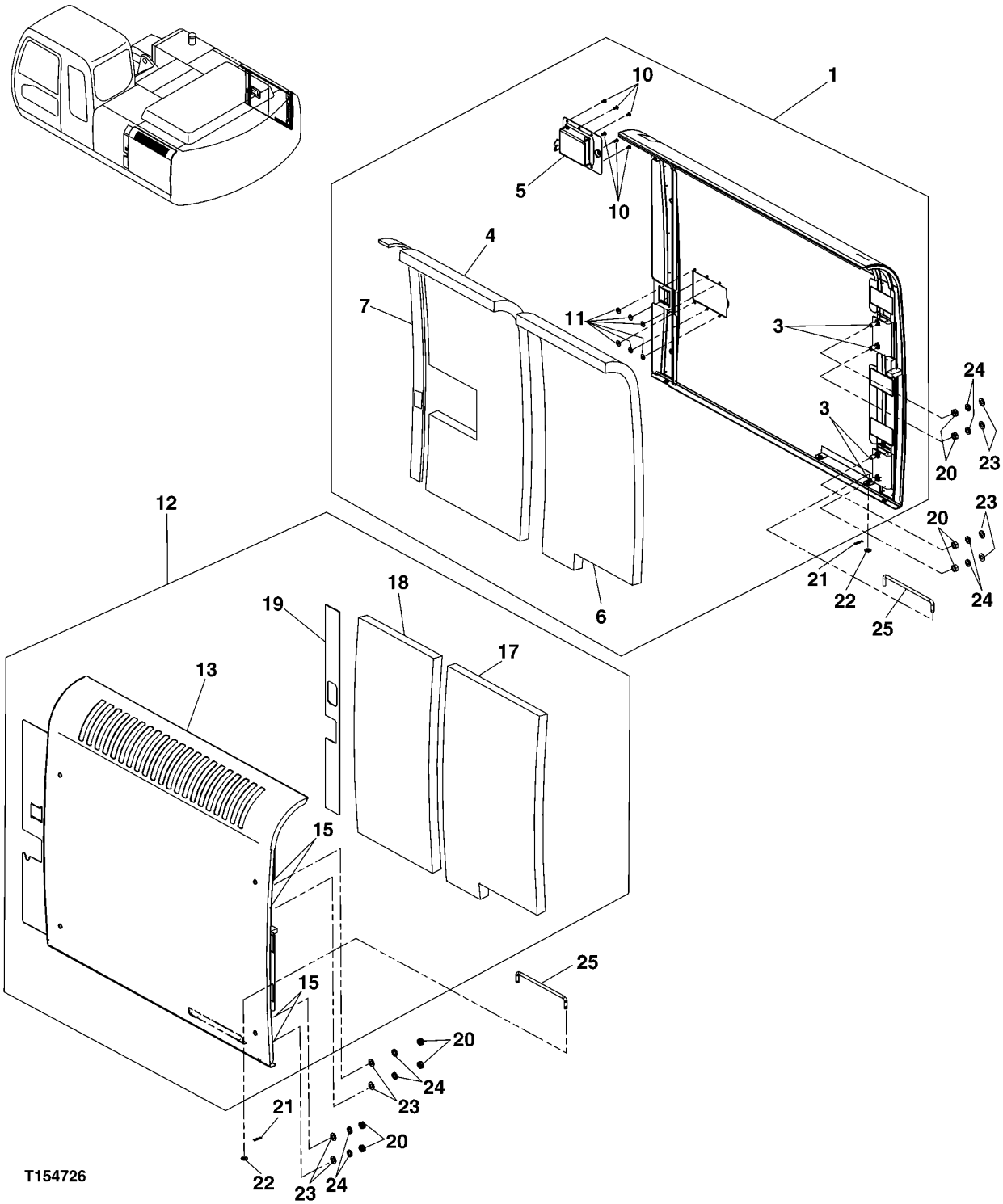

COMPARTMENT COVER DOORS

KEY	PART NO.	PART NAME	QTY	SERIAL NO.	REMARKS
1	DH700043J	DOOR	1		(SUB FOR THDH700043J)
3	19M7402	CAP SCREW	4		M10 X 25
4	4412574	ISOLATOR	1		(SUB FOR TH4412574)
5	DH400030	LOCK	1		(SUB FOR THDH400030)
6	DH400473	ISOLATOR	1		(SUB FOR DH400363 AND THDH400363)
7	DH400341	ISOLATOR	1		(SUB FOR THDH400341)
8	DH400347	ISOLATOR	1		(SUB FOR THDH400347)
9	DH400332	ISOLATOR	1		(SUB FOR THDH400332)
10	M63200	RIVET	6		4.775 MM (3/16")
11	24M7138	WASHER	6		5.300 X 15 X 1.200 MM (0.209" X 0.591" X 0.047")
12	DH700044J	DOOR	1		(SUB FOR THDH700044J)
13	DH500022J	DOOR	1		(SUB FOR THDH500022J)
14	.....	HINGE	2		
15	19M7402	CAP SCREW	4		M10 X 25
16	DH400332	ISOLATOR	1		(SUB FOR THDH400332)
17	DH400361	ISOLATOR	1		(SUB FOR THDH400361)
18	DH400362	ISOLATOR	1		(SUB FOR THDH400362)
19	DH400350	ISOLATOR	1		(SUB FOR THDH400350)
20	14M7274	NUT	8		M10
21	H132922	COTTER PIN	2		
22	24M7055	WASHER	2		8.400 X 16 X 1.600 MM (0.331" X 0.630" X 0.063")
23	24M7028	WASHER	8		10.500 X 20 X 2 MM (0.413" X 0.787" X 0.079")
24	12M7066	LOCK WASHER	8		10 MM (0.394")
25	4341788	ROD	2		(SUB FOR AT213884)

COMPARTMENT TOP COVER WEATHERSTRIP

T143300 -UN-28JUN01

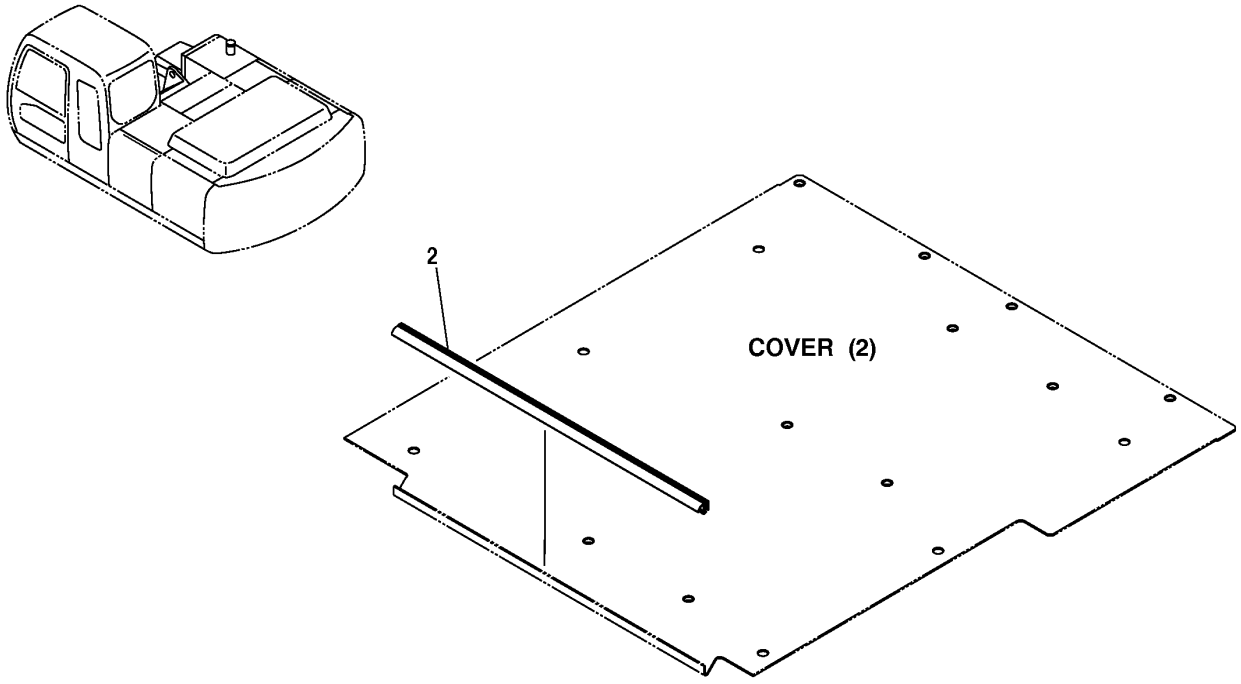

T143300

COMPARTMENT TOP COVER WEATHERSTRIP

KEY	PART NO.	PART NAME	QTY	SERIAL NO.	REMARKS
2	4445911	SEALING TRIM	1		(SUB FOR TH4445911)

ENGINE COMPARTMENT COVER

T147453 -UN-30OCT01

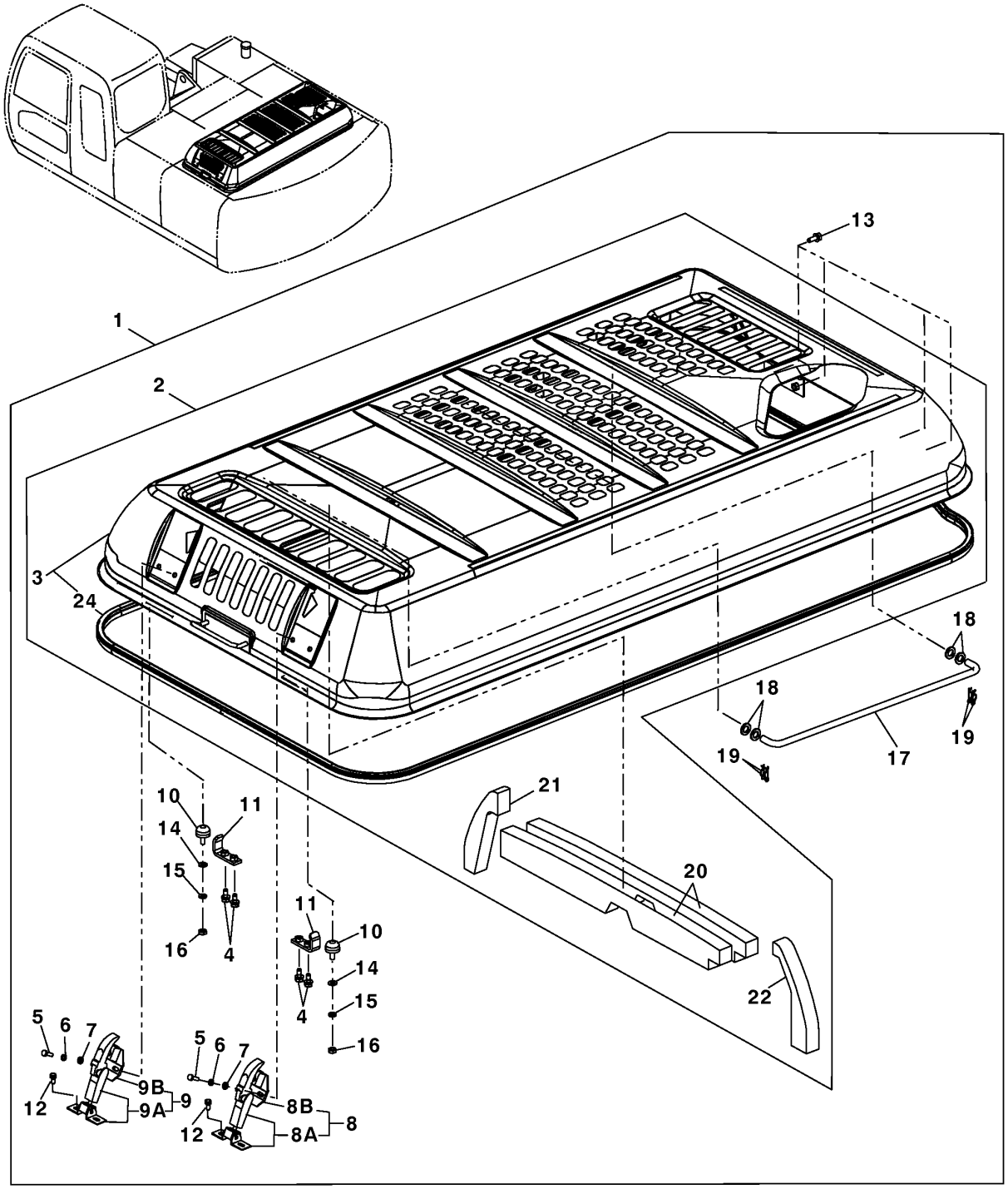

T147453

ENGINE COMPARTMENT COVER

KEY	PART NO.	PART NAME	QTY	SERIAL NO.	REMARKS
1	THDH900194	COVER	1		
2	5008107	COVER	1		(SUB FOR DH800042)
3	.....	COVER	1		(DH500019 NO LONGER AVAILABLE)
4	19M7402	CAP SCREW	4		M10 X 25
	12M7066	LOCK WASHER	4		10 MM (0.394")
	24M7028	WASHER	4		10.500 X 20 X 2 MM (0.413" X 0.787" X 0.079")
5	21M7397	SCREW	4		M8 X 25
6	12M7056	LOCK WASHER	4		8 MM (0.315") (SUB FOR 12M7065)
7	24M7055	WASHER	4		8.400 X 16 X 1.600 MM (0.331" X 0.630" X 0.063")
8	4361455	CATCH	1		(SUB FOR AT215532) (SUB FOR TH108769)
	AT194969	KEY	1		(SUB FOR AT147803)
8A	3040904	CATCH	1		(SUB FOR AT126162)
8B	3021131	ANCHOR	1		(SUB FOR TH102247)
9	4361455	CATCH	1		(SUB FOR TH111036) (SUB FOR TH108769)
	AT194969	KEY	1		(SUB FOR AT147803)
9A	3040904	CATCH	1		(SUB FOR AT126162)
9B	3021131	ANCHOR	1		(SUB FOR TH102247)
10	4294508	BUMPER	2		(SUB FOR AT201032)
11	AT307244	BRACKET	2		(SUB FOR AT171615 OR 9743889)
12	19M7881	SCREW	4		M8 X 20
	12M7056	LOCK WASHER	4		8 MM (0.315") (SUB FOR 12M7065)
13	19M7662	CAP SCREW	4		M10 X 30
	12M7066	LOCK WASHER	4		10 MM (0.394")
	24M7028	WASHER	4		10.500 X 20 X 2 MM (0.413" X 0.787" X 0.079")
14	24M7028	WASHER	2		10.500 X 20 X 2 MM (0.413" X 0.787" X 0.079")
15	12M7066	LOCK WASHER	2		10 MM (0.394")
16	14M7274	NUT	2		M10
17	4278783	BRACKET	1		(SUB FOR AT201025)
18	24M7053	WASHER	4		17 X 30 X 3 MM (0.669" X 1.181" X 0.118")
19	M40461	PIN	4		
20	4465397	ISOLATOR	2		(SUB FOR DH400251)
21	4465398	ISOLATOR	1		(SUB FOR DH400252)
22	4465396	ISOLATOR	1		(SUB FOR DH400253)
24	4278601	ISOLATOR	1		(SUB FOR AT155314)

TOOL BOX

T146643 -UN-22OCT01

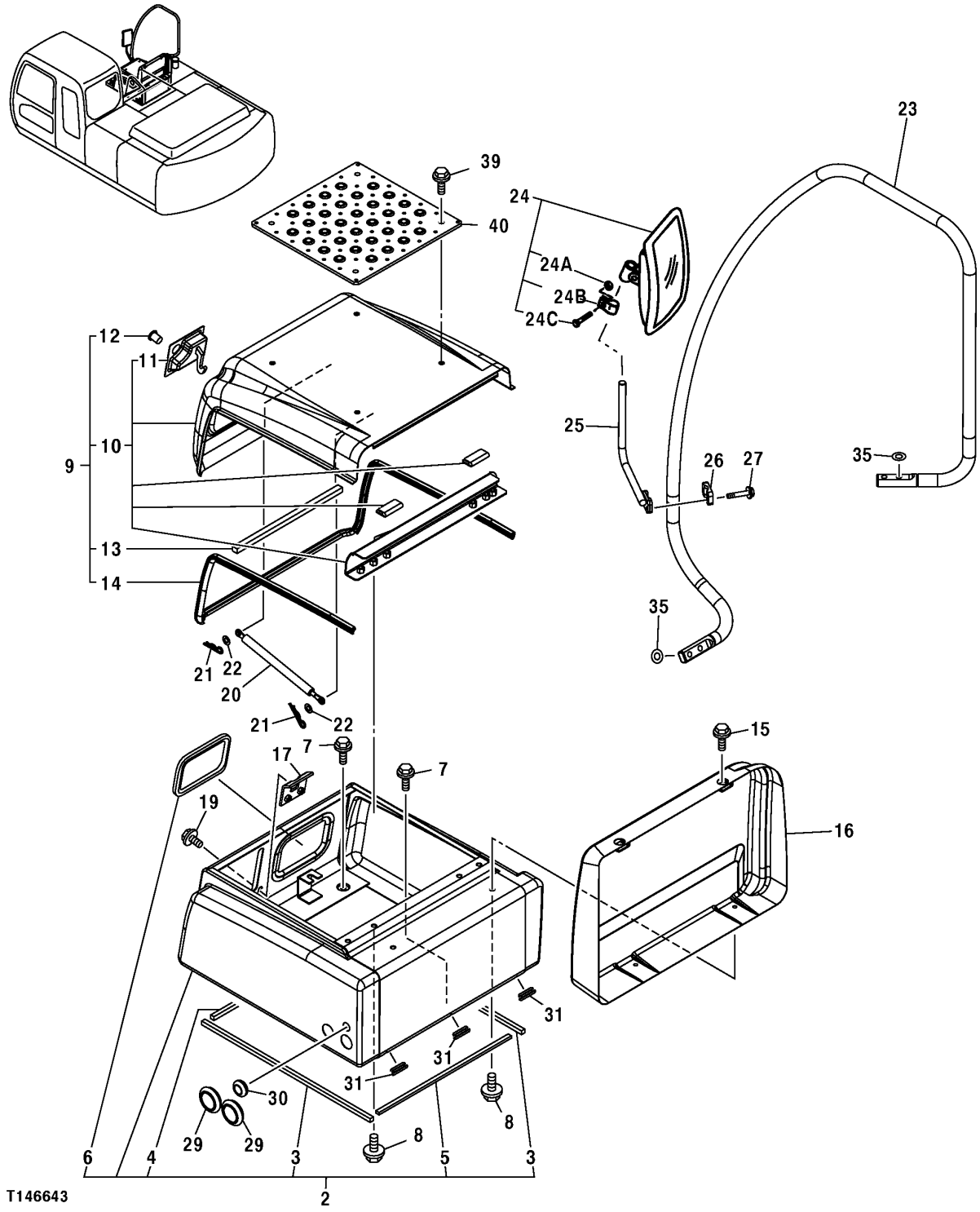

TOOL BOX

KEY	PART NO.	PART NAME	QTY	SERIAL NO.	REMARKS
2	6018671	TOOLBOX	1		(SUB FOR 7037283)
3	4426598	ISOLATOR	2		(SUB FOR TH4426598)
4	4426599	ISOLATOR	1		(SUB FOR TH4426599)
5	4429011	ISOLATOR	1		(SUB FOR TH4429011)
6	4436409	ISOLATOR	1		(SUB FOR TH4436409)
7	19M7662	CAP SCREW	6		M10 X 30
	12M7066	LOCK WASHER	6		10 MM (0.394")
	24M7028	WASHER	6		10.500 X 20 X 2 MM (0.413" X 0.787" X 0.079")
8	19M7662	CAP SCREW	4		M10 X 30
	12M7066	LOCK WASHER	4		10 MM (0.394")
	24M7028	WASHER	4		10.500 X 20 X 2 MM (0.413" X 0.787" X 0.079")
9	8077778	COVER	1		(SUB FOR 8077778J AND TH8077778J)
10	.....	COVER	1		(6018662 NO LONGER AVAILABLE) (SUB FOR TH6018662)
11	4379984	LATCH	1		(SUB FOR TH4379984)
12	4379989	CYLINDER	1		(SUB FOR TH4379989)
13	4436279	ISOLATOR	1		(SUB FOR TH4436279)
14	4443342	SEALING TRIM	1		(SUB FOR TH4443342)
15	19M7662	CAP SCREW	4		M10 X 30
	12M7066	LOCK WASHER	4		10 MM (0.394")
	24M7028	WASHER	4		10.500 X 20 X 2 MM (0.413" X 0.787" X 0.079")
16	7037241	COVER	1		(SUB FOR 7037241J AND TH7037241J)
17	9745798	CATCH	1		(SUB FOR AT214409)
18	4366830	BRACKET	2		(SUB FOR TH4366830)
19	19M7662	CAP SCREW	2		M10 X 30
	12M7058	LOCK WASHER	2		12 MM (0.472") (SUB FOR 12M7067)
	24M7346	WASHER	2		11 X 20 X 2 MM (0.433" X 0.787" X 0.079")
20	4352457	CYLINDER	1		(SUB FOR AT213967)
21	H132922	COTTER PIN	2		
22	24M7028	WASHER	2		10.500 X 20 X 2 MM (0.413" X 0.787" X 0.079")
23	7039248	HANDRAIL	1		
24	4420724	REAR VIEW MIRROR	1		(SUB FOR AT185207)
24A	14M7400	LOCK NUT	1		M10
24B	.....	CLAMP	1		(NOT AVAILABLE FOR SERVICE)
24C	03M7193	BOLT	1		M10 X 35
25	8077521	BRACKET	1		(SUB FOR TH8077521)
26	4425481	HOSE CLAMP	1		(SUB FOR TH4425481)
27	19M7981	CAP SCREW	2		M8 X 55
	12M7056	LOCK WASHER	2		8 MM (0.315") (SUB FOR 12M7065)
29	4276215	GROMMET	2		(SUB FOR AT155307)
30	4613243	GROMMET	1		(SUB FOR AT122152, 94-2807)
31	4426597	BUSHING	3		(SUB FOR TH4426597)
35	24M7047	WASHER	8		13 X 24 X 2.500 MM (0.512" X 0.945" X 0.098")
39	19M7662	CAP SCREW	4		M10 X 30
	12M7066	LOCK WASHER	4		10 MM (0.394")
	24M7028	WASHER	4		10.500 X 20 X 2 MM (0.413" X 0.787" X 0.079")
40	3091337	COVER	1		(SUB FOR TH3091337)

BOTTOM PROTECTION COVERS

T143303 -UN-22OCT01

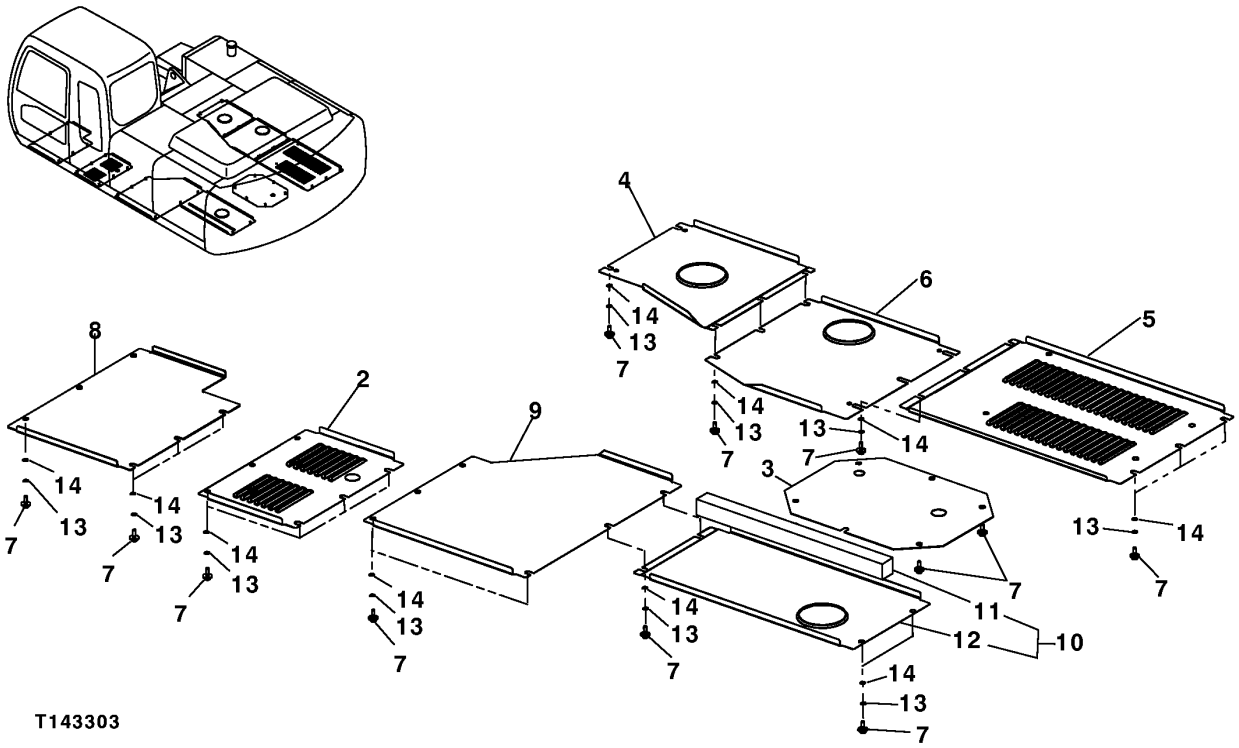

BOTTOM PROTECTION COVERS

KEY	PART NO.	PART NAME	QTY	SERIAL NO.	REMARKS
2	3085304	COVER	1		(SUB FOR TH3085304)
3	3085306	COVER	1		(SUB FOR TH3085306)
4	3085307	COVER	1		(SUB FOR TH3085307)
5	2043655	COVER	1		(SUB FOR TH2043655)
6	2043656	COVER	1		(SUB FOR TH2043656)
7	19M7550	CAP SCREW	37		M10 X 35
8	3090090	COVER	1		(SUB FOR TH3090090)
9	2044842	COVER	1		(SUB FOR TH2044842)
10	DH800041	COVER	1		(SUB FOR THDH800041)
11	DH400308	ISOLATOR	1		(SUB FOR THDH400308)
12	DH300082	COVER	1		(SUB FOR THDH300082)
13	24M7346	WASHER	37		11 X 20 X 2 MM (0.433" X 0.787" X 0.079")
14	12M7066	LOCK WASHER	37		10 MM (0.394")

COOLING PACKAGE AND HYDRAULIC PUMP COMPARTMENT DOORS(VENTED)

T165695 -UN-11MAR03

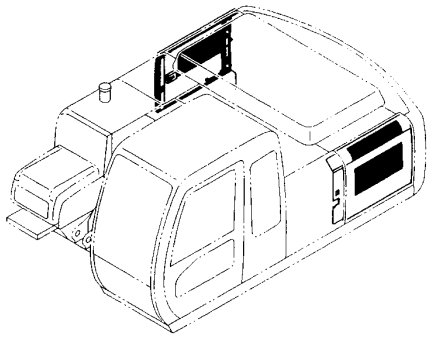

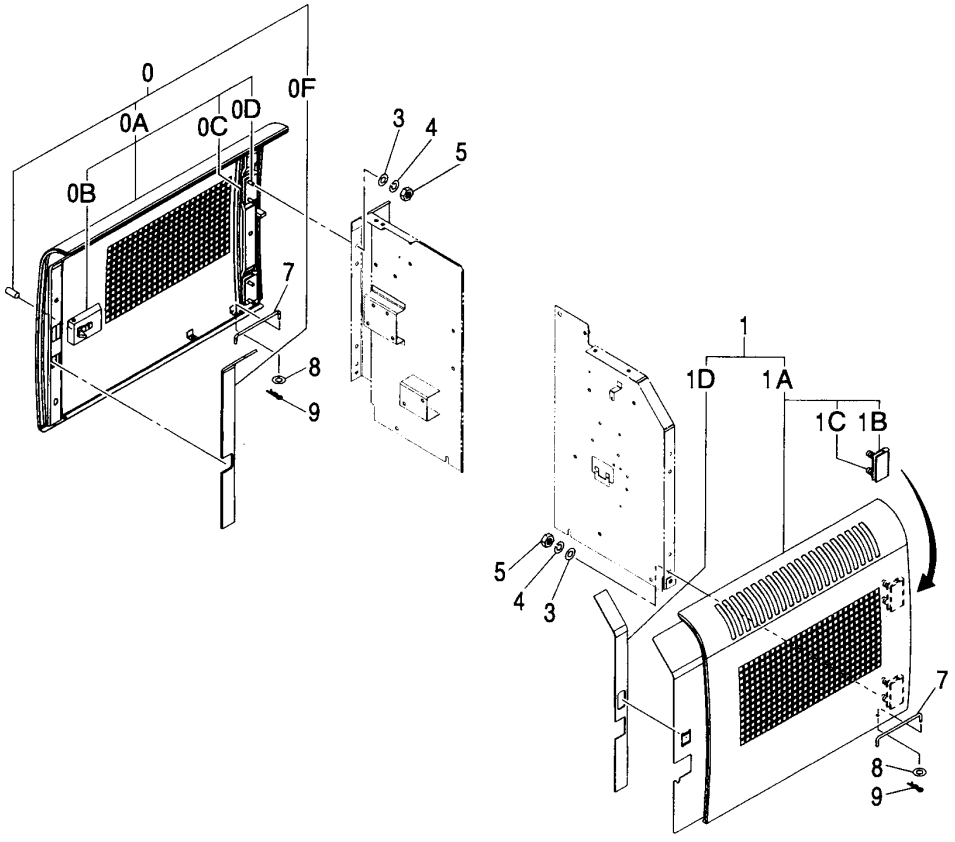

T165695

COOLING PACKAGE AND HYDRAULIC PUMP COMPARTMENT DOORS(VENTED)

KEY	PART NO.	PART NAME	QTY	SERIAL NO.	REMARKS
0	7039639	DOOR	1		(ASSEMBLY)
0A	5007469	DOOR	1		
0B	4409446	LOCK	1		
0C	.....	HINGE	2		(3072015 NOT AVAILABLE)
0D	19M7402	CAP SCREW	4		M10 X 25
0F	4425575	ISOLATOR	1		
1	7039640	DOOR	1		(ASSEMBLY)
1A	.....	DOOR	1		(5007470 NOT AVAILABLE)
1B	.....	HINGE	2		(3072015 NOT AVAILABLE)
1C	19M7402	CAP SCREW	4		M10 X 25
1D	4425576	ISOLATOR	1		
3	24M7028	WASHER	8		10.500 X 20 X 2 MM
4	12M7066	LOCK WASHER	8		10 MM
5	14M7274	NUT	8		M10
7	4341788	ROD	2		
8	24M7055	WASHER	2		8.400 X 16 X 1.600 MM, (SUB FOR A590108)
9	4022697	COTTER PIN	2		

RADIO KIT

TP54582 -UN-07FEB97

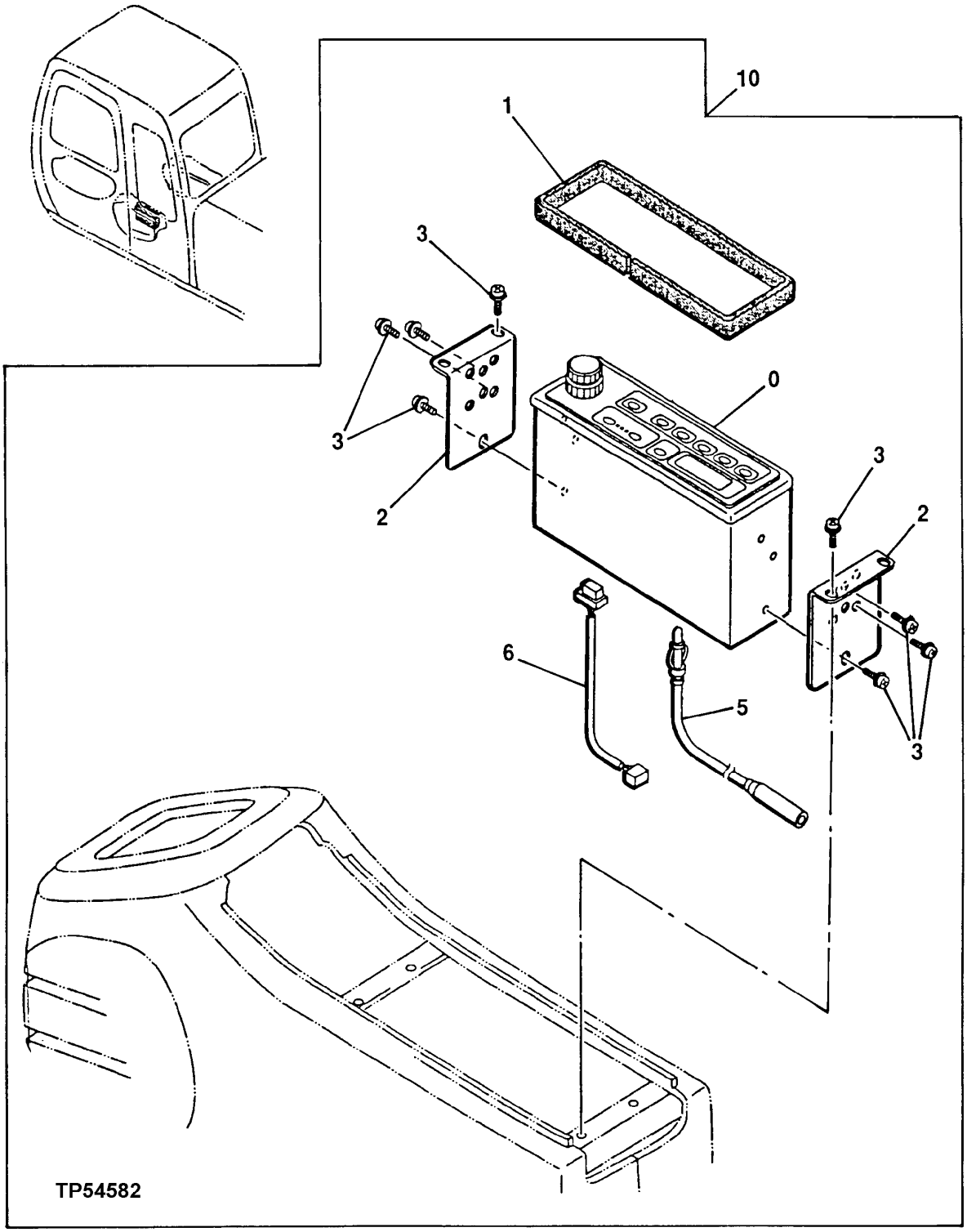

RADIO KIT

KEY	PART NO.	PART NAME	QTY	SERIAL NO.	REMARKS
0	4351187	RADIO	1		(SUB FOR AT214430)
1	4368973	ISOLATOR	1		(SUB FOR AT215533)
2	4341706	BRACKET	2		(SUB FOR AT213883)
3	19M7700	CAP SCREW	10		M5 X 10
	12M7064	LOCK WASHER	10		5 MM (0.197")
	24M7348	WASHER	10		5.500 X 10 X 1 MM (0.217" X 0.394" X 0.039")
5	4102096	WIRING HARNESS	1		(SUB FOR AT154913)
6	2037305	WIRING HARNESS	1		(SUB FOR AT215479)
10	**AT181125**	**RADIO**	**1**		**(KIT) (WHOLEGOODS)**

LEFT REAR VIEW MIRROR

T151065 -UN-06FEB02

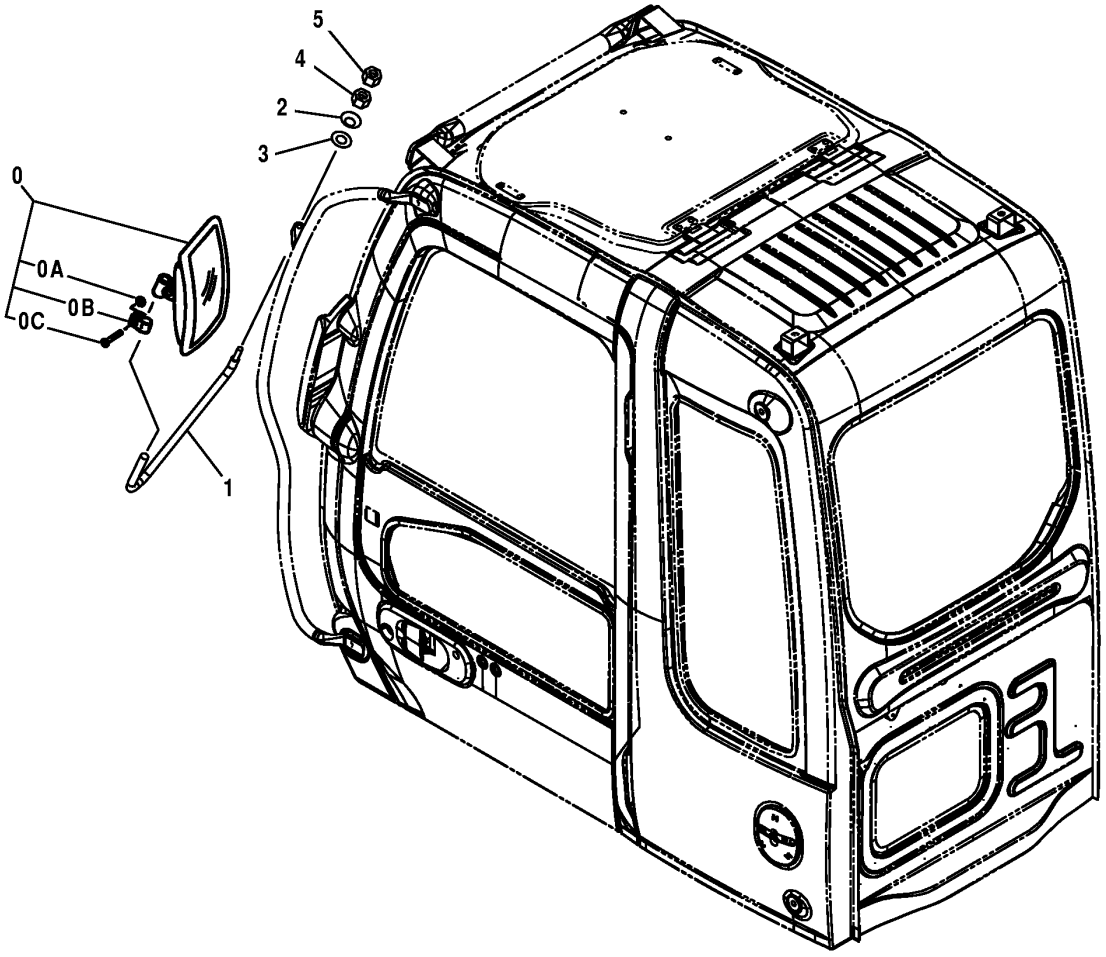

T151065

LEFT REAR VIEW MIRROR

KEY	PART NO.	PART NAME	QTY	SERIAL NO.	REMARKS
0	4420724	REAR VIEW MIRROR	1		(SUB FOR AT185207)
0A	14M7400	LOCK NUT	1		M10
0B	.....	CLAMP	1		(NOT AVAILABLE FOR SERVICE)
0C	03M7193	BOLT	1		M10 X 35
1	3091096	BRACKET	1		(SUB FOR TH3091096)
2	4172172	WASHER	2		(SUB FOR TH104118)
3	24M7047	WASHER	2		13 X 24 X 2.500 MM (0.512" X 0.945" X 0.098")
4	14M7275	NUT	1		M12
5	4449509	NUT	1		(SUB FOR TH4449509)

HORN

T151297 -UN-14FEB02

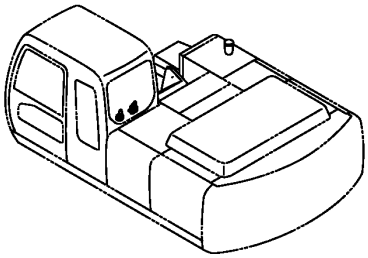

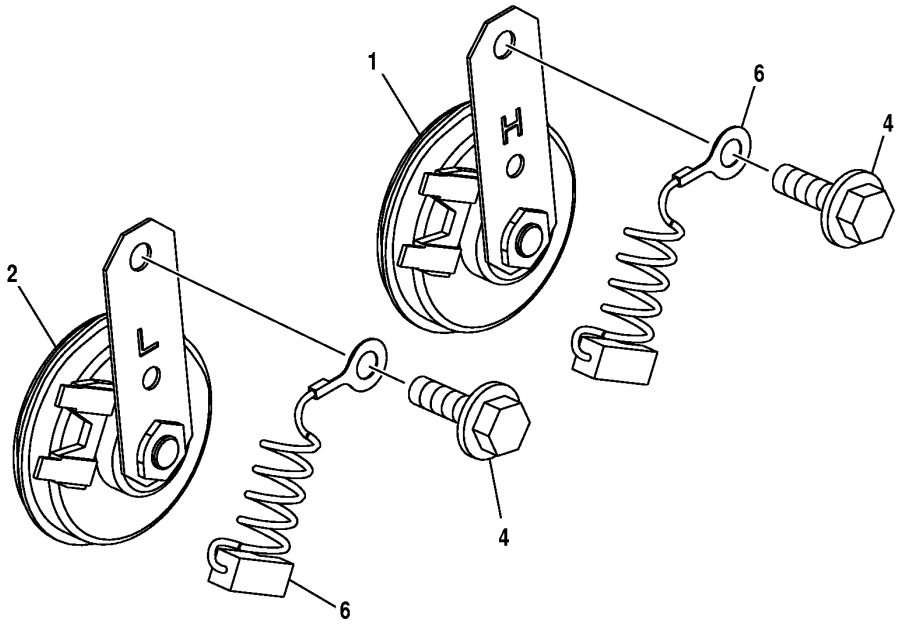

T151297

HORN

KEY	PART NO.	PART NAME	QTY	SERIAL NO.	REMARKS
1	AT64237	HORN	1		
2	AT64237	HORN	1		
4	12M7056	LOCK WASHER	2		8 MM (0.315") (SUB FOR 12M7065)
	19M7163	CAP SCREW	2		M8 X 25
	24M7055	WASHER	2		8.400 X 16 X 1.600 MM (0.331" X 0.630" X 0.063")
6	4254603	WIRING HARNESS	2		(SUB FOR AT154213)

TRAVEL MOTION ALARM

T143276 -UN-12OCT01

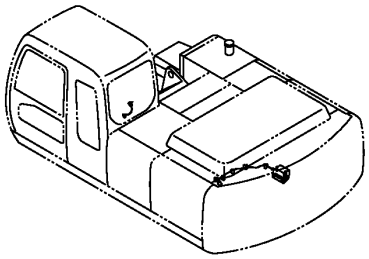

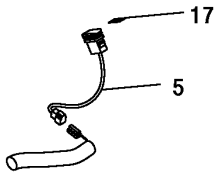

ELECTRIC PARTS

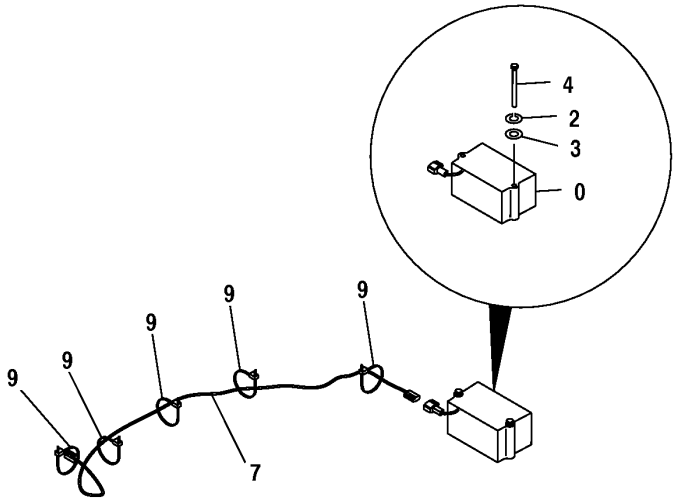

T143276

TRAVEL MOTION ALARM

KEY	PART NO.	PART NAME	QTY	SERIAL NO.	REMARKS
0	AT301074	ALARM SYSTEM	1		(SUB FOR AT154966, 4283028)
2	12M7056	LOCK WASHER	2		8 MM (0.315") (SUB FOR 12M7065)
3	24M7055	WASHER	2		8.400 X 16 X 1.600 MM (0.331" X 0.630" X 0.063")
4	19M7997	CAP SCREW	2		M8 X 110
5	4384758	SWITCH	1		(ROUND STYLE)
7	3088769	WIRING HARNESS	1		(SUB FOR TH3088769)
9	H77698	TIE BAND	6		
17	4450174	LABEL	1		(SUB FOR 4441246 AND TH4441246)

BUCKET
(GENERAL PURPOSE HIGH CAPACITY BUCKET)
(ALSO ORDER BUCKET TOOTH ASSEMBLIES)

T134589 -UN-12OCT00

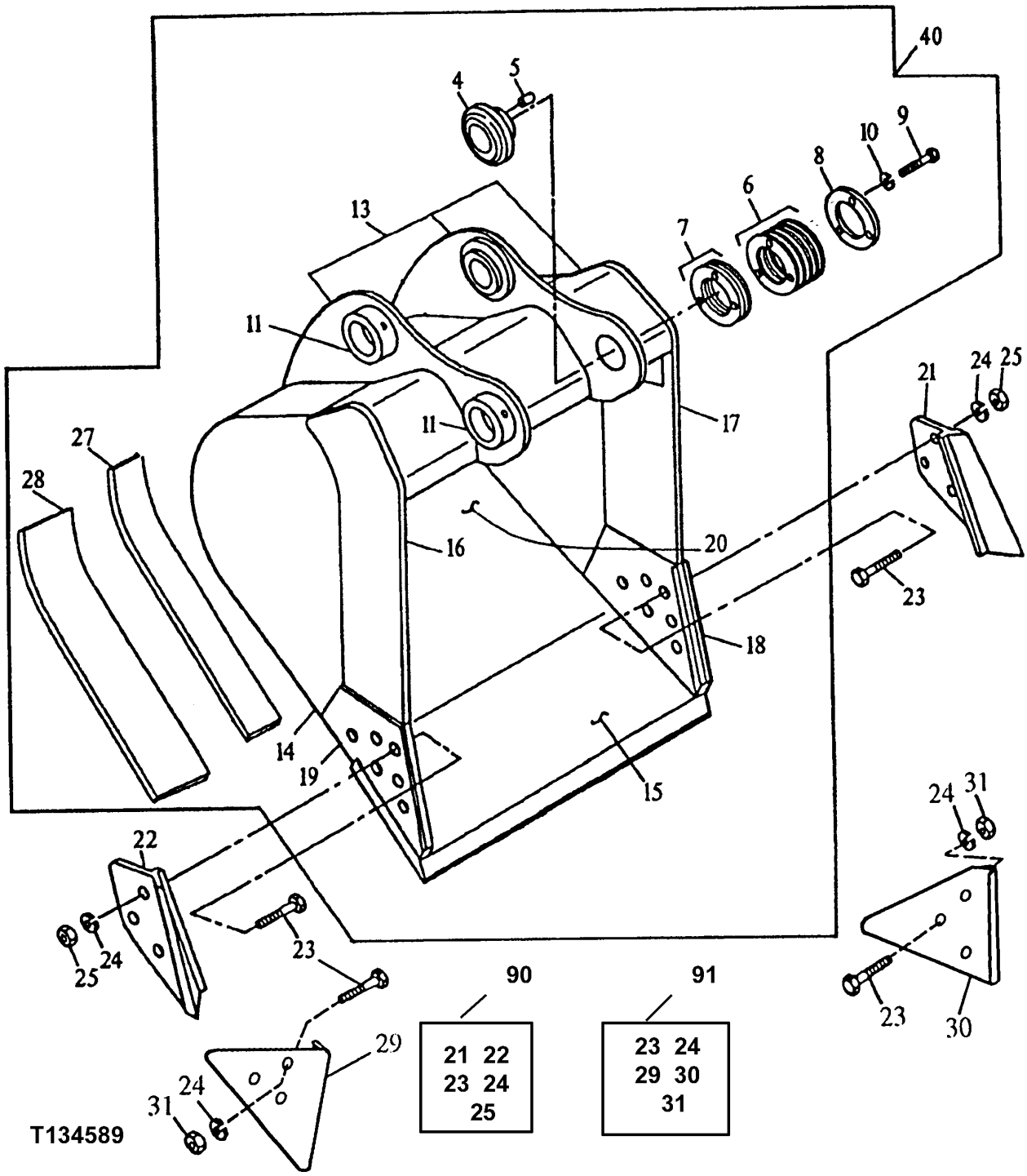

BUCKET
(GENERAL PURPOSE HIGH CAPACITY BUCKET)
(ALSO ORDER BUCKET TOOTH ASSEMBLIES)

KEY	PART NO.	PART NAME	QTY	SERIAL NO.	REMARKS
4	AT131083	SELF-ALIGNING BUSHING	1		(1 INCH HEAD THICKNESS)
5	R48685	DOWEL PIN	1		
6	TH104512	WASHER	9		
7	TH104513	SHIM	1		
8	TH104514	WASHER	1		
9	19H2706	CAP SCREW	3		5/8" X 2"
10	12H294	LOCK WASHER	3		5/8", (1" HEAD THICKNESS)
11	TH104509	BUSHING	2		
13	C607480	PIVOT	1		(BUCKET EAR BLANK ASSEMBLY) (ORDER FROM CENTRAL FABRICATORS)
14	300536	PLATE	2		(RIGHT AND LEFT SIDE) (ORDER FROM CENTRAL FABRICATORS)
15	.....	CUTTING EDGE	1		(CUT TO LENGTH FROM AT131090 BULK MATERIAL)
16	300534	VERTICAL CUTTER	1		(UPPER RIGHT SIDE) (ORDER FROM CENTRAL FABRICATORS)
17	300535	VERTICAL CUTTER	1		(UPPER LEFT SIDE) (ORDER FROM CENTRAL FABRICATORS)
18	300482	VERTICAL CUTTER	1		(LEFT INSERT) (ORDER FROM CENTRAL FABRICATORS)
19	300481	VERTICAL CUTTER	1		(RIGHT INSERT) (ORDER FROM CENTRAL FABRICATORS)
20	600318	MOLDBOARD	1		(30 INCH) (ORDER FROM CENTRAL FABRICATORS)
	600319	MOLDBOARD	1		(36 INCH) (ORDER FROM CENTRAL FABRICATORS)
	600320	MOLDBOARD	1		(42 INCH) (ORDER FROM CENTRAL FABRICATORS)
	600321	MOLDBOARD	1		(48 INCH) (ORDER FROM CENTRAL FABRICATORS)
21	.....	CUTTING EDGE	1		(SUB AT131080)
22	.....	CUTTING EDGE	1		(SUB AT131080)
23	09H1770	BOLT	6		7/8" X 2-1/2"
24	12H245	LOCK WASHER	6		7/8"
25	14H1077	NUT	6		7/8"
27	300524	BAR	1		(INNER WEAR) (ORDER FROM CENTRAL FABRICATORS)
28	306974	BAR	2		(OUTER WEAR) (ORDER FROM CENTRAL FABRICATORS)
29	.....	SHROUD	1		(WEAR SHROUD) (SUB AT167874)
30	.....	SHROUD	1		(WEAR SHROUD) (SUB AT167874)
31	14H1044	NUT	6		22.225 MM (7/8")
40	**AT163607**	**EXCAVATOR BUCKET**	**1**		**WHOLEGOODS (30 INCH - .95 CUBIC YARD) (AVAILABLE TOOTH ASSEMBLIES ON SEPARATE PAGE)**
	AT163608	**EXCAVATOR BUCKET**	**1**		**WHOLEGOODS (36 INCH - 1.16 CUBIC YARD) (AVAILABLE TOOTH ASSEMBLIES ON SEPARATE PAGE)**
	AT163609	**EXCAVATOR BUCKET**	**1**		**WHOLEGOODS (42 INCH - 1.38 CUBIC YARD) (AVAILABLE TOOTH ASSEMBLIES ON SEPARATE PAGE)**
	AT163610	**EXCAVATOR BUCKET**	**1**		**WHOLEGOODS (48 INCH - 1.60 CUBIC YARD) (AVAILABLE TOOTH ASSEMBLIES ON SEPARATE PAGE)**
90	**AT131080**	**END BIT**	**1**		**(SIDE CUTTER KIT)**
91	AT167874	KIT	1		(EDGE PROTECTOR)

BUCKET
(HEAVY DUTY)
(ALSO ORDER BUCKET TOOTH ASSEMBLIES)

TP50702 -UN-17OCT97

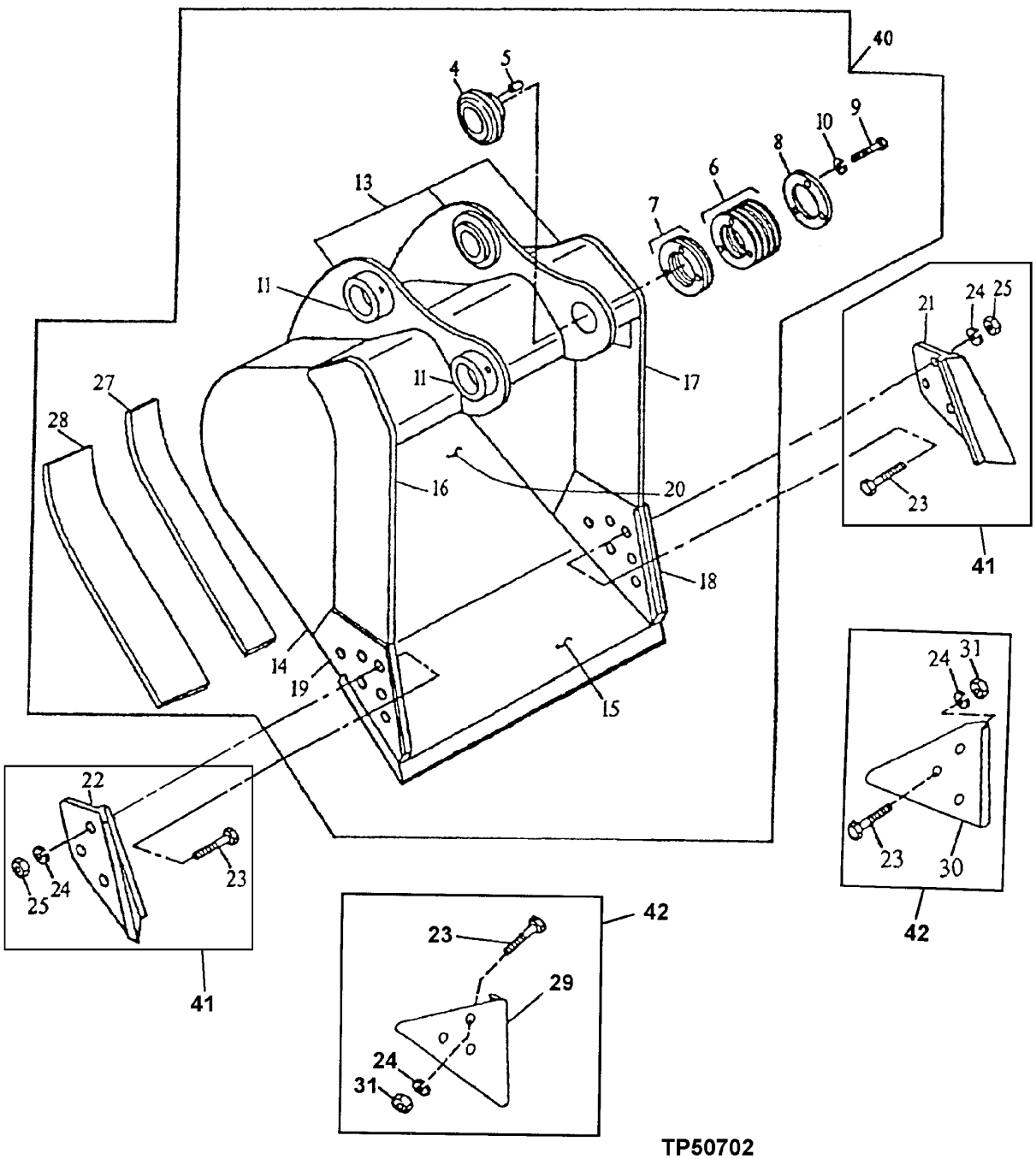

BUCKET
(HEAVY DUTY)
(ALSO ORDER BUCKET TOOTH ASSEMBLIES)

KEY	PART NO.	PART NAME	QTY	SERIAL NO.	REMARKS
4	AT131083	SELF-ALIGNING BUSHING	1		(1 INCH HEAD THICKNESS)
5	R48685	DOWEL PIN	1		
6	TH104512	WASHER	9		
7	TH104513	SHIM	1		
8	TH104514	WASHER	1		
9	19H2706	CAP SCREW	3		5/8" X 2"
10	12H294	LOCK WASHER	3		5/8"
11	TH104509	BUSHING	2		(LOCKING COLLAR)
13	C607480	PIVOT	1		(BUCKET EAR BLANK ASSEMBLY) (ORDER FROM CENTRAL FABRICATORS)
14	300804	PLATE	2		(RIGHT AND LEFT SIDE) (ORDER FROM CENTRAL FABRICATORS)
15	.....	CUTTING EDGE	1		(CUT TO LENGTH FROM AT131082 BULK MATERIAL)
16	300526	VERTICAL CUTTER	1		(UPPER RIGHT SIDE) (ORDER FROM CENTRAL FABRICATORS)
17	300527	VERTICAL CUTTER	1		(UPPER LEFT SIDE) (ORDER FROM CENTRAL FABRICATORS)
18	304568	VERTICAL CUTTER	1		(LEFT INSERT) (ORDER FROM CENTRAL FABRICATORS)
19	304567	VERTICAL CUTTER	1		(RIGHT INSERT) (ORDER FROM CENTRAL FABRICATORS)
20	600417	MOLDBOARD	1		(24 INCH) (ORDER FROM CENTRAL FABRICATORS)
	600418	MOLDBOARD	1		(30 INCH) (ORDER FROM CENTRAL FABRICATORS)
	600419	MOLDBOARD	1		(36 INCH) (ORDER FROM CENTRAL FABRICATORS)
	600420	MOLDBOARD	1		(42 INCH) (ORDER FROM CENTRAL FABRICATORS)
	600122	MOLDBOARD	1		(48 INCH) (ORDER FROM CENTRAL FABRICATORS)
21	.....	CUTTING EDGE	1		(SUB AT131085) (LEFT)
22	.....	CUTTING EDGE	1		(SUB AT131085) (RIGHT)
23	09H1771	BOLT	6		7/8" X 3"
24	12H245	LOCK WASHER	6		7/8"
25	14H1077	NUT	6		7/8"
27	300524	BAR	1		(INNER WEAR) (ORDER FROM CENTRAL FABRICATORS)
28	304564	BAR	2		(OUTER WEAR) (ORDER FROM CENTRAL FABRICATORS)
29	.....	SHROUD	1		(WEAR SHROUD) (SUB AT167876)
30	.....	SHROUD	1		(WEAR SHROUD) (SUB AT167876)
31	14H1044	NUT	6		22.225 MM (7/8")
40	**AT163611**	**EXCAVATOR BUCKET**	**1**		**WHOLEGOODS (24 INCH - .59 CUBIC YARD) (AVAILABLE TOOTH ASSEMBLIES ON SEPARATE PAGE)**
	AT163612	**EXCAVATOR BUCKET**	**1**		**WHOLEGOODS (30 INCH - .77 CUBIC YARD) (AVAILABLE TOOTH ASSEMBLIES ON SEPARATE PAGE)**
	AT163613	**EXCAVATOR BUCKET**	**1**		**WHOLEGOODS (36 INCH - .95 CUBIC YARD) (AVAILABLE TOOTH ASSEMBLIES ON SEPARATE PAGE)**
	AT163614	**EXCAVATOR BUCKET**	**1**		**WHOLEGOODS (42 INCH - 1.12 CUBIC YARD) (AVAILABLE TOOTH ASSEMBLIES ON SEPARATE PAGE)**
	AT163615	**EXCAVATOR BUCKET**	**1**		**WHOLEGOODS (48 INCH - 1.30 CUBIC YARD) (AVAILABLE TOOTH ASSEMBLIES ON SEPARATE PAGE)**
41	AT131085	KIT	1		(CUTTING EDGE) WHOLEGOODS
42	AT167876	KIT	1		(WEAR) WHOLEGOODS

BUCKET
(HEAVY DUTY HIGH CAPACITY)
(ALSO ORDER BUCKET TOOTH ASSEMBLIES)

TP50702 -UN-17OCT97

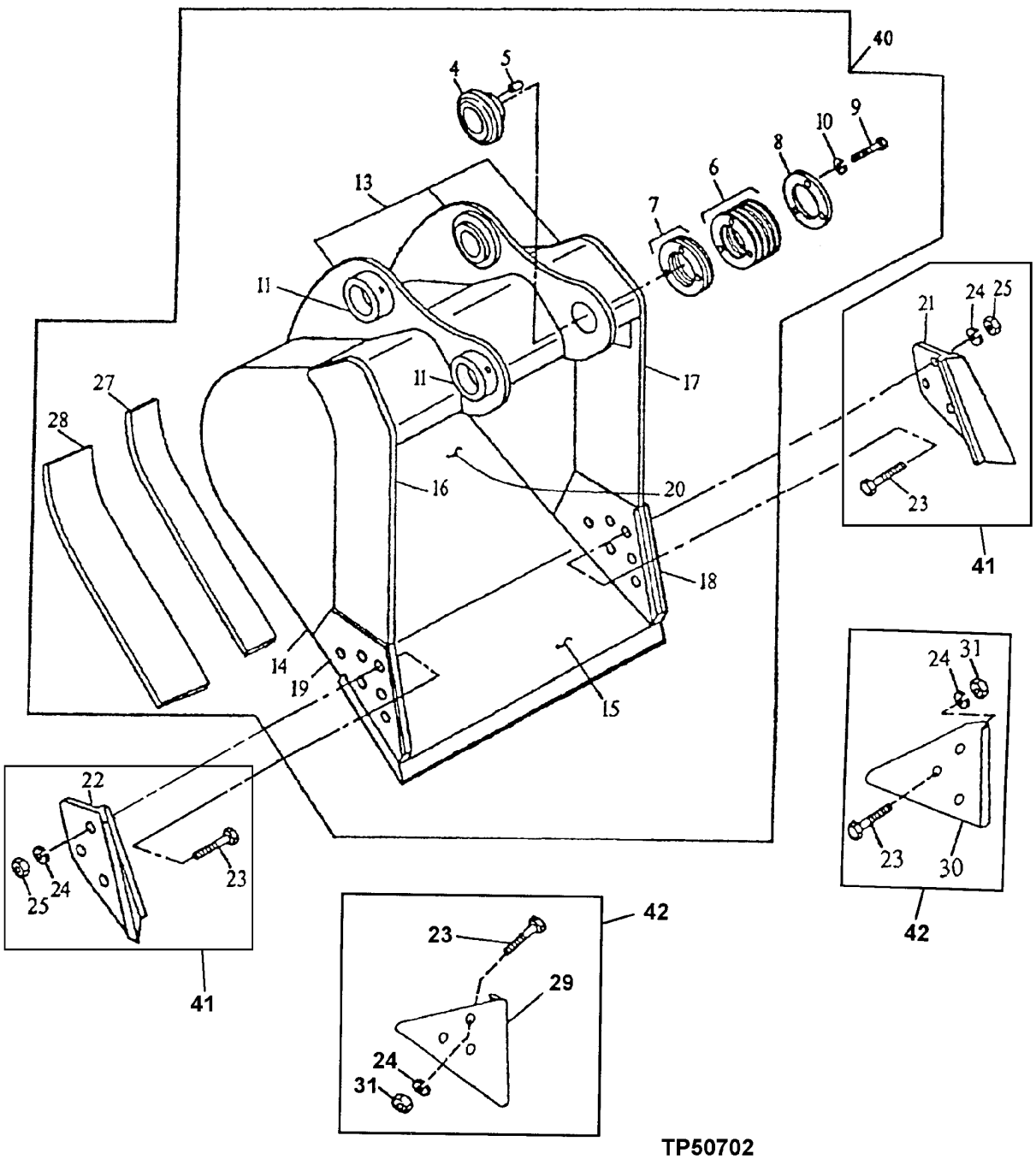

BUCKET
(HEAVY DUTY HIGH CAPACITY)
(ALSO ORDER BUCKET TOOTH ASSEMBIES)

KEY	PART NO.	PART NAME	QTY	SERIAL NO.	REMARKS
4	AT131083	SELF-ALIGNING BUSHING	1		(1 INCH HEAD THICKNESS)
5	R48685	DOWEL PIN	1		
6	TH104512	WASHER	9		
7	TH104513	SHIM	1		
8	TH104514	WASHER	1		
9	19H2706	CAP SCREW	3		5/8" X 2"
10	12H294	LOCK WASHER	3		5/8"
11	TH104509	BUSHING	2		(LOCKING COLLAR)
13	C607480	PIVOT	1		(BUCKET EAR BLANK ASSEMBLY) (ORDER FROM CENTRAL FABRICATORS)
14	300167	PLATE	2		(RIGHT AND LEFT SIDE) (ORDER FROM CENTRAL FABRICATORS)
15	.....	CUTTING EDGE	1		(CUT TO LENGTH FROM AT131090 BULK MATERIAL)
	C252567	CUTTING EDGE	1		(CUT TO LENGTH) USE WITH 36 INCH BUCKET, (ORDER FROM CENTRAL FABRICATORS)
16	300159	VERTICAL CUTTER	1		(UPPER RIGHT SIDE) (ORDER FROM CENTRAL FABRICATORS)
17	300160	VERTICAL CUTTER	1		(UPPER LEFT SIDE) (ORDER FROM CENTRAL FABRICATORS)
18	300158	VERTICAL CUTTER	1		(LEFT INSERT) (ORDER FROM CENTRAL FABRICATORS)
19	300157	VERTICAL CUTTER	1		(RIGHT INSERT) (ORDER FROM CENTRAL FABRICATORS)
20	600118	MOLDBOARD	1		(24 INCH) (ORDER FROM CENTRAL FABRICATORS)
	600119	MOLDBOARD	1		(30 INCH) (ORDER FROM CENTRAL FABRICATORS)
	600120	MOLDBOARD	1		(36 INCH) (ORDER FROM CENTRAL FABRICATORS)
	600121	MOLDBOARD	1		(42 INCH) (ORDER FROM CENTRAL FABRICATORS)
	600122	MOLDBOARD	1		(48 INCH) (ORDER FROM CENTRAL FABRICATORS)
21	.....	CUTTING EDGE	1		(SUB AT131085) (LEFT)
22	.....	CUTTING EDGE	1		(SUB AT131085) (RIGHT)
23	09H1771	BOLT	6		7/8" X 3"
24	12H245	LOCK WASHER	6		7/8"
25	14H1077	NUT	6		7/8"
27	300156	BAR	1		(INNER WEAR) (ORDER FROM CENTRAL FABRICATORS)
28	306452	BAR	2		(OUTER WEAR) (ORDER FROM CENTRAL FABRICATORS)
29	.....	SHROUD	1		(WEAR SHROUD) (SUB AT167876)
30	.....	SHROUD	1		(WEAR SHROUD) (SUB AT167876)
31	14H1044	NUT	6		22.225 MM (7/8")
40	**AT163616**	**EXCAVATOR BUCKET**	**1**		**WHOLEGOODS (24 INCH - .73 CUBIC YARD) (AVAILABLE TOOTH ASSEMBLIES ON SEPARATE PAGE)**
	AT163617	**EXCAVATOR BUCKET**	**1**		**WHOLEGOODS (30 INCH - .95 CUBIC YARD) (AVAILABLE TOOTH ASSEMBLIES ON SEPARATE PAGE)**
	AT163618	**EXCAVATOR BUCKET**	**1**		**WHOLEGOODS (36 INCH - 1.16 CUBIC YARD) (AVAILABLE TOOTH ASSEMBLIES ON SEPARATE PAGE)**
	AT163620	**EXCAVATOR BUCKET**	**1**		**WHOLEGOODS (42 INCH - 1.38 CUBIC YARD) (AVAILABLE TOOTH ASSEMBLIES ON SEPARATE PAGE)**
	AT187254	**EXCAVATOR BUCKET**	**1**		**WHOLEGOODS (36 INCH - 1.25 CUBIC YARD) (AVAILABLE TOOTH ASSEMBLIES ON SEPARATE PAGE) (AT183961 NO LONGER AVAILABLE) (SUB AT187254)**
	AT199358	**EXCAVATOR BUCKET**	**1**		**WHOLEGOODS (48 INCH - 1.6 CUBIC YARD BUCKET)**
41	AT131085	KIT	1		(CUTTING EDGE) WHOLEGOODS
42	AT167876	KIT	1		(WEAR) WHOLEGOODS

BUCKET
(SEVERE DUTY CAST LIP)
(ALSO ORDER BUCKET TOOTH ASSEMBLIES)

TP70496 -UN-09JAN01

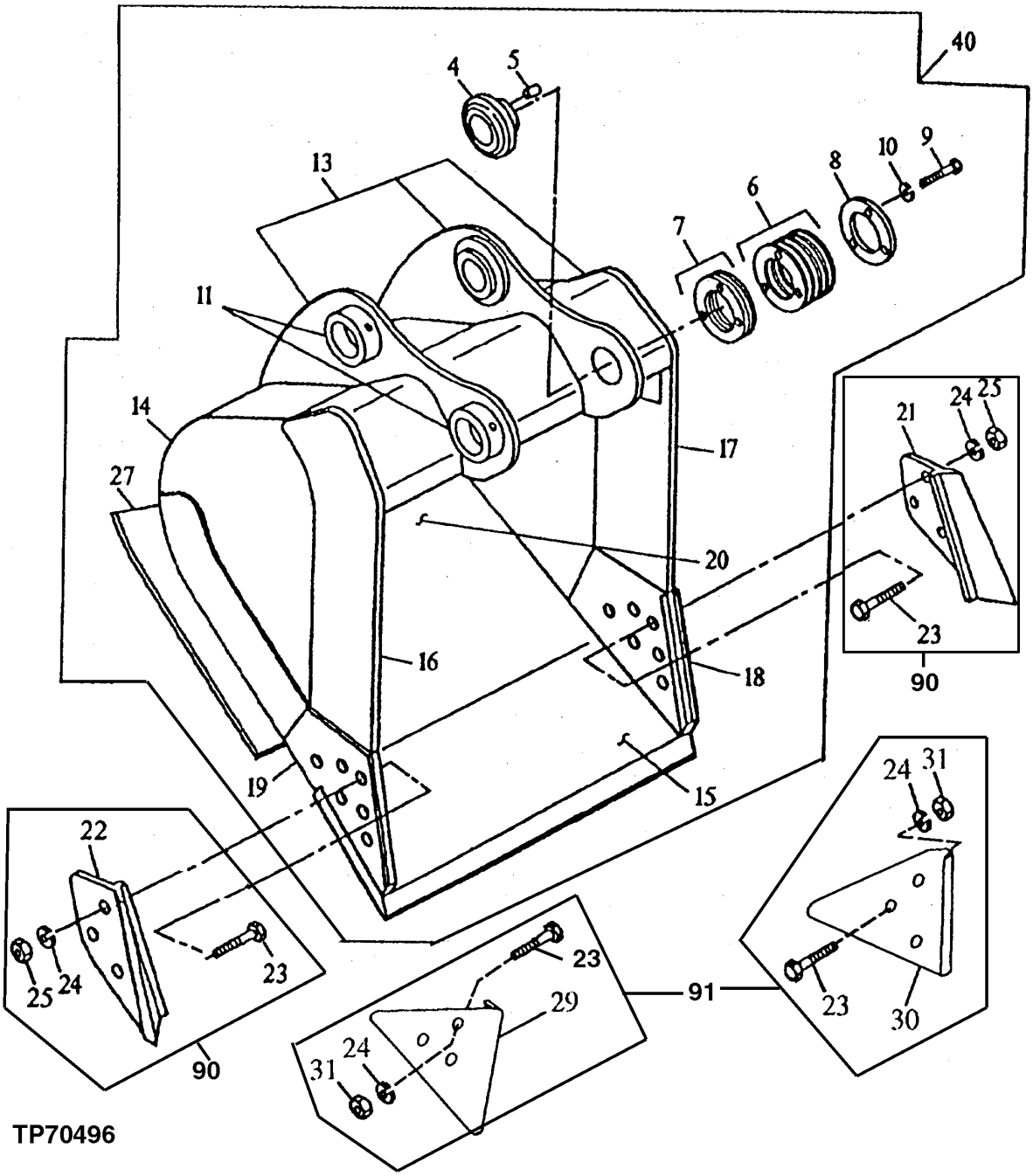

BUCKET
(SEVERE DUTY CAST LIP)
(ALSO ORDER BUCKET TOOTH ASSEMBLIES)

KEY	PART NO.	PART NAME	QTY	SERIAL NO.	REMARKS
4	AT131083	SELF-ALIGNING BUSHING	1		(1 INCH HEAD THICKNESS)
5	R48685	DOWEL PIN	1		
6	TH104512	WASHER	9		
7	TH104513	SHIM	1		
8	TH104514	WASHER	1		
9	19H2706	CAP SCREW	3		5/8" X 2"
10	12H294	LOCK WASHER	3		5/8"
11	TH104509	BUSHING	2		(LOCKING COLLAR)
13	C607480	PIVOT	1		(BUCKET EAR BLANK ASSEMBLY) (ORDER FROM CENTRAL FABRICATORS)
14	300952	PLATE	2		(RIGHT AND LEFT SIDE) (ORDER FROM CENTRAL FABRICATORS)
15	C252561	CUTTING EDGE	1		(USE WITH 24 INCH BUCKET) (ORDER FROM CENTRAL FABRICATORS)
	C252562	CUTTING EDGE	1		(USE WITH 30 INCH BUCKET) (ORDER FROM CENTRAL FABRICATORS)
	C252563	CUTTING EDGE	1		(USE WITH 36 INCH BUCKET) (ORDER FROM CENTRAL FABRICATORS)
	AT131097	CUTTING EDGE	1		(USE WITH 30 AND 36 INCH BUCKETS) (CUT TO LENGTH) (72 INCHES)
	T154189	CUTTING EDGE	1		(USE WITH 30 AND 36 INCH BUCKETS) (CUT TO LENGTH) (42 INCHES)
	T154188	CUTTING EDGE	1		(USE WITH 30 AND 36 INCH BUCKETS) (CUT TO LENGTH) (36 INCHES)
16	300159	VERTICAL CUTTER	1		(UPPER RIGHT SIDE) (ORDER FROM CENTRAL FABRICATORS)
17	300160	VERTICAL CUTTER	1		(UPPER LEFT SIDE) (ORDER FROM CENTRAL FABRICATORS)
18	300958	VERTICAL CUTTER	1		(LEFT INSERT) (ORDER FROM CENTRAL FABRICATORS)
19	300957	VERTICAL CUTTER	1		(RIGHT INSERT) (ORDER FROM CENTRAL FABRICATORS)
20	600515	MOLDBOARD	1		(24 INCH) (ORDER FROM CENTRAL FABRICATORS)
	600708	MOLDBOARD	1		(30 INCH) (ORDER FROM CENTRAL FABRICATORS)
	600517	MOLDBOARD	1		(36 INCH) (ORDER FROM CENTRAL FABRICATORS)
21	.....	CUTTING EDGE	1		(SUB AT131085)
22	.....	CUTTING EDGE	1		(SUB AT131085)
23	09H1771	BOLT	6		7/8" X 3"
24	12H245	LOCK WASHER	6		7/8"
25	14H1077	NUT	6		7/8"
27	607392	BAR	1		(USE WITH 24 INCH BUCKET) (ORDER FROM CENTRAL FABRICATORS)
	607393	BAR	1		(USE WITH 30 INCH BUCKET) (ORDER FROM CENTRAL FABRICATORS)
	607394	BAR	1		(USE WITH 36 INCH BUCKET) (ORDER FROM CENTRAL FABRICATORS)
29	.....	SHROUD	1		(WEAR SHROUD) (SUB AT167876)
30	.....	SHROUD	1		(WEAR SHROUD) (SUB AT167876)
31	14H1044	NUT	1		22.225 MM (7/8")
40	**AT171737**	**EXCAVATOR BUCKET**	**1**		**WHOLEGOODS (24 INCH) (AVAILABLE TOOTH ASSEMBLIES ON SEPARATE PAGE)**
	AT171739	**EXCAVATOR BUCKET**	**1**		**WHOLEGOODS (30 INCH) (AVAILABLE TOOTH ASSEMBLIES ON SEPARATE PAGE)**
	AT171741	**EXCAVATOR BUCKET**	**1**		**WHOLEGOODS (36 INCH) (AVAILABLE TOOTH ASSEMBLIES ON SEPARATE PAGE)**
90	AT131085	END BIT	1		(SIDE CUTTING KIT)
91	AT167876	KIT	1		(EDGE PROTECTOR)

BUCKET
(SEVERE DUTY PLATE LIP)
(ALSO ORDER BUCKET TOOTH ASSEMBLIES)

TP70496 -UN-09JAN01

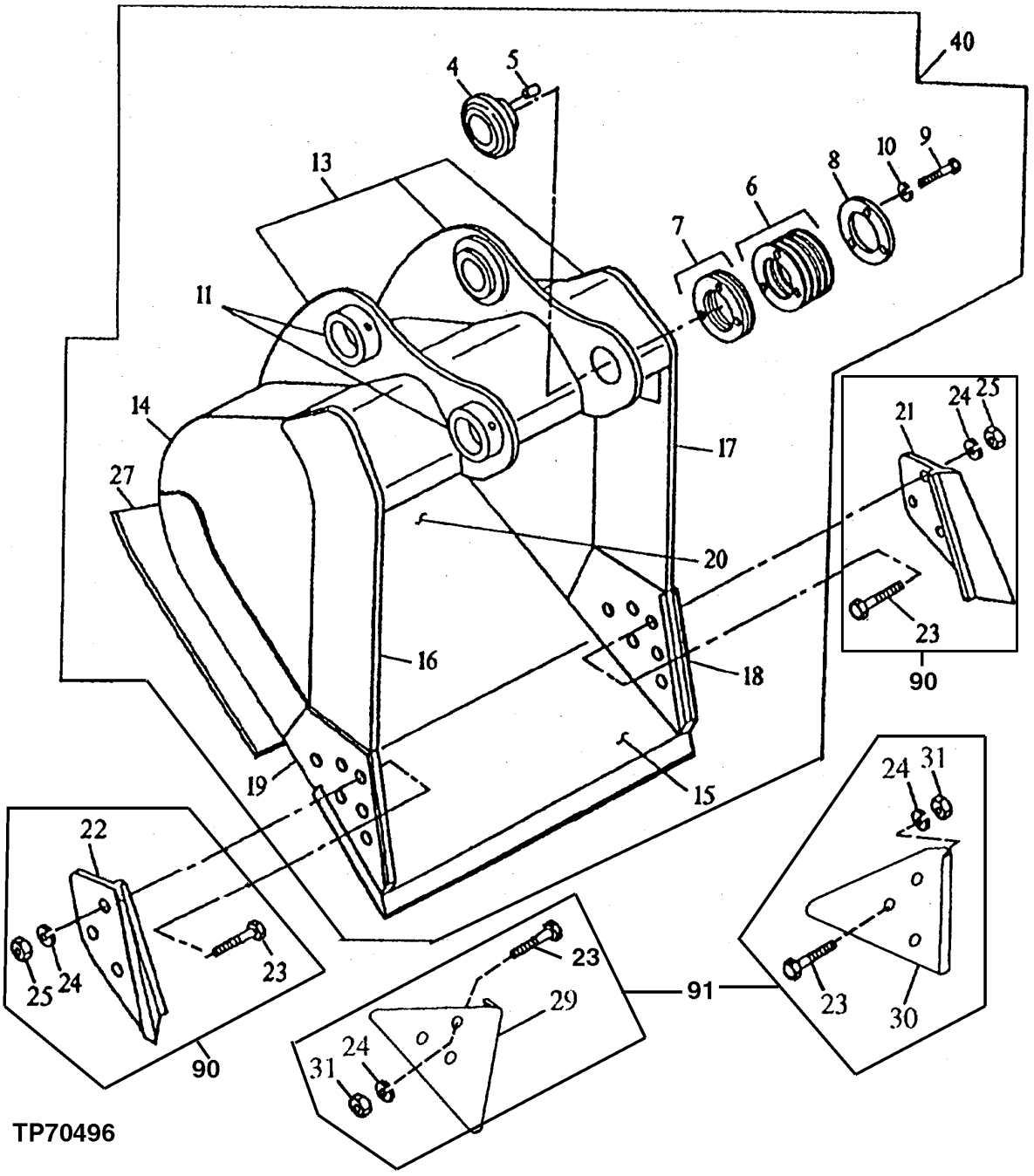

BUCKET
(SEVERE DUTY PLATE LIP)
(ALSO ORDER BUCKET TOOTH ASSEMBLIES)

KEY	PART NO.	PART NAME	QTY	SERIAL NO.	REMARKS
4	AT131083	SELF-ALIGNING BUSHING	1		(1 INCH HEAD THICKNESS)
5	R48685	DOWEL PIN	1		
6	TH104512	WASHER	9		
7	TH104513	SHIM	1		
8	TH104514	WASHER	1		
9	19H2706	CAP SCREW	3		5/8" X 2"
10	12H294	LOCK WASHER	3		5/8"
11	TH104509	BUSHING	2		(LOCKING COLLAR)
13	C607480	PIVOT	1		(BUCKET EAR BLANK ASSEMBLY) (ORDER FROM CENTRAL FABRICATORS)
14	305511	PLATE	2		(RIGHT AND LEFT SIDE) (ORDER FROM CENTRAL FABRICATORS)
15	.....	CUTTING EDGE	1		(CUT TO LENGTH FROM AT131097)
16	305512	VERTICAL CUTTER	1		(UPPER RIGHT SIDE) (ORDER FROM CENTRAL FABRICATORS)
17	305513	VERTICAL CUTTER	1		(UPPER LEFT SIDE) (ORDER FROM CENTRAL FABRICATORS)
18	305531	VERTICAL CUTTER	1		(LEFT INSERT) (ORDER FROM CENTRAL FABRICATORS)
19	305530	VERTICAL CUTTER	1		(RIGHT INSERT) (ORDER FROM CENTRAL FABRICATORS)
20	605990	MOLDBOARD	1		(30 INCH) (ORDER FROM CENTRAL FABRICATORS)
	605991	MOLDBOARD	1		(36 INCH) (ORDER FROM CENTRAL FABRICATORS)
21	.....	CUTTING EDGE	1		(SUB AT131085)
22	.....	CUTTING EDGE	1		(SUB AT131085)
23	09H1771	BOLT	6		7/8" X 3"
24	12H245	LOCK WASHER	6		7/8"
25	14H1077	NUT	6		7/8"
27	605995	BAR	1		(USE WITH 30 INCH BUCKET) (ORDER FROM CENTRAL FABRICATORS)
	605996	BAR	1		(USE WITH 36 INCH BUCKET) (ORDER FROM CENTRAL FABRICATORS)
29	.....	SHROUD	1		(WEAR SHROUD) (SUB AT167876)
30	.....	SHROUD	1		(WEAR SHROUD) (SUB AT167876)
31	14H1044	NUT	1		7/8"
40	**AT163624**	**EXCAVATOR BUCKET**	**1**		**WHOLEGOODS (30 INCH - .77 CUBIC YARD) (AVAILABLE TOOTH ASSEMBLIES ON SEPARATE PAGE)**
	AT163625	**EXCAVATOR BUCKET**	**1**		**WHOLEGOODS (36 INCH - .95 CUBIC YARD) (AVAILABLE TOOTH ASSEMBLIES ON SEPARATE PAGE)**
	AT199360	**EXCAVATOR BUCKET**	**1**		**WHOLEGOODS (42 INCH - 1.12 CUBIC YARD) (AVAILABLE TOOTH ASSEMBLIES ON SEPARATE PAGE)**
90	AT131085	END BIT	1		(SIDE CUTTER KIT)
91	AT167876	KIT	1		(EDGE PROTECTOR)

DITCHING BUCKET

TP32968 -UN-01JAN94

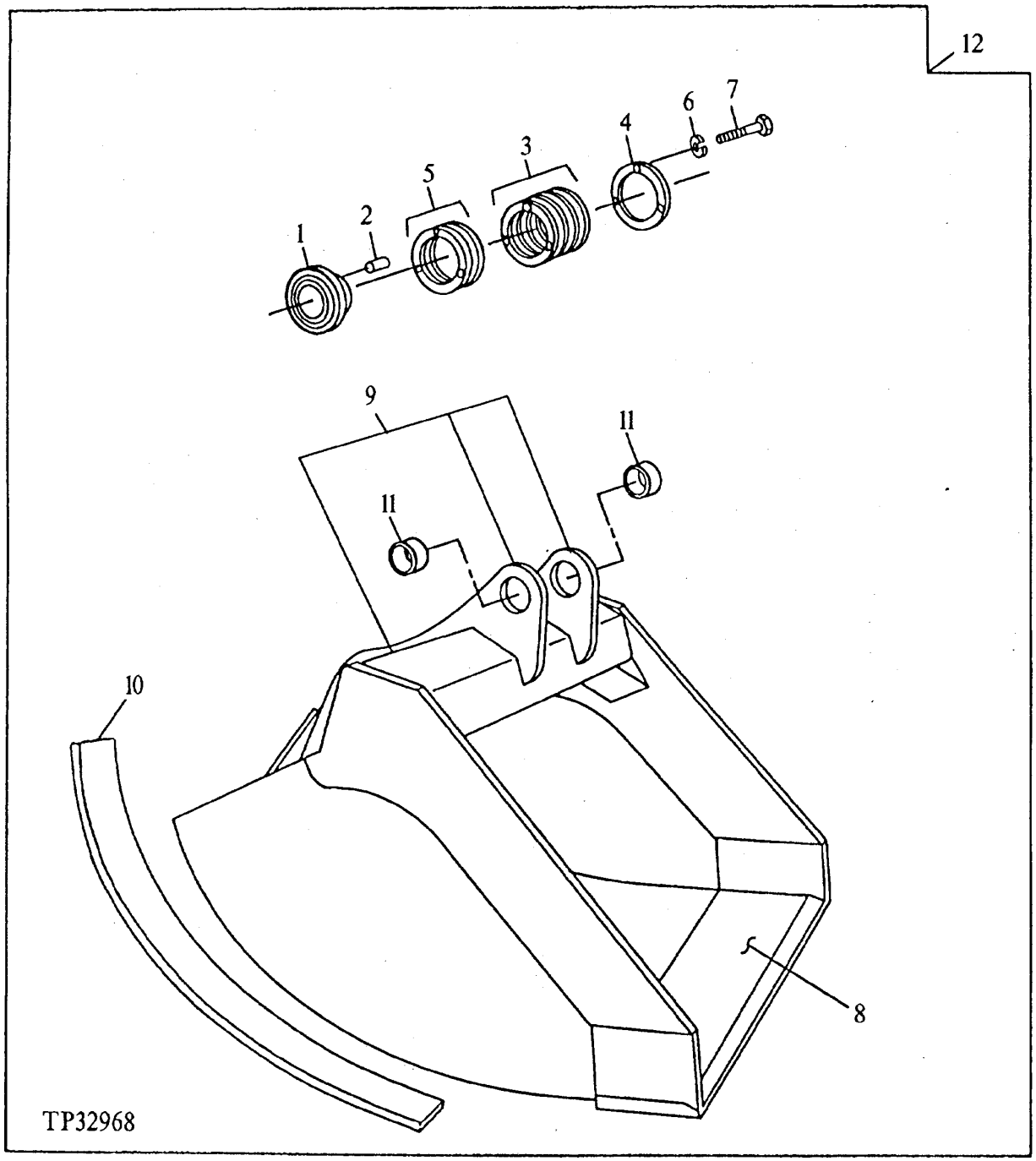

DITCHING BUCKET

KEY	PART NO.	PART NAME	QTY	SERIAL NO.	REMARKS
1	AT131083	SELF-ALIGNING BUSHING	1		(1" HEAD THICKNESS)
2	R48685	DOWEL PIN	1		
3	TH104512	WASHER	9		
4	TH104514	WASHER	1		
5	TH104513	SHIM	1		
6	12H294	LOCK WASHER	3		5/8"
7	19H2706	CAP SCREW	3		5/8" X 2"
8	AT131089	CUTTING EDGE	1		(USE WITH AT161005 BUCKET)
	AT131088	CUTTING EDGE	1		(USE WITH AT160685 BUCKET)
9	C607480	PIVOT	1		(BUCKET EAR BLANK ASSEMBLY) (ORDER FROM CENTRAL FABRICATORS)
10	300204	BAR	5		(WEAR STRIP) (ORDER FROM CENTRAL FABRICATORS)
11	TH104509	BUSHING	2		(USE WITH AT161005 BUCKET)
	TH108649	BUSHING	2		(USE WITH AT160685 BUCKET)
12	**AT131117**	**EXCAVATOR BUCKET**	**1**		**WHOLEGOODS (72 INCH - 1.06 CUBIC YARD)**
	AT160685	**EXCAVATOR BUCKET**	**1**		**WHOLEGOODS 60" WIDE (FOR USE WITH SUPER LONG FRONT) (.75 CU. YD.)**
	AT161005	**EXCAVATOR BUCKET**	**1**		**WHOLEGOODS 60" WIDE (.90 CU. YD.)**
	AT199362	**EXCAVATOR BUCKET**	**1**		**WHOLEGOODS (60 INCH - 1.13 CUBIC YARD)**
	AT199363	**EXCAVATOR BUCKET**	**1**		**WHOLEGOODS (72 INCH - 1.34 CUBIC YARD)**

BUCKET
(GENERAL PURPOSE)
(ALSO ORDER BUCKET TOOTH ASSEMBLIES)

T149120 -UN-14DEC01

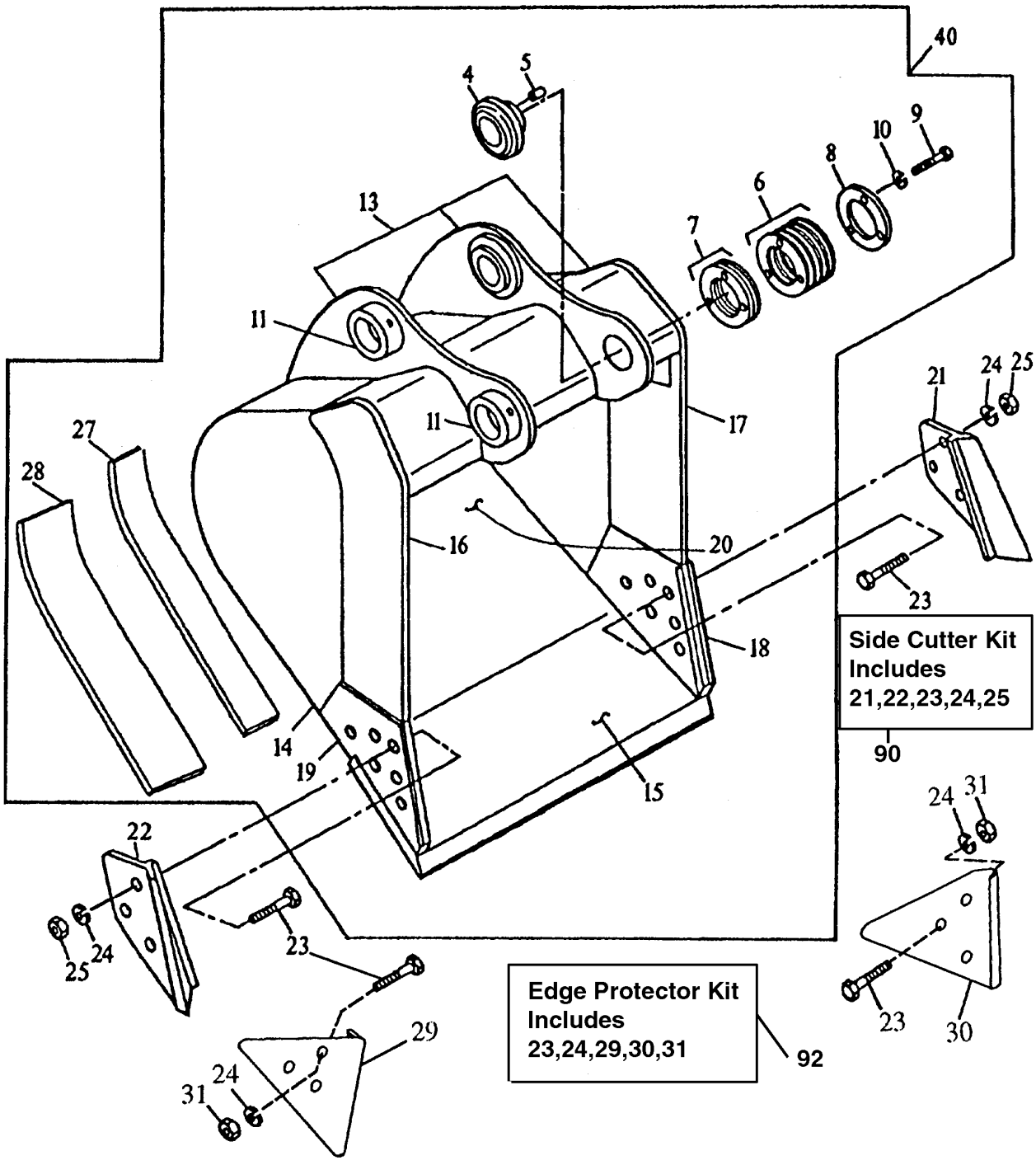

T149120

BUCKET
(GENERAL PURPOSE)
(ALSO ORDER BUCKET TOOTH ASSEMBLIES)

KEY	PART NO.	PART NAME	QTY	SERIAL NO.	REMARKS
4	AT131083	SELF-ALIGNING BUSHING	1		(1 INCH HEAD THICKNESS)
5	R48685	DOWEL PIN	1		
6	TH104512	WASHER	9		
7	TH104513	SHIM	1		
8	TH104514	WASHER	1		
9	19H2706	CAP SCREW	3		5/8" X 2"
10	12H294	LOCK WASHER	3		5/8"
11	TH104509	BUSHING	2		(LOCKING COLLAR)
13	C607480	PIVOT	1		(BUCKET EAR BLANK ASSEMBLY) (ORDER FROM CENTRAL FABRICATORS)
14	300536	PLATE	2		(RIGHT AND LEFT SIDE) (ORDER FROM CENTRAL FABRICATORS)
15	.....	CUTTING EDGE	1		(CUT TO LENGTH FROM AT131082)
16	300534	VERTICAL CUTTER	1		(UPPER RIGHT SIDE) (ORDER FROM CENTRAL FABRICATORS)
17	300535	VERTICAL CUTTER	1		(UPPER LEFT SIDE) (ORDER FROM CENTRAL FABRICATORS)
18	300482	VERTICAL CUTTER	1		(LEFT INSERT) (ORDER FROM CENTRAL FABRICATORS)
19	300481	VERTICAL CUTTER	1		(RIGHT INSERT) (ORDER FROM CENTRAL FABRICATORS)
20	600318	MOLDBOARD	1		(30 INCH) (ORDER FROM CENTRAL FABRICATORS)
	600319	MOLDBOARD	1		(36 INCH) (ORDER FROM CENTRAL FABRICATORS)
	600320	MOLDBOARD	1		(42 INCH) (ORDER FROM CENTRAL FABRICATORS)
	600321	MOLDBOARD	1		(48 INCH) (ORDER FROM CENTRAL FABRICATORS)
21	.....	CUTTING EDGE	1		(SUB AT131080) (LEFT)
22	.....	CUTTING EDGE	1		(SUB AT131080) (RIGHT)
23	09H1771	BOLT	6		7/8" X 3"
24	12H245	LOCK WASHER	6		7/8"
25	14H1077	NUT	6		7/8"
27	300524	BAR	1		(INNER WEAR) (ORDER FROM CENTRAL FABRICATORS)
28	306974	BAR	1		(OUTER WEAR) (ORDER FROM CENTRAL FABRICATORS)
29	.....	SHROUD	1		(WEAR SHROUD) (SUB AT167874)
30	.....	SHROUD	1		(WEAR SHROUD) (SUB AT167874)
31	14H1044	NUT	1		22.225 MM (7/8")
40	**AT163600**	**EXCAVATOR BUCKET**	**1**		**WHOLEGOODS (24 INCH - .59 CUBIC YARD) (AVAILABLE TOOTH ASSEMBLIES ON SEPARATE PAGE)**
	AT163602	**EXCAVATOR BUCKET**	**1**		**WHOLEGOODS (30 INCH - .77 CUBIC YARD) (AVAILABLE TOOTH ASSEMBLIES ON SEPARATE PAGE)**
	AT163603	**EXCAVATOR BUCKET**	**1**		**WHOLEGOODS (36 INCH - .95 CUBIC YARD) (AVAILABLE TOOTH ASSEMBLIES ON SEPARATE PAGE)**
	AT163604	**EXCAVATOR BUCKET**	**1**		**WHOLEGOODS (42 INCH - 1.12 CUBIC YARD) (AVAILABLE TOOTH ASSEMBLIES ON SEPARATE PAGE)**
	AT163605	**EXCAVATOR BUCKET**	**1**		**WHOLEGOODS (48 INCH - 1.30 CUBIC YARD) (AVAILABLE TOOTH ASSEMBLIES ON SEPARATE PAGE)**
41	AT131080	END BIT	1		
42	AT167874	KIT	1		

ROADBUILDER BUCKET KIT
(ORDER HEAVY DUTY BUCKET TOOTH ASSEMBLIES)

T141017 -UN-05APR01

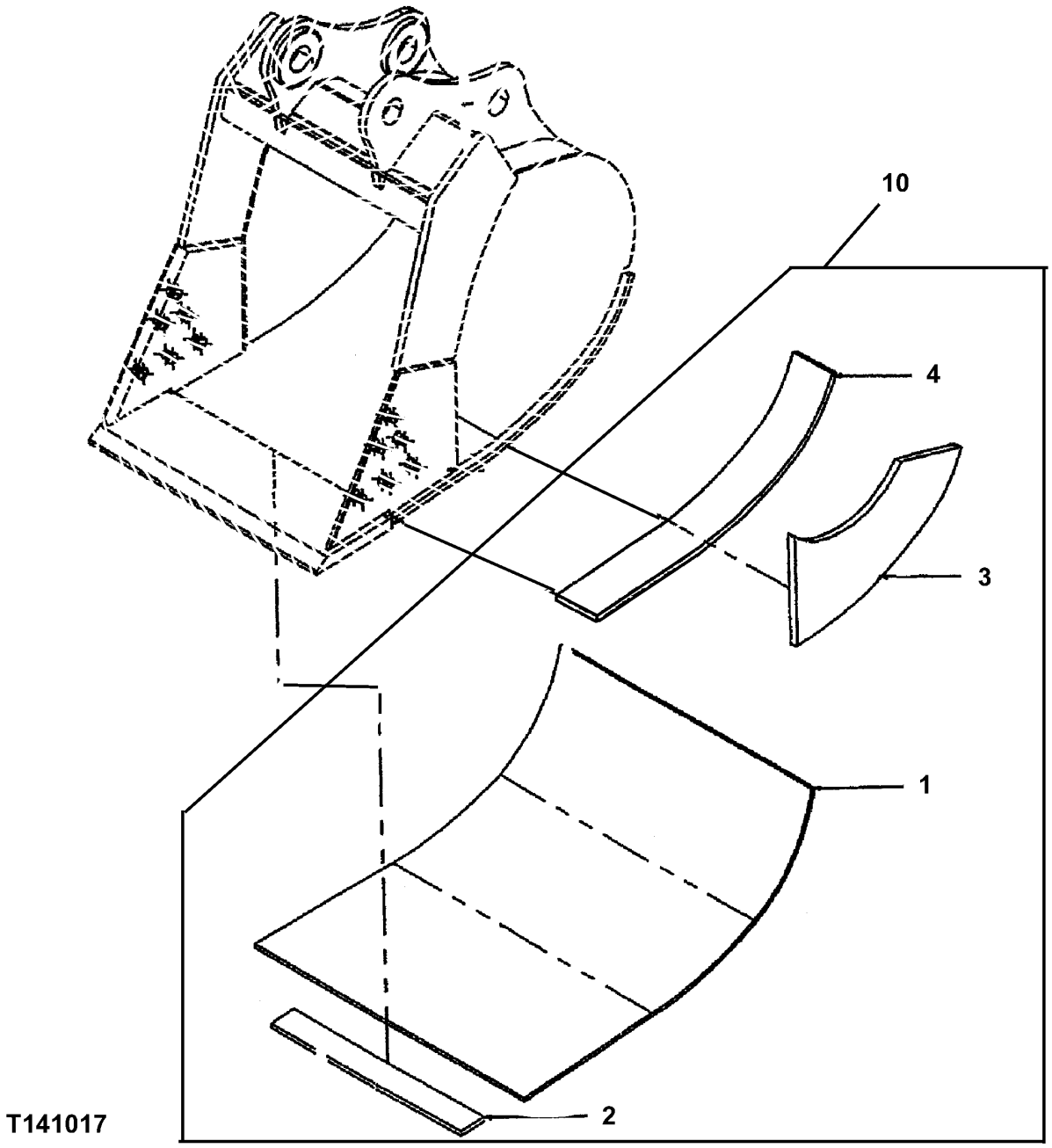

ROADBUILDER BUCKET KIT
(ORDER HEAVY DUTY BUCKET TOOTH ASSEMBLIES)

KEY	PART NO.	PART NAME	QTY	SERIAL NO.	REMARKS
1	623269	MOLDBOARD	1		(USE WITH 24 INCH BUCKET) (ORDER FROM CENTRAL FABRICATORS)
	623270	MOLDBOARD	1		(USE WITH 30 INCH BUCKET) (ORDER FROM CENTRAL FABRICATORS)
	623271	MOLDBOARD	1		(USE WITH 36 INCH BUCKET) (ORDER FROM CENTRAL FABRICATORS)
	623272	MOLDBOARD	1		(USE WITH 42 INCH BUCKET) (ORDER FROM CENTRAL FABRICATORS)
2	28025	BAR	5		(HORIZONTAL WEAR BAR) (USE WITH 24 INCH BUCKET) (ORDER FROM CENTRAL FABRICATORS)
	28031	BAR	5		(HORIZONTAL WEAR BAR) (USE WITH 30 INCH BUCKET) (ORDER FROM CENTRAL FABRICATORS)
	28037	BAR	5		(HORIZONTAL WEAR BAR) (USE WITH 36 INCH BUCKET) (ORDER FROM CENTRAL FABRICATORS)
	28043	BAR	5		(HORIZONTAL WEAR BAR) (USE WITH 42 INCH BUCKET) (ORDER FROM CENTRAL FABRICATORS)
3	313114	PLATE	2		(ORDER FROM CENTRAL FABRICATORS)
4	304564	PLATE	2		(OUTER WEAR BAR) (ORDER FROM CENTRAL FABRICATORS)
10	**AT187249**	**KIT**	**1**		**(WHOLEGOODS) (ALSO ORDER AT163616 24 INCH HEAVY DUTY BUCKET AND APPROPRIATE TOOTH KIT)**
	AT187250	**KIT**	**1**		**(WHOLEGOODS) (ALSO ORDER AT163617 30 INCH HEAVY DUTY BUCKET AND APPROPRIATE TOOTH KIT)**
	AT187251	**KIT**	**1**		**(WHOLEGOODS) (ALSO ORDER AT163618 36 INCH HEAVY DUTY BUCKET AND APPROPRIATE TOOTH KIT)**
	AT187252	**KIT**	**1**		**(WHOLEGOODS) (ALSO ORDERAT163620 42 INCH HEAVY DUTY BUCKET AND APPROPRIATE TOOTH KIT)**
	AT199359	**KIT**	**1**		**WHOLEGOODS (ALSO ORDER 48 INCH HEAVY DUTY HIGH CAPACITY BUCKET)**

ROADBUILDER BUCKET KIT
(ORDER HEAVY DUTY BUCKET TOOTH ASSEMBLIES)

T141043 -UN-05APR01

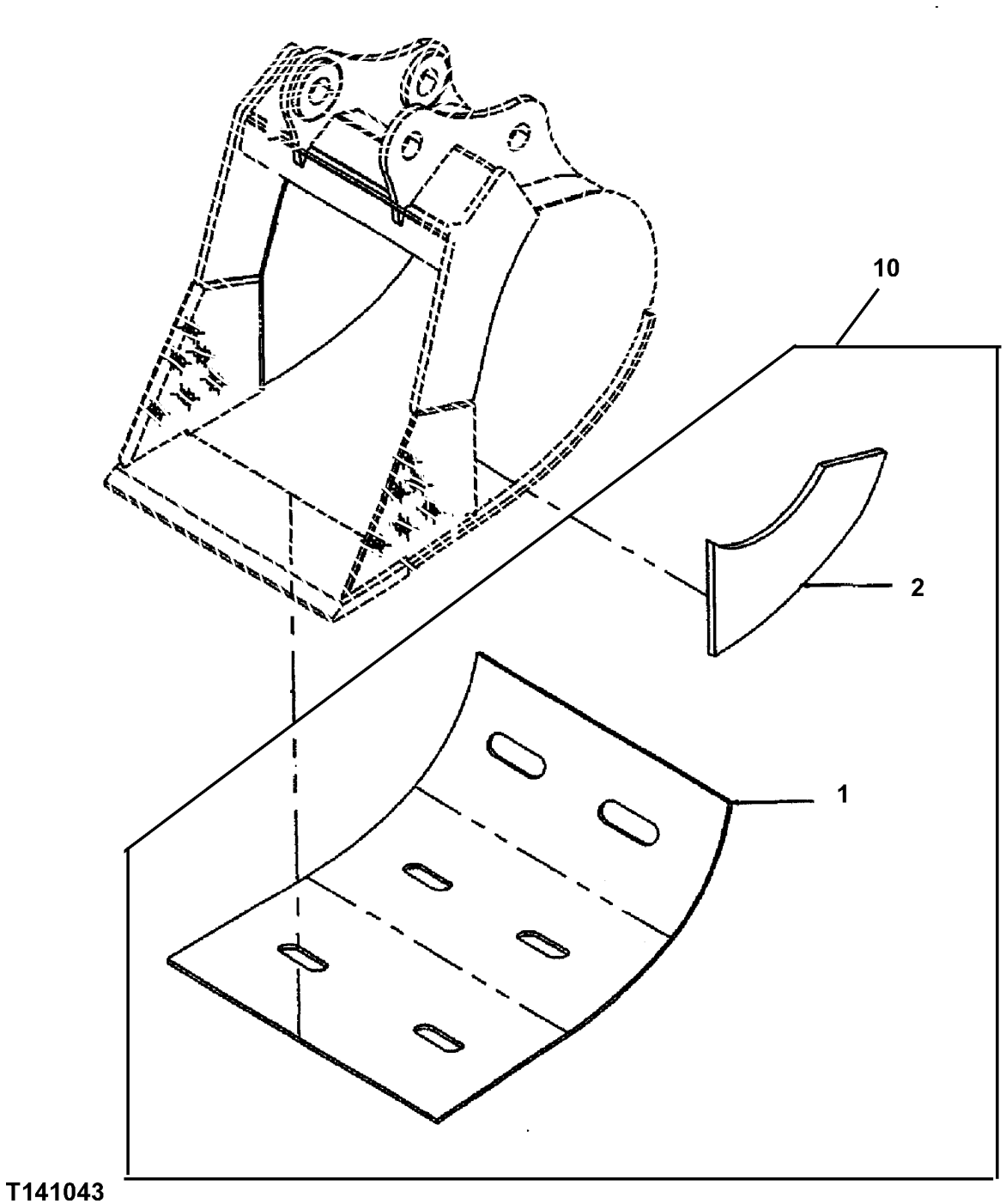

ROADBUILDER BUCKET KIT
(ORDER HEAVY DUTY BUCKET TOOTH ASSEMBLIES)

KEY	PART NO.	PART NAME	QTY	SERIAL NO.	REMARKS
1	605995	PLATE	1		(USE WITH 30 INCH BUCKET) (ORDER FROM CENTRAL FABRICATORS)
	605996	PLATE	1		(USE WITH 36 INCH BUCKET) (ORDER FROM CENTRAL FABRICATORS)
2	322555	PLATE	2		(ORDER FROM CENTRAL FABRICATORS)
10	**AT187253**	**KIT**	**1**		**(WHOLEGOODS) (ALSO ORDER AT163624 30 INCH SEVERE DUTY PLATE LIP BUCKET AND APPROPRIATE TOOTH KIT)**
	AT187254	**KIT**	**1**		**(WHOLEGOODS) (ALSO ORDER AT163625 36 INCH SEVERE DUTY PLATE LIP BUCKET AND APPROPRIATE TOOTH KIT)**
	AT199589	**KIT**	**1**		**(ROADBUILDER KIT)(ALSO ORDER 42 INCH SEVERE DUTY BUCKET)**

ESCO BUCKET CUTTING EDGES, TEETH AND ADAPTERS

T149713 -UN-04JAN02

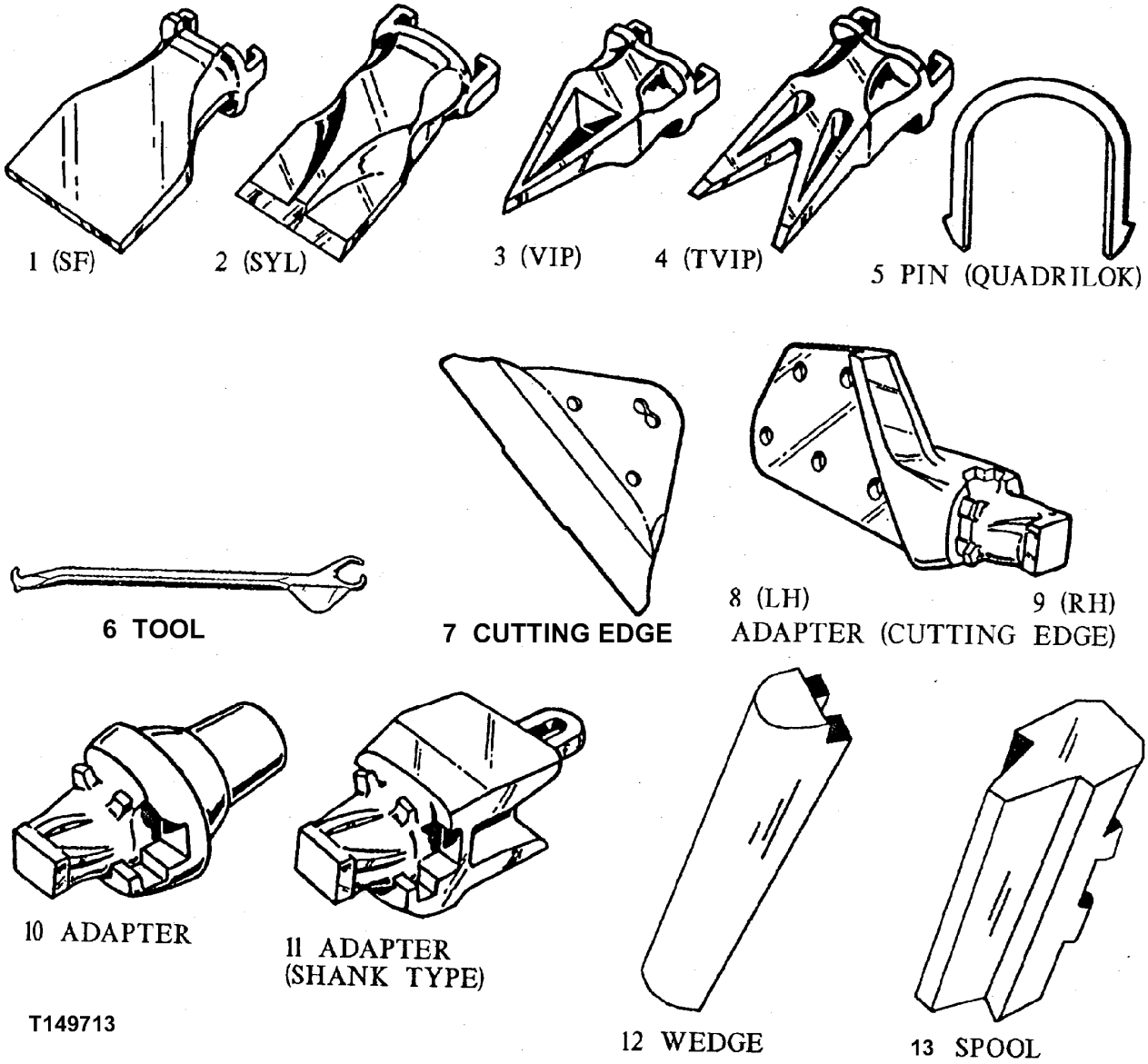

ESCO BUCKET CUTTING EDGES, TEETH AND ADAPTERS

KEY	PART NO.	PART NAME	QTY	SERIAL NO.	REMARKS
1	EX37S7F	TOOTH	AR		
2	EX37SYL	TOOTH	AR		
	EX47SYL	TOOTH	AR		
	EX21SYL	TOOTH	AR		
	EX27SYL	TOOTH	AR		
3	EX37VIP	TOOTH	AR		
4	EX37TVIP	TOOTH	AR		
5	EX37LKS	TOOTH RETAINER	AR		(SUB FOR EX37LK)
	EX47LK	PIN	AR		
	EX21LKS	TOOTH RETAINER	AR		(SUB FOR EX21LK)
	EX27LK	PIN	AR		
	EX27VPN	PIN	AR		
6	EX3-4-57QRT	TOOL	AR		
7	TPDE31329	SHROUD	AR		(SUB FOR EX31329-X)
8	EX1506-37	BUCKET TOOTH ADAPTER	AR		
9	EX1507-37	BUCKET TOOTH ADAPTER	AR		
10	EX450-37	BUCKET TOOTH ADAPTER	AR		
11	EX129A-37	BUCKET TOOTH ADAPTER	AR		
	EX5824-37	BUCKET TOOTH ADAPTER	AR		
	EX1829A-47	BUCKET TOOTH ADAPTER	AR		
	EX5850-27V	BUCKET TOOTH ADAPTER	AR		(SUB FOR EX5827-27, ALONG WITH EX27VPN AND EX27VPL)
	EX5849-21	BUCKET TOOTH ADAPTER	AR		(SUB FOR EX4894-21)
12	EX29W1	WEDGE	AR		(SUB FOR T52975)
	EX20W1	WEDGE	AR		(SUB FOR T38819)
13	EX20SP	SPOOL	AR		(SUB FOR T38818)
	EX29SP	SPOOL	AR		(SUB FOR T52974)
14	EX27VPL	PLUG	AR		(NOT ILLUSTRATED)

GENERAL PURPOSE HIGH CAPACITY BUCKET TOOTH ASSEMBLY
(30, 36, 42 OR 48 INCH BUCKET)

TP43771 -UN-01JAN94

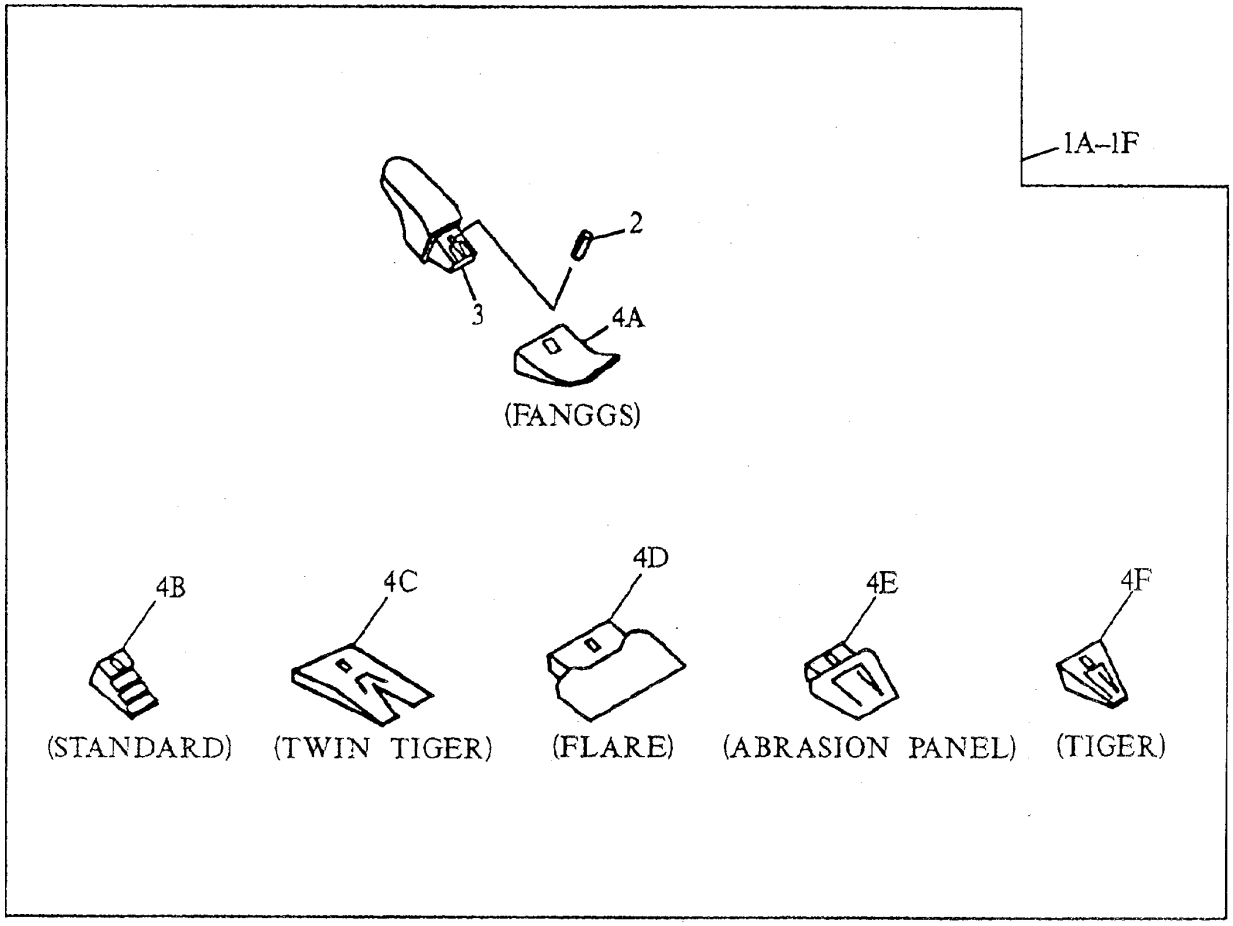

ORDER 3 SETS WITH 18 INCH BUCKET
ORDER 4 SETS WITH 24 INCH BUCKET
ORDER 4 SETS WITH 30 INCH BUCKET
ORDER 5 SETS WITH 36 INCH BUCKET
ORDER 5 SETS WITH 42 INCH BUCKET
ORDER 6 SETS WITH 48 INCH BUCKET
TP43771 ORDER 7 SETS WITH 54 INCH BUCKET

GENERAL PURPOSE HIGH CAPACITY BUCKET TOOTH ASSEMBLY
(30, 36, 42 OR 48 INCH BUCKET)

KEY	PART NO.	PART NAME	QTY	SERIAL NO.	REMARKS
1A	.....	KIT	1		(TOOTH) WHOLEGOODS (FANGGS 310 TOOTH ASSEMBLY) (AT162538 ONLY AVAILABLE WHEN ORDERING BUCKET)
	.....	KIT	1		(TOOTH) WHOLEGOODS (FANGGS 330 TOOTH ASSEMBLY) (AT178530 ONLY AVAILABLE WHEN ORDERING BUCKET)
	.....	KIT	1		(TOOTH) WHOLEGOODS (FANGGS 290 TOOTH ASSEMBLY) (AT178531 ONLY AVAILABLE WHEN ORDERING BUCKET)
1B	.....	KIT	1		(TOOTH) WHOLEGOODS (STANDARD 310 TOOTH ASSEMBLY) (AT163539 ONLY AVAILABLE WHEN ORDERING BUCKET)
	.....	KIT	1		(TOOTH) WHOLEGOODS (STANDARD 330 TOOTH ASSEMBLY) (AT178532 ONLY AVAILABLE WHEN ORDERING BUCKET)
	.....	KIT	1		(TOOTH) WHOLEGOODS (STANDARD 290 TOOTH ASSEMBLY) (AT178533 ONLY AVAILABLE WHEN ORDERING BUCKET)
1C	.....	KIT	1		(TOOTH) WHOLEGOODS (TWIN TIGER 310 TOOTH ASSEMBLY) (AT163543 ONLY AVAILABLE WHEN ORDERING BUCKET)
	.....	KIT	1		(TOOTH) WHOLEGOODS (TWIN TIGER 330 TOOTH ASSEMBLY) (AT178536 ONLY AVAILABLE WHEN ORDERING BUCKET)
	.....	KIT	1		(TOOTH) WHOLEGOODS (TWIN TIGER 290 TOOTH ASSEMBLY) (AT178537 ONLY AVAILABLE WHEN ORDERING BUCKET)
1D	.....	KIT	1		(TOOTH) WHOLEGOODS (FLARE) (AT163542 ONLY AVAILABLE WHEN ORDERING BUCKET)
1E	.....	KIT	1		(TOOTH) WHOLEGOODS (ABRASION PANEL) (AT163541 ONLY AVAILABLE WHEN ORDERING BUCKET)
1F	.....	KIT	1		(TOOTH) WHOLEGOODS (TIGER 310 TOOTH ASSEMBLY) (AT163540 ONLY AVAILABLE WHEN ORDERING BUCKET)
	.....	KIT	1		(TOOTH) WHOLEGOODS (TIGER 330 TOOTH ASSEMBLY) (AT178534 ONLY AVAILABLE WHEN ORDERING BUCKET)
	.....	KIT	1		(TOOTH) WHOLEGOODS (TIGER 290 TOOTH ASSEMBLY) (AT178535 ONLY AVAILABLE WHEN ORDERING BUCKET)
1G	.....	KIT	1		(TOOTH) WHOLEGOODS (ESCO STANDARD TOOTH ASSEMBLY) (NOT ILLUSTRATED) (AT163544 ONLY AVAILABLE WHEN ORDERING BUCKET)
1H	.....	KIT	1		(TOOTH) WHOLEGOODS (ESCO TWIN TIGER TOOTH ASSEMBLY) (NOT ILLUSTRATED) (AT163547 ONLY AVAILABLE WHEN ORDERING BUCKET)
1I	.....	KIT	1		(TOOTH) WHOLEGOODS (ESCO FLARE TOOTH ASSEMBLY) (NOT ILLUSTRATED) (AT163546 ONLY AVAILABLE WHEN ORDERING BUCKET)
1J	.....	KIT	1		(TOOTH) WHOLEGOODS (ESCO TIGER TOOTH ASSEMBLY) (NOT ILLUSTRATED) (AT163545 ONLY AVAILABLE WHEN ORDERING BUCKET)
1K	.....	KIT	1		(TOOTH) WHOLEGOODS (CATERPILLAR REPLACEMENT FANGGS TOOTH ASSEMBLY) (NOT ILLUSTRATED) (AT167192 ONLY AVAILABLE WHEN ORDERING BUCKET)
1L	.....	KIT	1		(TOOTH) WHOLEGOODS (CATERPILLAR REPLACEMENT STANDARD TOOTH ASSEMBLY) (NOT ILLUSTRATED) (AT167193 ONLY AVAILABLE WHEN ORDERING BUCKET)
1M	.....	KIT	1		(TOOTH) WHOLEGOODS (CATERPILLAR REPLACEMENT TWIN TIGER TOOTH ASSEMBLY) (NOT ILLUSTRATED) (AT167195 ONLY AVAILABLE WHEN ORDERING BUCKET)
1N	.....	KIT	1		(TOOTH) WHOLEGOODS (CATERPILLAR REPLACEMENT TIGER TOOTH ASSEMBLY) (NOT ILLUSTRATED) (AT167194 ONLY AVAILABLE WHEN ORDERING BUCKET)

GENERAL PURPOSE HIGH CAPACITY BUCKET TOOTH ASSEMBLY
(30, 36, 42 OR 48 INCH BUCKET)

TP43771 -UN-01JAN94

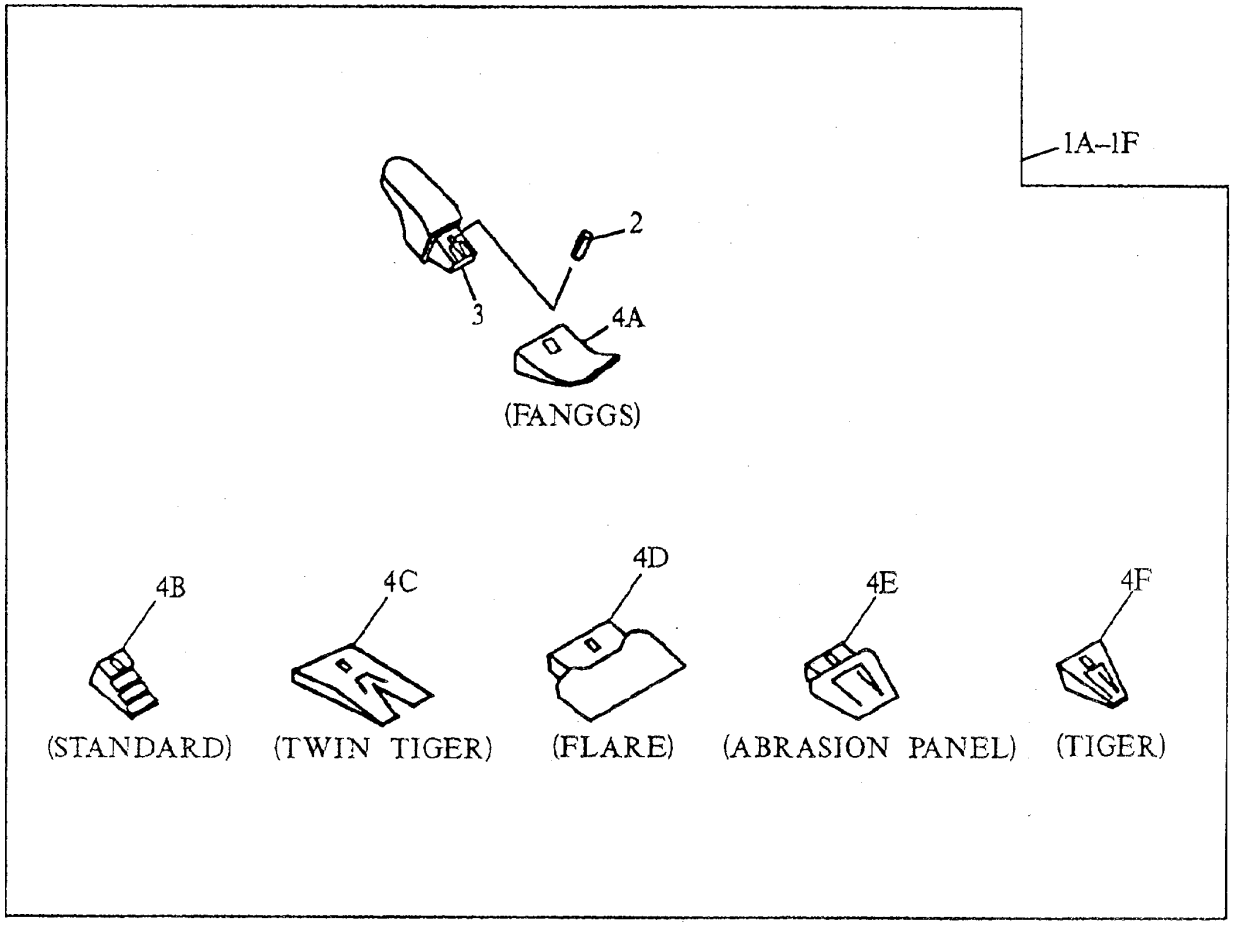

ORDER 3 SETS WITH 18 INCH BUCKET
ORDER 4 SETS WITH 24 INCH BUCKET
ORDER 4 SETS WITH 30 INCH BUCKET
ORDER 5 SETS WITH 36 INCH BUCKET
ORDER 5 SETS WITH 42 INCH BUCKET
ORDER 6 SETS WITH 48 INCH BUCKET
TP43771 ORDER 7 SETS WITH 54 INCH BUCKET

GENERAL PURPOSE HIGH CAPACITY BUCKET TOOTH ASSEMBLY
(30, 36, 42 OR 48 INCH BUCKET)

KEY	PART NO.	PART NAME	QTY	SERIAL NO.	REMARKS
2	TP160	PIN	1		(SUB FOR TP160L, THIS APPLICATION) (USE WITH 310 TOOTH ASSEMBLIES)
	TK330	PIN	1		(USE WITH 330 TOOTH ASSEMBLIES)
	TK290	PIN	1		(USE WITH 290 TOOTH ASSEMBLIES)
	EX27VPN	PIN	1		(ESCO) (NOT ILLUSTRATED ON THIS PAGE - SEE ESCO TOOTH PAGE)
	T9J2358	PIN FASTENER	1		(CATERPILLAR REPLACEMENT) (NOT ILLUSTRATED)
	EV39PN	PIN FASTENER	1		(FOR SUPER V-STYLE EV39SYL TOOTH KIT) (NOT ILLUSTRATED)
3	T153X310	BUCKET TOOTH ADAPTER	1		(USE WITH 310 TOOTH ASSEMBLIES)
	T158X330	BUCKET TOOTH ADAPTER	1		(USE WITH 330 TOOTH ASSEMBLIES)
	T158X290	BUCKET TOOTH ADAPTER	1		(USE WITH 290 TOOTH ASSEMBLIES)
	EX5850-27V	BUCKET TOOTH ADAPTER	1		(ESCO) (NOT ILLUSTRATED ON THIS PAGE - SEE ESCO TOOTH PAGE)
	T3G8354	BUCKET TOOTH ADAPTER	1		(CATERPILLAR REPLACEMENT) (NOT ILLUSTRATED)
	EV5856-V39	BUCKET TOOTH ADAPTER	1		(FOR SUPER V-STYLE EV39SYL TOOTH KIT) (NOT ILLUSTRATED)
4A	TF310	TOOTH	1		(ALSO ORDER TP160L) (FANGGS)
	TF330	TOOTH	1		(FANGGS)
	TF290	TOOTH	1		(FANGGS)
4B	TX310	TOOTH	1		(ALSO ORDER TP160L) (STANDARD)
	TX330	TOOTH	1		(STANDARD)
	TX290	TOOTH	1		(STANDARD)
4C	TX310WT	TOOTH	1		(ALSO ORDER TP160L) (TWIN TIGER)
	TX330WT	TOOTH	1		(TWIN TIGER)
	TX290WT	TOOTH	1		(TWIN TIGER)
4D	TX310F	TOOTH	1		(ALSO ORDER TP160L)
4E	TX310AP	TOOTH	1		(ALSO ORDER TP160L)
4F	TT310	TOOTH	1		(ALSO ORDER TP160L) (TIGER)
	TT330	TOOTH	1		(TIGER)
	TT290	TOOTH	1		(TIGER)
4G	EX27SYL	TOOTH	1		(ESCO STANDARD) (NOT ILLUSTRATED ON THIS PAGE - SEE ESCO TOOTH PAGE)
4H	EX27TVIP	TOOTH	1		(ESCO TWIN TIGER) (NOT ILLUSTRATED ON THIS PAGE - SEE ESCO TOOTH PAGE)
4I	EX27S6F	TOOTH	1		(ESCO FLARE) (NOT ILLUSTRATED ON THIS PAGE - SEE ESCO TOOTH PAGE)
4J	EX27VIP	TOOTH	1		(ESCO TIGER) (NOT ILLUSTRATED ON THIS PAGE - SEE ESCO TOOTH PAGE)
4K	TF1U3352D	TOOTH	1		(CATERPILLAR REPLACEMENT FANGGS) (NOT ILLUSTRATED)
4L	T1U3352	TOOTH	1		(CATERPILLAR REPLACEMENT STANDARD) (NOT ILLUSTRATED)
4M	TX1U3352WT	TOOTH	1		(CATERPILLAR REPLACEMENT TWIN TIGER) (NOT ILLUSTRATED)
4N	TT1U3352	TOOTH	1		(CATERPILLAR REPLACEMENT TIGER) (NOT ILLUSTRATED)
4O	EV39SYL	TOOTH	1		(FOR SUPER V-STYLE EV39SYL TOOTH KIT) (NOT ILLUSTRATED)
5	T3G9549	RETAINER	1		(CATERPILLAR REPLACEMENT) (NOT ILLUSTRATED)
6	EX27VPL	PLUG	1		(NOT ILLUSTRATED ON THIS PAGE - SEE ESCO TOOTH PAGE)

HEAVY DUTY BUCKET TOOTH ASSEMBLY
(24, 30, 36, 42 OR 48 INCH BUCKET)

TP43771 -UN-01JAN94

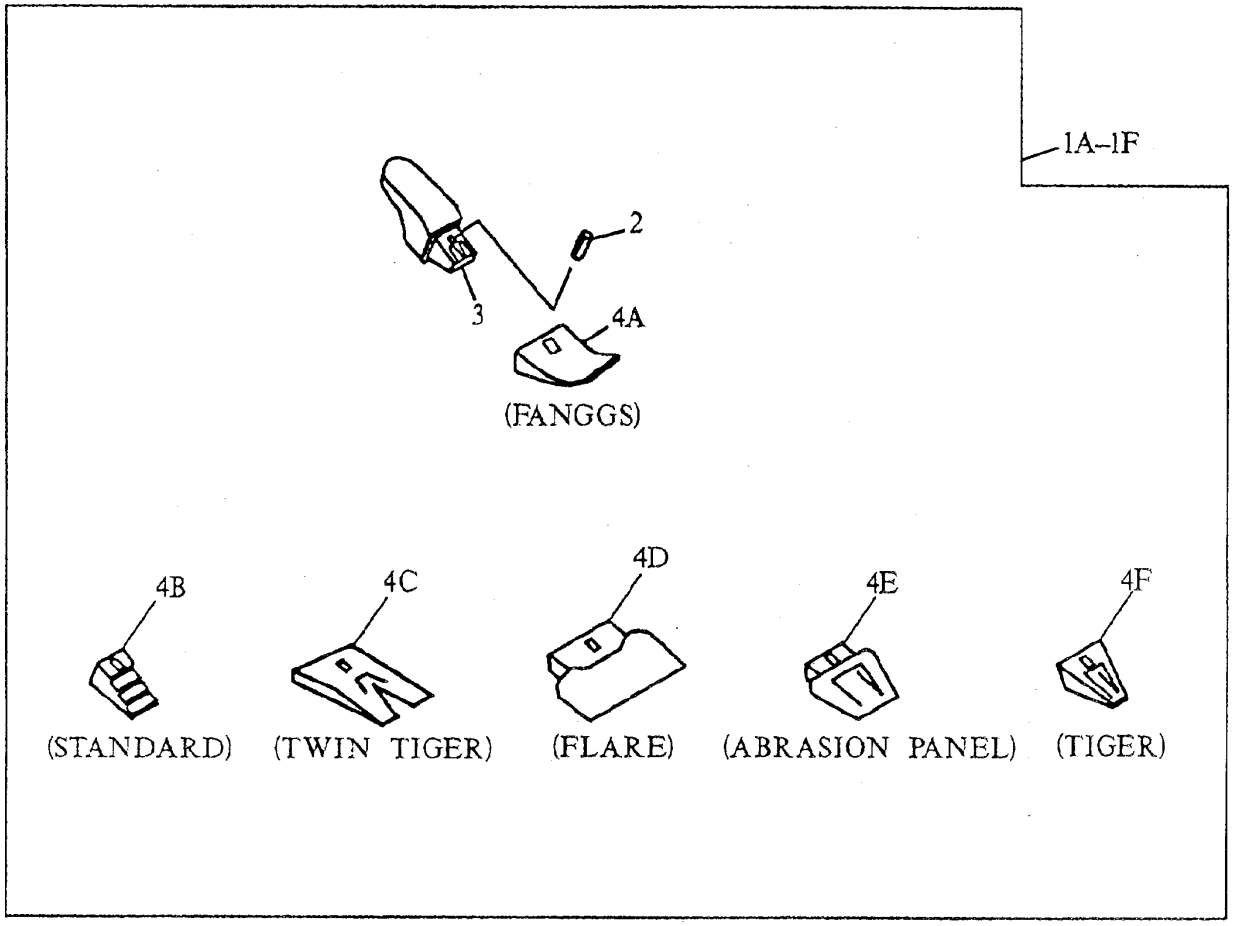

ORDER 3 SETS WITH 18 INCH BUCKET
ORDER 4 SETS WITH 24 INCH BUCKET
ORDER 4 SETS WITH 30 INCH BUCKET
ORDER 5 SETS WITH 36 INCH BUCKET
ORDER 5 SETS WITH 42 INCH BUCKET
ORDER 6 SETS WITH 48 INCH BUCKET
TP43771 ORDER 7 SETS WITH 54 INCH BUCKET

HEAVY DUTY BUCKET TOOTH ASSEMBLY
(24, 30, 36, 42 OR 48 INCH BUCKET)

KEY	PART NO.	PART NAME	QTY	SERIAL NO.	REMARKS
1A	.....	KIT	1		(TOOTH) WHOLEGOODS (FANGGS 310 TOOTH ASSEMBLY) (AT163538 ONLY AVAILABLE WHEN ORDERING BUCKET)
	.....	KIT	1		(TOOTH) WHOLEGOODS (FANGGS 330 TOOTH ASSEMBLY) (AT178530 ONLY AVAILABLE WHEN ORDERING BUCKET)
	.....	KIT	1		(TOOTH) WHOLEGOODS (FANGGS 290 TOOTH ASSEMBLY) (AT178531 ONLY AVAILABLE WHEN ORDERING BUCKET)
1B	.....	KIT	1		(TOOTH) WHOLEGOODS (STANDARD 310 TOOTH ASSEMBLY) (AT163539 ONLY AVAILABLE WHEN ORDERING BUCKET)
	.....	KIT	1		(TOOTH) WHOLEGOODS (STANDARD 330 TOOTH ASSEMBLY) (AT178532 ONLY AVAILABLE WHEN ORDERING BUCKET)
	.....	KIT	1		(TOOTH) WHOLEGOODS (STANDARD 290 TOOTH ASSEMBLY) (AT178533 ONLY AVAILABLE WHEN ORDERING BUCKET)
1C	.....	KIT	1		(TOOTH) WHOLEGOODS (TWIN TIGER 310 TOOTH ASSEMBLY) (AT163543 ONLY AVAILABLE WHEN ORDERING BUCKET
	.....	KIT	1		(TOOTH) WHOLEGOODS (TWIN TIGER 330 TOOTH ASSEMBLY) (AT178536 ONLY AVAILABLE WHEN ORDERING BUCKET)
	.....	KIT	1		(TOOTH) WHOLEGOODS (TWIN TIGER 290 TOOTH ASSEMBLY) (AT178537 ONLY AVAILABLE WHEN ORDERING BUCKET)
1D	.....	KIT	1		(TOOTH) WHOLEGOODS (FLARE) (AT163542 ONLY AVAILABLE WHEN ORDERING BUCKET)
1E	.....	KIT	1		(TOOTH) WHOLEGOODS (ABRASION PANEL) (AT163541 ONLY AVAILABLE WHEN ORDERING BUCKET)
1F	.....	KIT	1		(TOOTH) WHOLEGOODS (TIGER 310 TOOTH ASSEMBLY) (AT163540 ONLY AVAILABLE WHEN ORDERING BUCKET)
	.....	KIT	1		(TOOTH) WHOLEGOODS (TIGER 330 TOOTH ASSEMBLY) (AT178534 ONLY AVAILABLE WHEN ORDERING BUCKET)
	.....	KIT	1		(TOOTH) WHOLEGOODS (TIGER 290 TOOTH ASSEMBLY) (AT178535 ONLY AVAILABLE WHEN ORDERING BUCKET)
1G	.....	KIT	1		(TOOTH) WHOLEGOODS (ESCO STANDARD TOOTH ASSEMBLY) (NOT ILLUSTRATED) (AT163544 ONLY AVAILABLE WHEN ORDERING BUCKET)
1H	.....	KIT	1		(TOOTH) WHOLEGOODS (ESCO TWIN TIGER TOOTH ASSEMBLY) (NOT ILLUSTRATED) (AT163547 ONLY AVAILABLE WHEN ORDERING BUCKET)
1I	.....	KIT	1		(TOOTH) WHOLEGOODS (ESCO FLARE TOOTH ASSEMBLY) (NOT ILLUSTRATED) (AT163546 ONLY AVAILABLE WHEN ORDERING BUCKET)
1J	.....	KIT	1		(TOOTH) WHOLEGOODS (ESCO TIGER TOOTH ASSEMBLY) (NOT ILLUSTRATED) (AT163545 ONLY AVAILABLE WHEN ORDERING BUCKET)
1K	.....	KIT	1		(TOOTH) WHOLEGOODS (CATERPILLAR REPLACEMENT FANGGS TOOTH ASSEMBLY) (NOT ILLUSTRATED) (AT167192 ONLY AVAILABLE WHEN ORDERING BUCKET)
1L	.....	KIT	1		(TOOTH) WHOLEGOODS (CATERPILLAR REPLACEMENT STANDARD TOOTH ASSEMBLY) (NOT ILLUSTRATED) (AT167193 ONLY AVAILABLE WHEN ORDERING BUCKET)
1M	.....	KIT	1		(TOOTH) WHOLEGOODS (CATERPILLAR REPLACEMENT TWIN TIGER TOOTH ASSEMBLY) (NOT ILLUSTRATED) (AT167195 ONLY AVAILABLE WHEN ORDERING BUCKET)
1N	.....	KIT	1		(TOOTH) WHOLEGOODS (CATERPILLAR REPLACEMENT TIGER TOOTH ASSEMBLY) (NOT ILLUSTRATED) (AT167194 ONLY AVAILABLE WHEN ORDERING BUCKET)

HEAVY DUTY BUCKET TOOTH ASSEMBLY
(24, 30, 36, 42 OR 48 INCH BUCKET)

TP43771 -UN-01JAN94

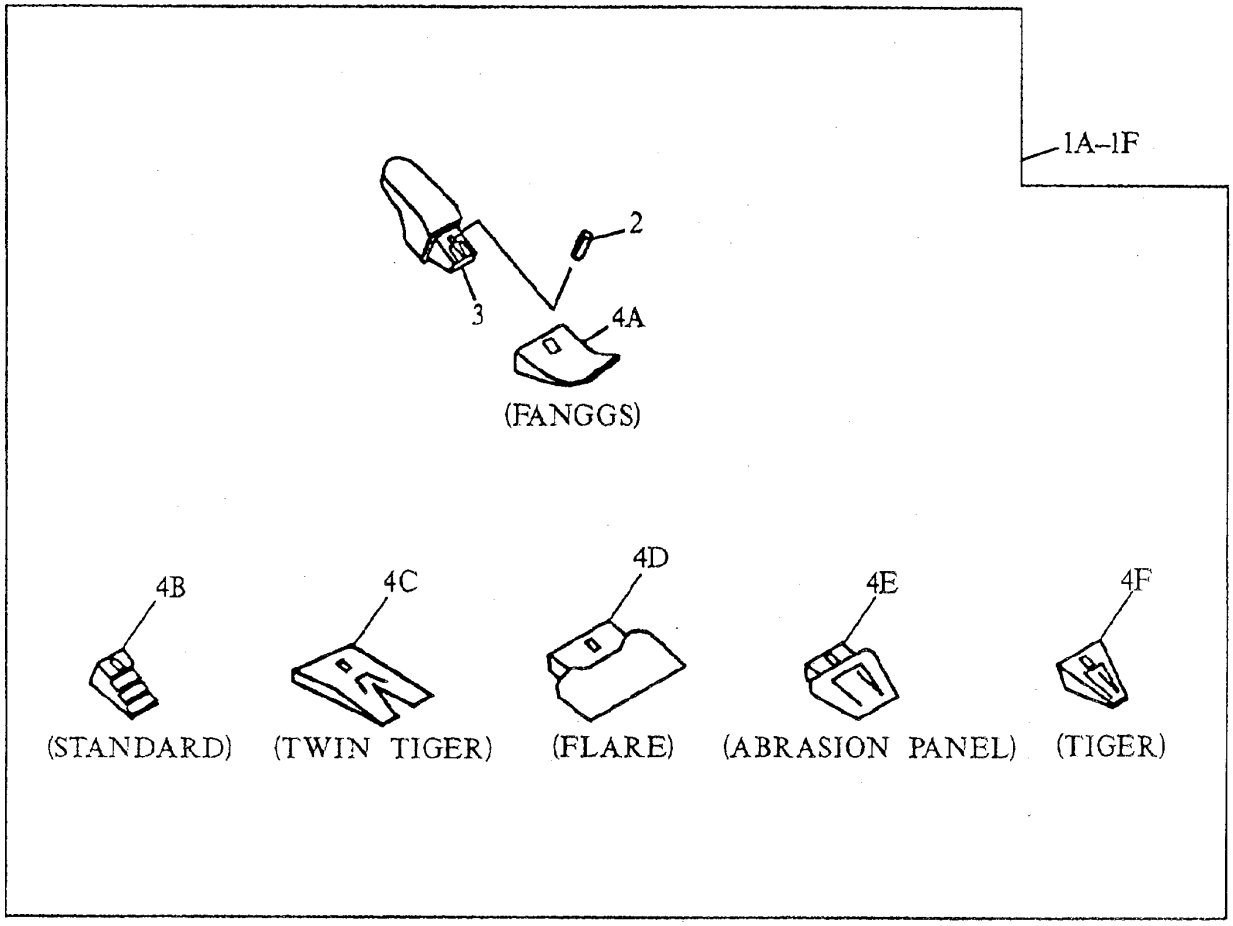

ORDER 3 SETS WITH 18 INCH BUCKET
ORDER 4 SETS WITH 24 INCH BUCKET
ORDER 4 SETS WITH 30 INCH BUCKET
ORDER 5 SETS WITH 36 INCH BUCKET
ORDER 5 SETS WITH 42 INCH BUCKET
ORDER 6 SETS WITH 48 INCH BUCKET
TP43771 ORDER 7 SETS WITH 54 INCH BUCKET

HEAVY DUTY BUCKET TOOTH ASSEMBLY
(24, 30, 36, 42 OR 48 INCH BUCKET)

KEY	PART NO.	PART NAME	QTY	SERIAL NO.	REMARKS
2	TP160	PIN	1		(SUB FOR TP160L, THIS APPLICATION) (USE WITH 310 TOOTH ASSEMBLY)
	TK330	PIN	1		(USE WITH 330 TOOTH ASSEMBLIES)
	TK290	PIN	1		(USE WITH 290 TOOTH ASSEMBLIES)
	EX27VPN	PIN	1		(ESCO) (NOT ILLUSTRATED ON THIS PAGE - SEE ESCO TOOTH PAGE)
	T9J2358	PIN FASTENER	1		(CATERPILLAR REPLACEMENT) (NOT ILLUSTRATED)
3	T153X310	BUCKET TOOTH ADAPTER	1		(USE WITH 310 TOOTH ASSEMBLIES)
	T158X330	BUCKET TOOTH ADAPTER	1		(USE WITH 330 TOOTH ASSEMBLIES)
	T158X290	BUCKET TOOTH ADAPTER	1		(USE WITH 290 TOOTH ASSEMBLIES)
	EX5850-27V	BUCKET TOOTH ADAPTER	1		(ESCO) (NOT ILLUSTRATED ON THIS PAGE - SEE ESCO TOOTH PAGE)
	T3G8354	BUCKET TOOTH ADAPTER	1		(CATERPILLAR REPLACEMENT) (NOT ILLUSTRATED)
4A	TF310	TOOTH	1		(ALSO ORDER TP160L) (FANGGS)
	TF330	TOOTH	1		(FANGGS)
	TF290	TOOTH	1		(FANGGS)
4B	TX310	TOOTH	1		(ALSO ORDER TP160L) (STANDARD)
	TX330	TOOTH	1		(STANDARD)
	TX290	TOOTH	1		(STANDARD)
4C	TX310WT	TOOTH	1		(ALSO ORDER TP160L) (TWIN TIGER)
	TX330WT	TOOTH	1		(TWIN TIGER)
	TX290WT	TOOTH	1		(TWIN TIGER)
4D	TX310F	TOOTH	1		(ALSO ORDER TP160L)
4E	TX310AP	TOOTH	1		(ALSO ORDER TP160L)
4F	TT310	TOOTH	1		(ALSO ORDER TP160L) (TIGER)
	TT330	TOOTH	1		(TIGER)
	TT290	TOOTH	1		(TIGER)
4G	EX27SYL	TOOTH	1		(ESCO STANDARD) (NOT ILLUSTRATED ON THIS PAGE - SEE ESCO TOOTH PAGE)
4H	EX27TVIP	TOOTH	1		(ESCO TWIN TIGER) (NOT ILLUSTRATED ON THIS PAGE - SEE ESCO TOOTH PAGE)
4I	EX27S6F	TOOTH	1		(ESCO FLARE) (NOT ILLUSTRATED ON THIS PAGE - SEE ESCO TOOTH PAGE)
4J	EX27VIP	TOOTH	1		(ESCO TIGER) (NOT ILLUSTRATED ON THIS PAGE - SEE ESCO TOOTH PAGE)
4K	TF1U3352D	TOOTH	1		(CATERPILLAR REPLACEMENT FANGGS) (NOT ILLUSTRATED)
4L	T1U3352	TOOTH	1		(CATERPILLAR REPLACEMENT STANDARD) (NOT ILLUSTRATED)
4M	TX1U3352WT	TOOTH	1		(CATERPILLAR REPLACEMENT TWIN TIGER) (NOT ILLUSTRATED)
4N	TT1U3352	TOOTH	1		(CATERPILLAR REPLACEMENT TIGER) (NOT ILLUSTRATED)
5	T3G9549	RETAINER	1		(CATERPILLAR REPLACEMENT) (NOT ILLUSTRATED)
6	EX27VPL	PLUG	1		(NOT ILLUSTRATED ON THIS PAGE - SEE ESCO TOOTH PAGE)

HEAVY DUTY HIGH CAPACITY BUCKET TOOTH ASSEMBLY
(310 SERIES TEETH)
(24, 30, 36 OR 42 INCH BUCKET)

TP43771 -UN-01JAN94

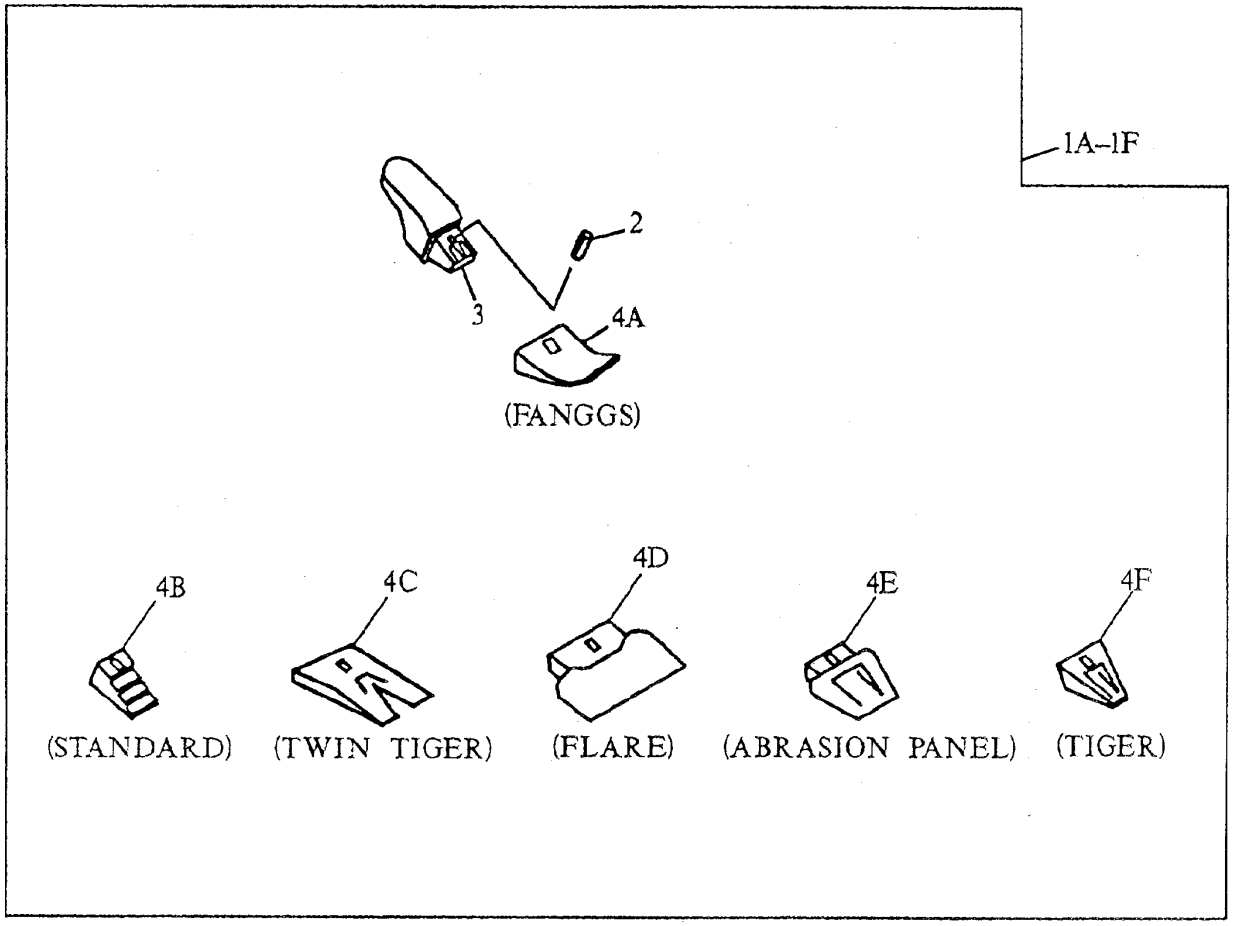

ORDER 3 SETS WITH 18 INCH BUCKET
ORDER 4 SETS WITH 24 INCH BUCKET
ORDER 4 SETS WITH 30 INCH BUCKET
ORDER 5 SETS WITH 36 INCH BUCKET
ORDER 5 SETS WITH 42 INCH BUCKET
ORDER 6 SETS WITH 48 INCH BUCKET
TP43771 ORDER 7 SETS WITH 54 INCH BUCKET

HEAVY DUTY HIGH CAPACITY BUCKET TOOTH ASSEMBLY
(24, 30, 36 OR 42 INCH BUCKET)

KEY	PART NO.	PART NAME	QTY	SERIAL NO.	REMARKS
1A	.....	KIT	1		(TOOTH) WHOLEGOODS (FANGGS 310 TOOTH ASSEMBLY) (AT163538 ONLY AVAILABLE WHEN ORDERING BUCKET)
	.....	KIT	1		(TOOTH) WHOLEGOODS (FANGGS 330 TOOTH ASSEMBLY) (AT178530 ONLY AVAILABLE WHEN ORDERING BUCKET)
	.....	KIT	1		(TOOTH) WHOLEGOODS (FANGGS 290 TOOTH ASSEMBLY) (AT178531 ONLY AVAILABLE WHEN ORDERING BUCKET)
1B	.....	KIT	1		(TOOTH) WHOLEGOODS (STANDARD 310 TOOTH ASSEMBLY) (AT163539 ONLY AVAILABLE WHEN ORDERING BUCKET)
	.....	KIT	1		(TOOTH) WHOLEGOODS (STANDARD 330 TOOTH ASSEMBLY) (AT178532 ONLY AVAILABLE WHEN ORDERING BUCKET)
	.....	KIT	1		(TOOTH) WHOLEGOODS (STANDARD 290 TOOTH ASSEMBLY) (AT178533 ONLY AVAILABLE WHEN ORDERING BUCKET)
1C	.....	KIT	1		(TOOTH) WHOLEGOODS (TWIN TIGER 310 TOOTH ASSEMBLY) (AT163543 ONLY AVAILABLE WHEN ORDERING BUCKET)
	.....	KIT	1		(TOOTH) WHOLEGOODS (TWIN TIGER 330 TOOTH ASSEMBLY) (AT178536 ONLY AVAILABLE WHEN ORDERING BUCKET)
	.....	KIT	1		(TOOTH) WHOLEGOODS (TWIN TIGER 290 TOOTH ASSEMBLY) (AT178537 ONLY AVAILABLE WHEN ORDERING BUCKET)
1D	.....	KIT	1		(TOOTH) WHOLEGOODS (FLARE) (AT163542 ONLY AVAILABLE WHEN ORDERING BUCKET)
1E	.....	KIT	1		(TOOTH) WHOLEGOODS (ABRASION PANEL) (AT163541 ONLY AVAILABLE WHEN ORDERING BUCKET)
1F	.....	KIT	1		(TOOTH) WHOLEGOODS (TIGER 310 TOOTH ASSEMBLY) (AT163540 ONLY AVAILABLE WHEN ORDERING BUCKET)
	.....	KIT	1		(TOOTH) WHOLEGOODS (TIGER 330 TOOTH ASSEMBLY) (AT178534 ONLY AVAILABLE WHEN ORDERING BUCKET)
	.....	KIT	1		(TOOTH) WHOLEGOODS (TIGER 290 TOOTH ASSEMBLY) (AT178535 ONLY AVAILABLE WHEN ORDERING BUCKET)
1G	.....	KIT	1		(TOOTH) WHOLEGOODS (ESCO STANDARD TOOTH ASSEMBLY) (NOT ILLUSTRATED) (AT163544 ONLY AVAILABLE WHEN ORDERING BUCKET)
1H	.....	KIT	1		(TOOTH) WHOLEGOODS (ESCO TWIN TIGER TOOTH ASSEMBLY) (NOT ILLUSTRATED) (AT163547 ONLY AVAILABLE WHEN ORDERING BUCKET)
1I	.....	KIT	1		(TOOTH) WHOLEGOODS (ESCO FLARE TOOTH ASSEMBLY) (NOT ILLUSTRATED) (AT163546 ONLY AVAILABLE WHEN ORDERING BUCKET)
1J	.....	KIT	1		(TOOTH) WHOLEGOODS (ESCO TIGER TOOTH ASSEMBLY) (NOT ILLUSTRATED) (AT163545 ONLY AVAILABLE WHEN ORDERING BUCKET)
1K	.....	KIT	1		(TOOTH) WHOLEGOODS (CATERPILLAR REPLACEMENT FANGGS TOOTH ASSEMBLY) (NOT ILLUSTRATED) (AT167192 ONLY AVAILABLE WHEN ORDERING BUCKET)
1L	.....	KIT	1		(TOOTH) WHOLEGOODS (CATERPILLAR REPLACEMENT STANDARD TOOTH ASSEMBLY) (NOT ILLUSTRATED) (AT167193 ONLY AVAILABLE WHEN ORDERING BUCKET)
1M	.....	KIT	1		(TOOTH) WHOLEGOODS (CATERPILLAR REPLACEMENT TWIN TIGER TOOTH ASSEMBLY) (NOT ILLUSTRATED) (AT167195 ONLY AVAILABLE WHEN ORDERING BUCKET)

HEAVY DUTY HIGH CAPACITY BUCKET TOOTH ASSEMBLY
(310 SERIES TEETH)
(24, 30, 36 OR 42 INCH BUCKET)

TP43771 -UN-01JAN94

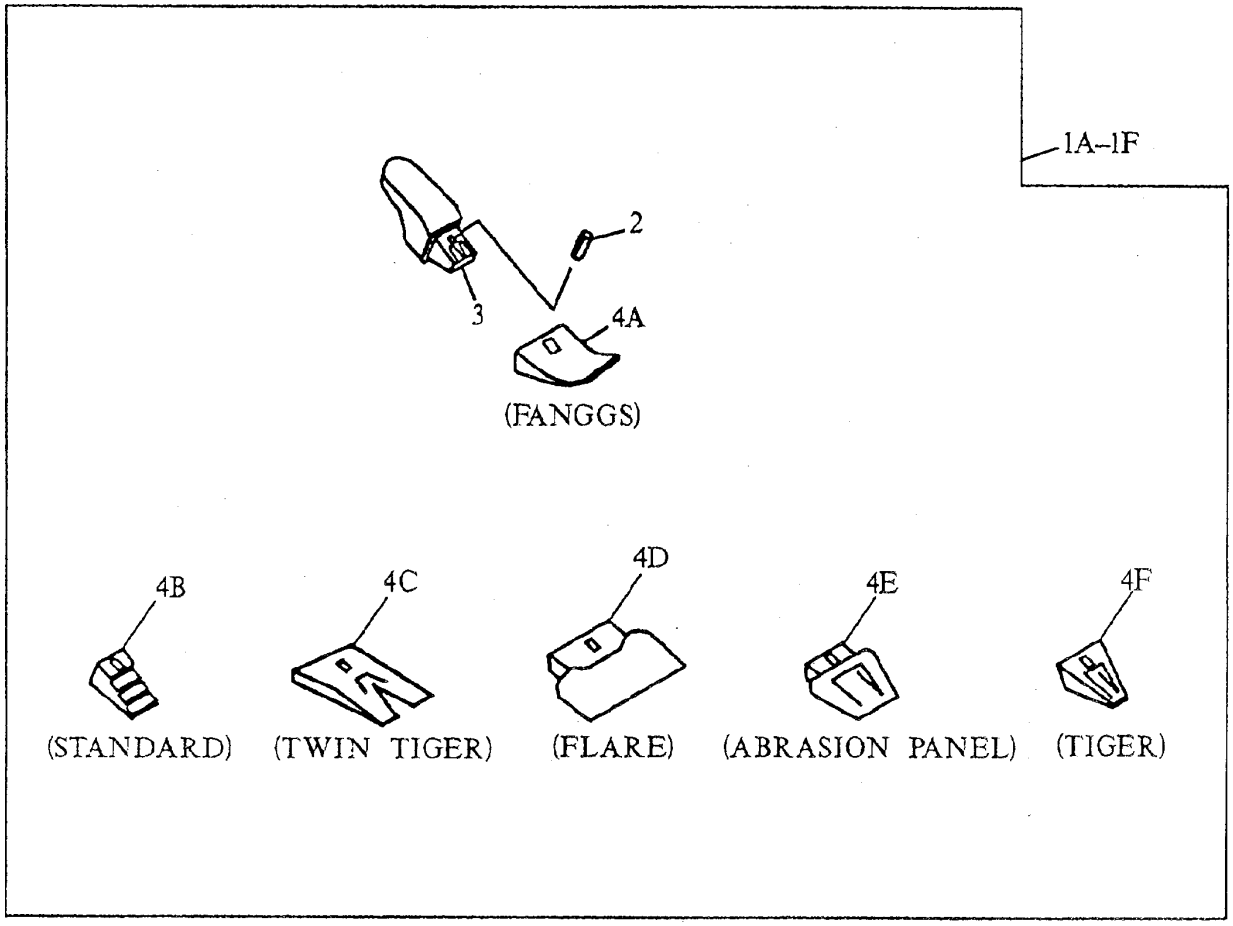

ORDER 3 SETS WITH 18 INCH BUCKET
ORDER 4 SETS WITH 24 INCH BUCKET
ORDER 4 SETS WITH 30 INCH BUCKET
ORDER 5 SETS WITH 36 INCH BUCKET
ORDER 5 SETS WITH 42 INCH BUCKET
ORDER 6 SETS WITH 48 INCH BUCKET
TP43771 ORDER 7 SETS WITH 54 INCH BUCKET

HEAVY DUTY HIGH CAPACITY BUCKET TOOTH ASSEMBLY
(24, 30, 36 OR 42 INCH BUCKET)

KEY	PART NO.	PART NAME	QTY	SERIAL NO.	REMARKS
1N	.....	KIT	1		(TOOTH) WHOLEGOODS (CATERPILLAR REPLACEMENT TIGER TOOTH ASSEMBLY) (NOT ILLUSTRATED) (AT167194 ONLY AVAILABLE WHEN ORDERING BUCKET)
1O	.....	KIT	1		(TOOTH) WHOLEGOODS (V-STYLE EV29SYL TOOTH KIT) (NOT ILLUSTRATED) (AT199355 ONLY AVAILABLE WHEN ORDERING BUCKET)
2	TP160	PIN	1		(SUB FOR TP160L, THIS APPLICATION) (USE WITH 310 TOOTH ASSEMBLIES)
	TK330	PIN	1		(USE WITH 330 TOOTH ASSEMBLIES)
	TK290	PIN	1		(USE WITH 290 TOOTH ASSEMBLIES)
	EX27VPN	PIN	1		(ESCO) (NOT ILLUSTRATED ON THIS PAGE - SEE ESCO TOOTH PAGE)
	T9J2358	PIN FASTENER	1		(CATERPILLAR REPLACEMENT) (NOT ILLUSTRATED)
	EV29PN	PIN FASTENER	1		(FOR V-STYLE EV29SYL TOOTH KIT) (NOT ILLUSTRATED)
3	T153X310	BUCKET TOOTH ADAPTER	1		(USE WITH 310 TOOTH ASSEMBLIES)
	T158X330	BUCKET TOOTH ADAPTER	1		(USE WITH 330 TOOTH ASSEMBLIES)
	T158X290	BUCKET TOOTH ADAPTER	1		(USE WITH 290 TOOTH ASSEMBLIES)
	EX5850-27V	BUCKET TOOTH ADAPTER	1		(ESCO) (NOT ILLUSTRATED ON THIS PAGE - SEE ESCO TOOTH PAGE)
	T3G8354	BUCKET TOOTH ADAPTER	1		(CATERPILLAR REPLACEMENT) (NOT ILLUSTRATED)
	EV5850-V29	BUCKET TOOTH ADAPTER	1		(FOR V-STYLE EV29SYL TOOTH KIT) (NOT ILLUSTRATED)
4A	TF310	TOOTH	1		(ALSO ORDER TP160L) (FANGGS)
	TF330	TOOTH	1		(FANGGS)
	TF290	TOOTH	1		(FANGGS)
4B	TX310	TOOTH	1		(ALSO ORDER TP160L) (STANDARD)
	TX330	TOOTH	1		(STANDARD)
	TX290	TOOTH	1		(STANDARD)
4C	TX310WT	TOOTH	1		(ALSO ORDER TP160L) (TWIN TIGER)
	TX330WT	TOOTH	1		(TWIN TIGER)
	TX290WT	TOOTH	1		(TWIN TIGER)
4D	TX310F	TOOTH	1		(ALSO ORDER TP160L)
4E	TX310AP	TOOTH	1		(ALSO ORDER TP160L)
4F	TT310	TOOTH	1		(ALSO ORDER TP160L) (TIGER)
	TT330	TOOTH	1		(TIGER)
	TT290	TOOTH	1		(TIGER)
4G	EX27SYL	TOOTH	1		(ESCO STANDARD) (NOT ILLUSTRATED ON THIS PAGE - SEE ESCO TOOTH PAGE)
4H	EX27TVIP	TOOTH	1		(ESCO TWIN TIGER) (NOT ILLUSTRATED ON THIS PAGE - SEE ESCO TOOTH PAGE)
4I	EX27S6F	TOOTH	1		(ESCO FLARE) (NOT ILLUSTRATED ON THIS PAGE - SEE ESCO TOOTH PAGE)
4J	EX27VIP	TOOTH	1		(ESCO TIGER) (NOT ILLUSTRATED ON THIS PAGE - SEE ESCO TOOTH PAGE)
4K	TF1U3352D	TOOTH	1		(CATERPILLAR REPLACEMENT FANGGS) (NOT ILLUSTRATED)
4L	T1U3352	TOOTH	1		(CATERPILLAR REPLACEMENT STANDARD) (NOT ILLUSTRATED)
4M	TX1U3352WT	TOOTH	1		(CATERPILLAR REPLACEMENT TWIN TIGER) (NOT ILLUSTRATED)
4N	TT1U3352	TOOTH	1		(CATERPILLAR REPLACEMENT TIGER) (NOT ILLUSTRATED)
4O	EV29SYL	TOOTH	1		(FOR V-STYLE EV29SYL TOOTH KIT) (NOT ILLUSTRATED)
5	T3G9549	RETAINER	1		(CATERPILLAR REPLACEMENT) (NOT ILLUSTRATED)
6	EX27VPL	PLUG	1		(NOT ILLUSTRATED ON THIS PAGE - SEE ESCO TOOTH PAGE)

SEVERE DUTY CAST LIP BUCKET TOOTH ASSEMBLY
(24, 30 OR 36 INCH BUCKET)

TP43782 -UN-01JAN94

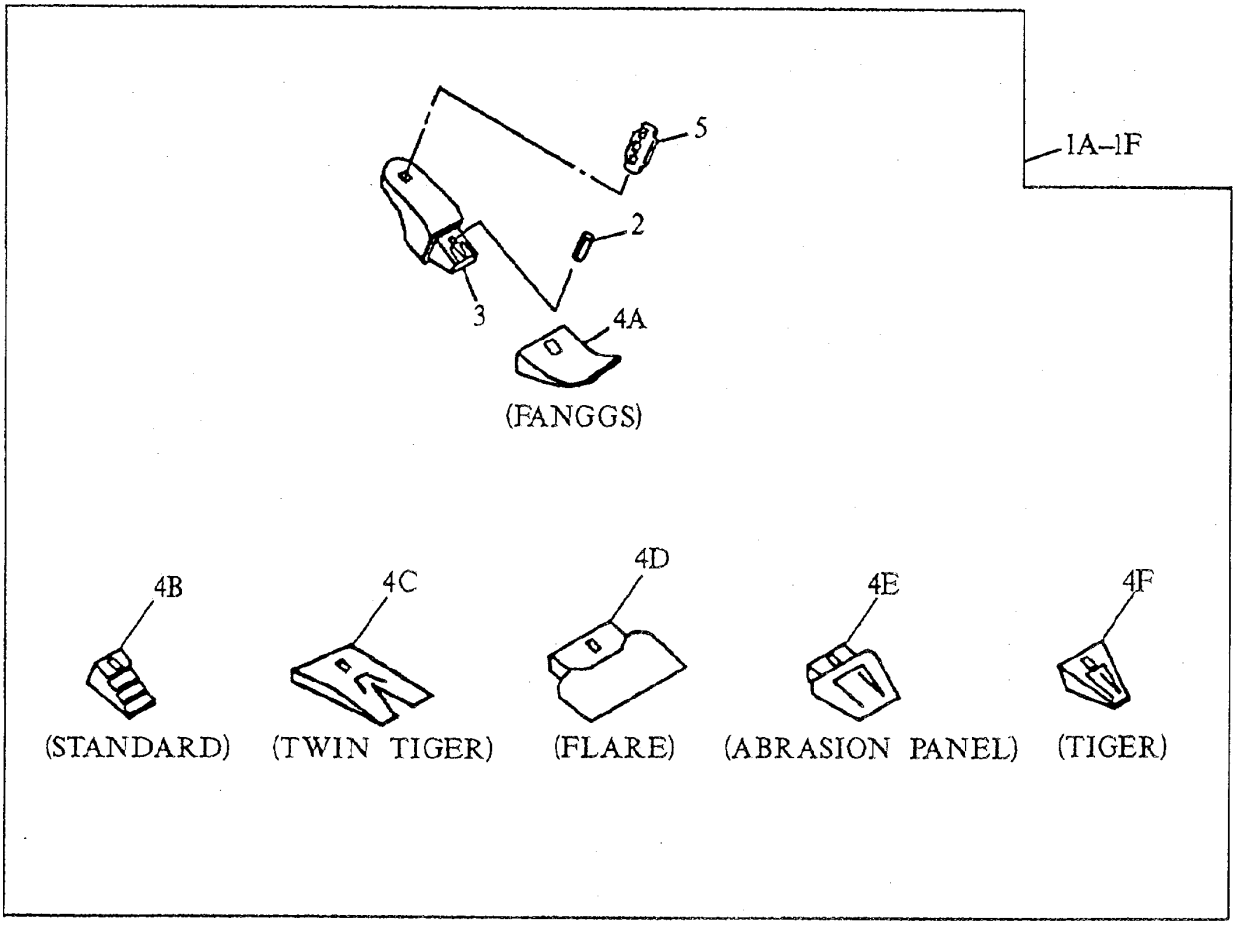

ORDER 4 SETS WITH 24 INCH BUCKET
ORDER 4 SETS WITH 30 INCH BUCKET
TP43782 ORDER 5 SETS WITH 36 INCH BUCKET

THIS PARTS LISTING IS CONTINUED

SEVERE DUTY CAST LIP BUCKET TOOTH ASSEMBLY
(24, 30 OR 36 INCH BUCKET)

KEY	PART NO.	PART NAME	QTY	SERIAL NO.	REMARKS
1A	.....	KIT	1		(TOOTH) WHOLEGOODS (FANGGS) (AT163825 ONLY AVAILABLE WHEN ORDERING BUCKET)
1B	.....	KIT	1		(TOOTH) WHOLEGOODS (STANDARD) (AT163826 ONLY AVAILABLE WHEN ORDERING BUCKET)
1C	.....	KIT	1		(TOOTH) WHOLEGOODS (TWIN TIGER) (AT163832 ONLY AVAILABLE WHEN ORDERING BUCKET)
1D	.....	KIT	1		(FLARE) (NOT AVAILABLE FOR THIS BUCKET)
1E	.....	KIT	1		(TOOTH) WHOLEGOODS (ABRASION PANEL) (AT163828 ONLY AVAILABLE WHEN ORDERING BUCKET)
1F	.....	KIT	1		(TOOTH) WHOLEGOODS (TIGER) (AT163827 ONLY AVAILABLE WHEN ORDERING BUCKET)
2	TP400HD	PIN	1		
3	T130X400	BUCKET TOOTH ADAPTER	1		
4A	TF400	TOOTH	1		
4B	TX400	TOOTH	1		
4C	TX400WT	TOOTH	1		
4D	.....	TOOTH	1		(NOT AVAILABLE FOR THIS BUCKET)
4E	TX400AP	TOOTH	1		
4F	TT400	TOOTH	1		
5	TK130	SHAFT KEY	1		

SEVERE DUTY PLATE LIP BUCKET TOOTH ASSEMBLY
(30 OR 36 INCH BUCKET)

TP43783 -UN-01JAN94

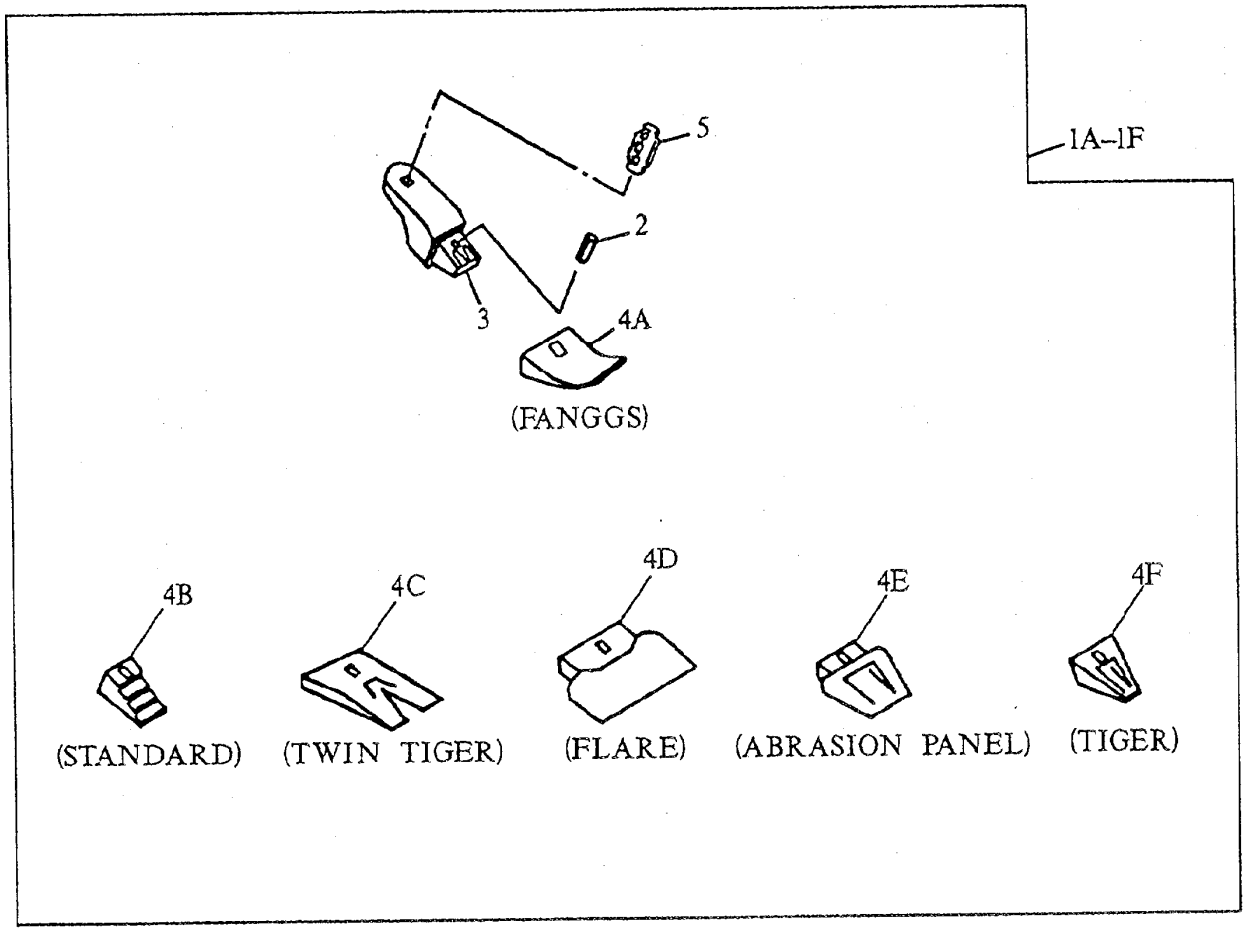

ORDER 4 SETS WITH 30 INCH BUCKET

TP43783 ORDER 4 SETS WITH 36 INCH BUCKET

SEVERE DUTY PLATE LIP BUCKET TOOTH ASSEMBLY
(30 OR 36 INCH BUCKET)

KEY	PART NO.	PART NAME	QTY	SERIAL NO.	REMARKS
1A	.....	KIT	1		(TOOTH) WHOLEGOODS (FANGGS) (AT163548 ONLY AVAILABLE WHEN ORDERING BUCKET)
1B	.....	KIT	1		(TOOTH) WHOLEGOODS (STANDARD) (AT163549 ONLY AVAILABLE WHEN ORDERING BUCKET)
1C	.....	KIT	1		(TOOTH) WHOLEGOODS (TWIN TIGER) (AT163553 ONLY AVAILABLE WHEN ORDERING BUCKET)
1D	.....	KIT	1		(TOOTH) WHOLEGOODS (FLARE) (AT163552 ONLY AVAILABLE WHEN ORDERING BUCKET)
1E	.....	KIT	1		(TOOTH) WHOLEGOODS (ABRASION PANEL) (AT163551 ONLY AVAILABLE WHEN ORDERING BUCKET)
1F	.....	KIT	1		(TOOTH) WHOLEGOODS (TIGER) (AT163550 ONLY AVAILABLE WHEN ORDERING BUCKET)
1G	.....	KIT	1		(TOOTH) WHOLEGOODS (ESCO STANDARD) (NOT ILLUSTRATED) (AT163554 ONLY AVAILABLE WHEN ORDERING BUCKET)
1H	.....	KIT	1		(TOOTH) WHOLEGOODS (ESCO TWIN TIGER) (NOT ILLUSTRATED) (AT163557 ONLY AVAILABLE WHEN ORDERING BUCKET)
1I	.....	KIT	1		(TOOTH) WHOLEGOODS (ESCO FLARE) (NOT ILLUSTRATED) (AT163556 ONLY AVAILABLE WHEN ORDERING BUCKET)
1J	.....	KIT	1		(TOOTH) WHOLEGOODS (ESCO TIGER) (NOT ILLUSTRATED) (AT163555 ONLY AVAILABLE WHEN ORDERING BUCKET)
1K	.....	KIT	1		(TOOTH) WHOLEGOODS (CATERPILLAR REPLACEMENT FANGGS) (NOT ILLUSTRATED) (AT167196 ONLY AVAILABLE WHEN ORDERING BUCKET)
1L	.....	KIT	1		(TOOTH) WHOLEGOODS (CATERPILLAR REPLACEMENT STANDARD) (NOT ILLUSTRATED) (AT167197 ONLY AVAILABLE WHEN ORDERING BUCKET)
1O	.....	KIT	1		(TOOTH) WHOLEGOODS (SUPER V-STYLE EV39SYL TOOTH KIT) (NOT ILLUSTRATED) (AT199361 ONLY AVAILABLE WHEN ORDERING BUCKET)
2	TP400HD	PIN	1		(SUB FOR PTP400HD)
	EX37VPN	PIN	1		(ESCO VERTALOK) (NOT ILLUSTRATED - SEE ESCO TOOTH PAGE)
3	T802X400	SHANK	1		(SUB FOR PT802X400)
	EX5856-37V	BUCKET TOOTH ADAPTER	1		(ESCO VERTALOK) (NOT ILLUSTRATED - SEE ESCO TOOTH PAGE)
4A	TF400	TOOTH	1		
4B	TX400	TOOTH	1		
4C	TX400WT	TOOTH	1		
4D	TX400F	TOOTH	1		
4E	TX400AP	TOOTH	1		
4F	TT400	TOOTH	1		
4G	EX37SYL	TOOTH	1		(ESCO STANDARD) (NOT ILLUSTRATED - SEE ESCO TOOTH PAGE) (SUB FOR EX5824-37, ALONG WITH EX37VPL AND EX37VPN)
4H	EX37TVIP	TOOTH	1		(ESCO TWIN TIGER) (NOT ILLUSTRATED - SEE ESCO TOOTH PAGE)
4I	EX37S7F	TOOTH	1		(ESCO FLARE) (NOT ILLUSTRATED - SEE ESCO TOOTH PAGE)
4J	EX37VIP	TOOTH	1		(ESCO TIGER) (NOT ILLUSTRATED - SEE ESCO TOOTH PAGE)
5	EX37VPL	PLUG	1		(NOT ILLUSTRATED - SEE ESCO TOOTH PAGE)

GENERAL PURPOSE BUCKET TOOTH ASSEMBLY
(24, 30, 36, 42 OR 48 INCH BUCKET)

TP43771 -UN-01JAN94

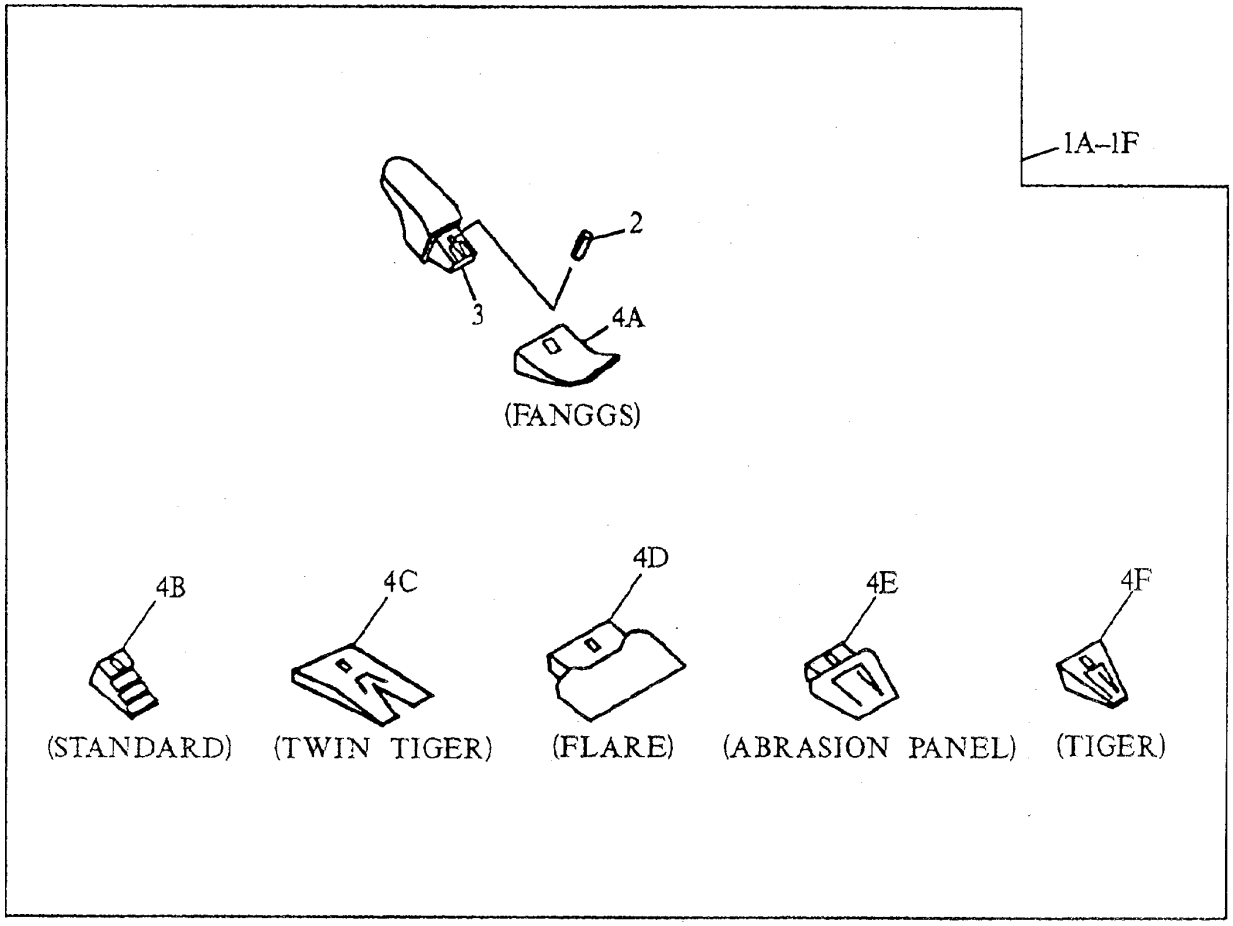

ORDER 3 SETS WITH 18 INCH BUCKET
ORDER 4 SETS WITH 24 INCH BUCKET
ORDER 4 SETS WITH 30 INCH BUCKET
ORDER 5 SETS WITH 36 INCH BUCKET
ORDER 5 SETS WITH 42 INCH BUCKET
ORDER 6 SETS WITH 48 INCH BUCKET
TP43771 ORDER 7 SETS WITH 54 INCH BUCKET

GENERAL PURPOSE BUCKET TOOTH ASSEMBLY
(24, 30, 36, 42 OR 48 INCH BUCKET)

KEY	PART NO.	PART NAME	QTY	SERIAL NO.	REMARKS
1A	.....	KIT	1		(TOOTH) WHOLEGOODS (FANGGS 310 TOOTH ASSEMBLY) (AT163538 ONLY AVAILABLE WHEN ORDERING BUCKET)
	.....	KIT	1		(TOOTH) WHOLEGOODS (FANGGS 330 TOOTH ASSEMBLY) (AT178530 ONLY AVAILABLE WHEN ORDERING BUCKET)
	.....	KIT	1		(TOOTH) WHOLEGOODS (FANGGS 290 TOOTH ASSEMBLY) (AT178531 ONLY AVAILABLE WHEN ORDERING BUCKET)
1B	.....	KIT	1		(TOOTH) WHOLEGOODS (STANDARD 310 TOOTH ASSEMBLY) (AT163539 ONLY AVAILABLE WHEN ORDERING BUCKET)
	.....	KIT	1		(TOOTH) WHOLEGOODS (STANDARD 330 TOOTH ASSEMBLY) (AT178532 ONLY AVAILABLE WHEN ORDERING BUCKET)
	.....	KIT	1		(TOOTH) WHOLEGOODS (STANDARD 290 TOOTH ASSEMBLY) (AT178533 ONLY AVAILABLE WHEN ORDERING BUCKET)
1C	.....	KIT	1		(TOOTH) WHOLEGOODS (TWIN TIGER 310 TOOTH ASSEMBLY) (AT163543 ONLY AVAILABLE WHEN ORDERING BUCKET)
	.....	KIT	1		(TOOTH) WHOLEGOODS (TWIN TIGER 330 TOOTH ASSEMBLY) (AT178536 ONLY AVAILABLE WHEN ORDERING BUCKET)
	.....	KIT	1		(TOOTH) WHOLEGOODS (TWIN TIGER 290 TOOTH ASSEMBLY) (AT178537 ONLY AVAILABLE WHEN ORDERING BUCKET)
1D	.....	KIT	1		(TOOTH) WHOLEGOODS (FLARE) (AT163542 ONLY AVAILABLE WHEN ORDERING BUCKET)
1E	.....	KIT	1		(TOOTH) WHOLEGOODS (ABRASION PANEL) (AT163541 ONLY AVAILABLE WHEN ORDERING BUCKET)
1F	.....	KIT	1		(TOOTH) WHOLEGOODS (TIGER 310 TOOTH ASSEMBLY) (AT163540 ONLY AVAILABLE WHEN ORDERING BUCKET)
	.....	KIT	1		(TOOTH) WHOLEGOODS (TIGER 330 TOOTH ASSEMBLY) (AT178534 ONLY AVAILABLE WHEN ORDERING BUCKET)
	.....	KIT	1		(TOOTH) WHOLEGOODS (TIGER 290 TOOTH ASSEMBLY) (AT178535 ONLY AVAILABLE WHEN ORDERING BUCKET)
1G	.....	KIT	1		(TOOTH) WHOLEGOODS (ESCO STANDARD TOOTH ASSEMBLY) (NOT ILLUSTRATED) (AT163544 ONLY AVAILABLE WHEN ORDERING BUCKET)
1H	.....	KIT	1		(TOOTH) WHOLEGOODS (ESCO TWIN TIGER TOOTH ASSEMBLY) (NOT ILLUSTRATED) (AT163547 ONLY AVAILABLE WHEN ORDERING BUCKET)
1I	.....	KIT	1		(TOOTH) WHOLEGOODS (ESCO FLARE TOOTH ASSEMBLY) (NOT ILLUSTRATED) (AT163546 ONLY AVAILABLE WHEN ORDERING BUCKET)
1J	.....	KIT	1		(TOOTH) WHOLEGOODS (ESCO TIGER TOOTH ASSEMBLY) (NOT ILLUSTRATED) (AT163545 ONLY AVAILABLE WHEN ORDERING BUCKET)
1K	.....	KIT	1		(TOOTH) WHOLEGOODS (CATERPILLAR REPLACEMENT FANGGS TOOTH ASSEMBLY) (NOT ILLUSTRATED) (AT167192 ONLY AVAILABLE WHEN ORDERING BUCKET)
1L	.....	KIT	1		(TOOTH) WHOLEGOODS (CATERPILLAR REPLACEMENT STANDARD TOOTH ASSEMBLY) (NOT ILLUSTRATED) (AT167193 ONLY AVAILABLE WHEN ORDERING BUCKET)
1M	.....	KIT	1		(TOOTH) WHOLEGOODS (CATERPILLAR REPLACEMENT TWIN TIGER TOOTH ASSEMBLY) (NOT ILLUSTRATED) (AT167195 ONLY AVAILABLE WHEN ORDERING BUCKET)
1N	.....	KIT	1		(TOOTH) WHOLEGOODS (CATERPILLAR REPLACEMENT TIGER TOOTH ASSEMBLY) (NOT ILLUSTRATED) (AT167194 ONLY AVAILABLE WHEN ORDERING BUCKET)

GENERAL PURPOSE BUCKET TOOTH ASSEMBLY
(24, 30, 36, 42 OR 48 INCH BUCKET)

TP43771 -UN-01JAN94

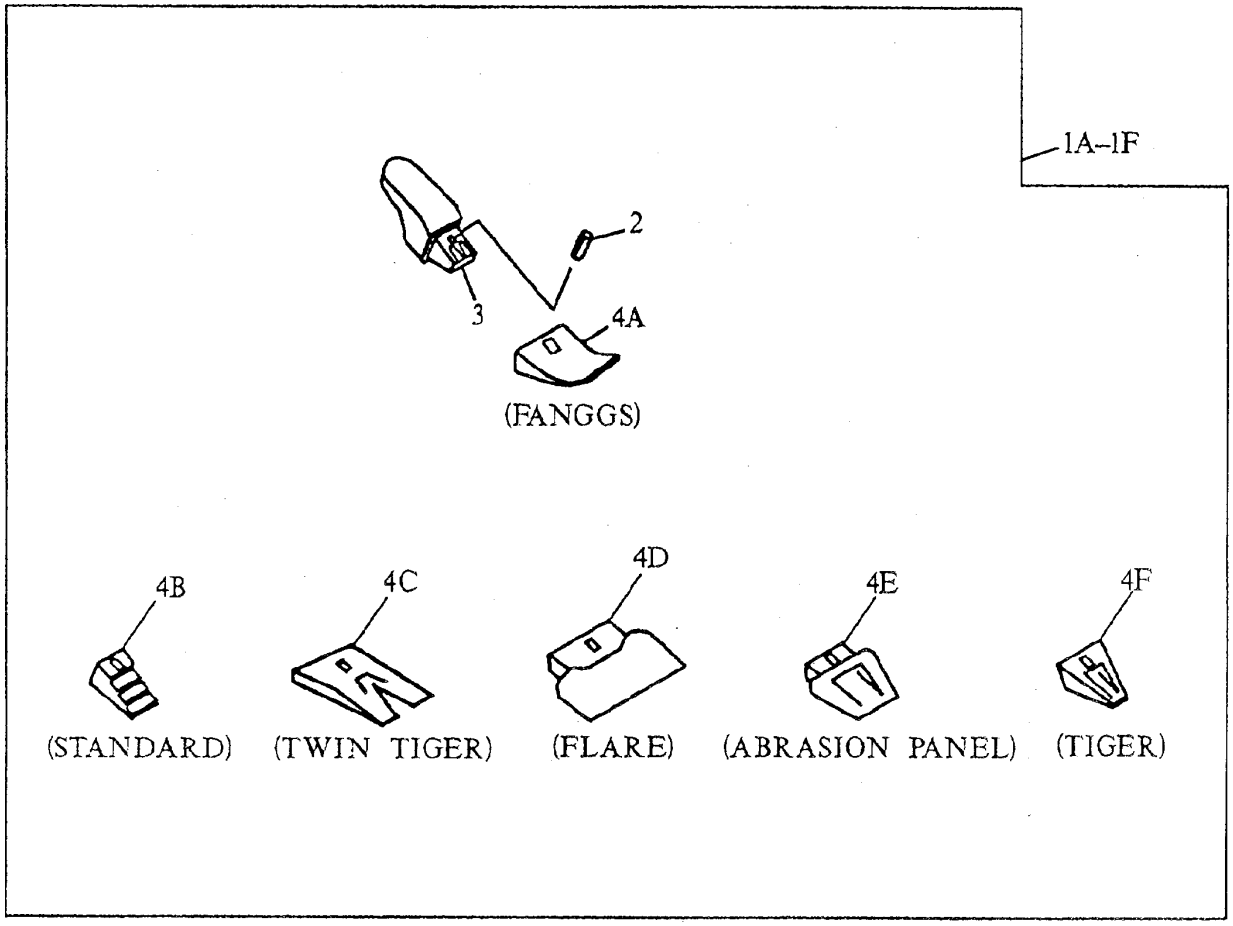

ORDER 3 SETS WITH 18 INCH BUCKET
ORDER 4 SETS WITH 24 INCH BUCKET
ORDER 4 SETS WITH 30 INCH BUCKET
ORDER 5 SETS WITH 36 INCH BUCKET
ORDER 5 SETS WITH 42 INCH BUCKET
ORDER 6 SETS WITH 48 INCH BUCKET
TP43771 ORDER 7 SETS WITH 54 INCH BUCKET

GENERAL PURPOSE BUCKET TOOTH ASSEMBLY
(24, 30, 36, 42 OR 48 INCH BUCKET)

KEY	PART NO.	PART NAME	QTY	SERIAL NO.	REMARKS
2	TP160	PIN	1		(SUB FOR TP160L, THIS APPLICATION) (USE WITH 310 TOOTH ASSEMBLIES)
	TK330	PIN	1		(USE WITH 330 TOOTH ASSEMBLIES)
	TK290	PIN	1		(USE WITH 290 TOOTH ASSEMBLIES)
	EX27VPN	PIN	1		(ESCO) (NOT ILLUSTRATED ON THIS PAGE - SEE ESCO TOOTH PAGE)
	T9J2358	PIN FASTENER	1		(CATERPILLAR REPLACEMENT) (NOT ILLUSTRATED)
3	T153X310	BUCKET TOOTH ADAPTER	1		(USE WITH 310 TOOTH ASSEMBLIES)
	T158X330	BUCKET TOOTH ADAPTER	1		(USE WITH 330 TOOTH ASSEMBLIES)
	T158X290	BUCKET TOOTH ADAPTER	1		(USE WITH 290 TOOTH ASSEMBLIES)
	EX5850-27V	BUCKET TOOTH ADAPTER	1		(ESCO) (NOT ILLUSTRATED ON THIS PAGE - SEE ESCO TOOTH PAGE)
	T3G8354	BUCKET TOOTH ADAPTER	1		(CATERPILLAR REPLACMENT) (NOT ILLUSTRATED)
4A	TF310	TOOTH	1		(ALSO ORDER TP160L) (FANGGS)
	TF330	TOOTH	1		(FANGGS)
	TF290	TOOTH	1		(FANGGS)
4B	TX310	TOOTH	1		(ALSO ORDER TP160L) (STANDARD)
	TX330	TOOTH	1		(STANDARD)
	TX290	TOOTH	1		(STANDARD)
4C	TX310WT	TOOTH	1		(ALSO ORDER TP160L) (TWIN TIGER)
	TX330WT	TOOTH	1		(TWIN TIGER)
	TX290WT	TOOTH	1		(TWIN TIGER)
4D	TX310F	TOOTH	1		(ALSO ORDER TP160L)
4E	TX310AP	TOOTH	1		(ALSO ORDER TP160L)
4F	TT310	TOOTH	1		(ALSO ORDER TP160L) (TIGER)
	TT330	TOOTH	1		(TIGER)
	TT290	TOOTH	1		(TIGER)
4G	EX27SYL	TOOTH	1		(ESCO STANDARD) (NOT ILLUSTRATED ON THIS PAGE - SEE ESCO TOOTH PAGE)
4H	EX27TVIP	TOOTH	1		(ESCO TWIN TIGER) (NOT ILLUSTRATED ON THIS PAGE - SEE ESCO TOOTH PAGE)
4I	EX27S6F	TOOTH	1		(ESCO FLARE) (NOT ILLUSTRATED ON THIS PAGE - SEE ESCO TOOTH PAGE)
4J	EX27VIP	TOOTH	1		(ESCO TIGER) (NOT ILLUSTRATED ON THIS PAGE - SEE ESCO TOOTH PAGE)
4K	TF1U3352D	TOOTH	1		(CATERPILLAR REPLACEMENT FANGGS) (NOT ILLUSTRATED)
4L	T1U3352	TOOTH	1		(CATERPILLAR REPLACEMENT STANDARD) (NOT ILLUSTRATED)
4M	TX1U3352WT	TOOTH	1		(CATERPILLAR REPLACEMENT TWIN TIGER) (NOT ILLUSTRATED)
4N	TT1U3352	TOOTH	1		(CATERPILLAR REPLACEMENT TIGER) (NOT ILLUSTRATED)
5	T3G9549	RETAINER	1		(CATERPILLAR REPLACEMENT) (NOT ILLUSTRATED)
6	EX27VPL	PLUG	1		(NOT ILLUSTRATED ON THIS PAGE - SEE ESCO TOOTH PAGE)

BUCKET DATA SHEET

T147427 -UN-26OCT01

EXCAVATOR BUCKET PIN-UP DATA

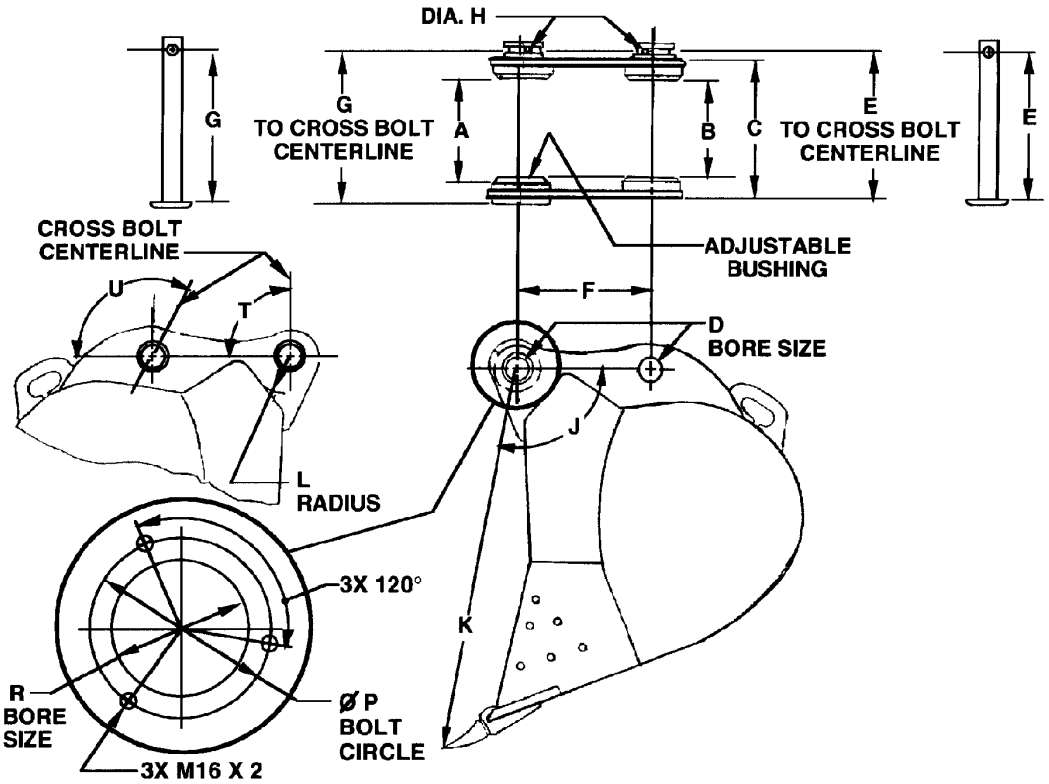

MODEL	200C LC 690D 690E LC	LONG FRONTS 690E LC, 790E LC, 892E LC	MODEL	200C LC 690D 690E LC	LONG FRONTS 690E LC, 790E LC, 892E LC
A	[324] 12.76	[224] 8.82	J (ANGLE)	99°	104°
B	[307] 12.09	[224] 8.82	K	[1422] 56.00	[940] 37.01
C	[413] 16.26	[335] 13.19	L	[111] 4.37	[149] 5.87
D	[80] 3.15	[65] 2.559	P	[150] 5.91	[65] 2.559
E	[438] 17.24	[352] 13.85	R	[120] 4.72	N.A.
F	[472] 18.58	[325] 12.80	S (3 HOLES)	M16 X 2	N.A.
G	[454] 17.87	[352] 13.85	T (ANGLE)	105°	165°
H	[17] 0.67	[17] 0.67	U (ANGLE)	105°	75°

Company policy limits the use of the enclosed drawings and information to your company and any other usage is expressly prohibited without the written consent of Deere & Company. We regret we cannot keep you informed of subsequent changes in the specifications furnished. You are, therefore, responsible for the risks involved in their use.

It is to be understood that furnishing you with the requested material does not automatically constitute a Deere & Company endorsement of your products on or with any John Deere product.

(13SEP96)

T147427

MEMORANDA

**CONTROL LEVER
(FRONT AND SWING)**

T146086 -UN-28SEP01

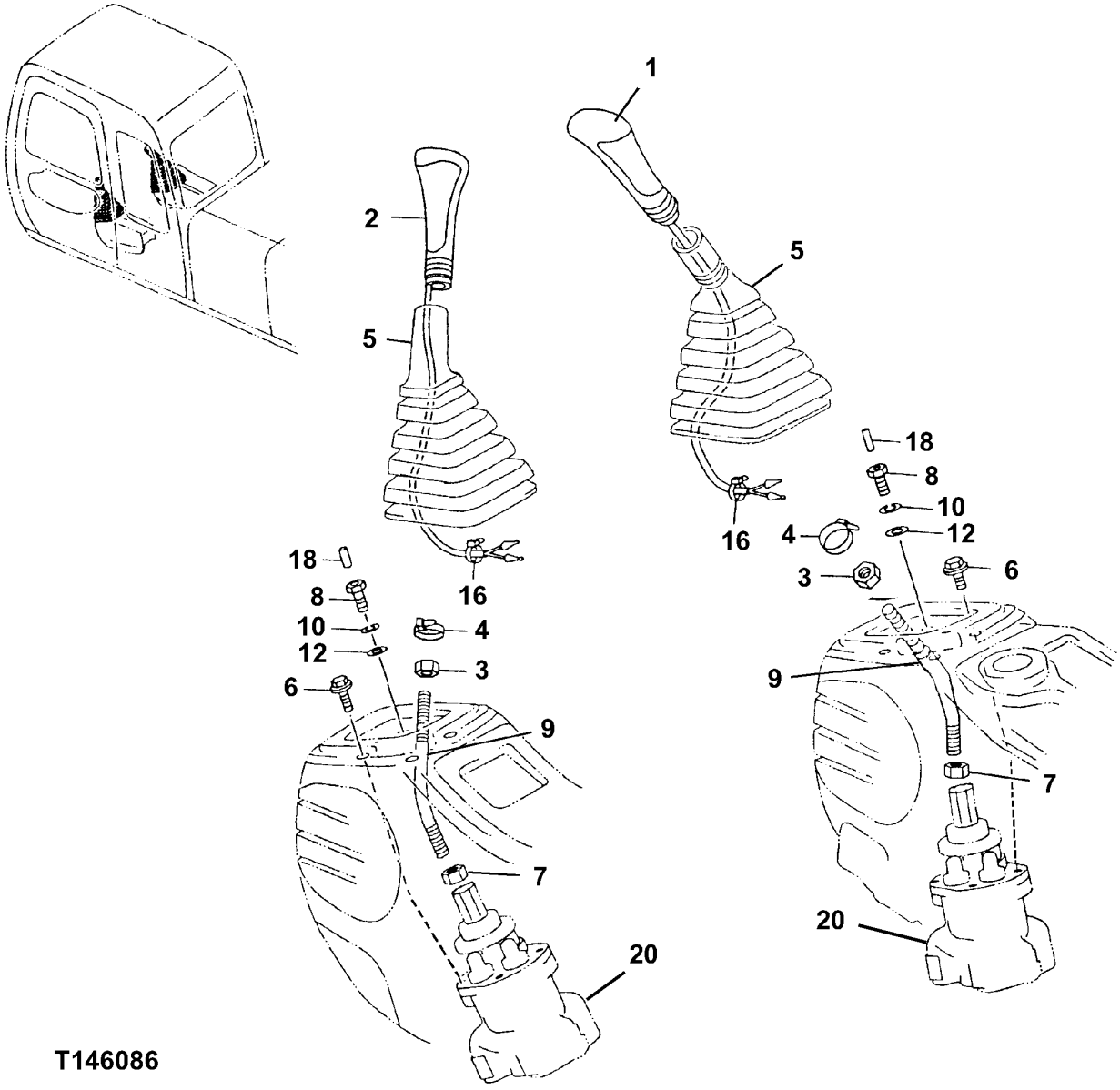

CONTROL LEVER
(FRONT AND SWING)

KEY	PART NO.	PART NAME	QTY	SERIAL NO.	REMARKS
1	2045471	GRIP	1		(SUB FOR TH2045471) (INCLUDES POWER LIFT SWITCH)
2	2045472	GRIP	1		(SUB FOR TH2045472) (INCLUDES HORN BUTTON)
3	14M7357	NUT	2		M12
4	H77698	TIE BAND	2		(SUB FOR M88199)
5	2045470	BOOT	2		(SUB FOR TH2045470)
6	12M7056	LOCK WASHER	6		8 MM (0.315") (SUB FOR 12M7065)
	24M7055	WASHER	6		8.400 X 16 X 1.600 MM (0.331" X 0.630" X 0.063")
	19M7163	CAP SCREW	6		M8 X 25
7	14M7141	NUT	2		M14
8	4438279	BOLT	2		(SUB FOR TH4438279)
9	4445322	LEVER	2		(SUB FOR TH4445322)
10	12M7056	LOCK WASHER	2		8 MM (0.315") (SUB FOR 12M7065)
12	24M7055	WASHER	2		8.400 X 16 X 1.600 MM (0.331" X 0.630" X 0.063")
16	H77698	TIE BAND	2		
18	34M7086	SPRING PIN	2		3 X 32 MM (0.118" X 1.260")
20	9195304	HYDR./PILOT CONTROL VALVE	2		(SUB FOR TH9195304)

**PILOT CONTROLLER VALVE COMPONENTS
(DIG AND SWING)**

T142561 -UN-18JUN01

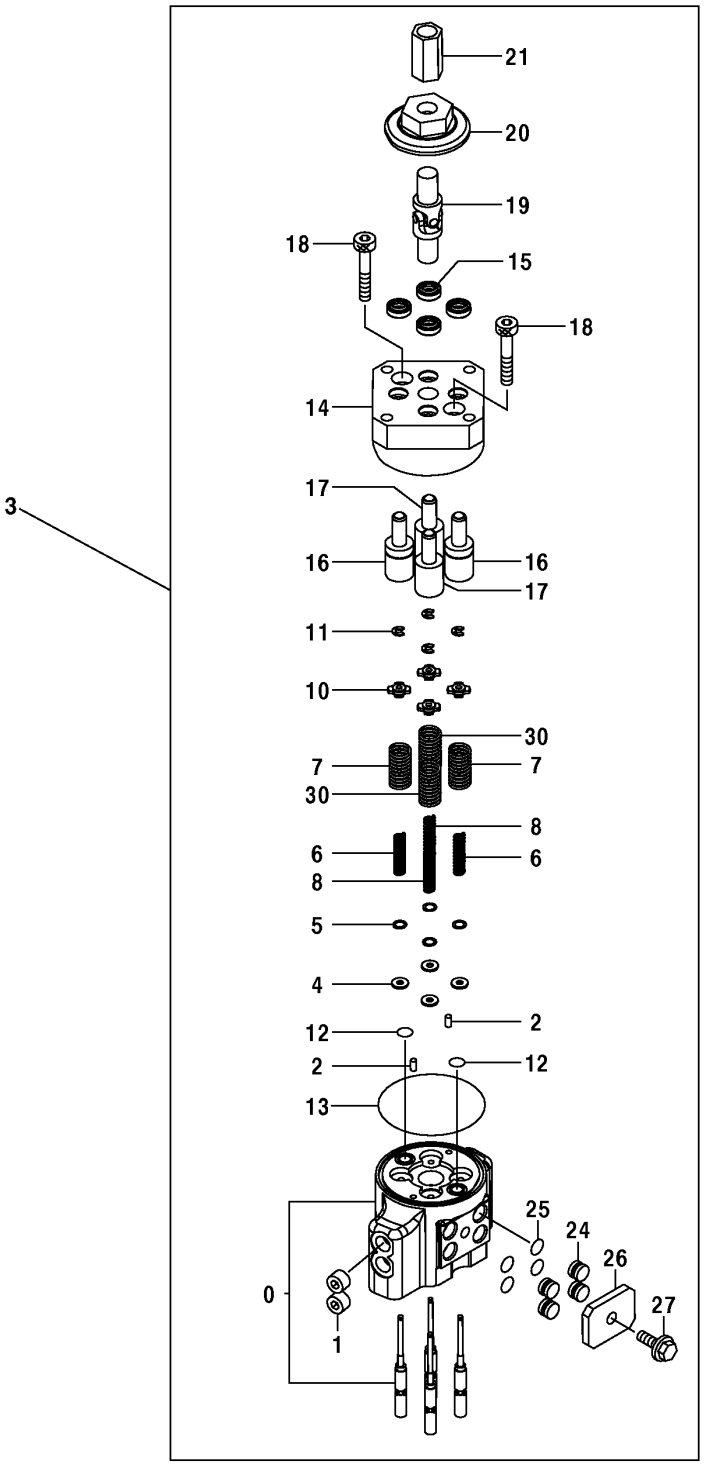

T142561

PILOT CONTROLLER VALVE COMPONENTS
(DIG AND SWING)

KEY	PART NO.	PART NAME	QTY	COMPONENT SERIAL NO.	REMARKS
0	.....	CASE	1		(TH8081319 NOT AVAILABLE)
1	94-2011	FITTING PLUG	2		
2	J400408	PIN	2		
3	9195304	HYDR./PILOT CONTROL VALVE	1		
4	4410898	SPACER	4		
5	4173208	SHIM	12		
6	4425414	SPRING	2		
7	4421771	SPRING	2		
8	4429120	SPRING	2		
10	4429119	GUIDE	4		
11	4437333	SNAP RING	4		
12	4431914	O-RING	2		
13	4431915	O-RING	1		
14	.....	MANIFOLD	1	-504162	(2044350 NO LONGER AVAILABLE) (SUB 9234284, (4) 4477852, (2) 9759158 AND (2) 9759157)
	9234284	MANIFOLD	1	504163-	(MANIFOLD HAS ONE PUNCH MARK ON TOP FACE) (SUB FOR 2044350, ALONG WITH (4) 4477852, (2) 9759158 AND(2) 9759157) (MANIFOLD HAS TWO PUNCH MARKS ON TOP FACE)
15	.....	SEAL	4	-504162	(4447050 NO LONGER AVAILABLE) (SUB 9234284, (4) 4477852, (2) 9759158 AND (2) 9759157)
	4477852	SEAL	4	504163-	(USE WITH 2044350) (SUB FOR 4447050, ALONG WITH 9234284, (2) 9759158, AND (2) 9759157) (USE WITH 9234284)
16	.....	PISTON	2	-504162	(9754825 NO LONGER AVAILABLE) (SUB 9234284, (4) 4477852, (2) 9759158 AND (2) 9759157)
	9759157	PISTON	2	504163-	(USE WITH 2044350) (SUB FOR 9754825, ALONG WITH (4) 4477852, 9234284, AND (2) 9759158) (USE WITH 9234284)
17	.....	PISTON	2	-504162	(9754826 NO LONGER AVAILABLE) (SUB 9234284, (4) 4477852, (2) 9759158 AND (2) 9759157)
	9759158	PISTON	2	504163-	(USE WITH 2044350) (SUB FOR 9754826, ALONG WITH (4) 4477852, (2)9759158, AND 9234284) (USE WITH 9234284)
18	J780845	BOLT	2		
19	4335060	UNIVERSAL JOINT	1		
20	4437106	CAM	1		
21	4182067	JOINTER	1		
24	4442323	PIPE PLUG	4		
25	CH11560	PACKING	4		
26	4442339	PLATE	1		
27	19M7932	CAP SCREW	1		M8 X 16
30	4446960	SPRING	2		

PILOT SYSTEM SHUTOFF LEVER

T142560 -UN-28JUN01

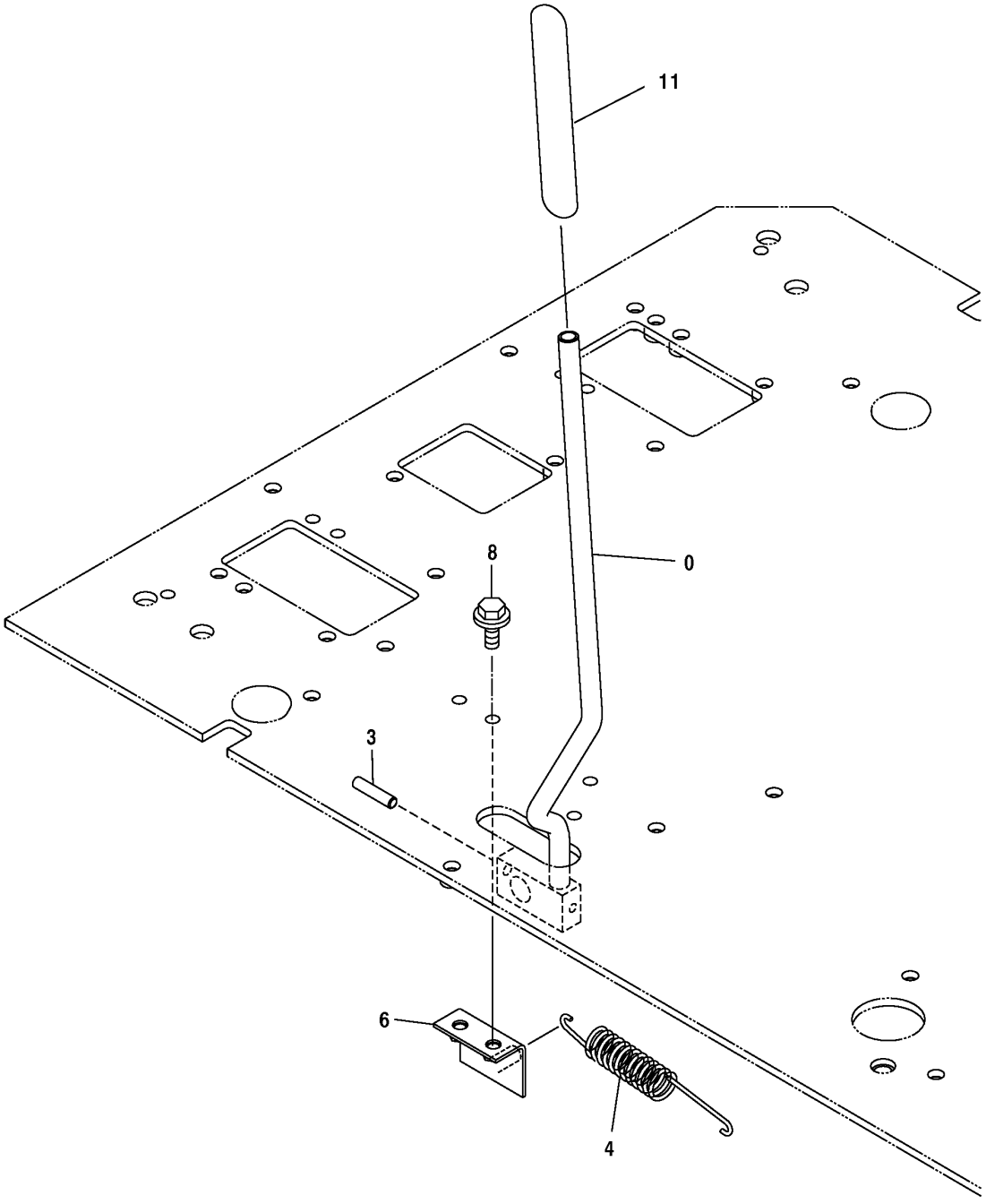

T142560

PILOT SYSTEM SHUTOFF LEVER

KEY	PART NO.	PART NAME	QTY	SERIAL NO.	REMARKS
0	7035503	LEVER	1		(SUB FOR TH7035503)
3	4116310	SPRING PIN	1		(SUB FOR TH4116310)
4	4189184	EXTENSION SPRING	1		(SUB FOR TH108392)
6	8073901	BRACKET	1		(SUB FOR TH8073901)
8	19M7662	CAP SCREW	2		M10 X 30
	12M7066	LOCK WASHER	2		10 MM
	24M7028	WASHER	2		10.500 X 20 X 2 MM
11	3089848	GRIP	1		(SUB FOR TH3089848)

PROPEL PILOT CONTROLLER LEVER AND PEDAL

T142559 -UN-18JUN01

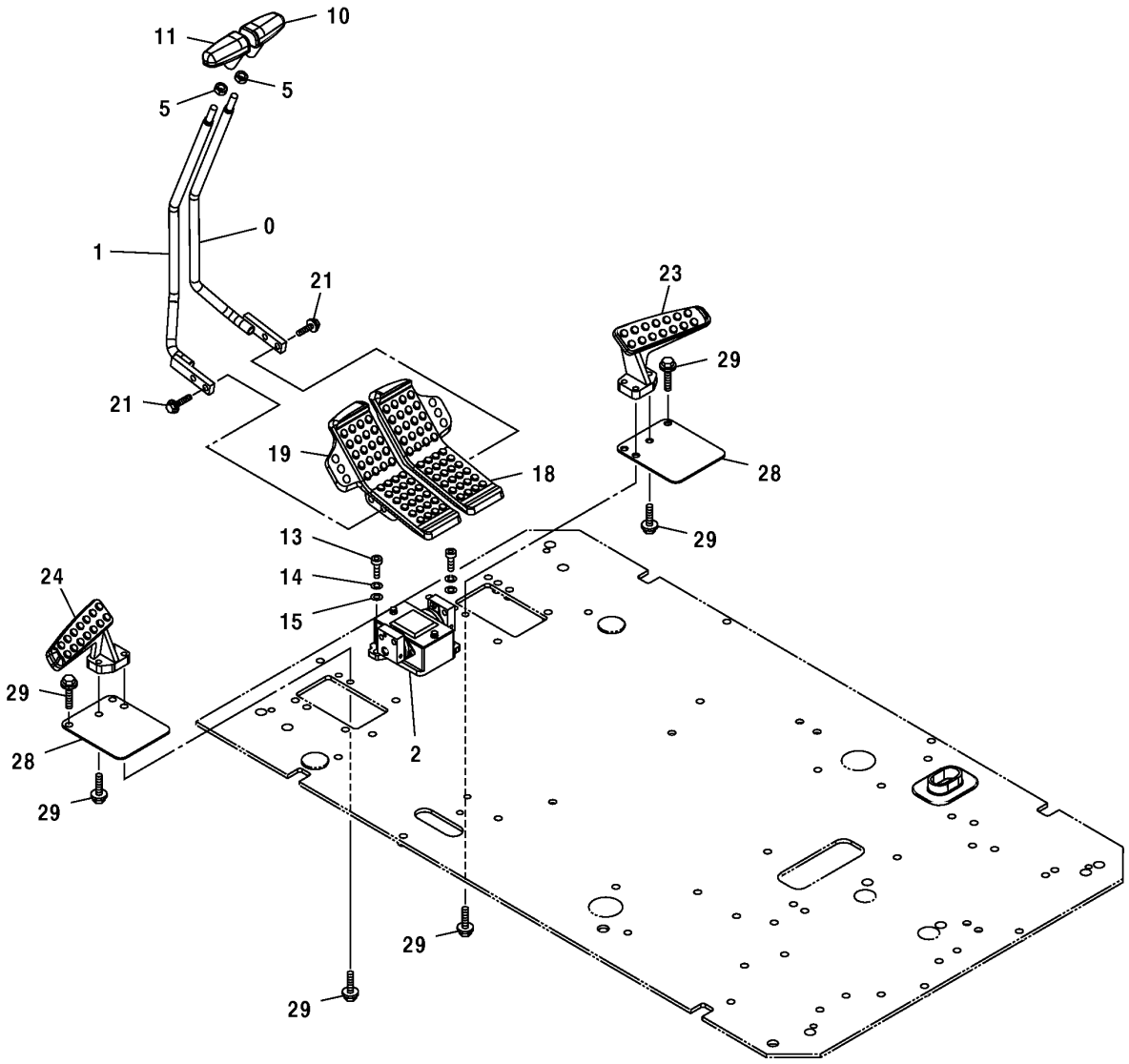

T142559

PROPEL PILOT CONTROLLER LEVER AND PEDAL

KEY	PART NO.	PART NAME	QTY	SERIAL NO.	REMARKS
0	8075450	LEVER	1		(SUB FOR TH8075450)
1	8075449	LEVER	1		(SUB FOR TH8075449)
2	9195307	HYDR./PILOT CONTROL VALVE	1	-XXXXXX	(SUB FOR TH9195307)
	9235551	HYDR./PILOT CONTROL VALVE	1	XXXXXX-	
5	4424185	NUT	2		(SUB FOR TH4424185)
10	2051176	GRIP	1		(SUB FOR TH2045468, 2045468)
11	2051177	GRIP	1		(SUB FOR TH2045469, 2045469)
13	19M8337	SCREW	2		M10 X 30
14	12M7066	LOCK WASHER	2		10 MM
15	24M7028	WASHER	2		10.500 X 20 X 2 MM
18	1024384	PEDAL	1		(SUB FOR AT202292)
19	1024224	PEDAL	1		(SUB FOR AT202291)
21	19M7658	CAP SCREW	4		M10 X 50
	12M7066	LOCK WASHER	4		10 MM
	24M7096	WASHER	4		10.500 X 18 X 1.600 MM
23	1015478	FOOTREST	1		(SUB FOR AT154056)
24	1015477	FOOTREST	1		(SUB FOR AT154055)
28	3052543	COVER	2		(SUB FOR AT154127)
29	19M7550	CAP SCREW	8		M10 X 35
	12M7066	LOCK WASHER	8		10 MM

PILOT VALVE COMPONENTS

T142562 -UN-18JUN01

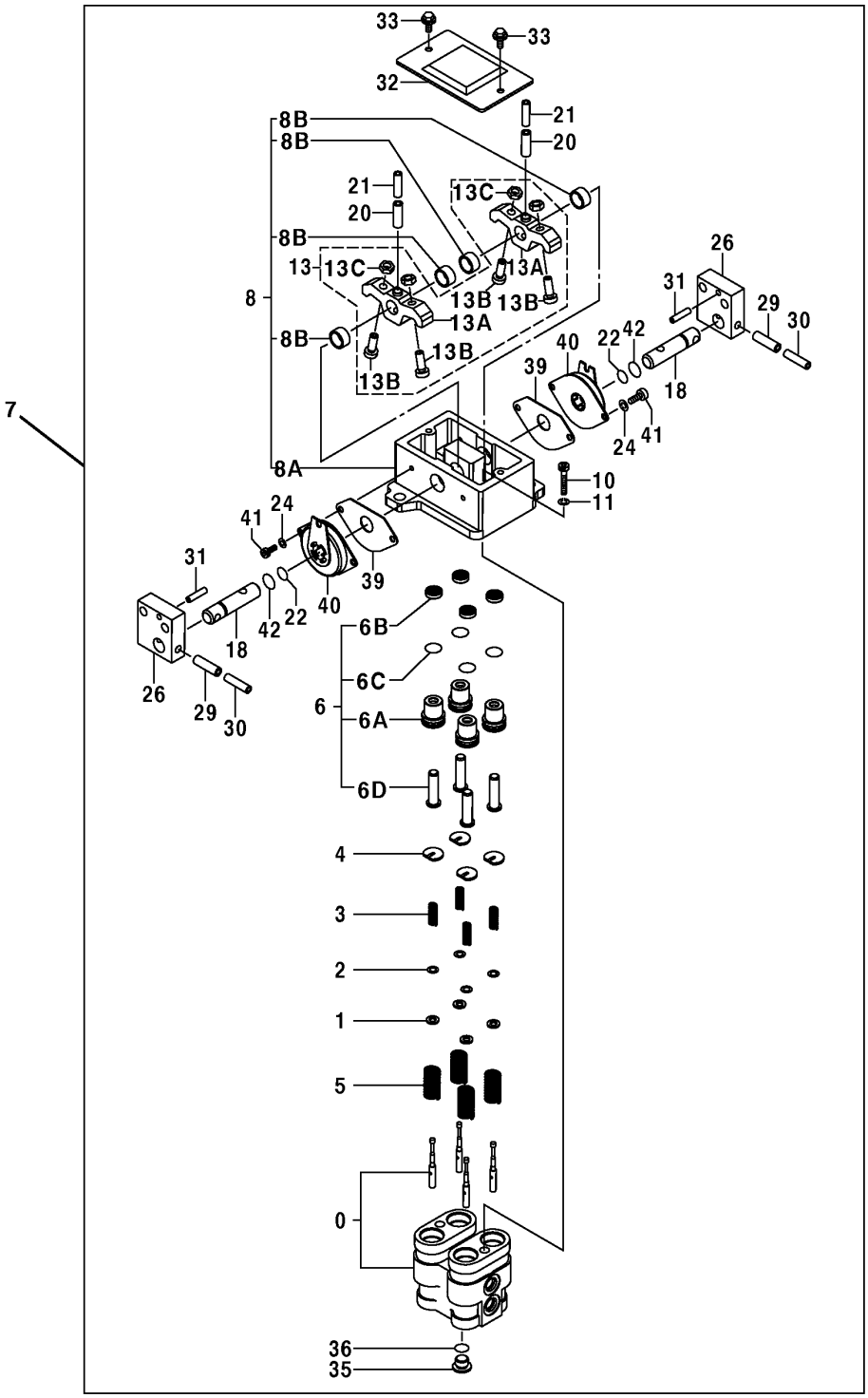

T142562

PILOT VALVE COMPONENTS

KEY	PART NO.	PART NAME	QTY	SERIAL NO.	REMARKS
0	8063718	HOUSING	1		(SUB FOR AT216001)
1	4319299	SPACER	4		(SUB FOR AT215885)
2	4203411	SHIM	12		(SUB FOR T108159)
3	4368629	COMPRESSION SPRING	4		(SUB FOR AT215954)
4	4364970	GUIDE	4		(SUB FOR AT215948)
5	4368630	COMPRESSION SPRING	4		(SUB FOR AT215955)
6	9151724	PLUNGER	4		(SUB FOR AT216016)
6A	.....	BUSHING	1		(AT217942 NOT AVAILABLE)
6B	4447050	SEAL	1		(SUB FOR TH4447050)
6C	CH11562	O-RING	1		
6D	3072517	PLUNGER	1		(SUB FOR AT215869)
7	9195307	HYDR./PILOT CONTROL VALVE	1		(SUB FOR TH9195307)
8	9184275	HOLDER	1		(SUB FOR TH9184275)
8A	.....	HOLDER	1		(TH2044332 NOT AVAILABLE)
8B	4437433	BUSHING	4		(SUB FOR TH4437433)
10	J781030	SCREW	2		(SUB FOR AT213614)
11	12M7066	LOCK WASHER	2		10 MM
13	9199146	KIT	2		(SUB FOR TH9199146)
13A	.....	CAM	1		(TH3087264 NOT AVAILABLE)
13B	4425290	SCREW	2		(SUB FOR TH4425290)
13C	4122395	NUT	2		(SUB FOR TH108364)
18	4425305	PIN FASTENER	2		(SUB FOR TH4425305)
20	34M7225	SPRING PIN	2		8 X 28 MM, (SUB FOR 34M6402)
21	4213419	SPRING PIN	2		(SUB FOR TH111654)
22	4185600	O-RING	2		(SUB FOR TH4185600)
24	12M7006	LOCK WASHER	4		6 MM
26	3087987	BRACKET	2		(SUB FOR TH3087987)
29	34M7124	SPRING PIN	2		8 X 30 MM
30	34M7062	SPRING PIN	2		5 X 32 MM
31	4051262	SPRING PIN	2		(SUB FOR AT213796)
32	8077903	COVER	1		(SUB FOR TH8077903)
33	19M7923	CAP SCREW	2		M6 X 12
	12M7006	LOCK WASHER	2		6 MM
	24M7293	WASHER	2		6.500 X 13 X 1.600 MM
35	4208977	DRAIN PLUG	1		(SUB FOR TH111351)
36	CH11561	PACKING	1		
39	4437432	GASKET	2		(SUB FOR TH4437432)
40	0209423	BOLT	2		(SUB FOR TH100738)
41	0209423	BOLT	4		(SUB FOR TH100738)
42	4447067	O-RING	2		(SUB FOR TH4447067)

AUXILIARY 2-WAY HYDRAULIC FOOT PEDAL CONTROL

T158465 -UN-16AUG02

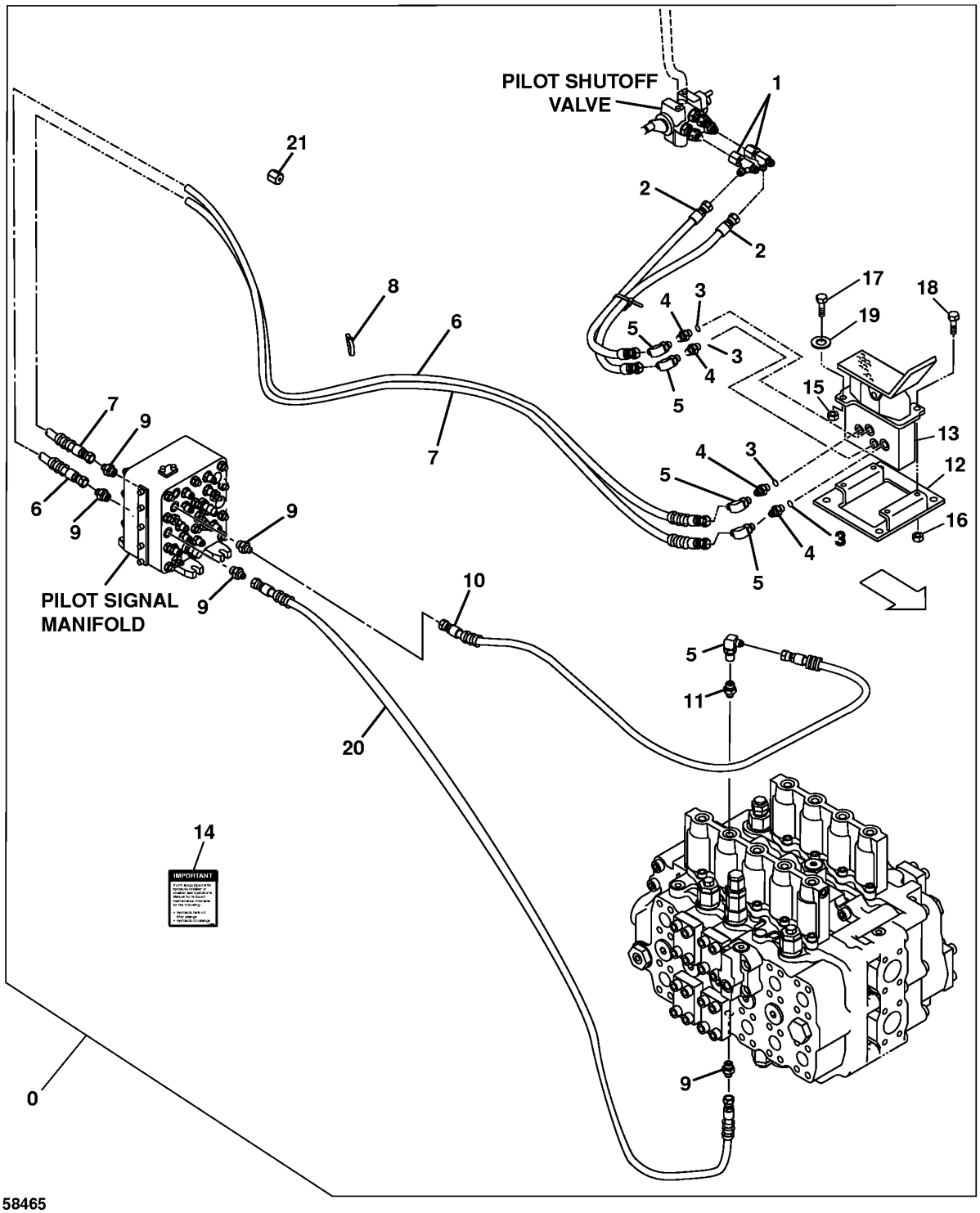

AUXILIARY 2-WAY HYDRAULIC FOOT PEDAL CONTROL

KEY	PART NO.	PART NAME	QTY	SERIAL NO.	REMARKS
0	**AT195684**	**KIT**	**1**		**WHOLEGOODS (AUXILIARY FOOT PEDAL CONTROL)**
1	AT36921	TEE FITTING	2		
2	AH108250	HOSE	2		9/16" X 787 MM (31") X 9/16"
3	R26448	O-RING	4		
4	R27212	FITTING	4		
5	AE24616	ELBOW FITTING	5		
6	AE42067	HYDRAULIC HOSE	1		9/16" X 3 700 MM (145-3/4") X 9/16"
7	AE42067	HYDRAULIC HOSE	1		9/16" X 3 700 MM (145-3/4") X 9/16"
8	H77698	TIE BAND	5		
9	4200466	ADAPTER	5		(SUB FOR TH108320)
	CH11570	O-RING	5		
10	AT68901	HYDRAULIC HOSE - FABRICATE	2		9/16" X 965 MM (38") X 9/16"
11	4202422	ADAPTER	1		(SUB FOR TH108440)
	CH11570	O-RING	1		
12	AT115535	SUPPORT	1		
13	AT152120	HAND OPERATED VALVE	1		
14	T149434	LABEL	1		
15	14M7296	FLANGE NUT	1		M10
16	14M7298	FLANGE NUT	4		M8
17	19M7784	SCREW	2		M10 X 20
18	19M7866	SCREW	4		M8 X 20
19	24M7296	WASHER	2		10.500 X 30 X 2.500 MM
20	AR90081	HYDRAULIC HOSE	1		
21	R31147	FITTING	1		(TANK PORT DRAIN LINE)

SINGLE PEDAL CONTROL KIT

T148421 -UN-06DEC01

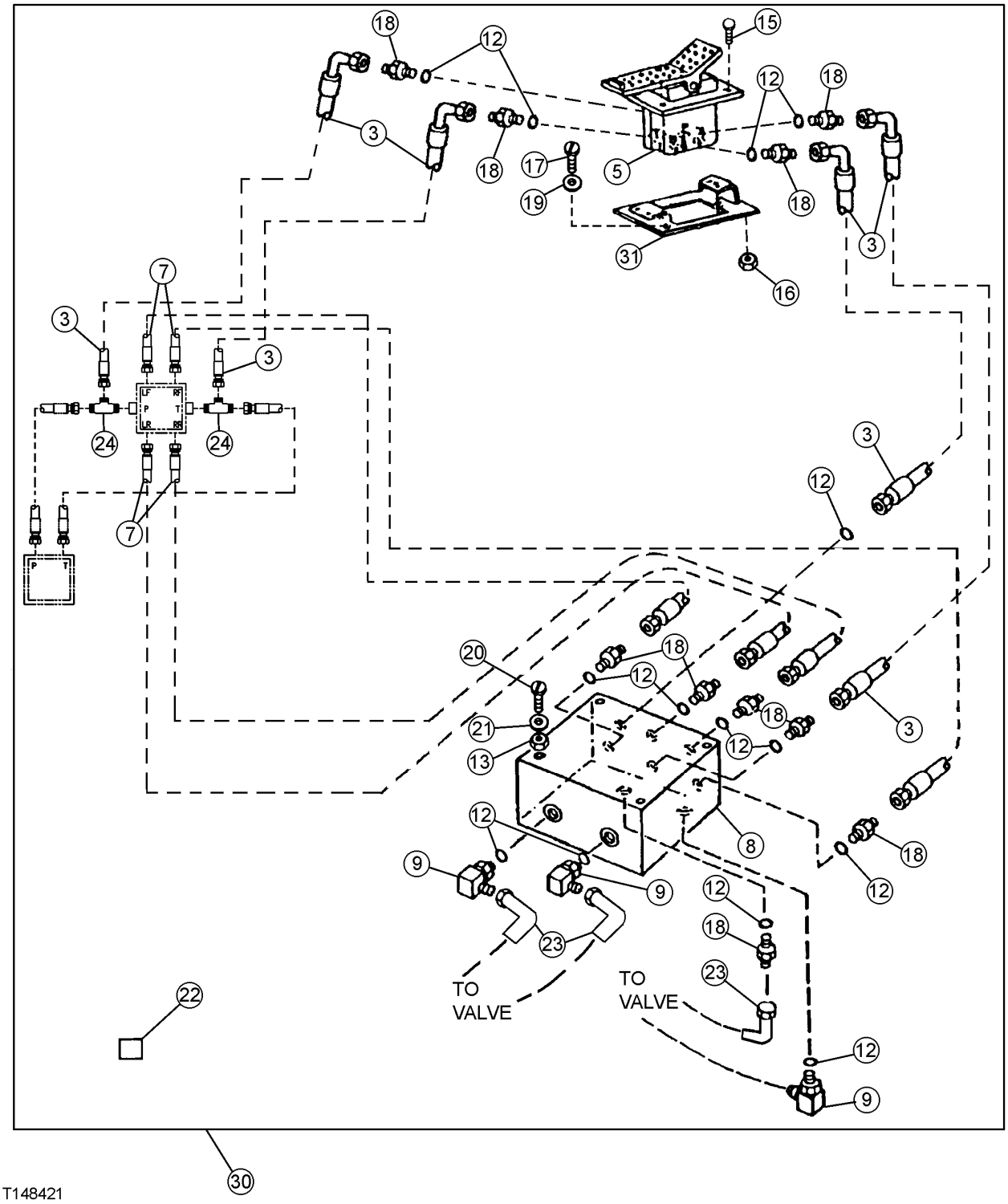

SINGLE PEDAL CONTROL KIT

KEY	PART NO.	PART NAME	QTY	SERIAL NO.	REMARKS
3	AT71082	HYDRAULIC HOSE - FABRICATE	4		9/16" X 711 MM (28") X 9/16"
5	AT152120	HAND OPERATED VALVE	1		(FOOT)
7	AT215538	HYDRAULIC HOSE - FABRICATE	4		9/16" X 880 MM (34-3/4") X 9/16"
8	AT170459	HYD ACTUATED CONTROL VALVE	1		
9	AT35121	ELBOW FITTING	3		
12	R26448	O-RING	14		11.887 X 1.981 MM (0.468" X 5/64")
13	14M7273	NUT	4		M8
15	19M7866	SCREW	4		M8 X 20
16	14M7298	FLANGE NUT	4		M8
17	19M7784	SCREW	2		M10 X 20
18	R27212	FITTING	11		
19	24M7296	WASHER	2		10.500 X 30 X 2.500 MM
20	19M8456	CAP SCREW	4		M8 X 100
21	24M7036	WASHER	4		9 X 16 X 1.600 MM (0.354" X 0.630" X 0.063")
22	T153674	LABEL	1		(WITHOUT AUXILIARY HYDRAULICS) (LOWER FRONT OF RIGHT SIDE CAB WINDOW)
	T153676	LABEL	1		(WITH AUXILIARY HYDRAULICS) (LOWER FRONT OF RIGHT SIDE CAB WINDOW)
23	AE24616	ELBOW FITTING	3		
24	AT36921	TEE FITTING	2		
30	**AT196435**	**KIT**	**1**		**(WHOLEGOODS) (SINGLE PEDAL PROPEL KIT)**
31	AT115535	SUPPORT	1		

STANDARD ARM 2.91 M

T188771 -UN-28MAR03

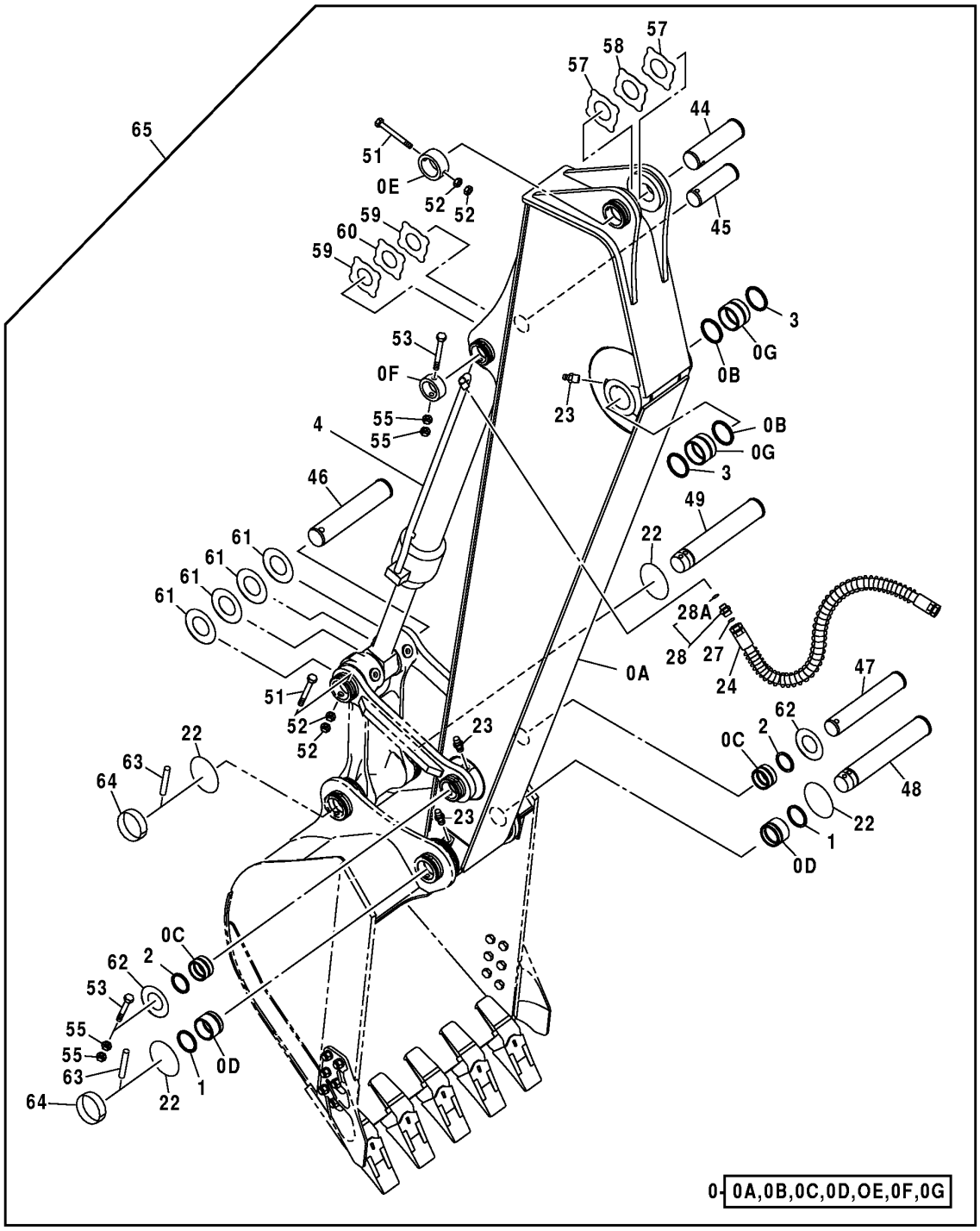

T188771

STANDARD ARM 2.91 M

KEY	PART NO.	PART NAME	QTY	SERIAL NO.	REMARKS
0	7035467	ARM	1		(SUB FOR TH7035467)
0A	6017445	ARM	1		(SUB FOR TH6017445)
0B	TH102445	SEAL	2		
0C	4409122	BUSHING	2		(SUB FOR TH4409122)
0D	4409178	BUSHING	2		(SUB FOR TH4409178)
0E	4434953	STOP	1		(SUB FOR TH4434953)
0F	4435239	STOP	1		(SUB FOR TH4435239)
0G	4443881	BUSHING	2		(SUB FOR TH4443881)
1	TH102446	SEAL	2		
2	TH104472	SEAL	2		
3	TH102445	SEAL	2		
4	.....	CYLINDER	1		(BUCKET CYLINDER) (SEE SEPARATE PAGE FOR DETAIL)
22	TH102444	O-RING	4		145 X 10 MM (5.709" X 0.394")
23	TH100074	LUBRICATION FITTING	6		
24	AT155741	HYDRAULIC HOSE - FABRICATE	2		1-3/16" X 1 600 MM (63") X 1-3/16"
27	T77858	O-RING	2		18.771 X 1.778 MM (0.739" X 0.070")
28	A853166	ADAPTER	2		(SUB FOR THA853166)
28A	T77858	O-RING	1		
44	3088575	PIN FASTENER	1		(SUB FOR TH3088575)
45	3088578	PIN FASTENER	1		(SUB FOR TH3088578)
46	AT192340	PIN FASTENER	1		(SUB FOR TH3088581, 3088581)
47	3088579	PIN FASTENER	1		(SUB FOR TH3088579)
48	3088577	PIN FASTENER	1		(SUB FOR TH3088577)
49	3088580	PIN FASTENER	1		(SUB FOR TH3088580)
51	4435126	PIN FASTENER	2		(SUB FOR TH4435126)
52	14M7277	NUT	4		M20
53	4435124	PIN FASTENER	2		(SUB FOR TH4435124)
55	14M7276	NUT	4		M16
57	4444286	THRUST WASHER	2		(SUB FOR TH4444286)
58	4444287	THRUST WASHER	1		(SUB FOR TH4444287)
59	4444288	THRUST WASHER	2		(SUB FOR TH4444288)
60	4444289	THRUST WASHER	1		(SUB FOR TH4444289)
61	4450012	THRUST WASHER	4		(SUB FOR TH4450012)
62	4450011	THRUST WASHER	2		(SUB FOR TH4450011)
63	4454560	PIN FASTENER	2		(SUB FOR TH4454560)
64	4454561	BUSHING	2		(SUB FOR TH4454561)
65	**AT194921**	**ARM**	**1**		**(WHOLE GOODS) (INCLUDES ARM, BUCKET CYLINDER, HOSES AND LINKAGE) (DOES NOT INCLUDE BUCKET)**

SHORT ARM 2.22 M

T146705 -UN-30OCT01

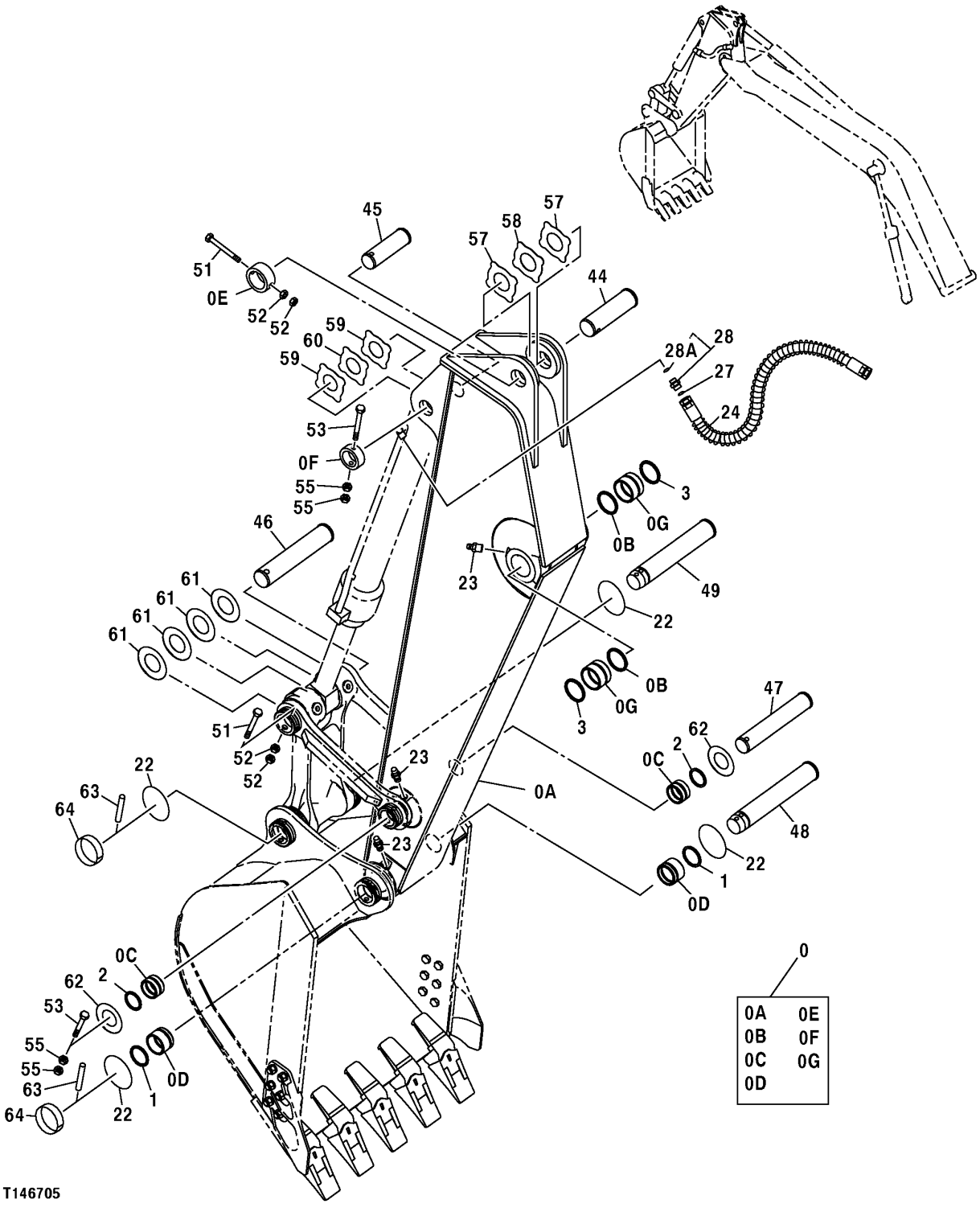

SHORT ARM 2.22 M

KEY	PART NO.	PART NAME	QTY	SERIAL NO.	REMARKS
0	7038166	ARM	1		(SUB FOR TH7038166)
0A	6019104	ARM	1		(SUB FOR TH6019104)
0B	TH102445	SEAL	2		
0C	4409122	BUSHING	2		(SUB FOR TH4409122)
0D	4409178	BUSHING	2		(SUB FOR TH4409178)
0E	4434953	STOP	1		(SUB FOR TH4434953)
0F	4435239	STOP	1		(SUB FOR TH4435239)
0G	4443881	BUSHING	2		(SUB FOR TH4443881)
1	TH102446	SEAL	2		
2	TH104472	SEAL	2		
3	TH102445	SEAL	2		
22	TH102444	O-RING	4		145 X 10 MM (5.709" X 0.394")
23	TH100074	LUBRICATION FITTING	4		
24	AT215504	HYDRAULIC HOSE - FABRICATE	2		
27	T77858	O-RING	2		18.771 X 1.778 MM (0.739" X 0.070")
28	A853166	ADAPTER	2		(SUB FOR THA853166)
28A	4506424	O-RING	1		23.700 X 3.500 MM (0.933" X 0.138") (SUB FOR TH100055)
44	3088575	PIN FASTENER	1		(SUB FOR TH3088575)
45	3088578	PIN FASTENER	1		(SUB FOR TH3088578)
46	AT192340	PIN FASTENER	1		(SUB FOR TH3088581, 3088581)
47	3088579	PIN FASTENER	1		(SUB FOR TH3088579)
48	3088577	PIN FASTENER	1		(SUB FOR TH3088577)
49	3088580	PIN FASTENER	1		(SUB FOR TH3088580)
51	4435126	PIN FASTENER	2		(SUB FOR TH4435126)
52	14M7277	NUT	4		M20
53	4435124	PIN FASTENER	2		(SUB FOR TH4435124)
55	14M7276	NUT	8		M16
57	4444286	THRUST WASHER	2		(SUB FOR TH4444286)
58	4444287	THRUST WASHER	1		(SUB FOR TH4444287)
59	4444288	THRUST WASHER	2		(SUB FOR TH4444288)
60	4444289	THRUST WASHER	1		(SUB FOR TH4444289)
61	4450012	THRUST WASHER	4		(SUB FOR TH4450012)
62	4450011	THRUST WASHER	2		(SUB FOR TH4450011)
63	4454560	PIN FASTENER	2		(SUB FOR TH4454560)
64	4454561	BUSHING	2		(SUB FOR TH4454561)
65	**AT194922**	**ARM**	**1**		**COMPLETE GOODS (NOT ILLUSTRATED)**

SUPER LONG FRONT ARM AND BUCKET LINKAGE

TP67419 -UN-01SEP00

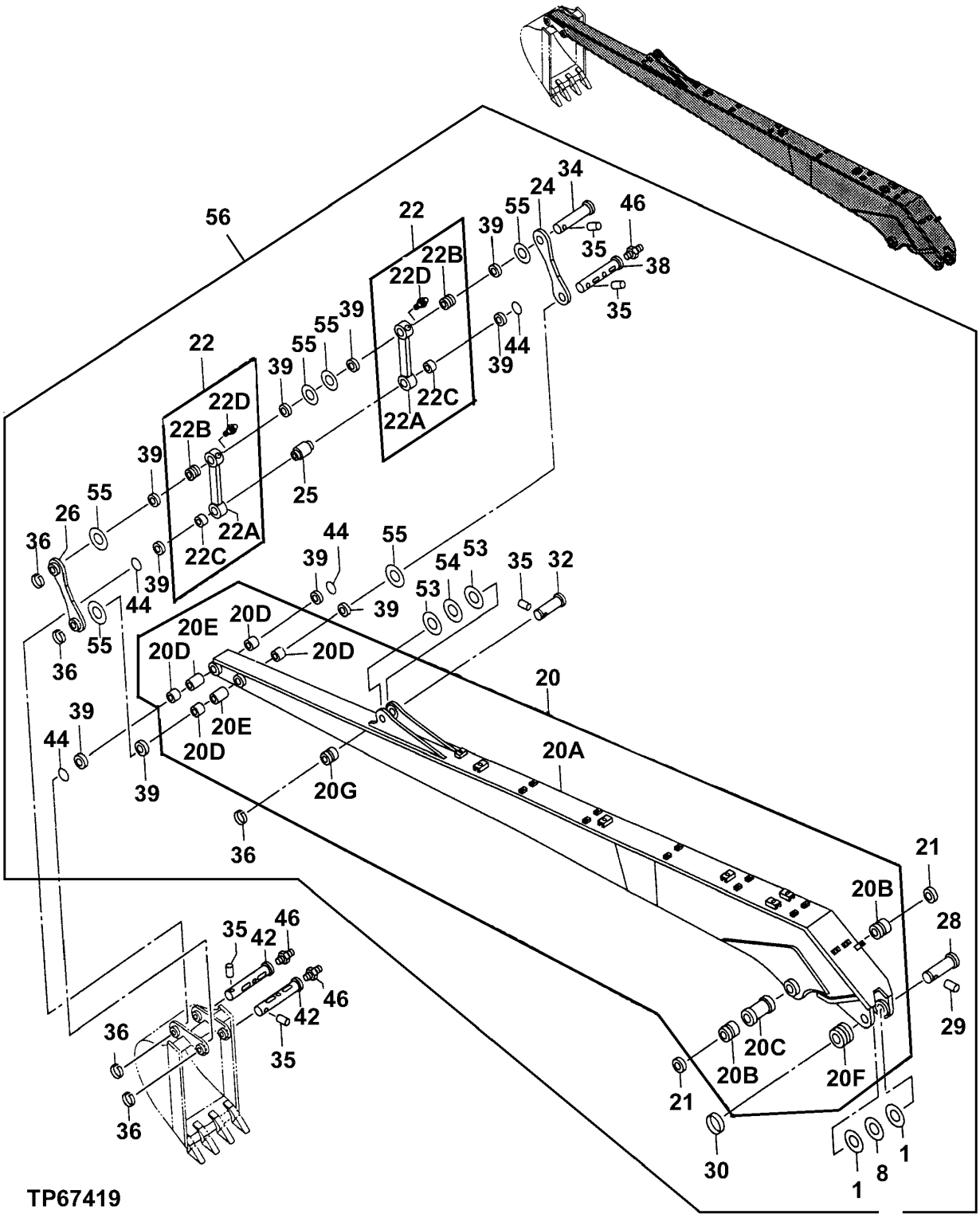

SUPER LONG FRONT ARM AND BUCKET LINKAGE

KEY	PART NO.	PART NAME	QTY	SERIAL NO.	REMARKS
1	4366691	THRUST WASHER	2		(SUB FOR AT214029)
8	4367409	THRUST WASHER	1		(SUB FOR AT214039)
20	7031847	ARM	1		(SUB FOR AT186460) (CONVENIENCE ASSEMBLY)
20A	.....	ARM	1		CONVENIENCE ASSEMBLY
20B	3072697	BUSHING	2		(SUB FOR AT213781)
20C	4370876	SPACER	1		(SUB FOR AT186464)
20D	AT122209	BUSHING	4		
20E	4287248	BUSHING	2		(SUB FOR AT186465) (SUB FOR AT159595)
20F	AT104509	BUSHING	1		
20G	TH108649	BUSHING	1		
21	TH102446	SEAL	2		
22	8072993	LINK	2		(SUB FOR AT186461)
22A	.....	LINK	1		
22B	4371132	BUSHING	1		(SUB FOR AT186466)
22C	AT122209	BUSHING	1		(SUB FOR P61799)
22D	TH100074	LUBRICATION FITTING	1		
24	4287250	LINK	1		(SUB FOR AT159599)
25	4287249	SPACER	1		(SUB FOR AT159600)
26	9738223	LINK	1		(SUB FOR AT159598)
28	3071063	PIN FASTENER	1		(SUB FOR AT186462)
29	4098713	PIN	1		(SUB FOR TH103627)
30	4098712	RING	1		(SUB FOR TH103629)
32	P60925	PIN FASTENER	1		
34	AT159601	PIN	1		
35	4065689	PIN FASTENER	5		(SUB FOR TH100625)
36	4065688	RETAINER	5		(SUB FOR TH100624)
38	3058763	PIN FASTENER	1		(SUB FOR AT159602)
39	TH100374	SEAL	10		
42	AT159603	PIN	2		
44	4066923	O-RING	4		(SUB FOR AT121233)
46	TH100074	LUBRICATION FITTING	3		
53	P60447	PLATE	2		
54	4367411	PLATE	1		(SUB FOR P60449)
55	4366693	PLATE	6		(SUB FOR AT186463)
56	.....	KIT	1		(WHOLEGOODS) (AT186457 NO LONGER AVAILABLE) (LONG FRONT ASSEMBLY KIT) (ALSO ORDER T190565, T153672, T153673 DECALS, AH165671 AND AH165673 CYLINDERS) (CONTAINS ALL ITEMS ON THIS PAGE - ADDITIONAL COMPONENTS LISTED ON SEPARATE PAGES)

BUCKET LINK

T143325 -UN-29JUN01

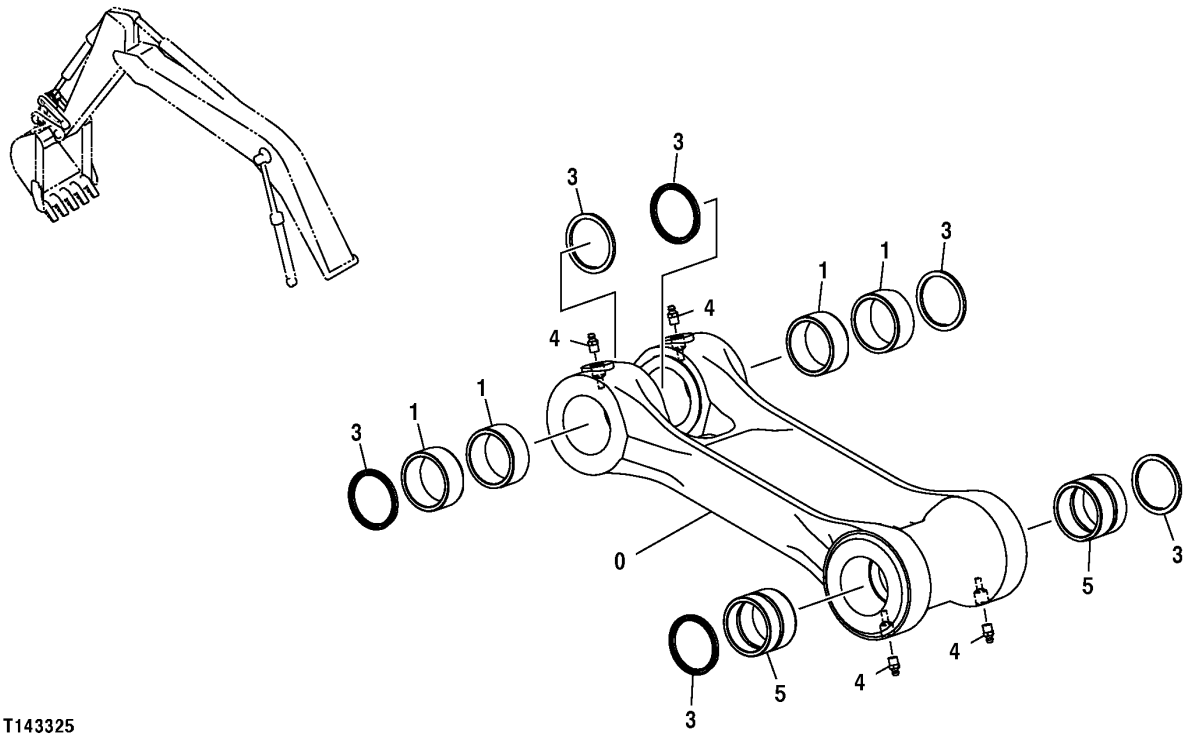

T143325

BUCKET LINK

KEY	PART NO.	PART NAME	QTY	SERIAL NO.	REMARKS
0	8076541	LINK	1		(SUB FOR 1027222) (SUB FOR TH1027222)
1	4352398	BUSHING	4		(SUB FOR AT213964)
3	TH102446	SEAL	6		
4	TH100074	LUBRICATION FITTING	4		
5	4443882	BUSHING	2		(SUB FOR TH4443882)

BOOM

T148748 -UN-11DEC01

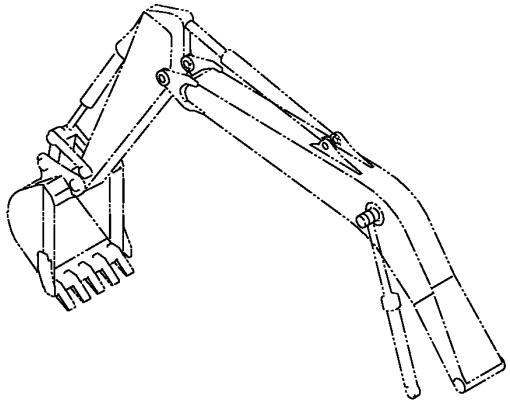

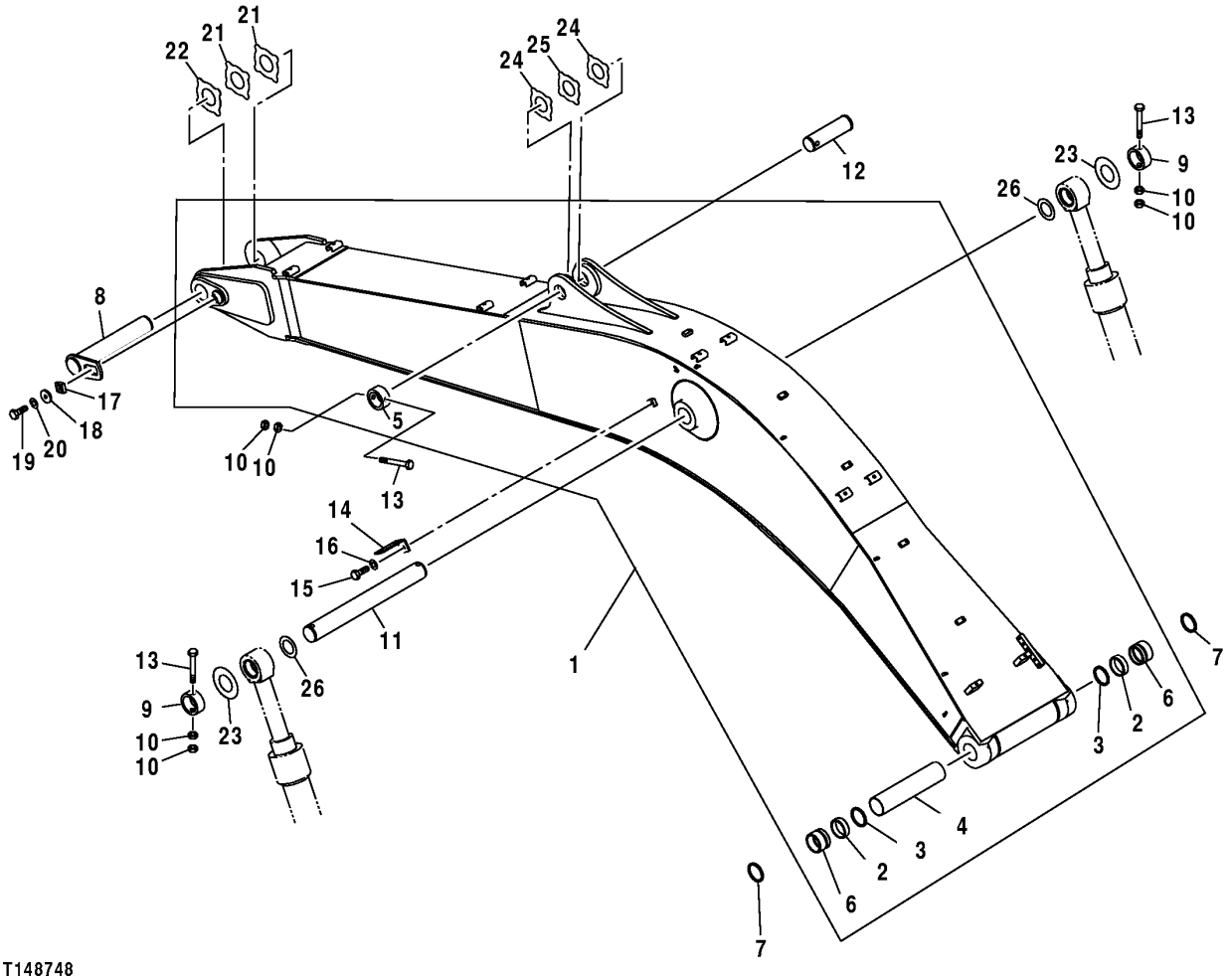

BOOM

KEY	PART NO.	PART NAME	QTY	SERIAL NO.	REMARKS
1	7035538	EXCAVATOR BOOM	1		(SUB FOR TH7035538)
2	4402460	BUSHING	2		(SUB FOR TH4402460)
3	TH102445	SEAL	2		
4	4435508	SPACER	1		(SUB FOR TH4435508)
5	4434953	STOP	1		(SUB FOR TH4434953)
6	4443880	BUSHING	2		(SUB FOR TH4443880)
7	TH102445	SEAL	2		
8	8081449	PIN FASTENER	1		(SUB FOR TH8081449)
9	TH102409	BUSHING	2		92.075 X 120.650 X 50.800 MM (3-5/8" X 4-3/4" X 2")
10	14M7277	NUT	6		M20
11	3088574	PIN FASTENER	1		(SUB FOR TH3088574)
12	3088575	PIN FASTENER	1		(SUB FOR TH3088575)
13	4435126	PIN FASTENER	3		(SUB FOR TH4435126)
14	4224631	BRACKET	1		(SUB FOR TH111685)
15	J901425	CAP SCREW	1		(SUB FOR TH104071)
16	12H317	LOCK WASHER	1		14.288 MM (9/16")
17	4424425	MANIFOLD	1		(SUB FOR TH4424425)
18	4426128	WASHER	1		(SUB FOR TH4426128)
19	T116332	BOLT	1		M18 X 40
20	J257218	LOCK WASHER	1		(SUB FOR AT250277)
21	4470743	THRUST WASHER	2		(SUB FOR 4444284)
22	4444285	THRUST WASHER	1		(SUB FOR TH4444285)
23	4444755	THRUST WASHER	2		(SUB FOR TH4444755)
24	4444286	THRUST WASHER	2		(SUB FOR TH4444286)
25	4444287	THRUST WASHER	1		(SUB FOR TH4444287)
26	4476062	THRUST WASHER	2		(SUB FOR 4450013, TH4450013)

SUPER LONG FRONT BOOM
WITH BOOM, ARM AND CYLINDER MOUNTING PINS

TP80636 -UN-06APR00

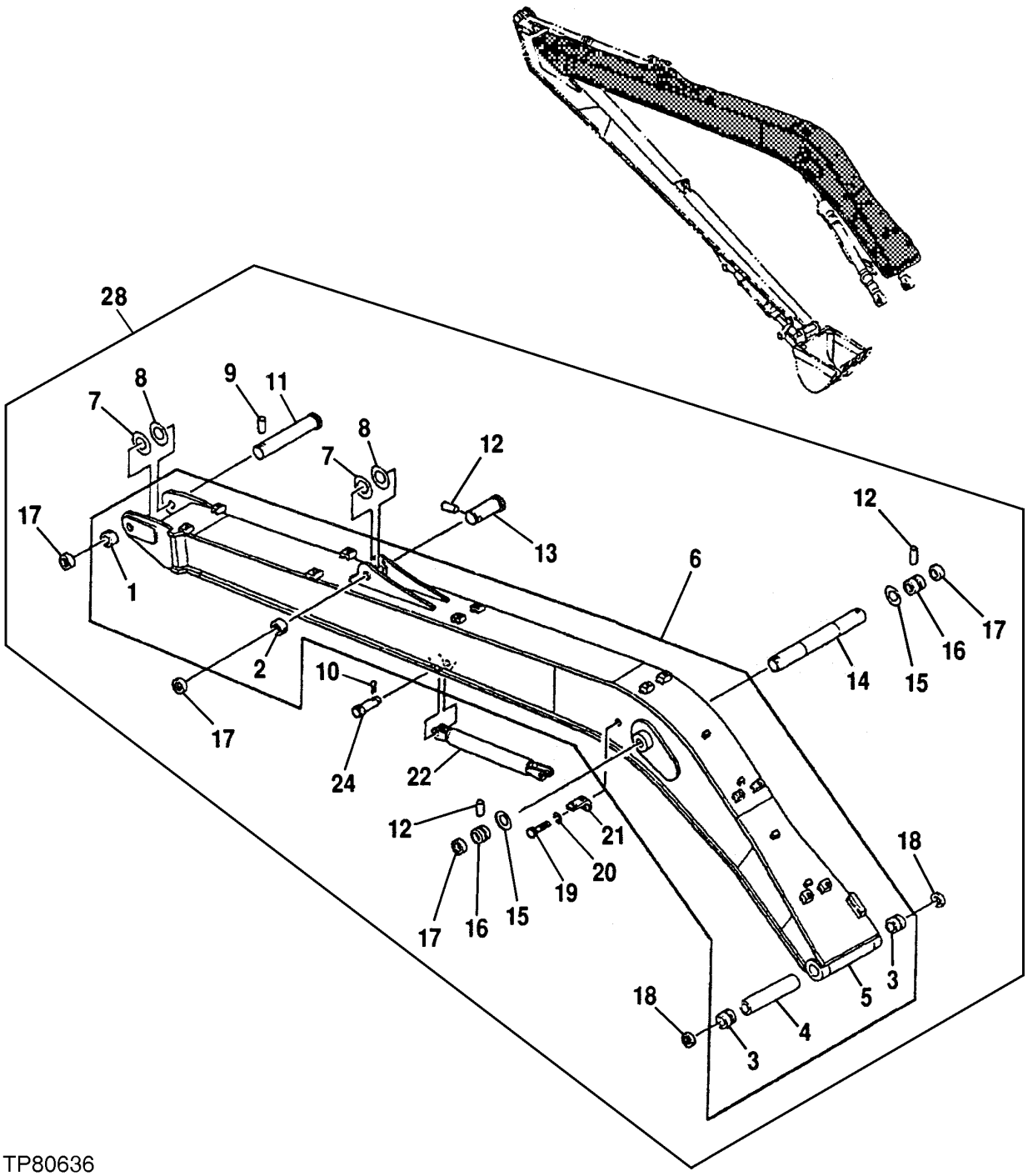

TP80636

SUPER LONG FRONT BOOM
WITH BOOM, ARM AND CYLINDER MOUNTING PINS

KEY	PART NO.	PART NAME	QTY	SERIAL NO.	REMARKS
1	T104269	BUSHING	1		
2	TH104509	BUSHING	1		
3	T153069	BUSHING	2		(SUB FOR T139505)
4	T139506	SPACER	1		
5	7031846	EXCAVATOR BOOM	1		CONVENIENCE ASSEMBLY, (SUB FOR AT186458) (SUPER LONG FRONT)
6	AT160865	EXCAVATOR BOOM	1		ASSEMBLY, CONVENIENCE ASSEMBLY, (SUPER LONG FRONT)
7	4361179	WASHER	2		(SUB FOR AT214006)
8	4361604	WASHER	2		(SUB FOR AT214008)
9	4109669	PIN	1		(SUB FOR TH104292)
10	11M7034	COTTER PIN	2		5 X 63 MM, (SUB FOR AT159567)
11	T115076	PIN	1		
12	4098713	PIN	3		(SUB FOR TH103627)
13	T139498	PIN FASTENER	1		
14	T144749	PIN	1		(SUB FOR T104336)
15	4361607	THRUST WASHER	2		(SUB FOR AT214009)
16	TH104509	BUSHING	2		
17	4098712	RING	4		(SUB FOR TH103629)
18	TH102445	SEAL	2		
19	J901425	CAP SCREW	1		(SUB FOR TH104071)
20	12H317	LOCK WASHER	1		
21	4224631	BRACKET	1		(SUB FOR TH111685)
22	9738224	BRACKET	1		(SUB FOR AT159566)
24	AT159565	PIN	2		
25	T190565	LABEL	1		(SUB FOR T166489) (NOT ILLUSTRATED) (SEE LABELS AND DECALS PAGE FOR LOCATION)
26	T153672	LABEL	1		(NOT ILLUSTRATED) (SEE LABELS AND DECALS PAGE FOR LOCATION)
27	T153673	LABEL	1		(NOT ILLUSTRATED) (SEE LABELS AND DECALS PAGE FOR LOCATION)
28	.....	KIT	1		(WHOLEGOODS) (AT186457 NO LONGER AVAILABLE) (LONG FRONT ASSEMBLY KIT) (ALSO ORDER AT197804 CYLINDER AND LABEL KIT) (CONTAINS ALL ITEMS ON THIS PAGE - ADDITIONAL COMPONENTS LISTED ON SEPARATE PAGES)
29	.....	KIT	1		(AT197804 NO LONGER AVAILABLE) (CYLINDER AND TUBE KIT) (INCLUDES AH165670 AND AH165672 CYLINDERS WITH PIPES, T153672, T153673, AND T190565 LABELS)

BUCKET LINK

T143326 -UN-28JUN01

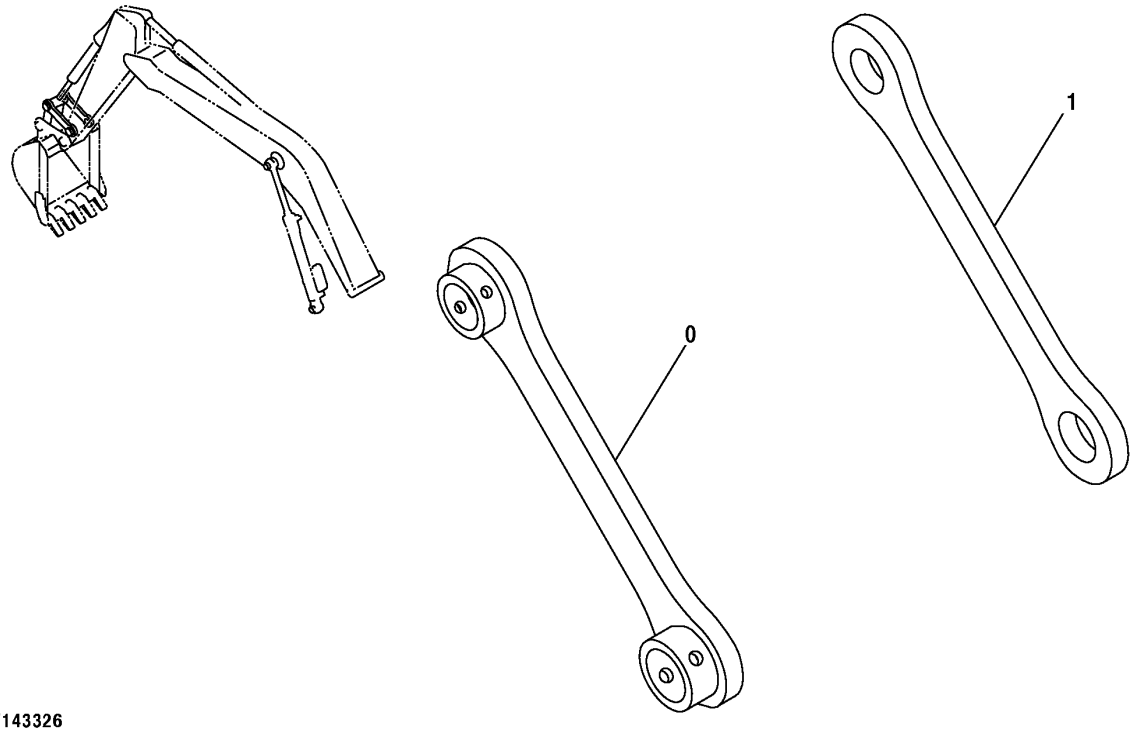

T143326

BUCKET LINK

KEY	PART NO.	PART NAME	QTY	SERIAL NO.	REMARKS
0	8074315J	LINK	1		(SUB FOR TH8074315J)
1	3084173J	LINK	1		(SUB FOR TH3084173J)

CONTROL VALVE

T148945 -UN-11DEC01

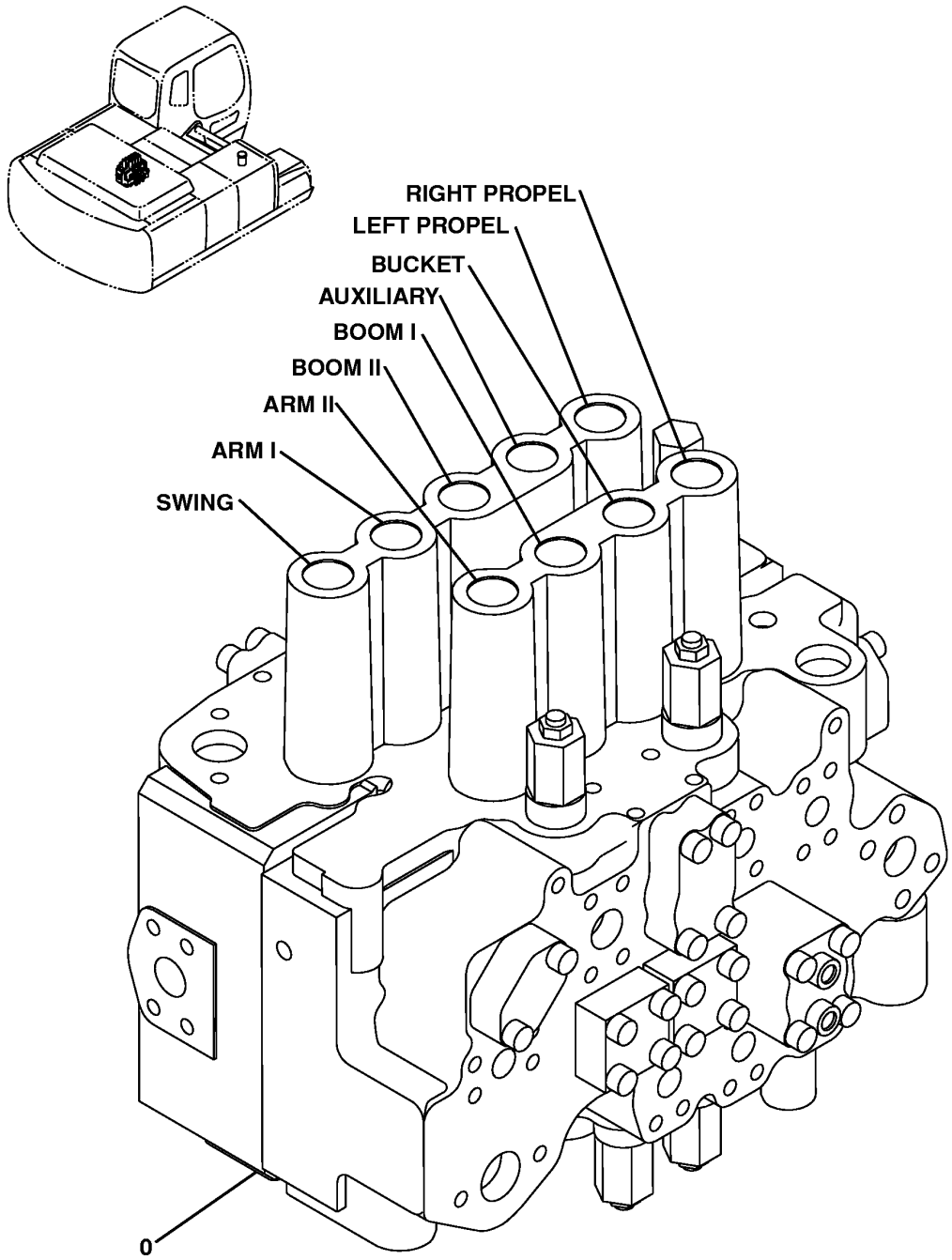

T148945

CONTROL VALVE

KEY	PART NO.	PART NAME	QTY	SERIAL NO.	REMARKS
0	4398652	FLOW CONTROL HYD. VALVE	1		

CONTROL VALVE SUPPORT

T143257 -UN-28JUN01

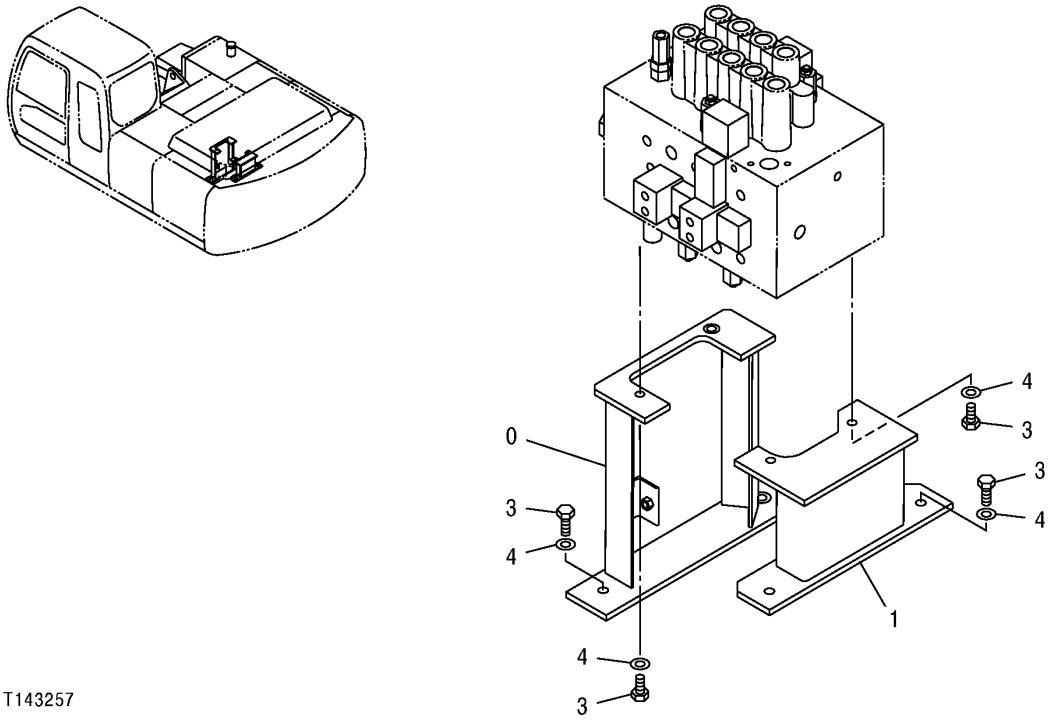

T143257

CONTROL VALVE SUPPORT

KEY	PART NO.	PART NAME	QTY	SERIAL NO.	REMARKS
0	8074127	BRACKET	1		(SUB FOR TH8074127)
1	8074128	BRACKET	1		(SUB FOR TH8074128)
3	19M7488	CAP SCREW	8		M16 X 40
4	12H294	LOCK WASHER	8		15.875 MM (5/8")

SIDE BRANCH HYDRAULIC HOSES

T143255 -UN-29JUN01

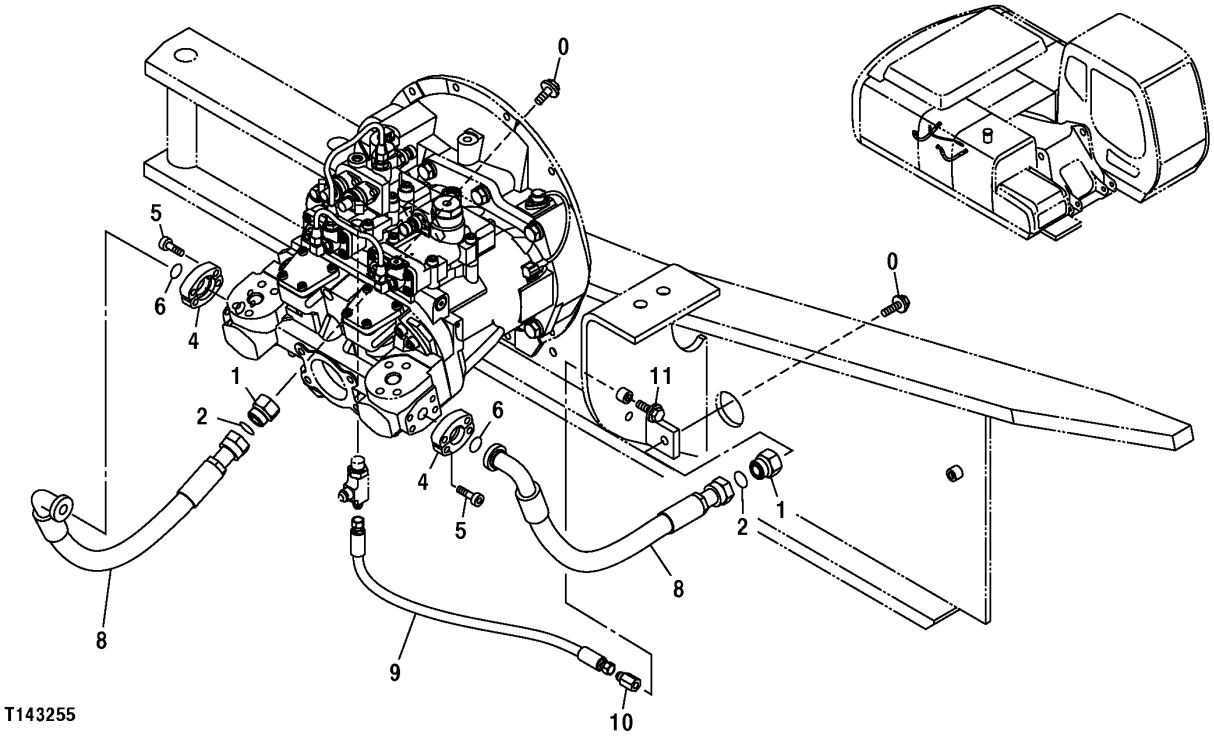

SIDE BRANCH HYDRAULIC HOSES

KEY	PART NO.	PART NAME	QTY	SERIAL NO.	REMARKS
0	19M7403	CAP SCREW	2		M12 X 35
	12H301	LOCK WASHER	2		12.700 MM (1/2")
1	4204882	FITTING PLUG	2		(SUB FOR TH109541)
2	T77858	O-RING	2		18.771 X 1.778 MM (0.739" X 0.070")
4	T107446	FLANGE FITTING	4		
5	19M8337	SCREW	8		M10 X 30
6	T59014	O-RING	2		24.994 X 3.531 MM (63/64" X 0.139")
8	4436937	HYDRAULIC HOSE - FABRICATE	2		(SUB FOR TH4436937)
9	4442133	HYDRAULIC HOSE - FABRICATE	1		(SUB FOR TH4442133)
10	4444381	PIPE PLUG	1		(SUB FOR TH4444381)
11	19M7662	CAP SCREW	1		M10 X 30
	12M7066	LOCK WASHER	1		10 MM (0.394")

**ELECTRIC FOOT SWITCH
FOR AUXILIARY CONTROL (ONE SOLENOID)**

TP44347 -UN-01JAN94

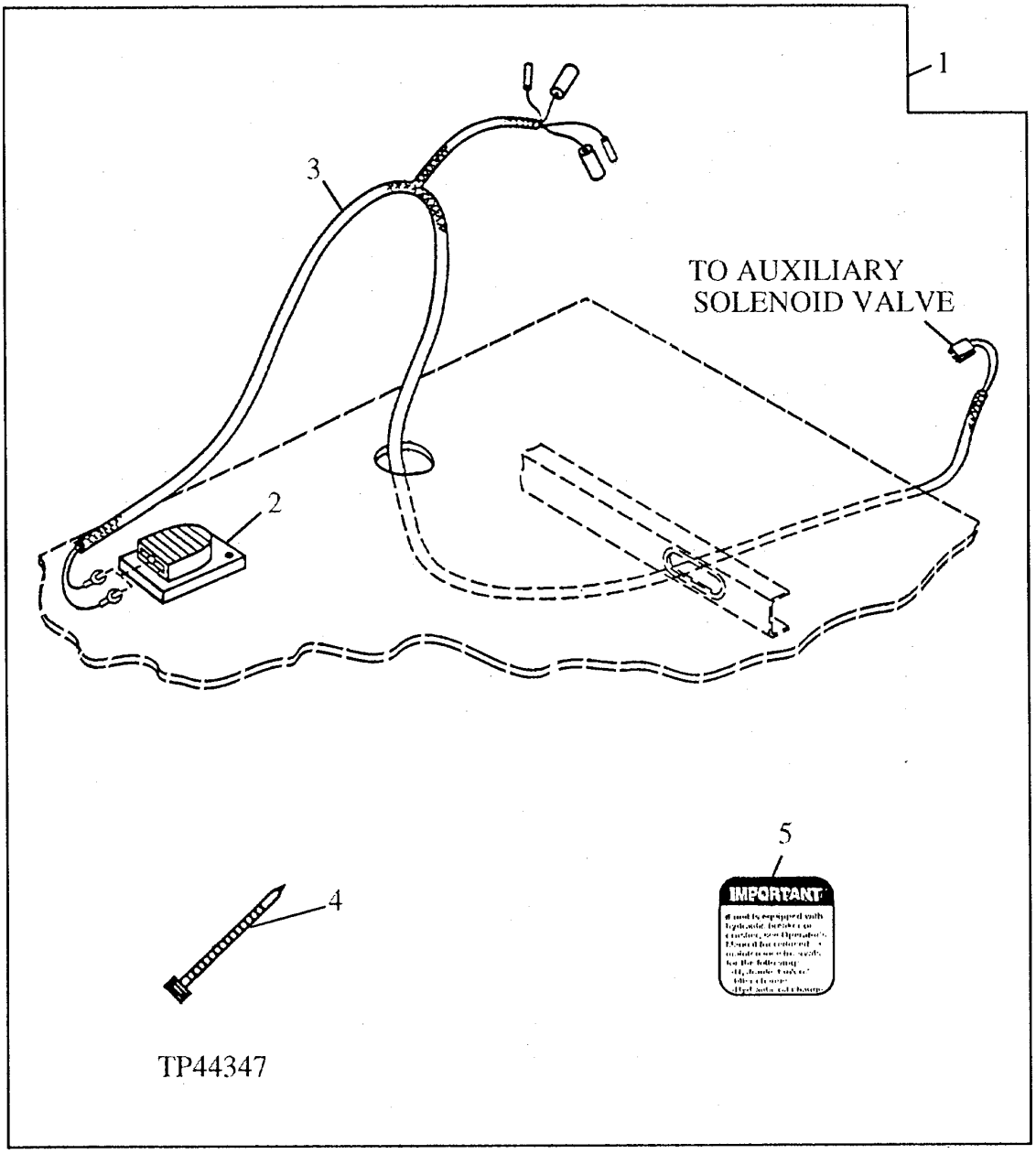

ELECTRIC FOOT SWITCH
FOR AUXILIARY CONTROL (ONE SOLENOID)

KEY	PART NO.	PART NAME	QTY	SERIAL NO.	REMARKS
1	**AT196587**	**SWITCH**	**1**		**WHOLEGOODS (ELECTRIC FOOT SWITCH FOR AUXILIARY VALVE)**
2	AT82210	SWITCH	1		(ELECTRIC FOOT CONTROL)
3	AT196588	WIRING HARNESS	1		
4	R44302	TIE BAND	2		(USE AS REQUIRED)
5	T149434	LABEL	1		(IMPORTANT - AUXILIARY ELECTRIC CONTROL)

ELECTRIC SOLENOID VALVE KIT
(1 WAY/2 WAY)
(WITHOUT PRESSURE SWITCH)

T157956 -UN-29JUL02

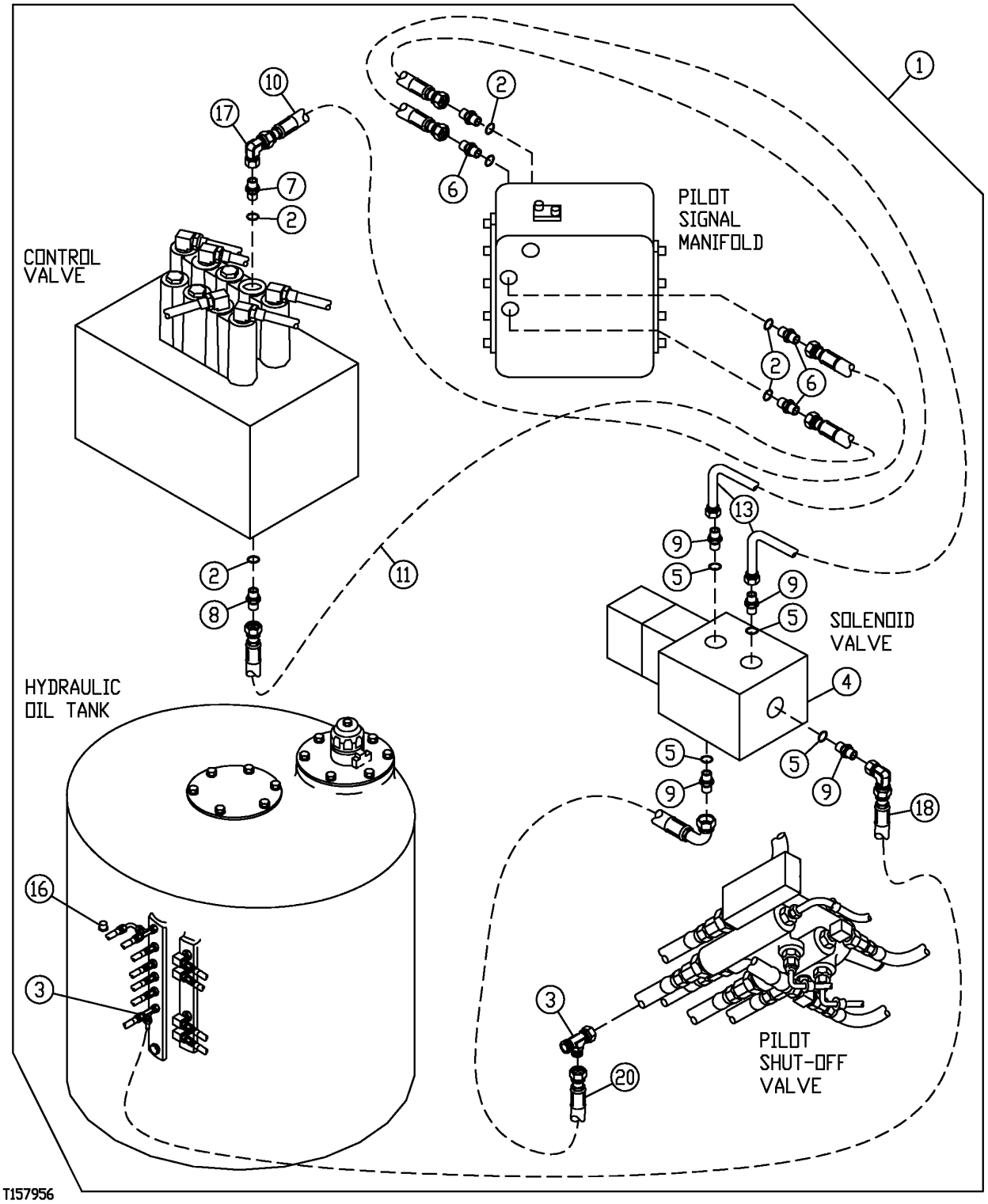

ELECTRIC SOLENOID VALVE KIT
(1 WAY/2 WAY)
(WITHOUT PRESSURE SWITCH)

KEY	PART NO.	PART NAME	QTY	SERIAL NO.	REMARKS
1	**AT195713**	**KIT**	**1**		**(WHOLEGOODS) ELECTRIC SOLENOID VALVE (INCLUDES H102543 FITTING)**
2	CH11570	O-RING	6		13.800 X 2.400 MM (0.543" X 0.094")
3	AT36921	TEE FITTING	2		
4	AT180585	SOLENOID	1		
5	R26448	O-RING	4		11.887 X 1.981 MM (0.468" X 5/64")
6	4200466	ADAPTER	4		(SUB FOR TH108320)
7	AT130053	ADAPTER	1		
8	AT131445	ADAPTER	1		
9	R27212	FITTING	4		
10	AT108783	HYDRAULIC HOSE - FABRICATE	1		9/16" X 567 MM (22-1/4") X 9/16"
11	AR90081	HYDRAULIC HOSE	1		9/16" X 1 270 MM (50") X 9/16"
12	24M7054	WASHER	4		6.400 X 12 X 1.600 MM, (NOT ILLUSTRATED)
13	AT68901	HYDRAULIC HOSE - FABRICATE	2		9/16" X 965 MM (38") X 9/16"
14	14M7272	NUT	2		M6, (NOT ILLUSTRATED)
15	19M7529	CAP SCREW	2		M6 X 55, (NOT ILLUSTRATED)
16	R31147	FITTING	1		(CAP)
17	AE24616	ELBOW FITTING	1		
18	AT71732	HYDRAULIC HOSE - FABRICATE	1		9/16" X 1 422 MM (56") X 9/16"
20	AT78124	HYDRAULIC HOSE - FABRICATE	1		9/16" X 3 531 MM (139") X 9/16"

**DUAL CONTROL HANDLE WITH WIRING
FOR AUXILIARY CONTROLS (2 SOLENOIDS)**

T144288 -UN-06AUG01

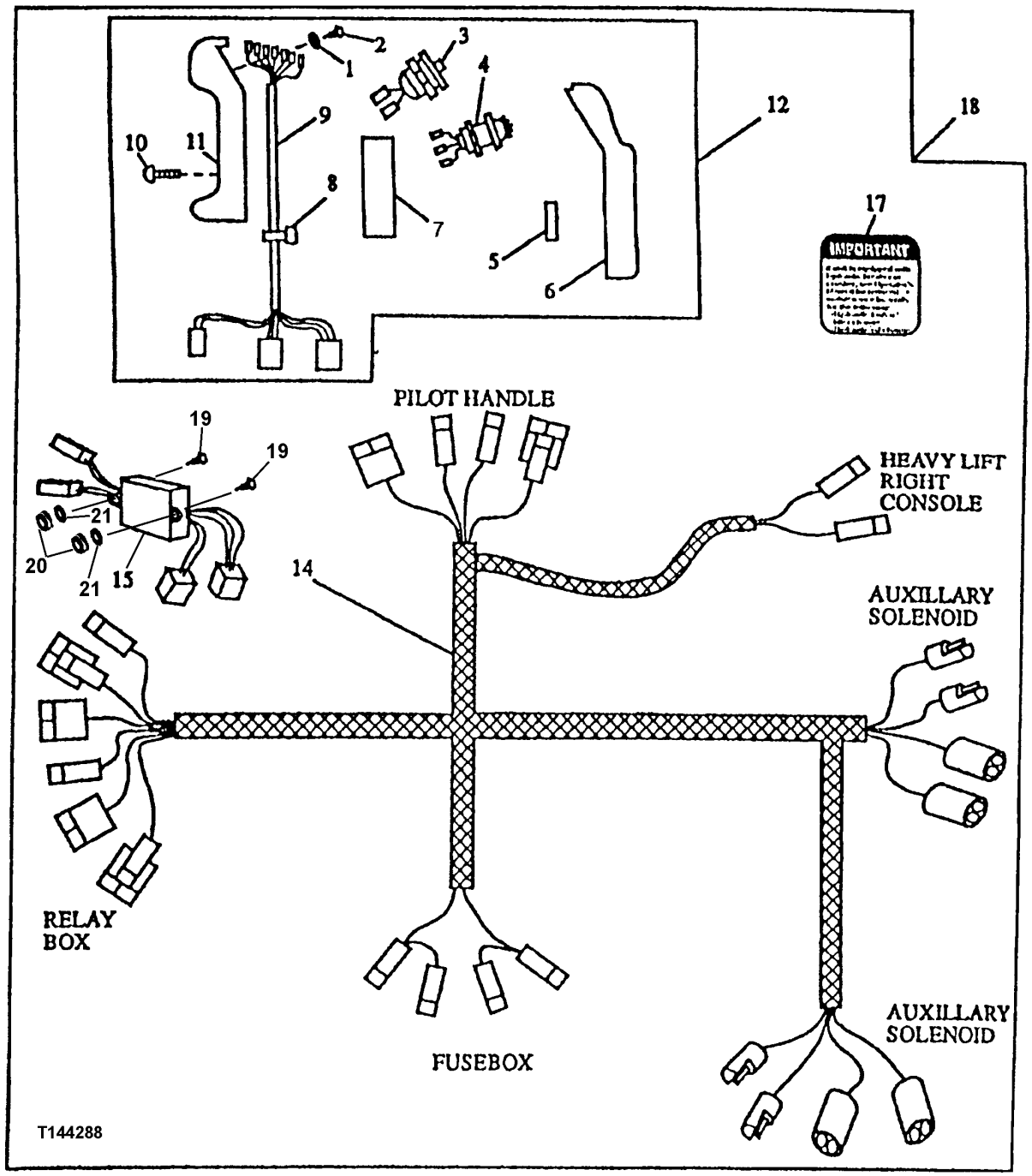

DUAL CONTROL HANDLE WITH WIRING
FOR AUXILIARY CONTROLS (2 SOLENOIDS)

KEY	PART NO.	PART NAME	QTY	SERIAL NO.	REMARKS
1	12H321	WASHER	7		0.138"
2	21H1308	SCREW	7		0.138" X 3/8"
3	AT139383	ROCKER SWITCH	1		PUSH BUTTON (MOMENTARY)
4	AT139382	ROCKER SWITCH	2		
5	R71799	NEEDLE ROLLER	2		
6	T114699	HANDLE	1		
7	T114698	SUPPORT	1		
8	R44302	TIE BAND	2		
9	AT195787	WIRING HARNESS	1		
10	T80394	SCREW	6		
11	AT115448	HANDLE	1		
12	AT195786	CONTROL LEVER	1		PILOT CONTROL
14	AT195788	WIRING HARNESS	1		SOLENOID VALVE
15	AT141562	RELAY MODULE	1		
17	T149434	LABEL	1		(IMPORTANT) (BETWEEN ASHTRAY AND OPERATOR'S CAUTION DECAL ON RIGHT SIDE OF CAB)
18	**AT195784**	**KIT**	**1**		**(CONTROL HANDLE WITH SWITCHES) WHOLEGOODS**
19	21M7246	SCREW	2		M6 X 16
20	14M7272	NUT	2		M6
21	24M7293	WASHER	2		6.500 X 13 X 1.600 MM

CONTROL PATTERN SELECTOR KIT

T156470 -UN-27JUN02

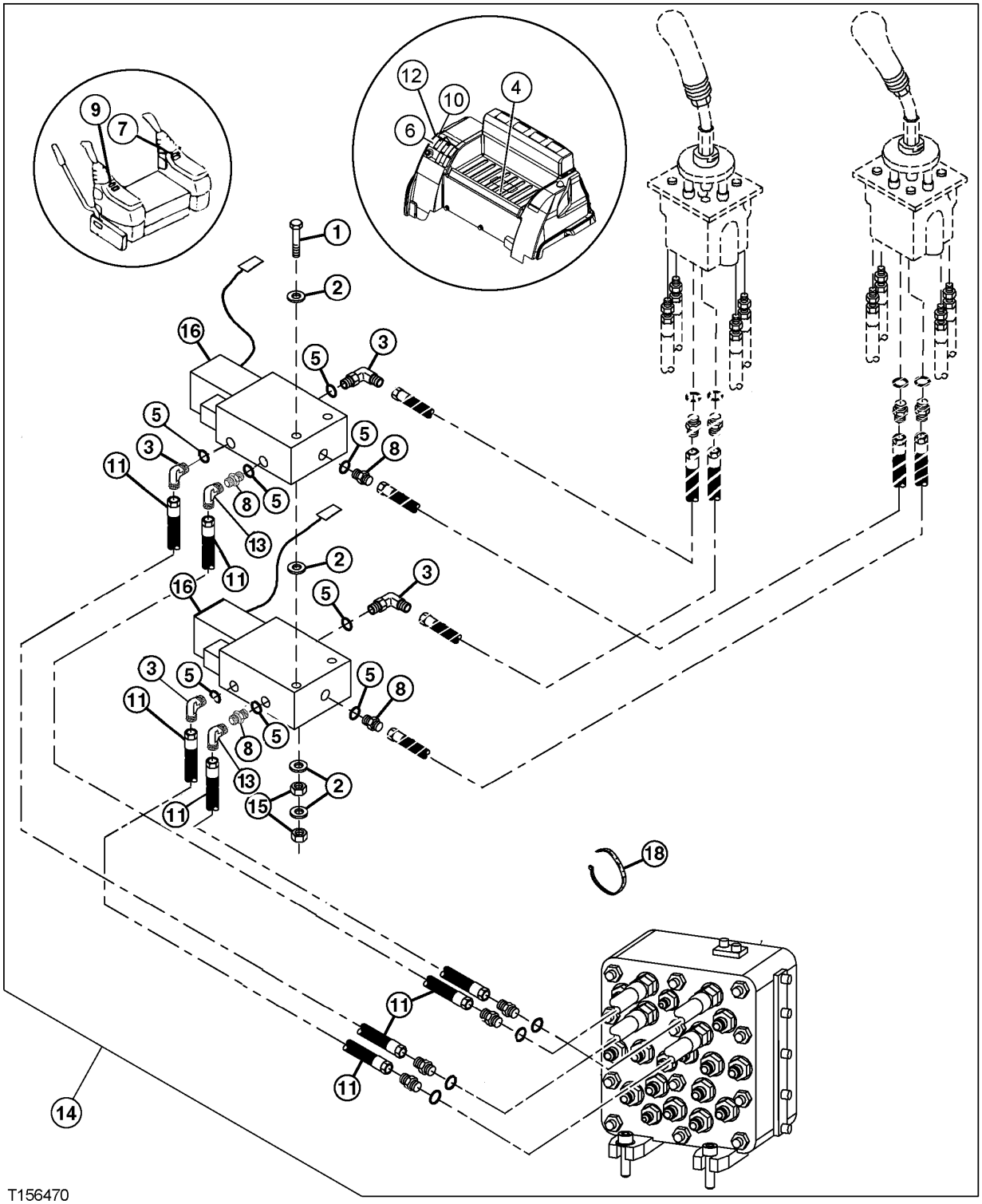

CONTROL PATTERN SELECTOR KIT

KEY	PART NO.	PART NAME	QTY	SERIAL NO.	REMARKS
1	19M8332	CAP SCREW	2		M6 X 90
2	24M7100	WASHER	10		6.600 X 22 X 2 MM
3	AT35121	ELBOW FITTING	4		37 DEG FLARE O-RING
4	AT307710	WIRING HARNESS	1		(SUB FOR AT190535)
5	R26448	O-RING	8		
6	AT83721	TOGGLE SWITCH	1		LOCKING
7	T159843	LABEL	4		CONTROL RIGHT
8	R27212	FITTING	4		
9	T159844	LABEL	1		CONTROL LEFT
10	T184858	LABEL	1		CONTROL PATTERN
11	AT71082	HYDRAULIC HOSE - FABRICATE	4		
12	37H43	SCREW	2		DRIVE SELF TAPPING
13	AE24616	ELBOW FITTING	2		
14	**AT307709**	**KIT**	**1**		**(WHOLEGOODS) CONTROL PATTERN SELECTOR KIT, (SUB FOR AT191397)**
15	14M7272	NUT	4		M6
16	AT306723	ELEC.PROPORTIONAL VALVE	2		(SUB FOR AT116486 AND AT140041) PIN DISCONNECT
	.....	ELECTRICAL COIL	1		(AT140041 NO LONGER AVAILABLE)
18	R44302	TIE BAND	AR		
20	T202379	BRACKET	3		
21	T63817	GROMMET	1		
22	19M7863	SCREW	3		
23	T22645	CLIP	4		
24	14M7272	NUT	3		

AUXILIARY HYDRAULIC PLUMBING (FIELD KIT)

T191164 -UN-02JUN03

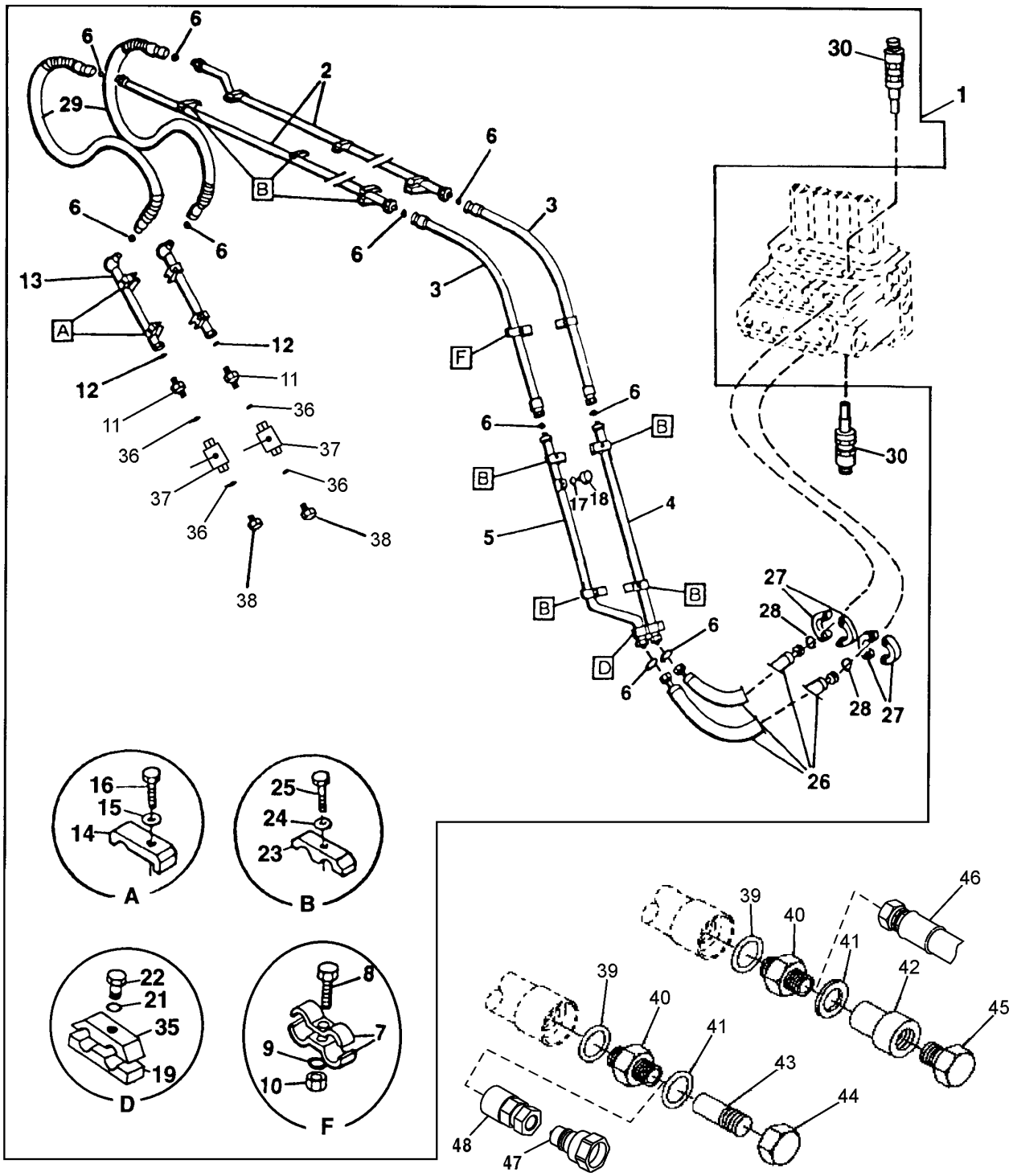

T191164

AUXILIARY HYDRAULIC PLUMBING (FIELD KIT)

KEY	PART NO.	PART NAME	QTY	SERIAL NO.	REMARKS
1	**AT196890**	**KIT**	**1**		**WHOLEGOODS (AUXILIARY HYDRAULIC LINE KIT)**
2	AT159786	OIL LINE	2		
3	AT159782	HYDRAULIC HOSE - FABRICATE	2		1-7/16" X 1 905 MM (75") X 1-7/16"
4	AT179566	OIL LINE	1		
5	AT179567	OIL LINE	1		
6	T76938	O-RING	10		23.520 X 1.778 MM (0.926" X 0.070")
7	4202103	CLAMP	4		(SUB FOR TH108302)
8	19M7361	CAP SCREW	2		M12 X 50
9	12H301	LOCK WASHER	2		12.700 MM (1/2")
10	14M7275	NUT	2		M12
11	38H1196	ADAPTER	2		
12	T78612	O-RING	2		
13	AT159934	OIL LINE	2		
14	4190127	CLAMP	4		(SUB FOR TH108313)
15	12H301	LOCK WASHER	4		12.700 MM (1/2")
16	19M7753	CAP SCREW	4		M12 X 70
17	T77858	O-RING	1		18.771 X 1.778 MM (0.739" X 0.070")
18	38H1419	FITTING PLUG	1		
19	4249704	CLAMP	1		(SUB FOR AT122946)
21	12H301	LOCK WASHER	1		12.700 MM (1/2")
22	19M7758	CAP SCREW	1		M12 X 130
23	4153488	CLAMP	10		(SUB FOR TH103780)
24	12H301	LOCK WASHER	10		12.700 MM (1/2")
25	19M7753	CAP SCREW	10		M12 X 70
26	AT179568	HYDRAULIC HOSE	2		1" X 1 422 MM (56") X 1-7/16"
27	H61354	FLANGE FITTING	4		(SUB FOR R29424, THIS APPLICATION)
28	T78313	O-RING	2		32.918 X 3.531 MM (1.296" X 0.139") (SUB FOR T59014, THIS APPLICATION)
29	AT179239	HYDRAULIC HOSE - FABRICATE	2		1-7/16" X 1 524 MM (60") X 1-7/16", (USE WITH 2.96M STANDARD ARM)
30	4282718	PRESSURE RELIEF VALVE	2		(SUB FOR AT155693)
35	4189860	CLAMP	1		(SUB FOR TH108314)
36	R29936	O-RING	4		29.743 X 2.946 MM (1.171" X 0.116")
37	AT196851	BALL	2		(BALL VALVE)
38	R36636	FITTING PLUG	2		
39	R29936	O-RING	2		
40	38H1216	ADAPTER	2		(ALSO ORDER T76938) (1" ORFS)
	38H1194	ADAPTER	2		(ALSO ORDER T77858) (3/4" ORFS)
	AT46961	UNION FITTING	2		(1" SAE, MALE)
	T27603	FITTING	2		(3/4" 37 DEGREE)
	T26767	FITTING	2		(1" 37 DEGREE)
	AT83306	ADAPTER	2		(3/4" SAE, MALE)
41	R29936	O-RING	2		
42	AT186111	QUICK COUPLER	1		(1" FEMALE)(SCREW TOGETHER COUPLER)
	.....	KIT	1		(AT189410 NO LONGER AVAILABLE)
43	AT186112	QUICK COUPLER	1		(1" MALE)(SCREW TOGETHER COUPLER)
	.....	KIT	1		(AT189409 NO LONGER AVAILABLE)
44	AT186113	CAP	1		
45	AT186114	PLUG	1		
46	X1JS78-20-16	HOSE FITTING	2		HOSE END - STRAIGHT - 1 1/4 X 1 IN
	X1J978-20-16	ELBOW FITTING	2		HOSE END - 90 DEG 1 1/4 X 1 IN
47	AT117365	HYDR.QUICK COUPLER PLUG	2		MALE QUICK COUPLER (-12) 1 1/16 SAE O-RING
	AT120498	COUPLING	2		MALE QUICK COUPLER (-16) 1 5/16 SAE O-RING
48	AT117364	HYDR.QUICK COUPLER SOCKET	2		FEMALE QUICK COUPLER (-12) 1 1/16 SAE O-RING
	AT120499	COUPLING	2		FEMALE QUICK COUPLER (-16) 1 5/16 SAE O-RING

AUXILIARY HYDRAULIC OPTIONAL LOW PRESSURE RETURN PLUMBING

T191246 -UN-03JUN03

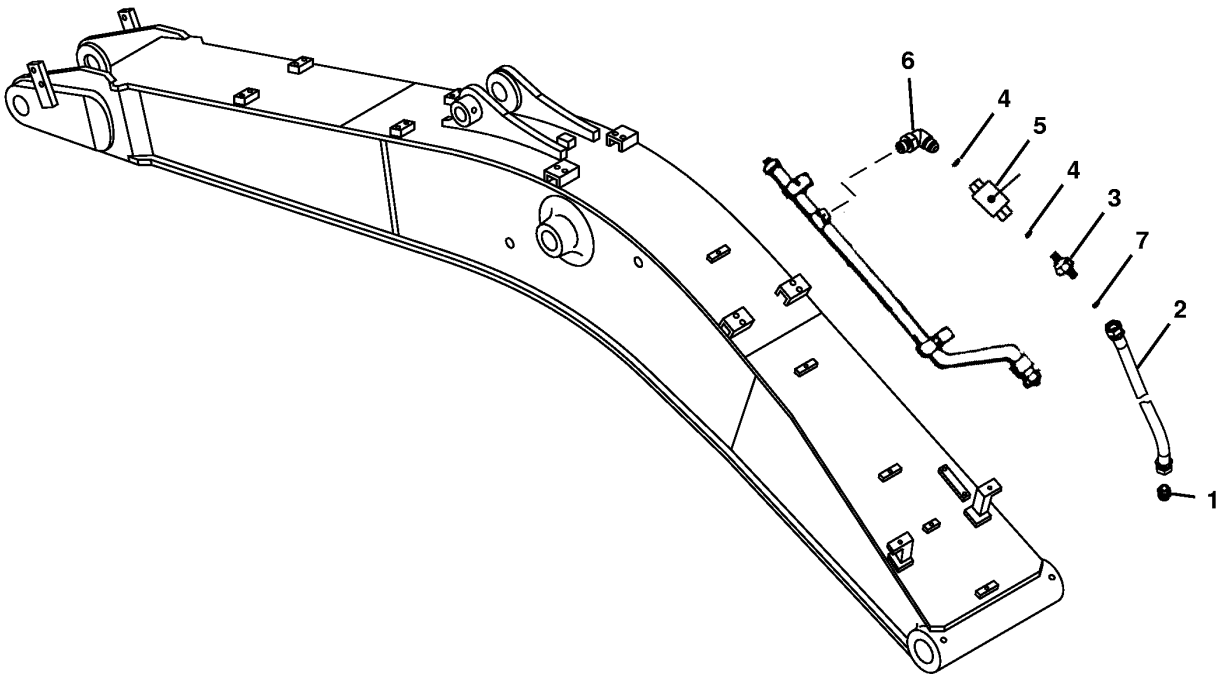

T191246

AUXILIARY HYDRAULIC OPTIONAL LOW PRESSURE RETURN PLUMBING

KEY	PART NO.	PART NAME	QTY	SERIAL NO.	REMARKS
1	4189535	ADAPTER	1		
2	AT304741	HYDRAULIC HOSE - FABRICATE	1		
3	38H1164	ADAPTER	1		
4	R29936	O-RING	2		
5	AT196851	BALL	1		
6	38H1086	ELBOW FITTING	1		
7	T78612	O-RING	1		

CONTROL VALVE PRESSURE AND RETURN AUXILIARY PLUMBING (FACTORY)

T161053 -UN-29OCT02

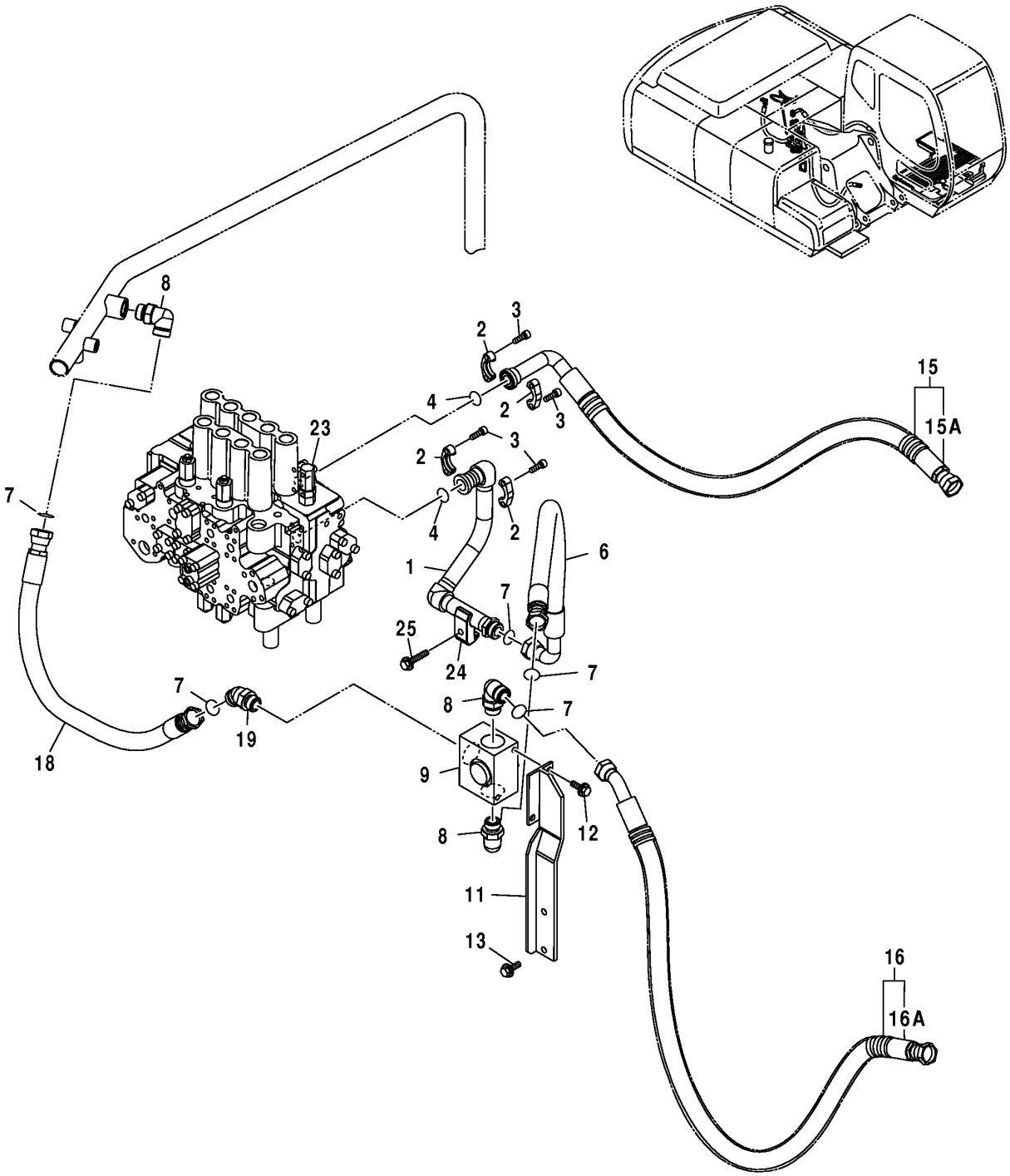

T161053

CONTROL VALVE PRESSURE AND RETURN AUXILIARY PLUMBING (FACTORY)

KEY	PART NO.	PART NAME	QTY	SERIAL NO.	REMARKS
1	8079794	OIL LINE	1		
2	H61354	FLANGE FITTING	4		(SUB FOR Z962453)
3	J781030	SCREW	8		
4	T78313	O-RING	2		
6	4308972	HYDRAULIC HOSE	1		
7	T76938	O-RING	5		(SUB FOR 4187328)
8	A853388	ELBOW FITTING	3		
9	4455599	MANIFOLD	1		
11	8079166	BRACKET	1		
12	19M8011	CAP SCREW	2		M12 X 30, (SUB FOR J011230)
13	19M7403	CAP SCREW	2		M12 X 35, (SUB FOR J021235)
15	9197330	HYDRAULIC HOSE	1		
15A	4429988	HYDRAULIC HOSE	1		
16	9197376	HYDRAULIC HOSE	1		
16A	4448718	HYDRAULIC HOSE - FABRICATE	1		
18	4307330	HYDRAULIC HOSE - FABRICATE	1		
19	4270315	ELBOW FITTING	1		
	4506429	O-RING	1		
23	4282718	PRESSURE RELIEF VALVE	2		
24	4190127	CLAMP	1		
25	19M8088	CAP SCREW	1		M12 X 75, (SUB FOR J011275)

BOOM AUXILIARY HOSES AND LINES (FACTORY INSTALLED)

T159377 -UN-28OCT02

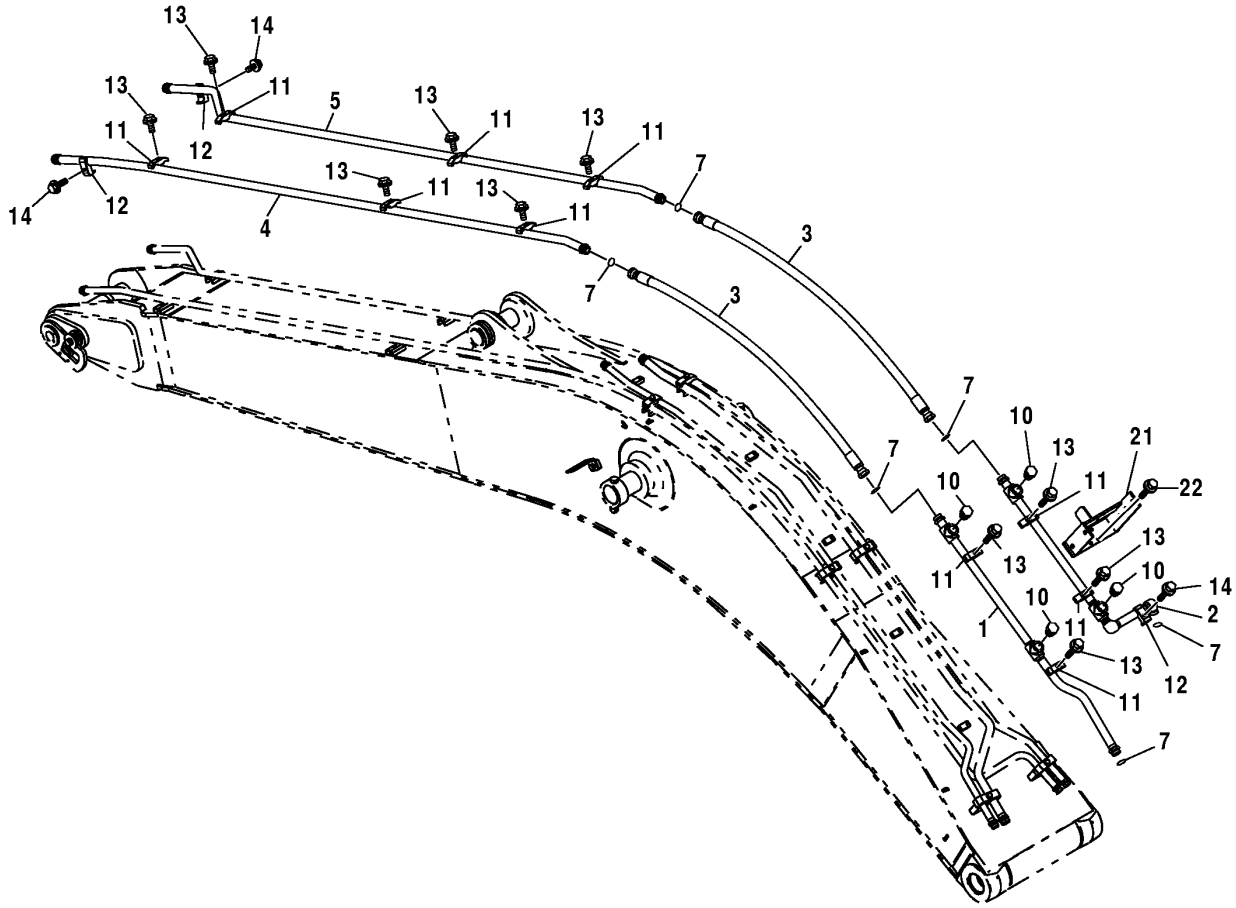

T159377

THIS PARTS LISTING IS CONTINUED

BOOM AUXILIARY HOSES AND LINES (FACTORY INSTALLED)

KEY	PART NO.	PART NAME	QTY	SERIAL NO.	REMARKS
1	8081638J	OIL LINE	1		
2	8080620J	OIL LINE	1		
3	4357695	HYDRAULIC HOSE - FABRICATE	2		
4	DH800081J	OIL LINE	1		(SUB FOR 8082052J)
5	DH800082J	OIL LINE	1		(SUB FOR 8082053J)
7	T76938	O-RING	6		(SUB FOR 4187328)
10	4113926	DRAIN PLUG	4		
	4506429	O-RING	4		
11	4153488	CLAMP	10		
12	4190127	CLAMP	3		
13	19M8348	CAP SCREW	10		M12 X 65, (SUB FOR J011265)
14	19M8088	CAP SCREW	3		(SUB FOR J011275)
21	8079431J	BRACKET	1		
22	19M7403	CAP SCREW	4		(SUB FOR J021235)

ARM AUXILIARY HOSES AND LINES (FACTORY INSTALLED)

T191172 -UN-19MAY03

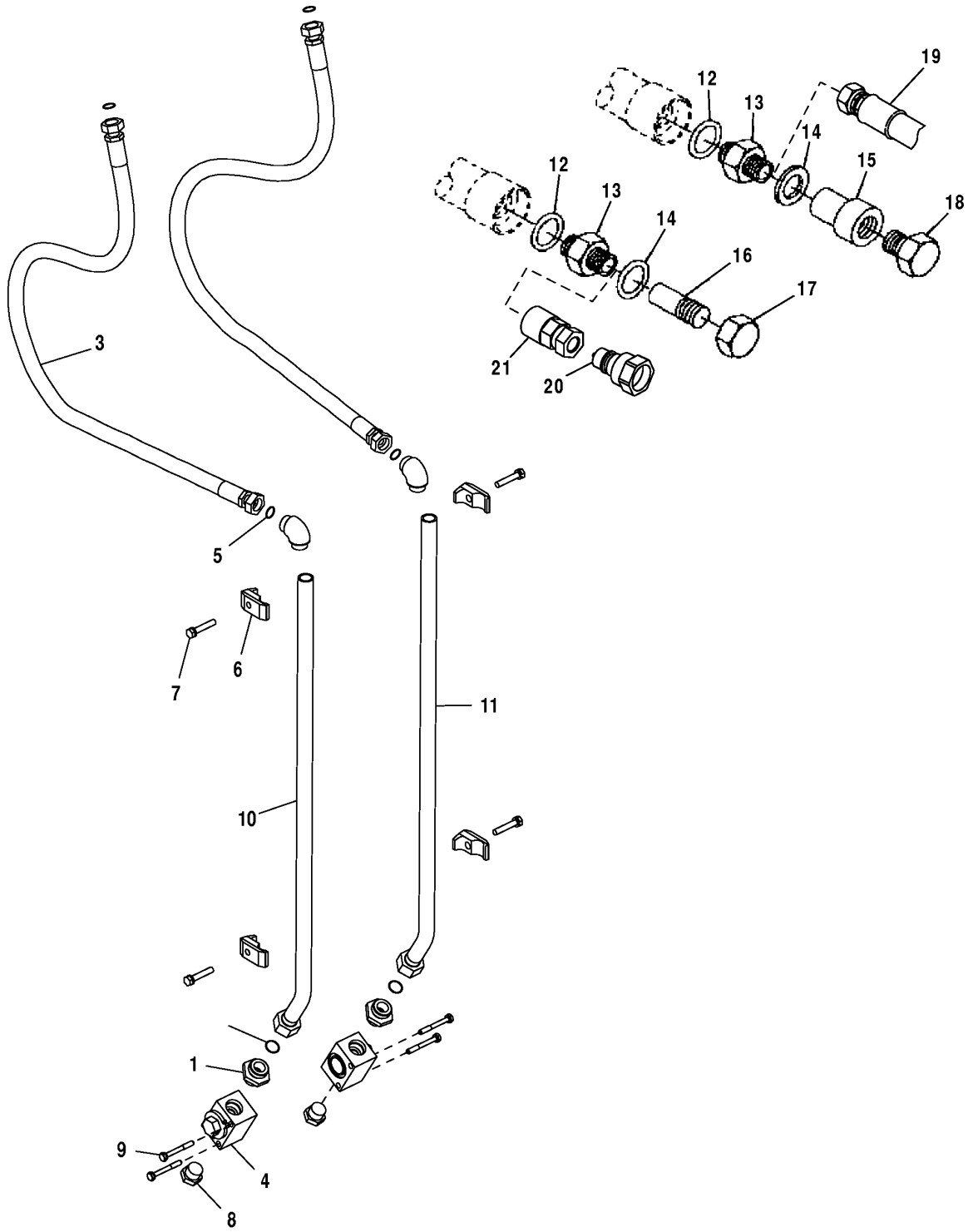

T191172

ARM AUXILIARY HOSES AND LINES (FACTORY INSTALLED)

KEY	PART NO.	PART NAME	QTY	SERIAL NO.	REMARKS
1	4205196	ADAPTER	2		
2	T78612	O-RING	2		(SUB FOR 4187329)
3	4400848	HYDRAULIC HOSE	2		
4	4600164	CHECK VALVE	2		
5	T76938	O-RING	4		(SUB FOR 4187328)
6	4190127	CLAMP	4		
7	19M8348	CAP SCREW	4		M12 X 65, (SUB FOR J011265)
8	4113926	DRAIN PLUG	2		(SUB FOR A885008)
9	19M8183	CAP SCREW	4		M10 X 90, (SUB FOR J011085)
10	8084097J	OIL LINE	1		
11	8083882J	OIL LINE	1		
12	TH101926	O-RING	2		
13	4189535	ADAPTER	2		(1" ORFS)
	4189537	ADAPTER	2		(3/4" ORFS)
	AT301151	FITTING	2		(1" SAE, MALE)
	X12-16F4OMXS	ADAPTER	2		(3/4" 37 DEGREE)
	X16F4OMXS	ADAPTER	2		(1" 37 DEGREE)
	AT305641	FITTING	2		(3/4" SAE, MALE)
14	R29936	O-RING	2		
15	AT186111	QUICK COUPLER	1		(1" FEMALE)(SCREW TOGETHER COUPLER)
	.....	KIT	1		(AT189410 NO LONGER AVAILABLE)
16	AT186112	QUICK COUPLER	1		(1" MALE)(SCREW TOGETHER COUPLER)
	.....	KIT	1		(AT189409 NO LONGER AVAILABLE)
17	AT186113	CAP	1		
18	AT186114	PLUG	1		
19	X1JS78-20-16	HOSE FITTING	2		HOSE END - STRAIGHT - 1 1/4 X 1 IN
	X1J978-20-16	ELBOW FITTING	2		HOSE END - 90 DEG 1 1/4 X 1 IN
20	AT117365	HYDR.QUICK COUPLER PLUG	2		MALE QUICK COUPLER (-12) 1 1/16 SAE O-RING
	AT120498	COUPLING	2		MALE QUICK COUPLER (-16) 1 5/16 SAE O-RING
21	AT117364	HYDR.QUICK COUPLER SOCKET	2		FEMALE QUICK COUPLER (-12) 1 1/16 SAE O-RING
	AT120499	COUPLING	2		FEMALE QUICK COUPLER (-16) 1 5/16 SAE O-RING

ARM ANTI-DRIFT KIT

T192468 -UN-02JUL03

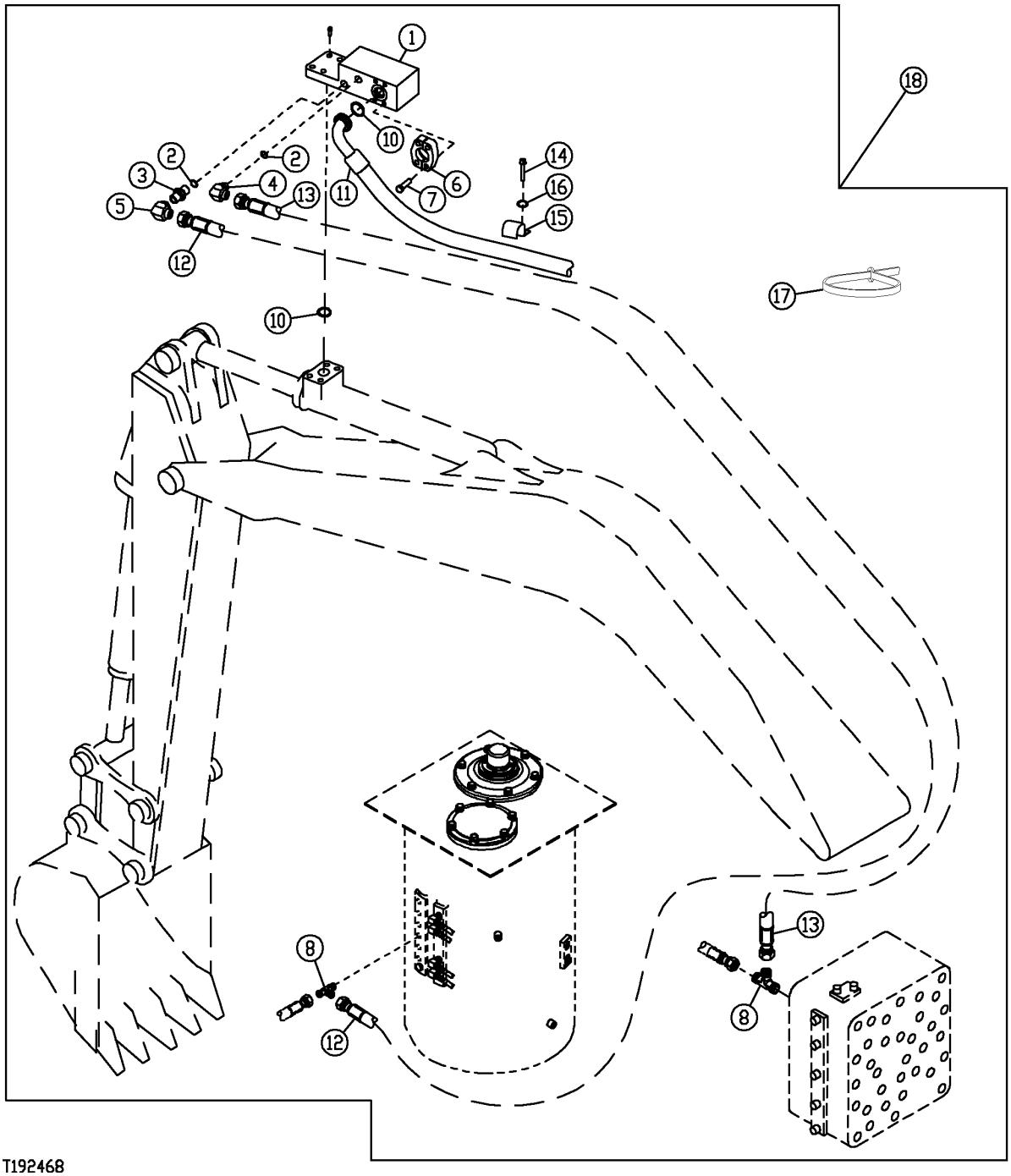

ARM ANTI-DRIFT KIT

KEY	PART NO.	PART NAME	QTY	SERIAL NO.	REMARKS
1	AT300303	CHECK VALVE	1		
2	AT300313	SEALING RING	2		
3	X6F4OMXS	ADAPTER	1		
4	X6C4OMXS	ELBOW FITTING	1		
5	AE24616	ELBOW FITTING	1		
6	T107068	FLANGE FITTING	2		
7	19M8395	SCREW	4		
8	AT36921	TEE FITTING	2		
10	T78313	O-RING	2		
11	AT300468	HYDRAULIC HOSE - FABRICATE	1		
12	AT300469	HYDRAULIC HOSE - FABRICATE	1		
13	AT300469	HYDRAULIC HOSE - FABRICATE	1		
14	19M7872	CAP SCREW	1		
15	T126057	CLAMP	1		
16	24M7044	WASHER	1		
17	H77698	TIE BAND	20		
18	**AT300477**	**KIT**	**1**		**ARM ANTI-DRIFT KIT**

BOOM ANTI-DRIFT KIT

T191697 -UN-11JUN03

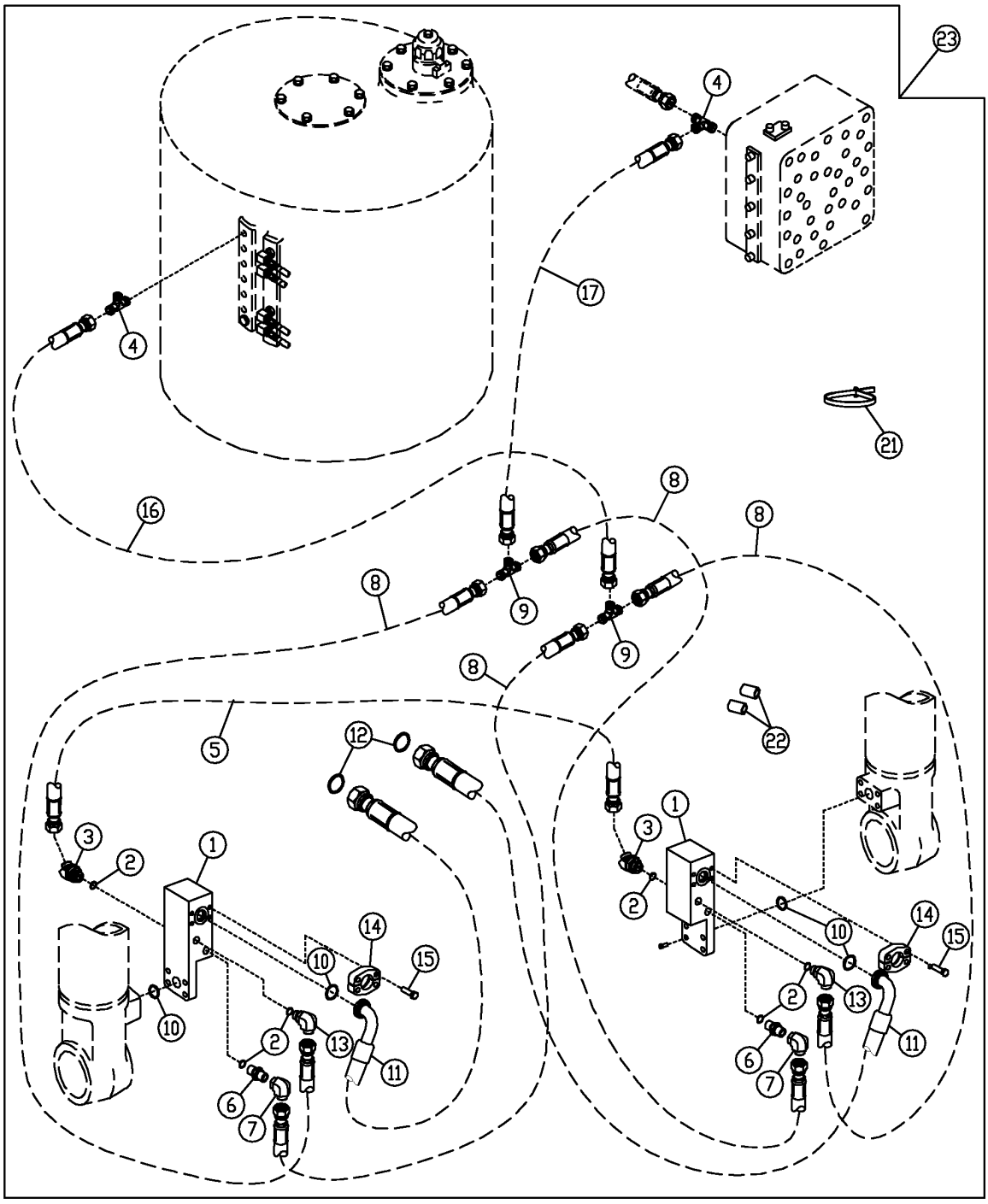

T191697

BOOM ANTI-DRIFT KIT

KEY	PART NO.	PART NAME	QTY	SERIAL NO.	REMARKS
1	AT300303	CHECK VALVE	2		
2	AT300313	SEALING RING	6		
3	X6V4OMXS	ELBOW FITTING	2		
4	AT36921	TEE FITTING	2		
5	AT300337	HYDRAULIC HOSE - FABRICATE	1		
6	X6F4OMXS	ADAPTER	2		
7	AE24616	ELBOW FITTING	2		
8	AT300338	HYDRAULIC HOSE - FABRICATE	4		
9	X6JTX-S	TEE FITTING	2		
10	T78313	O-RING	4		
11	AT300339	HYDRAULIC HOSE	2		
12	T77858	O-RING	2		
13	X6C4OMXS	ELBOW FITTING	2		
14	T107068	FLANGE FITTING	4		
15	19M8395	SCREW	8		
16	AT300465	HYDRAULIC HOSE - FABRICATE	1		
17	AT300466	HYDRAULIC HOSE - FABRICATE	1		
21	H77698	TIE BAND	20		
22	28H2577	SPACER	1		
23	**AT300210**	**KIT**	**1**		**BOOM ANTI-DRIFT KIT**

BOOM LINES TO ARM AND BUCKET CYLINDERS

T194333 -UN-22AUG03

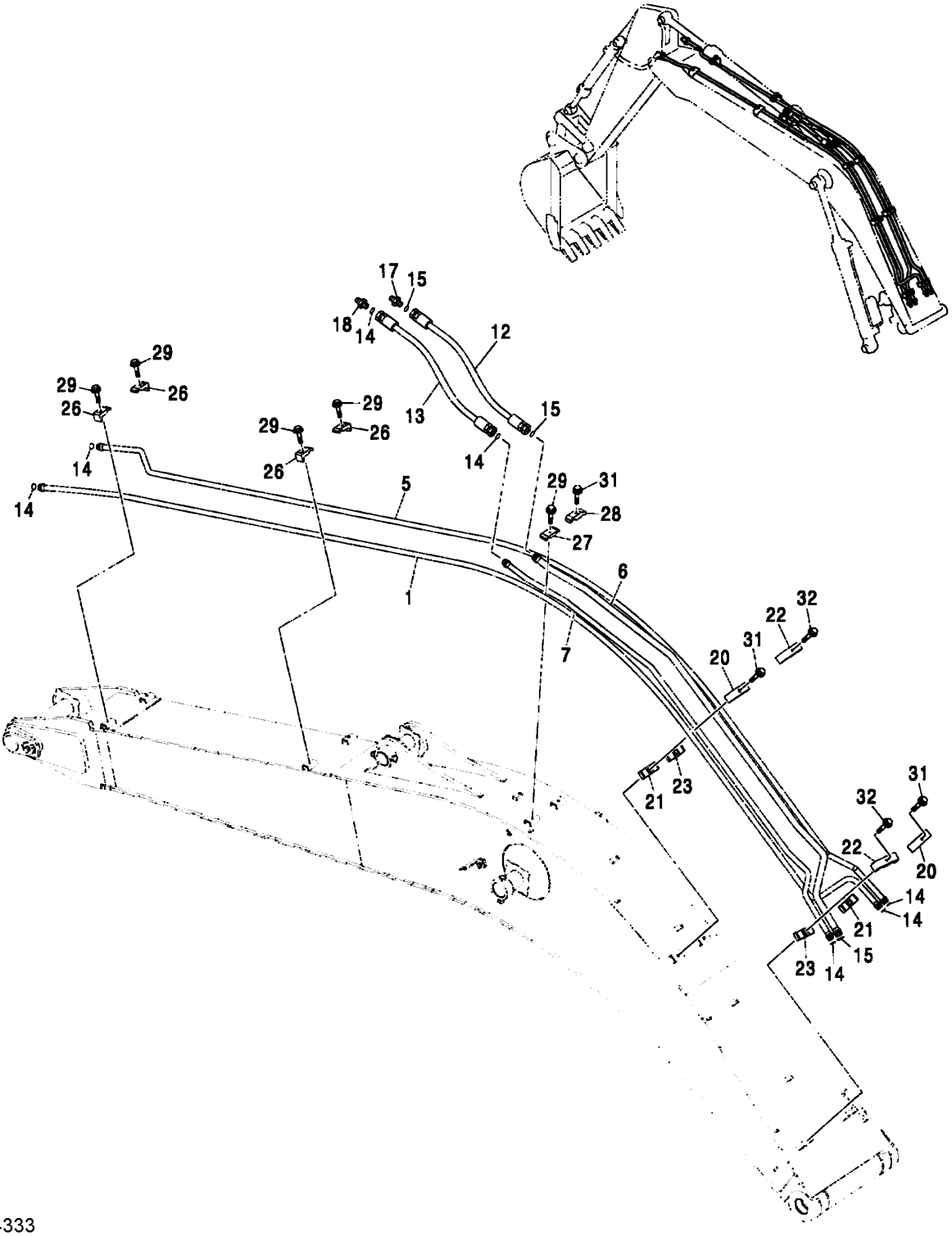

T194333

BOOM LINES TO ARM AND BUCKET CYLINDERS

KEY	PART NO.	PART NAME	QTY	SERIAL NO.	REMARKS
1	8081525	OIL LINE	1		
5	8082106	OIL LINE	1		
6	9156686	PIPE	1		(SUB FOR 8062625)
7	9156685	PIPE	1		(SUB FOR 8062624)
12	4276956	HYDRAULIC HOSE - FABRICATE	1		
13	AT168311	HYDRAULIC HOSE - FABRICATE	1		(SUB FOR 4249334)
14	T77858	O-RING	7		(SUB FOR 4187308)
15	T76938	O-RING	3		(SUB FOR 4187328)
17	A853188	ADAPTER	1		
	TH101926	O-RING	1		
18	A853186	ADAPTER	1		
	TH101926	O-RING	1		
20	4285723	CLAMP	2		
21	4285722	CLAMP	2		
22	4463554	HOSE CLAMP	2		
23	AT309596	CLAMP	2		(SUB FOR 4285724)
26	4190126	CLAMP	4		
27	4189859	CLAMP	1		
28	4153488	CLAMP	1		
29	19M7363	CAP SCREW	5		(SUB FOR J011260)
31	19M7753	CAP SCREW	3		(SUB FOR J011270)
32	19M8088	CAP SCREW	2		(SUB FOR J011275)

MAIN HYDRAULIC PUMP

T143240 -UN-01OCT01

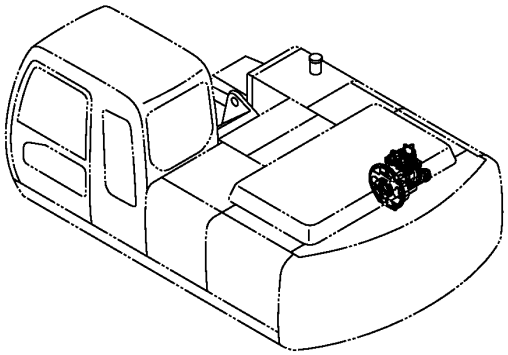

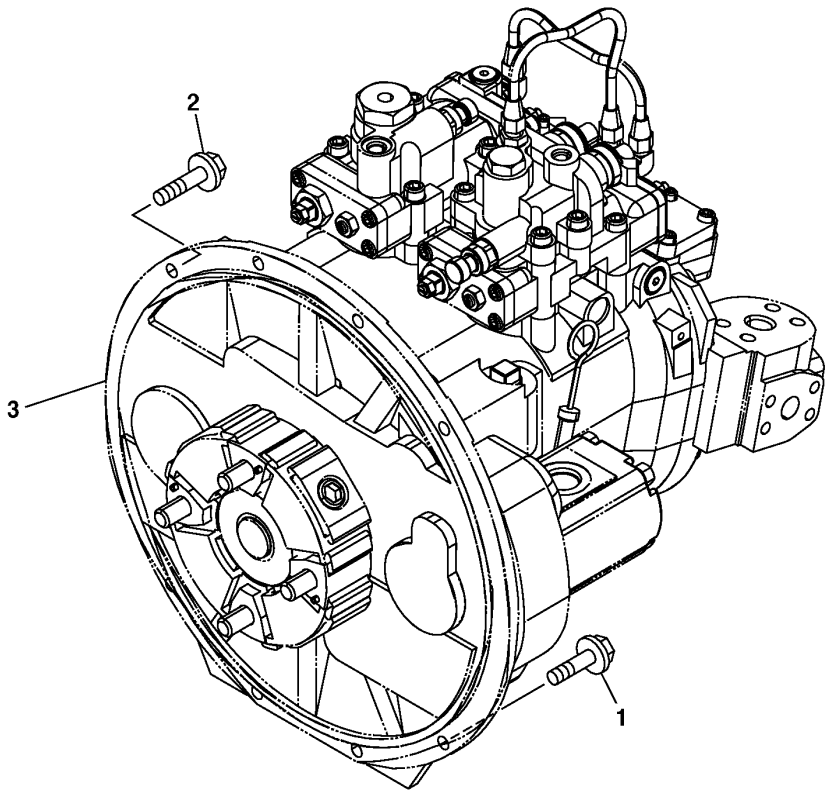

T143240

MAIN HYDRAULIC PUMP

KEY	PART NO.	PART NAME	QTY	SERIAL NO.	REMARKS
1	19M7662	CAP SCREW	5		M10 X 30
	12M7066	LOCK WASHER	5		10 MM (0.394")
2	19M7550	CAP SCREW	3		M10 X 35
	12M7066	LOCK WASHER	3		10 MM (0.394")
3	9195235	HYDRAULIC PUMP	1		(SUB FOR TH9195235)

MAIN HYDRAULIC PUMP

T147551 -UN-30OCT01

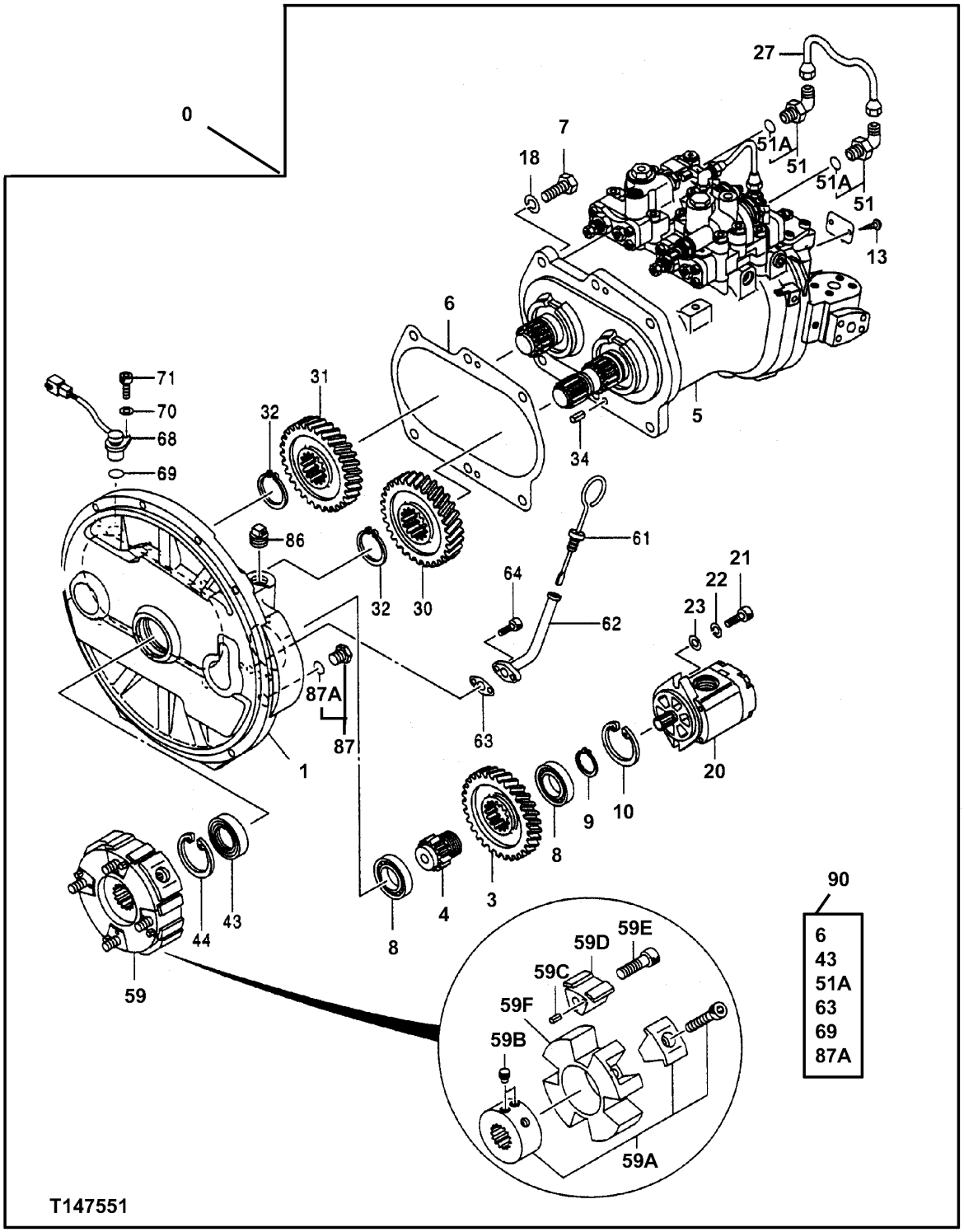

MAIN HYDRAULIC PUMP

KEY	PART NO.	PART NAME	QTY	SERIAL NO.	REMARKS
0	9195235	HYDRAULIC PUMP	1		(SUB FOR TH9195235)
1	1027184	HOUSING	1		(SUB FOR TH1027184)
3	3063840	GEAR	1		(SUB FOR AT202414)
4	3055594	SHAFT	1		(SUB FOR AT202412)
5	.....	HOUSING	1		(PUMP UNIT) (SEE FOLLOWING PAGE FOR COMPONENTS)
6	8058352	GASKET	1		(K) (SUB FOR AT214350)
7	19M7489	CAP SCREW	6		M16 X 45
8	JD8514	BALL BEARING	2		
9	962002	SNAP RING	1		(SUB FOR TH100483)
10	40M7090	SNAP RING	1		
13	37H99	SCREW	2		0.100" X 1/4"
18	12H294	LOCK WASHER	6		15.875 MM (5/8")
20	4276918	PUMP	1		(SUB FOR AT202122)
21	19M8337	SCREW	2		M10 X 30
22	12M7135	LOCK WASHER	2		10 MM (0.394") (SUB FOR 12M6791)
23	4114402	WASHER	2		(SUB FOR TH102181)
27	4369148	OIL LINE	1		(SUB FOR AT214046)
30	3063842	GEAR	1		(SUB FOR AT202415)
31	3063843	GEAR	1		(SUB FOR AT202416)
32	4274552	SNAP RING	2		(SUB FOR AT203647)
34	34M7061	SPRING PIN	2		8 X 20 MM (0.315" X 0.787")
43	4310055	SEAL	1		(K) (SUB FOR AT202443)
44	40M7090	SNAP RING	1		
51	4293950	ELBOW FITTING	2		(SUB FOR AT160584)
51A	M800650	PACKING	1		(K)
59	4416605	COUPLING	1		(SUB FOR TH4416605)
59A	4463992	HUB	1		(SUB FOR TH4463992)
59B	4334899	SET SCREW	2		(SUB FOR AT203651)
59C	34M7117	SPRING PIN	4		5 X 10 MM (0.197" X 0.394")
59D	4463993	INSERT	4		(SUB FOR TH4463993)
59E	4334894	BOLT	4		(SUB FOR TH4334894)
59F	.....	HOUSING	1		
61	4438059	DIPSTICK	1		(SUB FOR TH4438059)
62	9743977	DIPSTICK TUBE	1		(SUB FOR AT214406)
63	9742779	GASKET	1		(K) (SUB FOR AT214401)
64	19M7647	SCREW	2		M8 X 16, (SUB FOR AT217709)
68	4265372	SENSOR	1		(SUB FOR AT154297)
69	4306888	O-RING	1		(K) (SUB FOR AT154310)
70	24M7054	WASHER	1		6.400 X 12 X 1.600 MM (0.252" X 0.472" X 0.063")
71	19M8553	SCREW	1		M6 X 16
86	4234782	PLUG	1		(SUB FOR AT200990)
87	0309805	PIPE PLUG	1		(SUB FOR 4092534, ALONG WITH CH11570)
87A	CH11570	O-RING	1		(K) 13.800 X 2.400 MM (0.543" X 0.094")
90	4451036	SEAL KIT	1		(SUB FOR TH4451036)

MAIN HYDRAULIC PUMP UNIT

T147607 -UN-31OCT01

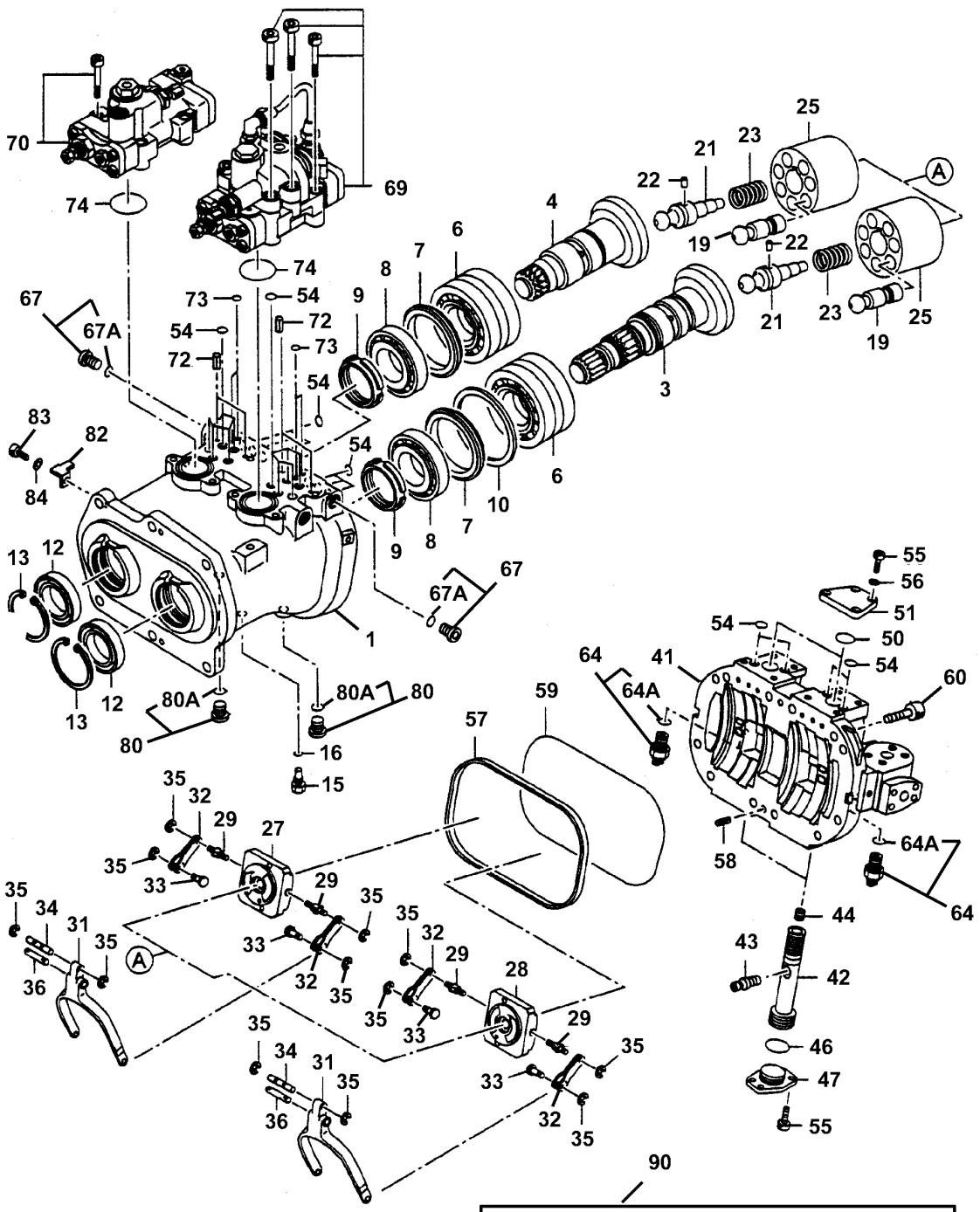

T147607

MAIN HYDRAULIC PUMP UNIT

KEY	PART NO.	PART NAME	QTY	SERIAL NO.	REMARKS
1	9195235	HYDRAULIC PUMP	1		(SUB FOR TH9195235 PUMP ASSEMBLY) (TH1026679 NOT AVAILABLE FOR SERVICE)
3	2036807	DISK	1		(SUB FOR AT213734)
4	2036808	DISK	1		(SUB FOR AT213735)
6	4337419	CYLINDRICAL ROLLER BEARING	2		(SUB FOR AT213873)
7	4348182	RING	2		(SUB FOR AT213920)
8	4337483	CYLINDRICAL ROLLER BEARING	2		(SUB FOR AT213874)
9	4178173	NUT	2		M60, (SUB FOR T107755)
10	4330054	THRUST WASHER	1		(SUB FOR AT202466) (SUB FOR AT170630)
12	AT213847	SEAL	2		(K)
13	4116290	SNAP RING	2		(SUB FOR TH111929)
15	4233165	FITTING	1		(SUB FOR AT154164)
16	M800650	PACKING	1		(K)
19	8059452	PISTON	14		(SUB FOR AT214351)
21	4337035	SHAFT	2		(SUB FOR AT213871)
22	4198956	PIN FASTENER	2		(SUB FOR T107766)
23	4179181	COMPRESSION SPRING	2		(SUB FOR T107767)
25	2036744	ROTOR	2		(SUB FOR AT213730)
27	2036795	VALVE	1		
28	2036786	VALVE	1		
29	4179179	DOWEL PIN	4		(SUB FOR TH109874)
31	3075674	LINK	2		(SUB FOR AT213793)
32	9724756	LEVER	4		(SUB FOR TH109873)
33	4179177	DOWEL PIN	4		(SUB FOR TH109875)
34	4179176	DOWEL PIN	2		(SUB FOR TH109876)
35	CH17951	RING	12		
36	4200227	DOWEL PIN	2		(SUB FOR TH109878)
41	1027131	CYLINDER HEAD	1		(SUB FOR TH1027131)
42	3069541	PISTON	2		(SUB FOR AT213762)
43	4338053	PIN	2		(SUB FOR AT213876)
44	4337812	SET SCREW	2		(SUB FOR AT213875)
46	4355085	O-RING	2		(K) (SUB FOR AT213975)
47	4338060	STOP	2		(SUB FOR AT213877)
50	4355083	O-RING	2		(K) (SUB FOR AT213974)
51	4338061	COVER	2		(SUB FOR AT213878)
54	CH11560	PACKING	20		(K)
55	19M8439	SCREW	16		M8 X 25
56	4514388	SPRING WASHER	8		(SUB FOR TH101835)
57	3070581	PACKING	1		(SUB FOR AT213767)
58	34M7061	SPRING PIN	2		8 X 20 MM
59	4342840	O-RING	1		(K) (SUB FOR AT213890)
60	19M8341	SCREW	12		M12 X 45
64	4436271	SENSOR	2		(SUB FOR AT175981 OR 4355012) (PUMP PRESSURE)
64A	TH102560	O-RING	1		(K) 15.800 X 2.400 MM (0.622" X 0.094") (SUB FOR AT175984)
67	9134110	PIPE PLUG	2		(SUB FOR AT203649)
67A	M800650	PACKING	1		(K)
69	9198935	REGULATOR	1		(SUB FOR TH9198935)
70	9198936	REGULATOR	1		(SUB FOR TH9198936)
72	34M3845	SPRING PIN	4		4 X 10 MM
73	4343074	O-RING	4		(K) (SUB FOR AT213894)
74	4348665	O-RING	2		(K) (SUB FOR AT213922)
80	9134111	PIPE PLUG	2		(SUB FOR AT203648)
80A	CH11570	O-RING	1		(K) 13.800 X 2.400 MM (0.543" X 0.094")
82	4252767	BRACKET	1		(SUB FOR AT154206)
83	0209423	BOLT	1		(SUB FOR TH100738)
84	12M7056	LOCK WASHER	1		8 MM, (SUB FOR 12M7065)
90	4451039	SEAL KIT	1		(SUB FOR TH4451039) (CONTAINS ALL PARTS MARKED K)

MAIN HYDRAULIC PUMP RIGHT HAND REGULATOR

T147610 -UN-31OCT01

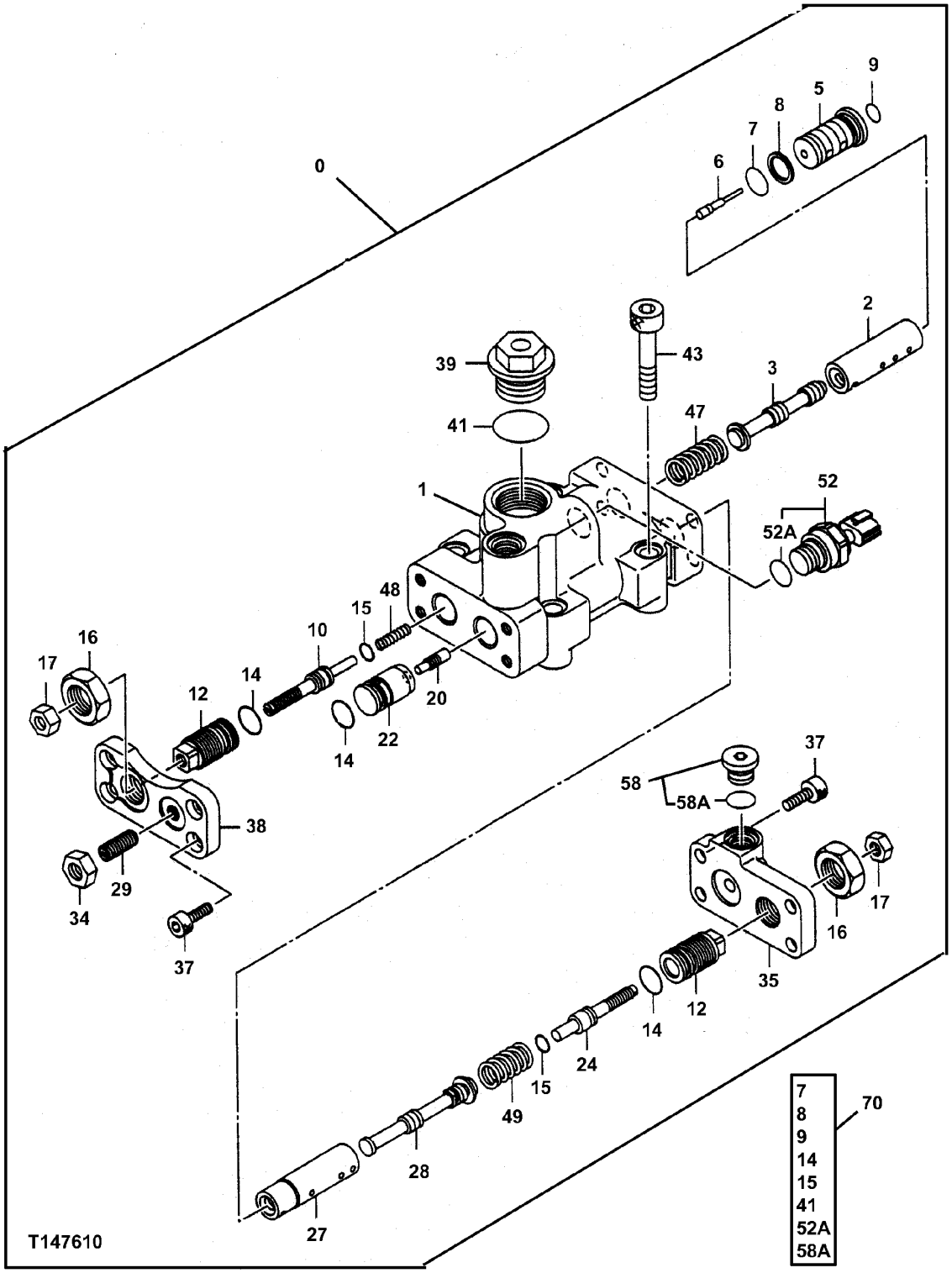

MAIN HYDRAULIC PUMP RIGHT HAND REGULATOR

KEY	PART NO.	PART NAME	QTY	SERIAL NO.	REMARKS
0	9198936	REGULATOR	1		(SUB FOR TH9198936)
1	.....	HOUSING	1		(TH1027149 NOT AVAILABLE FOR SERVICE)
2	4179155	SLEEVE	1		(SUB FOR TH109892)
3	4179156	SPOOL	1		(SUB FOR TH109893)
5	4422202	PISTON	1		(SUB FOR TH4422202)
6	4422188	VALVE	1		
7	TH102560	O-RING	1		(K) 15.800 X 2.400 MM (0.622" X 0.094")
8	4085607	BACK-UP RING	1		(K) (SUB FOR TH102562)
9	CH11560	PACKING	1		(K)
10	4368619	STOP	1		(SUB FOR AT214045)
12	4179161	STOP	2		(SUB FOR TH109898)
14	4342843	O-RING	3		(K) (SUB FOR AT213892)
15	4342841	O-RING	2		(K) (SUB FOR AT213891)
16	4068898	NUT	2		M20, (SUB FOR TH102567)
17	14M7273	NUT	2		M8
20	4179171	PISTON	1		(SUB FOR TH109911)
22	4451498	PISTON	1		(SUB FOR TH4451498)
24	4347107	STOP	1		(SUB FOR AT213917)
27	4346522	SLEEVE	1		(SUB FOR AT213913)
28	4346521	VALVE SPOOL	1		(SUB FOR AT213912)
29	4265964	SET SCREW	1		(SUB FOR AT201005)
34	14M7274	NUT	1		M10
35	3075775	END PLATE	1		(SUB FOR AT213794)
37	19M8446	SCREW	8		M8 X 20
38	4433327	COVER	1		(SUB FOR AT192511)
39	4447264	PIPE PLUG	1		(SUB FOR TH4447264)
41	4342846	O-RING	1		(K) (SUB FOR AT213893)
43	19M8339	SCREW	4		M10 X 55
47	4194176	COMPRESSION SPRING	1		(SUB FOR TH111263)
48	4423345	SPRING	1		(SUB FOR TH4423345)
49	4350928	COMPRESSION SPRING	1		(SUB FOR AT213951)
52	4436536	SENSOR	1		(SUB FOR TH4436536)
52A	CH11570	O-RING	1		(K) 13.800 X 2.400 MM (0.543" X 0.094")
58	9134110	PIPE PLUG	1		(SUB FOR AT203649)
58A	M800650	PACKING	1		(K)
70	4455719	SEAL KIT	1		(SUB FOR TH4455719) (CONTAINS ALL PARTS MARKED K)

MAIN HYDRAULIC PUMP LEFT HAND REGULATOR

T147618 -UN-01NOV01

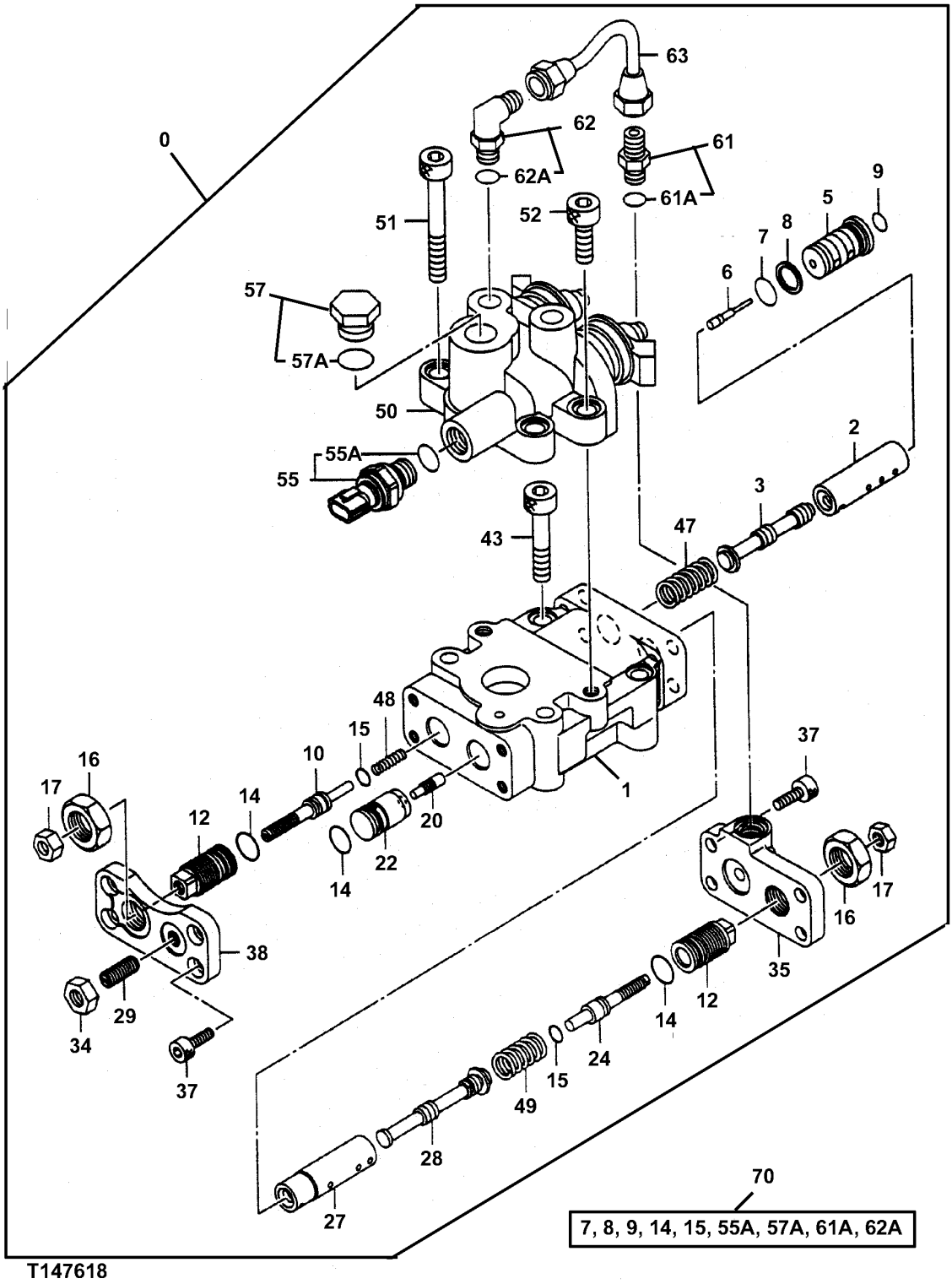

MAIN HYDRAULIC PUMP LEFT HAND REGULATOR

KEY	PART NO.	PART NAME	QTY	SERIAL NO.	REMARKS
0	9198935	REGULATOR	1		(SUB FOR TH9198935)
1	.....	HOUSING	1		(TH1026282 NOT AVAILABLE FOR SERVICE)
2	4179155	SLEEVE	1		(SUB FOR TH109892)
3	4179156	SPOOL	1		(SUB FOR TH109893)
5	4422202	PISTON	1		(SUB FOR TH4422202)
6	4422188	VALVE	1		
7	TH102560	O-RING	1		(K) 15.800 X 2.400 MM (0.622" X 0.094")
8	4085607	BACK-UP RING	1		(K) (SUB FOR TH102562)
9	CH11560	PACKING	1		(K)
10	4368619	STOP	1		(SUB FOR AT214045)
12	4179161	STOP	2		(SUB FOR TH109898)
14	4342843	O-RING	3		(K) (SUB FOR AT213892)
15	4342841	O-RING	2		(K) (SUB FOR AT213891)
16	4068898	NUT	2		M20, (SUB FOR TH102567)
17	14M7273	NUT	2		M8
20	4179171	PISTON	1		(SUB FOR TH109911)
22	4451498	PISTON	1		(SUB FOR TH4451498)
24	4347107	STOP	1		(SUB FOR AT213917)
27	4346522	SLEEVE	1		(SUB FOR AT213913)
28	4346521	VALVE SPOOL	1		(SUB FOR AT213912)
29	4265964	SET SCREW	1		(SUB FOR AT201005)
34	14M7274	NUT	1		M10
35	3075775	END PLATE	1		(SUB FOR AT213794)
37	19M8446	SCREW	8		M8 X 20
38	4433327	COVER	1		(SUB FOR AT192511)
43	19M8339	SCREW	2		M10 X 55
47	4194176	COMPRESSION SPRING	1		(SUB FOR TH111263)
48	4423345	SPRING	1		(SUB FOR TH4423345)
49	4350928	COMPRESSION SPRING	1		(SUB FOR AT213951)
50	4400442	SOLENOID VALVE	1		(SUB FOR TH4400442)
51	M341080	BOLT	2		(SUB FOR TH101483, 0215218)
52	19M8337	SCREW	2		M10 X 30
55	4436536	SENSOR	1		(SUB FOR TH4436536)
55A	CH11570	O-RING	1		(K) 13.800 X 2.400 MM (0.543" X 0.094")
57	4174541	DRAIN PLUG	1		(SUB FOR TH110477)
57A	4506418	O-RING	1		(K) (SUB FOR U46489)
61	4255304	ADAPTER	1		(SUB FOR AT155270)
61A	M800650	PACKING	1		(K)
62	4293950	ELBOW FITTING	1		(SUB FOR AT160584)
62A	M800650	PACKING	1		(K)
63	4436800	OIL LINE	1		(SUB FOR TH4436800)
70	4455733	SEAL KIT	1		(SUB FOR TH4455733) (CONTAINS ALL PARTS MARKED K)

MAIN HYDRAULIC PUMP GEAR

TP70465 -UN-08SEP00

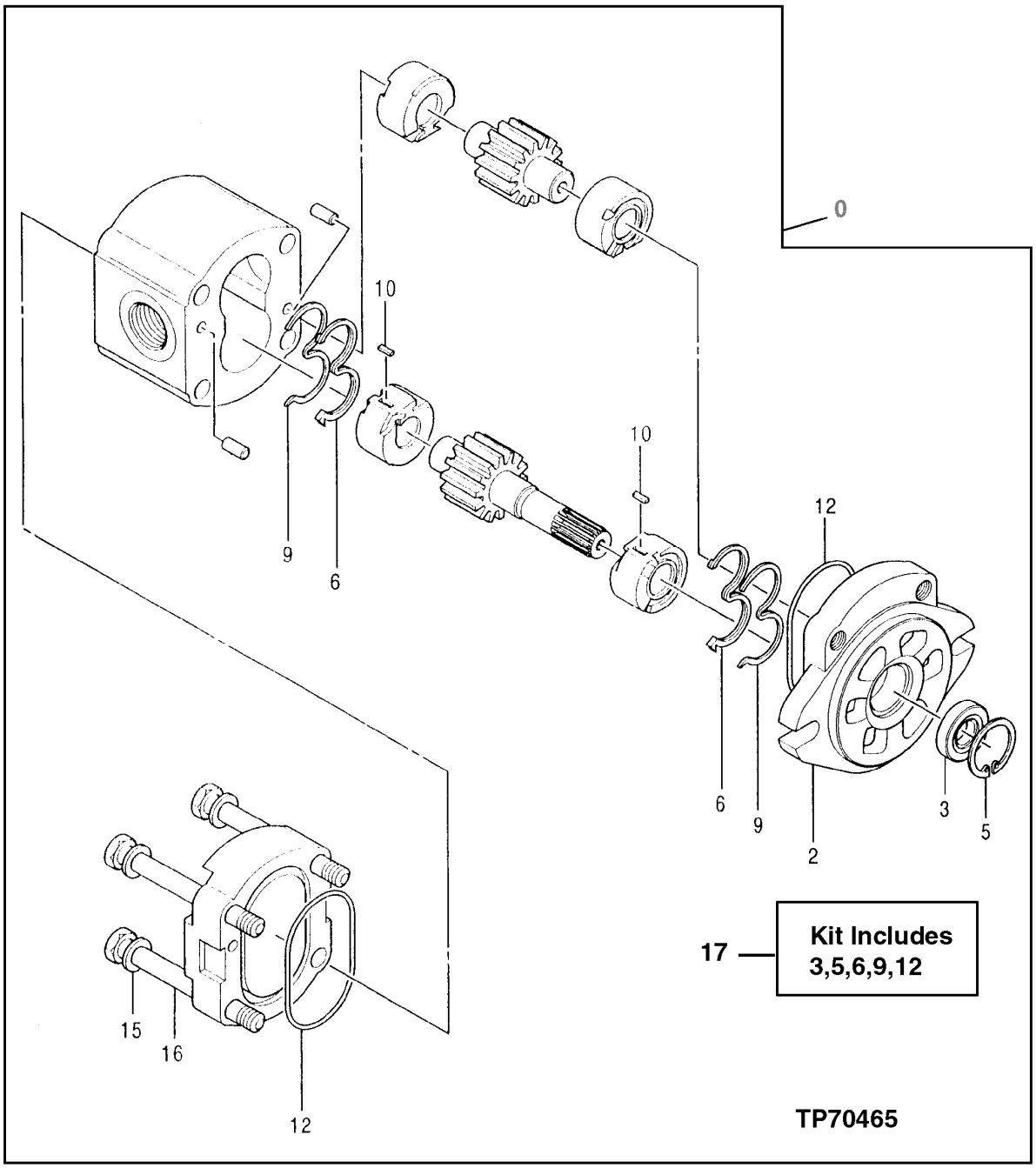

MAIN HYDRAULIC PUMP GEAR

KEY	PART NO.	PART NAME	QTY	SERIAL NO.	REMARKS
0	4276918	PUMP	1		(SUB FOR AT202122)
2	AT203653	FLANGE	1		
3	0408202	SEAL	1		(K) (SUB FOR AT153880)
5	.....	SNAP RING	1		(K) (AT153833 NOT AVAILABLE AS INDIVIDUAL SERVICE PART)
6	.....	SEAL	2		(K) (AT153881 NOT AVAILABLE AS INDIVUDAL SERVICE PART)
9	.....	FILTER ELEMENT	2		(K) (AT153834 NOT AVAILABLE AS INDIVUDAL SERVICE PART)
10	AT153838	SHAFT KEY	2		
12	AT153835	O-RING	2		(K) 64.500 X 2.700 MM (2.539" X 0.106")
15	AT153837	WASHER	4		10.400 X 18 X 2 MM (0.409" X 0.709" X 0.079")
16	0408204	BOLT	4		(SUB FOR AT153882)
17	0408207	SEAL KIT	1		INCLUDES ALL (K) PARTS (SEAT) (SUB FOR AT153885)

RELIEF VALVE

T147702 -UN-07JAN02

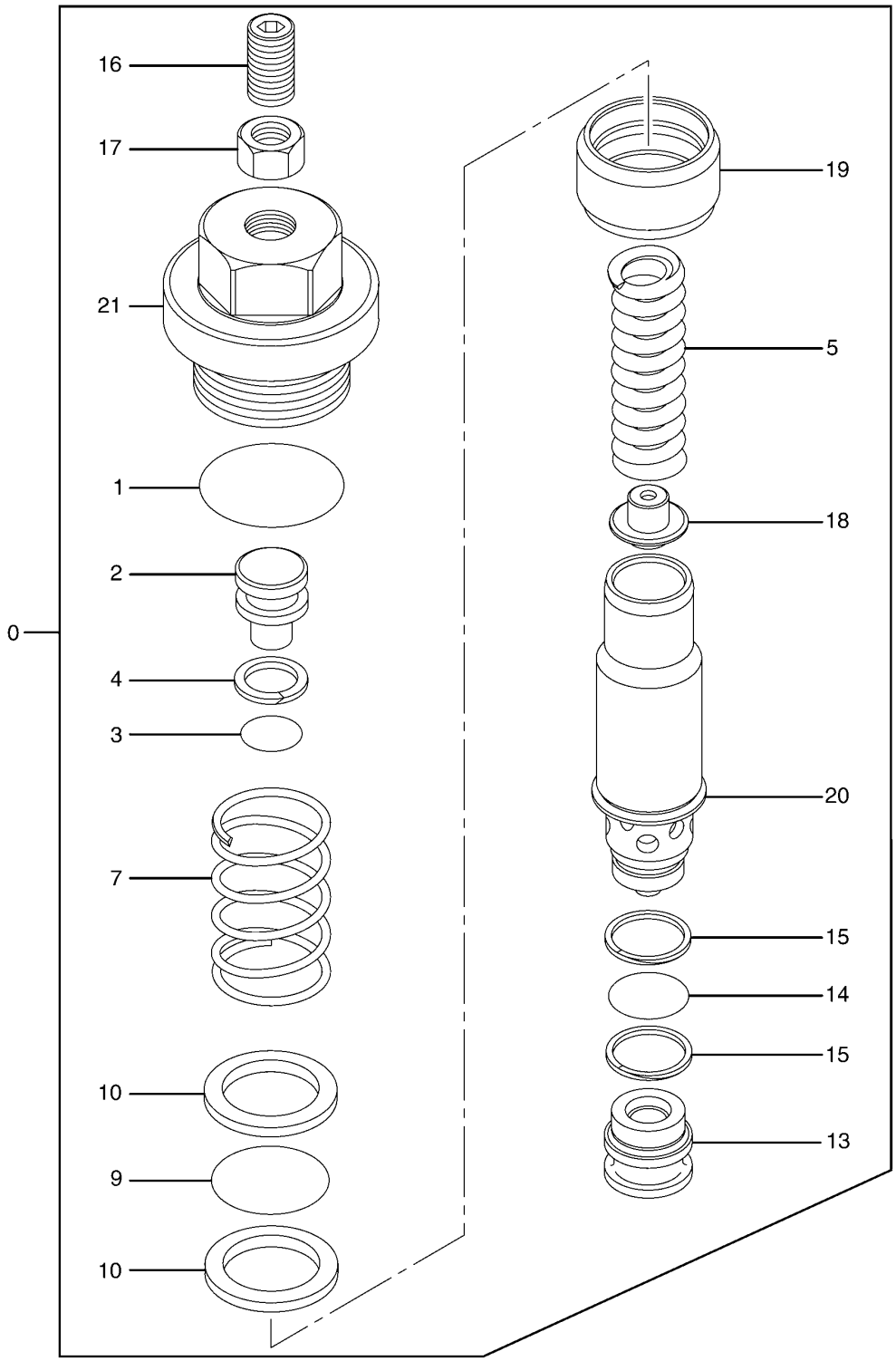

RELIEF VALVE

KEY	PART NO.	PART NAME	QTY	SERIAL NO.	REMARKS
0	9134147	PRESSURE RELIEF VALVE	1		
1	985098	O-RING	1		(SUB FOR TH102528)
2	4312883	PLUG	1		(SUB FOR AT215505)
3	CH10568	O-RING	1		
4	4027963	BACK-UP RING	1		(SUB FOR TH103579)
5	4312884	COMPRESSION SPRING	1		(SUB FOR AT215506)
7	4312894	COMPRESSION SPRING	1		(SUB FOR AT215508)
9	4314064	O-RING	1		(SUB FOR AT204885)
10	4314065	BACK-UP RING	2		(SUB FOR AT204886)
13	4312892	VALVE SEAT	1		(SUB FOR AT215507)
14	T111819	O-RING	1		
15	4040814	BACK-UP RING	2		(SUB FOR TH105938)
16	4312893	SCREW	1		(SUB FOR AT204883)
17	14M7275	NUT	1		M12
18	4337154	GUIDE	1		(SUB FOR AT215515)
19	4338110	PISTON	1		(SUB FOR AT215516)
20	9134147	PRESSURE RELIEF VALVE	1		
21	4312882	FITTING PLUG	1		(SUB FOR AT204879)

SERVO PISTON

T153958 -UN-16APR02

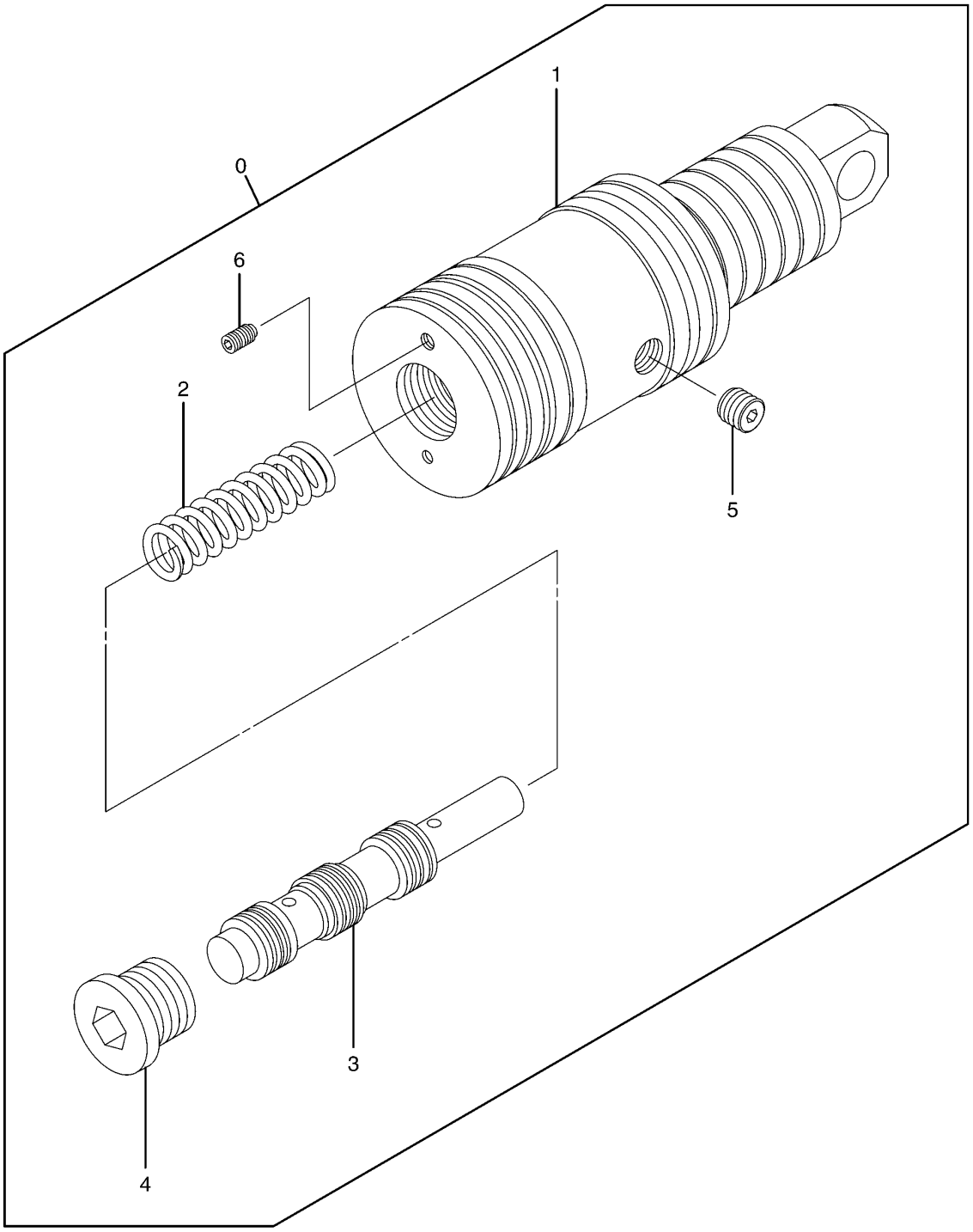

T153958

SERVO PISTON

KEY	PART NO.	PART NAME	QTY	SERIAL NO.	REMARKS
0	9098902	PISTON	1		(SUB FOR AT203612)
1	3054013	PISTON	1		(SUB FOR AT217938)
2	4252599	COMPRESSION SPRING	1		(SUB FOR AT154723)
3	4255977	SPOOL	1		(SUB FOR AT154750)
4	0309805	PIPE PLUG	1		(SUB FOR TH109285) (ALSO ORDER CH11570)
5	4257661	PLUG	1		(SUB FOR AT154756)
6	4252655	ORIFICE	1		(SUB FOR AT154724)

CONTROL VALVE (COMPONENTS)

T147920 -UN-07NOV01

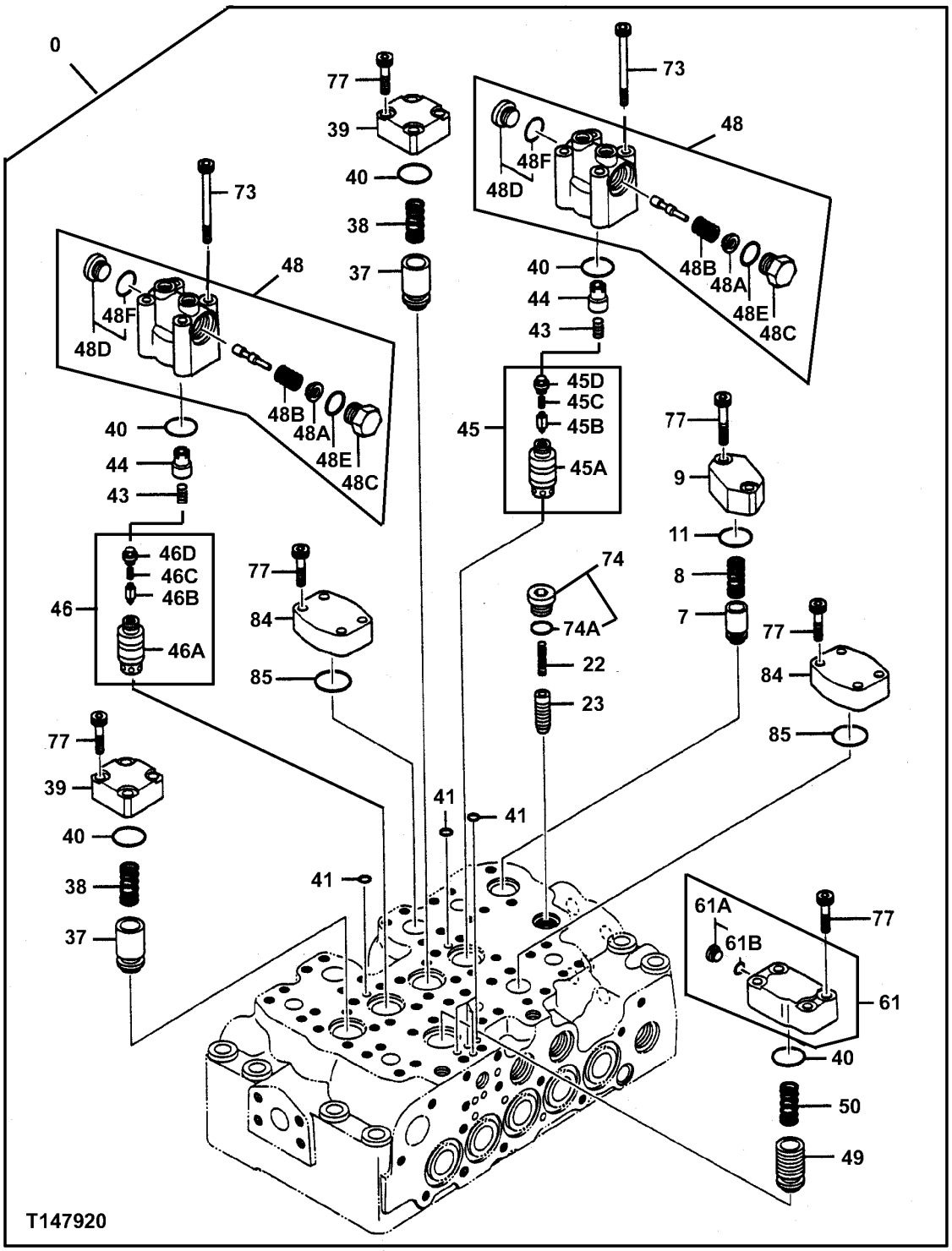

CONTROL VALVE (COMPONENTS)

KEY	PART NO.	PART NAME	QTY	SERIAL NO.	REMARKS
0	4398652	FLOW CONTROL HYD. VALVE	1		(CONTAINS ALL ITEMS ON THIS PAGE - ADDITIONAL COMPONENTS LISTED ON FOLLOWING PAGES)
7	0668111	POPPET	1		(SUB FOR AT213700)
8	0668112	SPRING	1		(SUB FOR AT213701)
9	0791601	FLANGE	1		(SUB FOR TH0791601)
11	CH17886	PACKING	1		(SUB FOR TH111690) (SUB FOR 4509182)
22	0668007	SPRING	1		(SUB FOR AT213693)
23	0791602	POPPET	1		(SUB FOR TH0791602)
37	0791603	POPPET	2		(SUB FOR TH0791603)
38	0791604	SPRING	2		(SUB FOR TH0791604)
39	0791605	FLANGE	2		(SUB FOR TH0791605)
40	985098	O-RING	5		31.700 X 3.500 MM (1.248" X 0.138") (SUB FOR TH102528)
41	4506406	O-RING	6		5.800 X 1.900 MM (0.228" X 0.075") (SUB FOR TH104587)
43	0791606	SPRING	2		(SUB FOR TH0791606)
44	0791607	SPACER	2		(SUB FOR TH0791607)
45	4454194	POPPET	1		(SUB FOR TH4454194)
45A	.....	POPPET	1		(TH0791609 NOT AVAILABLE)
45B	.....	POPPET	1		(TH0791610 NOT AVAILABLE)
45C	.....	SPRING	1		(TH0791611 NOT AVAILABLE)
45D	.....	PIPE PLUG	1		(TH0791612 NOT AVAILABLE)
46	4454195	POPPET	1		(SUB FOR TH4454195)
46A	.....	POPPET	1		(TH0791614 NOT AVAILABLE)
46B	.....	POPPET	1		(TH0791610 NOT AVAILABLE)
46C	.....	SPRING	1		(TH0791611 NOT AVAILABLE)
46D	.....	PIPE PLUG	1		(TH0791612 NOT AVAILABLE)
48	4454197	VALVE	2		
48A	.....	VALVE SEAT	1		(TH0791616 NOT AVAILABLE)
48B	.....	SPRING	1		(TH0791617 NOT AVAILABLE)
48C	.....	PIPE PLUG	1		(TH0791618 NOT AVAILABLE)
48D	0667817	FITTING PLUG	1		(SUB FOR AT213675)
48E	4506418	O-RING	1		(SUB FOR U46489)
48F	M800650	PACKING	1		
49	0791619	POPPET	1		(SUB FOR TH0791619)
50	0791620	SPRING	1		(SUB FOR TH0791620)
61	4454199	HOUSING	1		(SUB FOR TH4454199)
61A	0667713	FITTING PLUG	1		(SUB FOR AT213660)
61B	4506408	O-RING	1		(SUB FOR TH101490)
73	0791622	BOLT	8		(SUB FOR TH0791622)
74	0695007	FITTING PLUG	1		(SUB FOR AT250518)
74A	CH11570	O-RING	1		13.800 X 2.400 MM (0.543" X 0.094")
77	0791623	BOLT	22		(SUB FOR TH0791623)
84	0667726	CAP	2		(SUB FOR AT213668)
85	T78313	O-RING	2		32.918 X 3.531 MM (1.296" X 0.139")

CONTROL VALVE (4-SPOOL SIDE)

T147932 -UN-20DEC01

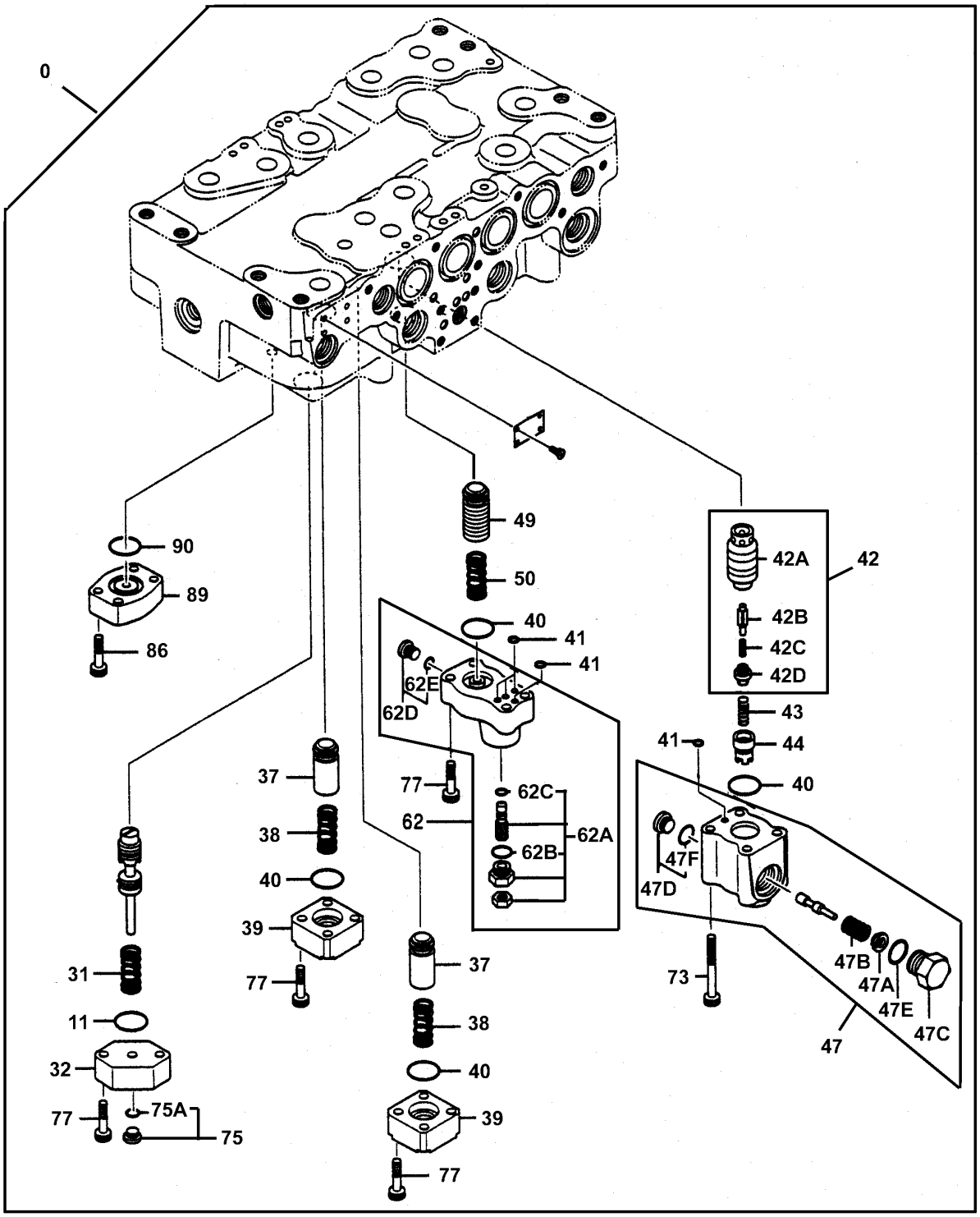

T147932

CONTROL VALVE (4-SPOOL SIDE)

KEY	PART NO.	PART NAME	QTY	SERIAL NO.	REMARKS
0	4398652	FLOW CONTROL HYD. VALVE	1		(CONTAINS ALL ITEMS ON THIS PAGE - ADDITIONAL COMPONENTS LISTED ON PREVIOUS AND FOLLOWING PAGES)
11	CH17886	PACKING	1		(SUB FOR TH111690) (SUB FOR 4509182)
31	0791701	SPRING	1		(SUB FOR TH0791701)
32	0791702	FLANGE	1		(SUB FOR TH0791702)
37	0791603	POPPET	2		(SUB FOR TH0791603)
38	0791604	SPRING	2		(SUB FOR TH0791604)
39	0791605	FLANGE	2		(SUB FOR TH0791605)
40	985098	O-RING	4		31.700 X 3.500 MM (1.248" X 0.138") (SUB FOR TH102528)
41	4506406	O-RING	5		5.800 X 1.900 MM (0.228" X 0.075") (SUB FOR TH104587)
42	4454193	POPPET	1		(SUB FOR TH4454193)
42A	.....	POPPET	1		(TH0791704 NOT AVAILABLE)
42B	.....	POPPET	1		(TH0791610 NOT AVAILABLE)
42C	.....	SPRING	1		(TH0791611 NOT AVAILABLE)
42D	.....	PIPE PLUG	1		(TH0791612 NOT AVAILABLE)
43	0791606	SPRING	1		(SUB FOR TH0791606)
44	0791607	SPACER	1		(SUB FOR TH0791607)
47	4454196	VALVE	1		
47A	.....	VALVE SEAT	1		(TH0791616 NOT AVAILABLE)
47B	.....	SPRING	1		(TH0791706 NOT AVAILABLE)
47C	.....	PIPE PLUG	1		(TH0791618 NOT AVAILABLE)
47D	0667817	FITTING PLUG	1		(SUB FOR AT213675)
47E	4506418	O-RING	1		(SUB FOR U46489)
47F	M800650	PACKING	1		
49	0791619	POPPET	1		(SUB FOR TH0791619)
50	0791620	SPRING	1		(SUB FOR TH0791620)
62	4454200	VALVE	1		
62A	.....	VALVE	1		(TH0791708 NOT AVAILABLE)
62B	M800650	PACKING	1		
62C	4506408	O-RING	1		7.800 X 1.900 MM (0.307" X 0.075") (SUB FOR TH101490)
62D	0667713	FITTING PLUG	1		(SUB FOR AT213660)
62E	4506408	O-RING	1		(SUB FOR TH101490)
73	0791622	BOLT	4		(SUB FOR TH0791622)
75	0689405	FITTING PLUG	1		(SUB FOR AT250517)
75A	M800650	PACKING	1		
77	0413909	BOLT	14		(SUB FOR AT154619)
86	0413619	BOLT	4		(SUB FOR AT154591)
89	AT154604	CAP	1		
90	A4730R	O-RING	1		24.994 X 3.531 MM (63/64" X 0.139")

CONTROL VALVE (5-SPOOL)

T196512 -UN-21NOV03

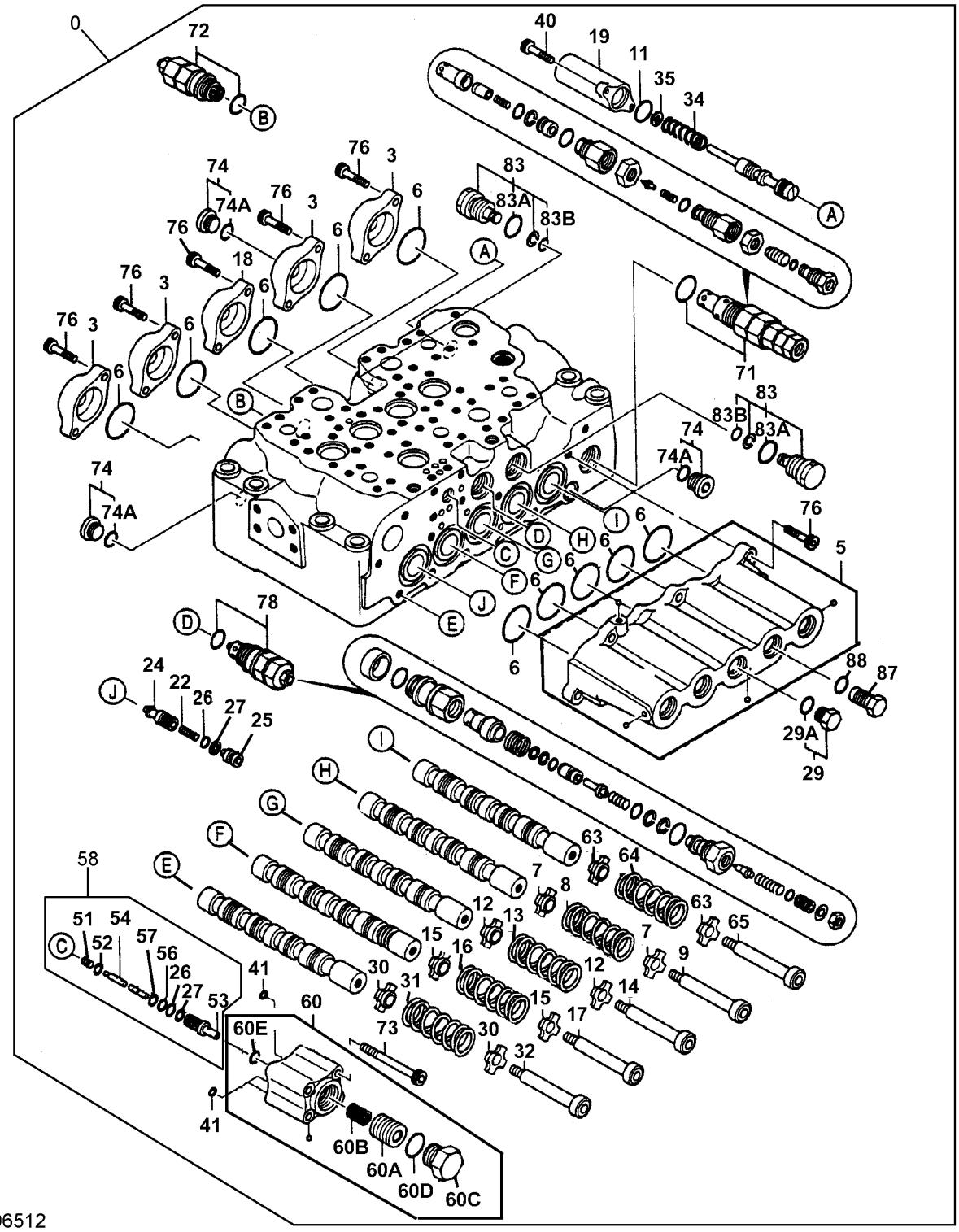

T196512

CONTROL VALVE (5-SPOOL)

KEY	PART NO.	PART NAME	QTY	SERIAL NO.	REMARKS
0	4398652	FLOW CONTROL HYD. VALVE	1		(CONTAINS ALL ITEMS ON THIS PAGE - ADDITIONAL COMPONENTS LISTED ON PREVIOUS AND FOLLOWING PAGES)
3	0791801	CAP	4		(SUB FOR TH0791801)
5	4454202	CAP	1		(SUB FOR TH4454202)
6	A811045	O-RING	10		(SUB FOR T74492)
7	0306003	PLUG	2		(SUB FOR TH109968)
8	0309705	SPRING	1		(SUB FOR TH109970)
9	0791815	STOP	1		(SUB FOR TH0791815)
11	CH17886	PACKING	1		(SUB FOR TH111690) (SUB FOR 4509182)
12	0306003	PLUG	2		(SUB FOR TH109968)
13	0309705	SPRING	1		(SUB FOR TH109970)
14	0791815	STOP	1		(SUB FOR TH0791815)
15	0306003	PLUG	2		(SUB FOR TH109968)
16	0309705	SPRING	1		(SUB FOR TH109970)
17	0791815	STOP	1		(SUB FOR TH0791815)
18	0791816	CAP	1		(SUB FOR TH0791816)
19	0791803	CAP	1		(SUB FOR TH0791803)
22	0668007	SPRING	1		(SUB FOR AT213693)
24	0791804	POPPET	1		(SUB FOR TH0791804)
25	0791805	SPACER	1		(SUB FOR TH0791805)
26	CH11560	PACKING	2		(SUB FOR TH106280)
27	4105167	BACK-UP RING	2		(SUB FOR TH110325)
29	0332914	DRAIN PLUG	1		(SUB FOR TH110315)
29A	CH11570	O-RING	1		13.800 X 2.400 MM (0.543" X 0.094")
30	0306003	PLUG	2		(SUB FOR TH109968)
31	0309705	SPRING	1		(SUB FOR TH109970)
32	0791815	STOP	1		(SUB FOR TH0791815)
34	0791806	SPRING	1		(SUB FOR TH0791806)
35	0791807	WASHER	1		(SUB FOR TH0791807)
40	12M7006	LOCK WASHER	2		6 MM (0.236")
	19M7603	SCREW	2		M6 X 20
	24M7105	WASHER	2		6 X 12 X 1.600 MM (0.236" X 0.472" X 0.063")
41	4506406	O-RING	3		5.800 X 1.900 MM (0.228" X 0.075") (SUB FOR TH104587)
51	0791808	SPRING	1		(SUB FOR TH0791808)
52	0791809	VALVE SEAT	1		(SUB FOR TH0791809)
53	.....	SLEEVE	1		(0791810 NO LONGER AVAILABLE) (SUB FOR TH0791810)
54	.....	POPPET	1		(0791811 NO LONGER AVAILABLE)
56	CH11560	PACKING	1		
57	4105167	BACK-UP RING	1		(SUB FOR AT130859)
58	0791818	VALVE	1		(ASSEMBLY)
60	4454198	VALVE	1		
60A	.....	PISTON	1		(TH0791813 NOT AVAILABLE)
60B	.....	SPRING	1		(TH0791814 NOT AVAILABLE)
60C	.....	PIPE PLUG	1		(TH0111803 NOT AVAILABLE)
60D	R29936	O-RING	1		29.743 X 2.946 MM (1.171" X 0.116")
60E	CH17167	O-RING	1		9.800 X 1.900 MM (0.386" X 0.075")
63	0306003	PLUG	2		(SUB FOR TH109968)
64	0309705	SPRING	1		(SUB FOR TH109970)
65	0791815	STOP	1		(SUB FOR TH0791815)
71	4372038	RELIEF VALVE	1		
72	4372039	RELIEF VALVE	1		
73	0791622	BOLT	4		(SUB FOR TH0791622)
74	0695007	FITTING PLUG	3		(SUB FOR AT250518)
74A	CH11570	O-RING	1		13.800 X 2.400 MM (0.543" X 0.094")
76	0459541	BOLT	16		(SUB FOR AT200931)
78	4358914	RELIEF VALVE	1		
83	0667927	FITTING PLUG	2		(SUB FOR AT213687)
83A	U12547	O-RING	1		23.470 X 2.946 MM (0.924" X 0.116")
83B	.....	O-RING	1		(TH4154207 NOT AVAILABLE)
87	0667931	FITTING PLUG	1		(SUB FOR AT213691)
88	CH11570	O-RING	1		13.800 X 2.400 MM (0.543" X 0.094")

CONTROL VALVE (4-SPOOL)

T147976 -UN-08NOV01

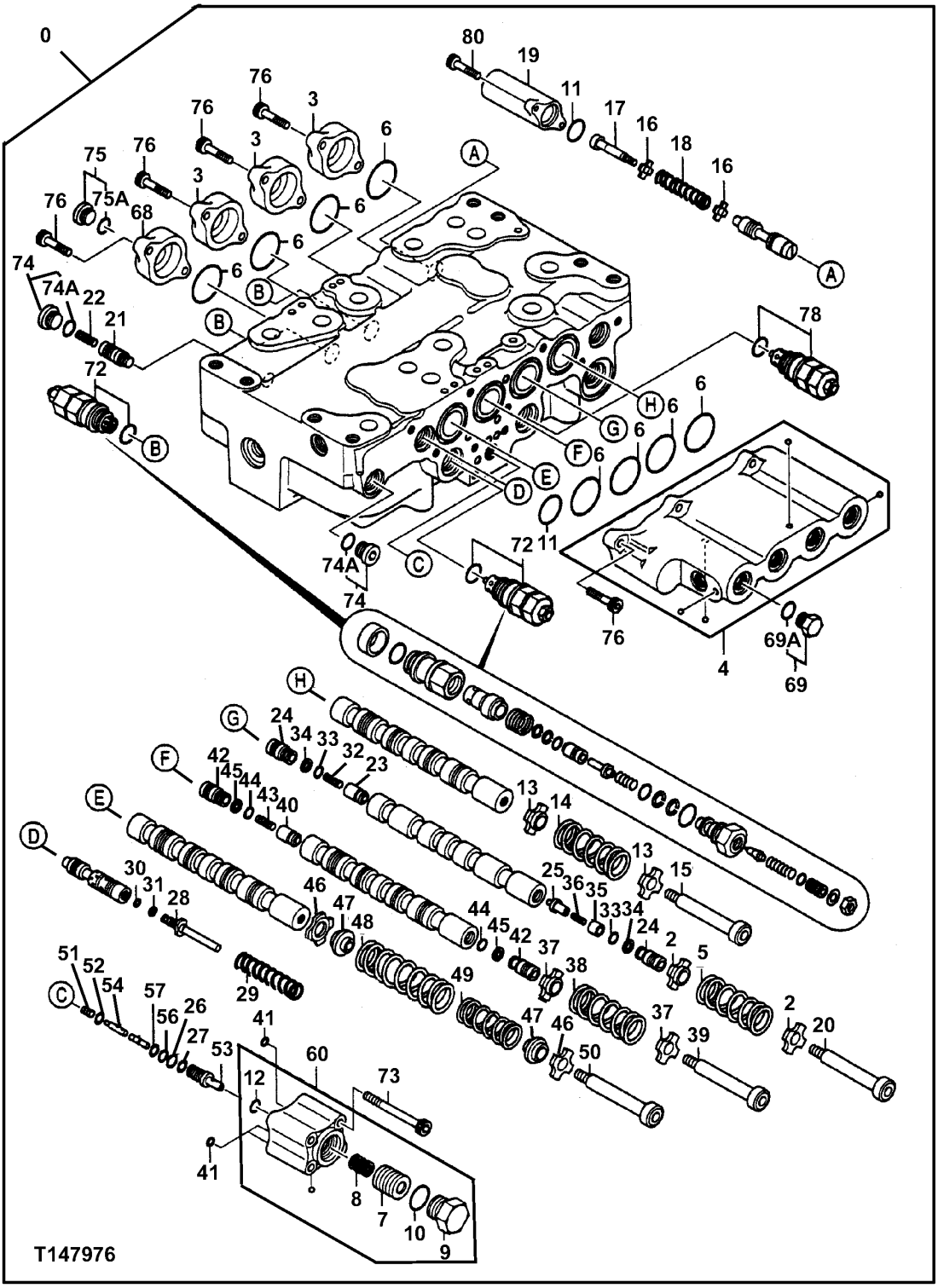

CONTROL VALVE (4-SPOOL)

KEY	PART NO.	PART NAME	QTY	SERIAL NO.	REMARKS
0	4398652	FLOW CONTROL HYD. VALVE	1		(CONTAINS ALL ITEMS ON THIS PAGE - ADDITIONAL COMPONENTS LISTED ON PREVIOUS AND FOLLOWING PAGES)
2	0306003	PLUG	2		(SUB FOR TH109968)
3	0791801	CAP	3		(SUB FOR TH0791801)
4	4454201	CAP	1		(SUB FOR TH4454201)
5	0309705	SPRING	1		(SUB FOR TH109970)
6	A811045	O-RING	8		(SUB FOR T74492)
7	.....	PISTON	1		(TH0791813 NOT AVAILABLE)
8	.....	SPRING	1		(TH0791814 NOT AVAILABLE)
9	.....	PIPE PLUG	1		(TH0111803 NOT AVAILABLE)
10	R29936	O-RING	1		29.743 X 2.946 MM (1.171" X 0.116")
11	CH17886	PACKING	2		(SUB FOR TH111690) (SUB FOR 4509182)
12	CH17167	O-RING	1		9.800 X 1.900 MM (0.386" X 0.075")
13	0306003	PLUG	2		(SUB FOR TH109968)
14	0309705	SPRING	1		(SUB FOR TH109970)
15	0791815	STOP	1		(SUB FOR TH0791815)
16	0332904	RETAINER	2		(SUB FOR TH110305)
17	0735807	SPOOL	1		(SUB FOR TH0735807)
18	0791902	SPRING	1		(SUB FOR TH0791902)
19	0791803	CAP	1		(SUB FOR TH0791803)
20	0791815	STOP	1		(SUB FOR TH0791815)
21	0791903	POPPET	1		(SUB FOR TH0791903)
22	0668007	SPRING	1		(SUB FOR AT213693)
23	0791905	POPPET	1		(SUB FOR TH0791905)
24	0791906	PIPE PLUG	2		(SUB FOR TH0791906)
25	0791907	POPPET	1		(SUB FOR TH0791907)
26	4317636	O-RING	1		(SUB FOR TH106280)
27	0332924	BACK-UP RING	1		(SUB FOR TH110325)
28	0791904	SPACER	1		(SUB FOR TH0791904)
29	0791914	SPRING	1		(SUB FOR TH0791914)
30	4013748	O-RING	1		(SUB FOR TH4013748)
31	0250914	BACK-UP RING	1		(SUB FOR AT218048)
32	0668007	SPRING	1		(SUB FOR AT213693)
33	4317636	O-RING	2		(SUB FOR TH106280)
34	0332924	BACK-UP RING	2		(SUB FOR TH110325)
35	0791908	SLEEVE	1		(SUB FOR TH0791908)
36	0791909	SPRING	1		(SUB FOR TH0791909)
37	0306003	PLUG	2		(SUB FOR TH109968)
38	0309705	SPRING	1		(SUB FOR TH109970)
39	0791815	STOP	1		(SUB FOR TH0791815)
40	0791905	POPPET	1		(SUB FOR TH0791905)
41	4506406	O-RING	3		5.800 X 1.900 MM (0.228" X 0.075") (SUB FOR TH104587)
42	0791906	PIPE PLUG	2		(SUB FOR TH0791906)
43	0668007	SPRING	1		(SUB FOR AT213693)
44	4317636	O-RING	2		(SUB FOR TH106280)
45	0332924	BACK-UP RING	2		(SUB FOR TH110325)
46	0791910	VALVE SEAT	2		(SUB FOR TH0791910)
47	0791911	VALVE SEAT	2		(SUB FOR TH0791911)
48	0791912	SPRING	1		(SUB FOR TH0791912)
49	0791913	SPRING	1		(SUB FOR TH0791913)

CONTROL VALVE (4-SPOOL) - CONTINUED

T191705 -UN-02JUN03

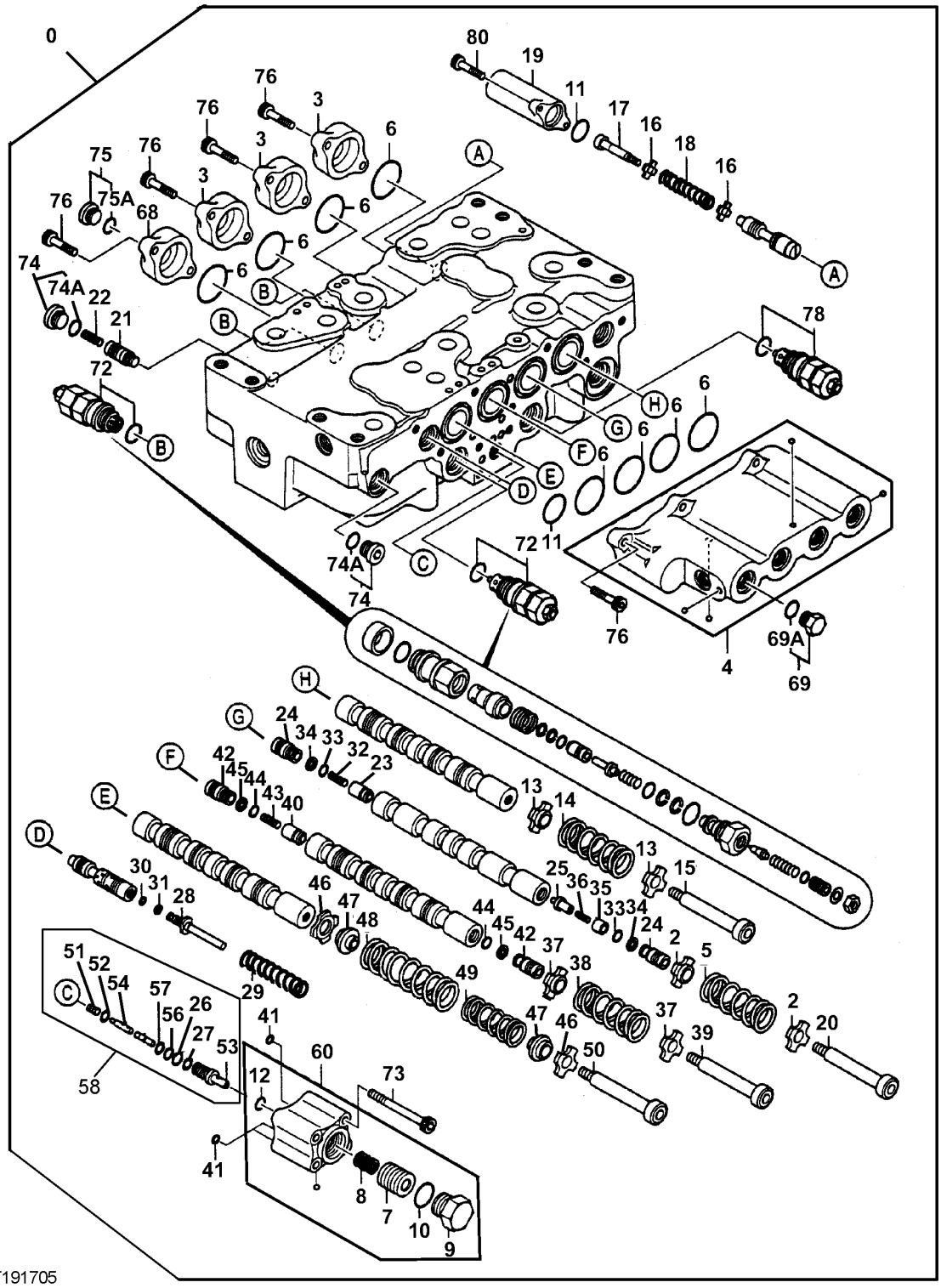

CONTROL VALVE (4-SPOOL) - CONTINUED

KEY	PART NO.	PART NAME	QTY	SERIAL NO.	REMARKS
0	4398652	FLOW CONTROL HYD. VALVE	1		(CONTAINS ALL ITEMS ON THIS PAGE - ADDITIONAL COMPONENTS LISTED ON PREVIOUS AND FOLLOWING PAGES)
50	0791815	STOP	1		(SUB FOR TH0791815)
51	0791808	SPRING	1		(SUB FOR TH0791808)
52	0791809	VALVE SEAT	1		(SUB FOR TH0791809)
53	.....	SLEEVE	1		(0791810 NO LONGER AVAILABLE) (SUB FOR TH0791810)
54	.....	POPPET	1		(0791811 NO LONGER AVAILABLE) (SUB FOR TH0791811)
56	CH11560	PACKING	1		
57	4105067	BACK-UP RING	1		(SUB FOR AT130859)
58	0791818	VALVE	1		(ASSEMBLY)
60	4454198	VALVE	1		
68	0791816	CAP	1		(SUB FOR TH0791816)
69	0332914	DRAIN PLUG	1		(SUB FOR TH110315)
69A	CH11570	O-RING	1		13.800 X 2.400 MM (0.543" X 0.094")
72	4372039	RELIEF VALVE	3		
73	0791622	BOLT	4		(SUB FOR TH0791622)
74	0695007	FITTING PLUG	2		(SUB FOR AT250518)
74A	CH11570	O-RING	1		13.800 X 2.400 MM (0.543" X 0.094")
75	0689405	FITTING PLUG	1		(SUB FOR AT250517)
75A	M800650	PACKING	1		
76	0459541	BOLT	14		(SUB FOR AT200931)
78	4358914	RELIEF VALVE	1		
80	12M7006	LOCK WASHER	2		6 MM (0.236")
	19M7603	SCREW	2		M6 X 20
	24M7105	WASHER	2		6 X 12 X 1.600 MM (0.236" X 0.472" X 0.063")

CONTROL VALVE (5-SPOOL SIDE)

T148002 -UN-08NOV01

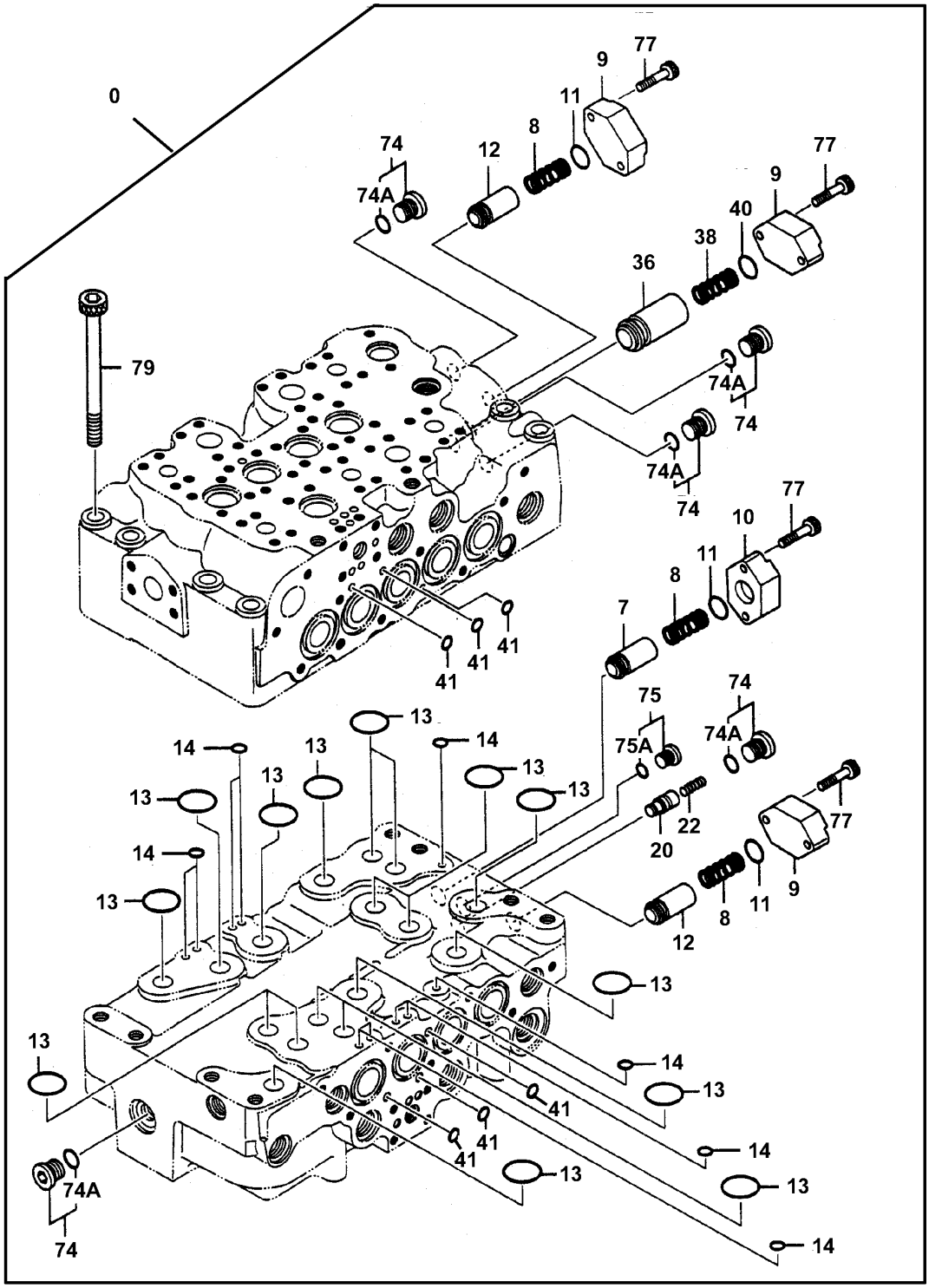

T148002

CONTROL VALVE (5-SPOOL SIDE)

KEY	PART NO.	PART NAME	QTY	SERIAL NO.	REMARKS
0	4398652	FLOW CONTROL HYD. VALVE	1		(CONTAINS ALL ITEMS ON THIS PAGE - ADDITIONAL COMPONENTS LISTED ON PREVIOUS PAGES)
7	0668111	POPPET	1		(SUB FOR AT213700)
8	0668112	SPRING	3		(SUB FOR AT213701)
9	0791601	FLANGE	3		(SUB FOR TH0791601)
10	0792001	FLANGE	1		(SUB FOR TH0792001)
11	CH17886	PACKING	3		(SUB FOR TH111690) (SUB FOR 4509182)
12	0792002	POPPET	2		(SUB FOR TH0792002)
13	0792003	O-RING	16		(SUB FOR TH0792003)
14	0792004	O-RING	10		(SUB FOR TH0792004)
20	0792005	POPPET	1		(SUB FOR TH0792005)
22	0668007	SPRING	1		(SUB FOR AT213693)
36	0792006	POPPET	1		(SUB FOR TH0792006)
38	0791604	SPRING	1		(SUB FOR TH0791604)
40	985098	O-RING	1		31.700 X 3.500 MM (1.248" X 0.138") (SUB FOR TH102528)
41	4506406	O-RING	6		5.800 X 1.900 MM (0.228" X 0.075") (SUB FOR TH104587)
74	0695007	FITTING PLUG	5		(SUB FOR AT250518)
74A	CH11570	O-RING	1		13.800 X 2.400 MM (0.543" X 0.094")
75	0689405	FITTING PLUG	1		(SUB FOR AT250517)
75A	M800650	PACKING	1		
77	0413909	BOLT	8		(SUB FOR AT154619)
79	0792007	BOLT	8		(SUB FOR TH0792007)

LOCK VALVE

T147718 -UN-03DEC01

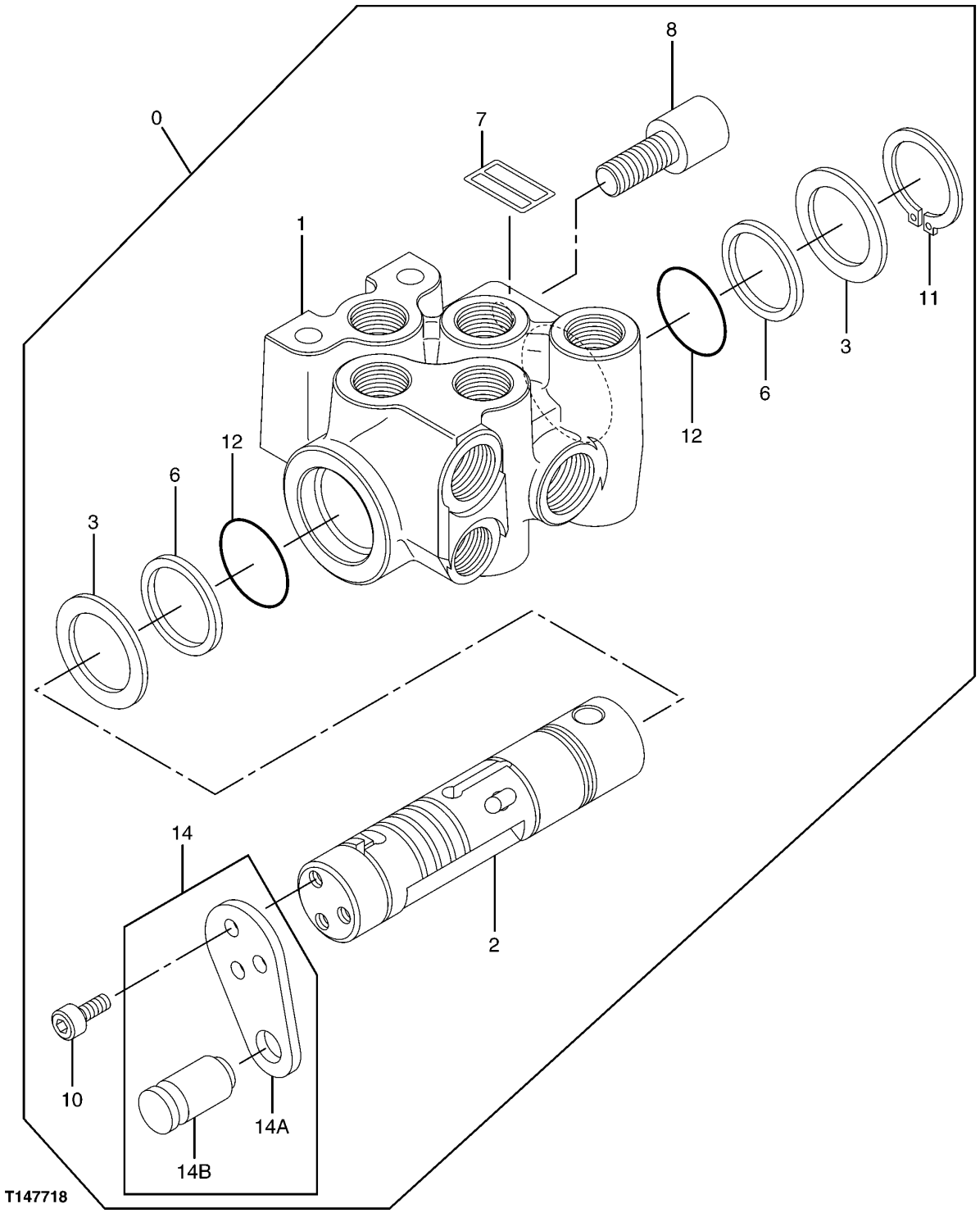

LOCK VALVE

KEY	PART NO.	PART NAME	QTY	SERIAL NO.	REMARKS
0	4407253	CONTROL VALVE	1		
1	.....	HOUSING	1		
2	.....	SPOOL VALVE	1		
3	0794201	WASHER	2		(SUB FOR TH0794201)
6	0794202	RING	2		(SUB FOR TH0794202)
7	.....	IDENTIFICATION PLATE	1		
8	0794203	PIN FASTENER	1		(SUB FOR TH0794203)
10	0794204	BOLT	3		(SUB FOR TH0794204)
11	0794205	SNAP RING	1		(SUB FOR TH0794205)
12	0794206	O-RING	2		(SUB FOR TH0794206)
14	0794207	BRACKET	1		(SUB FOR TH0794207)
14A	.....	BRACKET	1		
14B	.....	PIN	1		

SELECTOR VALVE

T147719 -UN-03DEC01

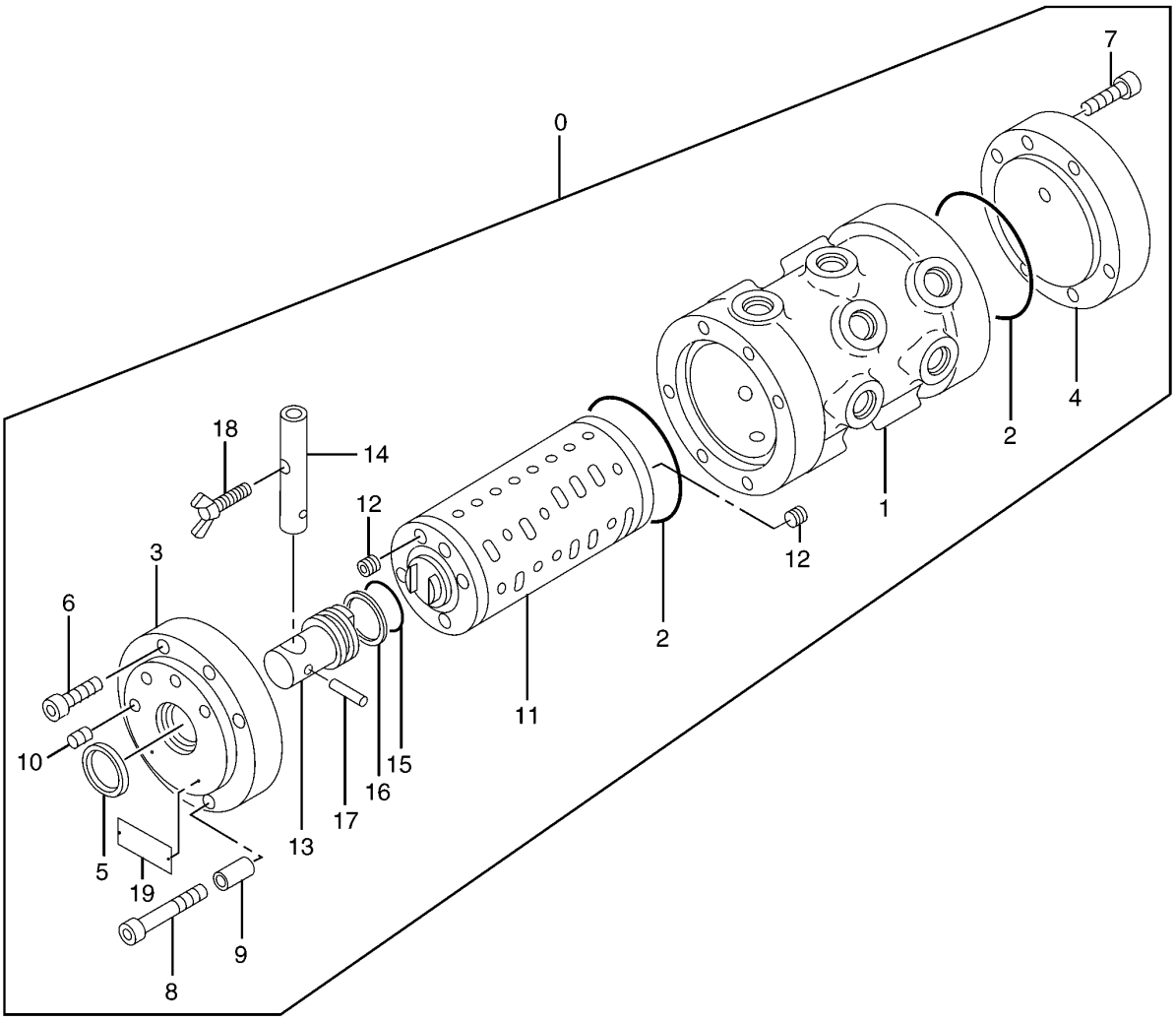

T147719

SELECTOR VALVE

KEY	PART NO.	PART NAME	QTY	SERIAL NO.	REMARKS
0	TH4447276	SELECTIVE CONTROL VALVE	1		
1	.....	CASE	1		
2	A811070	O-RING	2		(SUB FOR TH103140)
3	.....	COVER	1		
4	.....	COVER	1		
5	.....	SEAL	1		
6	TH0222911	BOLT	4		
7	19M8627	SCREW	6		M6 X 20
8	19M8156	SCREW	2		M6 X 55
9	.....	SPACER	2		
10	.....	INSERT	4		
11	.....	SPOOL VALVE	1		
12	.....	SET SCREW	8		
13	.....	PIN	1		
14	.....	LEVER	1		
15	AT264347	O-RING	1		(SUB FOR TH100136, 4506428)
16	4044839	BACK-UP RING	1		(SUB FOR TH103457)
17	4051262	SPRING PIN	1		(SUB FOR AT213796)
18	TH0824001	WING SCREW	1		
19	.....	IDENTIFICATION PLATE	1		

SOLENOID VALVE (SERIAL NO. -503485)

T148053 -UN-08NOV01

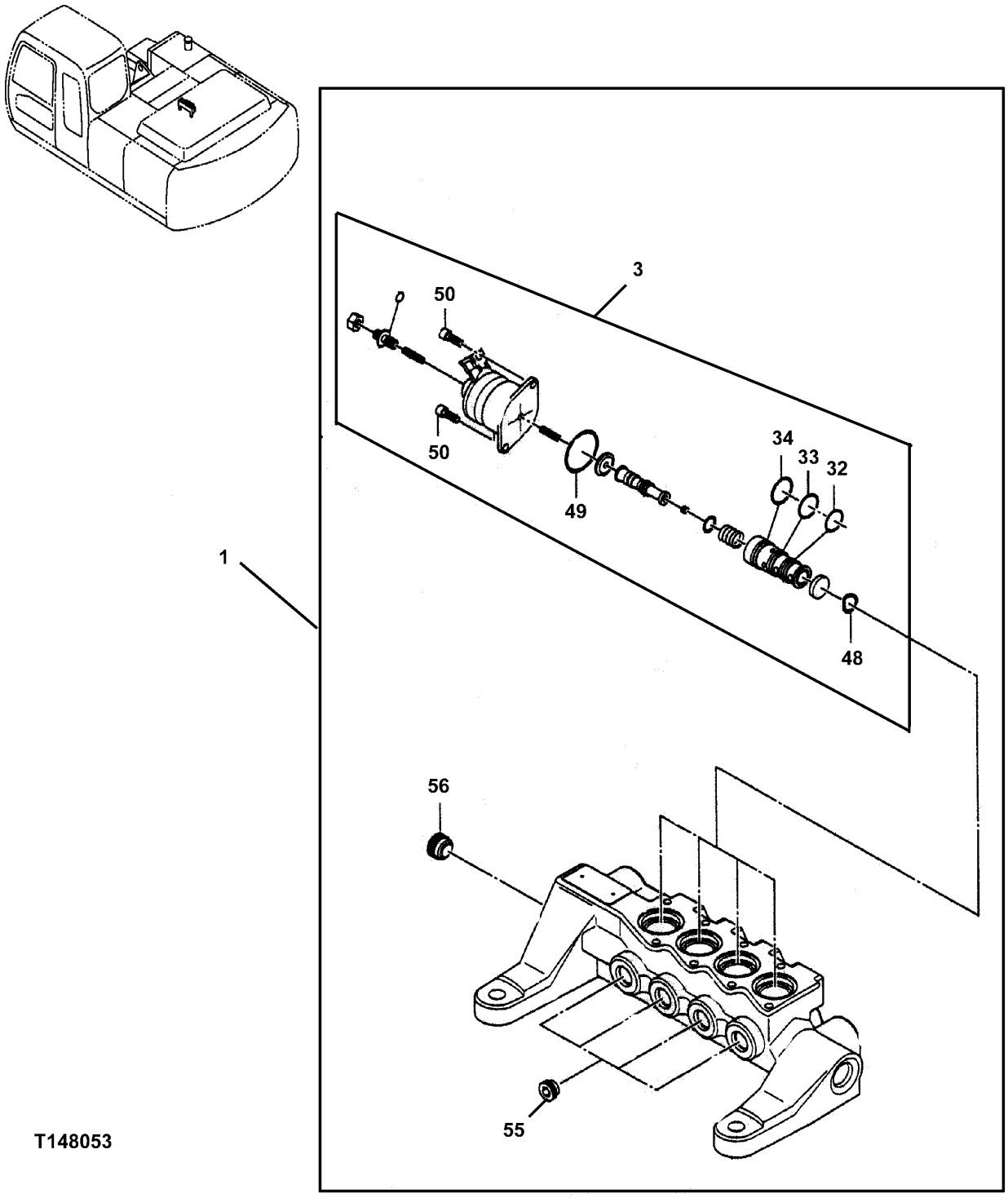

SOLENOID VALVE (SERIAL NO. -503485)

KEY	PART NO.	PART NAME	QTY	SERIAL NO.	REMARKS
1	4480966	SOLENOID VALVE	1		(SUB FOR 4400477)
3	4455991	SOLENOID VALVE	4		(SUB FOR TH4455991)
32	4185600	O-RING	1		(SUB FOR AT153902)
33	R99052	O-RING	1		14.800 X 1.900 MM (0.583" X 0.075")
34	0408411	O-RING	1		16.800 X 1.900 MM (0.661" X 0.075") (SUB FOR AT153904)
48	4455990	WASHER	1		(SUB FOR TH4455990)
49	4455989	SEAL	1		(SUB FOR TH4455989)
50	0387804	SCREW	2		(SUB FOR AT215661)
55	4455986	PIPE PLUG	4		(SUB FOR TH4455986)
56	4455987	PIPE PLUG	1		(SUB FOR TH4455987)

SOLENOID VALVE (SERIAL NO. 503486-)

T196767 -UN-16DEC03

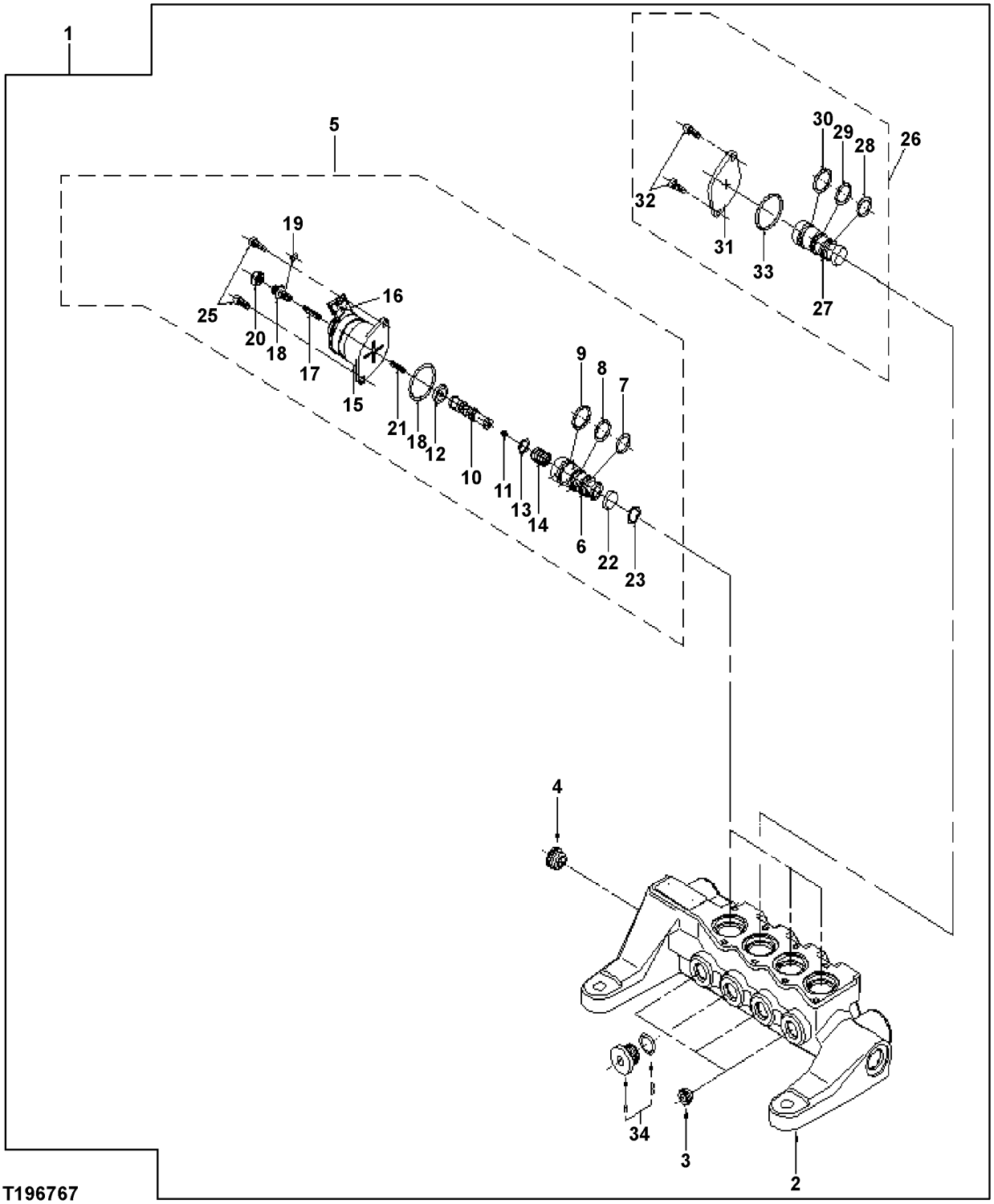

SOLENOID VALVE (SERIAL NO. 503486-)

KEY	PART NO.	PART NAME	QTY	SERIAL NO.	REMARKS
1	9223890	SOLENOID VALVE	1		
2	1031069	HOUSING	1		
3	.....	PLUG	3		
4	4487536	PLUG	1		
5	9218234	SOLENOID VALVE	3		
6	.....	SLEEVE	1		
7	4185600	O-RING	1		
8	R99052	O-RING	1		
9	0408411	O-RING	1		
10	.....	SPOOL	1		
11	.....	ORIFICE	1		
12	.....	DIAPHRAGM	1		
13	.....	WASHER	1		
14	.....	SPRING	1		
15	.....	SOLENOID	1		
16	.....	SOCKET	1		
17	.....	SPRING	1		
18	.....	SCREW	1		
19	.....	O-RING	1		
20	.....	NUT	1		
21	.....	SPRING	1		
22	.....	PLATE	1		
23	4489678	WASHER	1		
24	0670802	O-RING	1		
25	M340513	BOLT	2		
26	9223892	SLEEVE	1		
27	3095747	SLEEVE	1		
28	4185600	O-RING	1		
29	4484118	O-RING	1		
30	4484116	O-RING	1		
31	4484115	PLATE	1		
32	M340513	BOLT	2		
33	0670802	O-RING	1		
34	3097791	PLUG	1		

SOLENOID VALVE

T147712 -UN-03DEC01

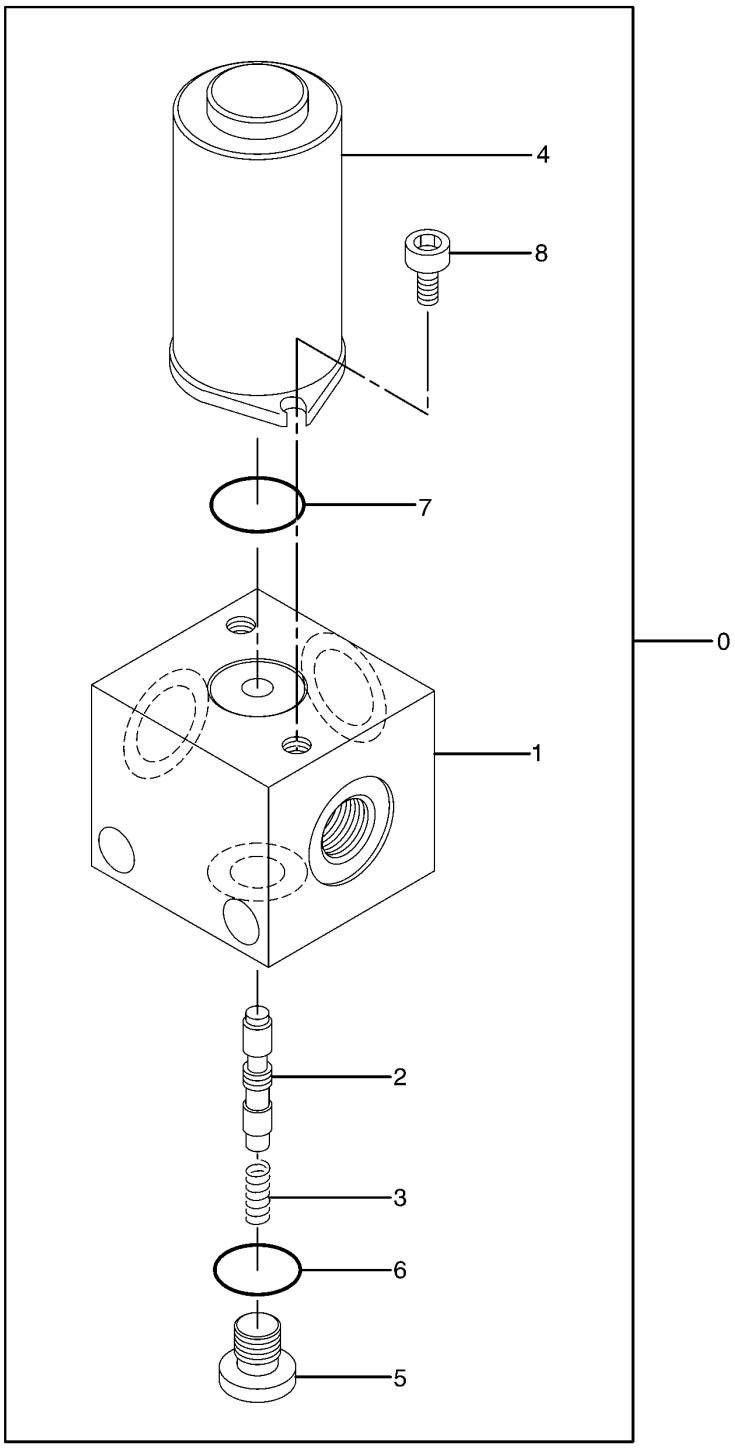

T147712

SOLENOID VALVE

KEY	PART NO.	PART NAME	QTY	SERIAL NO.	REMARKS
0	4261289	SOLENOID VALVE	1		(SUB FOR AT202111)
1	.....	HOUSING	1		
2	.....	SPOOL VALVE	1		
3	0444301	SPRING	1		(SUB FOR AT200231)
4	0444302	SOLENOID	1		(SUB FOR AT200232)
5	0215220	FITTING PLUG	1		(SUB FOR TH101485)
6	4506408	O-RING	1		(SUB FOR TH101490)
7	P50883	RING	1		
8	19M7887	SCREW	2		M5 X 10

PILOT SIGNAL MANIFOLD (HOUSING AND GASKETS)

T153960 -UN-16APR02

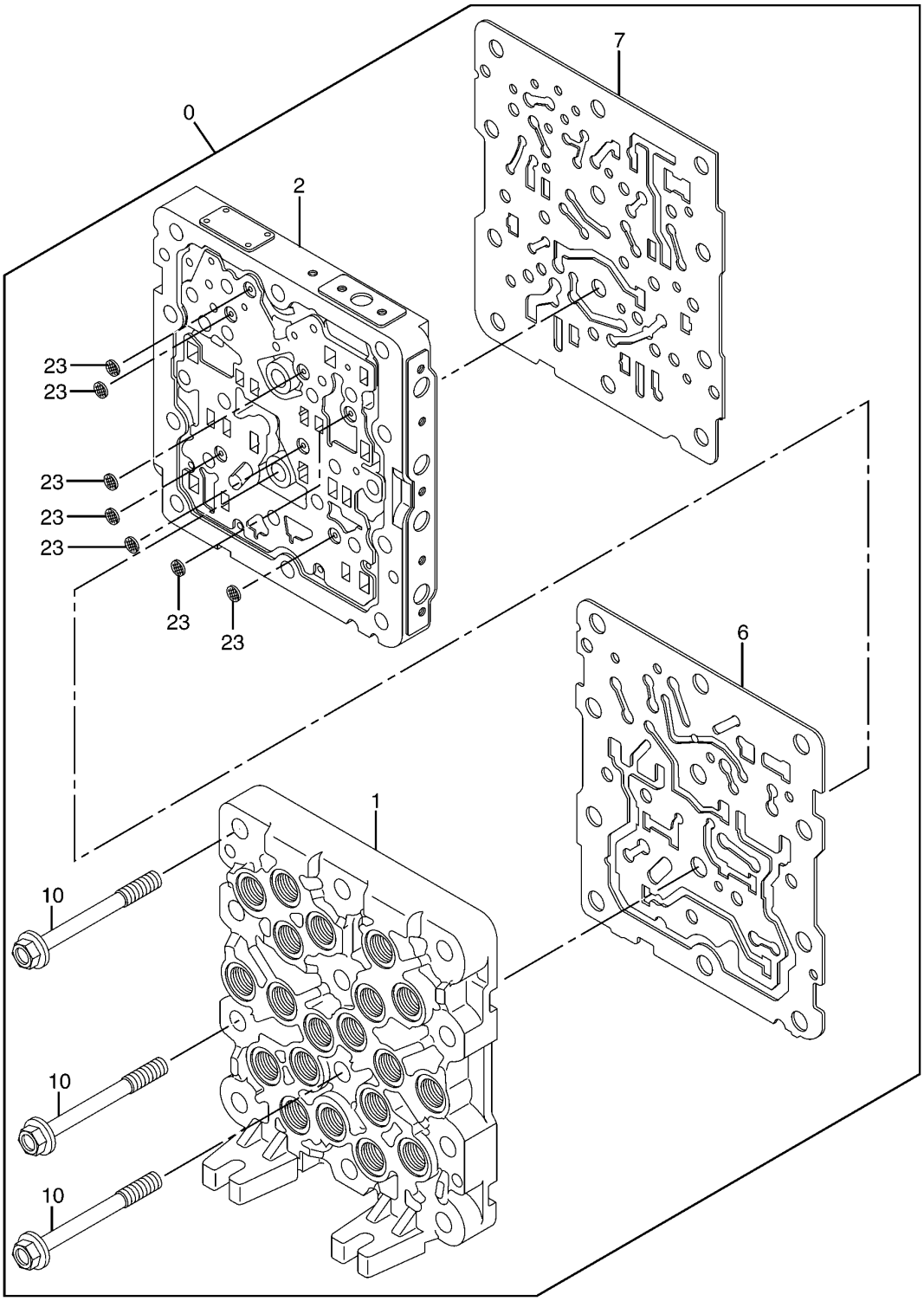

T153960

PILOT SIGNAL MANIFOLD (HOUSING AND GASKETS)

KEY	PART NO.	PART NAME	QTY	SERIAL NO.	REMARKS
0	4468337	FLOW CONTROL HYD. VALVE	1	-503485	(ADDITIONAL COMPONENTS LISTED ON FOLLOWING PAGES)
	4486321	VALVE	1	503486-	(ADDITIONAL COMPONENTS LISTED ON FOLLOWING PAGES)
1	.....	HOUSING	1		
2	.....	HOUSING	1		
6	.....	GASKET	1		
7	.....	GASKET	1		
10	.....	BOLSTER	12		
23	.....	FILTER	7		

PILOT SIGNAL MANIFOLD (VALVE SECTION)

T153961 -UN-16APR02

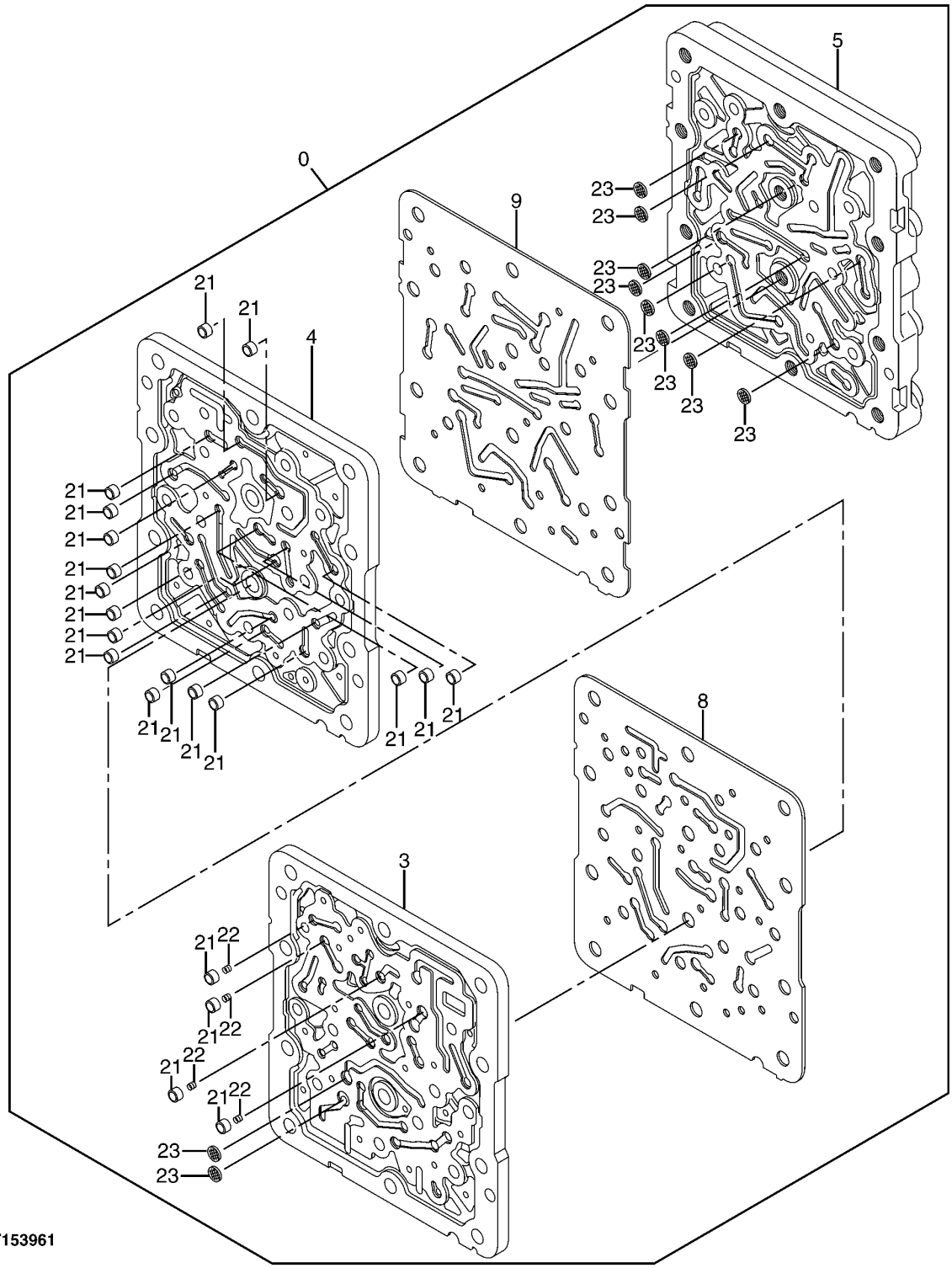

PILOT SIGNAL MANIFOLD (VALVE SECTION)

KEY	PART NO.	PART NAME	QTY	SERIAL NO.	REMARKS
0	4468337	FLOW CONTROL HYD. VALVE	1	-503485	(CONTAINS ALL PARTS ON THIS PAGE - ADDITIONAL COMPONENTS LISTED ON FOLLOWING PAGES)
	4486321	VALVE	1	503486-	(CONTAINS ALL PARTS ON THIS PAGE - ADDITIONAL COMPONENTS LISTED ON FOLLOWING PAGES)
3	.....	HOUSING	1		
4	.....	HOUSING	1		
5	.....	HOUSING	1		
8	.....	GASKET	1		
9	.....	GASKET	1		
21	.....	SLEEVE	21		
22	.....	SPRING	4		
23	.....	FILTER	10		

PILOT SIGNAL MANIFOLD (PILOT CONTROLLER SIDE)

T153964 -UN-16APR02

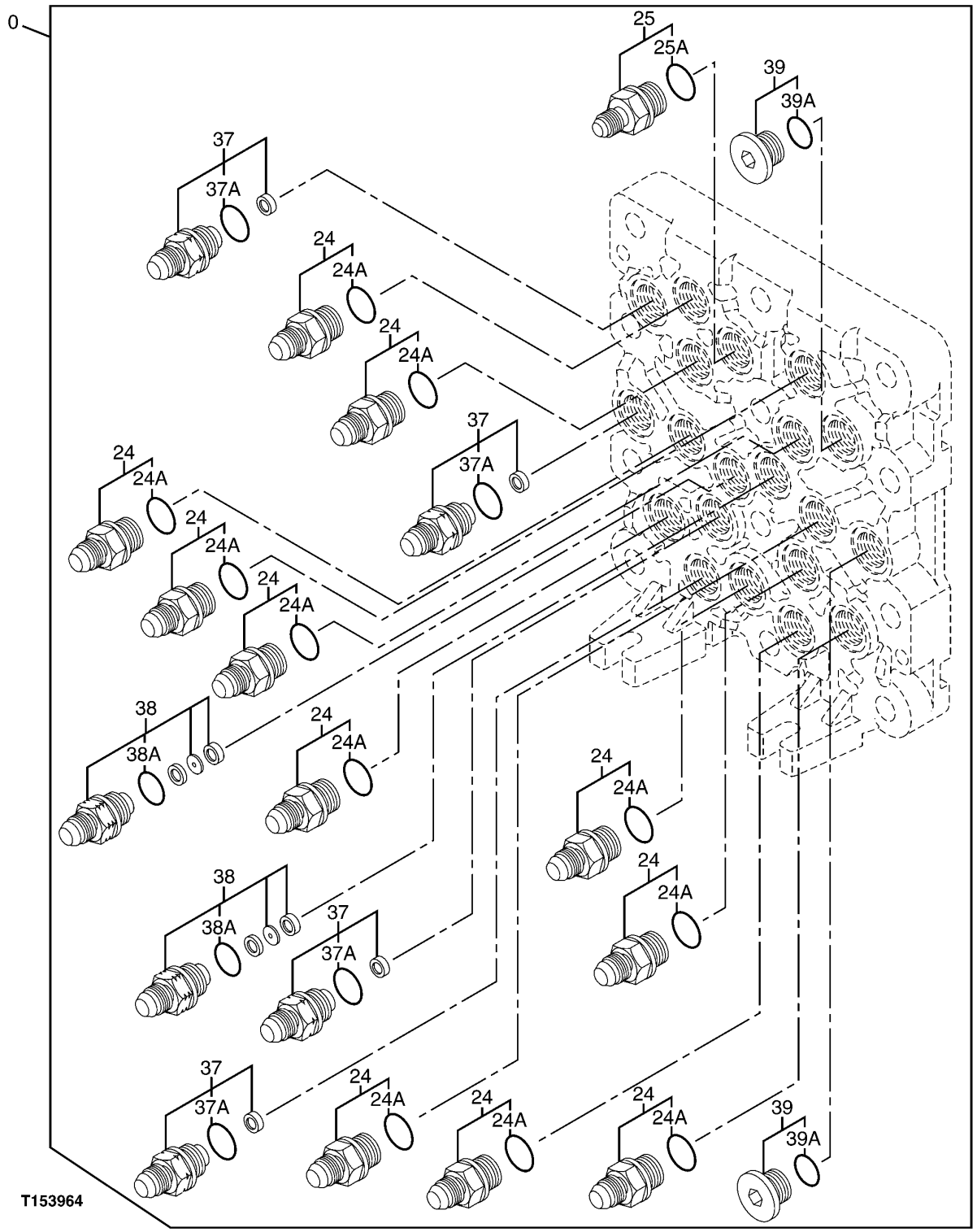

PILOT SIGNAL MANIFOLD (PILOT CONTROLLER SIDE)

KEY	PART NO.	PART NAME	QTY	SERIAL NO.	REMARKS
0	4468337	FLOW CONTROL HYD. VALVE	1	-503485	(CONTAINS ALL PARTS ON THIS PAGE - ADDITIONAL COMPONENTS LISTED ON PREVIOUS AND FOLLOWING PAGES)
	4486321	VALVE	1	503486-	(CONTAINS ALL PARTS ON THIS PAGE - ADDITIONAL COMPONENTS LISTED ON FOLLOWING PAGES)
24	4451784	ADAPTER	11		(SUB FOR TH4451784)
24A	CH11570	O-RING	1		
25	4451785	ADAPTER	1		(SUB FOR TH4451785)
25A	CH11570	O-RING	1		
37	4451787	ADAPTER	4		(SUB FOR TH4451787)
37A	CH11570	O-RING	1		
38	4482233	ADAPTER	2		(SUB FOR TH4451788 OR 4451788)
38A	CH11570	O-RING	1		
39	4451789	PIPE PLUG	2		(SUB FOR TH4451789)
39A	CH11570	O-RING	1		

PILOT SIGNAL MANIFOLD (CONTROL VALVE SIDE)
(SERIAL NUMBER -503485)

T153963 -UN-16APR02

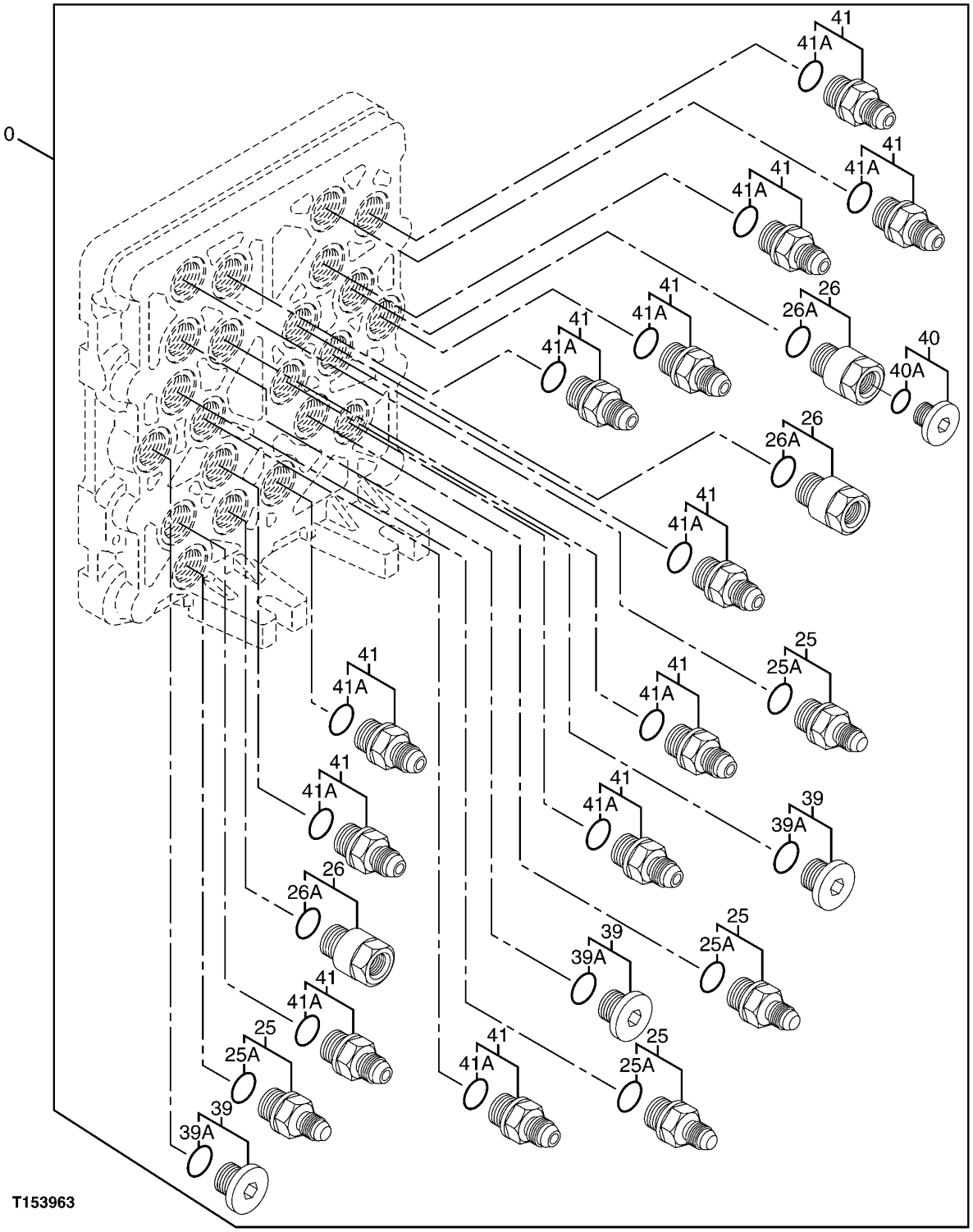

PILOT SIGNAL MANIFOLD (CONTROL VALVE SIDE)
(SERIAL NUMBER -503485)

KEY	PART NO.	PART NAME	QTY	SERIAL NO.	REMARKS
0	4468337	FLOW CONTROL HYD. VALVE	1		(CONTAINS ALL PARTS ON THIS PAGE -ADDITIONAL COMPONENTS LISTED ON PREVIOUS AND FOLLOWING PAGES)
25	4451785	ADAPTER	4		(SUB FOR TH4451785)
25A	CH11570	O-RING	1		
26	4451786	REDUCER	3		(SUB FOR TH4451786)
26A	CH11570	O-RING	1		
39	4451789	PIPE PLUG	3		(SUB FOR TH4451789)
39A	CH11570	O-RING	1		
40	4451790	PIPE PLUG	1		(SUB FOR TH4451790)
40A	M800650	PACKING	1		
41	4451797	ADAPTER	12		(SUB FOR TH4451797)
41A	CH11570	O-RING	1		

PILOT SIGNAL MANIFOLD (CONTROL VALVE SIDE)
(SERIAL NUMBER 503486-)

T164848 -UN-31JAN03

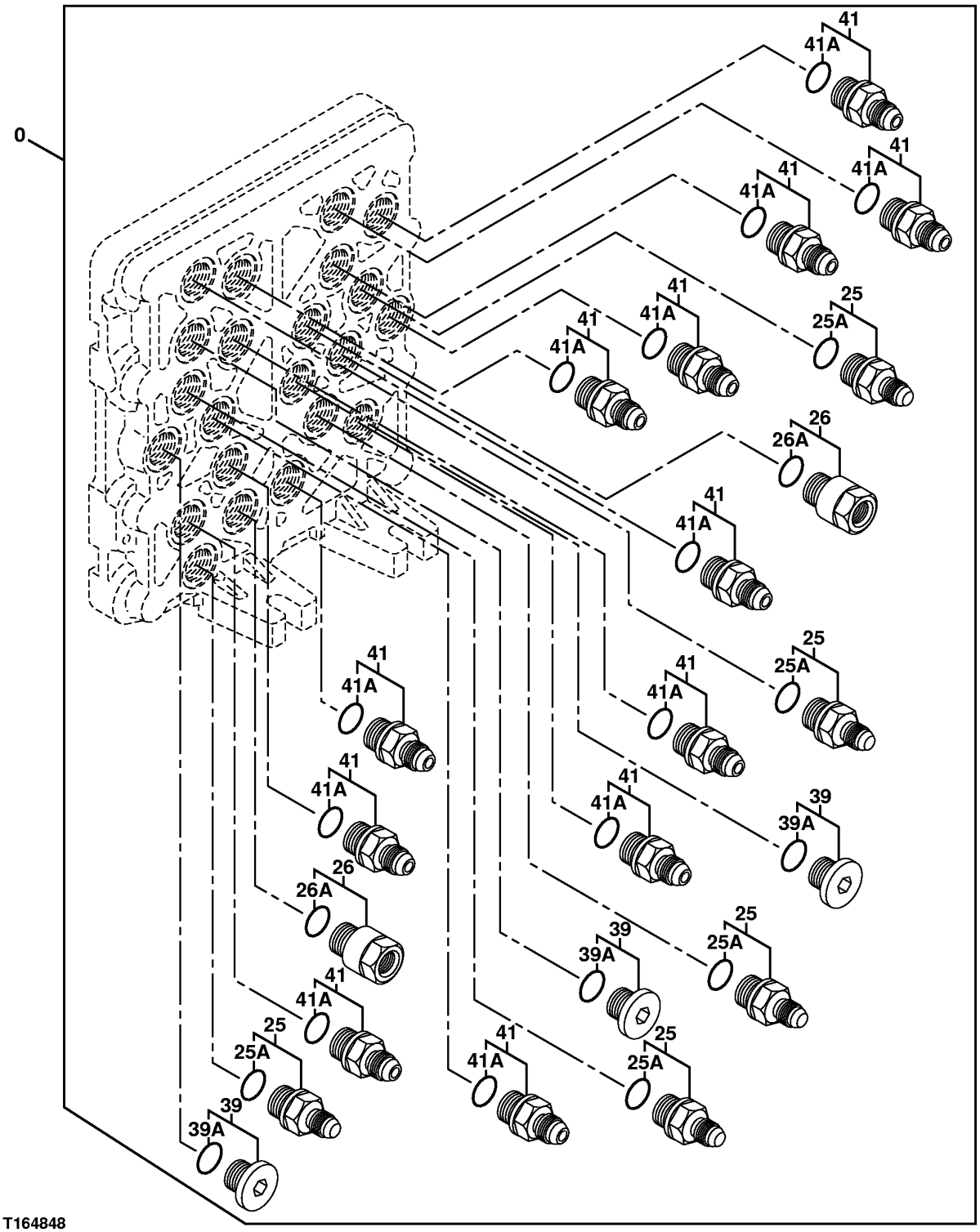

PILOT SIGNAL MANIFOLD (CONTROL VALVE SIDE)
(SERIAL NUMBER 503486-)

KEY	PART NO.	PART NAME	QTY	SERIAL NO.	REMARKS
0	4486321	VALVE	1		(CONTAINS ALL PARTS ON THIS PAGE -ADDITIONAL COMPONENTS LISTED ON PREVIOUS AND FOLLOWING PAGES)
25	4451785	ADAPTER	5		(SUB FOR TH4451785)
25A	CH11570	O-RING	1		
26	4451786	REDUCER	2		(SUB FOR TH4451786)
26A	CH11570	O-RING	1		
39	4451789	PIPE PLUG	3		(SUB FOR TH4451789)
39A	CH11570	O-RING	1		
41	4451797	ADAPTER	12		(SUB FOR TH4451797)
41A	CH11570	O-RING	1		

PILOT SIGNAL MANIFOLD VALVES

T153962 -UN-16APR02

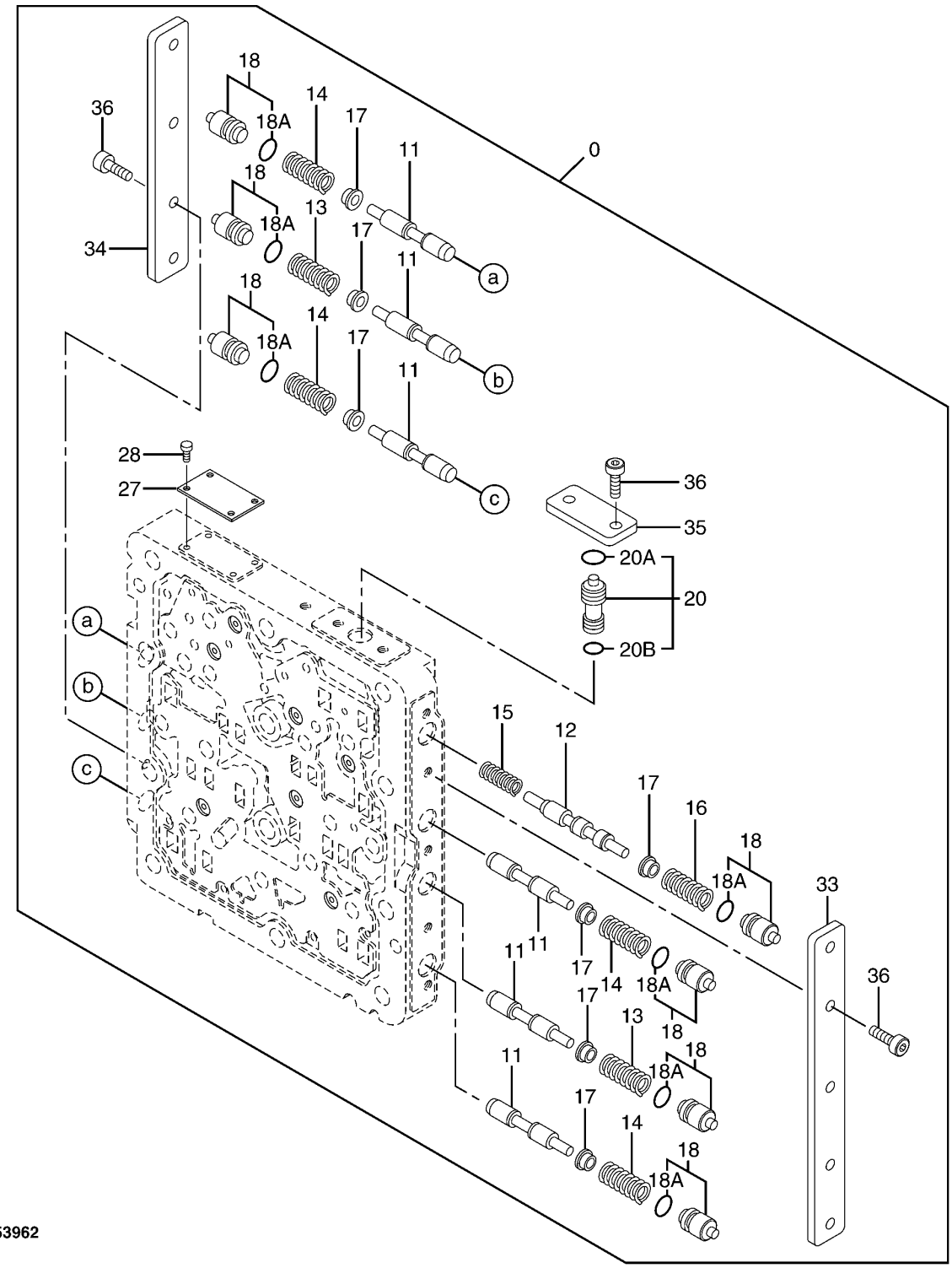

T153962

PILOT SIGNAL MANIFOLD VALVES

KEY	PART NO.	PART NAME	QTY	SERIAL NO.	REMARKS
0	4468337	FLOW CONTROL HYD. VALVE	1	-503485	(CONTAINS ALL PARTS ON THIS PAGE - ADDITIONAL COMPONENTS LISTED ON PREVIOUS PAGES)
	4486321	VALVE	1	503486-	(CONTAINS ALL PARTS ON THIS PAGE - ADDITIONAL COMPONENTS LISTED ON PREVIOUS PAGES)
11	4453819	SPOOL VALVE	6		(SUB FOR TH4453819)
12	4453820	SPOOL VALVE	1		(SUB FOR TH4453820)
13	0788703	SPRING	2		(SUB FOR TH0788703)
14	0788704	SPRING	4		(SUB FOR TH0788704)
15	0788705	SPRING	1		(SUB FOR TH0788705)
16	0788706	SPRING	1		(SUB FOR TH0788706)
17	0788707	VALVE SEAT	7		(SUB FOR TH0788707)
18	4452647	PIPE PLUG	7		(SUB FOR TH4452647)
18A	CH11560	PACKING	1		
20	4452648	SPOOL VALVE	1		(SUB FOR TH4452648)
20A	CH11560	PACKING	1		
20B	CH10567	PACKING	1		
27	.....	PLATE	1		NOT AVAILABLE
28	.....	SCREW	1		NOT AVAILABLE
33	0788710	PLATE	1		(SUB FOR TH0788710)
34	0788711	PLATE	1		(SUB FOR TH0788711)
35	0788712	PLATE	1		(SUB FOR TH0788712)
36	0788713	BOLT	11		(SUB FOR TH0788713)

SUCTION HYDRAULIC LINES

T143245 -UN-01OCT01

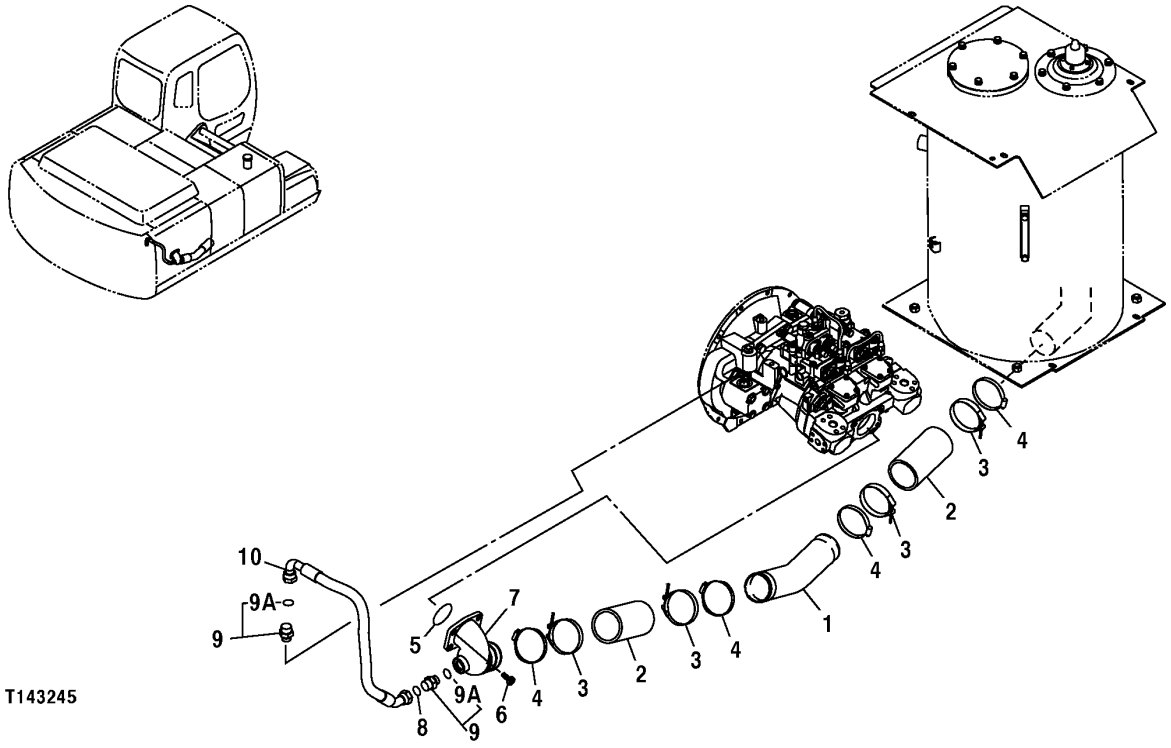

T143245

SUCTION HYDRAULIC LINES

KEY	PART NO.	PART NAME	QTY	SERIAL NO.	REMARKS
1	7039806	PIPE	1		(SUB FOR TH7039806)
2	4348414	HOSE	2		(SUB FOR AT176844)
3	Z29925	CLAMP	4		(SUB FOR AH103182)
4	AT56658	HOSE CLAMP	4		
5	CH17854	PACKING	1		
6	J781228	BOLT	4		(SUB FOR P61967) (SUB FOR AT214412)
7	2037825	MANIFOLD	1		(SUB FOR AT176799)
8	T77858	O-RING	1		18.771 X 1.778 MM (0.739" X 0.070")
9	A853166	ADAPTER	2		(SUB FOR THA853166)
9A	4506424	O-RING	1		23.700 X 3.500 MM (0.933" X 0.138") (SUB FOR TH100055)
10	4442642	HYDRAULIC HOSE - FABRICATE	1		(SUB FOR TH4442642)

DELIVERY LINES

T143246 -UN-01OCT01

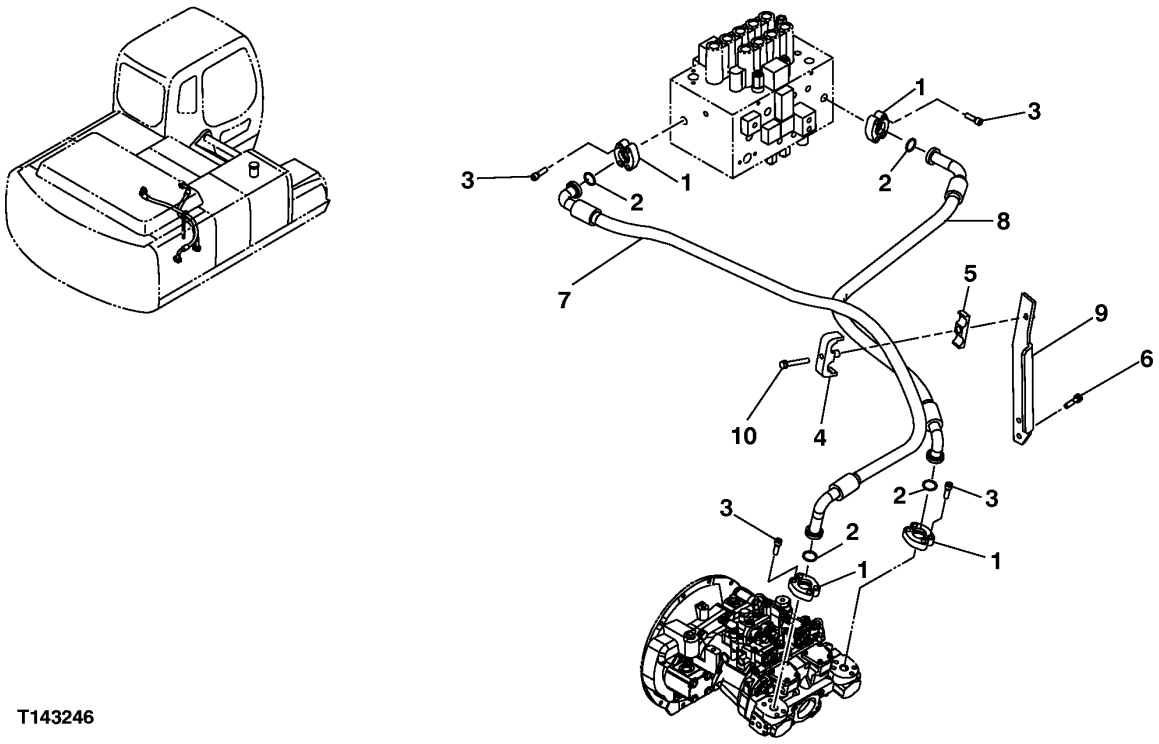

T143246

3H18

DELIVERY LINES

KEY	PART NO.	PART NAME	QTY	SERIAL NO.	REMARKS
1	4085560	FLANGE FITTING	8		(SUB FOR TH101960)
2	T78313	O-RING	4		32.918 X 3.531 MM (1.296" X 0.139")
3	J781240	BOLT	16		(SUB FOR AT214413)
4	8061722	CLAMP	1		(SUB FOR AT214442)
5	3072291	CLAMP	1		(SUB FOR AT214427)
6	19M7361	CAP SCREW	2		M12 X 50
	12H301	LOCK WASHER	2		12.700 MM (1/2")
7	DH400239	HYDRAULIC HOSE	1		(SUB FOR THDH400239)
8	4374095	HYDRAULIC HOSE	1		(SUB FOR AT215101)
9	DH800059	BRACKET	1		(SUB FOR THDH800059)
10	J011280	BOLT	1		(SUB FOR AT200006)

RETURN HYDRAULIC LINES

T143247 -UN-30OCT01

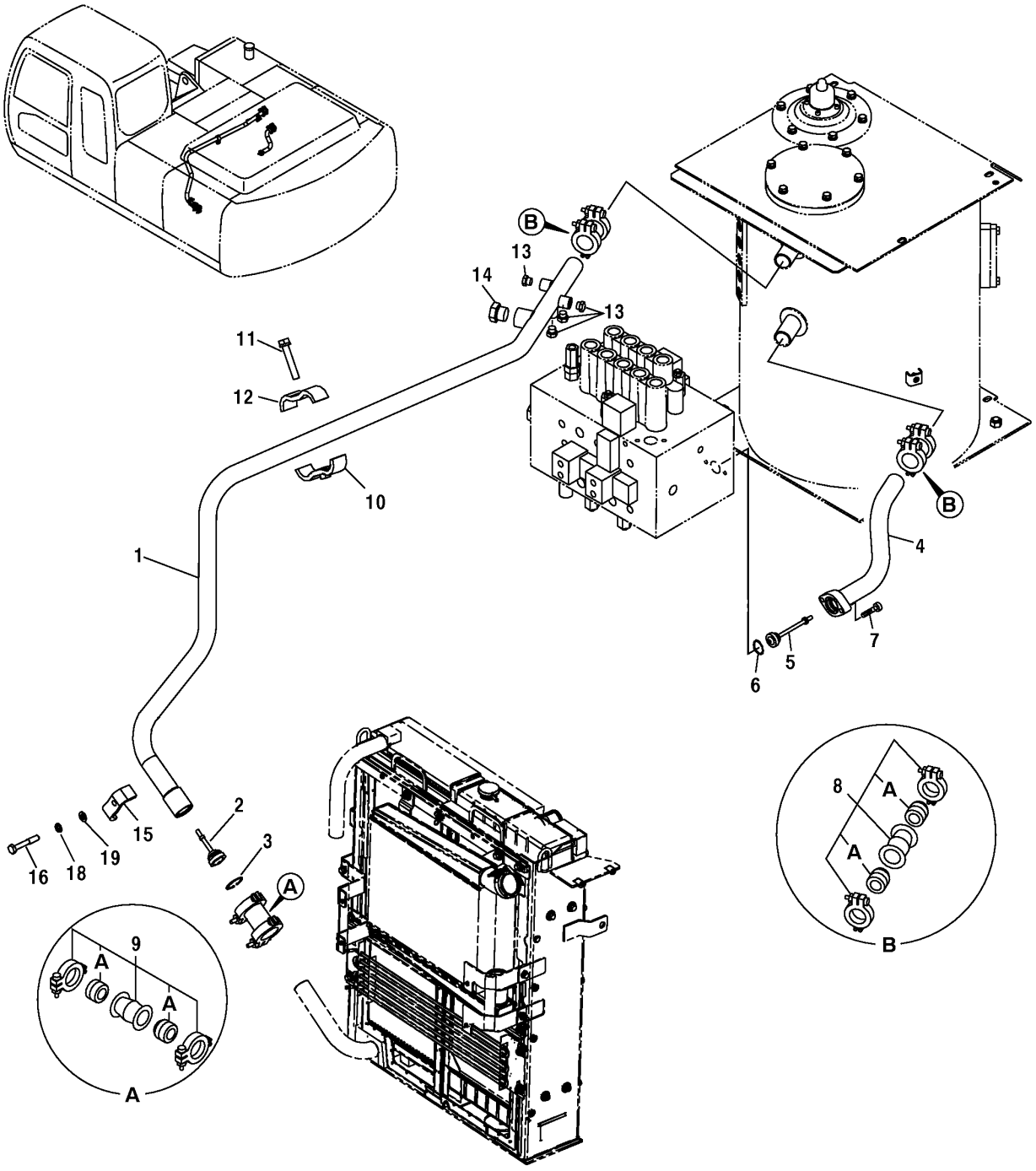

T143247

RETURN HYDRAULIC LINES

KEY	PART NO.	PART NAME	QTY	SERIAL NO.	REMARKS
1	DH700024	OIL LINE	1		(SUB FOR THDH700024)
2	4276584	VALVE	1		
3	40M7225	SNAP RING	1		
4	8074141	OIL LINE	1		(SUB FOR TH8074141)
5	4272164	VALVE	1		
6	A811040	O-RING	1		39.400 X 3.100 MM (1.551" X 0.122") (SUB FOR TH102992)
7	J781040	SCREW	2		(SUB FOR AT213615)
8	4069801	COUPLING	2		(SUB FOR TH101915)
8A	4196259	SEAL	2		(SUB FOR TH106966)
9	4067834	COUPLING	1		(SUB FOR TH102945)
9A	4196260	SEAL	2		(SUB FOR TH106967)
10	9752698	BRACKET	1		(SUB FOR TH9752698)
11	19M7753	CAP SCREW	1		M12 X 70
	12H301	LOCK WASHER	1		12.700 MM (1/2")
12	4053696	CLAMP	1		(SUB FOR TH102946)
13	0309805	PIPE PLUG	2		(SUB FOR TH109285)
14	4113926	DRAIN PLUG	1		(SUB FOR AT126200)
15	4053698	CLAMP	1		(SUB FOR TH101936)
16	19M8088	CAP SCREW	1		M12 X 75
18	12H301	LOCK WASHER	1		12.700 MM (1/2")
19	24M7047	WASHER	1		13 X 24 X 2.500 MM (0.512" X 0.945" X 0.098")

RETURN HYDRAULIC LINES

T143248 -UN-30OCT01

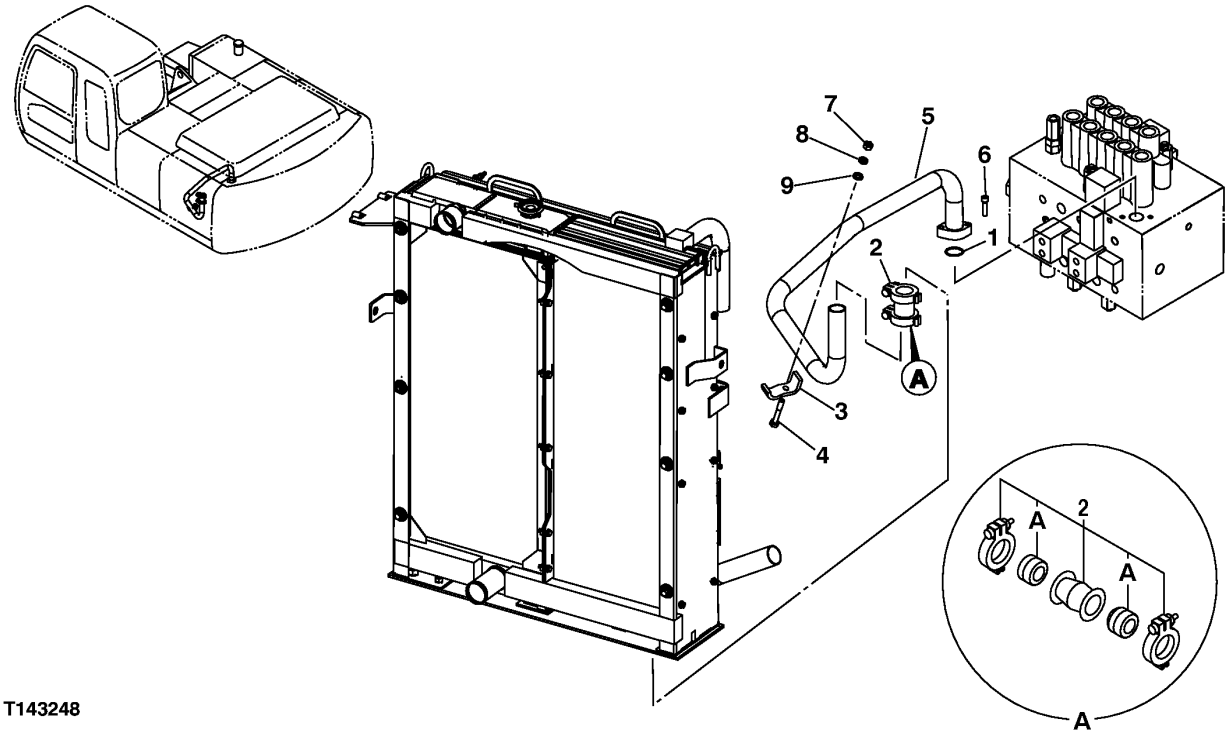

T143248

RETURN HYDRAULIC LINES

KEY	PART NO.	PART NAME	QTY	SERIAL NO.	REMARKS
1	A811040	O-RING	1		39.400 X 3.100 MM (1.551" X 0.122") (SUB FOR TH102992)
2	4069801	COUPLING	1		(SUB FOR TH101915)
2A	4196259	SEAL	2		(SUB FOR TH106966)
3	4053698	CLAMP	1		(SUB FOR TH101936)
4	19M8088	CAP SCREW	1		M12 X 75
5	DH700030	OIL LINE	1		(SUB FOR THDH700030)
6	J781040	SCREW	2		(SUB FOR AT213615)
7	14M7275	NUT	1		M12
8	12H301	LOCK WASHER	1		12.700 MM (1/2")
9	24M7047	WASHER	1		13 X 24 X 2.500 MM (0.512" X 0.945" X 0.098")

DRAIN HYDRAULIC LINES

T143249 -UN-11OCT01

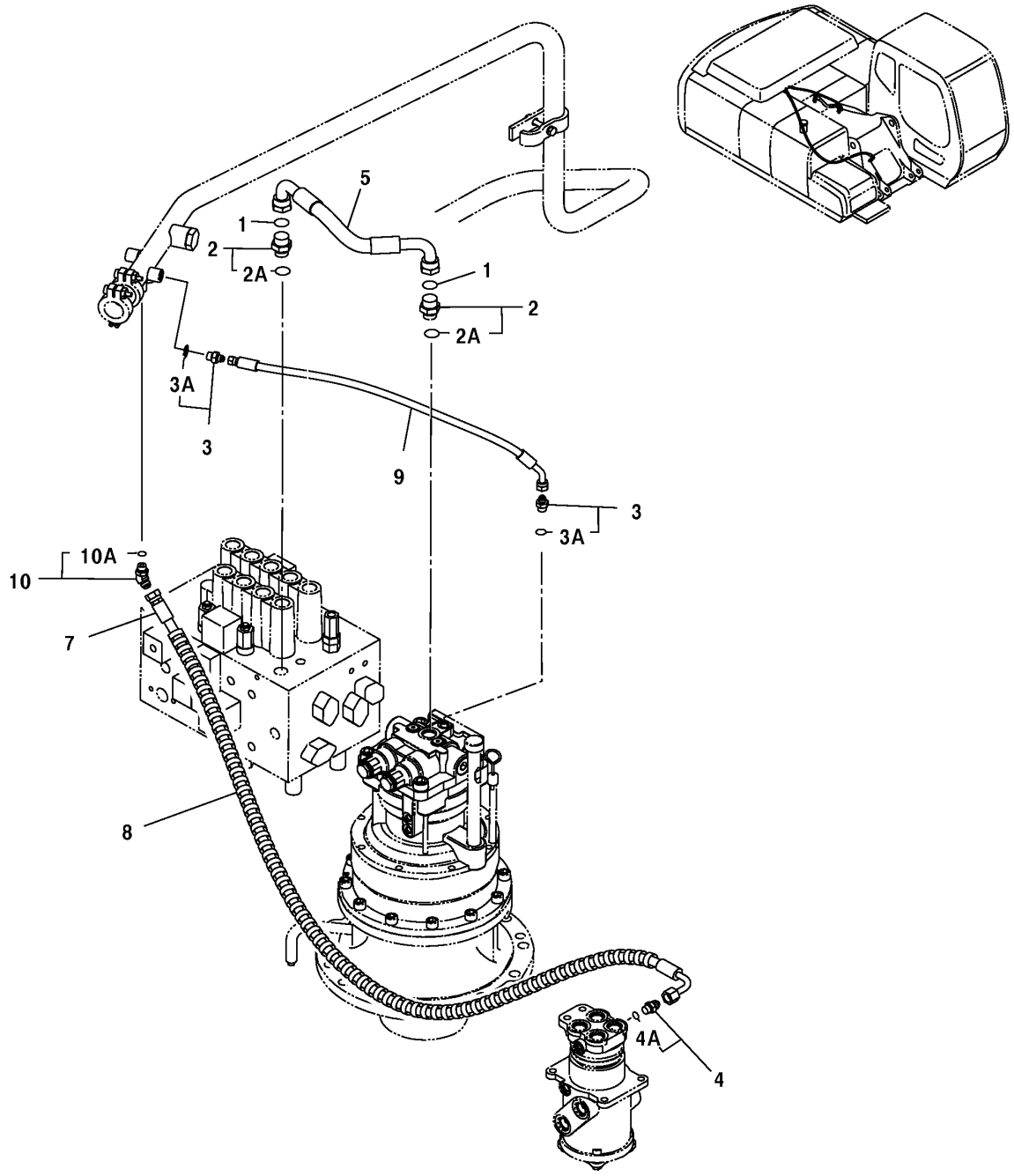

T143249

DRAIN HYDRAULIC LINES

KEY	PART NO.	PART NAME	QTY	SERIAL NO.	REMARKS
1	T76938	O-RING	2		23.520 X 1.778 MM (0.926" X 0.070")
2	A853166	ADAPTER	2		(SUB FOR THA853166)
2A	4506424	O-RING	1		23.700 X 3.500 MM (0.933" X 0.138") (SUB FOR TH100055)
3	4200466	ADAPTER	2		(SUB FOR TH108320)
3A	CH11570	O-RING	1		13.800 X 2.400 MM (0.543" X 0.094")
4	A852134	ADAPTER	1		(SUB FOR P67979)
4A	CH11570	O-RING	1		13.800 X 2.400 MM (0.543" X 0.094")
5	4429202	HYDRAULIC HOSE - FABRICATE	1		(SUB FOR TH4429202)
7	4429426	HYDRAULIC HOSE - FABRICATE	1		(SUB FOR TH4429426)
8	4327293	HOSE GUARD	2		(SUB FOR AT213831)
9	4450022	HYDRAULIC HOSE - FABRICATE	1		(SUB FOR TH4450022)
10	A852234	ELBOW FITTING	1		(SUB FOR THA852234)
10A	CH11570	O-RING	1		13.800 X 2.400 MM (0.543" X 0.094")

CONTROL VALVE MAIN HYDRAULIC HOSES

T151038 -UN-07FEB02

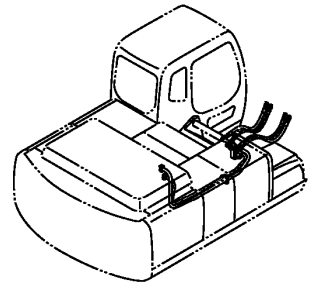

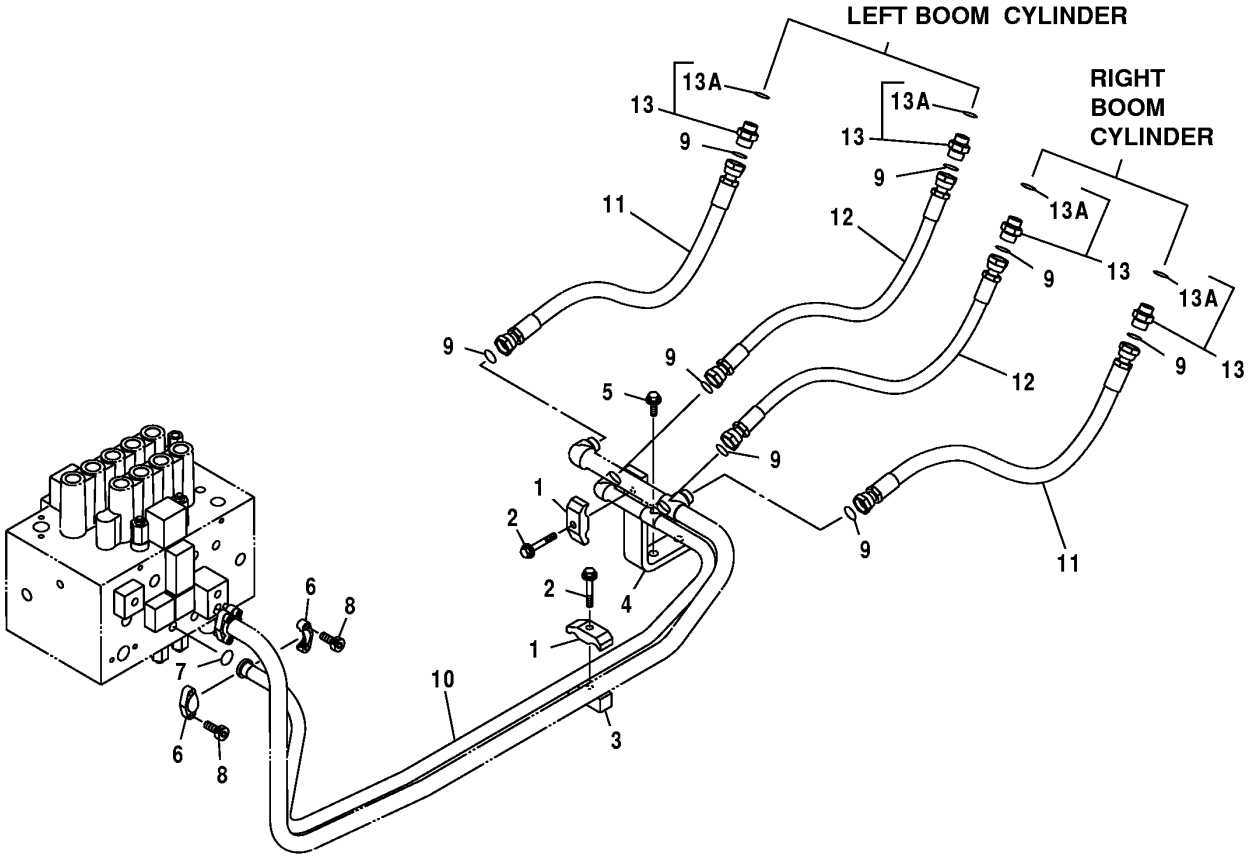

T151038

CONTROL VALVE MAIN HYDRAULIC HOSES

KEY	PART NO.	PART NAME	QTY	SERIAL NO.	REMARKS
1	4153488	CLAMP	2		(SUB FOR TH103780)
2	19M7753	CAP SCREW	2		M12 X 70
	12H301	LOCK WASHER	2		12.700 MM (1/2")
3	.....	STRAP	1		(AT155254 NOT AVAILABLE FOR SERVICE)
4	4417635	SUPPORT	1		(SUB FOR TH4417635)
5	19M7403	CAP SCREW	2		M12 X 35, (AT127270 NOT AVAILABLE FOR SERVICE)
	12M7058	LOCK WASHER	2		12 MM (0.472") (SUB FOR 12M7067)
	24H1748	WASHER	2		12.700 X 31.750 X 2.667 MM (1/2" X 1-1/4" X 0.105")
6	R29424	FLANGE FITTING	2		
7	T59014	O-RING	1		24.994 X 3.531 MM (63/64" X 0.139")
8	J781030	SCREW	4		(SUB FOR AT213614)
9	T77858	O-RING	8		18.771 X 1.778 MM (0.739" X 0.070")
10	8074106	OIL LINE	1		(SUB FOR TH8074106)
11	AT213806	HYDRAULIC HOSE	2		
12	AT213820	HYDRAULIC HOSE - FABRICATE	2		1-3/16" X 830 MM (32-3/4") X 1-3/16"
13	A853166	ADAPTER	4		(SUB FOR THA853166)
13A	4506424	O-RING	1		23.700 X 3.500 MM (0.933" X 0.138") (SUB FOR TH100055)

CONTROL VALVE HYDRAULIC LINES

T143251 -UN-11OCT01

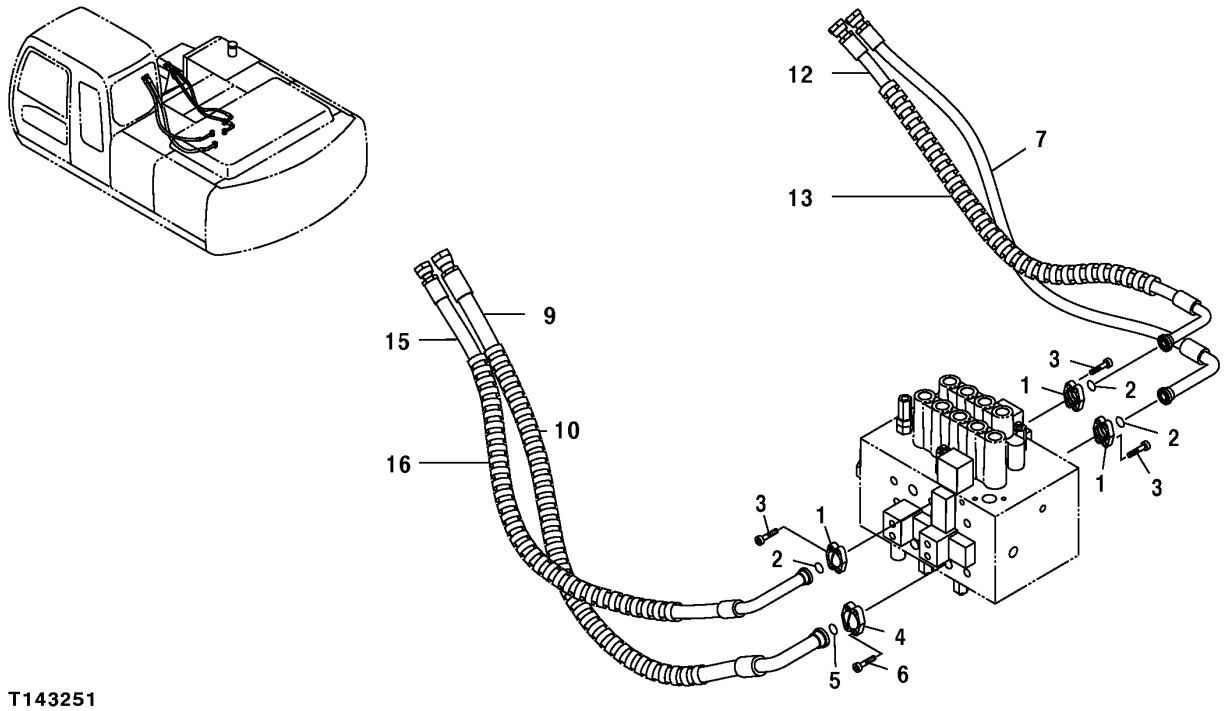

T143251

CONTROL VALVE HYDRAULIC LINES

KEY	PART NO.	PART NAME	QTY	SERIAL NO.	REMARKS
1	R29424	FLANGE FITTING	6		
2	T59014	O-RING	3		24.994 X 3.531 MM (63/64" X 0.139")
3	J781030	SCREW	12		(SUB FOR AT213614)
4	H61354	FLANGE FITTING	2		
5	T78313	O-RING	1		32.918 X 3.531 MM (1.296" X 0.139")
6	J781030	SCREW	4		(SUB FOR AT213614)
7	4410314	HYDRAULIC HOSE	1		(SUB FOR TH4410314)
9	4413856	HYDRAULIC HOSE	1		(SUB FOR TH4413856)
10	4327294	HOSE GUARD	4		(SUB FOR AT213832)
12	4413858	HYDRAULIC HOSE	1		(SUB FOR TH4413858)
13	4327294	HOSE GUARD	4		(SUB FOR AT213832)
15	4413854	HYDRAULIC HOSE	1		(SUB FOR TH4413854)
16	4327294	HOSE GUARD	4		(SUB FOR AT213832)

CONTROL VALVE HYDRAULIC LINES

T143252 -UN-28JUN01

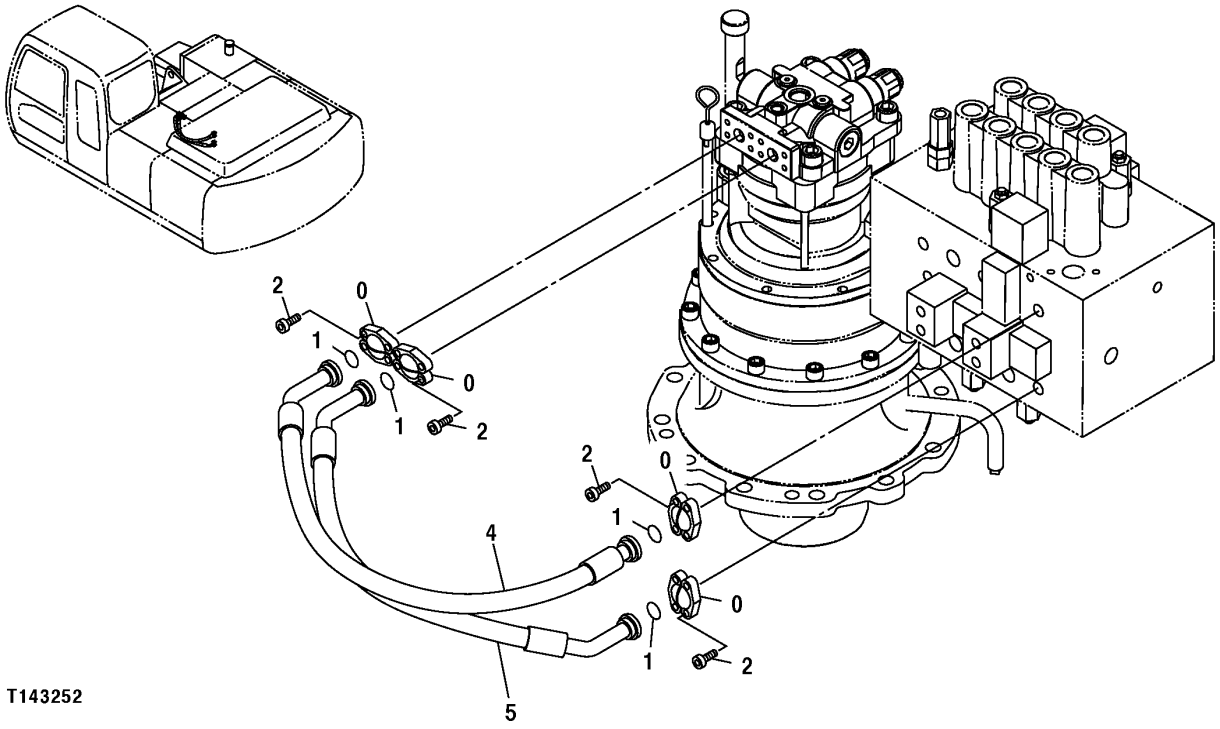

T143252

CONTROL VALVE HYDRAULIC LINES

KEY	PART NO.	PART NAME	QTY	SERIAL NO.	REMARKS
0	R29424	FLANGE FITTING	8		
1	T59014	O-RING	4		24.994 X 3.531 MM (63/64" X 0.139")
2	J781030	SCREW	16		(SUB FOR AT213614)
4	AT213973	HYDRAULIC HOSE	1		
5	AT213972	HYDRAULIC HOSE	1		

CONTROL VALVE HYDRAULIC LINES

T143253 -UN-11OCT01

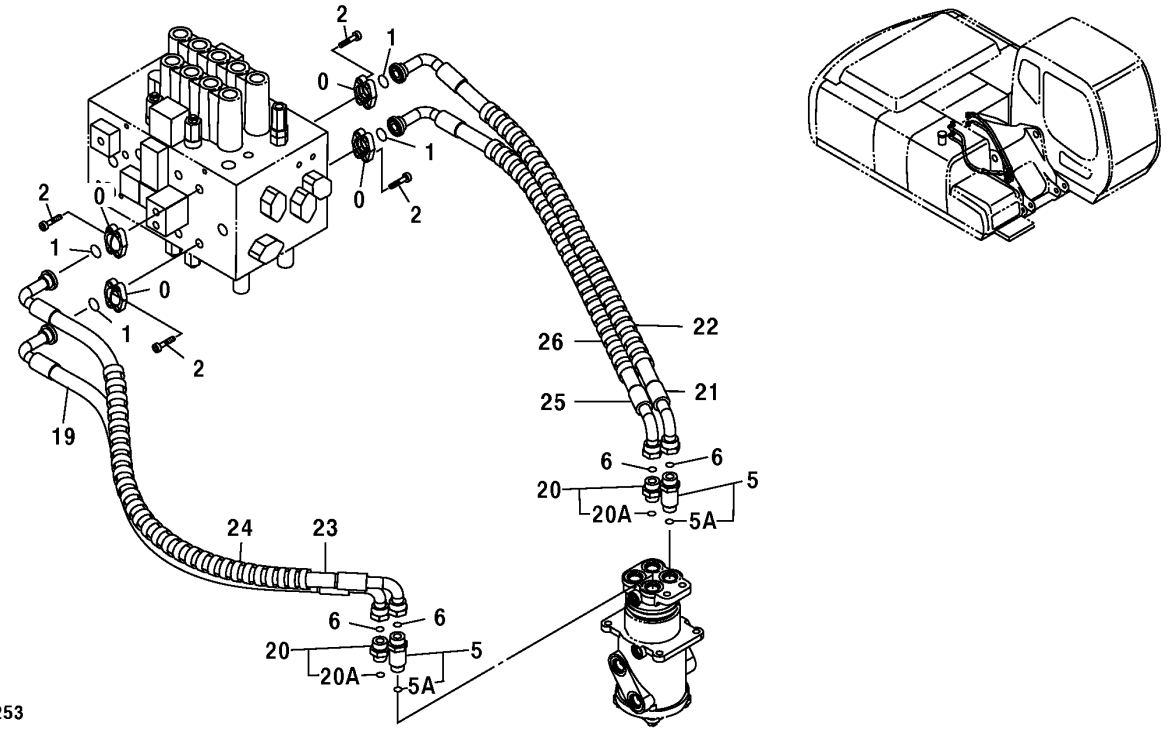

CONTROL VALVE HYDRAULIC LINES

KEY	PART NO.	PART NAME	QTY	SERIAL NO.	REMARKS
0	R29424	FLANGE FITTING	8		
1	T59014	O-RING	4		24.994 X 3.531 MM (63/64" X 0.139")
2	J781030	SCREW	16		(SUB FOR AT213614)
5	4189539	ADAPTER	2		(SUB FOR AT107393)
5A	4506424	O-RING	1		23.700 X 3.500 MM (0.933" X 0.138") (SUB FOR TH100055)
6	T77858	O-RING	4		18.771 X 1.778 MM (0.739" X 0.070")
19	4425873	HYDRAULIC HOSE - FABRICATE	1		(SUB FOR TH4425873)
20	A853166	ADAPTER	2		(SUB FOR THA853166)
20A	4506424	O-RING	1		23.700 X 3.500 MM (0.933" X 0.138") (SUB FOR TH100055)
21	4425880	HYDRAULIC HOSE - FABRICATE	1		(SUB FOR TH4425880)
22	4327294	HOSE GUARD	2		(SUB FOR AT213832)
23	4425857	HYDRAULIC HOSE - FABRICATE	1		(SUB FOR TH4425857)
24	4327294	HOSE GUARD	2		(SUB FOR AT213832)
25	4425886	HYDRAULIC HOSE - FABRICATE	1		(SUB FOR TH4425886)
26	4327294	HOSE GUARD	1		(SUB FOR AT213832)

BOOM BOTTOM HYDRAULIC LINES

T143254 -UN-28JUN01

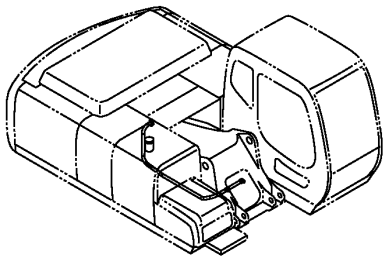

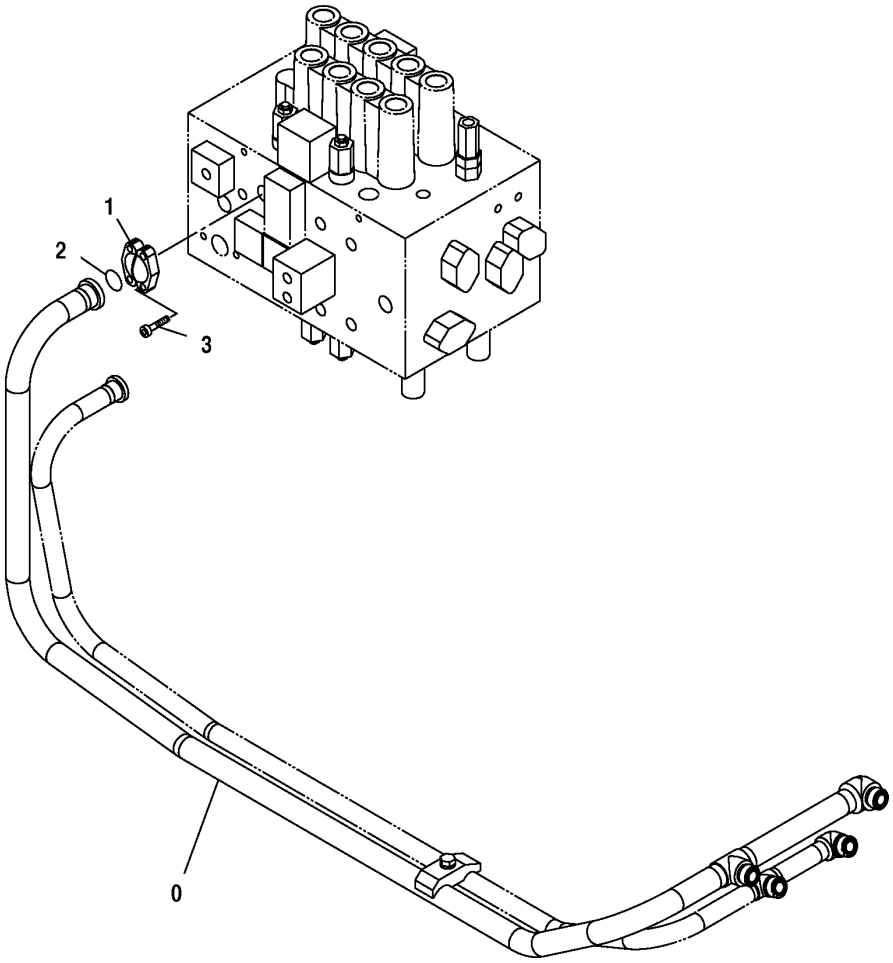

T143254

BOOM BOTTOM HYDRAULIC LINES

KEY	PART NO.	PART NAME	QTY	SERIAL NO.	REMARKS
0	8074107	OIL LINE	1		(SUB FOR TH8074107)
1	H61354	FLANGE FITTING	2		
2	T78313	O-RING	1		32.918 X 3.531 MM (1.296" X 0.139")
3	J781030	SCREW	4		(SUB FOR AT213614)

BOOM BOTTOM PIPINGS, SUPER LONG BOOM

TP67418 -UN-01SEP00

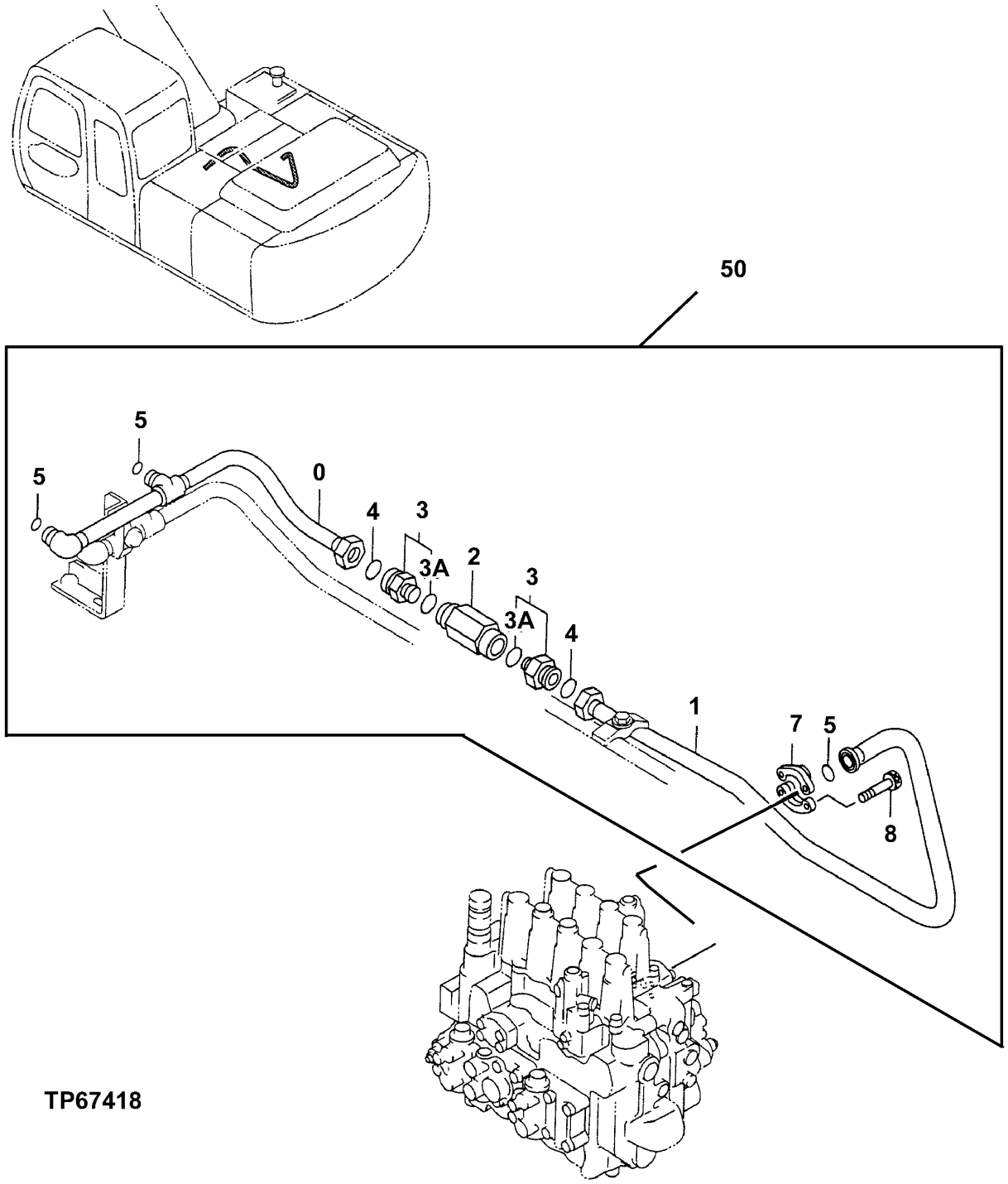

BOOM BOTTOM PIPINGS, SUPER LONG BOOM

KEY	PART NO.	PART NAME	QTY	SERIAL NO.	REMARKS
0	8066084	PIPE	1		(SUB FOR AT186483)
1	8066080	PIPE	1		(SUB FOR AT186484)
2	9075046	VALVE	1		(SUB FOR AT120774) (SLOW RETURN)
3	4207425	ADAPTER	2		(SUB FOR TH111740)
3A	TH101926	O-RING	1		
4	T78612	O-RING	2		
5	T77858	O-RING	2		
6	T78313	O-RING	1		
7	H61354	FLANGE FITTING	2		
8	J781030	SCREW	4		(SUB FOR AT213614)
50	.....	KIT	1		(WHOLEGOODS) (AT186457 NO LONGER AVAILABLE) (LONG FRONT ASSEMBLY KIT) (ALSO ORDER T190565, T153672, T153673 DECALS, AH165671 AND AH165673 CYLINDERS) (CONTAINS ALL ITEMS ON THIS PAGE - ADDITIONAL COMPONENTS LISTED ON SEPARATE PAGES)

SIDE BRANCH PIPING

T143255 -UN-29JUN01

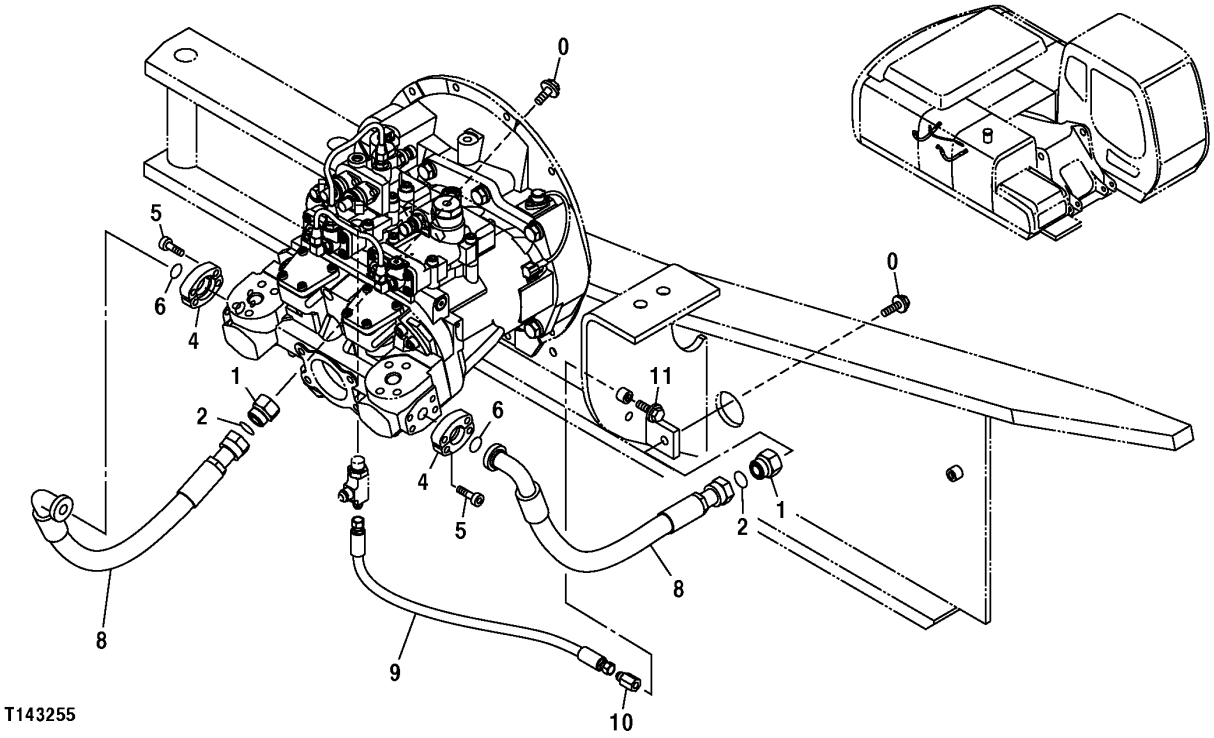

SIDE BRANCH PIPING

KEY	PART NO.	PART NAME	QTY	SERIAL NO.	REMARKS
0	19M7403	CAP SCREW	2		M12 X 35
	12H301	LOCK WASHER	2		12.700 MM (1/2")
1	4204882	FITTING PLUG	2		(SUB FOR TH109541)
2	T77858	O-RING	2		18.771 X 1.778 MM (0.739" X 0.070")
4	T107446	FLANGE FITTING	4		
5	19M8337	SCREW	8		M10 X 30
6	T59014	O-RING	2		24.994 X 3.531 MM (63/64" X 0.139")
8	4436937	HYDRAULIC HOSE - FABRICATE	2		(SUB FOR TH4436937)
9	4442133	HYDRAULIC HOSE - FABRICATE	1		(SUB FOR TH4442133)
10	4444381	PIPE PLUG	1		(SUB FOR TH4444381)
11	19M7662	CAP SCREW	1		M10 X 30
	12M7066	LOCK WASHER	1		10 MM (0.394")

PILOT HYDRAULIC HOSES, OIL LINES AND FILTER

T147417 -UN-30OCT01

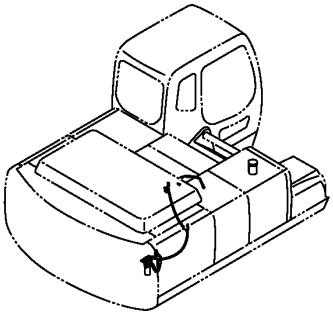

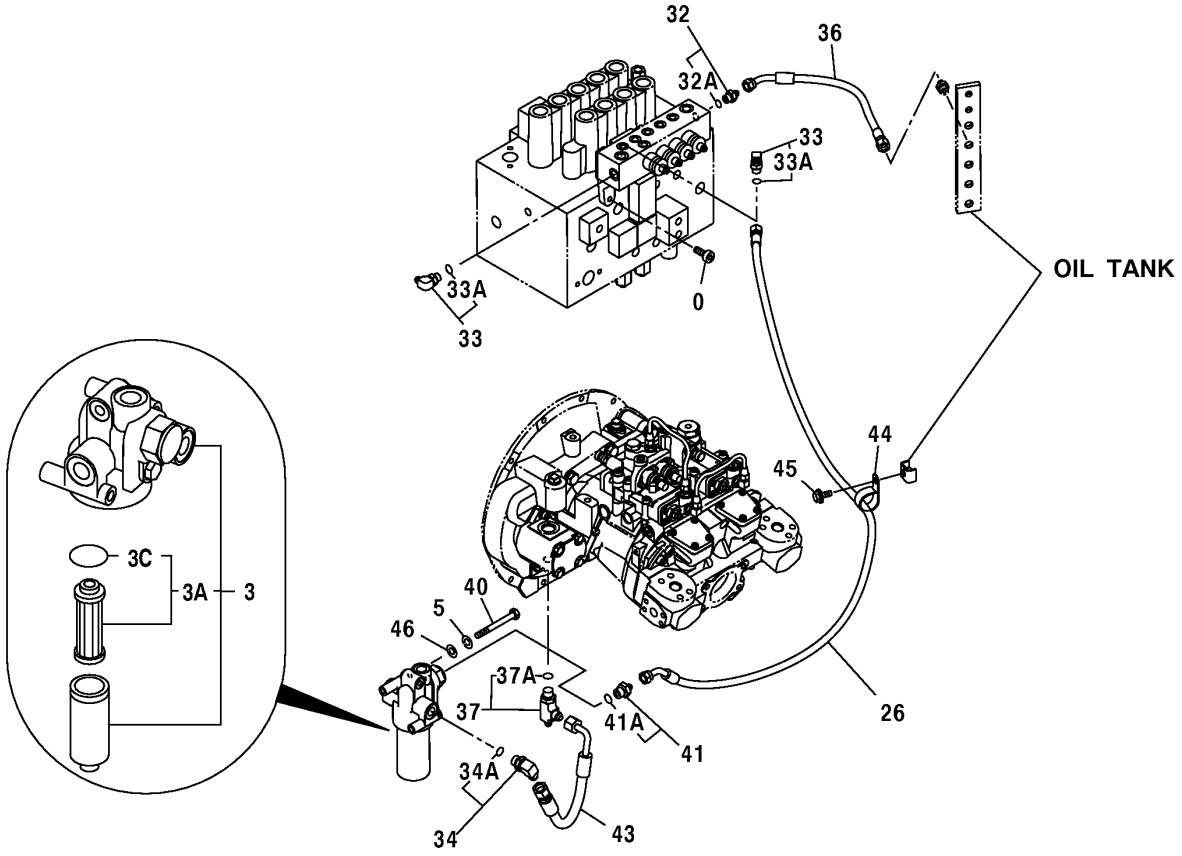

T147417

PILOT HYDRAULIC HOSES, OIL LINES AND FILTER

KEY	PART NO.	PART NAME	QTY	SERIAL NO.	REMARKS
0	J781030	SCREW	2		(SUB FOR AT213614)
3	4408959	FILTER	1		(SUB FOR TH4408959) (HYDRAULIC OIL)
3A	AT186554	FILTER ELEMENT	1		(SUB FOR AT214263)
3C	TH105683	O-RING	1		59.400 X 3.100 MM (2.339" X 0.122")
5	12M7066	LOCK WASHER	2		10 MM (0.394")
26	4427358	HYDRAULIC HOSE - FABRICATE	1		(SUB FOR TH4427358)
32	4200466	ADAPTER	1		(SUB FOR THA852133) (SUB FOR TH108320)
32A	CH11570	O-RING	1		13.800 X 2.400 MM (0.543" X 0.094")
33	4154671	ELBOW FITTING	2		(SUB FOR THA852333)
33A	CH11570	O-RING	1		13.800 X 2.400 MM (0.543" X 0.094")
34	A852344	ELBOW FITTING	1		
34A	4506418	O-RING	1		(SUB FOR U46489)
36	4436575	HYDRAULIC HOSE - FABRICATE	1		(SUB FOR TH4436575)
37	P68010	TEE FITTING	1		
37A	4506418	O-RING	1		(SUB FOR U46489)
40	19M8166	CAP SCREW	2		M10 X 110
41	A852143	ADAPTER	1		(SUB FOR THA852143)
41A	4506418	O-RING	1		(SUB FOR U46489)
43	4450081	HYDRAULIC HOSE - FABRICATE	1		(SUB FOR TH4450081)
44	4193848	CLIP	1		(SUB FOR TH110522)
45	19M7938	CAP SCREW	1		M10 X 20
	12M7066	LOCK WASHER	1		10 MM (0.394")
46	24M7028	WASHER	2		10.500 X 20 X 2 MM (0.413" X 0.787" X 0.079")

PILOT HYDRAULIC LINES

T143260 -UN-11OCT01

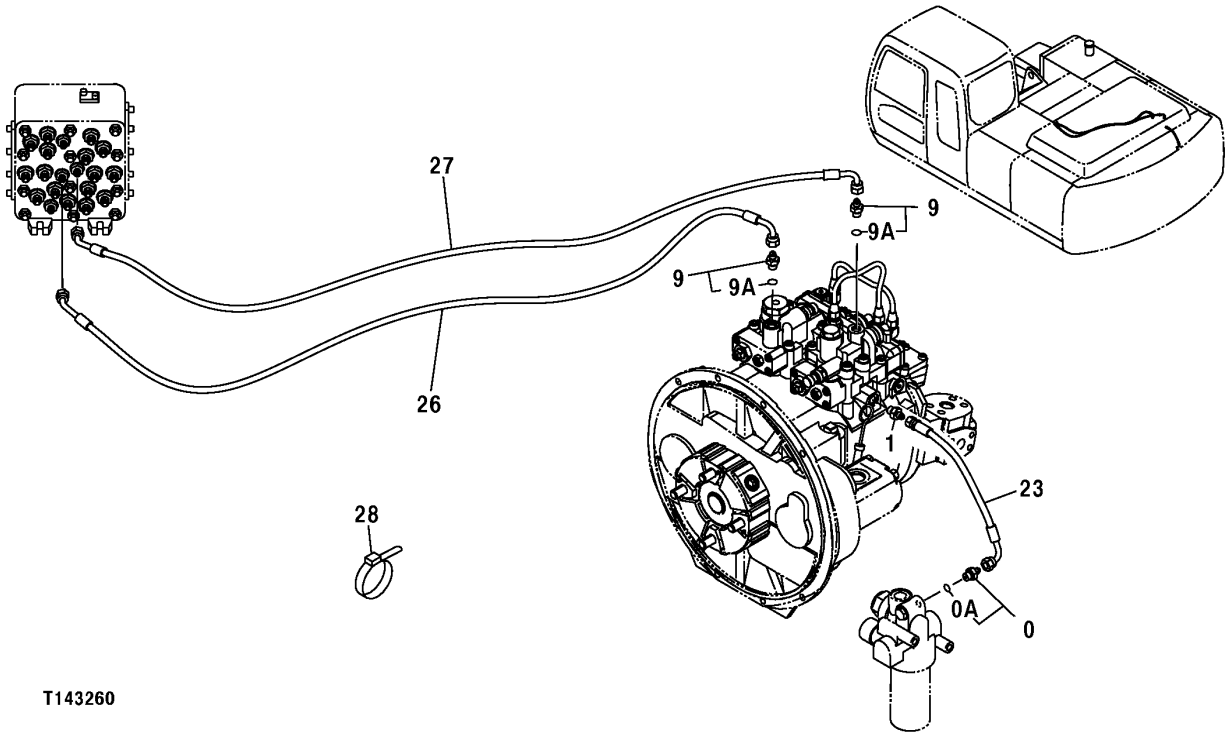

PILOT HYDRAULIC LINES

KEY	PART NO.	PART NAME	QTY	SERIAL NO.	REMARKS
0	P67968	ADAPTER	2		
0A	M800650	PACKING	1		
9	.....	ADAPTER	2		(THA852123 NOT AVAILABLE FOR SERVICE)
9A	M800650	PACKING	1		
23	DH400257	HYDRAULIC HOSE - FABRICATE	1		(SUB FOR THDH400257)
26	4449771	HYDRAULIC HOSE - FABRICATE	1		(SUB FOR TH4449771)
27	4449772	HYDRAULIC HOSE - FABRICATE	1		(SUB FOR TH4449772)
28	H77698	TIE BAND	1		

PILOT LINES(CONTROL VALVE TO ROTARY AND SIGNAL MANIFOLD)
(SERIAL NUMBER -503485)

T164808 -UN-05FEB03

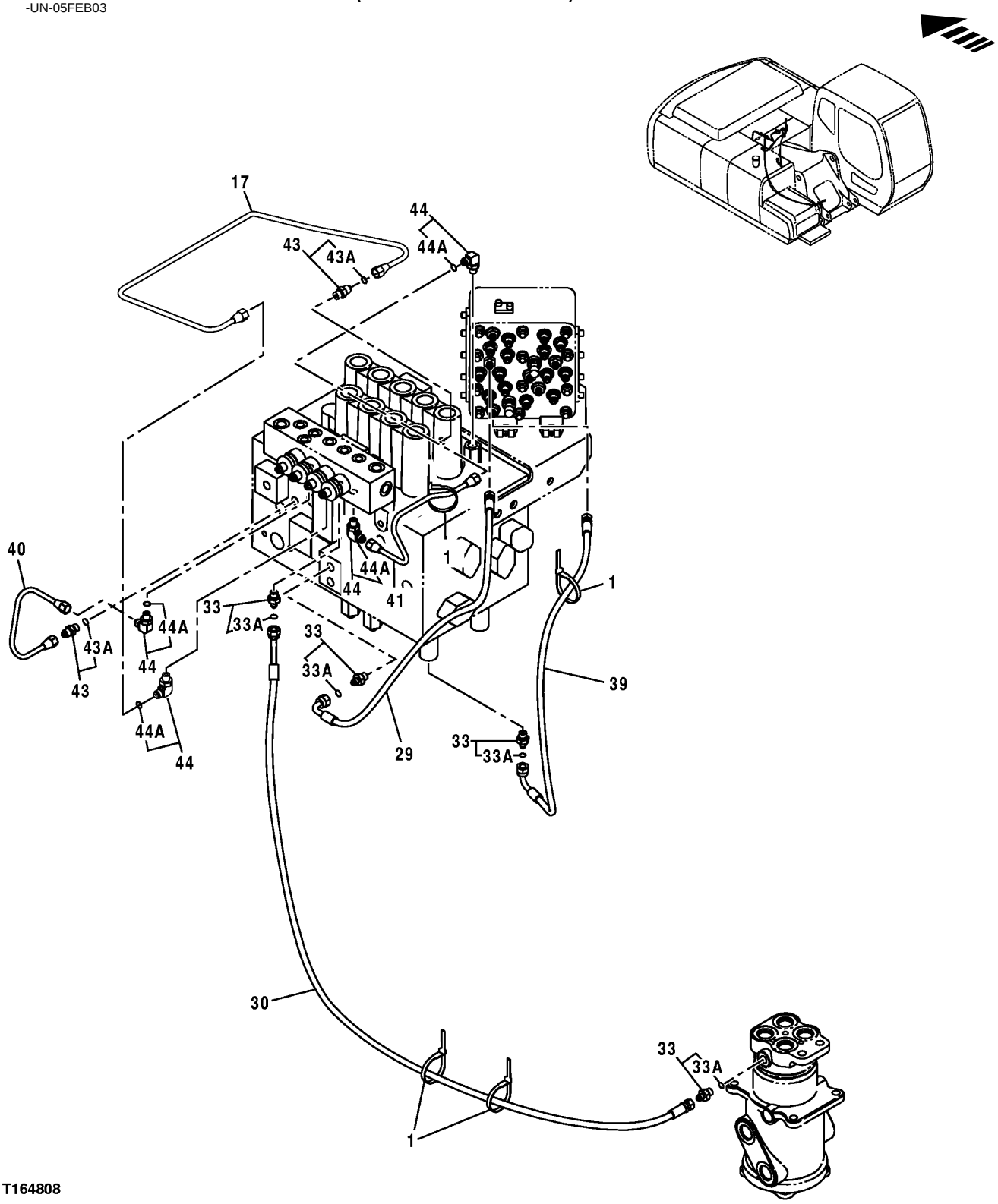

PILOT LINES(CONTROL VALVE TO ROTARY AND SIGNAL MANIFOLD)
(SERIAL NUMBER -503485)

KEY	PART NO.	PART NAME	QTY	SERIAL NO.	REMARKS
1	H77698	TIE BAND	4		
17	3091679	OIL LINE	1		
29	4427111	HYDRAULIC HOSE - FABRICATE	1		(SUB FOR TH4427111)
30	4427113	HYDRAULIC HOSE - FABRICATE	1		(SUB FOR TH4427113)
33	P67968	ADAPTER	4		
33A	M800650	PACKING	1		
39	4435036	HYDRAULIC HOSE - FABRICATE	1		(SUB FOR TH4435036)
40	4452044	OIL LINE	1		(SUB FOR TH4452044)
41	4452045	OIL LINE	1		(SUB FOR TH4452045)
43	4255304	ADAPTER	2		(SUB FOR AT155270)
43A	M800650	PACKING	1		
44	4293950	ELBOW FITTING	4		(SUB FOR AT160584)
44A	M800650	PACKING	1		

PILOT LINES(CONTROL VALVE TO ROTARY AND SIGNAL MANIFOLD)
(SERIAL NUMBER 503486-)

T164824 -UN-05FEB03

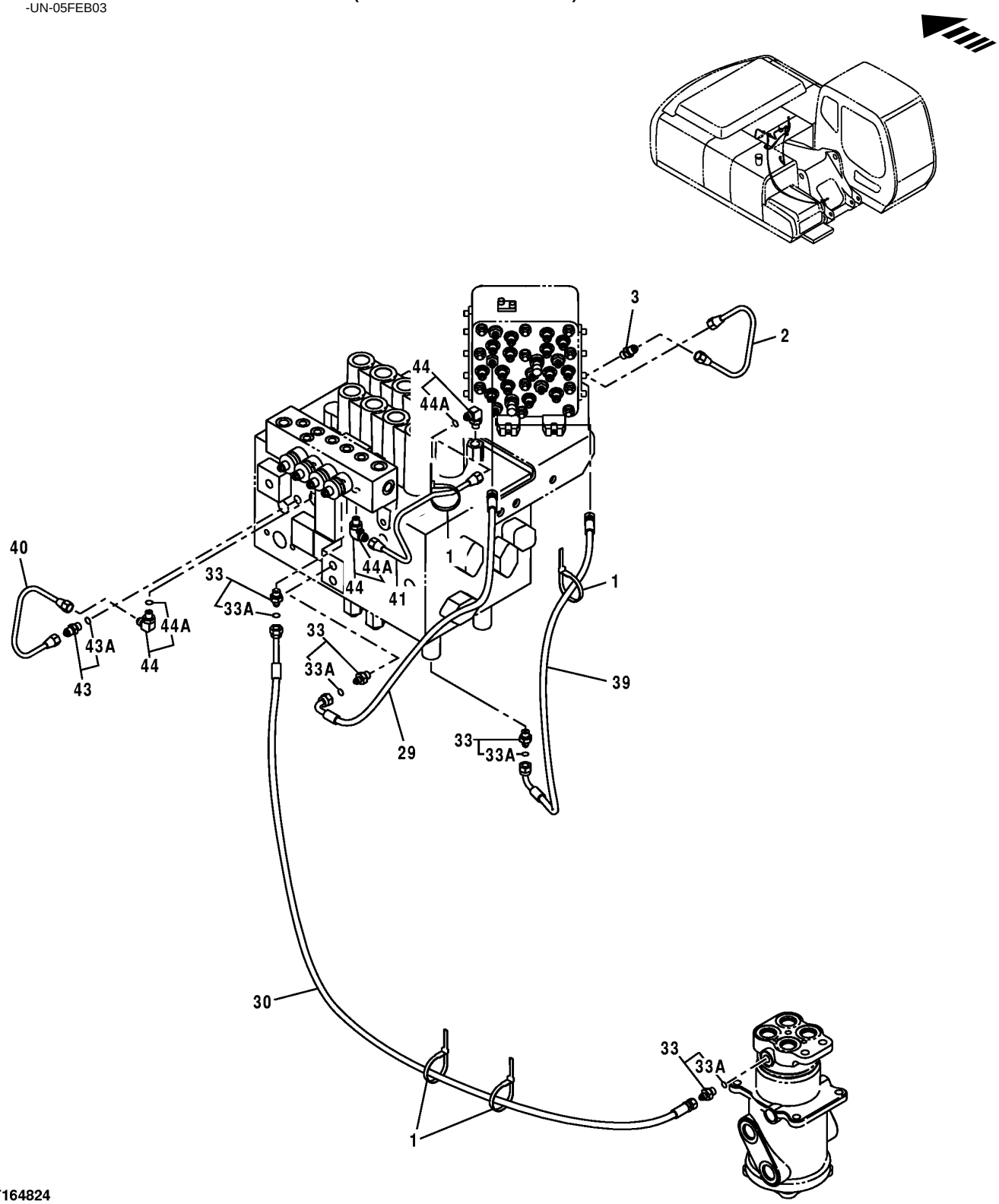

T164824

PILOT LINES(CONTROL VALVE TO ROTARY AND SIGNAL MANIFOLD)
(SERIAL NUMBER 503486-)

KEY	PART NO.	PART NAME	QTY	SERIAL NO.	REMARKS
1	H77698	TIE BAND	4		
2	4488663	HOSE	1		
3	A852122	ADAPTER	1		
29	4427111	HYDRAULIC HOSE - FABRICATE	1		(SUB FOR TH4427111)
30	4427113	HYDRAULIC HOSE - FABRICATE	1		(SUB FOR TH4427113)
33	P67968	ADAPTER	4		
33A	M800650	PACKING	1		
39	4435036	HYDRAULIC HOSE - FABRICATE	1		(SUB FOR TH4435036)
40	4452044	OIL LINE	1		(SUB FOR TH4452044)
41	4452045	OIL LINE	1		(SUB FOR TH4452045)
43	4255304	ADAPTER	1		(SUB FOR AT155270)
43A	M800650	PACKING	1		
44	4293950	ELBOW FITTING	3		(SUB FOR AT160584)
44A	M800650	PACKING	1		

PILOT HYDRAULIC LINES

T147746 -UN-07JAN02

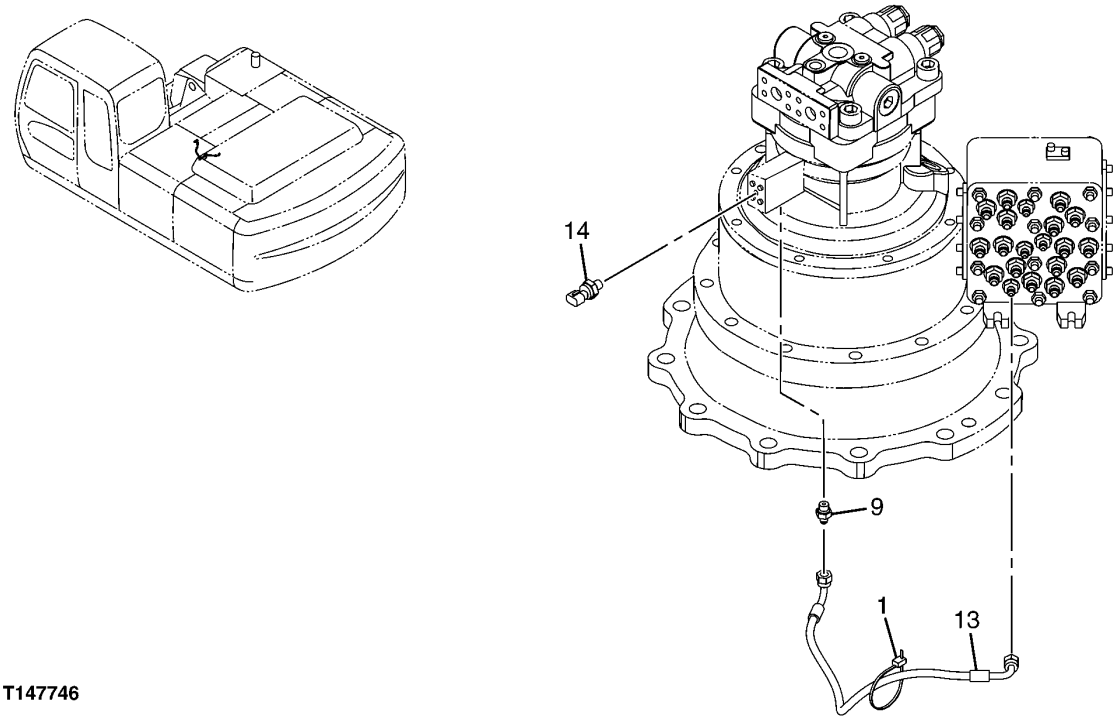

T147746

PILOT HYDRAULIC LINES

KEY	PART NO.	PART NAME	QTY	SERIAL NO.	REMARKS
1	H77698	TIE BAND	1		
9	.....	ADAPTER	1		
	M800650	PACKING	1		
13	4467914	HYDRAULIC HOSE	1		
14	4436535	SENSOR	1		(SUB FOR TH4436535)

PILOT LINES

T149722 -UN-04JAN02

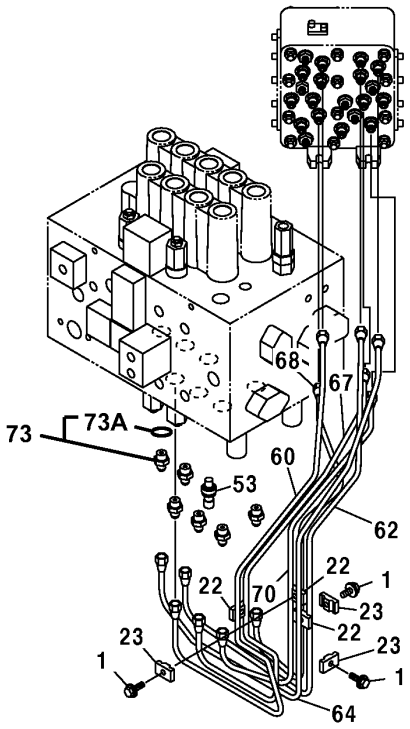

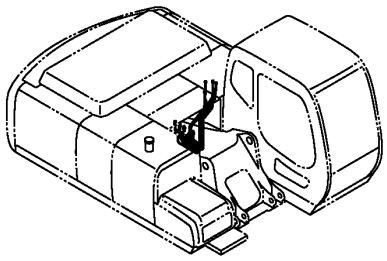

T149722

PILOT LINES

KEY	PART NO.	PART NAME	QTY	SERIAL NO.	REMARKS
1	19M7163	CAP SCREW	3		M8 X 25
	12M7056	LOCK WASHER	3		8 MM (0.315") (SUB FOR 12M7065)
22	9735305	CLAMP	3		(SUB FOR AP33637)
23	9735306	CLAMP	3		(SUB FOR AP33638)
53	4436535	SENSOR	1		(SUB FOR TH4436535)
60	3091680	OIL LINE	1		(SUB FOR TH3091680)
62	3091681	OIL LINE	1		(SUB FOR TH3091681)
64	3091682	OIL LINE	1		(SUB FOR TH3091682)
67	3091683	OIL LINE	1		(SUB FOR TH3091683)
68	3091684	OIL LINE	1		(SUB FOR TH3091684)
70	3091685	OIL LINE	1		(SUB FOR TH3091685)
73	4255305	ADAPTER	6		(SUB FOR AT213809)
73A	CH11570	O-RING	1		13.800 X 2.400 MM (0.543" X 0.094")

PILOT LINES

T143265 -UN-11OCT01

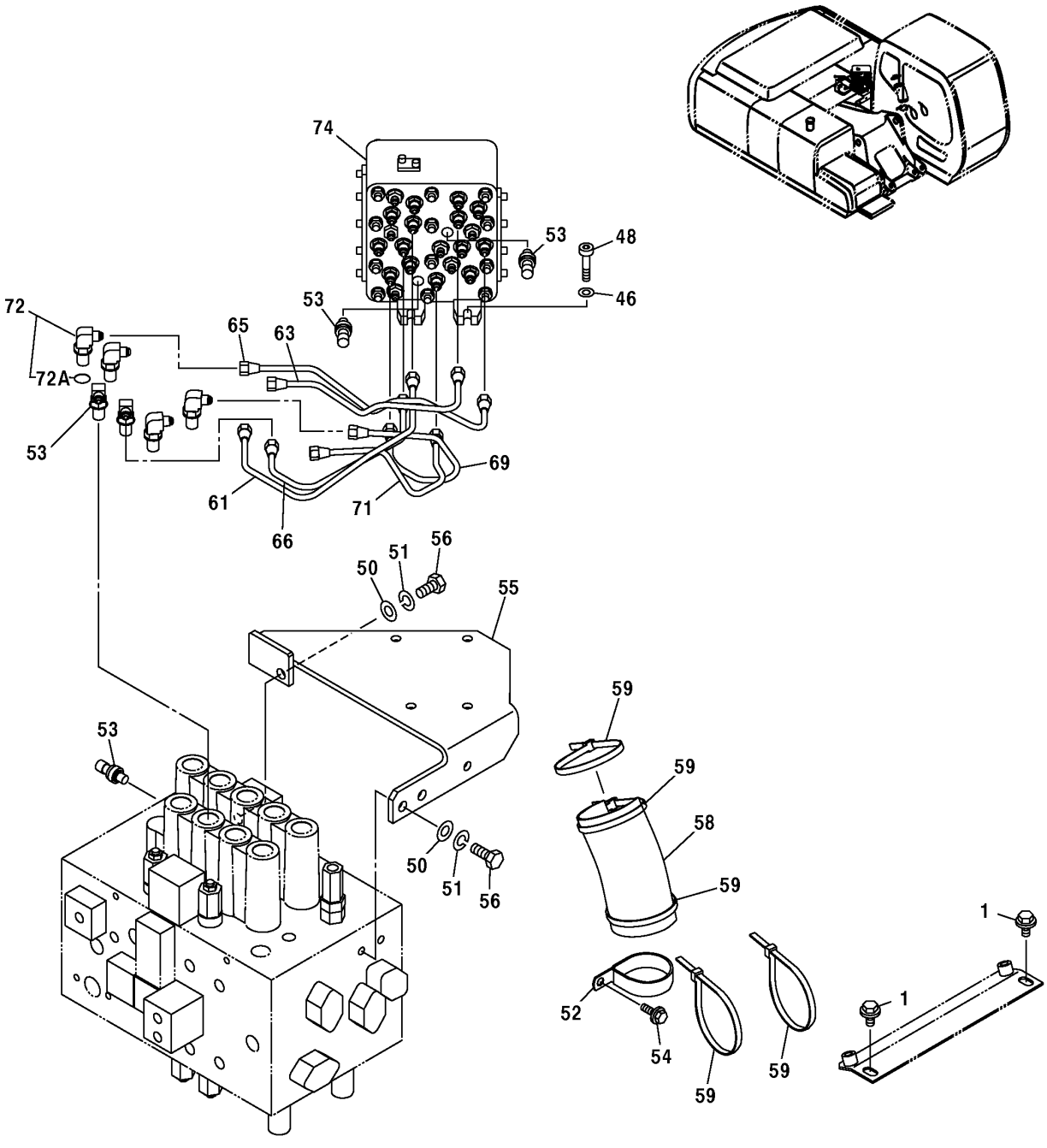

T143265

PILOT LINES

KEY	PART NO.	PART NAME	QTY	SERIAL NO.	REMARKS
1	19M7402	CAP SCREW	2		M10 X 25
	12M7058	LOCK WASHER	2		12 MM (0.472") (SUB FOR 12M7067)
	24M7346	WASHER	2		11 X 20 X 2 MM (0.433" X 0.787" X 0.079")
46	24M7028	WASHER	4		10.500 X 20 X 2 MM (0.413" X 0.787" X 0.079")
48	J781040	SCREW	4		(SUB FOR AT213615)
50	12H317	LOCK WASHER	3		14.288 MM (9/16")
51	24M7085	WASHER	3		15 X 28 X 2.500 MM (0.591" X 1.102" X 0.098")
52	4204136	CLIP	1		(SUB FOR TH4204136)
53	4436535	SENSOR	4		(SUB FOR TH4436535)
54	19M7662	CAP SCREW	1		M10 X 30
	12M7066	LOCK WASHER	1		10 MM (0.394")
55	8082452	BRACKET	1		(SUB FOR TH8082452)
56	19M6332	CAP SCREW	3		M14 X 35
58	4219918	BUSHING	1		(SUB FOR TH111416)
59	H77698	TIE BAND	5		
61	4452046	OIL LINE	1		(BOOM DOWN) (SUB FOR TH4452046)
63	4452047	OIL LINE	1		(ARM IN) (SUB FOR TH4452047)
65	4452048	OIL LINE	1		(RIGHT SWING) (SUB FOR TH4452048)
66	4452049	OIL LINE	1		(BUCKET CURL) (SUB FOR TH4452049)
69	4452050	OIL LINE	1		(LEFT PROPEL REVERSE) (SUB FOR TH4452050)
71	4452051	OIL LINE	1		(RIGHT PROPEL REVERSE) (SUB FOR TH4452051)
72	4420392	FITTING	6		(SUB FOR TH4420392)
72A	CH11570	O-RING	1		13.800 X 2.400 MM (0.543" X 0.094")
74	4468337	FLOW CONTROL HYD. VALVE	1	-503485	(SHUTTLE)
	4486321	VALVE	1	503486-	(SHUTTLE)

PILOT HYDRAULIC LINES

T147783 -UN-07JAN02

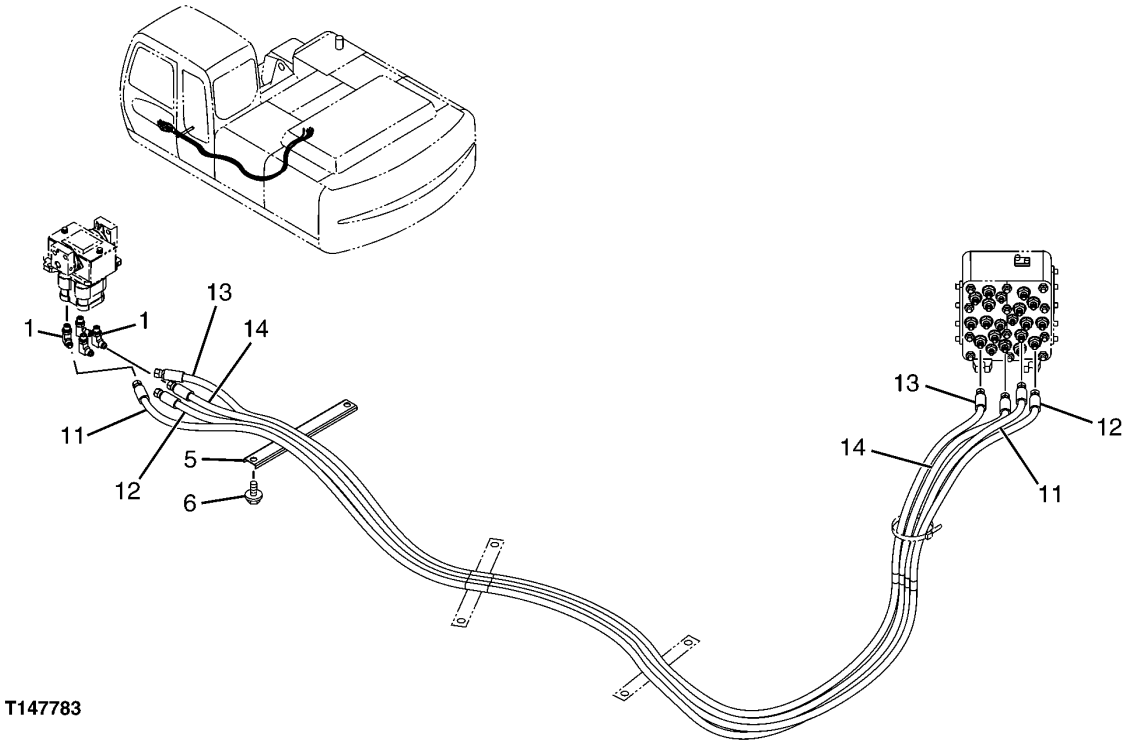

T147783

PILOT HYDRAULIC LINES

KEY	PART NO.	PART NAME	QTY	SERIAL NO.	REMARKS
1	A852323	ELBOW FITTING	4		
	M800650	PACKING	1		
5	4341877	CHANNEL	1		(SUB FOR AT213887)
6	19M7402	CAP SCREW	2		M10 X 25
	12M7096	LOCK WASHER	2		
	24M7096	WASHER	2		
11	4431841	HYDRAULIC HOSE	1		(SUB FOR TH4431841)
12	TH4431842	HYDRAULIC HOSE	1		
13	4459263	HYDRAULIC HOSE	1		(SUB FOR TH4459263)
14	TH4431844	HYDRAULIC HOSE	1		

PILOT HYDRAULIC LINES

T147785 -UN-07JAN02

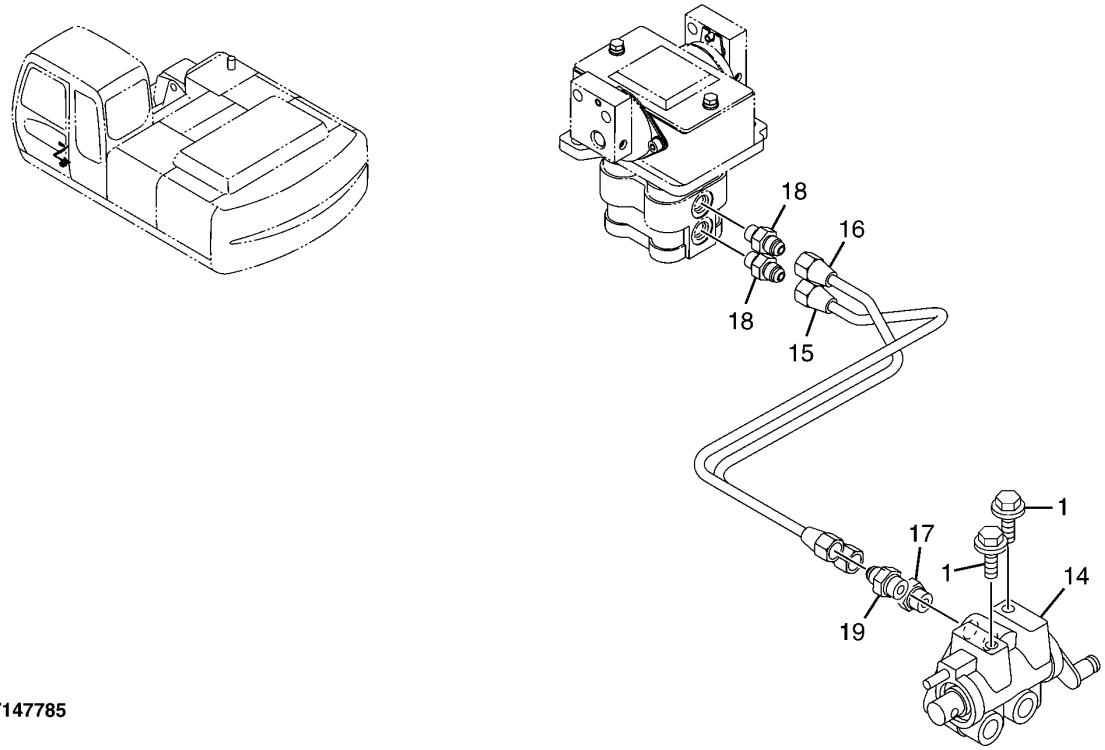

T147785

PILOT HYDRAULIC LINES

KEY	PART NO.	PART NAME	QTY	SERIAL NO.	REMARKS
1	19M7402	CAP SCREW	2		M10 X 25
	12M7066	LOCK WASHER	2		
	24M7028	WASHER	2		
14	4407253	CONTROL VALVE	1		
15	4452052	OIL LINE	1	-XXXXXX	
	4607398	OIL LINE	1	XXXXXX-	
16	4452053	OIL LINE	1	-XXXXXX	
	4607399	OIL LINE	1	XXXXXX-	
17	4255305	ADAPTER	1		(SUB FOR AT213809)
	CH11570	O-RING	1		
18	4255304	ADAPTER	2		(SUB FOR AT155270)
	M800650	PACKING	1		
19	4452326	FILTER ELEMENT	1		
	CH11570	O-RING	1		

PILOT HYDRAULIC LINES

T149633 -UN-10JAN02

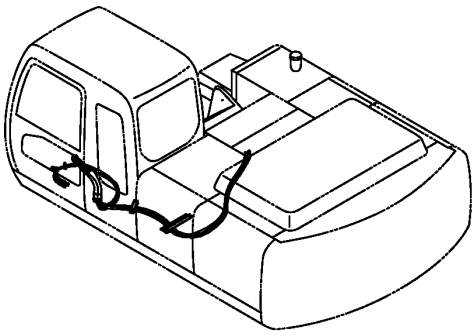

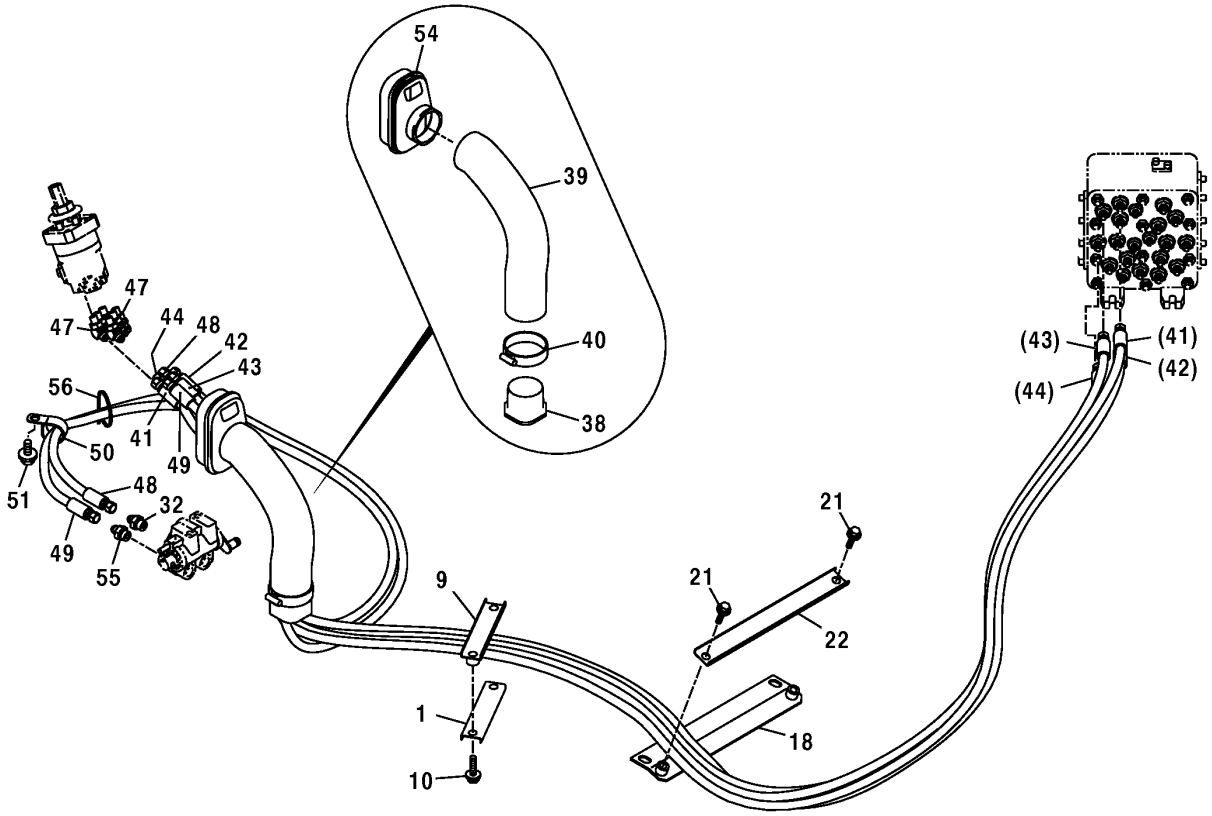

T149633

HYDRAULIC PLUMBING (LEFT PILOT CONTROLLER)

KEY	PART NO.	PART NAME	QTY	SERIAL NO.	REMARKS
1	4412666	CLAMP	1		
9	9751787	CLAMP	1		
10	19M7358	CAP SCREW	2		M10 X 40
18	8077444	BRACKET	1		
21	19M7402	CAP SCREW	2		M10 X 25
22	4425177	CLAMP	1		
32	A852133	ADAPTER	1		
38	3079728	BUSHING	1		
39	4351175	HOSE	1		
40	4351774	CLAMP	1		
41	4438247	HYDRAULIC HOSE	1		
42	4438251	HYDRAULIC HOSE	1		
43	4438252	HYDRAULIC HOSE	1		
44	4438255	HYDRAULIC HOSE	1		
47	A852223	ELBOW FITTING	6		
48	4437653	HYDRAULIC HOSE	1		
49	4437656	HYDRAULIC HOSE	1		
50	4193848	CLIP	1		(SUB FOR 4190264)
51	19M7938	CAP SCREW	1		M10 X 20
54	2045998	BUSHING	1		
55	4261938	FITTING	1		(SUB FOR AT154285)
56	H77698	CLIP	1		

PILOT HYDRAULIC LINES

T149643 -UN-10JAN02

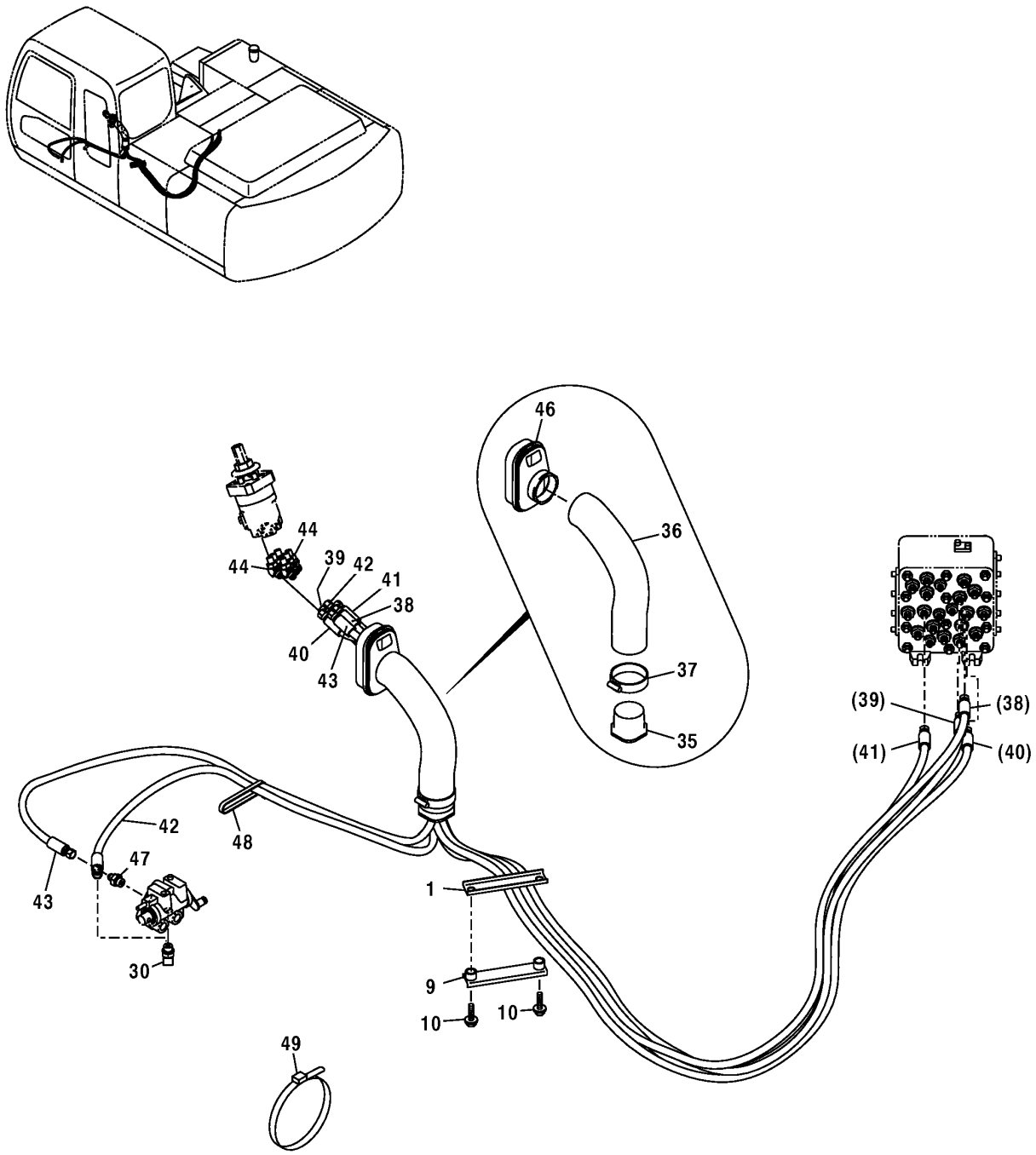

T149643

PILOT HYDRAULIC LINES

KEY	PART NO.	PART NAME	QTY	SERIAL NO.	REMARKS
1	4412666	CLAMP	1		
9	9751787	CLAMP	1		
10	19M7383	CAP SCREW	2		M10 X 55
30	P67989	ELBOW FITTING	1		
35	3079728	BUSHING	1		
36	4351175	HOSE	1		
37	4351774	CLAMP	1		
38	4438258	HYDRAULIC HOSE	1		
39	4438260	HYDRAULIC HOSE	1		
40	4438264	HYDRAULIC HOSE	1		
41	4438266	HYDRAULIC HOSE	1		
42	4438288	HYDRAULIC HOSE	1		
43	4438290	HYDRAULIC HOSE	1		
44	A852223	ELBOW FITTING	6		
46	2045998	BUSHING	1		
47	4261938	FITTING	1		(SUB FOR AT154285)
48	H77698	CLIP	1		
49	H77698	CLIP	1		

PILOT HYDRAULIC LINES(SERIAL NUMBER -503485)

T153975 -UN-16APR02

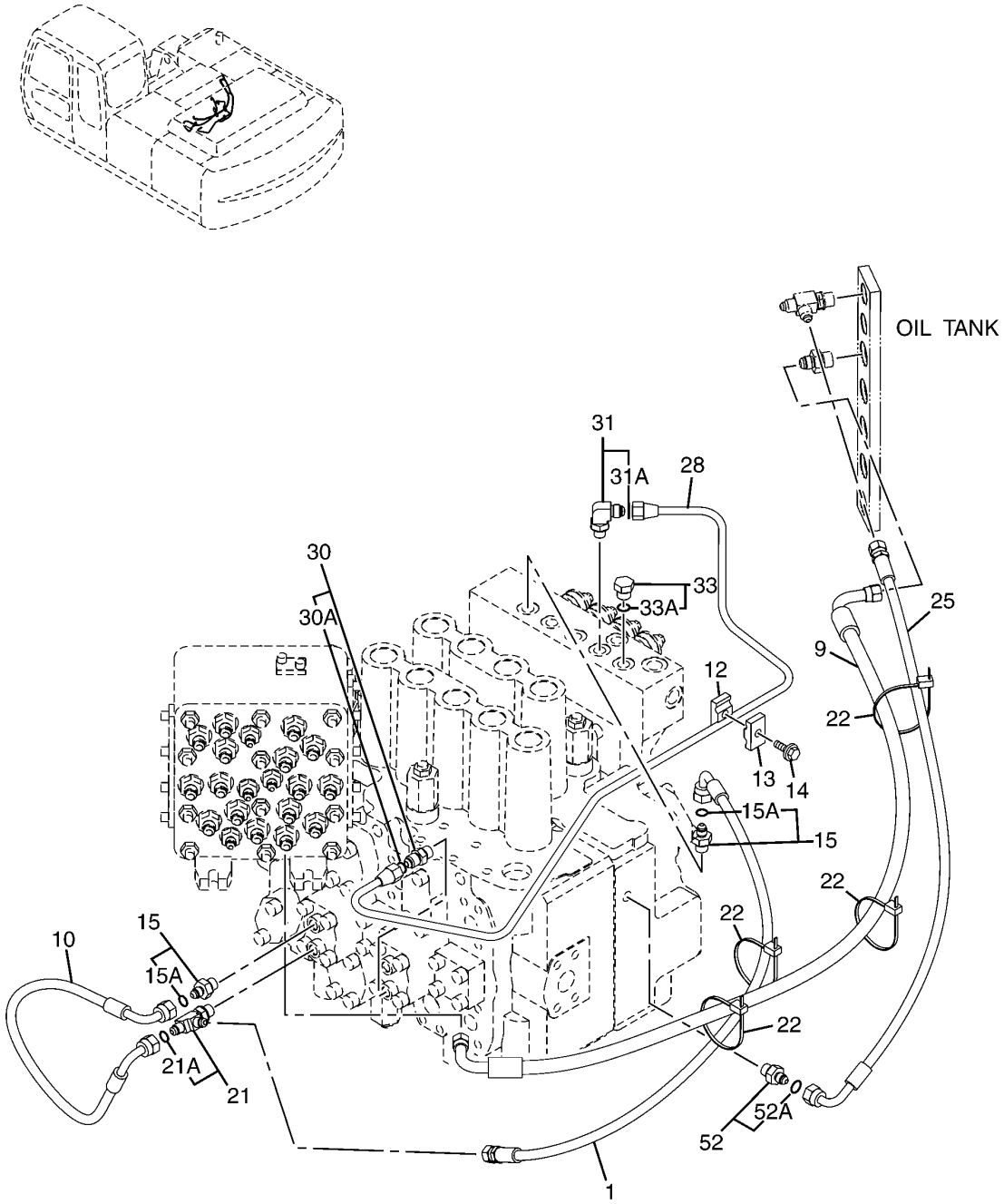

T153975

PILOT HYDRAULIC LINES(SERIAL NUMBER -503485)

KEY	PART NO.	PART NAME	QTY	SERIAL NO.	REMARKS
1	4468525	HOSE	1		
9	4437950	HYDRAULIC HOSE - FABRICATE	1		(SUB FOR TH4437950)
10	4427351	HYDRAULIC HOSE - FABRICATE	1		(SUB FOR TH4427351)
12	9735305	CLAMP	1		(SUB FOR AP33637)
13	9735306	CLAMP	1		(SUB FOR AP33638)
14	19M7163	CAP SCREW	1		M8 X 25
15	P67968	ADAPTER	3		
15A	M800650	PACKING	1		
21	A852422	TEE FITTING	1		(SUB FOR THA852422)
22	H77698	TIE BAND	4		
25	4444735	HYDRAULIC HOSE - FABRICATE	1		(SUB FOR TH4444735)
28	3091686	OIL LINE	1		(SUB FOR TH3091686)
30	4255304	ADAPTER	1		(SUB FOR AT155270)
	M800650	PACKING	1		
30A	M800650	PACKING	1		
31	4293950	ELBOW FITTING	1		(SUB FOR AT160584)
	M800650	PACKING	1		
31A	M800650	PACKING	1		
33	A885002	PIPE PLUG	2		(SUB FOR THA885002)
33A	M800650	PACKING	1		
52	4200465	ADAPTER	1		(SUB FOR TH108328)
52A	M800650	PACKING	1		

PILOT HYDRAULIC LINES(SERIAL NUMBER 503486-)

T165132 -UN-10FEB03

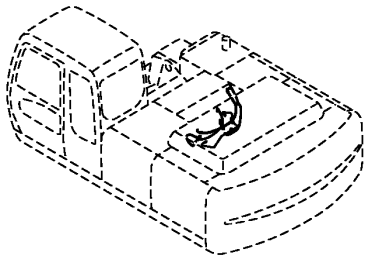

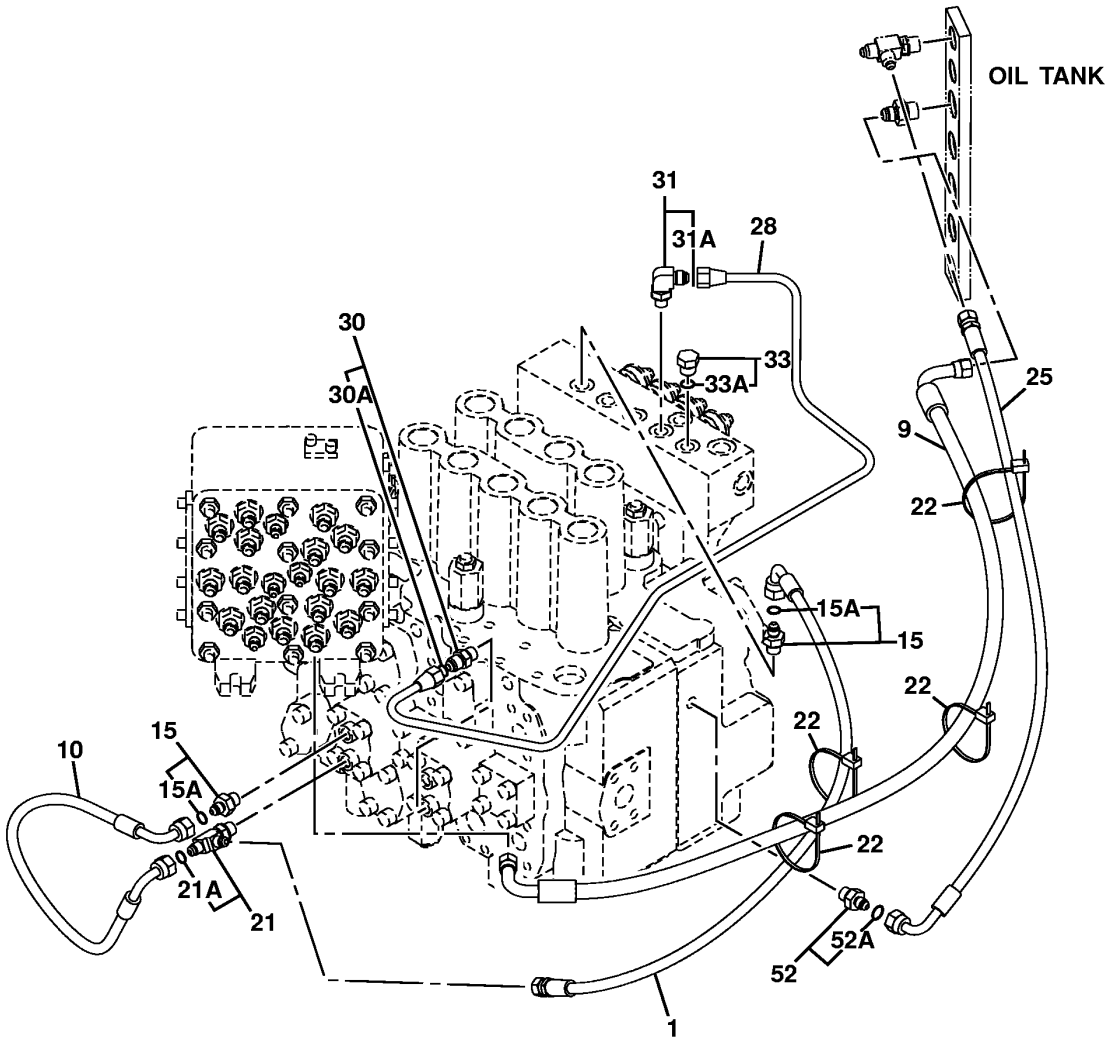

T165132

PILOT HYDRAULIC LINES(SERIAL NUMBER 503486-)

KEY	PART NO.	PART NAME	QTY	SERIAL NO.	REMARKS
1	4468525	HOSE	1		
9	4437950	HYDRAULIC HOSE - FABRICATE	1		(SUB FOR TH4437950)
10	4427351	HYDRAULIC HOSE - FABRICATE	1		(SUB FOR TH4427351)
15	P67968	ADAPTER	3		
15A	M800650	PACKING	1		
21	A852422	TEE FITTING	1		(SUB FOR THA852422)
22	H77698	TIE BAND	4		
25	4444735	HYDRAULIC HOSE - FABRICATE	1		(SUB FOR TH4444735)
28	3091686	OIL LINE	1		(SUB FOR TH3091686)
30	4255304	ADAPTER	1		(SUB FOR AT155270)
	M800650	PACKING	1		
30A	M800650	PACKING	1		
31	4293950	ELBOW FITTING	1		(SUB FOR AT160584)
	M800650	PACKING	1		
31A	M800650	PACKING	1		
33	A885002	PIPE PLUG	2		(SUB FOR THA885002)
33A	M800650	PACKING	1		
52	4200465	ADAPTER	1		(SUB FOR TH108328)
52A	M800650	PACKING	1		

PILOT HYDRAULIC PIPINGS

T159322 -UN-12SEP02

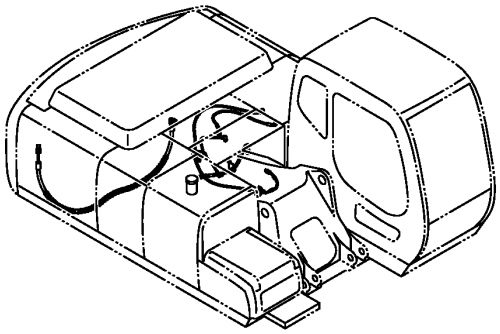

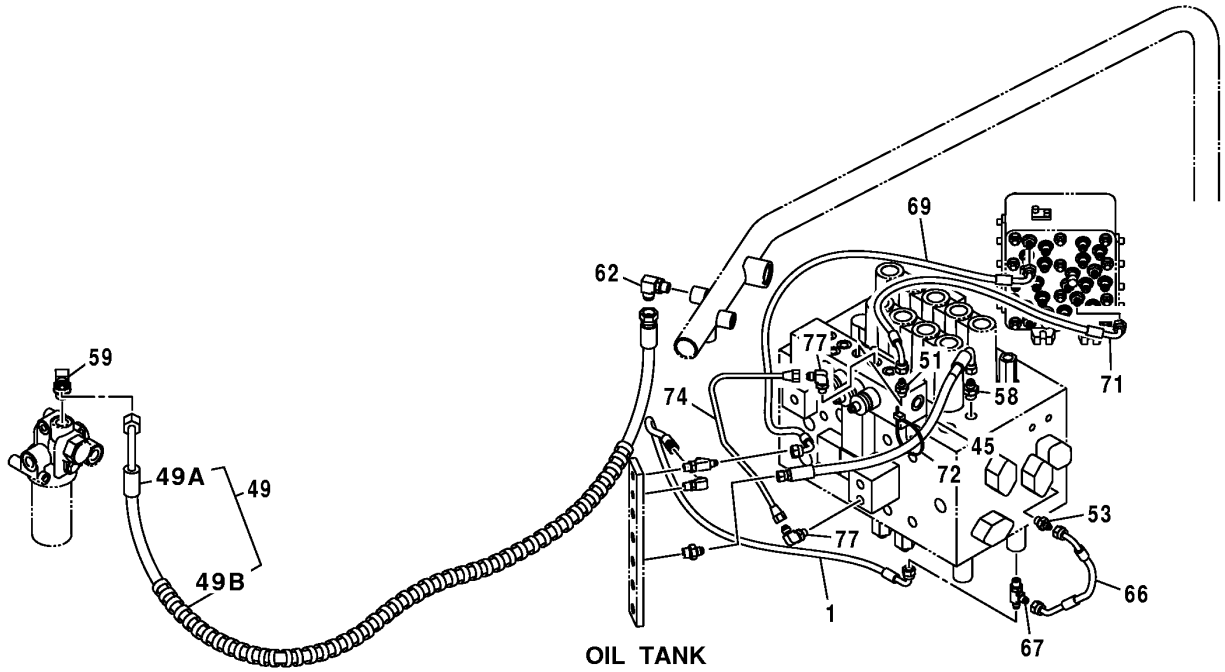

T159322

PILOT HYDRAULIC PIPINGS

KEY	PART NO.	PART NAME	QTY	SERIAL NO.	REMARKS
1	4427119	HYDRAULIC HOSE - FABRICATE	1		(SUB FOR TH4427119)
45	4427152	HYDRAULIC HOSE - FABRICATE	1		
49A	4331726	HOSE	1		
49B	4327293	HOSE GUARD	3		
51	A852122	ADAPTER	1		
	M800650	PACKING	1		
53	A852122	ADAPTER	2		
	M800650	PACKING	1		
58	A852133	ADAPTER	1		
	CH11570	O-RING	1		
59	A852344	ELBOW FITTING	1		
	4506418	O-RING	1		
62	A852334	ELBOW FITTING	1		
	CH11570	O-RING	1		
66	4427357	HYDRAULIC HOSE - FABRICATE	1		
67	A852422	TEE FITTING	1		
	M800650	PACKING	1		
69	4444461	HYDRAULIC HOSE - FABRICATE	1		
71	4442812	HYDRAULIC HOSE - FABRICATE	1		
72	H77698	TIE BAND	1		
74	4452054	OIL LINE	1		
77	4293950	ELBOW FITTING	2		
	M800650	PACKING	1		

PILOT HYDRAULIC LINES

T147798 -UN-07JAN02

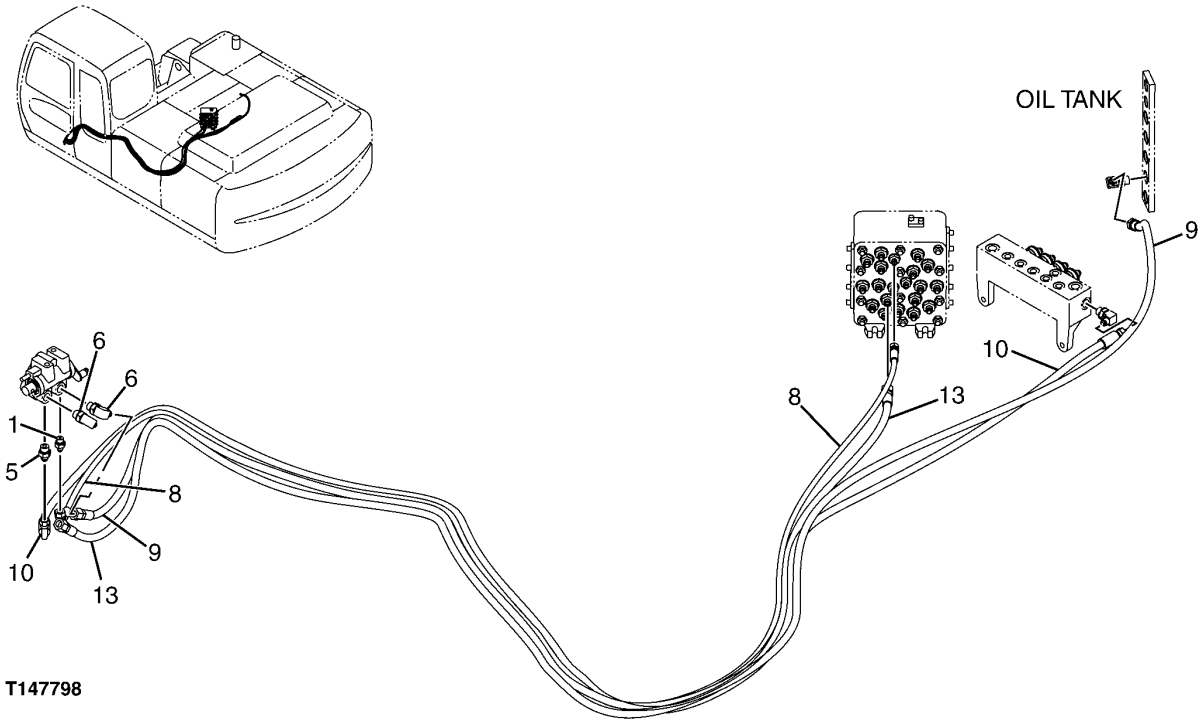

T147798

PILOT HYDRAULIC LINES

KEY	PART NO.	PART NAME	QTY	SERIAL NO.	REMARKS
1	P67968	ADAPTER	1		
	M800650	PACKING	1		
5	A852133	ADAPTER	1		(SUB FOR P67978)
	CH11570	O-RING	1		
6	P67989	ELBOW FITTING	2		
	CH11570	O-RING	1		
8	TH4442173	HYDRAULIC HOSE	1		
9	TH4444729	HYDRAULIC HOSE	1		
10	TH4444730	HYDRAULIC HOSE	1		
13	TH4465617	HYDRAULIC HOSE	1		

FRONT PIPINGS, SUPER LONG BOOM

TP67421 -UN-07SEP00

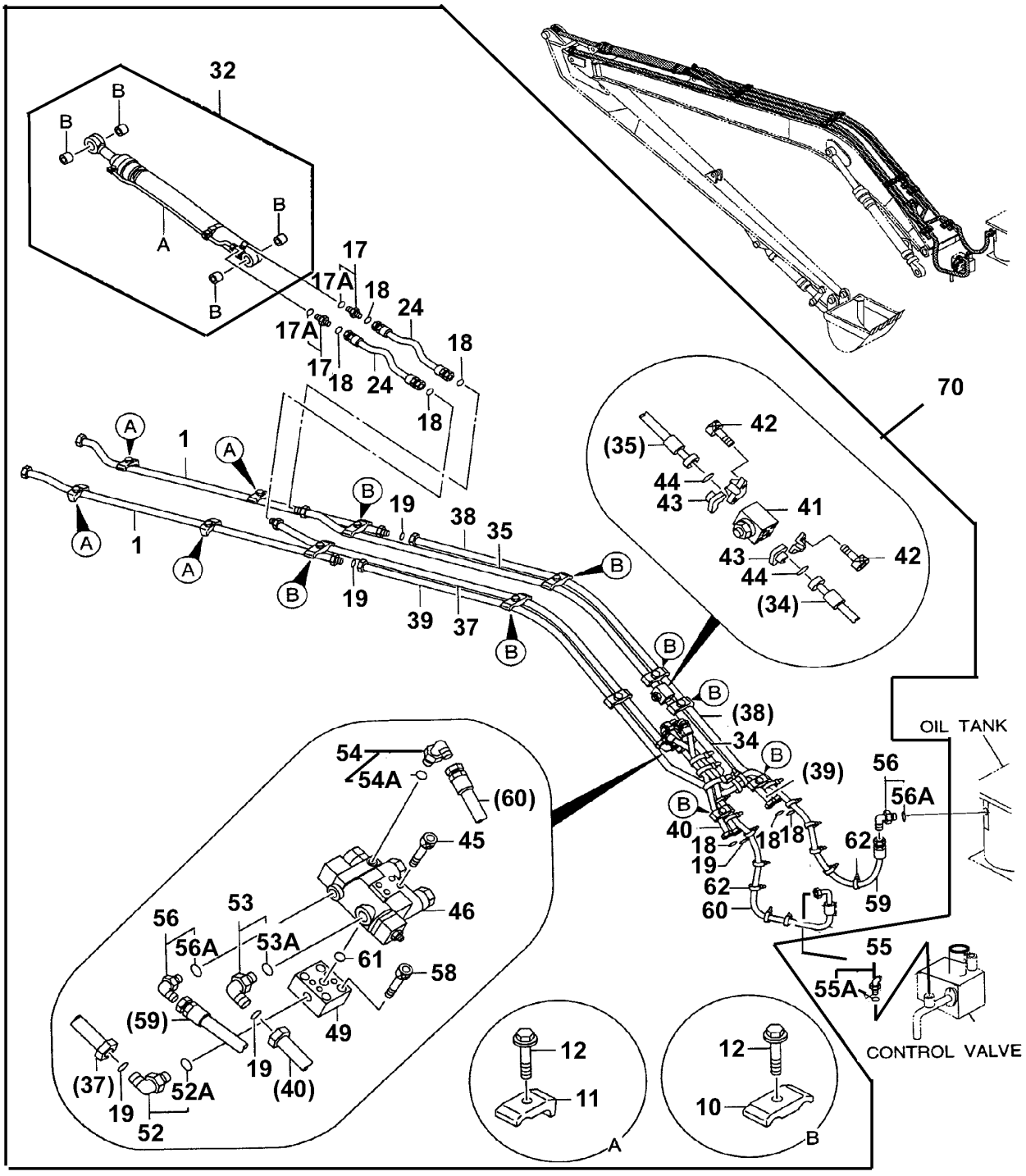

TP67421

FRONT PIPINGS, SUPER LONG BOOM

KEY	PART NO.	PART NAME	QTY	SERIAL NO.	REMARKS
1	8052578	TUBE	2		(SUB FOR AT160884)
10	4189859	CLAMP	9		(SUB FOR TH109071)
11	4190126	CLAMP	4		(SUB FOR TH109830)
12	19M7363	CAP SCREW	13		M12 X 60, (SUB FOR AT154207)
17	4189537	ADAPTER	2		(SUB FOR TH110496)
17A	TH101926	O-RING	1		
18	T77858	O-RING	7		
19	T76938	O-RING	5		
24	AT155257	HYDRAULIC HOSE - FABRICATE	2		
32	9150146	CYLINDER	1		BOOM, (SUB FOR AT186500)
32A	.....	CYLINDER	1		
32B	4352399	BUSHING	4		(SUB FOR AT213965)
34	8066949	PIPE	1		(SUB FOR AT186469)
35	8066950	PIPE	1		(SUB FOR AT186470)
37	8066952	PIPE	1		(SUB FOR AT186471)
38	8066953	PIPE	1		(SUB FOR AT186472)
39	8066954	PIPE	1		(SUB FOR AT186473)
40	8067195	PIPE	1		(SUB FOR AT186474)
41	4372037	VALVE	1		(SUB FOR AT186475)
42	J781030	SCREW	8		(SUB FOR AT213614)
43	R29424	FLANGE FITTING	4		(SUB FOR TH108300)
44	T59014	O-RING	2		
45	M341290	BOLT	4		(SUB FOR AT127258)
46	9153984	VALVE	1		(SUB FOR AT186719)
49	4374604	HOUSING	1		(SUB FOR AT186476)
52	4205391	ELBOW FITTING	1		(SUB FOR AT127606)
52A	4506424	O-RING	1		(SUB FOR TH100055)
53	4198799	ELBOW FITTING	1		(SUB FOR TH108325)
53A	TH101926	O-RING	1		
54	4154672	ELBOW FITTING	1		(SUB FOR TH101008)
54A	4506418	O-RING	1		(SUB FOR U46489)
55	4353073	ELBOW FITTING	1		(SUB FOR AT186478)
55A	4506424	O-RING	1		(SUB FOR TH100055)
56	4154671	ELBOW FITTING	2		(SUB FOR TH101047)
56A	CH11570	O-RING	1		
58	J781270	BOLT	4		(SUB FOR AT186477)
59	4342976	HYDRAULIC HOSE	1		(SUB FOR AT219678)
60	4375256	HYDRAULIC HOSE	1		(SUB FOR AT186482)
61	AT264324	O-RING	1		(SUB FOR TH100044)
62	4373212	CLIP	20		(SUB FOR AT186479)
70	.....	KIT	1		(WHOLEGOODS) (AT186457 NO LONGER AVAILABLE) (LONG FRONT ASSEMBLY KIT) (ALSO ORDER T190565, T153672, T153673, AH165673 AND AH165671 CYLINDERS) (CONTAINS ALL ITEMS ON THIS PAGE - ADDITIONAL COMPONENTS LISTED ON SEPARATE PAGES)

SUPER LONG BOOM ARM CYLINDER COMPONENTS

T195754 -UN-31OCT03

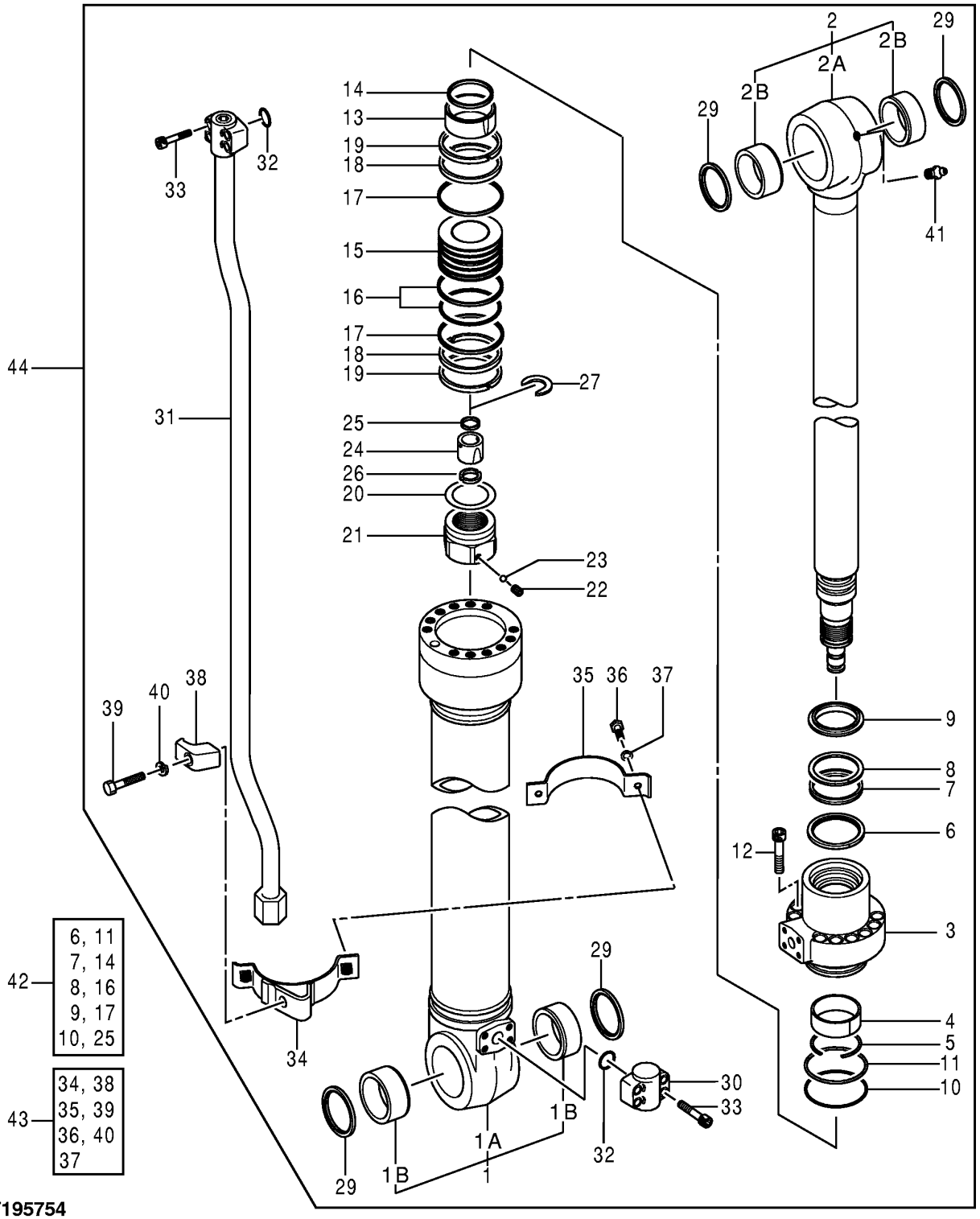

T195754

SUPER LONG ARM CYLINDER COMPONENTS

KEY	PART NO.	PART NAME	QTY	SERIAL NO.	REMARKS
1	0667401	CYLINDER	1		(ASSEMBLY)
1A	.....	CYLINDER	1		
1B	4352399	BUSHING	2		
2	0667402	ROD	1		(PISTON ROD ASSEMBLY)
2A	.....	ROD	1		(PISTON)
2B	4352399	BUSHING	2		
3	H154780	HYDR. CYLINDER ROD GUIDE	1		(SUB FOR 0667403)
4	T108050	WEAR RING	1		(SUB FOR 0309204)
5	0236905	SNAP RING	1		
6	AH148454	SEAL	1		(SUB FOR 0409905)
7	H155308	SEAL	1		(SUB FOR 0667404)
8	H155310	BACK-UP RING	1		(SUB FOR 0667405)
9	H155311	SEAL	1		(SUB FOR 0667406)
10	A811125	O-RING	1		
11	0409906	BACK-UP RING	1		
12	19M8913	SCREW	12		M18 X 80, (SUB FOR 0409907)
13	H155319	RING	1		(SUB FOR 0409908)
14	H155320	SEAL	1		(SUB FOR 0667407)
15	0481804	PISTON	1		(SUB FOR 0667408)
16	0254305	SEAL	1		
17	H155316	BACK-UP RING	2		(SUB FOR 0409911)
18	H155317	SEAL	2		(SUB FOR 0667409)
19	H155318	SEAL	2		(SUB FOR 0254309)
20	0309216	SHIM	1		
21	H155325	NUT	1		(SUB FOR 0667410)
22	22M7009	SET SCREW	1		M12 X 12, (SUB FOR 0309011)
23	T13624	BALL	1		(SUB FOR 0111707)
24	H155321	SPACER	1		(SUB FOR 0409913)
25	H155322	SEAL	1		(SUB FOR 0667411)
26	H155329	RING	2		(SUB FOR 0409915)
27	H155330	PISTON RING	1		(SUB FOR 0409916)
29	TH102446	SEAL	4		(SUB FOR 4067902)
30	H155333	SHOULDER FITTING	1		(SUB FOR 0387307)
31	AH148456	OIL LINE	1		(SUB FOR 0667412)
32	TH102788	O-RING	2		BOOM, (SUB FOR 984614)
33	M800636	BOLT	8		(SUB FOR 0309020)
34	AH148457	CLAMP	1		(SUB FOR 0667413)
35	H155347	CLAMP	1		(SUB FOR 0409920)
36	19M7550	CAP SCREW	2		M10 X 35, (SUB FOR 0408815)
37	12M7066	LOCK WASHER	2		10 MM, (SUB FOR 0325913)
38	0309219	CLAMP	1		
39	19M8348	CAP SCREW	1		M12 X 65, (SUB FOR 0224115)
40	12M7058	LOCK WASHER	1		12 MM, (SUB FOR 0224115)
41	TH100074	LUBRICATION FITTING	1		(SUB FOR J75481)
42	AH148453	KIT	1		(SEAL) (SUB FOR 4364916)
43	.....	KIT	1		(CLAMP) (0667414 NO LONGER AVAILABLE)
44	9150146	CYLINDER	1		(ARM)

THIRD FUNCTION BOOM HYDRAULIC HOSES AND OIL LINES

T151040 -UN-07FEB02

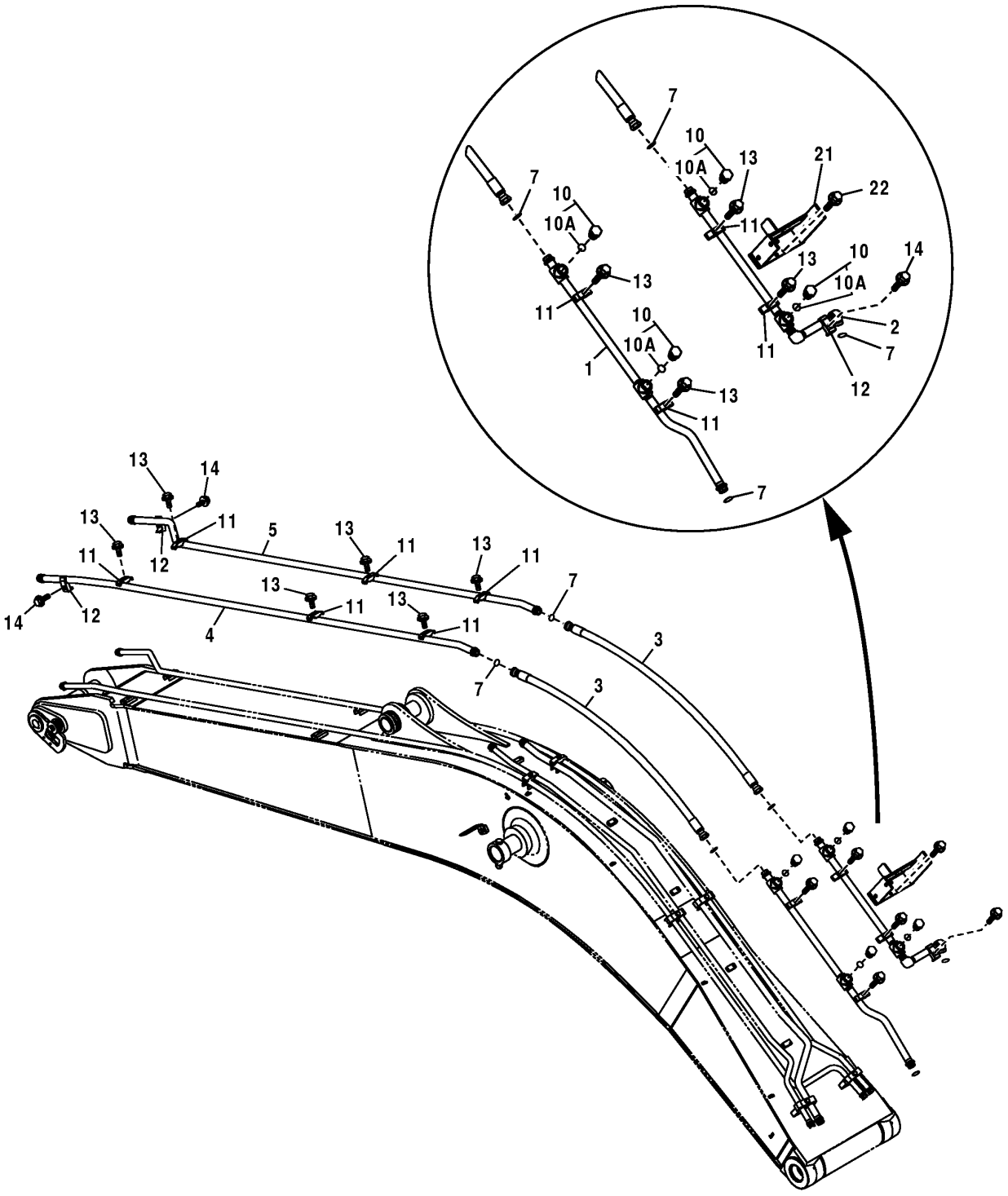

T151040

THIRD FUNCTION BOOM HYDRAULIC HOSES AND OIL LINES

KEY	PART NO.	PART NAME	QTY	SERIAL NO.	REMARKS
1	8081638J	OIL LINE	1		(SUB FOR TH8081638J)
2	8080620J	OIL LINE	1		(SUB FOR TH8080620J)
3	4357695	HYDRAULIC HOSE - FABRICATE	2		(SUB FOR TH4357695)
4	DH800081J	OIL LINE	1		(SUB FOR TH8082052J, 8082052J)
5	DH800082J	OIL LINE	1		(SUB FOR TH8082053J, 8082053J)
7	T76938	O-RING	6		23.520 X 1.778 MM (0.926" X 0.070")
10	4113926	DRAIN PLUG	4		(SUB FOR AT126200)
10A	TH101926	O-RING	1		28.700 X 3.500 MM (1.130" X 0.138")
11	4153488	CLAMP	10		(SUB FOR TH103780)
12	4190127	CLAMP	3		(SUB FOR TH108313)
13	19M8348	CAP SCREW	10		M12 X 65
	12H301	LOCK WASHER	10		12.700 MM (1/2")
14	19M8088	CAP SCREW	3		M12 X 75
	24M7047	WASHER	3		13 X 24 X 2.500 MM (0.512" X 0.945" X 0.098")
	12M7058	LOCK WASHER	3		12 MM (0.472") (SUB FOR 12M7067)
21	8079431J	BRACKET	1		(SUB FOR TH8079431J)
22	19M7662	CAP SCREW	4		M10 X 30
	12M7066	LOCK WASHER	4		10 MM (0.394")
	24M7028	WASHER	4		10.500 X 20 X 2 MM (0.413" X 0.787" X 0.079")

THIRD FUNCTION ARM HYDRAULIC HOSES AND OIL LINES

T151041 -UN-07FEB02

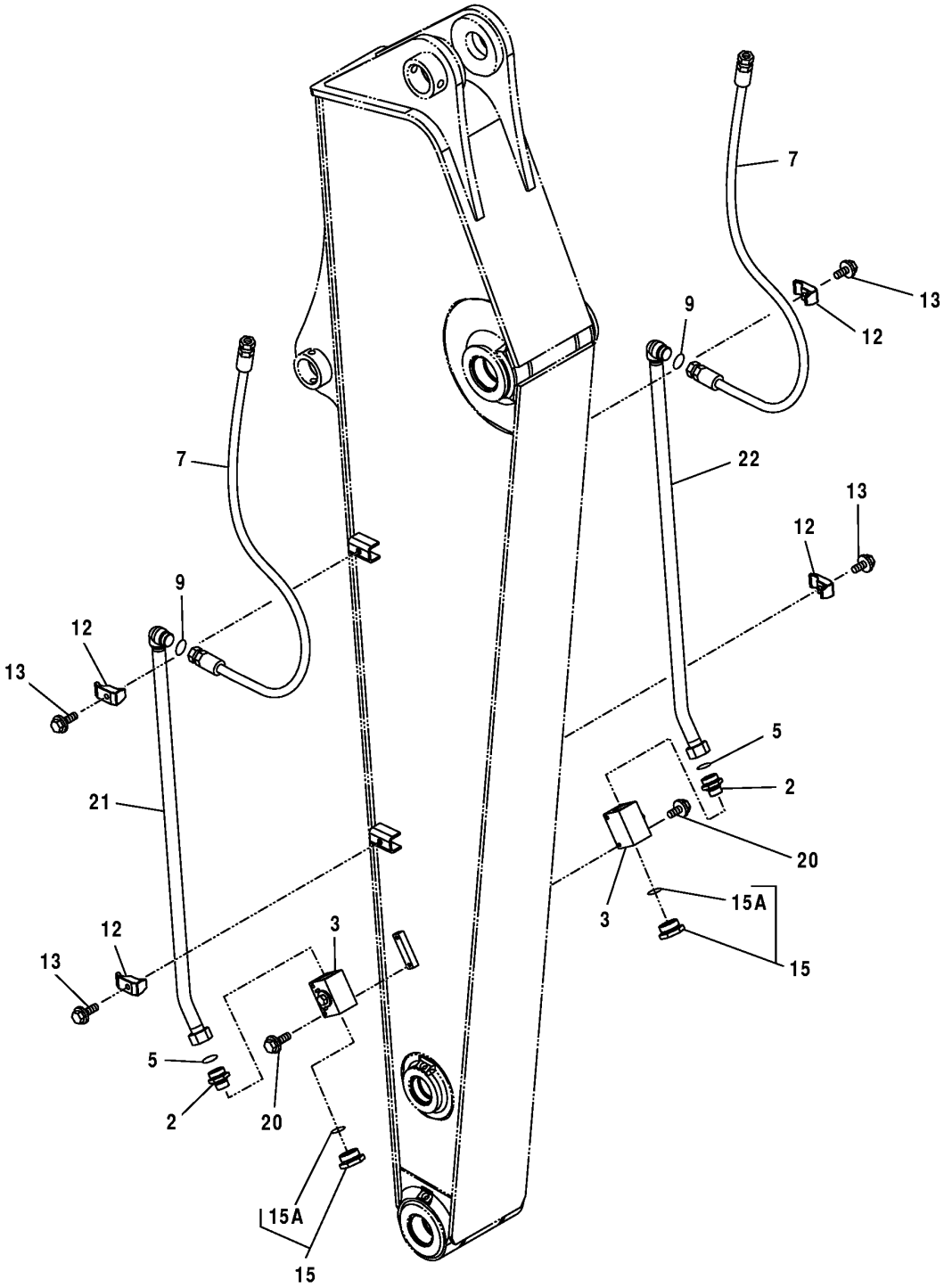

THIRD FUNCTION ARM HYDRAULIC HOSES AND OIL LINES

KEY	PART NO.	PART NAME	QTY	SERIAL NO.	REMARKS
2	.....	ADAPTER	2		(4205196 NOT AVAILABLE FOR SERVICE)
3	4447675	VALVE	2		
5	T78612	O-RING	2		29.870 X 1.778 MM (1.176" X 0.070")
7	4400848	HYDRAULIC HOSE	2		(SUB FOR TH4400848)
9	T76938	O-RING	4		23.520 X 1.778 MM (0.926" X 0.070")
12	4190127	CLAMP	4		(SUB FOR TH108313)
13	19M8348	CAP SCREW	4		M12 X 65
	12H301	LOCK WASHER	4		12.700 MM (1/2")
15	4113926	DRAIN PLUG	2		(SUB FOR AT126200)
15A	TH101926	O-RING	1		28.700 X 3.500 MM (1.130" X 0.138")
20	19M8183	CAP SCREW	4		M10 X 90
	12M7066	LOCK WASHER	4		10 MM (0.394")
21	8084097J	OIL LINE	1		(SUB FOR TH8084097J)
22	8083882J	OIL LINE	1		(SUB FOR TH8083882J)

THIRD FUNCTION HYDRAULIC HOSES AND OIL LINES

T147532 -UN-29OCT01

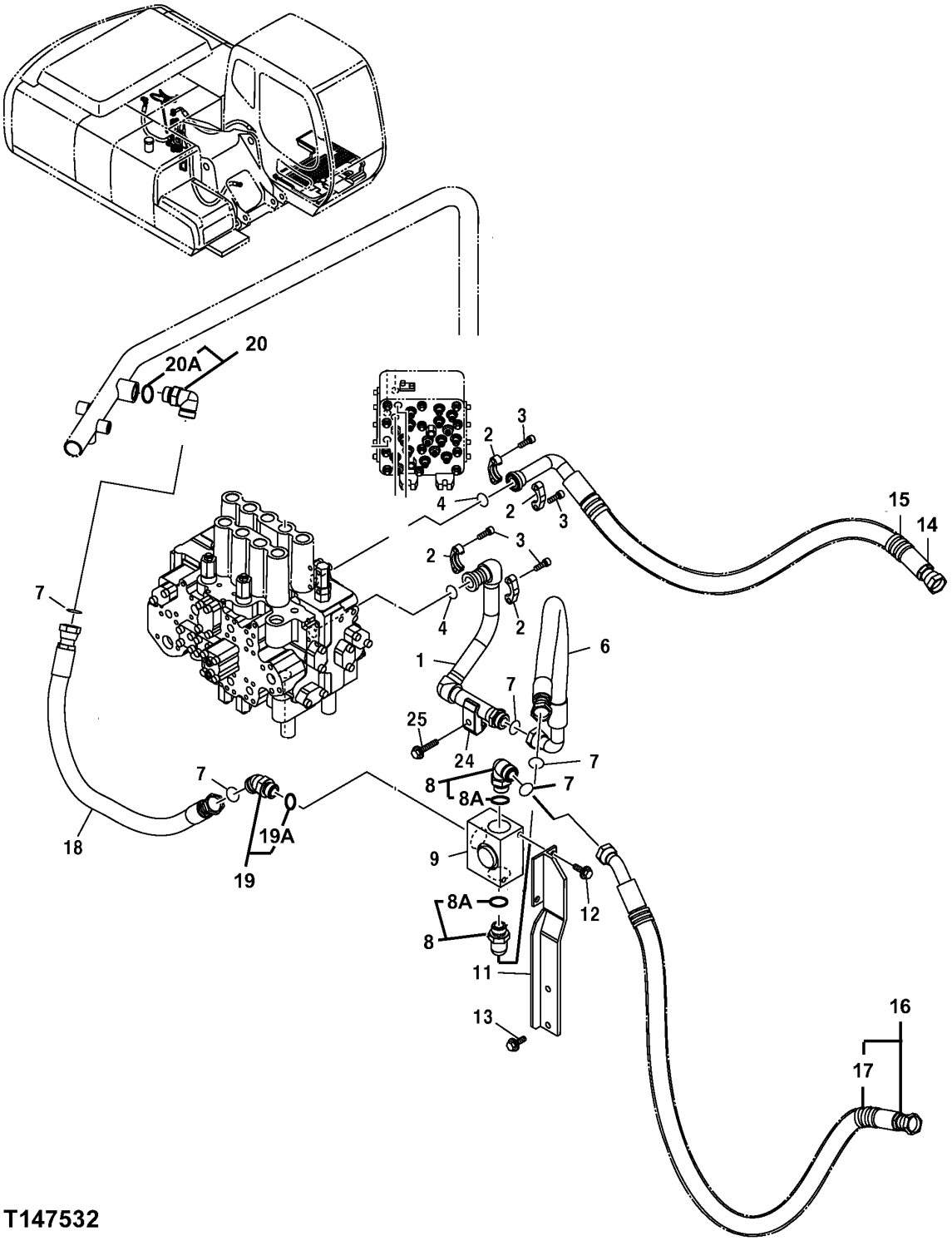

THIRD FUNCTION HYDRAULIC HOSES AND OIL LINES

KEY	PART NO.	PART NAME	QTY	SERIAL NO.	REMARKS
1	8079794	OIL LINE	1		(SUB FOR TH8079794)
2	H61354	FLANGE FITTING	4		
3	J781030	SCREW	8		(SUB FOR AT213614)
4	T78313	O-RING	2		32.918 X 3.531 MM (1.296" X 0.139")
6	4308972	HYDRAULIC HOSE	1		(SUB FOR TH4308972)
7	T76938	O-RING	5		23.520 X 1.778 MM (0.926" X 0.070")
8	4198799	ELBOW FITTING	2		(SUB FOR TH108325)
8A	TH101926	O-RING	1		28.700 X 3.500 MM (1.130" X 0.138")
9	4455599	MANIFOLD	1		(SUB FOR TH4455599)
11	8079166	BRACKET	1		(SUB FOR TH8079166)
12	19M8011	CAP SCREW	2		M12 X 30
	12M7058	LOCK WASHER	2		12 MM (0.472") (SUB FOR 12M7067)
13	19M7403	CAP SCREW	2		M12 X 35
	12H301	LOCK WASHER	2		12.700 MM (1/2")
	24M7047	WASHER	2		13 X 24 X 2.500 MM (0.512" X 0.945" X 0.098")
14	4429988	HYDRAULIC HOSE	1		(SUB FOR TH4429988)
15	4327294	HOSE GUARD	5		(SUB FOR AT213832)
16	9197376	HYDRAULIC HOSE	1		(SUB FOR TH9197376)
17	4327294	HOSE GUARD	6		(SUB FOR AT213832)
18	4307330	HYDRAULIC HOSE - FABRICATE	1		(SUB FOR TH4307330)
19	4270315	ELBOW FITTING	1		(SUB FOR AT201732)
19A	TH101926	O-RING	1		28.700 X 3.500 MM (1.130" X 0.138")
20	4198799	ELBOW FITTING	1		(SUB FOR TH108325)
20A	TH101926	O-RING	1		28.700 X 3.500 MM (1.130" X 0.138")
24	4190127	CLAMP	1		(SUB FOR TH108313)
25	19M8088	CAP SCREW	1		M12 X 75
	24M7047	WASHER	1		13 X 24 X 2.500 MM (0.512" X 0.945" X 0.098")
	12M7058	LOCK WASHER	1		12 MM (0.472") (SUB FOR 12M7067)

LUBRICATION HYDRAULIC LINES

T143333 -UN-28JUN01

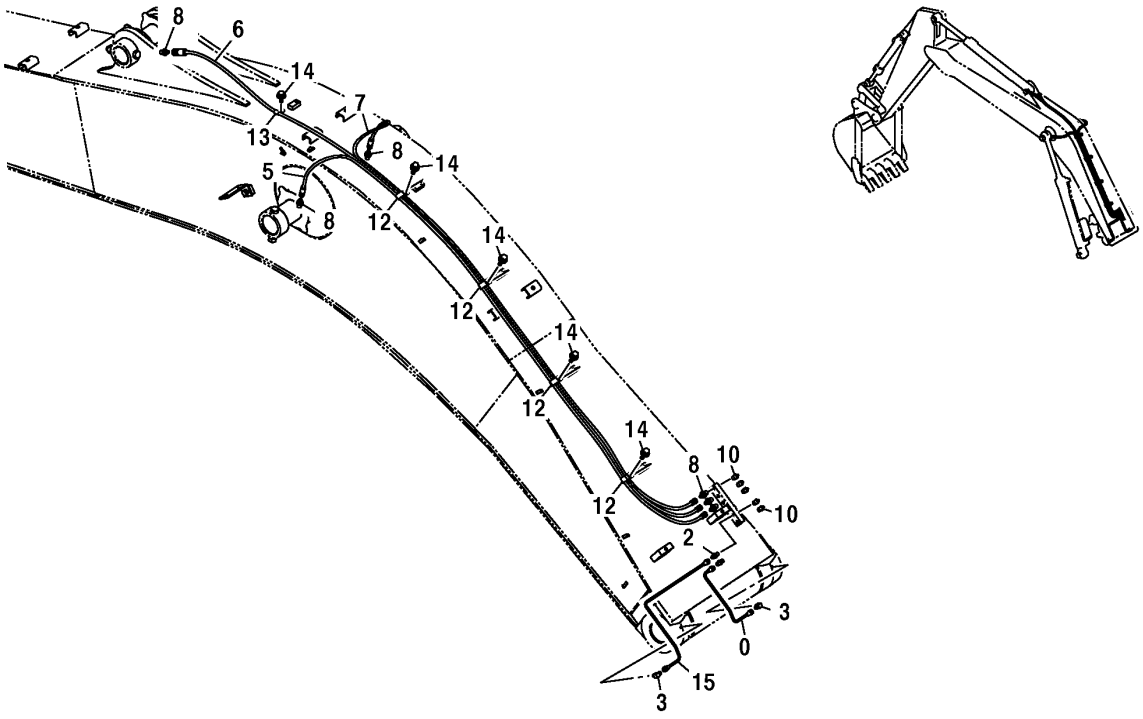

T143333

LUBRICATION HYDRAULIC LINES

KEY	PART NO.	PART NAME	QTY	SERIAL NO.	REMARKS
0	4361000	OIL LINE	1		(SUB FOR AT213994)
2	4360981	ADAPTER	2		(SUB FOR AT176256)
3	4345297	ELBOW FITTING	2		(SUB FOR AT176258)
5	4429280	HYDRAULIC HOSE - FABRICATE	1		(SUB FOR TH4429280)
6	4429287	HYDRAULIC HOSE - FABRICATE	1		(SUB FOR TH4429287)
7	4429283	HYDRAULIC HOSE - FABRICATE	1		(SUB FOR TH4429283)
8	4154651	ADAPTER	6		(SUB FOR TH100963)
10	JD7769	LUBRICATION FITTING	5		
12	T152608	CLAMP	4		
13	4190261	CLIP	1		(SUB FOR TH109649)
14	19M8324	CAP SCREW	5		M10 X 16
	12M7058	LOCK WASHER	5		12 MM (0.472") (SUB FOR 12M7067)
15	4370555	PIPE	1		(SUB FOR AT186467)

BOOM REDUCED DRIFT VALVE KIT

T149409 -UN-03JAN02

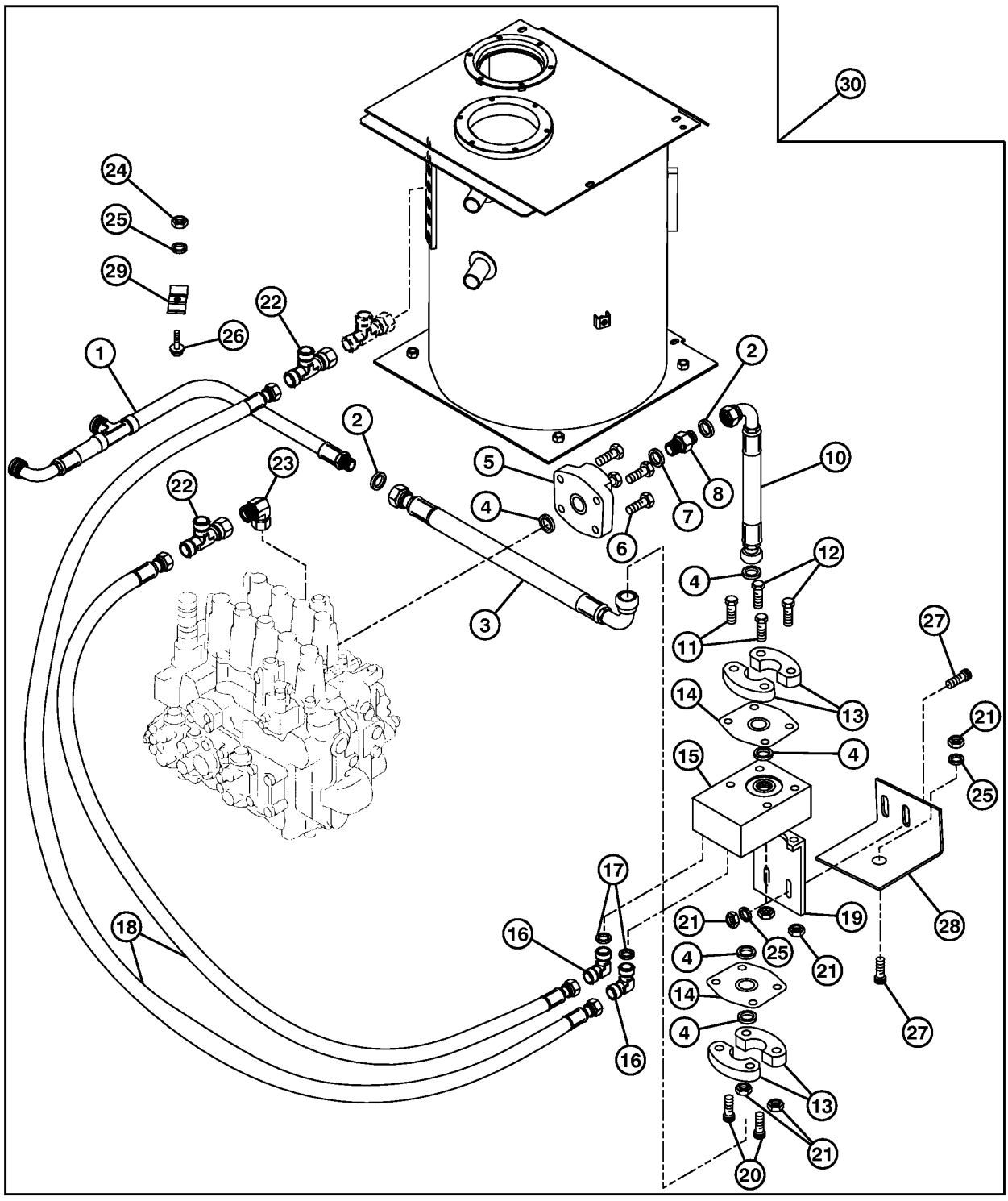

T149409

BOOM REDUCED DRIFT VALVE KIT

KEY	PART NO.	PART NAME	QTY	SERIAL NO.	REMARKS
1	AT147239	OIL LINE	1		
2	T76938	O-RING	1		23.520 X 1.778 MM (0.926" X 0.070")
3	AT177798	HYDRAULIC HOSE - FABRICATE	1		
4	T78313	O-RING	5		32.918 X 3.531 MM (1.296" X 0.139")
5	T60983	FLANGE FITTING	1		
6	0413619	BOLT	4		(SUB FOR AT154591)
7	U12547	O-RING	1		23.470 X 2.946 MM (0.924" X 0.116")
8	38H1216	ADAPTER	1		
10	AT183796	HYDRAULIC HOSE - FABRICATE	1		1" X 311 MM (12-1/4") X 1-7/16"
11	T111207	BOLT	2		M12 X 140
12	19M8519	SCREW	2		M12 X 120
13	T107068	FLANGE FITTING	4		
14	T145378	FITTING	2		
15	AT152186	HYD ACTUATED CONTROL VALVE	1		
16	AT35121	ELBOW FITTING	2		
17	R26448	O-RING	2		11.887 X 1.981 MM (0.468" X 5/64")
18	AT126601	HYDRAULIC HOSE - FABRICATE	2		9/16" X 1 250 MM (49-1/4") X 9/16"
19	T164046	BRACKET	1		
20	19M8395	SCREW	2		M12 X 40
21	14M7275	NUT	4		M12
22	AT36921	TEE FITTING	2		
23	AE24616	ELBOW FITTING	1		
24	14M7275	NUT	1		M12
25	12H301	LOCK WASHER	4		1/2"
26	19M7361	CAP SCREW	1		M12 X 50
27	19M7403	CAP SCREW	3		M12 X 35
28	T164047	BRACKET	1		
29	4202103	CLAMP	1		(SUB FOR TH108302)
30	**AT196907**	**KIT**	**1**		**WHOLEGOODS (BOOM REDUCED DRIFT KIT)**

AUXILIARY SOLENOID AND FLOW CONTROL VALVE KIT (1-WAY)

T189802 -UN-21APR03

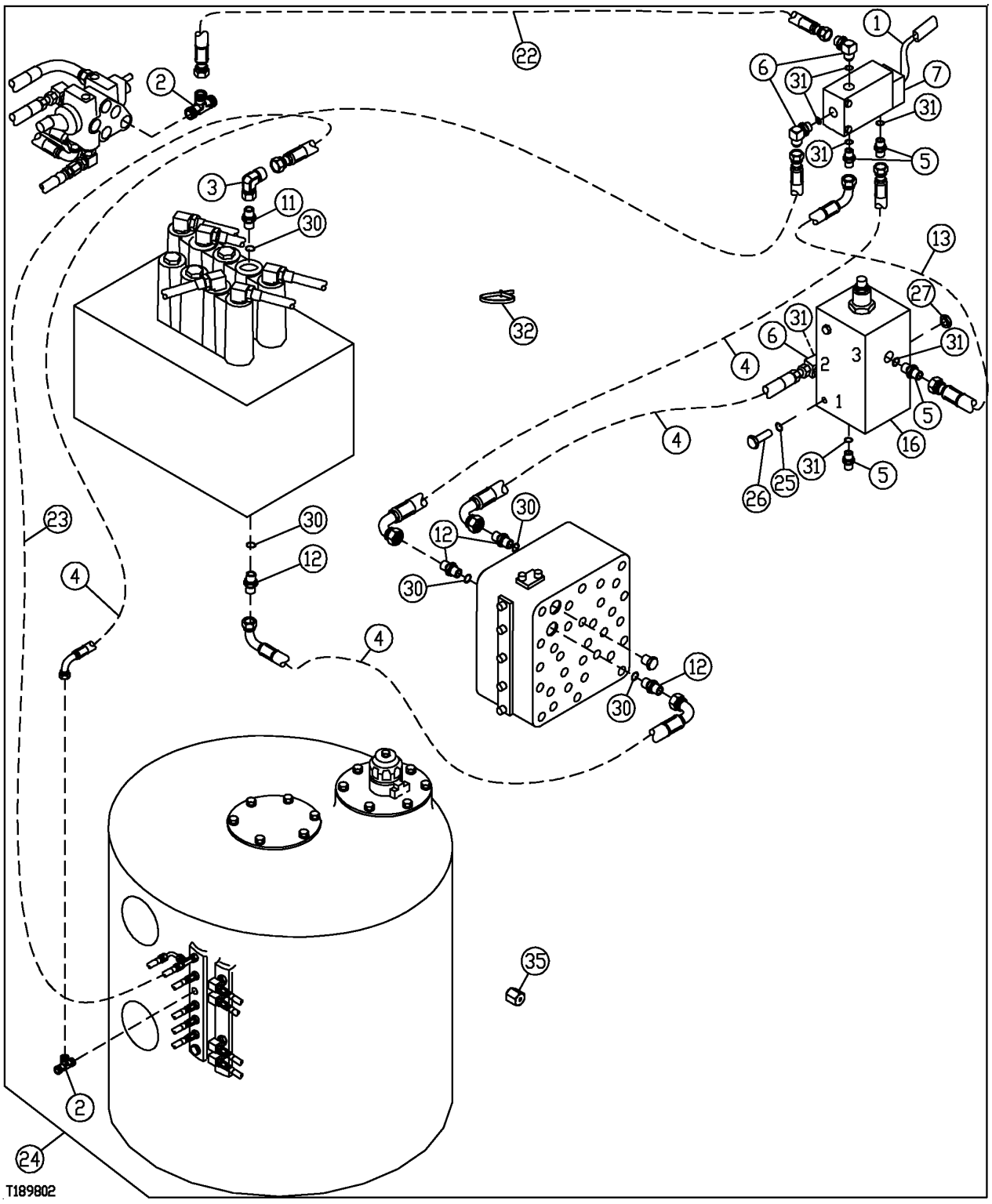

AUXILIARY SOLENOID AND FLOW CONTROL VALVE KIT (1-WAY)

KEY	PART NO.	PART NAME	QTY	SERIAL NO.	REMARKS
1	AT191297	WIRING HARNESS	1		
2	AT36921	TEE FITTING	3		
3	AE24616	ELBOW FITTING	1		
4	AT71732	HYDRAULIC HOSE - FABRICATE	4		
5	R27212	FITTING	4		
6	AT35121	ELBOW FITTING	4		
7	AT306723	ELEC.PROPORTIONAL VALVE	1		SOLENOID, (ASSEMBLE FROM AT116486 AND AT140041)
	.....	ELECTRICAL COIL	1		(AT140041 NO LONGER AVAILABLE)
11	AT130053	ADAPTER	1		
12	4200466	ADAPTER	4		
13	AT71082	HYDRAULIC HOSE - FABRICATE	1		(AE42718 NO LONGER AVAILABLE)
16	AT186623	HYDRAULIC PRESSURE VALVE	1		
22	AT130684	HYDRAULIC HOSE - FABRICATE	1		9/16" X 2 520 MM X 9/16"
23	AT71082	HYDRAULIC HOSE - FABRICATE	1		9/16" X 711 MM X 9/16"
24	**AT186622**	**SPOOL VALVE**	**1**		**(WHOLEGOODS) (COMPLETE KIT) (ALSO ORDER T188662 INSTRUCTIONS)**
25	24M7139	WASHER	4		6.400 X 18 X 1.600 MM, (NOT ILLUSTRATED)
26	19M7529	CAP SCREW	4		M6 X 55
27	14M7272	NUT	4		M6
30	CH11570	O-RING	5		
31	R26448	O-RING	7		
32	R44302	TIE BAND	4		
33	AH75160	ELBOW FITTING	2		(NOT ILLUSTRATED)
35	R31147	FITTING	1		

HYDRAULIC OIL RESERVOIR, FILTERS, AND SENSOR

T191791 -UN-11JUN03

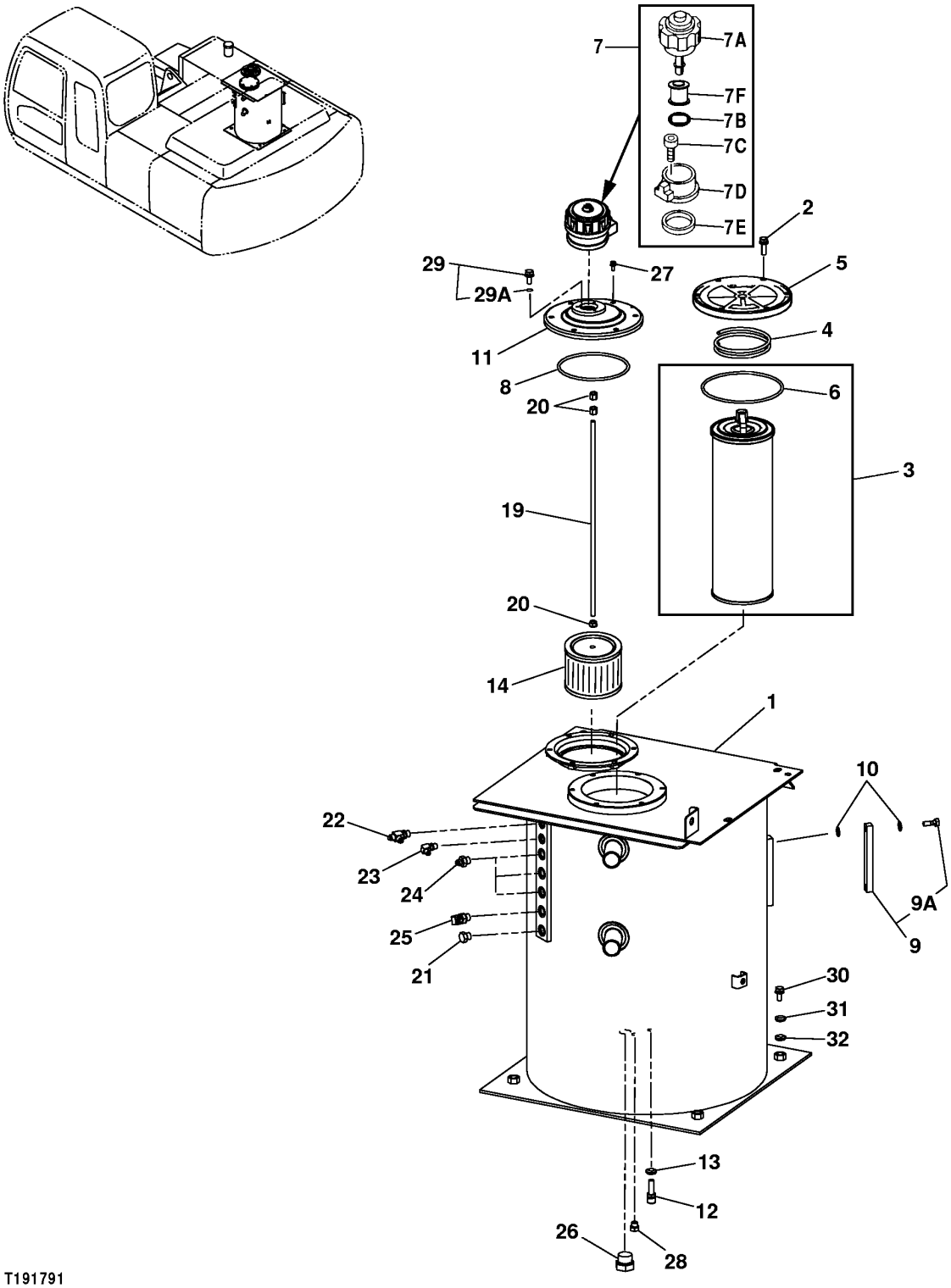

OIL TANK AND FILTER ELEMENTS

KEY	PART NO.	PART NAME	QTY	SERIAL NO.	REMARKS
1	DH500016	HYDRAULIC RESERVOIR	1		(SUB FOR THDH500016)
2	19M7550	CAP SCREW	6		M10 X 35
	12M7066	LOCK WASHER	6		10 MM (0.394")
	24M7028	WASHER	6		10.500 X 20 X 2 MM (0.413" X 0.787" X 0.079")
3	4448402	FILTER ELEMENT	1		(SUB FOR TH4443773) (SUB FOR 4443773)
	.....	FILTER ELEMENT	1		(CLEAN-UP FILTER) (LIMITED USE - APPROXIMATELY 3 HOURS) (IDLE SPEED)
4	4443659	SPRING	1		(SUB FOR TH4443659)
5	4440802	COVER	1		(SUB FOR TH4440802)
6	T110444	O-RING	1		
7	.....	BREATHER	1		(AT167079 NOT AVAILABLE FOR SERVICE)
7A	4326285	CAP	1		
7B	953612	O-RING	1		
7C	19M8146	SCREW	3		M5 X 16
7D	4222875	BASE	1		
7E	4222876	PACKING	1		
7F	4251384	FILTER ELEMENT	1		
8	TH100679	O-RING	1		159.300 X 5.700 MM (6.272" X 0.224")
9	8053499	LEVEL GAUGE	1		(SUB FOR TH108293)
9A	4100967	FITTING	2		(SUB FOR TH101894)
10	449558	WASHER	4		(SUB FOR TH100675)
11	8066670	COVER	1		(SUB FOR AT215118)
12	4250260	SENSOR	1		(SUB FOR AT154921)
13	4250261	GASKET	1		(SUB FOR AT154922)
14	4210224	STRAINER	1		(SUB FOR TH110133)
	AT190750	STRAINER	1		(ARCTIC) (32 MESH FOR ARCTIC CONDITIONS)
19	4396619	ROD	1		(SUB FOR AT250688)
20	14M7274	NUT	3		M10
21	A885003	PIPE PLUG	1		(SUB FOR THA885003)
22	A852422	TEE FITTING	1		(SUB FOR THA852422)
23	4154670	ELBOW FITTING	1		(SUB FOR THA852322)
	M800650	PACKING	2		
24	4200466	ADAPTER	3		(SUB FOR THA852133) (SUB FOR TH108320)
25	4154671	ELBOW FITTING	1		(SUB FOR THA852333)
26	4113926	DRAIN PLUG	1		(SUB FOR THA885008) (SUB FOR AT126200)
27	19M7402	CAP SCREW	6		M10 X 25
	12M7066	LOCK WASHER	6		10 MM (0.394")
	24M7028	WASHER	6		10.500 X 20 X 2 MM (0.413" X 0.787" X 0.079")
28	A885002	PIPE PLUG	1		(SUB FOR THA885002)
29	4209653	FITTING PLUG	1		(SUB FOR TH109514)
29A	4506418	O-RING	1		(SUB FOR U46489)
30	19M7488	CAP SCREW	4		M16 X 40
31	12H294	LOCK WASHER	4		15.875 MM (5/8")
32	24M7338	WASHER	4		17 X 30 X 3 MM (0.669" X 1.181" X 0.118")

BOOM CYLINDER BUSHINGS, RIGHT

T147411 -UN-30OCT01

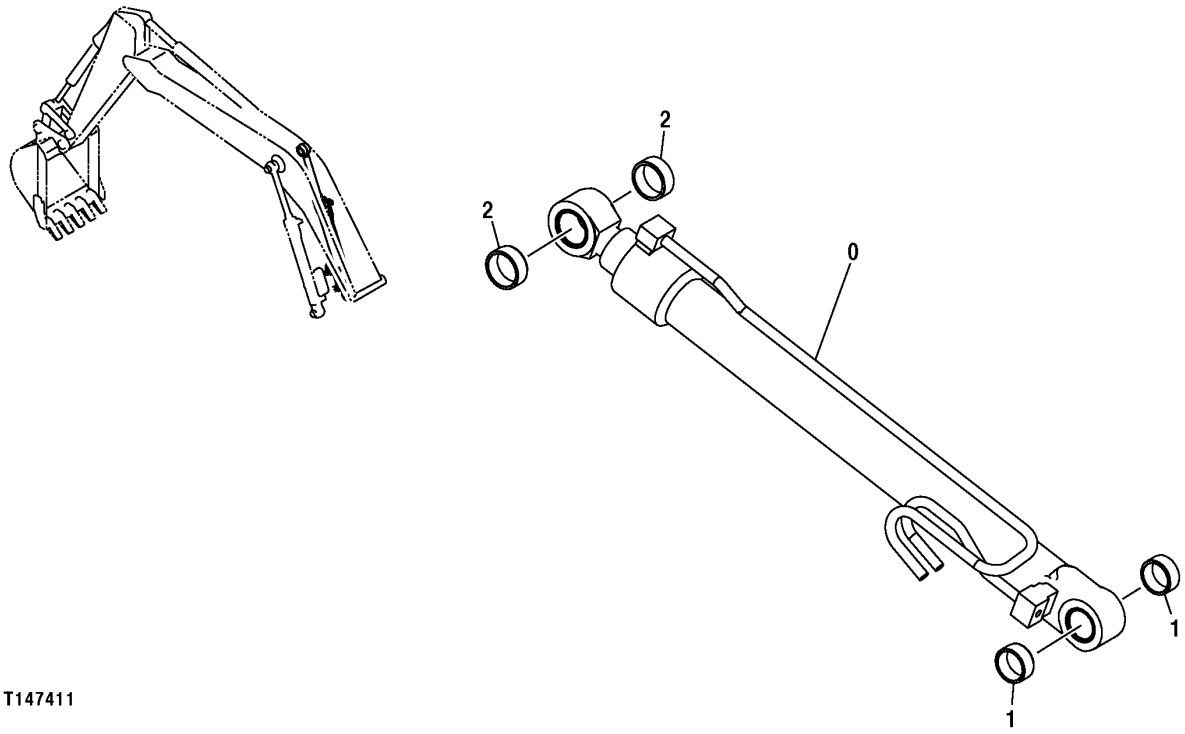

T147411

BOOM CYLINDER BUSHINGS, RIGHT

KEY	PART NO.	PART NAME	QTY	SERIAL NO.	REMARKS
0	9175422	HYDRAULIC CYLINDER	1		(SUB FOR TH9175422)
1	4352398	BUSHING	2		(SUB FOR AT213964)
2	4355875	BUSHING	2		(SUB FOR AT213976)

BOOM CYLINDER, RIGHT

T145959 -UN-27SEP01

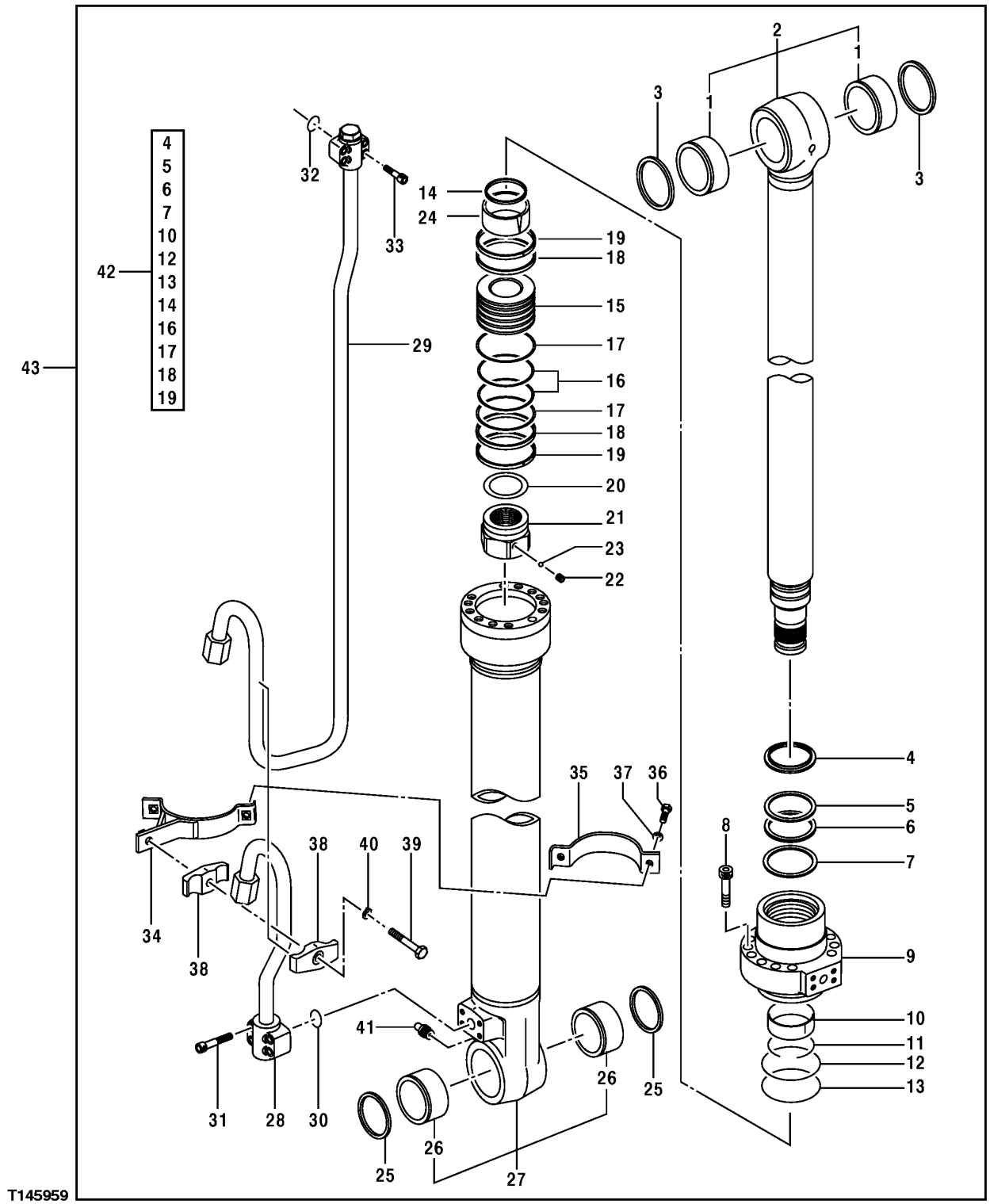

BOOM CYLINDER, RIGHT

KEY	PART NO.	PART NAME	QTY	SERIAL NO.	REMARKS
1	4355875	BUSHING	2		(SUB FOR AT213976)
2	AH173456	ROD	1		
3	TH102445	SEAL	2		
4	H155911	SEAL	1		(K)
5	AT309614	BACK-UP RING	1		(K) (SUB FOR TH104953, 4S00174)
6	AT309613	SEAL	1		(K) (SUB FOR TH104952, 4S00173)
7	H179701	SEAL	1		(K)
8	19M8931	SCREW	12		M16 X 75
9	.....	HYDR. CYLINDER ROD GUIDE	1		(SUB 9175422)
10	AT264272	BUSHING	1		(K) (SUB FOR T108019, 4272960)
11	0208304	SNAP RING	1		(SUB FOR TH104944)
12	AT264359	BACK-UP RING	1		(K) (SUB FOR TH104929, 4S00175)
13	AT264342	O-RING	1		(K) (SUB FOR TH100125)
14	H155919	SEAL	1		(K)
15	H155921	PISTON	1		
16	AT264355	SEAL	1		(K) (SUB FOR TH104922)
17	H155916	BACK-UP RING	2		(K)
18	.....	RING	2		(K)
19	AT264356	WEAR RING	2		(K) (SUB FOR 4S00158, TH104923)
20	0309013	SHIM	1		(SUB FOR T108030)
21	H178713	NUT	1		
22	22M7009	SET SCREW	1		M12 X 12
23	T13624	BALL	1		
24	H155920	RING	1		
25	TH102446	SEAL	2		
26	4352398	BUSHING	2		(SUB FOR AT213964)
27	AH165678	HYDRAULIC CYLINDER BARREL	1		
28	AH148788	OIL LINE	1		
29	AH148789	OIL LINE	1		
30	AT264348	O-RING	1		(SUB FOR TH102788)
31	19M8444	SCREW	4		M12 X 60
32	AT264360	O-RING	1		(SUB FOR TH104930, 4506430)
33	19M8339	SCREW	4		M10 X 55
34	AH148790	CLAMP	1		
35	0309314	CLAMP	1		(SUB FOR T108048)
36	19M7550	CAP SCREW	2		M10 X 35
37	12M7066	LOCK WASHER	2		10 MM
38	0236915	HALF CLAMP	2		(SUB FOR TH102783)
39	19M7607	CAP SCREW	1		M14 X 80
40	12M7068	LOCK WASHER	1		14 MM
41	TH100074	LUBRICATION FITTING	1		
42	AH173457	SEAL KIT	1		SEAL KIT (CONTAINS ALL PARTS MARKED K)
43	9175422	HYDRAULIC CYLINDER	1		(SUB FOR TH9175422)

RIGHT BOOM CYLINDER
(LONG BOOM)

T156571 -UN-28JUN02

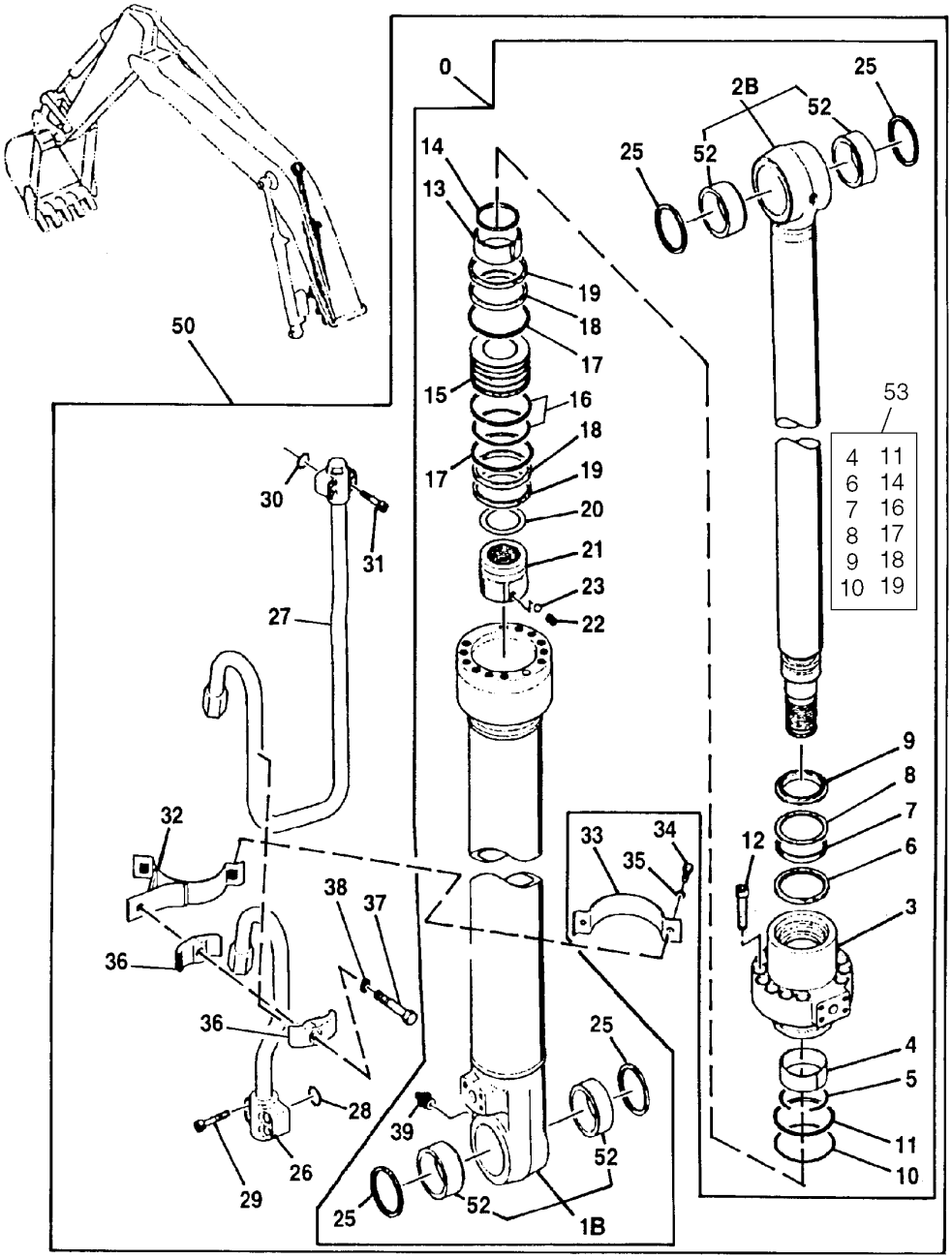

T156571

RIGHT BOOM CYLINDER
(LONG BOOM)

KEY	PART NO.	PART NAME	QTY	SERIAL NO.	REMARKS
0	AH165671	HYDRAULIC CYLINDER	1		
1B	AH165677	HYDRAULIC CYLINDER BARREL	1		(USE WITH AH165671)
2B	AH165681	ROD	1		(USE WITH AH165671)
3	H155161	HYDR. CYLINDER ROD GUIDE	1		
4	AT264272	BUSHING	1		(SUB FOR T108019, AT154778, 4272960)
5	0208304	SNAP RING	1		(SUB FOR TH104944)
6	AH148786	SEAL	1		
7	AT309613	SEAL	1		(SUB FOR TH104952, 4S00173)
8	AT309614	BACK-UP RING	1		(SUB FOR TH104953, 4S00174)
9	H155911	SEAL	1		
10	AT264342	O-RING	1		(SUB FOR TH100125)
11	AT264359	BACK-UP RING	1		(SUB FOR TH104929, 4S00175)
12	19M8931	SCREW	12		M16 X 75, (SUB FOR 19M8730, THIS APPLICATION)
13	H155920	RING	1		
14	H155919	SEAL	1		
15	H155921	PISTON	1		
16	AT264355	SEAL	1		(SUB FOR TH104922)
17	H155916	BACK-UP RING	2		
18	H155917	SEAL	2		
19	AT264356	WEAR RING	2		(SUB FOR 4S00158, TH104923)
20	0309013	SHIM	1		(SUB FOR T108030)
21	H155924	NUT	1		
22	22M7009	SET SCREW	1		M12 X 12
23	T13624	BALL	1		7.145 MM (9/32")
25	TH102446	SEAL	4		(SUB FOR AH140158)
26	AH148788	OIL LINE	1		
27	AH148789	OIL LINE	1		
28	AT264348	O-RING	1		(SUB FOR TH102788)
29	19M8444	SCREW	4		M12 X 60, (USE WHEN ATTACHING TUBE FLANGE DEPTH IS 45.97 MM)
30	AT264360	O-RING	1		(SUB FOR TH104930, 4506430)
31	19M8339	SCREW	4		M10 X 55, (USE WHEN ATTACHING TUBE FLANGE DEPTH IS 38.1 MM)
32	AH148790	CLAMP	1		
33	0309314	CLAMP	1		(SUB FOR T108048)
34	19M7550	CAP SCREW	2		M10 X 35, (SUB FOR AT153924)
35	12M7066	LOCK WASHER	2		10 MM (0.394")
36	0236915	HALF CLAMP	2		(SUB FOR TH102783)
37	19M7607	CAP SCREW	1		M14 X 80
38	12M7068	LOCK WASHER	1		14 MM (0.551")
39	TH100074	LUBRICATION FITTING	1		
50	AH165671	HYDRAULIC CYLINDER	1		(SUB FOR AT181849) (SUB FOR AT182447)
51	0208326-P	BUSHING	1		(USE WITH AH148782) (SUB FOR T108029)
52	4352398	BUSHING	2		(USE WITH AH165671) (SUB FOR AT213964)
53	AH148785	SEAL KIT	1		

BOOM CYLINDER BUSHINGS, LEFT

T147415 -UN-30OCT01

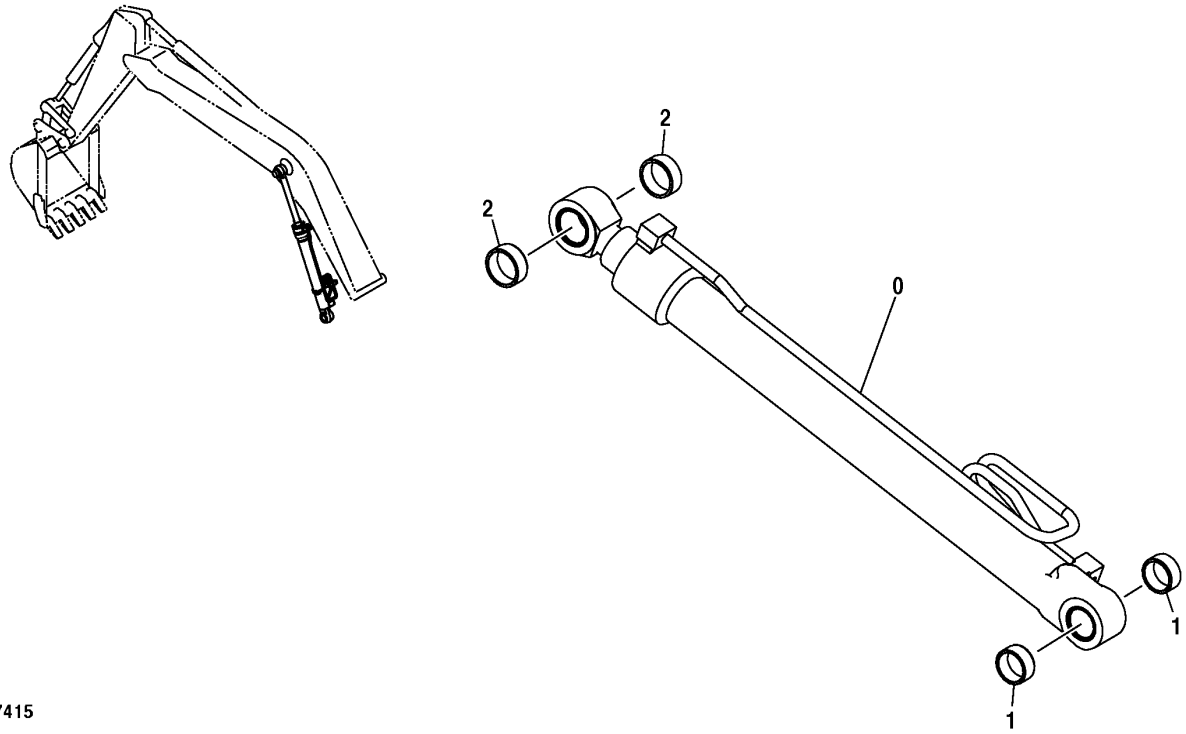

T147415

LEFT BOOM CYLINDER WITH BUSHINGS

KEY	PART NO.	PART NAME	QTY	SERIAL NO.	REMARKS
0	9175423	HYDRAULIC CYLINDER	1		(SUB FOR TH9175423)
1	4352398	BUSHING	2		(SUB FOR AT213964)
2	4355875	BUSHING	2		(SUB FOR AT213976)

BOOM CYLINDER, LEFT

T145962 -UN-27SEP01

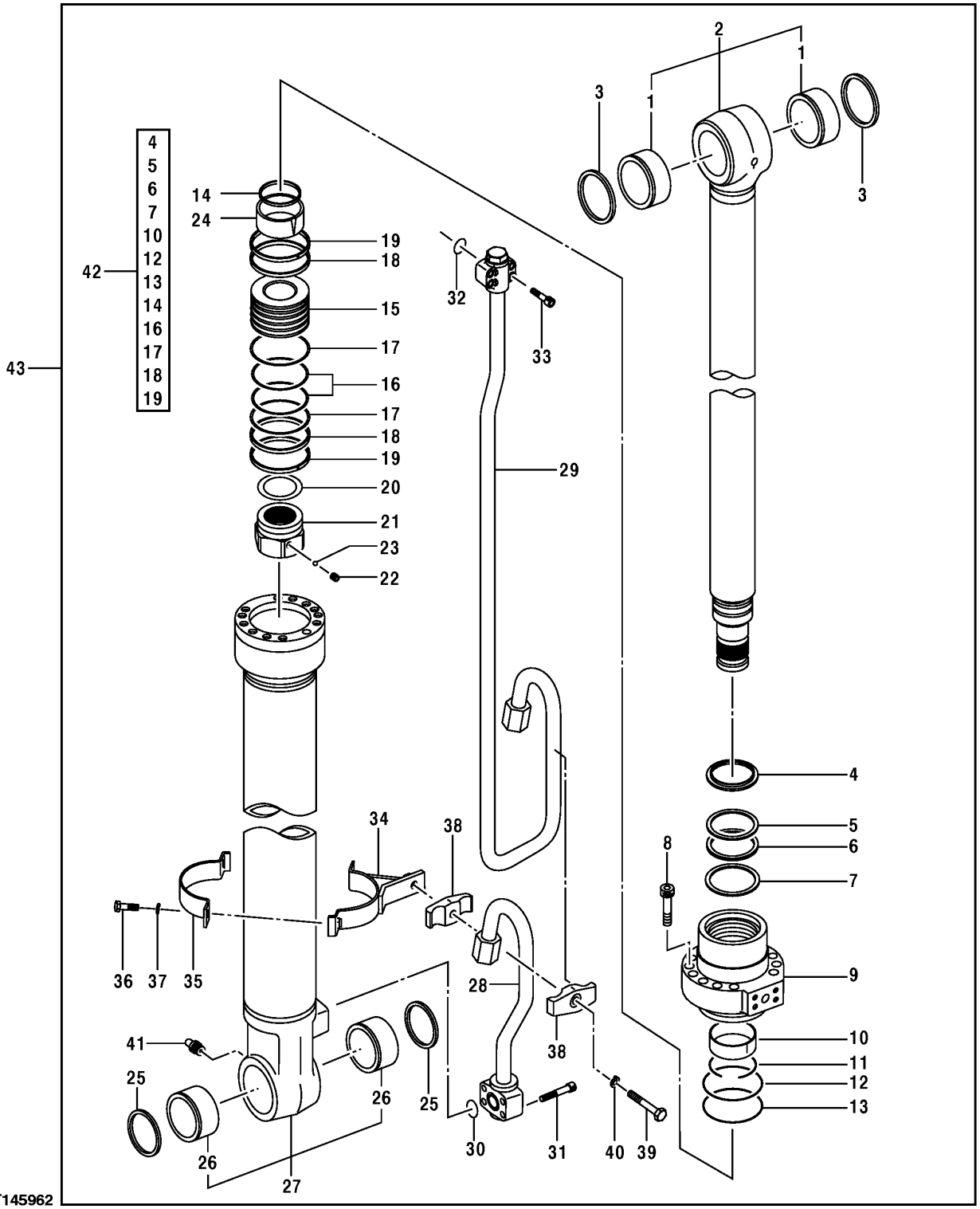

BOOM CYLINDER, LEFT

KEY	PART NO.	PART NAME	QTY	SERIAL NO.	REMARKS
1	4355875	BUSHING	2		(SUB FOR AT213976)
2	AH173456	ROD	1		
3	TH102445	SEAL	2		
4	H155911	SEAL	1		(K)
5	AT309614	BACK-UP RING	1		(K) (SUB FOR TH104953, 4S00174)
6	AT309613	SEAL	1		(K) (SUB FOR TH104952, 4S00173)
7	H179701	SEAL	1		(K)
8	19M8931	SCREW	12		M16 X 75
9	.....	HYDR. CYLINDER ROD GUIDE	1		(SUB 9175423)
10	AT264272	BUSHING	1		(K) (SUB FOR T108019, 4272960)
11	0208304	SNAP RING	1		(SUB FOR TH104944)
12	AT264359	BACK-UP RING	1		(K) (SUB FOR TH104929, 4S00175)
13	AT264342	O-RING	1		(K) (SUB FOR TH100125)
14	H155919	SEAL	1		(K)
15	H155921	PISTON	1		
16	AT264355	SEAL	1		(K) (SUB FOR TH104922)
17	H155916	BACK-UP RING	2		(K)
18	.....	RING	2		(K)
19	AT264356	WEAR RING	2		(K) (SUB FOR 4S00158, TH104923)
20	0309013	SHIM	1		(SUB FOR T108030)
21	H178713	NUT	1		
22	22M7009	SET SCREW	1		M12 X 12
23	T13624	BALL	1		
24	H155920	RING	1		
25	TH102446	SEAL	2		
26	4352398	BUSHING	2		(SUB FOR AT213964)
27	AH165677	HYDRAULIC CYLINDER BARREL	1		
28	AH148794	OIL LINE	1		
29	AH148795	OIL LINE	1		
30	AT264348	O-RING	1		(SUB FOR TH102788)
31	19M8444	SCREW	4		M12 X 60
32	AT264360	O-RING	1		(SUB FOR TH104930, 4506430)
33	19M8339	SCREW	4		M10 X 55
34	AH148790	CLAMP	1		
35	0309314	CLAMP	1		(SUB FOR T108048)
36	19M7550	CAP SCREW	2		M10 X 35
37	12M7066	LOCK WASHER	2		10 MM
38	0236915	HALF CLAMP	2		(SUB FOR TH102783)
39	19M7607	CAP SCREW	1		M14 X 80
40	12M7068	LOCK WASHER	1		14 MM
41	TH100074	LUBRICATION FITTING	1		
42	AH173457	SEAL KIT	1		SEAL KIT (CONTAINS ALL PARTS MARKED K)
43	9175423	HYDRAULIC CYLINDER	1		(SUB FOR TH9175423)

**LEFT BOOM CYLINDER
(LONG BOOM)**

T156572 -UN-28JUN02

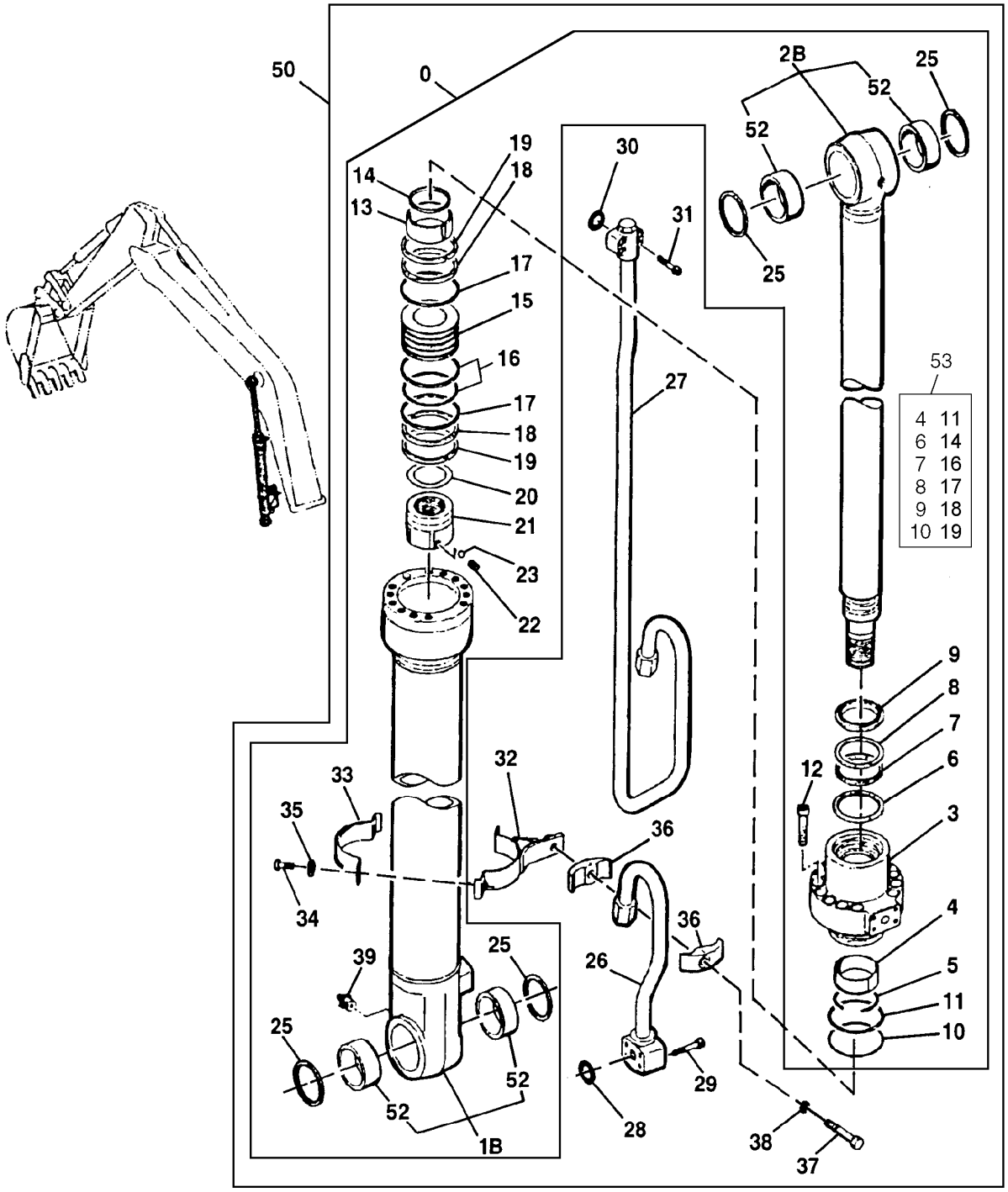

T156572

LEFT BOOM CYLINDER
(LONG BOOM)

KEY	PART NO.	PART NAME	QTY	SERIAL NO.	REMARKS
0	AH165673	HYDRAULIC CYLINDER	1		(SUB FOR AH148792)
1B	AH165677	HYDRAULIC CYLINDER BARREL	1		
2B	AH165681	ROD	1		(USE WITH AH165673)
3	H155161	HYDR. CYLINDER ROD GUIDE	1		
4	AT264272	BUSHING	1		(SUB FOR T108019, 4272960)
5	0208304	SNAP RING	1		(SUB FOR TH104944)
6	AH148786	SEAL	1		
7	AT309613	SEAL	1		(SUB FOR TH104952, 4S00173)
8	AT309614	BACK-UP RING	1		(SUB FOR TH104953, 4S00174)
9	H155911	SEAL	1		
10	AT264342	O-RING	1		(SUB FOR TH100125)
11	AT264359	BACK-UP RING	1		(SUB FOR TH104929, 4S00175)
12	19M8931	SCREW	12		M16 X 75, (SUB FOR 19M8730, THIS APPLICATION)
13	H155920	RING	1		
14	H155919	SEAL	1		
15	H155921	PISTON	1		
16	AT264355	SEAL	1		(SUB FOR TH104922)
17	H155916	BACK-UP RING	2		
18	H155917	SEAL	2		
19	AT264356	WEAR RING	2		(SUB FOR 4S00158, TH104923)
20	0309013	SHIM	1		(SUB FOR T108030)
21	H155924	NUT	1		
22	22M7009	SET SCREW	1		M12 X 12
23	T13624	BALL	1		7.145 MM (9/32")
25	TH102446	SEAL	4		(SUB FOR AH140158)
26	AH148794	OIL LINE	1		
27	AH148795	OIL LINE	1		
28	AT264348	O-RING	1		(SUB FOR TH102788)
29	19M8444	SCREW	4		M12 X 60, (USE WHEN ATTACHING TUBE FLANGE DEPTH IS 45.97 MM)
30	AT264360	O-RING	1		(SUB FOR TH104930, 4506430)
31	19M8339	SCREW	4		M10 X 55, (USE WHEN ATTACHING TUBE FLANGE DEPTH IS 38.1 MM)
32	AH148790	CLAMP	1		
33	0309314	CLAMP	1		(SUB FOR T108048)
34	19M7550	CAP SCREW	2		M10 X 35, (SUB FOR AT153924)
35	12M7066	LOCK WASHER	2		10 MM (0.394")
36	0236915	HALF CLAMP	2		(SUB FOR TH102783)
37	19M7607	CAP SCREW	1		M14 X 80
38	12M7068	LOCK WASHER	1		14 MM (0.551")
39	TH100074	LUBRICATION FITTING	1		
50	AH165673	HYDRAULIC CYLINDER	1		(SUB FOR AT181848) (SUB FOR AT182446)
52	4352398	BUSHING	4		(SUB FOR AT213964) (USE TWO FOR ROD END AND TWO FOR BARREL END)
53	AH148785	SEAL KIT	1		

ARM CYLINDER BUSHINGS

T143331 -UN-28JUN01

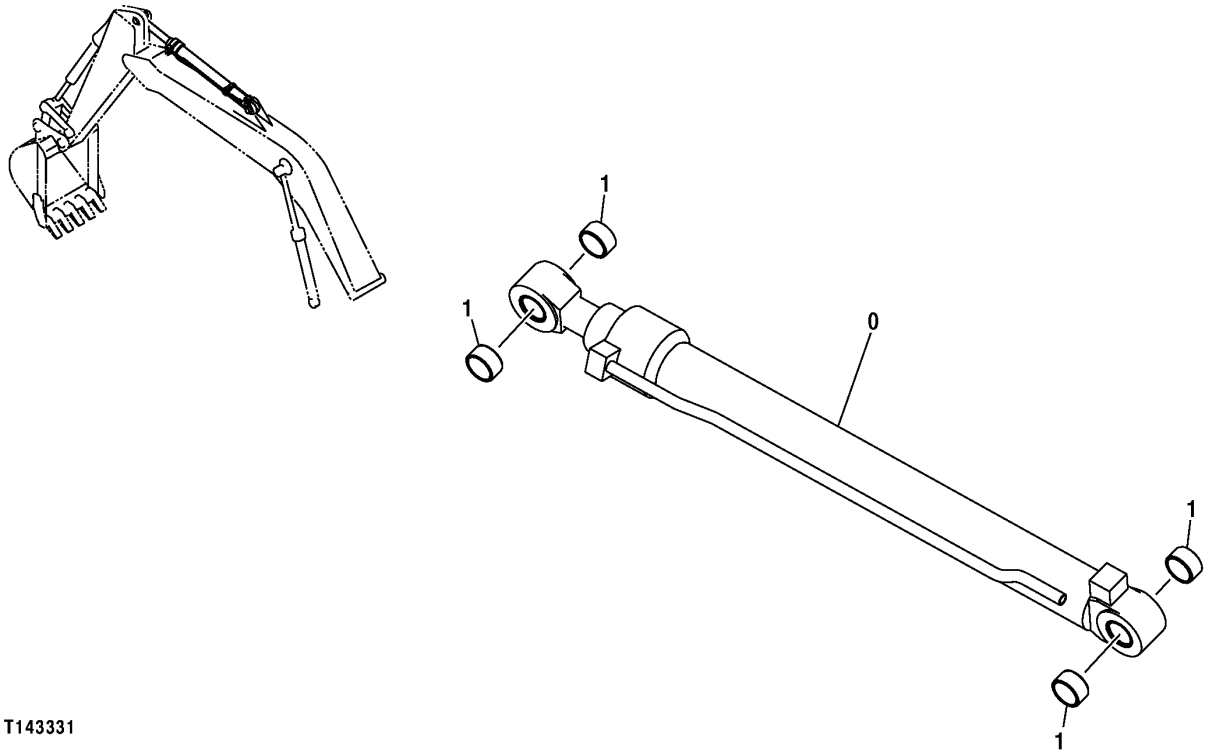

ARM CYLINDER BUSHINGS

KEY	PART NO.	PART NAME	QTY	SERIAL NO.	REMARKS
0	9169805	CYLINDER	1		
1	4352399	BUSHING	4		(SUB FOR AT213965)

ARM CYLINDER

T196764 -UN-05DEC03

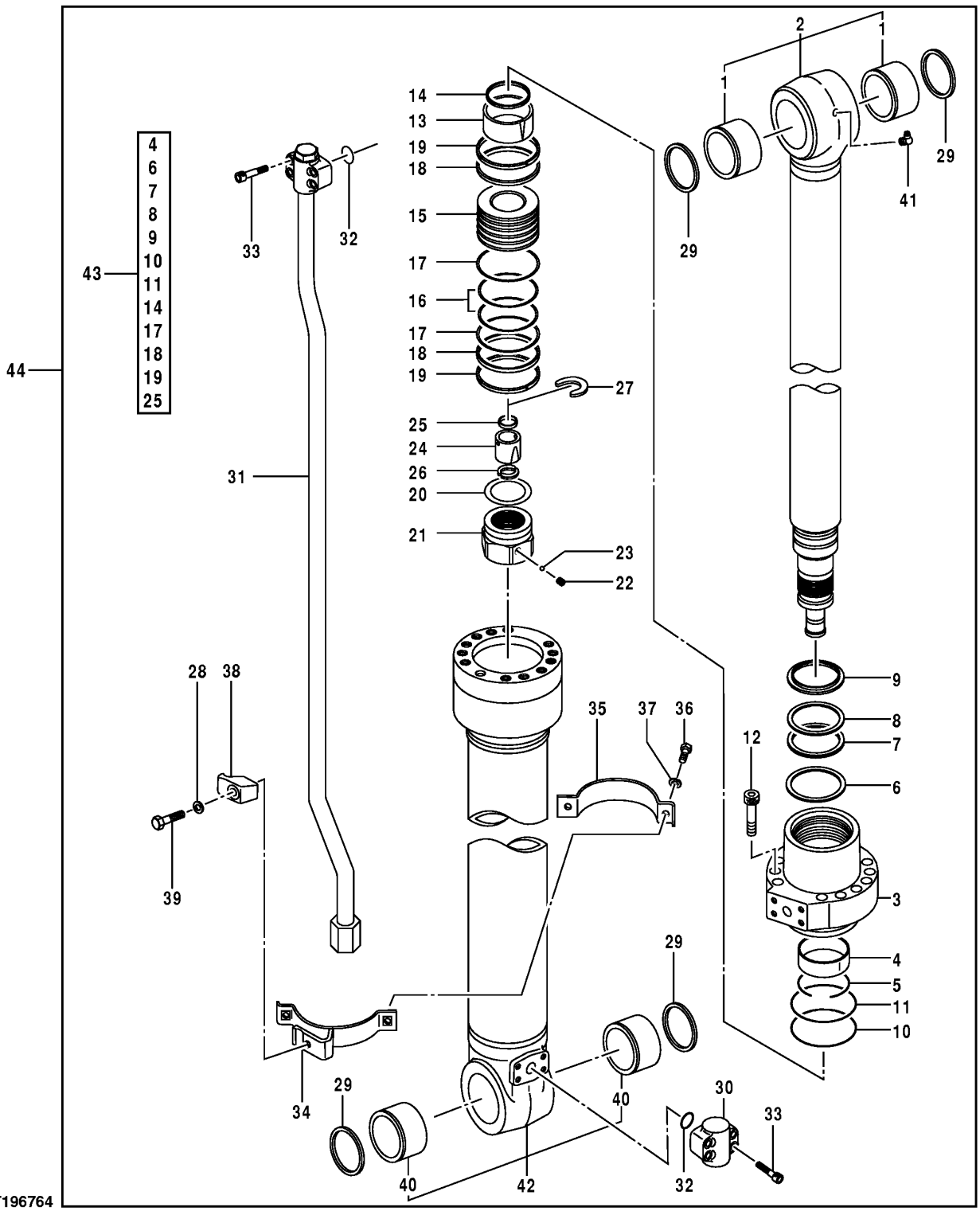

T196764

ARM CYLINDER

KEY	PART NO.	PART NAME	QTY	SERIAL NO.	REMARKS
1	4352399	BUSHING	2		(SUB FOR AT213965)
2	AH173443	ROD	1		
3	H178686	HYDR. CYLINDER ROD GUIDE	1		
4	T108050	WEAR RING	1		(K)
5	0236905	SNAP RING	1		(SUB FOR TH102766)
6	H179694	SNAP RING	1		(K)
7	H155308	SEAL	1		(K)
8	H155310	BACK-UP RING	1		(K)
9	H155311	SEAL	1		(K)
10	H178690	O-RING	1		(K)
11	H178691	BACK-UP RING	1		(K)
12	19M8913	SCREW	1		M18 X 80
13	H155319	RING	1		
14	H155320	SEAL	1		(K)
15	.....	PISTON	1		
16	AH173446	RING	1		
17	H178694	BACK-UP RING	2		(K)
18	H178695	BACK-UP RING	2		(K)
19	H178696	BACK-UP RING	2		(K)
20	0309216	SHIM	1		(SUB FOR T108063)
21	H178698	NUT	1		
22	22M7009	SET SCREW	1		M12 X 12
23	T13624	BALL	1		
24	H155321	SPACER	1		
25	H155322	SEAL	1		(K)
26	H155329	RING	1		
27	H155330	PISTON RING	1		
28	12M7058	LOCK WASHER	1		12 MM, (SUB FOR 12M7067)
29	TH102446	SEAL	4		
30	H155333	SHOULDER FITTING	1		
31	AH173447	OIL LINE	1		
32	AT264348	O-RING	1		(SUB FOR TH102788)
33	19M9012	SCREW	4		M12 X 55
34	AH173448	BAND	1		
35	H178703	BAND	1		
36	19M7550	CAP SCREW	2		M10 X 35
37	12M7066	LOCK WASHER	2		10 MM
38	0309219	CLAMP	1		(SUB FOR T108064)
39	19M8348	CAP SCREW	1		M12 X 65
40	4352399	BUSHING	2		(SUB FOR AT213965)
41	H179695	LUBRICATION FITTING	1		
42	AH173442	HYDRAULIC CYLINDER BARREL	1		
43	AH173444	HYDRAULIC CYLINDER KIT	1		SEAL KIT (CONTAINS ALL PARTS MARKED K)
44	9169805	CYLINDER	1		

BUCKET CYLINDER BUSHINGS

T143332 -UN-28JUN01

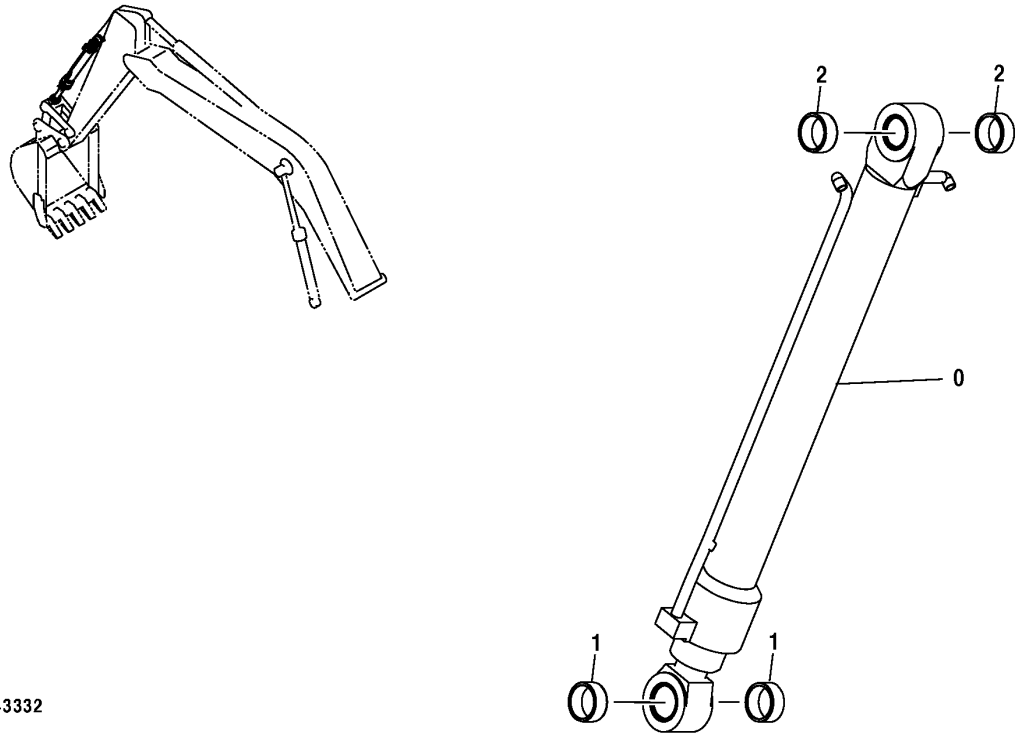

T143332

BUCKET CYLINDER BUSHINGS

KEY	PART NO.	PART NAME	QTY	SERIAL NO.	REMARKS
0	9169806	CYLINDER	1		
1	4352398	BUSHING	2		(SUB FOR AT213964)
2	4352400	BUSHING	2		(SUB FOR AT213966)

BUCKET CYLINDER (SERIAL NUMBER -503594)

T192182 -UN-18JUN03

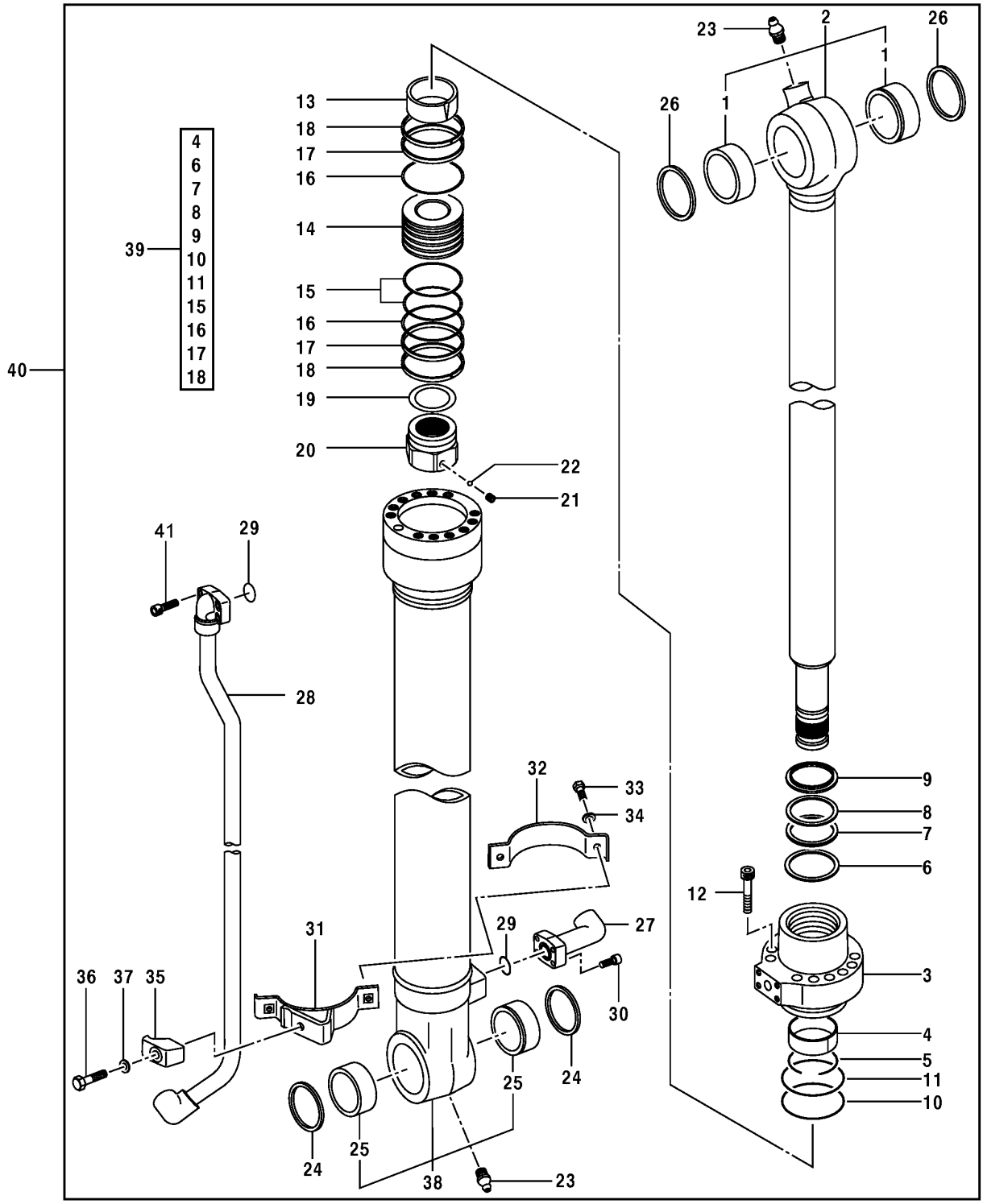

T192182

BUCKET CYLINDER (SERIAL NUMBER -503594)

KEY	PART NO.	PART NAME	QTY	SERIAL NO.	REMARKS
1	4352398	BUSHING	2		(SUB FOR AT213964)
2	AH173450	ROD	1		
3	H206941	HYDR. CYLINDER ROD GUIDE	1		
4	AT264314	WEAR RING	1		(K) (SUB FOR T108041)
5	4004663	SNAP RING	1		(SUB FOR AT132690)
6	H179700	SEAL	1		(K)
7	AT264357	SEAL	1		(K) (SUB FOR TH104925)
8	AT264358	BACK-UP RING	1		(K) (SUB FOR TH104926)
9	H157235	SCRAPER RING	1		(K)
10	AT264320	O-RING	1		(K) (SUB FOR T110448)
11	TH109353	BACK-UP RING	1		(K)
12	19M8931	SCREW	10		M16 X 75
13	H178712	RING	1		
14	H161605	PISTON	1		
15	TH105767	RING	1		(K)
16	H163431	BACK-UP RING	2		(K)
17	H163432	SCRAPER RING	2		(K)
18	AT309610	RING	2		(K) (SUB FOR TH109357, 4S00157)
19	0309013	SHIM	1		(SUB FOR T108030)
20	H178713	NUT	1		
21	22M7009	SET SCREW	1		M12 X 12
22	T13624	BALL	1		
23	TH100074	LUBRICATION FITTING	2		
24	TH104472	SEAL	2		
25	4352400	BUSHING	2		(SUB FOR AT213966)
26	AH140158	SEAL	2		
27	8086114	ELBOW FITTING	2		(SUB FOR AT114835)
28	AH173453	OIL LINE	1		
29	AT264360	O-RING	2		(SUB FOR TH104930, 4506430)
30	19M8337	SCREW	4		M10 X 30
31	AH173454	BAND	1		
32	H178717	BAND	1		
33	19M7550	CAP SCREW	2		M10 X 35
34	12M7066	LOCK WASHER	2		10 MM
35	T108036	CLAMP	1		
36	19M7362	CAP SCREW	1		M12 X 55
37	12M7058	LOCK WASHER	1		12 MM, (SUB FOR 12M7067)
38	AH173449	HYDRAULIC CYLINDER BARREL	1		
39	AH173451	HYDRAULIC CYLINDER KIT	1		SEAL KIT (CONTAINS ALL PARTS MARKED K)
40	.....	CYLINDER	1		(AH173435 NO LONGER AVAILABLE, SUB 9169806)
41	19M8339	SCREW	4		M10 X 55

BUCKET CYLINDER (SERIAL NUMBER 503595-)

T192182 -UN-18JUN03

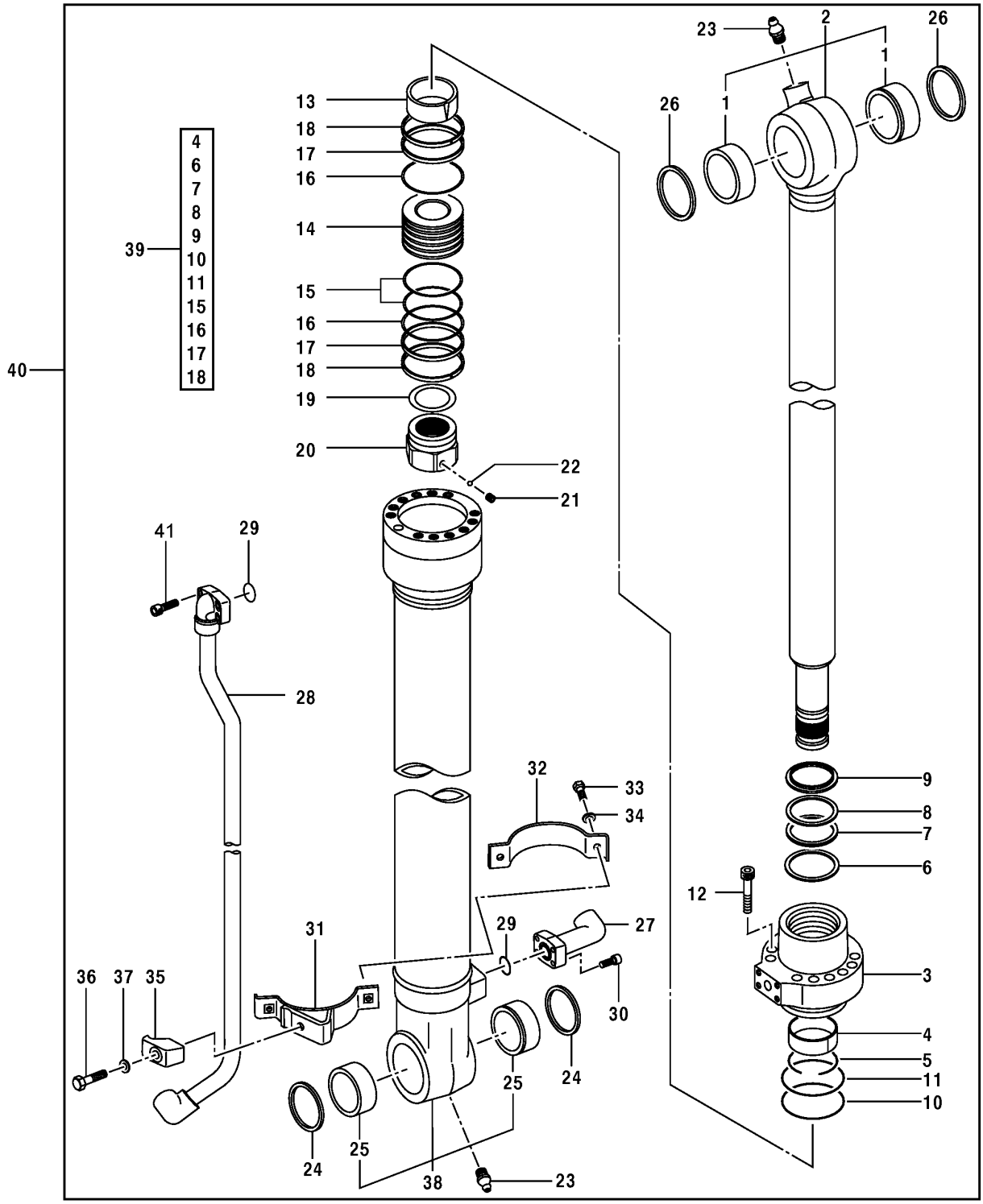

T192182

BUCKET CYLINDER (SERIAL NUMBER 503595-)

KEY	PART NO.	PART NAME	QTY	SERIAL NO.	REMARKS
1	4352398	BUSHING	2		(SUB FOR AT213964)
2	AH173450	ROD	1		
3	H178708	HYDR. CYLINDER ROD GUIDE	1		
4	T108041	WEAR RING	1		(K)
5	4004663	SNAP RING	1		(SUB FOR AT132690)
6	H179700	SEAL	1		(K)
7	TH104925	SEAL	1		(K)
8	TH104926	BACK-UP RING	1		(K)
9	H157235	SCRAPER RING	1		(K)
10	T110448	O-RING	1		(K)
11	TH109353	BACK-UP RING	1		(K)
12	19M8931	SCREW	10		M16 X 75
13	H206880	BUSHING	1		
14	H161605	PISTON	1		
15	TH105767	RING	1		(K)
16	H163431	BACK-UP RING	2		(K)
17	H163432	SCRAPER RING	2		(K)
18	AT309610	RING	2		(K) (SUB FOR TH109357, 4S00157)
19	0309013	SHIM	1		(SUB FOR T108030)
20	H178713	NUT	1		
21	22M7009	SET SCREW	1		M12 X 12
22	T13624	BALL	1		
23	TH100074	LUBRICATION FITTING	2		
24	TH104472	SEAL	2		
25	4352400	BUSHING	2		(SUB FOR AT213966)
26	AH140158	SEAL	2		
27	8086114	ELBOW FITTING	2		(SUB FOR AT114835)
28	AH173453	OIL LINE	1		
29	AT264360	O-RING	2		(SUB FOR TH104930, 4506430)
30	19M8337	SCREW	4		M10 X 30
31	AH173454	BAND	1		
32	H178717	BAND	1		
33	19M7550	CAP SCREW	2		M10 X 35
34	12M7066	LOCK WASHER	2		10 MM
35	T108036	CLAMP	1		
36	19M7362	CAP SCREW	1		M12 X 55
37	12M7058	LOCK WASHER	1		12 MM, (SUB FOR 12M7067)
38	AH173449	HYDRAULIC CYLINDER BARREL	1		
39	AH173451	HYDRAULIC CYLINDER KIT	1		SEAL KIT (CONTAINS ALL PARTS MARKED K)
40	9169806	CYLINDER	1		(SUB FOR AH173435)
41	19M8339	SCREW	4		M10 X 55

SWING DEVICE

T143241 -UN-11OCT01

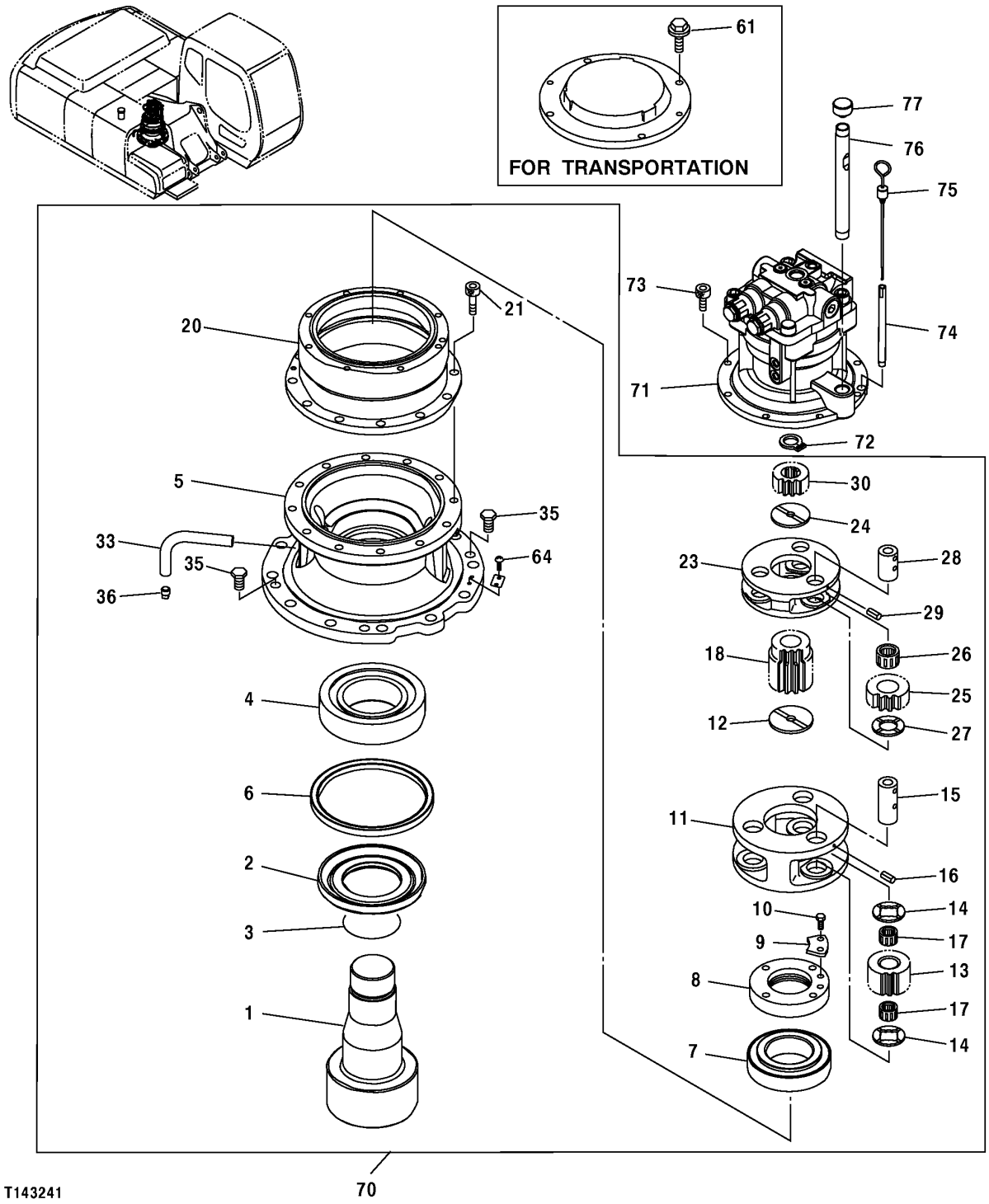

SWING DEVICE

KEY	PART NO.	PART NAME	QTY	SERIAL NO.	REMARKS
1	2044634	SHAFT	1		(SUB FOR TH2044634)
2	3083742	SLEEVE	1		(SUB FOR TH3083742)
3	AT264339	O-RING	1		(SUB FOR TH100122)
4	4402481	CYLINDRICAL ROLLER BEARING	1		(SUB FOR TH4402481)
5	1027617	HOUSING	1		(SUB FOR TH1027617)
6	4411535	SEAL	1		(SUB FOR TH4411535)
	4405532	SEAL	1		(EXTREME COLD WEATHER APPLICATIONS)
7	4402637	CYLINDRICAL ROLLER BEARING	1		(SUB FOR TH4402637)
8	3086064	NUT	1		(SUB FOR TH3086064)
9	4411122	PLATE	1		(SUB FOR TH4411122)
10	19M7938	CAP SCREW	2		M10 X 20
11	1026662	PLANET PINION CARRIER	1		(SUB FOR TH1026662)
12	4187590	PLATE	1		(SUB FOR TH109479)
13	3084729	GEAR	3		(SUB FOR TH3084729)
14	4336929	WEAR PLATE	6		(SUB FOR AT218167)
15	4336925	PIN	3		(SUB FOR AT213868)
16	34M7225	SPRING PIN	3		8 X 28 MM (0.315" X 1.102") (SUB FOR 34M6402)
17	4427630	NEEDLE BEARING	6		(SUB FOR TH4427630)
18	3080912	SUN GEAR	1		(SUB FOR TH3080912)
20	1025957	RING GEAR	1		(SUB FOR TH1025957)
21	19M8445	SCREW	12		M16 X 45
23	1025912	PLANET PINION CARRIER	1		(SUB FOR TH1025912)
24	4403371	PLATE	1		(SUB FOR TH4403371)
25	3082517	GEAR	3		(SUB FOR TH3082517)
26	4404506	NEEDLE BEARING	3		(SUB FOR AT213870)
27	4403082	PLATE	3		(SUB FOR TH4403082)
28	4336923	PIN	3		(SUB FOR AT213867)
29	4051262	SPRING PIN	3		(SUB FOR AT213796)
30	3084056	SUN GEAR	1		(SUB FOR TH3084056)
33	3089362	PIPE	1		(SUB FOR TH3089362)
35	4445352	PIPE PLUG	2		(SUB FOR TH4445352)
36	94-2012	FITTING PLUG	1		(SUB FOR TH100653)
61	19M8011	CAP SCREW	4		M12 X 30
	12M7058	LOCK WASHER	4		12 MM (0.472") (SUB FOR 12M7067)
64	37H99	SCREW	2		0.100" X 1/4"
70	9196963	HYDRAULIC MOTOR	1		(SUB FOR TH9196963)
71	4398514	HYDRAULIC MOTOR	1		
72	40M7046	SNAP RING	1		
73	19M8168	SCREW	8		M12 X 25
74	4264452	PIPE	1		(SUB FOR AT154293)
75	3074223	DIPSTICK	1		(SUB FOR AT213790)
76	4332658	PIPE	1		(SUB FOR AT213843)
77	4343365	CAP	1		(SUB FOR AT204965)

SWING DEVICE SUPPORT

T143242 -UN-28JUN01

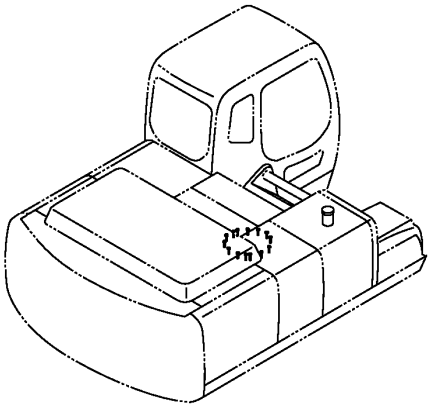

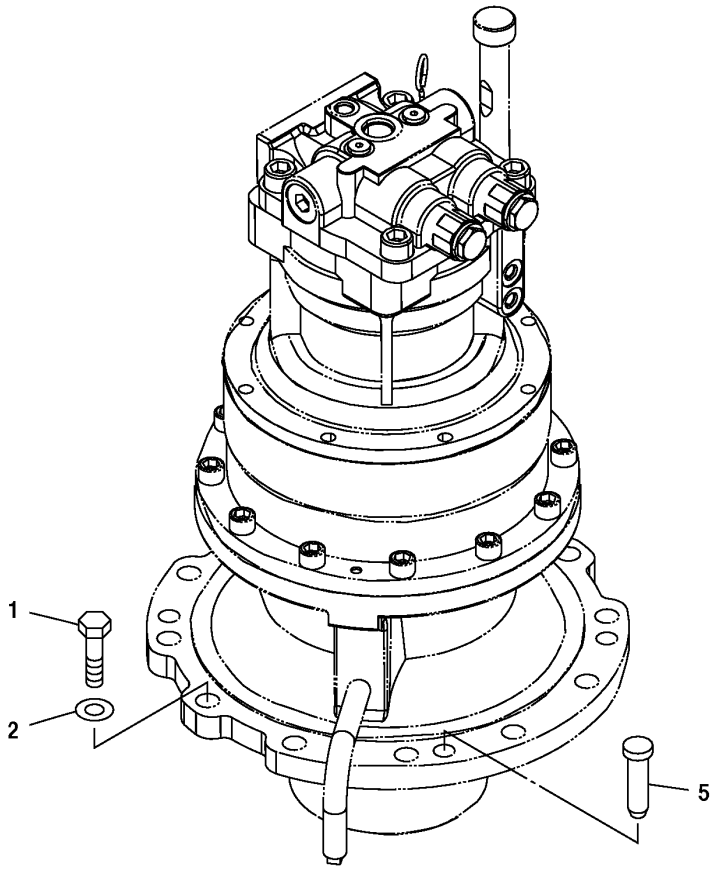

T143242

SWING DEVICE SUPPORT

KEY	PART NO.	PART NAME	QTY	SERIAL NO.	REMARKS
1	P61971	BOLT	12		
2	P61952	WASHER	12		
5	4080398	PIN FASTENER	2		(SUB FOR TH101880)

SWING OIL MOTOR

T147693 -UN-02NOV01

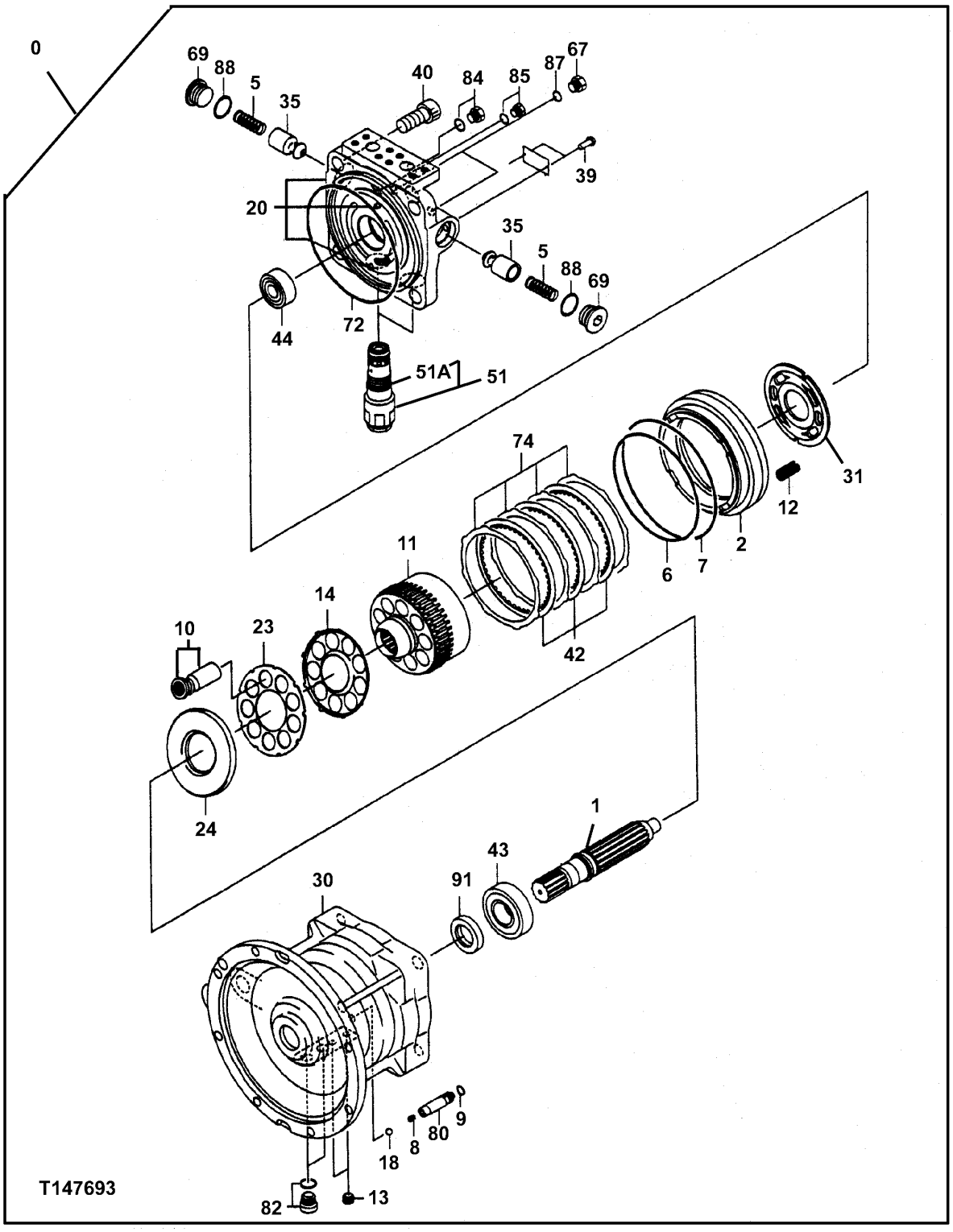

SWING OIL MOTOR

KEY	PART NO.	PART NAME	QTY	SERIAL NO.	REMARKS
0	4398514	HYDRAULIC MOTOR	1		
1	0788804	SHAFT	1		
2	0788814	PISTON	1		
5	0409216	SPRING	2		(SUB FOR AT155199)
6	4S00218	O-RING	1		(SUB FOR AT132389)
7	T80622	O-RING	1		183.744 X 3.531 MM (7-15/64" X 0.139")
8	0788818	SPRING	1		(SUB FOR TH0788818)
9	CH11568	PACKING	1		
10	0788801	PISTON	9		(SUB FOR TH0788801)
11	0788805	MANIFOLD	1		(SUB FOR TH0788805)
12	0788815	SPRING	24		(SUB FOR TH0788815)
13	15H560	PIPE PLUG	2		1.575 MM (1/16")
14	0788806	PLATE	1		(SUB FOR TH0788806)
18	R63075	BALL	1		5.558 MM (0.219")
20	0788802	COVER	1		(SUB FOR TH0788802)
23	0788807	RETAINER	1		(SUB FOR TH0788807)
24	0788808	PLATE	1		(SUB FOR TH0788808)
30	.....	CASE	1		(TH0788810 NOT AVAILABLE FOR SERVICE)
31	0788809	PLATE	1		(SUB FOR TH0788809)
35	0409215	PLUNGER	2		(SUB FOR AT155198)
39	0625509	CAP SCREW	2		(SUB FOR TH0625509)
40	0365318	SCREW	4		(SUB FOR AT128294)
42	0788816	THRUST WASHER	3		(SUB FOR TH0788816)
43	0788811	CYLINDRICAL ROLLER BEARING	1		(SUB FOR TH0788811)
44	0788812	CYLINDRICAL ROLLER BEARING	1		(SUB FOR TH0788812)
51	4451628	RELIEF VALVE	2		
51A	A811030	O-RING	2		29.400 X 3.100 MM (1.157" X 0.122") (SUB FOR TH101300)
67	0629404	FITTING PLUG	2		(SUB FOR AT213630)
69	0692708	FITTING PLUG	2		(SUB FOR AT217930)
72	0425115	O-RING	1		(SUB FOR AT155216)
74	0788817	THRUST WASHER	4		(SUB FOR TH0788817)
80	0788803	PLUNGER	1		(SUB FOR TH0788803)
82	0628705	PIPE PLUG	2		(SUB FOR TH0628705)
84	0694825	PIPE PLUG	1		(SUB FOR TH0694825)
85	0788819	PIPE PLUG	1		(SUB FOR TH0788819)
87	M800650	PACKING	2		
88	AT264347	O-RING	2		(SUB FOR TH100136, 4506428)
91	0788813	SEAL	1		(SUB FOR TH0788813)

MEMORANDA

1K20

NUMERICAL INDEX

PART NO.	GRID	KEY	PAGE
AA34965	2D2	9	1830 - 3
AA34965	2D14	3	1830 - 11
AE24616	3D15	5	3315 - 13
AE24616	3D17	23	3315 - 15
AE24616	3E16	17	3360 - 11
AE24616	3E20	13	3360 - 15
AE24616	3F8	5	3360 - 25
AE24616	3F10	7	3360 - 27
AE24616	3K10	23	3363 - 63
AE24616	3K12	3	3363 - 65
AE42067	3D15	6	3315 - 13
AE42067	3D15	7	3315 - 13
AE42718	3K12	13	3363 - 65
AH103182	3H16	3	3363 - 3
AH108250	3D15	2	3315 - 13
AH140158	3K20	25	3365 - 5B
AH140158	3L2	25	3365 - 9B
AH140158	3L10	26	3365 - 17
AH140158	3L12	26	3365 - 17B
AH148453	3J24	42	3363 - 51D
AH148454	3J24	6	3363 - 51D
AH148456	3J24	31	3363 - 51D
AH148457	3J24	34	3363 - 51D
AH148782	3K20	51	3365 - 5B
AH148785	3K20	53	3365 - 5B
AH148785	3L2	53	3365 - 9B
AH148786	3K20	6	3365 - 5B
AH148786	3L2	6	3365 - 9B
AH148788	3K18	28	3365 - 5
AH148788	3K20	26	3365 - 5B
AH148789	3K18	29	3365 - 5
AH148789	3K20	27	3365 - 5B
AH148790	3K18	34	3365 - 5
AH148790	3K20	32	3365 - 5B
AH148790	3K24	34	3365 - 9
AH148790	3L2	32	3365 - 9B
AH148792	3L2	0	3365 - 9B
AH148794	3K24	28	3365 - 9
AH148794	3L2	26	3365 - 9B
AH148795	3K24	29	3365 - 9
AH148795	3L2	27	3365 - 9B
AH165670	3E4	29	3344 - 3B
AH165671	1G17	20	1370 - 5
AH165671	3D23	56	3340 - 7
AH165671	3I12	50	3363 - 21B
AH165671	3J22	70	3363 - 51B
AH165671	3K20	0	3365 - 5B
AH165671	3K20	1B	3365 - 5B
AH165671	3K20	2B	3365 - 5B
AH165671	3K20	50	3365 - 5B
AH165671	3K20	52	3365 - 5B
AH165673	3D23	56	3340 - 7
AH165673	3I12	50	3363 - 21B
AH165673	3J22	70	3363 - 51B
AH165673	3L2	0	3365 - 9B
AH165673	3L2	2B	3365 - 9B
AH165673	3L2	50	3365 - 9B
AH165677	3K20	1B	3365 - 5B
AH165677	3K24	27	3365 - 9
AH165677	3L2	1B	3365 - 9B
AH165678	3K18	27	3365 - 5
AH165681	3K20	2B	3365 - 5B
AH165681	3L2	2B	3365 - 9B
AH173435	3L10	40	3365 - 17
AH173435	3L12	40	3365 - 17B
AH173442	3L6	42	3365 - 13
AH173443	3L6	2	3365 - 13
AH173444	3L6	43	3365 - 13
AH173446	3L6	16	3365 - 13
AH173447	3L6	31	3365 - 13
AH173448	3L6	34	3365 - 13
AH173449	3L10	38	3365 - 17
AH173449	3L12	38	3365 - 17B
AH173450	3L10	2	3365 - 17
AH173450	3L12	2	3365 - 17B
AH173451	3L10	39	3365 - 17
AH173451	3L12	39	3365 - 17B
AH173453	3L10	28	3365 - 17
AH173453	3L12	28	3365 - 17B
AH173454	3L10	31	3365 - 17
AH173454	3L12	31	3365 - 17B
AH173456	3K18	2	3365 - 5
AH173456	3K24	2	3365 - 9
AH173457	3K18	42	3365 - 5
AH173457	3K24	42	3365 - 9
AH20849	1F19	1D	0520 - 3
AH75160	3K12	33	3363 - 65
AL2976T	1F9	14	0505 - 3
AP33637	3J2	22	3363 - 33
AP33637	3J14	12	3363 - 45
AP33638	3J2	23	3363 - 33
AP33638	3J14	13	3363 - 45
AP34255	1B8	6	0130 - 11
AP34666	1B10	0	0130 - 13
AP34667	1B8	12	0130 - 11
AP38748	2C16	0	1810 - 37
AP38749	2C16	1	1810 - 37
AP38750	2C16	2	1810 - 37
AP38751	2C16	4	1810 - 37
AP38752	2C16	5	1810 - 37
AP38753	2C16	6	1810 - 37
AP38754	2C16	9	1810 - 37
AP38755	2C16	30	1810 - 37
AP38756	2C16	11	1810 - 37
AP38757	2C16	12	1810 - 37
AP38758	2C16	13	1810 - 37
AP38759	2C16	16	1810 - 37
AP38760	2C16	15	1810 - 37
AP38763	2C16	50	1810 - 37
AR21836	1G8	10	0560 - 7
AR21836	1G10	10	0560 - 7B
AR45925	1G21	21	1671 - 3
AR48236	1F13	2	0510 - 5
AR48236	1F25	10	0530 - 3
AR48236	1G8	20	0560 - 7
AR60937	2D18	10	1830 - 15
AR65507	1C23	9	0403 - 2
AR73234	1F19	1E	0520 - 3
AR73234	1F19	1G	0520 - 3
AR85519	1D16	1	0413 - 3
AR85519	1E6	14	0420 - 5
AR90081	3D15	20	3315 - 13
AR90081	3E16	11	3360 - 11
AT101944	2D10	17	1830 - 7
AT101944	2D22	17	1830 - 19
AT101945	2D10	16	1830 - 7
AT101945	2D22	16	1830 - 19
AT104509	3D23	20F	3340 - 7
AT105289	1F17	50	0510 - 9
AT106365	2C6	0B	1810 - 27
AT107393	3I8	5	3363 - 19
AT108783	3E16	10	3360 - 11
AT114835	3L10	27	3365 - 17
AT114835	3L12	27	3365 - 17B
AT115448	3E18	11	3360 - 13
AT115535	3D15	12	3315 - 13
AT115535	3D17	31	3315 - 15
AT116162	1H14	14	1674 - 13
AT116162	1H16	1	1674 - 13B
AT116486	3E20	16	3360 - 15
AT116486	3K12	7	3363 - 65
AT117364	3E22	48	3360 - 17
AT117364	3F6	21	3360 - 23
AT117365	3E22	47	3360 - 17
AT117365	3F6	20	3360 - 23
AT120498	3E22	47	3360 - 17
AT120498	3F6	20	3360 - 23
AT120499	3E22	48	3360 - 17
AT120499	3F6	21	3360 - 23
AT120774	3I12	2	3363 - 21B
AT121233	3D23	44	3340 - 7
AT121321	1H2	49	1674 - 5
AT121321	1H4	72	1674 - 7
AT122152	2E22	30	1910 - 21
AT122209	3D23	20D	3340 - 7
AT122209	3D23	22C	3340 - 7
AT122384	1H2	46	1674 - 5
AT122946	3E22	19	3360 - 17
AT126162	2E20	8A	1910 - 19
AT126162	2E20	9A	1910 - 19
AT126200	3H20	14	3363 - 7
AT126200	3K2	10	3363 - 53
AT126200	3K4	15	3363 - 55
AT126200	3K14	26	3364 - 3
AT126601	3K10	18	3363 - 63
AT127258	3J22	45	3363 - 51B
AT127270	3I2	5	3363 - 13
AT127606	3J22	52	3363 - 51B
AT128294	3L19	40	4360 - 7
AT130053	3E16	7	3360 - 11
AT130053	3K12	11	3363 - 65
AT130157	1G15	1	1369 - 3
AT130379	1I3	3	1740 - 3
AT130684	3K12	22	3363 - 65
AT130859	3G10	57	3362 - 11
AT130859	3G14	57	3362 - 15
AT130941	1B16	3	0250 - 3
AT131080	3B12	21	3302 - 3
AT131080	3B12	22	3302 - 3
AT131080	3B12	90	3302 - 3
AT131080	3B24	21	3302 - 15
AT131080	3B24	22	3302 - 15
AT131080	3B24	41	3302 - 15
AT131082	3B14	15	3302 - 5
AT131083	3B12	4	3302 - 3
AT131083	3B14	4	3302 - 5
AT131083	3B16	4	3302 - 7
AT131083	3B18	4	3302 - 9
AT131083	3B20	4	3302 - 11
AT131083	3B22	1	3302 - 13
AT131083	3B24	4	3302 - 15
AT131085	3B14	21	3302 - 5
AT131085	3B14	22	3302 - 5
AT131085	3B14	41	3302 - 5
AT131085	3B16	21	3302 - 7
AT131085	3B16	22	3302 - 7
AT131085	3B16	41	3302 - 7
AT131085	3B18	21	3302 - 9
AT131085	3B18	22	3302 - 9
AT131085	3B18	90	3302 - 9
AT131085	3B20	21	3302 - 11

NUMERICAL INDEX - CONTINUED

PART NO.	GRID	KEY	PAGE
AT131085	3B20	22	3302 - 11
AT131085	3B20	90	3302 - 11
AT131088	3B22	8	3302 - 13
AT131089	3B22	8	3302 - 13
AT131090	3B12	15	3302 - 3
AT131090	3B16	15	3302 - 7
AT131097	3B18	15	3302 - 9
AT131117	3B22	12	3302 - 13
AT131445	3E16	8	3360 - 11
AT131557	1C10	40	0267 - 3
AT131697	2B9	16	1810 - 7
AT131732	1I9	5	1740 - 9
AT131732	1I9	6	1740 - 9
AT131854	1I3	28	1740 - 3
AT131864	2B9	16A	1810 - 7
AT131865	2B9	16B	1810 - 7
AT131922	1F19	1K	0520 - 3
AT132389	3L19	6	4360 - 7
AT132457	1H4	5	1674 - 7
AT132690	3L10	5	3365 - 17
AT132690	3L12	5	3365 - 17B
AT135758	1G24	1C	1674 - 3
AT13740	1D2	28	0404 - 3
AT13740	1F17	10	0510 - 9
AT139382	3E18	4	3360 - 13
AT139383	3E18	3	3360 - 13
AT140041	3E20	16	3360 - 15
AT140041	3K12	7	3363 - 65
AT141562	3E18	15	3360 - 13
AT142288	1H12	1	1674 - 11
AT145341	1G21	15	1671 - 3
AT147239	3K10	1	3363 - 63
AT147301	1F13	1	0510 - 5
AT147803	1G4	9	0560 - 3
AT147803	1H4	0	1674 - 7
AT147803	2C16	18A	1810 - 37
AT147803	2E20	8	1910 - 19
AT147803	2E20	9	1910 - 19
AT152120	3D15	13	3315 - 13
AT152120	3D17	5	3315 - 15
AT152186	3K10	15	3363 - 63
AT153802	1G4	4	0560 - 3
AT153833	3F24	5	3361 - 13
AT153834	3F24	9	3361 - 13
AT153835	3F24	12	3361 - 13
AT153837	3F24	15	3361 - 13
AT153838	3F24	10	3361 - 13
AT153880	3F24	3	3361 - 13
AT153881	3F24	6	3361 - 13
AT153882	3F24	16	3361 - 13
AT153885	3F24	17	3361 - 13
AT153902	3G22	32	3362 - 23
AT153904	3G22	34	3362 - 23
AT153924	3K20	34	3365 - 5B
AT153924	3L2	34	3365 - 9B
AT154055	3D11	24	3315 - 9
AT154056	3D11	23	3315 - 9
AT154127	3D11	28	3315 - 9
AT154150	2B9	39	1810 - 7
AT154162	1B24	14	0260 - 7
AT154164	3F18	15	3361 - 7
AT154173	1B24	18	0260 - 7
AT154206	3F18	82	3361 - 7
AT154207	1G17	11	1370 - 5
AT154207	3J22	12	3363 - 51B
AT154213	2F9	6	2004 - 3
AT154214	1G24	4	1674 - 3
AT154229	1G21	8	1671 - 3
AT154239	1G4	5	0560 - 3
AT154243	1G4	3	0560 - 3
AT154243	1H2	16	1674 - 5
AT154278	2B9	20	1810 - 7
AT154285	3J10	55	3363 - 41
AT154285	3J12	47	3363 - 43
AT154293	3L15	74	4360 - 3
AT154297	3F16	68	3361 - 5
AT154310	3F16	69	3361 - 5
AT154321	1B24	8	0260 - 7
AT154351	2D2	14	1830 - 3
AT154413	2B9	24	1810 - 7
AT154528	1B24	0	0260 - 7
AT154591	3G8	86	3362 - 9
AT154591	3K10	6	3363 - 63
AT154604	3G8	89	3362 - 9
AT154619	3G8	77	3362 - 9
AT154619	3G16	77	3362 - 17
AT154697	1B16	2	0250 - 3
AT154702	1B16	36	0250 - 3
AT154723	3G4	2	3362 - 5
AT154724	3G4	6	3362 - 5
AT154750	3G4	3	3362 - 5
AT154756	3G4	5	3362 - 5
AT154757	1B22	1	0260 - 5
AT154778	3K20	4	3365 - 5B
AT154798	1B16	41	0250 - 3
AT154841	1B2	0	0130 - 5
AT154913	2F5	5	2001 - 3
AT154914	1F25	5C	0530 - 3
AT154921	3K14	12	3364 - 3
AT154922	3K14	13	3364 - 3
AT154929	1I3	2	1740 - 3
AT154952	1F13	5	0510 - 5
AT154961	1H4	32	1674 - 7
AT154966	2F11	0	2004 - 5
AT154968	1F25	5	0530 - 3
AT155189	2C16	26	1810 - 37
AT155198	3L19	35	4360 - 7
AT155199	3L19	5	4360 - 7
AT155216	3L19	72	4360 - 7
AT155249	1G2	4	0540 - 3
AT155254	3I2	3	3363 - 13
AT155257	3J22	24	3363 - 51B
AT155270	3F22	61	3361 - 11
AT155270	3I20	43	3363 - 29
AT155270	3I22	43	3363 - 29B
AT155270	3J8	18	3363 - 39
AT155270	3J14	30	3363 - 45
AT155270	3J16	30	3363 - 45B
AT155271	1I3	49	1740 - 3
AT155273	1G21	3	1671 - 3
AT155274	1I3	30	1740 - 3
AT155284	2E14	6	1910 - 13
AT155305	1B18	0	0260 - 3
AT155307	2E22	29	1910 - 21
AT155314	2E20	24	1910 - 19
AT155337	1F13	4	0510 - 5
AT155617	1G21	18	1671 - 3
AT155617	1G21	30	1671 - 3
AT155622	1F19	1	0520 - 3
AT155693	3E22	30	3360 - 17
AT155730	2C14	37	1810 - 35
AT155741	3D19	24	3340 - 3
AT156970	2B11	41	1810 - 9
AT156974	1H4	48	1674 - 7
AT156993	2B15	17	1810 - 13
AT156994	2B15	18	1810 - 13
AT157059	1F21	6	0520 - 5
AT157068	2B11	18	1810 - 9
AT157068	2B13	27	1810 - 11
AT159500	1C6	16	0262 - 3
AT159565	3E4	24	3344 - 3B
AT159566	3E4	22	3344 - 3B
AT159567	3E4	10	3344 - 3B
AT159595	3D23	20E	3340 - 7
AT159598	3D23	26	3340 - 7
AT159599	3D23	24	3340 - 7
AT159600	3D23	25	3340 - 7
AT159601	3D23	34	3340 - 7
AT159602	3D23	38	3340 - 7
AT159603	3D23	42	3340 - 7
AT159782	3E22	3	3360 - 17
AT159786	3E22	2	3360 - 17
AT159804	2D10	20	1830 - 7
AT159804	2D22	20	1830 - 19
AT159934	3E22	13	3360 - 17
AT160584	3F16	51	3361 - 5
AT160584	3F22	62	3361 - 11
AT160584	3I20	44	3363 - 29
AT160584	3I22	44	3363 - 29B
AT160584	3J14	31	3363 - 45
AT160584	3J16	31	3363 - 45B
AT160685	3B22	8	3302 - 13
AT160685	3B22	11	3302 - 13
AT160685	3B22	12	3302 - 13
AT160865	3E4	6	3344 - 3B
AT160884	3J22	1	3363 - 51B
AT160890	1G17	7	1370 - 5
AT160891	1G17	10	1370 - 5
AT160892	1G17	8	1370 - 5
AT160982	1H2	1A	1674 - 5
AT161005	3B22	8	3302 - 13
AT161005	3B22	11	3302 - 13
AT161005	3B22	12	3302 - 13
AT161192	2D10	25	1830 - 7
AT161192	2D22	25	1830 - 19
AT162538	3C8	1A	3302 - 23
AT162863	1H14	30	1674 - 13
AT163538	3C12	1A	3302 - 27
AT163538	3C16	1A	3302 - 31
AT163538	3C24	1A	3302 - 39
AT163539	3C8	1B	3302 - 23
AT163539	3C12	1B	3302 - 27
AT163539	3C16	1B	3302 - 31
AT163539	3C24	1B	3302 - 39
AT163540	3C8	1F	3302 - 23
AT163540	3C12	1F	3302 - 27
AT163540	3C16	1F	3302 - 31
AT163540	3C24	1F	3302 - 39
AT163541	3C8	1E	3302 - 23
AT163541	3C12	1E	3302 - 27
AT163541	3C16	1E	3302 - 31
AT163541	3C24	1E	3302 - 39
AT163542	3C8	1D	3302 - 23
AT163542	3C12	1D	3302 - 27
AT163542	3C16	1D	3302 - 31
AT163542	3C24	1D	3302 - 39
AT163543	3C8	1C	3302 - 23
AT163543	3C12	1C	3302 - 27
AT163543	3C16	1C	3302 - 31
AT163543	3C24	1C	3302 - 39
AT163544	3C8	1G	3302 - 23

NUMERICAL INDEX - CONTINUED

PART NO.	GRID	KEY	PAGE
AT163544	3C12	1G	3302 - 27
AT163544	3C16	1G	3302 - 31
AT163544	3C24	1G	3302 - 39
AT163545	3C8	1J	3302 - 23
AT163545	3C12	1J	3302 - 27
AT163545	3C16	1J	3302 - 31
AT163545	3C24	1J	3302 - 39
AT163546	3C8	1I	3302 - 23
AT163546	3C12	1I	3302 - 27
AT163546	3C16	1I	3302 - 31
AT163546	3C24	1I	3302 - 39
AT163547	3C8	1H	3302 - 23
AT163547	3C12	1H	3302 - 27
AT163547	3C16	1H	3302 - 31
AT163547	3C24	1H	3302 - 39
AT163548	3C22	1A	3302 - 37
AT163549	3C22	1B	3302 - 37
AT163550	3C22	1F	3302 - 37
AT163551	3C22	1E	3302 - 37
AT163552	3C22	1D	3302 - 37
AT163553	3C22	1C	3302 - 37
AT163554	3C22	1G	3302 - 37
AT163555	3C22	1J	3302 - 37
AT163556	3C22	1I	3302 - 37
AT163557	3C22	1H	3302 - 37
AT163600	3B24	40	3302 - 15
AT163602	3B24	40	3302 - 15
AT163603	3B24	40	3302 - 15
AT163604	3B24	40	3302 - 15
AT163605	3B24	40	3302 - 15
AT163607	3B12	40	3302 - 3
AT163608	3B12	40	3302 - 3
AT163609	3B12	40	3302 - 3
AT163610	3B12	40	3302 - 3
AT163611	3B14	40	3302 - 5
AT163612	3B14	40	3302 - 5
AT163613	3B14	40	3302 - 5
AT163614	3B14	40	3302 - 5
AT163615	3B14	40	3302 - 5
AT163616	3B16	40	3302 - 7
AT163616	3C2	10	3302 - 17
AT163617	3B16	40	3302 - 7
AT163617	3C2	10	3302 - 17
AT163618	3B16	40	3302 - 7
AT163618	3C2	10	3302 - 17
AT163620	3B16	40	3302 - 7
AT163624	3B20	40	3302 - 11
AT163624	3C4	10	3302 - 19
AT163625	3B20	40	3302 - 11
AT163625	3C4	10	3302 - 19
AT163825	3C20	1A	3302 - 35
AT163826	3C20	1B	3302 - 35
AT163827	3C20	1F	3302 - 35
AT163828	3C20	1E	3302 - 35
AT163832	3C20	1C	3302 - 35
AT167079	3K14	7	3364 - 3
AT167192	3C8	1K	3302 - 23
AT167192	3C12	1K	3302 - 27
AT167192	3C16	1K	3302 - 31
AT167192	3C24	1K	3302 - 39
AT167193	3C8	1L	3302 - 23
AT167193	3C12	1L	3302 - 27
AT167193	3C16	1L	3302 - 31
AT167193	3C24	1L	3302 - 39
AT167194	3C8	1N	3302 - 23
AT167194	3C12	1N	3302 - 27
AT167194	3C18	1N	3302 - 33
AT167194	3C24	1N	3302 - 39
AT167195	3C8	1M	3302 - 23
AT167195	3C12	1M	3302 - 27
AT167195	3C16	1M	3302 - 31
AT167195	3C24	1M	3302 - 39
AT167196	3C22	1K	3302 - 37
AT167197	3C22	1L	3302 - 37
AT167874	3B12	29	3302 - 3
AT167874	3B12	30	3302 - 3
AT167874	3B12	91	3302 - 3
AT167874	3B24	29	3302 - 15
AT167874	3B24	30	3302 - 15
AT167874	3B24	42	3302 - 15
AT167876	3B14	29	3302 - 5
AT167876	3B14	30	3302 - 5
AT167876	3B14	42	3302 - 5
AT167876	3B16	29	3302 - 7
AT167876	3B16	30	3302 - 7
AT167876	3B16	42	3302 - 7
AT167876	3B18	29	3302 - 9
AT167876	3B18	30	3302 - 9
AT167876	3B18	91	3302 - 9
AT167876	3B20	29	3302 - 11
AT167876	3B20	30	3302 - 11
AT167876	3B20	91	3302 - 11
AT168311	3F12	13	3360 - 51
AT170452	1B24	31	0260 - 7
AT170459	3D17	8	3315 - 15
AT170630	3F18	10	3361 - 7
AT170759	1F9	2	0505 - 3
AT171162	1F9	1	0505 - 3
AT171539	1F9	3	0505 - 3
AT171615	2E20	11	1910 - 19
AT171737	3B18	40	3302 - 9
AT171739	3B18	40	3302 - 9
AT171741	3B18	40	3302 - 9
AT172435	1H2	1C	1674 - 5
AT172436	1H2	1D	1674 - 5
AT173610	1F17	11	0510 - 9
AT173678	2C20	2	1821 - 5
AT174888	1I9	2	1740 - 9
AT174989	1D12	16	0409 - 3
AT175981	3F18	64	3361 - 7
AT175984	3F18	64A	3361 - 7
AT175989	1G4	9	0560 - 3
AT176256	1G17	1	1370 - 5
AT176256	3K8	2	3363 - 59
AT176258	3K8	3	3363 - 59
AT176789	2B13	6	1810 - 11
AT176799	3H16	7	3363 - 3
AT176844	3H16	2	3363 - 3
AT176949	1F17	1	0510 - 9
AT177419	1G4	11	0560 - 3
AT177798	3K10	3	3363 - 63
AT177804	2C6	0	1810 - 27
AT177805	2C6	0A	1810 - 27
AT177806	2C6	0C	1810 - 27
AT178530	3C8	1A	3302 - 23
AT178530	3C12	1A	3302 - 27
AT178530	3C16	1A	3302 - 31
AT178530	3C24	1A	3302 - 39
AT178531	3C8	1A	3302 - 23
AT178531	3C12	1A	3302 - 27
AT178531	3C16	1A	3302 - 31
AT178531	3C24	1A	3302 - 39
AT178532	3C8	1B	3302 - 23
AT178532	3C12	1B	3302 - 27
AT178532	3C16	1B	3302 - 31
AT178532	3C24	1B	3302 - 39
AT178533	3C8	1B	3302 - 23
AT178533	3C12	1B	3302 - 27
AT178533	3C16	1B	3302 - 31
AT178533	3C24	1B	3302 - 39
AT178534	3C8	1F	3302 - 23
AT178534	3C12	1F	3302 - 27
AT178534	3C16	1F	3302 - 31
AT178534	3C24	1F	3302 - 39
AT178535	3C8	1F	3302 - 23
AT178535	3C12	1F	3302 - 27
AT178535	3C16	1F	3302 - 31
AT178535	3C24	1F	3302 - 39
AT178536	3C8	1C	3302 - 23
AT178536	3C12	1C	3302 - 27
AT178536	3C16	1C	3302 - 31
AT178536	3C24	1C	3302 - 39
AT178537	3C8	1C	3302 - 23
AT178537	3C12	1C	3302 - 27
AT178537	3C16	1C	3302 - 31
AT178537	3C24	1C	3302 - 39
AT178845	1F9	30	0505 - 3
AT178893	1F9	6	0505 - 3
AT179239	3E22	29	3360 - 17
AT179566	3E22	4	3360 - 17
AT179567	3E22	5	3360 - 17
AT179568	3E22	26	3360 - 17
AT180004	1B8	5	0130 - 11
AT180005	1B8	4	0130 - 11
AT180006	1B8	7	0130 - 11
AT180007	1B4	10	0130 - 7
AT180007	1B8	1	0130 - 11
AT180007	1B10	7	0130 - 13
AT180008	1B8	9	0130 - 11
AT180009	1B10	5	0130 - 13
AT180011	1B10	8	0130 - 13
AT180012	1B10	6	0130 - 13
AT180013	1B10	3	0130 - 13
AT180015	1B4	8	0130 - 7
AT180017	1B4	9	0130 - 7
AT180019	1B4	4	0130 - 7
AT180020	1B4	5	0130 - 7
AT180021	1B4	7	0130 - 7
AT180022	1B4	3	0130 - 7
AT180025	1B12	1	0130 - 15
AT180027	1B12	2	0130 - 15
AT180028	1B12	4	0130 - 15
AT180030	1B12	7	0130 - 15
AT180034	1B12	24	0130 - 15
AT180035	1B12	24	0130 - 15
AT180036	1B12	25	0130 - 15
AT180042	1B6	6	0130 - 9
AT180046	1B6	12	0130 - 9
AT180047	1B6	11	0130 - 9
AT180048	1B12	22	0130 - 15
AT180585	3E16	4	3360 - 11
AT180705	1H14	4	1674 - 13
AT180705	1H16	20	1674 - 13B
AT180971	2C18	7	1821 - 3
AT180973	2C18	9	1821 - 3
AT180974	2C18	10	1821 - 3
AT180975	2C18	11	1821 - 3
AT180976	2C18	12	1821 - 3
AT180977	2C18	13	1821 - 3
AT180978	2C18	15	1821 - 3
AT180979	2C18	18	1821 - 3

NUMERICAL INDEX - CONTINUED

PART NO.	GRID	KEY	PAGE
AT180980	2C18	19	1821 - 3
AT181125	2F5	10	2001 - 3
AT181848	3L2	50	3365 - 9B
AT181849	3K20	50	3365 - 5B
AT182278	1B24	0	0260 - 7
AT182446	3L2	50	3365 - 9B
AT182447	3K20	50	3365 - 5B
AT182625	2B9	27	1810 - 7
AT182626	2B9	28	1810 - 7
AT183222	1F9	8	0505 - 3
AT183510	1F17	2	0510 - 9
AT183511	1F17	3	0510 - 9
AT183512	1F17	4	0510 - 9
AT183514	1F17	5	0510 - 9
AT183529	1F17	6	0510 - 9
AT183531	1F17	7	0510 - 9
AT183796	3K10	10	3363 - 63
AT183961	3B16	40	3302 - 7
AT185207	2E22	24	1910 - 21
AT185207	2F7	0	2002 - 3
AT185696	1G22	6	1672 - 2
AT186111	3E22	42	3360 - 17
AT186111	3F6	15	3360 - 23
AT186112	3E22	43	3360 - 17
AT186112	3F6	16	3360 - 23
AT186113	3E22	44	3360 - 17
AT186113	3F6	17	3360 - 23
AT186114	3E22	45	3360 - 17
AT186114	3F6	18	3360 - 23
AT186161	1B12	10	0130 - 15
AT186162	1B12	11	0130 - 15
AT186457	1G17	20	1370 - 5
AT186457	3D23	56	3340 - 7
AT186457	3E4	28	3344 - 3B
AT186457	3I12	50	3363 - 21B
AT186457	3J22	70	3363 - 51B
AT186458	3E4	5	3344 - 3B
AT186460	3D23	20	3340 - 7
AT186461	3D23	22	3340 - 7
AT186462	3D23	28	3340 - 7
AT186463	3D23	55	3340 - 7
AT186464	3D23	20C	3340 - 7
AT186465	3D23	20E	3340 - 7
AT186466	3D23	22B	3340 - 7
AT186467	1G17	4	1370 - 5
AT186467	3K8	15	3363 - 59
AT186469	3J22	34	3363 - 51B
AT186470	3J22	35	3363 - 51B
AT186471	3J22	37	3363 - 51B
AT186472	3J22	38	3363 - 51B
AT186473	3J22	39	3363 - 51B
AT186474	3J22	40	3363 - 51B
AT186475	3J22	41	3363 - 51B
AT186476	3J22	49	3363 - 51B
AT186477	3J22	58	3363 - 51B
AT186478	3J22	55	3363 - 51B
AT186479	3J22	62	3363 - 51B
AT186482	3J22	60	3363 - 51B
AT186483	3I12	0	3363 - 21B
AT186484	3I12	1	3363 - 21B
AT186500	3J22	32	3363 - 51B
AT186554	3I16	3A	3363 - 25
AT186622	3K12	24	3363 - 65
AT186623	3K12	16	3363 - 65
AT186647	1H4	66	1674 - 7
AT186719	3J22	46	3363 - 51B
AT187185	1B12	13	0130 - 15
AT187249	3C2	10	3302 - 17
AT187250	3C2	10	3302 - 17
AT187251	3C2	10	3302 - 17
AT187252	3C2	10	3302 - 17
AT187253	3C4	10	3302 - 19
AT187254	3B16	40	3302 - 7
AT187254	3C4	10	3302 - 19
AT189409	3E22	43	3360 - 17
AT189409	3F6	16	3360 - 23
AT189410	3E22	42	3360 - 17
AT189410	3F6	15	3360 - 23
AT189613	1F17	8	0510 - 9
AT189991	1F23	1	0520 - 7
AT190190	2D18	10	1830 - 15
AT190535	3E20	4	3360 - 15
AT190750	3K14	14	3364 - 3
AT190882	1F11	2	0510 - 2
AT190929	1H18	15	1674 - 15
AT191027	1H20	1	1674 - 17
AT191028	1H18	12	1674 - 15
AT191168	1F17	9	0510 - 9
AT191169	1F17	17	0510 - 9
AT191263	1F17	12	0510 - 9
AT191264	1F17	13	0510 - 9
AT191297	3K12	1	3363 - 65
AT191397	3E20	14	3360 - 15
AT192340	3D19	46	3340 - 3
AT192340	3D21	46	3340 - 5
AT192511	3F20	38	3361 - 9
AT192511	3F22	38	3361 - 11
AT193964	2C18	1	1821 - 3
AT193968	1F17	15	0510 - 9
AT193969	1F17	16	0510 - 9
AT194921	3D19	65	3340 - 3
AT194922	3D21	65	3340 - 5
AT194969	1G4	9	0560 - 3
AT194969	1H4	0	1674 - 7
AT194969	2B13	6	1810 - 11
AT194969	2C16	18A	1810 - 37
AT194969	2E20	8	1910 - 19
AT194969	2E20	9	1910 - 19
AT195278	2C18	0C	1821 - 3
AT195279	2C18	0D	1821 - 3
AT195280	2C18	20	1821 - 3
AT195282	2C18	16	1821 - 3
AT195283	2C18	17	1821 - 3
AT195284	2C18	2	1821 - 3
AT195286	2C18	0	1821 - 3
AT195287	2C18	8	1821 - 3
AT195684	3D15	0	3315 - 13
AT195713	3E16	1	3360 - 11
AT195741	1H4	74	1674 - 7
AT195784	3E18	18	3360 - 13
AT195786	3E18	12	3360 - 13
AT195787	3E18	9	3360 - 13
AT195788	3E18	14	3360 - 13
AT196435	3D17	30	3315 - 15
AT196563	1E13	15	0421 - 5
AT196563	1G8	22	0560 - 7
AT196567	2B23	6	1810 - 21
AT196587	3E14	1	3360 - 9
AT196588	3E14	3	3360 - 9
AT196589	1G8	19	0560 - 7
AT196851	3E22	37	3360 - 17
AT196851	3E24	5	3360 - 17B
AT196890	3E22	1	3360 - 17
AT196907	3K10	30	3363 - 63
AT197101	1H14	25	1674 - 13
AT197101	1H16	2	1674 - 13B
AT197149	1G22	11	1672 - 2
AT197804	3E4	28	3344 - 3B
AT197804	3E4	29	3344 - 3B
AT197818	1F17	17	0510 - 9
AT198270	1F17	18	0510 - 9
AT199340	1H16	5	1674 - 13B
AT199355	3C18	1O	3302 - 33
AT199358	3B16	40	3302 - 7
AT199359	3C2	10	3302 - 17
AT199360	3B20	40	3302 - 11
AT199361	3C22	1O	3302 - 37
AT199362	3B22	12	3302 - 13
AT199363	3B22	12	3302 - 13
AT199497	1H16	6	1674 - 13B
AT199498	1H20	1	1674 - 17
AT199589	3C4	10	3302 - 19
AT199748	2C18	16	1821 - 3
AT199749	2C18	17	1821 - 3
AT200006	3H18	10	3363 - 5
AT200010	2D16	15	1830 - 13
AT200011	1C4	6	0260 - 11
AT200012	1H4	12	1674 - 7
AT200012	1H4	30	1674 - 7
AT200012	1H4	53	1674 - 7
AT200231	3H2	3	3362 - 25
AT200232	3H2	4	3362 - 25
AT200499	1H2	1B	1674 - 5
AT200584	2B11	59	1810 - 9
AT200931	3G10	76	3362 - 11
AT200931	3G14	76	3362 - 15
AT200990	3F16	86	3361 - 5
AT200995	1G2	11	0540 - 3
AT201005	3F20	29	3361 - 9
AT201005	3F22	29	3361 - 11
AT201025	2E20	17	1910 - 19
AT201032	2E20	10	1910 - 19
AT201732	3K6	19	3363 - 57
AT202111	3H2	0	3362 - 25
AT202122	3F16	20	3361 - 5
AT202122	3F24	0	3361 - 13
AT202291	3D11	19	3315 - 9
AT202292	3D11	18	3315 - 9
AT202412	3F16	4	3361 - 5
AT202414	3F16	3	3361 - 5
AT202415	3F16	30	3361 - 5
AT202416	3F16	31	3361 - 5
AT202443	3F16	43	3361 - 5
AT202466	3F18	10	3361 - 7
AT202778	1H18	14	1674 - 15
AT203612	3G4	0	3362 - 5
AT203646	1B24	23	0260 - 7
AT203647	3F16	32	3361 - 5
AT203648	3F18	80	3361 - 7
AT203649	1C6	22	0262 - 3
AT203649	3F18	67	3361 - 7
AT203649	3F20	58	3361 - 9
AT203651	3F16	59B	3361 - 5
AT203653	3F24	2	3361 - 13
AT203656	1C6	23	0262 - 3
AT203657	1C6	20	0262 - 3
AT204879	3G2	21	3362 - 3
AT204883	3G2	16	3362 - 3
AT204885	3G2	9	3362 - 3
AT204886	3G2	10	3362 - 3
AT204941	1B16	15	0250 - 3

NUMERICAL INDEX - CONTINUED

PART NO.	GRID	KEY	PAGE
AT204965	3L15	77	4360 - 3
AT213603	2D18	1	1830 - 15
AT213605	1I11	3	1740 - 11
AT213608	2B13	55	1810 - 11
AT213610	2B19	13	1810 - 17
AT213614	3D13	10	3315 - 11
AT213614	3I2	8	3363 - 13
AT213614	3I4	3	3363 - 15
AT213614	3I4	6	3363 - 15
AT213614	3I6	2	3363 - 17
AT213614	3I8	2	3363 - 19
AT213614	3I10	3	3363 - 21
AT213614	3I12	8	3363 - 21B
AT213614	3I16	0	3363 - 25
AT213614	3J22	42	3363 - 51B
AT213614	3K6	3	3363 - 57
AT213615	3H20	7	3363 - 7
AT213615	3H22	6	3363 - 9
AT213615	3J4	48	3363 - 35
AT213621	1I3	21	1740 - 3
AT213624	2B13	23	1810 - 11
AT213630	3L19	67	4360 - 7
AT213660	3G6	61A	3362 - 7
AT213660	3G8	62D	3362 - 9
AT213668	3G6	84	3362 - 7
AT213675	3G6	48D	3362 - 7
AT213675	3G8	47D	3362 - 9
AT213687	3G10	83	3362 - 11
AT213691	3G10	87	3362 - 11
AT213693	3G6	22	3362 - 7
AT213693	3G10	22	3362 - 11
AT213693	3G12	22	3362 - 13
AT213693	3G12	32	3362 - 13
AT213693	3G12	43	3362 - 13
AT213693	3G16	22	3362 - 17
AT213700	3G6	7	3362 - 7
AT213700	3G16	7	3362 - 17
AT213701	3G6	8	3362 - 7
AT213701	3G16	8	3362 - 17
AT213730	3F18	25	3361 - 7
AT213734	3F18	3	3361 - 7
AT213735	3F18	4	3361 - 7
AT213762	3F18	42	3361 - 7
AT213767	3F18	57	3361 - 7
AT213781	3D23	20B	3340 - 7
AT213790	3L15	75	4360 - 3
AT213793	3F18	31	3361 - 7
AT213794	3F20	35	3361 - 9
AT213794	3F22	35	3361 - 11
AT213796	3D13	31	3315 - 11
AT213796	3G20	17	3362 - 21
AT213796	3L15	29	4360 - 3
AT213800	1I9	5	1740 - 9
AT213801	1I9	6	1740 - 9
AT213806	3I2	11	3363 - 13
AT213809	3J2	73	3363 - 33
AT213809	3J8	17	3363 - 39
AT213820	3I2	12	3363 - 13
AT213831	3H24	8	3363 - 11
AT213832	3I4	10	3363 - 15
AT213832	3I4	13	3363 - 15
AT213832	3I4	16	3363 - 15
AT213832	3I8	22	3363 - 19
AT213832	3I8	24	3363 - 19
AT213832	3I8	26	3363 - 19
AT213832	3K6	15	3363 - 57
AT213832	3K6	17	3363 - 57
AT213839	1B10	21	0130 - 13
AT213843	3L15	76	4360 - 3
AT213847	3F18	12	3361 - 7
AT213867	3L15	28	4360 - 3
AT213868	3L15	15	4360 - 3
AT213870	3L15	26	4360 - 3
AT213871	3F18	21	3361 - 7
AT213873	3F18	6	3361 - 7
AT213874	3F18	8	3361 - 7
AT213875	3F18	44	3361 - 7
AT213876	3F18	43	3361 - 7
AT213877	3F18	47	3361 - 7
AT213878	3F18	51	3361 - 7
AT213883	2F5	2	2001 - 3
AT213884	2E4	17	1910 - 3
AT213884	2E16	25	1910 - 15
AT213887	3J6	5	3363 - 37
AT213890	3F18	59	3361 - 7
AT213891	3F20	15	3361 - 9
AT213891	3F22	15	3361 - 11
AT213892	3F20	14	3361 - 9
AT213892	3F22	14	3361 - 11
AT213893	3F20	41	3361 - 9
AT213894	3F18	73	3361 - 7
AT213912	3F20	28	3361 - 9
AT213912	3F22	28	3361 - 11
AT213913	3F20	27	3361 - 9
AT213913	3F22	27	3361 - 11
AT213915	2D8	3	1830 - 5
AT213917	3F20	24	3361 - 9
AT213917	3F22	24	3361 - 11
AT213920	3F18	7	3361 - 7
AT213921	1I11	2	1740 - 11
AT213922	3F18	74	3361 - 7
AT213943	2D16	12	1830 - 13
AT213947	1G21	28	1671 - 3
AT213948	1G21	29	1671 - 3
AT213951	3F20	49	3361 - 9
AT213951	3F22	49	3361 - 11
AT213954	2C10	2	1810 - 31
AT213958	2C12	4	1810 - 33
AT213964	3D25	1	3340 - 9
AT213964	3K16	1	3365 - 3
AT213964	3K18	26	3365 - 5
AT213964	3K20	52	3365 - 5B
AT213964	3K22	1	3365 - 7
AT213964	3K24	26	3365 - 9
AT213964	3L2	52	3365 - 9B
AT213964	3L8	1	3365 - 15
AT213964	3L10	1	3365 - 17
AT213964	3L12	1	3365 - 17B
AT213965	3J22	32B	3363 - 51B
AT213965	3L4	1	3365 - 11
AT213965	3L6	1	3365 - 13
AT213965	3L6	40	3365 - 13
AT213966	3L8	2	3365 - 15
AT213966	3L10	25	3365 - 17
AT213966	3L12	25	3365 - 17B
AT213967	2E22	20	1910 - 21
AT213970	1G4	8	0560 - 3
AT213972	3I6	5	3363 - 17
AT213973	3I6	4	3363 - 17
AT213974	3F18	50	3361 - 7
AT213975	3F18	46	3361 - 7
AT213976	3K16	2	3365 - 3
AT213976	3K18	1	3365 - 5
AT213976	3K22	2	3365 - 7
AT213976	3K24	1	3365 - 9
AT213984	1H4	14	1674 - 7
AT213994	1G17	3	1370 - 5
AT213994	3K8	0	3363 - 59
AT214006	3E4	7	3344 - 3B
AT214007	2B9	17	1810 - 7
AT214008	3E4	8	3344 - 3B
AT214009	3E4	15	3344 - 3B
AT214011	1H4	2	1674 - 7
AT214011	2B25	2	1810 - 23
AT214011	2C4	2	1810 - 25B
AT214011	2C14	33	1810 - 35
AT214012	2C14	4	1810 - 35
AT214012	2C14	8	1810 - 35
AT214012	2C14	15	1810 - 35
AT214012	2C14	19	1810 - 35
AT214017	2B9	18	1810 - 7
AT214029	3D23	1	3340 - 7
AT214036	1H4	15	1674 - 7
AT214039	3D23	8	3340 - 7
AT214045	3F20	10	3361 - 9
AT214045	3F22	10	3361 - 11
AT214046	3F16	27	3361 - 5
AT214061	2B9	21	1810 - 7
AT214063	2B9	23	1810 - 7
AT214078	2B11	45	1810 - 9
AT214079	2B9	45	1810 - 7
AT214104	2B15	16	1810 - 13
AT214118	2B19	2	1810 - 17
AT214119	2B19	4	1810 - 17
AT214122	2B19	71	1810 - 17
AT214129	2B11	71	1810 - 9
AT214145	2B13	3	1810 - 11
AT214152	2B13	54	1810 - 11
AT214160	2B13	13	1810 - 11
AT214169	2B17	33	1810 - 15
AT214170	2B17	49	1810 - 15
AT214171	2B17	92	1810 - 15
AT214172	2B17	65	1810 - 15
AT214172	2B19	11	1810 - 17
AT214173	2B11	55	1810 - 9
AT214213	2D6	43	1830 - 3D
AT214245	2D6	46	1830 - 3D
AT214263	3I16	3A	3363 - 25
AT214290	2B13	7	1810 - 11
AT214292	2B13	56	1810 - 11
AT214297	2B15	28	1810 - 13
AT214299	2B13	21	1810 - 11
AT214299	2B17	61	1810 - 15
AT214300	2B17	74	1810 - 15
AT214301	2B15	22	1810 - 13
AT214305	2B11	60	1810 - 9
AT214305	2B15	11	1810 - 13
AT214307	2B19	50	1810 - 17
AT214309	2B17	69A	1810 - 15
AT214310	2B11	30	1810 - 9
AT214311	2B15	7	1810 - 13
AT214313	2B13	15	1810 - 11
AT214314	2B13	23	1810 - 11
AT214350	3F16	6	3361 - 5
AT214351	3F18	19	3361 - 7
AT214401	3F16	63	3361 - 5
AT214406	3F16	62	3361 - 5
AT214409	2E22	17	1910 - 21
AT214412	3H16	6	3363 - 3
AT214413	3H18	3	3363 - 5
AT214427	3H18	5	3363 - 5

NUMERICAL INDEX - CONTINUED

PART NO.	GRID	KEY	PAGE
AT214430	2F5	0	2001 - 3
AT214442	3H18	4	3363 - 5
AT215088	1G2	3	0540 - 3
AT215089	1G2	2	0540 - 3
AT215091	1G2	1	0540 - 3
AT215101	3H18	8	3363 - 5
AT215118	3K14	11	3364 - 3
AT215474	1G2	10	0540 - 3
AT215479	2F5	6	2001 - 3
AT215497	1C2	6	0260 - 9
AT215497	1C8	6	0263 - 3
AT215498	1C2	7	0260 - 9
AT215498	1C8	7	0263 - 3
AT215499	1F21	4	0520 - 5
AT215503	2C14	26	1810 - 35
AT215504	3D21	24	3340 - 5
AT215505	3G2	2	3362 - 3
AT215506	3G2	5	3362 - 3
AT215507	3G2	13	3362 - 3
AT215508	3G2	7	3362 - 3
AT215515	3G2	18	3362 - 3
AT215516	3G2	19	3362 - 3
AT215520	1F25	6	0530 - 3
AT215520	1G8	16	0560 - 7
AT215520	1G10	16	0560 - 7B
AT215532	2E20	8	1910 - 19
AT215533	2F5	1	2001 - 3
AT215538	3D17	7	3315 - 15
AT215573	1H4	67	1674 - 7
AT215661	3G22	50	3362 - 23
AT215869	3D13	6D	3315 - 11
AT215885	3D13	1	3315 - 11
AT215948	3D13	4	3315 - 11
AT215954	3D13	3	3315 - 11
AT215955	3D13	5	3315 - 11
AT216001	3D13	0	3315 - 11
AT216016	3D13	6	3315 - 11
AT216522	2C18	6	1821 - 3
AT216532	2C18	21	1821 - 3
AT216532	2C18	22	1821 - 3
AT217099	1I3	29	1740 - 3
AT217704	1G2	5	0540 - 3
AT217708	1G2	8	0540 - 3
AT217709	3F16	64	3361 - 5
AT217930	3L19	69	4360 - 7
AT217938	3G4	1	3362 - 5
AT217942	3D13	6A	3315 - 11
AT218048	3G12	31	3362 - 13
AT218141	2B13	61	1810 - 11
AT218151	1F15	6	0510 - 7
AT218159	1F21	2	0520 - 5
AT218160	1F25	1	0530 - 3
AT218167	3L15	14	4360 - 3
AT218179	1G21	31	1671 - 3
AT218190	2B11	7	1810 - 9
AT219468	1B12	12	0130 - 15
AT219470	1B12	24	0130 - 15
AT219471	1B12	8	0130 - 15
AT219478	1B12	26	0130 - 15
AT219485	1G21	40	1671 - 3
AT219489	1G21	2	1671 - 3
AT219667	2D14	10	1830 - 11
AT219678	3J22	59	3363 - 51B
AT250277	1I5	3	1740 - 5
AT250277	3E2	20	3344 - 3
AT250517	3G8	75	3362 - 9
AT250517	3G14	75	3362 - 15
AT250517	3G16	75	3362 - 17
AT250518	3G6	74	3362 - 7
AT250518	3G10	74	3362 - 11
AT250518	3G14	74	3362 - 15
AT250518	3G16	74	3362 - 17
AT250688	3K14	19	3364 - 3
AT264272	3K18	10	3365 - 5
AT264272	3K20	4	3365 - 5B
AT264272	3K24	10	3365 - 9
AT264272	3L2	4	3365 - 9B
AT264314	3L10	4	3365 - 17
AT264320	3L10	10	3365 - 17
AT264324	1G15	..	1369 - 3
AT264324	3J22	61	3363 - 51B
AT264339	3L15	3	4360 - 3
AT264342	3K18	13	3365 - 5
AT264342	3K20	10	3365 - 5B
AT264342	3K24	13	3365 - 9
AT264342	3L2	10	3365 - 9B
AT264347	1G15	..	1369 - 3
AT264347	3G20	15	3362 - 21
AT264347	3L19	88	4360 - 7
AT264348	3K18	30	3365 - 5
AT264348	3K20	28	3365 - 5B
AT264348	3K24	30	3365 - 9
AT264348	3L2	28	3365 - 9B
AT264348	3L6	32	3365 - 13
AT264354	1G15	..	1369 - 3
AT264355	3K18	16	3365 - 5
AT264355	3K20	16	3365 - 5B
AT264355	3K24	16	3365 - 9
AT264355	3L2	16	3365 - 9B
AT264356	3K18	19	3365 - 5
AT264356	3K20	19	3365 - 5B
AT264356	3K24	19	3365 - 9
AT264356	3L2	19	3365 - 9B
AT264357	3L10	7	3365 - 17
AT264358	3L10	8	3365 - 17
AT264359	3K18	12	3365 - 5
AT264359	3K20	11	3365 - 5B
AT264359	3K24	12	3365 - 9
AT264359	3L2	11	3365 - 9B
AT264360	1G15	..	1369 - 3
AT264360	3K18	32	3365 - 5
AT264360	3K20	30	3365 - 5B
AT264360	3K24	32	3365 - 9
AT264360	3L2	30	3365 - 9B
AT264360	3L10	29	3365 - 17
AT264360	3L12	29	3365 - 17B
AT264418	1B24	10	0260 - 7
AT280814	1B6	13	0130 - 9
AT300210	3F10	23	3360 - 27
AT300303	3F8	1	3360 - 25
AT300303	3F10	1	3360 - 27
AT300313	3F8	2	3360 - 25
AT300313	3F10	2	3360 - 27
AT300337	3F10	5	3360 - 27
AT300338	3F10	8	3360 - 27
AT300339	3F10	11	3360 - 27
AT300465	3F10	16	3360 - 27
AT300466	3F10	17	3360 - 27
AT300468	3F8	11	3360 - 25
AT300469	3F8	12	3360 - 25
AT300469	3F8	13	3360 - 25
AT300477	3F8	18	3360 - 25
AT301074	2F11	0	2004 - 5
AT301151	3F6	13	3360 - 23
AT301568	1B4	1	0130 - 7
AT301723	1H8	2	1674 - 7D
AT304741	3E24	2	3360 - 17B
AT305641	3F6	13	3360 - 23
AT306723	3E20	16	3360 - 15
AT306723	3K12	7	3363 - 65
AT307244	2E20	11	1910 - 19
AT307709	3E20	14	3360 - 15
AT307710	3E20	4	3360 - 15
AT309263	2C18	0A	1821 - 3
AT309264	2C18	0B	1821 - 3
AT309596	3F12	23	3360 - 51
AT309610	3L10	18	3365 - 17
AT309610	3L12	18	3365 - 17B
AT309613	3K18	6	3365 - 5
AT309613	3K20	7	3365 - 5B
AT309613	3K24	6	3365 - 9
AT309613	3L2	7	3365 - 9B
AT309614	3K18	5	3365 - 5
AT309614	3K20	8	3365 - 5B
AT309614	3K24	5	3365 - 9
AT309614	3L2	8	3365 - 9B
AT35121	3D17	9	3315 - 15
AT35121	3E20	3	3360 - 15
AT35121	3K10	16	3363 - 63
AT35121	3K12	6	3363 - 65
AT36921	3D15	1	3315 - 13
AT36921	3D17	24	3315 - 15
AT36921	3E16	3	3360 - 11
AT36921	3F8	8	3360 - 25
AT36921	3F10	4	3360 - 27
AT36921	3K10	22	3363 - 63
AT36921	3K12	2	3363 - 65
AT39141	1F17	18	0510 - 9
AT39390	1F21	5	0520 - 5
AT46961	3E22	40	3360 - 17
AT50529	1F19	1F	0520 - 3
AT50923	1F21	3	0520 - 5
AT53439	1F21	5	0520 - 5
AT56658	3H16	4	3363 - 3
AT64237	2F9	1	2004 - 3
AT64237	2F9	2	2004 - 3
AT66778	1F17	19	0510 - 9
AT66866	1I9	5	1740 - 9
AT66866	1I9	6	1740 - 9
AT66866	1I9	8	1740 - 9
AT68901	3D15	10	3315 - 13
AT68901	3E16	13	3360 - 11
AT71082	3D17	3	3315 - 15
AT71082	3E20	11	3360 - 15
AT71082	3K12	13	3363 - 65
AT71082	3K12	23	3363 - 65
AT71732	3E16	18	3360 - 11
AT71732	3K12	4	3363 - 65
AT73296	1F10	1	0505 - 4
AT74940	1F10	10	0505 - 4
AT78124	3E16	20	3360 - 11
AT78633	2D18	10	1830 - 15
AT78634	2D18	10	1830 - 15
AT82210	3E14	2	3360 - 9
AT83306	3E22	40	3360 - 17
AT83721	3E20	6	3360 - 15
AT84953	2D10	19	1830 - 7
AT84953	2D22	19	1830 - 19
AU42809	2D18	10	1830 - 15
A364R	1D22	7	0417 - 3
A4730R	3G8	90	3362 - 9

NUMERICAL INDEX - CONTINUED

PART NO.	GRID	KEY	PAGE
A4827R	1F5	17	0452 - 3
A590108	2F2	8	1910 - 25
A811030	1G15	..	1369 - 3
A811030	3L19	51A	4360 - 7
A811040	1G15	..	1369 - 3
A811040	3H20	6	3363 - 7
A811040	3H22	1	3363 - 9
A811045	1G15	..	1369 - 3
A811045	3G10	6	3362 - 11
A811045	3G12	6	3362 - 13
A811070	3G20	2	3362 - 21
A811125	3J24	10	3363 - 51D
A852122	3I22	3	3363 - 29B
A852122	3J18	51	3363 - 47
A852122	3J18	53	3363 - 47
A852133	3J10	32	3363 - 41
A852133	3J18	58	3363 - 47
A852133	3J20	5	3363 - 49
A852134	3H24	4	3363 - 11
A852143	3I16	41	3363 - 25
A852223	3J10	47	3363 - 41
A852223	3J12	44	3363 - 43
A852234	3H24	10	3363 - 11
A852323	3J6	1	3363 - 37
A852334	3J18	62	3363 - 47
A852344	1C2	3	0260 - 9
A852344	1C8	3	0263 - 3
A852344	3I16	34	3363 - 25
A852344	3J18	59	3363 - 47
A852422	3J14	21	3363 - 45
A852422	3J16	21	3363 - 45B
A852422	3J18	67	3363 - 47
A852422	3K14	22	3364 - 3
A852544	1C2	17	0260 - 9
A852544	1C8	17	0263 - 3
A853166	1C2	1	0260 - 9
A853166	1C8	1	0263 - 3
A853166	3D19	28	3340 - 3
A853166	3D21	28	3340 - 5
A853166	3H16	9	3363 - 3
A853166	3H24	2	3363 - 11
A853166	3I2	13	3363 - 13
A853166	3I8	20	3363 - 19
A853186	3F12	18	3360 - 51
A853188	3F12	17	3360 - 51
A853388	3F2	8	3360 - 19
A885002	3J14	33	3363 - 45
A885002	3J16	33	3363 - 45B
A885002	3K14	28	3364 - 3
A885003	3K14	21	3364 - 3
A885008	3F6	8	3360 - 23
CD16284	1D12	7	0409 - 3
CH10542	2E12	16	1910 - 11
CH10567	3H14	20B	3362 - 35
CH10568	3G2	3	3362 - 3
CH11436	1G15	..	1369 - 3
CH11560	3D7	25	3315 - 5
CH11560	3F18	54	3361 - 7
CH11560	3F20	9	3361 - 9
CH11560	3F22	9	3361 - 11
CH11560	3G10	26	3362 - 11
CH11560	3G10	56	3362 - 11
CH11560	3G14	56	3362 - 15
CH11560	3H14	18A	3362 - 35
CH11560	3H14	20A	3362 - 35
CH11561	3D13	36	3315 - 11
CH11562	3D13	6C	3315 - 11
CH11568	3L19	9	4360 - 7
CH11569	1G15	..	1369 - 3
CH11570	1G15	..	1369 - 3
CH11570	3D15	9	3315 - 13
CH11570	3D15	11	3315 - 13
CH11570	3E16	2	3360 - 11
CH11570	3F16	87A	3361 - 5
CH11570	3F18	80A	3361 - 7
CH11570	3F20	52A	3361 - 9
CH11570	3F22	55A	3361 - 11
CH11570	3G4	4	3362 - 5
CH11570	3G6	74A	3362 - 7
CH11570	3G10	29A	3362 - 11
CH11570	3G10	74A	3362 - 11
CH11570	3G10	88	3362 - 11
CH11570	3G14	69A	3362 - 15
CH11570	3G14	74A	3362 - 15
CH11570	3G16	74A	3362 - 17
CH11570	3H8	24A	3362 - 31
CH11570	3H8	25A	3362 - 31
CH11570	3H8	37A	3362 - 31
CH11570	3H8	38A	3362 - 31
CH11570	3H8	39A	3362 - 31
CH11570	3H10	25A	3362 - 33
CH11570	3H10	26A	3362 - 33
CH11570	3H10	39A	3362 - 33
CH11570	3H10	41A	3362 - 33
CH11570	3H12	25A	3362 - 33B
CH11570	3H12	26A	3362 - 33B
CH11570	3H12	39A	3362 - 33B
CH11570	3H12	41A	3362 - 33B
CH11570	3H24	3A	3363 - 11
CH11570	3H24	4A	3363 - 11
CH11570	3H24	10A	3363 - 11
CH11570	3I16	32A	3363 - 25
CH11570	3I16	33A	3363 - 25
CH11570	3J2	73A	3363 - 33
CH11570	3J4	72A	3363 - 35
CH11570	3J8	17	3363 - 39
CH11570	3J8	19	3363 - 39
CH11570	3J18	58	3363 - 47
CH11570	3J18	62	3363 - 47
CH11570	3J20	5	3363 - 49
CH11570	3J20	6	3363 - 49
CH11570	3J22	56A	3363 - 51B
CH11570	3K12	30	3363 - 65
CH11571	1G15	..	1369 - 3
CH11572	1G15	..	1369 - 3
CH12329	1C12	10	0267 - 5
CH12329	1G15	..	1369 - 3
CH14634	1G15	..	1369 - 3
CH14701	1G15	..	1369 - 3
CH16109	1B24	26	0260 - 7
CH17167	1G15	..	1369 - 3
CH17167	3G10	60E	3362 - 11
CH17167	3G12	12	3362 - 13
CH17854	3H16	5	3363 - 3
CH17886	3G6	11	3362 - 7
CH17886	3G8	11	3362 - 9
CH17886	3G10	11	3362 - 11
CH17886	3G12	11	3362 - 13
CH17886	3G16	11	3362 - 17
CH17951	3F18	35	3361 - 7
CH19111	1G15	..	1369 - 3
C252561	3B18	15	3302 - 9
C252562	3B18	15	3302 - 9
C252563	3B18	15	3302 - 9
C252567	3B16	15	3302 - 7
C607480	3B12	13	3302 - 3
C607480	3B14	13	3302 - 5
C607480	3B16	13	3302 - 7
C607480	3B18	13	3302 - 9
C607480	3B20	13	3302 - 11
C607480	3B22	9	3302 - 13
C607480	3B24	13	3302 - 15
DH100001	1B4	6	0130 - 7
DH100029	1B4	11	0130 - 7
DH100030	1B4	2	0130 - 7
DH200027	1F15	3	0510 - 7
DH200028	1B6	7	0130 - 9
DH200029	1B6	5	0130 - 9
DH300075	2E14	4	1910 - 13
DH300076	2E14	5	1910 - 13
DH300080	2E12	19	1910 - 11
DH300082	2E24	12	1910 - 23
DH300084	1F25	3	0530 - 3
DH300085	1B6	8	0130 - 9
DH300088	1B6	4	0130 - 9
DH300089	1B6	10	0130 - 9
DH400030	2E4	13	1910 - 3
DH400030	2E16	5	1910 - 15
DH400217	1G8	1	0560 - 7
DH400217	1G10	1	0560 - 7B
DH400223	2D8	14	1830 - 5
DH400239	3H18	7	3363 - 5
DH400248	1G8	2	0560 - 7
DH400248	1G10	2	0560 - 7B
DH400251	2E20	20	1910 - 19
DH400252	2E20	21	1910 - 19
DH400253	2E20	22	1910 - 19
DH400257	3I18	23	3363 - 27
DH400292	2E12	8	1910 - 11
DH400293	2E12	9	1910 - 11
DH400294	2E12	10	1910 - 11
DH400295	2E12	11	1910 - 11
DH400296	2E12	12	1910 - 11
DH400304	1F25	9	0530 - 3
DH400308	2E24	11	1910 - 23
DH400320	1B6	9	0130 - 9
DH400322	2E10	5	1910 - 9
DH400323	2E10	6	1910 - 9
DH400331	2E4	9	1910 - 3
DH400332	2E4	12	1910 - 3
DH400332	2E16	9	1910 - 15
DH400332	2E16	16	1910 - 15
DH400341	2E16	7	1910 - 15
DH400347	2E16	8	1910 - 15
DH400348	2E4	10	1910 - 3
DH400349	2E4	11	1910 - 3
DH400350	2E16	19	1910 - 15
DH400352	1I7	6	1740 - 7
DH400355	1I7	4	1740 - 7
DH400360	1I7	7	1740 - 7
DH400361	2E16	17	1910 - 15
DH400362	2E16	18	1910 - 15
DH400363	2E16	6	1910 - 15
DH400366	1B6	1	0130 - 9
DH400417	1I7	5	1740 - 7
DH400418	1F15	9	0510 - 7
DH400422	2E14	40	1910 - 13
DH400433	1F15	12	0510 - 7
DH400450	1A24	4	0130 - 3
DH400473	2E16	6	1910 - 15
DH400499	2E8	12	1910 - 7

NUMERICAL INDEX - CONTINUED

PART NO.	GRID	KEY	PAGE
DH500008	1I3	1	1740 - 3
DH500016	3K14	1	3364 - 3
DH500019	2E20	3	1910 - 19
DH500020J	2E4	5	1910 - 3
DH500022J	2E16	13	1910 - 15
DH600002	2E14	8	1910 - 13
DH600004	2E12	5	1910 - 11
DH600006J	2E14	20	1910 - 13
DH700012	2D8	11	1830 - 5
DH700013	1F25	7	0530 - 3
DH700014	2E12	29	1910 - 11
DH700015	2E12	4	1910 - 11
DH700015F	2E12	48	1910 - 11
DH700020	2E14	13	1910 - 13
DH700021	2E10	1	1910 - 9
DH700021F	2E10	5	1910 - 9
DH700021F	2E10	6	1910 - 9
DH700021F	2E10	13	1910 - 9
DH700022	2E10	2	1910 - 9
DH700023	2E14	16	1910 - 13
DH700024	3H20	1	3363 - 7
DH700028	2E12	32	1910 - 11
DH700030	3H22	5	3363 - 9
DH700035	2E12	31	1910 - 11
DH700037	2E6	2	1910 - 5
DH700038	1F15	2	0510 - 7
DH700042J	2E4	4	1910 - 3
DH700043J	2E16	1	1910 - 15
DH700044J	2E16	12	1910 - 15
DH700045	2E6	5	1910 - 5
DH800028	2E14	15	1910 - 13
DH800030	2E14	14	1910 - 13
DH800041	2E24	10	1910 - 23
DH800042	2E20	2	1910 - 19
DH800054	1G21	27	1671 - 3
DH800059	3H18	9	3363 - 5
DH800060	1F15	13	0510 - 7
DH800072	2E8	8	1910 - 7
DH800074J	2E8	9	1910 - 7
DH800076J	2E8	4	1910 - 7
DH800081J	3F4	4	3360 - 21
DH800081J	3K2	4	3363 - 53
DH800082J	3F4	5	3360 - 21
DH800082J	3K2	5	3363 - 53
DH900127	2E14	7	1910 - 13
DH900150	2E12	3	1910 - 11
EV29PN	3C18	2	3302 - 33
EV29SYL	3C18	4O	3302 - 33
EV39PN	3C10	2	3302 - 25
EV39SYL	3C10	4O	3302 - 25
EV5850-V29	3C18	3	3302 - 33
EV5856-V39	3C10	3	3302 - 25
EX129A-37	3C6	11	3302 - 21
EX1506-37	3C6	8	3302 - 21
EX1507-37	3C6	9	3302 - 21
EX1829A-47	3C6	11	3302 - 21
EX20SP	3C6	13	3302 - 21
EX20W1	3C6	12	3302 - 21
EX21LK	3C6	5	3302 - 21
EX21LKS	3C6	5	3302 - 21
EX21SYL	3C6	2	3302 - 21
EX27LK	3C6	5	3302 - 21
EX27SYL	3C6	2	3302 - 21
EX27SYL	3C10	4G	3302 - 25
EX27SYL	3C14	4G	3302 - 29
EX27SYL	3C18	4G	3302 - 33
EX27SYL	3D2	4G	3302 - 41
EX27S6F	3C10	4I	3302 - 25
EX27S6F	3C14	4I	3302 - 29
EX27S6F	3C18	4I	3302 - 33
EX27S6F	3D2	4I	3302 - 41
EX27TVIP	3C10	4H	3302 - 25
EX27TVIP	3C14	4H	3302 - 29
EX27TVIP	3C18	4H	3302 - 33
EX27TVIP	3D2	4H	3302 - 41
EX27VIP	3C10	4J	3302 - 25
EX27VIP	3C14	4J	3302 - 29
EX27VIP	3C18	4J	3302 - 33
EX27VIP	3D2	4J	3302 - 41
EX27VPL	3C6	11	3302 - 21
EX27VPL	3C6	14	3302 - 21
EX27VPL	3C10	6	3302 - 25
EX27VPL	3C14	6	3302 - 29
EX27VPL	3C18	6	3302 - 33
EX27VPL	3D2	6	3302 - 41
EX27VPN	3C6	5	3302 - 21
EX27VPN	3C6	11	3302 - 21
EX27VPN	3C10	2	3302 - 25
EX27VPN	3C14	2	3302 - 29
EX27VPN	3C18	2	3302 - 33
EX27VPN	3D2	2	3302 - 41
EX29SP	3C6	13	3302 - 21
EX29W1	3C6	12	3302 - 21
EX3-4-57QRT	3C6	6	3302 - 21
EX31329-X	3C6	7	3302 - 21
EX37LK	3C6	5	3302 - 21
EX37LKS	3C6	5	3302 - 21
EX37SYL	3C6	2	3302 - 21
EX37SYL	3C22	4G	3302 - 37
EX37S7F	3C6	1	3302 - 21
EX37S7F	3C22	4I	3302 - 37
EX37TVIP	3C6	4	3302 - 21
EX37TVIP	3C22	4H	3302 - 37
EX37VIP	3C6	3	3302 - 21
EX37VIP	3C22	4J	3302 - 37
EX37VPL	3C22	4G	3302 - 37
EX37VPL	3C22	5	3302 - 37
EX37VPN	3C22	2	3302 - 37
EX37VPN	3C22	4G	3302 - 37
EX450-37	3C6	10	3302 - 21
EX47LK	3C6	5	3302 - 21
EX47SYL	3C6	2	3302 - 21
EX4894-21	3C6	11	3302 - 21
EX5824-37	3C6	11	3302 - 21
EX5824-37	3C22	4G	3302 - 37
EX5827-27	3C6	11	3302 - 21
EX5849-21	3C6	11	3302 - 21
EX5850-27V	3C6	11	3302 - 21
EX5850-27V	3C10	3	3302 - 25
EX5850-27V	3C14	3	3302 - 29
EX5850-27V	3C18	3	3302 - 33
EX5850-27V	3D2	3	3302 - 41
EX5856-37V	3C22	3	3302 - 37
E1343FN	1E21	2	0429 - 5
FFSB110372	2D16	19	1830 - 13
F1451R	1F17	48	0510 - 9
H102543	3E16	1	3360 - 11
H132922	2B19	72	1810 - 17
H132922	2E4	19	1910 - 3
H132922	2E16	21	1910 - 15
H132922	2E22	21	1910 - 21
H154780	3J24	3	3363 - 51D
H155161	3K20	3	3365 - 5B
H155161	3L2	3	3365 - 9B
H155308	3J24	7	3363 - 51D
H155308	3L6	7	3365 - 13
H155310	3J24	8	3363 - 51D
H155310	3L6	8	3365 - 13
H155311	3J24	9	3363 - 51D
H155311	3L6	9	3365 - 13
H155316	3J24	17	3363 - 51D
H155317	3J24	18	3363 - 51D
H155318	3J24	19	3363 - 51D
H155319	3J24	13	3363 - 51D
H155319	3L6	13	3365 - 13
H155320	3J24	14	3363 - 51D
H155320	3L6	14	3365 - 13
H155321	3J24	24	3363 - 51D
H155321	3L6	24	3365 - 13
H155322	3J24	25	3363 - 51D
H155322	3L6	25	3365 - 13
H155325	3J24	21	3363 - 51D
H155329	3J24	26	3363 - 51D
H155329	3L6	26	3365 - 13
H155330	3J24	27	3363 - 51D
H155330	3L6	27	3365 - 13
H155333	3J24	30	3363 - 51D
H155333	3L6	30	3365 - 13
H155347	3J24	35	3363 - 51D
H155911	3K18	4	3365 - 5
H155911	3K20	9	3365 - 5B
H155911	3K24	4	3365 - 9
H155911	3L2	9	3365 - 9B
H155916	3K18	17	3365 - 5
H155916	3K20	17	3365 - 5B
H155916	3K24	17	3365 - 9
H155916	3L2	17	3365 - 9B
H155917	3K20	18	3365 - 5B
H155917	3L2	18	3365 - 9B
H155919	3K18	14	3365 - 5
H155919	3K20	14	3365 - 5B
H155919	3K24	14	3365 - 9
H155919	3L2	14	3365 - 9B
H155920	3K18	24	3365 - 5
H155920	3K20	13	3365 - 5B
H155920	3K24	24	3365 - 9
H155920	3L2	13	3365 - 9B
H155921	3K18	15	3365 - 5
H155921	3K20	15	3365 - 5B
H155921	3K24	15	3365 - 9
H155921	3L2	15	3365 - 9B
H155924	3K20	21	3365 - 5B
H155924	3L2	21	3365 - 9B
H157235	3L10	9	3365 - 17
H157235	3L12	9	3365 - 17B
H161605	3L10	14	3365 - 17
H161605	3L12	14	3365 - 17B
H163431	3L10	16	3365 - 17
H163431	3L12	16	3365 - 17B
H163432	3L10	17	3365 - 17
H163432	3L12	17	3365 - 17B
H178686	3L6	3	3365 - 13
H178690	3L6	10	3365 - 13
H178691	3L6	11	3365 - 13
H178694	3L6	17	3365 - 13
H178695	3L6	18	3365 - 13
H178696	3L6	19	3365 - 13
H178698	3L6	21	3365 - 13
H178703	3L6	35	3365 - 13
H178708	3L12	3	3365 - 17B
H178712	3L10	13	3365 - 17

NUMERICAL INDEX - CONTINUED

PART NO.	GRID	KEY	PAGE
H178713	3K18	21	3365 - 5
H178713	3K24	21	3365 - 9
H178713	3L10	20	3365 - 17
H178713	3L12	20	3365 - 17B
H178717	3L10	32	3365 - 17
H178717	3L12	32	3365 - 17B
H179694	3L6	6	3365 - 13
H179695	3L6	41	3365 - 13
H179700	3L10	6	3365 - 17
H179700	3L12	6	3365 - 17B
H179701	3K18	7	3365 - 5
H179701	3K24	7	3365 - 9
H206880	3L12	13	3365 - 17B
H206941	3L10	3	3365 - 17
H21259	1G13	18	1322 - 3
H23125	1C19	1	0402 - 3
H61354	3E22	27	3360 - 17
H61354	3F2	2	3360 - 19
H61354	3I4	4	3363 - 15
H61354	3I10	1	3363 - 21
H61354	3I12	7	3363 - 21B
H61354	3K6	2	3363 - 57
H77698	1C2	15	0260 - 9
H77698	1C2	37	0260 - 9
H77698	1C8	15	0263 - 3
H77698	1C8	37	0263 - 3
H77698	1F10	8	0505 - 4
H77698	1F13	7	0510 - 5
H77698	1G8	14	0560 - 7
H77698	1G10	14	0560 - 7B
H77698	1G17	9	1370 - 5
H77698	1G21	36	1671 - 3
H77698	1G21	37	1671 - 3
H77698	1H2	5	1674 - 5
H77698	1H4	10	1674 - 7
H77698	1H4	39	1674 - 7
H77698	1H4	40	1674 - 7
H77698	1H18	13	1674 - 15
H77698	2D8	9	1830 - 5
H77698	2D14	7	1830 - 11
H77698	2D18	14	1830 - 15
H77698	2F11	9	2004 - 5
H77698	3D5	4	3315 - 3
H77698	3D5	16	3315 - 3
H77698	3D15	8	3315 - 13
H77698	3F8	17	3360 - 25
H77698	3F10	21	3360 - 27
H77698	3I18	28	3363 - 27
H77698	3I20	1	3363 - 29
H77698	3I22	1	3363 - 29B
H77698	3I24	1	3363 - 31
H77698	3J4	59	3363 - 35
H77698	3J10	56	3363 - 41
H77698	3J12	48	3363 - 43
H77698	3J12	49	3363 - 43
H77698	3J14	22	3363 - 45
H77698	3J16	22	3363 - 45B
H77698	3J18	72	3363 - 47
H80440	1F25	5B	0530 - 3
JD5760	1G13	10	1322 - 3
JD5909	1G13	16	1322 - 3
JD7769	3K8	10	3363 - 59
JD8514	3F16	8	3361 - 5
J010814	1H4	5	1674 - 7
J011085	3F6	9	3360 - 23
J011230	3F2	12	3360 - 19
J011260	3F12	29	3360 - 51
J011265	3F4	13	3360 - 21
J011265	3F6	7	3360 - 23
J011270	3F12	31	3360 - 51
J011275	3F2	25	3360 - 19
J011275	3F4	14	3360 - 21
J011275	3F12	32	3360 - 51
J011280	3H18	10	3363 - 5
J020630	2D12	2	1830 - 9
J020835	2D12	2	1830 - 9
J021235	3F2	13	3360 - 19
J021235	3F4	22	3360 - 21
J031045	2D16	15	1830 - 13
J050820	2D18	1	1830 - 15
J219167	2C22	14	1821 - 7
J222014	1C4	6	0260 - 11
J257218	1I5	3	1740 - 5
J257218	3E2	20	3344 - 3
J257220	1I11	3	1740 - 11
J400408	3D7	2	3315 - 5
J460310	1H4	48	1674 - 7
J460620	1H4	12	1674 - 7
J460620	1H4	30	1674 - 7
J460620	1H4	53	1674 - 7
J680410	2B13	55	1810 - 11
J680514	2B19	13	1810 - 17
J680630	2B19	12	1810 - 17
J75481	3J24	41	3363 - 51D
J780845	3D7	18	3315 - 5
J781030	3D13	10	3315 - 11
J781030	3F2	3	3360 - 19
J781030	3I2	8	3363 - 13
J781030	3I4	3	3363 - 15
J781030	3I4	6	3363 - 15
J781030	3I6	2	3363 - 17
J781030	3I8	2	3363 - 19
J781030	3I10	3	3363 - 21
J781030	3I12	8	3363 - 21B
J781030	3I16	0	3363 - 25
J781030	3J22	42	3363 - 51B
J781030	3K6	3	3363 - 57
J781040	3H20	7	3363 - 7
J781040	3H22	6	3363 - 9
J781040	3J4	48	3363 - 35
J781228	3H16	6	3363 - 3
J781240	3H18	3	3363 - 5
J781270	3J22	58	3363 - 51B
J823025	1I7	2	1740 - 7
J901425	3E2	15	3344 - 3
J901425	3E4	19	3344 - 3B
J921240	1G2	10	0540 - 3
J921806	1G2	5	0540 - 3
J922095	1I3	21	1740 - 3
J932055	1B16	6	0250 - 3
J950018	1G2	8	0540 - 3
J952010	2C24	6	1821 - 9
J952014	1G24	1I	1674 - 3
M340513	3G24	25	3362 - 23B
M340513	3G24	32	3362 - 23B
M341080	3F22	51	3361 - 11
M341290	3J22	45	3363 - 51B
M341850	1C10	40	0267 - 3
M40461	2E20	19	1910 - 19
M430630	1H4	28	1674 - 7
M470625	2B13	23	1810 - 11
M63200	2E16	10	1910 - 15
M800051	2E12	16	1910 - 11
M800636	3J24	33	3363 - 51D
M800650	1C2	8A	0260 - 9
M800650	1C6	17A	0262 - 3
M800650	1C6	22A	0262 - 3
M800650	1C8	8A	0263 - 3
M800650	1G15	..	1369 - 3
M800650	3F16	51A	3361 - 5
M800650	3F18	16	3361 - 7
M800650	3F18	67A	3361 - 7
M800650	3F20	58A	3361 - 9
M800650	3F22	61A	3361 - 11
M800650	3F22	62A	3361 - 11
M800650	3G6	48F	3362 - 7
M800650	3G8	47F	3362 - 9
M800650	3G8	62B	3362 - 9
M800650	3G8	75A	3362 - 9
M800650	3G14	75A	3362 - 15
M800650	3G16	75A	3362 - 17
M800650	3H10	40A	3362 - 33
M800650	3I18	0A	3363 - 27
M800650	3I18	9A	3363 - 27
M800650	3I20	33A	3363 - 29
M800650	3I20	43A	3363 - 29
M800650	3I20	44A	3363 - 29
M800650	3I22	33A	3363 - 29B
M800650	3I22	43A	3363 - 29B
M800650	3I22	44A	3363 - 29B
M800650	3I24	9	3363 - 31
M800650	3J6	1	3363 - 37
M800650	3J8	18	3363 - 39
M800650	3J14	15A	3363 - 45
M800650	3J14	30	3363 - 45
M800650	3J14	30A	3363 - 45
M800650	3J14	31	3363 - 45
M800650	3J14	31A	3363 - 45
M800650	3J14	33A	3363 - 45
M800650	3J14	52A	3363 - 45
M800650	3J16	15A	3363 - 45B
M800650	3J16	30	3363 - 45B
M800650	3J16	30A	3363 - 45B
M800650	3J16	31	3363 - 45B
M800650	3J16	31A	3363 - 45B
M800650	3J16	33A	3363 - 45B
M800650	3J16	52A	3363 - 45B
M800650	3J18	51	3363 - 47
M800650	3J18	53	3363 - 47
M800650	3J18	67	3363 - 47
M800650	3J18	77	3363 - 47
M800650	3J20	1	3363 - 49
M800650	3K14	23	3364 - 3
M800650	3L19	87	4360 - 7
M800893	1G15	..	1369 - 3
M87733	1D20	3	0416 - 2
M88199	1G17	9	1370 - 5
M88199	1H2	5	1674 - 5
M88199	3D5	4	3315 - 3
N162946	2D10	10	1830 - 7
N162946	2D22	10	1830 - 19
N231749	1B22	2	0260 - 5
PTP400HD	3C22	2	3302 - 37
PT802X400	3C22	3	3302 - 37
P46402	1F19	1H	0520 - 3
P50883	3H2	7	3362 - 25
P60447	3D23	53	3340 - 7
P60449	3D23	54	3340 - 7
P60915	2C22	8	1821 - 7
P60925	3D23	32	3340 - 7
P61799	3D23	22C	3340 - 7

NUMERICAL INDEX - CONTINUED

PART NO.	GRID	KEY	PAGE
P61952	3L17	2	4360 - 5
P61967	3H16	6	3363 - 3
P61971	3L17	1	4360 - 5
P63343	1A24	2	0130 - 3
P63448	1G13	2	1322 - 3
P67968	1C2	8	0260 - 9
P67968	1C8	8	0263 - 3
P67968	3I18	0	3363 - 27
P67968	3I20	33	3363 - 29
P67968	3I22	33	3363 - 29B
P67968	3J14	15	3363 - 45
P67968	3J16	15	3363 - 45B
P67968	3J20	1	3363 - 49
P67978	3J20	5	3363 - 49
P67979	3H24	4	3363 - 11
P67989	3J12	30	3363 - 43
P67989	3J20	6	3363 - 49
P68010	3I16	37	3363 - 25
P68229	2D16	14	1830 - 13
P68233	2D16	0	1830 - 13
RE16142	1E6	4	0420 - 5
RE16223	1D9	10	0407 - 5
RE167207	1E4	25	0420 - 3
RE19797	1D16	5	0413 - 3
RE19797	1D18	7	0413 - 5
RE19797	1E4	14	0420 - 3
RE19800	1D16	16	0413 - 3
RE19800	1D18	9	0413 - 5
RE20901	1D16	17	0413 - 3
RE20901	1D18	8	0413 - 5
RE31617	1D12	13	0409 - 3
RE40048	1D20	17	0416 - 2
RE40048	1F25	4	0530 - 3
RE42139	1F10	7	0505 - 4
RE44574	1F2	3	0433 - 3
RE44574	1F5	18	0452 - 3
RE46684	1D24	15	0418 - 3
RE46685	1D9	6	0407 - 5
RE46685	1D21	11	0417 - 2
RE46685	1D22	10	0417 - 3
RE46685	1E2	6	0419 - 3
RE46686	1D24	3	0418 - 3
RE46686	1E2	7	0419 - 3
RE46686	1E4	16	0420 - 3
RE46686	1E6	12	0420 - 5
RE46686	1G8	17	0560 - 7
RE46686	1G10	17	0560 - 7B
RE500005	1C19	5	0402 - 3
RE500345	1E15	8	0422 - 3
RE500527	1F1	3	0433 - 2
RE500576	1G8	21	0560 - 7
RE500576	1G10	21	0560 - 7B
RE500608	1C23	3	0403 - 2
RE501456	1F5	33	0452 - 3
RE501938	1C21	17	0402 - 5
RE502986	1C19	6	0402 - 3
RE503211	1D20	7	0416 - 2
RE503664	1E21	8	0429 - 5
RE504134	1E8	12	0420 - 7
RE504543	1D8	10	0407 - 4
RE504564	1D8	3	0407 - 4
RE504639	1C17	4	0401 - 1
RE504836	1D8	4	0407 - 4
RE504914	1D7	6	0407 - 3
RE504969	1E4	26	0420 - 3
RE505227	1E4	4	0420 - 3
RE505264	1E23	2	0429 - 7
RE505264	1E25	2	0429 - 9
RE505501	1D2	11	0404 - 3
RE505980	1D22	16	0417 - 3
RE506116	1E4	9	0420 - 3
RE506117	1E4	20	0420 - 3
RE506118	1E4	5	0420 - 3
RE506665	1H14	6	1674 - 13
RE506681	1D16	22	0413 - 3
RE506688	1D14	2	0413 - 1
RE506871	1D10	5	0408 - 1
RE506991	1D19	1	0414 - 2
RE507149	1C18	4	0402 - 2
RE50752	1E8	1	0420 - 7
RE50752	1E10	1	0420 - 9
RE507598	1E6	2	0420 - 5
RE507643	1D2	3	0404 - 3
RE507643	1D4	1	0404 - 5
RE507653	1D16	7	0413 - 3
RE507654	1D16	8	0413 - 3
RE507655	1D16	9	0413 - 3
RE507656	1D16	10	0413 - 3
RE507657	1D16	11	0413 - 3
RE507658	1D16	12	0413 - 3
RE507766	1D18	13	0413 - 5
RE507850	1C23	10	0403 - 2
RE507852	1C23	6	0403 - 2
RE507864	1F5	33	0452 - 3
RE507952	1D2	27	0404 - 3
RE507952	1D9	7	0407 - 5
RE507952	1D21	1	0417 - 2
RE508185	1D2	22	0404 - 3
RE508195	1C21	3	0402 - 5
RE508195	1D16	23	0413 - 3
RE508566	1C21	16	0402 - 5
RE508657	1D20	2	0416 - 2
RE508716	1D18	15	0413 - 5
RE508719	1D20	2	0416 - 2
RE508847	1E8	5	0420 - 7
RE508847	1E8	6	0420 - 7
RE508847	1E10	5	0420 - 9
RE508847	1E10	6	0420 - 9
RE508985	1E8	5	0420 - 7
RE508985	1E8	6	0420 - 7
RE508985	1E10	6	0420 - 9
RE509032	1E5	1	0420 - 4
RE509032	1E10	2	0420 - 9
RE509036	1E8	2	0420 - 7
RE509794	1E5	4	0420 - 4
RE509794	1E10	5	0420 - 9
RE515228	1D18	1	0413 - 5
RE515229	1D18	2	0413 - 5
RE515230	1D18	3	0413 - 5
RE515231	1D18	4	0413 - 5
RE515232	1D18	5	0413 - 5
RE515233	1D18	6	0413 - 5
RE515326	1E13	1	0421 - 5
RE515341	1E13	3	0421 - 5
RE515341	1G8	24	0560 - 7
RE515718	1E13	2	0421 - 5
RE51649	1E5	3	0420 - 4
RE51649	1E8	8	0420 - 7
RE51649	1E10	8	0420 - 9
RE51650	1E8	9	0420 - 7
RE516512	1E8	13	0420 - 7
RE516512	1E10	9	0420 - 9
RE516513	1E8	13	0420 - 7
RE516553	1E8	1	0420 - 7
RE516553	1E10	1	0420 - 9
RE517180	1E10	2	0420 - 9
RE518088	1D18	12	0413 - 5
RE518177	1H16	21	1674 - 13B
RE519825	1E6	6	0420 - 5
RE520831	1D24	11	0418 - 3
RE52242	1D8	1	0407 - 4
RE52722	1D24	16	0418 - 3
RE54885	1D20	12	0416 - 2
RE55145	1D2	29	0404 - 3
RE56313	1C17	15	0401 - 1
RE56313	1C25	8	0404 - 1A
RE56369	1C17	21	0401 - 1
RE56690	1E2	2	0419 - 3
RE57489	1D12	15	0409 - 3
RE59355	1E18	2	0429 - 2
RE59579	1D9	7	0407 - 5
RE59810	1C21	11	0402 - 5
RE59810	1F5	19	0452 - 3
RE59811	1C17	22	0401 - 1
RE59992	1D20	15	0416 - 2
RE60005	1D12	3	0409 - 3
RE60029	1E4	18	0420 - 3
RE60029	1E6	11	0420 - 5
RE60071	1D19	3	0414 - 2
RE60242	1E4	27	0420 - 3
RE60242	1E6	13	0420 - 5
RE60854	1E5	2	0420 - 4
RE60854	1E8	4	0420 - 7
RE60854	1E10	4	0420 - 9
RE61812	1D19	6	0414 - 2
RE65165	1C17	7	0401 - 1
RE65168	1C17	10	0401 - 1
RE65908	1C23	11	0403 - 2
RE65909	1C23	11	0403 - 2
RE65911	1C17	7	0401 - 1
RE65912	1C17	10	0401 - 1
RE65978	1D20	13	0416 - 2
RE66083	1F3	12	0452 - 1
RE66085	1F3	17	0452 - 1
RE66178	1D6	1	0407 - 2
RE66334	1E11	2	0421 - 2
RE67231	1E2	1	0419 - 3
RE67238	1D5	1	0407 - 1
RE67238	1D8	8	0407 - 4
RE67238	1E2	13	0419 - 3
RE67239	1C21	5	0402 - 5
RE67901	1E8	2	0420 - 7
RE68155	1H14	16	1674 - 13
RE68155	1H16	7	1674 - 13B
RE68695	1C22	9	0402 - 6
RE68748	1D16	4	0413 - 3
RE68748	1D18	14	0413 - 5
RE68908	1D21	9	0417 - 2
RE69898	1D7	10	0407 - 3
RE70487	1E15	7	0422 - 3
RE70536	1E21	10	0429 - 5
RE70681	1E15	6	0422 - 3
RE70756	1E15	1	0422 - 3
RE70962	1D22	15	0417 - 3
R100369	1D22	14	0417 - 3
R100377	1E17	3	0423 - 3
R101225	1C17	14	0401 - 1
R101225	1C25	13	0404 - 1A
R104592	1D2	5	0404 - 3
R104592	1D12	5	0409 - 3
R107731	1C22	11	0402 - 6

NUMERICAL INDEX - CONTINUED

PART NO.	GRID	KEY	PAGE
R111137	1D2	10	0404 - 3
R113563	1E8	7	0420 - 7
R113563	1E10	7	0420 - 9
R113565	1E8	3	0420 - 7
R113565	1E10	3	0420 - 9
R114082	1C23	2	0403 - 2
R114193	1C17	20	0401 - 1
R114194	1C17	23	0401 - 1
R114194	1C25	12	0404 - 1A
R114241	1D2	17	0404 - 3
R115138	1D20	14	0416 - 2
R115250	1D21	3	0417 - 2
R115390	1D2	15	0404 - 3
R116115	1D8	5	0407 - 4
R116296	1D5	2	0407 - 1
R116366	1D14	3	0413 - 1
R116386	1C25	2	0404 - 1A
R116466	1D2	12	0404 - 3
R116516	1D12	12	0409 - 3
R116516	1F3	8	0452 - 1
R116516	1F5	8	0452 - 3
R119565	1D2	3	0404 - 3
R119565	1D4	1	0404 - 5
R119874	1D2	6	0404 - 3
R120631	1C17	3	0401 - 1
R120635	1C25	8	0404 - 1A
R120638	1D7	13	0407 - 3
R120641	1C17	12	0401 - 1
R120641	1C25	6	0404 - 1A
R121043	1D2	9	0404 - 3
R121376	1D7	7	0407 - 3
R121411	1C21	8	0402 - 5
R121424	1C21	7	0402 - 5
R121608	1D12	14	0409 - 3
R121608	1D12	15	0409 - 3
R121635	1D21	7	0417 - 2
R121674	1C19	4	0402 - 3
R121897	1E18	3	0429 - 2
R122226	1C24	1	0404 - 1
R123161	1C22	7	0402 - 6
R123174	1C17	11	0401 - 1
R123174	1C25	5	0404 - 1A
R123177	1C23	5	0403 - 2
R123226	1D22	9	0417 - 3
R123226	1D24	12	0418 - 3
R123226	1F3	4	0452 - 1
R123226	1F5	4	0452 - 3
R123271	1C22	5	0402 - 6
R123273	1F5	20	0452 - 3
R123284	1E21	4	0429 - 5
R123295	1D16	25	0413 - 3
R123324	1D24	14	0418 - 3
R123345	1F3	5	0452 - 1
R123345	1F5	5	0452 - 3
R123354	1D9	1	0407 - 5
R123354	1F3	13	0452 - 1
R123354	1F5	12	0452 - 3
R123395	1D22	1	0417 - 3
R123396	1E11	1	0421 - 2
R123417	1D22	13	0417 - 3
R123417	1F5	21	0452 - 3
R123471	1E2	5	0419 - 3
R123501	1E2	3	0419 - 3
R123501	1F5	23	0452 - 3
R123514	1C22	2	0402 - 6
R123525	1F5	25	0452 - 3
R123543	1C19	7	0402 - 3
R123543	1F3	1	0452 - 1
R123543	1F5	1	0452 - 3
R123561	1C17	5	0401 - 1
R123562	1C17	6	0401 - 1
R123563	1C17	8	0401 - 1
R123564	1C17	9	0401 - 1
R123565	1C22	10	0402 - 6
R123570	1D20	16	0416 - 2
R123570	1F3	6	0452 - 1
R123570	1F5	6	0452 - 3
R123572	1D20	6	0416 - 2
R123572	1F3	11	0452 - 1
R123572	1F5	11	0452 - 3
R123574	1C19	2	0402 - 3
R123575	1C19	3	0402 - 3
R123575	1F3	7	0452 - 1
R123575	1F5	7	0452 - 3
R123584	1C21	14	0402 - 5
R123584	1C25	4	0404 - 1A
R123586	1D10	2	0408 - 1
R123593	1D16	2	0413 - 3
R123593	1E6	15	0420 - 5
R123616	1D2	25	0404 - 3
R126086	1E8	10	0420 - 7
R128660	1E21	5	0429 - 5
R128662	1E21	5	0429 - 5
R130574	1C17	8	0401 - 1
R130575	1C17	9	0401 - 1
R130576	1C17	5	0401 - 1
R130577	1C17	6	0401 - 1
R131182	1D2	21	0404 - 3
R131206	1C17	16	0401 - 1
R131206	1C25	10	0404 - 1A
R131283	1C17	19	0401 - 1
R131768	1F2	2	0433 - 3
R132166	1E17	5	0423 - 3
R132186	1D2	20	0404 - 3
R132462	1D13	1	0410 - 2
R132518	1D2	7	0404 - 3
R132913	1E17	6	0423 - 3
R133295	1E18	1	0429 - 2
R133303	1C17	2	0401 - 1
R134212	1D16	20	0413 - 3
R134518	1C21	13	0402 - 5
R134518	1C25	3	0404 - 1A
R134526	1C25	1	0404 - 1A
R134552	1D6	2	0407 - 2
R135509	1E15	4	0422 - 3
R135510	1E15	5	0422 - 3
R135757	1C24	2	0404 - 1
R135918	1F1	1	0433 - 2
R135918	1F2	6	0433 - 3
R136475	1C24	5	0404 - 1
R136475	1C25	14	0404 - 1A
R136495	1D5	3	0407 - 1
R136495	1F5	31	0452 - 3
R136515	1C21	1	0402 - 5
R136515	1F5	22	0452 - 3
R136516	1F5	22	0452 - 3
R26125	1D12	4	0409 - 3
R26409	2D10	21	1830 - 7
R26409	2D22	21	1830 - 19
R26448	3D15	3	3315 - 13
R26448	3D17	12	3315 - 15
R26448	3E16	5	3360 - 11
R26448	3E20	5	3360 - 15
R26448	3K10	17	3363 - 63
R26448	3K12	31	3363 - 65
R26552	1C6	11	0262 - 3
R26650	1D2	13	0404 - 3
R26906	1D12	6	0409 - 3
R27212	3D15	4	3315 - 13
R27212	3D17	18	3315 - 15
R27212	3E16	9	3360 - 11
R27212	3E20	8	3360 - 15
R27212	3K12	5	3363 - 65
R28811	1F1	2	0433 - 2
R29424	3E22	27	3360 - 17
R29424	3I2	6	3363 - 13
R29424	3I4	1	3363 - 15
R29424	3I6	0	3363 - 17
R29424	3I8	0	3363 - 19
R29424	3J22	43	3363 - 51B
R29936	3E22	36	3360 - 17
R29936	3E22	39	3360 - 17
R29936	3E22	41	3360 - 17
R29936	3E24	4	3360 - 17B
R29936	3F6	14	3360 - 23
R29936	3G10	60D	3362 - 11
R29936	3G12	10	3362 - 13
R31147	3D15	21	3315 - 13
R31147	3E16	16	3360 - 11
R31147	3K12	35	3363 - 65
R36636	3E22	38	3360 - 17
R41778	2C20	4	1821 - 5
R42729	1C22	6	0402 - 6
R43409	1D12	9	0409 - 3
R44302	1H20	4	1674 - 17
R44302	2B23	5	1810 - 21
R44302	3E14	4	3360 - 9
R44302	3E18	8	3360 - 13
R44302	3E20	18	3360 - 15
R44302	3K12	32	3363 - 65
R47154	1D9	9	0407 - 5
R47693	1F10	5	0505 - 4
R48685	1C17	1	0401 - 1
R48685	1D2	1	0404 - 3
R48685	3B12	5	3302 - 3
R48685	3B14	5	3302 - 5
R48685	3B16	5	3302 - 7
R48685	3B18	5	3302 - 9
R48685	3B20	5	3302 - 11
R48685	3B22	2	3302 - 13
R48685	3B24	5	3302 - 15
R48808	1G22	4	1672 - 2
R500242	1E25	5	0429 - 9
R500320	1E23	1	0429 - 7
R500320	1E25	1	0429 - 9
R500335	1C23	3	0403 - 2
R500374	1D8	9	0407 - 4
R500374	1F5	32	0452 - 3
R500471	1D24	2	0418 - 3
R500472	1D24	7	0418 - 3
R500531	1E17	4	0423 - 3
R500704	1D24	13	0418 - 3
R501039	1D16	21	0413 - 3
R501124	1C23	1	0403 - 2
R501227	1D24	4	0418 - 3
R501228	1D24	1	0418 - 3
R501373	1F3	9	0452 - 1
R501373	1F5	9	0452 - 3
R501428	1E2	8	0419 - 3
R501428	1F5	13	0452 - 3
R501486	1G22	2	1672 - 2

NUMERICAL INDEX - CONTINUED

PART NO.	GRID	KEY	PAGE
R501489	1C17	25	0401 - 1
R502014	1E21	8	0429 - 5
R502079	1E23	3	0429 - 7
R502079	1E25	3	0429 - 9
R502465	1D6	7	0407 - 2
R502513	1D8	4	0407 - 4
R502513	1D8	11	0407 - 4
R502654	1C17	4	0401 - 1
R502687	1D7	6	0407 - 3
R502725	1D6	8	0407 - 2
R502811	1E2	11	0419 - 3
R502814	1F3	3	0452 - 1
R502814	1F5	3	0452 - 3
R502864	1F5	24	0452 - 3
R503444	1F2	1	0433 - 3
R503550	1C24	4	0404 - 1
R503813	1E21	9	0429 - 5
R504067	1E4	10	0420 - 3
R504535	1C18	4	0402 - 2
R504605	1E4	12	0420 - 3
R504605	1E6	8	0420 - 5
R504724	1C21	2	0402 - 5
R504734	1E2	9	0419 - 3
R504762	1E19	1	0429 - 3
R504798	1D16	14	0413 - 3
R504963	1E23	5	0429 - 7
R505143	1E4	28	0420 - 3
R505143	1E5	6	0420 - 4
R505472	1D18	11	0413 - 5
R515150	1D16	18	0413 - 3
R515307	1D9	2	0407 - 5
R515460	1E13	6	0421 - 5
R515461	1E13	9	0421 - 5
R515462	1G8	5	0560 - 7
R515462	1G10	5	0560 - 7B
R515736	1E13	8	0421 - 5
R51936	1E4	6	0420 - 3
R51936	1E6	1	0420 - 5
R51936	1E6	3	0420 - 5
R51936	1E6	5	0420 - 5
R53108	1F5	26	0452 - 3
R54114	1C23	4	0403 - 2
R54123	1F10	4	0505 - 4
R54510	1F10	2	0505 - 4
R54511	1F10	3	0505 - 4
R54565	1C22	1	0402 - 6
R54873	1D16	13	0413 - 3
R55599	1E4	11	0420 - 3
R55599	1E6	7	0420 - 5
R56902	1G13	1	1322 - 3
R61105	1F5	29	0452 - 3
R61467	1F2	8	0433 - 3
R61871	1D7	9	0407 - 3
R61871	1F3	16	0452 - 1
R61871	1F5	16	0452 - 3
R62107	1E4	21	0420 - 3
R62107	1E13	13	0421 - 5
R63075	3L19	18	4360 - 7
R63548	1D20	3	0416 - 2
R63548	1D20	4	0416 - 2
R64525	1G22	7	1672 - 2
R64857	1E4	7	0420 - 3
R71799	3E18	5	3360 - 13
R71963	1D14	1	0413 - 1
R72328	1D10	1	0408 - 1
R72328	1F5	27	0452 - 3
R72659	1D10	4	0408 - 1
R72853	1D20	5	0416 - 2
R74012	1E4	30	0420 - 3
R75892	1D2	16	0404 - 3
R75892	1F3	14	0452 - 1
R75892	1F5	14	0452 - 3
R80670	1E4	17	0420 - 3
R80670	1E5	7	0420 - 4
R81275	1D19	5	0414 - 2
R81275	1F3	10	0452 - 1
R81275	1F5	10	0452 - 3
R81876	1F11	3	0510 - 2
R85363	1D12	1	0409 - 3
R85687	1D12	8	0409 - 3
R89944	1D21	8	0417 - 2
R89944	1F5	28	0452 - 3
R90658	1D13	2	0410 - 2
R90658	1F3	2	0452 - 1
R90658	1F5	2	0452 - 3
R90692	1D12	10	0409 - 3
R91889	1D12	2	0409 - 3
R93910	1D12	8	0409 - 3
R96703	1E15	2	0422 - 3
R97185	1D7	8	0407 - 3
R97185	1F3	15	0452 - 1
R97185	1F5	15	0452 - 3
R98062	1D12	11	0409 - 3
R98063	1D12	8	0409 - 3
R98335	1D12	8	0409 - 3
R99052	3G22	33	3362 - 23
R99052	3G24	8	3362 - 23B
TF1U3352D	3C10	4K	3302 - 25
TF1U3352D	3C14	4K	3302 - 29
TF1U3352D	3C18	4K	3302 - 33
TF1U3352D	3D2	4K	3302 - 41
TF290	3C10	4A	3302 - 25
TF290	3C14	4A	3302 - 29
TF290	3C18	4A	3302 - 33
TF290	3D2	4A	3302 - 41
TF310	3C10	4A	3302 - 25
TF310	3C14	4A	3302 - 29
TF310	3C18	4A	3302 - 33
TF310	3D2	4A	3302 - 41
TF330	3C10	4A	3302 - 25
TF330	3C14	4A	3302 - 29
TF330	3C18	4A	3302 - 33
TF330	3D2	4A	3302 - 41
TF400	3C20	4A	3302 - 35
TF400	3C22	4A	3302 - 37
THA852123	3I18	9	3363 - 27
THA852133	3I16	32	3363 - 25
THA852133	3K14	24	3364 - 3
THA852143	3I16	41	3363 - 25
THA852234	3H24	10	3363 - 11
THA852322	3K14	23	3364 - 3
THA852333	3I16	33	3363 - 25
THA852333	3K14	25	3364 - 3
THA852422	3J14	21	3363 - 45
THA852422	3J16	21	3363 - 45B
THA852422	3K14	22	3364 - 3
THA852544	1C2	17	0260 - 9
THA852544	1C8	17	0263 - 3
THA853166	1C2	1	0260 - 9
THA853166	1C8	1	0263 - 3
THA853166	3D19	28	3340 - 3
THA853166	3D21	28	3340 - 5
THA853166	3H16	9	3363 - 3
THA853166	3H24	2	3363 - 11
THA853166	3I2	13	3363 - 13
THA853166	3I8	20	3363 - 19
THA885002	3J14	33	3363 - 45
THA885002	3J16	33	3363 - 45B
THA885002	3K14	28	3364 - 3
THA885003	3K14	21	3364 - 3
THA885008	3K14	26	3364 - 3
THDH100001	1B4	6	0130 - 7
THDH100029	1B4	11	0130 - 7
THDH100030	1B4	2	0130 - 7
THDH200027	1F15	3	0510 - 7
THDH200028	1B6	7	0130 - 9
THDH200029	1B6	5	0130 - 9
THDH300075	2E14	4	1910 - 13
THDH300076	2E14	5	1910 - 13
THDH300080	2E12	19	1910 - 11
THDH300082	2E24	12	1910 - 23
THDH300085	1B6	8	0130 - 9
THDH300088	1B6	4	0130 - 9
THDH300089	1B6	10	0130 - 9
THDH400030	2E4	13	1910 - 3
THDH400030	2E16	5	1910 - 15
THDH400102	1F15	11	0510 - 7
THDH400103	1F15	10	0510 - 7
THDH400223	2D8	14	1830 - 5
THDH400239	3H18	7	3363 - 5
THDH400257	3I18	23	3363 - 27
THDH400292	2E12	8	1910 - 11
THDH400293	2E12	9	1910 - 11
THDH400294	2E12	10	1910 - 11
THDH400295	2E12	11	1910 - 11
THDH400296	2E12	12	1910 - 11
THDH400308	2E24	11	1910 - 23
THDH400320	1B6	9	0130 - 9
THDH400322	2E10	5	1910 - 9
THDH400323	2E10	6	1910 - 9
THDH400331	2E4	9	1910 - 3
THDH400332	2E4	12	1910 - 3
THDH400332	2E16	9	1910 - 15
THDH400332	2E16	16	1910 - 15
THDH400341	2E16	7	1910 - 15
THDH400347	2E16	8	1910 - 15
THDH400348	2E4	10	1910 - 3
THDH400349	2E4	11	1910 - 3
THDH400350	2E16	19	1910 - 15
THDH400352	1I7	6	1740 - 7
THDH400355	1I7	4	1740 - 7
THDH400360	1I7	7	1740 - 7
THDH400361	2E16	17	1910 - 15
THDH400362	2E16	18	1910 - 15
THDH400363	2E16	6	1910 - 15
THDH400366	1B6	1	0130 - 9
THDH400417	1I7	5	1740 - 7
THDH400418	1F15	9	0510 - 7
THDH400422	2E14	40	1910 - 13
THDH400433	1F15	12	0510 - 7
THDH500008	1I3	1	1740 - 3
THDH500016	3K14	1	3364 - 3
THDH500020J	2E4	5	1910 - 3
THDH500022J	2E16	13	1910 - 15
THDH600002	2E14	8	1910 - 13
THDH600004	2E12	5	1910 - 11
THDH600006J	2E14	20	1910 - 13
THDH700012	2D8	11	1830 - 5
THDH700014	2E12	29	1910 - 11
THDH700015	2E12	4	1910 - 11
THDH700020	2E14	13	1910 - 13

NUMERICAL INDEX - CONTINUED

PART NO.	GRID	KEY	PAGE
THDH700021	2E10	1	1910 - 9
THDH700022	2E10	2	1910 - 9
THDH700023	2E14	16	1910 - 13
THDH700024	3H20	1	3363 - 7
THDH700028	2E12	32	1910 - 11
THDH700030	3H22	5	3363 - 9
THDH700035	2E12	31	1910 - 11
THDH700037	2E6	2	1910 - 5
THDH700038	1F15	2	0510 - 7
THDH700042J	2E4	4	1910 - 3
THDH700043J	2E16	1	1910 - 15
THDH700044J	2E16	12	1910 - 15
THDH700045	2E6	5	1910 - 5
THDH800028	2E14	15	1910 - 13
THDH800030	2E14	14	1910 - 13
THDH800041	2E24	10	1910 - 23
THDH800054	1G21	27	1671 - 3
THDH800059	3H18	9	3363 - 5
THDH800060	1F15	13	0510 - 7
THDH900127	2E14	7	1910 - 13
THDH900133	1G8	1	0560 - 7
THDH900133	1G10	1	0560 - 7B
THDH900134	1G8	7	0560 - 7
THDH900134	1G10	7	0560 - 7B
THDH900150	2E12	3	1910 - 11
THDH900163	1G8	2	0560 - 7
THDH900163	1G10	2	0560 - 7B
THDH900194	2E20	1	1910 - 19
THDH900286	1G8	4	0560 - 7
THDH900286	1G10	4	0560 - 7B
THJ823025	1I7	2	1740 - 7
THJ921840	1I5	2	1740 - 5
THM111030	2D8	13	1830 - 5
THM111060	2D8	10	1830 - 5
THM430630	1H4	28	1674 - 7
THM460616	1H4	75	1674 - 7
TH0003929	2C8	25	1810 - 29
TH0111803	3G10	60C	3362 - 11
TH0111803	3G12	9	3362 - 13
TH0222911	3G20	6	3362 - 21
TH0625509	3L19	39	4360 - 7
TH0628705	3L19	82	4360 - 7
TH0694825	3L19	84	4360 - 7
TH0735807	3G12	17	3362 - 13
TH0788703	3H14	13	3362 - 35
TH0788704	3H14	14	3362 - 35
TH0788705	3H14	15	3362 - 35
TH0788706	3H14	16	3362 - 35
TH0788707	3H14	17	3362 - 35
TH0788710	3H14	33	3362 - 35
TH0788711	3H14	34	3362 - 35
TH0788712	3H14	35	3362 - 35
TH0788713	3H14	36	3362 - 35
TH0788801	3L19	10	4360 - 7
TH0788802	3L19	20	4360 - 7
TH0788803	3L19	80	4360 - 7
TH0788805	3L19	11	4360 - 7
TH0788806	3L19	14	4360 - 7
TH0788807	3L19	23	4360 - 7
TH0788808	3L19	24	4360 - 7
TH0788809	3L19	31	4360 - 7
TH0788810	3L19	30	4360 - 7
TH0788811	3L19	43	4360 - 7
TH0788812	3L19	44	4360 - 7
TH0788813	3L19	91	4360 - 7
TH0788815	3L19	12	4360 - 7
TH0788816	3L19	42	4360 - 7
TH0788817	3L19	74	4360 - 7
TH0788818	3L19	8	4360 - 7
TH0788819	3L19	85	4360 - 7
TH0791601	3G6	9	3362 - 7
TH0791601	3G16	9	3362 - 17
TH0791602	3G6	23	3362 - 7
TH0791603	3G6	37	3362 - 7
TH0791603	3G8	37	3362 - 9
TH0791604	3G6	38	3362 - 7
TH0791604	3G8	38	3362 - 9
TH0791604	3G16	38	3362 - 17
TH0791605	3G6	39	3362 - 7
TH0791605	3G8	39	3362 - 9
TH0791606	3G6	43	3362 - 7
TH0791606	3G8	43	3362 - 9
TH0791607	3G6	44	3362 - 7
TH0791607	3G8	44	3362 - 9
TH0791609	3G6	45A	3362 - 7
TH0791610	3G6	45B	3362 - 7
TH0791610	3G6	46B	3362 - 7
TH0791610	3G8	42B	3362 - 9
TH0791611	3G6	45C	3362 - 7
TH0791611	3G6	46C	3362 - 7
TH0791611	3G8	42C	3362 - 9
TH0791612	3G6	45D	3362 - 7
TH0791612	3G6	46D	3362 - 7
TH0791612	3G8	42D	3362 - 9
TH0791614	3G6	46A	3362 - 7
TH0791616	3G6	48A	3362 - 7
TH0791616	3G8	47A	3362 - 9
TH0791617	3G6	48B	3362 - 7
TH0791618	3G6	48C	3362 - 7
TH0791618	3G8	47C	3362 - 9
TH0791619	3G6	49	3362 - 7
TH0791619	3G8	49	3362 - 9
TH0791620	3G6	50	3362 - 7
TH0791620	3G8	50	3362 - 9
TH0791622	3G6	73	3362 - 7
TH0791622	3G8	73	3362 - 9
TH0791622	3G10	73	3362 - 11
TH0791622	3G14	73	3362 - 15
TH0791623	3G6	77	3362 - 7
TH0791701	3G8	31	3362 - 9
TH0791702	3G8	32	3362 - 9
TH0791704	3G8	42A	3362 - 9
TH0791706	3G8	47B	3362 - 9
TH0791708	3G8	62A	3362 - 9
TH0791801	3G10	3	3362 - 11
TH0791801	3G12	3	3362 - 13
TH0791803	3G10	19	3362 - 11
TH0791803	3G12	19	3362 - 13
TH0791804	3G10	24	3362 - 11
TH0791805	3G10	25	3362 - 11
TH0791806	3G10	34	3362 - 11
TH0791807	3G10	35	3362 - 11
TH0791808	3G10	51	3362 - 11
TH0791808	3G14	51	3362 - 15
TH0791809	3G10	52	3362 - 11
TH0791809	3G14	52	3362 - 15
TH0791810	3G10	53	3362 - 11
TH0791810	3G14	53	3362 - 15
TH0791811	3G14	54	3362 - 15
TH0791813	3G10	60A	3362 - 11
TH0791813	3G12	7	3362 - 13
TH0791814	3G10	60B	3362 - 11
TH0791814	3G12	8	3362 - 13
TH0791815	3G10	9	3362 - 11
TH0791815	3G10	14	3362 - 11
TH0791815	3G10	17	3362 - 11
TH0791815	3G10	32	3362 - 11
TH0791815	3G10	65	3362 - 11
TH0791815	3G12	15	3362 - 13
TH0791815	3G12	20	3362 - 13
TH0791815	3G12	39	3362 - 13
TH0791815	3G14	50	3362 - 15
TH0791816	3G10	18	3362 - 11
TH0791816	3G14	68	3362 - 15
TH0791902	3G12	18	3362 - 13
TH0791903	3G12	21	3362 - 13
TH0791904	3G12	28	3362 - 13
TH0791905	3G12	23	3362 - 13
TH0791905	3G12	40	3362 - 13
TH0791906	3G12	24	3362 - 13
TH0791906	3G12	42	3362 - 13
TH0791907	3G12	25	3362 - 13
TH0791908	3G12	35	3362 - 13
TH0791909	3G12	36	3362 - 13
TH0791910	3G12	46	3362 - 13
TH0791911	3G12	47	3362 - 13
TH0791912	3G12	48	3362 - 13
TH0791913	3G12	49	3362 - 13
TH0791914	3G12	29	3362 - 13
TH0792001	3G16	10	3362 - 17
TH0792002	3G16	12	3362 - 17
TH0792003	3G16	13	3362 - 17
TH0792004	3G16	14	3362 - 17
TH0792005	3G16	20	3362 - 17
TH0792006	3G16	36	3362 - 17
TH0792007	3G16	79	3362 - 17
TH0794201	3G18	3	3362 - 19
TH0794202	3G18	6	3362 - 19
TH0794203	3G18	8	3362 - 19
TH0794204	3G18	10	3362 - 19
TH0794205	3G18	11	3362 - 19
TH0794206	3G18	12	3362 - 19
TH0794207	3G18	14	3362 - 19
TH0824001	3G20	18	3362 - 21
TH100044	1G15	..	1369 - 3
TH100044	3J22	61	3363 - 51B
TH100055	1C2	1A	0260 - 9
TH100055	1C8	1A	0263 - 3
TH100055	1G15	..	1369 - 3
TH100055	3D21	28A	3340 - 5
TH100055	3H16	9A	3363 - 3
TH100055	3H24	2A	3363 - 11
TH100055	3I2	13A	3363 - 13
TH100055	3I8	5A	3363 - 19
TH100055	3I8	20A	3363 - 19
TH100055	3J22	52A	3363 - 51B
TH100055	3J22	55A	3363 - 51B
TH100074	1I9	4	1740 - 9
TH100074	3D19	23	3340 - 3
TH100074	3D21	23	3340 - 5
TH100074	3D23	22D	3340 - 7
TH100074	3D23	46	3340 - 7
TH100074	3D25	4	3340 - 9
TH100074	3J24	41	3363 - 51D
TH100074	3K18	41	3365 - 5
TH100074	3K20	39	3365 - 5B
TH100074	3K24	41	3365 - 9
TH100074	3L2	39	3365 - 9B
TH100074	3L10	23	3365 - 17
TH100074	3L12	23	3365 - 17B
TH100122	3L15	3	4360 - 3

NUMERICAL INDEX - CONTINUED

PART NO.	GRID	KEY	PAGE
TH100125	3K18	13	3365 - 5
TH100125	3K20	10	3365 - 5B
TH100125	3K24	13	3365 - 9
TH100125	3L2	10	3365 - 9B
TH100136	1G15	..	1369 - 3
TH100136	3G20	15	3362 - 21
TH100136	3L19	88	4360 - 7
TH100364	1G17	5	1370 - 5
TH100374	3D23	39	3340 - 7
TH100434	1G4	2	0560 - 3
TH100483	3F16	9	3361 - 5
TH100509	1G4	8A	0560 - 3
TH100624	3D23	36	3340 - 7
TH100625	3D23	35	3340 - 7
TH100648	1B16	43	0250 - 3
TH100648	1G4	14	0560 - 3
TH100653	3L15	36	4360 - 3
TH100675	3K14	10	3364 - 3
TH100679	3K14	8	3364 - 3
TH100738	3D13	40	3315 - 11
TH100738	3D13	41	3315 - 11
TH100738	3F18	83	3361 - 7
TH100771	1C12	11	0267 - 5
TH100963	1G17	6	1370 - 5
TH100963	3K8	8	3363 - 59
TH101008	3J22	54	3363 - 51B
TH101047	3J22	56	3363 - 51B
TH101300	1G15	..	1369 - 3
TH101300	3L19	51A	4360 - 7
TH101483	3F22	51	3361 - 11
TH101485	3H2	5	3362 - 25
TH101490	1C6	23A	0262 - 3
TH101490	1G15	..	1369 - 3
TH101490	3G6	61B	3362 - 7
TH101490	3G8	62C	3362 - 9
TH101490	3G8	62E	3362 - 9
TH101490	3H2	6	3362 - 25
TH101734	1F15	8	0510 - 7
TH101815	2E14	17	1910 - 13
TH101835	3F18	56	3361 - 7
TH101880	3L17	5	4360 - 5
TH101894	3K14	9A	3364 - 3
TH101915	3H20	8	3363 - 7
TH101915	3H22	2	3363 - 9
TH101926	1C6	7	0262 - 3
TH101926	1C12	16	0267 - 5
TH101926	1G15	..	1369 - 3
TH101926	3F6	12	3360 - 23
TH101926	3F12	17	3360 - 51
TH101926	3F12	18	3360 - 51
TH101926	3I12	3A	3363 - 21B
TH101926	3J22	17A	3363 - 51B
TH101926	3J22	53A	3363 - 51B
TH101926	3K2	10A	3363 - 53
TH101926	3K4	15A	3363 - 55
TH101926	3K6	8A	3363 - 57
TH101926	3K6	19A	3363 - 57
TH101926	3K6	20A	3363 - 57
TH101936	3H20	15	3363 - 7
TH101936	3H22	3	3363 - 9
TH101960	3H18	1	3363 - 5
TH102171	2C6	3	1810 - 27
TH102181	3F16	23	3361 - 5
TH102247	2E20	8B	1910 - 19
TH102247	2E20	9B	1910 - 19
TH102264	1I11	5	1740 - 11
TH102409	3E2	9	3344 - 3
TH102444	3D19	22	3340 - 3
TH102444	3D21	22	3340 - 5
TH102445	3D19	0B	3340 - 3
TH102445	3D19	3	3340 - 3
TH102445	3D21	0B	3340 - 5
TH102445	3D21	3	3340 - 5
TH102445	3E2	3	3344 - 3
TH102445	3E2	7	3344 - 3
TH102445	3E4	18	3344 - 3B
TH102445	3K18	3	3365 - 5
TH102445	3K24	3	3365 - 9
TH102446	3D19	1	3340 - 3
TH102446	3D21	1	3340 - 5
TH102446	3D23	21	3340 - 7
TH102446	3D25	3	3340 - 9
TH102446	3J24	29	3363 - 51D
TH102446	3K18	25	3365 - 5
TH102446	3K20	25	3365 - 5B
TH102446	3K24	25	3365 - 9
TH102446	3L2	25	3365 - 9B
TH102446	3L6	29	3365 - 13
TH102528	3G2	1	3362 - 3
TH102528	3G6	40	3362 - 7
TH102528	3G8	40	3362 - 9
TH102528	3G16	40	3362 - 17
TH102560	3F18	64A	3361 - 7
TH102560	3F20	7	3361 - 9
TH102560	3F22	7	3361 - 11
TH102562	3F20	8	3361 - 9
TH102562	3F22	8	3361 - 11
TH102567	3F20	16	3361 - 9
TH102567	3F22	16	3361 - 11
TH1025878	1C10	1	0267 - 3
TH1025912	3L15	23	4360 - 3
TH1025957	3L15	20	4360 - 3
TH1026282	3F22	1	3361 - 11
TH1026662	3L15	11	4360 - 3
TH1026679	3F18	1	3361 - 7
TH1026779	1B16	12	0250 - 3
TH102706	1G15	..	1369 - 3
TH1027131	3F18	41	3361 - 7
TH1027149	3F20	1	3361 - 9
TH1027152	1B16	4	0250 - 3
TH1027158	1B16	20	0250 - 3
TH1027160	1B16	32	0250 - 3
TH1027161	1B16	23	0250 - 3
TH1027184	3F16	1	3361 - 5
TH1027222	3D25	0	3340 - 9
TH1027617	3L15	5	4360 - 3
TH102766	3L6	5	3365 - 13
TH102783	3K18	38	3365 - 5
TH102783	3K20	36	3365 - 5B
TH102783	3K24	38	3365 - 9
TH102783	3L2	36	3365 - 9B
TH102788	3J24	32	3363 - 51D
TH102788	3K18	30	3365 - 5
TH102788	3K20	28	3365 - 5B
TH102788	3K24	30	3365 - 9
TH102788	3L2	28	3365 - 9B
TH102788	3L6	32	3365 - 13
TH102932	1F13	1B	0510 - 5
TH102933	1F13	1A	0510 - 5
TH102945	3H20	9	3363 - 7
TH102946	3H20	12	3363 - 7
TH102992	1G15	..	1369 - 3
TH102992	3H20	6	3363 - 7
TH102992	3H22	1	3363 - 9
TH103140	3G20	2	3362 - 21
TH103262	1G17	2	1370 - 5
TH103446	1G15	..	1369 - 3
TH103457	3G20	16	3362 - 21
TH103498	1I7	1	1740 - 7
TH103574	1G15	..	1369 - 3
TH103576	1C12	4	0267 - 5
TH103579	3G2	4	3362 - 3
TH103627	3D23	29	3340 - 7
TH103627	3E4	12	3344 - 3B
TH103629	3D23	30	3340 - 7
TH103629	3E4	17	3344 - 3B
TH103780	3E22	23	3360 - 17
TH103780	3I2	1	3363 - 13
TH103780	3K2	11	3363 - 53
TH103791	1G24	1I	1674 - 3
TH104071	3E2	15	3344 - 3
TH104071	3E4	19	3344 - 3B
TH104118	2F7	2	2002 - 3
TH104196	2C24	6	1821 - 9
TH104232	1I9	3	1740 - 9
TH104292	3E4	9	3344 - 3B
TH104472	3D19	2	3340 - 3
TH104472	3D21	2	3340 - 5
TH104472	3L10	24	3365 - 17
TH104472	3L12	24	3365 - 17B
TH104509	3B12	11	3302 - 3
TH104509	3B14	11	3302 - 5
TH104509	3B16	11	3302 - 7
TH104509	3B18	11	3302 - 9
TH104509	3B20	11	3302 - 11
TH104509	3B22	11	3302 - 13
TH104509	3B24	11	3302 - 15
TH104509	3E4	2	3344 - 3B
TH104509	3E4	16	3344 - 3B
TH104512	3B12	6	3302 - 3
TH104512	3B14	6	3302 - 5
TH104512	3B16	6	3302 - 7
TH104512	3B18	6	3302 - 9
TH104512	3B20	6	3302 - 11
TH104512	3B22	3	3302 - 13
TH104512	3B24	6	3302 - 15
TH104513	3B12	7	3302 - 3
TH104513	3B14	7	3302 - 5
TH104513	3B16	7	3302 - 7
TH104513	3B18	7	3302 - 9
TH104513	3B20	7	3302 - 11
TH104513	3B22	5	3302 - 13
TH104513	3B24	7	3302 - 15
TH104514	3B12	8	3302 - 3
TH104514	3B14	8	3302 - 5
TH104514	3B16	8	3302 - 7
TH104514	3B18	8	3302 - 9
TH104514	3B20	8	3302 - 11
TH104514	3B22	4	3302 - 13
TH104514	3B24	8	3302 - 15
TH104587	3G6	41	3362 - 7
TH104587	3G8	41	3362 - 9
TH104587	3G10	41	3362 - 11
TH104587	3G12	41	3362 - 13
TH104587	3G16	41	3362 - 17
TH104634	1G15	..	1369 - 3
TH104922	3K18	16	3365 - 5
TH104922	3K20	16	3365 - 5B
TH104922	3K24	16	3365 - 9
TH104922	3L2	16	3365 - 9B
TH104923	3K18	19	3365 - 5

NUMERICAL INDEX - CONTINUED

PART NO.	GRID	KEY	PAGE
TH104923	3K20	19	3365 - 5B
TH104923	3K24	19	3365 - 9
TH104923	3L2	19	3365 - 9B
TH104925	3L10	7	3365 - 17
TH104925	3L12	7	3365 - 17B
TH104926	3L10	8	3365 - 17
TH104926	3L12	8	3365 - 17B
TH104929	3K18	12	3365 - 5
TH104929	3K20	11	3365 - 5B
TH104929	3K24	12	3365 - 9
TH104929	3L2	11	3365 - 9B
TH104930	1G15	..	1369 - 3
TH104930	3K18	32	3365 - 5
TH104930	3K20	30	3365 - 5B
TH104930	3K24	32	3365 - 9
TH104930	3L2	30	3365 - 9B
TH104930	3L10	29	3365 - 17
TH104930	3L12	29	3365 - 17B
TH104944	3K18	11	3365 - 5
TH104944	3K20	5	3365 - 5B
TH104944	3K24	11	3365 - 9
TH104944	3L2	5	3365 - 9B
TH104952	3K18	6	3365 - 5
TH104952	3K20	7	3365 - 5B
TH104952	3K24	6	3365 - 9
TH104952	3L2	7	3365 - 9B
TH104953	3K18	5	3365 - 5
TH104953	3K20	8	3365 - 5B
TH104953	3K24	5	3365 - 9
TH104953	3L2	8	3365 - 9B
TH105683	3I16	3C	3363 - 25
TH105767	3L10	15	3365 - 17
TH105767	3L12	15	3365 - 17B
TH105938	3G2	15	3362 - 3
TH106280	3G10	26	3362 - 11
TH106280	3G12	26	3362 - 13
TH106280	3G12	33	3362 - 13
TH106280	3G12	44	3362 - 13
TH106783	2B15	15	1810 - 13
TH106966	3H20	8A	3363 - 7
TH106966	3H22	2A	3363 - 9
TH106967	3H20	9A	3363 - 7
TH108205	1I3	27	1740 - 3
TH108293	3K14	9	3364 - 3
TH108300	3J22	43	3363 - 51B
TH108302	1C2	12	0260 - 9
TH108302	1C8	12	0263 - 3
TH108302	3E22	7	3360 - 17
TH108302	3K10	29	3363 - 63
TH108313	3E22	14	3360 - 17
TH108313	3K2	12	3363 - 53
TH108313	3K4	12	3363 - 55
TH108313	3K6	24	3363 - 57
TH108314	3E22	35	3360 - 17
TH108320	3D15	9	3315 - 13
TH108320	3E16	6	3360 - 11
TH108320	3H24	3	3363 - 11
TH108320	3I16	32	3363 - 25
TH108320	3K14	24	3364 - 3
TH108325	3J22	53	3363 - 51B
TH108325	3K6	8	3363 - 57
TH108325	3K6	20	3363 - 57
TH108328	3J14	52	3363 - 45
TH108328	3J16	52	3363 - 45B
TH108364	3D13	13C	3315 - 11
TH108392	3D9	4	3315 - 7
TH108440	3D15	11	3315 - 13
TH108460	1G21	19	1671 - 3
TH108460	1H2	44	1674 - 5
TH108567	2B9	14	1810 - 7
TH108568	2B9	14A	1810 - 7
TH108579	1F13	10	0510 - 5
TH108597	1H4	38	1674 - 7
TH108598	1H2	45	1674 - 5
TH108598	1H4	71	1674 - 7
TH108616	2C10	3	1810 - 31
TH108616	2D2	12	1830 - 3
TH108638	2B15	19	1810 - 13
TH108646	2B13	59	1810 - 11
TH108649	3B22	11	3302 - 13
TH108649	3D23	20G	3340 - 7
TH108661	2B15	23	1810 - 13
TH108661	2B23	1	1810 - 21
TH108668	2B15	32	1810 - 13
TH108769	2E20	8	1910 - 19
TH108769	2E20	9	1910 - 19
TH108793	1G8	13	0560 - 7
TH108793	1G10	13	0560 - 7B
TH108841	1B16	37	0250 - 3
TH108847	1B16	35	0250 - 3
TH108983	2C16	22	1810 - 37
TH109071	3J22	10	3363 - 51B
TH109285	3G4	4	3362 - 5
TH109285	3H20	13	3363 - 7
TH109353	3L10	11	3365 - 17
TH109353	3L12	11	3365 - 17B
TH109357	3L10	18	3365 - 17
TH109357	3L12	18	3365 - 17B
TH109399	1I3	24	1740 - 3
TH109410	1G2	6	0540 - 3
TH109445	2D14	11	1830 - 11
TH109479	3L15	12	4360 - 3
TH109514	3K14	29	3364 - 3
TH109541	3E12	1	3360 - 7
TH109541	3I14	1	3363 - 23
TH109556	1C2	13	0260 - 9
TH109556	1C8	13	0263 - 3
TH109649	1H2	43	1674 - 5
TH109649	3K8	13	3363 - 59
TH109726	1B16	5	0250 - 3
TH109830	3J22	11	3363 - 51B
TH109873	3F18	32	3361 - 7
TH109874	3F18	29	3361 - 7
TH109875	3F18	33	3361 - 7
TH109876	3F18	34	3361 - 7
TH109878	3F18	36	3361 - 7
TH109892	3F20	2	3361 - 9
TH109892	3F22	2	3361 - 11
TH109893	3F20	3	3361 - 9
TH109893	3F22	3	3361 - 11
TH109898	3F20	12	3361 - 9
TH109898	3F22	12	3361 - 11
TH109911	3F20	20	3361 - 9
TH109911	3F22	20	3361 - 11
TH109968	3G10	7	3362 - 11
TH109968	3G10	12	3362 - 11
TH109968	3G10	15	3362 - 11
TH109968	3G10	30	3362 - 11
TH109968	3G10	63	3362 - 11
TH109968	3G12	2	3362 - 13
TH109968	3G12	13	3362 - 13
TH109968	3G12	37	3362 - 13
TH109970	3G10	8	3362 - 11
TH109970	3G10	13	3362 - 11
TH109970	3G10	16	3362 - 11
TH109970	3G10	31	3362 - 11
TH109970	3G10	64	3362 - 11
TH109970	3G12	5	3362 - 13
TH109970	3G12	14	3362 - 13
TH109970	3G12	38	3362 - 13
TH110133	3K14	14	3364 - 3
TH110305	3G12	16	3362 - 13
TH110315	3G10	29	3362 - 11
TH110315	3G14	69	3362 - 15
TH110325	3G10	27	3362 - 11
TH110325	3G12	27	3362 - 13
TH110325	3G12	34	3362 - 13
TH110325	3G12	45	3362 - 13
TH110477	3F22	57	3361 - 11
TH110496	3J22	17	3363 - 51B
TH110522	3I16	44	3363 - 25
TH110612	1I11	6	1740 - 11
TH111036	2E20	9	1910 - 19
TH111263	3F20	47	3361 - 9
TH111263	3F22	47	3361 - 11
TH111351	3D13	35	3315 - 11
TH111416	3J4	58	3363 - 35
TH111654	3D13	21	3315 - 11
TH111685	3E2	14	3344 - 3
TH111685	3E4	21	3344 - 3B
TH111690	3G6	11	3362 - 7
TH111690	3G8	11	3362 - 9
TH111690	3G10	11	3362 - 11
TH111690	3G12	11	3362 - 13
TH111690	3G16	11	3362 - 17
TH111700	1F19	1J	0520 - 3
TH111740	3I12	3	3363 - 21B
TH111908	2C16	24	1810 - 37
TH111929	3F18	13	3361 - 7
TH112085	1C6	5	0262 - 3
TH2042060	1C10	20	0267 - 3
TH2042080	1C10	7	0267 - 3
TH2043655	2E24	5	1910 - 23
TH2043656	2E24	6	1910 - 23
TH2043851	1B16	38	0250 - 3
TH2043868	1B16	40	0250 - 3
TH2044332	3D13	8A	3315 - 11
TH2044634	3L15	1	4360 - 3
TH2044842	2E24	9	1910 - 23
TH2044922	2D2	33	1830 - 3
TH2045468	3D11	10	3315 - 9
TH2045469	3D11	11	3315 - 9
TH2045470	3D5	5	3315 - 3
TH2045471	3D5	1	3315 - 3
TH2045472	3D5	2	3315 - 3
TH2045509	2C14	29	1810 - 35
TH2048184	1H4	47	1674 - 7
TH2048203	1H4	47	1674 - 7
TH3072015	2E4	6	1910 - 3
TH3080912	3L15	18	4360 - 3
TH3081568	1C10	38	0267 - 3
TH3081570	1C10	16	0267 - 3
TH3081592	1C10	23	0267 - 3
TH3081593	1C10	22	0267 - 3
TH3081594	1C10	29	0267 - 3
TH3081595	1C10	25	0267 - 3
TH3082517	3L15	25	4360 - 3
TH3083742	3L15	2	4360 - 3
TH3084056	3L15	30	4360 - 3
TH3084173J	3E6	1	3344 - 5
TH3084729	3L15	13	4360 - 3

NUMERICAL INDEX - CONTINUED

PART NO.	GRID	KEY	PAGE
TH3085304	2E24	2	1910 - 23
TH3085306	2E24	3	1910 - 23
TH3085307	2E24	4	1910 - 23
TH3085485	1C10	12	0267 - 3
TH3085927	1B16	18	0250 - 3
TH3085941	1B16	30	0250 - 3
TH3085966	1B16	13	0250 - 3
TH3085985	1B16	25	0250 - 3
TH3086006	1B16	33	0250 - 3
TH3086064	3L15	8	4360 - 3
TH3086417	1C12	1	0267 - 5
TH3086531	1B16	8	0250 - 3
TH3087108	1A24	3	0130 - 3
TH3087256	1C4	0	0260 - 11
TH3087264	3D13	13A	3315 - 11
TH3087816	1G21	10	1671 - 3
TH3087882	1H4	1	1674 - 7
TH3087987	3D13	26	3315 - 11
TH3088573	1I3	40	1740 - 3
TH3088574	3E2	11	3344 - 3
TH3088575	3D19	44	3340 - 3
TH3088575	3D21	44	3340 - 5
TH3088575	3E2	12	3344 - 3
TH3088577	3D19	48	3340 - 3
TH3088577	3D21	48	3340 - 5
TH3088578	3D19	45	3340 - 3
TH3088578	3D21	45	3340 - 5
TH3088579	3D19	47	3340 - 3
TH3088579	3D21	47	3340 - 5
TH3088580	3D19	49	3340 - 3
TH3088580	3D21	49	3340 - 5
TH3088581	3D19	46	3340 - 3
TH3088581	3D21	46	3340 - 5
TH3088769	2F11	7	2004 - 5
TH3089362	3L15	33	4360 - 3
TH3089486	2C24	2	1821 - 9
TH3089848	3D9	11	3315 - 7
TH3090024	2C14	32	1810 - 35
TH3090025	2B25	0	1810 - 23
TH3090025	2C4	0	1810 - 25B
TH3090090	2E24	8	1910 - 23
TH3091096	2F7	1	2002 - 3
TH3091204	2D18	3	1830 - 15
TH3091204	2D20	3	1830 - 17
TH3091337	2E22	40	1910 - 21
TH3091338	2E6	8	1910 - 5
TH3091338	2E8	15	1910 - 7
TH3091680	3J2	60	3363 - 33
TH3091681	3J2	62	3363 - 33
TH3091682	3J2	64	3363 - 33
TH3091683	3J2	67	3363 - 33
TH3091684	3J2	68	3363 - 33
TH3091685	3J2	70	3363 - 33
TH3091686	3J14	28	3363 - 45
TH3091686	3J16	28	3363 - 45B
TH3091842	2C14	24	1810 - 35
TH3100010	1H8	1	1674 - 7D
TH4013748	3G12	30	3362 - 13
TH4116310	3D9	3	3315 - 7
TH4154207	3G10	83B	3362 - 11
TH4185600	3D13	22	3315 - 11
TH4204136	3J4	52	3363 - 35
TH4210851	1B16	27	0250 - 3
TH4246358	1B16	29	0250 - 3
TH4267667	1C2	5	0260 - 9
TH4267667	1C8	5	0263 - 3
TH4307330	3K6	18	3363 - 57
TH4308972	3K6	6	3363 - 57
TH4309995	1B16	28	0250 - 3
TH4334894	3F16	59E	3361 - 5
TH4347396	2D2	27	1830 - 3
TH4352947	2D18	18	1830 - 15
TH4357695	3K2	3	3363 - 53
TH4366830	2E22	18	1910 - 21
TH4379984	2E22	11	1910 - 21
TH4379989	2E22	12	1910 - 21
TH4380814	2E8	10	1910 - 7
TH4381572	1H4	6	1674 - 7
TH4396696	1C10	2	0267 - 3
TH4396747	1C10	19	0267 - 3
TH4396755	1C10	10	0267 - 3
TH4396759	1C10	35	0267 - 3
TH4396771	1C6	10	0262 - 3
TH4396774	1C10	28	0267 - 3
TH4396775	1C10	26	0267 - 3
TH4396836	1C12	8	0267 - 5
TH4396950	1C12	13	0267 - 5
TH4396955	1C12	7	0267 - 5
TH4397021	1C6	2	0262 - 3
TH4397022	1C6	8	0262 - 3
TH4397029	1C12	14	0267 - 5
TH4397757	1C10	17	0267 - 3
TH4398281	1C6	13	0262 - 3
TH4400442	3F22	50	3361 - 11
TH4400848	3K4	7	3363 - 55
TH4401293	1B16	24	0250 - 3
TH4402460	3E2	2	3344 - 3
TH4402481	3L15	4	4360 - 3
TH4402637	3L15	7	4360 - 3
TH4403082	3L15	27	4360 - 3
TH4403371	3L15	24	4360 - 3
TH4405128	2C24	4	1821 - 9
TH4405164	2D12	8	1830 - 9
TH4405166	2D12	6	1830 - 9
TH4406589	1B16	34	0250 - 3
TH4408959	3I16	3	3363 - 25
TH4409122	3D19	0C	3340 - 3
TH4409122	3D21	0C	3340 - 5
TH4409178	3D19	0D	3340 - 3
TH4409178	3D21	0D	3340 - 5
TH4409389	1C6	3	0262 - 3
TH4409640	1C10	6	0267 - 3
TH4409999	2B5	1	1810 - 3
TH4410314	3I4	7	3363 - 15
TH4411122	3L15	9	4360 - 3
TH4411535	3L15	6	4360 - 3
TH4412572	2E4	8	1910 - 3
TH4412574	2E16	4	1910 - 15
TH4413854	3I4	15	3363 - 15
TH4413856	3I4	9	3363 - 15
TH4413858	3I4	12	3363 - 15
TH4414759	1I7	8	1740 - 7
TH4414901	2E10	3	1910 - 9
TH4415013	2E12	6	1910 - 11
TH4415024	2C14	22	1810 - 35
TH4416605	3F16	59	3361 - 5
TH4417431	1C10	3	0267 - 3
TH4417635	3I2	4	3363 - 13
TH4417881	2E10	4	1910 - 9
TH4418301	1H2	26	1674 - 5
TH4420083	1F25	8	0530 - 3
TH4420392	3J4	72	3363 - 35
TH4420609	2E8	5	1910 - 7
TH4420875	2C14	0	1810 - 35
TH4420876	2C14	3	1810 - 35
TH4420877	2C14	7	1810 - 35
TH4420878	2C14	11	1810 - 35
TH4420879	2C14	14	1810 - 35
TH4420880	2C14	18	1810 - 35
TH4420958	1C10	30	0267 - 3
TH4422202	3F20	5	3361 - 9
TH4422202	3F22	5	3361 - 11
TH4422627	1C10	36	0267 - 3
TH4423345	3F20	48	3361 - 9
TH4423345	3F22	48	3361 - 11
TH4424157	2E12	17	1910 - 11
TH4424157	2E14	10	1910 - 13
TH4424185	3D11	5	3315 - 9
TH4424425	1I5	0	1740 - 5
TH4424425	3E2	17	3344 - 3
TH4425290	3D13	13B	3315 - 11
TH4425305	3D13	18	3315 - 11
TH4425481	2E22	26	1910 - 21
TH4425573	2D18	5	1830 - 15
TH4425577	2E12	7	1910 - 11
TH4425857	3I8	23	3363 - 19
TH4425873	3I8	19	3363 - 19
TH4425880	3I8	21	3363 - 19
TH4425886	3I8	25	3363 - 19
TH4425980	1I11	1	1740 - 11
TH4426046	2D12	2	1830 - 9
TH4426047	2D2	44	1830 - 3
TH4426047	2D4	0	1830 - 3B
TH4426048	2D2	46	1830 - 3
TH4426128	1I5	1	1740 - 5
TH4426128	3E2	18	3344 - 3
TH4426155	2D2	16	1830 - 3
TH4426156	2D18	8	1830 - 15
TH4426157	2D2	24	1830 - 3
TH4426158	2D2	36	1830 - 3
TH4426161	2D16	11	1830 - 13
TH4426162	2D2	20	1830 - 3
TH4426354	2C2	4	1810 - 25
TH4426597	2E22	31	1910 - 21
TH4426598	2E22	3	1910 - 21
TH4426599	2E22	4	1910 - 21
TH4427111	3I20	29	3363 - 29
TH4427111	3I22	29	3363 - 29B
TH4427113	3I20	30	3363 - 29
TH4427113	3I22	30	3363 - 29B
TH4427119	3J18	1	3363 - 47
TH4427351	3J14	10	3363 - 45
TH4427351	3J16	10	3363 - 45B
TH4427358	3I16	26	3363 - 25
TH4427429	1H4	9B	1674 - 7
TH4427630	3L15	17	4360 - 3
TH4428098	1C2	11	0260 - 9
TH4428098	1C8	11	0263 - 3
TH4429011	2E22	5	1910 - 21
TH4429202	3H24	5	3363 - 11
TH4429280	3K8	5	3363 - 59
TH4429283	3K8	7	3363 - 59
TH4429287	3K8	6	3363 - 59
TH4429426	3H24	7	3363 - 11
TH4429938	1H24	1	1674 - 19
TH4429988	3K6	14	3363 - 57
TH4430649	1I7	9	1740 - 7
TH4430870	2D2	48	1830 - 3
TH4430871	2D2	50	1830 - 3
TH4431090	1H4	11	1674 - 7
TH4431357	2E12	22	1910 - 11

NUMERICAL INDEX - CONTINUED

PART NO.	GRID	KEY	PAGE
TH4431357	2E14	11	1910 - 13
TH4431841	3J6	11	3363 - 37
TH4431842	3J6	12	3363 - 37
TH4431844	3J6	14	3363 - 37
TH4432965	2D18	11	1830 - 15
TH4433793	2D18	0	1830 - 15
TH4433794	2D18	7	1830 - 15
TH4434953	3D19	0E	3340 - 3
TH4434953	3D21	0E	3340 - 5
TH4434953	3E2	5	3344 - 3
TH4435036	3I20	39	3363 - 29
TH4435036	3I22	39	3363 - 29B
TH4435124	3D19	53	3340 - 3
TH4435124	3D21	53	3340 - 5
TH4435126	3D19	51	3340 - 3
TH4435126	3D21	51	3340 - 5
TH4435126	3E2	13	3344 - 3
TH4435129	1I3	41	1740 - 3
TH4435239	3D19	0F	3340 - 3
TH4435239	3D21	0F	3340 - 5
TH4435508	3E2	4	3344 - 3
TH4436242	1B16	11	0250 - 3
TH4436279	2E22	13	1910 - 21
TH4436409	2E22	6	1910 - 21
TH4436441	2D2	32	1830 - 3
TH4436534	1H4	51	1674 - 7
TH4436535	3I24	14	3363 - 31
TH4436535	3J2	53	3363 - 33
TH4436535	3J4	53	3363 - 35
TH4436536	3F20	52	3361 - 9
TH4436536	3F22	55	3361 - 11
TH4436575	3I16	36	3363 - 25
TH4436737	1H4	9G	1674 - 7
TH4436800	3F22	63	3361 - 11
TH4436937	3E12	8	3360 - 7
TH4436937	3I14	8	3363 - 23
TH4437432	3D13	39	3315 - 11
TH4437433	3D13	8B	3315 - 11
TH4437525	1C2	10	0260 - 9
TH4437525	1C8	10	0263 - 3
TH4437950	3J14	9	3363 - 45
TH4437950	3J16	9	3363 - 45B
TH4438059	3F16	61	3361 - 5
TH4438279	3D5	8	3315 - 3
TH4440802	3K14	5	3364 - 3
TH4441059	2D2	41	1830 - 3
TH4441061	2D2	42	1830 - 3
TH4441117	2C14	30	1810 - 35
TH4441139	2D2	39	1830 - 3
TH4441246	2F11	17	2004 - 5
TH4442133	3E12	9	3360 - 7
TH4442133	3I14	9	3363 - 23
TH4442173	3J20	8	3363 - 49
TH4442642	3H16	10	3363 - 3
TH4443342	2E22	14	1910 - 21
TH4443659	3K14	4	3364 - 3
TH4443773	3K14	3	3364 - 3
TH4443880	3E2	6	3344 - 3
TH4443881	3D19	0G	3340 - 3
TH4443881	3D21	0G	3340 - 5
TH4443882	3D25	5	3340 - 9
TH4444285	1I3	45	1740 - 3
TH4444285	3E2	22	3344 - 3
TH4444286	1I3	46	1740 - 3
TH4444286	3D19	57	3340 - 3
TH4444286	3D21	57	3340 - 5
TH4444286	3E2	24	3344 - 3
TH4444287	1I3	47	1740 - 3
TH4444287	3D19	58	3340 - 3
TH4444287	3D21	58	3340 - 5
TH4444287	3E2	25	3344 - 3
TH4444288	3D19	59	3340 - 3
TH4444288	3D21	59	3340 - 5
TH4444289	3D19	60	3340 - 3
TH4444289	3D21	60	3340 - 5
TH4444381	3E12	10	3360 - 7
TH4444381	3I14	10	3363 - 23
TH4444664	2B13	10	1810 - 11
TH4444729	3J20	9	3363 - 49
TH4444730	3J20	10	3363 - 49
TH4444735	3J14	25	3363 - 45
TH4444735	3J16	25	3363 - 45B
TH4444755	3E2	23	3344 - 3
TH4445220	2C8	22	1810 - 29
TH4445322	3D5	9	3315 - 3
TH4445352	3L15	35	4360 - 3
TH4445529	1B16	26	0250 - 3
TH4445531	1B16	14	0250 - 3
TH4445911	2E18	2	1910 - 17
TH4447050	3D13	6B	3315 - 11
TH4447067	3D13	42	3315 - 11
TH4447264	3F20	39	3361 - 9
TH4447276	3G20	0	3362 - 21
TH4448307	2B15	43	1810 - 13
TH4448308	2B13	52	1810 - 11
TH4448309	2B13	53	1810 - 11
TH4448314	2B11	9	1810 - 9
TH4448315	2B13	72	1810 - 11
TH4448318	2B17	18	1810 - 15
TH4448319	2B11	19	1810 - 9
TH4448601	2C8	27	1810 - 29
TH4448925	2D4	16	1830 - 3B
TH4448990	2C14	35	1810 - 35
TH4449019	1H4	45	1674 - 7
TH4449250	1H2	39	1674 - 5
TH4449361	1G4	12	0560 - 3
TH4449362	1G4	13	0560 - 3
TH4449378	1C2	9	0260 - 9
TH4449378	1C8	9	0263 - 3
TH4449509	2F7	5	2002 - 3
TH4449771	3I18	26	3363 - 27
TH4449772	3I18	27	3363 - 27
TH4450008	2D18	9	1830 - 15
TH4450008	2D20	0	1830 - 17
TH4450011	3D19	62	3340 - 3
TH4450011	3D21	62	3340 - 5
TH4450012	3D19	61	3340 - 3
TH4450012	3D21	61	3340 - 5
TH4450013	3E2	26	3344 - 3
TH4450022	3H24	9	3363 - 11
TH4450081	3I16	43	3363 - 25
TH4450494	1H2	52	1674 - 5
TH4450707	2D2	44	1830 - 3
TH4450708	2D2	46	1830 - 3
TH4451036	3F16	90	3361 - 5
TH4451039	3F18	90	3361 - 7
TH4451498	3F20	22	3361 - 9
TH4451498	3F22	22	3361 - 11
TH4451784	3H8	24	3362 - 31
TH4451785	3H8	25	3362 - 31
TH4451785	3H10	25	3362 - 33
TH4451785	3H12	25	3362 - 33B
TH4451786	3H10	26	3362 - 33
TH4451786	3H12	26	3362 - 33B
TH4451787	3H8	37	3362 - 31
TH4451788	3H8	38	3362 - 31
TH4451789	3H8	39	3362 - 31
TH4451789	3H10	39	3362 - 33
TH4451789	3H12	39	3362 - 33B
TH4451790	3H10	40	3362 - 33
TH4451797	3H10	41	3362 - 33
TH4451797	3H12	41	3362 - 33B
TH4452044	3I20	40	3363 - 29
TH4452044	3I22	40	3363 - 29B
TH4452045	3I20	41	3363 - 29
TH4452045	3I22	41	3363 - 29B
TH4452046	3J4	61	3363 - 35
TH4452047	3J4	63	3363 - 35
TH4452048	3J4	65	3363 - 35
TH4452049	3J4	66	3363 - 35
TH4452050	3J4	69	3363 - 35
TH4452051	3J4	71	3363 - 35
TH4452613	2C14	27	1810 - 35
TH4452647	3H14	18	3362 - 35
TH4452648	3H14	20	3362 - 35
TH4452740	2E8	6	1910 - 7
TH4452741	2E8	7	1910 - 7
TH4452742	2E8	11	1910 - 7
TH4452743	2E8	12	1910 - 7
TH4453663	2B11	31	1810 - 9
TH4453665	2B11	93	1810 - 9
TH4453666	2B11	95	1810 - 9
TH4453667	2B11	22	1810 - 9
TH4453670	2B13	20	1810 - 11
TH4453671	2B13	22	1810 - 11
TH4453674	2B13	58	1810 - 11
TH4453675	2B13	57	1810 - 11
TH4453676	2B13	50	1810 - 11
TH4453682	2B17	29	1810 - 15
TH4453683	2B17	30	1810 - 15
TH4453684	2B17	31	1810 - 15
TH4453686	2B9	33	1810 - 7
TH4453687	2B9	32	1810 - 7
TH4453689	2B15	1	1810 - 13
TH4453690	2B9	31	1810 - 7
TH4453819	3H14	11	3362 - 35
TH4453820	3H14	12	3362 - 35
TH4454193	3G8	42	3362 - 9
TH4454194	3G6	45	3362 - 7
TH4454195	3G6	46	3362 - 7
TH4454199	3G6	61	3362 - 7
TH4454201	3G12	4	3362 - 13
TH4454202	3G10	5	3362 - 11
TH4454518	1H4	4	1674 - 7
TH4454560	3D19	63	3340 - 3
TH4454560	3D21	63	3340 - 5
TH4454561	3D19	64	3340 - 3
TH4454561	3D21	64	3340 - 5
TH4455599	3K6	9	3363 - 57
TH4455719	3F20	70	3361 - 9
TH4455733	3F22	70	3361 - 11
TH4455975	2B13	4	1810 - 11
TH4455977	2B13	17	1810 - 11
TH4455978	2B13	19	1810 - 11
TH4455979	2B13	2	1810 - 11
TH4455981	2B13	12	1810 - 11
TH4455982	2B13	8	1810 - 11
TH4455983	2B13	9	1810 - 11
TH4455986	3G22	55	3362 - 23
TH4455987	3G22	56	3362 - 23
TH4455989	3G22	49	3362 - 23

NUMERICAL INDEX - CONTINUED

PART NO.	GRID	KEY	PAGE
TH4455990	3G22	48	3362 - 23
TH4455991	3G22	3	3362 - 23
TH4456130	2D12	1	1830 - 9
TH4456171	2B13	11	1810 - 11
TH4456172	2B13	26	1810 - 11
TH4456175	2B11	25	1810 - 9
TH4456177	2B11	2	1810 - 9
TH4456178	2B11	3	1810 - 9
TH4456179	2B11	4	1810 - 9
TH4456181	2B11	5	1810 - 9
TH4456182	2B11	17	1810 - 9
TH4456183	2B11	8	1810 - 9
TH4456184	2B11	29	1810 - 9
TH4456185	2B11	11	1810 - 9
TH4456218	2B15	2	1810 - 13
TH4456219	2B15	3	1810 - 13
TH4456220	2B15	4	1810 - 13
TH4456221	2B15	5	1810 - 13
TH4456222	2B15	6	1810 - 13
TH4456223	2B15	8	1810 - 13
TH4456224	2B15	9	1810 - 13
TH4456225	2B15	10	1810 - 13
TH4456226	2B15	12	1810 - 13
TH4456227	2B15	14	1810 - 13
TH4456228	2B15	20	1810 - 13
TH4456229	2B15	21	1810 - 13
TH4456230	2B15	26	1810 - 13
TH4456231	2B15	27	1810 - 13
TH4456232	2B15	29	1810 - 13
TH4456233	2B15	30	1810 - 13
TH4456234	2B15	31	1810 - 13
TH4456235	2B15	33	1810 - 13
TH4456236	2B15	34	1810 - 13
TH4456237	2B15	35	1810 - 13
TH4456238	2B9	37	1810 - 7
TH4456238	2B15	36	1810 - 13
TH4456239	2B15	37	1810 - 13
TH4456240	2B15	38	1810 - 13
TH4456241	2B15	39	1810 - 13
TH4456242	2B15	40	1810 - 13
TH4456246	2B21	2	1810 - 19
TH4456247	2B21	3	1810 - 19
TH4456248	2B21	6	1810 - 19
TH4456427	2B9	1	1810 - 7
TH4456428	2B9	15	1810 - 7
TH4456428	2B9	26	1810 - 7
TH4456429	2B9	30	1810 - 7
TH4456433	2B9	34	1810 - 7
TH4456434	2B9	35	1810 - 7
TH4456435	2B9	41	1810 - 7
TH4456436	2B9	42	1810 - 7
TH4456450	2B9	43	1810 - 7
TH4456456	2B9	29	1810 - 7
TH4456458	2B9	40	1810 - 7
TH4456723	2D18	0B	1830 - 15
TH4456725	2D18	0A	1830 - 15
TH4456735	1H4	9F	1674 - 7
TH4456778	1H4	9A	1674 - 7
TH4456778	1H10	7A	1674 - 9
TH4456798	1G2	12	0540 - 3
TH4459263	3J6	13	3363 - 37
TH4459435	2C14	41	1810 - 35
TH4460662	1F21	7	0520 - 5
TH4463992	3F16	59A	3361 - 5
TH4463993	3F16	59D	3361 - 5
TH4464274	2D4	8G	1830 - 3B
TH4464275	2D4	9	1830 - 3B
TH4464276	2D4	10	1830 - 3B
TH4464277	2D4	11	1830 - 3B
TH4464278	2D4	12	1830 - 3B
TH4464279	2D4	13	1830 - 3B
TH4464280	2D4	15	1830 - 3B
TH4464281	2D4	17	1830 - 3B
TH4464282	2D4	18	1830 - 3B
TH4464283	2D4	19	1830 - 3B
TH4464284	2D4	20	1830 - 3B
TH4464285	2D4	21	1830 - 3B
TH4464286	2D4	22	1830 - 3B
TH4464287	2D4	23	1830 - 3B
TH4464288	2D4	24	1830 - 3B
TH4464341	2D4	1	1830 - 3B
TH4464342	2D4	2	1830 - 3B
TH4464343	2D4	3	1830 - 3B
TH4464344	2D4	4	1830 - 3B
TH4464347	2D4	5	1830 - 3B
TH4464349	2D4	6	1830 - 3B
TH4464350	2D4	7	1830 - 3B
TH4464352	2D4	8	1830 - 3B
TH4464353	2D4	8A	1830 - 3B
TH4464354	2D4	8B	1830 - 3B
TH4464355	2D4	8C	1830 - 3B
TH4464356	2D4	8E	1830 - 3B
TH4464357	2D4	8F	1830 - 3B
TH4464450	2D4	25	1830 - 3B
TH4464451	2D4	26	1830 - 3B
TH4464452	2D4	27	1830 - 3B
TH4464453	2D4	28	1830 - 3B
TH4464454	2D4	29	1830 - 3B
TH4464455	2D4	30	1830 - 3B
TH4464456	2D6	31	1830 - 3D
TH4464457	2D6	32	1830 - 3D
TH4464458	2D6	33	1830 - 3D
TH4464459	2D6	34	1830 - 3D
TH4464460	2D6	35	1830 - 3D
TH4464461	2D6	36	1830 - 3D
TH4464462	2D6	37	1830 - 3D
TH4464463	2D6	38	1830 - 3D
TH4464465	2D6	40	1830 - 3D
TH4464466	2D6	41	1830 - 3D
TH4464473	2D6	42	1830 - 3D
TH4464474	2D6	44	1830 - 3D
TH4464475	2D6	45	1830 - 3D
TH4464476	2D6	47	1830 - 3D
TH4464477	2D6	49	1830 - 3D
TH4464478	2D6	50	1830 - 3D
TH4464479	2D6	52	1830 - 3D
TH4464480	2D6	54	1830 - 3D
TH4464483	2D6	56	1830 - 3D
TH4465617	3J20	13	3363 - 49
TH4468530	1H4	9H	1674 - 7
TH4468558	1H4	9	1674 - 7
TH4468943	2B13	65	1810 - 11
TH4468944	2B11	6	1810 - 9
TH4469337	1H4	0	1674 - 7
TH5006215J	1G4	1	0560 - 3
TH5006846	1A24	1	0130 - 3
TH5006958	1I7	3	1740 - 7
TH5007342	2C8	15	1810 - 29
TH6017445	3D19	0A	3340 - 3
TH6017975	2C10	5	1810 - 31
TH6018662	2E22	10	1910 - 21
TH6019104	3D21	0A	3340 - 5
TH6019252	2C8	14	1810 - 29
TH6019838	2C8	12	1810 - 29
TH6020171	2C24	0	1821 - 9
TH7035467	3D19	0	3340 - 3
TH7035503	3D9	0	3315 - 7
TH7035538	3E2	1	3344 - 3
TH7035539	2E4	1	1910 - 3
TH7035543	2E4	20	1910 - 3
TH7036594	2C12	0	1810 - 33
TH7036595	2C12	2	1810 - 33
TH7037241J	2E22	16	1910 - 21
TH7038166	3D21	0	3340 - 5
TH7039389	2C8	1	1810 - 29
TH7039806	3H16	1	3363 - 3
TH8071211	1C6	1	0262 - 3
TH8073901	3D9	6	3315 - 7
TH8074106	3I2	10	3363 - 13
TH8074107	3I10	0	3363 - 21
TH8074127	3E10	0	3360 - 5
TH8074128	3E10	1	3360 - 5
TH8074141	3H20	4	3363 - 7
TH8074159	2E8	9	1910 - 7
TH8074160	2E8	4	1910 - 7
TH8074315J	3E6	0	3344 - 5
TH8075190	1C10	15	0267 - 3
TH8075449	3D11	1	3315 - 9
TH8075450	3D11	0	3315 - 9
TH8076444J	2E8	3	1910 - 7
TH8076445J	2E8	8	1910 - 7
TH8076619	2C8	9	1810 - 29
TH8077521	2E22	25	1910 - 21
TH8077778J	2E22	9	1910 - 21
TH8077903	3D13	32	3315 - 11
TH8079166	3K6	11	3363 - 57
TH8079431J	3K2	21	3363 - 53
TH8079794	3K6	1	3363 - 57
TH8080620J	3K2	2	3363 - 53
TH8081319	3D7	0	3315 - 5
TH8081448	1I5	5	1740 - 5
TH8081449	3E2	8	3344 - 3
TH8081638J	3K2	1	3363 - 53
TH8081829	2E4	3	1910 - 3
TH8082052J	3K2	4	3363 - 53
TH8082053J	3K2	5	3363 - 53
TH8082452	3J4	55	3363 - 35
TH8083882J	3K4	22	3363 - 55
TH8084097J	3K4	21	3363 - 55
TH9167977	1C6	17	0262 - 3
TH9175422	3K16	0	3365 - 3
TH9175422	3K18	43	3365 - 5
TH9175423	3K22	0	3365 - 7
TH9175423	3K24	43	3365 - 9
TH9184275	3D13	8	3315 - 11
TH9195235	3F14	3	3361 - 3
TH9195235	3F16	0	3361 - 5
TH9195235	3F18	1	3361 - 7
TH9195304	3D5	20	3315 - 3
TH9195307	3D11	2	3315 - 9
TH9195307	3D13	7	3315 - 11
TH9196161	2E6	6	1910 - 5
TH9196963	3L15	70	4360 - 3
TH9197376	3K6	16	3363 - 57
TH9198935	3F18	69	3361 - 7
TH9198935	3F22	0	3361 - 11
TH9198936	3F18	70	3361 - 7
TH9198936	3F20	0	3361 - 9
TH9199146	3D13	13	3315 - 11
TH9200288	1B16	0	0250 - 3
TH9200288	1C10	0	0267 - 3

NUMERICAL INDEX - CONTINUED

PART NO.	GRID	KEY	PAGE
TH9751797	2E12	14	1910 - 11
TH9752698	3H20	10	3363 - 7
TH9753750	1C12	5	0267 - 5
TH9757192	2C8	29	1810 - 29
TK130	3C20	5	3302 - 35
TK290	3C10	2	3302 - 25
TK290	3C14	2	3302 - 29
TK290	3C18	2	3302 - 33
TK290	3D2	2	3302 - 41
TK330	3C10	2	3302 - 25
TK330	3C14	2	3302 - 29
TK330	3C18	2	3302 - 33
TK330	3D2	2	3302 - 41
TPDE31329	3C6	7	3302 - 21
TP160	3C10	2	3302 - 25
TP160	3C14	2	3302 - 29
TP160	3C18	2	3302 - 33
TP160	3D2	2	3302 - 41
TP160L	3C10	2	3302 - 25
TP160L	3C10	4A	3302 - 25
TP160L	3C10	4B	3302 - 25
TP160L	3C10	4C	3302 - 25
TP160L	3C10	4D	3302 - 25
TP160L	3C10	4E	3302 - 25
TP160L	3C10	4F	3302 - 25
TP160L	3C14	2	3302 - 29
TP160L	3C14	4A	3302 - 29
TP160L	3C14	4B	3302 - 29
TP160L	3C14	4C	3302 - 29
TP160L	3C14	4D	3302 - 29
TP160L	3C14	4E	3302 - 29
TP160L	3C14	4F	3302 - 29
TP160L	3C18	2	3302 - 33
TP160L	3C18	4A	3302 - 33
TP160L	3C18	4B	3302 - 33
TP160L	3C18	4C	3302 - 33
TP160L	3C18	4D	3302 - 33
TP160L	3C18	4E	3302 - 33
TP160L	3C18	4F	3302 - 33
TP160L	3D2	2	3302 - 41
TP160L	3D2	4A	3302 - 41
TP160L	3D2	4B	3302 - 41
TP160L	3D2	4C	3302 - 41
TP160L	3D2	4D	3302 - 41
TP160L	3D2	4E	3302 - 41
TP160L	3D2	4F	3302 - 41
TP400HD	3C20	2	3302 - 35
TP400HD	3C22	2	3302 - 37
TT1U3352	3C10	4N	3302 - 25
TT1U3352	3C14	4N	3302 - 29
TT1U3352	3C18	4N	3302 - 33
TT1U3352	3D2	4N	3302 - 41
TT290	3C10	4F	3302 - 25
TT290	3C14	4F	3302 - 29
TT290	3C18	4F	3302 - 33
TT290	3D2	4F	3302 - 41
TT310	3C10	4F	3302 - 25
TT310	3C14	4F	3302 - 29
TT310	3C18	4F	3302 - 33
TT310	3D2	4F	3302 - 41
TT330	3C10	4F	3302 - 25
TT330	3C14	4F	3302 - 29
TT330	3C18	4F	3302 - 33
TT330	3D2	4F	3302 - 41
TT400	3C20	4F	3302 - 35
TT400	3C22	4F	3302 - 37
TX1U3352WT	3C10	4M	3302 - 25
TX1U3352WT	3C14	4M	3302 - 29
TX1U3352WT	3C18	4M	3302 - 33
TX1U3352WT	3D2	4M	3302 - 41
TX290	3C10	4B	3302 - 25
TX290	3C14	4B	3302 - 29
TX290	3C18	4B	3302 - 33
TX290	3D2	4B	3302 - 41
TX290WT	3C10	4C	3302 - 25
TX290WT	3C14	4C	3302 - 29
TX290WT	3C18	4C	3302 - 33
TX290WT	3D2	4C	3302 - 41
TX310	3C10	4B	3302 - 25
TX310	3C14	4B	3302 - 29
TX310	3C18	4B	3302 - 33
TX310	3D2	4B	3302 - 41
TX310AP	3C10	4E	3302 - 25
TX310AP	3C14	4E	3302 - 29
TX310AP	3C18	4E	3302 - 33
TX310AP	3D2	4E	3302 - 41
TX310F	3C10	4D	3302 - 25
TX310F	3C14	4D	3302 - 29
TX310F	3C18	4D	3302 - 33
TX310F	3D2	4D	3302 - 41
TX310WT	3C10	4C	3302 - 25
TX310WT	3C14	4C	3302 - 29
TX310WT	3C18	4C	3302 - 33
TX310WT	3D2	4C	3302 - 41
TX330	3C10	4B	3302 - 25
TX330	3C14	4B	3302 - 29
TX330	3C18	4B	3302 - 33
TX330	3D2	4B	3302 - 41
TX330WT	3C10	4C	3302 - 25
TX330WT	3C14	4C	3302 - 29
TX330WT	3C18	4C	3302 - 33
TX330WT	3D2	4C	3302 - 41
TX400	3C20	4B	3302 - 35
TX400	3C22	4B	3302 - 37
TX400AP	3C20	4E	3302 - 35
TX400AP	3C22	4E	3302 - 37
TX400F	3C22	4D	3302 - 37
TX400WT	3C20	4C	3302 - 35
TX400WT	3C22	4C	3302 - 37
TY15733	1G21	0	1671 - 3
TY21517	1I9	5	1740 - 9
TY21517	1I9	6	1740 - 9
TY21517	1I9	7	1740 - 9
TY21709	1G21	0	1671 - 3
TY22328	2D14	9	1830 - 11
TY22328	2D14	10	1830 - 11
TY22450	1D10	6	0408 - 1
TY22462	1F13	2	0510 - 5
TY22462	1F25	10	0530 - 3
TY22462	1G8	20	0560 - 7
TY22464	1G8	10	0560 - 7
TY22464	1G10	10	0560 - 7B
TY22470	1F15	11	0510 - 7
TY22472	1F15	10	0510 - 7
TY24322	1G22	6	1672 - 2
TY24398	1G8	1	0560 - 7
TY24398	1G8	2	0560 - 7
TY24398	1G8	4	0560 - 7
TY24398	1G8	7	0560 - 7
TY24398	1G10	1	0560 - 7B
TY24398	1G10	2	0560 - 7B
TY24398	1G10	4	0560 - 7B
TY24398	1G10	6	0560 - 7B
TY24398	1G10	7	0560 - 7B
T1U3352	3C10	4L	3302 - 25
T1U3352	3C14	4L	3302 - 29
T1U3352	3C18	4L	3302 - 33
T1U3352	3D2	4L	3302 - 41
T101942	1G13	3	1322 - 3
T104269	3E4	1	3344 - 3B
T104336	3E4	14	3344 - 3B
T105740	2C20	3	1821 - 5
T105943	2D10	12	1830 - 7
T105943	2D22	12	1830 - 19
T107068	3F8	6	3360 - 25
T107068	3F10	14	3360 - 27
T107068	3K10	13	3363 - 63
T107446	3E12	4	3360 - 7
T107446	3I14	4	3363 - 23
T107729	1B16	16	0250 - 3
T107755	3F18	9	3361 - 7
T107766	3F18	22	3361 - 7
T107767	3F18	23	3361 - 7
T108019	3K18	10	3365 - 5
T108019	3K20	4	3365 - 5B
T108019	3K24	10	3365 - 9
T108019	3L2	4	3365 - 9B
T108029	3K20	51	3365 - 5B
T108030	3K18	20	3365 - 5
T108030	3K20	20	3365 - 5B
T108030	3K24	20	3365 - 9
T108030	3L2	20	3365 - 9B
T108030	3L10	19	3365 - 17
T108030	3L12	19	3365 - 17B
T108036	3L10	35	3365 - 17
T108036	3L12	35	3365 - 17B
T108041	3L10	4	3365 - 17
T108041	3L12	4	3365 - 17B
T108048	3K18	35	3365 - 5
T108048	3K20	33	3365 - 5B
T108048	3K24	35	3365 - 9
T108048	3L2	33	3365 - 9B
T108050	3J24	4	3363 - 51D
T108050	3L6	4	3365 - 13
T108063	3L6	20	3365 - 13
T108064	3L6	38	3365 - 13
T108159	3D13	2	3315 - 11
T110444	3K14	6	3364 - 3
T110448	3L10	10	3365 - 17
T110448	3L12	10	3365 - 17B
T110590	1G15	..	1369 - 3
T110593	1G15	..	1369 - 3
T111207	3K10	11	3363 - 63
T111819	1C10	31	0267 - 3
T111819	3G2	14	3362 - 3
T114698	3E18	7	3360 - 13
T114699	3E18	6	3360 - 13
T115076	3E4	11	3344 - 3B
T116057	1G4	10	0560 - 3
T116332	1I5	2	1740 - 5
T116332	3E2	19	3344 - 3
T116333	2D8	13	1830 - 5
T122075	1E2	4	0419 - 3
T122075	1F5	30	0452 - 3
T126057	3F8	15	3360 - 25
T130X400	3C20	3	3302 - 35
T130341	1F25	5A	0530 - 3
T13254	1E8	11	0420 - 7
T13624	3J24	23	3363 - 51D
T13624	3K18	23	3365 - 5
T13624	3K20	23	3365 - 5B

NUMERICAL INDEX - CONTINUED

PART NO.	GRID	KEY	PAGE
T13624	3K24	23	3365 - 9
T13624	3L2	23	3365 - 9B
T13624	3L6	23	3365 - 13
T13624	3L10	22	3365 - 17
T13624	3L12	22	3365 - 17B
T138508	1B18	5	0260 - 3
T138886	2C14	39	1810 - 35
T139498	3E4	13	3344 - 3B
T139505	3E4	3	3344 - 3B
T139506	3E4	4	3344 - 3B
T141022	1H12	2	1674 - 11
T144361	1G24	1E	1674 - 3
T144362	1G24	1F	1674 - 3
T144749	3E4	14	3344 - 3B
T145378	3K10	14	3363 - 63
T146102	1E15	3	0422 - 3
T146102	1G13	33	1322 - 3
T146667	1G13	26	1322 - 3
T146668	1G13	25	1322 - 3
T146671	1G13	42	1322 - 3
T149434	3D15	14	3315 - 13
T149434	3E14	5	3360 - 9
T149434	3E18	17	3360 - 13
T149983	1G13	32	1322 - 3
T152608	1G17	11	1370 - 5
T152608	3K8	12	3363 - 59
T152657	1G13	34	1322 - 3
T153X310	3C10	3	3302 - 25
T153X310	3C14	3	3302 - 29
T153X310	3C18	3	3302 - 33
T153X310	3D2	3	3302 - 41
T153069	3E4	3	3344 - 3B
T153672	1G17	20	1370 - 5
T153672	3D23	56	3340 - 7
T153672	3E4	26	3344 - 3B
T153672	3E4	29	3344 - 3B
T153672	3I12	50	3363 - 21B
T153673	3D23	56	3340 - 7
T153673	3E4	27	3344 - 3B
T153673	3J22	70	3363 - 51B
T153674	3D17	22	3315 - 15
T153676	3D17	22	3315 - 15
T154188	3B18	15	3302 - 9
T154189	3B18	15	3302 - 9
T157779	2C20	2	1821 - 5
T158X290	3C10	3	3302 - 25
T158X290	3C14	3	3302 - 29
T158X290	3C18	3	3302 - 33
T158X290	3D2	3	3302 - 41
T158X330	3C10	3	3302 - 25
T158X330	3C14	3	3302 - 29
T158X330	3C18	3	3302 - 33
T158X330	3D2	3	3302 - 41
T158020	2B9	25A	1810 - 7
T158021	2B9	25B	1810 - 7
T158584	1G22	1	1672 - 2
T159841	1G13	21	1322 - 3
T159841	1G13	54	1322 - 3
T159842	1G13	6	1322 - 3
T159842	1G13	54	1322 - 3
T159843	1G13	6	1322 - 3
T159843	3E20	7	3360 - 15
T159844	1G13	21	1322 - 3
T159844	3E20	9	3360 - 15
T159887	1G13	24	1322 - 3
T160103	1F17	20	0510 - 9
T160105	1F17	21	0510 - 9
T160106	1F17	22	0510 - 9
T160123	1F17	52	0510 - 9
T160124	1F17	23	0510 - 9
T160598	1F17	24	0510 - 9
T160599	1F17	25	0510 - 9
T160600	1F17	26	0510 - 9
T160910	1G13	16	1322 - 3
T161816	1F17	44	0510 - 9
T161818	1F23	4	0520 - 7
T162091	1F17	45	0510 - 9
T164046	3K10	19	3363 - 63
T164047	3K10	28	3363 - 63
T164167	1F17	27	0510 - 9
T166489	3E4	25	3344 - 3B
T167256	2B23	2	1810 - 21
T175293	1F9	7	0505 - 3
T177864	1B6	2	0130 - 9
T177865	1B6	3	0130 - 9
T184023	1G13	11	1322 - 3
T184759	1G13	12	1322 - 3
T184858	3E20	10	3360 - 15
T184964	1H14	18	1674 - 13
T184989	1F17	53	0510 - 9
T184990	1F17	54	0510 - 9
T186158	1F17	28	0510 - 9
T187535	1G13	30	1322 - 3
T187642	1G13	15	1322 - 3
T187710	1G13	35	1322 - 3
T187951	1F17	29	0510 - 9
T188566	1G13	31	1322 - 3
T188662	3K12	24	3363 - 65
T188737	1G13	41	1322 - 3
T188737	2C16	25	1810 - 37
T188862	1G13	23	1322 - 3
T188881	1G13	29	1322 - 3
T188882	1G13	9	1322 - 3
T18891	1D2	2	0404 - 3
T190303	1G22	10	1672 - 2
T190310	1G13	17	1322 - 3
T190393	1G13	27	1322 - 3
T190408	1F17	49	0510 - 9
T190409	1F17	51	0510 - 9
T190565	1G17	20	1370 - 5
T190565	3D23	56	3340 - 7
T190565	3E4	25	3344 - 3B
T190565	3I12	50	3363 - 21B
T190565	3J22	70	3363 - 51B
T190799	1G13	30	1322 - 3
T190801	1G13	35	1322 - 3
T190802	1G13	35	1322 - 3
T190803	1G13	30	1322 - 3
T191211	1I9	5	1740 - 9
T191211	1I9	6	1740 - 9
T19935	1F10	9	0505 - 4
T201519	1G13	6	1322 - 3
T201519	1G13	21	1322 - 3
T201519	1G13	54	1322 - 3
T20168	1D2	18	0404 - 3
T202379	3E20	20	3360 - 15
T20314	1C22	4	0402 - 6
T20316	1C22	3	0402 - 6
T203958	1I9	5	1740 - 9
T203958	1I9	6	1740 - 9
T205218	2C16	24	1810 - 37
T20758	1C24	6	0404 - 1
T22645	3E20	23	3360 - 15
T23474	1D2	19	0404 - 3
T24432	1G8	12	0560 - 7
T24432	1G10	12	0560 - 7B
T24432	2D8	2	1830 - 5
T24432	2D8	31	1830 - 5
T25838	1G13	44	1322 - 3
T26767	3E22	40	3360 - 17
T27603	3E22	40	3360 - 17
T27860	2D10	5	1830 - 7
T27860	2D22	5	1830 - 19
T28862	1D6	6	0407 - 2
T3G8354	3C10	3	3302 - 25
T3G8354	3C14	3	3302 - 29
T3G8354	3C18	3	3302 - 33
T3G8354	3D2	3	3302 - 41
T3G9549	3C10	5	3302 - 25
T3G9549	3C14	5	3302 - 29
T3G9549	3C18	5	3302 - 33
T3G9549	3D2	5	3302 - 41
T32854	1H2	42	1674 - 5
T38818	3C6	13	3302 - 21
T38819	3C6	12	3302 - 21
T43514	1D2	24	0404 - 3
T52222	1F19	1I	0520 - 3
T52223	1F19	1C	0520 - 3
T52224	1F19	1B	0520 - 3
T52974	3C6	13	3302 - 21
T52975	3C6	12	3302 - 21
T55564	2D10	1	1830 - 7
T55564	2D22	1	1830 - 19
T58477	1D12	6	0409 - 3
T59014	1G15	..	1369 - 3
T59014	3E12	6	3360 - 7
T59014	3E22	28	3360 - 17
T59014	3I2	7	3363 - 13
T59014	3I4	2	3363 - 15
T59014	3I6	1	3363 - 17
T59014	3I8	1	3363 - 19
T59014	3I14	6	3363 - 23
T59014	3J22	44	3363 - 51B
T60983	3K10	5	3363 - 63
T63817	3E20	21	3360 - 15
T74492	1G15	..	1369 - 3
T74492	3G10	6	3362 - 11
T74492	3G12	6	3362 - 13
T75197	1H20	2	1674 - 17
T76938	3E22	6	3360 - 17
T76938	3E22	40	3360 - 17
T76938	3F2	7	3360 - 19
T76938	3F4	7	3360 - 21
T76938	3F6	5	3360 - 23
T76938	3F12	15	3360 - 51
T76938	3H24	1	3363 - 11
T76938	3J22	19	3363 - 51B
T76938	3K2	7	3363 - 53
T76938	3K4	9	3363 - 55
T76938	3K6	7	3363 - 57
T76938	3K10	2	3363 - 63
T77613	1D20	8	0416 - 2
T77858	1C2	2	0260 - 9
T77858	1C8	2	0263 - 3
T77858	3D19	27	3340 - 3
T77858	3D19	28A	3340 - 3
T77858	3D21	27	3340 - 5
T77858	3E12	2	3360 - 7
T77858	3E22	17	3360 - 17
T77858	3E22	40	3360 - 17
T77858	3F10	12	3360 - 27

NUMERICAL INDEX - CONTINUED

PART NO.	GRID	KEY	PAGE
T77858	3F12	14	3360 - 51
T77858	3H16	8	3363 - 3
T77858	3I2	9	3363 - 13
T77858	3I8	6	3363 - 19
T77858	3I12	5	3363 - 21B
T77858	3I14	2	3363 - 23
T77858	3J22	18	3363 - 51B
T78313	3E22	28	3360 - 17
T78313	3F2	4	3360 - 19
T78313	3F8	10	3360 - 25
T78313	3F10	10	3360 - 27
T78313	3G6	85	3362 - 7
T78313	3H18	2	3363 - 5
T78313	3I4	5	3363 - 15
T78313	3I10	2	3363 - 21
T78313	3I12	6	3363 - 21B
T78313	3K6	4	3363 - 57
T78313	3K10	4	3363 - 63
T78593	1F9	10	0505 - 3
T78612	3E22	12	3360 - 17
T78612	3E24	7	3360 - 17B
T78612	3F6	2	3360 - 23
T78612	3I12	4	3363 - 21B
T78612	3K4	5	3363 - 55
T78787	1H14	17	1674 - 13
T78787	1H16	8	1674 - 13B
T79477	1F13	5	0510 - 5
T79477	1F13	6	0510 - 5
T79632	1G13	4	1322 - 3
T802X400	3C22	3	3302 - 37
T80394	3E18	10	3360 - 13
T80622	3L19	7	4360 - 7
T9J2358	3C10	2	3302 - 25
T9J2358	3C14	2	3302 - 29
T9J2358	3C18	2	3302 - 33
T9J2358	3D2	2	3302 - 41
U10778	1G15	..	1369 - 3
U12547	3G10	83A	3362 - 11
U12547	3K10	7	3363 - 63
U13639	1D2	23	0404 - 3
U13639	1F10	6	0505 - 4
U17409	1G15	..	1369 - 3
U42323	1G4	7	0560 - 3
U46155	1B24	10	0260 - 7
U46489	1C2	3A	0260 - 9
U46489	1C2	17A	0260 - 9
U46489	1C6	20A	0262 - 3
U46489	1C8	3A	0263 - 3
U46489	1C8	17A	0263 - 3
U46489	1C12	2	0267 - 5
U46489	1G15	..	1369 - 3
U46489	3F22	57A	3361 - 11
U46489	3G6	48E	3362 - 7
U46489	3G8	47E	3362 - 9
U46489	3I16	34A	3363 - 25
U46489	3I16	37A	3363 - 25
U46489	3I16	41A	3363 - 25
U46489	3J22	54A	3363 - 51B
U46489	3K14	29A	3364 - 3
WZ2141223	2D2	9	1830 - 3
WZ2141223	2D14	3	1830 - 11
X0103-4-4	1G17	6	1370 - 5
X1JS78-20-16	3E22	46	3360 - 17
X1JS78-20-16	3F6	19	3360 - 23
X1J978-20-16	3E22	46	3360 - 17
X1J978-20-16	3F6	19	3360 - 23
X12-16F4OMXS	3F6	13	3360 - 23
X16F4OMXS	3F6	13	3360 - 23
X6C4OMXS	3F8	4	3360 - 25
X6C4OMXS	3F10	13	3360 - 27
X6F4OMXS	3F8	3	3360 - 25
X6F4OMXS	3F10	6	3360 - 27
X6JTX-S	3F10	9	3360 - 27
X6V4OMXS	3F10	3	3360 - 27
Z29925	3H16	3	3363 - 3
Z962453	3F2	2	3360 - 19
0003929	2C8	25	1810 - 29
0004069	1H4	9	1674 - 7
0004070	1H2	1	1674 - 5
0004616	1H4	9	1674 - 7
0004911	1H2	1	1674 - 5
0111707	3J24	23	3363 - 51D
0208304	3K18	11	3365 - 5
0208304	3K20	5	3365 - 5B
0208304	3K24	11	3365 - 9
0208304	3L2	5	3365 - 9B
0208326-P	3K20	51	3365 - 5B
0209423	3D13	40	3315 - 11
0209423	3D13	41	3315 - 11
0209423	3F18	83	3361 - 7
0215218	3F22	51	3361 - 11
0215220	3H2	5	3362 - 25
0224115	3J24	39	3363 - 51D
0224115	3J24	40	3363 - 51D
0236905	3J24	5	3363 - 51D
0236905	3L6	5	3365 - 13
0236915	3K18	38	3365 - 5
0236915	3K20	36	3365 - 5B
0236915	3K24	38	3365 - 9
0236915	3L2	36	3365 - 9B
0250914	3G12	31	3362 - 13
0254305	3J24	16	3363 - 51D
0254309	3J24	19	3363 - 51D
0306003	3G10	7	3362 - 11
0306003	3G10	12	3362 - 11
0306003	3G10	15	3362 - 11
0306003	3G10	30	3362 - 11
0306003	3G10	63	3362 - 11
0306003	3G12	2	3362 - 13
0306003	3G12	13	3362 - 13
0306003	3G12	37	3362 - 13
0309011	3J24	22	3363 - 51D
0309013	3K18	20	3365 - 5
0309013	3K20	20	3365 - 5B
0309013	3K24	20	3365 - 9
0309013	3L2	20	3365 - 9B
0309013	3L10	19	3365 - 17
0309013	3L12	19	3365 - 17B
0309020	3J24	33	3363 - 51D
0309204	3J24	4	3363 - 51D
0309216	3J24	20	3363 - 51D
0309216	3L6	20	3365 - 13
0309219	3J24	38	3363 - 51D
0309219	3L6	38	3365 - 13
0309314	3K18	35	3365 - 5
0309314	3K20	33	3365 - 5B
0309314	3K24	35	3365 - 9
0309314	3L2	33	3365 - 9B
0309705	3G10	8	3362 - 11
0309705	3G10	13	3362 - 11
0309705	3G10	16	3362 - 11
0309705	3G10	31	3362 - 11
0309705	3G10	64	3362 - 11
0309705	3G12	5	3362 - 13
0309705	3G12	14	3362 - 13
0309705	3G12	38	3362 - 13
0309805	3F16	87	3361 - 5
0309805	3G4	4	3362 - 5
0309805	3H20	13	3363 - 7
0325913	3J24	37	3363 - 51D
0332904	3G12	16	3362 - 13
0332914	3G10	29	3362 - 11
0332914	3G14	69	3362 - 15
0332924	3G12	27	3362 - 13
0332924	3G12	34	3362 - 13
0332924	3G12	45	3362 - 13
0365318	3L19	40	4360 - 7
0387307	3J24	30	3363 - 51D
0387804	3G22	50	3362 - 23
0408202	3F24	3	3361 - 13
0408204	3F24	16	3361 - 13
0408207	3F24	17	3361 - 13
0408411	3G22	34	3362 - 23
0408411	3G24	9	3362 - 23B
0408815	3J24	36	3363 - 51D
0409215	3L19	35	4360 - 7
0409216	3L19	5	4360 - 7
0409905	3J24	6	3363 - 51D
0409906	3J24	11	3363 - 51D
0409907	3J24	12	3363 - 51D
0409908	3J24	13	3363 - 51D
0409911	3J24	17	3363 - 51D
0409913	3J24	24	3363 - 51D
0409915	3J24	26	3363 - 51D
0409916	3J24	27	3363 - 51D
0409920	3J24	35	3363 - 51D
0413619	3G8	86	3362 - 9
0413619	3K10	6	3363 - 63
0413909	3G8	77	3362 - 9
0413909	3G16	77	3362 - 17
0425115	3L19	72	4360 - 7
0444301	3H2	3	3362 - 25
0444302	3H2	4	3362 - 25
0459541	3G10	76	3362 - 11
0459541	3G14	76	3362 - 15
0481804	3J24	15	3363 - 51D
0625509	3L19	39	4360 - 7
0628705	3L19	82	4360 - 7
0629404	3L19	67	4360 - 7
0667401	3J24	1	3363 - 51D
0667402	3J24	2	3363 - 51D
0667403	3J24	3	3363 - 51D
0667404	3J24	7	3363 - 51D
0667405	3J24	8	3363 - 51D
0667406	3J24	9	3363 - 51D
0667407	3J24	14	3363 - 51D
0667408	3J24	15	3363 - 51D
0667409	3J24	18	3363 - 51D
0667410	3J24	21	3363 - 51D
0667411	3J24	25	3363 - 51D
0667412	3J24	31	3363 - 51D
0667413	3J24	34	3363 - 51D
0667414	3J24	43	3363 - 51D
0667713	3G6	61A	3362 - 7
0667713	3G8	62D	3362 - 9
0667726	3G6	84	3362 - 7
0667817	3G6	48D	3362 - 7
0667817	3G8	47D	3362 - 9
0667927	3G10	83	3362 - 11
0667931	3G10	87	3362 - 11
0668007	3G6	22	3362 - 7

NUMERICAL INDEX - CONTINUED

PART NO.	GRID	KEY	PAGE
0668007	3G10	22	3362 - 11
0668007	3G12	22	3362 - 13
0668007	3G12	32	3362 - 13
0668007	3G12	43	3362 - 13
0668007	3G16	22	3362 - 17
0668111	3G6	7	3362 - 7
0668111	3G16	7	3362 - 17
0668112	3G6	8	3362 - 7
0668112	3G16	8	3362 - 17
0670802	3G24	24	3362 - 23B
0670802	3G24	33	3362 - 23B
0689405	3G8	75	3362 - 9
0689405	3G14	75	3362 - 15
0689405	3G16	75	3362 - 17
0692708	3L19	69	4360 - 7
0694825	3L19	84	4360 - 7
0695007	3G6	74	3362 - 7
0695007	3G10	74	3362 - 11
0695007	3G14	74	3362 - 15
0695007	3G16	74	3362 - 17
0735807	3G12	17	3362 - 13
0788703	3H14	13	3362 - 35
0788704	3H14	14	3362 - 35
0788705	3H14	15	3362 - 35
0788706	3H14	16	3362 - 35
0788707	3H14	17	3362 - 35
0788710	3H14	33	3362 - 35
0788711	3H14	34	3362 - 35
0788712	3H14	35	3362 - 35
0788713	3H14	36	3362 - 35
0788801	3L19	10	4360 - 7
0788802	3L19	20	4360 - 7
0788803	3L19	80	4360 - 7
0788804	3L19	1	4360 - 7
0788805	3L19	11	4360 - 7
0788806	3L19	14	4360 - 7
0788807	3L19	23	4360 - 7
0788808	3L19	24	4360 - 7
0788809	3L19	31	4360 - 7
0788811	3L19	43	4360 - 7
0788812	3L19	44	4360 - 7
0788813	3L19	91	4360 - 7
0788814	3L19	2	4360 - 7
0788815	3L19	12	4360 - 7
0788816	3L19	42	4360 - 7
0788817	3L19	74	4360 - 7
0788818	3L19	8	4360 - 7
0788819	3L19	85	4360 - 7
0791601	3G6	9	3362 - 7
0791601	3G16	9	3362 - 17
0791602	3G6	23	3362 - 7
0791603	3G6	37	3362 - 7
0791603	3G8	37	3362 - 9
0791604	3G6	38	3362 - 7
0791604	3G8	38	3362 - 9
0791604	3G16	38	3362 - 17
0791605	3G6	39	3362 - 7
0791605	3G8	39	3362 - 9
0791606	3G6	43	3362 - 7
0791606	3G8	43	3362 - 9
0791607	3G6	44	3362 - 7
0791607	3G8	44	3362 - 9
0791619	3G6	49	3362 - 7
0791619	3G8	49	3362 - 9
0791620	3G6	50	3362 - 7
0791620	3G8	50	3362 - 9
0791622	3G6	73	3362 - 7
0791622	3G8	73	3362 - 9
0791622	3G10	73	3362 - 11
0791622	3G14	73	3362 - 15
0791623	3G6	77	3362 - 7
0791701	3G8	31	3362 - 9
0791702	3G8	32	3362 - 9
0791801	3G10	3	3362 - 11
0791801	3G12	3	3362 - 13
0791803	3G10	19	3362 - 11
0791803	3G12	19	3362 - 13
0791804	3G10	24	3362 - 11
0791805	3G10	25	3362 - 11
0791806	3G10	34	3362 - 11
0791807	3G10	35	3362 - 11
0791808	3G10	51	3362 - 11
0791808	3G14	51	3362 - 15
0791809	3G10	52	3362 - 11
0791809	3G14	52	3362 - 15
0791810	3G10	53	3362 - 11
0791810	3G14	53	3362 - 15
0791811	3G10	54	3362 - 11
0791811	3G14	54	3362 - 15
0791815	3G10	9	3362 - 11
0791815	3G10	14	3362 - 11
0791815	3G10	17	3362 - 11
0791815	3G10	32	3362 - 11
0791815	3G10	65	3362 - 11
0791815	3G12	15	3362 - 13
0791815	3G12	20	3362 - 13
0791815	3G12	39	3362 - 13
0791815	3G14	50	3362 - 15
0791816	3G10	18	3362 - 11
0791816	3G14	68	3362 - 15
0791818	3G10	58	3362 - 11
0791818	3G14	58	3362 - 15
0791902	3G12	18	3362 - 13
0791903	3G12	21	3362 - 13
0791904	3G12	28	3362 - 13
0791905	3G12	23	3362 - 13
0791905	3G12	40	3362 - 13
0791906	3G12	24	3362 - 13
0791906	3G12	42	3362 - 13
0791907	3G12	25	3362 - 13
0791908	3G12	35	3362 - 13
0791909	3G12	36	3362 - 13
0791910	3G12	46	3362 - 13
0791911	3G12	47	3362 - 13
0791912	3G12	48	3362 - 13
0791913	3G12	49	3362 - 13
0791914	3G12	29	3362 - 13
0792001	3G16	10	3362 - 17
0792002	3G16	12	3362 - 17
0792003	3G16	13	3362 - 17
0792004	3G16	14	3362 - 17
0792005	3G16	20	3362 - 17
0792006	3G16	36	3362 - 17
0792007	3G16	79	3362 - 17
0794201	3G18	3	3362 - 19
0794202	3G18	6	3362 - 19
0794203	3G18	8	3362 - 19
0794204	3G18	10	3362 - 19
0794205	3G18	11	3362 - 19
0794206	3G18	12	3362 - 19
0794207	3G18	14	3362 - 19
1010203	1B16	5	0250 - 3
1015477	3D11	24	3315 - 9
1015478	3D11	23	3315 - 9
1024224	3D11	19	3315 - 9
1024384	3D11	18	3315 - 9
1025878	1C10	1	0267 - 3
1025912	3L15	23	4360 - 3
1025957	3L15	20	4360 - 3
1026662	3L15	11	4360 - 3
1026779	1B16	12	0250 - 3
1027131	3F18	41	3361 - 7
1027152	1B16	4	0250 - 3
1027158	1B16	20	0250 - 3
1027160	1B16	32	0250 - 3
1027161	1B16	23	0250 - 3
1027184	3F16	1	3361 - 5
1027222	3D25	0	3340 - 9
1027579	1H10	7	1674 - 9
1027617	3L15	5	4360 - 3
1031069	3G24	2	3362 - 23B
2030811	1F19	1I	0520 - 3
2034607	1B24	31	0260 - 7
2036744	3F18	25	3361 - 7
2036786	3F18	28	3361 - 7
2036795	3F18	27	3361 - 7
2036807	3F18	3	3361 - 7
2036808	3F18	4	3361 - 7
2037305	2F5	6	2001 - 3
2037825	3H16	7	3363 - 3
2038764	2B9	25B	1810 - 7
2042060	1C10	20	0267 - 3
2042080	1C10	7	0267 - 3
2043655	2E24	5	1910 - 23
2043656	2E24	6	1910 - 23
2043851	1B16	38	0250 - 3
2043868	1B16	40	0250 - 3
2044350	3D7	14	3315 - 5
2044350	3D7	15	3315 - 5
2044350	3D7	16	3315 - 5
2044350	3D7	17	3315 - 5
2044634	3L15	1	4360 - 3
2044842	2E24	9	1910 - 23
2044922	2D2	33	1830 - 3
2045468	3D11	10	3315 - 9
2045469	3D11	11	3315 - 9
2045470	3D5	5	3315 - 3
2045471	3D5	1	3315 - 3
2045472	3D5	2	3315 - 3
2045509	2C14	29	1810 - 35
2045998	3J10	54	3363 - 41
2045998	3J12	46	3363 - 43
2048184	1H4	47	1674 - 7
2048203	1H4	47	1674 - 7
2051176	3D11	10	3315 - 9
2051177	3D11	11	3315 - 9
28025	3C2	2	3302 - 17
28031	3C2	2	3302 - 17
28037	3C2	2	3302 - 17
28043	3C2	2	3302 - 17
300156	3B16	27	3302 - 7
300157	3B16	19	3302 - 7
300158	3B16	18	3302 - 7
300159	3B16	16	3302 - 7
300159	3B18	16	3302 - 9
300160	3B16	17	3302 - 7
300160	3B18	17	3302 - 9
300167	3B16	14	3302 - 7
300204	3B22	10	3302 - 13
300481	3B12	19	3302 - 3
300481	3B24	19	3302 - 15

NUMERICAL INDEX - CONTINUED

PART NO.	GRID	KEY	PAGE
300482	3B12	18	3302 - 3
300482	3B24	18	3302 - 15
300524	3B12	27	3302 - 3
300524	3B14	27	3302 - 5
300524	3B24	27	3302 - 15
300526	3B14	16	3302 - 5
300527	3B14	17	3302 - 5
300534	3B12	16	3302 - 3
300534	3B24	16	3302 - 15
300535	3B12	17	3302 - 3
300535	3B24	17	3302 - 15
300536	3B12	14	3302 - 3
300536	3B24	14	3302 - 15
300804	3B14	14	3302 - 5
300952	3B18	14	3302 - 9
300957	3B18	19	3302 - 9
300958	3B18	18	3302 - 9
3021131	2E20	8B	1910 - 19
3021131	2E20	9B	1910 - 19
3040904	2E20	8A	1910 - 19
3040904	2E20	9A	1910 - 19
304564	3B14	28	3302 - 5
304564	3C2	4	3302 - 17
304567	3B14	19	3302 - 5
304568	3B14	18	3302 - 5
3052543	3D11	28	3315 - 9
3054013	3G4	1	3362 - 5
305511	3B20	14	3302 - 11
305512	3B20	16	3302 - 11
305513	3B20	17	3302 - 11
305530	3B20	19	3302 - 11
305531	3B20	18	3302 - 11
3055594	3F16	4	3361 - 5
3058763	3D23	38	3340 - 7
3063840	3F16	3	3361 - 5
3063842	3F16	30	3361 - 5
3063843	3F16	31	3361 - 5
306452	3B16	28	3302 - 7
3069541	3F18	42	3361 - 7
306974	3B12	28	3302 - 3
306974	3B24	28	3302 - 15
3070250	1B24	23	0260 - 7
3070581	3F18	57	3361 - 7
3071063	3D23	28	3340 - 7
3072015	2F2	0C	1910 - 25
3072015	2F2	1B	1910 - 25
3072291	3H18	5	3363 - 5
3072517	3D13	6D	3315 - 11
3072697	3D23	20B	3340 - 7
3074223	3L15	75	4360 - 3
3075674	3F18	31	3361 - 7
3075775	3F20	35	3361 - 9
3075775	3F22	35	3361 - 11
3075899	1G2	3	0540 - 3
3075901	1G2	1	0540 - 3
3075902	1G2	2	0540 - 3
3079124	1F15	6	0510 - 7
3079135	1F21	2	0520 - 5
3079728	3J10	38	3363 - 41
3079728	3J12	35	3363 - 43
3080912	3L15	18	4360 - 3
3081568	1C10	38	0267 - 3
3081570	1C10	16	0267 - 3
3081592	1C10	23	0267 - 3
3081593	1C10	22	0267 - 3
3081594	1C10	29	0267 - 3
3081595	1C10	25	0267 - 3
3082517	3L15	25	4360 - 3
3083742	3L15	2	4360 - 3
3084056	3L15	30	4360 - 3
3084173J	3E6	1	3344 - 5
3084729	3L15	13	4360 - 3
3085304	2E24	2	1910 - 23
3085306	2E24	3	1910 - 23
3085307	2E24	4	1910 - 23
3085485	1C10	12	0267 - 3
3085927	1B16	18	0250 - 3
3085941	1B16	30	0250 - 3
3085966	1B16	13	0250 - 3
3085985	1B16	25	0250 - 3
3086006	1B16	33	0250 - 3
3086064	3L15	8	4360 - 3
3086531	1B16	8	0250 - 3
3087108	1A24	3	0130 - 3
3087256	1C4	0	0260 - 11
3087816	1G21	10	1671 - 3
3087882	1H4	1	1674 - 7
3087987	3D13	26	3315 - 11
3088573	1I3	40	1740 - 3
3088574	3E2	11	3344 - 3
3088575	3D19	44	3340 - 3
3088575	3D21	44	3340 - 5
3088575	3E2	12	3344 - 3
3088577	3D19	48	3340 - 3
3088577	3D21	48	3340 - 5
3088578	3D19	45	3340 - 3
3088578	3D21	45	3340 - 5
3088579	3D19	47	3340 - 3
3088579	3D21	47	3340 - 5
3088580	3D19	49	3340 - 3
3088580	3D21	49	3340 - 5
3088581	3D19	46	3340 - 3
3088581	3D21	46	3340 - 5
3088769	2F11	7	2004 - 5
3089362	3L15	33	4360 - 3
3089486	2C24	2	1821 - 9
3089848	3D9	11	3315 - 7
3090025	2B25	0	1810 - 23
3090025	2C4	0	1810 - 25B
3090025	2C14	32	1810 - 35
3090090	2E24	8	1910 - 23
3091096	2F7	1	2002 - 3
3091204	2D18	3	1830 - 15
3091204	2D20	3	1830 - 17
3091337	2E22	40	1910 - 21
3091338	2E6	8	1910 - 5
3091338	2E8	15	1910 - 7
3091679	3I20	17	3363 - 29
3091680	3J2	60	3363 - 33
3091681	3J2	62	3363 - 33
3091682	3J2	64	3363 - 33
3091683	3J2	67	3363 - 33
3091684	3J2	68	3363 - 33
3091685	3J2	70	3363 - 33
3091686	3J14	28	3363 - 45
3091686	3J16	28	3363 - 45B
3091842	2C14	24	1810 - 35
3095747	3G24	27	3362 - 23B
3097791	3G24	34	3362 - 23B
3097862	2C22	19	1821 - 7
3101081	1C10	38	0267 - 3
313114	3C2	3	3302 - 17
322555	3C4	2	3302 - 19
4S00157	3L10	18	3365 - 17
4S00157	3L12	18	3365 - 17B
4S00158	3K18	19	3365 - 5
4S00158	3K20	19	3365 - 5B
4S00158	3K24	19	3365 - 9
4S00158	3L2	19	3365 - 9B
4S00173	3K18	6	3365 - 5
4S00173	3K20	7	3365 - 5B
4S00173	3K24	6	3365 - 9
4S00173	3L2	7	3365 - 9B
4S00174	3K18	5	3365 - 5
4S00174	3K20	8	3365 - 5B
4S00174	3K24	5	3365 - 9
4S00174	3L2	8	3365 - 9B
4S00175	3K18	12	3365 - 5
4S00175	3K20	11	3365 - 5B
4S00175	3K24	12	3365 - 9
4S00175	3L2	11	3365 - 9B
4S00218	3L19	6	4360 - 7
4004663	3L10	5	3365 - 17
4004663	3L12	5	3365 - 17B
4013748	3G12	30	3362 - 13
4022697	2F2	9	1910 - 25
4027959	1C12	11	0267 - 5
4027963	3G2	4	3362 - 3
4033725	1C12	4	0267 - 5
4040814	3G2	15	3362 - 3
4044839	3G20	16	3362 - 21
4051262	3D13	31	3315 - 11
4051262	3G20	17	3362 - 21
4051262	3L15	29	4360 - 3
4053696	3H20	12	3363 - 7
4053698	3H20	15	3363 - 7
4053698	3H22	3	3363 - 9
4065688	3D23	36	3340 - 7
4065689	3D23	35	3340 - 7
4066923	3D23	44	3340 - 7
4067834	3H20	9	3363 - 7
4067902	3J24	29	3363 - 51D
4068898	3F20	16	3361 - 9
4068898	3F22	16	3361 - 11
4069801	3H20	8	3363 - 7
4069801	3H22	2	3363 - 9
4080398	3L17	5	4360 - 5
4085560	3H18	1	3363 - 5
4085607	3F20	8	3361 - 9
4085607	3F22	8	3361 - 11
4087197	1F15	8	0510 - 7
4089012	2B21	1	1810 - 19
4089012	2B21	4	1810 - 19
4092111	2B9	39	1810 - 7
4092534	3F16	87	3361 - 5
4098712	3D23	30	3340 - 7
4098712	3E4	17	3344 - 3B
4098713	3D23	29	3340 - 7
4098713	3E4	12	3344 - 3B
4100967	3K14	9A	3364 - 3
4102096	2F5	5	2001 - 3
4105067	3G14	57	3362 - 15
4105167	3G10	27	3362 - 11
4105167	3G10	57	3362 - 11
4107762	2C16	24	1810 - 37
4109669	3E4	9	3344 - 3B
4113926	3F4	10	3360 - 21
4113926	3F6	8	3360 - 23
4113926	3H20	14	3363 - 7
4113926	3K2	10	3363 - 53
4113926	3K4	15	3363 - 55

NUMERICAL INDEX - CONTINUED

PART NO.	GRID	KEY	PAGE
4113926	3K14	26	3364 - 3
4114402	3F16	23	3361 - 5
4116290	3F18	13	3361 - 7
4116310	3D9	3	3315 - 7
4121128	1G13	43	1322 - 3
4121496	1G4	8A	0560 - 3
4122395	3D13	13C	3315 - 11
4123177	2B9	16	1810 - 7
4127708	1I9	3	1740 - 9
4128863	1I11	5	1740 - 11
4130174	1G17	2	1370 - 5
4139975	1B16	16	0250 - 3
4147896	2B13	59	1810 - 11
4152863	1F19	1J	0520 - 3
4153084	1G15	..	1369 - 3
4153251	1F13	1B	0510 - 5
4153488	3E22	23	3360 - 17
4153488	3F4	11	3360 - 21
4153488	3F12	28	3360 - 51
4153488	3I2	1	3363 - 13
4153488	3K2	11	3363 - 53
4154651	3K8	8	3363 - 59
4154670	3K14	23	3364 - 3
4154671	3I16	33	3363 - 25
4154671	3J22	56	3363 - 51B
4154671	3K14	25	3364 - 3
4154672	3J22	54	3363 - 51B
4161735	1I3	3	1740 - 3
4162836	1F25	5C	0530 - 3
4172172	2F7	2	2002 - 3
4173093	1B16	37	0250 - 3
4173208	3D7	5	3315 - 5
4174541	3F22	57	3361 - 11
4174859	1I7	1	1740 - 7
4178173	3F18	9	3361 - 7
4179155	3F20	2	3361 - 9
4179155	3F22	2	3361 - 11
4179156	3F20	3	3361 - 9
4179156	3F22	3	3361 - 11
4179161	3F20	12	3361 - 9
4179161	3F22	12	3361 - 11
4179171	3F20	20	3361 - 9
4179171	3F22	20	3361 - 11
4179176	3F18	34	3361 - 7
4179177	3F18	33	3361 - 7
4179179	3F18	29	3361 - 7
4179181	3F18	23	3361 - 7
4180555	1F13	10	0510 - 5
4182067	3D7	21	3315 - 5
4185600	3D13	22	3315 - 11
4185600	3G22	32	3362 - 23
4185600	3G24	7	3362 - 23B
4185600	3G24	28	3362 - 23B
4187082	2B9	14	1810 - 7
4187083	2B9	14A	1810 - 7
4187308	3F12	14	3360 - 51
4187328	3F2	7	3360 - 19
4187328	3F4	7	3360 - 21
4187328	3F6	5	3360 - 23
4187328	3F12	15	3360 - 51
4187329	3F6	2	3360 - 23
4187590	3L15	12	4360 - 3
4188649	1G2	4	0540 - 3
4189018	1G2	6	0540 - 3
4189184	3D9	4	3315 - 7
4189535	3E24	1	3360 - 17B
4189535	3F6	13	3360 - 23
4189537	3F6	13	3360 - 23
4189537	3J22	17	3363 - 51B
4189539	3I8	5	3363 - 19
4189859	3F12	27	3360 - 51
4189859	3J22	10	3363 - 51B
4189860	3E22	35	3360 - 17
4190126	3F12	26	3360 - 51
4190126	3J22	11	3363 - 51B
4190127	3E22	14	3360 - 17
4190127	3F2	24	3360 - 19
4190127	3F4	12	3360 - 21
4190127	3F6	6	3360 - 23
4190127	3K2	12	3363 - 53
4190127	3K4	12	3363 - 55
4190127	3K6	24	3363 - 57
4190253	1H4	38	1674 - 7
4190261	1H2	43	1674 - 5
4190261	3K8	13	3363 - 59
4190264	3J10	50	3363 - 41
4190266	1G8	13	0560 - 7
4190266	1G10	13	0560 - 7B
4190273	1G21	19	1671 - 3
4190273	1H2	44	1674 - 5
4190275	1H2	45	1674 - 5
4190275	1H4	71	1674 - 7
4191977	1I3	24	1740 - 3
4192034	2D14	11	1830 - 11
4192910	1B16	35	0250 - 3
4193848	3I16	44	3363 - 25
4193848	3J10	50	3363 - 41
4194176	3F20	47	3361 - 9
4194176	3F22	47	3361 - 11
4196259	3H20	8A	3363 - 7
4196259	3H22	2A	3363 - 9
4196260	3H20	9A	3363 - 7
4198799	3J22	53	3363 - 51B
4198799	3K6	8	3363 - 57
4198799	3K6	20	3363 - 57
4198956	3F18	22	3361 - 7
4199645	1I9	5	1740 - 9
4199645	1I9	6	1740 - 9
4200227	3F18	36	3361 - 7
4200465	3J14	52	3363 - 45
4200465	3J16	52	3363 - 45B
4200466	3D15	9	3315 - 13
4200466	3E16	6	3360 - 11
4200466	3H24	3	3363 - 11
4200466	3I16	32	3363 - 25
4200466	3K12	12	3363 - 65
4200466	3K14	24	3364 - 3
4201749	1I3	27	1740 - 3
4202103	1C2	12	0260 - 9
4202103	1C8	12	0263 - 3
4202103	3E22	7	3360 - 17
4202103	3K10	29	3363 - 63
4202422	3D15	11	3315 - 13
4203411	3D13	2	3315 - 11
4204136	3J4	52	3363 - 35
4204558	2B15	19	1810 - 13
4204579	2B15	23	1810 - 13
4204579	2B19	3	1810 - 17
4204579	2B23	1	1810 - 21
4204586	2B15	32	1810 - 13
4204882	3E12	1	3360 - 7
4204882	3I14	1	3363 - 23
4205084	2C10	3	1810 - 31
4205084	2D2	12	1830 - 3
4205196	3F6	1	3360 - 23
4205196	3K4	2	3363 - 55
4205391	3J22	52	3363 - 51B
4206452	1F13	1	0510 - 5
4207425	3I12	3	3363 - 21B
4208279	1I3	28	1740 - 3
4208977	3D13	35	3315 - 11
4209653	3K14	29	3364 - 3
4210224	3K14	14	3364 - 3
4210412	2B9	16A	1810 - 7
4210413	2B9	16B	1810 - 7
4210851	1B16	27	0250 - 3
4210853	1B16	36	0250 - 3
4211149	1I11	6	1740 - 11
4213419	3D13	21	3315 - 11
4219918	3J4	58	3363 - 35
4222875	3K14	7D	3364 - 3
4222876	3K14	7E	3364 - 3
4224631	3E2	14	3344 - 3
4224631	3E4	21	3344 - 3B
4229631	1C6	5	0262 - 3
4233165	3F18	15	3361 - 7
4234782	3F16	86	3361 - 5
4235232	2C22	12	1821 - 7
4235654	1H2	46	1674 - 5
4241780	1B24	18	0260 - 7
4246358	1B16	29	0250 - 3
4249334	3F12	13	3360 - 51
4249704	3E22	19	3360 - 17
4250260	3K14	12	3364 - 3
4250261	3K14	13	3364 - 3
4251384	3K14	7F	3364 - 3
4252599	3G4	2	3362 - 5
4252655	3G4	6	3362 - 5
4252767	3F18	82	3361 - 7
4254603	2F9	6	2004 - 3
4254604	1G24	4	1674 - 3
4255304	3F22	61	3361 - 11
4255304	3I20	43	3363 - 29
4255304	3I22	43	3363 - 29B
4255304	3J8	18	3363 - 39
4255304	3J14	30	3363 - 45
4255304	3J16	30	3363 - 45B
4255305	3J2	73	3363 - 33
4255305	3J8	17	3363 - 39
4255530	1I3	49	1740 - 3
4255567	1I3	49	1740 - 3
4255762	1G21	8	1671 - 3
4255799	1I3	2	1740 - 3
4255977	3G4	3	3362 - 5
4256314	1G2	11	0540 - 3
4257034	1G21	3	1671 - 3
4257128	1G4	5	0560 - 3
4257159	1G4	3	0560 - 3
4257159	1H2	16	1674 - 5
4257181	1I3	30	1740 - 3
4257661	3G4	5	3362 - 5
4258061	1B22	1	0260 - 5
4260369	2B9	20	1810 - 7
4261289	3H2	0	3362 - 25
4261669	2E14	6	1910 - 13
4261938	3J10	55	3363 - 41
4261938	3J12	47	3363 - 43
4264452	3L15	74	4360 - 3
4264805	1G13	5	1322 - 3
4264805	2C14	37	1810 - 35
4265372	3F16	68	3361 - 5

NUMERICAL INDEX - CONTINUED

PART NO.	GRID	KEY	PAGE
4265964	3F20	29	3361 - 9
4265964	3F22	29	3361 - 11
4267667	1C2	5	0260 - 9
4267667	1C8	5	0263 - 3
4270315	3F2	19	3360 - 19
4270315	3K6	19	3363 - 57
4270554	1H2	1A	1674 - 5
4272164	3H20	5	3363 - 7
4272297	1I11	6	1740 - 11
4272803	1B24	8	0260 - 7
4272960	3K18	10	3365 - 5
4272960	3K20	4	3365 - 5B
4272960	3K24	10	3365 - 9
4272960	3L2	4	3365 - 9B
4274282	1B18	0	0260 - 3
4274552	3F16	32	3361 - 5
4276215	2E22	29	1910 - 21
4276584	3H20	2	3363 - 7
4276918	3F16	20	3361 - 5
4276918	3F24	0	3361 - 13
4276956	3F12	12	3360 - 51
4278601	2E20	24	1910 - 19
4278783	2E20	17	1910 - 19
4280359	2D2	14	1830 - 3
4281293	1H4	32	1674 - 7
4282489	1F21	4	0520 - 5
4282718	3E22	30	3360 - 17
4282718	3F2	23	3360 - 19
4283028	2F11	0	2004 - 5
4283787	1F25	5	0530 - 3
4284094	1F13	4	0510 - 5
4284521	1B16	15	0250 - 3
4285323	1B16	41	0250 - 3
4285722	3F12	21	3360 - 51
4285723	3F12	20	3360 - 51
4285724	3F12	23	3360 - 51
4287248	3D23	20E	3340 - 7
4287249	3D23	25	3340 - 7
4287250	3D23	24	3340 - 7
4287670	1H2	1B	1674 - 5
4287903	2B9	24	1810 - 7
4287958	1G17	10	1370 - 5
4288047	1F19	1	0520 - 3
4288796	1H22	13	1674 - 17B
4288971	1G13	22	1322 - 3
4293950	3F16	51	3361 - 5
4293950	3F22	62	3361 - 11
4293950	3I20	44	3363 - 29
4293950	3I22	44	3363 - 29B
4293950	3J14	31	3363 - 45
4293950	3J16	31	3363 - 45B
4293950	3J18	77	3363 - 47
4294437	2C14	26	1810 - 35
4294508	2E20	10	1910 - 19
4295480	2B15	17	1810 - 13
4295876	2B15	18	1810 - 13
4297257	1C6	16	0262 - 3
4299059	1G13	28	1322 - 3
4299059	2C14	39	1810 - 35
4304827	2B11	41	1810 - 9
4306888	3F16	69	3361 - 5
4307026	1G24	1E	1674 - 3
4307027	1G24	1F	1674 - 3
4307330	3F2	18	3360 - 19
4307330	3K6	18	3363 - 57
4308972	3F2	6	3360 - 19
4308972	3K6	6	3363 - 57
4310055	3F16	43	3361 - 5
4312882	3G2	21	3362 - 3
4312883	3G2	2	3362 - 3
4312884	3G2	5	3362 - 3
4312892	3G2	13	3362 - 3
4312893	3G2	16	3362 - 3
4312894	3G2	7	3362 - 3
4314064	3G2	9	3362 - 3
4314065	3G2	10	3362 - 3
4315323	1H2	1C	1674 - 5
4315324	1H2	1D	1674 - 5
4317636	3G12	26	3362 - 13
4317636	3G12	33	3362 - 13
4317636	3G12	44	3362 - 13
4319299	3D13	1	3315 - 11
4320163	2B11	59	1810 - 9
4326285	3K14	7A	3364 - 3
4327293	3H24	8	3363 - 11
4327293	3J18	49B	3363 - 47
4327294	3I4	10	3363 - 15
4327294	3I4	13	3363 - 15
4327294	3I4	16	3363 - 15
4327294	3I8	22	3363 - 19
4327294	3I8	24	3363 - 19
4327294	3I8	26	3363 - 19
4327294	3K6	15	3363 - 57
4327294	3K6	17	3363 - 57
4330054	3F18	10	3361 - 7
4330785	2B5	2	1810 - 3
4331726	3J18	49A	3363 - 47
4331851	1B10	21	0130 - 13
4332658	3L15	76	4360 - 3
4333185	2C6	0	1810 - 27
4333835	2C22	11	1821 - 7
4334245	1B8	12	0130 - 11
4334245	1B8	15	0130 - 11
4334894	3F16	59E	3361 - 5
4334899	3F16	59B	3361 - 5
4335060	3D7	19	3315 - 5
4336570	1G24	1	1674 - 3
4336923	3L15	28	4360 - 3
4336925	3L15	15	4360 - 3
4336929	3L15	14	4360 - 3
4337035	3F18	21	3361 - 7
4337154	3G2	18	3362 - 3
4337419	3F18	6	3361 - 7
4337483	3F18	8	3361 - 7
4337812	3F18	44	3361 - 7
4338053	3F18	43	3361 - 7
4338060	3F18	47	3361 - 7
4338061	3F18	51	3361 - 7
4338110	3G2	19	3362 - 3
4338974	2C6	0C	1810 - 27
4341706	2F5	2	2001 - 3
4341788	2E4	17	1910 - 3
4341788	2E16	25	1910 - 15
4341788	2F2	7	1910 - 25
4341877	3J6	5	3363 - 37
4342840	3F18	59	3361 - 7
4342841	3F20	15	3361 - 9
4342841	3F22	15	3361 - 11
4342843	3F20	14	3361 - 9
4342843	3F22	14	3361 - 11
4342846	3F20	41	3361 - 9
4342976	3J22	59	3363 - 51B
4343074	3F18	73	3361 - 7
4343365	3L15	77	4360 - 3
4344303	1F25	6	0530 - 3
4344303	1G8	16	0560 - 7
4344303	1G10	16	0560 - 7B
4345297	3K8	3	3363 - 59
4345810	1I3	29	1740 - 3
4346521	3F20	28	3361 - 9
4346521	3F22	28	3361 - 11
4346522	3F20	27	3361 - 9
4346522	3F22	27	3361 - 11
4346770	2D8	3	1830 - 5
4347107	3F20	24	3361 - 9
4347107	3F22	24	3361 - 11
4347396	2D2	27	1830 - 3
4348182	3F18	7	3361 - 7
4348414	3H16	2	3363 - 3
4348589	1I11	2	1740 - 11
4348665	3F18	74	3361 - 7
4350249	2D16	12	1830 - 13
4350735	1G21	28	1671 - 3
4350736	1G21	29	1671 - 3
4350928	3F20	49	3361 - 9
4350928	3F22	49	3361 - 11
4351011	2C10	2	1810 - 31
4351175	3J10	39	3363 - 41
4351175	3J12	36	3363 - 43
4351187	2F5	0	2001 - 3
4351255	2C12	4	1810 - 33
4351774	3J10	40	3363 - 41
4351774	3J12	37	3363 - 43
4352398	3D25	1	3340 - 9
4352398	3K16	1	3365 - 3
4352398	3K18	26	3365 - 5
4352398	3K20	52	3365 - 5B
4352398	3K22	1	3365 - 7
4352398	3K24	26	3365 - 9
4352398	3L2	52	3365 - 9B
4352398	3L8	1	3365 - 15
4352398	3L10	1	3365 - 17
4352398	3L12	1	3365 - 17B
4352399	3J22	32B	3363 - 51B
4352399	3J24	1B	3363 - 51D
4352399	3J24	2B	3363 - 51D
4352399	3L4	1	3365 - 11
4352399	3L6	1	3365 - 13
4352399	3L6	40	3365 - 13
4352400	3L8	2	3365 - 15
4352400	3L10	25	3365 - 17
4352400	3L12	25	3365 - 17B
4352457	2E22	20	1910 - 21
4352947	2D18	18	1830 - 15
4353073	3J22	55	3363 - 51B
4353560	1G4	8	0560 - 3
4355012	3F18	64	3361 - 7
4355083	3F18	50	3361 - 7
4355085	3F18	46	3361 - 7
4355875	3K16	2	3365 - 3
4355875	3K18	1	3365 - 5
4355875	3K22	2	3365 - 7
4355875	3K24	1	3365 - 9
4356695	2B13	15	1810 - 11
4357695	3F4	3	3360 - 21
4357695	3K2	3	3363 - 53
4357862	2D18	10	1830 - 15
4358914	3G10	78	3362 - 11
4358914	3G14	78	3362 - 15
4359384	1H4	14	1674 - 7
4360981	1G17	1	1370 - 5

NUMERICAL INDEX - CONTINUED

PART NO.	GRID	KEY	PAGE
4360981	3K8	2	3363 - 59
4361000	1G17	3	1370 - 5
4361000	3K8	0	3363 - 59
4361179	3E4	7	3344 - 3B
4361302	2B9	17	1810 - 7
4361455	2E20	8	1910 - 19
4361455	2E20	9	1910 - 19
4361601	2C16	18	1810 - 37
4361604	3E4	8	3344 - 3B
4361607	3E4	15	3344 - 3B
4361638	1G4	9	0560 - 3
4361800	1H4	2	1674 - 7
4361800	2B25	2	1810 - 23
4361800	2C4	2	1810 - 25B
4361800	2C14	33	1810 - 35
4361802	2C14	4	1810 - 35
4361802	2C14	8	1810 - 35
4361802	2C14	15	1810 - 35
4361802	2C14	19	1810 - 35
4362135	2B13	6	1810 - 11
4362700	2B9	25A	1810 - 7
4364504	2B9	18	1810 - 7
4364916	3J24	42	3363 - 51D
4364970	3D13	4	3315 - 11
4366691	3D23	1	3340 - 7
4366693	3D23	55	3340 - 7
4366830	2E22	18	1910 - 21
4367375	1H4	15	1674 - 7
4367409	3D23	8	3340 - 7
4367411	3D23	54	3340 - 7
4367481	2B9	44	1810 - 7
4367664	1B24	10	0260 - 7
4368619	3F20	10	3361 - 9
4368619	3F22	10	3361 - 11
4368629	3D13	3	3315 - 11
4368630	3D13	5	3315 - 11
4368973	2F5	1	2001 - 3
4369148	3F16	27	3361 - 5
4369472	2C6	0A	1810 - 27
4369547	2B9	21	1810 - 7
4369549	2B9	23	1810 - 7
4369568	2B11	45	1810 - 9
4369569	2B9	45	1810 - 7
4369599	2B15	16	1810 - 13
4369615	2B19	2	1810 - 17
4369616	2B19	4	1810 - 17
4369619	2B19	71	1810 - 17
4369627	2B11	71	1810 - 9
4369645	2B13	3	1810 - 11
4369653	2B13	54	1810 - 11
4369661	2B13	13	1810 - 11
4369670	2B17	33	1810 - 15
4369671	2B17	49	1810 - 15
4369672	2B17	92	1810 - 15
4369674	2B17	65	1810 - 15
4369674	2B19	11	1810 - 17
4369675	2B11	55	1810 - 9
4370249	2D4	8D	1830 - 3B
4370267	2D6	43	1830 - 3D
4370269	2D4	14	1830 - 3B
4370296	2D6	39	1830 - 3D
4370298	2D6	48	1830 - 3D
4370299	2D6	46	1830 - 3D
4370308	2D6	53	1830 - 3D
4370309	2D6	55	1830 - 3D
4370555	1G17	4	1370 - 5
4370555	3K8	15	3363 - 59
4370876	3D23	20C	3340 - 7
4371132	3D23	22B	3340 - 7
4372037	3J22	41	3363 - 51B
4372038	3G10	71	3362 - 11
4372039	3G10	72	3362 - 11
4372039	3G14	72	3362 - 15
4372088	2B17	85B	1810 - 15
4372091	2B13	7	1810 - 11
4372093	2B13	56	1810 - 11
4372200	2C22	8	1821 - 7
4372210	2B15	28	1810 - 13
4372212	2B13	21	1810 - 11
4372212	2B17	61	1810 - 15
4372213	2B17	74	1810 - 15
4372214	2B15	22	1810 - 13
4372219	2B11	60	1810 - 9
4372219	2B15	11	1810 - 13
4372223	2B17	69A	1810 - 15
4372224	2B11	30	1810 - 9
4372225	2B15	7	1810 - 13
4372261	2B13	15	1810 - 11
4372560	2B13	23	1810 - 11
4373212	3J22	62	3363 - 51B
4374095	3H18	8	3363 - 5
4374265	1G4	11	0560 - 3
4374282	2D14	9	1830 - 11
4374604	3J22	49	3363 - 51B
4375256	3J22	60	3363 - 51B
4377817	2B17	69B	1810 - 15
4379984	2E22	11	1910 - 21
4379989	2E22	12	1910 - 21
4380534	2C22	13	1821 - 7
4380814	2E8	10	1910 - 7
4381572	1H4	6	1674 - 7
4381572	1H22	11	1674 - 17B
4382410	2C22	5	1821 - 7
4382432	2C22	9	1821 - 7
4382885	2B13	23	1810 - 11
4383156	1F25	1	0530 - 3
4384239	2C22	3	1821 - 7
4384758	1H4	67	1674 - 7
4384758	2F11	5	2004 - 5
4384759	1F9	6	0505 - 3
4386450	2B19	9	1810 - 17
4386452	2B19	7	1810 - 17
4387837	2B9	27	1810 - 7
4392801	2C18	7	1821 - 3
4392803	2C18	9	1821 - 3
4392804	2C18	10	1821 - 3
4392805	2C18	11	1821 - 3
4392806	2C18	12	1821 - 3
4392807	2C18	13	1821 - 3
4392809	2C18	15	1821 - 3
4392812	2C18	18	1821 - 3
4392813	2C18	19	1821 - 3
4396619	3K14	19	3364 - 3
4396696	1C10	2	0267 - 3
4396747	1C10	19	0267 - 3
4396755	1C10	10	0267 - 3
4396759	1C10	35	0267 - 3
4396771	1C6	10	0262 - 3
4396774	1C10	28	0267 - 3
4396775	1C10	26	0267 - 3
4396809	1F13	1A	0510 - 5
4397021	1C6	2	0262 - 3
4397022	1C6	8	0262 - 3
4397029	1C12	14	0267 - 5
4397757	1C10	17	0267 - 3
4397839	1G21	31	1671 - 3
4398281	1C6	13	0262 - 3
4398514	3L15	71	4360 - 3
4398514	3L19	0	4360 - 7
4398652	3E8	0	3360 - 3
4398652	3G6	0	3362 - 7
4398652	3G8	0	3362 - 9
4398652	3G10	0	3362 - 11
4398652	3G12	0	3362 - 13
4398652	3G14	0	3362 - 15
4398652	3G16	0	3362 - 17
4400079	2B11	7	1810 - 9
4400087	2B13	61	1810 - 11
4400442	3F22	50	3361 - 11
4400477	3G22	1	3362 - 23
4400848	3F6	3	3360 - 23
4400848	3K4	7	3363 - 55
4401293	1B16	24	0250 - 3
4402460	3E2	2	3344 - 3
4402476	2B9	28	1810 - 7
4402481	3L15	4	4360 - 3
4402637	3L15	7	4360 - 3
4403082	3L15	27	4360 - 3
4403327	2B15	16	1810 - 13
4403371	3L15	24	4360 - 3
4404506	3L15	26	4360 - 3
4405128	2C24	4	1821 - 9
4405164	2D12	8	1830 - 9
4405166	2D12	6	1830 - 9
4405532	3L15	6	4360 - 3
4406589	1B16	34	0250 - 3
4407253	3G18	0	3362 - 19
4407253	3J8	14	3363 - 39
4408959	3I16	3	3363 - 25
4409122	3D19	0C	3340 - 3
4409122	3D21	0C	3340 - 5
4409178	3D19	0D	3340 - 3
4409178	3D21	0D	3340 - 5
4409389	1C6	3	0262 - 3
4409446	2F2	0B	1910 - 25
4409640	1C10	6	0267 - 3
4409999	2B5	1	1810 - 3
4410314	3I4	7	3363 - 15
4410898	3D7	4	3315 - 5
4411122	3L15	9	4360 - 3
4411535	3L15	6	4360 - 3
4411821	2B19	3	1810 - 17
4412572	2E4	8	1910 - 3
4412574	2E16	4	1910 - 15
4412666	3J10	1	3363 - 41
4412666	3J12	1	3363 - 43
4413854	3I4	15	3363 - 15
4413856	3I4	9	3363 - 15
4413858	3I4	12	3363 - 15
4414207	1H4	66	1674 - 7
4414759	1I7	8	1740 - 7
4414857	2B11	18	1810 - 9
4414857	2B13	27	1810 - 11
4414901	2E10	3	1910 - 9
4415013	2E12	6	1910 - 11
4415024	2C14	22	1810 - 35
4416605	3F16	59	3361 - 5
4417431	1C10	3	0267 - 3
4417635	3I2	4	3363 - 13
4417881	2E10	4	1910 - 9
4418301	1H2	26	1674 - 5

NUMERICAL INDEX - CONTINUED

PART NO.	GRID	KEY	PAGE
4419601	1F19	1K	0520 - 3
4420083	1F25	8	0530 - 3
4420392	3J4	72	3363 - 35
4420531	2B13	56	1810 - 11
4420609	2E8	5	1910 - 7
4420724	2E22	24	1910 - 21
4420724	2F7	0	2002 - 3
4420875	2C14	0	1810 - 35
4420876	2C14	3	1810 - 35
4420877	2C14	7	1810 - 35
4420878	2C14	11	1810 - 35
4420879	2C14	14	1810 - 35
4420880	2C14	18	1810 - 35
4420958	1C10	30	0267 - 3
4421771	3D7	7	3315 - 5
4422188	3F20	6	3361 - 9
4422188	3F22	6	3361 - 11
4422202	3F20	5	3361 - 9
4422202	3F22	5	3361 - 11
4422627	1C10	36	0267 - 3
4423345	3F20	48	3361 - 9
4423345	3F22	48	3361 - 11
4424157	2E12	17	1910 - 11
4424157	2E14	10	1910 - 13
4424185	3D11	5	3315 - 9
4424425	1I5	0	1740 - 5
4424425	3E2	17	3344 - 3
4425177	3J10	22	3363 - 41
4425290	3D13	13B	3315 - 11
4425305	3D13	18	3315 - 11
4425414	3D7	6	3315 - 5
4425481	2E22	26	1910 - 21
4425573	2D18	5	1830 - 15
4425575	2F2	0F	1910 - 25
4425576	2F2	1D	1910 - 25
4425577	2E12	7	1910 - 11
4425857	3I8	23	3363 - 19
4425873	3I8	19	3363 - 19
4425880	3I8	21	3363 - 19
4425886	3I8	25	3363 - 19
4425980	1I11	1	1740 - 11
4426047	2D2	44	1830 - 3
4426047	2D4	0	1830 - 3B
4426048	2D2	46	1830 - 3
4426128	1I5	1	1740 - 5
4426128	3E2	18	3344 - 3
4426155	2D2	16	1830 - 3
4426156	2D18	8	1830 - 15
4426157	2D2	24	1830 - 3
4426158	2D2	36	1830 - 3
4426159	2D16	4	1830 - 13
4426161	2D16	11	1830 - 13
4426162	2D2	20	1830 - 3
4426352	2C2	0	1810 - 25
4426354	1H4	7	1674 - 7
4426354	2C2	4	1810 - 25
4426597	2E22	31	1910 - 21
4426598	2E22	3	1910 - 21
4426599	2E22	4	1910 - 21
4426700	1H22	10	1674 - 17B
4427111	3I20	29	3363 - 29
4427111	3I22	29	3363 - 29B
4427113	3I20	30	3363 - 29
4427113	3I22	30	3363 - 29B
4427119	3J18	1	3363 - 47
4427152	3J18	45	3363 - 47
4427351	3J14	10	3363 - 45
4427351	3J16	10	3363 - 45B
4427357	3J18	66	3363 - 47
4427358	3I16	26	3363 - 25
4427429	1H4	9B	1674 - 7
4427630	3L15	17	4360 - 3
4428007	1B18	5	0260 - 3
4428098	1C2	11	0260 - 9
4428098	1C8	11	0263 - 3
4428919	1I9	2	1740 - 9
4429011	2E22	5	1910 - 21
4429119	3D7	10	3315 - 5
4429120	3D7	8	3315 - 5
4429202	3H24	5	3363 - 11
4429280	3K8	5	3363 - 59
4429283	3K8	7	3363 - 59
4429287	3K8	6	3363 - 59
4429426	3H24	7	3363 - 11
4429938	1H24	1	1674 - 19
4429988	3F2	15A	3360 - 19
4429988	3K6	14	3363 - 57
4430649	1I7	9	1740 - 7
4430870	2D2	48	1830 - 3
4430871	2D2	50	1830 - 3
4430872	2D2	30	1830 - 3
4430872	2D2	31	1830 - 3
4430873	2D2	30	1830 - 3
4431090	1H4	11	1674 - 7
4431357	2E12	22	1910 - 11
4431357	2E14	11	1910 - 13
4431841	3J6	11	3363 - 37
4431859	2B9	49	1810 - 7
4431914	3D7	12	3315 - 5
4431915	3D7	13	3315 - 5
4432965	2D18	11	1830 - 15
4433327	3F20	38	3361 - 9
4433327	3F22	38	3361 - 11
4433793	2D18	0	1830 - 15
4433794	2D18	7	1830 - 15
4434953	3D19	0E	3340 - 3
4434953	3D21	0E	3340 - 5
4434953	3E2	5	3344 - 3
4435036	3I20	39	3363 - 29
4435036	3I22	39	3363 - 29B
4435124	3D19	53	3340 - 3
4435124	3D21	53	3340 - 5
4435126	3D19	51	3340 - 3
4435126	3D21	51	3340 - 5
4435126	3E2	13	3344 - 3
4435129	1I3	41	1740 - 3
4435239	3D19	0F	3340 - 3
4435239	3D21	0F	3340 - 5
4435508	3E2	4	3344 - 3
4436132	2D18	4	1830 - 15
4436242	1B16	11	0250 - 3
4436271	3F18	64	3361 - 7
4436279	2E22	13	1910 - 21
4436409	2E22	6	1910 - 21
4436441	2D2	32	1830 - 3
4436534	1H4	51	1674 - 7
4436535	3I24	14	3363 - 31
4436535	3J2	53	3363 - 33
4436535	3J4	53	3363 - 35
4436536	3F20	52	3361 - 9
4436536	3F22	55	3361 - 11
4436575	3I16	36	3363 - 25
4436800	3F22	63	3361 - 11
4436937	3E12	8	3360 - 7
4436937	3I14	8	3363 - 23
4437106	3D7	20	3315 - 5
4437333	3D7	11	3315 - 5
4437432	3D13	39	3315 - 11
4437433	3D13	8B	3315 - 11
4437525	1C2	10	0260 - 9
4437525	1C8	10	0263 - 3
4437653	3J10	48	3363 - 41
4437656	3J10	49	3363 - 41
4437950	3J14	9	3363 - 45
4437950	3J16	9	3363 - 45B
4438059	3F16	61	3361 - 5
4438247	3J10	41	3363 - 41
4438251	3J10	42	3363 - 41
4438252	3J10	43	3363 - 41
4438255	3J10	44	3363 - 41
4438258	3J12	38	3363 - 43
4438260	3J12	39	3363 - 43
4438264	3J12	40	3363 - 43
4438266	3J12	41	3363 - 43
4438279	3D5	8	3315 - 3
4438288	3J12	42	3363 - 43
4438290	3J12	43	3363 - 43
4440802	3K14	5	3364 - 3
4441059	2D2	41	1830 - 3
4441061	2D2	42	1830 - 3
4441117	2C14	30	1810 - 35
4441139	2D2	39	1830 - 3
4441246	2F11	17	2004 - 5
4442133	3E12	9	3360 - 7
4442133	3I14	9	3363 - 23
4442323	3D7	24	3315 - 5
4442339	3D7	26	3315 - 5
4442642	3H16	10	3363 - 3
4442812	3J18	71	3363 - 47
4443342	2E22	14	1910 - 21
4443659	3K14	4	3364 - 3
4443773	3K14	3	3364 - 3
4443880	3E2	6	3344 - 3
4443881	3D19	0G	3340 - 3
4443881	3D21	0G	3340 - 5
4443882	3D25	5	3340 - 9
4444284	1I3	44	1740 - 3
4444284	3E2	21	3344 - 3
4444285	1I3	45	1740 - 3
4444285	3E2	22	3344 - 3
4444286	1I3	46	1740 - 3
4444286	3D19	57	3340 - 3
4444286	3D21	57	3340 - 5
4444286	3E2	24	3344 - 3
4444287	1I3	47	1740 - 3
4444287	3D19	58	3340 - 3
4444287	3D21	58	3340 - 5
4444287	3E2	25	3344 - 3
4444288	3D19	59	3340 - 3
4444288	3D21	59	3340 - 5
4444289	3D19	60	3340 - 3
4444289	3D21	60	3340 - 5
4444381	3E12	10	3360 - 7
4444381	3I14	10	3363 - 23
4444461	3J18	69	3363 - 47
4444634	2B19	78	1810 - 17
4444664	2B13	10	1810 - 11
4444735	3J14	25	3363 - 45
4444735	3J16	25	3363 - 45B
4444755	3E2	23	3344 - 3
4445220	2C8	22	1810 - 29

NUMERICAL INDEX - CONTINUED

PART NO.	GRID	KEY	PAGE
4445322	3D5	9	3315 - 3
4445352	3L15	35	4360 - 3
4445529	1B16	26	0250 - 3
4445531	1B16	14	0250 - 3
4445911	2E18	2	1910 - 17
4445916	2D16	19	1830 - 13
4445917	2C2	0	1810 - 25
4445919	2C2	0A	1810 - 25
4445932	2C2	0A	1810 - 25
4446960	3D7	30	3315 - 5
4447050	3D7	15	3315 - 5
4447050	3D13	6B	3315 - 11
4447067	3D13	42	3315 - 11
4447264	3F20	39	3361 - 9
4447675	3K4	3	3363 - 55
4448179	2D12	5	1830 - 9
4448284	2D8	24	1830 - 5
4448285	2D8	35	1830 - 5
4448286	2D8	36	1830 - 5
4448296	1G21	18	1671 - 3
4448296	1G21	30	1671 - 3
4448306	2B15	25	1810 - 13
4448307	2B15	43	1810 - 13
4448308	2B13	52	1810 - 11
4448309	2B13	53	1810 - 11
4448310	2B13	65	1810 - 11
4448311	2B11	6	1810 - 9
4448312	2B17	1	1810 - 15
4448313	2B17	8A	1810 - 15
4448314	2B11	9	1810 - 9
4448314	2B11	19	1810 - 9
4448315	2B13	72	1810 - 11
4448318	2B17	18	1810 - 15
4448319	2B11	19	1810 - 9
4448402	3K14	3	3364 - 3
4448601	2C8	27	1810 - 29
4448718	3F2	16A	3360 - 19
4448925	2D4	16	1830 - 3B
4448990	2C14	35	1810 - 35
4449019	1H4	45	1674 - 7
4449068	2D16	7	1830 - 13
4449250	1H2	39	1674 - 5
4449348	2D16	17	1830 - 13
4449361	1G4	12	0560 - 3
4449362	1G4	13	0560 - 3
4449378	1C2	9	0260 - 9
4449378	1C8	9	0263 - 3
4449504	1H4	54	1674 - 7
4449509	2F7	5	2002 - 3
4449771	3I18	26	3363 - 27
4449772	3I18	27	3363 - 27
4450008	2D18	9	1830 - 15
4450008	2D20	0	1830 - 17
4450011	3D19	62	3340 - 3
4450011	3D21	62	3340 - 5
4450012	3D19	61	3340 - 3
4450012	3D21	61	3340 - 5
4450013	3E2	26	3344 - 3
4450022	3H24	9	3363 - 11
4450081	3I16	43	3363 - 25
4450174	2F11	17	2004 - 5
4450494	1H2	52	1674 - 5
4450707	2D2	44	1830 - 3
4450707	2D4	0	1830 - 3B
4450708	2D2	46	1830 - 3
4451036	3F16	90	3361 - 5
4451039	3F18	90	3361 - 7
4451204	2D8	3A	1830 - 5
4451498	3F20	22	3361 - 9
4451498	3F22	22	3361 - 11
4451628	3L19	51	4360 - 7
4451764	1H22	0	1674 - 17B
4451784	3H8	24	3362 - 31
4451785	3H8	25	3362 - 31
4451785	3H10	25	3362 - 33
4451785	3H12	25	3362 - 33B
4451786	3H10	26	3362 - 33
4451786	3H12	26	3362 - 33B
4451787	3H8	37	3362 - 31
4451788	3H8	38	3362 - 31
4451789	3H8	39	3362 - 31
4451789	3H10	39	3362 - 33
4451789	3H12	39	3362 - 33B
4451790	3H10	40	3362 - 33
4451797	3H10	41	3362 - 33
4451797	3H12	41	3362 - 33B
4452044	3I20	40	3363 - 29
4452044	3I22	40	3363 - 29B
4452045	3I20	41	3363 - 29
4452045	3I22	41	3363 - 29B
4452046	3J4	61	3363 - 35
4452047	3J4	63	3363 - 35
4452048	3J4	65	3363 - 35
4452049	3J4	66	3363 - 35
4452050	3J4	69	3363 - 35
4452051	3J4	71	3363 - 35
4452052	3J8	15	3363 - 39
4452053	3J8	16	3363 - 39
4452054	3J18	74	3363 - 47
4452326	3J8	19	3363 - 39
4452613	2C14	27	1810 - 35
4452647	3H14	18	3362 - 35
4452648	3H14	20	3362 - 35
4452740	2E8	6	1910 - 7
4452741	2E8	7	1910 - 7
4452742	2E8	11	1910 - 7
4452743	2E8	12	1910 - 7
4453663	2B11	31	1810 - 9
4453665	2B11	93	1810 - 9
4453666	2B11	95	1810 - 9
4453667	2B11	22	1810 - 9
4453670	2B13	20	1810 - 11
4453671	2B13	22	1810 - 11
4453672	2B11	80	1810 - 9
4453674	2B13	58	1810 - 11
4453675	2B13	57	1810 - 11
4453676	2B13	50	1810 - 11
4453680	2B17	16A	1810 - 15
4453681	2B17	28	1810 - 15
4453682	2B17	29	1810 - 15
4453683	2B17	30	1810 - 15
4453684	2B17	31	1810 - 15
4453686	2B9	33	1810 - 7
4453687	2B9	32	1810 - 7
4453689	2B15	1	1810 - 13
4453690	2B9	31	1810 - 7
4453819	3H14	11	3362 - 35
4453820	3H14	12	3362 - 35
4453869	2C22	6	1821 - 7
4453874	2C22	7	1821 - 7
4454193	3G8	42	3362 - 9
4454194	3G6	45	3362 - 7
4454195	3G6	46	3362 - 7
4454196	3G8	47	3362 - 9
4454197	3G6	48	3362 - 7
4454198	3G10	60	3362 - 11
4454198	3G14	60	3362 - 15
4454199	3G6	61	3362 - 7
4454200	3G8	62	3362 - 9
4454201	3G12	4	3362 - 13
4454202	3G10	5	3362 - 11
4454518	1H4	4	1674 - 7
4454519	1H10	0	1674 - 9
4454560	3D19	63	3340 - 3
4454560	3D21	63	3340 - 5
4454561	3D19	64	3340 - 3
4454561	3D21	64	3340 - 5
4455599	3F2	9	3360 - 19
4455599	3K6	9	3363 - 57
4455719	3F20	70	3361 - 9
4455733	3F22	70	3361 - 11
4455975	2B13	4	1810 - 11
4455977	2B13	17	1810 - 11
4455978	2B13	19	1810 - 11
4455979	2B13	2	1810 - 11
4455981	2B13	12	1810 - 11
4455982	2B13	8	1810 - 11
4455983	2B13	9	1810 - 11
4455986	3G22	55	3362 - 23
4455987	3G22	56	3362 - 23
4455989	3G22	49	3362 - 23
4455990	3G22	48	3362 - 23
4455991	3G22	3	3362 - 23
4456130	2D12	1	1830 - 9
4456171	2B13	11	1810 - 11
4456172	2B13	26	1810 - 11
4456173	2B13	5	1810 - 11
4456175	2B11	25	1810 - 9
4456177	2B11	2	1810 - 9
4456178	2B11	3	1810 - 9
4456179	2B11	4	1810 - 9
4456181	2B11	5	1810 - 9
4456182	2B11	17	1810 - 9
4456183	2B11	8	1810 - 9
4456184	2B11	29	1810 - 9
4456185	2B11	11	1810 - 9
4456218	2B15	2	1810 - 13
4456219	2B15	3	1810 - 13
4456220	2B15	4	1810 - 13
4456221	2B15	5	1810 - 13
4456222	2B15	6	1810 - 13
4456223	2B15	8	1810 - 13
4456224	2B15	9	1810 - 13
4456225	2B15	10	1810 - 13
4456226	2B15	12	1810 - 13
4456227	2B15	14	1810 - 13
4456228	2B15	20	1810 - 13
4456229	2B15	21	1810 - 13
4456230	2B15	26	1810 - 13
4456231	2B15	27	1810 - 13
4456232	2B15	29	1810 - 13
4456233	2B15	30	1810 - 13
4456234	2B15	31	1810 - 13
4456235	2B15	33	1810 - 13
4456236	2B15	34	1810 - 13
4456237	2B15	35	1810 - 13
4456238	2B9	37	1810 - 7
4456238	2B15	36	1810 - 13
4456239	2B15	37	1810 - 13
4456240	2B15	38	1810 - 13
4456241	2B15	39	1810 - 13

NUMERICAL INDEX - CONTINUED

PART NO.	GRID	KEY	PAGE
4456242	2B15	40	1810 - 13
4456244	2B21	8	1810 - 19
4456245	2B21	1	1810 - 19
4456246	2B21	1	1810 - 19
4456246	2B21	2	1810 - 19
4456247	2B21	1	1810 - 19
4456247	2B21	3	1810 - 19
4456248	2B21	6	1810 - 19
4456427	2B9	1	1810 - 7
4456428	2B9	15	1810 - 7
4456428	2B9	26	1810 - 7
4456429	2B9	30	1810 - 7
4456433	2B9	34	1810 - 7
4456434	2B9	35	1810 - 7
4456435	2B9	41	1810 - 7
4456436	2B9	42	1810 - 7
4456450	2B9	43	1810 - 7
4456458	2B9	40	1810 - 7
4456723	2D18	0B	1830 - 15
4456725	2D18	0A	1830 - 15
4456735	1H4	9F	1674 - 7
4456778	1H4	9A	1674 - 7
4456778	1H10	7A	1674 - 9
4456798	1D24	18	0418 - 3
4456798	1G2	12	0540 - 3
4456952	2B19	15	1810 - 17
4458227	2D18	0G	1830 - 15
4458228	2D18	0C	1830 - 15
4458229	2D18	0H	1830 - 15
4458230	2D18	0D	1830 - 15
4458231	2D18	0E	1830 - 15
4458232	2D18	0F	1830 - 15
4458233	2D18	0I	1830 - 15
4458234	2D18	0J	1830 - 15
4458235	2D18	7A	1830 - 15
4458236	2D18	7B	1830 - 15
4458237	2D18	7C	1830 - 15
4458238	2D18	4	1830 - 15
4458238	2D18	19	1830 - 15
4458239	2D18	4	1830 - 15
4458239	2D18	20	1830 - 15
4458240	2D18	4	1830 - 15
4458240	2D18	21	1830 - 15
4458241	2D18	4	1830 - 15
4458241	2D18	22	1830 - 15
4459249	2B19	83	1810 - 17
4459263	3J6	13	3363 - 37
4460037	1H4	9F	1674 - 7
4460399	2D12	3	1830 - 9
4460405	2B19	1	1810 - 17
4460662	1F21	7	0520 - 5
4463390	2B17	16A	1810 - 15
4463391	2B17	28	1810 - 15
4463392	2B17	29	1810 - 15
4463393	2B17	30	1810 - 15
4463394	2B17	31	1810 - 15
4463554	3F12	22	3360 - 51
4463992	3F16	59A	3361 - 5
4463993	3F16	59D	3361 - 5
4464275	2D4	9	1830 - 3B
4464276	2D4	10	1830 - 3B
4464277	2D4	11	1830 - 3B
4464278	2D4	12	1830 - 3B
4464279	2D4	13	1830 - 3B
4464280	2D4	15	1830 - 3B
4464281	2D4	17	1830 - 3B
4464282	2D4	18	1830 - 3B
4464283	2D4	19	1830 - 3B
4464284	2D4	20	1830 - 3B
4464285	2D4	21	1830 - 3B
4464286	2D4	22	1830 - 3B
4464287	2D4	23	1830 - 3B
4464288	2D4	24	1830 - 3B
4464341	2D4	1	1830 - 3B
4464342	2D4	2	1830 - 3B
4464343	2D4	3	1830 - 3B
4464344	2D4	4	1830 - 3B
4464345	2D4	4A	1830 - 3B
4464346	2D4	4B	1830 - 3B
4464347	2D4	5	1830 - 3B
4464349	2D4	6	1830 - 3B
4464350	2D4	7	1830 - 3B
4464352	2D4	8	1830 - 3B
4464354	2D4	8B	1830 - 3B
4464355	2D4	8C	1830 - 3B
4464356	2D4	8E	1830 - 3B
4464450	2D4	25	1830 - 3B
4464451	2D4	26	1830 - 3B
4464452	2D4	27	1830 - 3B
4464453	2D4	28	1830 - 3B
4464454	2D4	29	1830 - 3B
4464455	2D4	30	1830 - 3B
4464456	2D6	31	1830 - 3D
4464457	2D6	32	1830 - 3D
4464458	2D6	33	1830 - 3D
4464459	2D6	34	1830 - 3D
4464460	2D6	35	1830 - 3D
4464461	2D6	36	1830 - 3D
4464462	2D6	37	1830 - 3D
4464463	2D6	38	1830 - 3D
4464465	2D6	40	1830 - 3D
4464466	2D6	41	1830 - 3D
4464473	2D6	42	1830 - 3D
4464474	2D6	44	1830 - 3D
4464475	2D6	45	1830 - 3D
4464476	2D6	47	1830 - 3D
4464477	2D6	49	1830 - 3D
4464478	2D6	50	1830 - 3D
4464479	2D6	52	1830 - 3D
4464480	2D6	54	1830 - 3D
4464483	2D6	56	1830 - 3D
4465396	2E20	22	1910 - 19
4465397	2E20	20	1910 - 19
4465398	2E20	21	1910 - 19
4467914	3I24	13	3363 - 31
4468337	3H4	0	3362 - 27
4468337	3H6	0	3362 - 29
4468337	3H8	0	3362 - 31
4468337	3H10	0	3362 - 33
4468337	3H14	0	3362 - 35
4468337	3J4	74	3363 - 35
4468525	3J14	1	3363 - 45
4468525	3J16	1	3363 - 45B
4468530	1H4	9H	1674 - 7
4468943	2B13	65	1810 - 11
4468944	2B11	6	1810 - 9
4470743	1I3	44	1740 - 3
4470743	3E2	21	3344 - 3
4474296	2B7	1	1810 - 5
4474296	2B9	0	1810 - 7
4474296	2B11	0	1810 - 9
4474296	2B13	0	1810 - 11
4474296	2B15	0	1810 - 13
4474296	2B17	0	1810 - 15
4474296	2B19	0	1810 - 17
4474296	2B21	0	1810 - 19
4474298	2B11	26	1810 - 9
4474299	2B11	47	1810 - 9
4474300	2B11	10	1810 - 9
4474301	2B13	1	1810 - 11
4474302	2B13	5	1810 - 11
4474303	2B13	14	1810 - 11
4474304	2B13	16	1810 - 11
4474476	2B19	43	1810 - 17
4474477	2B19	40	1810 - 17
4474478	2B19	32	1810 - 17
4474479	2B19	5	1810 - 17
4474480	2B19	8	1810 - 17
4474482	2B19	47	1810 - 17
4474493	2B19	14	1810 - 17
4474494	2B19	10	1810 - 17
4474498	2B19	6	1810 - 17
4474499	2B19	75	1810 - 17
4474513	2B19	77	1810 - 17
4474513	2B19	84	1810 - 17
4474514	2B19	76	1810 - 17
4474515	2B19	21	1810 - 17
4474517	2B19	81	1810 - 17
4474518	2B19	80	1810 - 17
4474531	2B15	25	1810 - 13
4474532	2B15	41	1810 - 13
4476062	3E2	26	3344 - 3
4477216	2B19	44	1810 - 17
4477217	2B19	41	1810 - 17
4477218	2B19	37	1810 - 17
4477219	2B19	36	1810 - 17
4477373	1H4	0	1674 - 7
4477526	2D12	4	1830 - 9
4477852	3D7	14	3315 - 5
4477852	3D7	15	3315 - 5
4477852	3D7	16	3315 - 5
4477852	3D7	17	3315 - 5
4480966	3G22	1	3362 - 23
4482233	3H8	38	3362 - 31
4483202	1H22	2	1674 - 17B
4483203	1H22	3	1674 - 17B
4483204	1H22	4	1674 - 17B
4483205	1H22	5	1674 - 17B
4483208	1H22	8	1674 - 17B
4483209	1H22	9	1674 - 17B
4483282	1H22	1	1674 - 17B
4483283	1H22	6	1674 - 17B
4483676	1I13	1	1740 - 13
4484115	3G24	31	3362 - 23B
4484116	3G24	30	3362 - 23B
4484118	3G24	29	3362 - 23B
4485825	1H22	12	1674 - 17B
4486321	3H4	0	3362 - 27
4486321	3H6	0	3362 - 29
4486321	3H8	0	3362 - 31
4486321	3H12	0	3362 - 33B
4486321	3H14	0	3362 - 35
4486321	3J4	74	3363 - 35
4487330	1H4	54	1674 - 7
4487536	3G24	4	3362 - 23B
4487830	1H2	1	1674 - 5
4488663	3I22	2	3363 - 29B
4489678	3G24	23	3362 - 23B
449558	3K14	10	3364 - 3
4506406	3G6	41	3362 - 7
4506406	3G8	41	3362 - 9

NUMERICAL INDEX - CONTINUED

PART NO.	GRID	KEY	PAGE
4506406	3G10	41	3362 - 11
4506406	3G12	41	3362 - 13
4506406	3G16	41	3362 - 17
4506408	1C6	23A	0262 - 3
4506408	1G15	..	1369 - 3
4506408	3G6	61B	3362 - 7
4506408	3G8	62C	3362 - 9
4506408	3G8	62E	3362 - 9
4506408	3H2	6	3362 - 25
4506418	1C2	3A	0260 - 9
4506418	1C2	17A	0260 - 9
4506418	1C6	20A	0262 - 3
4506418	1C8	3A	0263 - 3
4506418	1C8	17A	0263 - 3
4506418	1C12	2	0267 - 5
4506418	1G15	..	1369 - 3
4506418	3F22	57A	3361 - 11
4506418	3G6	48E	3362 - 7
4506418	3G8	47E	3362 - 9
4506418	3I16	34A	3363 - 25
4506418	3I16	37A	3363 - 25
4506418	3I16	41A	3363 - 25
4506418	3J18	59	3363 - 47
4506418	3J22	54A	3363 - 51B
4506418	3K14	29A	3364 - 3
4506424	1C2	1A	0260 - 9
4506424	1C8	1A	0263 - 3
4506424	1G15	..	1369 - 3
4506424	3D21	28A	3340 - 5
4506424	3H16	9A	3363 - 3
4506424	3H24	2A	3363 - 11
4506424	3I2	13A	3363 - 13
4506424	3I8	5A	3363 - 19
4506424	3I8	20A	3363 - 19
4506424	3J22	52A	3363 - 51B
4506424	3J22	55A	3363 - 51B
4506428	1G15	..	1369 - 3
4506428	3G20	15	3362 - 21
4506428	3L19	88	4360 - 7
4506429	3F2	19	3360 - 19
4506429	3F4	10	3360 - 21
4506430	1G15	..	1369 - 3
4506430	3K18	32	3365 - 5
4506430	3K20	30	3365 - 5B
4506430	3K24	32	3365 - 9
4506430	3L2	30	3365 - 9B
4506430	3L10	29	3365 - 17
4506430	3L12	29	3365 - 17B
4509182	3G6	11	3362 - 7
4509182	3G8	11	3362 - 9
4509182	3G10	11	3362 - 11
4509182	3G12	11	3362 - 13
4509182	3G16	11	3362 - 17
4514388	3F18	56	3361 - 7
4600164	3F6	4	3360 - 23
4602549	2B7	1	1810 - 5
4602549	2B9	0	1810 - 7
4602549	2B11	0	1810 - 9
4602549	2B13	0	1810 - 11
4602549	2B15	0	1810 - 13
4602549	2B17	0	1810 - 15
4602549	2B19	0	1810 - 17
4602549	2B21	0	1810 - 19
4602562	2B15	25	1810 - 13
4602563	2B15	43	1810 - 13
4602564	2B13	52	1810 - 11
4602565	2B13	53	1810 - 11
4602566	2B13	65	1810 - 11
4602567	2B11	6	1810 - 9
4602568	2B17	1	1810 - 15
4602569	2B11	9	1810 - 9
4602569	2B11	19	1810 - 9
4602570	2B17	8B	1810 - 15
4602576	2B17	16B	1810 - 15
4602577	2B11	19	1810 - 9
4602578	2D12	2	1830 - 9
4602582	2B13	50	1810 - 11
4603008	2B11	13	1810 - 9
4603011	2B9	46	1810 - 7
4603012	2B9	47	1810 - 7
4603013	2B9	48	1810 - 7
4607398	3J8	15	3363 - 39
4607399	3J8	16	3363 - 39
4609477	2B19	77	1810 - 17
4609478	2B19	84	1810 - 17
4609479	2B19	77	1810 - 17
4609479	2B19	84	1810 - 17
4609480	2B19	77	1810 - 17
4609480	2B19	84	1810 - 17
4609676	2D2	44	1830 - 3
4610412	2D2	44	1830 - 3
4610412	2D2	45	1830 - 3
4610640	2C18	21	1821 - 3
4610641	2C18	22	1821 - 3
4613243	2E22	30	1910 - 21
4623638	2D12	1	1830 - 9
494918	2B15	15	1810 - 13
5006215J	1G4	1	0560 - 3
5006846	1A24	1	0130 - 3
5006958	1I7	3	1740 - 7
5007342	2C8	15	1810 - 29
5007469	2F2	0A	1910 - 25
5007470	2F2	1A	1910 - 25
5008107	2E20	2	1910 - 19
600118	3B16	20	3302 - 7
600119	3B16	20	3302 - 7
600120	3B16	20	3302 - 7
600121	3B16	20	3302 - 7
600122	3B14	20	3302 - 5
600122	3B16	20	3302 - 7
600318	3B12	20	3302 - 3
600318	3B24	20	3302 - 15
600319	3B12	20	3302 - 3
600319	3B24	20	3302 - 15
600320	3B12	20	3302 - 3
600320	3B24	20	3302 - 15
600321	3B12	20	3302 - 3
600321	3B24	20	3302 - 15
600417	3B14	20	3302 - 5
600418	3B14	20	3302 - 5
600419	3B14	20	3302 - 5
600420	3B14	20	3302 - 5
600515	3B18	20	3302 - 9
600517	3B18	20	3302 - 9
600708	3B18	20	3302 - 9
6017445	3D19	0A	3340 - 3
6017975	2C10	5	1810 - 31
6018662	2E22	10	1910 - 21
6018671	2E22	2	1910 - 21
6019104	3D21	0A	3340 - 5
6019252	2C8	14	1810 - 29
6019838	2C8	12	1810 - 29
6020125	2C24	0	1821 - 9
605990	3B20	20	3302 - 11
605991	3B20	20	3302 - 11
605995	3B20	27	3302 - 11
605995	3C4	1	3302 - 19
605996	3B20	27	3302 - 11
605996	3C4	1	3302 - 19
607392	3B18	27	3302 - 9
607393	3B18	27	3302 - 9
607394	3B18	27	3302 - 9
623269	3C2	1	3302 - 17
623270	3C2	1	3302 - 17
623271	3C2	1	3302 - 17
623272	3C2	1	3302 - 17
7031846	3E4	5	3344 - 3B
7031847	3D23	20	3340 - 7
7035467	3D19	0	3340 - 3
7035503	3D9	0	3315 - 7
7035538	3E2	1	3344 - 3
7035539	2E4	1	1910 - 3
7035543	2E4	20	1910 - 3
7036594	2C12	0	1810 - 33
7036595	2C12	2	1810 - 33
7037241	2E22	16	1910 - 21
7037241J	2E22	16	1910 - 21
7037283	2E22	2	1910 - 21
7038166	3D21	0	3340 - 5
7039248	2E22	23	1910 - 21
7039389	2C8	1	1810 - 29
7039639	2F2	0	1910 - 25
7039640	2F2	1	1910 - 25
7039806	3H16	1	3363 - 3
7042657	2C22	4	1821 - 7
8052020	1B2	0	0130 - 5
8052578	3J22	1	3363 - 51B
8053499	3K14	9	3364 - 3
8058352	3F16	6	3361 - 5
8059452	3F18	19	3361 - 7
8061722	3H18	4	3363 - 5
8062624	3F12	7	3360 - 51
8062625	3F12	6	3360 - 51
8063718	3D13	0	3315 - 11
8066080	3I12	1	3363 - 21B
8066084	3I12	0	3363 - 21B
8066670	3K14	11	3364 - 3
8066949	3J22	34	3363 - 51B
8066950	3J22	35	3363 - 51B
8066952	3J22	37	3363 - 51B
8066953	3J22	38	3363 - 51B
8066954	3J22	39	3363 - 51B
8067195	3J22	40	3363 - 51B
8067675	1F21	1	0520 - 5
8072993	3D23	22	3340 - 7
8073901	3D9	6	3315 - 7
8074106	3I2	10	3363 - 13
8074107	3I10	0	3363 - 21
8074127	3E10	0	3360 - 5
8074128	3E10	1	3360 - 5
8074141	3H20	4	3363 - 7
8074159	2E8	9	1910 - 7
8074160	2E8	4	1910 - 7
8074160J	2E8	4	1910 - 7
8074315J	3E6	0	3344 - 5
8075190	1C10	15	0267 - 3
8075449	3D11	1	3315 - 9
8075450	3D11	0	3315 - 9
8076444J	2E8	3	1910 - 7
8076445	2E8	8	1910 - 7
8076445J	2E8	8	1910 - 7

NUMERICAL INDEX - CONTINUED

PART NO.	GRID	KEY	PAGE
8076541	3D25	0	3340 - 9
8076619	2C8	9	1810 - 29
8077444	3J10	18	3363 - 41
8077521	2E22	25	1910 - 21
8077778	2E22	9	1910 - 21
8077778J	2E22	9	1910 - 21
8077903	3D13	32	3315 - 11
8079166	3F2	11	3360 - 19
8079166	3K6	11	3363 - 57
8079431J	3F4	21	3360 - 21
8079431J	3K2	21	3363 - 53
8079794	3F2	1	3360 - 19
8079794	3K6	1	3363 - 57
8080620J	3F4	2	3360 - 21
8080620J	3K2	2	3363 - 53
8081448	1I5	5	1740 - 5
8081449	3E2	8	3344 - 3
8081525	3F12	1	3360 - 51
8081638J	3F4	1	3360 - 21
8081638J	3K2	1	3363 - 53
8081829	2E4	3	1910 - 3
8082052J	3F4	4	3360 - 21
8082052J	3K2	4	3363 - 53
8082053J	3F4	5	3360 - 21
8082053J	3K2	5	3363 - 53
8082106	3F12	5	3360 - 51
8082452	3J4	55	3363 - 35
8083882J	3F6	11	3360 - 23
8083882J	3K4	22	3363 - 55
8084097J	3F6	10	3360 - 23
8084097J	3K4	21	3363 - 55
8086114	3L10	27	3365 - 17
8086114	3L12	27	3365 - 17B
9075046	3I12	2	3363 - 21B
9098902	3G4	0	3362 - 5
9107265EX	1B24	0	0260 - 7
9134109	1C6	23	0262 - 3
9134110	1C6	22	0262 - 3
9134110	3F18	67	3361 - 7
9134110	3F20	58	3361 - 9
9134111	3F18	80	3361 - 7
9134112	1C6	20	0262 - 3
9134147	3G2	0	3362 - 3
9134147	3G2	20	3362 - 3
9150146	3J22	32	3363 - 51B
9150146	3J24	44	3363 - 51D
9151724	3D13	6	3315 - 11
9153984	3J22	46	3363 - 51B
9156685	3F12	7	3360 - 51
9156686	3F12	6	3360 - 51
9167977	1C6	17	0262 - 3
9169646	1I9	10	1740 - 9
9169805	3L4	0	3365 - 11
9169805	3L6	44	3365 - 13
9169806	3L8	0	3365 - 15
9169806	3L10	40	3365 - 17
9169806	3L12	40	3365 - 17B
9175422	3K16	0	3365 - 3
9175422	3K18	9	3365 - 5
9175422	3K18	43	3365 - 5
9175423	3K22	0	3365 - 7
9175423	3K24	9	3365 - 9
9175423	3K24	43	3365 - 9
9181133	1C10	9	0267 - 3
9184275	3D13	8	3315 - 11
9185757	1C6	15	0262 - 3
9185757	1C12	0	0267 - 5
9195235	3F14	3	3361 - 3
9195235	3F16	0	3361 - 5
9195235	3F18	1	3361 - 7
9195304	3D5	20	3315 - 3
9195304	3D7	3	3315 - 5
9195307	3D11	2	3315 - 9
9195307	3D13	7	3315 - 11
9195450	1C6	0	0262 - 3
9195450	1C10	34	0267 - 3
9196161	2E6	6	1910 - 5
9196963	3L15	70	4360 - 3
9197330	3F2	15	3360 - 19
9197376	3F2	16	3360 - 19
9197376	3K6	16	3363 - 57
9198935	3F18	69	3361 - 7
9198935	3F22	0	3361 - 11
9198936	3F18	70	3361 - 7
9198936	3F20	0	3361 - 9
9199146	3D13	13	3315 - 11
9212078	1H6	1	1674 - 7B
9218234	3G24	5	3362 - 23B
9223890	3G24	1	3362 - 23B
9223892	3G24	26	3362 - 23B
9226759	1H4	54	1674 - 7
9229187	1B20	1	0260 - 3B
9234284	3D7	14	3315 - 5
9234284	3D7	15	3315 - 5
9234284	3D7	16	3315 - 5
9234284	3D7	17	3315 - 5
9235551	3D11	2	3315 - 9
94-2011	1G4	2	0560 - 3
94-2011	3D7	1	3315 - 5
94-2012	3L15	36	4360 - 3
94-2013	1B16	43	0250 - 3
94-2013	1G4	14	0560 - 3
94-2807	2E22	30	1910 - 21
94-2817	2C6	3	1810 - 27
953612	3K14	7B	3364 - 3
957474	1G15	..	1369 - 3
962002	3F16	9	3361 - 5
970860	1G15	..	1369 - 3
9724756	3F18	32	3361 - 7
9727822	1C2	13	0260 - 9
9727822	1C8	13	0263 - 3
9735305	3J2	22	3363 - 33
9735305	3J14	12	3363 - 45
9735306	3J2	23	3363 - 33
9735306	3J14	13	3363 - 45
9738223	3D23	26	3340 - 7
9738224	3E4	22	3344 - 3B
9738682	2C16	26	1810 - 37
9742779	3F16	63	3361 - 5
9743889	2E20	11	1910 - 19
9743977	3F16	62	3361 - 5
9745798	2E22	17	1910 - 21
9751787	3J10	9	3363 - 41
9751787	3J12	9	3363 - 43
9751797	2E12	14	1910 - 11
9752698	3H20	10	3363 - 7
9754825	3D7	16	3315 - 5
9754826	3D7	17	3315 - 5
9756736	2C22	16	1821 - 7
9757192	2C8	29	1810 - 29
9759157	3D7	14	3315 - 5
9759157	3D7	15	3315 - 5
9759157	3D7	16	3315 - 5
9759157	3D7	17	3315 - 5
9759158	3D7	14	3315 - 5
9759158	3D7	15	3315 - 5
9759158	3D7	16	3315 - 5
9759158	3D7	17	3315 - 5
984614	3J24	32	3363 - 51D
985098	3G2	1	3362 - 3
985098	3G6	40	3362 - 7
985098	3G8	40	3362 - 9
985098	3G16	40	3362 - 17