# MICHIGAN

# PARTS MANUAL
# No. 1469

RUTHZIL TRATOR COMERCIAL DE PEÇAS LTDA 11 97083-6812 ROLANDO CITRANGULO

# MODEL 210
# TRACTOR WAGON
## (REAR DUMP)

**Information contained herein pertains to Tractor Wagon (Rear Dump Section) only on Machine Serial Numbers 70U3 thru 70U12.**

**Tractor Wagon (Tractor Section) See Parts Manual No. 1392.**

**Tractor Scraper (Body Section) See Parts Manual No. 1475.**

**Record Your Machine Serial Number Here**

_____

CLARK EQUIPMENT

**CLARK EQUIPMENT COMPANY**
**Construction Machinery Division**
**BENTON HARBOR, MICHIGAN, U.S.A.**
In Canada: Canadian Clark, Ltd., St. Thomas, Ontario

MICHIGAN

SC6158996

Printed in U.S.A.

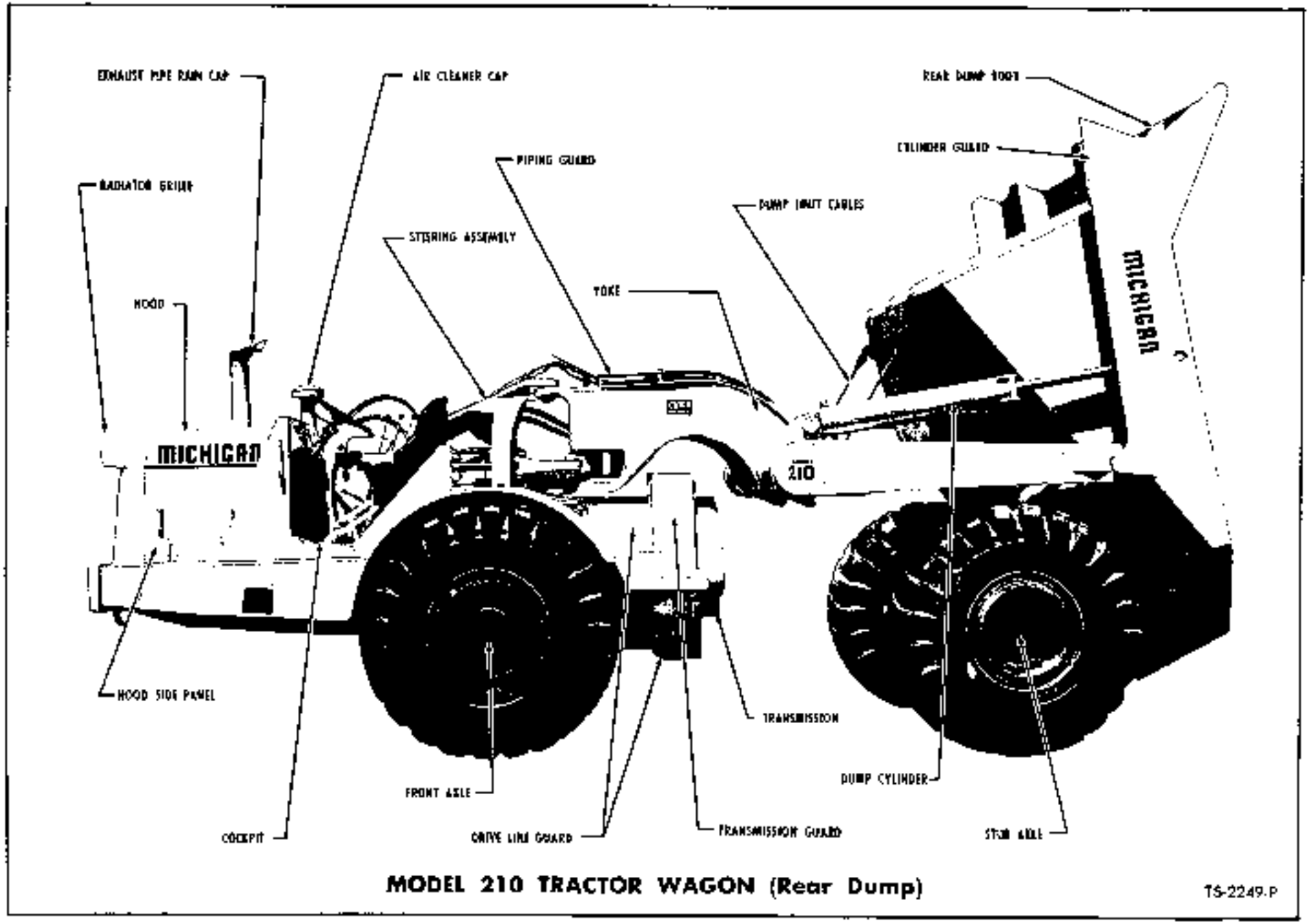


**MODEL 210 TRACTOR WAGON (Rear Dump)**

TS-2249-P

## WHEN ORDERING REPAIR PARTS

To assure the best results and to maintain the original quality built into the machine it is important that genuine "Clark" Parts be used when new parts are required.

**IMPORTANT: Always furnish the distributor with the machine serial number when ordering parts.**

Order through your nearest Clark Distributor, for THE MICHIGAN LINE.

Always give serial number of machine.

Furnish: Quantity, Part Number and Description.

## WHEN PARTS ARE RECEIVED

Check immediately for quantity, correctness and condition.

Advise your Michigan Distributor of any error.

Claims for damages, during shipment, should be made to the carrier, immediately.

# INDEX MODEL 210 TRACTOR WAGON (Rear Dump)

This index covers the Tractor Wagon (Rear Dump) Section only. Refer to Parts Manual No. 1392 for Tractor Section parts of Model 210 Tractor Wagon that are not covered in this index.


A

| | Page |
|---|---|
| Air Chamber — Rear Brake | 4 |
| Air Compressor Governor | 7 |
| Air Lines — Rear Dump | 5 |
| Air Lines — Tractor (Rear Dump) | 7 |
| Axle — Rear Dump Stub | 3 |

B

| | |
|---|---|
| Bowl Assembly and Dump Limit Cables | 1 |
| Brake Air Chamber — Rear | 4 |
| Brake Air Lines — Rear Dump | 5 |
| Brake Air Lines — Tractor (Rear Dump) | 7 |
| Brake Assembly — Rear | 4 |
| Brake Hand Valve | 7 |
| Brake Slack Adjuster | 4 |

C

| | |
|---|---|
| Cable, Dump Limit | 1 |
| Chamber, Air Brake — Rear | 4 |
| Control Valve, Rear Dump | 9 |
| Cylinder, Dump | 11 |

D

| | |
|---|---|
| Decals | 13 |
| Drive Shaft Rock Guards | 13 |
| Dump Cylinder | 11 |
| Dump Hydraulic System | 10 |
| Dump Limit Cable, Bowl | 1 |

G

| | |
|---|---|
| Governor, Air Compressor | 7 |

H

| | |
|---|---|
| Hydraulic Cylinder, Dump | 11 |
| Hydraulic System, Dump | 10 |

R

| | |
|---|---|
| Rock Guards | 13 |

T

| | |
|---|---|
| Tools | 13 |
| Transmission and Drive Shaft Rock Guards | 13 |

V

| | |
|---|---|
| Valve, Rear Dump Control | 9 |

W

| | |
|---|---|
| Wheel and Tire Data | 12 |

Y

| | |
|---|---|
| Yoke, Rear Dump | 2 |

# NOTES

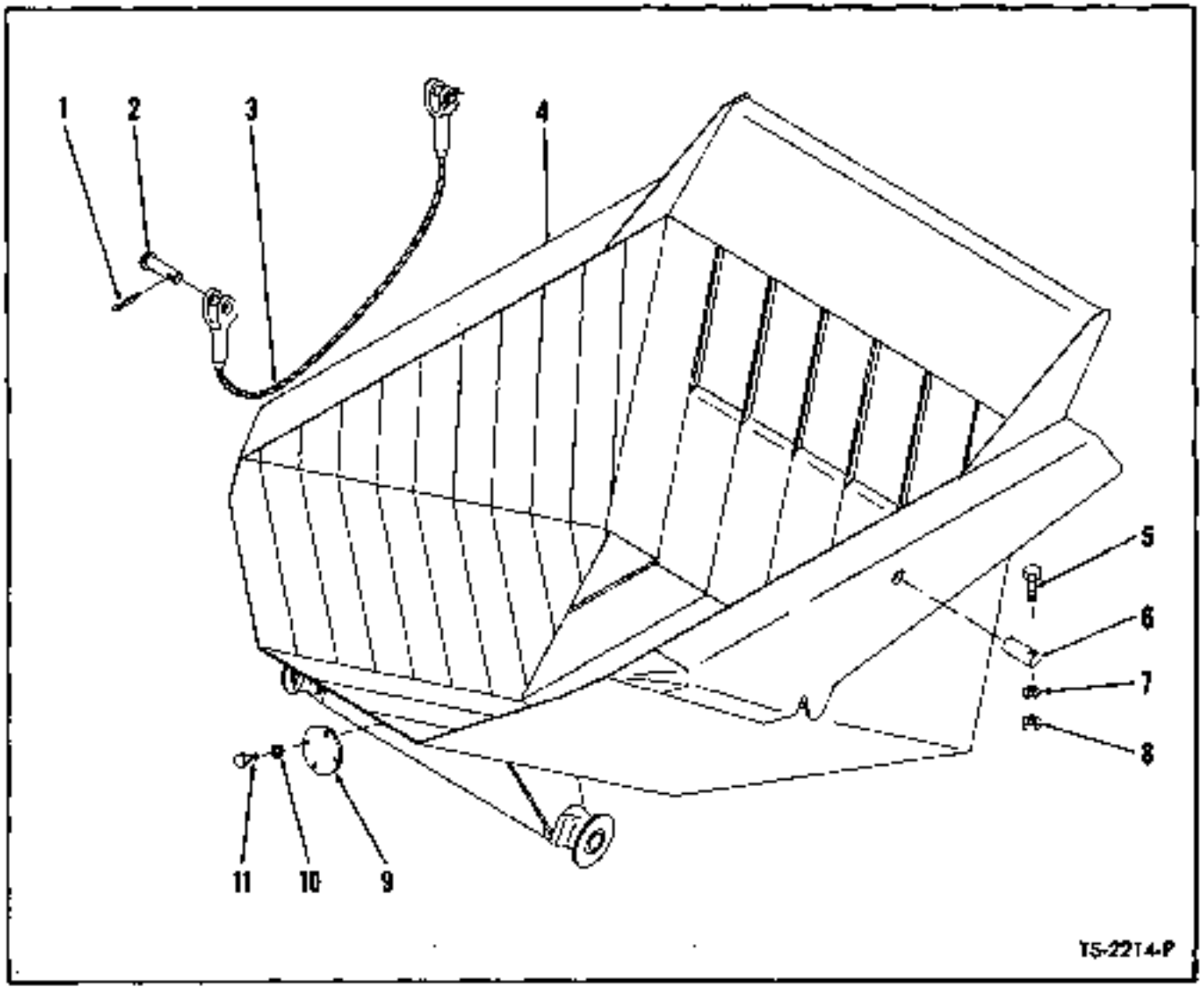


## BOWL ASSEMBLY AND DUMP LIMIT CABLE

| Item No. | Part No. | Description | No. Req'd. |
|---|---|---|---|
| 1 | 1F-1040 | COTTER, Cable Pin | 4 |
| 2 | 944671 | PIN, Cable Attaching | 4 |
| 3 | 582066 | CABLE, Dump Limit (Inc. 1, 2) | 2 |
| 4 | 593917 | BOWL ASSY, Rear Dump | 1 |
| 5 | 2C-10112 | BOLT, Pin Retaining | 2 |
| 6 | 594019 | PIN, Cylinder to Bowl | 2 |
| 7 | 4E-10 | LKWSHR, Pin Retaining | 2 |
| 8 | 2D-10 | NUT, Pin Retaining | 2 |
| 9 | 593737 | PLATE, Bowl Cover | 1 |
| 10 | 4E-06 | LKWSHR, Cover Plate | 4 |
| 11 | 2C-616 | BOLT, Cover Plate | 4 |

**WHEN ORDERING PARTS, ALWAYS STATE MODEL AND SERIAL NO. OF MACHINE**

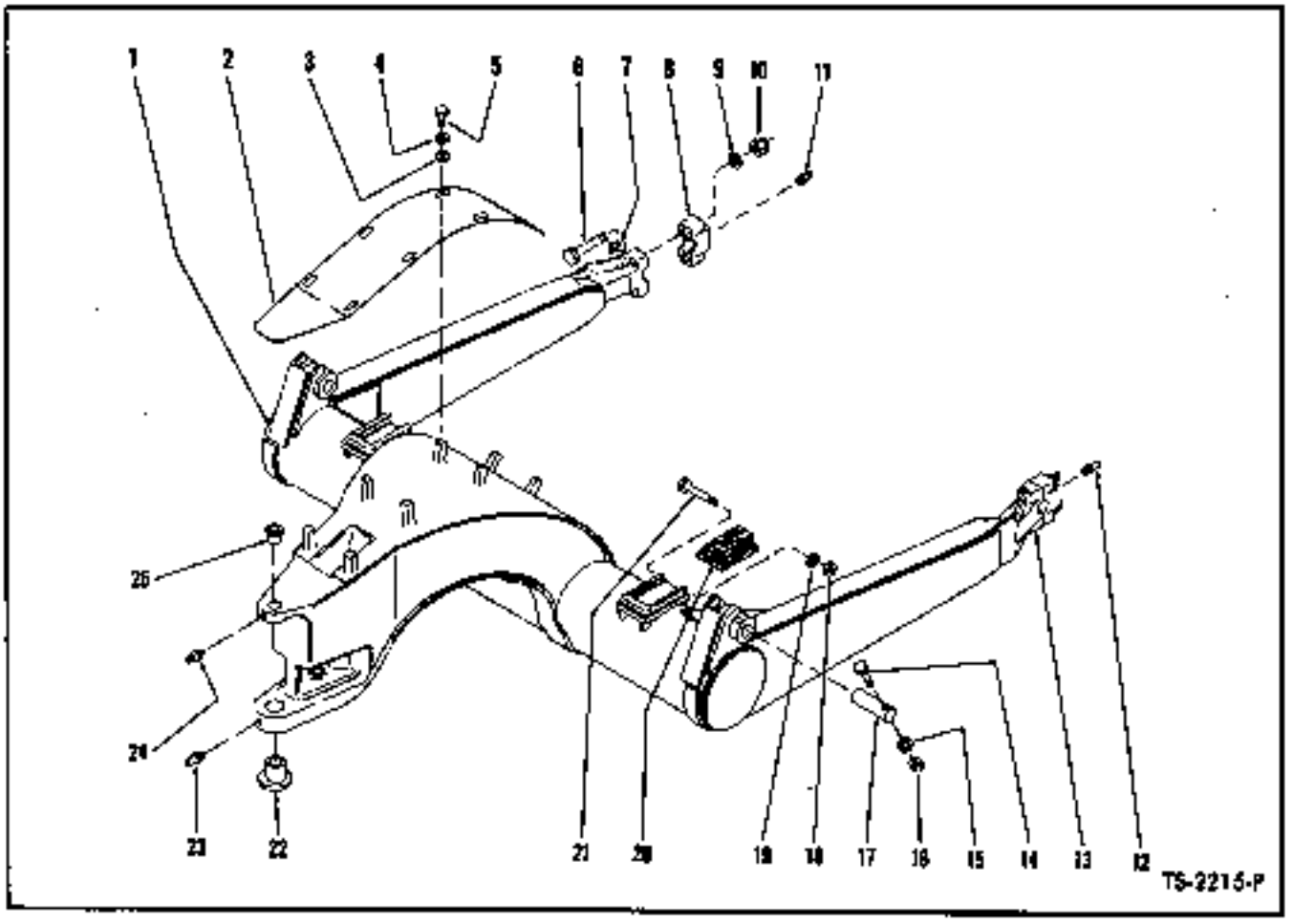


## YOKE ASSEMBLY

| Item No. | Part No. | Description | Mfr. Req'd. |
|---|---|---|---|
| 1 | 594390 | YOKE ASSY (Inc. 6 thru 9, 11, 20, 23) | 1 |
| 2 | 580887 | PLATE, Cover | 1 |
| 3 | 619027 | WASHER, Cover Plate | 8 |
| 4 | 4E-08 | LKWSHR, Cover Plate | 8 |
| 5 | 2C-816 | BOLT, Cover Plate | 8 |
| 6 | 24C-20144 | BOLT, Trunnion Bearing | 4 |
| 7 | 583002 | WASHER, Trunnion Bearing | 1 |
| 8 | 580799 | CAP, Trunnion Bearing | 2 |
| 9 | 583002 | WASHER, Trunnion Bearing | 1 |
| 10 | 680-20 | NUT, Trunnion Bearing | 4 |
| 11 | 10H-25 | FITTING, Trunnion Bearing Grease | 1 |
| 12 | 10H-25 | FITTING, Trunnion Bearing Grease | 1 |
| 13 | 580797 | BEARING ASSY, Trunnion (Inc. 6, 7, 8) | 2 |
| 14 | 2C-10112 | BOLT, Pin Retaining | 2 |
| 15 | 4E-10 | LKWSHR, Pin Retaining | 2 |
| 16 | 2D-10 | NUT, Pin Retaining | 2 |
| 17 | 590708 | PIN, Cylinder to Yoke | 2 |
| 18 | 2D-06 | NUT, Block Retaining | 2 |
| 19 | 4E-06 | LKWSHR, Block Retaining | 2 |
| 20 | 593908 | BLOCK, Body Stop | 2 |
| 21 | 14C-6136 | BOLT, Block Retaining | 2 |
| 22 | 592785 | BUSHING, Lower Yoke | 1 |
| 23 | 10H-25 | FITTING, Yoke Grease | 1 |
| 24 | 10H-25 | FITTING, Yoke Grease | 1 |
| 25 | 591623 | BUSHING, Upper Yoke | 1 |

**WHEN ORDERING PARTS, ALWAYS STATE MODEL AND SERIAL NO. OF MACHINE**

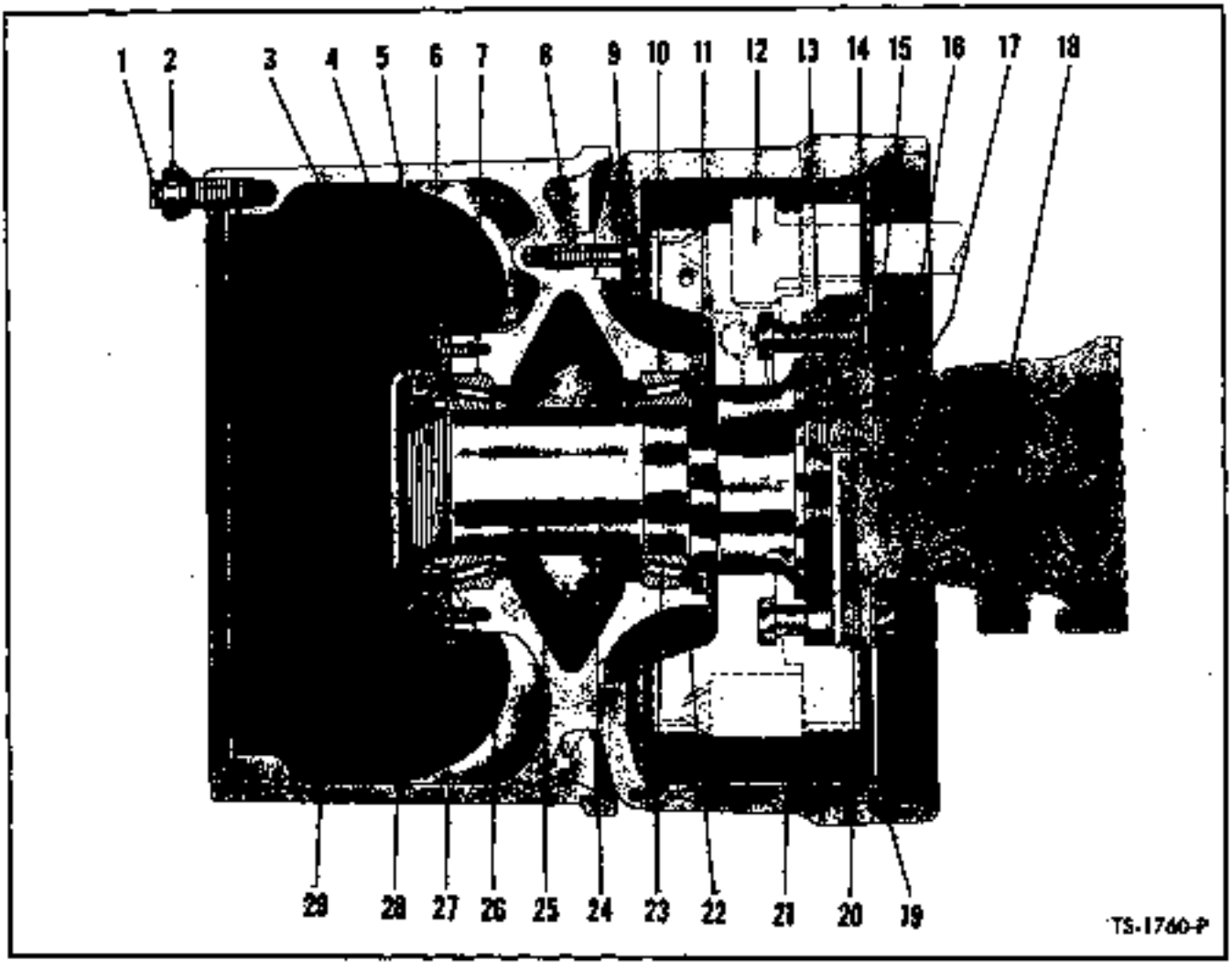


## STUB AXLE

| Item No. | Part No. | Description | No. Req'd. |
|---|---|---|---|
| 1 | 109137 | STUD, Wheel | 32 |
| 2 | 107985 | NUT, Wheel | 32 |
| 3 | 107729 | NUT, Spindle — Outer | 2 |
| 4 | 107730 | LOCK, Spindle Nut | 2 |
| 5 | 1C-718 | BOLT, Hub Cap | 12 |
| 6 | 4E-07 | LKWSHR, Hub Cap | 12 |
| 7 | 742262 | CUP, Outer Hub Bearing | 2 |
| 8 | 111461 | BOLT, Drum to Hub | 24 |
| 9 | 111656 | WASHER, Drum to Hub | 24 |
| 10 | 742262 | CUP, Inner Hub Bearing | 2 |
| 11 | 108705 | SEAL, Hub Oil | 2 |
| 12 | ——— | BRAKE ASSY — See Index | — |
| 13 | 108472 | BOLT, Spindle & Brake Attaching | 24 |
| 14 | 111658 | WASHER, Spindle & Brake Attaching | 24 |
| 15 | 107732 | NUT, Spindle & Brake Attaching | 24 |
| 16 | 4E-06 | LKWSHR, Dust Cover | 12 |
| 17 | 1C-630 | BOLT, Dust Cover | 12 |
| 18 | ——— | §Part of Bowl | — |
| 19 | 108477 | COVER, Dust | 4 |
| 20 | 655673 | SPACER, Dust Cover | 6 |
| 21 | 108464 | DRUM, Brake | 2 |
| 22 | 107983 | CATCHER, Oil | 2 |
| 23 | 742263 | CONE, Inner Hub Bearing | 2 |
| 24 | 108498 | SPINDLE | 2 |
| 25 | 731989 | CONE, Outer Hub Bearing | 2 |
| 26 | 107728 | NUT, Spindle — Inner | 2 |
| 27 | 108707 | GASKET, Hub Cap | 2 |
| 28 | 108706 | CAP, Hub | 2 |
| 29 | 109135 | HUB ASSY (Inc. 7, 10) | 2 |

§Not Sold Separately

**WHEN ORDERING PARTS, ALWAYS STATE MODEL AND SERIAL NO. OF MACHINE**

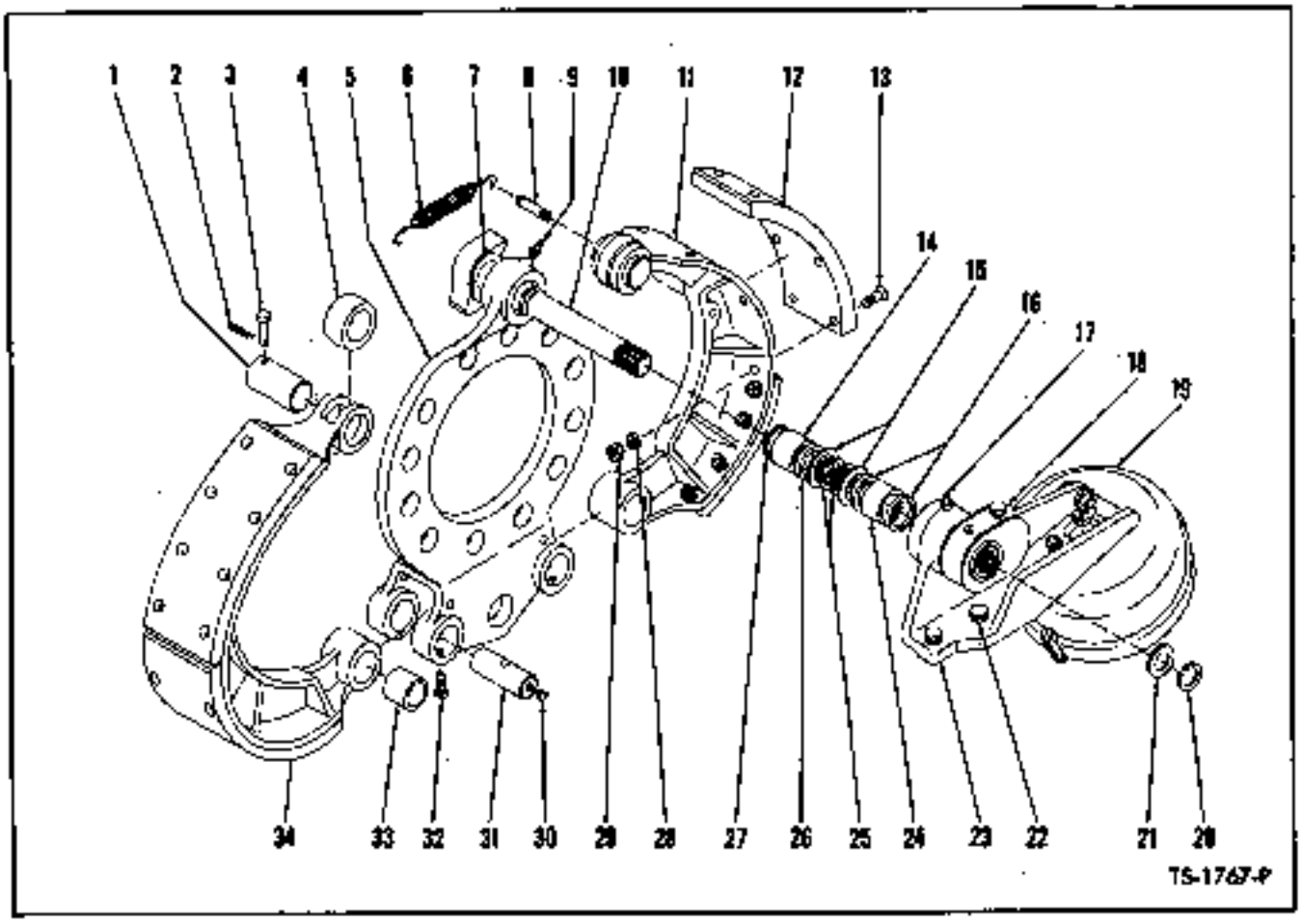


## BRAKE ASSEMBLY — REAR

| Item No. | Part No. | Description | No. Req'd. |
|---|---|---|---|
| A | 108456 | BRAKE ASSY (Inc. 1 thru 6, 8, 11, 12, 13, 28 thru 34) | 2 |
| | | NOTE: 2 Brake Assemblies required per axle. Quantities listed below are for 1 Brake Assembly. | |
| 1 | 109598 | PIN, Brake Cam Roller | 2 |
| 2 | 1F-308 | COTTER, Roller Pin Lock Pin | 2 |
| 3 | 110855 | PIN, Cam Roller Pin Lock | 2 |
| 4 | 107707 | ROLLER, Brake Cam | 2 |
| 5 | 107713 | SPIDER, Brake | 1 |
| 6 | 110814 | SPRING, Brake Shoe Return | 1 |
| 7 | 107735 | WASHER, Cam Shaft Thrust | 1 |
| 8 | 110126 | PIN, Spring Anchor | 2 |
| 9 | 12H-15 | FITTING, Brake Spider Grease | 1 |
| 10 | 107940 | CAM SHAFT — R.H. | 1 |
| 10A | 107941 | CAM SHAFT — L.H. | 1 |
| 11 | ---- | §SHOE, Brake — See 34 | 2 |
| 12 | 111056 | LINING, Brake Shoe | 4 |
| 13 | 111305 | BOLT, Lining to Shoe | 32 |
| 14 | 107739 | BUSHING, Brake Spider | 1 |
| 15 | 107736 | WASHER, Cam Shaft Retaining | 2 |
| 16 | 11E-135 | RETAINER, Cam Shaft Grease | 2 |
| 17 | 12H-15 | FITTING, Air Chamber Bracket Grease | 1 |
| 18 | 108476 | *ADJUSTER, Brake Slack — B.W. #226655 | 1 |
| 19 | 110206 | *AIR CHAMBER — B.W. #229403 | 1 |
| 20 | 224032 | RING, Slack Adjuster Retaining | 1 |
| 21 | 107010 | WASHER, Slack Adjuster Retaining | 1 |
| 22 | 1C-1236 | BOLT, Air Chamber Bracket | 2 |
| 22A | 4E-12 | LKWSHR, Air Chamber Bracket | 2 |
| 23 | 108467 | BRACKET, Air Chamber — R.H. | 1 |
| 23A | 108468 | BRACKET, Air Chamber — L.H. | 1 |
| 24 | 107739 | BUSHING, Air Chamber Bracket | 1 |
| 25 | 660516 | RING, Cam Shaft Retaining | 2 |
| 26 | 11E-135 | RETAINER, Cam Shaft Grease | 1 |
| 27 | 25K-60124 | "O" RING, Cam Shaft | 1 |
| 28 | 24E-06 | LKWSHR, Lining to Shoe | 32 |
| 29 | 21D-06 | NUT, Lining to Shoe | 32 |
| 30 | 16F-04 | PLUG, Anchor Pin | 1 |
| 31 | 109599 | PIN, Brake Shoe Anchor | 2 |
| 32 | 109597 | SET SCREW, Anchor Pin | 2 |
| 33 | 107709 | BUSHING, Brake Shoe | 2 |
| 34 | 111053 | SHOE ASSY, Brake (Inc. 1, 2, 3, 4, 8, 11, 12, 13, 28, 29, 33) | 2 |

§Not Sold Separately
*NOTE: Your local authorized Bendix Westinghouse Distributor or Dealer is equipped to service and supply these parts.

**WHEN ORDERING PARTS, ALWAYS STATE MODEL AND SERIAL NO. OF MACHINE**

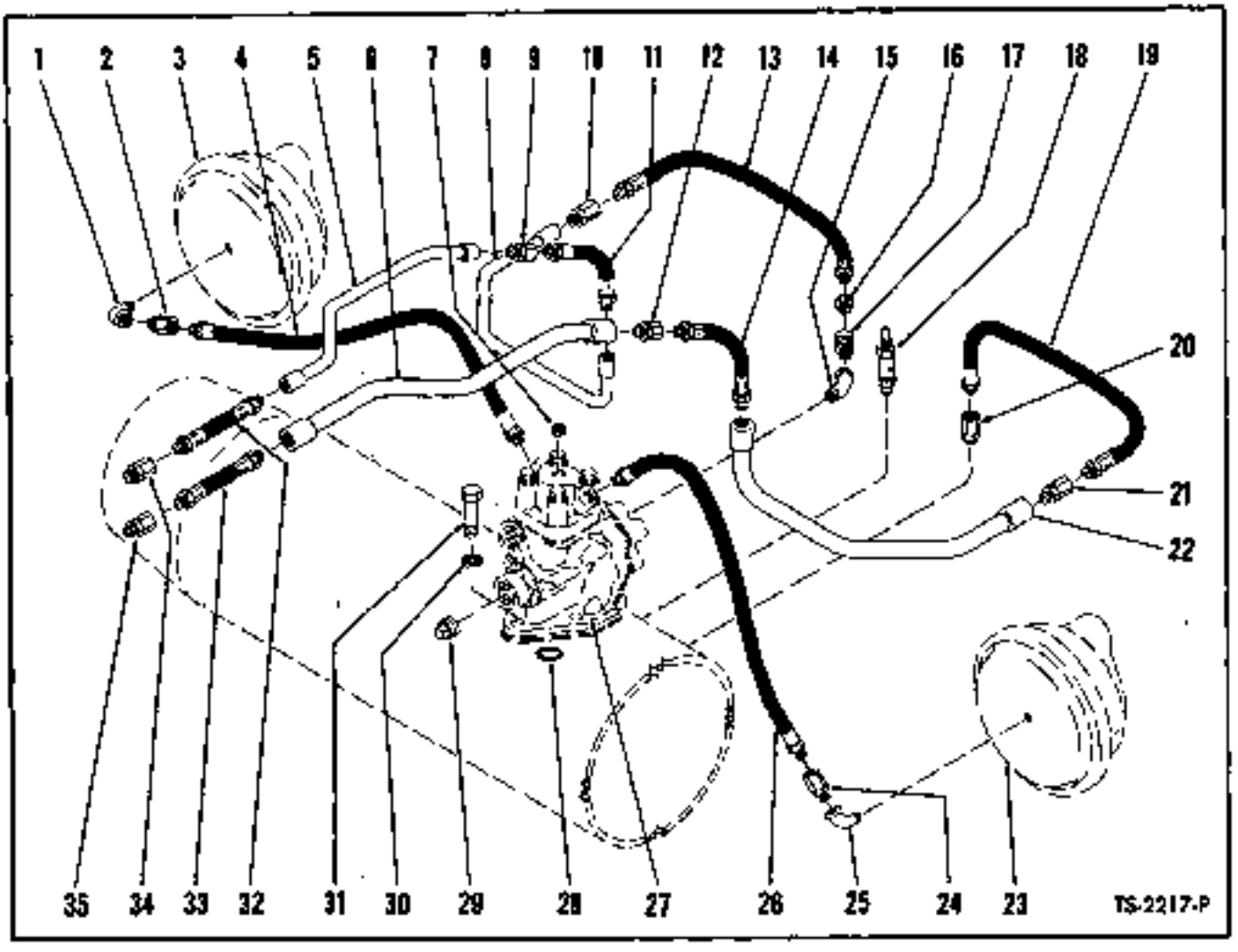


## BRAKE AIR LINES — REAR DUMP

| Item No. | Part No. | Description | No. Req'd. |
|---|---|---|---|
| 1 | 26F-2 | ELBOW, Air Chamber | 1 |
| 2 | 36F-2 | ADAPTER UNION | 1 |
| 3 | ——— | AIR CHAMBER — See Index | — |
| 4 | 593829 | HOSE, Relay Valve to Air Chamber | 1 |
| 5 | 593959 | PIPE, R.H. (On Yoke) | 1 |
| 6 | 593958 | PIPE, L.H. (On Yoke) | 1 |
| 7 | 13F-04 | PLUG, Relay Valve | 1 |
| 8 | 593966 | PIPE, R.H. (On Yoke) | 1 |
| 9 | 36F-3 | ADAPTER UNION | 1 |
| 10 | 36F-3 | ADAPTER UNION | 1 |
| 11 | 592741 | HOSE, Pipe to Pipe | 1 |
| 12 | 36F-4 | ADAPTER UNION | 1 |
| 13 | 594439 | HOSE, Pipe to Relay Valve | 1 |
| 14 | 592742 | HOSE, Pipe to Pipe | 1 |
| 15 | 25F-2 | ELBOW, Air Filter to Relay Valve | 1 |
| 16 | 71T186 | ADAPTER UNION | 1 |
| 17 | T08573 | FILTER, Air | 1 |
| 18 | 507815 | *VALVE, Safety — B.W. #205105 | 1 |
| 19 | 594438 | HOSE, Pipe to Air Reservoir | 1 |
| 20 | 33F-4 | ADAPTER UNION | 1 |
| 21 | 36F-4 | ADAPTER UNION | 1 |
| 22 | 593963 | PIPE, L.H. (On Yoke) | 1 |
| 23 | ——— | AIR CHAMBER — See Index | — |
| 24 | 36F-2 | ADAPTER UNION | 1 |
| 25 | 26F-2 | ELBOW, Air Chamber | 1 |
| 26 | 593829 | HOSE, Relay Valve to Air Chamber | 1 |
| 27 | 515125 | *VALVE, Relay — B.W. #~~294497~~ | 1 |
| 28 | 25K-40024 | "O" RING, Relay Valve | 1 |
| 29 | 13F-08 | PLUG, Relay Valve | 1 |
| 30 | 4E-06 | LKWSHR, Relay Valve Attaching | 3 |
| 31 | 2C-616 | BOLT, Relay Valve Attaching | 3 |
| 32 | 592741 | HOSE, Pipe to Pipe | 1 |
| 33 | 592742 | HOSE, Pipe to Pipe | 1 |
| 34 | 36F-3 | ADAPTER UNION | 1 |
| 35 | 36F-4 | ADAPTER UNION | 1 |

*NOTE: Your local authorized Bendix Westinghouse Distributor or Dealer is equipped to service and supply these parts.

**WHEN ORDERING PARTS, ALWAYS STATE MODEL AND SERIAL NO. OF MACHINE**

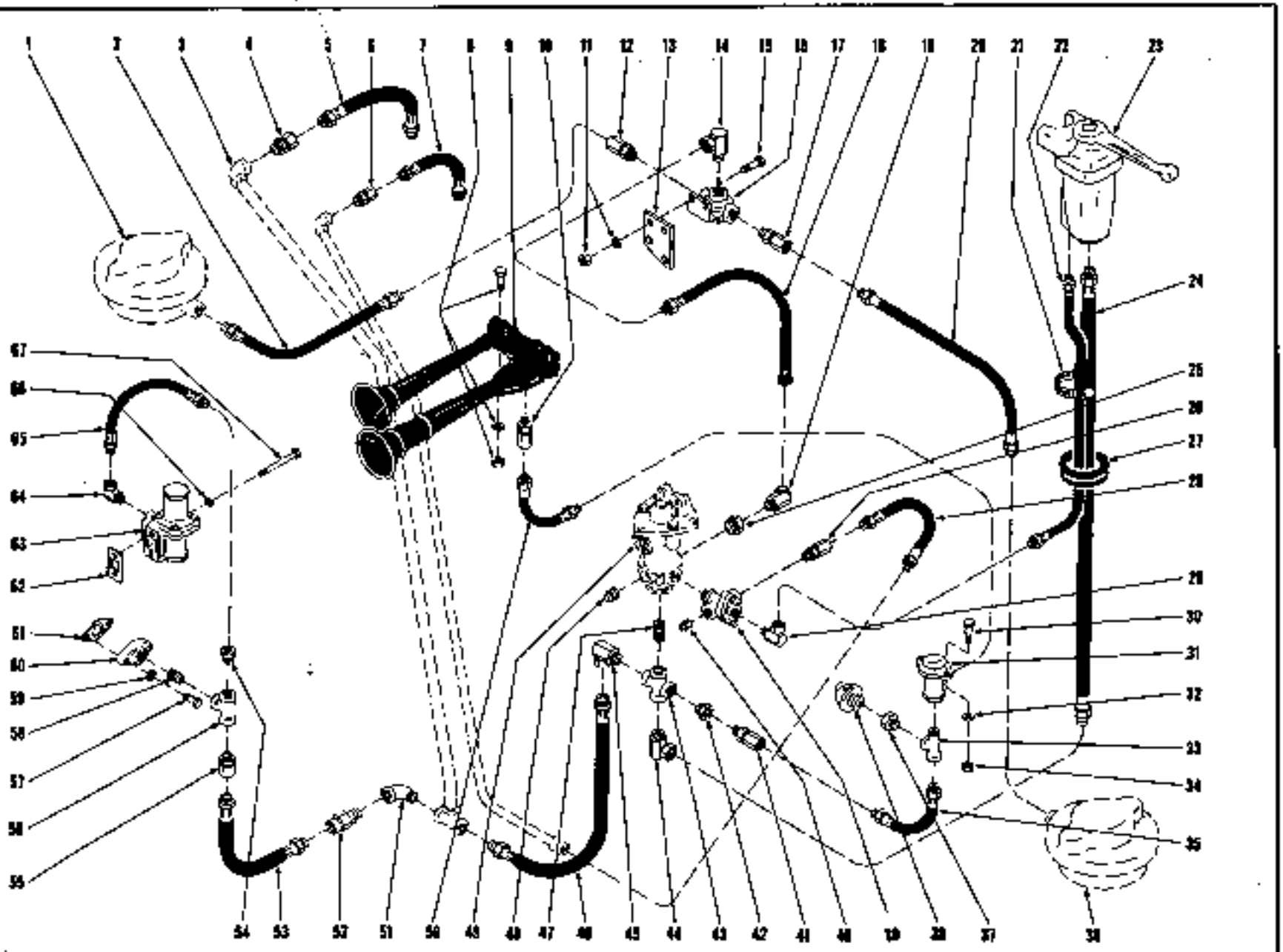

BRAKE AIR LINES — TRACTOR (FOR TRACTOR WAGON — REAR DUMP — MACHINES) TS-2266-P

## BRAKE AIR LINES — TRACTOR

| Item No. | Part No. | Description | No. Req'd. |
|---|---|---|---|
| 1 | ——— | AIR CHAMBER — See Parts Manual No. 1392 | † |
| 2 | 593474 | HOSE, Q.R.V. to Air Chamber | 1 |
| 3 | 594143 | PIPE ASSY, Firewall | 1 |
| 4 | 36F-4 | ADAPTER UNION | 1 |
| 5 | 594132 | HOSE, Firewall Pipe to Steering Assy Pipe | 1 |
| 6 | 36F-3 | ADAPTER UNION | 1 |
| 7 | 594133 | HOSE, Firewall Pipe to Steering Assy Pipe | 1 |
| 8 | 2C-508 | BOLT, Air Horn Attaching | 1 |
| 8A | 2D-05 | NUT, Air Horn Attaching | 1 |
| 8B | 4E-05 | LKWSHR, Air Horn Attaching | 1 |
| 9 | 593388 | *HORN, Air — B.W. #223585 | 1 |
| 10 | 36F-1 | ADAPTER UNION | 1 |
| 11 | 2D-05 | NUT, Q.R.V. to Bracket | 2 |
| 11A | 4E-05 | LKWSHR, Q.R.V. to Bracket | 2 |
| 12 | 36F-2 | ADAPTER UNION | 1 |
| 13 | 593478 | BRACKET, Quick Release Valve | 1 |
| 14 | 31F-3 | ADAPTER UNION | 1 |
| 15 | 2C-512 | BOLT, Q.R.V. to Bracket | 2 |
| 16 | 507816 | *VALVE, Quick Release — B.W. #205000 | 1 |
| 17 | 36F-2 | ADAPTER UNION | 1 |
| 18 | 594091 | HOSE, Foot Valve to Q.R.V. | 1 |
| 19 | 33F-3 | ADAPTER UNION | 1 |
| 20 | 593449 | HOSE, Q.R.V. to Air Chamber | 1 |
| 21 | 30H-45 | CLIP, Hose | 2 |
| 21A | 1D-04 | †NUT, Clip | 2 |
| 21B | 4E-04 | †LKWSHR, Clip | 2 |
| 22 | 593371 | HOSE, Double Check Valve to Hand Valve | 1 |
| 23 | 592291 | *VALVE, Brake Hand — B.W. #224491 | 1 |
| 24 | 593371 | HOSE, Foot Valve Cross to Hand Valve | 1 |
| 25 | 356614 | BUSHING, Foot Valve Reducing | 1 |
| 26 | 711186 | ADAPTER UNION | 1 |
| 27 | 652402 | GROMMET, Hose | 1 |
| 28 | 592784 | HOSE, Double Check Valve to Pipe | 1 |
| 29 | 31F-2 | ADAPTER UNION | 1 |
| 30 | 2C-412 | BOLT, Horn Valve Attaching | 2 |
| 31 | 530663 | *VALVE, Horn — B.W. #228672 | 1 |
| 32 | 4E-04 | LKWSHR, Horn Valve Attaching | 2 |
| 33 | 17F-2 | TEE, Horn Valve | 1 |
| 34 | 2D-04 | NUT, Horn Valve Attaching | 2 |
| 35 | 593438 | HOSE, Cross to Horn Valve | 1 |
| 36 | ——— | AIR CHAMBER — See Parts Manual No. 1392 | 1 |
| 37 | 356611 | BUSHING, Tee Reducing | 1 |
| 38 | 940643 | SENDER UNIT, Air Pressure | 1 |
| 39 | 594408 | *VALVE, Double Check — B.W. #227239 | 1 |
| 40 | 13F-04 | PLUG, Double Check Valve | 1 |
| 41 | 36F-2 | ADAPTER UNION | 1 |
| 42 | 356615 | BUSHING, Cross Reducing | 1 |
| 43 | 21F-4 | CROSS, Foot Valve | 1 |
| 44 | 301841 | ADAPTER UNION | 1 |
| 45 | 31F-4 | ADAPTER UNION | 1 |
| 46 | 592783 | HOSE, Pipe to Cross | 1 |
| 47 | 5K-409 | NIPPLE, Cross to Foot Valve | 1 |
| 48 | 13F-08 | PLUG, Foot Valve | 2 |
| 49 | ——— | BRAKE CONTROLS — See Parts Manual No. 1392 | — |
| 50 | 593435 | HOSE, Horn Valve to Horn | 1 |
| 51 | 26F-4 | ELBOW, Check Valve to Pipe | 1 |
| 52 | 593370 | *VALVE, Check — B.W. #228194 | 1 |
| 53 | 593280 | HOSE, Compressor to Pipe | 1 |
| 54 | 356616 | BUSHING, Tee Reducing | 1 |
| 55 | 36F-4 | ADAPTER UNION | 1 |
| 56 | 18F-4 | TEE, Discharge Fitting | 1 |
| 57 | 1C-516 | BOLT, Discharge Fitting | 2 |
| 58 | 5K-409 | NIPPLE, Tee to Discharge Fitting | 1 |
| 59 | 4E-05 | LKWSHR, Discharge Fitting | 2 |
| 60 | 510452 | *FITTING, Discharge — B.W. #213042 | 1 |
| 61 | 951948 | *GASKET, Discharge Fitting — B.W. #204920 | 1 |
| 62 | 942646 | *GASKET, Governor — B.W. #223577 | 1 |
| 63 | 942645 540306 | *GOVERNOR, Air Compressor — B.W. #226363 | 1 |
| 64 | 31F-1 | ADAPTER UNION | 1 |
| 65 | 593650 | HOSE, Governor to Tee | 1 |
| 66 | 4E-05 | LKWSHR, Governor to Compressor | 2 |
| 67 | 1C-548 | BOLT, Governor to Compressor | 2 |

*NOTE: Your local authorized Bendix Westinghouse Distributor or Dealer is equipped to service and supply these parts.
†Not Illustrated

**WHEN ORDERING PARTS, ALWAYS STATE MODEL AND SERIAL NO. OF MACHINE**

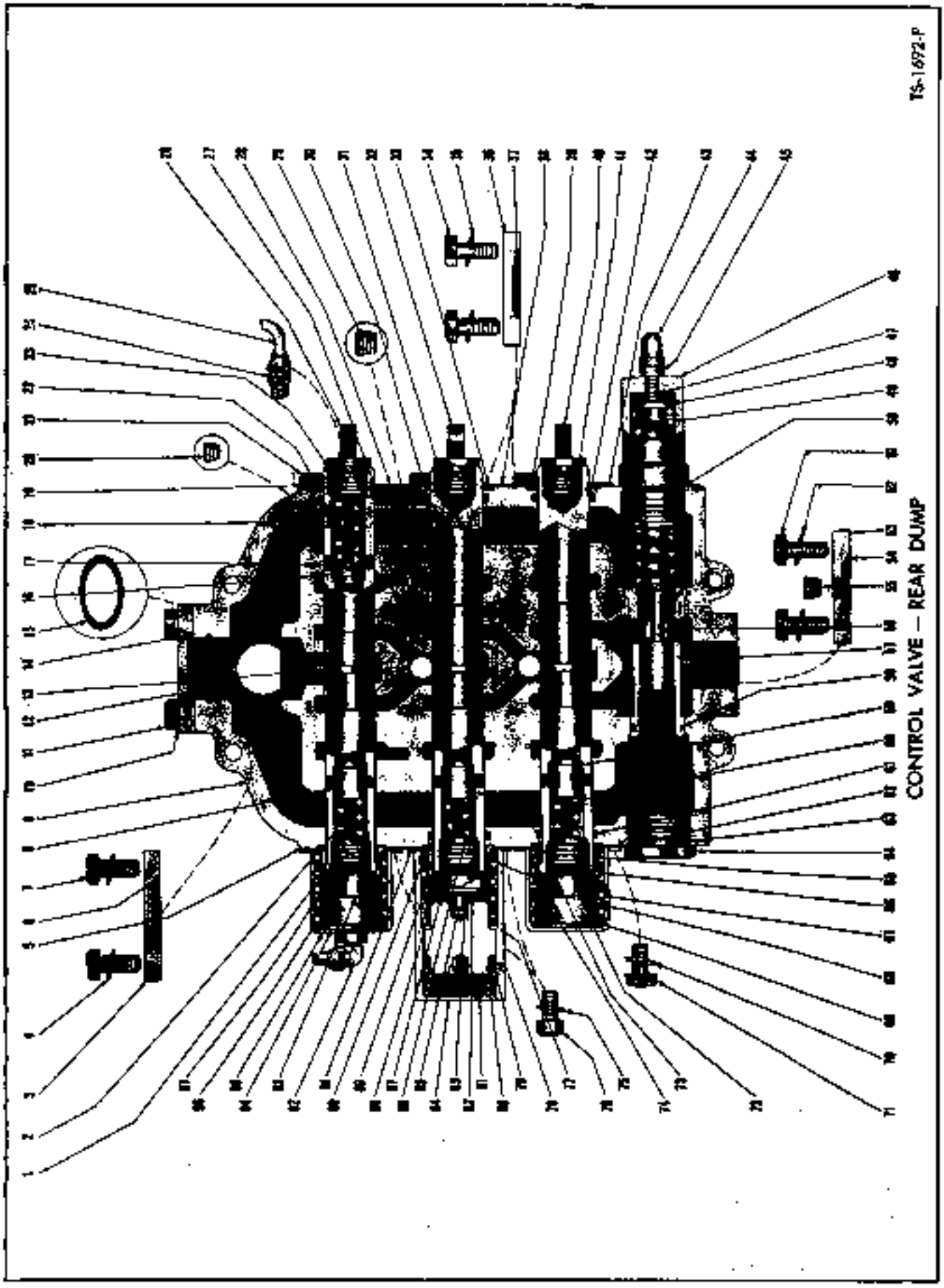
TS-1692-P
CONTROL VALVE — REAR DUMP

## CONTROL VALVE — REAR DUMP

| Item No. | Part No. | Description | No. Req'd. |
|---|---|---|---|
| A | 580950 | VALVE ASSY (Inc. 1 thru 97) | 1 |
| 1 | 944156 | RETAINER, Plunger Spring | 1 |
| 2 | 940166 | SPRING, Check Plunger | 1 |
| 3 | 943197 | COVER | 1 |
| 4 | 4E-08 | LKWSHR, Cover Bolt | 2 |
| 5 | 944147 | GASKET, Detent Cover | 1 |
| 6 | 25K-40208 | "O" RING, Cover | 1 |
| 7 | 2C-820 | BOLT, Cover | 2 |
| 8 | 943184 | VALVE, Plunger Check | 1 |
| 9 | ——— | §HOUSING — See "A" | — |
| 10 | 4E-08 | LKWSHR, Cover Bolt | 2 |
| 11 | 2C-820 | BOLT, Cover | 2 |
| 12 | 943197 | COVER | 1 |
| 13 | ——— | §SPOOLS — See "A" | — |
| 14 | 25K-40208 | "O" RING, Cover | 1 |
| 15 | 25K-60204 | "O" RING, Valve to Reservoir | 1 |
| 16 | 944144 | VALVE, Plunger Check | 1 |
| 17 | 743593 | SPACER, Check Valve Spring | 1 |
| 18 | 944145 | SPRING, Check Valve | 1 |
| 19 | 4E-05 | LKWSHR, Retainer Plate | 6 |
| 20 | 16F-02 | PLUG | 1 |
| 21 | 1C-512 | BOLT, Retainer Plate | 6 |
| 22 | 943187 | WIPER, Plunger | 1 |
| 23 | 943179 | "O" RING, Plunger Eye | 1 |
| 24 | 89F-3 | CONNECTOR, Oil Line Tube | 1 |
| 25 | 944146 | TUBE, Oil Line | 1 |
| 26 | 943180 | EYE, Plunger | 1 |
| 27 | 943181 | QUAD RING, Plunger | 1 |
| 28 | 943186 | PLATE, Wiper Retaining | 1 |
| 29 | 16F-08 | PLUG, Clean Out | 2 |
| 30 | 943181 | QUAD RING, Plunger | 1 |
| 31 | 943179 | "O" RING, Plunger Eye | 1 |
| 32 | 943180 | EYE, Plunger | 1 |
| 33 | 943187 | WIPER, Plunger | 1 |
| 34 | 2C-820 | BOLT, Cover | 4 |
| 35 | 4E-08 | LKWSHR, Cover | 4 |
| 36 | 943191 | COVER | 2 |
| 37 | 25K-40128 | "O" RING, Cover | 2 |
| 38 | 943186 | PLATE, Wiper Retaining | 1 |
| 39 | 943187 | WIPER, Plunger | 1 |
| 40 | 943180 | EYE, Plunger | 1 |
| 41 | 943179 | "O" RING, Plunger Eye | 1 |
| 42 | 943181 | QUAD RING, Plunger | 1 |
| 43 | 943186 | PLATE, Wiper Retaining | 1 |
| 44 | 863045 | NUT, Relief Valve Acorn | 1 |
| 45 | 8D-06 | NUT, Adjusting Screw Jam | 1 |
| 46 | 943196 | CAP, Relief Valve Adjusting | 1 |
| 47 | 940278 | SCREW, Relief Valve Adjusting | 1 |
| 48 | 943195 | GUIDE, Relief Valve Spring | 1 |
| 49 | 519251 | SPRING, Relief Valve | 1 |
| 50 | 25K-40124 | "O" RING, Relief Valve Adjusting Cap | 1 |
| 51 | 2C-820 | BOLT, Cover | 2 |
| 52 | 4E-08 | LKWSHR, Cover | 2 |
| 53 | 943488 | PLATE, Cylinder Port Cover | 1 |
| 54 | 25K-40128 | "O" RING, Cover Plate | 1 |
| 55 | 16F-04 | PLUG, Cover Plate | 1 |
| 56 | 943193 | PLUNGER, Relief Valve | 1 |
| 57 | 943192 | SEAT, Relief Valve Plunger | 1 |
| 58 | 25K-40116 | "O" RING, Relief Valve Plunger Seat | 1 |
| 59 | 943184 | VALVE, Plunger Check | 1 |
| 60 | 940166 | SPRING, Check Valve | 1 |
| 61 | 943181 | QUAD RING, Plunger | 1 |
| 62 | 943188 | GASKET, Spring Cover | 1 |
| 63 | 25K-40124 | "O" RING, Housing Cover | 1 |
| 64 | 943190 | CAP, Relief Valve Housing | 1 |
| 65 | 943182 | RETAINER, Plunger Spring | 1 |
| 66 | 943179 | "O" RING, Plunger Cap | 1 |
| 67 | 943183 | SPRING, Plunger Return | 1 |
| 68 | 943189 | COVER, Plunger Spring | 1 |
| 69 | 943182 | RETAINER, Plunger Spring | 1 |
| 70 | 4E-05 | LKWSHR, Spring Cover | 4 |
| 71 | 1C-512 | BOLT, Spring Cover | 4 |
| 72 | 943185 | CAP, Plunger | 1 |
| 73 | 943184 | VALVE, Plunger Check | 1 |
| 74 | 943183 | SPRING, Plunger Return | 1 |
| 75 | 4E-05 | LKWSHR, Detent Housing | 8 |
| 76 | 11G-512 | BOLT, Detent Housing | 8 |
| 77 | 944152 | WASHER, Spring Stop | 1 |
| 78 | 944150 | RING, Detent Snap | 1 |
| 79 | 944149 | SPACER, Detent Spring | 1 |
| 80 | 755762 | RING, Detent Spring Retaining | 1 |
| 81 | 944151 | POPPET, Detent | 1 |
| 82 | 675436 | PIN, Plunger Cap Roll | 1 |
| 83 | 944148 | PIN, Plunger Cap | 1 |
| 84 | 944157 | HOUSING, Detent | 1 |
| 85 | 660178 | PIN, Plunger Cap Roll | 1 |
| 86 | 940166 | SPRING, Check Plunger | 1 |
| 87 | 944153 | CAP, Plunger End | 1 |
| 88 | 943179 | "O" RING, End Cap | 1 |
| 89 | 944154 | RETAINER, Plunger Spring | 1 |
| 90 | 943181 | QUAD RING, Plunger | 1 |
| 91 | 944147 | GASKET, Detent Cover | 1 |
| 92 | 83F-3 | ELBOW, Oil Line Tube | 1 |
| 93 | 943185 | CAP, Plunger End | 1 |
| 94 | 944156 | RETAINER, Plunger Spring | 1 |
| 95 | 944155 | COVER, Plunger Spring | 1 |
| 96 | 943183 | SPRING, Plunger Return | 1 |
| 97 | 943179 | "O" RING, End Cap | 1 |
| 98 | 2C-880 | †BOLT, Valve to Reservoir | 3 |
| 99 | 4E-08 | †LKWSHR, Valve to Reservoir | 3 |

†Not Illustrated
§Not Sold Separately. Order complete Valve Assembly.

**WHEN ORDERING PARTS, ALWAYS STATE MODEL AND SERIAL NO. OF MACHINE**

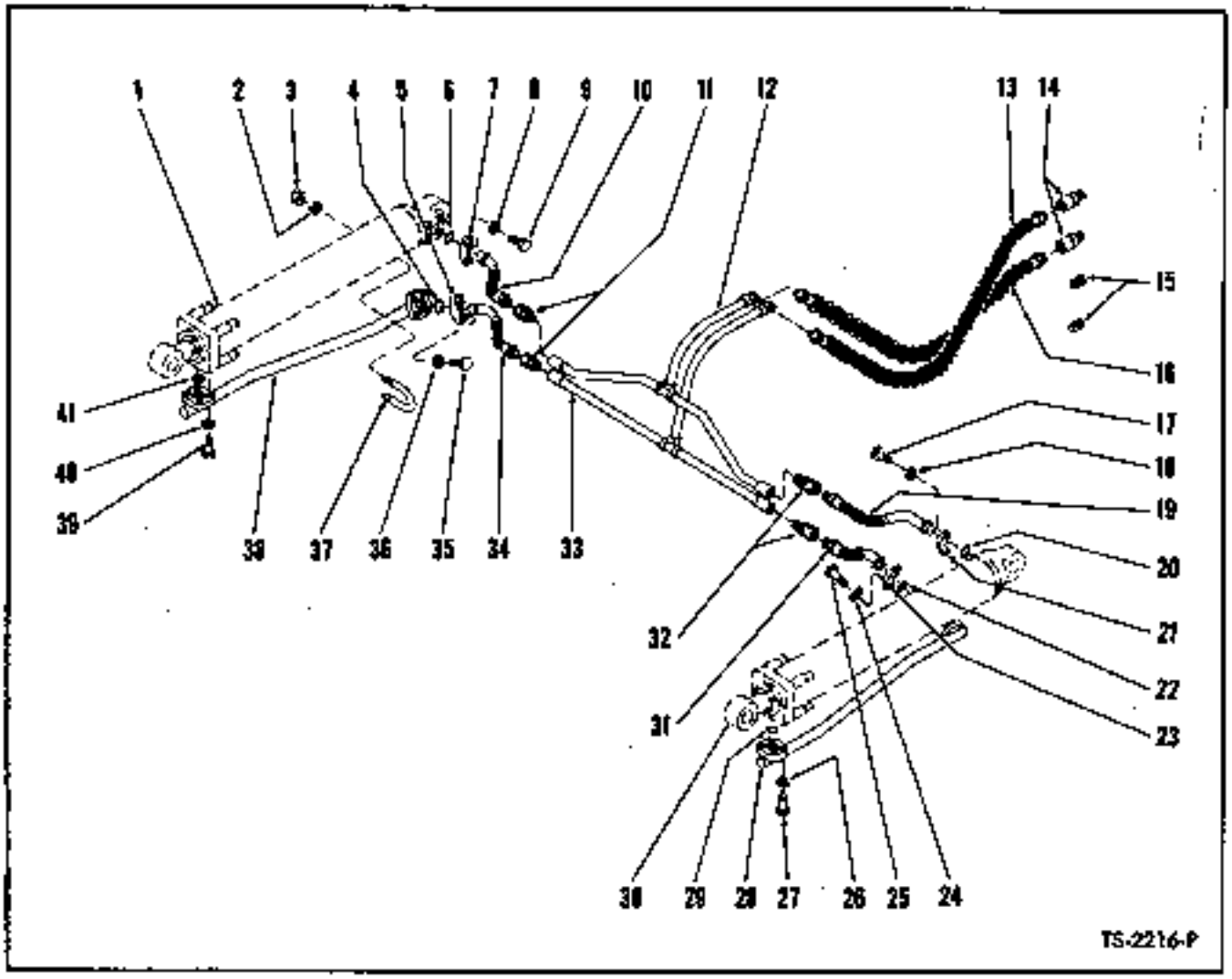


## HYDRAULIC SYSTEM — DUMP

| Item No. | Part No. | Description | No. Req'd. |
|---|---|---|---|
| 1 | ——— | DUMP CYLINDER — See Index | — |
| 2 | 4E-04 | LKWSHR, U-Bolt | 4 |
| 3 | 2D-04 | NUT, U-Bolt | 4 |
| 4 | 25K-40110 | "O" RING, Hose to Pipe | 1 |
| 5 | 663093 | FLANGE HALF, Hose to Pipe | 2 |
| 6 | 25K-40116 | "O" RING, Hose to Cylinder | 1 |
| 7 | 663094 | FLANGE HALF, Hose to Cylinder | 2 |
| 8 | 4E-07 | LKWSHR, Flange Half to Cylinder | 4 |
| 9 | 1C-722 | BOLT, Flange Half to Cylinder | 4 |
| 10 | 580846 | HOSE, Pipe to Cylinder | 1 |
| 11 | 36F-6 | ADAPTER UNION | 2 |
| 12 | 593954 | PIPE, Left Hand | 1 |
| 13 | 516599 | HOSE, Strg. Assy Pipe to Rear Pipe | 1 |
| 14 | 36F-6 | ADAPTER UNION | 2 |
| 15 | 10F-16 | PLUG, Scraper Pipes | 2 |
| 16 | 516599 | HOSE, Scraper Pipe to Rear Pipe | 1 |
| 17 | 1C-722 | BOLT, Flange Half to Cylinder | 4 |
| 18 | 4E-07 | LKWSHR, Flange Half to Cylinder | 4 |
| 19 | 580846 | HOSE, Pipe to Cylinder | 1 |
| 20 | 25K-40116 | "O" RING, Hose to Cylinder | 1 |
| 21 | 663094 | FLANGE HALF, Hose to Cylinder | 2 |
| 22 | 25K-40110 | "O" RING, Hose to Cylinder Pipe | 1 |
| 23 | 663093 | FLANGE HALF, Hose to Cylinder Pipe | 2 |
| 24 | 4E-06 | LKWSHR, Flange Half to Cylinder Pipe | 4 |
| 25 | 1C-620 | BOLT, Flange Half to Cylinder Pipe | 4 |
| 26 | 4E-06 | LKWSHR, Cylinder Pipe to Cylinder | 4 |
| 27 | 1C-620 | BOLT, Cylinder Pipe to Cylinder | 4 |
| 28 | 581050 | PIPE, R.H. Cylinder | 1 |
| 29 | 25K-40110 | "O" RING, Pipe to Cylinder | 1 |
| 30 | ——— | DUMP CYLINDER — See Index | — |
| 31 | 594020 | HOSE, Pipe to Cylinder Pipe | 1 |
| 32 | 36F-6 | ADAPTER UNION | 2 |
| 33 | 593950 | PIPE, Right Hand | 1 |
| 34 | 594020 | HOSE, Pipe to Cylinder Pipe | 1 |
| 35 | 1C-620 | BOLT, Flange Half to Cylinder Pipe | 4 |
| 36 | 4E-06 | LKWSHR, Flange Half to Cylinder Pipe | 4 |
| 37 | 594355 | U-BOLT, Cylinder Pipe to Cylinder | 1 |
| 38 | 581049 | PIPE, L.H. Cylinder | 1 |
| 39 | 1C-620 | BOLT, Cylinder Pipe to Cylinder | 4 |
| 40 | 4E-06 | LKWSHR, Cylinder Pipe to Cylinder | 4 |
| 41 | 25K-40110 | "O" RING, Cylinder Pipe to Cylinder | 1 |

**WHEN ORDERING PARTS, ALWAYS STATE MODEL AND SERIAL NO. OF MACHINE**

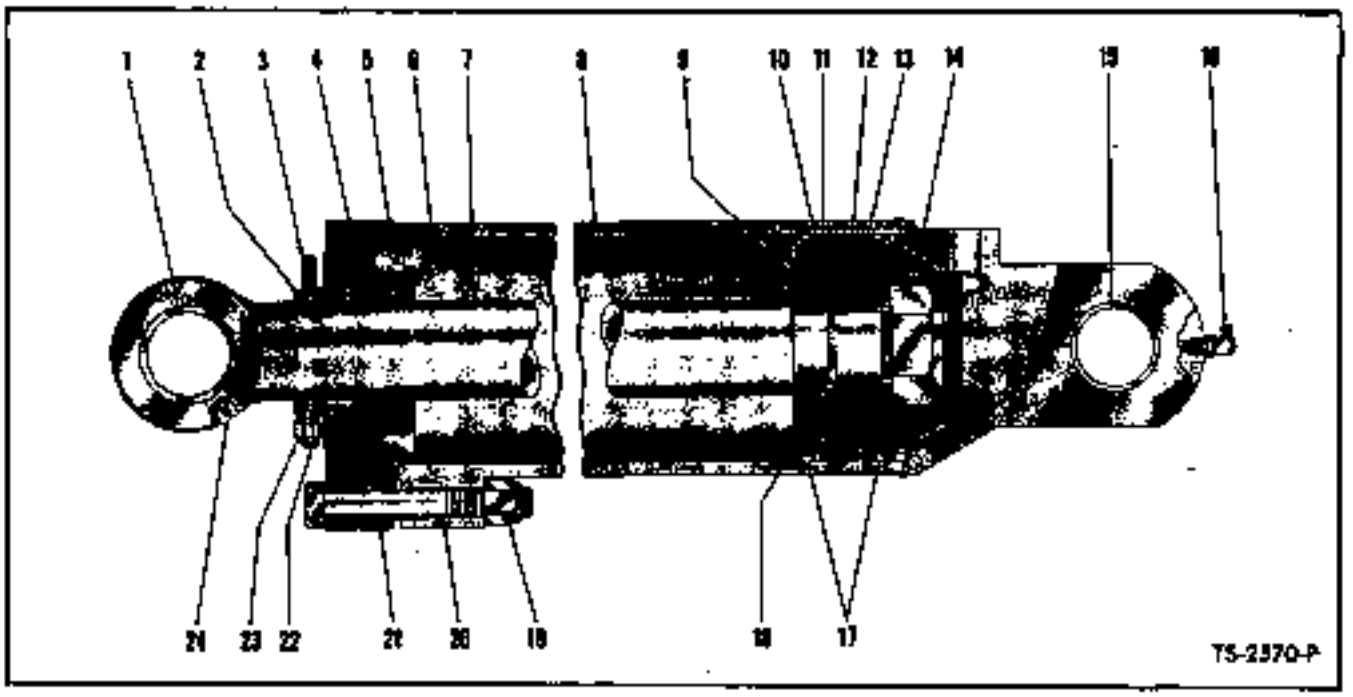


## CYLINDER DUMP

| Item No. | Part No. | Description | No. Req'd. |
|---|---|---|---|
| A | | *CYLINDER ASSY (Inc. 1 thru 24) | |
| B | 580794 | Right Hand | 1 |
| C | 580789 | Left Hand | 1 |
| *NOTE: 2 Cylinders used on machine — Quantities listed below are for 1 Cylinder. | | | |
| 1 | 512726 | BUSHING, Piston Rod | 1 |
| 2 | 941569 | WIPER, Piston Rod | 1 |
| 3 | 512747 | RETAINER, Piston Rod Wiper | 1 |
| 4 | 532272 | PACKING SET, Cylinder Cap | 1 |
| 5 | 25K-40800 | "O" RING, Cylinder Cap | 1 |
| 6 | 514740 | ADAPTER, Male Chevron Packing | 2 |
| 7 | 536382 | ROD ASSY, Piston (Inc. 1) | 1 |
| 8 | | CYLINDER TUBE (Inc. 15) | |
| 8A | 580795 | Right Hand | 1 |
| 8B | 580790 | Left Hand | 1 |
| 9 | 528180 | PISTON 2 - 541582 SUPERSEDES 528180 | 1 - PG. 2001 |
| 10 | 514755 | ‡SHIM, Piston Packing | — |
| 11 | 514753 | ADAPTER, Female Chevron Packing | 2 |
| 12 | ~~509356~~ 584237 | PACKING SET, Piston | 1 |
| 13 | 514752 | ADAPTER, Male Chevron Packing | 2 |
| 14 | 536058 | NUT, Piston Rod | 1 |
| 15 | 512726 | BUSHING, Cylinder Tube | 1 |
| 16 | 12H-15 | FITTING, Cylinder Grease | 1 |
| 17 | 524057 | RING, Piston Wear | 2 |
| 18 | 25K-40216 | "O" RING, Piston Rod | 1 |
| 19 | ~~68D-16~~ 18D-16 | NUT, Cylinder Cap | 4 |
| 20 | 24C-16128 | BOLT, Cylinder Cap | 4 |
| 21 | 581957 | **CAP, Cylinder | 1 |
| 22 | 528103 | GLAND, Packing | 1 |
| 23 | 4C-820 | BOLT, Packing Gland | 4 |
| 24 | 10H-25 | FITTING, Piston Rod Grease | 1 |

**NOTE: 581957 Cap can be used only with 528180 Piston (illustrated as item 9). Machines with old style cap must install 528180 Piston when installing 581957 Cap.

‡As Required

**WHEN ORDERING PARTS, ALWAYS STATE MODEL AND SERIAL NO. OF MACHINE**

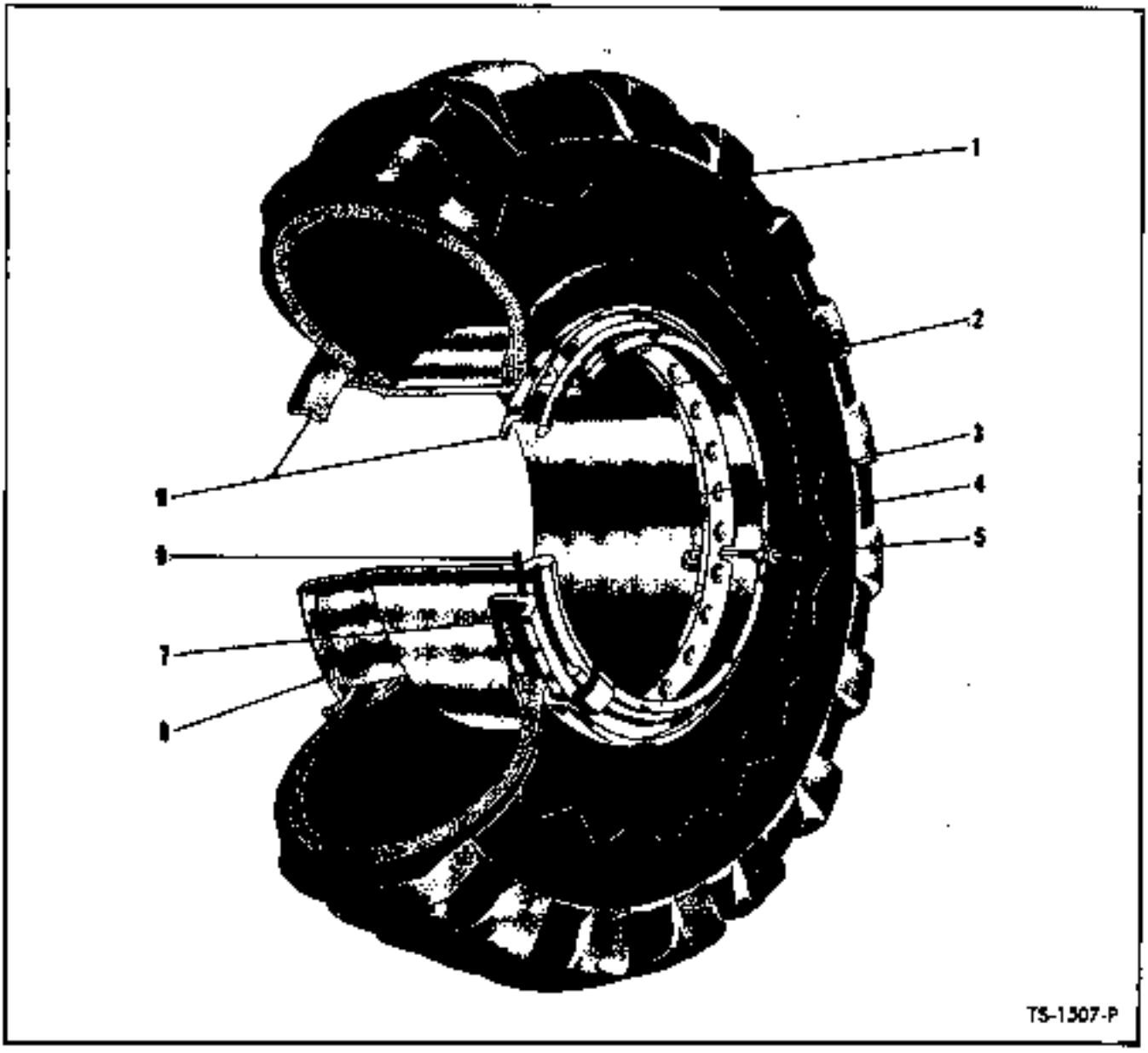


## WHEEL AND TIRE DATA

| Item No | 24.5 x 29 | 27.5 x 25 | DESCRIPTION | No. Req'd. |
|---|---|---|---|---|
| 1 | ——— | ——— | TIRE | 2 |
| 2 | 523253 | 580274 | RING, Lock | 2 |
| 3 | 529107 | 509445 | VALVE STEM | 2 |
| 4 | 551684 | ——— | ADAPTER, Valve Stem | 2 |
| 5 | 551685 | ——— | CAP, Valve | 2 |
| 6 | 582124 | 581649 | *WHEEL | 2 |
| 7 | 523252 | ~~580278~~ 522363 | BAND, Bead Seat | 2 |
| 8 | 513117 | 580278 | "O" RING | 2 |
| 9 | 580479 | 522329 | FLANGE | 4 |

*NOTE: 529370 PLUG must be used with each 581649 Wheel.

**WHEN ORDERING PARTS, ALWAYS STATE MODEL AND SERIAL NO. OF MACHINE**

## DECALS

| Item No. | Part No. | Description | No. Req'd |
|---|---|---|---|
| 1 | [illegible] | [illegible] | 1 |
| 2 | 551741 | DECAL, Clark Equipment | 2 |
| 3 | 593211 | DECAL, Model | 2 |
| 4 | 502776 | DECAL, Michigan | 2 |
| 5 | 528694 | DECAL, Patent | 1 |

542074 - Plate, Patent plus (4) 6C-605 Screw replaces 528694 Patent Decal. Scrap stock of 528694 Decal.

| Item No. | Part No. | Description | No. Req'd |
|---|---|---|---|
| 6 | 553412 | WRENCH, Wheel | 1 |
| 7 | 552164 | HANDLE, Wheel Wrench | 1 |
| 8 | 522996 | WRENCH, Hub Bearing — 8 1/16" | 1 |
| 9 | 522997 | WRENCH, Hub Bearing — 5 15/16" | 1 |
| 10 | 523029 | SLEEVE, Piston Rod Wiper Taper | 1 |
| 11 | 515201 | RING, Packing Compressor | 1 |

## TRANSMISSION AND DRIVE SHAFT ROCK GUARD

| Item No. | Part No. | Description | No. Req'd |
|---|---|---|---|
| 1 | 580869 | ROCK GUARD, Transmission | 1 |
| 2 | 2C-820 | BOLT, Guard Attaching | 2 |
| 3 | 2D-08 | NUT, Guard Attaching | 2 |
| 4 | 4E-08 | LKWSHR, Guard Attaching | 2 |
| 5 | 580872 | ROCK GUARD, Drive Shaft — L.H. | 1 |
| 6 | 580873 | ROCK GUARD, Drive Shaft — R.H. | 1 |
| 7 | 2C-816 | BOLT, L.H. Guard to R.H. Guard | 2 |
| 8 | 2D-08 | NUT, L.H. Guard to R.H. Guard | 2 |
| 9 | 4E-08 | LKWSHR, L.H. Guard to R.H. Guard | 2 |
| 10 | 2C-624 | BOLT, Guards to Frame | 4 |
| 11 | 2D-06 | NUT, Guards to Frame | 4 |
| 12 | 4E-06 | LKWSHR, Guards to Frame | 4 |

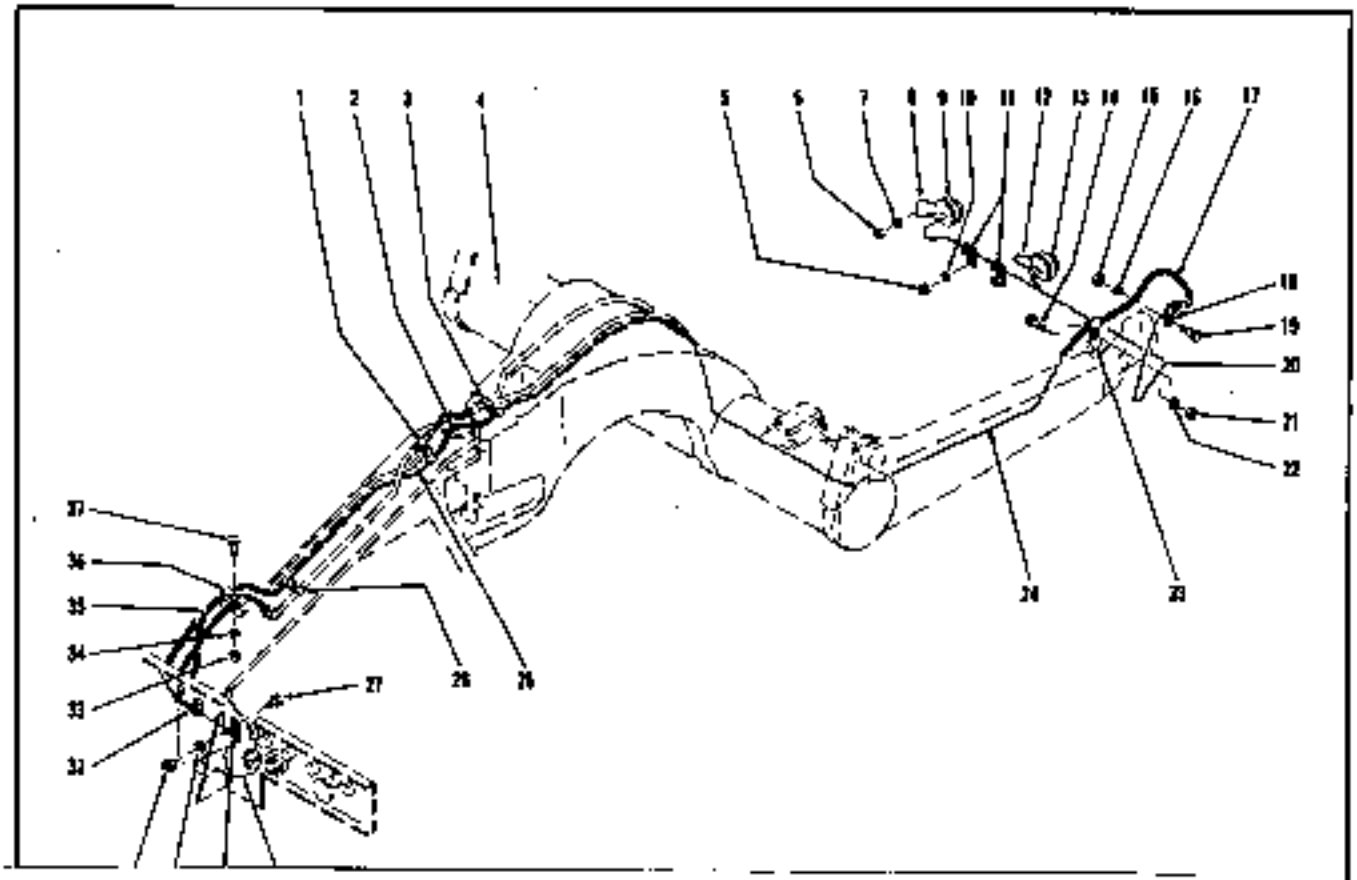


TS-2628-F

*NOTE: 945960 Lamp Kit consists of 1 - 547416 Lamp Assy, 3 #12E-10 Lkwshr, 3 #120-10 Nut and 1 - 002128 Template Form. The serviceable items of 547416 Lamp Assy are 551245 Sealed Beam Unit and 944976 Frame and Retainer Assy.

| Item No. | Part No. | Description | No. Req'd. |
|---|---|---|---|
| 1 | 580976 | CLAMP, Wire Assy — Double | 2 |
| 1A | 2C-410 | †BOLT, Clamp Attaching | 1 |
| 1B | 2D-04 | †NUT, Clamp Attaching | 1 |
| 1C | 4E-04 | †LKWSHR, Clamp Attaching | 1 |
| 2 | 580984 | WIRE ASSY | 1 |
| 3 | 580976 | CLAMP, Wire Assy — Double | 2 |
| 3A | 2C-410 | †BOLT, Clamp Attaching | 1 |
| 3B | 2D-04 | †NUT, Clamp Attaching | 1 |
| 3C | 4E-04 | †LKWSHR, Clamp Attaching | 1 |
| 4 | ---- | YOKE — See Index | — |
| 5 | 1D-04 | NUT, Clamp Attaching | 2 |
| 6 | 12D-8 | NUT, Lamp Attaching | 6 |
| 7 | 13E-8 | LKWSHR, Lamp Attaching | 6 |
| 8 | 550745 | WIRE, Ground | 1 |
| 9 | 551282 | LAMP ASSY (Inc. 9A) 945960 | 1 |
| 9A | 551245 | †SEALED UNIT, Lamp | 1 |
| 10 | 4E-04 | LKWSHR, Clamp Attaching | 2 |
| 11 | 30H-7 | CLAMP, Wire | 2 |
| 12 | 550745 | WIRE, Ground | 1 |
| 13 | 551282 | LAMP ASSY (Inc. 13A) 945960 | 1 |
| 13A | 551245 | †SEALED UNIT, Lamp | 1 |
| 14 | 2C-410 | BOLT, Clamp Attaching | 1 |
| 15 | 2D-04 | NUT, Clamp Attaching | 1 |
| 16 | 4E-04 | LKWSHR, Clamp Attaching | 1 |
| 17 | 580991 | WIRE ASSY | 1 |
| 18 | 30H-45 | CLAMP, Wire | 1 |
| 19 | 2C-408 | BOLT, Clamp Attaching | 1 |
| 20 | 580994 | WIRE | 1 |
| 21 | 2D-04 | NUT, Clamp Attaching | 1 |
| 22 | 4E-04 | LKWSHR, Clamp Attaching | 1 |
| 23 | 580976 | CLAMP, Wire Assy — Double | 2 |
| 24 | 580920 | WIRE | 1 |
| 25 | 580999 | WIRE | 1 |
| 26 | 580975 | CLAMP, Wire Assy — Double | 2 |
| 27 | 2C-408 | BOLT, Clamp Attaching | 1 |
| 28 | 581000 | WIRE | 1 |
| 29 | 30H-7 | CLAMP, Wire | 1 |
| 30 | 4E-04 | LKWSHR, Clamp Attaching | 1 |
| 31 | 2D-04 | NUT, Clamp Attaching | 1 |
| 32 | 30H-45 | CLAMP, Wire Assy | 1 |
| 33 | 2D-04 | NUT, Clamp Attaching | 2 |
| 34 | 4E-04 | LKWSHR, Clamp Attaching | 2 |
| 35 | 581001 | WIRE ASSY | 1 |
| 36 | 580975 | CLAMP, Wire Assy | 4 |
| 37 | 2C-410 | BOLT, Clamp Attaching | 2 |

†Not Illustrated

**WHEN ORDERING PARTS, ALWAYS STATE MODEL AND SERIAL NO. OF MACHINE**

# NUMERICAL INDEX


| Part No. | Page No. |
|---|---|
| 1C-512 | 9 |
| 1C-516 | 7 |
| 1C-548 | 7 |
| 1C-620 | 10 |
| 1C-630 | 3 |
| 1C-718 | 3 |
| 1C-722 | 10 |
| 1C-1236 | 4 |
| 1D-04 | 7, 14 |
| 1F-308 | 4 |
| 1F-1040 | 1 |
| 2C-408 | 14 |
| 2C-410 | 14 |
| 2C-412 | 7 |
| 2C-508 | 7 |
| 2C-512 | 7 |
| 2C-616 | 1, 5 |
| 2C-624 | 13 |
| 2C-816 | 2, 13 |
| 2C-820 | 9, 13 |
| 2C-860 | 9 |
| 2C-10812 | 1, 2 |
| 2D-04 | 7, 10, 14 |
| 2D-05 | 7 |
| 2D-06 | 2, 13 |
| 2D-08 | 13 |
| 2D-10 | 1, 2 |
| 4C-820 | 11 |
| 4E-04 | 7, 10, 14 |
| 4E-05 | 7, 9 |
| 4E-06 | 1, 2, 3, 5, 10, 13 |
| 4E-07 | 3, 10 |
| 4E-08 | 2, 9, 13 |
| 4E-10 | 1, 2 |
| 4E-12 | 4 |
| 5K-409 | 7 |
| 8D-05 | 9 |
| 10M-25 | 2, 11 |
| 11E-135 | 4 |
| 11G-512 | 9 |
| 12D-8 | 14 |
| 12M-15 | 4, 11 |
| 13E-8 | 14 |
| 13F-04 | 5, 7 |
| 13F-08 | 5, 7 |
| 13F-16 | 10 |
| 24C-6136 | 2 |
| 16F-02 | 9 |
| 16F-04 | 4, 9 |
| 16F-08 | 9 |
| 17F-2 | 7 |
| 18F-4 | 7 |
| 21D-06 | 4 |
| 21F-4 | 7 |
| 24C-16128 | 11 |
| 24C-18136 | 2 |
| 24E-06 | 4 |
| 25F-2 | 5 |
| 25K-40024 | 3 |
| 25K-40110 | 10 |
| 25K-40116 | 9, 10 |
| 25K-40124 | 9 |
| 25K-40128 | 9 |
| 25K-40208 | 9 |
| 25K-40216 | 11 |
| 25K-40800 | 11 |
| 25K-60124 | 4 |
| 25K-60204 | 9 |
| 26F-2 | 5 |
| 26F-4 | 7 |
| 30H-7 | 14 |
| 30H-45 | 7, 14 |
| 31F-1 | 7 |
| 31F-2 | 7 |
| 31F-3 | 7 |
| 31F-4 | 7 |
| 33F-3 | 7 |
| 33F-4 | 5 |
| 36F-1 | 7 |
| 36F-2 | 5, 7 |
| 36F-3 | 5, 7 |
| 36F-4 | 5, 7 |
| 36F-6 | 10 |
| 62D-16 | 2 |
| 66D-16 180-16 | 11 |
| 83F-3 | 9 |
| 89F-3 | 9 |
| 102439 | 3 |
| 102766 | 3 |
| 107010 | 4 |
| 107707 | 4 |
| 107709 | 4 |
| 107713 | 4 |
| 107728 | 3 |
| 107729 | 3 |
| 107730 | 3 |
| 107732 | 3 |
| 107735 | 4 |
| 107736 | 4 |
| 107739 | 4 |
| 107940 | 4 |
| 107941 | 4 |
| 107983 | 3 |
| 107985 | 3 |
| 108456 | 4 |
| 108464 | 3 |
| 108467 | 4 |
| 108468 | 4 |
| 108472 | 3 |
| 108476 | 4 |
| 108477 | 3 |
| 108498 | 3 |
| 108573 | 5 |
| 108705 | 3 |
| 108706 | 3 |
| 108707 | 3 |
| 109135 | 3 |
| 109137 | 3 |
| 109597 | 4 |
| 109598 | 4 |
| 109599 | 4 |
| 110126 | 4 |
| 110208 | 4 |
| 110814 | 4 |
| 110855 | 4 |
| 111053 | 4 |
| 111056 | 4 |
| 111905 | 4 |
| 111461 | 3 |
| 224032 | 4 |
| 301841 | 7 |
| 356611 | 7 |
| 356614 | 7 |
| 356615 | 7 |
| 356616 | 7 |
| 502776 | 13 |
| 507815 | 3 |
| 507816 | 7 |
| 509356 | 11 |
| 509445 | 12 |
| 510452 | 7 |
| 512726 | 11 |
| 512747 | 11 |
| 513117 | 12 |
| 514740 | 11 |
| 514752 | 11 |
| 514753 | 11 |
| 514755 | 11 |
| 515125 | 3 |
| 515201 | 13 |
| 516599 | 10 |
| 519251 | 9 |
| 522329 | 12 |
| 522996 | 13 |
| 522997 | 13 |
| 523029 | 13 |
| 523252 | 12 |
| 523253 | 12 |
| 524057 | 11 |
| 528103 | 11 |
| 528180 | 11 |
| 528694 | 13 |
| 529107 | 12 |
| 530860 | 7 |
| 532772 | 11 |
| 536058 | 11 |
| 536382 | 11 |
| 550745 | 14 |
| 551245 | 14 |
| 551282 | 14 |
| 551684 | 12 |
| 551685 | 12 |
| 551741 | 13 |
| 552164 | 13 |
| 553412 | 13 |
| 580273 | 12 |
| 580274 | 12 |
| 580278 | 12 |
| 580477 | 12 |
| 580479 | 12 |
| 580789 | 11 |
| 580790 | 11 |
| 580794 | 11 |
| 580795 | 11 |
| 580797 | 2 |
| 580799 | 2 |
| 580846 | 10 |
| 580869 | 13 |
| 580872 | 13 |
| 580873 | 13 |
| 580887 | 2 |
| 580920 | 14 |
| 580950 | 9 |
| 580975 | 14 |
| 580976 | 14 |
| 580984 | 14 |
| 580991 | 14 |
| 580994 | 14 |
| 580999 | 14 |
| 581000 | 14 |
| 581001 | 14 |
| 581049 | 10 |
| 581050 | 10 |
| 581957 | 11 |
| 582066 | 1 |
| 590708 | 2 |
| 591623 | 2 |
| 592291 | 7 |
| 592741 | 5 |
| 592742 | 5 |
| 592783 | 7 |
| 592784 | 7 |
| 592785 | 7 |
| 592811 | 13 |
| 593280 | 7 |
| 593370 | 7 |
| 593371 | 7 |
| 593388 | 7 |
| 593435 | 7 |
| 593436 | 7 |
| 593449 | 7 |
| 593474 | 7 |
| 593476 | 7 |
| 593618 | 12 |
| 593650 | 7 |
| 593737 | 1 |
| 593829 | 5 |
| 593908 | 2 |
| 593917 | 1 |
| 593950 | 10 |
| 593954 | 10 |
| 593958 | 5 |
| 593959 | 5 |
| 593960 | 5 |
| 593966 | 5 |
| 594019 | 1 |
| 594020 | 10 |
| 594091 | 7 |
| 594132 | 7 |
| 594133 | 7 |
| 594143 | 7 |
| 594355 | 10 |
| 594390 | 2 |
| 594408 | 7 |
| 594438 | 5 |
| 594439 | 5 |
| 619027 | 2 |
| 652402 | 7 |
| 653673 | 3 |
| 660178 | 9 |
| 660516 | 4 |
| 663093 | 10 |
| 663094 | 10 |
| 675436 | 9 |
| 711186 | 5, 7 |
| 731959 | 3 |
| 742262 | 3 |
| 742263 | 3 |
| 743593 | 9 |
| 755762 | 9 |
| 863045 | 9 |
| 940186 | 9 |
| 940278 | 9 |
| 940643 | 7 |
| 941569 | 11 |
| 942645 | 7 |
| 942646 | 7 |
| 943179 | 9 |
| 943180 | 9 |
| 943181 | 9 |
| 943182 | 9 |
| 943183 | 9 |
| 943184 | 9 |
| 943185 | 9 |
| 943186 | 9 |
| 943187 | 9 |
| 943188 | 9 |
| 943189 | 9 |
| 943190 | 9 |
| 943191 | 9 |
| 943192 | 9 |
| 943193 | 9 |
| 943195 | 9 |
| 943196 | 9 |
| 943197 | 9 |
| 943488 | 9 |
| 943593 | 9 |
| 944144 | 9 |
| 944145 | 9 |
| 944146 | 9 |
| 944147 | 9 |
| 944148 | 9 |
| 944149 | 9 |
| 944150 | 9 |
| 944151 | 9 |
| 944152 | 9 |
| 944153 | 9 |
| 944154 | 9 |
| 944155 | 9 |
| 944156 | 9 |
| 944157 | 9 |
| 944273 | 13 |
| 944671 | 1 |
| 951948 | 7 |

# NOTES