1A2

INTRODUCTION AND CUSTOMER INFORMATION

T197662A -UN-05FEB04

FEVEREIRO 1997

RUTHZIL TRATOR COMERCIAL DE PEÇAS LTDA 11 97083-6812 ROLANDO



LEFT-HAND SIDE VIEW OF JOHN DEERE 210LE LANDSCAPE LOADER
(MANUFACTURED 1997-)

TO THE CUSTOMER

THE PART NUMBERS IN THIS PARTS CATALOG WERE CORRECT AT THE TIME YOUR CATALOG WAS PUBLISHED. IT IS OUR POLICY TO CONSTANTLY IMPROVE OUR MACHINES AND, THEREFORE, PART NUMBERS MAY CHANGE. WHEN ORDERING PARTS, VERIFY PART NUMBERS THROUGH YOUR DEALER.

(SPECIFICATIONS AND DESIGN SUBJECT TO CHANGE WITHOUT NOTICE.)

COPYRIGHT © 2004 DEERE & COMPANY Moline, Illinois All rights reserved

SERIAL NUMBER LOCATIONS

EACH 210LE LANDSCAPE LOADER HAS EIGHT SERIAL NUMBERS, A PRODUCT IDENTIFICATION NUMBER PLATE, AN ENGINE SERIAL NUMBER PLATE, A HYDRAULIC PUMP SERIAL NUMBER PLATE, A MFWD AXLE SERIAL NUMBER PLATE, A TRANSMISSION SERIAL NUMBER PLATE, A REAR AXLE SERIAL NUMBER PLATE.

A STEERING VALVE SERIAL NUMBER PLATE AND A PRIORITY VALVE SERIAL NUMBER PLATE, BEHIND AND BELOW..

THE PRODUCT IDENTIFICATION NUMBER IS ON THE LEFT-HAND SIDE OF THE LOADER FRAME, JUST THE LIFT CYLINDER PIVOT BOSS.

THE ENGINE SERIAL NUMBER PLATE IS LOCATED ON THE RIGHT-HAND SIDE OF THE CYLINDER BLOCK NEAR THE FUEL PUMP.

THE MFWD AXLE SERIAL NUMBER PLATE IS LOCATED ON THE RIGHT-HAND (REAR) SIDE OF THE NFWD AXLE HOUSING.

THE REAR AXLE SERIAL NUMBER PLATE IS LOCATED ON THE RIGHT-HAND (FRONT) SIDE OF THE AXLE HOUSING.

THE TRANSMISSION SERIAL NUMBER PLATE IS LOCATED ON THE BOTTOM-REAR FACE OF THE HOUSING.

THE HYDRAULIC PUMP SERIAL NUMBER IS LOCATED ON THE TOP FACE OF THE PUMP.

LEFT-HAND SIDE, RIGHT-HAND SIDE, FRONT AND REAR OF THE LANDSCAPE LOADER IN THE DIRECTION OF FORWARD TRAVEL.

IF PRODUCT IDENTIFICATION NUMBERS OR SERIAL NUMBERS ARE REQUIRED FOR WARRANTY CLAIMS OR CORRESPONDENCE PERTAINING TO THIS PRODUCT. IT IS EXTREMELY IMPORTANT THAT ALL CHARACTERS BE FURNISHED. THIS CANNOT BE OVEREMPHASIZED.

ENGINE SERIAL NUMBER PLATE

TP58281 -UN-26JAN98

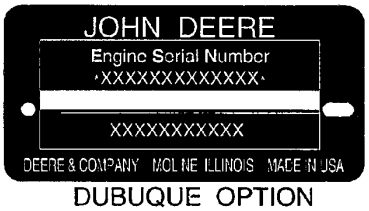

DUBUQUE OPTION

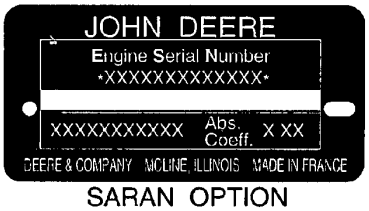

SARAN OPTION



TORREON OPTION

TP58281

FIRST LINE

	DEFINES
PE - JOHN DEERE TORREON T0 - JOHN DEERE DUBUQUE	DESIGNATES ENGINE MANUFACTURER
4	DESIGNATES NUMBER OF CYLINDERS
045 (4.5 LITERS)	DESIGNATES LITER DISPLACEMENT
D (NON-TURBOCHARGED) T (TURBOCHARGED)	DESIGNATES TYPE OF AIR INTAKE SYSTEM
XXXXXX	DESIGNATES ENGINE SERIAL NUMBER

SECOND LINE

	APPLICATION
TO4045DT050	210LE (ENGINE SERIAL NO. 702665-826110)
PE4045DT050	210LE (ENGINE SERIAL NO. 071973-)
PE4045DT059	210LE
PE4045TT092	210LE TURBO

SERIAL NUMBER LISTING INFORMATION

SERIAL NUMBER INFORMATION IS LISTED TO SHOW ON WHICH MACHINES EACH PART CAN BE USED; FOR EXAMPLE:

-	THE PART CAN BE USED ON ALL MACHINES.
000000-	THE PART CAN BE USED ON ALL MACHINES BEGINNING WITH THE SERIAL NUMBER LISTED.
-000000	THE PART CAN BE USED ON ALL MACHINES UP TO AND INCLUDING THE SERIAL NUMBER LISTED.
000000-000000	THE PART CAN BE USED ON ALL MACHINES BETWEEN AND INCLUDING THE SERIAL NUMBERS LISTED.

WHEN XXXXXX'S ARE LISTED IN PLACE OF A SERIAL NUMBER, A SERIAL NUMBER CHANGE WAS MADE BUT THE EXACT SERIAL NUMBER WAS NOT AVAILABLE WHEN THE CATALOG WAS PRODUCED.

DIRECTION ARROW

ARROWS ARE USED WITH ILLUSTRATIONS TO INDICATE THE FRONT OF THE UNIT. "RIGHT-HAND" AND "LEFT-HAND" SIDES OF THE LOADER OR TRACTOR PARTS ARE DETERMINED BY FACING IN THE DIRECTION OF MACHINE FORWARD TRAVEL

BOX-ENCLOSED ILLUSTRATIONS

A KEY NUMBER, SHOWN IN THE PARTS LIST, IS ASSIGNED TO A BOX ENCLOSING ALL PARTS SOLD AS A SERVICE ASSEMBLY.

COMPLETE GOODS LISTINGS

COMPLETE GOODS ARE LISTED IN BOLD FACE TYPE. ORDER SEPARATELY. DO NOT INCLUDE ON REPLACEMENT PARTS ORDER.

CHANGE INDICATOR LINE

CHANGES AFFECTING THE ORDERING OF PARTS ARE IDENTIFIED BY VERTICAL LINES MARKED IN THE LEFT-HAND MARGIN OF REVISED PARTS LISTING IMAGES. A LINE IS ALSO AT THE LEFT-HAND EDGE OF THE SAME PART NUMBER IN THE NUMERICAL INDEX TO SHOW THE LOCATION OF REVISED INFORMATION.

MFWD AXLE SERIAL NUMBER PLATE

TP19438 -UN-01JAN94

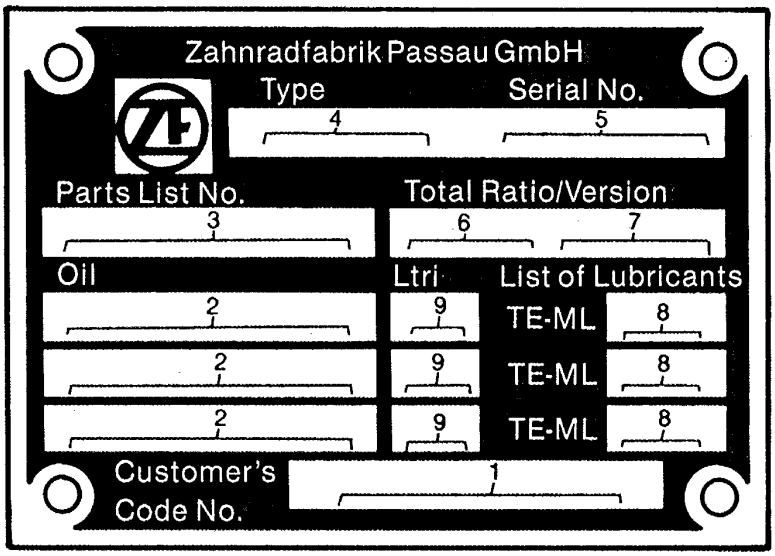

TP19438

1. DESIGNATES CUSTOMER'S CODE NUMBER	JOHN DEERE PART NUMBER
2. DESIGNATES TYPE OF LUBRICANT	M1L-L-2105B, SAE90
3. DESIGNATES ZF-PARTS-LIST NUMBER	4464 006 101
4. DESIGNATES AXLE TYPE	AP-11H
5. DESIGNATES AXLE SERIAL NUMBER	12345
6. DESIGNATES TOTAL - RATIO OF THE AXLE	20.28
7. DESIGNATES VERSION	SP. DIFF. (WITH OR WITHOUT SELF-LOCKING DIFFERENTIAL)
8. DESIGNATES LUBRICANT SPECIFICATION	05
9. DESIGNATES CAPACITY	LTR (DIFFERENTIAL CARRIER AND PLANETARY GEAR ASSEMBLY

MEMORANDA

ALPHABETICAL INDEX

GRID		PAGE
	A	
1H10	ACCESS COVER, INJECTION PUMP GEAR PE4045DT050(ESN.071973-900932)	0402A - 6
3J3	ACCESS SHIELDS, ENGINE (SN 848459-882700)	1912 - 4
3J1	ACCESS SHIELDS, ENGINE (SN -848458)	1912 - 2
2E18	ADAPTER, EXH ELBOW PE4045TT092	0410C - 3
1G4	ADAPTER,ENGINE OIL COOLER T04045DT050 S.N. -826110)	0419 - 2
1I19	ADAPTER,ENGINE OIL COOLER PE4045DT050 S.N.071973-)	0419A - 2
3I15	ADJUSTER, SWIVEL SEAT (SN XXXXXX-882700)	1821 - 10
3I17	ADJUSTER, SWIVEL SEAT (SN 882701-)	1821 - 12
1J3	ADJUSTING STRAP, ALTERNATOR PE4045DT050(S.N.071973-)	0423A - 2
2D7	ADJUSTING STRAP, ALTERNATOR PE4045DT059	0423B - 2
2F15	ADJUSTING STRAP, ALTERNATOR PE4045TT092	0423C - 2
1G10	ADJUSTING STRAP, ALTERNATOR T04045DT050(S.N. -826110)	0423 - 2
2H11	AIR CLEANER (S/N -882700)	0521 - 8
2H13	AIR CLEANER (S/N 882701-)	0521 - 10
2H11	AIR CLEANER ELEMENT (S/N -882700)	0521 - 8
2H13	AIR CLEANER ELEMENT (S/N 882701-)	0521 - 10
2H5	AIR CLEANER HOSES	0521 - 2
2H7	AIR CLEANER HOSES (S/N 882701-)	0521 - 4
2H9	AIR CLEANER HOSES (TURBO) (S/N 882701-)	0521 - 6
2H5	AIR CLEANER MOUNTING BRACKET	0521 - 2
2H7	AIR CLEANER MOUNTING BRACKET (S/N 882701-)	0521 - 4
2H9	AIR CLEANER MOUNTING BRACKET (TURBO) (S/N 882701-)	0521 - 6
2H11	AIR FILTER ELEMENT (S/N -882700)	0521 - 8
2H13	AIR FILTER ELEMENT (S/N 882701-)	0521 - 10
2H5	AIR FILTER RESTRICTION SENSOR	0521 - 2
2H7	AIR FILTER RESTRICTION SENSOR (S/N 882701-)	0521 - 4
2H9	AIR FILTER RESTRICTION SENSOR (TURBO) (S/N 882701-)	0521 - 6
2C14	AIR INTAKE (W/O TURBO) PE4045DT059	0414B - 2
2E22	AIR INTAKE (W/TURBO) PE4045TT092	0414C - 1
1F21	AIR INTAKE SYSTEM T04045DT050 S.N. -826110)	0414 - 2
1I11	AIR INTAKE SYSTEM PE4045DT050 (S.N.071973-)	0414A - 2
2C14	AIR INTAKE TEMPERATURE SENSOR (W/O TURBO) PE4045DT059	0414B - 2
2E22	AIR INTAKE TEMPERATURE SENSOR (W/TURBO) PE4045TT092	0414C - 1
2I12	AIR TEMPERATURE SENSOR PE4045DT059	0510B - 2
2I14	AIR TEMPERATURE SENSOR PE4045TT092	0510C - 1
3J18	ALARM, BACK-UP (S/N -840058)	2004 - 2
3J20	ALARM, BACK-UP (S/N 840059-882700)	2004 - 4
3J22	ALARM, BACK-UP (S/N 882701-)	2004 - 6
3G20	ALARM, MONITOR (SN -880053)	1674 - 28
3G22	ALARM, MONITOR (SN 880054-882700)	1674 - 30
3G24	ALARM, MONITOR (SN 882701-)	1674 - 32
3F15	ALTERNATOR (S/N -882700)	1672 - 2
3F16	ALTERNATOR (S/N 882701-)	1672 - 4
1J3	ALTERNATOR ADJUSTING STRAP PE4045DT050(S.N.071973-)	0423A - 2
1G10	ALTERNATOR ADJUSTING STRAP T04045DT050(S.N. -826110)	0423 - 2
2D7	ALTERNATOR ADJUSTING STRAP PE4045DT059	0423B - 2
2F15	ALTERNATOR ADJUSTING STRAP PE4045TT092	0423C - 2
3F15	ALTERNATOR CAPACITOR (S/N -882700)	1672 - 2
3F16	ALTERNATOR CAPACITOR (S/N 882701-)	1672 - 4
3F15	ALTERNATOR FAN (S/N -882700)	1672 - 2
3F16	ALTERNATOR FAN (S/N 882701-)	1672 - 4
1J3	ALTERNATOR MOUNTING BRACKETS PE4045DT050(S.N.071973-)	0423A - 2
2D7	ALTERNATOR MOUNTING BRACKETS PE4045DT059	0423B - 2
2F15	ALTERNATOR MOUNTING BRACKETS PE4045TT092	0423C - 2
1G10	ALTERNATOR MOUNTING BRACKETS T04045DT050(S.N. -826110)	0423 - 2
3F15	ALTERNATOR PULLEY (S/N -882700)	1672 - 2
3F16	ALTERNATOR PULLEY (S/N 882701-)	1672 - 4
3F1	ANGLE, BATTERY BOX (S/N 880054-882700)	1671 - 4
3F3	ANGLE, BATTERY BOX (S/N 882701-)	1671 - 6
3F11	ANGLE, DUAL BATTERY (S/N -882700)	1671 - 14
3F13	ANGLE, DUAL BATTERY (S/N 882701-)	1671 - 16
4G1	ARM, LOADER LIFT (S/N -880293)	3140 - 2
4G3	ARM, LOADER LIFT (S/N 880294-)	3140 - 4
3I15	ARMRESTS, SWIVEL SEAT (SN XXXXXX-882700)	1821 - 10
3I17	ARMRESTS, SWIVEL SEAT (SN 882701-)	1821 - 12
1H8	ARMS, ROCKER PE4045DT050 S.N.071973-)	0402A - 3
2B14	ARMS, ROCKER PE4045DT059	0402B - 2
2D21	ARMS, ROCKER PE4045TT092	0402C - 2
1E17	ARMS, ROCKER T04045DT050 S.N. -826110)	0402 - 3
4C21	AULILIARY VALVE SECTION, THIRD FUNCTION (S/N -880053)	2162 - 28
4D1	AULILIARY VALVE SECTION, THIRD FUNCTION (S/N XXXXXX-882700)	2162 - 32
4C23	AULILIARY VALVE SECTION, THIRD FUNCTION (S/N 880054-XXXXXX)	2162 - 30
4D3	AULILIARY VALVE SECTION, THIRD FUNCTION (S/N 882701-)	2162 - 34
1B19	AXLE HOUSING	0201 - 2
1C5	AXLE HOUSING, FRONT (WITHOUT MFWD) (SERIAL NO. 911132-)	0230 - 7
1C10	AXLE MOUNTING, FRONT	0242 - 4
1C8	AXLE MOUNTING, REAR	0242 - 2
1C1	AXLE PIVOT PIN (WITHOUT MFWD)	0230 - 2
1B19	AXLE ROLLER BEARING	0201 - 2
1B19	AXLE SHAFT	0201 - 2
1C6	AXLE SWIVEL HOUSING, FRONT (WITHOUT MFWD)(SERIAL NO. 911132-)	0230 - 8
1E1	AXLE TO TRANSMISSION LINES (S/N -880053)	0363 - 2
1E3	AXLE TO TRANSMISSION LINES (S/N 880054-)	0363 - 4
1C14	AXLE, FRONT (MFWD)	0250 - 4
1C1	AXLE, FRONT (WITHOUT MFWD)	0230 - 2
1C4	AXLE, FRONT (WITHOUT MFWD) (SERIAL NO. 911132-)	0230 - 6
	B	
3J18	BACK-UP ALARM (S/N -840058)	2004 - 2
3J20	BACK-UP ALARM (S/N 840059-882700)	2004 - 4
3J22	BACK-UP ALARM (S/N 882701-)	2004 - 6
2C15	BALANCER SHAFT PE4045DT059	0415B - 2
2E23	BALANCER SHAFT PE4045TT092	0415C - 2
1F22	BALANCER SHAFT, ENGINE T04045DT050 S.N. -826110)	0415 - 2
1I12	BALANCER SHAFT, ENGINE PE4045DT050 S.N.071973-)	0415A - 2

ALPHABETICAL INDEX - CONTINUED

GRID		PAGE
2G21	BALL JOINT, THROTTLE CONTROL (S/N 872334-882700)	0515 - 4
2G23	BALL JOINT, THROTTLE CONTROL (S/N 882701-)	0515 - 6
2G19	BALL JOINT,THROTTLE CONTROL (S/N -872333)	0515 - 2
3J11	BAR STOP, HOOD (S/N 882701-)	1921 - 8
4G5	BAR, CYLINDER SERVICE LOCK	3140 - 6
3D19	BARREL ASSEMBLY, HITCH PITCH CYLINDER (SN 882701-882706)	1520 - 20
3D21	BARREL ASSEMBLY, HITCH PITCH CYLINDER (SN 882707-)	1520 - 21A
3D17	BARREL, HITCH PITCH CYLINDER (SN 881746-882700)	1520 - 18
2J5	BARREL, STEERING CYLINDER (MFWD)	0965 - 4
2C4	BASE, OIL FILTER PE4045DT059	0407B - 4
2E11	BASE, OIL FILTER PE4045TT092	0407C - 4
3I19	BASE, SWIVEL SEAT (SN XXXXXX-)	1821 - 14
3E23	BATTERY BOX (S/N -880053)	1671 - 2
3F1	BATTERY BOX (S/N 880054-882700)	1671 - 4
3F3	BATTERY BOX (S/N 882701-)	1671 - 6
3F11	BATTERY, DUAL (S/N -882700)	1671 - 14
3F13	BATTERY, DUAL (S/N 882701-)	1671 - 16
3F5	BATTERY, SINGLE (S/N -882700)	1671 - 8
3F7	BATTERY, SINGLE (S/N 882701-)	1671 - 10
3F9	BATTERY, SINGLE (S/N 882701-)	1671 - 12
3F18	BEACON, ROTATING AND SWITCH	1673 - 2
2B21	BEARING CAP, MAIN PE4045DT059	0404B - 2
2E3	BEARING CAP, MAIN PE4045TT092	0404C - 2
1C3	BEARING, FRONT WHEEL (WITHOUT MFWD)	0230 - 4
1C5	BEARING,FRONT AXLE HOUSING (WITHOUT MFWD)(SERIAL NO. 911132-)	0230 - 7
2E1	BEARINGS, CONNECTING ROD PE4045TT092	0403C - 2
2B19	BEARINGS, C0NNECTING ROD PE4045DT059	0403B - 2
1H6	BEARINGS, MAIN PE4045DT050 S.N.071973-)	0401A - 2
1E15	BEARINGS, MAIN T04045DT050 S.N. -826110)	0401 - 2
2B12	BEARINGS, MAIN PE4045DT059	0401B - 2
2D20	BEARINGS, MAIN PE4045TT092	0401C - 2
4G24	BEARINGS, PTO GEAR BOX (SN 880054-)	4000 - 4
1H14	BEARINGS,C0NNECTING ROD PE4045DT050(S.N.071973-)	0403A - 2
1E23	BEARINGS,C0NNECTING ROD T04045DT050(S.N. -826110)	0403 - 2
1D9	BELL HOUSING	0341 - 1
1G13	BELT IDLER TENSIONER T04045DT050(S.N. -826110)	0429 - 4
1J6	BELT IDLER TENSIONER PE4045DT050 S.N.071973-)	0429A - 4
2D11	BELT TENSIONER, FAN PE4045DT059	0429B - 4
2F19	BELT TENSIONER, FAN PE4045TT092	0429C - 4
1J5	BELT, ENGINE ACCESSORY DRIVE PE4045DT050(S,N,071973-)	0429A - 2
2D9	BELT, ENGINE ACCESSORY DRIVE PE4045DT059	0429B - 2
2F17	BELT, ENGINE ACCESSORY DRIVE PE4045TT092	0429C - 2
1G12	BELT, ENGINE ACCESSORY DRIVE T04045DT050 S.N. -826110)	0429 - 2
1G13	BELT, FAN T04045DT050(S.N. -826110)	0429 - 4
1J6	BELT, FAN PE4045DT050 S.N.071973-)	0429A - 4
3I7	BELT, SEAT (S/N -843070)	1821 - 2
3I13	BELT, SEAT (S/N XXXXXX-)	1821 - 8
3I9	BELT, SEAT (S/N 843701-882700)	1821 - 4
3I11	BELT, SEAT (S/N 882701-)	1821 - 6
4D7	BETWEEN VALVE SECTIONS SEAL KIT	2162 - 38
2J9	BLEED SCREW, BRAKES	1011 - 2
1H16	BLOCK, CYLINDER PE4045DT050 S.N.071973-)	0404A - 2
2B21	BLOCK, CYLINDER PE4045DT059	0404B - 2
2E3	BLOCK, CYLINDER PE4045TT092	0404C - 2
1F1	BLOCK, CYLINDER T04045DT050 S.N. -826110)	0404 - 2
4G11	BOOM CYLINDER HYDRAULICS, LOADER (SN -880053)	3160 - 2
4G13	BOOM CYLINDER HYDRAULICS, LOADER (SN 880054-)	3160 - 4
4G17	BOOM CYLINDER, LOADER (S/N -882700)	3160 - 8
4G18	BOOM CYLINDER, LOADER (S/N 882701-)	3160 - 9
4C19	BOOM SECTION, HYDRAULIC VALVE	2162 - 26
4G5	BOOM SERVICE LOCK BAR	3140 - 6
4G1	BOOM, LOADER (S/N -880293)	3140 - 2
4G3	BOOM, LOADER (S/N 880294-)	3140 - 4
3H15	BOOT, GEARSHIFT AND LOADER BUCKET LEVER (S/N -872333)	1812 - 2
3H17	BOOT, GEARSHIFT AND LOADER BUCKET LEVER (S/N 872334-882700)	1812 - 4
3H19	BOOT, GEARSHIFT AND LOADER BUCKET LEVER (S/N 882701-)	1812 - 6
1D5	BOOT, TRANSMISSION SHIFTER CARROT	0315 - 2
3H17	BOOT,OPERATOR PLATFORM (S/N 872334-882700)	1812 - 4
3H19	BOOT,OPERATOR PLATFORM (S/N 882701-)	1812 - 6
2G7	BOTTLE, RADIATOR OVERFLOW (S/N -882700)	0511 - 2
2G11	BOTTLE, RADIATOR OVERFLOW (S/N -882700)	0511 - 6
2G9	BOTTLE, RADIATOR OVERFLOW (S/N 882701-)	0511 - 4
2G13	BOTTLE, RADIATOR OVERFLOW (S/N 882701-)	0511 - 8
3E23	BOX, BATTERY (S/N -880053)	1671 - 2
3F1	BOX, BATTERY (S/N 880054-882700)	1671 - 4
3F3	BOX, BATTERY (S/N 882701-)	1671 - 6
2D11	BRACKET, BELT TENSIONER PE4045DT059	0429B - 4
2F19	BRACKET, BELT TENSIONER PE4045TT092	0429C - 4
4C11	BRACKET, PIVOT ASSEMBLY	2162 - 18
1G13	BRACKET, TENSIONER T04045DT050(S.N. -826110)	0429 - 4
1J6	BRACKET, TENSIONER PE4045DT050 S.N.071973-)	0429A - 4
2H1	BRACKET, THROTTLE CABLE (S/N 872334-882700)	0515 - 8
2G19	BRACKET, THROTTLE CABLE (S/N -872333)	0515 - 2
2H3	BRACKET, THROTTLE CABLE (S/N 882701-)	0515 - 10
2G21	BRACKET, THROTTLE ROD (S/N 872334-882700)	0515 - 4
2G23	BRACKET, THROTTLE ROD (S/N 882701-)	0515 - 6
2H5	BRACKET,AIR CLEANER MOUNTING	0521 - 2
2H7	BRACKET,AIR CLEANER MOUNTING (S/N 882701-)	0521 - 4
2H9	BRACKET,AIR CLEANER MOUNTING (TURBO) (S/N 882701-)	0521 - 6
2G19	BRACKET,THROTTLE CONTROL (S/N -872333)	0515 - 2
1J3	BRACKETS, ALTERNATOR MOUNTING PE4045DT050(S.N.071973-)	0423A - 2
2D7	BRACKETS, ALTERNATOR MOUNTING PE4045DT059	0423B - 2

ALPHABETICAL INDEX - CONTINUED

GRID		PAGE
2F15	BRACKETS, ALTERNATOR MOUNTING PE4045TT092	0423C - 2
1G10	BRACKETS, ALTERNATOR MOUNTING T04045DT050(S.N. -826110)	0423 - 2
2J9	BRAKE DISK	1011 - 2
2J9	BRAKE HOUSING	1011 - 2
2J11	BRAKE PEDAL (SER.NO.-880907)	1060 - 2
2J13	BRAKE PEDAL (SER.NO.880908-)	1060 - 4
2J9	BRAKE PISTON	1011 - 2
2J13	BRAKE VALVE (SER NO.880908-)	1060 - 4
2J11	BRAKE VALVE (SER.NO.-880907)	1060 - 2
2J15	BRAKE VALVE (SER.NO.-880907)	1060 - 6
2J17	BRAKE VALVE (SER.NO.880908-)	1060 - 8
3H23	BRAKE VALVE BRACKETS (S/N -872333)	1816 - 2
2J19	BRAKE VALVE HOSES (SER.NO.-880907)	1063 - 2
2J21	BRAKE VALVE HOSES (SER.NO.880908-)	1063 - 4
2J23	BRAKE VALVE HOSES (S/N 880908-882700)	1063 - 6
2K1	BRAKE VALVE HOSES (S/N 882701-)	1063 - 8
2K3	BRAKE VALVE HOSES (TURBO) (S/N 882701-)	1063 - 10
2J11	BRAKE VALVE HOUSING (SER.NO.-880907)	1060 - 2
2J15	BRAKE VALVE HOUSING (SER.NO.-880907)	1060 - 6
2J13	BRAKE VALVE HOUSING (SER.NO.880908-)	1060 - 4
2J17	BRAKE VALVE HOUSING (SER.NO.880908-)	1060 - 8
2J13	BRAKE VALVE MOUNTING PLATE (SER.NO.880908-)	1060 - 4
2J19	BRAKE VALVE PRESSURE SWICH (SER.NO.-880907)	1063 - 2
2J17	BRAKE VALVE PUSH ROD (SER.NO.880908-)	1060 - 8
2J15	BRAKE VALVE REPAIR KIT (SER.NO.-880907)	1060 - 6
2J17	BRAKE VALVE REPAIR KIT (SER.NO.880908-)	1060 - 8
2K6	BRAKE, PARK (AXLE SERIAL NO. -217496)	1111 - 2
2K8	BRAKE, PARK (AXLE SERIAL NO. 217497-)	1111 - 4
2J9	BRAKES, SERVICE	1011 - 2
1D9	BREATHER, TRANSMISSION	0341 - 1
4E18	BUCKET CUTTING EDGE	3102 - 2
4E22	BUCKET CUTTING EDGE	3102 - 6
4G15	BUCKET CYLINDER, LOADER (S/N - 880293)	3160 - 6
4G16	BUCKET CYLINDER, LOADER (S/N 880294-)	3160 - 7
4F10	BUCKET CYLINDER, MULTI-PURPOSE (S/N -882701)	3102 - 19
4F9	BUCKET CYLINDER, MULTI-PURPOSE (S/N 882700-)	3102 - 18
4F19	BUCKET LEVELING LINKAGE (SN 870949-882700)	3115 - 4
4F17	BUCKET LEVELING LINKAGE (SN -870948)	3115 - 2
4F21	BUCKET LEVELING LINKAGE (SN 882701-)	3115 - 6
4G7	BUCKET LINKAGE, LOADER (S/N - 880293)	3140 - 8
4G9	BUCKET LINKAGE, LOADER (S/N 8800294-)	3140 - 10
4F13	BUCKET PINS, LOADER	3102 - 22
4D11	BUCKET SECTION RELIEF VALVES (S/N -738468)	2162 - 40
4C15	BUCKET SECTION, HYDRAULIC VALVE (S/N -882700)	2162 - 22
4C17	BUCKET SECTION, HYDRAULIC VALVE (S/N 882701-)	2162 - 24
4E18	BUCKET, LOADER	3102 - 2
4E22	BUCKET, LOADER	3102 - 6
4F11	BUCKET, LOADER DATA	3102 - 20
4F12	BUCKET, LOADER DATA	3102 - 21
4E24	BUCKET, MULTI-PURPOSE (S/N -880293)	3102 - 8
4F1	BUCKET, MULTI-PURPOSE (S/N 880294-)	3102 - 10
1C5	BUSHING,FRONT AXLE HOUSING (WITHOUT MFWD)(SERIAL NO. 911132-)	0230 - 7
1B25	BUSHING,TIE ROD (WITHOUT MFWD)	0230 - 1
3G20	BUZZER, MONITOR ALARM (SN -880053)	1674 - 28
3G22	BUZZER, MONITOR ALARM (SN 880054-882700)	1674 - 30
3G24	BUZZER, MONITOR ALARM (SN 882701-)	1674 - 32
2C4	BYPASS VALVE, OIL FILTER PE4045DT059	0407B - 4
2E11	BYPASS VALVE, OIL FILTER PE4045TT092	0407C - 4

C

3F11	CABLE, DUAL BATTERY (S/N -882700)	1671 - 14
3F13	CABLE, DUAL BATTERY (S/N 882701-)	1671 - 16
2G19	CABLE, ENGINE THROTTLE CONTROL (S/N -872333)	0515 - 2
2H1	CABLE, ENGINE THROTTLE CONTROL (S/N 872334-882700)	0515 - 8
2H3	CABLE, ENGINE THROTTLE CONTROL (S/N 882701-)	0515 - 10
3F5	CABLE, SINGLE BATTERY (S/N -882700)	1671 - 8
3F7	CABLE, SINGLE BATTERY (S/N 882701-)	1671 - 10
3G18	CAM/CRANKSHAFT SWITCH (FRONT WIRE HARNESS) (SN 882701-)	1674 - 26
4F17	CAM, RETURN-TO-DIG (SN -870948)	3115 - 2
4F19	CAM, RETURN-TO-DIG (SN 870949-882700)	3115 - 4
4F21	CAM, RETURN-TO-DIG (SN 882701-)	3115 - 6
1E16	CAMSHAFT T04045DT050 S.N. -826110)	0402 - 2
1H7	CAMSHAFT PE4045DT050 S.N.071973-)	0402A - 2
1H7	CAMSHAFT GEAR PE4045DT050 S.N.071973-)	0402A - 2
1E16	CAMSHAFT GEAR T04045DT050 S.N. -826110)	0402 - 2
2B13	CAMSHAFT PE4045DT059	0402B - 1
2E3	CAMSHAFT PE4045TT092	0404C - 2
3H11	CANOPY (S/N -872333)	1811 - 2
3H13	CANOPY (SN 872334-)	1811 - 4
3F18	CANOPY LIGHT BEACON	1673 - 2
1F5	CAP, ENGINE OIL FILL T04045DT050 S.N. -826110)	0407 - 2
1H20	CAP, ENGINE OIL FILL PE4045DT050 S.N. 71973-)	0407A - 2
2G11	CAP, FILLER, RADIATOR (S/N -882700)	0511 - 6
2G13	CAP, FILLER, RADIATOR (S/N 882701-)	0511 - 8
1H16	CAP, MAIN BEARING PE4045DT050 S.N.071973-)	0404A - 2

ALPHABETICAL INDEX - CONTINUED

GRID		PAGE
1F1	CAP, MAIN BEARING T04045DT050 S.N. -826110)	0404 - 2
2B21	CAP, MAIN BEARING PE4045DT059	0404B - 2
2E3	CAP, MAIN BEARING PE4045TT092	0404C - 2
2C1	CAP, OIL FILLER PE4045DT059	0407B - 1
2E8	CAP, OIL FILLER PE4045TT092	0407C - 1
2G7	CAP, RADIATOR (S/N -882700)	0511 - 2
2G9	CAP, RADIATOR (S/N 882701-)	0511 - 4
2I3	CAP, TANK (S/N -841621)	0560 - 2
3F15	CAPACITOR, ALTERNATOR (S/N -882700)	1672 - 2
3F16	CAPACITOR, ALTERNATOR (S/N 882701-)	1672 - 4
1C12	CARRIER, PLANETARY PINION	0250 - 2
4D13	CARTRIDGE (VALVE), 3GPM AND 6GPM (S/N -882700)	2162 - 42
4D9	CARTRIDGE (VALVE), 3GPM AND 6GPM (S/N 882701-)	2162 - 39A
4D15	CARTRIDGE (VALVE), 3GPM AND 6GPM (S/N 882701-)	2162 - 44
1D25	CHARGE PUMP	0360 - 5
1D25	CHARGE PUMP OIL FILTER	0360 - 5
1D25	CHARGE PUMP, AXIAL BEARING	0360 - 5
2H11	CLEANER, AIR (S/N -882700)	0521 - 8
2H13	CLEANER,AIR (S/N 882701-)	0521 - 10
1D13	CLUTCH ASSEMBLY, FORWARD	0350 - 2
1D13	CLUTCH ASSEMBLY, PISTON	0350 - 2
1D15	CLUTCH ASSEMBLY, PISTON	0350 - 4
1D15	CLUTCH ASSEMBLY, REVERSE	0350 - 4
2K6	CLUTCH DISK, PARK BRAKE (AXLE SERIAL NO. -217496)	1111 - 2
2K8	CLUTCH DISK, PARK BRAKE (AXLE SERIAL NO. 217497-)	1111 - 4
1D13	CLUTCH HUB	0350 - 2
1D15	CLUTCH HUB	0350 - 4
1H24	CODE 8803 OIL FILTER PE4045DT050 S.N.071973-)	0407A - 6
1D24	COIL,CONTROL VALVE SOLENOID	0360 - 4
3E23	COMPARTMENT, BATTERY (S/N -880053)	1671 - 2
3F1	COMPARTMENT, BATTERY (S/N 880054-882700)	1671 - 4
3F3	COMPARTMENT, BATTERY (S/N 882701-)	1671 - 6
3B21	CONDITIONER, COOLANT PE4045DT059	1369B - 2
3B23	CONDITIONER, COOLANT PE4045TT092	1369C - 1
1H14	CONNECTING ROD PE4045DT050 S.N.071973-)	0403A - 2
1E23	CONNECTING ROD T04045DT050 S.N. -826110)	0403 - 2
1H14	CONNECTING ROD BEARINGS PE4045DT050(S.N.071973-)	0403A - 2
1E23	CONNECTING ROD BEARINGS T04045DT050(S.N. -826110)	0403 - 2
2B19	CONNECTING ROD PE4045DT059	0403B - 2
2E1	CONNECTING ROD PE4045TT092	0403C - 2
3G5	CONNECTOR HALOGEN LAMP (SN -882700)	1674 - 12
1D22	CONTROL VALVE PISTON	0360 - 2
1D24	CONTROL VALVE SOLENOID COIL	0360 - 4
1D24	CONTROL VALVE SOLENOID KIT	0360 - 4
1D24	CONTROL VALVE SOLENOIDS	0360 - 4
4D5	CONTROL VALVE, FIFTH FUNCTION HITCH	2162 - 36
4C1	CONTROL VALVE, HYDRAULIC (BASIC FUNCTION)	2162 - 8
4C3	CONTROL VALVE, HYDRAULIC (FOUR FUNCTION) (S/N -882700)	2162 - 10
4C5	CONTROL VALVE, HYDRAULIC (FOUR FUNCTION) (S/N 882701-)	2162 - 12
4C7	CONTROL VALVE, HYDRAULIC (5TH FUNCTION)	2162 - 14
4B19	CONTROL VALVE, HYDRAULIC FITTINGS (S/N -LE880053)	2162 - 2
4B21	CONTROL VALVE, HYDRAULIC FITTINGS (S/N LE880054-)	2162 - 4
4C19	CONTROL VALVE, HYDRAULIC, BOOM SECTION	2162 - 26
4C15	CONTROL VALVE, HYDRAULIC, BUCKET SECTION (S/N -882700)	2162 - 22
4C17	CONTROL VALVE, HYDRAULIC, BUCKET SECTION (S/N 882701-)	2162 - 24
4D17	CONTROL VALVE, HYDRAULIC, HITCH LIFT (S/N XXXXXX-855518)	2162 - 46
4D19	CONTROL VALVE, HYDRAULIC, HITCH LIFT (S/N 855519-882700)	2162 - 48
4D21	CONTROL VALVE, HYDRAULIC, HITCH LIFT (S/N 882701-)	2162 - 50
4C13	CONTROL VALVE, HYDRAULIC, INLET SECTION	2162 - 20
4D13	CONTROL VALVE, HYDRAULIC, JUNCTION BLOCK (S/N -882700)	2162 - 42
4D9	CONTROL VALVE, HYDRAULIC, JUNCTION BLOCK (S/N 882701-)	2162 - 39A
4D15	CONTROL VALVE, HYDRAULIC, JUNCTION BLOCK (S/N 882701-)	2162 - 44
4D23	CONTROL VALVE, HYDRAULIC, PITCH (S/N -882700)	2162 - 52
4E1	CONTROL VALVE, HYDRAULIC, PITCH (S/N 882701-)	2162 - 54
4C11	CONTROL VALVE, HYDRAULIC, PIVOT	2162 - 18
4C9	CONTROL VALVE, HYDRAULIC,OPTIONAL	2162 - 16
4E3	CONTROL VALVE, TILT DUEL AND AUX. SECTION (S/N -882700)	2162 - 56
4E5	CONTROL VALVE, TILT DUEL AND AUX. SECTION (S/N 882701-)	2162 - 58
1D22	CONTROL VALVE, TRANSMISSION	0360 - 2
1D7	CONTROL, REVERSER WITH GUARD	0315 - 4
2C12	CONTROLLER, ENGINE PE4045DT059	0413B - 2
2E20	CONTROLLER, ENGINE PE4045TT092	0413C - 4
1D12	CONVERTER, TORQUE	0350 - 1
3B21	COOLANT CONDITIONER PE4045DT059	1369B - 2
3B23	COOLANT CONDITIONER PE4045TT092	1369C - 1
2G4	COOLANT HEATER, ENGINE	0505 - 1
2I12	COOLANT TEMP SENSOR PE4045DT059	0510B - 2
2I14	COOLANT TEMP SENSOR PE4045TT092	0510C - 1
3J9	COOLER GUARD, GRILLE (S/N 882701-)	1921 - 6
1E5	COOLER TO TRANSMISSION LINES	0363 - 6
2C20	COOLER, OIL (FIVE PLATE) PE4045DT059	0419B - 2
2F4	COOLER, OIL (FIVE PLATE) PE4045TT092	0419C - 2
1E7	COOLER, OIL, TRANSMISSION (S/N -882700)	0364 - 2
1E9	COOLER, OIL, TRANSMISSION (S/N 882701-)	0364 - 4
3B18	COOLSCAN PLUS TEST KIT, FLUID ANALYSIS PRODUCTS	1369 - 4
3C13	COUNTER WEIGHTS (SLAB), HITCH (SN -880053)	1511 - 12
3C7	COUNTER WEIGHTS, HITCH (S/N -880053)	1511 - 6
3C15	COUNTER WEIGHTS, HITCH (SLAB) (S/N 880054-882700)	1511 - 14
3C17	COUNTER WEIGHTS, HITCH (SLAB) (SN 882701-)	1511 - 16
3C9	COUNTERWEIGHTS, HITCH (S/N 880054-882700)	1511 - 8
3C11	COUNTERWEIGHTS, HITCH (S/N 882701-)	1511 - 10
4E20	COUPLER, FRONT	3102 - 4
4E20	COUPLER, LOADER BUCKET	3102 - 4
3J5	COVER (GRILLE SN -872333)	1921 - 2
1H10	COVER, ACCESS, INJECTION PUMP GEAR PE4045DT050(ESN.071973-900932)	0402A - 6
3F1	COVER, BATTERY BOX (S/N 880054-882700)	1671 - 4
3F3	COVER, BATTERY BOX (S/N 882701-)	1671 - 6

ALPHABETICAL INDEX - CONTINUED

GRID		PAGE
3F11	COVER, DUAL BATTERY (S/N -882700)	1671 - 14
3F13	COVER, DUAL BATTERY (S/N 882701-)	1671 - 16
3H15	COVER, GEARSHIFT (S/N -872333)	1812 - 2
3H17	COVER, GEARSHIFT (S/N 872334-882700)	1812 - 4
3H15	COVER, LOADER BUCKET LEVER (S/N -872333)	1812 - 2
3H17	COVER, LOADER BUCKET LEVER (S/N 872334-882700)	1812 - 4
1F5	COVER, OIL FILLER OPENING T04045DT050 S.N. -826110)	0407 - 2
1H20	COVER, OIL FILLER OPENING-PE4045DT050 S.N.071973-)	0407A - 2
4G22	COVER, PTO (SN 880054-)	4000 - 2
3H21	COVER, RIGHT SIDE OPERATOR PLATFORM (S/N 882701-)	1812 - 8
1E18	COVER, ROCKER ARM T04045DT050 S.N. -826110)	0402 - 4
1H9	COVER, ROCKER ARM PE4045DT050 S.N.071973-)	0402A - 4
2B15	COVER, ROCKER ARM PE4045DT059	0402B - 3
2D22	COVER, ROCKER ARM PE4045TT092	0402C - 3
1D5	COVER, SHIFT HOUSING	0315 - 2
3F5	COVER, SINGLE BATTERY (S/N -882700)	1671 - 8
3F7	COVER, SINGLE BATTERY (S/N 882701-)	1671 - 10
2I3	COVER, TANK (S/N -841621)	0560 - 2
1I17	COVER, THERMOSTAT PE4045DT050 S.N.071973-)	0418A - 2
2C18	COVER, THERMOSTAT PE4045DT059	0418B - 2
2F2	COVER, THERMOSTAT PE4045TT092	0418C - 2
1G2	COVER, THERMOSTAT T04045DT050 S.N. -826110)	0418 - 2
1H10	COVER, TIMING GEAR PE4045DT050(ESN.071973-900932)	0402A - 6
1E19	COVER, TIMING GEAR T04045DT050 (ENG.SER.NO.-826110)	0402 - 6
2B15	COVER, VALVE PE4045DT059	0402B - 3
2D22	COVER, VALVE PE4045TT092	0402C - 3
1C7	COVER, WHEEL HUB (WITHOUT MFWD) (SERIAL NO. 911132-)	0230 - 9
1E21	COVER,REPLACEMENT TIMING GEAR T04045DT050(ESN.-826110)	0402 - 8
1H12	COVER,TIMING GEAR PE4045DT050(ESN.900933-)	0402A - 8
3J13	COWL (S/N 872334-)	1921 - 10
3J7	COWL (S/N 872334-882700)	1921 - 4
3J9	COWL (S/N 882701-)	1921 - 6
3J5	COWL AND HOUSING GRILLE (SN -872333)	1921 - 2
1E15	CRANKSHAFT T04045DT050 S.N. -826110)	0401 - 2
1H6	CRANKSHAFT PE4045DT050 S.N.071973-)	0401A - 2
1H6	CRANKSHAFT GEAR PE4045DT050 S.N.071973-)	0401A - 2
1E15	CRANKSHAFT GEAR T04045DT050 S.N. -826110)	0401 - 2
2B12	CRANKSHAFT PE4045DT059	0401B - 2
2D20	CRANKSHAFT PE4045TT092	0401C - 2
2D9	CRANKSHAFT PULLEY PE4045DT059	0429B - 2
2F17	CRANKSHAFT PULLEY PE4045TT092	0429C - 2
1G12	CRANKSHAFT PULLEY T04045DT050 S.N. -826110)	0429 - 2
1J5	CRANKSHAFT PULLEY PE4045DT050 S.N.071973-)	0429A - 2
3G18	CRANKSHAFT/CAM SWITCH (FRONT WIRE HARNESS) (SN 882701-)	1674 - 26
4G19	CROWD CYLINDER	3160 - 10
4G19	CROWD CYLINDER REPAIR KIT	3160 - 10
3I15	CUSHIONS, SWIVEL SEAT (SN XXXXXX-882700)	1821 - 10
3I17	CUSHIONS, SWIVEL SEAT (SN 882701-)	1821 - 12
4E18	CUTTING EDGE, BUCKET	3102 - 2
4E22	CUTTING EDGE, BUCKET	3102 - 6
1H16	CYLINDER BLOCK PE4045DT050 S.N.071973-)	0404A - 2
1F1	CYLINDER BLOCK T04045DT050 S.N. -826110)	0404 - 2
2B21	CYLINDER BLOCK PE4045DT059	0404B - 2
2E3	CYLINDER BLOCK PE4045TT092	0404C - 2
2C8	CYLINDER HEAD PE4045DT059	0409B - 2
2E15	CYLINDER HEAD PE4045TT092	0409C - 2
1F14	CYLINDER HEAD T04045DT050 S.N. -826110)	0409 - 2
1I4	CYLINDER HEAD PE4045DT050 S.N.071973-)	0409A - 2
1I4	CYLINDER HEAD GASKET PE4045DT050 S.N.071973-)	0409A - 2
2C8	CYLINDER HEAD GASKET PE4045DT059	0409B - 2
2E15	CYLINDER HEAD GASKET PE4045TT092	0409C - 2
1F14	CYLINDER HEAD GASKET T04045DT050 S.N. -826110)	0409 - 2
1J10	CYLINDER HEAD REMOVAL GASKET SET PE4045DT050(S.N.071973-)	0452A - 1
1G17	CYLINDER HEAD REMOVAL GASKET SET T04045DT050(S.N. -826110)	0452 - 1
3E11	CYLINDER KIT, HITCH TILT (S/N -880053)	1520 - 34
3E13	CYLINDER KIT, HITCH TILT, FIFTH FUNCTION (S/N 880054-)	1520 - 36
1H14	CYLINDER LINER PE4045DT050 S.N.071973-)	0403A - 2
1E23	CYLINDER LINER T04045DT050 S.N. -826110)	0403 - 2
1H14	CYLINDER LINER O-RING KIT PE4045DT050(S.N.071973-)	0403A - 2
1E23	CYLINDER LINER O-RING KIT T04045DT050(S.N. -826110)	0403 - 2
2B19	CYLINDER LINER PE4045DT059	0403B - 2
2E1	CYLINDER LINER PE4045TT092	0403C - 2
4G5	CYLINDER ROD LOCK BAR	3140 - 6
4G19	CYLINDER, CROWD	3160 - 10
3D7	CYLINDER, HITCH LIFT (SN 845681-881738)	1520 - 10
3D9	CYLINDER, HITCH LIFT (SN 881739-882728)	1520 - 12
3D11	CYLINDER, HITCH LIFT (SN 882729-)	1520 - 13A
3C21	CYLINDER, HITCH, TILT(S/N XXXXXX-880053)	1520 - 2
3C23	CYLINDER, HITCH, TILT(S/N 880054-881736)	1520 - 4
3D1	CYLINDER, HITCH, TILT(S/N 881737-882733)	1520 - 6
3D3	CYLINDER, HITCH, TILT(S/N 882734-)	1520 - 7A
4G17	CYLINDER, LOADER BOOM (S/N -882700)	3160 - 8
4G18	CYLINDER, LOADER BOOM (S/N 882701-)	3160 - 9
4G11	CYLINDER, LOADER BOOM HYDRAULICS (SN -880053)	3160 - 2
4G13	CYLINDER, LOADER BOOM HYDRAULICS (SN 880054-)	3160 - 4
4G15	CYLINDER, LOADER BUCKET (S/N - 880293)	3160 - 6
4G16	CYLINDER, LOADER BUCKET (S/N 880294-)	3160 - 7
4F10	CYLINDER, MULTI-PURPOSE BUCKET (S/N -882701)	3102 - 19
4F5	CYLINDER, MULTI-PURPOSE BUCKET (S/N 880294-882700)	3102 - 14
4F9	CYLINDER, MULTI-PURPOSE BUCKET (S/N 882700-)	3102 - 18

ALPHABETICAL INDEX - CONTINUED

GRID		PAGE
4F7	CYLINDER, MULTI-PURPOSE BUCKET (S/N 882701-)	3102 - 16
3D17	CYLINDER, PITCH, HITCH (SN 881746-882700)	1520 - 18
3D19	CYLINDER, PITCH, HITCH (SN 882701-882706)	1520 - 20
3D13	CYLINDER, PITCH, HITCH (SN XXXXXX-880053)	1520 - 14
3D15	CYLINDER, PITCH, HITCH (SN 880054-881745)	1520 - 16
3D21	CYLINDER, PITCH, HITCH (SN 882707-)	1520 - 21A
2J3	CYLINDER, POWER STEERING (WITHOUT MFWD) (S/N -XXXXXX)	0965 - 2
2J4	CYLINDER, POWER STEERING (WITHOUT MFWD) (S/N XXXXXX-)	0965 - 3
2J5	CYLINDER, STEERING, MECHANICAL FRONT WHEEL DRIVE (MFWD)	0965 - 4
3E15	CYLINDER,, HITCH TILT, FIFTH FUNCTION (S/N 880054-882700)	1520 - 38
3E17	CYLINDER,, HITCH TILT, FIFTH FUNCTION (S/N 882701-)	1520 - 40
1C6	CYLINDER,FRONT AXLE STEERING (WITHOUT MFWD)(SERIAL NO. 911132-)	0230 - 8
3D5	CYLINDER,HITCH LIFT (SN -845680)	1520 - 8

D

3J11	DAMPER ASSEMBLY, HOOD (S/N 882701-)	1921 - 8
3G20	DASH INSTRUMENT PANEL AND HARNESS (SN -880053)	1674 - 28
3G22	DASH INSTRUMENT PANEL AND HARNESS (SN 880054-882700)	1674 - 30
3G24	DASH INSTRUMENT PANEL AND HARNESS (SN 882701-)	1674 - 32
4F11	DATA, LOADER BUCKET	3102 - 20
4F12	DATA, LOADER BUCKET	3102 - 21
4H11	DECAL, PTO CONTROL	4015 - 2
4G22	DECAL, PTO WARNING (SN 880054-)	4000 - 2
3B10	DECALS (S/N -882700)	1322 - 2
3B14	DECALS (S/N 882701-)	1322 - 6
3B19	DIESELSCAN TEST KIT, FLUID ANALYSIS PRODUCTS	1369 - 5
1D24	DIFF LOCK SOLENOID	0360 - 4
3G12	DIFF-LOCK SWITCH	1674 - 20
3G14	DIFF-LOCK SWITCH (SN 880054-882700)	1674 - 22
1B21	DIFFERENTIAL ASSEMBLY WITH LOCK	0210 - 2
1B22	DIFFERENTIAL ASSEMBLY WITH LOCK	0210 - 3
1B19	DIFFERENTIAL HOUSING	0201 - 2
1B21	DIFFERENTIAL HOUSING WITH LOCK	0210 - 2
1B22	DIFFERENTIAL HOUSING WITH LOCK	0210 - 3
1B24	DIFFERENTIAL LOCK PLUMBING	0210 - 5
3G16	DIFFERENTIAL LOCK SWITCH (SN 882701-)	1674 - 24
1C22	DIFFERENTIAL SPIRAL BEVEL GEAR (MFWD)	0250 - 12
1B21	DIFFERENTIAL WITH LOCK	0210 - 2
1B22	DIFFERENTIAL WITH LOCK	0210 - 3
3G14	DIODES, TRANSMISSION HARNESS (SN 880054-882700)	1674 - 22
3G16	DIODES, TRANSMISSION HARNESS (SN 882701-)	1674 - 24
3G12	DIODES, TRANSMISSION, HARNESS (SN -880053)	1674 - 20
1H21	DIPSTICK, ENGINE OIL PE4045DT050 S.N.071973-)	0407A - 3
2C2	DIPSTICK, ENGINE OIL PE4045DT059	0407B - 2
1F6	DIPSTICK, ENGINE OIL T04045DT050 S.N. -826110)	0407 - 3
2E9	DIPSTICK, ENGINE OIL PE4045TT092	0407C - 2
1D10	DIPSTICK, TRANSMISSION	0342 - 2
2J9	DISK, BRAKE	1011 - 2
1D19	DOG GEAR,OUTPUT SHAFT	0350 - 8
3C7	DRAWBAR WEIGHTS (S/N -880053)	1511 - 6
3C9	DRAWBAR WEIGHTS (S/N 880054-882700)	1511 - 8
3C11	DRAWBAR WEIGHTS (S/N 882701-)	1511 - 10
3C15	DRAWBAR WEIGHTS (SLAB) (S/N 880054-882700)	1511 - 14
3C13	DRAWBAR WEIGHTS (SLAB) (SN -880053)	1511 - 12
3C17	DRAWBAR WEIGHTS (SLAB) (SN 882701-)	1511 - 16
3C3	DRAWBAR, FIXED	1511 - 2
3C5	DRAWBAR, PTO (S/N 880054-)	1511 - 4
1C13	DRIVE SHAFT YOKE (MFWD)	0250 - 3
4H3	DRIVE SHAFT, PTO PUMP (S/N 880054-)	4000 - 8
4H5	DRIVE SHAFT, PTO PUMP (S/N 880054-) (CONT'D)	4000 - 10
1C13	DRIVE SHAFT, UNIVERSAL (MFWD)	0250 - 3
1J6	DRIVE, FAN PE4045DT050 S.N.071973-)	0429A - 4
1G13	DRIVE, FAN T04045DT050 S.N. -826110)	0429 - 4
1C20	DRIVE,PLANETARY (MFWD)	0250 - 10
1C21	DRIVE,PLANETARY (MFWD)	0250 - 11
1D8	DRIVESHAFT, REAR	0325 - 1
3F11	DUAL BATTERY (S/N -882700)	1671 - 14
3F13	DUAL BATTERY (S/N 882701-)	1671 - 16
3G12	DUMP SWITCH, NEUTRAL (SN -880053)	1674 - 20
3G14	DUMP SWITCH, NEUTRAL (SN 880054-882700)	1674 - 22
3G16	DUMP SWITCH, NEUTRAL (SN 882701-)	1674 - 24

E

1I2	ELBOW, ENGINE VENTILATING PE4045DT050(S.N.071973-)	0408A - 2
2C6	ELBOW, ENGINE VENTILATING PE4045DT059	0408B - 2
2E13	ELBOW, ENGINE VENTILATING PE4045TT092	0408C - 2
1F12	ELBOW, ENGINE VENTILATING T04045DT050(S.N. -826110)	0408 - 2
2E18	ELBOW, EXHAUST PE4045TT092	0410C - 3
2H11	ELEMENT, AIR CLEANER (S/N -882700)	0521 - 8
2H11	ELEMENT, AIR FILTER (S/N -882700)	0521 - 8
2C4	ELEMENT, ENGINE OIL FILTER PE4045DT059	0407B - 4
2E11	ELEMENT, ENGINE OIL FILTER PE4045TT092	0407C - 4
2C24	ELEMENT, FINAL FUEL FILTER PE4045DT059	0420B - 4
2F8	ELEMENT, FINAL FUEL FILTER PE4045TT092	0420C - 4
2C24	ELEMENT, FINAL FUEL FILTER PE4045DT059	0420B - 4
2F8	ELEMENT, FINAL FUEL FILTER PE4045TT092	0420C - 4
2H13	ELEMENT,AIR CLEANER (S/N 882701-)	0521 - 10
2H13	ELEMENT,AIR FILTER (S/N 882701-)	0521 - 10
1G6	ELEMENT,FUEL FILTER T04045DT050 S.N. -826110)	0420 - 2
1I21	ELEMENT,FUEL FILTER PE4045DT050 S.N.071973-)	0420A - 2
3J24	EMBLEM, SMV	2008 - 2
2J5	END CAP, STEERING CYLINDER (MFWD)	0965 - 4
4C3	END PLATE, HYDRAULIC CONTROL VALVE (S/N -882700)	2162 - 10

ALPHABETICAL INDEX - CONTINUED

GRID		PAGE
4C5	END PLATE, HYDRAULIC CONTROL VALVE (S/N 882701-)	2162 - 12
4C7	END PLATE, HYDRAULIC CONTROL VALVE (5TH FUNCTION)	2162 - 14
4C9	END PLATE, OPTIONAL HYDRAULIC CONTROL VALVE	2162 - 16
1J5	ENGINE ACCESSORY DRIVE BELT PE4045DT050(S.N.071973-)	0429A - 2
2D9	ENGINE ACCESSORY DRIVE BELT PE4045DT059	0429B - 2
2F17	ENGINE ACCESSORY DRIVE BELT PE4045TT092	0429C - 2
1G12	ENGINE ACCESSORY DRIVE BELT T04045DT050 S.N. -826110)	0429 - 2
1F22	ENGINE BALANCER SHAFT T04045DT050 S.N. -826110)	0415 - 2
1I12	ENGINE BALANCER SHAFT PE4045DT050 S.N.071973-)	0415A - 2
2C12	ENGINE CONTROLLER PE4045DT059	0413B - 2
2E20	ENGINE CONTROLLER PE4045TT092	0413C - 4
3G18	ENGINE COOLANT TEMPERATURE SWITCH (FRONT WIRE HARNESS) (SN 882701-)	1674 - 26
3G12	ENGINE COOLANT TEMPERATURE SWITCH (SN -880053)	1674 - 20
3G14	ENGINE COOLANT TEMPERATURE SWITCH (SN 880054-882700)	1674 - 22
3G16	ENGINE COOLANT TEMPERATURE SWITCH (SN 882701-)	1674 - 24
2G4	ENGINE COOLANT, HEATER	0505 - 1
2G17	ENGINE FAN (6 BLADE) (S/N 882701-)	0512 - 4
2G15	ENGINE FAN (7 BLADE) (S/N -882700)	0512 - 2
1J8	ENGINE FLYWHEEL PE4045DT050 S.N.071973-)	0433A - 2
1G15	ENGINE FLYWHEEL T04045DT050 S.N. -826110)	0433 - 2
1H15	ENGINE FRONT PLATE PE4045DT050 S.N.071973-)	0404A - 1
1E24	ENGINE FRONT PLATE T04045DT050 S.N. -826110)	0404 - 1
3G18	ENGINE FRONT WIRE HARNESS (SN 882701-)	1674 - 26
1J11	ENGINE MAJOR OVERHAUL GASKET SET PE4045DT050(S.N.071973-)	0452A - 2
1G18	ENGINE MAJOR OVERHAUL GASKET SET T04045DT050(S.N. -826110)	0452 - 2
2I1	ENGINE MOUNTING PARTS	0540 - 2
1H16	ENGINE OIL BY-PASS VALVE PE4045DT050 S.N.071973-)	0404A - 2
1F1	ENGINE OIL BY-PASS VALVE T04045DT050 S.N. -826110)	0404 - 2
1I19	ENGINE OIL COOLER PE4045DT050 S.N.071973-)	0419A - 2
1G4	ENGINE OIL COOLER T04045DT050 S.N. -826110)	0419 - 2
1G4	ENGINE OIL COOLER ADAPTER T04045DT050 S.N. -826110)	0419 - 2
1I19	ENGINE OIL COOLER ADAPTER PE4045DT050 S.N.071973-)	0419A - 2
1H21	ENGINE OIL DIPSTICK PE4045DT050 S.N.071973-)	0407A - 3
2C2	ENGINE OIL DIPSTICK PE4045DT059	0407B - 2
1F6	ENGINE OIL DIPSTICK T04045DT050 S.N. -826110)	0407 - 3
2E9	ENGINE OIL DIPSTICK PE4045TT092	0407C - 2
1H21	ENGINE OIL DIPSTICK TUBE PE4045DT050 S.N.071973-)	0407A - 3
2C2	ENGINE OIL DIPSTICK TUBE PE4045DT059	0407B - 2
2E9	ENGINE OIL DIPSTICK TUBE PE4045TT092	0407C - 2
1F6	ENGINE OIL DIPSTICK TUBE T04045DT050 S.N. -826110)	0407 - 3
1H9	ENGINE OIL FILL PLUG PE4045DT050 S.N.071973-)	0402A - 4
1E18	ENGINE OIL FILL PLUG T04045DT050 S.N. -826110)	0402 - 4
1H24	ENGINE OIL FILTER PE4045DT050 S.N.071973-)	0407A - 6
1F9	ENGINE OIL FILTER T04045DT050 S.N. -826110)	0407 - 6
2C4	ENGINE OIL FILTER AND HEADER PE4045DT059	0407B - 4
2E11	ENGINE OIL FILTER AND HEADER PE4045TT092	0407C - 4
1H22	ENGINE OIL PAN PE4045DT050 S.N.071973-)	0407A - 4
1F7	ENGINE OIL PAN T04045DT050 S.N. -826110)	0407 - 4
1H16	ENGINE OIL PRESSURE REGULATING VALVE (ENG. SER. NO. 889025-)	0404A - 2
1H10	ENGINE OIL PRESSURE REGULATING VALVE PE4045DT050(ESN.071973-889024)	0402A - 6
1E19	ENGINE OIL PRESSURE REGULATING VALVE T04045DT050 (ENG.SER.NO.-826110)	0402 - 6
1I1	ENGINE OIL PUMP PE4045DT050 S.N.071973-)	0407A - 8
1F11	ENGINE OIL PUMP T04045DT050 S.N. -826110)	0407 - 8
1I1	ENGINE OIL PUMP GEAR PE4045DT050 S.N.071973-)	0407A - 8
1F11	ENGINE OIL PUMP GEAR T04045DT050 S.N. -826110)	0407 - 8
1F11	ENGINE OIL PUMP HOUSING T04045DT050 S.N. -826110)	0407 - 8
1I1	ENGINE OIL PUMP HOUSING PE4045DT050 S.N.071973-)	0407A - 8
1I1	ENGINE OIL PUMP INTAKE PE4045DT050 S.N.071973-)	0407A - 8
1F11	ENGINE OIL PUMP INTAKE T04045DT050 S.N. -826110)	0407 - 8
1H14	ENGINE PISTON PE4045DT050 S.N.071973-)	0403A - 2
1E23	ENGINE PISTON T04045DT050 S.N. -826110)	0403 - 2
1H18	ENGINE SHORT BLOCK PE4045DT050 S.N.071973-)	0404A - 4
2B23	ENGINE SHORT BLOCK PE4045DT059	0404B - 4
2E5	ENGINE SHORT BLOCK PE4045TT092	0404C - 4
1F3	ENGINE SHORT BLOCK T04045DT050 S.N. -826110)	0404 - 4
3J1	ENGINE SIDE SHIELDS (SN -848458)	1912 - 2
3J3	ENGINE SIDE SHIELDS (SN 848459-882700)	1912 - 4
2H1	ENGINE THROTTLE CABLE (S/N 872334-882700)	0515 - 8
2H3	ENGINE THROTTLE CABLE (S/N 882701-)	0515 - 10
2G21	ENGINE THROTTLE CONTROL (S/N 872334-882700)	0515 - 4
2G19	ENGINE THROTTLE CONTROL (S/N -872333)	0515 - 2
2G23	ENGINE THROTTLE CONTROL (S/N 882701-)	0515 - 6
2G19	ENGINE THROTTLE CONTROL LEVER (S/N -872333)	0515 - 2
2G21	ENGINE THROTTLE CONTROL LEVER (S/N 872334-882700)	0515 - 4
2G23	ENGINE THROTTLE CONTROL LEVER (S/N 882701-)	0515 - 6
1I2	ENGINE VENTILATING SYSTEM PE4045DT050(S.N.071973-)	0408A - 2
2C6	ENGINE VENTILATING SYSTEM PE4045DT059	0408B - 2

ALPHABETICAL INDEX - CONTINUED

GRID		PAGE
2E13	ENGINE VENTILATING SYSTEM PE4045TT092	0408C - 2
1F12	ENGINE VENTILATING SYSTEM T04045DT050(S.N. -826110)	0408 - 2
3G12	ENGINE WIRE HARNESS (SN -880053)	1674 - 20
3G14	ENGINE WIRE HARNESS (SN 880054-882700)	1674 - 22
3G16	ENGINE WIRE HARNESS (SN 882701-)	1674 - 24
2G5	ETHER STARTING AID	0505 - 2
2E18	EXHAUST ELBOW PE4045TT092	0410C - 3
1I6	EXHAUST MANIFOLD PE4045DT050 S.N.071973-)	0410A - 1
2C10	EXHAUST MANIFOLD PE4045DT059	0410B - 2
2E17	EXHAUST MANIFOLD PE4045TT092	0410C - 2
1F16	EXHAUST MANIFOLD T04045DT050 S.N. -826110)	0410 - 1
2H19	EXHAUST PIPE, MUFFLER, SPARK ARRESTOR (S/N -882700)	0531 - 6
2H21	EXHAUST PIPE, MUFFLER, SPARK ARRESTOR (S/N 882701-)	0531 - 8
2H15	EXHAUST PIPE, MUFFLER, STANDARD (S/N -882700)	0531 - 2
2H17	EXHAUST PIPE, MUFFLER, STANDARD (S/N 882701-)	0531 - 4
2H23	EXHAUST PIPE, MUFFLER, TURBO (S/N 882701-)	0531 - 10
1I4	EXHAUST VALVE PE4045DT050 S.N.071973-)	0409A - 2
2C8	EXHAUST VALVE PE4045DT059	0409B - 2
2E15	EXHAUST VALVE PE4045TT092	0409C - 2
1F14	EXHAUST VALVE T04045DT050 S.N. -826110)	0409 - 2

F

1G13	FAN DRIVE T04045DT050 S.N. -826110)	0429 - 4
1J6	FAN DRIVE PE4045DT050 S.N.071973-)	0429A - 4
1J6	FAN DRIVE HOUSING PE4045DT050 S.N.071973-)	0429A - 4
1G13	FAN DRIVE HOUSING T04045DT050 S.N. -826110)	0429 - 4
1J6	FAN DRIVE HUB PE4045DT050 S.N.071973-)	0429A - 4
1G13	FAN DRIVE HUB T04045DT050 S.N. -826110)	0429 - 4
2D10	FAN DRIVE PE4045DT059	0429B - 3
2F18	FAN DRIVE PE4045TT092	0429C - 3
1G13	FAN DRIVE PULLEY	0429 - 4
1J6	FAN DRIVE PULLEY PE4045DT050 S.N.071973-)	0429A - 4
2G7	FAN SHROUD (S/N -882700)	0511 - 2
2G9	FAN SHROUD (S/N 882701-)	0511 - 4
3F15	FAN, ALTERNATOR (S/N -882700)	1672 - 2
3F16	FAN, ALTERNATOR (S/N 882701-)	1672 - 4
2G17	FAN, ENGINE (6 BLADE) (S/N 882701-)	0512 - 4
2G15	FAN, ENGINE (7 BLADE) (S/N -882700)	0512 - 2
3J15	FENDERS	1927 - 2
4D5	FIFTH FUNCTION VALVE KIT	2162 - 36
4C7	FIFTH FUNCTION W/THIRD FUNCTION BUCKET	2162 - 14
2G11	FILLER CAP, RADIATOR (S/N -882700)	0511 - 6
2G13	FILLER CAP, RADIATOR (S/N 882701-)	0511 - 8
2G11	FILLER TANK, RADIATOR (S/N -882700)	0511 - 6
2G13	FILLER TANK, RADIATOR (S/N 882701-)	0511 - 8
2C1	FILLER, OIL PE4045DT059	0407B - 1
2E8	FILLER, OIL PE4045TT092	0407C - 1
1D25	FILTER, CHARGE PUMP	0360 - 5
2C4	FILTER, ENGINE OIL PE4045DT059	0407B - 4
2E11	FILTER, ENGINE OIL PE4045TT092	0407C - 4
1G6	FILTER, FUEL T04045DT050 S.N. -826110)	0420 - 2
1I21	FILTER, FUEL PE4045DT050 S.N.071973-)	0420A - 2
2C22	FILTER, FUEL PE4045DT059	0420B - 2
2F6	FILTER, FUEL PE4045TT092	0420C - 2
4E7	FILTER, MAIN HYDRAULIC (S/N -880053)	2163 - 2
4E9	FILTER, MAIN HYDRAULIC (S/N 880054-880245)	2163 - 4
4E11	FILTER, MAIN HYDRAULIC (S/N 880246-)	2163 - 6
1D25	FILTER, TRANSMISSION	0360 - 5
2C24	FINAL FUEL ELEMENT PE4045DT059	0420B - 4
2F8	FINAL FUEL ELEMENT PE4045TT092	0420C - 4
2C24	FINAL FUEL FILTER AND LINES PE4045DT059	0420B - 4
2F8	FINAL FUEL FILTER AND LINES PE4045TT092	0420C - 4
2C24	FINAL FUEL FILTER ELEMENT PE4045DT059	0420B - 4
2F8	FINAL FUEL FILTER ELEMENT PE4045TT092	0420C - 4
2C24	FINAL FUEL FILTER FUEL LINES PE4045DT059	0420B - 4
2F8	FINAL FUEL FILTER FUEL LINES PE4045TT092	0420C - 4
2C24	FINAL FUEL FILTER HEATER PE4045DT059	0420B - 4
2F8	FINAL FUEL FILTER HEATER PE4045TT092	0420C - 4
2C24	FINAL FUEL FILTER PE4045DT059	0420B - 4
2F8	FINAL FUEL FILTER PE4045TT092	0420C - 4
2C24	FINAL FUEL FILTER SERVICE KIT PE4045DT059	0420B - 4
2F8	FINAL FUEL FILTER SERVICE KIT PE4045TT092	0420C - 4
3H23	FIREWALL,INSTRUMENT PANEL HOUSING (S/N -872333)	1816 - 2
3I1	FIREWALL,INSTRUMENT PANEL HOUSING (S/N 872334-882700)	1816 - 4
3I5	FIREWALL,INSTRUMENT PANEL HOUSING (S/N 882700-)	1816 - 8
3I3	FIREWALL,INSTRUMENT PANEL HOUSING (S/N 882701-)	1816 - 6
2J17	FITTINGS, BRAKE VALVE (SER.NO.880908-)	1060 - 8
4B19	FITTINGS, CONTROL VALVE (S/N -LE880053)	2162 - 2
4B21	FITTINGS, CONTROL VALVE (S/N LE880054-)	2162 - 4
4B23	FITTINGS, REVERSE VALVE MOUNT (S/N 882701-)	2162 - 6
3C3	FIXED DRAWBAR	1511 - 2
1D12	FLEXPLATE, TORQUE CONVERTOR	0350 - 1
3B18	FLUID ANALYSIS PRODUCTS (COOLSCAN PLUS TEST KIT)	1369 - 4
3B19	FLUID ANALYSIS PRODUCTS (DIESELSCAN TEST KIT)	1369 - 5
3B16	FLUID ANALYSIS PRODUCTS (OILSCAN PLUS TEST KIT)	1369 - 2
1J9	FLYWHEEL HOUSING PE4045DT050 S.N.071973-)	0433A - 3
1G16	FLYWHEEL HOUSING T04045DT050 S.N. -826110)	0433 - 3
2D14	FLYWHEEL HOUSING PE4045DT059	0433B - 3

ALPHABETICAL INDEX - CONTINUED

GRID		PAGE
2F22	FLYWHEEL HOUSING PE4045TT092	0433C - 3
2D13	FLYWHEEL PE4045DT059	0433B - 2
2F21	FLYWHEEL PE4045TT092	0433C - 2
1J8	FLYWHEEL RING GEAR PE4045DT050 S.N.071973-)	0433A - 2
1G15	FLYWHEEL RING GEAR T04045DT050 S.N. -826110)	0433 - 2
1J8	FLYWHEEL, ENGINE PE4045DT050 S.N.071973-)	0433A - 2
1G15	FLYWHEEL, ENGINE T04045DT050 S.N. -826110)	0433 - 2
1D7	FNR,RANGE SWITCH	0315 - 4
1D4	FORK, SHIFT	0315 - 1
1D13	FORWARD CLUTCH ASSEMBLY	0350 - 2
1D22	FORWARD, NEUTRAL AND REVERSE SOLENOIDS	0360 - 2
1D7	FORWARD,NEUTRAL,REVERSER CONTROL	0315 - 4
4C3	FOUR FUNCTIONS, HYDRAULIC CONTROL (S/N -882700)	2162 - 10
4C5	FOUR FUNCTIONS, HYDRAULIC CONTROL (S/N 882701-)	2162 - 12
3H2	FRAME, MAIN (S/N 837539-872333)	1741 - 2
3H4	FRAME, MAIN (S/N 872334-)	1741 - 4
3I15	FRAMES, SWIVEL SEAT (SN XXXXXX-882700)	1821 - 10
3I17	FRAMES, SWIVEL SEAT (SN 882701-)	1821 - 12
3G5	FRONT AND REAR TRACTOR LAMPS, HALOGEN (SN -882700)	1674 - 12
1C14	FRONT AXLE (MFWD)	0250 - 4
1C1	FRONT AXLE (WITHOUT MFWD)	0230 - 2
1C4	FRONT AXLE (WITHOUT MFWD) (SERIAL NO. 911132-)	0230 - 6
1C16	FRONT AXLE HOUSING (MFWD)	0250 - 6
1C18	FRONT AXLE HOUSING (MFWD)	0250 - 8
1C16	FRONT AXLE HOUSING (MWFD)	0250 - 6
1C5	FRONT AXLE HOUSING (WITHOUT MFWD) (SERIAL NO. 911132-)	0230 - 7
1C18	FRONT AXLE HUB (MFWD)	0250 - 8
1C14	FRONT AXLE PIVOT PIN (MFWD)	0250 - 4
1C4	FRONT AXLE PIVOT PIN (WITHOUT MFWD) (SERIAL NO. 911132-)	0230 - 6
1C6	FRONT AXLE SWIVEL HOUSING (WITHOUT MFWD) (SERIAL NO. 911132-)	0230 - 8
1C18	FRONT AXLE UNIVERSAL DRIVE SHAFT (MFWD)	0250 - 8
1C7	FRONT AXLE WHEEL HUB(WITHOUT MFWD) (SERIAL NO. 911132-)	0230 - 9
1B12	FRONT DRIVE WHEEL	0110 - 3A
1B13	FRONT DRIVE WHEEL	0110 - 3Z
2B20	FRONT PLATE (W/O AUX. DRIVE) PE4045DT059	0404B - 1
2E2	FRONT PLATE (W/O AUX. DRIVE) PE4045TT092	0404C - 1
1H15	FRONT PLATE, ENGINE PE4045DT050 S.N.071973-)	0404A - 1
1E24	FRONT PLATE, ENGINE T04045DT050 S.N. -826110)	0404 - 1
1B14	FRONT WHEEL (WITHOUT MFWD)	0120 - 1
1C3	FRONT WHEEL BEARING (WITHOUT MFWD)	0230 - 4
1C3	FRONT WHEEL HUB (WITHOUT MFWD)	0230 - 4
1G6	FUEL FILTER T04045DT050 S.N. -826110)	0420 - 2
1I21	FUEL FILTER PE4045DT050 S.N.071973-)	0420A - 2
1G6	FUEL FILTER ELEMENT T04045DT050 S.N. -826110)	0420 - 2
1I21	FUEL FILTER ELEMENT PE4045DT050 S.N.071973-)	0420A - 2
1I21	FUEL FILTER FUEL LINES PE4045DT050 S.N.071973-)	0420A - 2
1G6	FUEL FILTER FUEL LINES T04045DT050 S.N. -826110)	0420 - 2
2C22	FUEL FILTER PE4045DT059	0420B - 2
2F6	FUEL FILTER PE4045TT092	0420C - 2
2C24	FUEL FILTER, FINAL PE4045DT059	0420B - 4
2F8	FUEL FILTER, FINAL PE4045TT092	0420C - 4
2I3	FUEL FILTER, TANK (S/N -841621)	0560 - 2
2I3	FUEL GAUGE SENDER (S/N -841621)	0560 - 2
2I5	FUEL GAUGE SENDER (S/N 841622-)	0560 - 4
1F18	FUEL INJ. PUMP COLD ADVANCE SWITCH T04045DT050(S.N. -826110)	0413 - 3
1I8	FUEL INJ.PUMP COLD ADVANCE SWITCH PE4045DT050(S.N.071973-)	0413A - 3
1F18	FUEL INJ.PUMP SOLENOID WIRE HAENESS T04045DT050(S.N. -826110)	0413 - 3
1I8	FUEL INJ.PUMP SOLENOID WIRE HARNESS PE4045DT050(S.N.071973-)	0413A - 3
2I7	FUEL INJECTION LEAK-OFF LINE (S/N -841621)	0563 - 2
2I9	FUEL INJECTION LEAK-OFF LINE (S/N 841622-)	0563 - 4
1I9	FUEL INJECTION LINES PE4045DT050(S.N.071973-)	0413A - 4
1F19	FUEL INJECTION LINES T04045DT050(S.N. -826110)	0413 - 4
2C12	FUEL INJECTION LINES PE4045DT059	0413B - 2
2E20	FUEL INJECTION LINES PE4045TT092	0413C - 4
1F17	FUEL INJECTION NOZZLE T04045DT050 S.N. -826110)	0413 - 2
1I7	FUEL INJECTION NOZZLE PE4045DT050 S.N.071973-)	0413A - 2
2C11	FUEL INJECTION NOZZLE (W/O TURBO) PE4045DT059	0413B - 1
1I9	FUEL INJECTION PUMP PE4045DT050(S.N.071973-)	0413A - 4
1F19	FUEL INJECTION PUMP T04045DT050(S.N. -826110)	0413 - 4
1I9	FUEL INJECTION PUMP DRIVE GEAR PE4045DT050(S.N.071973-)	0413A - 4
2C12	FUEL INJECTION PUMP DRIVE GEAR PE4045DT059	0413B - 2
2E20	FUEL INJECTION PUMP DRIVE GEAR PE4045TT092	0413C - 4
1F19	FUEL INJECTION PUMP DRIVE GEAR T04045DT050(S.N. -826110)	0413 - 4
2C12	FUEL INJECTION PUMP PE4045DT059	0413B - 2
2E20	FUEL INJECTION PUMP PE4045TT092	0413C - 4
2E19	FUEL INJECTION SEAL, W/TURBO PE4045TT092	0413C - 2
1I9	FUEL INJECTION SYSTEM PE4045DT050(S.N.071973-)	0413A - 4
1F19	FUEL INJECTION SYSTEM T04045DT050(S.N. -826110)	0413 - 4
2C12	FUEL INJECTION SYSTEM PE4045DT059	0413B - 2
2E20	FUEL INJECTION SYSTEM PE4045TT092	0413C - 4
2I7	FUEL LINES (S/N -841621)	0563 - 2
2I9	FUEL LINES (S/N 841622-)	0563 - 4
2C24	FUEL LINES, FINAL FUEL FILTER PE4045DT059	0420B - 4
2F8	FUEL LINES, FINAL FUEL FILTER PE4045TT092	0420C - 4
1I21	FUEL LINES,FUEL FILTER PE4045DT050 S.N.071973-)	0420A - 2
1G6	FUEL LINES,FUEL FILTER T04045DT050 S.N. -826110)	0420 - 2
2I3	FUEL TANK (S/N -841621)	0560 - 2
2I5	FUEL TANK (S/N 841622-)	0560 - 4

ALPHABETICAL INDEX - CONTINUED

GRID		PAGE
3G18	FUEL TEMPERATURE SENSOR (FRONT WIRE HARNESS) (SN 882701-)	1674 - 26
1G8	FUEL TRANSFER PUMP T04045DT050 S.N. -826110)	0421 - 2
1I23	FUEL TRANSFER PUMP PE4045DT050 S.N.071973-)	0421A - 2
2D1	FUEL TRANSFER PUMP (FLEX FITTINGS) PE4045DT059	0421B - 2
2F10	FUEL TRANSFER PUMP (FLEX FITTINGS) PE4045TT092	0421C - 2
1I23	FUEL TRANSFER PUMP PUSH ROD PE4045DT050 S.N.071973-)	0421A - 2
1G8	FUEL TRANSFER PUMP PUSH ROD T04045DT050 S.N. -826110)	0421 - 2
3H23	FUSE AND RELAY MOUNTING BRACKET (S/N -872333)	1816 - 2
3I1	FUSE AND RELAY MOUNTING BRACKET (S/N 872334-882700)	1816 - 4
3I5	FUSE AND RELAY MOUNTING BRACKET (S/N 882700-)	1816 - 8
3I3	FUSE AND RELAY MOUNTING BRACKET (S/N 882701-)	1816 - 6
3G20	FUSES AND FUSE BLOCK (SN -880053)	1674 - 28
3G22	FUSES AND FUSE BLOCK (SN 880054-882700)	1674 - 30
3G24	FUSES AND FUSE BLOCK (SN 882701-)	1674 - 32

G

2D15	GASKET KIT, REBUILD PE4045DT059	0452B - 2
2F23	GASKET KIT, REBUILD PE4045TT092	0452C - 2
1J10	GASKET SET, CYLINDER HEAD REMOVAL PE4045DT050(S.N.071973-)	0452A - 1
1G17	GASKET SET, CYLINDER HEAD REMOVAL T04045DT050(S.N. -826110)	0452 - 1
1J11	GASKET SET,ENGINE MAJOR OVERHAUL PE4045DT050(S.N.071973-)	0452A - 2
1G18	GASKET SET,ENGINE MAJOR OVERHAUL T04045DT050(S.N. -826110)	0452 - 2
1J10	GASKET SET,IN CHASSIS OVERHAUL PE4045DT050(S.N.071973-)	0452A - 1
1G17	GASKET SET,IN CHASSIS OVERHAUL T04045DT050(S.N. -826110)	0452 - 1
1I4	GASKET, CYLINDER HEAD PE4045DT050 S.N.071973-)	0409A - 2
2C8	GASKET, CYLINDER HEAD PE4045DT059	0409B - 2
2E15	GASKET, CYLINDER HEAD PE4045TT092	0409C - 2
1F14	GASKET, CYLINDER HEAD T04045DT050 S.N. -826110)	0409 - 2
1D24	GASKET, INTERMEDIATE PLATE	0360 - 4
2C20	GASKET, OIL COOLER PE4045DT059	0419B - 2
2F4	GASKET, OIL COOLER PE4045TT092	0419C - 2
2C4	GASKET, OIL FILTER HOUSING PE4045DT059	0407B - 4
2E11	GASKET, OIL FILTER HOUSING PE4045TT092	0407C - 4
1H10	GASKET, TIMING GEAR COVER PE4045DT050(ESN.071973-900932)	0402A - 6
1E19	GASKET, TIMING GEAR COVER T04045DT050 (ENG.SER.NO.-826110)	0402 - 6
2B15	GASKET, VALVE COVER PE4045DT059	0402B - 3
2D22	GASKET, VALVE COVER PE4045TT092	0402C - 3
1H22	GASKET,OIL PAN PE4045DT050 S.N.071973-)	0407A - 4
1F7	GASKET,OIL PAN T04045DT050 S.N. -826110)	0407 - 4
1E21	GASKET,REPLACEMENT TIMING GEAR T04045DT050(ESN.-826110)	0402 - 8
1H9	GASKET,ROCKER ARM COVER PE4045DT050 S.N.071973-)	0402A - 4
1E18	GASKET,ROCKER ARM COVER T04045DT050 S.N. -826110)	0402 - 4
1H12	GASKET,TIMING GEAR COVER PE4045DT050(ESN.900933-)	0402A - 8
1D24	GASKET,TRANSMISSION CONTROL VALVE	0360 - 4
4G22	GEAR BOX, PTO (SN 880054-)	4000 - 2
4G24	GEAR BOX, PTO ASSEMBLY (SN 880054-)	4000 - 4
4G24	GEAR SHAFT, PTO ASSEMBLY (SN 880054-)	4000 - 4
4H1	GEAR SHAFT, PTO MOTOR (S/N 880054-)	4000 - 6
1D4	GEAR SHIFTERS	0315 - 1
1H7	GEAR, CAMSHAFT PE4045DT050 S.N.071973-)	0402A - 2
1E16	GEAR, CAMSHAFT T04045DT050 S.N. -826110)	0402 - 2
2B13	GEAR, CAMSHAFT PE4045DT059	0402B - 1
2E3	GEAR, CAMSHART PE4045TT092	0404C - 2
1H6	GEAR, CRANKSHAFT PE4045DT050 S.N.071973-)	0401A - 2
2B12	GEAR, CRANKSHAFT PE4045DT059	0401B - 2
2D20	GEAR, CRANKSHAFT PE4045TT092	0401C - 2
1E15	GEAR, CRANKSHAFT T04045DT050 S.N. -826110)	0401 - 2
1I1	GEAR, ENGINE OIL PUMP PE4045DT050 S.N.091973-)	0407A - 8
1F11	GEAR, ENGINE OIL PUMP T04045DT050 S.N. -826110)	0407 - 8
1I9	GEAR, FUEL INJECTION PUMP DRIVE PE4045DT050(S.N.071973-)	0413A - 4
2C12	GEAR, FUEL INJECTION PUMP DRIVE PE4045DT059	0413B - 2
2E20	GEAR, FUEL INJECTION PUMP DRIVE PE4045TT092	0413C - 4
1F19	GEAR, FUEL INJECTION PUMP DRIVE T04045DT050(S.N. -826110)	0413 - 4
1D21	GEAR, INTERMEDIATE, TRANSMISSION	0350 - 10
2C5	GEAR, OIL PUMP PE4045DT059	0407B - 7
2E12	GEAR, OIL PUMP PE4045TT092	0407C - 5
1C20	GEAR, PLANET (MFWD)	0250 - 10
1C21	GEAR, PLANET (MFWD)	0250 - 11
1C12	GEAR, PLANETARY PINION	0250 - 2
1C12	GEAR, PLANETARY RING	0250 - 2
1C20	GEAR, RING (MFWD)	0250 - 10
1C21	GEAR, RING (MFWD)	0250 - 11
2D13	GEAR, RING PE4045DT059	0433B - 2
2F21	GEAR, RING PE4045TT092	0433C - 2
1B21	GEAR, SPIRAL BEVEL WITH LOCK	0210 - 2
1B22	GEAR, SPIRAL BEVEL WITH LOCK	0210 - 3
1D20	GEAR, SYNCHRONIZER, 2ND	0350 - 9
1D21	GEAR, SYNCHRONIZER, 4TH	0350 - 10
1D20	GEAR, SYNCHRONIZER,1ST	0350 - 9
1D21	GEAR, SYNCHRONIZER,3RD	0350 - 10
2B20	GEAR, UPPER IDLER (W/O AUX. DRIVE) PE4045DT059	0404B - 1
2E2	GEAR, UPPER IDLER (W/O AUX. DRIVE) PE4045TT092	0404C - 1
1C22	GEAR,DIFFERENTIAL SPIRAL BEVEL (MFWD)	0250 - 12
3H15	GEARSHIFT BOOT AND COVER PLATE (S/N -872333)	1812 - 2
3H17	GEARSHIFT BOOT AND COVER PLATE (S/N 872334-882700)	1812 - 4
3H19	GEARSHIFT BOOT AND COVER PLATE (S/N 882701-)	1812 - 6
1D10	GEARSHIFT LEVER	0342 - 2

ALPHABETICAL INDEX - CONTINUED

GRID		PAGE
3J5	GRILLE (SN -872333)	1921 - 2
4H7	GRILLE, PTO (SN 880054-882700)	4000 - 12
4H9	GRILLE, PTO (SN 882701-)	4000 - 14
3J13	GRILLE, RADIATOR (S/N 872334-)	1921 - 10
3J7	GRILLE, RADIATOR (S/N 872334-882700)	1921 - 4
3J9	GRILLE, RADIATOR (S/N 882701-)	1921 - 6
3H6	GUARD, BOTTOM, TRANSMISSION	1746 - 2
3J9	GUARD, COOLER (GRILLE) (S/N 882701-)	1921 - 6
3G6	GUARD, LIGHT (S/N -848452)	1674 - 14
3G8	GUARD, LIGHT (S/N 848453-)	1674 - 16
3G10	GUARD, LIGHT (S/N 848453-)	1674 - 18
2G7	GUARD, RADIATOR (S/N -882700)	0511 - 2
2G9	GUARD, RADIATOR (S/N 882701-)	0511 - 4
1D7	GUARD, REVERSER CONTROL	0315 - 4

H

3G5	HALOGEN FRONT AND REAR TRACTOR LAMPS (SN -882700)	1674 - 12
3G5	HALOGEN LAMP CONNECTOR (SN -882700)	1674 - 12
4D23	HANDLE/LEVER KIT, CONTROL VALVE (S/N -882700)	2162 - 52
4D17	HANDLE/LEVER KIT, CONTROL VALVE (S/N XXXXXX-855518)	2162 - 46
4D19	HANDLE/LEVER KIT, CONTROL VALVE (S/N 855519-882700)	2162 - 48
4D21	HANDLE/LEVER KIT, CONTROL VALVE (S/N 882701-)	2162 - 50
4E1	HANDLE/LEVER KIT, CONTROL VALVE (S/N 882701-)	2162 - 54
3I19	HANDLE, SWIVEL SEAT (SN XXXXXX-)	1821 - 14
3G20	HARNESS, DASH (SN -880053)	1674 - 28
3G22	HARNESS, DASH (SN 880054-882700)	1674 - 30
3G24	HARNESS, DASH (SN 882701-)	1674 - 32
1D10	HARNESS, DIODE, TRANSMISSION	0342 - 2
3G12	HARNESS, ENGINE (SN -880053)	1674 - 20
3G14	HARNESS, ENGINE (SN 880054-882700)	1674 - 22
3G16	HARNESS, ENGINE (SN 882701-)	1674 - 24
3G18	HARNESS, ENGINE FRONT (SN 882701-)	1674 - 26
3G6	HARNESS, ROPS WIRING (S/N -848452)	1674 - 14
3G8	HARNESS, ROPS WIRING (S/N 848453-)	1674 - 16
3G10	HARNESS, ROPS WIRING (S/N 848453-)	1674 - 18
3G3	HARNESS, ROPS WIRING (SN -882700)	1674 - 10
3F22	HARNESS, ROPS WORK LIGHTS (S/N 848453-880221)	1674 - 4
3F24	HARNESS, ROPS WORK LIGHTS (S/N 880222-882700)	1674 - 6
3G1	HARNESS, ROPS WORK LIGHTS (S/N 882701-)	1674 - 8
3F20	HARNESS, ROPS WORK LIGHTS (SN -848452)	1674 - 2
1I4	HEAD, CYLINDER PE4045DT050 S.N.071973-)	0409A - 2
2C8	HEAD, CYLINDER PE4045DT059	0409B - 2
2E15	HEAD, CYLINDER PE4045TT092	0409C - 2
1F14	HEAD, CYLINDER T04045DT050 S.N. -826110)	0409 - 2
3D17	HEAD, HITCH PITCH CYLINDER (SN 881746-882700)	1520 - 18
2C4	HEADER, ENGINE OIL FILTER PE4045DT059	0407B - 4
2E11	HEADER, ENGINE OIL FILTER PE4045TT092	0407C - 4
3J9	HEAT SHIELD (S/N 882701-)	1921 - 6
3J5	HEAT SHIELD AND REFLECTOR GRILLE (SN -872333)	1921 - 2
2G4	HEATER, ENGINE COOLANT	0505 - 1
2C24	HEATER, FINAL FUEL FILTER PE4045DT059	0420B - 4
2F8	HEATER, FINAL FUEL FILTER PE4045TT092	0420C - 4
2G4	HEATING ELEMENT, ENGINE COOLANT HEATER	0505 - 1
3D5	HITCH LIFT CYLINDER (SN -845680)	1520 - 8
3D7	HITCH LIFT CYLINDER (SN 845681-881738)	1520 - 10
3D9	HITCH LIFT CYLINDER (SN 881739-882728)	1520 - 12
3D11	HITCH LIFT CYLINDER (SN 882729-)	1520 - 13A
4D17	HITCH LIFT SECTION, HYDRAULIC VALVE (S/N XXXXXX-855518)	2162 - 46
4D19	HITCH LIFT SECTION, HYDRAULIC VALVE (S/N 855519-882700)	2162 - 48
4D21	HITCH LIFT SECTION, HYDRAULIC VALVE (S/N 882701-)	2162 - 50
3D17	HITCH PITCH CYLINDER (SN 881746-882700)	1520 - 18
3D19	HITCH PITCH CYLINDER (SN 882701-882706)	1520 - 20
3D13	HITCH PITCH CYLINDER (SN XXXXXX-880053)	1520 - 14
3D15	HITCH PITCH CYLINDER (SN 880054-881745)	1520 - 16
3D21	HITCH PITCH CYLINDER (SN 882707-)	1520 - 21A
3C21	HITCH TILT CYLINDER (S/N XXXXXX-880053)	1520 - 2
3C23	HITCH TILT CYLINDER (S/N 880054-881736)	1520 - 4
3D1	HITCH TILT CYLINDER (S/N 881737-882733)	1520 - 6
3D3	HITCH TILT CYLINDER (S/N 882734-)	1520 - 7A
4D5	HITCH VALVE SECTION KIT, FIFTH FUNCTION	2162 - 36
3C19	HITCH WEIGHTS (KIT) (S/N 882701-)	1511 - 18
3C7	HITCH WEIGHTS (S/N -880053)	1511 - 6
3C9	HITCH WEIGHTS (S/N 880054-882700)	1511 - 8
3C11	HITCH WEIGHTS (S/N 882701-)	1511 - 10
3C15	HITCH WEIGHTS (SLAB) (S/N 880054-882700)	1511 - 14
3C13	HITCH WEIGHTS (SLAB) (SN -880053)	1511 - 12
3C17	HITCH WEIGHTS (SLAB) (SN 882701-)	1511 - 16
3C3	HITCH, FIXED	1511 - 2
3E1	HITCH, THREE POINT (S/N 880054-882700)	1520 - 24
3E3	HITCH, THREE POINT (S/N 882701-)	1520 - 26
3E11	HITCH, TILT CYLINDER KIT (S/N -880053)	1520 - 34
3E13	HITCH, TILT CYLINDER KIT, FIFTH FUNCTION (S/N 880054-)	1520 - 36
3E15	HITCH, TILT CYLINDER, FIFTH FUNCTION (S/N 880054-882700)	1520 - 38
3E17	HITCH, TILT CYLINDER, FIFTH FUNCTION (S/N 882701-)	1520 - 40
3D23	HITCH, 3 POINT (S/N -880053)	1520 - 22
3E5	HITCH, 3 POINT HOSES (SN -880053)	1520 - 28
3E7	HITCH, 3 POINT HOSES (880054-)	1520 - 30
3E9	HITCH, 3 POINT HOSES, 5TH FUNCTION (S/N LE880054-)	1520 - 32
3K1	HOLDER, OPERATOR'S MANUAL	2011 - 2
3J11	HOOD (S/N 882701-)	1921 - 8
3I22	HOOD ASSEMBLY (S/N -872333)	1911 - 2
3I24	HOOD ASSEMBLY (S/N 872334-)	1911 - 4
3J11	HOOD LATCH (S/N 882701-)	1921 - 8
3J9	HOOD MOUNT ASSY (S/N 882701-)	1921 - 6
3J11	HOOD RELEASE (S/N 882701-)	1921 - 8
3J11	HOOD SUPPORT (GRILLE) (S/N 882701-)	1921 - 8

ALPHABETICAL INDEX - CONTINUED

GRID		PAGE
3G18	HORN (FRONT WIRE HARNESS) (SN 882701-)	1674 - 26
3G12	HORN (SN -880053)	1674 - 20
3G14	HORN (SN 880054-882700)	1674 - 22
3G16	HORN (SN 882701-)	1674 - 24
4F23	HOSE (THIRD FUNCTION CLAMSHELL BUCKET) (SN 882701-)	3115 - 8
2C6	HOSE, ENGINE VENTILATING PE4045DT059	0408B - 2
2E13	HOSE, ENGINE VENTILATING PE4045TT092	0408C - 2
1E1	HOSE, TRANSMISSION TO AXLE (S/N -880053)	0363 - 2
1E3	HOSE, TRANSMISSION TO AXLE (S/N 880054-)	0363 - 4
1E5	HOSE, TRANSMISSION TO COOLER	0363 - 6
4E7	HOSES AND FITTINGS, MAIN HYDRAULICS (S/N -880053)	2163 - 2
4E9	HOSES AND FITTINGS, MAIN HYDRAULICS (S/N 880054-880245)	2163 - 4
4E11	HOSES AND FITTINGS, MAIN HYDRAULICS (S/N 880246-)	2163 - 6
2J19	HOSES, BRAKE VALVE (SER.NO.-880907)	1063 - 2
2J21	HOSES, BRAKE VALVE (SER.NO.880908-)	1063 - 4
2K1	HOSES, BRAKE VALVE (S/N 882701-)	1063 - 8
2J23	HOSES, BRAKE VALVE (SN 880908-882700)	1063 - 6
2K3	HOSES, BRAKE VALVE (TURBO) (S/N 882701-)	1063 - 10
4F5	HOSES, HYD, MULTI-PURPOSE BUCKET (S/N 880294-882700)	3102 - 14
4F7	HOSES, HYD, MULTI-PURPOSE BUCKET (S/N 882701-)	3102 - 16
3E5	HOSES, 3 POINT HITCH (SN -880053)	1520 - 28
3E7	HOSES, 3 POINT HITCH (SN 880054-)	1520 - 30
3E9	HOSES, 3 POINT HITCH, 5TH FUNCTION (S/N LE880054-)	1520 - 32
2H5	HOSES,AIR CLEANER	0521 - 2
2H7	HOSES,AIR CLEANER (S/N 882701-)	0521 - 4
2H9	HOSES,AIR CLEANER (TURBO) (S/N 882701-)	0521 - 6
3J5	HOUSING AND COWL GRILLE (SN -872333)	1921 - 2
1B19	HOUSING AXLE	0201 - 2
1D9	HOUSING, BELL	0341 - 1
2J9	HOUSING, BRAKE	1011 - 2
2J11	HOUSING, BRAKE VALVE (SER.NO.-880907)	1060 - 2
2J15	HOUSING, BRAKE VALVE (SER.NO.-880907)	1060 - 6
2J13	HOUSING, BRAKE VALVE (SER.NO.880908-)	1060 - 4
2J17	HOUSING, BRAKE VALVE (SER.NO.880908-)	1060 - 8
1B19	HOUSING, DIFFERENTIAL	0201 - 2
1B21	HOUSING, DIFFERENTIAL WITH LOCK	0210 - 2
1B22	HOUSING, DIFFERENTIAL WITH LOCK	0210 - 3
1G13	HOUSING, FAN DRIVE	0429 - 4
1J6	HOUSING, FAN DRIVE PE4045DT050 S.N.071973-)	0429A - 4
1J9	HOUSING, FLYWHEEL PE4045DT050 S.N.071973-)	0433A - 3
2D14	HOUSING, FLYWHEEL PE4045DT059	0433B - 3
2F22	HOUSING, FLYWHEEL PE4045TT092	0433C - 3
1G16	HOUSING, FLYWHEEL T04045DT050 S.N. -826110)	0433 - 3
3H23	HOUSING, INSTRUMENT PANEL (S/N -872333)	1816 - 2
2C5	HOUSING, OIL PUMP PE4045DT059	0407B - 7
2E12	HOUSING, OIL PUMP PE4045TT092	0407C - 5
2K6	HOUSING, PARK BRAKE (AXLE SERIAL NO. -217496)	1111 - 2
2K8	HOUSING, PARK BRAKE (AXLE SERIAL NO. 217497-)	1111 - 4
4H3	HOUSING, PTO PUMP (S/N 880054-)	4000 - 8
4H5	HOUSING, PTO PUMP (S/N 880054-) (CONT'D)	4000 - 10
1C6	HOUSING, SWIVEL, FRONT AXLE (WITHOUT MFWD)(SERIAL NO. 911132-)	0230 - 8
1D9	HOUSING, TRANSMISSION	0341 - 1
1I1	HOUSING,ENGINE OIL PUMP PE4045DT050 S.N.071973-)	0407A - 8
1F11	HOUSING,ENGINE OIL PUMP T04045DT050 S.N. -826110)	0407 - 8
1C18	HOUSING,FRONT AXLE (MFWD)	0250 - 8
1C16	HOUSING,FRONT AXLE (MWFD)	0250 - 6
1C5	HOUSING,FRONT AXLE (WITHOUT MFWD) (SERIAL NO. 911132-)	0230 - 7
1D5	HOUSING,SHIFT	0315 - 2
1D13	HUB, CLUTCH	0350 - 2
1D15	HUB, CLUTCH	0350 - 4
1J6	HUB, FAN DRIVE PE4045DT050 S.N.071973-)	0429A - 4
1G13	HUB, FAN DRIVE T04045DT050 S.N. -826110)	0429 - 4
2D10	HUB, FAN DRIVE PE4045DT059	0429B - 3
2F18	HUB, FAN DRIVE PE4045TT092	0429C - 3
1C7	HUB, FRONT AXLE WHEEL (WITHOUT MFWD) (SERIAL NO. 911132-)	0230 - 9
1C3	HUB, FRONT WHEEL (WITHOUT MFWD)	0230 - 4
1C18	HUB,FRONT AXLE (MFWD)	0250 - 8
4F5	HYD HOSE, MULTI-PURPOSE BUCKET (S/N 880294-882700)	3102 - 14
4F7	HYD HOSES, MULTI-PURPOSE BUCKET (S/N 882701-)	3102 - 16
4H13	HYDRALIC PUMP, PTO (S/N 880054-882700)	4063 - 2
4H15	HYDRALIC PUMP, PTO (S/N 882701-)	4063 - 4
4C1	HYDRAULIC CONTROL VALVE (BASIC FUNCTION)	2162 - 8
4C3	HYDRAULIC CONTROL VALVE (FOUR FUNCTIONS) (S/N -882700)	2162 - 10
4C5	HYDRAULIC CONTROL VALVE (FOUR FUNCTIONS) (S/N 882701-)	2162 - 12
4C7	HYDRAULIC CONTROL VALVE (5TH FUNCTION)	2162 - 14
4B19	HYDRAULIC CONTROL VALVE FITTINGS (S/N -LE880053)	2162 - 2
4B21	HYDRAULIC CONTROL VALVE FITTINGS (S/N LE880054-)	2162 - 4
4E20	HYDRAULIC FRONT COUPLER	3102 - 4
4H13	HYDRAULIC HOSE, PTO (S/N 880054-882700)	4063 - 2
4H15	HYDRAULIC HOSE, PTO (S/N 882701-)	4063 - 4
2I24	HYDRAULIC HOSES,STEERING VALVE (S/N 843070-880053)	0963 - 4
2J1	HYDRAULIC HOSES,STEERING VALVE (S/N 880054-880907)	0963 - 6
2I22	HYDRAULIC HOSES,STEERING VALVE (SN -843069)	0963 - 2
4E20	HYDRAULIC LOADER COUPLER, BUCKET	3102 - 4
4H1	HYDRAULIC MOTOR, PTO (S/N 880054-)	4000 - 6
4G22	HYDRAULIC MOTOR, PTO (SN 880054-)	4000 - 2
4F23	HYDRAULIC OIL LINE (THIRD FUNCTION CLAMSHELL BUCKET) (SN 882701-)	3115 - 8
4B15	HYDRAULIC PUMP (SN 880054-882700)	2161 - 4

ALPHABETICAL INDEX - CONTINUED

GRID		PAGE
4B13	HYDRAULIC PUMP (S/N -880053)	2161 - 2
4B17	HYDRAULIC PUMP (SN 882701-)	2161 - 6
4H3	HYDRAULIC PUMP, PTO (S/N 880054-)	4000 - 8
4H5	HYDRAULIC PUMP, PTO (S/N 880054-) (CONT'D)	4000 - 10
4B15	HYDRAULIC PUMPR RELIEF VALVE (SN 880054-882700)	2161 - 4
4B17	HYDRAULIC PUMPR RELIEF VALVE (SN 882701-)	2161 - 6
4E13	HYDRAULIC RESERVOIR	2164 - 2
4C19	HYDRAULIC VALVE, BOOM SECTION	2162 - 26
4C15	HYDRAULIC VALVE, BUCKET SECTION (S/N -882700)	2162 - 22
4C17	HYDRAULIC VALVE, BUCKET SECTION (S/N 882701-)	2162 - 24
4D5	HYDRAULIC VALVE, FIFTH FUNCTION	2162 - 36
4D17	HYDRAULIC VALVE, HITCH LIFT SECTION (S/N XXXXXX-855518)	2162 - 46
4D19	HYDRAULIC VALVE, HITCH LIFT SECTION (S/N 855519-882700)	2162 - 48
4D21	HYDRAULIC VALVE, HITCH LIFT SECTION (S/N 882701-)	2162 - 50
4C13	HYDRAULIC VALVE, INLET SECTION	2162 - 20
4D13	HYDRAULIC VALVE, JUNCTION BLOCK (S/N -882700)	2162 - 42
4D9	HYDRAULIC VALVE, JUNCTION BLOCK (S/N 882701-)	2162 - 39A
4D15	HYDRAULIC VALVE, JUNCTION BLOCK (S/N 882701-)	2162 - 44
4D23	HYDRAULIC VALVE, PITCH SECTION (S/N -882700)	2162 - 52
4E1	HYDRAULIC VALVE, PITCH SECTION (S/N 882701-)	2162 - 54
4E3	HYDRAULIC VALVE, TILT DUEL AND AUX. SECT (S/N -882700)	2162 - 56
4E5	HYDRAULIC VALVE, TILT DUEL AND AUX. SECT (S/N 882701-)	2162 - 58
4G11	HYDRAULICS, LOADER BOOM CYLINDER (SN -880053)	3160 - 2
4G13	HYDRAULICS, LOADER BOOM CYLINDER (SN 880054-)	3160 - 4
4E7	HYDRAULICS, MAIN PLUMBING AND FILTER (S/N -880053)	2163 - 2
4E9	HYDRAULICS, MAIN PLUMBING AND FILTER (S/N 880054-880245)	2163 - 4
4E11	HYDRAULICS, MAIN PLUMBING AND FILTER (S/N 880246-)	2163 - 6

I

1D18	IDLER SHAFT, MFWD	0350 - 7
3G20	IGNITION KEY	1674 - 28
3G22	IGNITION KEY (SN 880054-882700)	1674 - 30
3G24	IGNITION KEY (SN 882701-)	1674 - 32
3G20	IGNITION SWITCH	1674 - 28
3G22	IGNITION SWITCH (SN 880054-882700)	1674 - 30
3G24	IGNITION SWITCH (SN 882701-)	1674 - 32
1I16	IMPELLER, WATER PUMP (ENG.SER.NO.900933-)	0417A - 3
1G1	IMPELLER,REPLACEMENT WATER PUMP (ENG.SER.NO. -826110)	0417 - 3
1I15	IMPELLER,WATER PUMP PE4045DT050 (ENG.SER.NO.071973-900932)	0417A - 2
1F25	IMPELLER,WATER PUMP T04045DT050 S.N. -826110)	0417 - 2
1J10	IN CHASSIS OVERHAUL GASKET SET PE4045DT050(S.N.071973-)	0452A - 1
1G17	IN CHASSIS OVERHAUL GASKET SET T04045DT050(S.N. -826110)	0452 - 1
2E19	INJECTION NOZZLE, W/TURBO PE4045TT092	0413C - 2
2B16	INJECTION PUMP ACCESS COVER PE4045DT059	0402B - 4
2D23	INJECTION PUMP ACCESS COVER PE4045TT092	0402C - 4
2C12	INJECTION PUMP, FUEL PE4045DT059	0413B - 2
2E20	INJECTION PUMP, FUEL PE4045TT092	0413C - 4
1F5	INLET OIL FILL T04045DT050 S.N. -826110)	0407 - 2
1H20	INLET OIL FILL PE4045DT050 S.N.071973-)	0407A - 2
4C13	INLET SECTION, HYDRAULIC VALVE	2162 - 20
1F24	INLET, WATER PUMP T04045DT050 S.N. -826110)	0417 - 1
1I14	INLET, WATER PUMP PE4045DT050 S.N.071973-)	0417A - 1
2C17	INLET, WATER PUMP PE4045DT059	0417B - 1
2F1	INLET, WATER PUMP PE4045TT092	0417C - 1
1C22	INPUT FLANGE,(MFWD)	0250 - 12
1B23	INPUT PINION, SPIRAL BEVEL	0210 - 4
1D17	INPUT SHAFT	0350 - 6
2K6	INPUT SHAFT SEAL (AXLE SERIAL NO. -217496)	1111 - 2
2K8	INPUT SHAFT SEAL (AXLE SERIAL NO. 217497-)	1111 - 4
3I1	INSTRUMENT PANEL (S/N 872334-882700)	1816 - 4
3I5	INSTRUMENT PANEL (S/N 882700-)	1816 - 8
3I3	INSTRUMENT PANEL (S/N 882701-)	1816 - 6
3H23	INSTRUMENT PANEL (S/N -872333)	1816 - 2
3H23	INSTRUMENT PANEL HOUSING (S/N -872333)	1816 - 2
3I1	INSTRUMENT PANEL HOUSING FIREWALL (S/N 872334-882700)	1816 - 4
3I5	INSTRUMENT PANEL HOUSING FIREWALL (S/N 882700-)	1816 - 8
3I3	INSTRUMENT PANEL HOUSING FIREWALL (S/N 882701-)	1816 - 6
3H23	INSTRUMENT PANEL VANDAL COVER (S/N -872333)	1816 - 2
3I1	INSTRUMENT PANEL VANDAL GUARD (S/N 872334-882700)	1816 - 4
3I5	INSTRUMENT PANEL VANDAL GUARD (S/N 882700-)	1816 - 8
3I3	INSTRUMENT PANEL VANDAL GUARD (S/N 882701-)	1816 - 6
3G22	INSTRUMENT PANEL, DASH (SN 880054-882700)	1674 - 30
3G20	INSTRUMENT PANEL, DASH (SN -880053)	1674 - 28
3G24	INSTRUMENT PANEL, DASH (SN 882701-)	1674 - 32
1F21	INTAKE SYSTEM, AIR T04045DT050 S.N. -826110)	0414 - 2
1I11	INTAKE SYSTEM, AIR PE4045DT050 (S.N.071973-)	0414A - 2
2E22	INTAKE SYSTEM,AIR (W/TURBO) PE4045TT092	0414C - 1
2C8	INTAKE VALVE PE4045DT059	0409B - 2
2E15	INTAKE VALVE PE4045TT092	0409C - 2
1F14	INTAKE VALVE T04045DT050 S.N. -826110)	0409 - 2
1I4	INTAKE VALVE PE4045DT050 S.N.071973-)	0409A - 2

ALPHABETICAL INDEX - CONTINUED

GRID		PAGE
1I1	INTAKE, ENGINE OIL PUMP PE4045DT050 S.N.071973-)	0407A - 8
1F11	INTAKE, ENGINE OIL PUMP T04045DT050 S.N. -826110)	0407 - 8
2C3	INTAKE, OIL PUMP PE4045DT059	0407B - 3
2E10	INTAKE, OIL PUMP PE4045TT092	0407C - 3
2C14	INTAKE,AIR (W/O TURBO) PE4045DT059	0414B - 2
1D21	INTERMEDIATE GEAR, TRANSMISSION	0350 - 10
1D24	INTERMEDIATE PLATE GASKETS	0360 - 4
1D24	INTERMEDIATE PLATE,TRANSMISSION	0360 - 4
1D21	INTERMEDIATE SHAFT, TRANSMISSION	0350 - 10
3J5	ISOLATORS (GRILLE SN -872333)	1921 - 2

J

1D8	JOINT,UNIVERSAL (REVERSER)	0325 - 1
4F17	JOYSTICK LEVER (SN -870948)	3115 - 2
4F19	JOYSTICK LEVER (SN 870949-882700)	3115 - 4
4F21	JOYSTICK LEVER (SN 882701-)	3115 - 6
4F23	JOYSTICK LEVER (THIRD FUNCTION CLAMSHELL BUCKET) (SN 882701-)	3115 - 8
4D13	JUNCTION BLOCK, HYDRAULIC VALVE (S/N -882700)	2162 - 42
4D9	JUNCTION BLOCK, HYDRAULIC VALVE (S/N 882701-)	2162 - 39A
4D15	JUNCTION BLOCK, HYDRAULIC VALVE (S/N 882701-)	2162 - 44

K

3G20	KEY, IGNITION	1674 - 28
3G22	KEY, IGNITION (SN 880054-882700)	1674 - 30
3G24	KEY, IGNITION (SN 882701-)	1674 - 32
1C1	KING PIN (WITHOUT MFWD)	0230 - 2
1C6	KINGPIN, FRONT AXLE (WITHOUT MFWD) (SERIAL NO. 911132-)	0230 - 8
2J17	KIT, BRAKE VALVE REPAIR (SER.NO.880908-)	1060 - 8
1H14	KIT, CYLINDER LINER O-RING PE4045DT050(S.N.071973-)	0403A - 2
1E23	KIT, CYLINDER LINER O-RING T04045DT050(S.N. -826110)	0403 - 2
2B19	KIT, CYLINDER LINER PE4045DT059	0403B - 2
2C24	KIT, FINAL FUEL FILTER SERVICE PE4045DT059	0420B - 4
2F8	KIT, FINAL FUEL FILTER SERVICE PE4045TT092	0420C - 4
3D19	KIT, HITCH PITCH CYLINDER (SN 882701-882706)	1520 - 20
3D21	KIT, HITCH PITCH CYLINDER (SN 882707-)	1520 - 21A
3C19	KIT, HITCH WEIGHTS (S/N 882701-)	1511 - 18
4G17	KIT, LOADER BOOM CYLINDER REPAIR (S/N -882700)	3160 - 8
4G18	KIT, LOADER BOOM CYLINDER REPAIR (S/N 882701-)	3160 - 9
4G15	KIT, LOADER BUCKET CYLINDER REPAIR (S/N - 880293)	3160 - 6
4G16	KIT, LOADER BUCKET CYLINDER REPAIR (S/N 880294-)	3160 - 7
1G1	KIT, REPLACEMENT WATER PUMP REPAIR (ENG.SER.NO. -826110)	0417 - 3
2D5	KIT, STARTER MOTOR (DENSO) PE4045DT059 (S/N 882701-)	0422B - 4
2F13	KIT, STARTER MOTOR (DENSO) PE4045TT092	0422C - 4
2D3	KIT, STARTER MOTOR (DENSO, WET SEALED) PE4045DT059 (S/N 882701-)	0422B - 2
2F11	KIT, STARTER MOTOR (DENSO, WET SEALED) PE4045TT092	0422C - 2
2D2	KIT, STARTER MOTOR (ISKRA) PE4045DT059 (S/N -882700)	0422B - 1
3E11	KIT, TILT CYLINDER, HITCH (S/N -880053)	1520 - 34
3E13	KIT, TILT CYLINDER, HITCH, FIFTH FUNCTION (S/N 880054-)	1520 - 36
3H6	KIT, TRANSMISSION BOTTOM GUARD	1746 - 2
1C13	KIT, UNIVERSAL DRIVE SHAFT (MFWD)	0250 - 3
1I16	KIT, WATER PUMP REPAIR (ENG.SER.NO.900933-)	0417A - 3
4E5	KIT, 3RD FUNCITON LOADER AUXIL(S/N 88270 1-)	2162 - 58
4D5	KIT, 3RD FUNCITON LOADER AUXILIARY VALVE	2162 - 36
4E3	KIT, 3RD FUNCITON LOADER AUXILIARY VALVE (S/N -882700)	2162 - 56
4C21	KIT, 3RD FUNCITON LOADER AUXILIARY VALVE (S/N -880053)	2162 - 28
4D1	KIT, 3RD FUNCITON LOADER AUXILIARY VALVE (S/N XXXXXX-882700)	2162 - 32
4C23	KIT, 3RD FUNCITON LOADER AUXILIARY VALVE (S/N 880054-XXXXXX)	2162 - 30
4D3	KIT, 3RD FUNCITON LOADER AUXILIARY VALVE (S/N 882701-)	2162 - 34
4D7	KIT,BETWEEN VALVE SECTIONS SEAL	2162 - 38
2J15	KIT,BRAKE VALVE REPAIR (SER.NO.-880907)	1060 - 6
1D24	KIT,CONTROL VALVE SOLENOID	0360 - 4
4G19	KIT,CROWD CYLINDER REPAIR	3160 - 10
2F8	KIT,FINAL FUEL FILTER SERVICE PE4045TT092	0420C - 4
4F10	KIT,MULTI-PURPOSE BUCKET CYLINDER REPAIR (S/N -882701)	3102 - 19
1J1	KIT,STARTER MOTOR	0422A - 4
1I25	KIT,STARTER MOTOR (ENG.SER.NO.866616-)	0422A - 3
1I24	KIT,STARTER MOTOR PE4045DT050 (ENG.SER.NO.071973-866615)	0422A - 2
1G9	KIT,STARTER MOTOR T04045DT050 (ENG.SER.NO.-866615)	0422 - 1
4D7	KIT,THIRD FUNCTION VALVE REPAIR	2162 - 38
1I15	KIT,WATER PUMP REPAIR PE4045DT050 (ENG.SER.NO.071973-900932)	0417A - 2
1C1	KNUCKLE AND SPINDLE ASSEMBLY (WITHOUT MFWD)	0230 - 2

L

4H11	LABEL, PTO CONTROL	4015 - 2
4G22	LABEL, PTO WARNING (SN 880054-)	4000 - 2
3B10	LABELS (S/N -882700)	1322 - 2
3B14	LABELS (S/N 882701-)	1322 - 6
3B12	LABELS, WARNING (S/N 882701-)	1322 - 4
3G5	LAMPS TRACTOR, FRONT AND REAR HALOGEN (SN -882700)	1674 - 12
3J11	LATCH, HOOD (S/N 882701-)	1921 - 8
3J1	LATCH,SIDE SHIELD (SN -848458)	1912 - 2
4F15	LESS BUCKET PINS, LOADER (S/N 882701-)	3102 - 24
4D23	LEVER/HANDLE KIT, CONTROL VALVE (S/N -882700)	2162 - 52

ALPHABETICAL INDEX - CONTINUED

GRID		PAGE
4D17	LEVER/HANDLE KIT, CONTROL VALVE (S/N XXXXXX-855518)	2162 - 46
4D19	LEVER/HANDLE KIT, CONTROL VALVE (S/N 855519-882700)	2162 - 48
4D21	LEVER/HANDLE KIT, CONTROL VALVE (S/N 882701-)	2162 - 50
4E1	LEVER/HANDLE KIT, CONTROL VALVE (S/N 882701-)	2162 - 54
4F17	LEVER, BUCKET LEVEL/RETURN-TO-DIG (SN -870948)	3115 - 2
4F19	LEVER, BUCKET LEVEL/RETURN-TO-DIG (SN 870949-882700)	3115 - 4
4F21	LEVER, BUCKET LEVEL/RETURN-TO-DIG (SN 882701-)	3115 - 6
4F17	LEVER, CONTROL VALVE BUCKET SECTION (SN -870948)	3115 - 2
4F19	LEVER, CONTROL VALVE BUCKET SECTION (SN 870949-882700)	3115 - 4
4F21	LEVER, CONTROL VALVE BUCKET SECTION (SN 882701-)	3115 - 6
2G19	LEVER, ENGINE THROTTLE CONTROL (S/N -872333)	0515 - 2
2G21	LEVER, ENGINE THROTTLE CONTROL (S/N 872334-882700)	0515 - 4
2G23	LEVER, ENGINE THROTTLE CONTROL (S/N 882701-)	0515 - 6
1D10	LEVER, GEARSHIFT	0342 - 2
4F17	LEVER, JOYSTICK (SN -870948)	3115 - 2
4F19	LEVER, JOYSTICK (SN 870949-882700)	3115 - 4
4F21	LEVER, JOYSTICK (SN 882701-)	3115 - 6
4F23	LEVER, JOYSTICK (THIRD FUNCTION CLAMSHELL BUCKET) (SN 882701-)	3115 - 8
1D7	LEVER, SHIFTER	0315 - 4
4F23	LEVER, 3RD FUNCTION CLAMSHELL BUCKET (SN 882701-)	3115 - 8
4G1	LIFT ARM, LOADER (S/N -880293)	3140 - 2
4G3	LIFT ARM, LOADER (S/N 880294-)	3140 - 4
1D9	LIFT BRACKET, TRANSMISSION	0341 - 1
4D17	LIFT SECTION, HITCH, HYDRAULIC VALVE (S/N XXXXXX-855518)	2162 - 46
4D19	LIFT SECTION, HITCH, HYDRAULIC VALVE (S/N 855519-882700)	2162 - 48
4D21	LIFT SECTION, HITCH, HYDRAULIC VALVE (S/N 882701-)	2162 - 50
2B25	LIFT STRAPS, ENGINE PE4045DT059	0404B - 6
2E7	LIFT STRAPS, ENGINE PE4045TT092	0404C - 6
3G6	LIGHT GUARDS (S/N -848452)	1674 - 14
3G8	LIGHT GUARDS (S/N 848453-)	1674 - 16
3G10	LIGHT GUARDS (S/N 848453-)	1674 - 18
3F18	LIGHT, BEACON	1673 - 2
3G6	LIGHTS, BRAKE AND TAIL (S/N -848452)	1674 - 14
3G8	LIGHTS, BRAKE AND TAIL (S/N 848453-)	1674 - 16
3G10	LIGHTS, BRAKE AND TAIL (S/N 848453-)	1674 - 18
3G3	LIGHTS, BRAKE AND TAIL (SN -882700)	1674 - 10
3F22	LIGHTS, ROPS WORK LIGHTS (S/N 848453-880221)	1674 - 4
3F24	LIGHTS, ROPS WORK LIGHTS (S/N 880222-882700)	1674 - 6
3G1	LIGHTS, ROPS WORK LIGHTS (S/N 882701-)	1674 - 8
3F20	LIGHTS, ROPS WORK LIGHTS (SN -848452)	1674 - 2
2I7	LINE, FUEL INJECTION LEAK-OFF (S/N -841621)	0563 - 2
2I9	LINE, FUEL INJECTION LEAK-OFF (S/N 841622-)	0563 - 4
4F23	LINE, HYDRAULIC OIL (THIRD FUNCTION CLAMSHELL BUCKET) (SN 882701-)	3115 - 8
1H14	LINER, CYLINDER PE4045DT050 S.N.071973-)	0403A - 2
1E23	LINER, CYLINDER T04045DT050 S.N. -826110)	0403 - 2
2B19	LINER, CYLINDER PE4045DT059	0403B - 2
2E1	LINER, CYLINDER PE4045TT092	0403C - 2
1I9	LINES, FUEL INJECTION PE4045DT050(S.N.071973-)	0413A - 4
1F19	LINES, FUEL INJECTION T04045DT050(S.N. -826110)	0413 - 4
2C12	LINES, FUEL INJECTION PE4045DT059	0413B - 2
2E20	LINES, FUEL INJECTION PE4045TT092	0413C - 4
2H1	LINK, ENGINE THROTTLE CONTROL (S/N 872334-882700)	0515 - 8
2H3	LINK, ENGINE THROTTLE CONTROL (S/N 882701-)	0515 - 10
4F19	LINKAGE, BUCKET LEVELING (SN 870949-882700)	3115 - 4
4F17	LINKAGE, BUCKET LEVELING (SN -870948)	3115 - 2
4F21	LINKAGE, BUCKET LEVELING (SN 882701-)	3115 - 6
4G7	LINKAGE,LOADER BUCKET (S/N - 880293)	3140 - 8
4G9	LINKAGE,LOADER BUCKET (S/N 8800294-)	3140 - 10
4G5	LOADER ARM SERVICE LOCK	3140 - 6
4E3	LOADER AUX. VALVE, 3RD FUNCTION KIT (S/N -882700)	2162 - 56
4C21	LOADER AUX. VALVE, 3RD FUNCTION KIT (S/N -880053)	2162 - 28
4D1	LOADER AUX. VALVE, 3RD FUNCTION KIT (S/N XXXXXX-882700)	2162 - 32
4C23	LOADER AUX. VALVE, 3RD FUNCTION KIT (S/N 880054-XXXXXX)	2162 - 30
4D3	LOADER AUX. VALVE, 3RD FUNCTION KIT (S/N 882701-)	2162 - 34
4E5	LOADER AUX. VALVE, 3RD FUNCTION KIT (S/N 882701-)	2162 - 58
4G1	LOADER BOOM (S/N -880293)	3140 - 2
4G3	LOADER BOOM (S/N 880294-)	3140 - 4
4G17	LOADER BOOM CYLINDER (S/N -882700)	3160 - 8
4G18	LOADER BOOM CYLINDER (S/N 882701-)	3160 - 9
4G11	LOADER BOOM CYLINDER HYDRAULICS (SN -880053)	3160 - 2
4G13	LOADER BOOM CYLINDER HYDRAULICS (SN 880054-)	3160 - 4
4G17	LOADER BOOM CYLINDER REPAIR KIT (S/N -882700)	3160 - 8
4G18	LOADER BOOM CYLINDER REPAIR KIT (S/N 882701-)	3160 - 9
4G11	LOADER BOOM OIL LINES (SN -880053)	3160 - 2
4G13	LOADER BOOM OIL LINES (SN 880054-)	3160 - 4
4G5	LOADER BOOM SERVICE LOCK	3140 - 6
4E18	LOADER BUCKET	3102 - 2
4E22	LOADER BUCKET	3102 - 6
4G15	LOADER BUCKET CYLINDER (S/N - 880293)	3160 - 6
4G16	LOADER BUCKET CYLINDER (S/N 880294-)	3160 - 7
4F13	LOADER BUCKET CYLINDER PINS	3102 - 22

ALPHABETICAL INDEX - CONTINUED

GRID		PAGE
4G15	LOADER BUCKET CYLINDER REPAIR KIT (S/N - 880293)	3160 - 6
4G16	LOADER BUCKET CYLINDER REPAIR KIT (S/N 880294-)	3160 - 7
4F11	LOADER BUCKET DATA	3102 - 20
4F12	LOADER BUCKET DATA	3102 - 21
4F13	LOADER BUCKET LINK PINS	3102 - 22
4G7	LOADER BUCKET LINKAGE (S/N - 880293)	3140 - 8
4G9	LOADER BUCKET LINKAGE (S/N 8800294-)	3140 - 10
4F13	LOADER BUCKET PINS	3102 - 22
4F3	LOADER BUCKET,MULTI PURPOSE,92 INCH (S/N -880293)	3102 - 12
4E20	LOADER COUPLER, BUCKET	3102 - 4
4G7	LOADER FRAME TO BUCKET LINKAGE PIN (S/N - 880293)	3140 - 8
4G9	LOADER FRAME TO BUCKET LINKAGE PIN (S/N 8800294-)	3140 - 10
4F15	LOADER LESS BUCKET CYLINDER PINS (S/N 882701-)	3102 - 24
4F15	LOADER LESS BUCKET LINK PINS (S/N 882701-)	3102 - 24
4F15	LOADER LESS BUCKET PINS (S/N 882701-)	3102 - 24
3H15	LOADER LEVER BOOT AND COVER PLATE (S/N -872333)	1812 - 2
3H17	LOADER LEVER BOOT AND COVER PLATE (S/N 872334-882700)	1812 - 4
4G1	LOADER LIFT ARM (S/N -880293)	3140 - 2
4G3	LOADER LIFT ARM (S/N 880294-)	3140 - 4
4C21	LOADER VALVE, THIRD FUNCTION AUX. KIT (S/N -880053)	2162 - 28
4D1	LOADER VALVE, THIRD FUNCTION AUX. KIT (S/N XXXXXX-882700)	2162 - 32
4C23	LOADER VALVE, THIRD FUNCTION AUX. KIT (S/N 880054-XXXXXX)	2162 - 30
4D3	LOADER VALVE, THIRD FUNCTION AUX. KIT (S/N 882701-)	2162 - 34
4G5	LOCK BAR, BOOM SERVICE	3140 - 6
1B21	LOCK, DIFFERENTIAL ASSEMBLY	0210 - 2
1B22	LOCK, DIFFERENTIAL ASSEMBLY	0210 - 3
3J1	LOCK, SIDE SHIELD (SN -848458)	1912 - 2

M

1H16	MAIN BEARING CAP PE4045DT050 S.N.071973-)	0404A - 2
1F1	MAIN BEARING CAP T04045DT050 S.N. -826110)	0404 - 2
2B21	MAIN BEARING CAP PE4045DT059	0404B - 2
2E3	MAIN BEARING CAP PE4045TT092	0404C - 2
1E15	MAIN BEARINGS T04045DT050 S.N. -826110)	0401 - 2
1H6	MAIN BEARINGS PE4045DT050 S.N.071973-)	0401A - 2
2B12	MAIN BEARINGS PE4045DT059	0401B - 2
2D20	MAIN BEARINGS PE4045TT092	0401C - 2
3H2	MAIN FRAME (S/N 837539-872333)	1741 - 2
3H4	MAIN FRAME (S/N 872334-)	1741 - 4
2C10	MANIFOLD, EXHAUST PE4045DT059	0410B - 2
2E17	MANIFOLD, EXHAUST PE4045TT092	0410C - 2
1I6	MANIFOLD,EXHAUST PE4045DT050 S.N.071973-)	0410A - 1
1F16	MANIFOLD,EXHAUST T04045DT050 S.N. -826110)	0410 - 1
3K1	MANUAL HOLDER, OPERATOR'S	2011 - 2
2J5	MECHANICAL FRONT WHEEL DRIVE, STEERING CYLINDER (MFWD)	0965 - 4
1D18	MFWD IDLER SHAFT	0350 - 7
1D19	MFWD OUTPUT SHAFT	0350 - 8
1D18	MFWD PIPE	0350 - 7
1D24	MFWD SOLENOID	0360 - 4
3H11	MIRROR, REAR VIEW (S/N -872333)	1811 - 2
3H13	MIRROR, REAR VIEW (SN 872334-)	1811 - 4
4E24	MOLDBOARD (2184MM - 86INCH, 1.13M) (S/N -880293)	3102 - 8
4F3	MOLDBOARD (2184MM - 86INCH, 1.13M) (S/N -880293)	3102 - 12
4F1	MOLDBOARD (2184MM - 86INCH, 1.13M) (S/N 880294-)	3102 - 10
4E24	MOLDBOARD (2337MM - 92INCH, 1.25M) (S/N -880293)	3102 - 8
4F3	MOLDBOARD (2337MM - 92INCH, 1.25M) (S/N -880293)	3102 - 12
4F1	MOLDBOARD (2337MM - 92INCH, 1.25M) (S/N 880294-)	3102 - 10
3G22	MONITOR ALARM AND PANEL (SN 880054-882700)	1674 - 30
3G20	MONITOR ALARM AND PANEL (SN -880053)	1674 - 28
3G24	MONITOR ALARM AND PANEL (SN 882701-)	1674 - 32
2D5	MOTOR, STARTING (DENSO) PE4045DT059 (S/N 882701-)	0422B - 4
2F13	MOTOR, STARTING (DENSO) PE4045TT092	0422C - 4
2D3	MOTOR, STARTING (DENSO, WET SEALED) PE4045DT059 (S/N 882701-)	0422B - 2
2F11	MOTOR, STARTING (DENSO, WET SEALED) PE4045TT092	0422C - 2
2D2	MOTOR, STARTING (ISKRA) PE4045DT059 (S/N -882700)	0422B - 1
1J1	MOTOR,STARTING	0422A - 4
1I25	MOTOR,STARTING (ENG.SER.NO.866616-)	0422A - 3
1G9	MOTOR,STARTING T04045DT050 (ENG.SER.NO.-866615)	0422 - 1
1I24	MOTOR,STARTING PE4045DT050 (ENG.SER.NO.071973-866615)	0422A - 2
3I7	MOUNT, SEAT PEDESTAL (S/N -843070)	1821 - 2
3I13	MOUNT, SEAT PEDESTAL (S/N XXXXXX-)	1821 - 8
3I9	MOUNT, SEAT PEDESTAL (S/N 843701-882700)	1821 - 4
3I11	MOUNT, SEAT PEDESTAL (S/N 882701-)	1821 - 6
1D10	MOUNT, TRANSMISSION	0342 - 2
2I1	MOUNTING PARTS,ENGINE	0540 - 2
2J13	MOUNTING PLATE, BRAKE VALVE (SER.NO.880908-)	1060 - 4
1C10	MOUNTING, FRONT AXLE	0242 - 4
1C8	MOUNTING, REAR AXLE	0242 - 2
2G11	MOUNTS, RADIATOR (S/N -882700)	0511 - 6
2G13	MOUNTS, RADIATOR (S/N 882701-)	0511 - 8
1E7	MOUNTS, TRANSMISSION OIL COOLER (S/N -882700)	0364 - 2
1E9	MOUNTS, TRANSMISSION OIL COOLER (S/N 882701-)	0364 - 4
2H19	MUFFLER EXHAUST PIPE, SPARK ARRESTOR (S/N -882700)	0531 - 6
2H21	MUFFLER EXHAUST PIPE, SPARK ARRESTOR (S/N 882701-)	0531 - 8
2H15	MUFFLER EXHAUST PIPE, STANDARD (S/N -882700)	0531 - 2
2H17	MUFFLER EXHAUST PIPE, STANDARD (S/N 882701-)	0531 - 4

ALPHABETICAL INDEX - CONTINUED

GRID		PAGE
2H23	MUFFLER EXHAUST PIPE, TURBO (S/N 882701-)	0531 - 10
2H19	MUFFLER, SPARK ARRESTOR (S/N -882700)	0531 - 6
2H21	MUFFLER, SPARK ARRESTOR (S/N 882701-)	0531 - 8
2H15	MUFFLER, STANDARD (S/N -882700)	0531 - 2
2H17	MUFFLER, STANDARD (S/N 882701-)	0531 - 4
2H23	MUFFLER, TURBO (S/N 882701-)	0531 - 10
4E24	MULTI-PURPOSE BUCKET (S/N -880293)	3102 - 8
4F1	MULTI-PURPOSE BUCKET (S/N 880294-)	3102 - 10
4F10	MULTI-PURPOSE BUCKET CYLINDER (S/N -882701)	3102 - 19
4F9	MULTI-PURPOSE BUCKET CYLINDER (S/N 882700-)	3102 - 18
4F10	MULTI-PURPOSE BUCKET CYLINDER REPAIR KIT (S/N -882701)	3102 - 19
4F3	MULTI-PURPOSE BUCKET, WITH HYDRAULIC PLUMBING (S/N -880293)	3102 - 12
4F5	MULTI-PURPOSE BUCKET, WITH HYDRAULIC PLUMBING (S/N 880294-882700)	3102 - 14
4F7	MULTI-PURPOSE BUCKET, WITH HYDRAULIC PLUMBING (S/N 882701-)	3102 - 16

N

1D25	NEEDLE BEARING, AXIAL	0360 - 5
2G5	NOZZLE, ETHER STARTING AID	0505 - 2
1F17	NOZZLE, FUEL INJECTION T04045DT050 S.N. -826110)	0413 - 2
1I7	NOZZLE, FUEL INJECTION PE4045DT050 S.N.071973-)	0413A - 2
2C11	NOZZLE, FUEL INJECTION (W/O TURBO) PE4045DT059	0413B - 1
2E19	NOZZLE, INJECTION, W/TURBO PE4045TT092	0413C - 2

O

1J10	O'RINGS, CYLINDER HEAD PE4045DT050(S.N.071973-)	0452A - 1
1G17	O'RINGS, CYLINDER HEAD T04045DT050(S.N. -826110)	0452 - 1
1J11	O'RINGS, ENGINE PE4045DT050(S.N.071973-)	0452A - 2
1G18	O'RINGS, ENGINE T04045DT050(S.N. -826110)	0452 - 2
2B21	OIL BY-PASS VALVE PE4045DT059	0404B - 2
2E3	OIL BY-PASS VALVE PE4045TT092	0404C - 2
2C20	OIL COOLER (FIVE PLATE PE4045DT059	0419B - 2
2F4	OIL COOLER (FIVE PLATE PE4045TT092	0419C - 2
1I19	OIL COOLER, ENGINE PE4045DT050 S.N.071973-)	0419A - 2
1G4	OIL COOLER, ENGINE T04045DT050 S.N. -826110)	0419 - 2
4H7	OIL COOLER, PTO (SN 880054-882700)	4000 - 12
4H9	OIL COOLER, PTO (SN 882701-)	4000 - 14
1E7	OIL COOLER, TRANSMISSION (S/N -882700)	0364 - 2
1E9	OIL COOLER, TRANSMISSION (S/N 882701-)	0364 - 4
1H21	OIL DIPSTICK PE4045DT050 S.N.071973-)	0407A - 3
2C2	OIL DIPSTICK PE4045DT059	0407B - 2
2E9	OIL DIPSTICK PE4045TT092	0407C - 2
1F6	OIL DIPSTICK T04045DT050 S.N. -826110)	0407 - 3
1F5	OIL FILL INLET T04045DT050 S.N. -826110)	0407 - 2
1H20	OIL FILL INLET PE4045DT050 S.N.071973-)	0407A - 2
1F5	OIL FILL INLET CAP T04045DT050 S.N. -826110)	0407 - 2
1H20	OIL FILL INLET CAP PE4045DT050 S.N.071973-)	0407A - 2
1F5	OIL FILLER OPENING COVER T04045DT050 S.N. -826110)	0407 - 2
1H20	OIL FILLER OPENING COVER-PE4045DT050 S.N.071973-)	0407A - 2
2C1	OIL FILLER PE4045DT059	0407B - 1
2E8	OIL FILLER PE4045TT092	0407C - 1
2C4	OIL FILTER AND BASE, ENGINE PE4045DT059	0407B - 4
2E11	OIL FILTER AND BASE, ENGINE PE4045TT092	0407C - 4
2C4	OIL FILTER BYPASS VALVE PE4045DT059	0407B - 4
2E11	OIL FILTER BYPASS VALVE PE4045TT092	0407C - 4
1D25	OIL FILTER, CHARGE PUMP	0360 - 5
1H24	OIL FILTER, ENGINE PE4045DT050 S.N.071973-)	0407A - 6
1F9	OIL FILTER, ENGINE T04045DT050 S.N. -826110)	0407 - 6
4H13	OIL FILTER, PTO (S/N 880054-882700)	4063 - 2
4H15	OIL FILTER, PTO (S/N 882701-)	4063 - 4
1D25	OIL FILTER, TRANSMISSION	0360 - 5
4F23	OIL LINE, HYDRAULIC (THIRD FUNCTION CLAMSHELL BUCKET) (SN 882701-)	3115 - 8
4G11	OIL LINES, LOADER BOOM (SN -880053)	3160 - 2
4G13	OIL LINES, LOADER BOOM (SN 880054-)	3160 - 4
2E25	OIL LINES, TURBOCHARGER PE4045TT092	0416C - 2
1H22	OIL PAN GASKET PE4045DT050 S.N.071973-)	0407A - 4
1F7	OIL PAN GASKET T04045DT050 S.N. -826110)	0407 - 4
2C3	OIL PAN PE4045DT059	0407B - 3
2E10	OIL PAN PE4045TT092	0407C - 3
1H22	OIL PAN,ENGINE PE4045DT050 S.N.071973-)	0407A - 4
1F7	OIL PAN,ENGINE T04045DT050 S.N. -826110)	0407 - 4
2C3	OIL PUMP INTAKE PE4045DT059	0407B - 3
2E10	OIL PUMP INTAKE PE4045TT092	0407C - 3
2C5	OIL PUMP PE4045DT059	0407B - 7
2E12	OIL PUMP PE4045TT092	0407C - 5
2B18	OIL SEAL KIT, FRONT PE4045DT059	0402B - 6
2D25	OIL SEAL KIT, FRONT PE4045TT092	0402C - 6
3B16	OILSCAN PLUS TEST KIT, FLUID ANALYSIS	1369 - 2
3H15	OPERATOR PLATFORM (S/N -872333)	1812 - 2
3H17	OPERATOR PLATFORM (S/N 872334-882700)	1812 - 4
3H19	OPERATOR PLATFORM (S/N 882701-)	1812 - 6
3I7	OPERATOR SEAT (S/N -843070)	1821 - 2
3I13	OPERATOR SEAT (S/N XXXXXX-)	1821 - 8
3I9	OPERATOR SEAT (S/N 843701-882700)	1821 - 4
3I11	OPERATOR SEAT (S/N 882701-)	1821 - 6

ALPHABETICAL INDEX - CONTINUED

GRID		PAGE
3K1	OPERATOR'S MANUAL HOLDER	2011 - 2
3H21	OPERATOR'S RIGHT SIDE PLATFORM (S/N 882701-)	1812 - 8
4C9	OPTIONAL HYDRAULIC CONTROL VALVE	2162 - 16
2B21	ORIFICE, PISTON COOLING PE4045DT059	0404B - 2
2E3	ORIFICE, PISTON COOLING PE4045TT092	0404C - 2
1D19	OUTPUT SHAFT DOG GEAR	0350 - 8
1D19	OUTPUT SHAFT SCREEN	0350 - 8
1D19	OUTPUT SHAFT SLIDING SLEEVE	0350 - 8
1D19	OUTPUT SHAFT, MFWD	0350 - 8
1D20	OUTPUT YOKE, TRANSMISSION	0350 - 9
2D15	OVERHAUL GASKET KIT PE4045DT059	0452B - 2
2F23	OVERHAUL GASKET KIT PE4045TT092	0452C - 2
2D15	OVERHAUL KIT, ENGINE PE4045DT059	0452B - 2
2F23	OVERHAUL KIT, ENGINE PE4045TT092	0452C - 2

P

2C3	PAN, OIL PE4045DT059	0407B - 3
2E10	PAN, OIL PE4045TT092	0407C - 3
1H22	PAN,ENGINE OIL PE4045DT050 S.N.071973-)	0407A - 4
1F7	PAN,ENGINE OIL T04045DT050 S.N. -826110)	0407 - 4
3G20	PANEL, DASH (SN -880053)	1674 - 28
3G22	PANEL, DASH (SN 880054-882700)	1674 - 30
3G24	PANEL, DASH (SN 882701-)	1674 - 32
3G22	PANEL, MONITOR DISPLAY (SN 880054-882700)	1674 - 30
3G20	PANEL, MONITOR DISPLAY (SN -880053)	1674 - 28
3G24	PANEL, MONITOR DISPLAY (SN 882701-)	1674 - 32
3I1	PANEL,INSTRUMENT (S/N 872334-882700)	1816 - 4
3I5	PANEL,INSTRUMENT (S/N 882700-)	1816 - 8
3I3	PANEL,INSTRUMENT (S/N 882701-)	1816 - 6
3H23	PANEL,INSTRUMENT (S/N-872333)	1816 - 2
2K6	PARK BRAKE (AXLE SERIAL NO. -217496)	1111 - 2
2K8	PARK BRAKE (AXLE SERIAL NO. 217497-)	1111 - 4
2K6	PARK BRAKE CLUTCH DISK (AXLE SERIAL NO. -217496)	1111 - 2
2K8	PARK BRAKE CLUTCH DISK (AXLE SERIAL NO. 217497-)	1111 - 4
2K6	PARK BRAKE HOUSING (AXLE SERIAL NO. -217496)	1111 - 2
2K8	PARK BRAKE HOUSING (AXLE SERIAL NO. 217497-)	1111 - 4
2K6	PARK BRAKE PISTON (AXLE SERIAL NO. -217496)	1111 - 2
2K8	PARK BRAKE PISTON (AXLE SERIAL NO. 217497-)	1111 - 4
2K6	PARK BRAKE SEPERATOR PLATE (AXLE SERIAL NO. -217496)	1111 - 2
2K8	PARK BRAKE SEPERATOR PLATE (AXLE SERIAL NO. 217497-)	1111 - 4
1D24	PARK BRAKE SOLENOID	0360 - 4
3G12	PARK BRAKE SWITCH (SN -880053)	1674 - 20
3G14	PARK BRAKE SWITCH (SN 880054-882700)	1674 - 22
3G16	PARK BRAKE SWITCH (SN 882701-)	1674 - 24
2J11	PEDAL, BRAKE (SER.NO.-880907)	1060 - 2
2G21	PEDAL, THROTTLE CONTROL (S/N 872334-882700)	0515 - 4
2G23	PEDAL, THROTTLE CONTROL (S/N 882701-)	0515 - 6
2J13	PEDAL,BRAKE (SER.NO.880908-)	1060 - 4
2G19	PEDAL,THROTTLE CONTROL (S/N -872333)	0515 - 2
2J11	PEDALS, BRAKE (SER.NO.-880907)	1060 - 2
3I13	PEDESTAL (S/N XXXXXX-)	1821 - 8
3I19	PEDESTAL, SEAT, SWIVEL (SN XXXXXX-)	1821 - 14
3I7	PEDSTAL, SEAT (S/N -843070)	1821 - 2
1C1	PIN, AXLE PIVOT (WITHOUT MFWD)	0230 - 2
1C1	PIN, KING (WITHOUT MFWD)	0230 - 2
4G7	PIN, LOADER FRAME TO BUCKET LINKAGE (S/N - 880293)	3140 - 8
4G9	PIN, LOADER FRAME TO BUCKET LINKAGE (S/N 8800294-)	3140 - 10
1C14	PIN,FRONT AXLE PIVOT (MFWD)	0250 - 4
1C4	PIN,FRONT AXLE PIVOT (WITHOUT MFWD) (SERIAL NO. 911132-)	0230 - 6
1C12	PINION GEAR, PLANETARY	0250 - 2
1B21	PINION, BEVEL WITH LOCK	0210 - 2
1B22	PINION, BEVEL WITH LOCK	0210 - 3
4F13	PINS, BUCKET, LOADER	3102 - 22
4F15	PINS, LESS BUCKET, LOADER (S/N 882701-)	3102 - 24
4F13	PINS, LOADER BUCKET CYLINDER	3102 - 22
4F13	PINS, LOADER BUCKET LINK	3102 - 22
4F15	PINS, LOADER LESS BUCKET CYLINDER (S/N 882701-)	3102 - 24
4F15	PINS, LOADER LESS BUCKET LINK (S/N 882701-)	3102 - 24
1D18	PIPE, MFWD	0350 - 7
4H1	PISTON ASSY, PTO MOTOR (S/N 880054-)	4000 - 6
4H3	PISTON ASSY, PTO PUMP (S/N 880054-)	4000 - 8
4H5	PISTON ASSY, PTO PUMP (S/N 880054-) (CONT'D)	4000 - 10
2B21	PISTON COOLING ORIFICE PE4045DT059	0404B - 2
2E3	PISTON COOLING ORIFICE PE4045TT092	0404C - 2
2B19	PISTON PE4045DT059	0403B - 2
2E1	PISTON PE4045TT092	0403C - 2
1H14	PISTON RINGS PE4045DT050 S.N.071973-)	0403A - 2
1E23	PISTON RINGS T04045DT050 S.N. -826110)	0403 - 2
2B19	PISTON RINGS PE4045DT059	0403B - 2
2E1	PISTON RINGS PE4045TT092	0403C - 2
2J9	PISTON, BRAKE	1011 - 2
2J17	PISTON, BRAKE VALVE (SER.NO.880908-)	1060 - 8
1D13	PISTON, CLUTCH ASSEMBLY	0350 - 2
1D15	PISTON, CLUTCH ASSEMBLY	0350 - 4
1H14	PISTON, ENGINE PE4045DT050 S.N.071973-)	0403A - 2
1E23	PISTON, ENGINE T04045DT050 S.N. -826110)	0403 - 2
3D17	PISTON, HITCH PITCH CYLINDER (SN 881746-882700)	1520 - 18
3D19	PISTON, HITCH PITCH CYLINDER (SN 882701-882706)	1520 - 20
3D21	PISTON, HITCH PITCH CYLINDER (SN 882707-)	1520 - 21A
2K6	PISTON, PARK BRAKE (AXLE SERIAL NO. -217496)	1111 - 2
2K8	PISTON, PARK BRAKE (AXLE SERIAL NO. 217497-)	1111 - 4
1D22	PISTON, TRANSMISSION CONTROL VALVE	0360 - 2

ALPHABETICAL INDEX - CONTINUED

GRID		PAGE
4D23	PITCH SECTION, HYDRAULIC VALVE (S/N -882700)	2162 - 52
4E1	PITCH SECTION, HYDRAULIC VALVE (S/N 882701-)	2162 - 54
3D17	PITCH, CYLINDER, HITCH (SN 881746-882700)	1520 - 18
3D19	PITCH, CYLINDER, HITCH (SN 882701-882706)	1520 - 20
3D13	PITCH, CYLINDER, HITCH (SN XXXXXX-880053)	1520 - 14
3D15	PITCH, CYLINDER, HITCH (SN 880054-881745)	1520 - 16
3D21	PITCH, CYLINDER, HITCH (SN 882707-)	1520 - 21A
4C11	PIVOT, HYDRAULIC CONTROL VALVE	2162 - 18
1D5	PIVOT, SHIFT HOUSING	0315 - 2
1C20	PLANET GEAR (MFWD)	0250 - 10
1C21	PLANET GEAR (MFWD)	0250 - 11
1C12	PLANETARY CARRIER SHAFT	0250 - 2
1C20	PLANETARY DRIVE (MFWD)	0250 - 10
1C21	PLANETARY DRIVE (MFWD)	0250 - 11
1C12	PLANETARY PINION CARRIER	0250 - 2
1C12	PLANETARY PINION GEAR	0250 - 2
1C12	PLANETARY RING GEAR	0250 - 2
2B20	PLATE, FRONT (W/O AUX. DRIVE) PE4045DT059	0404B - 1
2E2	PLATE, FRONT (W/O AUX. DRIVE) PE4045TT092	0404C - 1
3C7	PLATE, HITCH (S/N -880053)	1511 - 6
4H3	PLATE, PORT PTO PUMP (S/N 880054-)	4000 - 8
4H5	PLATE, PORT PTO PUMP (S/N 880054-) (CONT'D)	4000 - 10
3H21	PLATE, RIGHT SIDE OPERATOR PLATFORM (S/N 882701-)	1812 - 8
4H1	PLATE, THRUST PTO MOTOR (S/N 880054-)	4000 - 6
4H1	PLATE, VALVE PTO MOTOR (S/N 880054-)	4000 - 6
2J13	PLATE,BRAKE VALVE MOUNTING (SER.NO.880908-)	1060 - 4
1B19	PLATE,REAR AXLE HOUSING MOUNTING	0201 - 2
3H15	PLATFORM, OPERATOR (S/N -872333)	1812 - 2
3H17	PLATFORM, OPERATOR (S/N 872334-882700)	1812 - 4
3H19	PLATFORM, OPERATOR (S/N 882701-)	1812 - 6
3H21	PLATFORM, OPERATOR RIGHT SIDE (S/N 882701-)	1812 - 8
1H9	PLUG,ENGINE OIL FILL PE4045DT050 S.N.071973-)	0402A - 4
1E18	PLUG,ENGINE OIL FILL T04045DT050 S.N. -826110)	0402 - 4
1B24	PLUMBING, DIFFERENTIAL LOCK	0210 - 5
4E7	PLUMBING, MAIN HYDRAULIC AND FILTER (S/N -880053)	2163 - 2
4E11	PLUMBING, MAIN HYDRAULIC AND FILTER (S/N 880054-)	2163 - 6
4E9	PLUMBING, MAIN HYDRAULIC AND FILTER (S/N 880054-880245)	2163 - 4
3E5	PLUMBING, 3 POINT HITCH (SN -880053)	1520 - 28
3E7	PLUMBING, 3 POINT HITCH (SN 880054-)	1520 - 30
3E9	PLUMBING, 3 POINT HITCH, 5TH FUNCTION (S/N LE880054-)	1520 - 32
4H3	PORT PLATE, PTO PUMP (SN 880054-)	4000 - 8
4H5	PORT PLATE, PTO PUMP (SN 880054-) (CONT'D)	4000 - 10
4D7	POSITIONER,THIRD FUNCTION VALVE	2162 - 38
2G4	POWER CORD, ENGINE COOLANT HEATER	0505 - 1
2J3	POWER STEERING CYLINDER (WITHOUT MFWD) (S/N -XXXXXX)	0965 - 2
2J4	POWER STEERING CYLINDER (WITHOUT MFWD) (S/N XXXXXX-)	0965 - 3
3G18	PRESSURE SWITCH (ENGINE OIL) (SN 882701-)	1674 - 26
2I20	PRIORITY VALVE, STEERING (S/N -880053)	0962 - 6
4G22	PTO COVER (SN 880054-)	4000 - 2
3C5	PTO DRAWBAR (S/N 880054-)	1511 - 4
4G22	PTO GEAR BOX (SN 880054-)	4000 - 2
4G24	PTO GEAR BOX ASSEMBLY (SN 880054-)	4000 - 4
4G24	PTO GEAR BOX BEARING (SN 880054-)	4000 - 4
4G24	PTO GEAR SHAFT (SN 880054-)	4000 - 4
4H7	PTO GRILLE (SN 880054-882700)	4000 - 12
4H9	PTO GRILLE (SN 882701-)	4000 - 14
4H13	PTO HYDRAULIC HOSE (S/N 880054-882700)	4063 - 2
4H15	PTO HYDRAULIC HOSE (S/N 882701-)	4063 - 4
4H1	PTO HYDRAULIC MOTOR (S/N 880054-)	4000 - 6
4G22	PTO HYDRAULIC MOTOR (SN 880054-)	4000 - 2
4H3	PTO HYDRAULIC PUMP (S/N 880054-)	4000 - 8
4H5	PTO HYDRAULIC PUMP (S/N 880054-) (CONT'D)	4000 - 10
4H13	PTO HYDRAULIC PUMP (S/N 880054-882700)	4063 - 2
4H15	PTO HYDRAULIC PUMP (S/N 882701-)	4063 - 4
4H1	PTO MOTOR GEAR SHAFT (S/N 880054-)	4000 - 6
4H7	PTO OIL COOLER (SN 880054-882700)	4000 - 12
4H9	PTO OIL COOLER (SN 882701-)	4000 - 14
4H13	PTO OIL FILTER (S/N 880054-882700)	4063 - 2
4H15	PTO OIL FILTER (S/N 882701-)	4063 - 4
1D17	PTO PUMP DRIVE SHAFT	0350 - 6
4H3	PTO PUMP DRIVE SHAFT (S/N 880054-)	4000 - 8
4H5	PTO PUMP DRIVE SHAFT (S/N 880054-) (CONT'D)	4000 - 10
4H11	PTO SWITCH	4015 - 2
4H11	PTO WIRING HARNESS	4015 - 2
3F15	PULLEY, ALTERNATOR (S/N -882700)	1672 - 2
3F16	PULLEY, ALTERNATOR (S/N 882701-)	1672 - 4
1J5	PULLEY, CRANKSHAFT PE4045DT050 S.N.071973-)	0429A - 2
2D9	PULLEY, CRANKSHAFT PE4045DT059	0429B - 2
2F17	PULLEY, CRANKSHAFT PE4045TT092	0429C - 2
1G12	PULLEY, CRANKSHAFT T04045DT050 S.N. -826110)	0429 - 2
1G13	PULLEY, FAN DRIVE	0429 - 4
1J6	PULLEY, FAN DRIVE PE4045DT050 S.N.071973-)	0429A - 4
1G13	PULLEY, TENSIONER T04045DT050(S.N. -826110)	0429 - 4
1J6	PULLEY, TENSIONER PE4045DT050 S.N.071973-)	0429A - 4
1I14	PULLEY, WATER PUMP PE4045DT050 S.N.071973-)	0417A - 1
2C17	PULLEY, WATER PUMP PE4045DT059	0417B - 1
2F1	PULLEY, WATER PUMP PE4045TT092	0417C - 1
1F24	PULLEY, WATER PUMP T04045DT050 S.N. -826110)	0417 - 1
1I1	PUMP, ENGINE OIL PE4045DT050 S.N.071973-)	0407A - 8
1F11	PUMP, ENGINE OIL T04045DT050 S.N. -826110)	0407 - 8
1I9	PUMP, FUEL INJECTION PE4045DT050(S.N.071973-)	0413A - 4
1F19	PUMP, FUEL INJECTION T04045DT050(S.N. -826110)	0413 - 4
2C12	PUMP, FUEL INJECTION PE4045DT059	0413B - 2
2E20	PUMP, FUEL INJECTION PE4045TT092	0413C - 4
1I23	PUMP, FUEL TRANSFER PE4045DT050 S.N.071973-)	0421A - 2

ALPHABETICAL INDEX - CONTINUED

GRID		PAGE
1G8	PUMP, FUEL TRANSFER T04045DT050 S.N. -826110)	0421 - 2
2D1	PUMP, FUEL TRANSFER (FLEX FITTINGS) PE4045DT059	0421B - 2
2F10	PUMP, FUEL TRANSFER (FLEX FITTINGS) PE4045TT092	0421C - 2
4B15	PUMP, MAIN HYDRAULIC (SN 880054-882700)	2161 - 4
4B13	PUMP, MAIN HYDRAULIC (S/N -880053)	2161 - 2
4B17	PUMP, MAIN HYDRAULIC (SN 882701-)	2161 - 6
2C5	PUMP, OIL PE4045DT059	0407B - 7
2E12	PUMP, OIL PE4045TT092	0407C - 5
1G1	PUMP, REPLACEMENT WATER (ENG.SER.NO. -826110)	0417 - 3
1I16	PUMP, WATER (ENG.SER.NO.900933-)	0417A - 3
2B16	PUMP, WATER (NO AUX) PE4045DT059	0402B - 4
2D23	PUMP, WATER (NO AUX) PE4045TT092	0402C - 4
1D25	PUMP,CHARGE	0360 - 5
1I15	PUMP,WATER PE4045DT050 (ENG.SER.NO.071973-900932)	0417A - 2
1F25	PUMP,WATER T04045DT050 S.N. -826110)	0417 - 2
2J17	PUSH ROD, BRAKE VALVE (SER.NO.880908-)	1060 - 8
1I23	PUSH ROD,FUEL TRANSFER PUMP PE4045DT050 S.N.071973-)	0421A - 2
1G8	PUSH ROD,FUEL TRANSFER PUMP T04045DT050 S.N. -826110)	0421 - 2
1H8	PUSH RODS PE4045DT050 S.N.071973-)	0402A - 3
2B14	PUSH RODS PE4045DT059	0402B - 2
2D21	PUSH RODS PE4045TT092	0402C - 2
1E17	PUSH RODS T04045DT050 S.N. -826110)	0402 - 3

Q

4E20	QUICK COUPLER, LOADER BUCKET	3102 - 4

R

2G7	RADIATOR (S/N -882700)	0511 - 2
2G9	RADIATOR (S/N 882701-)	0511 - 4
3J13	RADIATOR GRILLE (S/N 872334-)	1921 - 10
3J7	RADIATOR GRILLE (S/N 872334-882700)	1921 - 4
3J9	RADIATOR GRILLE (S/N 882701-)	1921 - 6
2G11	RADIATOR HOSES (S/N -882700)	0511 - 6
2G13	RADIATOR HOSES (S/N 882701-)	0511 - 8
1D4	RAIL, SHIFT	0315 - 1
3J3	RAIL,SLIDING DOOR (SN 848459-882700)	1912 - 4
1B19	REAR AXLE ASSEMBLY	0201 - 2
1B19	REAR AXLE HOUSING MOUNTING PLATE	0201 - 2
1B23	REAR AXLE RING GEAR AND PINION	0210 - 4
1B23	REAR AXLE SPIRAL BEVEL INPUT PINION	0210 - 4
1B23	REAR AXLE YOKE	0210 - 4
1B10	REAR DRIVE WHEEL	0110 - 2
1B11	REAR DRIVE WHEEL	0110 - 2Z
1B15	REAR WHEEL WEIGHTS (S/N -882700)	0149 - 1
1B16	REAR WHEEL WEIGHTS (S/N 882701-)	0149 - 2
3J5	REFLECTOR AND HEAT SHIELD GRILLE (SN -872333)	1921 - 2
3H23	RELAY AND FUSE MOUNTING BRACKET (S/N -872233)	1816 - 2
3I1	RELAY AND FUSE MOUNTING BRACKET (S/N 872334-882700)	1816 - 4
3I5	RELAY AND FUSE MOUNTING BRACKET (S/N 882700-)	1816 - 8
3I3	RELAY AND FUSE MOUNTING BRACKET (S/N 882701-)	1816 - 6
4B15	RELIEF VALVE, HYDRAULIC PUMP (SN 880054-882700)	2161 - 4
4B17	RELIEF VALVE, HYDRAULIC PUMP (SN 882701-)	2161 - 6
4H1	RELIEF VALVE, PTO MOTOR (S/N 880054-)	4000 - 6
4H3	RELIEF VALVE, PTO PUMP (S/N 880054-)	4000 - 8
4H5	RELIEF VALVE, PTO PUMP (S/N 880054-) (CONT'D)	4000 - 10
4D11	RELIEF VALVES, BUCKET SECTION (S/N -738468)	2162 - 40
4G17	REPAIR KIT, LOADER BOOM CYLINDER (S/N -882700)	3160 - 8
4G18	REPAIR KIT, LOADER BOOM CYLINDER (S/N 882701-)	3160 - 9
4G15	REPAIR KIT, LOADER BUCKET CYLINDER (S/N - 880293)	3160 - 6
4G16	REPAIR KIT, LOADER BUCKET CYLINDER (S/N 880294-)	3160 - 7
4G19	REPAIR KIT,CROWD CYLINDER	3160 - 10
1E21	REPLACEMENT TIMING GEAR COVER T04045DT050(ESN.-826110)	0402 - 8
1E21	REPLACEMENT TIMING GEAR COVER GASKET T04045DT050(ESN.-826110)	0402 - 8
1G1	REPLACEMENT WATER PUMP (ENG.SER.NO. -826110)	0417 - 3
1G1	REPLACEMENT WATER PUMP IMPELLER (ENG.SER.NO. -826110)	0417 - 3
1G1	REPLACEMENT WATER PUMP REPAIR KIT (ENG.SER.NO. -826110)	0417 - 3
4E13	RESERVOIR, HYDRAULIC	2164 - 2
3G18	RESISTOR (FRONT WIRE HARNESS) (SN 882701-)	1674 - 26
3D17	RETAINER, HITCH PITCH CYLINDER (SN 881746-882700)	1520 - 18
3D19	RETAINER, HITCH PITCH CYLINDER (SN 882701-882706)	1520 - 20
3D21	RETAINER, HITCH PITCH CYLINDER (SN 882707-)	1520 - 21A
4F17	RETURN-TO-DIG LINKAGE (SN -870948)	3115 - 2
4F19	RETURN-TO-DIG LINKAGE (SN 870949-882700)	3115 - 4
4F21	RETURN-TO-DIG LINKAGE (SN 882701-)	3115 - 6
4G1	RETURN-TO-DIG SWITCH (S/N -880293)	3140 - 2
4G3	RETURN-TO-DIG SWITCH (S/N 880294-)	3140 - 4
4F17	RETURN-TO-DIG SWITCH (SN -870948)	3115 - 2
3G12	RETURN-TO-DIG SWITCH (SN -880053)	1674 - 20
4F19	RETURN-TO-DIG SWITCH (SN 870949-882700)	3115 - 4
3G16	RETURN-TO-DIG SWITCH (SN 882701-)	1674 - 24
4F21	RETURN-TO-DIG SWITCH (SN 882701-)	3115 - 6
3G14	RETURN-TO-DIG SWITCH(SN 880054-882700)	1674 - 22
3J18	REVERSE ALARM (S/N -840058)	2004 - 2
3J20	REVERSE ALARM (S/N 840059-882700)	2004 - 4
3J22	REVERSE ALARM (S/N 882701-)	2004 - 6
1D15	REVERSE CLUTCH ASSEMBLY	0350 - 4
4B23	REVERSE VALVE MOUNT (S/N 882701-)	2162 - 6
1D7	REVERSER CONTROL WITH GUARD	0315 - 4
1D7	REVERSER CONTROL, SWITCH	0315 - 4
3H21	RIGHT SIDE OPERATOR PLATFORM (S/N 882701-)	1812 - 8
1B14	RIM, FRONT WHEEL (WITHOUT MFWD)	0120 - 1
1C20	RING GEAR (MFWD)	0250 - 10
1C21	RING GEAR (MFWD)	0250 - 11

ALPHABETICAL INDEX - CONTINUED

GRID		PAGE
1B23	RING GEAR AND PINION, REAR AXLE	0210 - 4
2D13	RING GEAR PE4045DT059	0433B - 2
2F21	RING GEAR PE4045TT092	0433C - 2
1J8	RING GEAR, FLYWHEEL PE4045DT050 S.N,071973-)	0433A - 2
1G15	RING GEAR, FLYWHEEL T04045DT050 S.N. -826110)	0433 - 2
1C12	RING GEAR, PLANETARY	0250 - 2
1H14	RINGS, PISTON PE4045DT050 S.N.071973-)	0403A - 2
1E23	RINGS, PISTON T04045DT050 S.N. -826110)	0403 - 2
2B19	RINGS, PISTON PE4045DT059	0403B - 2
2E1	RINGS, PISTON PE4045TT092	0403C - 2
1E18	ROCKER ARM COVER T04045DT050 S.N. -826110)	0402 - 4
1H9	ROCKER ARM COVER PE4045DT050 S.N.071973-)	0402A - 4
1H9	ROCKER ARM COVER GASKET PE4045DT050 S.N.071973-)	0402A - 4
1E18	ROCKER ARM COVER GASKET T04045DT050 S.N. -826110)	0402 - 4
2B15	ROCKER ARM COVER PE4045DT059	0402B - 3
2D22	ROCKER ARM COVER PE4045TT092	0402C - 3
1H8	ROCKER ARM SHAFT PE4045DT050 S.N.071973-)	0402A - 3
2B14	ROCKER ARM SHAFT PE4045DT059	0402B - 2
2D21	ROCKER ARM SHAFT PE4045TT092	0402C - 2
1E17	ROCKER ARM SHAFT T04045DT050 S.N. -826110)	0402 - 3
1H8	ROCKER ARMS PE4045DT050 S.N.071973-)	0402A - 3
2B14	ROCKER ARMS PE4045DT059	0402B - 2
2D21	ROCKER ARMS PE4045TT092	0402C - 2
1E17	ROCKER ARMS T04045DT050 S.N. -826110)	0402 - 3
1C16	ROD ASSEMBLY,TIE (MFWD)	0250 - 6
3D17	ROD GUIDE, HITCH PITCH CYLINDER (SN 881746-882700)	1520 - 18
3F1	ROD, BATTERY HOLDDOWN (S/N 880054-882700)	1671 - 4
3F3	ROD, BATTERY HOLDDOWN (S/N 882701-)	1671 - 6
4F17	ROD, BUCKET LEVELING (SN -870948)	3115 - 2
4F19	ROD, BUCKET LEVELING (SN 870949-882700)	3115 - 4
4F21	ROD, BUCKET LEVELING (SN 882701-)	3115 - 6
1H14	ROD, CONNECTING PE4045DT050 S.N.071973-)	0403A - 2
1E23	ROD, CONNECTING T04045DT050 S.N. -826110)	0403 - 2
2B19	ROD, CONNECTING PE4045DT059	0403B - 2
2E1	ROD, CONNECTING PE4045TT092	0403C - 2
4G5	ROD, CYLINDER LOCK BAR	3140 - 6
2G21	ROD, ENGINE THROTTLE CONTROL (S/N 872334-882700)	0515 - 4
2G23	ROD, ENGINE THROTTLE CONTROL (S/N 882701-)	0515 - 6
3D17	ROD, HITCH PITCH CYLINDER (SN 881746-882700)	1520 - 18
3D19	ROD, HITCH PITCH CYLINDER (SN 882701-882706)	1520 - 20
3D21	ROD, HITCH PITCH CYLINDER (SN 882707-)	1520 - 21A
2J5	ROD, STEERING CYLINDER (MFWD)	0965 - 4
1B25	ROD, TIE (WITHOUT MFWD)	0230 - 1
4F17	ROD, VALVE ACTUATOR BUCKET LEVEL (SN -870948)	3115 - 2
4F19	ROD, VALVE ACTUATOR BUCKET LEVEL (SN 870949-882700)	3115 - 4
4F21	ROD, VALVE ACTUATOR BUCKET LEVEL (SN 882701-)	3115 - 6
2G19	ROD,THROTTLE CONTROL (S/N -872333)	0515 - 2
1H8	RODS, PUSH PE4045DT050 S.N.071973-)	0402A - 3
2B14	RODS, PUSH PE4045DT059	0402B - 2
2D21	RODS, PUSH PE4045TT092	0402C - 2
1E17	RODS, PUSH T04045DT050 S.N. -826110)	0402 - 3
1B19	ROLLER BEARING,AXLE	0201 - 2
3G6	ROPS BRAKE LIGHT AND TAIL LIGHT (S/N -848452)	1674 - 14
3G8	ROPS BRAKE LIGHT AND TAIL LIGHT (S/N 848453-)	1674 - 16
3G10	ROPS BRAKE LIGHT AND TAIL LIGHT (S/N 848453-)	1674 - 18
3G3	ROPS BRAKE LIGHT AND TAIL LIGHT (SN -882700)	1674 - 10
3F22	ROPS WIRING HARNESS AND WORK LIGHTS (S/N 848453-880221)	1674 - 4
3F24	ROPS WIRING HARNESS AND WORK LIGHTS (S/N 880222-882700)	1674 - 6
3G1	ROPS WIRING HARNESS AND WORK LIGHTS (S/N 882701-)	1674 - 8
3F20	ROPS WIRING HARNESS AND WORK LIGHTS (SN -848452)	1674 - 2
3F18	ROTATING BEACON AND SWITCH	1673 - 2

S

1D19	SCREEN, REAR,OUTPUT SHAFT	0350 - 8
2J9	SCREW, BLEED, BRAKES	1011 - 2
1J9	SEA, FLYWHEEL HOUSING PE4045DT050 S.N.071973-)	0433A - 3
1G16	SEA, FLYWHEEL HOUSING T04045DT050 S.N. -826110)	0433 - 3
3H19	SEAL (OPERATOR PLATFORM (S/N 882701-)	1812 - 6
4B15	SEAL KIT, HYDRAULIC PUMP (SN 880054-882700)	2161 - 4
4B13	SEAL KIT, HYDRAULIC PUMP (S/N -880053)	2161 - 2
4B17	SEAL KIT, HYDRAULIC PUMP (SN 882701-)	2161 - 6
4C21	SEAL KIT, LOADER VALVE, THIRD FUNCTION (S/N -880053)	2162 - 28
4D1	SEAL KIT, LOADER VALVE, THIRD FUNCTION (S/N XXXXXX-882700)	2162 - 32
4C23	SEAL KIT, LOADER VALVE, THIRD FUNCTION (S/N 880054-XXXXXX)	2162 - 30
4D3	SEAL KIT, LOADER VALVE, THIRD FUNCTION (S/N 882701-)	2162 - 34
2E19	SEAL, FUEL INJECTION, W/TURBO PE4045TT092	0413C - 2
2K6	SEAL, SHAFT, INPUT (AXLE SERIAL NO. -217496)	1111 - 2
2K8	SEAL, SHAFT, INPUT (AXLE SERIAL NO. 217497-)	1111 - 4
1C13	SEAL,SLIDING YOKE (MFWD)	0250 - 3
3I15	SEAT ADJUSTER, SWIVEL (SN XXXXXX-882700)	1821 - 10
3I17	SEAT ADJUSTER, SWIVEL (SN 882701-)	1821 - 12
3I15	SEAT ARMRESTS, SWIVEL (SN XXXXXX-882700)	1821 - 10
3I17	SEAT ARMRESTS, SWIVEL (SN 882701-)	1821 - 12
3H15	SEAT BASE PLATE (S/N -872333)	1812 - 2
3H17	SEAT BASE PLATE (S/N 872334-882700)	1812 - 4
3H19	SEAT BASE PLATE (S/N 882701-)	1812 - 6
3I7	SEAT BELT (S/N -843070)	1821 - 2
3I13	SEAT BELT (S/N XXXXXX-)	1821 - 8
3I9	SEAT BELT (S/N 843701-882700)	1821 - 4

ALPHABETICAL INDEX - CONTINUED

GRID		PAGE
3I11	SEAT BELT (S/N 882701-)	1821 - 6
3I15	SEAT CUSHIONS, SWIVEL (SN XXXXXX-882700)	1821 - 10
3I17	SEAT CUSHIONS, SWIVEL (SN 882701-)	1821 - 12
3I15	SEAT FRAMES, SWIVEL (SN XXXXXX-882700)	1821 - 10
3I17	SEAT FRAMES, SWIVEL (SN 882701-)	1821 - 12
3I7	SEAT MOUNT, PEDESTAL (S/N -843070)	1821 - 2
3I13	SEAT MOUNT, PEDESTAL (S/N XXXXXX-)	1821 - 8
3I9	SEAT MOUNT, PEDESTAL (S/N 843701-882700)	1821 - 4
3I11	SEAT MOUNT, PEDESTAL (S/N 882701-)	1821 - 6
3I19	SEAT PEDESTAL, SWIVEL (SN XXXXXX-)	1821 - 14
3I7	SEAT, OPERATOR (S/N -843070)	1821 - 2
3I13	SEAT, OPERATOR (S/N XXXXXX-)	1821 - 8
3I9	SEAT, OPERATOR (S/N 843701-882700)	1821 - 4
3I11	SEAT, OPERATOR (S/N 882701-)	1821 - 6
4D5	SECTION VALVE, 5TH FUNCTION HITCH	2162 - 36
2I3	SENDER, FUEL GAUGE (S/N -841621)	0560 - 2
2I5	SENDER, FUEL GAUGE (S/N 841622-)	0560 - 4
3G18	SENDER, FUEL, ENGINE OIL, AIR FILTER (FRONT WIRE HARNESS) (SN 882701-)	1674 - 26
3G12	SENDER, FUEL, ENGINE OIL, AIR FILTER (SN -880053)	1674 - 20
3G14	SENDER, FUEL, ENGINE OIL, AIR FILTER (SN 880054-882700)	1674 - 22
3G16	SENDER, FUEL, ENGINE OIL, AIR FILTER (SN 882701-)	1674 - 24
3G12	SENDER, TRANSMISSION TEMPERATURE (SN -880053)	1674 - 20
3G14	SENDER, TRANSMISSION TEMPERATURE (SN 880054-882700)	1674 - 22
3G16	SENDER, TRANSMISSION TEMPERATURE (SN 882701-)	1674 - 24
2E22	SENSOR, AIR INTAKE TEMPERATURE (W/TURBO) PE4045TT092	0414C - 1
2I12	SENSOR, AIR TEMPERATURE PE4045DT059	0510B - 2
2I14	SENSOR, AIR TEMPERATURE PE4045TT092	0510C - 1
2I12	SENSOR, COOLANT TEMP PE4045DT059	0510B - 2
2I14	SENSOR, COOLANT TEMP PE4045TT092	0510C - 1
2C14	SENSOR, ENGINE HEAD TEMPERATURE PE4045DT059	0414B - 2
3G18	SENSOR, FUEL TEMPERATURE (FRONT WIRE HARNESS) (SN 882701-)	1674 - 26
2I12	SENSOR, TACHOMETER PE4045DT059	0510B - 2
2I14	SENSOR, TACHOMETER PE4045TT092	0510C - 1
2H5	SENSOR,AIR FILTER RESTRICTION	0521 - 2
2H7	SENSOR,AIR FILTER RESTRICTION (S/N 882701-)	0521 - 4
2H9	SENSOR,AIR FILTER RESTRICTION (TURBO) (S/N 882701-)	0521 - 6
2K6	SEPERATOR PLATE, PARK BRAKE (AXLE SERIAL NO. -217496)	1111 - 2
2K8	SEPERATOR PLATE, PARK BRAKE (AXLE SERIAL NO. 217497-)	1111 - 4
2J9	SERVICE BRAKES	1011 - 2
4G5	SERVICE LOCK BAR, BOOM	3140 - 6
4G5	SERVICE LOCK, LOADER ARM	3140 - 6
1B19	SHAFT, AXLE	0201 - 2
2C15	SHAFT, BALANCER PE4045DT059	0415B - 2
2E23	SHAFT, BALANCER PE4045TT092	0415C - 2
1I12	SHAFT, ENGINE BALANCER PE4045DT050 S.N.071973-)	0415A - 2
1F22	SHAFT, ENGINE BALANCER T04045DT050 S.N. -826110)	0415 - 2
1G13	SHAFT, FAN DRIVE T04045DT050(S.N. -826110)	0429 - 4
1J6	SHAFT, FAN DRIVE PE4045DT050 S.N.071973-)	0429A - 4
1D18	SHAFT, IDLER, MFWD	0350 - 7
2K8	SHAFT, INPUT SEAL (AXLE SERIAL NO. 217497-)	1111 - 4
2K6	SHAFT, INPUT, SEAL (AXLE SERIAL NO. -217496)	1111 - 2
1D21	SHAFT, INTERMEDIATE, TRANSMISSION	0350 - 10
1D19	SHAFT, OUTPUT, MFWD	0350 - 8
1C12	SHAFT, PLANETARY SHAFT	0250 - 2
1D17	SHAFT, PTO PUMP DRIVE	0350 - 6
1H8	SHAFT, ROCKER ARM PE4045DT050 S.N.071973-)	0402A - 3
2B14	SHAFT, ROCKER ARM PE4045DT059	0402B - 2
2D21	SHAFT, ROCKER ARM PE4045TT092	0402C - 2
1E17	SHAFT, ROCKER ARM T04045DT050 S.N. -826110)	0402 - 3
1D17	SHAFT, STATOR	0350 - 6
1C20	SHAFT, SUN GEAR (MFWD)	0250 - 10
1C21	SHAFT, SUN GEAR (MFWD)	0250 - 11
1D17	SHAFT, TURBINE	0350 - 6
1C13	SHAFT, UNIVERSAL DRIVE (MFWD)	0250 - 3
1D17	SHAFT,INPUT	0350 - 6
1D4	SHAFTS, SHIFTER	0315 - 1
1J5	SHEAVE, CRANKSHAFT PE4045DT050 S.N.071973-)	0429A - 2
2D9	SHEAVE, CRANKSHAFT PE4045DT059	0429B - 2
2F17	SHEAVE, CRANKSHAFT PE4045TT092	0429C - 2
1G12	SHEAVE, CRANKSHAFT T04045DT050 S.N. -826110)	0429 - 2
3J5	SHIELD(HEAT) AND REFLECTOR GRILLE (SN -872333)	1921 - 2
3H6	SHIELD, TRANSMISSION, KIT	1746 - 2
3J3	SHIELDS, ENGINE SIDE (SN 848459-882700)	1912 - 4
3J1	SHIELDS, ENGINE SIDE (SN -848458)	1912 - 2
1D4	SHIFT FORK	0315 - 1
1D5	SHIFT HOUSING	0315 - 2
1D5	SHIFT HOUSING COVER	0315 - 2
1D5	SHIFT HOUSING PIVOT	0315 - 2
1D7	SHIFT LEVER (F-N-R)	0315 - 4
1D4	SHIFT RAIL	0315 - 1
1D5	SHIFTER LEVER CARROT, TRANSMISSION	0315 - 2
1D4	SHIFTER SHAFTS	0315 - 1
2B23	SHORT BLOCK, ENGINE PE4045DT059	0404B - 4
2E5	SHORT BLOCK, ENGINE PE4045TT092	0404C - 4
1F3	SHORT BLOCK,ENGINE T04045DT050 S.N. -826110)	0404 - 4
1H18	SHORT BLOCK,ENGINE PE4045DT050 S.N.071973-)	0404A - 4
2G7	SHROUD, FAN (S/N -882700)	0511 - 2
2G9	SHROUD, FAN (S/N 882701-)	0511 - 4
4H1	SHUTTLE SPOOL, PTO MOTOR (S/N 880054-)	4000 - 6
3J1	SIDE SHIELDS, ENGINE (SN -848458)	1912 - 2
3J3	SIDE SHIELDS, ENGINE (SN 848459-882700)	1912 - 4
3J24	SIGN, SLOW MOVING VEHICLE	2008 - 2
3F5	SINGLE BATTERY (S/N -882700)	1671 - 8
3F7	SINGLE BATTERY (S/N 882701-)	1671 - 10
3F9	SINGLE BATTERY (S/N 882701-)	1671 - 12
3J3	SLIDING DOOR (SN 848459-882700)	1912 - 4
1D19	SLIDING SLEEVE, OUTPUT SHAFT	0350 - 8
1C13	SLIDING YOKE, SEAL (MFWD)	0250 - 3
3J24	SMV EMBLEM	2008 - 2
1D22	SOLENOID VALVE, TRANSMISSION, F-N-R	0360 - 2
2G5	SOLENOID, COLD WEATHER STARTING AID	0505 - 2
1D24	SOLENOIDS, CONTROL VALVE	0360 - 4
1D24	SOLENOIDS, PARK BRAKE, DIFF LOCK, MFWD	0360 - 4

ALPHABETICAL INDEX - CONTINUED

GRID		PAGE
4B23	SPACER, REVERSE VALVE MOUNT (S/N 882701-)	2162 - 6
1C1	SPINDLE AND KNUCKLE ASSEMBLY (WITHOUT MFWD)	0230 - 2
1C22	SPIRAL BEVEL GEAR,DIFFGERENTIAL (MFWD)	0250 - 12
1B23	SPIRAL BEVEL INPUT PINION	0210 - 4
4H1	SPOOL, SHUTTLE PTO MOTOR (S/N 880054-)	4000 - 6
1J1	STARTER MOTOR KIT	0422A - 4
1I25	STARTER MOTOR KIT (ENG.SER.N0.866616-)	0422A - 3
1I24	STARTER MOTOR KIT PE4045DT050 (ENG.SER.NO.071973-866615)	0422A - 2
1G9	STARTER MOTOR KIT T04045DT050 (ENG.SER.-866615)	0422 - 1
2D5	STARTER MOTOR KIT (DENSO) PE4045DT059 (S/N 882701-)	0422B - 4
2F13	STARTER MOTOR KIT (DENSO) PE4045TT092	0422C - 4
2D3	STARTER MOTOR KIT (DENSO, WET SEALED) PE4045DT059 (S/N 882701-)	0422B - 2
2F11	STARTER MOTOR KIT (DENSO, WET SEALED) PE4045TT092	0422C - 2
2D2	STARTER MOTOR KIT (ISKRA) PE4045DT059 (S/N -882700)	0422B - 1
2D5	STARTER MOTOR SWITCH (DENSO) PE4045DT059 (S/N 882701-)	0422B - 4
2F13	STARTER MOTOR SWITCH (DENSO) PE4045TT092	0422C - 4
2G5	STARTING AID, ETHER	0505 - 2
1I25	STARTING MOTOR (ENG.SER.NO.866616-)	0422A - 3
1J1	STARTING MOTOR (SERIAL NO.XXXXXX-)	0422A - 4
1G9	STARTING MOTOR T04045DT050 (ENG.SER.NO.-866615)	0422 - 1
1I24	STARTING MOTOR PE4045DT050 (ENG.SER.NO.071973-866615)	0422A - 2
2D5	STARTING MOTOR (DENSO) PE4045DT059 (S/N 882701-)	0422B - 4
2F13	STARTING MOTOR (DENSO) PE4045TT092	0422C - 4
2D3	STARTING MOTOR (DENSO, WET SEALED) PE4045DT059 (S/N 882701-)	0422B - 2
2F11	STARTING MOTOR (DENSO, WET SEALED) PE4045TT092	0422C - 2
2D2	STARTING MOTOR (ISKRA) PE4045DT059 (S/N -882700)	0422B - 1
1D17	STATOR SHAFT	0350 - 6
1C6	STEERING CYLINDER, FRONT AXLE (WITHOUT MFWD)(SERIAL NO. 911132-)	0230 - 8
2J5	STEERING CYLINDER, MECHANICAL FRONT WHEEL DRIVE (MFWD)	0965 - 4
2J3	STEERING CYLINDER, POWER (WITHOUT MFWD) (S/N -XXXXXX)	0965 - 2
2J4	STEERING CYLINDER, POWER (WITHOUT MFWD) (S/N XXXXXX-)	0965 - 3
2I20	STEERING PRIORITY VALVE (S/N -880053)	0962 - 6
2I18	STEERING VALVE	0962 - 4
2I24	STEERING VALVE HYDRAULIC HOSES (S/N 843070-880053)	0963 - 4
2J1	STEERING VALVE HYDRAULIC HOSES (S/N 880054-880907)	0963 - 6
2I22	STEERING VALVE HYDRAULIC HOSES (SN -843069)	0963 - 2
2I16	STEERING WHEEL	0962 - 2
1B14	STEM, VALVE (WITHOUT MFWD)	0120 - 1
2J13	STOP LIGHT SWITCH (SER.NO.880908-)	1060 - 4
2B25	STRAP, ENGINE LIFT PE4045DT059	0404B - 6
2E7	STRAP, ENGINE LIFT PE4045TT092	0404C - 6
3J11	STRIKER, HOOD (S/N 882701-)	1921 - 8
1C18	STUDS, WHEEL (MFWD)	0250 - 8
1D9	SUCTION PIPE, TRANSMISSION	0341 - 1
1C20	SUN GEAR SHAFT (MFWD)	0250 - 10
1C21	SUN GEAR SHAFT (MFWD)	0250 - 11
2G11	SUPPORT, FILLER TANK (S/N -882700)	0511 - 6
2G13	SUPPORT, FILLER TANK (S/N 882701-)	0511 - 8
3J11	SUPPORT, HOOD (S/N 882701-)	1921 - 8
3I9	SUPPORT, SEAT (S/N 843701-882700)	1821 - 4
3I11	SUPPORT, SEAT (S/N 882701-)	1821 - 6
3I19	SUPPORT, SWIVEL SEAT (SN XXXXXX-)	1821 - 14
1D10	SUPPORT, TRANSMISSION	0342 - 2
2J13	SWITCH, BRAKE LIGHT, PRESSURE (SER,NO.880908-)	1060 - 4
3G18	SWITCH, CAM/CRANKSHAFT (FRONT WIRE HARNESS) (SN 882701-)	1674 - 26
3G12	SWITCH, DIFF-LOCK	1674 - 20
3G14	SWITCH, DIFF-LOCK (SN 880054-882700)	1674 - 22
3G16	SWITCH, DIFFERENTIAL LOCK (SN 882701-)	1674 - 24
3G18	SWITCH, ENGINE COOLANT TEMPERATURE (FRONT WIRE HARNESS) (SN 882701-)	1674 - 26
3G12	SWITCH, ENGINE COOLANT TEMPERATURE (SN -880053)	1674 - 20
3G14	SWITCH, ENGINE COOLANT TEMPERATURE (SN 880054-882700)	1674 - 22
3G16	SWITCH, ENGINE COOLANT TEMPERATURE (SN 882701-)	1674 - 24
3G20	SWITCH, IGNITION	1674 - 28
3G22	SWITCH, IGNITION (SN 880054-882700)	1674 - 30
3G24	SWITCH, IGNITION (SN 882701-)	1674 - 32
4F17	SWITCH, MOMENTARY, BUCKET LEVEL/R-TO-DIG (SN -870948)	3115 - 2
4F19	SWITCH, MOMENTARY, BUCKET LEVEL/R-TO-DIG (SN 870949-882700)	3115 - 4
4F21	SWITCH, MOMENTARY, BUCKET LEVEL/R-TO-DIG (SN 882701-)	3115 - 6
3G12	SWITCH, NEUTRAL DUMP AND RETURN TO DIG (SN -880053)	1674 - 20
3G14	SWITCH, NEUTRAL DUMP AND RETURN TO DIG (SN 880054-882700)	1674 - 22
3G16	SWITCH, NEUTRAL DUMP AND RETURN TO DIG (SN 882701-)	1674 - 24
3G12	SWITCH, PARK BRAKE (SN -880053)	1674 - 20
3G14	SWITCH, PARK BRAKE (SN 880054-882700)	1674 - 22
3G16	SWITCH, PARK BRAKE (SN 882701-)	1674 - 24
3G18	SWITCH, PRESSURE (ENGINE OIL) (SN 882701-)	1674 - 26
4H11	SWITCH, PTO	4015 - 2
4G1	SWITCH, RETURN-TO-DIG (S/N -880293)	3140 - 2
4G3	SWITCH, RETURN-TO-DIG (S/N 880294-)	3140 - 4
1D7	SWITCH, REVERSER CONTROL	0315 - 4
3F18	SWITCH, ROTATING BEACON	1673 - 2
2D5	SWITCH, STARTER MOTOR (DENSO) PE4045DT059 (S/N 882701-)	0422B - 4
2F13	SWITCH, STARTER MOTOR (DENSO) PE4045TT092	0422C - 4
2D3	SWITCH, STARTER MOTOR(DENSO, WET SEALED) PE4045DT059 (S/N 882701-)	0422B - 2

ALPHABETICAL INDEX - CONTINUED

GRID		PAGE
2F11	SWITCH, STARTER MOTOR(DENSO, WET SEALED) PE4045TT092	0422C - 2
2J13	SWITCH, STOP LIGHT (SER.NO.880908-)	1060 - 4
2J19	SWITCH,BRAKE VALVE PRESSURE (SER.NO.-880907)	1063 - 2
1D7	SWITCH,FORWARD NUETRAL REVERSE	0315 - 4
1F18	SWITCH,FUEL INJ. PUMP COLD ADVANCE T04045DT050(S.N. -826110)	0413 - 3
1I8	SWITCH,FUEL INJ.PUMP COLD ADVANCE PE4045DT050(S.N.071973-)	0413A - 3
1J1	SWITCH,STARTER MOTOR	0422A - 4
3G20	SWITCHES, DASH PANEL (SN -880053)	1674 - 28
3G22	SWITCHES, DASH PANEL (SN 880054-882700)	1674 - 30
3G24	SWITCHES, DASH PANEL (SN 882701-)	1674 - 32
3G18	SWITCHES, FRONT WIRING HARNESS (SN 882701-)	1674 - 26
3G14	SWITCHES, WIRING HARNESS (SN 880054-882700)	1674 - 22
3G12	SWITCHES, WIRING HARNESS (SN -880053)	1674 - 20
3G16	SWITCHES, WIRING HARNESS (SN 882701-)	1674 - 24
1C6	SWIVEL HOUSING,FRONT AXLE (WITHOUT MFWD)(SERIAL NO. 911132-)	0230 - 8
3I19	SWIVEL SEAT BASE (SN XXXXXX-)	1821 - 14
3I19	SWIVEL SEAT HANDLE (SN XXXXXX-)	1821 - 14
3I19	SWIVEL SEAT SUPPORT (SN XXXXXX-)	1821 - 14
1D20	SYNCHRONIZER GEAR, 1ST	0350 - 9
1D20	SYNCHRONIZER GEAR, 2ND	0350 - 9
1D21	SYNCHRONIZER GEAR, 3RD	0350 - 10
1D21	SYNCHRONIZER GEAR, 4TH	0350 - 10
1I9	SYSTEM, FUEL INJECTION PE4045DT050(S.N.071973-)	0413A - 4
1F19	SYSTEM, FUEL INJECTION T04045DT050(S.N. -826110)	0413 - 4
2C12	SYSTEM, FUEL INJECTION PE4045DT059	0413B - 2
2E20	SYSTEM, FUEL INJECTION PE4045TT092	0413C - 4

T

2I12	TACHOMETER SENSOR PE4045DT059	0510B - 2
2I14	TACHOMETER SENSOR PE4045TT092	0510C - 1
2I3	TANK, FUEL (S/N -841621)	0560 - 2
2I5	TANK, FUEL (S/N 841622-)	0560 - 4
4E13	TANK, HYDRAULIC	2164 - 2
3G18	TEMPERATURE SENSOR, FUEL (FRONT WIRE HARNESS) (SN 882701-)	1674 - 26
1G13	TENSIONER, BELT IDLER T04045DT050(S.N. -826110)	0429 - 4
1J6	TENSIONER, BELT IDLER PE4045DT050 S.N.071973-)	0429A - 4
2D11	TENSIONER, FAN BELT PE4045DT059	0429B - 4
2F19	TENSIONER, FAN BELT PE4045TT092	0429C - 4
3B18	TEST KIT, FLUID ANALYSIS PRODUCTS (COOLSCAN)	1369 - 4
3B19	TEST KIT, FLUID ANALYSIS PRODUCTS (DIESELSCAN)	1369 - 5
3B16	TEST KIT, FLUID ANALYSIS PRODUCTS (OILSCAN)	1369 - 2
1G2	THERMOSTAT T04045DT050 S.N. -826110)	0418 - 2
1I17	THERMOSTAT PE4045DT050 S.N.071973-)	0418A - 2
1I17	THERMOSTAT COVER PE4045DT050 S.N.071973-)	0418A - 2
2C18	THERMOSTAT COVER PE4045DT059	0418B - 2
2F2	THERMOSTAT COVER PE4045TT092	0418C - 2
1G2	THERMOSTAT COVER T04045DT050 S.N. -826110)	0418 - 2
1I17	THERMOSTAT COVER TUBE PE4045DT050 S.N.071973-)	0418A - 2
2C18	THERMOSTAT COVER TUBE PE4045DT059	0418B - 2
2F2	THERMOSTAT COVER TUBE PE4045TT092	0418C - 2
1G2	THERMOSTAT COVER TUBE T04045DT050 S.N. -826110)	0418 - 2
2C18	THERMOSTAT PE4045DT059	0418B - 2
2F2	THERMOSTAT PE4045TT092	0418C - 2
4F23	THIRD FUNCTION CLAMSHELL BUCKET LEVER (SN 882701-)	3115 - 8
4C21	THIRD FUNCTION LOADER VALVE KIT (S/N -880053)	2162 - 28
4D1	THIRD FUNCTION LOADER VALVE KIT (S/N XXXXXX-882700)	2162 - 32
4C23	THIRD FUNCTION LOADER VALVE KIT (S/N 880054-XXXXXX)	2162 - 30
4D3	THIRD FUNCTION LOADER VALVE KIT (S/N 882701-)	2162 - 34
4D7	THIRD FUNCTION VALVE POSITIONER	2162 - 38
4D7	THIRD FUNCTION VALVE REPAIR KIT	2162 - 38
4D7	THIRD FUNCTION VALVE SECTION	2162 - 38
3E1	THREE POINT HITCH (S/N 880054-882700)	1520 - 24
3E3	THREE POINT HITCH (S/N 882701-)	1520 - 26
3E5	THREE POINT HITCH PLUMBING (SN -880053)	1520 - 28
3E7	THREE POINT HITCH PLUMBING (SN 880054-)	1520 - 30
3E9	THREE POINT HITCH PLUMBING, 5TH FUNCTION (S/N LE880054-)	1520 - 32
3D23	THREE POINT HITCH, (S/N -880053)	1520 - 22
2H1	THROTTLE CONTROL, CABLE (S/N 872334-882700)	0515 - 8
2H3	THROTTLE CONTROL, CABLE (S/N 882701-)	0515 - 10
2G21	THROTTLE CONTROL, ENGINE (S/N 872334-882700)	0515 - 4
2G23	THROTTLE CONTROL, ENGINE (S/N 882701-)	0515 - 6
2G19	THROTTLE CONTROL, ENGINE (S/N -872333)	0515 - 2
4H1	THRUST PLATE, PTO MOTOR (SN 880054-)	4000 - 6
1B25	TIE ROD (WITHOUT MFWD)	0230 - 1
1C16	TIE ROD ASSEMBLY (MFWD)	0250 - 6
1B25	TIE ROD BUSHING (WITHOUT MFWD)	0230 - 1
3E11	TILT CYLINDER KIT (S/N -880053)	1520 - 34
3E13	TILT CYLINDER KIT, FIFTH FUNCTION (S/N 880054-)	1520 - 36
3E15	TILT CYLINDER, FIFTH FUNCTION (S/N 880054-882700)	1520 - 38
3E17	TILT CYLINDER, FIFTH FUNCTION (S/N 882701-)	1520 - 40
3C21	TILT CYLINDER, HITCH (S/N XXXXXX-880053)	1520 - 2
3C23	TILT CYLINDER, HITCH (S/N 880054-881736)	1520 - 4
3D1	TILT CYLINDER, HITCH (S/N 881737-882733)	1520 - 6
3D3	TILT CYLINDER, HITCH (S/N 882734-)	1520 - 7A
3E15	TILT CYLINDER, HITCH, FIFTH FUNCTION (S/N 880054-882700)	1520 - 38
3E17	TILT CYLINDER, HITCH, FIFTH FUNCTION (S/N 882701-)	1520 - 40
4E3	TILT DUEL AND AUX. SECTION, HYDRAULIC VALVE (S/N -882700)	2162 - 56

ALPHABETICAL INDEX - CONTINUED

GRID		PAGE
4E5	TILT DUEL AND AUX. SECTION, HYDRAULIC VALVE (S/N 882701-)	2162 - 58
4E3	TILT, DUEL AND AUX. SECTION, HYDRUALIC VALVE (S/N -882700)	2162 - 56
4E5	TILT, DUEL AND AUX. SECTION, HYDRUALIC VALVE (S/N 882701-)	2162 - 58
1H10	TIMING GEAR COVER PE4045DT050(ESN.071973-900932)	0402A - 6
1H12	TIMING GEAR COVER PE4045DT050(ESN.900933-)	0402A - 8
1E19	TIMING GEAR COVER T04045DT050 (ENG.SER.NO.-826110)	0402 - 6
2B16	TIMING GEAR COVER (NO AUX) PE4045DT059	0402B - 4
2D23	TIMING GEAR COVER (NO AUX) PE4045TT092	0402C - 4
1H12	TIMING GEAR COVER GASKET PE4045DT050(ESN.900933-)	0402A - 8
1E19	TIMING GEAR COVER GASKET T04045DT050 (ENG.SER.NO.-826110)	0402 - 6
2B18	TIMING GEAR COVER SERVICE KIT PE4045DT059	0402B - 6
2D25	TIMING GEAR COVER SERVICE KIT PE4045TT092	0402C - 6
1D12	TORQUE CONVERTER	0350 - 1
1D12	TORQUE CONVERTOR FLEXPLATE	0350 - 1
3H6	TRANSMISSION BOTTOM GUARD KIT	1746 - 2
1D9	TRANSMISSION BREATHER	0341 - 1
1D22	TRANSMISSION CONTROL VALVE	0360 - 2
1D10	TRANSMISSION DIODE HARNESS	0342 - 2
3G12	TRANSMISSION DIODES HARNESS (SN -880053)	1674 - 20
3G14	TRANSMISSION DIODES HARNESS (SN 880054-882700)	1674 - 22
3G16	TRANSMISSION DIODES HARNESS (SN 882701-)	1674 - 24
1D9	TRANSMISSION HOUSING	0341 - 1
1D24	TRANSMISSION INTERMEDIATE PLATE	0360 - 4
1D9	TRANSMISSION LIFT BRACKET	0341 - 1
1D10	TRANSMISSION MOUNT	0342 - 2
1E7	TRANSMISSION OIL COOLER (S/N -882700)	0364 - 2
1E9	TRANSMISSION OIL COOLER (S/N 882701-)	0364 - 4
1D25	TRANSMISSION OIL FILTER	0360 - 5
1D20	TRANSMISSION OUTPUT YOKE	0350 - 9
1D5	TRANSMISSION SHIFTER CARROT BOOT	0315 - 2
1D5	TRANSMISSION SHIFTER LEVER CARROT	0315 - 2
1D22	TRANSMISSION SOLENOID VALVE	0360 - 2
1D9	TRANSMISSION SUCTION PIPE	0341 - 1
1D10	TRANSMISSION SUPPORT	0342 - 2
3G12	TRANSMISSION TEMPERATURE SENDER (SN -880053)	1674 - 20
3G14	TRANSMISSION TEMPERATURE SENDER (SN 880054-882700)	1674 - 22
3G16	TRANSMISSION TEMPERATURE SENDER (SN 882701-)	1674 - 24
1E1	TRANSMISSION TO AXLE LINES (S/N -880053)	0363 - 2
1E3	TRANSMISSION TO AXLE LINES (S/N 880054-)	0363 - 4
1E5	TRANSMISSION TO COOLER LINES	0363 - 6
1D10	TRANSMISSION, COMPLETE	0342 - 2
1D21	TRANSMISSION, INTERMEDIATE GEAR	0350 - 10
1I2	TUBE, ENGINE VENTILATING PE4045DT050(S.N.071973-)	0408A - 2
2C6	TUBE, ENGINE VENTILATING PE4045DT059	0408B - 2
2E13	TUBE, ENGINE VENTILATING PE4045TT092	0408C - 2
1F12	TUBE, ENGINE VENTILATING T04045DT050(S.N. -826110)	0408 - 2
2C18	TUBE, THERMOSTAT COVER PE4045DT059	0418B - 2
2F2	TUBE, THERMOSTAT COVER PE4045TT092	0418C - 2
1I17	TUBE,THERMOSTAT COVER PE4045DT050 S.N.071973-)	0418A - 2
1G2	TUBE,THERMOSTAT COVER T04045DT050 S.N. -826110)	0418 - 2
1D17	TURBINE SHAFT	0350 - 6
2H23	TURBO MUFFLER EXHAUST PIPE (S/N 882701-)	0531 - 10
2E25	TURBOCHARGER PE4045TT092	0416C - 2

U

1C13	UNIVERSAL DRIVE SHAFT (MFWD)	0250 - 3
1C13	UNIVERSAL DRIVE SHAFT KIT (MFWD)	0250 - 3
1C18	UNIVERSAL DRIVE SHAFT,FRONT AXLE (MFWD)	0250 - 8
1D8	UNIVERSAL JOINT (REVERSER)	0325 - 1
2K6	UNIVERSAL JOINT YOKE (AXLE SERIAL NO. -217496)	1111 - 2
2K8	UNIVERSAL JOINT YOKE (AXLE SERIAL NO. 217497-)	1111 - 4

V

4D13	VALVE CARTIRIDGE, 3GPM AND 6GPM (S/N -882700)	2162 - 42
4D9	VALVE CARTIRIDGE, 3GPM AND 6GPM (S/N 882701-)	2162 - 39A
4D15	VALVE CARTIRIDGE, 3GPM AND 6GPM (S/N 882701-)	2162 - 44
2B15	VALVE COVER PE4045DT059	0402B - 3
2D22	VALVE COVER PE4045TT092	0402C - 3
4D7	VALVE FUNCTION,THIRD FUNCTION	2162 - 38
4D5	VALVE KIT, FIFTH FUNCTION HITCH	2162 - 36
4E3	VALVE KIT, 3RD FUNCTION LOADER AUXILIARY (S/N -882700)	2162 - 56
4C21	VALVE KIT, 3RD FUNCTION LOADER AUXILIARY (S/N -880053)	2162 - 28
4D1	VALVE KIT, 3RD FUNCTION LOADER AUXILIARY (S/N XXXXXX-882700)	2162 - 32
4C23	VALVE KIT, 3RD FUNCTION LOADER AUXILIARY (S/N 880054-XXXXXX)	2162 - 30
4D3	VALVE KIT, 3RD FUNCTION LOADER AUXILIARY (S/N 882701-)	2162 - 34
4E5	VALVE KIT, 3RD FUNCTION LOADER AUXILIARY (S/N 882701-)	2162 - 58
4H1	VALVE PLATE, PTO MOTOR (S/N 880054-)	4000 - 6
1B14	VALVE STEM (WITHOUT MFWD)	0120 - 1
2J11	VALVE, BRAKE (SER.NO.-880907)	1060 - 2
2J15	VALVE, BRAKE (SER.NO.-880907)	1060 - 6
2J13	VALVE, BRAKE (SER.NO.880908-)	1060 - 4
2J17	VALVE, BRAKE (SER.NO.880908-)	1060 - 8
2J11	VALVE, BRAKE HOUSING (SER.NO.-880907)	1060 - 2
4D23	VALVE, CONTROL, LEVER/HANDLES KIT (S/N -882700)	2162 - 52

ALPHABETICAL INDEX - CONTINUED

GRID		PAGE
4D17	VALVE, CONTROL, LEVER/HANDLES KIT (S/N XXXXXX-855518)	2162 - 46
4D19	VALVE, CONTROL, LEVER/HANDLES KIT (S/N 855519-882700)	2162 - 48
4D21	VALVE, CONTROL, LEVER/HANDLES KIT (S/N 882701-)	2162 - 50
4E1	VALVE, CONTROL, LEVER/HANDLES KIT (S/N 882701-)	2162 - 54
1H16	VALVE, ENGINE OIL BY-PASS PE404DT050 S.N.071973-)	0404A - 2
1F1	VALVE, ENGINE OIL BY-PASS T04045DT050 S.N. -826110)	0404 - 2
2B21	VALVE, ENGINE OIL BY-PASS PE4045DT059	0404B - 2
1H16	VALVE, ENGINE OIL PRESSURE REGULATING (ENG. SER. NO. 889025-)	0404A - 2
1H10	VALVE, ENGINE OIL PRESSURE REGULATING PE4045DT050(ESN.071973-889024)	0402A - 6
1E19	VALVE, ENGINE OIL PRESSURE REGULATING T04045DT050 (ENG.SER.NO.-826110)	0402 - 6
1I4	VALVE, EXHAUST PE4045DT050 S.N.071973-)	0409A - 2
2C8	VALVE, EXHAUST PE4045DT059	0409B - 2
2E15	VALVE, EXHAUST PE4045TT092	0409C - 2
1F14	VALVE, EXHAUST T04045DT050 S.N. -826110)	0409 - 2
4C1	VALVE, HYDRAULIC CONTROL (BASIC FUNCTION)	2162 - 8
4C3	VALVE, HYDRAULIC CONTROL (FOUR FUNCTION) (S/N -882700)	2162 - 10
4C5	VALVE, HYDRAULIC CONTROL (FOUR FUNCTION) (S/N 882701-)	2162 - 12
4C7	VALVE, HYDRAULIC CONTROL (5TH FUNCTION)	2162 - 14
4B19	VALVE, HYDRAULIC CONTROL FITTINGS (S/N -LE880053)	2162 - 2
4B21	VALVE, HYDRAULIC CONTROL FITTINGS (S/N LE880054-)	2162 - 4
4C11	VALVE, HYDRAULIC CONTROL PIVOT	2162 - 18
4C9	VALVE, HYDRAULIC CONTROL,OPTIONAL	2162 - 16
4C19	VALVE, HYDRAULIC, BOOM SECTION	2162 - 26
4C15	VALVE, HYDRAULIC, BUCKET SECTION (S/N -882700)	2162 - 22
4C17	VALVE, HYDRAULIC, BUCKET SECTION (S/N 882701-)	2162 - 24
4D17	VALVE, HYDRAULIC, HITCH LIFT SECTION (S/N XXXXXX-855518)	2162 - 46
4D19	VALVE, HYDRAULIC, HITCH LIFT SECTION (S/N 855519-882700)	2162 - 48
4D21	VALVE, HYDRAULIC, HITCH LIFT SECTION (S/N 882701-)	2162 - 50
4C13	VALVE, HYDRAULIC, INLET SECTION	2162 - 20
4D13	VALVE, HYDRAULIC, JUNCTION BLOCK (S/N -882700)	2162 - 42
4D9	VALVE, HYDRAULIC, JUNCTION BLOCK (S/N 882701-)	2162 - 39A
4D15	VALVE, HYDRAULIC, JUNCTION BLOCK (S/N 882701-)	2162 - 44
4D23	VALVE, HYDRAULIC, PITCH SECTION (S/N -882700)	2162 - 52
4E1	VALVE, HYDRAULIC, PITCH SECTION (S/N 882701-)	2162 - 54
4E3	VALVE, HYDRAULIC, TILT DUEL AND AUX. SECTION (S/N -882700)	2162 - 56
4E5	VALVE, HYDRAULIC, TILT DUEL AND AUX. SECTION (S/N 882701-)	2162 - 58
1I4	VALVE, INTAKE PE4045DT050 S.N.071973-)	0409A - 2
2C8	VALVE, INTAKE PE4045DT059	0409B - 2
2E15	VALVE, INTAKE PE4045TT092	0409C - 2
1F14	VALVE, INTAKE T04045DT050 S.N. -826110)	0409 - 2
2B21	VALVE, OIL BY-PASS PE4045DT059	0404B - 2
2E3	VALVE, OIL BY-PASS PE4045TT092	0404C - 2
2C4	VALVE, OIL FILTER BYPASS PE4045DT059	0407B - 4
2E11	VALVE, OIL FILTER BYPASS PE4045TT092	0407C - 4
4H1	VALVE, RELIEF PTO MOTOR (S/N 880054-)	4000 - 6
4H3	VALVE, RELIEF PTO PUMP (S/N 880054-)	4000 - 8
4H5	VALVE, RELIEF PTO PUMP (S/N 880054-) (CONT'D)	4000 - 10
4D11	VALVE, RELIEF, BUCKET SECTION (S/N -738468)	2162 - 40
2I18	VALVE, STEERING	0962 - 4
2I20	VALVE, STEERING PRIORITY (S/N -880053)	0962 - 6
2I20	VALVE, STEERING PRIORITY RELIEF (S/N -880053)	0962 - 6
4C21	VALVE, THIRD FUNCTION LOADER KIT (S/N -880053)	2162 - 28
4D1	VALVE, THIRD FUNCTION LOADER KIT (S/N XXXXXX-882700)	2162 - 32
4C23	VALVE, THIRD FUNCTION LOADER KIT (S/N 880054-XXXXXX)	2162 - 30
4D3	VALVE, THIRD FUNCTION LOADER KIT (S/N 882701)	2162 - 34
1D22	VALVE, TRANSMISSION CONTROL	0360 - 2
1D22	VALVE, TRANSMISSION SOLENOID	0360 - 2
3H23	VANDAL COVER,INSTRUMENT PANEL (S/N -872333)	1816 - 2
3I1	VANDAL GUARD,INSTRUMENT PANEL (S/N 872334-882700)	1816 - 4
3I5	VANDAL GUARD,INSTRUMENT PANEL (S/N 882700-)	1816 - 8
3I3	VANDAL GUARD,INSTRUMENT PANEL (S/N 882701-)	1816 - 6
1I2	VENTILATING SYSTEM, ENGINE PE4045DT050(S.N.071973-)	0408A - 2
2C6	VENTILATING SYSTEM, ENGINE PE4045DT059	0408B - 2
2E13	VENTILATING SYSTEM, ENGINE PE4045TT092	0408C - 2
1F12	VENTILATING SYSTEM, ENGINE T04045DT050(S.N. -826110)	0408 - 2
3F15	VOLTAGE REGULATOR (S/N -882700)	1672 - 2
3F16	VOLTAGE REGULATOR (S/N 882701-)	1672 - 4

W

3B12	WARNING LABELS (S/N 882701-)	1322 - 4
3J18	WARNING, BACK-UP ALARM (S/N -840058)	2004 - 2
3J20	WARNING, BACK-UP ALARM (S/N 840059-882700)	2004 - 4
3J22	WARNING, BACK-UP ALARM (S/N 882701-)	2004 - 6
1I16	WATER PUMP (ENG.SER.NO.900933-)	0417A - 3
1I15	WATER PUMP PE4045DT050 (ENG.SER.NO.071973-900932)	0417A - 2
1F25	WATER PUMP T04045DT050 S.N. -826110)	0417 - 2
2B16	WATER PUMP (NO AUX) PE4045DT059	0402B - 4
2D23	WATER PUMP (NO AUX) PE4045TT092	0402C - 4

ALPHABETICAL INDEX - CONTINUED

GRID		PAGE
1I16	WATER PUMP IMPELLER (ENG.SER.NO.900933-)	0417A - 3
1I15	WATER PUMP IMPELLER PE4045DT050 (ENG.SER.NO.071973-900932)	0417A - 2
1F25	WATER PUMP IMPELLER T04045DT050 S.N. -826110)	0417 - 2
1F24	WATER PUMP INLET T04045DT050 S.N. -826110)	0417 - 1
1I14	WATER PUMP INLET PE4045DT050 S.N.071973-)	0417A - 1
2C17	WATER PUMP INLET PE4045DT059	0417B - 1
2F1	WATER PUMP INLET PE4045TT092	0417C - 1
2B18	WATER PUMP INSERT KIT PE4045DT059	0402B - 6
2D25	WATER PUMP INSERT KIT PE4045TT092	0402C - 6
1F24	WATER PUMP PULLEY T04045DT050 S.N. -826110)	0417 - 1
1I14	WATER PUMP PULLEY PE4045DT050 S.N.071972-)	0417A - 1
2C17	WATER PUMP PULLEY PE4045DT059	0417B - 1
2F1	WATER PUMP PULLEY PE4045TT092	0417C - 1
1I16	WATER PUMP REPAIR KIT (ENG.SER.NO.900933-)	0417A - 3
1I15	WATER PUMP REPAIR KIT PE4045DT050 (ENG.SER.NO.071973-900932)	0417A - 2
3C19	WEIGHTS (KIT), HITCH (S/N 882701-)	1511 - 18
3C15	WEIGHTS (SLAB), HITCH (S/N 880054-882700)	1511 - 14
3C13	WEIGHTS (SLAB), HITCH (SN -880053)	1511 - 12
3C17	WEIGHTS (SLAB), HITCH (SN 882701-)	1511 - 16
3C7	WEIGHTS, HITCH (S/N -880053)	1511 - 6
3C9	WEIGHTS, HITCH (S/N 880054-882700)	1511 - 8
3C11	WEIGHTS, HITCH (S/N 882701-)	1511 - 10
1B15	WEIGHTS, REAR WHEELS (S/N -882700)	0149 - 1
1B16	WEIGHTS, REAR WHEELS (S/N 882701-)	0149 - 2
1B10	WEIGHTS, WHEEL, HARDWARE	0110 - 2
1B11	WEIGHTS, WHEEL, HARDWARE	0110 - 2Z
1C3	WHEEL HUB, FRONT (WITHOUT MFWD)	0230 - 4
1C7	WHEEL HUB, FRONT AXLE (WITHOUT MFWD) (SERIAL NO. 911132-)	0230 - 9
1C8	WHEEL RIM MOUNTING	0242 - 2
1C10	WHEEL RIM MOUNTING	0242 - 4
1C18	WHEEL STUDS (MFWD)	0250 - 8
1B10	WHEEL WEIGHT HARDWARE	0110 - 2
1B11	WHEEL WEIGHT HARDWARE	0110 - 2Z
1B15	WHEEL WEIGHT, REAR (S/N -882700)	0149 - 1
1B16	WHEEL WEIGHTS, REAR (S/N 882701-)	0149 - 2
1B12	WHEEL, DRIVE, FRONT	0110 - 3A
1B13	WHEEL, DRIVE, FRONT	0110 - 3Z
1B10	WHEEL, DRIVE, REAR	0110 - 2
1B11	WHEEL, DRIVE, REAR	0110 - 2Z
1B14	WHEEL, FRONT (WITHOUT MFWD)	0120 - 1
2I16	WHEEL, STEERING	0962 - 2
1F18	WIRE HARNESS,FUEL INJ. PUMP SOLENOID T04045DT050(S.N. -826110)	0413 - 3
1I8	WIRE HARNESS,FUEL INJ.PUMP SOLONOID PE4045DT050(S.N.071973-)	0413A - 3
3G14	WIRING HARNESS, ENGINE (SN 880054-882700)	1674 - 22
3G12	WIRING HARNESS, ENGINE (SN -880053)	1674 - 20
3G16	WIRING HARNESS, ENGINE (SN 882701-)	1674 - 24
3G18	WIRING HARNESS, ENGINE FRONT (SN 882701-)	1674 - 26
4H11	WIRING HARNESS, PTO	4015 - 2
3F22	WORK LIGHTS AND HARNESS, ROPS (S/N 848453-880221)	1674 - 4
3F24	WORK LIGHTS AND HARNESS, ROPS (S/N 880222-882700)	1674 - 6
3G1	WORK LIGHTS AND HARNESS, ROPS (S/N 882701-)	1674 - 8
3F20	WORK LIGHTS AND HARNESS, ROPS (SN -848452)	1674 - 2

Y

4F17	YOKE, BUCKET LEVELING (SN -870948)	3115 - 2
4F19	YOKE, BUCKET LEVELING (SN 870949-882700)	3115 - 4
4F21	YOKE, BUCKET LEVELING (SN 882701-)	3115 - 6
1C13	YOKE, DRIVE SHAFT (MFWD)	0250 - 3
1B23	YOKE, REAR AXLE	0210 - 4
2K6	YOKE, REAR AXLE (AXLE SERIAL NO. -217496)	1111 - 2
1D20	YOKE, TRANSMISSION OUTPUT	0350 - 9
1B23	YOKE, UNIVERSAL JOINT	0210 - 4
2K6	YOKE, UNIVERSAL JOINT (AXLE SERIAL NO. -217496)	1111 - 2
2K8	YOKE, UNIVERSAL JOINT (AXLE SERIAL NO. 217497-)	1111 - 4
1C13	YOKE,SEAL,SLIDING (MFWD)	0250 - 3

REAR DRIVE WHEEL

TP50501 -UN-17OCT96

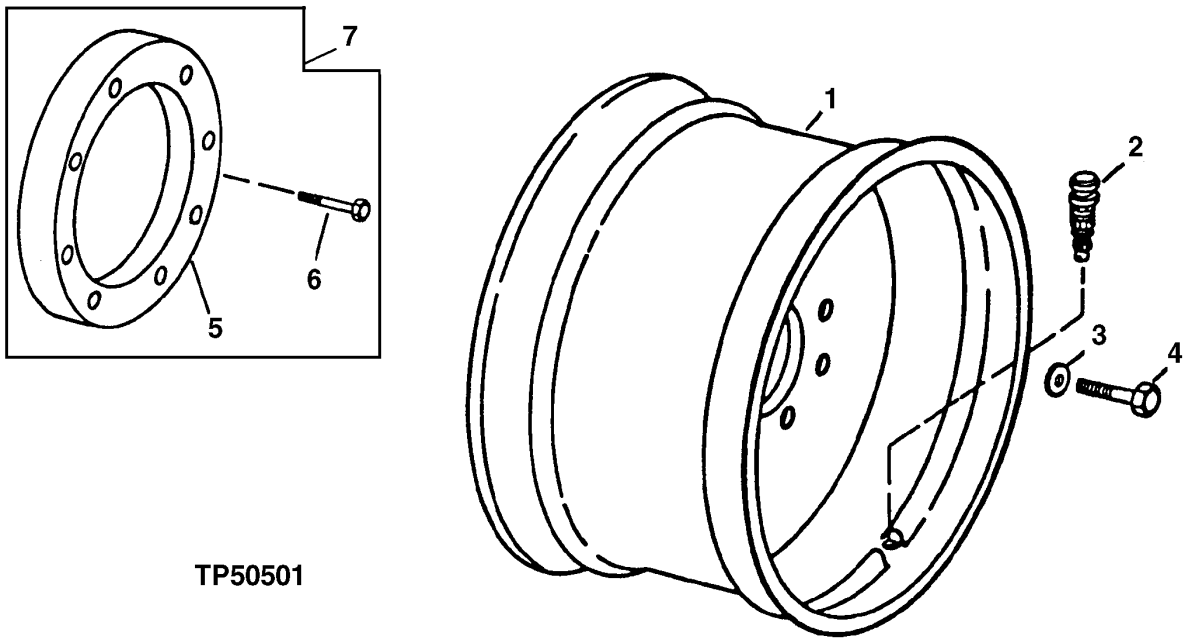

TP50501

KEY	PART NO.	PART NAME	QTY	SERIAL NO.	REMARKS
1	AT141444	WHEEL	1		(FOR 16.9 X 24 TIRE)
2	AT25226	TIRE VALVE STEM	1		(WITH CALCIUM CHLORIDE)
3	R54124	WASHER	8		
4	19H2717	CAP SCREW	8		3/4" X 1-3/4"
5	T66860	SPACER	2		FOR USE WITH CHAINS
6	19H3196	CAP SCREW	16		3/4" X 4"
7	AT179287	KIT	1		WHEEL SPACER
8	03H1516	BOLT	4		5/8" X 3-3/4", (NOT SHOWN-HARDWARE FOR 560 LB. WHEEL WEIGHT)
	R54124	WASHER	4		19.812 X 44.450 X 5.817 MM (0.780" X 1-3/4" X 0.229")
	K40015	LOCK NUT	4		15.875 MM (5/8")

REAR DRIVE WHEEL

TP50501 -UN-17OCT96

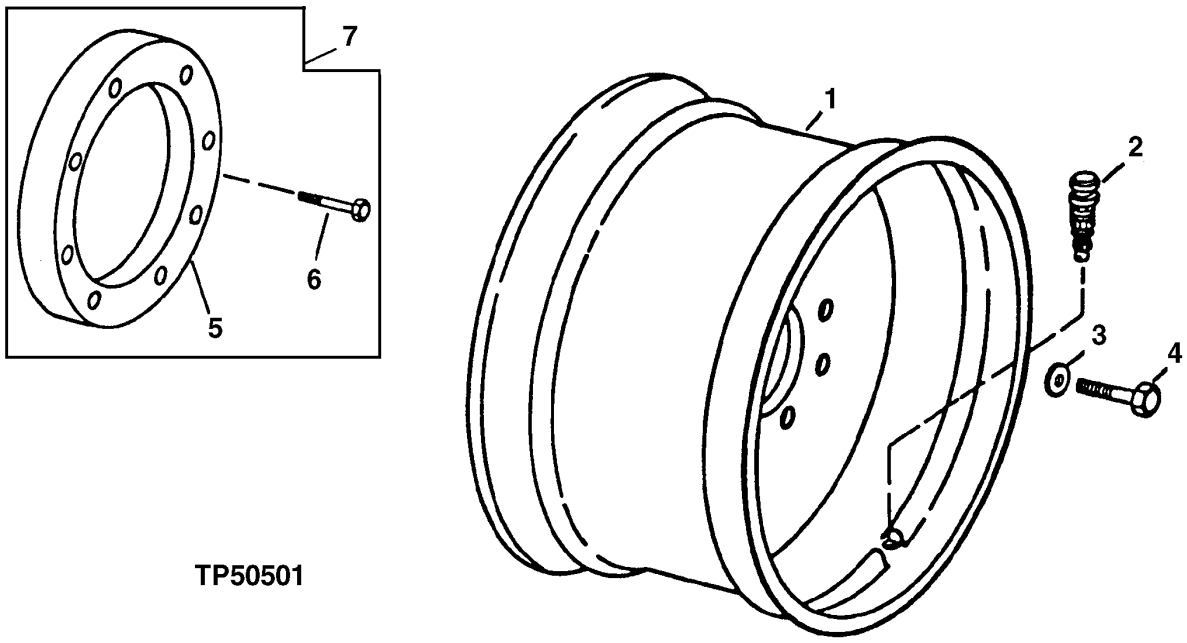

TP50501

KEY	PART NO.	PART NAME	QTY	SERIAL NO.	REMARKS
1	AT309110	WHEEL	1		(FOR 19.5L X 24 TIRE)
2	AT25226	TIRE VALVE STEM	1		(WITH CALCIUM CHLORIDE)
3	R54124	WASHER	4		
4	19H2717	CAP SCREW	4		3/4" X 1-3/4"
5	**AT66803**	**KIT**	**1**		**(WHOLEGOODS)**

FRONT DRIVE WHEEL

TP50502 -UN-17OCT96

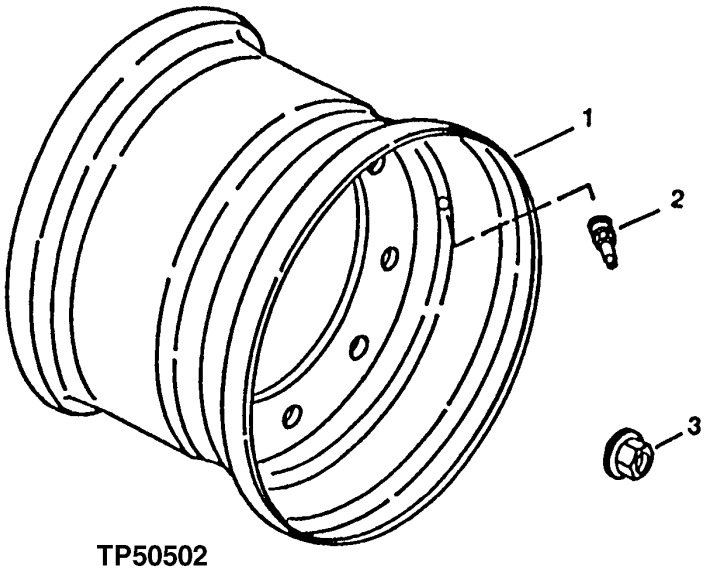

TP50502

KEY	PART NO.	PART NAME	QTY	SERIAL NO.	REMARKS
1	AT178499	WHEEL	1		(FOR 12 X 16.5 TIRE)
2	AN132749	TIRE VALVE STEM	1		
3	14M7332	FLANGE NUT	8		M18
4	**AT178497**	**KIT**	**1**		**(WHOLEGOODS)**

FRONT DRIVE WHEEL

T198050 -UN-24FEB04

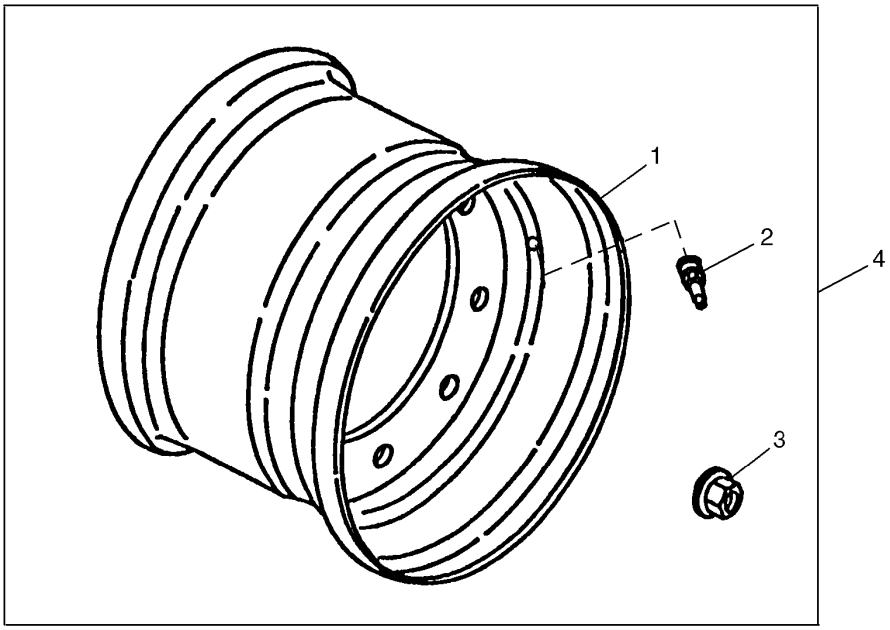

T198050

KEY	PART NO.	PART NAME	QTY	SERIAL NO.	REMARKS
1	AT178499	WHEEL	1		(FOR 12 X 16.5 TIRE)
2	AN132749	TIRE VALVE STEM	1		
3	14M7332	FLANGE NUT	8		M18
4	**AT178497**	**KIT**	**1**		**(WHOLEGOODS)**

MEMORANDA

FRONT WHEEL
(WITHOUT MECHANICAL FRONT WHEEL DRIVE)

TP3190 -UN-01JAN94

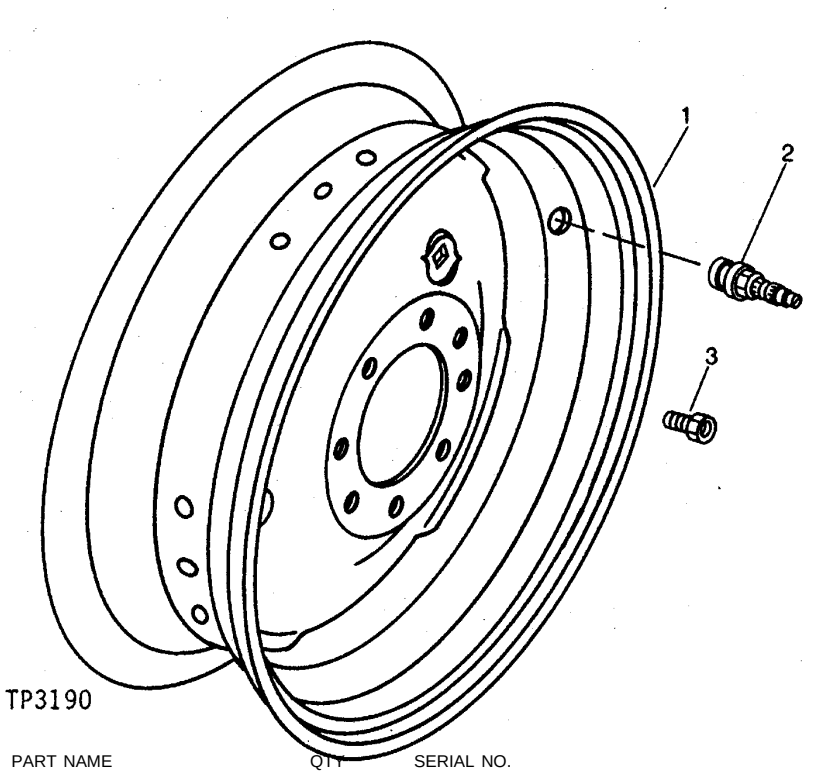

KEY	PART NO.	PART NAME	QTY	SERIAL NO.	REMARKS
1	AT51878	WHEEL	1		(FOR 11L X 15 TIRE)
2	AT25226	TIRE VALVE STEM	1		(WITH CALCIUM CHLORIDE)
3	JD21	WHEEL BOLT	8		

MEMORANDA

REAR WHEEL WEIGHTS (SERIAL NO. -882700)

TP55398 -UN-21JUL98

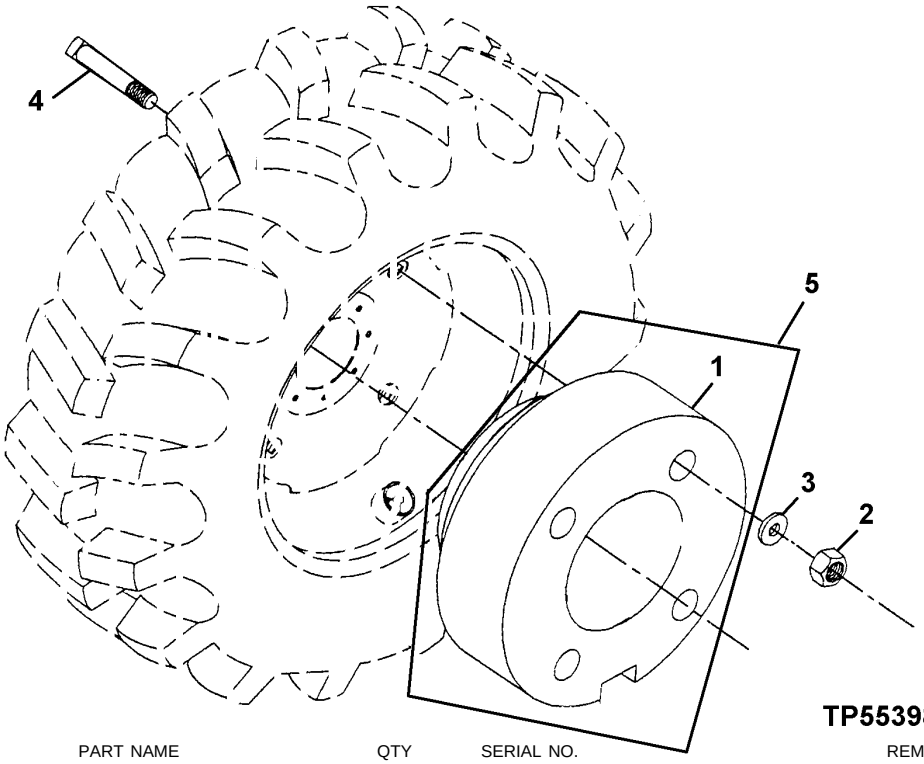

KEY	PART NO.	PART NAME	QTY	SERIAL NO.	REMARKS
1	.....	WEIGHT	2		
2	K40015	LOCK NUT	8		
3	R54124	WASHER	8		
4	03H2062	BOLT	8		
5	AT182967	WEIGHT	1		(WHOLEGOODS) (ALSO ORDER (8) K40015, (8) R54124 AND (8) 03H2062)

REAR WHEEL WEIGHTS (SERIAL NO. 882701-)

T196117 -UN-06NOV03

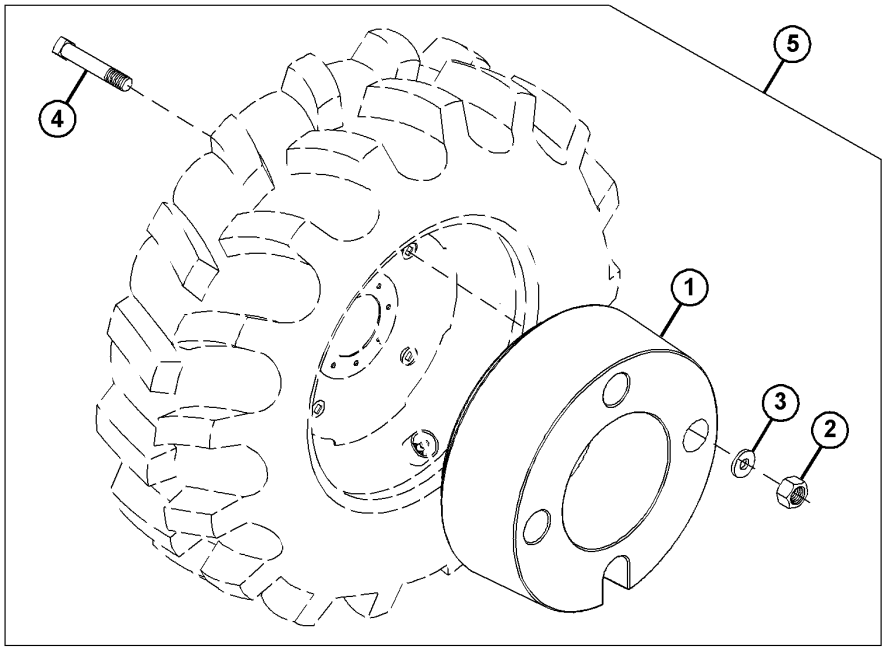

T196117

KEY	PART NO.	PART NAME	QTY	SERIAL NO.	REMARKS
1	.....	WEIGHT	2		
2	U44915	LOCK NUT	6		
3	R56423	WASHER	6		
4	03H2060	BOLT	6		
5	AT182546	WEIGHT	1		(WHOLEGOODS) (ALSO ORDER (8) K40015, (8) R54124 AND (8) 03H2062)

MEMORANDA

DIFFERENTIAL HOUSING, AXLE HOUSING AND SHAFT

T138038 -UN-20FEB01

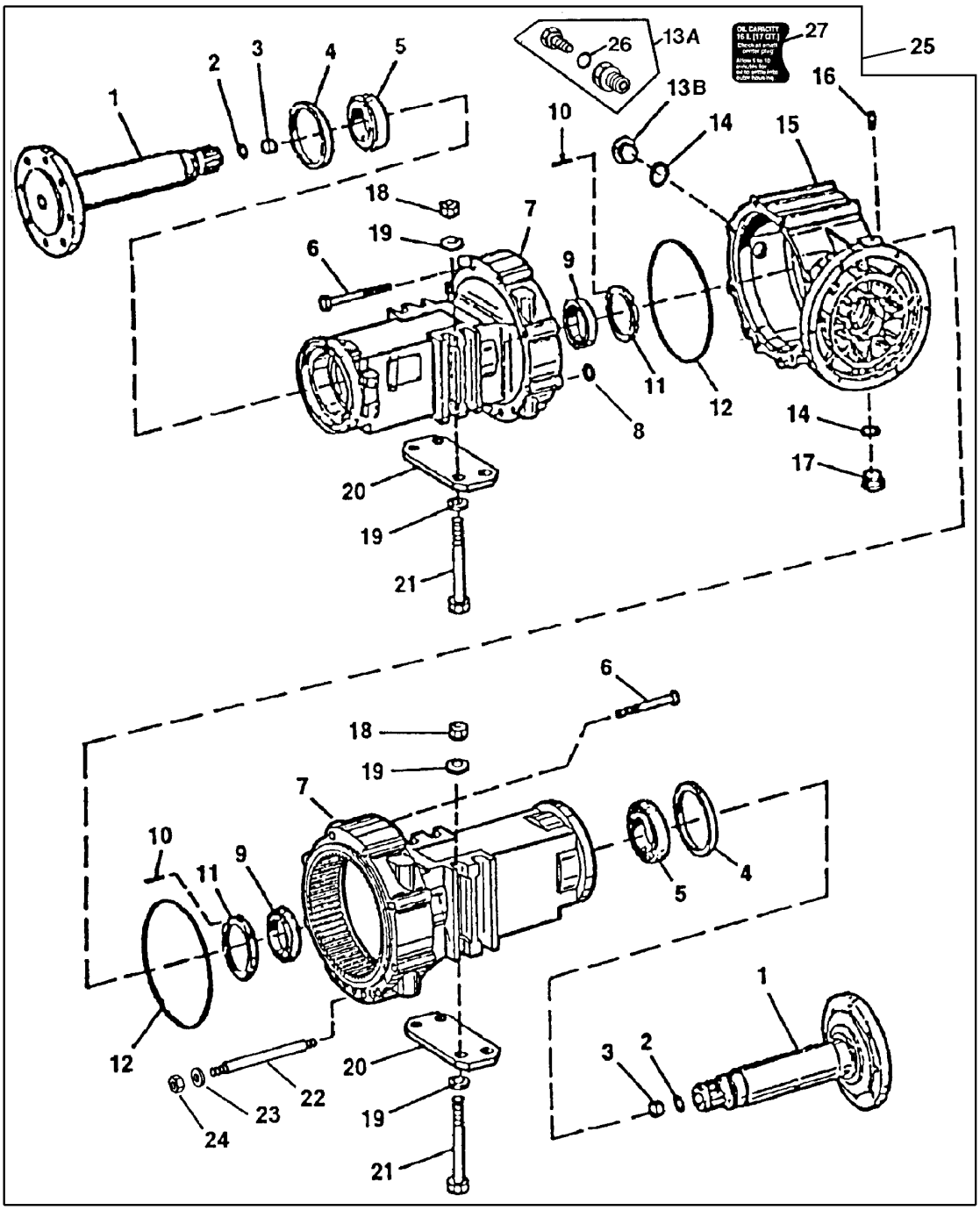

NOTE: REFER TO DTAC SOLUTION 43915 FOR DETAILS ON ALL AXLE UPDATES.

T138038

DIFFERENTIAL HOUSING, AXLE HOUSING AND SHAFT

KEY	PART NO.	PART NAME	QTY	AXLE SERIAL NO.	REMARKS
1	T154951	SHAFT	2		
2	R75382	WASHER	AR		
	R75383	SHIM	AR		
	R75384	SHIM	AR		
	R75385	WASHER	AR		
3	L38470	PIN FASTENER	2		
4	AT179502	SEAL	2		
5	AT179500	TAPERED ROLLER BEARING	2		
6	19M7677	CAP SCREW	16		M16 X 240
7	AT179499	HOUSING	2		
8	T159373	O-RING	8		
9	AT179501	TAPERED ROLLER BEARING	2		
10	T164844	GROOVE PIN	2		(SUB FOR T159372 AND T166083) (SUB FOR AT186927, ALSO ORDER INSTR. T184401)
11	T185444	NUT	2		(SUB FOR T159371)
12	T159362	O-RING	2		
13A	AT183793	KIT	1	-111531	(ALSO ORDER T164420)
13B	15M7030	PIPE PLUG	1	111532-	
14	L55580	O-RING	2		
15	.....	HOUSING	1	-111531	(T159361 NO LONGER AVAILABLE) (SUB T164998 AND T164999)
	T164998	HOUSING	1	111532-217496	(AXLE SERIAL NO. -217597)
	T188279	HOUSING	1	217497-	(AXLE SERIAL NO. 217598-)
16	AL32877	VENT	1		
17	L56822	PIPE PLUG	1		
18	14M7315	NUT	8		M20
19	N231749	WASHER	16		
20	T147269	PLATE	2		
21	19M8001	CAP SCREW	8		M20 X 260
22	T159388	STUD	4		
23	T159386	WASHER	4		
24	T159389	NUT	4		
25	AT184406	REAR AXLE	1	-217496	REMANUFACTURED (AT169780 NO LONGER AVAILABLE) (ALSO INCLUDES PLANETARY PINION CARRIER,RING GEAR ASSEMBLY,DIFFERENTIAL ASSEMBLY WITH LOCK SERVICE BRAKE,PARK BRAKE ASSEMBLY AND INPUT YOKE)
	AT195929	REAR AXLE	1	217497-	REMANUFACTURED (ALSO INCLUDES PLANETARY PINION CARRIER,RING GEAR ASSEMBLY,DIFFERENTIAL ASSEMBLY WITH LOCK SERVICE BRAKE,PARK BRAKE ASSEMBLY AND INPUT YOKE)
	AT196962	REAR AXLE	1	217497-	CONVENIENCE ASSEMBLY (ALSO INCLUDES PLANETARY PINION CARRIER,RING GEAR ASSEMBLY,DIFFERENTIAL ASSEMBLY WITH LOCK SERVICE BRAKE,PARK BRAKE ASSEMBLY AND INPUT YOKE)
26	T164433	GASKET	1	-111531	
27	T164420	LABEL	1	-111531	
	T164999	LABEL	1	111532-	

DIFFERENTIAL ASSEMBLY WITH LOCK

T138042 -UN-16FEB01

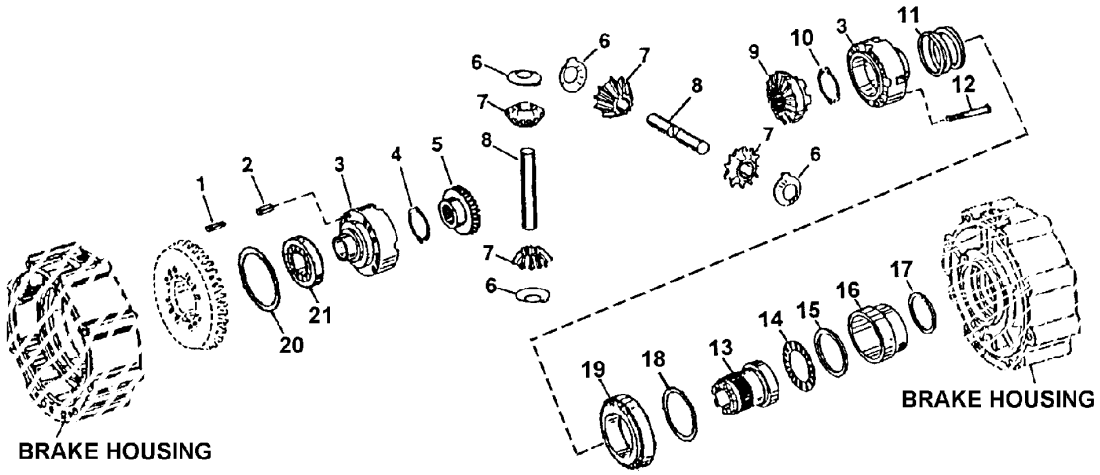

NOTE: REFER TO DTAC SOLUTION 43915 FOR DETAILS ON ALL AXLE UPDATES.

T138042

KEY	PART NO.	PART NAME	QTY	AXLE SERIAL NO.	REMARKS
1	T159359	SPRING PIN	4		
2	T159358	SPRING PIN	4		
3	AT186312	DIFFERENTIAL	1	-105967	(CONTAINS LEFT AND RIGHT SIDE) (SUB FOR T159347, AT182592 AND AT183071) (ALSO ORDER T163374, T163375, T163810 AND T166336)
	AT186312	DIFFERENTIAL	1	105968-	(CONTAINS LEFT AND RIGHT SIDE) (SUB FOR AT183071)
4	T163374	THRUST WASHER	1	-105967	(RING GEAR SIDE) (SUB FOR T159352) (ALSO ORDER AT186312, T163375, T163810 AND T166336)
	T163374	THRUST WASHER	1	105968-	(RING GEAR SIDE)
5	T159348	BEVEL GEAR	1		

DIFFERENTIAL ASSEMBLY WITH LOCK

KEY	PART NO.	PART NAME	QTY	AXLE SERIAL NO.	REMARKS
6	T159351	THRUST WASHER	4		
7	T159350	BEVEL GEAR	4		
8	T164431	PINION SHAFT	2		(SUB FOR T159354)
9	.....	BEVEL GEAR	1	-105967	(T159349 NO LONGER AVAILABLE) (SUB T163810) (ALSO ORDER AT186312, T166336, T163374 AND T163375)
	T163810	BEVEL GEAR	1	105968-	
10	.....	THRUST WASHER	1	-105967	(DIFF LOCK SIDE) (T159352 NO LONGER AVAILABLE) (SUB T163374) (ALSO ORDER AT182592 AND T163375)
	T163374	THRUST WASHER	1	105968-	(DIFF LOCK SIDE)
11	T159341	SPRING	1		
12	19M8771	SCREW	12		M14 X 120
13	.....	SHIFT COLLAR	1		(T159340 NO LONGER AVAILABLE) (SUB T166336) (ALSO ORDER AT186312, T163810, T163374 AND T163375)
	T166336	SHIFT COLLAR	1		(SUB FOR T163811)
14	AT179498	NEEDLE BEARING	1		
15	T159344	SEAL	1		
16	T159343	PISTON	1		
17	T159346	SEAL	1		
18	T159444	SHIM	1		.1 MM
	T159445	SHIM	1		.15 MM
	T159443	SHIM	1		.2 MM
	T159440	SHIM	1		.3 MM
	T159441	SHIM	1		.5 MM
	T159442	SHIM	1		1.0 MM
	T159446	SHIM	1		1.1 MM
	T159447	SHIM	1		1.2 MM
	T159448	SHIM	1		1.3 MM
	T159449	SHIM	1		1.4 MM
	T159450	SHIM	1		1.5 MM
	T159451	SHIM	1		1.6 MM
	T159452	SHIM	1		1.7 MM
	T159453	SHIM	1		1.8 MM
	T159457	SHIM	1		2.8 MM
	T159459	SHIM	1		3.0 MM
	T159461	SHIM	1		3.2 MM
	T159463	SHIM	1		3.4 MM
19	AT179504	TAPERED ROLLER BEARING	1		LEFT
20	T161247	SHIM	1		.20 MM
	T161246	SHIM	1		.30 MM
	T161245	SHIM	1		.40 MM
	T161244	SHIM	1		.50 MM
	T161243	SHIM	1		.70 MM
	T161242	SHIM	1		.75MM
	T161241	SHIM	1		.80 MM
	T161240	SHIM	1		.85MM
	T161239	SHIM	1		.90 MM
	T161238	SHIM	1		.95 MM
21	AT179505	TAPERED ROLLER BEARING	1		RIGHT

SPIRAL BEVEL INPUT PINION AND RING GEAR SET

TP58173 -UN-21FEB00

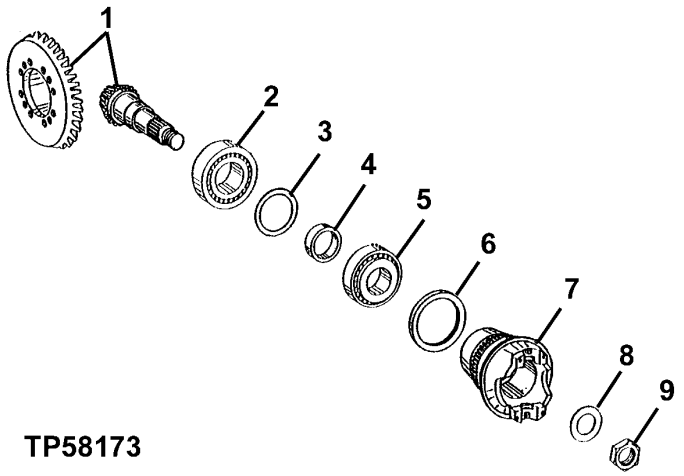

KEY	PART NO.	PART NAME	QTY	SERIAL NO.	REMARKS
1	AT171644	BEVEL GEAR DRIVE	1		
2	AT176491	CYLINDRICAL ROLLER BEARING	1		
3	T159310	SHIM	1		1.2 MM
	T159315	SHIM	1		1.3 MM
	T159314	SHIM	1		1.4 MM
	T159309	SHIM	1		1.5 MM
	T159313	SHIM	1		1.6 MM
	T159308	SHIM	1		1.8 MM
	T159311	SHIM	1		1.9 MM
	T159307	SHIM	1		2.0 MM
4	T159322	RING	1		16.4 MM
	T159323	RING	1		16.5 MM
	T159324	RING	1		16.6 MM
	T159325	RING	1		16.7 MM
	T159326	RING	1		16.8 MM
	.....	RING	1		16.83 MM
	T159334	RING	1		16.86 MM
	.....	RING	1		16.89 MM
	T159327	RING	1		16.92 MM
	.....	RING	1		16.95 MM
	.....	RING	1		17.01 MM
	T159338	RING	1		17.04 MM
	.....	RING	1		17.07 MM
	T159329	RING	1		17.10 MM
	T159330	RING	1		17.2 MM
	T159331	RING	1		17.3 MM
	T159332	RING	1		17.4 MM
5	AL79794	TAPERED ROLLER BEARING	1		
6	AT179537	SEAL	1		
7	T158437	UNIVERSAL JOINT YOKE	1		
8	T159316	WASHER	1		
9	T159317	NUT	1		

DIFFERENTIAL LOCK PLUMBING

TP57723 -UN-06MAY97

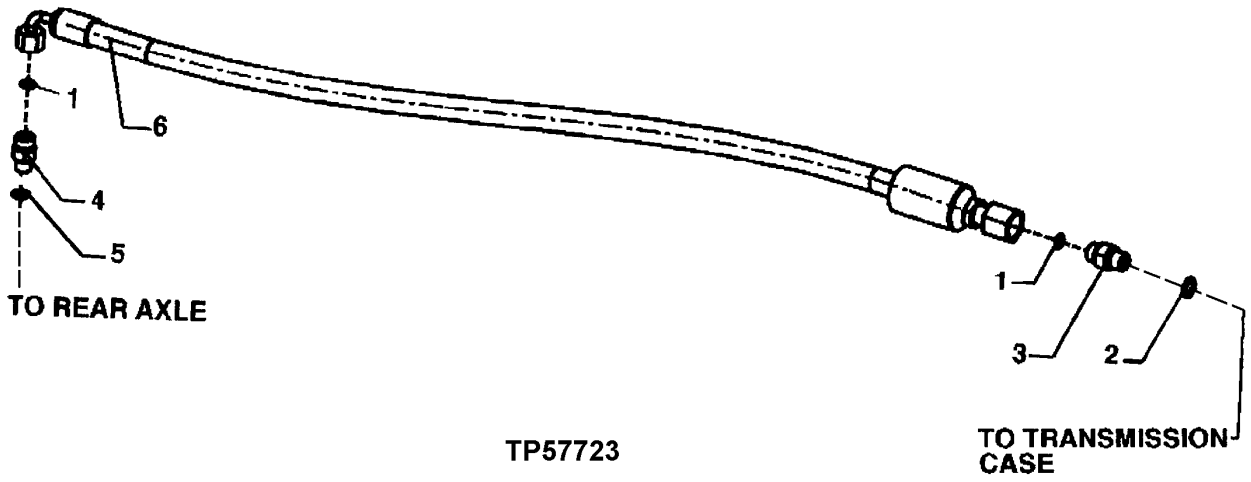

TP57723

KEY	PART NO.	PART NAME	QTY	SERIAL NO.	REMARKS
1	T77814	O-RING	2		
2	R26448	O-RING	1		
3	38H1168	ADAPTER	1		
4	38H1159	ADAPTER	1		(ALSO ORDER T77814 AND R28782)
5	R28782	O-RING	1		
6	AT171637	HYDRAULIC HOSE - FABRICATE	1		9/16" X 915 MM (36") X 9/16"

MEMORANDA

TIE ROD ASSEMBLY
(WITHOUT MECHANICAL FRONT WHEEL DRIVE)

TP29676 -UN-01JAN94

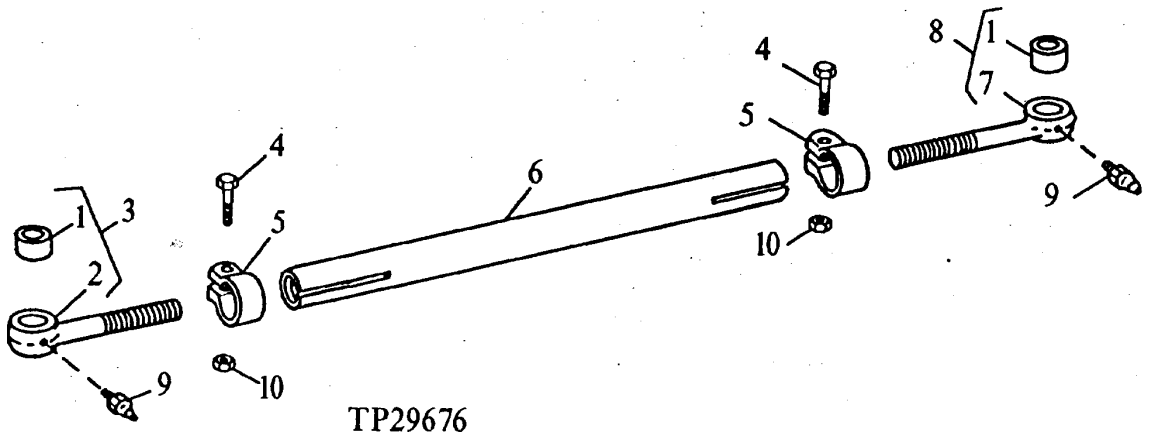

KEY	PART NO.	PART NAME	QTY	SERIAL NO.	REMARKS
1	T79786	BUSHING	2		
2	.....	BOLT	1		
3	AT79756	BOLT	1		(LEFT) (L.H. THREAD)
4	19H1439	CAP SCREW	2		5/8" X 3"
5	T69360	CLIP	1		
6	T81963	TUBE	1		(USE WITH AXLE MARKED T158828)
7	.....	BOLT	1		
8	AT79755	BOLT	1		(RIGHT) (R.H. THREAD)
9	JD7797	LUBRICATION FITTING	2		
10	U14555	LOCK NUT	2		

FRONT AXLE, SPINDLE AND KNUCKLE ASSEMBLY
(WITHOUT MECHANICAL FRONT WHEEL DRIVE)

TP58040 -UN-04JUN99

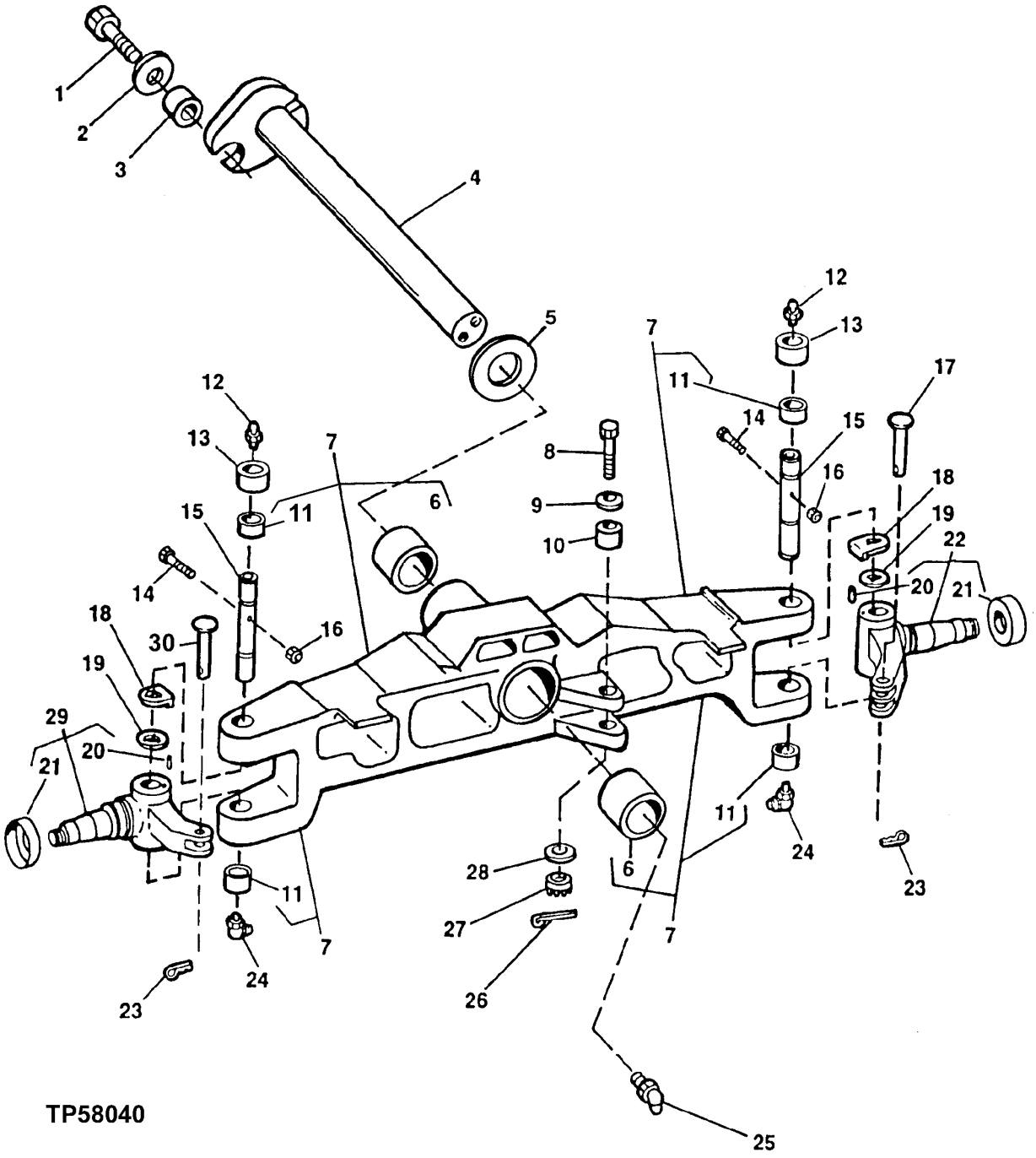

FRONT AXLE, SPINDLE AND KUNCKLE ASSEMBLY
(WITHOUT MECHANICAL FRONT WHEEL DRIVE)

KEY	PART NO.	PART NAME	QTY	SERIAL NO.	REMARKS
1	19M7488	CAP SCREW	1		M16 X 40
2	T119912	WASHER	1		
3	28H3414	SPACER	1		
4	AT183897	PIN FASTENER	2		(SUB FOR AT216278)
5	R46973	THRUST WASHER	4		
6	T140211	BUSHING	2		
7	.....	FRONT AXLE	1		(AT176216 NO LONGER AVAILABLE) (MARKED T158828) (SUB AT196428) (ALSO ORDER AT197852)
8	19M6575	CAP SCREW	1		M12 X 110
9	24H1162	WASHER	2		17/32" X 1-1/4" X 0.060"
10	T100813	BUSHING	1		(MARKED T158828)
11	T140207	BUSHING	4		
12	T162396	LUBRICATION FITTING	2		(SUB FOR JD7798)
13	T69027	SEAL	2		
14	19H3445	CAP SCREW	2		3/8" X 3-3/4"
15	T69365	KINGPIN	2		
16	T11234	LOCK NUT	2		
17	T69355	PIN	2		
18	T69364	THRUST WASHER	2		
19	T69363	THRUST WASHER	2		
20	34M7117	SPRING PIN	2		5 X 10 MM
21	R20255	DUST SHIELD	2		
22	AT182390	KNUCKLE	1		R.H, (MARKED T148467) (SUB FOR AT170049) (MARKED T148467)
23	11M7030	COTTER PIN	2		5 X 40 MM
24	JD7799	LUBRICATION FITTING	2		90° X 0.770" LONG
25	JD7838	ADAPTER	2		
26	11M7086	COTTER PIN	1		2.500 X 50 MM
27	14M7184	NUT	1		M12
28	24H1162	WASHER	2		17/32" X 1-1/4" X 0.060"
29	AT182391	KNUCKLE	1		L.H. (MARKED T148468) (SUB FOR AT170050) (MARKED T148468)
30	T69354	PIN	1		

FRONT WHEEL HUB
(WITHOUT MECHANICAL FOUR WHEEL DRIVE)

TP3225 -UN-01JAN94

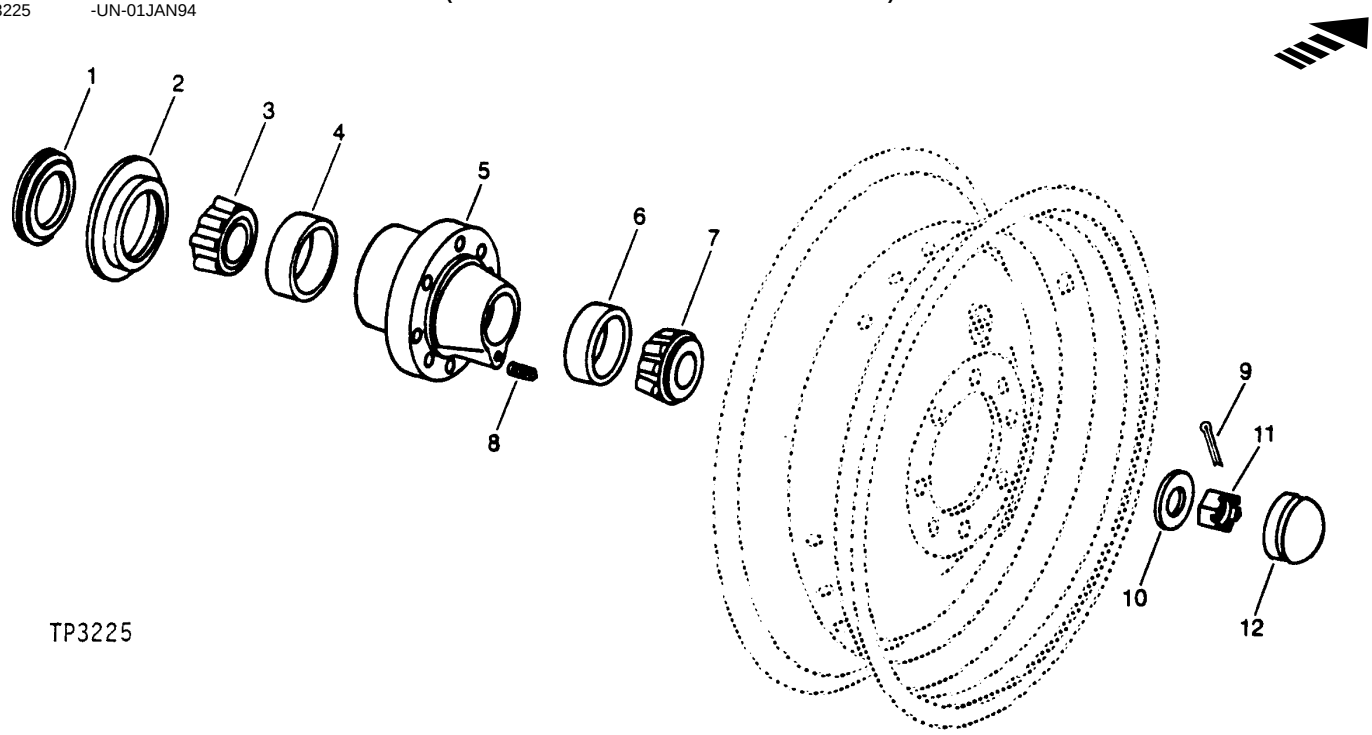

KEY	PART NO.	PART NAME	QTY	SERIAL NO.	REMARKS
1	AR26480	SEAL	1		
2	R26632	BUSHING	1		
3	JD9041	BEARING CONE	1		
4	JD9170	BEARING CUP	1		
5	R49841	HUB	1		(USE WITH AXLE MARKED T158828)
6	JD8251	BEARING CUP	1		
7	JD8929	BEARING CONE	1		
8	22H841	SET SCREW	1		1/4" X 1/4"
9	11M7030	COTTER PIN	1		5 X 40 MM
10	T75506	WASHER	1		
11	14M7519	NUT	1		M24
12	R50992	CAP	1		

MEMORANDA

STANDARD FRONT AXLE
(WITHOUT MECHANICAL FRONT WHEEL DRIVE)
(REPLACEMENT AXLE)

T188853 -UN-21MAR03

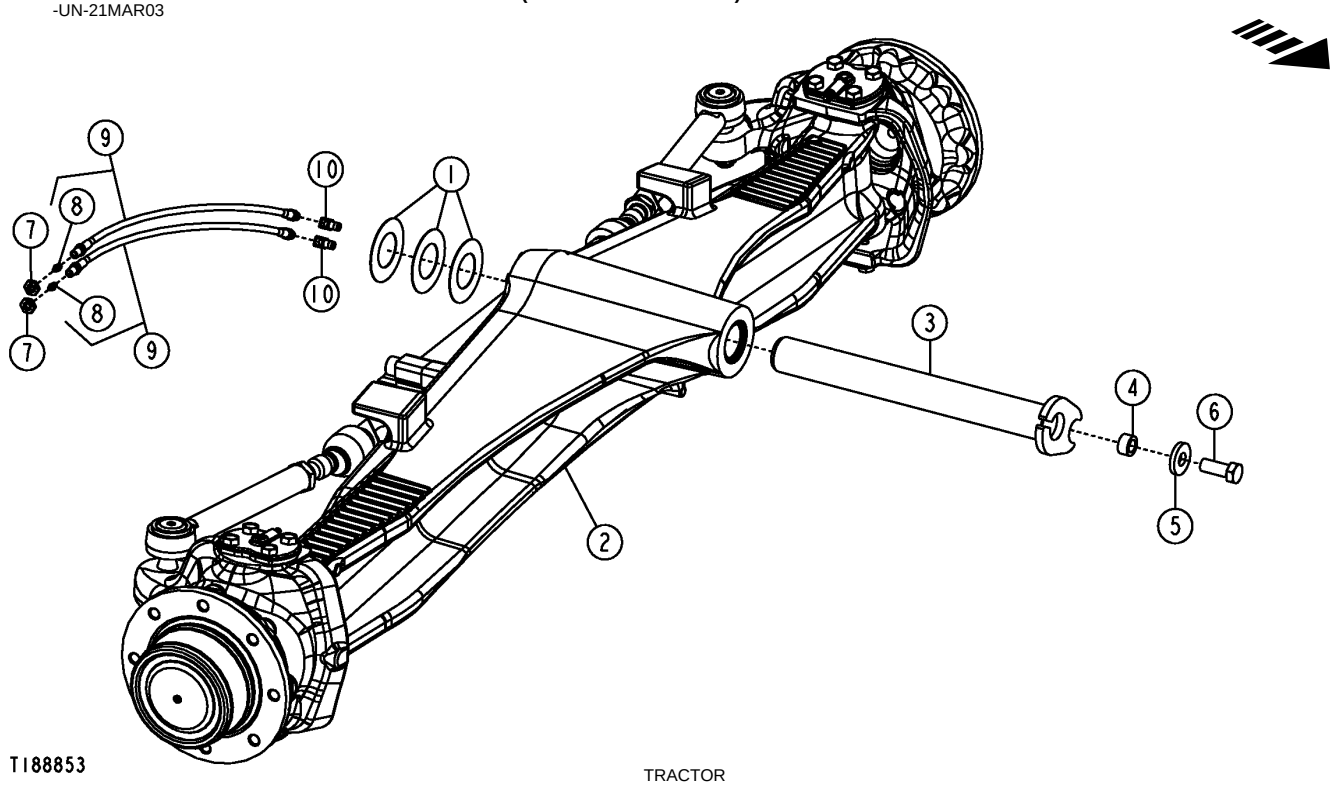

T188853

KEY	PART NO.	PART NAME	QTY	TRACTOR SERIAL NO.	REMARKS
1	R46973	THRUST WASHER	3		
2	**AT196428**	**FRONT AXLE**	**1**		**CONVENIENCE ASSEMBLY (COMPONENTS ON FOLLOWING PAGES)**
3	AT164442	PIN	1		
4	T18145	BUSHING	1		
5	T119912	WASHER	1		
6	19M7488	CAP SCREW	1		M16 X 40
7	E12379	NUT	2		
8	JD7797	LUBRICATION FITTING	2		
9	AT173254	HYDRAULIC HOSE	2		
10	JD7838	ADAPTER	2		

STANDARD FRONT AXLE HOUSING
(WITHOUT MECHANICAL FRONT WHEEL DRIVE)
(REPLACEMENT AXLE)

T188859 -UN-27MAR03

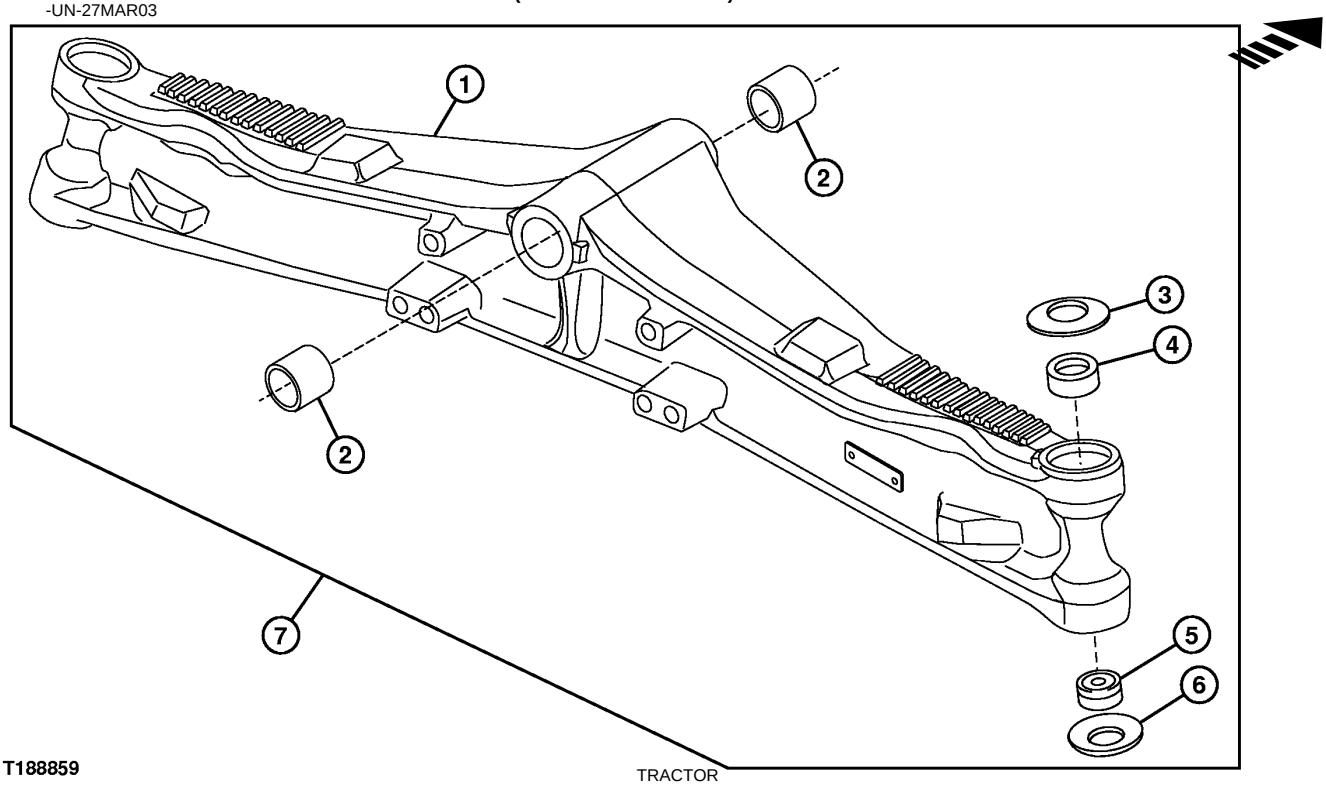

T188859

KEY	PART NO.	PART NAME	QTY	TRACTOR SERIAL NO.	REMARKS
1	T190750	AXLE	1		
2	T202499	BUSHING	2		(SUB FOR (2) T140211, THIS APPLICATION)
3	R121593	WASHER	2		
4	R113780	BUSHING	2		
5	RE45896	BEARING	2		
6	R121594	WASHER	2		
7	**AT196428**	**FRONT AXLE**	**1**		**CONVENIENCE ASSEMBLY (ADDITIONAL COMPONENTS ON FOLLOWING PAGES)**

SWIVEL HOUSINGS AND STEERING CYLINDER
(WITHOUT MECHANICAL FRONT WHEEL DRIVE)
(REPLACEMENT AXLE)

T188860 -UN-27MAR03

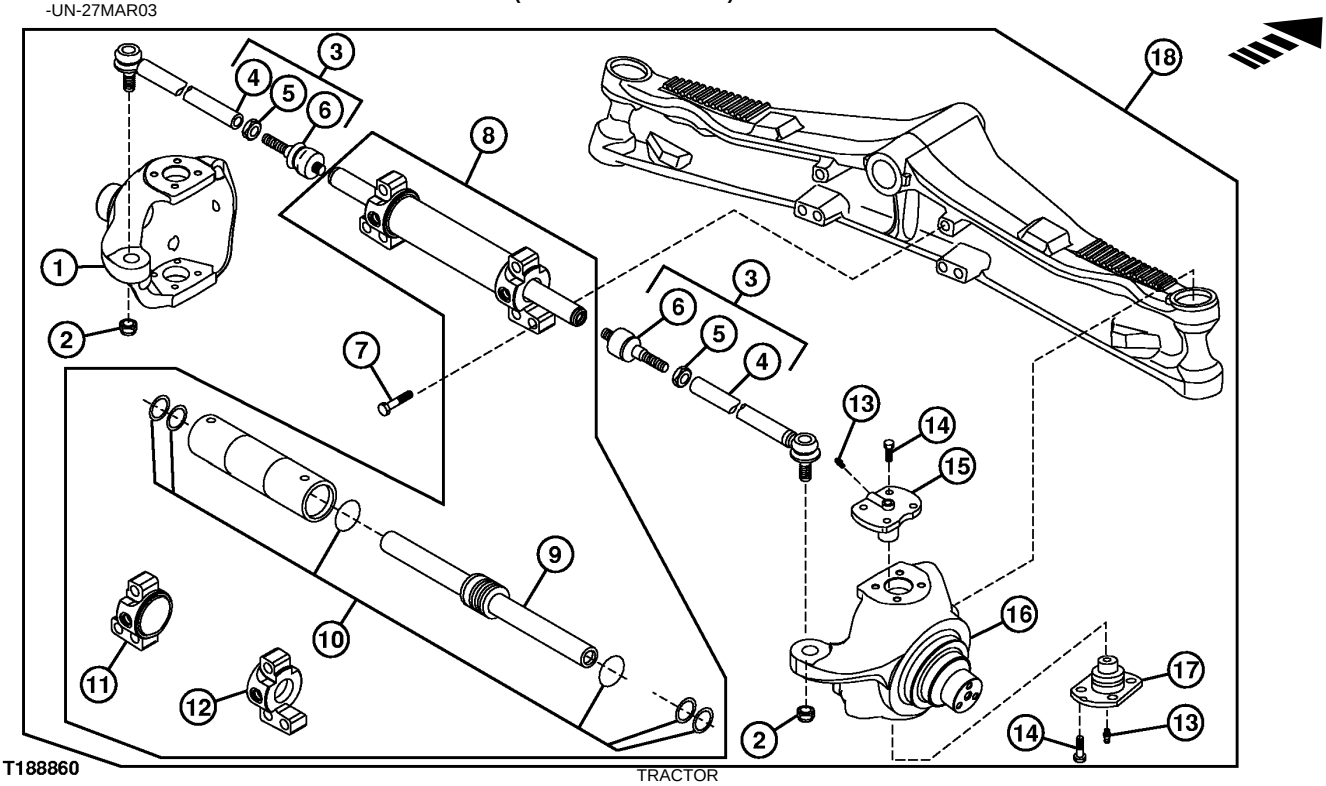

T188860

KEY	PART NO.	PART NAME	QTY	TRACTOR SERIAL NO.	REMARKS
1	T190745	HOUSING	1		L.H.
2	AT280268	LOCK NUT	2		M20
3	AT198602	TIE ROD	2		
4	T191428	TIE ROD	2		
5	14M7309	NUT	2		M24
6	T191427	BALL JOINT	2		
7	T116290	BOLT	6		M20 X 80
8	AT198598	CYLINDER	1		
9	AT280869	ROD	1		
10	T191430	SEAL KIT	1		
11	.....	HYDRAULIC CYLINDER CAP	1		L.H.
12	.....	HYDRAULIC CYLINDER CAP	1		R.H.
13	R140070	LUBRICATION FITTING	4		
14	19M8011	CAP SCREW	16		M12 X 30
15	RE57471	TRUNNION	2		
	R122218	SPACER	AR		
16	T190746	HOUSING	1		R.H.
17	RE57472	TRUNNION	2		
18	**AT196428**	**FRONT AXLE**	**1**		**CONVENIENCE ASSEMBLY (ADDITIONAL COMPONENTS ON PREVIOUS AND FOLLOWING PAGES)**

WHEEL HUB
(WITHOUT MECHANICAL FRONT WHEEL DRIVE)
(REPLACEMENT AXLE)

T188861 -UN-27MAR03

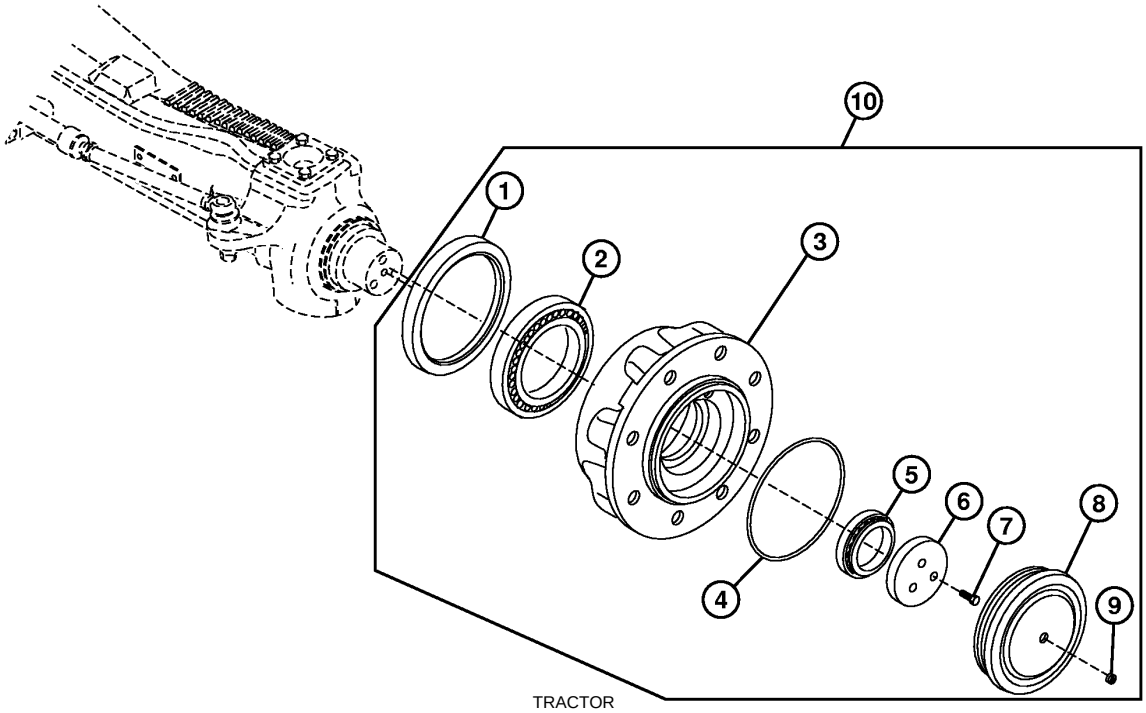

T188861

KEY	PART NO.	PART NAME	QTY	TRACTOR SERIAL NO.	REMARKS
1	AT280866	SEAL	2		
2	AT196169	BEARING	2		
3	T190749	HUB	2		
4	T188441	O-RING	2		
5	JD10063	TAPERED ROLLER BEARING	2		
6	T188442	RING	2		
7	19M8011	CAP SCREW	6		M12 X 30
8	T188448	CAP	2		
9	R121079	PLUG	2		
10	**AT196428**	**FRONT AXLE**	**1**		**CONVENIENCE ASSEMBLY (ADDITIONAL COMPONENTS ON PREVIOUS PAGES)**

REAR AXLE MOUNTING

TP52592 -UN-03FEB97

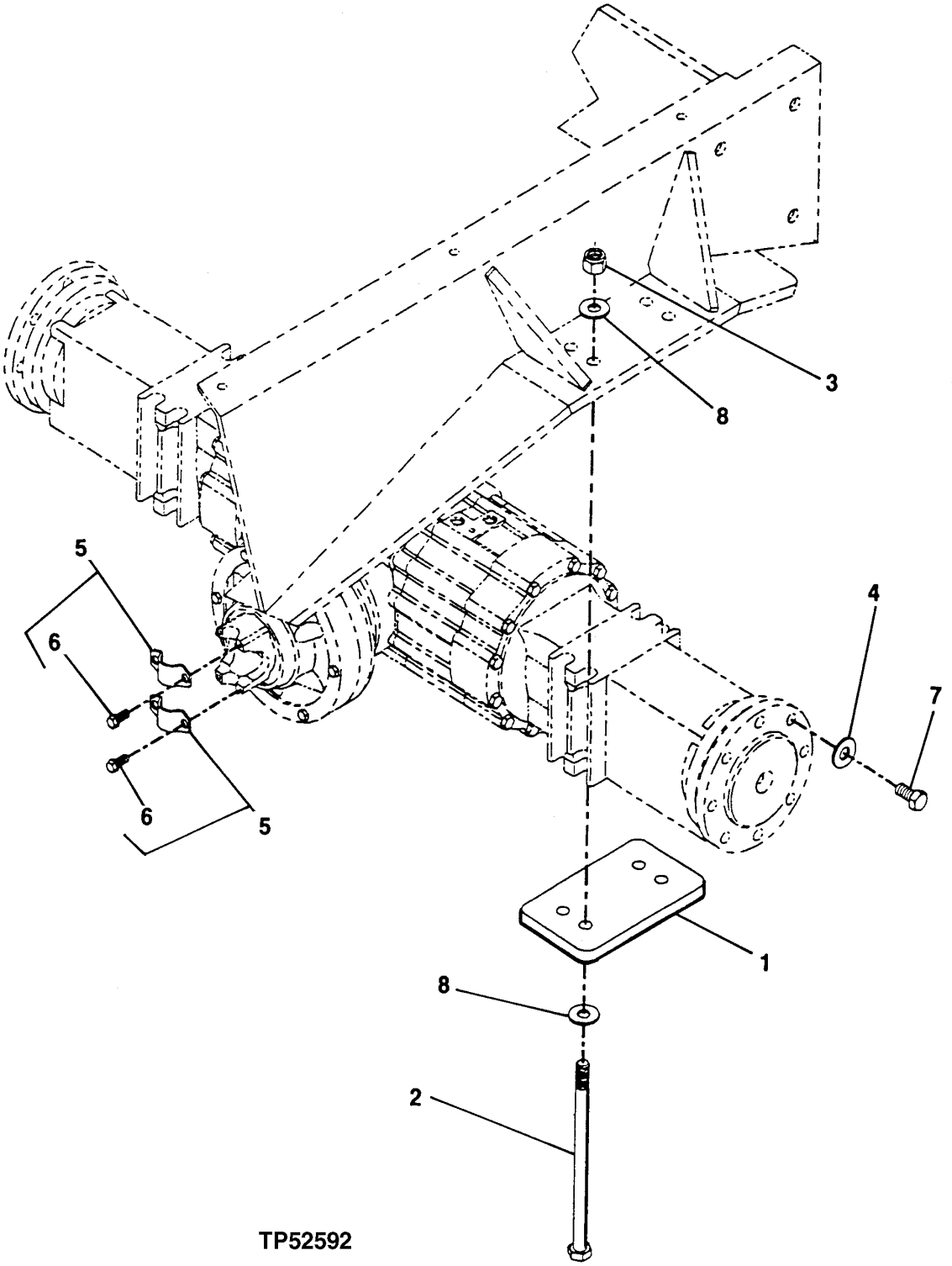

REAR AXLE MOUNTING

KEY	PART NO.	PART NAME	QTY	SERIAL NO.	REMARKS
1	T147269	PLATE	1	-882700	(SUB FOR AT216110)
	CB11450000	COVER	1	882701-	
2	08H4528	CAP SCREW	8		3/4" X 10-1/2"
3	T25879	NUT	8		
4	M48439	WASHER	16	-882700	
	24M7349	WASHER	16	882701-	21 X 37 X 3 MM
5	T69938	HALF CLAMP	2		
6	T113128	SCREW	8		
7	19H2716	CAP SCREW	16		3/4" X 1-1/2"
8	T151797	WASHER	16		20.630 X 47.630 X 6.350 MM (0.812" X 1.875" X 1/4")

FRONT AXLE MOUNTING

T195545 -UN-21OCT03

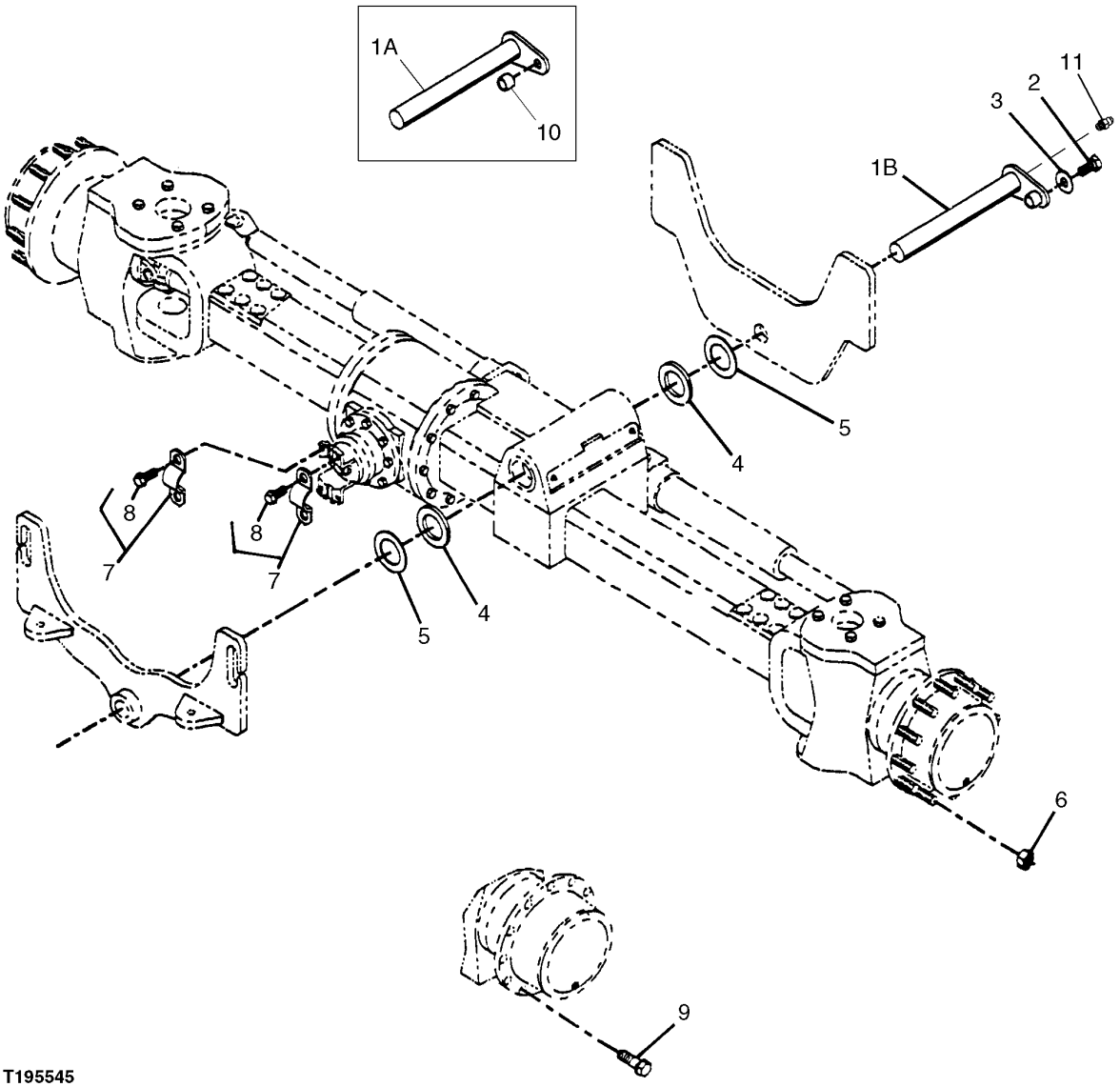

T195545

FRONT AXLE MOUNTING

KEY	PART NO.	PART NAME	QTY	SERIAL NO.	REMARKS
1A	AT216278	PIN FASTENER	1		
1B	AT183897	PIN FASTENER	1		
2	19H2599	CAP SCREW	1		5/8" X 2-1/2"
3	24M7338	WASHER	1	-882700	17 X 30 X 3 MM
	R56423	WASHER	1	882701-	
4	R46973	THRUST WASHER	4		
5	T80027	THRUST WASHER	4		
6	14M7332	FLANGE NUT	16		(4 WHEEL)
7	T69938	HALF CLAMP	2		
8	T113128	SCREW	4		7.925 X 19.050 MM (5/16" X 3/4")
9	JD21	WHEEL BOLT	12		(2 WHEEL)
10	28H3414	SPACER	1		
11	JD7759	LUBRICATION FITTING	1		(USE WITH AT183897)

PLANETARY PINION CARRIER

T138041 -UN-20FEB01

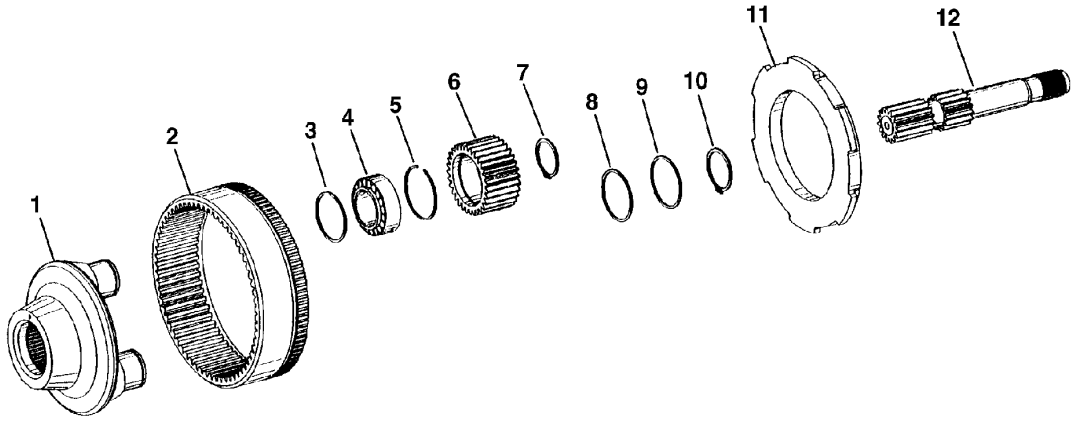

NOTE: REFER TO DTAC SOLUTION 43915 FOR DETAILS ON ALL AXLE UPDATES.

KEY	PART NO. T138041	PART NAME	QTY	SERIAL NO.	REMARKS
1	T166084	PLANET PINION CARRIER	1		(SUB FOR T159509)
2	.....	HOUSING	1		AXLE, RING GEAR, (ORDER AT179499)
3	.....	WASHER	6		(T159516 NO LONGER AVAILABLE) (SUB (6) T183922, (6) T183923 AND (3) T183921)
	T183922	WASHER	6		
4	AT179538	TAPERED ROLLER BEARING	3		
5	.....	SNAP RING	6		(T159517 NO LONGER AVAILABLE) (SUB (6) T183923, (6) T183922 AND (3) T183921)
	T183923	SNAP RING	6		
6	.....	PLANET PINION	3		(T159513 NO LONGER AVAILABLE) (SUB (3) T183921, (6) T183922 AND (6) T183923)
	T183921	PLANET PINION	3		
7	L110729	SNAP RING	3		
8	T159518	THRUST WASHER	1		
9	T159522	WASHER	1		0.5 MM
	T159523	WASHER	1		0.3 MM
	T159525	WASHER	1		0.2 MM
	T161248	SHIM	1		2.0 MM
	T161249	SHIM	1		1.5MM
10	T159519	SNAP RING	1		
11	T166085	PLATE	1		(SUB FOR T159520)
12	T154952	SHAFT	1		

DRIVE SHAFT
(MECHANICAL FRONT WHEEL DRIVE)

TP57917 -UN-10SEP98

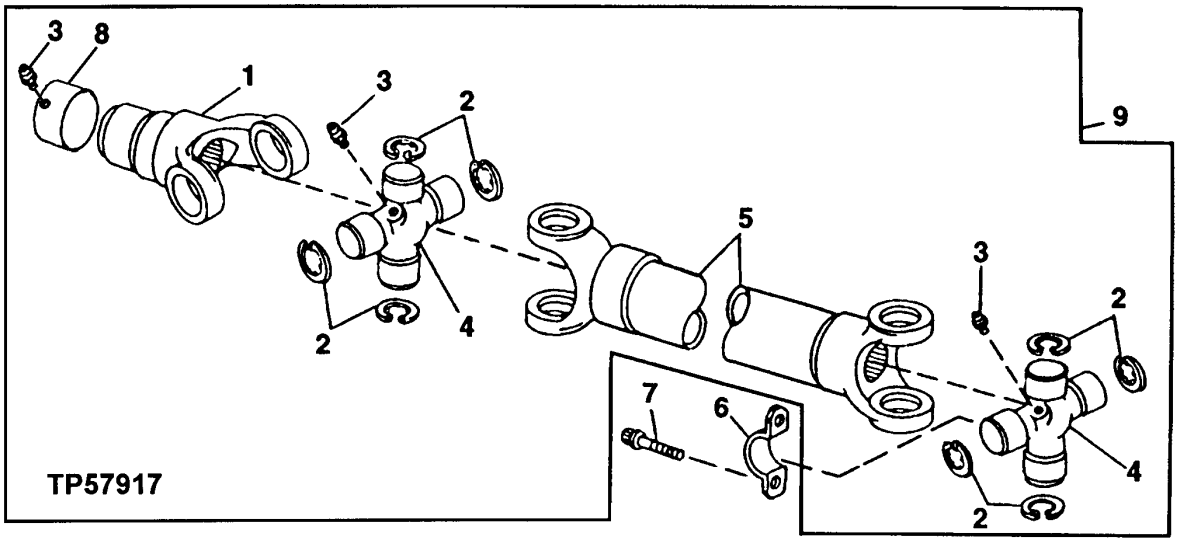

KEY	PART NO.	PART NAME	QTY	SERIAL NO.	REMARKS
1	AT179596	YOKE	1		
2	N119316	SNAP RING	6		
3	JD7797	LUBRICATION FITTING	1		
4	AT178387	KIT	2		(U-JOINT) GREASEABLE
	AT178389	KIT	2		(U-JOINT) LUBED FOR LIFE
5	.....	DRIVE SHAFT	1		
6	T69938	HALF CLAMP	2		
7	T113128	SCREW	4		
8	AT179590	SEAL	1		(SLIDING YOKE)
9	AT182735	UNIVERSAL DRIVESHAFT	1		LUBED FOR LIFE, (SUB FOR AT171346)

FRONT AXLE
(MECHANICAL FRONT WHEEL DRIVE)

TP57965 -UN-11NOV98

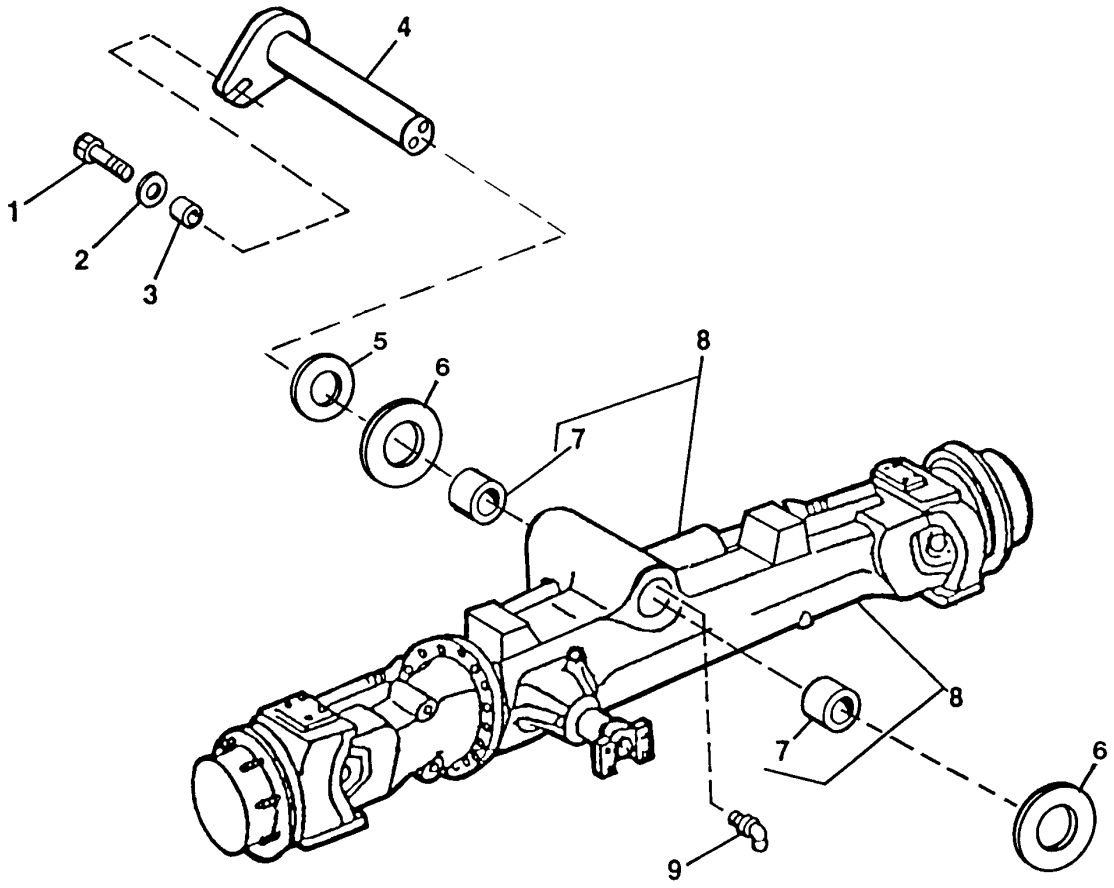

TP57965

FRONT AXLE
(MECHANICAL FRONT WHEEL DRIVE)

KEY	PART NO.	PART NAME	QTY	TRACTOR SERIAL NO.	REMARKS
1	19M7488	CAP SCREW	1		M16 X 40
2	T119912	WASHER	1		
3	T18145	BUSHING	1		
4	AT164442	PIN	1		
5	R46973	THRUST WASHER	4		
6	T80027	THRUST WASHER	2		
7	T140211	BUSHING	2		
8	AT178113	FRONT AXLE	1		CONVENIENCE ASSEMBLY
	AT186451	FRONT AXLE	1		CONVENIENCE ASSEMBLY-WITH LIMITED SLIP DIFFERENTIAL (NO BREAKDOWN AT THIS TIME)
9	JD7838	ADAPTER	2		

FRONT AXLE HOUSING AND TIE RODS
(MECHANICAL FRONT WHEEL DRIVE)

TP58058 -UN-20JUL99

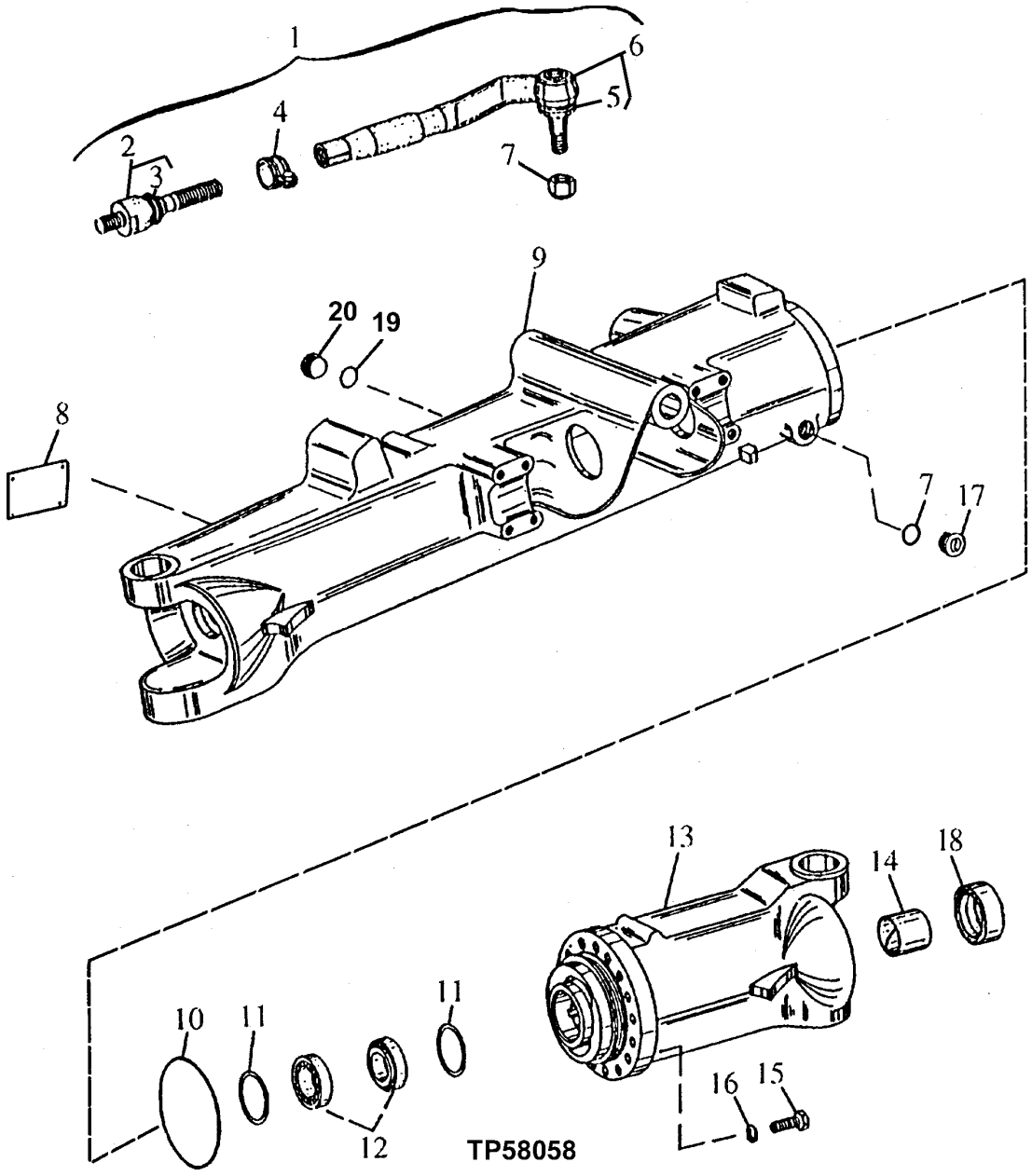

FRONT AXLE HOUSING AND TIE RODS
(MECHANICAL FRONT WHEEL DRIVE)

KEY	PART NO.	PART NAME	QTY	SERIAL NO.	REMARKS
1	AT170205	TIE ROD	1		L.H.
	AT170204	TIE ROD	1		R.H. (NOT ILLUSTRATED)
2	AL80542	TIE ROD	1		END, (SUB FOR AL81904)
3	AL113451	BOOT	1		
4	AT170209	CLAMP	1		
5	AL113460	BOOT	1		
6	AT170206	TIE ROD	1		L.H.
	AT170208	TIE ROD	1		R.H. (NOT ILLUSTRATED)
7	14M7513	LOCK NUT	1		M22
8	.....	SERIAL NUMBER PLATE	1		
9	T206432	HOUSING	1		R.H. (SUB FOR T151262)
10	L40306	O-RING	1		
11	L100141	WASHER	AR		1.15MM (0.0453")
	L100145	WASHER	AR		1.35MM (0.0531")
	L61263	WASHER	AR		1.50MM (0.0591")
	L61267	WASHER	AR		1.70MM (0.0669)
	L61271	WASHER	AR		1.90MM (0.0748")
	L61275	WASHER	AR		2.10MM (0.0827")
12	AL79808	TAPERED ROLLER BEARING	2		
13	T151089	HOUSING	1		L.H.
14	L114558	BUSHING	2		(SUB FOR L100228, THIS APPLICATION)
15	T151261	CAP SCREW	15		
16	L40014	WASHER	15		15 X 23.700 X 3 MM
17	L56822	PIPE PLUG	1		
18	L110233	SEAL	2		(SUB FOR T116820)
19	L55580	O-RING	2		
20	L100240	FITTING PLUG	1		

FRONT AXLE HOUSINGS,HUBS AND UNIVERSAL JOINTS
(MECHANICAL FRONT WHEEL DRIVE)

T144555 -UN-14AUG01

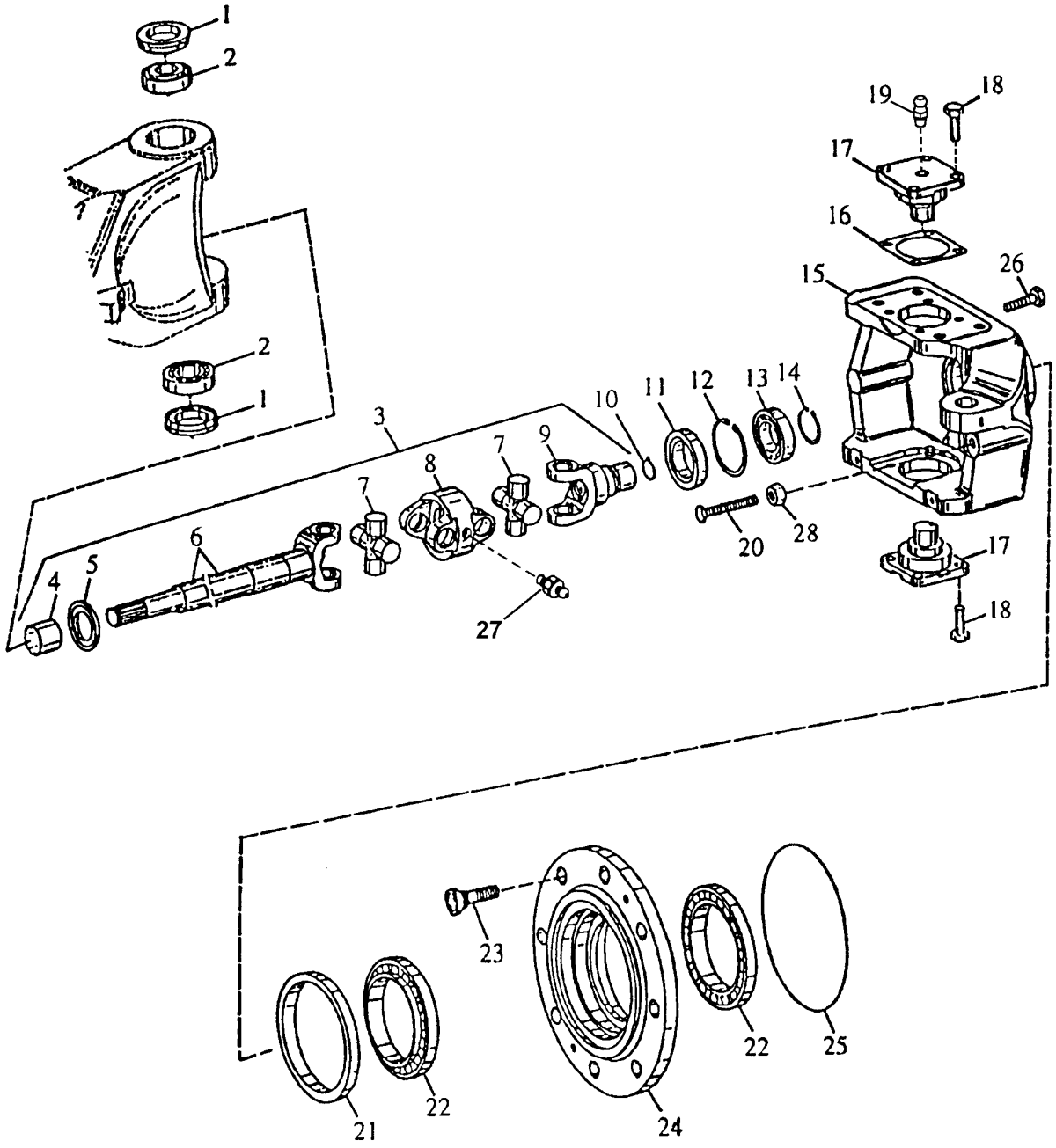

T144555

FRONT AXLE HOUSINGS,HUBS AND UNIVERSAL JOINTS
(MECHANICAL FRONT WHEEL DRIVE)

KEY	PART NO.	PART NAME	QTY	SERIAL NO.	REMARKS
1	AL79902	SEAL	2		
2	AL79901	TAPERED ROLLER BEARING	2		
3	AT167118	UNIVERSAL DRIVESHAFT	1		L.H.
	AT167119	UNIVERSAL DRIVESHAFT	1		R.H. (NOT ILLUSTRATED)
4	L100636	BUSHING	1		
5	L100635	SHEET	1		
6	T153722	SHAFT	1		L.H.
	T153721	SHAFT	1		R.H. (NOT ILLUSTRATED)
7	L100632	CROSS AND BEARING ASSEMBLY	2		
8	L100633	YOKE	1		
9	T153720	UNIVERSAL JOINT	1		
10	L40276	SNAP RING	1		
11	AL79951	SEAL	1		
12	40M5099	SNAP RING	1		
13	R115119	BALL BEARING	1		
14	T151264	SNAP RING	1		
15	T151088	HOUSING	1		L.H.
	T151087	HOUSING	1		R.H. (NOT ILLUSTRATED)
16	L100102	SHIM	AR		0.2 MM
	L100103	SHIM	AR		0.3 MM
	L100104	SHIM	AR		0.4 MM
	T166150	SHIM	AR		0.5 MM
	L100105	SHIM	AR		0.6 MM
	T166149	SHIM	AR		0.7 MM
	L100106	SHIM	AR		0.8MM
	T166145	SHIM	AR		0.9MM
	L100107	SHIM	AR		1.0 MM
	T166148	SHIM	AR		1.1MM
	T166147	SHIM	AR		1.2MM
	T166146	SHIM	AR		1.3MM
	L100109	SHIM	AR		1.6MM
	L100111	SHIM	AR		2.0MM
17	T188397	PIN	2		(SUB FOR T151074, THIS APPLICATION) (ALSO ORDER 58M5573)
18	19M8011	CAP SCREW	8		
19	58M5573	LUBRICATION FITTING	2		
20	L100239	SCREW	1		
21	AL79950	SEAL	1		
22	JD10249	TAPERED ROLLER BEARING	2		
23	L55598	WHEEL BOLT	8		
24	L100238	HUB	1		
25	L40317	O-RING	1		
26	19M8738	CAP SCREW	16		M10 X 45
27	58M5574	LUBRICATION FITTING	2		
28	14M7345	NUT	1		M14

PLANETARY DRIVE
(MECHANICAL FRONT WHEEL DRIVE)

TP57920 -UN-09SEP98

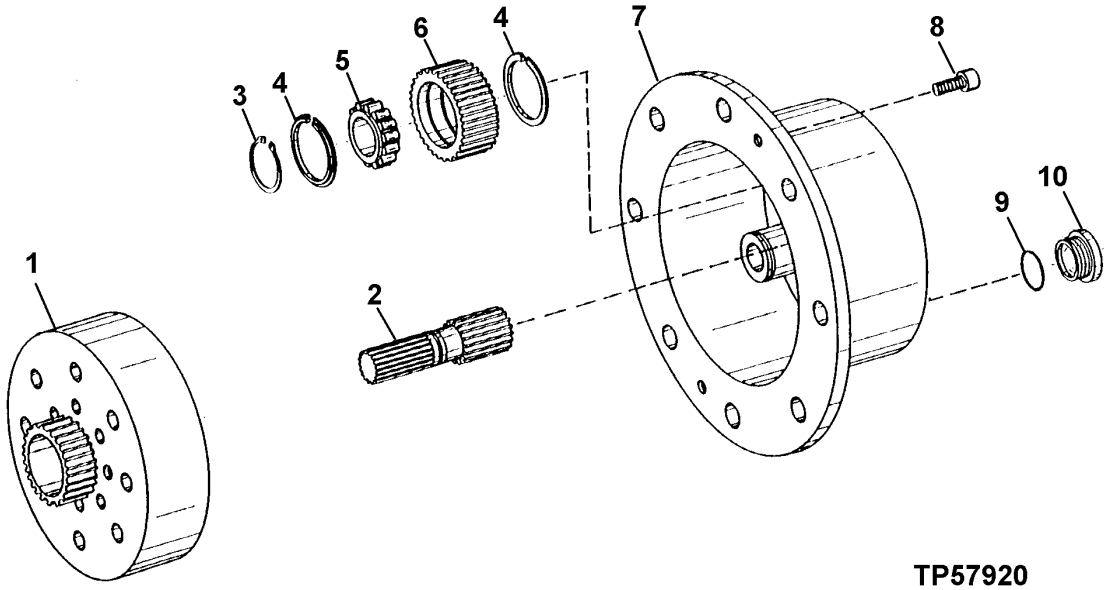

KEY	PART NO.	PART NAME	QTY	SERIAL NO.	REMARKS
1	L110235	RING GEAR	1		(SUB FOR T151063)
2	T151065	PINION SHAFT	1		
3	40M4624	SNAP RING	3		
4	L41159	SNAP RING	6		
5	JD10250	CYLINDRICAL ROLLER BEARING	3		
6	L79728	PLANET PINION	3		(SUB FOR T151064)
7	L100168	PLANET PINION CARRIER	1		
8	19M5039	SCREW	2		M10 X 20
9	L55580	O-RING	1		
10	L100240	FITTING PLUG	1		

OPEN DIFFERENTIAL
(MECHANICAL FRONT WHEEL DRIVE)

TP57922 -UN-09SEP98

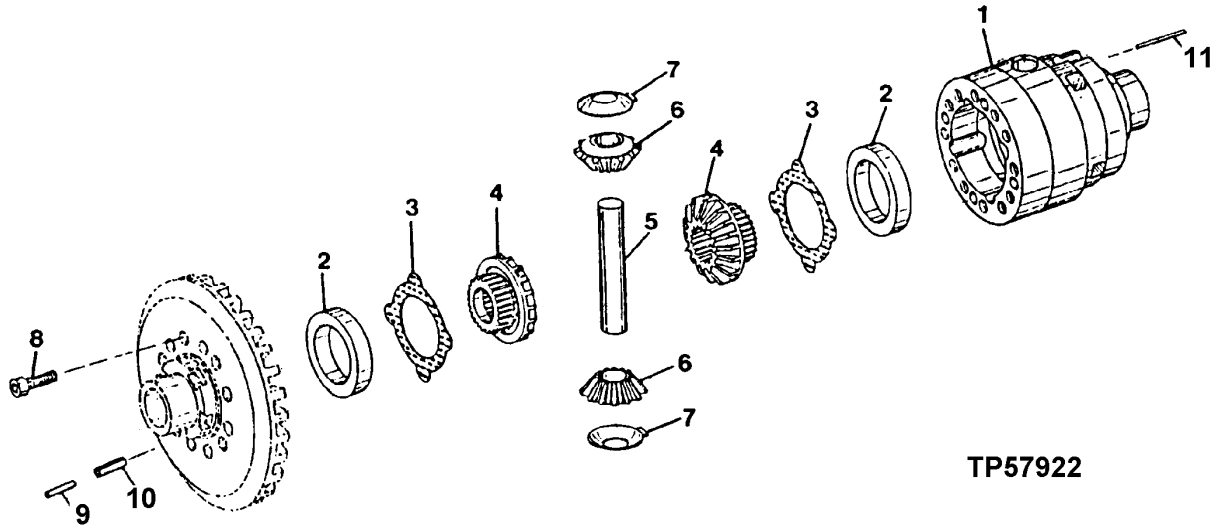

KEY	PART NO.	PART NAME	QTY	SERIAL NO.	REMARKS
1	L112197	HOUSING	1		(ALSO ORDER 34M5723) (SUB FOR T151080)
2	T162043	SPACER	2		13.5 MM
	T162044	SPACER	2		13.6 MM
	T162045	SPACER	2		13.7 MM
3	T162046	THRUST WASHER	2		
4	T151075	BEVEL GEAR DRIVE	2		
5	L60104	PIN FASTENER	1		
6	T116851	BEVEL GEAR	2		
7	L60103	THRUST WASHER	2		
8	19M8533	SCREW	12		M10 X 25, (SUB FOR T151077)
9	34M7224	SPRING PIN	4		8 X 26 MM
10	L100158	SPRING PIN	4		
11	34M5723	SPRING PIN	1		5 X 55 MM

SPIRAL BEVEL GEAR AND INPUT FLANGE
(MECHANICAL FRONT WHEEL DRIVE)

TP44517 -UN-01JAN94

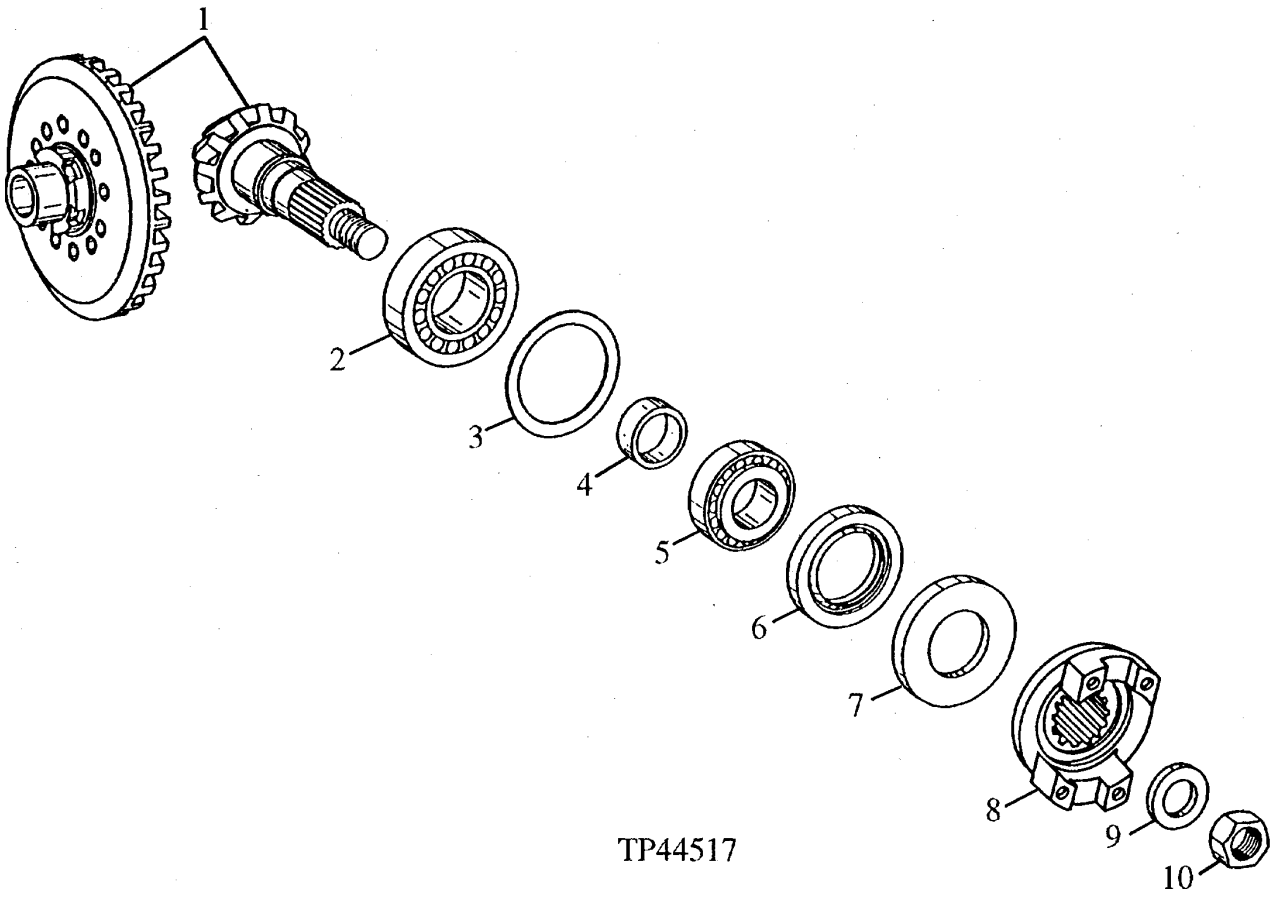

THIS PARTS LISTING IS CONTINUED

SPIRAL BEVEL GEAR AND INPUT FLANGE
(MECHANICAL FRONT WHEEL DRIVE)

KEY	PART NO.	PART NAME	QTY	SERIAL NO.	REMARKS
1	AT178112	RING GEAR AND PINION	1		
2	AL79794	TAPERED ROLLER BEARING	1		
3	L55606	SHIM	AR		0.650 MM (0.026")
	L55610	WASHER	AR		72 X 88.600 X 0.850 MM (2.835" X 3.488" X 0.033")
	L40982	WASHER	AR		72 X 88.600 X 1 MM (2.835" X 3.488" X 0.039")
	L40985	WASHER	AR		72 X 88.600 X 1.150 MM (2.835" X 3.488" X 0.045")
	L40988	WASHER	AR		72 X 88.600 X 1.300 MM (2.835" X 3.488" X 0.051")
	L40991	WASHER	AR		72 X 88.600 X 1.450 MM (2.835" X 3.488" X 0.057")
	L40994	WASHER	AR		72 X 88.600 X 1.600 MM (2.835" X 3.488" X 0.063")
4	L100057	SPACER	AR		15.10MM (0.5945")
	L100092	SPACER	AR		15.33MM (0.6035")
	L100060	SPACER	AR		15.40MM (0.6063")
	L100089	SPACER	AR		15.46MM (0.6089")
	L100096	SPACER	AR		15.48MM (0.6094")
	L100086	SPACER	AR		15.63MM (0.6154")
	L100063	SPACER	AR		15.70MM (0.6181")
	L100083	SPACER	AR		15.76MM (0.6205")
	L100080	SPACER	AR		15.93MM (0.6272)
	L100066	SPACER	AR		16,00MM (0.6299")
	L100077	SPACER	AR		16.06MM (0.6323")
	L100074	SPACER	AR		16.23MM (0.6390")
	L100069	SPACER	AR		16.30MM (0.6417")
5	AL111096	BEARING	1		(SUB FOR AT117348)
6	AT113921	SEAL	1		
7	L100230	GUARD	1		
8	T151072	FLANGE	1		
9	L35714	WASHER	1		
10	14M7498	LOCK NUT	1		M24

MEMORANDA

SHIFT FORKS AND SHIFT RAILS

TP52793 -UN-19AUG96

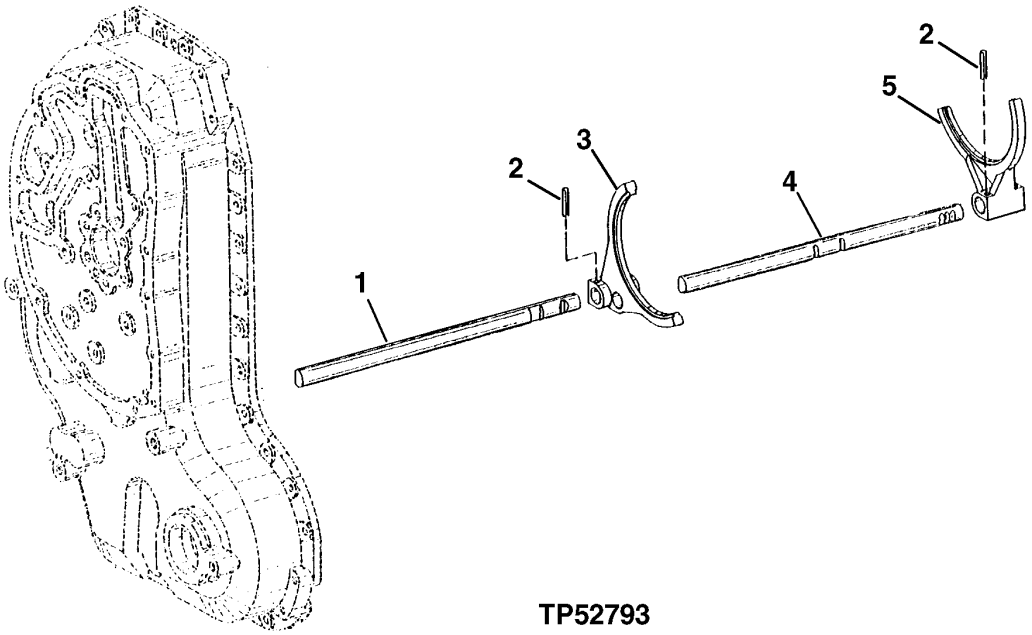

TP52793

KEY	PART NO.	PART NAME	QTY	SERIAL NO.	REMARKS
1	T158817	SHIFTER	1		1ST AND 2ND
2	T159578	SPRING PIN	4		
3	T158815	SHIFTER	1		1ST AND 2ND
4	T158818	SHIFTER	1		3RD AND 4TH
5	T158816	SHIFTER	1		3RD AND 4TH

TRANSMISSION SHIFTER LEVER AND HOUSING

TP57815 -UN-22DEC97

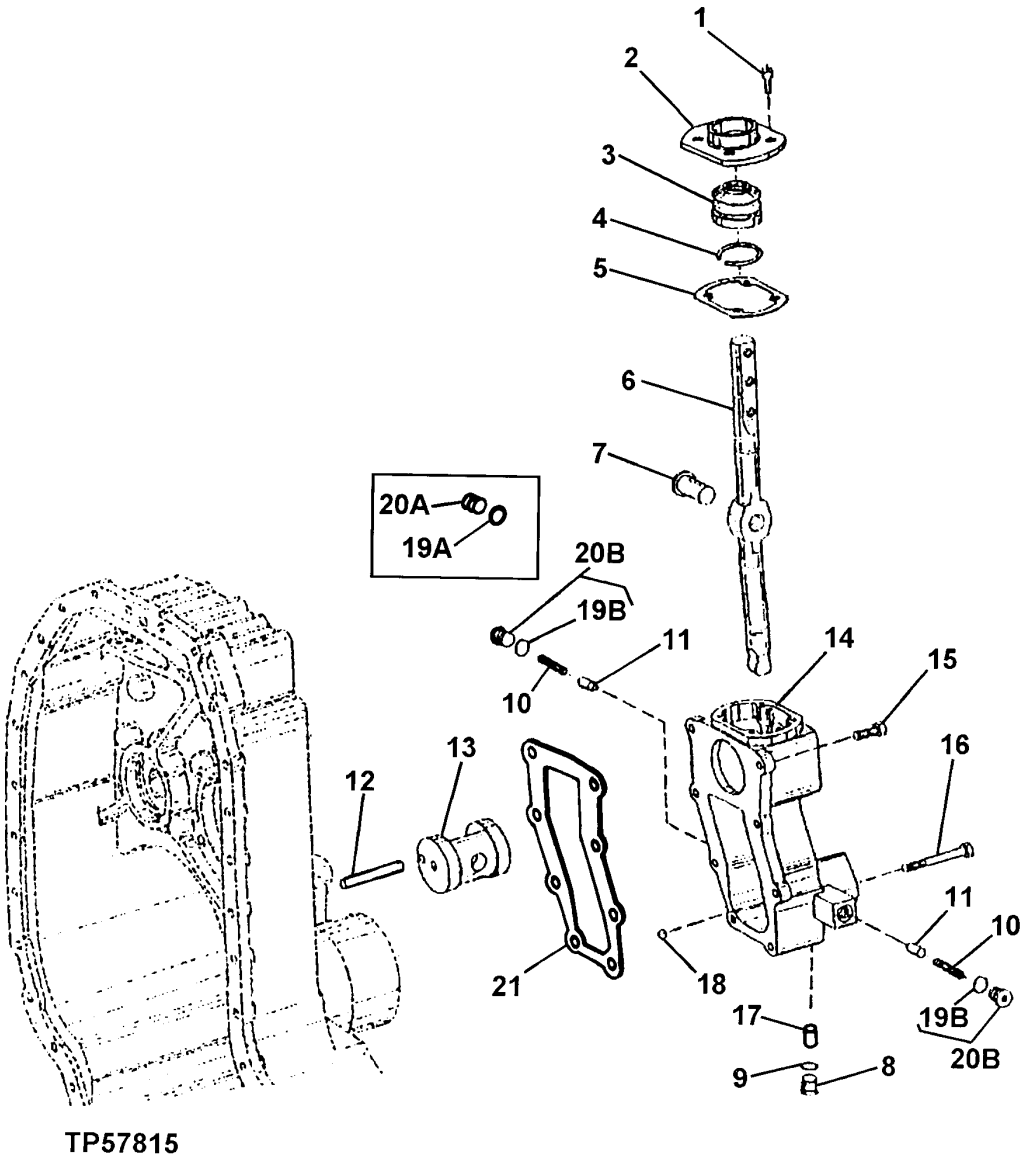

TRANSMISSION SHIFTER LEVER AND HOUSING

KEY	PART NO.	PART NAME	QTY	SERIAL NO.	REMARKS
1	19M7768	SCREW	4		M6 X 16
2	T158785	COVER	1		
3	T158784	BOOT	1		
4	T158758	SNAP RING	1		
5	T158786	GASKET	1		
6	T154828	LEVER	1		
7	T158820	PIVOT	1		
8	AT183282	PLUG	1		
9	T74553	O-RING	1		
10	T163869	SPRING	2		(SUB FOR T158761)
11	T158783	DETENT	2	-XXXXXX	
	T163868	PIN	2	XXXXXX-	
12	T158735	DOWEL PIN	1		
13	T158819	PIVOT	1		
14	T154127	HOUSING	1	-XXXXXX	
	T163867	HOUSING	1	XXXXXX-	
15	19M7407	CAP SCREW	6		M8 X 25
16	19M7663	CAP SCREW	2		M8 X 70
17	T158734	DOWEL PIN	1		
18	L38730	BALL	1		
19A	T74553	O-RING	2	-XXXXXX	
19B	Z29864	O-RING	2	XXXXXX-	
20A	AT175750	PLUG	2	-XXXXXX	
20B	AT183170	PLUG	2	XXXXXX-	
21	T163870	GASKET	1	XXXXXX-	

REVERSER CONTROL

TP48808 -UN-26MAY95

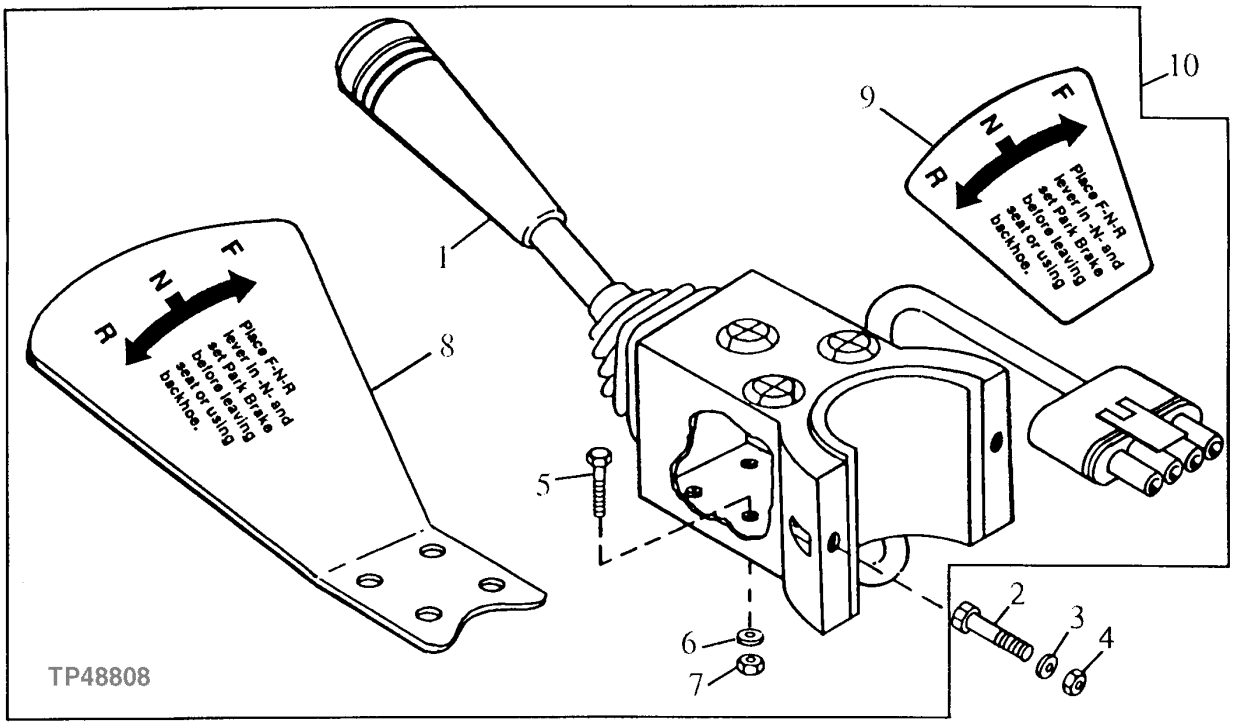

KEY	PART NO.	PART NAME	QTY	SERIAL NO.	REMARKS
1	.....	SWITCH	1		REVERSER CONTROL
2	19H2961	SCREW	2		0.190" X 3/4"
3	12H246	LOCK WASHER	2		0.190"
4	14H778	NUT	2		0.190"
5	T131177	SCREW	4		0.138" X 3/4"
6	R44255	WASHER	AR		
7	M90214	LOCK NUT	4		
8	.....	GUARD	1		
9	T140923	LABEL	1		FNR
10	AT180916	SWITCH	1		REVERSER CONTROL, (SUB FOR AT157471)

UNIVERSAL JOINT (REVERSER)

TP49504 -UN-02NOV96

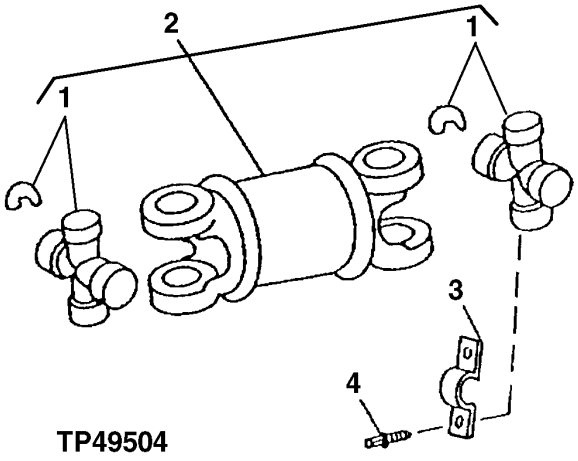

TP49504

KEY	PART NO.	PART NAME	QTY	SERIAL NO.	REMARKS
1	AT178389	KIT	2		
2	AT176080	UNIVERSAL DRIVESHAFT	1		
3	T69938	HALF CLAMP	4		
4	T113127	SCREW	8		

MEMORANDA

TRANSMISSION HOUSING

TP49970 -UN-25FEB99

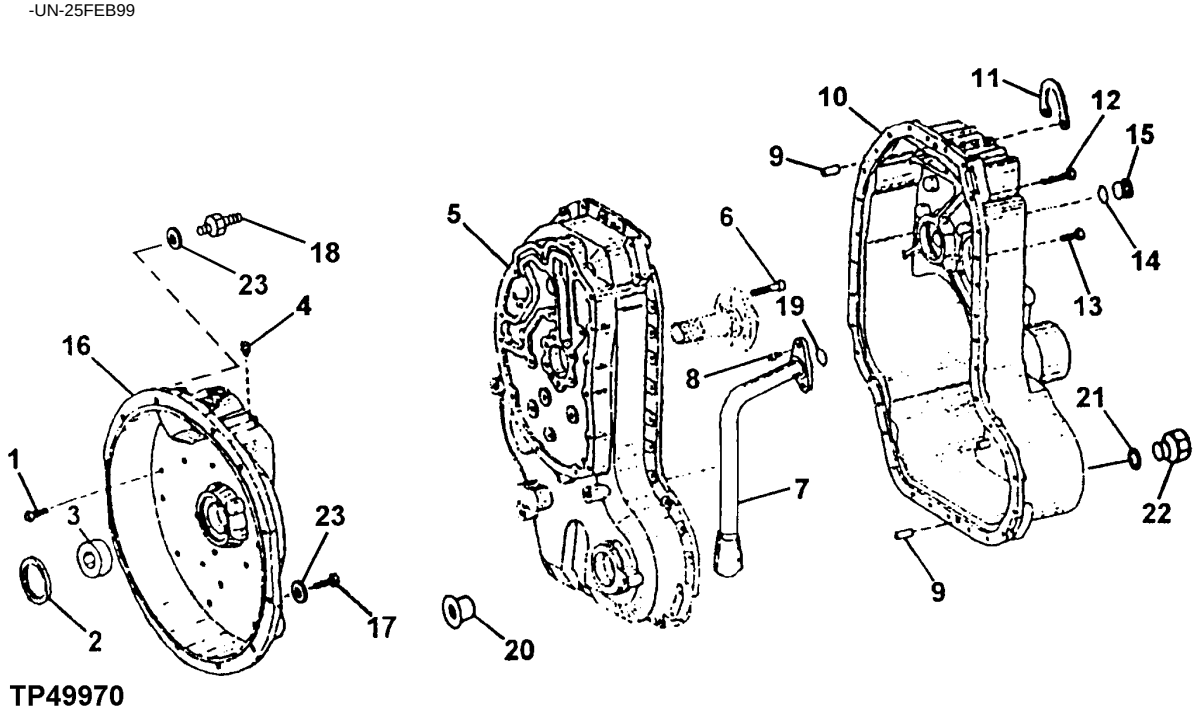

KEY	PART NO.	PART NAME	QTY	SERIAL NO.	REMARKS
1	19M7168	CAP SCREW	22		M10 X 30
2	AT179316	SEAL	1		
3	T164665	BUSHING	1		(SUB FOR T161139)
4	T116918	BREATHER	1		
5	T154129	HOUSING	1		FRONT
6	19M8213	SCREW	6		M10 X 50
7	AT179317	PIPE	1		
8	19M7660	SCREW	2		M8 X 20
9	T159564	DOWEL PIN	2		
10	T154128	HOUSING	1		REAR
11	T159567	PLATE	1		
12	19M7658	CAP SCREW	6		M10 X 50
13	19M7168	CAP SCREW	29		M10 X 30
14	L53816	O-RING	1		(SUB FOR T159566)
15	T159565	PLUG	1		
16	T154130	HOUSING	1		(MARKED T154130)
17	19M7662	CAP SCREW	11		M10 X 30
18	T161803	STUD	1		DOUBLE-END
19	T161181	O-RING	1		
20	T159683	COVER	1		(WITHOUT MFWD)
21	R26906	O-RING	2		
22	R27474	DRAIN PLUG	2		
23	24M7239	WASHER	12		10.700 X 21 X 2.500 MM

TRANSMISSION MOUNTING PARTS

T196714 -UN-04DEC03

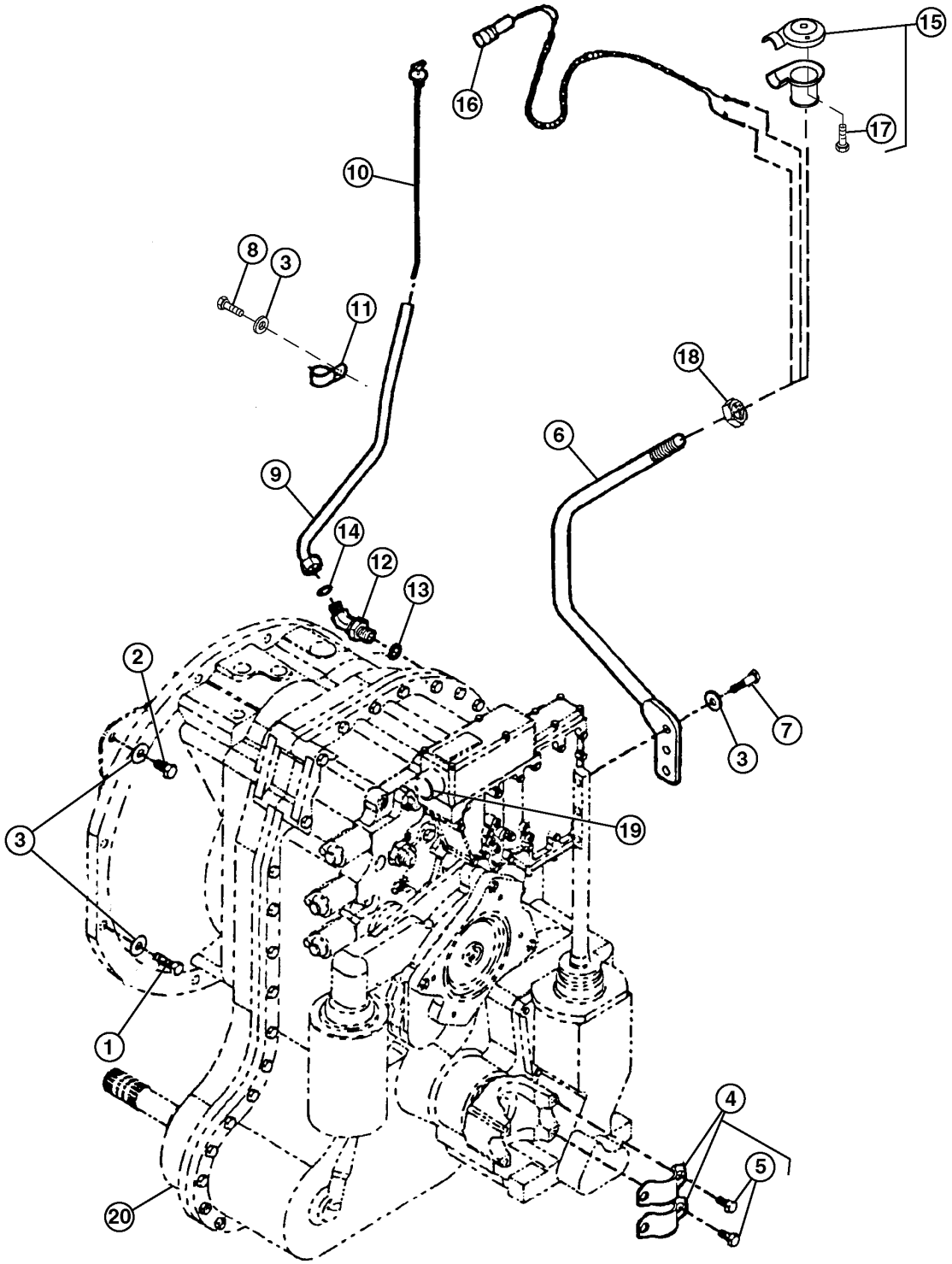

T196714

TRANSMISSION MOUNTING PARTS

KEY	PART NO.	PART NAME	QTY	SERIAL NO.	REMARKS
1	19M7550	CAP SCREW	12	-845009	M10 X 35
2	19M7786	SCREW	16	845010-880053	M10 X 30
	19M7662	CAP SCREW	16	880054-	M10 X 30
3	24M7239	WASHER	19		10.700 X 21 X 2.500 MM
4	T69938	HALF CLAMP	2		
5	T113128	SCREW	4		
6	AT216308	GEARSHIFT LEVER	1		
7	19M7662	CAP SCREW	3		M10 X 30
8	19M7932	CAP SCREW	1		M8 X 16
9	AT174365	DIPSTICK TUBE	1		
10	AT174898	DIPSTICK	1		
11	AT119290	HOSE CLAMP	1		
12	38H1050	ELBOW FITTING	1		(ALSO ORDER T78612 AND U13639)
13	U13639	O-RING	1		37.465 X 2.997 MM (1.475" X 0.118")
14	T78612	O-RING	1		29.870 X 1.778 MM (1.176" X 0.070")
15	AT169304	KNOB	1		
16	AT162180	SWITCH	1		(TRANSMISSION SHIFTER LEVER)
17	37H95	SCREW	2		
18	14H904	NUT	1		3/4"
19	AT181861	WIRING HARNESS	1		(TRANSMISSION DIODES)
20	AT171544	TRANSMISSION	1		(CONVENIENCE ASSEMBLY) (WITH MFWD)
	AT171541	TRANSMISSION	1		(CONVENIENCE ASSEMBLY) (WITHOUT MFWD)

MEMORANDA

TORQUE CONVERTOR

TP52781 -UN-21OCT96

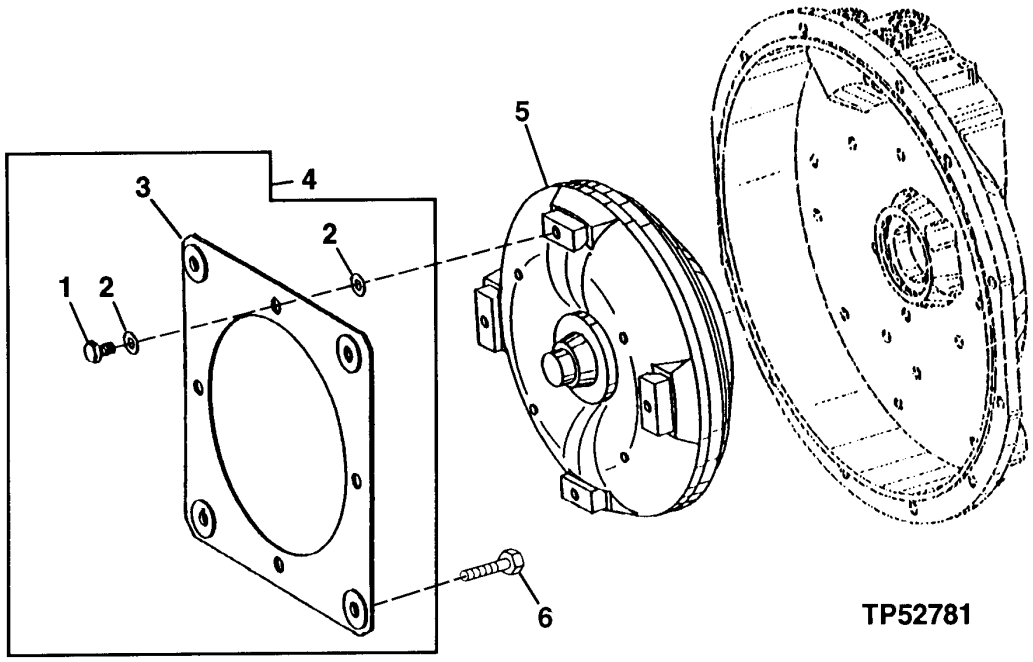

KEY	PART NO.	PART NAME	QTY	SERIAL NO.	REMARKS
1	19M8289	CAP SCREW	4		M10 X 16
2	T155324	WASHER	8		
3	AT179312	PLATE	2		
4	.....	PLATE	1		
5	AT196803	TORQUE CONVERTER	1		(SUB FOR AT172763, THIS APPLICATION)
6	19M7402	CAP SCREW	4		M10 X 25

FORWARD CLUTCH ASSEMBLY

TP57805 -UN-18NOV97

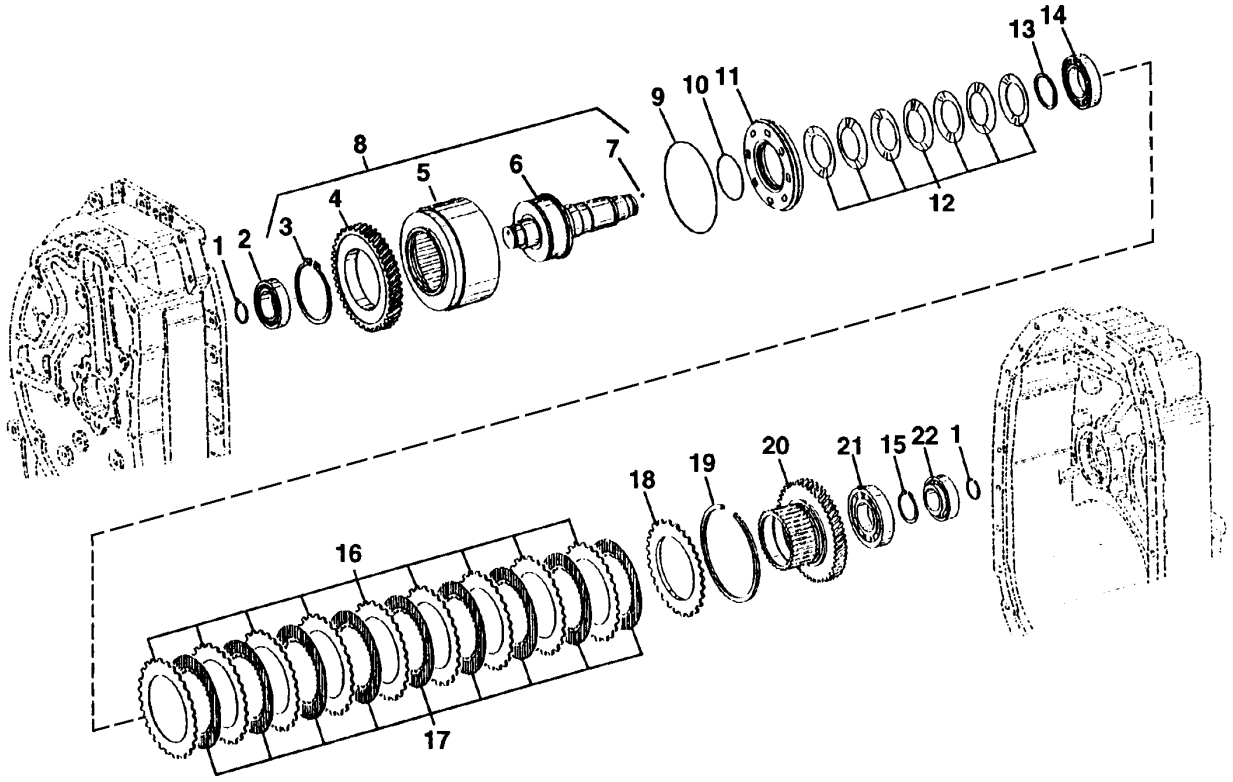

TP57805

FORWARD CLUTCH ASSEMBLY

KEY	PART NO.	PART NAME	QTY	SERIAL NO.	REMARKS
1	T158742	RING	2		
2	AT179472	TAPERED ROLLER BEARING	1		
3	.....	SNAP RING	1		
4	.....	GEAR	1		
5	.....	CLUTCH	1		
6	.....	SHAFT	1		
7	.....	BALL	1		
8	AT175733	CLUTCH	1		
9	.....	RING	1		(SUB AT193704) (T158739 NO LONGER AVAILABLE)
10	.....	RING	1		(SUB AT193704) (T158743 NO LONGER AVAILABLE)
11	AT193704	PISTON	1		(SUB FOR T158789)
12	T158775	DISK SPRING	7		
13	T158756	WASHER	1		
14	AT179469	TAPERED ROLLER BEARING	1		
15	T161193	SNAP RING	1		2.5MM
	T161192	SNAP RING	1		2.6MM
	T161191	SNAP RING	1		2.7MM
	T161190	SNAP RING	1		2.8MM
	T161189	SNAP RING	1		2.9MM
	T161188	SNAP RING	1		3.0MM
	T161187	SNAP RING	1		3.1MM
	T161186	SNAP RING	1		3.2MM
16	T158801	CLUTCH PLATE	9		
17	AT179473	DISK WITH INNER SPLINE	9		
18	T161147	PLATE	1		
19	T159570	SNAP RING	1		2.0 MM
	T159569	SNAP RING	1		2.5 MM
	T159568	SNAP RING	1		3.0 MM
	T158778	SNAP RING	1		3.5 MM
	T161183	SNAP RING	1		4.0 MM
20	T158802	HUB	1		
21	AT179470	TAPERED ROLLER BEARING	1		
22	AT179471	TAPERED ROLLER BEARING	1		

REVERSE CLUTCH ASSEMBLY

TP57806 -UN-18NOV97

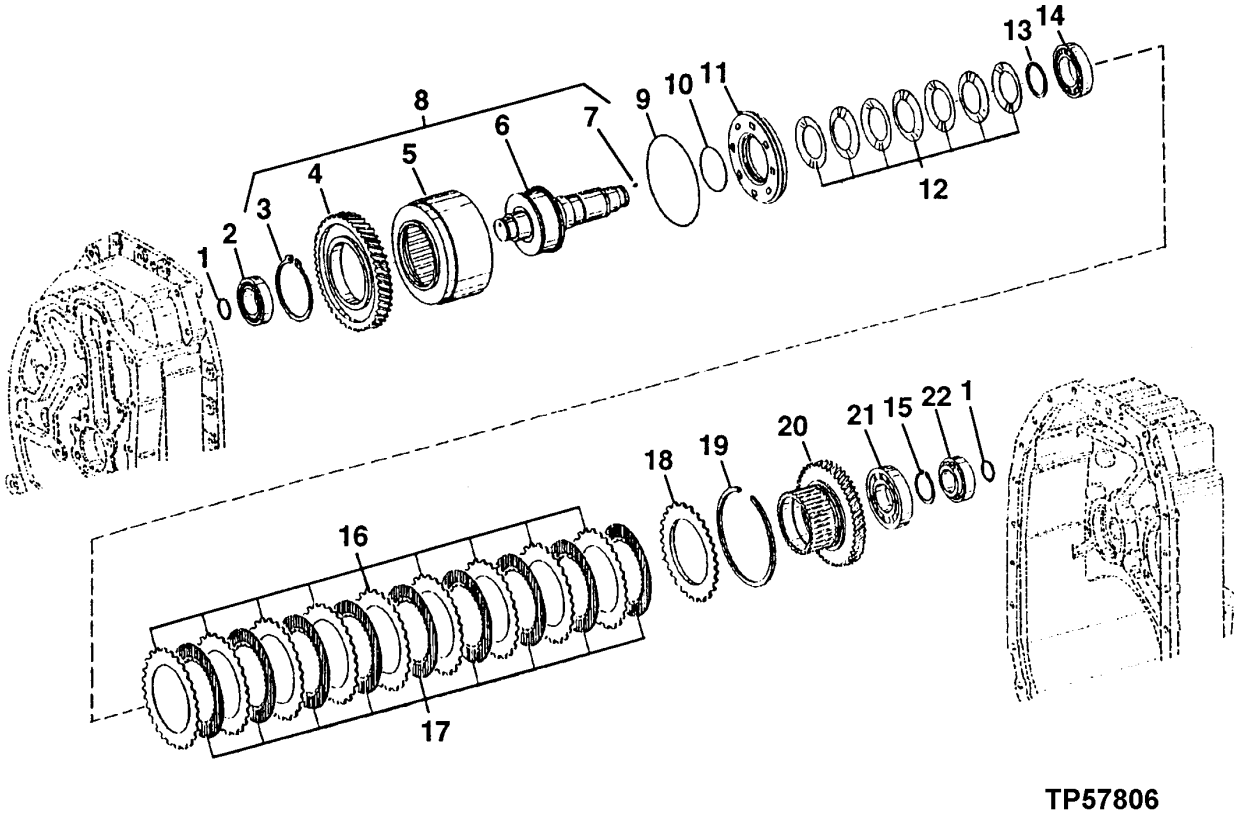

TP57806

REVERSE CLUTCH ASSEMBLY

KEY	PART NO.	PART NAME	QTY	SERIAL NO.	REMARKS
1	T158742	RING	2		
2	AT179472	TAPERED ROLLER BEARING	1		
3	.....	SNAP RING	1		
4	.....	GEAR	1		
5	.....	CLUTCH	1		
6	.....	SHAFT	1		
7	.....	BALL	1		
8	AT175734	CLUTCH	1		
9	.....	RING	1		(SUB AT193704) (T158739 NO LONGER AVAILABLE)
10	.....	RING	1		(SUB AT193704) (T158743 NO LONGER AVAILABLE)
11	AT193704	PISTON	1		(SUB FOR T158789)
12	T158775	DISK SPRING	7		
13	T158756	WASHER	1		
14	AT179469	TAPERED ROLLER BEARING	1		
15	T161193	SNAP RING	1		2.5MM
	T161192	SNAP RING	1		2.6MM
	T161191	SNAP RING	1		2.7MM
	T161190	SNAP RING	1		2.8MM
	T161189	SNAP RING	1		2.9MM
	T161188	SNAP RING	1		3.0MM
	T161187	SNAP RING	1		3.1MM
	T161186	SNAP RING	1		3.2MM
16	T158801	CLUTCH PLATE	9		
17	AT179473	DISK WITH INNER SPLINE	9		
18	T161147	PLATE	1		
19	T159570	SNAP RING	1		2.0 MM
	T159569	SNAP RING	1		2.5 MM
	T159568	SNAP RING	1		3.0 MM
	T158778	SNAP RING	1		3.5 MM
20	T158802	HUB	1		
21	AT179470	TAPERED ROLLER BEARING	1		
22	AT179471	TAPERED ROLLER BEARING	1		

INPUT SHAFTS

TP58039 -UN-18MAY99

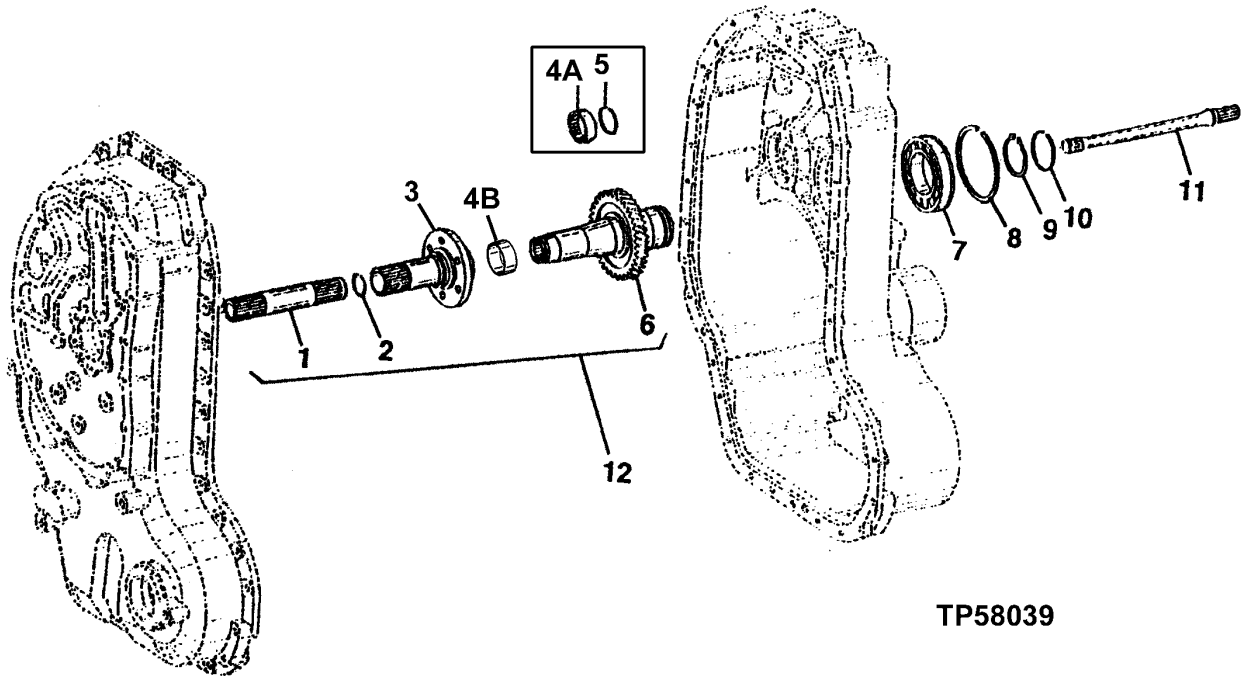

TP58039

KEY	PART NO.	PART NAME	QTY	SERIAL NO.	REMARKS
1	.....	SHAFT	1		
2	T158720	SNAP RING	1		
3	T158798	SHAFT	1	-874148	(USE IF AVAILABLE) (SUB T164654, T164655 AND AT187711)
	T164654	SHAFT	1	874149-	
4A	AT179313	NEEDLE BEARING	1	-874148	
4B	T164655	BUSHING	1	874149-	
5	T158746	RING	1	-874148	SEALING
6	.....	SHAFT	1		
7	AT179314	BALL BEARING	1		
8	T158717	SNAP RING	1		
9	T158718	SNAP RING	1		
10	T158740	PACKING	1		
11	T155259	SHAFT	1		
12	AT175735	SHAFT	1	-874148	(USE IF AVAILABLE) (SUB AT187711, T164654 AND T164655)
	AT187711	SHAFT	1	874149-	

MFWD IDLER SHAFT

TP52784 -UN-22OCT96

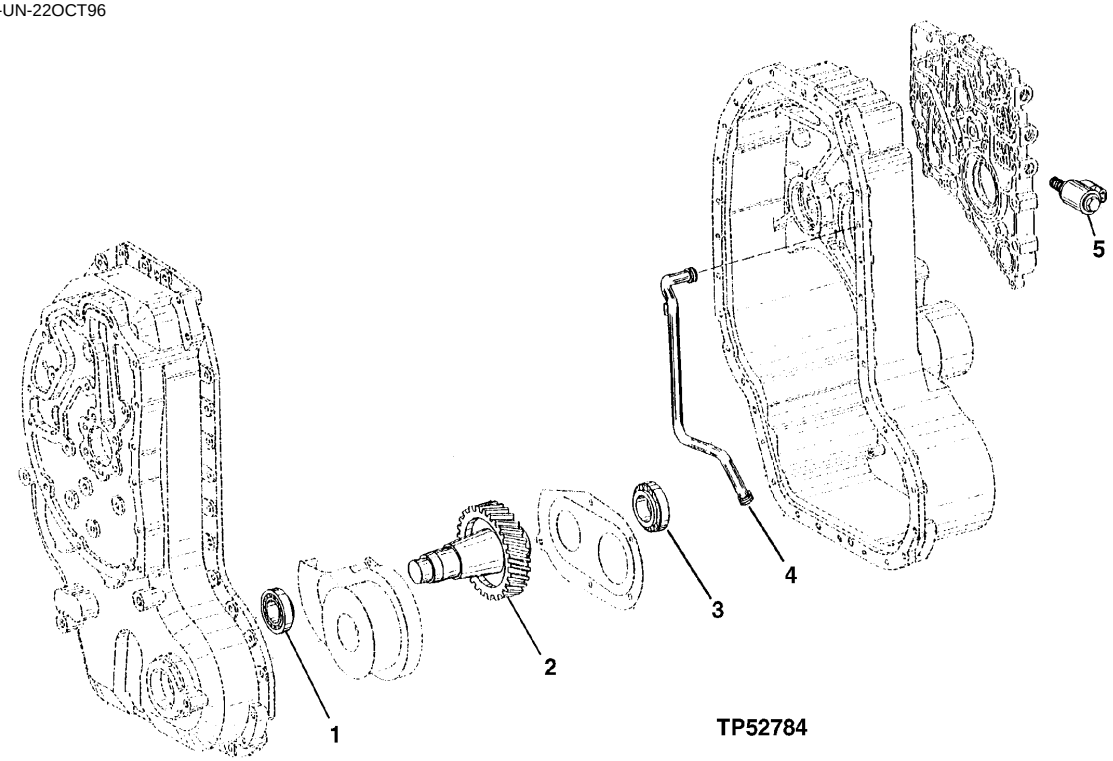

TP52784

KEY	PART NO.	PART NAME	QTY	SERIAL NO.	REMARKS
1	AT179471	TAPERED ROLLER BEARING	1		
2	T158714	SHAFT	1		
3	AT179468	TAPERED ROLLER BEARING	1		
4	AT179467	OIL LINE	1		
	T161218	O-RING	2		
5	AT177703	SOLENOID VALVE	2		PARK BRAKE AND DIFF LOCK, MFWD (IF REQUIRED)
	.....	SOLENOID	1		AT179318 NO LONGER AVAILABLE
	AT179319	ELECTRICAL COIL	1		
	AT179320	O-RING KIT	1		
	T161144	NUT	1		

MFWD OUTPUT SHAFT

TP52785 -UN-19AUG96

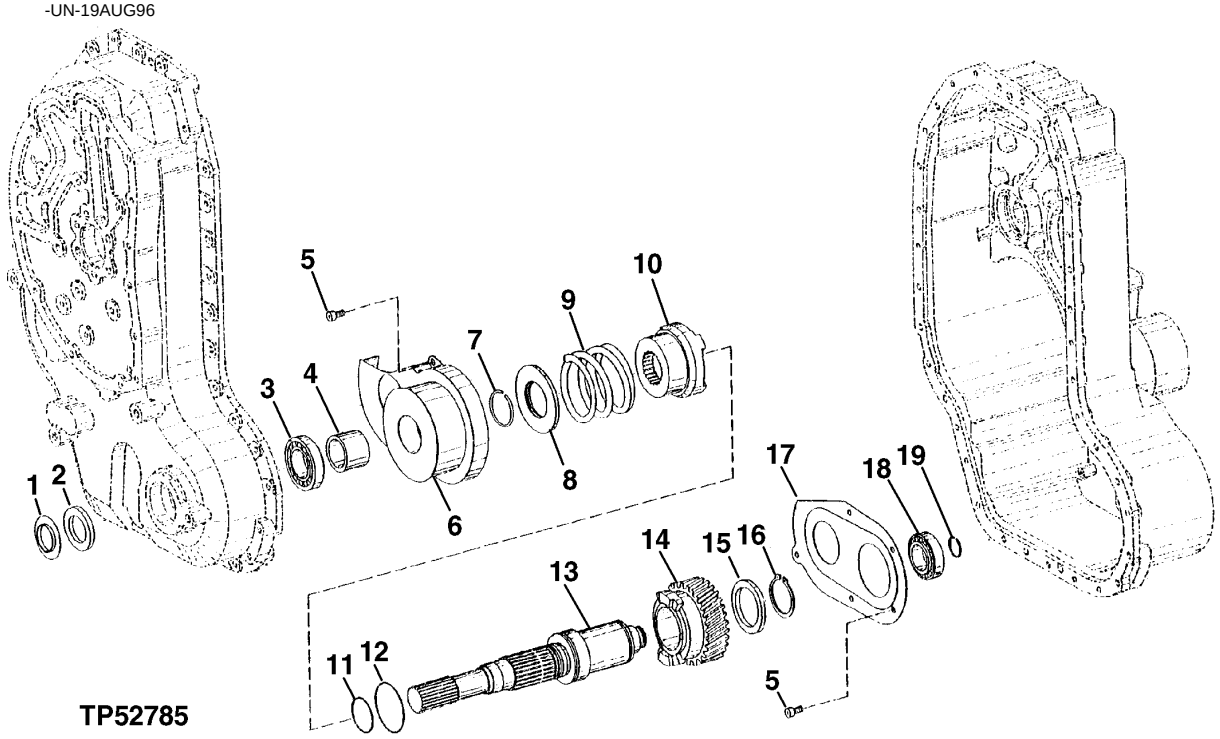

KEY	PART NO.	PART NAME	QTY	SERIAL NO.	REMARKS
1	T159572	SEAL	1		
2	AT179466	SEAL	1		
3	AT179468	TAPERED ROLLER BEARING	1		
4	T159571	BUSHING	1		
5	19M7931	SCREW	5		M8 X 16
6	T158861	SCREEN	1		
7	T158722	SNAP RING	1		
8	T158855	END PLATE	1		
9	T158762	SPRING	1		
10	T158859	SLEEVE	1		
11	T158745	RING	1		
12	T158744	RING	1		
13	T158858	SHAFT	1		
14	T158860	SPUR GEAR	1		
15	T158760	THRUST WASHER	1		
16	L78069	RING	1		
17	T158864	SCREEN	1		
18	AT179472	TAPERED ROLLER BEARING	1		(SUB FOR AT179497)
19	T158742	RING	1		

OUTPUT SHAFT GROUP

TP52790 -UN-19AUG96

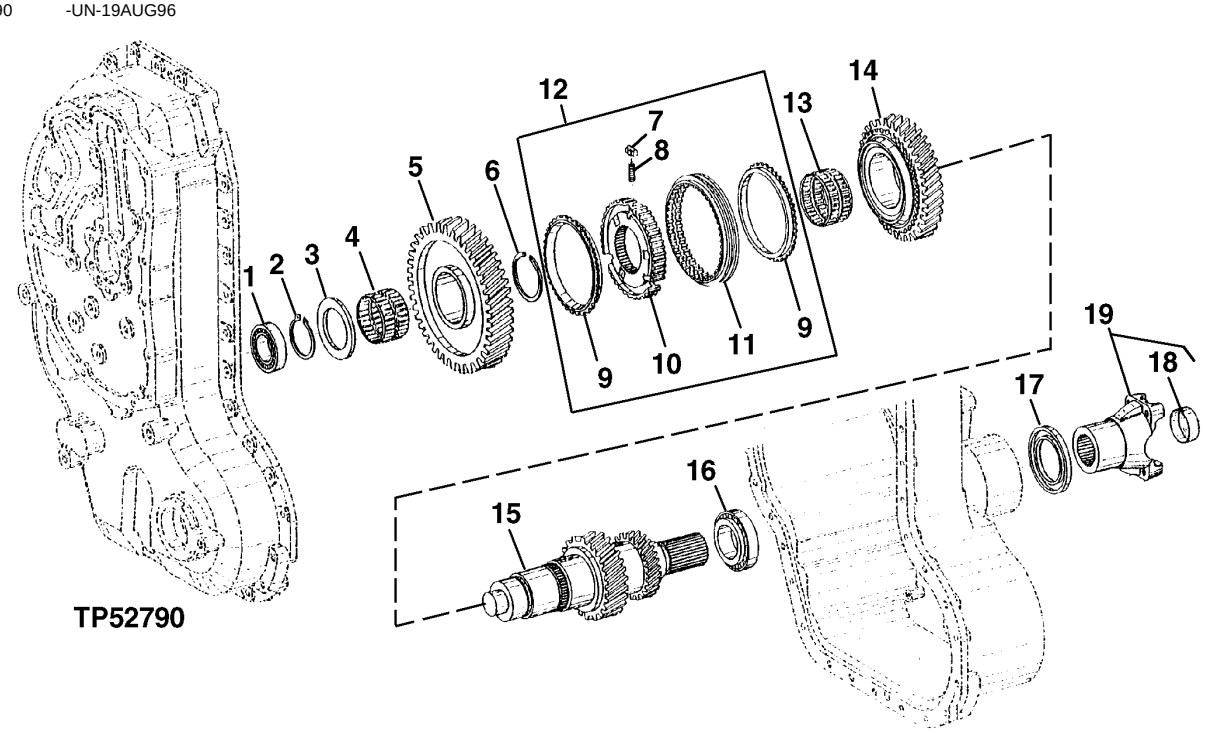

KEY	PART NO.	PART NAME	QTY	SERIAL NO.	REMARKS
1	AT179472	TAPERED ROLLER BEARING	1		
2	T158718	SNAP RING	1		
3	T158748	THRUST WASHER	1		
4	AT179482	NEEDLE BEARING	1		
5	T165399	GEAR	1		FIRST GEAR, (SUB FOR AT179486)
6	T159577	SNAP RING	1		1.8MM
	T159576	SNAP RING	1		1.9MM
	T159575	SNAP RING	1		
	T159574	SNAP RING	1		2.1MM
	T158777	SNAP RING	1		2.2MM
7	.....	DETENT	3		
8	.....	SPRING	3		
9	.....	RING	2		
10	.....	HUB	1		
11	.....	SHIFT COLLAR	1		
12	AT175748	SYNCHRONIZER	1		
13	AT179483	NEEDLE BEARING	1		
14	T165400	GEAR	1		SECOND GEAR, (SUB FOR AT179487)
15	T158811	SHAFT	1		
16	AT179485	TAPERED ROLLER BEARING	1		
17	AT179481	SEAL	1		
18	.....	PLUG	1		
19	AT177701	UNIVERSAL JOINT YOKE	1		

INTERMEDIATE SHAFT GROUP

TP52792 -UN-19AUG96

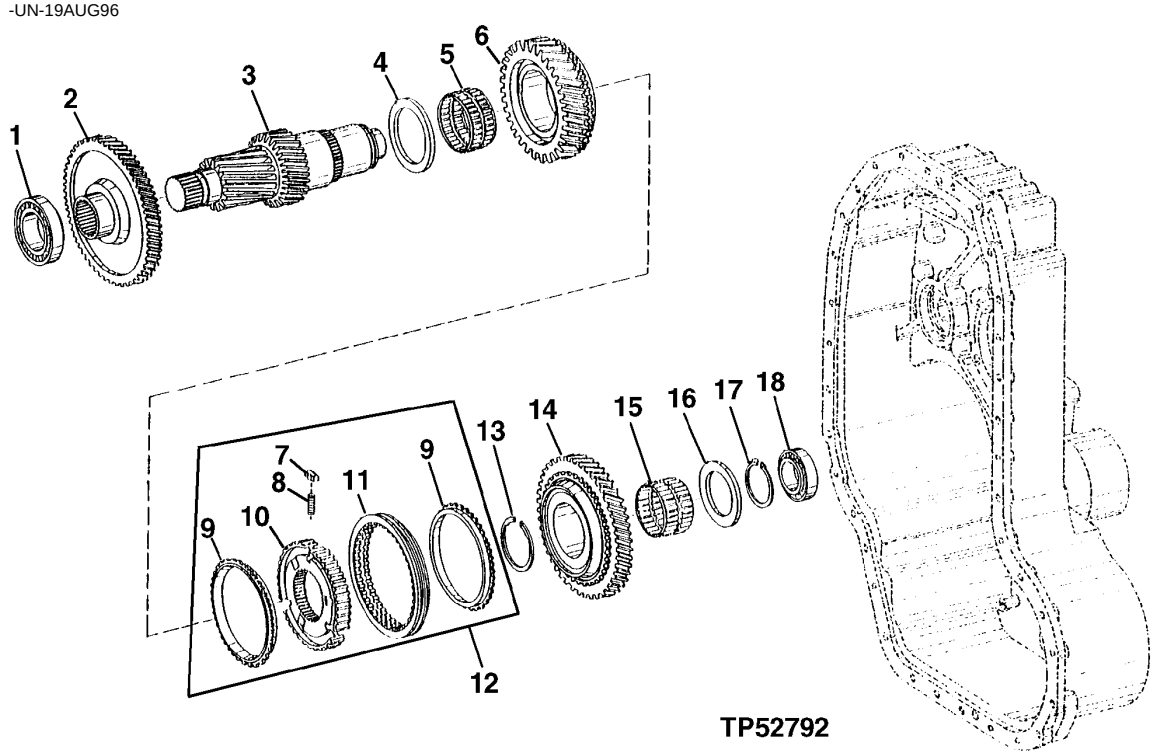

KEY	PART NO.	PART NAME	QTY	SERIAL NO.	REMARKS
1	AT179485	TAPERED ROLLER BEARING	1		
2	T158805	GEAR	1		
3	T158806	SHAFT	1		
4	T158747	THRUST WASHER	1		
5	AT179483	NEEDLE BEARING	1		
6	AT179490	GEAR	1		THIRD GEAR
7	.....	DETENT	3		
8	.....	SPRING	3		
9	.....	RING	2		
10	.....	HUB	1		
11	.....	SHIFT COLLAR	1		
12	AT175748	SYNCHRONIZER	1		
13	T159577	SNAP RING	1		1.8MM
	T159576	SNAP RING	1		1.9MM
	T159575	SNAP RING	1		
	T159574	SNAP RING	1		2.1MM
	T158777	SNAP RING	1		2.2
14	T165401	GEAR	1		FOURTH GEAR, (SUB FOR AT179489)
15	AT179482	NEEDLE BEARING	1		
16	T158748	THRUST WASHER	1		
17	T158718	SNAP RING	1		
18	AT179472	TAPERED ROLLER BEARING	1		

MEMORANDA

TRANSMISSION CONTROL VALVE GROUP

T150759 -UN-31JAN02

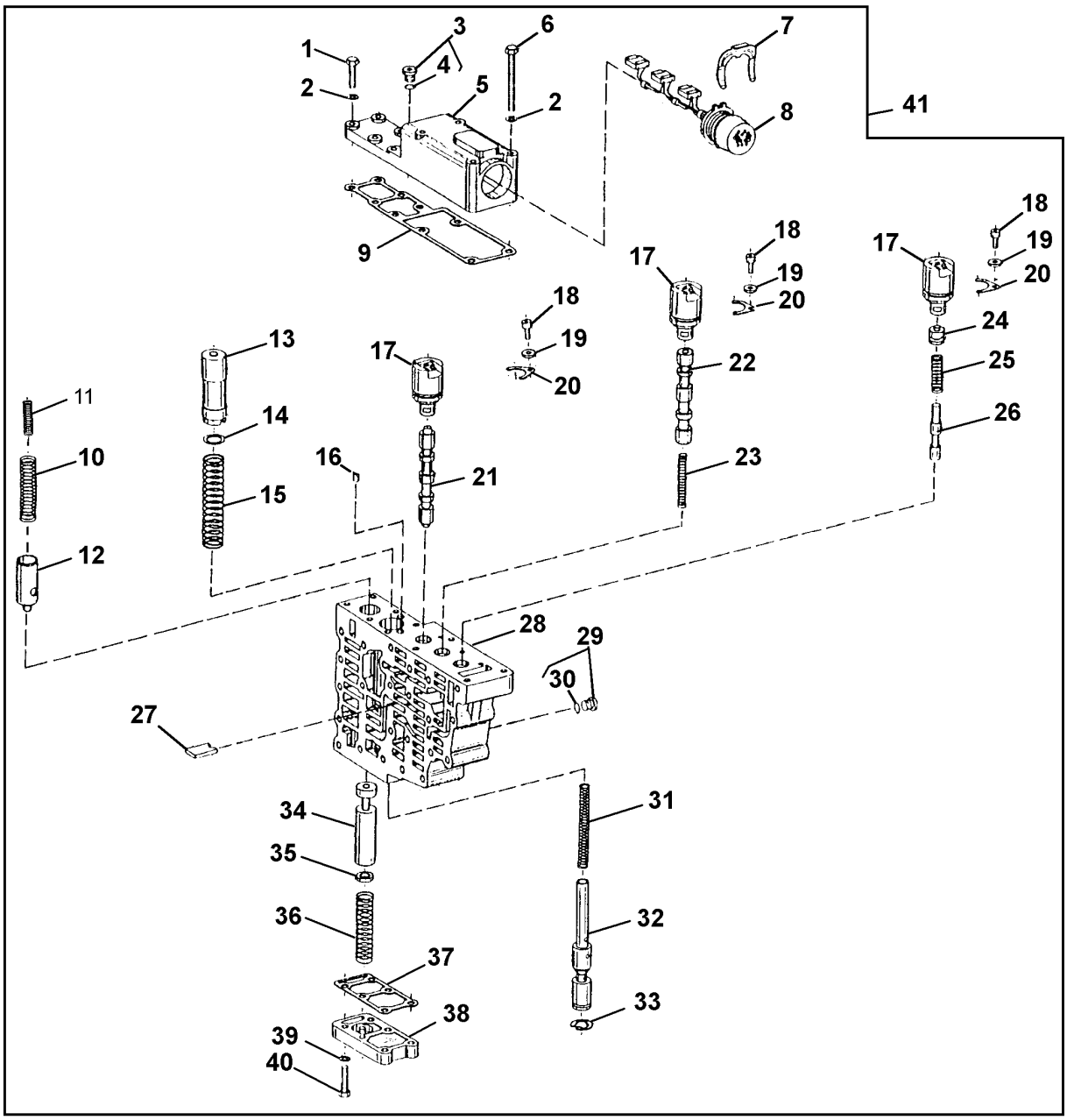

T150759

TRANSMISSION CONTROL VALVE GROUP

KEY	PART NO.	PART NAME	QTY	SERIAL NO.	REMARKS
1	T159593	CAP SCREW	6		
2	T161204	WASHER	AR		
3	T161194	PLUG	1		(INCLUDES ORING)
4	L11698	O-RING	1		(SUB FOR T116416)
5	T185606	COVER	1		(SUB FOR T159605)
6	T159607	CAP SCREW	4		
7	T161207	CLAMP	1		
8	AT179492	WIRING HARNESS	1		
9	T159604	GASKET	1		
10	T159584	SPRING	1		
11	T188173	SPRING	1		
12	.....	PISTON	1		(T159583 AND T161196, SHIM NO LONGER AVAILABLE) (SUB T188172)
	T188172	PISTON	1		
13	T162947	PISTON	1		(SUB FOR T159590)
14	T164584	SPACER	1		0.2 MM
	T164583	SPACER	1		0.3 MM
	T164582	SPACER	1		0.5 MM
	T161203	SHIM	1		1.0 MM
	T164581	SPACER	1		2.0 MM
15	T161202	SPRING	1		
16	T164577	ORIFICE	1		(SUB FOR T116546, THIS APPLICATION)
17	AT179491	SOLENOID VALVE	3		FORWARD, NEUTRAL, REVERSE
18	T164693	SCREW	3		(SUB FOR T159602)
19	T144487	WASHER	3		
20	T144486	PLATE	3		
21	AT182947	PISTON	1		
22	T159595	PISTON	1		
23	T159596	SPRING	1		
24	T159599	PLUG	1		
25	T159598	SPRING	1		
26	T159597	PISTON	1		
27	T159600	PLATE	1		
28	T159582	HOUSING	1		
29	T161194	PLUG	7		(INCLUDES ORING)
30	L11698	O-RING	7		(SUB FOR T116416)
31	T159589	SPRING	1		
32	T159587	PISTON	1		
33	T159588	LOCK WASHER	1		
34	T164579	PISTON	1		(SUB FOR T159585, THIS APPLICATION)
35	T161200	SPACER	AR		2.4 MM
	T161199	SPACER	AR		2.8 MM
	T161198	SPACER	AR		3.2 MM
	T161197	SPACER	AR		3.6 MM
36	T159586	SPRING	1		
37	T159591	GASKET	1		
38	T159592	COVER	1		
39	T161204	WASHER	6		
40	T159593	CAP SCREW	6		
41	AT195752	HYD ACTUATED CONTROL VALVE	1		(SUB FOR AT179447)

TRANSMISSSION INTERMEDIATE PLATE AND GASKETS

T135479 -UN-14NOV00

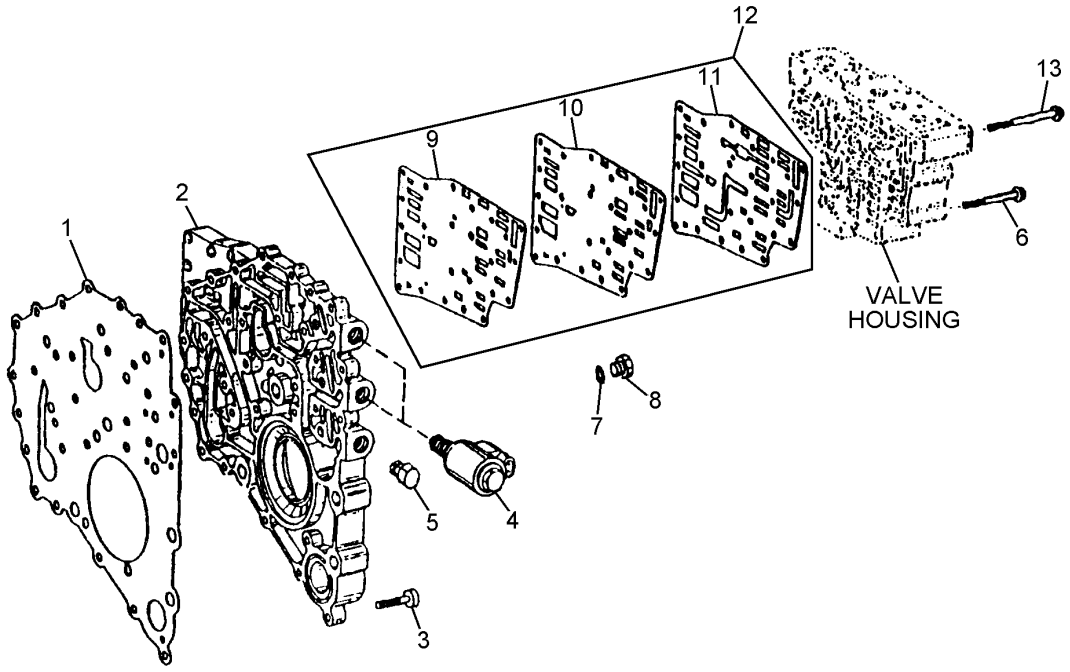

T135479

KEY	PART NO.	PART NAME	QTY	SERIAL NO.	REMARKS
1	T184586	GASKET	1		(SUB FOR T159608)
2	T186041	HOUSING	1		(SUB FOR T154257)
3	T161208	CAP SCREW	30		
4	AT177703	SOLENOID VALVE	2		PARK BRAKE AND DIFF LOCK, MFWD (IF REQUIRED)
	.....	SOLENOID	1		AT179318 NO LONGER AVAILABLE
	AT179319	ELECTRICAL COIL	1		
	AT179320	O-RING KIT	1		
	T161144	NUT	1		
5	T159684	PLUG	1		
6	T159607	CAP SCREW	19		
7	R26286	O-RING	1		
8	R27094	DRAIN PLUG	1		
9	.....	GASKET	1		(SUB AT192550) (ALSO ORDER (19) T159607) (SUB FOR T159610)
10	.....	PLATE	1		(SUB AT192550) (ALSO ORDER (19) T159607) (SUB FOR T159611)
11	.....	GASKET	1		(SUB AT192550) (ALSO ORDER (19) T159607) (SUB FOR T159612)
12	AT192550	PLATE	1		(SUB FOR T159610, T159611 AND T159612) (ALSO ORDER (19) T159607)
13	T159613	CAP SCREW	4		

CHARGE PUMP

TP57733 -UN-27JUN97

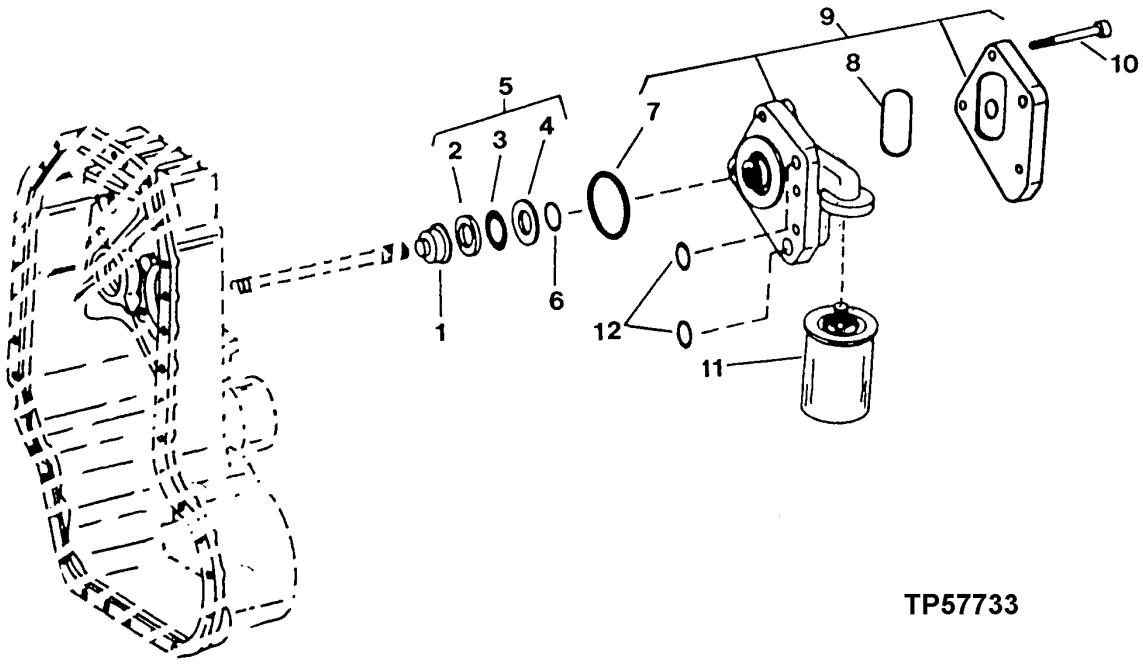

TP57733

KEY	PART NO.	PART NAME	QTY	SERIAL NO.	REMARKS
1	T166077	STOP	1		(SUB FOR T158795, THIS APPLICATION)
2	T158732	DISK	1		
3	AT179153	NEEDLE BEARING	1		
4	T158749	THRUST WASHER	1		
5	AT179153	NEEDLE BEARING	1		
6	T141689	O-RING	1		(SUB FOR T158741)
7	T162446	PACKING	1		
8	T162935	O-RING	1		
9	AT171342	HYDRAULIC PUMP	1		
10	T158754	CAP SCREW	4		
11	AT179323	OIL FILTER	1		
12	T19854	O-RING	1		(SUB FOR T159615)

TRANSMISSION OIL LINES
(SERIAL NO. -880053)

TP52595 -UN-27JAN97

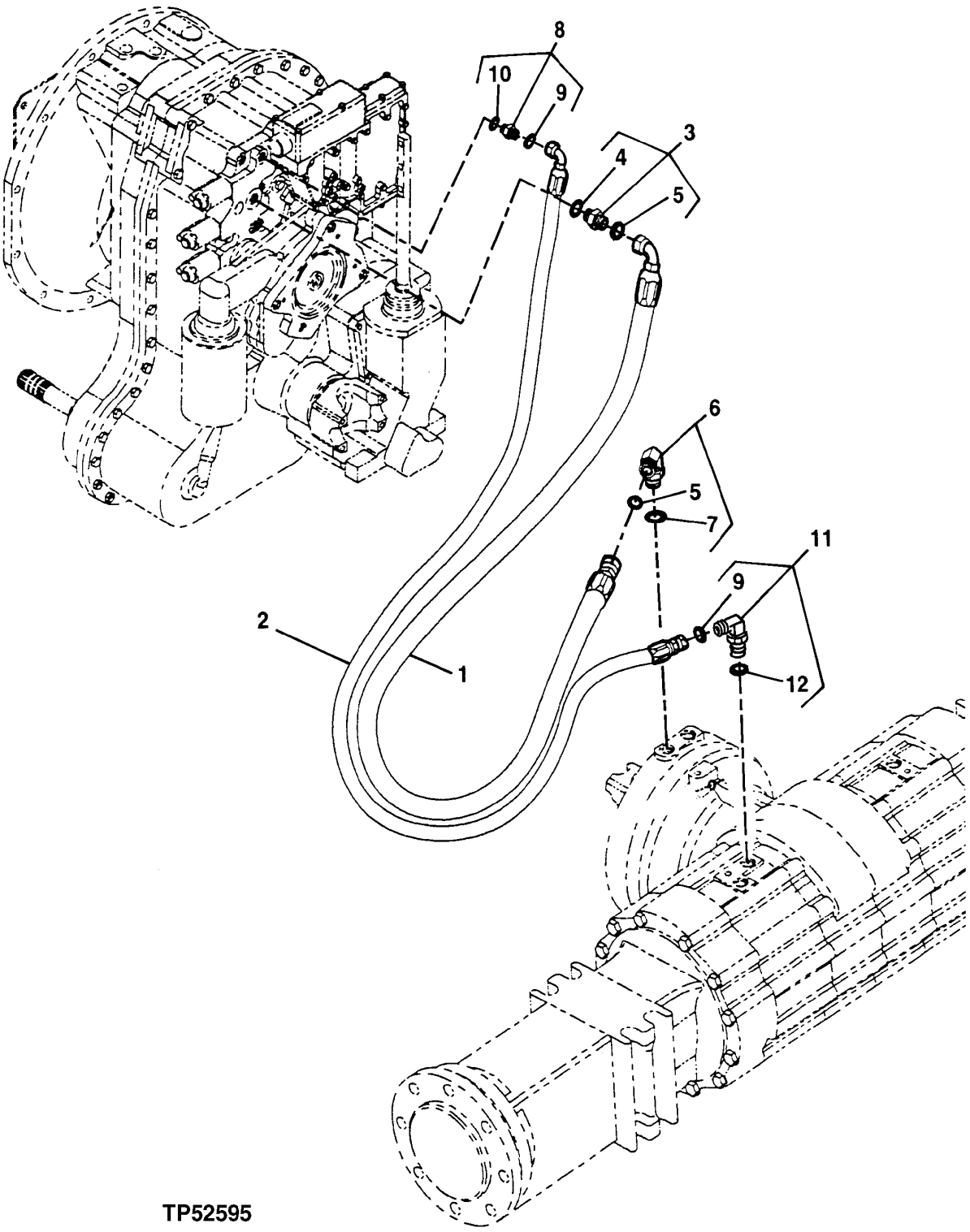

TP52595

TRANSMISSION OIL LINES
(SERIAL NO. -880053)

KEY	PART NO.	PART NAME	QTY	SERIAL NO.	REMARKS
1	AT216242	HYDRAULIC HOSE - FABRICATE	1	-880053	
2	AT216243	HYDRAULIC HOSE - FABRICATE	1	-880053	
3	38H1161	ADAPTER	1	-880053	
4	R26375	O-RING	1	-880053	16.358 X 2.210 MM (0.644" X 0.087")
5	T77857	O-RING	2	-880053	12.421 X 1.778 MM (0.489" X 0.070")
6	38H1012	ELBOW FITTING	1	-880053	
7	R26906	O-RING	1	-880053	19.177 X 2.464 MM (0.755" X 0.097")
8	38H1160	ADAPTER	1	-880053	(ALSO ORDER T77613 AND R26448)
9	T77613	O-RING	2	-880053	9.246 X 1.778 MM (0.364" X 0.070")
10	R26448	O-RING	1	-880053	11.887 X 1.981 MM (0.468" X 5/64")
11	38H1435	ELBOW FITTING	1	-880053	
12	R26287	O-RING	1	-880053	(SUB FOR AT201505)

TRANSMISSION OIL LINES
(SERIAL NO. 880054-)

TP80312 -UN-09DEC99

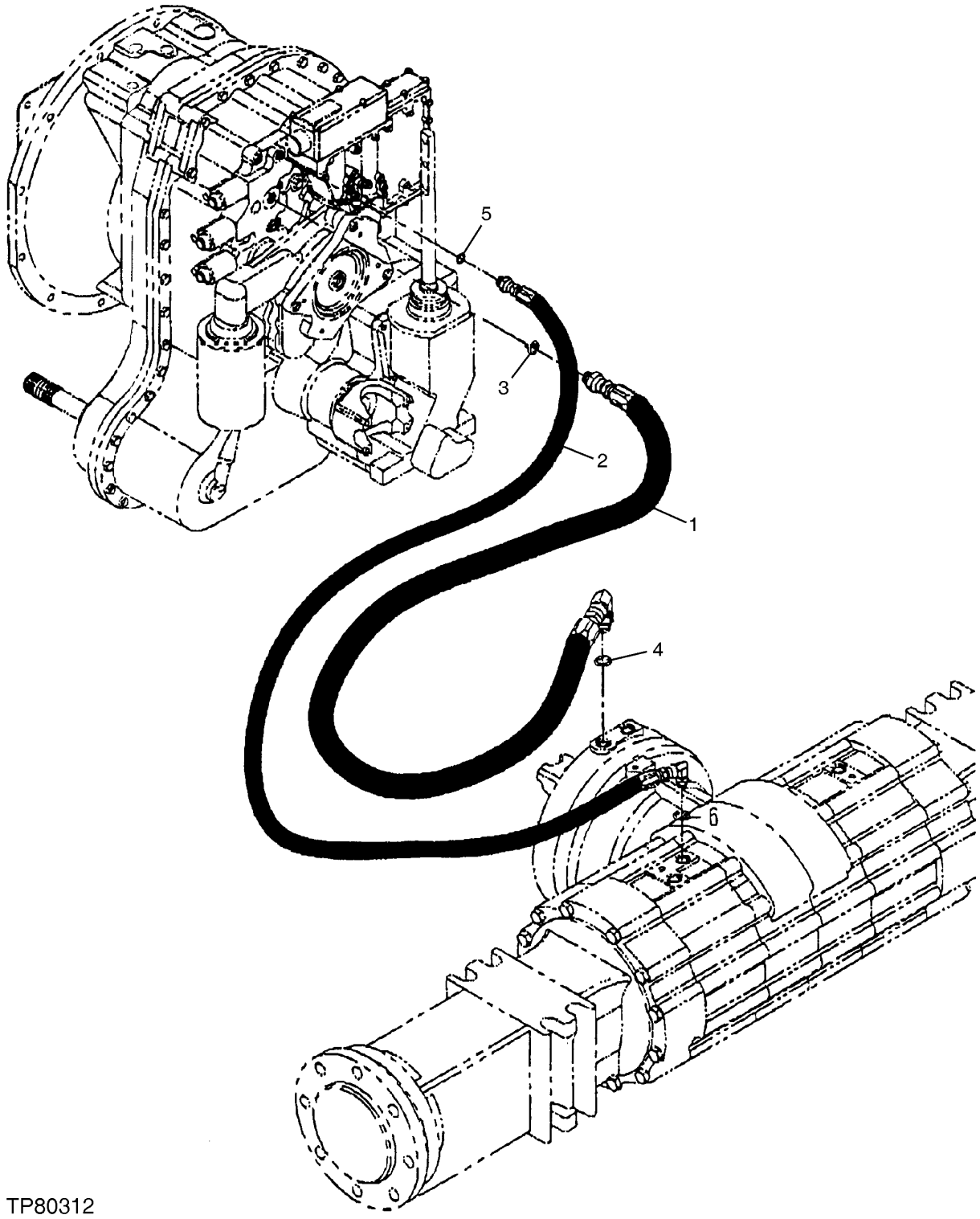

TRANSMISSION OIL LINES
(SERIAL NO. 880054-)

KEY	PART NO.	PART NAME	QTY	SERIAL NO.	REMARKS
1	AT189737	HYDRAULIC HOSE - FABRICATE	1	880054-	
2	AT189738	HYDRAULIC HOSE - FABRICATE	1	880054-	
3	R26375	O-RING	1	880054-	16.358 X 2.210 MM (0.644" X 0.087")
4	R26906	O-RING	1	880054-	19.177 X 2.464 MM (0.755" X 0.097")
5	R26448	O-RING	1	880054-	11.887 X 1.981 MM (0.468" X 5/64")
6	R26287	O-RING	1	880054-	7.645 X 1.626 MM (0.301" X 0.064")

TRANSMISSION COOLER LINES

T196701 -UN-04DEC03

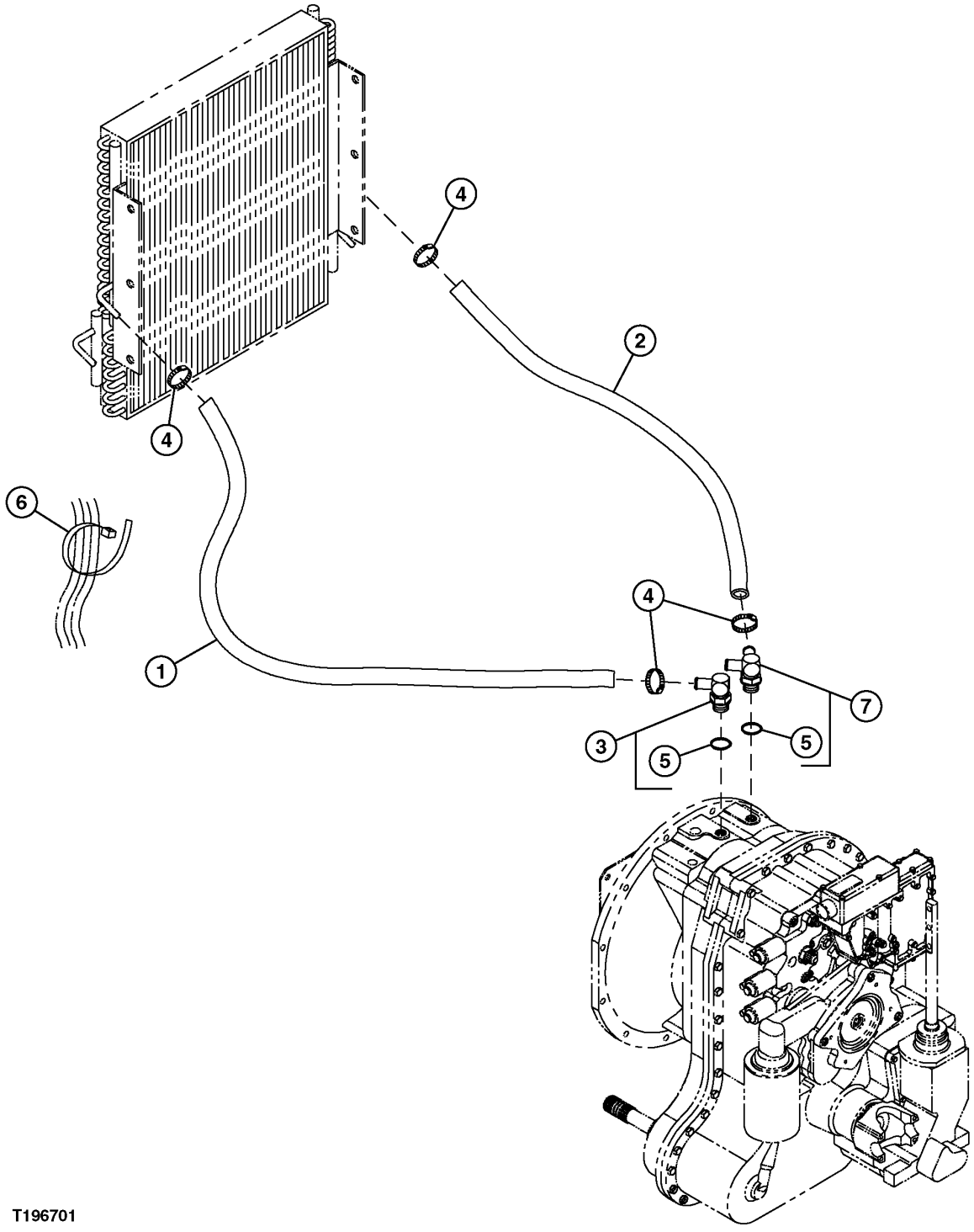

T196701

TRANSMISSION COOLER LINES

KEY	PART NO.	PART NAME	QTY	SERIAL NO.	REMARKS
1	AT188812	HYDRAULIC HOSE - FABRICATE	1	-882700	
	CB01446325	HYDRAULIC HOSE	1	882701-	
2	AT188813	HYDRAULIC HOSE - FABRICATE	1	-882700	
	CB01446326	HYDRAULIC HOSE	1	882701-	
3	AT216072	FITTING	2	-880907	
	AT216072	FITTING	1	880908-	
4	MG13021	HOSE CLAMP	4	-882700	
	TY22466	CLAMP	4	882701-	
5	R26906	O-RING	2		19.177 X 2.464 MM (0.755" X 0.097")
6	H77698	TIE BAND	1		
7	CB01416461	FITTING	1	880908-	

TRANSMISSION OIL COOLER (SERIAL NO. -882700)

TP52597 -UN-27JAN97

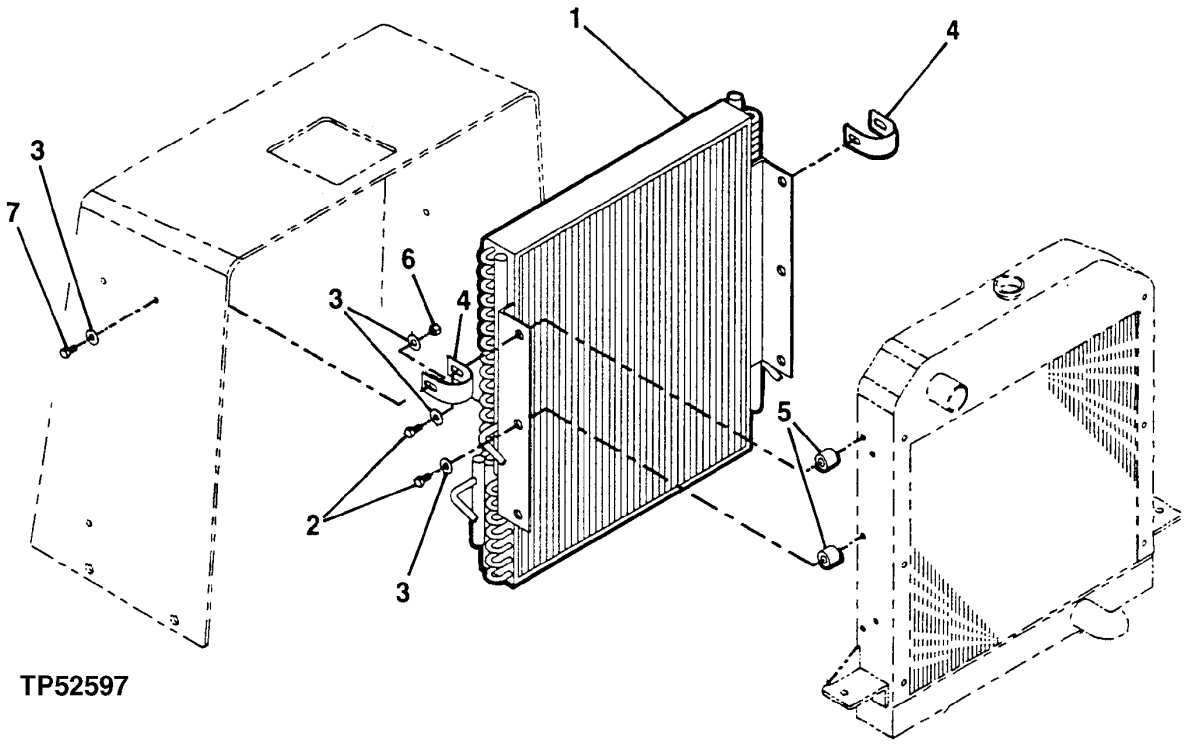

TP52597

TRANSMISSION OIL COOLER (SERIAL NO. -882700)

KEY	PART NO.	PART NAME	QTY	SERIAL NO.	REMARKS
1	AT141197	OIL COOLER	1		
2	19H3239	CAP SCREW	6		3/8" X 1-1/4"
3	R57696	WASHER	10		
4	AT216116	BRACKET	2		
5	AT216132	SPACER	6	-872334	
	B27952	BUSHING	6	872335-882700	
6	H99923	LOCK NUT	2		
7	19H2676	CAP SCREW	2		3/8" X 1"

TRANSMISSION OIL COOLER (SERIAL NO. 882701-)

T196318 -UN-13NOV03

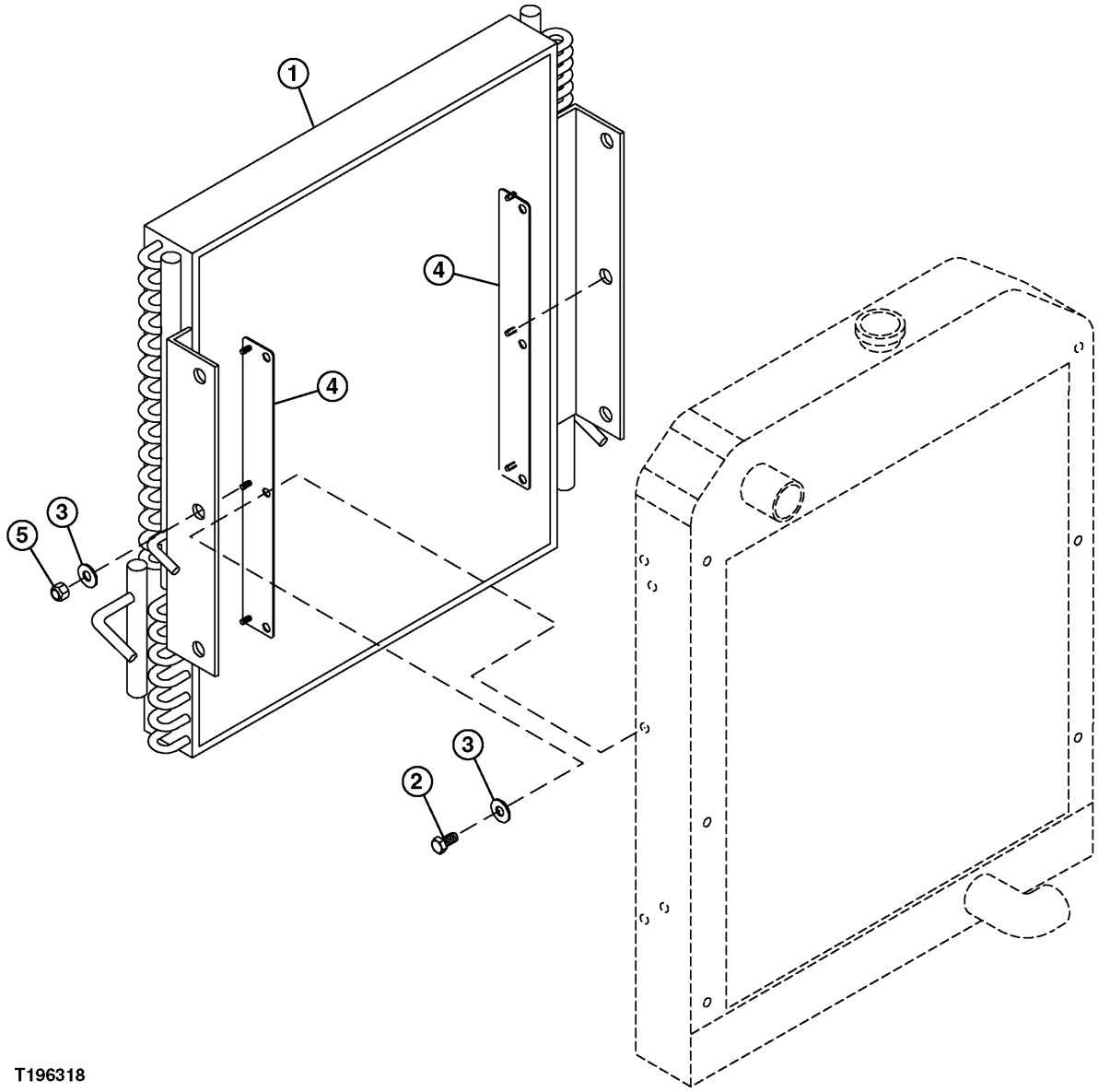

T196318

TRANSMISSION OIL COOLER (SERIAL NO. 882701-)

KEY	PART NO.	PART NAME	QTY	SERIAL NO.	REMARKS
1	CB01448395	OIL COOLER	1		
2	19H1648	CAP SCREW	6		3/8" X 3/4"
3	24H1305	WASHER	12		13/32" X 13/16" X 0.065"
4	CB11445786	BRACKET	1		RH
	CB11445785	BRACKET	1		LH
5	T11234	LOCK NUT	6		

CRANKSHAFT, GEAR AND MAIN BEARINGS
T04045DT050 (SERIAL NO. -826110)

T155453 -UN-05JUN02

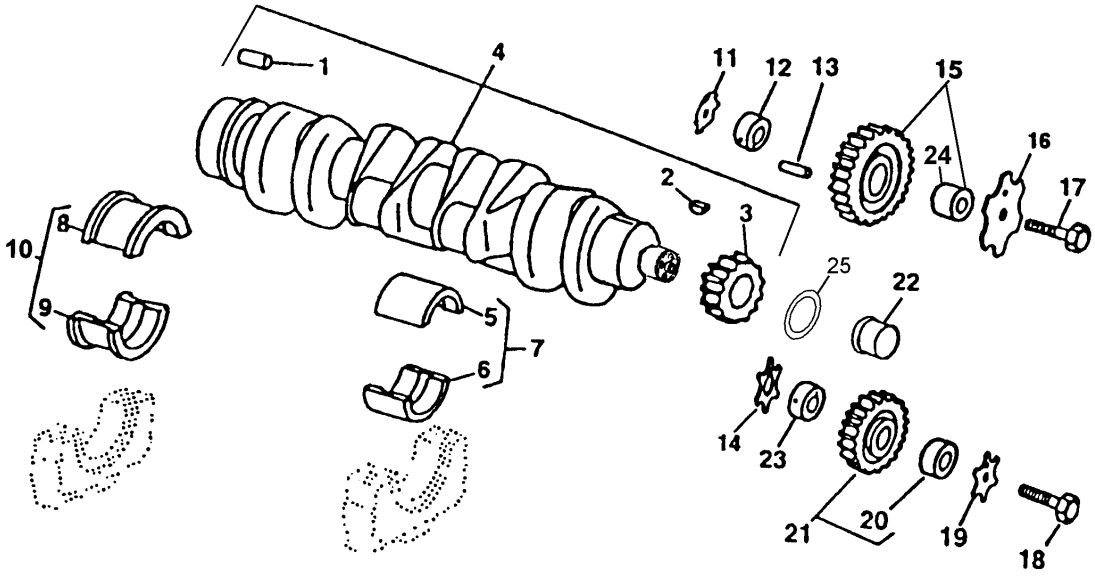

KEY	T155453 PART NO.	PART NAME	QTY	ENGINE SERIAL NO.	REMARKS
1	R48685	DOWEL PIN	1		12.700 X 28.448 MM (1/2" X 1.120")
2	26M4224	SHAFT KEY	1		4 X 16 MM, (USE WITH RE50618)
	R505609	SHAFT KEY	1		(USE WITH RE504638)
3	R120631	GEAR	1		(30 TEETH)
4	RE50618	CRANKSHAFT	1	-903066	(MARKED R113596) (SUB RE504638 AND RE516340) (ALSO ORDER RE59811)
	RE504638	CRANKSHAFT	1	903067-	(MARKED R113596) (ALSO ORDER RE516340)
5	.....	BEARING	4		STANDARD UPPER, (MARKED R123561)
	.....	BEARING	4		UNDERSIZE UPPER .254 MM, (MARKED R130576)
6	.....	BEARING	4		STANDARD LOWER, (MARKED R123562)
	.....	BEARING	4		UNDERSIZE LOWER .254 MM, (MARKED R130577)
7	RE65165	BEARING KIT	4		STANDARD
	RE65911	BEARING	4		UNDERSIZE .254 MM
8	.....	BEARING	1		STANDARD UPPER, (MARKED R123563)
	.....	BEARING	1		UNDERSIZE UPPER .254 MM, (MARKED R130574)
9	.....	BEARING	1		STANDARD LOWER, (MARKED R123564)
	.....	BEARING	1		UNDERSIZE LOWER .254 MM, (MARKED R130575)
10	RE65168	BEARING KIT	1		STANDARD
	RE65912	THRUST BEARING	1		UNDERSIZE .254 MM
11	R123174	LOCK WASHER	1	-766938	
	R101225	THRUST WASHER	1	766939-	
12	R120641	SHAFT	1	-766938	UPPER
	R109863	SHAFT	1	766939-	
13	34H288	SPRING PIN	1	-766938	4.775 X 44.450 MM (3/16" X 1-3/4")
14	R101225	THRUST WASHER	1		
15	RE56313	GEAR	1	-766938	(MARKED R120635)
	RE500631	GEAR	1	766939-	(MARKED R500363)
16	R131206	THRUST WASHER	1	-766938	
	R131283	THRUST WASHER	1	766939-	
17	19M8997	SCREW	1	-766938	M10 X 65
	19M8844	SCREW	1	766939-	M10 X 60
18	19M8966	SCREW	1		M10 X 50
19	R131283	THRUST WASHER	1		
20	R114193	BUSHING	1		
21	RE56369	GEAR	1		
22	RE59811	SLEEVE	1		
23	R114194	SHAFT	1		
24	.....	BUSHING	1	-766938	
	T20034	BUSHING	1	766939-	
25	RE516340	KIT	1	903067-	(USE WITH RE504638)

MEMORANDA

CAMSHAFT
T04045DT050
(SERIAL NO. -826110)

TP60711 -UN-17JUN98

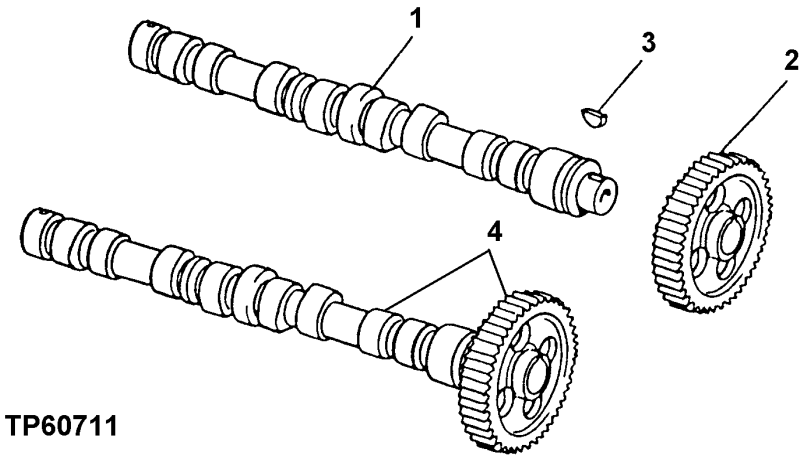

KEY	PART NO.	PART NAME	QTY	ENGINE SERIAL NO.	REMARKS
1	.....	CAMSHAFT	1		(A) (R135439 NO LONGER AVAILABLE)
2	.....	GEAR	1		(A) (60 TEETH) (R133812 NO LONGER AVAILABLE)
3	.....	SHAFT KEY	1		(A) (R133303 NO LONGER AVAILABLE)
4	RE56375	CAMSHAFT	1		(WITH GEAR AND KEY) (CONTAINS PARTS MARKED (A)) (MARKED R135439)

ROCKER ARM SHAFT, PUSH RODS AND ROCKER ARMS
T04045DT050
(SERIAL NO. -826110)

TP49263 -UN-20JUN95

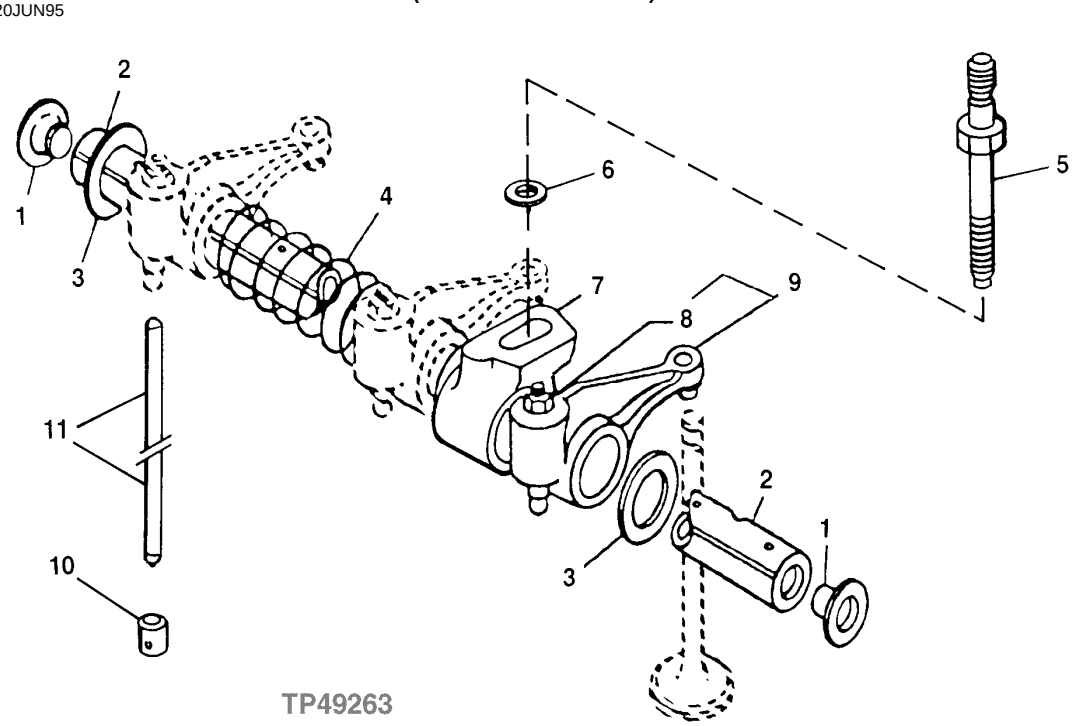

KEY	PART NO.	PART NAME	QTY	ENGINE SERIAL NO.	REMARKS
1	R54565	PLUG	2		
2	R123513	ROCKER ARM SHAFT	1		
3	T20316	WASHER	2		
4	T20314	SPRING	3		
5	R123271	STUD	4		
6	R42729	WASHER	4		
7	R123161	SUPPORT	4		
8	14M7148	NUT	1		M10
9	RE508317	ROCKER ARM	8		(SUB FOR RE68695)
10	R123565	FOLLOWER	8		
11	R107731	PUSH ROD	8		

ROCKER ARM COVER
T04045DT050
(SERIAL NO. -826110)

TP61820 -UN-22FEB99

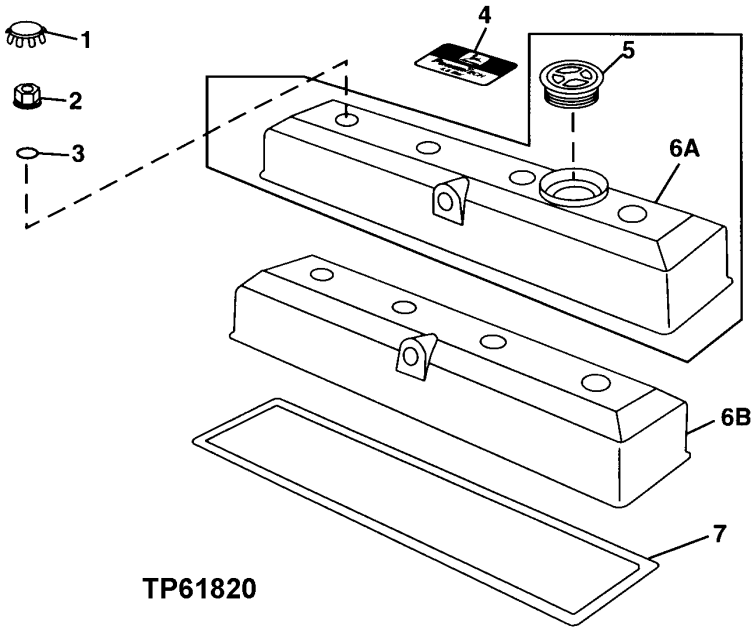

KEY	PART NO.	PART NAME	QTY	ENGINE SERIAL NO.	REMARKS
1	H23125	PLUG	4		
2	R123574	NUT	4		
3	R123575	O-RING	4		
4	R116324	MEDALLION	1		
5	RE59801	PLUG	1	-XXXXXX	
6A	RE70401	VALVE COVER	1	-XXXXXX	
6B	RE502969	VALVE COVER	1	XXXXXX-	
7	R123542	GASKET	1		
	RE520539	GASKET KIT	1		(HIGH TEMPERATURE)

MEMORANDA

TIMING GEAR COVER
T04045DT050
(ENGINE SERIAL NO. -826110)

T146446 -UN-12OCT01

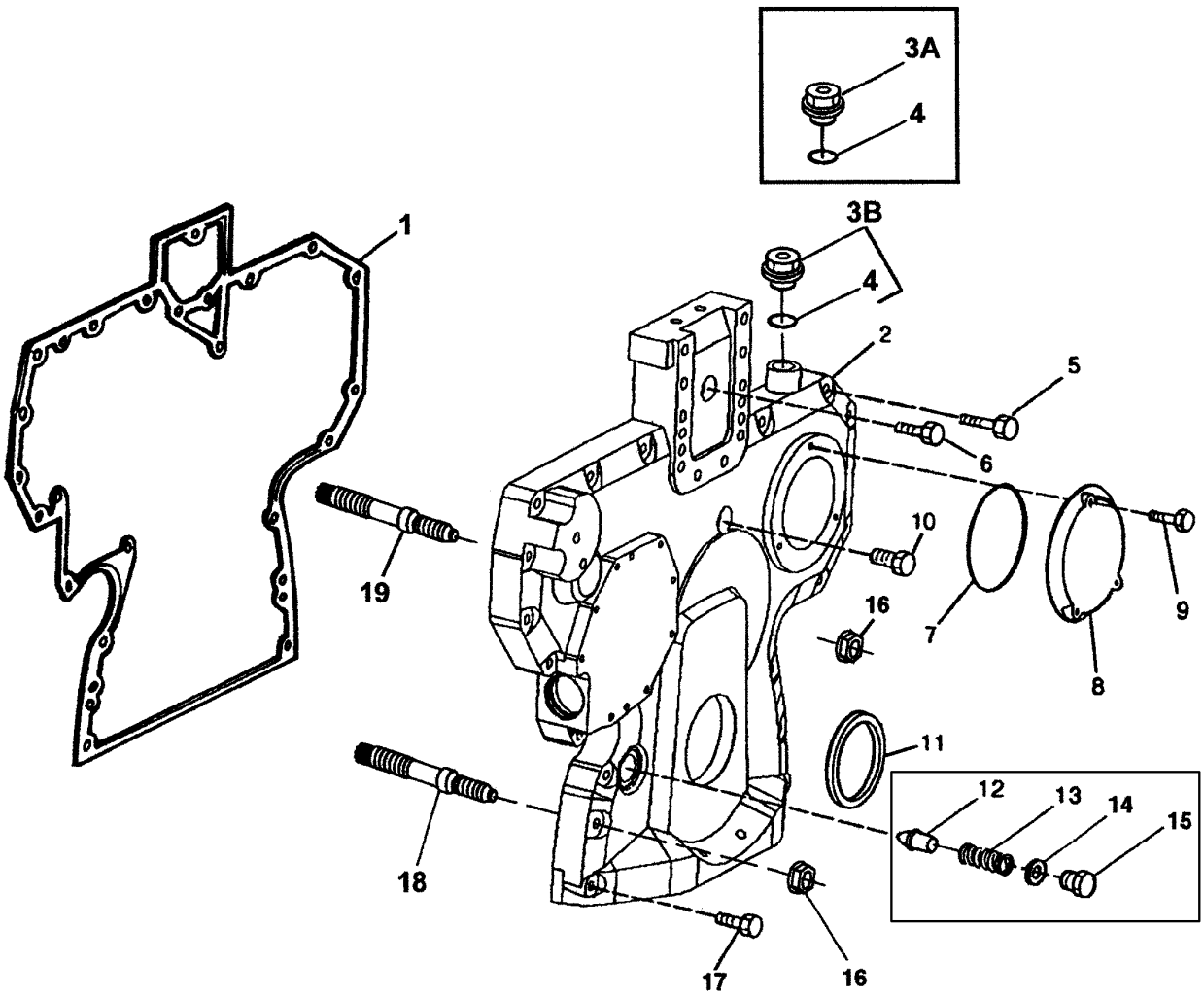

T146446

TIMING GEAR COVER
T04045DT050
(SERIAL NO. -826110)

KEY	PART NO.	PART NAME	QTY	ENGINE SERIAL NO.	REMARKS
1	R136516	GASKET	1		(SUB FOR R134534)
2	R505462	COVER	1		(SUB FOR R134531) (SUB R504725 AND RE515978)
3A	R101085	DRAIN PLUG	1		(SUB RE501938, THIS APPLICATION)
3B	RE501938	PLUG	1		
4	51M7044	O-RING	1		17.300 X 2.200 MM
5	19M8317	SCREW	6		M8 X 40
	19M7801	SCREW	1		M8 X 60
	19M7867	SCREW	1		M8 X 25
	RE67239	SCREW	1		
6	19M8291	SCREW	1		M8 X 35
7	R121424	O-RING	1		
8	R121411	COVER	1		
9	19M7775	SCREW	3		M6 X 16
10	19M7801	SCREW	1		M8 X 60
11	RE516340	KIT	1		(SUB FOR RE59810)
12	R83169	VALVE	1		
13	R131425	COMPRESSION SPRING	1		
14	A4827R	WASHER	1		
15	R91692	PLUG	1		OIL PRESSURE REGULATING
16	14M7296	FLANGE NUT	4		M10
17	19M7979	SCREW	2		M8 X 55
18	R123584	STUD	4		
19	R134518	STUD	2		

REPLACEMENT TIMING GEAR COVER
T04045DT050
(ENGINE SERIAL NO. -826110)

T149705 -UN-07FEB02

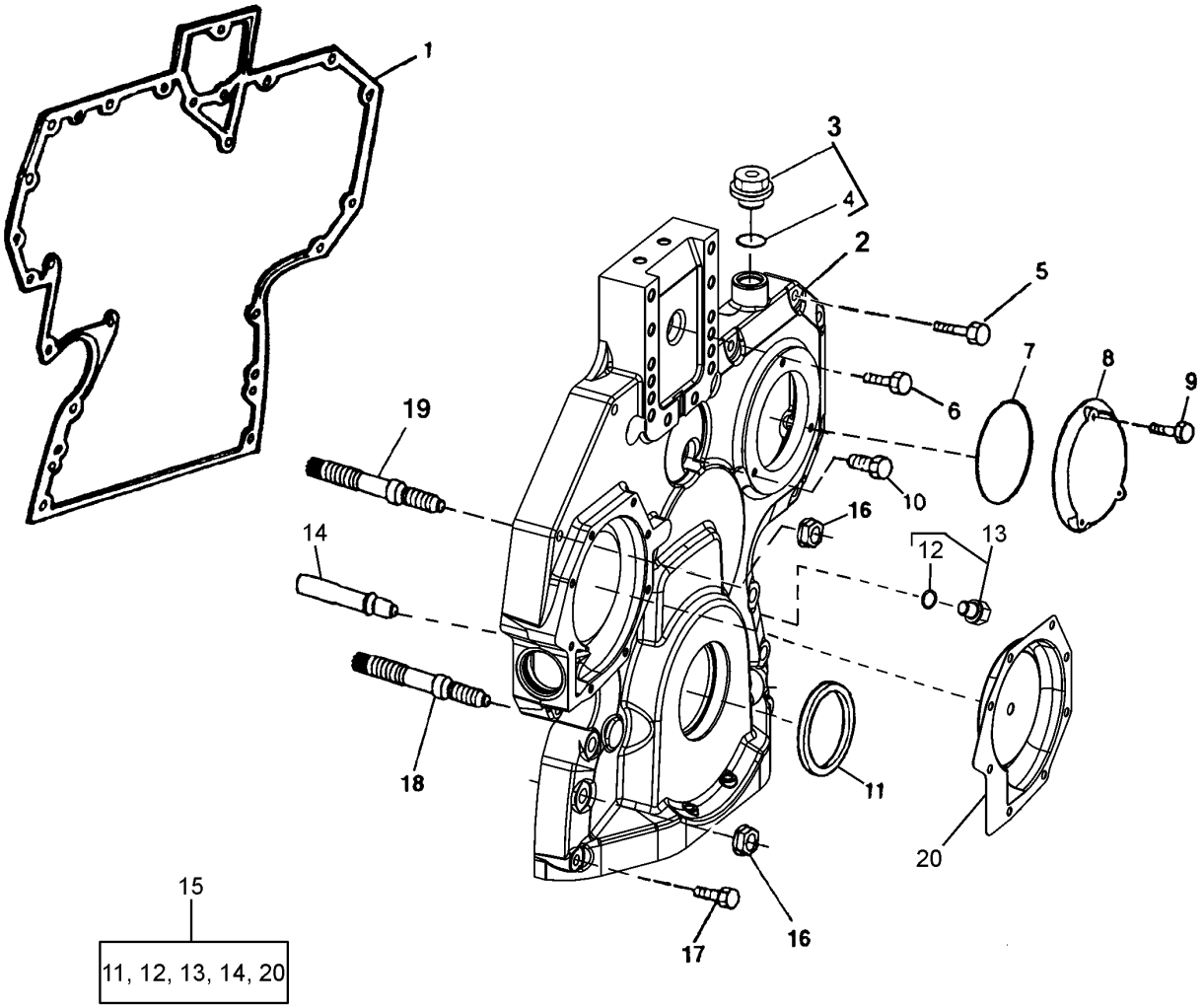

T149705

REPLACEMENT TIMING GEAR COVER
T04045DT050
(ENGINE SERIAL NO. -826110)

KEY	PART NO.	PART NAME	QTY	ENGINE SERIAL NO.	REMARKS
1	R136516	GASKET	1		
2	R504725	COVER	1		
3	RE501938	PLUG	1		(WITHOUT TACHOMETER SENSOR)
4	51M7044	O-RING	1		17.300 X 2.200 MM
5	19M8317	SCREW	6		M8 X 40
	19M7867	SCREW	1		M8 X 25
	RE67239	SCREW	1		
6	19M8291	SCREW	1		M8 X 35
7	R121424	O-RING	1		
8	R121411	COVER	1		
9	19M7775	SCREW	3		M6 X 16
10	19M7801	SCREW	1		M8 X 60
11	RE516340	SEAL	1		(SUB FOR RE59810)
12	51M7044	O-RING	1		17.300 X 2.200 MM
13	RE501938	PLUG	1		
14	RE505501	BLEED VALVE	1		
15	RE515978	KIT	1		
16	14M7296	FLANGE NUT	6		M10
17	19M7979	SCREW	2		M8 X 55
18	R123584	STUD	4		
19	R134518	STUD	2		
20	RE508566	KIT	1		(WATER PUMP INSERT REPAIR)

PISTON AND CONNECTING RODS
T04045DT050
(SERIAL NO. -826110)

TP49283 -UN-17JUL95

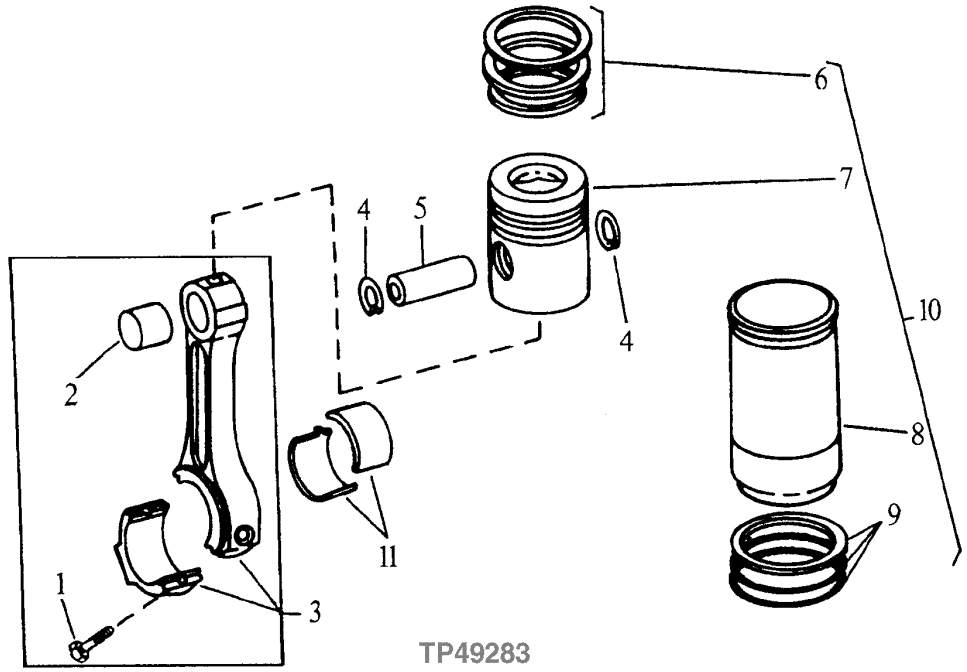

KEY	PART NO.	PART NAME	QTY	ENGINE SERIAL NO.	REMARKS
1	R114083	SCREW	8	-793991	(SUB FOR R500500)
	R501124	SCREW	8	793992-	
2	R123960	BUSHING	8		(SUB FOR R130603)
3	RE60272	CONNECTING ROD	4	-793991	(MARKED R123959) (SUB RE500002)
	RE500002	CONNECTING ROD	4	793992-	(MARKED R500000)
4	M41029	SNAP RING	8		
5	R123178	PISTON PIN	4		
6	RE66271	PISTON RING KIT	4		
7	.....	PISTON	4		
8	.....	CYLINDER LINER	4		STANDARD
9	AR65507	O-RING KIT	4		CYLINDER LINER
10	RE505110	PISTON-LINER KIT	4		PISTON WITH LINER, (SUB FOR RE65966)
11	RE65908	BEARING	4		STANDARD
	RE65909	BEARING	4		.010" UNDERSIZE

ENGINE FRONT PLATE
T04045DT050
(SERIAL NO. -826110)

TP49330 -UN-14NOV95

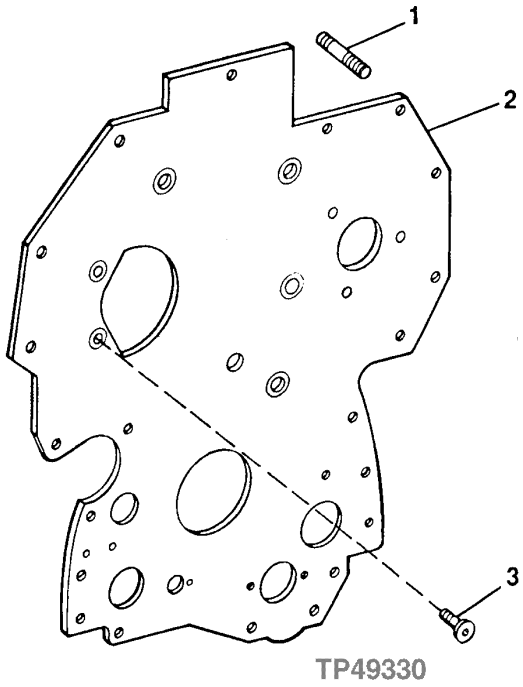

KEY	PART NO.	PART NAME	QTY	ENGINE SERIAL NO.	REMARKS
1	R116386	STUD	3		
2	R134527	PLATE	1		
3	R136475	SCREW	6		(SUB FOR R123355)

CYLINDER BLOCK AND MAIN BEARING CAP
T04045DT050
(SERIAL NO. -826110)

TP55064 -UN-15MAY97

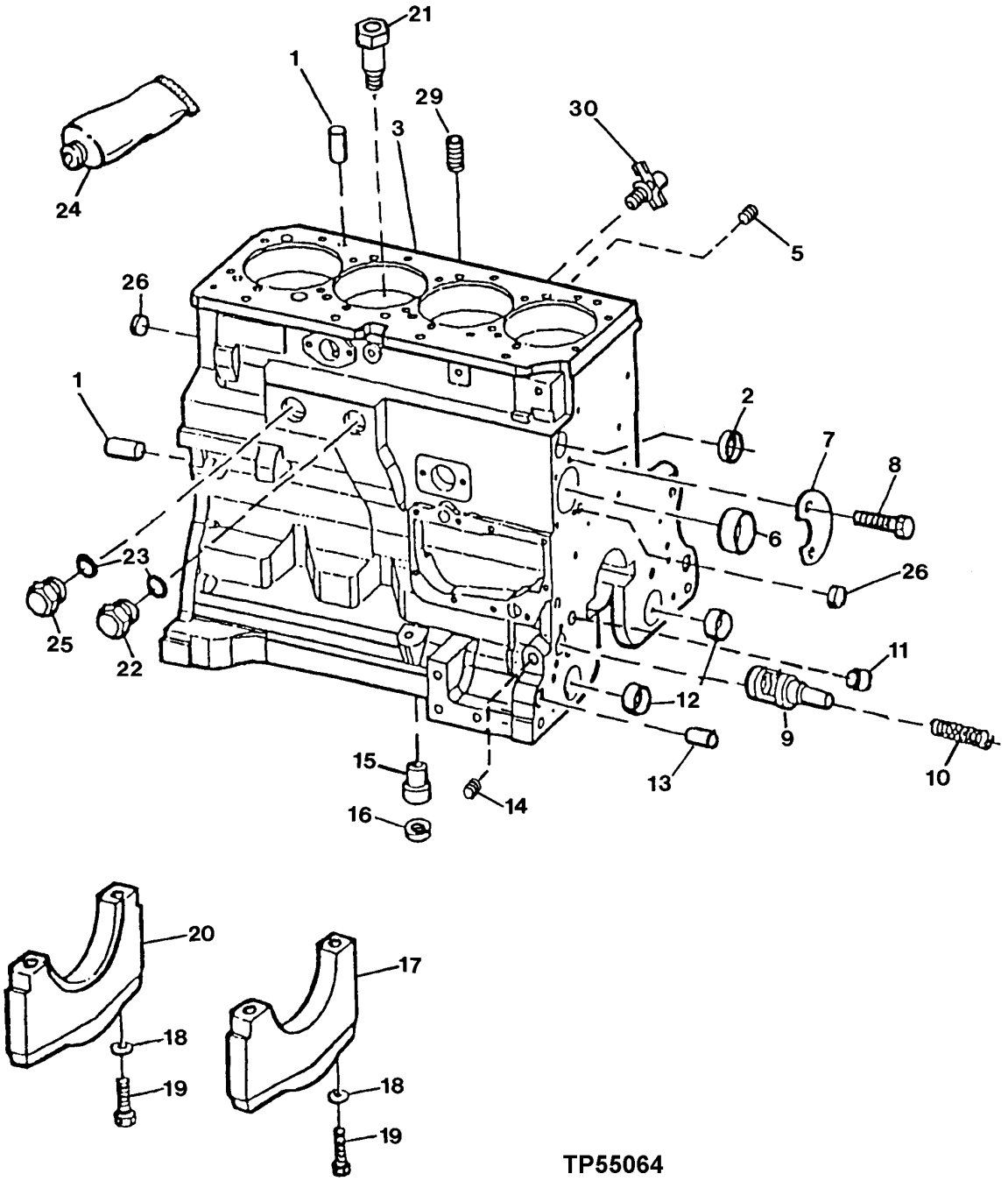

CYLINDER BLOCK AND MAIN BEARING CAP
T04045DT050
(SERIAL NO. -826110)

KEY	PART NO.	PART NAME	QTY	ENGINE SERIAL NO.	REMARKS
1	R48685	DOWEL PIN	4		
2	R116466	PLUG	1		
3	.....	CYLINDER BLOCK	1		(MARKED R115081) (ORDER RE516100)
5	R104592	PIPE PLUG	5		
6	R119874	BUSHING	1		CAMSHAFT
7	R132518	PLATE	1		
8	19M8999	SCREW	2		M8 X 25
9	R121043	FLOW CONTROL HYD. VALVE	1		ENGINE OIL BY-PASS
10	R111137	SPRING	1		
11	R26493	BUSHING	1		OIL PRESSURE REGULATING
12	R115299	BUSHING	6		BALANCER SHAFT
13	R26650	DOWEL PIN	2		
14	15H623	PIPE PLUG	1		3/8"
15	R115390	BUSHING	1		
16	R75892	O-RING	1		
17	R114241	BEARING CAP	4		
18	T20168	WASHER	10		
19	T23474	CAP SCREW	10		
20	R132186	BEARING CAP	1		
21	R131182	ORIFICE	4		
22	R39741	DRAIN PLUG	1		
23	U13639	O-RING	1		
24	TY6304	SEALANT	1		PLASTIC GASKET
25	R39741	DRAIN PLUG	1		
26	T18891	PLUG	2		
29	15H624	PIPE PLUG	1		1/2"
30	AT13740	DRAIN VALVE	1		

ENGINE SHORT BLOCK
T04045DT050
(SERIAL NO. -826110)

T156111 -UN-13JUN02

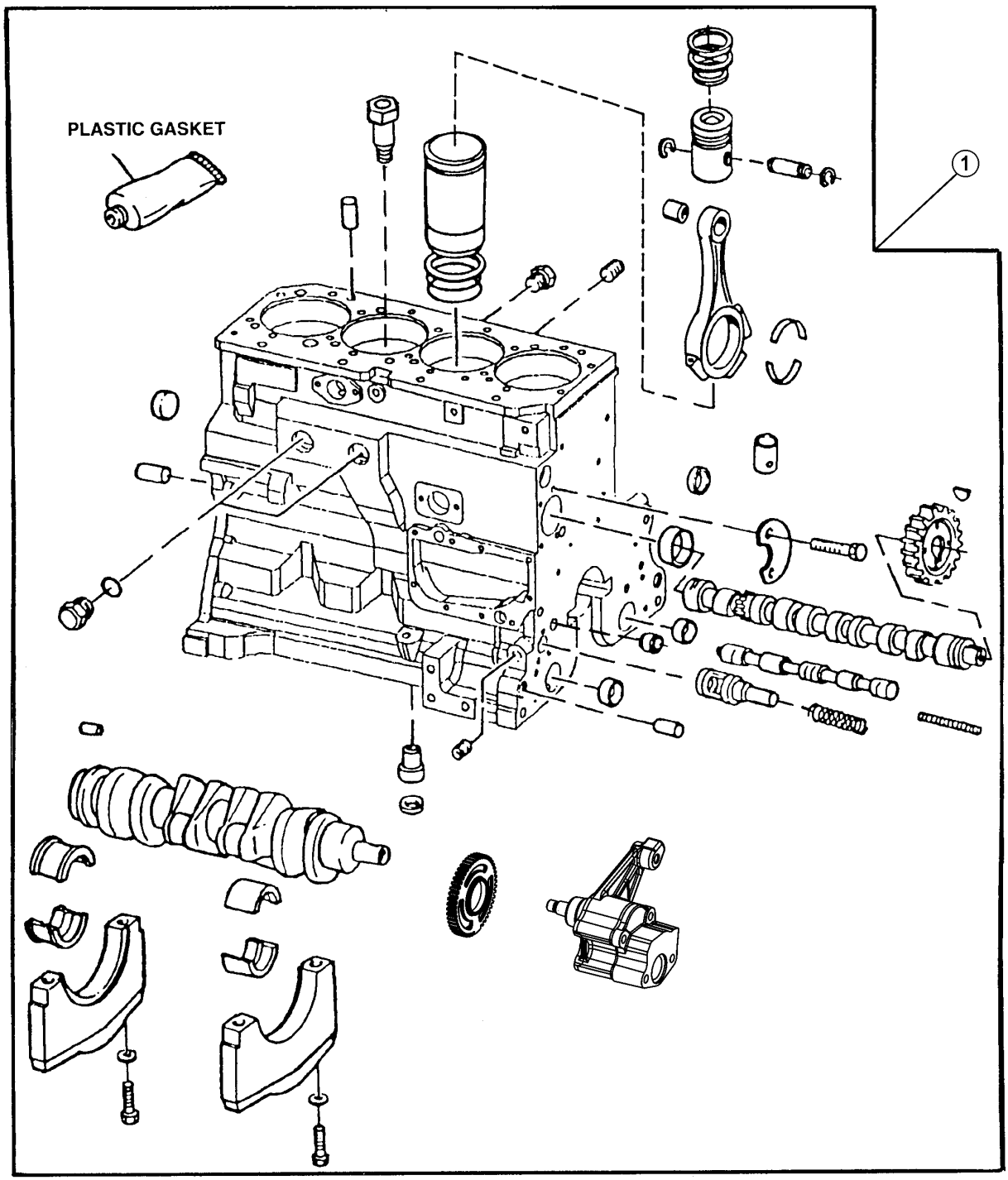

T156111

ENGINE SHORT BLOCK
T04045DT050
(SERIAL NO. -826110)

KEY	PART NO.	PART NAME	QTY	ENGINE SERIAL NO.	REMARKS
1	RE516100	SHORT BLOCK ASSEMBLY	1		(MARKED R115081) (SUB FOR RE65951) (DOES NOT INCLUDE FRONT PLATE)
	SE500711	COMPLETE BLOCK ASSEMBLY	1		(REMANUFACTURED)

ENGINE OIL FILLER INLET
T04045DT050
(SERIAL NO. -826110)

TP55080 -UN-18APR97

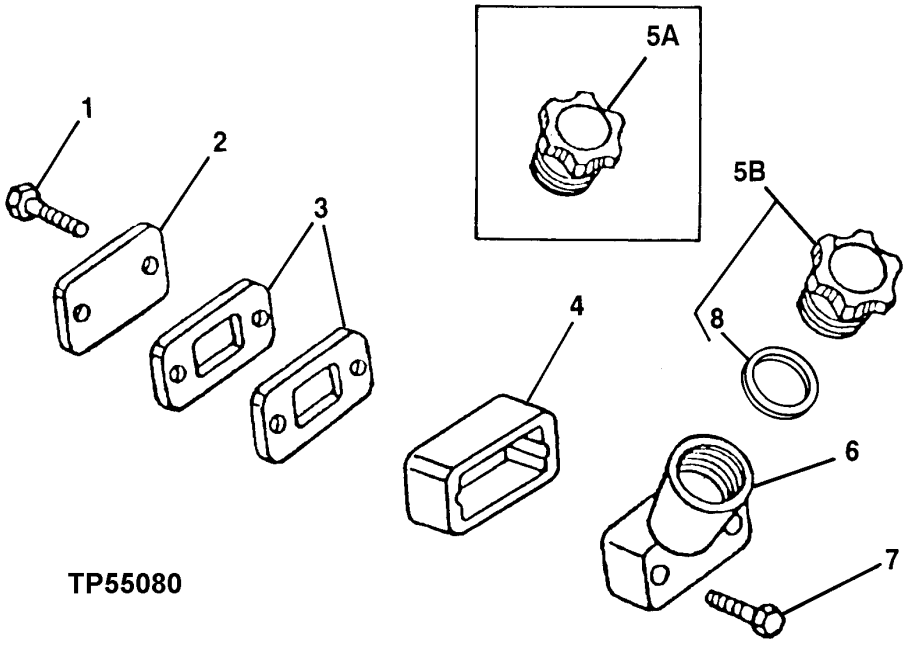

KEY	PART NO.	PART NAME	QTY	ENGINE SERIAL NO.	REMARKS
1	RE67238	SCREW	2		M8 X 20 (WITH PRE-APPLIED SEALANT)
2	R116296	COVER	1		
3	R136495	GASKET	2		
4	R136514	SPACER	1		
5A	.....	CAP	1		
5B	RE500005	FILLER CAP	1		
6	RE501377	FILLER NECK	1		
7	RE503609	SCREW	2		8M X 100 (WITH PRE-APPLIED SEALANT) (SUB FOR RE71527, THIS APPLICATION)
8	R500001	PACKING	1		

ENGINE OIL DIPSTICK
T04045DT050
(SERIAL NO. -826110)

TP49880 -UN-16AUG96

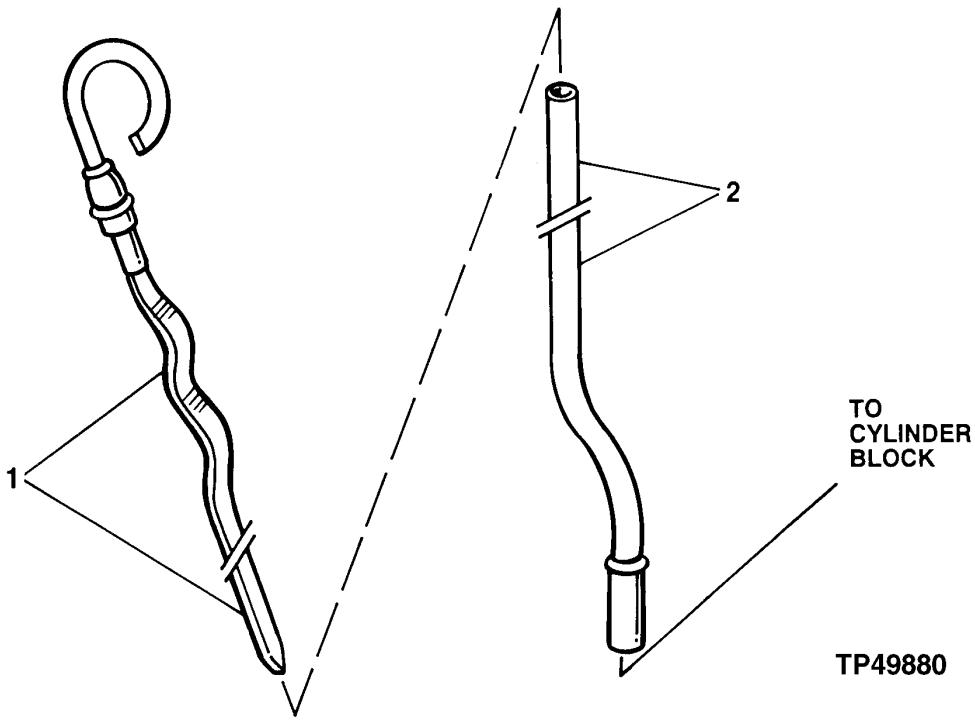

KEY	PART NO.	PART NAME	QTY	ENGINE SERIAL NO.	REMARKS
1	RE69243	DIPSTICK	1		
2	R502604	DIPSTICK TUBE	1		

ENGINE OIL PAN
T04045DT050
(SERIAL NO. -826110)

TP50804 -UN-25MAR98

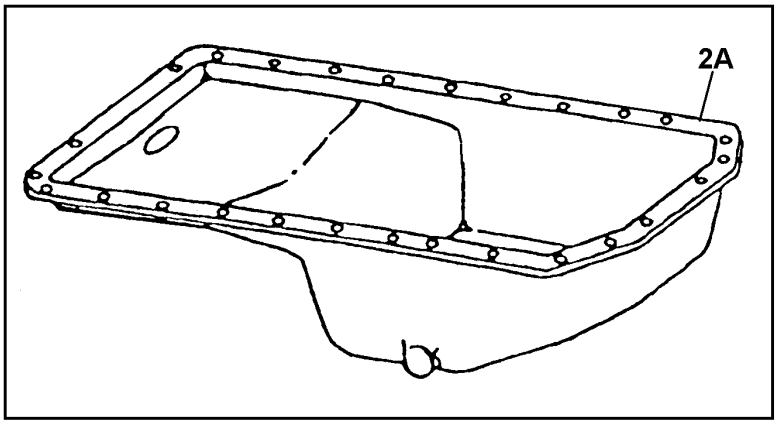

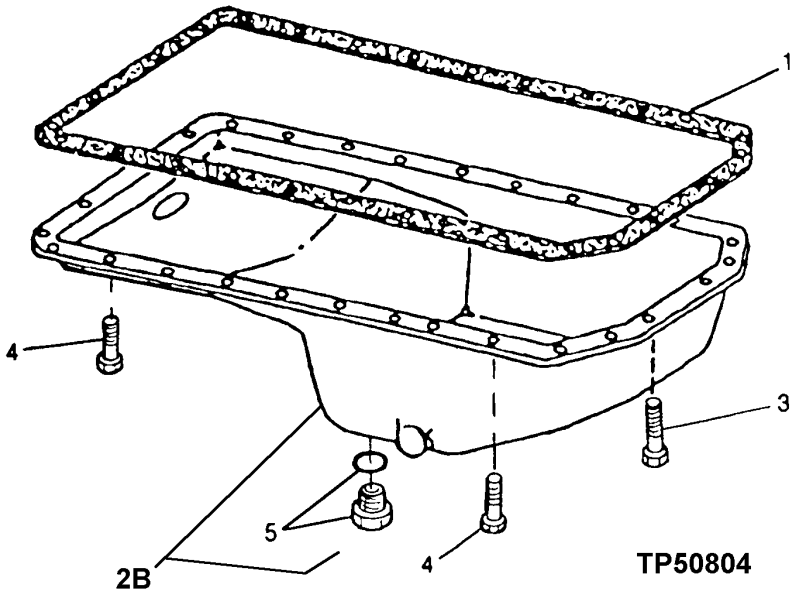

ENGINE OIL PAN
T04045DT050
(SERIAL NO. -826110)

KEY	PART NO.	PART NAME	QTY	ENGINE SERIAL NO.	REMARKS
1	R123353	GASKET	1		
2A	RE59427	OIL PAN	1		(SUB RE59439)
2B	RE59439	OIL PAN	1		
3	19M8062	SCREW	6		M8 X 20
4	19M8163	CAP SCREW	22		M8 X 16
5	RE46685	PLUG	1		

ENGINE OIL FILTER/ADAPTER
T04045DT050
(SERIAL NO. -826110)

TP55368 -UN-04MAY98

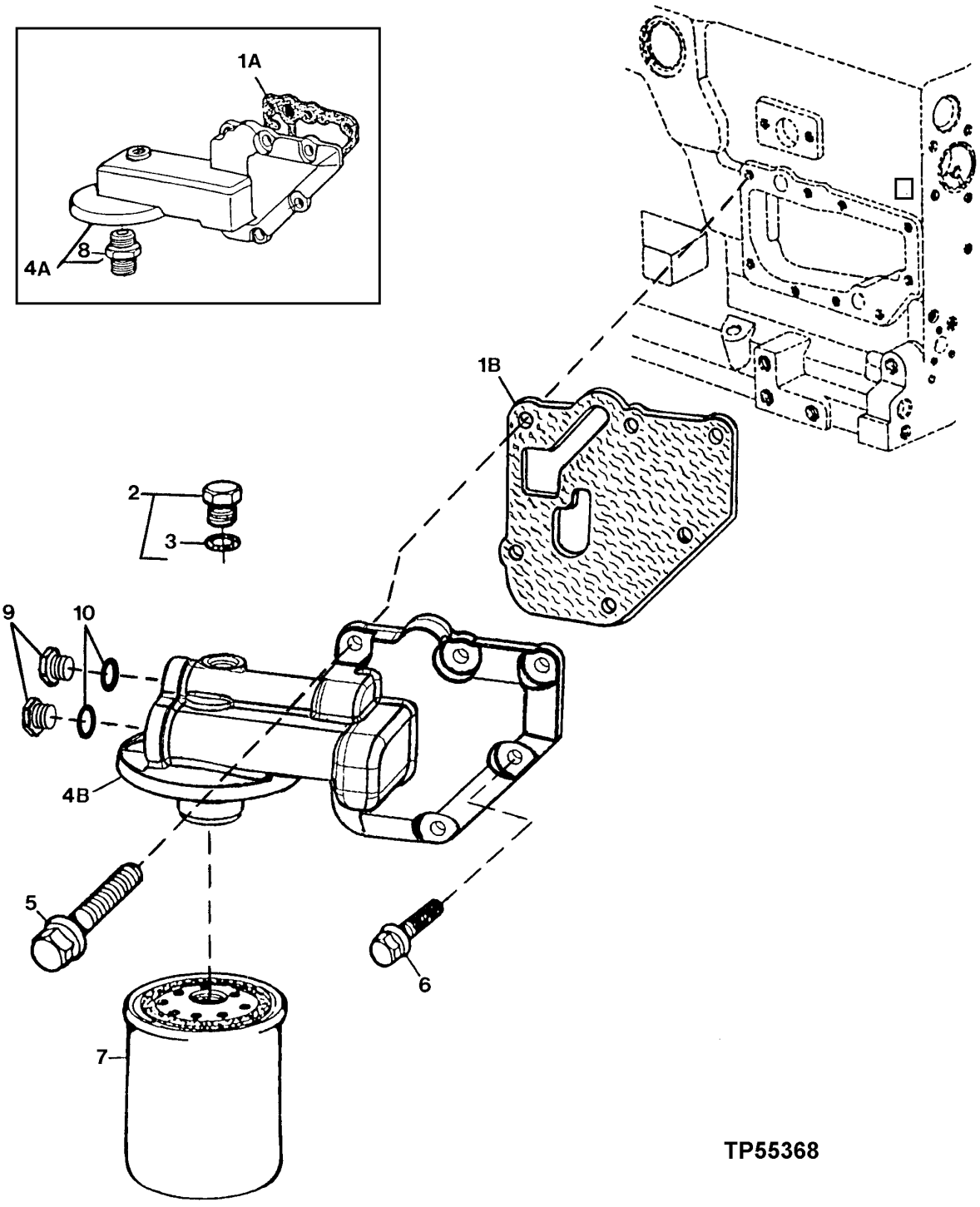

ENGINE OIL FILTER/ADAPTER
T04045DT050
(SERIAL NO. -826110)

KEY	PART NO.	PART NAME	QTY	ENGINE SERIAL NO.	REMARKS
1A	R123525	GASKET	1	-768842	
1B	R500374	GASKET	1	768843-	
2	RE46716	PLUG	AR	-XXXXXX	WITHOUT TURBO
	RE52242	DRAIN PLUG	AR	XXXXXX-	WITHOUT TURBO
3	51M7042	O-RING	1		13.300 X 2.200 MM
4A	RE59908	FILTER HEAD	1	-768842	(MARKED R123475) (SUB RE500133) (ALSO ORDER (2) R116115, (2) 51M7045 AND R500374)
4B	RE500133	FILTER HEAD	1	768843-	
5	19M7802	SCREW	5		M8 X 65
6	RE67238	SCREW	1		M8 X 20 (WITH PRE-APPLIED SEALANT)
7	RE59754	OIL FILTER	1		
8	.....	ADAPTER	1	-768842	(R123591 NO LONGER AVAILABLE, FURNISH RE503727)
9	R116115	FITTING	2	768843-	
10	51M7045	O-RING	2	768843-	

ENGINE OIL PUMP
T04045DT050
(SERIAL NO. -826110)

TP49570 -UN-17FEB97

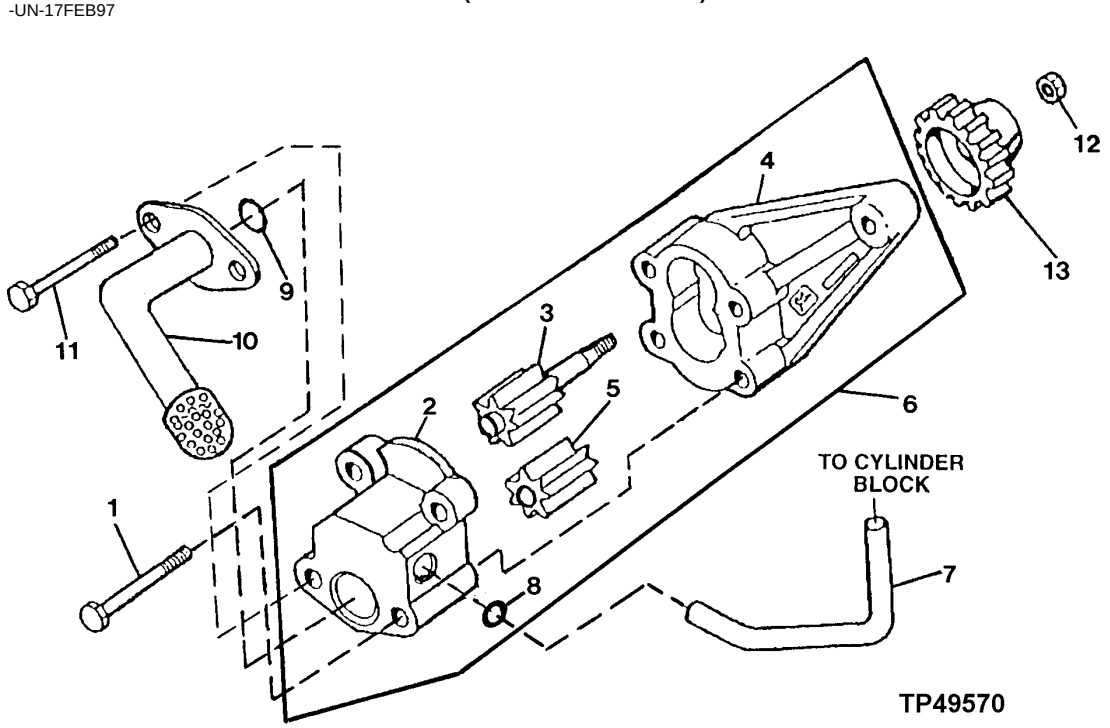

KEY	PART NO.	PART NAME	QTY	ENGINE SERIAL NO.	REMARKS
1	19M8987	SCREW	2		M8 X 65
2	.....	COVER	1		
3	.....	GEAR	1		
4	.....	HOUSING	1		
5	.....	GEAR	1		
6	RE504914	OIL PUMP	1		(MARKED R502867) (SUB FOR RE502269) (MARKED R123179) (SUB FOR RE70153 MARKED R123179 AND RE59582 MARKED R123179)
7	R121376	TUBE	1		
8	R97185	O-RING	1		
9	R61871	O-RING	1		
10	RE70073	OIL PUMP INTAKE	1		
11	19M8986	SCREW	2		M8 X 100
12	14M7066	NUT	1		M12
13	R120638	GEAR	1		(30 TEETH)

MEMORANDA

ENGINE VENTILATING SYSTEM
T04045DT050
(SERIAL NO. -826110)

TP49041 -UN-06SEP95

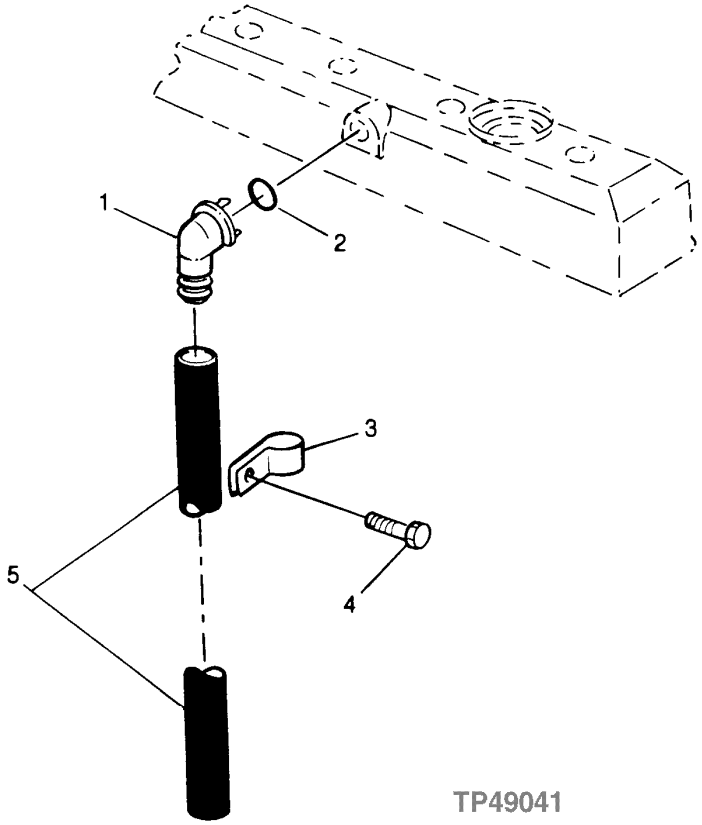

ENGINE VENTILATING SYSTEM
T04045DT050
(SERIAL NO. -826110)

KEY	PART NO.	PART NAME	QTY	ENGINE SERIAL NO.	REMARKS
1	R120467	ELBOW FITTING	1		
2	R72328	O-RING	1		18.720 X 2.616 MM (0.737" X 0.103")
3	R72659	CLAMP	1		
4	19M7866	SCREW	1		M8 X 20
5	H36031	HOSE	1		

CYLINDER HEAD, HEAD GASKET AND VALVES
T04045DT050
(SERIAL NO. -826110)

TP49042 -UN-06SEP95

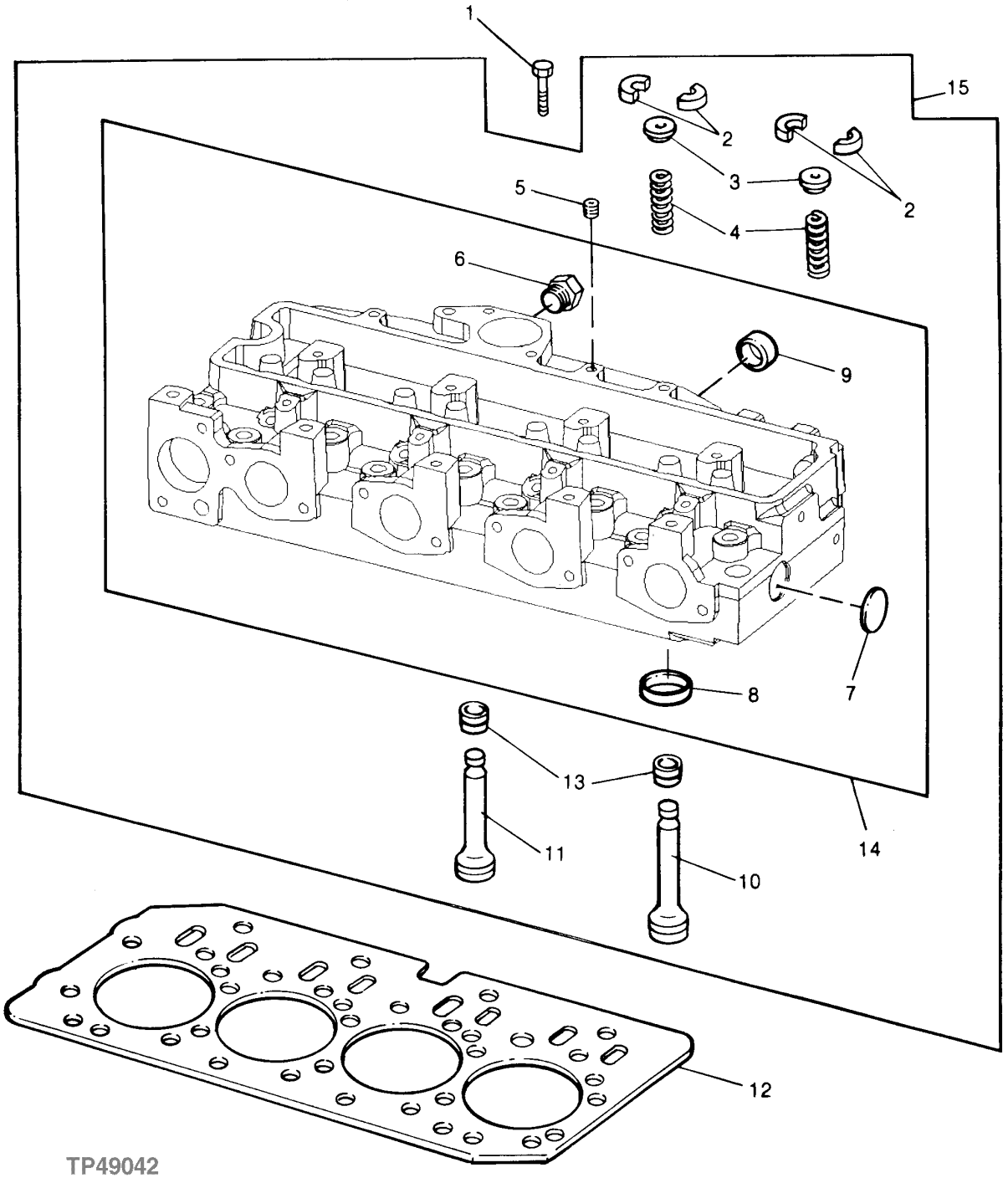

CYLINDER HEAD, HEAD GASKET AND VALVES
T04045DT050
(SERIAL NO. -826110)

KEY	PART NO.	PART NAME	QTY	ENGINE SERIAL NO.	REMARKS
1	R85363	CAP SCREW	18		
2	R91889	RETAINER	16		
3	RE60005	ROTATOR	8		
4	R26125	SPRING	8		
5	R104592	PIPE PLUG	1		
6	T58477	FITTING	1		
	R26906	O-RING	1		
7	CD16284	PLUG	1		
8	R98063	VALVE SEAT INSERT	4		STANDARD SIZE INTAKE VALVE
	R98335	VALVE SEAT INSERT	4		OVERSIZE INTAKE VALVE
	R85687	VALVE SEAT INSERT	4		STANDARD SIZE EXHAUST VALVE
	R93910	VALVE SEAT INSERT	4		OVERSIZE EXHAUST VALVE
9	R43409	PLUG	2		
10	R90692	EXHAUST VALVE	4		STANDARD
11	R98062	INTAKE VALVE	4		STANDARD
12	R116515	ENGINE CYLINDER HEAD GASKET	1		
13	RE31617	SEAL	8		
14	.....	CYLINDER HEAD	1		(MARKED R121402)
15	RE57234	CYLINDER HEAD	1		(MARKED R121402)

MEMORANDA

EXHAUST MANIFOLD
T04045DT050
(SERIAL NO. -826110)

TP49344 -UN-22NOV95

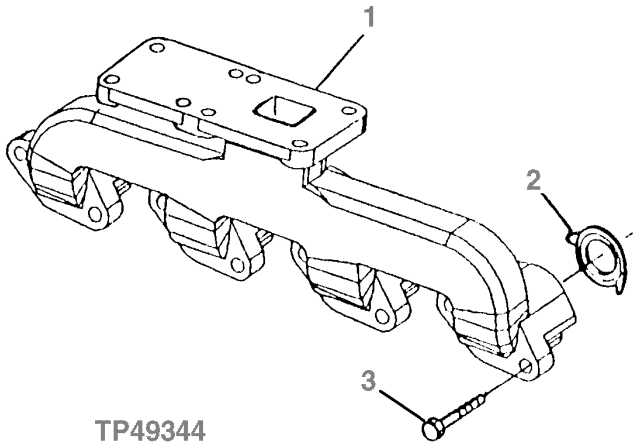

KEY	PART NO.	PART NAME	QTY	ENGINE SERIAL NO.	REMARKS
1	R132261	EXHAUST MANIFOLD	1		
2	R90658	GASKET	4		
3	19M7810	SCREW	8		M10 X 80

FUEL INJECTION NOZZLE
T04045DT050
(SERIAL NO. -826110)

TP48976 -UN-26OCT96

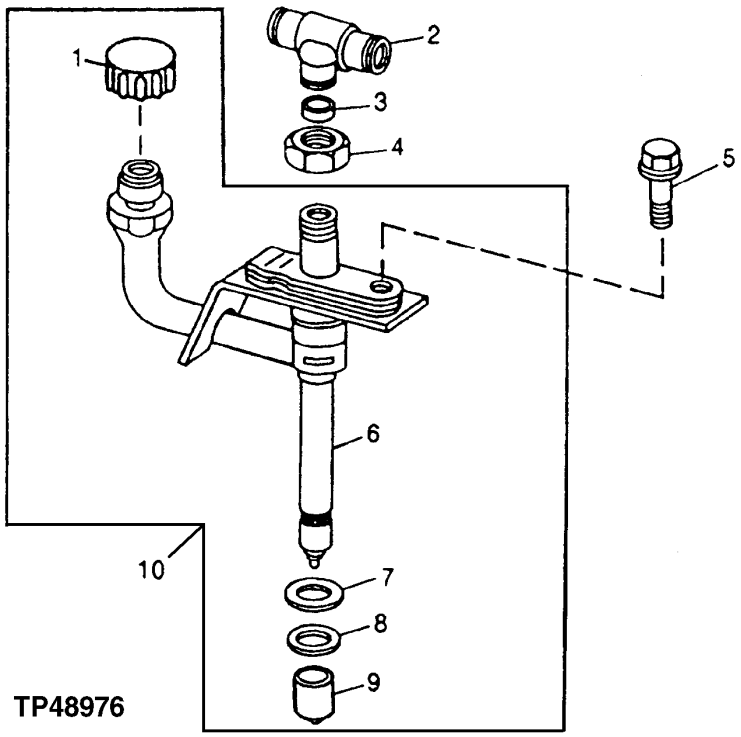

KEY	PART NO.	PART NAME	QTY	ENGINE SERIAL NO.	REMARKS
1	.....	CAP (HAT)	1		
2	R71963	TEE FITTING	1		
3	R79605	WASHER	1		
4	R79604	TUBE NUT	1		
5	R116366	SCREW	1		
6	.....	NOZZLE	1		
7	R92352	PACKING	1		
8	R48000	SEAL	1		(USE WITH OVERSIZE NOZZLE BORE)
	R500390	WASHER	1		(USE WITH STANDARD NOZZLE BORE)
9	T24472	CAP	1		
10	RE60062	INJECTION NOZZLE	1		
	SE500828	NOZZLE	1		(REMANUFACTURED) (PACKAGE OF FOUR)

FUEL INJECTION PUMP SOLENOID WIRE HARNESS
T04045DT050
(SERIAL NO. -826110)

TP50825 -UN-16APR98

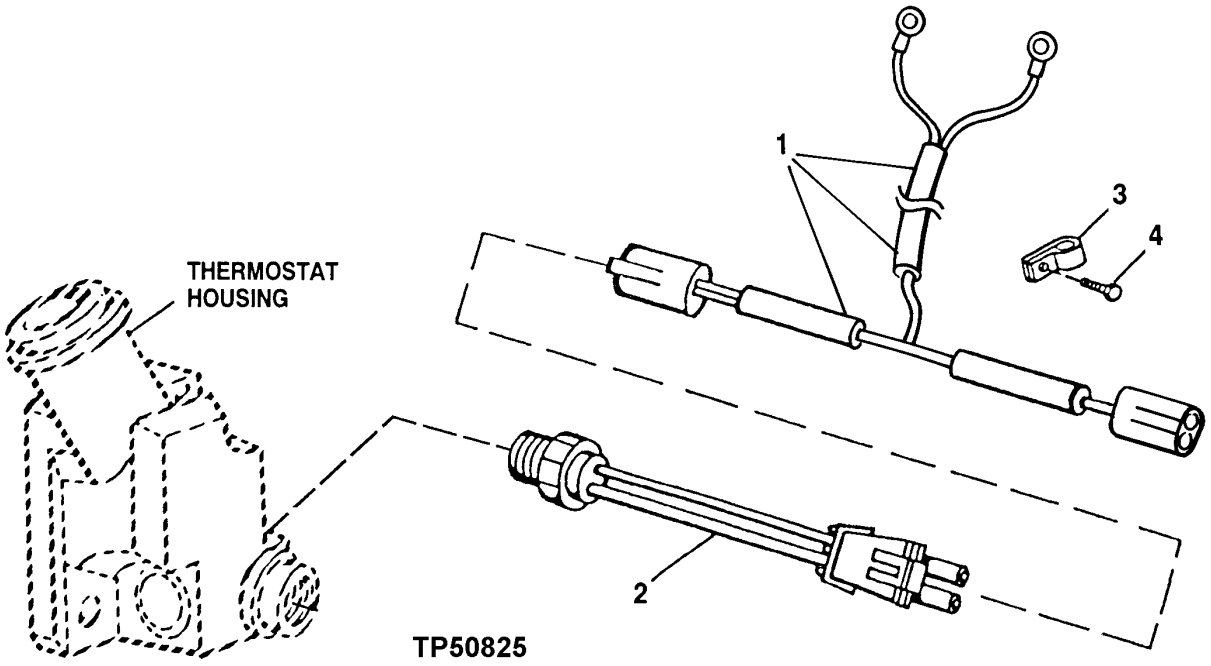

KEY	PART NO.	PART NAME	QTY	ENGINE SERIAL NO.	REMARKS
1	RE66560	WIRING HARNESS	1		
2	RE503242	SENSOR WIRING HARNESS	1		(SUB FOR RE66214)
3	T74410	CLAMP	1		
4	19M7783	SCREW	1		M10 X 16

FUEL INJECTION SYSTEM
(12 VOLT STANADYNE DB4)
T04045DT050
(SERIAL NO. -826110)

TP59229 -UN-09OCT97

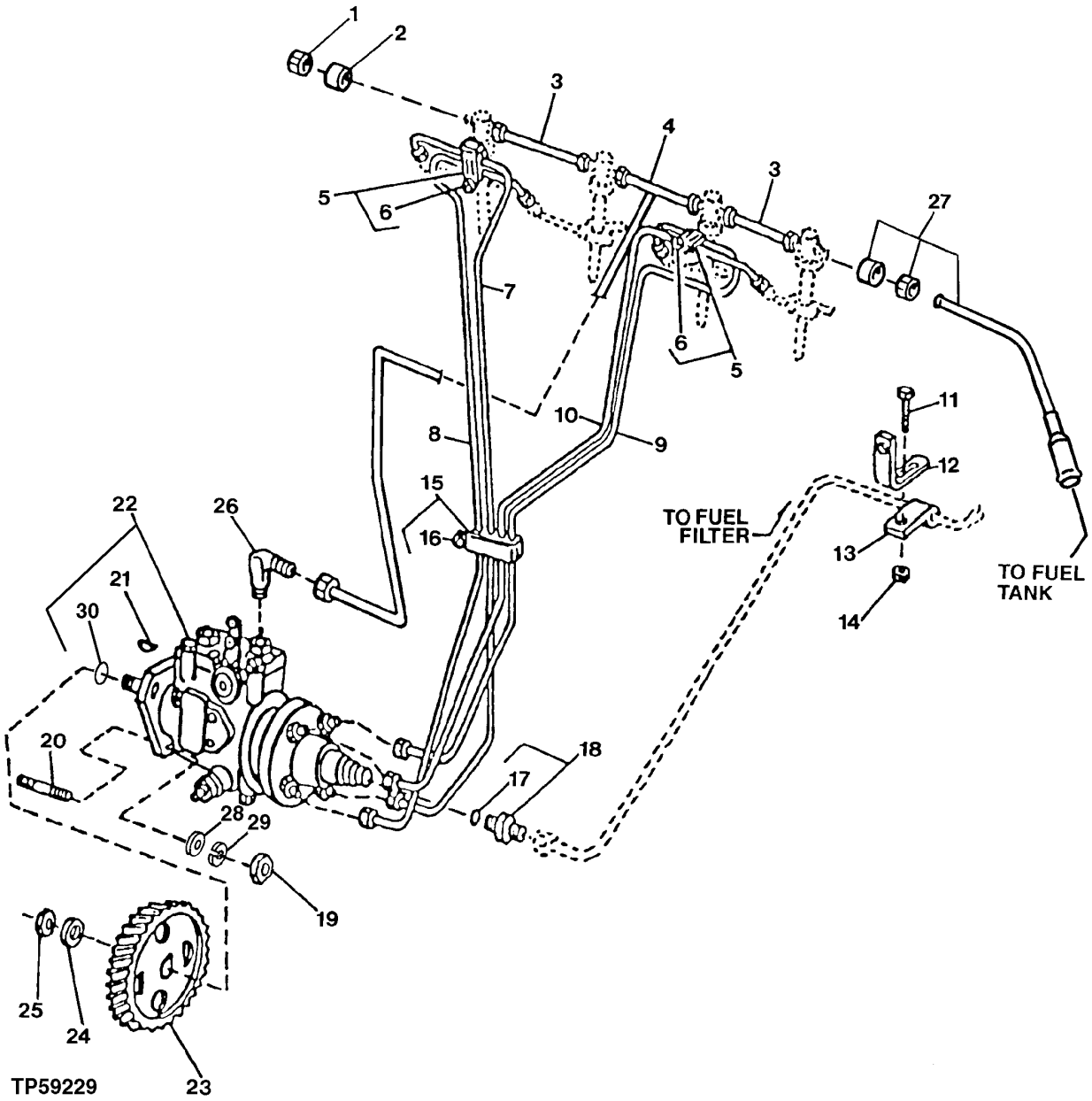

FUEL INJECTION SYSTEM
(12 VOLT STANADYNE DB4)
T04045DT050
(SERIAL NO. -826110)

KEY	PART NO.	PART NAME	QTY	ENGINE SERIAL NO.	REMARKS
1	AR85519	PLUG	1		
2	R123593	TUBE NUT	1		
3	RE68748	TUBE	2		
4	RE70848	FUEL LINE	1		LEAK-OFF
5	RE19797	CLAMP	2		
6	19M7300	CAP SCREW	2		M6 X 10
7	RE59447	FUEL LINE	1		NO. 1
8	RE59448	FUEL LINE	1		NO. 2
9	RE59449	FUEL LINE	1		NO. 3
10	RE59450	FUEL LINE	1		NO. 4
11	19M7865	SCREW	1		M8 X 16, NO. 2
12	R116116	BRACKET	1		
13	T14050	CLAMP	1		
14	14M7298	FLANGE NUT	1		M8
15	RE19799	CLAMP	1		
16	19M7300	CAP SCREW	1		M6 X 10
17	51M7040	O-RING	1		9.300 X 2.200 MM (0.366" X 0.087")
18	RE60029	ADAPTER	1		
19	14M7273	NUT	3		M8
20	R116386	STUD	3		
21	26H10	SHAFT KEY	1		3.962 X 15.875 MM (5/32" X 5/8")
22	RE500877	FUEL INJECTION PUMP	1	-790574	(A) (COLD ADVANCE READY) (SUB FOR RE67594)
	RE502380	FUEL INJECTION PUMP	1	790575-838789	(A)
	RE506123	FUEL INJECTION PUMP	1	838790-	
	SE500777	FUEL INJECTION PUMP	1	838790-	(REMANUFACTURED)
23	R132267	GEAR	1		(60 TEETH)
24	R132874	WASHER	1		
25	R91360	NUT	1		M14
26	R67364	ELBOW FITTING	1		
27	RE16142	FUEL LINE	1		
	R51936	SEALING WASHER	1		
	R51937	TUBE NUT	1		
28	T27860	WASHER	3		
29	12M7065	LOCK WASHER	3		
30	R502076	BACK-UP RING	1		(SUB FOR R89944)

(A) SEE YOUR AUTHORIZED PUMP REPAIR STATION FOR INTERNAL PARTS

AIR INTAKE SYSTEM
T04045DT050
(SERIAL NO. -826110)

TP49444 -UN-14AUG96

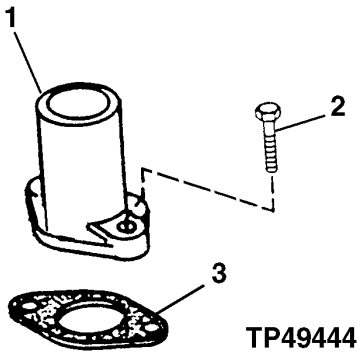

KEY	PART NO.	PART NAME	QTY	ENGINE SERIAL NO.	REMARKS
1	R123569	INTAKE MANIFOLD	1		
2	R500394	SCREW	2		
3	R81275	GASKET	1		

MEMORANDA

ENGINE BALANCER SHAFT
T04045DT050
(SERIAL NO. -826110)

T164769 -UN-28JAN03

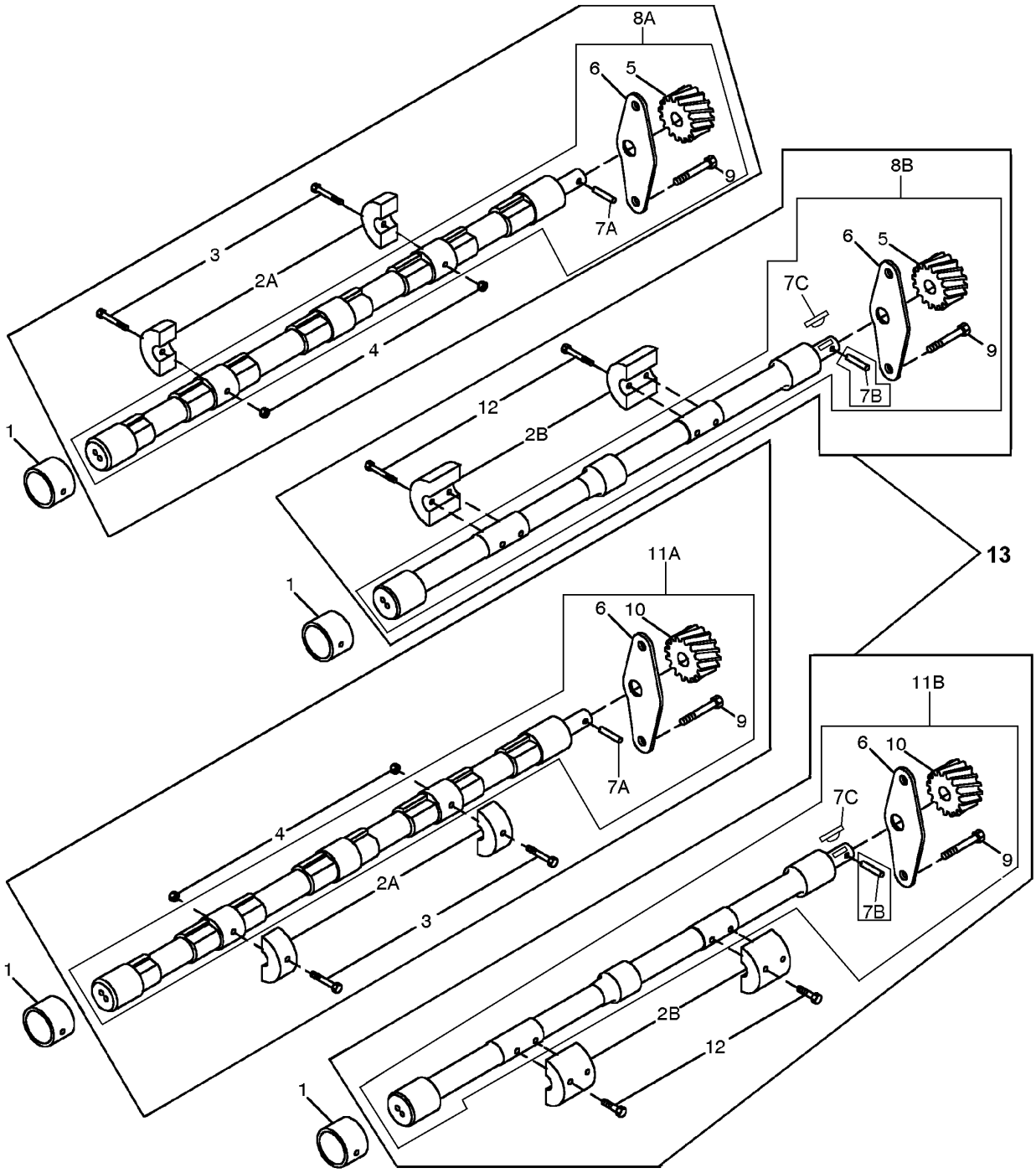

T164769

ENGINE BALANCER SHAFT
T04045DT050
(SERIAL NO. -826110)

KEY	PART NO.	PART NAME	QTY	SERIAL NO.	REMARKS
1	R115299	BUSHING	6		
2A	R134359	WEIGHT	4	-776566	(SUB R500265)
2B	R500265	WEIGHT	4	776567-	
3	T28745	BOLT	4	-776566	
4	T15634	NUT	4	-776566	
5	.....	GEAR	1		L.H. (15 TEETH)
6	.....	PLATE	2		
7A	26M4224	SHAFT KEY	2	-776566	4 X 16 MM
7B	34M7089	DOWEL PIN	1	776567-	4 X 12 MM
8A	RE69365	BALANCER SHAFT	1	-776566	L.H. SHAFT, (MARKED R115301) (SUB RE504741)
8B	RE500449	BALANCER SHAFT	1	776567-	
9	19M8998	SCREW	4		M8 X 12
10	.....	GEAR	1		R.H. (15 TEETH)
11A	RE69364	BALANCER SHAFT	1	-776566	R.H. SHAFT, (MARKED R116078) (SUB RE504741)
11B	RE500448	BALANCER SHAFT	1	776567-	
12	19M8882	SCREW	8	776567-	M8 X 40
13	RE504741	BALANCER SHAFT	1		

MEMORANDA

WATER PUMP INLET AND PULLEY
T04045DT050
(SERIAL NO. -826110)

TP49372 -UN-18JAN96

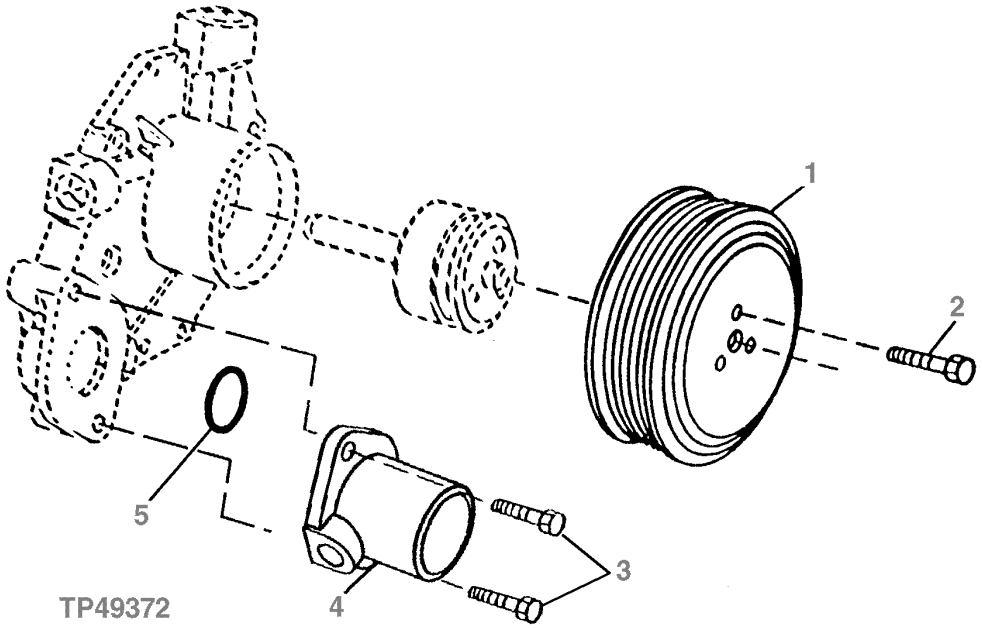

KEY	PART NO.	PART NAME	QTY	ENGINE SERIAL NO.	REMARKS
1	R115250	PULLEY	1		
2	19M7774	SCREW	3		M6 X 12
3	19M7867	SCREW	2		M8 X 25
4	R121634	WATER PUMP CONNECTION	1		
5	R89944	O-RING	1		

WATER PUMP ASSEMBLY
T04045DT050
(SERIAL NO. -826110)

T158421 -UN-13AUG02

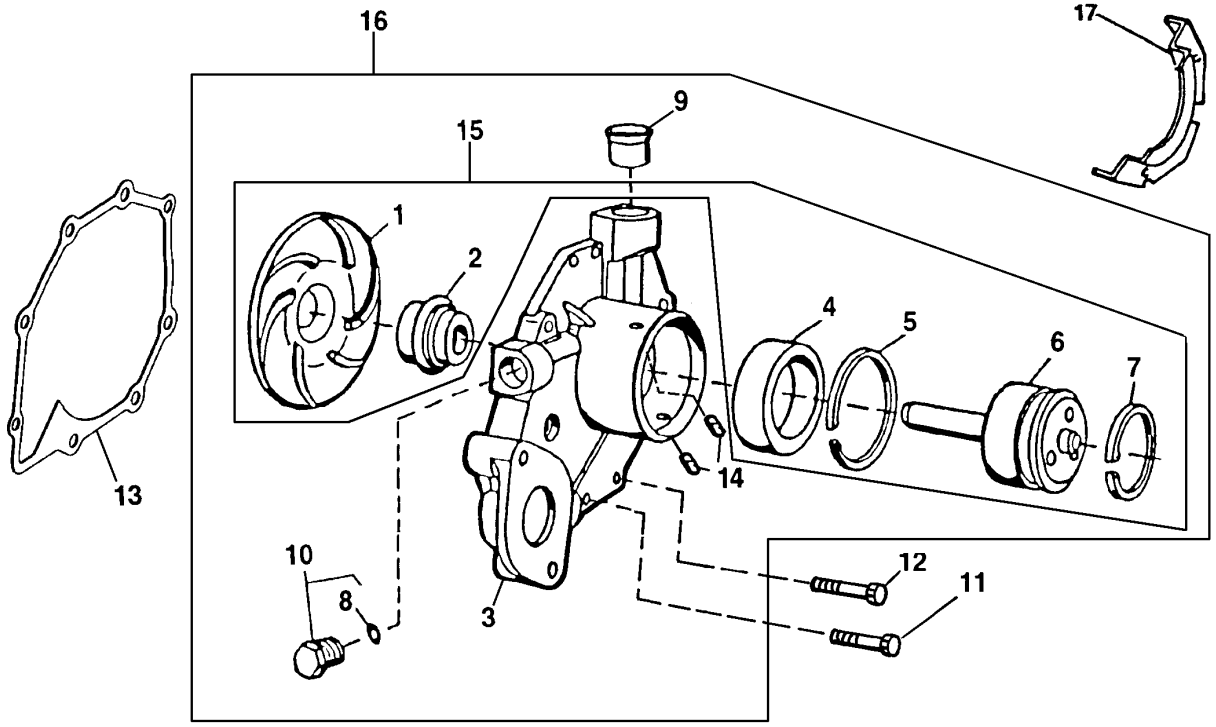

T158421

KEY	PART NO.	PART NAME	QTY	ENGINE SERIAL NO.	REMARKS
1	.....	IMPELLER	1		
2	.....	SEAL	1		
3	.....	HOUSING	1		
4	.....	BALL BEARING	1		
5	.....	RING	1		
6	.....	SHAFT	1		
7	A364R	SNAP RING	1		
8	51M7043	O-RING	1		15.300 X 2.200 MM
9	R123226	SEAL	1		
10	RE46685	PLUG	1		
11	19M7796	SCREW	3		M6 X 30
12	19M7863	SCREW	5		M6 X 25
13	R123417	GASKET	1		
14	R98527	FILTER	2		(USE WITH RE70683)
	R100369	FILTER	2		(USE WITH RE500737)
15	RE71240	KIT	1		(SUB FOR RE59407) (USE WITH RE56737 AND RE70683)
16	RE70683	WATER PUMP	1		(MARKED R121035) (SUB FOR RE56737) (SUB RE500737)
	RE500737	WATER PUMP	1		(MARKED R500401) (SUB RE505981)
	RE505981	WATER PUMP	1		(MARKED R503509)
17	R135841	SHROUD	1		

REPLACEMENT WATER PUMP ASSEMBLY
TO4045DT050
(ENGINE SERIAL NO. -826110)

T149718 -UN-07JAN02

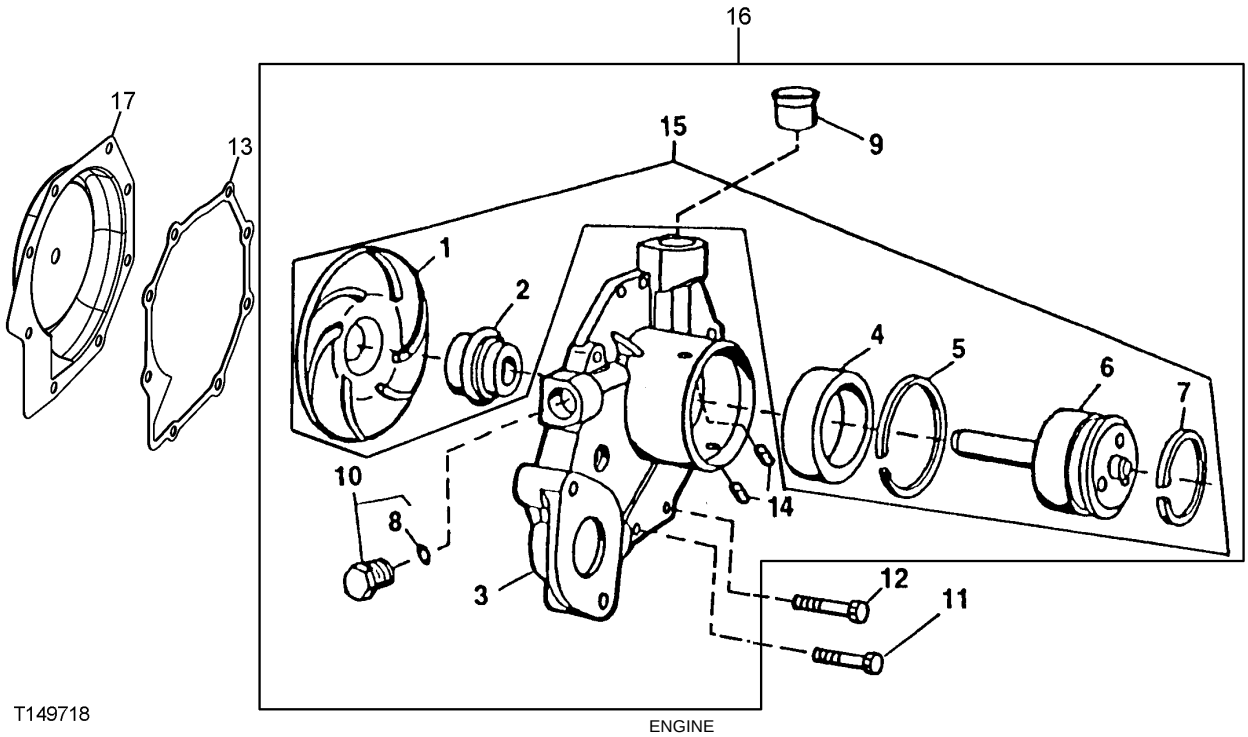

T149718

KEY	PART NO.	PART NAME	QTY	ENGINE SERIAL NO.	REMARKS
1	.....	IMPELLER	1		(MARKED R121036)
2	.....	SEAL	1		(MARKED R503509)
3	.....	HOUSING	1		
4	.....	BALL BEARING	1		
5	.....	RING	1		
6	.....	SHAFT	1		
7	A364R	SNAP RING	1		
8	51M7043	O-RING	1		15.300 X 2.200 MM
9	R123226	SEAL	1		
10	RE46685	PLUG	1		
11	19M7863	SCREW	5		M6 X 25
12	19M7796	SCREW	3		M6 X 30
13	R123417	GASKET	1		
14	R100369	FILTER	2		
15	RE70962	KIT	1		
16	RE505981	WATER PUMP	1		(MARKED R503509)
17	RE508566	KIT	1		(WATER PUMP INSERT REPAIR)

THERMOSTAT AND THERMOSTAT COVER
T04045DT050
(SERIAL NO. -826110)

TP49332 -UN-13DEC95

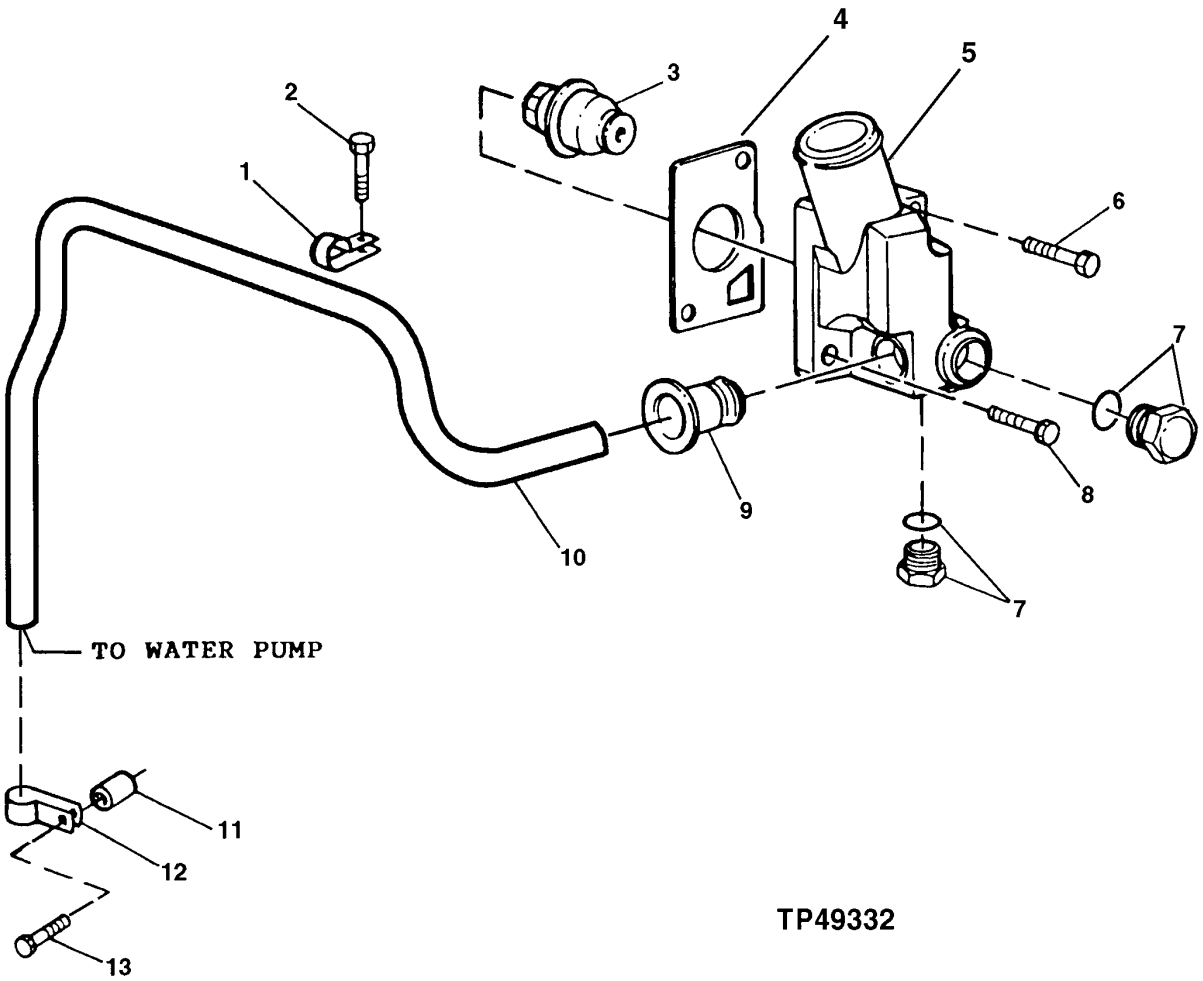

TP49332

THERMOSTAT AND THERMOSTAT
T04045DT050
(SERIAL NO. -826110)

KEY	PART NO.	PART NAME	QTY	ENGINE SERIAL NO.	REMARKS
1	R123323	CLAMP	1		
2	19M7788	SCREW	1		M12 X 25
3	RE522076	THERMOSTAT	2		(SUB FOR RE64354 OR RE506300, THIS APPLICATION) 82° C (180° F)
4	R502814	GASKET	1		(SUB FOR R121416 AND R135896)
5	R131016	COVER	1		
6	19M8292	SCREW	1		M10 X 50
7	RE46684	PLUG	2		
8	19M7786	SCREW	1		M10 X 30
9	R123226	SEAL	1		
10	R501144	TUBE	1		(SUB FOR R123588)
11	.....	SPACER	1		(ON TIMING COVER)
12	R123324	CLAMP	1		
13	.....	CAP SCREW	1		

ENGINE OIL COOLER
T04045DT050
(SERIAL NO. -826110)

T137126 -UN-15JAN01

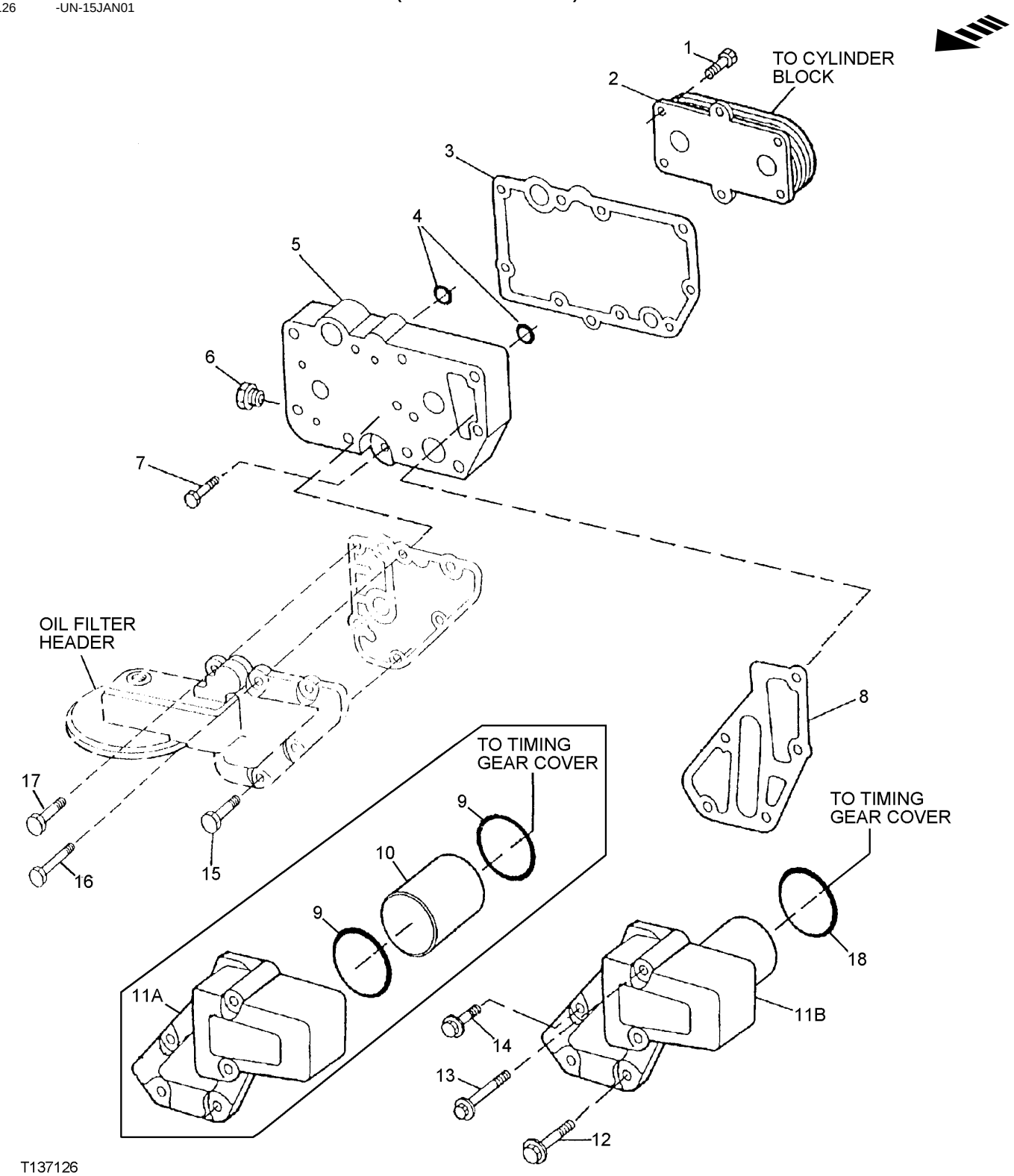

ENGINE OIL COOLER
T04045DT050
(SERIAL NO. -826110)

KEY	PART NO.	PART NAME	QTY	ENGINE SERIAL NO.	REMARKS
1	RE67231	SCREW	6		M6 X 16 (WITH PRE-APPLIED SEALANT)
2	RE59296	OIL COOLER	1		(SUB FOR RE56690)
3	R123501	GASKET	1		
4	T122075	O-RING	2		
5	R123471	HOUSING	1		
6	RE46686	PLUG	1		
7	RE46685	PLUG	1		
8	R501428	GASKET	1		(SUB FOR R123502)
9	R61105	O-RING	2		(USE WITH R135177)
10	R115252	TUBE	1		(USE WITH R135177)
11A	R135177	ADAPTER	1		(SUB R502811)
11B	R502811	ADAPTER	1		
12	19M7802	SCREW	2		M8 X 65
13	19M7970	SCREW	2		M8 X 100
14	RE67238	SCREW	1		M8 X 1.25 X 20 (WITH PRE-APPLIED SEALANT)
15	19M7802	SCREW	4		M8 X 65
16	19M7970	SCREW	1		M8 X 100
17	RE67238	SCREW	1		M8 X 20 (WITH PRE-APPLIED SEALANT)
18	R504734	O-RING	1		(USE WITH R502811)

FUEL FILTER AND FUEL LINES
T04045DT050
(SERIAL NO. -826110)

T152519 -UN-13MAR02

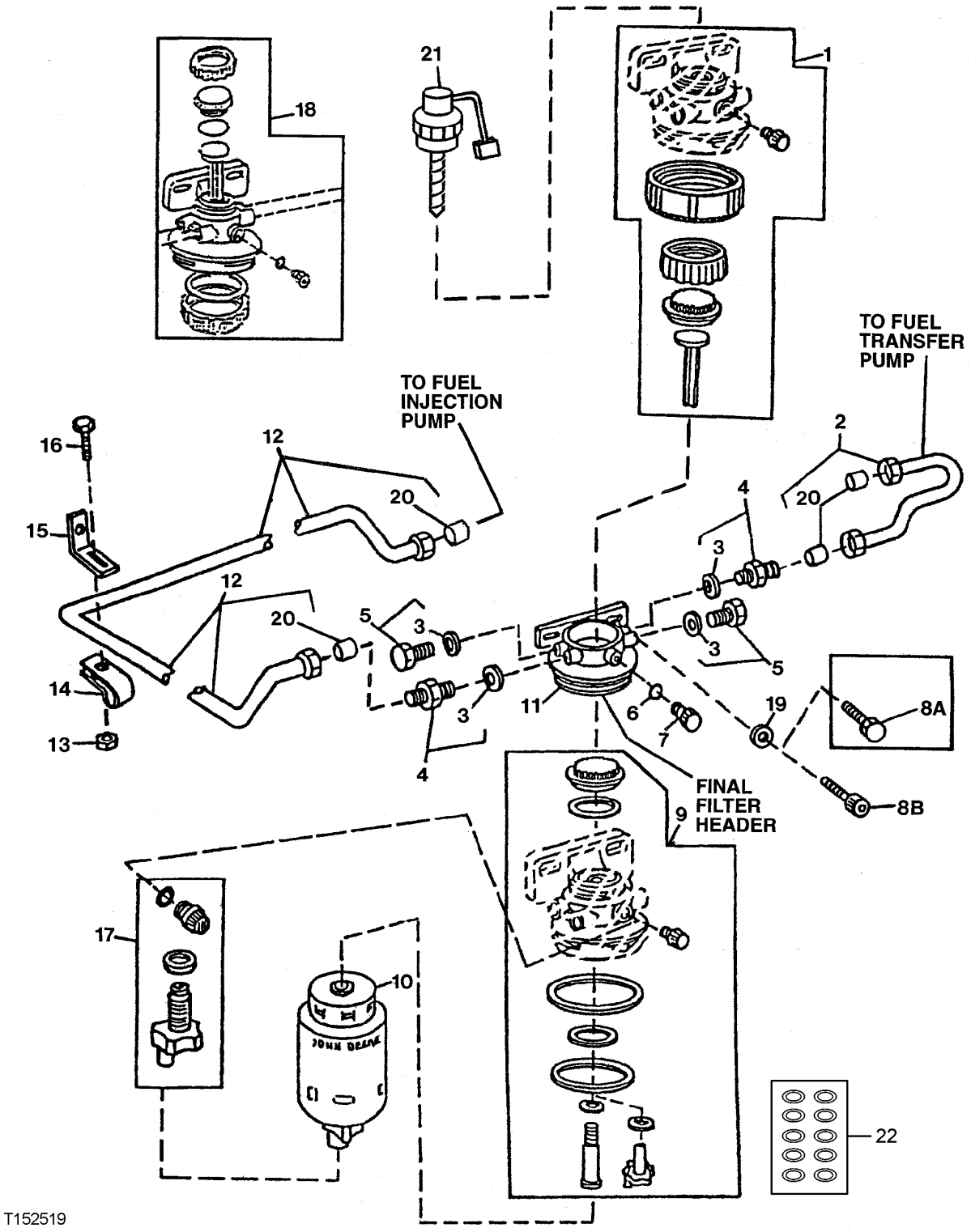

FUEL FILTER AND FUEL LINES
T04045DT050
(SERIAL NO. -826110)

KEY	PART NO.	PART NAME	QTY	ENGINE SERIAL NO.	REMARKS
1	RE51649	SEAL KIT	1		FUEL FILTER
2	RE60037	FUEL LINE	1		
	R74012	SEALING WASHER	2		7.140 X 12.300 X 6.400 MM (0.281" X 0.484" X 0.252")
3	51M7040	O-RING	1		
4	RE60029	ADAPTER	2		
5	RE46686	PLUG	2		
6	R113562	RING	1		
7	R113563	DRAIN PLUG	1		
8A	19M7785	SCREW	2	-795805	M10 X 25
8B	19M8328	SCREW	2	795806-	M10 X 25
9	RE516553	KIT	1		(SUB FOR RE50752) FUEL FILTER
10	RE62418	FUEL FILTER	1		INCLUDES DRAIN VALVE
11	.....	FILTER HEAD	1		FURNISH RE70358
12	RE60025	FUEL LINE	1		
	R74012	SEALING WASHER	2		
13	14M7298	FLANGE NUT	1		M8
14	T14050	CLAMP	1		
15	R116116	BRACKET	1		
16	19M7865	SCREW	1		M8 X 16
17	RE60854	KIT	1		DRAIN VALVE
18	RE70358	KIT	1		
19	24M7096	WASHER	2		10.500 X 18 X 1.600 MM
20	R123594	TUBE NUT	2		
21	RE51648	KIT	1		(FUEL FILTER HEATER)(12-VOLT)
	RE504134	KIT	1		(FUEL FILTER HEATER)(24-VOLT)
22	RE516513	KIT	1		(WITH HAND PRIMER) (CONTAINS 10 O-RINGS)
	RE516512	KIT	1		(WITHOUT HAND PRIMER) (CONTAINS 10 O-RINGS)

FUEL TRANSFER PUMP
T04045DT050
(SERIAL NO. -826110)

TP61907 -UN-24FEB00

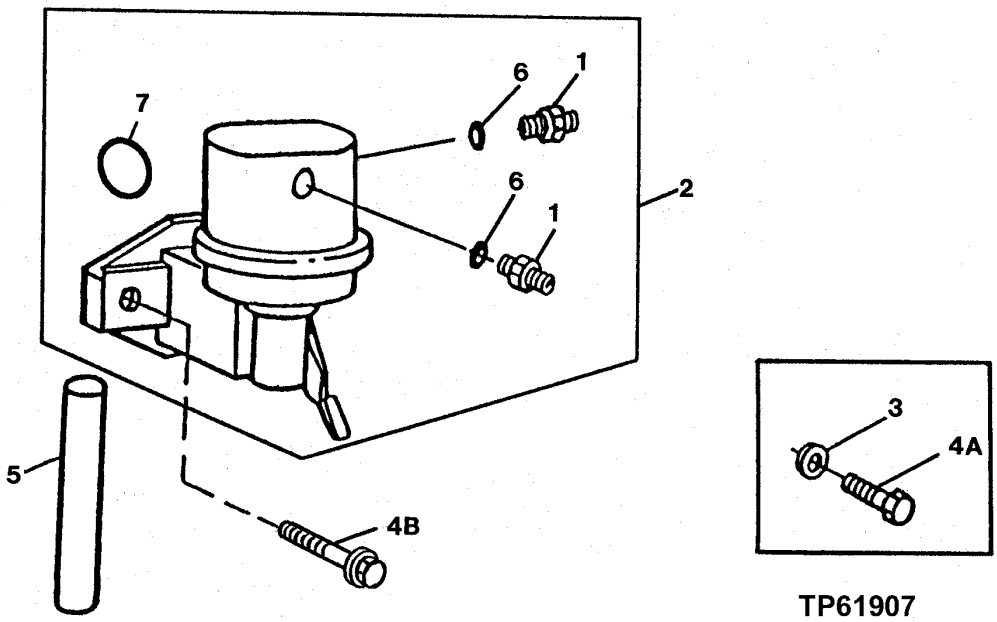

KEY	PART NO.	PART NAME	QTY	ENGINE SERIAL NO.	REMARKS
1	R500270	FITTING	2		
2	RE66153	FUEL PUMP	1		
3	24M7055	WASHER	2	-XXXXXX	8.400 X 16 X 1.600 MM
4A	RE66298	CAP SCREW	2	-XXXXXX	
4B	RE504233	CAP SCREW	2	XXXXXX-	
5	R133405	PUSH ROD	1		
6	R500271	O-RING	2		
7	R123273	O-RING	1		

STARTING MOTOR AND ATTACHING PARTS
T04045DT050
(SERIAL NO. -071972)

TP50830 -UN-29APR98

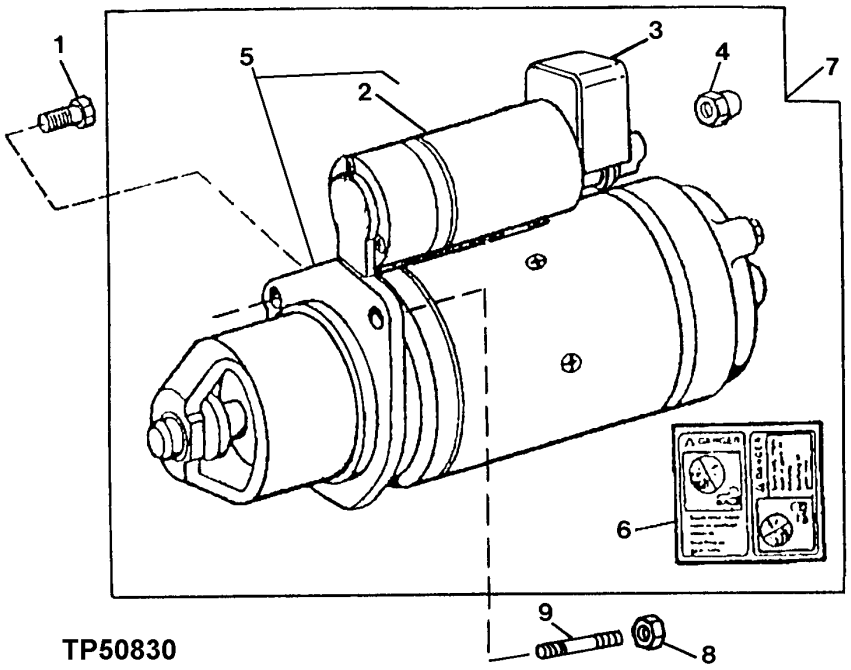

TP50830

KEY	PART NO.	PART NAME	QTY	ENGINE SERIAL NO.	REMARKS
1	19M7786	SCREW	2		M10 X 30
2	RE503633	SOLENOID	1		(RE70446 NO LONGER AVAILABLE) (USE WITH RE70728 AND RE501767) (SUB FOR RE501768 AND RE70446)
	RE503633	SOLENOID	1		(USE WITH RE501767) (SUB FOR RE501768)
3	R135431	COVER	1		
4	R135432	NUT	1		
5	.....	STARTER MOTOR	1		(MARKED AZJ3226 - 12 VOLT)
	RE70581	STARTER MOTOR DRIVE	1		(NOT ILLUSTRATED)
6	T146102	LABEL	1		
7	RE501767	STARTER MOTOR KIT	1		(ISKRA) (STARTER AND SOLENOID KIT) (SUB FOR RE70728)
8	14M7296	FLANGE NUT	1		
9	42M7058	STUD	1		

ALTERNATOR MOUNTING BRACKETS
T04045DT050
(SERIAL NO. -826110)

TP54987 -UN-14FEB97

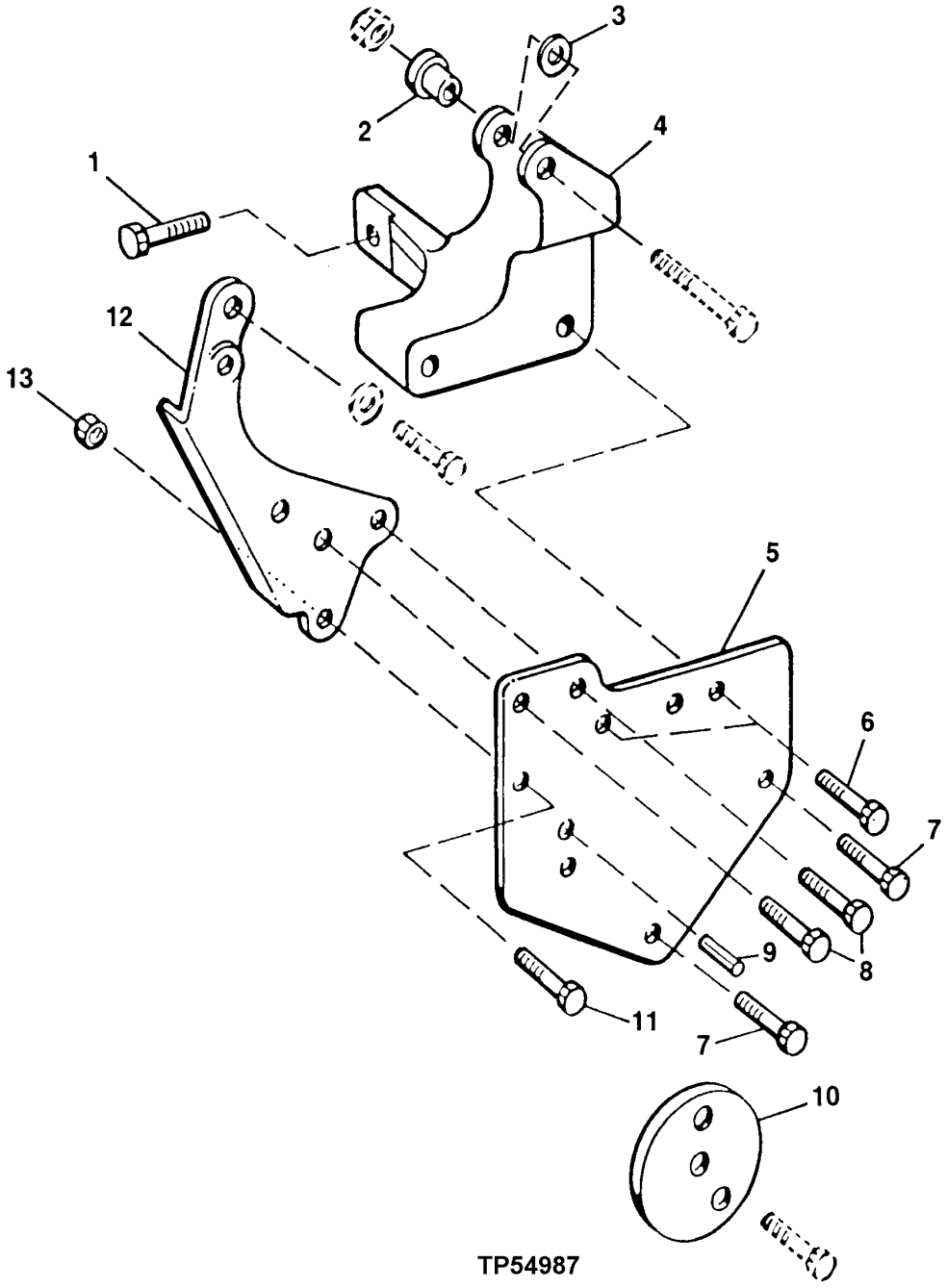

TP54987

ALTERNATOR MOUNTING BRACKETS
T04045DT050
(SERIAL NO. -826110)

KEY	PART NO.	PART NAME	QTY	ENGINE SERIAL NO.	REMARKS
1	19M7786	SCREW	2		M10 X 30
2	R100377	BUSHING	1		
3	R64525	THRUST WASHER	1		
4	R132166	BRACKET	1		
5	R132168	SUPPORT	1		
6	19M7785	SCREW	2		M10 X 25
7	19M7801	SCREW	1		M8 X 60
8	19M7786	SCREW	2		M10 X 30
9	34M7061	SPRING PIN	1		8 X 20 MM
10	R500321	SPACER	1		(SUB FOR R132169)
11	19M7786	SCREW	3		M10 X 30
12	R132167	STRAP	1		
13	14M7296	FLANGE NUT	1		

CRANKSHAFT PULLEY AND BELT
T04045DT050
(SERIAL NO. -826110)

TP53312 -UN-03JAN97

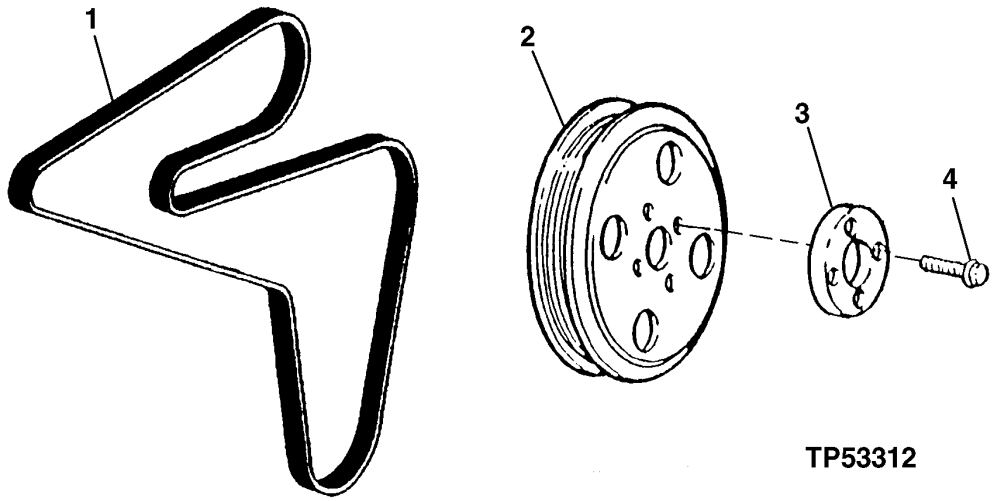

KEY	PART NO.	PART NAME	QTY	ENGINE SERIAL NO.	REMARKS
1	R135195	V-BELT	1		
2	R133295	SHEAVE	1		
3	R500649	FLANGE	1		(SUB FOR R133385)
4	R121897	SCREW	4		

MEMORANDA

FAN DRIVE PULLEYS ,FAN BELT AND TENSIONERS
T04045DT050
(SERIAL NO. -826110)

TP55150 -UN-10JUL97

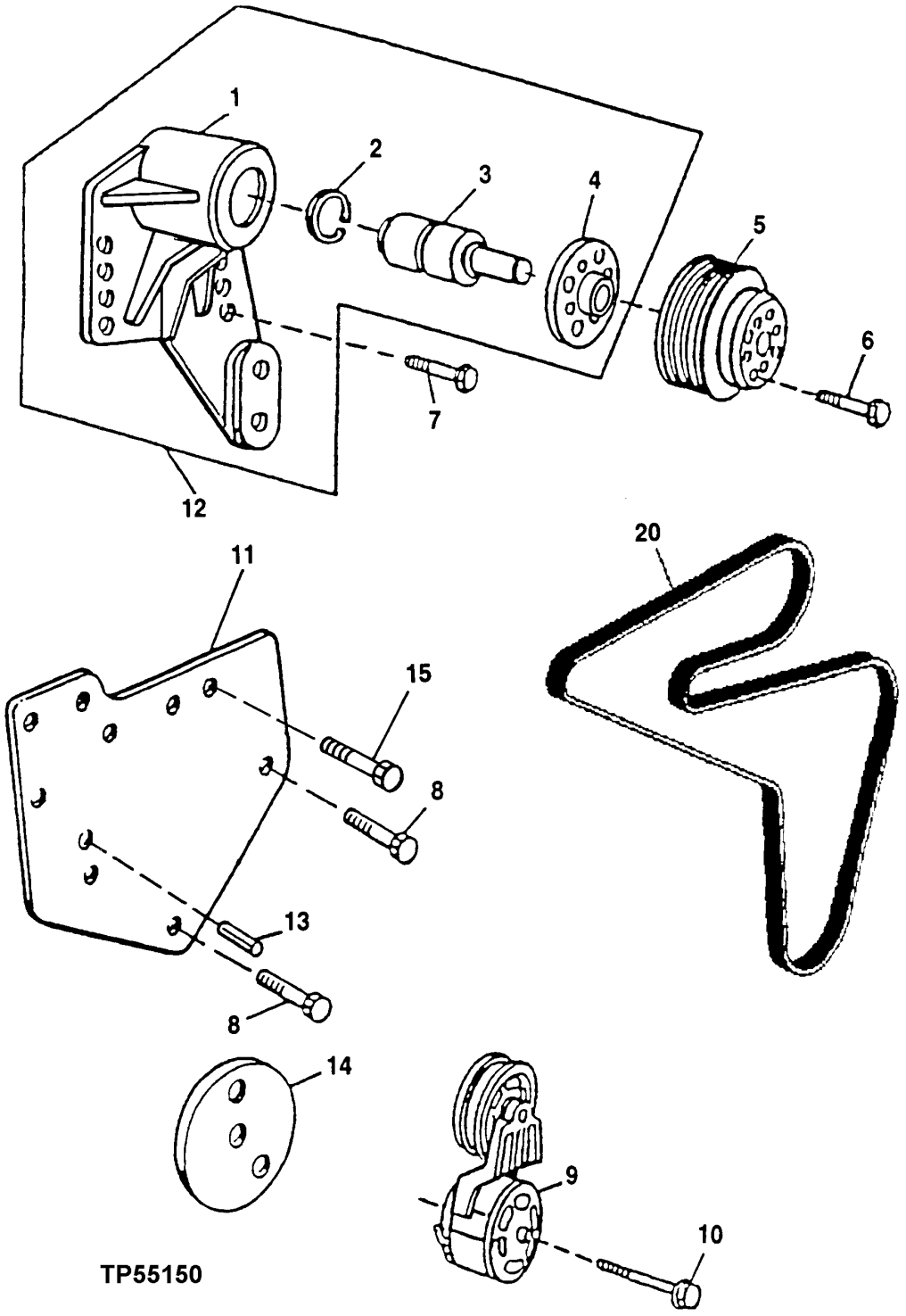

FAN DRIVE PULLEYS,FAN BELT AND TENSIONERS
T04045DT050
(SERIAL NO. -826110)

KEY	PART NO.	PART NAME	QTY	ENGINE SERIAL NO.	REMARKS
1	.....	HOUSING	1		
2	E1343FN	SNAP RING	1		
3	.....	SHAFT	1		(RE69292 NO LONGER AVAILABLE)
4	.....	HUB	1		(MARKED R123284)
5	R128660	PULLEY	1		
6	19M7784	SCREW	4		M10 X 20
7	19M7835	SCREW	4		M10 X 35
8	19M7801	SCREW	2		M8 X 60
9	RE70535	TIGHTENER	1		(RE70535 NO LONGER AVAILABLE) (ORDER RE518097 AND R516623)
10	19M7811	SCREW	1		M10 X 90
11	R133978	SUPPORT	1		
12	RE500538	BEARING HOUSING W/ BEARING	1		(SUB FOR RE59707)
13	34M7061	SPRING PIN	1		8 X 20 MM
14	R516623	SPACER	1		(SUB FOR R135531 OR R500322)
15	19M7785	SCREW	2		M10 X 25
20	R135195	V-BELT	1		

ENGINE FLYWHEEL
T04045DT050
(SERIAL NO. -826110)

TP54964 -UN-13FEB97

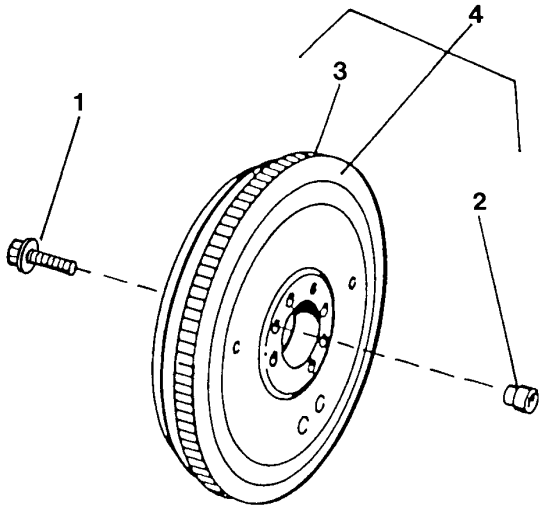

TP54964

KEY	PART NO.	PART NAME	QTY	ENGINE SERIAL NO.	REMARKS
1	R135918	BOLT	6		HS, SAE 8, 1/2" X 1-1/2"
2	R123521	SLEEVE	1		
3	R28811	RING GEAR	1		(129 TEETH)
4	RE500137	FLYWHEEL	1		

FLYWHEEL HOUSING
T04045DT050
(SERIAL NO. -826110)

T158306 -UN-02AUG02

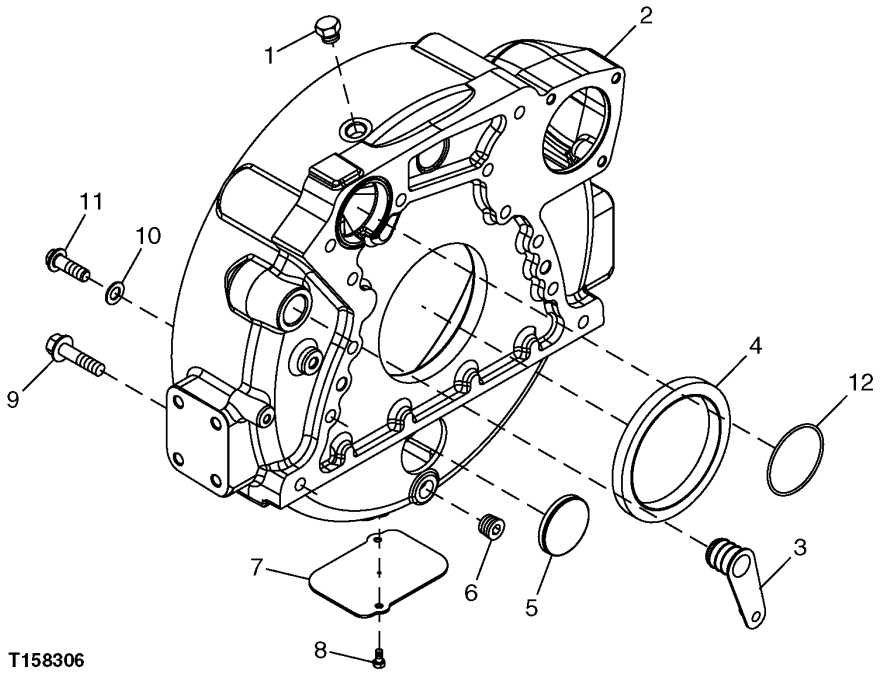

KEY	PART NO.	PART NAME	QTY	ENGINE SERIAL NO.	REMARKS
1	R39112	FITTING	1		
2	R132006	HOUSING	1	-867794	(SUB FOR R121793) (SUB R503451 AND R61467)
	R503451	HOUSING	1	867795-	
3	R131769	PLUG	1		
4	RE44574	SEAL	1		
5	T13518	PLUG	1		
6	15H624	PIPE PLUG	1		12.700 MM
7	R121039	PLATE	2		
8	19M7923	CAP SCREW	2		M6 X 12
9	19M8306	SCREW	4		
10	T77258	WASHER	8		(USE WITH 19M7493)
11	R135918	BOLT	8		(SUB FOR 19M7493, THIS APPLICATION)
12	R61467	O-RING	1	867795-	(USE WITH R503451)

MEMORANDA

CYLINDER HEAD REMOVAL AND IN VEHICLE OVERHAUL GASKET SETS
T04045DT050
(SERIAL NO. -826110)

T150756 -UN-31JAN02

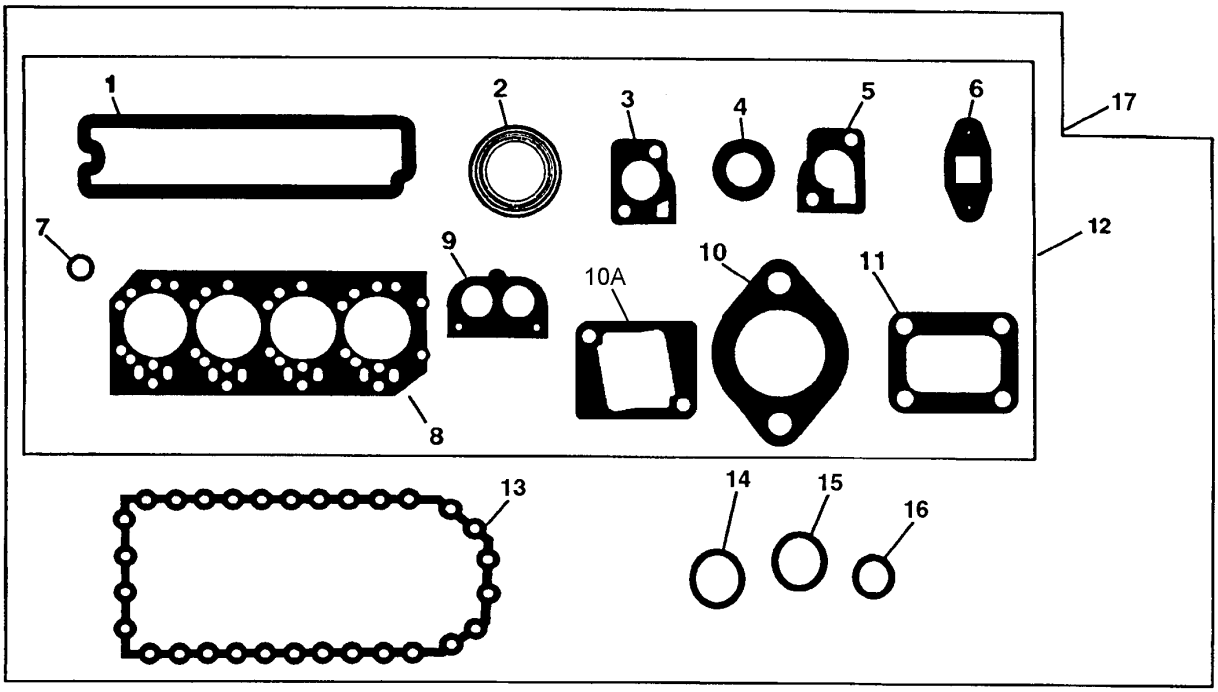

T150756

KEY	PART NO.	PART NAME	QTY	ENGINE SERIAL NO.	REMARKS
1	R123542	GASKET	1		ROCKER ARM COVER
	RE520539	GASKET KIT	1		(HIGH TEMPERATURE)
2	R90658	GASKET	4		EXHAUST MANIFOLD
3	R502814	GASKET	1		(SUB FOR R121416 AND R135896) THERMOSTAT COVER
4	R123226	SEAL	2		WATER BY-PASS TUBE
5	R123345	GASKET	1		THERMOSTAT HOUSING
6	R123570	GASKET	1		TURBOCHARGER OIL OUTLET LINE-NOT REQ'D
7	R123575	O-RING	4		ROCKER ARM COVER HOLD DOWN STUD
8	R116515	ENGINE CYLINDER HEAD GASKET	1		CYLINDER HEAD
9	R501373	GASKET	1		THERMOSTAT COVER, (SUB FOR R54638)
10	R81275	GASKET	1	-XXXXXX	AIR INLET
10A	R133893	GASKET	1	XXXXXX-	AIR INLET
11	R92097	GASKET	1		TURBOCHARGER TO EXHAUST MANIFOLD-NOT REQ'D
12	RE66082	GASKET KIT	1		CYLINDER HEAD REMOVAL
13	R123352	GASKET	1		ENGINE OIL PAN
14	R75892	O-RING	1		OIL PUMP TUBE CONNECTOR
15	R97185	O-RING	1		OIL PUMP OUTLET TUBE TO COVER
16	R61871	O-RING	1		OIL PUMP INTAKE TUBE
17	RE66084	GASKET KIT	1		IN CHASSIS OVERHAUL

ENGINE MAJOR OVERHAUL GASKET SET
T04045DT050
(SERIAL NO. -826110)

TP55371 -UN-07MAY98

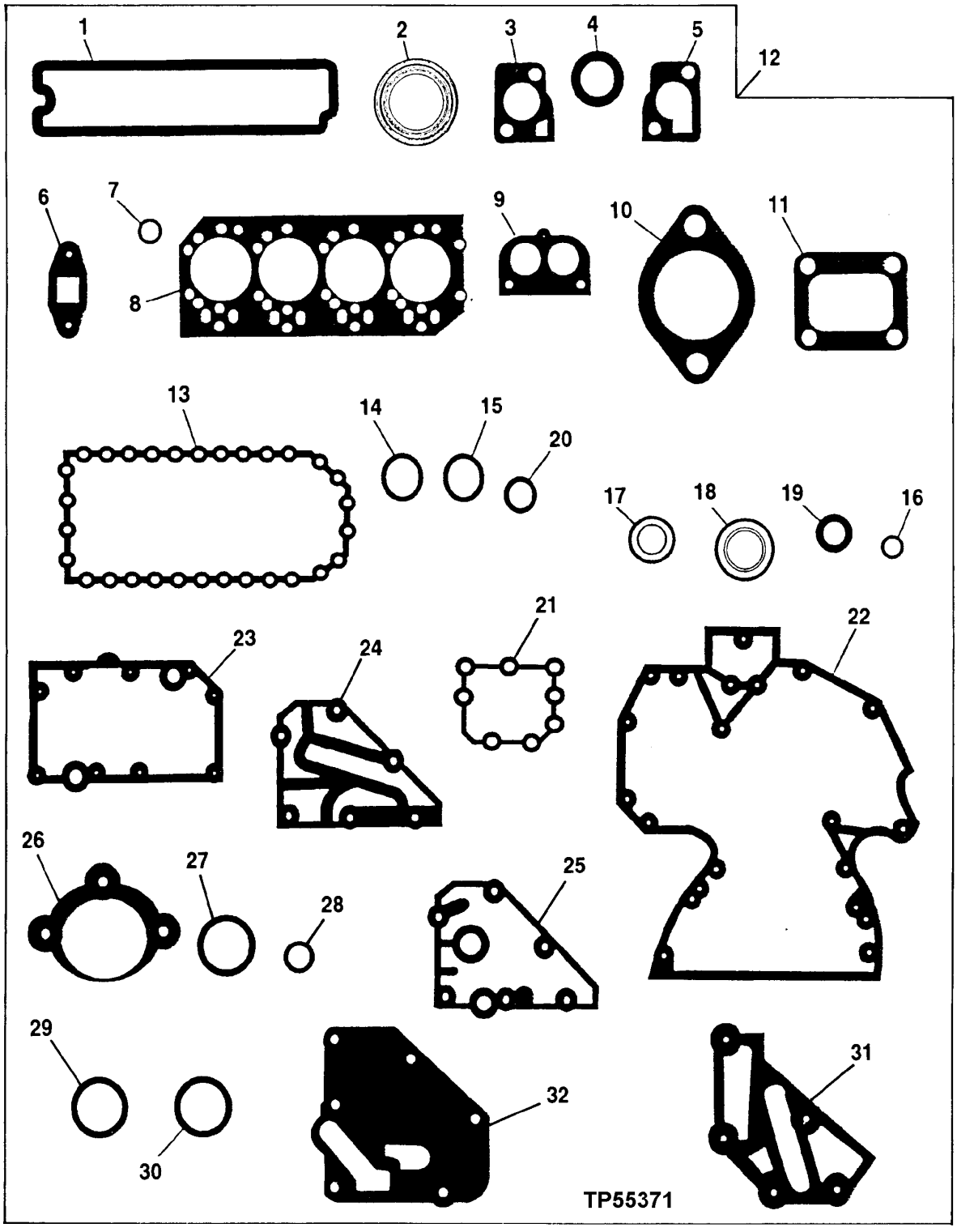

ENGINE MAJOR OVERHAUL GASKET SET
T04045DT050
(SERIAL NO. -826110)

KEY	PART NO.	PART NAME	QTY	ENGINE SERIAL NO.	REMARKS
1	R123542	GASKET	1		ROCKER ARM COVER
	RE520539	GASKET KIT	1		(HIGH TEMPERATURE)
2	R90658	GASKET	4		EXHAUST MANIFOLD
3	R502814	GASKET	1		(SUB FOR R121416 AND R135896) THERMOSTAT COVER
4	R123226	SEAL	2		WATER BY-PASS TUBE
5	R123345	GASKET	1		THERMOSTAT HOUSING
6	R123570	GASKET	1		TURBOCHARGER OIL OUTLET TUBE-NOT REQ'D
7	R123575	O-RING	4		ROCKER ARM COVER HOLD DOWN STUD
8	R116515	ENGINE CYLINDER HEAD GASKET	1		CYLINDER HEAD
9	R501373	GASKET	1		(SUB FOR R54638) THERMOSTAT COVER
10	R81275	GASKET	1		AIR INLET
11	R92097	GASKET	1		TURBOCHARGER TO EXHAUST MANIFOLD-NOT REQ'D
12	RE66086	GASKET KIT	1		MAJOR OVERHAUL
	RE66092	ENGINE OVERHAUL KIT	1		ENGINE OVERHAUL(INCLUDES ENGINE MAJOR OVERHAUL GASKET SET;CONNECTING ROD BEARINGS; MAIN BEARINGS AND CYLINDER KITS) (ORDER ONE KIT PER ENGINE)
13	R123352	GASKET	1		ENGINE OIL PAN
14	R75892	O-RING	1		OIL PUMP TUBE CONNECTOR
15	R97185	O-RING	1		OIL PUMP OUTLET TUBE TO COVER
16	R61871	O-RING	1		OIL PUMP INTAKE TUBE
17	A4827R	WASHER	1		OIL PRESSURE REGULATOR PLUG
18	RE44574	SEAL	1		REAR OIL SEAL
19	RE516340	KIT	1		FRONT OIL SEAL, (SUB FOR RE59810)
20	R123273	O-RING	1		FUEL TRANSFER PUMP
21	R123417	GASKET	1		WATER PUMP
22	R136515	GASKET	1		TIMING GEAR COVER(WITH AUXILLARY DRIVE) (SUB FOR R123425 AND R134533)
	R136516	GASKET	1		(SUB FOR R123421 AND R134534) TIMING GEAR COVER(WITHOUT AUXILLARY DRIVE)
23	R123501	GASKET	1		OIL COOLER HOUSING
24	R123504	GASKET	1		REMOTE OIL FILTER ADAPTER
25	R123525	GASKET	1	-764919	OIL FILTER HEADER
26	R53108	GASKET	1		STARTING MOTOR
27	R72328	O-RING	4		OIL FILTER TUBES
28	R89944	O-RING	1		WATER PUMP INLET
29	R61105	O-RING	2		CONNECTOR TUBE TO TIMING GEAR COVER
30	T122075	O-RING	2		OIL COOLER TO HOUSING
31	R501428	GASKET	1		(SUB FOR R123502) COOLANT PASSAGE ADAPTER
32	R500374	GASKET	1	764920-	OIL FILTER HEADER

CRANKSHAFT, GEAR AND MAIN BEARINGS
PE4045DT050 (SERIAL NO.071973-)

T155453 -UN-05JUN02

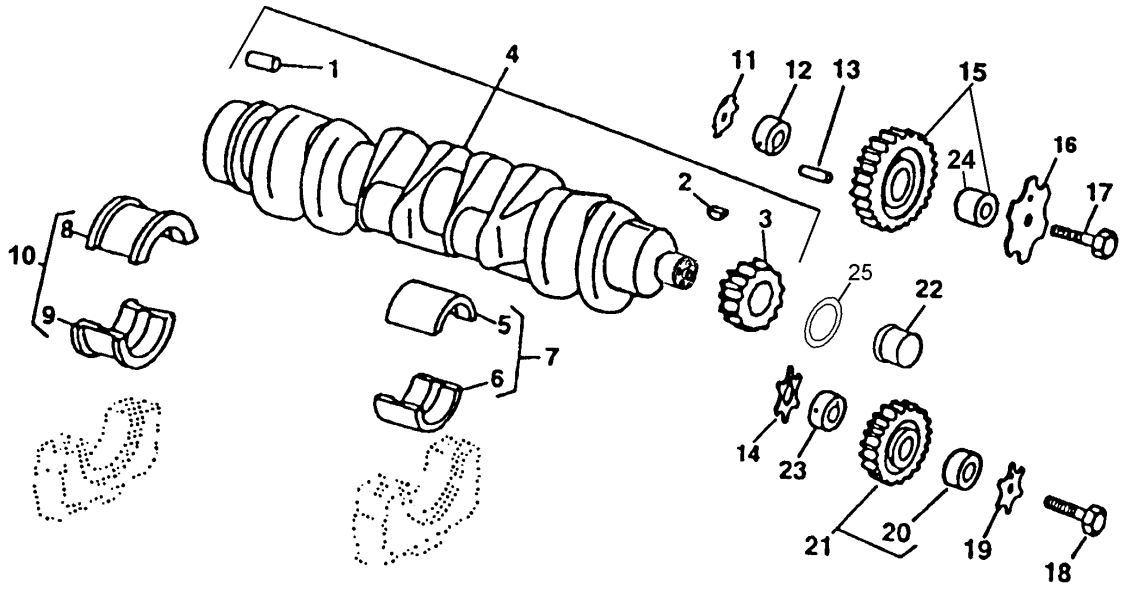

KEY	T155453 PART NO.	PART NAME	QTY	ENGINE SERIAL NO.	REMARKS
1	R48685	DOWEL PIN	1		12.700 X 28.448 MM (1/2" X 1.120")
2	26M4224	SHAFT KEY	1	-903066	4 X 16 MM
	R505609	SHAFT KEY	1	903067-	
3	R120631	GEAR	1		(30 TEETH)
4	RE50618	CRANKSHAFT	1	-903066	(MARKED R113596) (SUB RE504638 AND RE516340) (ALSO ORDER RE59811)
	RE504638	CRANKSHAFT	1	903067-	(MARKED R113596) (ALSO ORDER RE516340)
5	.....	BEARING	4		STANDARD UPPER, (MARKED R123561)
	.....	BEARING	4		UNDERSIZE UPPER .254 MM, (MARKED R130576)
6	.....	BEARING	4		STANDARD LOWER, (MARKED R123562)
	.....	BEARING	4		UNDERSIZE LOWER .254 MM, (MARKED R130577)
7	RE65165	BEARING KIT	4		STANDARD
	RE65911	BEARING	4		UNDERSIZE .254 MM
8	.....	BEARING	1		STANDARD UPPER, (MARKED R123563)
	.....	BEARING	1		UNDERSIZE UPPER .254 MM, (MARKED R130574)
9	.....	BEARING	1		STANDARD LOWER, (MARKED R123564)
	.....	BEARING	1		UNDERSIZE LOWER .254 MM, (MARKED R130575)
10	RE65168	BEARING KIT	1		STANDARD
	RE65912	THRUST BEARING	1		UNDERSIZE .254 MM
11	R101225	THRUST WASHER	1		
12	R120641	SHAFT	AR		UPPER
13	34H288	SPRING PIN	AR		4.775 X 44.450 MM (3/16" X 1-3/4")
14	R101225	THRUST WASHER	1		
15	RE500631	GEAR	1		(MARKED R120635)
16	R131283	THRUST WASHER	1		
17	19M8844	SCREW	1		M10 X 60
18	19M8966	SCREW	1		M10 X 50
19	R131283	THRUST WASHER	1		
20	R114193	BUSHING	1		
21	RE56369	GEAR	1		
22	RE59811	SLEEVE	1		
23	R114194	SHAFT	1		
24	T20034	BUSHING	1		
25	RE516340	KIT	1	903067-	

MEMORANDA

CAMSHAFT
PE4045DT050
(SERIAL NO.071973-)

TP60711 -UN-17JUN98

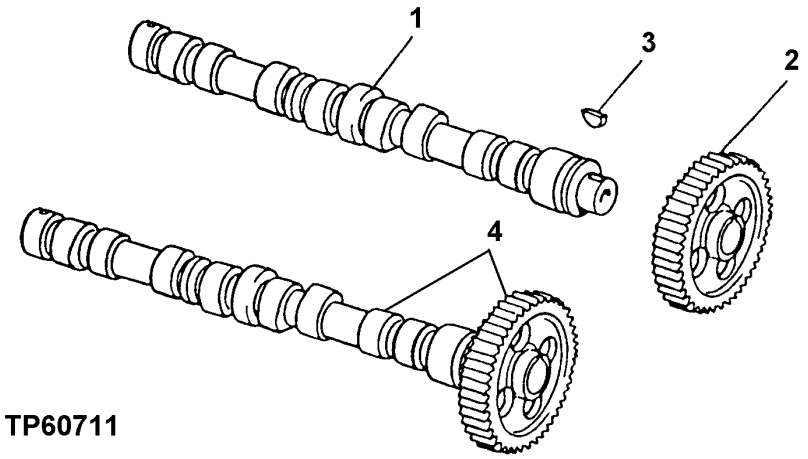

KEY	PART NO.	PART NAME	QTY	ENGINE SERIAL NO.	REMARKS
1	.....	CAMSHAFT	1		(A) (R135439 NO LONGER AVAILABLE)
2	.....	GEAR	1		(A) (60 TEETH) (R133812 NO LONGER AVAILABLE)
3	.....	SHAFT KEY	1		(A) (R133303 NO LONGER AVAILABLE)
4	RE56375	CAMSHAFT	1		(WITH GEAR AND KEY) (CONTAINS PARTS MARKED (A)) (MARKED R135439)

ROCKER ARM SHAFT, PUSH RODS AND ROCKER ARMS
PE4045DT050
(SERIAL NO.071973-)

TP49263 -UN-20JUN95

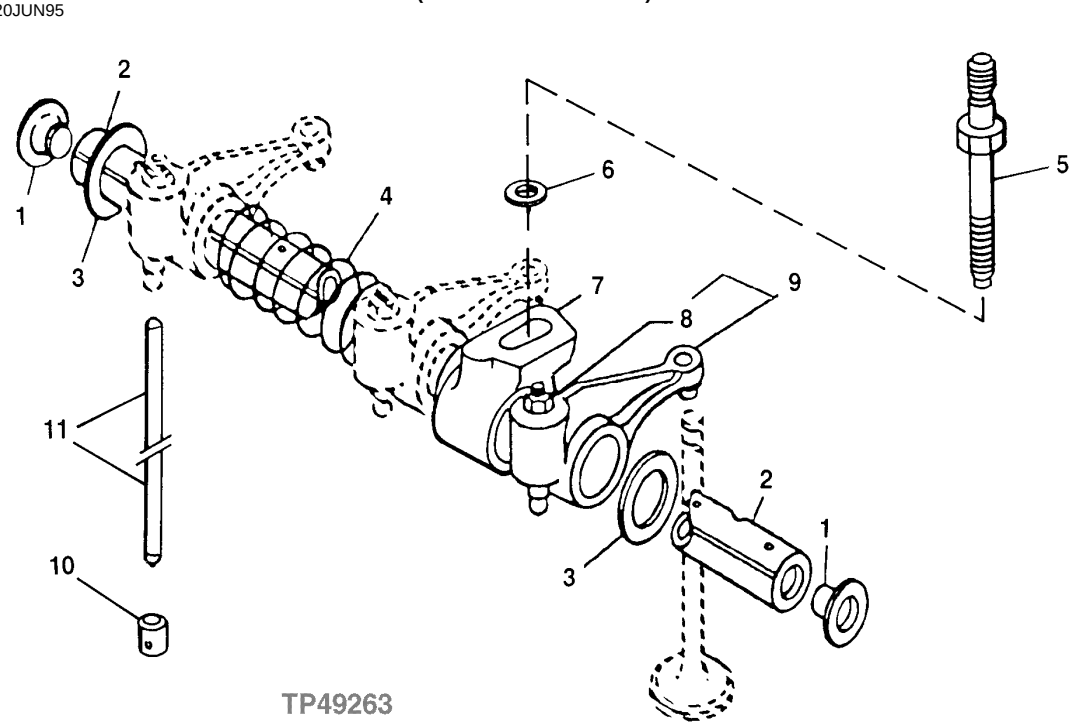

KEY	PART NO.	PART NAME	QTY	ENGINE SERIAL NO.	REMARKS
1	R54565	PLUG	2		
2	R123513	ROCKER ARM SHAFT	1		
3	T20316	WASHER	2		
4	T20314	SPRING	3		
5	R123271	STUD	4		
6	R42729	WASHER	4		
7	R123161	SUPPORT	4		
8	14M7273	NUT	1		M8
9	RE508317	ROCKER ARM	8		(SUB FOR RE68695)
10	R123565	FOLLOWER	8		
11	R107731	PUSH ROD	8		

ROCKER ARM COVER
PE4045DT050
(SERIAL NO.071973-)

TP61820 -UN-22FEB99

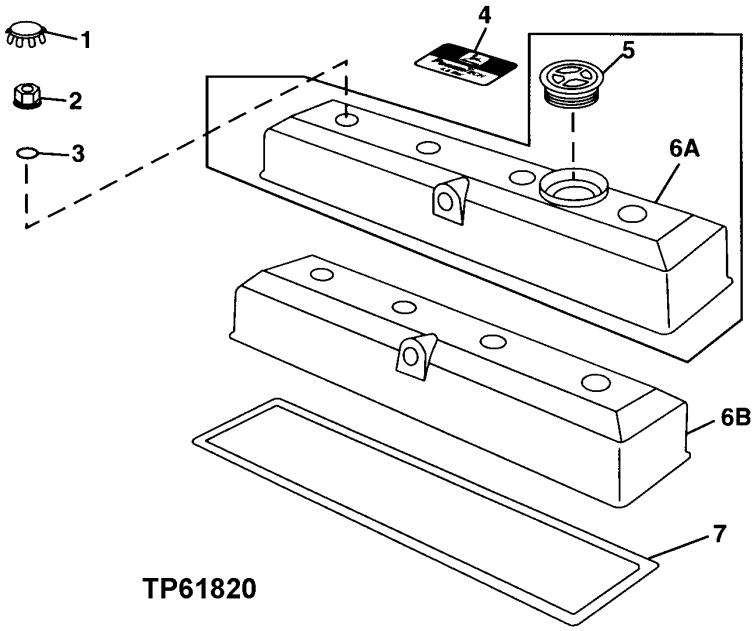

KEY	PART NO.	PART NAME	QTY	ENGINE SERIAL NO.	REMARKS
1	H23125	PLUG	4		
2	R123574	NUT	4		
3	R123575	O-RING	4		
4	R116324	MEDALLION	1		
5	RE59801	PLUG	AR		
6	RE502969	VALVE COVER	1		
7	R123542	GASKET	1		
	RE520539	GASKET KIT	1		(HIGH TEMPERATURE)

MEMORANDA

TIMING GEAR COVER
PE4045DT050
(SERIAL NO.071973-208930)

T146513 -UN-12OCT01

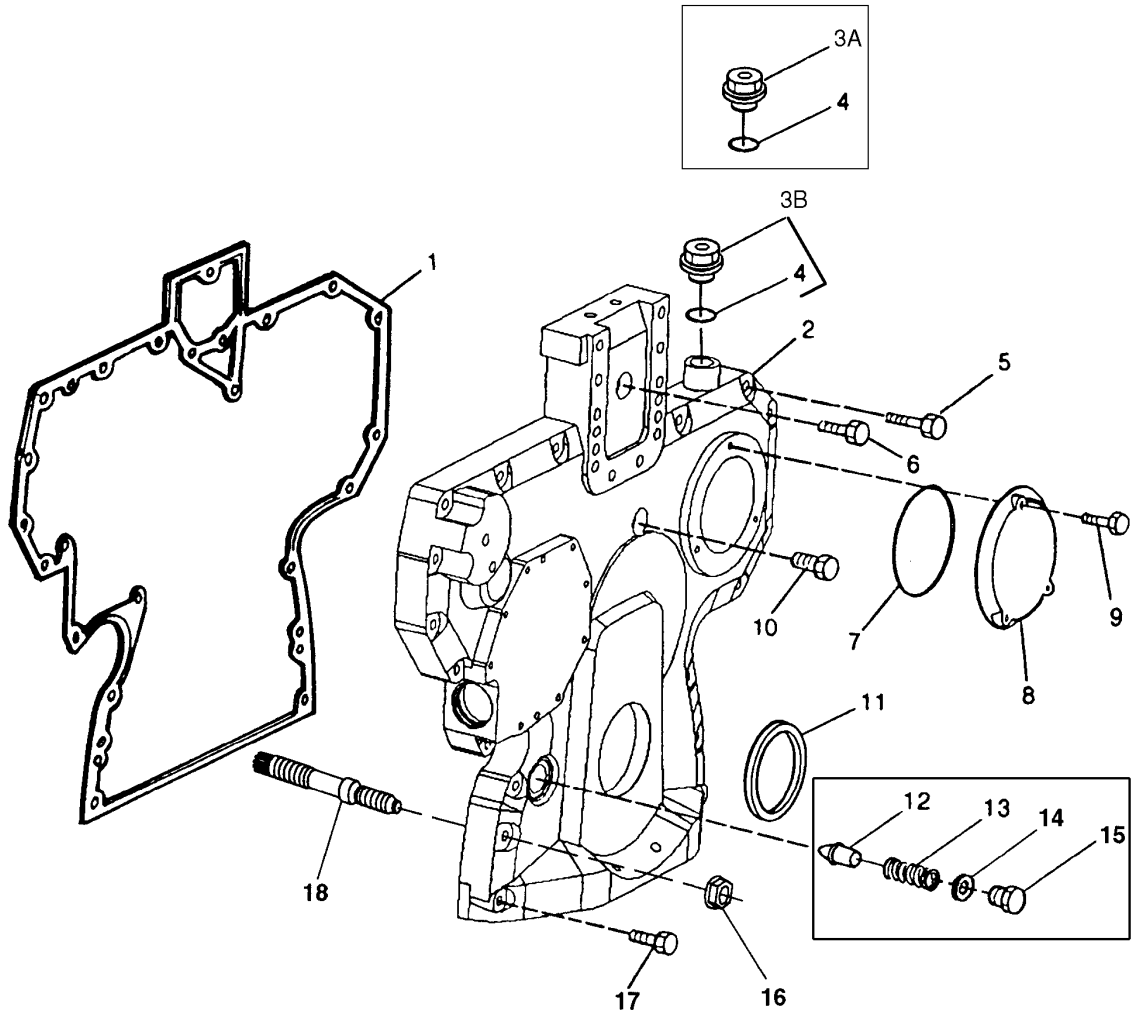

T146513

TIMING GEAR COVER
PE4045DT050
(SERIAL NO.071973-208930)

KEY	PART NO.	PART NAME	QTY	ENGINE SERIAL NO.	REMARKS
1	R136516	GASKET	1		
2	R505462	COVER	1		(SUB FOR R134531) (SUB R504725 AND RE515978)
3	RE501938	PLUG	1		
4	51M7044	O-RING	1		17.300 X 2.200 MM
5	19M8317	SCREW	6		M8 X 40
	19M7801	SCREW	1		M8 X 60
	19M7867	SCREW	1		M8 X 25
	RE67239	SCREW	1		
6	19M8291	SCREW	1		M8 X 35
7	R121424	O-RING	1		
8	R121411	COVER	1		
9	19M7775	SCREW	3		M6 X 16
10	19M7801	SCREW	1		M8 X 60
11	RE516340	KIT	1		(SUB FOR RE59810)
12	R83169	VALVE	1	-889024	
13	R131425	COMPRESSION SPRING	1	-889024	
14	A4827R	WASHER	1	-889024	
15	R91692	PLUG	1	-889024	OIL PRESSURE REGULATING
16	14M7296	FLANGE NUT	4		M10
17	19M7979	SCREW	2		M8 X 55
18	R123584	STUD	4		

TIMING GEAR COVER
PE4045DT050
(ENGINE SERIAL NO. 208931-)

T149705 -UN-07FEB02

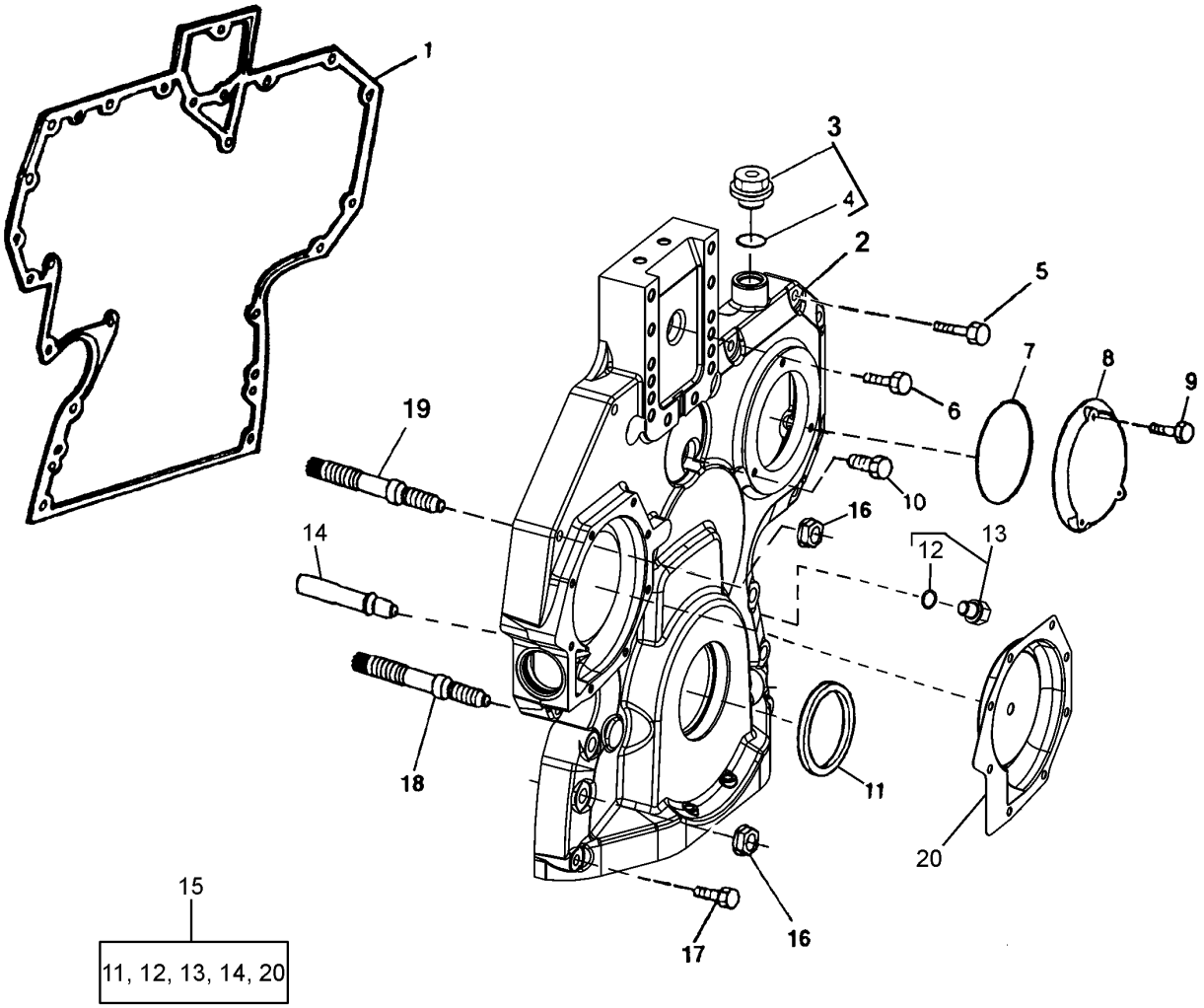

T149705

TIMING GEAR COVER
PE4045DT050
(ENGINE SERIAL NO. 208931-)

KEY	PART NO.	PART NAME	QTY	ENGINE SERIAL NO.	REMARKS
1	R136516	GASKET	1		
2	R504725	COVER	1		
3	RE501938	PLUG	1		(WITHOUT TACHOMETER SENSOR)
4	51M7044	O-RING	1		17.300 X 2.200 MM
5	19M8317	SCREW	6		M8 X 40
	19M7867	SCREW	1		M8 X 25
	RE67239	SCREW	1		
6	19M8291	SCREW	1		M8 X 35
7	R121424	O-RING	1		
8	R121411	COVER	1		
9	19M7775	SCREW	3		M6 X 16
10	19M7801	SCREW	1		M8 X 60
11	RE516340	KIT	1		(SUB FOR RE59810)
12	51M7044	O-RING	1		17.300 X 2.200 MM
13	RE501938	PLUG	1		
14	RE505501	BLEED VALVE	1		
15	RE515978	KIT	1		
16	14M7296	FLANGE NUT	6		M10
17	19M7979	SCREW	2		M8 X 55
18	R123584	STUD	4		
19	R134518	STUD	2		
20	RE508566	KIT	1		(WATER PUMP INSERT REPAIR)

PISTON AND CONNECTING RODS
PE4045DT050
(SERIAL NO.071973-)

TP49283 -UN-17JUL95

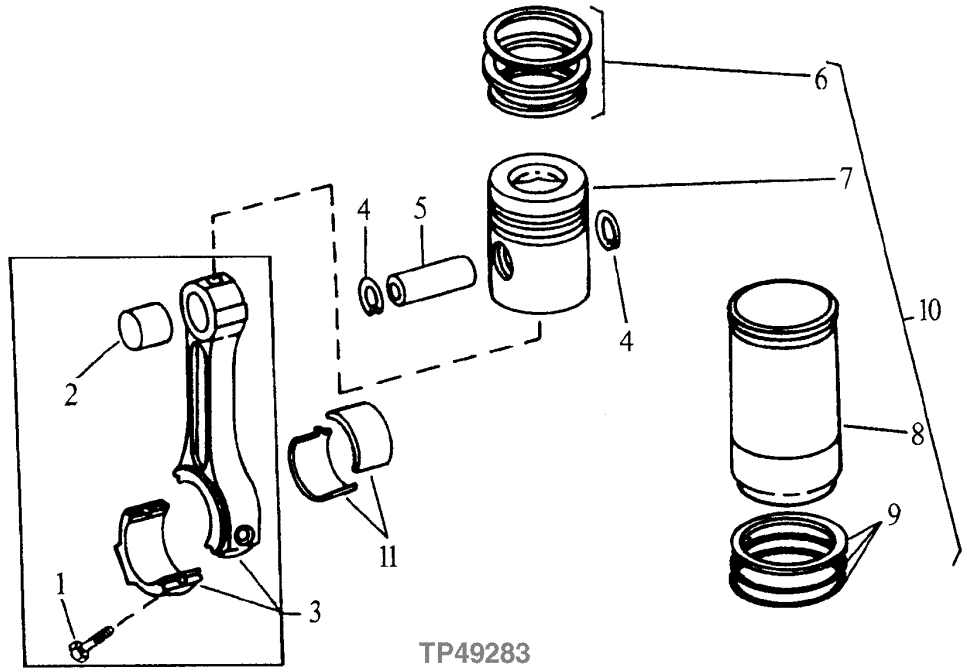

KEY	PART NO.	PART NAME	QTY	ENGINE SERIAL NO.	REMARKS
1	R501124	SCREW	8		
2	R123960	BUSHING	8		
3	RE500002	CONNECTING ROD	4		(MARKED R500000)
4	M41029	SNAP RING	8		
5	R123178	PISTON PIN	4		
6	RE66271	PISTON RING KIT	4		
7	.....	PISTON	4		
8	.....	CYLINDER LINER	4		STANDARD
9	AR65507	O-RING KIT	4		CYLINDER LINER
10	RE505110	PISTON-LINER KIT	4		PISTON WITH LINER, (SUB FOR RE65966)
11	RE65908	BEARING	4		STANDARD
	RE65909	BEARING	4		.010" UNDERSIZE

ENGINE FRONT PLATE
PE4045DT050
(SERIAL NO.071973-)

TP49330 -UN-14NOV95

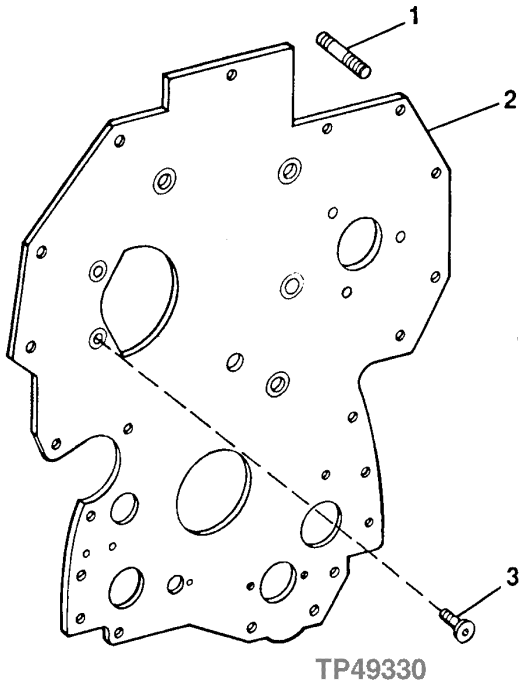

KEY	PART NO.	PART NAME	QTY	ENGINE SERIAL NO.	REMARKS
1	R116386	STUD	3		
2	R134527	PLATE	1		
3	R136475	SCREW	6		

CYLINDER BLOCK AND MAIN BEARING CAP
PE4045DT050
(SERIAL NO.071973-)

T146521 -UN-15OCT01

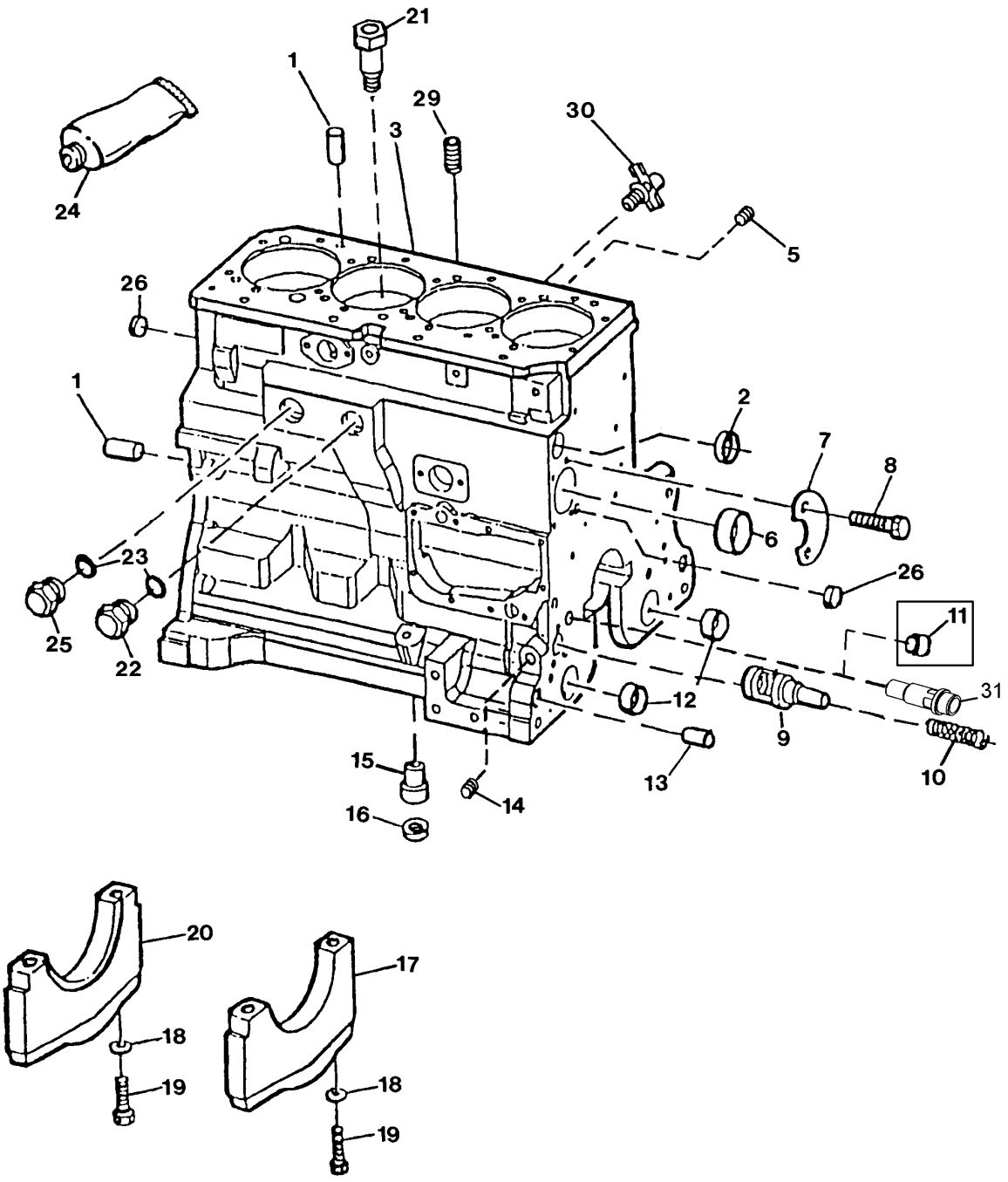

T146521

CYLINDER BLOCK AND MAIN BEARING CAP
PE4045DT050
(SERIAL NO.071973-)

KEY	PART NO.	PART NAME	QTY	ENGINE SERIAL NO.	REMARKS
1	R48685	DOWEL PIN	4		
2	R116466	PLUG	1		
3	.....	CYLINDER BLOCK	1		(MARKED R115081) (ORDER RE516100)
5	R104592	PIPE PLUG	5		
6	R119874	BUSHING	1		CAMSHAFT
7	R132518	PLATE	1		
8	19M8999	SCREW	2		M8 X 25
9	R121043	FLOW CONTROL HYD. VALVE	1		ENGINE OIL BY-PASS
10	R111137	SPRING	1		
11	R26493	BUSHING	1	-889024	OIL PRESSURE REGULATING
12	R115299	BUSHING	6		BALANCER SHAFT
13	R26650	DOWEL PIN	2		
14	15H623	PIPE PLUG	1		3/8"
15	R115390	BUSHING	1		
16	R75892	O-RING	1		
17	R114241	BEARING CAP	4		
18	T20168	WASHER	10		
19	T23474	CAP SCREW	10		
20	R132186	BEARING CAP	1		
21	R131182	ORIFICE	4		
22	R39741	DRAIN PLUG	1		
23	U13639	O-RING	1		
24	TY6304	SEALANT	1		PLASTIC GASKET
25	R39741	DRAIN PLUG	1		
26	T18891	PLUG	2		
29	15H624	PIPE PLUG	1		1/2"
30	AT13740	DRAIN VALVE	1		
31	RE505501	BLEED VALVE	1	889025-	(OIL PRESSURE REGULATING)

ENGINE SHORT BLOCK
PE4045DT050
(SERIAL NO.071973-)

T156111 -UN-13JUN02

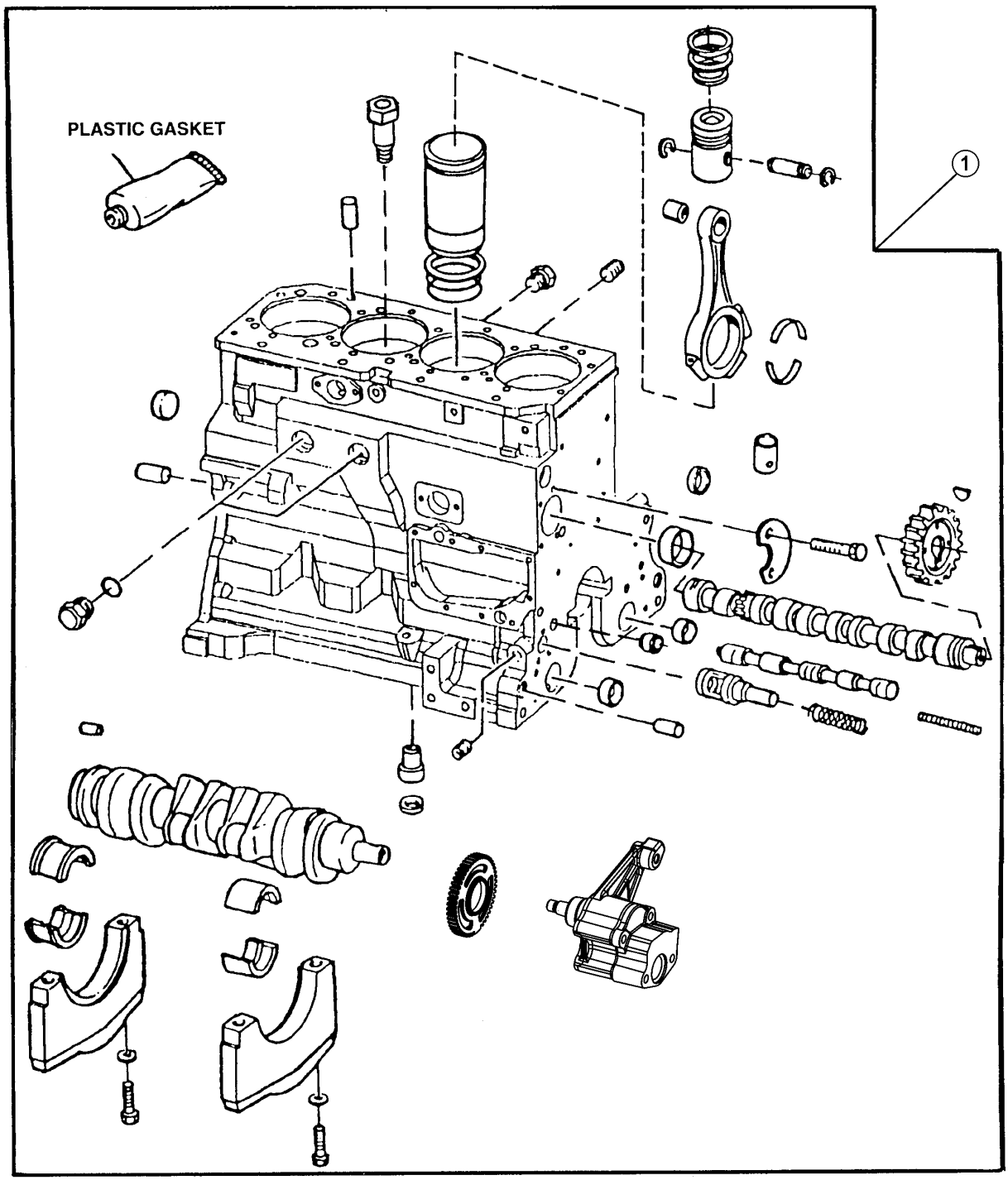

T156111

ENGINE SHORT BLOCK
PE4045DT050
(SERIAL NO.071973-)

KEY	PART NO.	PART NAME	QTY	ENGINE SERIAL NO.	REMARKS
1	RE516100	SHORT BLOCK ASSEMBLY	1		(MARKED R115081) (SUB FOR RE65951) (DOES NOT INCLUDE FRONT PLATE)
	SE500711	COMPLETE BLOCK ASSEMBLY	1		(REMANUFACTURED)

ENGINE OIL FILLER INLET
PE4045DT050
(SERIAL NO.071973-)

TP55080 -UN-18APR97

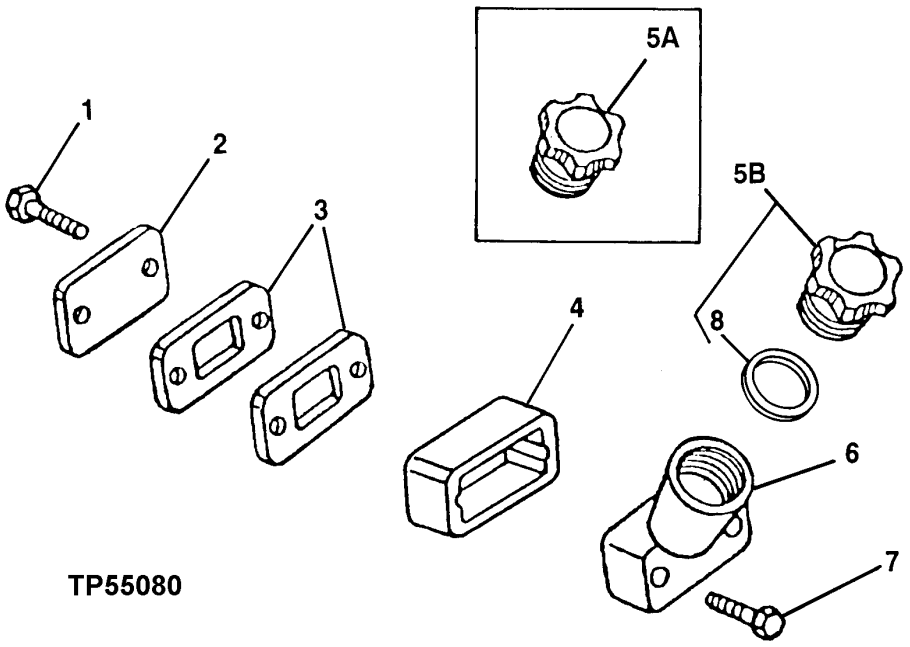

KEY	PART NO.	PART NAME	QTY	ENGINE SERIAL NO.	REMARKS
1	RE67238	SCREW	2		M8 X 20 (WITH PRE-APPLIED SEALANT)
2	R116296	COVER	1		
3	R136495	GASKET	2		
4	R136514	SPACER	1		
5A	.....	CAP	1		
5B	RE500005	FILLER CAP	1		
6	RE501377	FILLER NECK	1		
7	RE503609	SCREW	2		8M X 100 (WITH PRE-APPLIED SEALANT)
8	R500001	PACKING	1		

ENGINE OIL DIPSTICK
PE4045DT050
(SERIAL NO.071973-)

TP49880 -UN-16AUG96

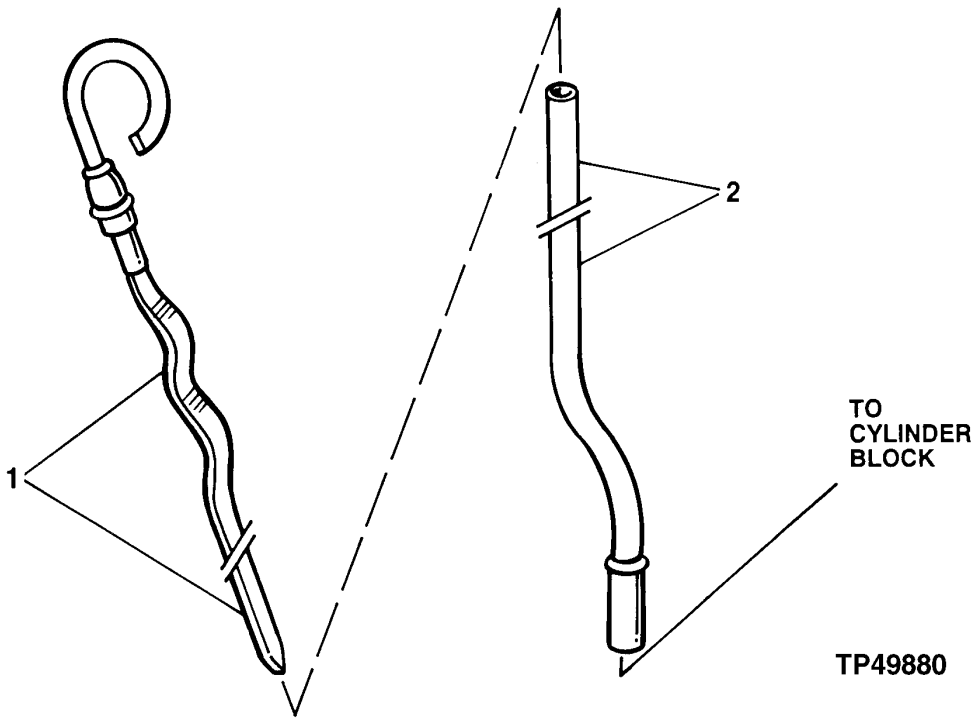

KEY	PART NO.	PART NAME	QTY	ENGINE SERIAL NO.	REMARKS
1	RE69243	DIPSTICK	1		
2	R502604	DIPSTICK TUBE	1		

ENGINE OIL PAN
PE4045DT050
(SERIAL NO.071973-)

TP50804 -UN-25MAR98

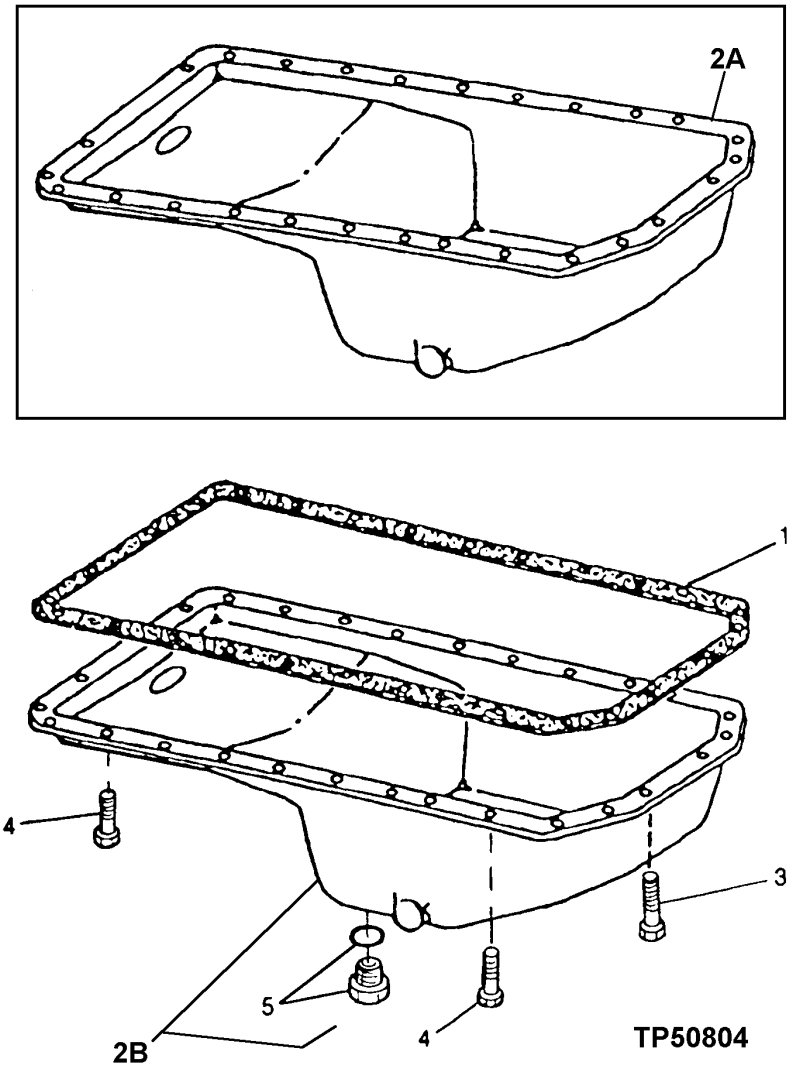

ENGINE OIL PAN
PE4045DT050
(SERIAL NO.071973-)

KEY	PART NO.	PART NAME	QTY	ENGINE SERIAL NO.	REMARKS
1	R123353	GASKET	1		
2A	RE59427	OIL PAN	1		(SUB RE59439)
2B	RE59439	OIL PAN	1		
3	19M8062	SCREW	6		M8 X 20
4	19M8163	CAP SCREW	22		M8 X 16
5	RE46685	PLUG	1		

ENGINE OIL FILTER/ADAPTER
PE4045DT050
(SERIAL NO.071973-)

TP55368 -UN-04MAY98

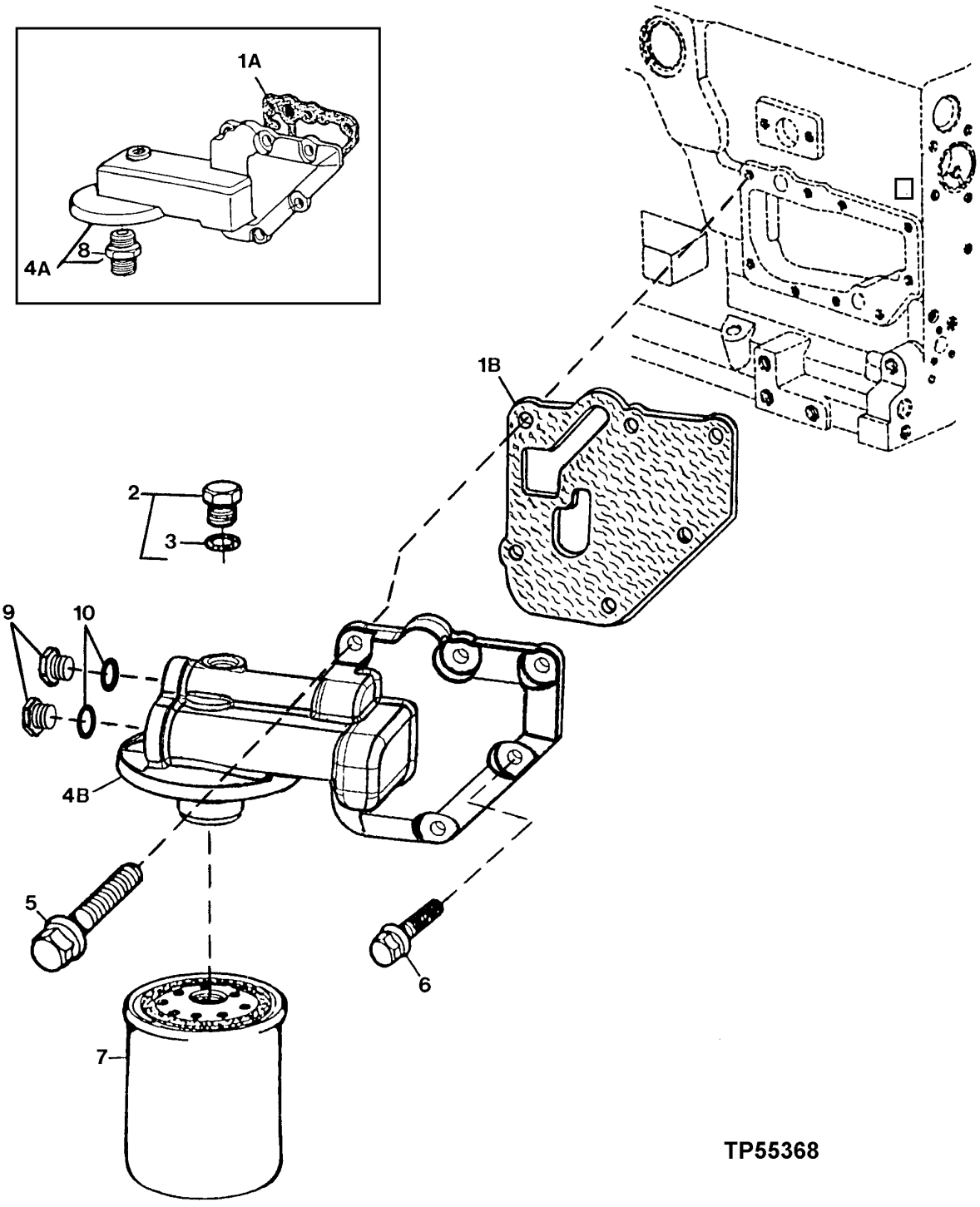

ENGINE OIL FILTER/ADAPTER
PE4045DT050
(SERIAL NO.071973-)

KEY	PART NO.	PART NAME	QTY	ENGINE SERIAL NO.	REMARKS
1	R500374	GASKET	1		
2	RE52242	PLUG	AR		
3	51M7042	O-RING	1		13.300 X 2.200 MM
4	RE500133	FILTER HEAD	1		
5	19M7802	SCREW	5		M8 X 65
6	RE67238	SCREW	1		M8 X 20 (WITH PRE-APPLIED SEALANT)
7	RE59754	OIL FILTER	1		
8	.....	ADAPTER	AR		(R123591 NO LONGER AVAILABLE, FURNISH RE503727)
9	R116115	FITTING	2		
10	51M7045	O-RING	2		

ENGINE OIL PUMP
PE4045DT050
(SERIAL NO.071973-)

TP49570 -UN-17FEB97

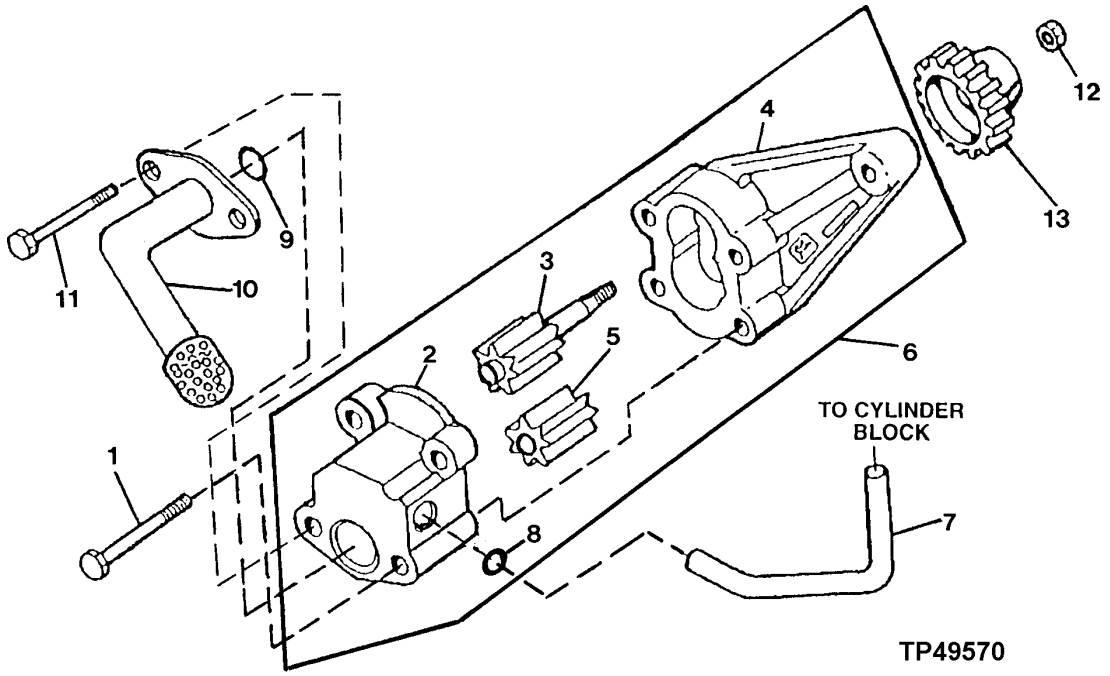

KEY	PART NO.	PART NAME	QTY	ENGINE SERIAL NO.	REMARKS
1	19M8987	SCREW	2		M8 X 65
2	.....	COVER	1		
3	.....	GEAR	1		
4	.....	HOUSING	1		
5	.....	GEAR	1		
6	RE504914	OIL PUMP	1		(MARKED R502867)
7	R121376	TUBE	1		
8	R97185	O-RING	1		
9	R61871	O-RING	1		
10	RE70073	OIL PUMP INTAKE	1		
11	19M8986	SCREW	2		M8 X 100
12	14M7066	NUT	1		M12
13	R120638	GEAR	1		(30 TEETH)

MEMORANDA

ENGINE VENTILATING SYSTEM
PE4045DT050
(SERIAL NO.071973-)

TP49041 -UN-06SEP95

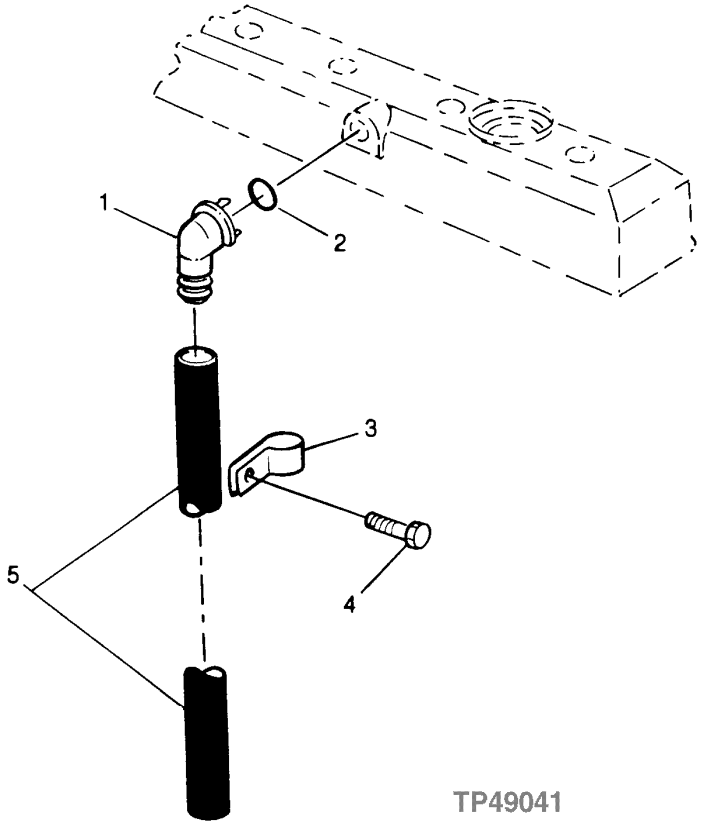

ENGINE VENTILATING SYSTEM
PE4045DT050
(SERIAL NO.071973-)

KEY	PART NO.	PART NAME	QTY	ENGINE SERIAL NO.	REMARKS
1	R120467	ELBOW FITTING	1		
2	R72328	O-RING	1		18.720 X 2.616 MM (0.737" X 0.103")
3	R72659	CLAMP	1		
4	19M7866	SCREW	1		M8 X 20
5	H36031	HOSE	1		

CYLINDER HEAD, HEAD GASKET AND VALVES
PE4045DT050
(SERIAL NO.071973-)

TP49042 -UN-06SEP95

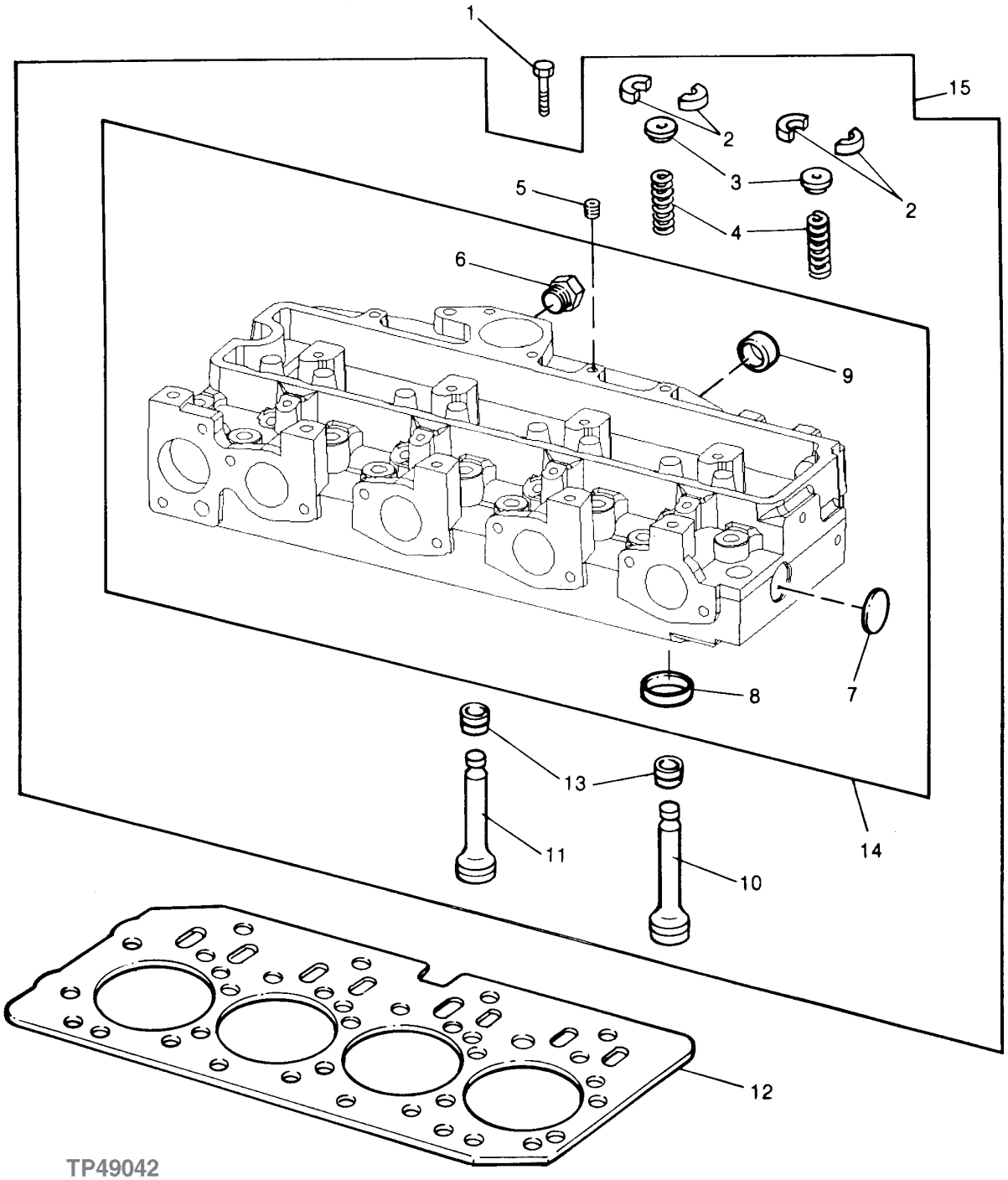

CYLINDER HEAD, HEAD GASKET AND VALVES
PE4045DT050
(SERIAL NO.071973-)

KEY	PART NO.	PART NAME	QTY	ENGINE SERIAL NO.	REMARKS
1	R85363	CAP SCREW	18		
2	R91889	RETAINER	16		
3	RE60005	ROTATOR	8		
4	R26125	SPRING	8		
5	R104592	PIPE PLUG	1		
6	T58477	FITTING	1		
	R26906	O-RING	1		
7	CD16284	PLUG	1		
8	R98063	VALVE SEAT INSERT	4		STANDARD SIZE INTAKE VALVE
	R98335	VALVE SEAT INSERT	4		OVERSIZE INTAKE VALVE
	R85687	VALVE SEAT INSERT	4		STANDARD SIZE EXHAUST VALVE
	R93910	VALVE SEAT INSERT	4		OVERSIZE EXHAUST VALVE
9	R43409	PLUG	2		
10	R90692	EXHAUST VALVE	4		STANDARD
11	R98062	INTAKE VALVE	4		STANDARD
12	R116515	ENGINE CYLINDER HEAD GASKET	1		
13	RE31617	SEAL	8		
14	.....	CYLINDER HEAD	1		(MARKED R121402)
15	RE57234	CYLINDER HEAD	1		(MARKED R121402)

MEMORANDA

EXHAUST MANIFOLD
PE4045DT050
(SERIAL NO.071973-)

TP49344 -UN-22NOV95

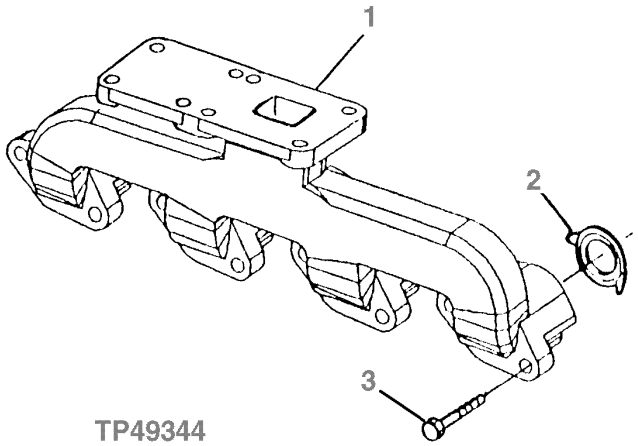

KEY	PART NO.	PART NAME	QTY	ENGINE SERIAL NO.	REMARKS
1	R132261	EXHAUST MANIFOLD	1		
2	R90658	GASKET	4		
3	19M7810	SCREW	8		M10 X 80

FUEL INJECTION NOZZLE
PE4045DT050
(SERIAL NO.071973-)

TP48976 -UN-26OCT96

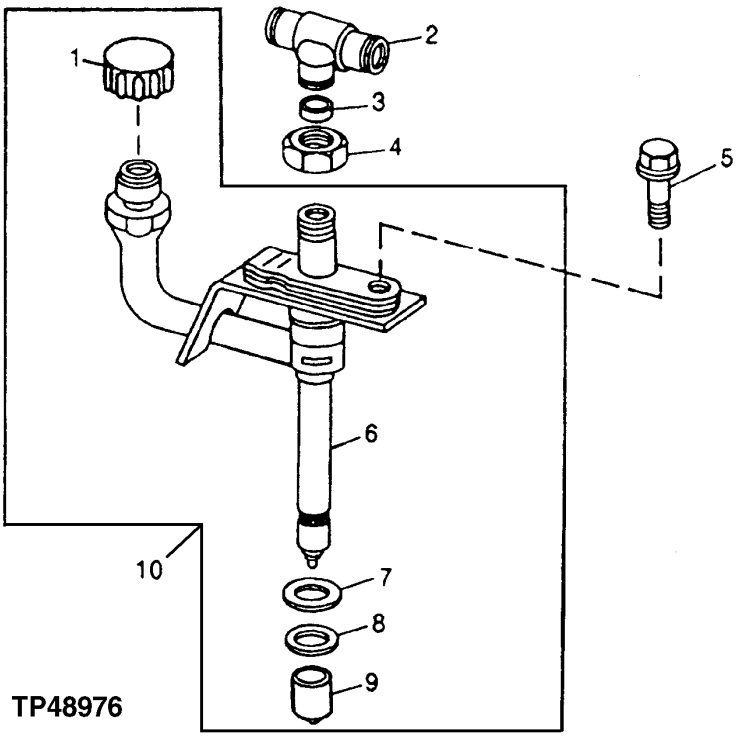

KEY	PART NO.	PART NAME	QTY	ENGINE SERIAL NO.	REMARKS
1	.....	CAP (HAT)	1		
2	R71963	TEE FITTING	1		
3	R79605	WASHER	1		
4	R79604	TUBE NUT	1		
5	R116366	SCREW	1		
6	.....	NOZZLE	1		
7	R92352	PACKING	1		
8	R48000	SEAL	1		(USE WITH OVERSIZE NOZZLE BORE)
	R500390	WASHER	1		(USE WITH STANDARD NOZZLE BORE)
9	T24472	CAP	1		
10	RE60062	INJECTION NOZZLE	1		
	SE500828	NOZZLE	1		(REMANUFACTURED) (PACKAGE OF FOUR)

FUEL INJECTION PUMP SOLENOID WIRE HARNESS
PE4045DT050
(SERIAL NO.071973-)

TP50825 -UN-16APR98

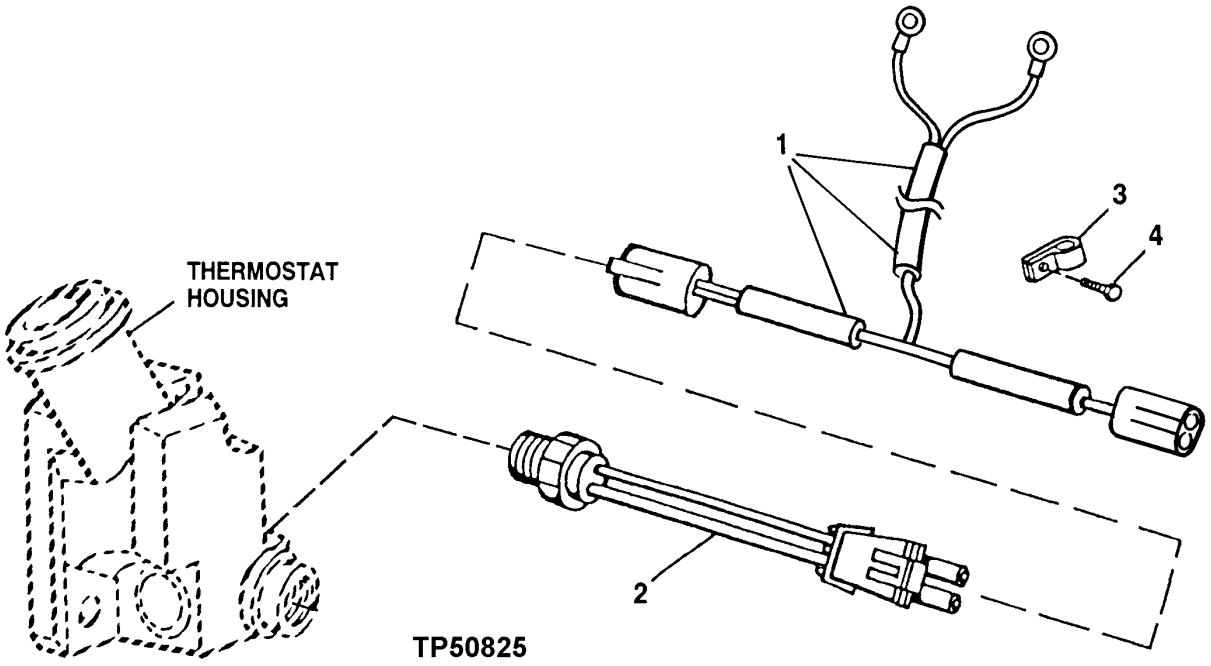

KEY	PART NO.	PART NAME	QTY	ENGINE SERIAL NO.	REMARKS
1	RE66560	WIRING HARNESS	1		
2	RE503242	SENSOR WIRING HARNESS	1		
3	T74410	CLAMP	1		
4	19M7783	SCREW	1		M10 X 16

FUEL INJECTION SYSTEM
(12 VOLT STANADYNE DB4)
PE4045DT050
(SERIAL NO.071973-)

TP59229 -UN-09OCT97

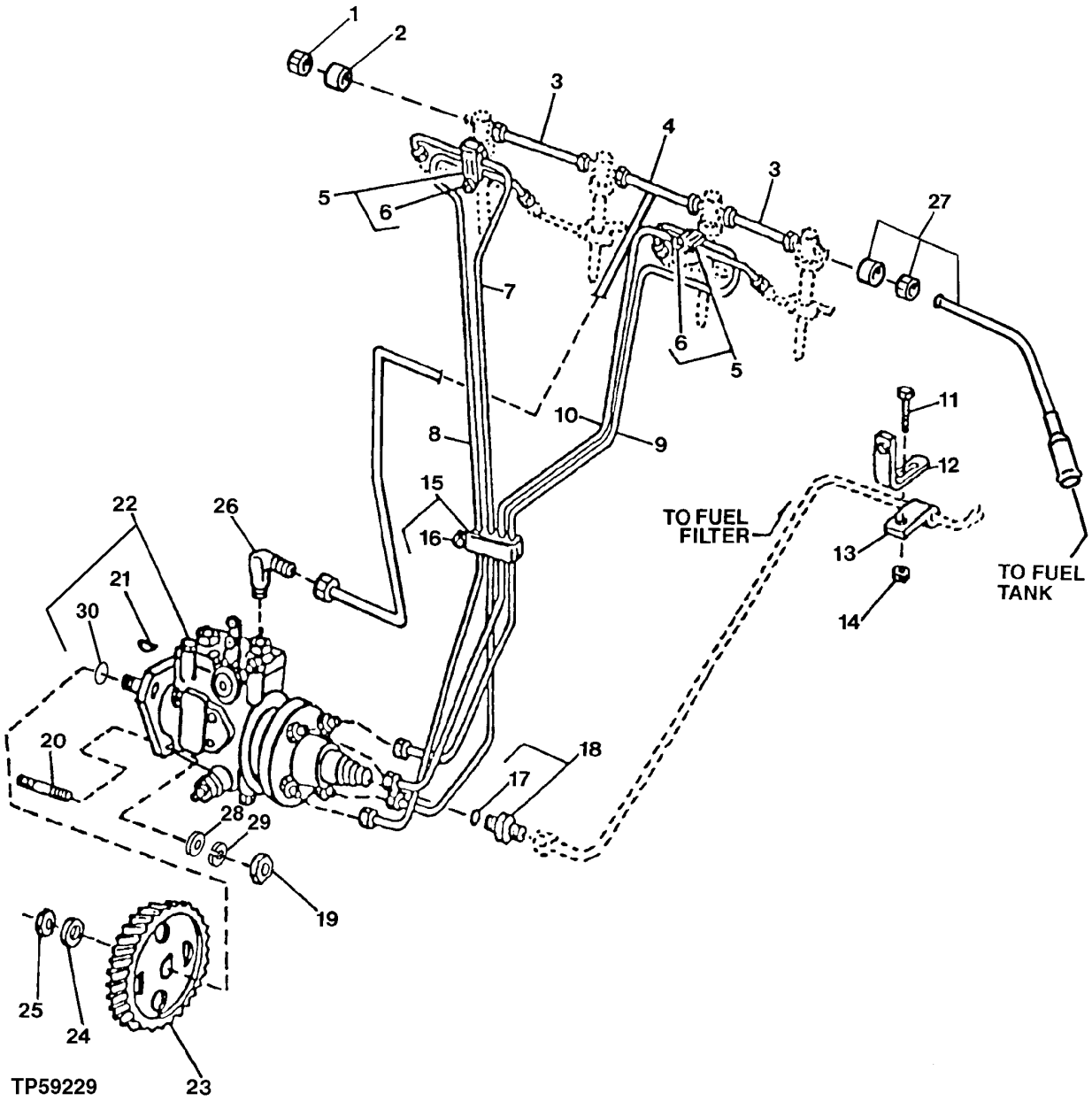

FUEL INJECTION SYSTEM
(12 VOLT STANADYNE DB4)
PE4045DT050
(SERIAL NO.071973-)

KEY	PART NO.	PART NAME	QTY	ENGINE SERIAL NO.	REMARKS
1	AR85519	PLUG	1		
2	R123593	TUBE NUT	1		
3	RE68748	TUBE	2		
4	RE70848	FUEL LINE	1		LEAK-OFF
5	RE19797	CLAMP	2		
6	19M7300	CAP SCREW	2		M6 X 10
7	RE59447	FUEL LINE	1		NO. 1
8	RE59448	FUEL LINE	1		NO. 2
9	RE59449	FUEL LINE	1		NO. 3
10	RE59450	FUEL LINE	1		NO. 4
11	19M7865	SCREW	1		M8 X 16, NO. 2
12	R116116	BRACKET	1		
13	T14050	CLAMP	1		
14	14M7298	FLANGE NUT	1		M8
15	RE19799	CLAMP	1		
16	19M7300	CAP SCREW	1		M6 X 10
17	51M7040	O-RING	1		9.300 X 2.200 MM (0.366" X 0.087")
18	RE60029	ADAPTER	1		
19	14M7273	NUT	3		M8
20	R116386	STUD	3		
21	26H10	SHAFT KEY	1		3.962 X 15.875 MM (5/32" X 5/8")
22	RE502380	FUEL INJECTION PUMP	1	-XXXXXX	(A)
	RE506123	FUEL INJECTION PUMP	1	XXXXXX-	(A)
	SE500777	FUEL INJECTION PUMP	1	XXXXXX-	(REMANUFACTURED)
23	R132267	GEAR	1		(60 TEETH)
24	R132874	WASHER	1		
25	R91360	NUT	1		M14
26	R67364	ELBOW FITTING	1		
27	RE16142	FUEL LINE	1		
	R51936	SEALING WASHER	1		
	R51937	TUBE NUT	1		
28	T27860	WASHER	3		
29	12M7065	LOCK WASHER	3		
30	R502076	BACK-UP RING	1		

(A) SEE YOUR AUTHORIZED PUMP REPAIR STATION FOR INTERNAL PARTS

AIR INTAKE SYSTEM
PE4045DT050
(SERIAL NO.071973-)

TP49444 -UN-14AUG96

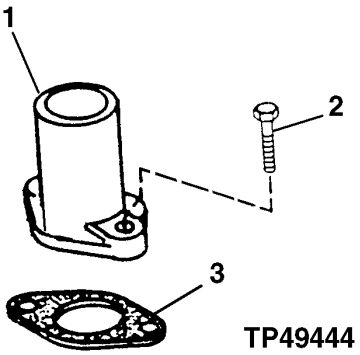

KEY	PART NO.	PART NAME	QTY	ENGINE SERIAL NO.	REMARKS
1	R123569	INTAKE MANIFOLD	1		
2	R500394	SCREW	2		
3	R81275	GASKET	1		

MEMORANDA

ENGINE BALANCER SHAFT
PE4045DT050
(SERIAL NO.071973-)

T149536 -UN-03JAN02

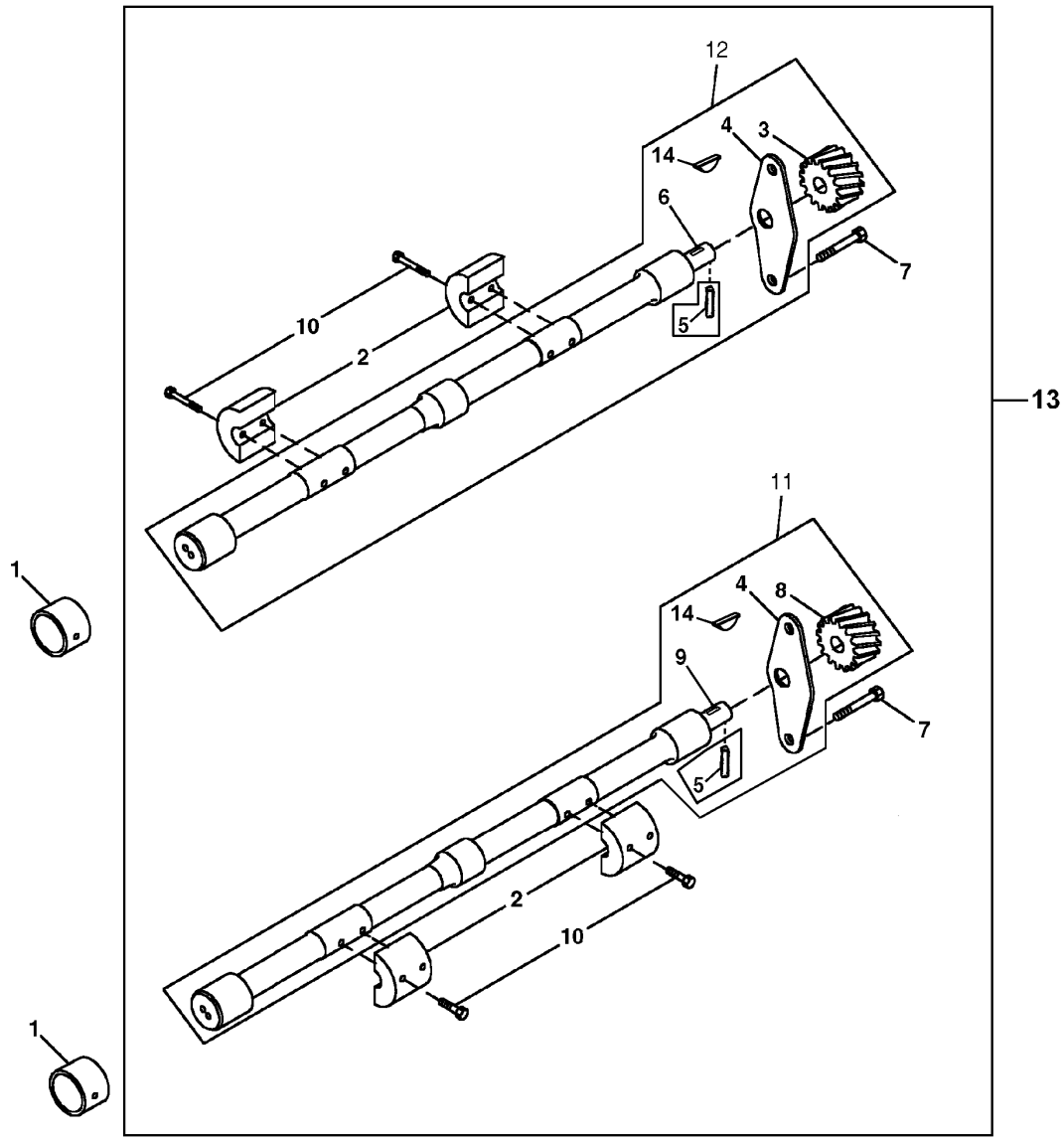

T149536

ENGINE BALANCER SHAFT
PE4045DT050
(SERIAL NO.071973-)

KEY	PART NO.	PART NAME	QTY	SERIAL NO.	REMARKS
1	R115299	BUSHING	6		
2	R500265	WEIGHT	4		STANDARD DUTY
3	.....	GEAR	1		L.H.(15 TEETH)
4	.....	PLATE	2		
5	34M7089	DOWEL PIN	AR		4 X 12 MM
6	.....	BALANCER SHAFT	1		L.H.
7	19M8998	SCREW	4		
8	.....	GEAR	1		R.H.(15TEETH)
9	.....	BALANCER SHAFT	1		R.H.
10	19M8882	SCREW	8		M8 X 40
11	RE500448	BALANCER SHAFT	1		R.H.
12	RE500449	BALANCER SHAFT	1		L.H.
13	RE504741	BALANCER SHAFT	1		
14	R133303	SHAFT KEY	AR		

MEMORANDA

WATER PUMP INLET AND PULLEY
PE4045DT050
(SERIAL NO.071973-)

TP49372 -UN-18JAN96

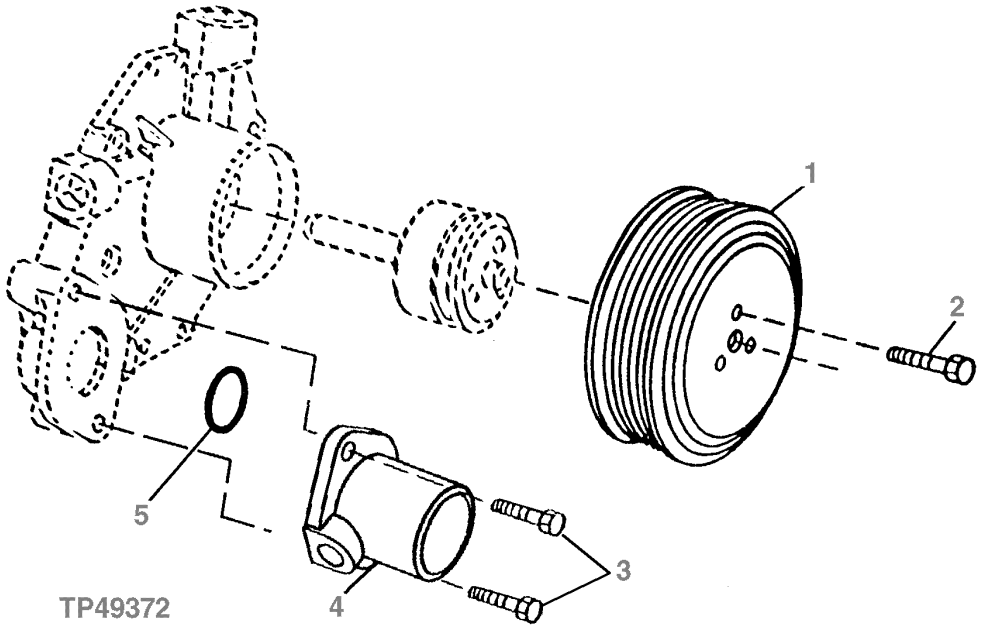

KEY	PART NO.	PART NAME	QTY	ENGINE SERIAL NO.	REMARKS
1	R115250	PULLEY	1		
2	19M7774	SCREW	3		M6 X 12
3	19M7867	SCREW	2		M8 X 25
4	R121634	WATER PUMP CONNECTION	1		
5	R89944	O-RING	1		

WATER PUMP ASSEMBLY
PE4045DT050
(ENGINE SERIAL NO.071973-208930)

T158421 -UN-13AUG02

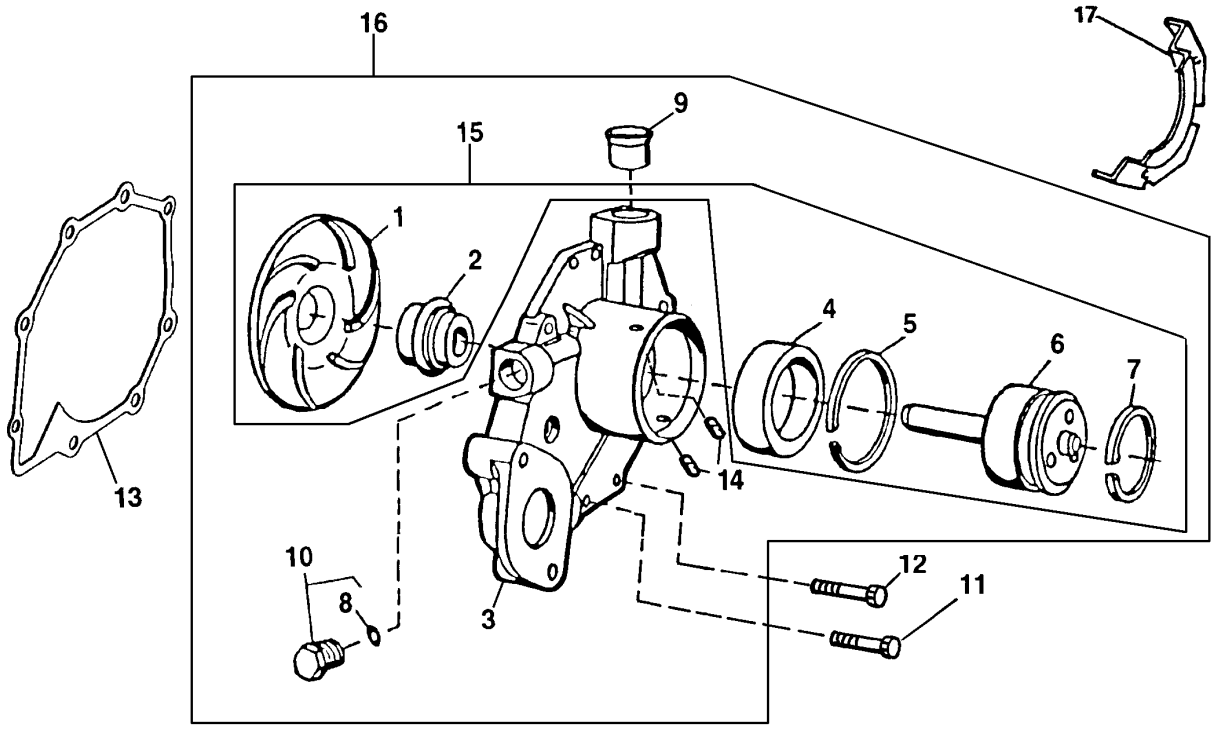

T158421

KEY	PART NO.	PART NAME	QTY	ENGINE SERIAL NO.	REMARKS
1	.....	IMPELLER	1		
2	.....	SEAL	1		
3	.....	HOUSING	1		
4	.....	BALL BEARING	1		
5	.....	RING	1		
6	.....	SHAFT	1		
7	A364R	SNAP RING	1		
8	51M7043	O-RING	1		15.300 X 2.200 MM
9	R123226	SEAL	1		
10	RE46685	PLUG	1		
11	19M7796	SCREW	3		M6 X 30
12	19M7863	SCREW	5		M6 X 25
13	R123417	GASKET	1		
14	R100369	FILTER	2		
15	RE71240	KIT	1		
16	RE500737	WATER PUMP	1		(MARKED R500401) (SUB RE505981 AND RE508566)
17	R135841	SHROUD	1		

WATER PUMP ASSEMBLY
PE4045DT050
(ENGINE SERIAL NO.208931-)

T149718 -UN-07JAN02

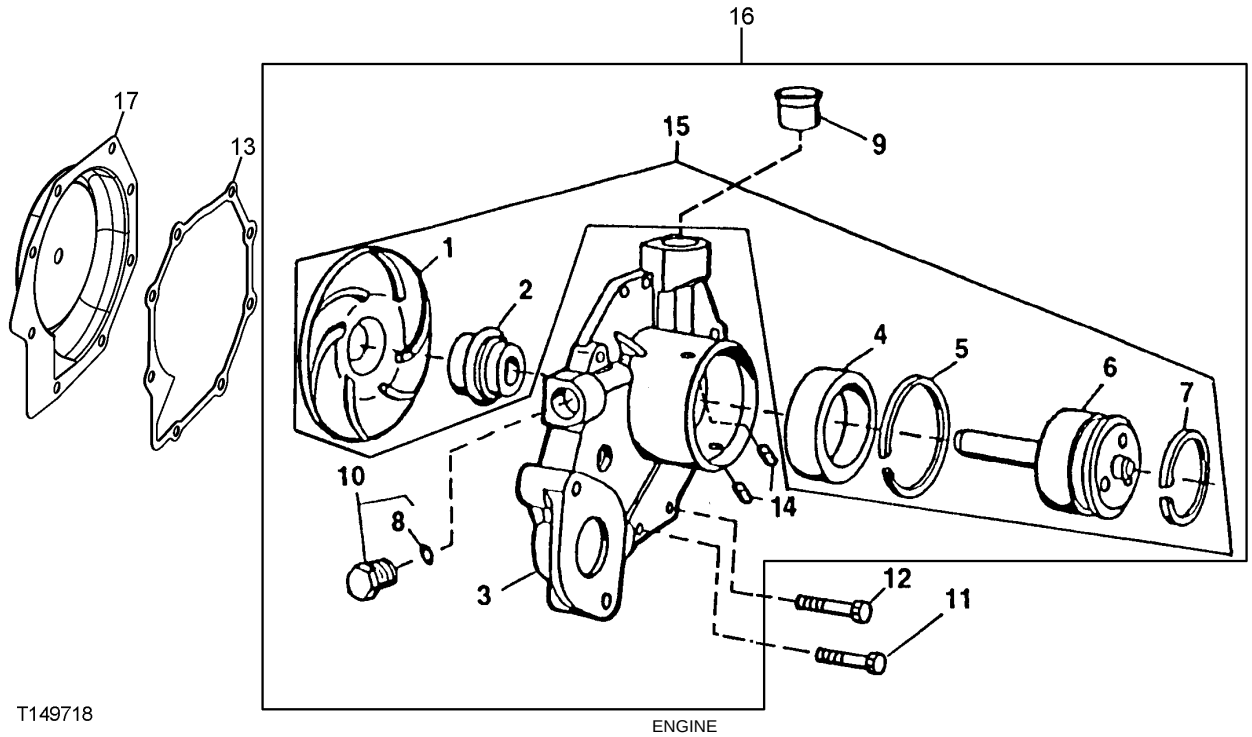

T149718

KEY	PART NO.	PART NAME	QTY	ENGINE SERIAL NO.	REMARKS
1	.....	IMPELLER	1		(MARKED R121036)
2	.....	SEAL	1		(MARKED R503509)
3	.....	HOUSING	1		
4	.....	BALL BEARING	1		
5	.....	RING	1		
6	.....	SHAFT	1		
7	A364R	SNAP RING	1		
8	51M7043	O-RING	1		15.300 X 2.200 MM
9	R123226	SEAL	1		
10	RE46685	PLUG	1		
11	19M7863	SCREW	5		M6 X 25
12	19M7796	SCREW	3		M6 X 30
13	R123417	GASKET	1		
14	R100369	FILTER	2		
15	RE70962	KIT	1		
16	RE505981	WATER PUMP	1		(MARKED R503509)
17	RE508566	KIT	1		(WATER PUMP INSERT REPAIR)

THERMOSTAT AND THERMOSTAT COVER
PE4045DT050
(SERIAL NO.071973-)

TP49332 -UN-13DEC95

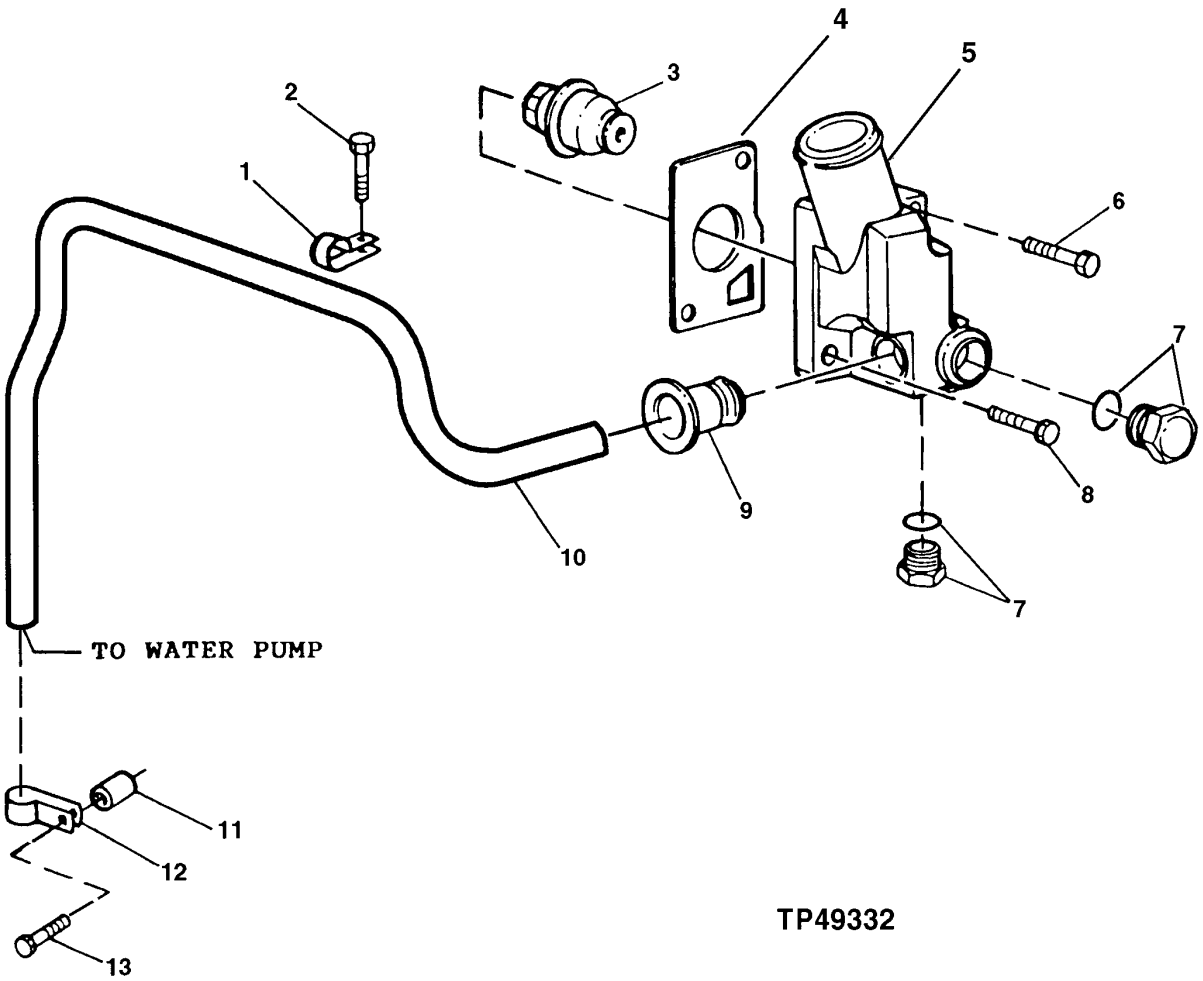

THERMOSTAT AND THERMOSTAT
PE4045DT050
(SERIAL NO.071973-)

KEY	PART NO.	PART NAME	QTY	ENGINE SERIAL NO.	REMARKS
1	R123323	CLAMP	1		
2	19M7788	SCREW	1		M12 X 25
3	RE522076	THERMOSTAT	2		(SUB FOR RE64354 OR RE506300, THIS APPLICATION) 82° C (180° F)
4	R502814	GASKET	1		(SUB FOR R135896)
5	R131016	COVER	1		
6	19M8292	SCREW	1		M10 X 50
7	RE46684	PLUG	2		
8	19M7786	SCREW	1		M10 X 30
9	R123226	SEAL	1		
10	R501144	TUBE	1		
11	.....	SPACER	1		(ON TIMING COVER)
12	R123324	CLAMP	1		
13	.....	CAP SCREW	1		

ENGINE OIL COOLER
PE4045DT050
(SERIAL NO.071973-)

T137126 -UN-15JAN01

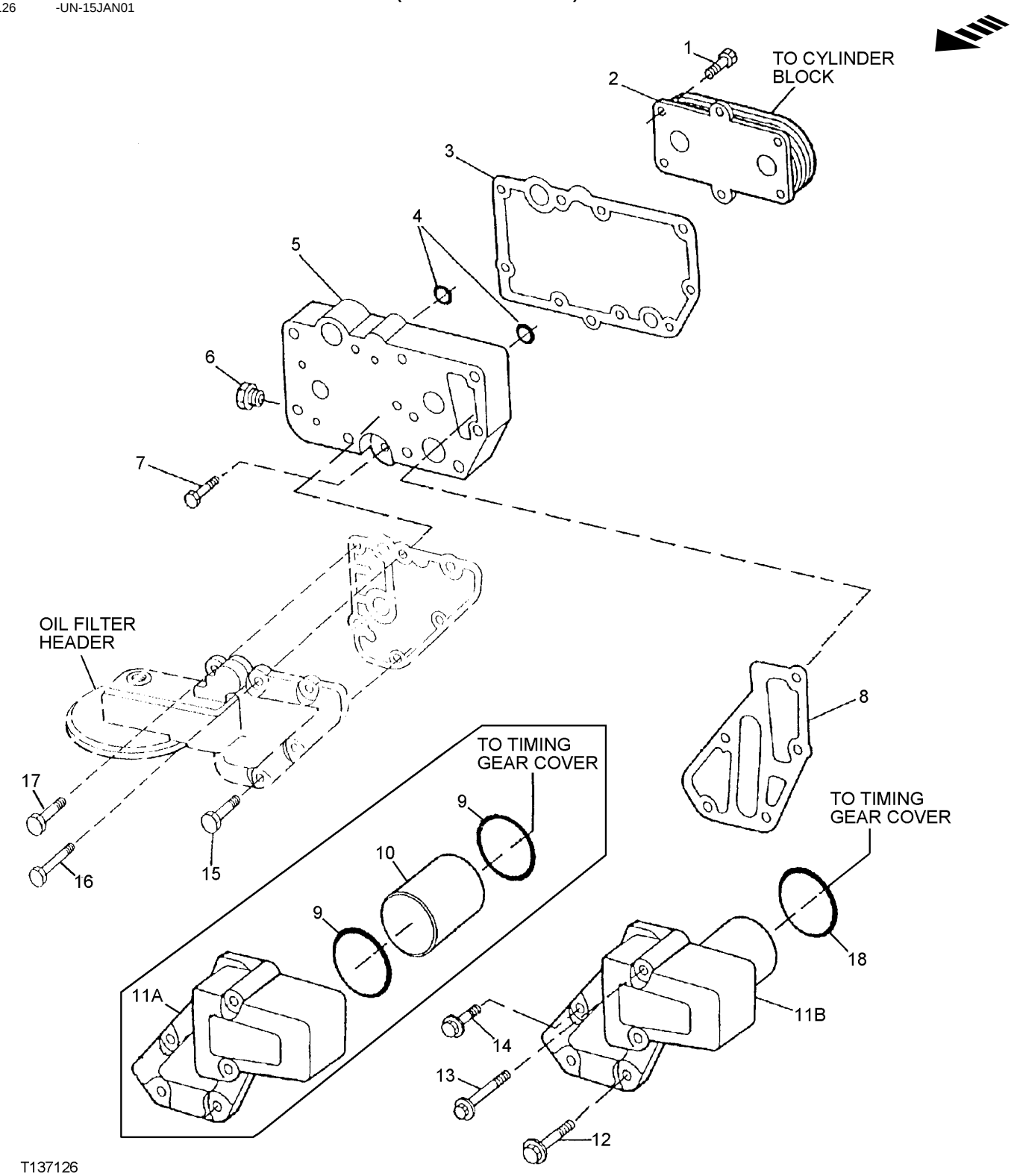

ENGINE OIL COOLER
PE4045DT050
(SERIAL NO.071973-)

KEY	PART NO.	PART NAME	QTY	ENGINE SERIAL NO.	REMARKS
1	RE67231	SCREW	6		M6 X 16 (WITH PRE-APPLIED SEALANT)
2	RE59296	OIL COOLER	1		
3	R123501	GASKET	1		
4	T122075	O-RING	2		
5	R123471	HOUSING	1		
6	RE46686	PLUG	1		
7	RE46685	PLUG	1		
8	R501428	GASKET	1		
9	R61105	O-RING	2	-873088	
10	R115252	TUBE	1	-873088	
11A	R135177	ADAPTER	1	-873088	(SUB R502811)
11B	R502811	ADAPTER	1	873089-	
12	19M7802	SCREW	2		M8 X 65
13	19M7970	SCREW	2		M8 X 100
14	RE67238	SCREW	1		M8 X 1.25 X 20 (WITH PRE-APPLIED SEALANT)
15	19M7802	SCREW	4		M8 X 65
16	19M7970	SCREW	1		M8 X 100
17	RE67238	SCREW	1		M8 X 20 (WITH PRE-APPLIED SEALANT)
18	R504734	O-RING	1	873089-	

FUEL FILTER AND FUEL LINES
PE4045DT050
(SERIAL NO.071973-)

T152519 -UN-13MAR02

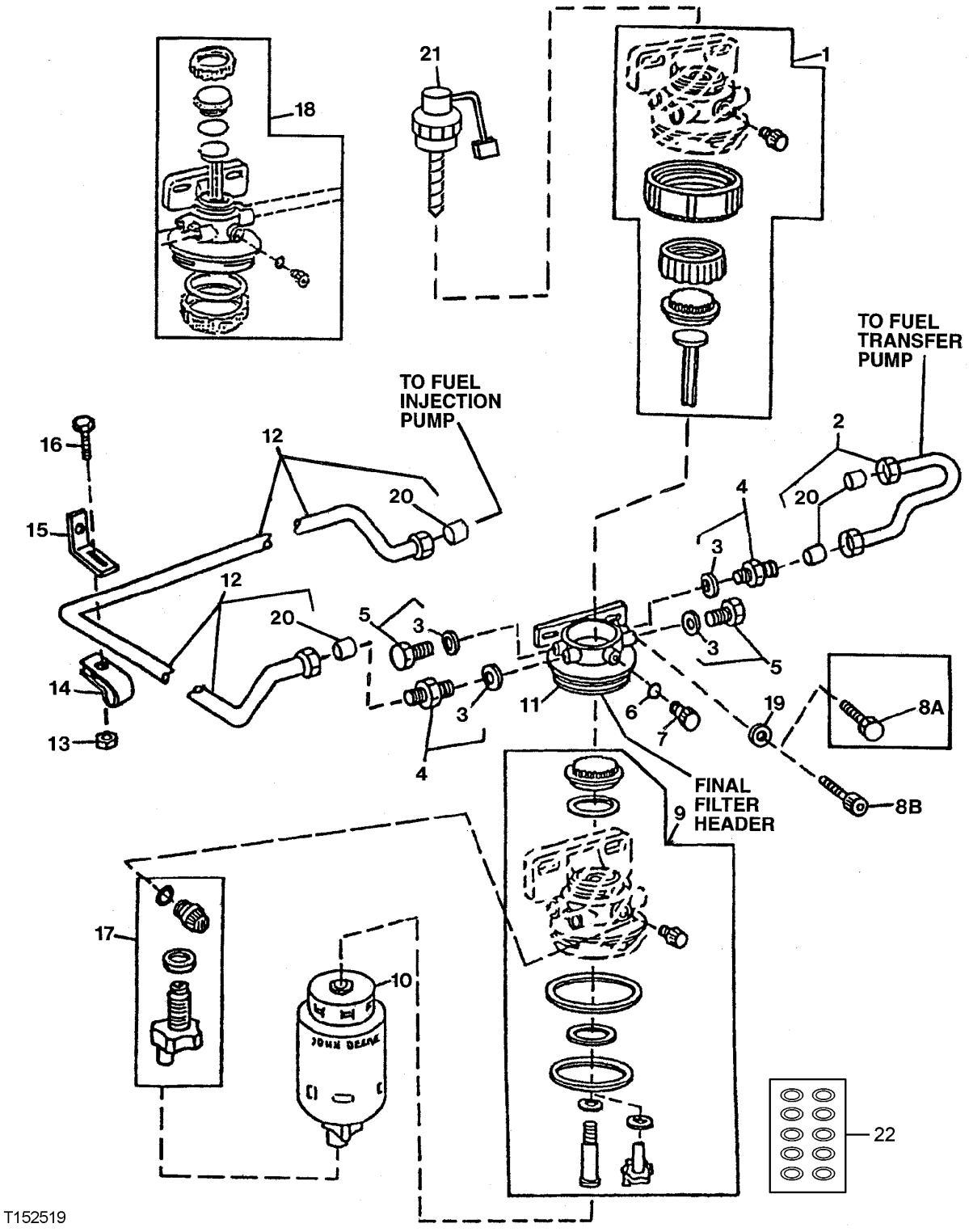

FUEL FILTER AND FUEL LINES
PE4045DT050
(SERIAL NO.071973-)

KEY	PART NO.	PART NAME	QTY	ENGINE SERIAL NO.	REMARKS
1	RE51649	SEAL KIT	1		FUEL FILTER
2	RE60037	FUEL LINE	1		
	R74012	SEALING WASHER	2		7.140 X 12.300 X 6.400 MM (0.281" X 0.484" X 0.252")
3	51M7040	O-RING	1		
4	RE60029	ADAPTER	2		
5	RE46686	PLUG	2		
6	R113562	RING	1		
7	R113563	DRAIN PLUG	1		
8A	19M8328	SCREW	2		M10 X 25
9	RE516553	KIT	1		(SUB FOR RE50752) FUEL FILTER
10	RE62418	FUEL FILTER	1		INCLUDES DRAIN VALVE
11	.....	FILTER HEAD	1		FURNISH RE70358
12	RE60025	FUEL LINE	1		
	R74012	SEALING WASHER	2		
13	14M7298	FLANGE NUT	1		M8
14	T14050	CLAMP	1		
15	R116116	BRACKET	1		
16	19M7865	SCREW	1		M8 X 16
17	RE60854	KIT	1		DRAIN VALVE
18	RE70358	KIT	1		
19	24M7096	WASHER	2		10.500 X 18 X 1.600 MM
20	R123594	TUBE NUT	2		
21	RE51648	KIT	1		(FUEL FILTER HEATER)(12-VOLT)
	RE504134	KIT	1		(FUEL FILTER HEATER)(24-VOLT)
22	RE516513	KIT	1		(WITH HAND PRIMER) (CONTAINS 10 O-RINGS)
	RE516512	KIT	1		(WITHOUT HAND PRIMER) (CONTAINS 10 O-RINGS)

FUEL TRANSFER PUMP

TP61907 -UN-24FEB00

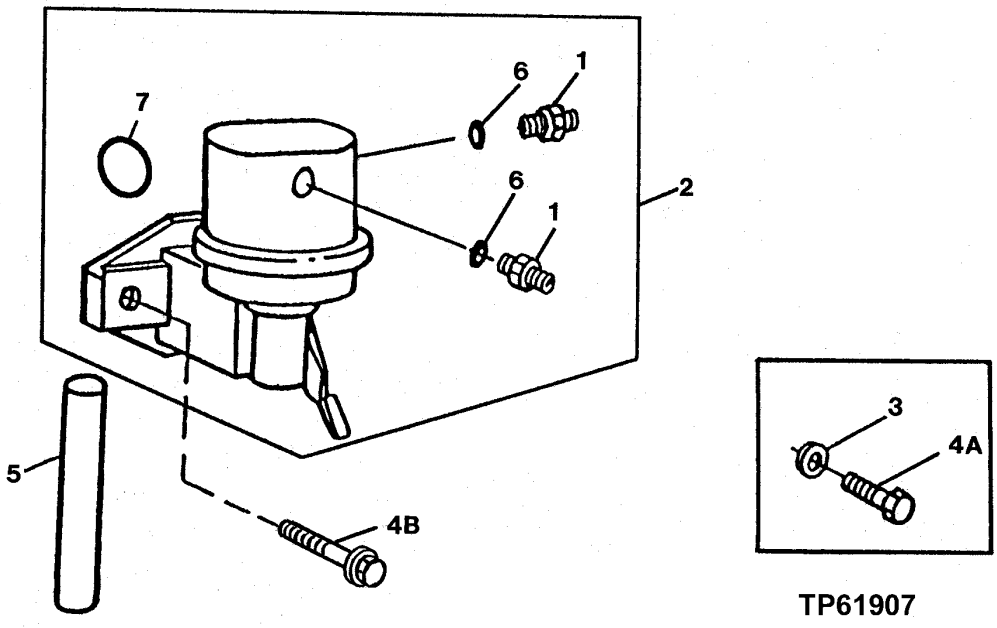

TP61907

KEY	PART NO.	PART NAME	QTY	ENGINE SERIAL NO.	REMARKS
1	R500270	FITTING	2		
2	RE66153	FUEL PUMP	1		
3	24M7055	WASHER	AR		
4A	RE66298	CAP SCREW	AR		
4B	RE504233	CAP SCREW	2		
5	R133405	PUSH ROD	1		
6	R500271	O-RING	2		
7	R123273	O-RING	1		

MEMORANDA

STARTING MOTOR AND ATTACHING PARTS
PE4045DT050
(SERIAL NO.071973-866615)

TP50830 -UN-29APR98

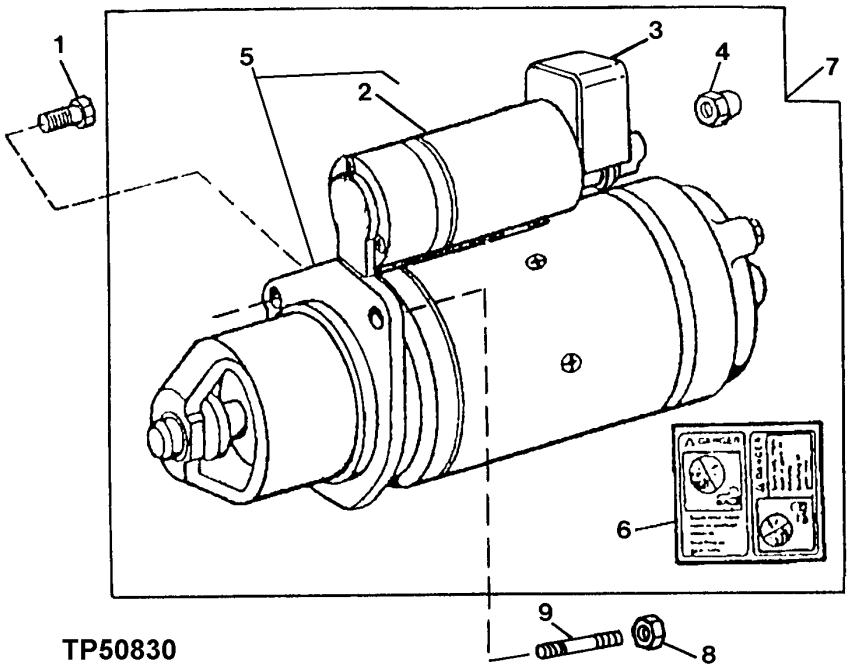

TP50830

KEY	PART NO.	PART NAME	QTY	ENGINE SERIAL NO.	REMARKS
1	19M7786	SCREW	2		M10 X 30
2	RE503633	SOLENOID	1		(USE WITH RE501767)
3	R135431	COVER	1		
4	R135432	NUT	1		
5	.....	STARTER MOTOR	1		(MARKED AZJ3226 - 12 VOLT)
	RE70581	STARTER MOTOR DRIVE	1		(NOT ILLUSTRATED)
6	T146102	LABEL	1		
7	RE501767	STARTER MOTOR KIT	1		(ISKRA) (STARTER AND SOLENOID KIT)
8	14M7296	FLANGE NUT	1		
9	42M7058	STUD	1		

STARTING MOTOR AND ATTACHING PARTS (ISKRA)
PE4045DT050
(ENGINE SERIAL NO.866616-)

T135657 -UN-27NOV00

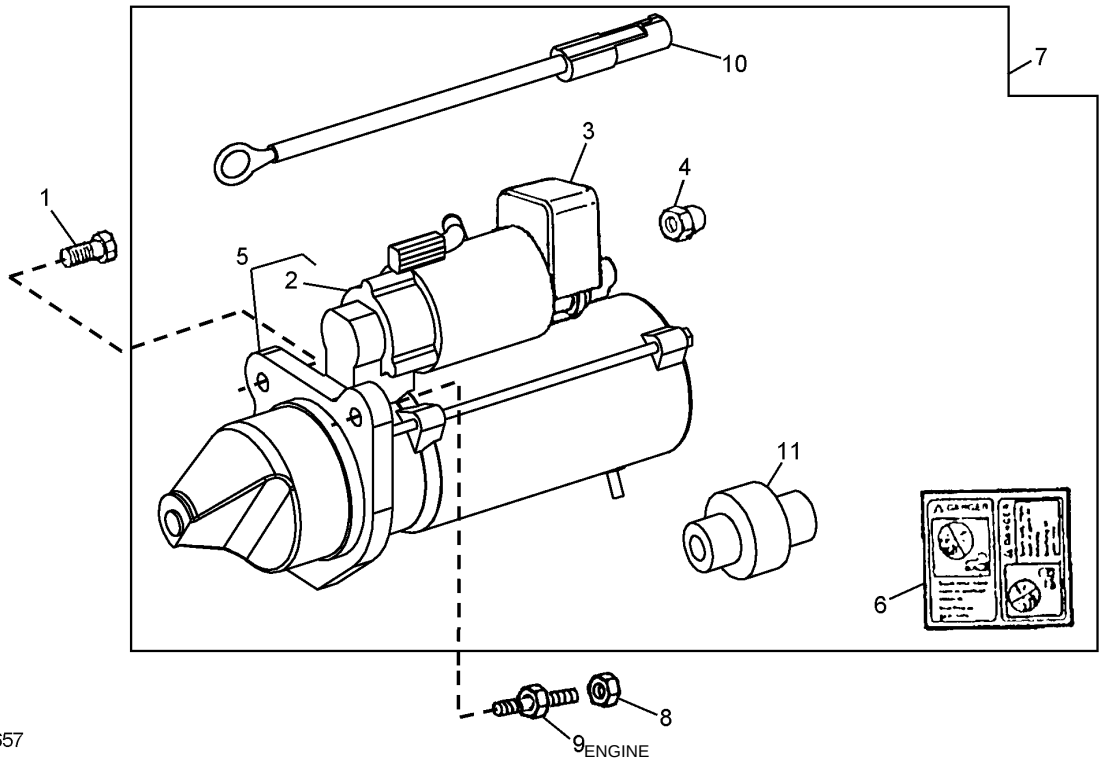

T135657

KEY	PART NO.	PART NAME	QTY	ENGINE SERIAL NO.	REMARKS
1	19M7786	SCREW	2		M10 X 30
2	RE515428	SOLENOID	1		(SUB FOR RE507637)
3	R135431	COVER	1		
4	R135432	NUT	1		
5	.....	STARTER MOTOR	1		(12 VOLT)
6	T146102	LABEL	1		
7	.....	KIT	1		(SUB FOR RE501767, THIS APPLICATION) (SUB RE506105 AND AT196314)
8	14M7296	FLANGE NUT	1		M10
9	R503419	STUD	1		
10	RE505400	BATTERY CABLE	1		
11	RE515688	STARTER MOTOR DRIVE	1		(SUB FOR RE507638)

STARTING MOTOR (DENSO)
(ENGINE SERIAL NO.866616-)

T149124 -UN-14DEC01

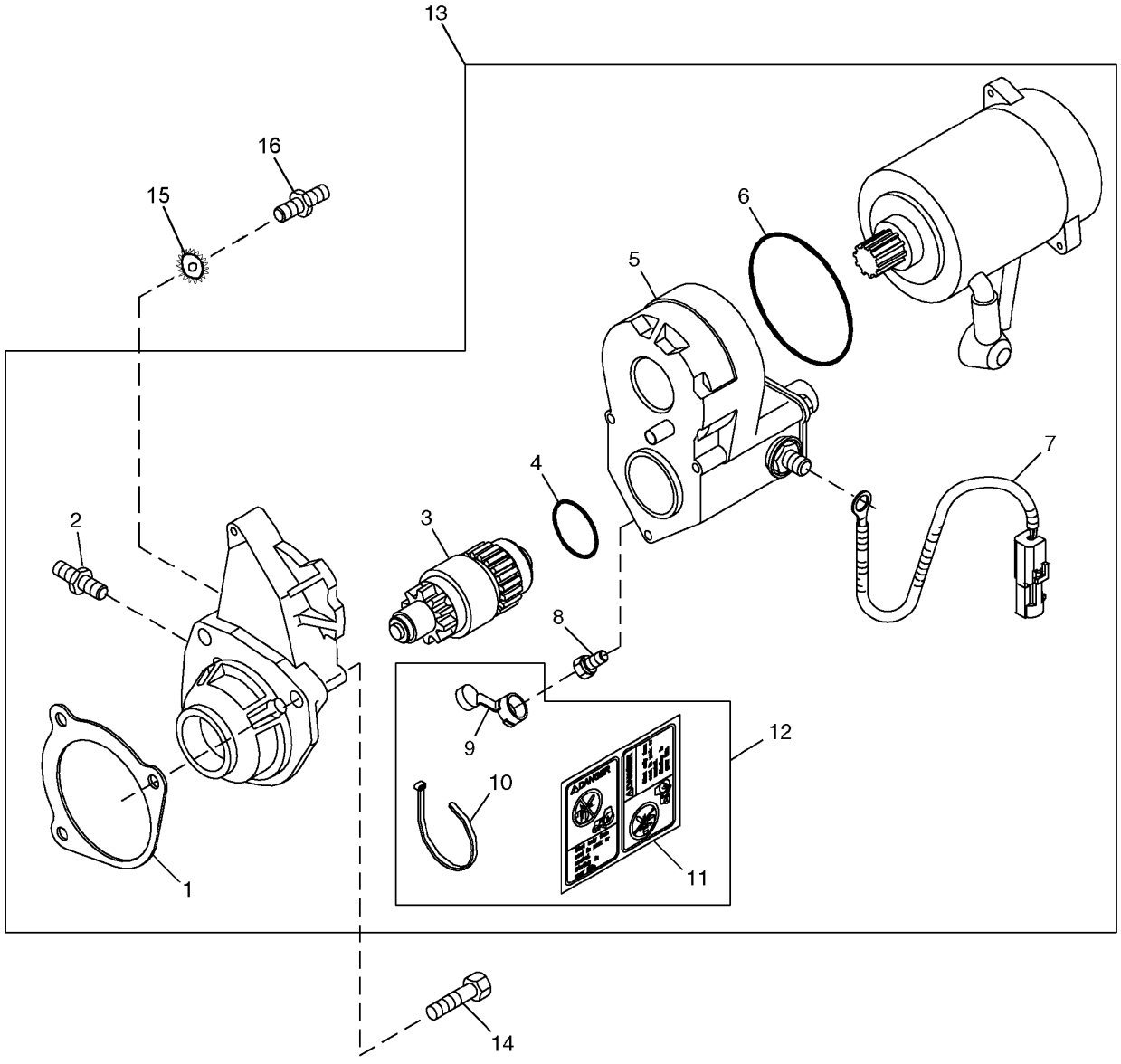

T149124

STARTING MOTOR (DENSO)
(ENGINE SERIAL NO.866616-)

KEY	PART NO.	PART NAME	QTY	ENGINE SERIAL NO.	REMARKS
1	R53108	GASKET	1		NOT USED IN THIS APPLICATION
2	R136052	STUD	1		
3	RE70487	CLUTCH	1		
4	R135510	O-RING	1		
5	RE70486	SOLENOID	1		
6	R135509	SEAL	1		
7	RE505400	WIRING HARNESS	1		
8	RE71256	SCREW WITH WASHER	1		
9	.....	COVER	1		(ORDER RE70756)
10	R96703	TIE BAND	1		NOT USED IN THIS APPLICATION
11	T146102	LABEL	1		"DANGER: START ONLY FROM SEAT..."
12	RE70756	KIT	1		
13	RE506105	STARTER MOTOR KIT	1		DENSO 12V WET SEALED, (MARKED RE504244)
14	19M7786	SCREW	2		M10 X 30
15	12M7033	LOCK WASHER	1		10.500 MM
16	R503419	STUD	1		

ALTERNATOR MOUNTING BRACKETS
PE4045DT050
(SERIAL NO.071973-)

TP54987 -UN-14FEB97

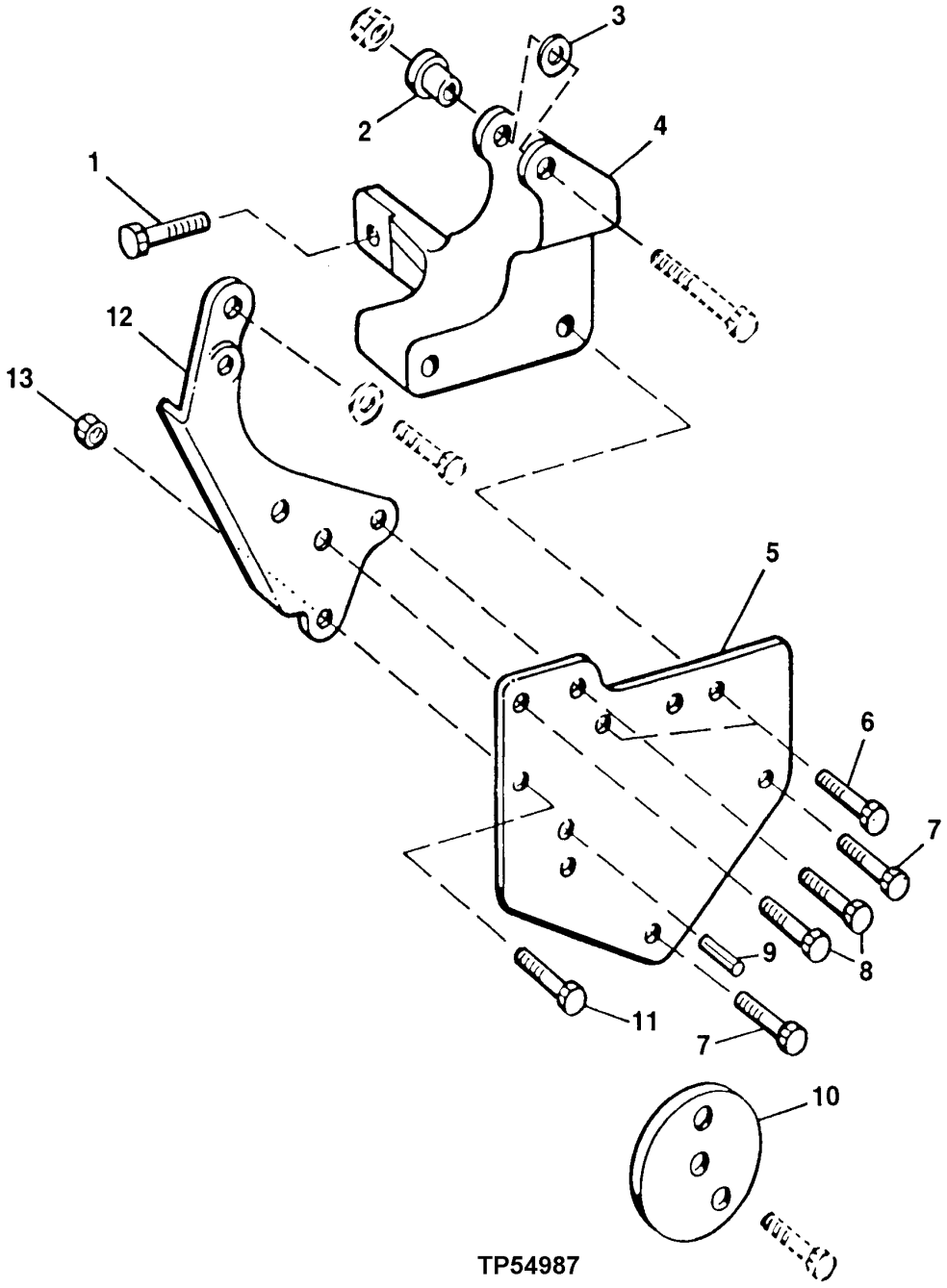

TP54987

ALTERNATOR MOUNTING BRACKETS
PE4045DT050
(SERIAL NO.071973-)

KEY	PART NO.	PART NAME	QTY	ENGINE SERIAL NO.	REMARKS
1	19M7786	SCREW	2		M10 X 30
2	R100377	BUSHING	1		
3	R64525	THRUST WASHER	1		
4	R132166	BRACKET	1		
5	R132168	SUPPORT	1		
6	19M7785	SCREW	2		M10 X 25
7	19M7801	SCREW	1		M8 X 60
8	19M7786	SCREW	2		M10 X 30
9	34M7061	SPRING PIN	1		8 X 20 MM
10	R500321	SPACER	1		
11	19M7786	SCREW	3		M10 X 30
12	R132167	STRAP	1		
13	14M7296	FLANGE NUT	1		

CRANKSHAFT PULLEY AND BELT
PE4045DT050
(SERIAL NO.071973-)

TP53312 -UN-03JAN97

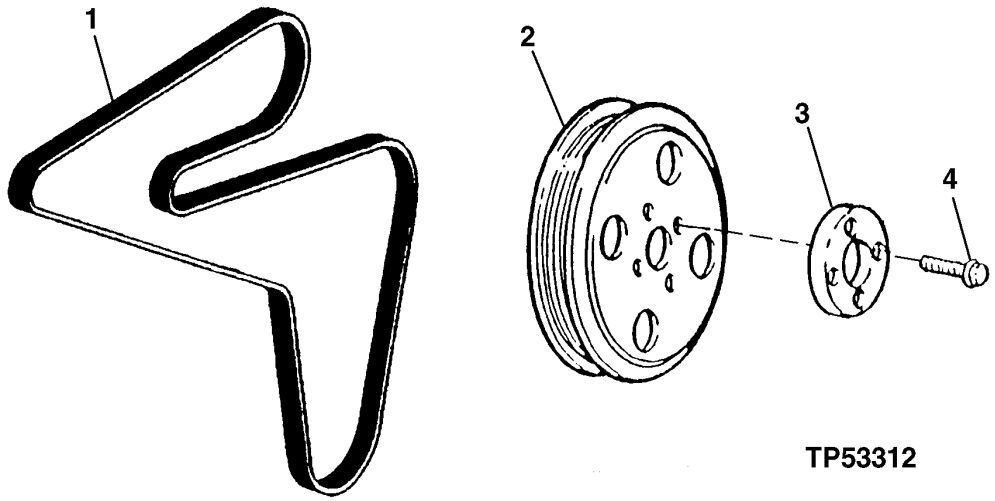

KEY	PART NO.	PART NAME	QTY	ENGINE SERIAL NO.	REMARKS
1	R135195	V-BELT	1		
2	R133295	SHEAVE	1		
3	R500649	FLANGE	1		
4	R121897	SCREW	4		

MEMORANDA

FAN DRIVE PULLEYS ,FAN BELT AND TENSIONERS
PE4045DT050
(SERIAL NO.071973-)

TP55150 -UN-10JUL97

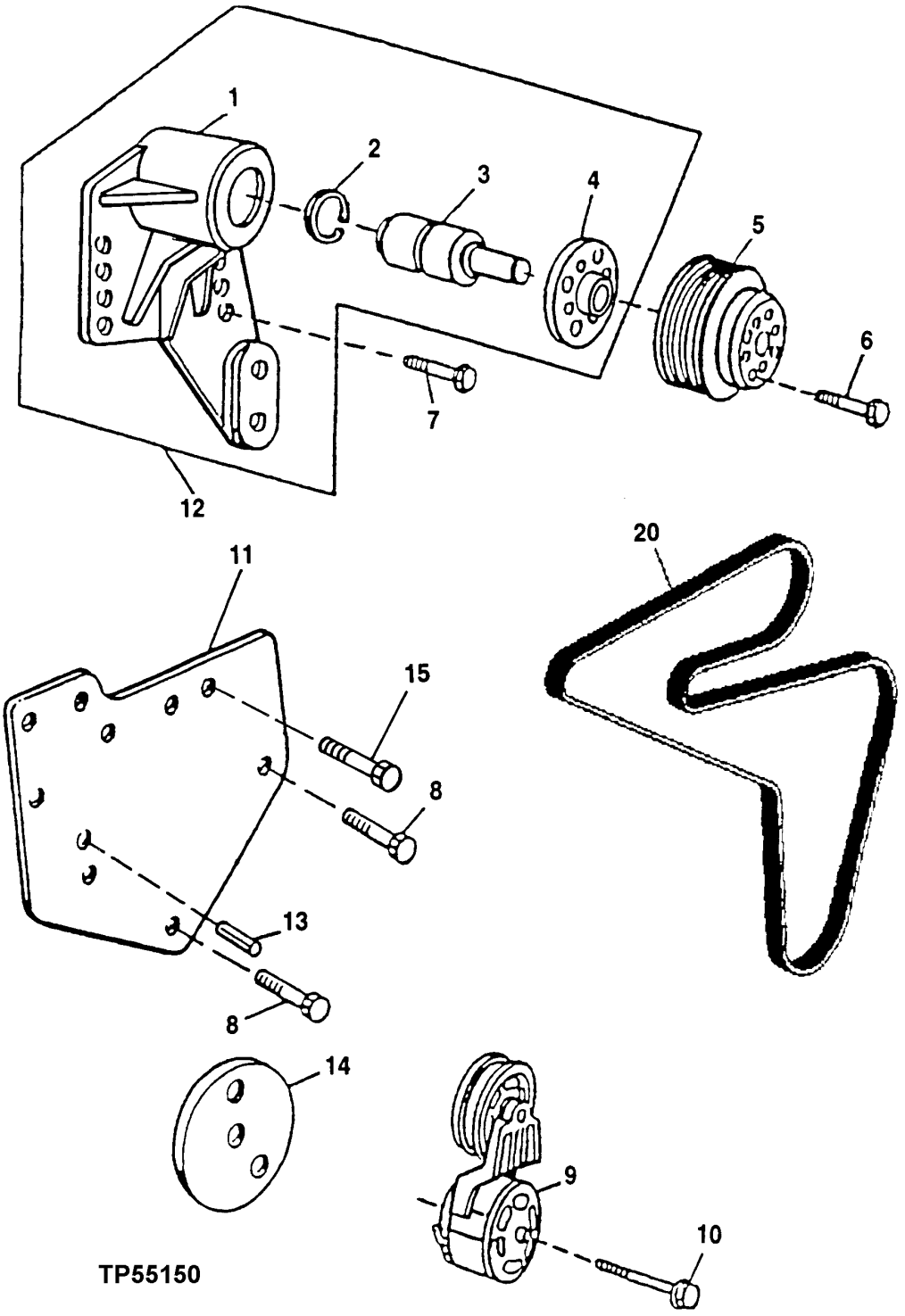

FAN DRIVE PULLEYS,FAN BELT AND TENSIONERS
PE4045DT050
(SERIAL NO.071973-)

KEY	PART NO.	PART NAME	QTY	ENGINE SERIAL NO.	REMARKS
1	.....	HOUSING	1		
2	E1343FN	SNAP RING	1		
3	.....	SHAFT	1		(RE69292 NO LONGER AVAILABLE)
4	.....	HUB	1		(MARKED R123284)
5	R128660	PULLEY	1		
6	19M7784	SCREW	4		M10 X 20
7	19M7835	SCREW	4		M10 X 35
8	19M7801	SCREW	2		M8 X 60
9	RE70535	TIGHTENER	1		(RE70535 NO LONGER AVAILABLE) (ORDER RE518097 AND R516623)
10	19M7811	SCREW	1		M10 X 90
11	R133978	SUPPORT	1		
12	RE500538	BEARING HOUSING W/ BEARING	1		
13	34M7061	SPRING PIN	1		8 X 20 MM
14	R516623	SPACER	1		(R500322 NO LONGER AVAILABLE) (SUB FOR R135531 OR R500322)
15	19M7785	SCREW	2		M10 X 25
20	R135195	V-BELT	1		

ENGINE FLYWHEEL
PE4045DT050
(SERIAL NO.071973-)

TP54964 -UN-13FEB97

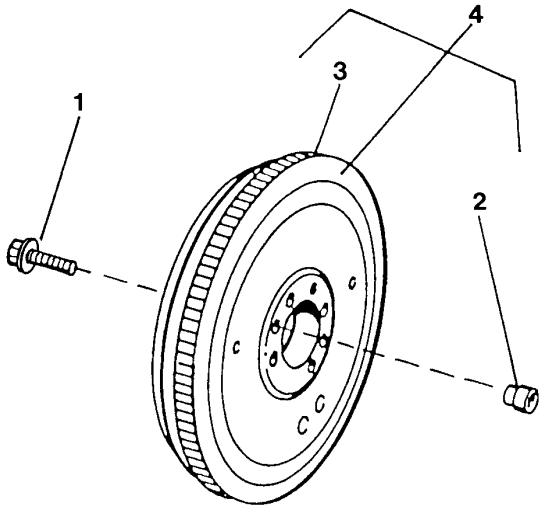

TP54964

KEY	PART NO.	PART NAME	QTY	ENGINE SERIAL NO.	REMARKS
1	R135918	BOLT	6		HS, SAE 8, 1/2" X 1-1/2"
2	R123521	SLEEVE	1		
3	R28811	RING GEAR	1		(129 TEETH)
4	RE500137	FLYWHEEL	1		

FLYWHEEL HOUSING
PE4045DT050
(SERIAL NO.071973-)

T158306 -UN-02AUG02

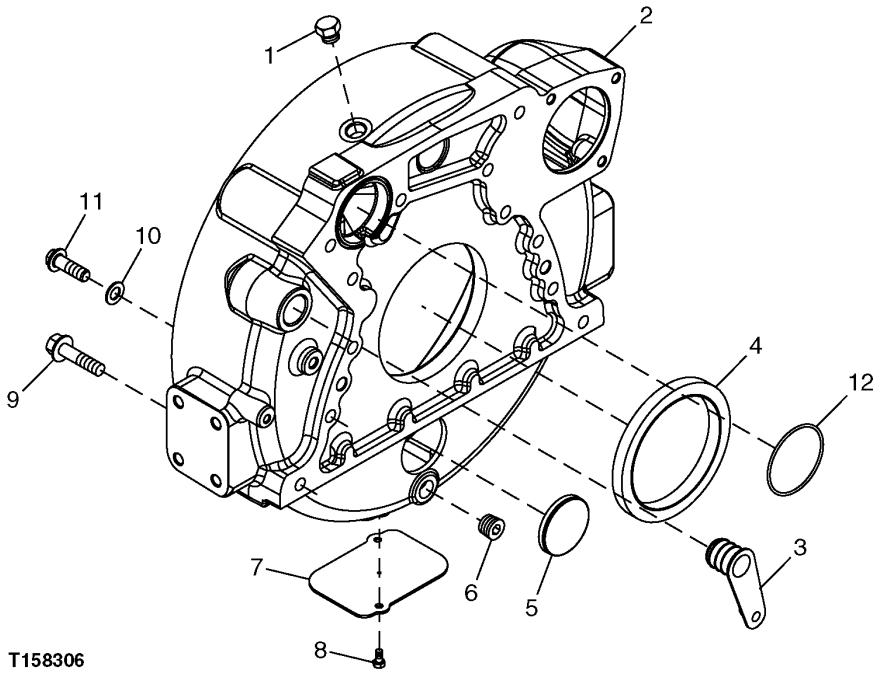

KEY	PART NO.	PART NAME	QTY	ENGINE SERIAL NO.	REMARKS
1	R39112	FITTING	1		
2	R132006	HOUSING	1	-867794	(SUB R503451 AND R61467)
	R503451	HOUSING	1	867795-	
3	R131769	PLUG	1		
4	RE44574	SEAL	1		
5	T13518	PLUG	1		
6	15H624	PIPE PLUG	1		12.700 MM
7	R121039	PLATE	2		
8	19M7923	CAP SCREW	2		M6 X 12
9	19M8306	SCREW	4		
10	T77258	WASHER	8		(USE WITH 19M7493)
11	R135918	BOLT	8		
12	R61467	O-RING	1	867795-	(USE WITH R503451)

MEMORANDA

CYLINDER HEAD REMOVAL AND IN VEHICLE OVERHAUL GASKET SETS
PE4045DT050
(SERIAL NO.071973-)

T150756 -UN-31JAN02

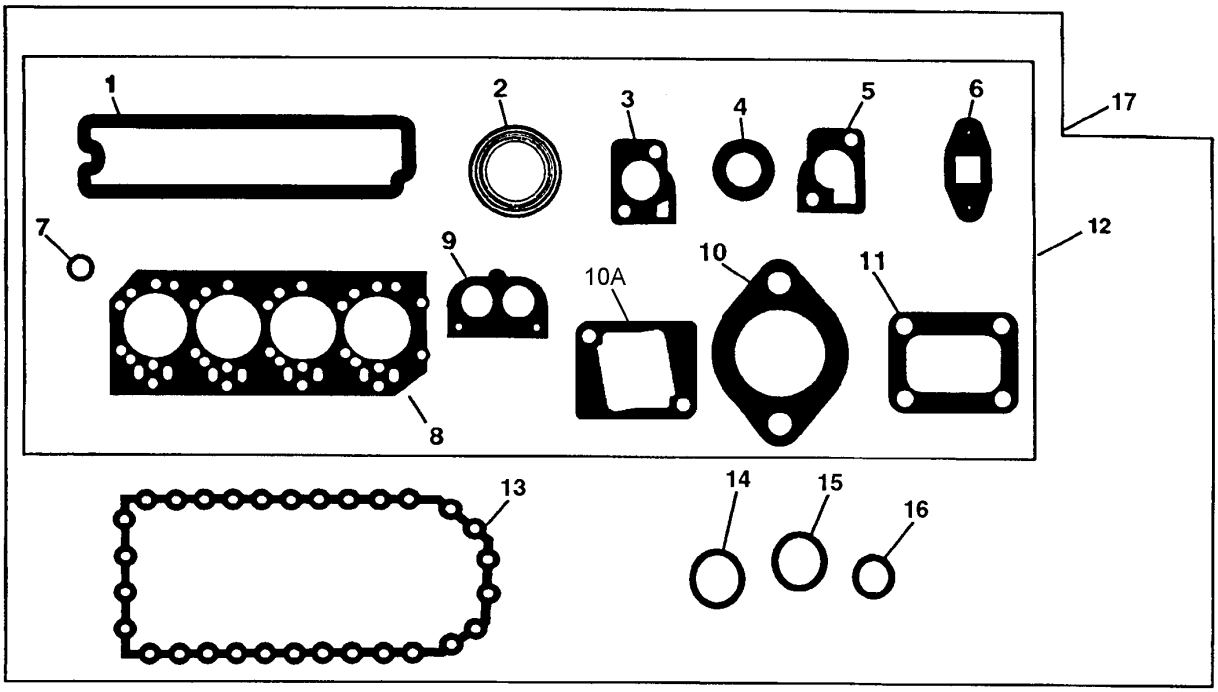

T150756

KEY	PART NO.	PART NAME	QTY	ENGINE SERIAL NO.	REMARKS
1	R123542	GASKET	1		ROCKER ARM COVER
	RE520539	GASKET KIT	1		(HIGH TEMPERATURE)
2	R90658	GASKET	4		EXHAUST MANIFOLD
3	R502814	GASKET	1		(SUB FOR R135896) THERMOSTAT COVER
4	R123226	SEAL	2		WATER BY-PASS TUBE
5	R123345	GASKET	1		THERMOSTAT HOUSING
6	R123570	GASKET	1		TURBOCHARGER OIL OUTLET LINE-NOT REQ'D
7	R123575	O-RING	4		ROCKER ARM COVER HOLD DOWN STUD
8	R116515	ENGINE CYLINDER HEAD GASKET	1		CYLINDER HEAD
9	R501373	GASKET	1		THERMOSTAT COVER
10	R81275	GASKET	1	-XXXXXX	AIR INLET
10A	R133893	GASKET	1	XXXXXX-	AIR INLET
11	R92097	GASKET	1		TURBOCHARGER TO EXHAUST MANIFOLD-NOT REQ'D
12	RE66082	GASKET KIT	1		CYLINDER HEAD REMOVAL
13	R123352	GASKET	1		ENGINE OIL PAN
14	R75892	O-RING	1		OIL PUMP TUBE CONNECTOR
15	R97185	O-RING	1		OIL PUMP OUTLET TUBE TO COVER
16	R61871	O-RING	1		OIL PUMP INTAKE TUBE
17	RE66084	GASKET KIT	1		IN CHASSIS OVERHAUL

ENGINE MAJOR OVERHAUL GASKET SET
PE4045DT050
(SERIAL NO.071973-)

TP55371 -UN-07MAY98

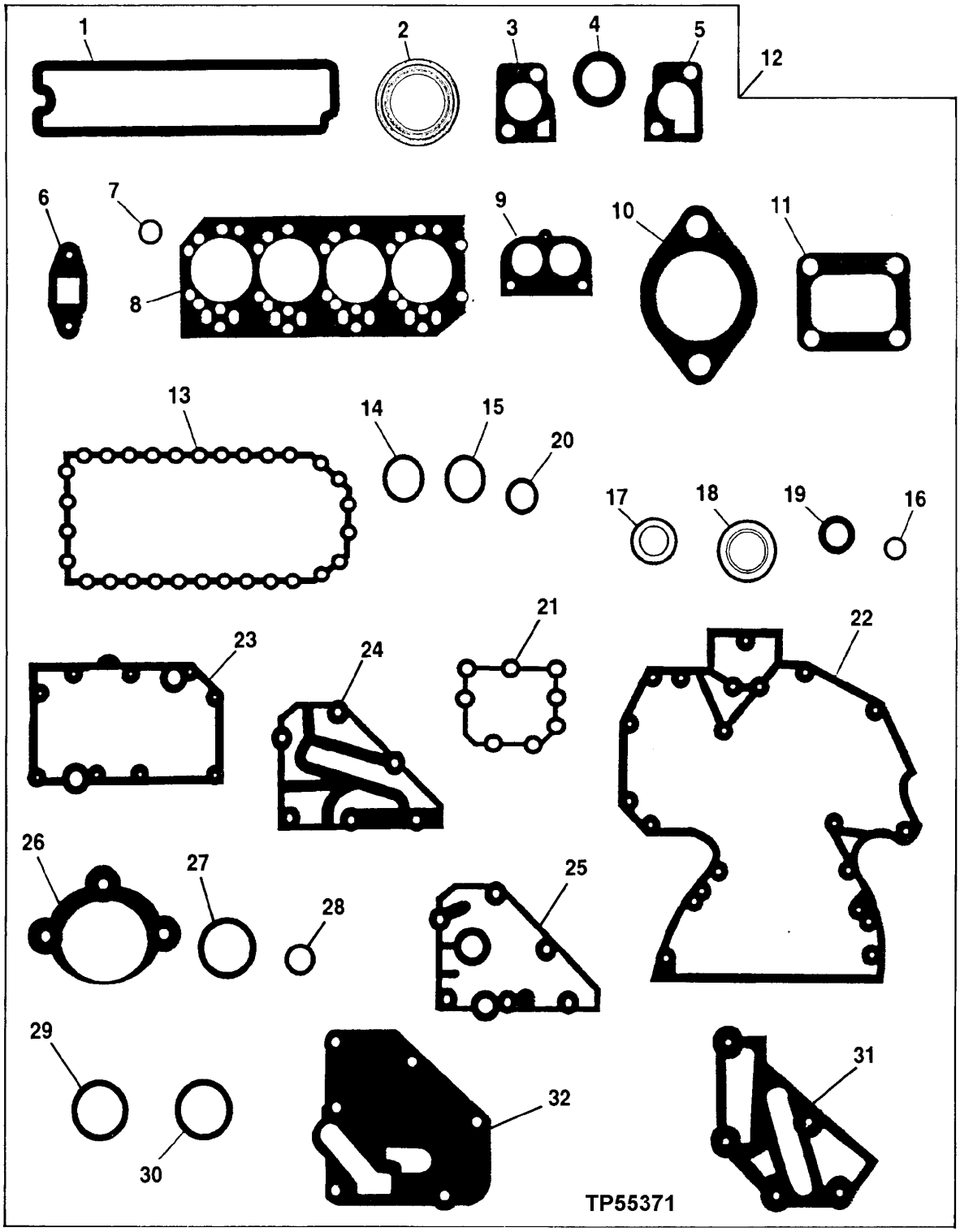

ENGINE MAJOR OVERHAUL GASKET SET
PE4045DT050
(SERIAL NO.071973-)

KEY	PART NO.	PART NAME	QTY	ENGINE SERIAL NO.	REMARKS
1	R123542	GASKET	1		ROCKER ARM COVER
	RE520539	GASKET KIT	1		(HIGH TEMPERATURE)
2	R90658	GASKET	4		EXHAUST MANIFOLD
3	R502814	GASKET	1		(SUB FOR R135896) THERMOSTAT COVER
4	R123226	SEAL	2		WATER BY-PASS TUBE
5	R123345	GASKET	1		THERMOSTAT HOUSING
6	R123570	GASKET	1		TURBOCHARGER OIL OUTLET TUBE-NOT REQ'D
7	R123575	O-RING	4		ROCKER ARM COVER HOLD DOWN STUD
8	R116515	ENGINE CYLINDER HEAD GASKET	1		CYLINDER HEAD
9	R501373	GASKET	1		THERMOSTAT COVER
10	R81275	GASKET	1		AIR INLET
11	R92097	GASKET	1		TURBOCHARGER TO EXHAUST MANIFOLD-NOT REQ'D
12	RE66086	GASKET KIT	1		MAJOR OVERHAUL
	RE66092	ENGINE OVERHAUL KIT	1		ENGINE OVERHAUL(INCLUDES ENGINE MAJOR OVERHAUL GASKET SET;CONNECTING ROD BEARINGS; MAIN BEARINGS AND CYLINDER KITS) (ORDER ONE KIT PER ENGINE)
13	R123352	GASKET	1		ENGINE OIL PAN
14	R75892	O-RING	1		OIL PUMP TUBE CONNECTOR
15	R97185	O-RING	1		OIL PUMP OUTLET TUBE TO COVER
16	R61871	O-RING	1		OIL PUMP INTAKE TUBE
17	A4827R	WASHER	1		OIL PRESSURE REGULATOR PLUG
18	RE44574	SEAL	1		REAR OIL SEAL
19	RE516340	KIT	1		FRONT OIL SEAL, (SUB FOR RE59810)
20	R123273	O-RING	1		FUEL TRANSFER PUMP
21	R123417	GASKET	1		WATER PUMP
22	R136515	GASKET	1		TIMING GEAR COVER(WITH AUXILLARY DRIVE)
	R136516	GASKET	1		TIMING GEAR COVER(WITHOUT AUXILLARY DRIVE)
23	R123501	GASKET	1		OIL COOLER HOUSING
24	R123504	GASKET	1		REMOTE OIL FILTER ADAPTER
25	R123525	GASKET	1	-XXXXXX	OIL FILTER HEADER
26	R53108	GASKET	1		STARTING MOTOR
27	R72328	O-RING	4		OIL FILTER TUBES
28	R89944	O-RING	1		WATER PUMP INLET
29	R61105	O-RING	2		CONNECTOR TUBE TO TIMING GEAR COVER
30	T122075	O-RING	2		OIL COOLER TO HOUSING
31	R501428	GASKET	1		(SUB FOR R123502) COOLANT PASSAGE ADAPTER
32	R500374	GASKET	1	XXXXXX-	OIL FILTER HEADER

CRANKSHAFT AND MAIN BEARINGS
PE4045DT059

RGP10108 -UN-22SEP03

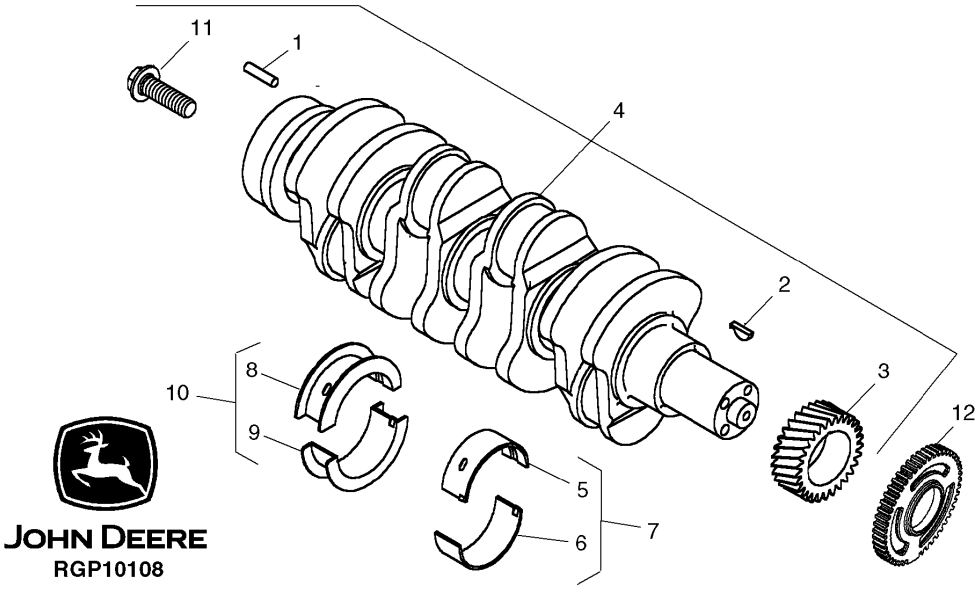

KEY	PART NO.	PART NAME	QTY	ENGINE SERIAL NO.	REMARKS
1	R48685	DOWEL PIN	1		12.700 X 28.448 MM
2	R505609	SHAFT KEY	1		4 X 16 MM
3	R120631	GEAR	1		
4	RE504638	CRANKSHAFT	1		(MARKED R113596) (ALSO ORDER RE59811)
5	.....	BEARING	4		(MARKED R123561)
	.....	BEARING	4		.254 MM, (MARKED R130576)
6	.....	BEARING	4		(MARKED R123562)
	.....	BEARING	4		.254 MM, (MARKED R130577)
7	RE65165	BEARING KIT	4		
	RE65911	BEARING	4		.254 MM
8	.....	BEARING	1		(MARKED R123563)
	.....	BEARING	1		.254 MM, (MARKED R130574)
9	.....	BEARING	1		(MARKED R123564)
	.....	BEARING	1		.254 MM, (MARKED R130575)
10	RE65168	BEARING KIT	1		
	RE65912	THRUST BEARING	1		.254 MM
11	R135918	BOLT	4		(A)
12	R501489	WHEEL SPEED SENSOR	1		CRANKSHAFT TIMING
..	RE59811	SLEEVE	1		

(A) FLYWHEEL/CRANKSHAFT

CAMSHAFT
PE4045DT059

TP60711 -UN-17JUN98

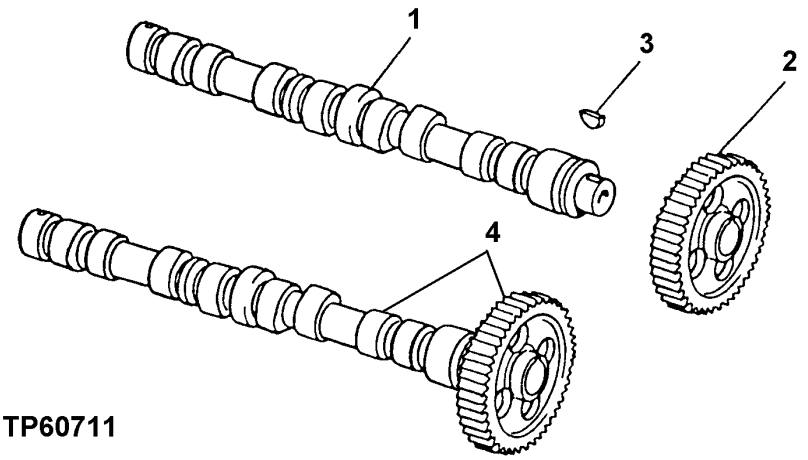

KEY	PART NO.	PART NAME	QTY	ENGINE SERIAL NO.	REMARKS
1	.....	CAMSHAFT	1		(ORDER RE56375)
2	.....	GEAR	1		(ORDER RE56375)
3	R133303	SHAFT KEY	1		
4	RE56375	CAMSHAFT	1		(MARKED R135439)

ROCKER ARM SHAFT, PUSH RODS AND ROCKER ARMS
PE4045DT059

TP49263 -UN-20JUN95

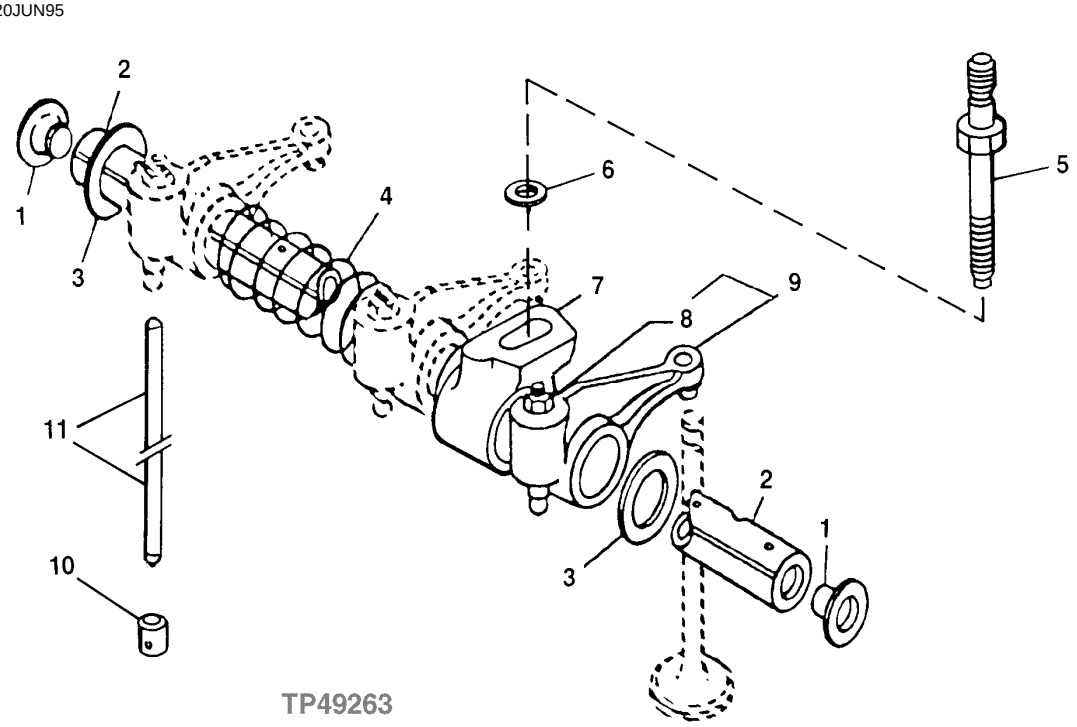

KEY	PART NO.	PART NAME	QTY	ENGINE SERIAL NO.	REMARKS
1	R54565	PLUG	2		
2	R123513	ROCKER ARM SHAFT	1		
3	T20316	WASHER	2		
4	T20314	SPRING	3		
5	R123271	STUD	4		
6	24M7346	WASHER	4		
7	R123161	SUPPORT	4		
8	14M7148	NUT	1		M10
9	RE508317	ROCKER ARM	8		
10	R123565	FOLLOWER	8		
11	R107731	PUSH ROD	8		

ROCKER ARM COVER
PE4045DT059

RGP9330 -UN-29JAN03

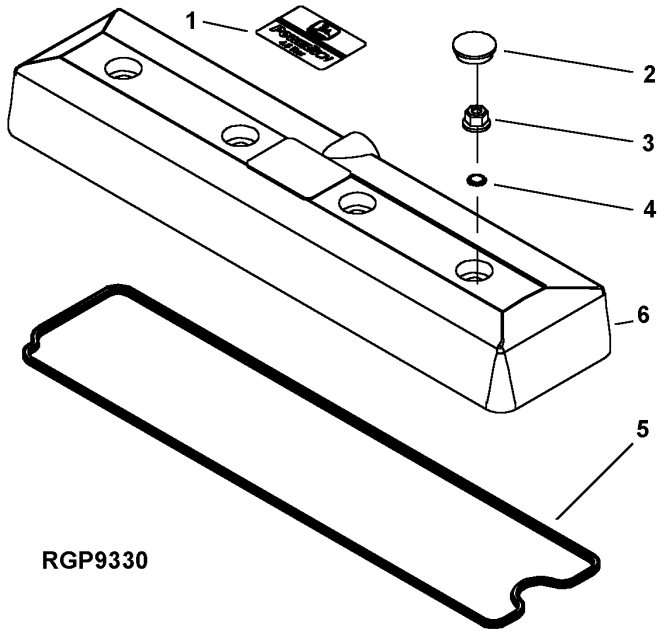

KEY	PART NO.	PART NAME	QTY	ENGINE SERIAL NO.	REMARKS
1	R116324	MEDALLION	1		
2	H23125	PLUG	4		
3	R123574	NUT	4		
4	R123575	O-RING	4		
5	R123542	GASKET	1		
	RE520539	GASKET KIT	1		(HIGH TEMPERATURE)
6	RE502969	VALVE COVER	1		

TIMING GEAR COVER
PE4045DT059

RGP8338 -UN-07DEC01

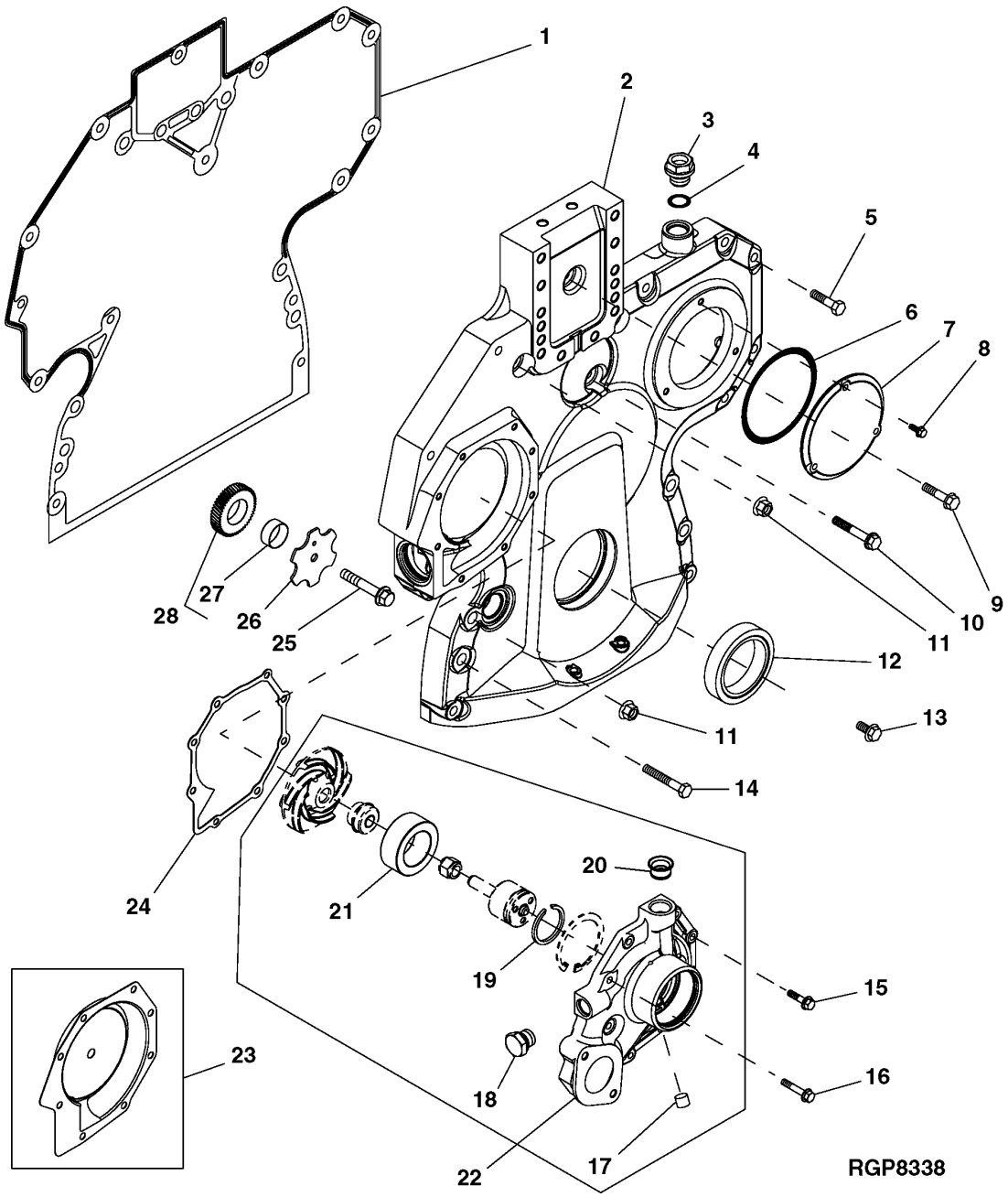

TIMING GEAR COVER
PE4045DT059

KEY	PART NO.	PART NAME	QTY	ENGINE SERIAL NO.	REMARKS
1	R136516	GASKET	1		
2	R504725	COVER	1		
3	RE517370	FITTING PLUG	1		
4	51M7044	O-RING	1		17.300 X 2.200 MM
5	19M8317	SCREW	10		M8 X 40
6	R121424	O-RING	1		
7	R121411	COVER	1		
8	19M7775	SCREW	3		M6 X 16
9	19M8291	SCREW	1		M8 X 35
10	RE67239	SCREW	1		M8 X 45
11	14M7296	FLANGE NUT	6		M10
12	RE516340	KIT	1		(SUB FOR RE59810)
13	19M7801	SCREW	1		M8 X 60
14	19M7979	SCREW	2		M8 X 55
15	19M7863	SCREW	5		M6 X 25
16	19M7796	SCREW	3		M6 X 30
17	R100369	FILTER	2		
18	RE46685	PLUG	2		(INCLUDES 51M7043)
19	A364R	SNAP RING	1		
20	R123226	SEAL	1		
21	.....	BALL BEARING	1		
22	RE505981	WATER PUMP	1		(B) (MARKED R503509)
23	RE508566	KIT	1		
24	R123417	GASKET	1		
25	19M8966	SCREW	1		M10 X 50
26	R131283	THRUST WASHER	1		
27	R114193	BUSHING	1		
28	RE56369	GEAR	1		
..	RE506381	COVER	1		(A)

(A) CONTAINS WATER PUMP, TIMING GEAR COVER, SEALS AND HARDWARE

(B) USE WITHOUT AUXILIARY DRIVE (OPTION 5299)

TIMING GEAR COVER SERVICE KIT
PE4045DT059

RGP8516 -UN-23JAN02

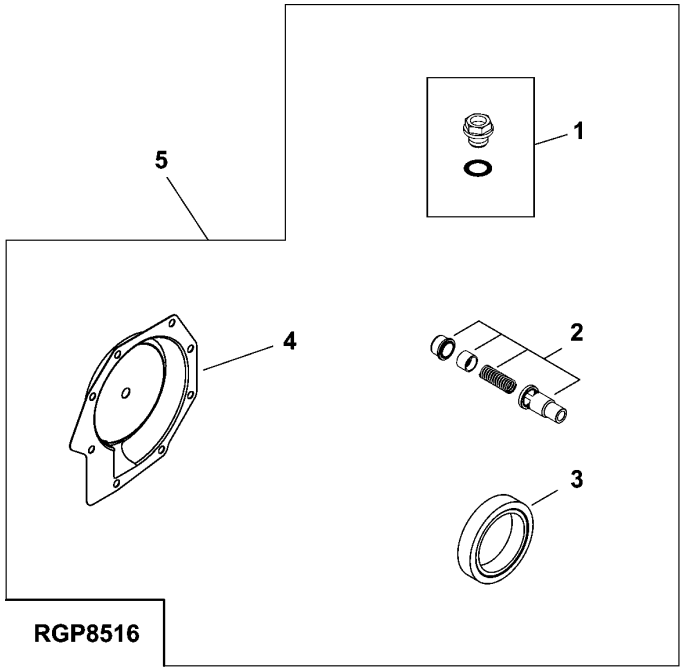

KEY	PART NO.	PART NAME	QTY	ENGINE SERIAL NO.	REMARKS
1	RE517370	FITTING PLUG	1		
2	RE505501	BLEED VALVE	1		
3	RE516340	KIT	1		(SUB FOR RE59810)
4	RE508566	KIT	1		
5	RE515978	KIT	1		

MEMORANDA

CONNECTING RODS, PISTONS AND LINERS
PE4045DT059

TP49283 -UN-17JUL95

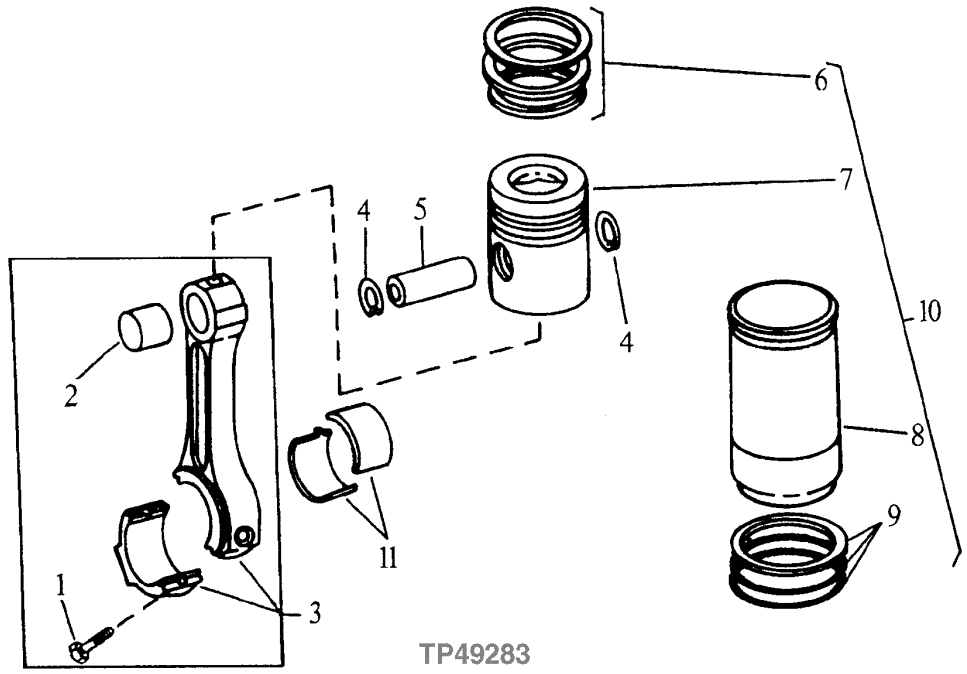

KEY	PART NO.	PART NAME	QTY	ENGINE SERIAL NO.	REMARKS
1	R501124	SCREW	8		
2	R123960	BUSHING	4		
3	RE500002	CONNECTING ROD	4		(MARKED R500000)
4	M41029	SNAP RING	8		
5	R123178	PISTON PIN	4		
6	RE66271	PISTON RING KIT	4		
7	.....	PISTON	4		(ORDER RE505110) (MARKED RE505101)
8	.....	CYLINDER LINER	4		(ORDER RE505110)
9	R26121	O-RING	4		
	R48767	PACKING	4		
	R55453	O-RING	4		
	AR65507	O-RING KIT	4		
10	RE505110	PISTON-LINER KIT	4		(MARKED RE505101)
11	RE65908	BEARING	4		
	RE65909	BEARING	4		.010" US

ENGINE FRONT PLATE
PE4045DT059

RGP8269 -UN-07NOV01

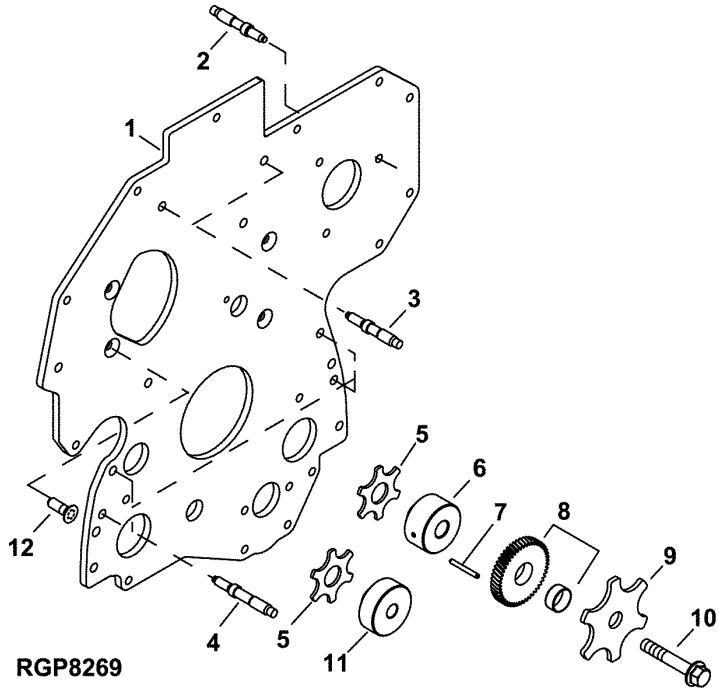

KEY	PART NO.	PART NAME	QTY	ENGINE SERIAL NO.	REMARKS
1	R134527	PLATE	1		
2	R116386	STUD	3		
3	R134518	STUD	2		
4	R123584	STUD	4		
5	R101225	THRUST WASHER	1		
	R123174	LOCK WASHER	1		
6	R120641	SHAFT	1		(UPPER)
7	34H288	SPRING PIN	1		3/16" X 1-3/4"
8	RE56313	GEAR	1		(MARKED R120635)
9	R131206	THRUST WASHER	1		UPPER IDLER
10	19M8997	SCREW	1		M10 X 65
11	R114194	SHAFT	1		(LOWER)
12	R136475	SCREW	6		

CYLINDER BLOCK AND MAIN BEARING CAP
PE4045DT059

RGP9883 -UN-30JUL03

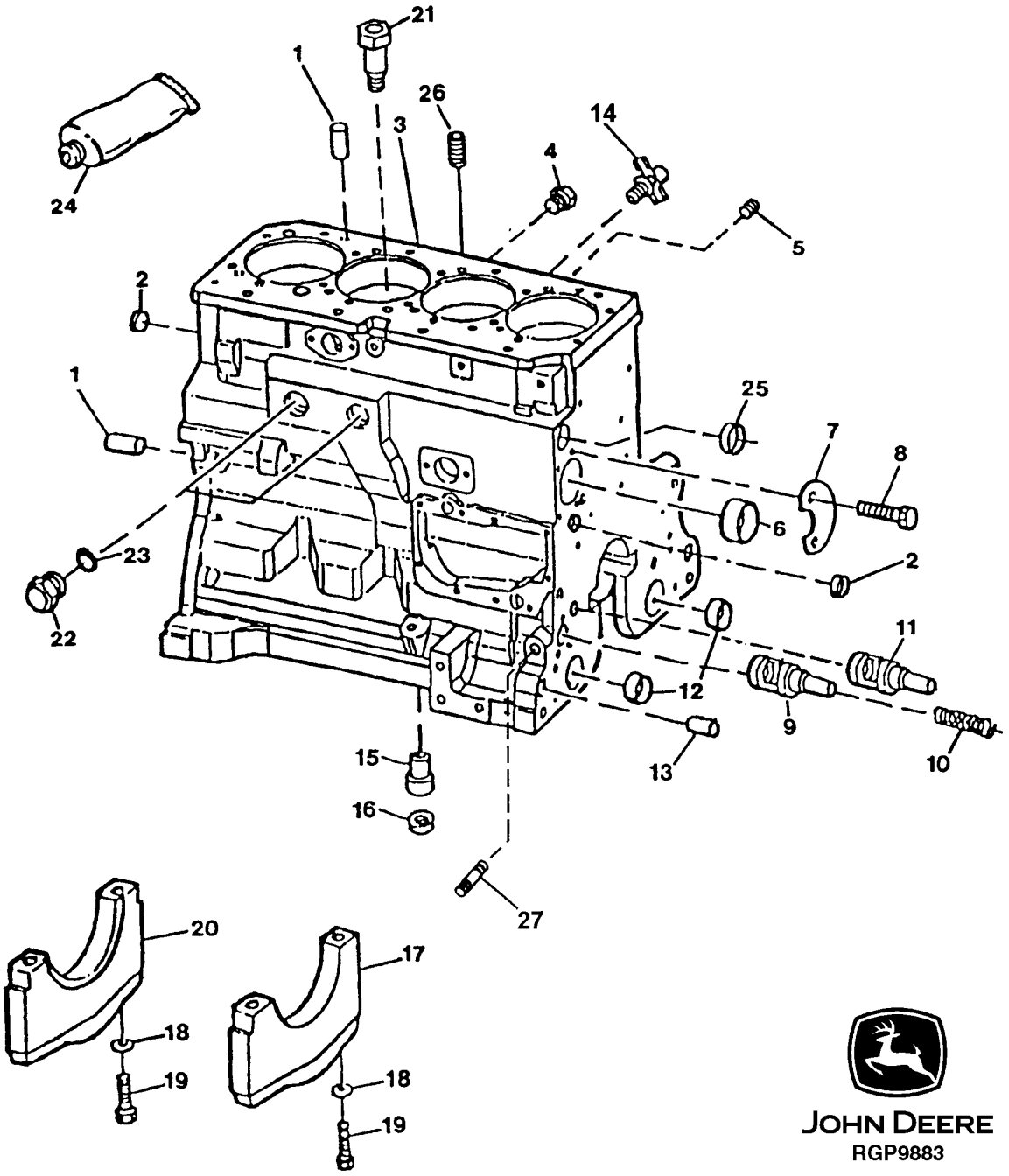

CYLINDER BLOCK AND MAIN BEARING CAP
PE4045DT059

KEY	PART NO.	PART NAME	QTY	ENGINE SERIAL NO.	REMARKS
1	R48685	DOWEL PIN	2		
2	T18891	PLUG	2		
	R116466	PLUG	1		
3	.....	CYLINDER BLOCK	1		(MARKED R115081) (ORDER RE520031)
4	R55233	PIPE PLUG	1		
5	R104592	PIPE PLUG	5		
6	R119874	BUSHING	1		
7	R132518	PLATE	1		
8	19M8999	SCREW	2		M8 X 25
9	R121043	FLOW CONTROL HYD. VALVE	1		
10	R111137	SPRING	1		
11	RE505501	BLEED VALVE	1		
12	R115299	BUSHING	6		
13	R26650	DOWEL PIN	2		
14	AT13740	DRAIN VALVE	1		
15	R115390	BUSHING	1		
16	R75892	O-RING	1		
17	R114241	BEARING CAP	4		
18	T20168	WASHER	10		
19	T23474	CAP SCREW	10		
20	R132186	BEARING CAP	1		
21	R131182	ORIFICE	4		
22	RE508185	DRAIN PLUG	2		
23	U13639	O-RING	2		
24	T43514	GASKET	1		
25	R116466	PLUG	1		
26	15H624	PIPE PLUG	1		1/2"
27	15H623	PIPE PLUG	1		3/8"

ENGINE SHORT BLOCK
PE4045DT059

T156111 -UN-13JUN02

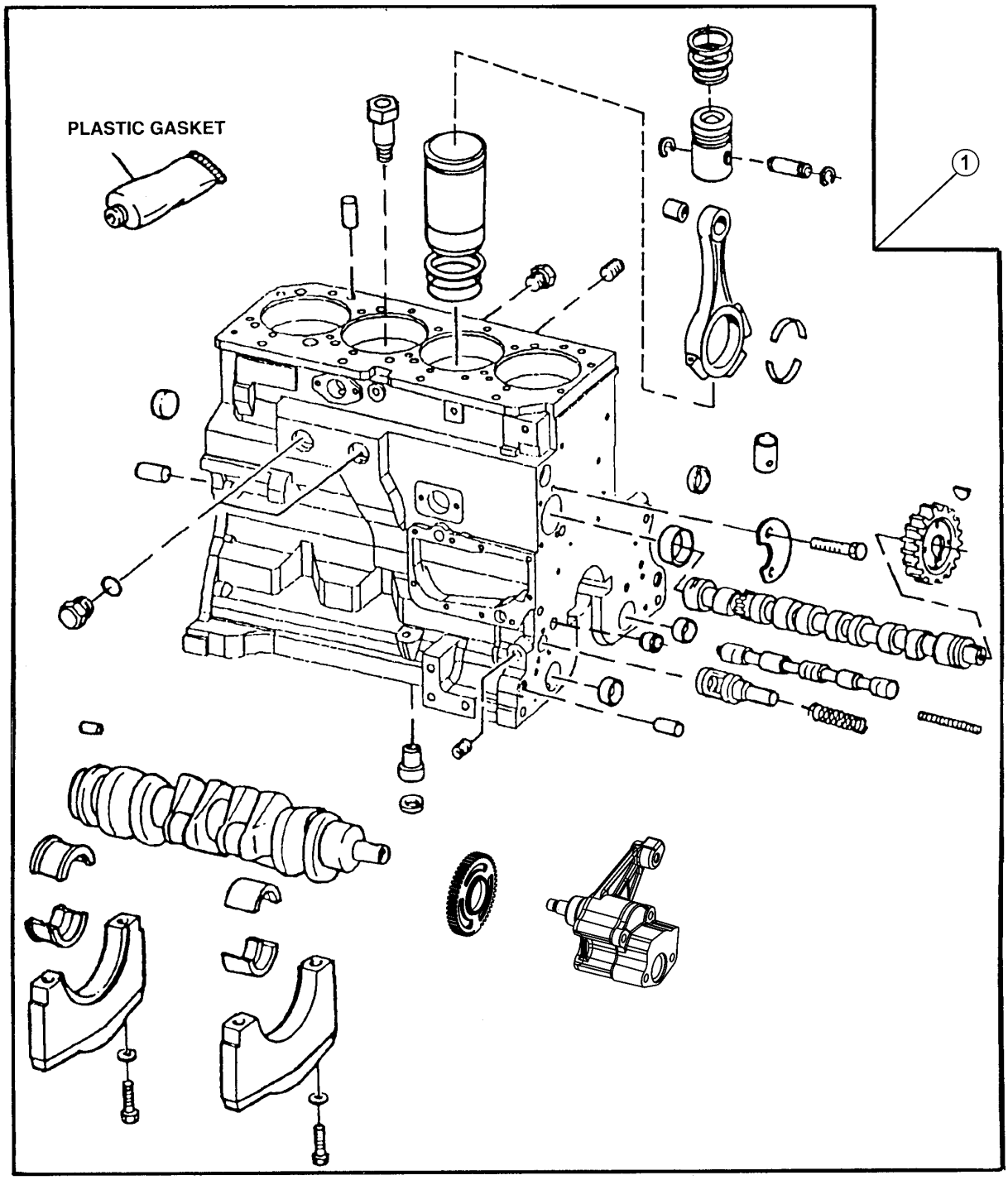

T156111

ENGINE SHORT BLOCK
PE4045DT059

KEY	PART NO.	PART NAME	QTY	ENGINE SERIAL NO.	REMARKS
1	RE520031	SHORT BLOCK ASSEMBLY	1		(MARKED R115081) (DOES NOT INCLUDE FRONT PLATE)

LIFT STRAPS
PE4045DT059

RGP7560 -UN-26JUN01

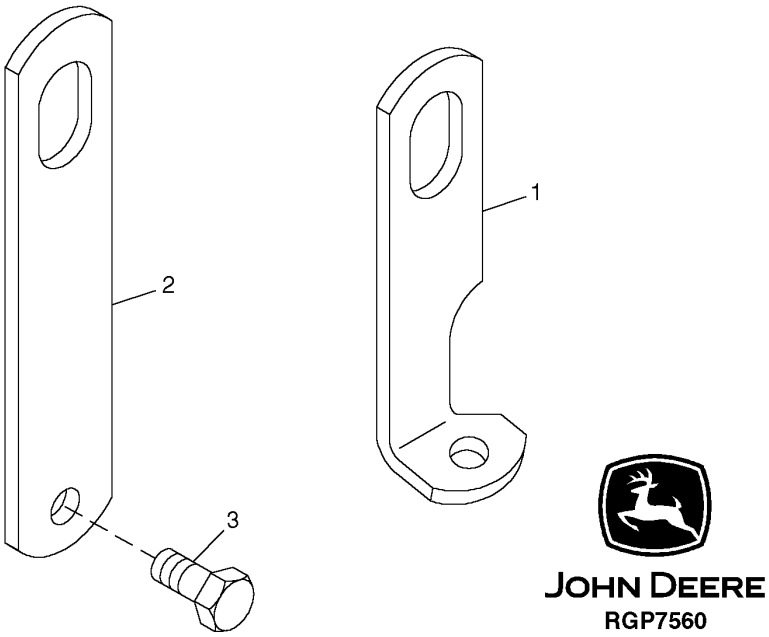

KEY	PART NO.	PART NAME	QTY	ENGINE SERIAL NO.	REMARKS
1	R502175	STRAP	1		(FRONT)
2	R502329	STRAP	1		(REAR)
3	19M7788	SCREW	2		M12 X 25

ENGINE OIL FILLER INLET
PE4045DT059

RGP5991 -UN-29JAN02

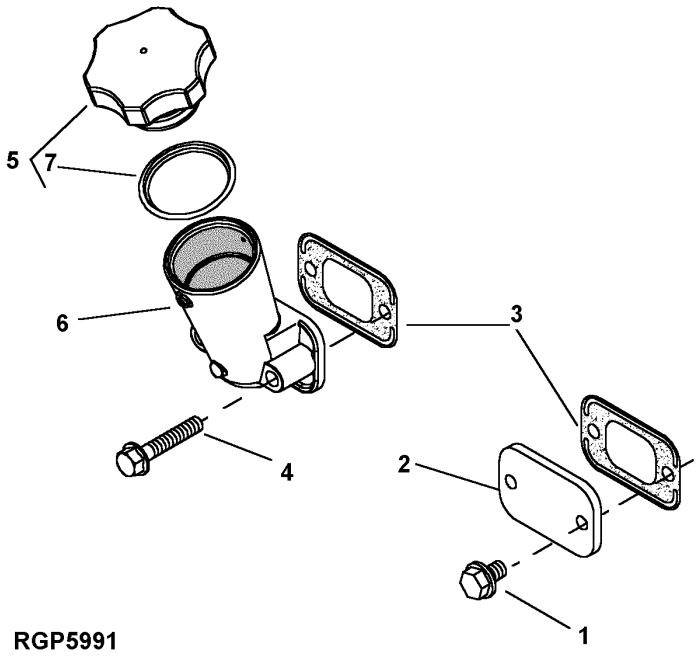

RGP5991

KEY	PART NO.	PART NAME	QTY	ENGINE SERIAL NO.	REMARKS
1	RE67238	SCREW	2		M8 X 20
2	R116296	COVER	1		
3	R136495	GASKET	2		
4	RE67239	SCREW	2		M8 X 45
5	RE500005	FILLER CAP	1		
6	RE501377	FILLER NECK	1		
7	R502902	PACKING	1		

ENGINE OIL DIPSTICK
PE4045DT059

RGP10106 -UN-19SEP03

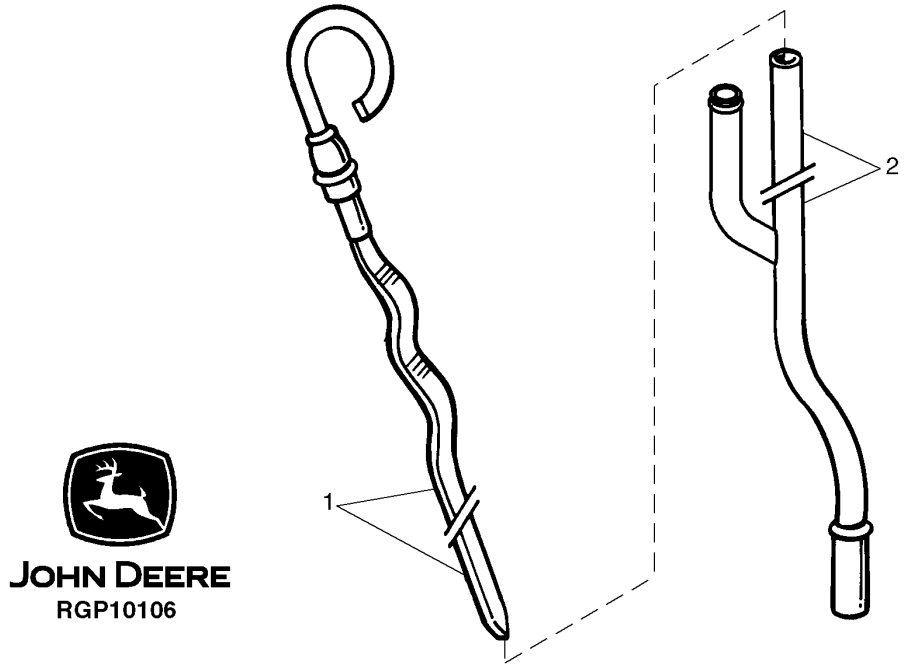

KEY	PART NO.	PART NAME	QTY	ENGINE SERIAL NO.	REMARKS
1	RE69243	DIPSTICK	1		
2	RE522078	DIPSTICK TUBE	1		

ENGINE OIL PAN
PE4045DT059

RGP7706 -UN-31MAY01

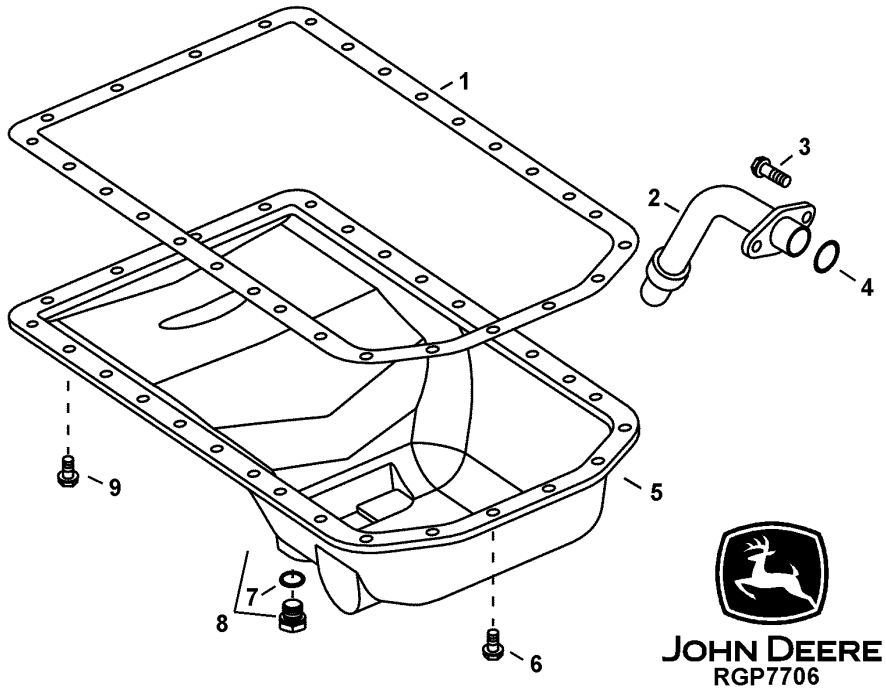

KEY	PART NO.	PART NAME	QTY	ENGINE SERIAL NO.	REMARKS
1	R123352	GASKET	1		
2	RE70073	OIL PUMP INTAKE	1		
3	19M8986	SCREW	2		M8 X 100
4	R61871	O-RING	1		
5	RE59439	OIL PAN	1		(MARKED R54813 OR R12323) (INCLUDES RE46685)
6	19M8062	SCREW	6		M8 X 20
7	51M7043	O-RING	2		15.300 X 2.200 MM (0.602" X 0.087")
8	RE46685	PLUG	2		
9	19M8163	CAP SCREW	22		M8 X 16

OIL FILTER
PE4045DT059

T145377 -UN-14SEP01

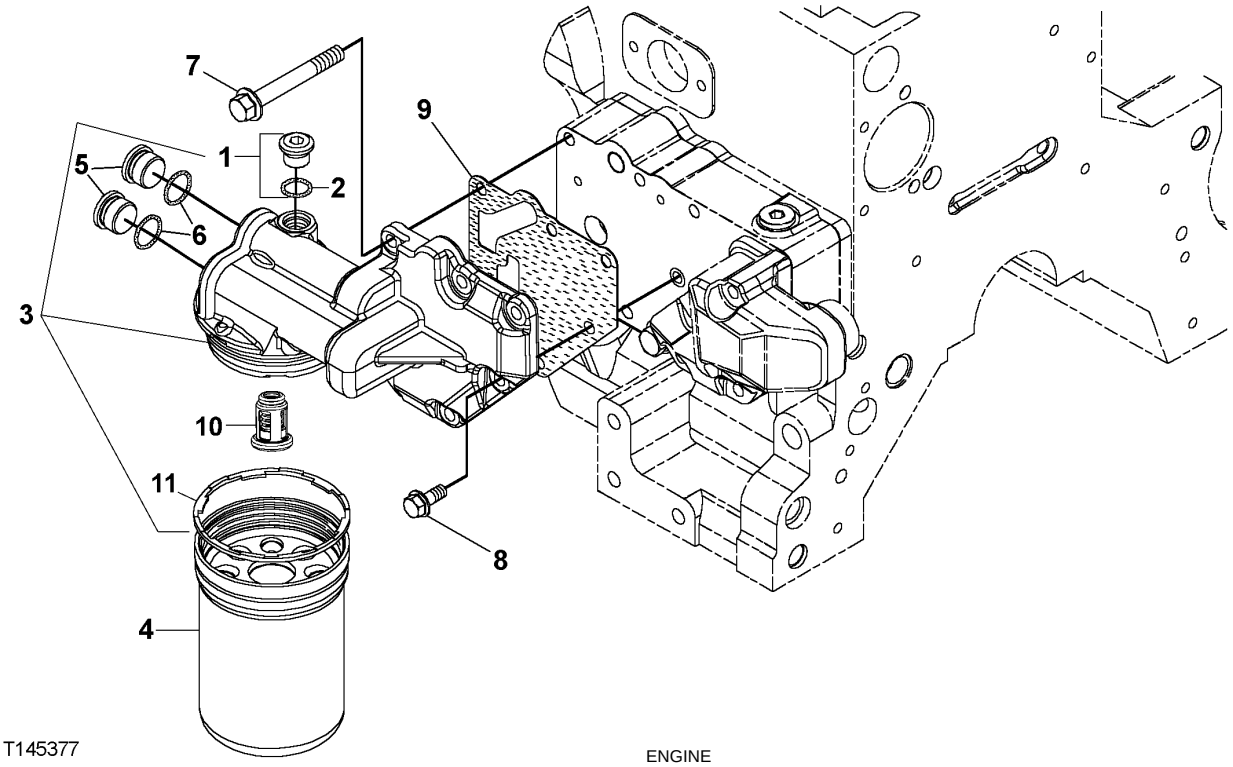

T145377

KEY	PART NO.	PART NAME	QTY	ENGINE SERIAL NO.	REMARKS
1	RE52242	DRAIN PLUG	1		M16 X 1.5
2	51M7042	O-RING	1		13.300 X 2.200 MM
3	RE504564	FILTER HEAD	1		(MARKED R502505)
4	RE504836	OIL FILTER	1		(ALSO ORDER R502513)
5	R116115	FITTING	2		
6	51M7045	O-RING	2		19.300 X 2.200 MM
7	19M7802	SCREW	5		M8 X 65
8	RE67238	SCREW	1		M22 X 1.5
9	R500374	GASKET	1		
10	RE504543	FLOW CONTROL HYD. VALVE	1		
11	R502513	SEAL	1		

ENGINE OIL PUMP
PE4045DT059

RGP6223 -UN-28APR03

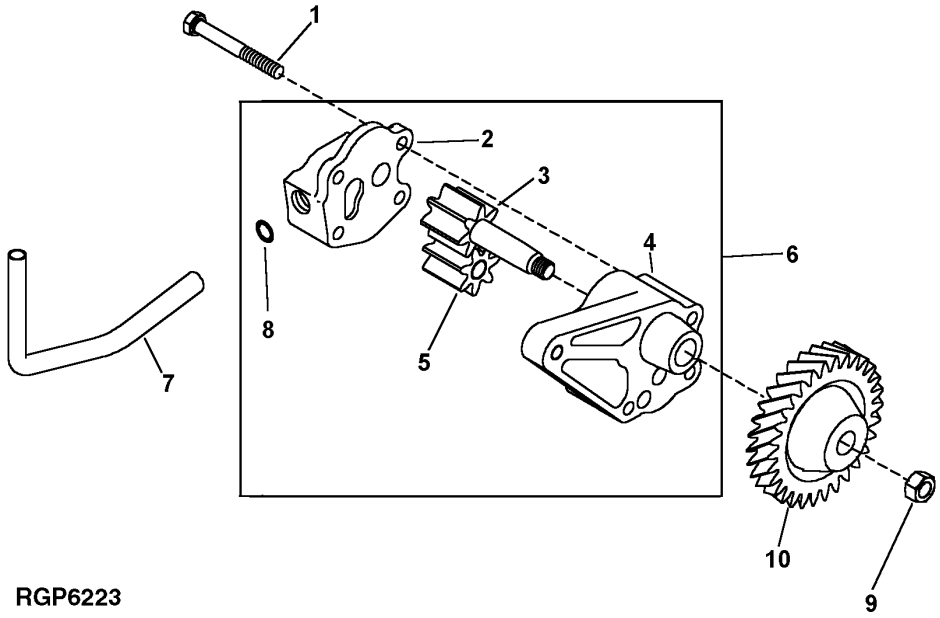

RGP6223

KEY	PART NO.	PART NAME	QTY	ENGINE SERIAL NO.	REMARKS
1	19M8987	SCREW	2		M8 X 65
2	.....	COVER	1		(ORDER RE504914)
3	.....	GEAR	1		(ORDER RE504914)
4	.....	HOUSING	1		(ORDER RE504914)
5	.....	GEAR	1		(ORDER RE504914)
6	RE504914	OIL PUMP	1		(MARKED R502687)
7	R121376	TUBE	1		
8	R97185	O-RING	1		
9	14M7066	NUT	1		M12
10	R120638	GEAR	1		

ENGINE VENTILATING SYSTEM
PE4045DT059

RGP10105 -UN-19SEP03

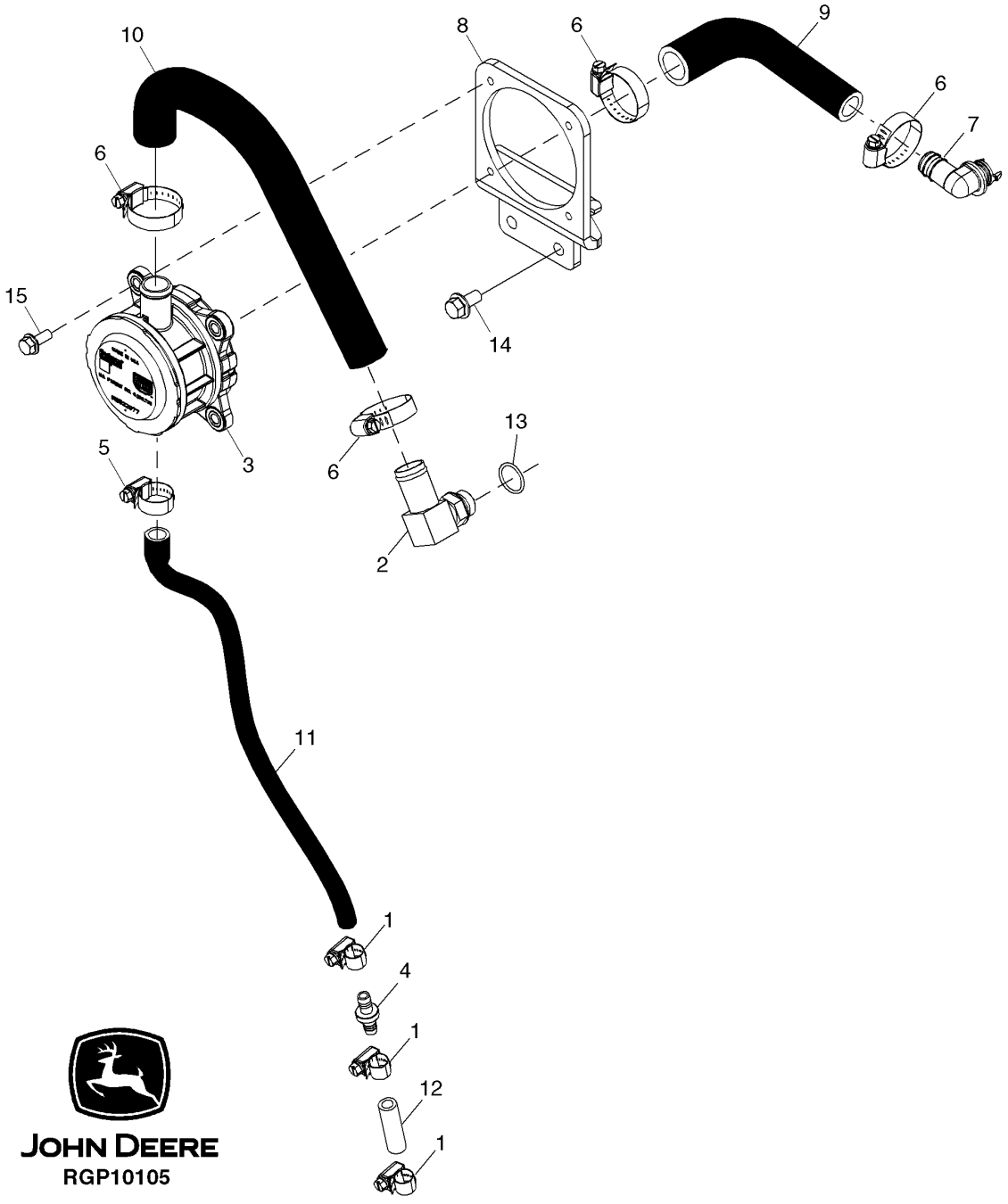

ENGINE VENTILATING SYSTEM
PE4045DT059

KEY	PART NO.	PART NAME	QTY	ENGINE SERIAL NO.	REMARKS
1	AR21836	CLAMP	3		
2	AT196258	ELBOW FITTING	1		
3	RE522077	IMPACTOR	1		
4	RE522079	CHECK VALVE	1		
5	RE65978	CLAMP	1		
6	AR21839	CLAMP	4		
7	R120467	ELBOW FITTING	1		
8	R519244	BRACKET	1		
9	R519273	HOSE	1		
10	R519274	HOSE	1		
11	R519275	HOSE	1		
12	R519286	HOSE	1		
13	R72328	O-RING	1		
14	19M7784	SCREW	4		M10 X 20
15	19M7866	SCREW	4		M8 X 20

CYLINDER HEAD, HEAD GASKET AND VALVES
PE4045DT059

TP49042 -UN-06SEP95

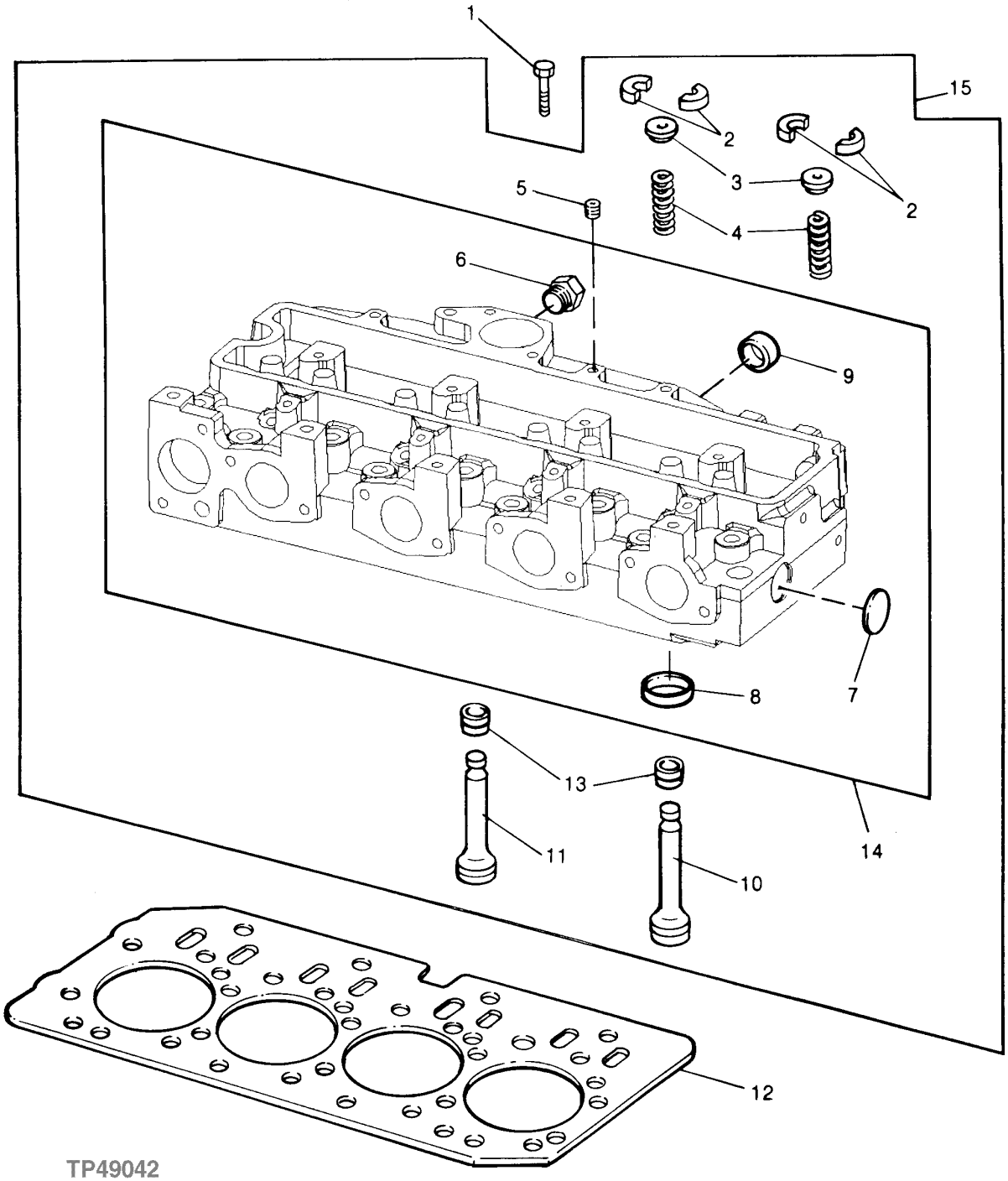

CYLINDER HEAD, HEAD GASKET AND VALVES
PE4045DT059

KEY	PART NO.	PART NAME	QTY	ENGINE SERIAL NO.	REMARKS
1	R85363	CAP SCREW	18		
2	R91889	RETAINER	16		
3	RE60005	ROTATOR	8		
4	R26125	SPRING	8		
5	R104592	PIPE PLUG	1		
6	T58477	FITTING	1		
	R26906	O-RING	1		
7	CD16284	PLUG	1		
8	R98063	VALVE SEAT INSERT	4		STANDARD SIZE INTAKE VALVE
	R98335	VALVE SEAT INSERT	4		OVERSIZE INTAKE VALVE
	R106831	VALVE SEAT INSERT	4		STANDARD INTAKE VALVE
	R85687	VALVE SEAT INSERT	4		STANDARD SIZE EXHAUST VALVE
	R93910	VALVE SEAT INSERT	4		OVERSIZE EXHAUST VALVE
	R106829	VALVE SEAT INSERT	4		STANDARD EXHAUST VALVE
9	R43409	PLUG	2		
10	R90692	EXHAUST VALVE	4		STANDARD
11	R98062	INTAKE VALVE	4		STANDARD
12	R116515	ENGINE CYLINDER HEAD GASKET	1		
13	RE31617	SEAL	8		
14	.....	CYLINDER HEAD	1		(MARKED R121402)
15	RE57234	CYLINDER HEAD	1		(MARKED R121402)

EXHAUST MANIFOLD
PE4045DT059

TP49344 -UN-22NOV95

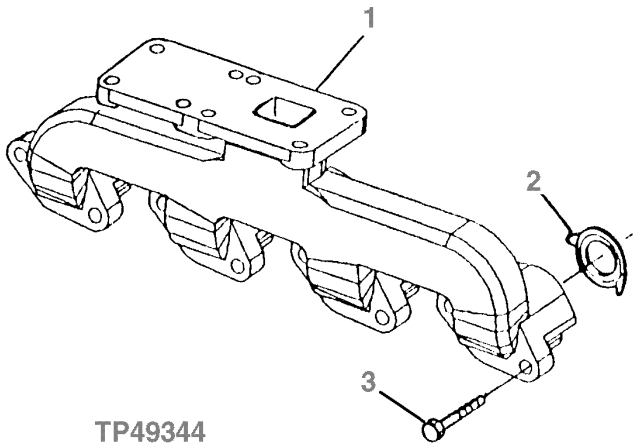

KEY	PART NO.	PART NAME	QTY	ENGINE SERIAL NO.	REMARKS
1	R132261	EXHAUST MANIFOLD	1		
2	R90658	GASKET	4		
3	19M7810	SCREW	8		M10 X 80

FUEL INJECTION NOZZLE (WITHOUT TURBOCHARGER)
PE4045DT059

RGP10095 -UN-28AUG03

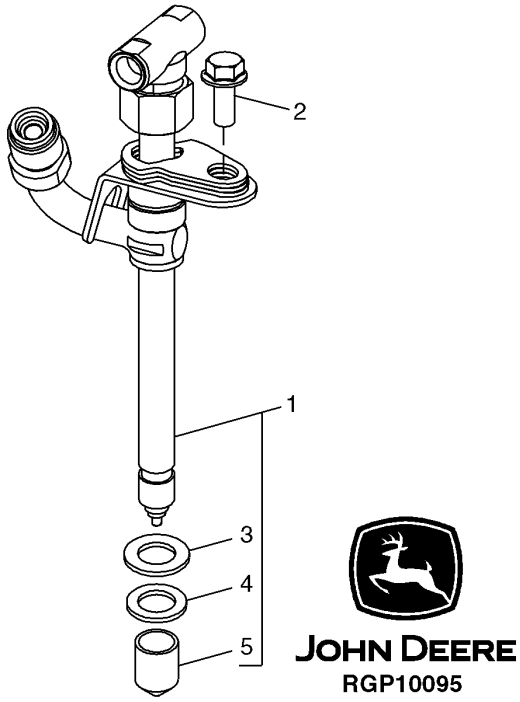

KEY	PART NO.	PART NAME	QTY	ENGINE SERIAL NO.	REMARKS
1	RE515684	INJECTION NOZZLE	1		
2	R116366	SCREW	1		
3	R60746	WASHER	1		
4	R500390	WASHER	1		
5	T24472	CAP	1		

FUEL INJECTION PUMP, FUEL INJECTION LINES AND ENGINE CONTROLLER
PE4045DT059

RGP10110 -UN-23SEP03

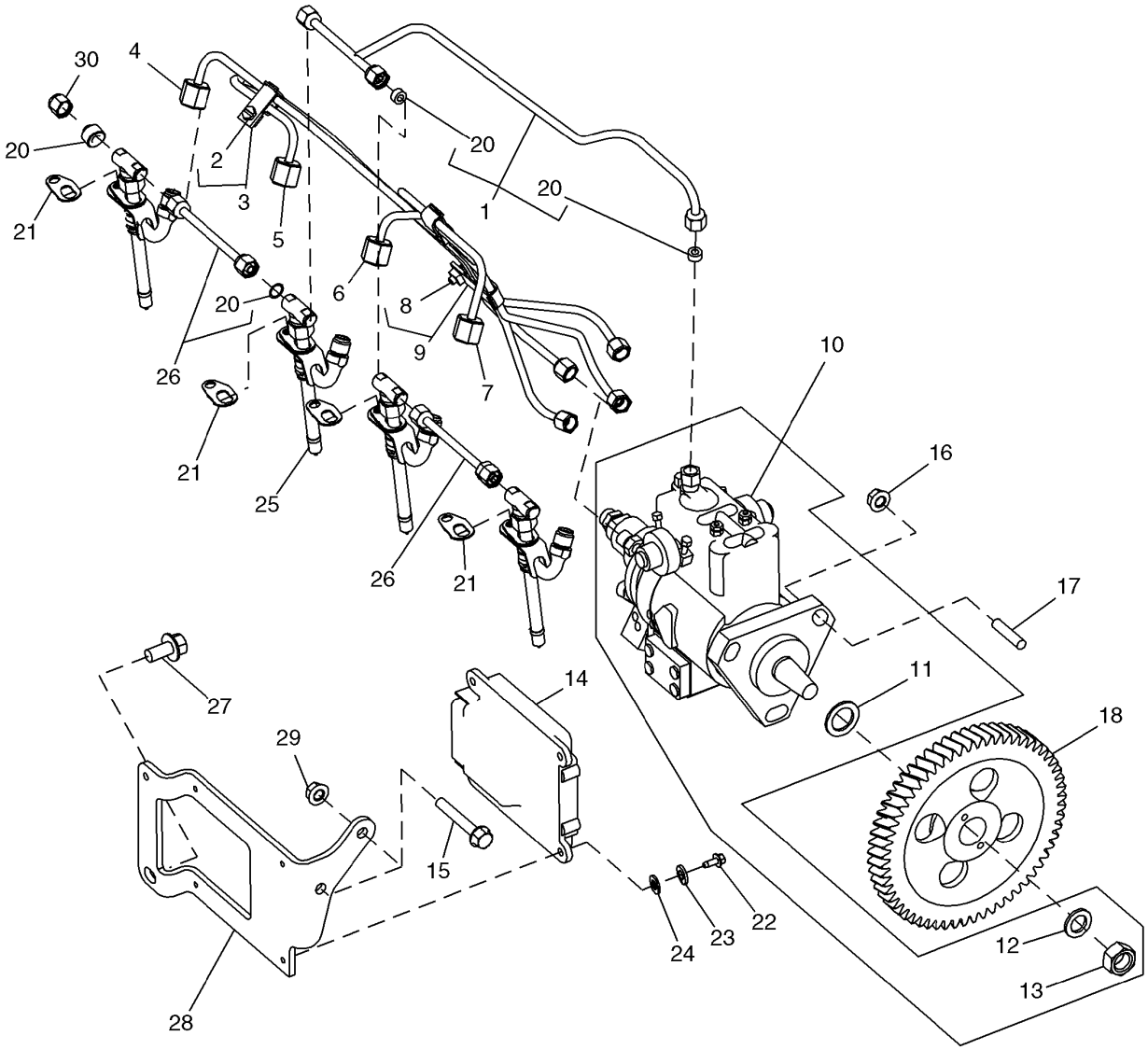

JOHN DEERE
RGP10110

FUEL INJECTION PUMP, FUEL INJECTION LINES AND ENGINE CONTROLLER
PE4045DT059

KEY	PART NO.	PART NAME	QTY	ENGINE SERIAL NO.	REMARKS
1	RE515815	FUEL LINE	1		
2	19M7923	CAP SCREW	2		M6 X 12
3	RE19797	CLAMP	2		
4	RE507646	FUEL LINE	1		NO.1
5	RE507647	FUEL LINE	1		NO.2
6	RE507648	FUEL LINE	1		NO.3
7	RE507649	FUEL LINE	1		NO.4
8	19M7923	CAP SCREW	1		M6 X 12
9	RE19799	CLAMP	1		
10	RE518087	FUEL INJECTION PUMP	1		(12V)
	RE521822	KIT	1		(TEMPERATURE SENSOR)
	RE521823	KIT	1		(PRESSURE REGULATOR)
	RE521824	KIT	1		(TIMING PIN HOLE)
	RE521825	KIT	1		(TRANSPUMP SCREW)
	RE522109	KIT	1		(SOLENOID CONNECTOR)
11	R502076	BACK-UP RING	1		
12	R132874	WASHER	1		
13	R91360	NUT	1		M14
14	RE518176	ENGINE CONTROLLER	1		(WHEN ENGINE CONTROLLER IS BEING REPLACED YOU MUST PROVIDE THE ENGINE SERIAL NUMBER)
15	19M7979	SCREW	2		M8 X 55
16	14M7298	FLANGE NUT	3		M8
17	R116386	STUD	3		
18	R505472	GEAR	1		
19	R123593	TUBE NUT	6		
20	R51936	SEALING WASHER	6		
21	RE508716	CLAMP	4		
22	19M7640	CAP SCREW	4		M5 X 12
23	12H316	LOCK WASHER	4		5.486 MM
24	24M7027	WASHER	4		5.300 X 10 X 1 MM
25	RE515684	INJECTION NOZZLE	4		
26	RE68748	TUBE	2		
27	19M7784	SCREW	2		M10 X 20
28	R503520	BRACKET	1		
29	14M7298	FLANGE NUT	2		M8
30	AR85519	PLUG	2		

AIR INTAKE SYSTEM (WITHOUT TURBOCHARGER)
PE4045DT059

RGP10089 -UN-28AUG03

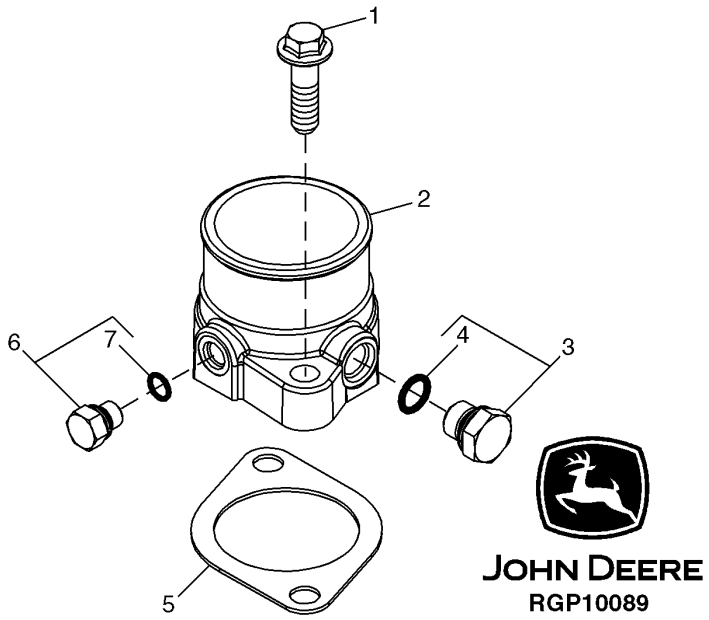

KEY	PART NO.	PART NAME	QTY	ENGINE SERIAL NO.	REMARKS
1	R500394	SCREW	2		
2	R504694	INTAKE MANIFOLD	1		
3	RE60071	FITTING	1		
4	51M7039	O-RING	1		8.100 X 1.600 MM
5	R81275	GASKET	1		
6	RE61812	SENSOR	1		
7	51M7041	O-RING	1		

MEMORANDA

ENGINE BALANCER SHAFT
PE4045DT059

RGP5639 -UN-19OCT00

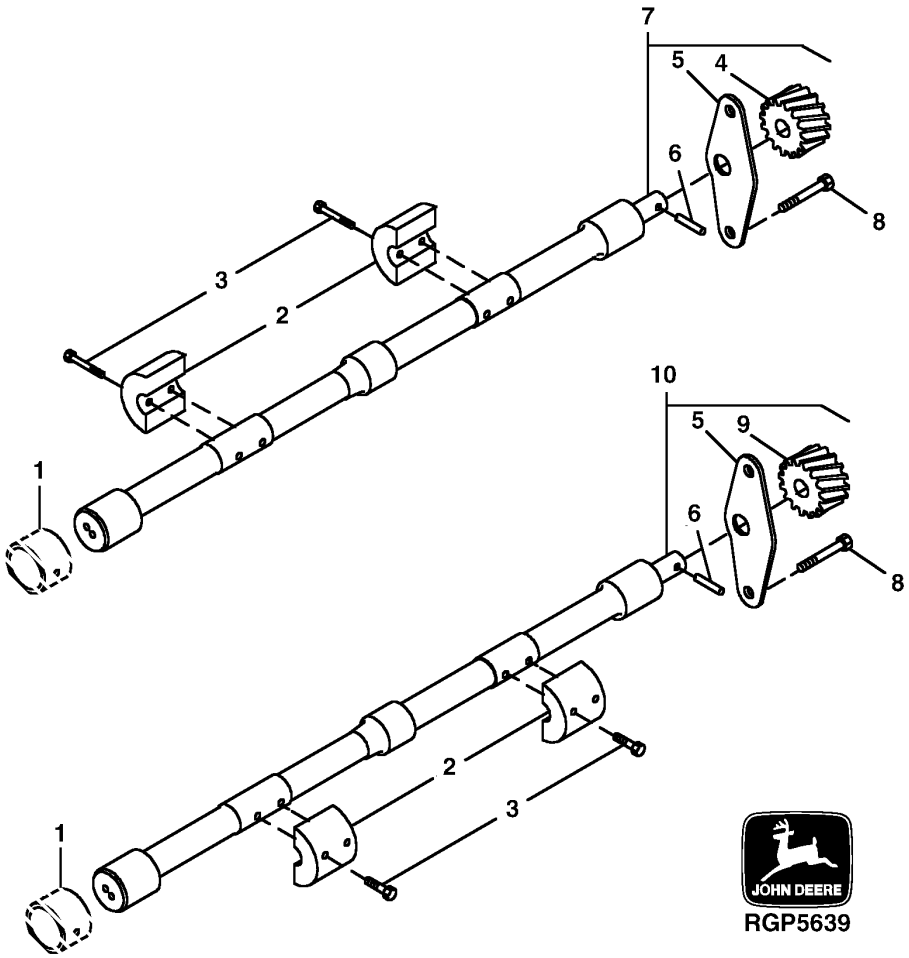

ENGINE BALANCER SHAFT
PE4045DT059

KEY	PART NO.	PART NAME	QTY	ENGINE SERIAL NO.	REMARKS
1	.....	BUSHING	6		
2	R500265	WEIGHT	4		
	R500650	WEIGHT	4		HEAVY DUTY
3	19M8882	SCREW	8		M8 X 40
4	.....	GEAR	1		LH
5	.....	PLATE	2		
6	R133303	SHAFT KEY	1		
7	RE500449	BALANCER SHAFT	1		LH, (MARKED R500266)
8	19M8998	SCREW	4		M8 X 12
9	.....	GEAR	1		RH
10	RE500448	BALANCER SHAFT	1		RH, (MARKED R500668)

MEMORANDA

WATER PUMP INLET AND PULLEY
PE4045DT059

TP49372 -UN-18JAN96

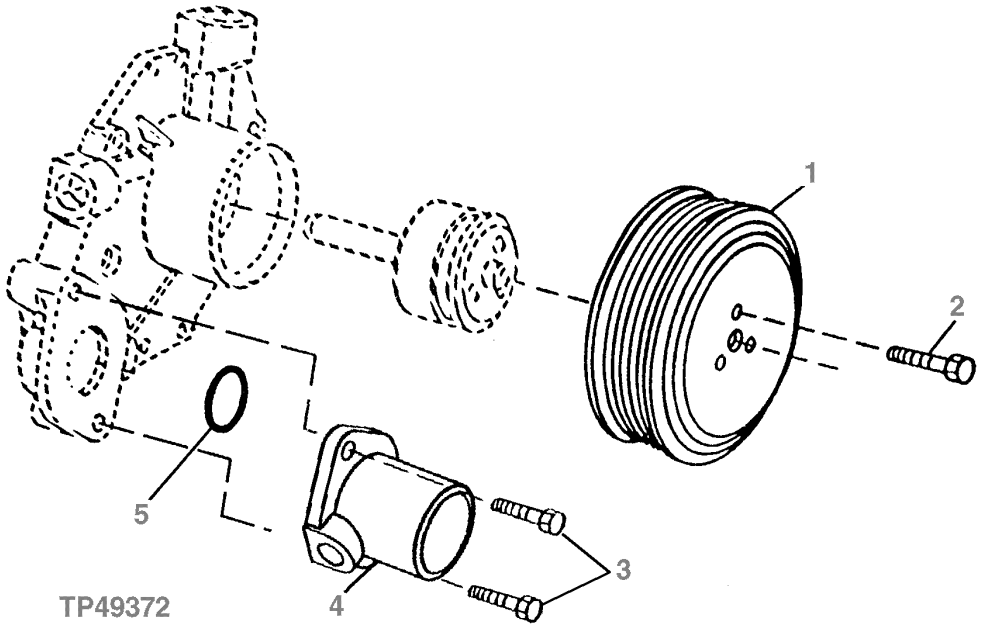

KEY	PART NO.	PART NAME	QTY	ENGINE SERIAL NO.	REMARKS
1	R121038	PULLEY	1		
2	19M7774	SCREW	3		M6 X 12
3	19M7867	SCREW	2		M8 X 25
4	R121634	WATER PUMP CONNECTION	1		
5	R89944	O-RING	1		

THERMOSTAT AND THERMOSTAT COVER
PE4045DT059

TP49332 -UN-13DEC95

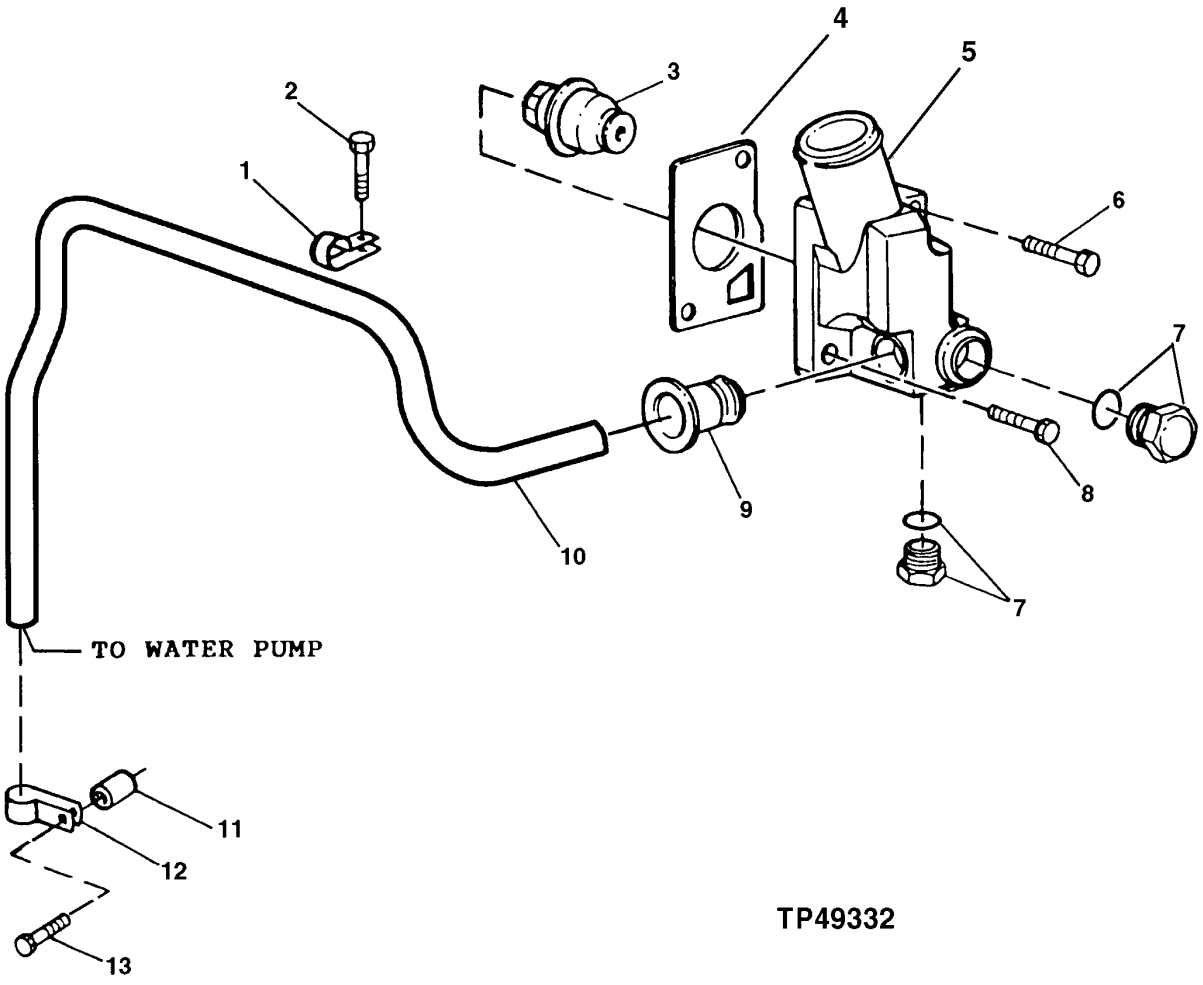

THERMOSTAT AND THERMOSTAT COVER
PE4045DT059

KEY	PART NO.	PART NAME	QTY	ENGINE SERIAL NO.	REMARKS
1	R123323	CLAMP	1		
2	19M7788	SCREW	1		M12 X 25
3	RE522076	THERMOSTAT	2		(SUB FOR RE506300, THIS APPLICATION) 82° C (180° F)
4	R502814	GASKET	1		
5	R131016	COVER	1		
6	19M8292	SCREW	1		M10 X 50
7	RE46684	PLUG	2		
8	19M7786	SCREW	1		M10 X 30
9	R123226	SEAL	1		
10	R501144	TUBE	1		
11	.....	SPACER	1		(ON TIMING COVER)
12	R123324	CLAMP	1		
13	.....	CAP SCREW	1		

ENGINE OIL COOLER
PE4045DT059

RGP9888 -UN-30JUL03

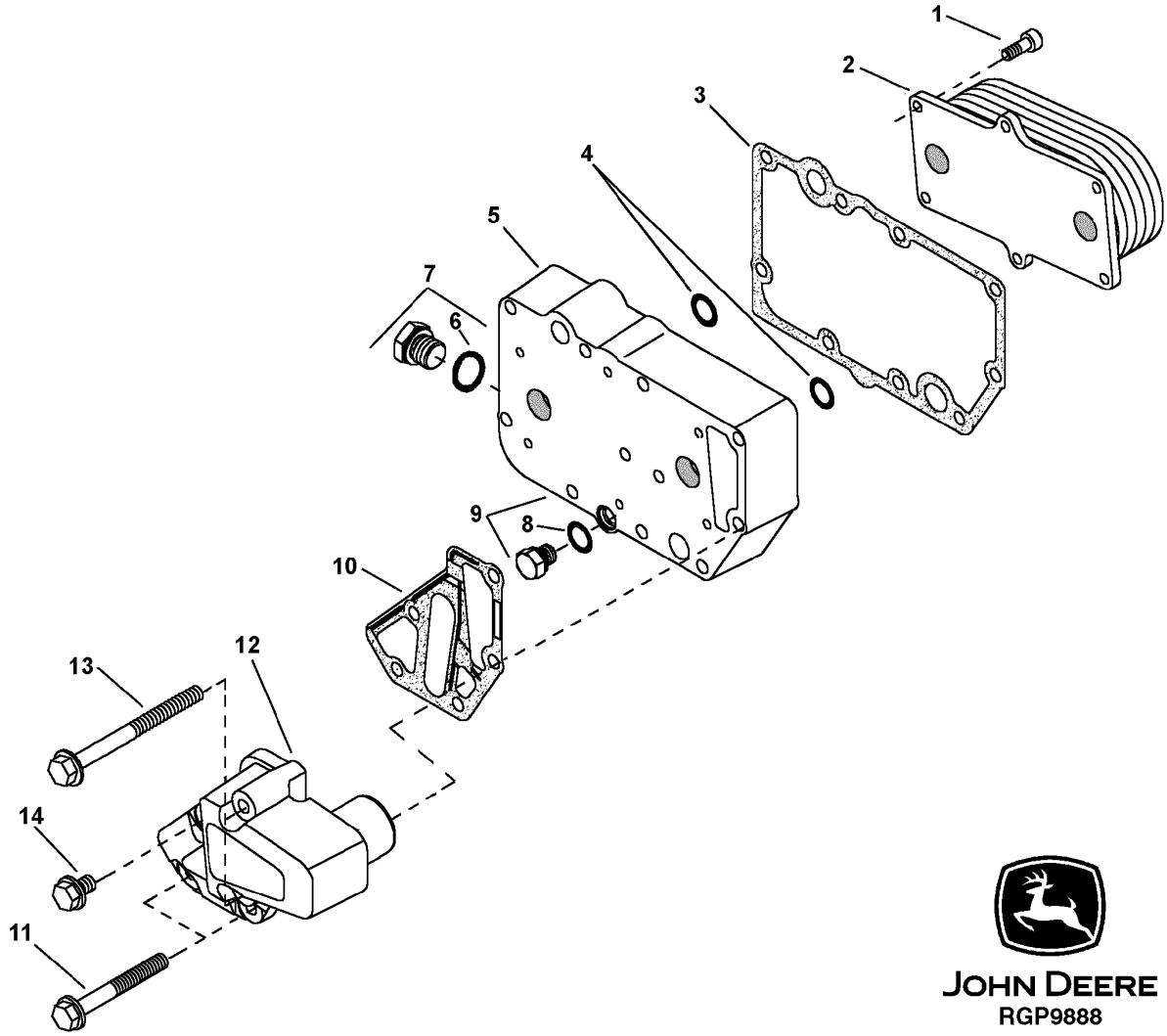

ENGINE OIL COOLER
PE4045DT059

KEY	PART NO.	PART NAME	QTY	ENGINE SERIAL NO.	REMARKS
1	RE67231	SCREW	6		M6 X 16
2	RE59296	OIL COOLER	1		
3	R123501	GASKET	1		
4	T122075	O-RING	2		
5	R123471	HOUSING	1		
6	51M7043	O-RING	1		15.300 X 2.200 MM
7	RE46685	PLUG	1		
8	51M7040	O-RING	1		9.300 X 2.200 MM
9	RE46686	PLUG	1		
10	R501428	GASKET	1		
11	19M7802	SCREW	2		M8 X 65
12	R502811	ADAPTER	1		
13	19M7970	SCREW	2		M8 X 100
14	RE67238	SCREW	1		M8 X 20

FUEL FILTER AND FUEL LINES
PE4045DT059

RGP10111 -UN-02OCT03

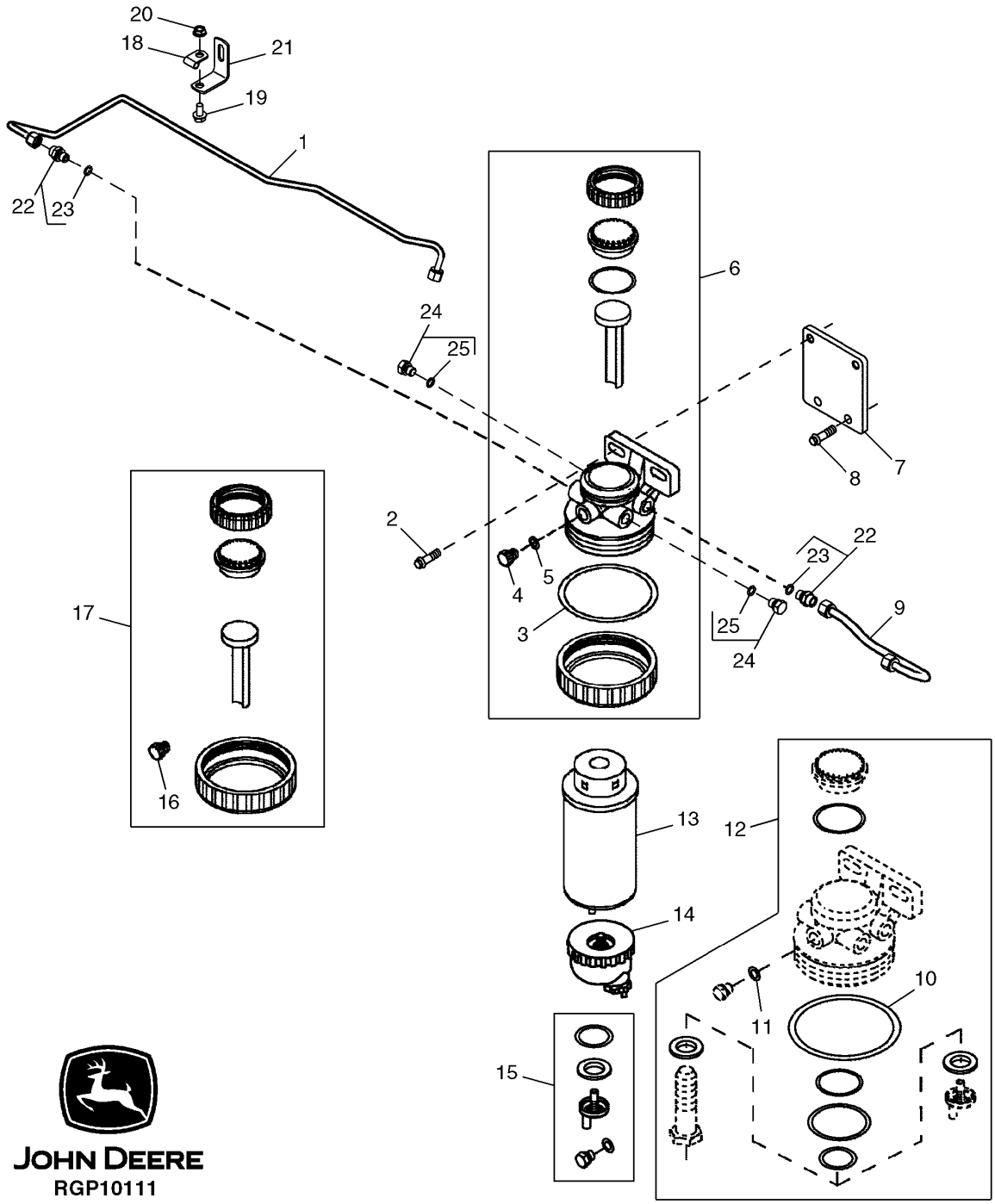

FUEL FILTER AND FUEL LINES
PE4045DT059

KEY	PART NO.	PART NAME	QTY	ENGINE SERIAL NO.	REMARKS
1	RE522214	FUEL LINE	1		
2	19M8963	SCREW	2		M10 X 35
3	RE516553	KIT	1		
4	R113563	DRAIN PLUG	1		
5	R113562	RING	1		
6	RE509794	SEAL KIT	1		
7	R516437	BRACKET	1		
8	19M7784	SCREW	2		M10 X 20
9	RE522215	FUEL LINE	1		
10	RE516553	KIT	1		
11	R113562	RING	1		
12	RE516512	KIT	1		
13	RE509031	FILTER ELEMENT	1		
14	RE51650	SEDIMENT BOWL	1		(A)
15	RE60854	KIT	1		
16	R113563	DRAIN PLUG	1		
17	RE51649	SEAL KIT	1		
18	T14050	CLAMP	1		
19	19M7865	SCREW	1		M8 X 16
20	14M7298	FLANGE NUT	1		M8
21	R116116	BRACKET	1		
22	RE60029	ADAPTER	2		
23	51M7040	O-RING	1		
24	RE46686	PLUG	2		
25	51M7040	O-RING	1		

(A) TRANSPARENT

FINAL FUEL FILTER, FUEL LINES AND SERVICE KITS
PE4045DT059

RGP10112 -UN-02OCT03

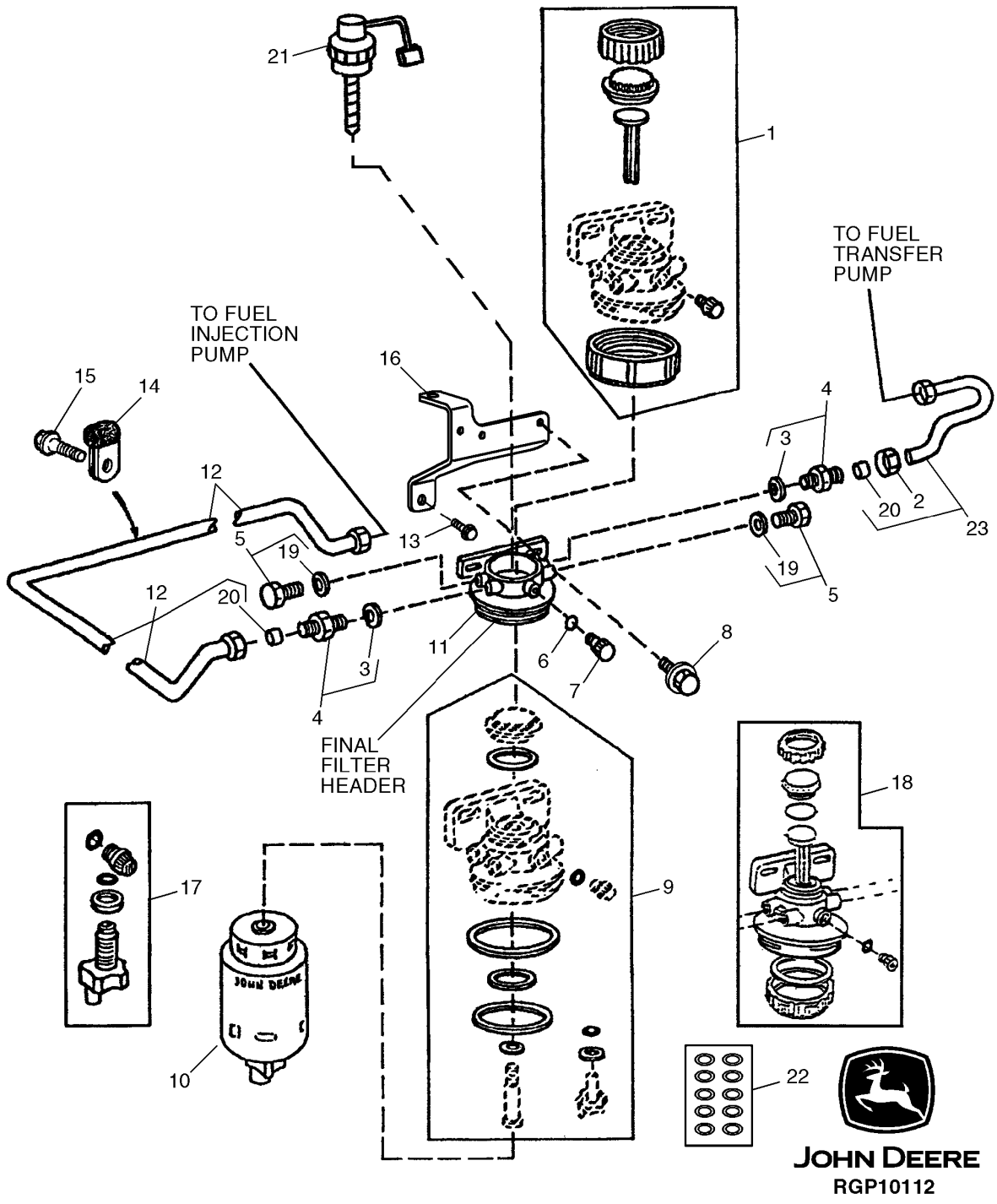

FINAL FUEL FILTER, FUEL LINES AND SERVICE KITS
PE4045DT059

KEY	PART NO.	PART NAME	QTY	ENGINE SERIAL NO.	REMARKS
1	RE51649	SEAL KIT	1		
2	R123594	TUBE NUT	2		
3	51M7040	O-RING	2		
4	RE60029	ADAPTER	2		
5	RE46686	PLUG	2		
6	R113565	SEAL	1		
7	R113563	DRAIN PLUG	1		
8	19M7784	SCREW	2		M10 X 20
9	RE516553	KIT	1		FUEL FILTER
10	RE517181	FUEL FILTER	1		INCLUDES DRAIN VALVE
	RE51650	SEDIMENT BOWL	1		
11	.....	FILTER HEAD	1		(ORDER RE508847)
12	RE518656	LINE	1		
13	19M7835	SCREW	1		M10 X 35
14	T30367	CLAMP	1		
15	19M7788	SCREW	1		M12 X 25
16	R516671	BRACKET	1		
17	RE60854	KIT	1		DRAIN VALVE
18	RE508847	FILTER HEAD	1		
19	51M7040	O-RING	2		
20	R74012	SEALING WASHER	4		
21	RE51648	KIT	1		FUEL FILTER HEATER (12-VOLT)
22	RE516513	KIT	1		(WITH HAND PRIMER) (CONTAINS 10 O-RINGS)
	RE516512	KIT	1		(WITHOUT HAND PRIMER) (CONTAINS 10 O-RINGS)
23	RE60037	FUEL LINE	1		

FUEL TRANSFER PUMP
PE4045DT059

RGP8271 -UN-05NOV01

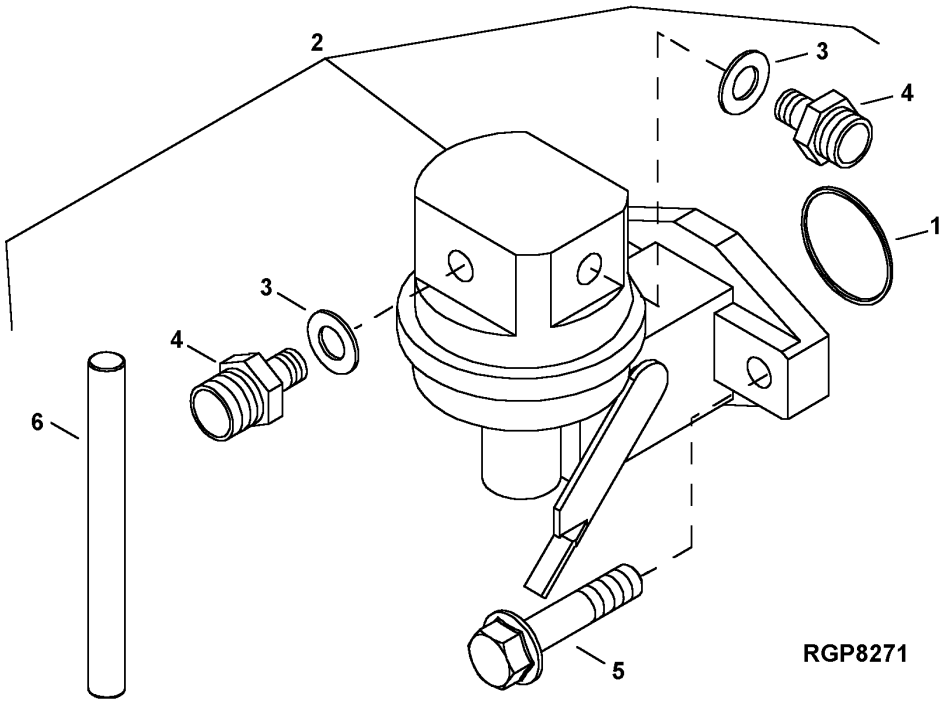

KEY	PART NO.	PART NAME	QTY	ENGINE SERIAL NO.	REMARKS
1	R123273	O-RING	1		
2	RE66153	FUEL PUMP	1		
3	R500271	O-RING	2		
4	R500270	FITTING	2		
5	RE504233	SCREW	2		
6	R133405	PUSH ROD	1		

STARTING MOTOR AND ATTACHING PARTS (ISKRA) PE4045DT059 (SERIAL NO. -882700)

RGP10104 -UN-17SEP03

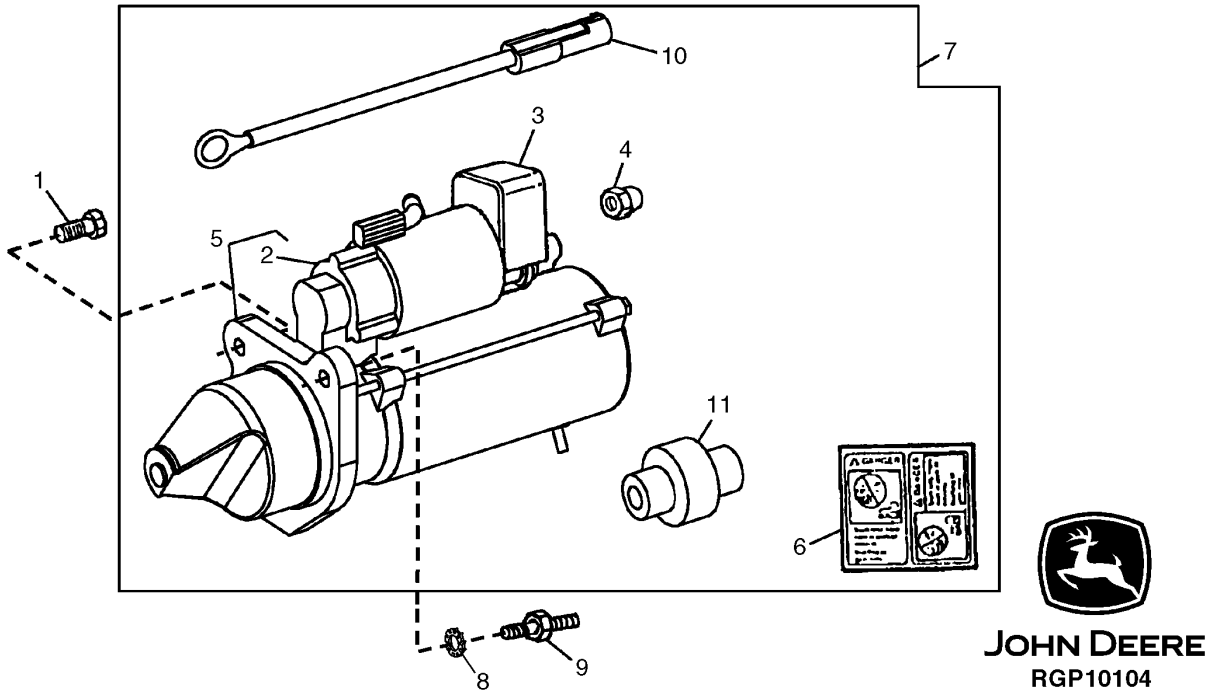

KEY	PART NO.	PART NAME	QTY	ENGINE SERIAL NO.	REMARKS
1	19M7786	SCREW	2		M10 X 30
2	RE515428	SOLENOID	1		
3	R515482	COVER	1		
4	R135432	NUT	1		
5	.....	STARTER MOTOR	1		(12 VOLT)
6	T146102	LABEL	1		
7	RE507639	STARTER MOTOR KIT	1		
8	12M7033	LOCK WASHER	1		10.500 MM
9	R515479	STUD	1		
10	RE505400	BATTERY CABLE	1		
11	RE515688	STARTER MOTOR DRIVE	1		

STARTING MOTOR (DENSO) PE4045DT059 (SERIAL NO. 882701-)

T149124 -UN-14DEC01

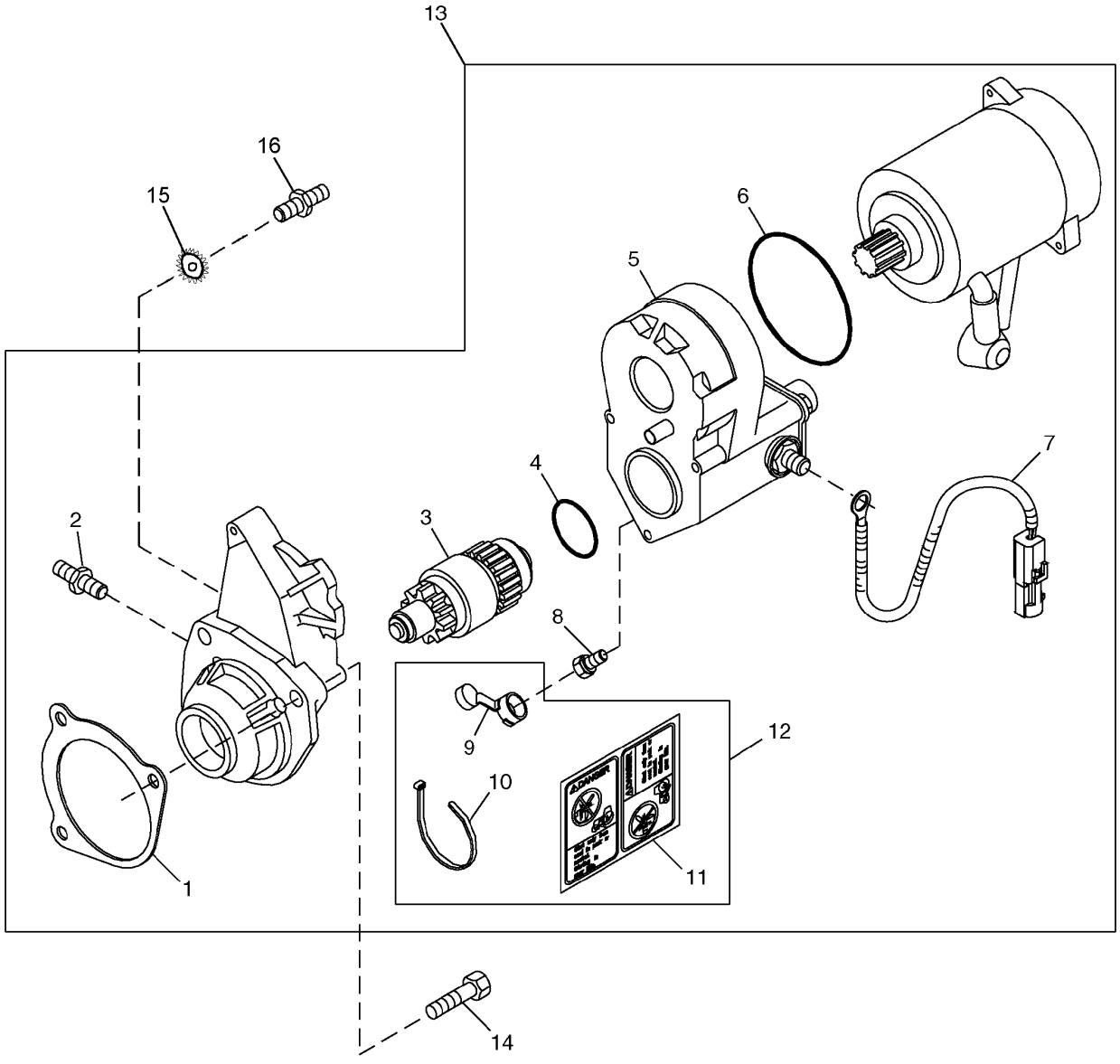

T149124

STARTING MOTOR (DENSO) PE4045DT059 (SERIAL NO. 882701-)

KEY	PART NO.	PART NAME	QTY	ENGINE SERIAL NO.	REMARKS
1	R53108	GASKET	1		
2	R136052	STUD	1		
3	RE70487	CLUTCH	1		
4	R135510	O-RING	1		
5	RE70486	SOLENOID	1		
6	R135509	SEAL	1		
7	RE505400	WIRING HARNESS	1		
8	RE71256	SCREW WITH WASHER	1		
9	.....	COVER	1		(ORDER RE70756)
10	R96703	TIE BAND	1		NOT USED IN THIS APPLICATION
11	T146102	LABEL	1		"DANGER: START ONLY FROM SEAT..."
12	RE70756	KIT	1		
13	RE506105	STARTER MOTOR KIT	1		DENSO 12V WET SEALED, (MARKED RE504244)
14	19M7786	SCREW	2		M10 X 30
15	12M7033	LOCK WASHER	1		10.500 MM
16	R503419	STUD	1		

STARTING MOTOR AND ATTACHING PARTS (DENSO)
PE4045DT059 (SERIAL NO. 882701-)

T147951 -UN-08NOV01

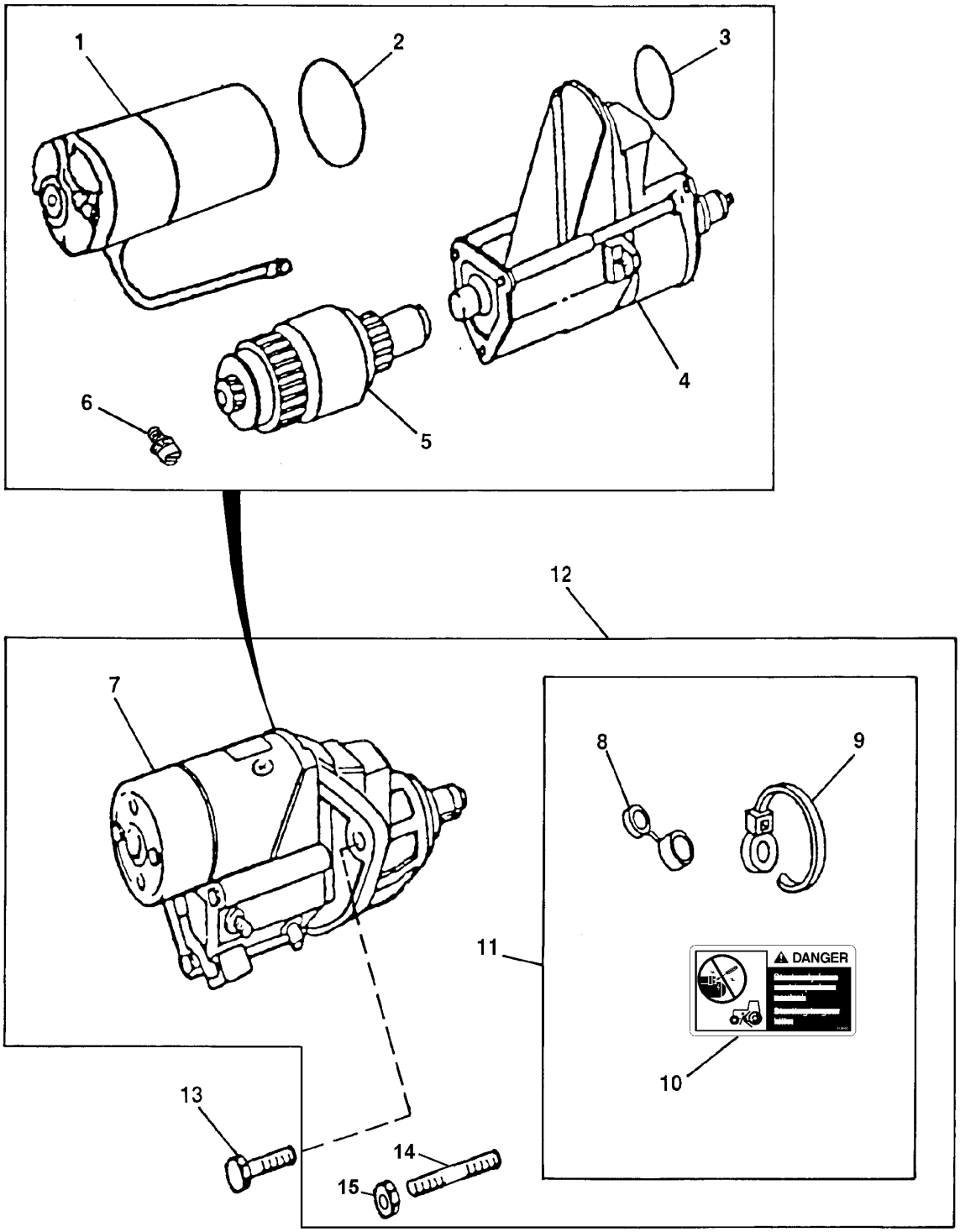

T147951

STARTING MOTOR AND ATTACHING PARTS (DENSO)
PE4045TT092 (SERIAL NO. 882701-)

KEY	PART NO.	PART NAME	QTY	ENGINE SERIAL NO.	REMARKS
1	.....	MOTOR	1		
2	R135509	SEAL	1		
3	R135510	O-RING	1		
4	RE70486	SOLENOID	1		
5	RE70487	CLUTCH	1		
6	RE71256	SCREW WITH WASHER	1		M5 X .8
7	.....	STARTER MOTOR	1		(12-VOLT L.H. DENSO)
8	.....	COVER	1		
9	R96703	TIE BAND	1		
10	T146102	LABEL	1		(BYPASS START)
11	RE70756	KIT	1		(SOLENOID KIT)
12	RE501298	STARTER MOTOR KIT	1		12V L.H. DENSO, (MARKED RE501294)
13	19M7786	SCREW	3		M10 X 30
14	R503419	STUD	1		(LOWER RIGHT HAND)
15	14M7299	FLANGE NUT	1		M12, (LOWER RIGHT HAND)

ALTERNATOR MOUNTING BRACKETS
PE4045DT059

RGP10107 -UN-19SEP03

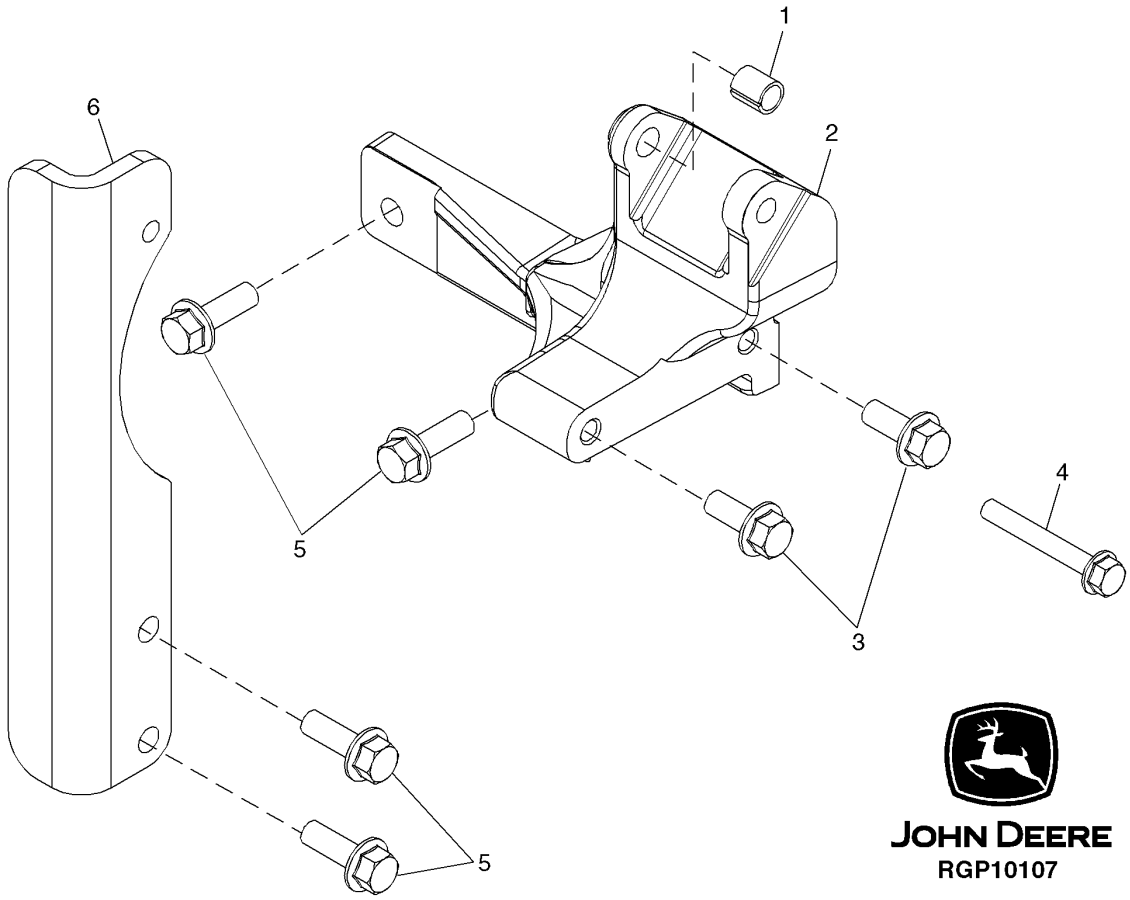

ALTERNATOR MOUNTING BRACKETS
PE4045DT059

KEY	PART NO.	PART NAME	QTY	ENGINE SERIAL NO.	REMARKS
1	R100377	BUSHING	1		
2	R132166	BRACKET	1		
3	19M7785	SCREW	2		M10 X 25
4	19M7801	SCREW	1		M8 X 60
5	19M7786	SCREW	4		M10 X 30
6	R500531	STRAP	1		

CRANKSHAFT PULLEY AND BELT
PE4045DT059

TP53312 -UN-03JAN97

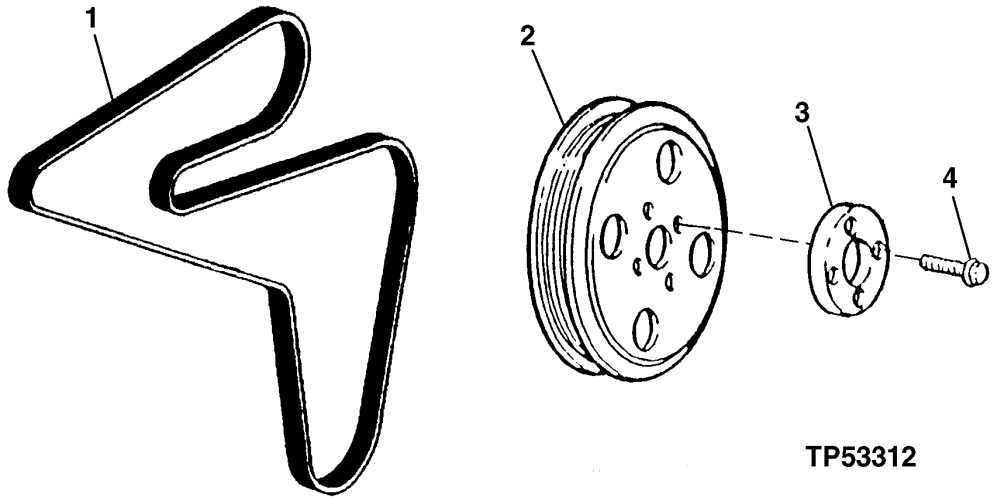

KEY	PART NO.	PART NAME	QTY	ENGINE SERIAL NO.	REMARKS
1	R135195	V-BELT	1		
2	R133295	SHEAVE	1		
3	R500649	FLANGE	1		
4	R121897	SCREW	4		

FAN DRIVE
PE4045DT059

RGP6123 -UN-08MAR00

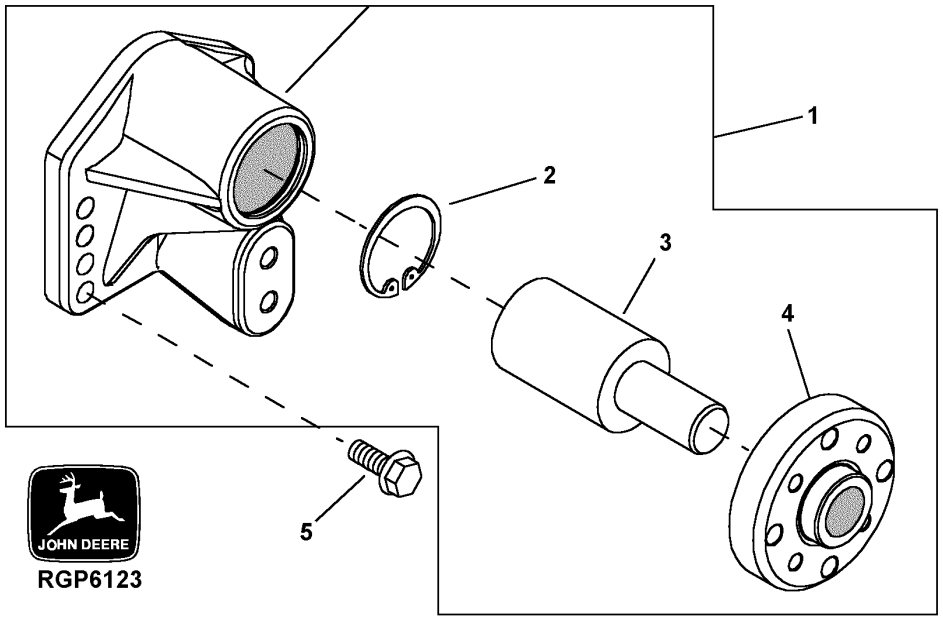

KEY	PART NO.	PART NAME	QTY	ENGINE SERIAL NO.	REMARKS
1	RE500539	BEARING HOUSING W/ BEARING	1		(MARKED R500304)
2	H80753	SNAP RING	1		
3	.....	BEARING	1		
4	.....	HUB	1		
5	19M7835	SCREW	4		M10 X 35

FAN BELT TENSIONER
PE4045DT059

RGP10109 -UN-22SEP03

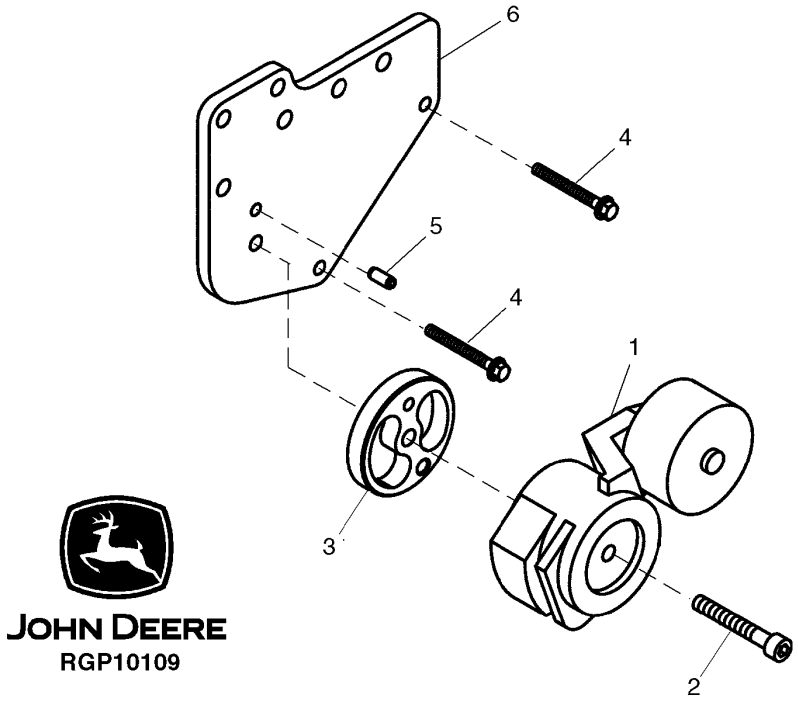

2D12

FAN BELT TENSIONER
PE4045DT059

KEY	PART NO.	PART NAME	QTY	ENGINE SERIAL NO.	REMARKS
1	RE518097	TIGHTENER	1		
2	19M7811	SCREW	1		M10 X 90
3	R516623	SPACER	1		
4	19M7801	SCREW	2		
5	34M7061	SPRING PIN	1		8 X 20 MM
6	R133978	SUPPORT	1		

ENGINE FLYWHEEL
PE4045DT059

RGP7636 -UN-31MAY01

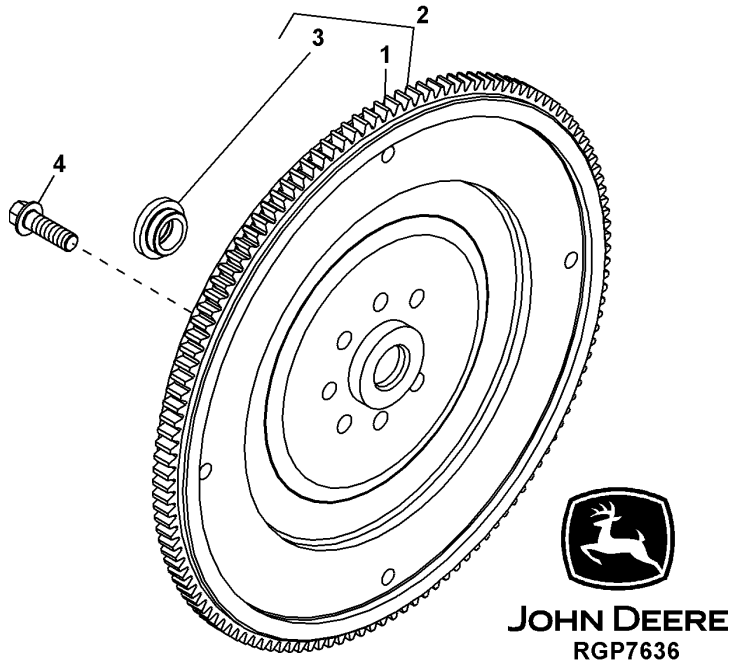

KEY	PART NO.	PART NAME	QTY	ENGINE SERIAL NO.	REMARKS
1	R28811	RING GEAR	1		
2	RE500137	FLYWHEEL	1		(MARKED R500096)
3	R123521	SLEEVE	1		
4	R135918	BOLT	4		

FLYWHEEL HOUSING
PE4045DT059

RGP10113 -UN-30SEP03

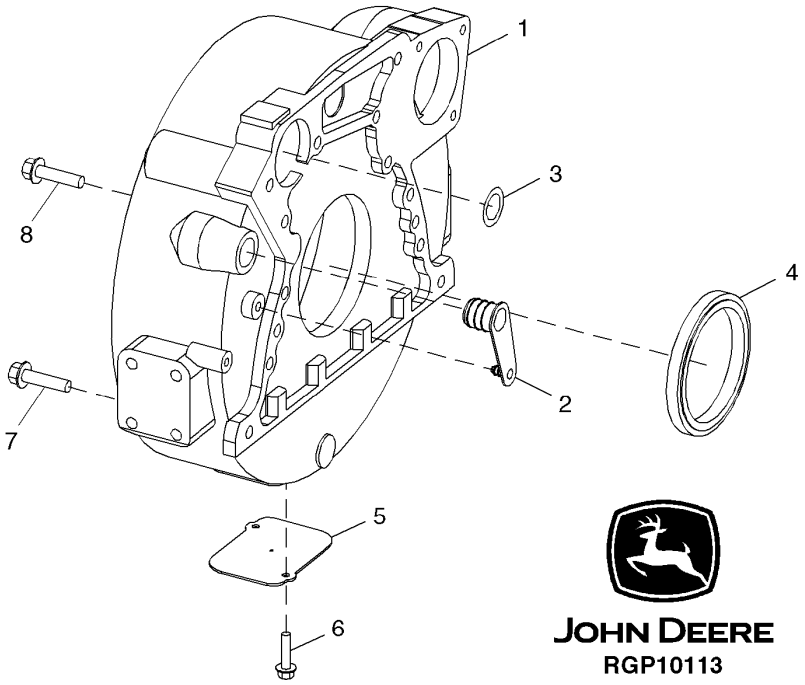

KEY	PART NO.	PART NAME	QTY	ENGINE SERIAL NO.	REMARKS
1	R503449	HOUSING	1		
2	R131769	PLUG	1		
3	R61467	O-RING	1		
4	RE44574	SEAL	1		
5	R121039	PLATE	1		
6	19M7923	CAP SCREW	2		M6 X 12
7	19M8306	SCREW	4		M12 X 50
8	R135918	BOLT	8		

ENGINE GASKET SET/ENGINE OVERHAUL KIT
PE4045DT059

RGP7893 -UN-12JUL01

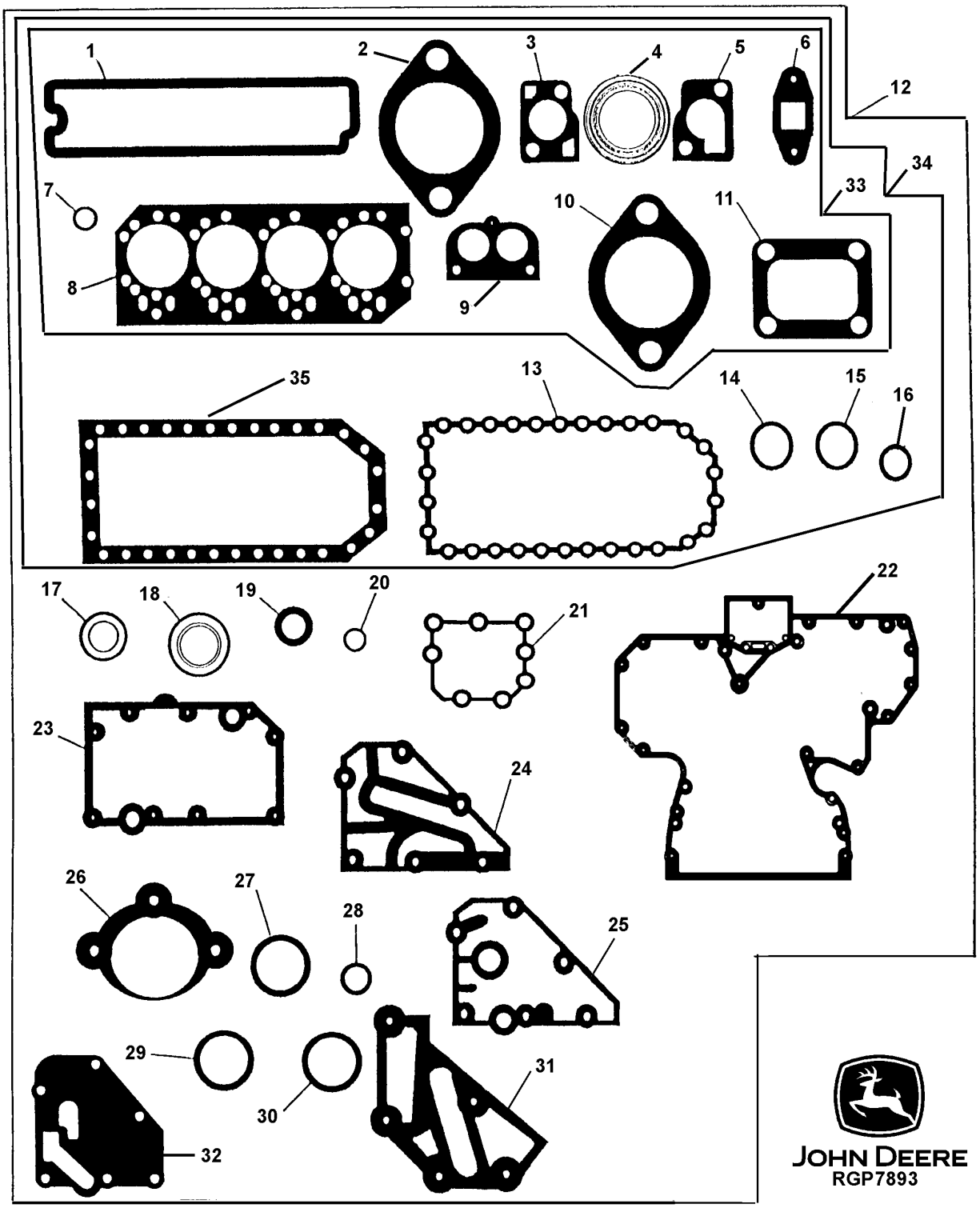

ENGINE GASKET SET/ENGINE OVERHAUL KIT
PE4045DT059

KEY	PART NO.	PART NAME	QTY	ENGINE SERIAL NO.	REMARKS
1	R123542	GASKET	1		ROCKER ARM COVER
	RE520539	GASKET KIT	1		HIGH TEMP ROCKER ARM COVER GASKET & SHIMS (NOT INCLUDED IN MAJOR KITS)
2	R90658	GASKET	4		EXHAUST MANIFOLD
3	R502814	GASKET	1		THERMOSTAT COVER
4	R123226	SEAL	2		WATER BY-PASS TUBE
5	R123345	GASKET	1		THERMOSTAT HOUSING
6	R123570	GASKET	1		TURBOCHARGER OIL OUTLET TUBE
	R503891	GASKET	1		TURBOCHARGER OIL OUTLET TUBE
7	R123575	O-RING	4		ROCKER ARM COVER HOLD DOWN STUD
8	R116515	ENGINE CYLINDER HEAD GASKET	1		
9	R501373	GASKET	1		THERMOSTAT COVER
10	R81275	GASKET	1		AIR INLET
	R133893	GASKET	1		AIR INLET
11	R92097	GASKET	1		TO EXHAUST MANIFOLD
12	RE501455	GASKET KIT	1		(ALSO ORDER RE66084) ENGINE MAJOR OVERHAUL
	RE66092	ENGINE OVERHAUL KIT	1		(ENGINE REBUILD KIT) (NOT ALL ILLUSTRATED) (INCLUDES MAJOR OVERHAUL GASKET SET, CRANKSHAFT BEARINGS, CONNECTING ROD BEARINGS, AND PISTON WITH CYLINDER LINER KIT) (ORDER ONE KIT PER ENGINE)
	TY6304	SEALANT	1		
13	R123352	GASKET	1		ENGINE OIL PAN, (USE WITH CODE 1901, 1902, 1903 AND 1949 ENGINE OIL PAN)
14	R75892	O-RING	1		OIL PUMP TUBE CONNECTOR
15	R97185	O-RING	1		OIL PUMP OUTLET TUBE TO COVER
16	R61871	O-RING	1		OIL PUMP INTAKE TUBE
17	A4827R	WASHER	1		OIL PRESSURE REGULATOR PLUG
18	RE44574	SEAL	1		REAR OIL SEAL
19	RE516340	KIT	1		FRONT OIL SEAL, (SUB FOR RE59810)
20	R123273	O-RING	1		FUEL TRANSFER PUMP
21	R123417	GASKET	1		WATER PUMP
22	R136516	GASKET	1		TIMING GEAR COVER (USE WITH CODE 4401 TIMING GEAR COVER)
	R136515	GASKET	1		TIMING GEAR COVER (USE WITH CODE 4402 TIMING GEAR COVER)
23	R123501	GASKET	1		OIL COOLER HOUSING
24	R502864	GASKET	1		REMOTE OIL FILTER ADAPTER
25	R123525	GASKET	1		OIL FILTER HEADER
26	R53108	GASKET	1		STARTING MOTOR
27	R72328	O-RING	4		OIL FILTER TUBES
28	R89944	O-RING	1		WATER PUMP INLET
29	R504734	O-RING	2		CONNECTOR TUBE TO TIMING GEAR COVER
30	T122075	O-RING	2		OIL COOLER TO HOUSING
31	R501428	GASKET	1		COOLANT PASSAGE ADAPTER
32	R500374	GASKET	1		OIL FILTER HEADER
33	RE66082	GASKET KIT	1		CYLINDER HEAD REMOVAL
34	RE66084	GASKET KIT	1		IN CHASSIS OVERHAUL
35	R123353	GASKET	1		ENGINE OIL PAN (USE WITH CODE 1904 AND 1923 ENGINE OIL PAN)

CRANKSHAFT AND MAIN BEARINGS
PE4045TT092

RGP10108 -UN-22SEP03

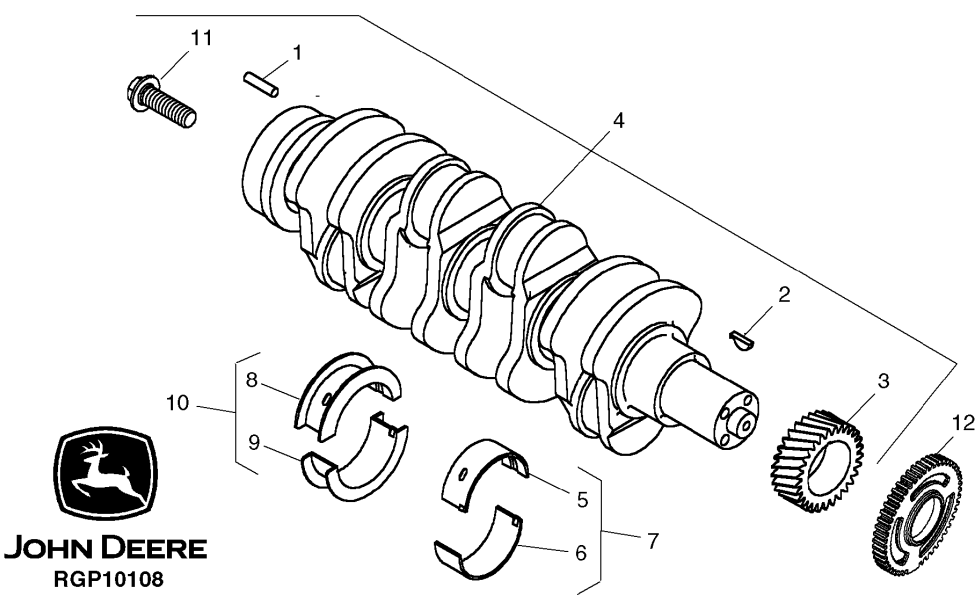

KEY	PART NO.	PART NAME	QTY	ENGINE SERIAL NO.	REMARKS
1	R48685	DOWEL PIN	1		12.700 X 28.448 MM
2	R505609	SHAFT KEY	1		4 X 16 MM
3	R120631	GEAR	1		
4	RE504638	CRANKSHAFT	1		(MARKED R113596) (ALSO ORDER RE59811)
5	.....	BEARING	4		(MARKED R123561)
	.....	BEARING	4		.254 MM, (MARKED R130576)
6	.....	BEARING	4		(MARKED R123562)
	.....	BEARING	4		.254 MM, (MARKED R130577)
7	RE65165	BEARING KIT	4		
	RE65911	BEARING	4		.254 MM
8	.....	BEARING	1		(MARKED R123563)
	.....	BEARING	1		.254 MM, (MARKED R130574)
9	.....	BEARING	1		(MARKED R123564)
	.....	BEARING	1		.254 MM, (MARKED R130575)
10	RE65168	BEARING KIT	1		
	RE65912	THRUST BEARING	1		.254 MM
11	R135918	BOLT	4		(A)
12	R501489	WHEEL SPEED SENSOR	1		CRANKSHAFT TIMING
..	RE59811	SLEEVE	1		

(A) FLYWHEEL/CRANKSHAFT

MEMORANDA

ROCKER ARM SHAFT, PUSH RODS AND ROCKER ARMS
PE4045TT092

TP49263 -UN-20JUN95

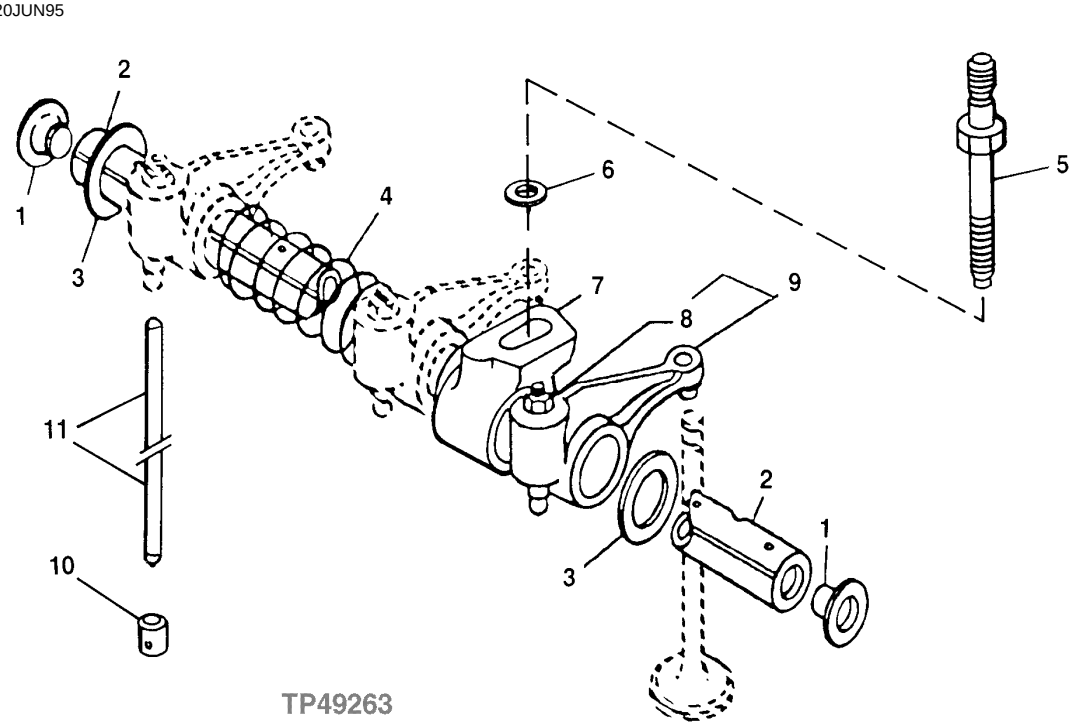

KEY	PART NO.	PART NAME	QTY	ENGINE SERIAL NO.	REMARKS
1	R54565	PLUG	2		
2	R123513	ROCKER ARM SHAFT	1		
3	T20316	WASHER	2		
4	T20314	SPRING	3		
5	R123271	STUD	4		
6	24M7346	WASHER	4		
7	R123161	SUPPORT	4		
8	14M7148	NUT	1		M10
9	RE508317	ROCKER ARM	8		
10	R123565	FOLLOWER	8		
11	R107731	PUSH ROD	8		

ROCKER ARM COVER
PE4045TT092

RGP9330 -UN-29JAN03

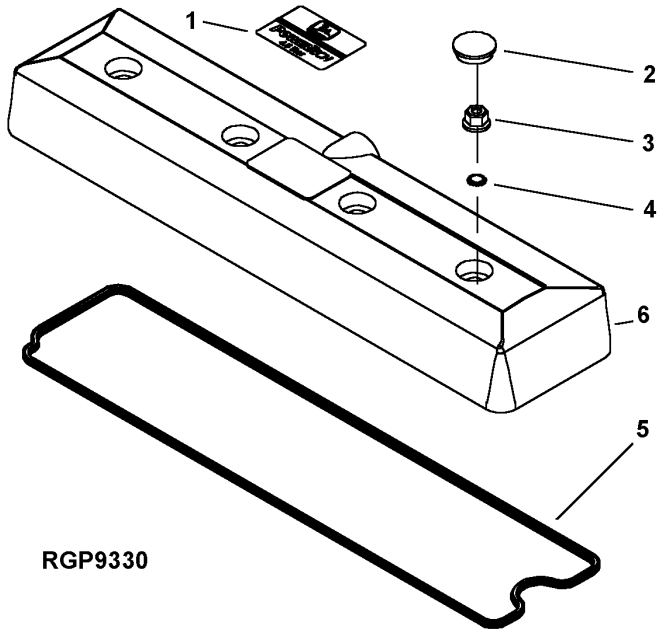

KEY	PART NO.	PART NAME	QTY	ENGINE SERIAL NO.	REMARKS
1	R116324	MEDALLION	1		
2	H23125	PLUG	4		
3	R123574	NUT	4		
4	R123575	O-RING	4		
5	R123542	GASKET	1		
	RE520539	GASKET KIT	1		(HIGH TEMPERATURE)
6	RE502969	VALVE COVER	1		

TIMING GEAR COVER
PE4045TT092

RGP8338 -UN-07DEC01

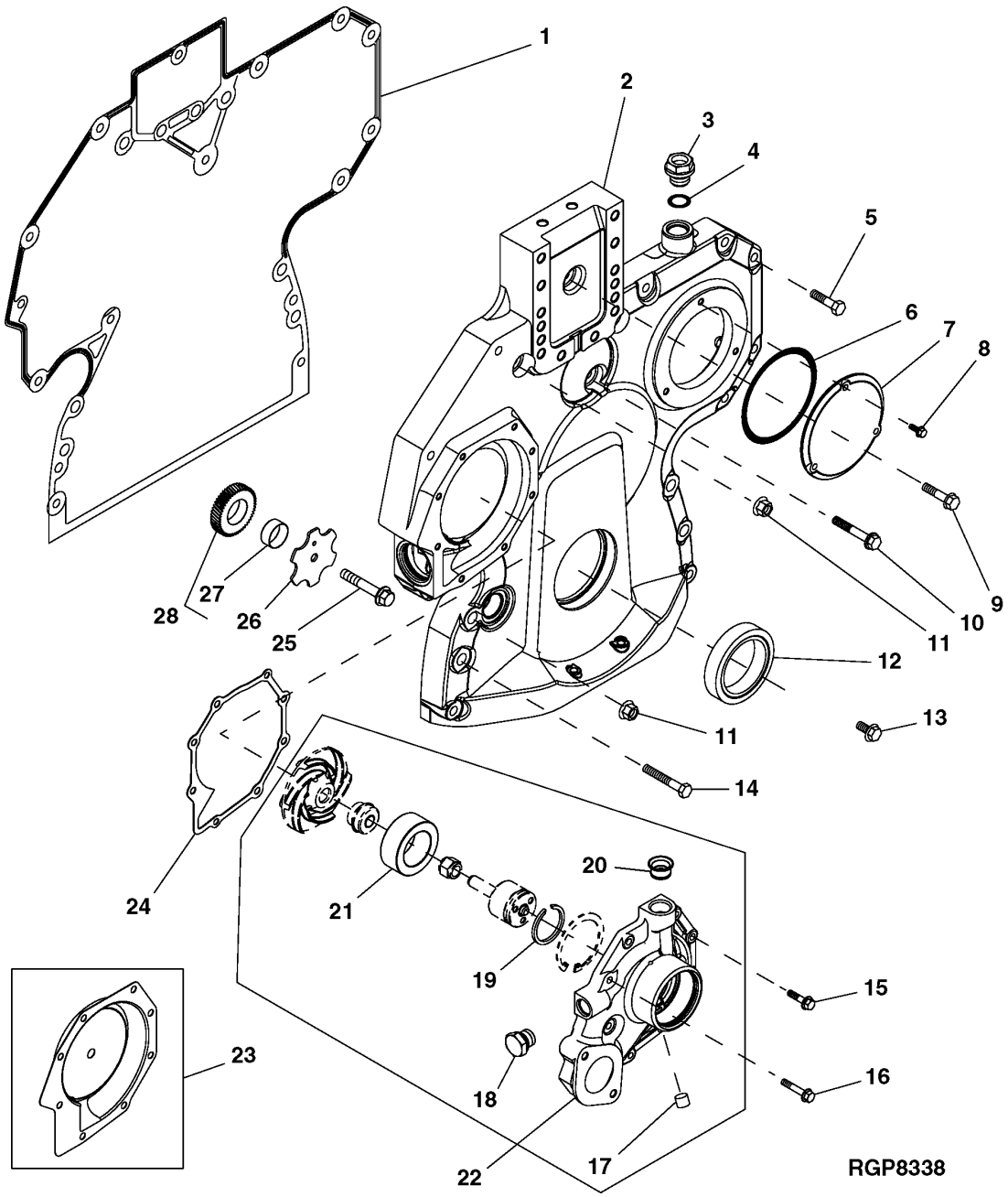

TIMING GEAR COVER
PE4045TT092

KEY	PART NO.	PART NAME	QTY	ENGINE SERIAL NO.	REMARKS
1	R136516	GASKET	1		
2	R504725	COVER	1		
3	RE517370	FITTING PLUG	1		
4	51M7044	O-RING	1		17.300 X 2.200 MM
5	19M8317	SCREW	10		M8 X 40
6	R121424	O-RING	1		
7	R121411	COVER	1		
8	19M7775	SCREW	3		M6 X 16
9	19M8291	SCREW	1		M8 X 35
10	RE67239	SCREW	1		M8 X 45
11	14M7296	FLANGE NUT	6		M10
12	RE516340	KIT	1		(SUB FOR RE59810)
13	19M7801	SCREW	1		M8 X 60
14	19M7979	SCREW	2		M8 X 55
15	19M7863	SCREW	5		M6 X 25
16	19M7796	SCREW	3		M6 X 30
17	R100369	FILTER	2		
18	RE46685	PLUG	2		(INCLUDES 51M7043)
19	A364R	SNAP RING	1		
20	R123226	SEAL	1		
21	.....	BALL BEARING	1		
22	RE505981	WATER PUMP	1		(B) (MARKED R503509)
23	RE508566	KIT	1		
24	R123417	GASKET	1		
25	19M8966	SCREW	1		M10 X 50
26	R131283	THRUST WASHER	1		
27	R114193	BUSHING	1		
28	RE56369	GEAR	1		
..	RE506381	COVER	1		(A)

(A) CONTAINS WATER PUMP, TIMING GEAR COVER, SEALS AND HARDWARE

(B) USE WITHOUT AUXILIARY DRIVE

TIMING GEAR COVER SERVICE KIT
PE4045TT092

RGP8516 -UN-23JAN02

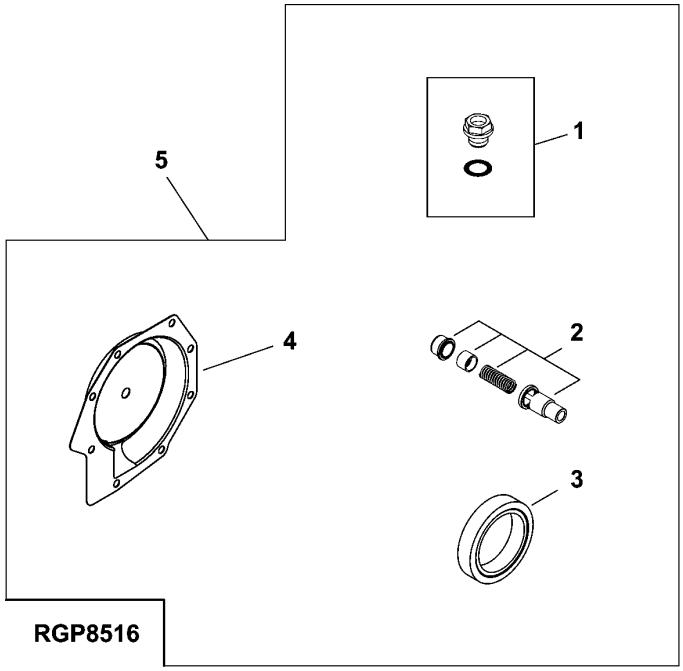

KEY	PART NO.	PART NAME	QTY	ENGINE SERIAL NO.	REMARKS
1	RE517370	FITTING PLUG	1		
2	RE505501	BLEED VALVE	1		
3	RE516340	KIT	1		(SUB FOR RE59810)
4	RE508566	KIT	1		
5	RE515978	KIT	1		

MEMORANDA

CONNECTING RODS, PISTONS AND LINERS
PE4045TT092

TP49283 -UN-17JUL95

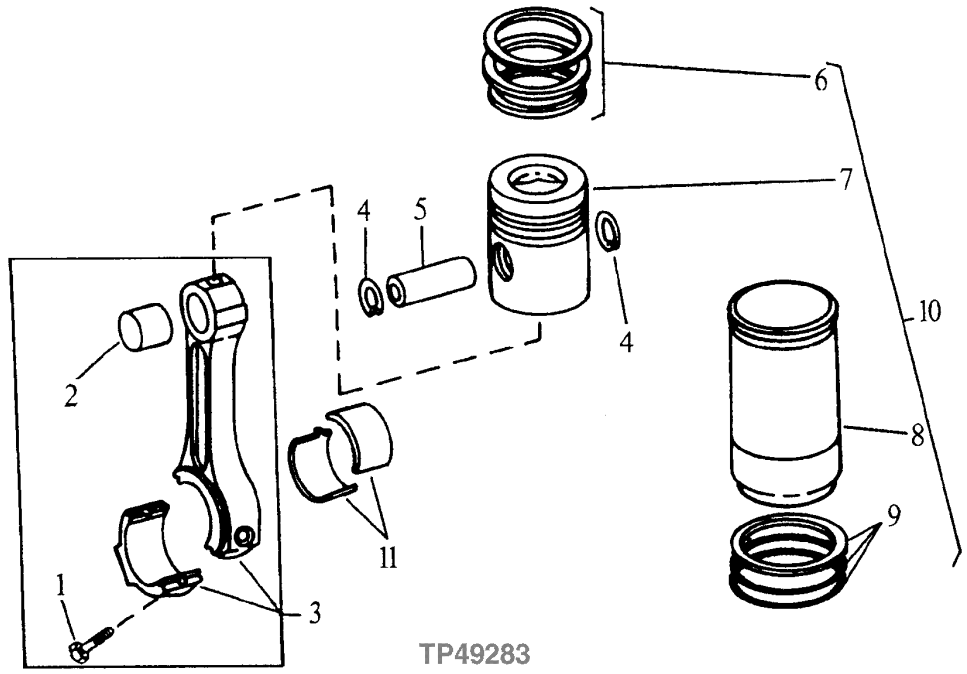

KEY	PART NO.	PART NAME	QTY	ENGINE SERIAL NO.	REMARKS
1	R501124	SCREW	8		
2	R114082	BUSHING	4		
3	RE500608	CONNECTING ROD	4		(MARKED R500335)
4	M41029	SNAP RING	8		
5	R123177	PISTON PIN	4		
6	RE507852	PISTON RING KIT	4		
7	.....	PISTON	4		(ORDER RE507920)
8	.....	CYLINDER LINER	4		(ORDER RE507920)
9	R26121	O-RING	4		
	R48767	PACKING	4		
	R55453	O-RING	4		
	AR65507	O-RING KIT	4		
10	RE507920	PISTON-LINER KIT	4		(MARKED RE515372)
11	RE65908	BEARING	8		
	RE65909	BEARING	AR		.010" US

ENGINE FRONT PLATE
PE4045TT092

RGP8269 -UN-07NOV01

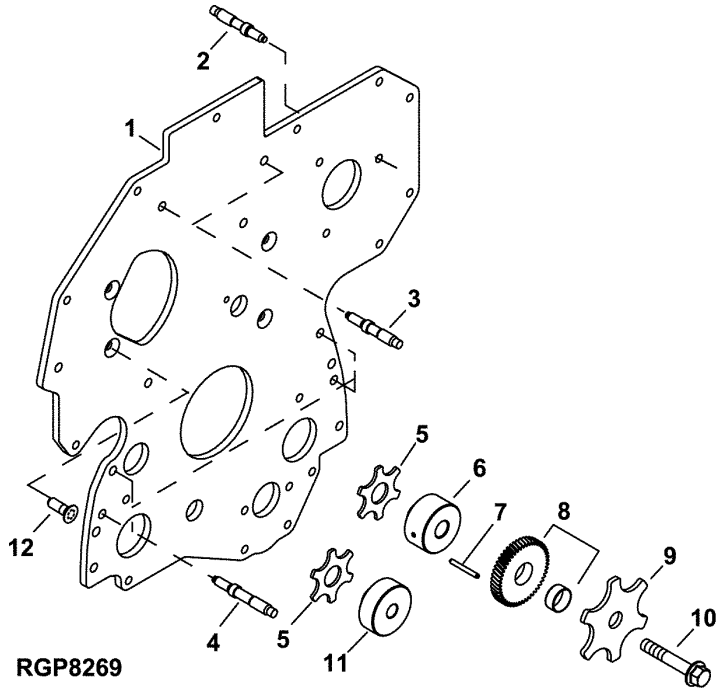

KEY	PART NO.	PART NAME	QTY	ENGINE SERIAL NO.	REMARKS
1	R134527	PLATE	1		
2	R116386	STUD	3		
3	R134518	STUD	2		
4	R123584	STUD	4		
5	R101225	THRUST WASHER	1		
	R123174	LOCK WASHER	1		
6	R120641	SHAFT	1		(UPPER)
7	34H288	SPRING PIN	1		3/16" X 1-3/4"
8	RE56313	GEAR	1		(MARKED R120635)
9	R131206	THRUST WASHER	1		UPPER IDLER
10	19M8997	SCREW	1		M10 X 65
11	R114194	SHAFT	1		(LOWER)
12	R136475	SCREW	6		

CYLINDER BLOCK AND MAIN BEARINGS
PE4045TT092

RGP8283 -UN-09SEP02

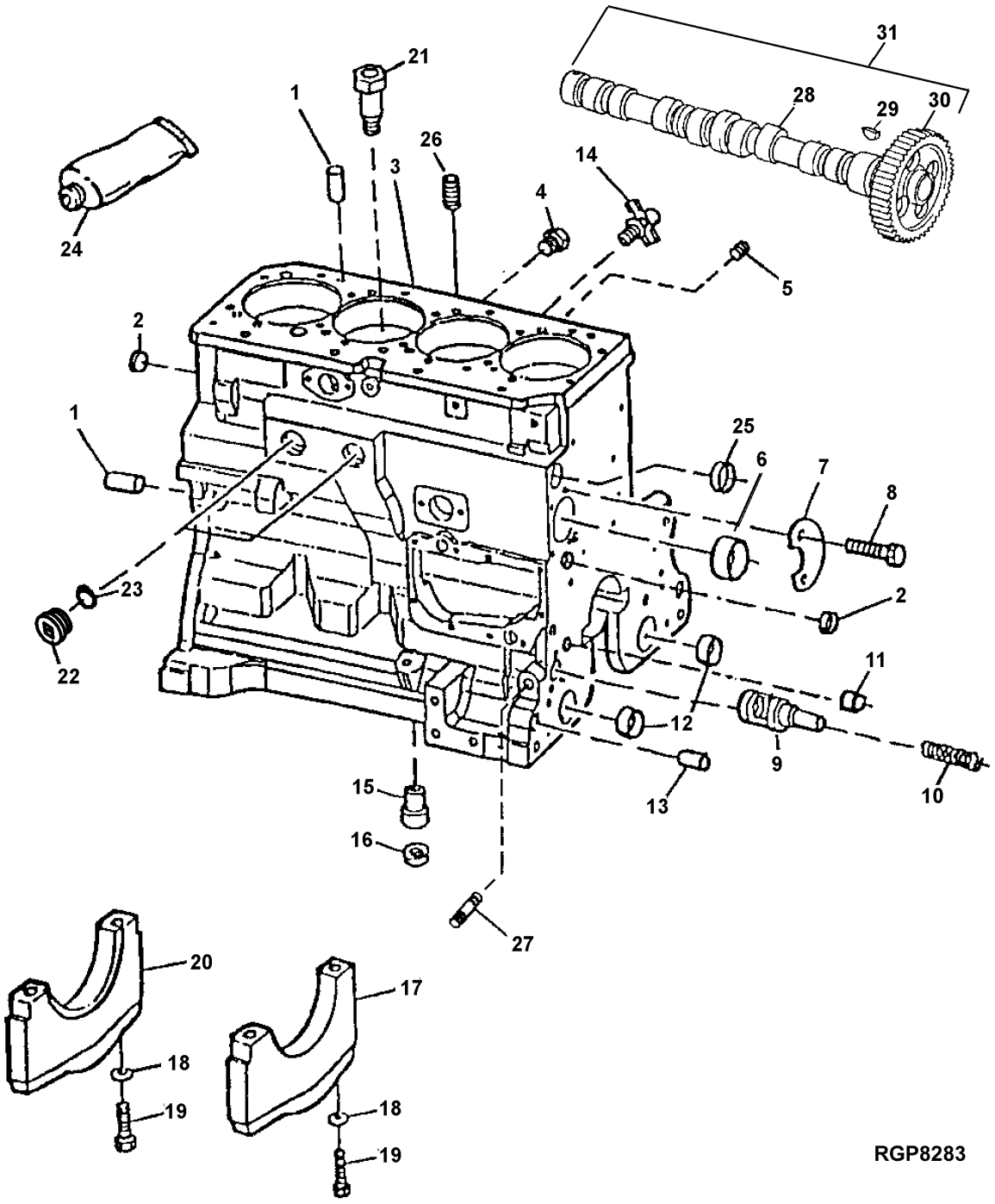

CYLINDER BLOCK AND MAIN BEARINGS
PE4045TT092

KEY	PART NO.	PART NAME	QTY	ENGINE SERIAL NO.	REMARKS
1	R48685	DOWEL PIN	2		
2	T18891	PLUG	2		
	R116466	PLUG	1		
3	.....	CYLINDER BLOCK	1		(MARKED R115081) (ORDER RE520023)
4	R55233	PIPE PLUG	1		
5	R104592	PIPE PLUG	5		
6	R119874	BUSHING	1		
7	R132518	PLATE	1		
8	19M8999	SCREW	2		M8 X 25
9	R121043	FLOW CONTROL HYD. VALVE	1		
10	R111137	SPRING	1		
11	RE505501	BLEED VALVE	1		
12	R115299	BUSHING	6		
13	R26650	DOWEL PIN	2		
14	AT13740	DRAIN VALVE	1		
15	R115390	BUSHING	1		
16	R75892	O-RING	1		
17	R114241	BEARING CAP	4		
18	T20168	WASHER	10		
19	T23474	CAP SCREW	10		
20	R132186	BEARING CAP	1		
21	R131182	ORIFICE	4		
22	RE508185	DRAIN PLUG	2		
23	U13639	O-RING	2		
24	T43514	GASKET	1		
25	R116466	PLUG	1		
26	15H624	PIPE PLUG	1		1/2"
27	15H623	PIPE PLUG	1		3/8"
28	.....	CAMSHAFT	1		(MARKED R504534) (ORDER RE507595)
29	R133303	SHAFT KEY	1		
30	.....	GEAR	1		(MARKED R516237) (ORDER RE507595) (60 TEETH)
31	RE507595	CAMSHAFT	1		(MARKED R504534)

ENGINE SHORT BLOCK
PE4045TT092

T156111 -UN-13JUN02

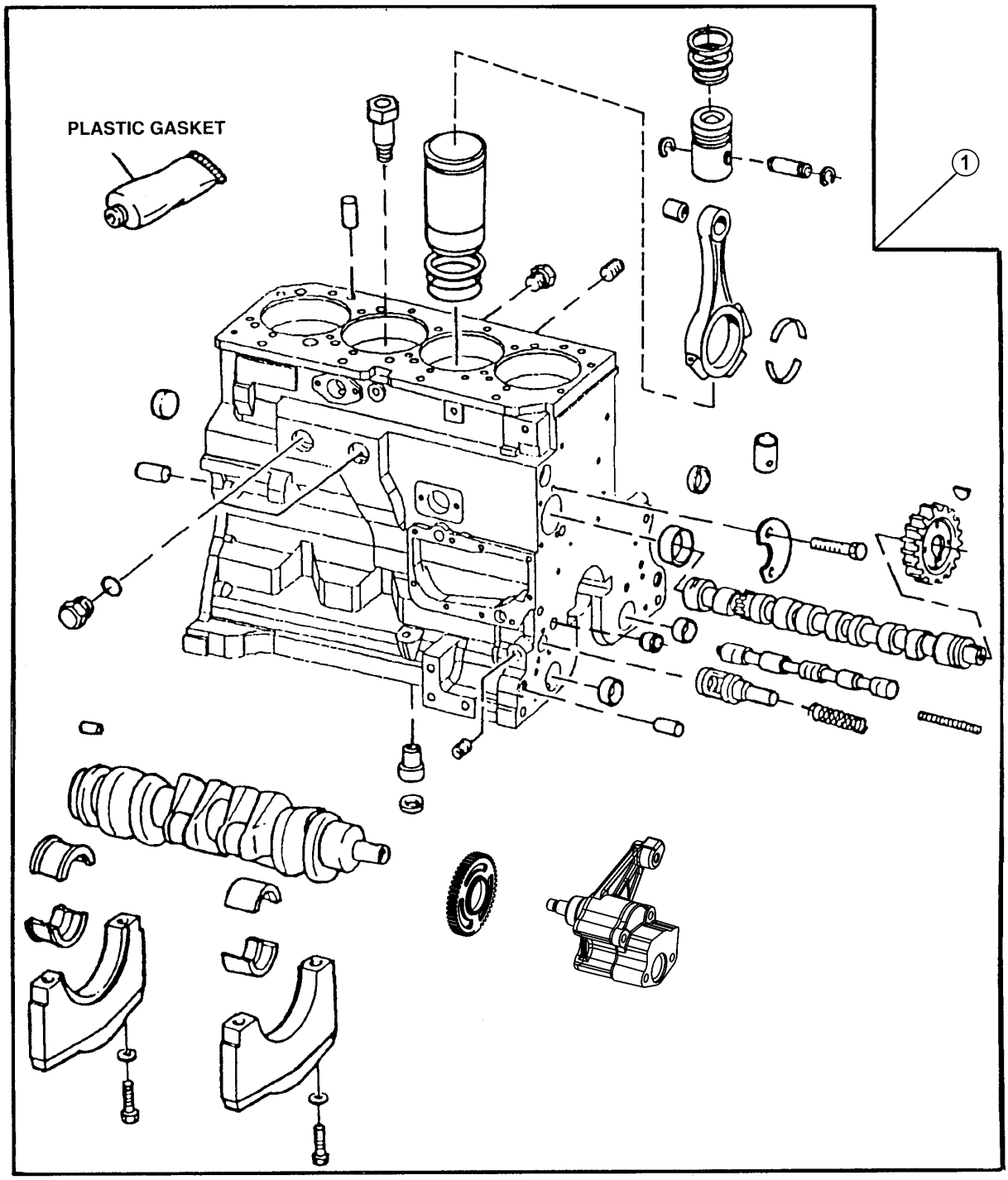

T156111

ENGINE SHORT BLOCK
PE4045TT092

KEY	PART NO.	PART NAME	QTY	ENGINE SERIAL NO.	REMARKS
1	RE508078	SHORT BLOCK ASSEMBLY	1		(MARKED R115081) (DOES NOT INCLUDE FRONT PLATE)

LIFT STRAPS
PE4045TT092

RGP7560 -UN-26JUN01

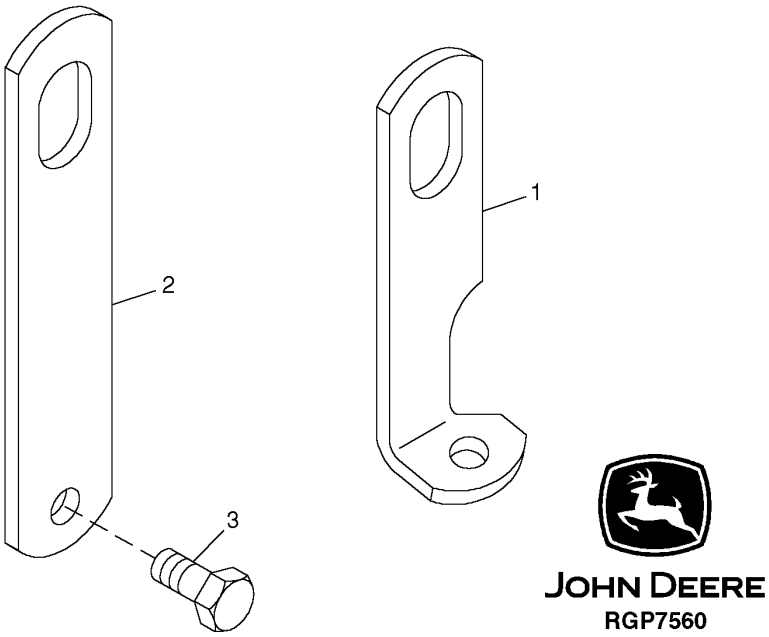

KEY	PART NO.	PART NAME	QTY	ENGINE SERIAL NO.	REMARKS
1	R502175	STRAP	1		(FRONT)
2	R502329	STRAP	1		(REAR)
3	19M7788	SCREW	2		M12 X 25

ENGINE OIL FILLER INLET
PE4045TT092

RGP5991 -UN-29JAN02

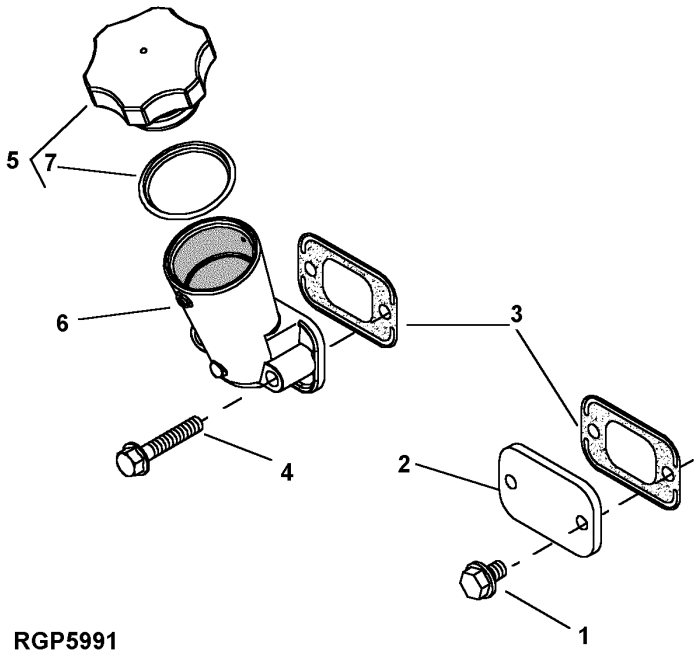

RGP5991

KEY	PART NO.	PART NAME	QTY	ENGINE SERIAL NO.	REMARKS
1	RE67238	SCREW	2		M8 X 20
2	R116296	COVER	1		
3	R136495	GASKET	2		
4	RE67239	SCREW	2		M8 X 45
5	RE500005	FILLER CAP	1		
6	RE501377	FILLER NECK	1		
7	R502902	PACKING	1		

ENGINE OIL DIPSTICK
PE4045TT092

RGP6190 -UN-17MAR00

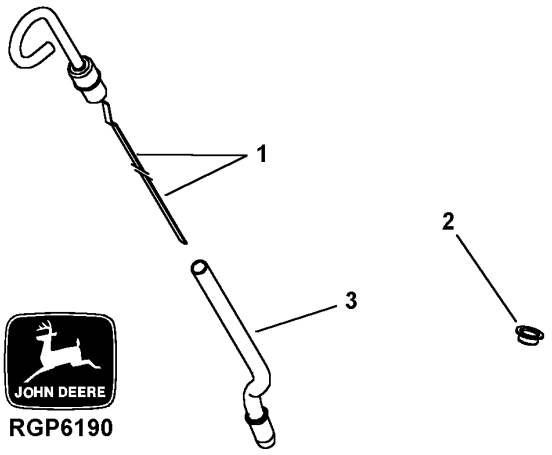

KEY	PART NO.	PART NAME	QTY	ENGINE SERIAL NO.	REMARKS
1	RE69243	DIPSTICK	1		
2	R502725	PLUG	1		
3	R502604	DIPSTICK TUBE	1		

ENGINE OIL PAN
PE4045TT092

RGP7714 -UN-31MAY01

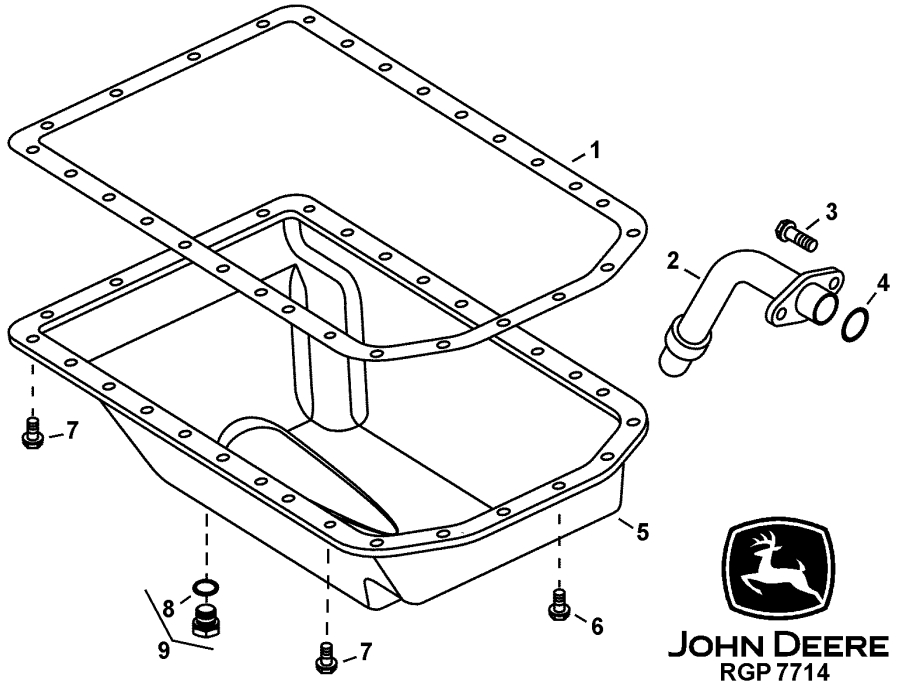

KEY	PART NO.	PART NAME	QTY	ENGINE SERIAL NO.	REMARKS
1	R123352	GASKET	1		
2	RE57619	OIL PUMP INTAKE	1		
3	19M8986	SCREW	2		M8 X 100
4	R61871	O-RING	1		
5	RE59545	OIL PAN	1		(MARKED R87814)
6	19M8062	SCREW	6		M8 X 20
7	19M8163	CAP SCREW	22		M8 X 16
8	51M7043	O-RING	1		15.300 X 2.200 MM (0.602" X 0.087")
9	RE46685	PLUG	1		

OIL FILTER
PE4045TT092

T145377 -UN-14SEP01

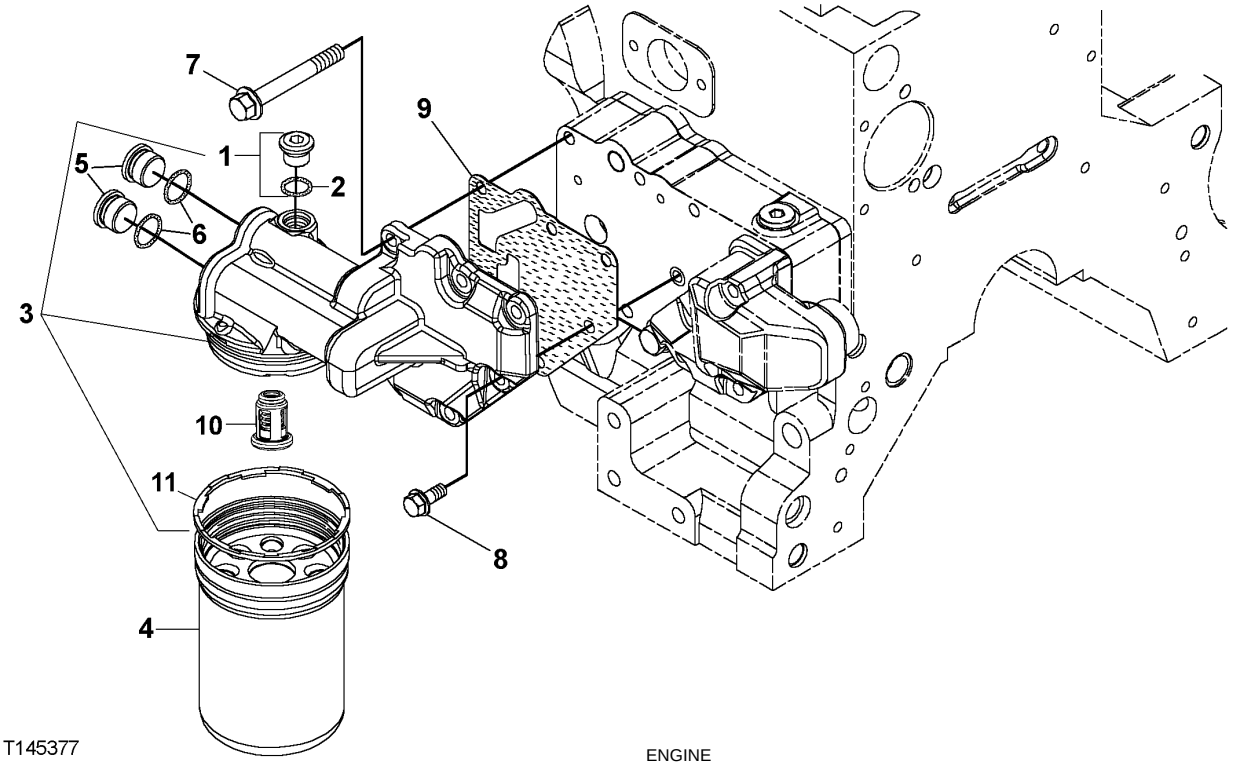

T145377

KEY	PART NO.	PART NAME	QTY	ENGINE SERIAL NO.	REMARKS
1	RE52242	DRAIN PLUG	1		M16 X 1.5
2	51M7042	O-RING	1		13.300 X 2.200 MM
3	RE504564	FILTER HEAD	1		(MARKED R502505)
4	RE504836	OIL FILTER	1		(ALSO ORDER R502513)
5	R116115	FITTING	2		
6	51M7045	O-RING	2		19.300 X 2.200 MM
7	19M7802	SCREW	5		M8 X 65
8	RE67238	SCREW	1		M22 X 1.5
9	R500374	GASKET	1		
10	RE504543	FLOW CONTROL HYD. VALVE	1		
11	R502513	SEAL	1		

ENGINE OIL PUMP
PE4045TT092

RGP6223 -UN-28APR03

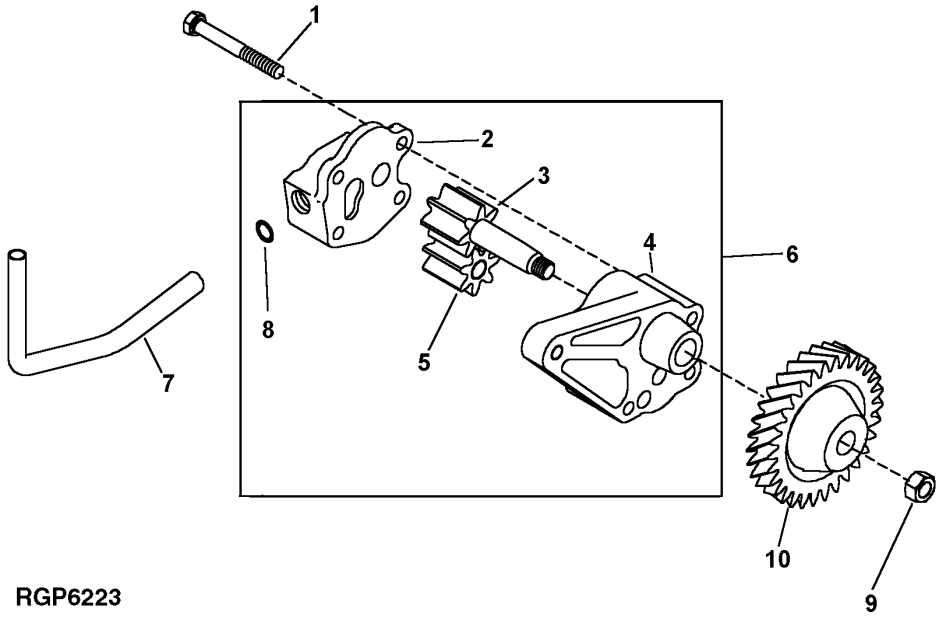

RGP6223

KEY	PART NO.	PART NAME	QTY	ENGINE SERIAL NO.	REMARKS
1	19M8987	SCREW	2		M8 X 65
2	.....	COVER	1		(ORDER RE504914)
3	.....	GEAR	1		(ORDER RE504914)
4	.....	HOUSING	1		(ORDER RE504914)
5	.....	GEAR	1		(ORDER RE504914)
6	RE504914	OIL PUMP	1		(MARKED R502687)
7	R121376	TUBE	1		
8	R97185	O-RING	1		
9	14M7066	NUT	1		M12
10	R120638	GEAR	1		

ENGINE VENTILATING SYSTEM
PE4045TT092

TP49041 -UN-06SEP95

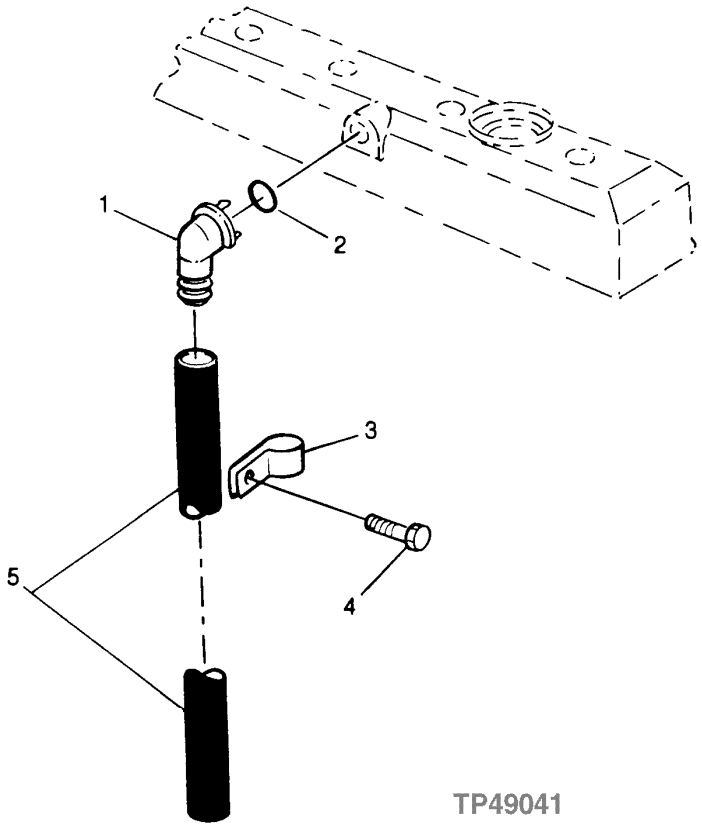

ENGINE VENTILATING SYSTEM
PE4045TT092

KEY	PART NO.	PART NAME	QTY	ENGINE SERIAL NO.	REMARKS
1	R120467	ELBOW FITTING	1		
2	R72328	O-RING	1		18.720 X 2.616 MM (0.737" X 0.103")
3	R72659	CLAMP	1		
4	19M7866	SCREW	1		M8 X 20
5	H36031	HOSE	1		

CYLINDER HEAD, HEAD GASKET AND VALVES
PE4045TT092

TP49042 -UN-06SEP95

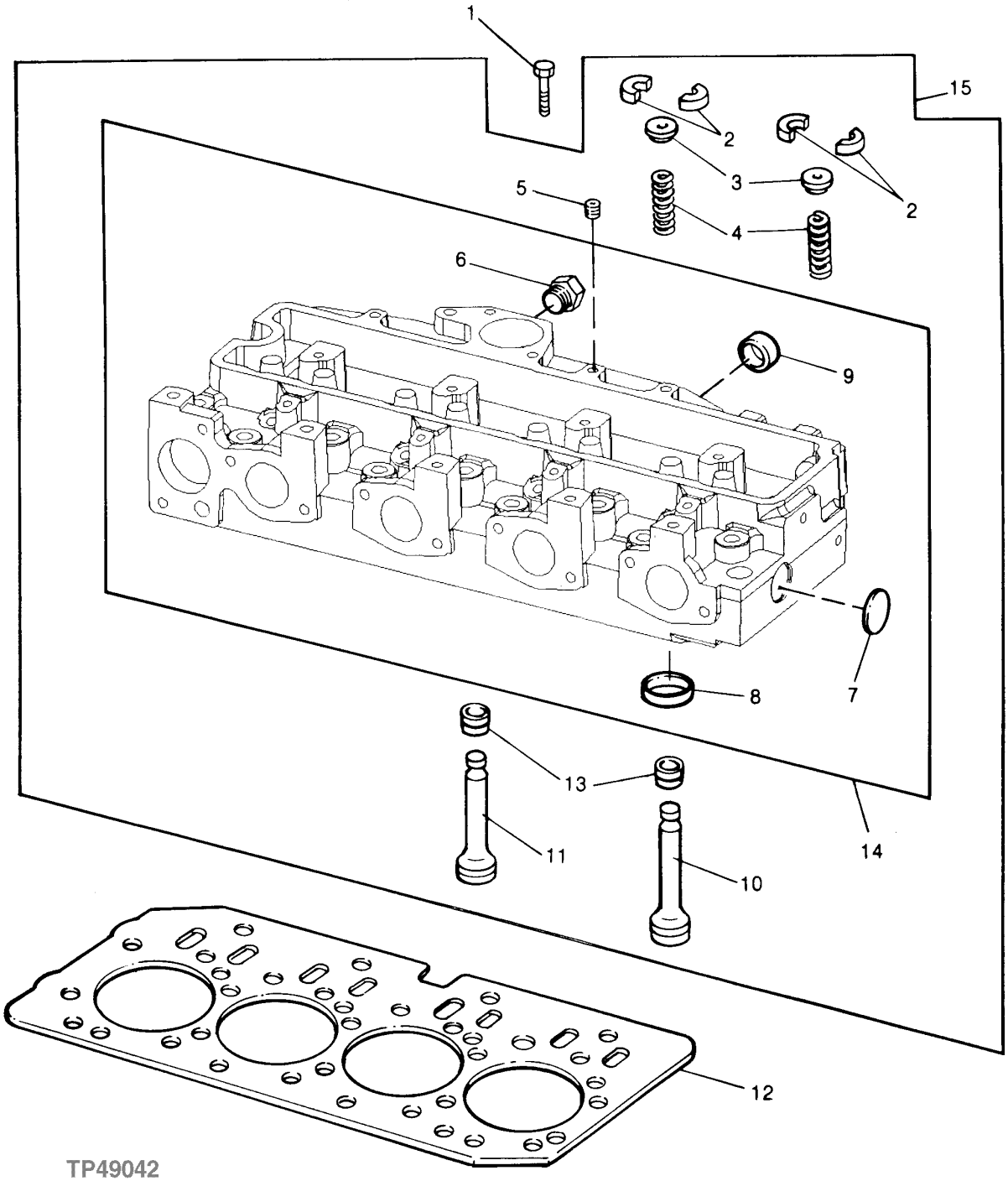

CYLINDER HEAD, HEAD GASKET AND VALVES
PE4045TT092

KEY	PART NO.	PART NAME	QTY	ENGINE SERIAL NO.	REMARKS
1	R85363	CAP SCREW	18		
2	R91889	RETAINER	16		
3	RE60005	ROTATOR	8		
4	R26125	SPRING	8		
5	R104592	PIPE PLUG	1		
6	T58477	FITTING	1		
	R26906	O-RING	1		
7	CD16284	PLUG	1		
8	R98063	VALVE SEAT INSERT	4		STANDARD SIZE INTAKE VALVE
	R98335	VALVE SEAT INSERT	4		OVERSIZE INTAKE VALVE
	R106831	VALVE SEAT INSERT	4		STANDARD INTAKE VALVE
	R85687	VALVE SEAT INSERT	4		STANDARD SIZE EXHAUST VALVE
	R93910	VALVE SEAT INSERT	4		OVERSIZE EXHAUST VALVE
	R106829	VALVE SEAT INSERT	4		STANDARD EXHAUST VALVE
9	R43409	PLUG	2		
10	R90692	EXHAUST VALVE	4		STANDARD
11	R98062	INTAKE VALVE	4		STANDARD
12	R116515	ENGINE CYLINDER HEAD GASKET	1		
13	RE31617	SEAL	8		
14	.....	CYLINDER HEAD	1		(MARKED R121402)
15	RE57234	CYLINDER HEAD	1		(MARKED R121402)

EXHAUST MANIFOLD
PE4045TT092

RGP10103 -UN-29SEP03

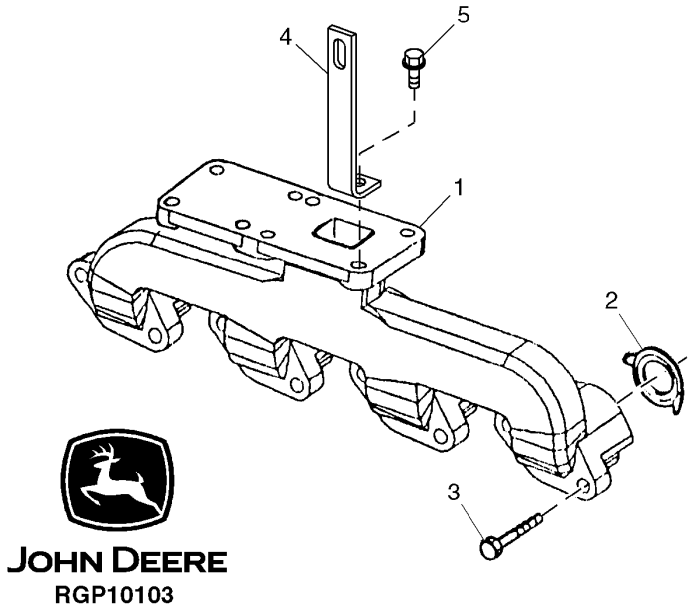

KEY	PART NO.	PART NAME	QTY	ENGINE SERIAL NO.	REMARKS
1	R132261	EXHAUST MANIFOLD	1		
2	R90658	GASKET	4		
3	19M7810	SCREW	8		M10 X 80
4	T201123	ANGLE	1		
5	19M8292	SCREW	1		M10 X 50

EXHAUST ELBOW
PE4045TT092

RGP6262 -UN-17MAR00

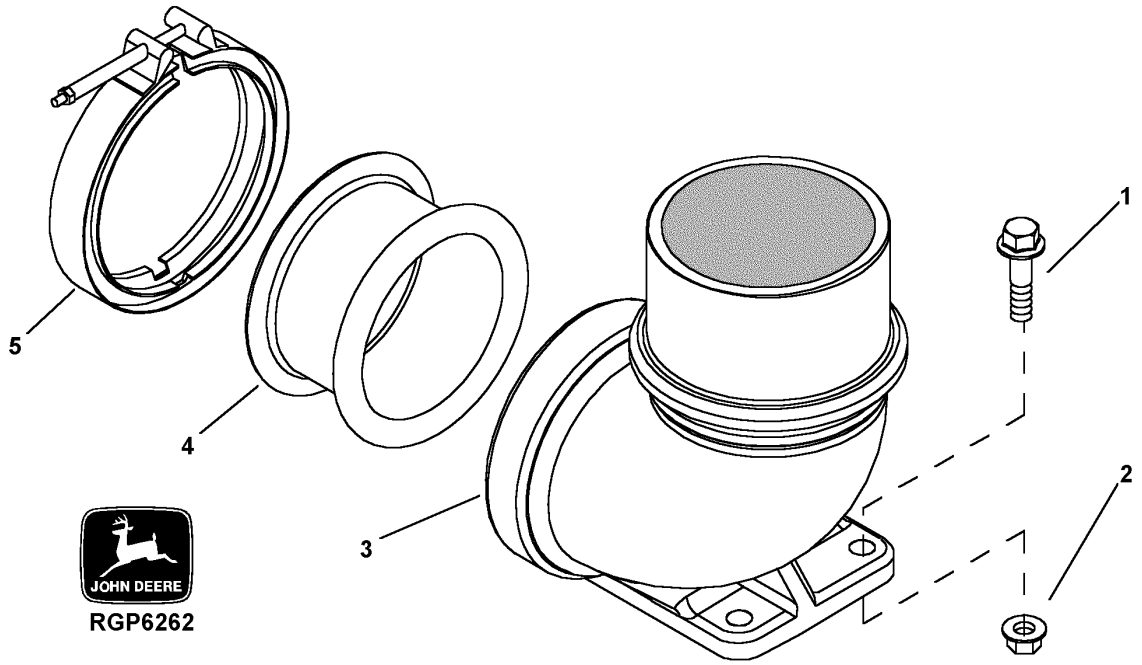

KEY	PART NO.	PART NAME	QTY	ENGINE SERIAL NO.	REMARKS
1	19M8162	SCREW	4		M10 X 40
2	14M7296	FLANGE NUT	4		M10
3	R123246	PIPE ELBOW	1		
4	R87732	ADAPTER	1		
5	RE40048	CLAMP	1		

FUEL INJECTION NOZZLE (WITH TURBOCHARGER)
PE4045TT092

RGP10096 -UN-28AUG03

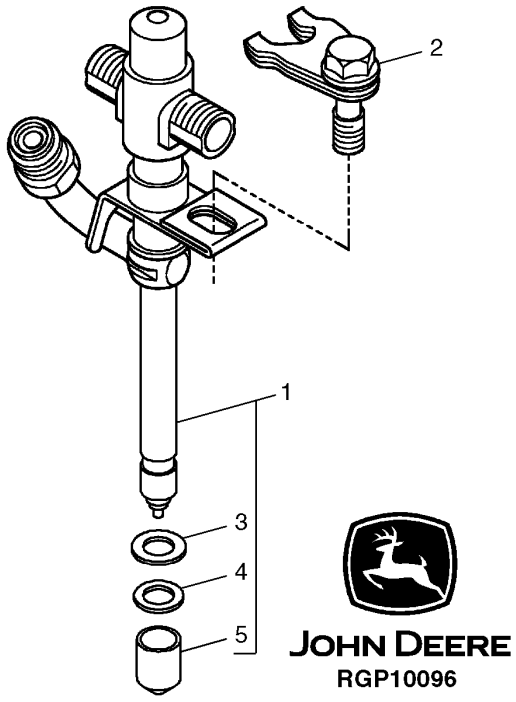

KEY	PART NO.	PART NAME	QTY	ENGINE SERIAL NO.	REMARKS
1	RE507766	INJECTION NOZZLE	6		
	SE500830	NOZZLE	1		(REMANUFACTURED) (PACKAGE OF FOUR)
2	RE508716	CLAMP	6		
3	R92352	PACKING	1		
4	R500390	WASHER	1		
5	T24472	CAP	1		

MEMORANDA

FUEL INJECTION PUMP, FUEL INJECTION LINES AND ENGINE CONTROLLER
PE4045TT092

RGP10110 -UN-23SEP03

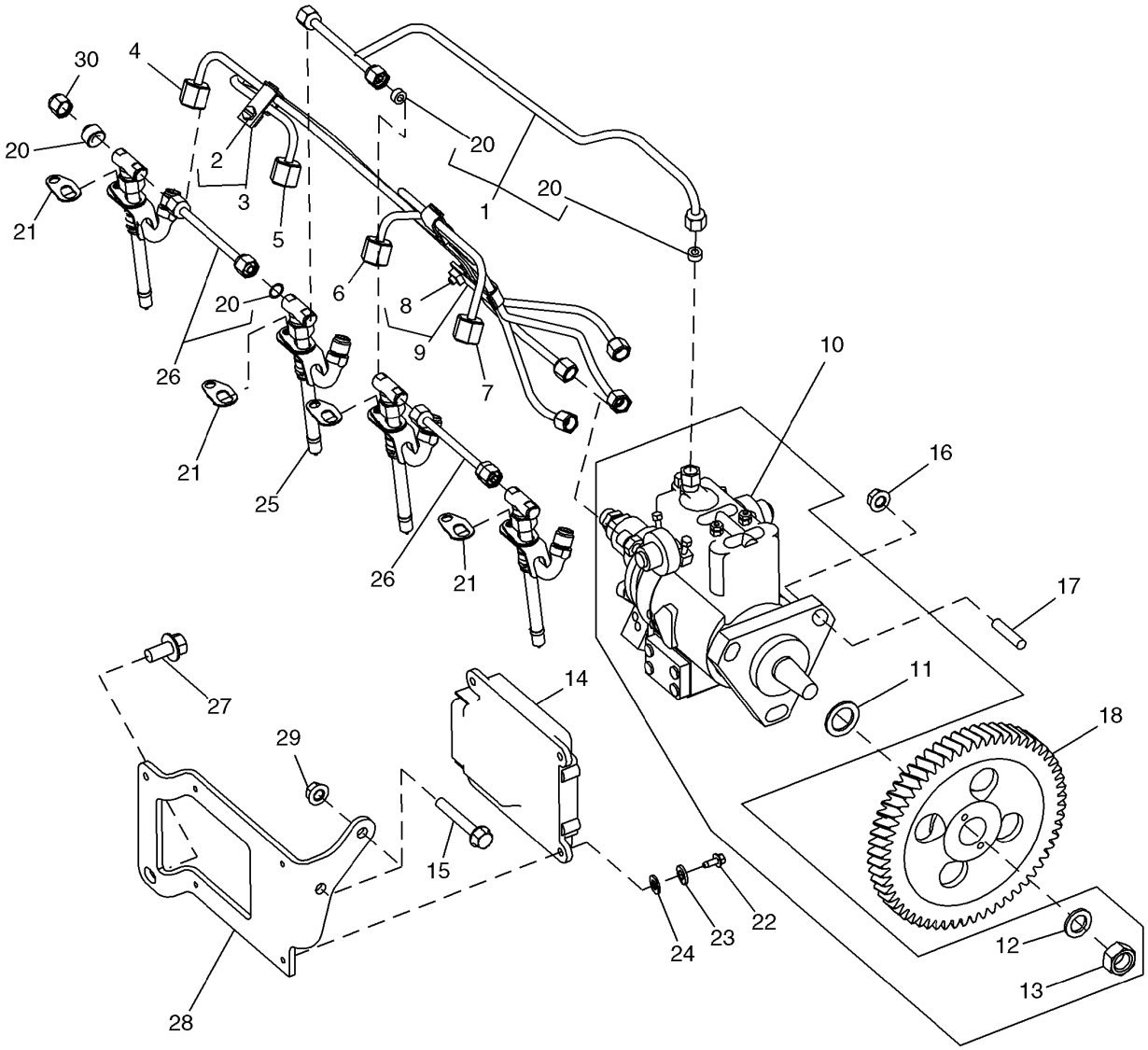

JOHN DEERE
RGP10110

FUEL INJECTION PUMP,FUEL INJECTION LINES AND ENGINE CONTROLLER
PE4045TT092

KEY	PART NO.	PART NAME	QTY	ENGINE SERIAL NO.	REMARKS
1	RE507598	FUEL LINE	1		
2	19M7923	CAP SCREW	2		M6 X 12
3	RE19797	CLAMP	2		
4	RE507646	FUEL LINE	1		NO.1
5	RE507647	FUEL LINE	1		NO.2
6	RE507648	FUEL LINE	1		NO.3
7	RE507649	FUEL LINE	1		NO.4
8	19M7923	CAP SCREW	1		M6 X 12
9	RE19799	CLAMP	1		
10	RE518087	FUEL INJECTION PUMP	1		(12V)
	RE521822	KIT	1		
	RE521823	KIT	1		
	RE521824	KIT	1		
	RE521825	KIT	1		
	RE522109	KIT	1		
11	R502076	BACK-UP RING	1		
12	R132874	WASHER	1		
13	R91360	NUT	1		M14
14	RE518176	ENGINE CONTROLLER	1		(WHEN ENGINE CONTROLLER IS BEING REPLACED YOU MUST PROVIDE THE ENGINE SERIAL NUMBER)
15	19M7979	SCREW	2		M8 X 55
16	14M7298	FLANGE NUT	3		M8
17	R116386	STUD	3		
18	R505472	GEAR	1		
19	R123593	TUBE NUT	1		
20	R51936	SEALING WASHER	6		
21	RE508716	CLAMP	4		
22	19M7640	CAP SCREW	4		M5 X 12
23	12H316	LOCK WASHER	4		5.486 MM
24	24M7027	WASHER	4		5.300 X 10 X 1 MM
25	RE507766	INJECTION NOZZLE	4		
	SE500830	NOZZLE	1		(REMANUFACTURED) (PACKAGE OF FOUR)
26	RE68748	TUBE	2		
27	19M7784	SCREW	2		M10 X 20
28	R503520	BRACKET	1		
29	14M7298	FLANGE NUT	2		M8
30	AR85519	PLUG	2		

MEMORANDA

AIR INTAKE SYSTEM
PE4045TT092

RGP10088 -UN-28AUG03

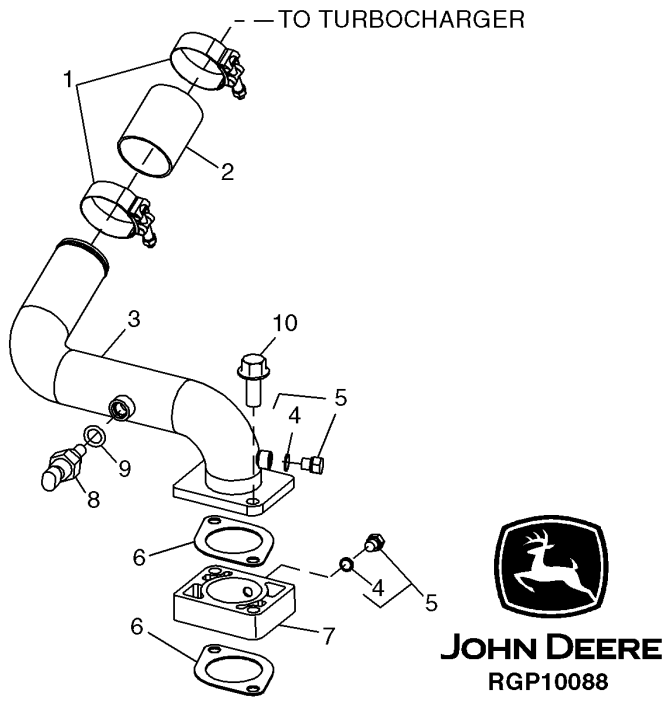

KEY	PART NO.	PART NAME	QTY	ENGINE SERIAL NO.	REMARKS
1	R110531	CLAMP	2		
2	R500596	HOSE	1		
3	RE506949	STRUCTURAL TUBING	1		
4	51M7039	O-RING	2		8.100 X 1.600 MM
5	RE60071	FITTING	2		
6	R81275	GASKET	2		
7	R501472	SPACER	1		(AIR INLET) (ALSO ORDER (2) R81275)
8	RE61812	SENSOR	1		(AIR INTAKE TEMPERATURE)
9	51M7041	O-RING	1		11.300 X 2.200 MM
10	19M8292	SCREW	2		M10 X 50

ENGINE BALANCER SHAFT
PE4045TT092

RGP5639 -UN-19OCT00

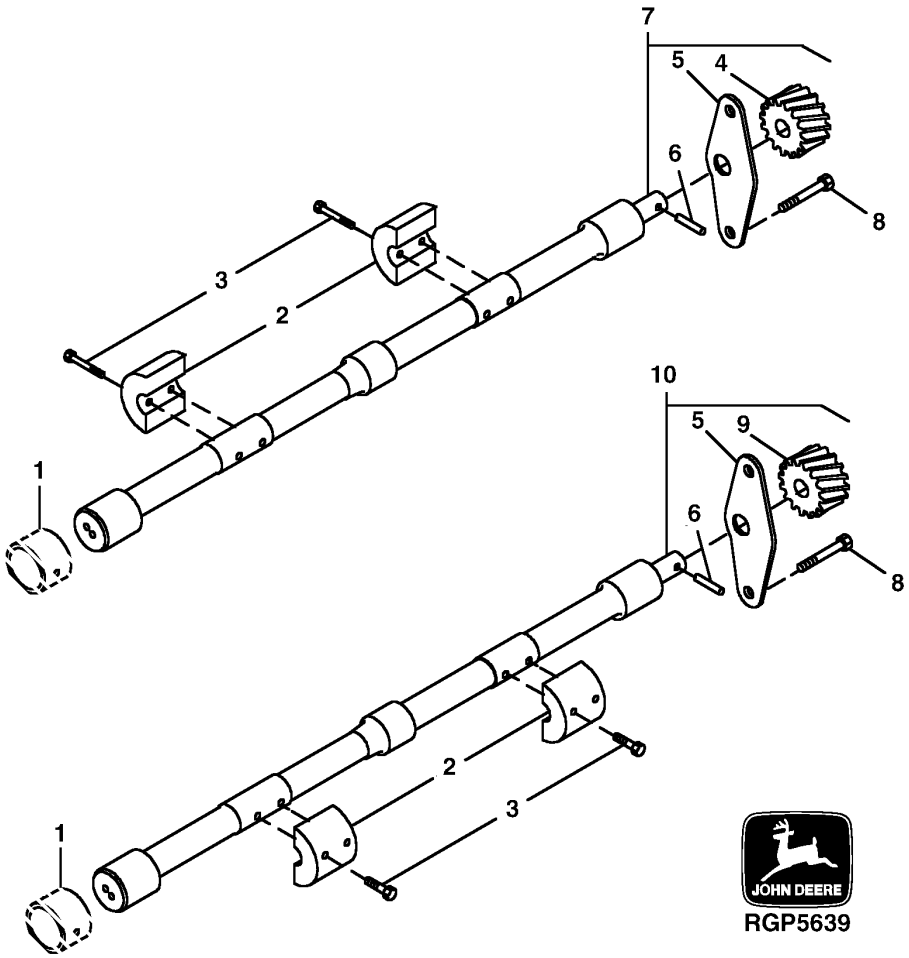

ENGINE BALANCER SHAFT
PE4045TT092

KEY	PART NO.	PART NAME	QTY	ENGINE SERIAL NO.	REMARKS
1	.....	BUSHING	6		
2	R500265	WEIGHT	4		
	R500650	WEIGHT	4		HEAVY DUTY
3	19M8882	SCREW	8		M8 X 40
4	.....	GEAR	1		LH
5	.....	PLATE	2		
6	R133303	SHAFT KEY	1		
7	RE500449	BALANCER SHAFT	1		LH, (MARKED R500266)
8	19M8998	SCREW	4		M8 X 12
9	.....	GEAR	1		RH
10	RE500448	BALANCER SHAFT	1		RH, (MARKED R500668)

TURBOCHARGER AND OIL LINES
PE4045TT092

RGP8404 -UN-29NOV01

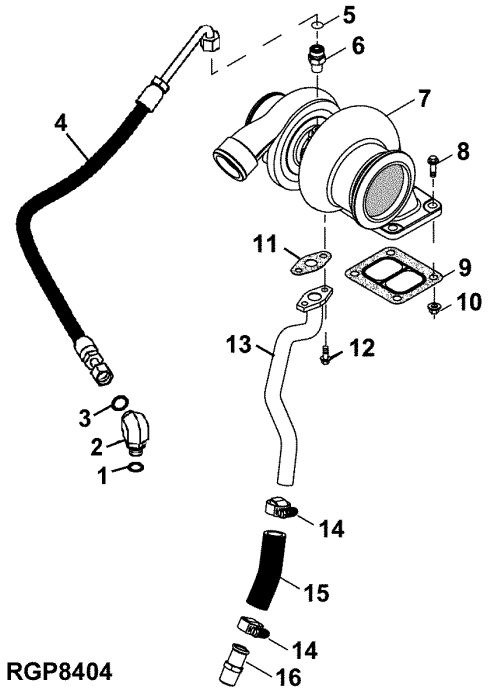

KEY	PART NO.	PART NAME	QTY	ENGINE SERIAL NO.	REMARKS
1	51M7042	O-RING	1		
2	38H5154	ELBOW FITTING	1		(INCLUDES 51M7042)
3	T77613	O-RING	1		
4	RE501260	OIL LINE	1		
5	R63548	O-RING	1		
6	M87733	ADAPTER	1		
7	RE509572	TURBOCHARGER	1		(A)
8	19M8162	SCREW	4		
9	R92097	GASKET	1		
10	14M7296	FLANGE NUT	4		
11	R503891	GASKET	1		
12	19M7862	SCREW	2		
13	RE509555	OIL LINE	1		
14	RE65978	CLAMP	2		
15	.....	HOSE	1		(MAKE FROM R120013)
16	RE54885	HOSE FITTING	1		

(A) REMANUFACTURED

WATER PUMP INLET AND PULLEY
PE4045TT092

TP49372 -UN-18JAN96

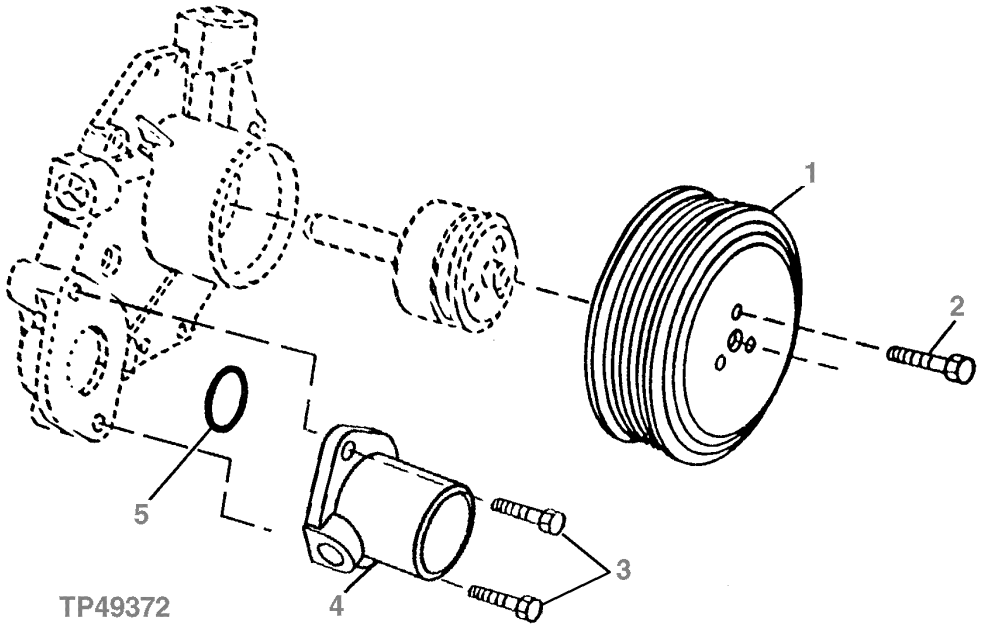

KEY	PART NO.	PART NAME	QTY	ENGINE SERIAL NO.	REMARKS
1	R121038	PULLEY	1		
2	19M7774	SCREW	3		M6 X 12
3	19M7867	SCREW	2		M8 X 25
4	R121634	WATER PUMP CONNECTION	1		
5	R89944	O-RING	1		

THERMOSTAT AND THERMOSTAT COVER
PE4045TT092

TP49332 -UN-13DEC95

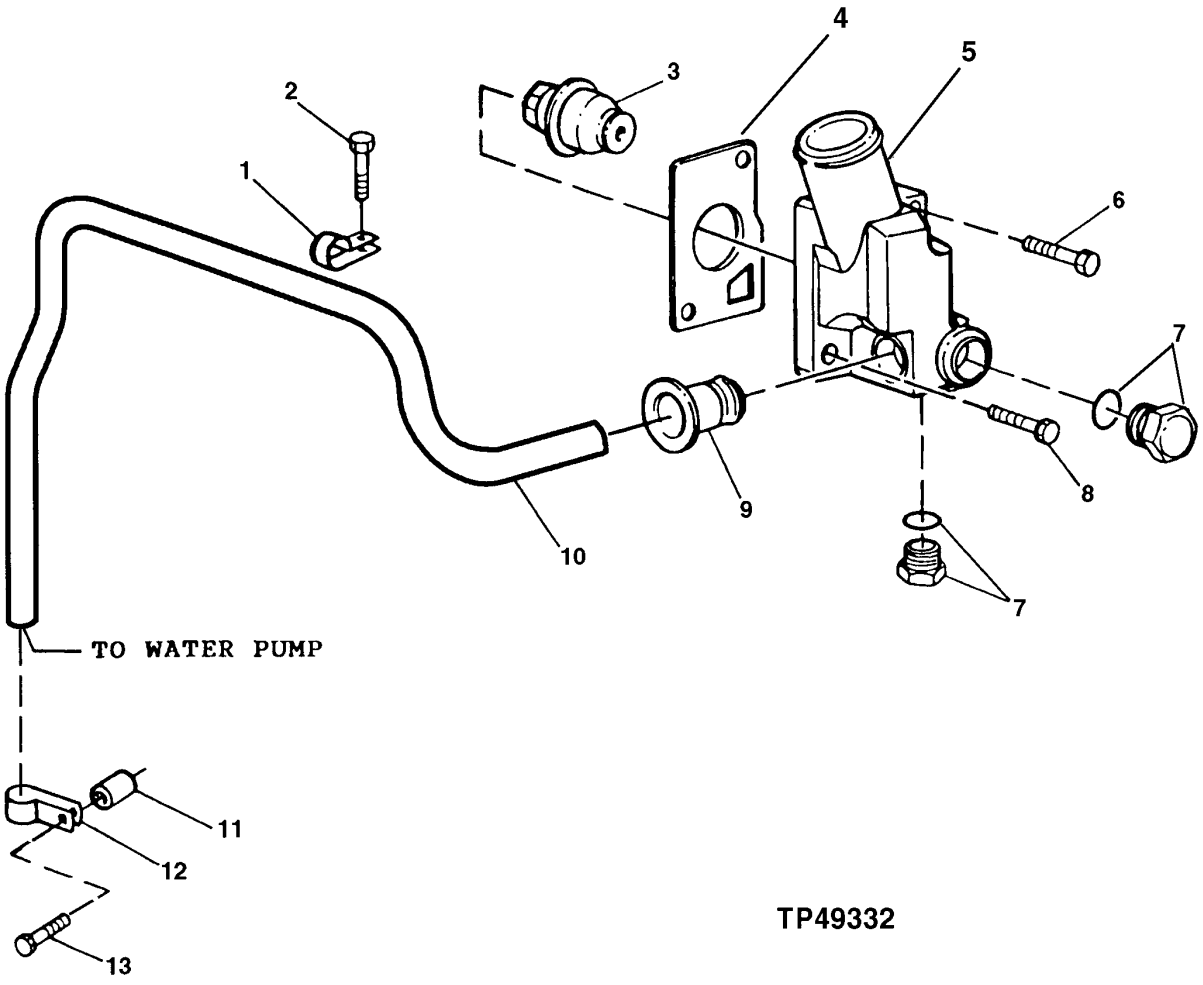

THERMOSTAT AND THERMOSTAT COVER
PE4045TT092

KEY	PART NO.	PART NAME	QTY	ENGINE SERIAL NO.	REMARKS
1	R123323	CLAMP	1		
2	19M7788	SCREW	1		M12 X 25
3	RE522076	THERMOSTAT	2		(SUB FOR RE506300, THIS APPLICATION) 82° C (180° F)
4	R502814	GASKET	1		
5	R131016	COVER	1		
6	19M8292	SCREW	1		M10 X 50
7	RE46684	PLUG	2		
8	19M7786	SCREW	1		M10 X 30
9	R123226	SEAL	1		
10	R501144	TUBE	1		
11	.....	SPACER	1		(ON TIMING COVER)
12	R123324	CLAMP	1		
13	.....	CAP SCREW	1		

ENGINE OIL COOLER
PE4045TT092

RGP9888 -UN-30JUL03

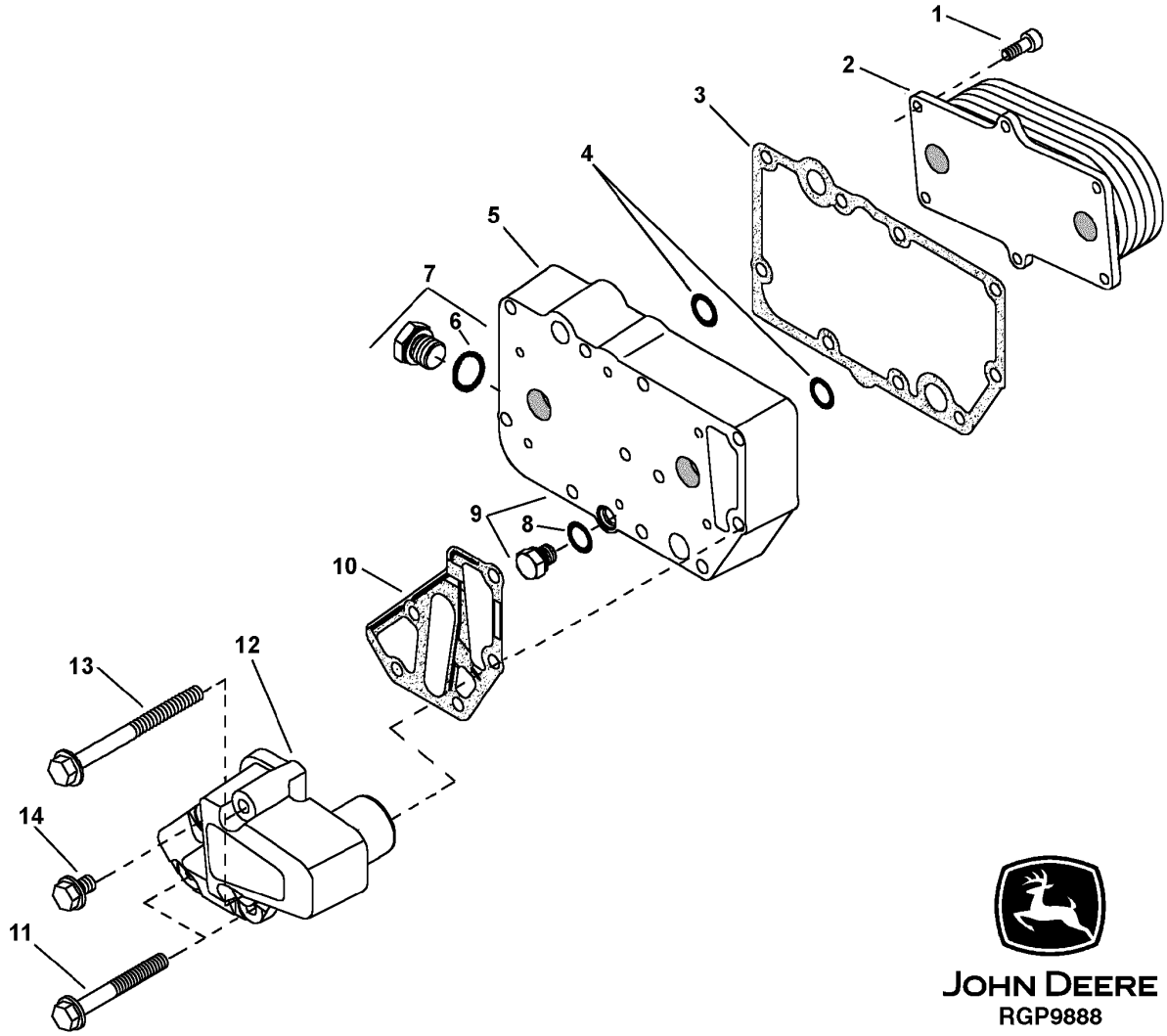

ENGINE OIL COOLER
PE4045TT092

KEY	PART NO.	PART NAME	QTY	ENGINE SERIAL NO.	REMARKS
1	RE67231	SCREW	6		M6 X 16
2	RE59296	OIL COOLER	1		
3	R123501	GASKET	1		
4	T122075	O-RING	2		
5	R123471	HOUSING	1		
6	51M7043	O-RING	1		15.300 X 2.200 MM
7	RE46685	PLUG	1		
8	51M7040	O-RING	1		9.300 X 2.200 MM
9	RE46686	PLUG	1		
10	R501428	GASKET	1		
11	19M7802	SCREW	2		M8 X 65
12	R502811	ADAPTER	1		
13	19M7970	SCREW	2		M8 X 100
14	RE67238	SCREW	1		M8 X 20

FUEL FILTER AND FUEL LINES
PE4045TT092

RGP10111 -UN-02OCT03

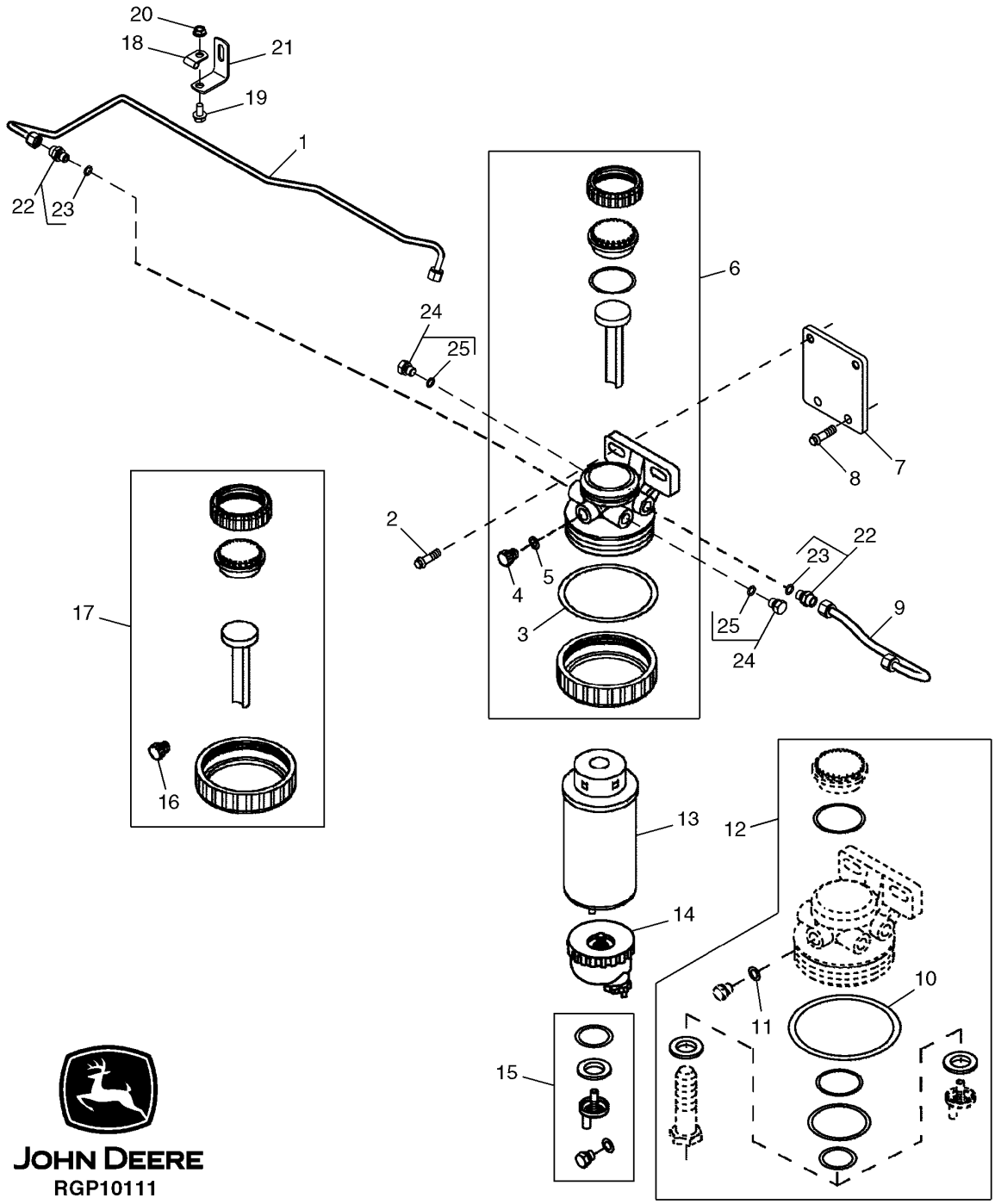

FUEL FILTER AND FUEL LINES
PE4045TT092

KEY	PART NO.	PART NAME	QTY	ENGINE SERIAL NO.	REMARKS
1	RE507597	FUEL LINE	1		
2	19M7784	SCREW	2		M10 X 20
3	RE516553	KIT	1		
4	R113563	DRAIN PLUG	1		
5	R113562	RING	1		
6	RE509794	SEAL KIT	1		
7	R516437	BRACKET	1		
8	19M7784	SCREW	2		M10 X 20
9	RE60037	FUEL LINE	1		
10	RE516553	KIT	1		
11	R113562	RING	1		
12	RE516512	KIT	1		
13	RE509031	FILTER ELEMENT	1		
14	RE51650	SEDIMENT BOWL	1		(A)
15	RE60854	KIT	1		
16	R113563	DRAIN PLUG	1		
17	RE51649	SEAL KIT	1		
18	T14050	CLAMP	1		
19	19M7865	SCREW	1		M8 X 16
20	14M7298	FLANGE NUT	1		M8
21	R116116	BRACKET	1		
22	RE60029	ADAPTER	2		
23	51M7040	O-RING	1		
24	RE46686	PLUG	2		
25	51M7040	O-RING	1		

(A) TRANSPARENT

FINAL FUEL FILTER, FUEL LINES AND SERVICE KITS
PE4045TT092

RGP10112 -UN-02OCT03

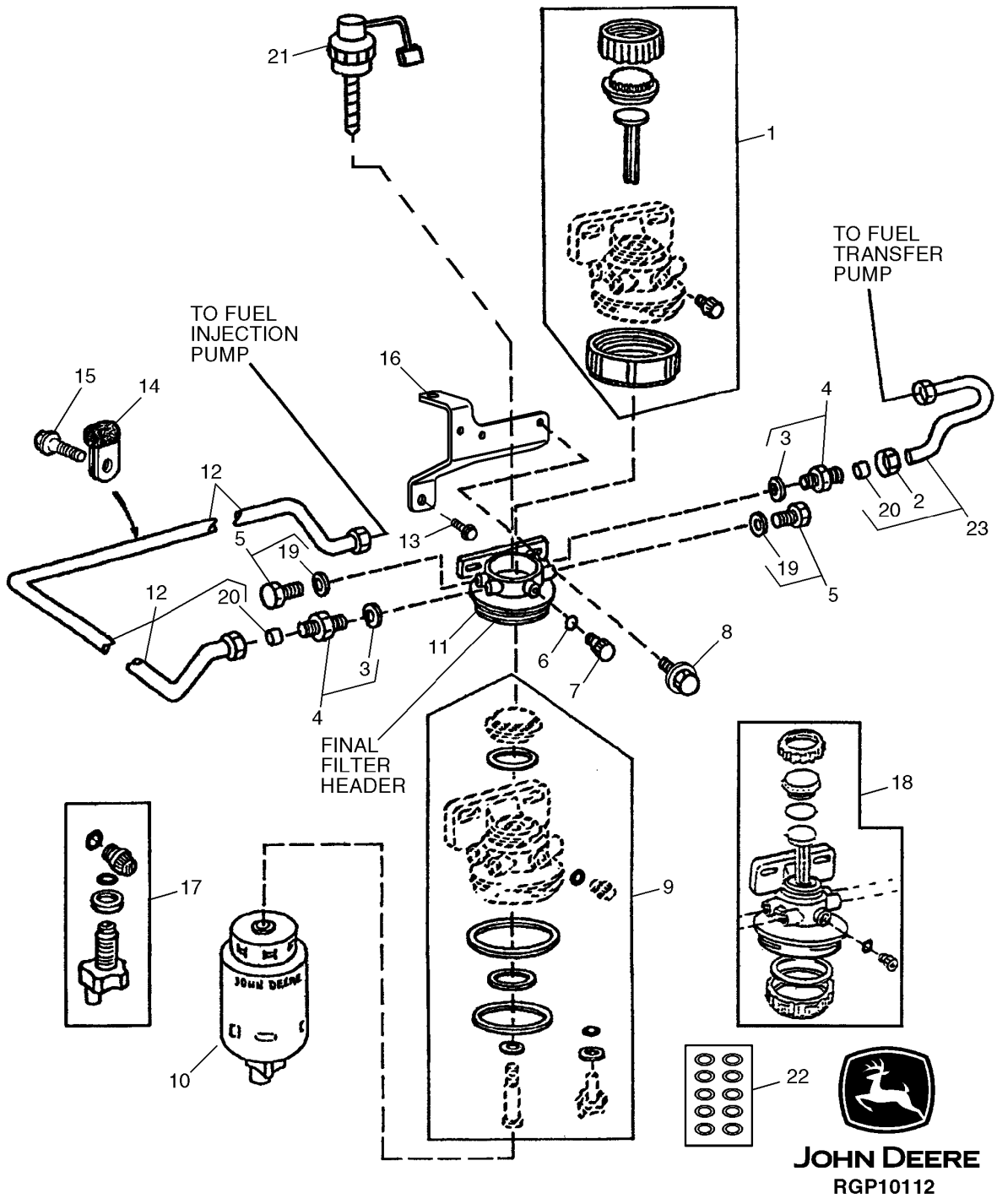

FINAL FUEL FILTER, FUEL LINES AND SERVICE KITS
PE4045TT092

KEY	PART NO.	PART NAME	QTY	ENGINE SERIAL NO.	REMARKS
1	RE51649	SEAL KIT	1		
2	R123594	TUBE NUT	2		
3	51M7040	O-RING	2		
4	RE60029	ADAPTER	2		
5	RE46686	PLUG	2		
6	R113565	SEAL	1		
7	R113563	DRAIN PLUG	1		
8	19M7784	SCREW	2		M10 X 20
9	RE516553	KIT	1		FUEL FILTER
10	RE517181	FUEL FILTER	1		INCLUDES DRAIN VALVE
	RE51650	SEDIMENT BOWL	1		
11	.....	FILTER HEAD	1		(ORDER RE508847)
12	RE518656	LINE	1		
13	19M7835	SCREW	1		M10 X 35
14	T30367	CLAMP	1		
15	19M7788	SCREW	1		M12 X 25
16	R516671	BRACKET	1		
17	RE60854	KIT	1		DRAIN VALVE
18	RE508847	FILTER HEAD	1		
19	51M7040	O-RING	2		
20	R74012	SEALING WASHER	4		
21	RE51648	KIT	1		FUEL FILTER HEATER (12-VOLT)
22	RE516513	KIT	1		(WITH HAND PRIMER) (CONTAINS 10 O-RINGS)
	RE516512	KIT	1		(WITHOUT HAND PRIMER) (CONTAINS 10 O-RINGS)
23	RE60037	FUEL LINE	1		

FUEL TRANSFER PUMP
PE4045TT092

RGP8271 -UN-05NOV01

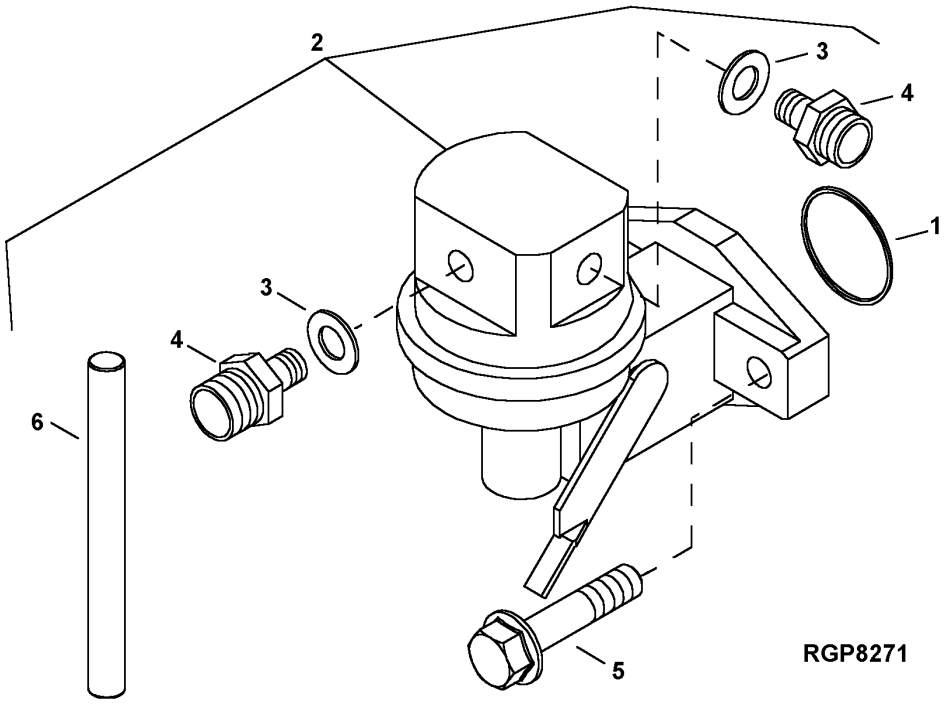

KEY	PART NO.	PART NAME	QTY	ENGINE SERIAL NO.	REMARKS
1	R123273	O-RING	1		
2	RE66153	FUEL PUMP	1		
3	R500271	O-RING	2		
4	R500270	FITTING	2		
5	RE504233	SCREW	2		
6	R133405	PUSH ROD	1		

MEMORANDA

STARTING MOTOR (DENSO)
PE4045TT092

T149124 -UN-14DEC01

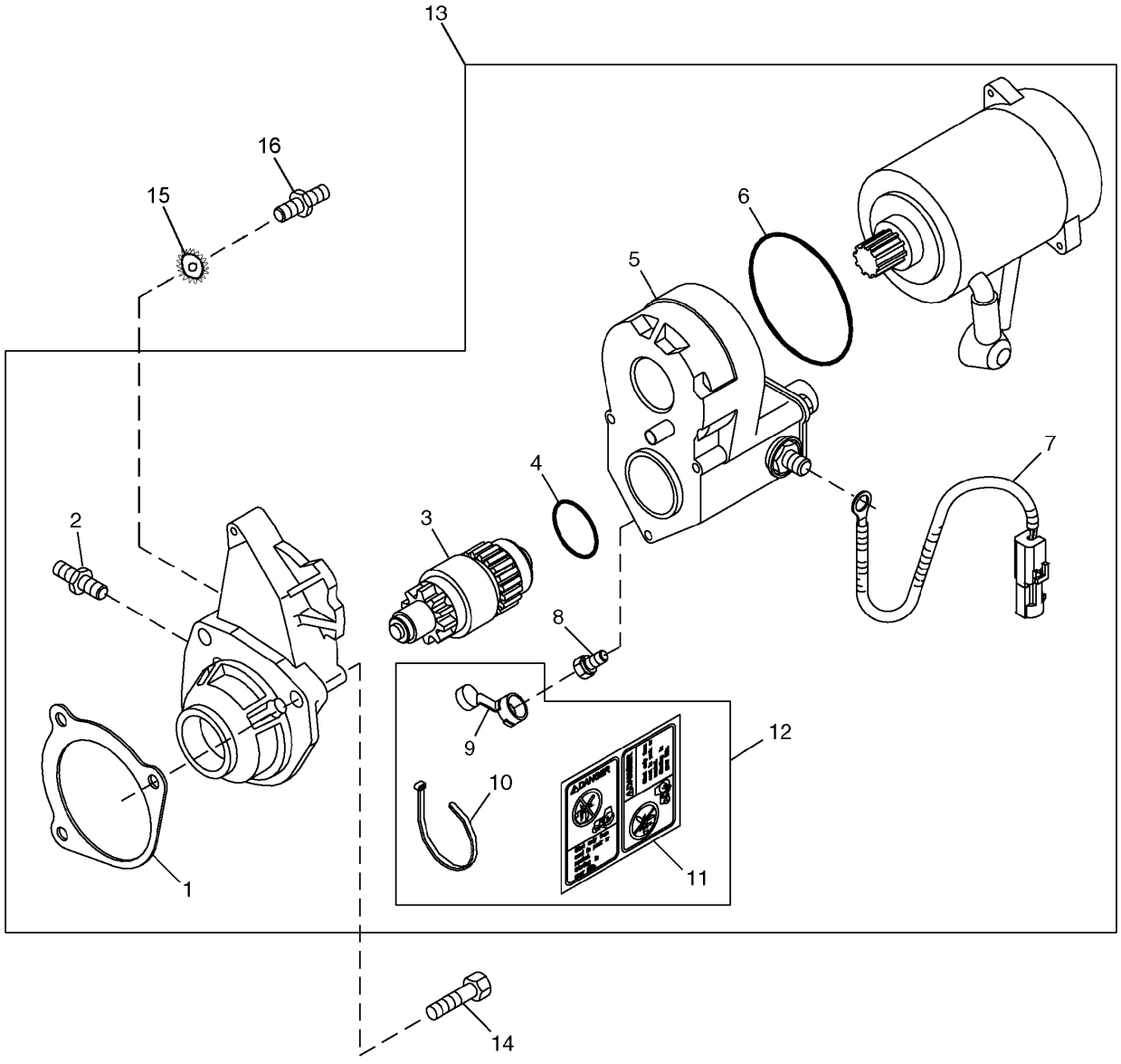

T149124

STARTING MOTOR (DENSO)
PE4045TT092

KEY	PART NO.	PART NAME	QTY	ENGINE SERIAL NO.	REMARKS
1	R53108	GASKET	1		
2	R136052	STUD	1		
3	RE70487	CLUTCH	1		
4	R135510	O-RING	1		
5	RE70486	SOLENOID	1		
6	R135509	SEAL	1		
7	RE505400	WIRING HARNESS	1		
8	RE71256	SCREW WITH WASHER	1		
9	.....	COVER	1		(ORDER RE70756)
10	R96703	TIE BAND	1		NOT USED IN THIS APPLICATION
11	T146102	LABEL	1		"DANGER: START ONLY FROM SEAT..."
12	RE70756	KIT	1		
13	RE506105	STARTER MOTOR KIT	1		DENSO 12V WET SEALED, (MARKED RE504244)
14	19M7786	SCREW	2		M10 X 30
15	12M7033	LOCK WASHER	1		10.500 MM
16	R503419	STUD	1		

STARTING MOTOR AND ATTACHING PARTS (DENSO)
PE4045TT092

T147951 -UN-08NOV01

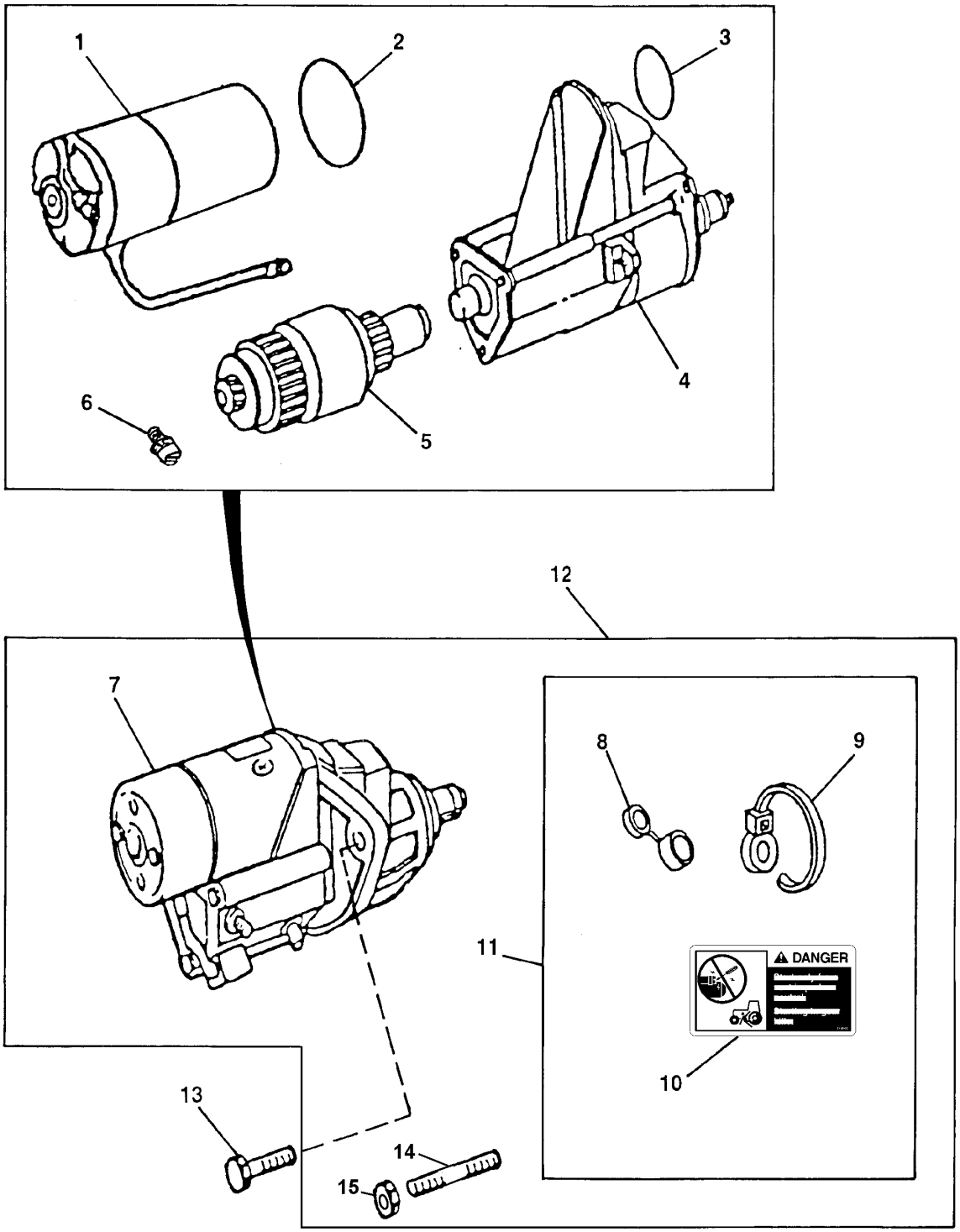

T147951

STARTING MOTOR AND ATTACHING PARTS (DENSO)
PE4045TT092

KEY	PART NO.	PART NAME	QTY	ENGINE SERIAL NO.	REMARKS
1	.....	MOTOR	1		
2	R135509	SEAL	1		
3	R135510	O-RING	1		
4	RE70486	SOLENOID	1		
5	RE70487	CLUTCH	1		
6	RE71256	SCREW WITH WASHER	1		M5 X .8
7	.....	STARTER MOTOR	1		(12-VOLT L.H. DENSO)
8	.....	COVER	1		
9	R96703	TIE BAND	1		
10	T146102	LABEL	1		(BYPASS START)
11	RE70756	KIT	1		(SOLENOID KIT)
12	RE501298	STARTER MOTOR KIT	1		12V L.H. DENSO, (MARKED RE501294)
13	19M7786	SCREW	3		M10 X 30
14	R503419	STUD	1		(LOWER RIGHT HAND)
15	14M7299	FLANGE NUT	1		M12, (LOWER RIGHT HAND)

ALTERNATOR MOUNTING BRACKETS
PE4045TT092

RGP10107 -UN-19SEP03

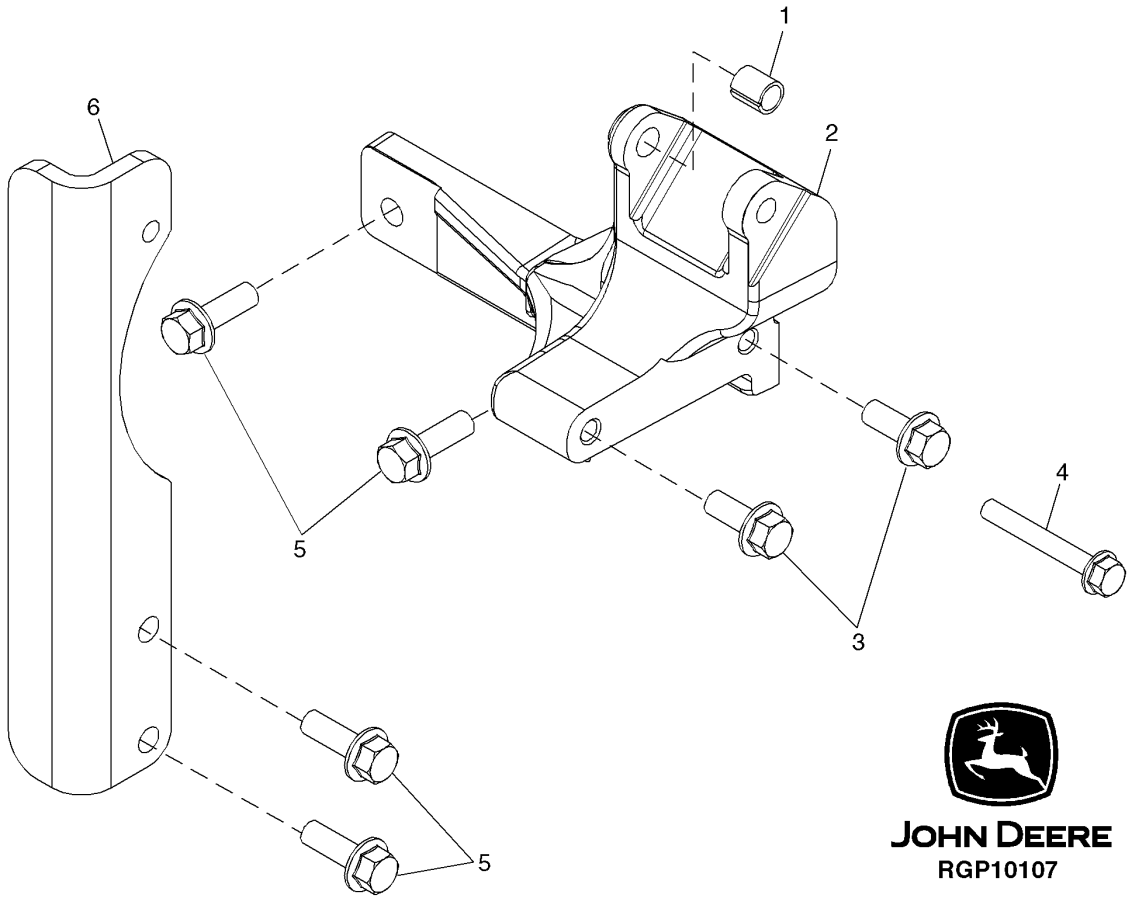

ALTERNATOR MOUNTING BRACKETS
PE4045TT092

KEY	PART NO.	PART NAME	QTY	ENGINE SERIAL NO.	REMARKS
1	R100377	BUSHING	1		
2	R132166	BRACKET	1		
3	19M7785	SCREW	2		M10 X 25
4	19M7801	SCREW	1		M8 X 60
5	19M7786	SCREW	4		M10 X 30
6	R500531	STRAP	1		

CRANKSHAFT PULLEY AND BELT
PE4045TT092

TP53312 -UN-03JAN97

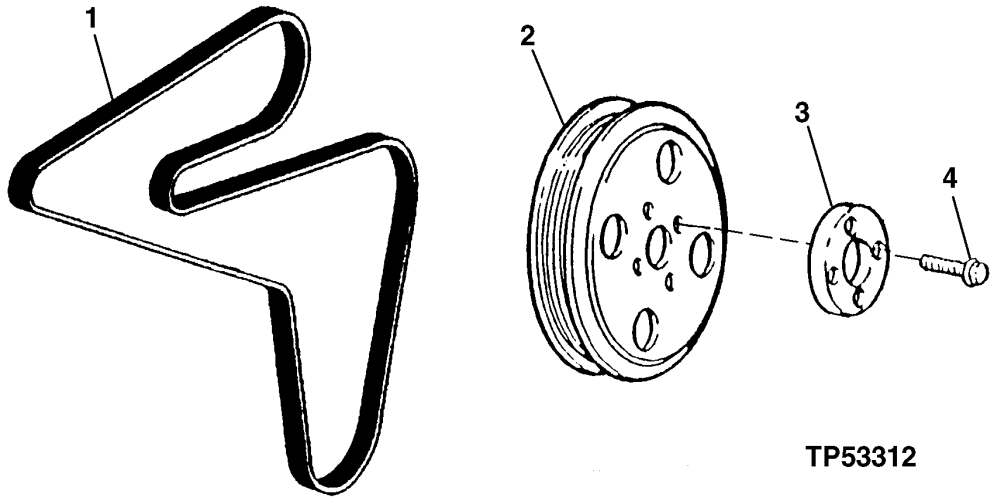

KEY	PART NO.	PART NAME	QTY	ENGINE SERIAL NO.	REMARKS
1	R135195	V-BELT	1		
2	R133295	SHEAVE	1		
3	R500649	FLANGE	1		
4	R121897	SCREW	4		

FAN DRIVE
PE4045TT092

RGP6123 -UN-08MAR00

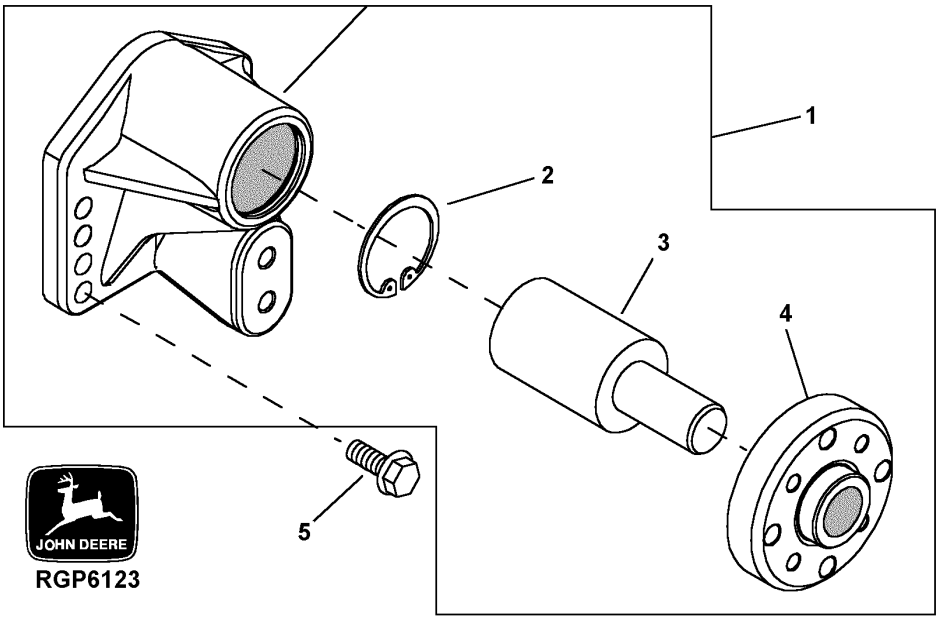

KEY	PART NO.	PART NAME	QTY	ENGINE SERIAL NO.	REMARKS
1	RE500539	BEARING HOUSING W/ BEARING	1		(MARKED R500304)
2	H80753	SNAP RING	1		
3	.....	BEARING	1		
4	.....	HUB	1		
5	19M7835	SCREW	4		M10 X 35

FAN BELT TENSIONER
PE4045TT092

RGP10109 -UN-22SEP03

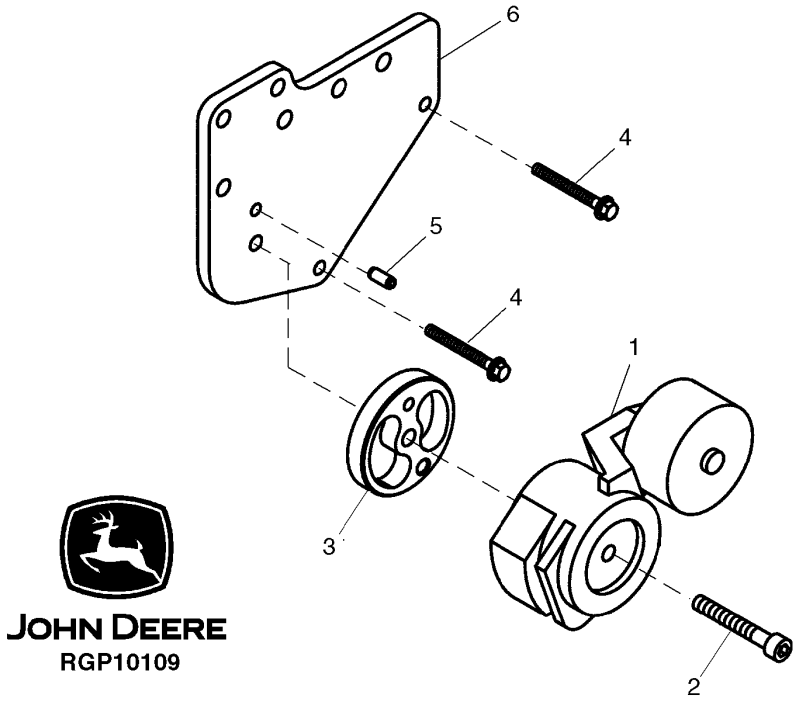

FAN BELT TENSIONER
PE4045TT092

KEY	PART NO.	PART NAME	QTY	ENGINE SERIAL NO.	REMARKS
1	RE518097	TIGHTENER	1		
2	19M7811	SCREW	1		M10 X 90
3	R516623	SPACER	1		
4	19M7801	SCREW	2		
5	34M7061	SPRING PIN	1		8 X 20 MM
6	R133978	SUPPORT	1		

ENGINE FLYWHEEL
PE4045TT092

RGP7636 -UN-31MAY01

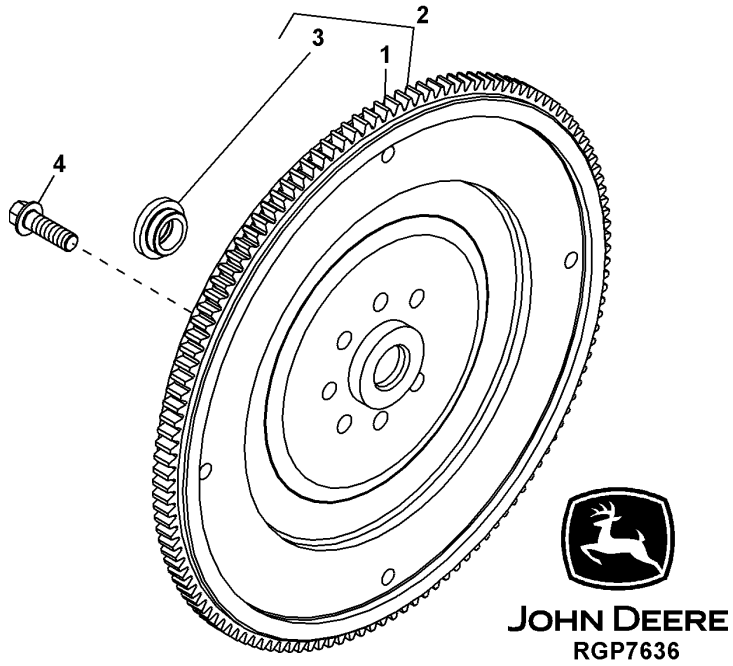

KEY	PART NO.	PART NAME	QTY	ENGINE SERIAL NO.	REMARKS
1	R28811	RING GEAR	1		
2	RE500137	FLYWHEEL	1		(MARKED R500096)
3	R123521	SLEEVE	1		
4	R135918	BOLT	4		

FLYWHEEL HOUSING
PE4045TT092

RGP10113 -UN-30SEP03

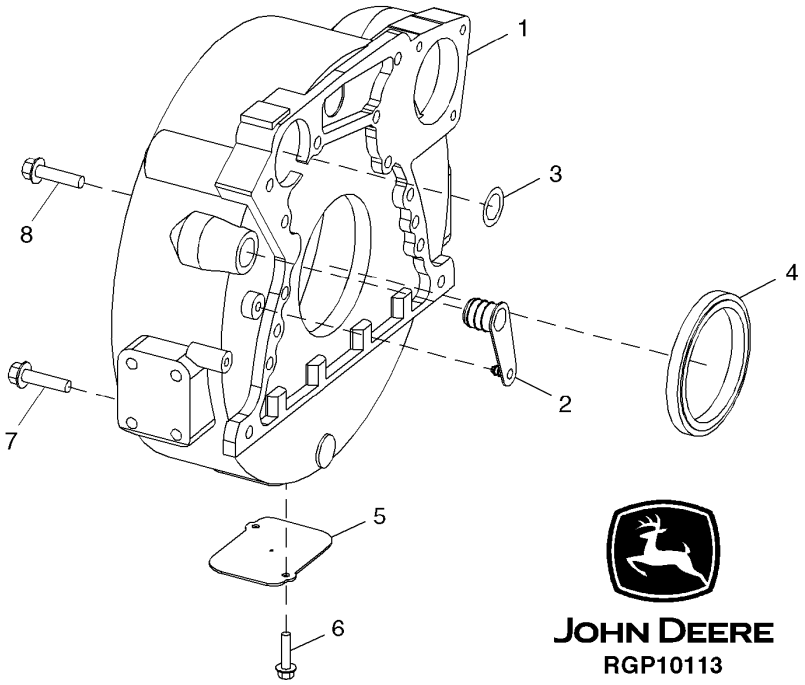

KEY	PART NO.	PART NAME	QTY	ENGINE SERIAL NO.	REMARKS
1	R503449	HOUSING	1		
2	R131769	PLUG	1		
3	R61467	O-RING	1		
4	RE44574	SEAL	1		
5	R121039	PLATE	1		
6	19M7923	CAP SCREW	2		M6 X 12
7	19M8306	SCREW	4		M12 X 50
8	R135918	BOLT	8		

ENGINE GASKET SET/ENGINE OVERHAUL KIT
PE4045TT092

RGP7893 -UN-12JUL01

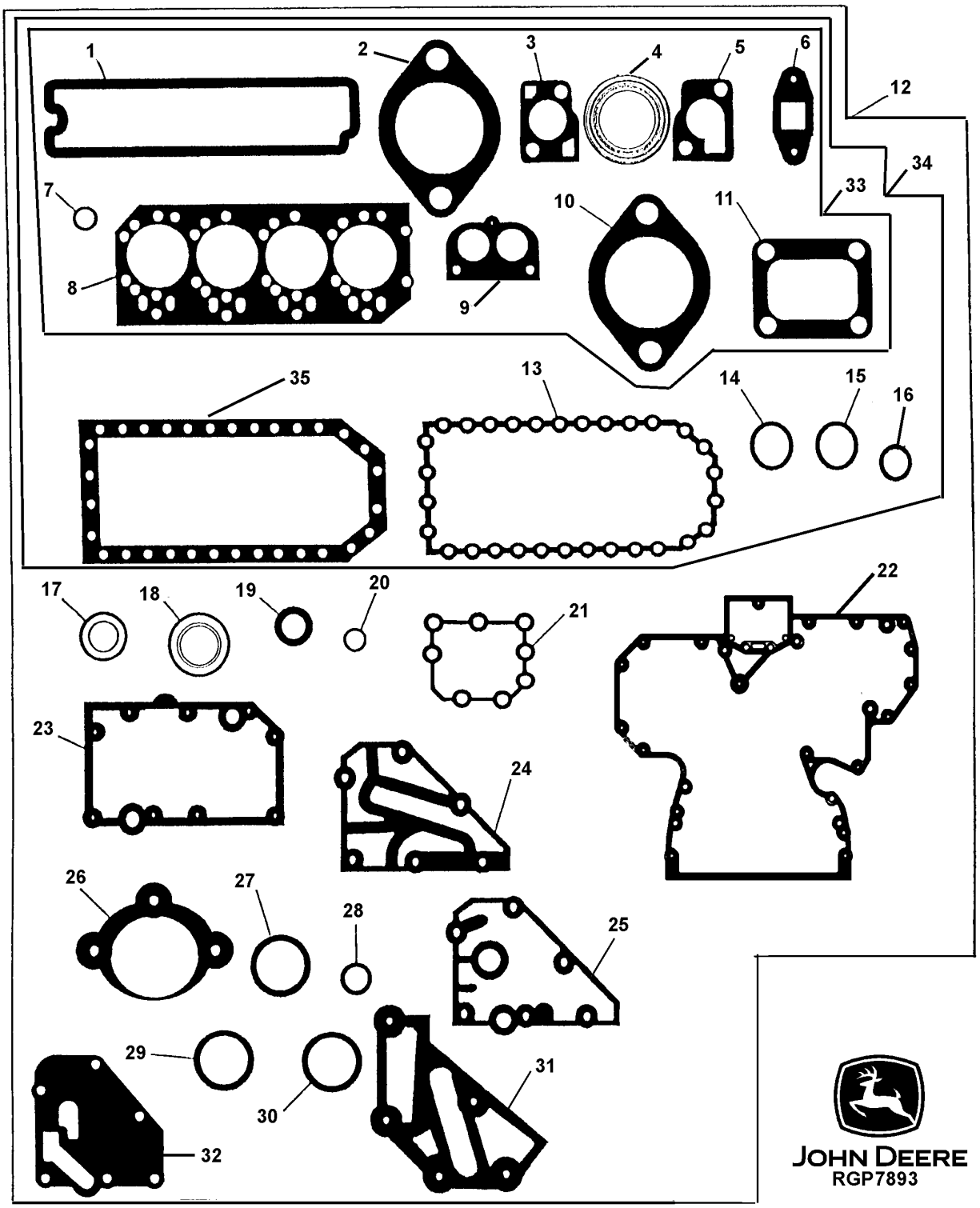

ENGINE GASKET SET/ENGINE OVERHAUL KIT
PE4045DT059

KEY	PART NO.	PART NAME	QTY	ENGINE SERIAL NO.	REMARKS
1	R123542	GASKET	1		ROCKER ARM COVER
	RE520539	GASKET KIT	1		HIGH TEMP ROCKER ARM COVER GASKET & SHIMS (NOT INCLUDED IN MAJOR KITS)
2	R90658	GASKET	4		EXHAUST MANIFOLD
3	R502814	GASKET	1		THERMOSTAT COVER
4	R123226	SEAL	2		WATER BY-PASS TUBE
5	R123345	GASKET	1		THERMOSTAT HOUSING
6	R123570	GASKET	1		TURBOCHARGER OIL OUTLET TUBE
	R503891	GASKET	1		TURBOCHARGER OIL OUTLET TUBE
7	R123575	O-RING	4		ROCKER ARM COVER HOLD DOWN STUD
8	R116515	ENGINE CYLINDER HEAD GASKET	1		
9	R501373	GASKET	1		THERMOSTAT COVER
10	R81275	GASKET	1		AIR INLET
	R133893	GASKET	1		AIR INLET
11	R92097	GASKET	1		TURBOCHARGER TO EXHAUST MANIFOLD
12	RE501455	GASKET KIT	1		(ALSO ORDER RE66084) ENGINE MAJOR OVERHAUL
	RE507923	ENGINE OVERHAUL KIT	1		(ENGINE REBUILD KIT) (NOT ALL ILLUSTRATED) (INCLUDES MAJOR OVERHAUL GASKET SET, CRANKSHAFT BEARINGS, CONNECTING ROD BEARINGS, AND PISTON WITH CYLINDER LINER KIT) (ORDER ONE KIT PER ENGINE)
	TY6304	SEALANT	1		
13	R123352	GASKET	1		ENGINE OIL PAN, (USE WITH CODE 1901, 1902, 1903 AND 1949 ENGINE OIL PAN)
14	R75892	O-RING	1		OIL PUMP TUBE CONNECTOR
15	R97185	O-RING	1		OIL PUMP OUTLET TUBE TO COVER
16	R61871	O-RING	1		OIL PUMP INTAKE TUBE
17	A4827R	WASHER	1		OIL PRESSURE REGULATOR PLUG
18	RE44574	SEAL	1		REAR OIL SEAL
19	RE516340	KIT	1		FRONT OIL SEAL, (SUB FOR RE59810)
20	R123273	O-RING	1		FUEL TRANSFER PUMP
21	R123417	GASKET	1		WATER PUMP
22	R136516	GASKET	1		TIMING GEAR COVER (USE WITH CODE 4401 TIMING GEAR COVER)
	R136515	GASKET	1		TIMING GEAR COVER (USE WITH CODE 4402 TIMING GEAR COVER)
23	R123501	GASKET	1		OIL COOLER HOUSING
24	R502864	GASKET	1		REMOTE OIL FILTER ADAPTER
25	R123525	GASKET	1		OIL FILTER HEADER
26	R53108	GASKET	1		STARTING MOTOR
27	R72328	O-RING	4		OIL FILTER TUBES
28	R89944	O-RING	1		WATER PUMP INLET
29	R504734	O-RING	2		CONNECTOR TUBE TO TIMING GEAR COVER
30	T122075	O-RING	2		OIL COOLER TO HOUSING
31	R501428	GASKET	1		COOLANT PASSAGE ADAPTER
32	R500374	GASKET	1		OIL FILTER HEADER
33	RE66082	GASKET KIT	1		CYLINDER HEAD REMOVAL
34	RE66084	GASKET KIT	1		IN CHASSIS OVERHAUL
35	R123353	GASKET	1		ENGINE OIL PAN (USE WITH CODE 1904 AND 1923 ENGINE OIL PAN)

MEMORANDA

ENGINE COOLANT HEATER

TP27956 -UN-01JAN94

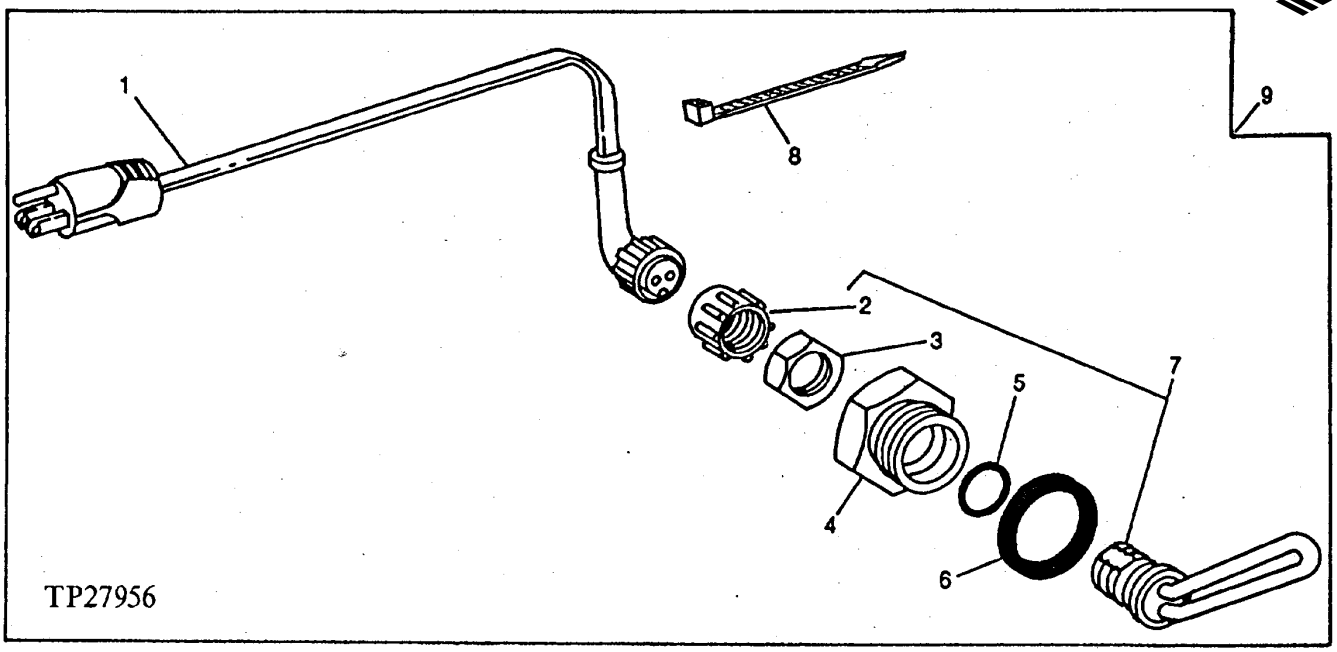

KEY	PART NO.	PART NAME	QTY	SERIAL NO.	REMARKS
1	AT73296	POWER CORD	1		
2	.....	CAP	1		
3	.....	NUT	1		
4	R54123	ADAPTER	1		
5	R47693	GASKET	1		
6	U13639	O-RING	1		
7	RE42139	HEATING ELEMENT	1		
8	R44302	TIE BAND	1		
	H77698	TIE BAND	3		
9	AT74940	COOLANT HEATER	1		

COLD WEATHER START AID

TP80411 -UN-26JAN00

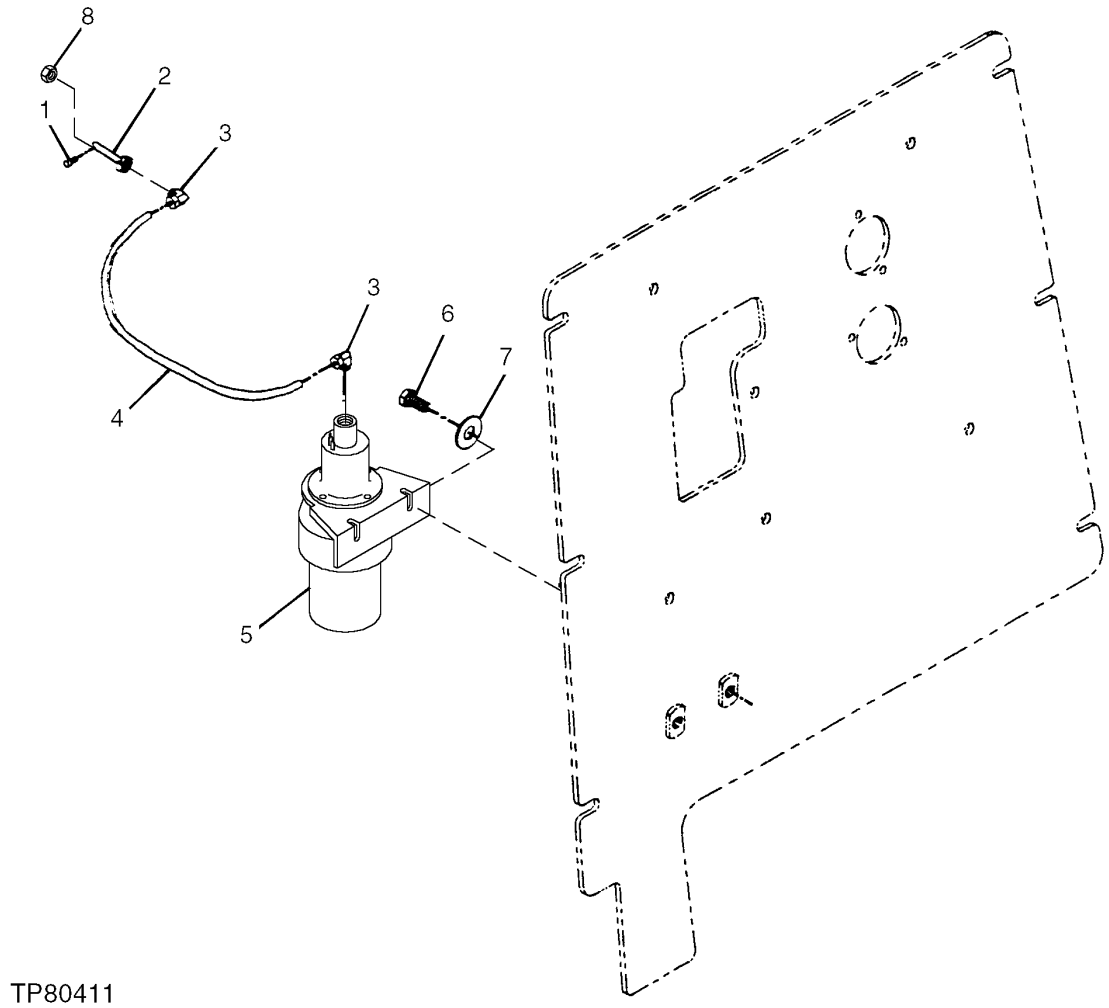

TP80411

COLD WEATHER START AID

KEY	PART NO.	PART NAME	QTY	SERIAL NO.	REMARKS
1	T155858	NOZZLE	1		(SUB FOR R28583)
2	R47160	NOZZLE HOLDER	1		
3	RE21790	ELBOW FITTING	2		
4	T78593	TUBE	1		(BULK-CUT TO 32 INCH LENGTH)
5	RE48310	STARTING AID SOLENOID	1		
6	19H1919	CAP SCREW	2		1/4" X 5/8"
7	24H1139	WASHER	2		11/16" X 1-1/4" X 0.105"
8	T27986	FITTING	1		

RADIATOR AND SHROUD (SERIAL NO. -882700)

TP52599 -UN-27JAN97

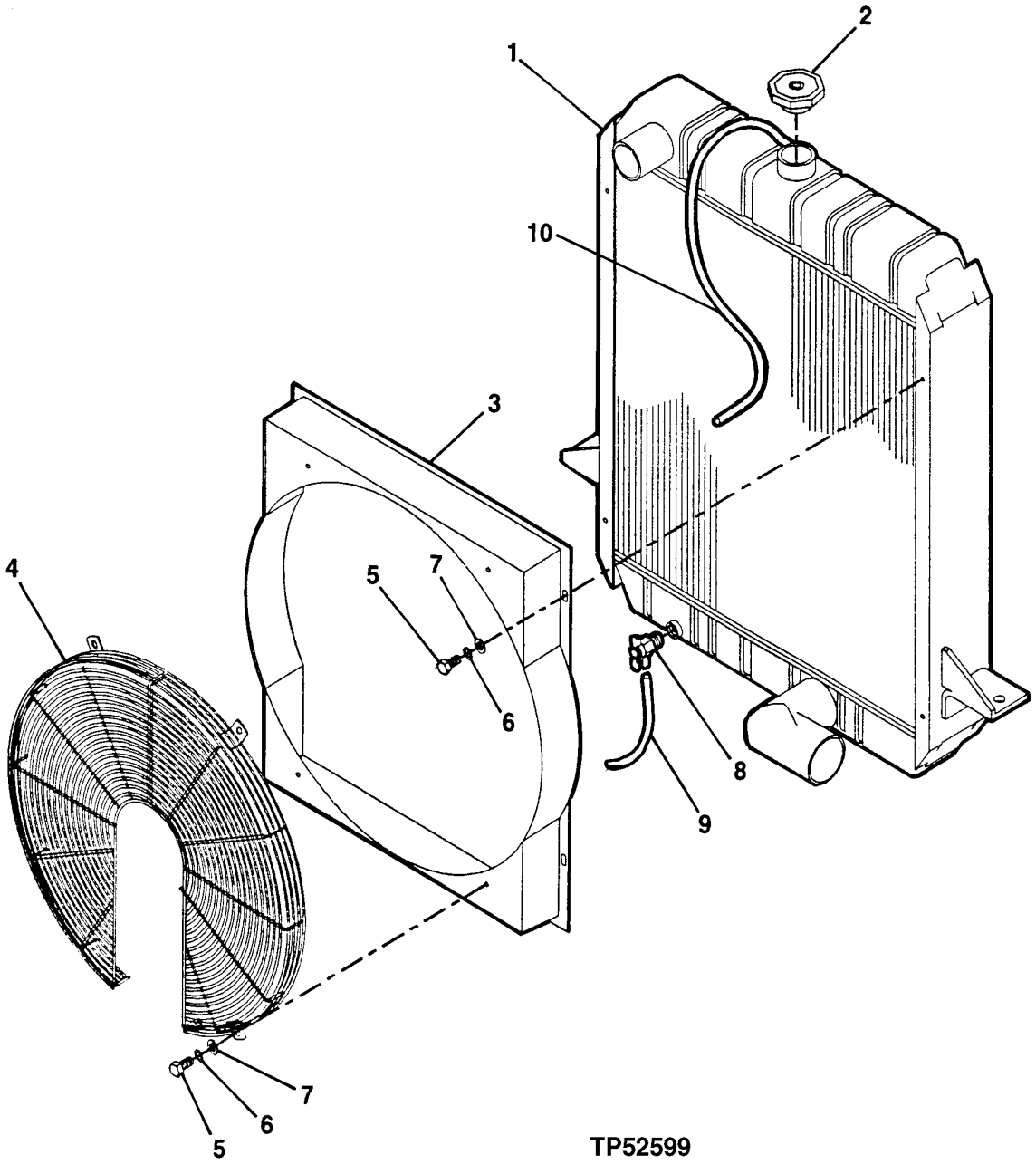

RADIATOR AND SHROUD (SERIAL NO. -882700)

KEY	PART NO.	PART NAME	QTY	SERIAL NO.	REMARKS
1	AT216674	RADIATOR	1		
2	AT173610	FILLER CAP	1		(15 PSI)
3	AT216673	SHROUD	1		
4	AT216675	GUARD	1		
5	19H1813	CAP SCREW	8		5/16" X 5/8"
6	24H1122	WASHER	8		3/8" X 7/8" X 0.083"
7	12M7056	LOCK WASHER	8		8 MM
8	AT216676	VALVE SEAT	1		
9	.....	HOSE	1		(CUT TO LENGTH)
10	.....	HOSE	1		(CUT TO LENGTH)

RADIATOR AND SHROUD (SERIAL NO. 882701-)

T195507 -UN-14OCT03

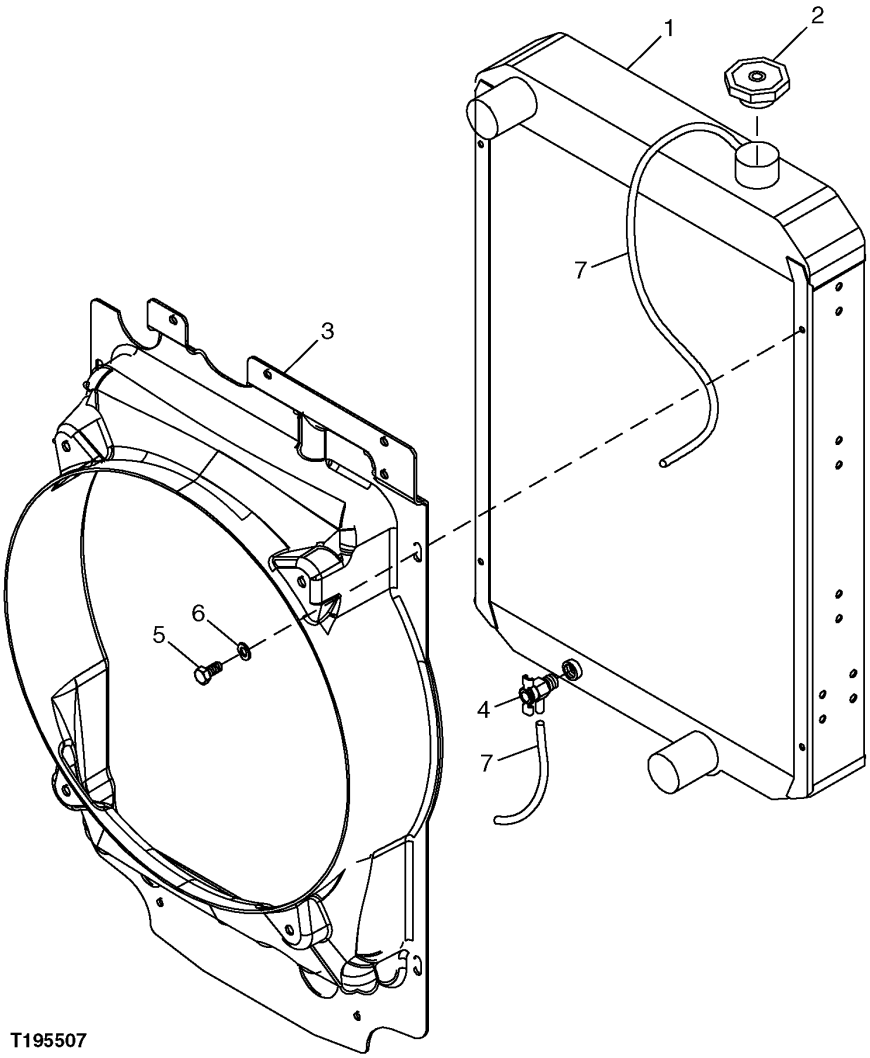

T195507

RADIATOR AND SHROUD (SERIAL NO. 882701-)

KEY	PART NO.	PART NAME	QTY	SERIAL NO.	REMARKS
1	AT184503	RADIATOR	1		
2	AT173610	FILLER CAP	1		(15 PSI)
3	AT186747	SHROUD	1		
4	AT13740	DRAIN VALVE	1		
5	T106596	SCREW	4		M8 X 16
6	24M7207	WASHER	4		0.331" X 0.945" X 0.079"
7	TY22566	BULK HOSE	AR		(CUT TO LENGTH)

RADIATOR HOSES AND MOUNTS (SERIAL NO. -882700)

T195571 -UN-17OCT03

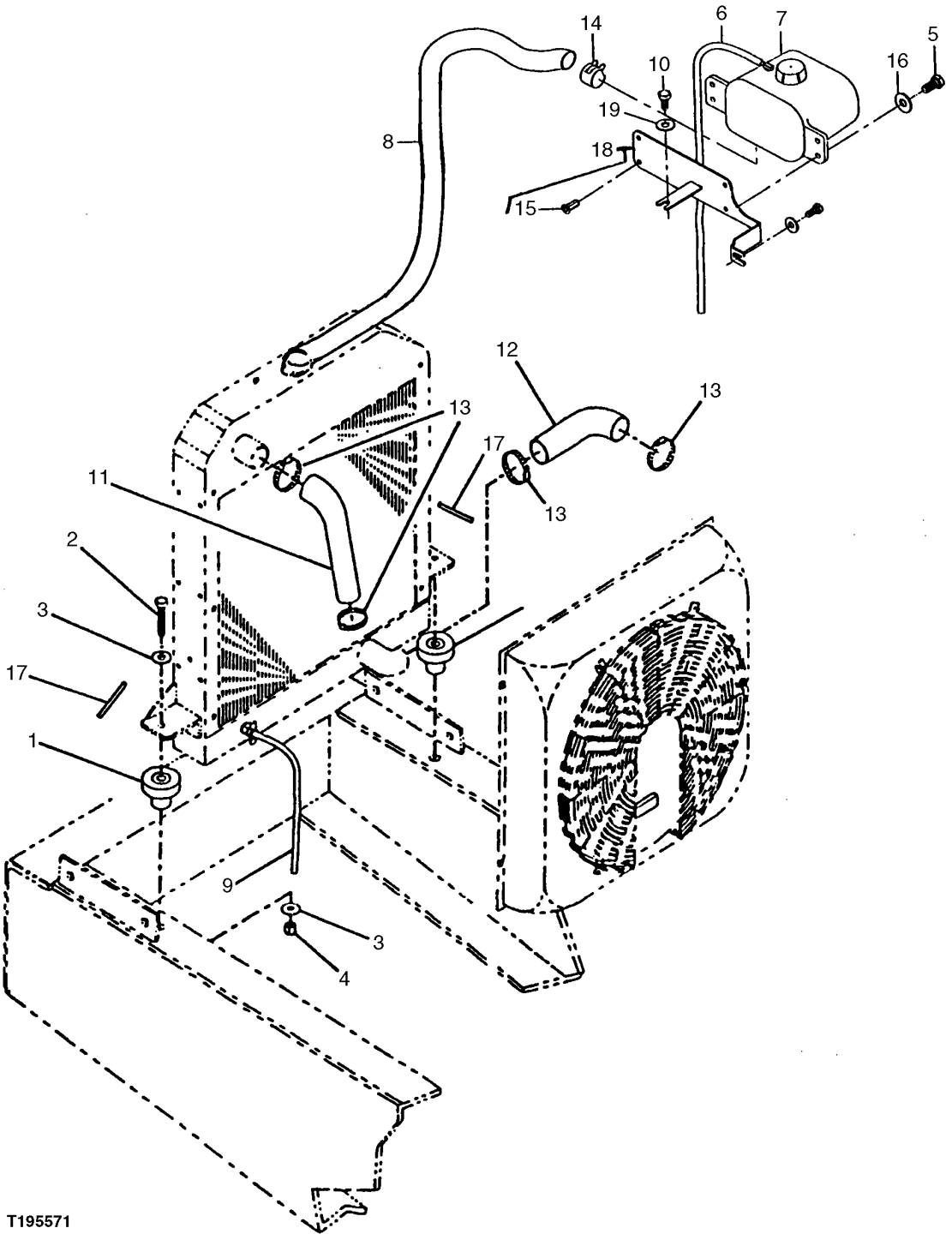

RADIATOR HOSES AND MOUNTS (SERIAL NO. -882700)

KEY	PART NO.	PART NAME	QTY	SERIAL NO.	REMARKS
1	U42208	ISOLATOR	2		(SUB FOR AT216511)
2	19H3742	SCREW	2		3/8" X 1-5/8"
3	R57696	WASHER	4		9.931 X 23.114 X 3.048 MM (25/64" X 0.910" X 0.120")
4	H99923	LOCK NUT	2		3/8"
5	19H1948	CAP SCREW	4		1/4" X 3/4"
6	.....	HOSE	1		(FURNISH TY22566 BULK MATERIAL CUT TO 30 INCH LENGTH) (T119816 NOT AVAILABLE FOR SERVICE)
7	AN205068	TANK	1		(INCLUDES AT186925) (SUB FOR AT216512) (SUB FOR AT174403, THIS APPLICATION)
	AT186925	FILLER CAP	1		(SUB FOR AT106413, THIS APPLICATION)
8	.....	HOSE	1		(FURNISH TY22566 BULK MATERIAL CUT TO 44 INCH LENGTH) (T119816 NOT AVAILABLE FOR SERVICE)
9	.....	HOSE	1		(FURNISH TY22566 BULK MATERIAL CUT TO 19 INCH LENGTH) (T119816 NOT AVAILABLE FOR SERVICE)
10	19M7938	CAP SCREW	1		M10 X 20
11	T164476	RADIATOR HOSE	1		(UPPER) (SUB FOR AT216447)
12	T164475	HOSE	1		(LOWER) (SUB FOR AT216448)
13	TY22470	CLAMP	4		(SUB FOR AR21840 OR AT214752)
14	TY22462	CLAMP	1	-833344	(SUB FOR T164019)
15	T164467	NUT	4		
16	24H1287	WASHER	4		9/32" X 5/8" X 0.065"
17	AT181862	SEAL	2		
18	AT185441	SUPPORT	1		(SUB FOR AT216508)
19	24M7239	WASHER	1		10.700 X 21 X 2.500 MM

RADIATOR HOSES AND MOUNTS (SERIAL NO. 882701-)

T195508 -UN-14OCT03

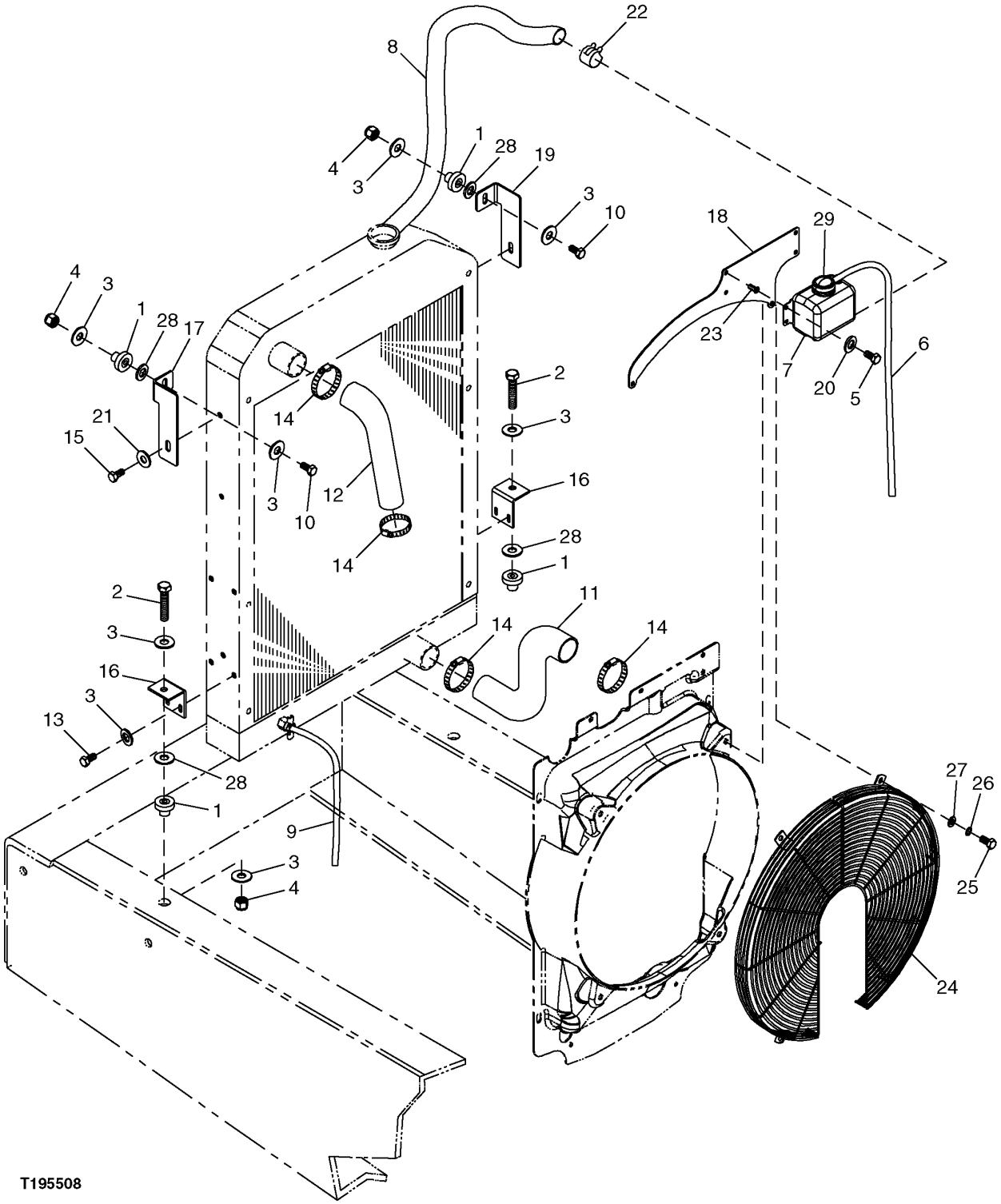

RADIATOR HOSES AND MOUNTS (SERIAL NO. 882701-)

KEY	PART NO.	PART NAME	QTY	SERIAL NO.	REMARKS
1	U42208	ISOLATOR	2		(SUB FOR AT216511)
2	19H3217	CAP SCREW	2		3/8" X 1-3/4"
3	24H1219	WASHER	8		7/16" X 1" X 0.083"
4	T11234	LOCK NUT	4		
5	19H1948	CAP SCREW	4		1/4" X 3/4"
6	TY22566	BULK HOSE	AR		(CUT TO 30 INCH LENGTH)
7	AN205068	TANK	1		(INCLUDES AT186925)
8	TY22566	BULK HOSE	1		(CUT TO 44 INCH LENGTH)
9	TY22566	BULK HOSE	1		(CUT TO 19 INCH LENGTH)
10	.....	CAP SCREW	1		
11	T155827	HOSE	1		(UPPER) (SUB FOR AT216447)
12	T155826	RADIATOR HOSE	1		(LOWER) (SUB FOR AT216448)
13	19M7784	SCREW	4		M10 X 20
14	TY22470	CLAMP	4		
15	.....	CAP SCREW	1		
16	CB01444042	BRACKET	2		
17	CB01444411	SUPPORT	1		LH
18	CB01446252	SHIELD	1		
19	CB01444410	SUPPORT	1		RH
20	24H1776	WASHER	4		5/16" X 47/64" X 0.065"
21	T158424	WASHER	2		
22	TY22462	CLAMP	1		
23	T164466	NUT	1		
24	CB01446314	LINK	1		
25	19M7867	SCREW	4		M8 X 25
26	24H1305	WASHER	4		13/32" X 13/16" X 0.065"
27	12M7056	LOCK WASHER	4		
28	24H1176	WASHER	4		13/32" X 1-1/4" X 0.100"
29	AT186925	FILLER CAP	1		

ENGINE FAN (7 BLADE) (SERIAL NO. -882700)

T196333 -UN-13NOV03

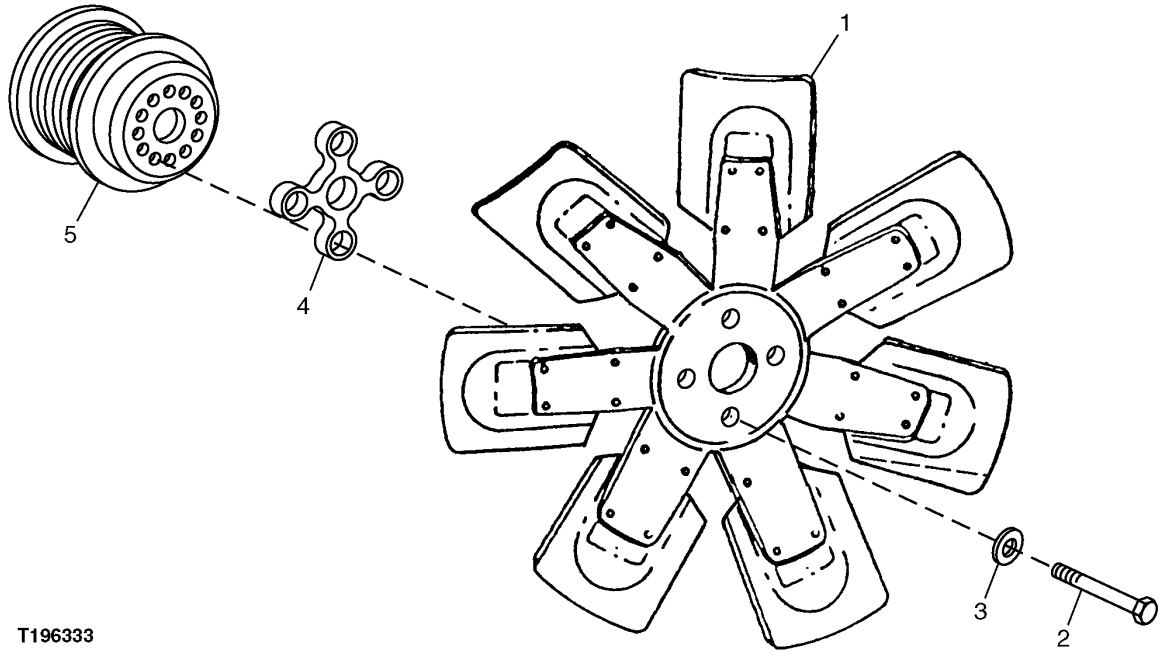

T196333

ENGINE FAN (7 BLADE) (SERIAL NO. -882700)

KEY	PART NO.	PART NAME	QTY	SERIAL NO.	REMARKS
1	AT37631	FAN	1		
2	19M7742	CAP SCREW	4		M10 X 65
3	R57696	WASHER	4		
4	R90563	SPACER	1		
5	R128660	PULLEY	1		

ENGINE FAN (6 BLADE) (SERIAL NO. 882701-)

T195510 -UN-13NOV03

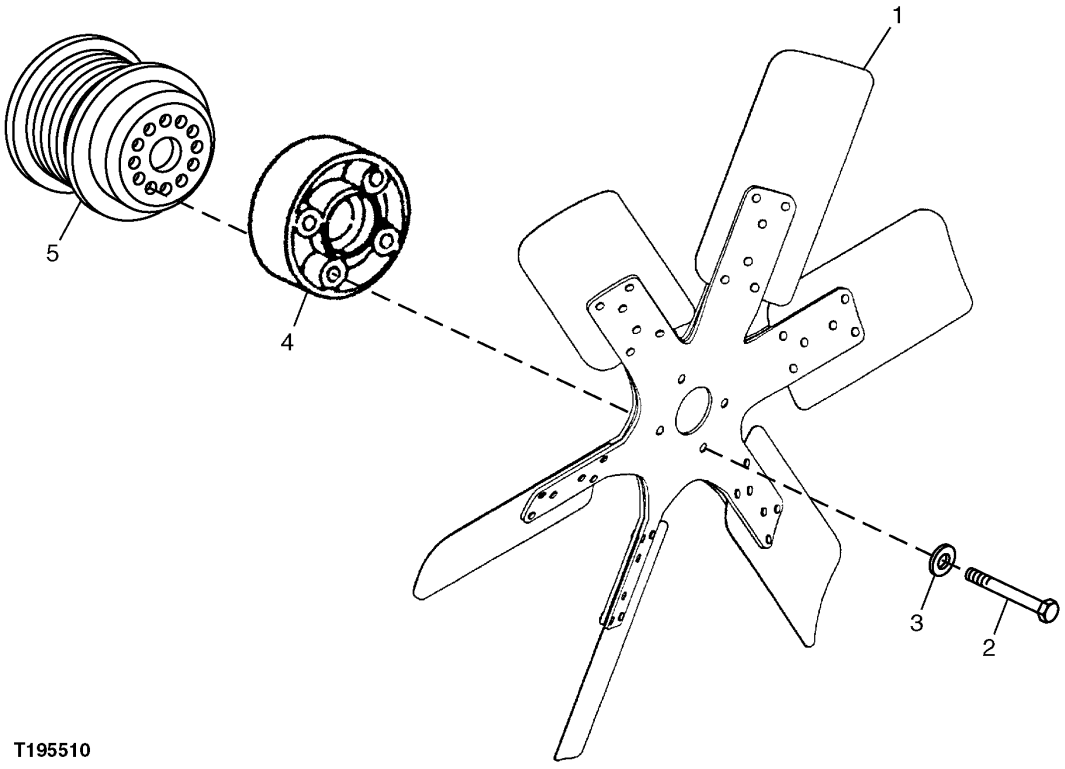

T195510

ENGINE FAN (6 BLADE) (SERIAL NO. 882701-)

KEY	PART NO.	PART NAME	QTY	SERIAL NO.	REMARKS
1	AT178394	FAN	1		
2	19M7810	SCREW	4		M10 X 80
3	R57696	WASHER	4		
4	T113232	HUB	1		
5	R128660	PULLEY	1		

ENGINE THROTTLE CONTROL
(SERIAL NO. -872333)

TP61761 -UN-21JAN99

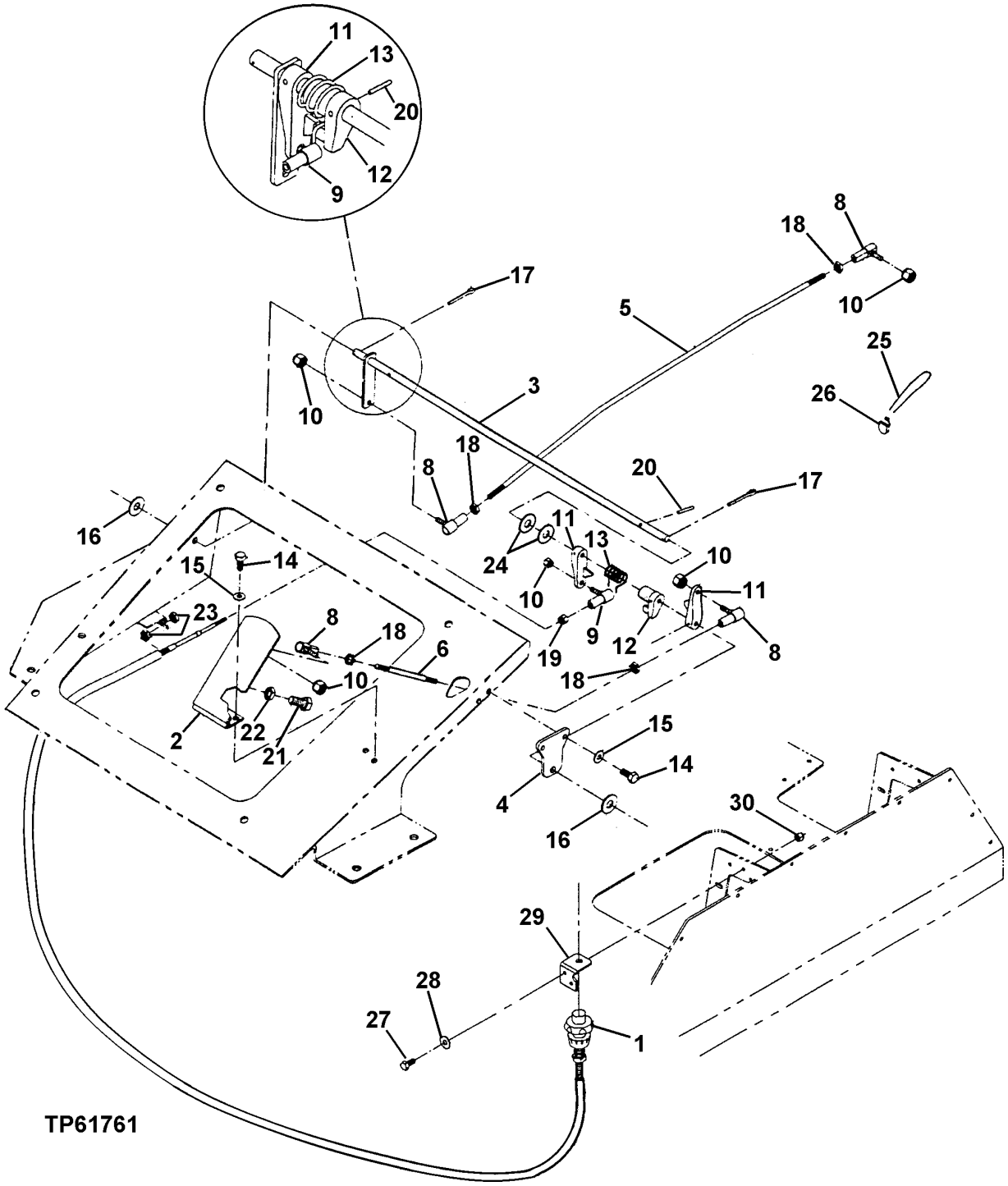

ENGINE THROTTLE CONTROL
(SERIAL NO. -872333)

KEY	PART NO.	PART NAME	QTY	SERIAL NO.	REMARKS
1	AT216168	CABLE	1	-872333	(INCLUDES NUTS)
2	AT216282	PEDAL	1	-835636	
	AT183315	PEDAL	1	835637-872333	
3	AT216302	ROD	1	-872333	
4	AT216119	BRACKET	1	-872333	
5	AT216657	ROD	1	-872333	
6	AT216120	ROD	1	-872333	
8	AU11709	BALL JOINT	4	-872333	
9	AT201310	BALL JOINT	1	-872333	
10	T10581	LOCK NUT	5	-872333	(SUB FOR T60313)
11	T22240	ARM	2	-872333	
12	T22150	ARM	1	-872333	
13	T77165	SPRING	1	-872333	
14	19H1227	CAP SCREW	4	-872333	1/4" X 1/2"
15	24H1287	WASHER	4	-872333	9/32" X 5/8" X 0.065"
16	24H1305	WASHER	2	-872333	13/32" X 13/16" X 0.065"
17	11M7059	COTTER PIN	4	-872333	3.200 X 20 MM
18	14H649	NUT	4	-872333	1/4"
19	14H631	NUT	1	-872333	0.190"
20	34H264	SPRING PIN	2	-872333	5/32" X 7/8"
21	19H3217	CAP SCREW	1	-872333	3/8" X 1-3/4"
22	14H732	NUT	1	-872333	3/8"
23	.....	NUT	2	-872333	
24	24H1652	WASHER	2	-872333	13/32" X 11/16" X 7/64"
25	.....	WIRE	1	-872333	
26	.....	SEAL	1	-872333	
27	19H2676	CAP SCREW	2	-872333	3/8" X 1"
28	R57696	WASHER	2	-872333	
29	T165100	BRACKET	1	-872333	
30	T11234	LOCK NUT	2	-872333	

ENGINE THROTTLE LINKAGE (SERIAL NO. 872334-882700)

TP80127 -UN-17SEP99

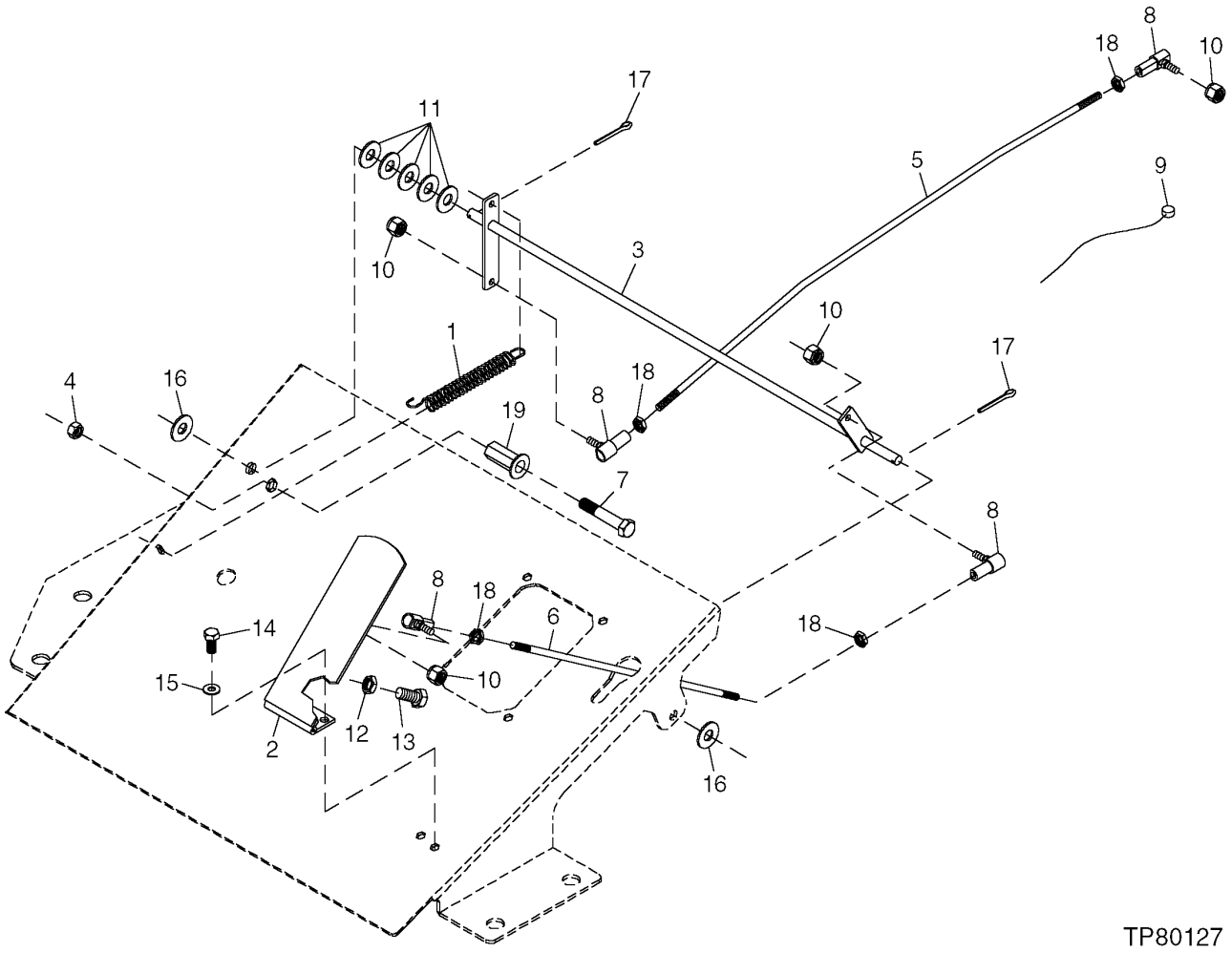

ENGINE THROTTLE LINKAGE (SERIAL NO. 872334-882700)

KEY	PART NO.	PART NAME	QTY	SERIAL NO.	REMARKS
1	M84831	EXTENSION SPRING	1		
2	AT183315	PEDAL	1		
3	AT187517	ROD	1		
4	N10215	LOCK NUT	1	872334-XXXXXX	3/8"
	M40333	LOCK NUT	1	XXXXXX-	1/4"
5	AT216657	ROD	1		
6	AT216120	ROD	1		
7	19H3065	CAP SCREW	1	872334-XXXXXX	3/8" X 2"
	19H3434	CAP SCREW	1	XXXXXX-	1/4" X 2"
8	AU11709	BALL JOINT	4		
9	.....	SEAL	1		
10	T10585	LEVER	4		
11	24H1652	WASHER	5		13/32" X 11/16" X 7/64"
12	14H732	NUT	1		3/8"
13	19H3217	CAP SCREW	1		3/8" X 1-3/4"
14	19H1914	CAP SCREW	2		1/4" X 1"
15	24H1776	WASHER	4		5/16" X 47/64" X 0.065"
16	24H1305	WASHER	2		13/32" X 13/16" X 0.065"
17	11M7059	COTTER PIN	2		0.126" X 0.787", (SUB FOR 11H211)
18	14H649	NUT	4		1/4"
19	T164467	NUT	1	872334-XXXXXX	
	T164466	NUT	1	XXXXXX-	

ENGINE THROTTLE LINKAGE (SERIAL NO. 882701-)

T197251 -UN-12JAN04

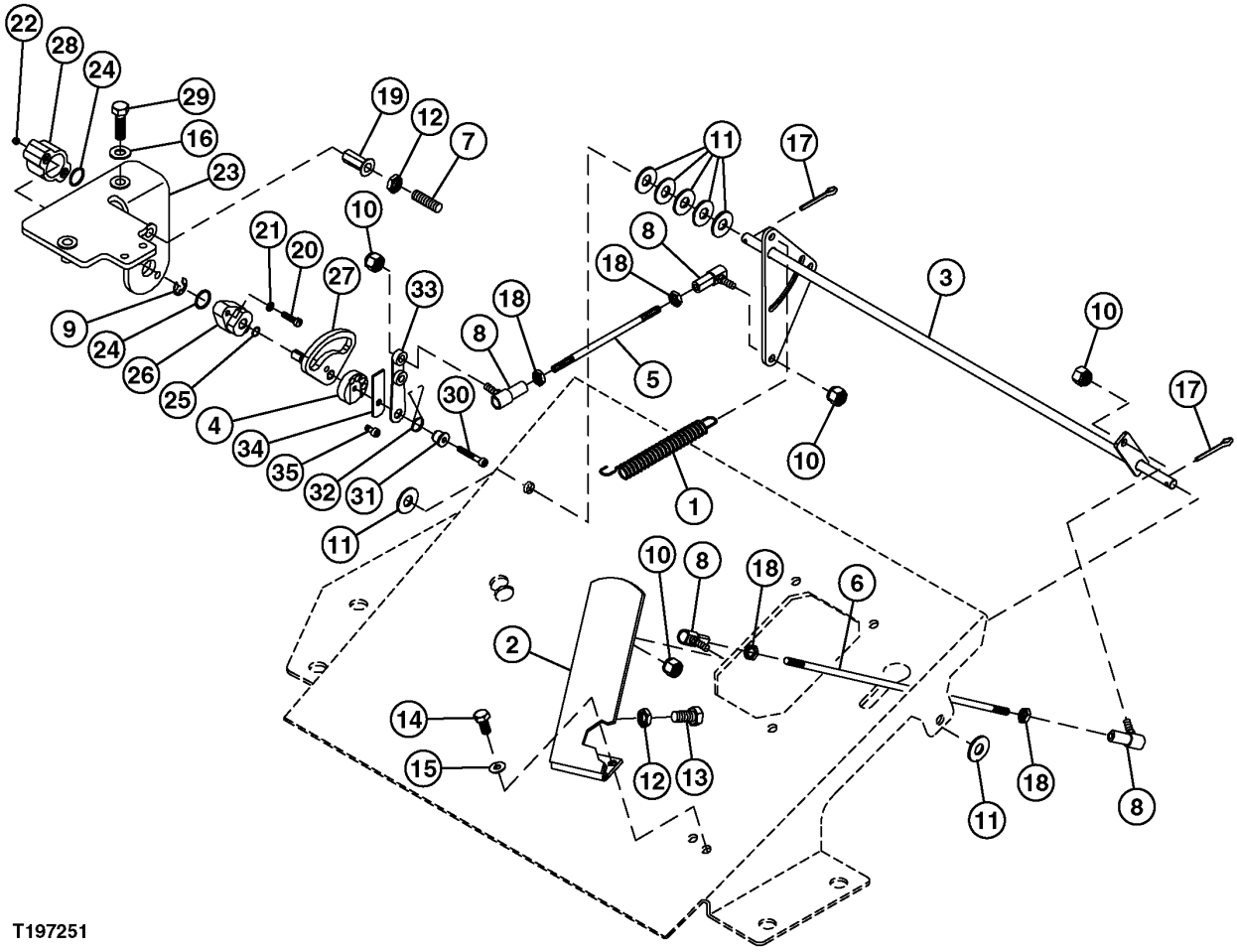

ENGINE THROTTLE LINKAGE (SERIAL NO. 882701-)

KEY	PART NO.	PART NAME	QTY	SERIAL NO.	REMARKS
1	M84831	EXTENSION SPRING	1		
2	AT183315	PEDAL	1		
3	CB11446888	ROD	1		
4	T19861	SPACER	1		
5	CB01446734	ROD	1		POTENTIOMETER
6	AT216120	ROD	2		LINKAGE
7	AT280517	SOCKET	1		
8	AU11709	BALL JOINT	4		
9	R72653	SNAP RING	1		
10	T10581	LOCK NUT	4		
11	24H1652	WASHER	7		13/32" X 11/16" X 7/64"
12	14H732	NUT	1		3/8"
13	19H3239	CAP SCREW	1		3/8" X 1-1/4"
14	19H1914	CAP SCREW	2		1/4" X 1"
15	24H1776	WASHER	2		5/16" X 47/64" X 0.065"
16	24H1305	WASHER	2		13/32" X 13/16" X 0.065"
17	11M7059	COTTER PIN	2		0.126" X 0.787"
18	14H649	NUT	4		1/4"
19	T164468	NUT	1		
20	21H1383	SCREW	2		0.190" X 2"
21	12M7060	WASHER	2		0.209"
22	14H631	NUT	2		0.190"
23	CB11442420	GUARD	1		
24	P48347	O-RING	2		
25	A4365R	O-RING	1		
26	R100686	SUPPORT	1		
27	CB11448657	SHAFT	1		
28	RE56165	POTENTIOMETER	1		
29	19H3239	CAP SCREW	2		3/8" X 1-1/4"
30	R70513	SCREW	1		
31	T17950	RETAINER	1		
32	T17949	SPRING	1		
33	T19858	LEVER	1		
34	T19860	STRAP	1		
35	CB01450691	SOCKET HEAD SCREW	1		

ENGINE THROTTLE CONTROL CABLE (SERIAL NO. 872334-882700)

TP80128 -UN-25AUG99

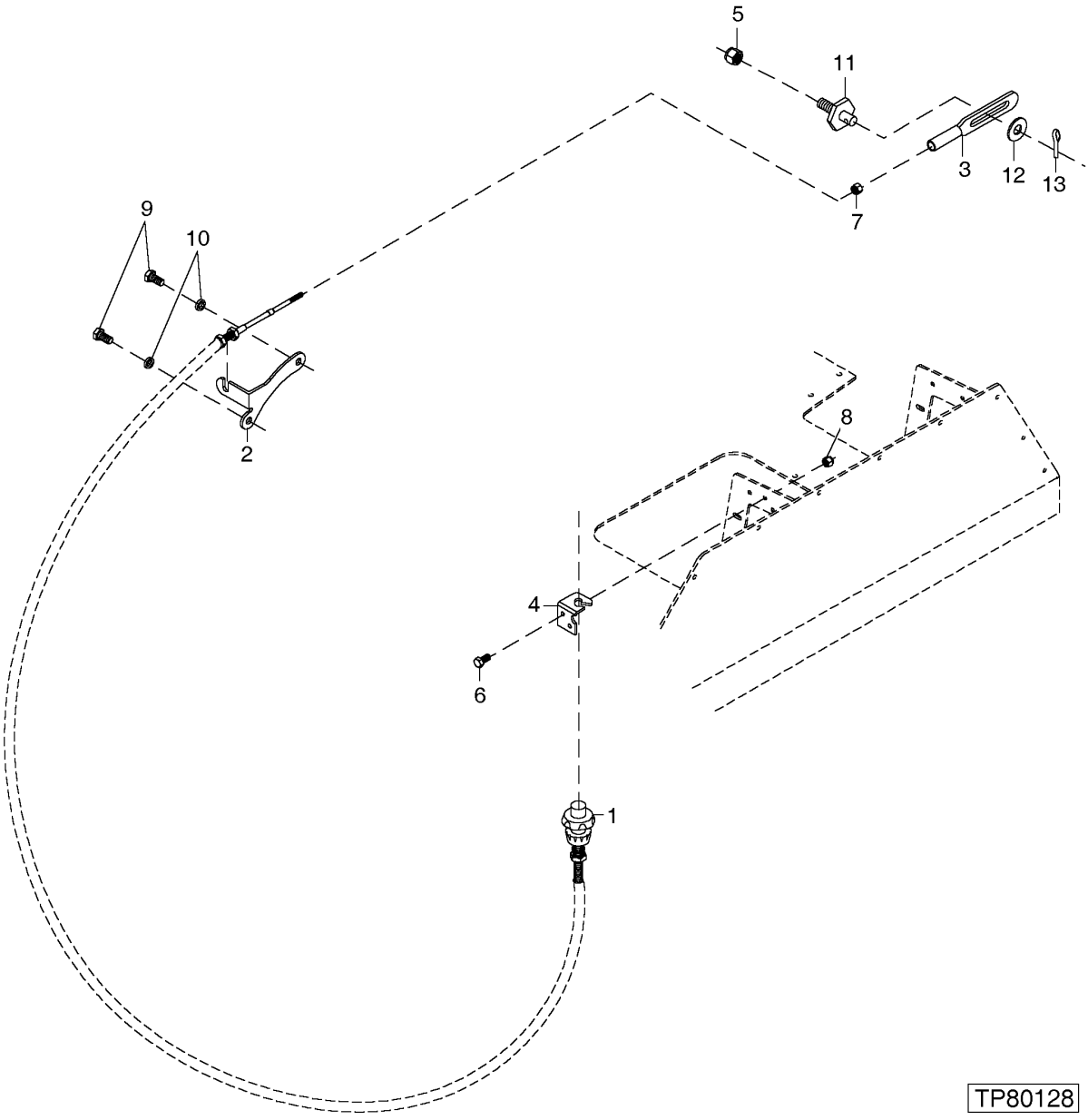

ENGINE THROTTLE CONTROL CABLE (SERIAL NO. 872334-882700)

KEY	PART NO.	PART NAME	QTY	SERIAL NO.	REMARKS
1	AT190369	CABLE	1		(INCLUDES NUTS) (SUB FOR AT188964)
2	AT187519	BRACKET	1		
3	AT187520	LINK	1		
4	T165100	BRACKET	1		
5	T60313	LOCK NUT	1		
6	19H2676	CAP SCREW	2		3/8" X 1"
7	14H631	NUT	1		0.190"
8	T11234	LOCK NUT	2		
9	19M7938	CAP SCREW	2		M10 X 20
10	24M7239	WASHER	2		10.700 X 21 X 2.500 MM
11	AT187523	PIN	1		
12	24H1136	WASHER	1		11/32" X 11/16" X 0.065"
13	11M7077	COTTER PIN	1		1.600 X 25 MM

ENGINE THROTTLE CONTROL CABLE (SERIAL NO. 882701-)

T196026 -UN-19DEC03

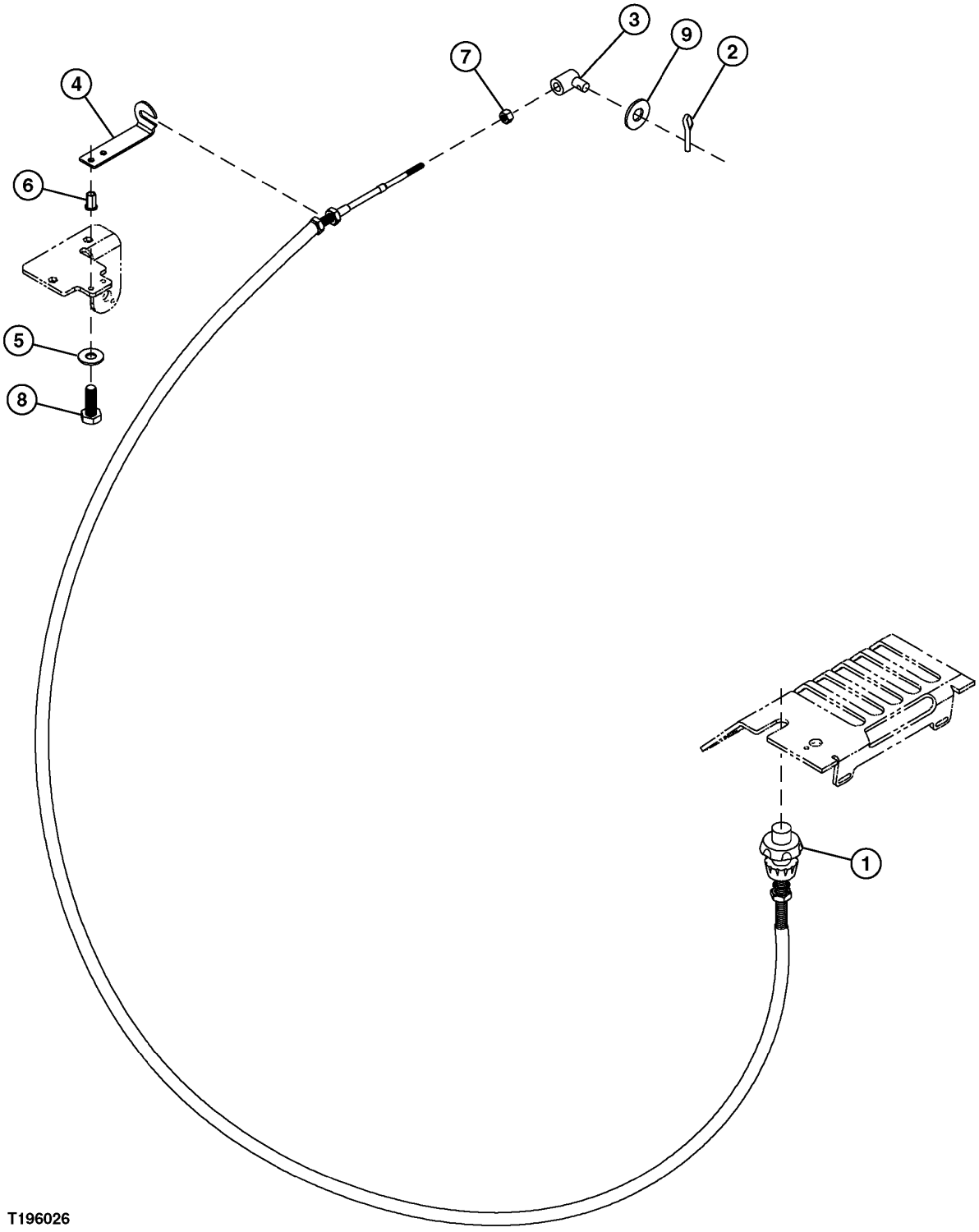

T196026

ENGINE THROTTLE CONTROL CABLE (SERIAL NO. 882701-)

KEY	PART NO.	PART NAME	QTY	SERIAL NO.	REMARKS
1	AT216168	CABLE	1		(INCLUDES NUTS)
2	11M7077	COTTER PIN	1		1.600 X 25 MM
3	CB01449997	PIVOT	1		
4	.....	BRACKET	1		(THROTTLE)
5	24H1288	WASHER	2		9/32" X 1" X 1/16"
6	T164466	NUT	2		
7	14H631	NUT	1		0.190"
8	19H1914	CAP SCREW	2		1/4" X 1"
9	24H1776	WASHER	1		5/16" X 47/64" X 0.065"

AIR CLEANER HOSES,TUBE AND MOUNTING BRACKET

TP80392 -UN-24JAN00

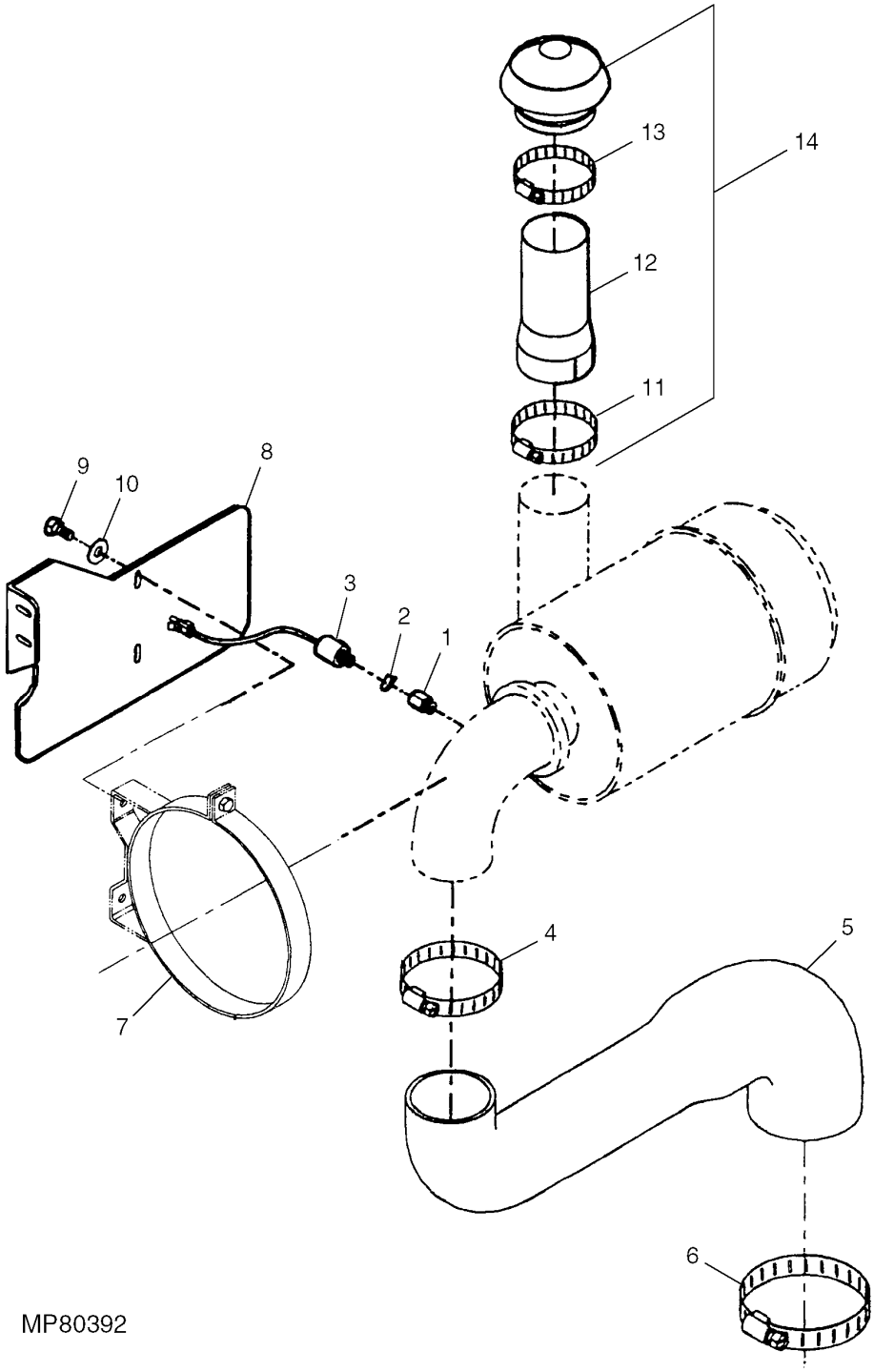

AIR CLEANER HOSES,TUBE AND MOUNTING BRACKET

KEY	PART NO.	PART NAME	QTY	SERIAL NO.	REMARKS
1	T82907	ADAPTER	1		
2	R26286	O-RING	1		10.516 X 1.829 MM (0.414" X 0.072")
3	RE12176	AIR RESTRICTION SENSOR	1	-832008	
	AT178542	AIR RESTRICTION SENSOR	1	832009-	
4	AR85328	CLAMP	1		
5	T154700	HOSE	1		
6	.....	CLAMP	1		
7	AT171054	BAND	1		
8	AT216135	BRACKET	1		
9	CB01390888	SCREW	4		
10	24H1305	WASHER	4		
11	.....	CLAMP	1		
12	AT177542	TUBE	1		
13	.....	CLAMP	1		
14	AT171169	CAP	1		

AIR CLEANER HOSES,TUBE AND MOUNTING BRACKET (S/N 882701-)

T196981 -UN-17DEC03

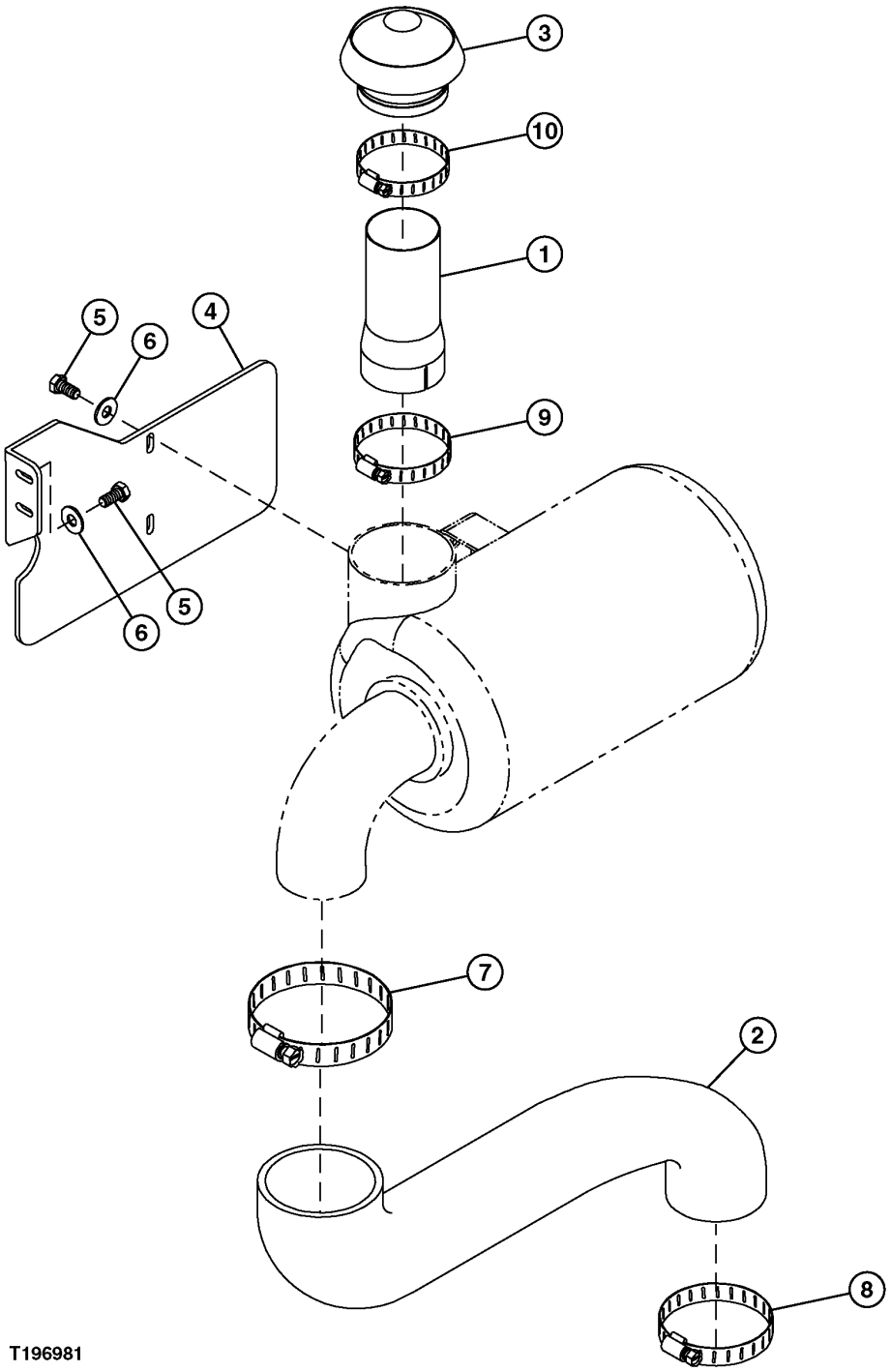

AIR CLEANER HOSES,TUBE AND MOUNTING BRACKET (S/N 882701-)

KEY	PART NO.	PART NAME	QTY	SERIAL NO.	REMARKS
1	AT177542	TUBE	1		
2	T154700	HOSE	1		
3	AT171169	CAP	1		
4	CB01442776	PLATE	1		
5	19M7513	CAP SCREW	4		M8 X 30
6	24H1136	WASHER	4		11/32" X 11/16" X 0.065"
7	AR21842	CLAMP	1		
8	TY22472	CLAMP	1		
9	.....	HOSE CLAMP	1		
10	.....	HOSE CLAMP	1		

AIR CLEANER HOSES,TUBE AND MOUNTING BRACKET (TURBO) (S/N 882701-)

T196982 -UN-17DEC03

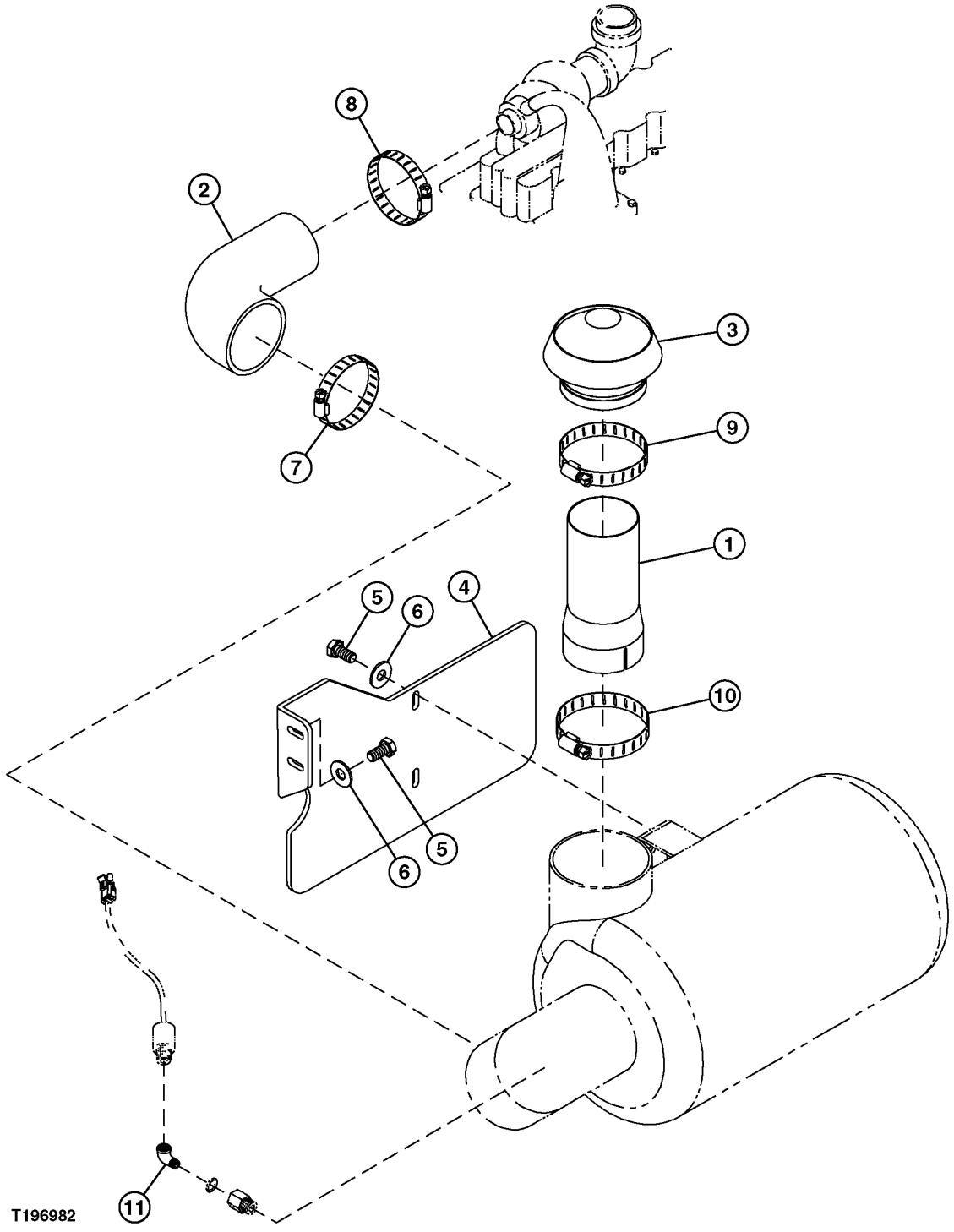

AIR CLEANER HOSES,TUBE AND MOUNTING BRACKET (TURBO) (S/N 882701-)

KEY	PART NO.	PART NAME	QTY	SERIAL NO.	REMARKS
1	AT177542	TUBE	1		
2	T164034	HOSE	1		
3	AT171169	CAP	1		
4	CB01442776	PLATE	1		
5	19M7513	CAP SCREW	4		M8 X 30
6	24H1136	WASHER	4		11/32" X 11/16" X 0.065"
7	AR21842	CLAMP	1		
8	AH104837	HOSE CLAMP	1		
9	.....	HOSE CLAMP	1		
10	.....	HOSE CLAMP	1		
11	T56112	ELBOW FITTING	1		

AIR CLEANER AND AIR FILTER ELEMENTS (SERIAL NO. -882700)

TP52612 -UN-12FEB97

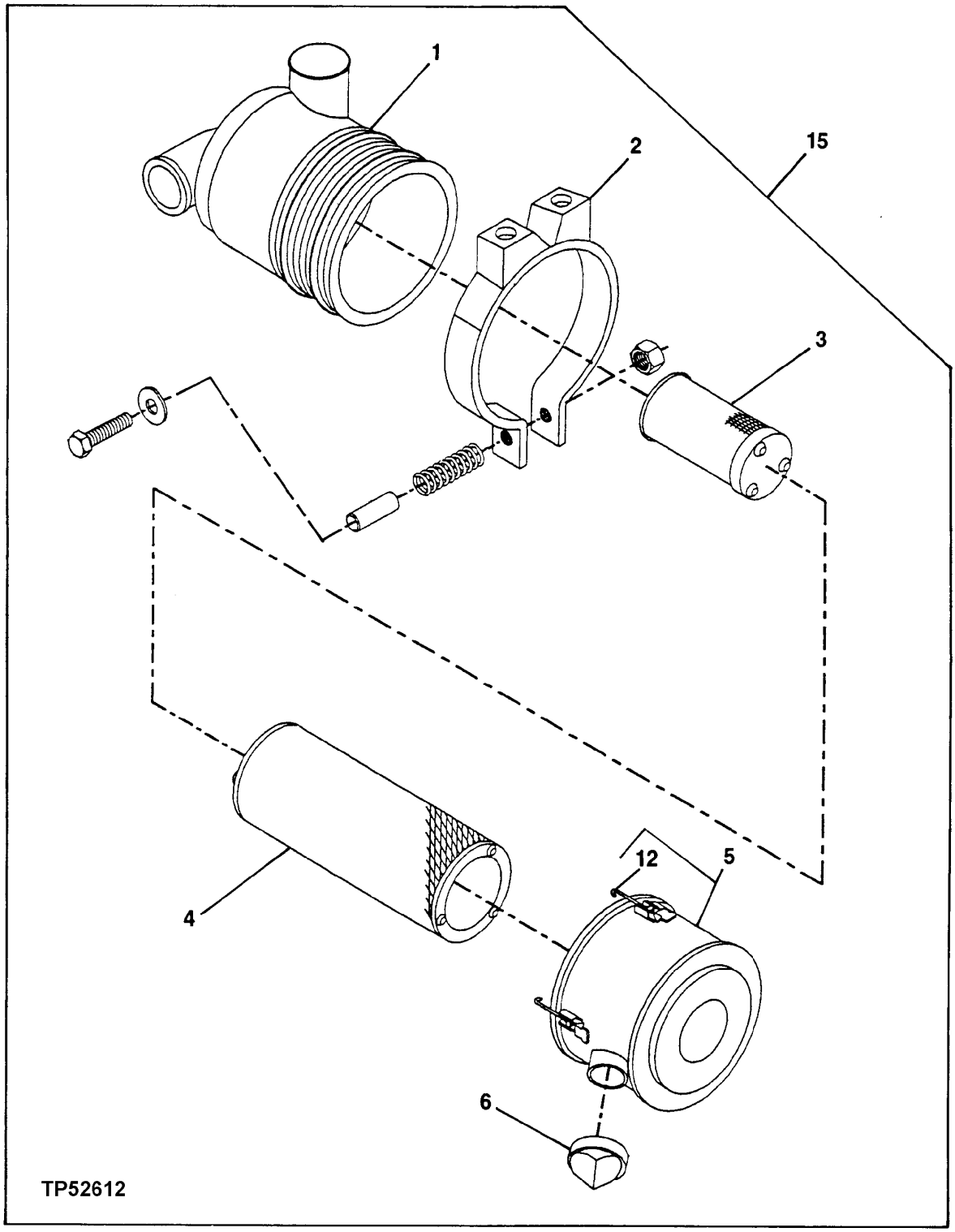

AIR CLEANER AND AIR FILTER ELEMENTS (SERIAL NO. -882700)

KEY	PART NO.	PART NAME	QTY	SERIAL NO.	REMARKS
1	.....	HOUSING	1		
2	AT171054	BAND	1		
3	AT171854	AIR FILTER	1		
4	AT171853	AIR FILTER	1		
5	AT171855	COVER	1		
6	R48568	VALVE	1		
12	AT180680	LATCH	3		(SUB FOR R124848)
15	AT169911	AIR CLEANER	1		(INCLUDES SENSOR AND FITTING)

AIR CLEANER AND AIR FILTER ELEMENTS (SERIAL NO. 882701-)

T196793 -UN-08DEC03

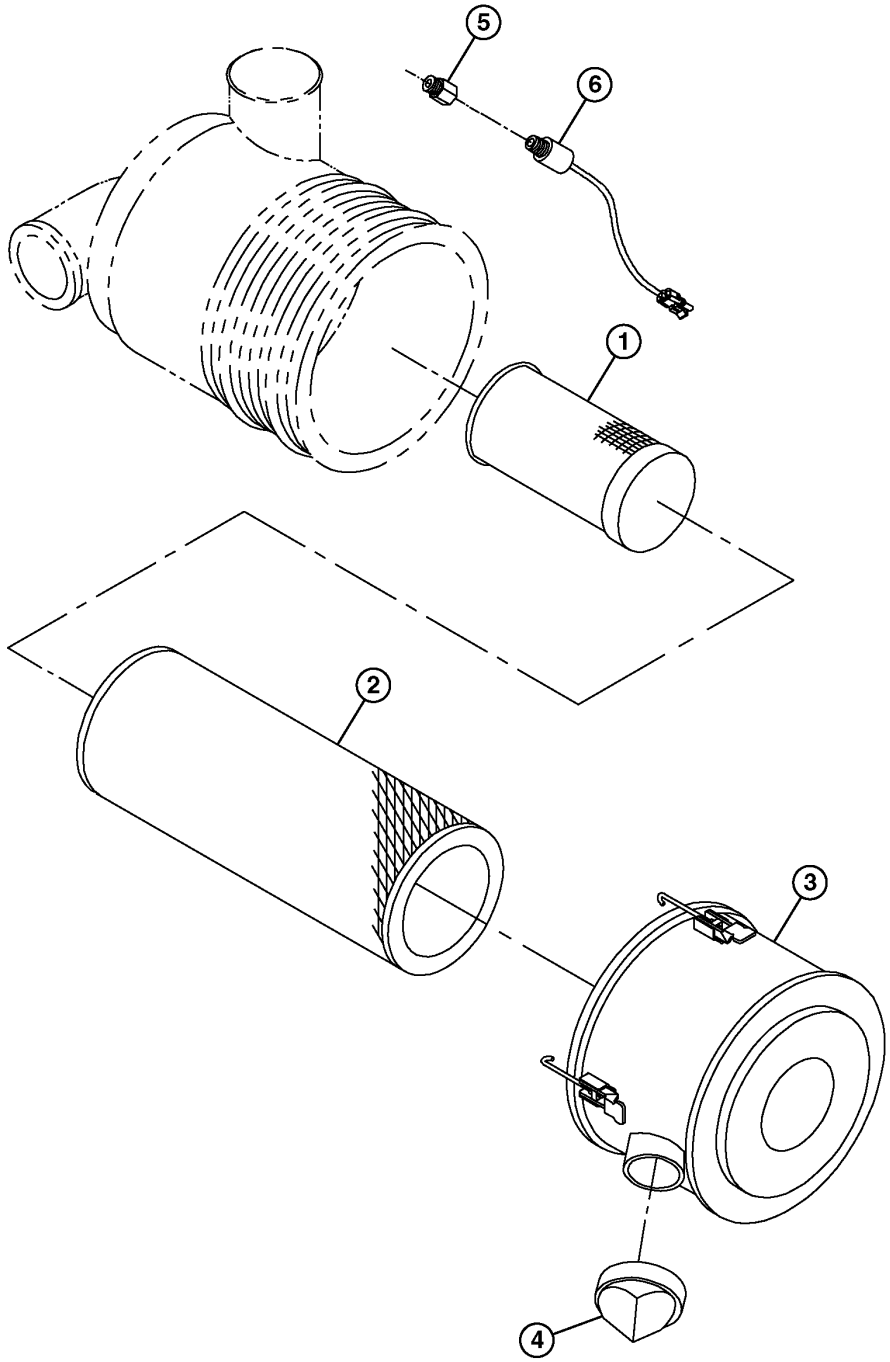

T196793

AIR CLEANER AND AIR FILTER ELEMENTS (SERIAL NO. 882701-)

KEY	PART NO.	PART NAME	QTY	SERIAL NO.	REMARKS
1	AT171854	AIR FILTER	1		
2	KV16429	AIR FILTER	1		
3	AT171855	COVER	1		
4	R48568	VALVE	1		
5	AR44361	FITTING	1		
6	AT178542	AIR RESTRICTION SENSOR	1		

EXHAUST PIPE AND MUFFLER, STANDARD (SERIAL NO. -882700)

TP69501 -UN-12APR00

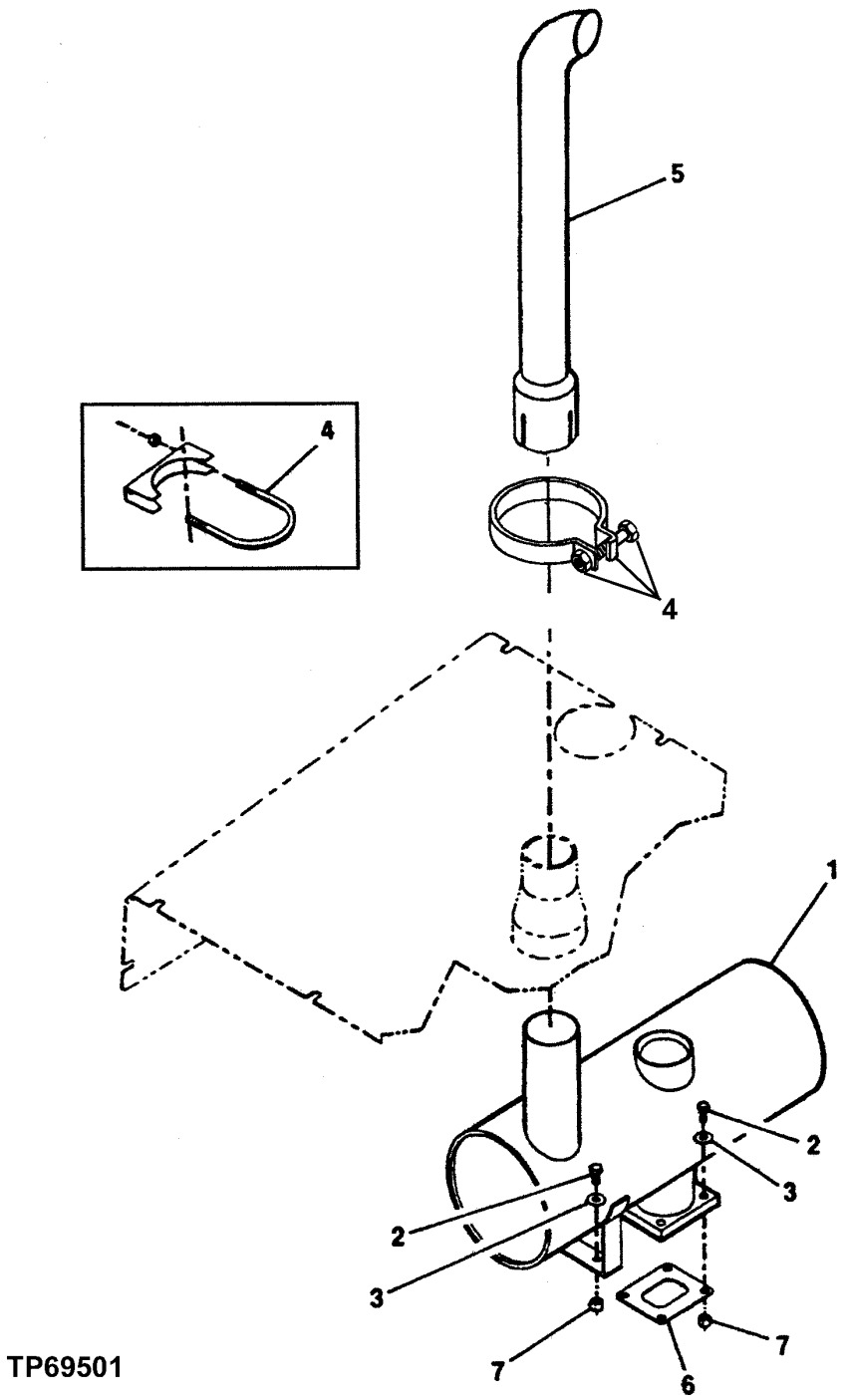

EXHAUST PIPE AND MUFFLER, STANDARD (SERIAL NO. -882700)

KEY	PART NO.	PART NAME	QTY	SERIAL NO.	REMARKS
1	AT183837	MUFFLER	1		(NON SPARK ARRESTING) (SUB FOR AT216170)
	AT182385	SPARK ARRESTING MUFFLER	1		
2	19H2633	CAP SCREW	6		3/8" X 1-1/2"
3	R57696	WASHER	12		9.931 X 23.114 X 3.048 MM (25/64" X 0.910" X 0.120")
4	AE20595	CLAMP	1	-XXXXXX	
	AT183848	CLAMP	1	XXXXXX-	
5	AT216683	EXHAUST PIPE	1		
6	R89879	GASKET	1		
7	N10215	LOCK NUT	6		9.525 MM (3/8")

EXHAUST PIPE AND MUFFLER, STANDARD (SERIAL NO. 882701-)

T196478 -UN-25NOV03

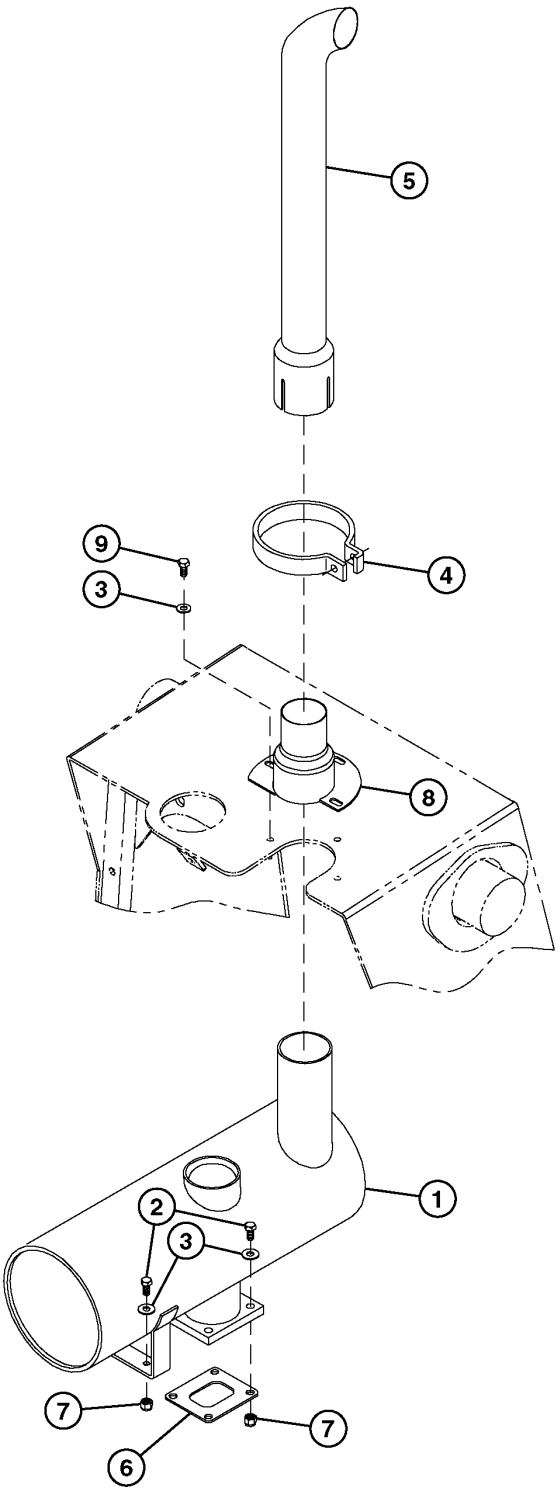

T196478

EXHAUST PIPE AND MUFFLER, STANDARD (SERIAL NO. 882701-)

KEY	PART NO.	PART NAME	QTY	SERIAL NO.	REMARKS
1	AT173891	MUFFLER	1		(NON SPARK ARRESTING)
2	19H2633	CAP SCREW	6		3/8" X 1-1/2"
3	R57696	WASHER	15		
4	AT183848	CLAMP	1		
5	AT216683	EXHAUST PIPE	1		
6	R89879	GASKET	1		
7	T11234	LOCK NUT	6		(SUB FOR AT176124)
8	CB11444772	VALVE STACK	1		
9	19H3239	CAP SCREW	3		3/8" X 1-1/4"
10	T11234	LOCK NUT	3		

EXHAUST PIPE AND MUFFLER, SPARK ARRESTOR (SERIAL NO. -882700)

T196479 -UN-20NOV03

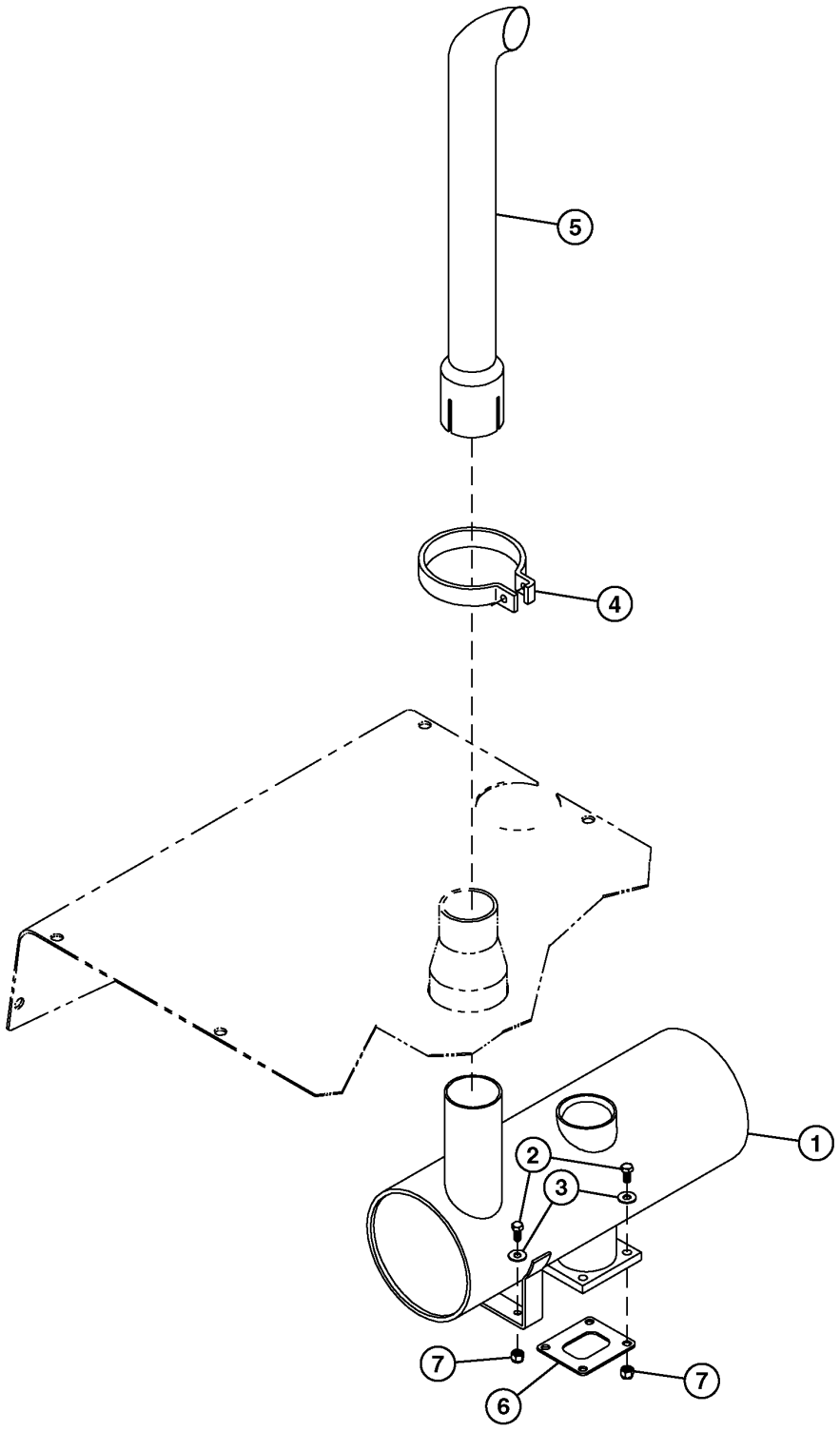

T196479

EXHAUST PIPE AND MUFFLER, SPARK ARRESTOR (SERIAL NO. -882700)

KEY	PART NO.	PART NAME	QTY	SERIAL NO.	REMARKS
1	AT182385	SPARK ARRESTING MUFFLER	1		
2	19H2633	CAP SCREW	6		3/8" X 1-1/2"
3	R57696	WASHER	12		9.931 X 23.114 X 3.048 MM (25/64" X 0.910" X 0.120")
4	AT183848	CLAMP	1		
5	AT216683	EXHAUST PIPE	1		
6	R89879	GASKET	1		
7	T11234	LOCK NUT	6		(SUB FOR AT176124)

EXHAUST PIPE AND MUFFLER, SPARK ARRESTOR (SERIAL NO. 882701-)

T196488 -UN-20NOV03

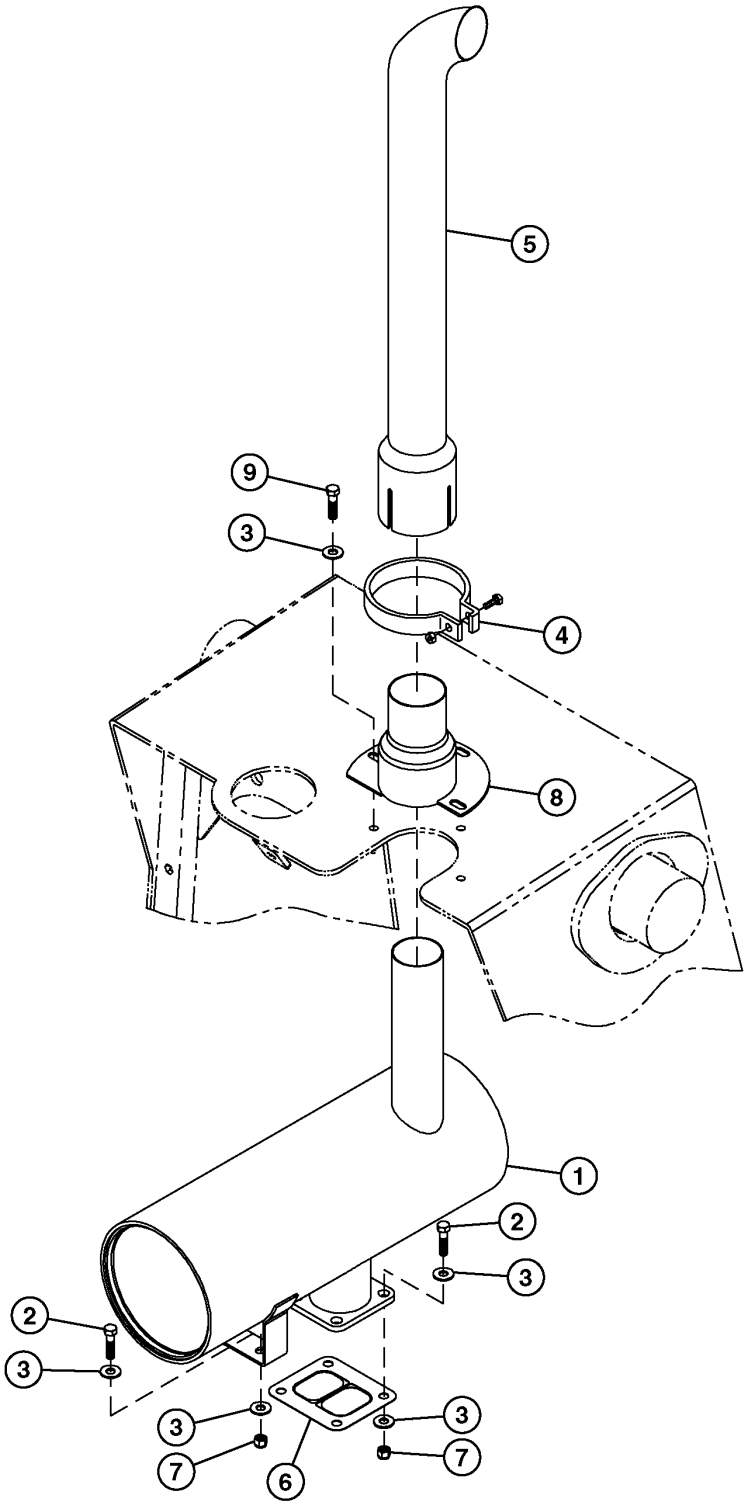

T196488

EXHAUST PIPE AND MUFFLER, SPARK ARRESTOR (SERIAL NO. 882701-)

KEY	PART NO.	PART NAME	QTY	SERIAL NO.	REMARKS
1	CB01444019	MUFFLER	1		
2	19H2633	CAP SCREW	6		3/8" X 1-1/2"
3	R57696	WASHER	12		9.931 X 23.114 X 3.048 MM (25/64" X 0.910" X 0.120")
4	AT183848	CLAMP	1		
5	AT216683	EXHAUST PIPE	1		
6	R89879	GASKET	1		
7	T11234	LOCK NUT	6		(SUB FOR AT176124)
8	CB11444772	VALVE STACK	1		
9	19H3239	CAP SCREW	3		3/8" X 1-1/4"
10	T11234	LOCK NUT	3		3/8"

EXHAUST PIPE AND MUFFLER, TURBO (SERIAL NO. 882701-)

T196452 -UN-19NOV03

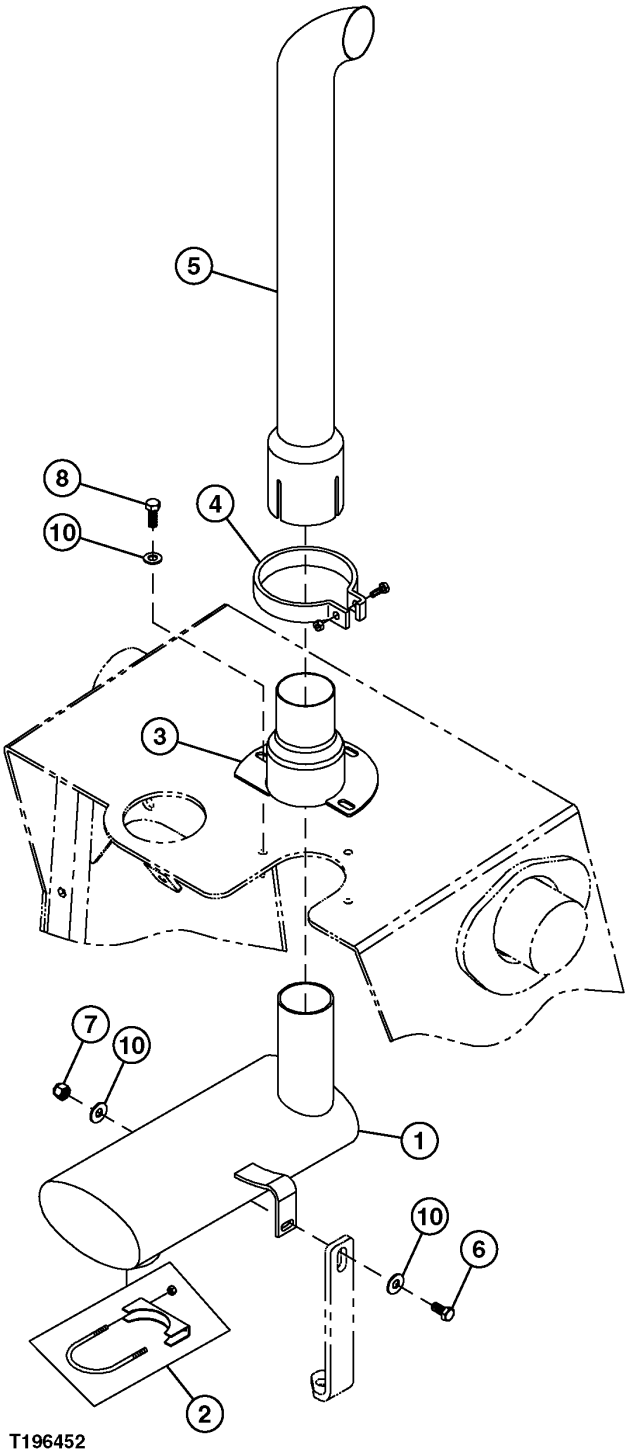

EXHAUST PIPE AND MUFFLER, TURBO (SERIAL NO. 882701-)

KEY	PART NO.	PART NAME	QTY	SERIAL NO.	REMARKS
1	CB01446335	MUFFLER	1		
2	0550038668	CLAMP	1		
3	CB11444772	VALVE STACK	1		
4	AT183848	CLAMP	1		
5	AT216683	EXHAUST PIPE	1		
6	19H2676	CAP SCREW	1		3/8" X 1"
7	T11234	LOCK NUT	1		(SUB FOR AT176124)
8	19H3239	CAP SCREW	3		3/8" X 1-1/4"
10	R57696	WASHER	3		

ENGINE MOUNTING PARTS

TP61723 -UN-10JUL98

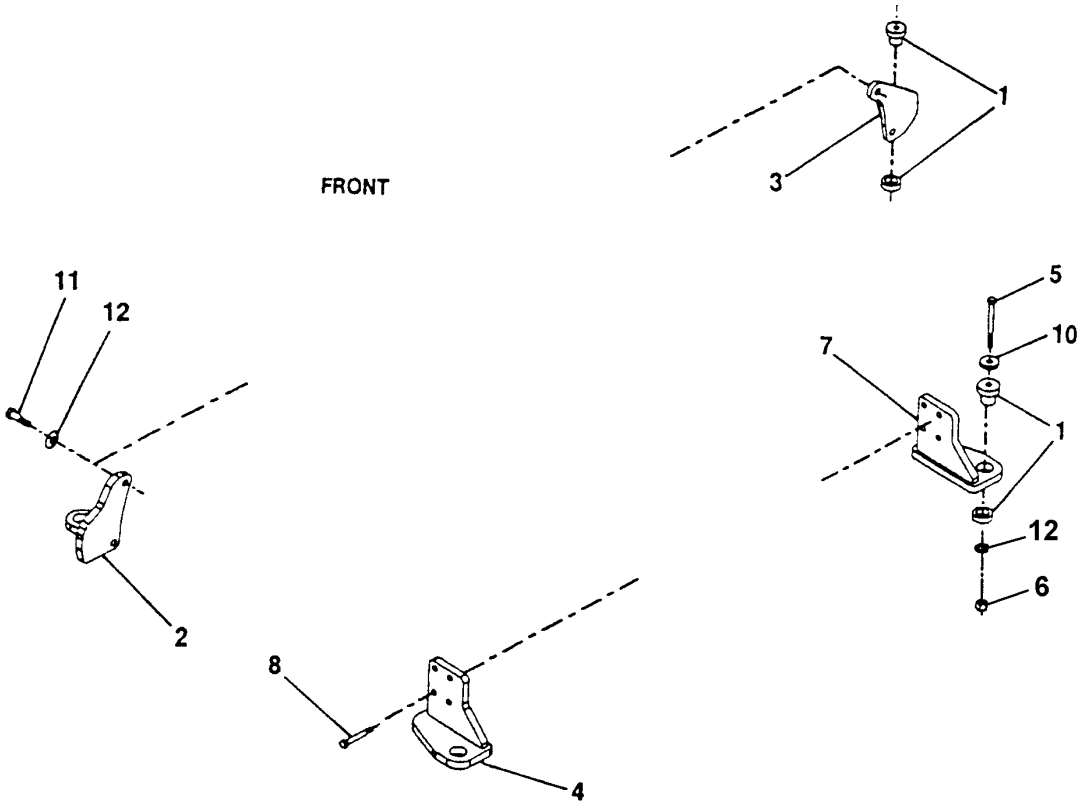

ENGINE MOUNTING PARTS

KEY	PART NO.	PART NAME	QTY	SERIAL NO.	REMARKS
1	AT170854	ISOLATOR	4		(SUB FOR AT216108)
2	AT216274	BRACKET	1		
3	AT216275	BRACKET	1		
4	AT216277	BRACKET	1		
5	19H3170	CAP SCREW	4		5/8" X 4-1/2"
6	U44915	LOCK NUT	4		
7	AT216276	BRACKET	1		
8	19M7813	SCREW	8		M12 X 45
10	24H1852	WASHER	4		21/32" X 2-3/4" X 0.180"
11	19M7488	CAP SCREW	4		M16 X 40
12	R73290	WASHER	8		0.641" X 1.063" X 0.105"

FUEL TANK (SERIAL NO. -841621)

TP52617 -UN-03FEB97

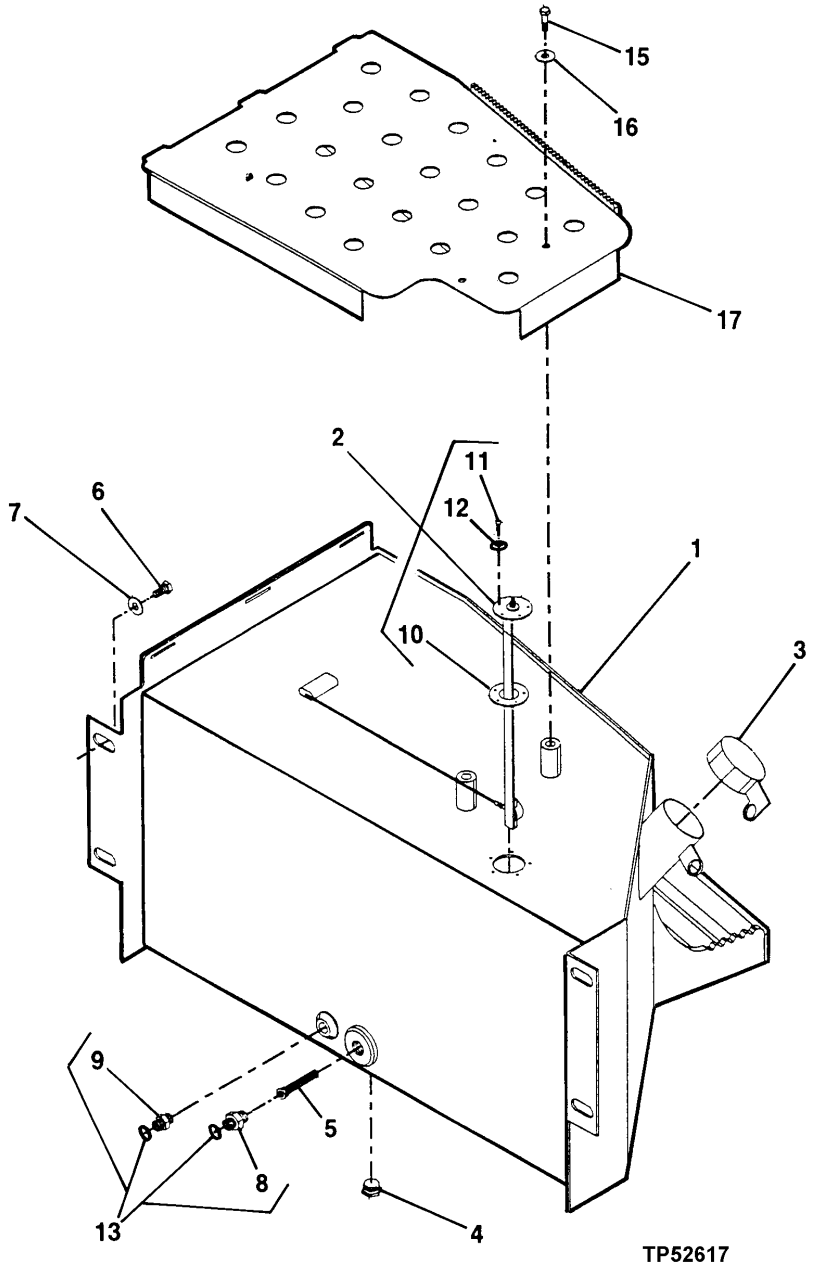

FUEL TANK (SERIAL NO. -841621)

KEY	PART NO.	PART NAME	QTY	SERIAL NO.	REMARKS
1	AT216279	FUEL TANK	1	-830778	
	AT183316	FUEL TANK	1	830779-841621	
2	AT216312	FUEL SENDER	1	-841621	
3	AT176378	FILLER CAP	1	-841621	
	T159244	GASKET	1	-841621	(NOT ILLUSTRATED)
4	15H585	PIPE PLUG	1	-841621	
5	T42633	FUEL FILTER	1	-841621	
6	19H3526	CAP SCREW	4	-841621	
7	R56423	WASHER	4	-841621	
8	T81030	ADAPTER	1	-841621	
9	T78646	ADAPTER	1	-841621	
10	.....	GASKET	1	-841621	
11	.....	BOLT	5	-841621	
12	.....	WASHER	5	-841621	
13	T77613	O-RING	2	-841621	
15	19H2676	CAP SCREW	2	-841621	
16	24H1305	WASHER	2	-841621	
17	AT216745	COVER	1	-841621	

FUEL TANK (SERIAL NO. 841622-)

TP80278 -UN-20OCT99

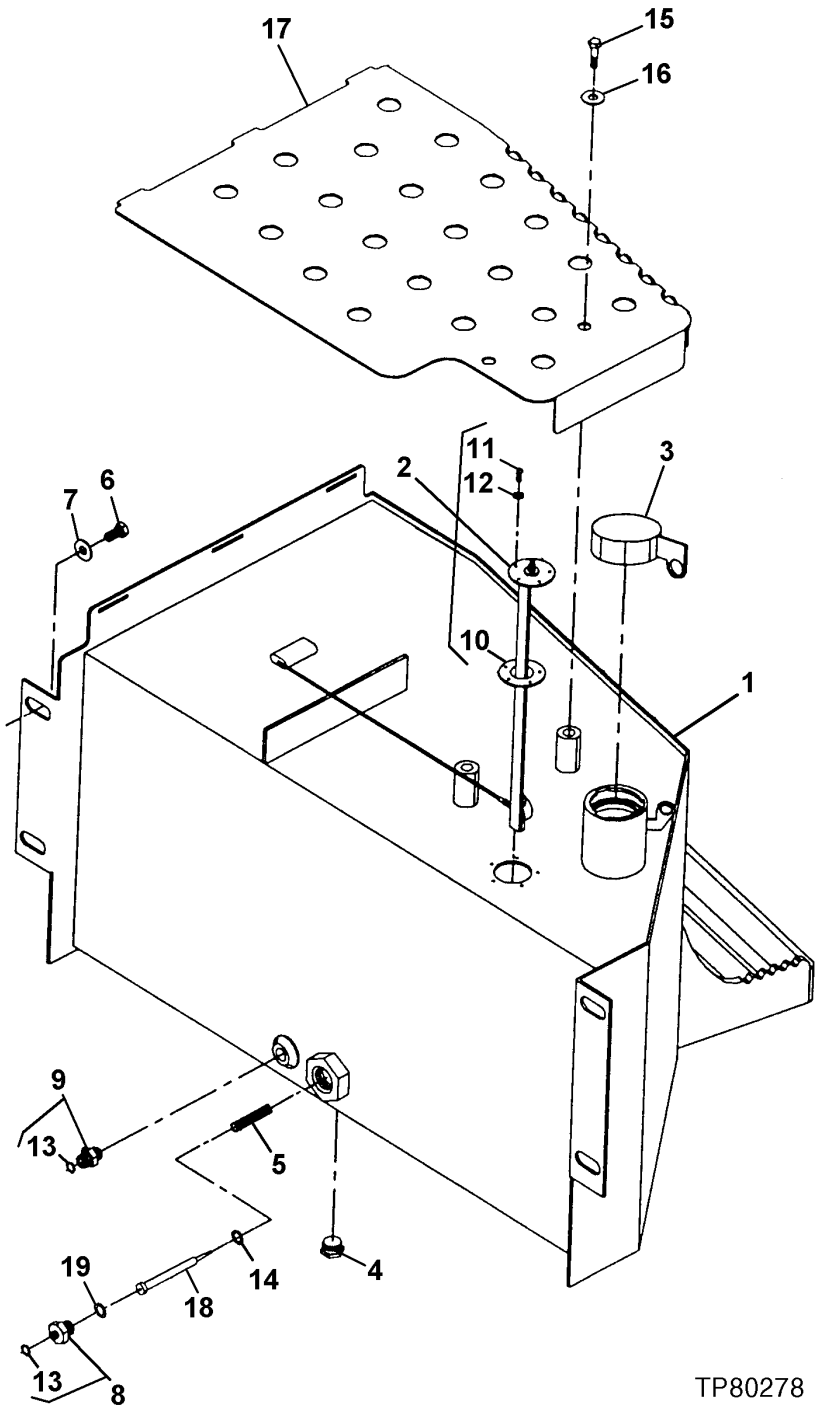

FUEL TANK (SERIAL NO. 841622-)

KEY	PART NO.	PART NAME	QTY	SERIAL NO.	REMARKS
1	AT183893	FUEL TANK	1	841622-	
2	AT183857	FUEL SENDER	1	841622-	
3	AT176378	FILLER CAP	1	841622-	
	T159244	GASKET	1	841622-	(NOT ILLUSTRATED)
4	15H585	PIPE PLUG	1	841622-	
5	AT65241	STRAINER	1	841622-	
	TY15969	ADHESIVE	1		
6	19H3526	CAP SCREW	4	841622-	
7	R56423	WASHER	4	841622-	
8	38H1408	UNION FITTING	1	841622-	
9	T78646	ADAPTER	1	841622-	
10	.....	GASKET	1	841622-	
11	.....	BOLT	5	841622-	
12	.....	WASHER	5	841622-	
13	T77613	O-RING	2	841622-	
14	T76938	O-RING	1	841622-	
15	19H2676	CAP SCREW	2	841622-882700	3/8" X 1"
	CB01390888	BOLT	2	882701-	3/8" X 1-1/4"
16	24H1305	WASHER	2	841622-882700	13/32" X 13/16" X 0.065"
	24H1219	WASHER	2	882701-	7/16" X 1" X 0.083"
17	AT183317	TANK	1	841622-	
18	AT183892	TUBE	1	841622-	
19	T77858	O-RING	1	841622-	

FUEL LINES AND FITTINGS
(SERIAL NO. -841621)

TP52618 -UN-03FEB97

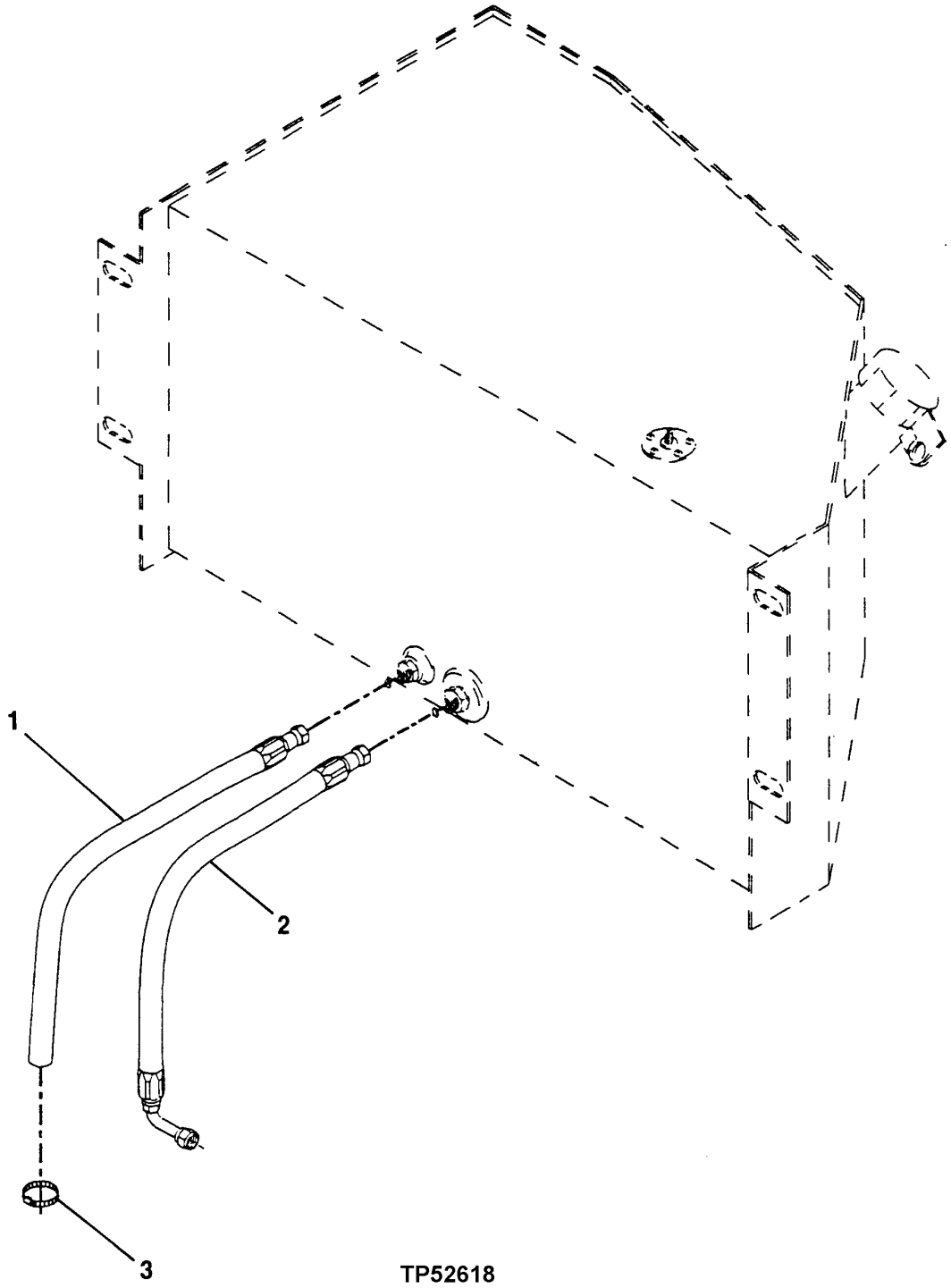

TP52618

FUEL LINES AND FITTINGS
(SERIAL NO. -841621)

KEY	PART NO.	PART NAME	QTY	SERIAL NO.	REMARKS
1	AT216254	HYDRAULIC HOSE - FABRICATE	1	-841621	
2	AT216740	HOSE	1	-841621	
3	AT120105	HOSE CLAMP	1	-841621	

FUEL LINES AND FITTINGS
(SERIAL NO. 841622-)

T196357 -UN-18NOV03

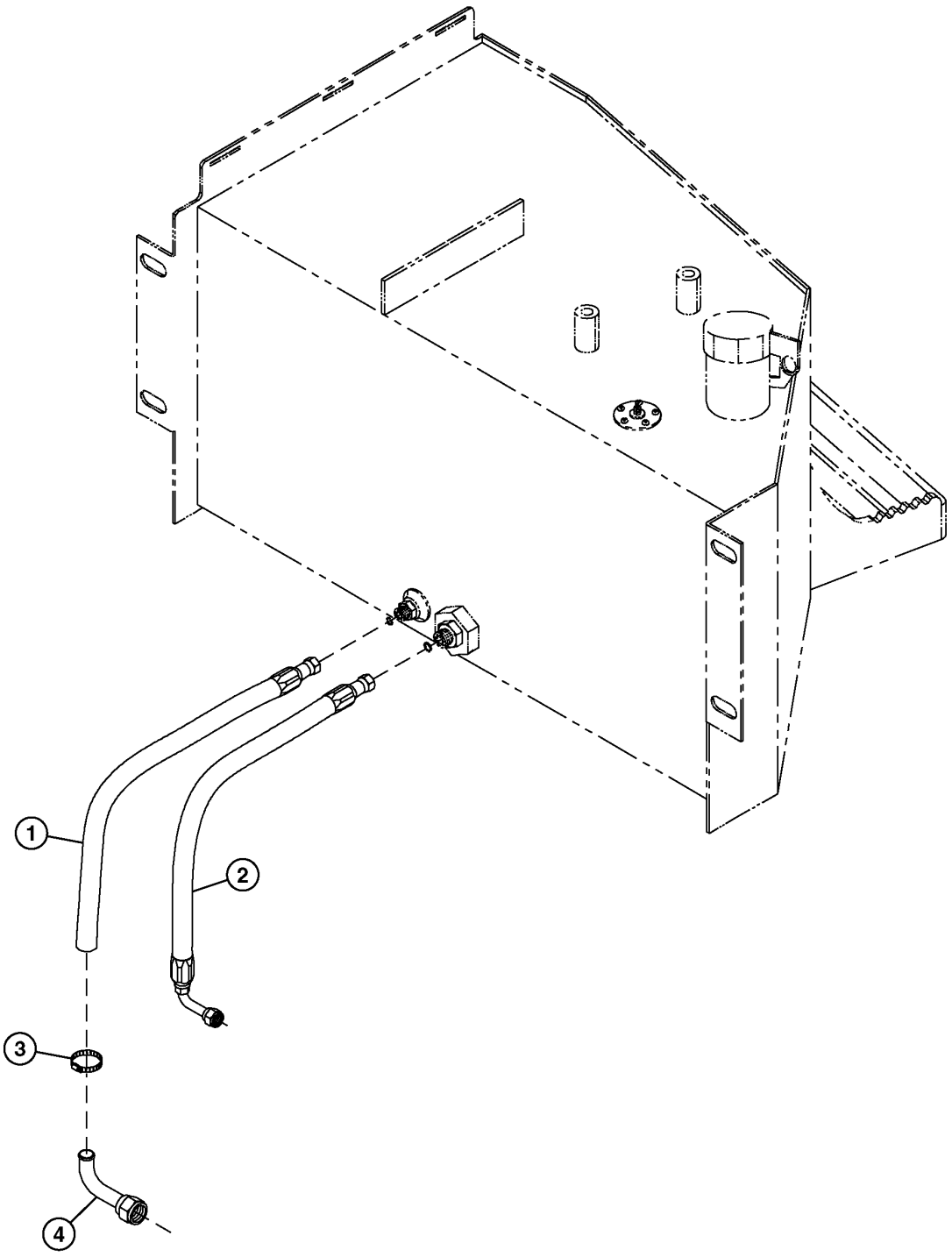

T196357

FUEL LINES AND FITTINGS
(SERIAL NO. 841622-)

KEY	PART NO.	PART NAME	QTY	SERIAL NO.	REMARKS
1	AT188833	HYDRAULIC HOSE - FABRICATE	1		
2	AT183894	HYDRAULIC HOSE	1		
3	AT120105	HOSE CLAMP	1		
4	RE16142	FUEL LINE	1		

TEMPERATURE AND WHEEL SPEED SENSORS
PE4045DT059

RGP8389 -UN-27NOV01

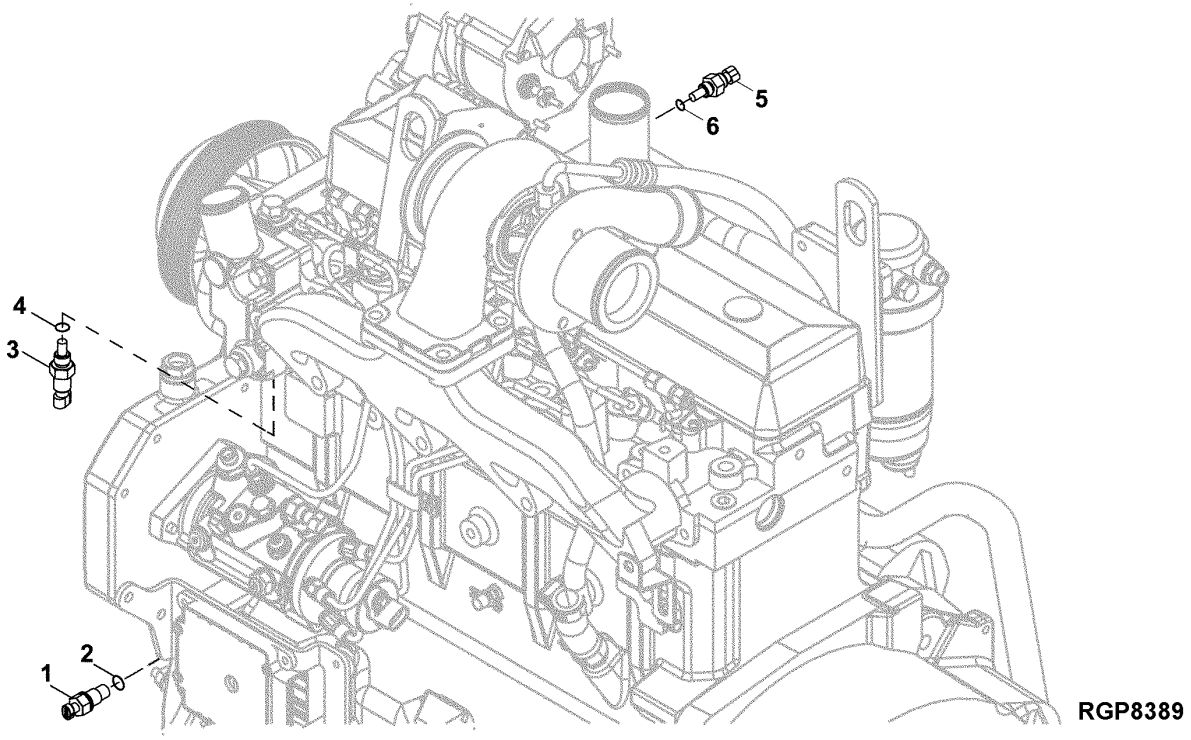

KEY	PART NO.	PART NAME	QTY	ENGINE SERIAL NO.	REMARKS
1	RE519144	SENSOR	1		(SUB FOR RE508195)
2	51M7044	O-RING	1		17.300 X 2.200 MM, (USE WITH RE508195)
3	RE52722	COOLANT TEMPERATURE SENSOR	1		
4	51M7041	O-RING	1		
5	RE61812	ENGINE HEAD TEMP SENSOR	1		
6	51M7041	O-RING	1		

TEMPERATURE AND WHEEL SPEED SENSORS
PE4045TT092

RGP8389 -UN-27NOV01

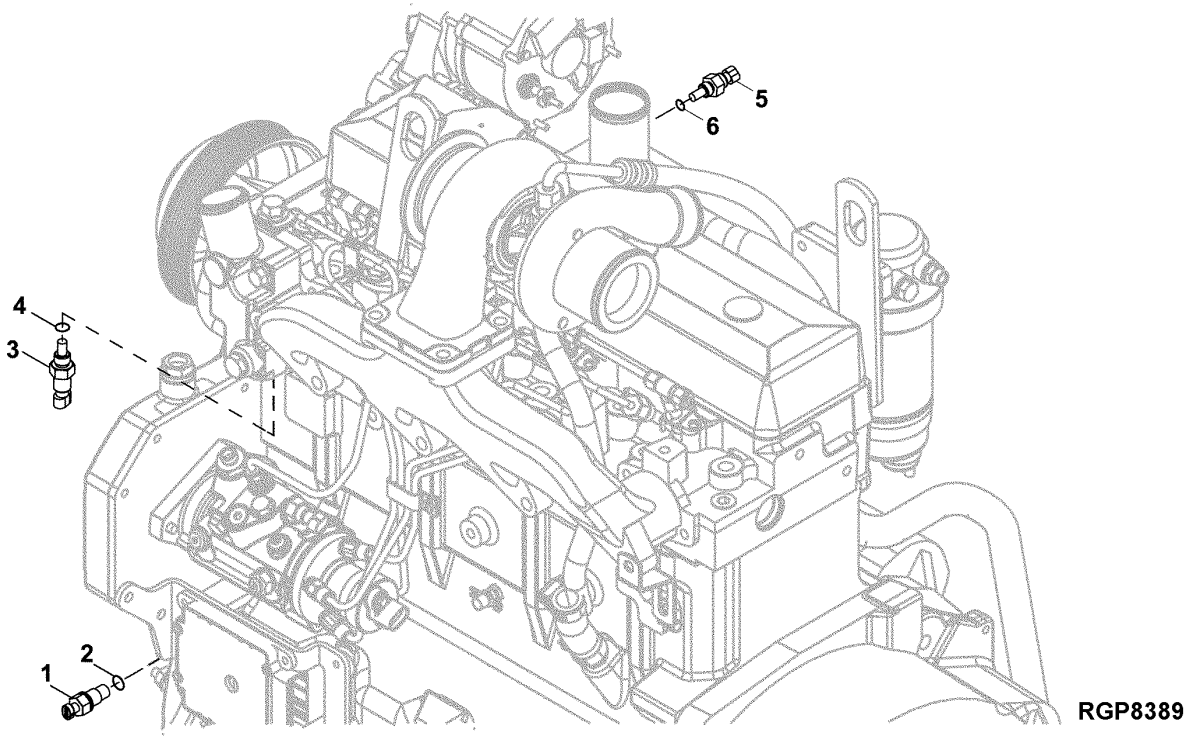

KEY	PART NO.	PART NAME	QTY	ENGINE SERIAL NO.	REMARKS
1	RE519144	SENSOR	1		(SUB FOR RE508195)
2	51M7044	O-RING	1		17.300 X 2.200 MM, (USE WITH RE508195)
3	RE52722	COOLANT TEMPERATURE SENSOR	1		
4	51M7041	O-RING	1		
5	RE61812	ENGINE HEAD TEMP SENSOR	1		
6	51M7041	O-RING	1		

STEERING WHEEL

TP56237 -UN-15MAY97

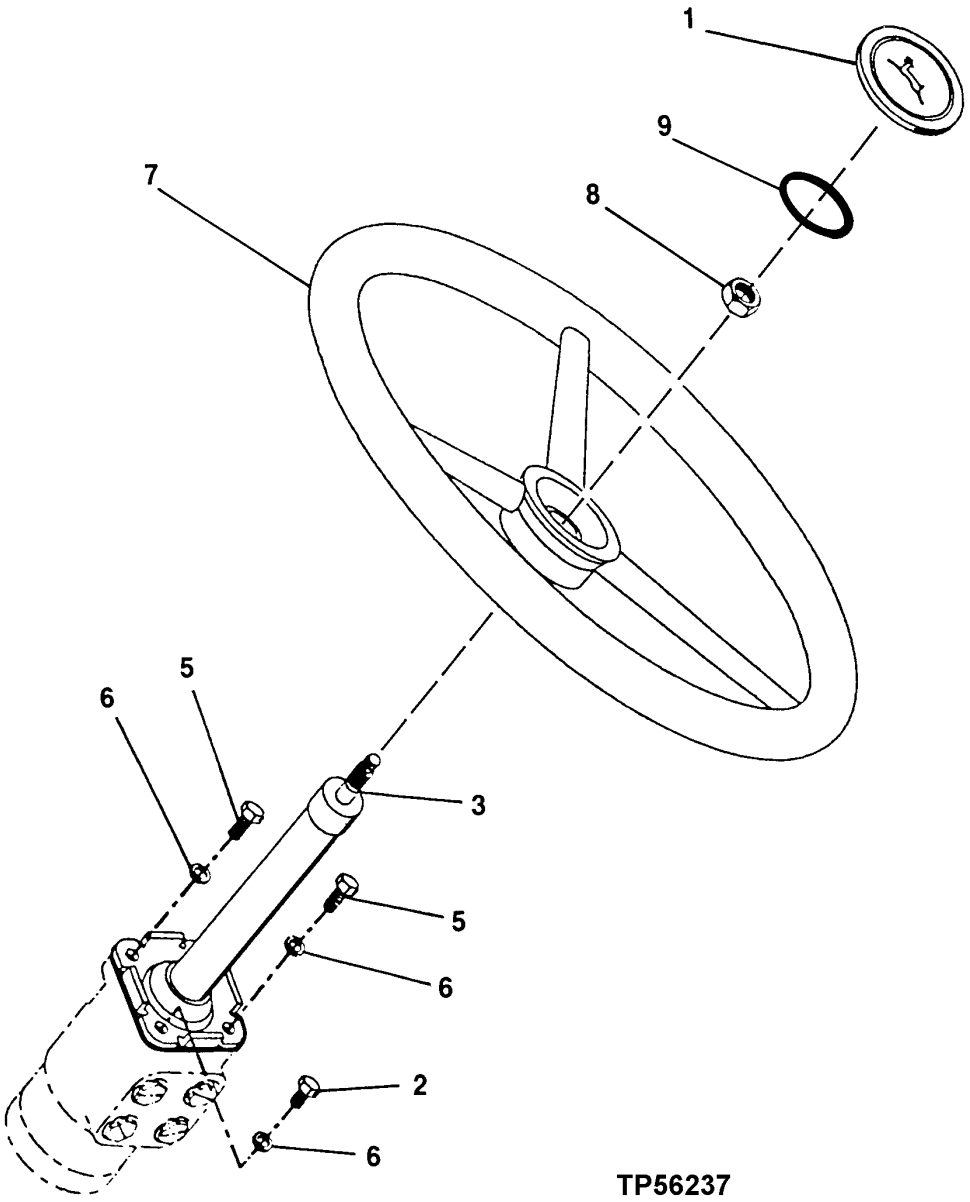

STEERING WHEEL

KEY	PART NO.	PART NAME	QTY	SERIAL NO.	REMARKS
1	AL155227	COVER	1		(SUB FOR R47998 OR AL118173)
2	19H1648	CAP SCREW	2		3/8" X 3/4"
3	AT183856	STEERING COLUMN	1		(SUB FOR AT216749)
5	19H2633	CAP SCREW	2		3/8" X 1-1/2"
6	R57696	WASHER	4		9.931 X 23.114 X 3.048 MM (25/64" X 0.910" X 0.120")
7	AT139694	STEERING WHEEL	1		
8	T13630	NUT	1		
9	B3690R	O-RING	1		47.219 X 3.531 MM (1-55/64" X 0.139")

STEERING VALVE

TP80320 -UN-03DEC99

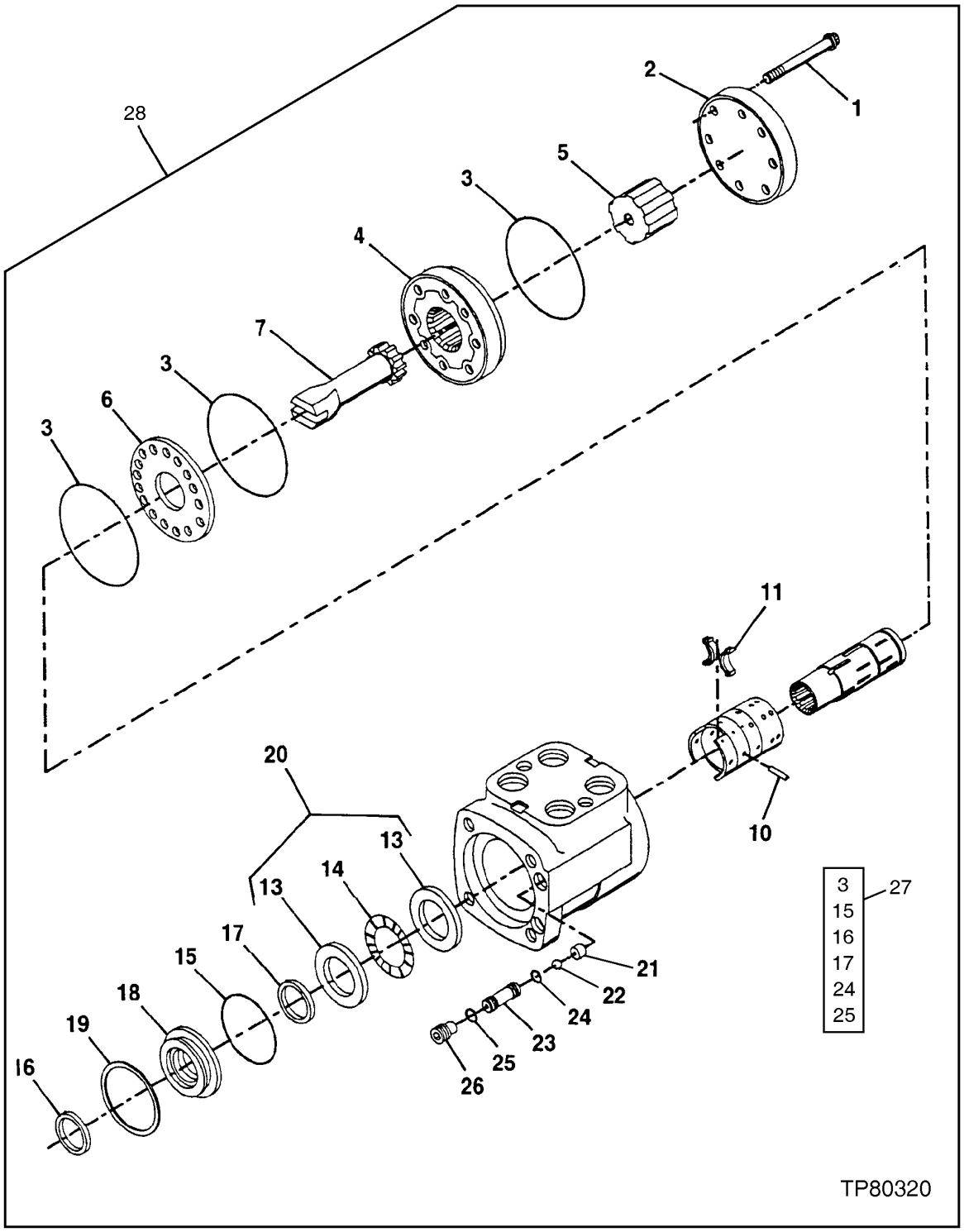

STEERING VALVE

KEY	PART NO.	PART NAME	QTY	SERIAL NO.	REMARKS
1	T152292	CAP SCREW	1		
2	T152291	CAP	1		
3	T152288	O-RING	1		(A)
4	AT61111	ROTOR	1		
5	T64318	SPACER	1		
6	T152293	PLATE	1		
7	T37253	DRIVE	1		
10	M4124T	DOWEL PIN	1		
11	RE50401	KIT	1		
13	T41836	THRUST BEARING RACE	2		
14	JD8856	NEEDLE BEARING	1		
15	B3690R	O-RING	1		(A)
16	C15104	SEAL	1		(A)
17	AT175622	SEAL	1		(A)
18	T77346	BUSHING	1		
19	T54324	SNAP RING	1		
20	RE58878	BEARING KIT	1		
21	T64311	RETAINER	1		
22	R26552	BALL	1		
23	T64312	SEAT	1		
24	R10093	O-RING	1		(A)
25	A3917R	O-RING	1		(A)
26	T64313	SET SCREW	1		
27	AT167183	SEAL KIT	1		O'RING (INCLUDES PARTS MARKED (A))
28	AT216035	FLOW CONTROL HYD. VALVE	1		
	T164311	BUSHING	1		

STEERING PRIORITY VALVE
(SERIAL NO. -880053)

TP52621 -UN-31JAN97

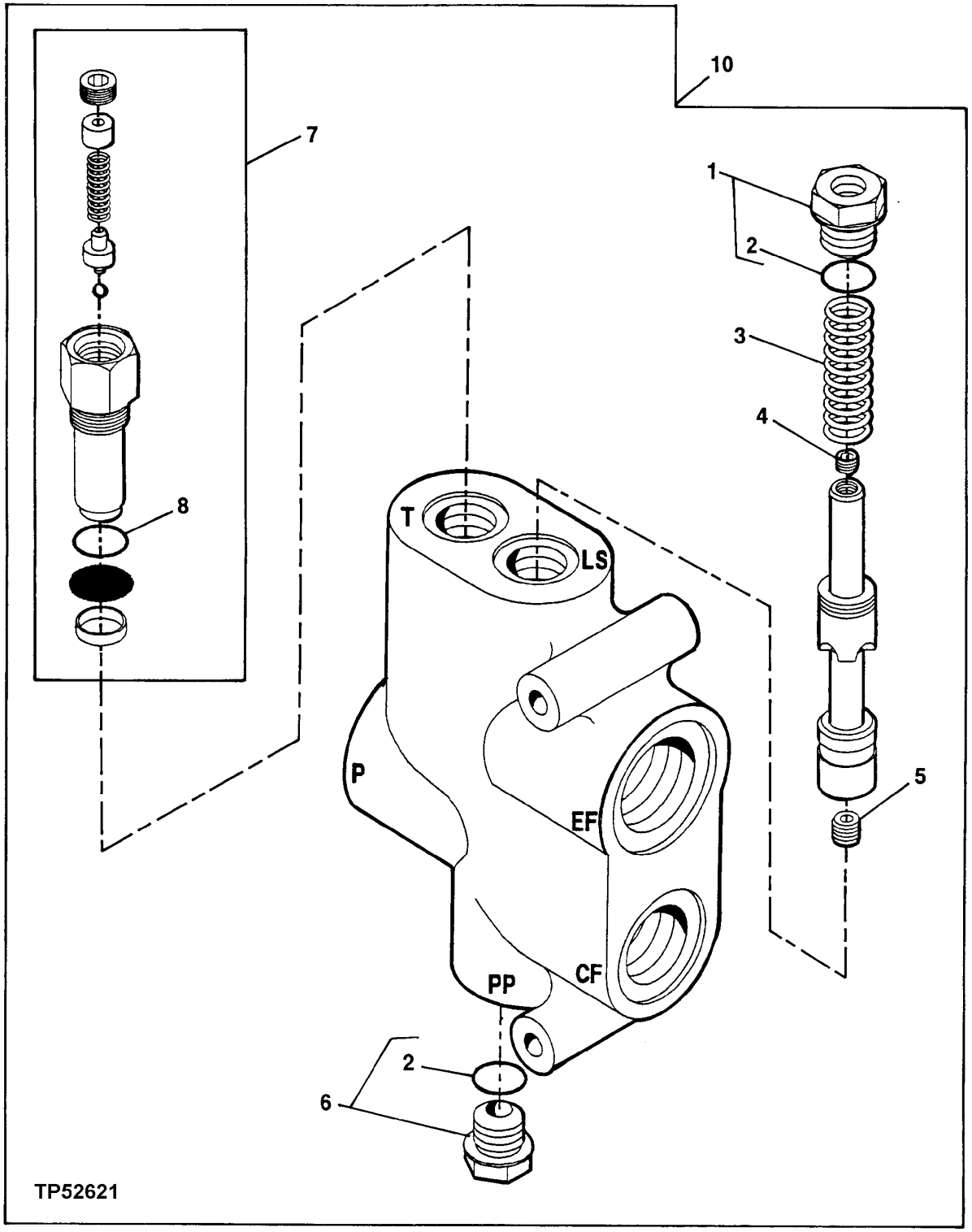

STEERING PRIORITY VALVE
(SERIAL NO. -880053)

KEY	PART NO.	PART NAME	QTY	SERIAL NO.	REMARKS
1	AT216197	FITTING PLUG	1	-880053	
2	T101568	O-RING	2	-880053	
3	T107365	COMPRESSION SPRING	1	-880053	
4	T101571	ORIFICE	1	-880053	
5	T107230	ORIFICE	1	-880053	
6	AT107494	PLUG	1	-880053	
7	AT216204	PRESSURE RELIEF VALVE	1	-880053	
8	AT216161	O-RING	1	-880053	
10	AT216036	FLOW CONTROL HYD. VALVE	1	-880053	

STEERING VALVE HYDRAULIC HOSES AND FITTINGS
(SERIAL NO. -843069)

TP56231 -UN-20MAY97

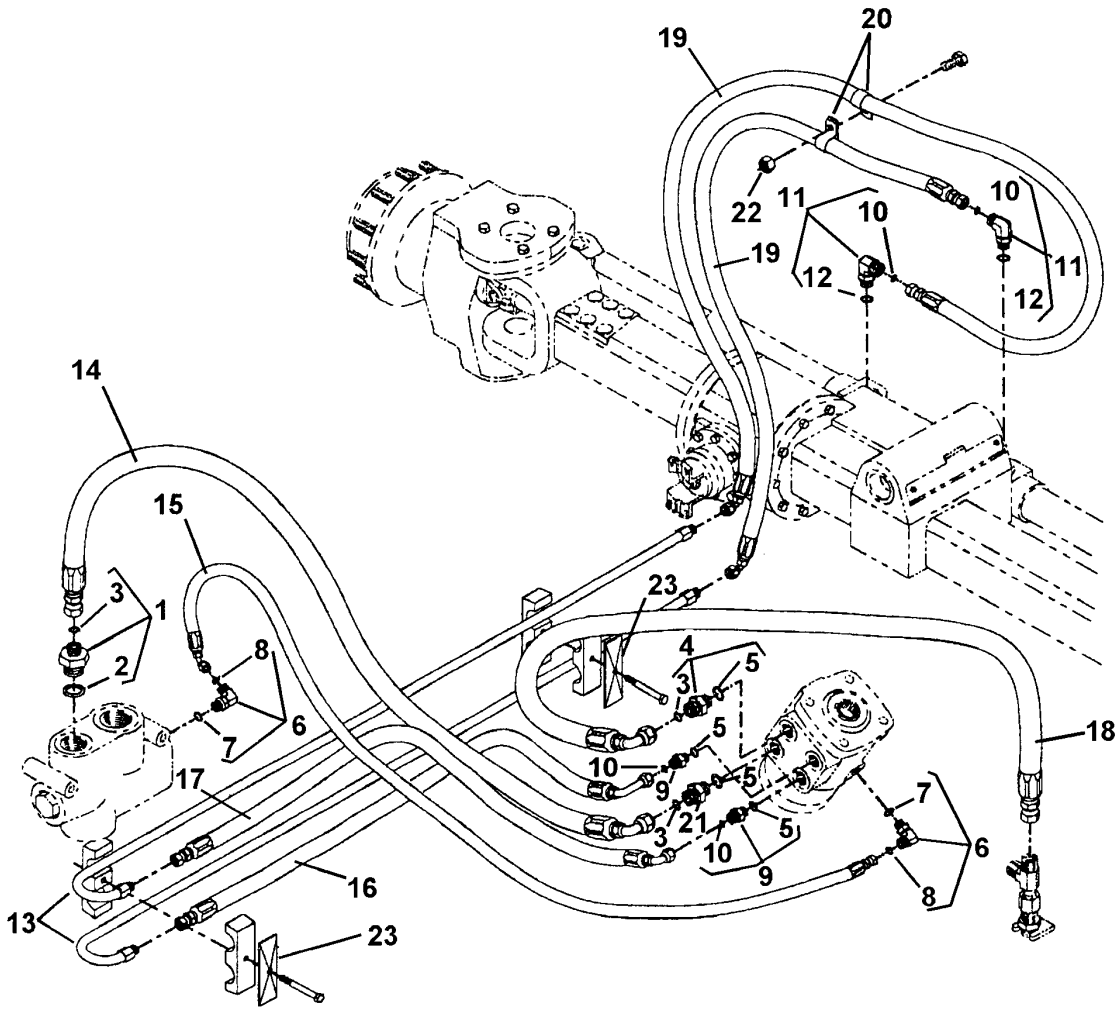

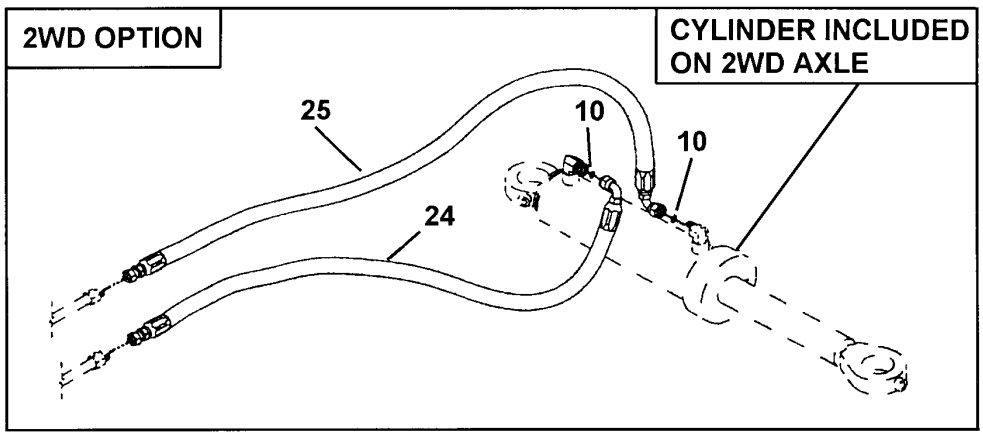

TP56231

STEERING VALVE HYDRAULIC HOSES AND FITTINGS
(SERIAL NO. -843069)

KEY	PART NO.	PART NAME	QTY	SERIAL NO.	REMARKS
1	38H1175	ADAPTER	1	-843069	
2	U12547	O-RING	1	-843069	23.470 X 2.946 MM (0.924" X 0.116")
3	T77857	O-RING	3	-843069	12.421 X 1.778 MM (0.489" X 0.070")
4	38H1161	ADAPTER	1	-843069	(ALSO ORDER T77857 AND R26375)
5	R26375	O-RING	4	-843069	16.358 X 2.210 MM (0.644" X 0.087")
6	38H1003	ELBOW FITTING	2	-843069	(ALSO ORDER T77814 AND R28782)
7	R28782	O-RING	2	-843069	8.915 X 1.829 MM (0.351" X 0.072")
8	T77814	O-RING	2	-843069	7.645 X 1.778 MM (0.301" X 0.070")
9	AT144204	FITTING	2	-843069	
10	T77613	O-RING	6	-843069	9.246 X 1.778 MM (0.364" X 0.070")
11	38H1004	ELBOW FITTING	2	-843069	(ALSO ORDER T77613 AND R26448)
12	R26448	O-RING	2	-843069	11.887 X 1.981 MM (0.468" X 5/64")
13	AT216746	OIL TUBE	2	-843069	
14	AT216236	HYDRAULIC HOSE - FABRICATE	1	-843069	
15	AT216238	HYDRAULIC HOSE - FABRICATE	1	-843069	
16	AT216240	HYDRAULIC HOSE - FABRICATE	1	-843069	
17	AT216239	HYDRAULIC HOSE - FABRICATE	1	-843069	
18	AT216237	HYDRAULIC HOSE - FABRICATE	1	-843069	
19	AT216256	HYDRAULIC HOSE - FABRICATE	2	-843069	
20	T76719	CLAMP	2	-843069	
21	AT216037	CHECK VALVE	1	-843069	
22	T11234	LOCK NUT	1	-843069	
23	AT216166	CLAMP	2	-843069	
24	AT181874	HYDRAULIC HOSE - FABRICATE	1	-843069	
25	AT181875	HYDRAULIC HOSE - FABRICATE	1	-843069	

STEERING VALVE HYDRAULIC HOSES AND FITTINGS
(SERIAL NO. 843070-880053)

TP61783 -UN-21JAN99

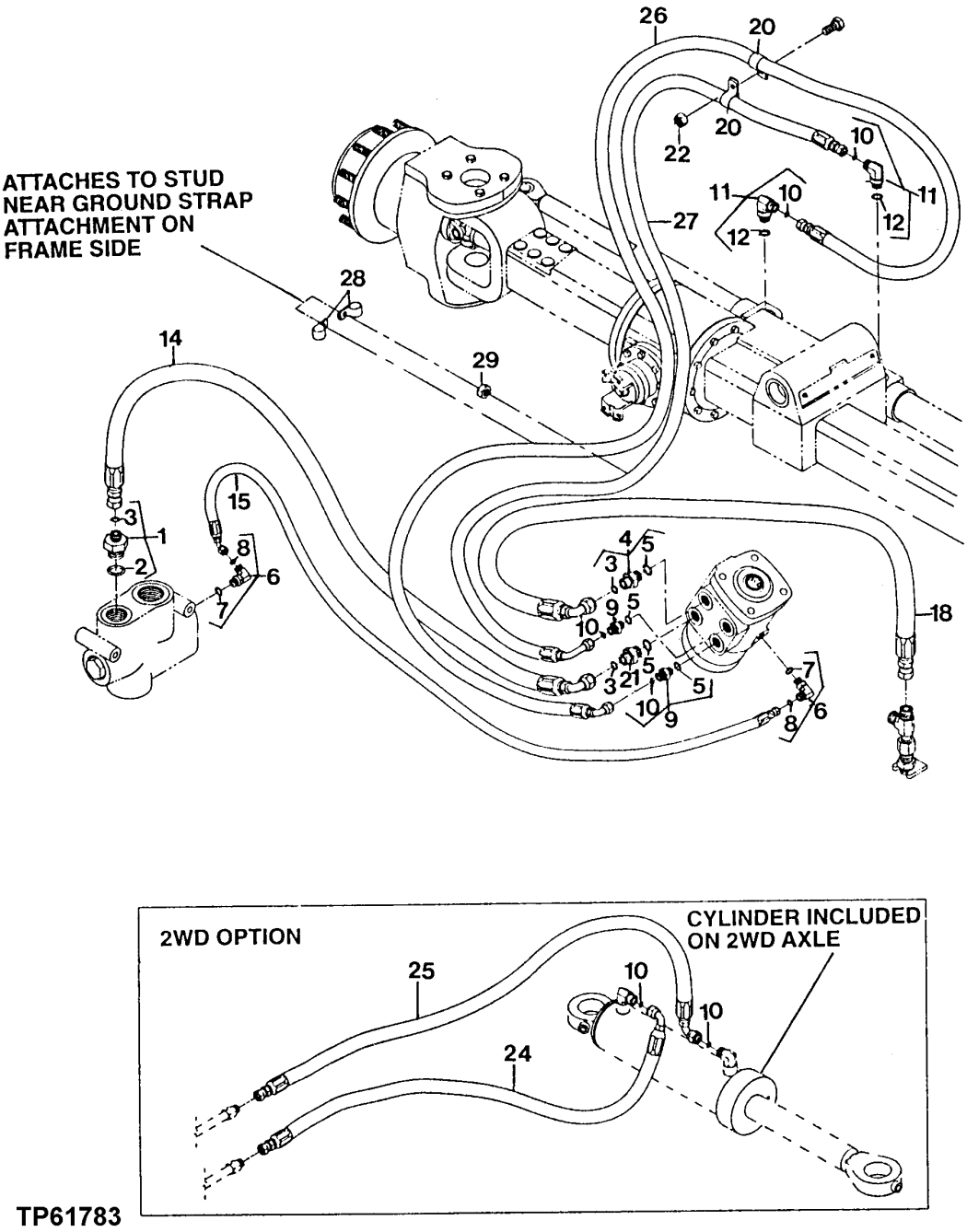

STEERING VALVE HYDRAULIC HOSES AND FITTINGS
(SERIAL NO. 843070-880053)

KEY	PART NO.	PART NAME	QTY	SERIAL NO.	REMARKS
1	38H1175	ADAPTER	1	843070-880053	
2	U12547	O-RING	1	843070-880053	23.470 X 2.946 MM (0.924" X 0.116")
3	T77857	O-RING	3	843070-880053	12.421 X 1.778 MM (0.489" X 0.070")
4	38H1161	ADAPTER	1	843070-880053	
5	R26375	O-RING	4	843070-880053	16.358 X 2.210 MM (0.644" X 0.087")
6	38H1003	ELBOW FITTING	2	843070-880053	
7	R28782	O-RING	2	843070-880053	8.915 X 1.829 MM (0.351" X 0.072")
8	T77814	O-RING	2	843070-880053	7.645 X 1.778 MM (0.301" X 0.070")
9	AT144204	FITTING	2	843070-880053	
10	T77613	O-RING	6	843070-880053	9.246 X 1.778 MM (0.364" X 0.070")
11	38H1004	ELBOW FITTING	2	843070-880053	(ALSO ORDER T77613 AND R26448)
12	R26448	O-RING	2	843070-880053	11.887 X 1.981 MM (0.468" X 5/64")
14	AT216236	HYDRAULIC HOSE - FABRICATE	1	843070-880053	
15	AT216238	HYDRAULIC HOSE - FABRICATE	1	843070-880053	
18	AT216237	HYDRAULIC HOSE - FABRICATE	1	843070-880053	
20	T76719	CLAMP	2	843070-880053	
21	AT216037	CHECK VALVE	1	843070-880053	
22	T11234	LOCK NUT	1	843070-880053	
24	AT184389	HYDRAULIC HOSE - FABRICATE	1	843070-880053	
25	AT184390	HYDRAULIC HOSE - FABRICATE	1	843070-880053	
26	AT184391	HYDRAULIC HOSE - FABRICATE	1	843070-880053	
27	AT184392	HYDRAULIC HOSE - FABRICATE	1	843070-880053	
28	T75197	CLAMP	2	843070-880053	
29	T11234	LOCK NUT	1	843070-880053	3/8"

STEERING VALVE HYDRAULIC HOSES AND FITTINGS
(SERIAL NO. 880054 -)

T195506 -UN-14OCT03

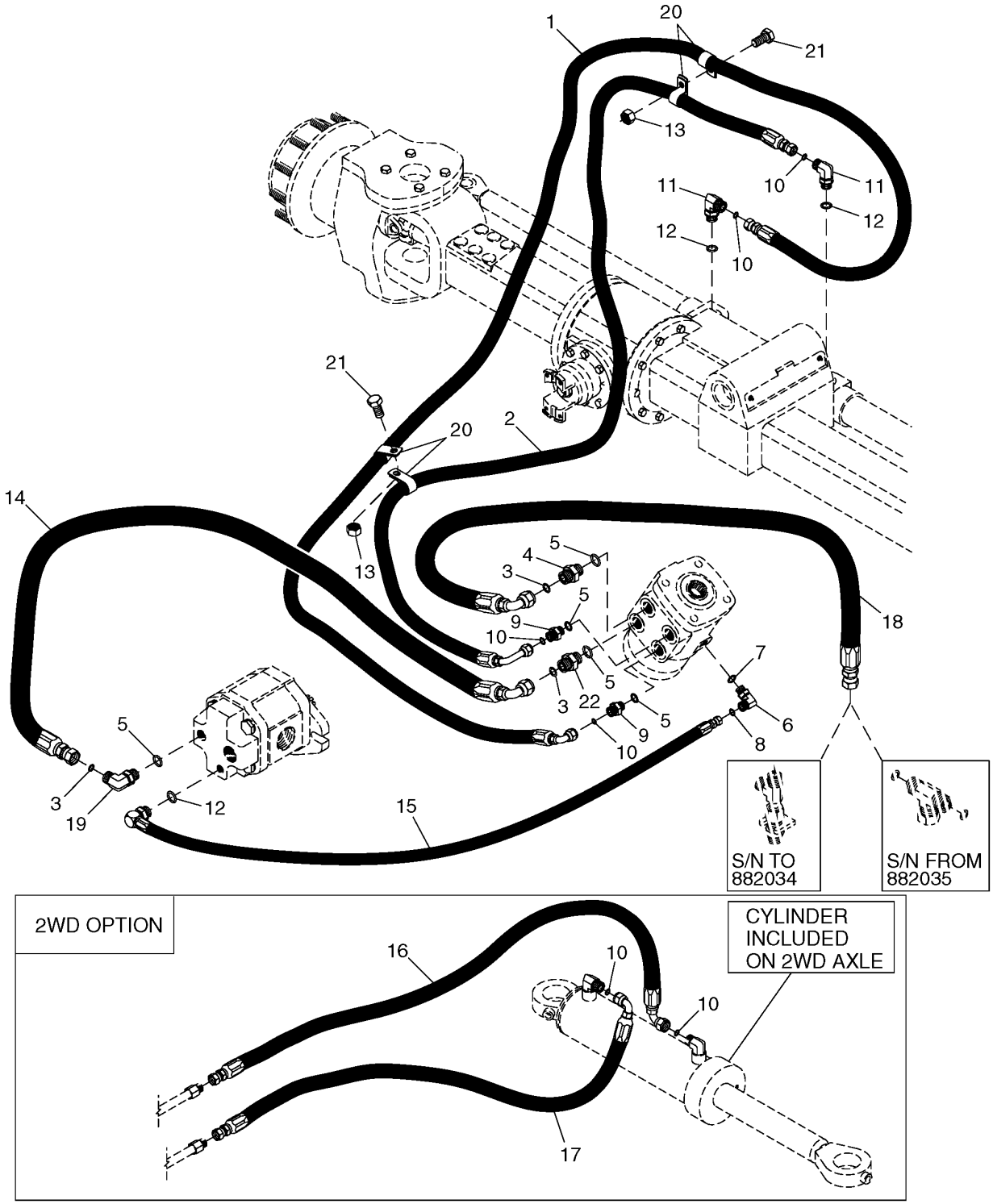

T195506

STEERING VALVE HYDRAULIC HOSES AND FITTINGS
(SERIAL NO. 880054-)

KEY	PART NO.	PART NAME	QTY	SERIAL NO.	REMARKS
1	AT188816	HYDRAULIC HOSE - FABRICATE	1		
2	AT188822	HYDRAULIC HOSE - FABRICATE	1		
3	T77857	O-RING	3		12.421 X 1.778 MM (0.489" X 0.070")
4	38H1161	ADAPTER	1		
5	R26375	O-RING	5		16.358 X 2.210 MM (0.644" X 0.087")
6	38H1003	ELBOW FITTING	1		
7	R28782	O-RING	1		8.915 X 1.829 MM (0.351" X 0.072")
8	T77814	O-RING	1		7.645 X 1.778 MM (0.301" X 0.070")
9	38H1445	ADAPTER	2	880054-882700	
	AT201397	FITTING	2	882701-	
10	T77613	O-RING	4		9.246 X 1.778 MM (0.364" X 0.070")
11	38H1009	ELBOW FITTING	2		(ALSO ORDER T77613 AND R26448)
12	R26448	O-RING	2		11.887 X 1.981 MM (0.468" X 5/64")
13	T11234	LOCK NUT	1		3/8"
14	AT188823	HYDRAULIC HOSE - FABRICATE	1		
15	AT188824	HYDRAULIC HOSE - FABRICATE	1		
16	AT188825	HYDRAULIC HOSE - FABRICATE	1		
17	AT188826	HYDRAULIC HOSE - FABRICATE	1		
18	AT188827	HYDRAULIC HOSE - FABRICATE	1	880054-882700	
	CB11447844	HYDRAULIC HOSE	1	882701-	
19	38H1005	ELBOW FITTING	1		
20	H75541	CLAMP	4	880054-882700	
	T76719	CLAMP	4	882700-	
21	19H2633	CAP SCREW	2		3/8" X 1-1/2"
22	AT141527	CHECK VALVE	1		

POWER STEERING CYLINDER
(WITHOUT MECHANICAL FRONT WHEEL DRIVE)
(SERIAL NO. - XXXXXX)

TP80324 -UN-03DEC99

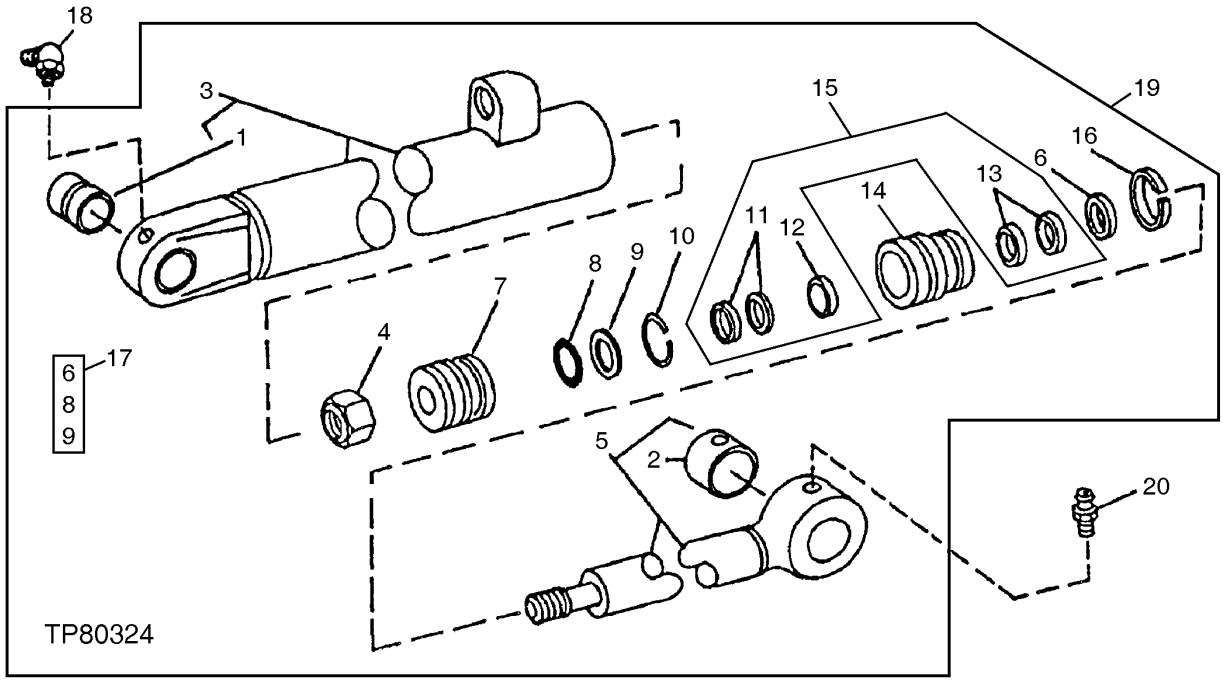

KEY	PART NO.	PART NAME	QTY	SERIAL NO.	REMARKS
1	R81854	BUSHING	1	-XXXXXX	
2	R72700	BUSHING	1	-XXXXXX	
3	RE22413	HYDRAULIC CYLINDER BARREL	1	-XXXXXX	
4	R82570	LOCK NUT	1	-XXXXXX	
5	RE22415	ROD	1	-XXXXXX	
6	H169509	BACK-UP RING	AR	-XXXXXX	(SUB FOR R91726)
7	AH138200	PISTON	1	-XXXXXX	WITH WEAR RINGS AND SEALS
8	H158942	O-RING	1	-XXXXXX	
9	R79117	WASHER	1	-XXXXXX	
10	R82571	SNAP RING	1	-XXXXXX	
11	RE21846	SEAL	1	-XXXXXX	
12	R82566	SEAL	1	-XXXXXX	
13	RE24532	SEAL	1	-XXXXXX	
14	R94417	HYDR. CYLINDER ROD GUIDE	1	-XXXXXX	
15	RE21875	HYDRAULIC CYLINDER KIT	1	-XXXXXX	
16	R90565	SNAP RING	1	-XXXXXX	
17	AH167552	HYDRAULIC CYLINDER KIT	1	-XXXXXX	(SUB FOR AH137789)
18	JD7838	ADAPTER	1	-XXXXXX	
19	AH139130	HYDRAULIC CYLINDER	1	-XXXXXX	
20	JD7798	LUBRICATION FITTING	1	-XXXXXX	(ROD END)

POWER STEERING CYLINDER
(WITHOUT MECHANICAL FRONT WHEEL DRIVE)
(SERIAL NO. XXXXXX-)

TP80324 -UN-03DEC99

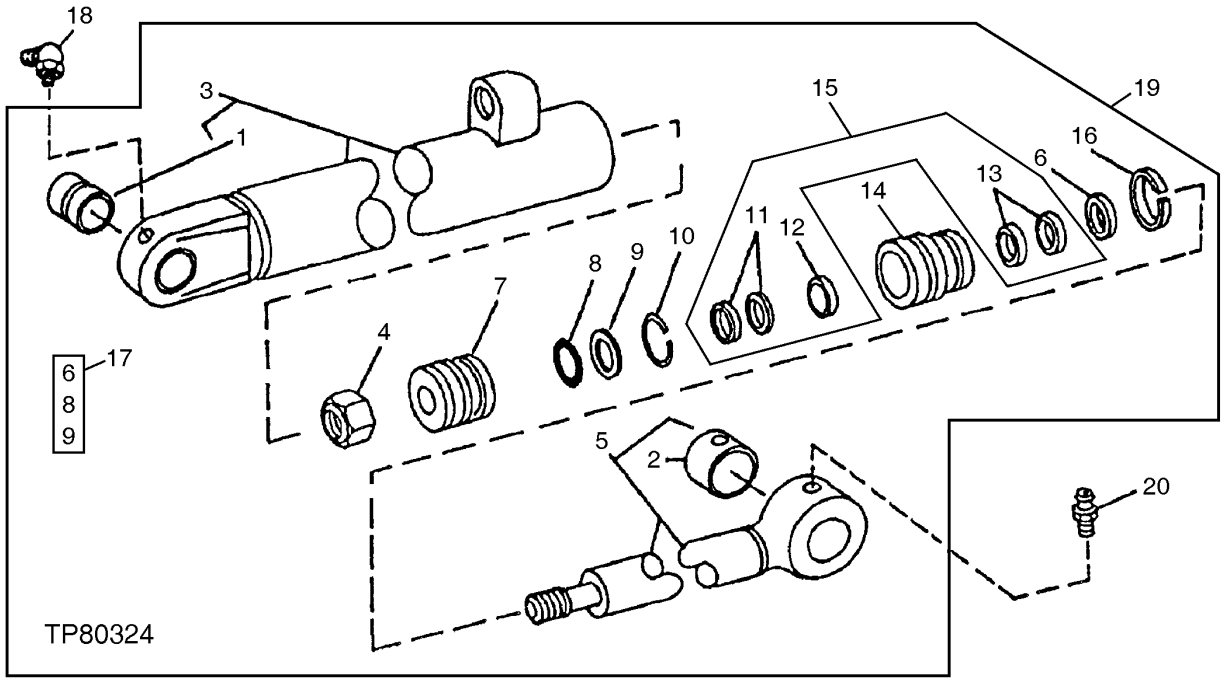

KEY	PART NO.	PART NAME	QTY	SERIAL NO.	REMARKS
1	R81854	BUSHING	1	XXXXXX-	
2	R72700	BUSHING	1	XXXXXX-	
3	RE22413	HYDRAULIC CYLINDER BARREL	1	XXXXXX-	
4	R82570	LOCK NUT	1	XXXXXX-	
5	RE22415	ROD	1	XXXXXX-	
6	H169509	BACK-UP RING	AR	XXXXXX-	
7	AH138200	PISTON	1	XXXXXX-	WITH WEAR RINGS AND SEALS
8	H158942	O-RING	1	XXXXXX-	
9	R79117	WASHER	1	XXXXXX-	
10	R82571	SNAP RING	1	XXXXXX-	
11	AH151381	SEAL	1	XXXXXX-	
12	H158676	SEAL	1	XXXXXX-	
13	AH151380	SEAL	1	XXXXXX-	
14	H157662	HYDR. CYLINDER ROD GUIDE	1	XXXXXX-	
15	AH149810	HYDRAULIC CYLINDER KIT	1	XXXXXX-	(ROD END)
16	R90565	SNAP RING	1	XXXXXX-	
17	AH167552	HYDRAULIC CYLINDER KIT	1	XXXXXX-	(SUB FOR AH137789)
18	JD7838	ADAPTER	1	XXXXXX-	
19	AH154780	HYDRAULIC CYLINDER	1	XXXXXX-	
20	T162396	LUBRICATION FITTING	1	XXXXXX-	(ROD END)

STEERING CYLINDER
(MECHANICAL FRONT WHEEL DRIVE)

TP70433 -UN-30AUG00

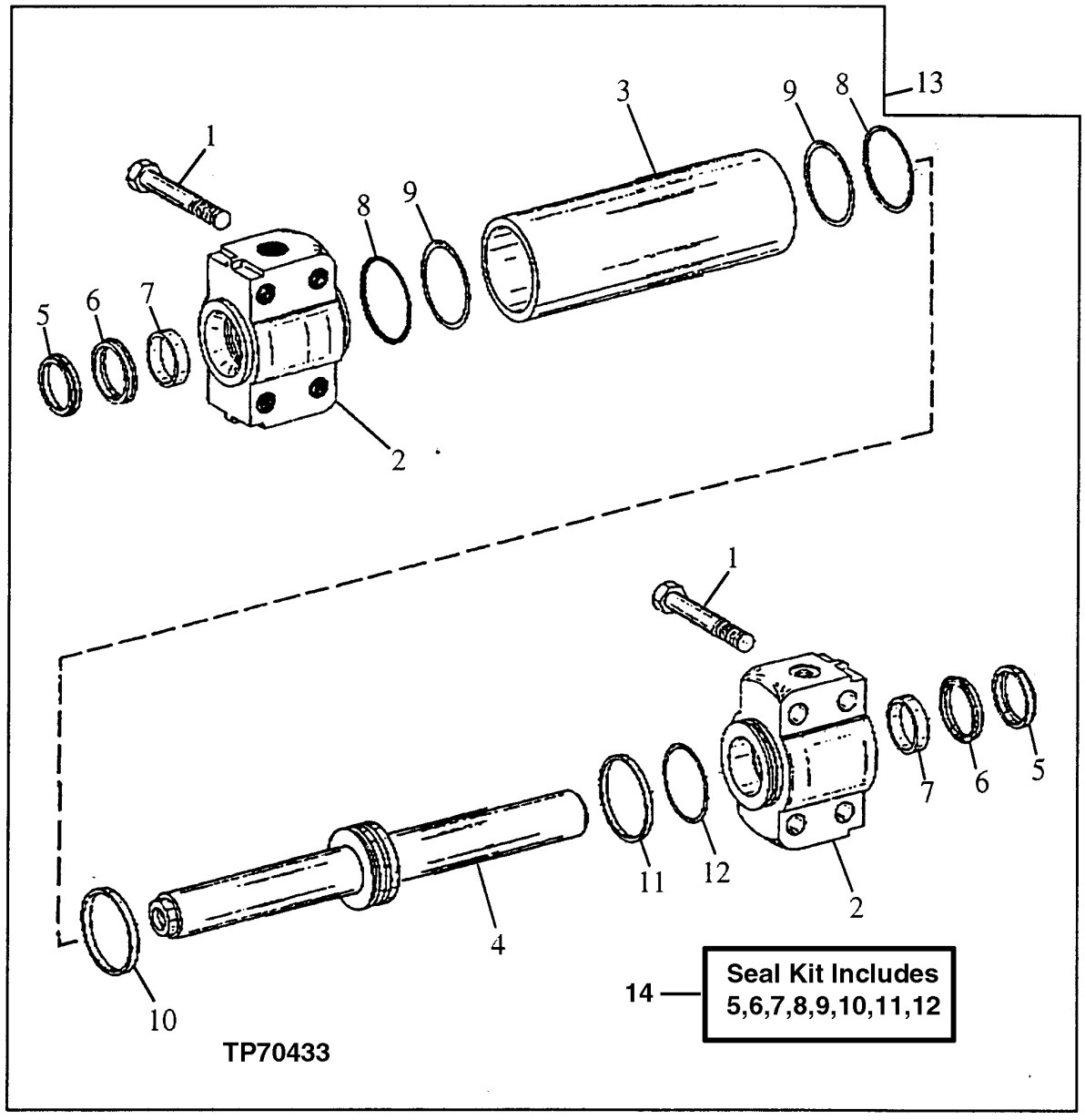

STEERING CYLINDER
(MECHANICAL FRONT WHEEL DRIVE)

KEY	PART NO.	PART NAME	QTY	SERIAL NO.	REMARKS
1	19M8632	CAP SCREW	8		M16 X 75
2	T153723	HYDRAULIC CYLINDER CAP	2		
3	T153742	HYDRAULIC CYLINDER BARREL	1		
4	AT195573	ROD	1		(SUB FOR T153743)
5	.....	SEAL	2		
6	.....	SEAL	2		
7	.....	GUIDE	2		
8	.....	O-RING	2		
9	.....	RING	2		
10	.....	SEAL	1		
11	.....	GUIDE	1		
12	.....	O-RING	1		
13	AT195570	CYLINDER	1		(SUB FOR AT167332)
14	T153744	HYDRAULIC CYLINDER KIT	1		

SERVICE BRAKE ASSEMBLY

T138044 -UN-20FEB01

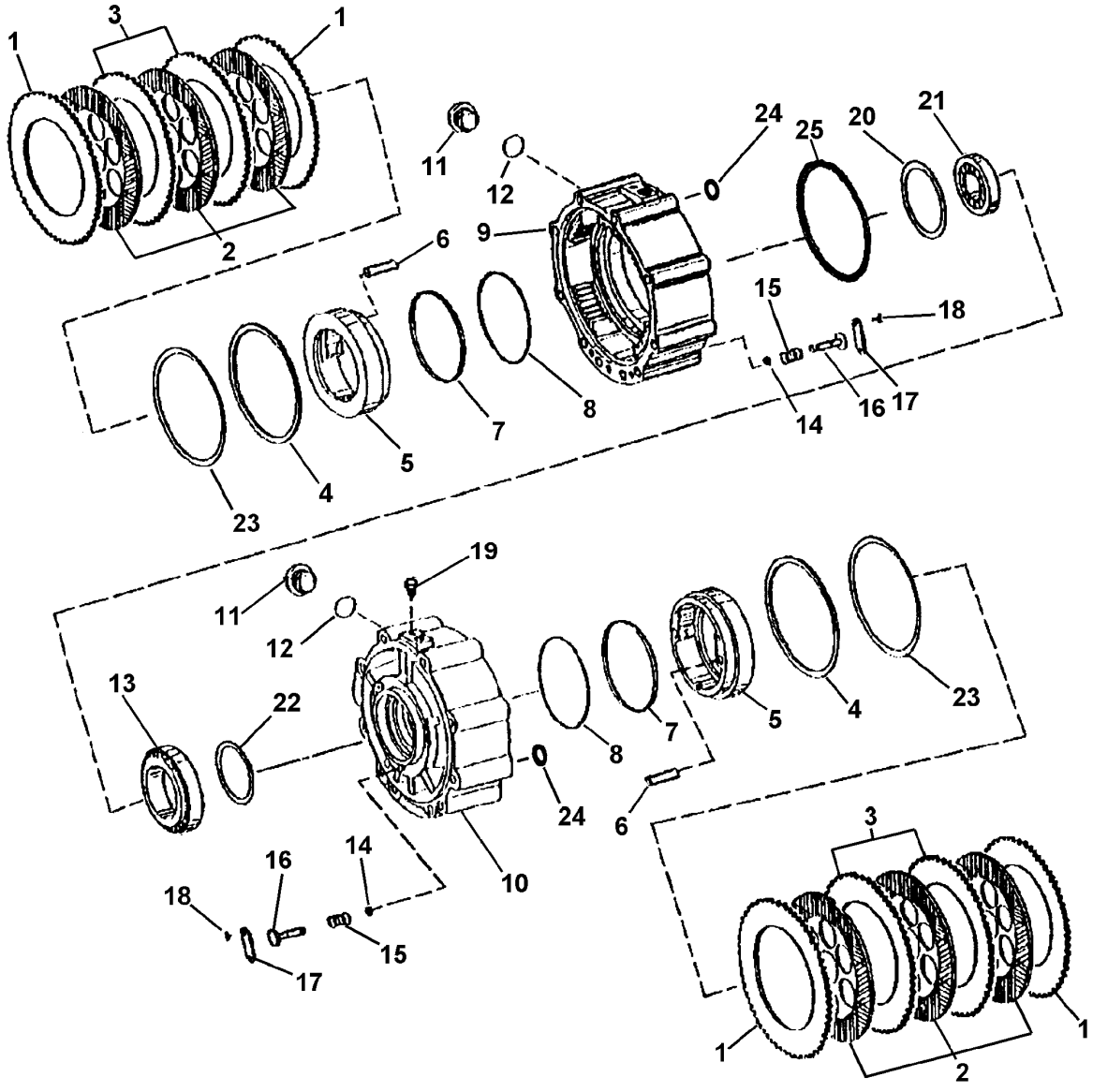

NOTE: REFER TO DTAC SOLUTION 43915 FOR DETAILS ON ALL AXLE UPDATES.

T138044

SERVICE BRAKE ASSEMBLY

KEY	PART NO.	PART NAME	QTY	SERIAL NO.	REMARKS
1	T159409	PLATE	4		(3MM)
2	AT179503	BRAKE DISK	6		
3	T161233	DISK	4		(4MM)
4	T159402	SEAL	2		
5	T185443	PISTON	2		(SUB FOR T159405 AND T166086)
6	T159399	DOWEL PIN	4		
7	T159400	SEAL	2		
8	T159401	BACK-UP RING	2		
9	T159396	HOUSING	1		RIGHT
10	T159397	HOUSING	1		LEFT
11	15M7030	PIPE PLUG	2		
12	L55580	O-RING	2		
13	AT179504	TAPERED ROLLER BEARING	1		LEFT
14	T159407	RING	6		
15	T159408	SPRING	6		
16	T159406	PIN	6		
17	T159398	LOCK PLATE	6		
18	19M8425	CAP SCREW	12		
19	T162517	SCREW	2		(BLEED)
20	T161247	SHIM	1		.20 MM
	T161246	SHIM	1		.30 MM
	T161245	SHIM	1		.40 MM
	T161244	SHIM	1		.50 MM
	T161243	SHIM	1		.70 MM
	T161242	SHIM	1		.75MM
	T161241	SHIM	1		.80 MM
	T161240	SHIM	1		.85MM
	T161239	SHIM	1		.90 MM
	T161238	SHIM	1		.95 MM
21	AT179505	TAPERED ROLLER BEARING	1		RIGHT
22	T159444	SHIM	1		.1 MM
	T159445	SHIM	1		.15 MM
	T159443	SHIM	1		.2 MM
	T159440	SHIM	1		.3 MM
	T159441	SHIM	1		.5 MM
	T159442	SHIM	1		1.0 MM
	T159446	SHIM	1		1.1 MM
	T159447	SHIM	1		1.2 MM
	T159448	SHIM	1		1.3 MM
	T159449	SHIM	1		1.4 MM
	T159450	SHIM	1		1.5 MM
	T159451	SHIM	1		1.6 MM
	T159452	SHIM	1		1.7 MM
	T159453	SHIM	1		1.8 MM
	T183500	SOLID SHIM	1		2.15 MM
	T183502	SOLID SHIM	1		2.25 MM
	T183505	SOLID SHIM	1		2.4 MM
	T183506	SOLID SHIM	1		2.45 MM
	T183507	SOLID SHIM	1		2.5 MM
	T159457	SHIM	1		2.8 MM
	T159459	SHIM	1		3.0 MM
	T159461	SHIM	1		3.2 MM
	T159463	SHIM	1		3.4 MM
23	T159403	BACK-UP RING	2		
24	T159373	O-RING	8		
25	T159362	O-RING	1		

BRAKE VALVE AND PEDALS
(SERIAL NO. -880907)

TP52623 -UN-31JAN97

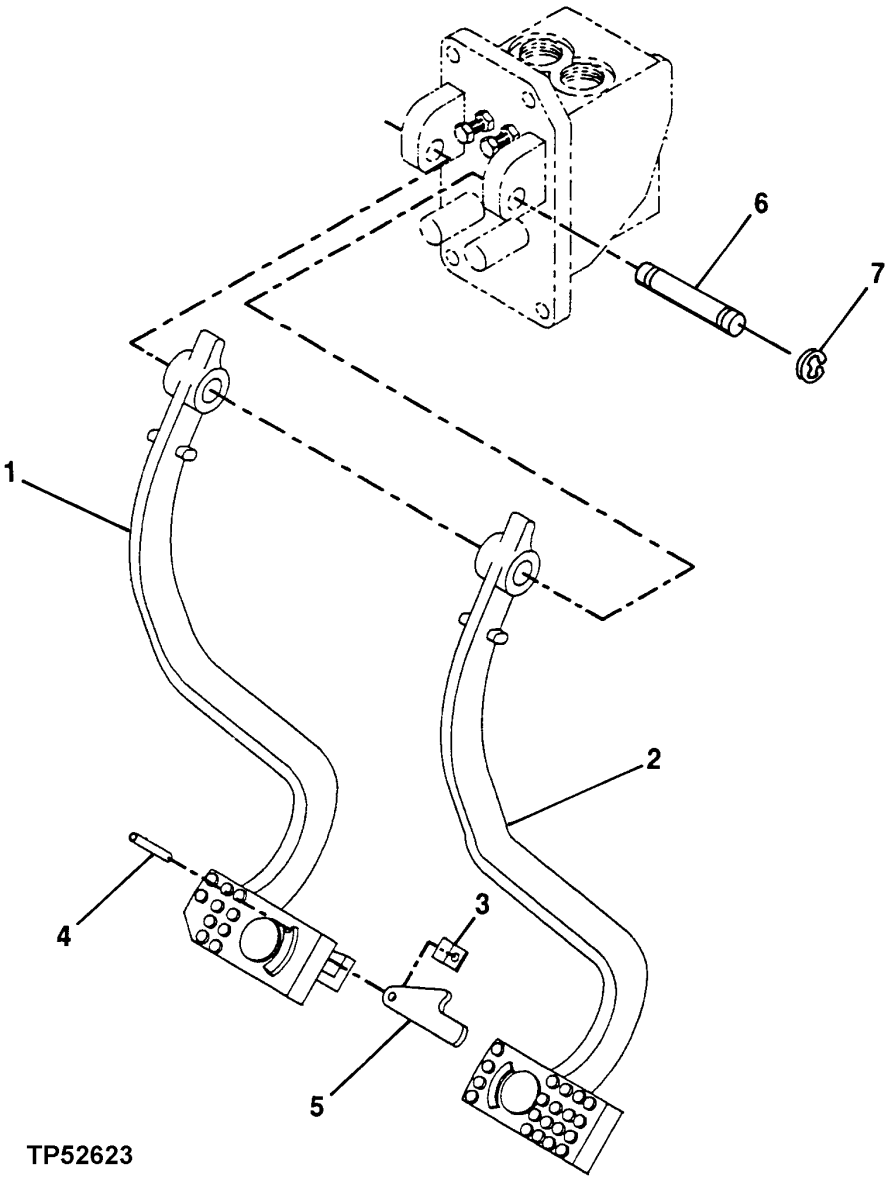

BRAKE VALVE AND PEDALS
(ENGINE SERIAL NO. -880907)

KEY	PART NO.	PART NAME	QTY	SERIAL NO.	REMARKS
1	RE42423	PEDAL	1		LEFT
2	RE42424	PEDAL	1		RIGHT
3	R50034	LEAF SPRING	1		
4	34H311	SPRING PIN	1		1/4" X 7/8"
5	R50879	ARM	1		
6	T133078	PIN FASTENER	1		
7	F2863R	SNAP RING	2		

BRAKE VALVE AND PEDALS
(SERIAL NO.880908-)

T153159 -UN-02APR02

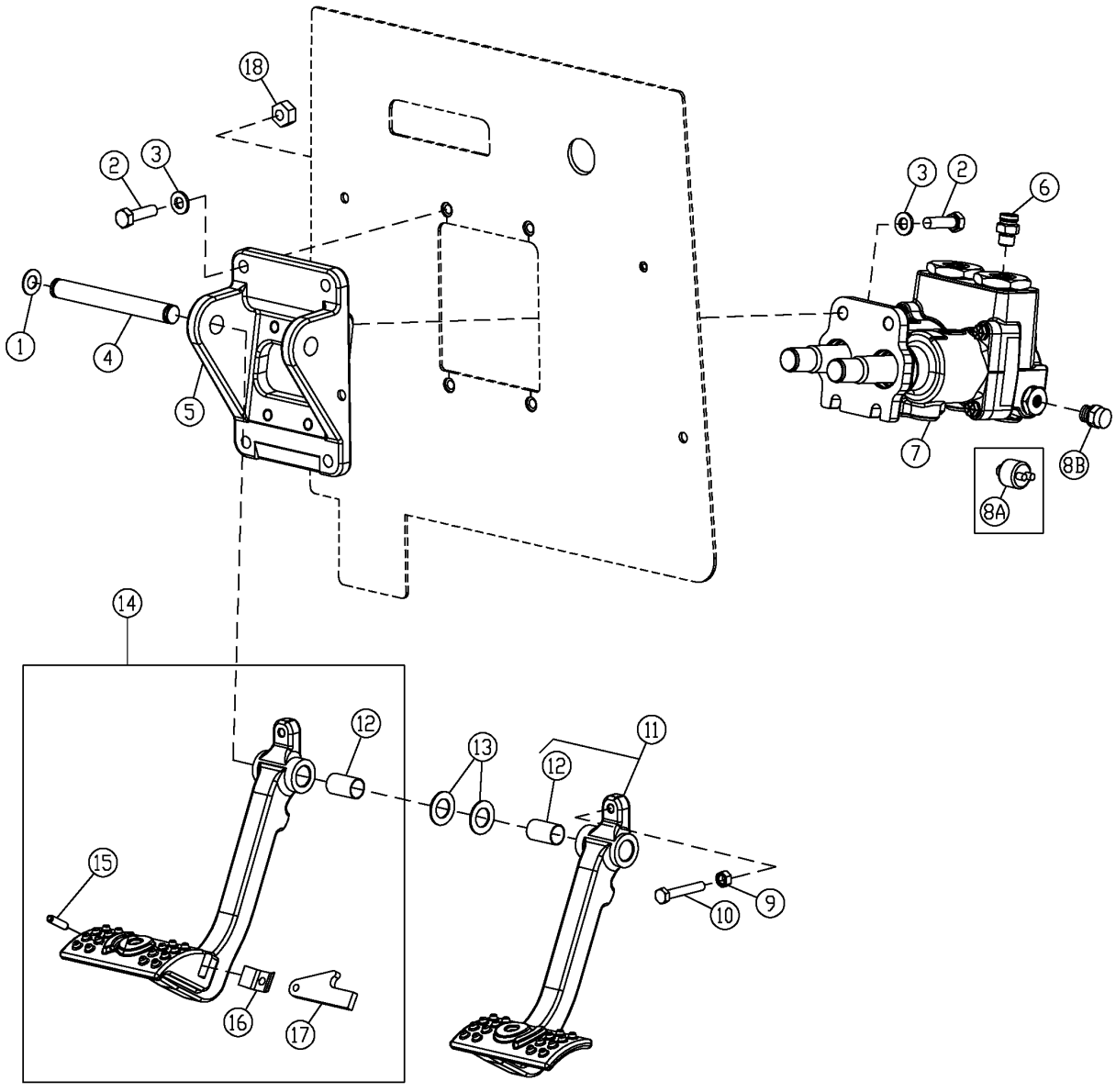

T153159

BRAKE VALVE AND PEDALS
(SERIAL NO.880908-)

KEY	PART NO.	PART NAME	QTY	SERIAL NO.	REMARKS
1	F2863R	SNAP RING	1		
2	19M7550	CAP SCREW	8	-882700	M10 X 35
	19H2633	CAP SCREW	8	882701-	9.525 X 38.100 MM
3	24M7239	WASHER	8		
4	T165282	PIN FASTENER	1		
5	.....	PLATE	1	-882700	
	T166171	BRACKET	1	882701-	
6	AT187666	ADAPTER	7		
	AT193365	KIT	1		STC
7	AT304761	MANUAL HYDRAULIC VALVE	1		(SUB FOR AT184578)
8A	R32548	TOUCH SWITCH	2	-XXXXXX	(BRAKE LIGHT PRESSURE SWITCH)
8B	R42852	PIPE PLUG	2	XXXXXX-	
9	14M7273	NUT	2		M8
10	19M7164	CAP SCREW	2	-882700	M8 X 50
	19M7981	CAP SCREW	2	882701-	M8 X 55
11	AT184592	PEDAL	1		RIGHT
12	B177R	BUSHING	1		
13	24H1381	WASHER	2		
14	AT184579	PEDAL	1		LEFT
15	34H101	SPRING PIN	1		1/4" X 1"
16	R50034	LEAF SPRING	1		
	24H1285	WASHER	1		17/64" X 7/16" X 0.065"
17	R50879	ARM	1		
18	T11234	LOCK NUT	4		

BRAKE VALVE AND REPAIR KIT
(SERIAL NO. -880907)

TP80347 -UN-10JAN00

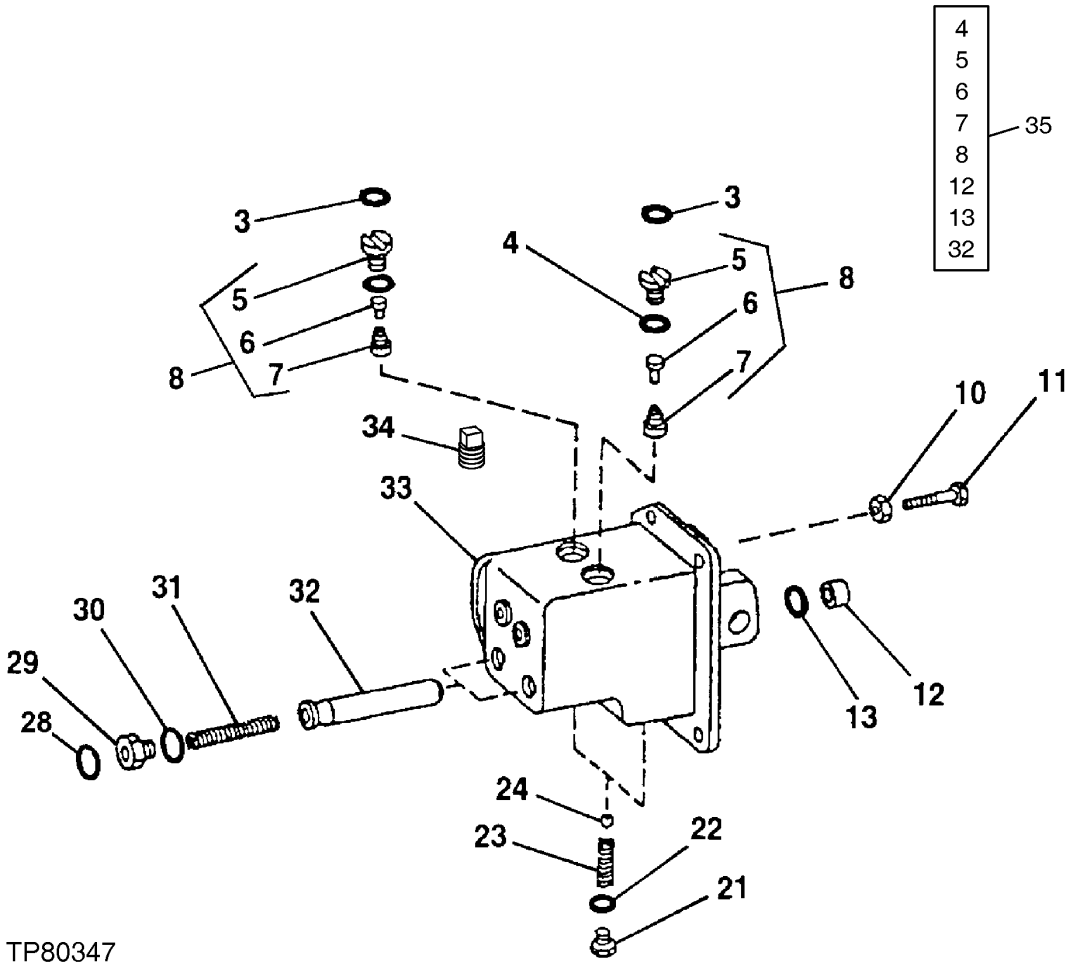

BRAKE VALVE AND REPAIR KIT
(SERIAL NO. -880907)

KEY	PART NO.	PART NAME	QTY	SERIAL NO.	REMARKS
3	R29936	O-RING	2		29.743 X 2.946 MM (1.171" X 0.116")
4	R26906	O-RING	2		19.177 X 2.464 MM (0.755" X 0.097")
5	.....	SEAT	2		
6	.....	VALVE	2		
7	.....	SPRING	2		
8	.....	CHECK VALVE	2		AT135655 NO LONGER AVAILABLE, (SUB AT184432)
10	14H732	NUT	2		3/8"
11	L32504	CAP SCREW	2		9.525 X 31.750 MM
12	T22101	SEAL	2		
13	T163092	SEAL	2		(SUB FOR R495R, THIS APPLICATION)
16	34H312	SPRING PIN	1		1/4" X 1"
21	R39112	FITTING	2		
22	R26375	O-RING	2		16.358 X 2.210 MM (0.644" X 0.087")
23	T21816	SPRING	2		
24	D2361R	BALL	2		
28	R26287	O-RING	2		7.645 X 1.626 MM (0.301" X 0.064")
29	R50110	FITTING	2		
30	U12547	O-RING	2		23.470 X 2.946 MM (0.924" X 0.116")
31	A4737R	SPRING	2		
32	.....	PISTON	2		T127125 NO LONGER AVAILABLE, (SUB AT184432)
33	AT186842	HOUSING	1		(INCLUDES T122169 AND 15H558)
34	15H558	PIPE PLUG	1		1/16"
35	AT184432	KIT	1		(REQUIRES 2 KITS FOR 1 VALVE)

BRAKE VALVE ASSEMBLY AND REPAIR KIT
(SERIAL N0.880908-)

TP69682 -UN-22SEP00

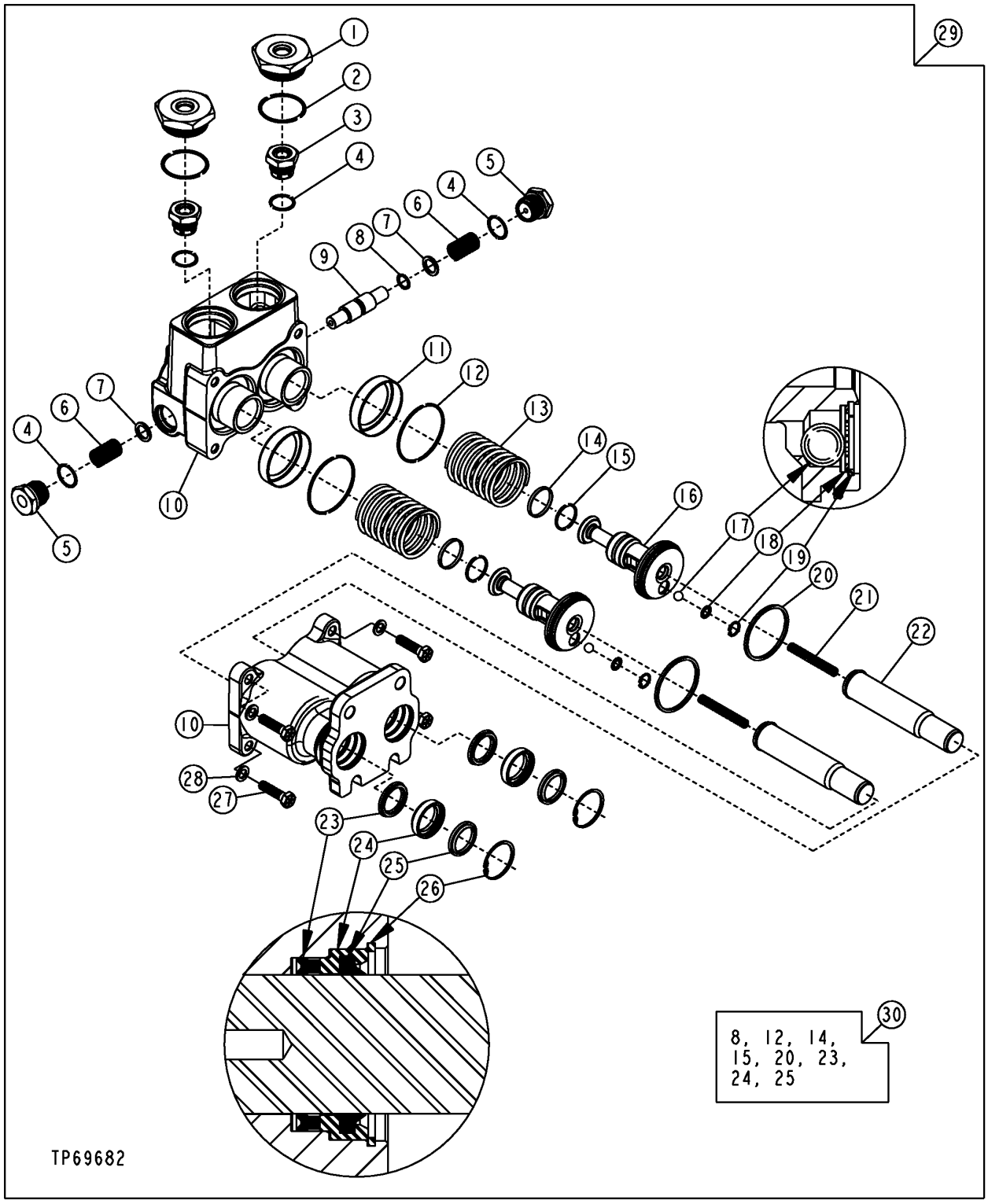

BRAKE VALVE ASSEMBLY AND REPAIR KIT
(SERIAL NO.880908-)

KEY	PART NO.	PART NAME	QTY	SERIAL NO.	REMARKS
1	T183268	FITTING	2		
2	U13639	O-RING	2		
3	AT188343	CHECK VALVE	2		
4	R26906	O-RING	4		
5	T185926	PLUG	2		
6	T183274	SPRING	2		
7	T183273	WASHER	2		
8	.....	RING	2		
9	T183272	PISTON	1		
10	.....	HOUSING	1		(ORDER AT304761)
11	T183271	RETAINER	2		
12	.....	O-RING	2		
13	T183270	SPRING	2		
14	.....	SEAL	2		
15	.....	RING	2		
16	T183276	PISTON	2		
17	R26552	BALL	2		
18	T185078	LOCK WASHER	2		
19	R48523	SNAP RING	2		
20	T183362	PISTON RING	2		
21	T183269	SPRING	2		
22	AT192151	PUSH ROD	2		
23	.....	SEAL	2		
24	.....	SEAL	2		
25	T183357	RETAINER	2		
26	M41029	SNAP RING	2		
27	19H1849	CAP SCREW	4		5/16" X 1-1/4"
28	T183310	WASHER	4		
29	AT304761	MANUAL HYDRAULIC VALVE	1		(SUB FOR AT184578)
30	AT192419	KIT	1		(BRAKE VALVE OVERHAUL) (REQUIRES 1 KIT PER VALVE)

BRAKE VALVE HOSES AND FITTINGS
(SERIAL NO. -880907)

TP80329 -UN-02DEC99

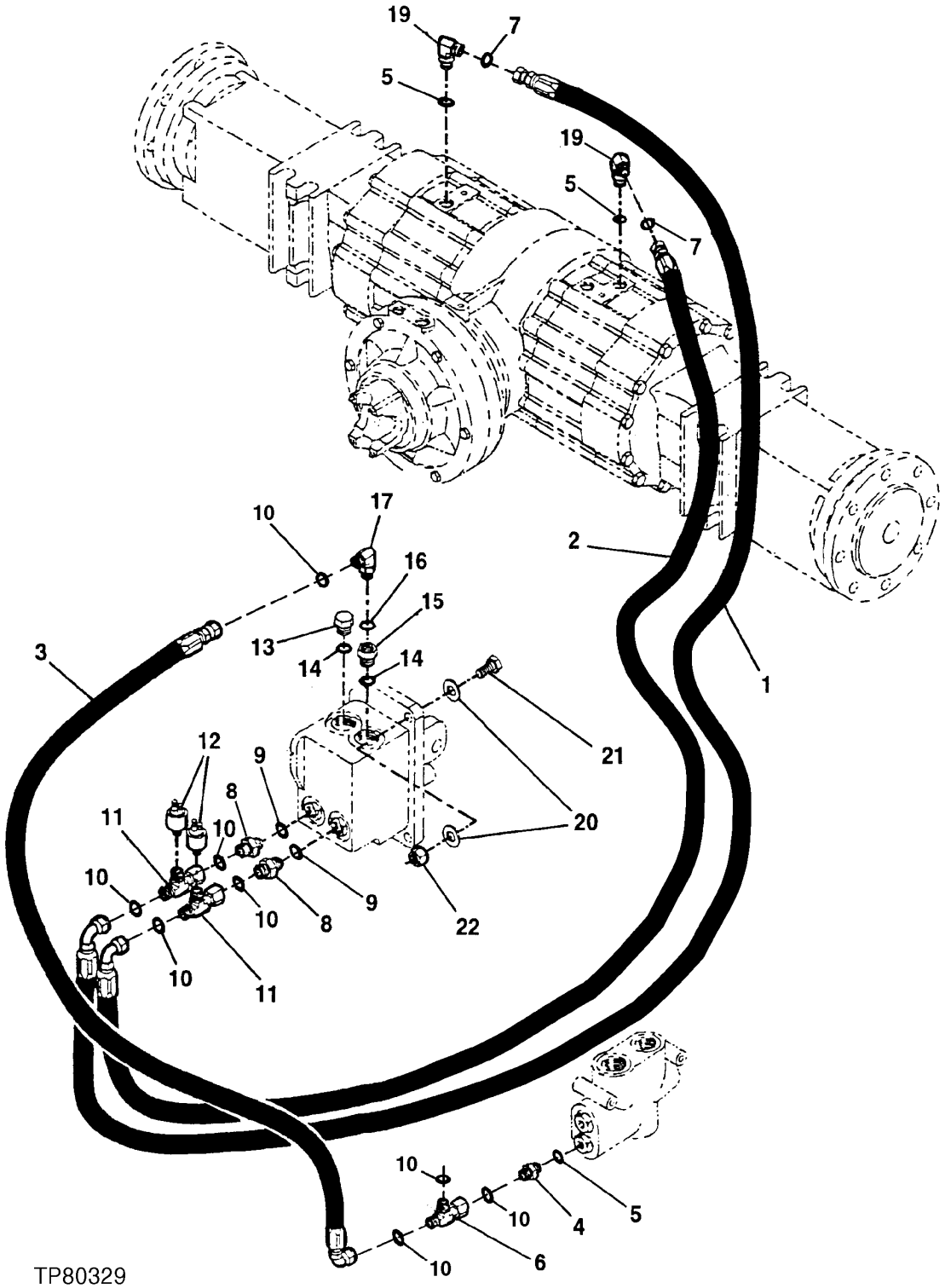

BRAKE VALVE HOSES AND FITTINGS
(SERIAL NO. -880907)

KEY	PART NO.	PART NAME	QTY	SERIAL NO.	REMARKS
1	AT216246	HYDRAULIC HOSE - FABRICATE	1	-880053	
	AT189047	HYDRAULIC HOSE - FABRICATE	1	880054-	
2	AT216245	HYDRAULIC HOSE - FABRICATE	1	-880053	
	AT189048	HYDRAULIC HOSE - FABRICATE	1	880054-	
3	AT216244	HYDRAULIC HOSE - FABRICATE	1	-880053	
	AT216249	HYDRAULIC HOSE - FABRICATE	1	880054-	
4	38H1309	ADAPTER	1		
5	R28782	O-RING	3		8.915 X 1.829 MM (0.351" X 0.072")
6	38H1030	TEE FITTING	1		
7	T77814	O-RING	4		7.645 X 1.778 MM (0.301" X 0.070")
8	38H1166	ADAPTER	2		
9	R26287	O-RING	1		7.645 X 1.626 MM (0.301" X 0.064") (SUB FOR AT201505)
10	T77613	O-RING	6		9.246 X 1.778 MM (0.364" X 0.070")
11	AT216621	TEE FITTING	2	-880053	
	38H1004	ELBOW FITTING	2	880054-	
12	R32548	TOUCH SWITCH	2		PRESSURE
13	R36636	FITTING PLUG	1	-880053	
	38H1004	ELBOW FITTING	1	880054-	
14	R29936	O-RING	2		29.743 X 2.946 MM (1.171" X 0.116")
15	AT216067	FITTING	1		
16	R26448	O-RING	1		11.887 X 1.981 MM (0.468" X 5/64")
17	38H1004	ELBOW FITTING	1		
19	38H1009	ELBOW FITTING	2		
20	24H1305	WASHER	8		13/32" X 13/16" X 0.065"
21	19H2633	CAP SCREW	4		3/8" X 1-1/2"
22	T11234	LOCK NUT	4		9.525 MM (3/8")
23	AT189740	BLEED VALVE	2	880054-	
24	AL32877	VENT	1	880054-	(SUB FOR AT189753)

BRAKE VALVE HOSES AND FITTINGS
(SERIAL NO.880908-)

T196710 -UN-04DEC03

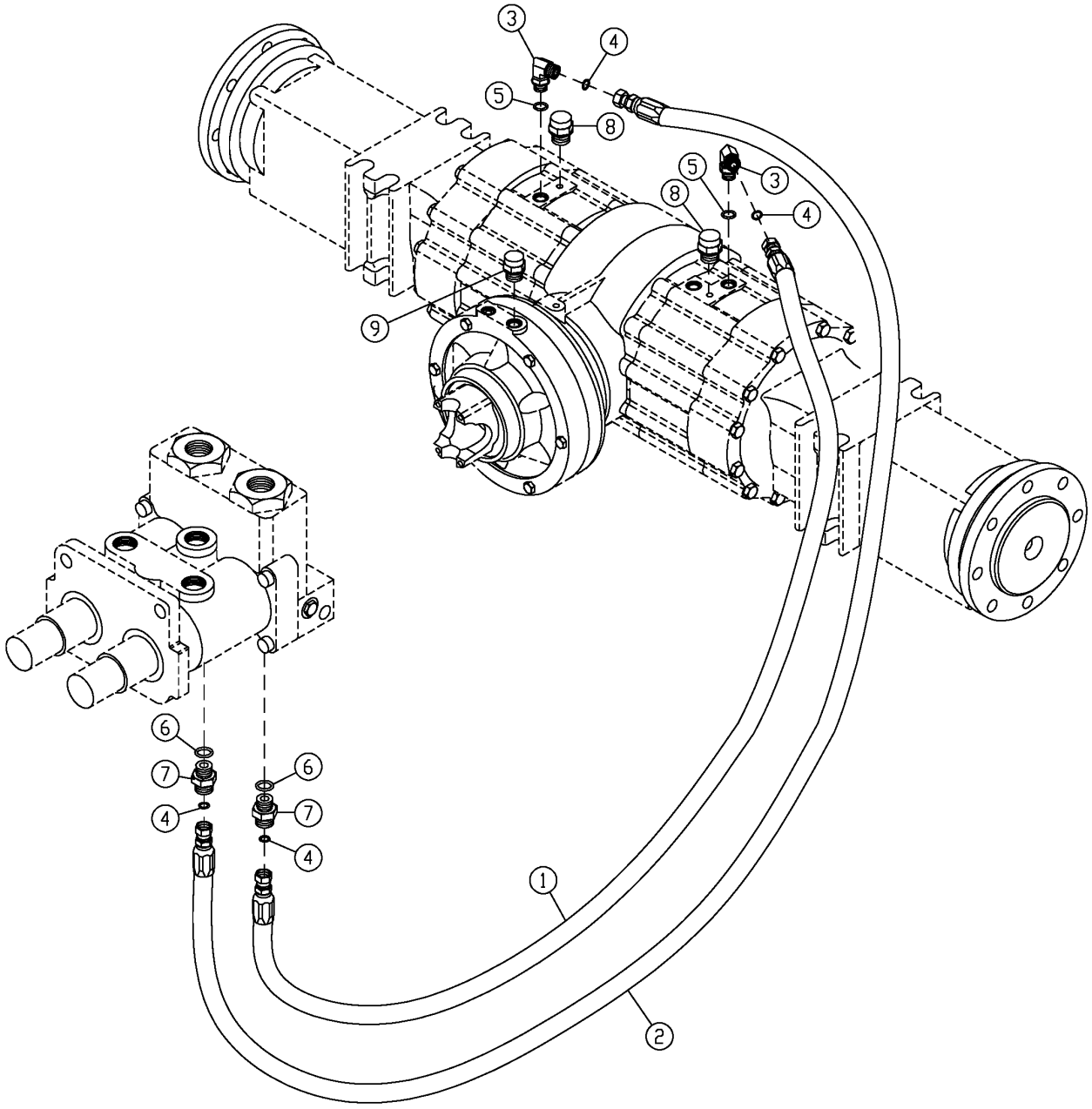

T196710

BRAKE VALVE HOSES AND FITTINGS
(SERIAL NO.880908-)

KEY	PART NO.	PART NAME	QTY	SERIAL NO.	REMARKS
1	CB11412105	HYDRAULIC HOSE - FABRICATE	1		
2	CB11412106	HYDRAULIC HOSE - FABRICATE	1		
3	.....	ELBOW FITTING	1		
4	T77814	O-RING	4		
5	R28782	O-RING	2		8.915 X 1.829 MM (0.351" X 0.072")
6	R26448	O-RING	2		
7	38H1168	ADAPTER	2		
8	AT189740	BLEED VALVE	2		
9	AL32877	VENT	1		

BRAKE VALVE HOSES AND FITTINGS
(BRAKE VALVE TO TRANSMISSION CONTROL VALVE)
(SERIAL NO.880908-882700)

T137962 -UN-23FEB01

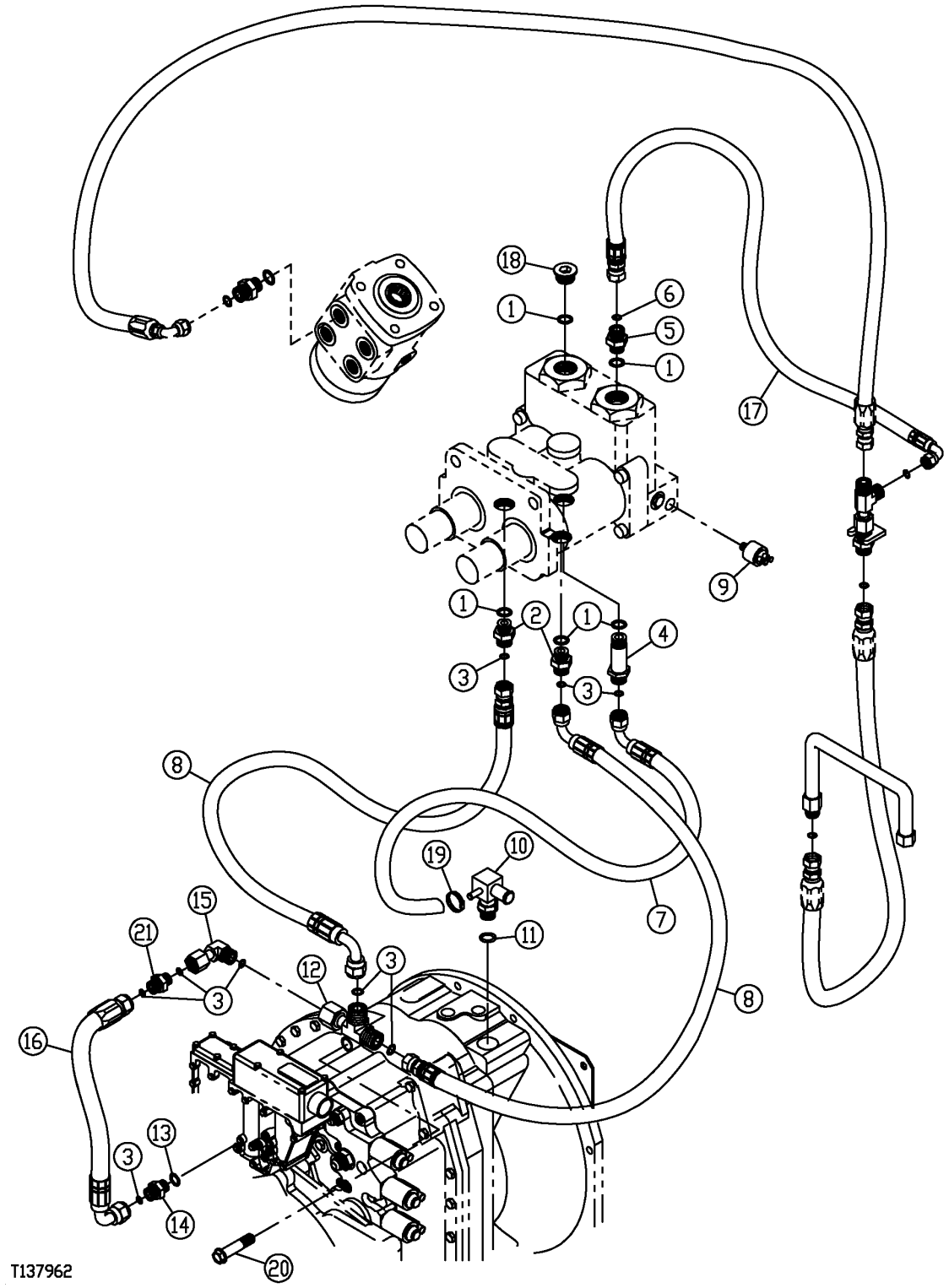

BRAKE VALVE HOSES AND FITTINGS
(BRAKE VALVE TO TRANSMISSION CONTROL VALVE)
(SERIAL NO.880908-882700)

KEY	PART NO.	PART NAME	QTY	SERIAL NO.	REMARKS
1	R26448	O-RING	5		
2	38H1160	ADAPTER	2		
3	T77613	O-RING	8		
4	38H1212	ADAPTER	1		
5	38H1173	ADAPTER	2		
6	T77857	O-RING	2		
7	CB11410534	HYDRAULIC HOSE - FABRICATE	1		
8	CB11410535	HYDRAULIC HOSE - FABRICATE	1		
9	R32548	TOUCH SWITCH	2		
10	AT186236	ELBOW FITTING	1		
11	R26906	O-RING	1		
12	AT189017	TEE FITTING	1		
13	R26286	O-RING	1		
14	38H1575	ADAPTER	1		
15	38H1094	ELBOW FITTING	1		
16	CB11410532	HYDRAULIC HOSE - FABRICATE	1		
17	AT188827	HYDRAULIC HOSE - FABRICATE	1		
18	CB11412101	HYDRAULIC HOSE - FABRICATE	1		
19	AT120105	HOSE CLAMP	1		
20	19M7479	CAP SCREW	1		M10 X 80
21	38H1278	UNION FITTING	1		

BRAKE VALVE HOSES AND FITTINGS
(BRAKE VALVE TO TRANSMISSION CONTROL VALVE)
(SERIAL NO. 882701-)

T196993 -UN-17DEC03

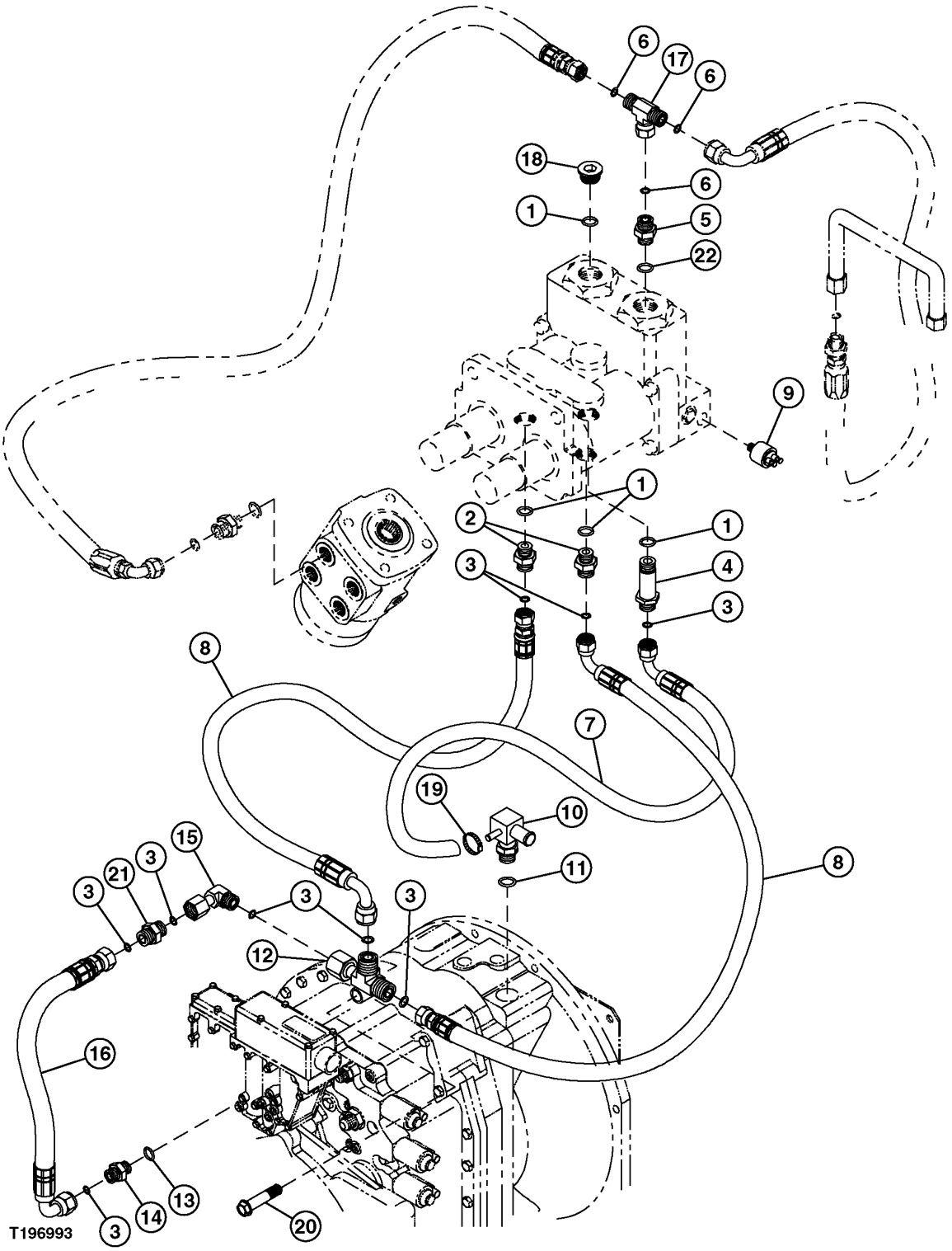

BRAKE VALVE HOSES AND FITTINGS
(BRAKE VALVE TO TRANSMISSION CONTROL VALVE)
(SERIAL NO. 882701-)

KEY	PART NO.	PART NAME	QTY	SERIAL NO.	REMARKS
1	R26448	O-RING	4		
2	38H1160	ADAPTER	2		
3	T77613	O-RING	9		
4	38H1212	ADAPTER	1		(ALSO ORDER T77613 AND R26448)
5	38H1161	ADAPTER	1		(ALSO ORDER T77857 AND R26375)
6	T77857	O-RING	3		
7	CB11410534	HYDRAULIC HOSE - FABRICATE	2		
8	CB11410535	HYDRAULIC HOSE - FABRICATE	2		
9	R32548	TOUCH SWITCH	2		
10	CB01416461	FITTING	1		
11	R26375	O-RING	1		
12	AT191868	TEE FITTING	1		
13	T26286	ISOLATOR	1		
14	38H1575	ADAPTER	1		
15	38H1094	ELBOW FITTING	1		
16	CB11416926	HOSE	1		
17	38H1039	TEE FITTING	1		
18	AT49216	FITTING PLUG	1		
19	AT120105	HOSE CLAMP	1		
20	19M8081	CAP SCREW	1		M10 X 80
21	38H1278	UNION FITTING	1		
22	R26375	O-RING	1		

BRAKE VALVE HOSES AND FITTINGS (TURBO)
(BRAKE VALVE TO TRANSMISSION CONTROL VALVE)
(SERIAL NO. 882701-)

T196994 -UN-17DEC03

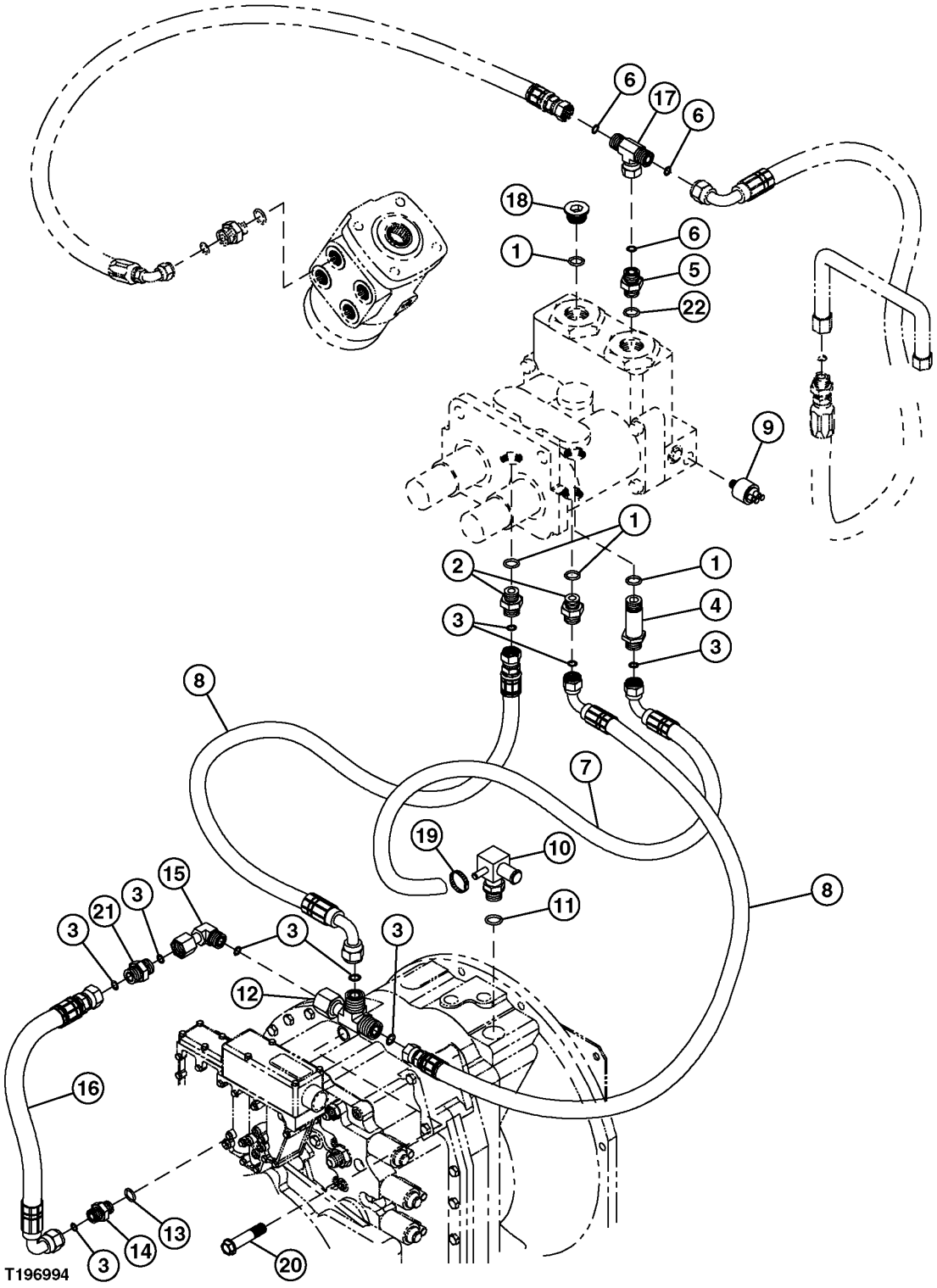

BRAKE VALVE HOSES AND FITTINGS (TURBO)
(BRAKE VALVE TO TRANSMISSION CONTROL VALVE)
(SERIAL NO. 882701-)

KEY	PART NO.	PART NAME	QTY	SERIAL NO.	REMARKS
1	R26448	O-RING	4		
2	38H1160	ADAPTER	2		
3	T77613	O-RING	9		
4	38H1212	ADAPTER	1		(ALSO ORDER T77613 AND R26448)
5	38H1161	ADAPTER	1		(ALSO ORDER T77857 AND R26375)
6	T77857	O-RING	3		
7	CB11410534	HYDRAULIC HOSE - FABRICATE	1		
8	CB11410535	HYDRAULIC HOSE - FABRICATE	2		
9	R32548	TOUCH SWITCH	2		
10	CB01447074	FITTING	1		
11	R26375	O-RING	1		
12	AT191868	TEE FITTING	1		
13	T26286	ISOLATOR	1		
14	38H1575	ADAPTER	1		
15	38H1094	ELBOW FITTING	1		
16	CB11416926	HOSE	1		
17	38H1039	TEE FITTING	1		
18	AT49216	FITTING PLUG	1		
19	AT120105	HOSE CLAMP	1		
20	19M8081	CAP SCREW	1		M10 X 80
21	38H1278	UNION FITTING	1		
22	R26375	O-RING	1		

PARKING BRAKE AND HOSE
(AXLE SERIAL NO. -217496)

T138047 -UN-20FEB01

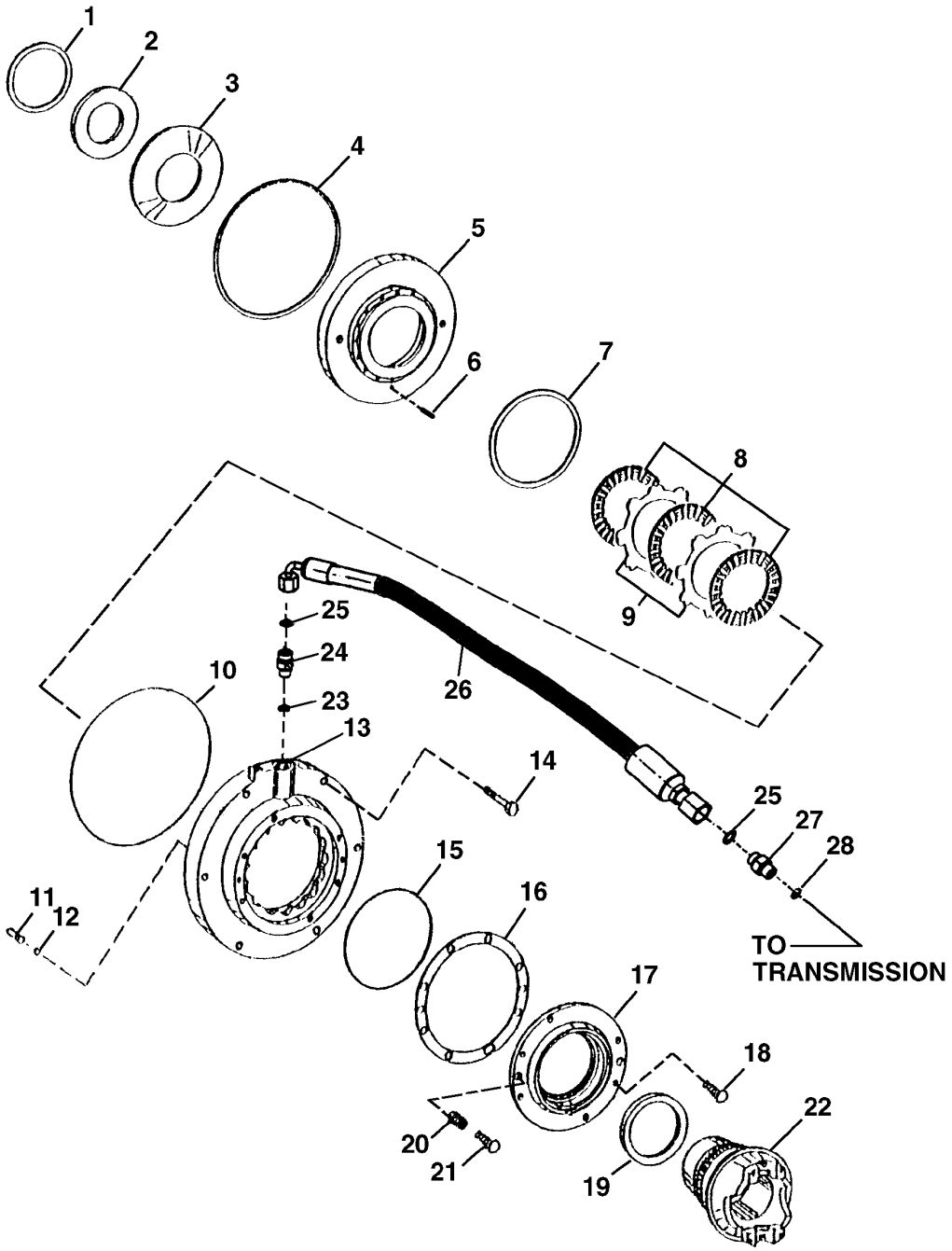

NOTE: REFER TO DTAC SOLUTION 43915 FOR DETAILS ON ALL AXLE UPDATES.

T138047

PARKING BRAKE AND HOSE
(AXLE SERIAL NO. -217496)

KEY	PART NO.	PART NAME	QTY	AXLE SERIAL NO.	REMARKS
1	T159479	SHIM	1		0.6 MM
	T159480	SHIM	1		0.7 MM
	T159481	SHIM	1		0.8 MM
	T159482	SHIM	1		0.9 MM
	T159483	SHIM	1		2.0 MM
2	T159484	SUPPORT	1		
3	T159485	DISK SPRING	1		
4	T159478	SEAL	1		
5	T159476	PISTON	1		
6	T159473	SPRING PIN	1		
7	T159477	SEAL	1		
8	T159475	CLUTCH DISK	3		
9	T159474	PLATE	2		
10	T159472	O-RING	1		
11	T159486	PIN	2		
12	T159487	O-RING	2		
13	T159471	HOUSING	1		
14	19M8499	CAP SCREW	6		M10 X 60
15	T174398	O-RING	1		(SUB FOR T159491)
16	T159492	SHIM	1		1.0 MM
	T159493	SHIM	1		0.5 MM
	T159494	SHIM	1		0.3 MM
	T159495	SHIM	1		0.1 MM
	T159496	SHIM	1		0.15 MM
	T159497	SHIM	1		0.2 MM
17	T159490	COVER	1		
18	19M8761	SCREW	6		M10 X 22
19	AT179537	SEAL	1		
20	T159502	LOCK NUT	2		(MANUAL RELEASE-PARK BRAKE)
21	T159499	CAP SCREW	2		(MANUAL RELEASE-PARK BRAKE)
22	T158437	UNIVERSAL JOINT YOKE	1		
23	R26906	O-RING	1		
24	38H1162	ADAPTER	1		
25	T77932	O-RING	2		
26	AT179899	HYDRAULIC HOSE - FABRICATE	1		1" X 655 MM (25-3/4") X 1"
27	38H1317	FITTING	1		
28	R26375	O-RING	1		

PARKING BRAKE
(AXLE SERIAL NO. 217497-)

TP57991 -UN-09FEB99

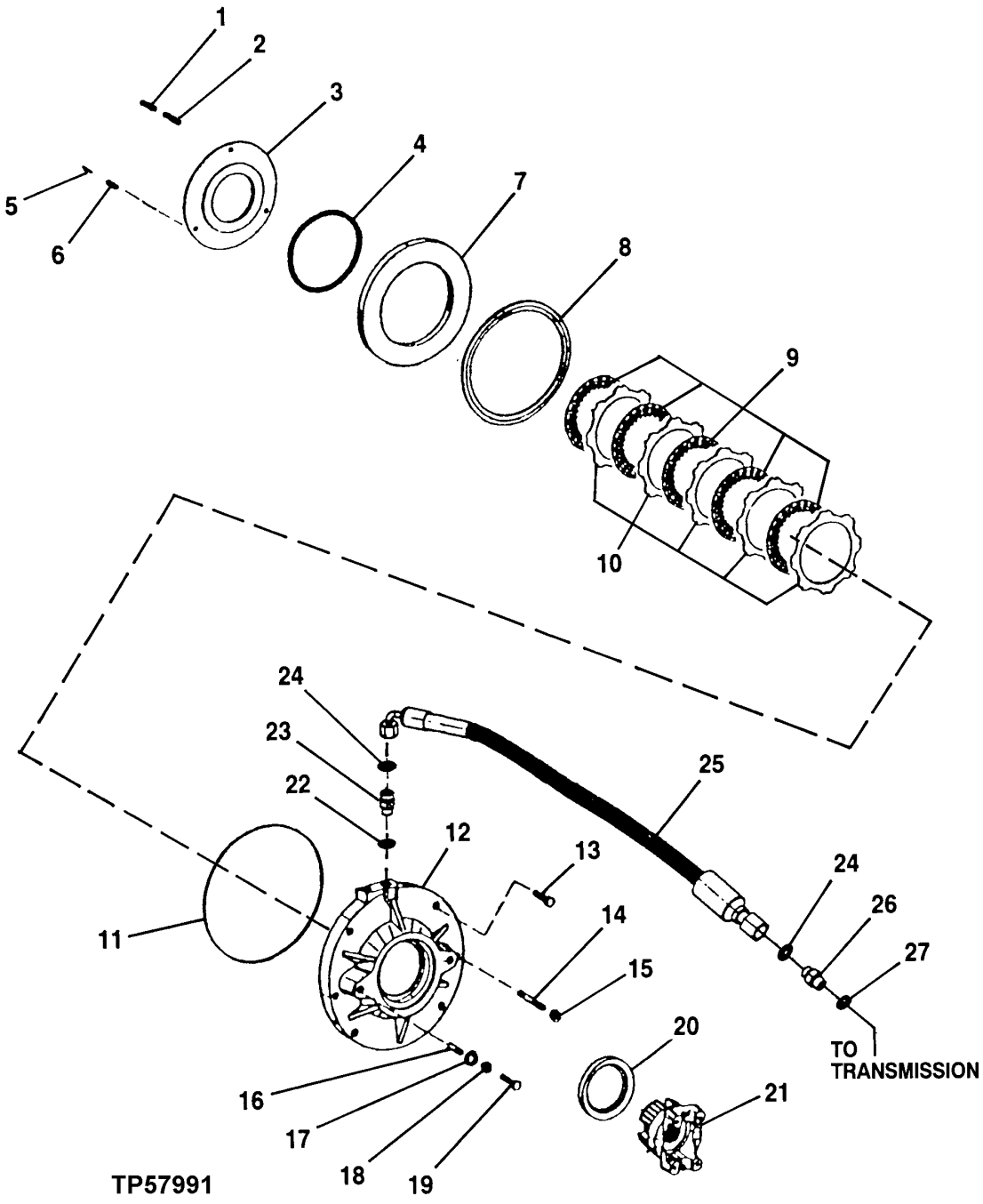

PARKING BRAKE
(SERIAL NO. 217497-)

KEY	PART NO.	PART NAME	QTY	AXLE SERIAL NO.	REMARKS
1	T164917	COMPRESSION SPRING	14		
2	T164916	COMPRESSION SPRING	14		
3	T164915	PLATE	2		
4	T159477	SEAL	1		
5	T164911	PIN	1		
6	T159359	SPRING PIN	2		
7	T164914	PISTON	1		
8	T159478	SEAL	1		
9	T159475	CLUTCH DISK	3		
10	T159474	PLATE	2		
11	T164909	O-RING	1		
12	T188234	HOUSING	1		
13	19M7179	CAP SCREW	4		M10 X 50
14	T164912	STUD	2		
15	T164913	NUT	2		
16	T164918	PIN	2		
17	T159487	O-RING	2		
18	T159502	LOCK NUT	2		
19	T164922	SCREW	2		
20	AT179537	SEAL	1		
21	T188229	UNIVERSAL JOINT YOKE	1		
22	R26906	O-RING	1		
23	38H1006	ELBOW FITTING	1		(SUB FOR 38H1162, THIS APPLICATION)
24	T77932	O-RING	2		
25	AT179899	HYDRAULIC HOSE - FABRICATE	1		
26	38H1317	FITTING	1		
27	R26375	O-RING	1		

TRADEMARKS AND LABELS (SERIAL NO. -882700)

T152921 -UN-25MAR02

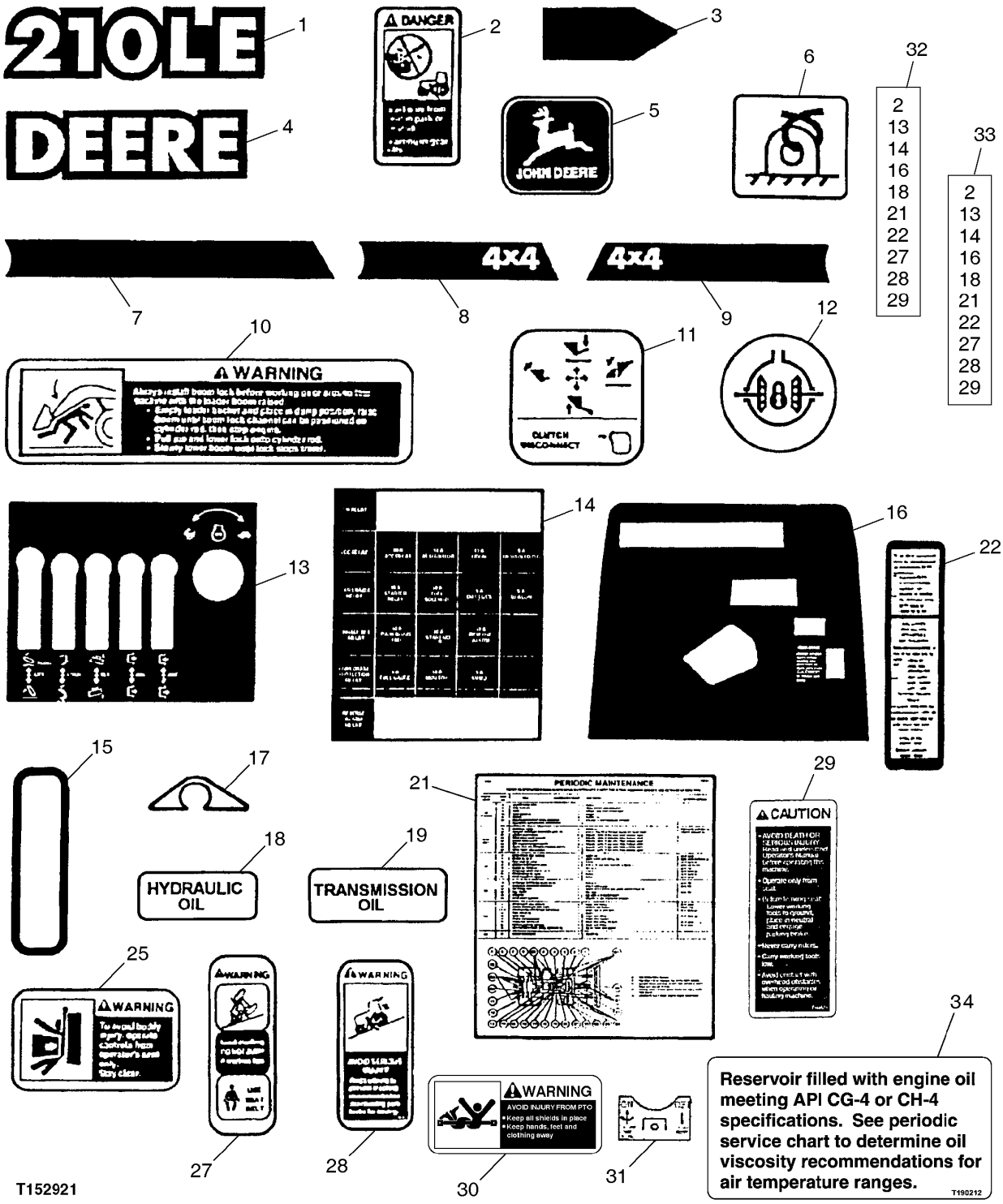

TRADEMARKS AND LABELS (SERIAL NO. -882700)

KEY	PART NO.	PART NAME	QTY	SERIAL NO.	REMARKS
1	T161287	LABEL	2		MODEL DESIGNATION
2	T146102	LABEL	1		BYPASS ENGINE START
	T146104	SAFETY SIGN	1	-880053	BYPASS ENGINE START-FRENCH
	T146106	SAFETY SIGN	1	-880053	BYPASS ENGINE START-SPANISH
3	T160759	LABEL	1	-880053	BUCKET LEVEL INDICATOR
	T139806	LABEL	1	880054-	BUCKET LEVEL INDICATOR
4	T160817	LABEL	2		DEERE-LOADER LIFT ARMS
5	JD5718	LABEL	1		LEAPING DEERE
6	T153680	LABEL	4		TIE DOWN
7	T161285	LABEL	1		STRIP-RIGHT SHOWN
	T161286	LABEL	1		STRIP-LEFT NOT SHOWN
8	T161283	LABEL	1		HOOD-4 X 4 RIGHT
9	T161284	LABEL	1		HOOD-4 X 4 LEFT
10	T152442	LABEL	1		BOOM LOCK
11	T134782	LABEL	1		LOADER CONTROL AND CLUTCH DISCONNECT
12	L80302	LABEL	1		DIFFERENTIAL LOCK
13	T161288	LABEL	1		HITCH CONTROL
	T163124	LABEL	1		HITCH CONTROL-FRENCH
	T163131	LABEL	1		HITCH CONTROL-SPANISH
14	T163179	LABEL	1	-880053	FUSE BLOCK
	T161290	LABEL	1	880054-	FUSE BLOCK-FRENCH
	T163121	LABEL	1	-880053	FUSE BLOCK-FRENCH
	T163128	LABEL	1	-880053	FUSE BLOCK-SPANISH
15	JD5909	REFLECTOR	2		REFLECTOR-ROPS POST
16	T161289	LABEL	1		INSTRUMENT PANEL
	T163122	LABEL	1		INSTRUMENT PANEL-FRENCH
	T163129	LABEL	1		INSTRUMENT PANEL-SPANISH
17	T161678	LABEL	1		PROTECTIVE-LOADER LIFT ARMS FOR SERVICE LOCK
18	T140283	LABEL	1		HYDRAULIC OIL
	T163125	LABEL	1		HYDRAULIC OIL-FRENCH
	T163132	LABEL	1		HYDRAULIC OIL-SPANISH
19	T140311	LABEL	1		TRANSMISSION OIL
21	T190340	LABEL	1		PERIODIC MAINTENANCE, (SUB FOR T161291, T163579 OR T187126)
	.....	LABEL	1	-XXXXXX	PERIODIC MAINTENANCE-FRENCH (T187127 NO LONGER AVAILABLE)
	T190365	LABEL	1	XXXXXX-	PERIODIC MAINTENANCE-FRENCH, (SUB FOR T163119 OR T163581)
	.....	LABEL	1	-XXXXXX	PERIODIC MAINTENANCE-SPANISH (T187128 NO LONGER AVAILABLE)
	T190366	LABEL	1	XXXXXX-	PERIODIC MAINTENANCE-SPANISH, (SUB FOR T163126 OR T163580)
22	T161408	LABEL	1	-847334	ROPS
	T164750	LABEL	1	847335-	ROPS
	T163120	LABEL	1	-843072	ROPS-FRENCH
	T164755	LABEL	1	843073-	ROPS-FRENCH
	T163127	LABEL	1	-843072	ROPS-SPANISH
	T164756	LABEL	1	843073-	ROPS-SPANISH
25	T146081	SERVICE SCHOOL APPVL SEAL	1	-880053	WARNING
	CB1392570	LABEL	1	880054-	WARNING
27	T146097	LABEL	1		WARNING-SEAT BELT
	T146099	SAFETY SIGN	1		(F) WARNING-SEAT BELT-FRENCH
	T146098	SAFETY SIGN	1		(S) WARNING-SEAT BELT-SPANISH
28	T159028	LABEL	2		WARNING-PARK BRAKE
	T160762	LABEL	1		(F) WARNING-PARK BRAKE-FRENCH
	T160769	SAFETY SIGN	1		(S) WARNING-PARK BRAKE-SPANISH
29	T160579	LABEL	1		CAUTION
	T163123	LABEL	1		(F) CAUTION-FRENCH
	T163130	SAFETY SIGN	1		(S) CAUTION-SPANISH
30	R122717	LABEL	1	880054-	PTO WARNING
31	AT187376	LABEL	1	880054-	PTO CONTROL
32	AT182552	KIT	1		FRENCH (IMPORTANT: MUST ALSO ORDER TRANSLATED OPERATOR'S MANUAL THROUGH YOUR AUTHORIZED DEALER)
33	AT182549	KIT	1		SPANISH (IMPORTANT: MUST ALSO ORDER TRANSLATED OPERATOR'S MANUAL THROUGH YOUR AUTHORIZED DEALER)
34	T190212	LABEL	1	XXXXXX-	

WARNING LABELS (SERIAL NO. 882701-)

T197833 -UN-13FEB04

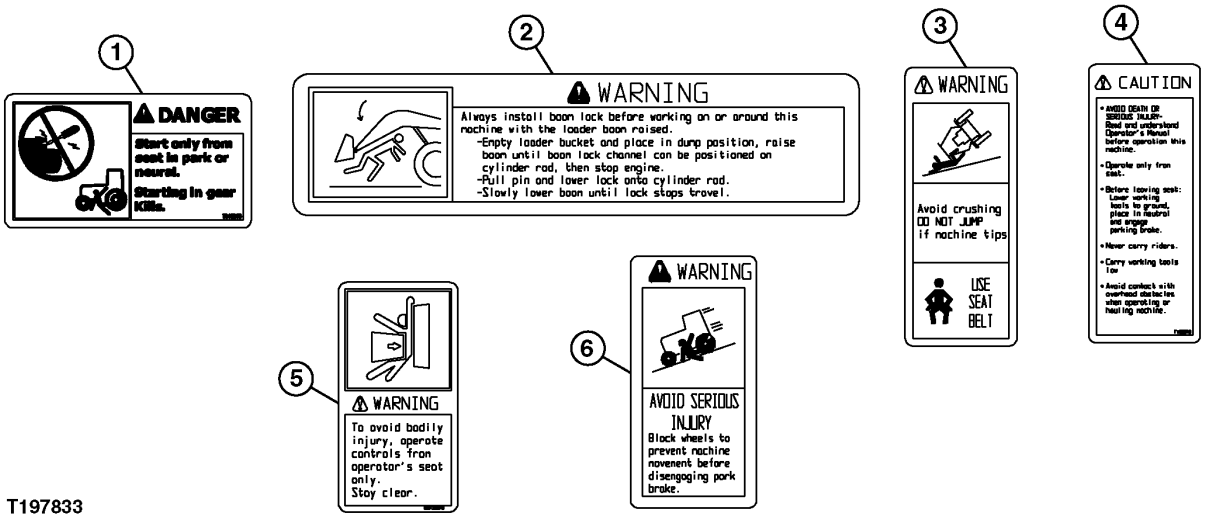

T197833

WARNING LABELS (SERIAL NO. 882701-)

KEY	PART NO.	PART NAME	QTY	SERIAL NO.	REMARKS
1	T146102	LABEL	1		BYPASS ENGINE START
2	T152442	LABEL	1		BOOM LOCK
3	T146097	LABEL	1		WARNING-SEAT BELT
4	T160579	LABEL	1		CAUTION
5	CB01392570	SAFETY SIGN	1		WARNING
6	T159028	LABEL	1		PARK BRAKE (WARNING)

TRADEMARKS AND LABELS (SERIAL NO. 882701-)

T197821 -UN-13FEB04

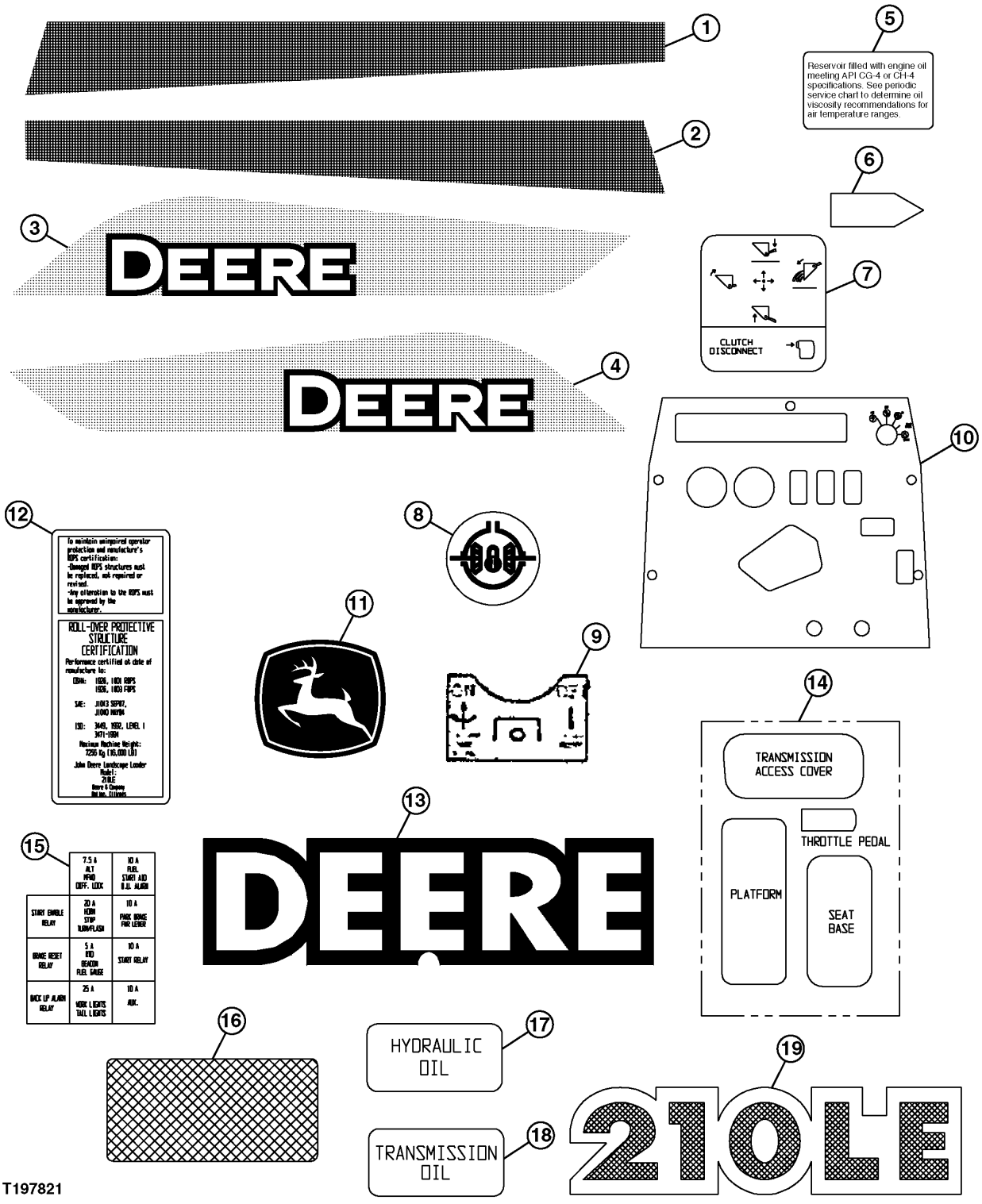

T197821

TRADEMARKS AND LABELS (SERIAL NO. 882701-)

KEY	PART NO.	PART NAME	QTY	SERIAL NO.	REMARKS
1	T206605	LABEL	1		HOOD-4 X 4 LEFT
2	T206606	LABEL	1		HOOD-4 X 4 RIGHT
3	T206608	LABEL	1		DEERE-LOADER LIFT ARMS (LH)
4	T206609	LABEL	1		DEERE-LOADER LIFT ARMS (RH)
5	T206663	LABEL	1		OIL DESCRIPTION
6	T139806	LABEL	1		BUCKET LEVEL INDICATOR
7	CB01448470	LABEL	1		LDR CONTROL MULTI (TIER II)
8	L80302	LABEL	1		DIFFERENTIAL LOCK
9	AT187376	LABEL	1		PTO CONTROL
10	T161289	LABEL	1		INSTRUMENT PANEL
11	JD5749	LABEL	1		LEAPING DEERE
	JD5764	LABEL	1		LEAPING DEERE
12	T206672	ROPS	1		CERTIFICATION
13	T184044	LABEL	1		DEERE
14	H21259	MAT	1		ANTI-SKID
15	AT190338	LABEL	1		FUSE BLOCK
16	JD5909	REFLECTOR	2		RED
17	T140283	LABEL	1		HYDRAULIC OIL
18	T140311	LABEL	1		TRANSMISSION OIL
19	T206610	LABEL	2		MODEL DESIGNATION

FLUID ANALYSIS PRODUCTS (OILSCAN PLUS TEST KIT)

T135474 -UN-15NOV00



T135474

FLUID ANALYSIS PRODUCTS (OILSCAN PLUS TEST KIT)

KEY	PART NO.	PART NAME	QTY	SERIAL NO.	REMARKS
1	AT178840	KIT	1		STANDARD ENGINE, SELF EXTRACTION (12 PER PACKAGE)(INCLUDES SPECTROCHEMICAL ANALYSIS, VISCOSITY, ° WATER, FUEL DILUTION, GLYCOL, FUEL SOOT) (SUB FOR AT178843)
	AT180333	KIT	1		STANDARD ENGINE, 4 OZ BOTTLE (10 PER PACKAGE) (SAME AS AT178840) (SUB FOR AT180335)
	AT178842	KIT	1		COMPREHENSIVE ENGINE W/TBN (EXTENDED DRAIN) (12 PER PACKAGE)(SAME AS AT178840 PLUS TBN)
	AT180334	KIT	1		COMPREHENSIVE ENGINE W/TBN (EXTENDED DRAIN) 4 OZ BOTTLE (10 PRT PACKAGE) (SAME AS AT178842)
	AT178844	KIT	1		COMPREHENSIVE HYDRAULIC & HYDROSTATIC SYSTEMS, 4 OZ BOTTLE (10 PER PACKAGE) (REQUIRES USE OF A SAMPLING VALVE FOR ACCURATE RESULTS)
	ISPKIT3	PUMP	1		OIL EXTRACTION (1 PER PACKAGE)(CAN BE USED WITH AT180333, AT180334, AND AT180335 KITS TO EXTRACT OIL SAMPLE)
	DSO345	TUBE	1		500'ROLL (USED WITH IPSKIT3 PUMP TO EXTRACT SAMPLE)
	DSO346	TUBE	1		100' ROLL (USED WITH IPSKIT3 PUMP TO EXTRACT SAMPLE)

FLUID ANALYSIS PRODUCTS (COOLSCAN PLUS TEST KIT)

T135475 -UN-15NOV00



T135475

KEY	PART NO.	PART NAME	QTY	SERIAL NO.	REMARKS
1	AT183016	KIT	1		COOLANT ANALYSIS (6 PER PACKAGE)(TESTS FREEZE POINT, ° ANTIFREEZE, PH, RESERVE ALKALINITY, NITRITE, MOLYBDATE, SILICATE, VISUAL ASSESSMENT & CORROSION METALS (IRON, COPPER, ALUMINUM & LEAD))

FLUID ANALYSIS PRODUCTS (DIESELSCAN TEST KIT)

T135476 -UN-15NOV00



T135476

KEY	PART NO.	PART NAME	QTY	SERIAL NO.	REMARKS
1	AT180344	KIT	1		DIESEL ANALYSIS (6 PER PACKAGE)(USED TO VERIFY TYPE, SUITABILITY FOR COLD TEMPERATURE OPERATIONS, CLEANLINESS, WATER CONTENT AND IF FUEL IS WITHIN ASTM SPECIFICATIONS. CHECKS API GRAVITY, VISCOSITY AT 40C, SULFUR, CETANE INDEX, DISTILLATION, CLOUD POINT, POUR POINT AND COLD FILTER PLUGGING POINT.

ENGINE COOLANT CONDITIONER
PE4045DT059

RGP9624 -UN-26JUN03



KEY	PART NO.	PART NAME	QTY	ENGINE SERIAL NO.	REMARKS
1	TY16004	ENGINE COOLANT CONDITIONER	1		
2	TY16005	ENGINE COOLANT CONDITIONER	1		

ENGINE COOLANT CONDITIONER
PE4045TT092

RGP9624 -UN-26JUN03



KEY	PART NO.	PART NAME	QTY	ENGINE SERIAL NO.	REMARKS
1	TY16004	ENGINE COOLANT CONDITIONER	1		
2	TY16005	ENGINE COOLANT CONDITIONER	1		

FIXED DRAWBAR

TP52630 -UN-31JAN97

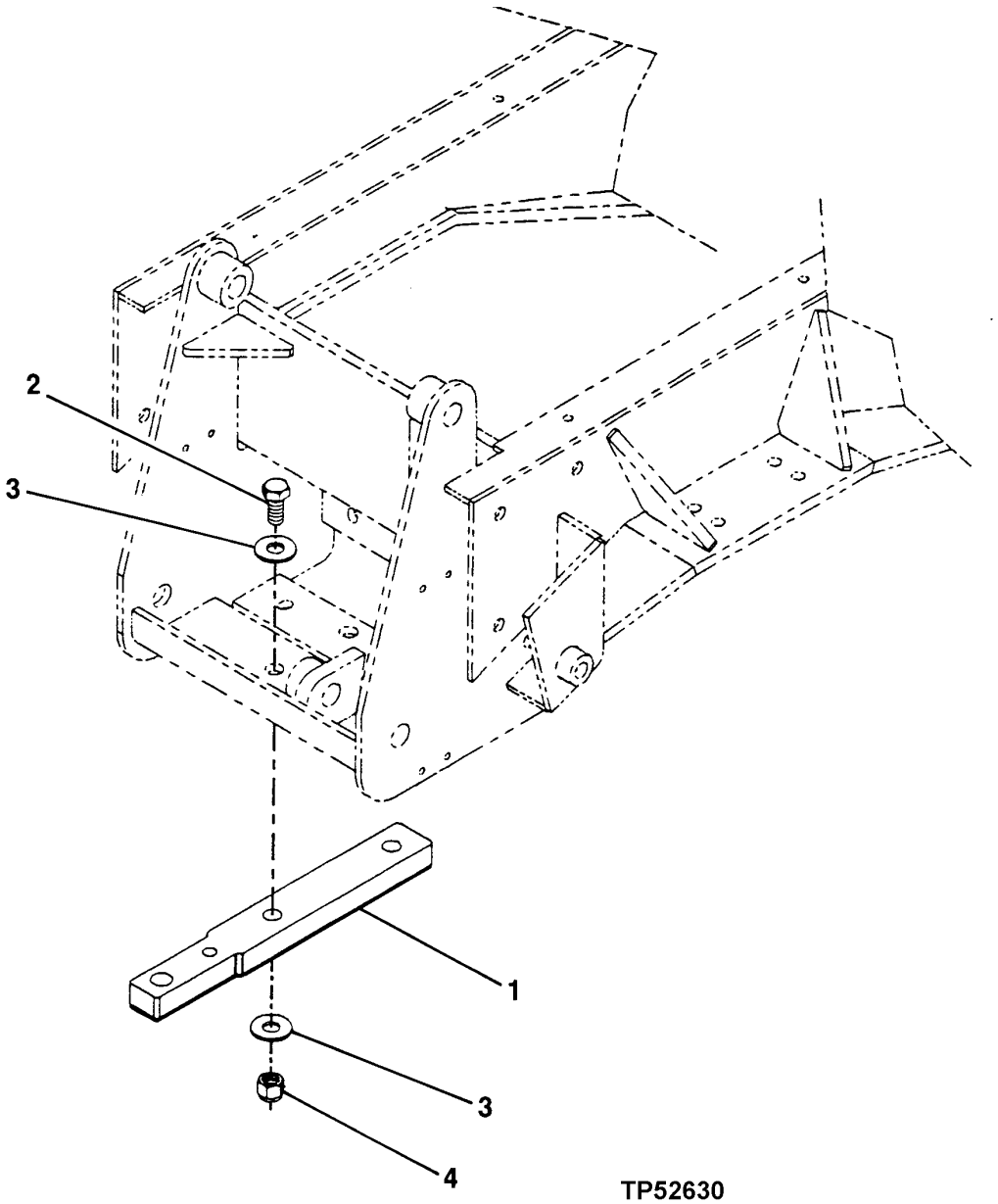

TP52630

FIXED DRAWBAR

KEY	PART NO.	PART NAME	QTY	SERIAL NO.	REMARKS
1	AT216441	DRAWBAR	1	-833326	
	AT187673	DRAWBAR	1	833327-	
2	19H3099	CAP SCREW	2	-833326	1" X 3-3/4"
	19H3027	CAP SCREW	2	833327-	3/4" X 3-1/2"
3	24H1197	WASHER	4		1-1/16" X 2-1/2" X 0.164"
4	T34950	NUT	2	-833326	1"
	T25879	NUT	2	833327-	3/4"

DRAWBAR WITH PTO
(SERIAL NO. 880054-)

TP80304 -UN-10NOV99

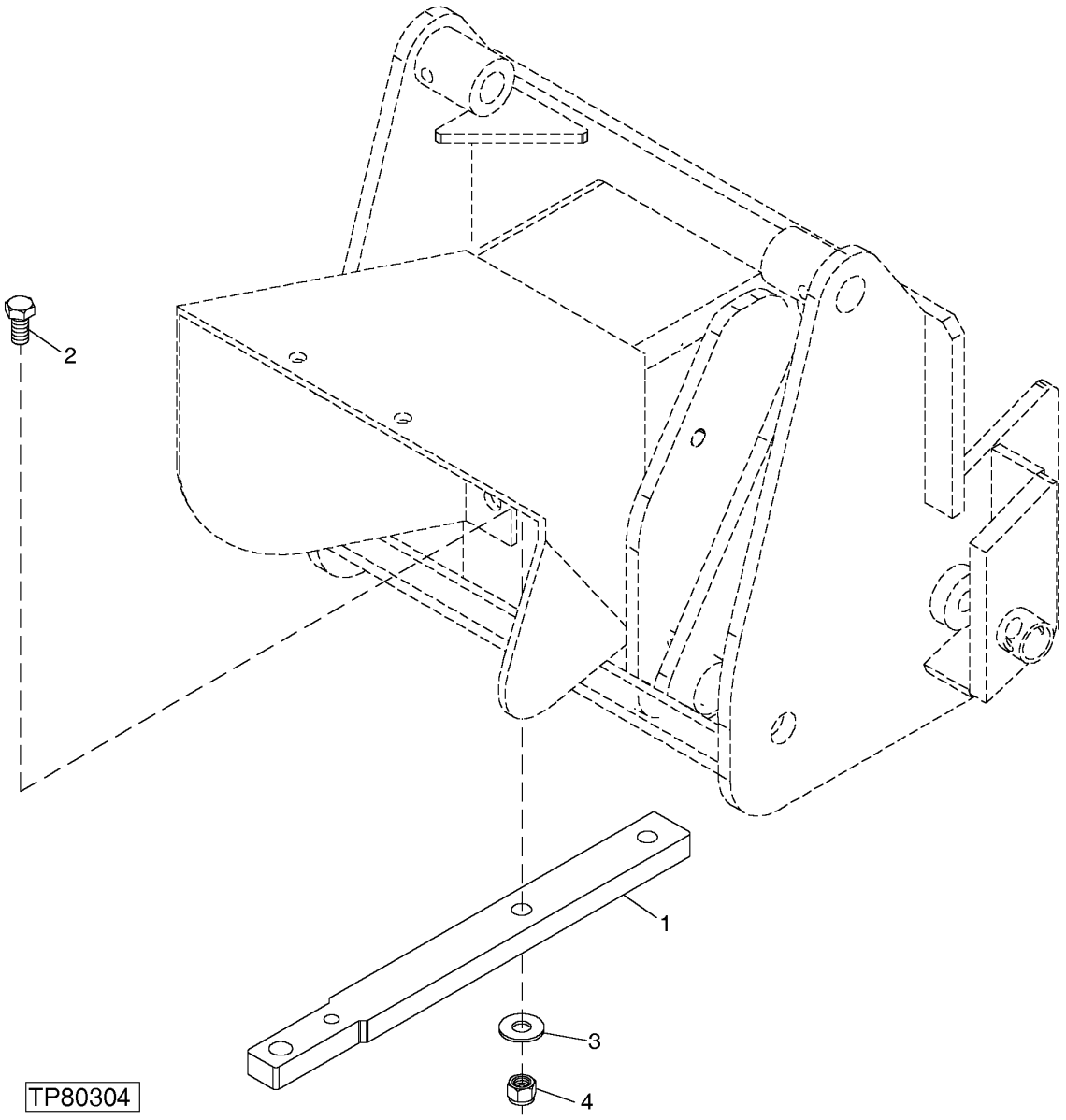

DRAWBAR WITH PTO
(SERIAL NO. 880054-)

KEY	PART NO.	PART NAME	QTY	SERIAL NO.	REMARKS
1	AT190086	DRAWBAR	1		(USED WITH PTO)
2	19H3027	CAP SCREW	2		3/4" X 3-1/2"
3	24H1197	WASHER	2		1-1/16" X 2-1/2" X 0.164"
4	T25879	NUT	2		

HITCH, WEIGHTS WITH DRAWBAR
(SERIAL NO. -880053)

TP56238 -UN-23MAY97

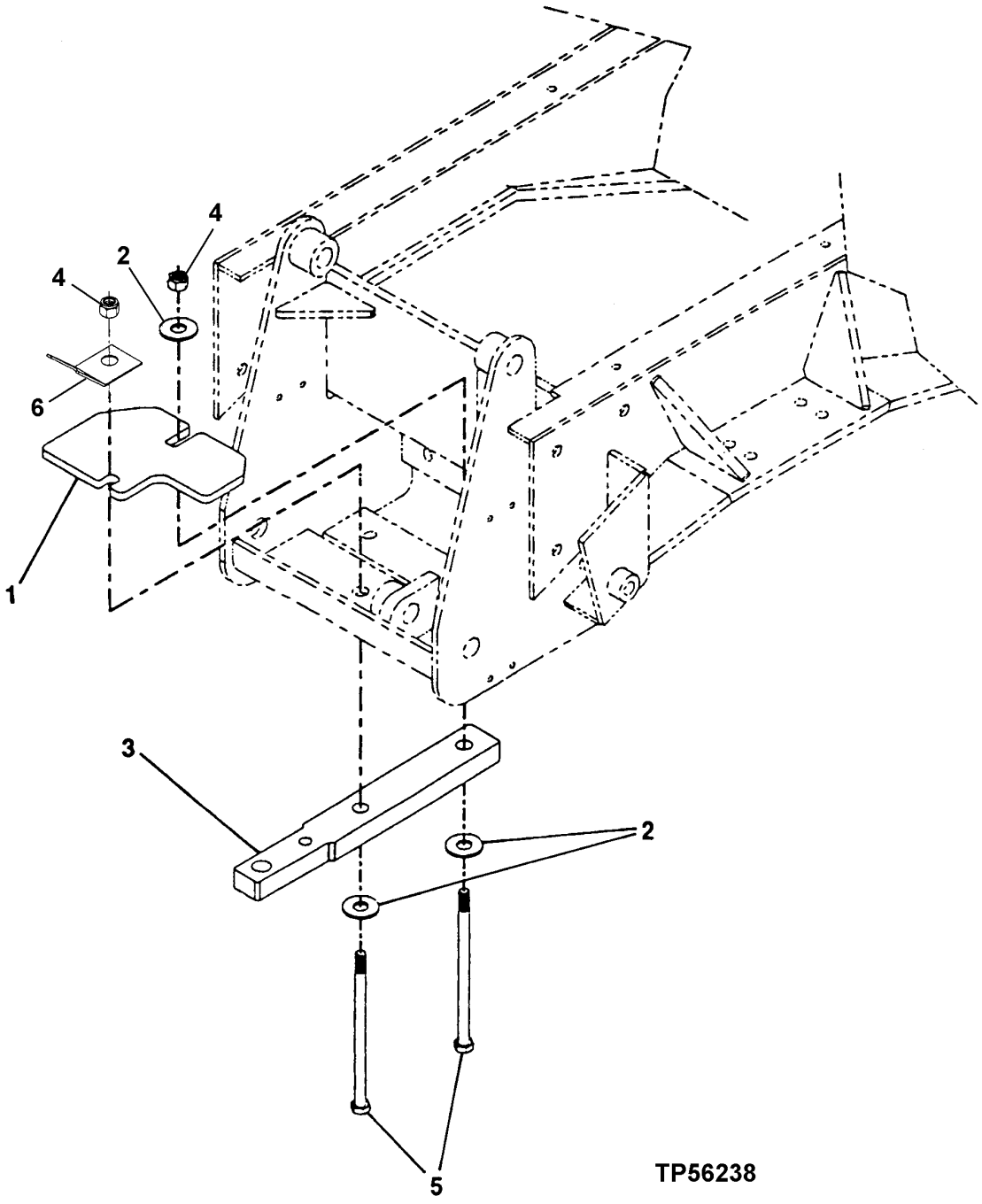

HITCH, WEIGHTS WITH DRAWBAR
(SERIAL NO. -880053)

KEY	PART NO.	PART NAME	QTY	SERIAL NO.	REMARKS
1	AT216658	WEIGHT	9		
2	24H1197	WASHER	3		1-1/16" X 2-1/2" X 0.164"
3	AT216441	DRAWBAR	1	-833326	
4	T34950	NUT	2		
5	08H4819	CAP SCREW	2		(SUB FOR AT216600)
6	.....	PLATE	1		

HITCH, WEIGHTS WITH DRAWBAR (SERIAL NO. 880054-882700)

TP80349 -UN-07DEC99

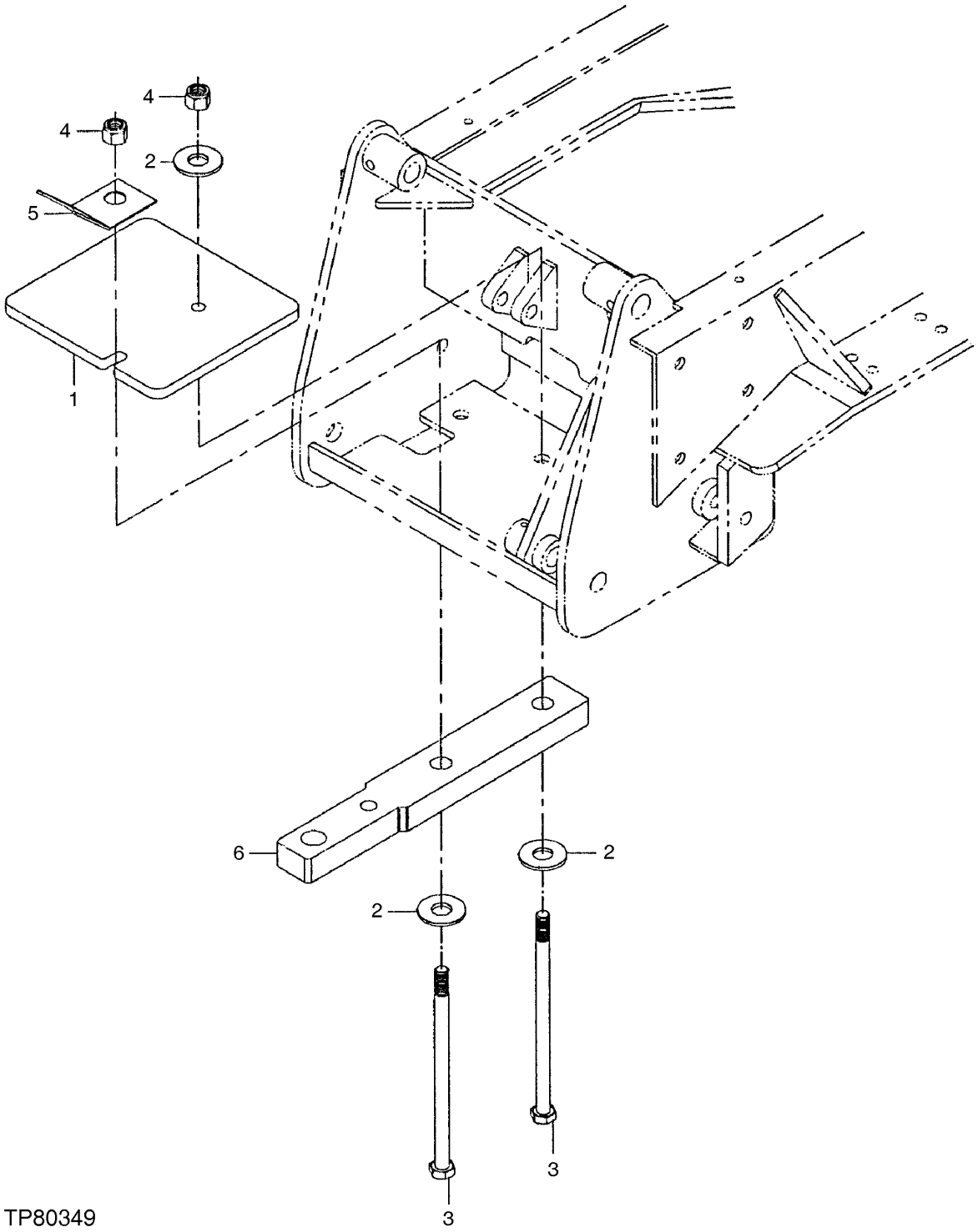

HITCH, WEIGHTS WITH DRAWBAR (SERIAL NO. 880054-882700)

KEY	PART NO.	PART NAME	QTY	SERIAL NO.	REMARKS
1	AT188645	WEIGHT	6		COUNTERWEIGHTS (58 LBS. EACH)
2	24M7349	WASHER	3	-833326	21 X 37 X 3 MM
	24M7349	WASHER	4	833327-	21 X 37 X 3 MM
3	08H4811	BOLT	2	-880990	3/4" X 10"
	19H3322	CAP SCREW	2	880991-	3/4" X 8"
4	T25879	NUT	2		
5	.....	HITCH PLATE	1	-880990	
6	AT187673	DRAWBAR	1	833327-	

HITCH, WEIGHTS WITH DRAWBAR (SERIAL NO. 882701-)

T195687 -UN-28OCT03

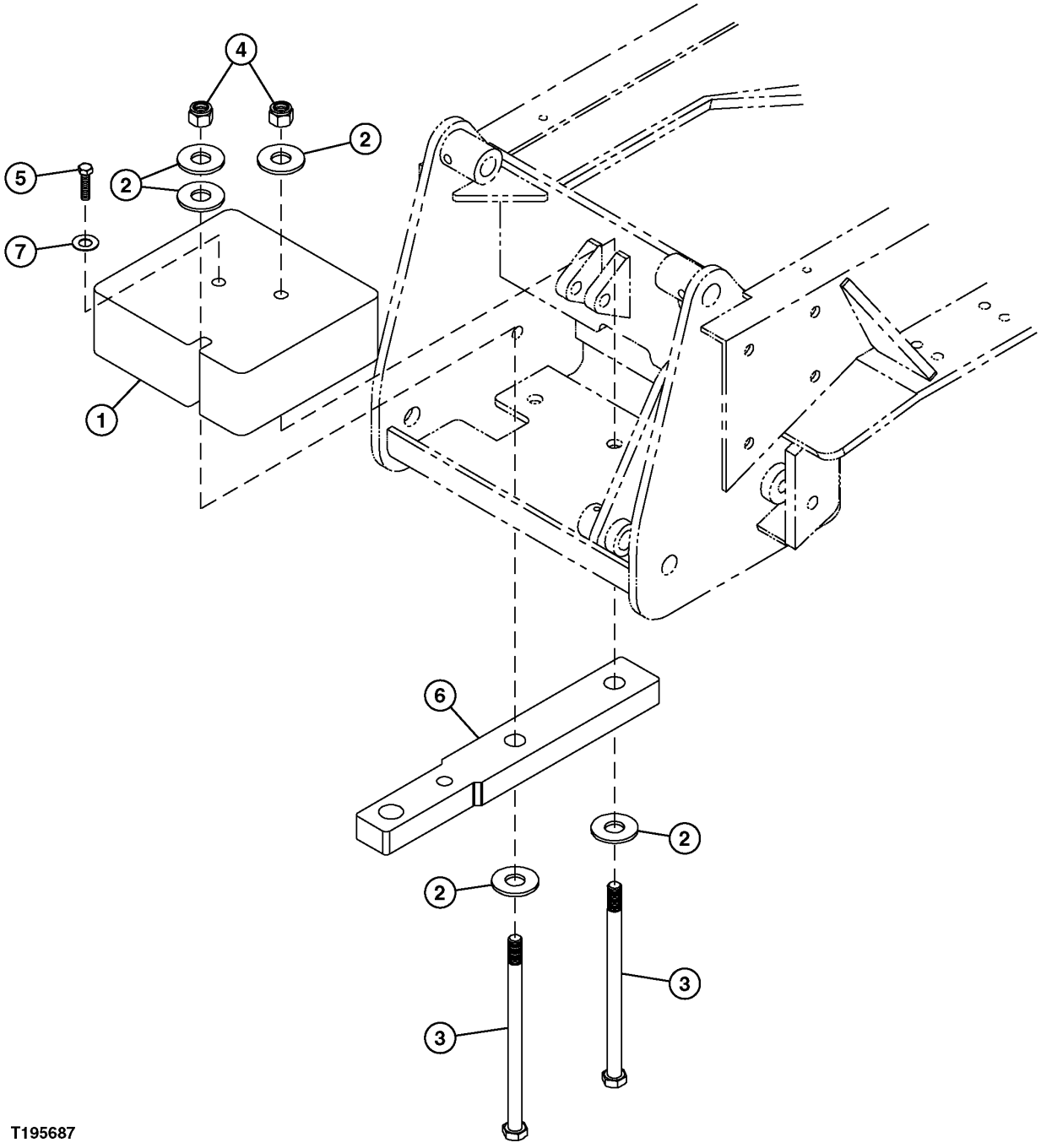

T195687

HITCH, WEIGHTS WITH DRAWBAR (SERIAL NO. 882701-)

KEY	PART NO.	PART NAME	QTY	SERIAL NO.	REMARKS
1	CB01401939	WEIGHT	6		
2	24M7277	WASHER	5		21 X 60 X 4 MM
3	08H4528	CAP SCREW	2		3/4" X 10-1/2"
4	T25879	NUT	2		
5	19H2993	CAP SCREW	1		1/2" X 1-1/2"
6	AT187673	DRAWBAR	1	833327-	
7	24H1211	WASHER	1		9/16" X 1-3/8" X 0.105"

WEIGHTS, HITCH (SLAB)
(SERIAL NO. -880053)

TP61724 -UN-15JUL98

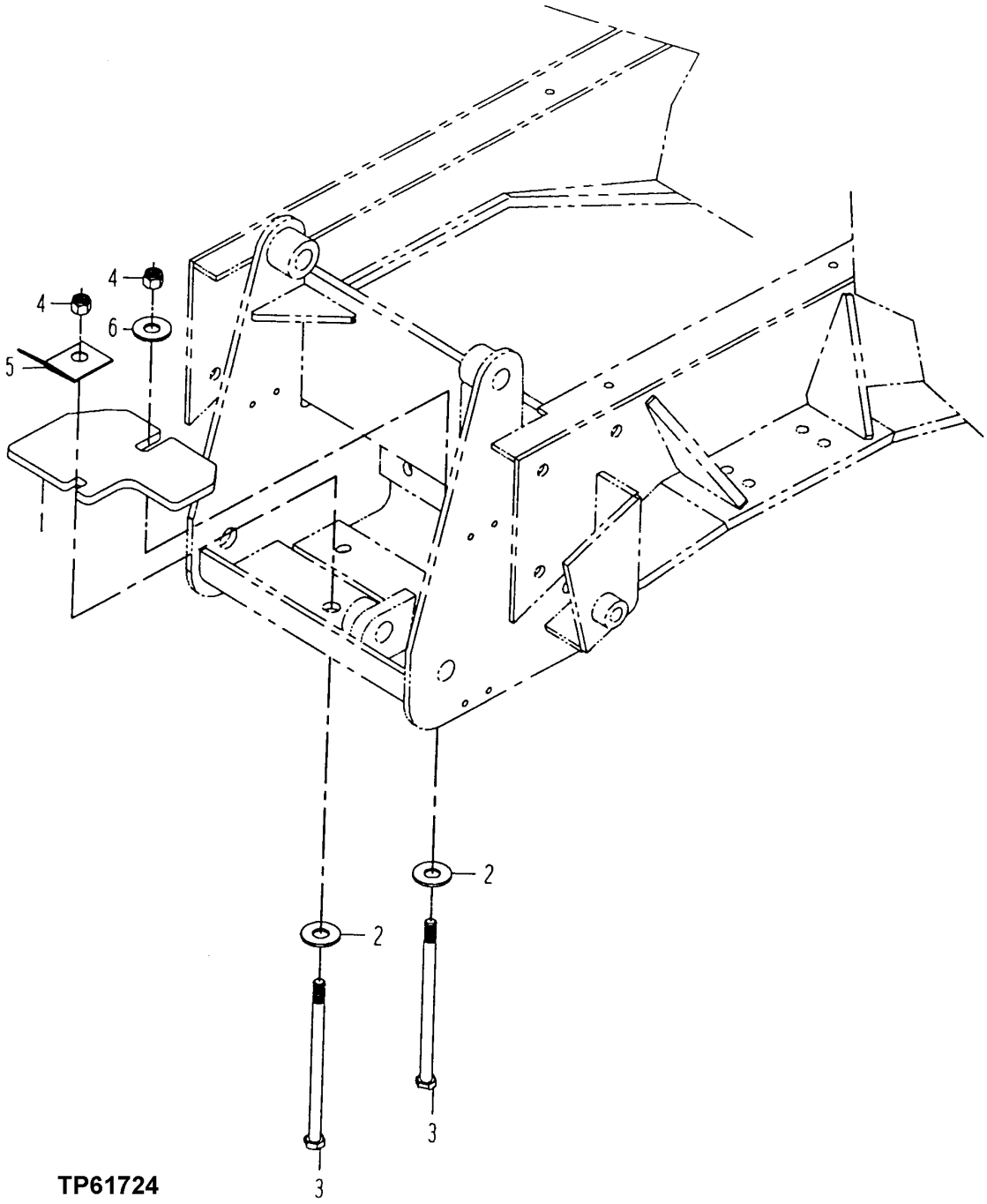

WEIGHTS, HITCH (SLAB)
(SERIAL NO. -880053)

KEY	PART NO.	PART NAME	QTY	SERIAL NO.	REMARKS
1	AT216658	WEIGHT	9	-880053	COUNTERWEIGHTS (58 LBS. EACH)
2	24H1197	WASHER	2	-880053	1-1/16" X 2-1/2" X 0.164"
3	N236692	BOLT	2	-872334	(SUB FOR AT119532)
	08H4616	CAP SCREW	2	872335-880053	3/4" X 11"
4	T34950	NUT	2	-880053	
5	.....	SUPPORT	1	-880053	
6	24H1460	WASHER	1	-880053	

WEIGHTS, HITCH (SLAB) (SERIAL NO. 880054-882700)

TP56851 -UN-17AUG99

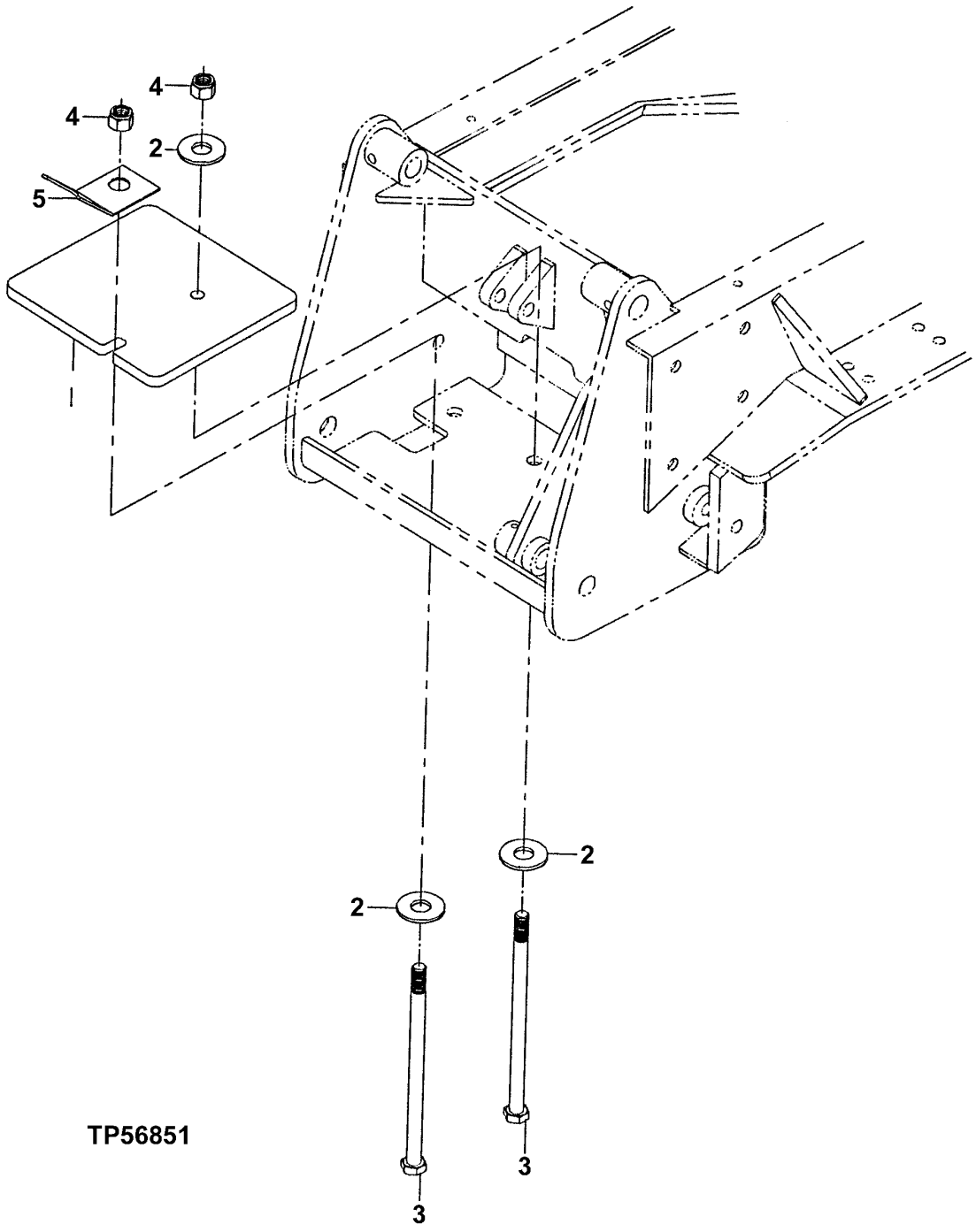

WEIGHTS, HITCH (SLAB) (SERIAL NO. 880054-882700)

KEY	PART NO.	PART NAME	QTY	SERIAL NO.	REMARKS
1	AT188645	WEIGHT	6		COUNTERWEIGHTS (58 LBS. EACH)
2	24M7349	WASHER	3		0.827" X 1.457" X 0.118"
3	19H3322	CAP SCREW	2		3/4" X 8"
4	T25879	NUT	2		
5	.....	HITCH PLATE	1	880054-880990	

WEIGHTS, HITCH (SLAB) (SERIAL NO. 882701-)

T195688 -UN-28OCT03

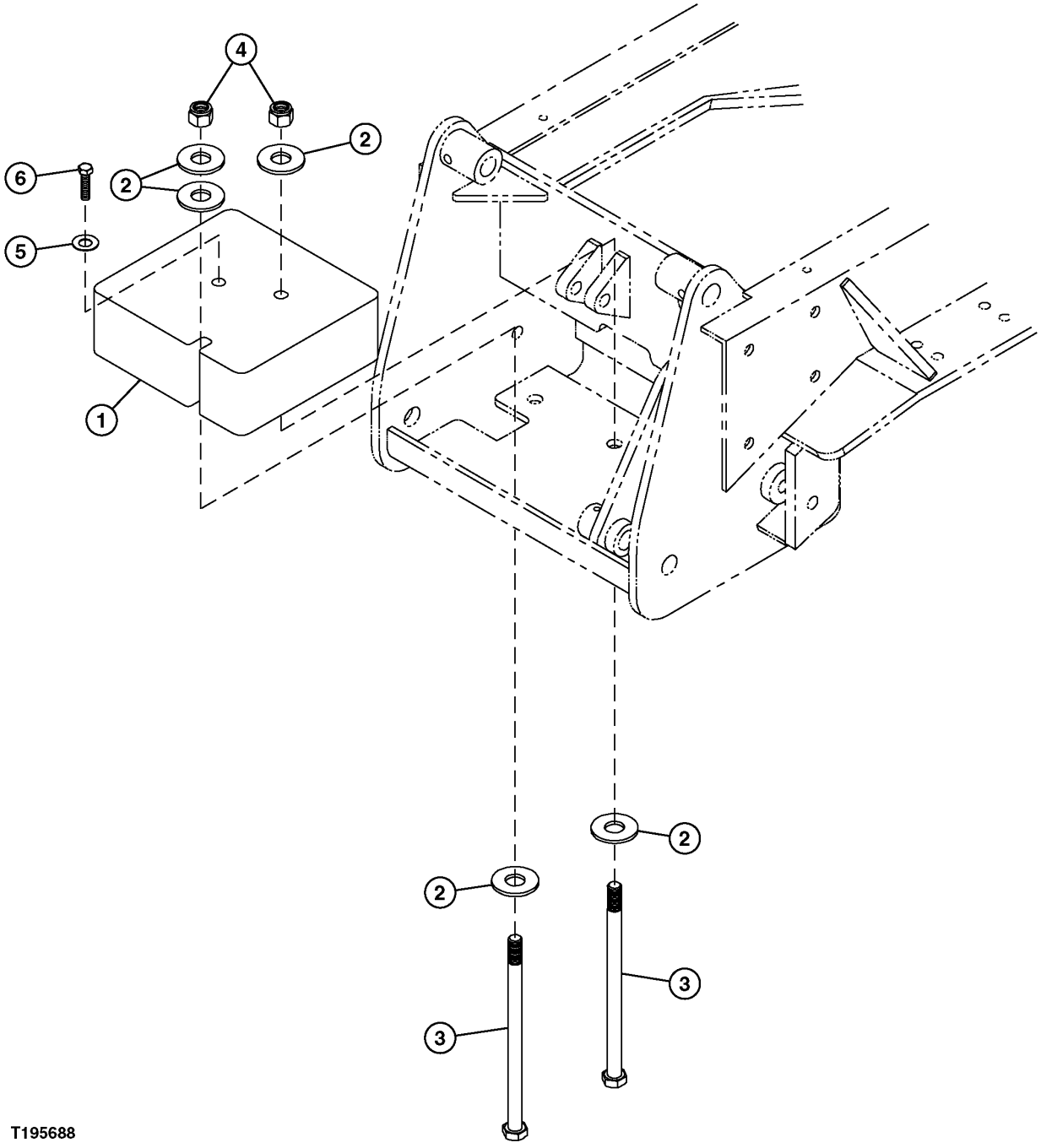

T195688

WEIGHTS, HITCH (SLAB) (SERIAL NO. 882701-)

KEY	PART NO.	PART NAME	QTY	SERIAL NO.	REMARKS
1	CB01401939	WEIGHT	6		
2	24M7277	WASHER	5		0.827" X 2.362" X 0.157"
3	08H4423	CAP SCREW	2		3/4" X 9"
4	T25879	NUT	2		
5	24H1211	WASHER	1		9/16" X 1-3/8" X 0.105"
6	19H2993	CAP SCREW	1		1/2" X 1-1/2"

WEIGHTS, HITCH (KIT) (SERIAL NO. 882701-)

T196524 -UN-25NOV03

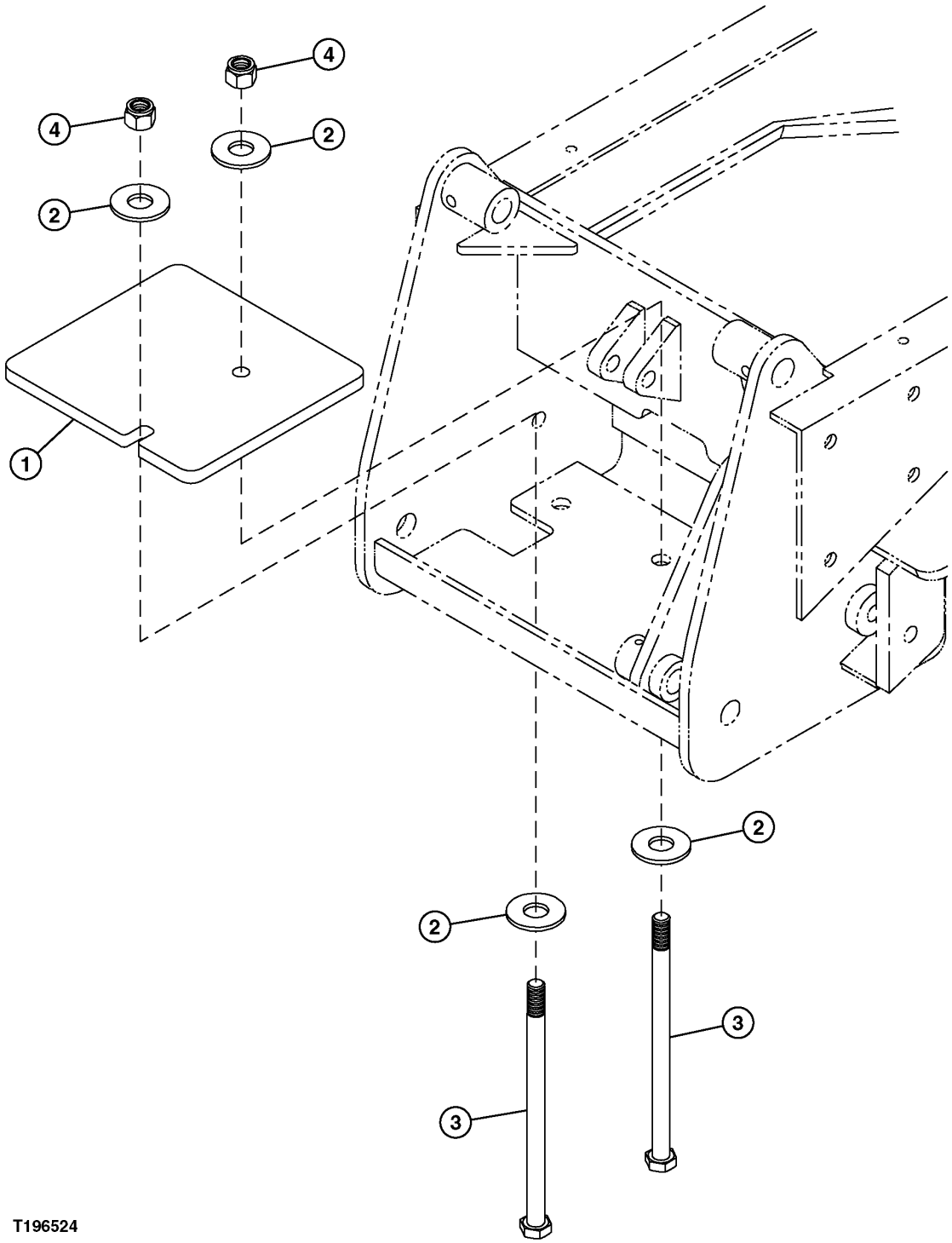

T196524

WEIGHTS, HITCH (KIT) (SERIAL NO. 882701-)

KEY	PART NO.	PART NAME	QTY	SERIAL NO.	REMARKS
1	AT188645	WEIGHT	6		COUNTERWEIGHTS (58 LBS. EACH)
2	24M7349	WASHER	4		0.827" X 1.457" X 0.118"
3	19H3322	CAP SCREW	2		3/4" X 8"
4	T25879	NUT	2		

CYLINDER, TILT (SERIAL NO. XXXXXX-880053)

TP80350 -UN-07DEC99

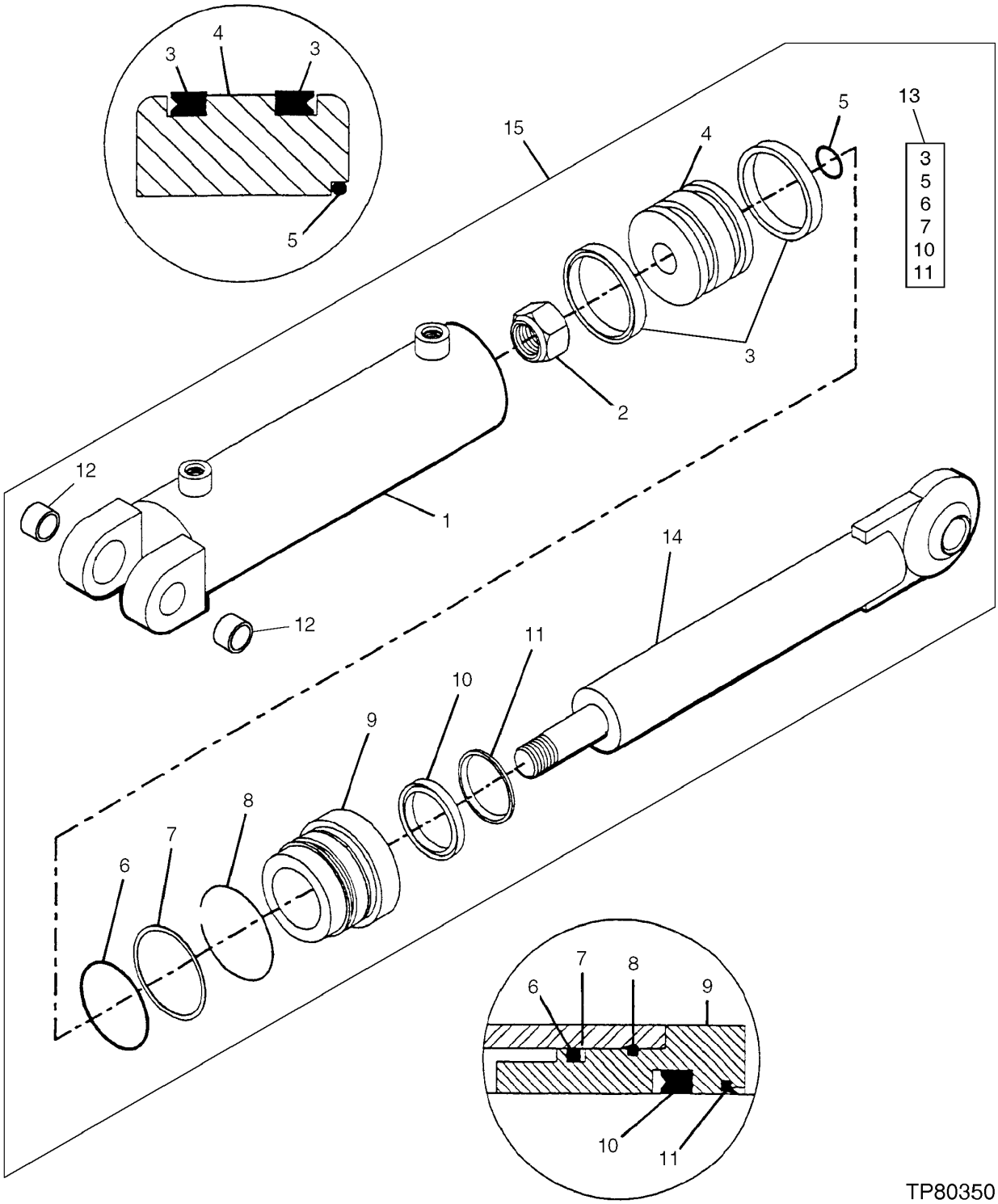

CYLINDER, TILT (SERIAL NO. XXXXXX-880053)

KEY	PART NO.	PART NAME	QTY	SERIAL NO.	REMARKS
1	AT216179	HYDRAULIC CYLINDER BARREL	1		(SUB AT183258)
2	AT216053	LOCK NUT	1		
3	.....	SEAL	2		
4	AT216176	PISTON	1		
5	.....	O-RING	1		
6	.....	O-RING	1		
7	.....	BACK-UP RING	1		
8	AT216229	RETAINER	1		
9	AT216178	HYDR. CYLINDER ROD GUIDE	1		
10	.....	SEAL	1		
11	.....	SEAL	1		
12	AT216076	BUSHING	2		
13	AT216095	HYDRAULIC CYLINDER KIT	1		
14	AT216180	ROD	1		
15	AT183258	CYLINDER	1		(SUB FOR AT216030)

CYLINDER, TILT (SERIAL NO. 880054-881736)

TP80350 -UN-07DEC99

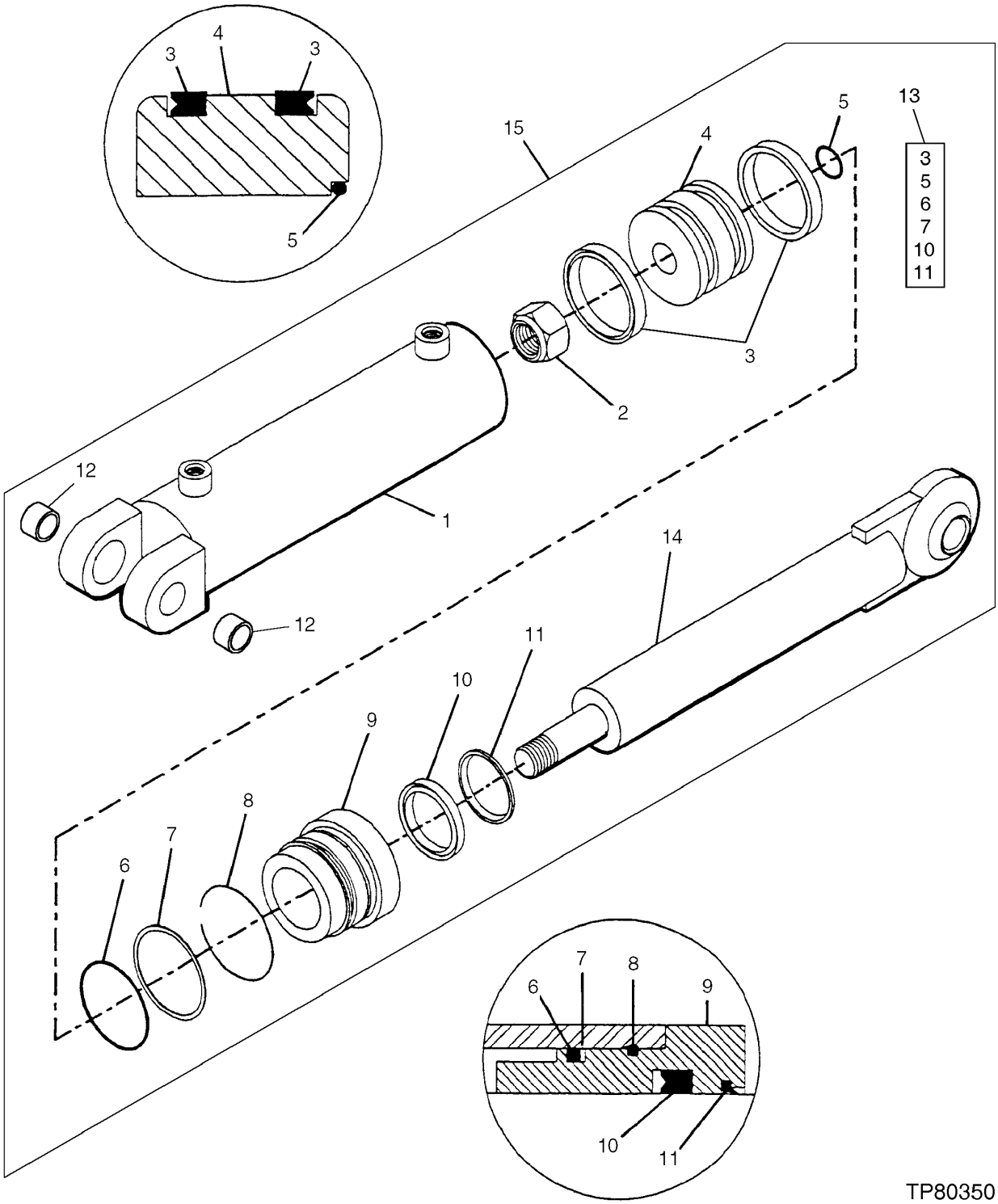

CYLINDER, TILT (SERIAL NO. 880054-881736)

KEY	PART NO.	PART NAME	QTY	SERIAL NO.	REMARKS
1	.....	HYDRAULIC CYLINDER BARREL	1		(CB01410805 NO LONGER AVAILABLE) (ORDER CB11439088)
2	AT216053	LOCK NUT	1		
3	.....	SEAL	2		
4	CB01410807	PISTON	1		
5	.....	O-RING	1		
6	.....	O-RING	1		
7	.....	BACK-UP RING	1		
8	AT216229	RETAINER	1		
9	AT216178	HYDR. CYLINDER ROD GUIDE	1		
10	.....	SEAL	1		
11	.....	SEAL	1		
12	AT216076	BUSHING	2		
13	AT216095	HYDRAULIC CYLINDER KIT	1		
14	CB01410806	ROD	1		
15	.....	HYDRAULIC CYLINDER	1		(AT188660 NO LONGER AVAILABLE) (SUB FOR AT216030) (ORDER CB11439088)

CYLINDER, TILT (SERIAL NO. 881737-882733)

TP80350 -UN-07DEC99

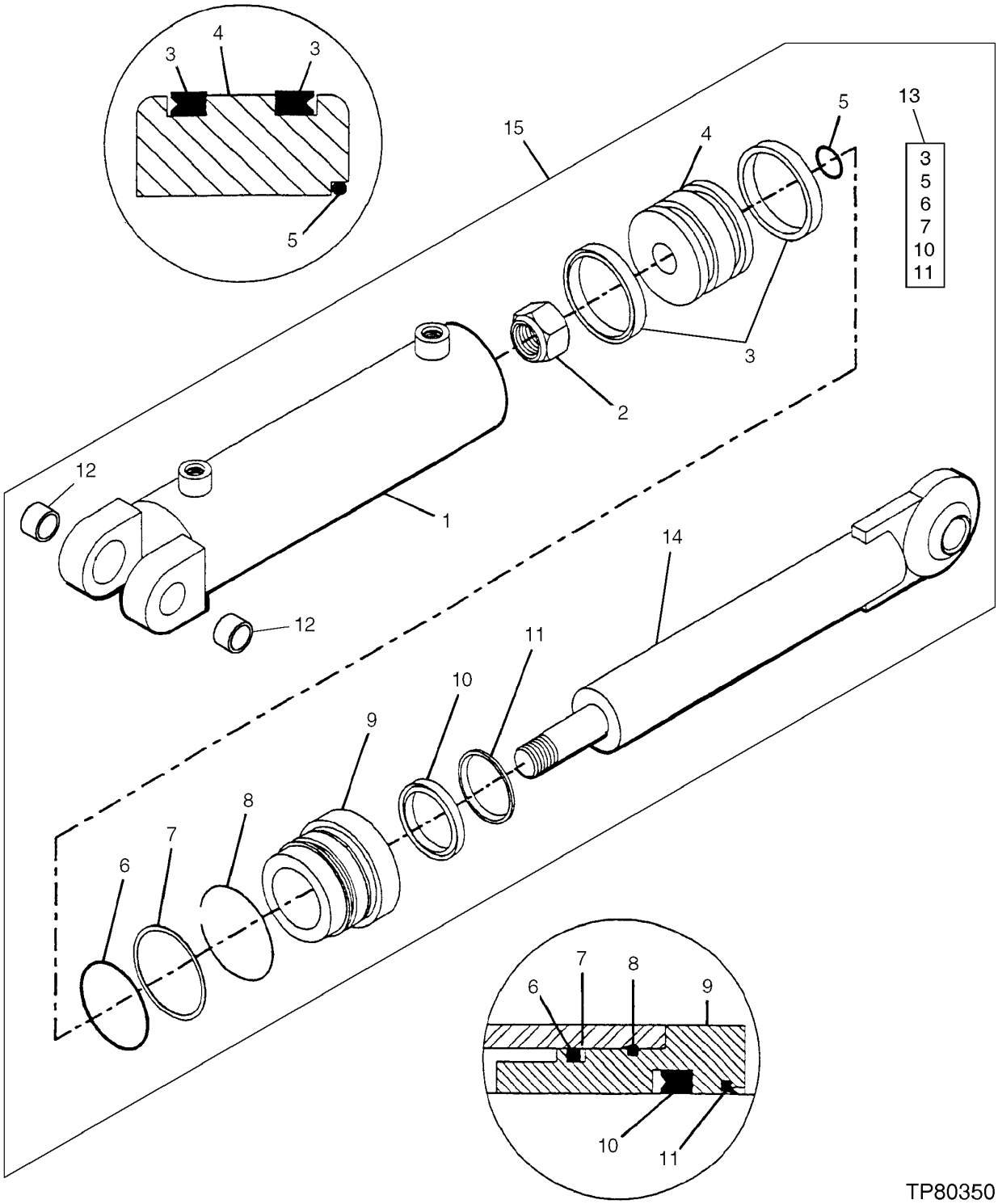

CYLINDER, TILT (SERIAL NO. 881737-882733)

KEY	PART NO.	PART NAME	QTY	SERIAL NO.	REMARKS
1	CB01439778	BARREL	1		
2	CB01448417	NUT	1		
3	.....	SEAL	2		
4	CB01439779	PISTON	1		
5	.....	O-RING	1		
6	.....	O-RING	1		
7	.....	BACK-UP RING	1		
8	AT216229	RETAINER	1		
9	CB01439916	HYDR. CYLINDER ROD GUIDE	1		
10	.....	SEAL	1		
11	.....	SEAL	1		
12	AT216076	BUSHING	2		
13	CB11439893	SEAL KIT	1		
14	CB01410806	ROD	1		
15	CB11439088	CYLINDER	1		(SUB FOR AT188660)

CYLINDER, TILT (SERIAL NO. 882734-)

T197970 -UN-24FEB04

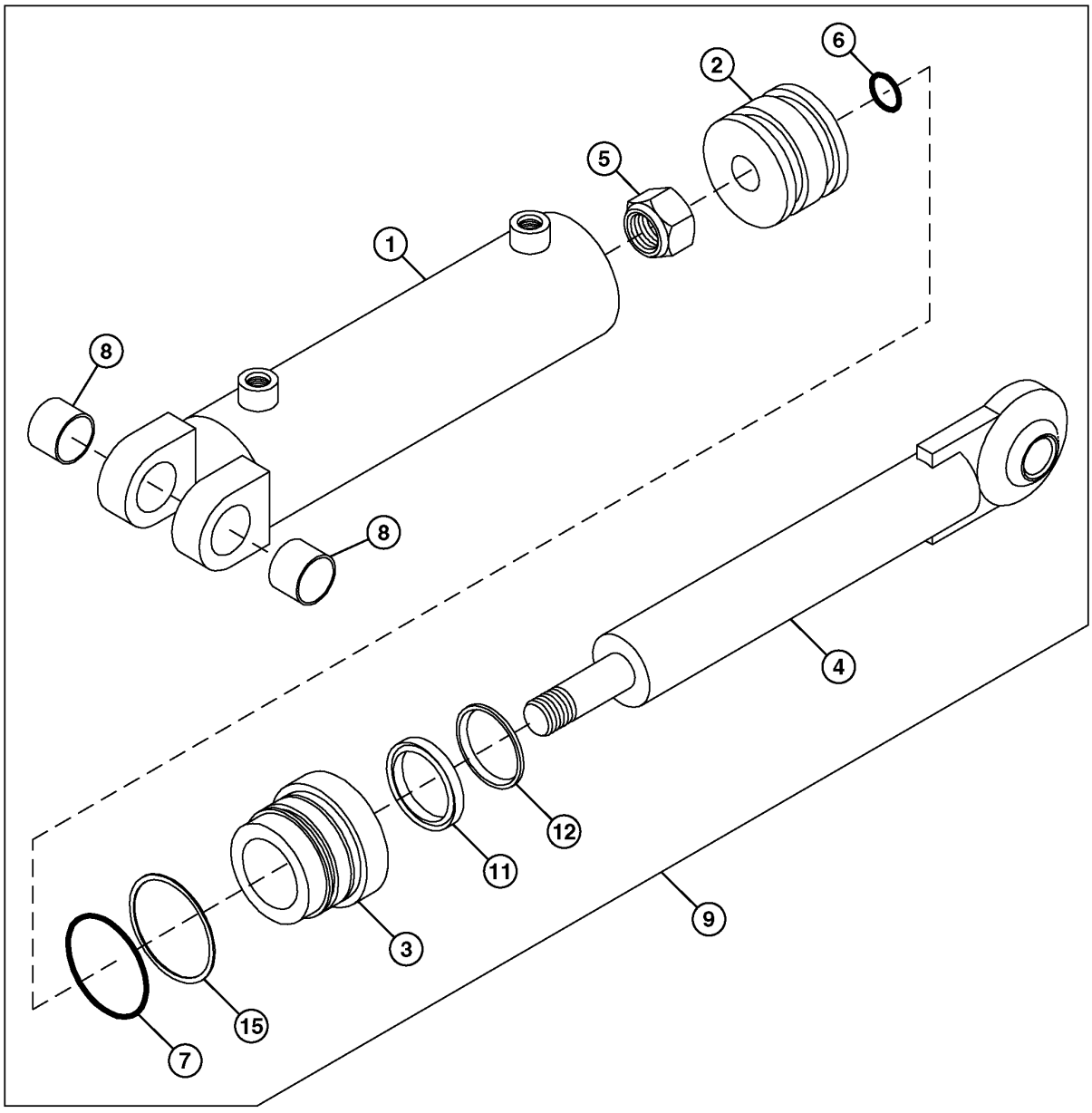

T197970

CYLINDER, TILT (SERIAL NO. 882734-)

KEY	PART NO.	PART NAME	QTY	SERIAL NO.	REMARKS
1	CB01455860	HYDRAULIC CYLINDER BARREL	1		
2	CB01455861	PISTON	1		
3	CB01455862	HYDR. CYLINDER ROD GUIDE	1		
4	CB01455864	ROD	1		
5	P49591	LOCK NUT	1		1"
6	.....	O-RING	1		
7	.....	BACK-UP RING	1		
8	AT216076	BUSHING	1		
9	CB11453664	HYDRAULIC CYLINDER	1		

CYLINDER, LIFT (SERIAL NO. -845680)

TP80351 -UN-07DEC99

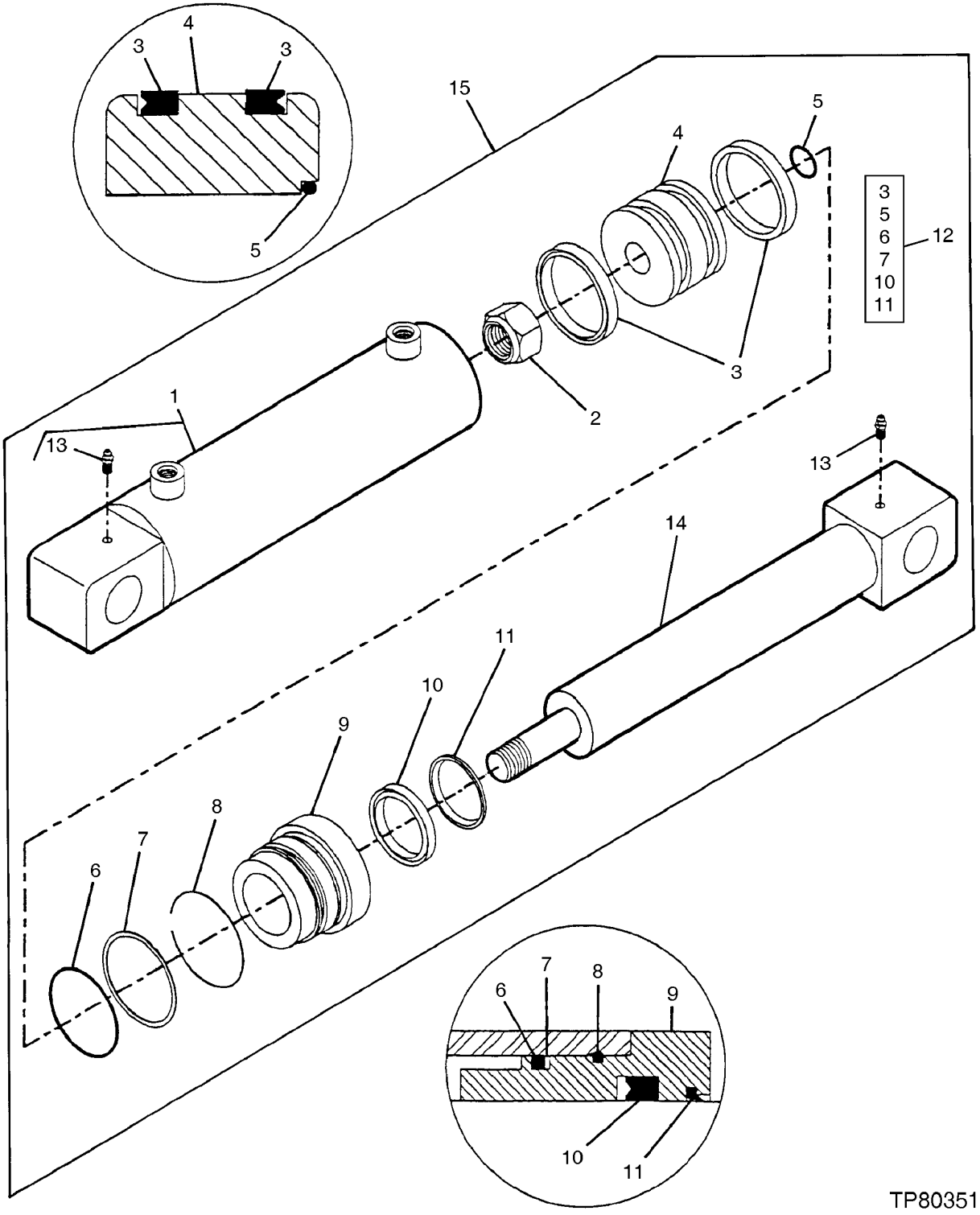

CYLINDER, LIFT (SERIAL NO. -845680)

KEY	PART NO.	PART NAME	QTY	SERIAL NO.	REMARKS
1	.....	HYDRAULIC CYLINDER BARREL	1	-845680	
2	AT216053	LOCK NUT	1	-845680	
3	.....	SEAL	2	-845680	
4	AT216176	PISTON	1	-845680	
5	.....	O-RING	1	-845680	
6	.....	O-RING	1	-845680	
7	.....	BACK-UP RING	1	-845680	
8	AT216229	RETAINER	1	-845680	
9	.....	HYDR. CYLINDER ROD GUIDE	1	-845680	(AT216177 NO LONGER AVAILABLE)
10	.....	SEAL	1	-845680	
11	.....	SEAL	1	-845680	
12	AT216094	HYDRAULIC CYLINDER KIT	1	-845680	
13	JD7759	LUBRICATION FITTING	2	-845680	
14	AT216182	ROD	1	-845680	
15	.....	HYDRAULIC CYLINDER	1	-845680	(SUB AT183862) AT216031 NO LONGER AVAILABLE
	AT183862	HYDRAULIC CYLINDER	1	-845680	(SUB AT189508)

CYLINDER, LIFT (SERIAL NO. 845681-881738)

TP80460 -UN-21FEB00

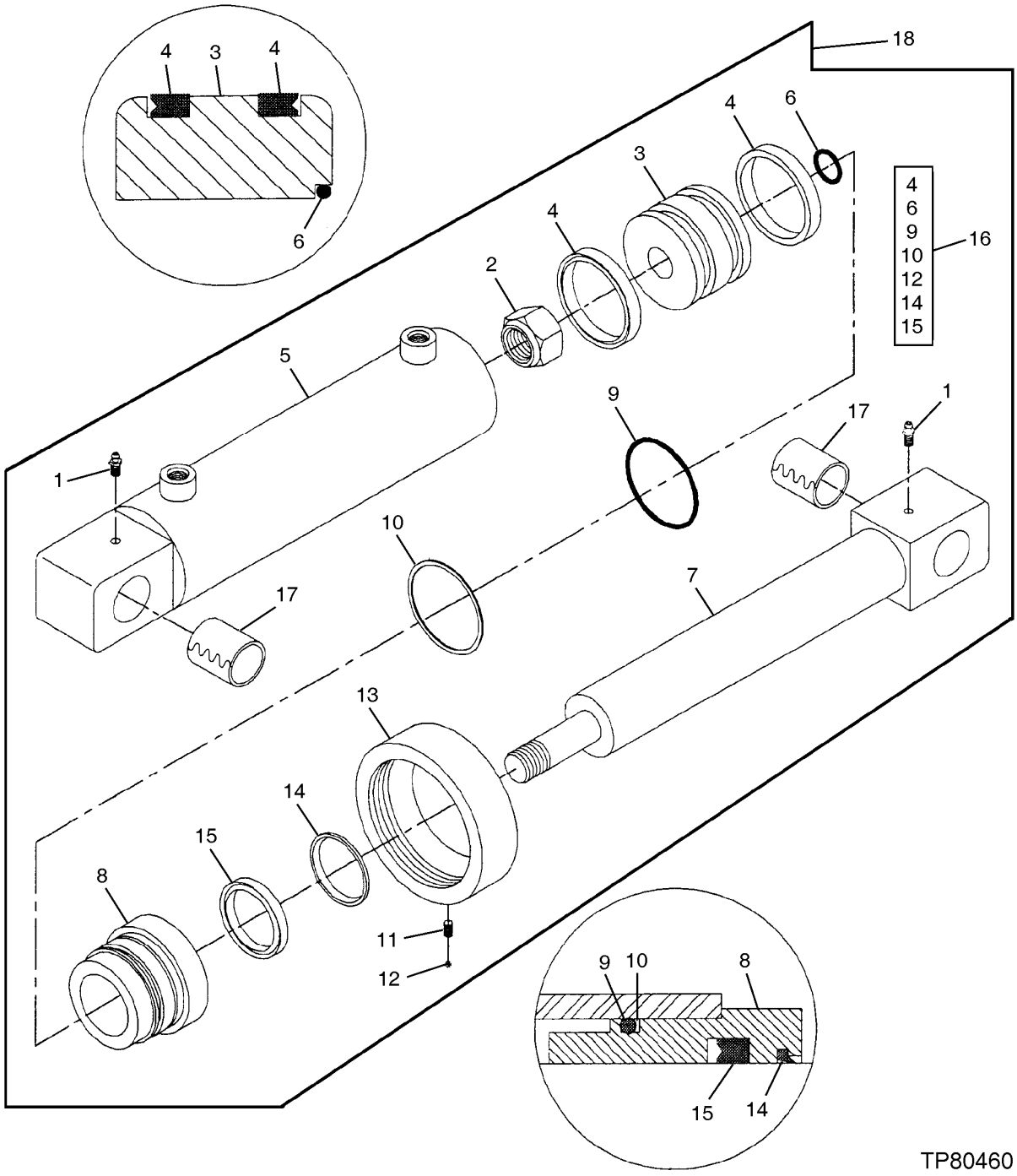

CYLINDER, LIFT (SERIAL NO. 845681-881738)

KEY	PART NO.	PART NAME	QTY	SERIAL NO.	REMARKS
1	JD7759	LUBRICATION FITTING	2		
2	AT216053	LOCK NUT	1		
3	AT216176	PISTON	1		
4	.....	SEAL	2		
5	.....	HYDRAULIC CYLINDER BARREL	1		
6	.....	O-RING	1		
7	AT184384	ROD	1		
8	T165014	GUIDE	1		
9	.....	O-RING	1		
10	.....	SEAL	1		
11	22H897	SET SCREW	2		
12	.....	SEAL	2		NYLON BALL
13	T165015	CAP	1		
14	.....	SEAL	1		WIPER SEAL
15	.....	SEAL	1		
16	AT216094	HYDRAULIC CYLINDER KIT	2		
17	AT216081	BUSHING	2		
18	.....	HYDRAULIC CYLINDER	1		(AT189508 NO LONGER AVAILABLE) (SUB FOR AT183862) (ORDER CB11439084)

CYLINDER, LIFT (SERIAL NO. 881739-882728)

TP80460 -UN-21FEB00

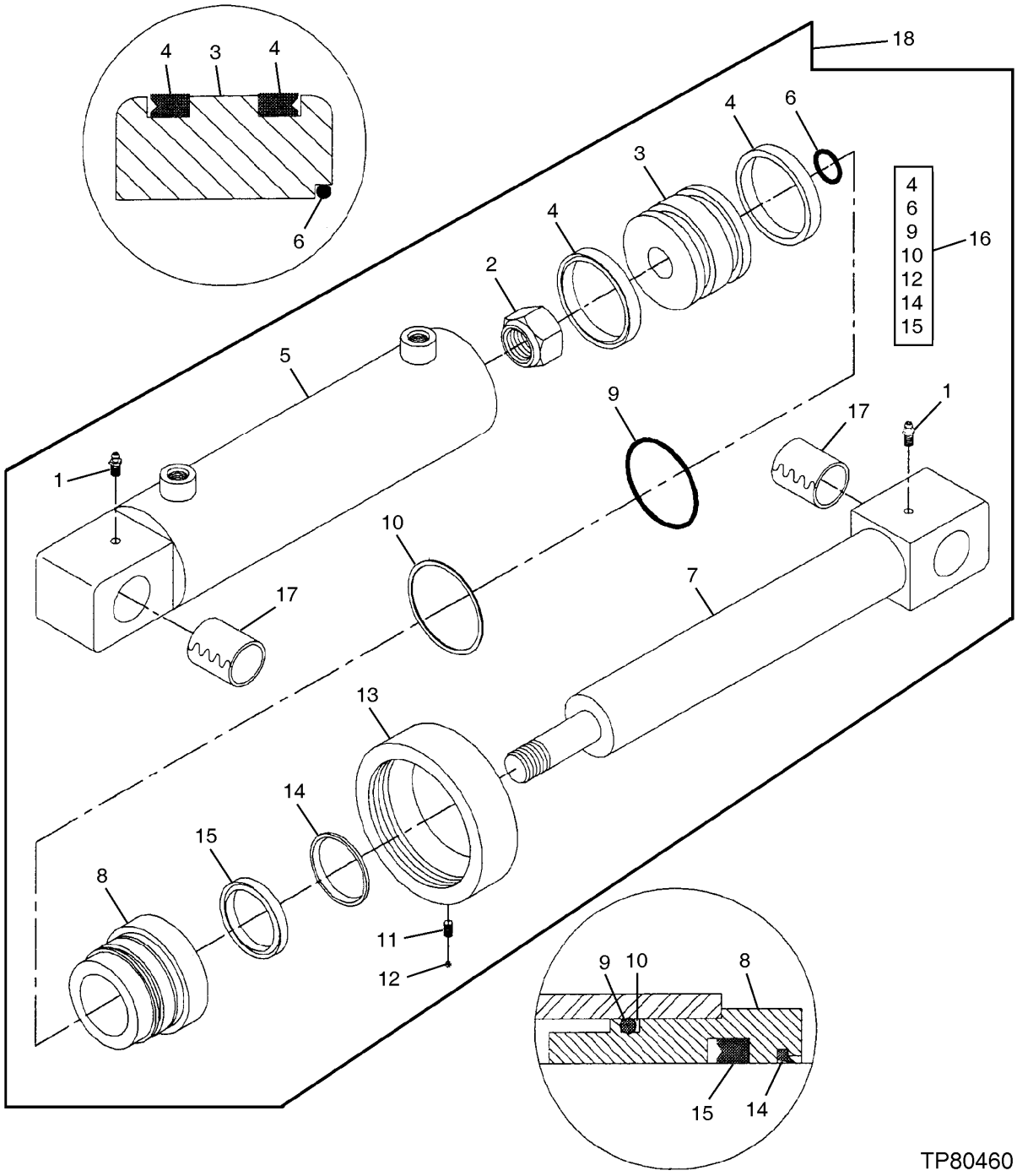

CYLINDER, LIFT (SERIAL NO. 881739-882728)

KEY	PART NO.	PART NAME	QTY	SERIAL NO.	REMARKS
1	JD7759	LUBRICATION FITTING	2		(SUB FOR AT183862)
2	AT216053	LOCK NUT	1		
3	CB01439787	PISTON	1		
4	.....	SEAL	2		
5	CB01439786	BARREL	1		
6	.....	O-RING	1		
7	AT184384	ROD	1		
8	CB01439785	SEAL	1		
9	.....	O-RING	1		
10	.....	SEAL	1		
11	22H897	SET SCREW	2		
12	.....	SEAL	2		NYLON BALL
13	T165015	CAP	1		
14	.....	SEAL	1		WIPER SEAL
15	.....	SEAL	1		
16	CB11439894	SEAL KIT	1		
17	AT216081	BUSHING	2		
18	CB11439084	CYLINDER	1		(SUB FOR AT189508)

CYLINDER, LIFT (SERIAL NO. 882729-)

T198030 -UN-24FEB04

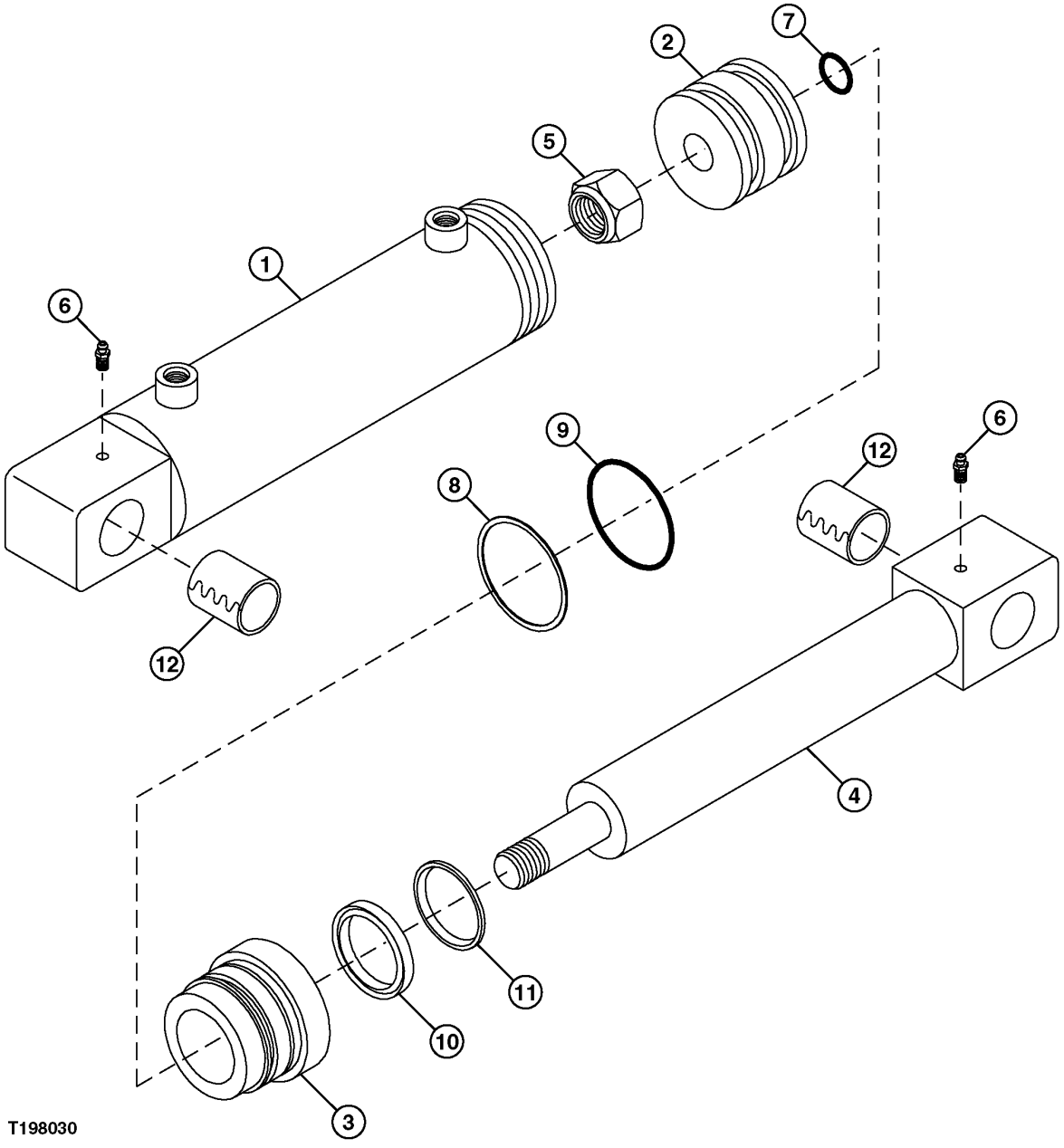

CYLINDER, LIFT (SERIAL NO. 882729-)

KEY	PART NO.	PART NAME	QTY	SERIAL NO.	REMARKS
1	CB01455877	HYDRAULIC CYLINDER BARREL	1		
2	CBO1455861	PISTON	1		
3	CB01455862	HYDR. CYLINDER ROD GUIDE	1		
4	CBO1455878	ROD	1		
5	P49591	LOCK NUT	1		
6	CBO1455879	LUBRICATION FITTING	2		
7	.....	O-RING	1		
8	.....	BACK-UP RING	1		
9	.....	O-RING	1		
10	.....	SEAL	1		
11	.....	SEAL	1		WIPER
12	.....	BUSHING	2		

CYLINDER, PITCH (SERIAL NO. XXXXXX-880053)

TP80353 -UN-07DEC99

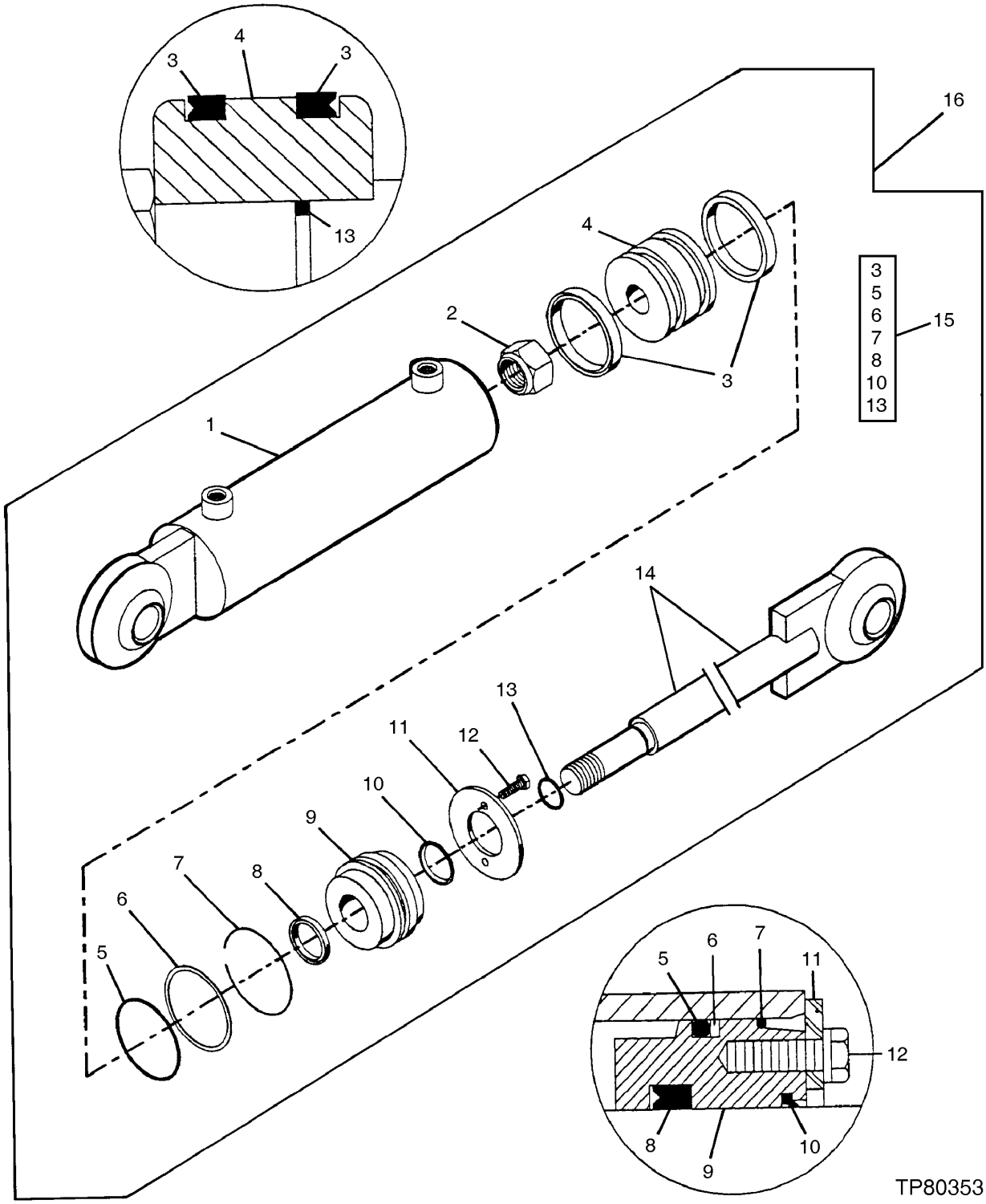

CYLINDER, PITCH (SERIAL NO. XXXXXX-880053)

KEY	PART NO.	PART NAME	QTY	SERIAL NO.	REMARKS
1	.....	HYDRAULIC CYLINDER BARREL	1		
2	AT216050	LOCK NUT	1		
3	.....	SEAL	2		
4	AT216174	PISTON	1		
5	.....	O-RING	1		
6	.....	O-RING	1		
7	AT216228	RETAINER	1		
8	.....	SEAL	1		
9	AT216175	HYDR. CYLINDER ROD GUIDE	1		
10	.....	SEAL	1		
11	AT216051	WASHER	2		
12	19H1948	CAP SCREW	2		1/4" X 3/4", (SUB FOR AT216052)
	12H302	LOCK WASHER	2		1/4"
13	.....	O-RING	1		
14	AT216184	ROD	1		
15	AT216093	SEAL KIT	1	-835631	
	AT216094	HYDRAULIC CYLINDER KIT	1	835632-880053	(SEAL)
16	AT216032	HYDRAULIC CYLINDER	1	-835631	
	AT183261	HYDRAULIC CYLINDER	1	835632-880053	

CYLINDER, PITCH (SERIAL NO. 880054-881745)

T152313 -UN-06MAR02

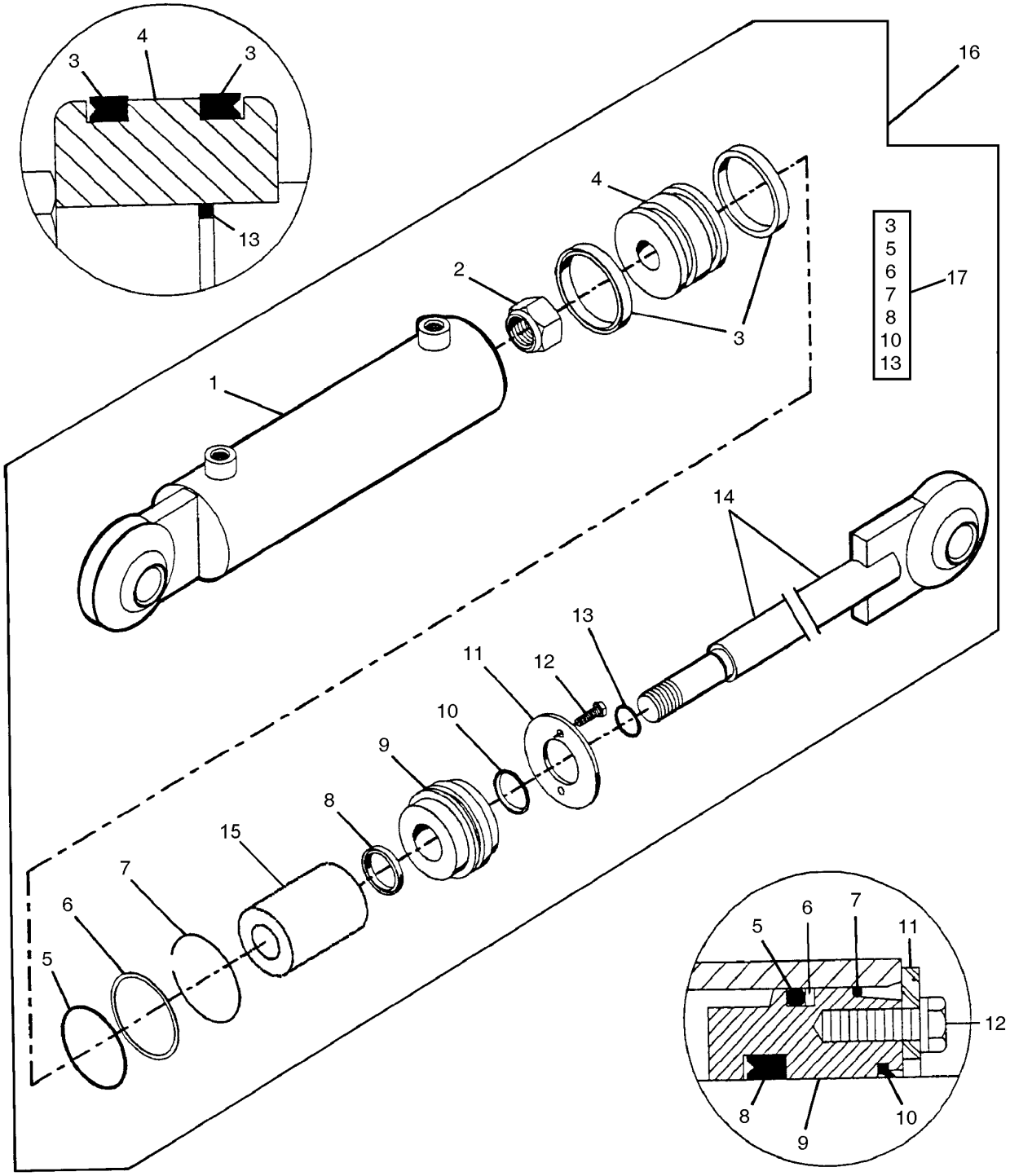

T152313

CYLINDER, PITCH (SERIAL NO. 880054-881745)

KEY	PART NO.	PART NAME	QTY	SERIAL NO.	REMARKS
1	.....	HYDRAULIC CYLINDER BARREL	1		(AT188654 NO LONGER AVAILABLE) (ORDER CB11439085)
2	AT216050	LOCK NUT	1		
3	.....	SEAL	2		
4	AT216174	PISTON	1		
5	.....	O-RING	1		
6	.....	O-RING	1		
7	AT216228	RETAINER	1		
8	.....	SEAL	1		
9	AT216175	HYDR. CYLINDER ROD GUIDE	1		
10	.....	SEAL	1		
11	AT216051	WASHER	2		
12	19H1948	CAP SCREW	2		1/4" X 3/4", (SUB FOR AT216052)
	12H302	LOCK WASHER	2		1/4"
13	.....	O-RING	1		
14	CB01410775	ROD	1		(AT187377 NO LONGER AVAILABLE) (ORDER CB11439085)
15	CB01410816	STOP	1		
16	.....	HYDRAULIC CYLINDER	1		(AT187377 NO LONGER AVAILABLE) (ORDER CB11439085)
17	AT216093	SEAL KIT	1		

CYLINDER, PITCH (SERIAL NO. 881746-881700)

T152313 -UN-06MAR02

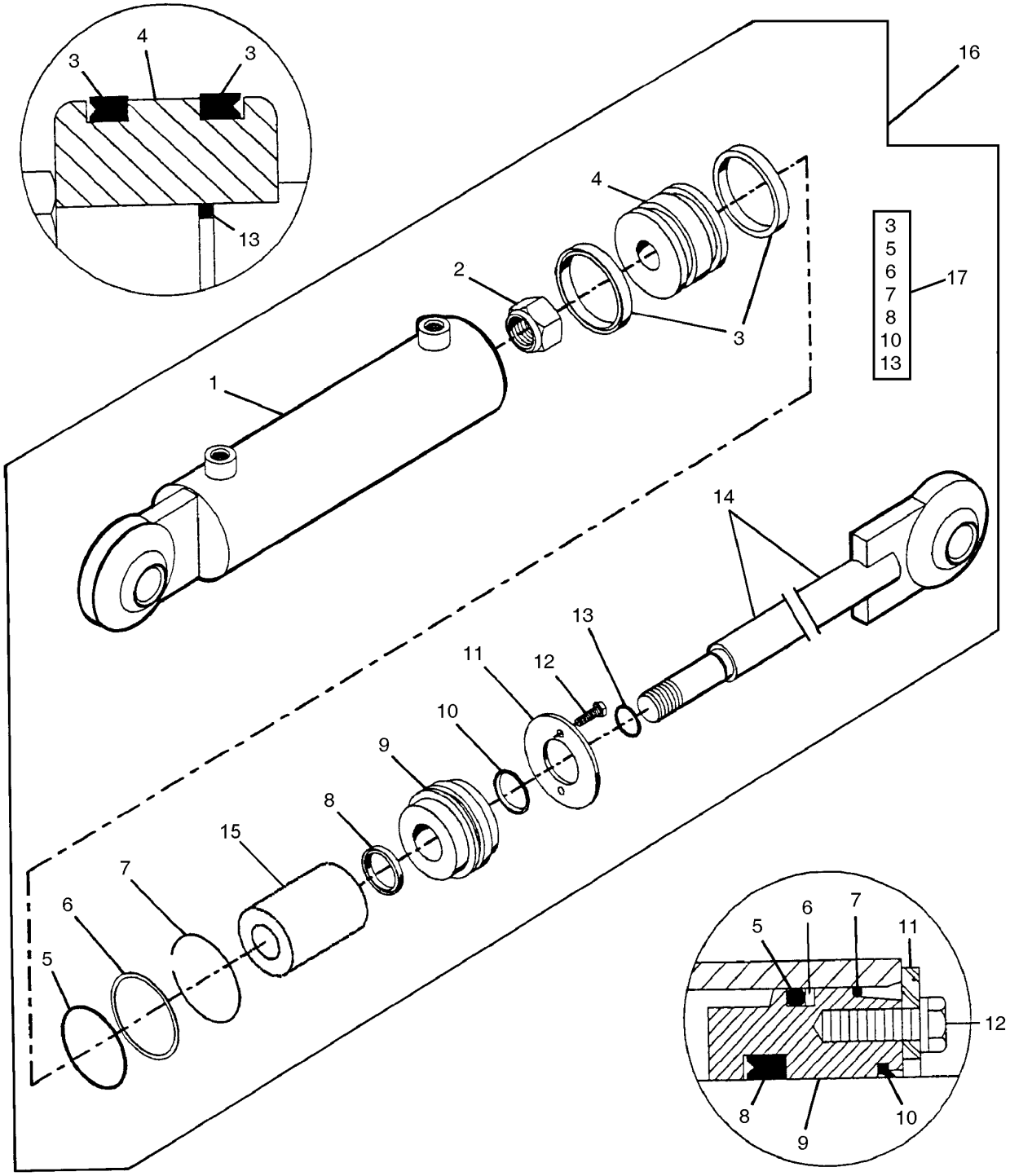

T152313

CYLINDER, PITCH (SERIAL NO. 881746-882700)

KEY	PART NO.	PART NAME	QTY	SERIAL NO.	REMARKS
1	CB01439782	BARREL	1		
2	AT216050	LOCK NUT	1		
3	.....	SEAL	2		
4	CB01439783	PISTON	1		
5	.....	O-RING	1		
6	.....	O-RING	1		
7	AT216228	RETAINER	1		
8	.....	SEAL	1		
9	CB01439780	HYDR. CYLINDER ROD GUIDE	1		
10	.....	SEAL	1		
11	AT216051	WASHER	2		
12	19H1948	CAP SCREW	2		1/4" X 3/4", (22.5" RETRACTABLE)
	12H302	LOCK WASHER	2		1/4"
13	.....	O-RING	1		
14	CB11440069	ROD	1		
15	CB01439781	STOP	1		
16	CB11439085	CYLINDER	1		(SUB FOR AT187377)
17	CB11439892	SEAL KIT	1		

CYLINDER, PITCH (SERIAL NO. 882701-882706)

T196813 -UN-10DEC03

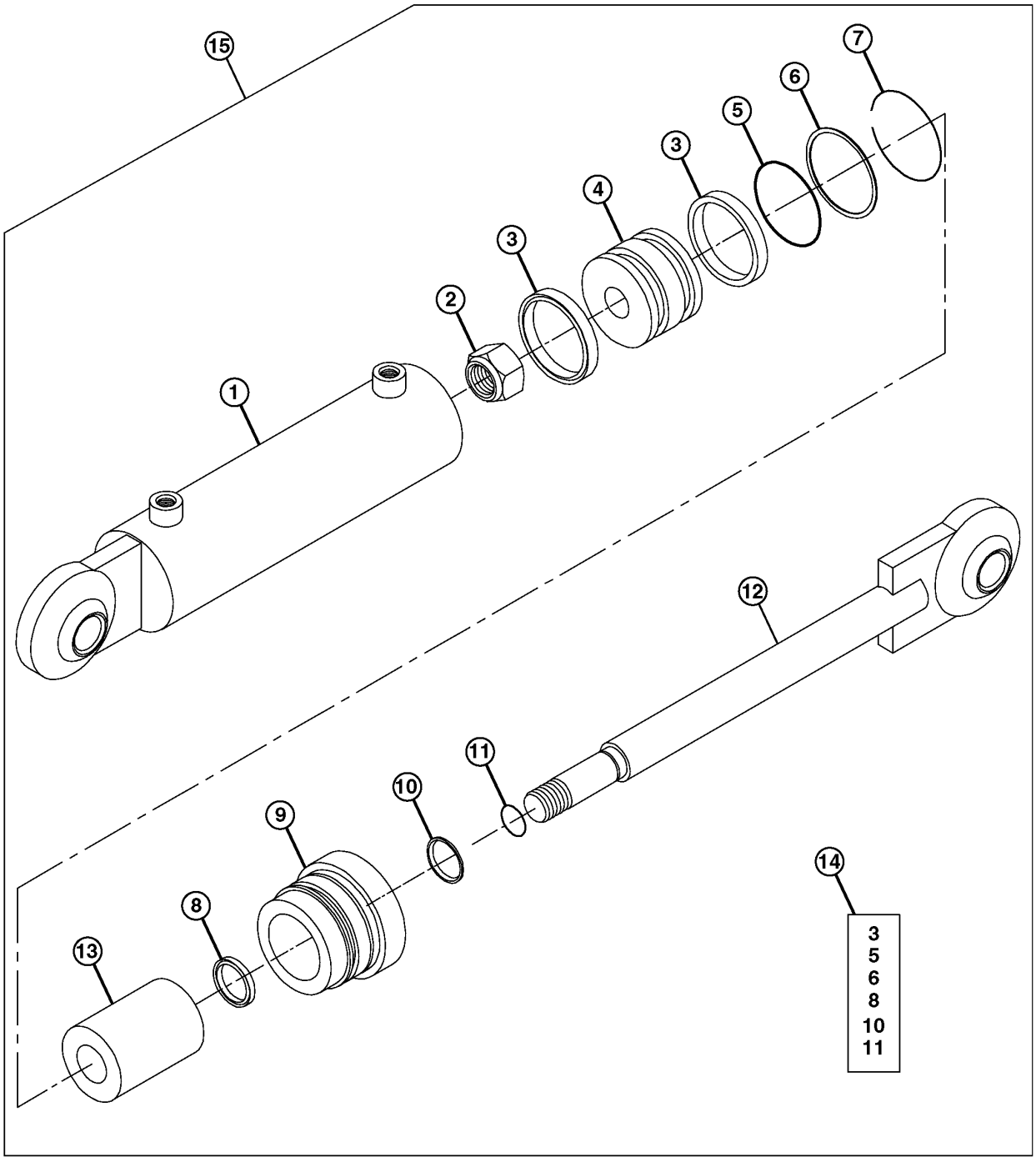

T196813

CYLINDER, PITCH (SERIAL NO. 882701-882706)

KEY	PART NO.	PART NAME	QTY	SERIAL NO.	REMARKS
1	CB01439782	BARREL	1		
2	AT216050	LOCK NUT	1		
3	.....	SEAL	2		
4	CB01439783	PISTON	1		
5	.....	O-RING	1		
6	.....	O-RING	1		
7	AT216228	RETAINER	1		
8	.....	SEAL	1		
9	CB01439780	HYDR. CYLINDER ROD GUIDE	1		
10	.....	SEAL	1		
11	.....	O-RING	1		
12	CB01410775	ROD	1		(22.5" RETRACTABLE)
13	CB01439781	STOP	1		
14	CB11439892	SEAL KIT	1		
15	CB11439085	CYLINDER	1		

CYLINDER, PITCH (SERIAL NO. 882707-)

T198031 -UN-24FEB04

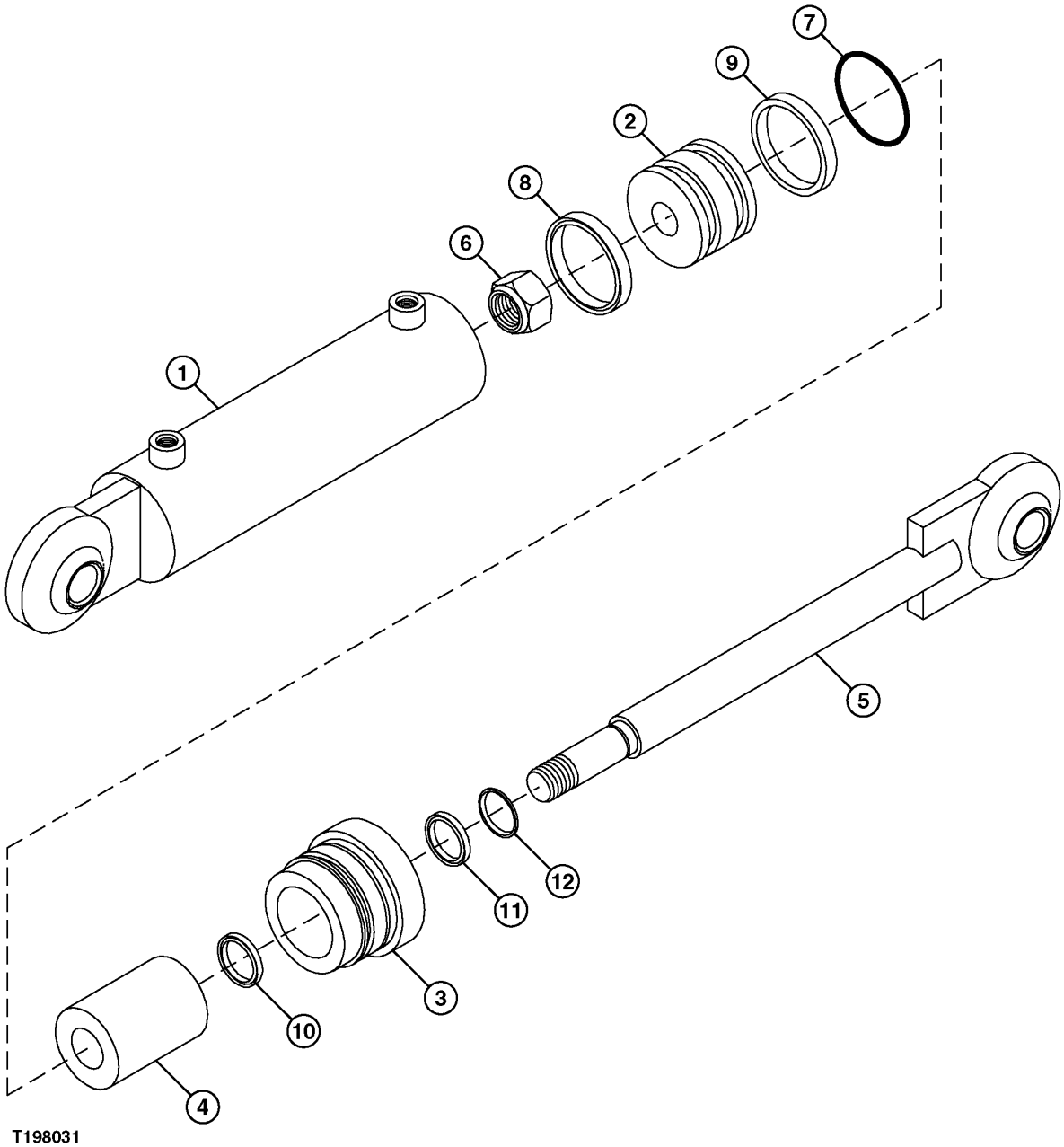

T198031

CYLINDER, PITCH (SERIAL NO. 882707-)

KEY	PART NO.	PART NAME	QTY	SERIAL NO.	REMARKS
1	CB01455823	HYDRAULIC CYLINDER BARREL	1		
2	CB01455824	PISTON	1		
3	CB01455824	PISTON	1		
4	CB01455826	HYDR. CYLINDER ROD GUIDE	1		
5	CB01455827	ROD	1		
6	P45231	LOCK NUT	1		
7	.....	O-RING	1		
8	.....	WEAR RING	1		
9	.....	WEAR RING	1		
10	.....	WEAR RING	2		
11	.....	SEAL	1		
12	.....	SEAL	1		

HITCH, 3 POINT
(SERIAL NO. -880053)

TP56688 -UN-23MAR99

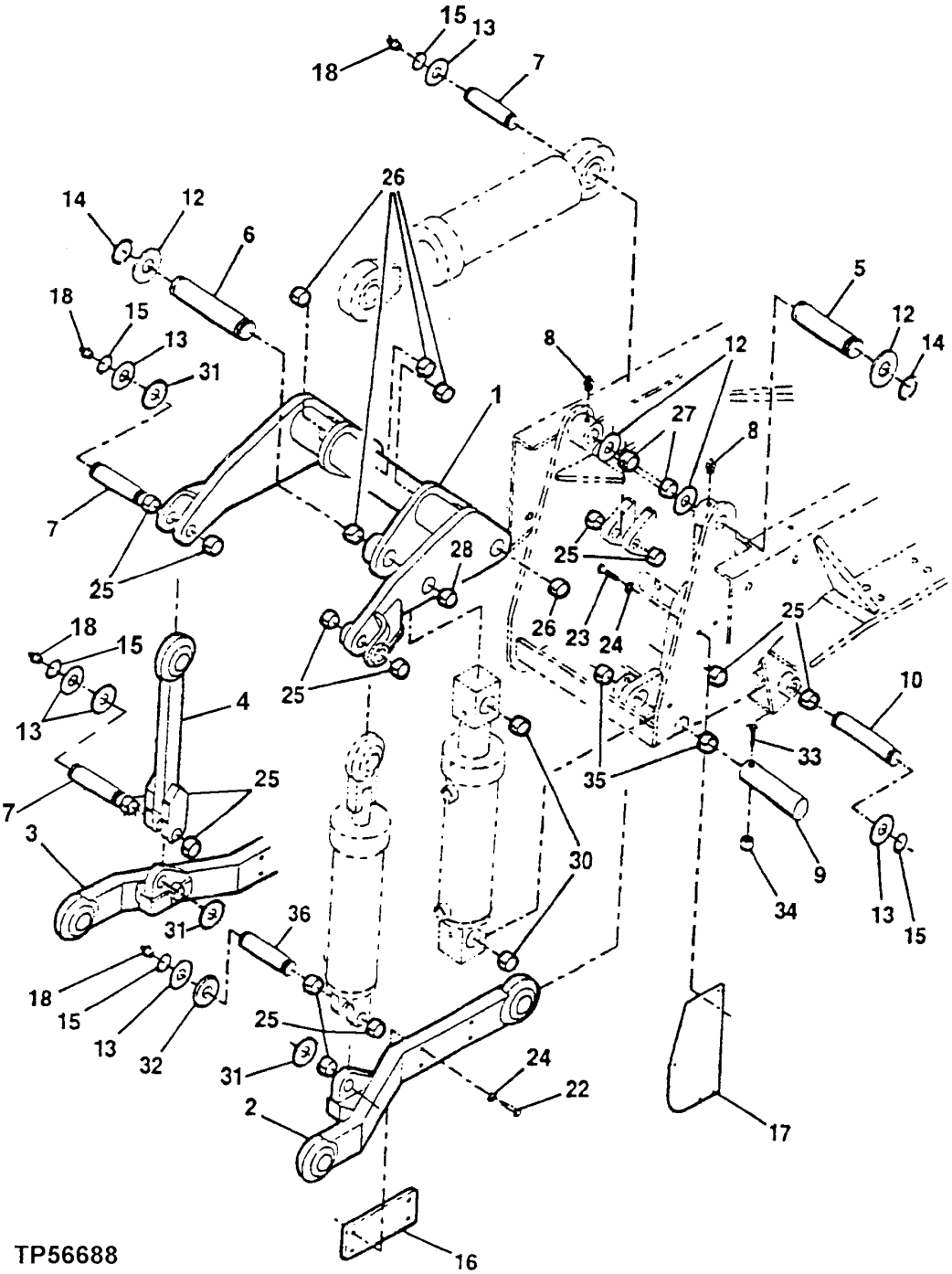

HITCH, 3 POINT
(SERIAL NO. -880053)

KEY	PART NO.	PART NAME	QTY	SERIAL NO.	REMARKS
1	AT216310	FRAME	1	-880053	(INCLUDES BUSHINGS)
2	AT216303	LINK	1	-880053	(INCLUDES BUSHINGS)
3	AT216304	LINK	1	-880053	(INCLUDES BUSHINGS)
4	AT216301	LINK	1	-880053	
5	AT182030	PIN FASTENER	2	-880053	
6	AT183898	PIN FASTENER	1	-880053	(SUB FOR AT182031)
7	AT182032	PIN FASTENER	3	-880053	
8	JD7759	LUBRICATION FITTING	2	-880053	
9	AT216087	PIN FASTENER	1	-880053	
10	AT182347	PIN FASTENER	2	-880053	(SUB FOR AT216086)
12	24H1536	WASHER	25	-880053	1-17/32" X 2-1/4" X 0.060"
13	24H1862	WASHER	22	-880053	1-1/32" X 1-1/2" X 0.060"
14	U16068	SNAP RING	6	-880053	
15	W23122	SNAP RING	14	-880053	
16	AT216123	WEAR PLATE	2	-880053	
17	AT216124	WEAR PLATE	2	-880053	
18	JD7842	LUBRICATION FITTING	4	-880053	
22	19H3065	CAP SCREW	8	-880053	3/8" X 2"
23	19H3239	CAP SCREW	10	-880053	3/8" X 1-1/4"
24	24H1652	WASHER	10	-880053	13/32" X 11/16" X 7/64"
25	AT216076	BUSHING	14	-880053	
26	AT216078	BUSHING	5	-880053	
27	AT216079	BUSHING	2	-880053	
28	AT216080	BUSHING	1	-880053	
30	AT216081	BUSHING	2	-880053	
31	AT182254	WASHER	18	-880053	
32	.....	SPACER	1	-880053	(NOT USED)
33	19H2855	CAP SCREW	1	-880053	3/8" X 3-1/4"
34	T11234	LOCK NUT	1	-880053	
35	AT216077	BUSHING	1	-880053	
36	AT183313	PIN FASTENER	2	-880053	

HITCH, 3 POINT
(SERIAL NO. 880054-882700)

T156693 -UN-28JUN02

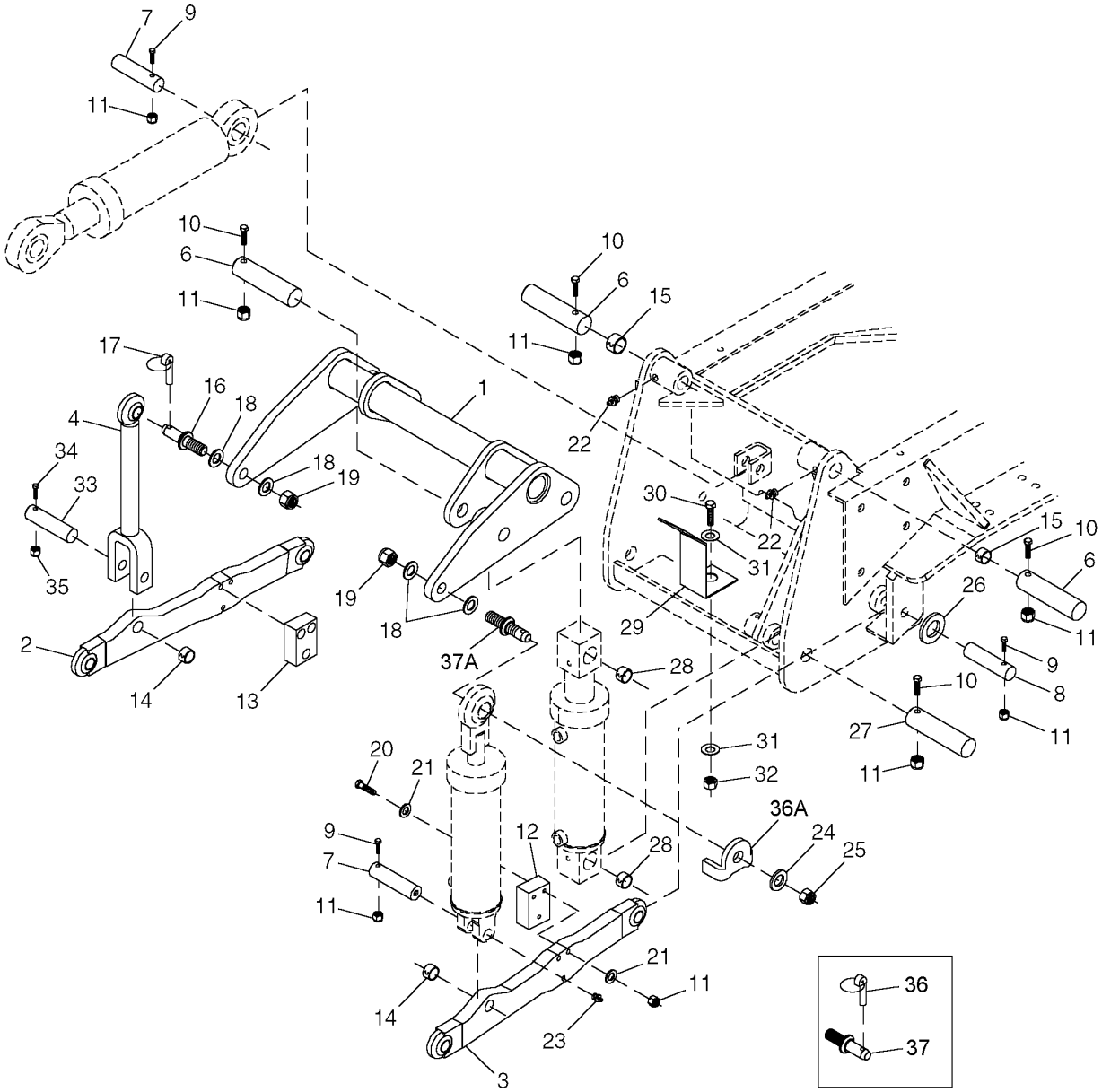

T156693

HITCH, 3 POINT
(SERIAL NO. 880054-882700)

KEY	PART NO.	PART NAME	QTY	SERIAL NO.	REMARKS
1	CB11395814	ARM	1	880054-	(SUB FOR AT188663)
2	AT188664	LINK	1	880054-	LH
3	AT188665	LINK	1	880054-	RH
4	AT188666	LINK	1	880054-	
6	AT188671	PIN	3	880054-	
7	AT188672	PIN	2	880054-880214	
	AT188672	PIN	1	880215-	
8	AT188673	PIN	2	880054-	
9	19H3065	CAP SCREW	5	880054-	3/8" X 2"
10	19H2458	CAP SCREW	4	880054-	3/8" X 3", 3/8 X 2-1/4
11	T11234	LOCK NUT	15	880054-	
12	AT188674	CYLINDER BLOCK	1	880054-	RH
13	AT188675	CYLINDER BLOCK	1	880054-	LH
14	AT188676	BUSHING	2	880054-	
15	AT188677	BUSHING	2	880054-	
16	AT188679	PIN	1	880054-	
17	34M7077	SPRING PIN	1	880054-	
18	U11651	WASHER	4	880054-	
19	U13572	LOCK NUT	2	880054-	
20	19H2732	CAP SCREW	6	880054-	3/8" X 2-3/4"
21	T105740	WASHER	12	880054-	
22	T162396	LUBRICATION FITTING	3	880054-	
23	AT57867	FITTING	3	880054-	LUBRICATION
24	R20136	WASHER	1	880190-	
25	H34753	LOCK NUT	1	880190-	
26	AT182254	WASHER	2	880054-	
27	AT216087	PIN FASTENER	1	880054-	
28	AT216081	BUSHING	2	880054-	
29	AT181929	SUPPORT	1	880190-	
30	.....	CAP SCREW	1	880190-	
31	24H1111	WASHER	1	880190-	
32	14H1040	NUT	1	880190-	
33	AT190450	PIN	1	880054-	
34	19H3065	CAP SCREW	1	880054-	
35	T11234	LOCK NUT	1	880054-	
36	34M7077	SPRING PIN	1	880054-880214	
36A	CB01385241	GUIDE	1	880215-	
37	AT188679	PIN	1	880054-880189	
37A	CB01385123	PIN	1	880190-	

HITCH, 3 POINT
(SERIAL NO. 882701-)

T196897 -UN-15DEC03

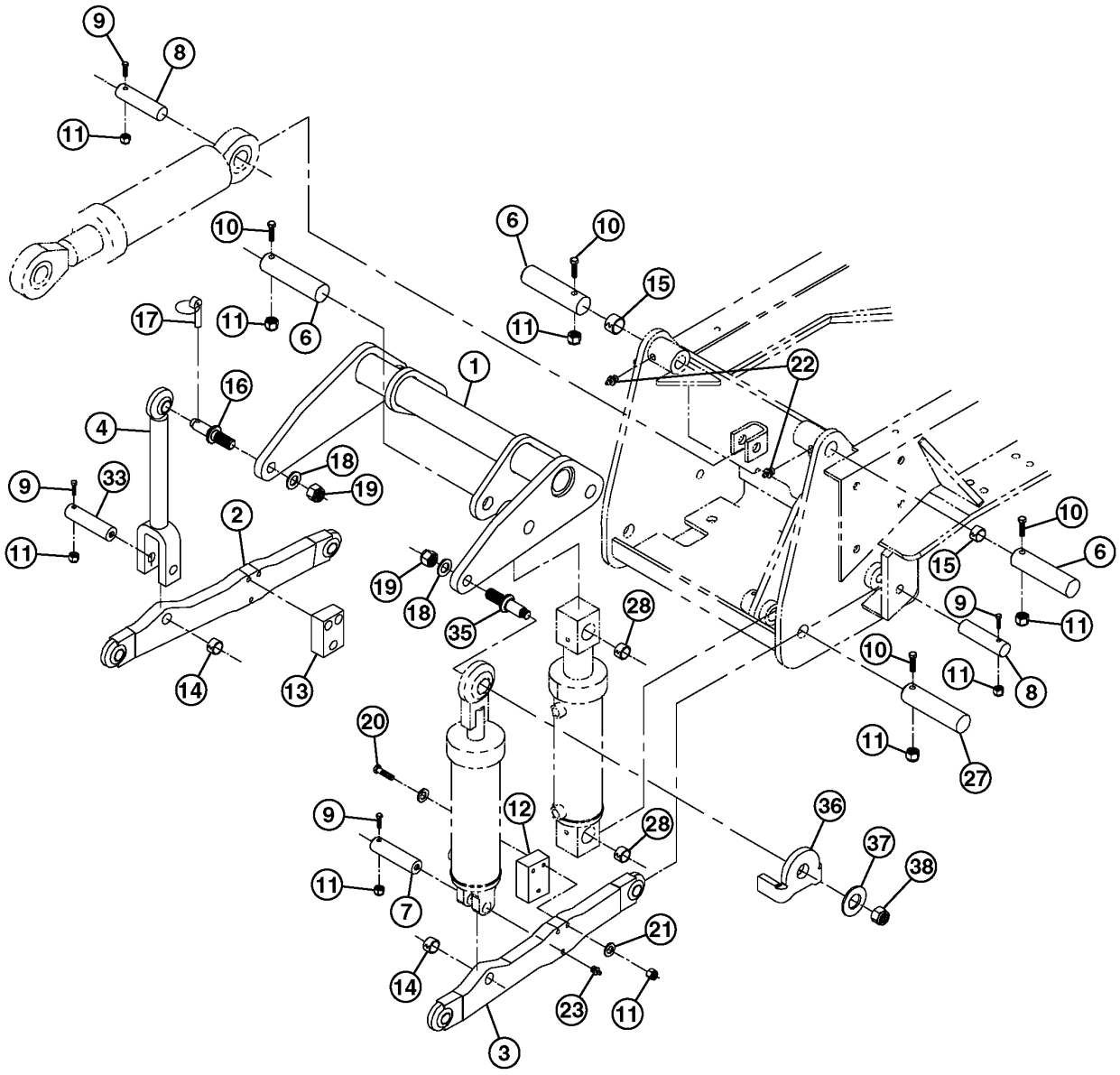

T196897

HITCH, 3 POINT
(SERIAL NO. 882701-)

KEY	PART NO.	PART NAME	QTY	SERIAL NO.	REMARKS
1	CB11395814	PIVOT	1		(SUB FOR AT188663)
2	AT188664	LINK	1		LH
3	AT188665	LINK	1		RH
4	AT188666	LINK	1		
6	AT188671	PIN	3		
7	AT188672	PIN	1		
8	AT188673	PIN	3		
9	19H3065	CAP SCREW	5		3/8" X 2"
10	19H2458	CAP SCREW	4		3/8" X 3", 3/8 X 2-1/4
11	T11234	LOCK NUT	16		
12	AT188674	CYLINDER BLOCK	1		RH
13	AT188675	CYLINDER BLOCK	1		LH
14	AT188676	BUSHING	2		
15	AT188677	BUSHING	2		
16	AT188679	PIN	1		
17	34M7077	SPRING PIN	1		
18	U11651	WASHER	2		
19	U13572	LOCK NUT	2		
20	19H2732	CAP SCREW	6		3/8" X 2-3/4"
21	T105740	WASHER	12		
22	JD7798	LUBRICATION FITTING	3		
23	JD7844	LUBRICATION FITTING	2		
27	AT216087	PIN FASTENER	1		
28	AT216081	BUSHING	2		
33	AT216081	BUSHING	1		
35	CB01385123	PIN	1		
36	CB01385241	GUIDE	1		
37	R20136	WASHER	1		
38	H34753	LOCK NUT	1		
39	U11649	WASHER	1		

HITCH, 3 POINT PLUMBING
(SERIAL NO. -880053)

T165586 -UN-19FEB03

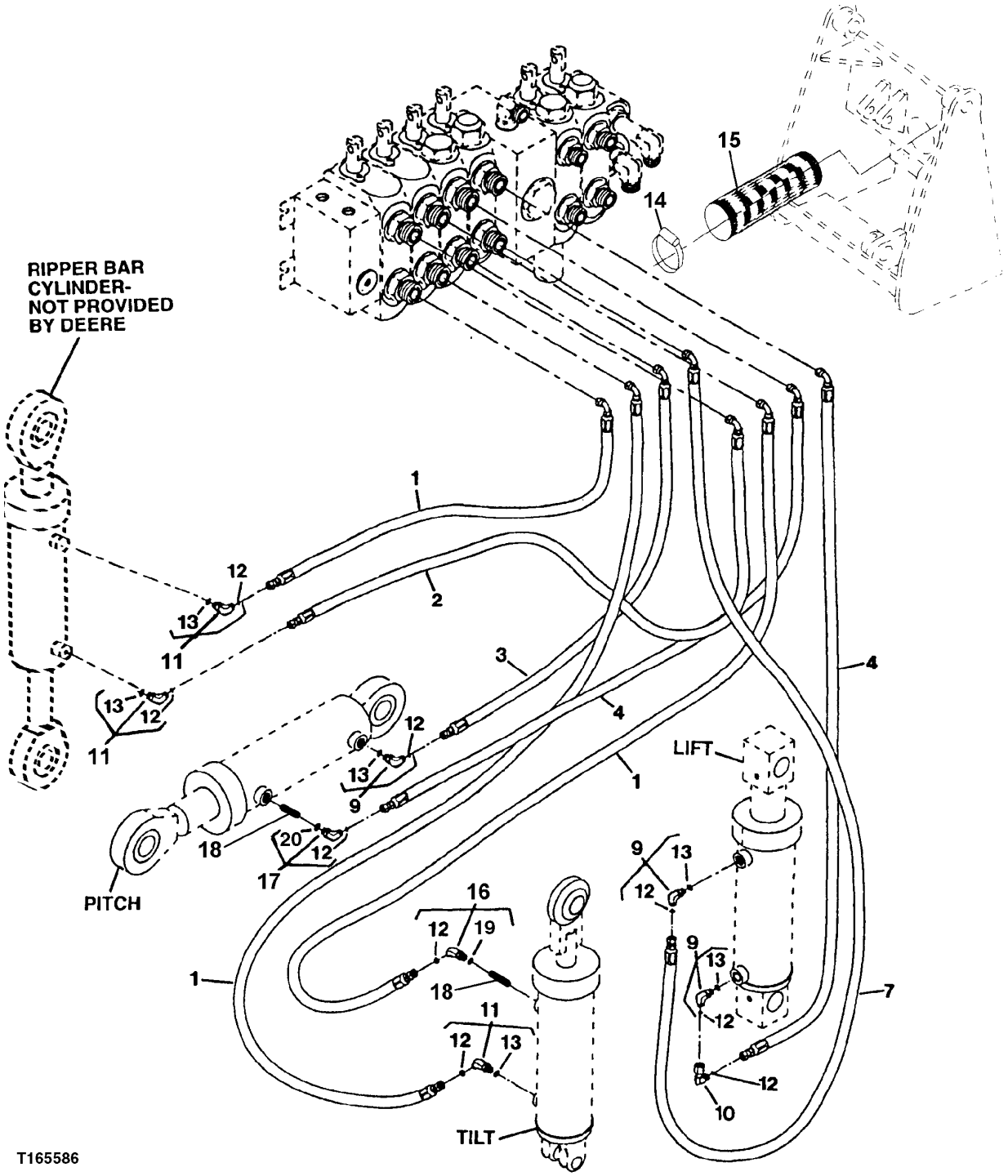

HITCH, 3 POINT PLUMBING
(SERIAL NO. -880053)

KEY	PART NO.	PART NAME	QTY	SERIAL NO.	REMARKS
1	AT216270	HYDRAULIC HOSE - FABRICATE	3	-880053	
2	AT216271	HYDRAULIC HOSE - FABRICATE	1	-880053	
3	AT216266	HYDRAULIC HOSE - FABRICATE	1	-880053	
4	AT216265	HYDRAULIC HOSE - FABRICATE	2	-880053	
7	AT216264	HYDRAULIC HOSE - FABRICATE	4	-880053	
9	38H1009	ELBOW FITTING	3	-880053	
10	38H1093	ELBOW FITTING	1	-880053	
11	38H1545	ELBOW FITTING	3	-880053	(45 DEGREE)
12	T77814	O-RING	9	-880053	7.645 X 1.778 MM (0.301" X 0.070")
13	R26448	O-RING	5	-880053	0.468" X 5/64"
14	TY22469	CLAMP	AR	-880053	
15	AT182636	COVER	AR	-880053	CORDURA SLEEVE MUST BE FITTED AROUND ALL HOSES EXITING HITCHPLATE.
16	AT182637	FITTING	1	XXXXXX-835631	
	38H1545	ELBOW FITTING	1	835632-880053	
17	AT182638	FITTING	1	XXXXXX-835631	
	38H1009	ELBOW FITTING	1	835632-880053	
18	AT182639	ORIFICE	1	XXXXXX-835631	
19	R28782	O-RING	1	XXXXXX-835631	0.351" X 0.072", (USE WITH AT182637)
	R26448	O-RING	1	835632-880053	0.468" X 5/64", (USE WITH 38H1545)
20	R28782	O-RING	1	XXXXXX-835631	0.351" X 0.072", (USE WITH AT182638)
	R26448	O-RING	1	835632-880053	0.468" X 5/64", (USE WITH 38H1009)

HITCH, 3 POINT PLUMBING
(SERIAL NO. 880054-)

TP68946 -UN-29JUN00

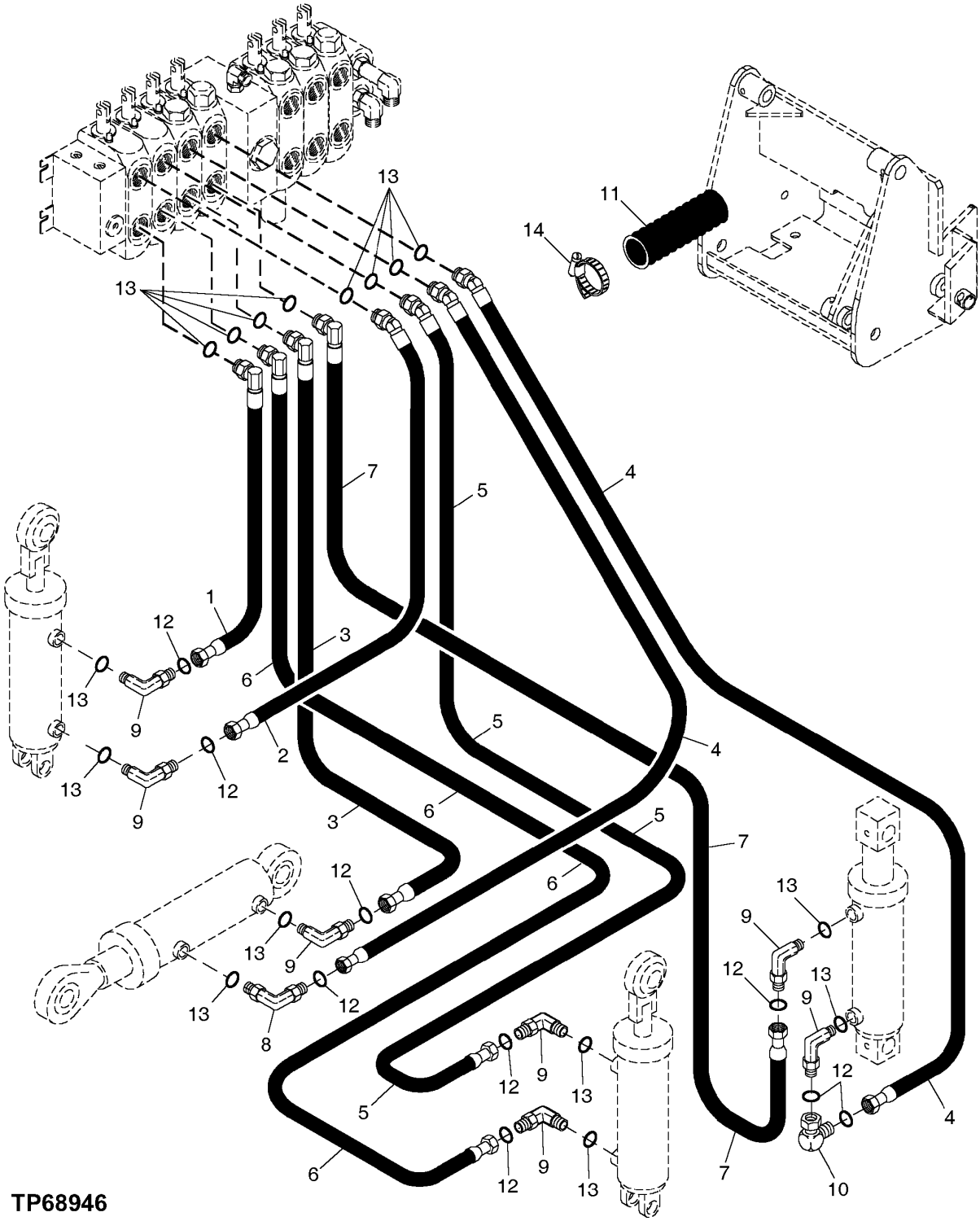

HITCH, 3 POINT PLUMBING
(SERIAL NO. 880054-)

KEY	PART NO.	PART NAME	QTY	SERIAL NO.	REMARKS
1	AT188905	HYDRAULIC HOSE - FABRICATE	1		
2	AT188908	HYDRAULIC HOSE - FABRICATE	1		
3	AT188858	HYDRAULIC HOSE - FABRICATE	1		
4	AT188859	HYDRAULIC HOSE - FABRICATE	2		
5	AT190337	HYDRAULIC HOSE	1		
6	AT188920	HYDRAULIC HOSE - FABRICATE	1		
7	AT188861	HYDRAULIC HOSE	1		
8	38H1009	ELBOW FITTING	1		
9	38H1545	ELBOW FITTING	6		
	38H1145	FITTING PLUG	2		
10	38H1093	ELBOW FITTING	1		
11	AT182636	COVER	AR		CORDURA SLEEVE MUST BE FITTED AROUND ALL HOSES EXITING HITCHPLATE.
12	T77814	O-RING	9		0.301" X 0.070"
13	R26448	O-RING	8		0.468" X 5/64"
14	TY22470	CLAMP	AR	880054-882700	
	TY22471	CLAMP	1	882701-	

HITCH, 3 POINT PLUMBING (5TH FUNCTION)
(SERIAL NO. 880054-)

TP80287 -UN-16DEC99

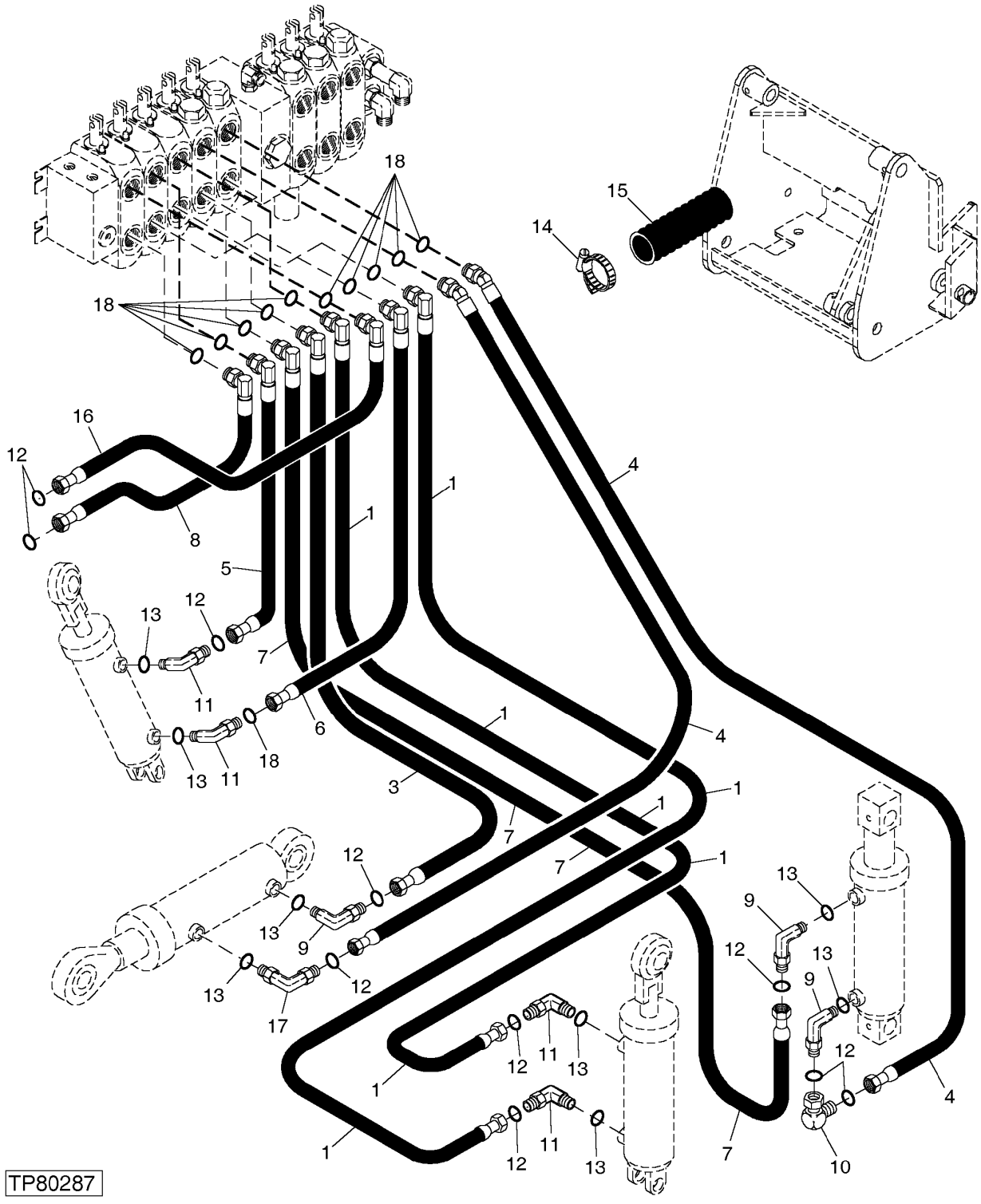

HITCH, 3 POINT PLUMBING (5TH FUNCTION)
(SERIAL NO. 880054-)

KEY	PART NO.	PART NAME	QTY	SERIAL NO.	REMARKS
1	AT216270	HYDRAULIC HOSE - FABRICATE	3	880054-	
2	AT216271	HYDRAULIC HOSE - FABRICATE	1	880054-	
3	AT216266	HYDRAULIC HOSE - FABRICATE	1	880054-	
4	AT216265	HYDRAULIC HOSE - FABRICATE	2	880054-	
5	AT188920	HYDRAULIC HOSE - FABRICATE	1	880054-	
6	AT188860	HYDRAULIC HOSE - FABRICATE	1	880054-	
7	AT216264	HYDRAULIC HOSE - FABRICATE	4	880054-	
8	AT188908	HYDRAULIC HOSE - FABRICATE	1	880054-	
	38H1145	FITTING PLUG	1	880054-	
9	38H1009	ELBOW FITTING	3	880054-	
10	38H1093	ELBOW FITTING	1	880054-	
11	38H1545	ELBOW FITTING	6	880054-	(45 DEGREE)
12	T77814	O-RING	9	880054-	0.301" X 0.070"
13	R26448	O-RING	8	880054-	0.468" X 5/64"
14	TY22469	CLAMP	AR	880054-	
15	AT182636	COVER	AR	880054-	CORDURA SLEEVE MUST BE FITTED AROUND ALL HOSES EXITING HITCHPLATE.
16	AT188905	HYDRAULIC HOSE - FABRICATE	1	880054-	
	38H1145	FITTING PLUG	1	880054-	
17	38H1009	ELBOW FITTING	1	880054-	
18	T77814	O-RING	11	880054-	

TILT CYLINDER KIT
(SERIAL NO. -880053)

TP52744 -UN-15MAY97

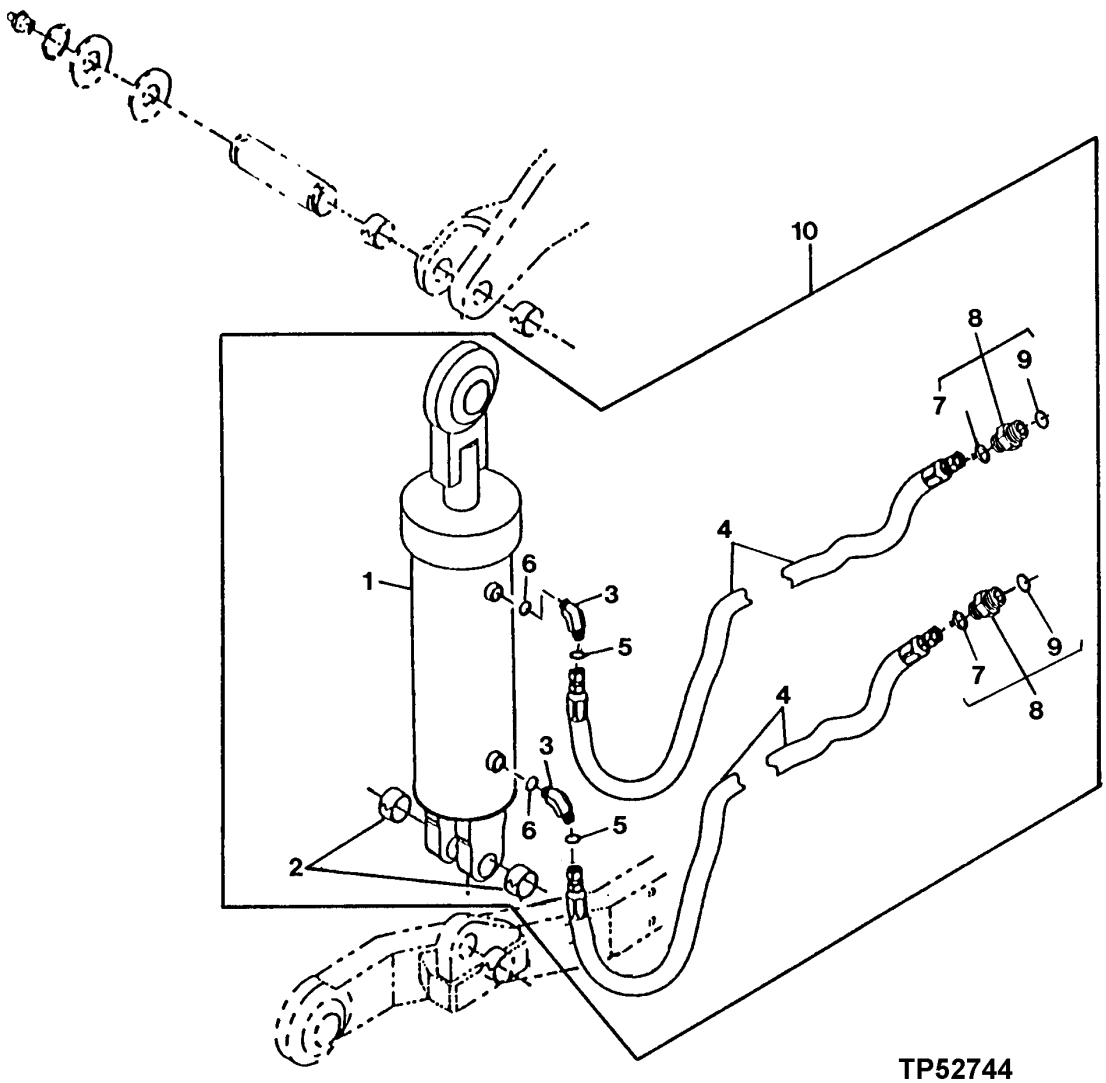

TILT CYLINDER KIT
(SERIAL NO. -880053)

KEY	PART NO.	PART NAME	QTY	SERIAL NO.	REMARKS
1	AT183258	CYLINDER	1	-880053	(SUB FOR AT216030) (INCLUDES ORIFACE)
2	AT216076	BUSHING	2	-880053	
3	38H1545	ELBOW FITTING	2	-880053	
4	AT216270	HYDRAULIC HOSE - FABRICATE	2	-880053	
5	T77814	O-RING	2	-880053	0.301" X 0.070"
6	R26448	O-RING	2	-880053	0.468" X 5/64"
7	T77814	O-RING	2	-880053	0.301" X 0.070"
8	AT201397	FITTING	2	-880053	
9	R26375	O-RING	2	-880053	0.644" X 0.087"
10	AT180359	KIT	1	-880053	

TILT CYLINDER KIT (FIFTH FUNCTION)
(SERIAL NO. 880054-)

TP80305 -UN-21DEC99

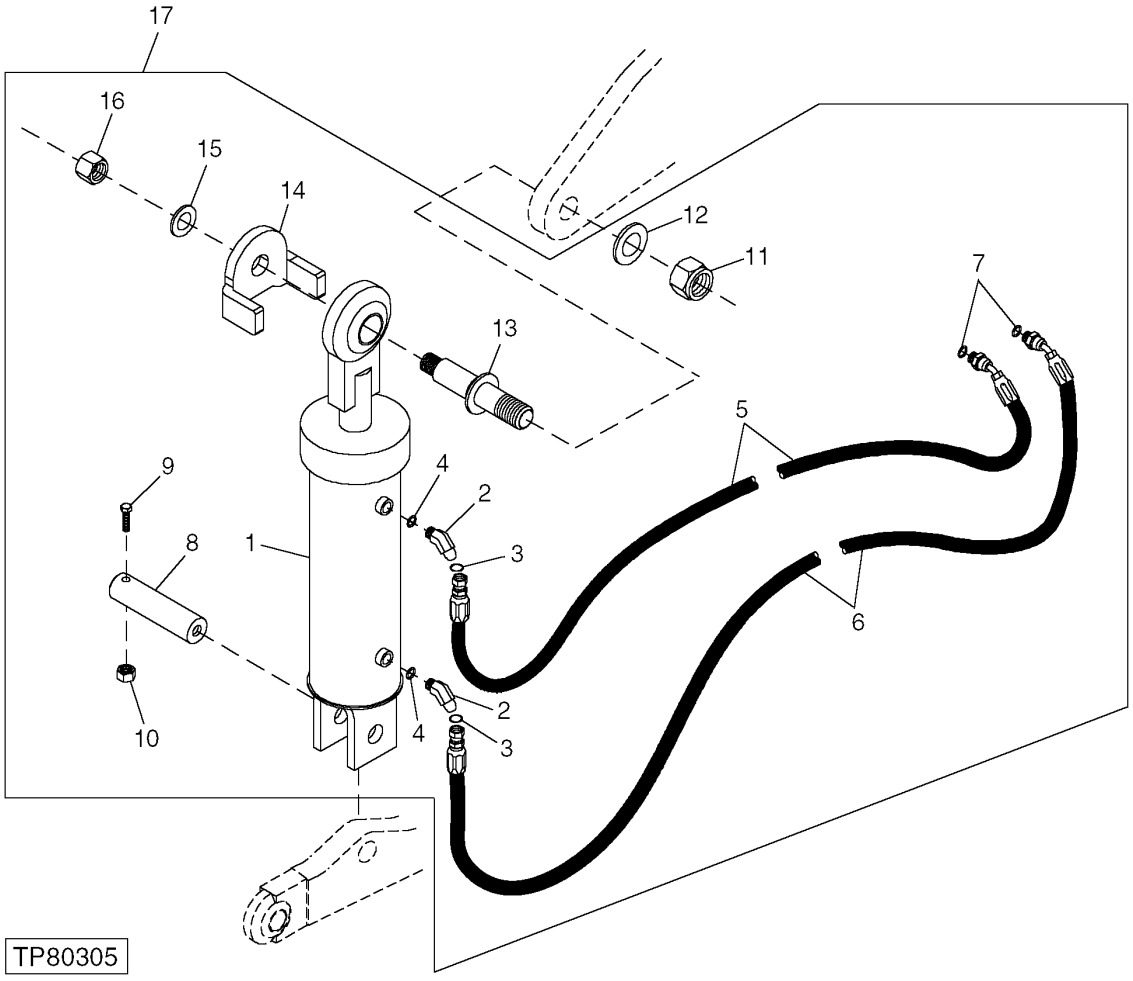

TILT CYLINDER KIT (FIFTH FUNCTION)
(SERIAL NO. 880054-)

KEY	PART NO.	PART NAME	QTY	SERIAL NO.	REMARKS
1	AT188660	CYLINDER	1		
2	38H1545	ELBOW FITTING	2		
3	T77814	O-RING	2		7.645 X 1.778 MM (0.301" X 0.070")
4	R26448	O-RING	2		11.887 X 1.981 MM (0.468" X 5/64")
5	AT188920	HYDRAULIC HOSE - FABRICATE	1		
6	AT190337	HYDRAULIC HOSE - FABRICATE	2		
7	R26375	O-RING	2		16.358 X 2.210 MM (0.644" X 0.087")
8	AT188672	PIN	2		
9	19H3065	CAP SCREW	1		9.525 X 50.800 MM (3/8" X 2")
10	T11234	LOCK NUT	1		9.525 MM (3/8")
11	U13572	LOCK NUT	1		
12	U11651	WASHER	1		32.156 X 57.150 X 3.048 MM (1-17/64" X 2-1/4" X 0.120") BACKUP
13	CB01385123	PIN	1		
14	CB01385241	GUIDE	1		
15	R20136	WASHER	1		25/32" X 2-3/4" X 1/4"
16	H34753	LOCK NUT	1		3/4"
17	**AT190370**	**KIT**	**1**		**(TILT CYLINDER) (WHOLEGOODS)**

TILT CYLINDER (FIFTH FUNCTION) (SERIAL NO. 880054-882700)

TP80305 -UN-21DEC99

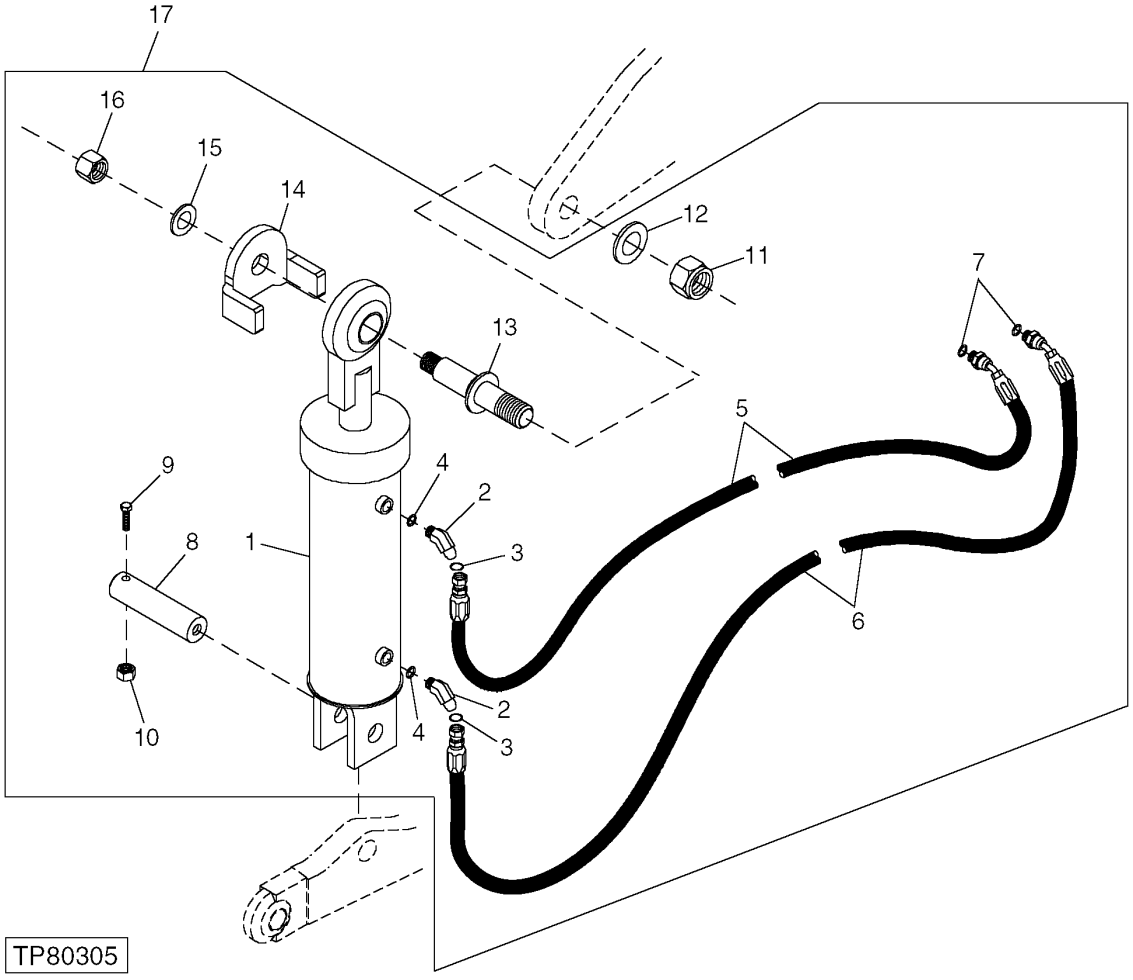

TILT CYLINDER (FIFTH FUNCTION) (SERIAL NO. 880054-882700)

KEY	PART NO.	PART NAME	QTY	SERIAL NO.	REMARKS
1	AT188660	CYLINDER	1		
2	AT216076	BUSHING	2		
3	.....	FITTING	2		
4	AT188920	HYDRAULIC HOSE - FABRICATE	2		
5	T77814	O-RING	6		0.301" X 0.070"
6	AT190337	HYDRAULIC HOSE	2		
7	R26375	O-RING	2		0.644" X 0.087"
8	AT188908	HYDRAULIC HOSE - FABRICATE	1		
9	AT188905	HYDRAULIC HOSE - FABRICATE	1		
11	CB01385123	PIN	1	880190-	
12	CB01385241	GUIDE	1	880190-	
13	H34753	LOCK NUT	1	880190-	
14	R20136	WASHER	1	880190-	25/32" X 2-3/4" X 1/4"
15	U13572	LOCK NUT	1	880190-	1-1/8"
16	U11651	WASHER	1	880190-	1-17/64" X 2-1/4" X 0.120"

TILT CYLINDER (FIFTH FUNCTION) (SERIAL NO. 882701-)

T197954 -UN-23FEB04

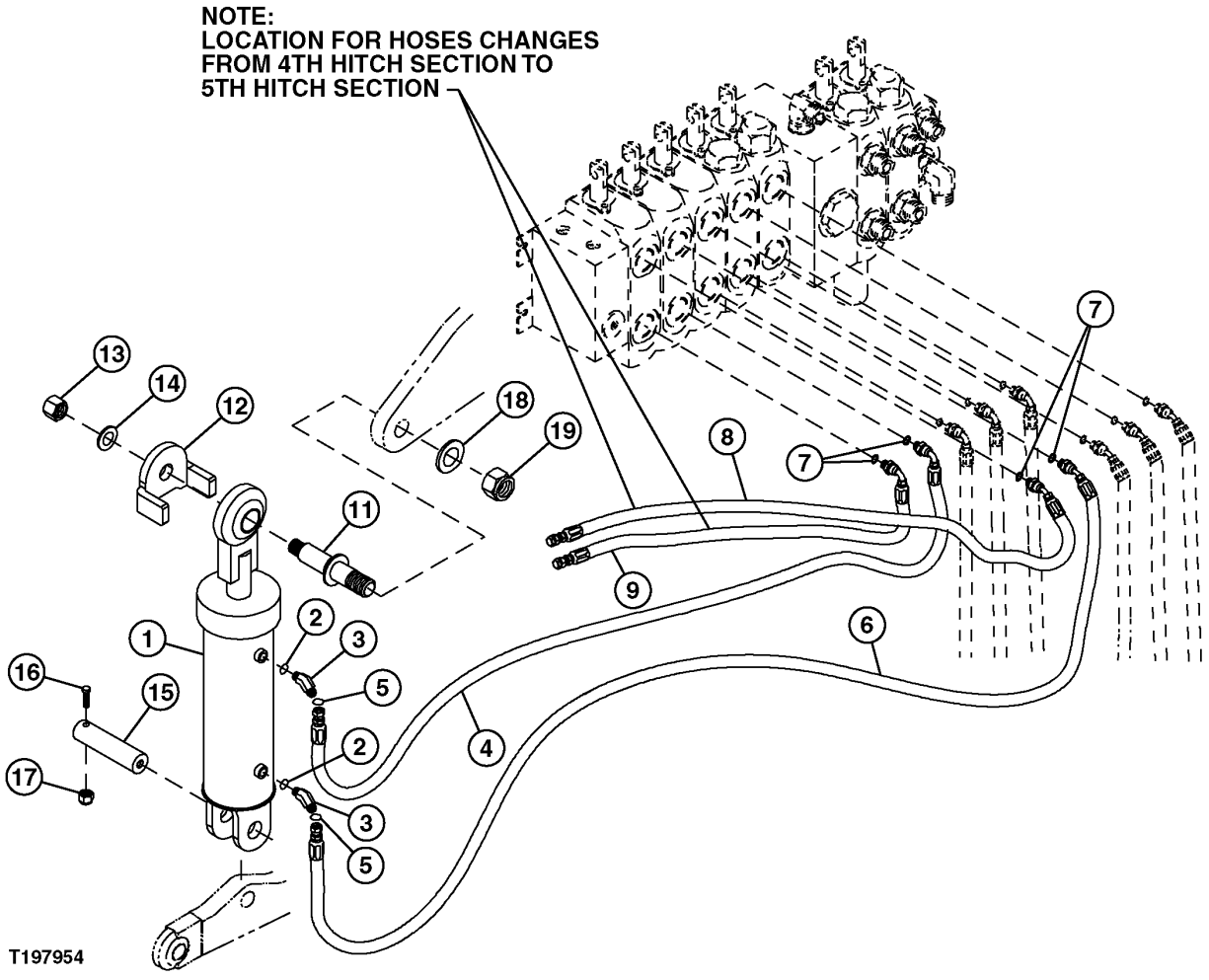

TILT CYLINDER (FIFTH FUNCTION) (SERIAL NO. 882701-)

KEY	PART NO.	PART NAME	QTY	SERIAL NO.	REMARKS
1	CB11439088	CYLINDER	1	882701-882733	
	CB11453664	HYDRAULIC CYLINDER	1	882734-	
2	R26448	O-RING	2		0.468" X 5/64"
3	.....	FITTING	2		
4	AT188920	HYDRAULIC HOSE - FABRICATE	2		
5	T77814	O-RING	6		0.301" X 0.070"
6	AT190337	HYDRAULIC HOSE	2		
7	R26375	O-RING	2		0.644" X 0.087"
8	AT188908	HYDRAULIC HOSE - FABRICATE	1		
9	AT188905	HYDRAULIC HOSE - FABRICATE	1		
11	CB01385123	PIN	1		
12	CB01385241	GUIDE	1		
13	H34753	LOCK NUT	1		
14	R20136	WASHER	1		25/32" X 2-3/4" X 1/4"
15	AT188672	PIN	1		
16	19H3065	CAP SCREW	1		3/8" X 2"
17	T11234	LOCK NUT	1		3/8"
18	U13572	LOCK NUT	1		1-1/8"
19	U11651	WASHER	1		1-17/64" X 2-1/4" X 0.120"

BATTERY BOX
(SERIAL NO. -880053)

TP61728 -UN-21JUL98

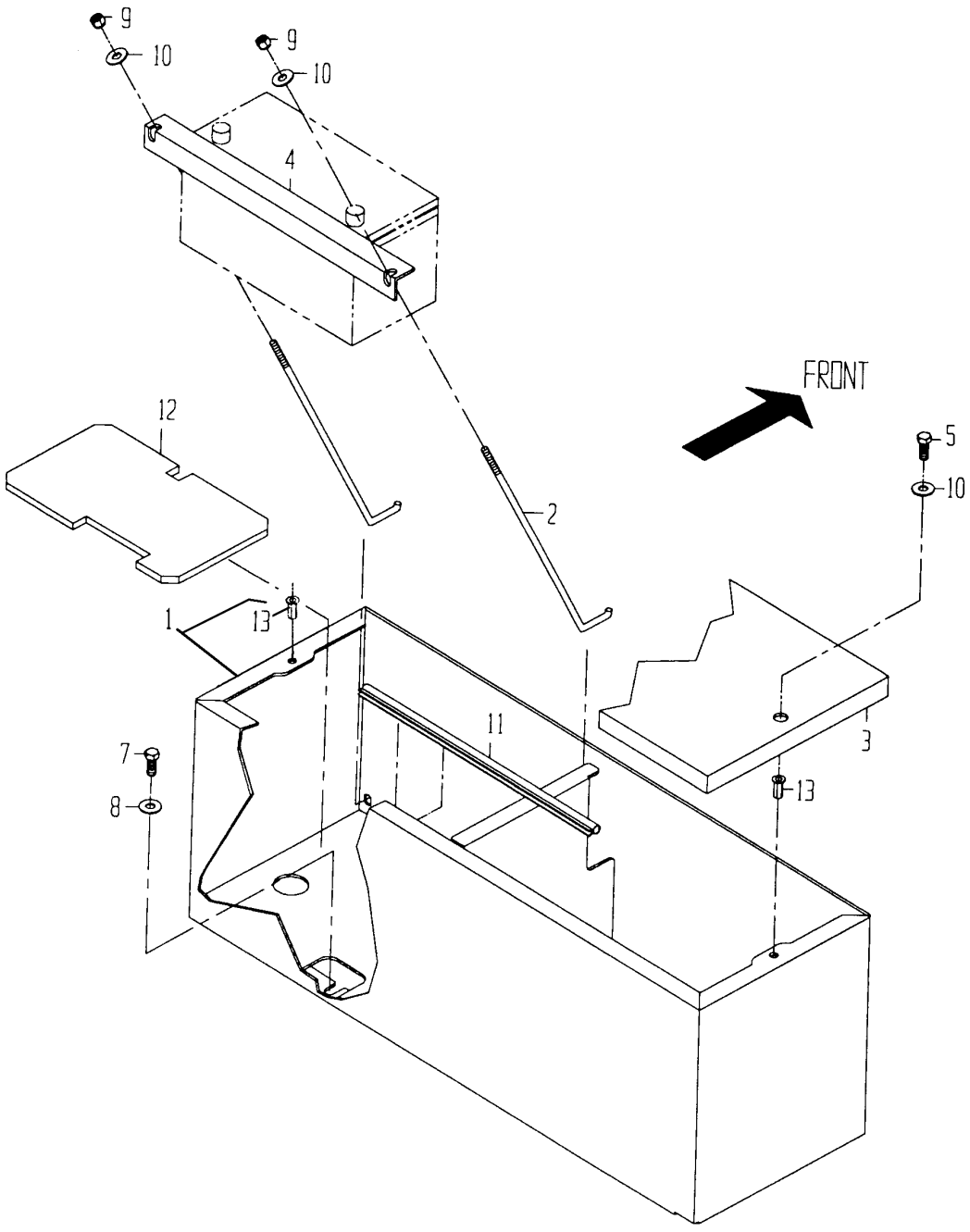

TP61728

BATTERY BOX
(SERIAL NO. -880053)

KEY	PART NO.	PART NAME	QTY	SERIAL NO.	REMARKS
1	AT216285	BATTERY BOX	1	-880053	
2	T22571	BOLT	2	-880053	
3	AT216117	COVER	1	-880053	
4	T121288	CLAMP	1	-880053	(SUB FOR T64105)
5	19H1948	CAP SCREW	2	-880053	1/4" X 3/4"
7	19H1648	CAP SCREW	4	-880053	3/8" X 3/4"
8	R57696	WASHER	4	-880053	
9	M40333	LOCK NUT	2	-880053	
10	24H1287	WASHER	4	-880053	9/32" X 5/8" X 0.065"
11	R88613	SEALING TRIM	1	-880053	(46 INCHES LONG)
12	AT216741	SUPPORT	1	-880053	(WOOD)
13	T164466	NUT	2	-880053	

BATTERY BOX (SERIAL NO. 880054-882700)

TP80389 -UN-12JAN00

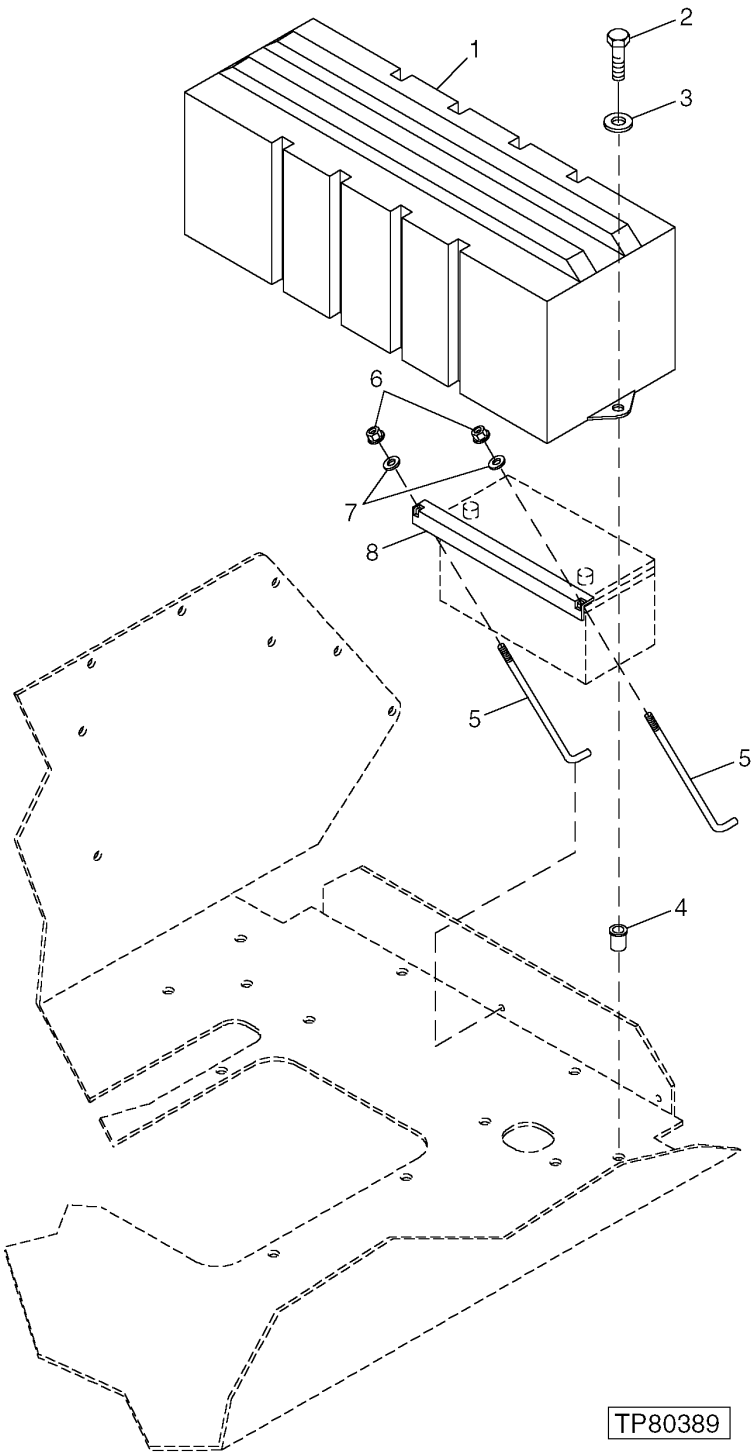

BATTERY BOX (SERIAL NO. 880054-882700)

KEY	PART NO.	PART NAME	QTY	SERIAL NO.	REMARKS
1	AT190943	COVER	1	880054-	(BATTERY)
2	19H2676	CAP SCREW	2	880054-	3/8" X 1"
3	24H1305	WASHER	2	880054-	13/32" X 13/16" X 0.065"
4	T164468	NUT	2	880054-	
5	T22571	BOLT	2	880054-	(BATTERY HOLDDOWN)
6	14H786	NUT	2	880054-	1/4"
7	24H1776	WASHER	4	880054-	5/16" X 47/64" X 0.065"
8	T121288	ANGLE	1	880054-	

BATTERY BOX (SERIAL NO. 882701-)

T196660 -UN-19DEC03

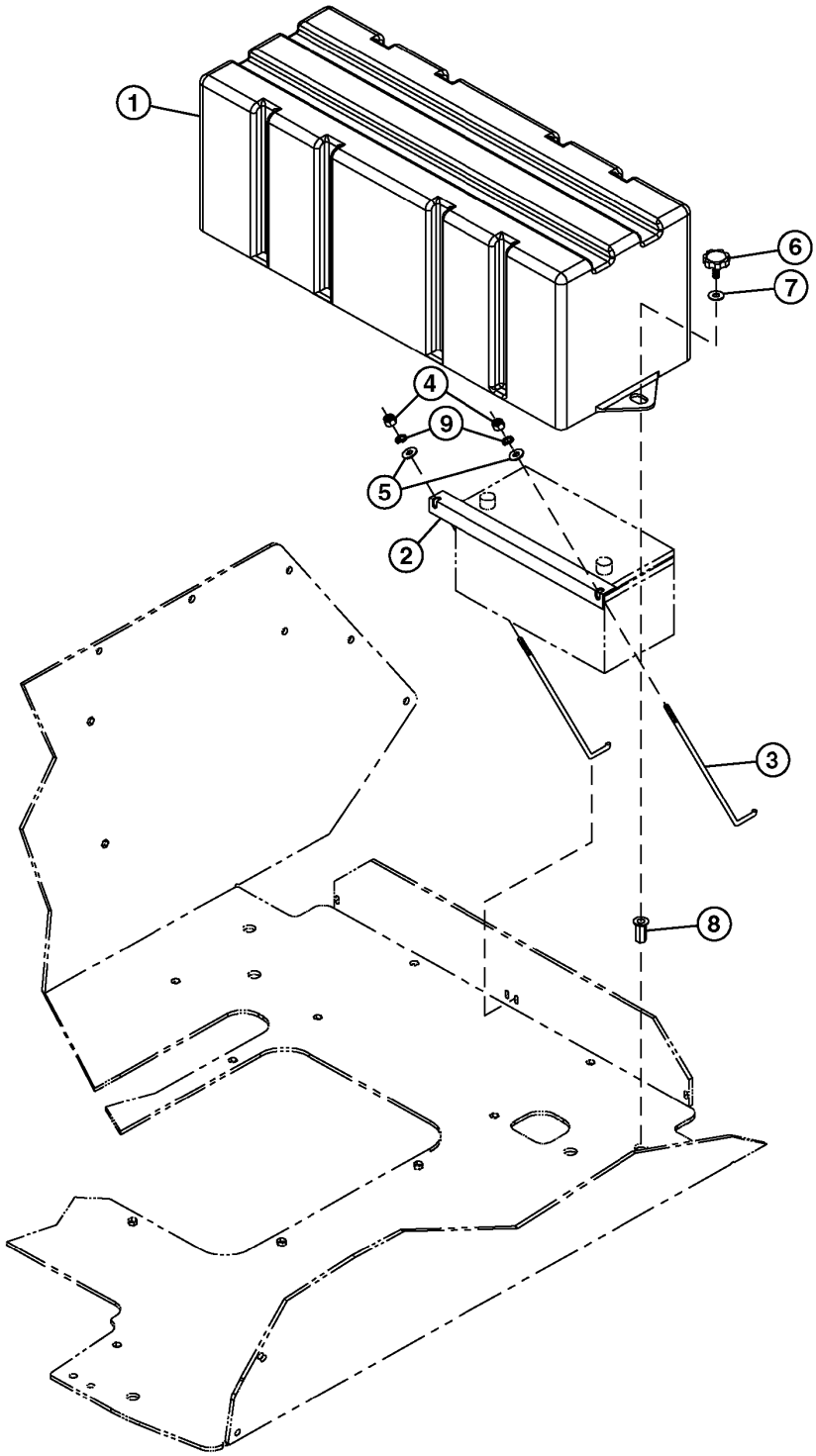

T196660

BATTERY BOX (SERIAL NO. 882701-)

KEY	PART NO.	PART NAME	QTY	SERIAL NO.	REMARKS
1	AT190943	COVER	1		(BATTERY)
2	T121288	ANGLE	1		
3	T22571	BOLT	2		(BATTERY HOLDDOWN)
4	14H786	NUT	2		1/4"
5	24H1776	WASHER	4		5/16" X 47/64" X 0.065"
6	CB11435140	BOLT	2		
7	24H1219	WASHER	2		7/16" X 1" X 0.083"
8	T164468	NUT	2		
9	12H302	LOCK WASHER	2		1/4"

BATTERY, SINGLE (SERIAL NO. -882700)

TP56242 -UN-22MAY97

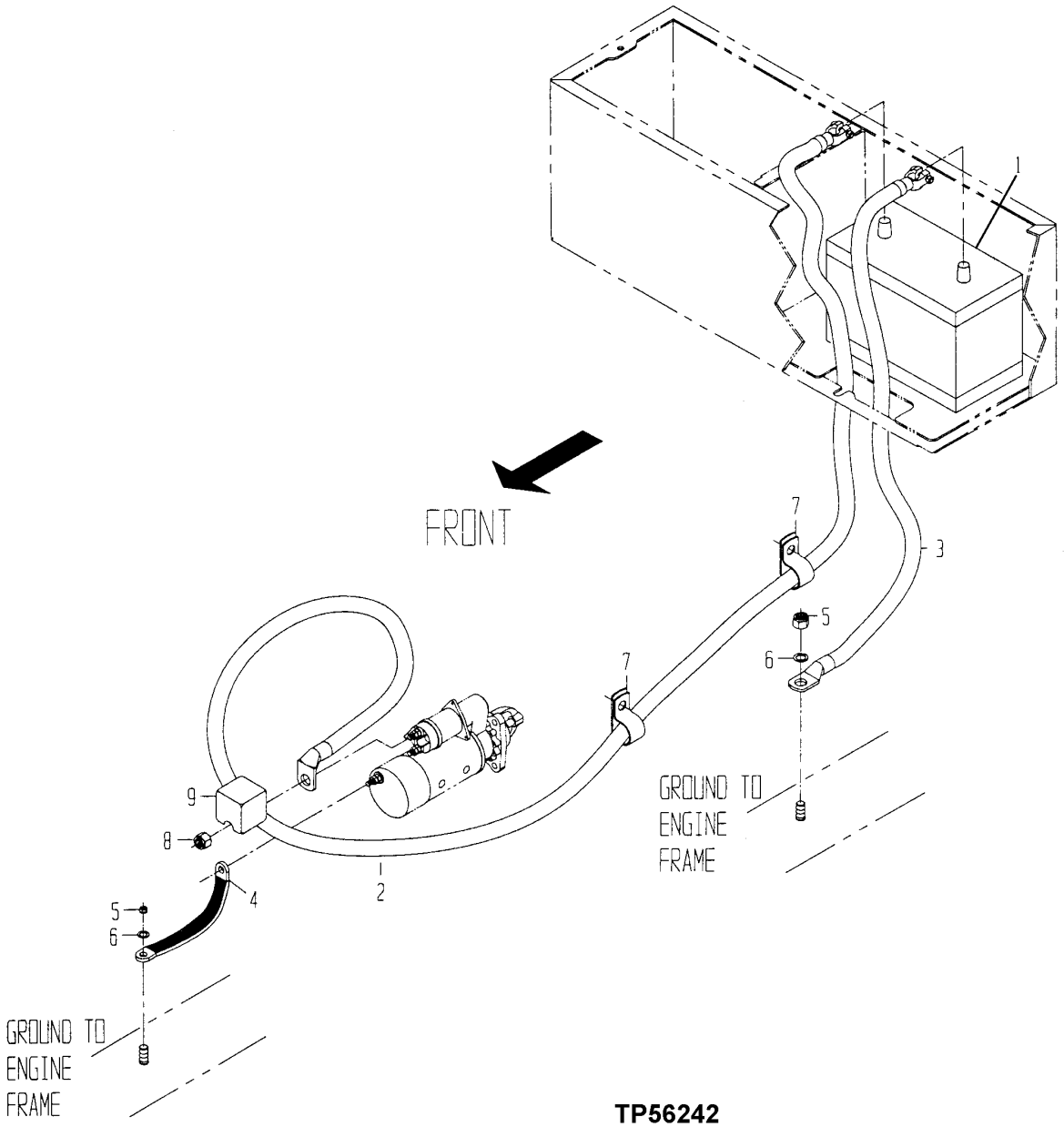

TP56242

BATTERY, SINGLE (SERIAL NO. -882700)

KEY	PART NO.	PART NAME	QTY	SERIAL NO.	REMARKS
1	TY6128	DRY CHARGED BATTERY	1		
2	AT216677	CABLE	1		
3	AT216678	CABLE	1		
4	T144139	GROUND CABLE	1	-845011	
	R36545	GROUND CABLE	1	845012-	
5	T11234	LOCK NUT	2		
6	24H1305	WASHER	2		13/32" X 13/16" X 0.065"
7	T102934	CLAMP	2		
8	R135432	NUT	1		
9	R135431	COVER	1		

BATTERY, SINGLE (SERIAL NO. 882701-)

T195629 -UN-20OCT03

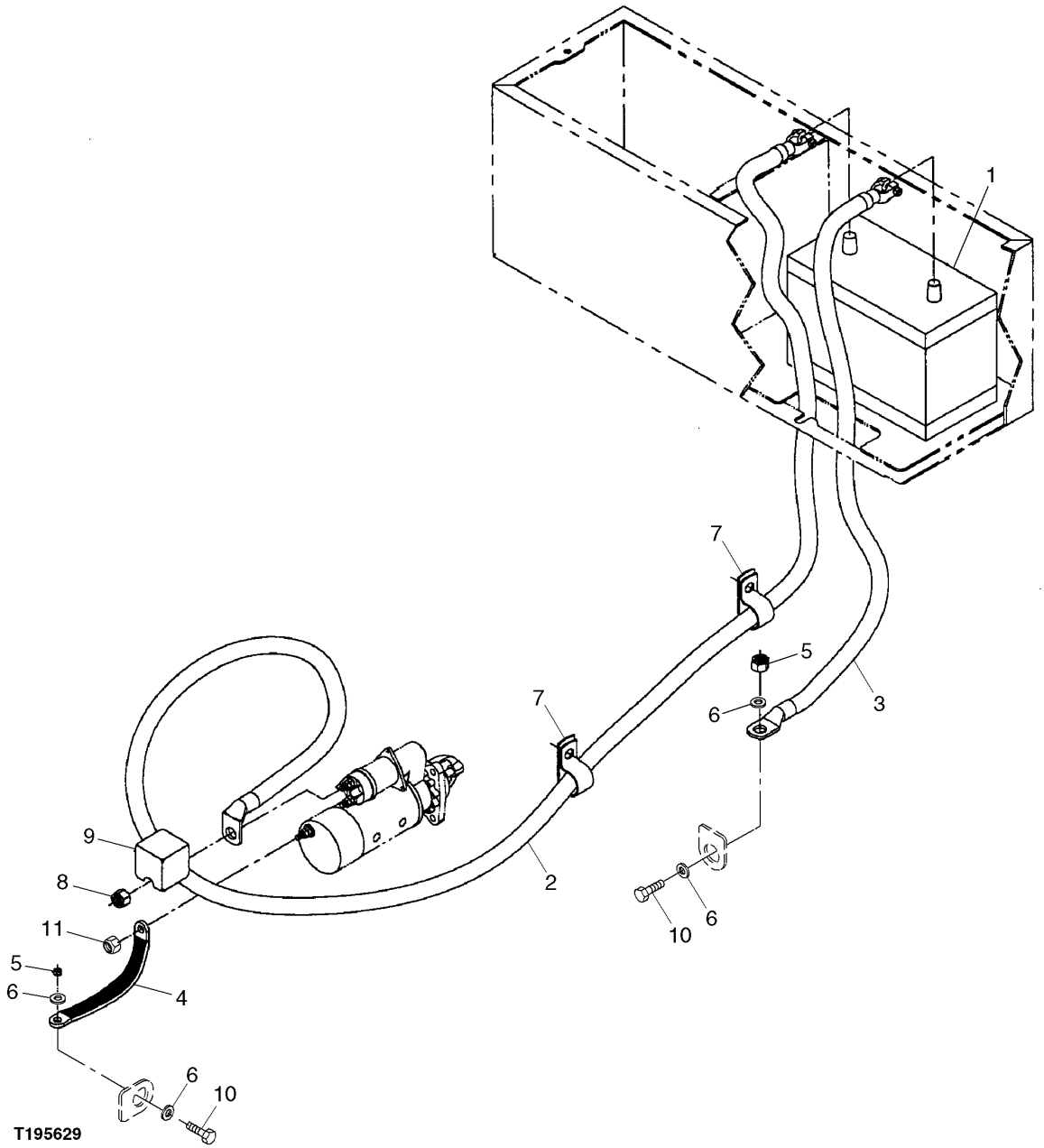

BATTERY, SINGLE (SERIAL NO. 882701-)

KEY	PART NO.	PART NAME	QTY	SERIAL NO.	REMARKS
1	.....	DRY CHARGED BATTERY	1		
2	AT216677	CABLE	1		
3	0361365500	BATTERY CABLE	1		
4	R35645	SEAL	1		
5	T11234	LOCK NUT	2		
6	24H1219	WASHER	2		7/16" X 1" X 0.083"
7	T102934	CLAMP	2		
8	R135432	NUT	1		
9	R135431	COVER	1		
10	19H2676	CAP SCREW	2		3/8" X 1"
11	14M7313	LOCK NUT	1		M12

BATTERY, SINGLE (SERIAL NO. 882701-)

T196157 -UN-18DEC03

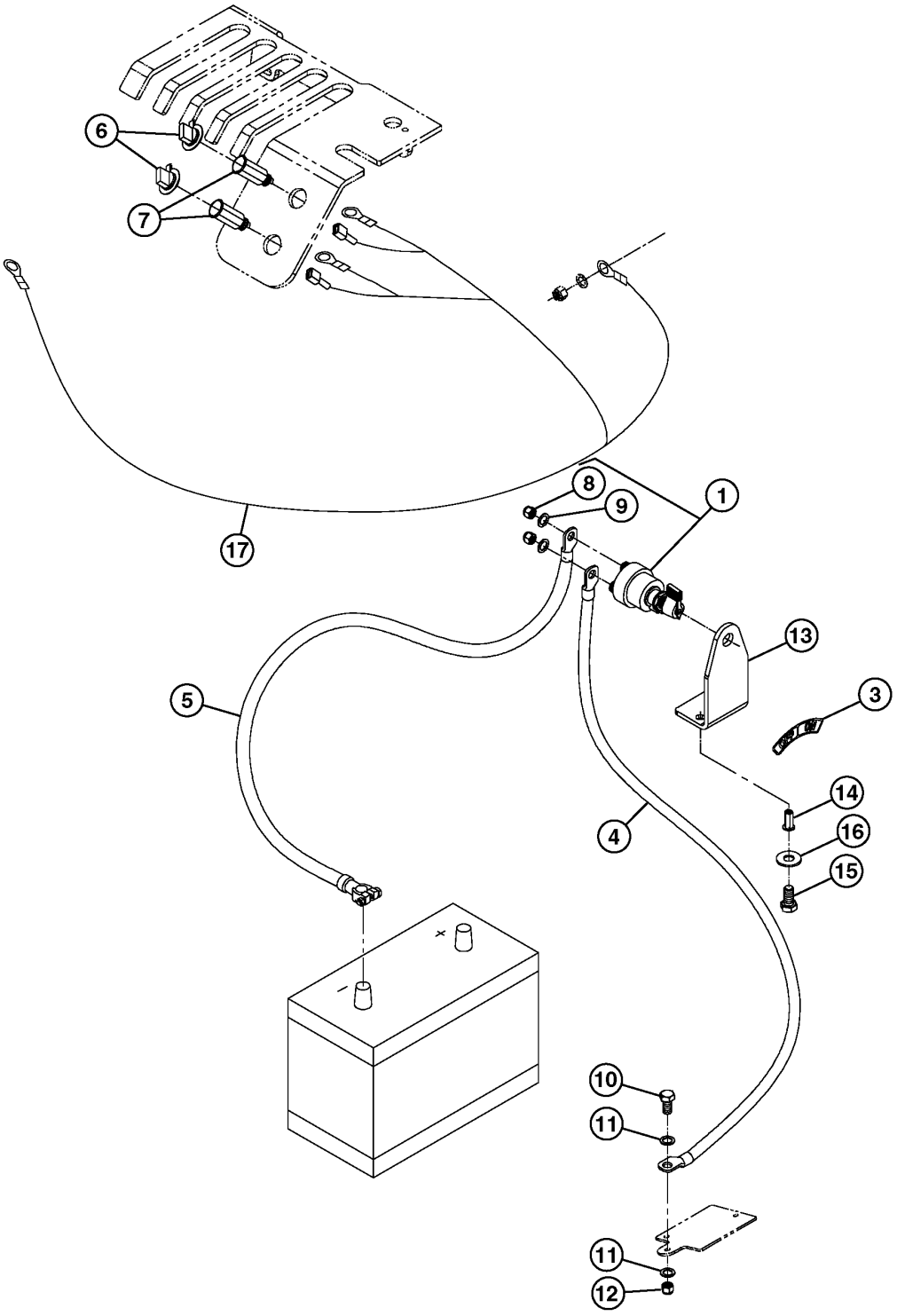

T196157

BATTERY, SINGLE (SERIAL NO. 882701-)

KEY	PART NO.	PART NAME	QTY	SERIAL NO.	REMARKS
1	AT41188	SWITCH	1		INCLUDES NUT AND WASHER
2	24M7239	WASHER	2		10.700 X 21 X 2.500 MM
3	CB01448497	LABEL	1		
4	CB11446855	BATTERY CABLE	1		
5	CB11446856	BATTERY CABLE	1		
6	H170373	PLUG	2		
7	AR56766	HOUSING	2		
8	.....	NUT	2		
9	.....	WASHER	2		
10	19H3434	CAP SCREW	1		1/4" X 2"
11	14M7313	LOCK NUT	1		M12
12	M40333	LOCK NUT	1		
13	CB01447162	COVER	1		
14	T164468	NUT	2		
15	CB01390888	BOLT	2		
16	24H1305	WASHER	2		13/32" X 13/16" X 0.065"

BATTERY, DUAL (SERIAL NO. -882700)

T197128 -UN-06JAN04

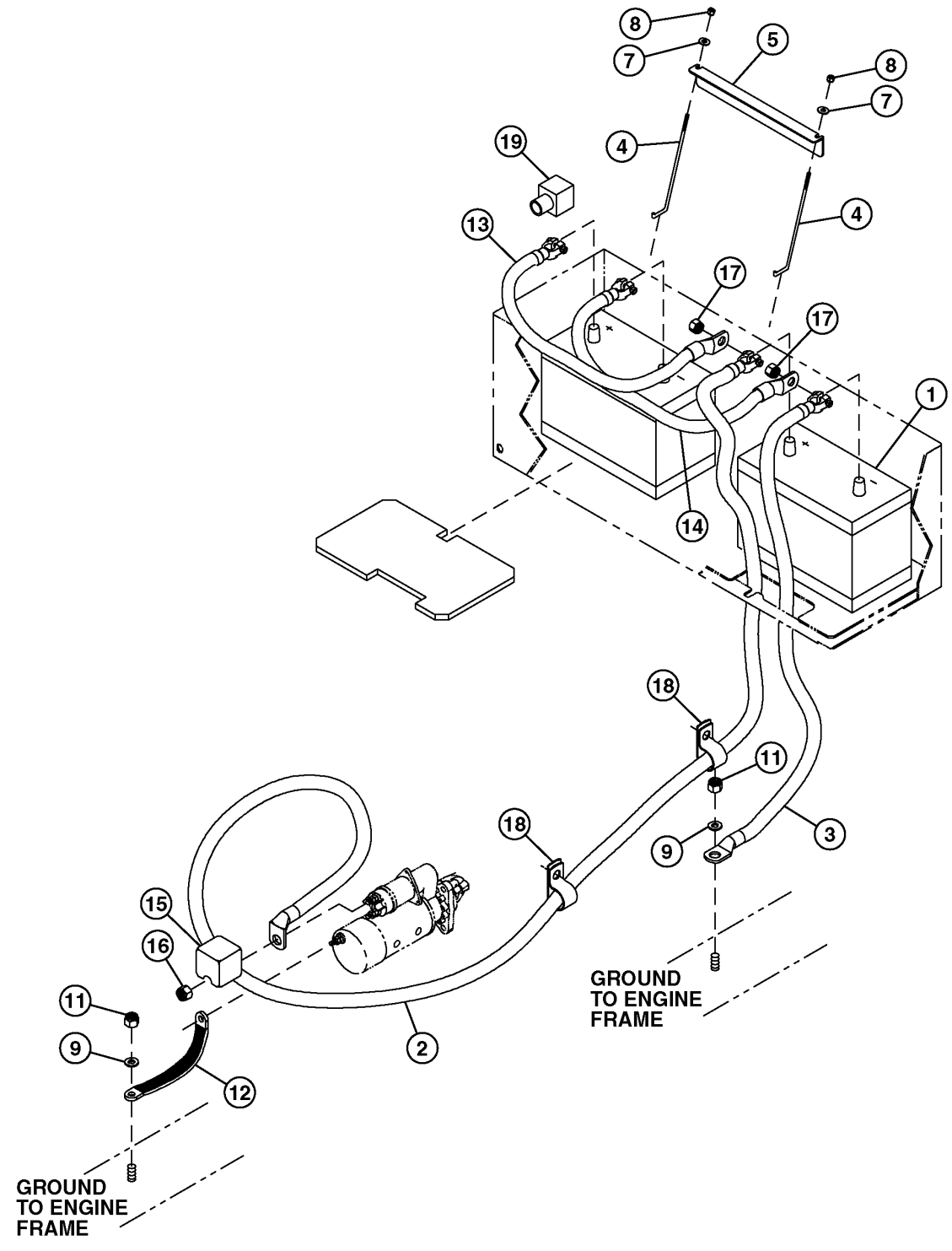

T197128

BATTERY, DUAL (SERIAL NO. -882700)

KEY	PART NO.	PART NAME	QTY	SERIAL NO.	REMARKS
1	TY6128	DRY CHARGED BATTERY	2		
2	AT216677	CABLE	1		
3	AT216678	CABLE	1		
4	T22571	BOLT	2		
5	T121288	ANGLE	1		(SUB FOR T64105)
7	24H1287	WASHER	2		9/32" X 5/8" X 0.065"
8	14H786	NUT	2		1/4"
9	24H1305	WASHER	2		13/32" X 13/16" X 0.065"
11	T11234	LOCK NUT	2		
12	T144139	GROUND CABLE	1	-845011	
	R36545	GROUND CABLE	1	845012-	
13	AT216464	CABLE	1		
14	AT216465	CABLE	1		
15	R135431	COVER	1		
16	R135432	NUT	1		
17	14H785	NUT	2		5/16"
18	T102934	CLAMP	2		
19	T129165	BOOT	4		

BATTERY, DUAL (SERIAL NO.882701-)

T197129 -UN-06JAN04

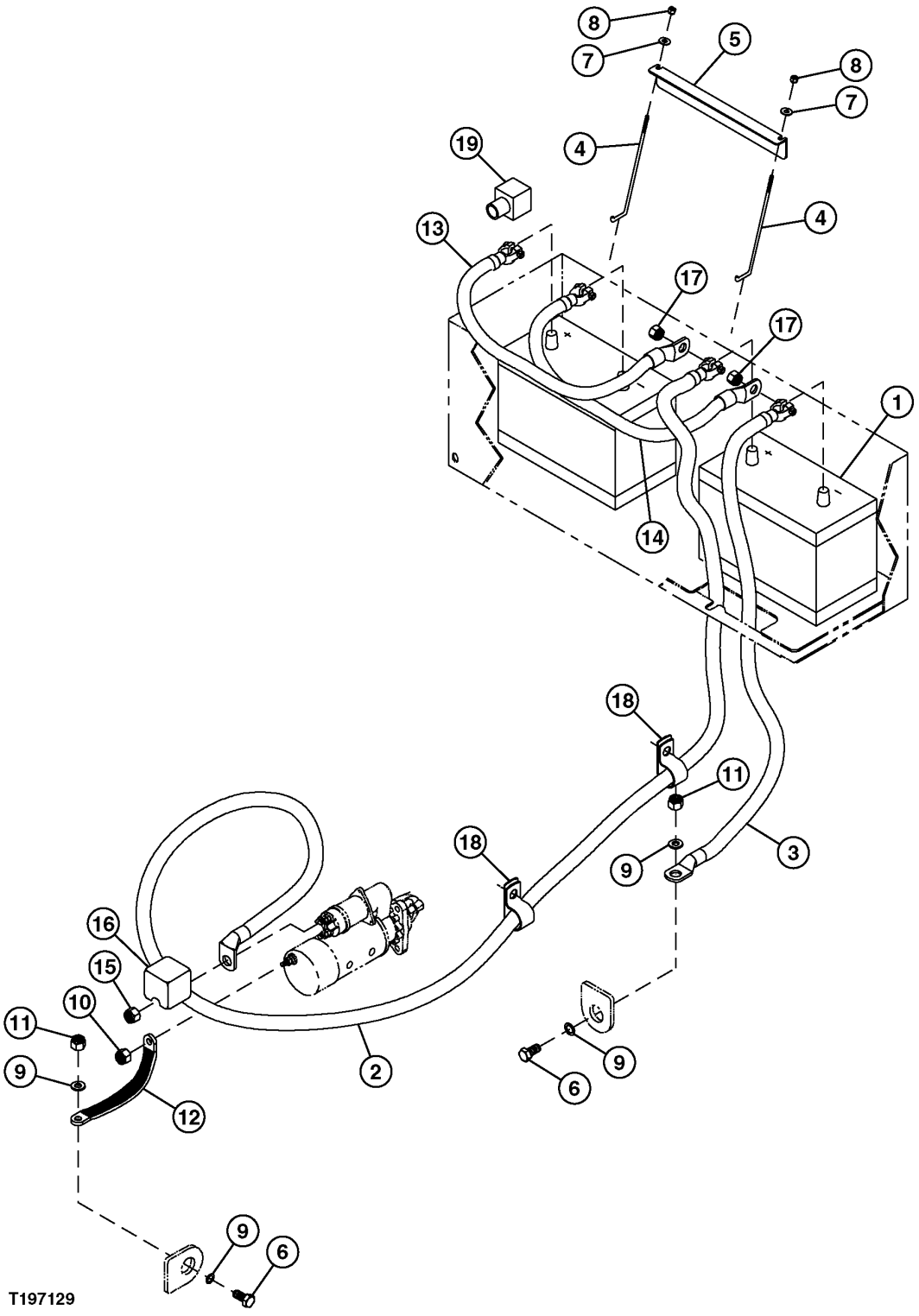

BATTERY, DUAL (SERIAL NO.882701-)

KEY	PART NO.	PART NAME	QTY	SERIAL NO.	REMARKS
1	TY6128	DRY CHARGED BATTERY	2		
2	AT216677	CABLE	1		
3	0361365500	BATTERY CABLE	1		
4	T22571	BOLT	2		
5	T121288	ANGLE	1		(SUB FOR T64105)
6	19H2676	CAP SCREW	2		3/8" X 1"
7	24H1776	WASHER	2		5/16" X 47/64" X 0.065"
8	14H786	NUT	2		1/4"
9	24H1219	WASHER	4		7/16" X 1" X 0.083"
10	14M7313	LOCK NUT	1		M12
11	T11234	LOCK NUT	2		
12	R36545	GROUND CABLE	1		
13	AT216464	CABLE	1		
14	0361365500	BATTERY CABLE	1		
15	R135432	NUT	1		
16	R135431	COVER	1		
17	14H785	NUT	2		5/16"
18	T102934	CLAMP	2		
19	T129165	BOOT	4		

ALTERNATOR AND ATTACHING PARTS (SERIAL NO. -882700)

TP58372 -UN-13NOV98

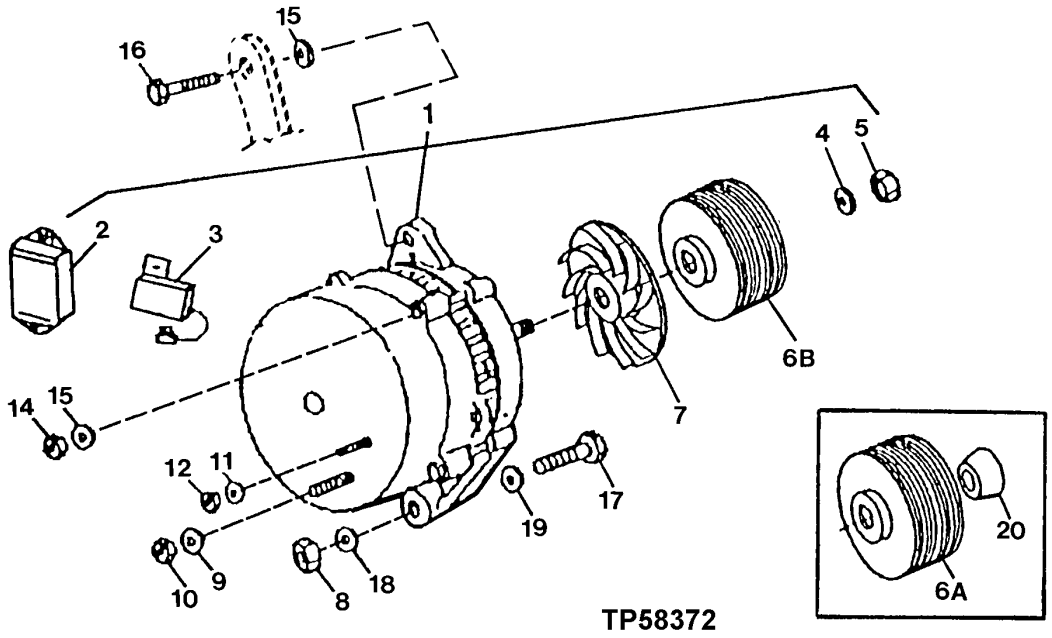

KEY	PART NO.	PART NAME	QTY	SERIAL NO.	REMARKS
1	TY6799	ALTERNATOR	1		AT220393 65 AMP BOSCH-CONVENIENCE ASSEMBLY TY6799 65 AMP REMANUFACTURED, (SUB FOR AT173624 OR AT220393)
2	H144094	VOLTAGE REGULATOR	1		
3	H144095	CAPACITOR	1		
4	T10745	WASHER	1		
5	14M7158	NUT	1		M16
6A	R94350	PULLEY	1	-XXXXXX	
6B	R501486	PULLEY	1	XXXXXX-	
7	T158584	FAN	1		
8	14M7274	NUT	1		M10
9	24M7036	WASHER	2		9 X 16 X 1.600 MM
10	14M7273	NUT	1		M8
11	12M7060	WASHER	2		5.300 MM
12	14M7297	NUT	1		M5
13	24H1283	WASHER	2		7/32" X 1/2" X 0.049"
14	14M7297	NUT	1		M5
15	24H1621	WASHER	1		11/32" X 1" X 0.220"
16	19M7513	CAP SCREW	1		M8 X 30
17	19M8093	CAP SCREW	1		M10 X 100
18	24M7239	WASHER	1		10.700 X 21 X 2.500 MM
19	R48808	WASHER	1		
20	R94351	BUSHING	1	-XXXXXX	

MEMORANDA

ALTERNATOR AND ATTACHING PARTS (SERIAL NO. 882701-)

T195661 -UN-19DEC03

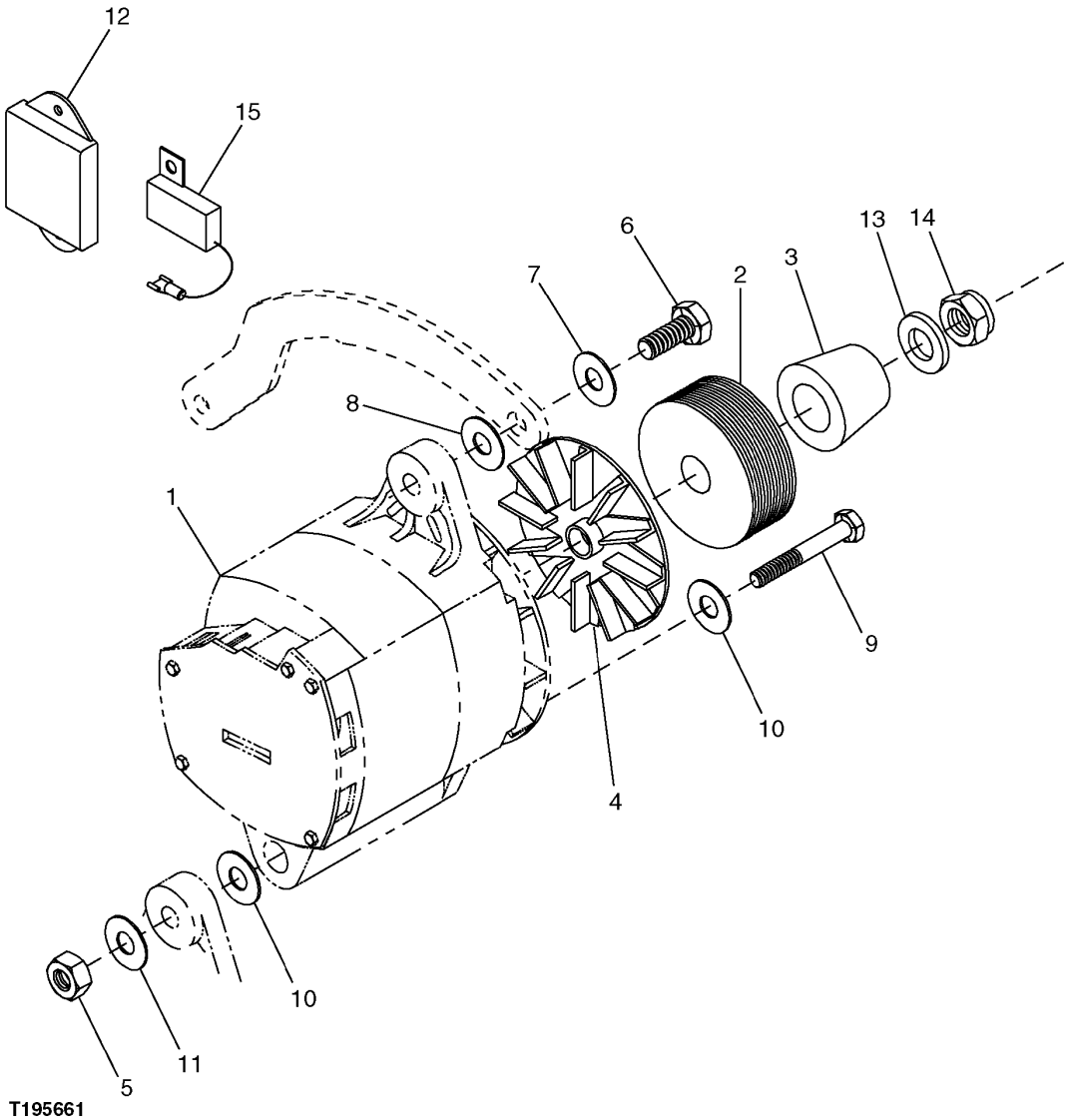

T195661

ALTERNATOR AND ATTACHING PARTS (SERIAL NO. 882701-)

KEY	PART NO.	PART NAME	QTY	SERIAL NO.	REMARKS
1	AT173624	ALTERNATOR	1		65 AMP (INCLUDES PARTS MARKED (A))
2	R94350	PULLEY	1		
3	R94351	BUSHING	1		
4	T158584	FAN	1		
5	14M7274	NUT	1		M10
6	19M7513	CAP SCREW	1		
7	24H1621	WASHER	1		
8	R48808	WASHER	1		8.128 X 15.748 X 3.937 MM
9	19M8093	CAP SCREW	1		M10 X 100
10	R64525	THRUST WASHER	2		10.310 X 17.480 X 0.910 MM
11	24M7239	WASHER	1		10.700 X 21 X 2.500 MM
12	H144094	VOLTAGE REGULATOR	1		(A)
13	T10745	WASHER	1		(A)
14	14M7158	NUT	1		(A) M16
15	H144095	CAPACITOR	1		(A)

ROTATING BEACON

TP52724 -UN-07APR97

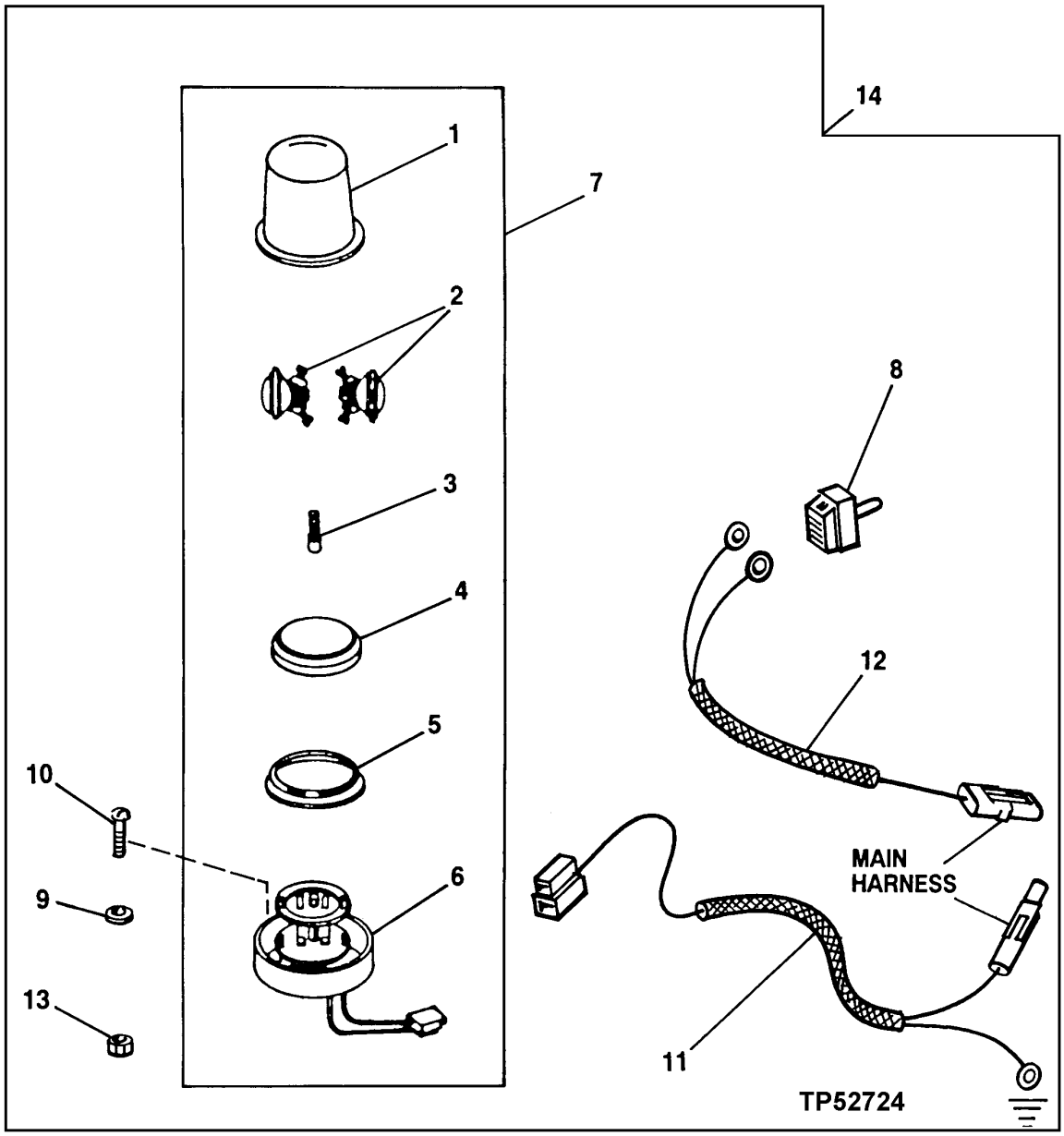

ROTATING BEACON

KEY	PART NO.	PART NAME	QTY	SERIAL NO.	REMARKS
1	T76607	LENS	1		
2	AH91124	LAMP	2		
3	T76609	BRUSH	1		
4	AT74938	RETAINER	1		
5	T76608	GASKET	1		
6	.....	MOTOR	1		
	.....	ISOLATOR	1		
7	AT74936	LAMP	1		
8	AT106154	TOGGLE SWITCH	1		
9	24M7088	WASHER	3		6.600 X 12 X 1.600 MM
10	19H1914	CAP SCREW	3		1/4" X 1"
11	AT180637	WIRING HARNESS	1		
12	AT180636	WIRING HARNESS	1		
13	M40333	LOCK NUT	3		6.350 MM
14	AT180635	LAMP	1		

ROPS STANDARD LIGHTING
(SERIAL NO. -848452)

T141862 -UN-03MAY01

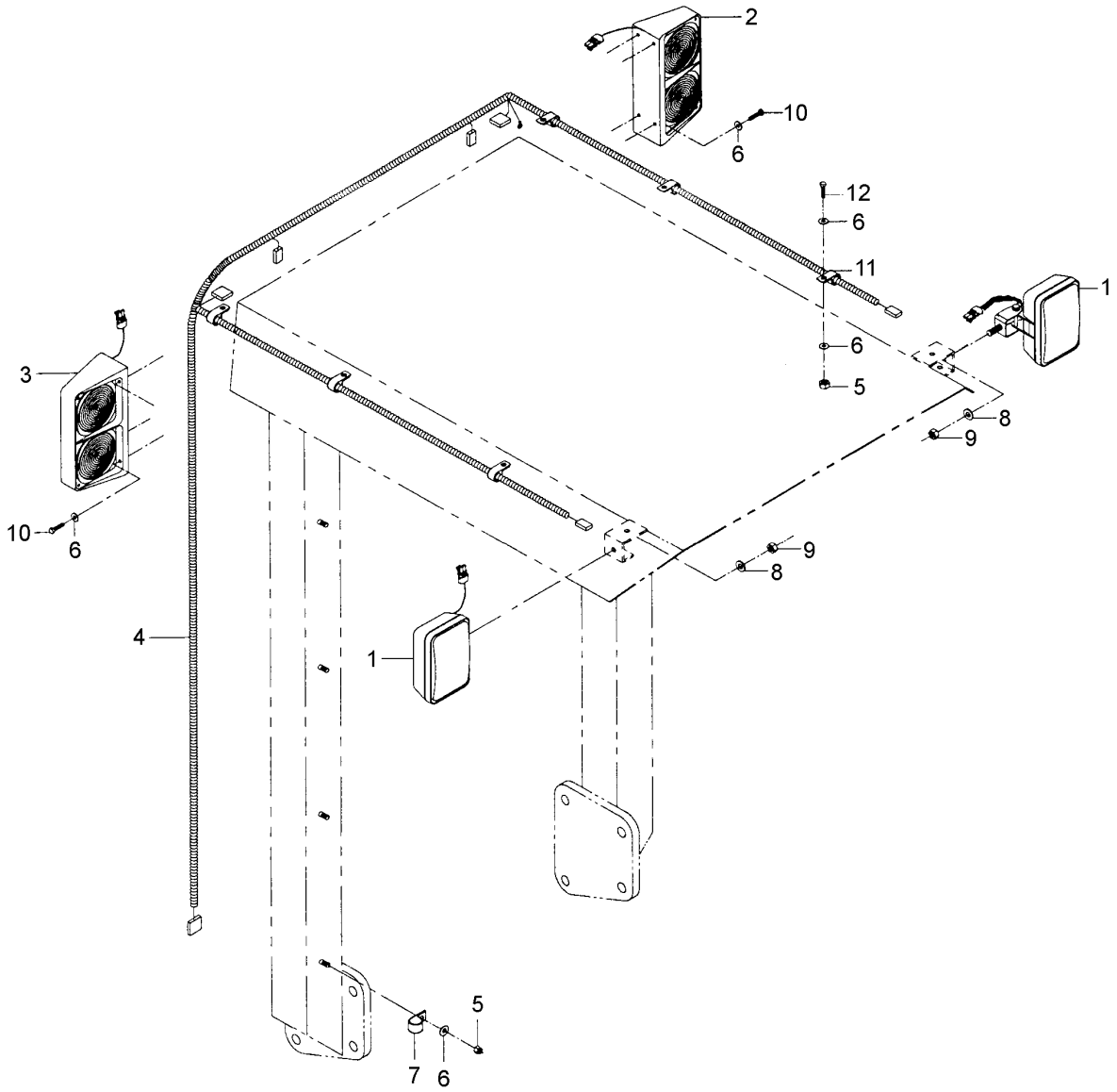

T141862

ROPS STANDARD LIGHTING
(SERIAL NO. -848452)

KEY	PART NO.	PART NAME	QTY	SERIAL NO.	REMARKS
1	AT135486	FLOODLAMP	2	-848452	(ALSO ORDER RE12363, (2) R78060 AND (2) R78062)
2	AT216149	INDICATOR LIGHT	1	-848452	LEFT(TURN AND STOP)
3	AT216148	INDICATOR LIGHT	1	-848452	RIGHT(TURN AND STOP)
4	AT216462	WIRING HARNESS	1	-848452	
5	M40333	LOCK NUT	17	-848452	
6	24H1287	WASHER	27	-848452	9/32" X 5/8" X 0.065"
7	T76252	CLAMP	7	-848452	
8	T35860	WASHER	2	-848452	
9	14M7275	NUT	2	-848452	
10	19H1914	CAP SCREW	8	-848452	1/4" X 1"
11	AT205286	CLAMP	6	-848452	
12	19H1948	CAP SCREW	6	-848452	1/4" X 3/4"

ROPS STANDARD LIGHTING (SERIAL NO. 848453-880221)

T141863 -UN-03MAY01

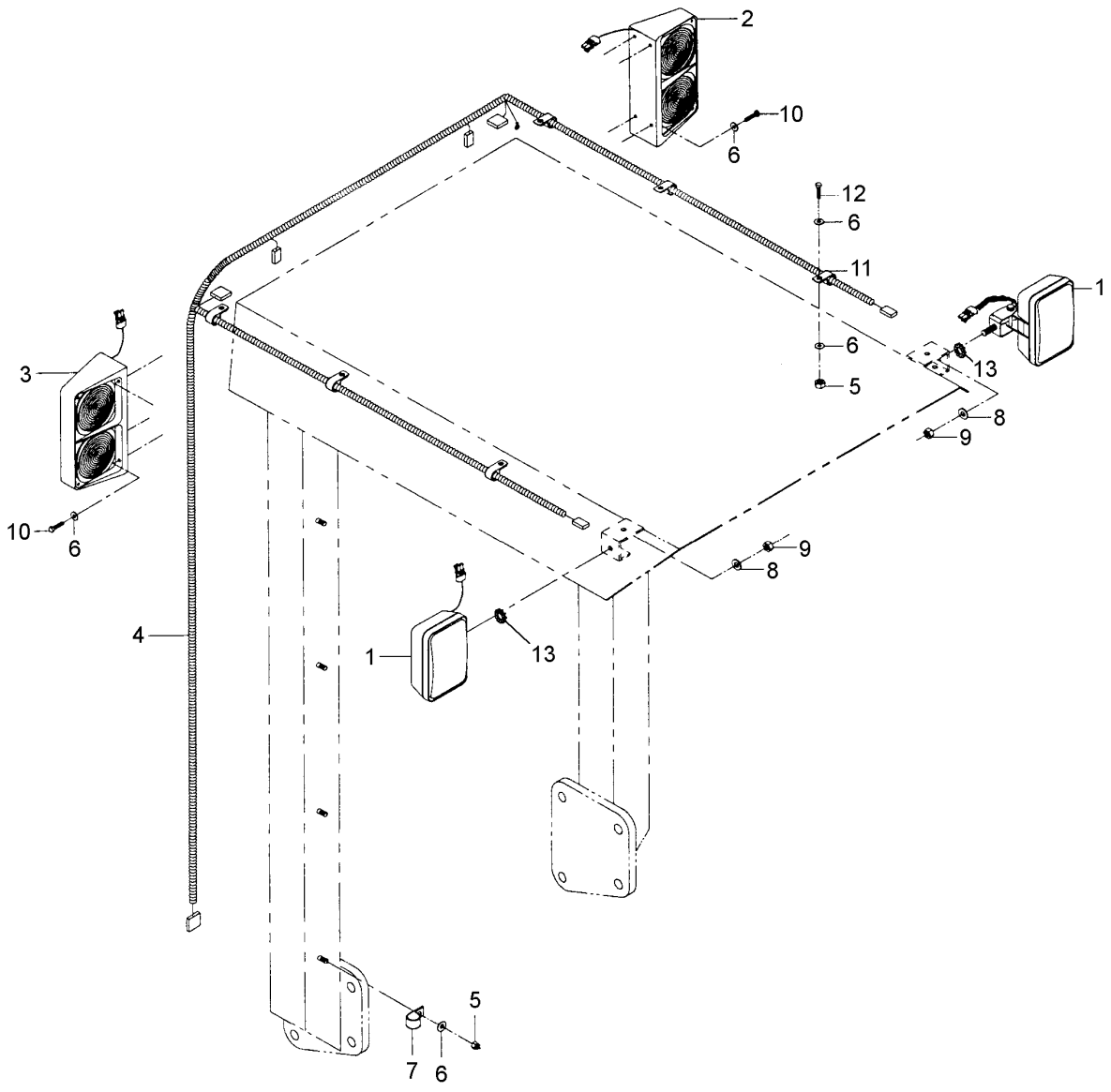

T141863

ROPS STANDARD LIGHTING (SERIAL NO. 848453-880221)

KEY	PART NO.	PART NAME	QTY	SERIAL NO.	REMARKS
1	AT184815	LAMP	1		RH, (SUB FOR AT163948)
	AT184813	LAMP	1		LH, (SUB FOR AT163950)
2	AT216149	INDICATOR LIGHT	1		LH TURN
3	AT216148	INDICATOR LIGHT	1		RH TURN
4	AT216462	WIRING HARNESS	1		
5	M40333	LOCK NUT	17		
6	24H1287	WASHER	27		9/32" X 5/8" X 0.065"
7	T75276	CLAMP	7		
8	24M7239	WASHER	2		10.700 X 21 X 2.500 MM
9	14M7274	NUT	2		M10
10	19H1791	CAP SCREW	8		1/4" X 1-1/4"
11	AH87142	CLIP	6		
12	19H1948	CAP SCREW	6		1/4" X 3/4"
13	H75516	LOCK WASHER	2		

ROPS STANDARD LIGHTING (SERIAL NO. 880222-882700)

T195799 -UN-03NOV03

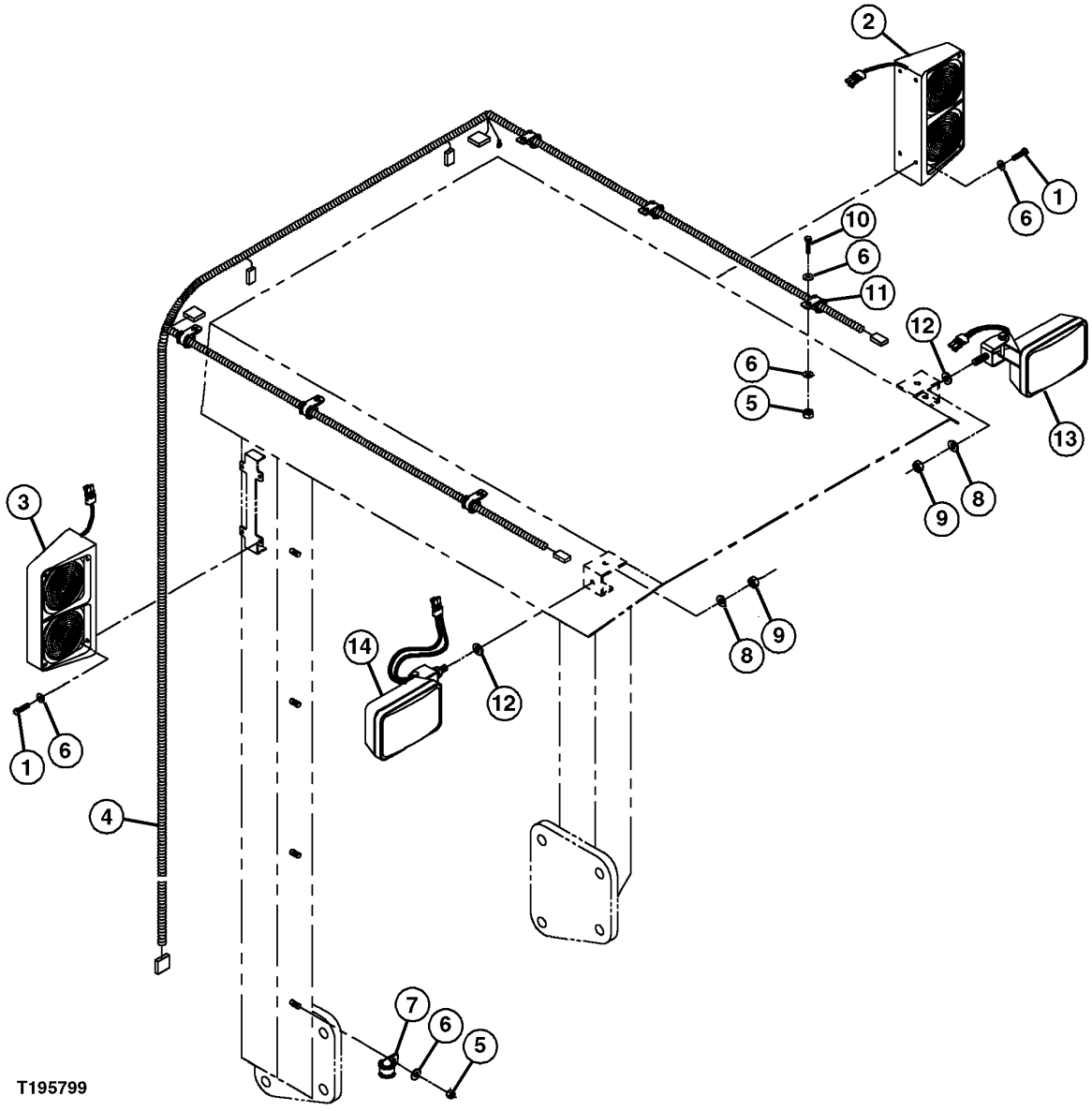

ROPS STANDARD LIGHTING (SERIAL NO. 880222-882700)

KEY	PART NO.	PART NAME	QTY	SERIAL NO.	REMARKS
1	19H1791	CAP SCREW	8		1/4" X 1-1/4"
2	AT216148	INDICATOR LIGHT	1		BRAKE/TAIL (RH)
3	AT216149	INDICATOR LIGHT	1		BRAKE/TAIL (LH)
4	AT216462	WIRING HARNESS	1		
5	M40333	LOCK NUT	13		
6	24H1776	WASHER	27		5/16" X 47/64" X 0.065"
7	T75276	CLAMP	7		
8	T35860	WASHER	2		13.614 X 27.280 X 2.413 MM
9	14M7274	NUT	2		M10
10	AT182434	BOLT	6		
11	AT205286	CLAMP	6		
12	.....	WASHER	2		STAR
13	CB11447038	FLOODLAMP	1		
14	CB11447039	FLOODLAMP	1		

ROPS STANDARD LIGHTING (SERIAL NO. 882701-)

T195851 -UN-03NOV03

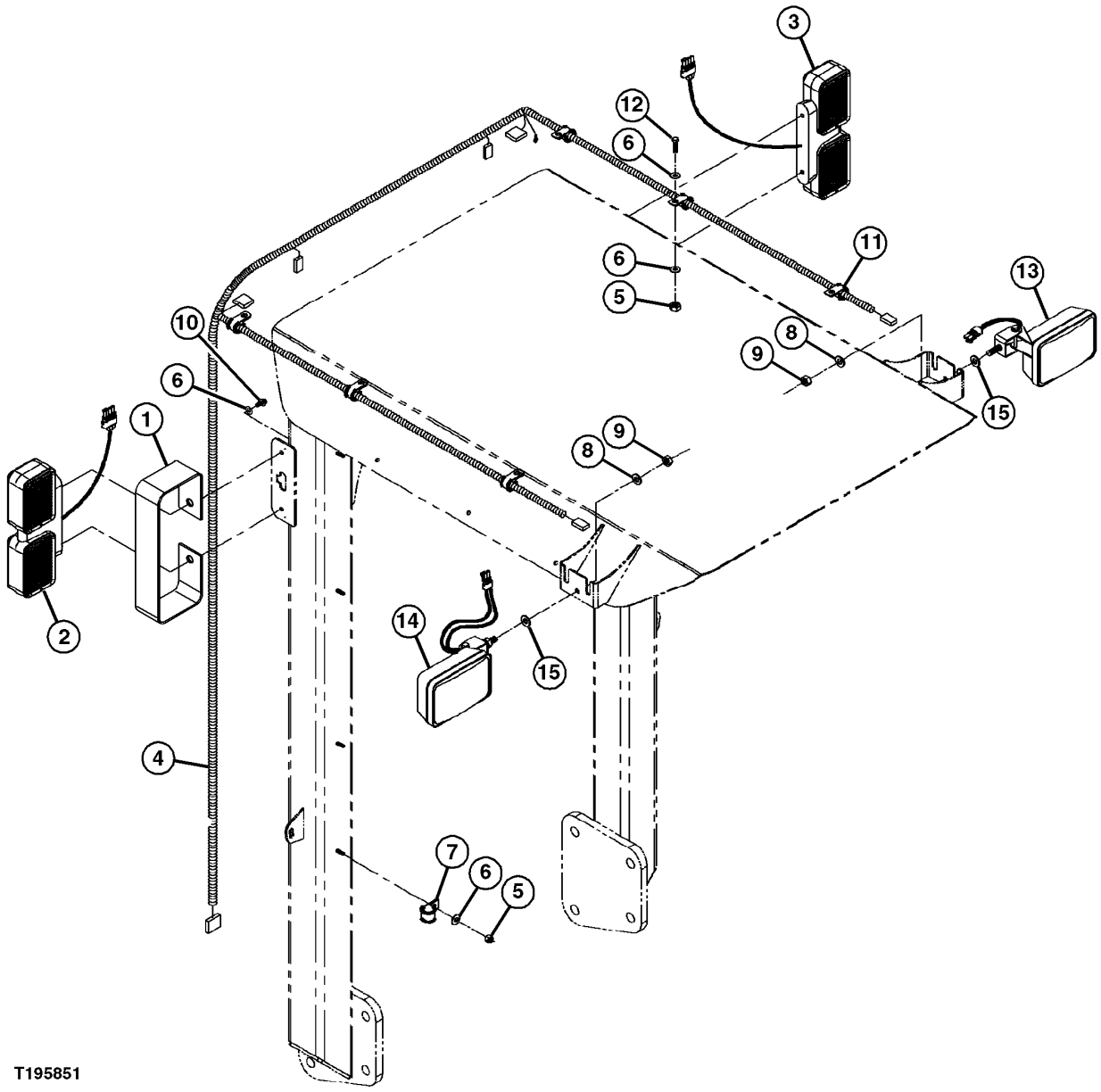

ROPS STANDARD LIGHTING (SERIAL NO. 882701-)

KEY	PART NO.	PART NAME	QTY	SERIAL NO.	REMARKS
1	LVU12050	BRACKET	2		
2	CB11449811	INDICATOR LIGHT	1		BRAKE/TAIL (RH)
3	CB11449810	INDICATOR LIGHT	1		BRAKE/TAIL (LH)
4	AT216462	WIRING HARNESS	1		
5	M40333	LOCK NUT	13		
6	24H1776	WASHER	23		5/16" X 47/64" X 0.065"
7	T75276	CLAMP	7		
8	T35860	WASHER	2		13.614 X 27.280 X 2.413 MM
9	14M7274	NUT	2		M10
10	19M7964	CAP SCREW	4		M8 X 12
11	AT205286	CLAMP	6		
12	AT182434	BOLT	6		
13	CB11447038	FLOODLAMP	1		
14	CB11447039	FLOODLAMP	1		
15	.....	WASHER	2		STAR

BRAKE LIGHT-TAIL LIGHT (SERIAL NO. -882700)

TP52642 -UN-04FEB97

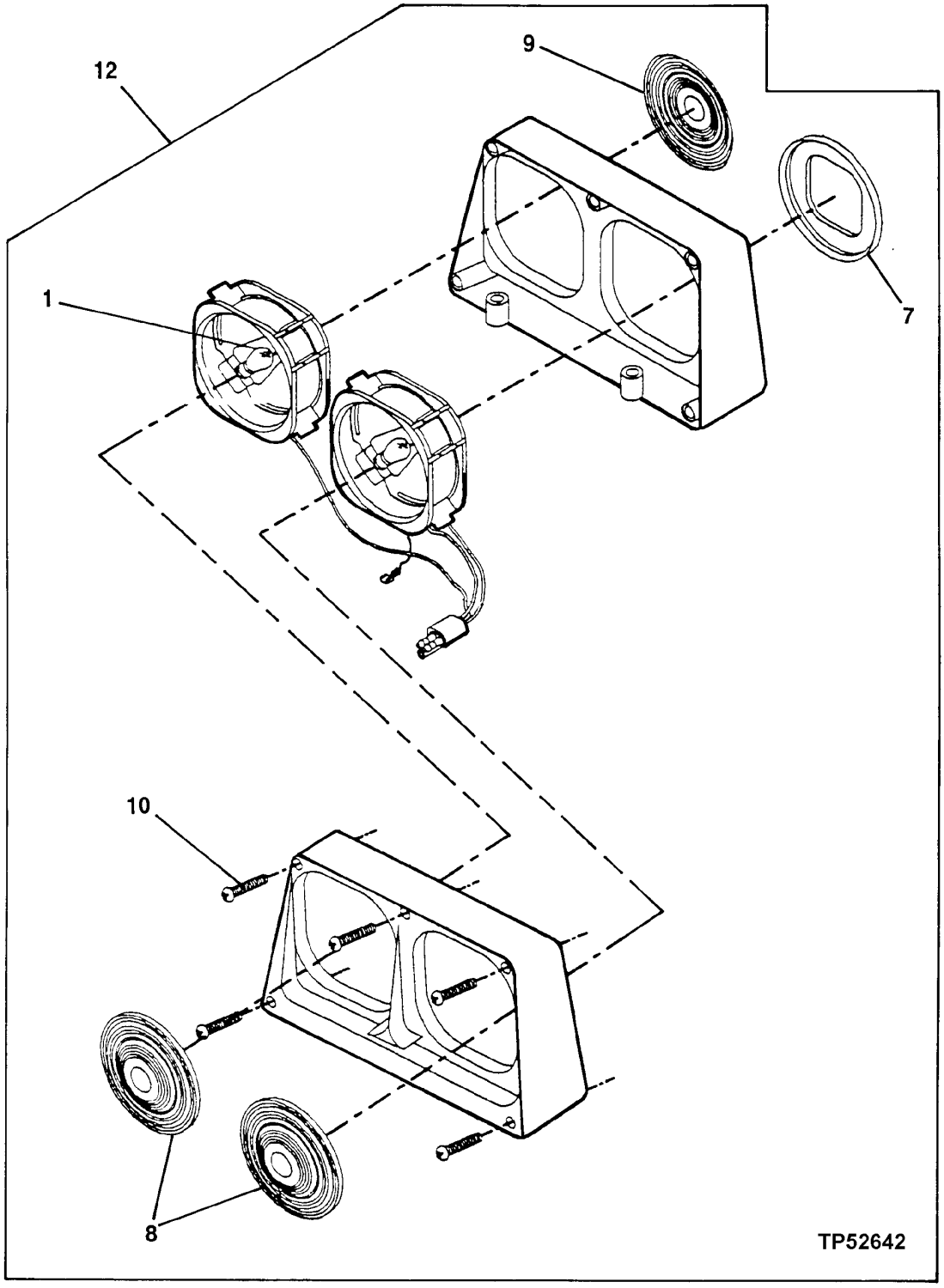

BRAKE LIGHT-TAIL LIGHT (SERIAL NO. -882700)

KEY	PART NO.	PART NAME	QTY	SERIAL NO.	REMARKS
1	AR48041	BULB	2		
7	AT216074	BEZEL	1		
8	AT216233	LENS	1		RED
9	AT216234	LENS	2		AMBER
10	.....	BOLT	5		
12	AT216149	LAMP	1		LEFT-SHOWN
	AT216148	LAMP	1		RIGHT-NOT SHOWN

HALOGEN FRONT AND REAR WORK LAMPS AND CONNECTOR
(SERIAL NO. -882700)

TP61763 -UN-08OCT98

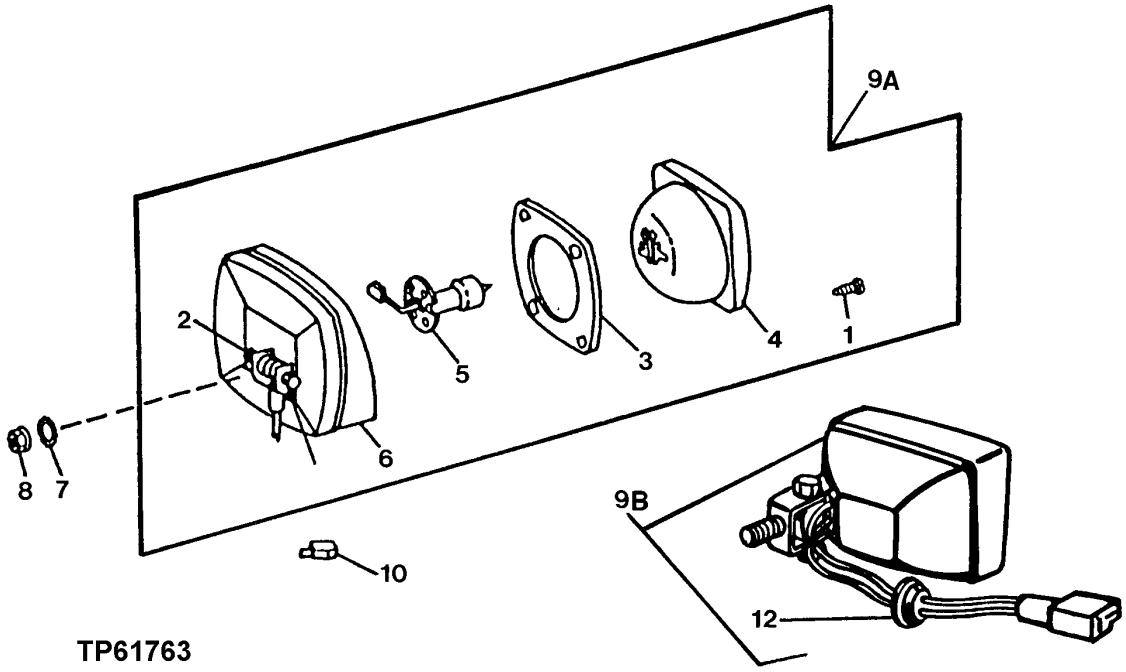

TP61763

KEY	PART NO.	PART NAME	QTY	SERIAL NO.	REMARKS
1	T80394	SCREW	4		
2	14M7166	LOCK NUT	1		
3	T80393	GASKET	1		
4	.....	LENS	1		
5	AT130104	BULB	1		HALOGEN
6	.....	HOUSING	1		
7	12M7032	LOCK WASHER	1		0.331"
	24H1272	WASHER	1		9/16" X 1-1/4" X 1/4", (LIGHT STUD BETWEEN LOCK WASHER AND BOTTOM OF LIGHT HOUSING)
					(NOT ILLUSTRATED)
8	14M7299	FLANGE NUT	1		M12
9A	AT135486	FLOODLAMP	1	-848452	
9B	AT184813	LAMP	1	848453-	(SUB FOR AT163950)
	AT184815	LAMP	1	848453-	(SUB FOR AT163948)
	AT130104	BULB	1	848453-	HALOGEN
10	T28585	ELECTRICAL CONNECTOR ASSY	1		(LIGHT, MALE TERMINAL END)
11	19M7269	CAP SCREW	1		M8 X 50
12	T145074	GROMMET	1	848453-	

MEMORANDA

ROPS ADDITIONAL LIGHTING
(SERIAL NO. -848452)

TP56244 -UN-21MAY97

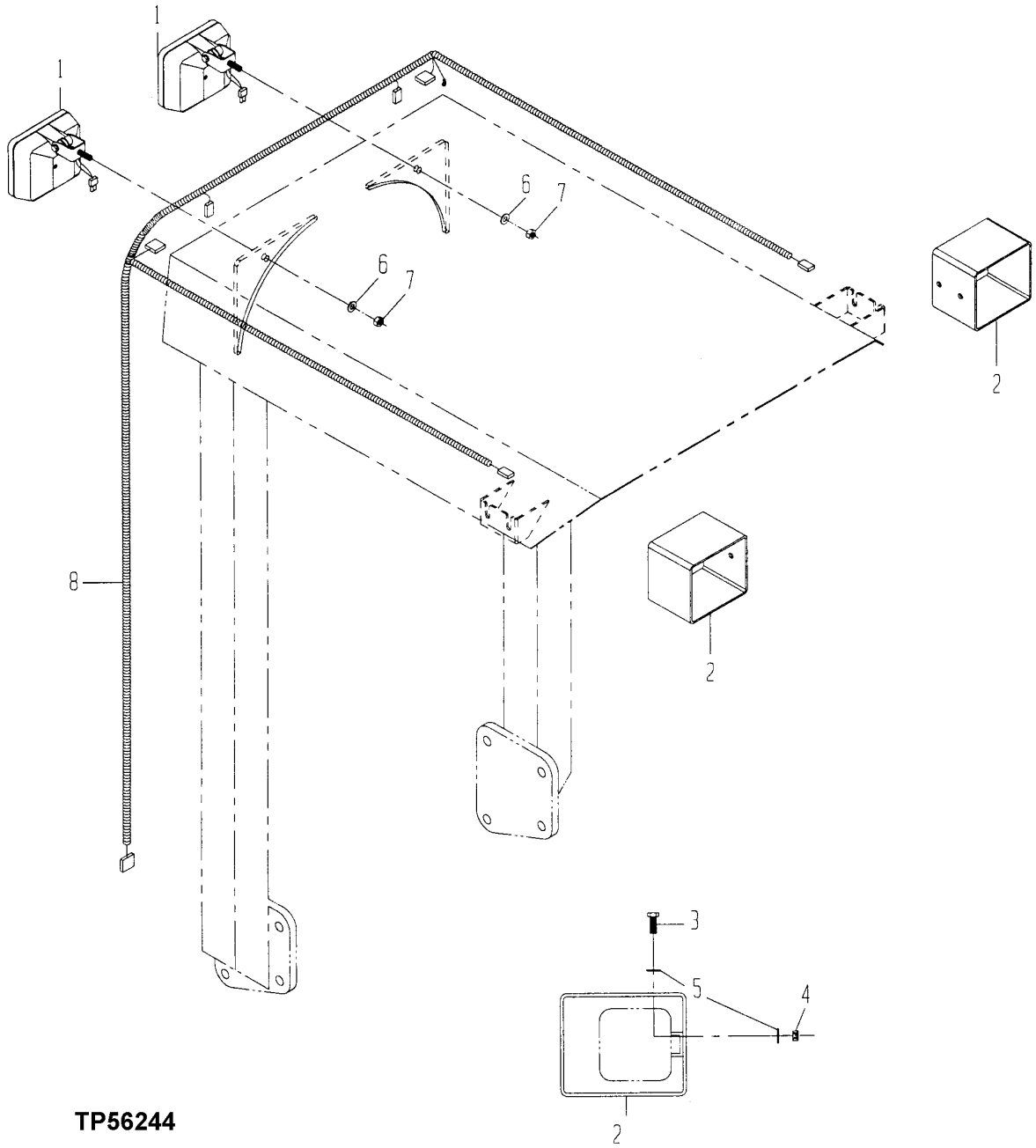

TP56244

ROPS ADDITIONAL LIGHTING
(SERIAL NO. -848452)

KEY	PART NO.	PART NAME	QTY	SERIAL NO.	REMARKS
1	AT135486	FLOODLAMP	2	-848452	
	AT130104	BULB	1	-848452	(NOT SHOWN)
	T80393	GASKET	1	-848452	(NOT SHOWN)
	T80394	SCREW	4	-848452	(NOT SHOWN)
	12M7032	LOCK WASHER	1	-848452	8.400 MM, (NOT SHOWN)
	14M7166	LOCK NUT	1	-848452	M8, (NOT SHOWN)
	19M7269	CAP SCREW	1	-848452	M8 X 50, (NOT SHOWN)
2	AT183256	GUARD	2	-848452	(SUB FOR AT181922)
3	19H2676	CAP SCREW	2	-848452	3/8" X 1"
4	T11234	LOCK NUT	2	-848452	
5	R57696	WASHER	4	-848452	9.931 X 23.114 X 3.048 MM (25/64" X 0.910" X 0.120")
6	T35860	WASHER	2	-848452	13.614 X 27.280 X 2.413 MM (0.536" X 1.074" X 0.095")
7	14M7275	NUT	2	-848452	M12
8	AT216462	WIRING HARNESS	1	-848452	

ROPS ADDITIONAL LIGHTING
(SERIAL NO. 848453-)

TP80384 -UN-14JAN00

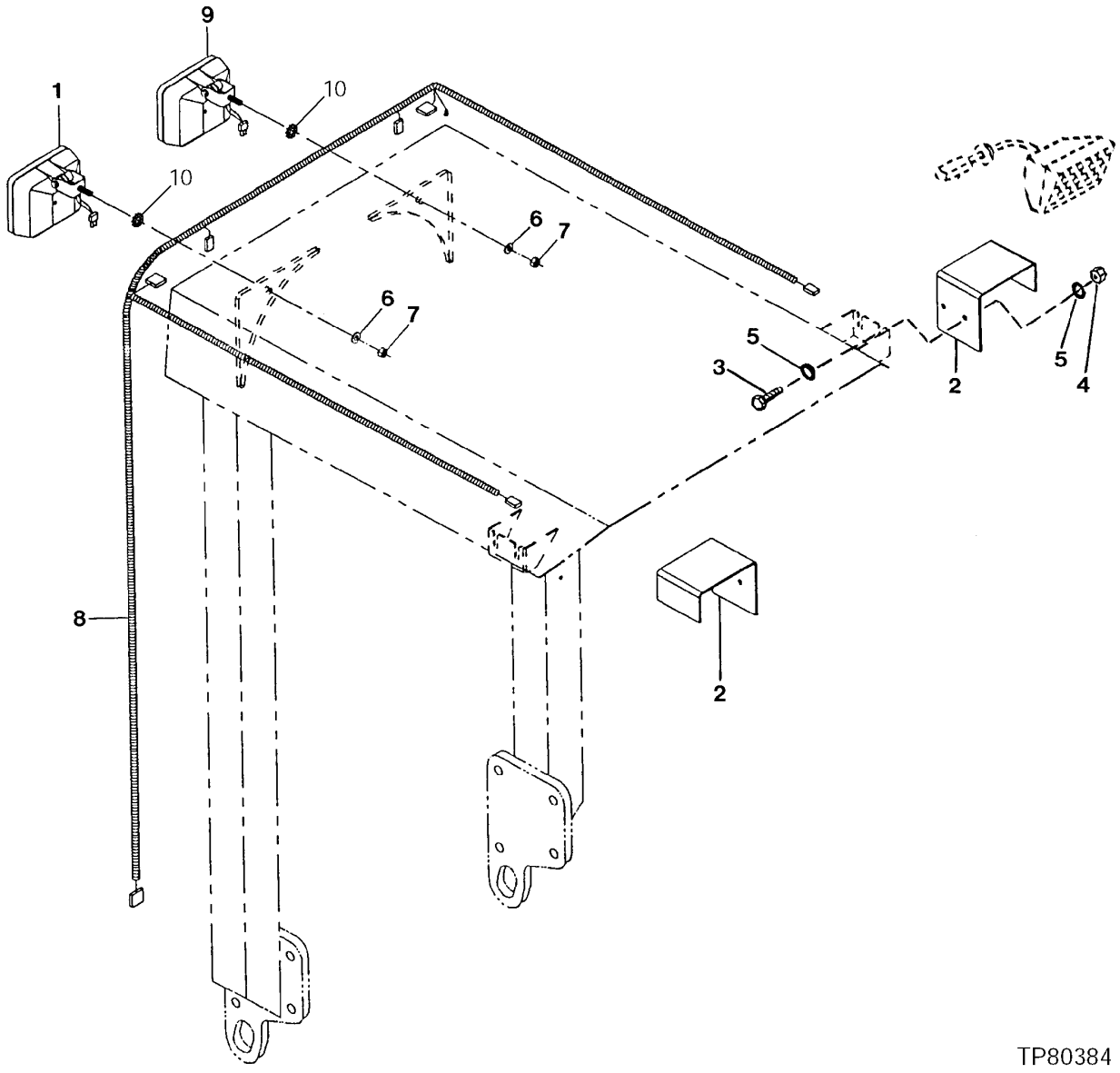

ROPS ADDITIONAL LIGHTING
(SERIAL NO. 848453-)

KEY	PART NO.	PART NAME	QTY	SERIAL NO.	REMARKS
1	AT184815	LAMP	1	848453-	(SUB FOR AT163948) RIGHT HAND
2	T165478	GUARD	2	848453-	
3	19H2676	CAP SCREW	4	848453-	3/8" X 1"
4	T11234	LOCK NUT	4	848453-	
5	R57696	WASHER	4	848453-	9.931 X 23.114 X 3.048 MM (25/64" X 0.910" X 0.120")
6	24M7239	WASHER	2	848453-	10.700 X 21 X 2.500 MM (0.421" X 0.827" X 0.098")
7	14M7274	NUT	2	848453-	M10
8	AT216462	WIRING HARNESS	1	848453-	
9	AT163950	FLOODLAMP	1	848453-	(ALSO ORDER RE12363) LEFT HAND
10	H75516	LOCK WASHER	2	848453-	

ROPS ADDITIONAL LIGHTING
(SERIAL NO. 848453-)

T195875 -UN-31OCT03

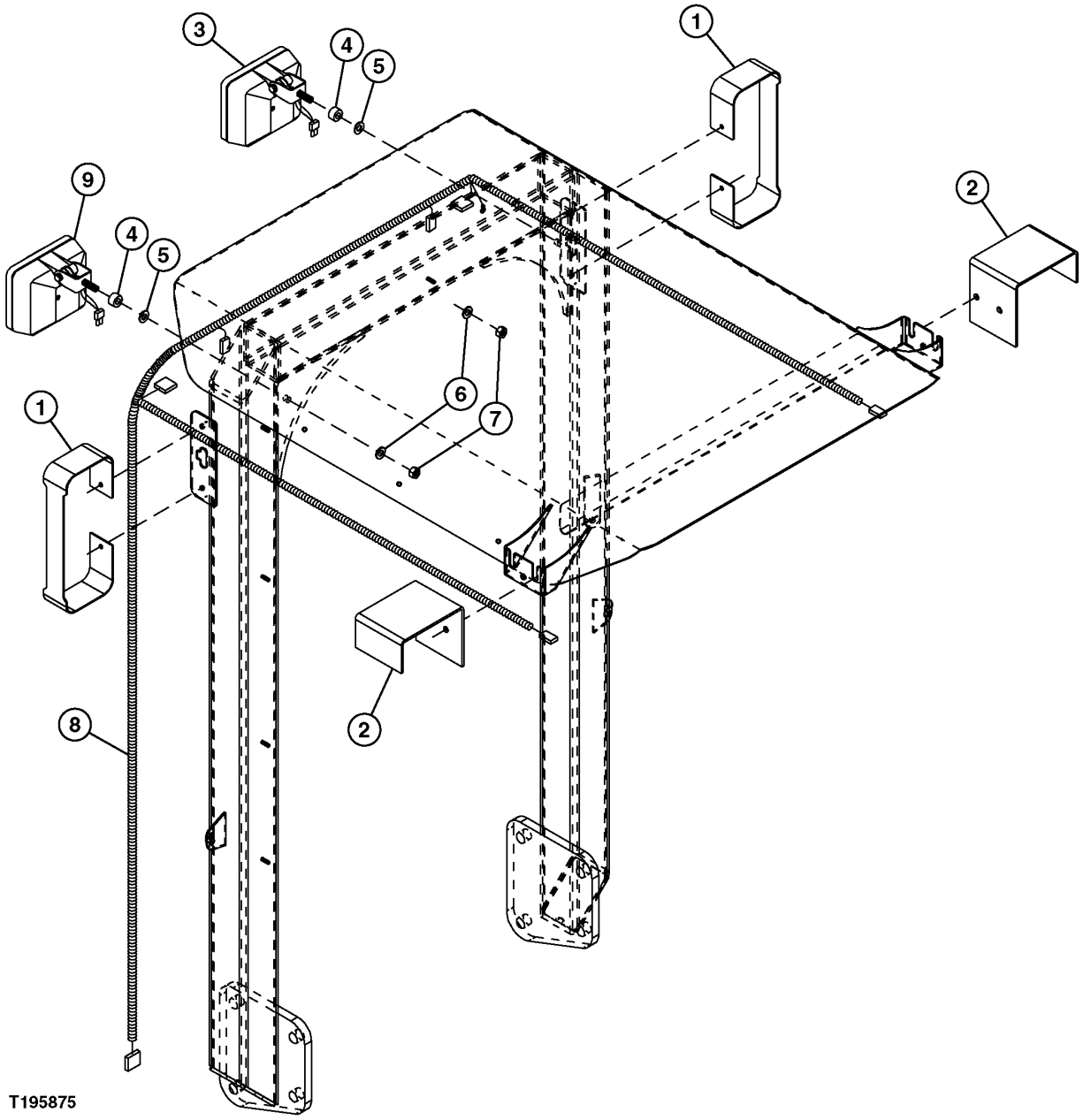

ROPS ADDITIONAL LIGHTING
(SERIAL NO. 848453-)

KEY	PART NO.	PART NAME	QTY	SERIAL NO.	REMARKS
1	LVU12050	BRACKET	2		
2	CB01446307	GUARD	2		
3	CB11447039	FLOODLAMP	1		LH
4	12H331	LOCK WASHER	2		3/8"
5	ET15515	SPACER	2		
6	T35860	WASHER	2		13.614 X 27.280 X 2.413 MM
7	14M7274	NUT	2		M10
8	AT216462	WIRING HARNESS	1		
9	CB11447038	FLOODLAMP	1		RH

ENGINE HARNESS
(SERIAL NO. -880053)

TP80255 -UN-11OCT99

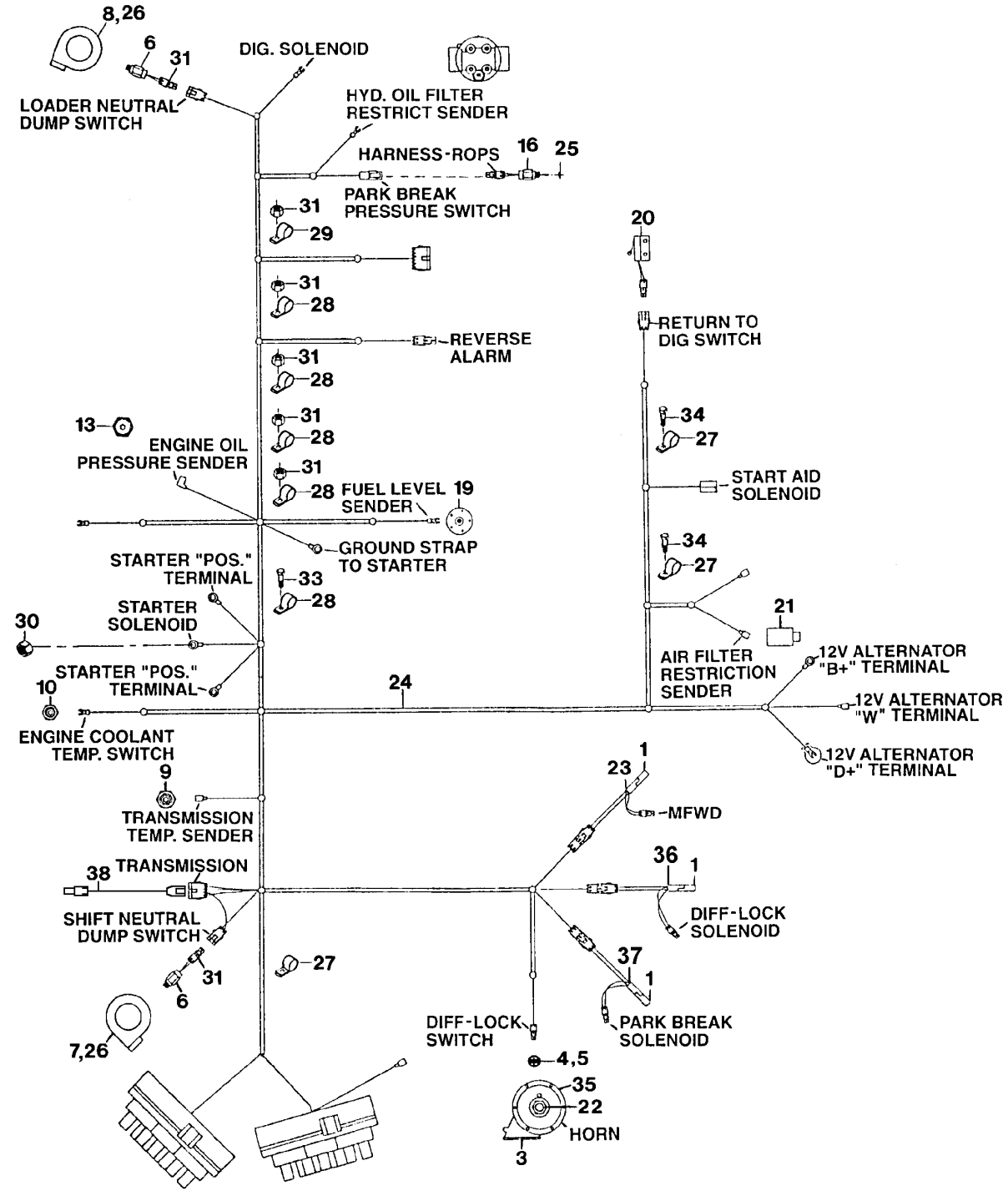

TP80255

ENGINE HARNESS
(SERIAL NO. -880053)

KEY	PART NO.	PART NAME	QTY	SERIAL NO.	REMARKS
1	AR94101	DIODE	3	-880053	(1 AMP)
3	AT180293	KIT	1	-880053	HIGH NOTE HORN, (SUB FOR R64700)
4	RE46534	SWITCH	1	-880053	
5	RE43637	ACTUATOR	1	-880053	
6	AT162180	SWITCH	2	-880053	(GEARSHIFT AND LOADER CONTROL)
7	AT169304	KNOB	1	-880053	
8	AT171550	KNOB	1	-880053	
9	AT174893	SWITCH	1	-880053	
10	AT164352	SWITCH	1	-880053	
13	AT85174	SWITCH	1	-880053	
16	AT159811	SWITCH	1	-880053	
19	AT183857	FUEL SENDER	1	-880053	(SUB FOR AT216312)
20	AT184726	SWITCH	1	-880053	(SUB FOR AT167306)
21	RE12176	AIR RESTRICTION SENSOR	1	-832008	
	AT178542	AIR RESTRICTION SENSOR	1	832009-880053	
22	R11278	NUT	1	-880053	7/8"
23	AT216499	WIRING HARNESS	1	-880053	DIODE
24	AT216498	WIRING HARNESS	1	-880053	ENGINE
25	R26287	O-RING	1	-880053	(SUB FOR AT201505)
26	37H95	SCREW	4	-880053	
27	T78787	CLAMP	3	-880053	
28	T76252	CLAMP	5	-880053	
29	AT205286	CLAMP	1	-880053	
30	14M7375	FLANGE NUT	1	-880053	M5
31	14H1076	NUT	7	-880053	3/8"
33	19M7938	CAP SCREW	1	-880053	M10 X 20
34	19H2676	CAP SCREW	2	-880053	3/8" X 1"
35	AT181923	WIRING HARNESS	1	-880053	(PIGTAIL FOR HORN-NOT SHOWN)
36	AT182156	WIRING HARNESS	1	-880053	
37	AT182157	WIRING HARNESS	1	-880053	
38	AT181861	WIRING HARNESS	1	-880053	(TRANSMISSION DIODES)

ENGINE HARNESS (SERIAL NO. 880054-882700)

TP80759 -UN-25MAY00

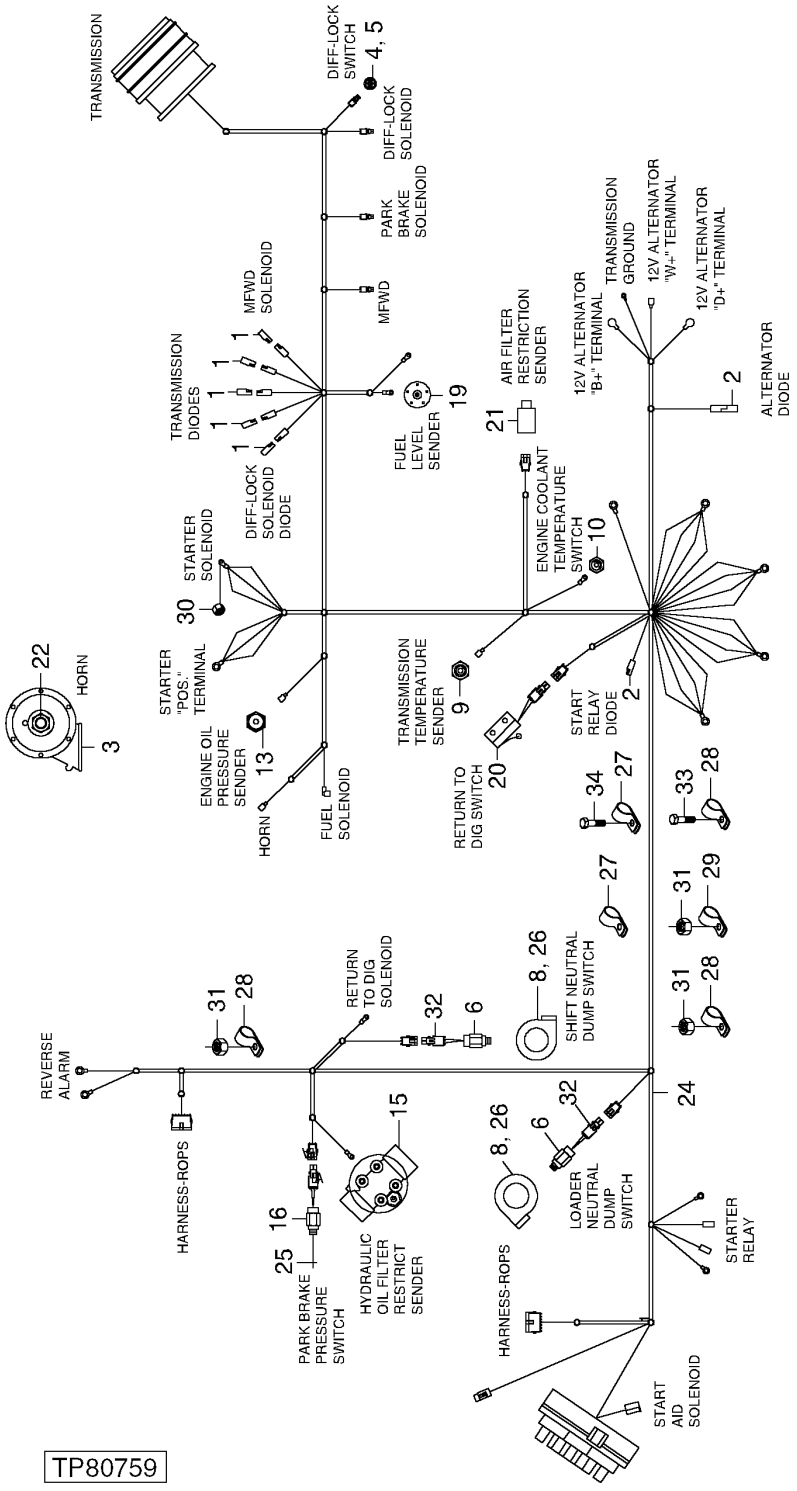

ENGINE HARNESS (SERIAL NO. 880054-882700)

KEY	PART NO.	PART NAME	QTY	SERIAL NO.	REMARKS
1	AR94101	DIODE	5	880054-	(1 AMP)
2	AT103399	DIODE	2	880054-	
3	AT180293	KIT	1	880054-	HIGH NIGHT HORN, (SUB FOR T161689)
4	RE46534	SWITCH	1	880054-	
5	RE43637	ACTUATOR	1	880054-	
6	AT162180	SWITCH	2	880054-	(GEARSHIFT AND LOADER CONTROL)
7	AT169304	KNOB	1	880054-	
8	AT171550	KNOB	1	880054-	
9	AT174893	SWITCH	1	880054-	
10	AT164352	SWITCH	1	880054-	
13	AT85174	SWITCH	1	880054-	
15	.....	HYDRAULIC FILTER	1	880054-	
	AT144994	FILTER HEAD	1	880054-	
	AT129419	SWITCH	1	880054-	
	AT184206	FILTER ELEMENT	1	880054-	
16	AT159811	SWITCH	1	880054-	
19	AT183857	FUEL SENDER	1	880054-	(SUB FOR AT216312)
20	AT184726	SWITCH	1	880054-	(SUB FOR AT167306)
21	RE12176	AIR RESTRICTION SENSOR	1	880054-	
22	14M7272	NUT	1	880054-	M6
24	AT188701	WIRING HARNESS	1	880054-	ENGINE
25	R26287	O-RING	1	880054-	(SUB FOR AT201505)
26	37H95	SCREW	4	880054-	
27	T78787	CLAMP	3	880054-	
28	T75276	CLAMP	6	880054-	
29	AH87142	CLIP	1	880054-	
30	14M7375	FLANGE NUT	1	880054-	M5
31	14H1076	NUT	5	880054-	3/8"
32	RE12363	ELECTRICAL CONNECTOR ASSY	2	880054-	
33	19M7938	CAP SCREW	1	880054-	M10 X 20
34	19H2676	CAP SCREW	2	880054-	3/8" X 1"
35	AT181861	WIRING HARNESS	1	880054-	(TRANSMISSION DIODES)

ENGINE HARNESS (SERIAL NO. 882701-)

T196806 -UN-09DEC03

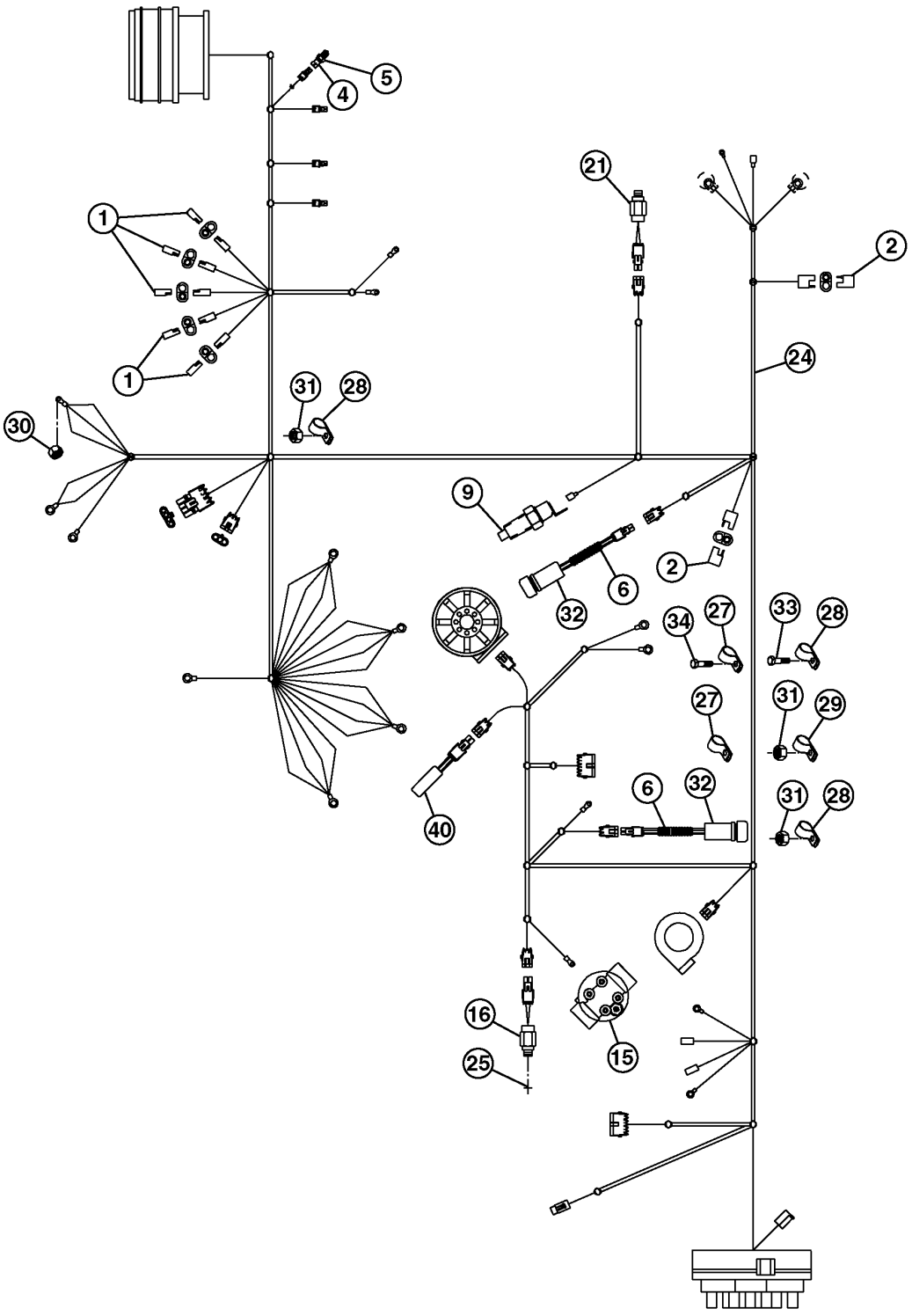

T196806

ENGINE HARNESS (SERIAL NO. 882701-)

KEY	PART NO.	PART NAME	QTY	SERIAL NO.	REMARKS
1	AR94101	DIODE	1		(1 AMP)
2	AT103399	DIODE	2		
4	RE46534	SWITCH	1		
5	RE43637	ACTUATOR	1		
6	AT162180	SWITCH	2		(GEARSHIFT AND LOADER CONTROL)
7	AT169304	KNOB	1		
8	AT171550	KNOB	1		
9	AT174893	SWITCH	1		
10	T75276	CLAMP	1		
11	12H331	LOCK WASHER	1		3/8"
15	.....	HYDRAULIC FILTER	1		
16	AT159811	SWITCH	1		
19	AT183857	FUEL SENDER	1		
20	AT184726	SWITCH	1		
21	RE12176	AIR RESTRICTION SENSOR	1		
24	CB11442346	WIRING HARNESS	1		(REAR) ENGINE
	CB11445537	WIRING HARNESS	1		POWER SHIFT TRAMISSION ELECTRONICS
25	R26287	O-RING	1		
26	37H95	SCREW	4		
27	T78787	CLAMP	3		
28	T76252	CLAMP	4		
29	AT205286	CLAMP	1		
30	14M7375	FLANGE NUT	1		M5
31	14H1076	NUT	5		3/8"
32	RE12363	ELECTRICAL CONNECTOR ASSY	2		
33	19M7938	CAP SCREW	3		M10 X 20
34	19H2676	CAP SCREW	2		3/8" X 1"
35	T102934	CLAMP	1		(TRANSMISSION DIODES)
36	AT141011	RELAY	1		
37	AT182434	BOLT	2		
38	14M7303	FLANGE NUT	2		M6
39	AT250993	CAP SCREW	1		
40	CB01447005	WIRING HARNESS	1		

ENGINE FRONT HARNESS
(SERIAL NO. 882701-)

T196984 -UN-17DEC03

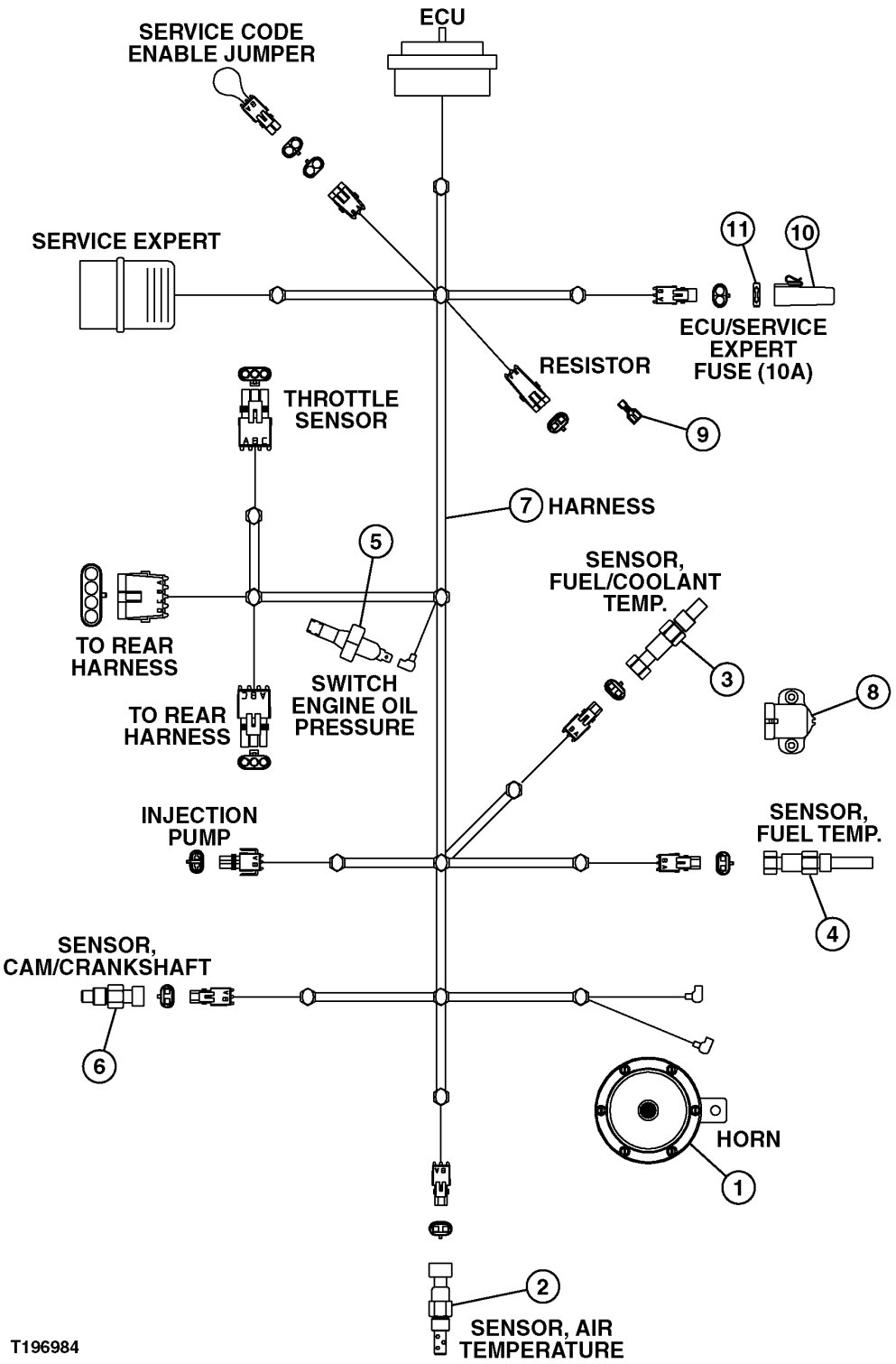

ENGINE FRONT HARNESS
(SERIAL NO. 882701-)

KEY	PART NO.	PART NAME	QTY	SERIAL NO.	REMARKS
1	AT226281	HORN	1		
2	RE61812	SENSOR	1		AIR TEMPERATURE
3	RE52722	SENSOR	1		FUEL/COOLANT TEMPERATURE
4	AH156144	COOLANT TEMPERATURE SENSOR	1		
5	AT85174	SWITCH	1		ENGINE OIL PRESSURE
6	RE519144	SENSOR	1		CAM/CRANKSHAFT, (SUB FOR RE508195)
7	CB11442803	TUBE	1		
8	RE56165	POTENTIOMETER	1		
9	AT190929	RESISTOR	1		
10	57M8487	ELECTRICAL CONNECTOR CAP	1		
11	57M7121	FUSE	1		(10 AMP)

DASH INSTRUMENT PANEL
(SERIAL NO. -880053)

TP56481 -UN-01MAY98

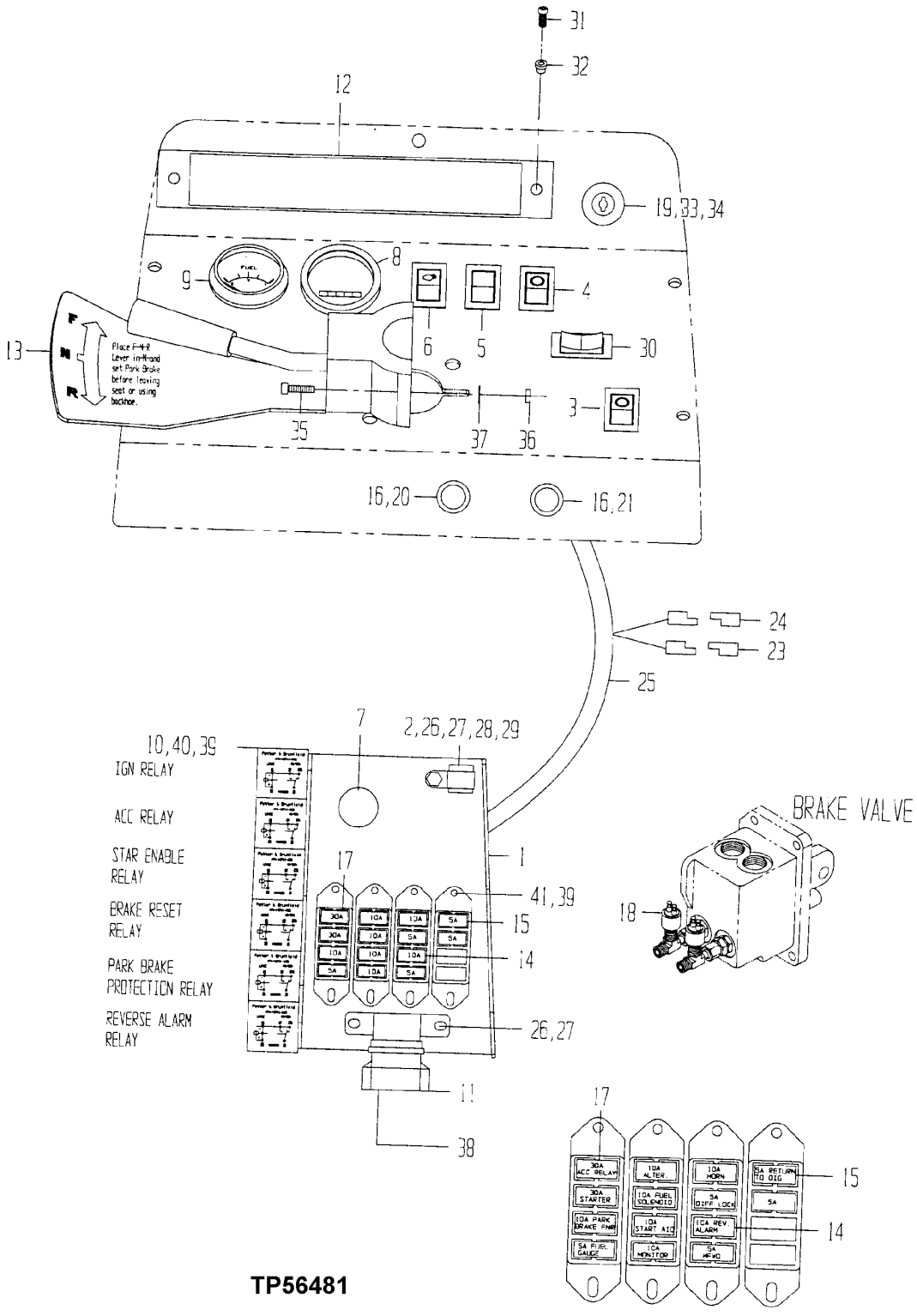

TP56481

DASH INSTRUMENT PANEL
(SERIAL NO. -880053)

KEY	PART NO.	PART NAME	QTY	SERIAL NO.	REMARKS
1	AT183262	PLATE	1	-880053	(SUB FOR AT216115)
2	AT216450	FLASHER	1	-880053	
3	AT216459	ROCKER SWITCH	1	-880053	PARK BRAKE
4	AT175297	SWITCH	1	-880053	MFWD
5	AT175070	SWITCH	1	-880053	WARNING LIGHTS
	T162380	BULB	1	-880053	
6	AT175069	SWITCH	1	-880053	FRONT LIGHTS
7	AT171958	AUDIBLE WARNING ALARM	1	-880053	
8	AT226353	HOUR METER	1	-880053	(SUB FOR AT86509)
9	AT216469	LEVEL GAUGE	1	-880053	FUEL
10	AT262182	RELAY	6	-880053	(SUB FOR AT184830) (SUB FOR AT168878, THIS APPLICATION)
11	AT141011	RELAY	1	-880053	STARTER
12	AT183859	MONITOR	1	-880053	DISPLAY PANEL, (SUB FOR AT174769) (USE IF AVAILABLE) (WHEN NO LONGER AVAILABLE, SUB AT199058)
	AT199058	MONITOR	1	-880053	DISPLAY PANEL
	57M7102	BULB	2	-880053	
13	AT180916	SWITCH	1	-880053	MOTION CONTROL-F.N.R LEVER ASSEMBLY, (SUB FOR AT157471)
14	57M7121	FUSE	7	-880053	10 AMP
15	57M7125	FUSE	5	-880053	5 AMP
16	R39554	SWITCH	2	-880053	FLUID AND HORN
17	57M7146	FUSE	2	-880053	30 AMP
18	R32548	TOUCH SWITCH	2	-880053	
19	AT195301	SWITCH	1	-880053	IGNITION (INCLUDES AT145929 KEY) (SUB FOR AT145931)
	AT145929	KEY	1	-880053	IGNITION, (USE WITH AT145931)
	AT195301	SWITCH	1	-880053	IGNITION (INCLUDES AT195302 KEY)
	AT195302	KEY	1	-880053	IGNITION, (USE WITH AT195301)
20	T55585	CAP	1	-880053	
21	T55501	CAP	1	-880053	
22	AA4927R	BULB	1	-880053	
23	AR94101	DIODE	4	-880053	(1 AMP)
24	AT103399	DIODE	2	-880053	(5 AMP)
25	AT216507	WIRING HARNESS	1	-880053	DASH (FUSE BLOCK)
26	19H1948	CAP SCREW	1	-880053	1/4" X 3/4"
27	M40333	LOCK NUT	3	-880053	1/4"
28	AT119290	HOSE CLAMP	1	-880053	
29	24H1287	WASHER	1	-880053	9/32" X 5/8" X 0.065"
30	AT175300	SWITCH	1	-880053	TURN SIGNAL
	T162380	BULB	1	-880053	
31	T82791	SCREW	2	-880053	
32	T82792	NUT	2	-880053	
33	R44342	NUT	1	-880053	
34	R52725	ELECTRICAL CONNECTOR ASSY	1	-880053	
35	19H2961	SCREW	2	-880053	0.190" X 3/4"
36	14H778	NUT	2	-880053	0.190"
37	12H246	LOCK WASHER	2	-880053	0.190"
38	14M7298	FLANGE NUT	2	-880053	M8
39	T12847	LOCK NUT	11	-880053	4.775 MM (3/16")
40	21H1301	SCREW	3	-880053	0.190" X 1/2"
41	21H1148	SCREW	8	-880053	0.190" X 3/4"

DASH INSTRUMENT PANEL
(SERIAL NO. 880054-882700)

TP80112 -UN-13AUG99

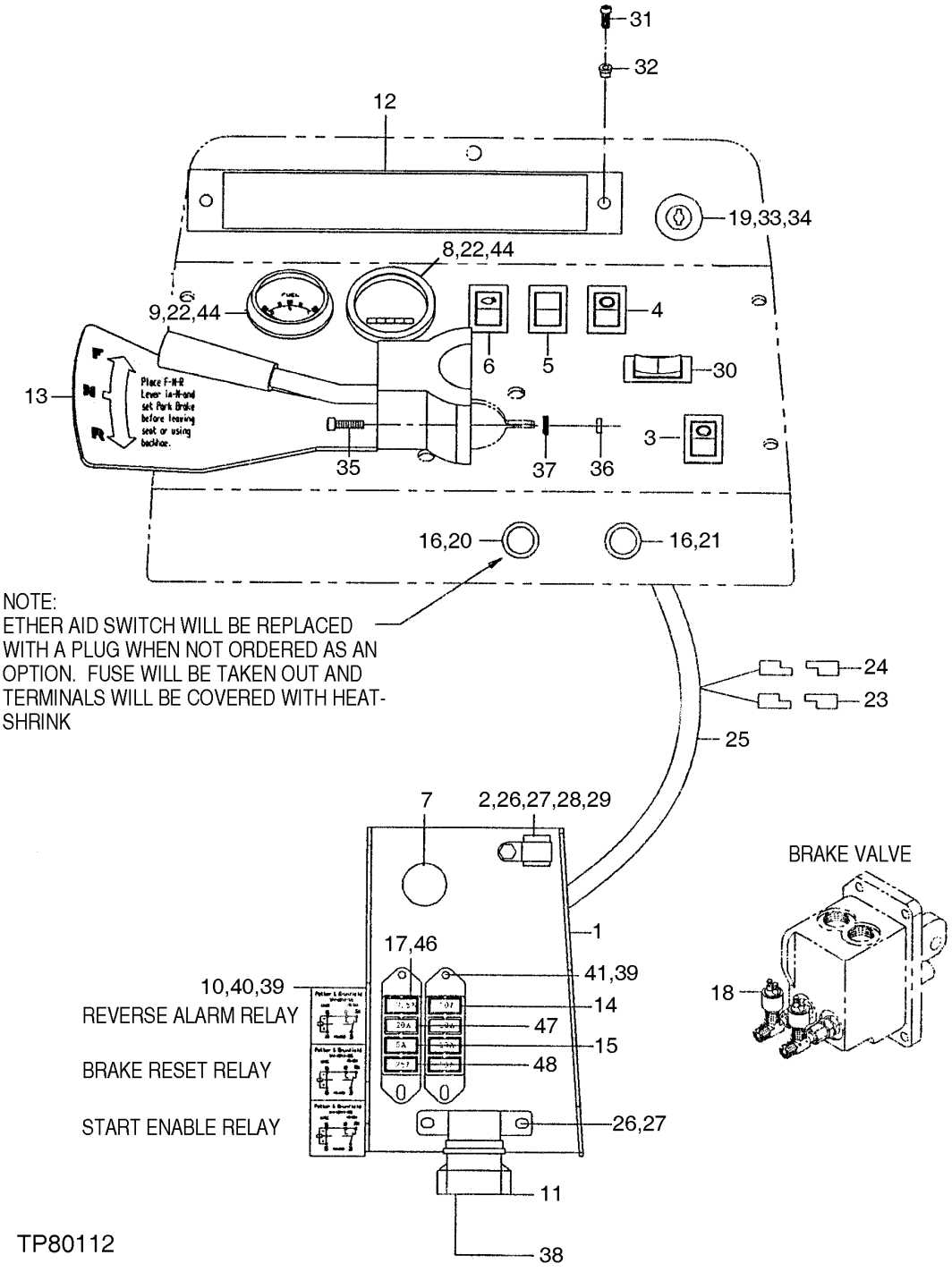

DASH INSTRUMENT PANEL
(SERIAL NO. 880054-882700)

KEY	PART NO.	PART NAME	QTY	SERIAL NO.	REMARKS
1	AT188683	BRACKET	1	880054-	(FUSE BLOCK)
2	.....	TURN SIGNAL FLASHER	1	880054-880804	(AT216450 NO LONGER USED, SUB AU41465)
	AU41465	FLASHER	1	880805-	(SUB FOR AT216450)
3	AT216459	ROCKER SWITCH	1	880054-	PARK BRAKE
4	AT175297	SWITCH	1	880054-	MFWD
5	AT175070	SWITCH	1	880054-	WARNING LIGHTS
	T162380	BULB	1	880054-	
6	AT175069	SWITCH	1	880054-	FRONT LIGHTS
7	AT171958	AUDIBLE WARNING ALARM	1	880054-	FAULT ALARM
8	AT226353	HOUR METER	1	880054-	(SUB FOR AT86509)
9	AT216469	LEVEL GAUGE	1	880054-	FUEL
10	AT262182	RELAY	6	880054-	(SUB FOR AT184830) (SUB FOR AT168878, THIS APPLICATION)
11	AT141011	RELAY	1	880054-	STARTER
12	AT183859	MONITOR	1	880054-	DISPLAY PANEL, (SUB FOR AT174769)
	57M7102	BULB	2	880054-	
13	AT180916	SWITCH	1	880054-	MOTION CONTROL-F.N.R LEVER ASSEMBLY, (SUB FOR AT157471)
14	57M7121	FUSE	7	880054-	10 AMP
15	57M7125	FUSE	5	880054-	5 AMP
16	AT188735	SWITCH	2	880054-	FLUID AND HORN
17	.....	FUSE	1	880054-	25 AMP
18	R32548	TOUCH SWITCH	2	880054-	
19	AT195301	SWITCH	1	880054-	IGNITION (INCLUDES KEY) (SUB FOR AT145931)
	AT145929	KEY	1	880054-	IGNITION (NOT ILLUSTRATED)
20	T55585	CAP	1	880054-	
21	T55501	CAP	1	880054-	
22	AA4927R	BULB	1	880054-	
23	AR94101	DIODE	4	880054-	(1 AMP)
24	AT103399	DIODE	2	880054-	(5 AMP)
25	AT188684	WIRING HARNESS	1	880054-	DASH
26	19H1948	CAP SCREW	1	880054-	1/4" X 3/4"
27	M40333	LOCK NUT	3	880054-	1/4", (SUB FOR AT119514)
28	AT119290	HOSE CLAMP	1	880054-	
29	24H1287	WASHER	1	880054-	9/32" X 5/8" X 0.065"
30	AT175300	SWITCH	1	880054-	TURN SIGNAL
	T162380	BULB	1	880054-	
31	T82791	SCREW	2	880054-	
32	T82792	NUT	2	880054-	
33	R44342	NUT	1	880054-	
34	R52725	ELECTRICAL CONNECTOR ASSY	1	880054-	
35	19H2961	SCREW	2	880054-	0.190" X 3/4"
36	14H778	NUT	2	880054-	0.190"
37	12H246	LOCK WASHER	2	880054-	0.190"
38	14M7303	FLANGE NUT	2	880054-	M6
39	T12847	LOCK NUT	11	880054-	4.775 MM (3/16")
40	21H1301	SCREW	3	880054-	0.190" X 1/2"
41	21H1148	SCREW	8	880054-	0.190" X 3/4"
42	T16738	PLUG	1	880054-	
43	.....	STRUCTURAL TUBING	AR	880054-	HEAT SHRINK (NOT ILLUSTRSTED)
44	AT188700	GAUGE	1	880054-	
46	57M7120	FUSE	1	880054-	20 AMP
48	.....	RELAY	1	880054-	100 AMP

DASH INSTRUMENT PANEL
(SERIAL NO. 882701-)

T196907 -UN-18DEC03

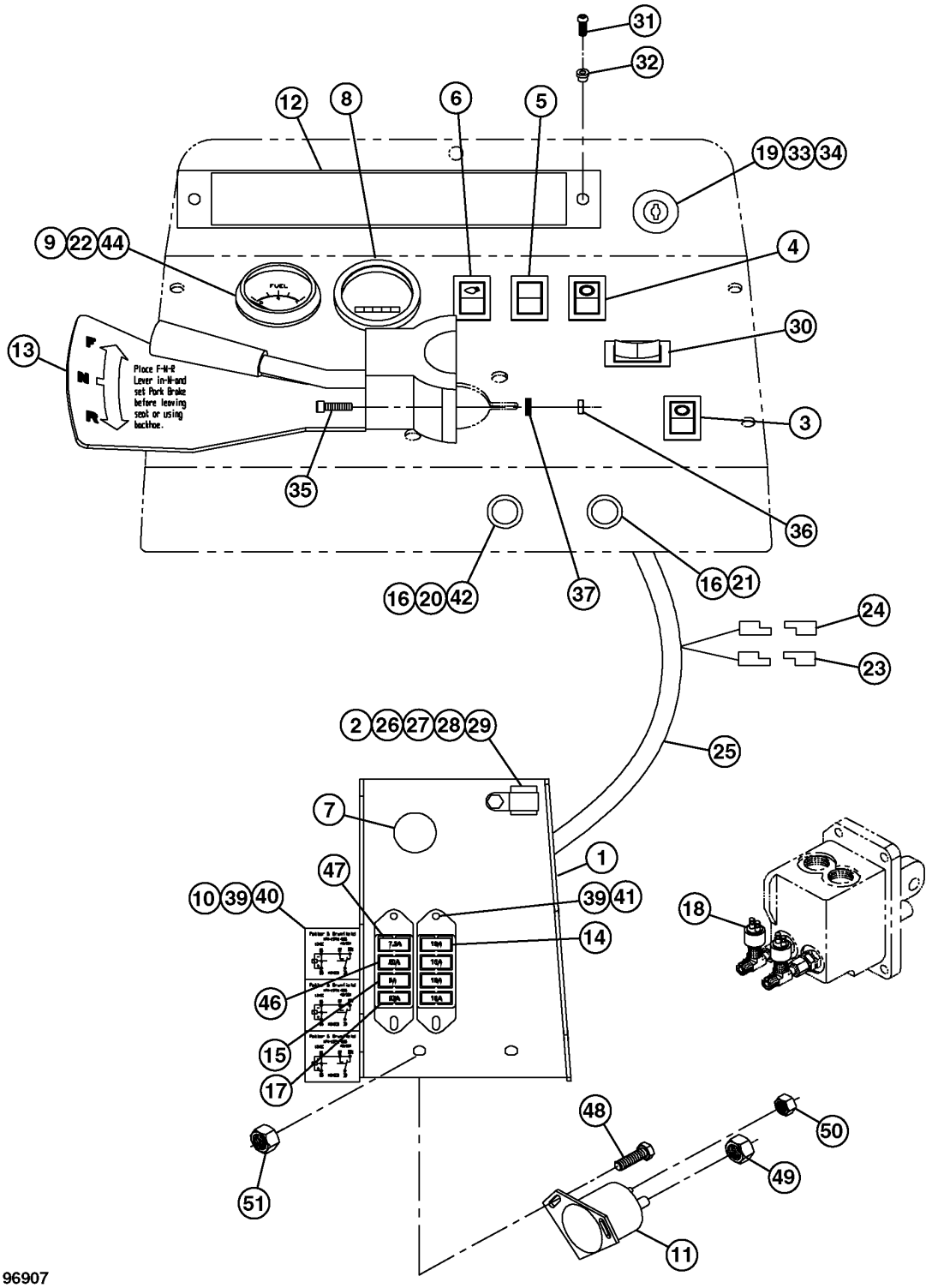

T196907

DASH INSTRUMENT PANEL
(SERIAL NO. 882701-)

KEY	PART NO.	PART NAME	QTY	SERIAL NO.	REMARKS
1	AT188683	BRACKET	1		
2	AU41465	FLASHER	1		
3	AT216459	ROCKER SWITCH	1		
4	AT180123	SWITCH	1		OPTIONAL
5	AT175070	SWITCH	1		
6	AT175069	SWITCH	1		
7	AT171958	AUDIBLE WARNING ALARM	1		
8	M142438	HOUR METER	1		
9	AT216469	LEVEL GAUGE	1		
10	AH148758	RELAY	3		
11	AR73144	RELAY	1		
12	CB01444697	BRACKET	1		
13	AT180916	SWITCH	1		
14	57M7121	FUSE	4		10 AMP, (INCLUDED IN KEY 25)
15	57M7125	FUSE	1		5 AMP, (INCLUDED IN KEY 25)
16	AT188735	SWITCH	1		
17	99M7069	FUSE	1		25 AMP, (INCLUDED IN KEY 25)
18	R32548	TOUCH SWITCH	2		
19	AT195301	SWITCH	1		
20	T55585	CAP	1		
21	T55501	CAP	1		
22	AA4927R	BULB	1		(INCLUDED IN 44)
23	AR94101	DIODE	4		
24	AT103399	DIODE	2		
25	CB11443537	WIRING HARNESS	1		(INCLUDES KEYS 14, 15 AND 17)
26	19H1948	CAP SCREW	1		1/4" X 3/4"
27	M40333	LOCK NUT	3		
28	AT119290	HOSE CLAMP	1		
29	24H1136	WASHER	1		11/32" X 11/16" X 0.065"
30	AT175300	SWITCH	1		
31	T82791	SCREW	2		
32	T82792	NUT	2		
33	R44342	NUT	1		
34	R52725	ELECTRICAL CONNECTOR ASSY	1		
35	19H2961	SCREW	2		0.190" X 3/4"
36	14H778	NUT	2		0.190"
37	12H246	LOCK WASHER	2		0.190"
39	T12847	LOCK NUT	7		
40	21H1019	SCREW	3		0.190" X 1/2"
41	21H1148	SCREW	4		0.190" X 3/4"
42	T16738	PLUG	1		
44	AT188700	GAUGE	1		(INCLUDES KEY 22)
45	.....	ELEC. CONNECTOR TERMINAL	1		
46	57M7120	FUSE	1		
47	99M7064	FUSE	1		
48	19H1948	CAP SCREW	2		1/4" X 3/4"
49	14H611	NUT	2		5/16"
50	14H631	NUT	1		0.190"
51	M40333	LOCK NUT	2		
52	.....	CONDUIT	12		(NOT ILLUSTRATED)
53	T75276	CLAMP	1		(NOT ILLUSTRATED)
54	12H301	LOCK WASHER	1		(NOT ILLUSTRATED)
55	M142439	BRACKET	1		(NOT ILLUSTRATED)
56	14M7139	NUT	1		M4, (NOT ILLUSTRATED)
57	M142439	BRACKET	1		(NOT ILLUSTRATED)
58	.....	LOCK WASHER	1		STAR (NOT ILLUSTRATED)

MAIN FRAME
(SERIAL NO. 837539-872333)

TP61716 -UN-07JUL98

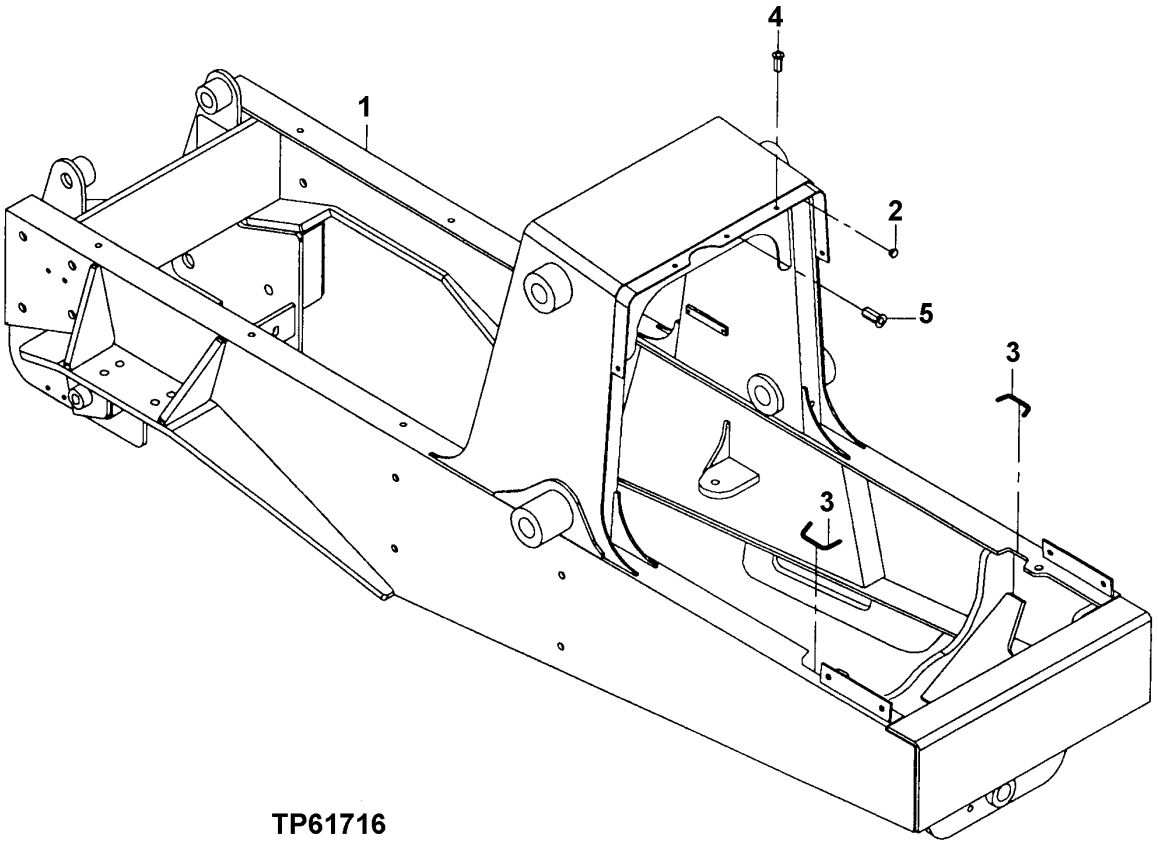

TP61716

MAIN FRAME
(SERIAL NO. 837539-872333)

KEY	PART NO.	PART NAME	QTY	SERIAL NO.	REMARKS
1	AT216273	FRAME	1	837539-872333	
2	.....	PLUG	1	837539-872333	
3	AT181877	SEALING TRIM	1	837539-872333	
4	T164467	NUT	5	837539-872333	
5	T164468	NUT	10	837539-872333	

MAIN FRAME
(SERIAL NO. 872334-)

T196510 -UN-25NOV03

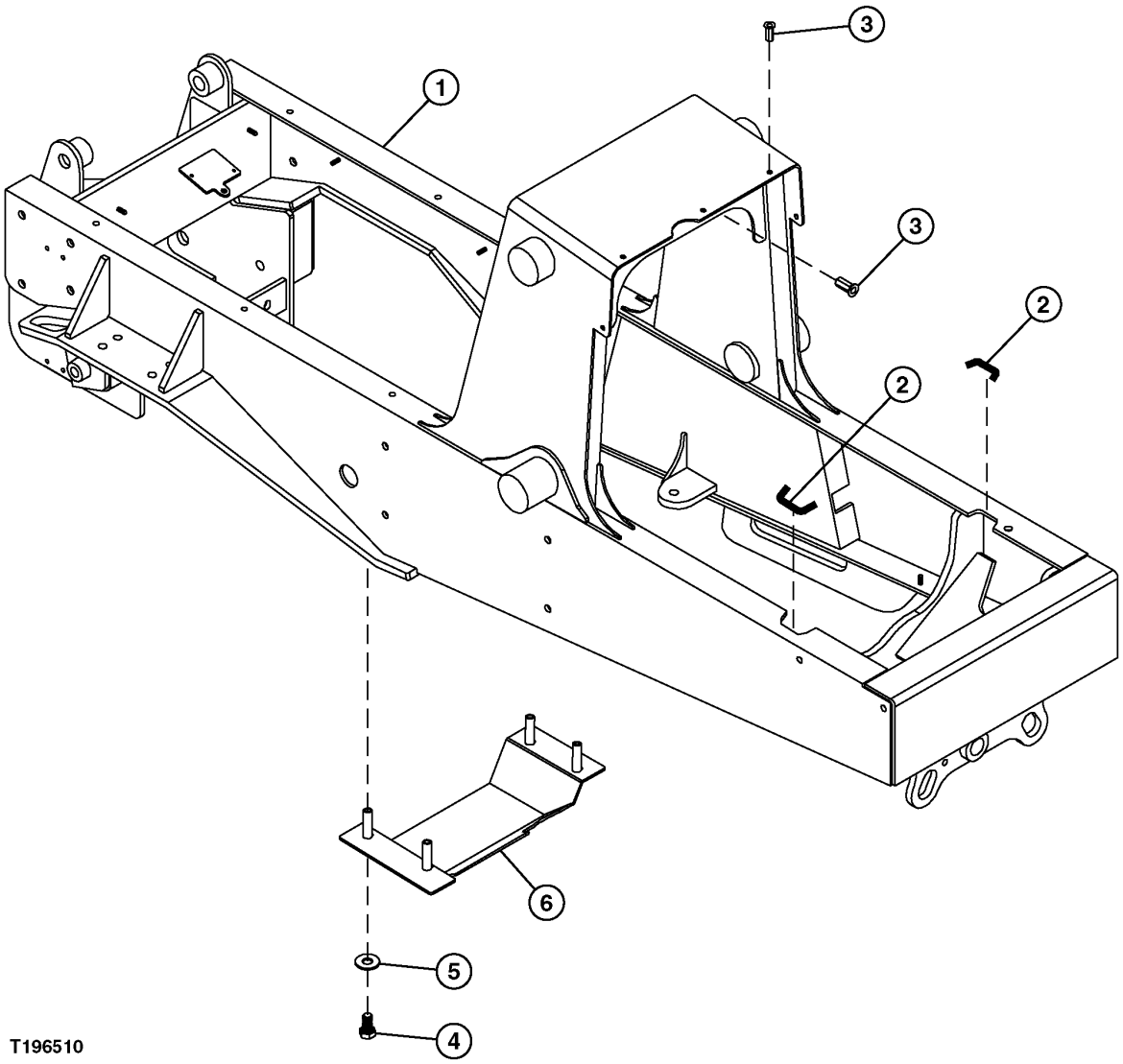

T196510

MAIN FRAME
(SERIAL NO. 872334-)

KEY	PART NO.	PART NAME	QTY	SERIAL NO.	REMARKS
1	AT187526	FRAME	1	872334-880053	
	AT188680	FRAME	1	880054-880329	
	AT191874	FRAME	1	880330-882700	
	CB11441777	COVER	1	882701-	
2	AT181877	SEALING TRIM	2	872334-	
3	T164468	NUT	7	872334-882700	
	T164468	NUT	10	882701-	
4	19H3340	CAP SCREW	3	882701-	5/8" X 5-1/2"
5	R56423	WASHER	3	882701-	0.667" X 1.385" X 5/32"
6	CB11447139	GUARD	1	882701-	

BOTTOM GUARD, TRANSMISSION

TP52742 -UN-20MAY97

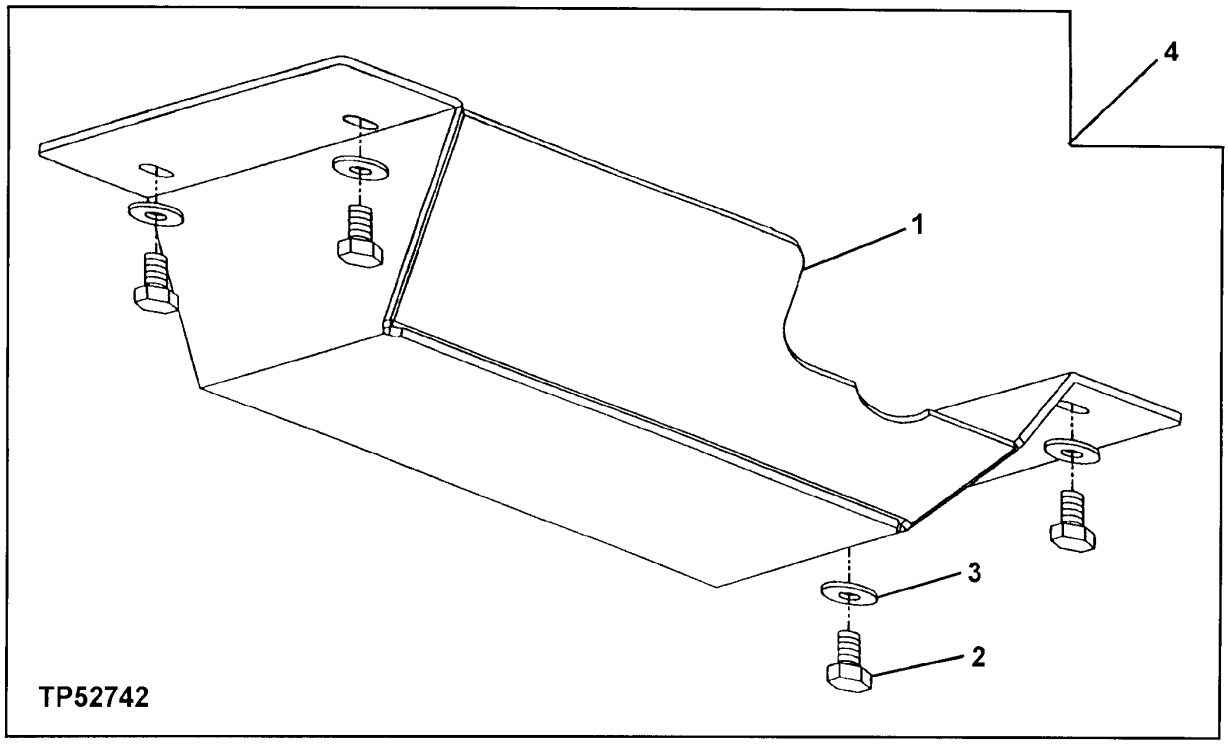

BOTTOM GUARD, TRANSMISSION

KEY	PART NO.	PART NAME	QTY	SERIAL NO.	REMARKS
1	.....	GUARD	1		
2	19H2472	CAP SCREW	4		1/2" X 1"
3	24M7240	WASHER	4		13 X 25 X 3 MM
4	**AT180358**	**KIT**	**1**		**(BOTTOM GUARD) WHOLEGOODS**

CANOPY
(SERIAL NO. -872333)

TP56247 -UN-22MAY97

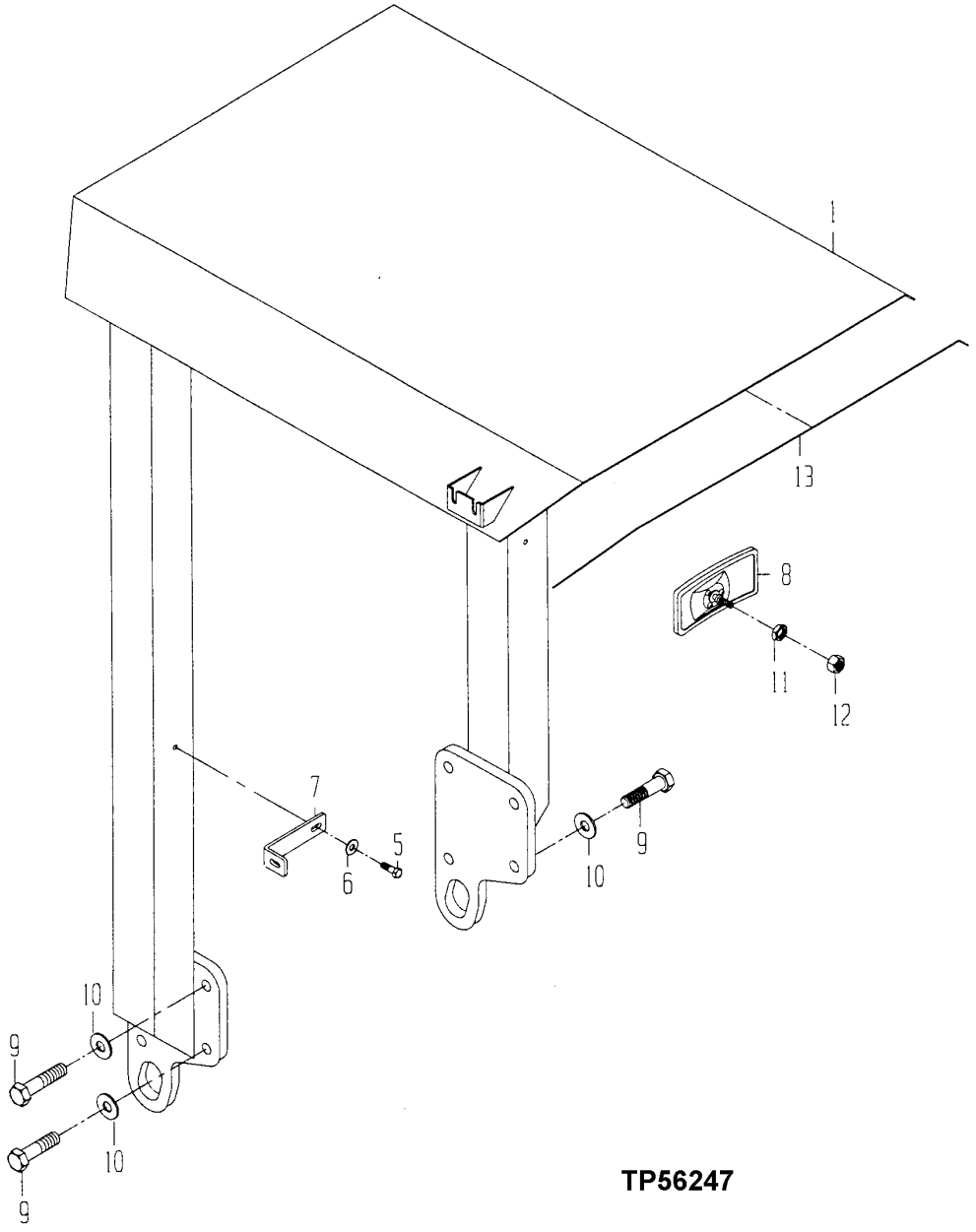

TP56247

CANOPY
(SERIAL NO. -872333)

KEY	PART NO.	PART NAME	QTY	SERIAL NO.	REMARKS
1	AT183257	CANOPY	1	-872333	(SUB FOR AT181924)
5	19H2676	CAP SCREW	2	-743051	3/8" X 1"
6	24H1305	WASHER	2	-743051	13/32" X 13/16" X 0.065"
7	AT216118	BRACKET	2	-743051	
8	AT222333	REAR VIEW MIRROR	1	-872333	(SUB FOR RE52660 AND AT186760)
9	19H2431	CAP SCREW	16	-872333	3/4" X 2-1/4"
10	M48439	WASHER	8	-872333	
11	AT216042	NUT	1	-872333	
12	T16464	LOCK NUT	1	-872333	
13	AT216736	SEALING TRIM	1	-872333	

CANOPY
(SERIAL NO. 872334-)

TP80129 -UN-25AUG99

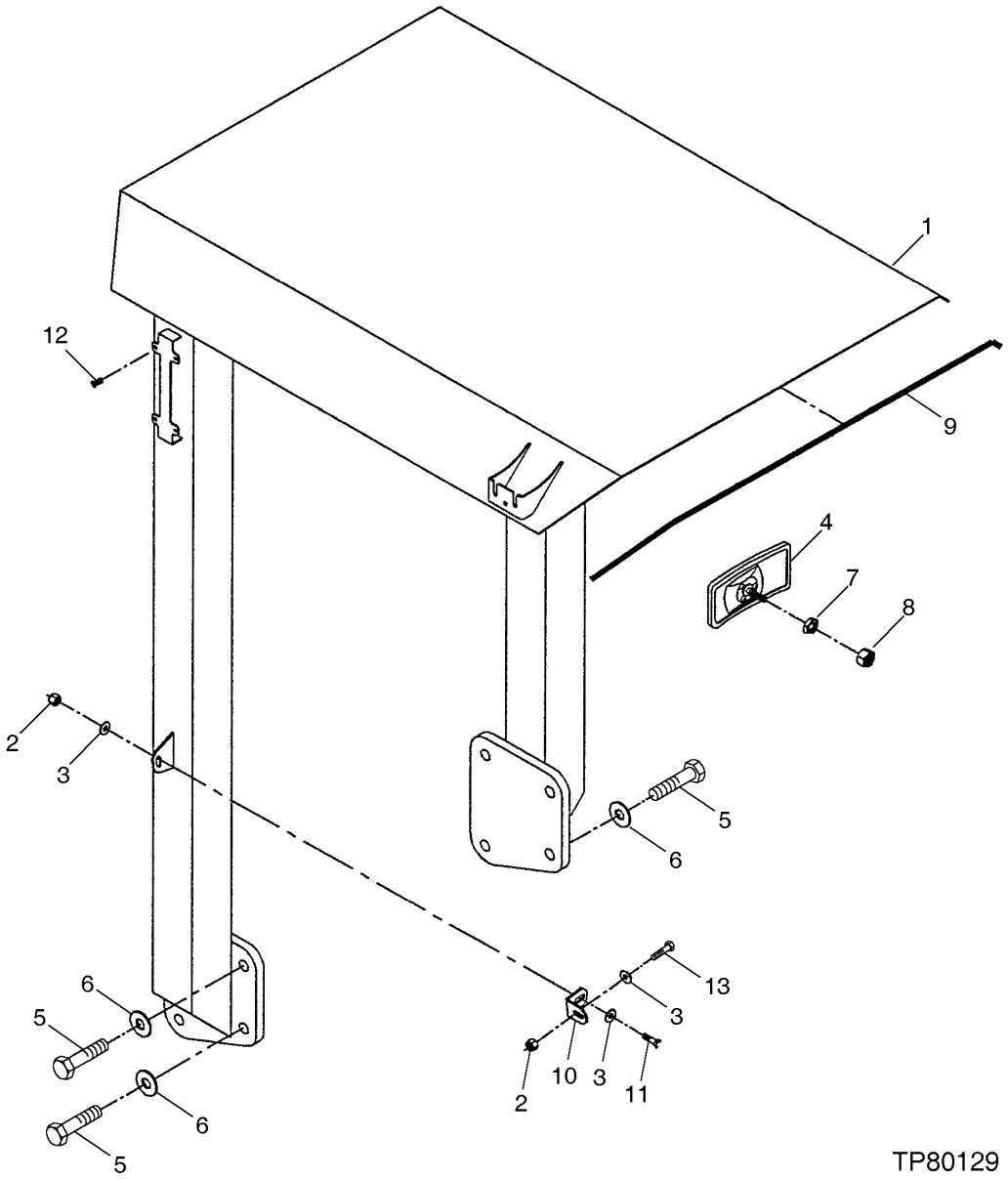

3H14

CANOPY
(SERIAL NO. 872334-)

KEY	PART NO.	PART NAME	QTY	SERIAL NO.	REMARKS
1	AT187527	CANOPY	1	872334-882700	
	CB11451689	CANOPY	1	882701-	
2	T11234	LOCK NUT	4		
3	24H1305	WASHER	6	872334-882700	13/32" X 13/16" X 0.065"
	24H1219	WASHER	6	882701-	7/16" X 1" X 0.083"
4	AT222333	REAR VIEW MIRROR	1		(SUB FOR RE52660)
5	19H2431	CAP SCREW	8	872334-882700	3/4" X 2-1/4"
	19H3188	CAP SCREW	8	882701-	3/4" X 2-1/4"
6	24M7349	WASHER	8		21 X 37 X 3 MM
7	14H785	NUT	1		5/16"
8	T16464	LOCK NUT	1		
9	AT216736	SEALING TRIM	1		
10	AT187528	BRACE	1		
11	19H2676	CAP SCREW	2		3/8" X 1"
12	T164466	NUT	8	872334-882700	
13	19H3239	CAP SCREW	2	872334-	3/8" X 1-1/4"

OPERATOR PLATFORM
(SERIAL NO. -872333)

TP61782 -UN-01DEC98

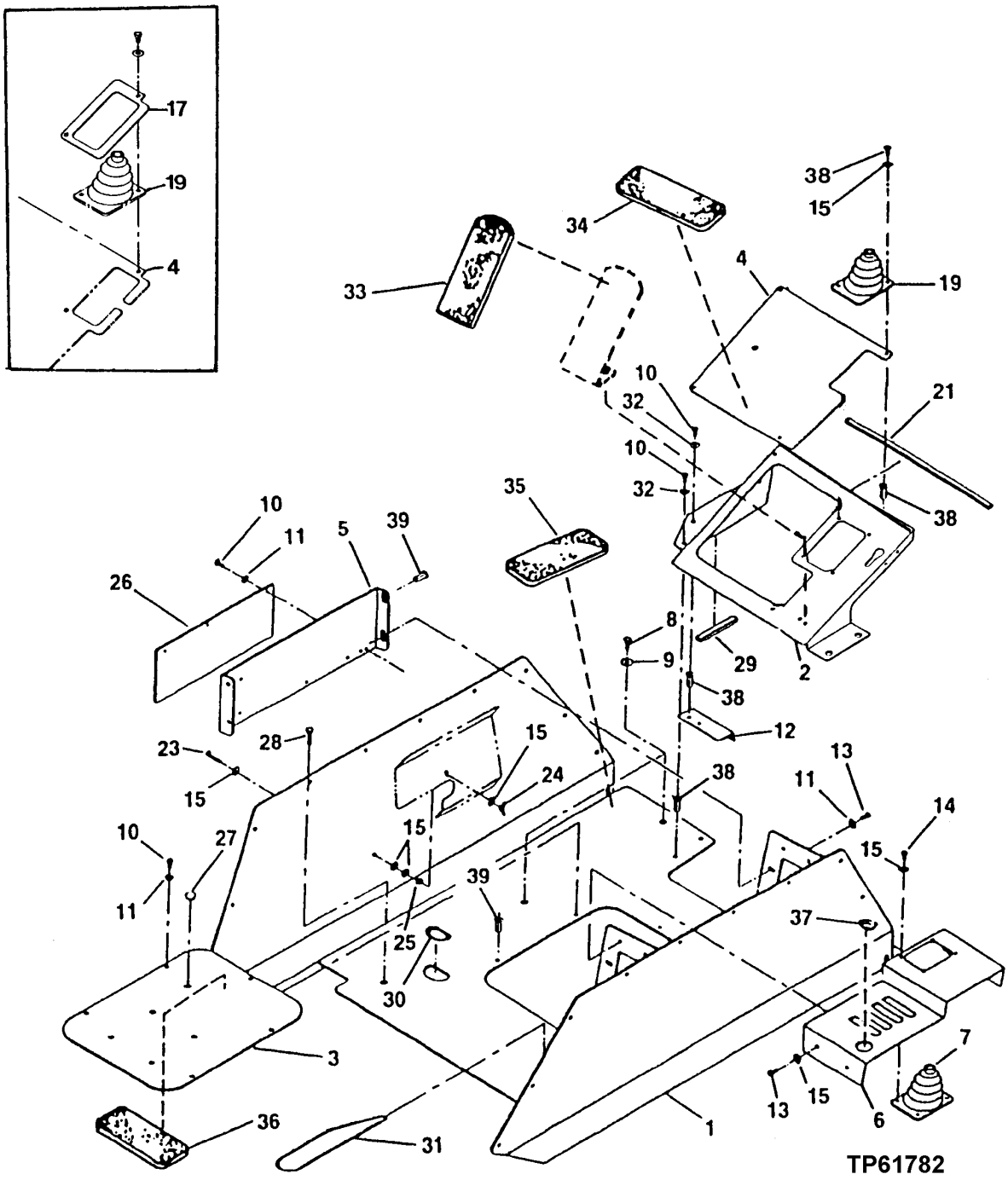

OPERATOR PLATFORM
(SERIAL NO. -872333)

KEY	PART NO.	PART NAME	QTY	SERIAL NO.	REMARKS
1	AT216484	PLATFORM	1	-872333	
2	AT183314	FLOOR	1	-835635	(SUB FOR AT216486)
	AT185442	FLOOR	1	835636-872333	
3	AT216743	PLATE	1	-872333	(SEAT MOUNT)
4	AT216509	COVER	1	-835635	
	T165855	DOOR	1	835636-872333	
5	AT181878	BRACKET	1	-872333	
6	AT216502	COVER	1	-872334	
7	AT101909	BOOT	1	-872333	(LOADER BUCKET LEVER)
8	19H2993	CAP SCREW	6	-872333	1/2" X 1-1/2"
9	T35860	WASHER	6	-872333	13.614 X 27.280 X 2.413 MM (0.536" X 1.074" X 0.095")
10	19H1648	CAP SCREW	22	-872333	3/8" X 3/4"
11	R57696	WASHER	17	-872333	9.931 X 23.114 X 3.048 MM (25/64" X 0.910" X 0.120")
12	AT216510	BRACKET	1	-872333	
13	19H1948	CAP SCREW	4	-872333	1/4" X 3/4"
14	19M8425	CAP SCREW	4	-872333	M6 X 16
15	24H1287	WASHER	19	-872333	9/32" X 5/8" X 0.065"
17	AT216438	COVER	1	-872333	
19	AT167541	BOOT	1	-835635	(GEARSHIFT)
	AT177366	BOOT	1	835636-872333	
20	AT214945	SEALING TRIM	1	-872333	(CUT TO 22 INCHES)
21	AT214945	SEALING TRIM	1	-872333	(CUT TO 34 INCHES)
23	19H2935	SCREW	1	-872333	1/4" X 1-1/2"
24	14H952	WING NUT	1	-872333	1/4"
25	14H786	NUT	1	-872333	1/4"
26	AT216429	ISOLATOR	1	-872333	
27	M2047T	PLUG	1	-872333	(SUB FOR AT216622)
28	19H2473	CAP SCREW	2	-872333	1/2" X 1-3/4"
29	AT181879	SEAL	1	-872333	
30	.....	ISOLATOR	1	-872333	(CUT TO 13 INCHES) (MAKE FROM T61861)
31	.....	ISOLATOR	1	-872333	(15 INCHES LONG) (MAKE FROM T61861)
32	24H1305	WASHER	5	-872333	13/32" X 13/16" X 0.065"
33	H21259	MAT	1	-872333	(CUT TO SHAPE OF PEDAL)
34	H21259	MAT	1	-872333	(CUT TO 13.2 INCHES LONG)
35	H21259	MAT	1	-872333	
36	H21259	MAT	1	-872333	(CUT TO 12.5 INCHES LONG)
37	T161380	PLUG	1	-872333	
38	19H1914	CAP SCREW	7	-872333	
39	T164468	NUT	19	-872333	

OPERATOR PLATFORM (SERIAL NO. 872334-882700)

TP80132 -UN-25AUG99

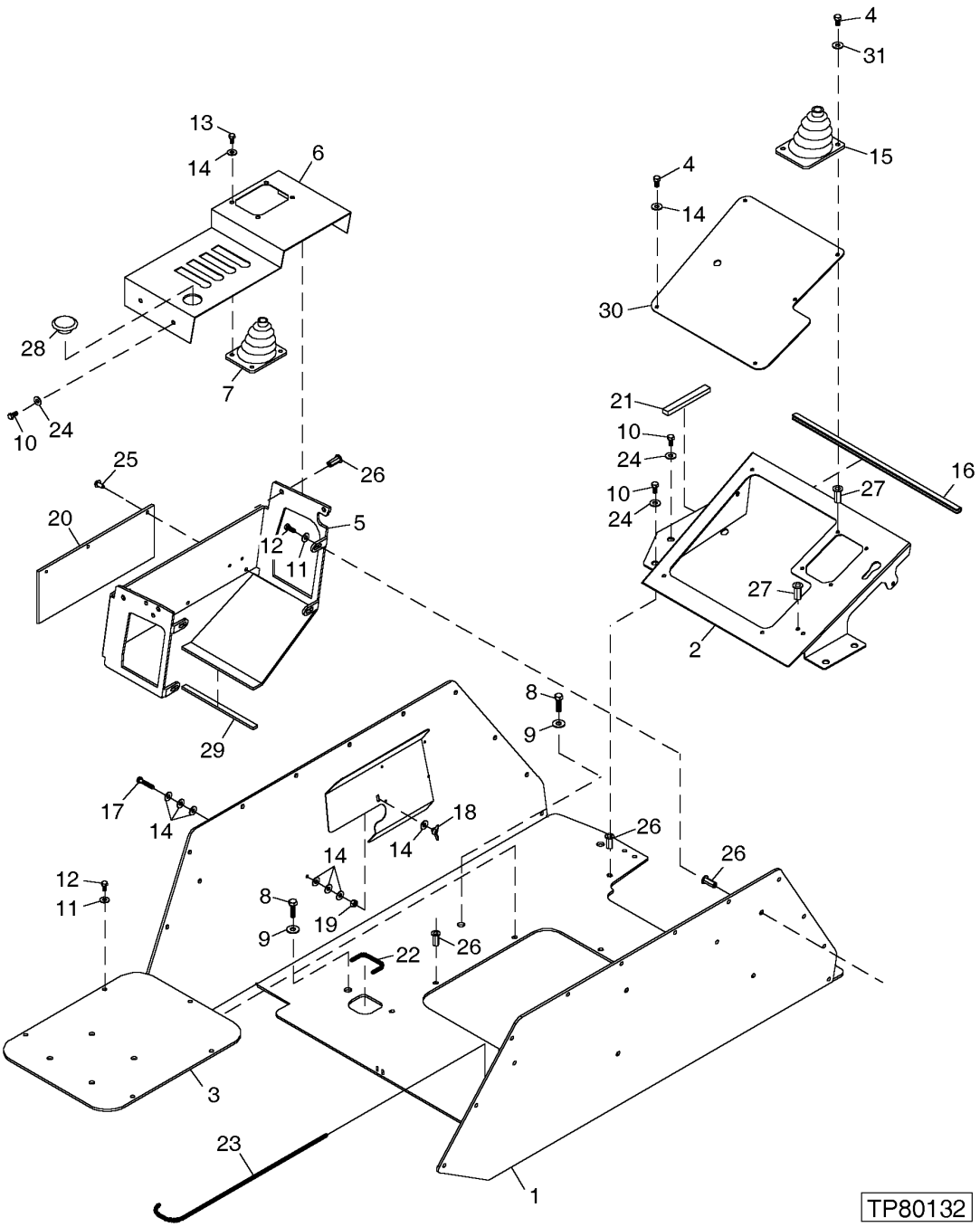

3H18

OPERATOR PLATFORM (SERIAL NO. 872334-882700)

KEY	PART NO.	PART NAME	QTY	SERIAL NO.	REMARKS
1	AT187597	PLATFORM	1	872334-880329	
	CB11394325	PLATFORM	1	880330-882700	
2	AT185442	FLOOR	1		
3	AT187599	BRACKET	1		(SEAT MOUNT)
4	19H1914	CAP SCREW	4		1/4" X 1"
5	AT187600	BRACKET	1		(VALVE ASSEMBLY)
6	AT187601	COVER	1		
7	AT101909	BOOT	1		(LOADER BUCKET LEVER)
8	.....	CAP SCREW	6		
9	T35860	WASHER	6		
10	19H2676	CAP SCREW	9		3/8" X 1"
11	R57696	WASHER	9		25/64" X 0.910" X 0.120"
12	19H3239	CAP SCREW	9		3/8" X 1-1/4"
13	19M8425	CAP SCREW	4		M6 X 16
14	24H1287	WASHER	11		9/32" X 5/8" X 0.065"
15	AT177366	BOOT	1		(SHIFT LEVER)
16	AT186702	SEALING TRIM	1		(CUT TO 34 INCHES)
17	19H2721	CAP SCREW	1		1/4" X 1-1/2"
18	14H952	WING NUT	1		1/4"
19	14H786	NUT	1		1/4"
20	.....	COVER	1		
21	AT181879	SEAL	1		
22	T61861	ISOLATOR	1		(CUT TO 13 INCHES)
23	T61861	ISOLATOR	1		(CUT TO 20 INCHES)
24	24H1305	WASHER	9		13/32" X 13/16" X 0.065"
25	T161380	PLUG	3		
26	T164468	NUT	22		
27	T164466	NUT	10		
28	T164511	PLUG	1		
29	T74403	ISOLATOR	1		(CUT TO 10 INCHES)
30	T165855	DOOR	1		
31	24H1288	WASHER	4		9/32" X 1" X 1/16"

OPERATOR PLATFORM (SERIAL NO. 882701-)

T196692 -UN-04DEC03

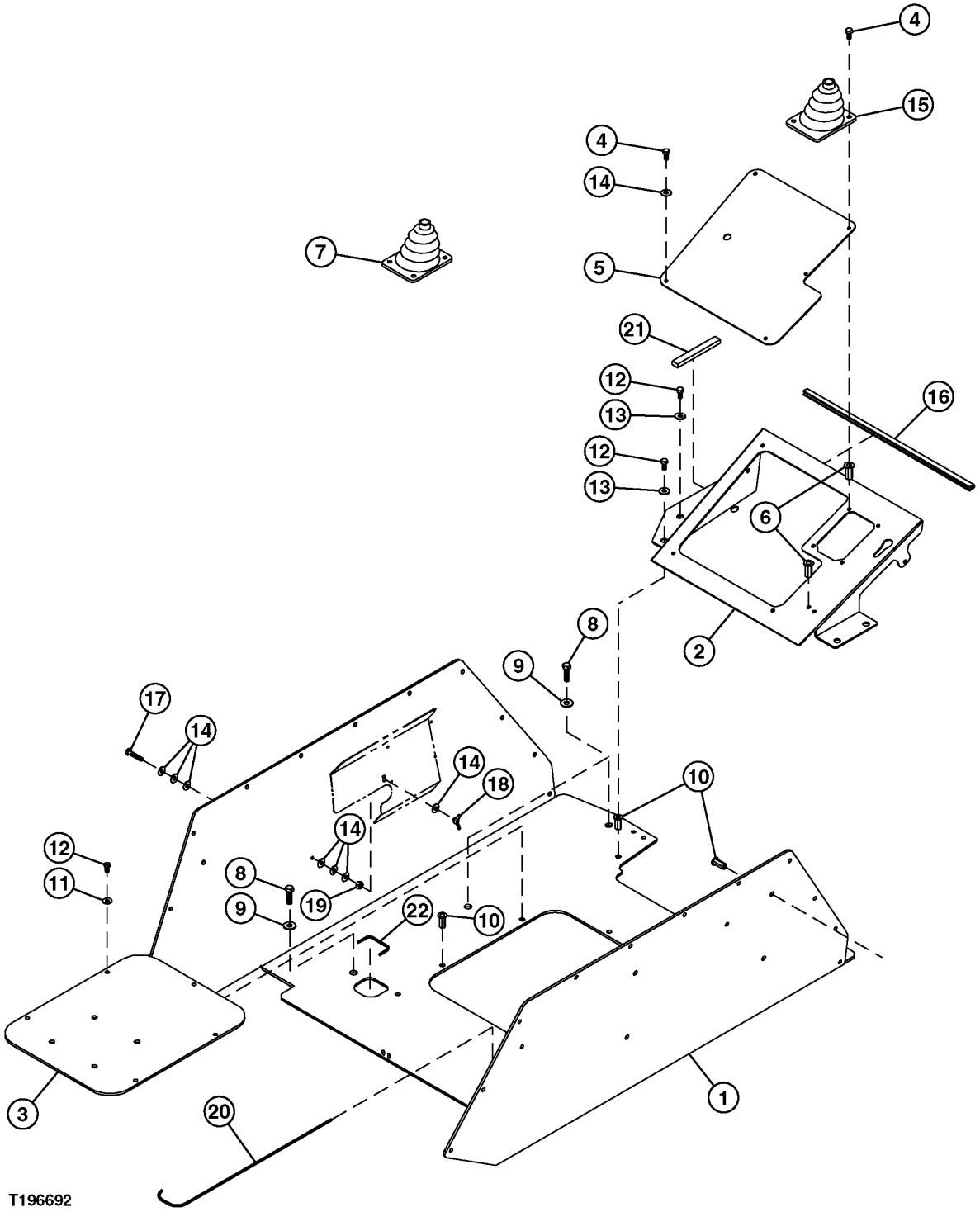

OPERATOR PLATFORM (SERIAL NO. 882701-)

KEY	PART NO.	PART NAME	QTY	SERIAL NO.	REMARKS
1	CB11442792	PLATFORM	1		
2	CB11451645	PLATFORM	1		ACCELERATOR
3	AT187599	BRACKET	1		(SEAT MOUNT)
4	19H1914	CAP SCREW	4		1/4" X 1"
5	CB01419128	DOOR	1		
	CB01446827	DOOR	1		POWERSHIFT
6	T164466	NUT	10		
7	AT101909	BOOT	1		(LOADER BUCKET LEVER)
8	19H2993	CAP SCREW	6		1/2" X 1-1/2"
9	T35860	WASHER	6		
10	T164466	NUT	18		
11	R57696	WASHER	5		25/64" X 0.910" X 0.120"
12	CB01390888	BOLT	10		
13	24H1219	WASHER	5		7/16" X 1" X 0.083"
14	24H1776	WASHER	11		5/16" X 47/64" X 0.065"
15	CB01418975	BOOT	1		(SHIFT LEVER)
16	N155090	ISOLATOR	34		(CUT TO 34 INCHES)
17	19H2721	CAP SCREW	1		1/4" X 1-1/2"
18	14H952	WING NUT	1		1/4"
19	14H786	NUT	1		1/4"
20	T61861	ISOLATOR	1		
21	AT181879	SEAL	1		
22	T61861	ISOLATOR	1		(CUT TO 13 INCHES)

RIGHT SIDE OPERATOR PLATFORM (SERIAL NO. 882701-)

T197366 -UN-15JAN04

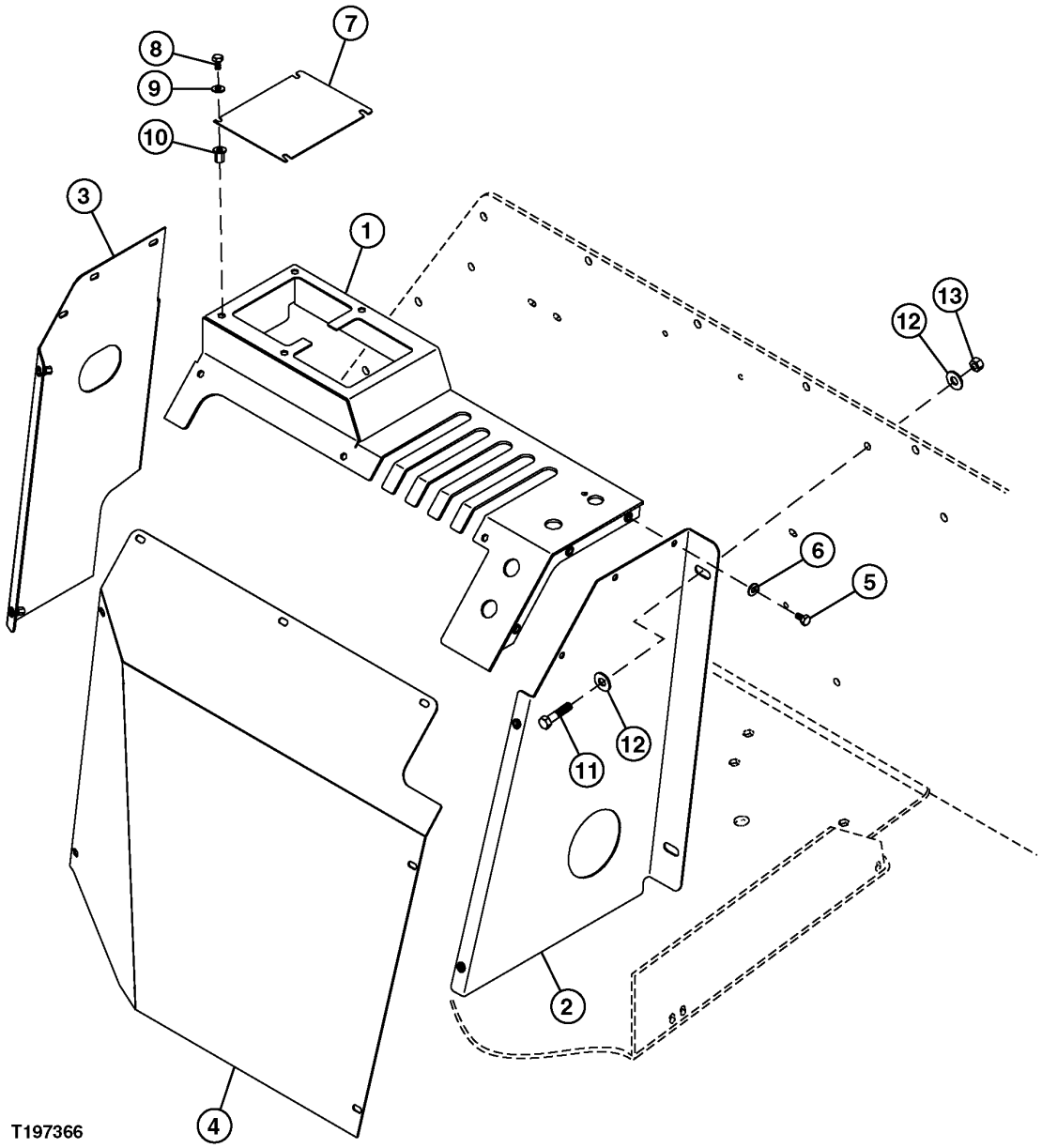

RIGHT SIDE OPERATOR PLATFORM (SERIAL NO. 882701-)

KEY	PART NO.	PART NAME	QTY	SERIAL NO.	REMARKS
1	.....	COVER	1		
2	CB01451862	COVER	1		
3	.....	COVER	1		
4	.....	COVER	1		
5	19H1948	CAP SCREW	13		1/4" X 3/4"
6	24H1136	WASHER	13		11/32" X 11/16" X 0.065"
7	.....	COVER	1		
8	19H2676	CAP SCREW	4		3/8" X 1"
9	24H1287	WASHER	4		9/32" X 5/8" X 0.065"
10	T164466	NUT	8		
11	19H3239	CAP SCREW	4		3/8" X 1-1/4"
12	24H1305	WASHER	8		13/32" X 13/16" X 0.065"
13	T11234	LOCK NUT	4		3/8"

INSTRUMENT PANEL,PANEL VANDAL GUARD AND FIREWALL
(SERIAL NO. -872333)

TP61765 -UN-01DEC98

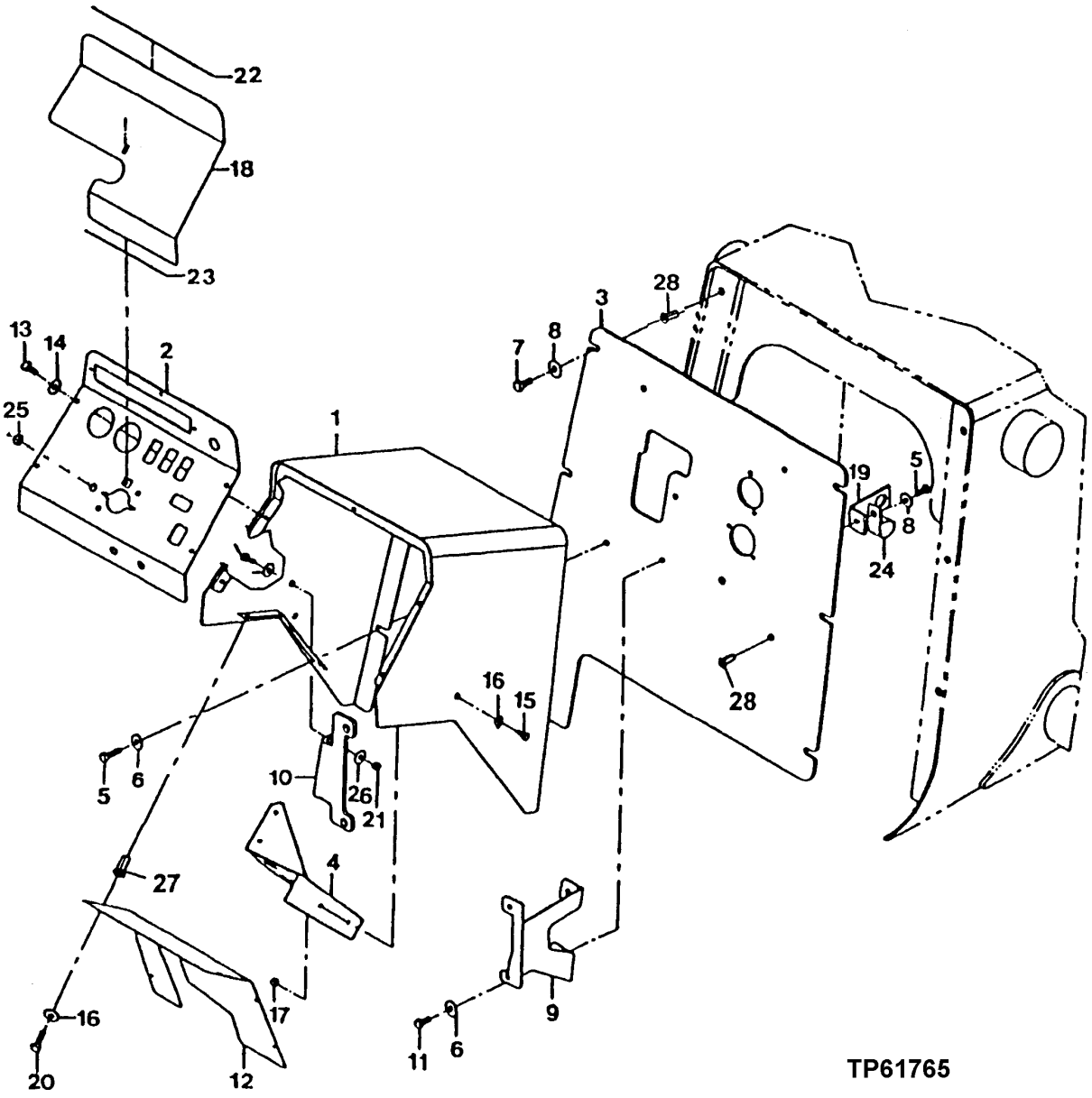

INSTRUMENT PANEL,PANEL VANDAL GUARD AND FIREWALL
(SERIAL NO. -872333)

KEY	PART NO.	PART NAME	QTY	SERIAL NO.	REMARKS
1	AT216281	COWL	1	-872333	
2	AT216324	INSTRUMENT PANEL	1	-872333	
3	AT216294	FIREWALL	1	-847332	
	AT184808	FIREWALL	1	847333-872333	
4	AT183262	PLATE	1	-872333	FUSE/RELAY MOUNTING, (SUB FOR AT216115)
5	19H2676	CAP SCREW	5	-872333	3/8" X 1"
6	24H1305	WASHER	2	-872333	10.312 X 20.625 X 1.651 MM (13/32" X 13/16" X 0.065")
7	19H2898	CAP SCREW	6	-847332	1/2" X 1-1/4"
	19H3239	CAP SCREW	6	847333-872333	3/8" X 1-1/4"
8	T105740	WASHER	14	-872333	11.400 X 25.400 X 2.286 MM (0.449" X 1" X 0.090")
9	AT216126	BRACKET	1	-872333	RIGHT BRAKE VALVE
10	AT216127	BRACKET	1	-872333	LEFT BRAKE VALVE
11	19H1648	CAP SCREW	4	-872333	3/8" X 3/4"
12	AT216133	COVER	1	-872333	
13	19H1648	CAP SCREW	5	-872333	3/8" X 3/4"
14	24H1287	WASHER	5	-872333	9/32" X 5/8" X 0.065"
15	19H1948	CAP SCREW	2	-872333	1/4" X 3/4"
16	24H1287	WASHER	8	-872333	9/32" X 5/8" X 0.065"
17	M40333	LOCK NUT	2	-872333	
18	AT216134	PLATE	1	-872333	VANDAL COVER
19	AT119186	ANGLE	1	-872333	
20	AT216040	BOLT	6	-872333	
21	T11234	LOCK NUT	2	-872333	9.525 MM (3/8")
22	AT181881	SEALING TRIM	1	-872333	(15 INCHES LONG)
23	AT216737	SEALING TRIM	1	-872333	(9.5 INCHES LONG)
24	AT119290	HOSE CLAMP	1	-872333	
25	AT124918	GROMMET	1	-872333	(NOT SHOWN)
26	24H1305	WASHER	2	-872333	13/32" X 13/16" X 0.065"
27	T164466	NUT	11	-872333	
28	T164468	NUT	7	-872333	

INSTRUMENT PANEL, PANEL VANDAL GUARD AND FIREWALL (SERIAL NO. 872334-882700)

T137894 -UN-08FEB01

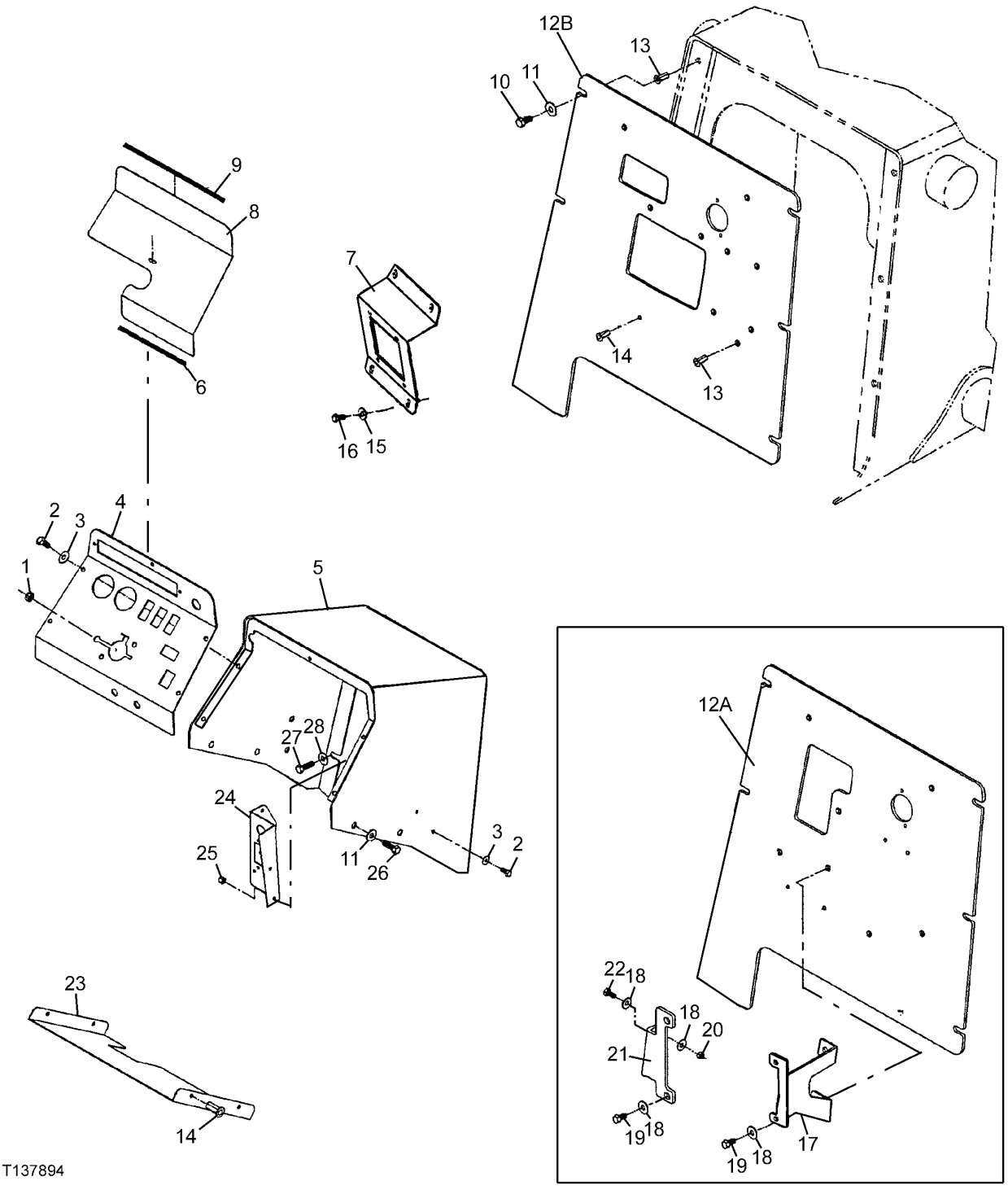

INSTRUMENT PANEL, PANEL VANDAL GUARD AND FIREWALL (SERIAL NO. 872334-882700)

KEY	PART NO.	PART NAME	QTY	SERIAL NO.	REMARKS
1	AT124918	GROMMET	1		
2	19H1948	CAP SCREW	7		1/4" X 3/4"
3	24H1136	WASHER	13		11/32" X 11/16" X 0.065"
4	AT187530	INSTRUMENT PANEL	1		
5	AT187529	HOUSING	1		
6	.....	SEALING TRIM	1		
7	CB01407196	BRACKET	1	880908-	
8	AT187573	COVER	14		
9	AT181881	SEALING TRIM	1		
10	19H3239	CAP SCREW	6	872334-880907	
	CB01390888	BOLT	6	880908-	
11	T105740	WASHER	14		
12A	AT184808	FIREWALL	1	872334-880907	
12B	CB11412587	FIREWALL	1	880908-	
13	T164468	NUT	7		
14	T164466	NUT	11		
15	T105740	WASHER	4	880908-	
16	CB01390888	BOLT	4	880908-	
17	AT216126	BRACKET	1	872334-880907	R.H.BRAKE VALVE
18	24H1305	WASHER	6	872334-880907	13/32" X 13/16" X 0.065"
19	19H1648	CAP SCREW	4	872334-880907	3/8" X 3/4"
20	T11234	LOCK NUT	2	872334-880907	
21	AT216127	BRACKET	1	872334-880907	L.H.BRAKE VALVE
22	19H2676	CAP SCREW	2	872334-880907	3/8" X 1"
23	AT187572	COVER	1	872334-880907	
	CB11412590	COVER	1	880908-	
24	AT187571	BRACKET	1	872334-880907	
	AT183262	PLATE	1	880908-	
25	M49333	WASHER	2		
26	19H1919	CAP SCREW	14		1/4" X 5/8"
27	19H2626	CAP SCREW	5	872334-880907	5/8" X 4-3/4"
	CB01390888	BOLT	6	880908-	
28	24H1305	WASHER	6		13/32" X 13/16" X 0.065"

INSTRUMENT PANEL, PANEL VANDAL GUARD AND FIREWALL (SERIAL NO. 882701-)

T196146 -UN-07NOV03

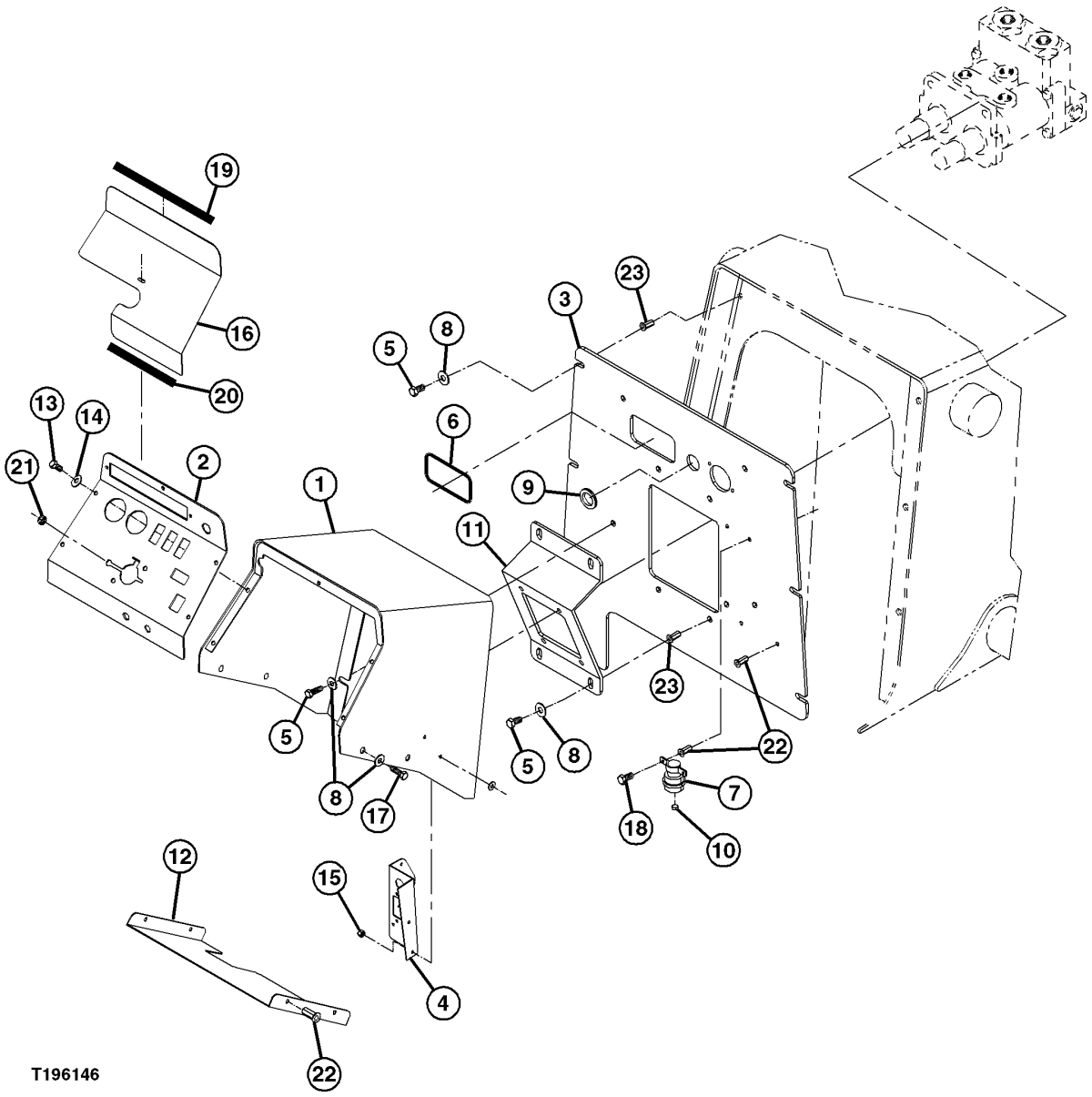

INSTRUMENT PANEL, PANEL VANDAL GUARD AND FIREWALL (SERIAL NO. 882701-)

KEY	PART NO.	PART NAME	QTY	SERIAL NO.	REMARKS
1	CB11444133	HOUSING	1		
	0560034505	PLUG	2		
2	CB11444136	INSTRUMENT PANEL	1		
3	CB11412587	FIREWALL	1		
4	2101378376	BRACKET	1		
5	CB01390888	BOLT	6		
6	.....	SEAL	1		
7	AT141011	RELAY	1		
8	T105740	WASHER	20		
9	H96823	GROMMET	1		
10	14M7303	FLANGE NUT	2		M6
11	CB01407196	BRACKET	1		
12	CB11412590	COVER	1		
13	AT182434	BOLT	7		
14	24H1776	WASHER	13		5/16" X 47/64" X 0.065"
15	M40333	LOCK NUT	2		
16	CB01443923	PLATE	1		
17	AT182433	BOLT	4		
18	AT182434	BOLT	2		
19	AT181881	SEALING TRIM	1		
20	AT216737	SEALING TRIM	1		
21	CB01395000	GROMMET	1		
22	T164466	NUT	11		
23	T164468	NUT	9		

INSTRUMENT PANEL, PANEL VANDAL GUARD AND FIREWALL (SERIAL NO. 882700-)

T196146 -UN-07NOV03

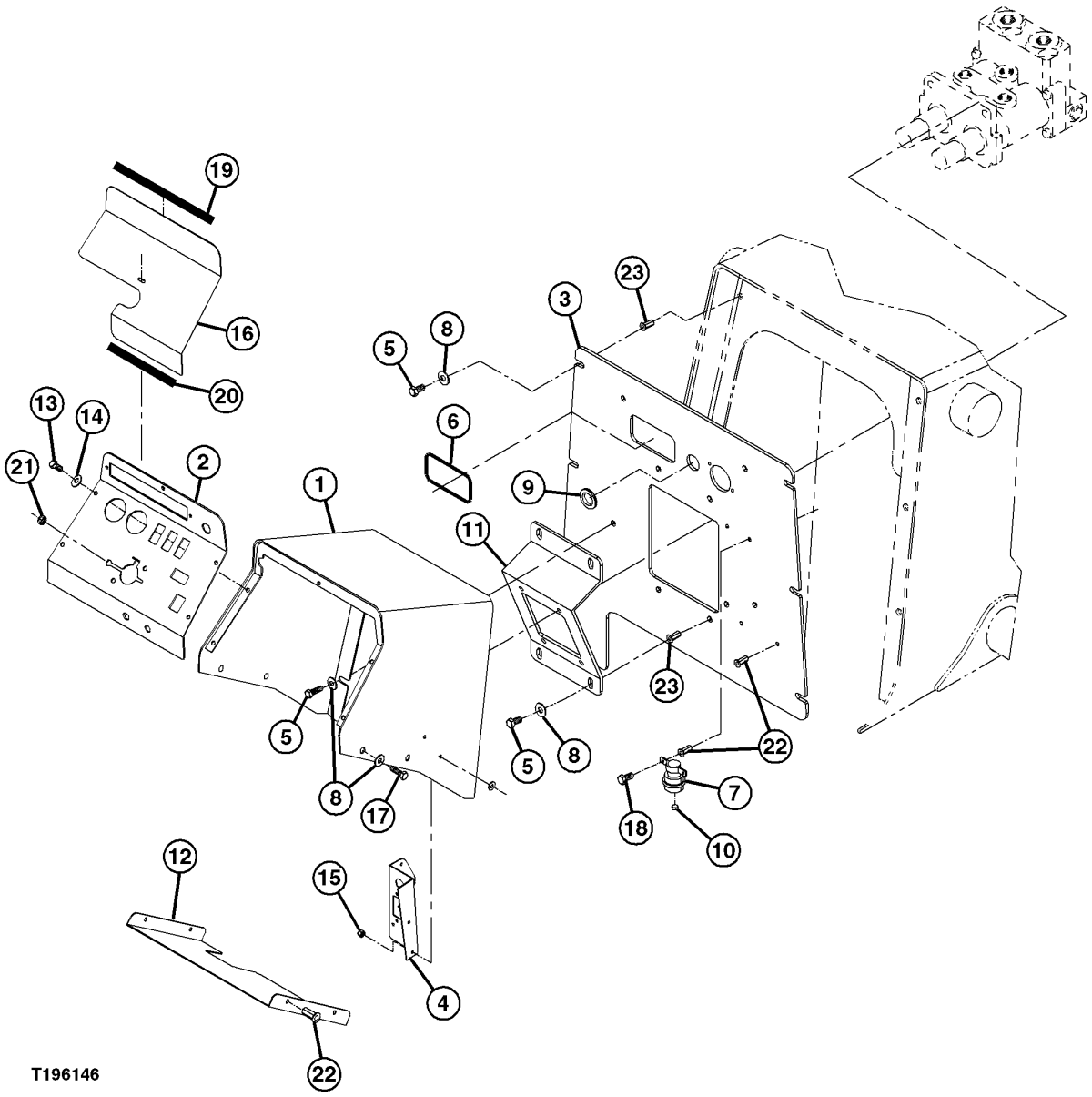

INSTRUMENT PANEL, PANEL VANDAL GUARD AND FIREWALL (SERIAL NO. 882700-)

KEY	PART NO.	PART NAME	QTY	SERIAL NO.	REMARKS
1	CB11444133	HOUSING	1		
	0560034505	PLUG	2		
2	CB11444136	INSTRUMENT PANEL	1		
3	CB11412587	FIREWALL	1		
4	2101378376	BRACKET	1		
5	CB01390888	BOLT	6		
6	0731416445	RADIO ACCESSORY	1		
7	AT141011	RELAY	1		
8	T105740	WASHER	20		
9	H96823	GROMMET	1		
10	14M7303	FLANGE NUT	2		M6
11	CB01407196	BRACKET	1		
12	CB11412590	COVER	1		
13	AT182434	BOLT	7		
14	24H1776	WASHER	13		5/16" X 47/64" X 0.065"
15	M40333	LOCK NUT	2		
16	CB01443923	PLATE	1		
17	AT182433	BOLT	4		
18	AT182434	BOLT	2		
19	AT181881	SEALING TRIM	1		
20	AT216737	SEALING TRIM	1		
21	CB01395000	GROMMET	1		
22	T164466	NUT	11		
23	T164468	NUT	9		

OPERATOR SEAT AND BELTS
(SERIAL NO. -843070)

TP52650 -UN-03FEB97

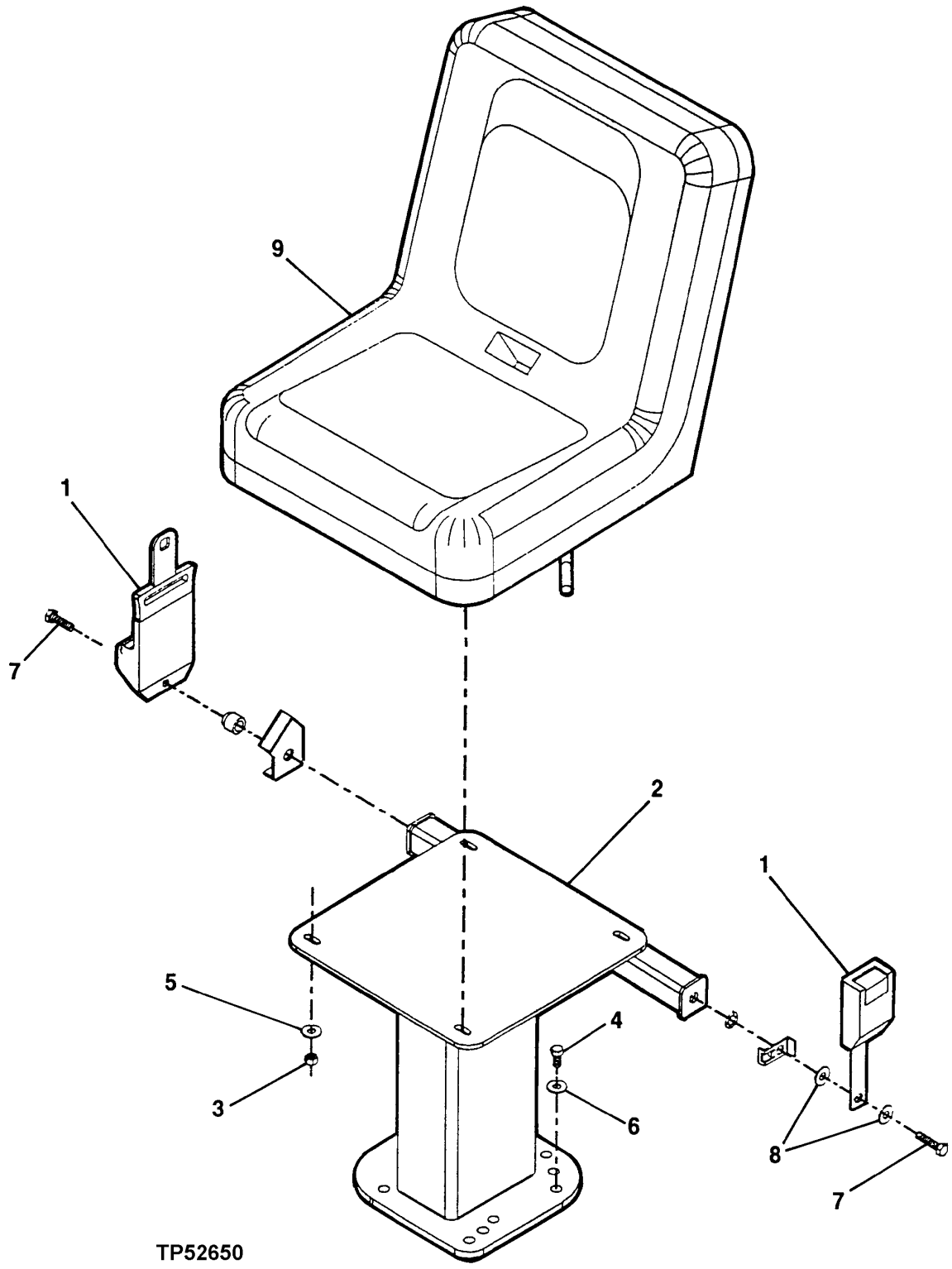

OPERATOR SEAT AND BELTS
(SERIAL NO. -843070)

KEY	PART NO.	PART NAME	QTY	SERIAL NO.	REMARKS
1	AT216515	SEAT BELT	1	-843070	(2 INCH)
	AT216516	SEAT BELT	1	-843070	(3 INCH)
2	AT216497	PEDESTAL	1	-843070	(FIXED)
3	14M7426	LOCK NUT	4	-843070	M8
4	19H2993	CAP SCREW	4	-843070	1/2" X 1-1/2"
5	24H1122	WASHER	4	-843070	3/8" X 7/8" X 0.083"
6	T35860	WASHER	4	-843070	0.536" X 1.074" X 0.095"
7	19H3547	CAP SCREW	2	-843070	7/16" X 1"
8	24H1226	WASHER	2	-843070	1/2" X 1-1/4" X 0.083"
9	AT180754	SEAT	1	-843070	(NON-SUSPENSION) (USE AT180756 ADJUSTERS)
	AT180756	KIT	1	-843070	(4 INCH ADJUSTERS, SAE-NOT SHOWN) (FOR AT180754 SEAT)

OPERATOR SEAT AND BELTS (SERIAL NO 843701-882700)

T195660 -UN-23OCT03

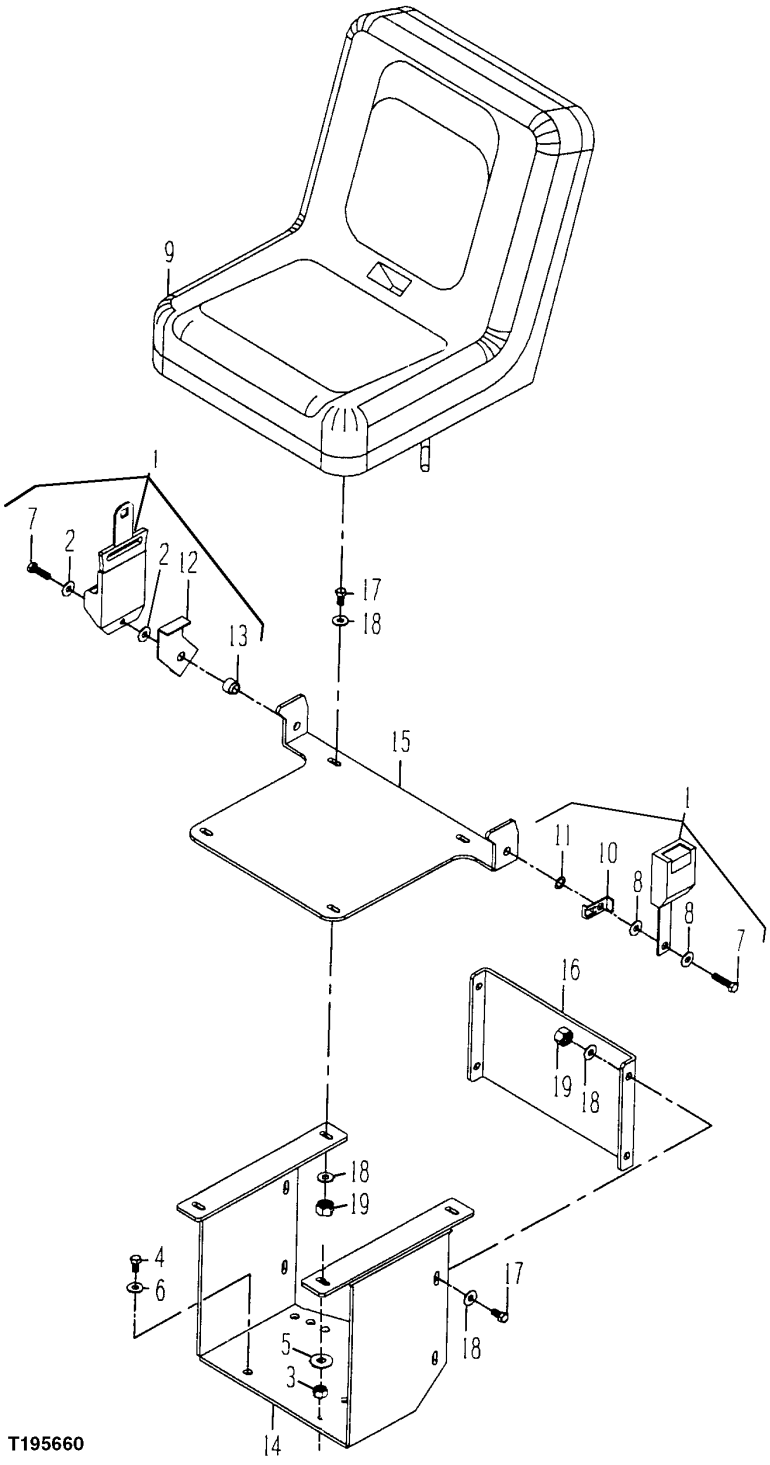

OPERATOR SEAT AND BELTS (SERIAL NO 843701-882700)

KEY	PART NO.	PART NAME	QTY	SERIAL NO.	REMARKS
1	AT179423	SEAT BELT	1		(2 INCH) ALSO REQUIRES (4)T105740 AND (2)19H2109
	AT179425	SEAT BELT	1		(3 INCH) ALSO REQUIRES (4)T105740 AND (2)19H2109 (USE IF AVAILABLE) (SUB AT178065)
	AT178065	SEAT BELT	1		3 INCH, (ALSO ORDER (4) T105740 AND (2) 19H2109)
3	14M7426	LOCK NUT	4		M8
4	19H2993	CAP SCREW	4		1/2" X 1-1/2"
5	24H1122	WASHER	4		3/8" X 7/8" X 0.083"
6	T35860	WASHER	4		0.536" X 1.074" X 0.095"
7	19H3547	CAP SCREW	2		7/16" X 1"
8	T105740	WASHER	2		0.449" X 1" X 0.090"
9	AT180754	SEAT	1		(NON-SUSPENSION) (USE AT180756 ADJUSTERS)
	AT180756	KIT	1		(4 INCH ADJUSTERS, SAE-NOT SHOWN) (FOR AT180754 SEAT)
10	.....	SPACER	1		
11	24H1226	WASHER	2		1/2" X 1-1/4" X 0.083"
12	.....	SPACER	1		
13	.....	SPACER	1		
14	T165017	BASE	1		
15	T165018	SUPPORT	1		
16	T165019	PLATE	1		
17	19H2633	CAP SCREW	8		3/8" X 1-1/2"
18	R57696	WASHER	16		9.931 X 23.114 X 3.048 MM
19	T11234	LOCK NUT	8		

OPERATOR SEAT AND BELTS (SERIAL NO. 882701-)

T195640 -UN-18DEC03

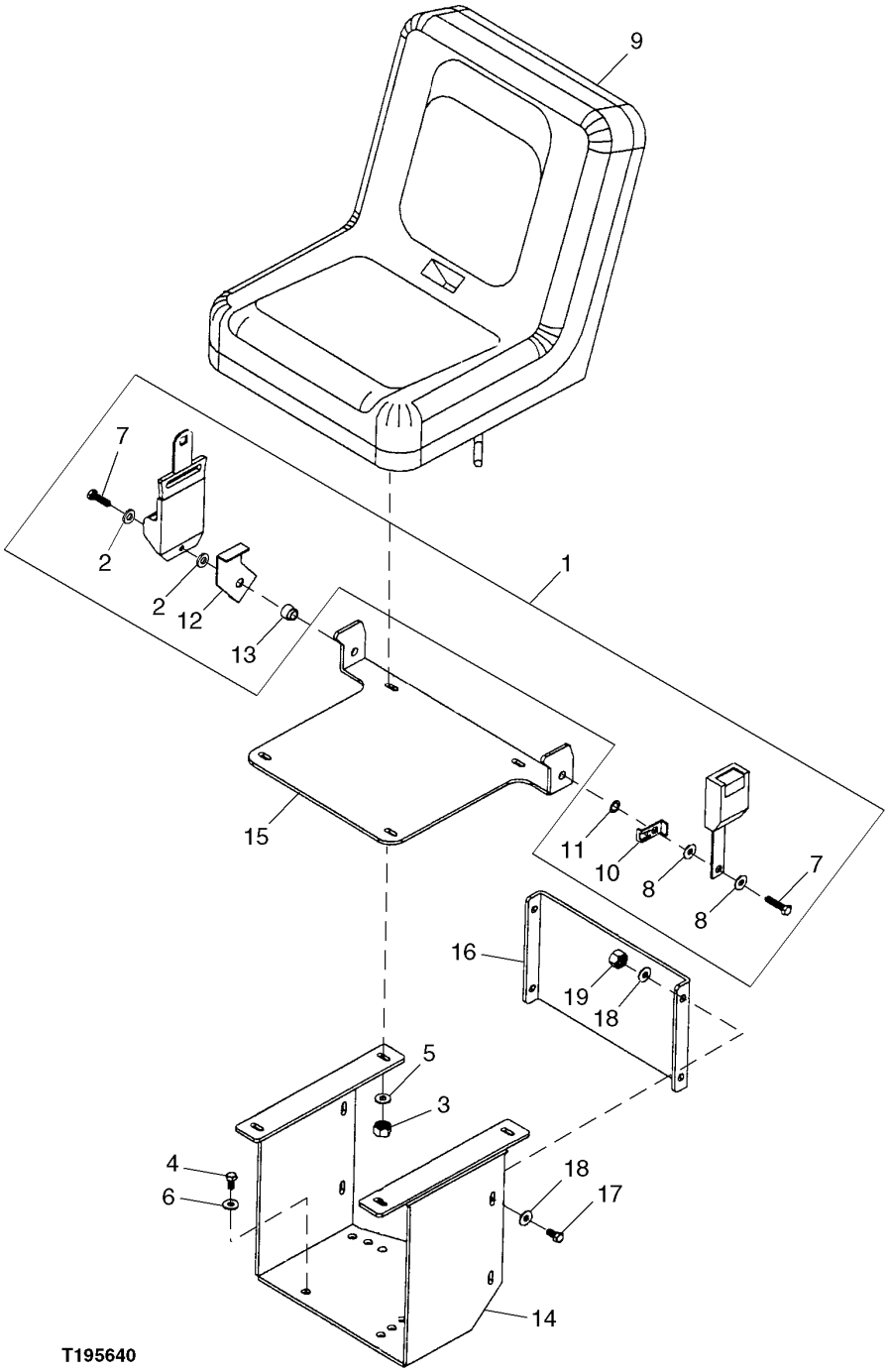

OPERATOR SEAT AND BELTS (SERIAL NO. 882701-)

KEY	PART NO.	PART NAME	QTY	SERIAL NO.	REMARKS
1	AT179425	SEAT BELT	1		(3 INCH) (INCLUDES T161230 INSTALLATION INSTRUCTIONS) (INCLUDES (2) 19H2109 AND (4) T105740)
	AT179423	SEAT BELT	1		(2 INCH) (INCLUDES T161230 INSTALLATION INSTRUCTIONS) (INCLUDES ITEMS MARKED (A)) (INCLUDES (2) 19H2109 AND (4) T105740)
2	T105740	WASHER	2		(A)
3	14M7426	LOCK NUT	4		M8
4	19H2993	CAP SCREW	4		1/2" X 1-1/2"
5	24H1122	WASHER	4		3/8" X 7/8" X 0.083"
6	T35860	WASHER	4		0.536" X 1.074" X 0.095"
7	19H3547	CAP SCREW	2		(A) 7/16" X 1"
8	24H1226	WASHER	2		(A) 1/2" X 1-1/4" X 0.083"
9	AT180754	SEAT	1		(NON-SUSPENSION) (USE AT180756 ADJUSTERS)
	AT180756	KIT	1		(4 INCH ADJUSTERS, SAE-NOT SHOWN) (FOR AT180754 SEAT)
10	.....	SPACER	1		(A)
11	T105740	WASHER	2		(A) 0.449" X 1" X 0.090"
12	.....	SPACER	1		(A)
13	.....	SPACER	1		(A)
14	T165017	BASE	1		
15	T165018	SUPPORT	1		
16	T165019	PLATE	1		
17	19H2633	CAP SCREW	4		3/8" X 1-1/2"
18	R57696	WASHER	8		25/64" X 0.910" X 0.120"
19	T11234	LOCK NUT	4		3/8"

OPERATOR SEAT AND BELTS
(SERIAL NO. XXXXXX-)

T196914 -UN-18DEC03

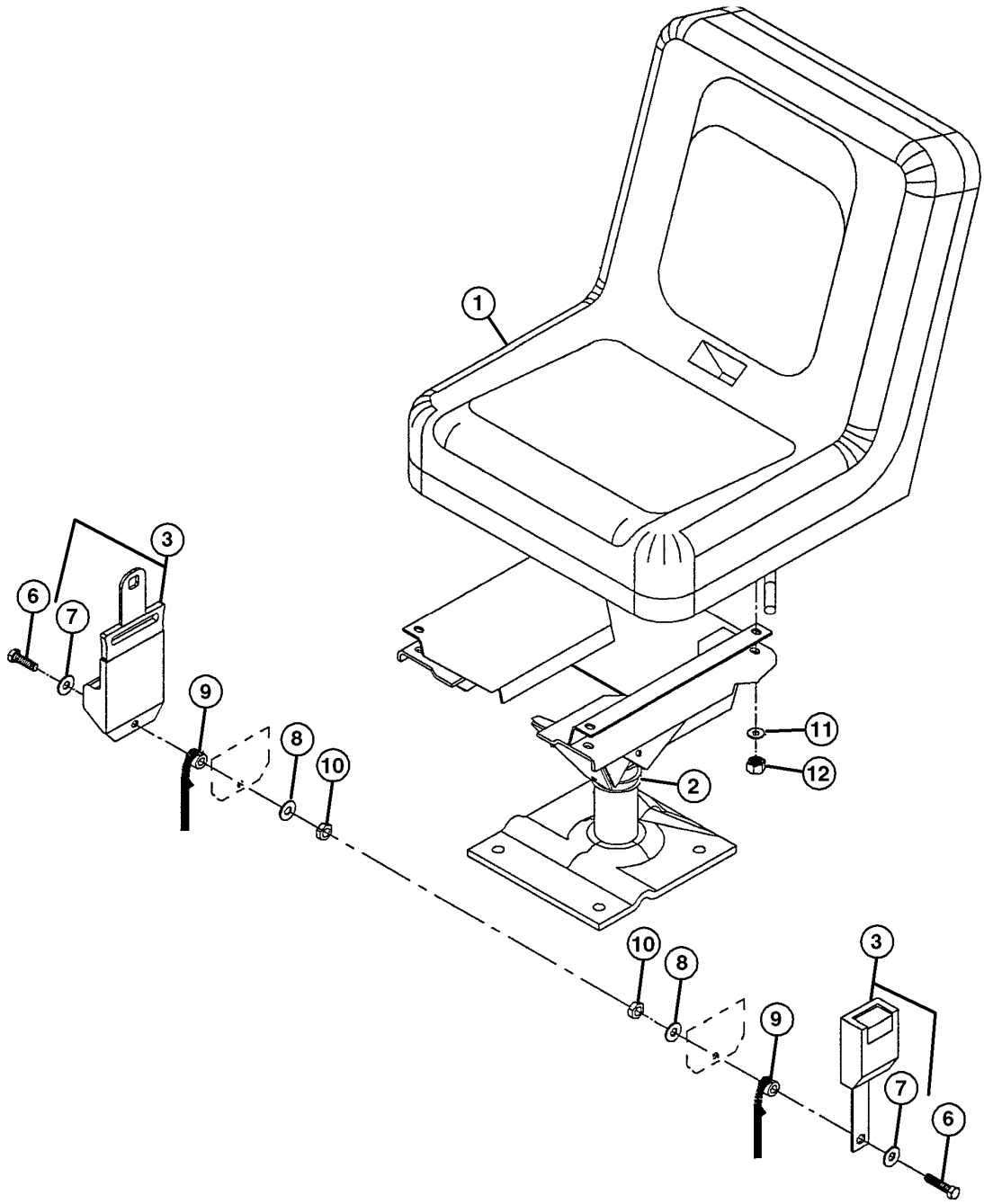

T196914

OPERATOR SEAT AND BELTS
(SERIAL NO. XXXXXX-)

KEY	PART NO.	PART NAME	QTY	SERIAL NO.	REMARKS
1	AT180753	SEAT	1	-882700	(SEE FOLLOWING PAGES FOR BREAKDOWN) (ALSO ORDER AMT2616)
	AMT2616	KIT	1	-882700	
	AT180753	SEAT	1	882701-	(SEE FOLLOWING PAGES FOR BREAKDOWN) (ALSO ORDER AT180755)
	AT180755	KIT	1	882701-	
2	AT181323	PEDESTAL	1		
3	AT216516	SEAT BELT	1	-848452	
	AT179423	SEAT BELT	1	848453-882700	
	AT179425	SEAT BELT	1	882701-	(ALSO ORDER (4) T105740 AND (2) 19H3569)
	T105740	WASHER	4	882701-	(USE WITH AT179425)
	19H3569	CAP SCREW	2	882701-	7/16" X 1-1/4", (USE WITH AT179425)
4	19H2993	CAP SCREW	4		1/2" X 1-1/2"
5	T35860	WASHER	4		
6	19H3187	CAP SCREW	2		7/16" X 1-1/2"
7	24H1226	WASHER	2	-882700	1/2" X 1-1/4" X 0.083"
	.....	WASHER	2	882701-	
8	T105740	WASHER	2		
9	AT181882	SPACER	2	-872334	
	M40617	SPACER	2	872335-	
10	M91187	LOCK NUT	2		
11	R57696	WASHER	4		
12	14M7426	LOCK NUT	4		M8

SWIVEL SEAT CUSHIONS, ARMRESTS AND SEAT FRAMES
(SERIAL NO. XXXXXX-882700)

T196918 -UN-18DEC03

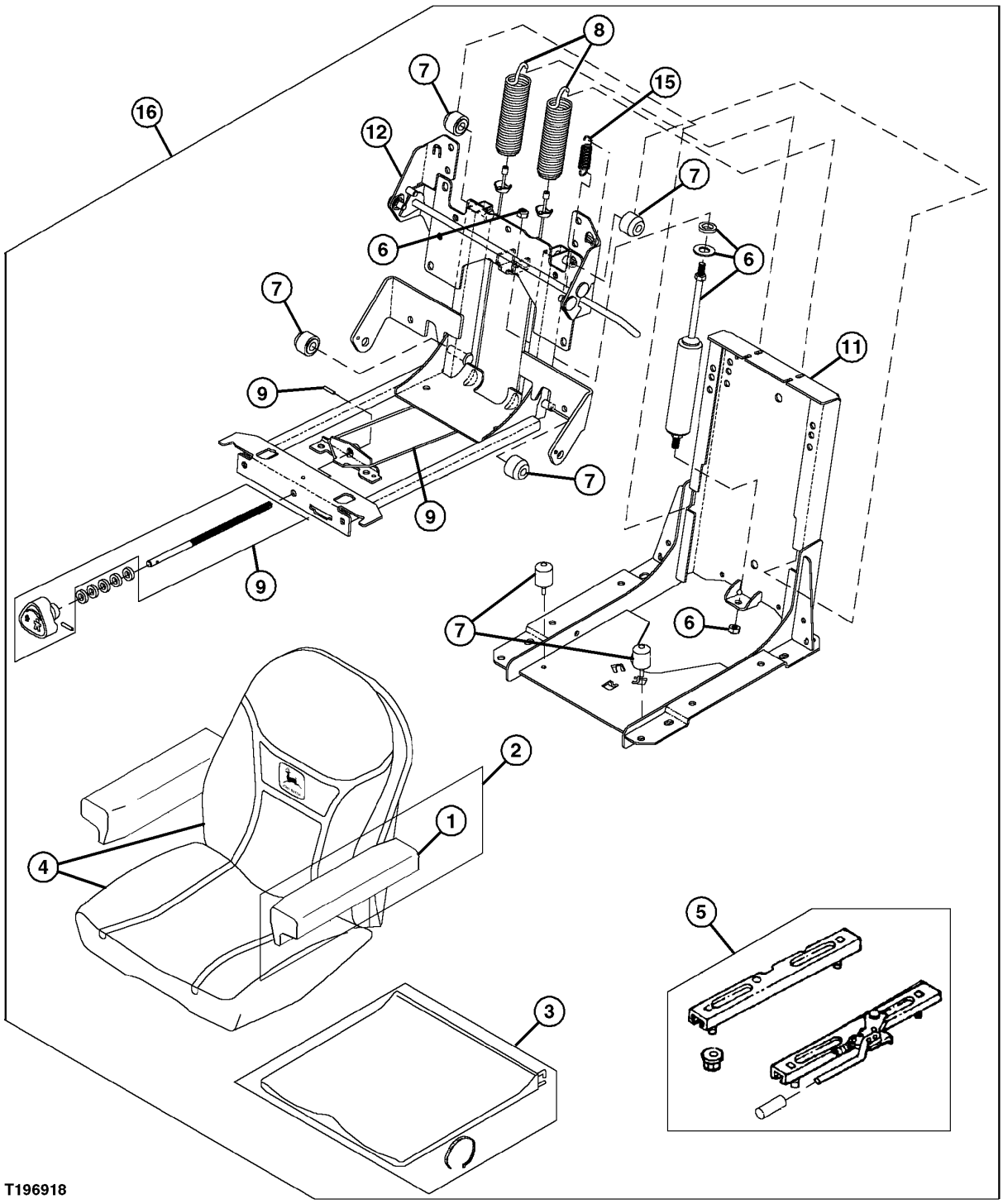

SWIVEL SEAT CUSHIONS, ARMRESTS AND SEAT FRAMES
(SERIAL NO. XXXXXX-882700)

KEY	PART NO.	PART NAME	QTY	SERIAL NO.	REMARKS
1	AT186022	ARMREST KIT	1	XXXXXX-	(ARMREST PAD) (INCLUDES HARDWARE AND PAD FOR 1 ARMREST)
2	AT186021	ARMREST KIT	1	XXXXXX-	(ARM ASSY) (INCLUDES AT186022)
3	AT186015	KIT	1	XXXXXX-	(BOOT)
4	AT186016	CUSHION	1	XXXXXX-	(ASSY KIT) (BACK AND BOTTOM CUSHION)
5	AMT2616	MOUNTING PARTS	1	XXXXXX-	(KIT-ADJUST)
6	AT186017	KIT	1	XXXXXX-	(DAMPER)
7	AT186018	KIT	1	XXXXXX-	(ROLLER)
8	AT186019	KIT	1	XXXXXX-	(SPRING AND CABLE)
9	AT186020	KIT	1	XXXXXX-	(TENSION ADJUST)
10	.....	FRAME	1	XXXXXX-	(ASSY-SEAT)
11	.....	SUPPORT	1	XXXXXX-	
12	.....	SEAT SUSPENSION	1	XXXXXX-	(ASSY)
15	R138325	EXTENSION SPRING	1	XXXXXX-	
16	AT180753	SEAT	1	XXXXXX-	(DELUXE)

SWIVEL SEAT CUSHIONS, ARMRESTS AND SEAT FRAMES
(SERIAL NO. 882701-)

T196919 -UN-18DEC03

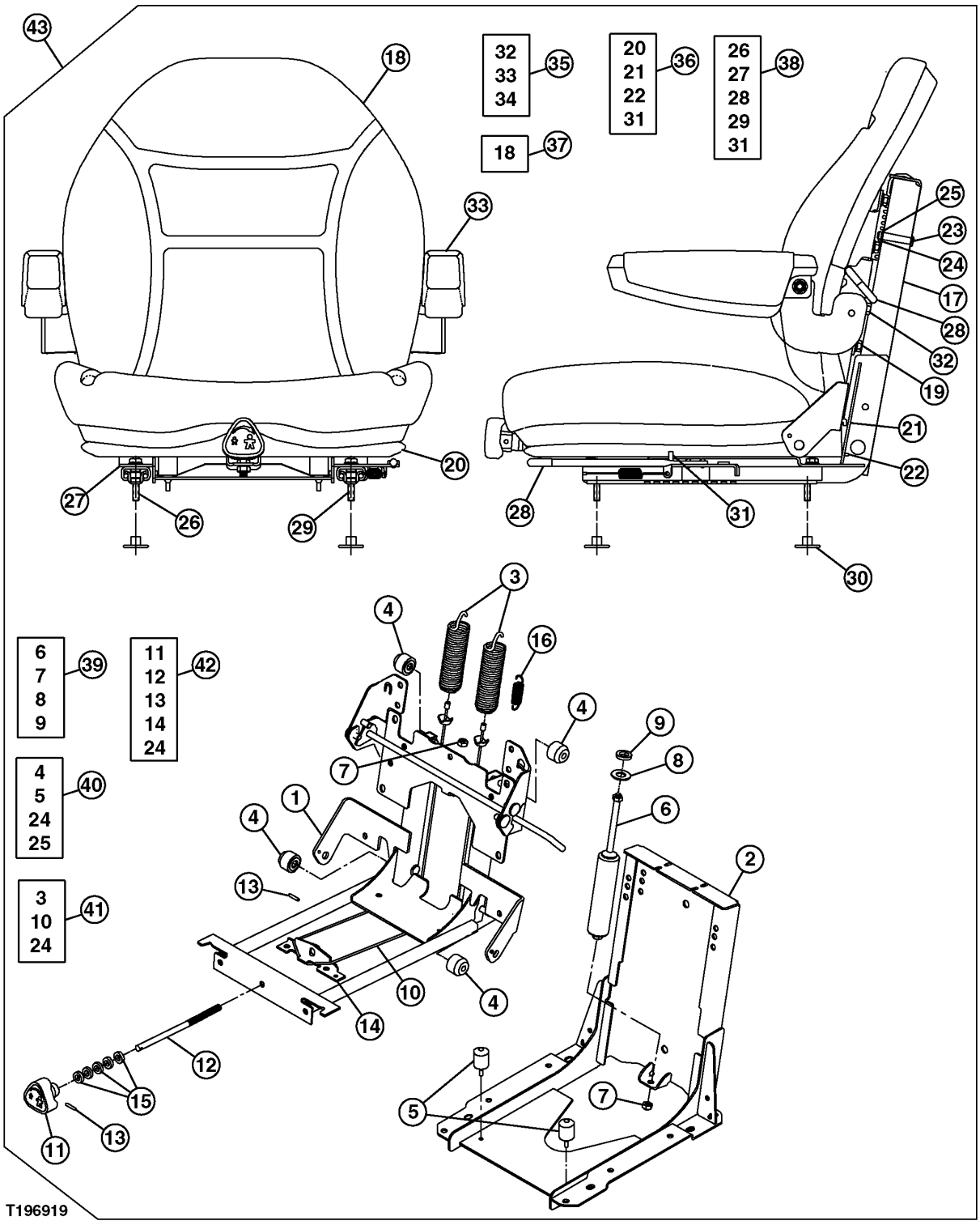

SWIVEL SEAT CUSHIONS, ARMRESTS AND SEAT FRAMES
(SERIAL NO. 882701-)

KEY	PART NO.	PART NAME	QTY	SERIAL NO.	REMARKS
1	.....	FRAME	1		
2	.....	CHANNEL	1		
3	.....	EXTENSION SPRING	2		(G)
4	.....	ROLLER	4		(F)
5	.....	BUMPER	2		(F)
6	.....	GAS OPERATED CYLINDER	1		(E)
7	.....	NUT	2		(E)
8	AT137542	WASHER	1		(E)
9	.....	SPACER	1		(E)
10	.....	CABLE	1		(G)
11	.....	KNOB	1		(H) TENSION
12	.....	SHAFT	1		(H) TENSION ADJUSTER
13	.....	SPRING PIN	2		(H)
14	.....	EXTENSION SPRING	1		(H)
15	.....	SPACER	5		
16	R138325	EXTENSION SPRING	1		
17	.....	SEAT SUSPENSION	1		
18	.....	PAN	1		(C)
19	.....	BOLT	6		
20	.....	BOOT	1		(B)
21	.....	WIRE	1		(B) UPPER
22	.....	WIRE	2		(B) LOWER
23	.....	PIN FASTENER	2		
24	.....	NUT	2		(F) (G) (H)
25	.....	SPACER	2		(F)
26	.....	ADJUSTER	1		(D)
27	.....	LOCK NUT	4		(D)
28	.....	CAP	2		(D)
29	.....	PLUG	1		(D) LATCHING
30	.....	TIE BAND	4		
31	.....	BOLT	2		(B) (D)
32	.....	ARMREST KIT	2		(A)
33	.....	ARMREST KIT	2		(A)
34	AT186022	ARMREST KIT	1		(A)
35	AT186021	ARMREST KIT	1		(INCLUDES ITEMS MARKED (A))
36	AT186015	KIT	1		(INCLUDES ITEMS MARKED (B))
37	AT186016	CUSHION	1		(INCLUDES PARTS MARKED (C))
38	AT180775	MOUNTING PARTS	1		(INCLUDES PARTS MARKED (D))
39	AT186017	KIT	1		(INCLUDES ITEMS MARKED (E))
40	AT186018	KIT	1		(INCLUDES ITEMS MARKED (F))
41	AT186019	KIT	1		(INCLUDES ITEMS MARKED (G))
42	AT186019	KIT	1		(INCLUDES ITEMS MARKED (H))
43	AT180753	SEAT	1		(ALSO ORDER AT180755)
	AT180755	KIT	1		(USE WITH AT180753)

SWIVEL SEAT PEDESTAL, BASE, SUPPORT AND HANDLE
(SERIAL NO. XXXXXX-)

TP69542 -UN-25AUG00

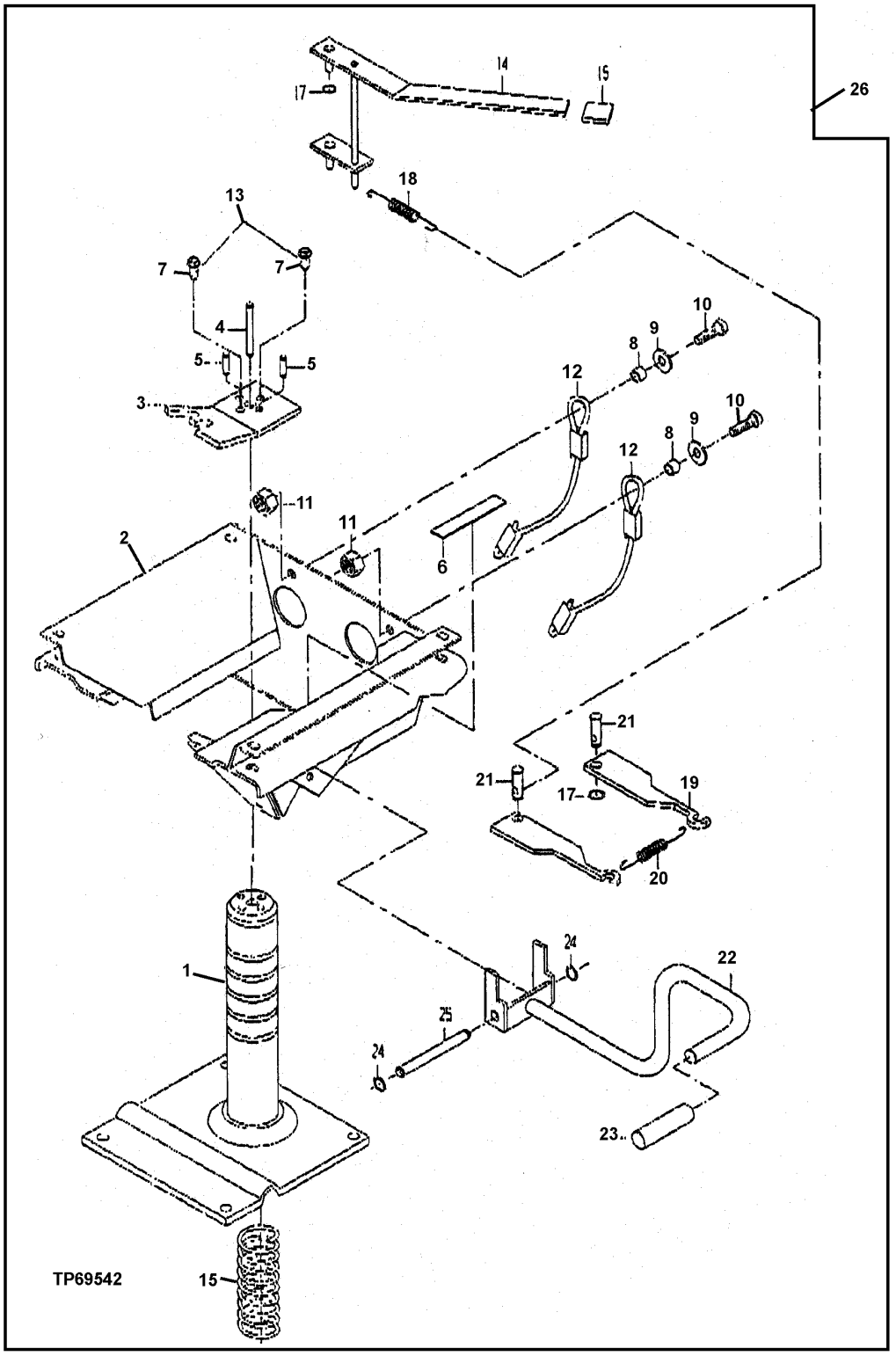

SWIVEL SEAT PEDESTAL, BASE, SUPPORT AND HANDLE
(SERIAL NO. XXXXXX-)

KEY	PART NO.	PART NAME	QTY	SERIAL NO.	REMARKS
1	.....	BASE	1		
2	.....	SUPPORT	1		
3	T162435	LATCH	1		(SWIVEL)
4	T105957	PIN	1		
5	T105963	GROOVE PIN	2	-882700	5/16" X 3/4"
6	.....	STRIP	1		(WEAR)
7	.....	CAP SCREW	2		
8	AT192063	SPACER	2		
9	.....	WASHER	2	-882700	
	AT137542	WASHER	2	882701-	
10	19H3547	CAP SCREW	2		7/16" X 1"
11	14H807	NUT	2		7/16", (TETHER)
12	AT192067	MOUNTING PARTS	2		(TETHER)
13	.....	ADHESIVE	1		
14	AT181328	HANDLE	1	XXXXXX-	(UPPER)
15	T105956	GRIP	1	XXXXXX-	(SWIVEL HANDLE)
16	.....	SPRING	1	XXXXXX-	
17	T105964	PUSH NUT	3	XXXXXX-	(PUSH)
18	T105961	EXTENSION SPRING	1	XXXXXX-	
19	T105954	LATCH	2	XXXXXX-	(VERTICAL ADJUST)
20	T105960	EXTENSION SPRING	1	XXXXXX-	
21	T105959	PIN FASTENER	2	XXXXXX-	(VERTICAL ADJUST)
22	AT181329	HANDLE	1	XXXXXX-	(LOWER)
23	T105962	KNOB	1	XXXXXX-	
24	T105965	PUSH NUT	2	XXXXXX-	(PUSH)
25	T105958	PIN	1	XXXXXX-	
26	AT181323	PEDESTAL	1	XXXXXX-	(TWO POSITION SWIVEL)

HOOD ASSEMBLY
(SERIAL NO. -872333)

TP52651 -UN-03FEB97

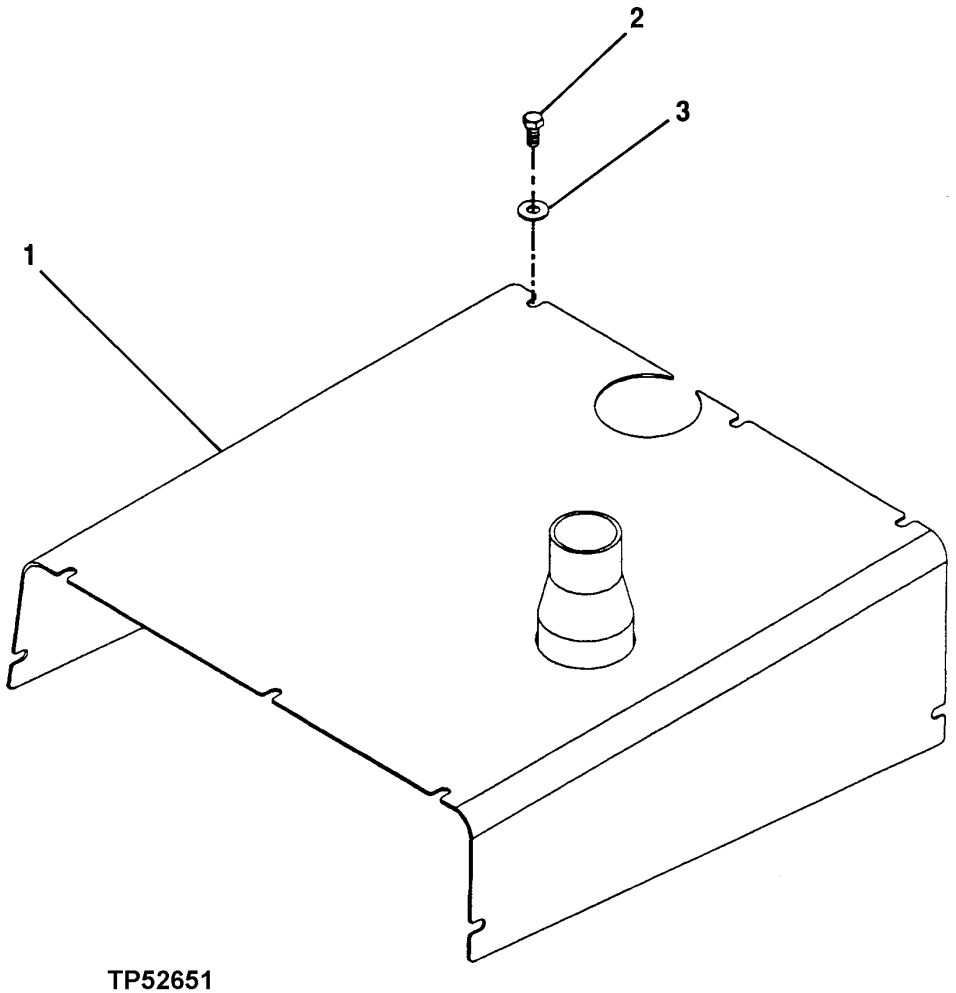

TP52651

HOOD ASSEMBLY
(SERIAL NO. -872333

KEY	PART NO.	PART NAME	QTY	SERIAL NO.	REMARKS
1	AT216748	HOOD	1	-848458	(SUB FOR AT216114)
	AT184807	HOOD	1	848459-872333	
2	19H3239	CAP SCREW	10	-872333	3/8" X 1-1/4"
3	24H1305	WASHER	10	-848458	13/32" X 13/16" X 0.065"
	T105740	WASHER	10	848459-872333	

HOOD ASSEMBLY (SERIAL NO. 872334-)

TP80131 -UN-25AUG99

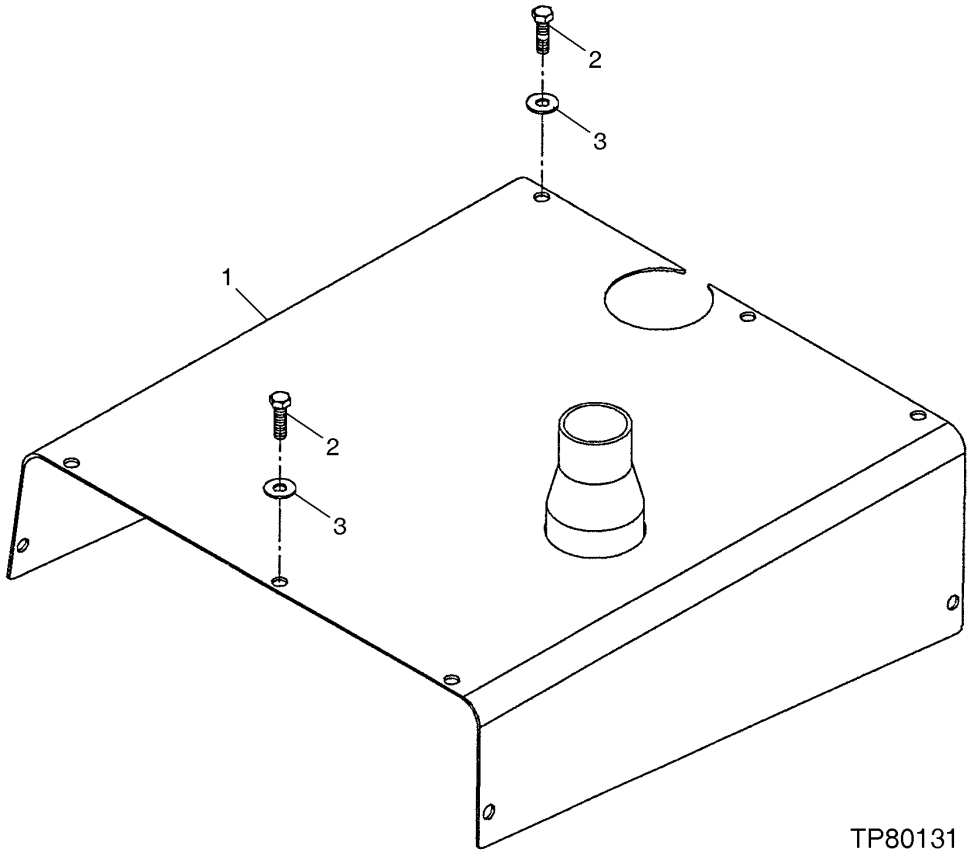

HOOD ASSEMBLY (SERIAL NO. 872334-)

KEY	PART NO.	PART NAME	QTY	SERIAL NO.	REMARKS
1	AT187575	HOOD	1	872334-	(SUB FOR AT216114)
2	CB01390888	BOLT	10	872334-	
3	24M7296	WASHER	10	872334-	10.500 X 30 X 2.500 MM, (SUB FOR 24H1176)

ENGINE SIDE SHIELDS, LATCH, AND LOCK
(SERIAL NO. -848458)

TP52652 -UN-23JAN97

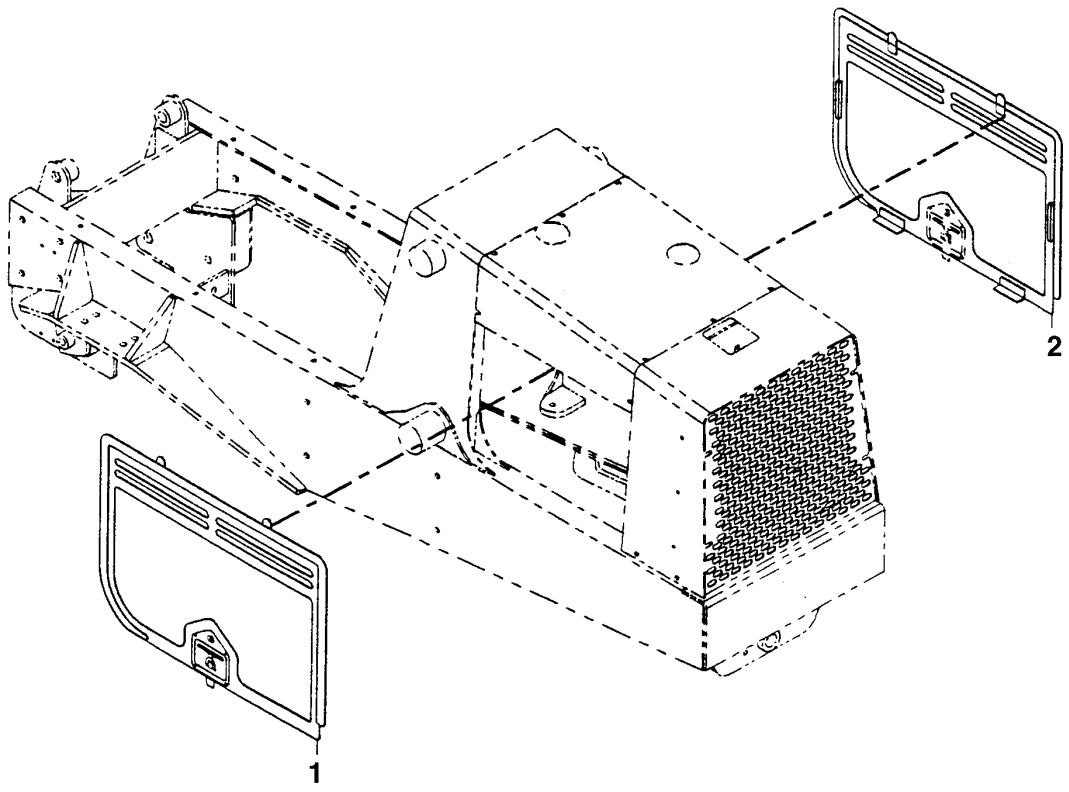

TP52652

ENGINE SIDE SHIELDS, LATCH AND LOCK
(SERIAL NO. -848458)

KEY	PART NO.	PART NAME	QTY	SERIAL NO.	REMARKS
1	AT216488	SHIELD	1	-848458	RIGHT
	AT183407	LATCH	1	-848458	
	AT74878	LOCK	1	-848458	
2	AT216500	SHIELD	1	-848458	LEFT
	AT183407	LATCH	1	-848458	
	AT74878	LOCK	1	-848458	

ENGINE SIDE SHIELDS, WITH SLIDING DOOR (SERIAL NO. 848459-882700)

TP61801 -UN-19JAN99

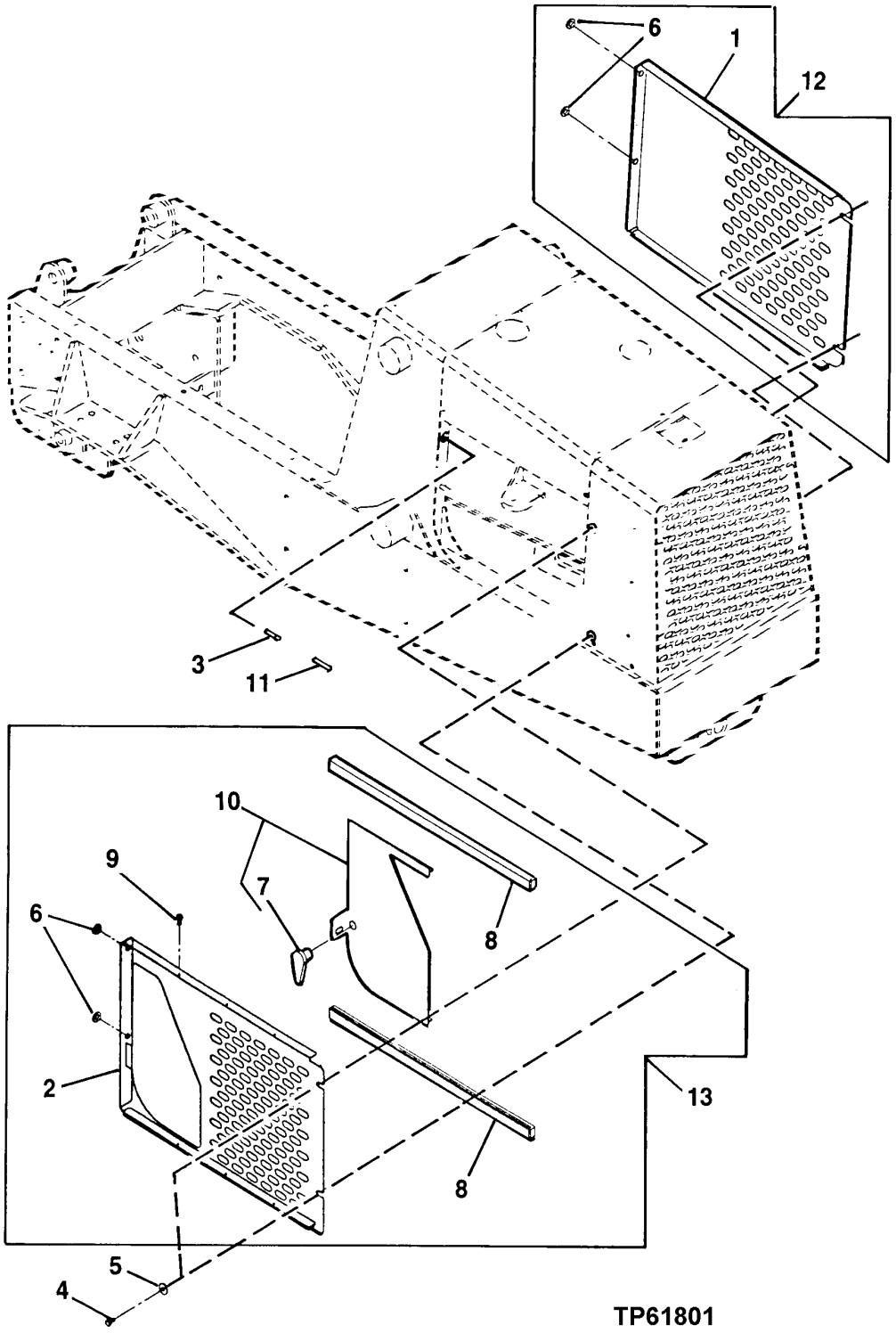

ENGINE SIDE SHIELDS, WITH SLIDING DOOR (SERIAL NO. 848459-882700)

KEY	PART NO.	PART NAME	QTY	SERIAL NO.	REMARKS
1	.....	SHIELD	1	848459-	
2	.....	SHIELD	1	848459-	
3	AT280517	SOCKET	4	848459-	(SUB FOR 22H1021)
4	CB01390888	BOLT	4	848459-	
5	T105740	WASHER	4	848459-	
6	T165472	GROMMET	4	848459-	
7	AT189710	LATCH	1	848459-	(SUB FOR AT178612)
8	T160200	GUIDE	2	848459-	
9	37H7	SCREW	1	848459-	0.190" X 3/8"
10	AT184805	DOOR	1	848459-	
11	CB01393571	CAP	4	848459-	(SUB FOR T165471)
12	AT185870	SHIELD	1	848459-	
13	AT185871	SHIELD	1	848459-	

GRILLE (SERIAL NO. -872333)

TP61720 -UN-20JUL98

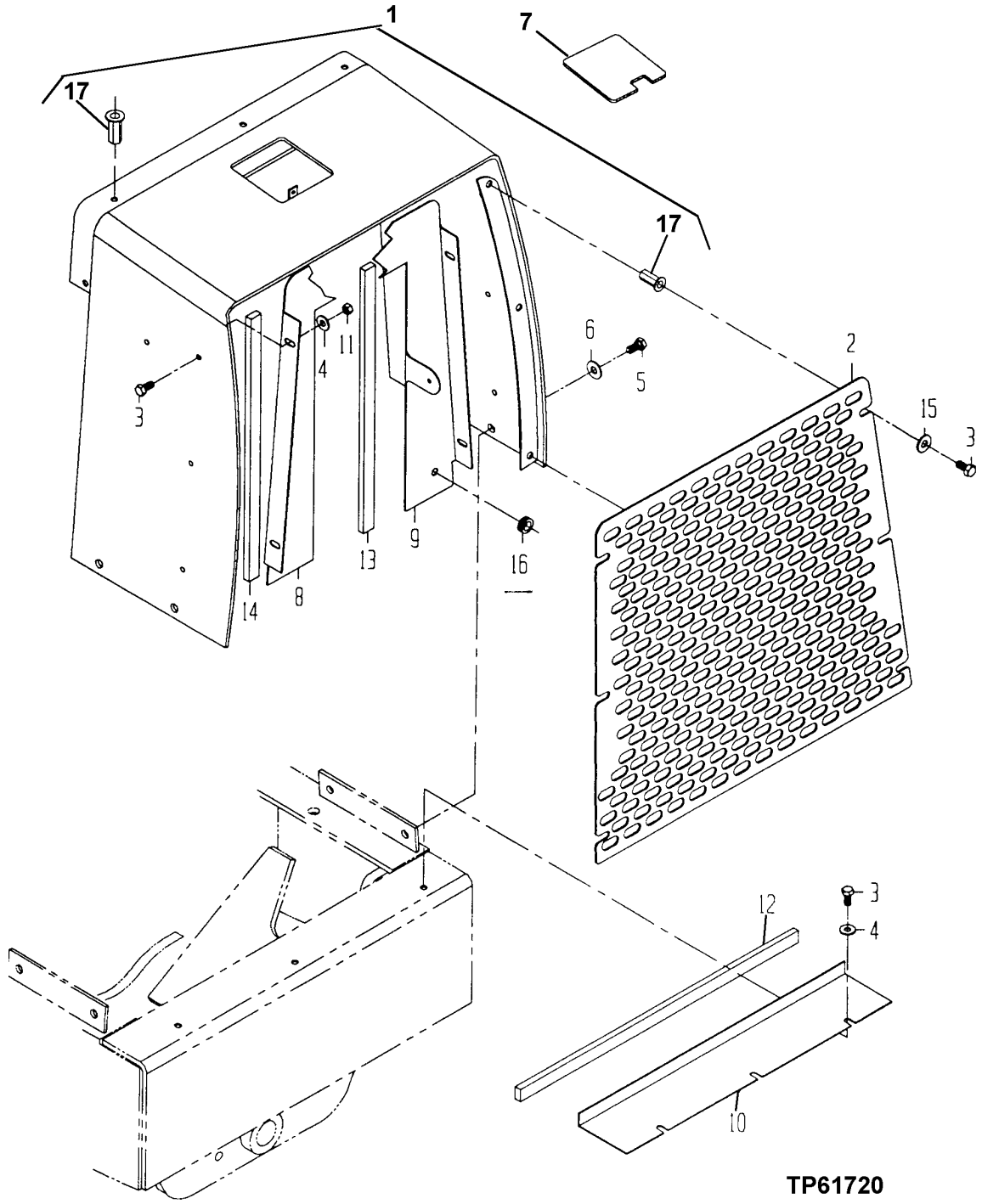

GRILLE (SERIAL NO. -872333)

KEY	PART NO.	PART NAME	QTY	SERIAL NO.	REMARKS
1	AT216286	COWL	1	-848458	
	AT184806	HOUSING	1	848459-872333	
2	AT216113	GRILLE	1	-872333	
3	19H2676	CAP SCREW	12	-872333	3/8" X 1"
4	R57696	WASHER	6	-872333	9.931 X 23.114 X 3.048 MM (25/64" X 0.910" X 0.120")
5	19H2472	CAP SCREW	4	-872333	1/2" X 1"
6	T35860	WASHER	4	-872333	
7	AT216751	COVER	1	-872333	
8	AT216128	HEAT SHIELD	1	-872333	
9	AT216129	HEAT SHIELD	1	-872333	
10	AT216130	DEFLECTOR	1	-841448	
11	T11234	LOCK NUT	6	-872333	
12	T74403	ISOLATOR	1	-841448	(CUT TO 19 INCH LENGTH)
13	T74403	ISOLATOR	1	-872333	(CUT TO 30 INCH LENGTH)
14	T74403	ISOLATOR	1	-872333	(CUT TO 31 INCH LENGTH)
15	24H1305	WASHER	6	-872333	13/32" X 13/16" X 0.065"
16	AT124918	GROMMET	1	828182-872333	
17	T164467	NUT	11	-872333	(INCLUDED WITH AT216286)

GRILLE (SERIAL NO. 872334-882700)

T137000 -UN-11JAN01

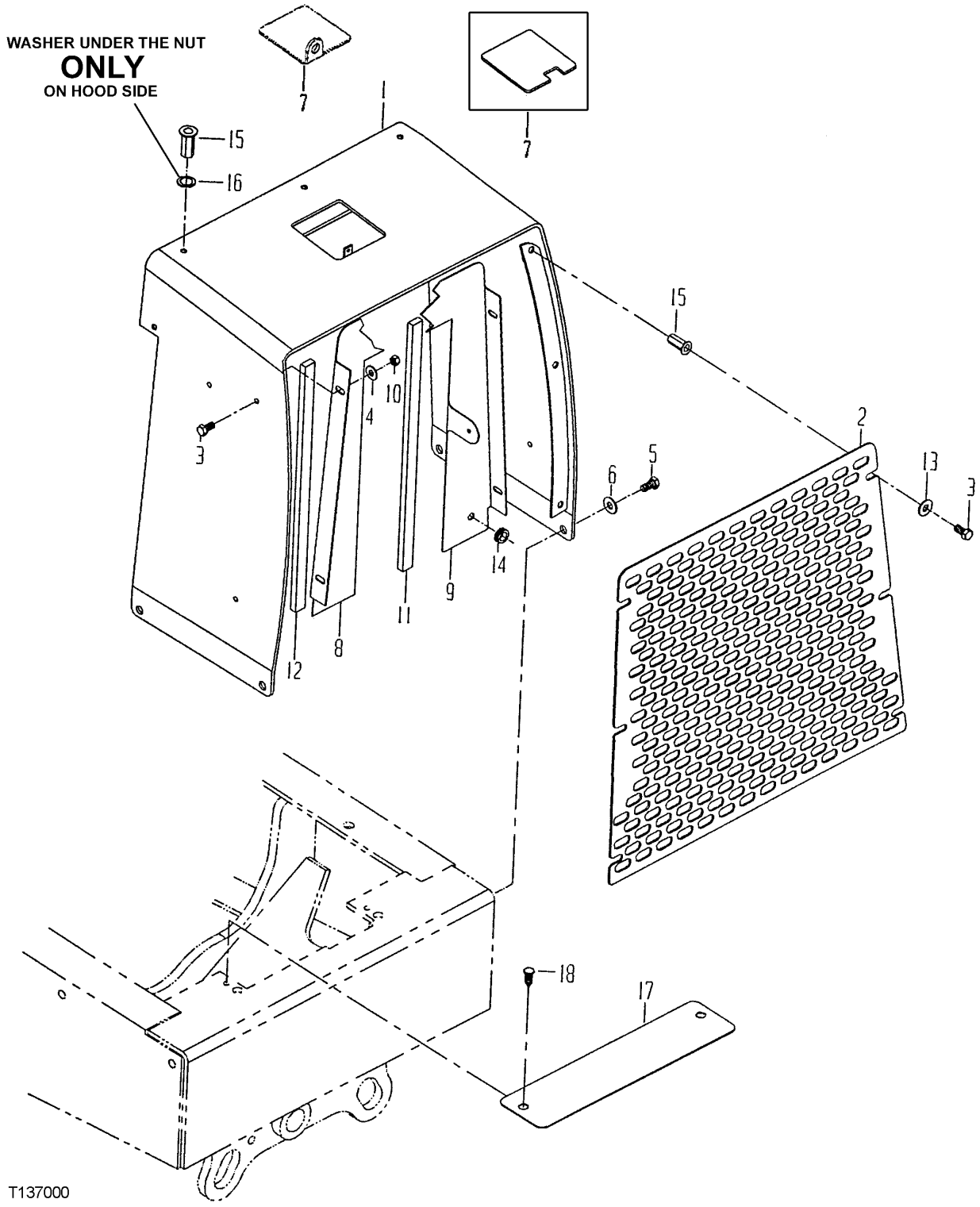

GRILLE (SERIAL NO. 872334-882700)

KEY	PART NO.	PART NAME	QTY	SERIAL NO.	REMARKS
1	AT187576	COWL	1	872334-	
2	AT187577	GRILLE	1	872334-	
3	19H2676	CAP SCREW	10	872334-	3/8" X 1"
	CB01390888	BOLT	6	XXXXXX-	
4	R57696	WASHER	5	872334-	25/64" X 0.910" X 0.120"
5	.....	BOLT	4	872334-	1/2" X 1-1/2"
6	T35860	WASHER	4	872334-	
7	.....	COVER	1	872334-880308	RADIATOR CAP (AT216751 NO LONGER USED, SUB CB11408214)
	CB11395478	COVER	1	880309-	
8	AT187578	SHIELD	1	872334-	RH
9	AT187579	SHIELD	1	872334-	LH
10	T11234	LOCK NUT	6	872334-	
11	T63019	WEATHERSTRIP	1	872334-	(30 INCHES LONG) (SUB FOR AT187580)
12	T63019	WEATHERSTRIP	1	872334-	(31 INCHES LONG) (SUB FOR AT187580)
13	24H1305	WASHER	6	872334-	13/32" X 13/16" X 0.065"
14	AT124918	GROMMET	1	872334-	
15	T164468	NUT	11	872334-	
16	.....	WASHER	5	872334-	
17	AT187594	PLATE	1	872334-	
18	T164468	NUT	5	872334-880053	
	T161380	PLUG	2	880054-	

GRILLE (SERIAL NO. 882701-)

T196715 -UN-04DEC03

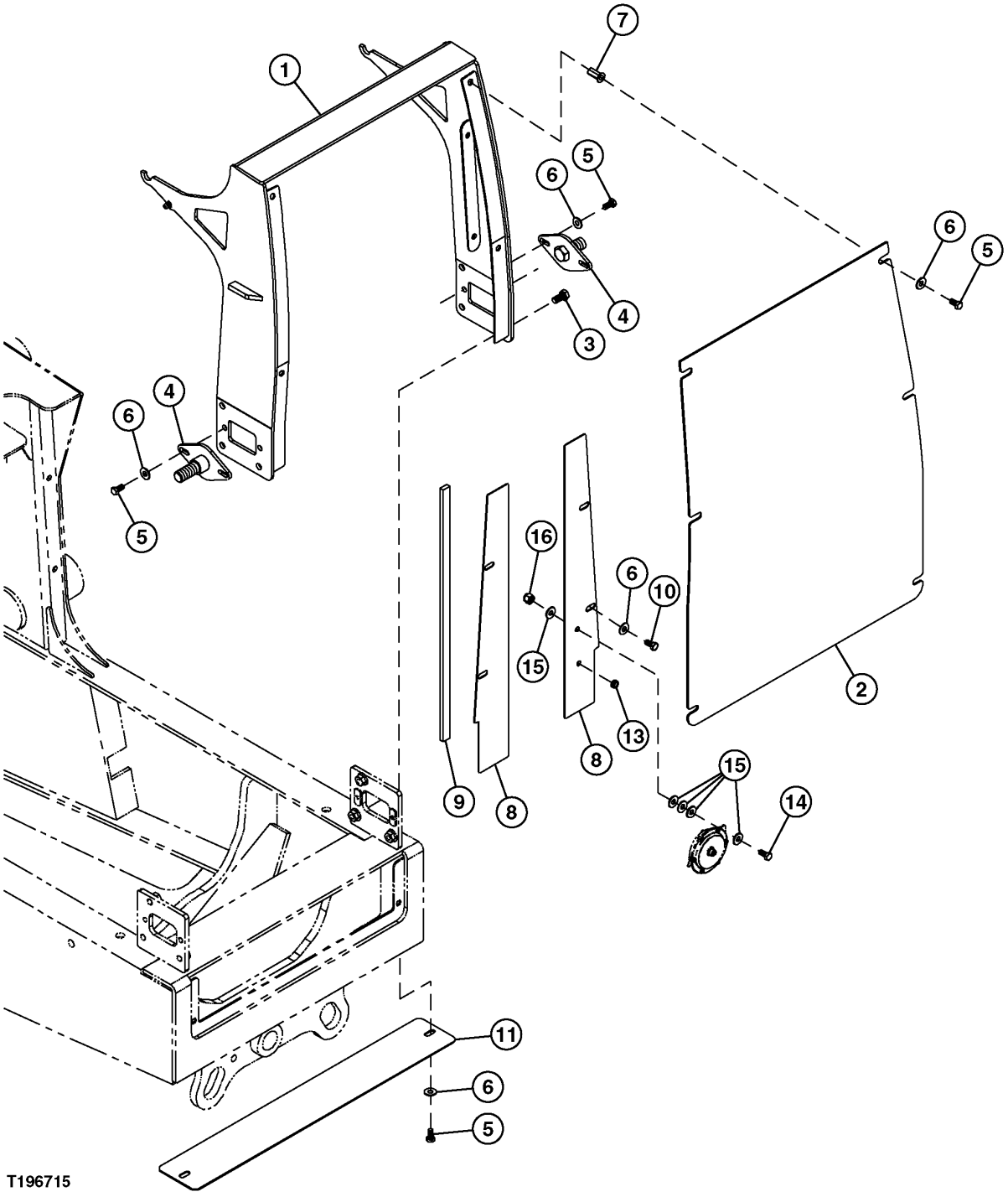

GRILLE (SERIAL NO. 882701-)

KEY	PART NO.	PART NAME	QTY	SERIAL NO.	REMARKS
1	CB11450626	GRILLE	1		
2	CB01442703	GRILLE	1		
3	CB01390891	BOLT	3		
4	CB11450628	MOUNTING PARTS	2		HOOD
5	CB01390888	BOLT	12		1/2" X 1-1/2"
6	24H1219	WASHER	16		7/16" X 1" X 0.083"
7	T164467	NUT	6		
8	CB01445284	TUBE	1		
9	T63019	WEATHERSTRIP	AR		
10	19H2676	CAP SCREW	4		3/8" X 1"
11	CB01451856	GUARD	1		
12	CB01451866	SHIELD	1		
13	AT124918	GROMMET	1		
14	19H1791	CAP SCREW	1		1/4" X 1-1/4"
15	24H1776	WASHER	5		5/16" X 47/64" X 0.065"
16	M40333	LOCK NUT	1		1/4"

HOOD (SERIAL NO. 882701-)

T196734 -UN-04DEC03

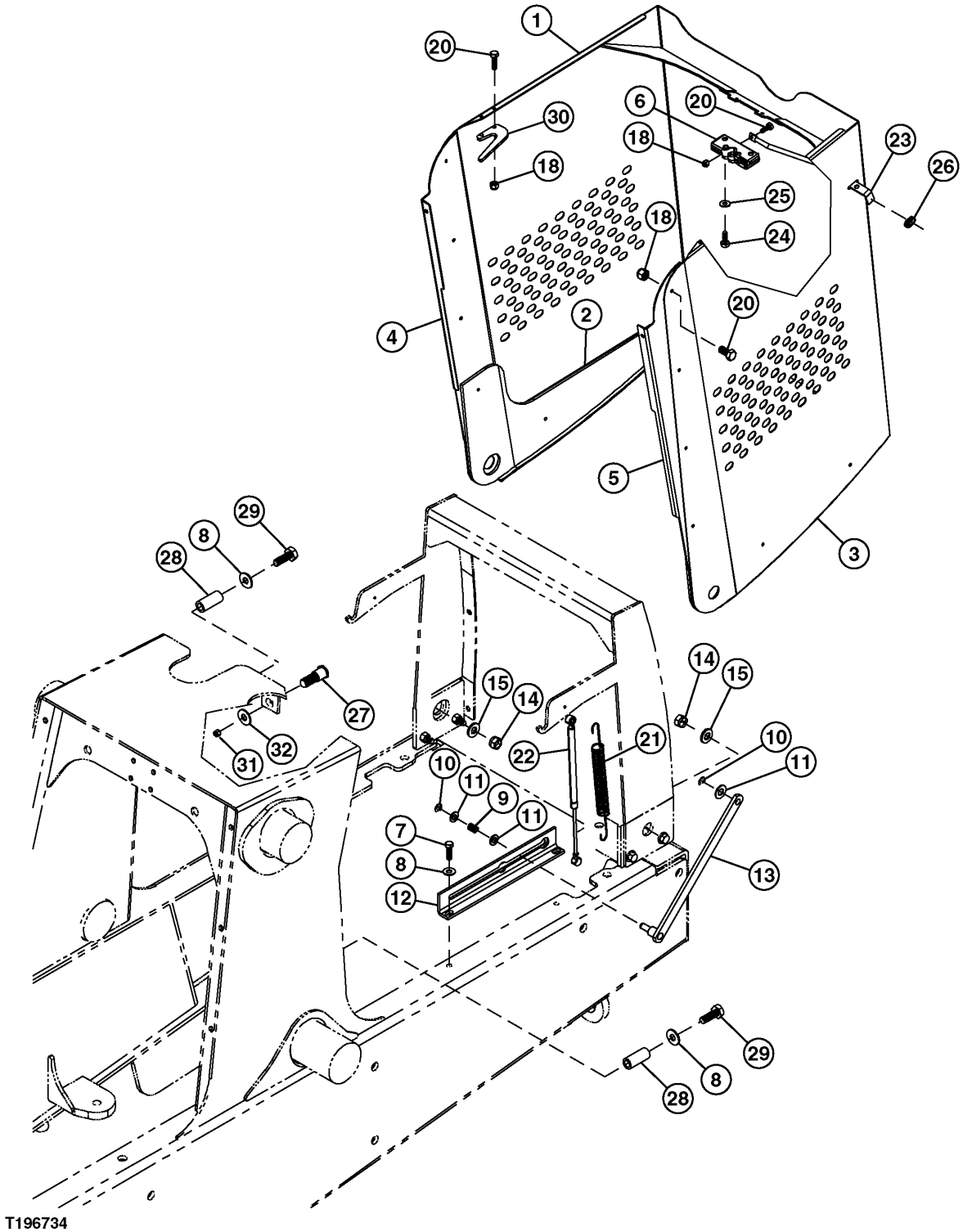

T196734

HOOD (SERIAL NO. 882701-)

KEY	PART NO.	PART NAME	QTY	SERIAL NO.	REMARKS
1	CB11444125	BRACKET	1		
2	CB11444761	VALVE STACK	1		
3	CB11444762	VALVE STACK	1		
4	CB01450919	BRACE	1		
5	CB01450920	BRACE	11		1/2" X 1-1/2"
6	CB11445879	LATCH	1		
7	CB01390888	BOLT	2		
8	T105740	WASHER	4		
9	T165981	COMPRESSION SPRING	1		
10	R26871	SNAP RING	2		
11	24M7047	WASHER	3		13 X 24 X 2.500 MM
12	T165978	GUIDE	1		
13	AT189661	BAR	1		
14	U44915	LOCK NUT	2		
15	24H1236	WASHER	2		13/16" X 2" X 0.149"
18	M40333	LOCK NUT	15		
20	AT182434	BOLT	15		
21	T165977	EXTENSION SPRING	3		
22	AT196433	GAS OPERATED CYLINDER	1		
23	CB11448670	ROD	1		
24	19M7933	CAP SCREW	2		M6 X 25
25	24M7054	WASHER	2		
26	T188642	GROMMET	1		
27	AR91896	STRIKER	1		
28	CB01448480	SPACER	2		
29	CB01452072	BOLT	2		
31	K40006	LOCK NUT	1		
32	24H1325	WASHER	1		15/32" X 59/64" X 0.065"

RADIATOR DOOR KIT
(SERIAL NO. XXXXXX-880308)

T137112 -UN-11JAN01

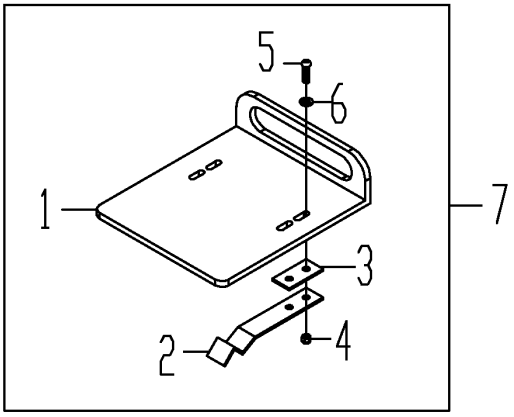

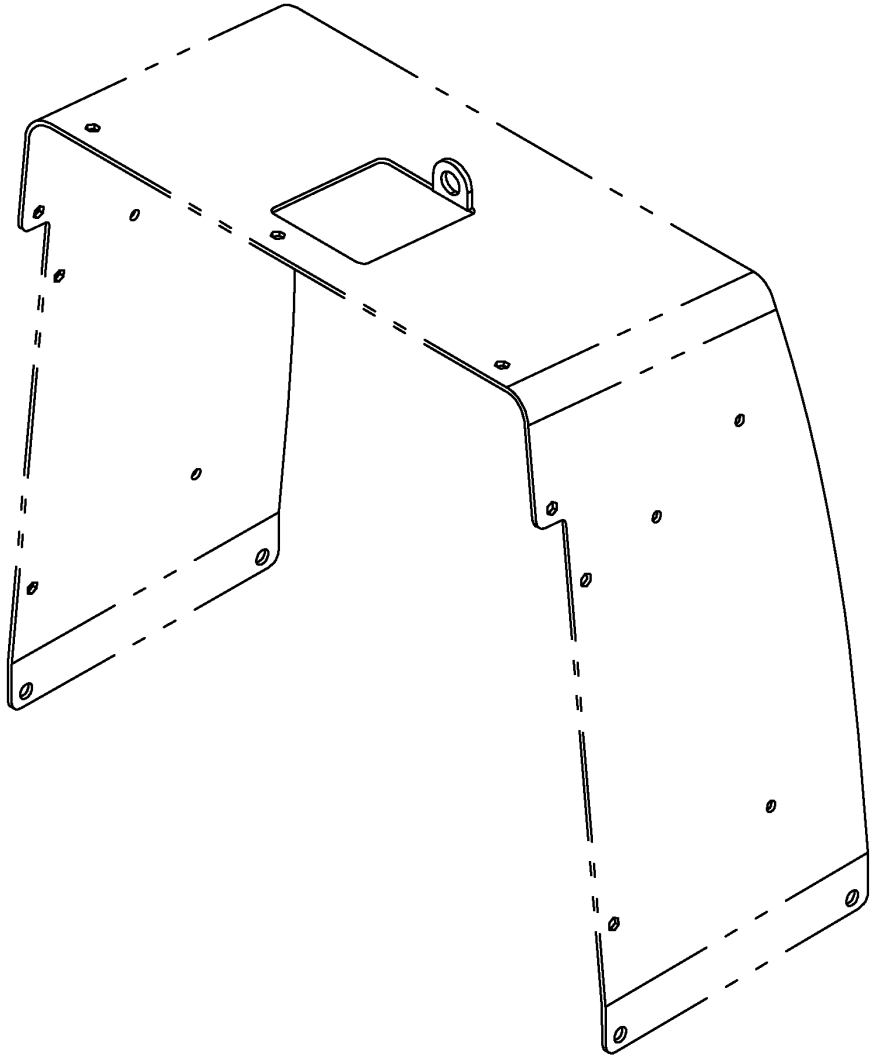

T137112

RADIATOR DOOR KIT
(SERIAL NO. XXXXXX-880308)

KEY	PART NO.	PART NAME	QTY	SERIAL NO.	REMARKS
1	CB01405868	DOOR	1		
2	T10379	CLAMP	2		
3	T10381	REINFORCEMENT	2		
4	CB1408205	LOCK NUT	4		
5	T82791	SCREW	4		1/2" X 1-1/2"
6	24H1287	WASHER	4		
7	CB11408214	KIT	1		RADIATOR CAP DOOR

FENDERS

T195611 -UN-17OCT03

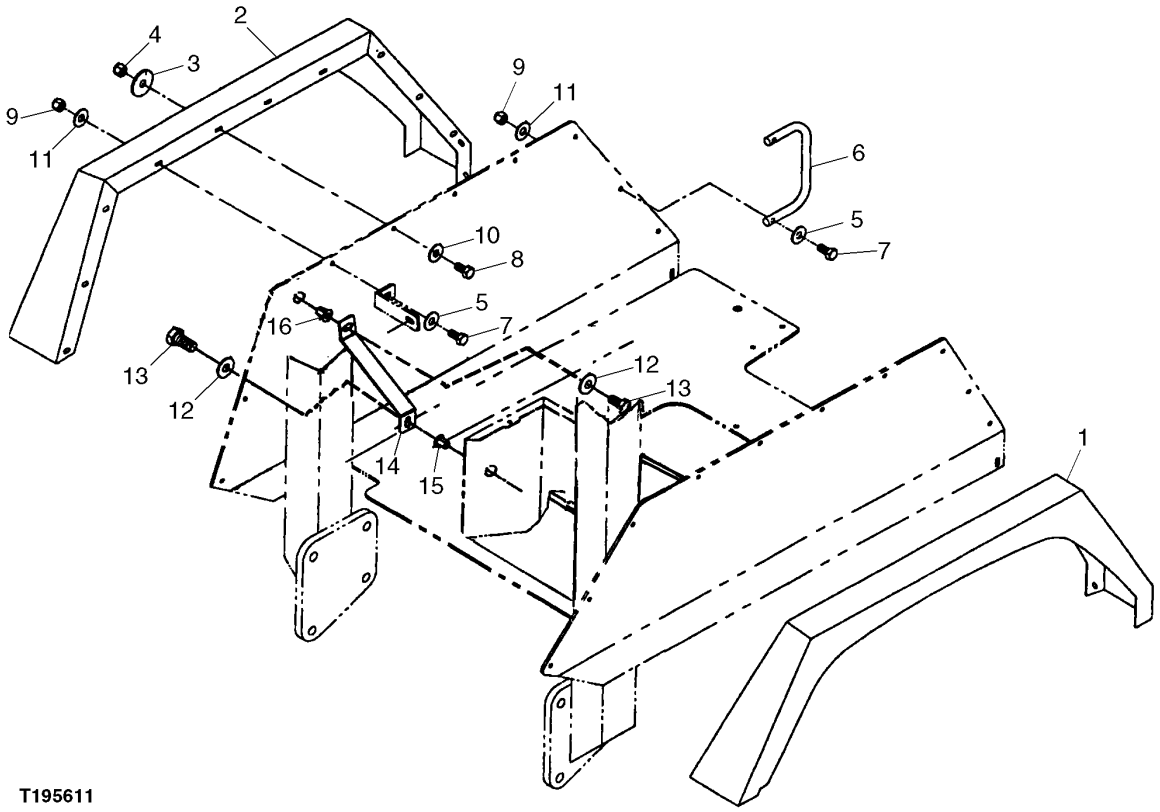

T195611

FENDERS

KEY	PART NO.	PART NAME	QTY	SERIAL NO.	REMARKS
1	T158623	FENDER	1		RIGHT
2	T158624	FENDER	1		LEFT
3	24H1305	WASHER	17	-882700	13/32" X 13/16" X 0.065"
	24H1288	WASHER	17	882701-	9/32" X 1" X 1/16"
4	H99923	LOCK NUT	17	-882700	3/8"
	M40333	LOCK NUT	17	882701-	1/4"
5	R57696	WASHER	6		25/64" X 0.910" X 0.120"
6	AT216473	HANDLE	1		
7	19H3239	CAP SCREW	2	-882700	3/8" X 1-1/4"
	19H2633	CAP SCREW	2	882701-	3/8" X 1-1/2"
8	19H2676	CAP SCREW	17	-882700	3/8" X 1"
	19H1914	CAP SCREW	17	882701-	1/4" X 1"
9	T11234	LOCK NUT	2		9.525 MM (3/8")
10	24H1287	WASHER	17		9/32" X 5/8" X 0.065"
11	24H1305	WASHER	2	-882700	13/32" X 13/16" X 0.065"
	24H1219	WASHER	2	882701-	7/16" X 1" X 0.083"
12	R57696	WASHER	2		
13	19H2676	CAP SCREW	2		3/8" X 1"
14	T164474	STRAP	1	-872334	(SUB FOR T164997)
15	T164467	NUT	1	-872334	
16	T164468	NUT	1	-872334	

BACK-UP ALARM (SERIAL NO. -840058)

TP56255 -UN-23MAY97

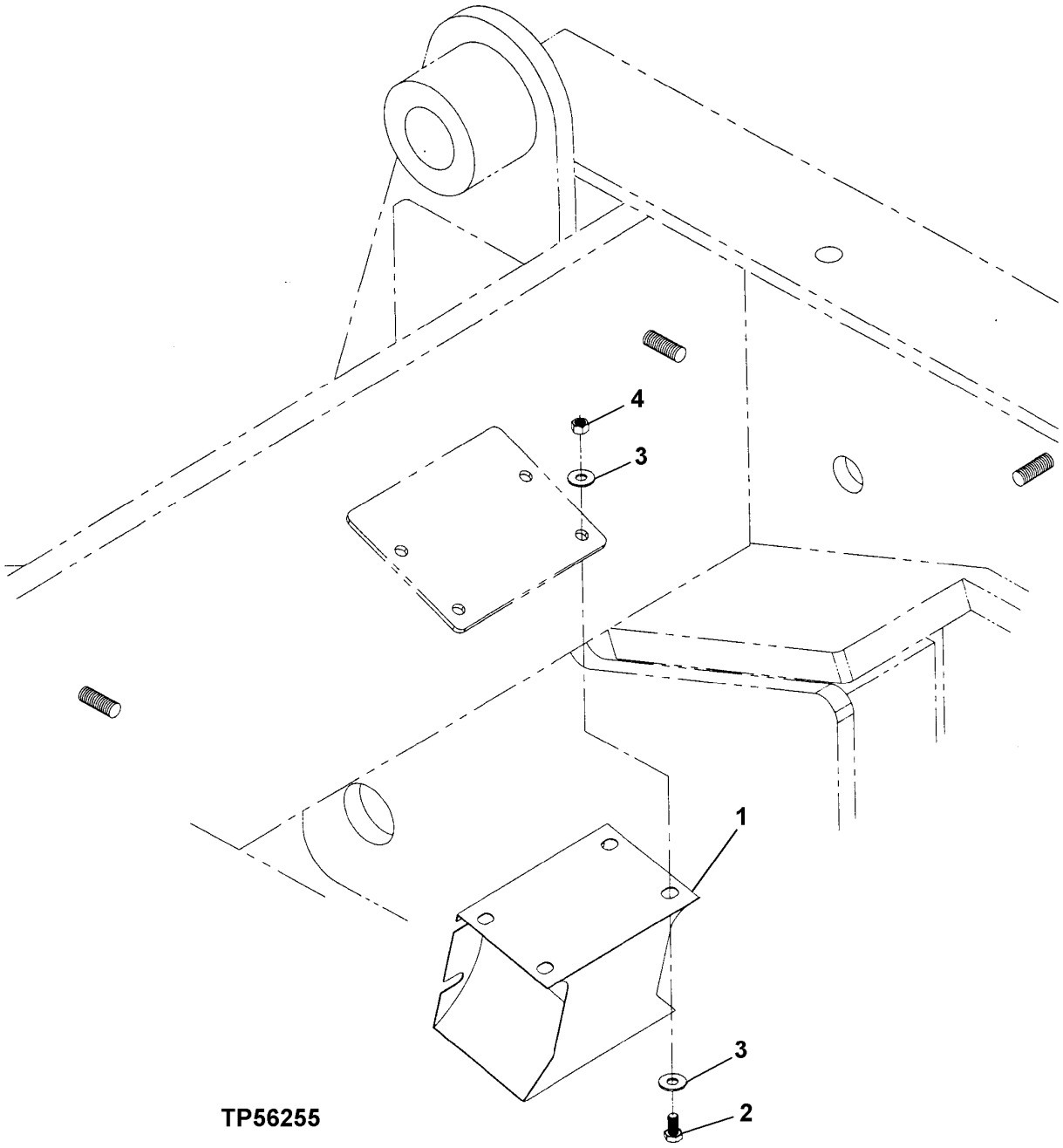

BACK-UP ALARM (SERIAL NO. -840058)

KEY	PART NO.	PART NAME	QTY	SERIAL NO.	REMARKS
1	AT120461	TRAVEL WARNING ALARM	1		
2	19H1948	CAP SCREW	4		1/4" X 3/4"
3	24H1287	WASHER	8		9/32" X 5/8" X 0.065"
4	M40333	LOCK NUT	4		6.350 MM (1/4")

BACK-UP ALARM (SERIAL NO. 840059-882700)

T195716 -UN-30OCT03

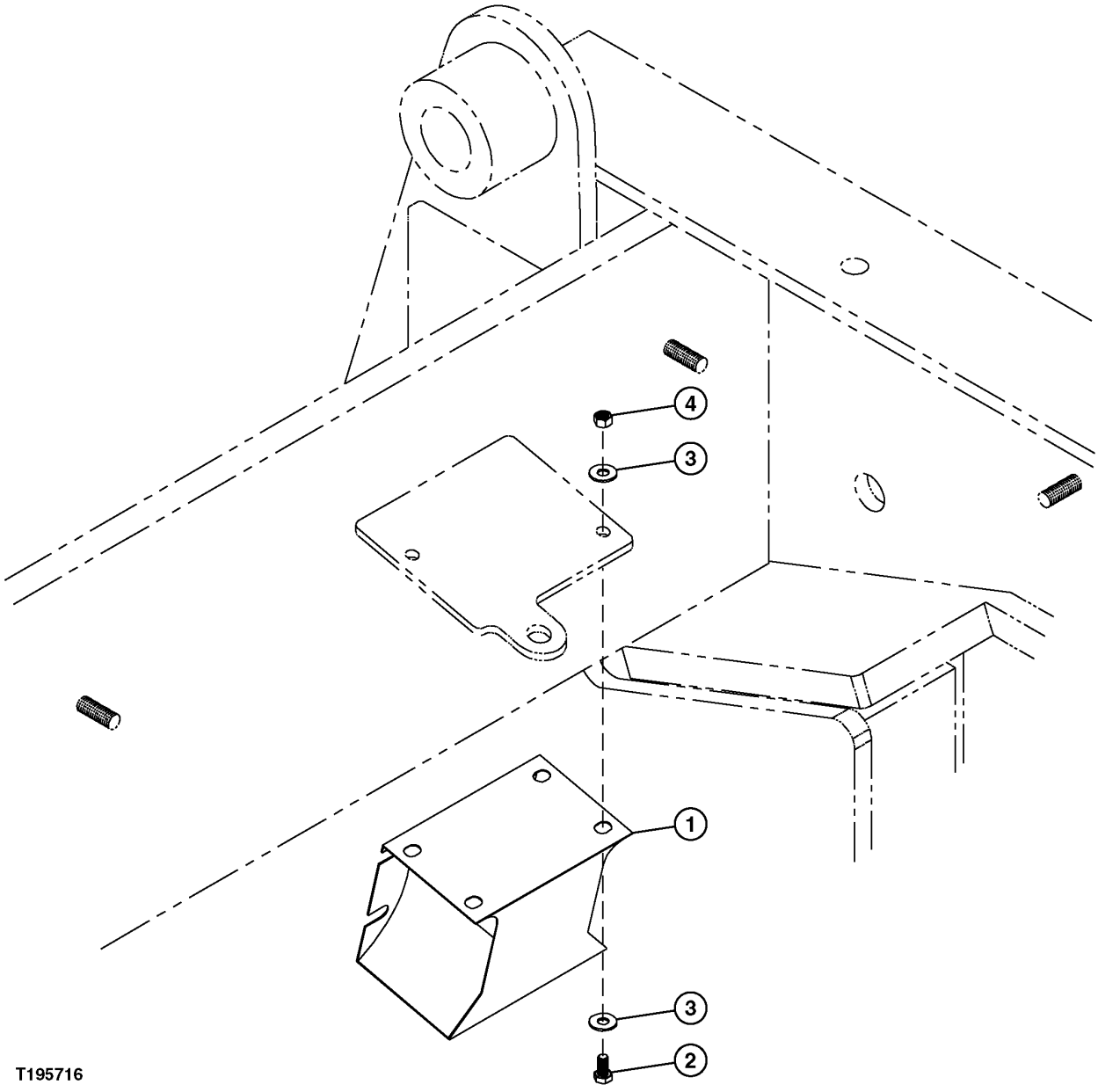

BACK-UP ALARM (SERIAL NO. 840059-882700)

KEY	PART NO.	PART NAME	QTY	SERIAL NO.	REMARKS
1	AT120461	TRAVEL WARNING ALARM	1		
2	AT182434	BOLT	2		
3	24H1176	WASHER	4		13/32" X 1-1/4" X 0.100"
4	M40333	LOCK NUT	2		1/4"

BACK-UP ALARM (SERIAL NO. 882701-)

T195717 -UN-08DEC03

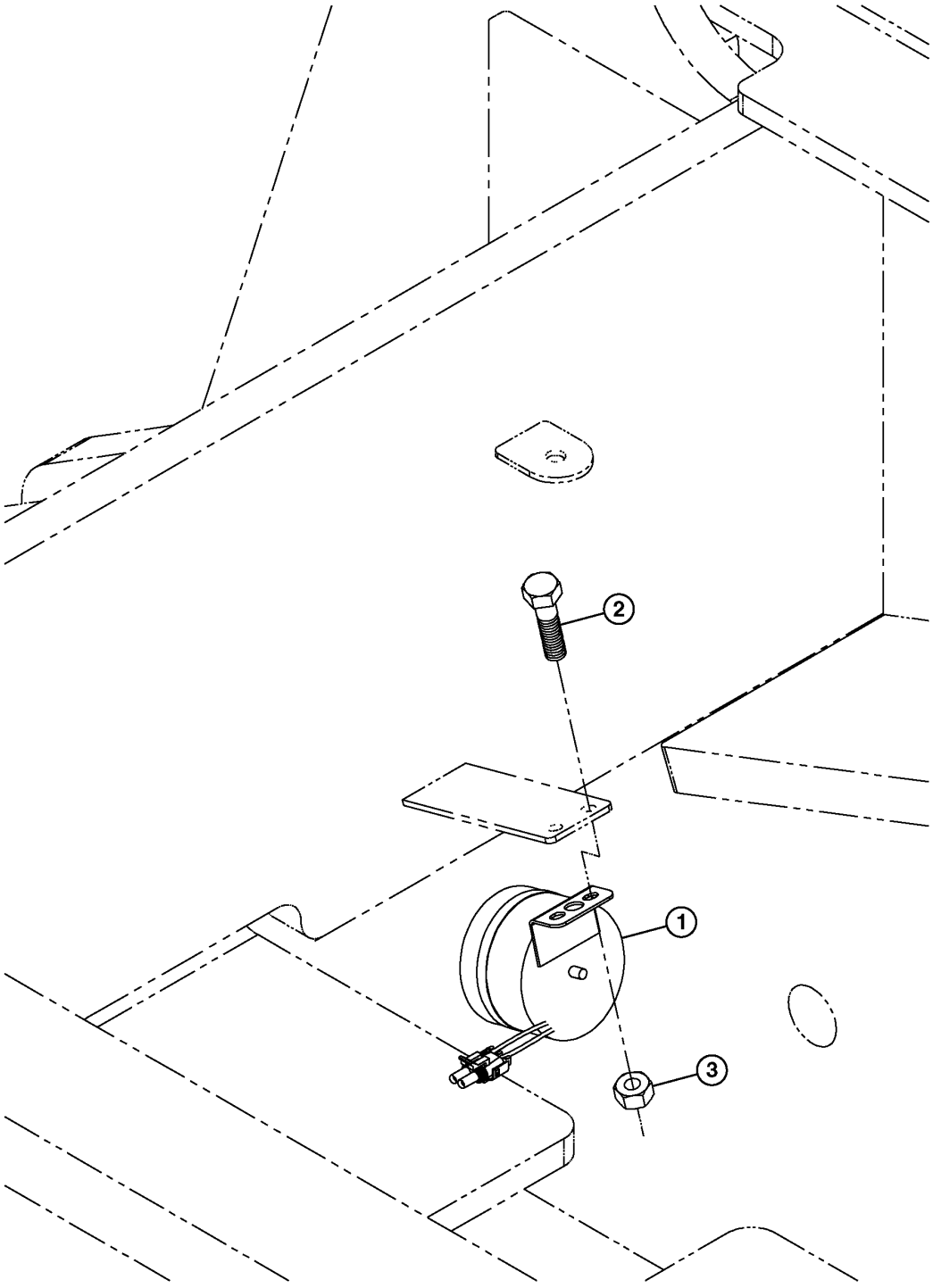

T195717

BACK-UP ALARM (SERIAL NO. 882701-)

KEY	PART NO.	PART NAME	QTY	SERIAL NO.	REMARKS
1	AZ61786	TRAVEL WARNING ALARM	1		
2	21H1019	SCREW	2		0.190" X 1/2"
3	T12847	LOCK NUT	2		3/16"

SMV EMBLEM

TP52676 -UN-12FEB97

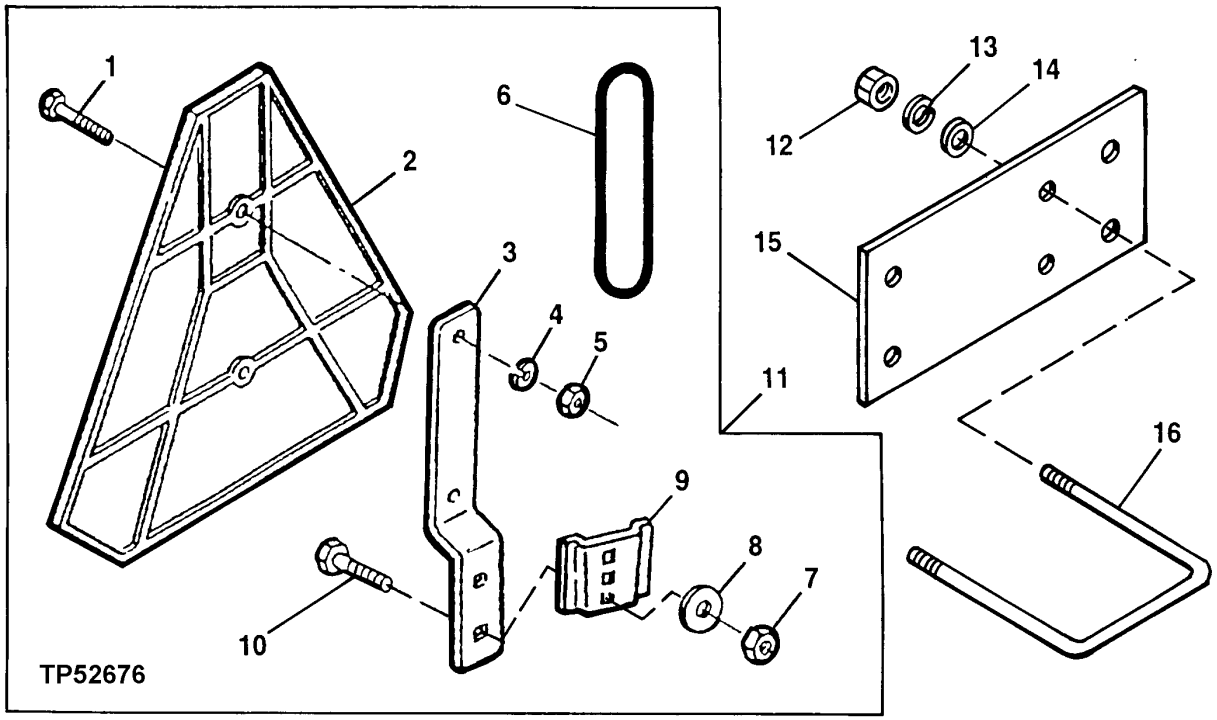

KEY	PART NO.	PART NAME	QTY	SERIAL NO.	REMARKS
1	21H1302	SCREW	2		1/4" X 5/8"
2	JD5930	SMV EMBLEM	1		(SUB FOR JD5929)
3	JD5404	BRACKET	1		
4	24H1288	WASHER	2		9/32" X 1" X 1/16"
5	14H786	NUT	2		1/4"
6	JD5901	REFLECTOR	2		
7	14H785	NUT	2		5/16"
8	12M7065	LOCK WASHER	2		
9	JD126	SOCKET	1		
10	03H1268	BOLT	1		5/16" X 3/4"
11	AT179732	SMV EMBLEM	1		(WHOLEGOODS)
12	14H1076	NUT	4		3/8"
13	12H304	LOCK WASHER	4		3/8"
14	24H1305	WASHER	4		13/32" X 13/16" X 0.065"
15	T161859	PLATE	1		
16	N132114	U-BOLT	2		

MEMORANDA

OPERATOR'S MANUAL HOLDER

TP52655 -UN-23JAN97

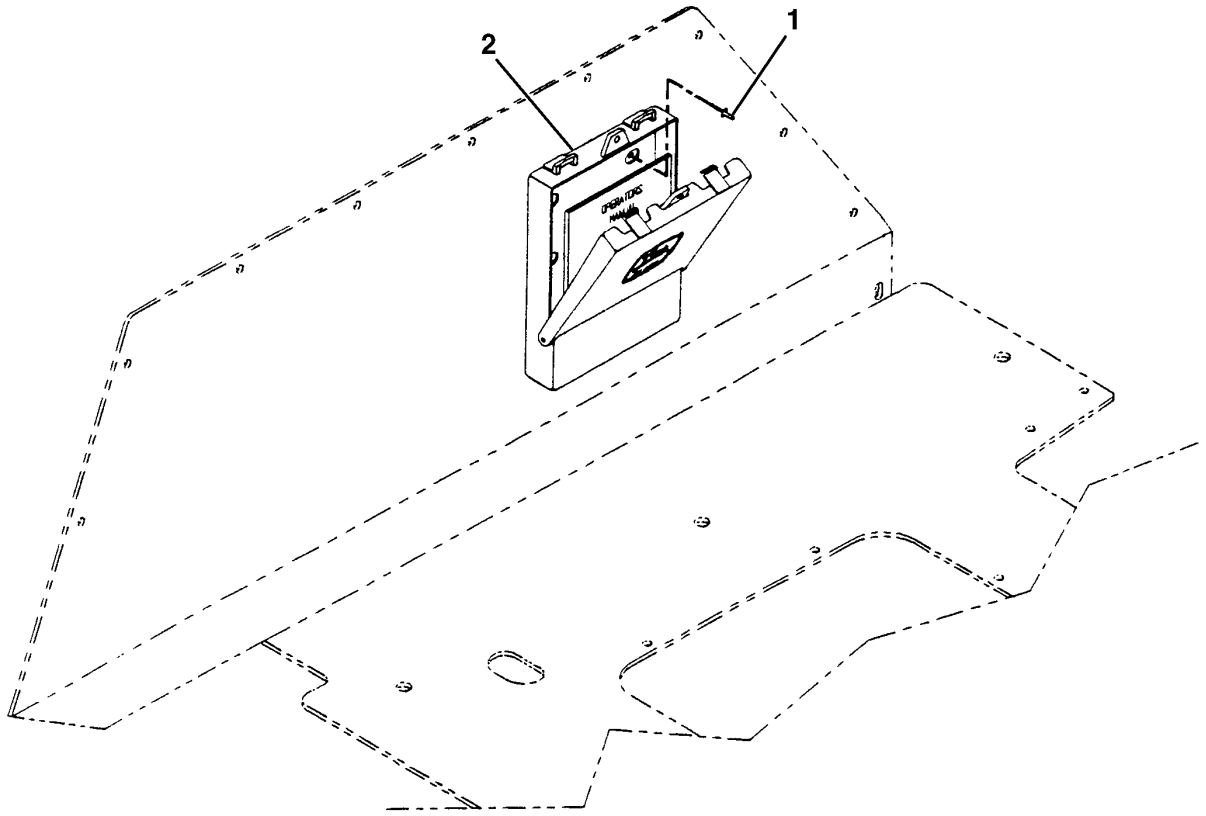

TP52655

OPERATOR'S MANUAL HOLDER

KEY	PART NO.	PART NAME	QTY	SERIAL NO.	REMARKS
1	AW16787	RIVET	4	-XXXXXX	3/16"
	R113189	RIVET	4	XXXXXX-	
2	AT195894	HOLDER	1		(SUB FOR RE14246, THIS APPLICATION)
	DB1440	ELECTRONIC DOCUMENT	1		CD

HYDRAULIC PUMP (SERIAL NO. -880053)

TP80344 -UN-06DEC99

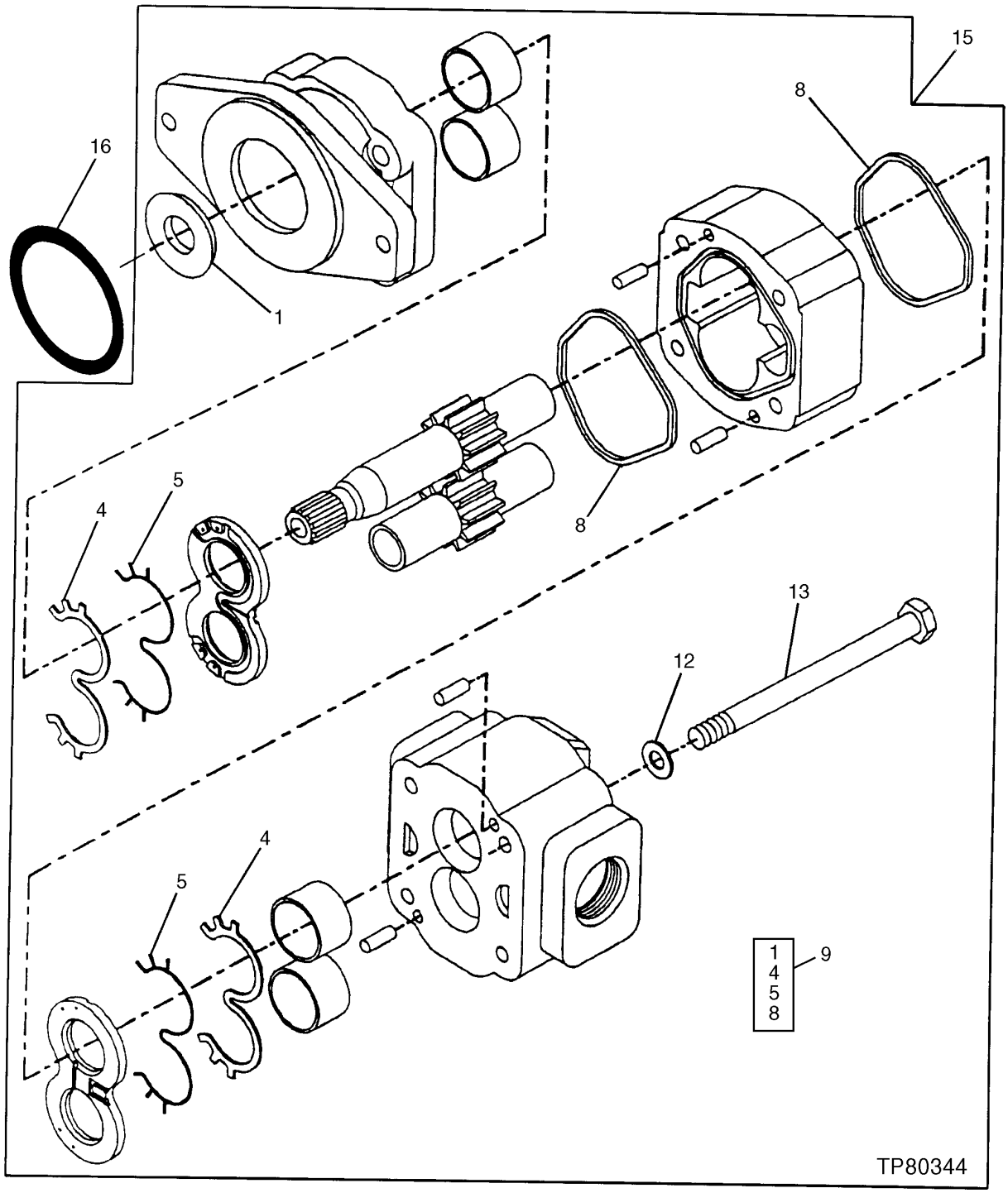

HYDRAULIC PUMP (SERIAL NO. -880053)

KEY	PART NO.	PART NAME	QTY	SERIAL NO.	REMARKS
1	AT163296	SEAL	1		
4	.....	SEAL	2		
5	.....	SEAL	2		
8	.....	GASKET	2		
9	AT216092	SEAL KIT	1		
12	AT119372	WASHER	4		
13	AT216216	BOLT	4		
15	AT216039	PUMP	1		
16	F37030242	O-RING	1		

HYDRAULIC PUMP (SERIAL NO. 880054-882700)

T148334 -UN-18DEC01

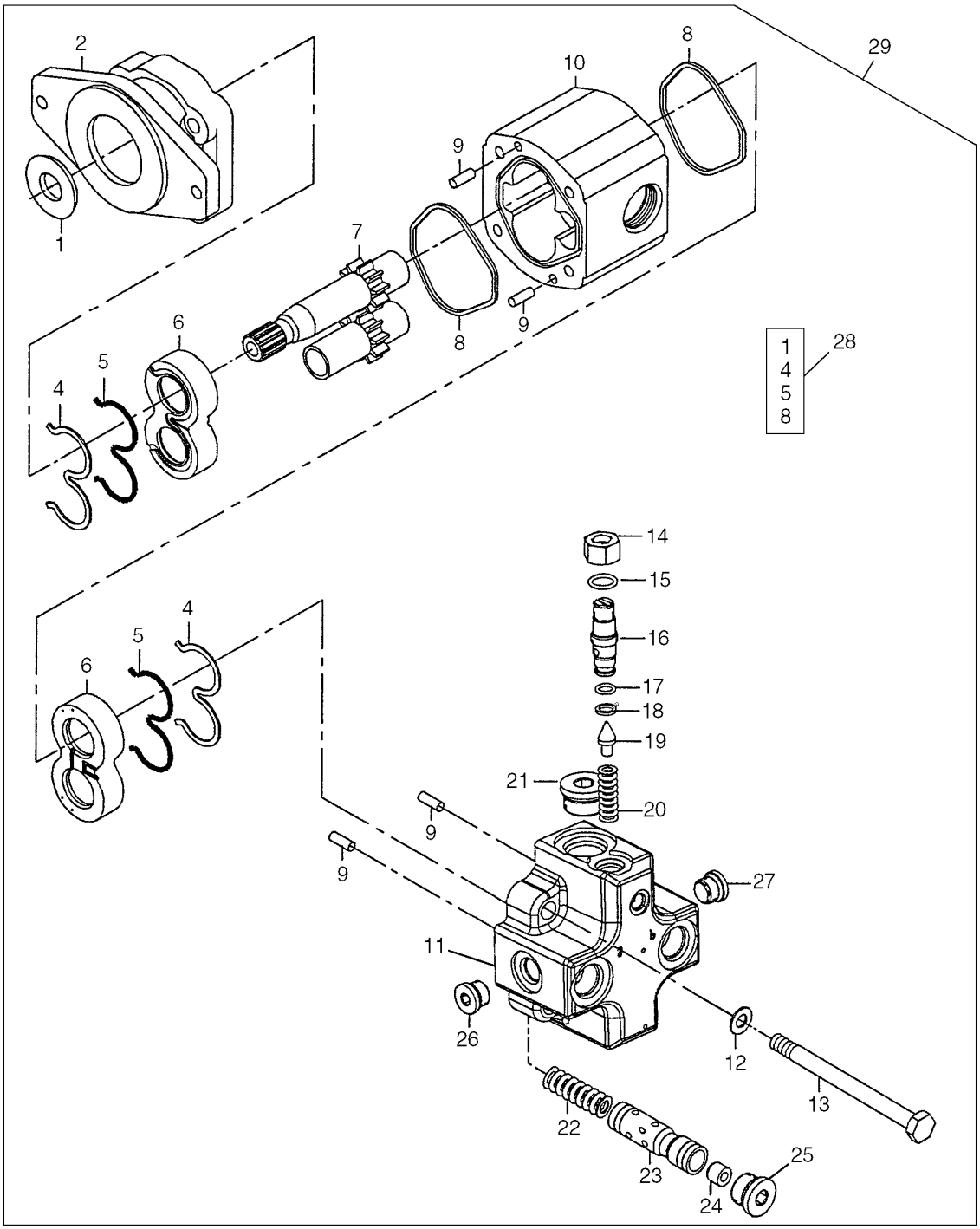

T148334

HYDRAULIC PUMP (SERIAL NO. 880054-882700)

KEY	PART NO.	PART NAME	QTY	SERIAL NO.	REMARKS
1	AT163296	SEAL	1		(SUB FOR AT188717)
2	AT188718	HOUSING	1		
4	.....	SEAL	2		
5	.....	SEAL	2		
6	AT188722	PLATE	2		
7	AT188736	GEAR	1		SET (WITH SPLINED SHAFT)
8	.....	GASKET	2		
9	AT188739	DOWEL PIN	2		
10	AT188741	HOUSING	1		GEAR
11	AT188744	HOUSING	1		VALVE
12	AT188745	WASHER	4		
13	19M8061	CAP SCREW	4		M12 X 140, (SUB FOR AT188747)
14	AT188748	NUT	1		
15	AT188749	RING	1		
16	AT188751	PRESSURE RELIEF VALVE	1		
17	AT188752	RING	1		
18	AT188753	BACK-UP RING	1		
19	AT188754	POPPET	1		
20	AT188755	SPRING	1		
21	AT188757	PLUG	1		
22	AT188758	SPRING	1		
23	.....	SPOOL	1		CB01439345 IS NO LONGER AVAILABLE, (ORDER AT188707)
24	AT188761	PLUG	1		
25	AT119577	PLUG	1		
26	AT189600	PLUG	1		
27	AT189600	PLUG	1		
28	CB11452988	SEAL KIT	1		COMPLETE
29	AT188707	PUMP	1		

HYDRAULIC PUMP (SERIAL NO. 882701-)

T196421 -UN-18NOV03

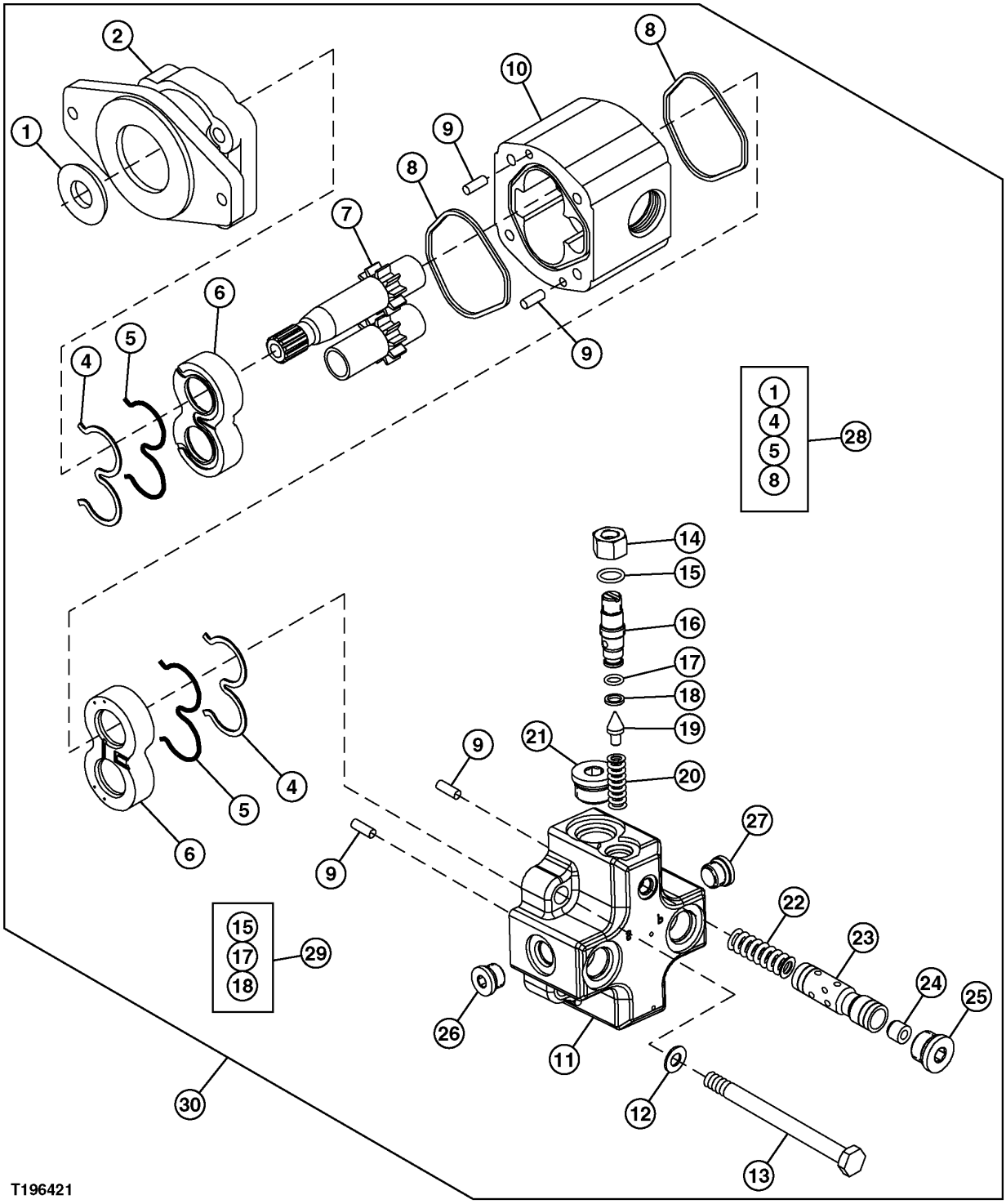

HYDRAULIC PUMP (SERIAL NO. 882701-)

KEY	PART NO.	PART NAME	QTY	SERIAL NO.	REMARKS
1	.....	SEAL	1		(A)
2	AT188718	HOUSING	1		
4	.....	SEAL	2		(A)
5	.....	SEAL	2		(A)
6	AT188722	PLATE	2		
7	AT188736	GEAR	1		SET (WITH SPLINED SHAFT)
8	.....	GASKET	2		(A)
9	AT188739	DOWEL PIN	2		
10	AT188741	HOUSING	1		GEAR
11	AT188744	HOUSING	1		VALVE
12	AT188745	WASHER	4		
13	19M8061	CAP SCREW	4		M12 X 140
14	AT188748	NUT	1		
15	.....	O-RING	1		(B)
16	AT188751	PRESSURE RELIEF VALVE	1		
17	.....	BACK-UP RING	1		(B)
18	.....	BACK-UP RING	1		(B)
19	AT188754	POPPET	1		
20	AT188755	SPRING	1		
21	AT188757	PLUG	1		
22	AT188758	SPRING	1		
23	.....	SPOOL	1		CB01439345 IS NO LONGER AVAILABLE, (ORDER AT188707)
24	AT188761	PLUG	1		
25	AT119577	PLUG	1		
26	AT189600	PLUG	1		
27	AT189600	PLUG	1		
28	CB11452988	SEAL KIT	1		COMPLETE (INCLUDES PARTS MARKED (A))
29	CB11452992	SEAL KIT	1		(INCLUDES PARTS MARKED (B))
30	AT188707	PUMP	1		

HYDRAULIC CONTROL VALVE FITTINGS (SERIAL NO. -880053)

TP80289 -UN-16NOV99

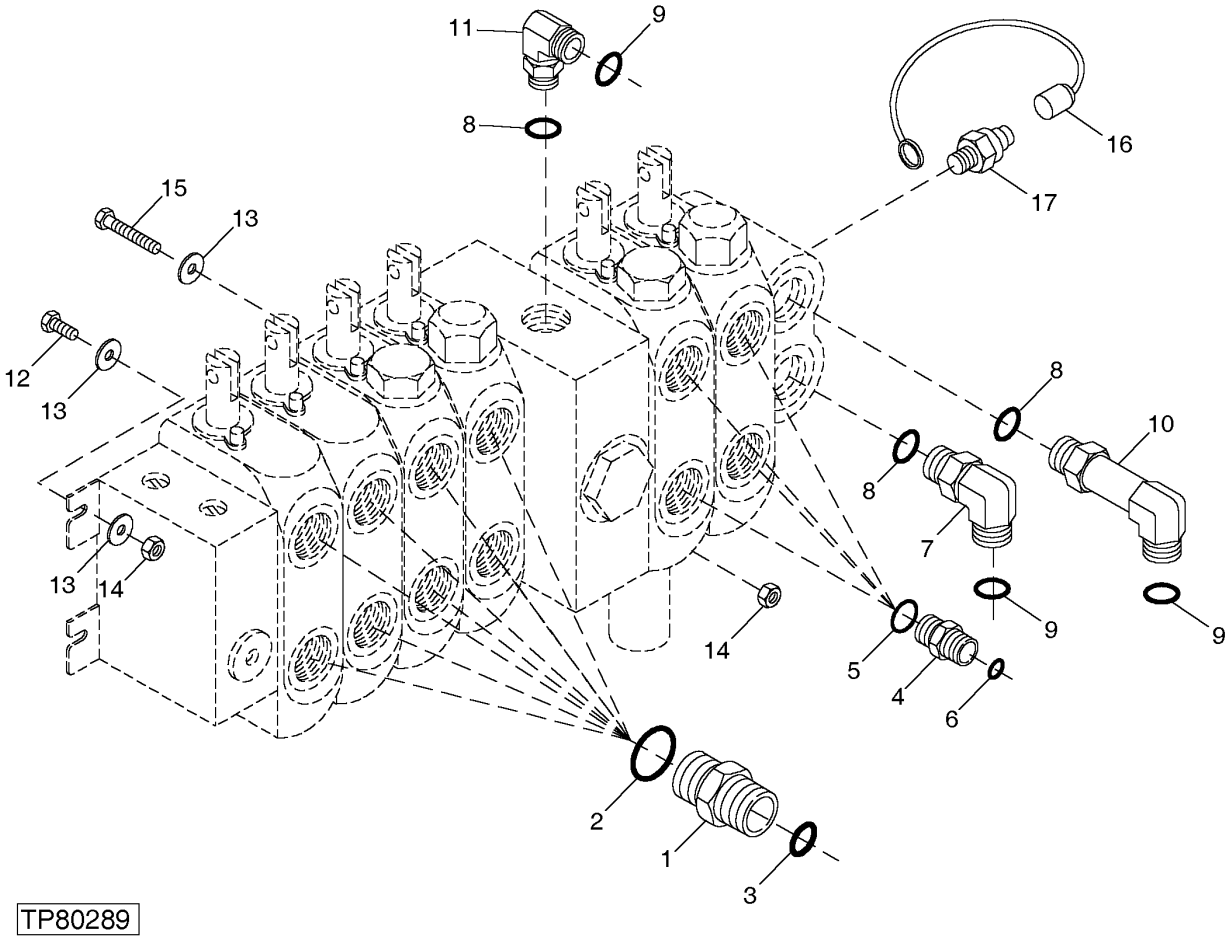

HYDRAULIC CONTROL VALVE FITTINGS (SERIAL NO. -880053)

KEY	PART NO.	PART NAME	QTY	SERIAL NO.	REMARKS
1	AT201397	FITTING	8		
2	R26375	O-RING	8		16.358 X 2.210 MM (0.644" X 0.087")
3	T77814	O-RING	8		7.645 X 1.778 MM (0.301" X 0.070")
4	38H1174	ADAPTER	4		
5	R26906	O-RING	4		19.177 X 2.464 MM (0.755" X 0.097")
6	T77857	O-RING	4		12.421 X 1.778 MM (0.489" X 0.070")
7	38H1007	ELBOW FITTING	1		
8	U12547	O-RING	3		23.470 X 2.946 MM (0.924" X 0.116")
9	T77858	O-RING	3		18.771 X 1.778 MM (0.739" X 0.070")
10	38H1492	ELBOW FITTING	1		
11	38H1014	ELBOW FITTING	1		
12	19H1914	CAP SCREW	2		1/4" X 1"
13	24H1287	WASHER	3		9/32" X 5/8" X 0.065"
14	M40333	LOCK NUT	3		6.350 MM (1/4")
15	19H2151	CAP SCREW	1		1/4" X 3"
16	AT205083	CAP	1		
17	AT205081	FITTING	1		

HYDRAULIC CONTROL VALVE FITTINGS (SERIAL NO. 880054-)

TP80288 -UN-16NOV99

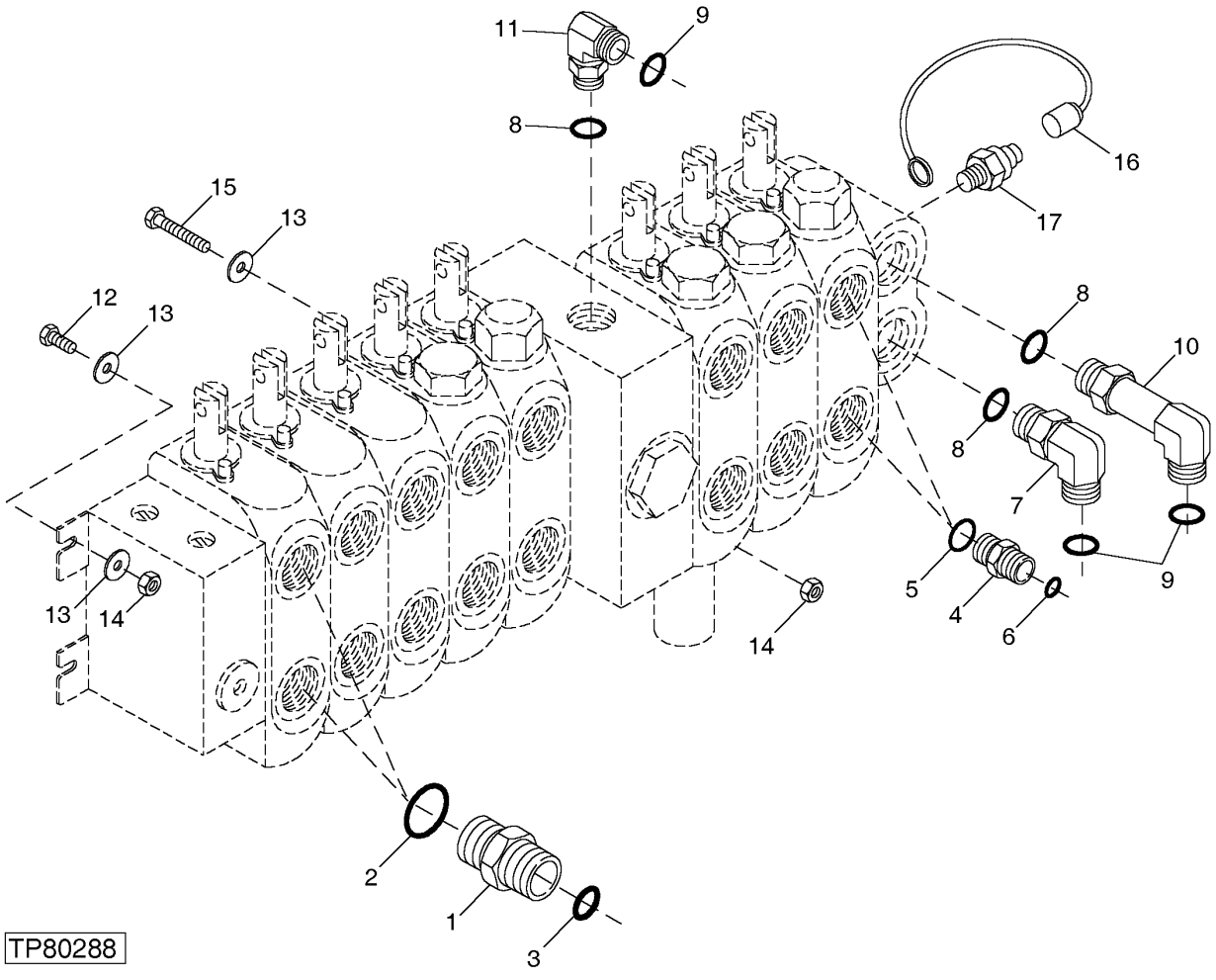

HYDRAULIC CONTROL VALVE FITTINGS (SERIAL NO. 880054-)

KEY	PART NO.	PART NAME	QTY	SERIAL NO.	REMARKS
1	38H1445	ADAPTER	2		
2	T77814	O-RING	2		0.301" X 0.070"
3	R26375	O-RING	2		0.644" X 0.087"
4	38H1174	ADAPTER	4		(ALSO ORDER T77857 AND R26906)
5	R26906	O-RING	4		0.755" X 0.097"
6	T77857	O-RING	4		0.489" X 0.070"
7	38H1007	ELBOW FITTING	1		(ALSO ORDER T77858 AND U12547)
8	U12547	O-RING	3		0.924" X 0.116"
9	T77858	O-RING	3		0.739" X 0.070"
10	38H1492	ELBOW FITTING	1		
11	38H1014	ELBOW FITTING	1		
12	19H1914	CAP SCREW	2		1/4" X 1"
13	24H1287	WASHER	3		9/32" X 5/8" X 0.065"
14	M40333	LOCK NUT	3		1/4"
15	19H2151	CAP SCREW	1		1/4" X 3"
16	AT205083	CAP	1		
17	AT205081	FITTING	1		

REVERSE VALVE MOUNT (SERIAL NO. 882701-)

T196843 -UN-10DEC03

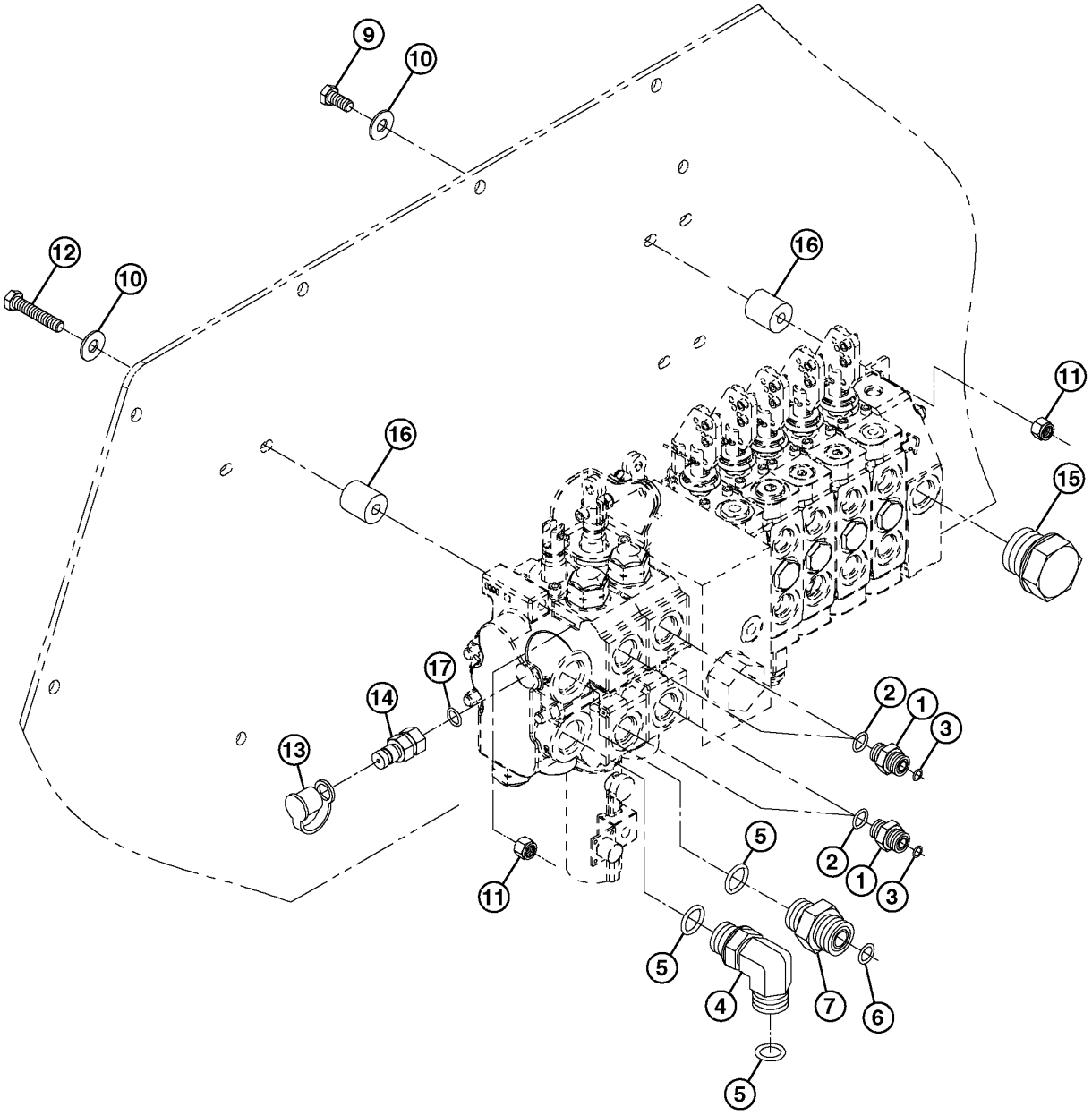

T196843

REVERSE VALVE MOUNT (SERIAL NO. 882701-)

KEY	PART NO.	PART NAME	QTY	SERIAL NO.	REMARKS
1	38H1174	ADAPTER	4		
2	R26906	O-RING	4		0.755" X 0.097"
3	T77857	O-RING	4		0.489" X 0.070"
4	38H1007	ELBOW FITTING	1		
5	U12547	O-RING	2		0.924" X 0.116"
6	T77858	O-RING	2		0.739" X 0.070"
7	38H1163	ADAPTER	1		
9	19H3434	CAP SCREW	2		1/4" X 2"
10	24H1776	WASHER	3		5/16" X 47/64" X 0.065"
11	M40333	LOCK NUT	3		1/4"
12	.....	CAP SCREW	1		
13	AT205083	CAP	1		
14	AT205081	FITTING	1		
15	0071342640	FITTING PLUG	1		
16	CB01446349	SPACER	3		
17	R28782	O-RING	1		

HYDRAULIC CONTROL VALVE (BASIC FUNCTION)

TP80339 -UN-10DEC99

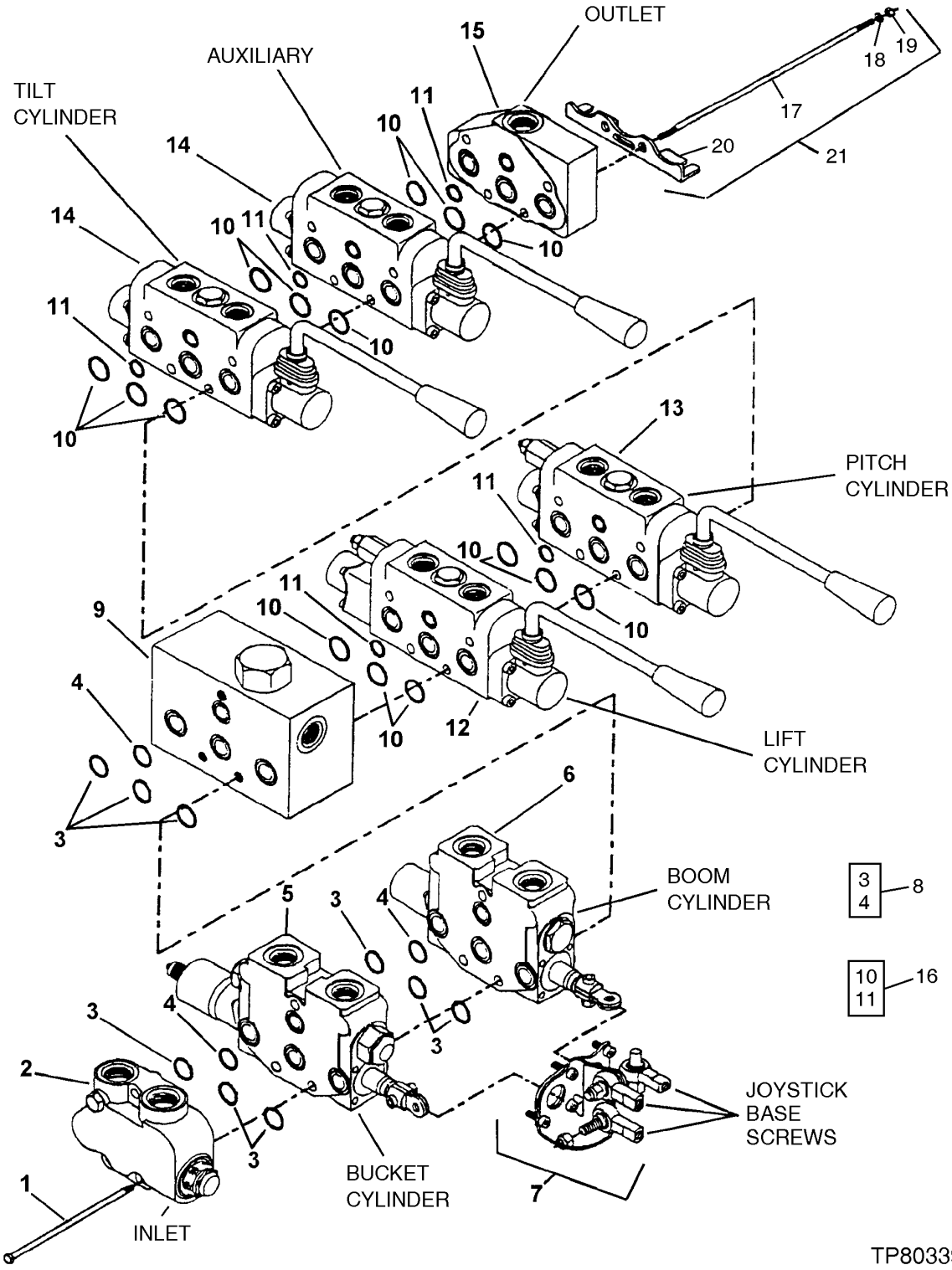

HYDRAULIC CONTROL VALVE (BASIC FUNCTION)

KEY	PART NO.	PART NAME	QTY	SERIAL NO.	REMARKS
1	AT216603	BOLT	3		
2	AT216686	END PLATE	1		(INLET)
3	.....	O-RING	9		
4	.....	O-RING	3		
5	AT188911	SPOOL VALVE	1		(BUCKET CYLINDER) (SUB FOR AT216753)
6	AT188910	SPOOL VALVE	1		(BOOM CYLINDERS) (SUB FOR AT216754)
7	AT216653	BASE	1		
8	AT216752	SEAL KIT	1		
9	AT216755	VALVE	1	-880245	
	AT190356	HYD ACTUATED CONTROL VALVE	1	880246-	
10	.....	O-RING	15		
11	.....	O-RING	5		
12	AT188914	VALVE	1	-855518	(HITCH LIFT CYLINDER) (SUB FOR AT216756)
	CB11423081	HYD ACTUATED CONTROL VALVE	1	855519-	(HITCH LIFT CYLINDER)
13	AT188912	SPOOL VALVE	1		(PITCH CYLINDER) (SUB FOR AT216757)
14	AT188913	SPOOL VALVE	2		(TILT CYLINDER AND AUXILIARY SECTION) (SUB FOR AT216758)
15	AT216759	END PLATE	1		(OUTLET)
16	AT216760	SEAL KIT	1		
17	CB01388296	STUD	4		
18	12M7050	LOCK WASHER	4		
19	M110577	NUT	4		
20	AT216662	BRACKET	1		
21	AT216604	KIT	1		(STUD KIT)

NOTE:TRANSITION VALVE AT190356 MAY BE USED IN PLACE OF AT216755

HYDRAULIC CONTROL VALVE FOUR FUNCTIONS (W/OPTIONAL THIRD FUNCTION BUCKET) (SERIAL NO. -882700)

TP80281 -UN-10DEC99

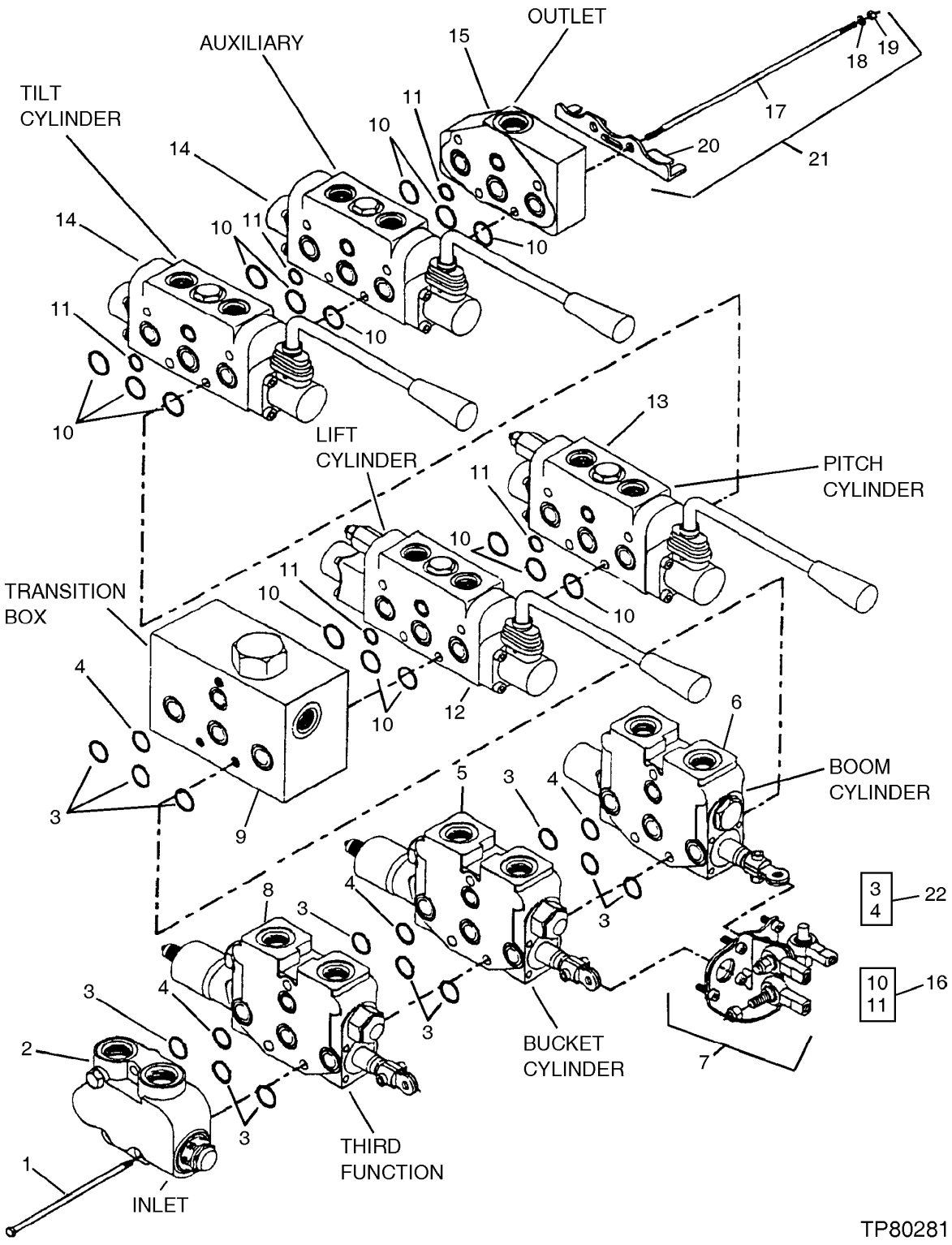

HYDRAULIC CONTROL VALVE FOUR FUNCTIONS (W/OPTIONAL THIRD FUNCTION BUCKET) (SERIAL NO. -882700)

KEY	PART NO.	PART NAME	QTY	SERIAL NO.	REMARKS
1	CB01388064	STUD	3		
2	AT216686	END PLATE	1		(INLET)
3	.....	O-RING	12		
4	.....	O-RING	3		
5	AT188911	SPOOL VALVE	1		BUCKET CYLINDER, (SUB FOR AT216753)
6	AT188910	SPOOL VALVE	1		BOOM CYLINDERS, (SUB FOR AT216754)
7	AT216653	BASE	1		
8	AT167240	DRAIN VALVE	1		THIRD FUNCTION (BUCKET)
9	AT216755	VALVE	1	880054-880245	
	AT190356	HYD ACTUATED CONTROL VALVE	1	880246-	
10	.....	O-RING	15		
11	.....	O-RING	5		
12	AT188914	VALVE	1	-855518	HITCH LIFT CYLINDER, (SUB FOR AT216756)
	CB11423081	HYD ACTUATED CONTROL VALVE	1	855519-	
13	AT188912	SPOOL VALVE	1		PITCH CYLINDER, (SUB FOR AT216757)
14	AT188913	SPOOL VALVE	2		TILT CYLINDER AND AUXILIARY SECTION, (SUB FOR AT216758)
15	AT216759	END PLATE	1		(OUTLET)
16	AT216760	SEAL KIT	1		
17	CB01388296	STUD	1		
18	12M7050	LOCK WASHER	4		
19	M110577	NUT	4		
20	AT216662	BRACKET	1		
21	AT216604	KIT	1		(STUD KIT)
22	AT216752	SEAL KIT	1		

NOTE:TRANSITION VALVE AT190356 MAY BE USED IN PLACE OF AT216755

HYDRAULIC CONTROL VALVE FOUR FUNCTIONS (W/OPTIONAL THIRD FUNCTION BUCKET) (SERIAL NO. 882701-)

T197324 -UN-13JAN04

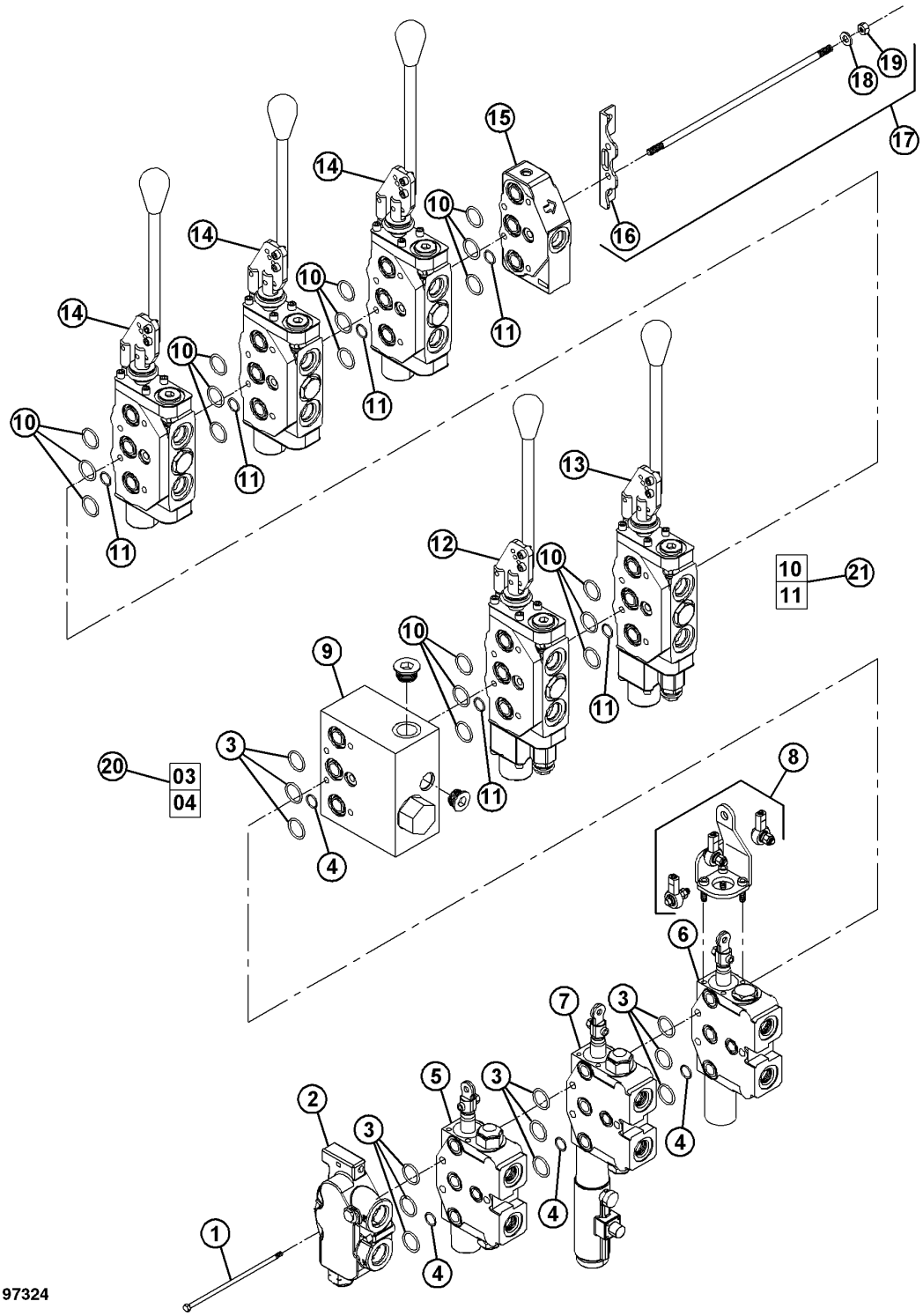

HYDRAULIC CONTROL VALVE FOUR FUNCTIONS (W/OPTIONAL THIRD FUNCTION BUCKET) (SERIAL NO. 882701-)

KEY	PART NO.	PART NAME	QTY	SERIAL NO.	REMARKS
1	AT216603	BOLT	3		
2	AT216686	END PLATE	2		(INLET)
3	.....	O-RING	9		(A)
4	.....	O-RING	3		(A)
5	AT167240	DRAIN VALVE	1		BUCKET CYLINDER
6	AT188910	SPOOL VALVE	2		BOOM CYLINDERS
7	CB11454187	KIT	1		
8	AT216653	BASE	1		
9	CB11454189	KIT	1		
10	.....	O-RING	15		(B)
11	.....	O-RING	5		(B)
12	CB11454190	KIT	1		HITCH LIFT CYLINDER
13	CB11454191	KIT	1		PITCH CYLINDER
14	CB11454192	KIT	2		TILT CYLINDER AND AUXILIARY SECTION
15	AT216759	END PLATE	1		(OUTLET)
16	AT216662	BRACKET	1		
17	AT216604	KIT	3		
18	.....	WASHER	4		
19	.....	NUT	4		
20	AT216752	SEAL KIT	1		(INCLUDES PARTS MARKED (A))
21	AT216760	SEAL KIT	1		STUD KIT (INCLUDES PARTS MARKED (B))

**HYDRAULIC CONTROL VALVE (FIFTH FUNCTION)
(W/OPTIONAL THIRD FUNCTION BUCKET)**

TP80282 -UN-10DEC99

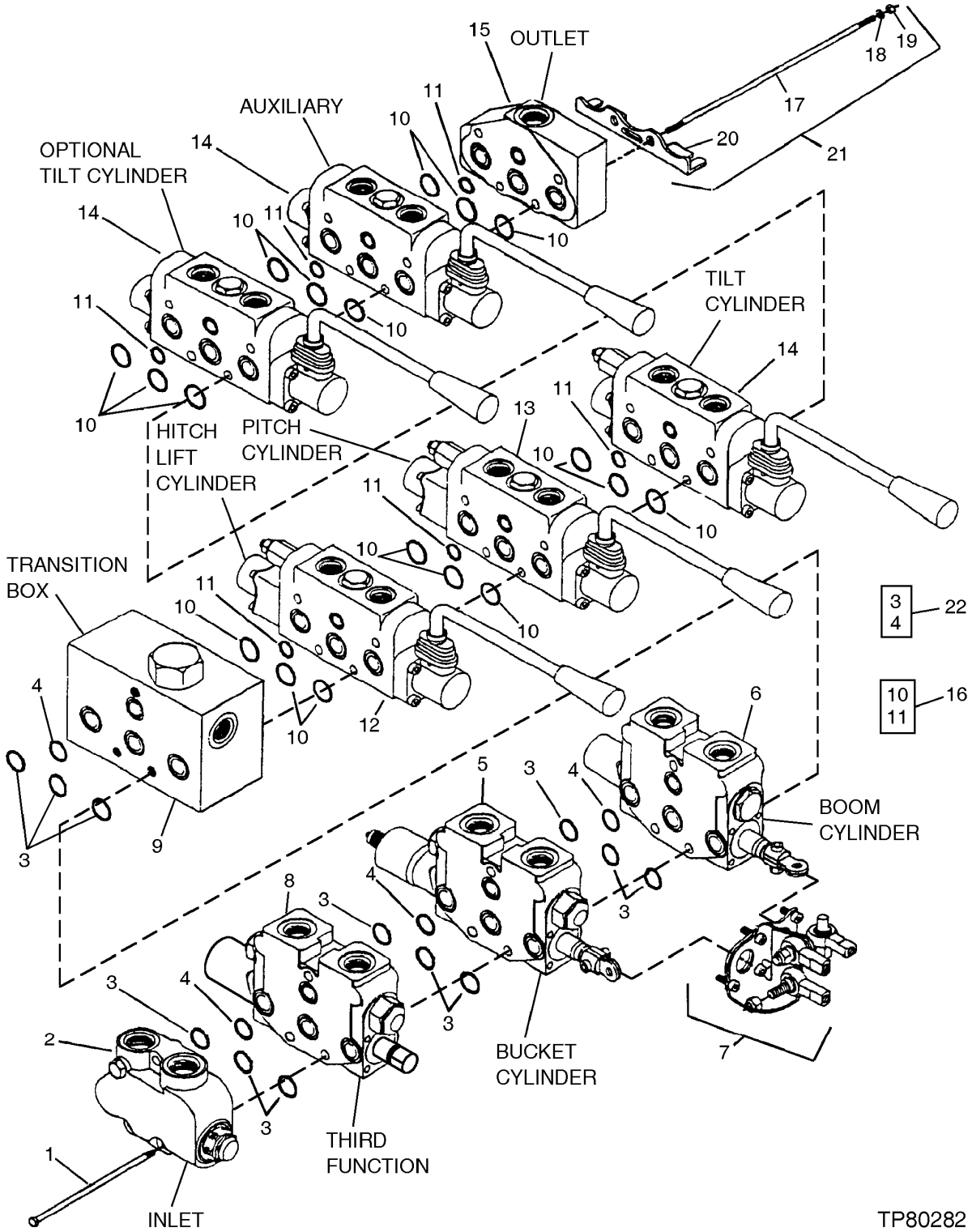

HYDRAULIC CONTROL VALVE (FIFTH FUNCTION)
(W/OPTIONAL THIRD FUNCTION BUCKET)

KEY	PART NO.	PART NAME	QTY	SERIAL NO.	REMARKS
1	CB01388064	STUD	3		
2	AT216686	END PLATE	1		INLET
3	.....	O-RING	12		
4	.....	O-RING	3		
5	AT188911	SPOOL VALVE	1		BUCKET CYLINDER, (SUB FOR AT216753)
6	AT188910	SPOOL VALVE	1		BOOM CYLINDERS, (SUB FOR AT216753)
7	AT216653	BASE	1		
8	AT167240	DRAIN VALVE	1		THIRD FUNCTION (BUCKET)
9	AT216755	VALVE	1	880054-880245	
	AT190356	HYD ACTUATED CONTROL VALVE	1	880246-	
10	.....	O-RING	18		
11	.....	O-RING	6		
12	AT188914	VALVE	1	-855518	HITCH LIFT CYLINDER, (SUB FOR AT216756)
	CB11423081	HYD ACTUATED CONTROL VALVE	1	855519-	
13	AT188912	SPOOL VALVE	1		PITCH CYLINDER, (SUB FOR AT216757)
14	AT188913	SPOOL VALVE	2		TILT CYLINDER AND AUXILIARY SECTION, (SUB FOR AT216758)
15	AT216759	END PLATE	1		(OUTLET)
16	AT216760	SEAL KIT	1		
17	CB01388050	STUD	1		
18	12M7050	LOCK WASHER	4		
19	M110577	NUT	4		
20	AT216662	BRACKET	1		
21	CB11388048	KIT	1		
22	AT216752	SEAL KIT	1		

NOTE:TRANSITION VALVE AT190356 MAY BE USED IN PLACE OF AT216755

OPTIONAL HYDRAULIC CONTROL VALVE

TP80283 -UN-10DEC99

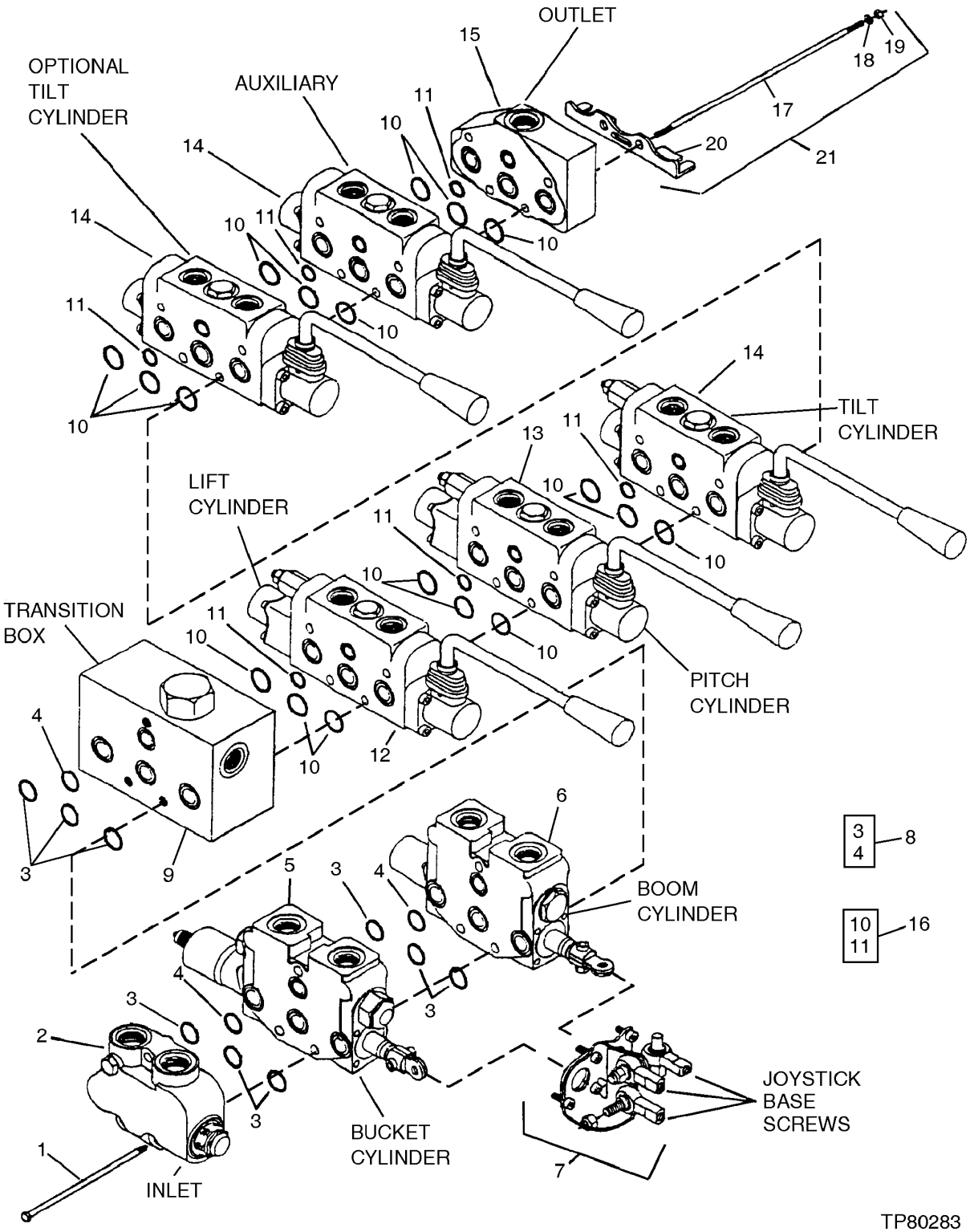

OPTIONAL HYDRAULIC CONTROL VALVE

KEY	PART NO.	PART NAME	QTY	SERIAL NO.	REMARKS
1	AT216603	BOLT	3		
2	AT216686	END PLATE	1		(INLET)
3	.....	O-RING	9		
4	.....	O-RING	3		
5	AT188911	SPOOL VALVE	1		BUCKET CYLINDER, (SUB FOR AT216753)
6	AT188910	SPOOL VALVE	1		BOOM CYLINDERS, (SUB FOR AT216754)
7	AT216653	BASE	1		
8	AT216752	SEAL KIT	1		
9	AT216755	VALVE	1	880054-880245	
	AT190356	HYD ACTUATED CONTROL VALVE	1	880246-	
10	.....	O-RING	18		
11	.....	O-RING	6		
12	AT188914	VALVE	1	-855518	HITCH LIFT CYLINDER, (SUB FOR AT216756)
	CB11423081	HYD ACTUATED CONTROL VALVE	1	855519-	
13	AT188912	SPOOL VALVE	1		PITCH CYLINDER, (SUB FOR AT216757)
14	AT188913	SPOOL VALVE	2		TILT CYLINDER AND AUXILIARY SECTION, (SUB FOR AT216758)
15	AT216759	END PLATE	1		(OUTLET)
16	AT216760	SEAL KIT	1		
17	CB01388050	STUD	1		
18	12M7050	LOCK WASHER	4		
19	M110577	NUT	4		
21	CB11388048	KIT	1		STUD
22	AT216752	SEAL KIT	1		

NOTE:TRANSITION VALVE AT190356 MAY BE USED IN PLACE OF AT216755

PIVOT ASSEMBLY

TP80182 -UN-15SEP99

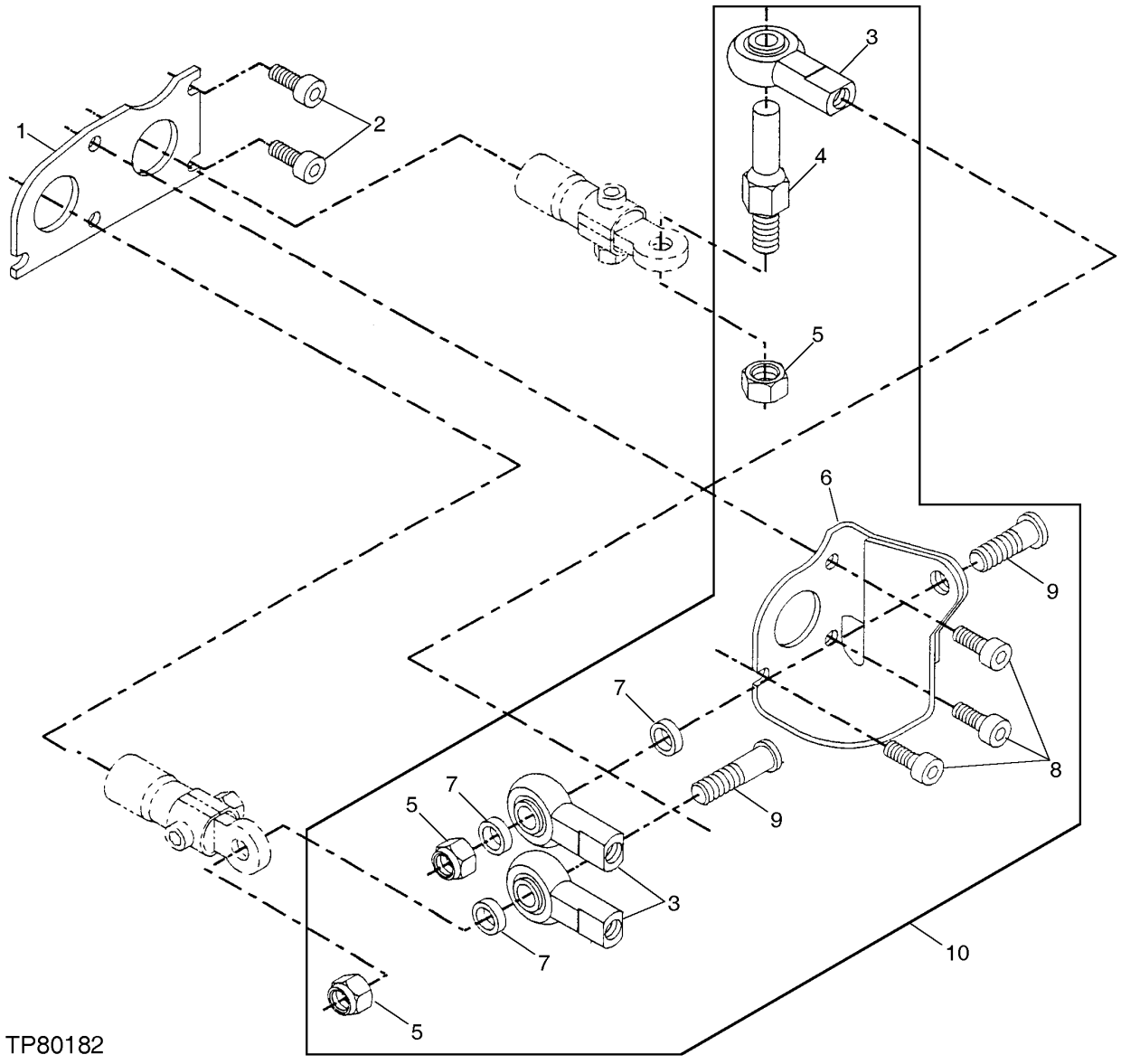

PIVOT ASSEMBLY

KEY	PART NO.	PART NAME	QTY	SERIAL NO.	REMARKS
1	M121913	PLATE	1		
2	T104773	CAP SCREW	2		
3	AT49297	LINK END	3		
4	M121921	STUD	1		(SUB FOR AT216724)
5	14H650	NUT	3		
6	M121926	BRACKET	1		
7	M121918	SPACER	3		
8	19H2924	SCREW	3		
9	M121920	STUD	2		
10	AT216653	BASE	1		

INLET SECTION, HYDRAULIC VALVE

TP80369 -UN-22DEC99

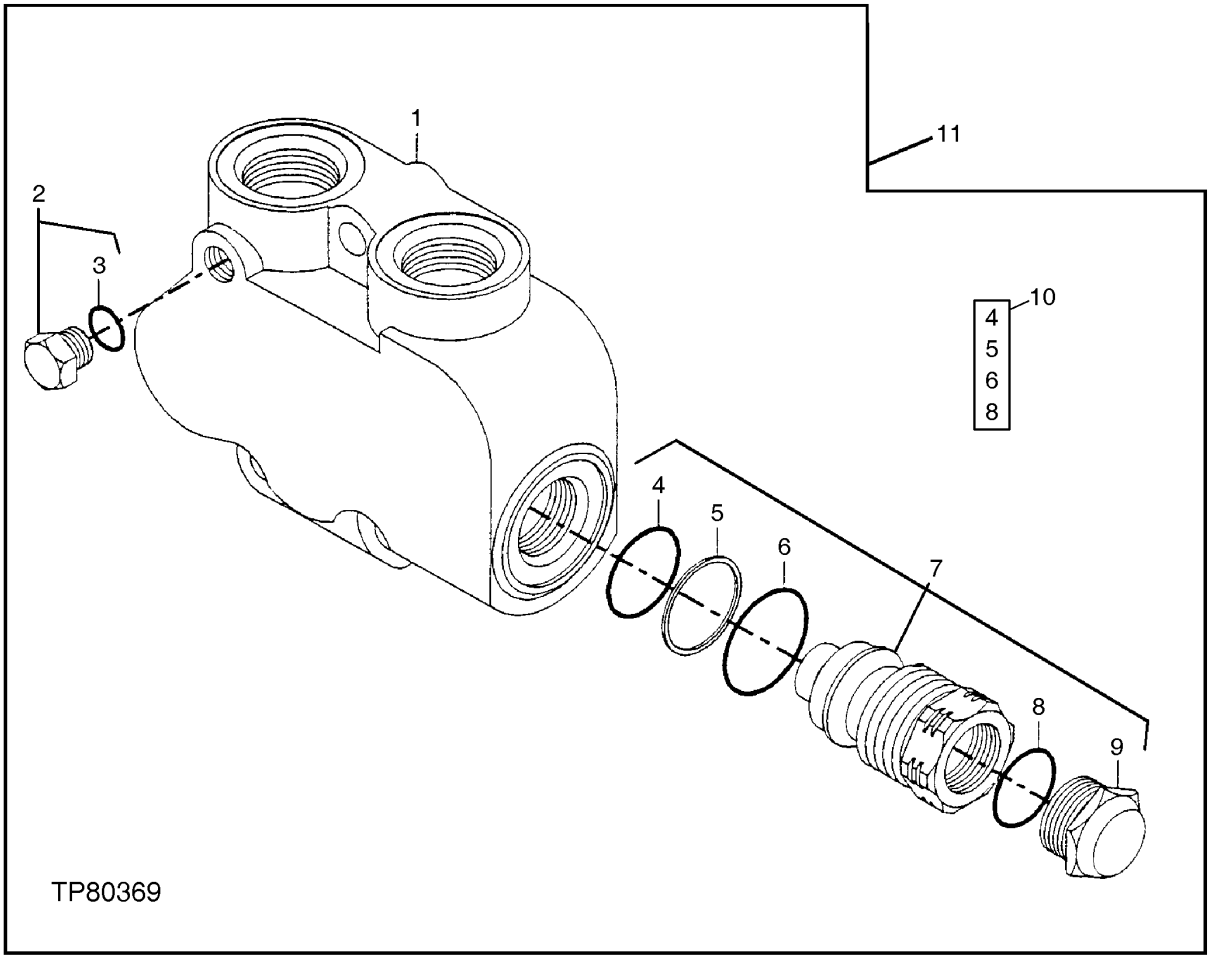

INLET SECTION, HYDRAULIC VALVE

KEY	PART NO.	PART NAME	QTY	SERIAL NO.	REMARKS
1	T113058	END PLATE	1		
2	.....	PLUG	1		
3	.....	O-RING	1		
4	.....	O-RING	1		
5	.....	BACK-UP RING	1		
6	.....	O-RING	1		
7	AT71724	PRESSURE RELIEF VALVE	1		
8	.....	O-RING	1		
9	.....	PLUG	1		
10	AT216688	SEAL KIT	1		
11	AT216686	END PLATE	1		(INLET)

BUCKET SECTION, HYDRAULIC VALVE (SERIAL NO. -882700)

T154325 -UN-25APR02

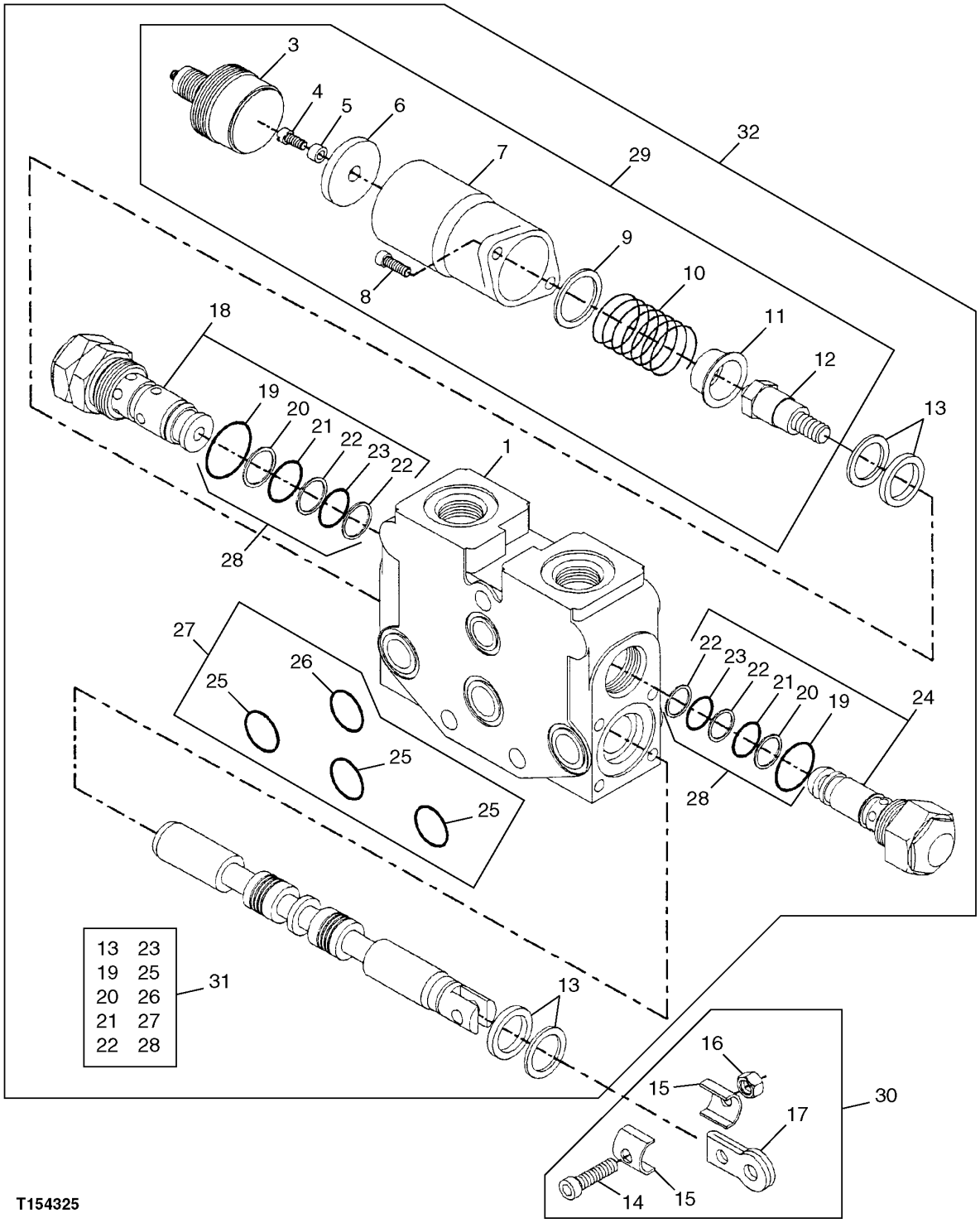

BUCKET SECTION, HYDRAULIC VALVE (SERIAL NO. -882700)

KEY	PART NO.	PART NAME	QTY	SERIAL NO.	REMARKS
1	.....	HOUSING	1		
3	AT167440	RETAINER	1		(RETURN TO DIG)
4	.....	BOLT	1		
5	.....	WASHER	1		
6	T151328	ARMATURE	1		(SUB FOR T61148)
7	T118654	CAP	1		
8	19H2931	SCREW	2		1/4" X 0.620"
9	T113008	WASHER	1		
10	.....	SPRING	1		
11	T104788	LOCKING COLLAR	1		
12	.....	ADAPTER	1		
13	.....	SEAL	4		(ORDER AT216645)
14	.....	BOLT	1		
15	.....	CLAMP	2		
16	.....	NUT	1		
17	.....	END	1		
18	AT101701	PRESSURE RELIEF VALVE	1		(ORDER AT160684 SEAL KIT FOR SEAL REPLACEMENT)
19	.....	O-RING	2		
20	.....	BACK-UP RING	2		
21	.....	O-RING	2		
22	.....	BACK-UP RING	4		
23	.....	O-RING	2		
24	AT101699	PRESSURE RELIEF VALVE	1		(ORDER AT160684 SEAL KIT FOR SEAL REPLACEMENT)
25	.....	O-RING	3		
26	.....	O-RING	1		
27	AT216752	SEAL KIT	1		
28	AT216643	SEAL KIT	2		
29	AT167439	SOLENOID	1		(SPOOL POSITIONER)
30	AT182318	KIT	1		(CLEVIS ADAPTER) (SUB FOR AT216696)
31	AT216645	SEAL KIT	1		
32	AT188911	SPOOL VALVE	1		(BUCKET) (SUB FOR AT216753)

BUCKET SECTION, HYDRAULIC VALVE (SERIAL NO. 882701-)

T197350 -UN-14JAN04

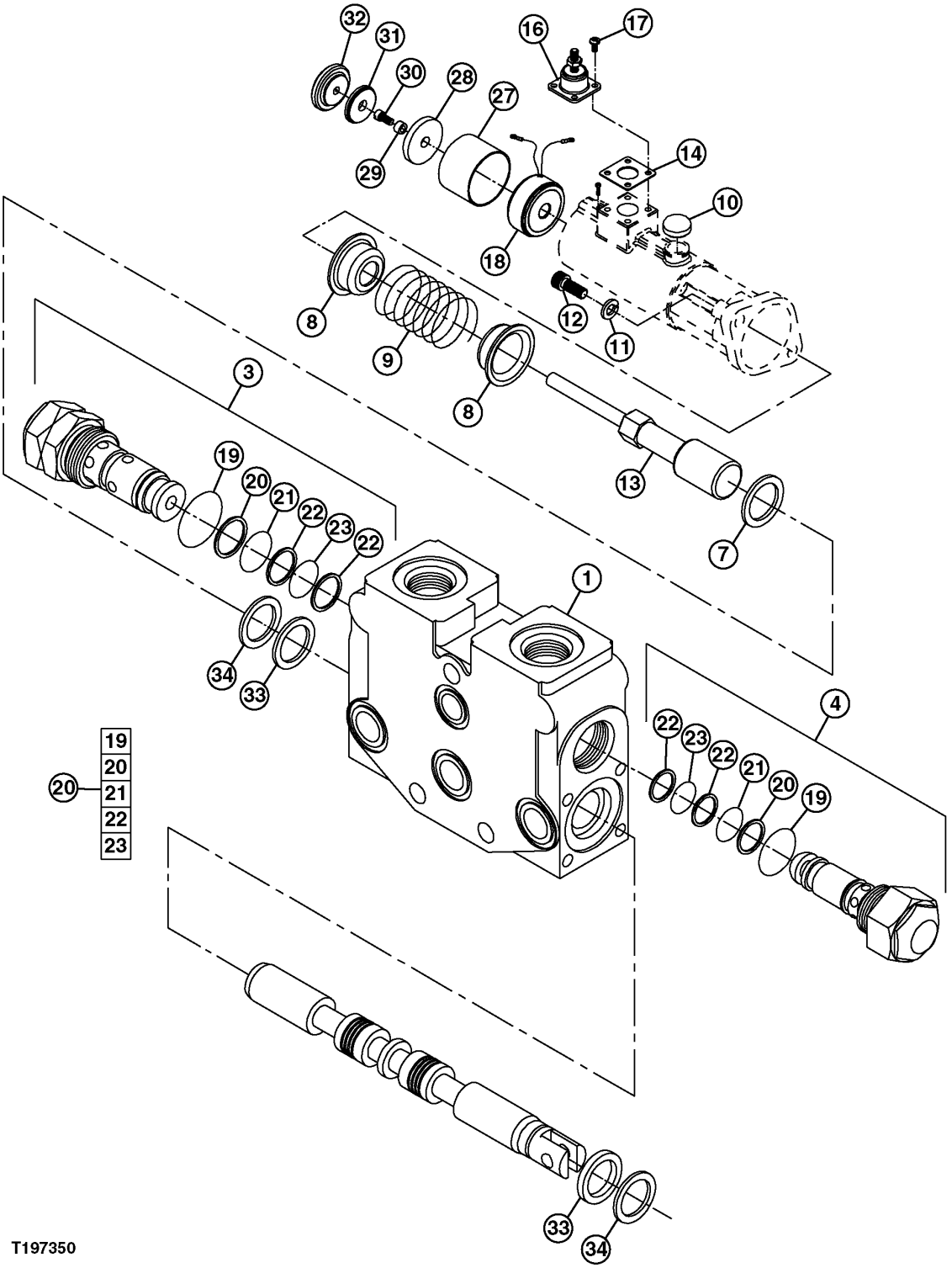

BUCKET SECTION, HYDRAULIC VALVE (SERIAL NO. 882701-)

KEY	PART NO.	PART NAME	QTY	SERIAL NO.	REMARKS
1	.....	HOUSING	1		
3	AT101701	PRESSURE RELIEF VALVE	1		(ORDER AT160684 SEAL KIT FOR SEAL REPLACEMENT)
4	AT101699	PRESSURE RELIEF VALVE	1		(ORDER AT160684 SEAL KIT FOR SEAL REPLACEMENT)
6	AT216643	SEAL KIT	2		
7	.....	SEAL	1		
8	.....	LOCKING COLLAR	2		
9	.....	SPRING	1		
10	.....	CAP	1		
11	12H322	LOCK WASHER	2		1/4"
12	19H2992	SCREW	2		1/4" X 1-1/4"
13	.....	SPOOL	1		
14	.....	GASKET	1		
16	.....	ELECTRICAL CONNECTOR ASSY	1		
17	21H958	SCREW	4		0.112" X 1/4"
18	.....	MAGNET	1		(12 VDC ELECTRO)
19	.....	O-RING	2		
20	.....	BACK-UP RING	2		
21	.....	O-RING	2		
22	.....	BACK-UP RING	4		
23	.....	O-RING	2		
27	.....	BUSHING	1		
28	T61148	ARMATURE	1		
29	AT216607	WASHER	1		(SPOOL POSITIONER)
30	AT216606	BOLT	1		
31	.....	SPACER	1		
32	.....	PLUG	1		
33	.....	BACK-UP RING	2		
34	.....	SEAL	2		

BOOM SECTION, HYDRAULIC VALVE

T154326 -UN-25APR02

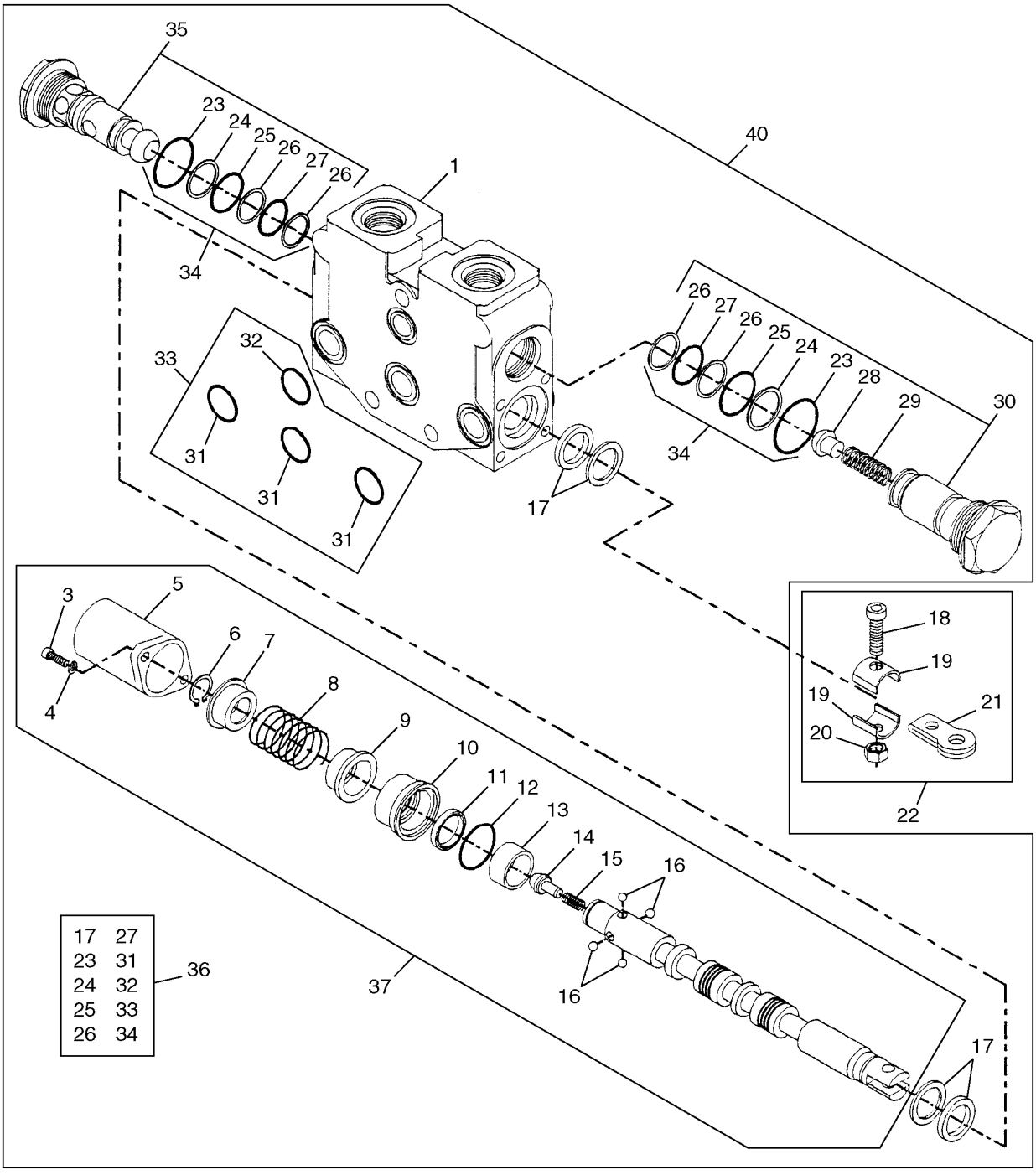

T154326

BOOM SECTION, HYDRAULIC VALVE

KEY	PART NO.	PART NAME	QTY	SERIAL NO.	REMARKS
1	.....	HOUSING	1		
3	19H3554	SCREW	2		1/4" X 0.880"
4	.....	LOCK WASHER	2		
5	T118653	CAP	1		
6	.....	SNAP RING	1		
7	.....	RETAINER	1		
8	T125548	SPRING	1		
9	T142863	ROUND RETAINER	1		
10	T142864	SLEEVE	1		
11	AT216644	SEAL	1		
12	T142866	PACKING	1		
13	T142865	SLEEVE	1		
14	T104782	FOLLOWER	1		
15	T125549	SPRING	1		
16	T120233	BALL	4		
17	AT216641	SEAL KIT	4		(A)
18	.....	BOLT	1		
19	.....	CLAMP	2		
20	.....	NUT	1		
21	.....	END	1		
22	AT182318	KIT	1		(SUB FOR AT216696)
23	.....	O-RING	2		(A)
24	.....	BACK-UP RING	2		(A)
25	.....	O-RING	2		(A)
26	.....	BACK-UP RING	4		(A)
27	.....	O-RING	2		(A)
28	U13616	PRESSURE RELIEF VALVE	1		
29	T36012	SPRING	1		
30	AT38197	PLUG	1		
31	.....	O-RING	3		(A)
32	.....	O-RING	1		(A)
33	AT216752	SEAL KIT	1		(A)
34	AT216643	SEAL KIT	2		(A)
35	AT216706	HYD ACTUATED CONTROL VALVE	1		
36	AT216645	SEAL KIT	1		(INCLUDES PARTS MARKED (A))
37	AT167591	RETAINER	1		
40	AT188910	SPOOL VALVE	1		(BOOM) (SUB FOR AT216754)

THIRD FUNCTION LOADER AUXILIARY VALVE KIT (SERIAL NO. -880053)

T140720 -UN-30MAR01

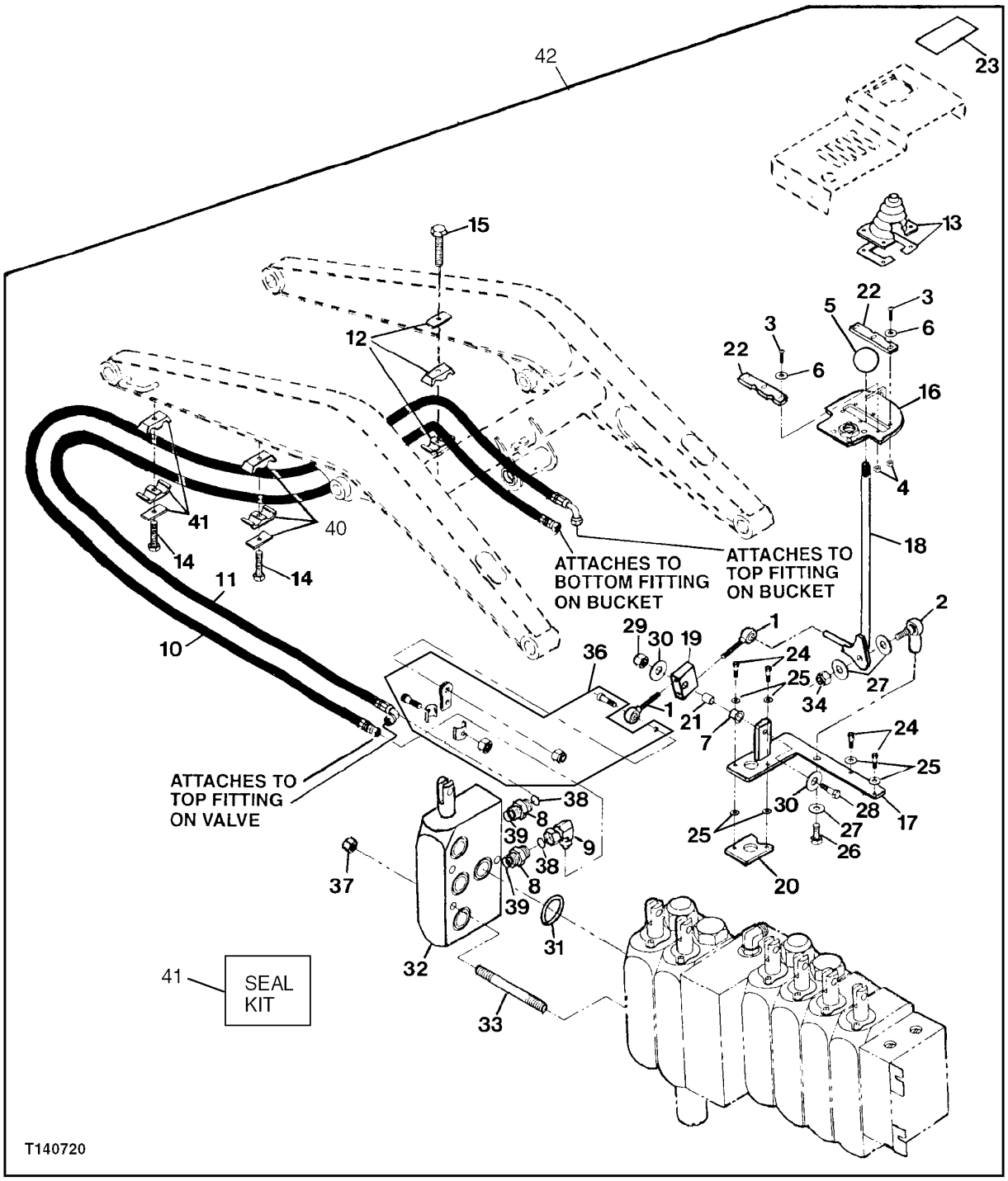

THIRD FUNCTION LOADER AUXILIARY VALVE KIT (SERIAL NO. -880053)

KEY	PART NO.	PART NAME	QTY	SERIAL NO.	REMARKS
1	AT46594	LINK END	2	-880053	
2	AT169087	BALL JOINT	1	-880053	(SUB FOR AT49300)
3	21H1148	SCREW	6	-880053	0.190" X 3/4"
4	T12847	LOCK NUT	6	-880053	3/16"
5	T162970	KNOB	1	-880053	
6	AT216514	WASHER	6	-880053	
7	T23639	BUSHING	1	-880053	
8	38H1174	ADAPTER	2	-880053	(ALSO ORDER T77857 AND R26906)
9	38H1012	ELBOW FITTING	1	-880053	
10	AT184820	HYDRAULIC HOSE - FABRICATE	1	-880053	(SUB FOR AT182097)
11	AT184827	HYDRAULIC HOSE - FABRICATE	1	-880053	(SUB FOR AT182098)
12	T162971	CLAMP	1	-880053	
13	AT101909	BOOT	1	-880053	
14	19H1913	CAP SCREW	2	-880053	5/16" X 2-1/4"
15	19M7572	CAP SCREW	1	-880053	M10 X 45
16	AT182102	BASE	1	-880053	
17	AT182103	BASE	1	-880053	
18	AT182104	LEVER	1	-880053	
19	T162977	PIVOT	1	-880053	
20	T162975	SPACER	1	-880053	
21	T162976	BUSHING	1	-880053	
22	T162978	BEARING	2	-880053	
23	T134785	LABEL	1	-880053	(LOADER CONTROL-MULTIPURPOSE BUCKET)
24	19H2932	SCREW	4	-880053	1/4" X 1"
25	24H1287	WASHER	6	-880053	9/32" X 5/8" X 0.065"
26	19H2263	CAP SCREW	1	-880053	3/8" X 1", (SUB FOR F1002516H8)
27	R57696	WASHER	3	-880053	9.931 X 23.114 X 3.048 MM (25/64" X 0.910" X 0.120")
28	19H3552	CAP SCREW	1	-880053	5/16" X 1-1/2"
29	T16464	LOCK NUT	1	-880053	
30	24H1122	WASHER	2	-880053	3/8" X 7/8" X 0.083"
31	AT216752	SEAL KIT	1	-880053	
32	AT167240	DRAIN VALVE	1	-880053	(INCLUDES PARTS MARKED (A)) (ALSO ORDER AT160682)
33	.....	STUD	3	-880053	(A) (SUB 19H1648, THIS APPLICATION)
	19H1648	CAP SCREW	3	-880053	3/8" X 3/4"
34	T27945	LOCK NUT	1	-880053	3/8"
36	AT182318	KIT	1	-880053	(CLEVIS ADAPTER KIT)
37	14H1076	NUT	3	-880053	3/8"
38	T77857	O-RING	2	-880053	12.421 X 1.778 MM (0.489" X 0.070")
39	R26906	O-RING	2	-880053	19.177 X 2.464 MM (0.755" X 0.097")
40	T165496	CLAMP	2	-880053	
41	AT160682	SEAL KIT	1	-880053	(A)
42	AT180361	KIT	1	-880053	(COMPLETE)

THIRD FUNCTION LOADER AUXILIARY VALVE KIT (SERIAL NO. 880054-XXXXXX)

T140721 -UN-30MAR01

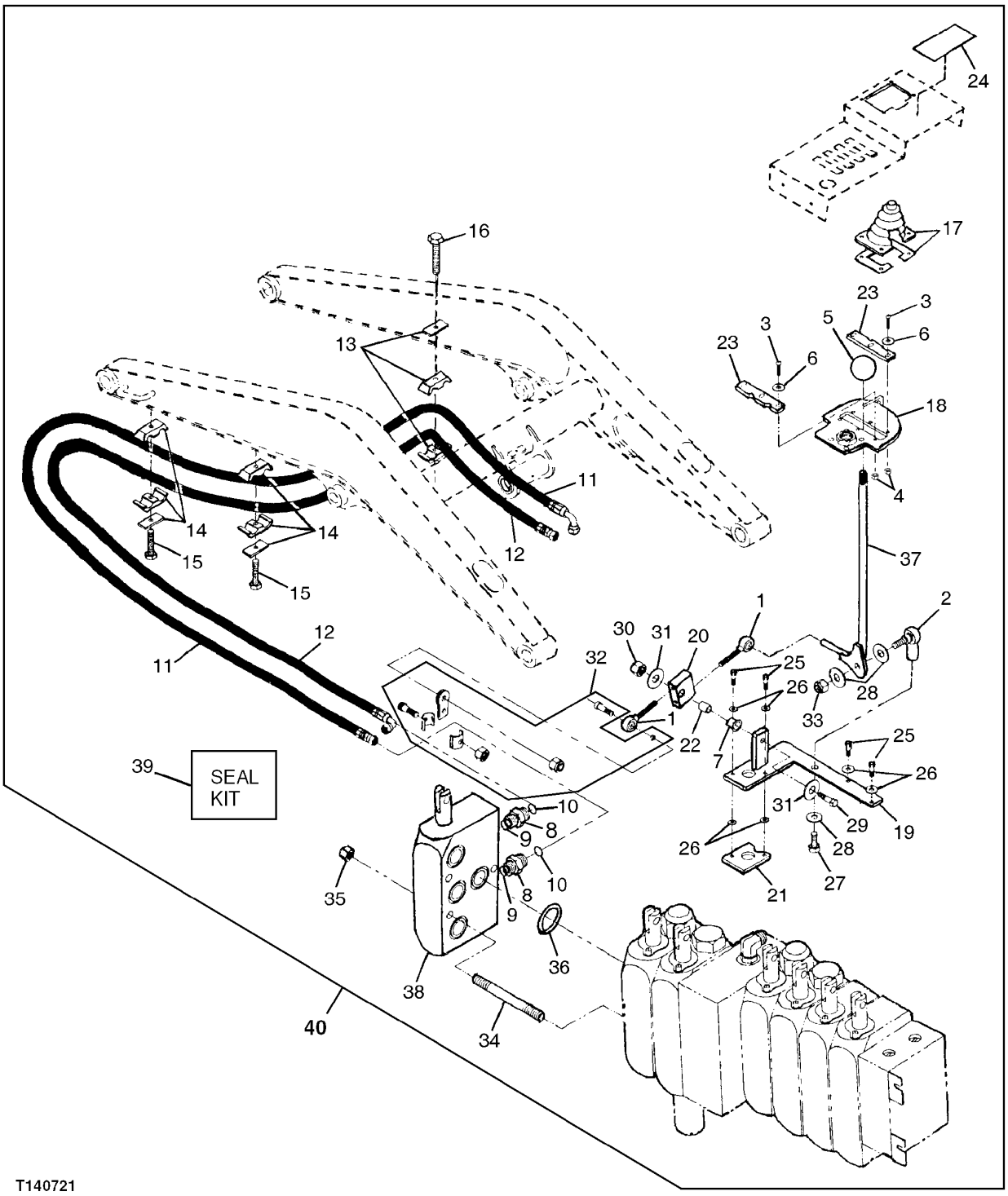

THIRD FUNCTION LOADER AUXILIARY VALVE KIT (SERIAL NO. 880054-XXXXXX)

KEY	PART NO.	PART NAME	QTY	SERIAL NO.	REMARKS
1	AT46594	LINK END	2		
2	AT169087	BALL JOINT	1		(SUB FOR AT49300)
3	21H1148	SCREW	6		0.190" X 3/4"
4	T12847	LOCK NUT	6		4.775 MM (3/16")
5	T162970	KNOB	1		
6	24H1283	WASHER	6		7/32" X 1/2" X 0.049"
7	T23639	BUSHING	1		
8	38H1174	ADAPTER	2		
9	R26906	O-RING	2		19.177 X 2.464 MM (0.755" X 0.097")
10	T77857	O-RING	2		12.421 X 1.778 MM (0.489" X 0.070")
11	AT188921	HYDRAULIC HOSE - FABRICATE	1		(INCLUDES TY22388)
	TY22388	FITTING PLUG	1		
12	AT188922	HYDRAULIC HOSE - FABRICATE	1		(INCLUDES TY22388)
	TY22388	FITTING PLUG	1		
13	T165496	CLAMP	1		
14	T162971	CLAMP	2		
15	19H1907	CAP SCREW	2		5/16" X 2-3/4"
16	19M7572	CAP SCREW	1		M10 X 45
17	AT188923	BOOT	1		
18	AT182102	BASE	1		
19	AT182103	BASE	1		
20	T162977	PIVOT	1		
21	T162975	SPACER	1		
22	T162976	BUSHING	1		
23	T162978	BEARING	2		
24	T134785	LABEL	1		(LOADER CONTROL-MULTIPURPOSE BUCKET)
25	19H2932	SCREW	4		1/4" X 1"
26	24H1136	WASHER	6		11/32" X 11/16" X 0.065"
27	19H2263	CAP SCREW	1		3/8" X 1", (SUB FOR F1002516H8)
28	R57696	WASHER	3		25/64" X 0.910" X 0.120"
29	19H3552	CAP SCREW	1		5/16" X 1-1/2"
30	T16464	LOCK NUT	1		5/16"
31	24H1122	WASHER	2		3/8" X 7/8" X 0.083"
32	AT182318	KIT	1		
33	T27945	LOCK NUT	1		
34	CB01388064	STUD	1		(A)
	19H1648	CAP SCREW	1		3/8" X 3/4"
35	14H1076	NUT	1		3/8"
36	.....	SEAL	1		
37	AT182104	LEVER	1		
38	AT182099	KIT	1		VALVE (INCLUDES PARTS MARKED (A))
39	AT216752	SEAL KIT	1		(A) 3RD FUNCTION LOADER VALVE
40	AT180361	KIT	1		3RD FUNCTION LOADER VALVE (COMPLETE)

THIRD FUNCTION LOADER AUXILIARY VALVE KIT (SERIAL NO. XXXXXX-882700)

T196114 -UN-07NOV03

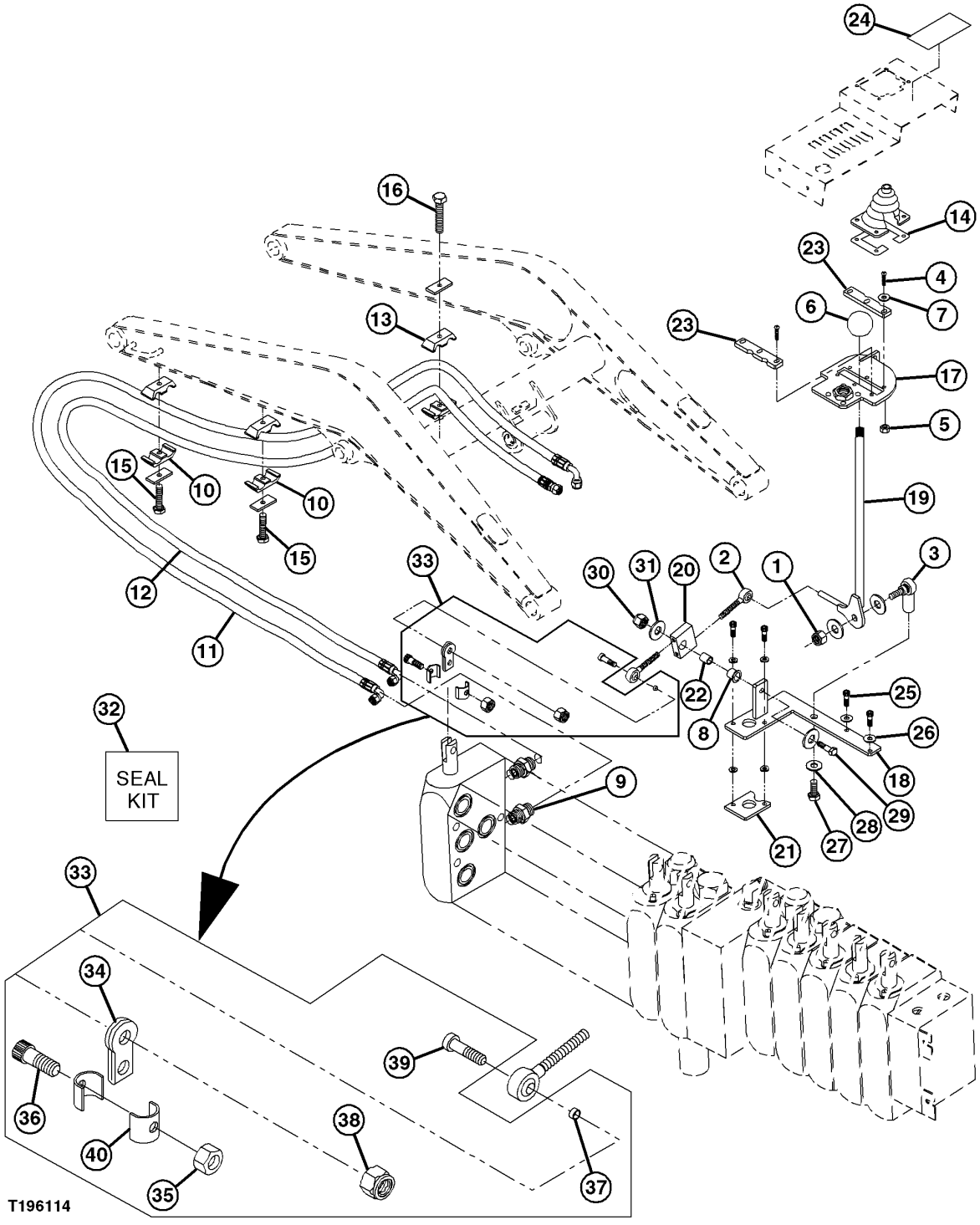

THIRD FUNCTION LOADER AUXILIARY VALVE KIT (SERIAL NO. XXXXXX-882700)

KEY	PART NO.	PART NAME	QTY	SERIAL NO.	REMARKS
1	T27945	LOCK NUT	1		
2	AT46594	LINK END	2		
3	AT169087	BALL JOINT	1		
4	21H1148	SCREW	6		0.190" X 3/4"
5	T12847	LOCK NUT	6		3/16"
6	T162970	KNOB	1		
7	24H1283	WASHER	6		7/32" X 1/2" X 0.049"
8	T23639	BUSHING	1		
9	38H1174	ADAPTER	2		
	T77932	O-RING	1		
	R26906	O-RING	1		
10	T162971	CLAMP	2		
11	AT188922	HYDRAULIC HOSE - FABRICATE	1		(INCLUDES TY22388)
	TY22388	FITTING PLUG	1		
12	AT188921	HYDRAULIC HOSE - FABRICATE	1		(INCLUDES TY22388)
	TY22388	FITTING PLUG	1		
13	T165496	CLAMP	1		
14	AT188923	BOOT	1		
15	19H1907	CAP SCREW	2		5/16" X 2-3/4", (SUB FOR AT188918)
16	19M7572	CAP SCREW	1		M10 X 45
17	AT182102	BASE	1		
18	AT182103	BASE	1		
19	AT182104	LEVER	1		
20	T162977	PIVOT	1		
21	T162975	SPACER	1		
22	T162976	BUSHING	1		
23	T162978	BEARING	2		
24	T134785	LABEL	1		(LOADER CONTROL-MULTIPURPOSE BUCKET)
25	19H2932	SCREW	4		1/4" X 1"
26	24H1776	WASHER	6		5/16" X 47/64" X 0.065"
27	19H2263	CAP SCREW	1		3/8" X 1", (SUB FOR F1002516H8)
28	R57696	WASHER	3		25/64" X 0.910" X 0.120"
29	19H3552	CAP SCREW	1		5/16" X 1-1/2"
30	T16464	LOCK NUT	1		5/16"
31	24H1122	WASHER	2		3/8" X 7/8" X 0.083"
32	AT216752	SEAL KIT	1		
33	2223002944	SEAL KIT	1		
34	.....	ADAPTER	1		
35	.....	NUT	1		
36	.....	BOLT	1		
37	.....	BUSHING	1		
38	.....	NUT	1		
39	.....	BOLT	1		
40	.....	CLEVIS	2		

THIRD FUNCTION LOADER AUXILIARY VALVE KIT (SERIAL NO. 882701-)

T196115 -UN-07NOV03

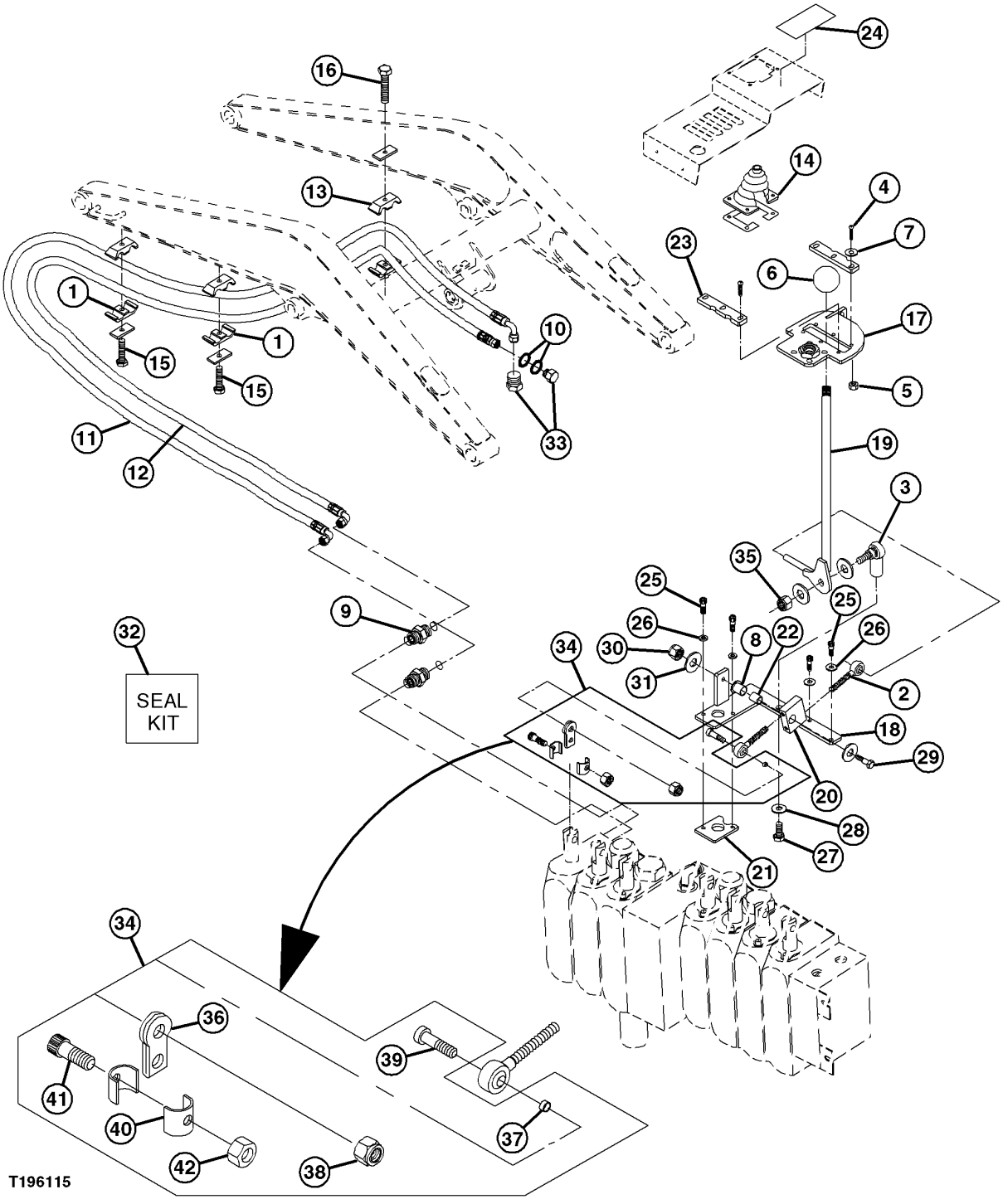

THIRD FUNCTION LOADER AUXILIARY VALVE KIT (SERIAL NO. 882701-)

KEY	PART NO.	PART NAME	QTY	SERIAL NO.	REMARKS
1	T162971	CLAMP	2		
2	AT46594	LINK END	2		
3	AT169087	BALL JOINT	1		
4	21H1148	SCREW	6		4.826 X 19.050 MM (0.190" X 3/4")
5	T12847	LOCK NUT	6		
6	T162970	KNOB	1		
7	24H1283	WASHER	6		7/32" X 1/2" X 0.049"
8	T23639	BUSHING	1		
9	38H1174	ADAPTER	2		
	T77932	O-RING	1		
	T77857	O-RING	1		
10	T77857	O-RING	2		
11	AT188921	HYDRAULIC HOSE - FABRICATE	1		(INCLUDES TY22388)
12	AT188922	HYDRAULIC HOSE - FABRICATE	1		(INCLUDES TY22388)
13	T165496	CLAMP	1		
14	AT188923	BOOT	1		
15	19H2732	CAP SCREW	2		3/8" X 2-3/4"
16	19M7572	CAP SCREW	1		M10 X 45
17	AT182102	BASE	1		
18	AT182103	BASE	1		
19	AT182104	LEVER	1		
20	T162977	PIVOT	1		
21	T162975	SPACER	1		
22	T162976	BUSHING	1		
23	T162978	BEARING	2		
24	T134785	LABEL	1		(LOADER CONTROL-MULTIPURPOSE BUCKET)
25	19H2932	SCREW	4		1/4" X 1"
26	24H1776	WASHER	6		5/16" X 47/64" X 0.065"
27	19H2263	CAP SCREW	1		3/8" X 1"
28	R57696	WASHER	3		25/64" X 0.910" X 0.120"
29	19H3552	CAP SCREW	1		5/16" X 1-1/2"
30	T16464	LOCK NUT	1		5/16"
31	24H1122	WASHER	2		3/8" X 7/8" X 0.083"
32	AT216752	SEAL KIT	1		
33	.....	PLUG	2		
34	2223002944	SEAL KIT	1		
35	T27945	LOCK NUT	1		3/8"
36	.....	ADAPTER	1		
37	.....	BUSHING	1		
38	.....	NUT	1		
39	.....	BOLT	1		
40	.....	CLEVIS	1		
41	.....	BOLT	1		
42	.....	NUT	1		

FIFTH FUNCTION HITCH VALVE KIT

TP52743 -UN-15MAY97

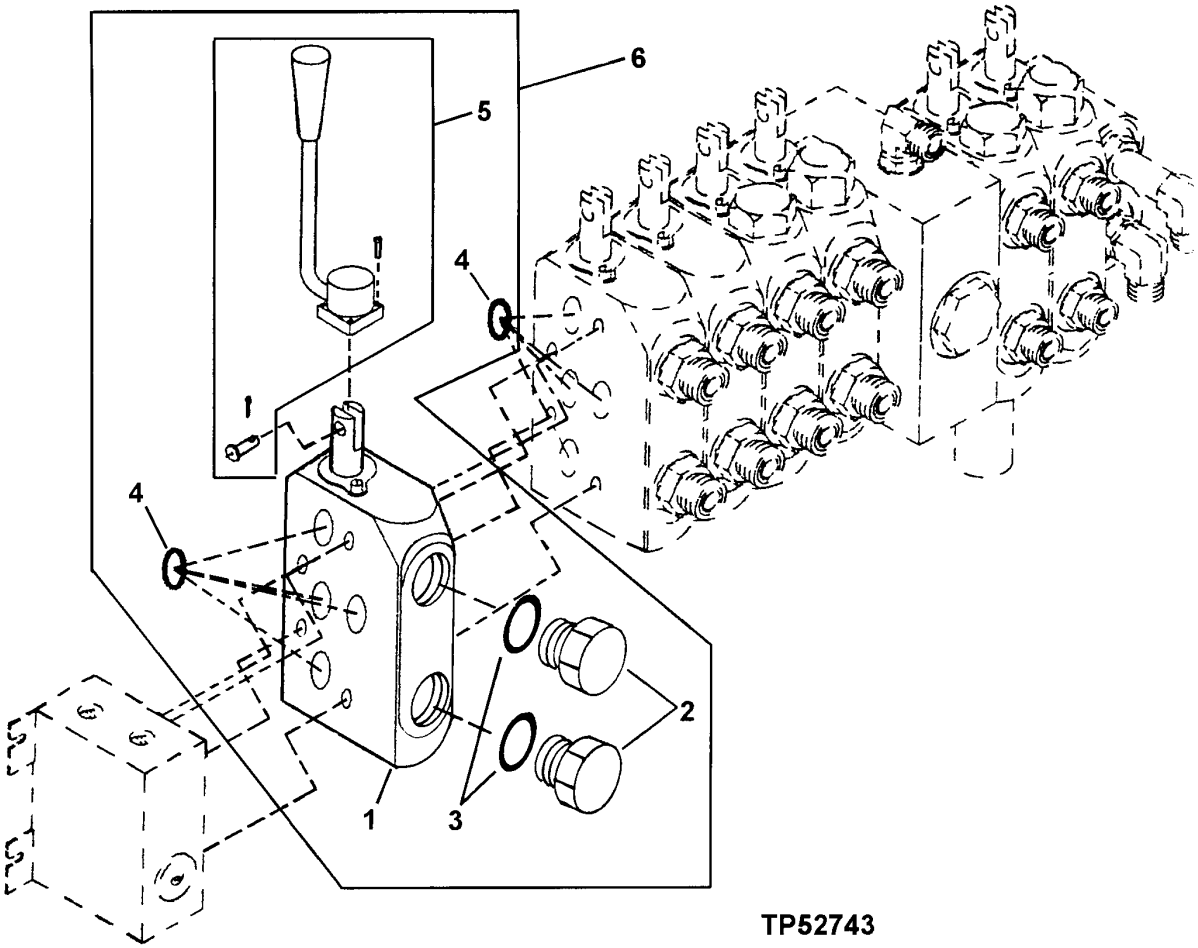

TP52743

FIFTH FUNCTION HITCH VALVE KIT

KEY	PART NO.	PART NAME	QTY	SERIAL NO.	REMARKS
1	AT188913	SPOOL VALVE	1		(SUB FOR AT216758)
2	38H1147	FITTING PLUG	2		
3	R26375	O-RING	2		16.358 X 2.210 MM (0.644" X 0.087")
4	AT216760	SEAL KIT	2		
5	AT182531	KIT	1		(SUB FOR AT216718) (HANDLE, BOOT AND PINS)
6	AT180360	KIT	1		5TH FUNCTION HITCH VALVE (INCLUDES STUDS AND MOUNTING HARDWARE) (WHOLEGOODS)

THIRD FUNCTION VALVE SECTION,REPAIR KIT AND POSITIONER

T161292 -UN-05NOV02

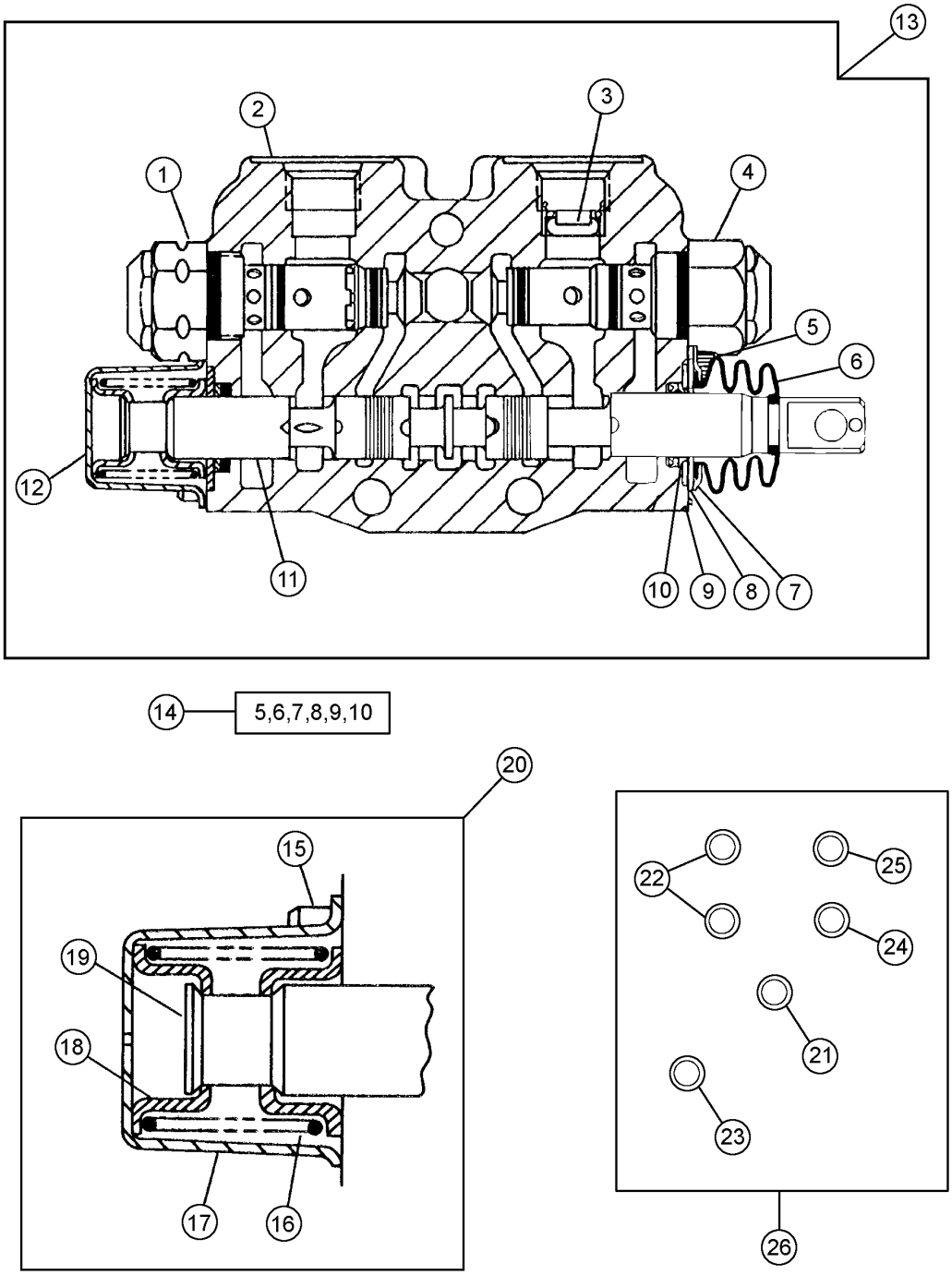

T161292

THIRD FUNCTION VALVE SECTION REPAIR KIT AND POSITIONER

KEY	PART NO.	PART NAME	QTY	SERIAL NO.	REMARKS
1	AT101701	PRESSURE RELIEF VALVE	1		
2	.....	HOUSING	1		
3	AT101746	ORIFICE	1		
4	AT101699	PRESSURE RELIEF VALVE	1		
5	T104773	CAP SCREW	2		
6	T151335	BOOT	1		
7	T151337	RETAINER	1		
8	T104784	PLATE	1		
9	.....	RETAINER	1		
10	.....	SEAL	2		
11	.....	SEAL	2		
12	AT104333	HYDR./PILOT CONTROL VALVE	1		
13	AT167240	DRAIN VALVE	1		(ALSO ORDER AT160682)
14	AT167443	SEAL KIT	1		SPOOL SEAL REPAIR
15	19H3554	SCREW	2		1/4" X 0.880"
16	T105045	SPRING	1		
17	.....	CAP	1		
18	T104788	LOCKING COLLAR	1		
19	T104789	VALVE SPOOL	1		
20	AT104333	HYDR./PILOT CONTROL VALVE	1		
21	T49819	O-RING	2		
22	T142419	O-RING	2		
23	.....	SNAP RING	1		
24	T135968	O-RING	2		
25	T135797	O-RING	1		
26	AT160682	SEAL KIT	1		(BETWEEN VALVE SECTIONS)

JUNCTION BLOCK, HYDRAULIC VALVE (SERIAL NO. 882701-)

T197356 -UN-26JAN04

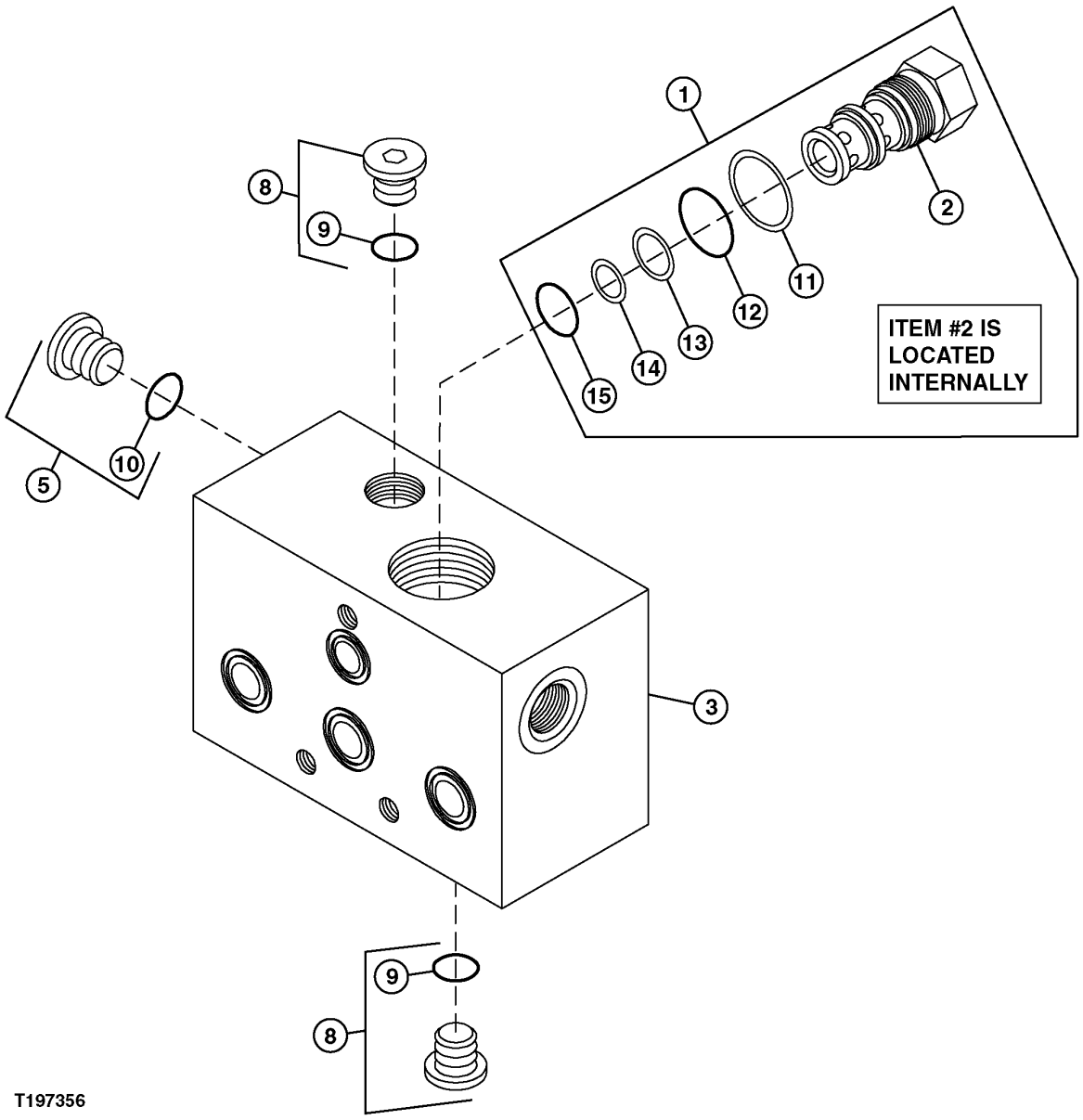

JUNCTION BLOCK, HYDRAULIC VALVE (SERIAL NO. 882701-)

KEY	PART NO.	PART NAME	QTY	SERIAL NO.	REMARKS
1	AT185958	SEAL KIT	1		
2	CB11411020	FLOW CONTROL HYD. VALVE	1		(10 GPM CARTRIDGE-STANDARD)
3	.....	HOUSING	1		
5	R27474	DRAIN PLUG	1		
8	R39112	FITTING	2		
9	.....	O-RING	2		
10	.....	O-RING	1		
11	.....	GASKET	1		
12	.....	O-RING	1		
13	.....	GASKET	1		
14	.....	GASKET	1		

RELIEF VALVES
(BUCKET SECTION)
(WITH OR WITHOUT RETURN-TO-DIG)
(SERIAL NO. -738468)

TP80327 -UN-03DEC99

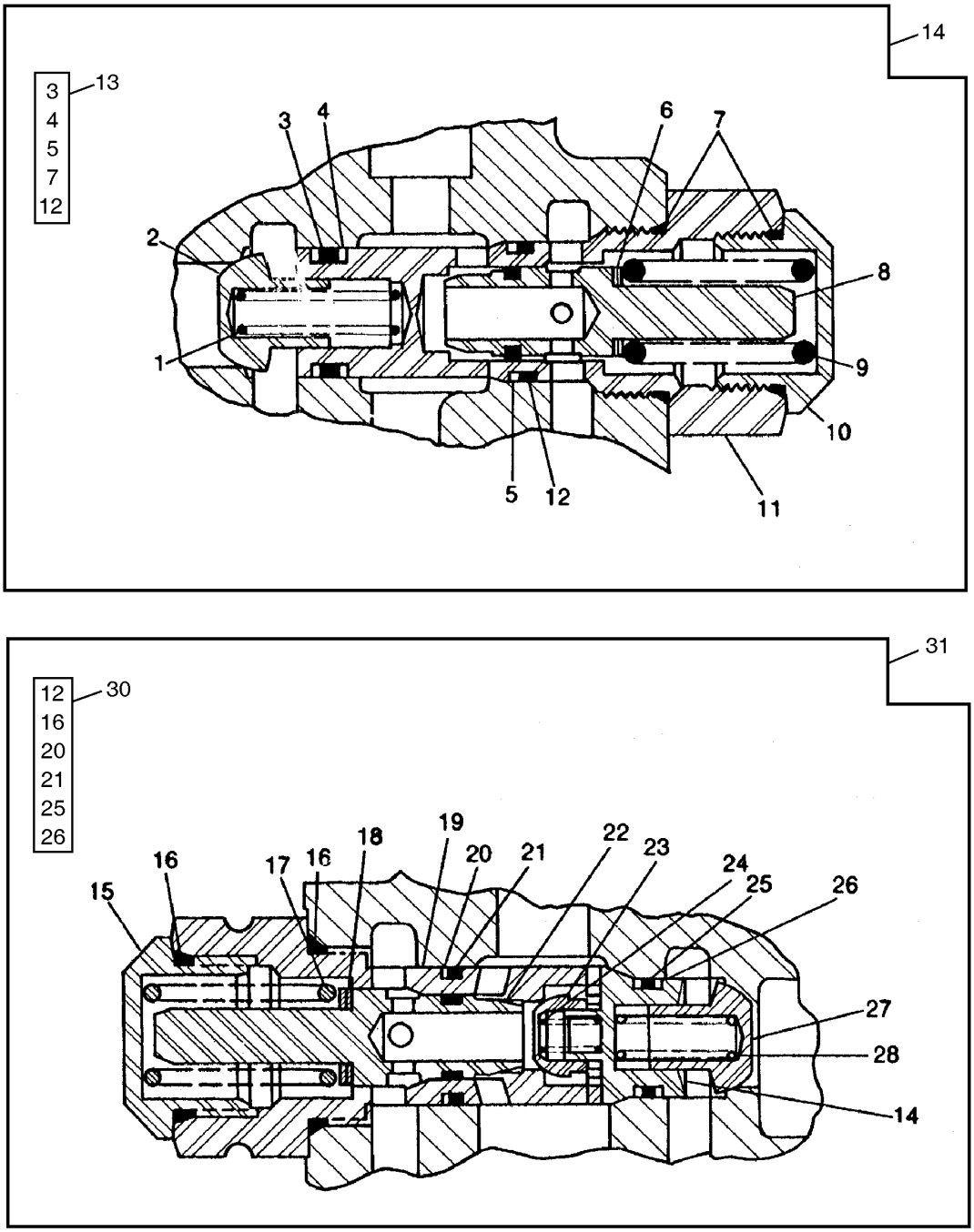

TP80327

RELIEF VALVES
(BUCKET SECTION)
(WITH OR WITHOUT RETURN-TO-DIG)
(SERIAL NO. -738468)

KEY	PART NO.	PART NAME	QTY	SERIAL NO.	REMARKS
1	T36012	SPRING	1	-738468	
2	U13616	PRESSURE RELIEF VALVE	1	-738468	
3	H63283	O-RING	1	-738468	
4	T35984	BACK-UP RING	2	-738468	
5	T35985	BACK-UP RING	1	-738468	
6	.....	SOLID SHIM	AR	-738468	(SUB AT101699)
7	W19903	O-RING	2	-738468	
8	.....	POPPET	1	-738468	(SUB AT101699)
9	.....	SPRING	1	-738468	(SUB AT101699)
10	.....	CAP	1	-738468	(SUB AT101699)
11	.....	CASE	1	-738468	(SUB AT101699)
12	Z29304	O-RING	1	-738468	
13	AT160684	SEAL KIT	1	-738468	
14	AT101699	PRESSURE RELIEF VALVE	1	-738468	(TOP BUCKET SECTION)
15	.....	CAP	1	-738468	(SUB AT101701)
16	W19903	O-RING	2	-738468	
17	.....	SPRING	1	-738468	(SUB AT101701)
18	.....	SOLID SHIM	AR	-738468	(SUB AT101701)
19	.....	CASE	1	-738468	(SUB AT101701)
20	T35985	BACK-UP RING	1	-738468	
21	Z29304	O-RING	1	-738468	
22	.....	POPPET	1	-738468	(SUB AT101701)
23	.....	POPPET	1	-738468	(T58862 NO LONGER AVAILABLE)
24	.....	SPRING	1	-738468	(T58863 NO LONGER AVAILABLE)
25	H63283	O-RING	1	-738468	
26	T35984	BACK-UP RING	1	-738468	
27	.....	POPPET	1	-738468	(T58864 NO LONGER AVAILABLE)
28	.....	SPRING	1	-738468	(T58865 NO LONGER AVAILABLE)
29	.....	RETAINER	1	-738468	(SUB AT101701)
30	AT160684	SEAL KIT	1	-738468	
31	AT101701	PRESSURE RELIEF VALVE	1	-738468	(BOTTOM BUCKET SECTION)

JUNCTION BLOCK, HYDRAULIC VALVE (SERIAL NO. -882700)

TP61800 -UN-19JAN99

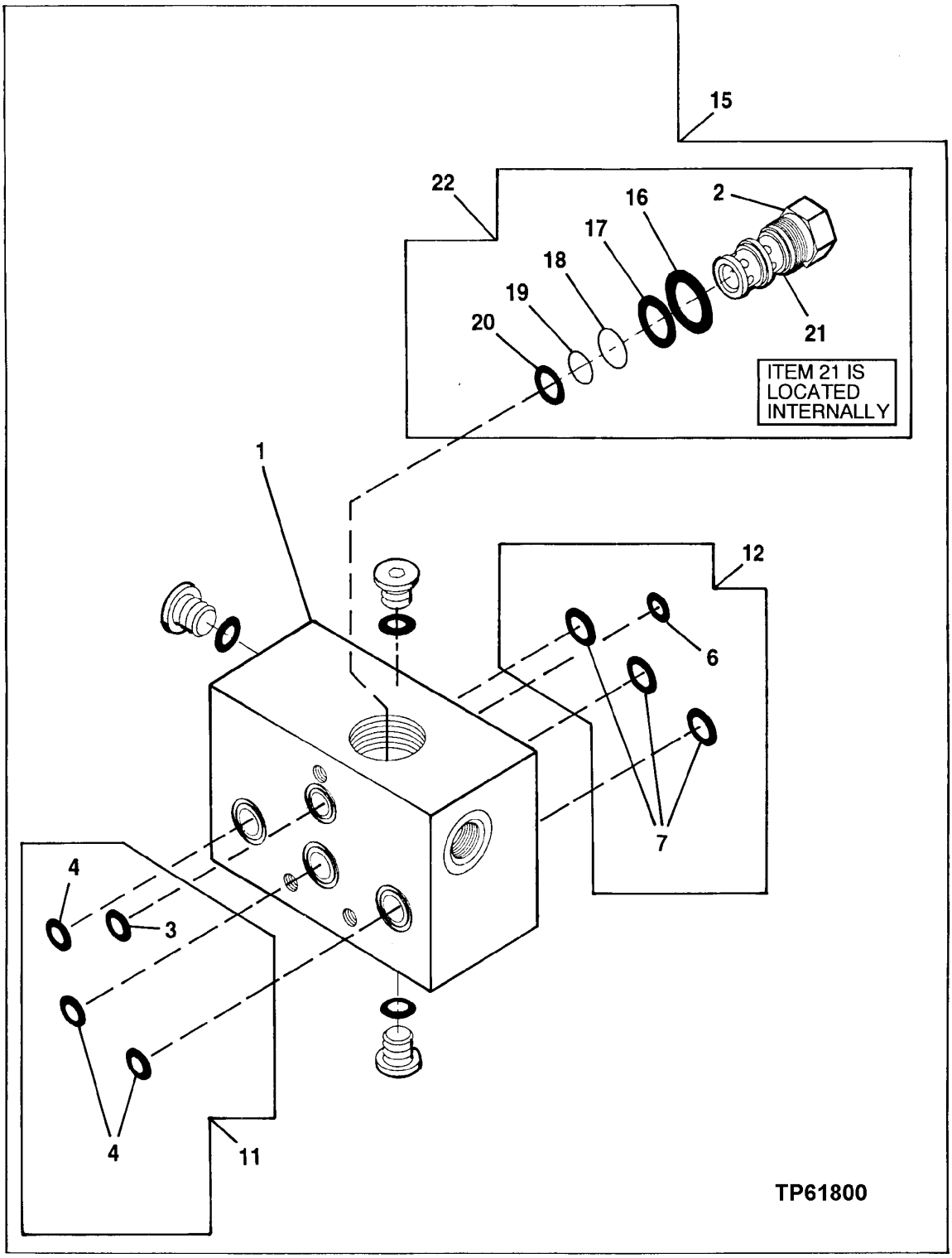

JUNCTION BLOCK, HYDRAULIC VALVE (SERIAL NO. -882700)

KEY	PART NO.	PART NAME	QTY	SERIAL NO.	REMARKS
1	.....	HOUSING	1		
2	AT216710	VALVE	1		(6 GPM CARTRIDGE-STANDARD)
	AT180854	HYD ACTUATED CONTROL VALVE	1		(3 GPM CARTRIDGE-OPTIONAL)
	CB1141020	HYD ACTUATED CONTROL VALVE	1		(10 GPM CARTRIDGE-OPTIONAL)
3	.....	O-RING	1		
4	.....	O-RING	3		
6	.....	O-RING	1		
7	R495R	O-RING	3		
11	AT216752	SEAL KIT	1		
12	AT216760	SEAL KIT	1		
15	AT216755	VALVE	1	-880245	
	AT190356	HYD ACTUATED CONTROL VALVE	1	880246-	
16	.....	O-RING	1		
17	.....	O-RING	1		
18	.....	BACK-UP RING	1		
19	.....	BACK-UP RING	1		
20	.....	O-RING	1		
21	.....	O-RING	1		
22	AT185958	SEAL KIT	1		

NOTE:TRANSITION VALVE AT190356 MAY BE USED IN PLACE OF AT216755

JUNCTION BLOCK, HYDRAULIC VALVE (SERIAL NO. 882701-)

T197356 -UN-26JAN04

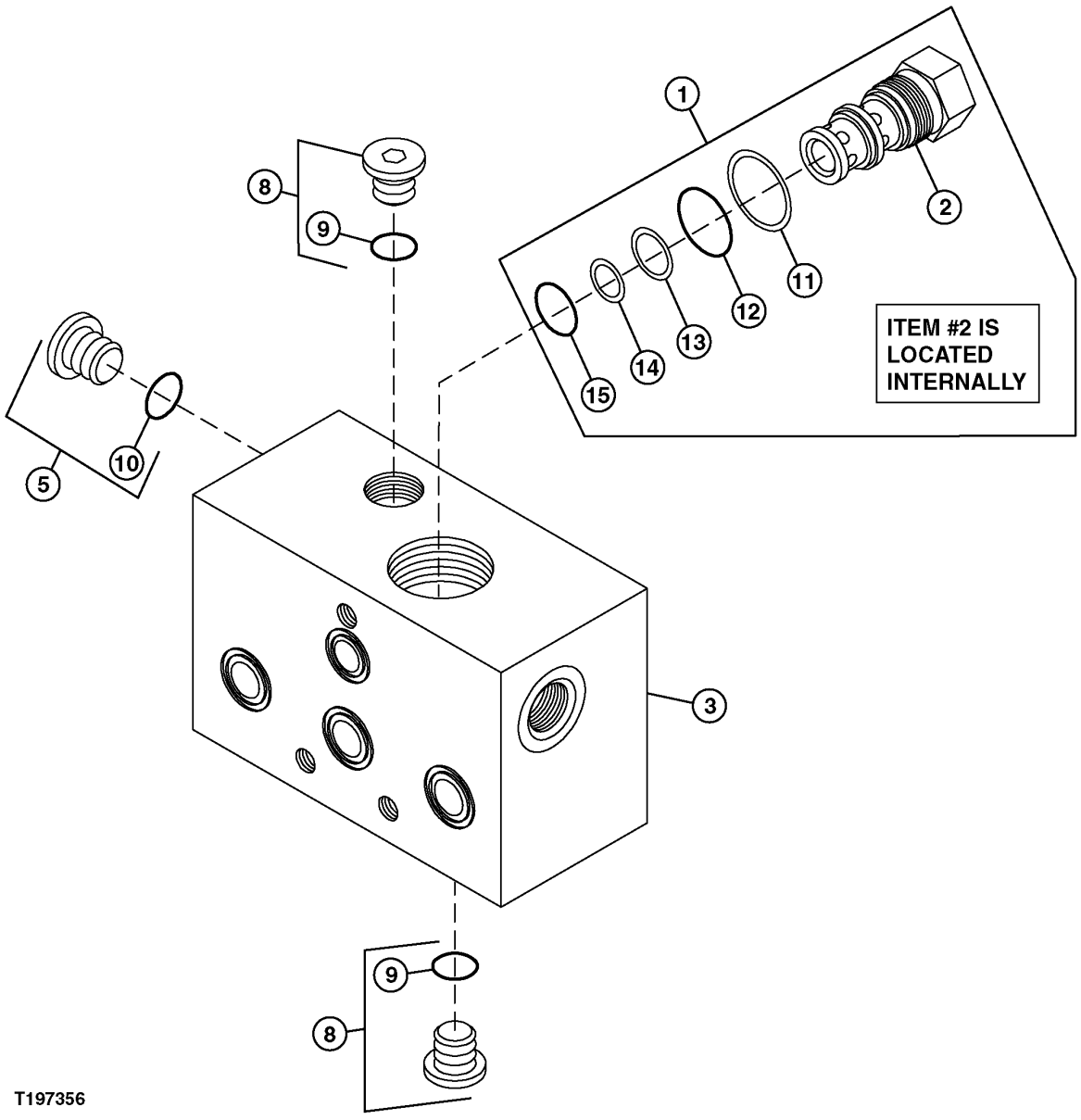

JUNCTION BLOCK, HYDRAULIC VALVE (SERIAL NO. 882701-)

KEY	PART NO.	PART NAME	QTY	SERIAL NO.	REMARKS
1	AT185958	SEAL KIT	1		
2	CB11411020	FLOW CONTROL HYD. VALVE	1		(10 GPM CARTRIDGE-STANDARD)
3	.....	HOUSING	1		
5	R27474	DRAIN PLUG	1		
8	R39112	FITTING	2		
9	.....	O-RING	2		
10	.....	O-RING	1		
11	.....	GASKET	1		
12	.....	O-RING	1		
13	.....	GASKET	1		
14	.....	GASKET	1		

HITCH LIFT SECTION, HYDRAULIC VALVE (SERIAL NO. XXXXXX-855518)

T144115 -UN-19JUL01

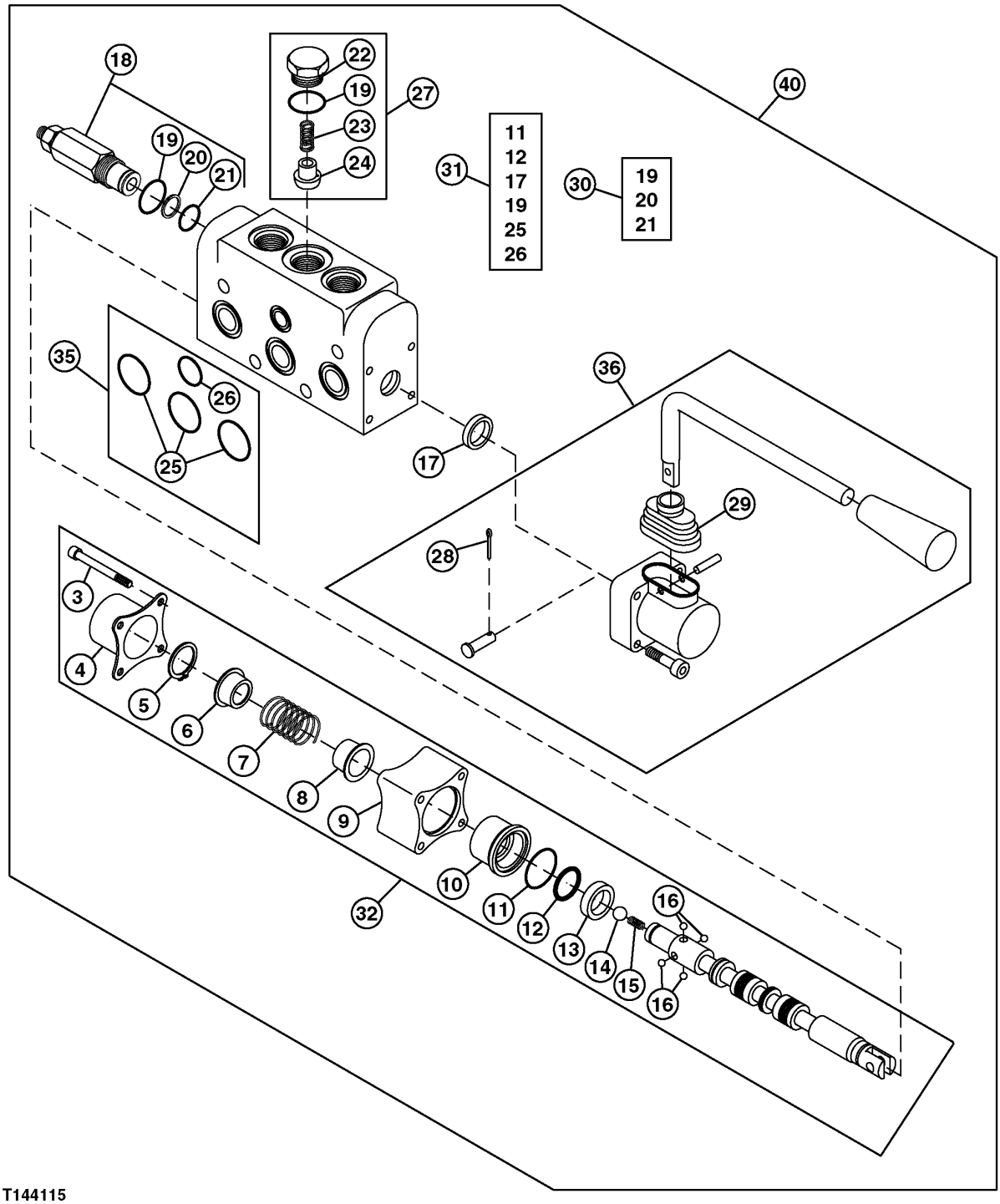

T144115

HITCH LIFT SECTION, HYDRAULIC VALVE (SERIAL NO. XXXXXX-855518)

KEY	PART NO.	PART NAME	QTY	SERIAL NO.	REMARKS
1	.....	HOUSING	1		
3	.....	BOLT	4		
4	.....	CAP	1		
5	.....	SNAP RING	1		
6	.....	RETAINER	1		
7	.....	SPRING	1		
8	.....	RETAINER	1		
9	.....	SPACER	2		
10	.....	SLEEVE	1		
11	.....	O-RING	1		
12	.....	O-RING	1		
13	.....	SLEEVE	1		
14	.....	BALL	1		
15	.....	SPRING	1		
16	.....	BALL	4		
17	.....	SEAL	1		
18	AT216714	RELIEF VALVE	1		
19	.....	O-RING	2		
20	.....	BACK-UP RING	1		
21	.....	O-RING	1		
22	.....	PLUG	1		
23	T36012	SPRING	1		
24	U13616	PRESSURE RELIEF VALVE	1		
25	R495R	O-RING	3		
26	.....	O-RING	1		
27	AT216715	CHECK VALVE	1		
28	11M7009	COTTER PIN	1		2 X 16 MM
29	AT216687	BOOT	1		
30	AT216646	SEAL KIT	1		
31	AT216648	SEAL KIT	1		
32	AT216716	KIT	1		
35	AT216760	SEAL KIT	1		
36	AT182531	KIT	1		(HANDLE) (SUB FOR AT216718)
40	AT188914	VALVE	1		(HITCH LIFT) (SUB FOR AT216756)

HITCH LIFT SECTION, HYDRAULIC VALVE (SERIAL NO. 855519-882700)

T144116 -UN-19JUL01

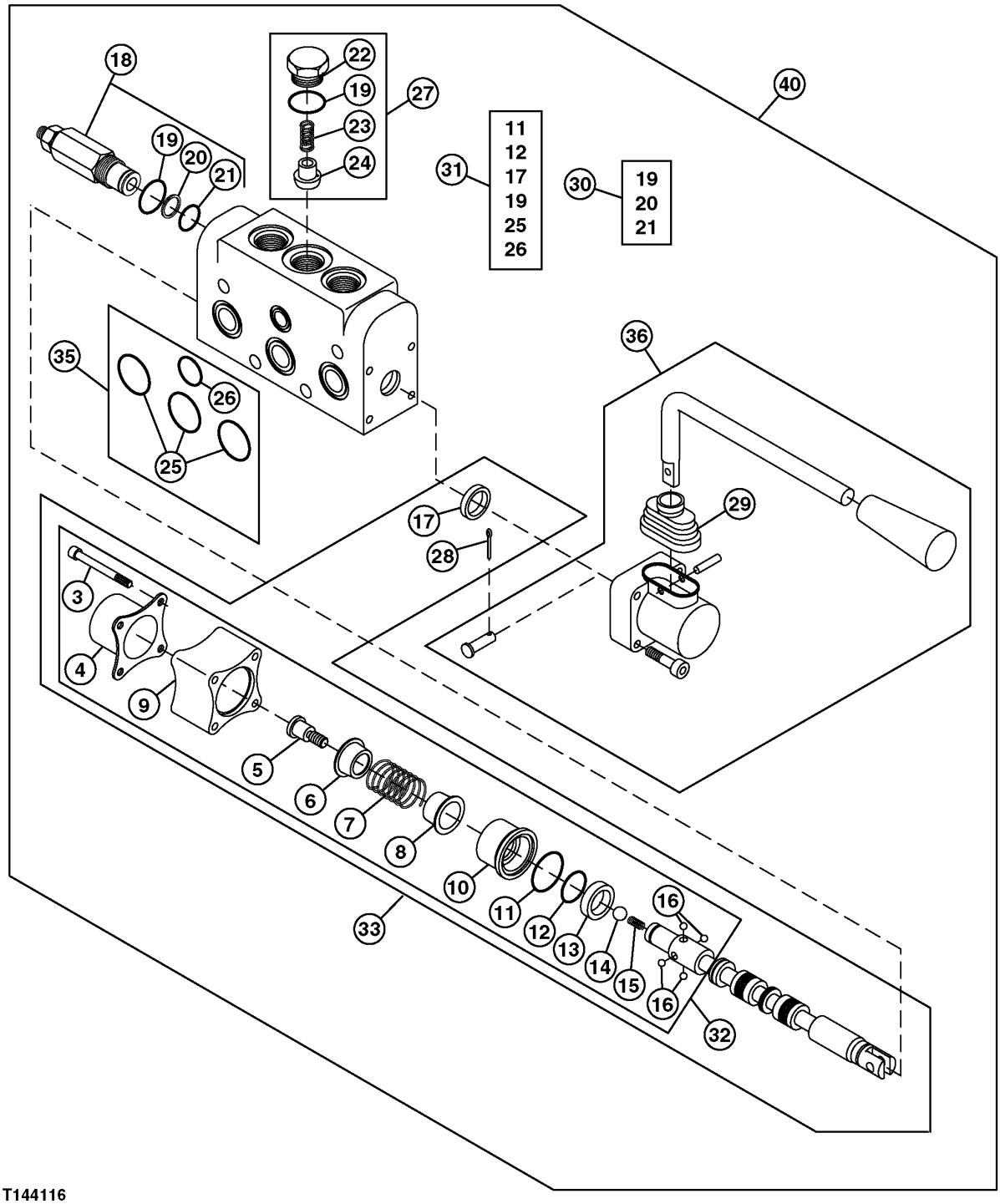

T144116

HITCH LIFT SECTION, HYDRAULIC VALVE (SERIAL NO. 855519-882700)

KEY	PART NO.	PART NAME	QTY	SERIAL NO.	REMARKS
3	AT216605	BOLT	4		
4	.....	CAP	1		
5	.....	SCREW	1		
6	.....	RETAINER	1		
7	AT216668	SPRING	1		
8	AT216632	RETAINER	1		
9	AT216633	SPACER	2		
10	.....	SLEEVE	1		
11	.....	O-RING	1		
12	.....	O-RING	1		
13	AT216713	SLEEVE	1		
14	AT216738	BALL	1		
15	AT216669	SPRING	1		
16	AT216739	BALL	4		
17	.....	SEAL	1		
18	AT216714	RELIEF VALVE	1		
19	.....	O-RING	2		
20	.....	BACK-UP RING	1		
21	.....	O-RING	1		
22	AT216717	PLUG	1		
23	T36012	SPRING	1		
24	U13616	PRESSURE RELIEF VALVE	1		
25	R495R	O-RING	3		
26	.....	O-RING	1		
27	AT216715	CHECK VALVE	1		
28	11M7009	COTTER PIN	1		2 X 16 MM
29	AT216687	BOOT	1		
30	AT216646	SEAL KIT	1		
31	AT196206	SEAL KIT	1		
32	CB01423103	KIT	1	855519-881086	
33	.....	KIT	1	881087-	
35	AT216760	SEAL KIT	1		
36	AT182531	HANDLE	1		
40	CB11423081	HYD ACTUATED CONTROL VALVE	1		(HITCH LIFT)

HITCH LIFT SECTION, HYDRAULIC VALVE (SERIAL NO. 882701-)

T196909 -UN-18DEC03

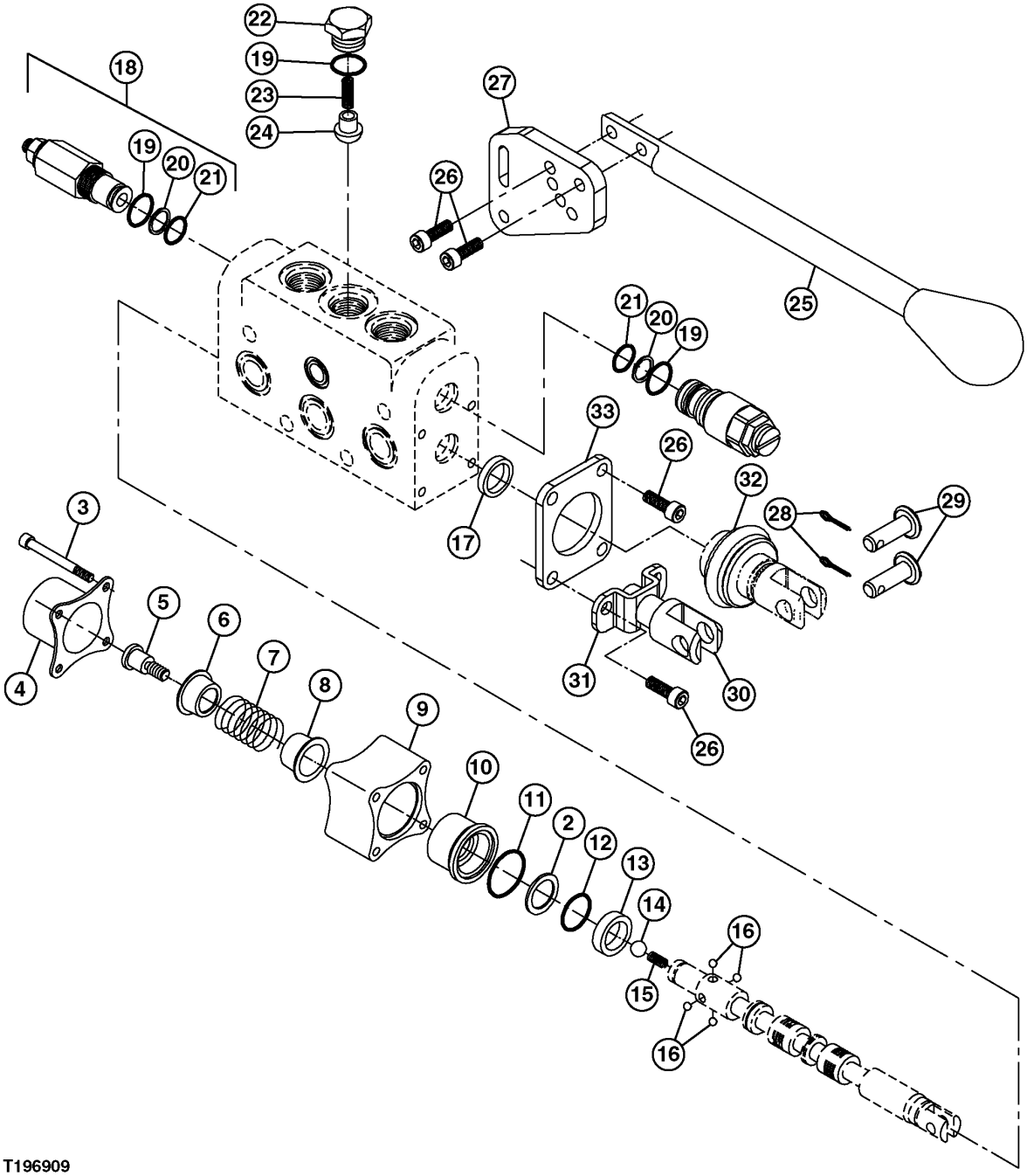

T196909

HITCH LIFT SECTION, HYDRAULIC VALVE (SERIAL NO. 882701-)

KEY	PART NO.	PART NAME	QTY	SERIAL NO.	REMARKS
2	CB01454599	BACK-UP RING	1		
3	.....	BOLT	4		
4	.....	CAP	1		
5	.....	SCREW	1		
6	.....	RETAINER	1		
7	.....	SPRING	1		
8	AT216632	RETAINER	1		
9	AT216633	SPACER	2		
10	.....	SLEEVE	1		
11	.....	O-RING	1		
12	.....	O-RING	1		
13	CB01454598	SLEEVE	1		
14	AT216738	BALL	1		
15	AT216669	SPRING	1		
16	AT216739	BALL	4		
17	.....	SEAL	1		
18	AT216714	RELIEF VALVE	1		
19	.....	O-RING	2		
20	.....	BACK-UP RING	1		
21	.....	O-RING	1		
22	AT216717	PLUG	1		
23	T36012	SPRING	1		
24	U13616	PRESSURE RELIEF VALVE	1		
25	CB01453549	HANDLE	1		
26	.....	BOLT	1		
27	.....	BRACKET	1		
28	11M7009	COTTER PIN	1		0.079" X 0.630"
29	.....	PIN FASTENER	2		
30	CB01453544	PIVOT	1		
31	CB01453543	BRACKET	1		
32	CB01453548	BOOT	1		
33	CB01453542	PLATE	1		

PITCH SECTION, HYDRAULIC VALVE (SERIAL NO. -882700)

TP80335 -UN-06DEC99

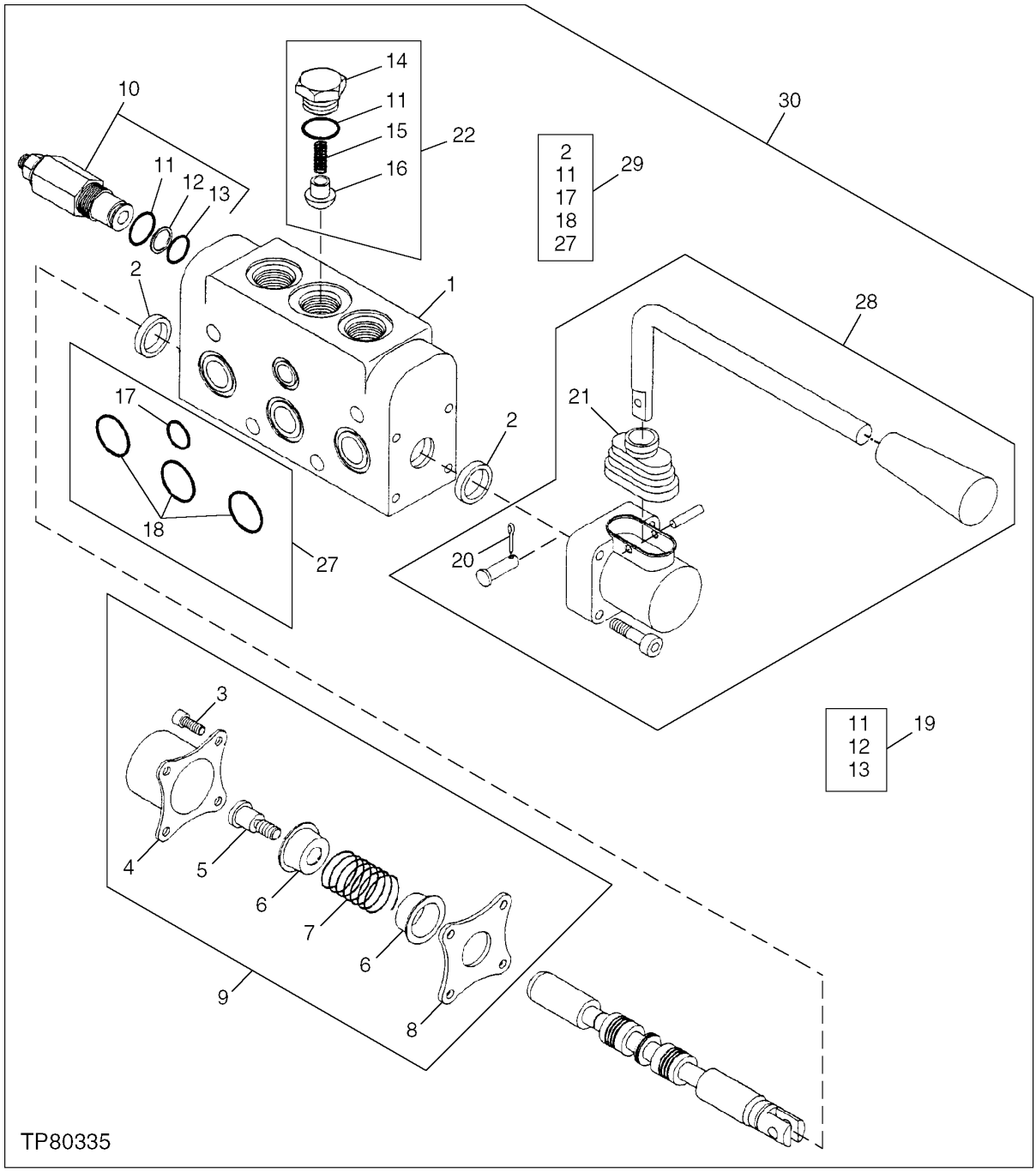

PITCH SECTION, HYDRAULIC VALVE (SERIAL NO. -882700)

KEY	PART NO.	PART NAME	QTY	SERIAL NO.	REMARKS
1	.....	HOUSING	1		
2	.....	SEAL	2		
3	.....	BOLT	4		
4	.....	CAP	1		
5	.....	ADAPTER	1		
6	.....	RETAINER	2		
7	.....	SPRING	1		
8	.....	PLATE	1		
9	AT197737	KIT	2		(SUB FOR AT216719)
10	AT216720	PRESSURE RELIEF VALVE	1		
11	.....	O-RING	2		
12	.....	BACK-UP RING	1		
13	.....	O-RING	1		
14	.....	PLUG	1		
15	T36012	SPRING	1		
16	U13616	PRESSURE RELIEF VALVE	1		
17	.....	O-RING	1		
18	R495R	O-RING	3		
19	AT216646	SEAL KIT	1		
20	11M7009	COTTER PIN	1		2 X 16 MM
21	AT216687	BOOT	1		
22	AT216715	CHECK VALVE	1		
27	AT216760	SEAL KIT	1		
28	AT182531	KIT	1		(HANDLE) (SUB FOR AT216718)
29	AT197736	KIT	1		(SUB FOR AT216647)
30	AT188912	SPOOL VALVE	1		(PITCH) (SUB FOR AT216757)

PITCH SECTION, HYDRAULIC VALVE (SERIAL NO. 882701-)

T196908 -UN-18DEC03

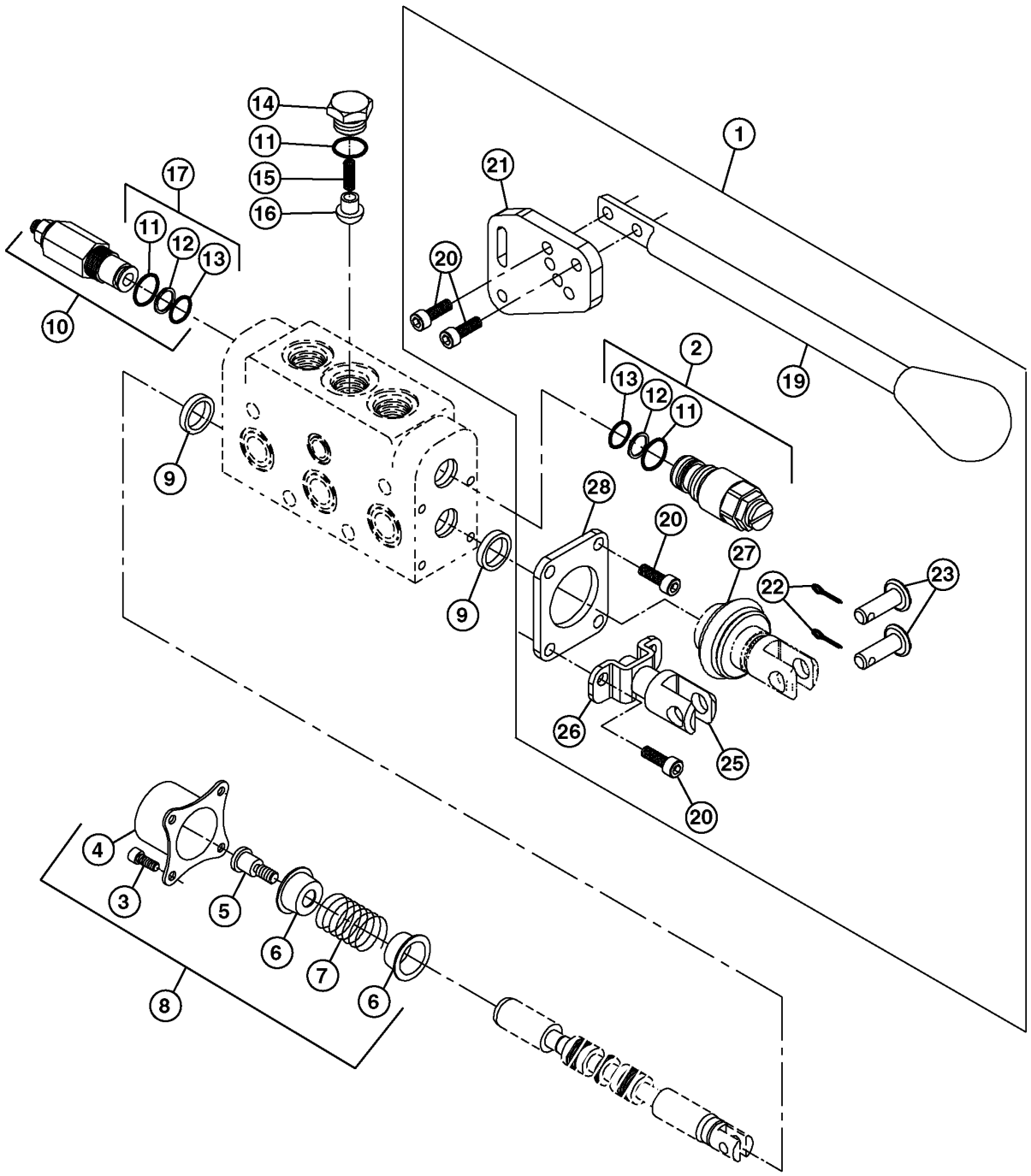

T196908

PITCH SECTION, HYDRAULIC VALVE (SERIAL NO. 882701-)

KEY	PART NO.	PART NAME	QTY	SERIAL NO.	REMARKS
1	CB11453171	HANDLE	1		(INCLUDES PARTS MARKED (A))
2	CB11454573	PLUG	1		
3	.....	BOLT	4		(B)
4	.....	CAP	1		(B)
5	.....	ADAPTER	1		(B)
6	.....	RETAINER	2		(B)
7	.....	SPRING	1		(B)
8	AT197737	KIT	2		(INCLUDES PARTS MARKED (B))
9	.....	SEAL	2		
10	AT216714	PRESSURE RELIEF VALVE	1		
11	.....	O-RING	2		(C)
12	.....	BACK-UP RING	1		(C)
13	.....	O-RING	1		(C)
14	.....	PLUG	1		
15	T36012	SPRING	1		
16	U13616	PRESSURE RELIEF VALVE	1		
17	AT216646	SEAL KIT	1		(INCLUDES PARTS MARKED (C))
19	CB01453549	HANDLE	1		(A)
20	.....	SCREW	1		(A)
21	.....	BRACKET	1		(A)
22	11M7009	COTTER PIN	2		(A) 0.079" X 0.630"
23	.....	PIN FASTENER	2		(A)
25	.....	PIVOT	1		(A)
26	.....	HANDLE	1		(A)
27	CB01453548	BOOT	1		(A)
28	CB01453542	PLATE	1		(A)

TILT, DUEL AND AUXILIARY SECTION, HYDRAULIC VALVE (SERIAL NO. -882700)

TP80336 -UN-06DEC99

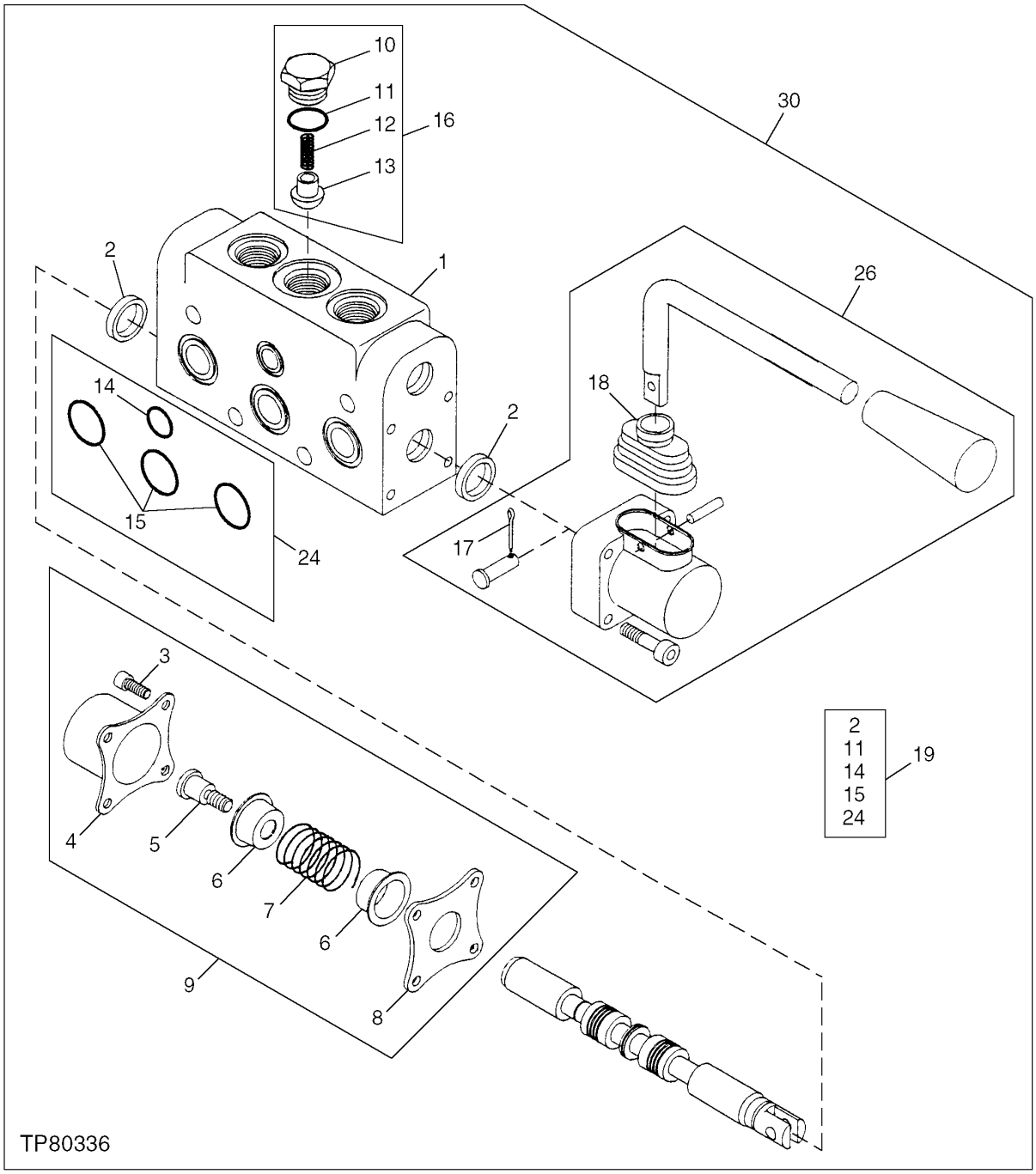

TILT, DUEL AND AUXILIARY SECTION, HYDRAULIC VALVE (SERIAL NO. -882700)

KEY	PART NO.	PART NAME	QTY	SERIAL NO.	REMARKS
1	.....	HOUSING	1		
2	.....	SEAL	2		
3	.....	BOLT	4		
4	.....	CAP	1		
5	.....	ADAPTER	1		
6	.....	RETAINER	2		
7	.....	SPRING	1		
8	.....	PLATE	1		
9	AT197737	KIT	2		(SUB FOR AT216719)
10	.....	PLUG	1		
11	.....	O-RING	1		
12	T36012	SPRING	1		
13	U13616	PRESSURE RELIEF VALVE	1		
14	.....	O-RING	1		
15	R495R	O-RING	3		
16	AT216715	CHECK VALVE	1		
17	11M7009	COTTER PIN	1		
18	AT216687	BOOT	1		
19	AT197736	KIT	1		(SUB FOR AT216647)
24	AT216760	SEAL KIT	1		
26	AT182531	KIT	1		(HANDLE) (SUB FOR AT216718)
30	AT188913	SPOOL VALVE	1		(TILT, DUEL AND AUXILIARY) (SUB FOR AT216758)

TILT, DUEL AND AUXILIARY SECTION, HYDRAULIC VALVE (SERIAL NO. 882701-)

T197347 -UN-19FEB04

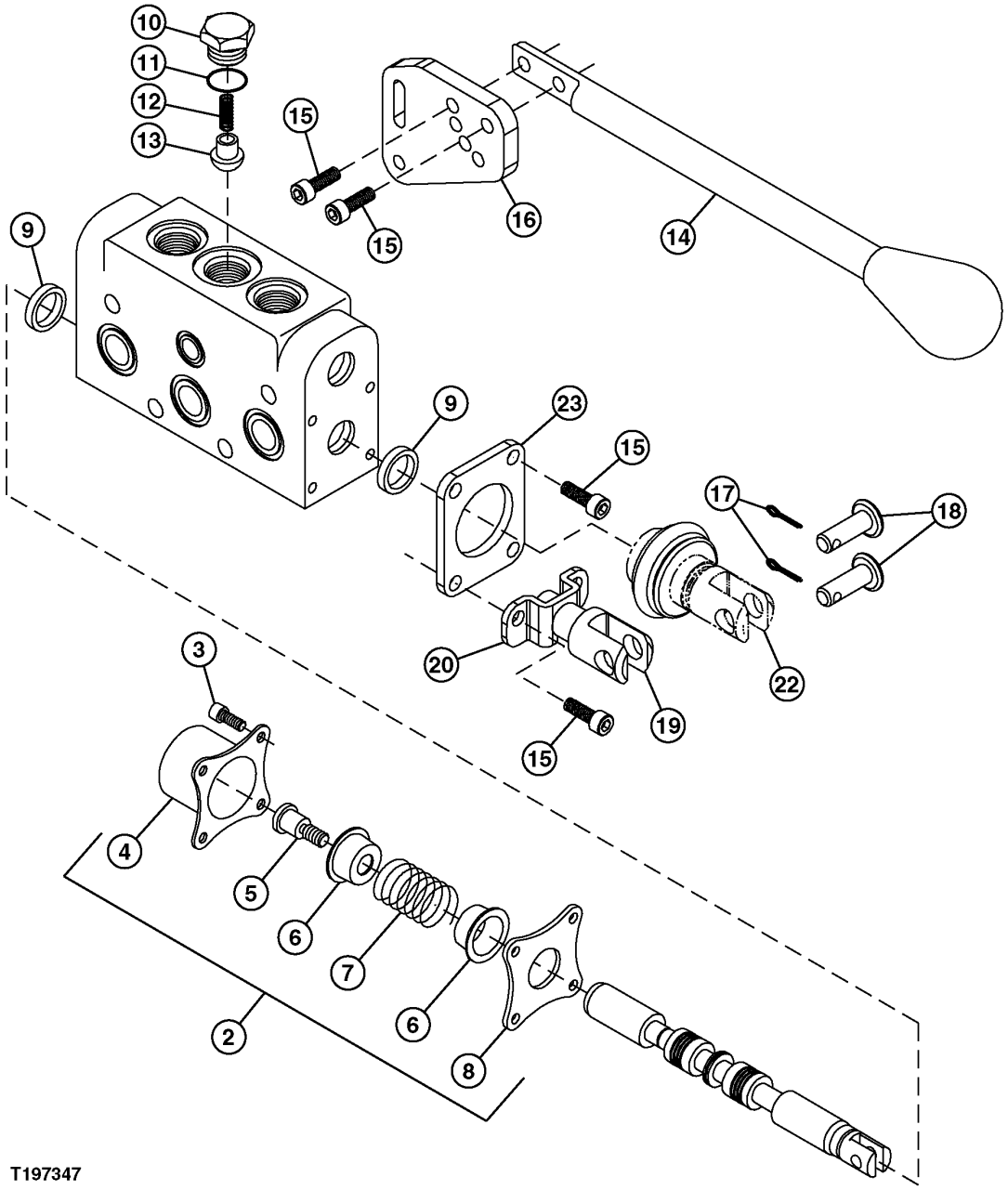

T197347

TILT, DUEL AND AUXILIARY SECTION, HYDRAULIC VALVE (SERIAL NO. 882701-)

KEY	PART NO.	PART NAME	QTY	SERIAL NO.	REMARKS
2	AT197737	KIT	4		
3	.....	BOLT	4		
4	.....	CAP	1		
5	.....	ADAPTER	1		
6	.....	RETAINER	2		
7	.....	SPRING	1		
8	.....	PLATE	1		
9	.....	SEAL	2		
10	.....	PLUG	1		
11	.....	O-RING	1		
12	T36012	SPRING	1		
13	U13616	PRESSURE RELIEF VALVE	1		
14	.....	HANDLE	6		
15	.....	BOLT	1		
16	.....	BRACKET	1		
17	11M7009	COTTER PIN	2		
18	.....	PIN FASTENER	2		
19	.....	PIVOT	1		
20	.....	BRACKET	1		
22	.....	BOOT	1		
23	.....	PLATE	1		

MAIN HYDRAULICS PLUMBING
(SERIAL NO. -880053)

TP80493 -UN-29MAR00

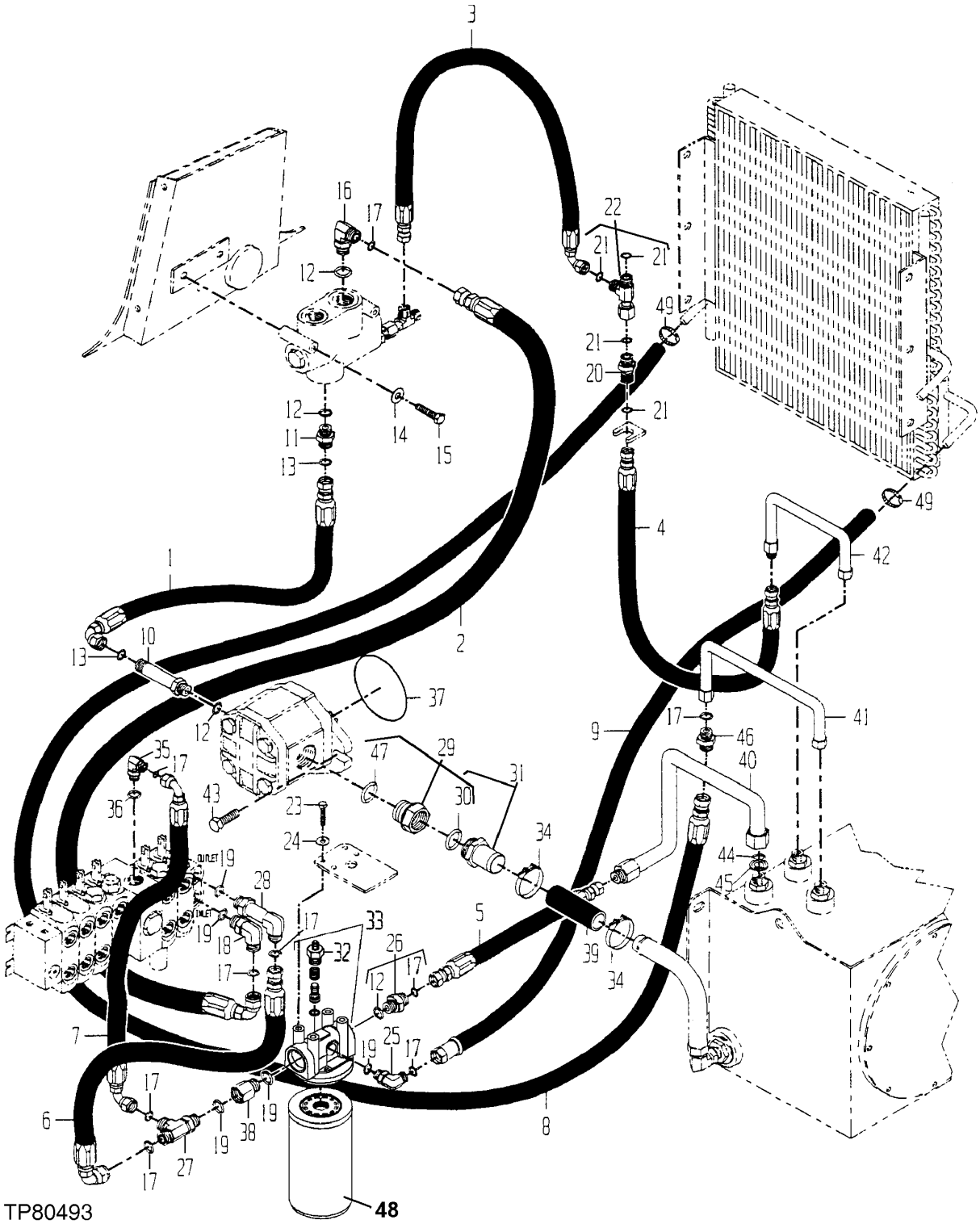

MAIN HYDRAULICS PLUMBING
(SERIAL NO. -880053)

KEY	PART NO.	PART NAME	QTY	SERIAL NO.	REMARKS
1	AT216247	HYDRAULIC HOSE - FABRICATE	1	-880053	
2	AT216248	HYDRAULIC HOSE - FABRICATE	1	-880053	
3	AT216249	HYDRAULIC HOSE - FABRICATE	1	-880053	
4	AT216250	HYDRAULIC HOSE - FABRICATE	1	-880053	
5	AT216251	HYDRAULIC HOSE - FABRICATE	1	-880053	
6	AT216252	HYDRAULIC HOSE - FABRICATE	1	-880053	
7	AT216253	HYDRAULIC HOSE - FABRICATE	1	-880053	
8	AT216258	HYDRAULIC HOSE - FABRICATE	1	-880053	
9	AT216257	HYDRAULIC HOSE - FABRICATE	1	-880053	
10	38H1216	ADAPTER	1	-880053	
11	38H1164	ADAPTER	1	-880053	
12	R29936	O-RING	1	-880053	29.743 X 2.946 MM (1.171" X 0.116")
13	T76938	O-RING	2	-880053	23.520 X 1.778 MM (0.926" X 0.070")
14	24M7238	WASHER	2	-880053	8.700 X 17 X 2 MM
15	19H1904	CAP SCREW	2	-880053	5/16" X 3"
16	38H1052	ELBOW FITTING	1	-880053	
17	T77858	O-RING	9	-880053	18.771 X 1.778 MM (0.739" X 0.070")
18	38H1007	ELBOW FITTING	1	-880053	
19	U12547	O-RING	5	-880053	23.470 X 2.946 MM (0.924" X 0.116")
20	38H1275	ADAPTER	1	-880053	
21	T77857	O-RING	4	-880053	12.421 X 1.778 MM (0.489" X 0.070")
22	38H1031	TEE FITTING	1	-872334	
	AT187670	TEE FITTING	1	872335-880053	(SUB FOR AT187693)
23	19M7402	CAP SCREW	4	-880053	M10 X 25
24	24M7239	WASHER	4	-880053	10.700 X 21 X 2.500 MM
25	AT119578	ELBOW FITTING	1	-880053	
26	AT216070	FITTING	1	-880053	
27	38H1026	TEE FITTING	1	-880053	
28	38H1492	ELBOW FITTING	2	-880053	
29	T164471	FITTING	1	-880053	(SUB FOR AT216066)
30	U13639	O-RING	1	-880053	37.465 X 2.997 MM (1.475" X 0.118")
31	T164471	FITTING	1	-880053	(SUB FOR AT216068)
32	AT129419	SWITCH	1	-880053	(FILTER BYPASS KIT)
	AT60644	SENDER	1	-880053	
	R26375	O-RING	1	-880053	PLUG
	14H778	NUT	2	-880053	
	P46051	O-RING	1	-880053	
33	AT144994	FILTER HEAD	1	-880053	(INCLUDES AT129419)
34	AT170921	CLAMP	2	-880053	
35	38H1014	ELBOW FITTING	1	-880053	
36	R26906	O-RING	1	-880053	19.177 X 2.464 MM (0.755" X 0.097")
37	AT205268	O-RING	1	-880053	101.194 X 3.531 MM (3-63/64" X 0.139")
38	T27517	ADAPTER	1	-880053	
39	.....	HOSE	1	-880053	(MAKE FROM TY22334, CUT TO LENGTH)
40	AT216260	OIL TUBE	1	-880053	
41	CB11421661	OIL TUBE	1	-880053	(SUB FOR AT216261)
42	CB11421147	OIL TUBE	1	-880053	(SUB FOR AT216262)
43	19M7790	SCREW	2	-880053	M12 X 35
44	T76938	O-RING	1	-880053	23.520 X 1.778 MM (0.926" X 0.070")
45	AT216661	ORIFICE	1	-880053	
46	AT216624	FITTING	1	-880053	
47	U13639	O-RING	1	-880053	37.465 X 2.997 MM (1.475" X 0.118")
48	AT184206	FILTER ELEMENT	1	-880053	(SUB FOR AT144879, THIS APPLICATION)
49	AT119703	CLAMP	2	-880053	

MAIN HYDRAULICS PLUMBING
(SERIAL NO. 880054-880245)

TP80296 -UN-07DEC99

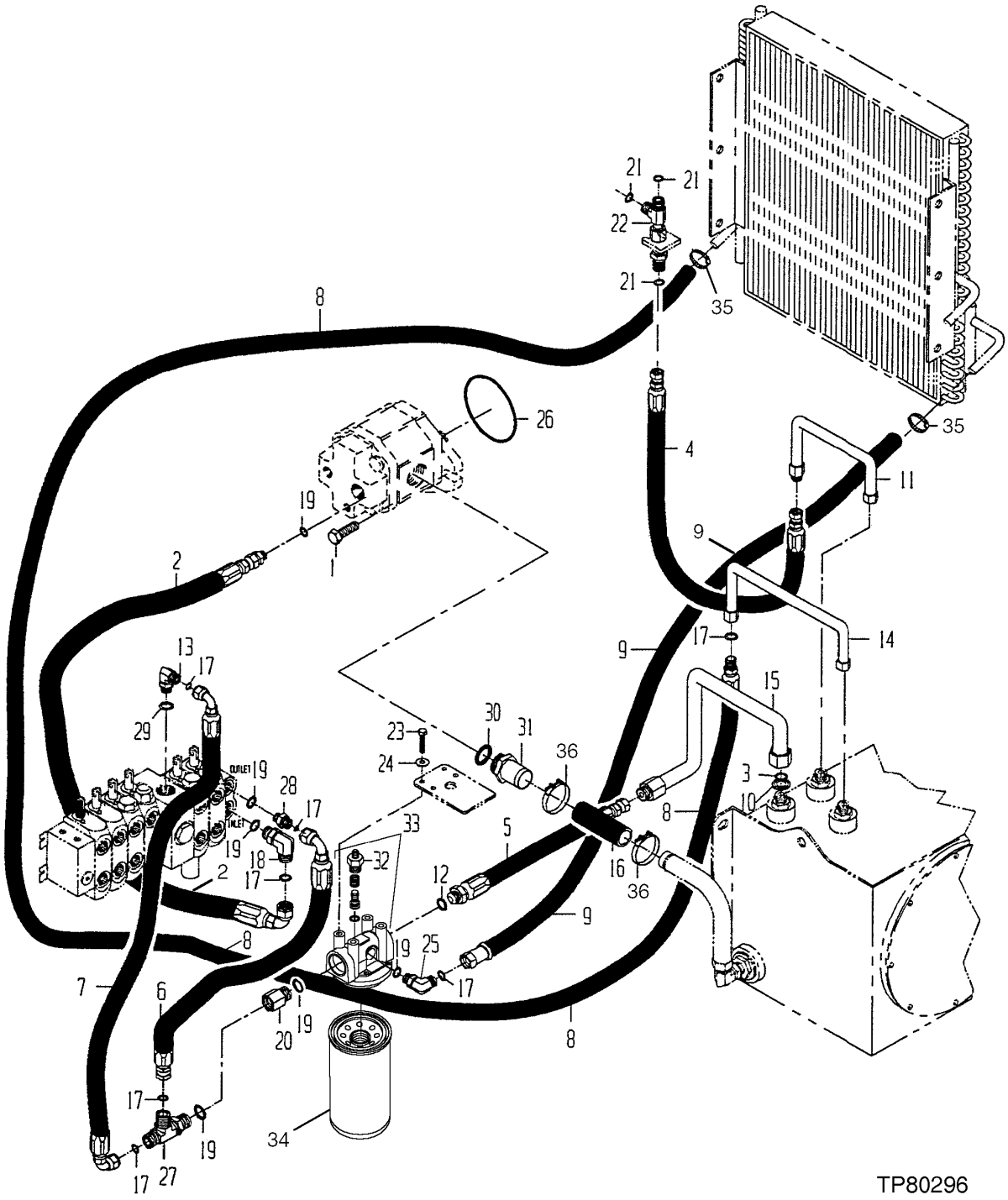

MAIN HYDRAULICS PLUMBING
(SERIAL NO. 880054-880245)

KEY	PART NO.	PART NAME	QTY	SERIAL NO.	REMARKS
1	19M7789	SCREW	2	880054-880245	M12 X 30
2	AT188862	HYDRAULIC HOSE - FABRICATE	1	880054-880245	
3	T76938	O-RING	1	880054-880245	
4	CB11419579	HYDRAULIC HOSE - FABRICATE	1	880054-880245	(SUB FOR AT188863)
5	AT188865	HYDRAULIC HOSE - FABRICATE	1	880054-880245	
6	AT188867	HYDRAULIC HOSE - FABRICATE	1	880054-880245	
7	AT188868	HYDRAULIC HOSE - FABRICATE	1	880054-880245	
8	AT188870	HYDRAULIC HOSE - FABRICATE	1	880054-880245	
9	AT188871	HYDRAULIC HOSE - FABRICATE	1	880054-880245	
10	AT216661	ORIFICE	1	880054-880245	
11	CB11421147	OIL TUBE	1	880054-880245	(SUB FOR AT216262)
12	R29936	O-RING	1	880054-880245	29.743 X 2.946 MM (1.171" X 0.116")
13	38H1014	ELBOW FITTING	1	880054-880245	
14	CB11421661	OIL TUBE	1	880054-880245	(SUB FOR AT216261)
15	AT216260	OIL TUBE	1	880054-880245	
16	.....	HOSE	1	880054-880245	(MAKE FROM TY22334)
17	T77858	O-RING	9	880054-880245	18.771 X 1.778 MM (0.739" X 0.070")
18	38H1007	ELBOW FITTING	1	880054-880245	
19	U12547	O-RING	6	880054-880245	
20	T27517	ADAPTER	1	880054-880245	
21	T77857	O-RING	4	880054-880245	12.421 X 1.778 MM (0.489" X 0.070")
22	AT187670	TEE FITTING	1	880054-880245	(INCLUDES T77857)
23	19M7402	CAP SCREW	4	880054-880245	M10 X 25
24	24M7239	WASHER	4	880054-880245	10.700 X 21 X 2.500 MM
25	AT119578	ELBOW FITTING	1	880054-880245	
26	AT205268	O-RING	1	880054-880245	
27	38H1026	TEE FITTING	1	880054-880245	
28	38H1163	ADAPTER	1	880054-880245	
29	R26906	O-RING	1	880054-880245	
30	U13639	O-RING	1	880054-880245	37.465 X 2.997 MM (1.475" X 0.118")
31	T164471	FITTING	1	880054-880245	
32	AT129419	SWITCH	1	880054-880245	(FILTER BYPASS KIT)
	AT60644	SENDER	1	880054-880245	
	R26375	O-RING	1	880054-880245	PLUG
	14H778	NUT	2	880054-880245	
	P46051	O-RING	1	880054-880245	
33	AT144994	FILTER HEAD	1	880054-880245	
34	AT184206	FILTER ELEMENT	1	880054-880245	(SUB FOR AT144879, THIS APPLICATION)
35	AT119703	CLAMP	2	880054-880245	
36	RE25110	CLAMP	2	880054-880245	

MAIN HYDRAULICS PLUMBING
(SERIAL NO. 880246-)

TP80397 -UN-17JAN00

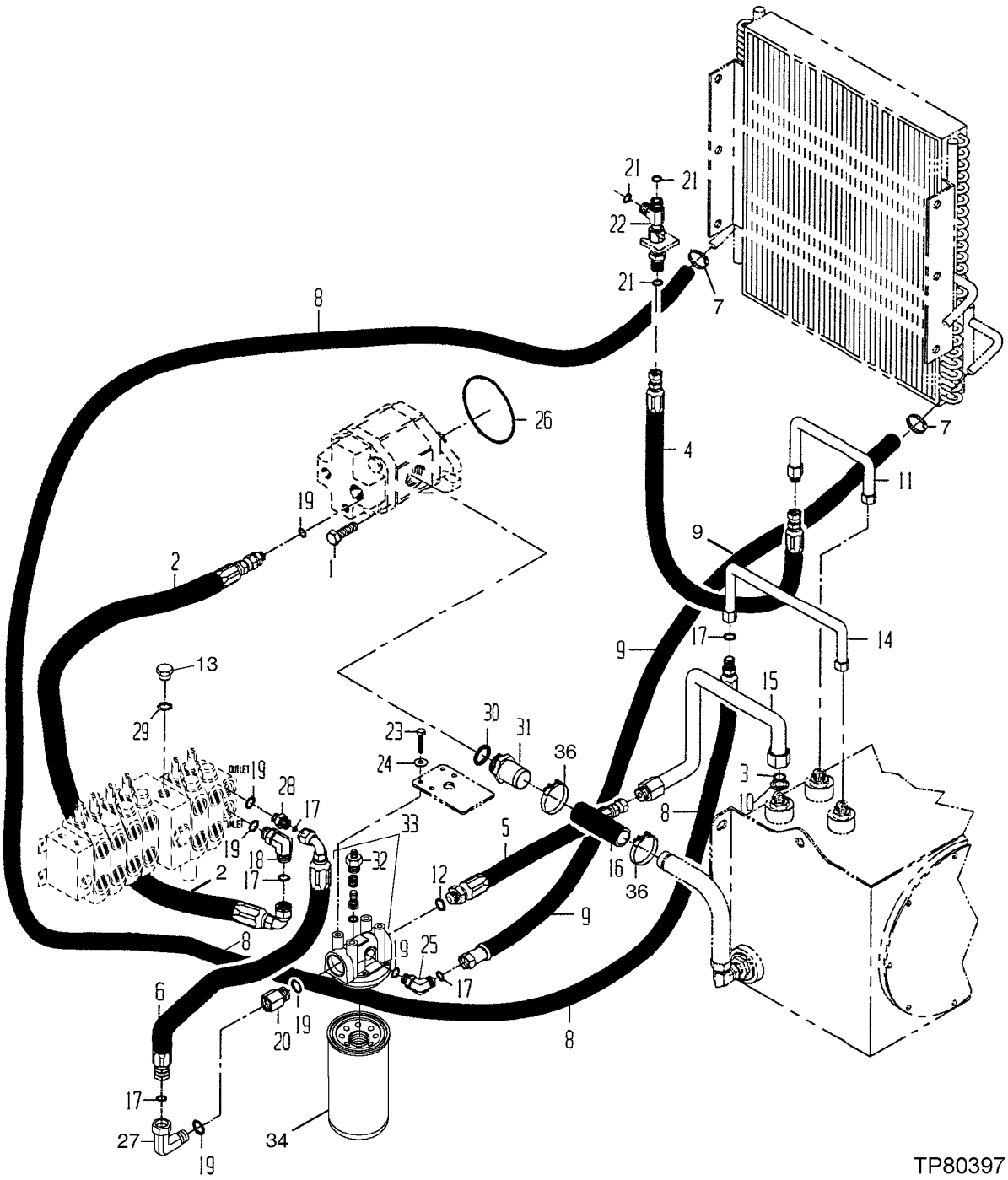

MAIN HYDRAULICS PLUMBING
(SERIAL NO. 880246-)

KEY	PART NO.	PART NAME	QTY	SERIAL NO.	REMARKS
1	19M7789	SCREW	2	880246-	M12 X 30
2	AT188862	HYDRAULIC HOSE - FABRICATE	1	880246-	
3	T76938	O-RING	1		
4	CB11419579	HYDRAULIC HOSE - FABRICATE	1	880246-882700	(SUB FOR AT188863)
	CB11447457	HYDRAULIC HOSE	1	882701-	
5	AT188865	HYDRAULIC HOSE - FABRICATE	1		
6	AT188867	HYDRAULIC HOSE - FABRICATE	1		
	CB11446035	HOSE	1	882701-	
7	AT119703	CLAMP	2		
8	AT188870	HYDRAULIC HOSE - FABRICATE	1		
9	AT188871	HYDRAULIC HOSE - FABRICATE	1		
10	AT216661	ORIFICE	1		
11	CB11421147	OIL TUBE	1		(SUB FOR AT216262)
12	R29936	O-RING	1		29.743 X 2.946 MM (1.171" X 0.116")
13	R27474	DRAIN PLUG	1		
14	CB11421661	OIL TUBE	1		(SUB FOR AT216261)
15	AT216260	OIL TUBE	1		
16	.....	HOSE	1		(MAKE FROM TY22334)
17	T77858	O-RING	7		18.771 X 1.778 MM (0.739" X 0.070")
18	38H1007	ELBOW FITTING	2		
19	U12547	O-RING	6		
20	T27517	ADAPTER	1		
21	T77857	O-RING	4		12.421 X 1.778 MM (0.489" X 0.070")
22	AT187670	TEE FITTING	1		(INCLUDES T77857)
23	19M7402	CAP SCREW	4		M10 X 25
24	24M7239	WASHER	4		10.700 X 21 X 2.500 MM
25	AT119578	ELBOW FITTING	1	880246-882700	
	38H1013	ELBOW FITTING	1	882701-	
26	AT205268	O-RING	1		
27	38H1026	TEE FITTING	1		
28	38H1163	ADAPTER	2		
29	R26906	O-RING	1		
30	U13639	O-RING	1		37.465 X 2.997 MM (1.475" X 0.118")
31	T164471	FITTING	1		
32	AT129419	SWITCH	1		(FILTER BYPASS KIT)
	AT60644	SENDER	1		
	R26375	O-RING	1		PLUG
	14H778	NUT	2		
	P46051	O-RING	1		
33	AT144994	FILTER HEAD	1		
	AT260644	GASKET	1		
	R26375	O-RING	1		
	14H778	NUT	2		0.190"
	P46051	O-RING	1		
34	AT184206	FILTER ELEMENT	1		(SUB FOR AT144879, THIS APPLICATION)
35	RE25110	CLAMP	2		

HYDRAULIC RESERVOIR

T137222 -UN-11JAN01

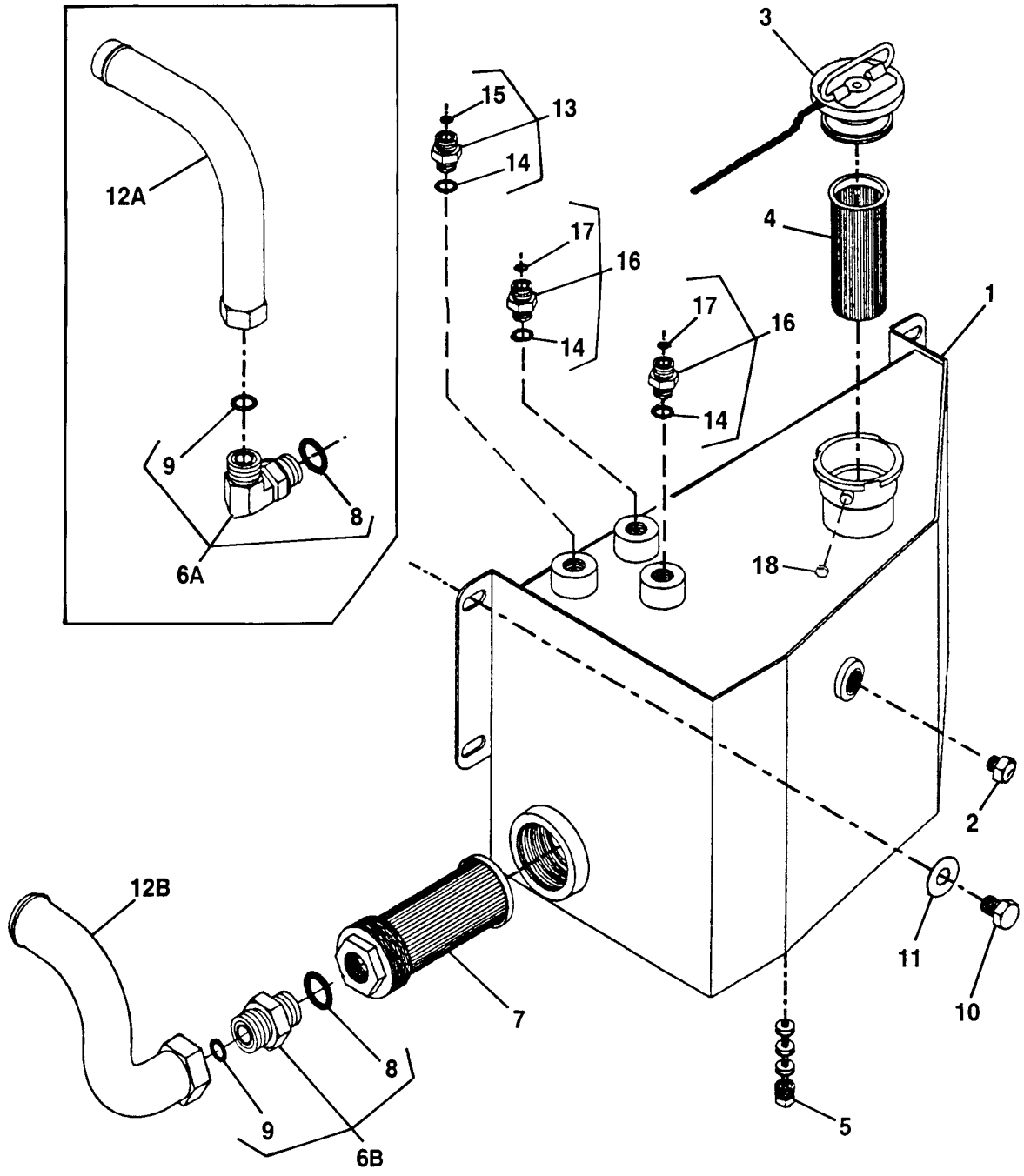

T137222

HYDRAULIC RESERVOIR

KEY	PART NO.	PART NAME	QTY	SERIAL NO.	REMARKS
1	AT216280	HYDRAULIC RESERVOIR	1		
2	AT119301	SIGHT PLUG	1		
3	AT216172	CAP	1		
4	AT216055	STRAINER	1		
5	AT216109	DRAIN PLUG	1		
6A	38H1090	ELBOW FITTING	1	-849731	(ALSO ORDER T78784 AND U13639)
6B	38H1197	ADAPTER	1	849732-	(ALSO ORDER T78784 AND R26773)
7	AT216061	STRAINER	1		
8	U13639	O-RING	1	-849731	37.465 X 2.997 MM (1.475" X 0.118")
	R26773	O-RING	1	849732-	43.688 X 2.997 MM (1.720" X 0.118")
9	T78784	O-RING	1		37.821 X 1.778 MM (1.489" X 0.070")
10	19H3526	CAP SCREW	4		5/8" X 1-1/4"
11	R56423	WASHER	4		16.942 X 35.179 X 3.962 MM (0.667" X 1.385" X 5/32")
12A	AT216272	OIL TUBE	1	-849731	
12B	AT185443	TUBE	1	849732-	
13	38H1179	ADAPTER	1	-882700	(ALSO ORDER T76938 AND U12547)
	0071358873	FITTING	1	882701-	(ALSO ORDER T76938 AND U12547)
14	U12547	O-RING	3		23.470 X 2.946 MM (0.924" X 0.116")
15	T76938	O-RING	1		23.520 X 1.778 MM (0.926" X 0.070")
16	38H1163	ADAPTER	2		(ALSO ORDER T77858 AND U12547)
17	T77858	O-RING	2		18.771 X 1.778 MM (0.739" X 0.070")
18	AT193034	BREATHER	1		

LOADER BUCKET
.86 CUBIC METER (1.12 CUBIC YARD)

TP52791 -UN-26AUG96

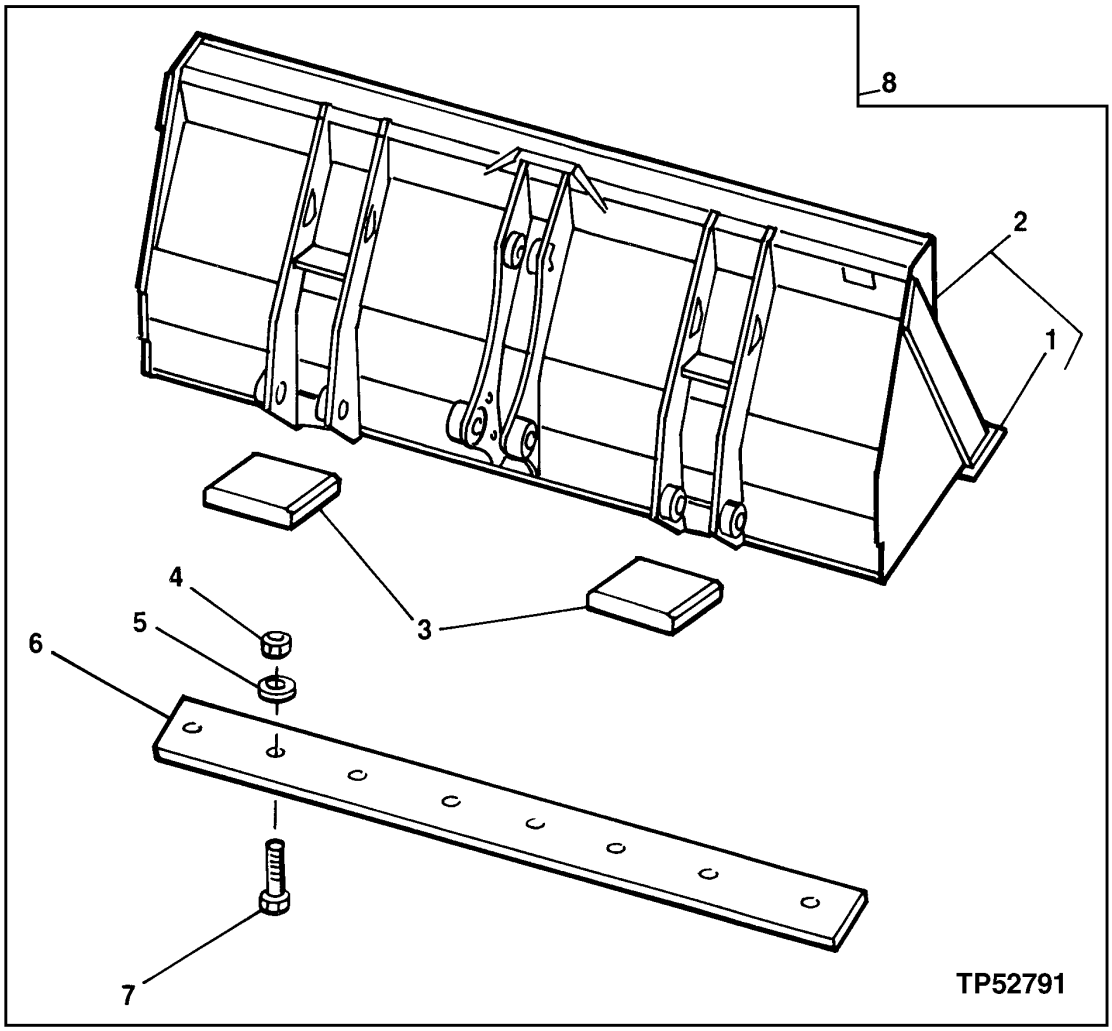

LOADER BUCKET
.86 CUBIC METER (1.12 CUBIC YARD)

KEY	PART NO.	PART NAME	QTY	SERIAL NO.	REMARKS
1	T158633	CUTTING EDGE	1		(1.12 CUBIC YARD) SQUARE CUT
	T150487	CUTTING EDGE	1		(1.12 CUBIC YARD) SBF
2	.....	LOADER BUCKET	1		
3	T147296	PLATE	2		
4	14H1039	NUT	7	-882700	5/8"
	U44915	LOCK NUT	7	882701-	5/8"
5	24M7241	WASHER	7		17 X 34 X 4 MM
6	T150517	CUTTING EDGE	1		(AUXILIARY) 3/4 THICK X 8 DBF X 86, (ALSO ORDER (7) 09H1759, (7) 14H1039, (7) 24M7241)
7	09H1759	BOLT	7		5/8" X 2-1/4"
8	AT183746	LOADER BUCKET	1	-880293	.86 CUBIC METER (1.12 CUBIC YARD) (WHOLEGOODS) (SUB FOR AT173359)
	AT185526	LOADER BUCKET	1	880294-	(LOW PROFILE) .86 CUBIC METER (1.12 CUBIC YARD) (WHOLEGOODS)
	AT180838	**KIT**	**1**		**LOADER BUCKET (USE WITH HYDRAULIC COUPLER AT180848 OR AT194410) (WHOLEGOODS)**
	AT180842	**KIT**	**1**		**FORKS (USE WITH HYDRAULIC COUPLER AT180848 OR AT194410) (WHOLEGOODS)**

HYDRAULIC FRONT COUPLER

T195700 -UN-07NOV03

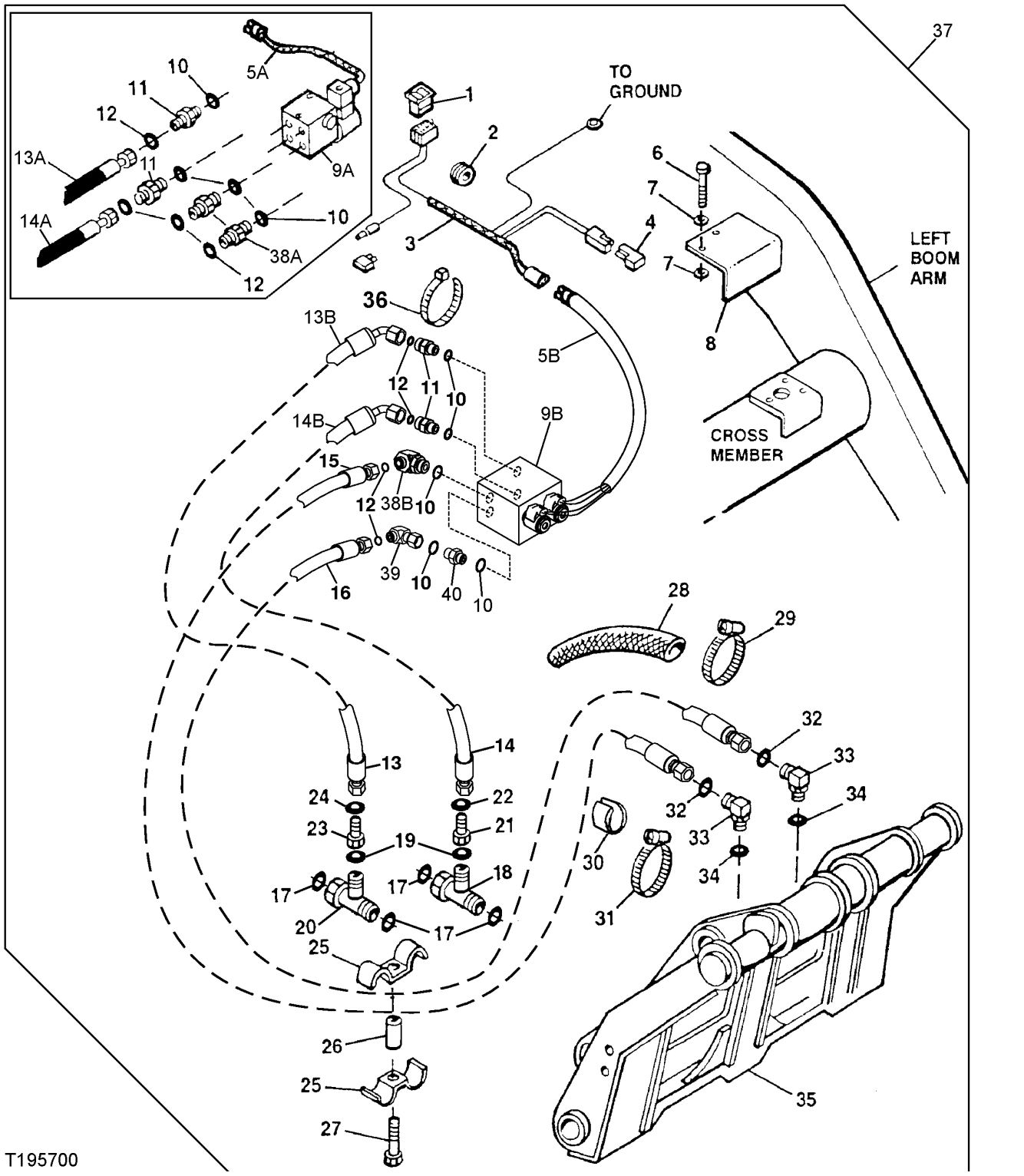

HYDRAULIC FRONT COUPLER

KEY	PART NO.	PART NAME	QTY	SERIAL NO.	REMARKS
1	AT181292	SWITCH	1		
2	N30256	GROMMET	1		
3	AT193699	CAB WIRING HARNESS	1		(ALSO ORDER AT185876) (SUB FOR AT181270 AND AT185877)
4	AR94101	DIODE	1		
5A	AT185876	WIRING HARNESS	1	-XXXXXX	(ALSO ORDER AT193699) (SUB FOR AT181270)
5B	AT300857	WIRING HARNESS	1	XXXXXX-	(ALSO ORDER AT193699)
6	19M7763	CAP SCREW	2		M6 X 75
7	24M7250	WASHER	4		6.400 X 17 X 3 MM
8	T162407	COVER	1		
9A	AT181422	HYD ACTUATED CONTROL VALVE	1		
9B	AT300855	HYD ACTUATED CONTROL VALVE	1		
10	R26448	O-RING	4		
11	38H1168	ADAPTER	4		
12	T77814	O-RING	4		
13A	AT181268	HYDRAULIC HOSE - FABRICATE	1	-880293	9/16" X 559 MM (22") X 13/16"
	AT194784	HYDRAULIC HOSE - FABRICATE	1	880294-XXXXXX	9/16" X 466 MM (18-1/4") X 13/16"
13B	AT300860	HYDRAULIC HOSE - FABRICATE	1	XXXXXX-	
14A	AT181269	HYDRAULIC HOSE - FABRICATE	1	-880293	9/16" X 508 MM (20") X 13/16"
	AT194784	HYDRAULIC HOSE - FABRICATE	1	880294-XXXXXX	9/16" X 466 MM (18-1/4") X 13/16"
14B	AT300860	HYDRAULIC HOSE - FABRICATE	1	XXXXXX-	
15	AT181324	HYDRAULIC HOSE - FABRICATE	1	-880293	9/16" X 3 353 MM (132") X 9/16"
	AT194785	HYDRAULIC HOSE - FABRICATE	1	880294-	9/16" X 2 990 MM (117-3/4") X 11/16"
16	AT181325	HYDRAULIC HOSE - FABRICATE	1	-880293	9/16" X 3 200 MM (126") X 9/16"
	AT194786	HYDRAULIC HOSE - FABRICATE	1	880294-	9/16" X 2 838 MM (111-3/4") X 11/16"
17	T77932	O-RING	4		
18	38H1031	TEE FITTING	1		(ALSO ORDER T77857)
19	T77857	O-RING	2		
20	38H1032	TEE FITTING	1		
21	38H1471	REDUCER	1		
22	T77932	O-RING	1		
23	38H1471	REDUCER	1		
24	T77613	O-RING	1		
25	R46919	HALF CLAMP	2		
26	28H1878	SPACER	1		
27	19M7179	CAP SCREW	1		
28	T162439	HOSE GUARD	1		
29	AR21842	CLAMP	2		
30	T105774	GUIDE	2		
31	AR21839	CLAMP	2		
32	T77613	O-RING	2		
33	38H1009	ELBOW FITTING	2		
34	R26448	O-RING	2		
35	.....	HYDR.QUICK COUPLER SOCKET	1	-880293	
	AT185748	HYDR.QUICK COUPLER SOCKET	1	880294-	(ORDER AT185635)
36	H77698	TIE BAND	12		
37	AT180848	KIT	1	-880293	(INCLUDES T162321 INSTRUCTIONS) (WHOLEGOODS)
	AT300853	KIT	1	880294-	(INCLUDES T187205 INSTRUCTIONS) (WHOLEGOODS) (SUB FOR AT185635 OR AT194410)
38A	38H1168	ADAPTER	2	-913970	(PORT A & B)
38B	38H1009	ELBOW FITTING	1	913971-	(PORT A)
39	38H1093	ELBOW FITTING	1	913971-	(PORT B)
40	38H1168	ADAPTER	1	913971-	(PORT B)

LOADER BUCKET
.76 CUBIC METER (1.00 CUBIC YARD)

TP57857 -UN-22APR98

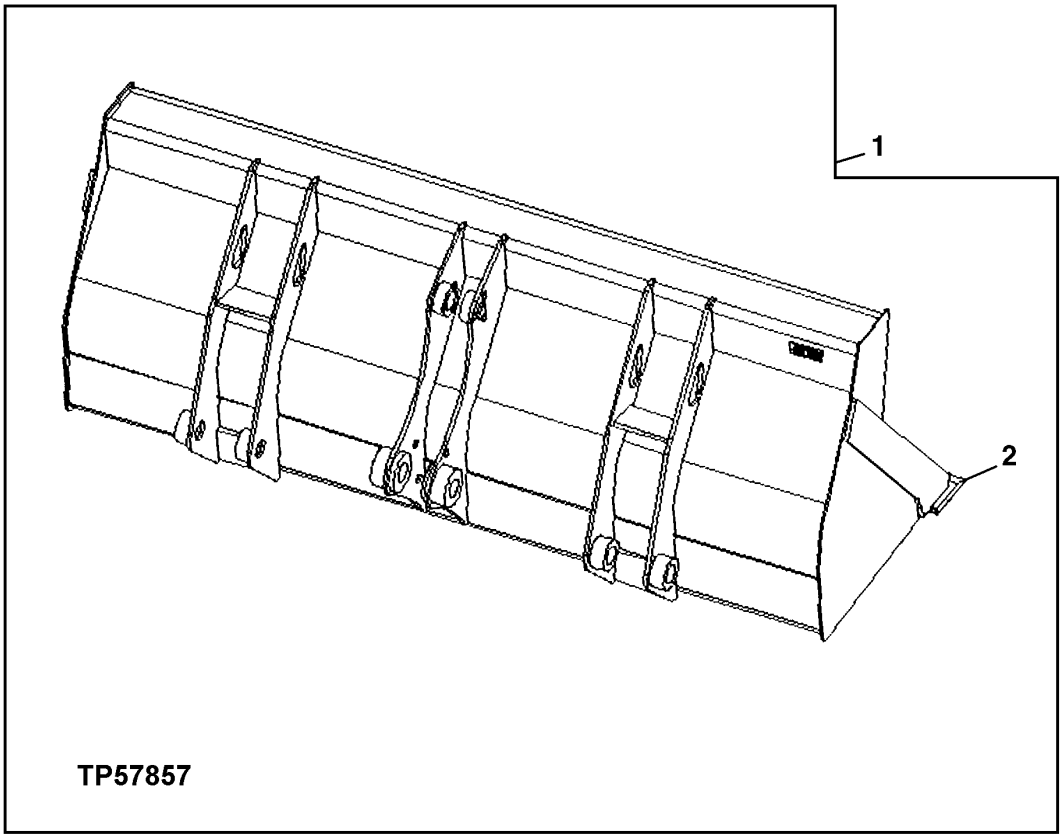

LOADER BUCKET
.76 CUBIC METER (1.00 CUBIC YARD)

KEY	PART NO.	PART NAME	QTY	SERIAL NO.	REMARKS
1	AT176559	LOADER BUCKET	1	-880293	.76 CUBIC METER (1.00 CUBIC YARD) (WHOLEGOODS)
	AT184738	LOADER BUCKET	1	880294-	.76 CUBIC METER (1.00 CUBIC YARD) HEAVY DUTY (LONG LIP BUCKET) (WHOLEGOODS)
2	T150487	CUTTING EDGE	1	-880293	(WELDED ON)
	T150517	CUTTING EDGE	1	880294-	REVERSIBLE

MULTI-PURPOSE BUCKET
(GANNON)
(SERIAL NO. -880293)

TP57894 -UN-10SEP98

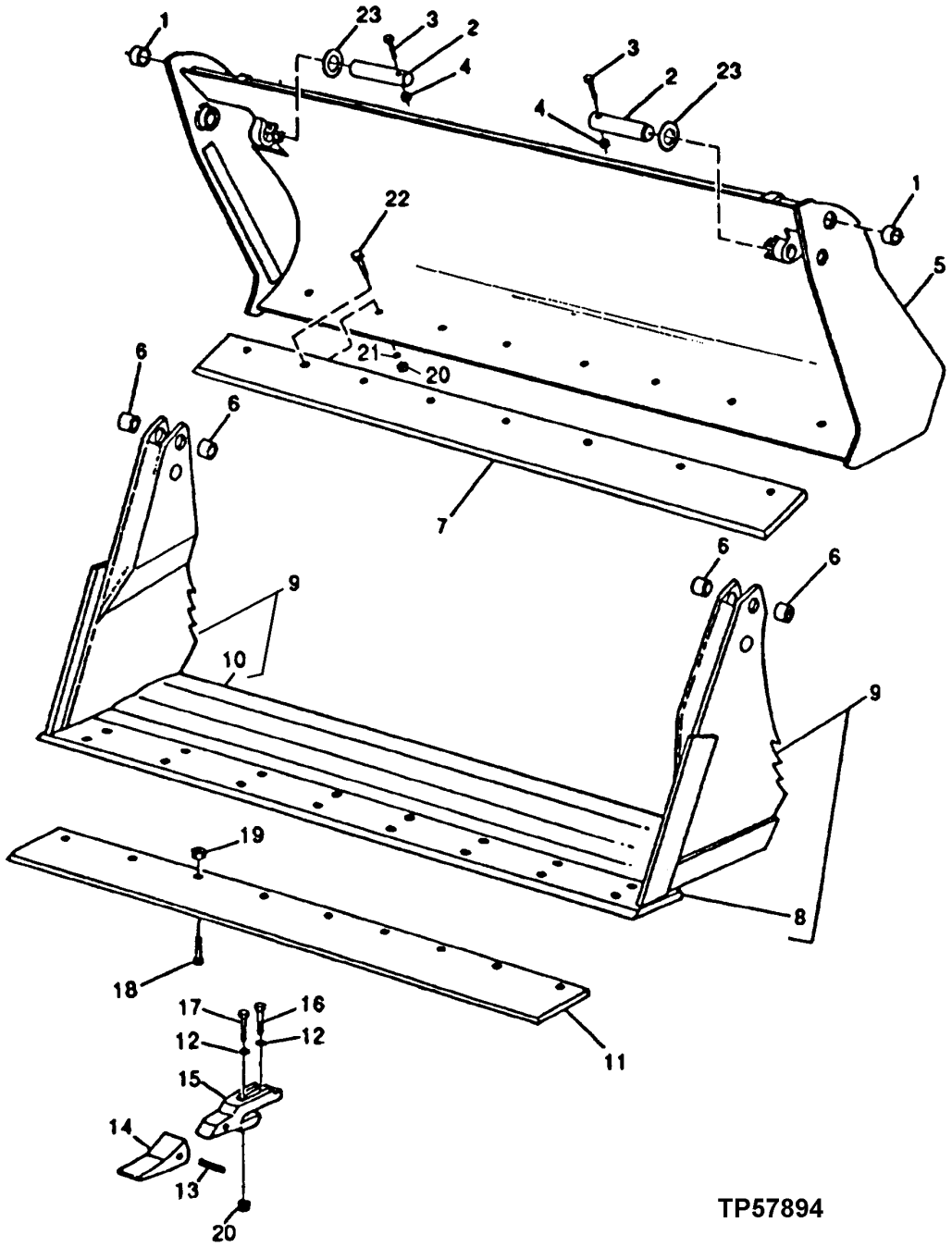

MULTI-PURPOSE BUCKET
(GANNON)
(SERIAL NO. -880293)

KEY	PART NO.	PART NAME	QTY	SERIAL NO.	REMARKS
1	T128534	BUSHING	2	-880293	25.743 X 34.989 X 25.400 MM (1.014" X 1.378" X 1")
2	T167059	PIN	2	-880293	(SUB FOR T28535)
3	19H2106	CAP SCREW	2	-880293	7/16" X 2-3/4"
4	K40006	LOCK NUT	2	-880293	11.125 MM (7/16")
5	.....	MOLDBOARD	1	-880293	(SUB AT180050 OR AT179838)
6	T128533	BUSHING	4	-880293	38.800 X 47.680 X 38.100 MM (1.528" X 1.877" X 1-1/2")
7	T162400	CUTTING EDGE	1	-880293	(2184MM - 86INCH - 1.13M)
8	T161635	CUTTING EDGE	1	-880293	(2184MM - 86INCH - 1.13M)
9	.....	HINGE	1	-880293	(SUB AT180050 OR AT179838)
10	T161636	CUTTING EDGE	1	-880293	(2184MM - 86INCH - 1.13M)
11	T150517	CUTTING EDGE	1	-880293	(AUXILIARY) 1/2 THICK X 8 INCH DBF X 86 INCH, (ALSO ORDER (7) 14H1039, (7) 24M7241 AND (7) 09H1759)
	T84194	CUTTING EDGE	1	-880293	(AUXILIARY) 3/4 THICK X 8 INCH DBF X 92 3/8 INCH, (ALSO ORDER (7) 14H1039, (7) 24M7241 AND (7) 09H1764)
12	24H1367	WASHER	AR	-880293	21/32" X 1-1/4" X 1/4"
13	T23P	PIN	AR	-880293	
14	T230SP	TOOTH	AR	-880293	
15	T221X230	ADAPTER	AR	-880293	
16	19H2599	CAP SCREW	AR	-880293	5/8" X 2-1/2"
17	19H2641	CAP SCREW	AR	-880293	5/8" X 3-1/4"
18	09H1759	BOLT	AR	-880293	5/8" X 2-1/4"
	09H1764	BOLT	AR	-880293	5/8" X 2-1/2"
	09H1757	BOLT	AR	-880053	5/8" X 2-3/4"
19	14H1039	NUT	7	-880053	5/8"
20	K40015	LOCK NUT	7	-880053	15.875 MM (5/8")
21	24M7241	WASHER	7	-880053	17 X 34 X 4 MM
22	10H1039	BOLT	7	-880053	5/8" X 1-3/4"
23	24H1554	WASHER	2	-880053	1-5/8" X 3-1/2" X 0.180"

MULTI-PURPOSE BUCKET
(SERIAL NO. 880294-)

TP58137 -UN-16DEC99

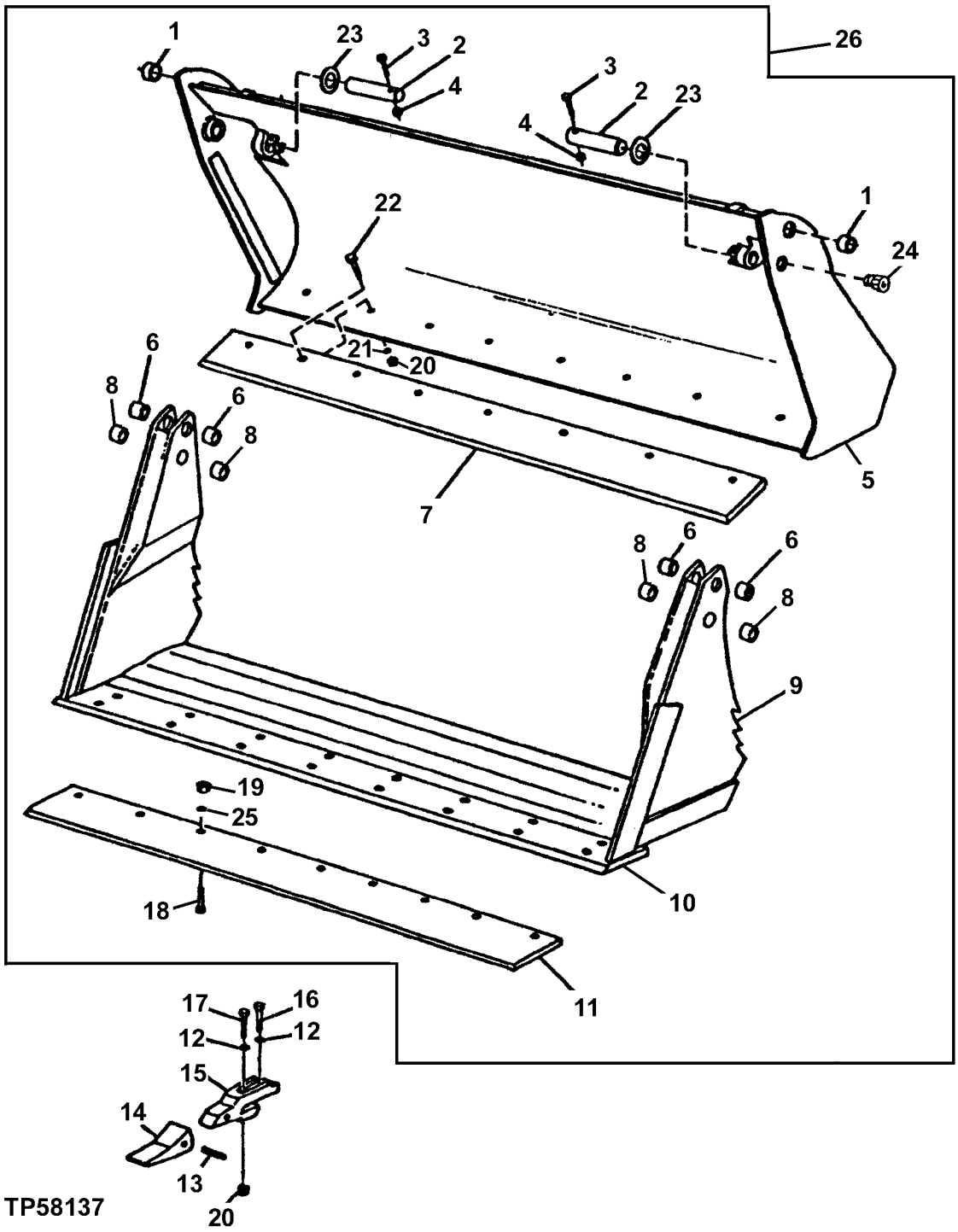

MULTI-PURPOSE BUCKET
(SERIAL NO. 880294-)

KEY	PART NO.	PART NAME	QTY	SERIAL NO.	REMARKS
1	T128534	BUSHING	2	880294-	
2	T167059	PIN	2	880294-	
3	19H2106	CAP SCREW	2	880294-	7/16" X 2-3/4"
4	K40006	LOCK NUT	2	880294-	11.125 MM (7/16")
5	.....	MOLDBOARD	1	880294-	(SUB AT180050)
6	T166433	BUSHING	4	880294-	
7	T166454	CUTTING EDGE	1	880294-	(2083 MM) 82"
8	T128533	BUSHING	4	880294-	
9	.....	HINGE	1	880294-	(SUB AT180050)
10	T166455	CUTTING EDGE	1	880294-	(2083 MM) 82"
11	T150517	CUTTING EDGE	1	880294-	(AUXILIARY) 3/4 THICK X 8 INCH DBF X 82 INCH, (ALSO ORDER (8) 14H1039, (8) 24M7241 AND (8) 09H1759)
12	24H1367	WASHER	AR	880294-	21/32" X 1-1/4" X 1/4"
13	T23P	PIN	AR	880294-	
14	T230SP	TOOTH	AR	880294-	
15	T221X230	ADAPTER	AR	880294-	
16	19H2599	CAP SCREW	AR	880294-	5/8" X 2-1/2"
17	19H3244	CAP SCREW	AR	880294-	5/8" X 2-1/4"
18	09H1759	BOLT	8	880294-	5/8" X 2-1/4"
19	14H1039	NUT	8	880294-	5/8"
20	14H1039	NUT	8	880294-	5/8"
21	24M7241	WASHER	8	880294-	17 X 34 X 4 MM
22	09H1776	BOLT	8	880294-	5/8" X 1-3/4"
23	24H1554	WASHER	2	880294-	1-5/8" X 3-1/2" X 0.180"
24	JD7797	LUBRICATION FITTING	2	880294-	
25	24M7241	WASHER	8	880294-	
26	AT185634	MULTI-PURPOSE BUCKET	1	880294-	(WHOLEGOODS)

MULTI-PURPOSE BUCKET
(WITH HYDRAULIC PLUMBING)
(SERIAL NO. -880293)

TP80403 -UN-26JAN00

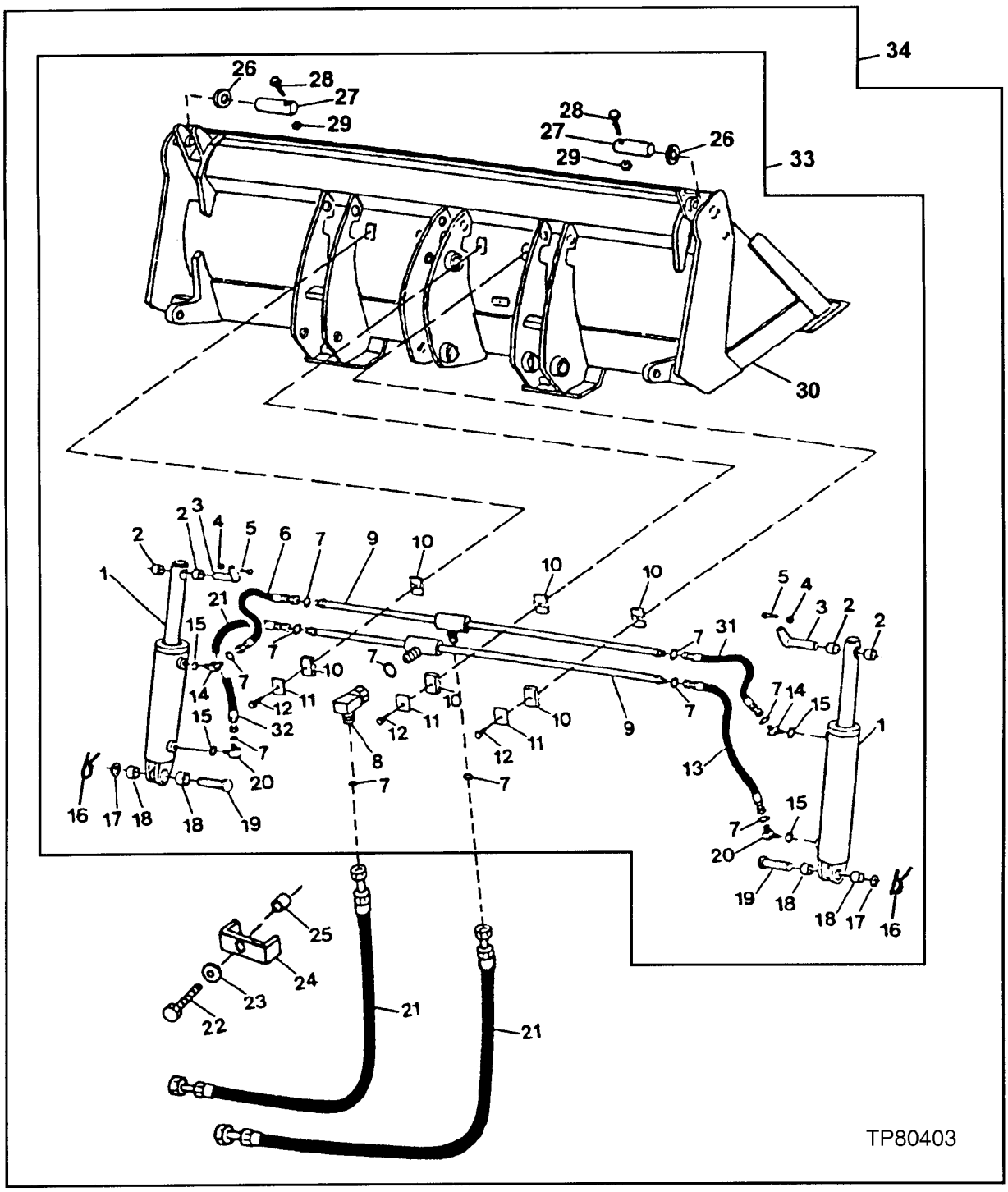

MULTI-PURPOSE BUCKET
(WITH HYDRAULIC PLUMBING)
(SERIAL NO. -880293)

KEY	PART NO.	PART NAME	QTY	SERIAL NO.	REMARKS
1	.....	CYLINDER	2	-880293	(AT190880 NO LONGER AVAILABLE) (SUB FOR AT182266) (SUB (2) AH210737) (ALSO ORDER (2) T191318 AND (6) 24H1138)
2	T128532	BUSHING	4	-880293	1.035" X 1.370" X 3/4"
3	AT188305	U-JOINT LOCK PIN	2	-880293	(SUB FOR AT142584)
	AT190900	U-JOINT LOCK PIN	2	-880293	
4	T54568	LOCK NUT	2	-880293	3/8"
5	19H2676	CAP SCREW	2	-880293	3/8" X 1"
6	AT181650	HYDRAULIC HOSE - FABRICATE	1	-880293	LEFT SIDE
7	T77857	O-RING	11	-880293	0.489" X 0.070"
8	38H1095	ELBOW FITTING	2	-880293	
9	AT179960	OIL LINE	2	-880293	
10	H135156	CLAMP	6	-880293	
11	H121168	PLATE	3	-880293	
12	19H2661	CAP SCREW	3	-880293	5/16" X 1-3/8"
13	AT179983	HYDRAULIC HOSE - FABRICATE	1	-880293	RIGHT SIDE
14	38H1521	ELBOW FITTING	2	-880293	
15	R26448	O-RING	4	-880293	0.468" X 5/64"
16	11M7030	COTTER PIN	2	-880293	0.197" X 1.575"
17	24H1138	WASHER	2	-880293	1-1/16" X 2" X 0.134"
18	H26895	BUSHING	4	-880293	1.003" X 1-1/4" X 0.607", (SUB FOR T128531, THIS APPLICATION)
19	T128536	PIN FASTENER	2	-880293	0.995" X 2-9/16"
20	38H1314	ELBOW FITTING	2	-880293	
21	AT175198	HYDRAULIC HOSE - FABRICATE	2	-880293	
22	19H2633	CAP SCREW	1	-880293	3/8" X 1-1/2"
23	24M7106	WASHER	1	-880293	10 X 18 X 2.500 MM
24	U40398	CLAMP	1	-880293	(NOT REQUIRED)
25	28H3383	BUSHING	1	-880293	0.493" X 0.675" X 3/4", (NOT REQUIRED) (SUB FOR T126050)
26	24H1554	WASHER	2	-880293	1-5/8" X 3-1/2" X 0.180"
27	T128535	PIN FASTENER	2	-880293	1-1/2" X 7-3/8"
28	19H2106	CAP SCREW	2	-880293	7/16" X 2-3/4"
29	K40006	LOCK NUT	2	-880293	7/16"
30	.....	MOLDBOARD	1	-880293	(2184MM - 86INCH - 1.13M) (SUB AT177940 OR AT180050)
31	AT179974	HYDRAULIC HOSE - FABRICATE	1	-880293	RIGHT SIDE
32	AT179984	HYDRAULIC HOSE - FABRICATE	1	-880293	LEFT SIDE
33	.....	MULTI-PURPOSE BUCKET	1	-880293	(2184MM - 86INCH, 1.13M) (AT177940 NO LONGER AVAILABLE) (SUB AT180050)
34	AT180050	MULTI-PURPOSE BUCKET	1	-880293	(WHOLEGOODS) (2184MM - 86INCH, 1.13M) INCLUDES T160759 LABEL,R44302 BAND

MULTI-PURPOSE BUCKET, WITH HYDRAULIC PLUMBING (SERIAL NO. 880294-882700)

TP80404 -UN-26JAN00

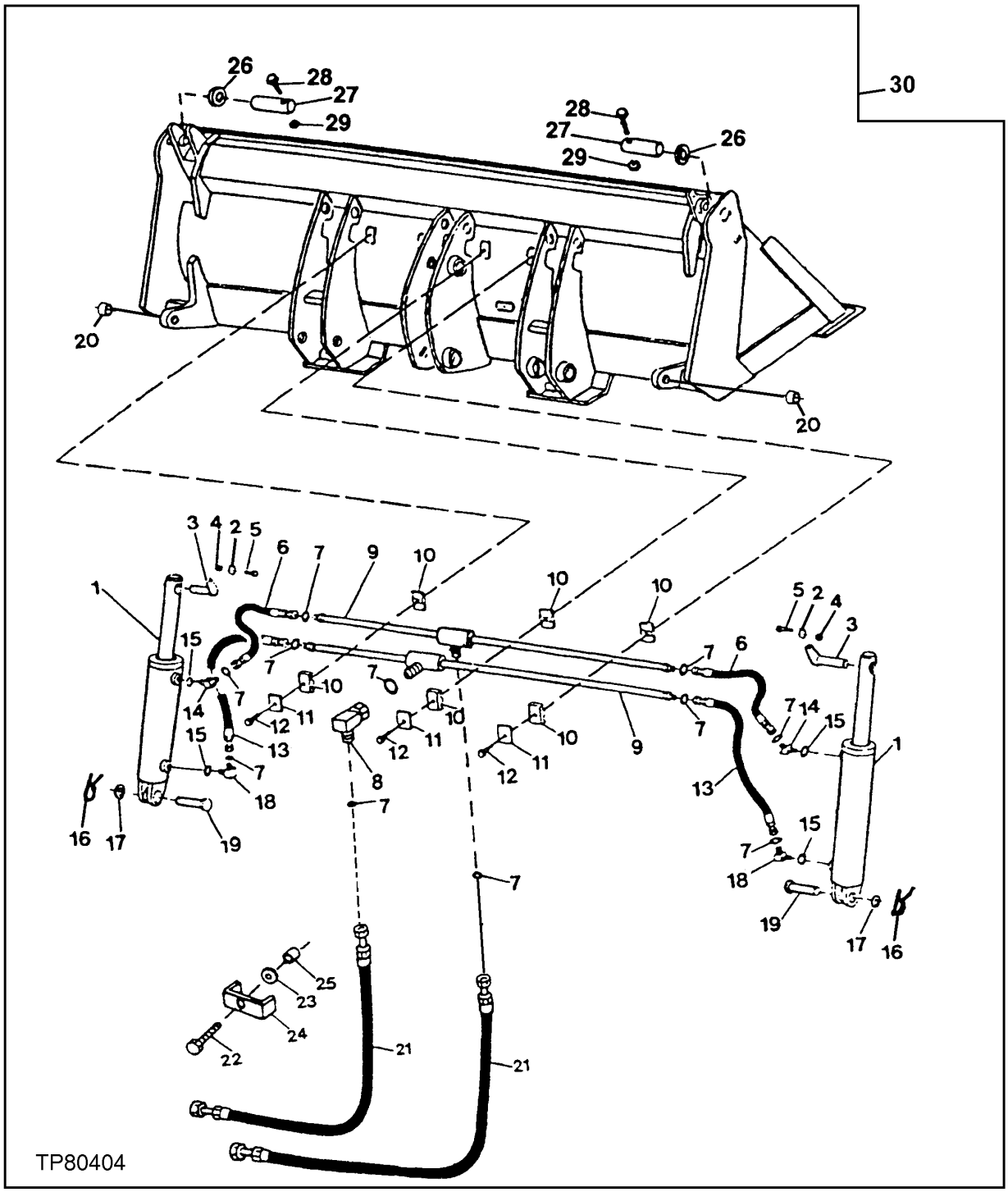

MULTI-PURPOSE BUCKET, WITH HYDRAULIC PLUMBING (SERIAL NO. 880294-882700)

KEY	PART NO.	PART NAME	QTY	SERIAL NO.	REMARKS
1	.....	CYLINDER	2	880294-	(AT190880 NO LONGER AVAILABLE) (SUB (2) AH210737) (ALSO ORDER (2) T191318 AND (6) 24H1138)
2	24M7239	WASHER	2	880294-	10.700 X 21 X 2.500 MM
3	T185041	PIN	2	880294-	
4	T54568	LOCK NUT	2	880294-	3/8"
5	19H3239	CAP SCREW	2	880294-	3/8" X 1-1/4"
6	AT190628	HYDRAULIC HOSE - FABRICATE	2	880294-	
7	T77857	O-RING	11	880294-	0.489" X 0.070"
8	38H1095	ELBOW FITTING	1	880294-	
9	AT189819	LINE	2	880294-	
10	H135156	CLAMP	6	880294-	
11	H121168	PLATE	3	880294-	
12	19H3552	CAP SCREW	3	880294-	5/16" X 1-1/2"
13	AT190702	HYDRAULIC HOSE - FABRICATE	2	880294-	
14	38H1314	ELBOW FITTING	2	880294-	
	38H1521	ELBOW FITTING	2	880294-	
15	R26448	O-RING	4	880294-	0.468" X 5/64"
16	11H218	COTTER PIN	2	880294-	3/16" X 1-1/2"
17	24H1138	WASHER	2	880294-	1-1/16" X 2" X 0.134"
18	38H1314	ELBOW FITTING	2	880294-	
19	T128536	PIN FASTENER	2	880294-	0.995" X 2-9/16"
20	T166433	BUSHING	2	880294-	(SUB FOR T166390)
21	AT175198	HYDRAULIC HOSE - FABRICATE	2	880294-	
22	19H2633	CAP SCREW	1	880294-	3/8" X 1-1/2"
23	24M7106	WASHER	1	880294-	10 X 18 X 2.500 MM
24	U40398	CLAMP	1	880294-	
25	28H3383	BUSHING	1	880294-	0.493" X 0.675" X 3/4"
26	24H1554	WASHER	2	880294-	1-5/8" X 3-1/2" X 0.180"
27	T128535	PIN FASTENER	2	880294-	1-1/2" X 7-3/8"
28	19H2106	CAP SCREW	2	880294-	7/16" X 2-3/4"
29	K40006	LOCK NUT	2	880294-	7/16"
30	AT185634	MULTI-PURPOSE BUCKET	1	880294-	(2184 MM - 86 INCH 1.13M) (WHOLEGOODS) (INCLUDES T160759)

MULTI-PURPOSE BUCKET, WITH HYDRAULIC PLUMBING (SERIAL NO. 882701-)

T197346 -UN-14JAN04

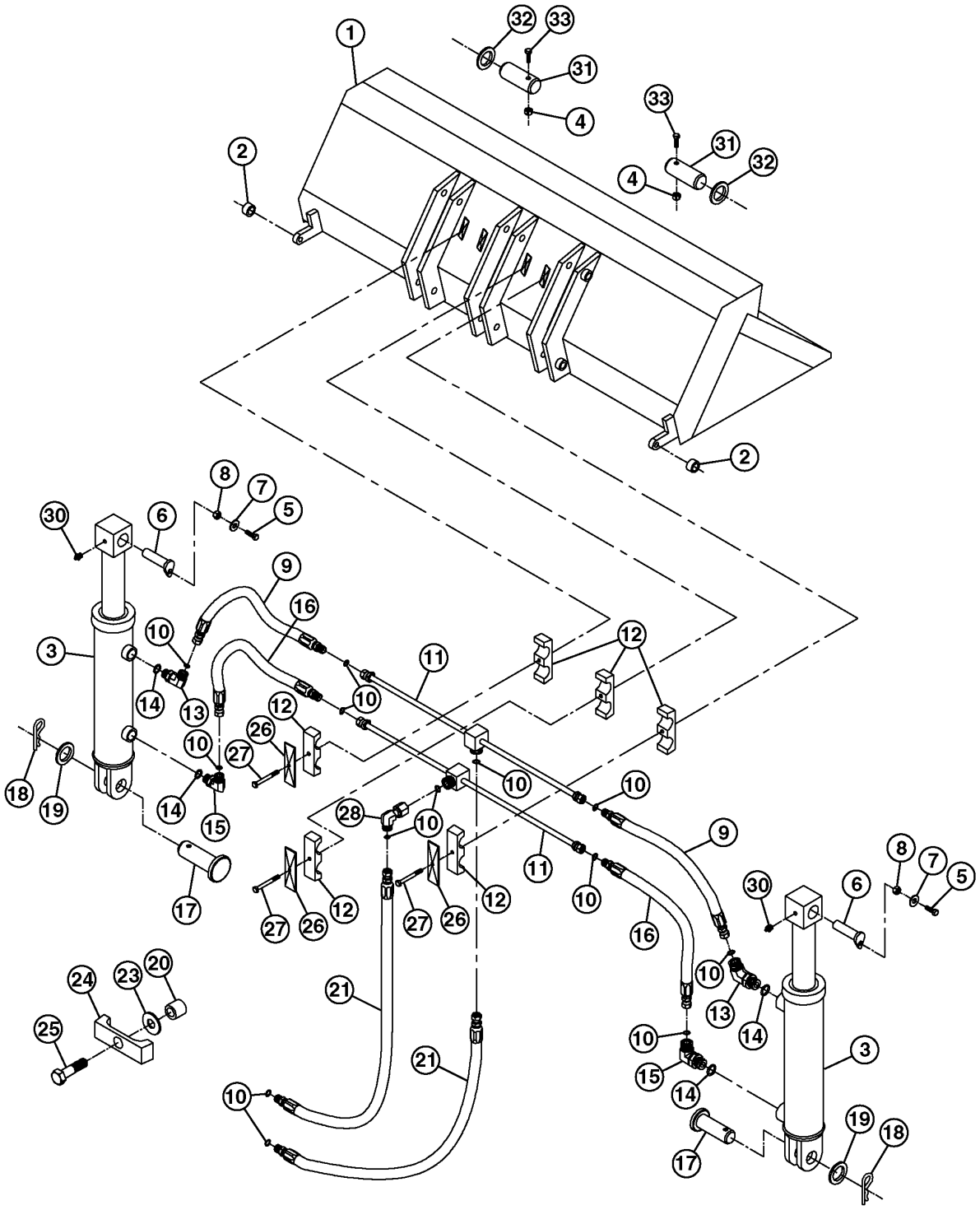

T197346

MULTI-PURPOSE BUCKET, WITH HYDRAULIC PLUMBING (SERIAL NO. 882701-)

KEY	PART NO.	PART NAME	QTY	SERIAL NO.	REMARKS
1	AT185634	CYLINDER	1		
2	T166433	BUSHING	2		25.880 X 35.080 X 19.100 MM
3	AH210737	HYDRAULIC CYLINDER	2		
4	K40006	LOCK NUT	2		AT175644 IS NOT SERVICED
5	19H3239	CAP SCREW	2		3/8" X 1-1/4"
6	AT190900	U-JOINT LOCK PIN	2		
7	24M7239	WASHER	2		0.421" X 0.827" X 0.098"
8	T54568	LOCK NUT	2		
9	CB11422823	HOSE	2		
10	T77857	O-RING	13		
11	AT189819	LINE	2		
12	H135156	CLAMP	6		
13	38H1521	ELBOW FITTING	2		
14	R26448	O-RING	4		
15	38H1314	ELBOW FITTING	2		
16	CB11422821	HOSE	2		
17	T185041	PIN	2		0.995" X 2.720"
18	11M7030	COTTER PIN	2		0.197" X 1.575"
19	24H1138	WASHER	2		1-1/16" X 2" X 0.134"
20	28H3383	BUSHING	1		(SUB FOR T166390)
21	CB11422829	HOSE	2		
22	R44302	TIE BAND	4		
23	24M7106	WASHER	1		10 X 18 X 2.500 MM
24	U40398	CLAMP	1		
25	19H2633	CAP SCREW	1		3/8" X 1-1/2"
26	H121168	PLATE	3		
27	19H3552	CAP SCREW	3		5/16" X 1-1/2"
28	38H1095	ELBOW FITTING	1		
30	JD7797	LUBRICATION FITTING	2		
31	T167059	PIN	2		
32	24H1554	WASHER	2		1-5/8" X 3-1/2" X 0.180"
33	19H2106	CAP SCREW	2		7/16" X 2-3/4"

MULTI-PURPOSE BUCKET CYLINDER (SERIAL NO. -882700)

TP80338 -UN-08DEC99

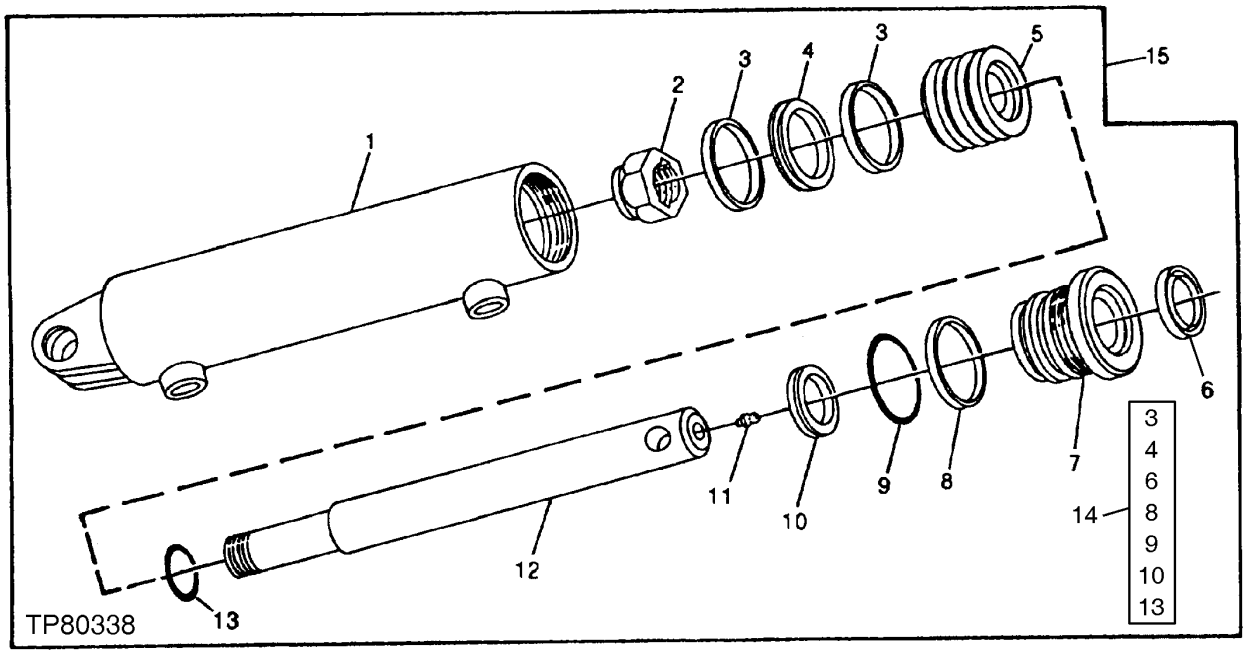

KEY	PART NO.	PART NAME	QTY	SERIAL NO.	REMARKS
1	.....	BARREL	1		AT182268 NO LONGER AVAILABLE, (SUB AT190880)
	AT190881	BARREL	1		
2	H29619	LOCK NUT	1		
3	.....	WEAR RING	2		
4	.....	SEAL	1		
5	T163117	PISTON	1		
6	.....	SEAL	1		
7	T163116	HYDR. CYLINDER ROD GUIDE	1		
8	.....	BACK-UP RING	1		
9	.....	O-RING	1		
10	.....	SEAL	1		
11	JD7797	LUBRICATION FITTING	1		
12	T163118	ROD	1		
13	.....	O-RING	1		
14	.....	KIT	1		AT182267 NO LONGER AVAILABLE, (USE WITH AT182266) (SUB AT190898)
	AT190898	KIT	1		(USE WITH AT190880)
15	.....	CYLINDER	1		(AT182266 NO LONGER AVAILABLE) (SUB AT190880 OR AH210737)
	.....	CYLINDER	1		AT190880 NO LONGER AVAILABLE, (SUB AH210737)

MULTI-PURPOSE BUCKET CYLINDER AND REPAIR KIT (REPLACEMENT CYLINDER) (SERIAL NO. -882701)

T197121 -UN-08JAN04

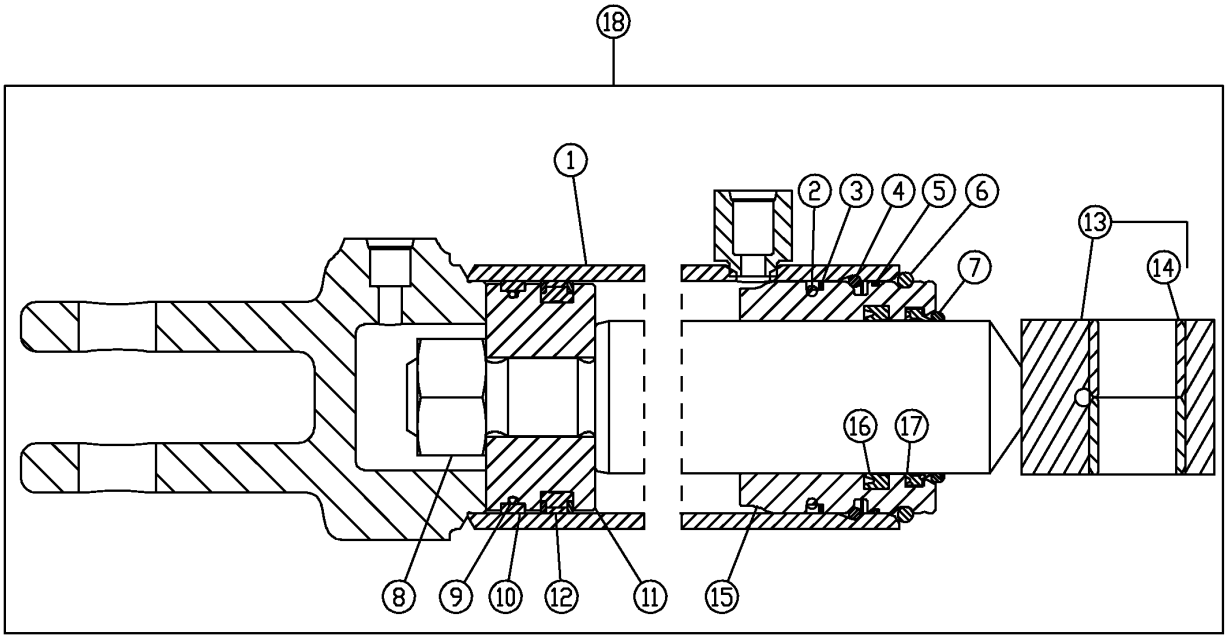

19 — 2,3,5,9,10,12,16,17

T197121

KEY	PART NO.	PART NAME	QTY	SERIAL NO.	REMARKS
1	.....	HYDRAULIC CYLINDER BARREL	1		
2	T14065	O-RING	1		
3	.....	RING	2		
4	H177854	SNAP RING	1		
5	.....	O-RING	1		
6	H180927	SNAP RING	1		
7	.....	O-RING	1		
8	H179692	NUT	1		
9	.....	WEAR RING	1		
10	.....	O-RING	1		
11	.....	PISTON	1		
12	.....	SEAL	1		
13	.....	ROD	1		
14	.....	BUSHING	1		
15	.....	HYDR. CYLINDER ROD GUIDE	1		
16	H152203	SEAL	1		
17	.....	SEAL	1		
18	AH210737	HYDRAULIC CYLINDER	1		
19	AH209022	HYDRAULIC CYLINDER KIT	1		KIT

LOADER BUCKET DATA

TP57758 -UN-15AUG97

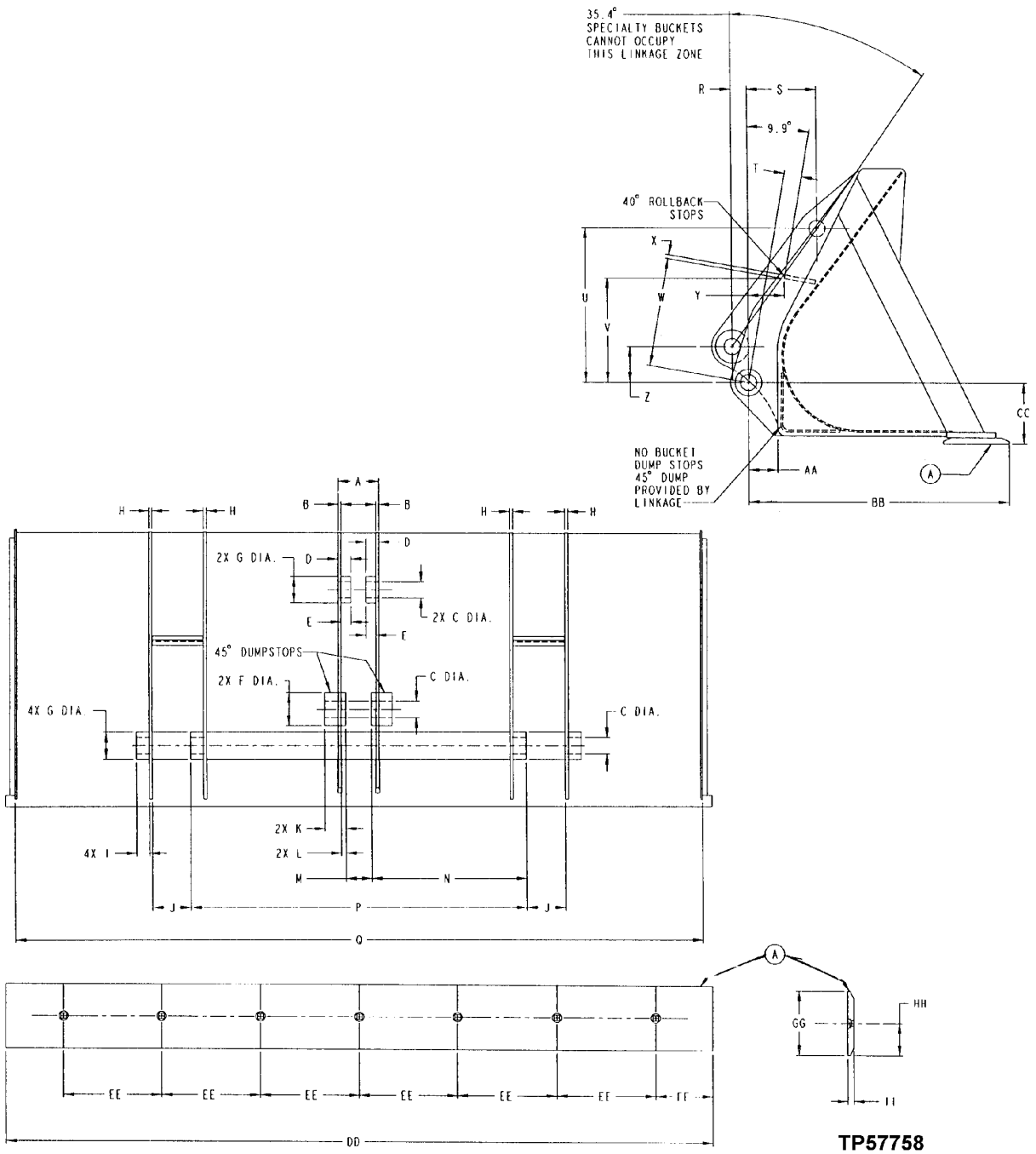

TP57758

TP57759 -UN-15AUG97

LOADER BUCKET DATA

	1.12 CU. YD .86 CU. M	1.3 CU. YD 1.0 CU. M
A	125-128	125-128
B	9.53	12
C	49.74-49.86	49.74-49.86
D	40.01	42.48
E	30.48	30.48
F	101.6	101.6
G	82.55	82.55
H	9.53	9.53
I	40	40
J	117.5-120.5	117.5-120.5
K	64	64
L	13.73	11.25
M	78.5-81.5	78.5-81.5
N	476.9-479.9	476.9-479.9
P	1035.3-1038.3	1035.3-1038.3
Q	2124	2286
R	46.3-52.3	46.3-52.3
S	213	213
T	54	54
U	480.3	480.3
V	324.67	324.67
W	339	339
X	12	12
Y	111.48	111.48
Z	111.6	111.6
AA	88.67	77.8
BB	806.1	847.39
CC	187.08	231.76
DD	2181-2187	2343-2349
EE	304.8	304.8
FF	177.6	106.2
GG	203.2	203.2
HH	101.6	101.6
II	19.05	19.05
(A)	T150517	T84194

Company policy limits the use of the enclosed drawings and information to your company and any other usage is expressly prohibited without the written consent of Deere & Company. We regeret we cannot keep you informed of subsequent changes in the specifications furnished. You are, therefore, responsible for the risks involved in their use.

It is to be understood that furnishing you with the requested material does not automatically constitute a Deere & Company endorsement of your products on or with any John Deere product.

TP57759

LOADER BUCKET PINS

T195646 -UN-21OCT03

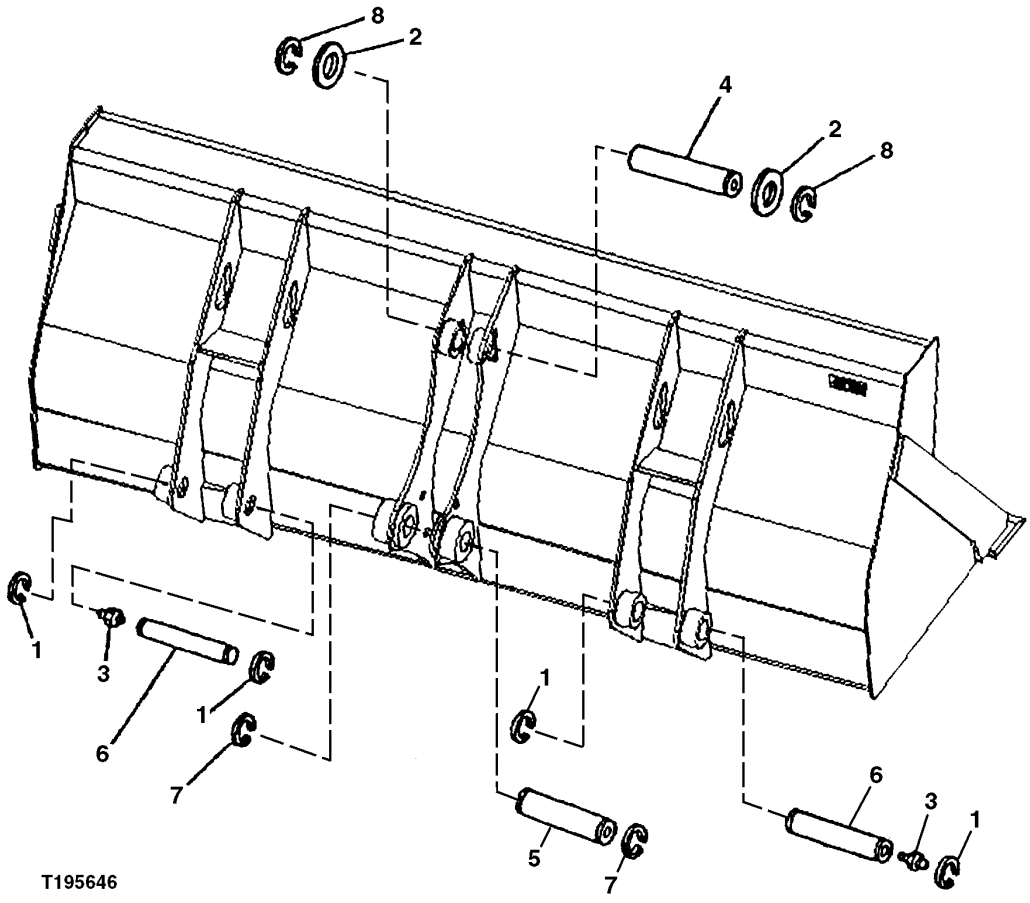

LOADER BUCKET PINS

KEY	PART NO.	PART NAME	QTY	SERIAL NO.	REMARKS
1	40M7166	SNAP RING	8	-880293	
	40M7166	SNAP RING	4	880294-	
2	24H1598	WASHER	2	-880293	2-1/16" X 3-1/2" X 0.105"
	T161036	WASHER	2	880294-	2.205" X 3.150" X 0.079"
3	T162396	LUBRICATION FITTING	2	-882700	(SUB FOR JD7798)
	JD7798	LUBRICATION FITTING	2	882701-	
4	T154359	PIN FASTENER	1	-880293	
	T165333	PIN FASTENER	1	880294-882700	
	T165314	PIN	1	882701-	
	T165333	PIN FASTENER	1	-XXXXXX	(USE WITH 1.00 CUBIC YARD BUCKET)
	T154359	PIN FASTENER	1	XXXXXX-	(USE WITH 1.00 CUBIC YARD BUCKET)
5	T154358	PIN FASTENER	1	-880293	
	T165332	PIN FASTENER	1	880294-	
	T165332	PIN FASTENER	1	-XXXXXX	(USE WITH 1.00 CUBIC YARD BUCKET)
	T154358	PIN FASTENER	1	XXXXXX-	(USE WITH 1.00 CUBIC YARD BUCKET)
6	T154360	PIN FASTENER	2		
7	40M7166	SNAP RING	4	-880293	
	40M7066	SNAP RING	4	880294-882700	(USE WITH T154359, T165333, T154358 OR T165332)
	40M7166	SNAP RING	2	882701-	(USE WITH T154358 OR T165332)
8	40M7066	SNAP RING	2	882701-	(USE WITH T165314)

LOADER LESS BUCKET PINS (SERIAL NO. 882701-)

T196774 -UN-08DEC03

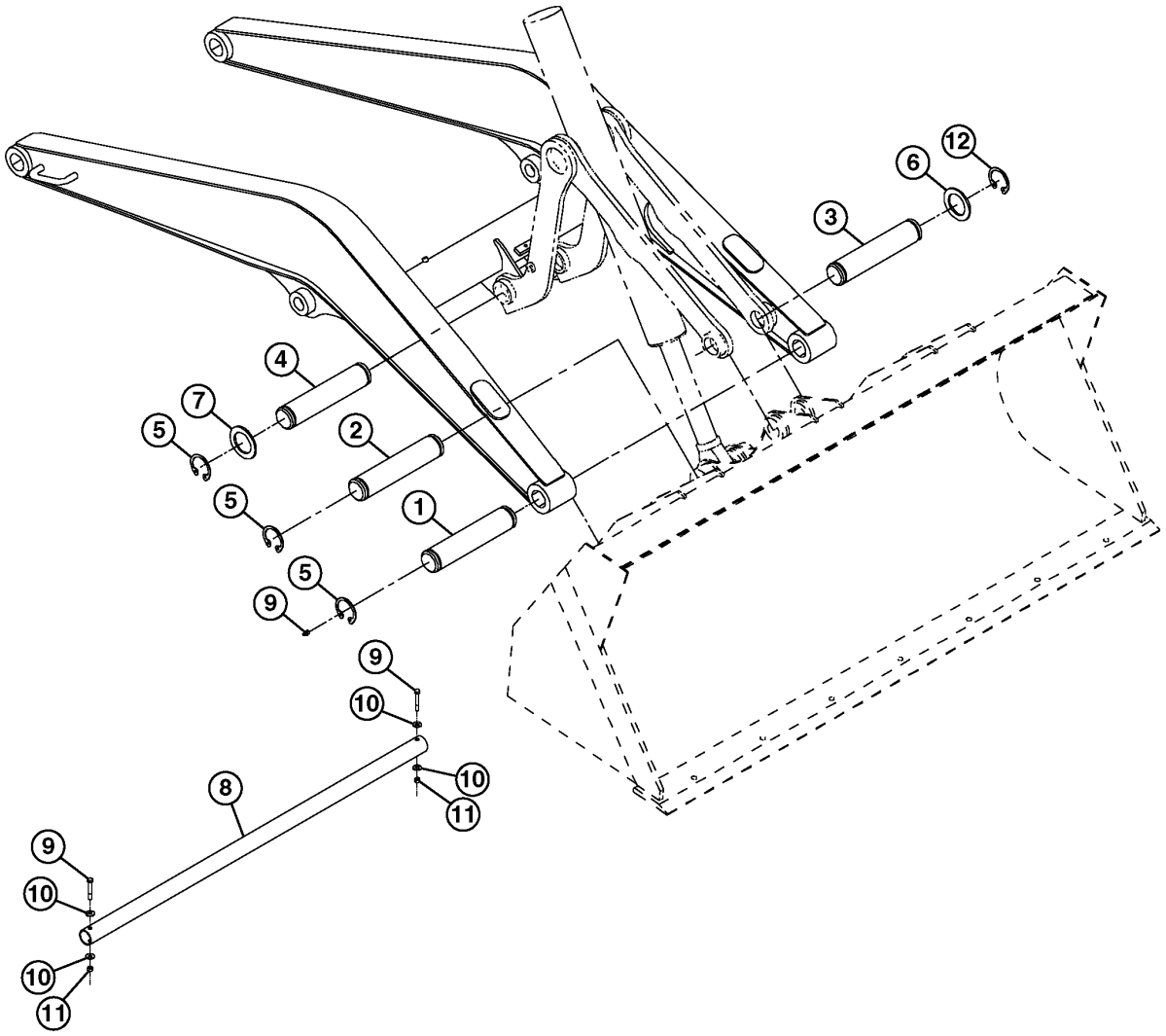

T196774

LOADER LESS BUCKET PINS (SERIAL NO. 882701-)

KEY	PART NO.	PART NAME	QTY	SERIAL NO.	REMARKS
1	T154360	PIN FASTENER	2		
2	T165332	PIN FASTENER	1		1.948" X 9.630"
3	T165333	PIN FASTENER	1		(SUB FOR JD7798)
4	T165314	PIN	1		
5	40M7166	SNAP RING	1		
6	T161036	WASHER	2		
7	24H1595	WASHER	2		
8	.....	PIPE	1		(USE WITH T165314)
9	19H3031	CAP SCREW	2		3/8" X 2-1/2"
10	24H1219	WASHER	4		7/16" X 1" X 0.083"
11	T11234	LOCK NUT	2		3/8"
12	40M7066	SNAP RING	2		

BUCKET LEVELING AND RETURN-TO-DIG LINKAGE
(SERIAL NO. -870948)

T150384 -UN-18JAN02

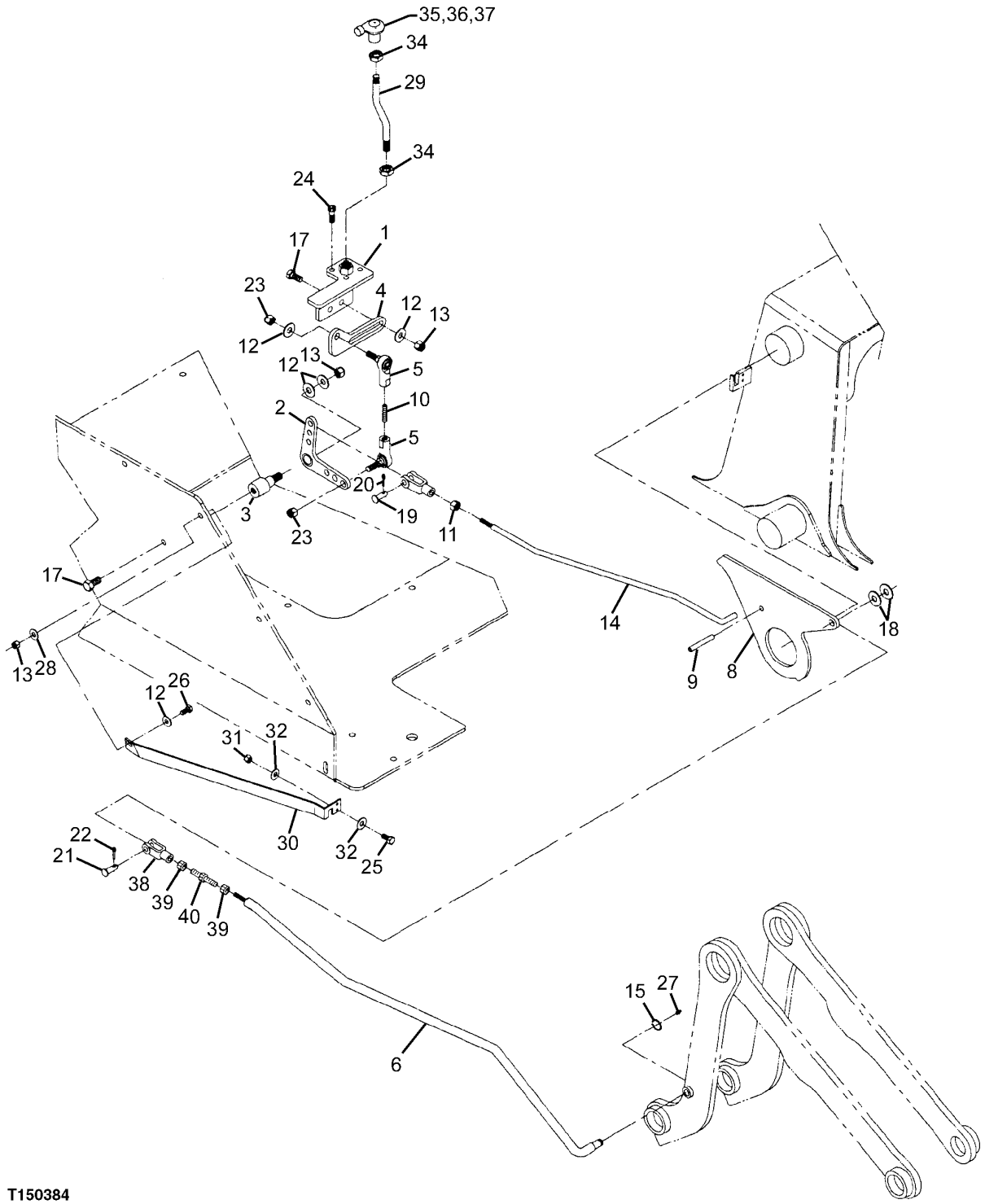

BUCKET LEVELING AND RETURN-TO-DIG LINKAGE
(SERIAL NO. -870948)

KEY	PART NO.	PART NAME	QTY	SERIAL NO.	REMARKS
1	AT216503	BASE	1		(JOYSTICK LEVER)
2	AT216504	PIVOT	1		
3	AT216435	SHAFT	1		
4	AT216436	PLATE	1		
5	AT216420	BALL JOINT	2		
6	AT182015	TUBE	1		(SUB FOR AT171546)
7	AT159794	YOKE	1		
8	AT216659	PLATE	1		(RETURN-TO-DIG CAM FOLLOWER FOR SWITCH)
9	AT216422	COTTER PIN	1		
10	AT216411	ROD	1		
11	14H774	NUT	1		3/8"
12	R57696	WASHER	4		9.931 X 23.114 X 3.048 MM (25/64" X 0.910" X 0.120")
13	R11151	LOCK NUT	3		
14	AT216444	ROD	1		
15	AT216430	SNAP RING	1		
17	19H2676	CAP SCREW	2		3/8" X 1"
18	T35860	WASHER	2		13.614 X 27.280 X 2.413 MM (0.536" X 1.074" X 0.095")
19	C1067R	PIN FASTENER	1		
20	11M7081	COTTER PIN	1		2.500 X 20 MM
	T148182	RING	1		(USE AFTER COTTER PIN IS DISCARDED)
21	AT216421	PIN FASTENER	1		
22	11M7059	COTTER PIN	1		3.200 X 20 MM
23	T27945	LOCK NUT	2		
24	AT216416	BOLT	3		(TO PIVOT ASSEMBLY BALLJOINTS ON HYDRAULIC CONTROL VALVE)
25	19H1914	CAP SCREW	2		1/4" X 1"
26	19H1791	CAP SCREW	1		1/4" X 1-1/4"
27	T162396	LUBRICATION FITTING	1		(SUB FOR JD7798)
28	24H1288	WASHER	1		9/32" X 1" X 1/16"
29	AT216474	MULTI-FUNCTIONAL CONTROLLER	1		(JOYSTICK)
30	AT216443	GUARD	1		
	AT183321	GUARD	1	831832-870948	
31	M40333	LOCK NUT	2	-870948	6.350 MM
32	24H1287	WASHER	6		9/32" X 5/8" X 0.065"
34	R27448	NUT	2		19.050 MM (3/4")
35	AT162180	SWITCH	1		(MOMENTARY-NEUTRAL DUMP)
36	AT171550	KNOB	1		
37	37H95	SCREW	2		
38	T159981	YOKE	1		
39	14H881	NUT	2		1/2"
40	T159980	STUD	1		

BUCKET LEVELING AND RETURN-TO-DIG LINKAGE
(SERIAL NO. 870949-882700)

TP80365 -UN-21DEC99

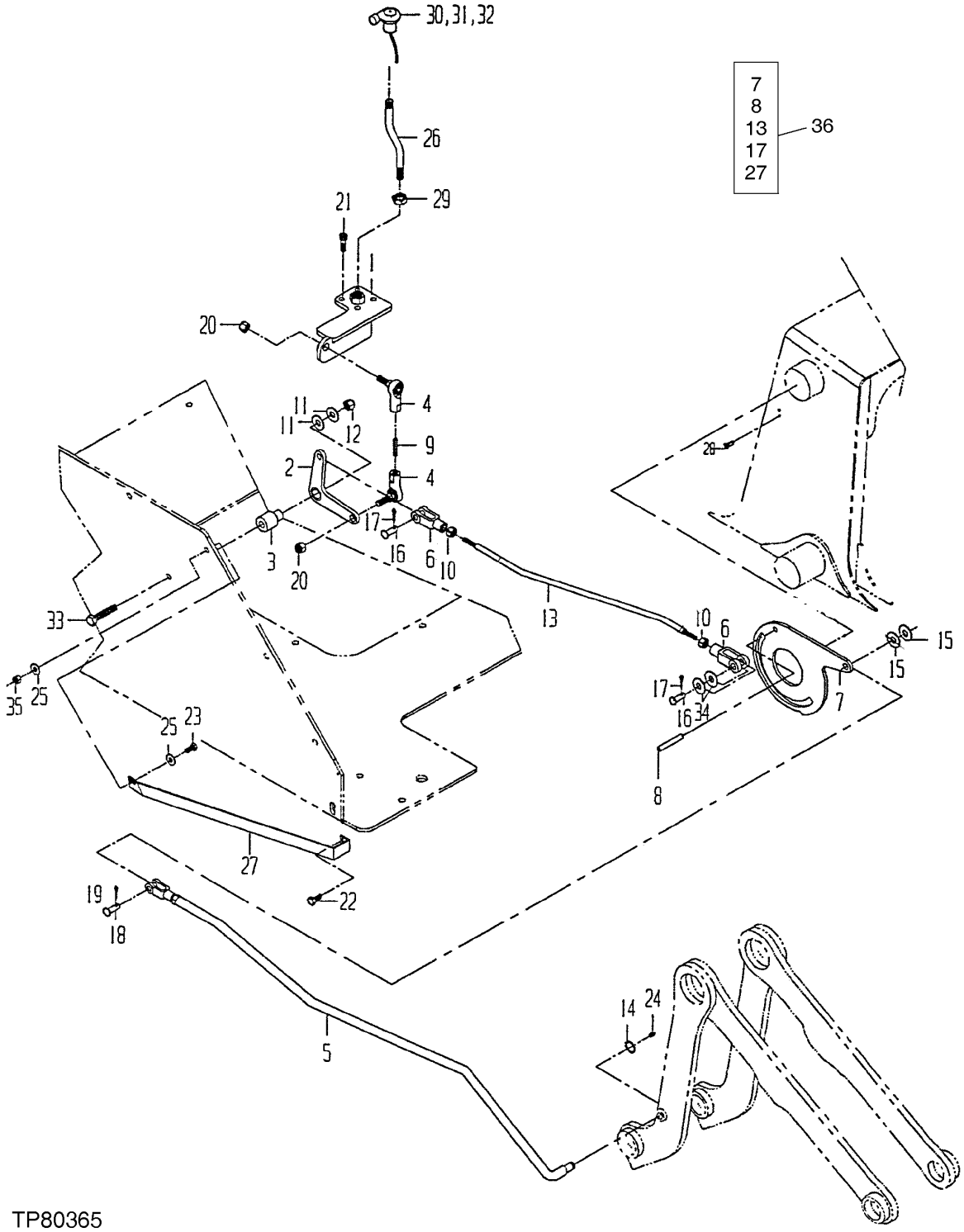

BUCKET LEVELING AND RETURN-TO-DIG LINKAGE
(SERIAL NO. 870949-882700)

KEY	PART NO.	PART NAME	QTY	SERIAL NO.	REMARKS
1	AT187476	LINKAGE	1	870949-	(JOYSTICK LEVER)
2	AT189450	PIVOT	1	870949-	FEEDBACK, (SUB FOR AT187477)
3	AT187479	PIVOT	1	870949-	
4	AT216420	BALL JOINT	2	870949-	
5	AT184682	TUBE	1	870949-	
6	AT159794	YOKE	2	870949-872987	
	B175R	YOKE	2	872988-	
7	CB01382411	CAM	1	870949-	PLATE, (SUB FOR AT187495)
8	AT216422	COTTER PIN	1	870949-	
9	AT216411	ROD	1	870949-	
10	14H774	NUT	2	870949-872987	3/8"
	14H826	NUT	2	872988-	1/2"
11	24H1305	WASHER	2	870949-	13/32" X 13/16" X 0.065"
12	T11234	LOCK NUT	1	870949-	
13	AT187496	ROD	1	870949-872987	LEVELING
	CB01383307	ROD	1	872988-	LEVELING
14	5787YT	SNAP RING	1	870949-	
15	T35860	WASHER	1	870949-	
16	C1067R	PIN FASTENER	2	870949-872987	
	R65563	PIN FASTENER	2	872988-	
17	11H206	COTTER PIN	2	870949-	3/32" X 3/4"
18	AT216421	PIN FASTENER	1	870949-	
19	11H211	COTTER PIN	1	870949-	
20	T27945	LOCK NUT	2	870949-	
21	AT216416	BOLT	4	870949-	
22	19H2676	CAP SCREW	2	870949-	3/8" X 1"
23	19H2975	CAP SCREW	1	870949-	1/4" X 1-1/4"
24	T162396	LUBRICATION FITTING	1	870949-	(SUB JD7798)
25	24H1288	WASHER	2	870949-	9/32" X 1" X 1/16"
26	AT216474	MULTI-FUNCTIONAL CONTROLLER	1	870949-	
27	CB01382413	GUARD	1	870949-	
28	T164468	NUT	3	870949-	
29	14H904	NUT	1	870949-	
30	AT162180	SWITCH	1	870949-	
31	AT171550	KNOB	1	870949-	
32	37H95	SCREW	2	870949-	
33	19H3031	CAP SCREW	1	870949-	3/8" X 2-1/2"
34	24H1338	WASHER	2	870949-	33/64" X 7/8" X 0.048"
35	M40333	LOCK NUT	1	870949-	
36	AT189456	KIT	1	870949-	AUTO LEVEL (ALSO INCLUDES CB01382412)

BUCKET LEVELING AND RETURN-TO-DIG LINKAGE
(SERIAL NO. 882701-)

T196900 -UN-15DEC03

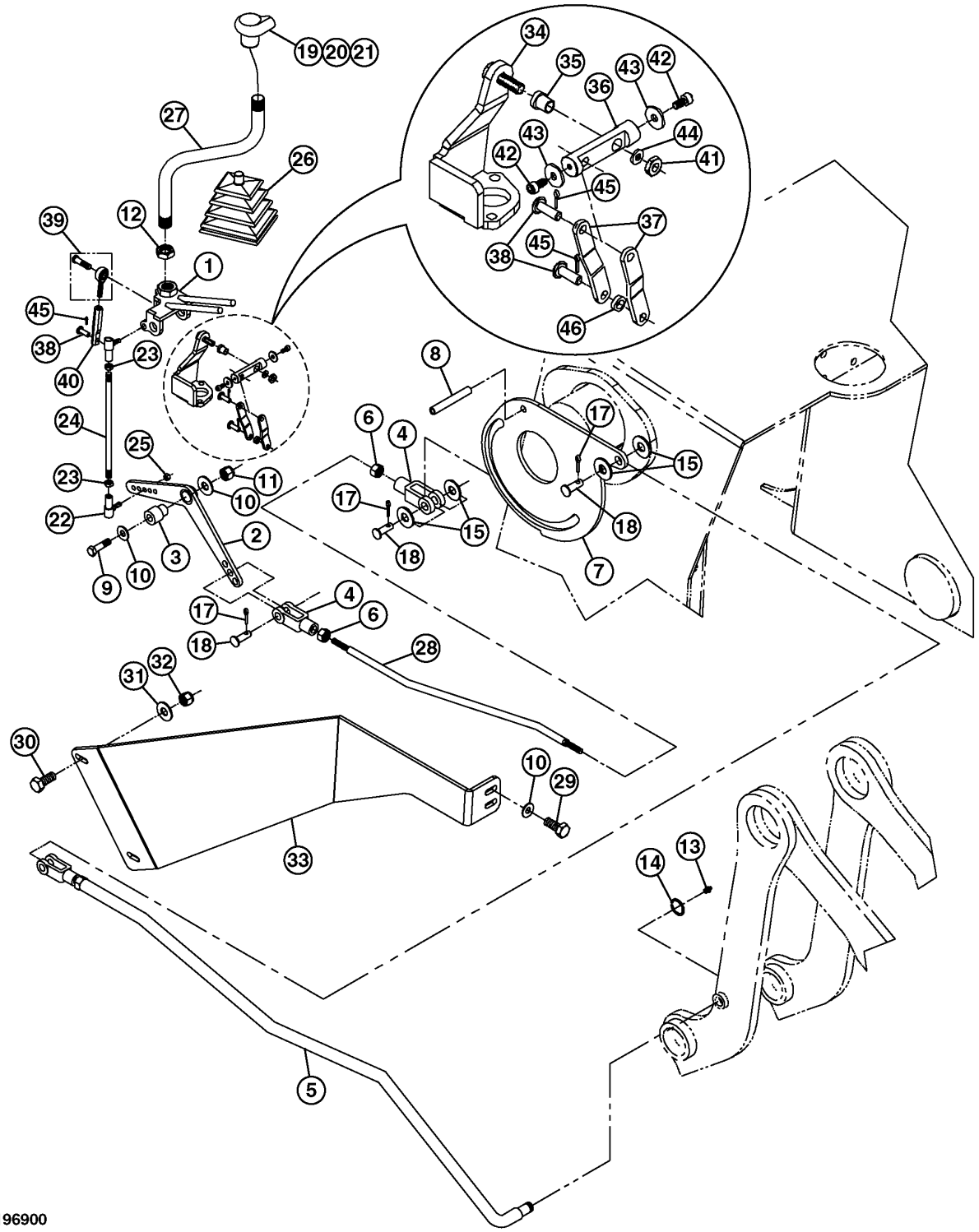

BUCKET LEVELING AND RETURN-TO-DIG LINKAGE
(SERIAL NO. 882701-)

KEY	PART NO.	PART NAME	QTY	SERIAL NO.	REMARKS
1	CB11450631	LINKAGE	1		
2	CB11448563	LINKAGE	1		
3	CB01444442	SHEET	1		
4	B175R	YOKE	2		
5	AT184682	TUBE	1		
6	14H826	NUT	2		1/2"
7	CB01452370	PLATE	1		
8	AT216422	COTTER PIN	1		
9	19H3031	CAP SCREW	1		3/8" X 2-1/2"
10	24H1305	WASHER	4		13/32" X 13/16" X 0.065"
11	T11234	LOCK NUT	1		
12	14H904	NUT	1		3/4"
13	JD7798	LUBRICATION FITTING	1		
14	5787YT	SNAP RING	1		
15	T35860	WASHER	4		
16	AT216416	BOLT	3		
17	11M7059	COTTER PIN	3		
18	AT216421	PIN FASTENER	3		
19	AT162180	SWITCH	1		
20	AT171550	KNOB	1		
21	37H95	SCREW	2		
22	AU11709	BALL JOINT	2		
23	14H649	NUT	2		1/4"
24	CB01446176	MONITOR	1		
25	T10581	LOCK NUT	2		
26	AT167543	BOOT	1		
27	CB01444508	BRACKET	1		
28	CB01446263	ROD	1		
29	19H2676	CAP SCREW	2		3/8" X 1"
30	19H1791	CAP SCREW	2		1/4" X 1-1/4"
31	24H1288	WASHER	2		9/32" X 1" X 1/16"
32	M40333	LOCK NUT	2		
33	CB01448705	LABEL	1		
34	CB11450651	BRACKET	1		
35	CB01450646	BUSHING	1		
36	CB01450168	ROD	1		
37	CB01451065	LINKAGE	2		
38	CB01450666	PIN FASTENER	2		
39	CB01450671	BALL JOINT	1		
40	CB01450675	LINKAGE	1		
41	14H882	NUT	1		5/16"
42	CB01450691	SOCKET HEAD SCREW	2		
43	CB01451565	WASHER	2		
44	24H1776	WASHER	1		5/16" X 47/64" X 0.065"
45	11M7077	COTTER PIN	3		
46	24H1283	WASHER	1		7/32" X 1/2" X 0.049"

THIRD FUNCTION CLAMSHELL BUCKET LINES AND LINKAGE (OPTIONAL)
(SERIAL NO. 882701-)

T197000 -UN-17DEC03

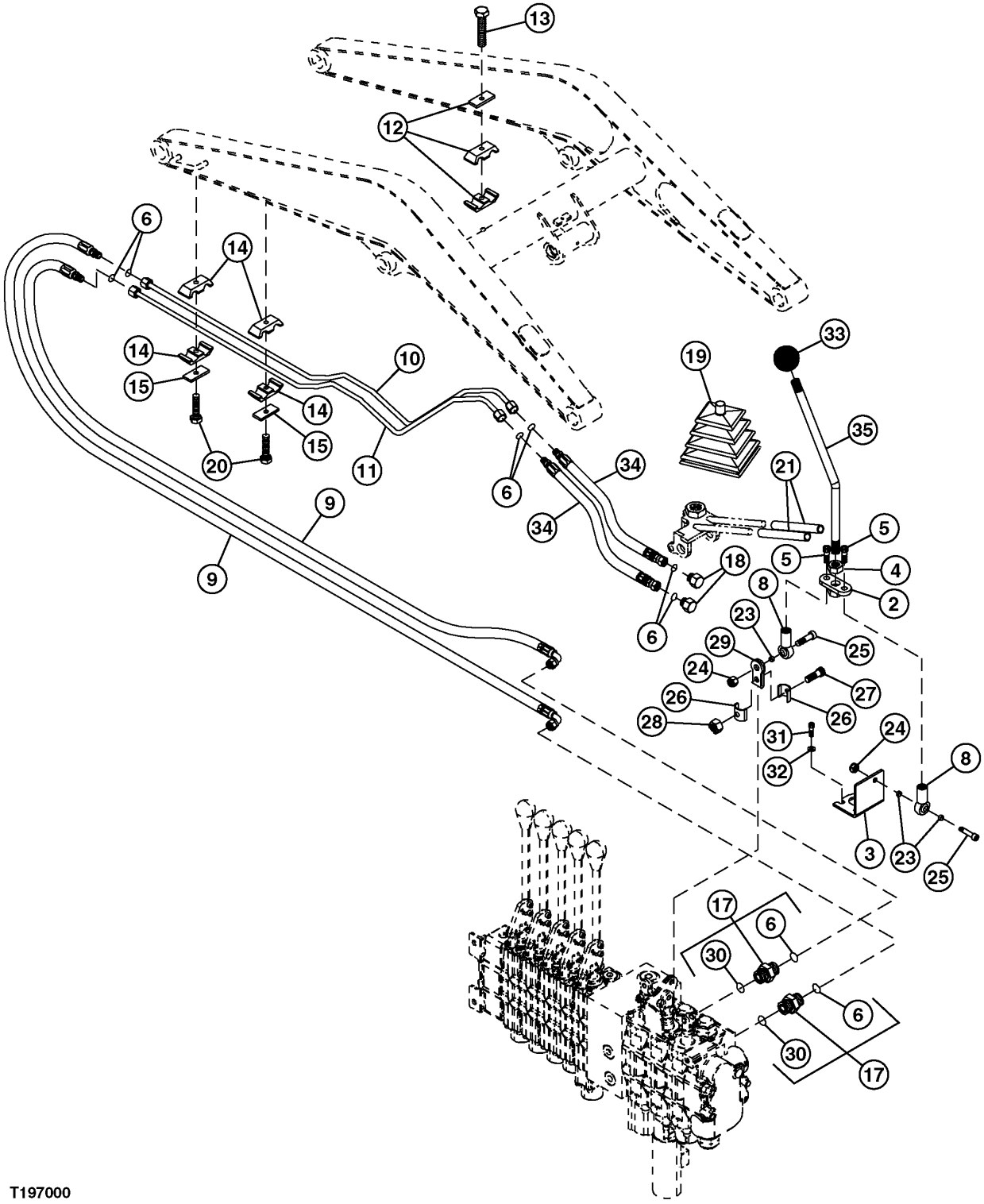

T197000

THIRD FUNCTION CLAMSHELL BUCKET LINES AND LINKAGE (OPTIONAL)
(SERIAL NO. 882701-)

KEY	PART NO.	PART NAME	QTY	SERIAL NO.	REMARKS
2	CB11450622	LINKAGE	1		
3	CB01444503	PIVOT	1		
4	14H826	NUT	6		1/2"
5	AT216416	BOLT	2		
6	T77857	O-RING	8		
8	AT49297	LINK END	2		
9	CB11435869	SPACER	2		
10	CB11422740	GUIDE	1		
11	CB11422738	TUBE	1		
12	U40398	CLAMP	1		
13	19M7572	CAP SCREW	1		M10 X 45
14	H135156	CLAMP	4		
15	H121168	PLATE	2		
17	.....	FITTING	2		
18	TY22388	FITTING PLUG	2		
19	AT167543	BOOT	1		
20	19H2732	CAP SCREW	2		3/8" X 2-3/4"
21	CB01451503	GUIDE	2		
23	.....	BUSHING	3		
24	.....	NUT	2		
25	.....	BOLT	2		
26	.....	CLEVIS	2		
27	.....	BOLT	1		
28	.....	NUT	1		
29	.....	ADAPTER	1		
30	R26906	O-RING	2		
31	19H2932	SCREW	2		1/4" X 1"
32	24H1776	WASHER	2		5/16" X 47/64" X 0.065"
33	T162970	KNOB	1		
34	CB11422829	HOSE	2		
35	CB01444467	BAR	1		

LOADER LIFT ARM
(SERIAL NO. -880293)

TP80378 -UN-26JAN00

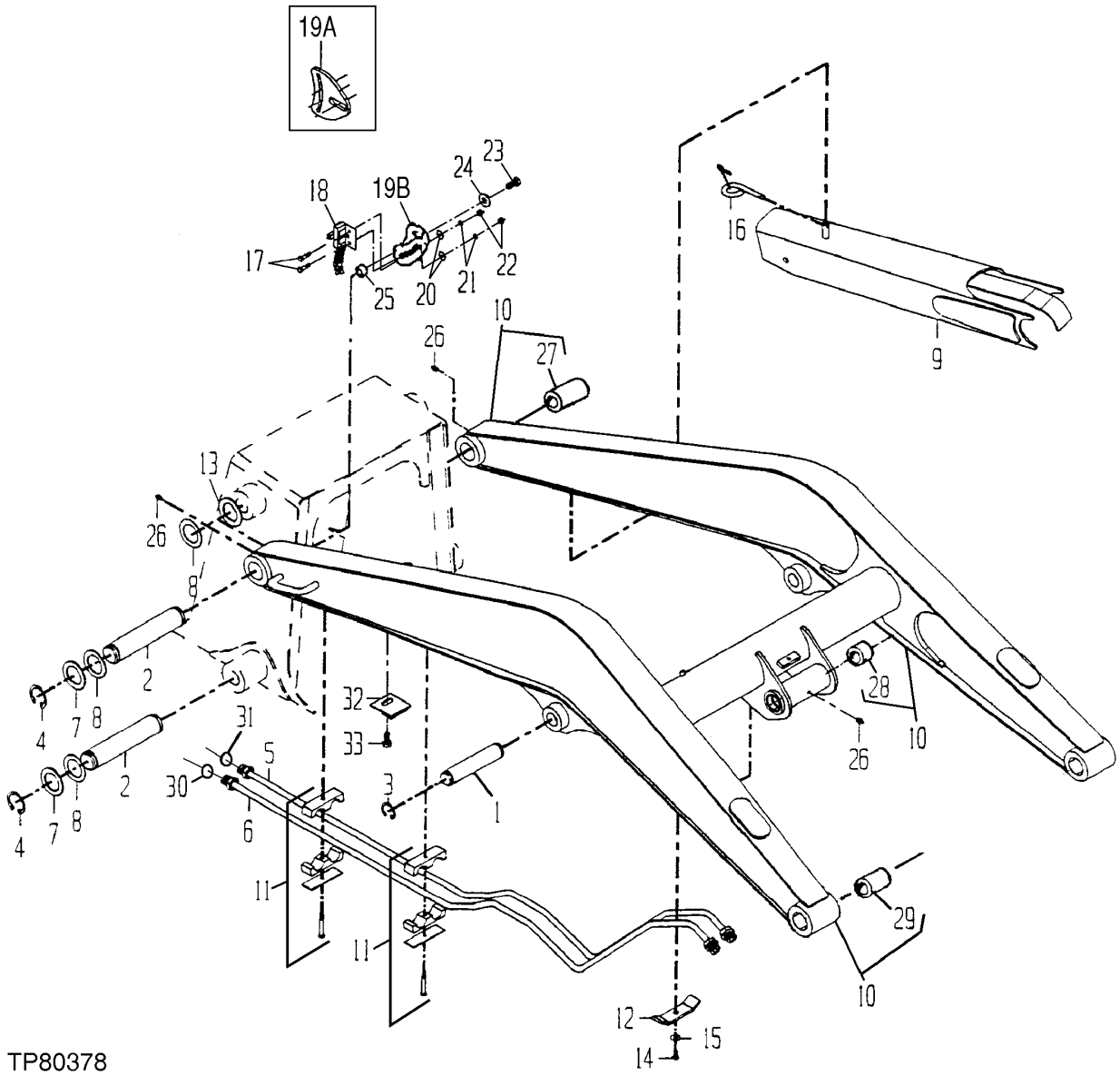

TP80378

LOADER LIFT ARM
(SERIAL NO. -880293)

KEY	PART NO.	PART NAME	QTY	SERIAL NO.	REMARKS
1	T154363	PIN	2	-880293	50 X 2 MM
2	T158132	PIN	4	-880293	
3	40M7166	SNAP RING	4	-880293	
4	T61226	SNAP RING	8	-880293	
5	CB11421149	OIL TUBE	1	-880293	(SUB FOR AT216418)
6	CB11421151	OIL TUBE	1	-880293	(SUB FOR AT216419)
7	T75815	WASHER	8	-880293	
8	24H1589	WASHER	16	-880293	2" X 3-3/16" X 0.036"
9	AT179953	ARM	1	-880293	(SUB FOR AT171780) (SUB AT192367)
10	AT190948	LOADER BOOM	1	-828947	(USE IF AVAILABLE) (SUB FOR AT168962)
	CB11388547	ARM	1	828948-880293	
11	AT216467	CLAMP	2	-880293	
12	T105720	CLAMP	1	-880293	
13	AT216440	SPACER	4	-880293	
14	19M7938	CAP SCREW	1	-880293	M10 X 20
15	24M7239	WASHER	1	-880293	10.700 X 21 X 2.500 MM
16	AT178745	PIN	1	-880293	
17	21H1301	SCREW	2	-880293	0.190" X 1/2"
18	AT184726	SWITCH	1	-880293	RETURN-TO-DIG, (SUB FOR AT167306)
19A	AT216442	PLATE	1	-880136	RETURN TO DIG
19B	CB01382412	BRACKET	1	880137-880293	RETURN TO DIG, (SUB FOR AT187500)
20	24H1283	WASHER	2	-880293	7/32" X 1/2" X 0.049"
21	AT216410	WASHER	2	-880136	
	12H246	LOCK WASHER	2	880137-880293	
22	14H778	NUT	2	-880293	0.190"
23	19M7403	CAP SCREW	1	-880293	M12 X 35
24	T35860	WASHER	1	-880293	
25	AT216445	SPACER	1	-872333	(USE IF AVAILBLE) (SUB N15515)
	N15515	BUSHING	1	872334-880293	
26	JD7798	LUBRICATION FITTING	3	-880293	(USE IF AVAILBLE) (SUB T162396)
27	T154166	BUSHING	2	-880293	
28	T154058	BUSHING	2	-880293	
29	T154165	BUSHING	2	-880293	
30	T77932	O-RING	2	-880293	15.596 X 1.778 MM (0.614" X 0.070")
31	T77857	O-RING	2	-880293	12.421 X 1.778 MM (0.489" X 0.070")
32	.....	BRACKET	2	828948-880293	
33	19M7402	CAP SCREW	2	828948-880293	M10 X 25

LOADER LIFT ARM
(SERIAL NO. 880294-)

T196759 -UN-08DEC03

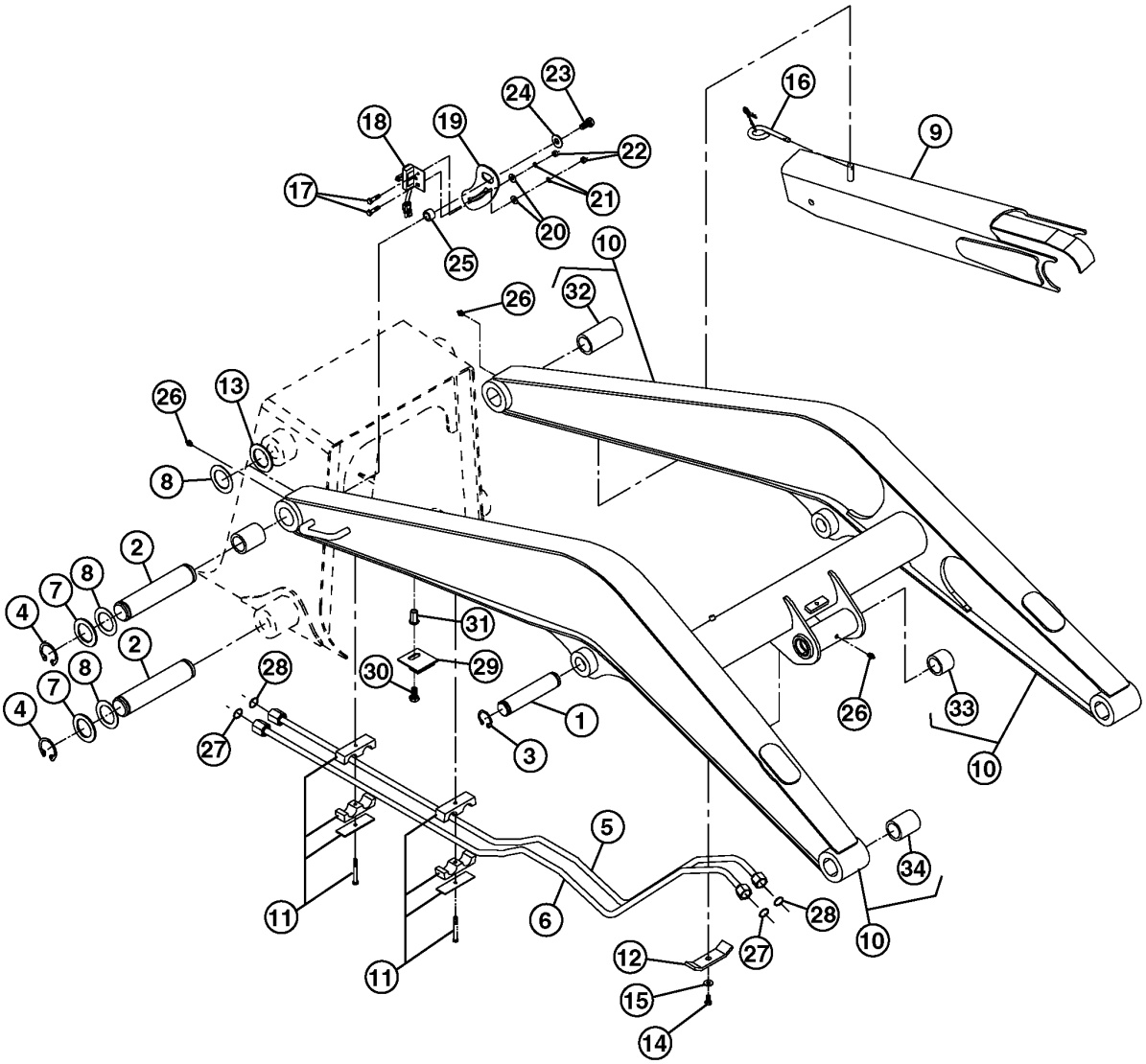

T196759

LOADER LIFT ARM
(SERIAL NO. 880294-)

KEY	PART NO.	PART NAME	QTY	SERIAL NO.	REMARKS
1	T165314	PIN	2	880294-882700	50 X 2 MM
	T154363	PIN	2	882701-	
2	T158132	PIN	4		
3	40M7066	SNAP RING	4	-882700	
	40M7080	SNAP RING	4	882701-	
4	T61226	SNAP RING	8		
5	CB11421149	OIL TUBE	1		(SUB FOR AT216418)
6	CB11421151	OIL TUBE	1		(SUB FOR AT216419)
7	T75815	WASHER	10		
8	T161036	WASHER	16	880294-882700	2.205" X 3.150" X 0.079"
	24H1589	WASHER	16	882701-	
9	AT192367	ARM	1	880294-882700	(SUB FOR AT179953)
	AT307260	ARM	1	882701-	
10	CB11388547	ARM	1	880294-882700	
	CB11392598	PART NOT CODED	1	882701-	
11	AT216467	CLAMP	1		
12	T105720	CLAMP	1		
13	AT216440	SPACER	4	880294-880642	
14	AT250986	CAP SCREW	1	880294-882700	
	19M7938	CAP SCREW	1	882701-	
15	24M7239	WASHER	1		10.700 X 21 X 2.500 MM
16	AT178745	PIN	1		
17	21H1301	SCREW	2		0.190" X 1/2"
18	AT184726	SWITCH	1		
19	CB01382412	BRACKET	1		(INCLUDED IN KIT AT189456)
20	24H1287	WASHER	2		9/32" X 5/8" X 0.065"
21	12H246	LOCK WASHER	2		0.190"
22	14H778	NUT	2		0.190"
23	19M7403	CAP SCREW	1		M12 X 35
24	T35860	WASHER	1		
25	N15515	BUSHING	1	880294-882700	(SUB FOR AT216445)
	ET15515	SPACER	1	882701-	
26	JD7798	LUBRICATION FITTING	3		(USE IF AVAILBLE)
27	T77932	O-RING	2		
28	T77857	O-RING	2		
29	.....	BRACKET	2	880294-882700	
	2100327062	BRACKET	2	882701-	
30	19M7402	CAP SCREW	2		M10 X 25
31	T164468	NUT	2	882701-	
32	T154166	BUSHING	2		
33	T154058	BUSHING	2		
34	T154165	BUSHING	2		

REPLACEMENT LOADER ARM SERVICE LOCK

T134150 -UN-30SEP00

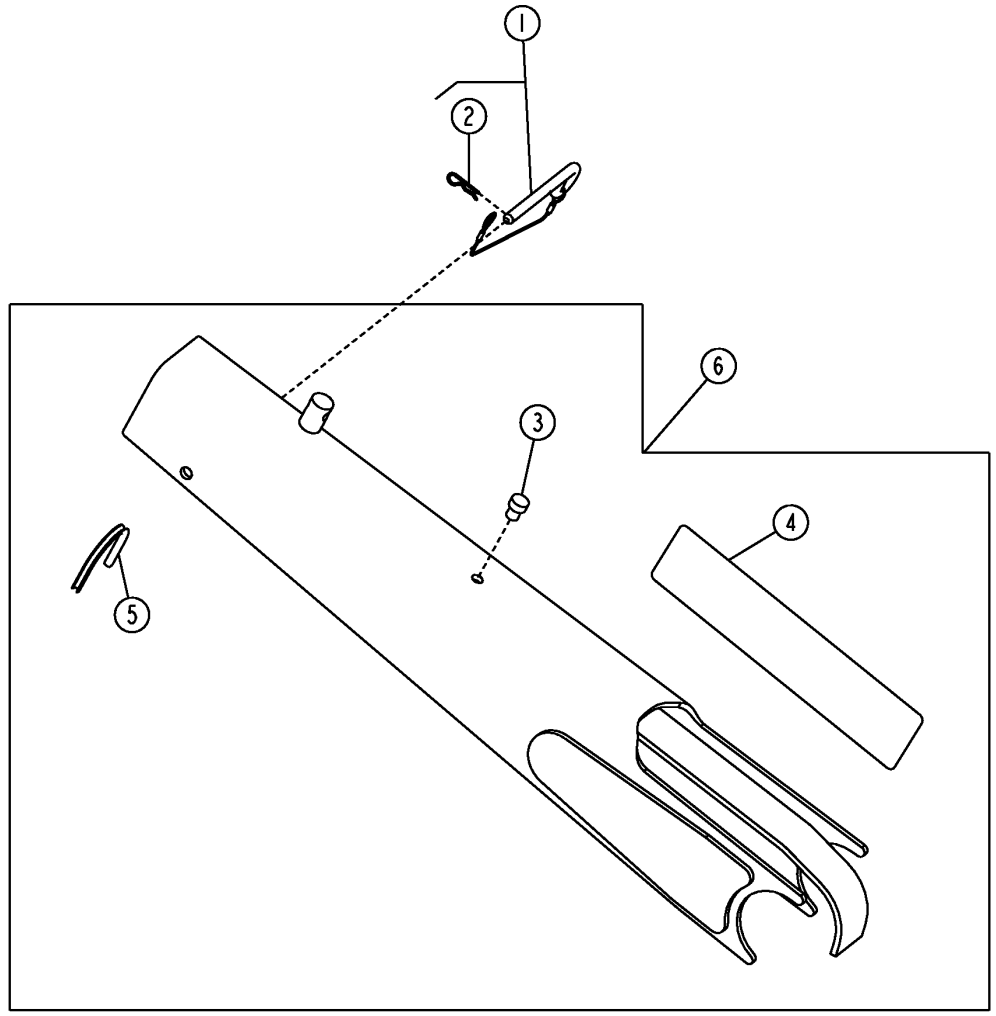

T134150

REPLACEMENT LOADER ARM SERVICE LOCK

KEY	PART NO.	PART NAME	QTY	SERIAL NO.	REMARKS
1	AT178745	PIN	1		
2	J16931	PIN	1		
3	T14083	BUMPER	1		
4	T185902	LABEL	1		
5	.....	SEALING TRIM	1		
6	AT192367	ARM	1		SERVICE LOCK

LOADER BUCKET LINKAGE
(SERIAL NO. - 880293)

TP80406 -UN-26JAN00

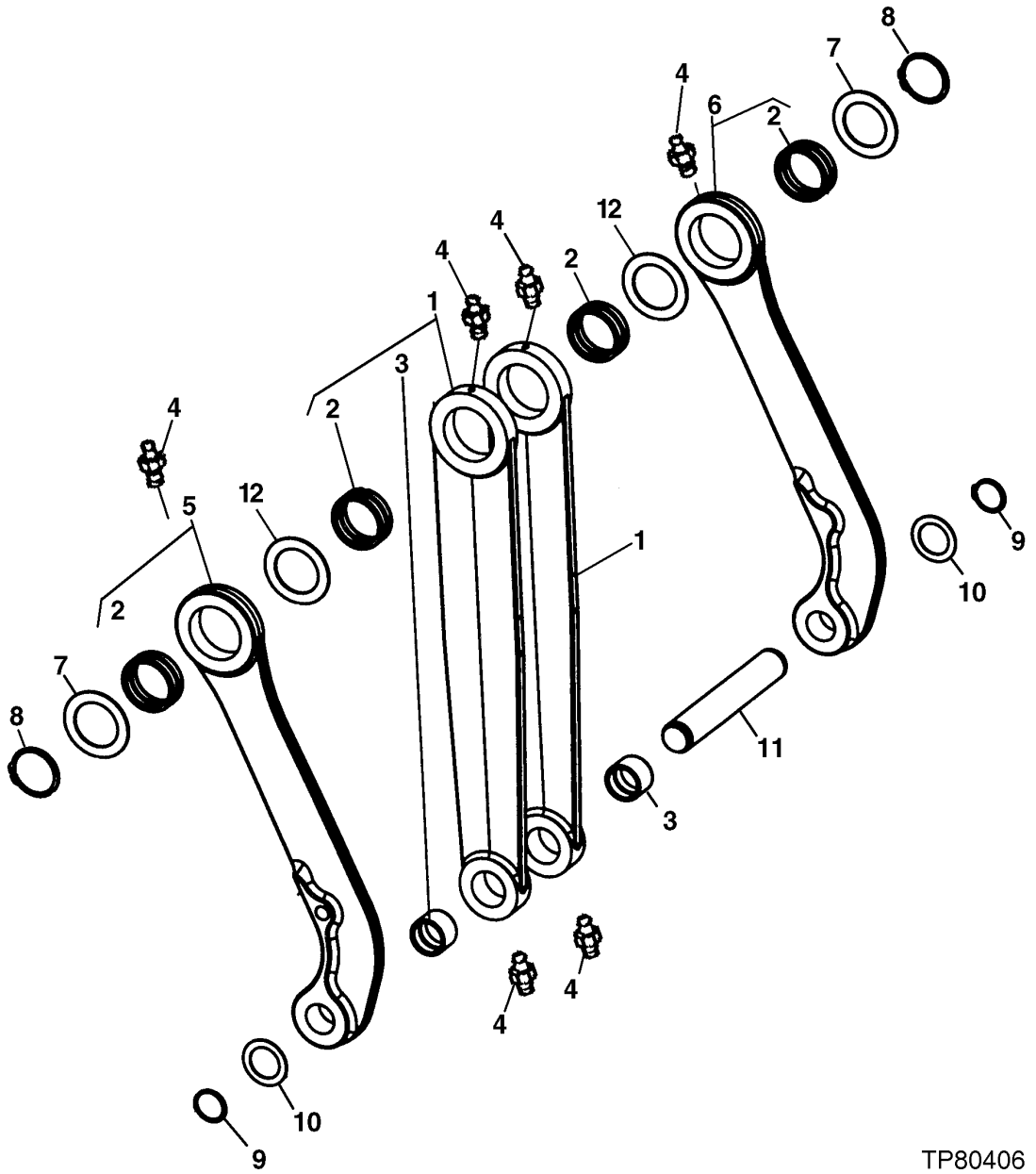

LOADER BUCKET LINKAGE
(SERIAL NO. - 880293)

KEY	PART NO.	PART NAME	QTY	SERIAL NO.	REMARKS
1	AT170829	LINK	2	-880293	
2	T154057	BUSHING	4	-880293	
3	T154058	BUSHING	2	-880293	
4	T162396	LUBRICATION FITTING	6	-880293	(SUB FOR JD7798)
5	AT180493	LINK	1	-880293	(SUB FOR AT179738)
6	AT180494	LINK	1	-880293	(SUB FOR AT179739)
7	28H1635	SPACER	4	-880293	0.493" X 0.675" X 2-1/8"
8	40M7217	SNAP RING	2	-880293	
9	40M7166	SNAP RING	2	-880293	
10	24H1598	WASHER	2	-880293	
11	T154353	PIN	1	-880293	
12	T161497	SHIM	AR	-880293	

LOADER BUCKET LINKAGE
(SERIAL NO. 880294-)

TP80407 -UN-26JAN00

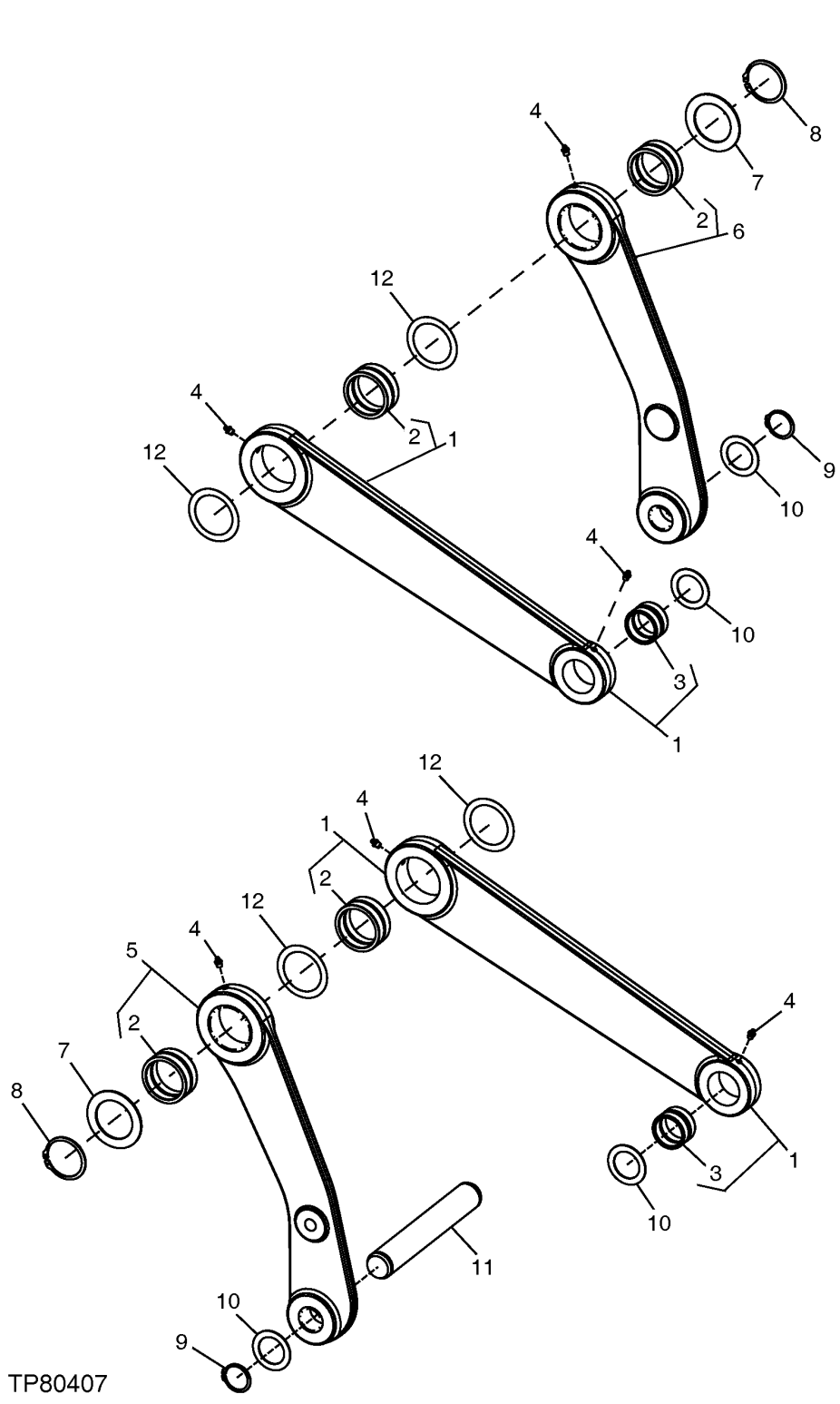

LOADER BUCKET LINKAGE
(SERIAL NO. 880294-)

KEY	PART NO.	PART NAME	QTY	SERIAL NO.	REMARKS
1	AT184064	LINK	2	880294-	
2	T165310	BUSHING	4	880294-	
3	T183356	BUSHING	2	880294-	
4	T162396	LUBRICATION FITTING	6	880294-	(SUB FOR JD7798)
5	AT184646	LINK	1	880294-	
6	AT184647	LINK	1	880294-	
7	T158579	WASHER	4	880294-	2.953" X 4.331" X 0.118"
8	40M7217	SNAP RING	2	880294-	
9	40M7066	SNAP RING	2	880294-	
10	T161036	WASHER	4	880294-	
11	T165314	PIN	1	880294-	
12	T161497	SHIM	AR	880294-	

LOADER BOOM LIFT CYLINDER HYDRAULICS
(SERIAL NO. -880053)

TP61779 -UN-06NOV98

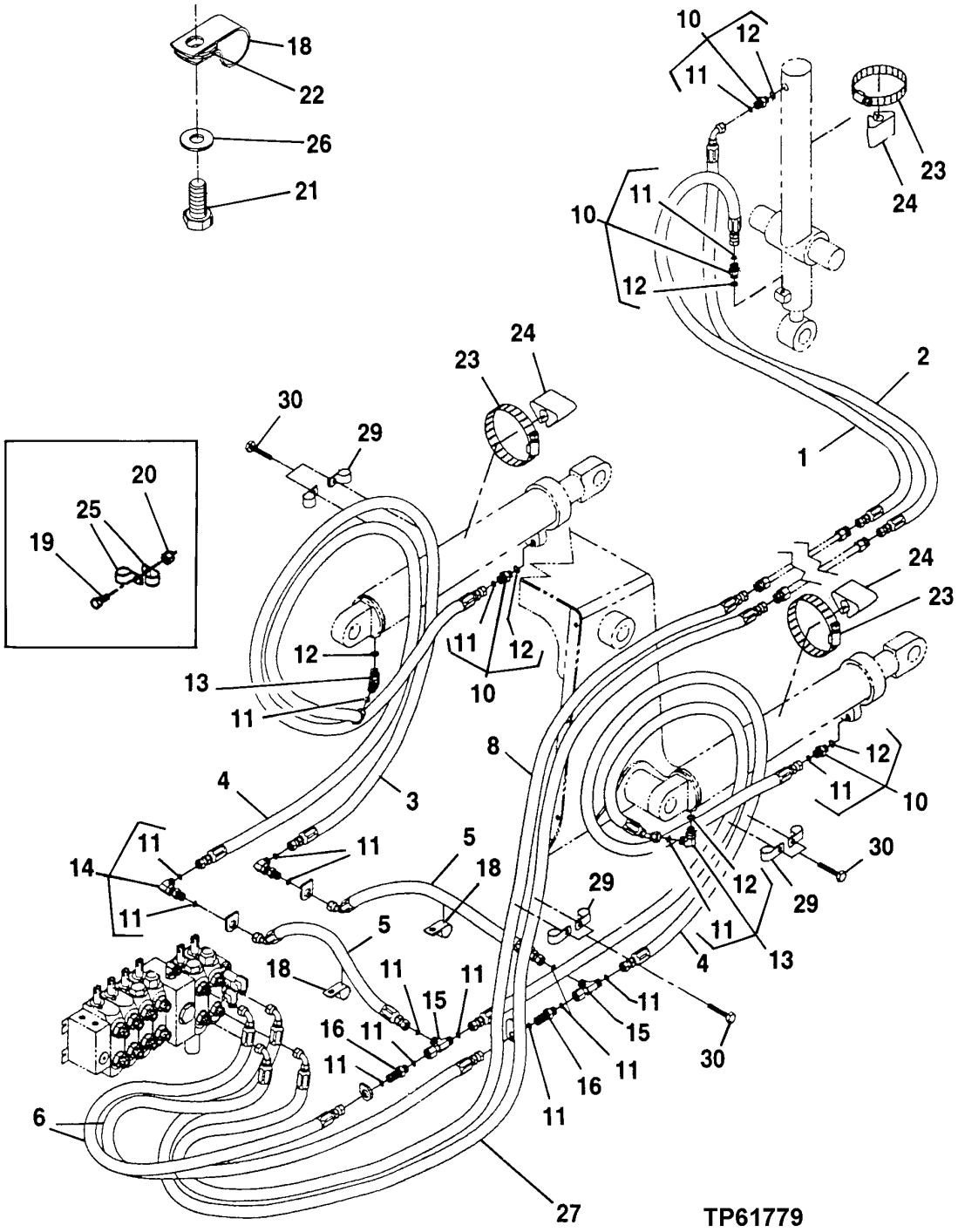

LOADER BOOM LIFT CYLINDER HYDRAULICS
(SERIAL NO. -880053)

KEY	PART NO.	PART NAME	QTY	SERIAL NO.	REMARKS
1	AT181164	HYDRAULIC HOSE - FABRICATE	1	-880053	
2	AT181165	HYDRAULIC HOSE - FABRICATE	1	-880053	
3	AT216475	HYDRAULIC HOSE	2	-880053	
4	AT216476	HYDRAULIC HOSE	2	-880053	
5	AT216477	HYDRAULIC HOSE	2	-880053	
6	AT216478	HYDRAULIC HOSE	2	-880053	
8	AT216479	HYDRAULIC HOSE	1	-880053	
10	38H1174	ADAPTER	4	-880053	
11	T77857	O-RING	18	-880053	12.421 X 1.778 MM (0.489" X 0.070")
12	R26906	O-RING	6	-880053	19.177 X 2.464 MM (0.755" X 0.097")
13	38H1012	ELBOW FITTING	2	-880053	
14	38H1323	ELBOW FITTING	2	-880053	
15	38H1031	TEE FITTING	2	-880053	
16	38H1275	ADAPTER	2	-880053	
18	AT124557	HOSE CLAMP	1	-880053	
19	19H1648	CAP SCREW	2	-843030	3/8" X 3/4"
20	T11234	LOCK NUT	2	-743030	
21	19M7933	CAP SCREW	1	-880053	M6 X 25
22	R57696	WASHER	2	-880053	9.931 X 23.114 X 3.048 MM (25/64" X 0.910" X 0.120")
23	TY22489	HOSE CLAMP	3	-880053	(SUB FOR AR85329)
24	T105773	GUIDE	1	-880053	
25	T75197	CLAMP	4	-743030	
26	24H1287	WASHER	1	-880053	9/32" X 5/8" X 0.065"
27	AT216483	HYDRAULIC HOSE	1	-880053	
29	T75197	CLAMP	6	743031-880053	
30	19H2676	CAP SCREW	3	743031-880053	

LOADER BOOM LIFT CYLINDER HYDRAULICS
(SERIAL NO. 880054-)

T196997 -UN-18DEC03

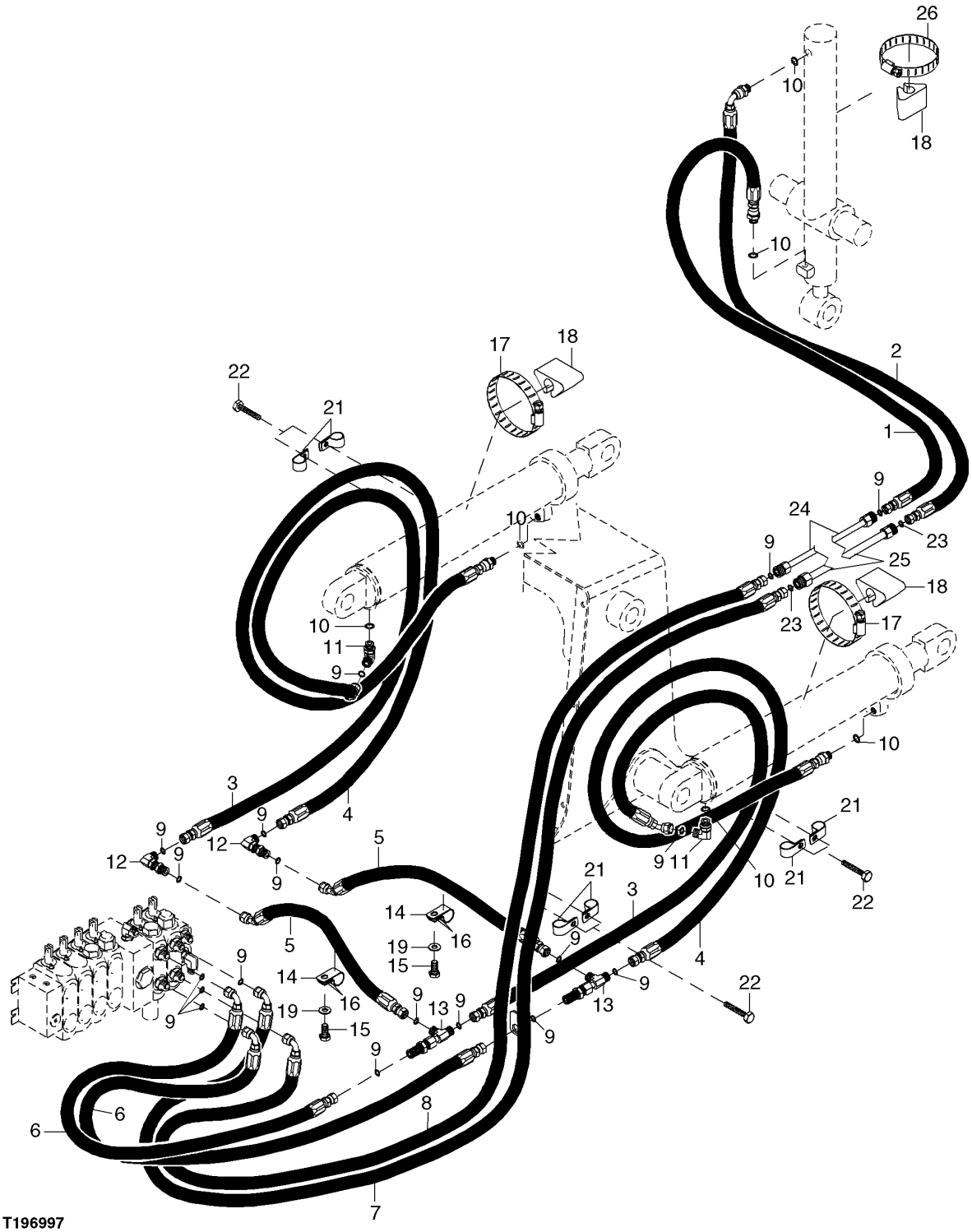

LOADER BOOM LIFT CYLINDER HYDRAULICS
(SERIAL NO. 880054-)

KEY	PART NO.	PART NAME	QTY	SERIAL NO.	REMARKS
1	CB11419574	HYDRAULIC HOSE - FABRICATE	1	880054-	(SUB FOR AT188873)
2	CB11419575	HYDRAULIC HOSE - FABRICATE	1	880054-	(SUB FOR AT188875)
3	AT188876	HYDRAULIC HOSE - FABRICATE	2	880054-	
4	AT188877	HYDRAULIC HOSE - FABRICATE	2	880054-	
5	AT188878	HYDRAULIC HOSE - FABRICATE	2	880054-	
6	AT188879	HYDRAULIC HOSE - FABRICATE	2	880054-	
7	CB11419576	HYDRAULIC HOSE - FABRICATE	1	880054-	(SUB FOR AT188880)
8	CB11419577	HYDRAULIC HOSE - FABRICATE	1	880054-	(SUB FOR AT188881)
9	T77857	O-RING	24	880054-	0.489" X 0.070"
10	R26906	O-RING	6	880054-	0.755" X 0.097"
11	38H1012	ELBOW FITTING	2	880054-	
12	38H1323	ELBOW FITTING	2	880054-	
13	AT187670	TEE FITTING	2	880054-	
14	AT124557	HOSE CLAMP	2	880054-	
15	19M7933	CAP SCREW	2	880054-	M6 X 25
16	R57696	WASHER	2	880054-	25/64" X 0.910" X 0.120"
17	TY22475	CLAMP	2	880054-	(SUB FOR C16054)
18	T105773	GUIDE	3	880054-	
19	24H1287	WASHER	2	880054-882700	9/32" X 5/8" X 0.065"
	24H1136	WASHER	2	882701-	11/32" X 11/16" X 0.065"
21	A2613R	CLIP	6	880054-882700	
	AT124557	HOSE CLAMP	6	882701-	
22	19H2676	CAP SCREW	3	880054-	3/8" X 1"
23	T77932	O-RING	3	880054-	0.614" X 0.070"
24	CB11421149	OIL TUBE	1	880054-	(SUB FOR AT216418)
25	CB11421151	OIL TUBE	1	880054-	(SUB FOR AT216419)
26	TY22475	CLAMP	1	-882700	
	AU12450	HOSE CLAMP	1	882701-	

LOADER BUCKET CYLINDER
SERIAL NO. -880293)

TP80375 -UN-21DEC99

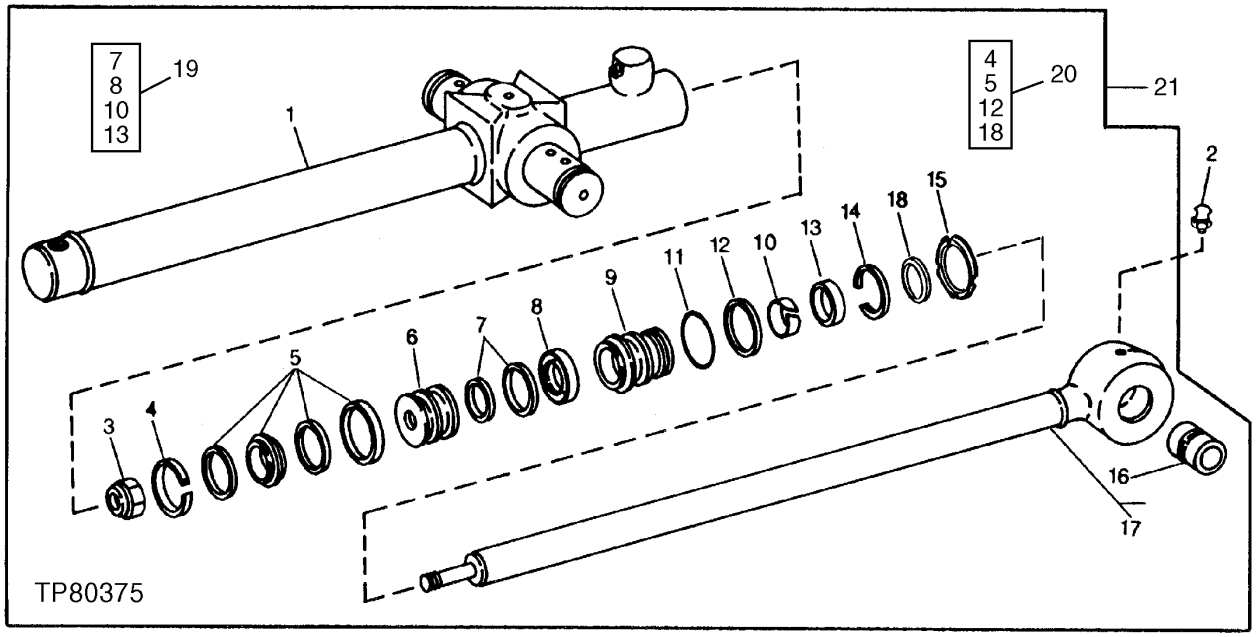

KEY	PART NO.	PART NAME	QTY	SERIAL NO.	REMARKS
1	AH150920	HYDRAULIC CYLINDER BARREL	1	-880293	
2	T162396	LUBRICATION FITTING	1	-880293	(SUB FOR JD7798)
3	R81866	NUT	1	-880293	
4	R81777	WEAR RING	1	-880293	
5	RE20345	SEAL	1	-880293	
6	R86084	PISTON	1	-880293	
7	AH146560	SEAL	1	-880293	
8	H152202	SEAL	1	-880293	
9	H157510	HYDR. CYLINDER ROD GUIDE	1	-880293	(SUB FOR H152347)
10	H152793	BACK-UP RING	1	-880293	
11	T12582	O-RING	1	-880293	
12	R81864	BACK-UP RING	1	-880293	
13	AH146556	SEAL	1	-880293	
14	R81789	RING	1	-880293	
15	R81795	NUT	1	-880293	
16	H151594	BUSHING	1	-880293	
17	AH146886	ROD	1	-880293	
18	R91729	RING	AR	-880293	
19	AH147868	HYDRAULIC CYLINDER KIT	1	-880293	
20	AH149842	HYDRAULIC CYLINDER KIT	1	-880293	
21	AH146873	HYDRAULIC CYLINDER	1	-880293	

LOADER BUCKET CYLINDER
(SERIAL NO. 880294-)

TP80402 -UN-26JAN00

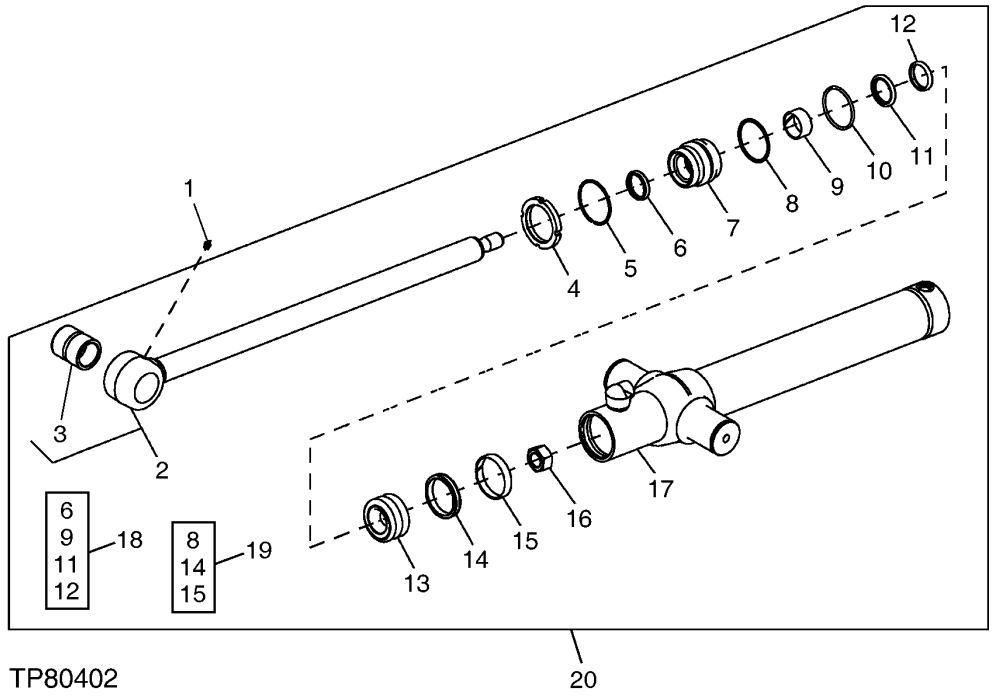

TP80402

KEY	PART NO.	PART NAME	QTY	SERIAL NO.	REMARKS
1	T162396	LUBRICATION FITTING	1	880294-	
2	AH162040	END	1	880294-	(SUB FOR JD7798)
3	H151594	BUSHING	1	880294-	
4	R81794	NUT	1	880294-	
5	R81788	RING	1	880294-	
6	AH146557	SEAL	1	880294-	
7	H154352	HYDR. CYLINDER ROD GUIDE	1	880294-	
8	R79101	BACK-UP RING	1	880294-	
9	H152794	WEAR RING	1	880294-	
10	F1430R	O-RING	1	880294-	
11	AH146561	SEAL	1	880294-	
12	H152203	SEAL	1	880294-	
13	H142090	PISTON	1	880294-	
14	RE20344	SEAL	1	880294-	
15	R81776	WEAR RING	1	880294-	
16	H170539	NUT	1	880294-	
17	AH171229	HYDRAULIC CYLINDER BARREL	1	880294-	(SUB FOR AH166471)
18	AH210484	HYDRAULIC CYLINDER KIT	1	880294-	(SUB FOR AH148164)
19	AH149843	HYDRAULIC CYLINDER KIT	1	880294-	
20	AH173567	HYDRAULIC CYLINDER	1	880294-	(SUB FOR AH162038 AND AH171228)

BOOM CYLINDER (SERIAL NO. -882700)

TP80376 -UN-21DEC99

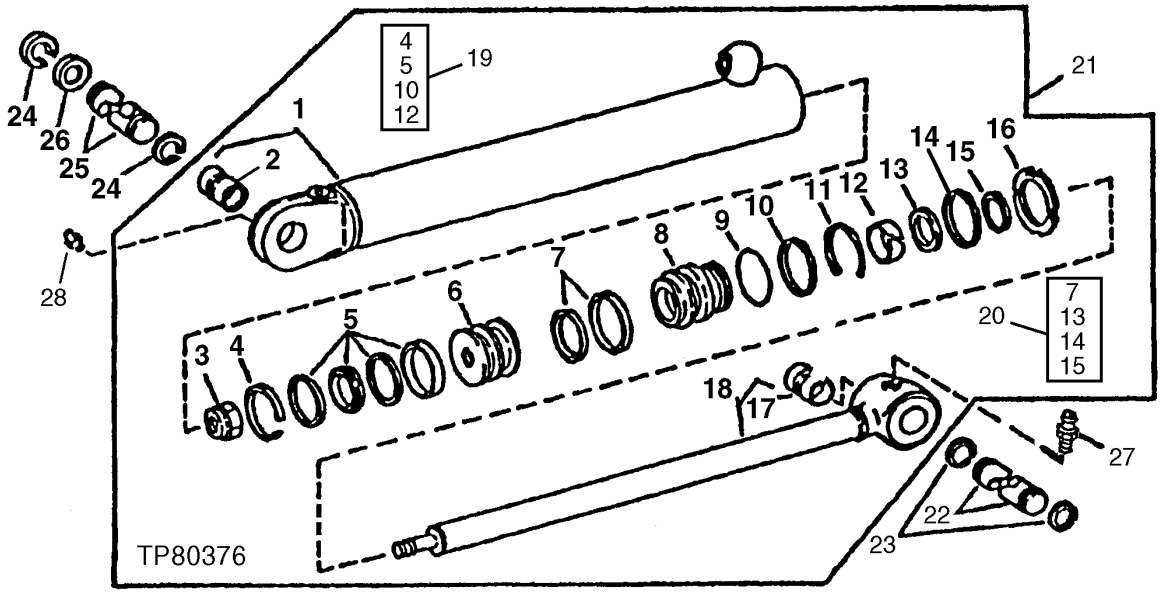

KEY	PART NO.	PART NAME	QTY	SERIAL NO.	REMARKS
1	AH146876	HYDRAULIC CYLINDER BARREL	1		
2	H159941	BUSHING	1		
3	R81866	NUT	1		
4	R81777	WEAR RING	1		(BK)
5	RE20345	SEAL	1		(BK)
6	H145359	PISTON	1		
7	AH146561	SEAL	1		(RK)
8	H152345	HYDR. CYLINDER ROD GUIDE	1		
9	T12582	O-RING	1		
10	R81864	BACK-UP RING	1		(BK)
11	R81789	RING	1		
12	R91729	RING	AR		(BK)
13	H152203	SEAL	1		(RK)
14	H152794	WEAR RING	1		(RK)
15	AH146557	SEAL	1		(RK)
16	R81795	NUT	1		
17	H151542	BUSHING	1		
18	AH146875	ROD	1		
19	AH149842	HYDRAULIC CYLINDER KIT	1		
20	AH210484	HYDRAULIC CYLINDER KIT	1		(SUB FOR AH148164)
21	.....	HYDRAULIC CYLINDER	1		(AH146874 NO LONGER AVAILABLE) (SUB AH207401)
22	T154363	PIN	2		
23	40M7180	SNAP RING	1		
24	T61226	SNAP RING	4		
25	T158132	PIN	1		
26	T75815	WASHER	AR		1.988" X 2.953" X 0.197"
27	T162396	LUBRICATION FITTING	1		STRAIGHT, (SUB FOR JD7798)
28	T162396	LUBRICATION FITTING	1		(SUB FOR JD7798)

BOOM CYLINDER (SERIAL NO. 882701-)

T196129 -UN-10NOV03

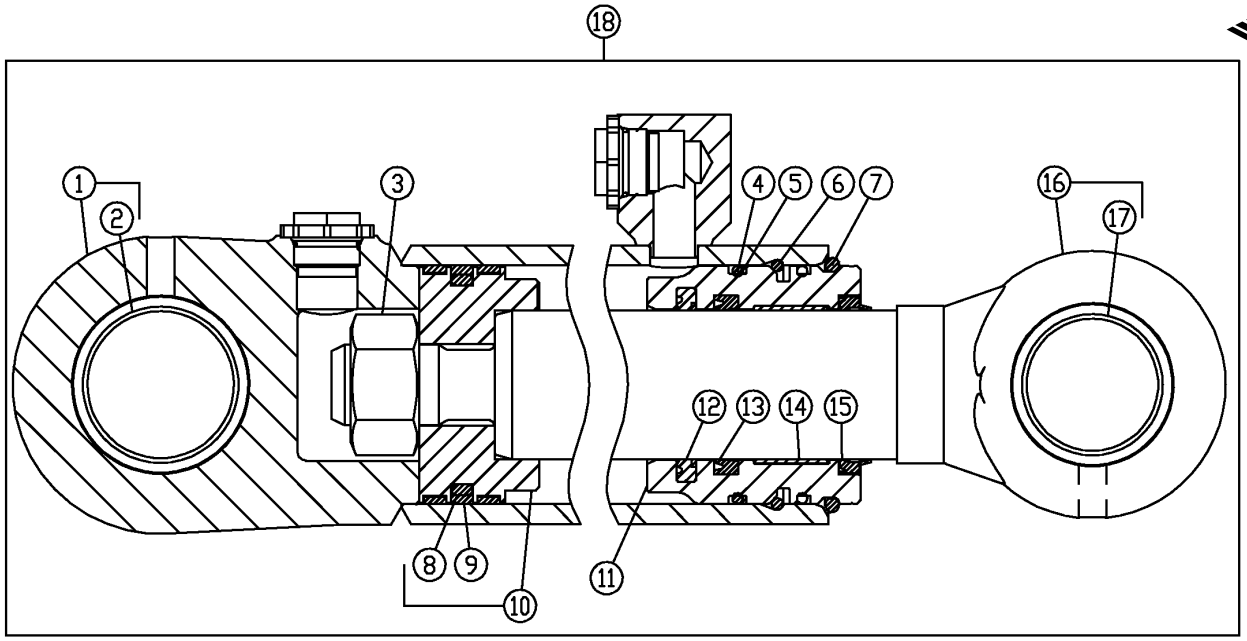

19-12,13,14,15 20-5,8,9

T196129

KEY	PART NO.	PART NAME	QTY	SERIAL NO.	REMARKS
1	AH211204	HYDRAULIC CYLINDER BARREL	1		
2	H159941	BUSHING	1		
3	H170538	NUT	1		
4	T12582	O-RING	2		
5	R81864	BACK-UP RING	1		
6	.....	SNAP RING	1		
7	.....	SNAP RING	1		
8	R98323	SEAL	1		
9	R98322	SEAL	1		
10	AH165826	PISTON	1		
11	.....	HYDR. CYLINDER ROD GUIDE	1		
12	AH146561	SEAL	1		
13	H152203	SEAL	1		
14	H208987	WEAR RING	1		
15	AH146557	SEAL	1		
16	AH146875	ROD	1		
17	H151542	BUSHING	1		
18	AH211203	HYDRAULIC CYLINDER	1		
19	AH210484	HYDRAULIC CYLINDER KIT	1		
20	AH212092	HYDRAULIC CYLINDER KIT	1		

BOOM LIFT CYLINDER
(REPLACEMENT CYLINDER)

T161672 -UN-18NOV02

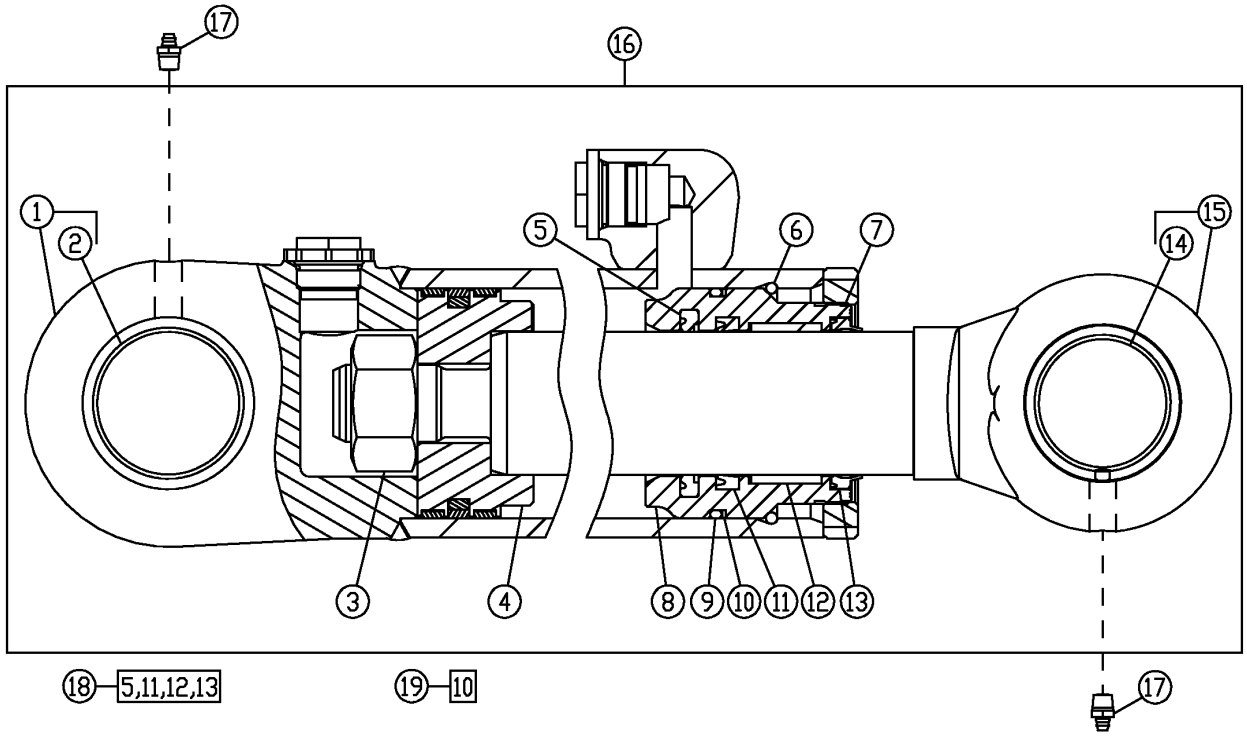

T161672

KEY	PART NO.	PART NAME	QTY	SERIAL NO.	REMARKS
1	AH146876	HYDRAULIC CYLINDER BARREL	1		
2	H159941	BUSHING	1		
3	H170538	NUT	1		
4	AH165826	PISTON	1		
5	AH146561	SEAL	1		
6	R81789	RING	1		
7	R81795	NUT	1		
8	H152345	HYDR. CYLINDER ROD GUIDE	1		
9	T12582	O-RING	1		
10	R81864	BACK-UP RING	1		
11	H152203	SEAL	1		
12	H152794	WEAR RING	1		
13	AH146557	SEAL	1		
14	H151542	BUSHING	1		
15	AH146875	ROD	1		
16	AH207401	HYDRAULIC CYLINDER	1		
17	T162396	LUBRICATION FITTING	2		
18	AH210484	HYDRAULIC CYLINDER KIT	1		CYLINDER ROD SEAL KIT, (SUB FOR AH148164)
19	AH202080	HYDRAULIC CYLINDER KIT	1		CYLINDER BORE SEAL KIT

MEMORANDA

PTO HITCH
(SERIAL NO. 880054-)

TP80301 -UN-16NOV99

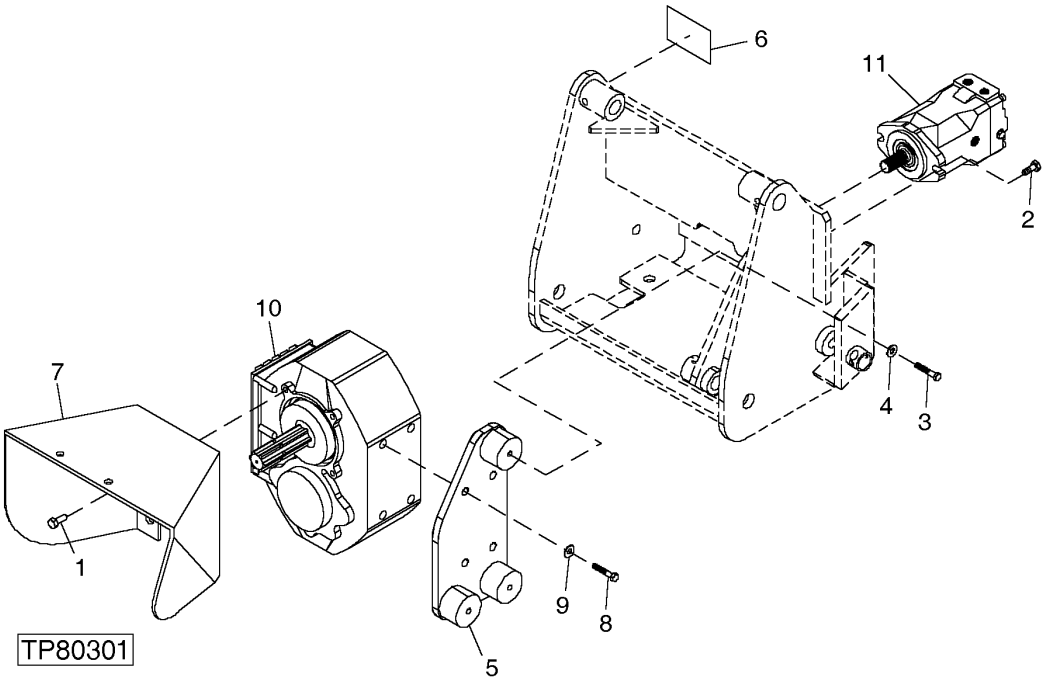

PTO HITCH
(SERIAL NO. 880054-)

KEY	PART NO.	PART NAME	QTY	SERIAL NO.	REMARKS
1	19M7872	CAP SCREW	4	880054-	M12 X 25
2	19M7877	CAP SCREW	2	880054-	M14 X 30
3	19H2735	CAP SCREW	3	880054-	1/2" X 2"
4	T35860	WASHER	3	880054-	
5	AT190018	SUPPORT	1	880054-	
6	R122717	LABEL	2	880054-	
7	AT187381	GUARD	1	880054-	
8	19M7790	SCREW	3	880054-	M12 X 35
9	T105740	WASHER	3	880054-	
10	AT187073	GEAR CASE	1	880054-	
11	AT187074	HYDRAULIC MOTOR	1	880054-	

PTO GEAR BOX
(SERIAL NO. 880054-)

TP80299 -UN-11NOV99

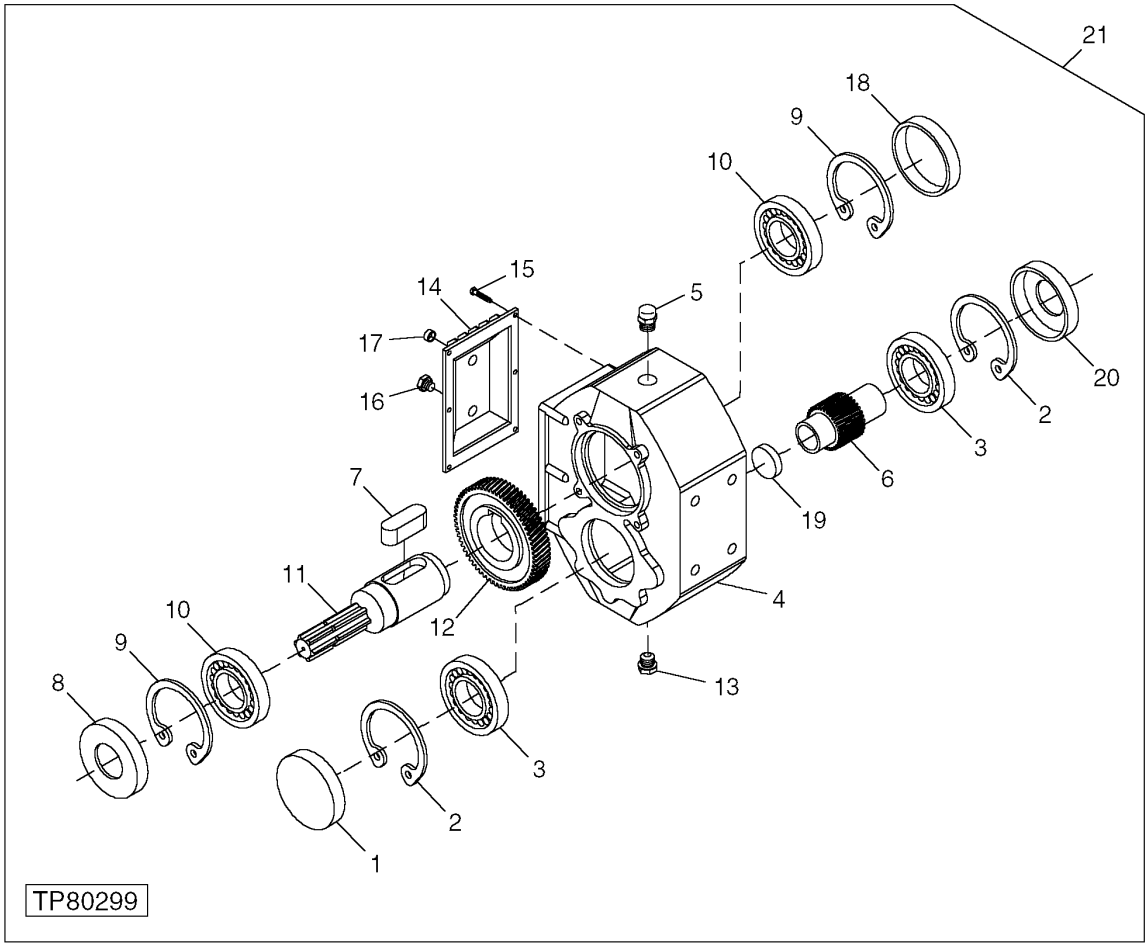

PTO GEAR BOX
(SERIAL NO. 880054-)

KEY	PART NO.	PART NAME	QTY	SERIAL NO.	REMARKS
1	AT190027	PLUG	1	880054-	
2	AT190029	SNAP RING	2	880054-	
3	AT190030	BEARING	2	880054-	
4	AT190031	HOUSING	1	880054-	
5	AT190032	PLUG	1	880054-	
6	AT190033	SHAFT	1	880054-	
7	AT190034	SHAFT KEY	1	880054-	
8	AT190035	SEAL	1	880054-	
9	AT190036	SNAP RING	2	880054-	
10	AT190037	BEARING	2	880054-	
11	AT190038	SHAFT	1	880054-	
12	AT190039	GEAR	1	880054-	
13	AT190040	PLUG	1	880054-	
14	AT190041	COVER	1	880054-	
15	AT190042	SCREW	6	880054-	
16	AT190043	PLUG	1	880054-	
17	AT190044	PLUG	1	880054-	
18	AT190045	PLUG	1	880054-	
19	AT190046	PLUG	1	880054-	
20	AT190047	SEAL	1	880054-	
21	AT187073	GEAR CASE	1	880054-	

PTO HYDRAULIC MOTOR (SERIAL NO. 880054-)

TP80302 -UN-16NOV99

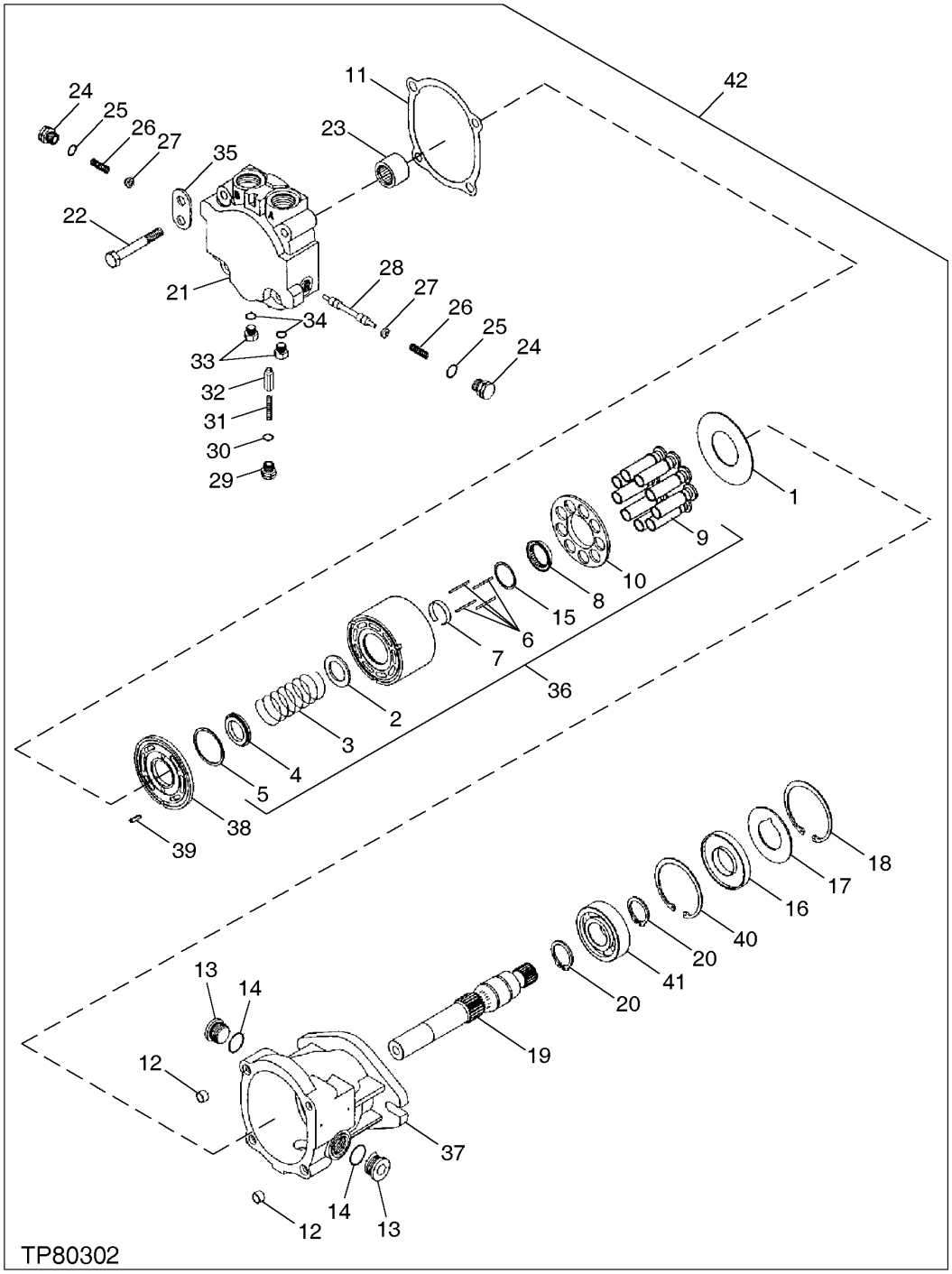

PTO HYDRAULIC MOTOR (SERIAL NO. 880054-)

KEY	PART NO.	PART NAME	QTY	SERIAL NO.	REMARKS
1	AT190048	PLATE	1		THRUST
2	.....	WASHER	1		
3	.....	COMPRESSION SPRING	1		
4	.....	WASHER	1		
5	.....	SNAP RING	1		
6	.....	PISTON PIN	4		
7	.....	RETAINER	1		
8	.....	GUIDE	1		
9	.....	PISTON	9		ASSEMBLY
10	.....	RETAINER	1		
11	AT190049	GASKET	1		
12	AT190050	SPRING PIN	2		
13	M74877	PLUG	2		
14	T165493	O-RING	2		(SUB FOR AT190052)
15	.....	WASHER	1		
16	AN202199	SEAL	1		(SUB FOR AT190053)
17	N208927	SEALING WASHER	1		SUPPORT
18	N208925	SNAP RING	1		(SUB FOR AT190055)
19	AT190056	SHAFT	1		GEAR (13 TOOTH)
20	N208924	SNAP RING	2		(SUB FOR AT190057)
21	AT190058	CAP	1		TWIN PORTS
22	.....	BOLT	4		
23	AT190059	NEEDLE BEARING	1		
24	AT190060	PLUG	2		
25	AT190061	O-RING	2		
26	AT190062	SPRING	2		
27	AT196462	PLATE	2		GUIDE, (SUB FOR AT190063)
28	R150990	SPOOL	1		
29	AT190065	PLUG	1		
30	M42665	O-RING	1		
31	AT190067	SPRING	1		
32	AT190068	POPPET	1		RELIEF VALVE
33	T176383	PLUG	2		
34	AT190070	O-RING	2		
35	.....	LUG	1		
36	AT190071	CYLINDER BLOCK	1		
37	.....	HOUSING	1		MOTOR
38	AT190072	PLATE	1		VALVE
39	AT190074	PIN	1		
40	N208925	SNAP RING	1		
41	JD9344	BALL BEARING	1		
42	AT187074	HYDRAULIC MOTOR	1		HYDRAULIC

PTO HYDRAULIC PUMP
(SERIAL NO. 880054-)

TP80753 -UN-24MAY00

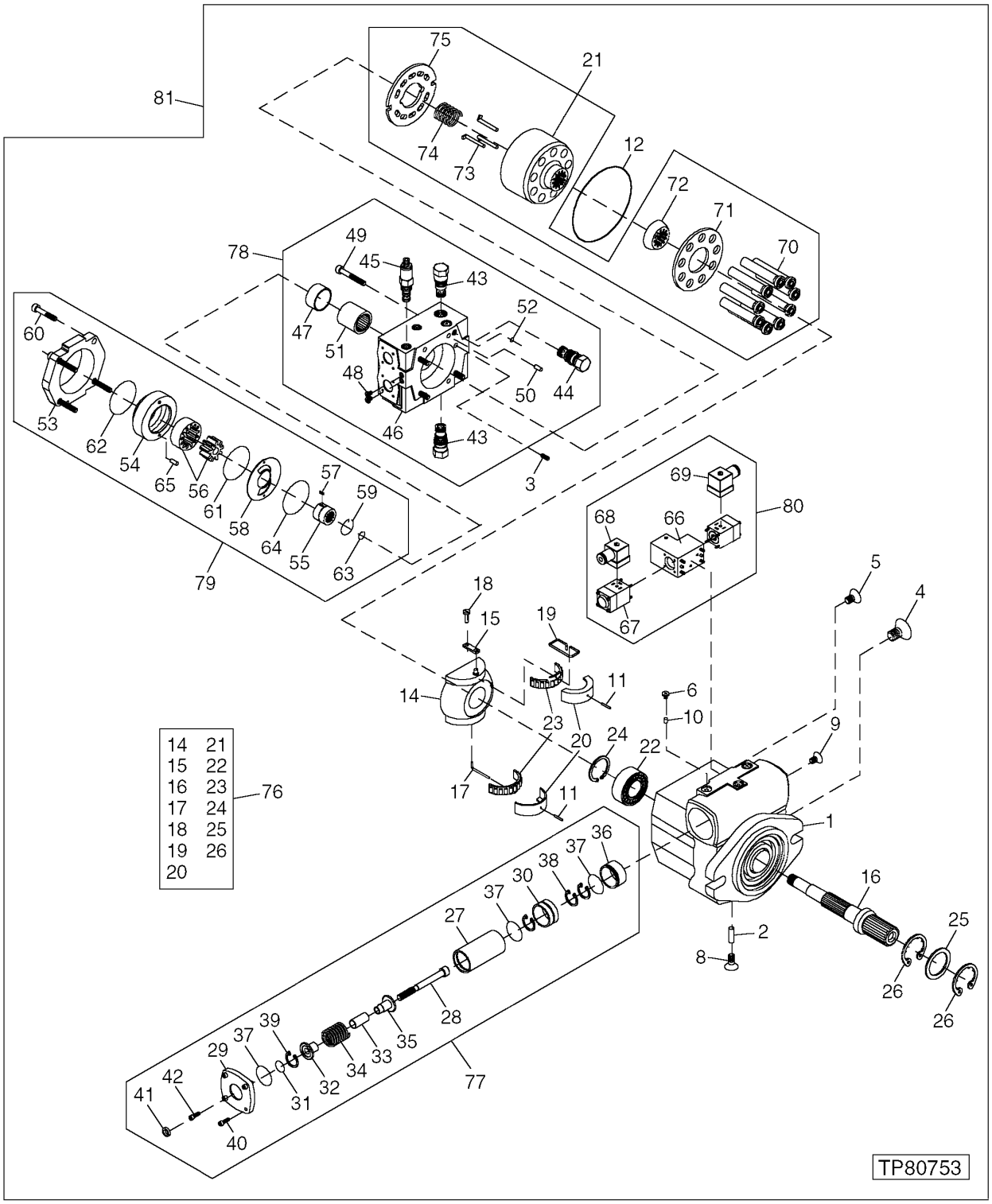

PTO HYDRAULIC PUMP
(SERIAL NO. 880054-)

KEY	PART NO.	PART NAME	QTY	SERIAL NO.	REMARKS
1	CB01387509	HOUSING	1	880054-	PUMP
2	CB01387510	PIN FASTENER	1	880054-	JOINT
3	CB01387511	PIN FASTENER	1	880054-	CYLINDER
4	CB01387512	SELF-LOCKING SCREW	1	880054-	
5	CB01387513	SELF-LOCKING SCREW	2	880054-	
6	.....	SELF-LOCKING SCREW	5	880054-	(CAMECO PART NUMBER 0631369112)
7	CB01387515	SELF-LOCKING SCREW	2	880054-	(NOT ILLUSTRATED)
8	CB01387516	SELF-LOCKING SCREW	1	880054-	
9	CB01387517	PIN FASTENER	2	880054-	BREAK OFF
10	CB01387518	ORIFICE	2	880054-	
11	CB01387520	PIN FASTENER	2	880054-	CLAMP
12	CB01387522	O-RING	1	880054-	
13	CB01387523	ORIFICE	1	880054-	(NOT ILLUSTRATED)
14	CB01387524	SWASH PLATE	1	880054-	
15	CB01387526	RING	1	880054-	SLIDE
16	CB01387528	DRIVE SHAFT	1	880054-	
17	.....	WIRE	1	880054-	(CAMECO PART NUMBER 0631369194)
18	CB01387529	PIN FASTENER	1	880054-	JOINT
19	CB01387530	WIRE	1	880054-	
20	CB01387533	BEARING CAP	1	880054-	
21	CB01387537	HYDRAULIC CYLINDER BARREL	1	880054-	
22	CB01387538	ROLLER BEARING	1	880054-	
23	CB01387540	CRADLE	1	880054-	BEARING
24	.....	SNAP RING	1	880054-	(CAMECO PART NUMBER 0631369234)
25	CB01387542	SEAL	1	880054-	
26	CB01387543	SNAP RING	2	880054-	
27	CB01387550	PISTON	1	880054-	POSITIONING
28	CB01387551	ROD	1	880054-	
29	CB01387556	BUSHING	1	880054-	
30	CB01387557	RING	1	880054-	
31	CB01387557	RING	1	880054-	
32	CB01387558	BUSHING	1	880054-	
33	CB01387559	BUSHING	1	880054-	
34	CB01387560	SPRING	2	880054-	
35	CB01387561	BUSHING	1	880054-	
36	CB01387561	BUSHING	1	880054-	
37	CB01387563	O-RING	1	880054-	
38	CB01387565	SNAP RING	1	880054-	
39	CB01387567	SNAP RING	1	880054-	
40	CB01387568	SOCKET HEAD SCREW	4	880054-	
41	CB01387569	NUT	1	880054-	
42	CB01387570	O-RING	1	880054-	
43	CB01387571	RELIEF VALVE	2	880054-	
44	CB01387572	RELIEF VALVE	1	880054-	
45	CB01387573	CONTROL VALVE	1	880054-	
46	CB01387574	PORT PLATE	1	880054-	
47	CB01387575	BUSHING	1	880054-	
48	CB01387577	SELF-LOCKING SCREW	2	880054-	
49	CB01387579	SOCKET HEAD SCREW	4	880054-	
50	CB01387580	PIN FASTENER	2	880054-	
51	CB01387581	ROLLER BEARING	1	880054-	
76	CB11387504	KIT	1	880054-	ROTARY GROUP
77	CB11387481	KIT	1	880054-	CONTROL HYDRAULICS
78	CB11387505	KIT	1	880054-	PORT PLATE
79	.....	KIT	1	880054-	INTERNAL GEAR PUMP (CAMECO PART NUMBER 0631385844)
80	CB11387506	KIT	1	880054-	FOUR WAY DIRECTIONAL VALVE
81	AT187072	PUMP	1	880054-	COMPLETE

PTO HYDRAULIC PUMP, CONTINUED
(SERIAL NO. 880054-)

TP80753 -UN-24MAY00

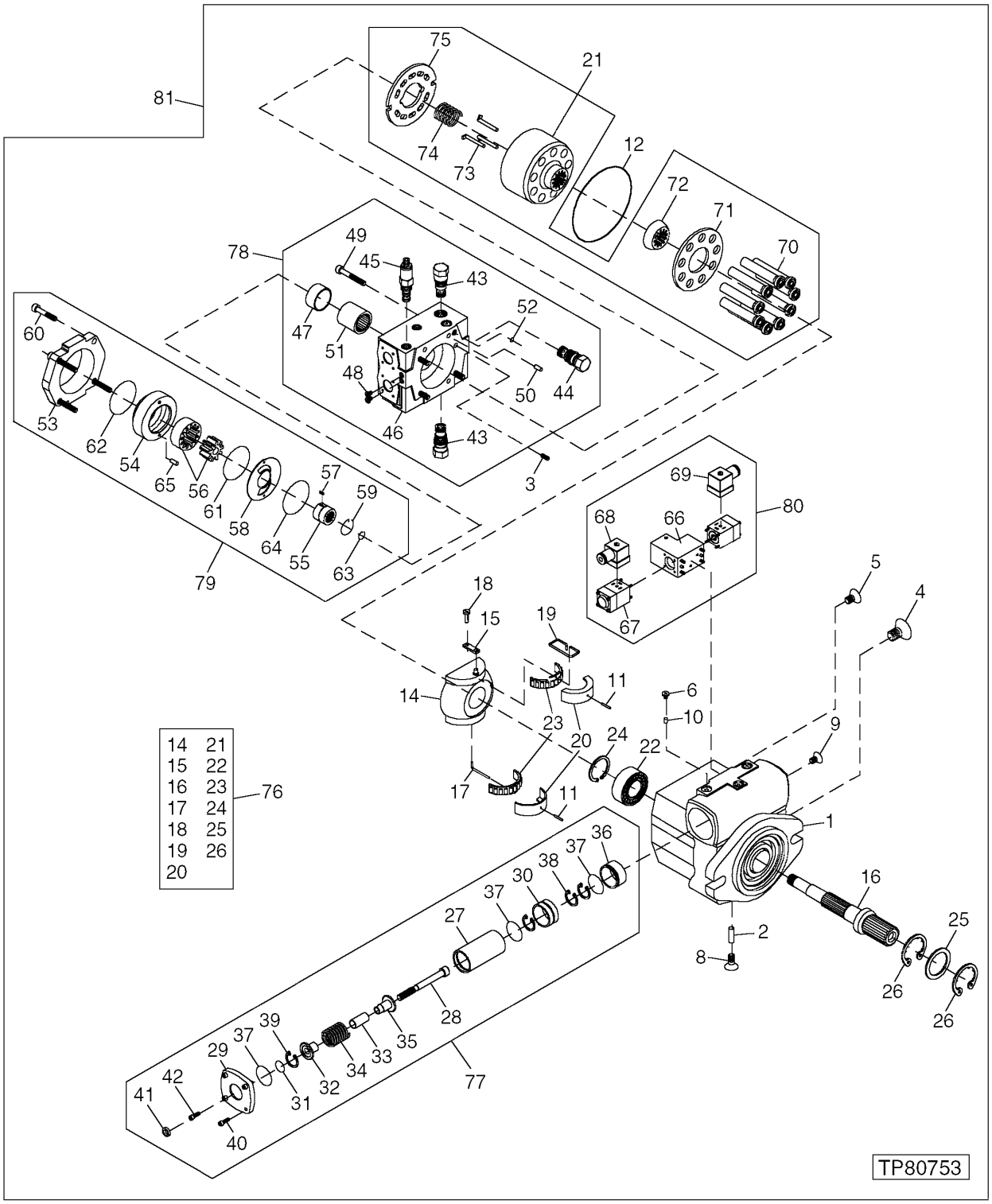

PTO HYDRAULIC PUMP, CONTINUED
(SERIAL NO. 880054-)

KEY	PART NO.	PART NAME	QTY	SERIAL NO.	REMARKS
52	.....	O-RING	1	880054-	(CAMECO PART NUMBER 0631369400)
53	.....	FLANGE	1	880054-	(CAMECO PART NUMBER 0631369746)
54	CB01387582	HOUSING	1	880054-	
55	CB01387583	DRIVE SHAFT	1	880054-	
56	CB01387584	GEAR	1	880054-	
57	CB01387585	SHAFT KEY	1	880054-	
58	CB01387586	WEAR PLATE	1	880054-	
59	CB01387587	SNAP RING	1	880054-	
60	CB01387588	SOCKET HEAD SCREW	4	880054-	
61	CB01387589	SEAL	2	880054-	
62	CB01387590	O-RING	1	880054-	
63	CB01387591	SNAP RING	1	880054-	
64	CB01387592	O-RING	1	880054-	
65	0631369422	PIN FASTENER	1	880054-	
66	CB01387595	HOUSING	1	880054-	VALVE
67	CB01387597	SOLENOID	2	880054-	
68	CB01387604	TERMINAL	1	880054-	
69	CB01387505	TERMINAL	1	880054-	
70	.....	PISTON	9	880054-	
71	.....	PLATE	1	880054-	
72	.....	GEAR	1	880054-	
73	.....	PIN FASTENER	3	880054-	
74	.....	SPRING	1	880054-	
75	.....	PLATE	1	880054-	
76	CB11387504	KIT	1	880054-	ROTARY GROUP
77	CB11387481	KIT	1	880054-	CONTROL HYDRAULICS
78	CB11387505	KIT	1	880054-	PORT PLATE
79	.....	KIT	1	880054-	INTERNAL GEAR PUMP (CAMECO PART NUMBER 0631385844)
80	CB11387506	KIT	1	880054-	FOUR WAY DIRECTIONAL VALVE
81	AT187072	PUMP	1	880054-	COMPLETE

PTO OIL COOLER (SERIAL NO. 880054-882700)

TP80123 -UN-25AUG99

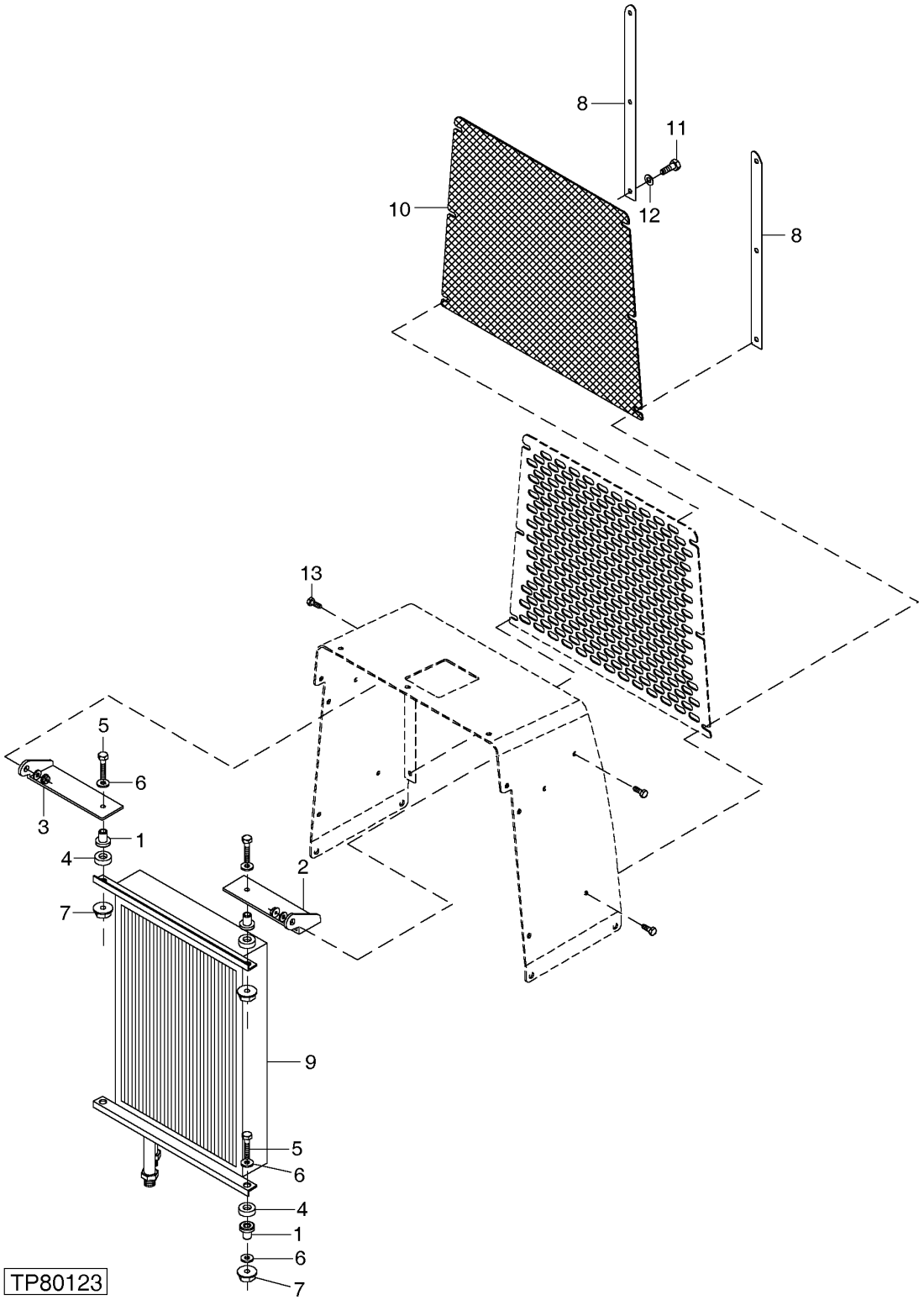

PTO OIL COOLER (SERIAL NO. 880054-882700)

KEY	PART NO.	PART NAME	QTY	SERIAL NO.	REMARKS
1	U42208	ISOLATOR	4		
2	T166886	BRACKET	1		RH
3	T166887	BRACKET	1		LH
4	AT187397	SPACER	4		
5	19H3131	CAP SCREW	4		5/16" X 2"
6	R57696	WASHER	4		
7	T16464	LOCK NUT	4		
8	T166888	RETAINER	2		
9	.....	OIL COOLER	1		
10	AT187435	GRILLE	1		
11	19H2676	CAP SCREW	6		3/8" X 1"
12	24H1305	WASHER	6		13/32" X 13/16" X 0.065"
13	19H3239	CAP SCREW	4		3/8" X 1-1/4"

PTO OIL COOLER
(SERIAL NO. 880054-)

T196642 -UN-19DEC03

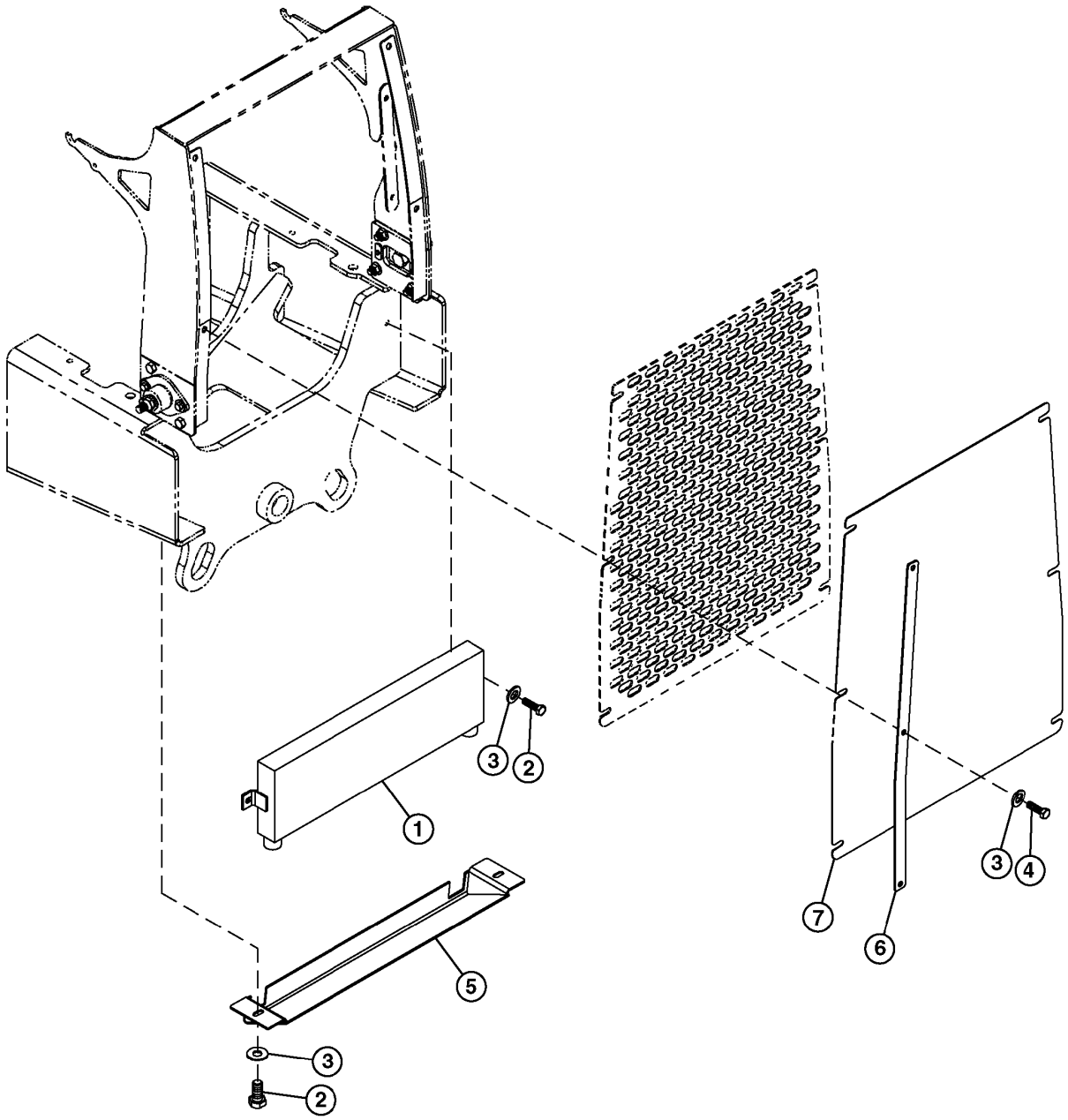

T196642

4H10

PTO OIL COOLER
(SERIAL NO. 880054-)

KEY	PART NO.	PART NAME	QTY	SERIAL NO.	REMARKS
1	CB01450928	OIL COOLER	1		
2	19H3217	CAP SCREW	4		3/8" X 1-3/4"
3	24H1219	WASHER	10		7/16" X 1" X 0.083"
4	CB01390888	BOLT	6		
5	CB11451300	GUARD	1		
6	CB1447115	RETAINER	2		
7	CB1447116	GRILLE	1		

PTO CONTROL
(SERIAL NO. 880054-)

TP80755 -UN-25MAY00

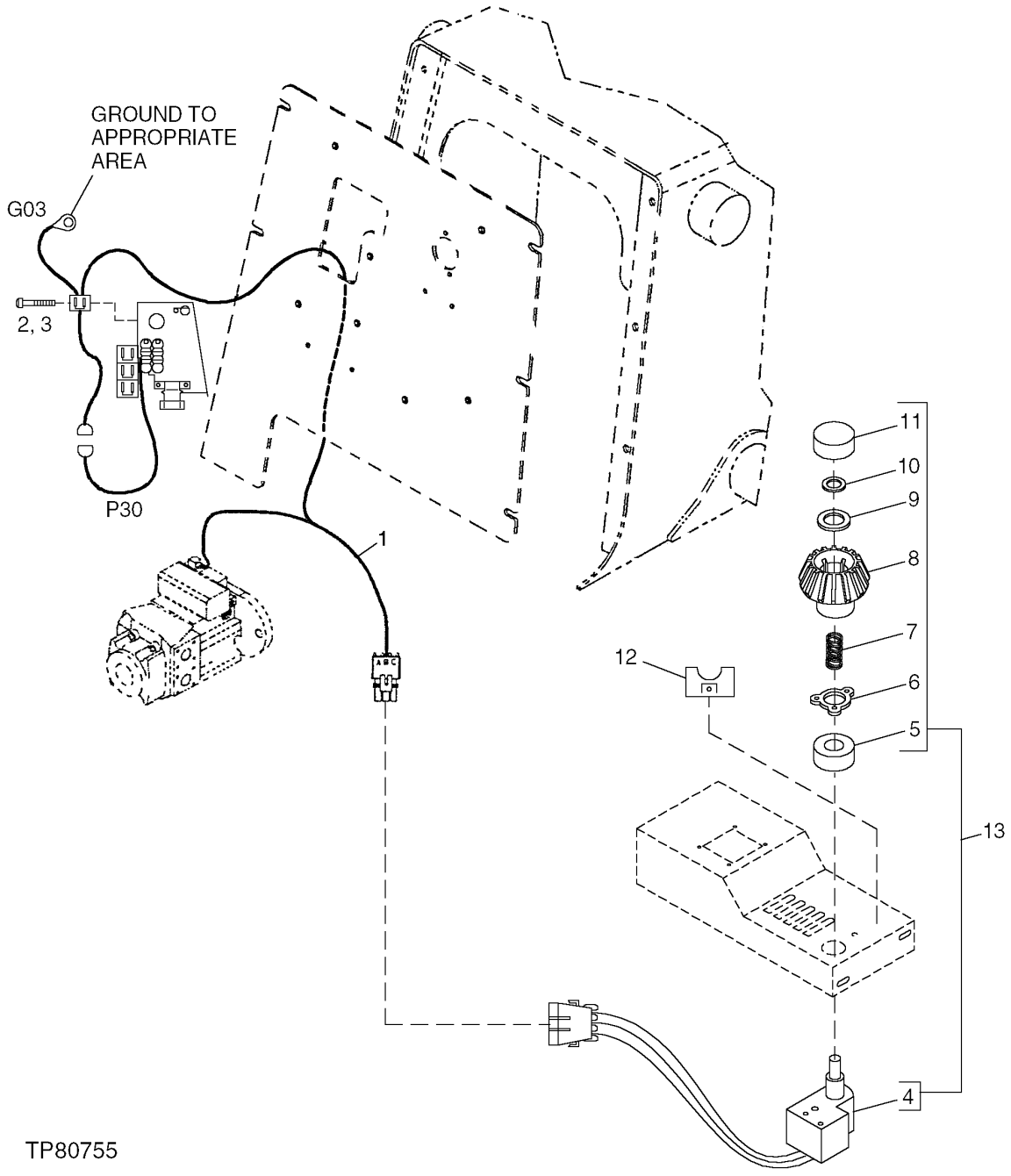

PTO CONTROL
(SERIAL NO. 880054-)

KEY	PART NO.	PART NAME	QTY	SERIAL NO.	REMARKS
1	AT187077	WIRING HARNESS	1	880054-	
2	21H1301	SCREW	1	880054-	0.190" X 1/2", PTO (ASSEMBLY)
3	T12847	LOCK NUT	1	880054-	
4	RE169008	SWITCH	1	880054-	
5	R118252	BUSHING	1	880054-	BASE
6	R112630	WASHER	1	880054-	
7	R44313	SPRING	1	880054-	
8	R117611	KNOB	1	880054-	
9	24M7362	WASHER	1	880054-	8.400 X 16 X 1.600 MM
10	R72653	SNAP RING	1	880054-	
11	R108073	CAP	1	880054-	
12	AT187376	LABEL	1	880054-882700	PTO
	CB01448432	LABEL	1	882701-	PTO
13	.....	KIT	1	880054-882700	PTO SWITCH (CAMECO PART NUMBER 2103003367)
	AH148758	RELAY	1	882701-	

PTO HYDRAULICS
(SERIAL NO. 880054-882700)

TP80124 -UN-30AUG99

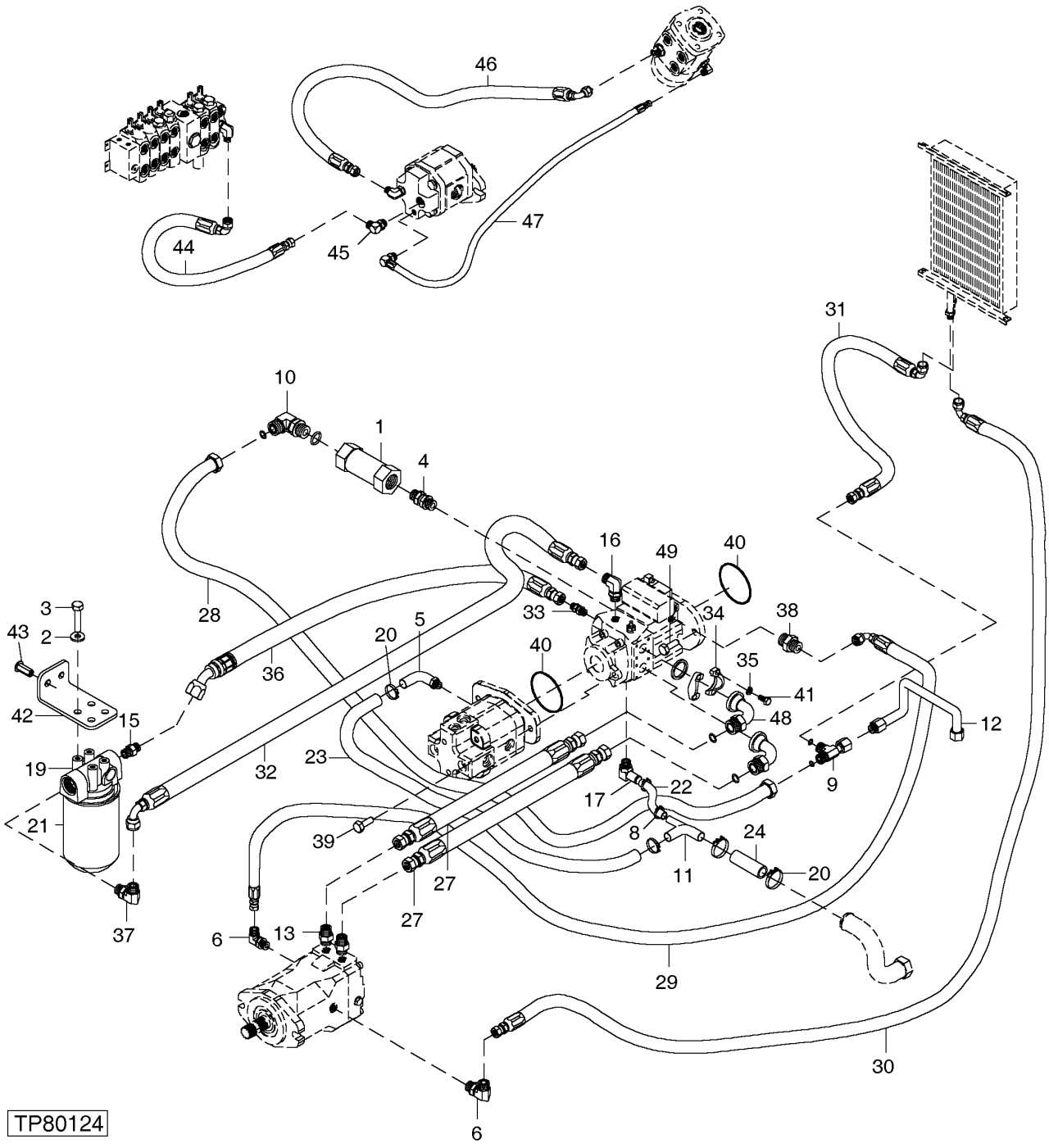

PTO HYDRAULICS
(SERIAL NO. 880054-882700)

KEY	PART NO.	PART NAME	QTY	SERIAL NO.	REMARKS
1	AT119006	CHECK VALVE	1		
2	24M7239	WASHER	4		10.700 X 21 X 2.500 MM, RH
3	19M7938	CAP SCREW	4		M10 X 20
4	AT190022	FITTING	1		
5	AT190023	FITTING	1		
6	38H1014	ELBOW FITTING	2		
8	AR21837	CLAMP	2		
9	38H1033	TEE FITTING	1		
10	AT143833	FITTING	1		
11	AT187421	FITTING	1		
12	AT187339	TUBE	1		
13	38H1163	ADAPTER	2		
15	38H1175	ADAPTER	1		
16	38H1005	ELBOW FITTING	1		
17	AT187340	ELBOW FITTING	1		
19	AN204503	FILTER HEAD	1		
20	RE25110	CLAMP	2		
21	AN203010	HYDRAULIC FILTER	1		
22	AT187387	HYDRAULIC HOSE	1		
23	AT187389	HYDRAULIC HOSE	1		
24	AT187391	HYDRAULIC HOSE - FABRICATE	1		
27	AT189958	HYDRAULIC HOSE - FABRICATE	2		
28	AT187076	HYDRAULIC HOSE - FABRICATE	1		
29	AT189959	HYDRAULIC HOSE - FABRICATE	1		
30	AT189960	HYDRAULIC HOSE - FABRICATE	1		
31	AT189962	HYDRAULIC HOSE - FABRICATE	1	-XXXXXX	
	CB01416957	HYDRAULIC HOSE	1	XXXXXX-	
32	AT189963	HYDRAULIC HOSE - FABRICATE	1		
33	38H1046	ELBOW FITTING	1		
34	T107446	FLANGE FITTING	4		
35	12H304	LOCK WASHER	8		3/8"
36	AT187402	HYDRAULIC HOSE - FABRICATE	1		
37	AT119578	ELBOW FITTING	1		
38	38H1193	ADAPTER	1		
39	19M7789	SCREW	2		M12 X 30
40	AT205268	O-RING	2		
41	19H3239	CAP SCREW	8		3/8" X 1-1/4"
42	AT190025	BRACKET	1		
43	T164468	NUT	2		
44	AT189964	HYDRAULIC HOSE - FABRICATE	1		
45	38H1007	ELBOW FITTING	1		
46	AT189965	HYDRAULIC HOSE - FABRICATE	1		
47	AT189966	HYDRAULIC HOSE - FABRICATE	1		
48	AT190026	FITTING	2		90° ELBOW
49	19M7877	CAP SCREW	2		M14 X 30

PTO HYDRAULICS
(SERIAL NO. 882701-)

T196911 -UN-15DEC03

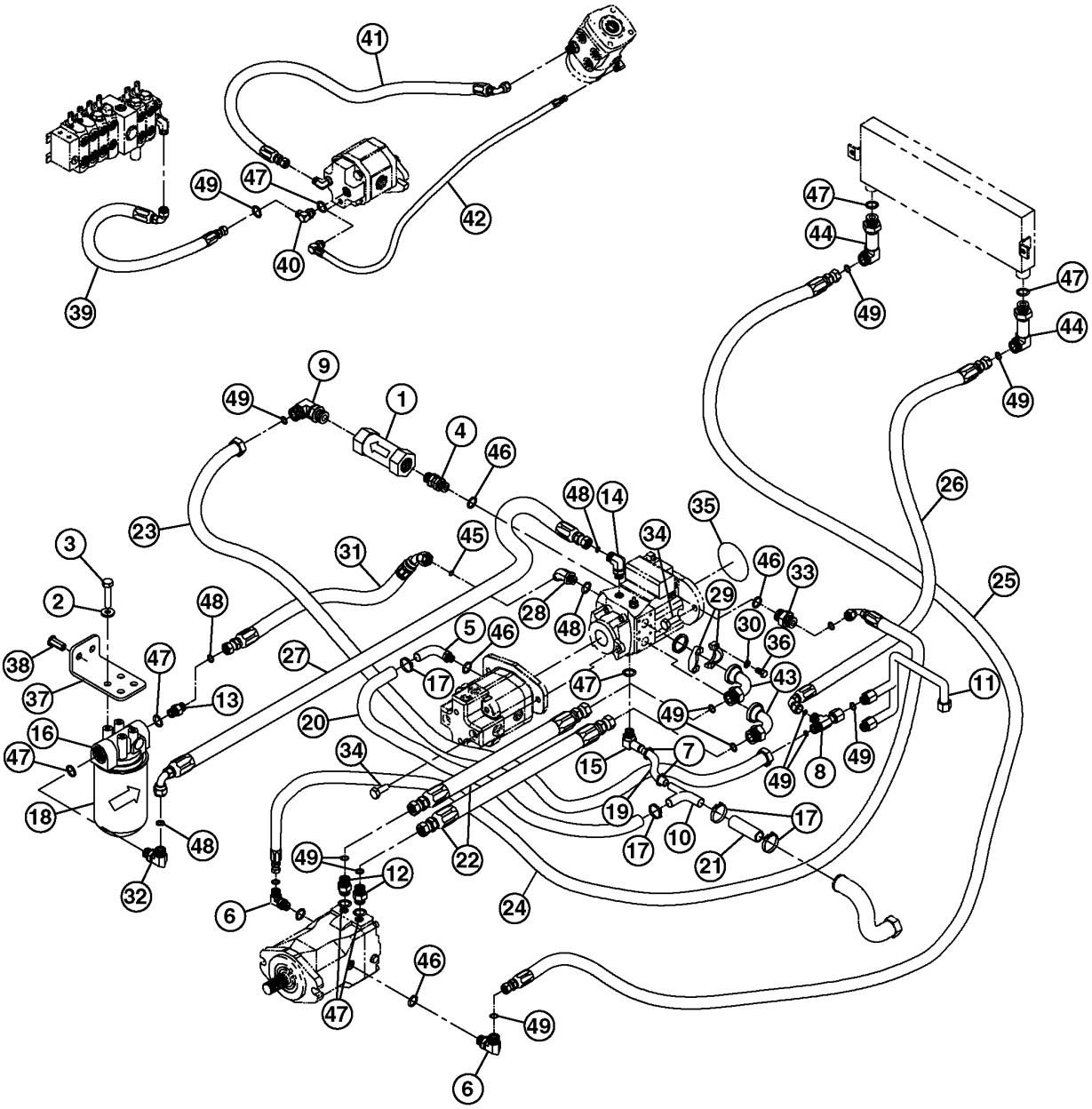

T196911

PTO HYDRAULICS
(SERIAL NO. 882701-)

KEY	PART NO.	PART NAME	QTY	SERIAL NO.	REMARKS
1	AT119006	CHECK VALVE	1		
2	24M7239	WASHER	4		10.700 X 21 X 2.500 MM
3	19M7938	CAP SCREW	4		M10 X 20
4	AT190022	FITTING	1		
5	AT190023	FITTING	1		
6	38H1014	ELBOW FITTING	2		
7	AR21839	CLAMP	2		
8	38H1033	TEE FITTING	1		
9	AT143833	FITTING	1		
10	AT187421	FITTING	1		
11	AT187339	TUBE	1		
12	38H1163	ADAPTER	2		
13	38H1175	ADAPTER	1		
14	38H1005	ELBOW FITTING	1		
15	AT187340	ELBOW FITTING	1		
16	AN204503	FILTER HEAD	1		
17	RE25110	CLAMP	4		
18	AN203010	HYDRAULIC FILTER	1		
19	AT187387	HYDRAULIC HOSE	1		
20	AT187389	HYDRAULIC HOSE	1		
21	AT187391	HYDRAULIC HOSE - FABRICATE	1		
22	AT189958	HYDRAULIC HOSE - FABRICATE	2		
23	AT187076	HYDRAULIC HOSE - FABRICATE	1		
24	AT189959	HYDRAULIC HOSE - FABRICATE	1		
25	CB11451120	HYDRAULIC HOSE	1		
26	CB11451119	HYDRAULIC HOSE	1		
27	AT189963	HYDRAULIC HOSE - FABRICATE	1		
28	38H1046	ELBOW FITTING	1		
29	T107446	FLANGE FITTING	4		
30	12H304	LOCK WASHER	8		3/8"
31	AT187402	HYDRAULIC HOSE - FABRICATE	1		
32	AT119578	ELBOW FITTING	1		
33	38H1193	ADAPTER	1		
34	19M7789	SCREW	4		M12 X 30
35	AT205268	O-RING	1		
36	19H3239	CAP SCREW	8		3/8" X 1-1/4"
37	AT190025	BRACKET	1		
38	T164468	NUT	2		
39	AT189964	HYDRAULIC HOSE - FABRICATE	1		
40	38H1007	ELBOW FITTING	1		
41	AT189965	HYDRAULIC HOSE - FABRICATE	1		
42	AT189966	HYDRAULIC HOSE - FABRICATE	1		
43	AT190026	FITTING	2		
44	38H1492	ELBOW FITTING	2		
45	R26375	O-RING	2		
46	R26906	O-RING	4		
47	U12547	O-RING	5		
48	T77857	O-RING	4		
49	T77858	O-RING	13		
50	U13639	O-RING	1		

MEMORANDA

1K20

NUMERICAL INDEX

PART NO.	GRID	KEY	PAGE
AA4927R	3G21	22	1674 - 29
AA4927R	3G23	22	1674 - 31
AA4927R	3G25	22	1674 - 33
AE20595	2H16	4	0531 - 3
AH104837	2H10	8	0521 - 7
AH137789	2J3	17	0965 - 2
AH137789	2J4	17	0965 - 3
AH138200	2J3	7	0965 - 2
AH138200	2J4	7	0965 - 3
AH139130	2J3	19	0965 - 2
AH146556	4G15	13	3160 - 6
AH146557	4G16	6	3160 - 7
AH146557	4G17	15	3160 - 8
AH146557	4G18	15	3160 - 9
AH146557	4G19	13	3160 - 10
AH146560	4G15	7	3160 - 6
AH146561	4G16	11	3160 - 7
AH146561	4G17	7	3160 - 8
AH146561	4G18	12	3160 - 9
AH146561	4G19	5	3160 - 10
AH146873	4G15	21	3160 - 6
AH146874	4G17	21	3160 - 8
AH146875	4G17	18	3160 - 8
AH146875	4G18	16	3160 - 9
AH146875	4G19	15	3160 - 10
AH146876	4G17	1	3160 - 8
AH146876	4G19	1	3160 - 10
AH146886	4G15	17	3160 - 6
AH147868	4G15	19	3160 - 6
AH148164	4G16	18	3160 - 7
AH148164	4G17	20	3160 - 8
AH148164	4G19	18	3160 - 10
AH148758	3G25	10	1674 - 33
AH148758	4H12	13	4015 - 3
AH149810	2J4	15	0965 - 3
AH149842	4G15	20	3160 - 6
AH149842	4G17	19	3160 - 8
AH149843	4G16	19	3160 - 7
AH150920	4G15	1	3160 - 6
AH151380	2J4	13	0965 - 3
AH151381	2J4	11	0965 - 3
AH154780	2J4	19	0965 - 3
AH156144	3G19	4	1674 - 27
AH162038	4G16	20	3160 - 7
AH162040	4G16	2	3160 - 7
AH165826	4G18	10	3160 - 9
AH165826	4G19	4	3160 - 10
AH166471	4G16	17	3160 - 7
AH167552	2J3	17	0965 - 2
AH167552	2J4	17	0965 - 3
AH171228	4G16	20	3160 - 7
AH171229	4G16	17	3160 - 7
AH173567	4G16	20	3160 - 7
AH202080	4G19	19	3160 - 10
AH207401	4G17	21	3160 - 8
AH207401	4G19	16	3160 - 10
AH209022	4F10	19	3102 - 19
AH210484	4G16	18	3160 - 7
AH210484	4G17	20	3160 - 8
AH210484	4G18	19	3160 - 9
AH210484	4G19	18	3160 - 10
AH210737	4F4	1	3102 - 13
AH210737	4F6	1	3102 - 15
AH210737	4F8	3	3102 - 17
AH210737	4F9	15	3102 - 18
AH210737	4F10	18	3102 - 19
AH211203	4G18	18	3160 - 9
AH211204	4G18	1	3160 - 9
AH212092	4G18	20	3160 - 9
AH87142	3F23	11	1674 - 5
AH87142	3G15	29	1674 - 23
AH91124	3F19	2	1673 - 3
AL111096	1C23	5	0250 - 13
AL113451	1C17	3	0250 - 7
AL113460	1C17	5	0250 - 7
AL118173	2I17	1	0962 - 3
AL155227	2I17	1	0962 - 3
AL32877	1B20	16	0201 - 3
AL32877	2J20	24	1063 - 3
AL32877	2J22	9	1063 - 5
AL79794	1B23	5	0210 - 4
AL79794	1C23	2	0250 - 13
AL79808	1C17	12	0250 - 7
AL79901	1C19	2	0250 - 9
AL79902	1C19	1	0250 - 9
AL79950	1C19	21	0250 - 9
AL79951	1C19	11	0250 - 9
AL80542	1C17	2	0250 - 7
AL81904	1C17	2	0250 - 7
AMT2616	3I14	1	1821 - 9
AMT2616	3I16	5	1821 - 11
AN132749	1B12	2	0110 - 3A
AN132749	1B13	2	0110 - 3Z
AN202199	4H2	16	4000 - 7
AN203010	4H14	21	4063 - 3
AN203010	4H16	18	4063 - 5
AN204503	4H14	19	4063 - 3
AN204503	4H16	16	4063 - 5
AN205068	2G12	7	0511 - 7
AN205068	2G14	7	0511 - 9
AR21836	2C7	1	0408B - 3
AR21837	4H14	8	4063 - 3
AR21839	2C7	6	0408B - 3
AR21839	4E21	31	3102 - 5
AR21839	4H16	7	4063 - 5
AR21840	2G12	13	0511 - 7
AR21842	2H8	7	0521 - 5
AR21842	2H10	7	0521 - 7
AR21842	4E21	29	3102 - 5
AR26480	1C3	1	0230 - 4
AR44361	2H14	5	0521 - 11
AR48041	3G4	1	1674 - 11
AR56766	3F10	7	1671 - 13
AR65507	1E23	9	0403 - 2
AR65507	1H14	9	0403A - 2
AR65507	2B19	9	0403B - 2
AR65507	2E1	9	0403C - 2
AR73144	3G25	11	1674 - 33
AR85328	2H6	4	0521 - 3
AR85329	4G12	23	3160 - 3
AR85519	1F20	1	0413 - 5
AR85519	1I10	1	0413A - 5
AR85519	2C13	30	0413B - 3
AR85519	2E21	30	0413C - 5
AR91896	3J12	27	1921 - 9
AR94101	3G13	1	1674 - 21
AR94101	3G15	1	1674 - 23
AR94101	3G17	1	1674 - 25
AR94101	3G21	23	1674 - 29
AR94101	3G23	23	1674 - 31
AR94101	3G25	23	1674 - 33
AR94101	4E21	4	3102 - 5
AT101699	4C16	24	2162 - 23
AT101699	4C18	4	2162 - 25
AT101699	4D8	4	2162 - 39
AT101699	4D12	6	2162 - 41
AT101699	4D12	8	2162 - 41
AT101699	4D12	9	2162 - 41
AT101699	4D12	10	2162 - 41
AT101699	4D12	11	2162 - 41
AT101699	4D12	14	2162 - 41
AT101701	4C16	18	2162 - 23
AT101701	4C18	3	2162 - 25
AT101701	4D8	1	2162 - 39
AT101701	4D12	15	2162 - 41
AT101701	4D12	17	2162 - 41
AT101701	4D12	18	2162 - 41
AT101701	4D12	19	2162 - 41
AT101701	4D12	22	2162 - 41
AT101701	4D12	29	2162 - 41
AT101701	4D12	31	2162 - 41
AT101746	4D8	3	2162 - 39
AT101909	3H16	7	1812 - 3
AT101909	3H18	7	1812 - 5
AT101909	3H20	7	1812 - 7
AT101909	4C22	13	2162 - 29
AT103399	3G15	2	1674 - 23
AT103399	3G17	2	1674 - 25
AT103399	3G21	24	1674 - 29
AT103399	3G23	24	1674 - 31
AT103399	3G25	24	1674 - 33
AT104333	4D8	12	2162 - 39
AT104333	4D8	20	2162 - 39
AT106154	3F19	8	1673 - 3
AT106413	2G12	7	0511 - 7
AT107494	2I21	6	0962 - 7
AT113921	1C23	6	0250 - 13
AT117348	1C23	5	0250 - 13
AT119006	4H14	1	4063 - 3
AT119006	4H16	1	4063 - 5
AT119186	3H24	19	1816 - 3
AT119290	1D11	11	0342 - 3
AT119290	3G21	28	1674 - 29
AT119290	3G23	28	1674 - 31
AT119290	3G25	28	1674 - 33
AT119290	3H24	24	1816 - 3
AT119301	4E14	2	2164 - 3
AT119372	4B14	12	2161 - 3
AT119514	3G23	27	1674 - 31
AT119532	3C14	3	1511 - 13
AT119577	4B16	25	2161 - 5
AT119577	4B18	25	2161 - 7
AT119578	4E8	25	2163 - 3
AT119578	4E10	25	2163 - 5
AT119578	4E12	25	2163 - 7
AT119578	4H14	37	4063 - 3
AT119578	4H16	32	4063 - 5
AT119703	4E8	49	2163 - 3
AT119703	4E10	35	2163 - 5
AT119703	4E12	7	2163 - 7
AT120105	2I8	3	0563 - 3
AT120105	2I10	3	0563 - 5
AT120105	2J24	19	1063 - 7
AT120105	2K2	19	1063 - 9
AT120105	2K4	19	1063 - 11
AT120461	3J19	1	2004 - 3
AT120461	3J21	1	2004 - 5
AT124557	4G12	18	3160 - 3
AT124557	4G14	14	3160 - 5
AT124557	4G14	21	3160 - 5
AT124918	3H24	25	1816 - 3

NUMERICAL INDEX - CONTINUED

PART NO.	GRID	KEY	PAGE
AT124918	3I2	1	1816 - 5
AT124918	3J6	16	1921 - 3
AT124918	3J8	14	1921 - 5
AT124918	3J10	13	1921 - 7
AT129419	3G15	15	1674 - 23
AT129419	4E8	32	2163 - 3
AT129419	4E8	33	2163 - 3
AT129419	4E10	32	2163 - 5
AT129419	4E12	32	2163 - 7
AT130104	3G5	5	1674 - 12
AT130104	3G5	9B	1674 - 12
AT130104	3G7	1	1674 - 15
AT135486	3F21	1	1674 - 3
AT135486	3G5	9A	1674 - 12
AT135486	3G7	1	1674 - 15
AT135655	2J16	8	1060 - 7
AT13740	1F2	30	0404 - 3
AT13740	1H17	30	0404A - 3
AT13740	2B22	14	0404B - 3
AT13740	2E4	14	0404C - 3
AT13740	2G10	4	0511 - 5
AT137542	3I18	8	1821 - 13
AT137542	3I20	9	1821 - 15
AT139694	2I17	7	0962 - 3
AT141011	3G17	36	1674 - 25
AT141011	3G21	11	1674 - 29
AT141011	3G23	11	1674 - 31
AT141011	3I4	7	1816 - 7
AT141011	3I6	7	1816 - 9
AT141197	1E8	1	0364 - 3
AT141444	1B10	1	0110 - 2
AT141527	2J2	22	0963 - 7
AT142584	4F4	3	3102 - 13
AT143833	4H14	10	4063 - 3
AT143833	4H16	9	4063 - 5
AT144204	2I23	9	0963 - 3
AT144204	2I25	9	0963 - 5
AT144879	4E8	48	2163 - 3
AT144879	4E10	34	2163 - 5
AT144879	4E12	34	2163 - 7
AT144994	3G15	15	1674 - 23
AT144994	4E8	33	2163 - 3
AT144994	4E10	33	2163 - 5
AT144994	4E12	33	2163 - 7
AT145929	3G21	19	1674 - 29
AT145929	3G23	19	1674 - 31
AT145931	3G21	19	1674 - 29
AT145931	3G23	19	1674 - 31
AT157471	1D7	10	0315 - 4
AT157471	3G21	13	1674 - 29
AT157471	3G23	13	1674 - 31
AT159794	4F18	7	3115 - 3
AT159794	4F20	6	3115 - 5
AT159811	3G13	16	1674 - 21
AT159811	3G15	16	1674 - 23
AT159811	3G17	16	1674 - 25
AT160682	4C22	32	2162 - 29
AT160682	4C22	41	2162 - 29
AT160682	4D8	13	2162 - 39
AT160682	4D8	26	2162 - 39
AT160684	4C16	18	2162 - 23
AT160684	4C16	24	2162 - 23
AT160684	4C18	3	2162 - 25
AT160684	4C18	4	2162 - 25
AT160684	4D12	13	2162 - 41
AT160684	4D12	30	2162 - 41
AT162180	1D11	16	0342 - 3
AT162180	3G13	6	1674 - 21
AT162180	3G15	6	1674 - 23
AT162180	3G17	6	1674 - 25
AT162180	4F18	35	3115 - 3
AT162180	4F20	30	3115 - 5
AT162180	4F22	19	3115 - 7
AT163296	4B14	1	2161 - 3
AT163296	4B16	1	2161 - 5
AT163948	3F23	1	1674 - 5
AT163948	3G5	9B	1674 - 12
AT163948	3G9	1	1674 - 17
AT163950	3F23	1	1674 - 5
AT163950	3G5	9B	1674 - 12
AT163950	3G9	9	1674 - 17
AT164352	3G13	10	1674 - 21
AT164352	3G15	10	1674 - 23
AT164442	1C4	3	0230 - 6
AT164442	1C15	4	0250 - 5
AT167118	1C19	3	0250 - 9
AT167119	1C19	3	0250 - 9
AT167183	2I19	27	0962 - 5
AT167240	4C4	8	2162 - 11
AT167240	4C6	5	2162 - 13
AT167240	4C8	8	2162 - 15
AT167240	4C22	32	2162 - 29
AT167240	4D8	13	2162 - 39
AT167306	3G13	20	1674 - 21
AT167306	3G15	20	1674 - 23
AT167306	4G2	18	3140 - 3
AT167332	2J6	13	0965 - 5
AT167439	4C16	29	2162 - 23
AT167440	4C16	3	2162 - 23
AT167443	4D8	14	2162 - 39
AT167541	3H16	19	1812 - 3
AT167543	4F22	26	3115 - 7
AT167543	4F24	19	3115 - 9
AT167591	4C20	37	2162 - 27
AT168878	3G21	10	1674 - 29
AT168878	3G23	10	1674 - 31
AT168962	4G2	10	3140 - 3
AT169087	4C22	2	2162 - 29
AT169087	4C24	2	2162 - 31
AT169087	4D2	3	2162 - 33
AT169087	4D4	3	2162 - 35
AT169304	1D11	15	0342 - 3
AT169304	3G13	7	1674 - 21
AT169304	3G15	7	1674 - 23
AT169304	3G17	7	1674 - 25
AT169780	1B20	25	0201 - 3
AT169911	2H12	15	0521 - 9
AT170049	1C2	22	0230 - 3
AT170050	1C2	29	0230 - 3
AT170204	1C17	1	0250 - 7
AT170205	1C17	1	0250 - 7
AT170206	1C17	6	0250 - 7
AT170208	1C17	6	0250 - 7
AT170209	1C17	4	0250 - 7
AT170829	4G8	1	3140 - 9
AT170854	2I2	1	0540 - 3
AT170921	4E8	34	2163 - 3
AT171054	2H6	7	0521 - 3
AT171054	2H12	2	0521 - 9
AT171169	2H6	14	0521 - 3
AT171169	2H8	3	0521 - 5
AT171169	2H10	3	0521 - 7
AT171342	1D25	9	0360 - 5
AT171346	1C13	9	0250 - 3
AT171541	1D11	20	0342 - 3
AT171544	1D11	20	0342 - 3
AT171546	4F18	6	3115 - 3
AT171550	3G13	8	1674 - 21
AT171550	3G15	8	1674 - 23
AT171550	3G17	8	1674 - 25
AT171550	4F18	36	3115 - 3
AT171550	4F20	31	3115 - 5
AT171550	4F22	20	3115 - 7
AT171637	1B24	6	0210 - 5
AT171644	1B23	1	0210 - 4
AT171780	4G2	9	3140 - 3
AT171853	2H12	4	0521 - 9
AT171854	2H12	3	0521 - 9
AT171854	2H14	1	0521 - 11
AT171855	2H12	5	0521 - 9
AT171855	2H14	3	0521 - 11
AT171958	3G21	7	1674 - 29
AT171958	3G23	7	1674 - 31
AT171958	3G25	7	1674 - 33
AT172763	1D12	5	0350 - 1
AT173254	1C4	9	0230 - 6
AT173359	4E19	8	3102 - 3
AT173610	2G8	2	0511 - 3
AT173610	2G10	2	0511 - 5
AT173624	3F15	1	1672 - 2
AT173624	3F17	1	1672 - 5
AT173891	2H18	1	0531 - 5
AT174365	1D11	9	0342 - 3
AT174403	2G12	7	0511 - 7
AT174769	3G21	12	1674 - 29
AT174769	3G23	12	1674 - 31
AT174893	3G13	9	1674 - 21
AT174893	3G15	9	1674 - 23
AT174893	3G17	9	1674 - 25
AT174898	1D11	10	0342 - 3
AT175069	3G21	6	1674 - 29
AT175069	3G23	6	1674 - 31
AT175069	3G25	6	1674 - 33
AT175070	3G21	5	1674 - 29
AT175070	3G23	5	1674 - 31
AT175070	3G25	5	1674 - 33
AT175198	4F4	21	3102 - 13
AT175198	4F6	21	3102 - 15
AT175297	3G21	4	1674 - 29
AT175297	3G23	4	1674 - 31
AT175300	3G21	30	1674 - 29
AT175300	3G23	30	1674 - 31
AT175300	3G25	30	1674 - 33
AT175622	2I19	17	0962 - 5
AT175644	4F8	4	3102 - 17
AT175733	1D14	8	0350 - 3
AT175734	1D16	8	0350 - 5
AT175735	1D17	12	0350 - 6
AT175748	1D20	12	0350 - 9
AT175748	1D21	12	0350 - 10
AT175750	1D6	20A	0315 - 3
AT176080	1D8	2	0325 - 1
AT176124	2H18	7	0531 - 5
AT176124	2H20	7	0531 - 7
AT176124	2H22	7	0531 - 9
AT176124	2H24	7	0531 - 11
AT176216	1C2	7	0230 - 3
AT176378	2I4	3	0560 - 3
AT176378	2I6	3	0560 - 5
AT176491	1B23	2	0210 - 4
AT176559	4E23	1	3102 - 7

NUMERICAL INDEX - CONTINUED

PART NO.	GRID	KEY	PAGE
AT177366	3H16	19	1812 - 3
AT177366	3H18	15	1812 - 5
AT177542	2H6	12	0521 - 3
AT177542	2H8	1	0521 - 5
AT177542	2H10	1	0521 - 7
AT177701	1D20	19	0350 - 9
AT177703	1D18	5	0350 - 7
AT177703	1D24	4	0360 - 4
AT177940	4F4	30	3102 - 13
AT177940	4F4	33	3102 - 13
AT178065	3I10	1	1821 - 5
AT178112	1C23	1	0250 - 13
AT178113	1C15	8	0250 - 5
AT178387	1C13	4	0250 - 3
AT178389	1C13	4	0250 - 3
AT178389	1D8	1	0325 - 1
AT178394	2G18	1	0512 - 5
AT178497	1B12	4	0110 - 3A
AT178497	1B13	4	0110 - 3Z
AT178499	1B12	1	0110 - 3A
AT178499	1B13	1	0110 - 3Z
AT178542	2H6	3	0521 - 3
AT178542	2H14	6	0521 - 11
AT178542	3G13	21	1674 - 21
AT178612	3J4	7	1912 - 5
AT178745	4G2	16	3140 - 3
AT178745	4G4	16	3140 - 5
AT178745	4G6	1	3140 - 7
AT178840	3B17	1	1369 - 3
AT178842	3B17	1	1369 - 3
AT178843	3B17	1	1369 - 3
AT178844	3B17	1	1369 - 3
AT179153	1D25	3	0360 - 5
AT179153	1D25	5	0360 - 5
AT179287	1B10	7	0110 - 2
AT179312	1D12	3	0350 - 1
AT179313	1D17	4A	0350 - 6
AT179314	1D17	7	0350 - 6
AT179316	1D9	2	0341 - 1
AT179317	1D9	7	0341 - 1
AT179319	1D18	5	0350 - 7
AT179319	1D24	4	0360 - 4
AT179320	1D18	5	0350 - 7
AT179320	1D24	4	0360 - 4
AT179323	1D25	11	0360 - 5
AT179423	3I10	1	1821 - 5
AT179423	3I12	1	1821 - 7
AT179423	3I14	3	1821 - 9
AT179425	3I10	1	1821 - 5
AT179425	3I12	1	1821 - 7
AT179425	3I14	3	1821 - 9
AT179447	1D23	41	0360 - 3
AT179466	1D19	2	0350 - 8
AT179467	1D18	4	0350 - 7
AT179468	1D18	3	0350 - 7
AT179468	1D19	3	0350 - 8
AT179469	1D14	14	0350 - 3
AT179469	1D16	14	0350 - 5
AT179470	1D14	21	0350 - 3
AT179470	1D16	21	0350 - 5
AT179471	1D14	22	0350 - 3
AT179471	1D16	22	0350 - 5
AT179471	1D18	1	0350 - 7
AT179472	1D14	2	0350 - 3
AT179472	1D16	2	0350 - 5
AT179472	1D19	18	0350 - 8
AT179472	1D20	1	0350 - 9
AT179472	1D21	18	0350 - 10
AT179473	1D14	17	0350 - 3
AT179473	1D16	17	0350 - 5
AT179481	1D20	17	0350 - 9
AT179482	1D20	4	0350 - 9
AT179482	1D21	15	0350 - 10
AT179483	1D20	13	0350 - 9
AT179483	1D21	5	0350 - 10
AT179485	1D20	16	0350 - 9
AT179485	1D21	1	0350 - 10
AT179486	1D20	5	0350 - 9
AT179487	1D20	14	0350 - 9
AT179489	1D21	14	0350 - 10
AT179490	1D21	6	0350 - 10
AT179491	1D23	17	0360 - 3
AT179492	1D23	8	0360 - 3
AT179497	1D19	18	0350 - 8
AT179498	1B22	14	0210 - 3
AT179499	1B20	7	0201 - 3
AT179499	1C12	2	0250 - 2
AT179500	1B20	5	0201 - 3
AT179501	1B20	9	0201 - 3
AT179502	1B20	4	0201 - 3
AT179503	2J10	2	1011 - 3
AT179504	1B22	19	0210 - 3
AT179504	2J10	13	1011 - 3
AT179505	1B22	21	0210 - 3
AT179505	2J10	21	1011 - 3
AT179537	1B23	6	0210 - 4
AT179537	2K7	19	1111 - 3
AT179537	2K9	20	1111 - 5
AT179538	1C12	4	0250 - 2
AT179590	1C13	8	0250 - 3
AT179596	1C13	1	0250 - 3
AT179732	3J24	11	2008 - 2
AT179738	4G8	5	3140 - 9
AT179739	4G8	6	3140 - 9
AT179838	4E25	5	3102 - 9
AT179838	4E25	9	3102 - 9
AT179899	2K7	26	1111 - 3
AT179899	2K9	25	1111 - 5
AT179953	4G2	9	3140 - 3
AT179953	4G4	9	3140 - 5
AT179960	4F4	9	3102 - 13
AT179974	4F4	31	3102 - 13
AT179983	4F4	13	3102 - 13
AT179984	4F4	32	3102 - 13
AT180050	4E25	5	3102 - 9
AT180050	4E25	9	3102 - 9
AT180050	4F2	5	3102 - 11
AT180050	4F2	9	3102 - 11
AT180050	4F4	30	3102 - 13
AT180050	4F4	33	3102 - 13
AT180050	4F4	34	3102 - 13
AT180123	3G25	4	1674 - 33
AT180293	3G13	3	1674 - 21
AT180293	3G15	3	1674 - 23
AT180333	3B17	1	1369 - 3
AT180334	3B17	1	1369 - 3
AT180335	3B17	1	1369 - 3
AT180344	3B19	1	1369 - 5
AT180358	3H7	4	1746 - 3
AT180359	3E12	10	1520 - 35
AT180360	4D6	6	2162 - 37
AT180361	4C22	42	2162 - 29
AT180361	4C24	40	2162 - 31
AT180493	4G8	5	3140 - 9
AT180494	4G8	6	3140 - 9
AT180635	3F19	14	1673 - 3
AT180636	3F19	12	1673 - 3
AT180637	3F19	11	1673 - 3
AT180680	2H12	12	0521 - 9
AT180753	3I14	1	1821 - 9
AT180753	3I16	16	1821 - 11
AT180753	3I18	43	1821 - 13
AT180754	3I8	9	1821 - 3
AT180754	3I10	9	1821 - 5
AT180754	3I12	9	1821 - 7
AT180755	3I14	1	1821 - 9
AT180755	3I18	43	1821 - 13
AT180756	3I8	9	1821 - 3
AT180756	3I10	9	1821 - 5
AT180756	3I12	9	1821 - 7
AT180775	3I18	38	1821 - 13
AT180838	4E19	8	3102 - 3
AT180842	4E19	8	3102 - 3
AT180848	4E19	8	3102 - 3
AT180848	4E21	37	3102 - 5
AT180854	4D14	2	2162 - 43
AT180916	1D7	10	0315 - 4
AT180916	3G21	13	1674 - 29
AT180916	3G23	13	1674 - 31
AT180916	3G25	13	1674 - 33
AT181164	4G12	1	3160 - 3
AT181165	4G12	2	3160 - 3
AT181268	4E21	13A	3102 - 5
AT181269	4E21	14A	3102 - 5
AT181270	4E21	3	3102 - 5
AT181270	4E21	5A	3102 - 5
AT181292	4E21	1	3102 - 5
AT181323	3I14	2	1821 - 9
AT181323	3I20	26	1821 - 15
AT181324	4E21	15	3102 - 5
AT181325	4E21	16	3102 - 5
AT181328	3I20	14	1821 - 15
AT181329	3I20	22	1821 - 15
AT181422	4E21	9A	3102 - 5
AT181650	4F4	6	3102 - 13
AT181861	1D11	19	0342 - 3
AT181861	3G13	38	1674 - 21
AT181861	3G15	35	1674 - 23
AT181862	2G12	17	0511 - 7
AT181874	2I23	24	0963 - 3
AT181875	2I23	25	0963 - 3
AT181877	3H3	3	1741 - 3
AT181877	3H5	2	1741 - 5
AT181878	3H16	5	1812 - 3
AT181879	3H16	29	1812 - 3
AT181879	3H18	21	1812 - 5
AT181879	3H20	21	1812 - 7
AT181881	3H24	22	1816 - 3
AT181881	3I2	9	1816 - 5
AT181881	3I4	19	1816 - 7
AT181881	3I6	19	1816 - 9
AT181882	3I14	9	1821 - 9
AT181922	3G7	2	1674 - 15
AT181923	3G13	35	1674 - 21
AT181924	3H12	1	1811 - 3
AT181929	3E2	29	1520 - 25
AT182015	4F18	6	3115 - 3
AT182030	3D24	5	1520 - 23
AT182031	3D24	6	1520 - 23
AT182032	3D24	7	1520 - 23
AT182097	4C22	10	2162 - 29

NUMERICAL INDEX - CONTINUED

PART NO.	GRID	KEY	PAGE
AT182098	4C22	11	2162 - 29
AT182099	4C24	38	2162 - 31
AT182102	4C22	16	2162 - 29
AT182102	4C24	18	2162 - 31
AT182102	4D2	17	2162 - 33
AT182102	4D4	17	2162 - 35
AT182103	4C22	17	2162 - 29
AT182103	4C24	19	2162 - 31
AT182103	4D2	18	2162 - 33
AT182103	4D4	18	2162 - 35
AT182104	4C22	18	2162 - 29
AT182104	4C24	37	2162 - 31
AT182104	4D2	19	2162 - 33
AT182104	4D4	19	2162 - 35
AT182156	3G13	36	1674 - 21
AT182157	3G13	37	1674 - 21
AT182254	3D24	31	1520 - 23
AT182254	3E2	26	1520 - 25
AT182266	4F4	1	3102 - 13
AT182266	4F9	14	3102 - 18
AT182266	4F9	15	3102 - 18
AT182267	4F9	14	3102 - 18
AT182268	4F9	1	3102 - 18
AT182318	4C16	30	2162 - 23
AT182318	4C20	22	2162 - 27
AT182318	4C22	36	2162 - 29
AT182318	4C24	32	2162 - 31
AT182347	3D24	10	1520 - 23
AT182385	2H16	1	0531 - 3
AT182385	2H20	1	0531 - 7
AT182390	1C2	22	0230 - 3
AT182391	1C2	29	0230 - 3
AT182433	3I4	17	1816 - 7
AT182433	3I6	17	1816 - 9
AT182434	3F25	10	1674 - 7
AT182434	3G2	12	1674 - 9
AT182434	3G17	37	1674 - 25
AT182434	3I4	13	1816 - 7
AT182434	3I4	18	1816 - 7
AT182434	3I6	13	1816 - 9
AT182434	3I6	18	1816 - 9
AT182434	3J12	20	1921 - 9
AT182434	3J21	2	2004 - 5
AT182531	4D6	5	2162 - 37
AT182531	4D18	36	2162 - 47
AT182531	4D20	36	2162 - 49
AT182531	4D24	28	2162 - 53
AT182531	4E4	26	2162 - 57
AT182546	1B16	5	0149 - 2
AT182549	3B11	33	1322 - 3
AT182552	3B11	32	1322 - 3
AT182592	1B21	3	0210 - 2
AT182592	1B22	10	0210 - 3
AT182636	3E6	15	1520 - 29
AT182636	3E8	11	1520 - 31
AT182636	3E10	15	1520 - 33
AT182637	3E6	16	1520 - 29
AT182637	3E6	19	1520 - 29
AT182638	3E6	17	1520 - 29
AT182638	3E6	20	1520 - 29
AT182639	3E6	18	1520 - 29
AT182735	1C13	9	0250 - 3
AT182947	1D23	21	0360 - 3
AT182967	1B15	5	0149 - 1
AT183016	3B18	1	1369 - 4
AT183071	1B21	3	0210 - 2
AT183170	1D6	20B	0315 - 3
AT183256	3G7	2	1674 - 15
AT183257	3H12	1	1811 - 3
AT183258	3C22	1	1520 - 3
AT183258	3C22	15	1520 - 3
AT183258	3E12	1	1520 - 35
AT183261	3D14	16	1520 - 15
AT183262	3G21	1	1674 - 29
AT183262	3H24	4	1816 - 3
AT183262	3I2	24	1816 - 5
AT183282	1D6	8	0315 - 3
AT183313	3D24	36	1520 - 23
AT183314	3H16	2	1812 - 3
AT183315	2G20	2	0515 - 3
AT183315	2G22	2	0515 - 5
AT183315	2G24	2	0515 - 7
AT183316	2I4	1	0560 - 3
AT183317	2I6	17	0560 - 5
AT183321	4F18	30	3115 - 3
AT183407	3J2	1	1912 - 3
AT183407	3J2	2	1912 - 3
AT183746	4E19	8	3102 - 3
AT183793	1B20	13A	0201 - 3
AT183837	2H16	1	0531 - 3
AT183848	2H16	4	0531 - 3
AT183848	2H18	4	0531 - 5
AT183848	2H20	4	0531 - 7
AT183848	2H22	4	0531 - 9
AT183848	2H24	4	0531 - 11
AT183856	2I17	3	0962 - 3
AT183857	2I6	2	0560 - 5
AT183857	3G13	19	1674 - 21
AT183857	3G15	19	1674 - 23
AT183857	3G17	19	1674 - 25
AT183859	3G21	12	1674 - 29
AT183859	3G23	12	1674 - 31
AT183862	3D6	15	1520 - 9
AT183862	3D8	18	1520 - 11
AT183862	3D10	1	1520 - 13
AT183892	2I6	18	0560 - 5
AT183893	2I6	1	0560 - 5
AT183894	2I10	2	0563 - 5
AT183897	1C2	4	0230 - 3
AT183897	1C11	1B	0242 - 5
AT183897	1C11	11	0242 - 5
AT183898	3D24	6	1520 - 23
AT184064	4G10	1	3140 - 11
AT184206	3G15	15	1674 - 23
AT184206	4E8	48	2163 - 3
AT184206	4E10	34	2163 - 5
AT184206	4E12	34	2163 - 7
AT184384	3D8	7	1520 - 11
AT184384	3D10	7	1520 - 13
AT184389	2I25	24	0963 - 5
AT184390	2I25	25	0963 - 5
AT184391	2I25	26	0963 - 5
AT184392	2I25	27	0963 - 5
AT184406	1B20	25	0201 - 3
AT184432	2J16	8	1060 - 7
AT184432	2J16	32	1060 - 7
AT184432	2J16	35	1060 - 7
AT184503	2G10	1	0511 - 5
AT184578	2J14	7	1060 - 5
AT184578	2J18	29	1060 - 9
AT184579	2J14	14	1060 - 5
AT184592	2J14	11	1060 - 5
AT184646	4G10	5	3140 - 11
AT184647	4G10	6	3140 - 11
AT184682	4F20	5	3115 - 5
AT184682	4F22	5	3115 - 7
AT184726	3G13	20	1674 - 21
AT184726	3G15	20	1674 - 23
AT184726	3G17	20	1674 - 25
AT184726	4G2	18	3140 - 3
AT184726	4G4	18	3140 - 5
AT184738	4E23	1	3102 - 7
AT184805	3J4	10	1912 - 5
AT184806	3J6	1	1921 - 3
AT184807	3I23	1	1911 - 3
AT184808	3H24	3	1816 - 3
AT184808	3I2	12A	1816 - 5
AT184813	3F23	1	1674 - 5
AT184813	3G5	9B	1674 - 12
AT184815	3F23	1	1674 - 5
AT184815	3G5	9B	1674 - 12
AT184815	3G9	1	1674 - 17
AT184820	4C22	10	2162 - 29
AT184827	4C22	11	2162 - 29
AT184830	3G21	10	1674 - 29
AT184830	3G23	10	1674 - 31
AT185441	2G12	18	0511 - 7
AT185442	3H16	2	1812 - 3
AT185442	3H18	2	1812 - 5
AT185443	4E14	12B	2164 - 3
AT185526	4E19	8	3102 - 3
AT185634	4F2	26	3102 - 11
AT185634	4F6	30	3102 - 15
AT185634	4F8	1	3102 - 17
AT185635	4E21	35	3102 - 5
AT185635	4E21	37	3102 - 5
AT185748	4E21	35	3102 - 5
AT185870	3J4	12	1912 - 5
AT185871	3J4	13	1912 - 5
AT185876	4E21	3	3102 - 5
AT185876	4E21	5A	3102 - 5
AT185877	4E21	3	3102 - 5
AT185958	4D10	1	2162 - 39B
AT185958	4D14	22	2162 - 43
AT185958	4D16	1	2162 - 45
AT186015	3I16	3	1821 - 11
AT186015	3I18	36	1821 - 13
AT186016	3I16	4	1821 - 11
AT186016	3I18	37	1821 - 13
AT186017	3I16	6	1821 - 11
AT186017	3I18	39	1821 - 13
AT186018	3I16	7	1821 - 11
AT186018	3I18	40	1821 - 13
AT186019	3I16	8	1821 - 11
AT186019	3I18	41	1821 - 13
AT186019	3I18	42	1821 - 13
AT186020	3I16	9	1821 - 11
AT186021	3I16	2	1821 - 11
AT186021	3I18	35	1821 - 13
AT186022	3I16	1	1821 - 11
AT186022	3I16	2	1821 - 11
AT186022	3I18	34	1821 - 13
AT186236	2J24	10	1063 - 7
AT186312	1B21	3	0210 - 2
AT186312	1B21	4	0210 - 2
AT186312	1B22	9	0210 - 3
AT186312	1B22	13	0210 - 3
AT186451	1C15	8	0250 - 5
AT186702	3H18	16	1812 - 5
AT186747	2G10	3	0511 - 5
AT186760	3H12	8	1811 - 3

NUMERICAL INDEX - CONTINUED

PART NO.	GRID	KEY	PAGE
AT186842	2J16	33	1060 - 7
AT186925	2G12	7	0511 - 7
AT186925	2G14	7	0511 - 9
AT186925	2G14	29	0511 - 9
AT186927	1B20	10	0201 - 3
AT187072	4H4	81	4000 - 9
AT187072	4H6	81	4000 - 11
AT187073	4G23	10	4000 - 3
AT187073	4G25	21	4000 - 5
AT187074	4G23	11	4000 - 3
AT187074	4H2	42	4000 - 7
AT187076	4H14	28	4063 - 3
AT187076	4H16	23	4063 - 5
AT187077	4H12	1	4015 - 3
AT187339	4H14	12	4063 - 3
AT187339	4H16	11	4063 - 5
AT187340	4H14	17	4063 - 3
AT187340	4H16	15	4063 - 5
AT187376	3B11	31	1322 - 3
AT187376	3B15	9	1322 - 7
AT187376	4H12	12	4015 - 3
AT187377	3D16	14	1520 - 17
AT187377	3D16	16	1520 - 17
AT187377	3D18	16	1520 - 19
AT187381	4G23	7	4000 - 3
AT187387	4H14	22	4063 - 3
AT187387	4H16	19	4063 - 5
AT187389	4H14	23	4063 - 3
AT187389	4H16	20	4063 - 5
AT187391	4H14	24	4063 - 3
AT187391	4H16	21	4063 - 5
AT187397	4H8	4	4000 - 13
AT187402	4H14	36	4063 - 3
AT187402	4H16	31	4063 - 5
AT187421	4H14	11	4063 - 3
AT187421	4H16	10	4063 - 5
AT187435	4H8	10	4000 - 13
AT187476	4F20	1	3115 - 5
AT187477	4F20	2	3115 - 5
AT187479	4F20	3	3115 - 5
AT187495	4F20	7	3115 - 5
AT187496	4F20	13	3115 - 5
AT187500	4G2	19B	3140 - 3
AT187517	2G22	3	0515 - 5
AT187519	2H2	2	0515 - 9
AT187520	2H2	3	0515 - 9
AT187523	2H2	11	0515 - 9
AT187526	3H5	1	1741 - 5
AT187527	3H14	1	1811 - 5
AT187528	3H14	10	1811 - 5
AT187529	3I2	5	1816 - 5
AT187530	3I2	4	1816 - 5
AT187571	3I2	24	1816 - 5
AT187572	3I2	23	1816 - 5
AT187573	3I2	8	1816 - 5
AT187575	3I25	1	1911 - 5
AT187576	3J8	1	1921 - 5
AT187577	3J8	2	1921 - 5
AT187578	3J8	8	1921 - 5
AT187579	3J8	9	1921 - 5
AT187580	3J8	11	1921 - 5
AT187580	3J8	12	1921 - 5
AT187594	3J8	17	1921 - 5
AT187597	3H18	1	1812 - 5
AT187599	3H18	3	1812 - 5
AT187599	3H20	3	1812 - 7
AT187600	3H18	5	1812 - 5
AT187601	3H18	6	1812 - 5
AT187666	2J14	6	1060 - 5
AT187670	4E8	22	2163 - 3
AT187670	4E10	22	2163 - 5
AT187670	4E12	22	2163 - 7
AT187670	4G14	13	3160 - 5
AT187673	3C4	1	1511 - 3
AT187673	3C10	6	1511 - 9
AT187673	3C12	6	1511 - 11
AT187693	4E8	22	2163 - 3
AT187711	1D17	3	0350 - 6
AT187711	1D17	12	0350 - 6
AT188305	4F4	3	3102 - 13
AT188343	2J18	3	1060 - 9
AT188645	3C10	1	1511 - 9
AT188645	3C16	1	1511 - 15
AT188645	3C20	1	1511 - 19
AT188654	3D16	1	1520 - 17
AT188660	3C24	15	1520 - 5
AT188660	3D2	15	1520 - 7
AT188660	3E14	1	1520 - 37
AT188660	3E16	1	1520 - 39
AT188663	3E2	1	1520 - 25
AT188663	3E4	1	1520 - 27
AT188664	3E2	2	1520 - 25
AT188664	3E4	2	1520 - 27
AT188665	3E2	3	1520 - 25
AT188665	3E4	3	1520 - 27
AT188666	3E2	4	1520 - 25
AT188666	3E4	4	1520 - 27
AT188671	3E2	6	1520 - 25
AT188671	3E4	6	1520 - 27
AT188672	3E2	7	1520 - 25
AT188672	3E4	7	1520 - 27
AT188672	3E14	8	1520 - 37
AT188672	3E18	15	1520 - 41
AT188673	3E2	8	1520 - 25
AT188673	3E4	8	1520 - 27
AT188674	3E2	12	1520 - 25
AT188674	3E4	12	1520 - 27
AT188675	3E2	13	1520 - 25
AT188675	3E4	13	1520 - 27
AT188676	3E2	14	1520 - 25
AT188676	3E4	14	1520 - 27
AT188677	3E2	15	1520 - 25
AT188677	3E4	15	1520 - 27
AT188679	3E2	16	1520 - 25
AT188679	3E2	37	1520 - 25
AT188679	3E4	16	1520 - 27
AT188680	3H5	1	1741 - 5
AT188683	3G23	1	1674 - 31
AT188683	3G25	1	1674 - 33
AT188684	3G23	25	1674 - 31
AT188700	3G23	44	1674 - 31
AT188700	3G25	44	1674 - 33
AT188701	3G15	24	1674 - 23
AT188707	4B16	23	2161 - 5
AT188707	4B16	29	2161 - 5
AT188707	4B18	23	2161 - 7
AT188707	4B18	30	2161 - 7
AT188717	4B16	1	2161 - 5
AT188718	4B16	2	2161 - 5
AT188718	4B18	2	2161 - 7
AT188722	4B16	6	2161 - 5
AT188722	4B18	6	2161 - 7
AT188735	3G23	16	1674 - 31
AT188735	3G25	16	1674 - 33
AT188736	4B16	7	2161 - 5
AT188736	4B18	7	2161 - 7
AT188739	4B16	9	2161 - 5
AT188739	4B18	9	2161 - 7
AT188741	4B16	10	2161 - 5
AT188741	4B18	10	2161 - 7
AT188744	4B16	11	2161 - 5
AT188744	4B18	11	2161 - 7
AT188745	4B16	12	2161 - 5
AT188745	4B18	12	2161 - 7
AT188747	4B16	13	2161 - 5
AT188748	4B16	14	2161 - 5
AT188748	4B18	14	2161 - 7
AT188749	4B16	15	2161 - 5
AT188751	4B16	16	2161 - 5
AT188751	4B18	16	2161 - 7
AT188752	4B16	17	2161 - 5
AT188753	4B16	18	2161 - 5
AT188754	4B16	19	2161 - 5
AT188754	4B18	19	2161 - 7
AT188755	4B16	20	2161 - 5
AT188755	4B18	20	2161 - 7
AT188757	4B16	21	2161 - 5
AT188757	4B18	21	2161 - 7
AT188758	4B16	22	2161 - 5
AT188758	4B18	22	2161 - 7
AT188761	4B16	24	2161 - 5
AT188761	4B18	24	2161 - 7
AT188812	1E6	1	0363 - 7
AT188813	1E6	2	0363 - 7
AT188816	2J2	1	0963 - 7
AT188822	2J2	2	0963 - 7
AT188823	2J2	14	0963 - 7
AT188824	2J2	15	0963 - 7
AT188825	2J2	16	0963 - 7
AT188826	2J2	17	0963 - 7
AT188827	2J2	18	0963 - 7
AT188827	2J24	17	1063 - 7
AT188833	2I10	1	0563 - 5
AT188858	3E8	3	1520 - 31
AT188859	3E8	4	1520 - 31
AT188860	3E10	6	1520 - 33
AT188861	3E8	7	1520 - 31
AT188862	4E10	2	2163 - 5
AT188862	4E12	2	2163 - 7
AT188863	4E10	4	2163 - 5
AT188863	4E12	4	2163 - 7
AT188865	4E10	5	2163 - 5
AT188865	4E12	5	2163 - 7
AT188867	4E10	6	2163 - 5
AT188867	4E12	6	2163 - 7
AT188868	4E10	7	2163 - 5
AT188870	4E10	8	2163 - 5
AT188870	4E12	8	2163 - 7
AT188871	4E10	9	2163 - 5
AT188871	4E12	9	2163 - 7
AT188873	4G14	1	3160 - 5
AT188875	4G14	2	3160 - 5
AT188876	4G14	3	3160 - 5
AT188877	4G14	4	3160 - 5
AT188878	4G14	5	3160 - 5
AT188879	4G14	6	3160 - 5
AT188880	4G14	7	3160 - 5
AT188881	4G14	8	3160 - 5
AT188905	3E8	1	1520 - 31
AT188905	3E10	16	1520 - 33
AT188905	3E16	9	1520 - 39

NUMERICAL INDEX - CONTINUED

PART NO.	GRID	KEY	PAGE
AT188905	3E18	9	1520 - 41
AT188908	3E8	2	1520 - 31
AT188908	3E10	8	1520 - 33
AT188908	3E16	8	1520 - 39
AT188908	3E18	8	1520 - 41
AT188910	4C2	6	2162 - 9
AT188910	4C4	6	2162 - 11
AT188910	4C6	6	2162 - 13
AT188910	4C8	6	2162 - 15
AT188910	4C10	6	2162 - 17
AT188910	4C20	40	2162 - 27
AT188911	4C2	5	2162 - 9
AT188911	4C4	5	2162 - 11
AT188911	4C8	5	2162 - 15
AT188911	4C10	5	2162 - 17
AT188911	4C16	32	2162 - 23
AT188912	4C2	13	2162 - 9
AT188912	4C4	13	2162 - 11
AT188912	4C8	13	2162 - 15
AT188912	4C10	13	2162 - 17
AT188912	4D24	30	2162 - 53
AT188913	4C2	14	2162 - 9
AT188913	4C4	14	2162 - 11
AT188913	4C8	14	2162 - 15
AT188913	4C10	14	2162 - 17
AT188913	4D6	1	2162 - 37
AT188913	4E4	30	2162 - 57
AT188914	4C2	12	2162 - 9
AT188914	4C4	12	2162 - 11
AT188914	4C8	12	2162 - 15
AT188914	4C10	12	2162 - 17
AT188914	4D18	40	2162 - 47
AT188918	4D2	15	2162 - 33
AT188920	3E8	6	1520 - 31
AT188920	3E10	5	1520 - 33
AT188920	3E14	5	1520 - 37
AT188920	3E16	4	1520 - 39
AT188920	3E18	4	1520 - 41
AT188921	4C24	11	2162 - 31
AT188921	4D2	12	2162 - 33
AT188921	4D4	11	2162 - 35
AT188922	4C24	12	2162 - 31
AT188922	4D2	11	2162 - 33
AT188922	4D4	12	2162 - 35
AT188923	4C24	17	2162 - 31
AT188923	4D2	14	2162 - 33
AT188923	4D4	14	2162 - 35
AT188964	2H2	1	0515 - 9
AT189017	2J24	12	1063 - 7
AT189047	2J20	1	1063 - 3
AT189048	2J20	2	1063 - 3
AT189450	4F20	2	3115 - 5
AT189456	4F20	36	3115 - 5
AT189456	4G4	19	3140 - 5
AT189508	3D6	15	1520 - 9
AT189508	3D8	18	1520 - 11
AT189508	3D10	18	1520 - 13
AT189600	4B16	26	2161 - 5
AT189600	4B16	27	2161 - 5
AT189600	4B18	26	2161 - 7
AT189600	4B18	27	2161 - 7
AT189661	3J12	13	1921 - 9
AT189710	3J4	7	1912 - 5
AT189737	1E4	1	0363 - 5
AT189738	1E4	2	0363 - 5
AT189740	2J20	23	1063 - 3
AT189740	2J22	8	1063 - 5
AT189753	2J20	24	1063 - 3
AT189819	4F6	9	3102 - 15
AT189819	4F8	11	3102 - 17
AT189958	4H14	27	4063 - 3
AT189958	4H16	22	4063 - 5
AT189959	4H14	29	4063 - 3
AT189959	4H16	24	4063 - 5
AT189960	4H14	30	4063 - 3
AT189962	4H14	31	4063 - 3
AT189963	4H14	32	4063 - 3
AT189963	4H16	27	4063 - 5
AT189964	4H14	44	4063 - 3
AT189964	4H16	39	4063 - 5
AT189965	4H14	46	4063 - 3
AT189965	4H16	41	4063 - 5
AT189966	4H14	47	4063 - 3
AT189966	4H16	42	4063 - 5
AT190018	4G23	5	4000 - 3
AT190022	4H14	4	4063 - 3
AT190022	4H16	4	4063 - 5
AT190023	4H14	5	4063 - 3
AT190023	4H16	5	4063 - 5
AT190025	4H14	42	4063 - 3
AT190025	4H16	37	4063 - 5
AT190026	4H14	48	4063 - 3
AT190026	4H16	43	4063 - 5
AT190027	4G25	1	4000 - 5
AT190029	4G25	2	4000 - 5
AT190030	4G25	3	4000 - 5
AT190031	4G25	4	4000 - 5
AT190032	4G25	5	4000 - 5
AT190033	4G25	6	4000 - 5
AT190034	4G25	7	4000 - 5
AT190035	4G25	8	4000 - 5
AT190036	4G25	9	4000 - 5
AT190037	4G25	10	4000 - 5
AT190038	4G25	11	4000 - 5
AT190039	4G25	12	4000 - 5
AT190040	4G25	13	4000 - 5
AT190041	4G25	14	4000 - 5
AT190042	4G25	15	4000 - 5
AT190043	4G25	16	4000 - 5
AT190044	4G25	17	4000 - 5
AT190045	4G25	18	4000 - 5
AT190046	4G25	19	4000 - 5
AT190047	4G25	20	4000 - 5
AT190048	4H2	1	4000 - 7
AT190049	4H2	11	4000 - 7
AT190050	4H2	12	4000 - 7
AT190052	4H2	14	4000 - 7
AT190053	4H2	16	4000 - 7
AT190055	4H2	18	4000 - 7
AT190056	4H2	19	4000 - 7
AT190057	4H2	20	4000 - 7
AT190058	4H2	21	4000 - 7
AT190059	4H2	23	4000 - 7
AT190060	4H2	24	4000 - 7
AT190061	4H2	25	4000 - 7
AT190062	4H2	26	4000 - 7
AT190063	4H2	27	4000 - 7
AT190065	4H2	29	4000 - 7
AT190067	4H2	31	4000 - 7
AT190068	4H2	32	4000 - 7
AT190070	4H2	34	4000 - 7
AT190071	4H2	36	4000 - 7
AT190072	4H2	38	4000 - 7
AT190074	4H2	39	4000 - 7
AT190086	3C6	1	1511 - 5
AT190337	3E8	5	1520 - 31
AT190337	3E14	6	1520 - 37
AT190337	3E16	6	1520 - 39
AT190337	3E18	6	1520 - 41
AT190338	3B15	15	1322 - 7
AT190356	4C2	9	2162 - 9
AT190356	4C2	..	2162 - 9
AT190356	4C4	9	2162 - 11
AT190356	4C4	..	2162 - 11
AT190356	4C8	9	2162 - 15
AT190356	4C8	..	2162 - 15
AT190356	4C10	9	2162 - 17
AT190356	4C10	..	2162 - 17
AT190356	4D14	15	2162 - 43
AT190356	4D14	..	2162 - 43
AT190369	2H2	1	0515 - 9
AT190370	3E14	17	1520 - 37
AT190450	3E2	33	1520 - 25
AT190628	4F6	6	3102 - 15
AT190702	4F6	13	3102 - 15
AT190880	4F4	1	3102 - 13
AT190880	4F6	1	3102 - 15
AT190880	4F9	1	3102 - 18
AT190880	4F9	14	3102 - 18
AT190880	4F9	15	3102 - 18
AT190881	4F9	1	3102 - 18
AT190898	4F9	14	3102 - 18
AT190900	4F4	3	3102 - 13
AT190900	4F8	6	3102 - 17
AT190929	3G19	9	1674 - 27
AT190943	3F2	1	1671 - 5
AT190943	3F4	1	1671 - 7
AT190948	4G2	10	3140 - 3
AT191868	2K2	12	1063 - 9
AT191868	2K4	12	1063 - 11
AT191874	3H5	1	1741 - 5
AT192063	3I20	8	1821 - 15
AT192067	3I20	12	1821 - 15
AT192151	2J18	22	1060 - 9
AT192367	4G2	9	3140 - 3
AT192367	4G4	9	3140 - 5
AT192367	4G6	6	3140 - 7
AT192419	2J18	30	1060 - 9
AT192550	1D24	9	0360 - 4
AT192550	1D24	10	0360 - 4
AT192550	1D24	11	0360 - 4
AT192550	1D24	12	0360 - 4
AT193034	4E14	18	2164 - 3
AT193365	2J14	6	1060 - 5
AT193699	4E21	3	3102 - 5
AT193699	4E21	5A	3102 - 5
AT193699	4E21	5B	3102 - 5
AT193704	1D14	9	0350 - 3
AT193704	1D14	10	0350 - 3
AT193704	1D14	11	0350 - 3
AT193704	1D16	9	0350 - 5
AT193704	1D16	10	0350 - 5
AT193704	1D16	11	0350 - 5
AT194410	4E19	8	3102 - 3
AT194410	4E21	37	3102 - 5
AT194784	4E21	13A	3102 - 5
AT194784	4E21	14A	3102 - 5
AT194785	4E21	15	3102 - 5
AT194786	4E21	16	3102 - 5
AT195301	3G21	19	1674 - 29
AT195301	3G23	19	1674 - 31

NUMERICAL INDEX - CONTINUED

PART NO.	GRID	KEY	PAGE
AT195301	3G25	19	1674 - 33
AT195302	3G21	19	1674 - 29
AT195570	2J6	13	0965 - 5
AT195573	2J6	4	0965 - 5
AT195752	1D23	41	0360 - 3
AT195894	3K2	2	2011 - 3
AT195929	1B20	25	0201 - 3
AT196169	1C7	2	0230 - 9
AT196206	4D20	31	2162 - 49
AT196258	2C7	2	0408B - 3
AT196314	1I25	7	0422A - 3
AT196428	1C2	7	0230 - 3
AT196428	1C4	2	0230 - 6
AT196428	1C5	7	0230 - 7
AT196428	1C6	18	0230 - 8
AT196428	1C7	10	0230 - 9
AT196433	3J12	22	1921 - 9
AT196462	4H2	27	4000 - 7
AT196803	1D12	5	0350 - 1
AT196962	1B20	25	0201 - 3
AT197736	4D24	29	2162 - 53
AT197736	4E4	19	2162 - 57
AT197737	4D24	9	2162 - 53
AT197737	4E2	8	2162 - 55
AT197737	4E4	9	2162 - 57
AT197737	4E6	2	2162 - 59
AT197852	1C2	7	0230 - 3
AT198598	1C6	8	0230 - 8
AT198602	1C6	3	0230 - 8
AT199058	3G21	12	1674 - 29
AT201310	2G20	9	0515 - 3
AT201397	2J2	9	0963 - 7
AT201397	3E12	8	1520 - 35
AT201397	4B20	1	2162 - 3
AT201505	1E2	12	0363 - 3
AT201505	2J20	9	1063 - 3
AT201505	3G13	25	1674 - 21
AT201505	3G15	25	1674 - 23
AT205081	4B20	17	2162 - 3
AT205081	4B22	17	2162 - 5
AT205081	4B24	14	2162 - 7
AT205083	4B20	16	2162 - 3
AT205083	4B22	16	2162 - 5
AT205083	4B24	13	2162 - 7
AT205268	4E8	37	2163 - 3
AT205268	4E10	26	2163 - 5
AT205268	4E12	26	2163 - 7
AT205268	4H14	40	4063 - 3
AT205268	4H16	35	4063 - 5
AT205286	3F21	11	1674 - 3
AT205286	3F25	11	1674 - 7
AT205286	3G2	11	1674 - 9
AT205286	3G13	29	1674 - 21
AT205286	3G17	29	1674 - 25
AT214752	2G12	13	0511 - 7
AT214945	3H16	20	1812 - 3
AT214945	3H16	21	1812 - 3
AT216030	3C22	15	1520 - 3
AT216030	3C24	15	1520 - 5
AT216030	3E12	1	1520 - 35
AT216032	3D14	16	1520 - 15
AT216035	2I19	28	0962 - 5
AT216036	2I21	10	0962 - 7
AT216037	2I23	21	0963 - 3
AT216037	2I25	21	0963 - 5
AT216039	4B14	15	2161 - 3
AT216040	3H24	20	1816 - 3
AT216042	3H12	11	1811 - 3
AT216050	3D14	2	1520 - 15
AT216050	3D16	2	1520 - 17
AT216050	3D18	2	1520 - 19
AT216050	3D20	2	1520 - 21
AT216051	3D14	11	1520 - 15
AT216051	3D16	11	1520 - 17
AT216051	3D18	11	1520 - 19
AT216052	3D14	12	1520 - 15
AT216052	3D16	12	1520 - 17
AT216053	3C22	2	1520 - 3
AT216053	3C24	2	1520 - 5
AT216053	3D6	2	1520 - 9
AT216053	3D8	2	1520 - 11
AT216053	3D10	2	1520 - 13
AT216055	4E14	4	2164 - 3
AT216061	4E14	7	2164 - 3
AT216066	4E8	29	2163 - 3
AT216067	2J20	15	1063 - 3
AT216068	4E8	31	2163 - 3
AT216070	4E8	26	2163 - 3
AT216072	1E6	3	0363 - 7
AT216074	3G4	7	1674 - 11
AT216076	3C22	12	1520 - 3
AT216076	3C24	12	1520 - 5
AT216076	3D2	12	1520 - 7
AT216076	3D4	8	1520 - 7B
AT216076	3D24	25	1520 - 23
AT216076	3E12	2	1520 - 35
AT216076	3E16	2	1520 - 39
AT216077	3D24	35	1520 - 23
AT216078	3D24	26	1520 - 23
AT216079	3D24	27	1520 - 23
AT216080	3D24	28	1520 - 23
AT216081	3D8	17	1520 - 11
AT216081	3D10	17	1520 - 13
AT216081	3D24	30	1520 - 23
AT216081	3E2	28	1520 - 25
AT216081	3E4	28	1520 - 27
AT216081	3E4	33	1520 - 27
AT216086	3D24	10	1520 - 23
AT216087	3D24	9	1520 - 23
AT216087	3E2	27	1520 - 25
AT216087	3E4	27	1520 - 27
AT216092	4B14	9	2161 - 3
AT216093	3D14	15	1520 - 15
AT216093	3D16	17	1520 - 17
AT216094	3D6	12	1520 - 9
AT216094	3D8	16	1520 - 11
AT216094	3D14	15	1520 - 15
AT216095	3C22	13	1520 - 3
AT216095	3C24	13	1520 - 5
AT216108	2I2	1	0540 - 3
AT216109	4E14	5	2164 - 3
AT216110	1C9	1	0242 - 3
AT216113	3J6	2	1921 - 3
AT216114	3I23	1	1911 - 3
AT216114	3I25	1	1911 - 5
AT216115	3G21	1	1674 - 29
AT216115	3H24	4	1816 - 3
AT216116	1E8	4	0364 - 3
AT216117	3E24	3	1671 - 3
AT216118	3H12	7	1811 - 3
AT216119	2G20	4	0515 - 3
AT216120	2G20	6	0515 - 3
AT216120	2G22	6	0515 - 5
AT216120	2G24	6	0515 - 7
AT216123	3D24	16	1520 - 23
AT216124	3D24	17	1520 - 23
AT216126	3H24	9	1816 - 3
AT216126	3I2	17	1816 - 5
AT216127	3H24	10	1816 - 3
AT216127	3I2	21	1816 - 5
AT216128	3J6	8	1921 - 3
AT216129	3J6	9	1921 - 3
AT216130	3J6	10	1921 - 3
AT216132	1E8	5	0364 - 3
AT216133	3H24	12	1816 - 3
AT216134	3H24	18	1816 - 3
AT216135	2H6	8	0521 - 3
AT216148	3F21	3	1674 - 3
AT216148	3F23	3	1674 - 5
AT216148	3F25	2	1674 - 7
AT216148	3G4	12	1674 - 11
AT216149	3F21	2	1674 - 3
AT216149	3F23	2	1674 - 5
AT216149	3F25	3	1674 - 7
AT216149	3G4	12	1674 - 11
AT216161	2I21	8	0962 - 7
AT216166	2I23	23	0963 - 3
AT216168	2G20	1	0515 - 3
AT216168	2H4	1	0515 - 11
AT216170	2H16	1	0531 - 3
AT216172	4E14	3	2164 - 3
AT216174	3D14	4	1520 - 15
AT216174	3D16	4	1520 - 17
AT216175	3D14	9	1520 - 15
AT216175	3D16	9	1520 - 17
AT216176	3C22	4	1520 - 3
AT216176	3D6	4	1520 - 9
AT216176	3D8	3	1520 - 11
AT216177	3D6	9	1520 - 9
AT216178	3C22	9	1520 - 3
AT216178	3C24	9	1520 - 5
AT216179	3C22	1	1520 - 3
AT216180	3C22	14	1520 - 3
AT216182	3D6	14	1520 - 9
AT216184	3D14	14	1520 - 15
AT216197	2I21	1	0962 - 7
AT216204	2I21	7	0962 - 7
AT216216	4B14	13	2161 - 3
AT216228	3D14	7	1520 - 15
AT216228	3D16	7	1520 - 17
AT216228	3D18	7	1520 - 19
AT216228	3D20	7	1520 - 21
AT216229	3C22	8	1520 - 3
AT216229	3C24	8	1520 - 5
AT216229	3D2	8	1520 - 7
AT216229	3D6	8	1520 - 9
AT216233	3G4	8	1674 - 11
AT216234	3G4	9	1674 - 11
AT216236	2I23	14	0963 - 3
AT216236	2I25	14	0963 - 5
AT216237	2I23	18	0963 - 3
AT216237	2I25	18	0963 - 5
AT216238	2I23	15	0963 - 3
AT216238	2I25	15	0963 - 5
AT216239	2I23	17	0963 - 3
AT216240	2I23	16	0963 - 3
AT216242	1E2	1	0363 - 3
AT216243	1E2	2	0363 - 3
AT216244	2J20	3	1063 - 3
AT216245	2J20	2	1063 - 3
AT216246	2J20	1	1063 - 3

NUMERICAL INDEX - CONTINUED

PART NO.	GRID	KEY	PAGE
AT216247	4E8	1	2163 - 3
AT216248	4E8	2	2163 - 3
AT216249	2J20	3	1063 - 3
AT216249	4E8	3	2163 - 3
AT216250	4E8	4	2163 - 3
AT216251	4E8	5	2163 - 3
AT216252	4E8	6	2163 - 3
AT216253	4E8	7	2163 - 3
AT216254	2I8	1	0563 - 3
AT216256	2I23	19	0963 - 3
AT216257	4E8	9	2163 - 3
AT216258	4E8	8	2163 - 3
AT216260	4E8	40	2163 - 3
AT216260	4E10	15	2163 - 5
AT216260	4E12	15	2163 - 7
AT216261	4E8	41	2163 - 3
AT216261	4E10	14	2163 - 5
AT216261	4E12	14	2163 - 7
AT216262	4E8	42	2163 - 3
AT216262	4E10	11	2163 - 5
AT216262	4E12	11	2163 - 7
AT216264	3E6	7	1520 - 29
AT216264	3E10	7	1520 - 33
AT216265	3E6	4	1520 - 29
AT216265	3E10	4	1520 - 33
AT216266	3E6	3	1520 - 29
AT216266	3E10	3	1520 - 33
AT216270	3E6	1	1520 - 29
AT216270	3E10	1	1520 - 33
AT216270	3E12	4	1520 - 35
AT216271	3E6	2	1520 - 29
AT216271	3E10	2	1520 - 33
AT216272	4E14	12A	2164 - 3
AT216273	3H3	1	1741 - 3
AT216274	2I2	2	0540 - 3
AT216275	2I2	3	0540 - 3
AT216276	2I2	7	0540 - 3
AT216277	2I2	4	0540 - 3
AT216278	1C2	4	0230 - 3
AT216278	1C11	1A	0242 - 5
AT216279	2I4	1	0560 - 3
AT216280	4E14	1	2164 - 3
AT216281	3H24	1	1816 - 3
AT216282	2G20	2	0515 - 3
AT216285	3E24	1	1671 - 3
AT216286	3J6	1	1921 - 3
AT216294	3H24	3	1816 - 3
AT216301	3D24	4	1520 - 23
AT216302	2G20	3	0515 - 3
AT216303	3D24	2	1520 - 23
AT216304	3D24	3	1520 - 23
AT216308	1D11	6	0342 - 3
AT216310	3D24	1	1520 - 23
AT216312	2I4	2	0560 - 3
AT216312	3G13	19	1674 - 21
AT216312	3G15	19	1674 - 23
AT216324	3H24	2	1816 - 3
AT216410	4G2	21	3140 - 3
AT216411	4F18	10	3115 - 3
AT216411	4F20	9	3115 - 5
AT216416	4F18	24	3115 - 3
AT216416	4F20	21	3115 - 5
AT216416	4F22	16	3115 - 7
AT216416	4F24	5	3115 - 9
AT216418	4G2	5	3140 - 3
AT216418	4G4	5	3140 - 5
AT216418	4G14	24	3160 - 5
AT216419	4G2	6	3140 - 3
AT216419	4G4	6	3140 - 5
AT216419	4G14	25	3160 - 5
AT216420	4F18	5	3115 - 3
AT216420	4F20	4	3115 - 5
AT216421	4F18	21	3115 - 3
AT216421	4F20	18	3115 - 5
AT216421	4F22	18	3115 - 7
AT216422	4F18	9	3115 - 3
AT216422	4F20	8	3115 - 5
AT216422	4F22	8	3115 - 7
AT216429	3H16	26	1812 - 3
AT216430	4F18	15	3115 - 3
AT216435	4F18	3	3115 - 3
AT216436	4F18	4	3115 - 3
AT216438	3H16	17	1812 - 3
AT216440	4G2	13	3140 - 3
AT216440	4G4	13	3140 - 5
AT216441	3C4	1	1511 - 3
AT216441	3C8	3	1511 - 7
AT216442	4G2	19A	3140 - 3
AT216443	4F18	30	3115 - 3
AT216444	4F18	14	3115 - 3
AT216445	4G2	25	3140 - 3
AT216445	4G4	25	3140 - 5
AT216447	2G12	11	0511 - 7
AT216447	2G14	11	0511 - 9
AT216448	2G12	12	0511 - 7
AT216448	2G14	12	0511 - 9
AT216450	3G21	2	1674 - 29
AT216450	3G23	2	1674 - 31
AT216459	3G21	3	1674 - 29
AT216459	3G23	3	1674 - 31
AT216459	3G25	3	1674 - 33
AT216462	3F21	4	1674 - 3
AT216462	3F23	4	1674 - 5
AT216462	3F25	4	1674 - 7
AT216462	3G2	4	1674 - 9
AT216462	3G7	8	1674 - 15
AT216462	3G9	8	1674 - 17
AT216462	3G11	8	1674 - 19
AT216464	3F12	13	1671 - 15
AT216464	3F14	13	1671 - 17
AT216465	3F12	14	1671 - 15
AT216467	4G2	11	3140 - 3
AT216467	4G4	11	3140 - 5
AT216469	3G21	9	1674 - 29
AT216469	3G23	9	1674 - 31
AT216469	3G25	9	1674 - 33
AT216473	3J16	6	1927 - 3
AT216474	4F18	29	3115 - 3
AT216474	4F20	26	3115 - 5
AT216475	4G12	3	3160 - 3
AT216476	4G12	4	3160 - 3
AT216477	4G12	5	3160 - 3
AT216478	4G12	6	3160 - 3
AT216479	4G12	8	3160 - 3
AT216483	4G12	27	3160 - 3
AT216484	3H16	1	1812 - 3
AT216486	3H16	2	1812 - 3
AT216488	3J2	1	1912 - 3
AT216497	3I8	2	1821 - 3
AT216498	3G13	24	1674 - 21
AT216499	3G13	23	1674 - 21
AT216500	3J2	2	1912 - 3
AT216502	3H16	6	1812 - 3
AT216503	4F18	1	3115 - 3
AT216504	4F18	2	3115 - 3
AT216507	3G21	25	1674 - 29
AT216508	2G12	18	0511 - 7
AT216509	3H16	4	1812 - 3
AT216510	3H16	12	1812 - 3
AT216511	2G12	1	0511 - 7
AT216511	2G14	1	0511 - 9
AT216512	2G12	7	0511 - 7
AT216514	4C22	6	2162 - 29
AT216515	3I8	1	1821 - 3
AT216516	3I8	1	1821 - 3
AT216516	3I14	3	1821 - 9
AT216600	3C8	5	1511 - 7
AT216603	4C2	1	2162 - 9
AT216603	4C6	1	2162 - 13
AT216603	4C10	1	2162 - 17
AT216604	4C2	21	2162 - 9
AT216604	4C4	21	2162 - 11
AT216604	4C6	17	2162 - 13
AT216605	4D20	3	2162 - 49
AT216606	4C18	30	2162 - 25
AT216607	4C18	29	2162 - 25
AT216621	2J20	11	1063 - 3
AT216622	3H16	27	1812 - 3
AT216624	4E8	46	2163 - 3
AT216632	4D20	8	2162 - 49
AT216632	4D22	8	2162 - 51
AT216633	4D20	9	2162 - 49
AT216633	4D22	9	2162 - 51
AT216641	4C20	17	2162 - 27
AT216643	4C16	28	2162 - 23
AT216643	4C18	6	2162 - 25
AT216643	4C20	34	2162 - 27
AT216644	4C20	11	2162 - 27
AT216645	4C16	13	2162 - 23
AT216645	4C16	31	2162 - 23
AT216645	4C20	36	2162 - 27
AT216646	4D18	30	2162 - 47
AT216646	4D20	30	2162 - 49
AT216646	4D24	19	2162 - 53
AT216646	4E2	17	2162 - 55
AT216647	4D24	29	2162 - 53
AT216647	4E4	19	2162 - 57
AT216648	4D18	31	2162 - 47
AT216653	4C2	7	2162 - 9
AT216653	4C4	7	2162 - 11
AT216653	4C6	8	2162 - 13
AT216653	4C8	7	2162 - 15
AT216653	4C10	7	2162 - 17
AT216653	4C12	10	2162 - 19
AT216657	2G20	5	0515 - 3
AT216657	2G22	5	0515 - 5
AT216658	3C8	1	1511 - 7
AT216658	3C14	1	1511 - 13
AT216659	4F18	8	3115 - 3
AT216661	4E8	45	2163 - 3
AT216661	4E10	10	2163 - 5
AT216661	4E12	10	2163 - 7
AT216662	4C2	20	2162 - 9
AT216662	4C4	20	2162 - 11
AT216662	4C6	16	2162 - 13
AT216662	4C8	20	2162 - 15
AT216668	4D20	7	2162 - 49
AT216669	4D20	15	2162 - 49
AT216669	4D22	15	2162 - 51
AT216673	2G8	3	0511 - 3
AT216674	2G8	1	0511 - 3

NUMERICAL INDEX - CONTINUED

PART NO.	GRID	KEY	PAGE
AT216675	2G8	4	0511 - 3
AT216676	2G8	8	0511 - 3
AT216677	3F6	2	1671 - 9
AT216677	3F8	2	1671 - 11
AT216677	3F12	2	1671 - 15
AT216677	3F14	2	1671 - 17
AT216678	3F6	3	1671 - 9
AT216678	3F12	3	1671 - 15
AT216683	2H16	5	0531 - 3
AT216683	2H18	5	0531 - 5
AT216683	2H20	5	0531 - 7
AT216683	2H22	5	0531 - 9
AT216683	2H24	5	0531 - 11
AT216686	4C2	2	2162 - 9
AT216686	4C4	2	2162 - 11
AT216686	4C6	2	2162 - 13
AT216686	4C8	2	2162 - 15
AT216686	4C10	2	2162 - 17
AT216686	4C14	11	2162 - 21
AT216687	4D18	29	2162 - 47
AT216687	4D20	29	2162 - 49
AT216687	4D24	21	2162 - 53
AT216687	4E4	18	2162 - 57
AT216688	4C14	10	2162 - 21
AT216696	4C16	30	2162 - 23
AT216696	4C20	22	2162 - 27
AT216706	4C20	35	2162 - 27
AT216710	4D14	2	2162 - 43
AT216713	4D20	13	2162 - 49
AT216714	4D18	18	2162 - 47
AT216714	4D20	18	2162 - 49
AT216714	4D22	18	2162 - 51
AT216714	4E2	10	2162 - 55
AT216715	4D18	27	2162 - 47
AT216715	4D20	27	2162 - 49
AT216715	4D24	22	2162 - 53
AT216715	4E4	16	2162 - 57
AT216716	4D18	32	2162 - 47
AT216717	4D20	22	2162 - 49
AT216717	4D22	22	2162 - 51
AT216718	4D6	5	2162 - 37
AT216718	4D18	36	2162 - 47
AT216718	4D24	28	2162 - 53
AT216718	4E4	26	2162 - 57
AT216719	4D24	9	2162 - 53
AT216719	4E4	9	2162 - 57
AT216720	4D24	10	2162 - 53
AT216724	4C12	4	2162 - 19
AT216736	3H12	13	1811 - 3
AT216736	3H14	9	1811 - 5
AT216737	3H24	23	1816 - 3
AT216737	3I4	20	1816 - 7
AT216737	3I6	20	1816 - 9
AT216738	4D20	14	2162 - 49
AT216738	4D22	14	2162 - 51
AT216739	4D20	16	2162 - 49
AT216739	4D22	16	2162 - 51
AT216740	2I8	2	0563 - 3
AT216741	3E24	12	1671 - 3
AT216743	3H16	3	1812 - 3
AT216745	2I4	17	0560 - 3
AT216746	2I23	13	0963 - 3
AT216748	3I23	1	1911 - 3
AT216749	2I17	3	0962 - 3
AT216751	3J6	7	1921 - 3
AT216751	3J8	7	1921 - 5
AT216752	4C2	8	2162 - 9
AT216752	4C4	22	2162 - 11
AT216752	4C6	20	2162 - 13
AT216752	4C8	22	2162 - 15
AT216752	4C10	8	2162 - 17
AT216752	4C10	22	2162 - 17
AT216752	4C16	27	2162 - 23
AT216752	4C20	33	2162 - 27
AT216752	4C22	31	2162 - 29
AT216752	4C24	39	2162 - 31
AT216752	4D2	32	2162 - 33
AT216752	4D4	32	2162 - 35
AT216752	4D14	11	2162 - 43
AT216753	4C2	5	2162 - 9
AT216753	4C4	5	2162 - 11
AT216753	4C8	5	2162 - 15
AT216753	4C8	6	2162 - 15
AT216753	4C10	5	2162 - 17
AT216753	4C16	32	2162 - 23
AT216754	4C2	6	2162 - 9
AT216754	4C4	6	2162 - 11
AT216754	4C10	6	2162 - 17
AT216754	4C20	40	2162 - 27
AT216755	4C2	9	2162 - 9
AT216755	4C2	..	2162 - 9
AT216755	4C4	9	2162 - 11
AT216755	4C4	..	2162 - 11
AT216755	4C8	9	2162 - 15
AT216755	4C8	..	2162 - 15
AT216755	4C10	9	2162 - 17
AT216755	4C10	..	2162 - 17
AT216755	4D14	15	2162 - 43
AT216755	4D14	..	2162 - 43
AT216756	4C2	12	2162 - 9
AT216756	4C4	12	2162 - 11
AT216756	4C8	12	2162 - 15
AT216756	4C10	12	2162 - 17
AT216756	4D18	40	2162 - 47
AT216757	4C2	13	2162 - 9
AT216757	4C4	13	2162 - 11
AT216757	4C8	13	2162 - 15
AT216757	4C10	13	2162 - 17
AT216757	4D24	30	2162 - 53
AT216758	4C2	14	2162 - 9
AT216758	4C4	14	2162 - 11
AT216758	4C8	14	2162 - 15
AT216758	4C10	14	2162 - 17
AT216758	4D6	1	2162 - 37
AT216758	4E4	30	2162 - 57
AT216759	4C2	15	2162 - 9
AT216759	4C4	15	2162 - 11
AT216759	4C6	15	2162 - 13
AT216759	4C8	15	2162 - 15
AT216759	4C10	15	2162 - 17
AT216760	4C2	16	2162 - 9
AT216760	4C4	16	2162 - 11
AT216760	4C6	21	2162 - 13
AT216760	4C8	16	2162 - 15
AT216760	4C10	16	2162 - 17
AT216760	4D6	4	2162 - 37
AT216760	4D14	12	2162 - 43
AT216760	4D18	35	2162 - 47
AT216760	4D20	35	2162 - 49
AT216760	4D24	27	2162 - 53
AT216760	4E4	24	2162 - 57
AT220393	3F15	1	1672 - 2
AT222333	3H12	8	1811 - 3
AT222333	3H14	4	1811 - 5
AT226281	3G19	1	1674 - 27
AT226353	3G21	8	1674 - 29
AT226353	3G23	8	1674 - 31
AT250986	4G4	14	3140 - 5
AT250993	3G17	39	1674 - 25
AT25226	1B10	2	0110 - 2
AT25226	1B11	2	0110 - 2Z
AT25226	1B14	2	0120 - 1
AT260644	4E12	33	2163 - 7
AT262182	3G21	10	1674 - 29
AT262182	3G23	10	1674 - 31
AT280268	1C6	2	0230 - 8
AT280517	2G24	7	0515 - 7
AT280517	3J4	3	1912 - 5
AT280866	1C7	1	0230 - 9
AT280869	1C6	9	0230 - 8
AT300853	4E21	37	3102 - 5
AT300855	4E21	9B	3102 - 5
AT300857	4E21	5B	3102 - 5
AT300860	4E21	13B	3102 - 5
AT300860	4E21	14B	3102 - 5
AT304761	2J14	7	1060 - 5
AT304761	2J18	10	1060 - 9
AT304761	2J18	29	1060 - 9
AT307260	4G4	9	3140 - 5
AT309110	1B11	1	0110 - 2Z
AT37631	2G16	1	0512 - 3
AT38197	4C20	30	2162 - 27
AT41188	3F10	1	1671 - 13
AT46594	4C22	1	2162 - 29
AT46594	4C24	1	2162 - 31
AT46594	4D2	2	2162 - 33
AT46594	4D4	2	2162 - 35
AT49216	2K2	18	1063 - 9
AT49216	2K4	18	1063 - 11
AT49297	4C12	3	2162 - 19
AT49297	4F24	8	3115 - 9
AT49300	4C22	2	2162 - 29
AT49300	4C24	2	2162 - 31
AT51878	1B14	1	0120 - 1
AT57867	3E2	23	1520 - 25
AT60644	4E8	32	2163 - 3
AT60644	4E10	32	2163 - 5
AT60644	4E12	32	2163 - 7
AT61111	2I19	4	0962 - 5
AT65241	2I6	5	0560 - 5
AT66803	1B11	5	0110 - 2Z
AT71724	4C14	7	2162 - 21
AT73296	2G4	1	0505 - 1
AT74878	3J2	1	1912 - 3
AT74878	3J2	2	1912 - 3
AT74936	3F19	7	1673 - 3
AT74938	3F19	4	1673 - 3
AT74940	2G4	9	0505 - 1
AT79755	1B25	8	0230 - 1
AT79756	1B25	3	0230 - 1
AT85174	3G13	13	1674 - 21
AT85174	3G15	13	1674 - 23
AT85174	3G19	5	1674 - 27
AT86509	3G21	8	1674 - 29
AT86509	3G23	8	1674 - 31
AU11709	2G20	8	0515 - 3
AU11709	2G22	8	0515 - 5
AU11709	2G24	8	0515 - 7
AU11709	4F22	22	3115 - 7
AU12450	4G14	26	3160 - 5
AU41465	3G23	2	1674 - 31

NUMERICAL INDEX - CONTINUED

PART NO.	GRID	KEY	PAGE
AU41465	3G25	2	1674 - 33
AW16787	3K2	1	2011 - 3
AZJ3226	1G9	5	0422 - 1
AZJ3226	1I24	5	0422A - 2
AZ61786	3J23	1	2004 - 7
A2613R	4G14	21	3160 - 5
A364R	1F25	7	0417 - 2
A364R	1G1	7	0417 - 3
A364R	1I15	7	0417A - 2
A364R	1I16	7	0417A - 3
A364R	2B17	19	0402B - 5
A364R	2D24	19	0402C - 5
A3917R	2I19	25	0962 - 5
A4365R	2G24	25	0515 - 7
A4737R	2J16	31	1060 - 7
A4827R	1E20	14	0402 - 7
A4827R	1G19	17	0452 - 3
A4827R	1H11	14	0402A - 7
A4827R	1J12	17	0452A - 3
A4827R	2D16	17	0452B - 3
A4827R	2F24	17	0452C - 3
B175R	4F20	6	3115 - 5
B175R	4F22	4	3115 - 7
B177R	2J14	12	1060 - 5
B27952	1E8	5	0364 - 3
B3690R	2I17	9	0962 - 3
B3690R	2I19	15	0962 - 5
CBO1455861	3D12	2	1520 - 13B
CBO1455878	3D12	4	1520 - 13B
CBO1455879	3D12	6	1520 - 13B
CB01382411	4F20	7	3115 - 5
CB01382412	4F20	36	3115 - 5
CB01382412	4G2	19B	3140 - 3
CB01382412	4G4	19	3140 - 5
CB01382413	4F20	27	3115 - 5
CB01383307	4F20	13	3115 - 5
CB01385123	3E2	37A	1520 - 25
CB01385123	3E4	35	1520 - 27
CB01385123	3E14	13	1520 - 37
CB01385123	3E16	11	1520 - 39
CB01385123	3E18	11	1520 - 41
CB01385241	3E2	36A	1520 - 25
CB01385241	3E4	36	1520 - 27
CB01385241	3E14	14	1520 - 37
CB01385241	3E16	12	1520 - 39
CB01385241	3E18	12	1520 - 41
CB01387505	4H6	69	4000 - 11
CB01387509	4H4	1	4000 - 9
CB01387510	4H4	2	4000 - 9
CB01387511	4H4	3	4000 - 9
CB01387512	4H4	4	4000 - 9
CB01387513	4H4	5	4000 - 9
CB01387515	4H4	7	4000 - 9
CB01387516	4H4	8	4000 - 9
CB01387517	4H4	9	4000 - 9
CB01387518	4H4	10	4000 - 9
CB01387520	4H4	11	4000 - 9
CB01387522	4H4	12	4000 - 9
CB01387523	4H4	13	4000 - 9
CB01387524	4H4	14	4000 - 9
CB01387526	4H4	15	4000 - 9
CB01387528	4H4	16	4000 - 9
CB01387529	4H4	18	4000 - 9
CB01387530	4H4	19	4000 - 9
CB01387533	4H4	20	4000 - 9
CB01387537	4H4	21	4000 - 9
CB01387538	4H4	22	4000 - 9
CB01387540	4H4	23	4000 - 9
CB01387542	4H4	25	4000 - 9
CB01387543	4H4	26	4000 - 9
CB01387550	4H4	27	4000 - 9
CB01387551	4H4	28	4000 - 9
CB01387556	4H4	29	4000 - 9
CB01387557	4H4	30	4000 - 9
CB01387557	4H4	31	4000 - 9
CB01387558	4H4	32	4000 - 9
CB01387559	4H4	33	4000 - 9
CB01387560	4H4	34	4000 - 9
CB01387561	4H4	35	4000 - 9
CB01387561	4H4	36	4000 - 9
CB01387563	4H4	37	4000 - 9
CB01387565	4H4	38	4000 - 9
CB01387567	4H4	39	4000 - 9
CB01387568	4H4	40	4000 - 9
CB01387569	4H4	41	4000 - 9
CB01387570	4H4	42	4000 - 9
CB01387571	4H4	43	4000 - 9
CB01387572	4H4	44	4000 - 9
CB01387573	4H4	45	4000 - 9
CB01387574	4H4	46	4000 - 9
CB01387575	4H4	47	4000 - 9
CB01387577	4H4	48	4000 - 9
CB01387579	4H4	49	4000 - 9
CB01387580	4H4	50	4000 - 9
CB01387581	4H4	51	4000 - 9
CB01387582	4H6	54	4000 - 11
CB01387583	4H6	55	4000 - 11
CB01387584	4H6	56	4000 - 11
CB01387585	4H6	57	4000 - 11
CB01387586	4H6	58	4000 - 11
CB01387587	4H6	59	4000 - 11
CB01387588	4H6	60	4000 - 11
CB01387589	4H6	61	4000 - 11
CB01387590	4H6	62	4000 - 11
CB01387591	4H6	63	4000 - 11
CB01387592	4H6	64	4000 - 11
CB01387595	4H6	66	4000 - 11
CB01387597	4H6	67	4000 - 11
CB01387604	4H6	68	4000 - 11
CB01388050	4C8	17	2162 - 15
CB01388050	4C10	17	2162 - 17
CB01388064	4C4	1	2162 - 11
CB01388064	4C8	1	2162 - 15
CB01388064	4C24	34	2162 - 31
CB01388296	4C2	17	2162 - 9
CB01388296	4C4	17	2162 - 11
CB01390888	2H6	9	0521 - 3
CB01390888	2I6	15	0560 - 5
CB01390888	3F10	15	1671 - 13
CB01390888	3H20	12	1812 - 7
CB01390888	3I2	10	1816 - 5
CB01390888	3I2	16	1816 - 5
CB01390888	3I2	27	1816 - 5
CB01390888	3I4	5	1816 - 7
CB01390888	3I6	5	1816 - 9
CB01390888	3I25	2	1911 - 5
CB01390888	3J4	4	1912 - 5
CB01390888	3J8	3	1921 - 5
CB01390888	3J10	5	1921 - 7
CB01390888	3J12	7	1921 - 9
CB01390888	4H10	4	4000 - 15
CB01390891	3J10	3	1921 - 7
CB01392570	3B13	5	1322 - 5
CB01393571	3J4	11	1912 - 5
CB01395000	3I4	21	1816 - 7
CB01395000	3I6	21	1816 - 9
CB01401939	3C12	1	1511 - 11
CB01401939	3C18	1	1511 - 17
CB01405868	3J14	1	1921 - 11
CB01407196	3I2	7	1816 - 5
CB01407196	3I4	11	1816 - 7
CB01407196	3I6	11	1816 - 9
CB01410775	3D16	14	1520 - 17
CB01410775	3D20	12	1520 - 21
CB01410805	3C24	1	1520 - 5
CB01410806	3C24	14	1520 - 5
CB01410806	3D2	14	1520 - 7
CB01410807	3C24	4	1520 - 5
CB01410816	3D16	15	1520 - 17
CB01416461	1E6	7	0363 - 7
CB01416461	2K2	10	1063 - 9
CB01416957	4H14	31	4063 - 3
CB01418975	3H20	15	1812 - 7
CB01419128	3H20	5	1812 - 7
CB01423103	4D20	32	2162 - 49
CB01439345	4B16	23	2161 - 5
CB01439345	4B18	23	2161 - 7
CB01439778	3D2	1	1520 - 7
CB01439779	3D2	4	1520 - 7
CB01439780	3D18	9	1520 - 19
CB01439780	3D20	9	1520 - 21
CB01439781	3D18	15	1520 - 19
CB01439781	3D20	13	1520 - 21
CB01439782	3D18	1	1520 - 19
CB01439782	3D20	1	1520 - 21
CB01439783	3D18	4	1520 - 19
CB01439783	3D20	4	1520 - 21
CB01439785	3D10	8	1520 - 13
CB01439786	3D10	5	1520 - 13
CB01439787	3D10	3	1520 - 13
CB01439916	3D2	9	1520 - 7
CB01442703	3J10	2	1921 - 7
CB01442776	2H8	4	0521 - 5
CB01442776	2H10	4	0521 - 7
CB01443923	3I4	16	1816 - 7
CB01443923	3I6	16	1816 - 9
CB01444019	2H22	1	0531 - 9
CB01444042	2G14	16	0511 - 9
CB01444410	2G14	19	0511 - 9
CB01444411	2G14	17	0511 - 9
CB01444442	4F22	3	3115 - 7
CB01444467	4F24	35	3115 - 9
CB01444503	4F24	3	3115 - 9
CB01444508	4F22	27	3115 - 7
CB01444697	3G25	12	1674 - 33
CB01445284	3J10	8	1921 - 7
CB01446176	4F22	24	3115 - 7
CB01446252	2G14	18	0511 - 9
CB01446263	4F22	28	3115 - 7
CB01446307	3G11	2	1674 - 19
CB01446314	2G14	24	0511 - 9
CB01446325	1E6	1	0363 - 7
CB01446326	1E6	2	0363 - 7
CB01446335	2H24	1	0531 - 11
CB01446349	4B24	16	2162 - 7
CB01446734	2G24	5	0515 - 7
CB01446827	3H20	5	1812 - 7
CB01447005	3G17	40	1674 - 25
CB01447074	2K4	10	1063 - 11
CB01447162	3F10	13	1671 - 13
CB01448395	1E10	1	0364 - 5

NUMERICAL INDEX - CONTINUED

PART NO.	GRID	KEY	PAGE
CB01448417	3D2	2	1520 - 7
CB01448432	4H12	12	4015 - 3
CB01448470	3B15	7	1322 - 7
CB01448480	3J12	28	1921 - 9
CB01448497	3F10	3	1671 - 13
CB01448705	4F22	33	3115 - 7
CB01449997	2H4	3	0515 - 11
CB01450168	4F22	36	3115 - 7
CB01450646	4F22	35	3115 - 7
CB01450666	4F22	38	3115 - 7
CB01450671	4F22	39	3115 - 7
CB01450675	4F22	40	3115 - 7
CB01450691	2G24	35	0515 - 7
CB01450691	4F22	42	3115 - 7
CB01450919	3J12	4	1921 - 9
CB01450920	3J12	5	1921 - 9
CB01450928	4H10	1	4000 - 15
CB01451065	4F22	37	3115 - 7
CB01451503	4F24	21	3115 - 9
CB01451565	4F22	43	3115 - 7
CB01451856	3J10	11	1921 - 7
CB01451862	3H22	2	1812 - 9
CB01451866	3J10	12	1921 - 7
CB01452072	3J12	29	1921 - 9
CB01452370	4F22	7	3115 - 7
CB01453542	4D22	33	2162 - 51
CB01453542	4E2	28	2162 - 55
CB01453543	4D22	31	2162 - 51
CB01453544	4D22	30	2162 - 51
CB01453548	4D22	32	2162 - 51
CB01453548	4E2	27	2162 - 55
CB01453549	4D22	25	2162 - 51
CB01453549	4E2	19	2162 - 55
CB01454598	4D22	13	2162 - 51
CB01454599	4D22	2	2162 - 51
CB01455823	3D22	1	1520 - 21B
CB01455824	3D22	2	1520 - 21B
CB01455824	3D22	3	1520 - 21B
CB01455826	3D22	4	1520 - 21B
CB01455827	3D22	5	1520 - 21B
CB01455860	3D4	1	1520 - 7B
CB01455861	3D4	2	1520 - 7B
CB01455862	3D4	3	1520 - 7B
CB01455862	3D12	3	1520 - 13B
CB01455864	3D4	4	1520 - 7B
CB01455877	3D12	1	1520 - 13B
CB11387481	4H4	77	4000 - 9
CB11387481	4H6	77	4000 - 11
CB11387504	4H4	76	4000 - 9
CB11387504	4H6	76	4000 - 11
CB11387505	4H4	78	4000 - 9
CB11387505	4H6	78	4000 - 11
CB11387506	4H4	80	4000 - 9
CB11387506	4H6	80	4000 - 11
CB11388048	4C8	21	2162 - 15
CB11388048	4C10	21	2162 - 17
CB11388547	4G2	10	3140 - 3
CB11388547	4G4	10	3140 - 5
CB11392598	4G4	10	3140 - 5
CB11394325	3H18	1	1812 - 5
CB11395478	3J8	7	1921 - 5
CB11395814	3E2	1	1520 - 25
CB11395814	3E4	1	1520 - 27
CB11408214	3J14	7	1921 - 11
CB1141020	4D14	2	2162 - 43
CB11410532	2J24	16	1063 - 7
CB11410534	2J24	7	1063 - 7
CB11410534	2K2	7	1063 - 9
CB11410534	2K4	7	1063 - 11
CB11410535	2J24	8	1063 - 7
CB11410535	2K2	8	1063 - 9
CB11410535	2K4	8	1063 - 11
CB11411020	4D10	2	2162 - 39B
CB11411020	4D16	2	2162 - 45
CB11412101	2J24	18	1063 - 7
CB11412105	2J22	1	1063 - 5
CB11412106	2J22	2	1063 - 5
CB11412587	3I2	12B	1816 - 5
CB11412587	3I4	3	1816 - 7
CB11412587	3I6	3	1816 - 9
CB11412590	3I2	23	1816 - 5
CB11412590	3I4	12	1816 - 7
CB11412590	3I6	12	1816 - 9
CB11416926	2K2	16	1063 - 9
CB11416926	2K4	16	1063 - 11
CB11419574	4G14	1	3160 - 5
CB11419575	4G14	2	3160 - 5
CB11419576	4G14	7	3160 - 5
CB11419577	4G14	8	3160 - 5
CB11419579	4E10	4	2163 - 5
CB11419579	4E12	4	2163 - 7
CB11421147	4E8	42	2163 - 3
CB11421147	4E10	11	2163 - 5
CB11421147	4E12	11	2163 - 7
CB11421149	4G2	5	3140 - 3
CB11421149	4G4	5	3140 - 5
CB11421149	4G14	24	3160 - 5
CB11421151	4G2	6	3140 - 3
CB11421151	4G4	6	3140 - 5
CB11421151	4G14	25	3160 - 5
CB11421661	4E8	41	2163 - 3
CB11421661	4E10	14	2163 - 5
CB11421661	4E12	14	2163 - 7
CB11422738	4F24	11	3115 - 9
CB11422740	4F24	10	3115 - 9
CB11422821	4F8	16	3102 - 17
CB11422823	4F8	9	3102 - 17
CB11422829	4F8	21	3102 - 17
CB11422829	4F24	34	3115 - 9
CB11423081	4C2	12	2162 - 9
CB11423081	4C4	12	2162 - 11
CB11423081	4C8	12	2162 - 15
CB11423081	4C10	12	2162 - 17
CB11423081	4D20	40	2162 - 49
CB11435140	3F4	6	1671 - 7
CB11435869	4F24	9	3115 - 9
CB11439084	3D8	18	1520 - 11
CB11439084	3D10	18	1520 - 13
CB11439085	3D16	1	1520 - 17
CB11439085	3D16	14	1520 - 17
CB11439085	3D16	16	1520 - 17
CB11439085	3D18	16	1520 - 19
CB11439085	3D20	15	1520 - 21
CB11439088	3C24	1	1520 - 5
CB11439088	3C24	15	1520 - 5
CB11439088	3D2	15	1520 - 7
CB11439088	3E18	1	1520 - 41
CB11439892	3D18	17	1520 - 19
CB11439892	3D20	14	1520 - 21
CB11439893	3D2	13	1520 - 7
CB11439894	3D10	16	1520 - 13
CB11440069	3D18	14	1520 - 19
CB11441777	3H5	1	1741 - 5
CB11442346	3G17	24	1674 - 25
CB11442420	2G24	23	0515 - 7
CB11442792	3H20	1	1812 - 7
CB11442803	3G19	7	1674 - 27
CB11443537	3G25	25	1674 - 33
CB11444125	3J12	1	1921 - 9
CB11444133	3I4	1	1816 - 7
CB11444133	3I6	1	1816 - 9
CB11444136	3I4	2	1816 - 7
CB11444136	3I6	2	1816 - 9
CB11444761	3J12	2	1921 - 9
CB11444762	3J12	3	1921 - 9
CB11444772	2H18	8	0531 - 5
CB11444772	2H22	8	0531 - 9
CB11444772	2H24	3	0531 - 11
CB11445537	3G17	24	1674 - 25
CB11445785	1E10	4	0364 - 5
CB11445786	1E10	4	0364 - 5
CB11445879	3J12	6	1921 - 9
CB11446035	4E12	6	2163 - 7
CB11446855	3F10	4	1671 - 13
CB11446856	3F10	5	1671 - 13
CB11446888	2G24	3	0515 - 7
CB11447038	3F25	13	1674 - 7
CB11447038	3G2	13	1674 - 9
CB11447038	3G11	9	1674 - 19
CB11447039	3F25	14	1674 - 7
CB11447039	3G2	14	1674 - 9
CB11447039	3G11	3	1674 - 19
CB11447139	3H5	6	1741 - 5
CB11447457	4E12	4	2163 - 7
CB11447844	2J2	18	0963 - 7
CB11448563	4F22	2	3115 - 7
CB11448657	2G24	27	0515 - 7
CB11448670	3J12	23	1921 - 9
CB11449810	3G2	3	1674 - 9
CB11449811	3G2	2	1674 - 9
CB11450000	1C9	1	0242 - 3
CB11450622	4F24	2	3115 - 9
CB11450626	3J10	1	1921 - 7
CB11450628	3J10	4	1921 - 7
CB11450631	4F22	1	3115 - 7
CB11450651	4F22	34	3115 - 7
CB11451119	4H16	26	4063 - 5
CB11451120	4H16	25	4063 - 5
CB11451300	4H10	5	4000 - 15
CB11451645	3H20	2	1812 - 7
CB11451689	3H14	1	1811 - 5
CB11452988	4B16	28	2161 - 5
CB11452988	4B18	28	2161 - 7
CB11452992	4B18	29	2161 - 7
CB11453171	4E2	1	2162 - 55
CB11453664	3D4	9	1520 - 7B
CB11453664	3E18	1	1520 - 41
CB11454187	4C6	7	2162 - 13
CB11454189	4C6	9	2162 - 13
CB11454190	4C6	12	2162 - 13
CB11454191	4C6	13	2162 - 13
CB11454192	4C6	14	2162 - 13
CB11454573	4E2	2	2162 - 55
CB1392570	3B11	25	1322 - 3
CB1408205	3J14	4	1921 - 11
CB1447115	4H10	6	4000 - 15
CB1447116	4H10	7	4000 - 15
CD16284	1F15	7	0409 - 3
CD16284	1I5	7	0409A - 3
CD16284	2C9	7	0409B - 3
CD16284	2E16	7	0409C - 3

NUMERICAL INDEX - CONTINUED

PART NO.	GRID	KEY	PAGE
C1067R	4F18	19	3115 - 3
C1067R	4F20	16	3115 - 5
C15104	2I19	16	0962 - 5
C16054	4G14	17	3160 - 5
DB1440	3K2	2	2011 - 3
DSO345	3B17	1	1369 - 3
DSO346	3B17	1	1369 - 3
D2361R	2J16	24	1060 - 7
ET15515	3G11	5	1674 - 19
ET15515	4G4	25	3140 - 5
E12379	1C4	7	0230 - 6
E1343FN	1G14	2	0429 - 5
E1343FN	1J7	2	0429A - 5
F1002516H8	4C22	26	2162 - 29
F1002516H8	4C24	27	2162 - 31
F1002516H8	4D2	27	2162 - 33
F1430R	4G16	10	3160 - 7
F2863R	2J12	7	1060 - 3
F2863R	2J14	1	1060 - 5
F37030242	4B14	16	2161 - 3
H121168	4F4	11	3102 - 13
H121168	4F6	11	3102 - 15
H121168	4F8	26	3102 - 17
H121168	4F24	15	3115 - 9
H135156	4F4	10	3102 - 13
H135156	4F6	10	3102 - 15
H135156	4F8	12	3102 - 17
H135156	4F24	14	3115 - 9
H142090	4G16	13	3160 - 7
H144094	3F15	2	1672 - 2
H144094	3F17	12	1672 - 5
H144095	3F15	3	1672 - 2
H144095	3F17	15	1672 - 5
H145359	4G17	6	3160 - 8
H151542	4G17	17	3160 - 8
H151542	4G18	17	3160 - 9
H151542	4G19	14	3160 - 10
H151594	4G15	16	3160 - 6
H151594	4G16	3	3160 - 7
H152202	4G15	8	3160 - 6
H152203	4F10	16	3102 - 19
H152203	4G16	12	3160 - 7
H152203	4G17	13	3160 - 8
H152203	4G18	13	3160 - 9
H152203	4G19	11	3160 - 10
H152345	4G17	8	3160 - 8
H152345	4G19	8	3160 - 10
H152347	4G15	9	3160 - 6
H152793	4G15	10	3160 - 6
H152794	4G16	9	3160 - 7
H152794	4G17	14	3160 - 8
H152794	4G19	12	3160 - 10
H154352	4G16	7	3160 - 7
H157510	4G15	9	3160 - 6
H157662	2J4	14	0965 - 3
H158676	2J4	12	0965 - 3
H158942	2J3	8	0965 - 2
H158942	2J4	8	0965 - 3
H159941	4G17	2	3160 - 8
H159941	4G18	2	3160 - 9
H159941	4G19	2	3160 - 10
H169509	2J3	6	0965 - 2
H169509	2J4	6	0965 - 3
H170373	3F10	6	1671 - 13
H170538	4G18	3	3160 - 9
H170538	4G19	3	3160 - 10
H170539	4G16	16	3160 - 7
H177854	4F10	4	3102 - 19
H179692	4F10	8	3102 - 19
H180927	4F10	6	3102 - 19
H208987	4G18	14	3160 - 9
H21259	3B15	14	1322 - 7
H21259	3H16	33	1812 - 3
H21259	3H16	34	1812 - 3
H21259	3H16	35	1812 - 3
H21259	3H16	36	1812 - 3
H23125	1E18	1	0402 - 4
H23125	1H9	1	0402A - 4
H23125	2B15	2	0402B - 3
H23125	2D22	2	0402C - 3
H26895	4F4	18	3102 - 13
H29619	4F9	2	3102 - 18
H34753	3E2	25	1520 - 25
H34753	3E4	38	1520 - 27
H34753	3E14	16	1520 - 37
H34753	3E16	13	1520 - 39
H34753	3E18	13	1520 - 41
H36031	1F13	5	0408 - 3
H36031	1I3	5	0408A - 3
H36031	2E14	5	0408C - 3
H63283	4D12	3	2162 - 41
H63283	4D12	25	2162 - 41
H75516	3F23	13	1674 - 5
H75516	3G9	10	1674 - 17
H75541	2J2	20	0963 - 7
H77698	1E6	6	0363 - 7
H77698	2G4	8	0505 - 1
H77698	4E21	36	3102 - 5
H80753	2D10	2	0429B - 3
H80753	2F18	2	0429C - 3
H96823	3I4	9	1816 - 7
H96823	3I6	9	1816 - 9
H99923	1E8	6	0364 - 3
H99923	2G12	4	0511 - 7
H99923	3J16	4	1927 - 3
IPSKIT3	3B17	1	1369 - 3
ISPKIT3	3B17	1	1369 - 3
JD10063	1C7	5	0230 - 9
JD10249	1C19	22	0250 - 9
JD10250	1C20	5	0250 - 10
JD126	3J24	9	2008 - 2
JD21	1B14	3	0120 - 1
JD21	1C11	9	0242 - 5
JD5404	3J24	3	2008 - 2
JD5718	3B11	5	1322 - 3
JD5749	3B15	11	1322 - 7
JD5764	3B15	11	1322 - 7
JD5901	3J24	6	2008 - 2
JD5909	3B11	15	1322 - 3
JD5909	3B15	16	1322 - 7
JD5929	3J24	2	2008 - 2
JD5930	3J24	2	2008 - 2
JD7759	1C11	11	0242 - 5
JD7759	3D6	13	1520 - 9
JD7759	3D8	1	1520 - 11
JD7759	3D10	1	1520 - 13
JD7759	3D24	8	1520 - 23
JD7797	1B25	9	0230 - 1
JD7797	1C4	8	0230 - 6
JD7797	1C13	3	0250 - 3
JD7797	4F2	24	3102 - 11
JD7797	4F8	30	3102 - 17
JD7797	4F9	11	3102 - 18
JD7798	1C2	12	0230 - 3
JD7798	2J3	20	0965 - 2
JD7798	3E4	22	1520 - 27
JD7798	4F14	3	3102 - 23
JD7798	4F16	3	3102 - 25
JD7798	4F18	27	3115 - 3
JD7798	4F20	24	3115 - 5
JD7798	4F22	13	3115 - 7
JD7798	4G2	26	3140 - 3
JD7798	4G4	26	3140 - 5
JD7798	4G8	4	3140 - 9
JD7798	4G10	4	3140 - 11
JD7798	4G15	2	3160 - 6
JD7798	4G16	2	3160 - 7
JD7798	4G17	27	3160 - 8
JD7798	4G17	28	3160 - 8
JD7799	1C2	24	0230 - 3
JD7838	1C2	25	0230 - 3
JD7838	1C4	10	0230 - 6
JD7838	1C15	9	0250 - 5
JD7838	2J3	18	0965 - 2
JD7838	2J4	18	0965 - 3
JD7842	3D24	18	1520 - 23
JD7844	3E4	23	1520 - 27
JD8251	1C3	6	0230 - 4
JD8856	2I19	14	0962 - 5
JD8929	1C3	7	0230 - 4
JD9041	1C3	3	0230 - 4
JD9170	1C3	4	0230 - 4
JD9344	4H2	41	4000 - 7
J16931	4G6	2	3140 - 7
KV16429	2H14	2	0521 - 11
K40006	3J12	31	1921 - 9
K40006	4E25	4	3102 - 9
K40006	4F2	4	3102 - 11
K40006	4F4	29	3102 - 13
K40006	4F6	29	3102 - 15
K40006	4F8	4	3102 - 17
K40015	1B10	8	0110 - 2
K40015	1B15	2	0149 - 1
K40015	1B15	5	0149 - 1
K40015	1B16	5	0149 - 2
K40015	4E25	20	3102 - 9
LVU12050	3G2	1	1674 - 9
LVU12050	3G11	1	1674 - 19
L100057	1C23	4	0250 - 13
L100060	1C23	4	0250 - 13
L100063	1C23	4	0250 - 13
L100066	1C23	4	0250 - 13
L100069	1C23	4	0250 - 13
L100074	1C23	4	0250 - 13
L100077	1C23	4	0250 - 13
L100080	1C23	4	0250 - 13
L100083	1C23	4	0250 - 13
L100086	1C23	4	0250 - 13
L100089	1C23	4	0250 - 13
L100092	1C23	4	0250 - 13
L100096	1C23	4	0250 - 13
L100102	1C19	16	0250 - 9
L100103	1C19	16	0250 - 9
L100104	1C19	16	0250 - 9
L100105	1C19	16	0250 - 9
L100106	1C19	16	0250 - 9
L100107	1C19	16	0250 - 9
L100109	1C19	16	0250 - 9
L100111	1C19	16	0250 - 9
L100141	1C17	11	0250 - 7
L100145	1C17	11	0250 - 7

NUMERICAL INDEX - CONTINUED

PART NO.	GRID	KEY	PAGE
L100158	1C21	10	0250 - 11
L100168	1C20	7	0250 - 10
L100228	1C17	14	0250 - 7
L100230	1C23	7	0250 - 13
L100238	1C19	24	0250 - 9
L100239	1C19	20	0250 - 9
L100240	1C17	20	0250 - 7
L100240	1C20	10	0250 - 10
L100632	1C19	7	0250 - 9
L100633	1C19	8	0250 - 9
L100635	1C19	5	0250 - 9
L100636	1C19	4	0250 - 9
L110233	1C17	18	0250 - 7
L110235	1C20	1	0250 - 10
L110729	1C12	7	0250 - 2
L112197	1C21	1	0250 - 11
L114558	1C17	14	0250 - 7
L11698	1D23	4	0360 - 3
L11698	1D23	30	0360 - 3
L32504	2J16	11	1060 - 7
L35714	1C23	9	0250 - 13
L38470	1B20	3	0201 - 3
L38730	1D6	18	0315 - 3
L40014	1C17	16	0250 - 7
L40276	1C19	10	0250 - 9
L40306	1C17	10	0250 - 7
L40317	1C19	25	0250 - 9
L40982	1C23	3	0250 - 13
L40985	1C23	3	0250 - 13
L40988	1C23	3	0250 - 13
L40991	1C23	3	0250 - 13
L40994	1C23	3	0250 - 13
L41159	1C20	4	0250 - 10
L53816	1D9	14	0341 - 1
L55580	1B20	14	0201 - 3
L55580	1C17	19	0250 - 7
L55580	1C20	9	0250 - 10
L55580	2J10	12	1011 - 3
L55598	1C19	23	0250 - 9
L55606	1C23	3	0250 - 13
L55610	1C23	3	0250 - 13
L56822	1B20	17	0201 - 3
L56822	1C17	17	0250 - 7
L60103	1C21	7	0250 - 11
L60104	1C21	5	0250 - 11
L61263	1C17	11	0250 - 7
L61267	1C17	11	0250 - 7
L61271	1C17	11	0250 - 7
L61275	1C17	11	0250 - 7
L78069	1D19	16	0350 - 8
L79728	1C20	6	0250 - 10
L80302	3B11	12	1322 - 3
L80302	3B15	8	1322 - 7
MG13021	1E6	4	0363 - 7
M110577	4C2	19	2162 - 9
M110577	4C4	19	2162 - 11
M110577	4C8	19	2162 - 15
M110577	4C10	19	2162 - 17
M121913	4C12	1	2162 - 19
M121918	4C12	7	2162 - 19
M121920	4C12	9	2162 - 19
M121921	4C12	4	2162 - 19
M121926	4C12	6	2162 - 19
M142438	3G25	8	1674 - 33
M142439	3G25	55	1674 - 33
M142439	3G25	57	1674 - 33
M2047T	3H16	27	1812 - 3
M40333	2G22	4	0515 - 5
M40333	3E24	9	1671 - 3
M40333	3F10	12	1671 - 13
M40333	3F19	13	1673 - 3
M40333	3F21	5	1674 - 3
M40333	3F23	5	1674 - 5
M40333	3F25	5	1674 - 7
M40333	3G2	5	1674 - 9
M40333	3G21	27	1674 - 29
M40333	3G23	27	1674 - 31
M40333	3G25	27	1674 - 33
M40333	3G25	51	1674 - 33
M40333	3H24	17	1816 - 3
M40333	3I4	15	1816 - 7
M40333	3I6	15	1816 - 9
M40333	3J10	16	1921 - 7
M40333	3J12	18	1921 - 9
M40333	3J16	4	1927 - 3
M40333	3J19	4	2004 - 3
M40333	3J21	4	2004 - 5
M40333	4B20	14	2162 - 3
M40333	4B22	14	2162 - 5
M40333	4B24	11	2162 - 7
M40333	4F18	31	3115 - 3
M40333	4F20	35	3115 - 5
M40333	4F22	32	3115 - 7
M40617	3I14	9	1821 - 9
M41029	1E23	4	0403 - 2
M41029	1H14	4	0403A - 2
M41029	2B19	4	0403B - 2
M41029	2E1	4	0403C - 2
M41029	2J18	26	1060 - 9
M4124T	2I19	10	0962 - 5
M42665	4H2	30	4000 - 7
M48439	1C9	4	0242 - 3
M48439	3H12	10	1811 - 3
M49333	3I2	25	1816 - 5
M74877	4H2	13	4000 - 7
M84831	2G22	1	0515 - 5
M84831	2G24	1	0515 - 7
M87733	2E25	6	0416C - 2
M90214	1D7	7	0315 - 4
M91187	3I14	10	1821 - 9
N10215	2G22	4	0515 - 5
N10215	2H16	7	0531 - 3
N119316	1C13	2	0250 - 3
N132114	3J24	16	2008 - 2
N155090	3H20	16	1812 - 7
N15515	4G2	25	3140 - 3
N15515	4G4	25	3140 - 5
N208924	4H2	20	4000 - 7
N208925	4H2	18	4000 - 7
N208925	4H2	40	4000 - 7
N208927	4H2	17	4000 - 7
N231749	1B20	19	0201 - 3
N236692	3C14	3	1511 - 13
N30256	4E21	2	3102 - 5
P45231	3D22	6	1520 - 21B
P46051	4E8	32	2163 - 3
P46051	4E10	32	2163 - 5
P46051	4E12	32	2163 - 7
P46051	4E12	33	2163 - 7
P48347	2G24	24	0515 - 7
P49591	3D4	5	1520 - 7B
P49591	3D12	5	1520 - 13B
RE12176	2H6	3	0521 - 3
RE12176	3G13	21	1674 - 21
RE12176	3G15	21	1674 - 23
RE12176	3G17	21	1674 - 25
RE12363	3F21	1	1674 - 3
RE12363	3G9	9	1674 - 17
RE12363	3G15	32	1674 - 23
RE12363	3G17	32	1674 - 25
RE14246	3K2	2	2011 - 3
RE16142	1F20	27	0413 - 5
RE16142	1I10	27	0413A - 5
RE16142	2I10	4	0563 - 5
RE169008	4H12	4	4015 - 3
RE19797	1F20	5	0413 - 5
RE19797	1I10	5	0413A - 5
RE19797	2C13	3	0413B - 3
RE19797	2E21	3	0413C - 5
RE19799	1F20	15	0413 - 5
RE19799	1I10	15	0413A - 5
RE19799	2C13	9	0413B - 3
RE19799	2E21	9	0413C - 5
RE20344	4G16	14	3160 - 7
RE20345	4G15	5	3160 - 6
RE20345	4G17	5	3160 - 8
RE21790	2G6	3	0505 - 3
RE21846	2J3	11	0965 - 2
RE21875	2J3	15	0965 - 2
RE22413	2J3	3	0965 - 2
RE22413	2J4	3	0965 - 3
RE22415	2J3	5	0965 - 2
RE22415	2J4	5	0965 - 3
RE24532	2J3	13	0965 - 2
RE25110	4E10	36	2163 - 5
RE25110	4E12	35	2163 - 7
RE25110	4H14	20	4063 - 3
RE25110	4H16	17	4063 - 5
RE31617	1F15	13	0409 - 3
RE31617	1I5	13	0409A - 3
RE31617	2C9	13	0409B - 3
RE31617	2E16	13	0409C - 3
RE40048	2E18	5	0410C - 3
RE42139	2G4	7	0505 - 1
RE42423	2J12	1	1060 - 3
RE42424	2J12	2	1060 - 3
RE43637	3G13	5	1674 - 21
RE43637	3G15	5	1674 - 23
RE43637	3G17	5	1674 - 25
RE44574	1G16	4	0433 - 3
RE44574	1G19	18	0452 - 3
RE44574	1J9	4	0433A - 3
RE44574	1J12	18	0452A - 3
RE44574	2D14	4	0433B - 3
RE44574	2D16	18	0452B - 3
RE44574	2F22	4	0433C - 3
RE44574	2F24	18	0452C - 3
RE45896	1C5	5	0230 - 7
RE46534	3G13	4	1674 - 21
RE46534	3G15	4	1674 - 23
RE46534	3G17	4	1674 - 25
RE46684	1G3	7	0418 - 3
RE46684	1I18	7	0418A - 3
RE46684	2C19	7	0418B - 3
RE46684	2F3	7	0418C - 3
RE46685	1F8	5	0407 - 5
RE46685	1F25	10	0417 - 2
RE46685	1G1	10	0417 - 3
RE46685	1G5	7	0419 - 3
RE46685	1H23	5	0407A - 5
RE46685	1I15	10	0417A - 2

NUMERICAL INDEX - CONTINUED

PART NO.	GRID	KEY	PAGE
RE46685	1I16	10	0417A - 3
RE46685	1I20	7	0419A - 3
RE46685	2B17	18	0402B - 5
RE46685	2C3	5	0407B - 3
RE46685	2C3	8	0407B - 3
RE46685	2C21	7	0419B - 3
RE46685	2D24	18	0402C - 5
RE46685	2E10	9	0407C - 3
RE46685	2F5	7	0419C - 3
RE46686	1G5	6	0419 - 3
RE46686	1G7	5	0420 - 3
RE46686	1I20	6	0419A - 3
RE46686	1I22	5	0420A - 3
RE46686	2C21	9	0419B - 3
RE46686	2C23	24	0420B - 3
RE46686	2C25	5	0420B - 5
RE46686	2F5	9	0419C - 3
RE46686	2F7	24	0420C - 3
RE46686	2F9	5	0420C - 5
RE46716	1F10	2	0407 - 7
RE48310	2G6	5	0505 - 3
RE500002	1E23	3	0403 - 2
RE500002	1H14	3	0403A - 2
RE500002	2B19	3	0403B - 2
RE500005	1F5	5B	0407 - 2
RE500005	1H20	5B	0407A - 2
RE500005	2C1	5	0407B - 1
RE500005	2E8	5	0407C - 1
RE500133	1F10	4A	0407 - 7
RE500133	1F10	4B	0407 - 7
RE500133	1H25	4	0407A - 7
RE500137	1G15	4	0433 - 2
RE500137	1J8	4	0433A - 2
RE500137	2D13	2	0433B - 2
RE500137	2F21	2	0433C - 2
RE500448	1F23	11B	0415 - 3
RE500448	1I13	11	0415A - 3
RE500448	2C16	10	0415B - 3
RE500448	2E24	10	0415C - 3
RE500449	1F23	8B	0415 - 3
RE500449	1I13	12	0415A - 3
RE500449	2C16	7	0415B - 3
RE500449	2E24	7	0415C - 3
RE500538	1G14	12	0429 - 5
RE500538	1J7	12	0429A - 5
RE500539	2D10	1	0429B - 3
RE500539	2F18	1	0429C - 3
RE500608	2E1	3	0403C - 2
RE500631	1E15	15	0401 - 2
RE500631	1H6	15	0401A - 2
RE500737	1F25	14	0417 - 2
RE500737	1F25	16	0417 - 2
RE500737	1I15	16	0417A - 2
RE500877	1F20	22	0413 - 5
RE501260	2E25	4	0416C - 2
RE501294	2D6	12	0422B - 5
RE501294	2F14	12	0422C - 5
RE501298	2D6	12	0422B - 5
RE501298	2F14	12	0422C - 5
RE501377	1F5	6	0407 - 2
RE501377	1H20	6	0407A - 2
RE501377	2C1	6	0407B - 1
RE501377	2E8	6	0407C - 1
RE501455	2D16	12	0452B - 3
RE501455	2F24	12	0452C - 3
RE501767	1G9	2	0422 - 1
RE501767	1G9	7	0422 - 1
RE501767	1I24	2	0422A - 2
RE501767	1I24	7	0422A - 2
RE501767	1I25	7	0422A - 3
RE501768	1G9	2	0422 - 1
RE501938	1E20	3A	0402 - 7
RE501938	1E20	3B	0402 - 7
RE501938	1E22	3	0402 - 9
RE501938	1E22	13	0402 - 9
RE501938	1H11	3	0402A - 7
RE501938	1H13	3	0402A - 9
RE501938	1H13	13	0402A - 9
RE502269	1F11	6	0407 - 8
RE502380	1F20	22	0413 - 5
RE502380	1I10	22	0413A - 5
RE502969	1E18	6B	0402 - 4
RE502969	1H9	6	0402A - 4
RE502969	2B15	6	0402B - 3
RE502969	2D22	6	0402C - 3
RE503242	1F18	2	0413 - 3
RE503242	1I8	2	0413A - 3
RE503609	1F5	7	0407 - 2
RE503609	1H20	7	0407A - 2
RE503633	1G9	2	0422 - 1
RE503633	1I24	2	0422A - 2
RE503727	1F10	8	0407 - 7
RE503727	1H25	8	0407A - 7
RE50401	2I19	11	0962 - 5
RE504134	1G7	21	0420 - 3
RE504134	1I22	21	0420A - 3
RE504233	1G8	4B	0421 - 2
RE504233	1I23	4B	0421A - 2
RE504233	2D1	5	0421B - 2
RE504233	2F10	5	0421C - 2
RE504244	1J2	13	0422A - 5
RE504244	2D4	13	0422B - 3
RE504244	2F12	13	0422C - 3
RE504543	2C4	10	0407B - 4
RE504543	2E11	10	0407C - 4
RE504564	2C4	3	0407B - 4
RE504564	2E11	3	0407C - 4
RE504638	1E15	4	0401 - 2
RE504638	1H6	4	0401A - 2
RE504638	2B12	4	0401B - 2
RE504638	2D20	4	0401C - 2
RE504741	1F23	8A	0415 - 3
RE504741	1F23	11A	0415 - 3
RE504741	1F23	13	0415 - 3
RE504741	1I13	13	0415A - 3
RE504836	2C4	4	0407B - 4
RE504836	2E11	4	0407C - 4
RE504914	1F11	6	0407 - 8
RE504914	1I1	6	0407A - 8
RE504914	2C5	2	0407B - 7
RE504914	2C5	3	0407B - 7
RE504914	2C5	4	0407B - 7
RE504914	2C5	5	0407B - 7
RE504914	2C5	6	0407B - 7
RE504914	2E12	2	0407C - 5
RE504914	2E12	3	0407C - 5
RE504914	2E12	4	0407C - 5
RE504914	2E12	5	0407C - 5
RE504914	2E12	6	0407C - 5
RE505101	2B19	7	0403B - 2
RE505101	2B19	10	0403B - 2
RE505110	1E23	10	0403 - 2
RE505110	1H14	10	0403A - 2
RE505110	2B19	7	0403B - 2
RE505110	2B19	8	0403B - 2
RE505110	2B19	10	0403B - 2
RE505400	1I25	10	0422A - 3
RE505400	1J2	7	0422A - 5
RE505400	2D2	10	0422B - 1
RE505400	2D4	7	0422B - 3
RE505400	2F12	7	0422C - 3
RE505501	1E22	14	0402 - 9
RE505501	1H13	14	0402A - 9
RE505501	1H17	31	0404A - 3
RE505501	2B18	2	0402B - 6
RE505501	2B22	11	0404B - 3
RE505501	2D25	2	0402C - 6
RE505501	2E4	11	0404C - 3
RE505981	1F25	16	0417 - 2
RE505981	1G1	16	0417 - 3
RE505981	1I15	16	0417A - 2
RE505981	1I16	16	0417A - 3
RE505981	2B17	22	0402B - 5
RE505981	2D24	22	0402C - 5
RE506105	1I25	7	0422A - 3
RE506105	1J2	13	0422A - 5
RE506105	2D4	13	0422B - 3
RE506105	2F12	13	0422C - 3
RE506123	1F20	22	0413 - 5
RE506123	1I10	22	0413A - 5
RE50618	1E15	4	0401 - 2
RE50618	1H6	4	0401A - 2
RE506300	1G3	3	0418 - 3
RE506300	1I18	3	0418A - 3
RE506300	2C19	3	0418B - 3
RE506300	2F3	3	0418C - 3
RE506381	2B17	..	0402B - 5
RE506381	2D24	..	0402C - 5
RE506949	2E22	3	0414C - 1
RE50752	1G7	9	0420 - 3
RE50752	1I22	9	0420A - 3
RE507595	2E4	28	0404C - 3
RE507595	2E4	30	0404C - 3
RE507595	2E4	31	0404C - 3
RE507597	2F7	1	0420C - 3
RE507598	2E21	1	0413C - 5
RE507637	1I25	2	0422A - 3
RE507638	1I25	11	0422A - 3
RE507639	2D2	7	0422B - 1
RE507646	2C13	4	0413B - 3
RE507646	2E21	4	0413C - 5
RE507647	2C13	5	0413B - 3
RE507647	2E21	5	0413C - 5
RE507648	2C13	6	0413B - 3
RE507648	2E21	6	0413C - 5
RE507649	2C13	7	0413B - 3
RE507649	2E21	7	0413C - 5
RE507766	2E19	1	0413C - 2
RE507766	2E21	25	0413C - 5
RE507852	2E1	6	0403C - 2
RE507920	2E1	7	0403C - 2
RE507920	2E1	8	0403C - 2
RE507920	2E1	10	0403C - 2
RE507923	2F24	12	0452C - 3
RE508078	2E6	1	0404C - 5
RE508185	2B22	22	0404B - 3
RE508185	2E4	22	0404C - 3
RE508195	2I12	1	0510B - 2
RE508195	2I12	2	0510B - 2
RE508195	2I14	1	0510C - 1
RE508195	2I14	2	0510C - 1

NUMERICAL INDEX - CONTINUED

PART NO.	GRID	KEY	PAGE
RE508195	3G19	6	1674 - 27
RE508317	1E17	9	0402 - 3
RE508317	1H8	9	0402A - 3
RE508317	2B14	9	0402B - 2
RE508317	2D21	9	0402C - 2
RE508566	1E22	20	0402 - 9
RE508566	1G1	17	0417 - 3
RE508566	1H13	20	0402A - 9
RE508566	1I15	16	0417A - 2
RE508566	1I16	17	0417A - 3
RE508566	2B17	23	0402B - 5
RE508566	2B18	4	0402B - 6
RE508566	2D24	23	0402C - 5
RE508566	2D25	4	0402C - 6
RE508716	2C13	21	0413B - 3
RE508716	2E19	2	0413C - 2
RE508716	2E21	21	0413C - 5
RE508847	2C25	11	0420B - 5
RE508847	2C25	18	0420B - 5
RE508847	2F9	11	0420C - 5
RE508847	2F9	18	0420C - 5
RE509031	2C23	13	0420B - 3
RE509031	2F7	13	0420C - 3
RE509555	2E25	13	0416C - 2
RE509572	2E25	7	0416C - 2
RE509794	2C23	6	0420B - 3
RE509794	2F7	6	0420C - 3
RE515372	2E1	10	0403C - 2
RE515428	1I25	2	0422A - 3
RE515428	2D2	2	0422B - 1
RE515684	2C11	1	0413B - 1
RE515684	2C13	25	0413B - 3
RE515688	1I25	11	0422A - 3
RE515688	2D2	11	0422B - 1
RE515815	2C13	1	0413B - 3
RE515978	1E20	2	0402 - 7
RE515978	1E22	15	0402 - 9
RE515978	1H11	2	0402A - 7
RE515978	1H13	15	0402A - 9
RE515978	2B18	5	0402B - 6
RE515978	2D25	5	0402C - 6
RE516100	1F2	3	0404 - 3
RE516100	1F4	1	0404 - 5
RE516100	1H17	3	0404A - 3
RE516100	1H19	1	0404A - 5
RE516340	1E15	4	0401 - 2
RE516340	1E15	25	0401 - 2
RE516340	1E20	11	0402 - 7
RE516340	1E22	11	0402 - 9
RE516340	1G19	19	0452 - 3
RE516340	1H6	4	0401A - 2
RE516340	1H6	25	0401A - 2
RE516340	1H11	11	0402A - 7
RE516340	1H13	11	0402A - 9
RE516340	1J12	19	0452A - 3
RE516340	2B17	12	0402B - 5
RE516340	2B18	3	0402B - 6
RE516340	2D16	19	0452B - 3
RE516340	2D24	12	0402C - 5
RE516340	2D25	3	0402C - 6
RE516340	2F24	19	0452C - 3
RE51648	1G7	21	0420 - 3
RE51648	1I22	21	0420A - 3
RE51648	2C25	21	0420B - 5
RE51648	2F9	21	0420C - 5
RE51649	1G7	1	0420 - 3
RE51649	1I22	1	0420A - 3
RE51649	2C23	17	0420B - 3
RE51649	2C25	1	0420B - 5
RE51649	2F7	17	0420C - 3
RE51649	2F9	1	0420C - 5
RE51650	2C23	14	0420B - 3
RE51650	2C25	10	0420B - 5
RE51650	2F7	14	0420C - 3
RE51650	2F9	10	0420C - 5
RE516512	1G7	22	0420 - 3
RE516512	1I22	22	0420A - 3
RE516512	2C23	12	0420B - 3
RE516512	2C25	22	0420B - 5
RE516512	2F7	12	0420C - 3
RE516512	2F9	22	0420C - 5
RE516513	1G7	22	0420 - 3
RE516513	1I22	22	0420A - 3
RE516513	2C25	22	0420B - 5
RE516513	2F9	22	0420C - 5
RE516553	1G7	9	0420 - 3
RE516553	1I22	9	0420A - 3
RE516553	2C23	3	0420B - 3
RE516553	2C23	10	0420B - 3
RE516553	2C25	9	0420B - 5
RE516553	2F7	3	0420C - 3
RE516553	2F7	10	0420C - 3
RE516553	2F9	9	0420C - 5
RE517181	2C25	10	0420B - 5
RE517181	2F9	10	0420C - 5
RE517370	2B17	3	0402B - 5
RE517370	2B18	1	0402B - 6
RE517370	2D24	3	0402C - 5
RE517370	2D25	1	0402C - 6
RE518087	2C13	10	0413B - 3
RE518087	2E21	10	0413C - 5
RE518097	1G14	9	0429 - 5
RE518097	1J7	9	0429A - 5
RE518097	2D12	1	0429B - 5
RE518097	2F20	1	0429C - 5
RE518176	2C13	14	0413B - 3
RE518176	2E21	14	0413C - 5
RE518656	2C25	12	0420B - 5
RE518656	2F9	12	0420C - 5
RE519144	2I12	1	0510B - 2
RE519144	2I14	1	0510C - 1
RE519144	3G19	6	1674 - 27
RE520023	2E4	3	0404C - 3
RE520031	2B22	3	0404B - 3
RE520031	2B24	1	0404B - 5
RE520539	1E18	7	0402 - 4
RE520539	1G17	1	0452 - 1
RE520539	1G19	1	0452 - 3
RE520539	1H9	7	0402A - 4
RE520539	1J10	1	0452A - 1
RE520539	1J12	1	0452A - 3
RE520539	2B15	5	0402B - 3
RE520539	2D16	1	0452B - 3
RE520539	2D22	5	0402C - 3
RE520539	2F24	1	0452C - 3
RE521822	2C13	10	0413B - 3
RE521822	2E21	10	0413C - 5
RE521823	2C13	10	0413B - 3
RE521823	2E21	10	0413C - 5
RE521824	2C13	10	0413B - 3
RE521824	2E21	10	0413C - 5
RE521825	2C13	10	0413B - 3
RE521825	2E21	10	0413C - 5
RE522076	1G3	3	0418 - 3
RE522076	1I18	3	0418A - 3
RE522076	2C19	3	0418B - 3
RE522076	2F3	3	0418C - 3
RE522077	2C7	3	0408B - 3
RE522078	2C2	2	0407B - 2
RE522079	2C7	4	0408B - 3
RE522109	2C13	10	0413B - 3
RE522109	2E21	10	0413C - 5
RE522214	2C23	1	0420B - 3
RE522215	2C23	9	0420B - 3
RE52242	1F10	2	0407 - 7
RE52242	1H25	2	0407A - 7
RE52242	2C4	1	0407B - 4
RE52242	2E11	1	0407C - 4
RE52660	3H12	8	1811 - 3
RE52660	3H14	4	1811 - 5
RE52722	2I12	3	0510B - 2
RE52722	2I14	3	0510C - 1
RE52722	3G19	3	1674 - 27
RE54885	2E25	16	0416C - 2
RE56165	2G24	28	0515 - 7
RE56165	3G19	8	1674 - 27
RE56313	1E15	15	0401 - 2
RE56313	2B20	8	0404B - 1
RE56313	2E2	8	0404C - 1
RE56369	1E15	21	0401 - 2
RE56369	1H6	21	0401A - 2
RE56369	2B17	28	0402B - 5
RE56369	2D24	28	0402C - 5
RE56375	1E16	4	0402 - 2
RE56375	1H7	4	0402A - 2
RE56375	2B13	1	0402B - 1
RE56375	2B13	2	0402B - 1
RE56375	2B13	4	0402B - 1
RE56690	1G5	2	0419 - 3
RE56737	1F25	15	0417 - 2
RE56737	1F25	16	0417 - 2
RE57234	1F15	15	0409 - 3
RE57234	1I5	15	0409A - 3
RE57234	2C9	15	0409B - 3
RE57234	2E16	15	0409C - 3
RE57471	1C6	15	0230 - 8
RE57472	1C6	17	0230 - 8
RE57619	2E10	2	0407C - 3
RE58878	2I19	20	0962 - 5
RE59296	1G5	2	0419 - 3
RE59296	1I20	2	0419A - 3
RE59296	2C21	2	0419B - 3
RE59296	2F5	2	0419C - 3
RE59407	1F25	15	0417 - 2
RE59427	1F8	2A	0407 - 5
RE59427	1H23	2A	0407A - 5
RE59439	1F8	2A	0407 - 5
RE59439	1F8	2B	0407 - 5
RE59439	1H23	2A	0407A - 5
RE59439	1H23	2B	0407A - 5
RE59439	2C3	5	0407B - 3
RE59447	1F20	7	0413 - 5
RE59447	1I10	7	0413A - 5
RE59448	1F20	8	0413 - 5
RE59448	1I10	8	0413A - 5
RE59449	1F20	9	0413 - 5
RE59449	1I10	9	0413A - 5
RE59450	1F20	10	0413 - 5
RE59450	1I10	10	0413A - 5
RE59545	2E10	5	0407C - 3
RE59582	1F11	6	0407 - 8

NUMERICAL INDEX - CONTINUED

PART NO.	GRID	KEY	PAGE
RE59707	1G14	12	0429 - 5
RE59754	1F10	7	0407 - 7
RE59754	1H25	7	0407A - 7
RE59801	1E18	5	0402 - 4
RE59801	1H9	5	0402A - 4
RE59810	1E20	11	0402 - 7
RE59810	1E22	11	0402 - 9
RE59810	1G19	19	0452 - 3
RE59810	1H11	11	0402A - 7
RE59810	1H13	11	0402A - 9
RE59810	1J12	19	0452A - 3
RE59810	2B17	12	0402B - 5
RE59810	2B18	3	0402B - 6
RE59810	2D16	19	0452B - 3
RE59810	2D24	12	0402C - 5
RE59810	2D25	3	0402C - 6
RE59810	2F24	19	0452C - 3
RE59811	1E15	4	0401 - 2
RE59811	1E15	22	0401 - 2
RE59811	1H6	4	0401A - 2
RE59811	1H6	22	0401A - 2
RE59811	2B12	4	0401B - 2
RE59811	2B12	..	0401B - 2
RE59811	2D20	4	0401C - 2
RE59811	2D20	..	0401C - 2
RE59908	1F10	4A	0407 - 7
RE60005	1F15	3	0409 - 3
RE60005	1I5	3	0409A - 3
RE60005	2C9	3	0409B - 3
RE60005	2E16	3	0409C - 3
RE60025	1G7	12	0420 - 3
RE60025	1I22	12	0420A - 3
RE60029	1F20	18	0413 - 5
RE60029	1G7	4	0420 - 3
RE60029	1I10	18	0413A - 5
RE60029	1I22	4	0420A - 3
RE60029	2C23	22	0420B - 3
RE60029	2C25	4	0420B - 5
RE60029	2F7	22	0420C - 3
RE60029	2F9	4	0420C - 5
RE60037	1G7	2	0420 - 3
RE60037	1I22	2	0420A - 3
RE60037	2C25	23	0420B - 5
RE60037	2F7	9	0420C - 3
RE60037	2F9	23	0420C - 5
RE60062	1F17	10	0413 - 2
RE60062	1I7	10	0413A - 2
RE60071	2C14	3	0414B - 2
RE60071	2E22	5	0414C - 1
RE60272	1E23	3	0403 - 2
RE60854	1G7	17	0420 - 3
RE60854	1I22	17	0420A - 3
RE60854	2C23	15	0420B - 3
RE60854	2C25	17	0420B - 5
RE60854	2F7	15	0420C - 3
RE60854	2F9	17	0420C - 5
RE61812	2C14	6	0414B - 2
RE61812	2E22	8	0414C - 1
RE61812	2I12	5	0510B - 2
RE61812	2I14	5	0510C - 1
RE61812	3G19	2	1674 - 27
RE62418	1G7	10	0420 - 3
RE62418	1I22	10	0420A - 3
RE64354	1G3	3	0418 - 3
RE64354	1I18	3	0418A - 3
RE65165	1E15	7	0401 - 2
RE65165	1H6	7	0401A - 2
RE65165	2B12	7	0401B - 2
RE65165	2D20	7	0401C - 2
RE65168	1E15	10	0401 - 2
RE65168	1H6	10	0401A - 2
RE65168	2B12	10	0401B - 2
RE65168	2D20	10	0401C - 2
RE65908	1E23	11	0403 - 2
RE65908	1H14	11	0403A - 2
RE65908	2B19	11	0403B - 2
RE65908	2E1	11	0403C - 2
RE65909	1E23	11	0403 - 2
RE65909	1H14	11	0403A - 2
RE65909	2B19	11	0403B - 2
RE65909	2E1	11	0403C - 2
RE65911	1E15	7	0401 - 2
RE65911	1H6	7	0401A - 2
RE65911	2B12	7	0401B - 2
RE65911	2D20	7	0401C - 2
RE65912	1E15	10	0401 - 2
RE65912	1H6	10	0401A - 2
RE65912	2B12	10	0401B - 2
RE65912	2D20	10	0401C - 2
RE65951	1F4	1	0404 - 5
RE65951	1H19	1	0404A - 5
RE65966	1E23	10	0403 - 2
RE65966	1H14	10	0403A - 2
RE65978	2C7	5	0408B - 3
RE65978	2E25	14	0416C - 2
RE66082	1G17	12	0452 - 1
RE66082	1J10	12	0452A - 1
RE66082	2D16	33	0452B - 3
RE66082	2F24	33	0452C - 3
RE66084	1G17	17	0452 - 1
RE66084	1J10	17	0452A - 1
RE66084	2D16	12	0452B - 3
RE66084	2D16	34	0452B - 3
RE66084	2F24	12	0452C - 3
RE66084	2F24	34	0452C - 3
RE66086	1G19	12	0452 - 3
RE66086	1J12	12	0452A - 3
RE66092	1G19	12	0452 - 3
RE66092	1J12	12	0452A - 3
RE66092	2D16	12	0452B - 3
RE66153	1G8	2	0421 - 2
RE66153	1I23	2	0421A - 2
RE66153	2D1	2	0421B - 2
RE66153	2F10	2	0421C - 2
RE66214	1F18	2	0413 - 3
RE66271	1E23	6	0403 - 2
RE66271	1H14	6	0403A - 2
RE66271	2B19	6	0403B - 2
RE66298	1G8	4A	0421 - 2
RE66298	1I23	4A	0421A - 2
RE66560	1F18	1	0413 - 3
RE66560	1I8	1	0413A - 3
RE67231	1G5	1	0419 - 3
RE67231	1I20	1	0419A - 3
RE67231	2C21	1	0419B - 3
RE67231	2F5	1	0419C - 3
RE67238	1F5	1	0407 - 2
RE67238	1F10	6	0407 - 7
RE67238	1G5	14	0419 - 3
RE67238	1G5	17	0419 - 3
RE67238	1H20	1	0407A - 2
RE67238	1H25	6	0407A - 7
RE67238	1I20	14	0419A - 3
RE67238	1I20	17	0419A - 3
RE67238	2C1	1	0407B - 1
RE67238	2C4	8	0407B - 4
RE67238	2C21	14	0419B - 3
RE67238	2E8	1	0407C - 1
RE67238	2E11	8	0407C - 4
RE67238	2F5	14	0419C - 3
RE67239	1E20	5	0402 - 7
RE67239	1E22	5	0402 - 9
RE67239	1H11	5	0402A - 7
RE67239	1H13	5	0402A - 9
RE67239	2B17	10	0402B - 5
RE67239	2C1	4	0407B - 1
RE67239	2D24	10	0402C - 5
RE67239	2E8	4	0407C - 1
RE67594	1F20	22	0413 - 5
RE68695	1E17	9	0402 - 3
RE68695	1H8	9	0402A - 3
RE68748	1F20	3	0413 - 5
RE68748	1I10	3	0413A - 5
RE68748	2C13	26	0413B - 3
RE68748	2E21	26	0413C - 5
RE69243	1F6	1	0407 - 3
RE69243	1H21	1	0407A - 3
RE69243	2C2	1	0407B - 2
RE69243	2E9	1	0407C - 2
RE69292	1G14	3	0429 - 5
RE69292	1J7	3	0429A - 5
RE69364	1F23	11A	0415 - 3
RE69365	1F23	8A	0415 - 3
RE70073	1F11	10	0407 - 8
RE70073	1I1	10	0407A - 8
RE70073	2C3	2	0407B - 3
RE70153	1F11	6	0407 - 8
RE70358	1G7	18	0420 - 3
RE70358	1I22	18	0420A - 3
RE70401	1E18	6A	0402 - 4
RE70446	1G9	2	0422 - 1
RE70486	1J2	5	0422A - 5
RE70486	2D4	5	0422B - 3
RE70486	2D6	4	0422B - 5
RE70486	2F12	5	0422C - 3
RE70486	2F14	4	0422C - 5
RE70487	1J2	3	0422A - 5
RE70487	2D4	3	0422B - 3
RE70487	2D6	5	0422B - 5
RE70487	2F12	3	0422C - 3
RE70487	2F14	5	0422C - 5
RE70535	1G14	9	0429 - 5
RE70535	1J7	9	0429A - 5
RE70581	1G9	5	0422 - 1
RE70581	1I24	5	0422A - 2
RE70683	1F25	14	0417 - 2
RE70683	1F25	15	0417 - 2
RE70683	1F25	16	0417 - 2
RE70728	1G9	2	0422 - 1
RE70728	1G9	7	0422 - 1
RE70756	1J2	9	0422A - 5
RE70756	1J2	12	0422A - 5
RE70756	2D4	9	0422B - 3
RE70756	2D4	12	0422B - 3
RE70756	2D6	11	0422B - 5
RE70756	2F12	9	0422C - 3
RE70756	2F12	12	0422C - 3
RE70756	2F14	11	0422C - 5
RE70848	1F20	4	0413 - 5
RE70848	1I10	4	0413A - 5
RE70962	1G1	15	0417 - 3

NUMERICAL INDEX - CONTINUED

PART NO.	GRID	KEY	PAGE
RE70962	1I16	15	0417A - 3
RE71240	1F25	15	0417 - 2
RE71240	1I15	15	0417A - 2
RE71256	1J2	8	0422A - 5
RE71256	2D4	8	0422B - 3
RE71256	2D6	6	0422B - 5
RE71256	2F12	8	0422C - 3
RE71256	2F14	6	0422C - 5
RE71527	1F5	7	0407 - 2
R100369	1F25	14	0417 - 2
R100369	1G1	14	0417 - 3
R100369	1I15	14	0417A - 2
R100369	1I16	14	0417A - 3
R100369	2B17	17	0402B - 5
R100369	2D24	17	0402C - 5
R100377	1G11	2	0423 - 3
R100377	1J4	2	0423A - 3
R100377	2D8	1	0423B - 3
R100377	2F16	1	0423C - 3
R100686	2G24	26	0515 - 7
R10093	2I19	24	0962 - 5
R101085	1E20	3A	0402 - 7
R101225	1E15	11	0401 - 2
R101225	1E15	14	0401 - 2
R101225	1H6	11	0401A - 2
R101225	1H6	14	0401A - 2
R101225	2B20	5	0404B - 1
R101225	2E2	5	0404C - 1
R104592	1F2	5	0404 - 3
R104592	1F15	5	0409 - 3
R104592	1H17	5	0404A - 3
R104592	1I5	5	0409A - 3
R104592	2B22	5	0404B - 3
R104592	2C9	5	0409B - 3
R104592	2E4	5	0404C - 3
R104592	2E16	5	0409C - 3
R106829	2C9	8	0409B - 3
R106829	2E16	8	0409C - 3
R106831	2C9	8	0409B - 3
R106831	2E16	8	0409C - 3
R107731	1E17	11	0402 - 3
R107731	1H8	11	0402A - 3
R107731	2B14	11	0402B - 2
R107731	2D21	11	0402C - 2
R108073	4H12	11	4015 - 3
R109863	1E15	12	0401 - 2
R110531	2E22	1	0414C - 1
R111137	1F2	10	0404 - 3
R111137	1H17	10	0404A - 3
R111137	2B22	10	0404B - 3
R111137	2E4	10	0404C - 3
R11151	4F18	13	3115 - 3
R112630	4H12	6	4015 - 3
R11278	3G13	22	1674 - 21
R113189	3K2	1	2011 - 3
R113562	1G7	6	0420 - 3
R113562	1I22	6	0420A - 3
R113562	2C23	5	0420B - 3
R113562	2C23	11	0420B - 3
R113562	2F7	5	0420C - 3
R113562	2F7	11	0420C - 3
R113563	1G7	7	0420 - 3
R113563	1I22	7	0420A - 3
R113563	2C23	4	0420B - 3
R113563	2C23	16	0420B - 3
R113563	2C25	7	0420B - 5
R113563	2F7	4	0420C - 3
R113563	2F7	16	0420C - 3
R113563	2F9	7	0420C - 5
R113565	2C25	6	0420B - 5
R113565	2F9	6	0420C - 5
R113596	1E15	4	0401 - 2
R113596	1H6	4	0401A - 2
R113596	2B12	4	0401B - 2
R113596	2D20	4	0401C - 2
R113780	1C5	4	0230 - 7
R114082	2E1	2	0403C - 2
R114083	1E23	1	0403 - 2
R114193	1E15	20	0401 - 2
R114193	1H6	20	0401A - 2
R114193	2B17	27	0402B - 5
R114193	2D24	27	0402C - 5
R114194	1E15	23	0401 - 2
R114194	1H6	23	0401A - 2
R114194	2B20	11	0404B - 1
R114194	2E2	11	0404C - 1
R114241	1F2	17	0404 - 3
R114241	1H17	17	0404A - 3
R114241	2B22	17	0404B - 3
R114241	2E4	17	0404C - 3
R115081	1F2	3	0404 - 3
R115081	1F4	1	0404 - 5
R115081	1H17	3	0404A - 3
R115081	1H19	1	0404A - 5
R115081	2B22	3	0404B - 3
R115081	2B24	1	0404B - 5
R115081	2E4	3	0404C - 3
R115081	2E6	1	0404C - 5
R115119	1C19	13	0250 - 9
R115250	1F24	1	0417 - 1
R115250	1I14	1	0417A - 1
R115252	1G5	10	0419 - 3
R115252	1I20	10	0419A - 3
R115299	1F2	12	0404 - 3
R115299	1F23	1	0415 - 3
R115299	1H17	12	0404A - 3
R115299	1I13	1	0415A - 3
R115299	2B22	12	0404B - 3
R115299	2E4	12	0404C - 3
R115301	1F23	8A	0415 - 3
R115390	1F2	15	0404 - 3
R115390	1H17	15	0404A - 3
R115390	2B22	15	0404B - 3
R115390	2E4	15	0404C - 3
R116078	1F23	11A	0415 - 3
R116115	1F10	4A	0407 - 7
R116115	1F10	9	0407 - 7
R116115	1H25	9	0407A - 7
R116115	2C4	5	0407B - 4
R116115	2E11	5	0407C - 4
R116116	1F20	12	0413 - 5
R116116	1G7	15	0420 - 3
R116116	1I10	12	0413A - 5
R116116	1I22	15	0420A - 3
R116116	2C23	21	0420B - 3
R116116	2F7	21	0420C - 3
R116296	1F5	2	0407 - 2
R116296	1H20	2	0407A - 2
R116296	2C1	2	0407B - 1
R116296	2E8	2	0407C - 1
R116324	1E18	4	0402 - 4
R116324	1H9	4	0402A - 4
R116324	2B15	1	0402B - 3
R116324	2D22	1	0402C - 3
R116366	1F17	5	0413 - 2
R116366	1I7	5	0413A - 2
R116366	2C11	2	0413B - 1
R116386	1E24	1	0404 - 1
R116386	1F20	20	0413 - 5
R116386	1H15	1	0404A - 1
R116386	1I10	20	0413A - 5
R116386	2B20	2	0404B - 1
R116386	2C13	17	0413B - 3
R116386	2E2	2	0404C - 1
R116386	2E21	17	0413C - 5
R116466	1F2	2	0404 - 3
R116466	1H17	2	0404A - 3
R116466	2B22	2	0404B - 3
R116466	2B22	25	0404B - 3
R116466	2E4	2	0404C - 3
R116466	2E4	25	0404C - 3
R116515	1F15	12	0409 - 3
R116515	1G17	8	0452 - 1
R116515	1G19	8	0452 - 3
R116515	1I5	12	0409A - 3
R116515	1J10	8	0452A - 1
R116515	1J12	8	0452A - 3
R116515	2C9	12	0409B - 3
R116515	2D16	8	0452B - 3
R116515	2E16	12	0409C - 3
R116515	2F24	8	0452C - 3
R117611	4H12	8	4015 - 3
R118252	4H12	5	4015 - 3
R119874	1F2	6	0404 - 3
R119874	1H17	6	0404A - 3
R119874	2B22	6	0404B - 3
R119874	2E4	6	0404C - 3
R120013	2E25	15	0416C - 2
R120467	1F13	1	0408 - 3
R120467	1I3	1	0408A - 3
R120467	2C7	7	0408B - 3
R120467	2E14	1	0408C - 3
R120631	1E15	3	0401 - 2
R120631	1H6	3	0401A - 2
R120631	2B12	3	0401B - 2
R120631	2D20	3	0401C - 2
R120635	1E15	15	0401 - 2
R120635	1H6	15	0401A - 2
R120635	2B20	8	0404B - 1
R120635	2E2	8	0404C - 1
R120638	1F11	13	0407 - 8
R120638	1I1	13	0407A - 8
R120638	2C5	10	0407B - 7
R120638	2E12	10	0407C - 5
R120641	1E15	12	0401 - 2
R120641	1H6	12	0401A - 2
R120641	2B20	6	0404B - 1
R120641	2E2	6	0404C - 1
R121035	1F25	16	0417 - 2
R121036	1G1	1	0417 - 3
R121036	1I16	1	0417A - 3
R121038	2C17	1	0417B - 1
R121038	2F1	1	0417C - 1
R121039	1G16	7	0433 - 3
R121039	1J9	7	0433A - 3
R121039	2D14	5	0433B - 3
R121039	2F22	5	0433C - 3
R121043	1F2	9	0404 - 3
R121043	1H17	9	0404A - 3
R121043	2B22	9	0404B - 3
R121043	2E4	9	0404C - 3

NUMERICAL INDEX - CONTINUED

PART NO.	GRID	KEY	PAGE
R121079	1C7	9	0230 - 9
R121376	1F11	7	0407 - 8
R121376	1I1	7	0407A - 8
R121376	2C5	7	0407B - 7
R121376	2E12	7	0407C - 5
R121402	1F15	14	0409 - 3
R121402	1F15	15	0409 - 3
R121402	1I5	14	0409A - 3
R121402	1I5	15	0409A - 3
R121402	2C9	14	0409B - 3
R121402	2C9	15	0409B - 3
R121402	2E16	14	0409C - 3
R121402	2E16	15	0409C - 3
R121411	1E20	8	0402 - 7
R121411	1E22	8	0402 - 9
R121411	1H11	8	0402A - 7
R121411	1H13	8	0402A - 9
R121411	2B17	7	0402B - 5
R121411	2D24	7	0402C - 5
R121416	1G3	4	0418 - 3
R121416	1G17	3	0452 - 1
R121416	1G19	3	0452 - 3
R121424	1E20	7	0402 - 7
R121424	1E22	7	0402 - 9
R121424	1H11	7	0402A - 7
R121424	1H13	7	0402A - 9
R121424	2B17	6	0402B - 5
R121424	2D24	6	0402C - 5
R121593	1C5	3	0230 - 7
R121594	1C5	6	0230 - 7
R121634	1F24	4	0417 - 1
R121634	1I14	4	0417A - 1
R121634	2C17	4	0417B - 1
R121634	2F1	4	0417C - 1
R121793	1G16	2	0433 - 3
R121897	1G12	4	0429 - 2
R121897	1J5	4	0429A - 2
R121897	2D9	4	0429B - 2
R121897	2F17	4	0429C - 2
R122218	1C6	15	0230 - 8
R122717	3B11	30	1322 - 3
R122717	4G23	6	4000 - 3
R123161	1E17	7	0402 - 3
R123161	1H8	7	0402A - 3
R123161	2B14	7	0402B - 2
R123161	2D21	7	0402C - 2
R123174	1E15	11	0401 - 2
R123174	2B20	5	0404B - 1
R123174	2E2	5	0404C - 1
R123177	2E1	5	0403C - 2
R123178	1E23	5	0403 - 2
R123178	1H14	5	0403A - 2
R123178	2B19	5	0403B - 2
R123179	1F11	6	0407 - 8
R123226	1F25	9	0417 - 2
R123226	1G1	9	0417 - 3
R123226	1G3	9	0418 - 3
R123226	1G17	4	0452 - 1
R123226	1G19	4	0452 - 3
R123226	1I15	9	0417A - 2
R123226	1I16	9	0417A - 3
R123226	1I18	9	0418A - 3
R123226	1J10	4	0452A - 1
R123226	1J12	4	0452A - 3
R123226	2B17	20	0402B - 5
R123226	2C19	9	0418B - 3
R123226	2D16	4	0452B - 3
R123226	2D24	20	0402C - 5
R123226	2F3	9	0418C - 3
R123226	2F24	4	0452C - 3
R12323	2C3	5	0407B - 3
R123246	2E18	3	0410C - 3
R123271	1E17	5	0402 - 3
R123271	1H8	5	0402A - 3
R123271	2B14	5	0402B - 2
R123271	2D21	5	0402C - 2
R123273	1G8	7	0421 - 2
R123273	1G19	20	0452 - 3
R123273	1I23	7	0421A - 2
R123273	1J12	20	0452A - 3
R123273	2D1	1	0421B - 2
R123273	2D16	20	0452B - 3
R123273	2F10	1	0421C - 2
R123273	2F24	20	0452C - 3
R123284	1G14	4	0429 - 5
R123284	1J7	4	0429A - 5
R123323	1G3	1	0418 - 3
R123323	1I18	1	0418A - 3
R123323	2C19	1	0418B - 3
R123323	2F3	1	0418C - 3
R123324	1G3	12	0418 - 3
R123324	1I18	12	0418A - 3
R123324	2C19	12	0418B - 3
R123324	2F3	12	0418C - 3
R123345	1G17	5	0452 - 1
R123345	1G19	5	0452 - 3
R123345	1J10	5	0452A - 1
R123345	1J12	5	0452A - 3
R123345	2D16	5	0452B - 3
R123345	2F24	5	0452C - 3
R123352	1G17	13	0452 - 1
R123352	1G19	13	0452 - 3
R123352	1J10	13	0452A - 1
R123352	1J12	13	0452A - 3
R123352	2C3	1	0407B - 3
R123352	2D16	13	0452B - 3
R123352	2E10	1	0407C - 3
R123352	2F24	13	0452C - 3
R123353	1F8	1	0407 - 5
R123353	1H23	1	0407A - 5
R123353	2D16	35	0452B - 3
R123353	2F24	35	0452C - 3
R123355	1E24	3	0404 - 1
R123417	1F25	13	0417 - 2
R123417	1G1	13	0417 - 3
R123417	1G19	21	0452 - 3
R123417	1I15	13	0417A - 2
R123417	1I16	13	0417A - 3
R123417	1J12	21	0452A - 3
R123417	2B17	24	0402B - 5
R123417	2D16	21	0452B - 3
R123417	2D24	24	0402C - 5
R123417	2F24	21	0452C - 3
R123421	1G19	22	0452 - 3
R123425	1G19	22	0452 - 3
R123471	1G5	5	0419 - 3
R123471	1I20	5	0419A - 3
R123471	2C21	5	0419B - 3
R123471	2F5	5	0419C - 3
R123475	1F10	4A	0407 - 7
R123501	1G5	3	0419 - 3
R123501	1G19	23	0452 - 3
R123501	1I20	3	0419A - 3
R123501	1J12	23	0452A - 3
R123501	2C21	3	0419B - 3
R123501	2D16	23	0452B - 3
R123501	2F5	3	0419C - 3
R123501	2F24	23	0452C - 3
R123502	1G5	8	0419 - 3
R123502	1G19	31	0452 - 3
R123502	1J12	31	0452A - 3
R123504	1G19	24	0452 - 3
R123504	1J12	24	0452A - 3
R123513	1E17	2	0402 - 3
R123513	1H8	2	0402A - 3
R123513	2B14	2	0402B - 2
R123513	2D21	2	0402C - 2
R123521	1G15	2	0433 - 2
R123521	1J8	2	0433A - 2
R123521	2D13	3	0433B - 2
R123521	2F21	3	0433C - 2
R123525	1F10	1A	0407 - 7
R123525	1G19	25	0452 - 3
R123525	1J12	25	0452A - 3
R123525	2D16	25	0452B - 3
R123525	2F24	25	0452C - 3
R123542	1E18	7	0402 - 4
R123542	1G17	1	0452 - 1
R123542	1G19	1	0452 - 3
R123542	1H9	7	0402A - 4
R123542	1J10	1	0452A - 1
R123542	1J12	1	0452A - 3
R123542	2B15	5	0402B - 3
R123542	2D16	1	0452B - 3
R123542	2D22	5	0402C - 3
R123542	2F24	1	0452C - 3
R123561	1E15	5	0401 - 2
R123561	1H6	5	0401A - 2
R123561	2B12	5	0401B - 2
R123561	2D20	5	0401C - 2
R123562	1E15	6	0401 - 2
R123562	1H6	6	0401A - 2
R123562	2B12	6	0401B - 2
R123562	2D20	6	0401C - 2
R123563	1E15	8	0401 - 2
R123563	1H6	8	0401A - 2
R123563	2B12	8	0401B - 2
R123563	2D20	8	0401C - 2
R123564	1E15	9	0401 - 2
R123564	1H6	9	0401A - 2
R123564	2B12	9	0401B - 2
R123564	2D20	9	0401C - 2
R123565	1E17	10	0402 - 3
R123565	1H8	10	0402A - 3
R123565	2B14	10	0402B - 2
R123565	2D21	10	0402C - 2
R123569	1F21	1	0414 - 2
R123569	1I11	1	0414A - 2
R123570	1G17	6	0452 - 1
R123570	1G19	6	0452 - 3
R123570	1J10	6	0452A - 1
R123570	1J12	6	0452A - 3
R123570	2D16	6	0452B - 3
R123570	2F24	6	0452C - 3
R123574	1E18	2	0402 - 4
R123574	1H9	2	0402A - 4
R123574	2B15	3	0402B - 3
R123574	2D22	3	0402C - 3
R123575	1E18	3	0402 - 4
R123575	1G17	7	0452 - 1
R123575	1G19	7	0452 - 3

NUMERICAL INDEX - CONTINUED

PART NO.	GRID	KEY	PAGE
R123575	1H9	3	0402A - 4
R123575	1J10	7	0452A - 1
R123575	1J12	7	0452A - 3
R123575	2B15	4	0402B - 3
R123575	2D16	7	0452B - 3
R123575	2D22	4	0402C - 3
R123575	2F24	7	0452C - 3
R123584	1E20	18	0402 - 7
R123584	1E22	18	0402 - 9
R123584	1H11	18	0402A - 7
R123584	1H13	18	0402A - 9
R123584	2B20	4	0404B - 1
R123584	2E2	4	0404C - 1
R123588	1G3	10	0418 - 3
R123591	1F10	8	0407 - 7
R123591	1H25	8	0407A - 7
R123593	1F20	2	0413 - 5
R123593	1I10	2	0413A - 5
R123593	2C13	19	0413B - 3
R123593	2E21	19	0413C - 5
R123594	1G7	20	0420 - 3
R123594	1I22	20	0420A - 3
R123594	2C25	2	0420B - 5
R123594	2F9	2	0420C - 5
R123959	1E23	3	0403 - 2
R123960	1E23	2	0403 - 2
R123960	1H14	2	0403A - 2
R123960	2B19	2	0403B - 2
R124848	2H12	12	0521 - 9
R128660	1G14	5	0429 - 5
R128660	1J7	5	0429A - 5
R128660	2G16	5	0512 - 3
R128660	2G18	5	0512 - 5
R130574	1E15	8	0401 - 2
R130574	1H6	8	0401A - 2
R130574	2B12	8	0401B - 2
R130574	2D20	8	0401C - 2
R130575	1E15	9	0401 - 2
R130575	1H6	9	0401A - 2
R130575	2B12	9	0401B - 2
R130575	2D20	9	0401C - 2
R130576	1E15	5	0401 - 2
R130576	1H6	5	0401A - 2
R130576	2B12	5	0401B - 2
R130576	2D20	5	0401C - 2
R130577	1E15	6	0401 - 2
R130577	1H6	6	0401A - 2
R130577	2B12	6	0401B - 2
R130577	2D20	6	0401C - 2
R130603	1E23	2	0403 - 2
R131016	1G3	5	0418 - 3
R131016	1I18	5	0418A - 3
R131016	2C19	5	0418B - 3
R131016	2F3	5	0418C - 3
R131182	1F2	21	0404 - 3
R131182	1H17	21	0404A - 3
R131182	2B22	21	0404B - 3
R131182	2E4	21	0404C - 3
R131206	1E15	16	0401 - 2
R131206	2B20	9	0404B - 1
R131206	2E2	9	0404C - 1
R131283	1E15	16	0401 - 2
R131283	1E15	19	0401 - 2
R131283	1H6	16	0401A - 2
R131283	1H6	19	0401A - 2
R131283	2B17	26	0402B - 5
R131283	2D24	26	0402C - 5
R131425	1E20	13	0402 - 7
R131425	1H11	13	0402A - 7
R131769	1G16	3	0433 - 3
R131769	1J9	3	0433A - 3
R131769	2D14	2	0433B - 3
R131769	2F22	2	0433C - 3
R132006	1G16	2	0433 - 3
R132006	1J9	2	0433A - 3
R132166	1G11	4	0423 - 3
R132166	1J4	4	0423A - 3
R132166	2D8	2	0423B - 3
R132166	2F16	2	0423C - 3
R132167	1G11	12	0423 - 3
R132167	1J4	12	0423A - 3
R132168	1G11	5	0423 - 3
R132168	1J4	5	0423A - 3
R132169	1G11	10	0423 - 3
R132186	1F2	20	0404 - 3
R132186	1H17	20	0404A - 3
R132186	2B22	20	0404B - 3
R132186	2E4	20	0404C - 3
R132261	1F16	1	0410 - 1
R132261	1I6	1	0410A - 1
R132261	2C10	1	0410B - 2
R132261	2E17	1	0410C - 2
R132267	1F20	23	0413 - 5
R132267	1I10	23	0413A - 5
R132518	1F2	7	0404 - 3
R132518	1H17	7	0404A - 3
R132518	2B22	7	0404B - 3
R132518	2E4	7	0404C - 3
R132874	1F20	24	0413 - 5
R132874	1I10	24	0413A - 5
R132874	2C13	12	0413B - 3
R132874	2E21	12	0413C - 5
R133295	1G12	2	0429 - 2
R133295	1J5	2	0429A - 2
R133295	2D9	2	0429B - 2
R133295	2F17	2	0429C - 2
R133303	1E16	3	0402 - 2
R133303	1H7	3	0402A - 2
R133303	1I13	14	0415A - 3
R133303	2B13	3	0402B - 1
R133303	2C16	6	0415B - 3
R133303	2E4	29	0404C - 3
R133303	2E24	6	0415C - 3
R133385	1G12	3	0429 - 2
R133405	1G8	5	0421 - 2
R133405	1I23	5	0421A - 2
R133405	2D1	6	0421B - 2
R133405	2F10	6	0421C - 2
R133812	1E16	2	0402 - 2
R133812	1H7	2	0402A - 2
R133893	1G17	10A	0452 - 1
R133893	1J10	10A	0452A - 1
R133893	2D16	10	0452B - 3
R133893	2F24	10	0452C - 3
R133978	1G14	11	0429 - 5
R133978	1J7	11	0429A - 5
R133978	2D12	6	0429B - 5
R133978	2F20	6	0429C - 5
R134359	1F23	2A	0415 - 3
R134518	1E20	19	0402 - 7
R134518	1E22	19	0402 - 9
R134518	1H13	19	0402A - 9
R134518	2B20	3	0404B - 1
R134518	2E2	3	0404C - 1
R134527	1E24	2	0404 - 1
R134527	1H15	2	0404A - 1
R134527	2B20	1	0404B - 1
R134527	2E2	1	0404C - 1
R134531	1E20	2	0402 - 7
R134531	1H11	2	0402A - 7
R134533	1G19	22	0452 - 3
R134534	1E20	1	0402 - 7
R134534	1G19	22	0452 - 3
R135177	1G5	11A	0419 - 3
R135177	1I20	11A	0419A - 3
R135195	1G12	1	0429 - 2
R135195	1G14	20	0429 - 5
R135195	1J5	1	0429A - 2
R135195	1J7	20	0429A - 5
R135195	2D9	1	0429B - 2
R135195	2F17	1	0429C - 2
R135431	1G9	3	0422 - 1
R135431	1I24	3	0422A - 2
R135431	1I25	3	0422A - 3
R135431	3F6	9	1671 - 9
R135431	3F8	9	1671 - 11
R135431	3F12	15	1671 - 15
R135431	3F14	16	1671 - 17
R135432	1G9	4	0422 - 1
R135432	1I24	4	0422A - 2
R135432	1I25	4	0422A - 3
R135432	2D2	4	0422B - 1
R135432	3F6	8	1671 - 9
R135432	3F8	8	1671 - 11
R135432	3F12	16	1671 - 15
R135432	3F14	15	1671 - 17
R135439	1E16	1	0402 - 2
R135439	1E16	4	0402 - 2
R135439	1H7	1	0402A - 2
R135439	1H7	4	0402A - 2
R135439	2B13	4	0402B - 1
R135509	1J2	6	0422A - 5
R135509	2D4	6	0422B - 3
R135509	2D6	2	0422B - 5
R135509	2F12	6	0422C - 3
R135509	2F14	2	0422C - 5
R135510	1J2	4	0422A - 5
R135510	2D4	4	0422B - 3
R135510	2D6	3	0422B - 5
R135510	2F12	4	0422C - 3
R135510	2F14	3	0422C - 5
R135531	1G14	14	0429 - 5
R135531	1J7	14	0429A - 5
R135841	1F25	17	0417 - 2
R135841	1I15	17	0417A - 2
R135896	1G3	4	0418 - 3
R135896	1G17	3	0452 - 1
R135896	1G19	3	0452 - 3
R135896	1I18	4	0418A - 3
R135896	1J10	3	0452A - 1
R135896	1J12	3	0452A - 3
R135918	1G15	1	0433 - 2
R135918	1G16	11	0433 - 3
R135918	1J8	1	0433A - 2
R135918	1J9	11	0433A - 3
R135918	2B12	11	0401B - 2
R135918	2D13	4	0433B - 2
R135918	2D14	8	0433B - 3
R135918	2D20	11	0401C - 2
R135918	2F21	4	0433C - 2
R135918	2F22	8	0433C - 3

NUMERICAL INDEX - CONTINUED

PART NO.	GRID	KEY	PAGE
R136052	1J2	2	0422A - 5
R136052	2D4	2	0422B - 3
R136052	2F12	2	0422C - 3
R136475	1E24	3	0404 - 1
R136475	1H15	3	0404A - 1
R136475	2B20	12	0404B - 1
R136475	2E2	12	0404C - 1
R136495	1F5	3	0407 - 2
R136495	1H20	3	0407A - 2
R136495	2C1	3	0407B - 1
R136495	2E8	3	0407C - 1
R136514	1F5	4	0407 - 2
R136514	1H20	4	0407A - 2
R136515	1G19	22	0452 - 3
R136515	1J12	22	0452A - 3
R136515	2D16	22	0452B - 3
R136515	2F24	22	0452C - 3
R136516	1E20	1	0402 - 7
R136516	1E22	1	0402 - 9
R136516	1G19	22	0452 - 3
R136516	1H11	1	0402A - 7
R136516	1H13	1	0402A - 9
R136516	1J12	22	0452A - 3
R136516	2B17	1	0402B - 5
R136516	2D16	22	0452B - 3
R136516	2D24	1	0402C - 5
R136516	2F24	22	0452C - 3
R138325	3I16	15	1821 - 11
R138325	3I18	16	1821 - 13
R140070	1C6	13	0230 - 8
R150990	4H2	28	4000 - 7
R20136	3E2	24	1520 - 25
R20136	3E4	37	1520 - 27
R20136	3E14	15	1520 - 37
R20136	3E16	14	1520 - 39
R20136	3E18	14	1520 - 41
R20255	1C2	21	0230 - 3
R26121	2B19	9	0403B - 2
R26121	2E1	9	0403C - 2
R26125	1F15	4	0409 - 3
R26125	1I5	4	0409A - 3
R26125	2C9	4	0409B - 3
R26125	2E16	4	0409C - 3
R26286	1D24	7	0360 - 4
R26286	2H6	2	0521 - 3
R26286	2J24	13	1063 - 7
R26287	1E2	12	0363 - 3
R26287	1E4	6	0363 - 5
R26287	2J16	28	1060 - 7
R26287	2J20	9	1063 - 3
R26287	3G13	25	1674 - 21
R26287	3G15	25	1674 - 23
R26287	3G17	25	1674 - 25
R26375	1E2	4	0363 - 3
R26375	1E4	3	0363 - 5
R26375	2I23	4	0963 - 3
R26375	2I23	5	0963 - 3
R26375	2I25	5	0963 - 5
R26375	2J2	5	0963 - 7
R26375	2J16	22	1060 - 7
R26375	2K2	5	1063 - 9
R26375	2K2	11	1063 - 9
R26375	2K2	22	1063 - 9
R26375	2K4	5	1063 - 11
R26375	2K4	11	1063 - 11
R26375	2K4	22	1063 - 11
R26375	2K7	28	1111 - 3
R26375	2K9	27	1111 - 5
R26375	3E12	9	1520 - 35
R26375	3E14	7	1520 - 37
R26375	3E16	7	1520 - 39
R26375	3E18	7	1520 - 41
R26375	4B20	2	2162 - 3
R26375	4B22	3	2162 - 5
R26375	4D6	3	2162 - 37
R26375	4E8	32	2163 - 3
R26375	4E10	32	2163 - 5
R26375	4E12	32	2163 - 7
R26375	4E12	33	2163 - 7
R26375	4H16	45	4063 - 5
R26448	1B24	2	0210 - 5
R26448	1E2	8	0363 - 3
R26448	1E2	10	0363 - 3
R26448	1E4	5	0363 - 5
R26448	2I23	11	0963 - 3
R26448	2I23	12	0963 - 3
R26448	2I25	11	0963 - 5
R26448	2I25	12	0963 - 5
R26448	2J2	11	0963 - 7
R26448	2J2	12	0963 - 7
R26448	2J20	16	1063 - 3
R26448	2J22	6	1063 - 5
R26448	2J24	1	1063 - 7
R26448	2K2	1	1063 - 9
R26448	2K2	4	1063 - 9
R26448	2K4	1	1063 - 11
R26448	2K4	4	1063 - 11
R26448	3E6	13	1520 - 29
R26448	3E6	19	1520 - 29
R26448	3E6	20	1520 - 29
R26448	3E8	13	1520 - 31
R26448	3E10	13	1520 - 33
R26448	3E12	6	1520 - 35
R26448	3E14	4	1520 - 37
R26448	3E18	2	1520 - 41
R26448	4E21	10	3102 - 5
R26448	4E21	34	3102 - 5
R26448	4F4	15	3102 - 13
R26448	4F6	15	3102 - 15
R26448	4F8	14	3102 - 17
R26493	1F2	11	0404 - 3
R26493	1H17	11	0404A - 3
R26552	2I19	22	0962 - 5
R26552	2J18	17	1060 - 9
R26632	1C3	2	0230 - 4
R26650	1F2	13	0404 - 3
R26650	1H17	13	0404A - 3
R26650	2B22	13	0404B - 3
R26650	2E4	13	0404C - 3
R26773	4E14	6B	2164 - 3
R26773	4E14	8	2164 - 3
R26871	3J12	10	1921 - 9
R26906	1D9	21	0341 - 1
R26906	1E2	7	0363 - 3
R26906	1E4	4	0363 - 5
R26906	1E6	5	0363 - 7
R26906	1F15	6	0409 - 3
R26906	1I5	6	0409A - 3
R26906	2C9	6	0409B - 3
R26906	2E16	6	0409C - 3
R26906	2J16	4	1060 - 7
R26906	2J18	4	1060 - 9
R26906	2J24	11	1063 - 7
R26906	2K7	23	1111 - 3
R26906	2K9	22	1111 - 5
R26906	4B20	5	2162 - 3
R26906	4B22	4	2162 - 5
R26906	4B22	5	2162 - 5
R26906	4B24	2	2162 - 7
R26906	4C22	8	2162 - 29
R26906	4C22	39	2162 - 29
R26906	4C24	9	2162 - 31
R26906	4D2	9	2162 - 33
R26906	4E8	36	2163 - 3
R26906	4E10	29	2163 - 5
R26906	4E12	29	2163 - 7
R26906	4F24	30	3115 - 9
R26906	4G12	12	3160 - 3
R26906	4G14	10	3160 - 5
R26906	4H16	46	4063 - 5
R27094	1D24	8	0360 - 4
R27448	4F18	34	3115 - 3
R27474	1D9	22	0341 - 1
R27474	4D10	5	2162 - 39B
R27474	4D16	5	2162 - 45
R27474	4E12	13	2163 - 7
R28583	2G6	1	0505 - 3
R28782	1B24	4	0210 - 5
R28782	1B24	5	0210 - 5
R28782	2I23	6	0963 - 3
R28782	2I23	7	0963 - 3
R28782	2I25	7	0963 - 5
R28782	2J2	7	0963 - 7
R28782	2J20	5	1063 - 3
R28782	2J22	5	1063 - 5
R28782	3E6	19	1520 - 29
R28782	3E6	20	1520 - 29
R28782	4B24	17	2162 - 7
R28811	1G15	3	0433 - 2
R28811	1J8	3	0433A - 2
R28811	2D13	1	0433B - 2
R28811	2F21	1	0433C - 2
R29936	2J16	3	1060 - 7
R29936	2J20	14	1063 - 3
R29936	4E8	12	2163 - 3
R29936	4E10	12	2163 - 5
R29936	4E12	12	2163 - 7
R32548	2J14	8A	1060 - 5
R32548	2J20	12	1063 - 3
R32548	2J24	9	1063 - 7
R32548	2K2	9	1063 - 9
R32548	2K4	9	1063 - 11
R32548	3G21	18	1674 - 29
R32548	3G23	18	1674 - 31
R32548	3G25	18	1674 - 33
R35645	3F8	4	1671 - 11
R36545	3F6	4	1671 - 9
R36545	3F12	12	1671 - 15
R36545	3F14	12	1671 - 17
R36636	2J20	13	1063 - 3
R39112	1G16	1	0433 - 3
R39112	1J9	1	0433A - 3
R39112	2J16	21	1060 - 7
R39112	4D10	8	2162 - 39B
R39112	4D16	8	2162 - 45
R39554	3G21	16	1674 - 29
R39741	1F2	22	0404 - 3
R39741	1F2	25	0404 - 3
R39741	1H17	22	0404A - 3
R39741	1H17	25	0404A - 3
R42729	1E17	6	0402 - 3

NUMERICAL INDEX - CONTINUED

PART NO.	GRID	KEY	PAGE
R42729	1H8	6	0402A - 3
R42852	2J14	8B	1060 - 5
R43409	1F15	9	0409 - 3
R43409	1I5	9	0409A - 3
R43409	2C9	9	0409B - 3
R43409	2E16	9	0409C - 3
R44255	1D7	6	0315 - 4
R44302	2G4	8	0505 - 1
R44302	4F8	22	3102 - 17
R44313	4H12	7	4015 - 3
R44342	3G21	33	1674 - 29
R44342	3G23	33	1674 - 31
R44342	3G25	33	1674 - 33
R46919	4E21	25	3102 - 5
R46973	1C2	5	0230 - 3
R46973	1C4	1	0230 - 6
R46973	1C11	4	0242 - 5
R46973	1C15	5	0250 - 5
R47160	2G6	2	0505 - 3
R47693	2G4	5	0505 - 1
R47998	2I17	1	0962 - 3
R48000	1F17	8	0413 - 2
R48000	1I7	8	0413A - 2
R48523	2J18	19	1060 - 9
R48568	2H12	6	0521 - 9
R48568	2H14	4	0521 - 11
R48685	1E15	1	0401 - 2
R48685	1F2	1	0404 - 3
R48685	1H6	1	0401A - 2
R48685	1H17	1	0404A - 3
R48685	2B12	1	0401B - 2
R48685	2B22	1	0404B - 3
R48685	2D20	1	0401C - 2
R48685	2E4	1	0404C - 3
R48767	2B19	9	0403B - 2
R48767	2E1	9	0403C - 2
R48808	3F15	19	1672 - 2
R48808	3F17	8	1672 - 5
R495R	2J16	13	1060 - 7
R495R	4D14	7	2162 - 43
R495R	4D18	25	2162 - 47
R495R	4D20	25	2162 - 49
R495R	4D24	18	2162 - 53
R495R	4E4	15	2162 - 57
R49841	1C3	5	0230 - 4
R500000	1E23	3	0403 - 2
R500000	1H14	3	0403A - 2
R500000	2B19	3	0403B - 2
R500001	1F5	8	0407 - 2
R500001	1H20	8	0407A - 2
R500096	2D13	2	0433B - 2
R500096	2F21	2	0433C - 2
R500265	1F23	2A	0415 - 3
R500265	1F23	2B	0415 - 3
R500265	1I13	2	0415A - 3
R500265	2C16	2	0415B - 3
R500265	2E24	2	0415C - 3
R500266	2C16	7	0415B - 3
R500266	2E24	7	0415C - 3
R500270	1G8	1	0421 - 2
R500270	1I23	1	0421A - 2
R500270	2D1	4	0421B - 2
R500270	2F10	4	0421C - 2
R500271	1G8	6	0421 - 2
R500271	1I23	6	0421A - 2
R500271	2D1	3	0421B - 2
R500271	2F10	3	0421C - 2
R500304	2D10	1	0429B - 3
R500304	2F18	1	0429C - 3
R500321	1G11	10	0423 - 3
R500321	1J4	10	0423A - 3
R500322	1G14	14	0429 - 5
R500322	1J7	14	0429A - 5
R500335	2E1	3	0403C - 2
R50034	2J12	3	1060 - 3
R50034	2J14	16	1060 - 5
R500363	1E15	15	0401 - 2
R500374	1F10	1B	0407 - 7
R500374	1F10	4A	0407 - 7
R500374	1G19	32	0452 - 3
R500374	1H25	1	0407A - 7
R500374	1J12	32	0452A - 3
R500374	2C4	9	0407B - 4
R500374	2D16	32	0452B - 3
R500374	2E11	9	0407C - 4
R500374	2F24	32	0452C - 3
R500390	1F17	8	0413 - 2
R500390	1I7	8	0413A - 2
R500390	2C11	4	0413B - 1
R500390	2E19	4	0413C - 2
R500394	1F21	2	0414 - 2
R500394	1I11	2	0414A - 2
R500394	2C14	1	0414B - 2
R500401	1F25	16	0417 - 2
R500401	1I15	16	0417A - 2
R500500	1E23	1	0403 - 2
R500531	2D8	6	0423B - 3
R500531	2F16	6	0423C - 3
R500596	2E22	2	0414C - 1
R500649	1G12	3	0429 - 2
R500649	1J5	3	0429A - 2
R500649	2D9	3	0429B - 2
R500649	2F17	3	0429C - 2
R500650	2C16	2	0415B - 3
R500650	2E24	2	0415C - 3
R500668	2C16	10	0415B - 3
R500668	2E24	10	0415C - 3
R50110	2J16	29	1060 - 7
R501124	1E23	1	0403 - 2
R501124	1H14	1	0403A - 2
R501124	2B19	1	0403B - 2
R501124	2E1	1	0403C - 2
R501144	1G3	10	0418 - 3
R501144	1I18	10	0418A - 3
R501144	2C19	10	0418B - 3
R501144	2F3	10	0418C - 3
R501373	1G17	9	0452 - 1
R501373	1G19	9	0452 - 3
R501373	1J10	9	0452A - 1
R501373	1J12	9	0452A - 3
R501373	2D16	9	0452B - 3
R501373	2F24	9	0452C - 3
R501428	1G5	8	0419 - 3
R501428	1G19	31	0452 - 3
R501428	1I20	8	0419A - 3
R501428	1J12	31	0452A - 3
R501428	2C21	10	0419B - 3
R501428	2D16	31	0452B - 3
R501428	2F5	10	0419C - 3
R501428	2F24	31	0452C - 3
R501472	2E22	7	0414C - 1
R501486	3F15	6B	1672 - 2
R501489	2B12	12	0401B - 2
R501489	2D20	12	0401C - 2
R502076	1F20	30	0413 - 5
R502076	1I10	30	0413A - 5
R502076	2C13	11	0413B - 3
R502076	2E21	11	0413C - 5
R502175	2B25	1	0404B - 6
R502175	2E7	1	0404C - 6
R502329	2B25	2	0404B - 6
R502329	2E7	2	0404C - 6
R502505	2C4	3	0407B - 4
R502505	2E11	3	0407C - 4
R502513	2C4	4	0407B - 4
R502513	2C4	11	0407B - 4
R502513	2E11	4	0407C - 4
R502513	2E11	11	0407C - 4
R502604	1F6	2	0407 - 3
R502604	1H21	2	0407A - 3
R502604	2E9	3	0407C - 2
R502687	2C5	6	0407B - 7
R502687	2E12	6	0407C - 5
R502725	2E9	2	0407C - 2
R502811	1G5	11A	0419 - 3
R502811	1G5	11B	0419 - 3
R502811	1I20	11A	0419A - 3
R502811	1I20	11B	0419A - 3
R502811	2C21	12	0419B - 3
R502811	2F5	12	0419C - 3
R502814	1G3	4	0418 - 3
R502814	1G17	3	0452 - 1
R502814	1G19	3	0452 - 3
R502814	1I18	4	0418A - 3
R502814	1J10	3	0452A - 1
R502814	1J12	3	0452A - 3
R502814	2C19	4	0418B - 3
R502814	2D16	3	0452B - 3
R502814	2F3	4	0418C - 3
R502814	2F24	3	0452C - 3
R502864	2D16	24	0452B - 3
R502864	2F24	24	0452C - 3
R502867	1F11	6	0407 - 8
R502867	1I1	6	0407A - 8
R502902	2C1	7	0407B - 1
R502902	2E8	7	0407C - 1
R503419	1I25	9	0422A - 3
R503419	1J2	16	0422A - 5
R503419	2D4	16	0422B - 3
R503419	2D6	14	0422B - 5
R503419	2F12	16	0422C - 3
R503419	2F14	14	0422C - 5
R503449	2D14	1	0433B - 3
R503449	2F22	1	0433C - 3
R503451	1G16	2	0433 - 3
R503451	1J9	2	0433A - 3
R503509	1F25	16	0417 - 2
R503509	1G1	16	0417 - 3
R503509	1I16	16	0417A - 3
R503509	2B17	22	0402B - 5
R503509	2D24	22	0402C - 5
R503520	2C13	28	0413B - 3
R503520	2E21	28	0413C - 5
R503891	2D16	6	0452B - 3
R503891	2E25	11	0416C - 2
R503891	2F24	6	0452C - 3
R504534	2E4	28	0404C - 3
R504534	2E4	31	0404C - 3
R504694	2C14	2	0414B - 2
R504725	1E20	2	0402 - 7
R504725	1E22	2	0402 - 9

NUMERICAL INDEX - CONTINUED

PART NO.	GRID	KEY	PAGE
R504725	1H11	2	0402A - 7
R504725	1H13	2	0402A - 9
R504725	2B17	2	0402B - 5
R504725	2D24	2	0402C - 5
R504734	1G5	18	0419 - 3
R504734	1I20	18	0419A - 3
R504734	2D16	29	0452B - 3
R504734	2F24	29	0452C - 3
R505462	1E20	2	0402 - 7
R505462	1H11	2	0402A - 7
R505472	2C13	18	0413B - 3
R505472	2E21	18	0413C - 5
R505609	1E15	2	0401 - 2
R505609	1H6	2	0401A - 2
R505609	2B12	2	0401B - 2
R505609	2D20	2	0401C - 2
R50879	2J12	5	1060 - 3
R50879	2J14	17	1060 - 5
R50992	1C3	12	0230 - 4
R515479	2D2	9	0422B - 1
R515482	2D2	3	0422B - 1
R516237	2E4	30	0404C - 3
R516437	2C23	7	0420B - 3
R516437	2F7	7	0420C - 3
R516623	1G14	9	0429 - 5
R516623	1G14	14	0429 - 5
R516623	1J7	9	0429A - 5
R516623	1J7	14	0429A - 5
R516623	2D12	3	0429B - 5
R516623	2F20	3	0429C - 5
R516671	2C25	16	0420B - 5
R516671	2F9	16	0420C - 5
R519244	2C7	8	0408B - 3
R519273	2C7	9	0408B - 3
R519274	2C7	10	0408B - 3
R519275	2C7	11	0408B - 3
R519286	2C7	12	0408B - 3
R51936	1F20	27	0413 - 5
R51936	1I10	27	0413A - 5
R51936	2C13	20	0413B - 3
R51936	2E21	20	0413C - 5
R51937	1F20	27	0413 - 5
R51937	1I10	27	0413A - 5
R52725	3G21	34	1674 - 29
R52725	3G23	34	1674 - 31
R52725	3G25	34	1674 - 33
R53108	1G19	26	0452 - 3
R53108	1J2	1	0422A - 5
R53108	1J12	26	0452A - 3
R53108	2D4	1	0422B - 3
R53108	2D16	26	0452B - 3
R53108	2F12	1	0422C - 3
R53108	2F24	26	0452C - 3
R54123	2G4	4	0505 - 1
R54124	1B10	3	0110 - 2
R54124	1B10	8	0110 - 2
R54124	1B11	3	0110 - 2Z
R54124	1B15	3	0149 - 1
R54124	1B15	5	0149 - 1
R54124	1B16	5	0149 - 2
R54565	1E17	1	0402 - 3
R54565	1H8	1	0402A - 3
R54565	2B14	1	0402B - 2
R54565	2D21	1	0402C - 2
R54638	1G17	9	0452 - 1
R54638	1G19	9	0452 - 3
R54813	2C3	5	0407B - 3
R55233	2B22	4	0404B - 3
R55233	2E4	4	0404C - 3
R55453	2B19	9	0403B - 2
R55453	2E1	9	0403C - 2
R56423	1B16	3	0149 - 2
R56423	1C11	3	0242 - 5
R56423	2I4	7	0560 - 3
R56423	2I6	7	0560 - 5
R56423	3H5	5	1741 - 5
R56423	4E14	11	2164 - 3
R57696	1E8	3	0364 - 3
R57696	2G12	3	0511 - 7
R57696	2G16	3	0512 - 3
R57696	2G18	3	0512 - 5
R57696	2G20	28	0515 - 3
R57696	2H16	3	0531 - 3
R57696	2H18	3	0531 - 5
R57696	2H20	3	0531 - 7
R57696	2H22	3	0531 - 9
R57696	2H24	10	0531 - 11
R57696	2I17	6	0962 - 3
R57696	3E24	8	1671 - 3
R57696	3G7	5	1674 - 15
R57696	3G9	5	1674 - 17
R57696	3H16	11	1812 - 3
R57696	3H18	11	1812 - 5
R57696	3H20	11	1812 - 7
R57696	3I10	18	1821 - 5
R57696	3I12	18	1821 - 7
R57696	3I14	11	1821 - 9
R57696	3J6	4	1921 - 3
R57696	3J8	4	1921 - 5
R57696	3J16	5	1927 - 3
R57696	3J16	12	1927 - 3
R57696	4C22	27	2162 - 29
R57696	4C24	28	2162 - 31
R57696	4D2	28	2162 - 33
R57696	4D4	28	2162 - 35
R57696	4F18	12	3115 - 3
R57696	4G12	22	3160 - 3
R57696	4G14	16	3160 - 5
R57696	4H8	6	4000 - 13
R60746	2C11	3	0413B - 1
R61105	1G5	9	0419 - 3
R61105	1G19	29	0452 - 3
R61105	1I20	9	0419A - 3
R61105	1J12	29	0452A - 3
R61467	1G16	2	0433 - 3
R61467	1G16	12	0433 - 3
R61467	1J9	2	0433A - 3
R61467	1J9	12	0433A - 3
R61467	2D14	3	0433B - 3
R61467	2F22	3	0433C - 3
R61871	1F11	9	0407 - 8
R61871	1G17	16	0452 - 1
R61871	1G19	16	0452 - 3
R61871	1I1	9	0407A - 8
R61871	1J10	16	0452A - 1
R61871	1J12	16	0452A - 3
R61871	2C3	4	0407B - 3
R61871	2D16	16	0452B - 3
R61871	2E10	4	0407C - 3
R61871	2F24	16	0452C - 3
R63548	2E25	5	0416C - 2
R64525	1G11	3	0423 - 3
R64525	1J4	3	0423A - 3
R64525	3F17	10	1672 - 5
R64700	3G13	3	1674 - 21
R65563	4F20	16	3115 - 5
R67364	1F20	26	0413 - 5
R67364	1I10	26	0413A - 5
R70513	2G24	30	0515 - 7
R71963	1F17	2	0413 - 2
R71963	1I7	2	0413A - 2
R72328	1F13	2	0408 - 3
R72328	1G19	27	0452 - 3
R72328	1I3	2	0408A - 3
R72328	1J12	27	0452A - 3
R72328	2C7	13	0408B - 3
R72328	2D16	27	0452B - 3
R72328	2E14	2	0408C - 3
R72328	2F24	27	0452C - 3
R72653	2G24	9	0515 - 7
R72653	4H12	10	4015 - 3
R72659	1F13	3	0408 - 3
R72659	1I3	3	0408A - 3
R72659	2E14	3	0408C - 3
R72700	2J3	2	0965 - 2
R72700	2J4	2	0965 - 3
R73290	2I2	12	0540 - 3
R74012	1G7	2	0420 - 3
R74012	1G7	12	0420 - 3
R74012	1I22	2	0420A - 3
R74012	1I22	12	0420A - 3
R74012	2C25	20	0420B - 5
R74012	2F9	20	0420C - 5
R75382	1B20	2	0201 - 3
R75383	1B20	2	0201 - 3
R75384	1B20	2	0201 - 3
R75385	1B20	2	0201 - 3
R75892	1F2	16	0404 - 3
R75892	1G17	14	0452 - 1
R75892	1G19	14	0452 - 3
R75892	1H17	16	0404A - 3
R75892	1J10	14	0452A - 1
R75892	1J12	14	0452A - 3
R75892	2B22	16	0404B - 3
R75892	2D16	14	0452B - 3
R75892	2E4	16	0404C - 3
R75892	2F24	14	0452C - 3
R78060	3F21	1	1674 - 3
R78062	3F21	1	1674 - 3
R79101	4G16	8	3160 - 7
R79117	2J3	9	0965 - 2
R79117	2J4	9	0965 - 3
R79604	1F17	4	0413 - 2
R79604	1I7	4	0413A - 2
R79605	1F17	3	0413 - 2
R79605	1I7	3	0413A - 2
R81275	1F21	3	0414 - 2
R81275	1G17	10	0452 - 1
R81275	1G19	10	0452 - 3
R81275	1I11	3	0414A - 2
R81275	1J10	10	0452A - 1
R81275	1J12	10	0452A - 3
R81275	2C14	5	0414B - 2
R81275	2D16	10	0452B - 3
R81275	2E22	6	0414C - 1
R81275	2E22	7	0414C - 1
R81275	2F24	10	0452C - 3
R81776	4G16	15	3160 - 7
R81777	4G15	4	3160 - 6
R81777	4G17	4	3160 - 8
R81788	4G16	5	3160 - 7

NUMERICAL INDEX - CONTINUED

PART NO.	GRID	KEY	PAGE
R81789	4G15	14	3160 - 6
R81789	4G17	11	3160 - 8
R81789	4G19	6	3160 - 10
R81794	4G16	4	3160 - 7
R81795	4G15	15	3160 - 6
R81795	4G17	16	3160 - 8
R81795	4G19	7	3160 - 10
R81854	2J3	1	0965 - 2
R81854	2J4	1	0965 - 3
R81864	4G15	12	3160 - 6
R81864	4G17	10	3160 - 8
R81864	4G18	5	3160 - 9
R81864	4G19	10	3160 - 10
R81866	4G15	3	3160 - 6
R81866	4G17	3	3160 - 8
R82566	2J3	12	0965 - 2
R82570	2J3	4	0965 - 2
R82570	2J4	4	0965 - 3
R82571	2J3	10	0965 - 2
R82571	2J4	10	0965 - 3
R83169	1E20	12	0402 - 7
R83169	1H11	12	0402A - 7
R85363	1F15	1	0409 - 3
R85363	1I5	1	0409A - 3
R85363	2C9	1	0409B - 3
R85363	2E16	1	0409C - 3
R85687	1F15	8	0409 - 3
R85687	1I5	8	0409A - 3
R85687	2C9	8	0409B - 3
R85687	2E16	8	0409C - 3
R86084	4G15	6	3160 - 6
R87732	2E18	4	0410C - 3
R87814	2E10	5	0407C - 3
R88613	3E24	11	1671 - 3
R89879	2H16	6	0531 - 3
R89879	2H18	6	0531 - 5
R89879	2H20	6	0531 - 7
R89879	2H22	6	0531 - 9
R89944	1F20	30	0413 - 5
R89944	1F24	5	0417 - 1
R89944	1G19	28	0452 - 3
R89944	1I14	5	0417A - 1
R89944	1J12	28	0452A - 3
R89944	2C17	5	0417B - 1
R89944	2D16	28	0452B - 3
R89944	2F1	5	0417C - 1
R89944	2F24	28	0452C - 3
R90563	2G16	4	0512 - 3
R90565	2J3	16	0965 - 2
R90565	2J4	16	0965 - 3
R90658	1F16	2	0410 - 1
R90658	1G17	2	0452 - 1
R90658	1G19	2	0452 - 3
R90658	1I6	2	0410A - 1
R90658	1J10	2	0452A - 1
R90658	1J12	2	0452A - 3
R90658	2C10	2	0410B - 2
R90658	2D16	2	0452B - 3
R90658	2E17	2	0410C - 2
R90658	2F24	2	0452C - 3
R90692	1F15	10	0409 - 3
R90692	1I5	10	0409A - 3
R90692	2C9	10	0409B - 3
R90692	2E16	10	0409C - 3
R91360	1F20	25	0413 - 5
R91360	1I10	25	0413A - 5
R91360	2C13	13	0413B - 3
R91360	2E21	13	0413C - 5
R91692	1E20	15	0402 - 7
R91692	1H11	15	0402A - 7
R91726	2J3	6	0965 - 2
R91729	4G15	18	3160 - 6
R91729	4G17	12	3160 - 8
R91889	1F15	2	0409 - 3
R91889	1I5	2	0409A - 3
R91889	2C9	2	0409B - 3
R91889	2E16	2	0409C - 3
R92097	1G17	11	0452 - 1
R92097	1G19	11	0452 - 3
R92097	1J10	11	0452A - 1
R92097	1J12	11	0452A - 3
R92097	2D16	11	0452B - 3
R92097	2E25	9	0416C - 2
R92097	2F24	11	0452C - 3
R92352	1F17	7	0413 - 2
R92352	1I7	7	0413A - 2
R92352	2E19	3	0413C - 2
R93910	1F15	8	0409 - 3
R93910	1I5	8	0409A - 3
R93910	2C9	8	0409B - 3
R93910	2E16	8	0409C - 3
R94350	3F15	6A	1672 - 2
R94350	3F17	2	1672 - 5
R94351	3F15	20	1672 - 2
R94351	3F17	3	1672 - 5
R94417	2J3	14	0965 - 2
R96703	1J2	10	0422A - 5
R96703	2D4	10	0422B - 3
R96703	2D6	9	0422B - 5
R96703	2F12	10	0422C - 3
R96703	2F14	9	0422C - 5
R97185	1F11	8	0407 - 8
R97185	1G17	15	0452 - 1
R97185	1G19	15	0452 - 3
R97185	1I1	8	0407A - 8
R97185	1J10	15	0452A - 1
R97185	1J12	15	0452A - 3
R97185	2C5	8	0407B - 7
R97185	2D16	15	0452B - 3
R97185	2E12	8	0407C - 5
R97185	2F24	15	0452C - 3
R98062	1F15	11	0409 - 3
R98062	1I5	11	0409A - 3
R98062	2C9	11	0409B - 3
R98062	2E16	11	0409C - 3
R98063	1F15	8	0409 - 3
R98063	1I5	8	0409A - 3
R98063	2C9	8	0409B - 3
R98063	2E16	8	0409C - 3
R98322	4G18	9	3160 - 9
R98323	4G18	8	3160 - 9
R98335	1F15	8	0409 - 3
R98335	1I5	8	0409A - 3
R98335	2C9	8	0409B - 3
R98335	2E16	8	0409C - 3
R98527	1F25	14	0417 - 2
SE500711	1F4	1	0404 - 5
SE500711	1H19	1	0404A - 5
SE500777	1F20	22	0413 - 5
SE500777	1I10	22	0413A - 5
SE500828	1F17	10	0413 - 2
SE500828	1I7	10	0413A - 2
SE500830	2E19	1	0413C - 2
SE500830	2E21	25	0413C - 5
TY15969	2I6	5	0560 - 5
TY16004	3B21	1	1369B - 2
TY16004	3B23	1	1369C - 1
TY16005	3B21	2	1369B - 2
TY16005	3B23	2	1369C - 1
TY22334	4E8	39	2163 - 3
TY22334	4E10	16	2163 - 5
TY22334	4E12	16	2163 - 7
TY22388	4C24	11	2162 - 31
TY22388	4C24	12	2162 - 31
TY22388	4D2	11	2162 - 33
TY22388	4D2	12	2162 - 33
TY22388	4D4	11	2162 - 35
TY22388	4D4	12	2162 - 35
TY22388	4F24	18	3115 - 9
TY22462	2G12	14	0511 - 7
TY22462	2G14	22	0511 - 9
TY22466	1E6	4	0363 - 7
TY22469	3E6	14	1520 - 29
TY22469	3E10	14	1520 - 33
TY22470	2G12	13	0511 - 7
TY22470	2G14	14	0511 - 9
TY22470	3E8	14	1520 - 31
TY22471	3E8	14	1520 - 31
TY22472	2H8	8	0521 - 5
TY22475	4G14	17	3160 - 5
TY22475	4G14	26	3160 - 5
TY22489	4G12	23	3160 - 3
TY22566	2G10	7	0511 - 5
TY22566	2G12	6	0511 - 7
TY22566	2G12	8	0511 - 7
TY22566	2G12	9	0511 - 7
TY22566	2G14	6	0511 - 9
TY22566	2G14	8	0511 - 9
TY22566	2G14	9	0511 - 9
TY6128	3F6	1	1671 - 9
TY6128	3F12	1	1671 - 15
TY6128	3F14	1	1671 - 17
TY6304	1F2	24	0404 - 3
TY6304	1H17	24	0404A - 3
TY6304	2D16	12	0452B - 3
TY6304	2F24	12	0452C - 3
TY6799	3F15	1	1672 - 2
T100813	1C2	10	0230 - 3
T101568	2I21	2	0962 - 7
T101571	2I21	4	0962 - 7
T102934	3F6	7	1671 - 9
T102934	3F8	7	1671 - 11
T102934	3F12	18	1671 - 15
T102934	3F14	18	1671 - 17
T102934	3G17	35	1674 - 25
T10379	3J14	2	1921 - 11
T10381	3J14	3	1921 - 11
T104773	4C12	2	2162 - 19
T104773	4D8	5	2162 - 39
T104782	4C20	14	2162 - 27
T104784	4D8	8	2162 - 39
T104788	4C16	11	2162 - 23
T104788	4D8	18	2162 - 39
T104789	4D8	19	2162 - 39
T105045	4D8	16	2162 - 39
T105720	4G2	12	3140 - 3
T105720	4G4	12	3140 - 5
T105740	3E2	21	1520 - 25
T105740	3E4	21	1520 - 27
T105740	3H24	8	1816 - 3
T105740	3I2	11	1816 - 5

NUMERICAL INDEX - CONTINUED

PART NO.	GRID	KEY	PAGE
T105740	3I2	15	1816 - 5
T105740	3I4	8	1816 - 7
T105740	3I6	8	1816 - 9
T105740	3I10	1	1821 - 5
T105740	3I10	8	1821 - 5
T105740	3I12	1	1821 - 7
T105740	3I12	2	1821 - 7
T105740	3I12	11	1821 - 7
T105740	3I14	3	1821 - 9
T105740	3I14	8	1821 - 9
T105740	3I23	3	1911 - 3
T105740	3J4	5	1912 - 5
T105740	3J12	8	1921 - 9
T105740	4G23	9	4000 - 3
T105773	4G12	24	3160 - 3
T105773	4G14	18	3160 - 5
T105774	4E21	30	3102 - 5
T10581	2G20	10	0515 - 3
T10581	2G24	10	0515 - 7
T10581	4F22	25	3115 - 7
T10585	2G22	10	0515 - 5
T105954	3I20	19	1821 - 15
T105956	3I20	15	1821 - 15
T105957	3I20	4	1821 - 15
T105958	3I20	25	1821 - 15
T105959	3I20	21	1821 - 15
T105960	3I20	20	1821 - 15
T105961	3I20	18	1821 - 15
T105962	3I20	23	1821 - 15
T105963	3I20	5	1821 - 15
T105964	3I20	17	1821 - 15
T105965	3I20	24	1821 - 15
T106596	2G10	5	0511 - 5
T107230	2I21	5	0962 - 7
T107365	2I21	3	0962 - 7
T107446	4H14	34	4063 - 3
T107446	4H16	29	4063 - 5
T10745	3F15	4	1672 - 2
T10745	3F17	13	1672 - 5
T11234	1C2	16	0230 - 3
T11234	1E10	5	0364 - 5
T11234	2G14	4	0511 - 9
T11234	2G20	30	0515 - 3
T11234	2H2	8	0515 - 9
T11234	2H18	7	0531 - 5
T11234	2H18	10	0531 - 5
T11234	2H20	7	0531 - 7
T11234	2H22	7	0531 - 9
T11234	2H22	10	0531 - 9
T11234	2H24	7	0531 - 11
T11234	2I23	22	0963 - 3
T11234	2I25	22	0963 - 5
T11234	2I25	29	0963 - 5
T11234	2J2	13	0963 - 7
T11234	2J14	18	1060 - 5
T11234	2J20	22	1063 - 3
T11234	3D24	34	1520 - 23
T11234	3E2	11	1520 - 25
T11234	3E2	35	1520 - 25
T11234	3E4	11	1520 - 27
T11234	3E14	10	1520 - 37
T11234	3E18	17	1520 - 41
T11234	3F6	5	1671 - 9
T11234	3F8	5	1671 - 11
T11234	3F12	11	1671 - 15
T11234	3F14	11	1671 - 17
T11234	3G7	4	1674 - 15
T11234	3G9	4	1674 - 17
T11234	3H14	2	1811 - 5
T11234	3H22	13	1812 - 9
T11234	3H24	21	1816 - 3
T11234	3I2	20	1816 - 5
T11234	3I10	19	1821 - 5
T11234	3I12	19	1821 - 7
T11234	3J6	11	1921 - 3
T11234	3J8	10	1921 - 5
T11234	3J16	9	1927 - 3
T11234	4F16	11	3102 - 25
T11234	4F20	12	3115 - 5
T11234	4F22	11	3115 - 7
T11234	4G12	20	3160 - 3
T113008	4C16	9	2162 - 23
T113058	4C14	1	2162 - 21
T113127	1D8	4	0325 - 1
T113128	1C9	6	0242 - 3
T113128	1C11	8	0242 - 5
T113128	1C13	7	0250 - 3
T113128	1D11	5	0342 - 3
T113232	2G18	4	0512 - 5
T116290	1C6	7	0230 - 8
T116416	1D23	4	0360 - 3
T116416	1D23	30	0360 - 3
T116546	1D23	16	0360 - 3
T116820	1C17	18	0250 - 7
T116851	1C21	6	0250 - 11
T116918	1D9	4	0341 - 1
T118653	4C20	5	2162 - 27
T118654	4C16	7	2162 - 23
T119816	2G12	6	0511 - 7
T119816	2G12	8	0511 - 7
T119816	2G12	9	0511 - 7
T119912	1C2	2	0230 - 3
T119912	1C4	5	0230 - 6
T119912	1C15	2	0250 - 5
T120233	4C20	16	2162 - 27
T121288	3E24	4	1671 - 3
T121288	3F2	8	1671 - 5
T121288	3F4	2	1671 - 7
T121288	3F12	5	1671 - 15
T121288	3F14	5	1671 - 17
T122075	1G5	4	0419 - 3
T122075	1G19	30	0452 - 3
T122075	1I20	4	0419A - 3
T122075	1J12	30	0452A - 3
T122075	2C21	4	0419B - 3
T122075	2D16	30	0452B - 3
T122075	2F5	4	0419C - 3
T122075	2F24	30	0452C - 3
T122169	2J16	33	1060 - 7
T125548	4C20	8	2162 - 27
T125549	4C20	15	2162 - 27
T12582	4G15	11	3160 - 6
T12582	4G17	9	3160 - 8
T12582	4G18	4	3160 - 9
T12582	4G19	9	3160 - 10
T126050	4F4	25	3102 - 13
T127125	2J16	32	1060 - 7
T12847	3G21	39	1674 - 29
T12847	3G23	39	1674 - 31
T12847	3G25	39	1674 - 33
T12847	3J23	3	2004 - 7
T12847	4C22	4	2162 - 29
T12847	4C24	4	2162 - 31
T12847	4D2	5	2162 - 33
T12847	4D4	5	2162 - 35
T12847	4H12	3	4015 - 3
T128531	4F4	18	3102 - 13
T128532	4F4	2	3102 - 13
T128533	4E25	6	3102 - 9
T128533	4F2	8	3102 - 11
T128534	4E25	1	3102 - 9
T128534	4F2	1	3102 - 11
T128535	4F4	27	3102 - 13
T128535	4F6	27	3102 - 15
T128536	4F4	19	3102 - 13
T128536	4F6	19	3102 - 15
T129165	3F12	19	1671 - 15
T129165	3F14	19	1671 - 17
T131177	1D7	5	0315 - 4
T133078	2J12	6	1060 - 3
T134782	3B11	11	1322 - 3
T134785	4C22	23	2162 - 29
T134785	4C24	24	2162 - 31
T134785	4D2	24	2162 - 33
T134785	4D4	24	2162 - 35
T13518	1G16	5	0433 - 3
T13518	1J9	5	0433A - 3
T135797	4D8	25	2162 - 39
T135968	4D8	24	2162 - 39
T13630	2I17	8	0962 - 3
T139806	3B11	3	1322 - 3
T139806	3B15	6	1322 - 7
T140207	1C2	11	0230 - 3
T140211	1C2	6	0230 - 3
T140211	1C5	2	0230 - 7
T140211	1C15	7	0250 - 5
T140283	3B11	18	1322 - 3
T140283	3B15	17	1322 - 7
T140311	3B11	19	1322 - 3
T140311	3B15	18	1322 - 7
T14050	1F20	13	0413 - 5
T14050	1G7	14	0420 - 3
T14050	1I10	13	0413A - 5
T14050	1I22	14	0420A - 3
T14050	2C23	18	0420B - 3
T14050	2F7	18	0420C - 3
T14065	4F10	2	3102 - 19
T14083	4G6	3	3140 - 7
T140923	1D7	9	0315 - 4
T141689	1D25	6	0360 - 5
T142419	4D8	22	2162 - 39
T142863	4C20	9	2162 - 27
T142864	4C20	10	2162 - 27
T142865	4C20	13	2162 - 27
T142866	4C20	12	2162 - 27
T144139	3F6	4	1671 - 9
T144139	3F12	12	1671 - 15
T144486	1D23	20	0360 - 3
T144487	1D23	19	0360 - 3
T145074	3G5	12	1674 - 12
T146081	3B11	25	1322 - 3
T146097	3B11	27	1322 - 3
T146097	3B13	3	1322 - 5
T146098	3B11	27	1322 - 3
T146099	3B11	27	1322 - 3
T146102	1G9	6	0422 - 1
T146102	1I24	6	0422A - 2
T146102	1I25	6	0422A - 3
T146102	1J2	11	0422A - 5
T146102	2D2	6	0422B - 1
T146102	2D4	11	0422B - 3

NUMERICAL INDEX - CONTINUED

PART NO.	GRID	KEY	PAGE
T146102	2D6	10	0422B - 5
T146102	2F12	11	0422C - 3
T146102	2F14	10	0422C - 5
T146102	3B11	2	1322 - 3
T146102	3B13	1	1322 - 5
T146104	3B11	2	1322 - 3
T146106	3B11	2	1322 - 3
T147269	1B20	20	0201 - 3
T147269	1C9	1	0242 - 3
T147296	4E19	3	3102 - 3
T148182	4F18	20	3115 - 3
T148467	1C2	22	0230 - 3
T148468	1C2	29	0230 - 3
T150487	4E19	1	3102 - 3
T150487	4E23	2	3102 - 7
T150517	4E19	6	3102 - 3
T150517	4E23	2	3102 - 7
T150517	4E25	11	3102 - 9
T150517	4F2	11	3102 - 11
T151063	1C20	1	0250 - 10
T151064	1C20	6	0250 - 10
T151065	1C20	2	0250 - 10
T151072	1C23	8	0250 - 13
T151074	1C19	17	0250 - 9
T151075	1C21	4	0250 - 11
T151077	1C21	8	0250 - 11
T151080	1C21	1	0250 - 11
T151087	1C19	15	0250 - 9
T151088	1C19	15	0250 - 9
T151089	1C17	13	0250 - 7
T151261	1C17	15	0250 - 7
T151262	1C17	9	0250 - 7
T151264	1C19	14	0250 - 9
T151328	4C16	6	2162 - 23
T151335	4D8	6	2162 - 39
T151337	4D8	7	2162 - 39
T151797	1C9	8	0242 - 3
T152288	2I19	3	0962 - 5
T152291	2I19	2	0962 - 5
T152292	2I19	1	0962 - 5
T152293	2I19	6	0962 - 5
T152442	3B11	10	1322 - 3
T152442	3B13	2	1322 - 5
T153680	3B11	6	1322 - 3
T153720	1C19	9	0250 - 9
T153721	1C19	6	0250 - 9
T153722	1C19	6	0250 - 9
T153723	2J6	2	0965 - 5
T153742	2J6	3	0965 - 5
T153743	2J6	4	0965 - 5
T153744	2J6	14	0965 - 5
T154057	4G8	2	3140 - 9
T154058	4G2	28	3140 - 3
T154058	4G4	33	3140 - 5
T154058	4G8	3	3140 - 9
T154127	1D6	14	0315 - 3
T154128	1D9	10	0341 - 1
T154129	1D9	5	0341 - 1
T154130	1D9	16	0341 - 1
T154165	4G2	29	3140 - 3
T154165	4G4	34	3140 - 5
T154166	4G2	27	3140 - 3
T154166	4G4	32	3140 - 5
T154257	1D24	2	0360 - 4
T154353	4G8	11	3140 - 9
T154358	4F14	5	3102 - 23
T154358	4F14	7	3102 - 23
T154359	4F14	4	3102 - 23
T154359	4F14	7	3102 - 23
T154360	4F14	6	3102 - 23
T154360	4F16	1	3102 - 25
T154363	4G2	1	3140 - 3
T154363	4G4	1	3140 - 5
T154363	4G17	22	3160 - 8
T154700	2H6	5	0521 - 3
T154700	2H8	2	0521 - 5
T154828	1D6	6	0315 - 3
T154951	1B20	1	0201 - 3
T154952	1C12	12	0250 - 2
T155259	1D17	11	0350 - 6
T155324	1D12	2	0350 - 1
T155826	2G14	12	0511 - 9
T155827	2G14	11	0511 - 9
T155858	2G6	1	0505 - 3
T15634	1F23	4	0415 - 3
T158132	4G2	2	3140 - 3
T158132	4G4	2	3140 - 5
T158132	4G17	25	3160 - 8
T158424	2G14	21	0511 - 9
T158437	1B23	7	0210 - 4
T158437	2K7	22	1111 - 3
T158579	4G10	7	3140 - 11
T158584	3F15	7	1672 - 2
T158584	3F17	4	1672 - 5
T158623	3J16	1	1927 - 3
T158624	3J16	2	1927 - 3
T158633	4E19	1	3102 - 3
T158714	1D18	2	0350 - 7
T158717	1D17	8	0350 - 6
T158718	1D17	9	0350 - 6
T158718	1D20	2	0350 - 9
T158718	1D21	17	0350 - 10
T158720	1D17	2	0350 - 6
T158722	1D19	7	0350 - 8
T158732	1D25	2	0360 - 5
T158734	1D6	17	0315 - 3
T158735	1D6	12	0315 - 3
T158739	1D14	9	0350 - 3
T158739	1D16	9	0350 - 5
T158740	1D17	10	0350 - 6
T158741	1D25	6	0360 - 5
T158742	1D14	1	0350 - 3
T158742	1D16	1	0350 - 5
T158742	1D19	19	0350 - 8
T158743	1D14	10	0350 - 3
T158743	1D16	10	0350 - 5
T158744	1D19	12	0350 - 8
T158745	1D19	11	0350 - 8
T158746	1D17	5	0350 - 6
T158747	1D21	4	0350 - 10
T158748	1D20	3	0350 - 9
T158748	1D21	16	0350 - 10
T158749	1D25	4	0360 - 5
T158754	1D25	10	0360 - 5
T158756	1D14	13	0350 - 3
T158756	1D16	13	0350 - 5
T158758	1D6	4	0315 - 3
T158760	1D19	15	0350 - 8
T158761	1D6	10	0315 - 3
T158762	1D19	9	0350 - 8
T158775	1D14	12	0350 - 3
T158775	1D16	12	0350 - 5
T158777	1D20	6	0350 - 9
T158777	1D21	13	0350 - 10
T158778	1D14	19	0350 - 3
T158778	1D16	19	0350 - 5
T158783	1D6	11	0315 - 3
T158784	1D6	3	0315 - 3
T158785	1D6	2	0315 - 3
T158786	1D6	5	0315 - 3
T158789	1D14	11	0350 - 3
T158789	1D16	11	0350 - 5
T158795	1D25	1	0360 - 5
T158798	1D17	3	0350 - 6
T158801	1D14	16	0350 - 3
T158801	1D16	16	0350 - 5
T158802	1D14	20	0350 - 3
T158802	1D16	20	0350 - 5
T158805	1D21	2	0350 - 10
T158806	1D21	3	0350 - 10
T158811	1D20	15	0350 - 9
T158815	1D4	3	0315 - 1
T158816	1D4	5	0315 - 1
T158817	1D4	1	0315 - 1
T158818	1D4	4	0315 - 1
T158819	1D6	13	0315 - 3
T158820	1D6	7	0315 - 3
T158828	1B25	6	0230 - 1
T158828	1C2	7	0230 - 3
T158828	1C2	10	0230 - 3
T158828	1C3	5	0230 - 4
T158855	1D19	8	0350 - 8
T158858	1D19	13	0350 - 8
T158859	1D19	10	0350 - 8
T158860	1D19	14	0350 - 8
T158861	1D19	6	0350 - 8
T158864	1D19	17	0350 - 8
T159028	3B11	28	1322 - 3
T159028	3B13	6	1322 - 5
T159244	2I4	3	0560 - 3
T159244	2I6	3	0560 - 5
T159307	1B23	3	0210 - 4
T159308	1B23	3	0210 - 4
T159309	1B23	3	0210 - 4
T159310	1B23	3	0210 - 4
T159311	1B23	3	0210 - 4
T159313	1B23	3	0210 - 4
T159314	1B23	3	0210 - 4
T159315	1B23	3	0210 - 4
T159316	1B23	8	0210 - 4
T159317	1B23	9	0210 - 4
T159322	1B23	4	0210 - 4
T159323	1B23	4	0210 - 4
T159324	1B23	4	0210 - 4
T159325	1B23	4	0210 - 4
T159326	1B23	4	0210 - 4
T159327	1B23	4	0210 - 4
T159329	1B23	4	0210 - 4
T159330	1B23	4	0210 - 4
T159331	1B23	4	0210 - 4
T159332	1B23	4	0210 - 4
T159334	1B23	4	0210 - 4
T159338	1B23	4	0210 - 4
T159340	1B22	13	0210 - 3
T159341	1B22	11	0210 - 3
T159343	1B22	16	0210 - 3
T159344	1B22	15	0210 - 3
T159346	1B22	17	0210 - 3
T159347	1B21	3	0210 - 2
T159348	1B21	5	0210 - 2
T159349	1B22	9	0210 - 3

NUMERICAL INDEX - CONTINUED

PART NO.	GRID	KEY	PAGE
T159350	1B22	7	0210 - 3
T159351	1B22	6	0210 - 3
T159352	1B21	4	0210 - 2
T159352	1B22	10	0210 - 3
T159354	1B22	8	0210 - 3
T159358	1B21	2	0210 - 2
T159359	1B21	1	0210 - 2
T159359	2K9	6	1111 - 5
T159361	1B20	15	0201 - 3
T159362	1B20	12	0201 - 3
T159362	2J10	25	1011 - 3
T159371	1B20	11	0201 - 3
T159372	1B20	10	0201 - 3
T159373	1B20	8	0201 - 3
T159373	2J10	24	1011 - 3
T159386	1B20	23	0201 - 3
T159388	1B20	22	0201 - 3
T159389	1B20	24	0201 - 3
T159396	2J10	9	1011 - 3
T159397	2J10	10	1011 - 3
T159398	2J10	17	1011 - 3
T159399	2J10	6	1011 - 3
T159400	2J10	7	1011 - 3
T159401	2J10	8	1011 - 3
T159402	2J10	4	1011 - 3
T159403	2J10	23	1011 - 3
T159405	2J10	5	1011 - 3
T159406	2J10	16	1011 - 3
T159407	2J10	14	1011 - 3
T159408	2J10	15	1011 - 3
T159409	2J10	1	1011 - 3
T159440	1B22	18	0210 - 3
T159440	2J10	22	1011 - 3
T159441	1B22	18	0210 - 3
T159441	2J10	22	1011 - 3
T159442	1B22	18	0210 - 3
T159442	2J10	22	1011 - 3
T159443	1B22	18	0210 - 3
T159443	2J10	22	1011 - 3
T159444	1B22	18	0210 - 3
T159444	2J10	22	1011 - 3
T159445	1B22	18	0210 - 3
T159445	2J10	22	1011 - 3
T159446	1B22	18	0210 - 3
T159446	2J10	22	1011 - 3
T159447	1B22	18	0210 - 3
T159447	2J10	22	1011 - 3
T159448	1B22	18	0210 - 3
T159448	2J10	22	1011 - 3
T159449	1B22	18	0210 - 3
T159449	2J10	22	1011 - 3
T159450	1B22	18	0210 - 3
T159450	2J10	22	1011 - 3
T159451	1B22	18	0210 - 3
T159451	2J10	22	1011 - 3
T159452	1B22	18	0210 - 3
T159452	2J10	22	1011 - 3
T159453	1B22	18	0210 - 3
T159453	2J10	22	1011 - 3
T159457	1B22	18	0210 - 3
T159457	2J10	22	1011 - 3
T159459	1B22	18	0210 - 3
T159459	2J10	22	1011 - 3
T159461	1B22	18	0210 - 3
T159461	2J10	22	1011 - 3
T159463	1B22	18	0210 - 3
T159463	2J10	22	1011 - 3
T159471	2K7	13	1111 - 3
T159472	2K7	10	1111 - 3
T159473	2K7	6	1111 - 3
T159474	2K7	9	1111 - 3
T159474	2K9	10	1111 - 5
T159475	2K7	8	1111 - 3
T159475	2K9	9	1111 - 5
T159476	2K7	5	1111 - 3
T159477	2K7	7	1111 - 3
T159477	2K9	4	1111 - 5
T159478	2K7	4	1111 - 3
T159478	2K9	8	1111 - 5
T159479	2K7	1	1111 - 3
T159480	2K7	1	1111 - 3
T159481	2K7	1	1111 - 3
T159482	2K7	1	1111 - 3
T159483	2K7	1	1111 - 3
T159484	2K7	2	1111 - 3
T159485	2K7	3	1111 - 3
T159486	2K7	11	1111 - 3
T159487	2K7	12	1111 - 3
T159487	2K9	17	1111 - 5
T159490	2K7	17	1111 - 3
T159491	2K7	15	1111 - 3
T159492	2K7	16	1111 - 3
T159493	2K7	16	1111 - 3
T159494	2K7	16	1111 - 3
T159495	2K7	16	1111 - 3
T159496	2K7	16	1111 - 3
T159497	2K7	16	1111 - 3
T159499	2K7	21	1111 - 3
T159502	2K7	20	1111 - 3
T159502	2K9	18	1111 - 5
T159509	1C12	1	0250 - 2
T159513	1C12	6	0250 - 2
T159516	1C12	3	0250 - 2
T159517	1C12	5	0250 - 2
T159518	1C12	8	0250 - 2
T159519	1C12	10	0250 - 2
T159520	1C12	11	0250 - 2
T159522	1C12	9	0250 - 2
T159523	1C12	9	0250 - 2
T159525	1C12	9	0250 - 2
T159564	1D9	9	0341 - 1
T159565	1D9	15	0341 - 1
T159566	1D9	14	0341 - 1
T159567	1D9	11	0341 - 1
T159568	1D14	19	0350 - 3
T159568	1D16	19	0350 - 5
T159569	1D14	19	0350 - 3
T159569	1D16	19	0350 - 5
T159570	1D14	19	0350 - 3
T159570	1D16	19	0350 - 5
T159571	1D19	4	0350 - 8
T159572	1D19	1	0350 - 8
T159574	1D20	6	0350 - 9
T159574	1D21	13	0350 - 10
T159575	1D20	6	0350 - 9
T159575	1D21	13	0350 - 10
T159576	1D20	6	0350 - 9
T159576	1D21	13	0350 - 10
T159577	1D20	6	0350 - 9
T159577	1D21	13	0350 - 10
T159578	1D4	2	0315 - 1
T159582	1D23	28	0360 - 3
T159583	1D23	12	0360 - 3
T159584	1D23	10	0360 - 3
T159585	1D23	34	0360 - 3
T159586	1D23	36	0360 - 3
T159587	1D23	32	0360 - 3
T159588	1D23	33	0360 - 3
T159589	1D23	31	0360 - 3
T159590	1D23	13	0360 - 3
T159591	1D23	37	0360 - 3
T159592	1D23	38	0360 - 3
T159593	1D23	1	0360 - 3
T159593	1D23	40	0360 - 3
T159595	1D23	22	0360 - 3
T159596	1D23	23	0360 - 3
T159597	1D23	26	0360 - 3
T159598	1D23	25	0360 - 3
T159599	1D23	24	0360 - 3
T159600	1D23	27	0360 - 3
T159602	1D23	18	0360 - 3
T159604	1D23	9	0360 - 3
T159605	1D23	5	0360 - 3
T159607	1D23	6	0360 - 3
T159607	1D24	6	0360 - 4
T159607	1D24	9	0360 - 4
T159607	1D24	10	0360 - 4
T159607	1D24	11	0360 - 4
T159607	1D24	12	0360 - 4
T159608	1D24	1	0360 - 4
T159610	1D24	9	0360 - 4
T159610	1D24	12	0360 - 4
T159611	1D24	10	0360 - 4
T159611	1D24	12	0360 - 4
T159612	1D24	11	0360 - 4
T159612	1D24	12	0360 - 4
T159613	1D24	13	0360 - 4
T159615	1D25	12	0360 - 5
T159683	1D9	20	0341 - 1
T159684	1D24	5	0360 - 4
T159980	4F18	40	3115 - 3
T159981	4F18	38	3115 - 3
T160200	3J4	8	1912 - 5
T160579	3B11	29	1322 - 3
T160579	3B13	4	1322 - 5
T160759	3B11	3	1322 - 3
T160759	4F6	30	3102 - 15
T160762	3B11	28	1322 - 3
T160769	3B11	28	1322 - 3
T160817	3B11	4	1322 - 3
T161036	4F14	2	3102 - 23
T161036	4F16	6	3102 - 25
T161036	4G4	8	3140 - 5
T161036	4G10	10	3140 - 11
T161139	1D9	3	0341 - 1
T161144	1D18	5	0350 - 7
T161144	1D24	4	0360 - 4
T161147	1D14	18	0350 - 3
T161147	1D16	18	0350 - 5
T161181	1D9	19	0341 - 1
T161183	1D14	19	0350 - 3
T161186	1D14	15	0350 - 3
T161186	1D16	15	0350 - 5
T161187	1D14	15	0350 - 3
T161187	1D16	15	0350 - 5
T161188	1D14	15	0350 - 3
T161188	1D16	15	0350 - 5
T161189	1D14	15	0350 - 3
T161189	1D16	15	0350 - 5
T161190	1D14	15	0350 - 3
T161190	1D16	15	0350 - 5

NUMERICAL INDEX - CONTINUED

PART NO.	GRID	KEY	PAGE
T161191	1D14	15	0350 - 3
T161191	1D16	15	0350 - 5
T161192	1D14	15	0350 - 3
T161192	1D16	15	0350 - 5
T161193	1D14	15	0350 - 3
T161193	1D16	15	0350 - 5
T161194	1D23	3	0360 - 3
T161194	1D23	29	0360 - 3
T161196	1D23	12	0360 - 3
T161197	1D23	35	0360 - 3
T161198	1D23	35	0360 - 3
T161199	1D23	35	0360 - 3
T161200	1D23	35	0360 - 3
T161202	1D23	15	0360 - 3
T161203	1D23	14	0360 - 3
T161204	1D23	2	0360 - 3
T161204	1D23	39	0360 - 3
T161207	1D23	7	0360 - 3
T161208	1D24	3	0360 - 4
T161218	1D18	4	0350 - 7
T161230	3I12	1	1821 - 7
T161233	2J10	3	1011 - 3
T161238	1B22	20	0210 - 3
T161238	2J10	20	1011 - 3
T161239	1B22	20	0210 - 3
T161239	2J10	20	1011 - 3
T161240	1B22	20	0210 - 3
T161240	2J10	20	1011 - 3
T161241	1B22	20	0210 - 3
T161241	2J10	20	1011 - 3
T161242	1B22	20	0210 - 3
T161242	2J10	20	1011 - 3
T161243	1B22	20	0210 - 3
T161243	2J10	20	1011 - 3
T161244	1B22	20	0210 - 3
T161244	2J10	20	1011 - 3
T161245	1B22	20	0210 - 3
T161245	2J10	20	1011 - 3
T161246	1B22	20	0210 - 3
T161246	2J10	20	1011 - 3
T161247	1B22	20	0210 - 3
T161247	2J10	20	1011 - 3
T161248	1C12	9	0250 - 2
T161249	1C12	9	0250 - 2
T161283	3B11	8	1322 - 3
T161284	3B11	9	1322 - 3
T161285	3B11	7	1322 - 3
T161286	3B11	7	1322 - 3
T161287	3B11	1	1322 - 3
T161288	3B11	13	1322 - 3
T161289	3B11	16	1322 - 3
T161289	3B15	10	1322 - 7
T161290	3B11	14	1322 - 3
T161291	3B11	21	1322 - 3
T161380	3H16	37	1812 - 3
T161380	3H18	25	1812 - 5
T161380	3J8	18	1921 - 5
T161408	3B11	22	1322 - 3
T161497	4G8	12	3140 - 9
T161497	4G10	12	3140 - 11
T161635	4E25	8	3102 - 9
T161636	4E25	10	3102 - 9
T161678	3B11	17	1322 - 3
T161689	3G15	3	1674 - 23
T161803	1D9	18	0341 - 1
T161859	3J24	15	2008 - 2
T162043	1C21	2	0250 - 11
T162044	1C21	2	0250 - 11
T162045	1C21	2	0250 - 11
T162046	1C21	3	0250 - 11
T162321	4E21	37	3102 - 5
T162380	3G21	5	1674 - 29
T162380	3G21	30	1674 - 29
T162380	3G23	5	1674 - 31
T162380	3G23	30	1674 - 31
T162396	1C2	12	0230 - 3
T162396	2J4	20	0965 - 3
T162396	3E2	22	1520 - 25
T162396	4F14	3	3102 - 23
T162396	4F18	27	3115 - 3
T162396	4F20	24	3115 - 5
T162396	4G2	26	3140 - 3
T162396	4G8	4	3140 - 9
T162396	4G10	4	3140 - 11
T162396	4G15	2	3160 - 6
T162396	4G16	1	3160 - 7
T162396	4G17	27	3160 - 8
T162396	4G17	28	3160 - 8
T162396	4G19	17	3160 - 10
T162400	4E25	7	3102 - 9
T162407	4E21	8	3102 - 5
T162435	3I20	3	1821 - 15
T162439	4E21	28	3102 - 5
T162446	1D25	7	0360 - 5
T162517	2J10	19	1011 - 3
T162935	1D25	8	0360 - 5
T162947	1D23	13	0360 - 3
T162970	4C22	5	2162 - 29
T162970	4C24	5	2162 - 31
T162970	4D2	6	2162 - 33
T162970	4D4	6	2162 - 35
T162970	4F24	33	3115 - 9
T162971	4C22	12	2162 - 29
T162971	4C24	14	2162 - 31
T162971	4D2	10	2162 - 33
T162971	4D4	1	2162 - 35
T162975	4C22	20	2162 - 29
T162975	4C24	21	2162 - 31
T162975	4D2	21	2162 - 33
T162975	4D4	21	2162 - 35
T162976	4C22	21	2162 - 29
T162976	4C24	22	2162 - 31
T162976	4D2	22	2162 - 33
T162976	4D4	22	2162 - 35
T162977	4C22	19	2162 - 29
T162977	4C24	20	2162 - 31
T162977	4D2	20	2162 - 33
T162977	4D4	20	2162 - 35
T162978	4C22	22	2162 - 29
T162978	4C24	23	2162 - 31
T162978	4D2	23	2162 - 33
T162978	4D4	23	2162 - 35
T163092	2J16	13	1060 - 7
T163116	4F9	7	3102 - 18
T163117	4F9	5	3102 - 18
T163118	4F9	12	3102 - 18
T163119	3B11	21	1322 - 3
T163120	3B11	22	1322 - 3
T163121	3B11	14	1322 - 3
T163122	3B11	16	1322 - 3
T163123	3B11	29	1322 - 3
T163124	3B11	13	1322 - 3
T163125	3B11	18	1322 - 3
T163126	3B11	21	1322 - 3
T163127	3B11	22	1322 - 3
T163128	3B11	14	1322 - 3
T163129	3B11	16	1322 - 3
T163130	3B11	29	1322 - 3
T163131	3B11	13	1322 - 3
T163132	3B11	18	1322 - 3
T163179	3B11	14	1322 - 3
T163374	1B21	3	0210 - 2
T163374	1B21	4	0210 - 2
T163374	1B22	9	0210 - 3
T163374	1B22	10	0210 - 3
T163374	1B22	13	0210 - 3
T163375	1B21	3	0210 - 2
T163375	1B21	4	0210 - 2
T163375	1B22	9	0210 - 3
T163375	1B22	10	0210 - 3
T163375	1B22	13	0210 - 3
T163579	3B11	21	1322 - 3
T163580	3B11	21	1322 - 3
T163581	3B11	21	1322 - 3
T163810	1B21	3	0210 - 2
T163810	1B21	4	0210 - 2
T163810	1B22	9	0210 - 3
T163810	1B22	13	0210 - 3
T163811	1B22	13	0210 - 3
T163867	1D6	14	0315 - 3
T163868	1D6	11	0315 - 3
T163869	1D6	10	0315 - 3
T163870	1D6	21	0315 - 3
T164019	2G12	14	0511 - 7
T164034	2H10	2	0521 - 7
T164311	2I19	28	0962 - 5
T164420	1B20	13A	0201 - 3
T164420	1B20	27	0201 - 3
T164431	1B22	8	0210 - 3
T164433	1B20	26	0201 - 3
T164466	2G14	23	0511 - 9
T164466	2G22	19	0515 - 5
T164466	2H4	6	0515 - 11
T164466	3E24	13	1671 - 3
T164466	3H14	12	1811 - 5
T164466	3H18	27	1812 - 5
T164466	3H20	6	1812 - 7
T164466	3H20	10	1812 - 7
T164466	3H22	10	1812 - 9
T164466	3H24	27	1816 - 3
T164466	3I2	14	1816 - 5
T164466	3I4	22	1816 - 7
T164466	3I6	22	1816 - 9
T164467	2G12	15	0511 - 7
T164467	2G22	19	0515 - 5
T164467	3H3	4	1741 - 3
T164467	3J6	17	1921 - 3
T164467	3J10	7	1921 - 7
T164467	3J16	15	1927 - 3
T164468	2G24	19	0515 - 7
T164468	3F2	4	1671 - 5
T164468	3F4	8	1671 - 7
T164468	3F10	14	1671 - 13
T164468	3H3	5	1741 - 3
T164468	3H5	3	1741 - 5
T164468	3H16	39	1812 - 3
T164468	3H18	26	1812 - 5
T164468	3H24	28	1816 - 3
T164468	3I2	13	1816 - 5
T164468	3I4	23	1816 - 7
T164468	3I6	23	1816 - 9

NUMERICAL INDEX - CONTINUED

PART NO.	GRID	KEY	PAGE
T164468	3J8	15	1921 - 5
T164468	3J8	18	1921 - 5
T164468	3J16	16	1927 - 3
T164468	4F20	28	3115 - 5
T164468	4G4	31	3140 - 5
T164468	4H14	43	4063 - 3
T164468	4H16	38	4063 - 5
T164471	4E8	29	2163 - 3
T164471	4E8	31	2163 - 3
T164471	4E10	31	2163 - 5
T164471	4E12	31	2163 - 7
T164474	3J16	14	1927 - 3
T164475	2G12	12	0511 - 7
T164476	2G12	11	0511 - 7
T164511	3H18	28	1812 - 5
T164577	1D23	16	0360 - 3
T164579	1D23	34	0360 - 3
T164581	1D23	14	0360 - 3
T164582	1D23	14	0360 - 3
T164583	1D23	14	0360 - 3
T164584	1D23	14	0360 - 3
T16464	3H12	12	1811 - 3
T16464	3H14	8	1811 - 5
T16464	4C22	29	2162 - 29
T16464	4C24	30	2162 - 31
T16464	4D2	30	2162 - 33
T16464	4D4	30	2162 - 35
T16464	4H8	7	4000 - 13
T164654	1D17	3	0350 - 6
T164654	1D17	12	0350 - 6
T164655	1D17	3	0350 - 6
T164655	1D17	4B	0350 - 6
T164655	1D17	12	0350 - 6
T164665	1D9	3	0341 - 1
T164693	1D23	18	0360 - 3
T164750	3B11	22	1322 - 3
T164755	3B11	22	1322 - 3
T164756	3B11	22	1322 - 3
T164844	1B20	10	0201 - 3
T164909	2K9	11	1111 - 5
T164911	2K9	5	1111 - 5
T164912	2K9	14	1111 - 5
T164913	2K9	15	1111 - 5
T164914	2K9	7	1111 - 5
T164915	2K9	3	1111 - 5
T164916	2K9	2	1111 - 5
T164917	2K9	1	1111 - 5
T164918	2K9	16	1111 - 5
T164922	2K9	19	1111 - 5
T164997	3J16	14	1927 - 3
T164998	1B20	15	0201 - 3
T164999	1B20	15	0201 - 3
T164999	1B20	27	0201 - 3
T165014	3D8	8	1520 - 11
T165015	3D8	13	1520 - 11
T165015	3D10	13	1520 - 13
T165017	3I10	14	1821 - 5
T165017	3I12	14	1821 - 7
T165018	3I10	15	1821 - 5
T165018	3I12	15	1821 - 7
T165019	3I10	16	1821 - 5
T165019	3I12	16	1821 - 7
T165100	2G20	29	0515 - 3
T165100	2H2	4	0515 - 9
T165282	2J14	4	1060 - 5
T165310	4G10	2	3140 - 11
T165314	4F14	4	3102 - 23
T165314	4F14	8	3102 - 23
T165314	4F16	4	3102 - 25
T165314	4F16	8	3102 - 25
T165314	4G4	1	3140 - 5
T165314	4G10	11	3140 - 11
T165332	4F14	5	3102 - 23
T165332	4F14	7	3102 - 23
T165332	4F16	2	3102 - 25
T165333	4F14	4	3102 - 23
T165333	4F14	7	3102 - 23
T165333	4F16	3	3102 - 25
T165399	1D20	5	0350 - 9
T165400	1D20	14	0350 - 9
T165401	1D21	14	0350 - 10
T165471	3J4	11	1912 - 5
T165472	3J4	6	1912 - 5
T165478	3G9	2	1674 - 17
T165493	4H2	14	4000 - 7
T165496	4C22	40	2162 - 29
T165496	4C24	13	2162 - 31
T165496	4D2	13	2162 - 33
T165496	4D4	13	2162 - 35
T165855	3H16	4	1812 - 3
T165855	3H18	30	1812 - 5
T165977	3J12	21	1921 - 9
T165978	3J12	12	1921 - 9
T165981	3J12	9	1921 - 9
T166077	1D25	1	0360 - 5
T166083	1B20	10	0201 - 3
T166084	1C12	1	0250 - 2
T166085	1C12	11	0250 - 2
T166086	2J10	5	1011 - 3
T166145	1C19	16	0250 - 9
T166146	1C19	16	0250 - 9
T166147	1C19	16	0250 - 9
T166148	1C19	16	0250 - 9
T166149	1C19	16	0250 - 9
T166150	1C19	16	0250 - 9
T166171	2J14	5	1060 - 5
T166336	1B21	3	0210 - 2
T166336	1B21	4	0210 - 2
T166336	1B22	9	0210 - 3
T166336	1B22	13	0210 - 3
T166390	4F6	20	3102 - 15
T166390	4F8	20	3102 - 17
T166433	4F2	6	3102 - 11
T166433	4F6	20	3102 - 15
T166433	4F8	2	3102 - 17
T166454	4F2	7	3102 - 11
T166455	4F2	10	3102 - 11
T166886	4H8	2	4000 - 13
T166887	4H8	3	4000 - 13
T166888	4H8	8	4000 - 13
T167059	4E25	2	3102 - 9
T167059	4F2	2	3102 - 11
T167059	4F8	31	3102 - 17
T16738	3G23	42	1674 - 31
T16738	3G25	42	1674 - 33
T174398	2K7	15	1111 - 3
T176383	4H2	33	4000 - 7
T17949	2G24	32	0515 - 7
T17950	2G24	31	0515 - 7
T18145	1C4	4	0230 - 6
T18145	1C15	3	0250 - 5
T183268	2J18	1	1060 - 9
T183269	2J18	21	1060 - 9
T183270	2J18	13	1060 - 9
T183271	2J18	11	1060 - 9
T183272	2J18	9	1060 - 9
T183273	2J18	7	1060 - 9
T183274	2J18	6	1060 - 9
T183276	2J18	16	1060 - 9
T183310	2J18	28	1060 - 9
T183356	4G10	3	3140 - 11
T183357	2J18	25	1060 - 9
T183362	2J18	20	1060 - 9
T183500	2J10	22	1011 - 3
T183502	2J10	22	1011 - 3
T183505	2J10	22	1011 - 3
T183506	2J10	22	1011 - 3
T183507	2J10	22	1011 - 3
T183921	1C12	3	0250 - 2
T183921	1C12	5	0250 - 2
T183921	1C12	6	0250 - 2
T183922	1C12	3	0250 - 2
T183922	1C12	5	0250 - 2
T183922	1C12	6	0250 - 2
T183923	1C12	3	0250 - 2
T183923	1C12	5	0250 - 2
T183923	1C12	6	0250 - 2
T184044	3B15	13	1322 - 7
T184586	1D24	1	0360 - 4
T185041	4F6	3	3102 - 15
T185041	4F8	17	3102 - 17
T185078	2J18	18	1060 - 9
T185443	2J10	5	1011 - 3
T185444	1B20	11	0201 - 3
T185606	1D23	5	0360 - 3
T185902	4G6	4	3140 - 7
T185926	2J18	5	1060 - 9
T186041	1D24	2	0360 - 4
T187126	3B11	21	1322 - 3
T187127	3B11	21	1322 - 3
T187128	3B11	21	1322 - 3
T187205	4E21	37	3102 - 5
T188172	1D23	12	0360 - 3
T188173	1D23	11	0360 - 3
T188229	2K9	21	1111 - 5
T188234	2K9	12	1111 - 5
T188279	1B20	15	0201 - 3
T188397	1C19	17	0250 - 9
T188441	1C7	4	0230 - 9
T188442	1C7	6	0230 - 9
T188448	1C7	8	0230 - 9
T188642	3J12	26	1921 - 9
T18891	1F2	26	0404 - 3
T18891	1H17	26	0404A - 3
T18891	2B22	2	0404B - 3
T18891	2E4	2	0404C - 3
T190212	3B11	34	1322 - 3
T190340	3B11	21	1322 - 3
T190365	3B11	21	1322 - 3
T190366	3B11	21	1322 - 3
T190745	1C6	1	0230 - 8
T190746	1C6	16	0230 - 8
T190749	1C7	3	0230 - 9
T190750	1C5	1	0230 - 7
T191318	4F4	1	3102 - 13
T191318	4F6	1	3102 - 15
T191427	1C6	6	0230 - 8
T191428	1C6	4	0230 - 8
T191430	1C6	10	0230 - 8
T19854	1D25	12	0360 - 5
T19858	2G24	33	0515 - 7

NUMERICAL INDEX - CONTINUED

PART NO.	GRID	KEY	PAGE
T19860	2G24	34	0515 - 7
T19861	2G24	4	0515 - 7
T20034	1E15	24	0401 - 2
T20034	1H6	24	0401A - 2
T201123	2E17	4	0410C - 2
T20168	1F2	18	0404 - 3
T20168	1H17	18	0404A - 3
T20168	2B22	18	0404B - 3
T20168	2E4	18	0404C - 3
T202499	1C5	2	0230 - 7
T20314	1E17	4	0402 - 3
T20314	1H8	4	0402A - 3
T20314	2B14	4	0402B - 2
T20314	2D21	4	0402C - 2
T20316	1E17	3	0402 - 3
T20316	1H8	3	0402A - 3
T20316	2B14	3	0402B - 2
T20316	2D21	3	0402C - 2
T206432	1C17	9	0250 - 7
T206605	3B15	1	1322 - 7
T206606	3B15	2	1322 - 7
T206608	3B15	3	1322 - 7
T206609	3B15	4	1322 - 7
T206610	3B15	19	1322 - 7
T206663	3B15	5	1322 - 7
T206672	3B15	12	1322 - 7
T21816	2J16	23	1060 - 7
T221X230	4E25	15	3102 - 9
T221X230	4F2	15	3102 - 11
T22101	2J16	12	1060 - 7
T22150	2G20	12	0515 - 3
T22240	2G20	11	0515 - 3
T22571	3E24	2	1671 - 3
T22571	3F2	5	1671 - 5
T22571	3F4	3	1671 - 7
T22571	3F12	4	1671 - 15
T22571	3F14	4	1671 - 17
T23P	4E25	13	3102 - 9
T23P	4F2	13	3102 - 11
T230SP	4E25	14	3102 - 9
T230SP	4F2	14	3102 - 11
T23474	1F2	19	0404 - 3
T23474	1H17	19	0404A - 3
T23474	2B22	19	0404B - 3
T23474	2E4	19	0404C - 3
T23639	4C22	7	2162 - 29
T23639	4C24	7	2162 - 31
T23639	4D2	8	2162 - 33
T23639	4D4	8	2162 - 35
T24472	1F17	9	0413 - 2
T24472	1I7	9	0413A - 2
T24472	2C11	5	0413B - 1
T24472	2E19	5	0413C - 2
T25879	1C9	3	0242 - 3
T25879	3C4	4	1511 - 3
T25879	3C6	4	1511 - 5
T25879	3C10	4	1511 - 9
T25879	3C12	4	1511 - 11
T25879	3C16	4	1511 - 15
T25879	3C18	4	1511 - 17
T25879	3C20	4	1511 - 19
T26286	2K2	13	1063 - 9
T26286	2K4	13	1063 - 11
T27517	4E8	38	2163 - 3
T27517	4E10	20	2163 - 5
T27517	4E12	20	2163 - 7
T27860	1F20	28	0413 - 5
T27860	1I10	28	0413A - 5
T27945	4C22	34	2162 - 29
T27945	4C24	33	2162 - 31
T27945	4D2	1	2162 - 33
T27945	4D4	35	2162 - 35
T27945	4F18	23	3115 - 3
T27945	4F20	20	3115 - 5
T27986	2G6	8	0505 - 3
T28535	4E25	2	3102 - 9
T28585	3G5	10	1674 - 12
T28745	1F23	3	0415 - 3
T30367	2C25	14	0420B - 5
T30367	2F9	14	0420C - 5
T34950	3C4	4	1511 - 3
T34950	3C8	4	1511 - 7
T34950	3C14	4	1511 - 13
T35860	3F21	8	1674 - 3
T35860	3F25	8	1674 - 7
T35860	3G2	8	1674 - 9
T35860	3G7	6	1674 - 15
T35860	3G11	6	1674 - 19
T35860	3H16	9	1812 - 3
T35860	3H18	9	1812 - 5
T35860	3H20	9	1812 - 7
T35860	3I8	6	1821 - 3
T35860	3I10	6	1821 - 5
T35860	3I12	6	1821 - 7
T35860	3I14	5	1821 - 9
T35860	3J6	6	1921 - 3
T35860	3J8	6	1921 - 5
T35860	4F18	18	3115 - 3
T35860	4F20	15	3115 - 5
T35860	4F22	15	3115 - 7
T35860	4G2	24	3140 - 3
T35860	4G4	24	3140 - 5
T35860	4G23	4	4000 - 3
T35984	4D12	4	2162 - 41
T35984	4D12	26	2162 - 41
T35985	4D12	5	2162 - 41
T35985	4D12	20	2162 - 41
T36012	4C20	29	2162 - 27
T36012	4D12	1	2162 - 41
T36012	4D18	23	2162 - 47
T36012	4D20	23	2162 - 49
T36012	4D22	23	2162 - 51
T36012	4D24	15	2162 - 53
T36012	4E2	15	2162 - 55
T36012	4E4	12	2162 - 57
T36012	4E6	12	2162 - 59
T37253	2I19	7	0962 - 5
T41836	2I19	13	0962 - 5
T42633	2I4	5	0560 - 3
T43514	2B22	24	0404B - 3
T43514	2E4	24	0404C - 3
T49819	4D8	21	2162 - 39
T54324	2I19	19	0962 - 5
T54568	4F4	4	3102 - 13
T54568	4F6	4	3102 - 15
T54568	4F8	8	3102 - 17
T55501	3G21	21	1674 - 29
T55501	3G23	21	1674 - 31
T55501	3G25	21	1674 - 33
T55585	3G21	20	1674 - 29
T55585	3G23	20	1674 - 31
T55585	3G25	20	1674 - 33
T56112	2H10	11	0521 - 7
T58477	1F15	6	0409 - 3
T58477	1I5	6	0409A - 3
T58477	2C9	6	0409B - 3
T58477	2E16	6	0409C - 3
T58862	4D12	23	2162 - 41
T58863	4D12	24	2162 - 41
T58864	4D12	27	2162 - 41
T58865	4D12	28	2162 - 41
T60313	2G20	10	0515 - 3
T60313	2H2	5	0515 - 9
T61148	4C16	6	2162 - 23
T61148	4C18	28	2162 - 25
T61226	4G2	4	3140 - 3
T61226	4G4	4	3140 - 5
T61226	4G17	24	3160 - 8
T61861	3H16	30	1812 - 3
T61861	3H16	31	1812 - 3
T61861	3H18	22	1812 - 5
T61861	3H18	23	1812 - 5
T61861	3H20	20	1812 - 7
T61861	3H20	22	1812 - 7
T63019	3J8	11	1921 - 5
T63019	3J8	12	1921 - 5
T63019	3J10	9	1921 - 7
T64105	3E24	4	1671 - 3
T64105	3F12	5	1671 - 15
T64105	3F14	5	1671 - 17
T64311	2I19	21	0962 - 5
T64312	2I19	23	0962 - 5
T64313	2I19	26	0962 - 5
T64318	2I19	5	0962 - 5
T66860	1B10	5	0110 - 2
T69027	1C2	13	0230 - 3
T69354	1C2	30	0230 - 3
T69355	1C2	17	0230 - 3
T69360	1B25	5	0230 - 1
T69363	1C2	19	0230 - 3
T69364	1C2	18	0230 - 3
T69365	1C2	15	0230 - 3
T69938	1C9	5	0242 - 3
T69938	1C11	7	0242 - 5
T69938	1C13	6	0250 - 3
T69938	1D8	3	0325 - 1
T69938	1D11	4	0342 - 3
T74403	3H18	29	1812 - 5
T74403	3J6	12	1921 - 3
T74403	3J6	13	1921 - 3
T74403	3J6	14	1921 - 3
T74410	1F18	3	0413 - 3
T74410	1I8	3	0413A - 3
T74553	1D6	9	0315 - 3
T74553	1D6	19A	0315 - 3
T75197	2I25	28	0963 - 5
T75197	4G12	25	3160 - 3
T75197	4G12	29	3160 - 3
T75276	3F23	7	1674 - 5
T75276	3F25	7	1674 - 7
T75276	3G2	7	1674 - 9
T75276	3G15	28	1674 - 23
T75276	3G17	10	1674 - 25
T75276	3G25	53	1674 - 33
T75506	1C3	10	0230 - 4
T75815	4G2	7	3140 - 3
T75815	4G4	7	3140 - 5
T75815	4G17	26	3160 - 8
T76252	3F21	7	1674 - 3
T76252	3G13	28	1674 - 21
T76252	3G17	28	1674 - 25

NUMERICAL INDEX - CONTINUED

PART NO.	GRID	KEY	PAGE
T76607	3F19	1	1673 - 3
T76608	3F19	5	1673 - 3
T76609	3F19	3	1673 - 3
T76719	2I23	20	0963 - 3
T76719	2I25	20	0963 - 5
T76719	2J2	20	0963 - 7
T76938	2I6	14	0560 - 5
T76938	4E8	13	2163 - 3
T76938	4E8	44	2163 - 3
T76938	4E10	3	2163 - 5
T76938	4E12	3	2163 - 7
T76938	4E14	13	2164 - 3
T76938	4E14	15	2164 - 3
T77165	2G20	13	0515 - 3
T77258	1G16	10	0433 - 3
T77258	1J9	10	0433A - 3
T77346	2I19	18	0962 - 5
T77613	1E2	8	0363 - 3
T77613	1E2	9	0363 - 3
T77613	2E25	3	0416C - 2
T77613	2I4	13	0560 - 3
T77613	2I6	13	0560 - 5
T77613	2I23	10	0963 - 3
T77613	2I23	11	0963 - 3
T77613	2I25	10	0963 - 5
T77613	2I25	11	0963 - 5
T77613	2J2	10	0963 - 7
T77613	2J2	11	0963 - 7
T77613	2J20	10	1063 - 3
T77613	2J24	3	1063 - 7
T77613	2K2	3	1063 - 9
T77613	2K2	4	1063 - 9
T77613	2K4	3	1063 - 11
T77613	2K4	4	1063 - 11
T77613	4E21	24	3102 - 5
T77613	4E21	32	3102 - 5
T77814	1B24	1	0210 - 5
T77814	1B24	4	0210 - 5
T77814	2I23	6	0963 - 3
T77814	2I23	8	0963 - 3
T77814	2I25	8	0963 - 5
T77814	2J2	8	0963 - 7
T77814	2J20	7	1063 - 3
T77814	2J22	4	1063 - 5
T77814	3E6	12	1520 - 29
T77814	3E8	12	1520 - 31
T77814	3E10	12	1520 - 33
T77814	3E10	18	1520 - 33
T77814	3E12	5	1520 - 35
T77814	3E12	7	1520 - 35
T77814	3E14	3	1520 - 37
T77814	3E16	5	1520 - 39
T77814	3E18	5	1520 - 41
T77814	4B20	3	2162 - 3
T77814	4B22	2	2162 - 5
T77814	4E21	12	3102 - 5
T77857	1E2	5	0363 - 3
T77857	2I23	3	0963 - 3
T77857	2I23	4	0963 - 3
T77857	2I25	3	0963 - 5
T77857	2J2	3	0963 - 7
T77857	2J24	6	1063 - 7
T77857	2K2	5	1063 - 9
T77857	2K2	6	1063 - 9
T77857	2K4	5	1063 - 11
T77857	2K4	6	1063 - 11
T77857	4B20	6	2162 - 3
T77857	4B22	4	2162 - 5
T77857	4B22	6	2162 - 5
T77857	4B24	3	2162 - 7
T77857	4C22	8	2162 - 29
T77857	4C22	38	2162 - 29
T77857	4C24	10	2162 - 31
T77857	4D4	9	2162 - 35
T77857	4D4	10	2162 - 35
T77857	4E8	21	2163 - 3
T77857	4E10	21	2163 - 5
T77857	4E10	22	2163 - 5
T77857	4E12	21	2163 - 7
T77857	4E12	22	2163 - 7
T77857	4E21	18	3102 - 5
T77857	4E21	19	3102 - 5
T77857	4F4	7	3102 - 13
T77857	4F6	7	3102 - 15
T77857	4F8	10	3102 - 17
T77857	4F24	6	3115 - 9
T77857	4G2	31	3140 - 3
T77857	4G4	28	3140 - 5
T77857	4G12	11	3160 - 3
T77857	4G14	9	3160 - 5
T77857	4H16	48	4063 - 5
T77858	2I6	19	0560 - 5
T77858	4B20	9	2162 - 3
T77858	4B22	7	2162 - 5
T77858	4B22	9	2162 - 5
T77858	4B24	6	2162 - 7
T77858	4E8	17	2163 - 3
T77858	4E10	17	2163 - 5
T77858	4E12	17	2163 - 7
T77858	4E14	16	2164 - 3
T77858	4E14	17	2164 - 3
T77858	4H16	49	4063 - 5
T77932	2K7	25	1111 - 3
T77932	2K9	24	1111 - 5
T77932	4D2	9	2162 - 33
T77932	4D4	9	2162 - 35
T77932	4E21	17	3102 - 5
T77932	4E21	22	3102 - 5
T77932	4G2	30	3140 - 3
T77932	4G4	27	3140 - 5
T77932	4G14	23	3160 - 5
T78593	2G6	4	0505 - 3
T78612	1D11	12	0342 - 3
T78612	1D11	14	0342 - 3
T78646	2I4	9	0560 - 3
T78646	2I6	9	0560 - 5
T78784	4E14	6A	2164 - 3
T78784	4E14	6B	2164 - 3
T78784	4E14	9	2164 - 3
T78787	3G13	27	1674 - 21
T78787	3G15	27	1674 - 23
T78787	3G17	27	1674 - 25
T79786	1B25	1	0230 - 1
T80027	1C11	5	0242 - 5
T80027	1C15	6	0250 - 5
T80393	3G5	3	1674 - 12
T80393	3G7	1	1674 - 15
T80394	3G5	1	1674 - 12
T80394	3G7	1	1674 - 15
T81030	2I4	8	0560 - 3
T81963	1B25	6	0230 - 1
T82791	3G21	31	1674 - 29
T82791	3G23	31	1674 - 31
T82791	3G25	31	1674 - 33
T82791	3J14	5	1921 - 11
T82792	3G21	32	1674 - 29
T82792	3G23	32	1674 - 31
T82792	3G25	32	1674 - 33
T82907	2H6	1	0521 - 3
T84194	4E25	11	3102 - 9
U11649	3E4	39	1520 - 27
U11651	3E2	18	1520 - 25
U11651	3E4	18	1520 - 27
U11651	3E14	12	1520 - 37
U11651	3E16	16	1520 - 39
U11651	3E18	19	1520 - 41
U12547	2I23	2	0963 - 3
U12547	2I25	2	0963 - 5
U12547	2J16	30	1060 - 7
U12547	4B20	8	2162 - 3
U12547	4B22	7	2162 - 5
U12547	4B22	8	2162 - 5
U12547	4B24	5	2162 - 7
U12547	4E8	19	2163 - 3
U12547	4E10	19	2163 - 5
U12547	4E12	19	2163 - 7
U12547	4E14	13	2164 - 3
U12547	4E14	14	2164 - 3
U12547	4E14	16	2164 - 3
U12547	4H16	47	4063 - 5
U13572	3E2	19	1520 - 25
U13572	3E4	19	1520 - 27
U13572	3E14	11	1520 - 37
U13572	3E16	15	1520 - 39
U13572	3E18	18	1520 - 41
U13616	4C20	28	2162 - 27
U13616	4D12	2	2162 - 41
U13616	4D18	24	2162 - 47
U13616	4D20	24	2162 - 49
U13616	4D22	24	2162 - 51
U13616	4D24	16	2162 - 53
U13616	4E2	16	2162 - 55
U13616	4E4	13	2162 - 57
U13616	4E6	13	2162 - 59
U13639	1D11	12	0342 - 3
U13639	1D11	13	0342 - 3
U13639	1F2	23	0404 - 3
U13639	1H17	23	0404A - 3
U13639	2B22	23	0404B - 3
U13639	2E4	23	0404C - 3
U13639	2G4	6	0505 - 1
U13639	2J18	2	1060 - 9
U13639	4E8	30	2163 - 3
U13639	4E8	47	2163 - 3
U13639	4E10	30	2163 - 5
U13639	4E12	30	2163 - 7
U13639	4E14	6A	2164 - 3
U13639	4E14	8	2164 - 3
U13639	4H16	50	4063 - 5
U14555	1B25	10	0230 - 1
U16068	3D24	14	1520 - 23
U40398	4F4	24	3102 - 13
U40398	4F6	24	3102 - 15
U40398	4F8	24	3102 - 17
U40398	4F24	12	3115 - 9
U42208	2G12	1	0511 - 7
U42208	2G14	1	0511 - 9
U42208	4H8	1	4000 - 13
U44915	1B16	2	0149 - 2
U44915	2I2	6	0540 - 3
U44915	3J12	14	1921 - 9

NUMERICAL INDEX - CONTINUED

PART NO.	GRID	KEY	PAGE
U44915	4E19	4	3102 - 3
W19903	4D12	7	2162 - 41
W19903	4D12	16	2162 - 41
W23122	3D24	15	1520 - 23
Z29304	4D12	12	2162 - 41
Z29304	4D12	21	2162 - 41
Z29864	1D6	19B	0315 - 3
0071342640	4B24	15	2162 - 7
0071358873	4E14	13	2164 - 3
0361365500	3F8	3	1671 - 11
0361365500	3F14	3	1671 - 17
0361365500	3F14	14	1671 - 17
0550038668	2H24	2	0531 - 11
0560034505	3I4	1	1816 - 7
0560034505	3I6	1	1816 - 9
0631369422	4H6	65	4000 - 11
0731416445	3I6	6	1816 - 9
2100327062	4G4	29	3140 - 5
2101378376	3I4	4	1816 - 7
2101378376	3I6	4	1816 - 9
2223002944	4D2	33	2162 - 33
2223002944	4D4	34	2162 - 35
5787YT	4F20	14	3115 - 5
5787YT	4F22	14	3115 - 7

PART NO.	GRID	KEY	PAGE

PART NO.	GRID	KEY	PAGE