# 3C 3CPLUS 3CX 4CX 214 215 217

Product Catalog \ CONSTRUCTION \ NORTH AMERICA \ CONSTRUCTION / INDUSTRIAL \ BACKHOE LOADER 3CX,4CX,214,215,217 \ 3C PLUS (91HP) , Made in Brazil with Dieselmax/IESA Engine 9812/0080 \ A ATTACHMENTS \ A01 SHOVELS

## 9812/0080 A1-1-1 SHOVEL, G.P 1.0M3, 2253MM (7'4") WIDE

ABRIL 2013

RUTHZIL TRATOR COMERCIAL DE PEÇAS LTDA 11 97083-6812 ROLANDO CITRANGULO

MOTOR P4001T

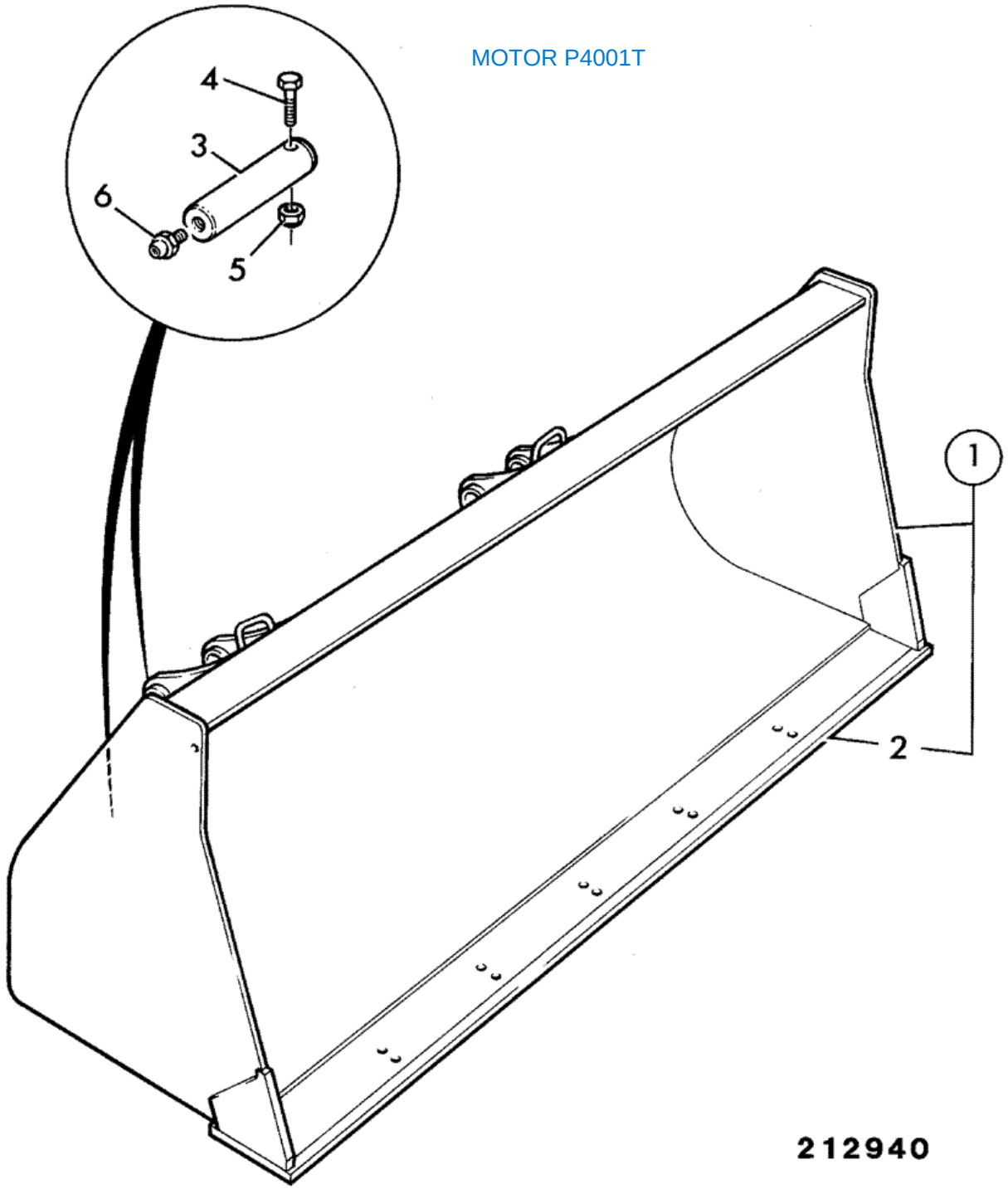


| Item | Part # | Change No | Description | Usage Code | QTY |
|---|---|---|---|---|---|
| | | | | | |

| | | | | | |
|---|---|---|---|---|---|
| 1 | 335/05773 | | Shovel GP 1.0m3 7'4" 214e Brazil | | 1 |
| 2 | :123/04023 | | Toeplate | | 1 |
| 3 | 811/80001 | | Pin pivot | | 4 |
| 4 | 1305/3222Z | | Bolt 3/8"UNF x 3" | | 4 |
| 5 | 1340/0203Z | | Nut | | 4 |
| 6 | 1450/0002 | | Nipple grease, straight 1/4 | | 4 |

# 9812/0080 A1-1-2 SHOVEL, G.P 1.0M3, 2253MM (7'4") WIDE, HEAVY DUTY

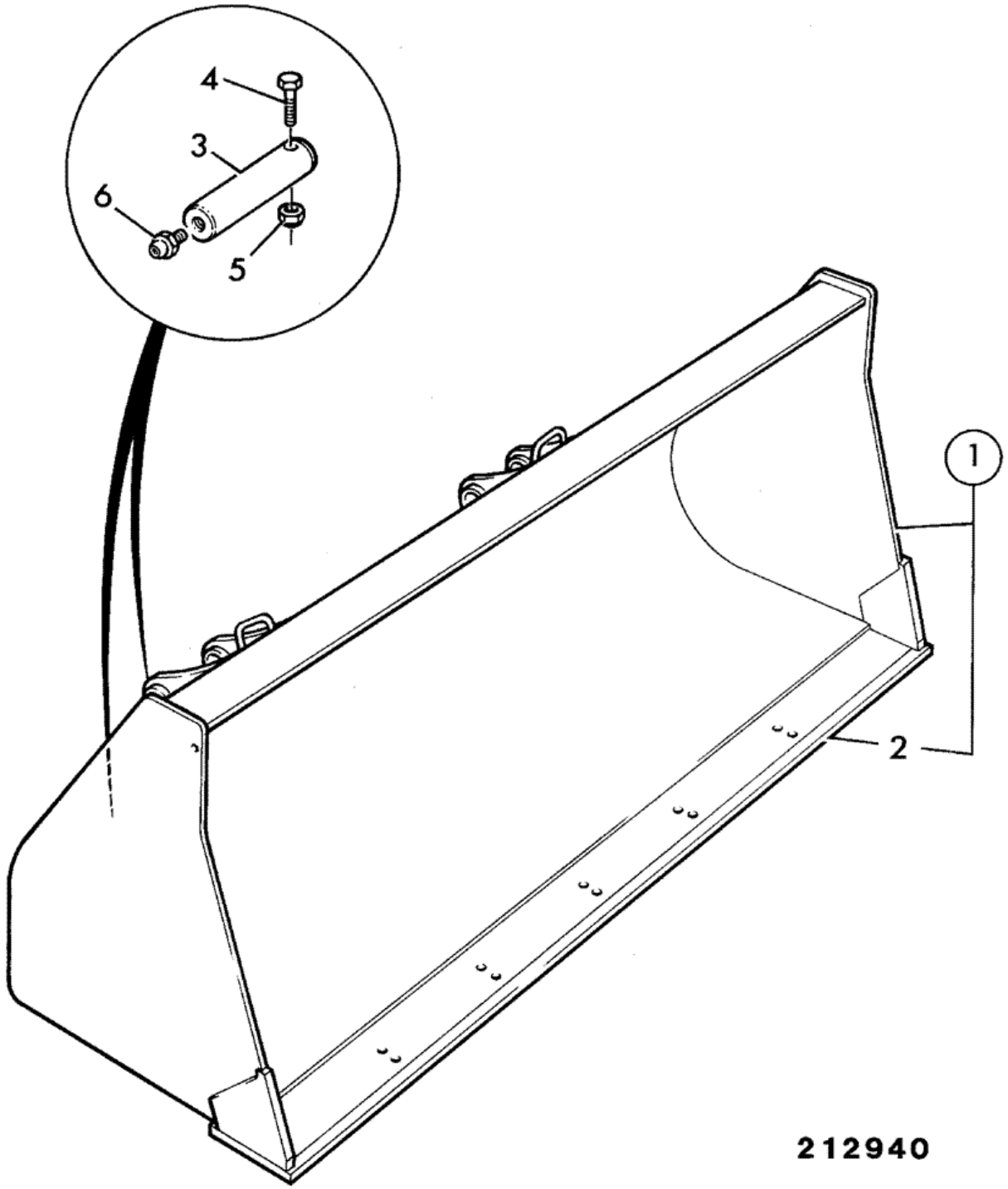


| Item | Part # | Change No | Description | Usage Code | QTY |
|---|---|---|---|---|---|
| | | | | | |

| | | | | | |
|---|---|---|---|---|---|
| 1 | 335/05774 | | Shovel GP 1.0m3 7'4"H/Duty 214e Brazil | | 1 |
| 2 | :123/04256 | | Toeplate | | 1 |
| 3 | 811/80001 | | Pin pivot | | 4 |
| 4 | 1305/3222Z | | Bolt 3/8"UNF x 3" | | 4 |
| 5 | 1340/0203Z | | Nut | | 4 |
| 6 | 1450/0002 | | Nipple grease, straight 1/4 | | 4 |

Product Catalog \ CONSTRUCTION \ NORTH AMERICA \ CONSTRUCTION / INDUSTRIAL \ BACKHOE LOADER 3CX,4CX,214,215,217 \ 3C PLUS (91HP) , Made in Brazil with Dieselmax/IESA Engine 9812/0080 \ A ATTACHMENTS \ A01 SHOVELS

# 9812/0080 A1-1-3 SHOVEL, G.P 1.0M3, 2253MM (7'4") WIDE, HEAVY DUTY ,HIGH PIVOT 4WD

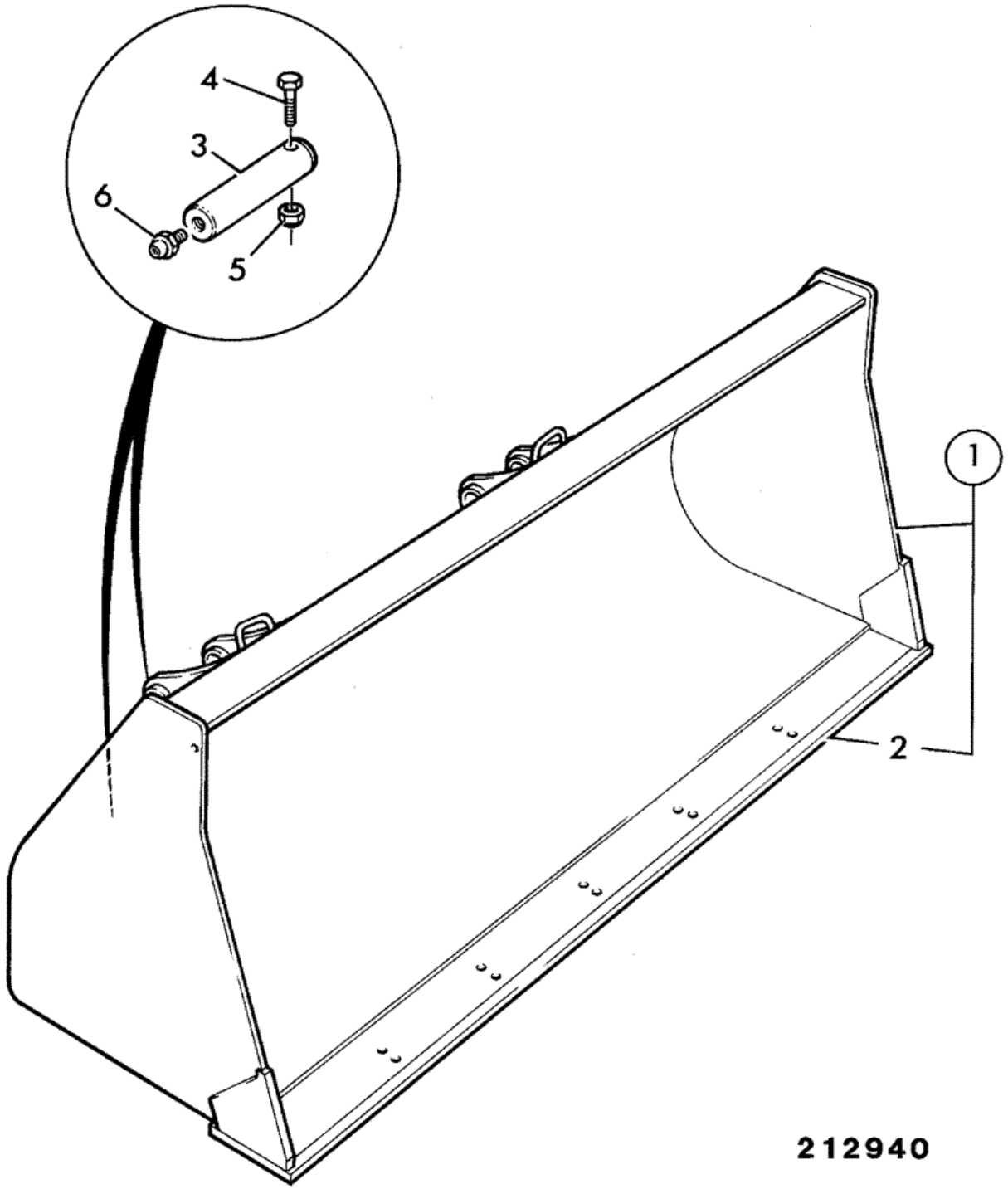


| Item | Part # | Change No | Description | Usage Code | QTY |
|---|---|---|---|---|---|
| | | | | | |

| | | | | | |
|---|---|---|---|---|---|
| 1 | 335/05775 | | Shovel GP 1.0m3 7,4"H/Duty 214e high pivots 4WD<br>*Brazil* | | 1 |
| 2 | :123/04256 | | Toeplate | | 1 |
| 3 | 811/80001 | | Pin pivot | | 4 |
| 4 | 1305/3222Z | | Bolt 3/8"UNF x 3" | | 4 |
| 5 | 1340/0203Z | | Nut | | 4 |
| 6 | 1450/0002 | | Nipple grease, straight 1/4 | | 4 |

# 9812/0080 A1-4-2 SHOVEL, G.P 1.1M3, 2350MM (7'8.5") WIDE, QUICKHITCH

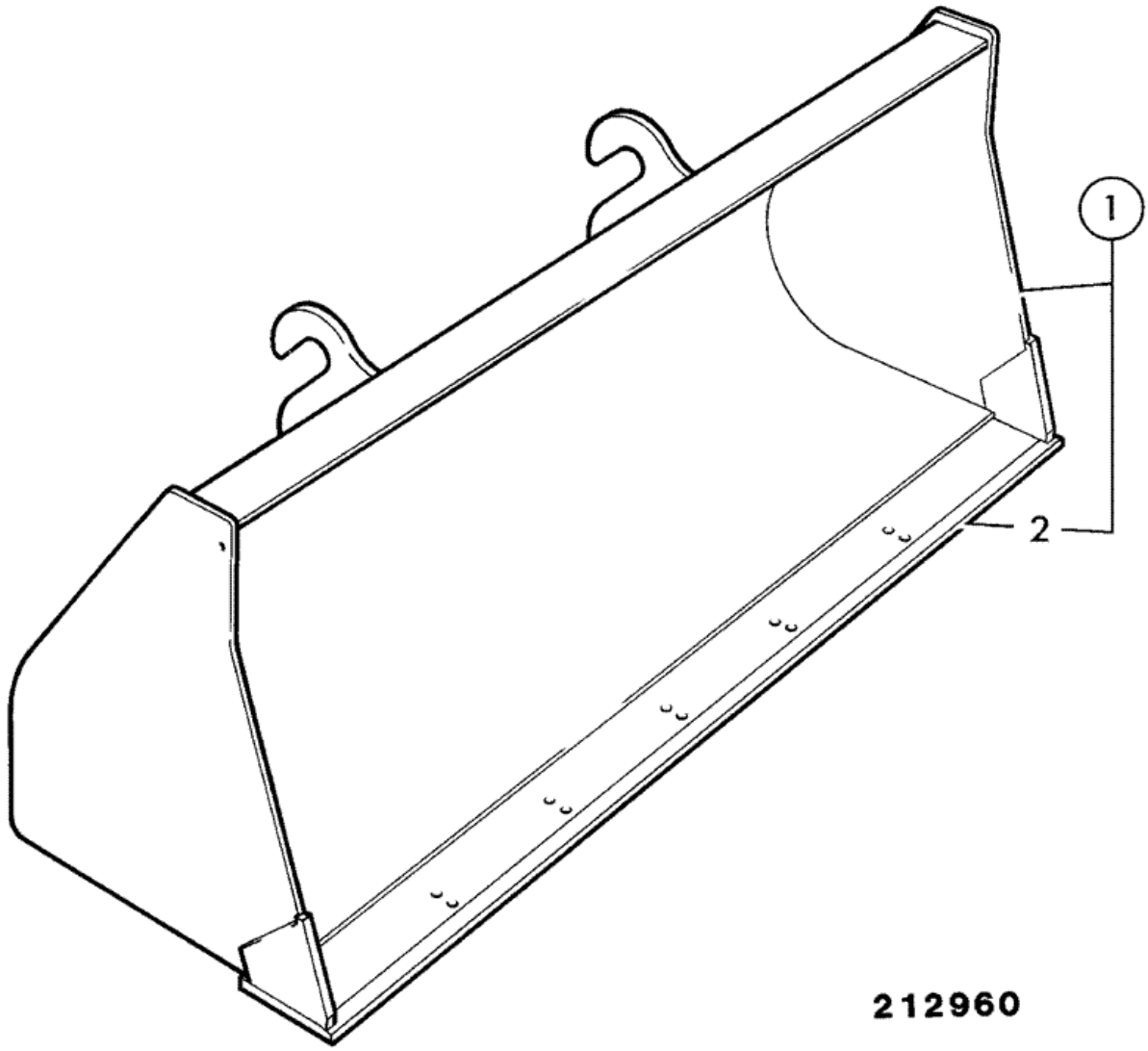

| Item | Part # | Change No | Description | Usage Code | QTY |
|---|---|---|---|---|---|
| 1 | 126/00186 | | Shovel GP 1.1m3 heavy duty quickhitch 2350mm | | 1 |
| 2 | :123/04004 | | Toeplate | | 1 |

# 9812/0080 A1-7-1 SHOVEL, CLAM, 6 IN 1, 7'4" WIDE 1.0M3

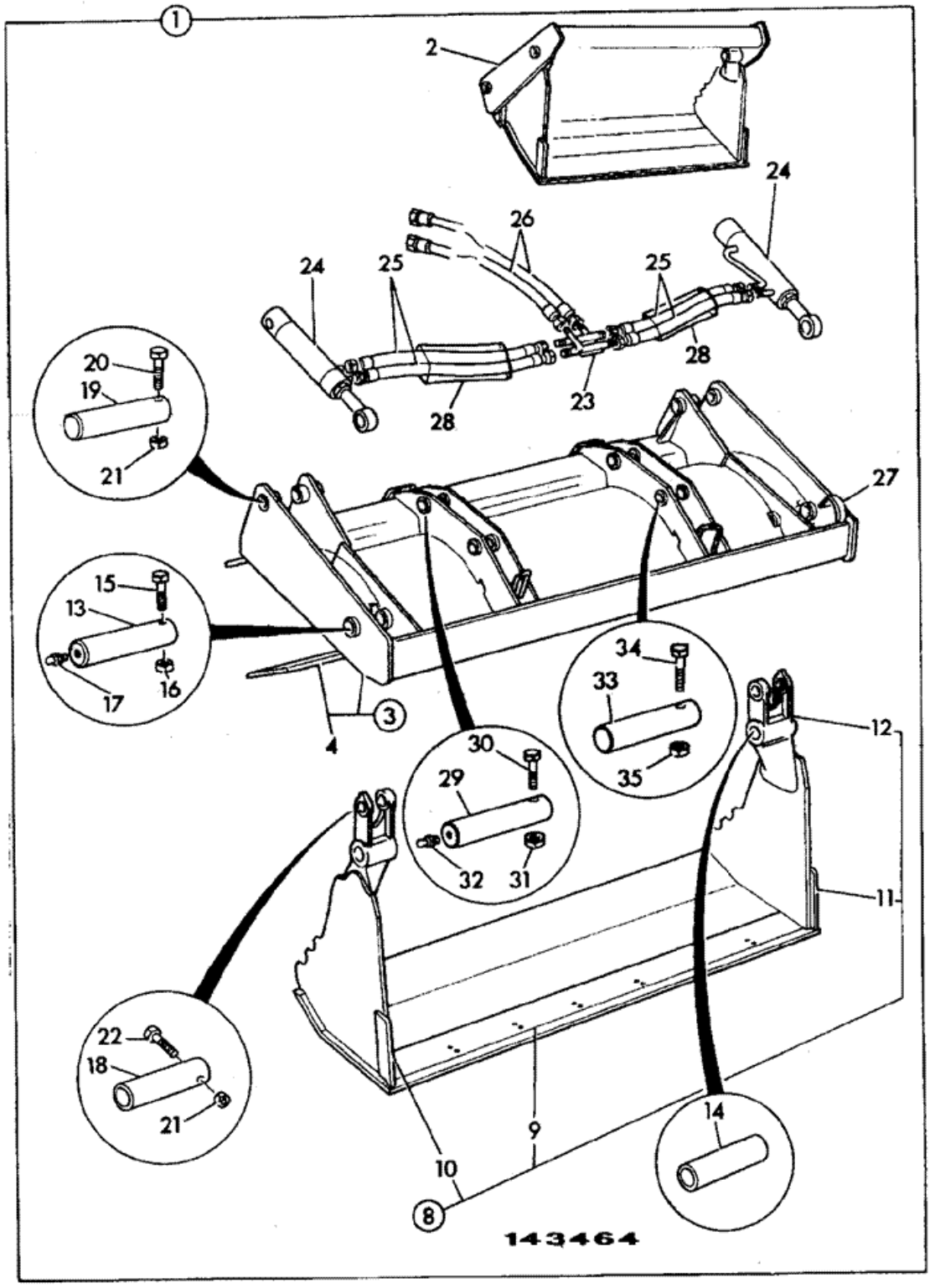

| Item | Part # | Change No | Description | Usage Code | QTY |
|---|---|---|---|---|---|
| 1 | 126/02542 | | Shovel 6 in 1 clam, 1.0m3 7'4" wide | | 1 |
| 1 | 128/14662 | | Shovel 6 in 1, 7' 4" wide 1.Om3 with forks | | 1 |
| 2 | :NSP | | None serviced part | | 1 |
| 3 | :125/00366 | | Blade back 1.0m3 7'4" wide<br>*no forks* | | 1 |
| 3 | :331/44826 | | Blade back, 7' 4" wide 1.0m3 with fork bkts | | 1 |
| 3A | ::123/04049 | | Bracket indicator | | 1 |
| 4 | ::531/38111 | | Toeplate 2253mm (7'4") wide | | 1 |
| 8 | :125/50200 | | Jaw clamshovel | | 1 |
| 9 | ::123/04145 | | Toeplate 6 in 1 shovel 7'4" wide | | 1 |
| 10 | ::123/04423 | | Sidecutter right hand | | 1 |
| 11 | ::123/04422 | | Sidecutter left hand | | 1 |
| 12 | ::123/04274 | | Pivot casting right hand | | 1 |
| 12 | ::123/04275 | | Pivot casting left hand | | 1 |
| 13 | :811/80007 | | Pin pivot | | 2 |
| 13A | :811/80007A | | Pin pivot 0.1mm oversize | | 2 |
| 13B | :811/80007B | | Pin pivot 0.25mm oversize | | 2 |
| 14 | :1208/0023 | | Bush | | 2 |
| 15 | :1305/3226Z | | Bolt | | 2 |
| 16 | :1340/0204Z | | Nut philidas thin | | 2 |
| 17 | :1450/1001 | | Nipple grease 90deg. angle | | 2 |
| 18 | :811/50398 | | Pin pivot | | 2 |
| 18A | :811/50398A | | Pin pivot 0.1mm oversize | | 2 |
| 18B | :811/50398B | | Pin pivot 0.25mm oversize | | 2 |
| 19 | :811/80018 | | Pin pivot | | 2 |
| 20 | :1305/3222Z | | Bolt 3/8"UNF x 3" | | 2 |
| 21 | :1340/0203Z | | Nut | | 5 |
| 22 | :1305/3226Z | | Bolt | | 2 |
| 23 | :123/05538 | Superseded | Pipe assembly backblade | | 1 |
| 23 | :335/13748 | | Pipe assembly, backblade | | 1 |
| 24 | :556/60331 | Superseded | Ram clamshovel | | 2 |
| 24 | :556/60401 | | Ram clamshovel 557 closed centres | | 2 |
| 25 | :612/02900 | | Hose 3/8"BSP x 360mm | | 4 |
| 26 | 612/80266 | | Hose 3/8BSP 665mm with wire guard<br>*not supplied with shovel* | | 2 |
| 26 | :612/80266 | | Hose 3/8BSP 665mm with wire guard | | 1 |
| 27 | :817/03808 | | Label indicator | | 1 |
| 28 | . | | 'See Remark'<br>*Not fitted* | | 0 |
| 29 | 811/80001 | | Pin pivot | | 2 |
| 30 | 1305/3222Z | | Bolt 3/8"UNF x 3" | | 2 |
| 31 | 1340/0203Z | | Nut | | 2 |
| 32 | 1450/0001 | | Nipple grease, straight 1/8 BSP | | 2 |
| 33 | 811/80001 | | Pin pivot | | 2 |
| 34 | 1305/3222Z | | Bolt 3/8"UNF x 3" | | 2 |
| 35 | 1340/0203Z | | Nut | | 2 |

Product Catalog \ CONSTRUCTION \ NORTH AMERICA \ CONSTRUCTION / INDUSTRIAL \ BACKHOE LOADER 3CX,4CX,214,215,217 \ 3C PLUS (91HP) , Made in Brazil with Dieselmax/IESA Engine 9812/0080 \ A ATTACHMENTS \ A01 SHOVELS

# 9812/0080 A1-8-2 SHOVEL, CLAM, 6 IN 1, 2350MM (7'8.5") WIDE, QUICKHITCH

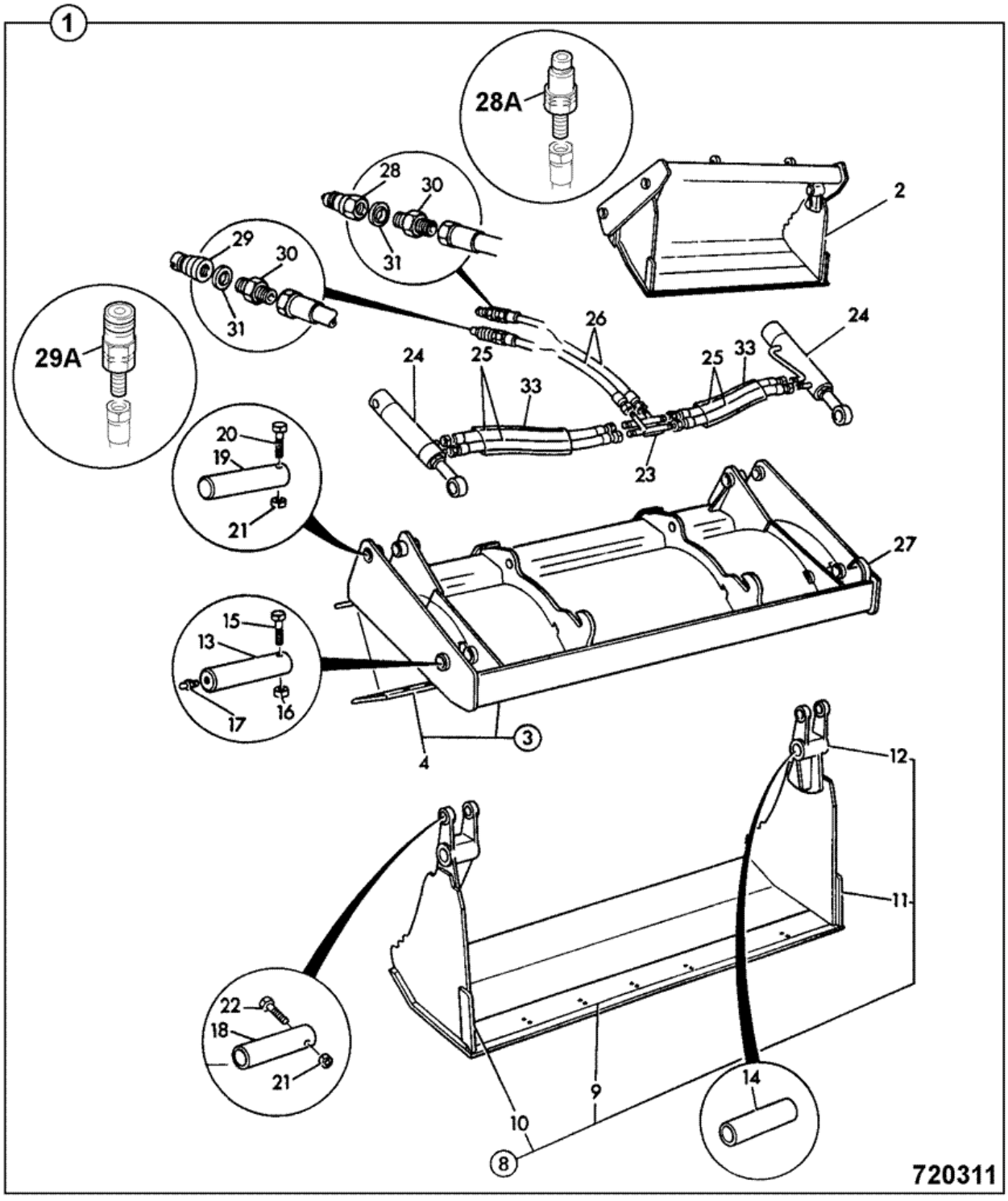


| Item | Part # | Change No | Description | Usage Code | QTY |
|---|---|---|---|---|---|
| | | | Shovel 6 in 1 quickhitch 2350mm (7'8.5") wide | | |

| | | | | | |
|---|---|---|---|---|---|
| 1 | 126/00581 | | *1.0m3 SAE struck capacity.* | | 1 |
| 2 | :NSP | | None serviced part | | 1 |
| 3 | :125/00173 | | Blade back quickhitch 2350mm (7'8.5") wide<br>*1.0m3 SAE struck capacity.* | | 1 |
| 4 | ::123/02362 | | Toeplate 2343mm long | | 1 |
| 8 | :125/50100 | | Jaw clamshovel 2350mm (7'8.5") wide | | 1 |
| 9 | ::123/04144 | | Toeplate 6 in 1 7'8" wide | | 1 |
| 10 | ::123/04423 | | Sidecutter right hand | | 1 |
| 11 | ::123/04422 | | Sidecutter left hand | | 1 |
| 12 | ::123/04274 | | Pivot casting right hand | | 1 |
| 12 | ::123/04275 | | Pivot casting left hand | | 1 |
| 13 | :811/80007 | | Pin pivot | | 2 |
| 13A | :811/80007A | | Pin pivot 0.1mm oversize | | 2 |
| 13B | :811/80007B | | Pin pivot 0.25mm oversize | | 2 |
| 14 | :1208/0023 | | Bush | | 2 |
| 15 | :1305/3226Z | | Bolt | | 2 |
| 16 | :1340/0204Z | | Nut philidas thin | | 2 |
| 17 | :1450/1001 | | Nipple grease 90deg. angle | | 2 |
| 18 | :811/50398 | | Pin pivot | | 2 |
| 18A | :811/50398A | | Pin pivot 0.1mm oversize | | 2 |
| 18B | :811/50398B | | Pin pivot 0.25mm oversize | | 2 |
| 19 | :811/80018 | | Pin pivot | | 2 |
| 20 | :1305/3222Z | | Bolt 3/8"UNF x 3" | | 2 |
| 21 | :1340/0203Z | | Nut | | 5 |
| 22 | :1305/3226Z | | Bolt | | 2 |
| 23 | :123/05538 | Superseded | Pipe assembly backblade | | 1 |
| 23 | :335/13748 | | Pipe assembly, backblade | | 1 |
| 24 | :556/60331 | Superseded | Ram clamshovel<br>*For components see index E4* | | 2 |
| 24 | :556/60401 | | Ram clamshovel 557 closed centres | | 2 |
| 25 | :612/07700 | | Hose 3/8BSPx405 | | 4 |
| 26 | :612/00800 | | Hose | | 2 |
| 27 | :817/03808 | | Label indicator | | 1 |
| 28 | :45/910700 | | Coupling 3/8" BSP male quick hitch | | 1 |
| 28A | :45/920067 | | Coupling 3/8"BSP male quick release | | 1 |
| 29 | :45/910600 | | Coupling 3/8" BSP female quick release | | 1 |
| 29A | :45/920066 | | Coupling 3/8"BSP female quick release | | 1 |
| 30 | :1604/0003 | | Adapter male/male | | 2 |
| 30 | 1612/0003 | | Adapter male/female | | 2 |
| 31 | :1406/0015 | | Washer seal | | 2 |
| 33 | . | | 'See Remark'<br>*Not fitted* | | 0 |

Product Catalog \ CONSTRUCTION \ NORTH AMERICA \ CONSTRUCTION / INDUSTRIAL \ BACKHOE LOADER 3CX,4CX,214,215,217 \ 3C PLUS (91HP) , Made in Brazil with Dieselmax/IESA Engine 9812/0080 \ A ATTACHMENTS \ A02 BUCKETS

# 9812/0080 A2-1-2 BUCKET, GENERAL PURPOSE, BOLT ON TEETH

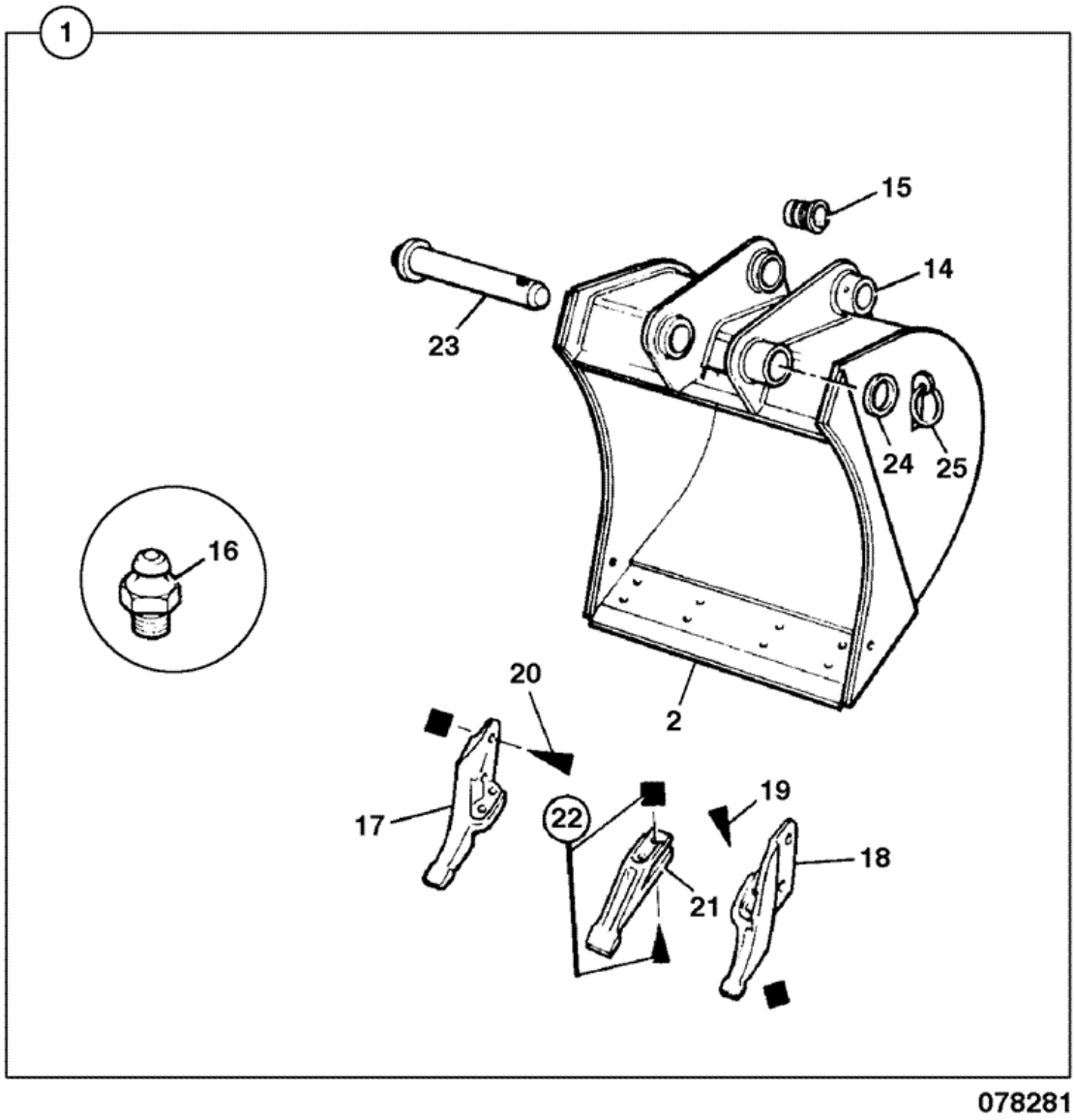


| Item | Part # | Change No | Description | Usage Code | QTY |
|---|---|---|---|---|---|
| 1 | 980/89818 | | Bucket 12in (305mm) | B | 1 |

| | | | | | |
|---|---|---|---|---|---|
| 1 | 980/89989 | | Bucket 300mm | M | 1 |
| 1 | 980/89990 | | Bucket 400mm | D | 1 |
| 1 | 980/89991 | | Bucket 450mm | E | 1 |
| 1 | 980/89992 | | Bucket 500mm | F | 1 |
| 1 | 980/89993 | | Bucket 600mm | G | 1 |
| 1 | 980/89994 | | Bucket 800mm | H | 1 |
| 2 | :531/24703 | | Toeplate 12in bucket | B | 1 |
| 2 | :331/47988 | | Toeplate 14" bucket | C | 1 |
| 2 | :331/49462 | | Toeplate 400mm bucket | D | 1 |
| 2 | :331/49466 | | Toeplate 450mm bucket | E | 1 |
| 2 | :331/49468 | | Toeplate 500mm bucket | F | 1 |
| 2 | :331/49470 | | Toeplate 600mm bucket | G | 1 |
| 2 | :331/49472 | | Toeplate 800mm bucket | H | 1 |
| 2 | 331/49457 | | Toeplate 300mm bucket | M | 1 |
| 14 | NSP | | None serviced part | | 1 |
| 15 | :G65/0 | | Bush pivot | C to H | 4 |
| 15 | :809/10032 | | Bush Spring<br>*12" bucket only* | B | 4 |
| 16 | :1450/0001 | | Nipple grease, straight 1/8 BSP | B to H | 4 |
| 17 | :531/03208 | | Sidecutter double flange right hand | B to H | 1 |
| 18 | :531/03209 | | Sidecutter double flange left hand | B to H | 1 |
| 19 | :826/00303 | | Ploughbolt 3/4unf x 70mm | B to H | 4 |
| 19 | :1340/0701Z | | Nut | A to H | 4 |
| 20 | :1305/0714Z | | Bolt | B to H | 2 |
| 20 | :1340/0701Z | | Nut | B to H | 2 |
| 21 | :531/03205 | | Tooth | B to H | 0 |
| 22 | :826/00303 | | Ploughbolt 3/4unf x 70mm | B to H | 0 |
| 22 | :1340/0701Z | | Nut | B to H | 0 |
| 23 | 911/12400 | | Pin pivot | C to H | 2 |
| 23 | 911/16600 | | Pin pivot 305mm<br>*12" bucket only* | B | 2 |
| 23 | 826/01598 | | Pin lynch | M | 2 |
| 23 | 1019/2073 | | Pin pivot | M | 2 |
| 24 | 823/00470 | | Washer | B to H | 2 |
| 25 | 826/00512 | | Pin lynch | B to H | 2 |

# 9812/0080 A2-1-3 BUCKET, GENERAL PURPOSE, BOLT ON TEETH

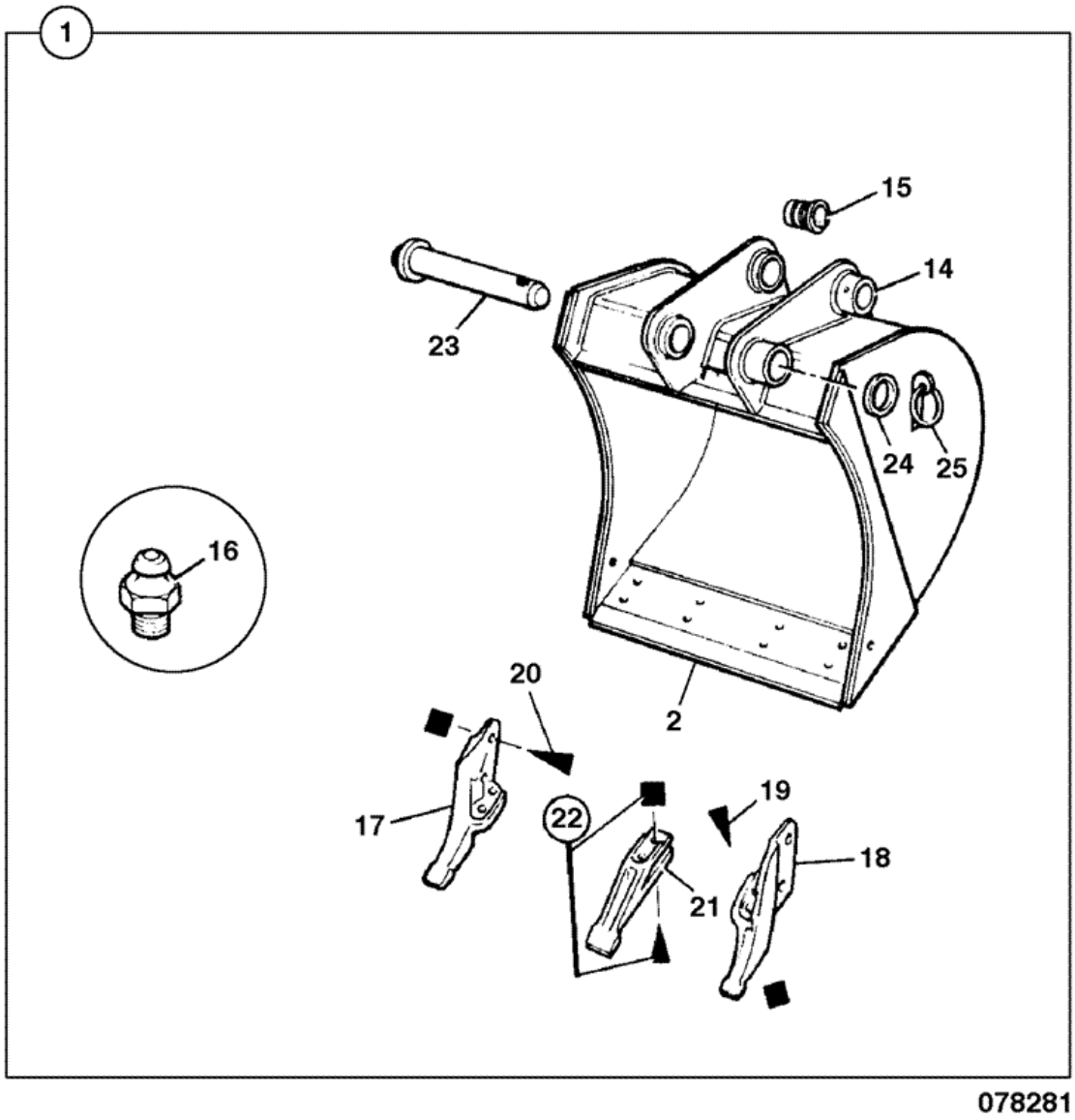


| Item | Part # | Change No | Description | Usage Code | QTY |
|---|---|---|---|---|---|
| 1 | 980/89993 | | Bucket 600mm | G | 1 |

| | | | | | |
|---|---|---|---|---|---|
| 1 | 980/89994 | | Bucket 800mm | H | 1 |
| 2 | :331/49470 | | Toeplate 600mm bucket | G | 1 |
| 2 | :331/49472 | | Toeplate 800mm bucket | H | 1 |
| 14 | NSP | | None serviced part | | 1 |
| 15 | :G65/0 | | Bush pivot | G & H | 4 |
| 16 | :1450/0001 | | Nipple grease, straight 1/8 BSP | G & H | 4 |
| 17 | :531/03208 | | Sidecutter double flange right hand | G & H | 1 |
| 18 | :531/03209 | | Sidecutter double flange left hand | G & H | 1 |
| 19 | :826/00303 | | Ploughbolt 3/4unf x 70mm | G & H | 4 |
| 19 | :1340/0701Z | | Nut | G & H | 4 |
| 20 | :1305/0714Z | | Bolt | G & H | 2 |
| 20 | :1340/0701Z | | Nut | G & H | 2 |
| 21 | :531/03205 | | Tooth | G & H | 0 |
| 22 | :826/00303 | | Ploughbolt 3/4unf x 70mm | G & H | 0 |
| 22 | :1340/0701Z | | Nut | G & H | 0 |
| 23 | 911/12400 | | Pin pivot | G & H | 2 |
| 24 | 823/00470 | | Washer | G & H | 2 |
| 25 | 826/00512 | | Pin lynch | G & H | 2 |

# 9812/0080 A2-1-7 BUCKET, EXCAVATOR, HEAVY DUTY AND, HEAVY DUTY-HIGH CAPACITY

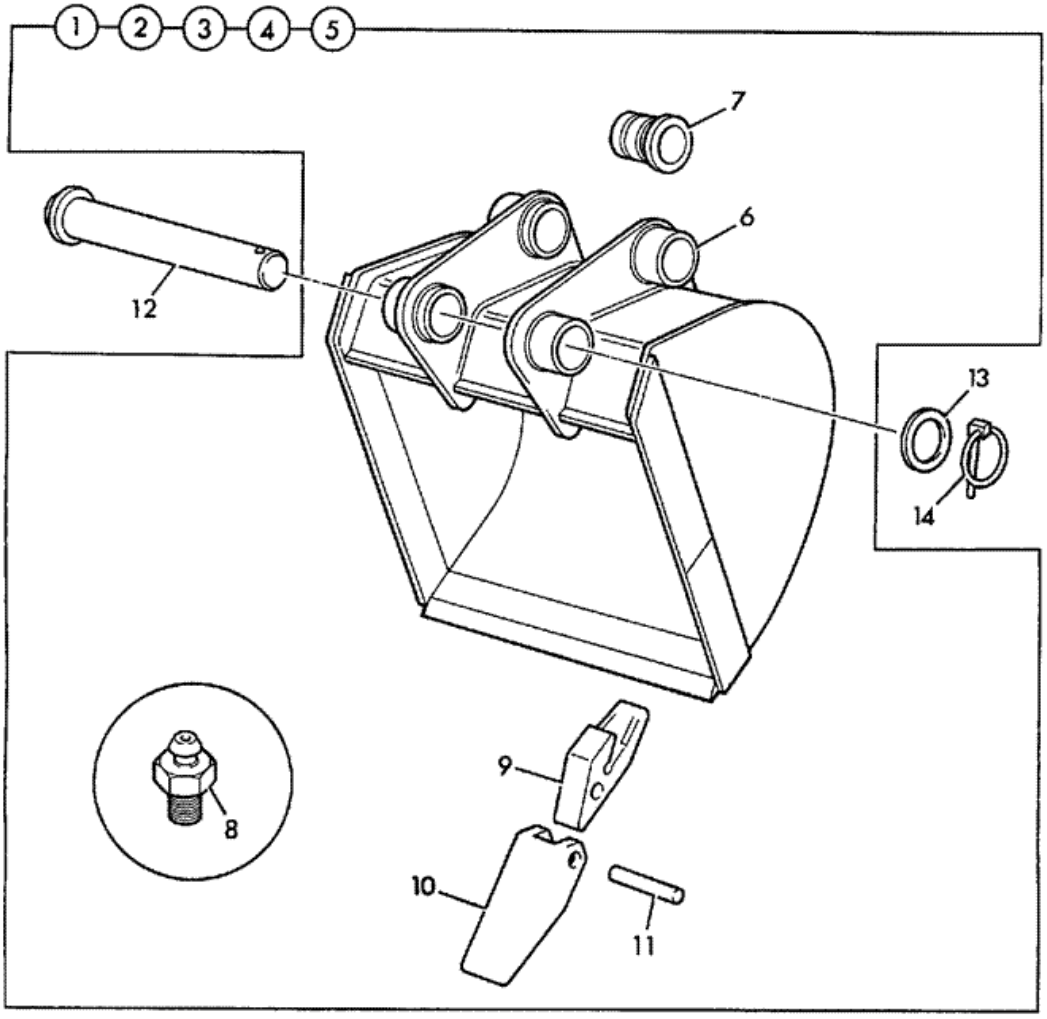


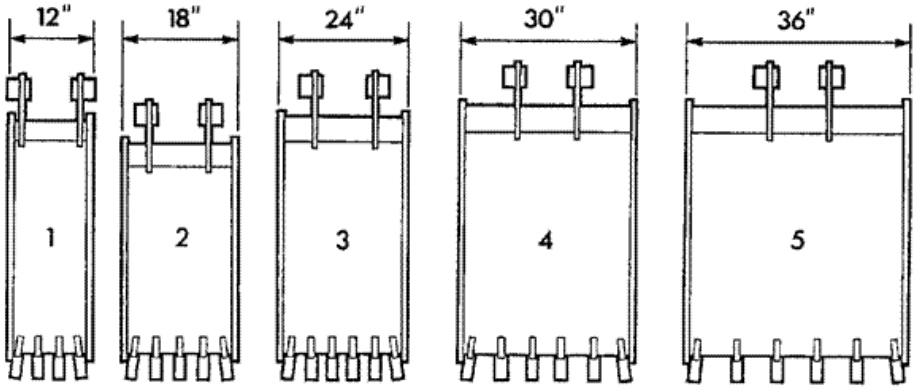


190570

| Item | Part # | Change No | Description | Usage Code | QTY |
|---|---|---|---|---|---|
| 1 | 980/88295 | | Bucket 305mm wide | A | 1 |
| 1A | :980/84403 | | Toeplate 12" | | 1 |
| 2 | 980/88296 | | Bucket 457mm wide | B | 1 |
| 2 | 980/88400 | | Bucket HIGH CAPACITY 18" heavy duty | | 1 |
| 2A | :980/84407 | | Toeplate 18" | | 1 |
| | | | | | |

| | | | | | |
|---|---|---|---|---|---|
| 3 | 980/88297 | | Bucket 610mm wide | C | 1 |
| 3 | 980/88299 | | Bucket 610mm wide HD high capacity | | 1 |
| 3A | :980/84411 | | Toeplate 24" | | 1 |
| 4 | 980/88298 | | Bucket 762mm wide | D | 1 |
| 4 | 980/88300 | | Bucket 762mm wide HD high capacity | | 1 |
| 4A | :980/84415 | | Toeplate 30" | | 1 |
| 5 | 980/88302 | | Bucket 914mm wide | E | 1 |
| 5 | 980/88301 | | Bucket 914mm wide HD high capacity | | 1 |
| 5A | :980/84419 | | Toeplate 36" | | 1 |
| 6 | :1096/2004 | | Boss pivot | ABCDE | 4 |
| 7 | :G65/0 | | Bush pivot | ABCDE | 4 |
| 8 | :1450/0001 | | Nipple grease, straight 1/8 BSP | ABCDE | 4 |
| 9 | :980/68209 | | Adapter tooth | ABCDE | 0 |
| 10 | :980/33601 | | Tooth tip-forged | ABCDE | 0 |
| 11 | :980/33603 | | Pin flex | ABCDE | 0 |
| 12 | 911/12400 | | Pin pivot | ABCDE | 2 |
| 13 | 823/00470 | | Washer | ABCDE | 2 |
| 14 | 826/00512 | | Pin lynch | ABCDE | 2 |

Product Catalog \ CONSTRUCTION \ NORTH AMERICA \ CONSTRUCTION / INDUSTRIAL \ BACKHOE LOADER 3CX,4CX,214,215,217 \ 3C PLUS (91HP) , Made in Brazil with Dieselmax/IESA Engine 9812/0080 \ A ATTACHMENTS \ A02 BUCKETS

# 9812/0080 A2-2-1 TOOTH, RIPPER

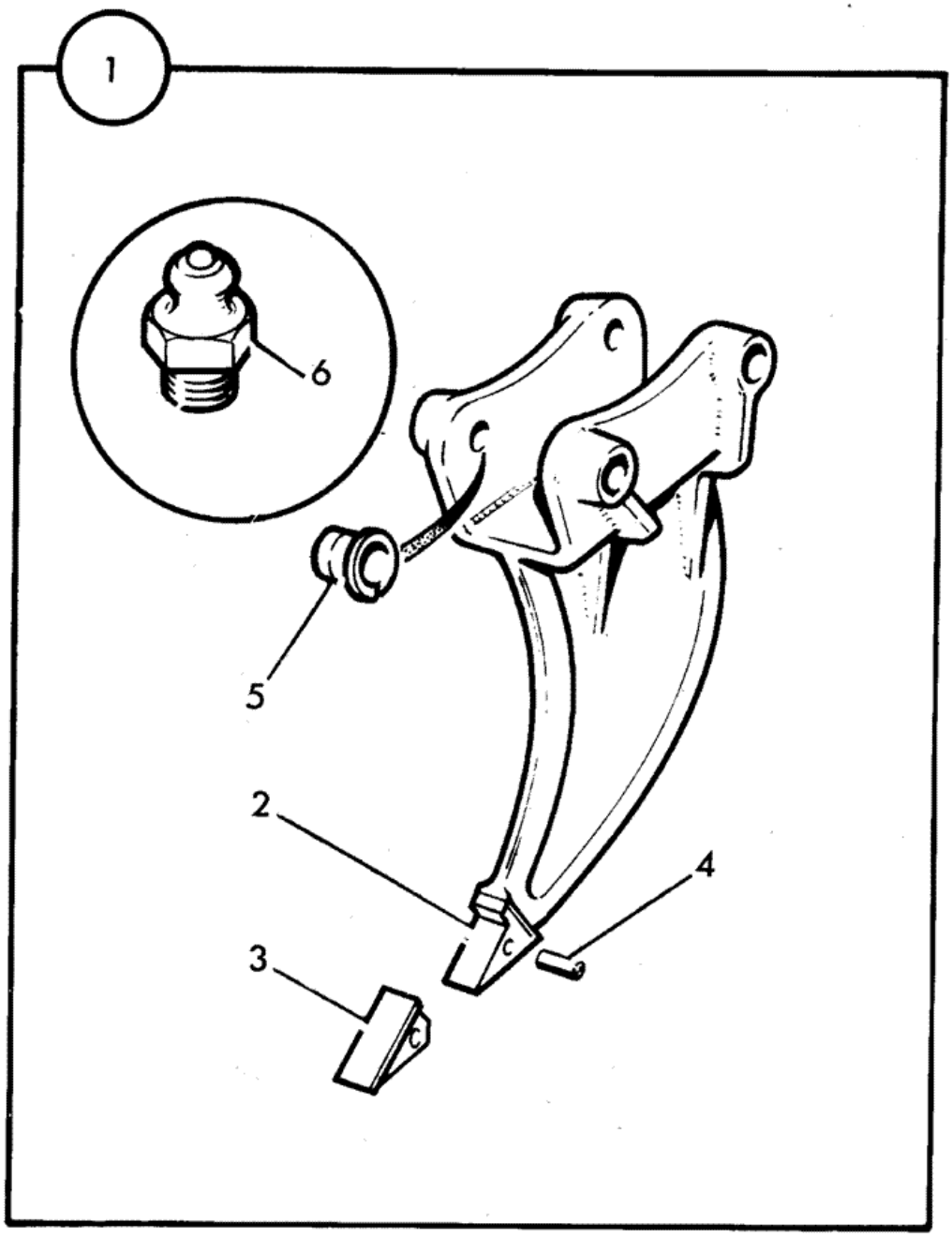


| Item | Part # | Change No | Description | Usage Code | QTY |
|---|---|---|---|---|---|
| 1 | 529/03000 | | Tooth Ripper Fabrication | | 1 |
| 2 | :529/03102 | | Holder tooth,ripper casting | | 1 |
| | | | | | |

| | | | | | |
|---|---|---|---|---|---|
| 3 | :529/03001 | | Tooth tip | | 1 |
| 4 | :529/03002 | | Pin flex | | 1 |
| 5 | :G65/0 | | Bush pivot | | 4 |
| 6 | :1450/0001 | | Nipple grease, straight 1/8 BSP | | 1 |

# 9812/0080 A2-3-1 BLADE, DITCH CLEANING

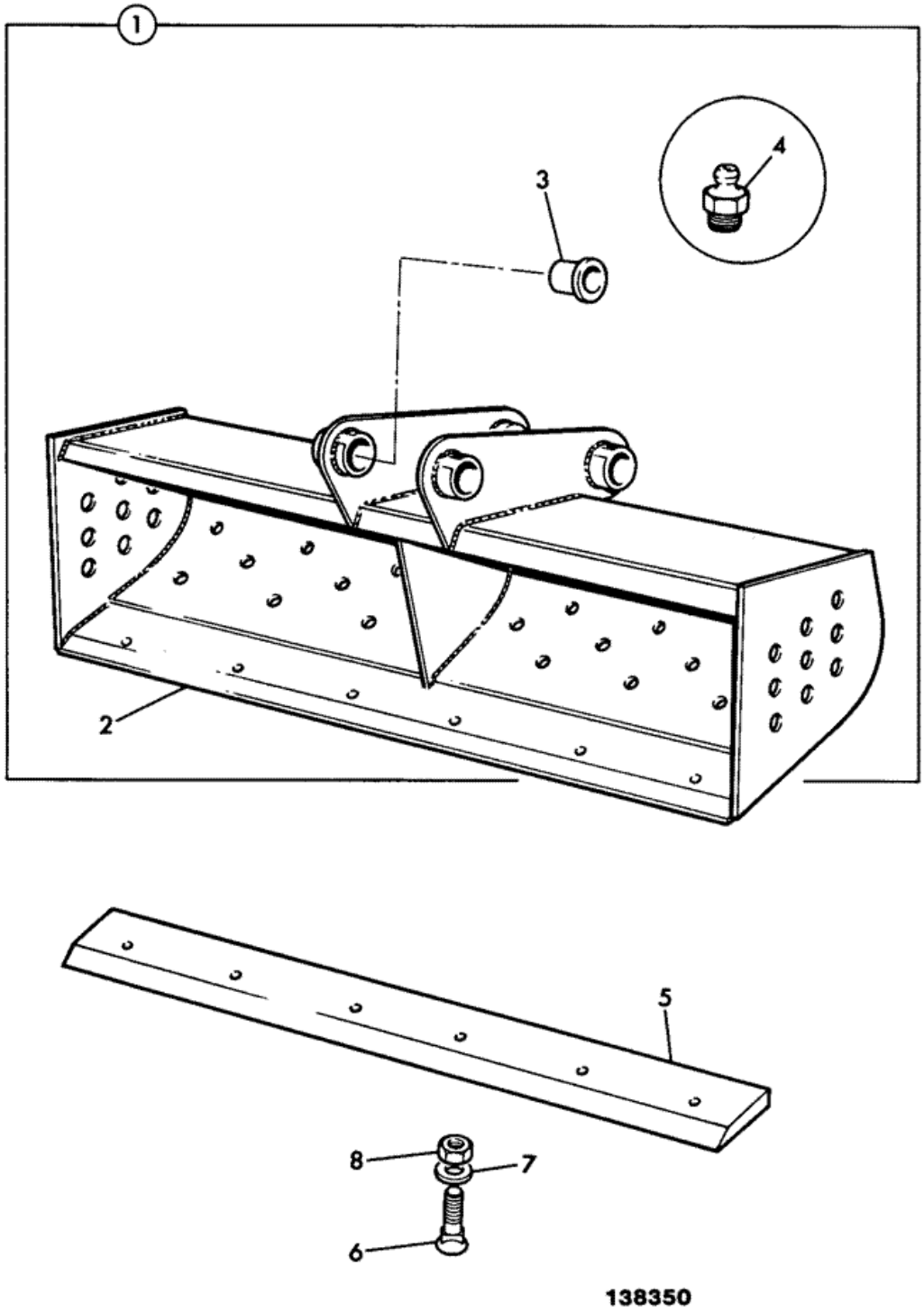

| Item | Part # | Change No | Description | Usage Code | QTY |
|---|---|---|---|---|---|
| 1 | 993/35700 | | Blade grading 1525mm wide | A | 1 |
| 1 | 993/35800 | | Blade grading 1830mm wide | B | 1 |
| 2 | :534/02505 | | Toeplate 5'0" (1525mm) | A | 1 |
| 2 | :533/04704 | | Toeplate 6'0" (1830mm) | B | 1 |
| 3 | :G65/0 | | Bush pivot | | 4 |
| 4 | :1450/0002 | | Nipple grease, straight 1/4 | | 4 |
| 5 | NSP | | None serviced part | | 1 |
| 6 | NSP | | None serviced part | | 1 |
| 7 | NSP | | None serviced part | | 1 |
| 8 | NSP | | None serviced part | | 1 |

Product Catalog \ CONSTRUCTION \ NORTH AMERICA \ CONSTRUCTION / INDUSTRIAL \ BACKHOE LOADER 3CX,4CX,214,215,217 \ 3C PLUS (91HP) , Made in Brazil with Dieselmax/IESA Engine 9812/0080 \ A ATTACHMENTS \ A02 BUCKETS

# 9812/0080 A2-4-1 BUCKET, JAW, 460MM WIDE, JAW, 600MM WIDE

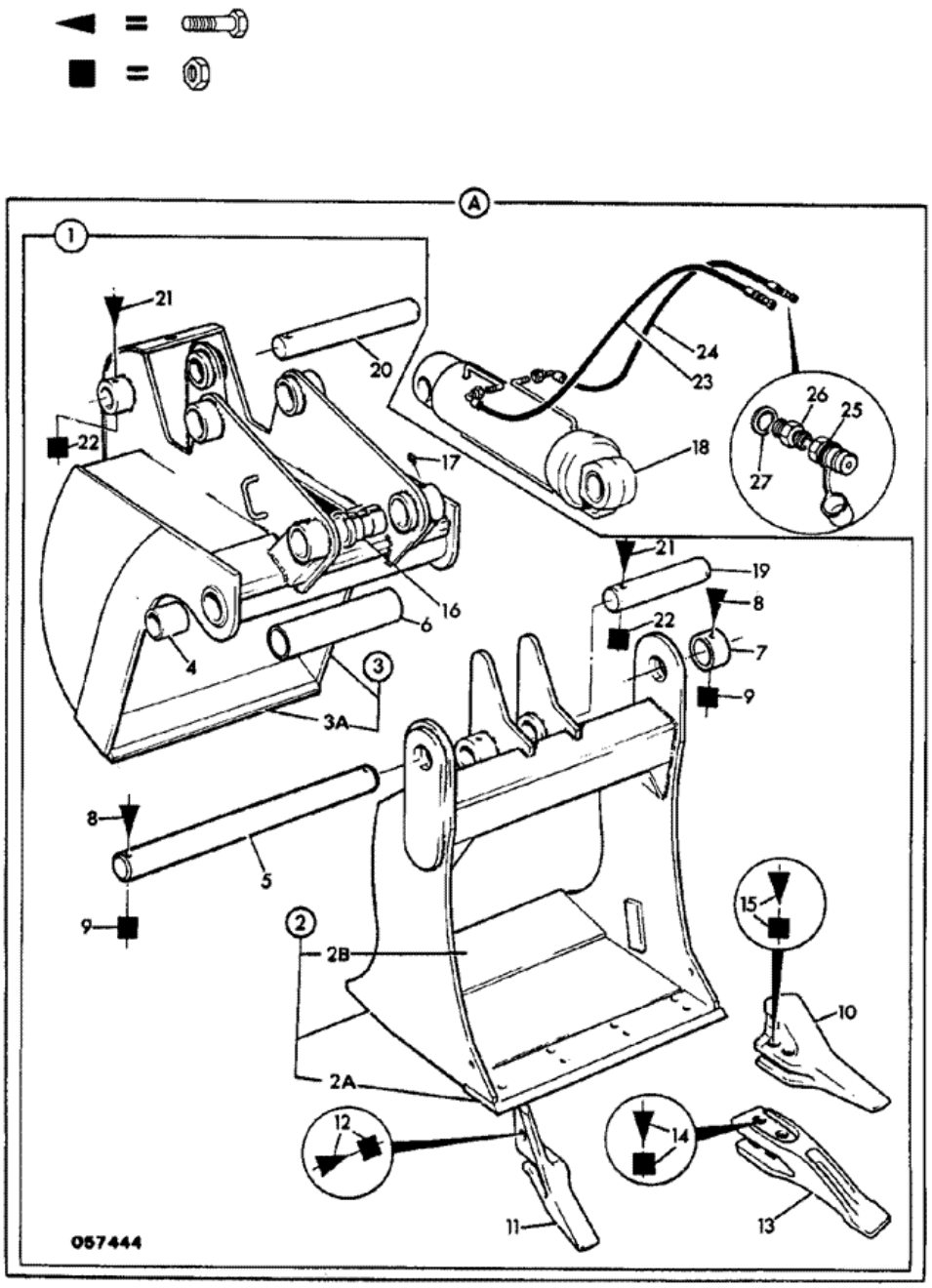


| Item | Part # | Change No | Description | Usage Code | QTY |
|---|---|---|---|---|---|
| A | 531/20100 | | Bucket jaw 460mm (18") wide | A | 1 |

| | | | | | |
|---|---|---|---|---|---|
| A | 531/19800 | | Bucket jaw 600mm (23") wide | B | 1 |
| 1 | :531/20200 | | Bucket jaw 460mm (18") wide | A | 1 |
| 1 | :531/19900 | | Bucket jaw 600mm (23") | B | 1 |
| 2 | ::529/69000 | | Jaw 460mm (18") wide | A | 1 |
| 2 | ::529/69200 | | Jaw 600mm (23") wide | B | 1 |
| 2A | :::529/69001 | | Toeplate front 460mm (18") wide<br>*Welded to jaw* | A | 1 |
| 2A | :::529/69201 | | Toeplate front 600mm (23") wide<br>*Welded to jaw* | B | 1 |
| 2B | :::529/24603 | | Toeplate rear 460mm (18") wide<br>*Welded to jaw* | A | 1 |
| 2B | :::529/24506 | | Toeplate rear 600mm (23") wide<br>*Welded to jaw* | B | 1 |
| 3 | ::531/20300 | | Blade dozer 460mm (18") wide | A | 1 |
| 3 | ::531/20000 | | Blade dozer 600mm (23") wide | B | 1 |
| 3A | :::529/25108 | | Toeplate 460mm (18") wide<br>*Welded to blade* | A | 1 |
| 3A | :::529/25204 | | Toeplate 600mm (23") wide<br>*Welded to blade* | B | 1 |
| 4 | ::1208/0017 | | Bush | AB | 2 |
| 5 | ::811/20007 | | Pin pivot 460mm (18") wide jaw | A | 1 |
| 5 | ::811/20008 | | Pin pivot 600mm (23") wide jaw | B | 1 |
| 6 | ::830/00207 | | Spacer 460mm (18") wide jaw | A | 1 |
| 6 | ::830/00208 | | Spacer 305mm wide jaw | B | 1 |
| 7 | ::1089/0005 | | Collar | AB | 1 |
| 8 | ::1305/3224 | | Bolt | AB | 2 |
| 9 | ::1340/0203Z | | Nut | AB | 2 |
| 10 | :531/03206 | | Sidecutter single flange | AB | 1 |
| 10 | :531/03208 | | Sidecutter double flange right hand | AB | 1 |
| 11 | :531/03207 | | Sidecutter single flange | AB | 1 |
| 11 | :531/03209 | | Sidecutter double flange left hand | AB | 1 |
| 12 | :1305/0714 | | Bolt | AB | 2 |
| 12 | :1340/0701 | | Nut | AB | 2 |
| 13 | :531/03205 | | Tooth | AB | 2 |
| 14 | :826/00303 | | Ploughbolt 3/4unf x 70mm | AB | 4 |
| 14 | :1340/0701 | | Nut | AB | 4 |
| 15 | :826/00303 | | Ploughbolt 3/4unf x 70mm | AB | 4 |
| 15 | :1340/0701 | | Nut | AB | 4 |
| 16 | :G65/0 | | Bush pivot | AB | 4 |
| 17 | :1450/0001 | | Nipple grease, straight 1/8 BSP | AB | 6 |
| 18 | :. | | 'See Remark'<br>*See Index E4* | AB | 1 |
| 19 | :1019/2018 | | Pin Pivot | AB | 1 |
| 20 | :811/80013 | | Pin pivot | AB | 1 |
| 21 | :1305/3226 | | Bolt L=1.3/4" | AB | 2 |
| 22 | :1340/0203Z | | Nut | AB | 2 |
| 23 | :613/22000 | | Hose | AB | 1 |
| 24 | :613/22000 | | Hose | AB | 1 |
| 25 | 45/903400 | | Coupling<br>*See Note 1* | | 2 |
| 26 | 1604/0004 | | Adapter male/male | | 2 |
| 27 | 1406/0018 | | Seal bonded 1/2" BSP | | 2 |

*Note 1: A new design coupling 45/904800 & 45/904700 may be used to replace this part*

Product Catalog \ CONSTRUCTION \ NORTH AMERICA \ CONSTRUCTION / INDUSTRIAL \ BACKHOE LOADER 3CX,4CX,214,215,217 \ 3C PLUS (91HP) , Made in Brazil with Dieselmax/IESA Engine 9812/0080 \ A ATTACHMENTS \ A03 ATTACHMENTS

# 9812/0080 A3-1-5 FORK LIFT, 6 IN 1 CLAM SHOVEL, MOUNTED 1.0M3

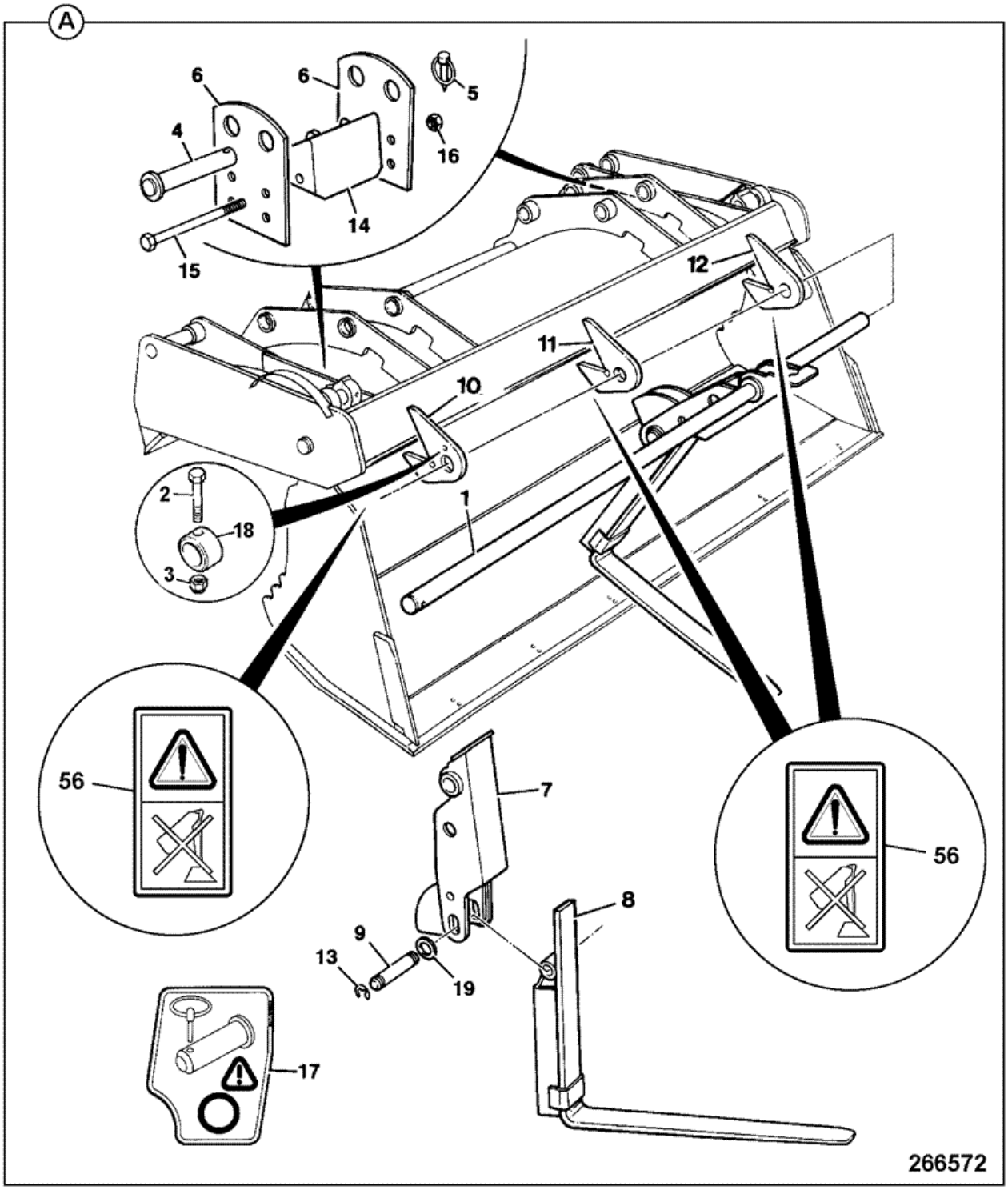


| Item | Part # | Change No | Description | Usage Code | QTY |
|---|---|---|---|---|---|
| 1 | 123/06667 | | Pin pivot | | 1 |

| | | | | | |
|---|---|---|---|---|---|
| 2 | 1315/3416Z | | Bolt hex. head M10 x 70 | | 2 |
| 3 | 1370/0303Z | | Nut lock M10 | | 1 |
| 4 | 123/00932 | | Pin pivot | | 2 |
| 5 | 826/00600 | | Pin linch | | 2 |
| 6 | 123/07329 | | Bracket | | 4 |
| 7 | 125/00224 | | Carrier link arm 1.0m3 | | 2 |
| 8 | 123/04827 | | Fork | | 2 |
| 9 | 811/70109 | | Pin pivot | | 2 |
| 10 | 123/04293 | | Bracket fork rail support | | 1 |
| 11 | 123/04294 | | Bracket fork rail support | | 1 |
| 12 | 123/04293 | | Bracket fork rail support | | 1 |
| 13 | 821/00309 | | Clip 'E' | | 4 |
| 14 | 123/06296 | | Block rubber pad | | 2 |
| 15 | 1315/3424Z | | Bolt M10 x 140 | | 2 |
| 16 | 1370/0303Z | | Nut lock M10 | | 2 |
| 17 | 817/04503 | | Decal | | 2 |
| 18 | 123/06668 | | Collar | | 2 |
| 19 | 823/00569 | Superseded | Spacer | | 4 |
| 19 | 332/C7128 | | Washer 39x60x3.2mm | | 4 |
| 56 | 817/70144 | | Label no pull | | 3 |

Product Catalog \ CONSTRUCTION \ NORTH AMERICA \ CONSTRUCTION / INDUSTRIAL \ BACKHOE LOADER 3CX,4CX,214,215,217 \ 3C PLUS (91HP) , Made in Brazil with Dieselmax/IESA Engine 9812/0080 \ A ATTACHMENTS \ A03 ATTACHMENTS

# 9812/0080 A3-3-1 ROCKBREAKER, HM265Q, 980/90241

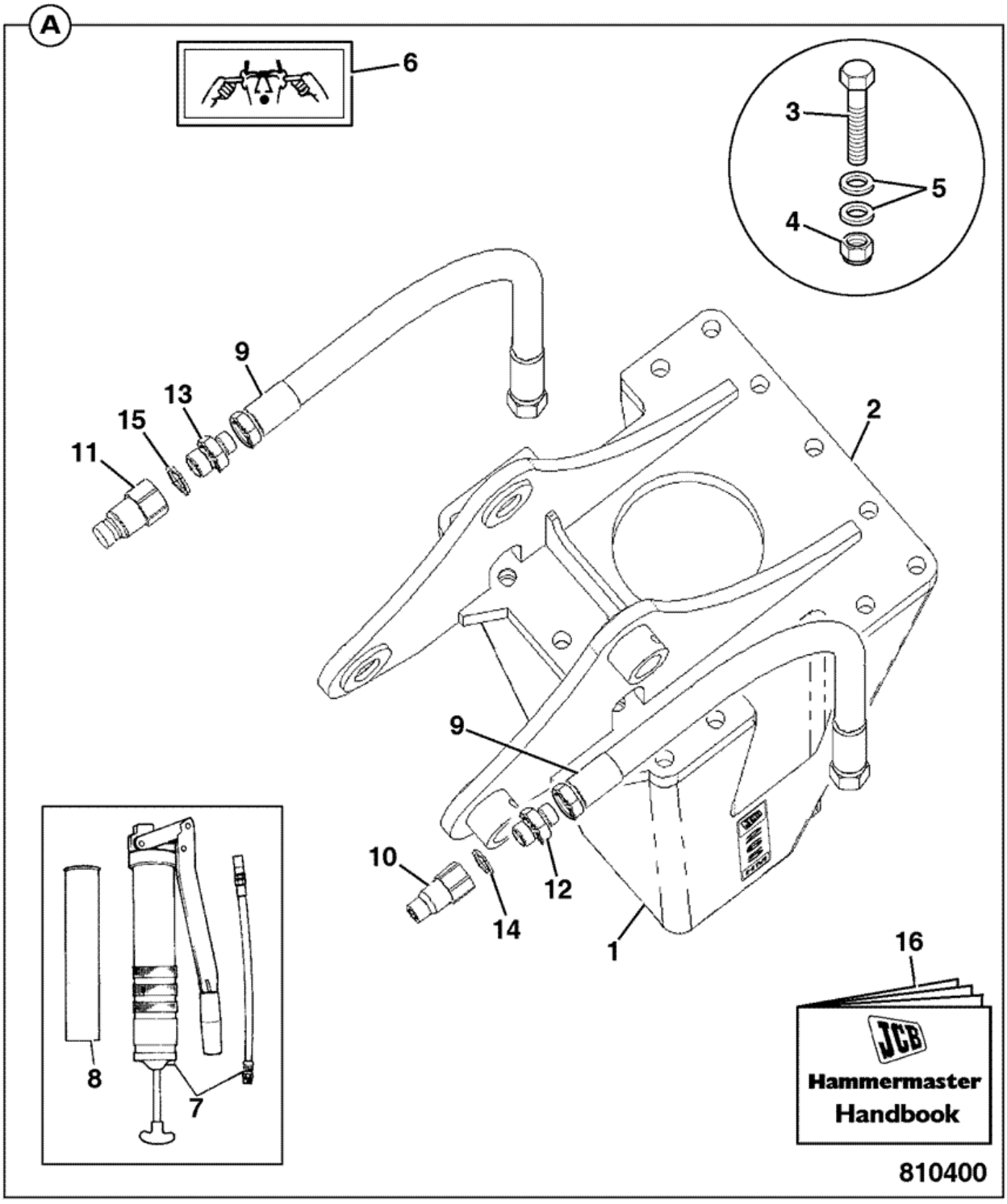


| Item | Part # | Change No | Description | Usage Code | QTY |
|---|---|---|---|---|---|
| A | 980/90241 | | Rockbreaker HM265Q assembly | | 1 |
| 1 | :980/90192 | | Rockbreaker SB410 ABI | | 1 |

| | | | | | |
|---|---|---|---|---|---|
| | | | *For components see A3-3-11* | | |
| 2 | :335/10703 | | Bracket hanger HM265 JCB2CX | | 1 |
| 3 | :1315/3717D | | Bolt M16x75 | | 14 |
| 4 | :1370/0603Z | | Nut M16 | | 14 |
| 5 | :823/10400 | | Washer Nord-lock M16 | | 28 |
| 6 | :332/P4712 | | Label ear protection | | 1 |
| 7 | :992/11300 | | Tool grease gun | | 1 |
| 8 | :4003/1119 | | Cartridge grease, hammer P64 | | 1 |
| 9 | :613/07900 | | Hose | | 2 |
| 10 | :45/910500 | | Coupling 1/2" BSP male quick release | | 1 |
| 11 | :45/910300 | | Coupling 3/4" BSP male quick release | | 1 |
| 12 | :1606/0009 | | Adapter reducing | | 1 |
| 13 | :1604/0004 | | Adapter male/male | | 1 |
| 14 | :1406/0018 | | Seal bonded 1/2" BSP | | 1 |
| 15 | :1406/0021 | | Seal bonded 3/4" BSP | | 1 |
| 16 | :9814/0525 | | Book rockbreaker instruct HM165, 265, 385,495 | | 1 |

# 9812/0080 A3-7-1 TOOTH & TOEPLATE, OPTIONS, SHOVELS

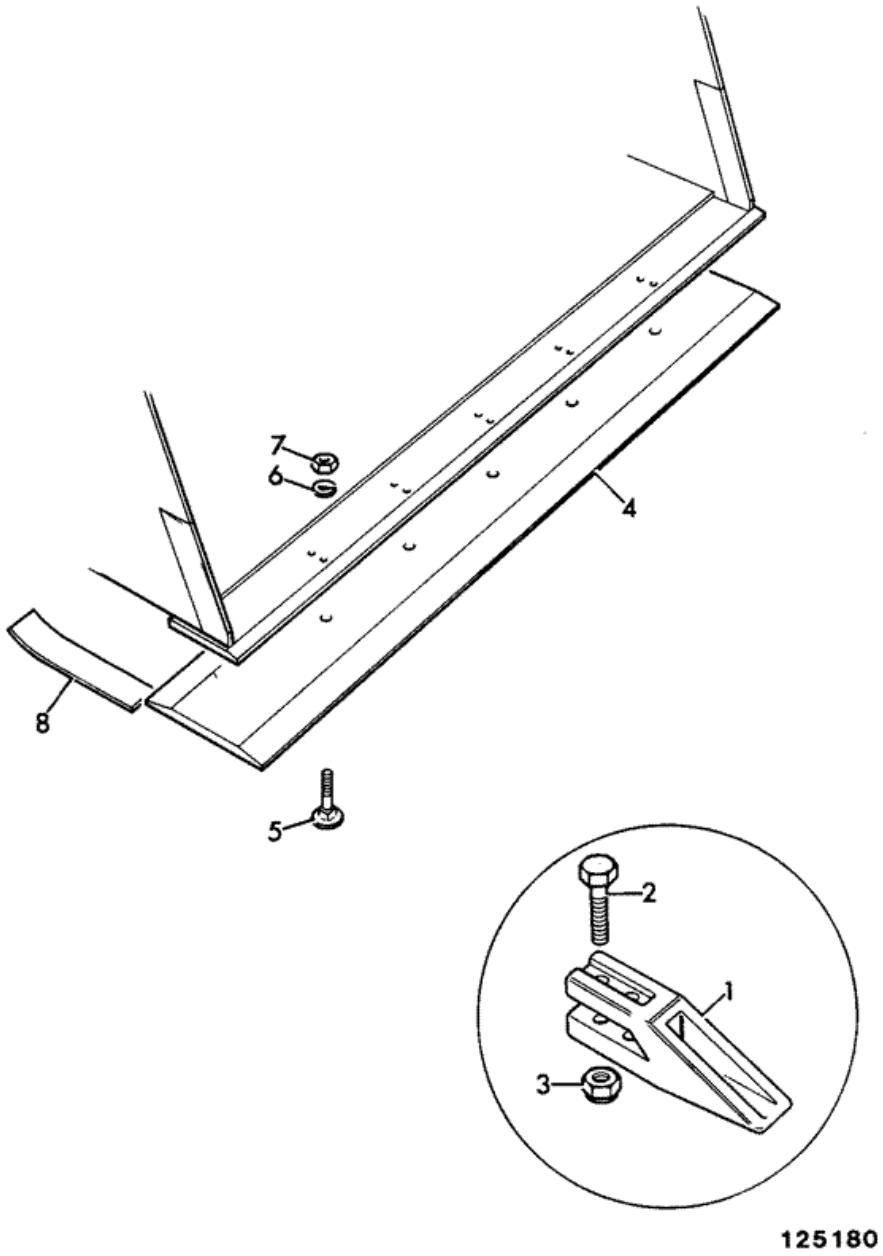


| Item | Part # | Change No | Description | Usage Code | QTY |
|---|---|---|---|---|---|
| 1 | 531/03205 | | Tooth | | 0 |
| 2 | 826/00303 | | Ploughbolt 3/4unf x 70mm<br>*2 per tooth* | | 0 |
| 3 | 1340/0701Z | | Nut | | 0 |
| 4 | 993/99391 | | Toeplate 8 hole, bolt on type 295mm x 2235mm long<br>*double cutting edge* | | 1 |

| | | | | | |
|---|---|---|---|---|---|
| 5 | 826/00217 | | Ploughbolt 3/4UNF x 2 1/4 | | 0 |
| 6 | 1416/0011 | | Washer | | 0 |
| 7 | 1340/0701Z | | Nut | | 0 |

Product Catalog \ CONSTRUCTION \ NORTH AMERICA \ CONSTRUCTION / INDUSTRIAL \ BACKHOE LOADER 3CX,4CX,214,215,217 \ 3C PLUS (91HP) , Made in Brazil with Dieselmax/IESA Engine 9812/0080 \ A ATTACHMENTS \ A03 ATTACHMENTS

# 9812/0080 A3-8-1 FORK FRAMES & FORKS, INDUSTRIAL

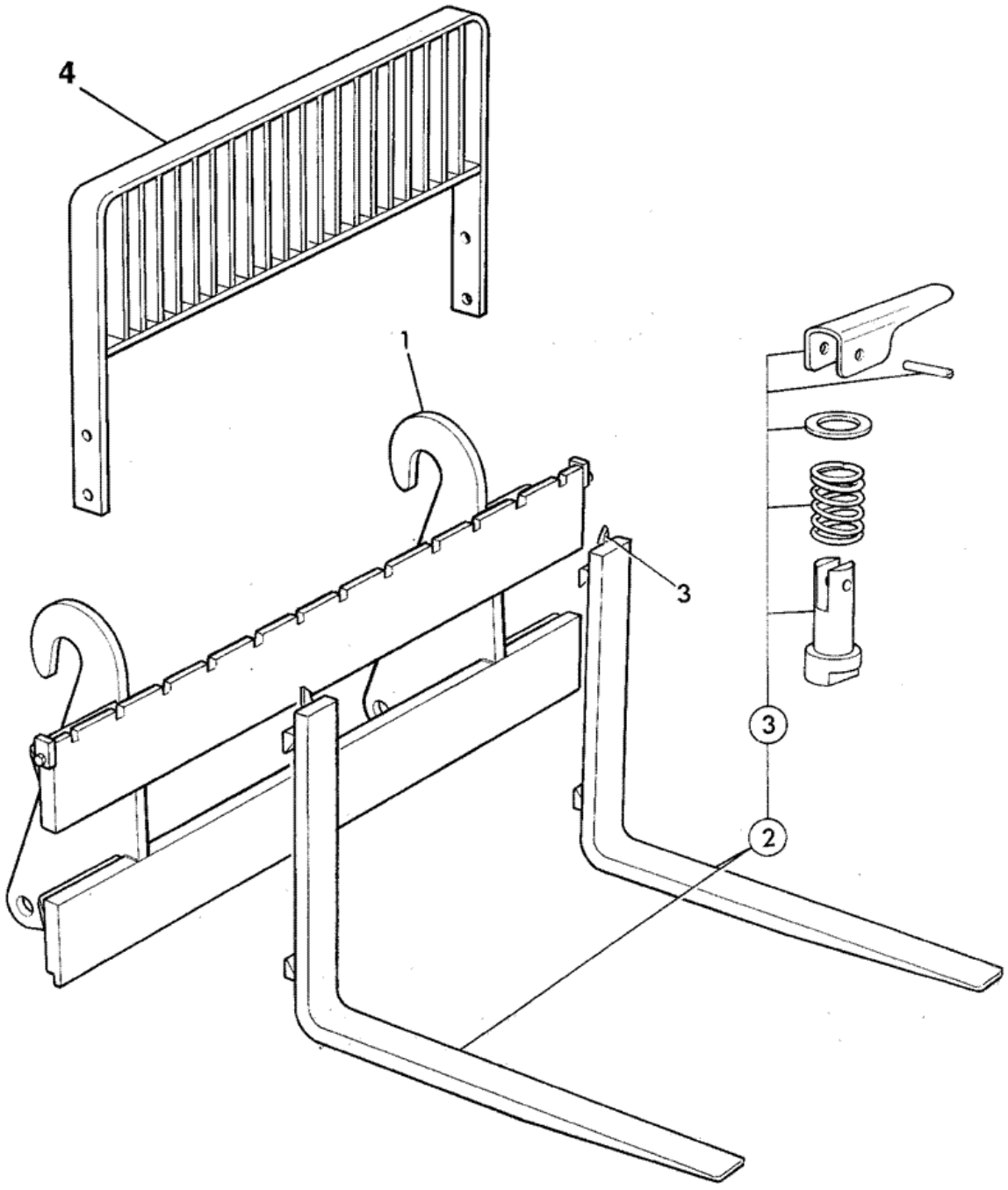


251310

| Item | Part # | Change No | Description | Usage Code | QTY |
|---|---|---|---|---|---|
| 1 | 980/07200 | | Frame fork | | 1 |
| 2 | 123/01374 | | Fork 2T S.W.L. | | 1 |
| | | | | | |

| | | | | | |
|---|---|---|---|---|---|
| 3 | 993/51100 | | Kit-fork retention Class 2 fork | | 1 |
| 4 | 980/14200 | | Guard load | | 1 |

# 9812/0080 A1-1-10 SHOVEL, G.P 1.1M3, 2350MM (7'8") H/DUTY, BRAZIL HIGH PIVOT

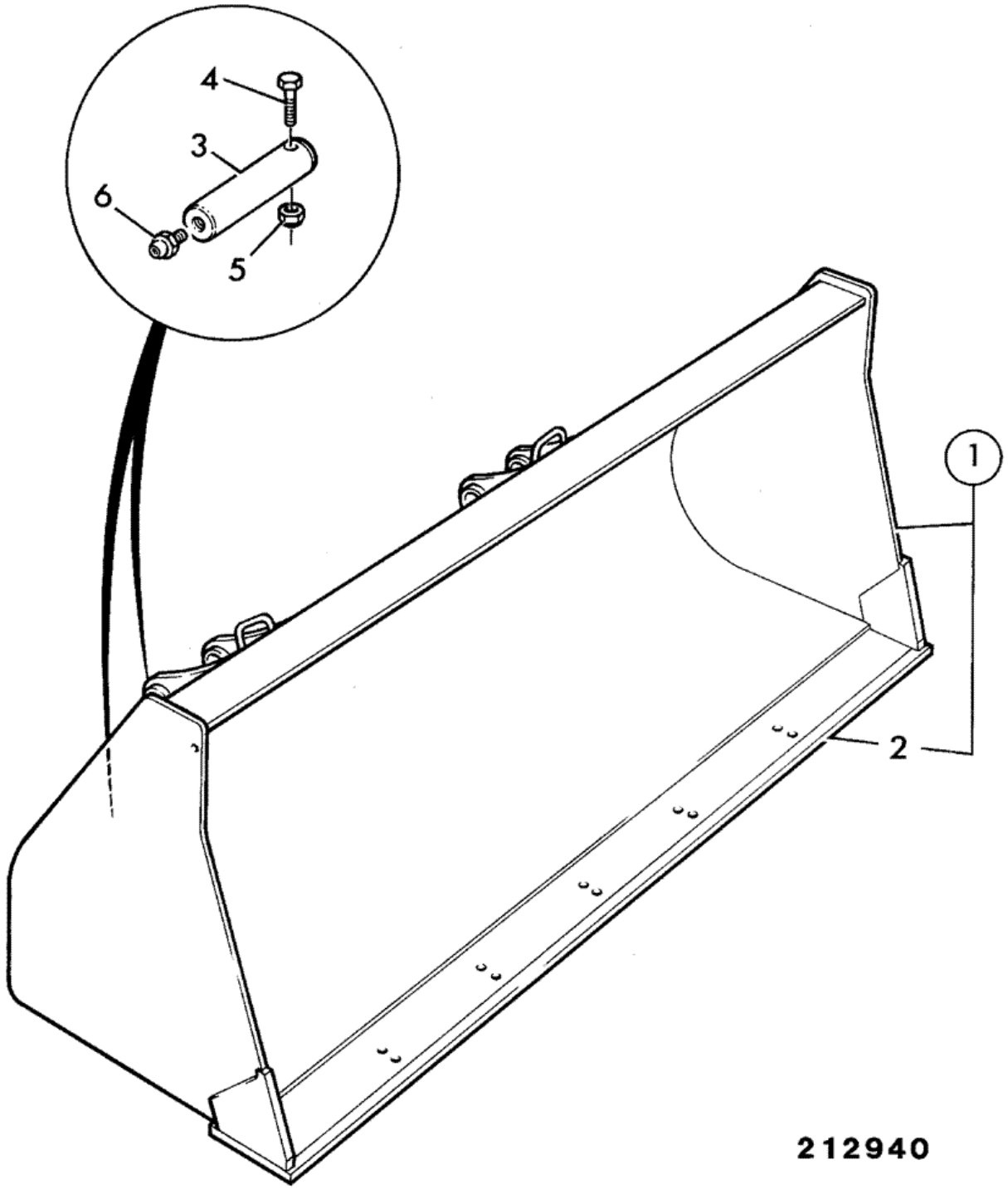


| Item | Part # | Change No | Description | Usage Code | QTY |
|---|---|---|---|---|---|
| | | | | | |

| | | | | | |
|---|---|---|---|---|---|
| 1 | 339/01033 | | Shovel 1.1m3(7'8") H/Duty Brazil, High pivots | | 1 |
| 2 | :331/37529 | | Toeplate 1.1m3 shovel 214e Brazil | | 1 |
| 3 | 811/80001 | | Pin pivot | | 4 |
| 4 | 1305/3222Z | | Bolt 3/8"UNF x 3" | | 4 |
| 5 | 1340/0203Z | | Nut | | 4 |
| 6 | 1450/0001 | | Nipple grease, straight 1/8 BSP | | 4 |

Product Catalog \ CONSTRUCTION \ NORTH AMERICA \ CONSTRUCTION / INDUSTRIAL \ BACKHOE LOADER 3CX,4CX,214,215,217 \ 3C PLUS (91HP) , Made in Brazil with Dieselmax/IESA Engine 9812/0080 \ A ATTACHMENTS \ A03 ATTACHMENTS

# 9812/0080 A3-24-5 QUICKHITCH, EXCAVATOR

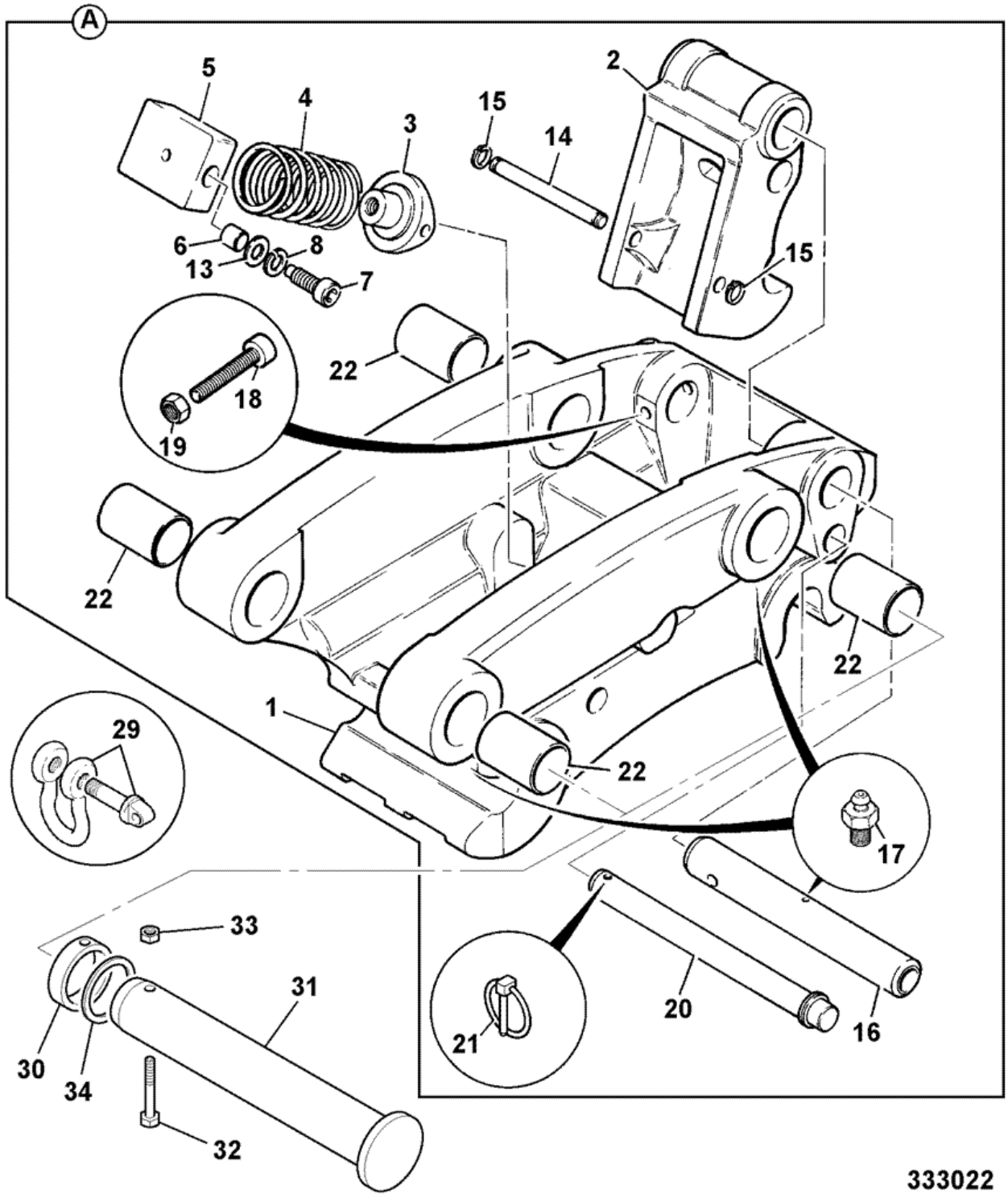


| Item | Part # | Change No | Description | Usage Code | QTY |
|---|---|---|---|---|---|
| A | 126/03077 | | Kit-quickhitch mechanical | | 1 |
| 1 | :128/10412 | | Body c/w bearings quickhitch | | 1 |
| | | | | | |

| | | | | | |
|---|---|---|---|---|---|
| 2 | :123/07757 | | Latch | | 1 |
| 3 | :123/07772 | | Pivot quickhitch | | 1 |
| 4 | :814/10143 | | Spring off-pins quichhitch | | 1 |
| 5 | :128/10413 | | Block pivot c/w bearings | | 1 |
| 6 | ::831/00137 | | Bush | | 2 |
| 7 | :123/07761 | | Bolt trunnion | | 2 |
| 8 | :1425/0014Z | | Washer | | 2 |
| 13 | :. | | 'See Remark'<br>*no longer fitted* | | 2 |
| 14 | :123/07762 | | Pin pivot | | 1 |
| 15 | :826/00614 | | Circlip | | 2 |
| 16 | :811/50578 | | Pin pivot | | 1 |
| 17 | :1450/0001 | | Nipple grease, straight 1/8 BSP | | 5 |
| 18 | :1391/3419Z | | Capscrew | | 1 |
| 19 | :1370/0303Z | | Nut lock M10 | | 1 |
| 20 | :123/07763 | | Pin lock | | 1 |
| 21 | :826/00600 | | Pin linch | | 1 |
| 22 | :809/00192 | | Bearing | | 4 |
| 27 | :123/09001 | | Plate SWL 1ton | | 1 |
| 28 | :826/00562 | | Screw hammer drive | | 2 |
| 29 | 918/66900 | | Link bow. 1 TON SWL | | 1 |
| 30 | 123/06668 | | Collar | | 2 |
| 31 | 911/12400 | | Pin pivot | | 2 |
| 32 | 1315/3416Z | | Bolt hex. head M10 x 70 | | 2 |
| 33 | 1370/0303Z | | Nut lock M10 | | 2 |
| 34 | 823/00470 | | Washer | | 2 |

# 9812/0080 A3-3-11 ROCKBREAKER, HM265Q, COMPONENTS

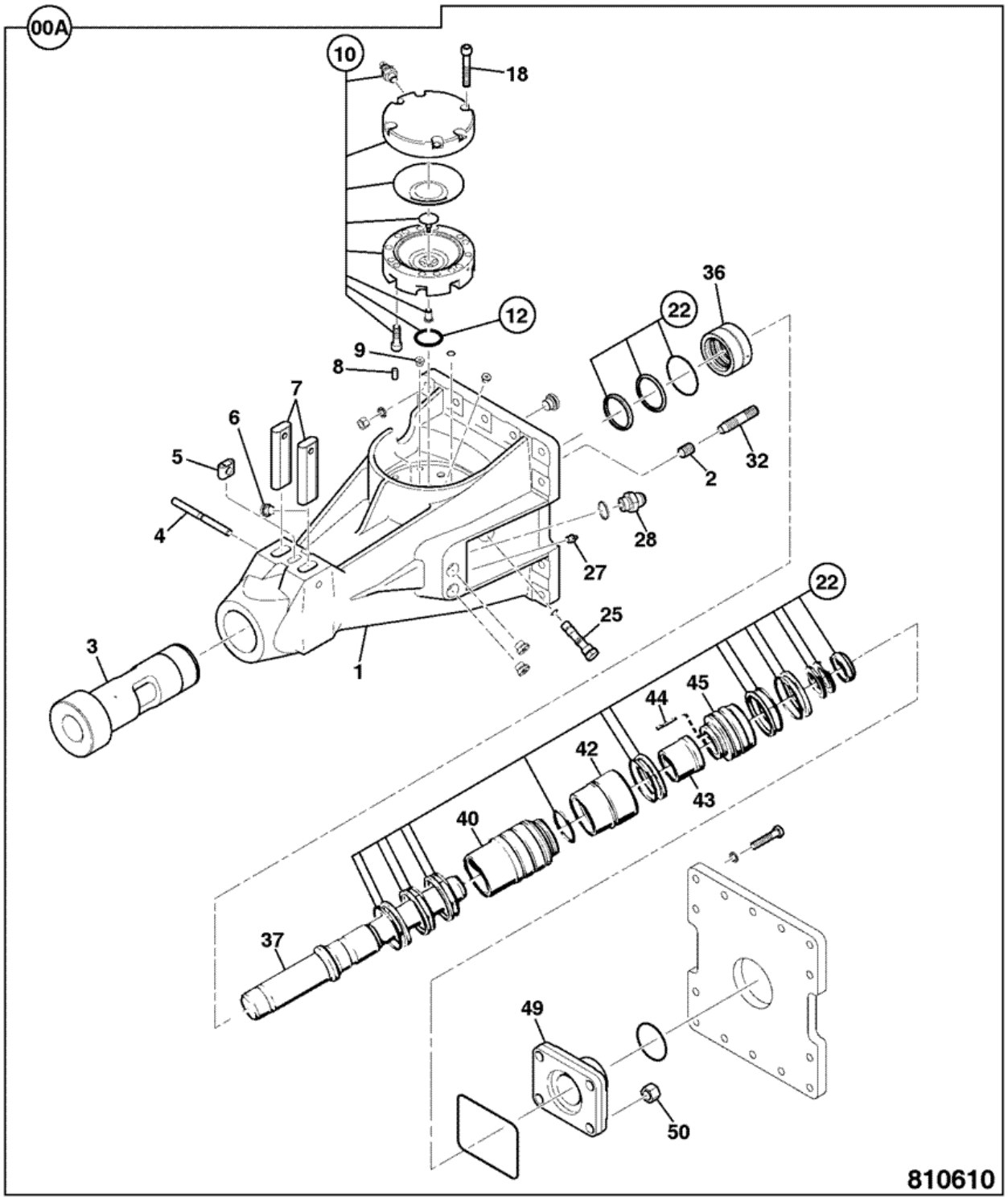


| Item | Part # | Change No | Description | Usage Code | QTY |
|---|---|---|---|---|---|
| | | | 'See Remark' | | |

| | | | | | |
|---|---|---|---|---|---|
| A | . | | *See A3-3-1* | | 1 |
| 1 | :980/90192 | | Rockbreaker SB410 ABI | | 1 |
| 2 | ::331/56106 | | Insert thread | | 4 |
| 3 | ::331/56109 | | Bush BUSH | | 1 |
| 3 | ::331/56110 | | Bush 1mm oversize | | 1 |
| 4 | ::331/56113 | | Pin lock | | 1 |
| 5 | ::331/56085 | | Lock buffer | | 1 |
| 6 | ::331/56118 | | Plug | | 3 |
| 7 | ::331/56120 | | Retainer tool | | 2 |
| 8 | ::331/56121 | | Pin parallel | | 1 |
| 9 | ::331/56122 | | Plug | | 2 |
| 10 | ::331/56123 | | Accumulator assembly | | 1 |
| 10A | 331/62382 | | Valve charge | | 1 |
| 12 | ::331/56136 | | Kit-repair accumulator | | 1 |
| 18 | ::331/56124 | | Screw | | 4 |
| 22 | ::331/56139 | | Kit-repair breaker | | 1 |
| 24 | ::331/56013 | | Plug hex socket | | 1 |
| 25 | ::331/56125 | | Restrictor | | 1 |
| 27 | ::816/13445 | | Nipple grease | | 1 |
| 28 | ::1604/0004 | | Adapter male/male | | 2 |
| 32 | ::331/56127 | | Stud | | 4 |
| 36 | ::331/56128 | | Guide piston | | 1 |
| 37 | ::331/56129 | | Piston | | 1 |
| 40 | ::331/56130 | | Liner | | 1 |
| 42 | ::331/56131 | | Housing valve | | 1 |
| 43 | ::331/56132 | | Valve main | | 1 |
| 44 | ::331/55931 | | Plunger | | 6 |
| 45 | ::331/56133 | | Housing seal | | 1 |
| 49 | ::331/56134 | | Bracket end piece | | 1 |
| 50 | ::331/56135 | | Nut | | 4 |
| 51 | 817/20107 | | Decal HM265 | | 2 |

Product Catalog \ CONSTRUCTION \ NORTH AMERICA \ CONSTRUCTION / INDUSTRIAL \ BACKHOE LOADER 3CX,4CX,214,215,217 \ 3C PLUS (91HP) , Made in Brazil with Dieselmax/IESA Engine 9812/0080 \ A ATTACHMENTS \ A03 ATTACHMENTS

# 9812/0080 A3-3-21 ROCKBREAKER, HM385Q, 980/90239

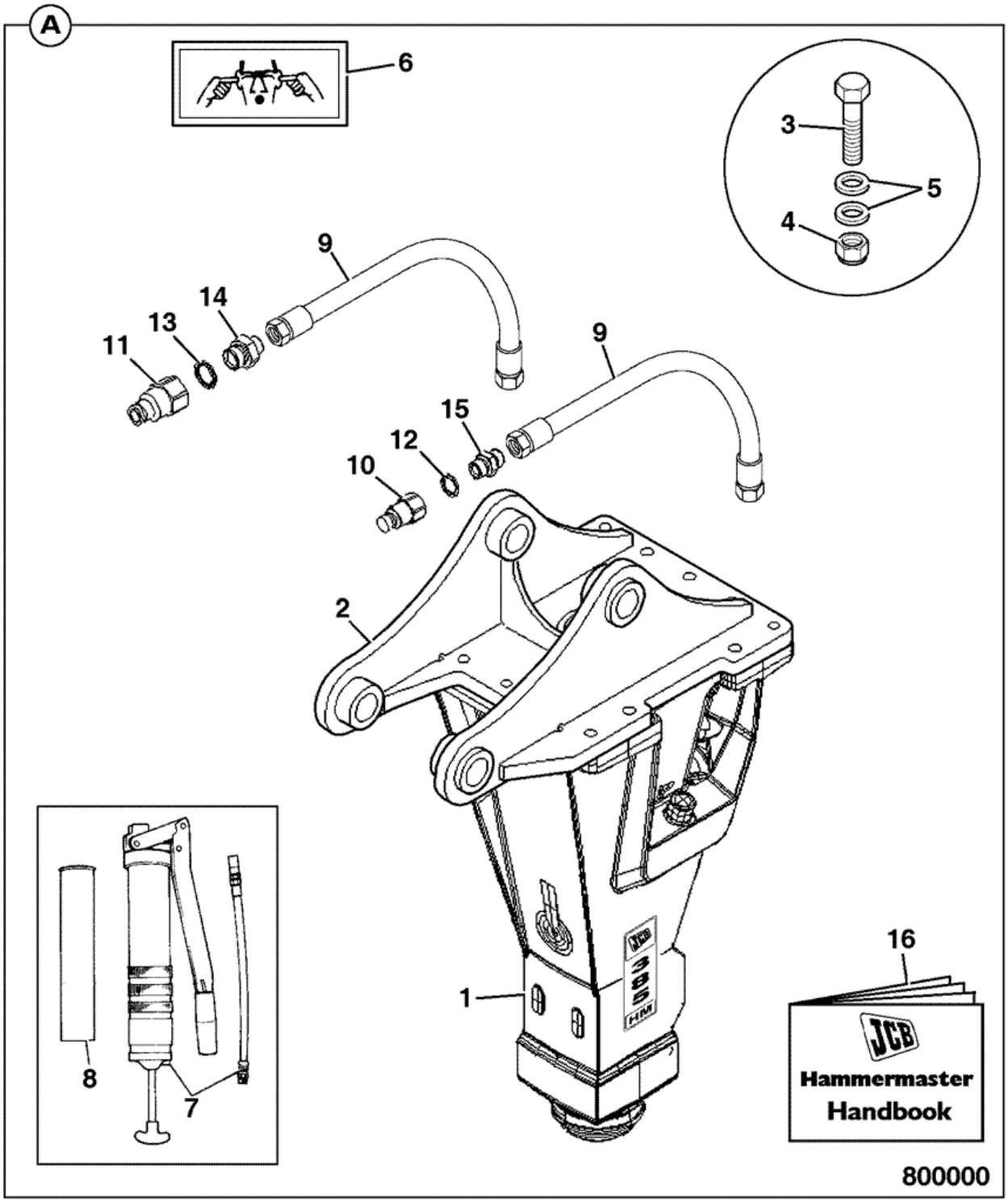


| Item | Part # | Change No | Description | Usage Code | QTY |
|---|---|---|---|---|---|
| A | 980/90239 | | Rockbreaker HM385Q assembly 3CX 4CX | | 1 |
| 1 | :980/90191 | | Rockbreaker HM385Q ABI | | 1 |

| | | | | | |
|---|---|---|---|---|---|
| | | | *For components see A3-3-31* | | |
| 2 | :335/09865 | Superseded | Bracket hanger HM385 3CX, 4CX | | 1 |
| 2 | 335/11592 | | Bracket HANGER BRACKET 3CX - HM365Q | | 1 |
| 3 | :1315/3718D | | Bolt | | 14 |
| 4 | :1370/0603Z | | Nut M16 | | 14 |
| 5 | :823/10400 | | Washer Nord-lock M16 | | 28 |
| 6 | :332/P4712 | | Label ear protection | | 1 |
| 7 | :992/11300 | | Tool grease gun | | 1 |
| 8 | :4003/1119 | | Cartridge grease, hammer P64 | | 1 |
| 9 | :615/80103 | | Hose | | 2 |
| 10 | :45/910300 | | Coupling 3/4" BSP male quick release | | 1 |
| 11 | :45/910200 | | Coupling 1"BSP male quick release | | 1 |
| 12 | :1406/0021 | | Seal bonded 3/4" BSP | | 1 |
| 13 | :1406/0026 | | Washer seal | | 1 |
| 14 | :1606/0012 | | Adapter | | 1 |
| 15 | :1604/0006 | | Adapter 3/4" BSP M/M | | 1 |
| 16 | :9814/0525 | | Book rockbreaker instruct HM165, 265, 385,495 | | 1 |
| 17 | 817/20423 | | Label pump flow/rpm | | 1 |
| 18 | :335/12566 | | Lever bent | | 1 |

Product Catalog \ CONSTRUCTION \ NORTH AMERICA \ CONSTRUCTION / INDUSTRIAL \ BACKHOE LOADER 3CX,4CX,214,215,217 \ 3C PLUS (91HP) , Made in Brazil with Dieselmax/IESA Engine 9812/0080 \ A ATTACHMENTS \ A03 ATTACHMENTS

# 9812/0080 A3-3-31 ROCKBREAKER, HM385Q, COMPONENTS

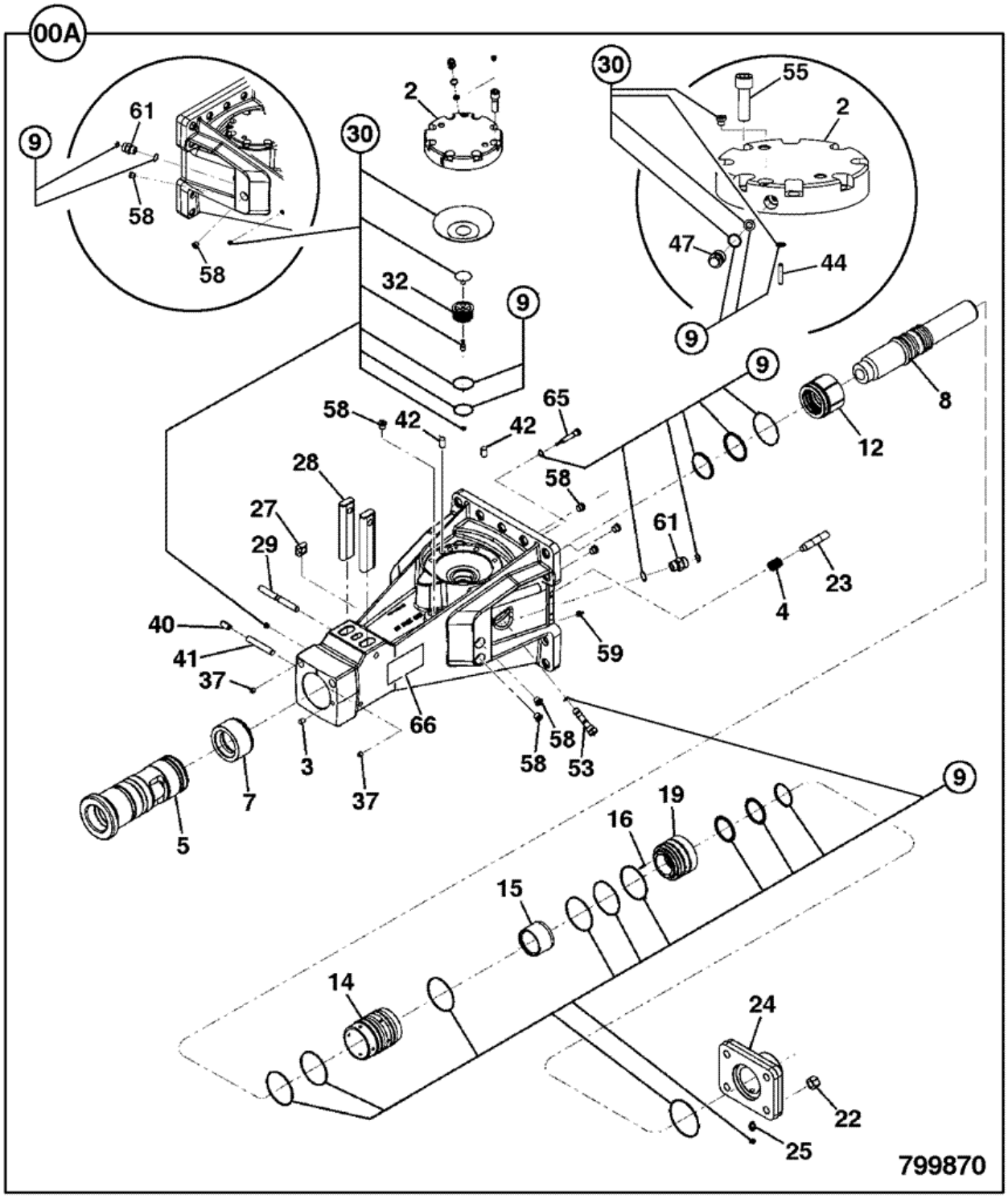


| Item | Part # | Change No | Description | Usage Code | QTY |
|---|---|---|---|---|---|
| | | | 'See Remark' | | |

| | | | | | |
|---|---|---|---|---|---|
| A | . | | *See A3-3-21* | | 1 |
| 1 | :980/90191 | | Rockbreaker HM385Q ABI | | 1 |
| 2 | ::331/55898 | | Housing Accumulator | | 1 |
| 3 | ::331/56022 | | Plug | | 1 |
| 4 | ::331/55983 | | Insert thread | | 4 |
| 5 | ::331/55979 | | Bush | | 1 |
| 7 | ::331/55903 | | Stop ring | | 1 |
| 8 | ::331/55907 | | Piston | | 1 |
| 9 | ::331/55895 | | Kit-repair Breaker | | 1 |
| 12 | ::331/55909 | | Guide piston | | 1 |
| 14 | ::331/55911 | | Liner | | 1 |
| 15 | ::331/55913 | | Valve main | | 1 |
| 16 | ::331/55931 | | Plunger | | 8 |
| 19 | ::331/55932 | | Housing seal | | 1 |
| 22 | ::331/55933 | | Nut | | 4 |
| 23 | ::331/55936 | | Stud | | 4 |
| 24 | ::331/55938 | | Bracket end piece | | 1 |
| 25 | ::331/55940 | | Valve check complete | | 1 |
| 27 | ::331/55945 | | Buffer lock | | 1 |
| 28 | ::331/55947 | | Retainer Tool | | 1 |
| 29 | ::331/55949 | | Pin lock | | 1 |
| 30 | ::331/55930 | | Kit-repair accumulator | | 1 |
| 32 | ::331/55956 | | Seat diaphragm support | | 1 |
| 37 | ::331/55996 | | Plug | | 2 |
| 40 | ::826/11502 | | Pin spring | | 1 |
| 41 | ::331/55958 | | Pin parallel | | 1 |
| 42 | ::331/56010 | | Pin parallel | | 2 |
| 44 | ::331/56011 | | Pin parallel | | 1 |
| 47 | ::331/55951 | | Valve charge | | 1 |
| 53 | ::331/55990 | | Restrictor | | 1 |
| 55 | ::331/55966 | | Capscrew | | 8 |
| 58 | ::331/56013 | | Plug hex socket | | 8 |
| 59 | ::816/13445 | | Nipple grease | | 1 |
| 61 | :1604/0006 | | Adapter 3/4" BSP M/M | | 2 |
| 65 | ::331/56018 | | Pin lock | | 1 |
| 66 | :817/20106 | | Decal HM385 | | 2 |
| 67 | 817/20423 | | Label pump flow/rpm | | 1 |

Product Catalog \ CONSTRUCTION \ NORTH AMERICA \ CONSTRUCTION / INDUSTRIAL \ BACKHOE LOADER 3CX,4CX,214,215,217 \ 3C PLUS (91HP) , Made in Brazil with Dieselmax/IESA Engine 9812/0080 \ A ATTACHMENTS \ A03 ATTACHMENTS

# 9812/0080 A3-6-10 QUICKHITCH, LOADER, MANUAL

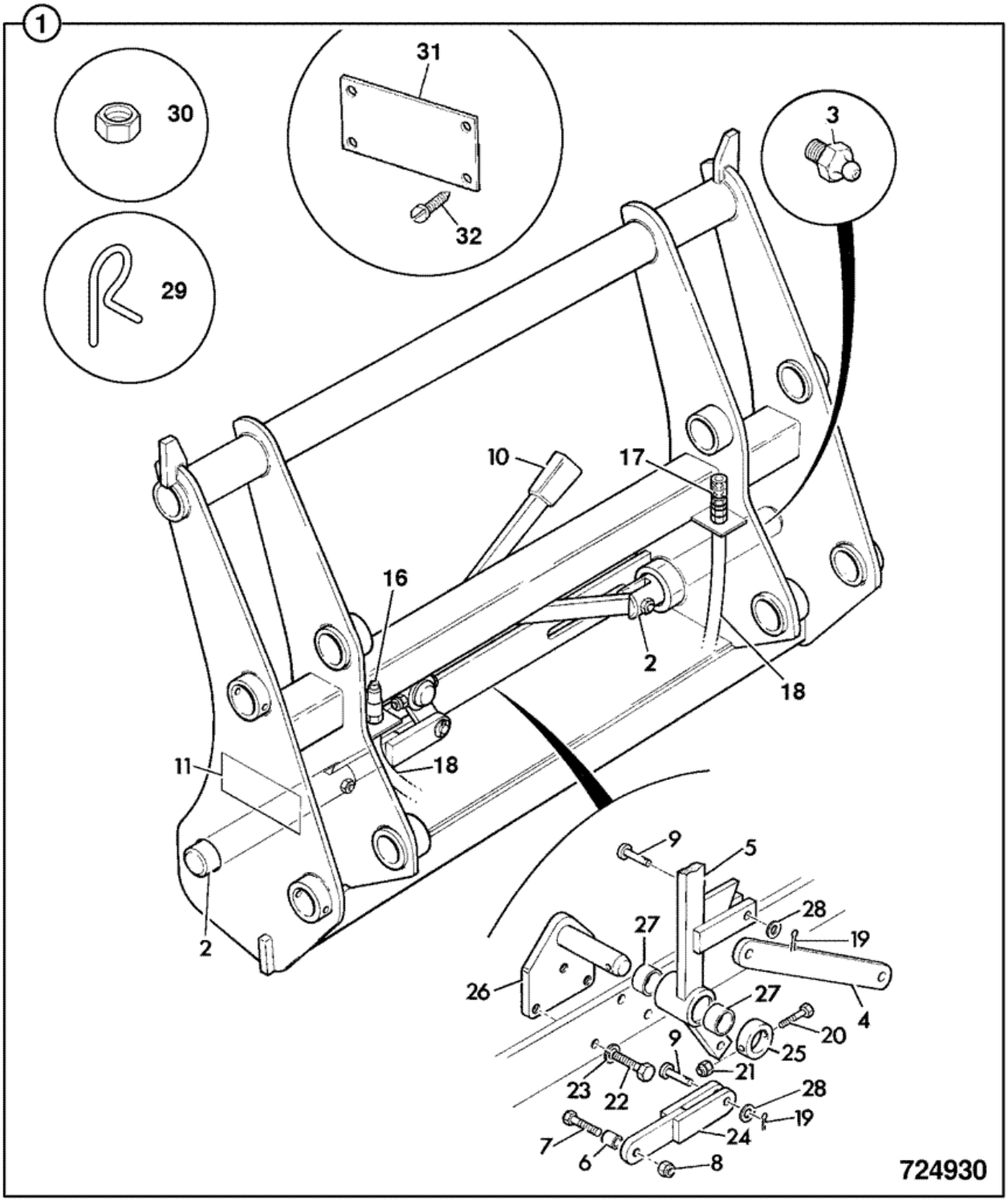


| Item | Part # | Change No | Description | Usage Code | QTY |
|---|---|---|---|---|---|
| A | 980/89601 | | Attachment Quickhitch | | 1 |
| 1 | :335/06316 | | Quickhitch loader | | 1 |
| | | | | | |

| | | | | | |
|---|---|---|---|---|---|
| 2 | :980/11401 | | Pin pivot | | 2 |
| 3 | :1450/0001A | | Nipple grease | | 2 |
| 4 | :980/84223 | | Link LONG | | 1 |
| 5 | :980/86033 | | Handle | | 1 |
| 6 | :980/82200 | | Spacer 22mm long | | 2 |
| 7 | :1315/3419Z | | Bolt M10x90mm | | 2 |
| 8 | :1370/0303Z | | Nut lock M10 | | 2 |
| 9 | :980/84225 | | Pin | | 3 |
| 10 | :123/01256 | | Handle grip | | 1 |
| 11 | :N.S.P | | None serviced part | | 1 |
| 13 | :45/920067 | | Coupling 3/8"BSP male quick release | | 1 |
| 14 | :45/920066 | | Coupling 3/8"BSP female quick release | | 1 |
| 15 | :612/07600 | | Hose high pressure, 3/8" L=610 | | 2 |
| 16 | :2103/0709 | | Pin split | | 2 |
| 17 | :1315/3213Z | | Bolt M6x55 | | 1 |
| 18 | :1370/0103Z | | Nut Self lock M6 | | 1 |
| 19 | :1315/0507Z | | Bolt | | 3 |
| 20 | :1425/0009Z | | Washer Spring M12 | | 3 |
| 21 | :980/86035 | | Link short | | 1 |
| 22 | :980/84224 | | Boss | | 1 |
| 23 | :980/86034 | | Bracket | | 1 |
| 24 | :980/11402 | | Bush | | 1 |
| 25 | :1420/0008Z | | Washer Plain M10 | | 2 |
| 26 | :826/00479 | | Clip 'R' | | 1 |
| 27 | :1356/0203Z | | Nut backing | | 2 |
| 28 | :817/19231 | | Label 1.1M3 Max. | | 1 |
| 29 | :826/10511 | | Fastener | | 8 |

Product Catalog \ CONSTRUCTION \ NORTH AMERICA \ CONSTRUCTION / INDUSTRIAL \ BACKHOE LOADER 3CX,4CX,214,215,217 \ 3C PLUS (91HP) , Made in Brazil with Dieselmax/IESA Engine 9812/0080 \ B BODYWORK, CAB, LOADER END \ B01 BODYWORK/FRAME

# 9812/0080 B1-5-1 BONNET ASSEMBLY, 2WS

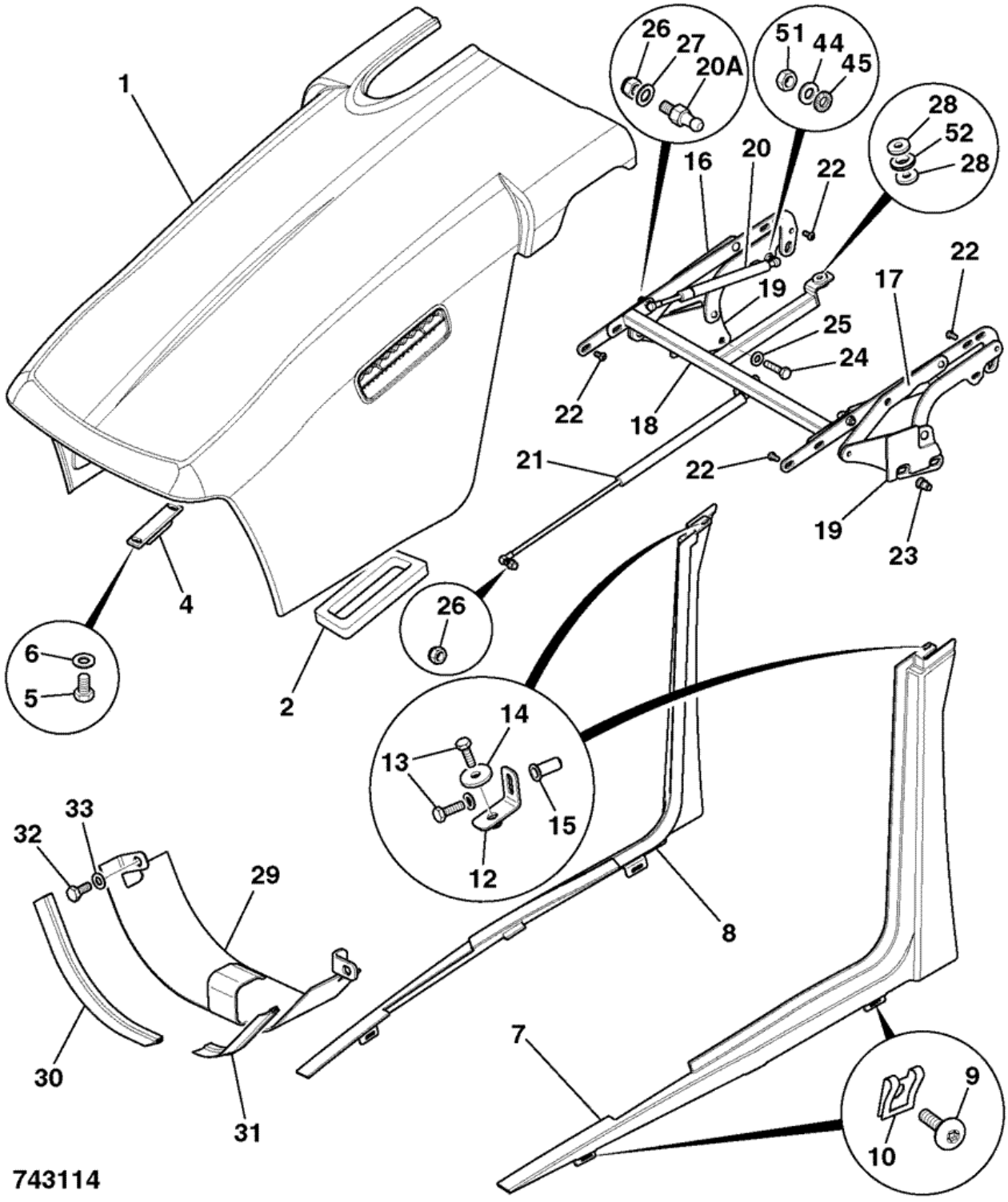


| Item | Part # | Change No | Description | Usage Code | QTY |
|---|---|---|---|---|---|
| 1 | 346/90019 | Superseded | Bonnet | | 1 |
| 1 | 128/C6611 | | Bonnet | | 1 |
| | | | | | |

| | | | | | |
|---|---|---|---|---|---|
| 1A | :128/15667 | | Vent assembly air induction | | 1 |
| 1B | :1430/1206Z | | Screw No 8 x 1 1/4"<br>*holds item 1A to item 1* | | 2 |
| 2 | 926/51401 | | Gasket air intake | | 1 |
| 4 | 331/26981 | | Catch bonnet | | 1 |
| 5 | 1315/0301Z | | Screw hex head M8 X 12 | | 2 |
| 6 | 1420/0007Z | | Washer plain M8 | | 2 |
| 7 | 346/00064 | | Rail bonnet LH, 2WS NLA see TI 2/503 | | 1 |
| 8 | 346/00065 | | Rail bonnet RH, 2WS NLA see TI 2/503 | | 1 |
| 9 | 826/01768 | | Screw M6x25mm | | 6 |
| 10 | 826/01465 | | Retainer "U" nut | | 6 |
| 12 | 331/47298 | | Bracket upper rail | | 2 |
| 13 | 1315/0205Z | | Bolt | | 4 |
| 14 | 823/00030 | | Washer 25mm o/dia 7mm i/dia | | 2 |
| 15 | 826/01810 | | Nut rivet, M6 open end for 5.5 to 8mm plate | | 2 |
| 16 | 128/14553 | <M TBA | Hinge bonnet RH | | 1 |
| 16 | 128/C1888 | | Hinge bonnet, RH | | 1 |
| 17 | 128/14552 | <M TBA | Hinge bonnet LH | | 1 |
| 17 | 128/C1889 | | Hinge bonnet, LH | | 1 |
| 18 | 335/07952 | | Hinge torsion beam | | 1 |
| 20 | 331/60675 | Superseded | Strut gas 244-390 | | 2 |
| 20 | 331/66727 | | Strut gas 235-390 | | 2 |
| 20A | 331/60391 | | Ball fitting 10 X M8 | | 1 |
| 21 | 331/47026 | Superseded | Strut gas 335-585 | | 1 |
| 21 | 331/66785 | | Strut gas 585x327 | | 1 |
| 22 | 826/11284 | | Screw M8x16 button head | | 8 |
| 23 | 826/01249 | | Nut rivet M10 open end for 6 to 8.5mm plate | | 4 |
| 24 | 1315/0409Z | | Screw M10x35mm | | 4 |
| 25 | 1420/0008Z | | Washer Plain M10 | | 4 |
| 26 | 1371/0203Z | | Nut | | 3 |
| 27 | 1420/0007Z | | Washer plain M8 | | 4 |
| 28 | 823/10639 | | Washer 9x26x5 | | 2 |
| 29 | . | | 'See Remark'<br>*only used on 4WS* | | 1 |
| 44 | 1418/0011Z | | Washer lock | | 2 |
| 45 | 1370/0202Z | | Nut M8 | | 4 |
| 51 | 1370/0201Z | | Nut M8 | | 2 |
| 52 | 2410/0304 | | Grommet | | 1 |

Product Catalog \ CONSTRUCTION \ NORTH AMERICA \ CONSTRUCTION / INDUSTRIAL \ BACKHOE LOADER 3CX,4CX,214,215,217 \ 3C PLUS (91HP) , Made in Brazil with Dieselmax/IESA Engine 9812/0080 \ B BODYWORK, CAB, LOADER END \ B01 BODYWORK/FRAME

# 9812/0080 B1-5-3 BONNET ASSEMBLY, 2WS

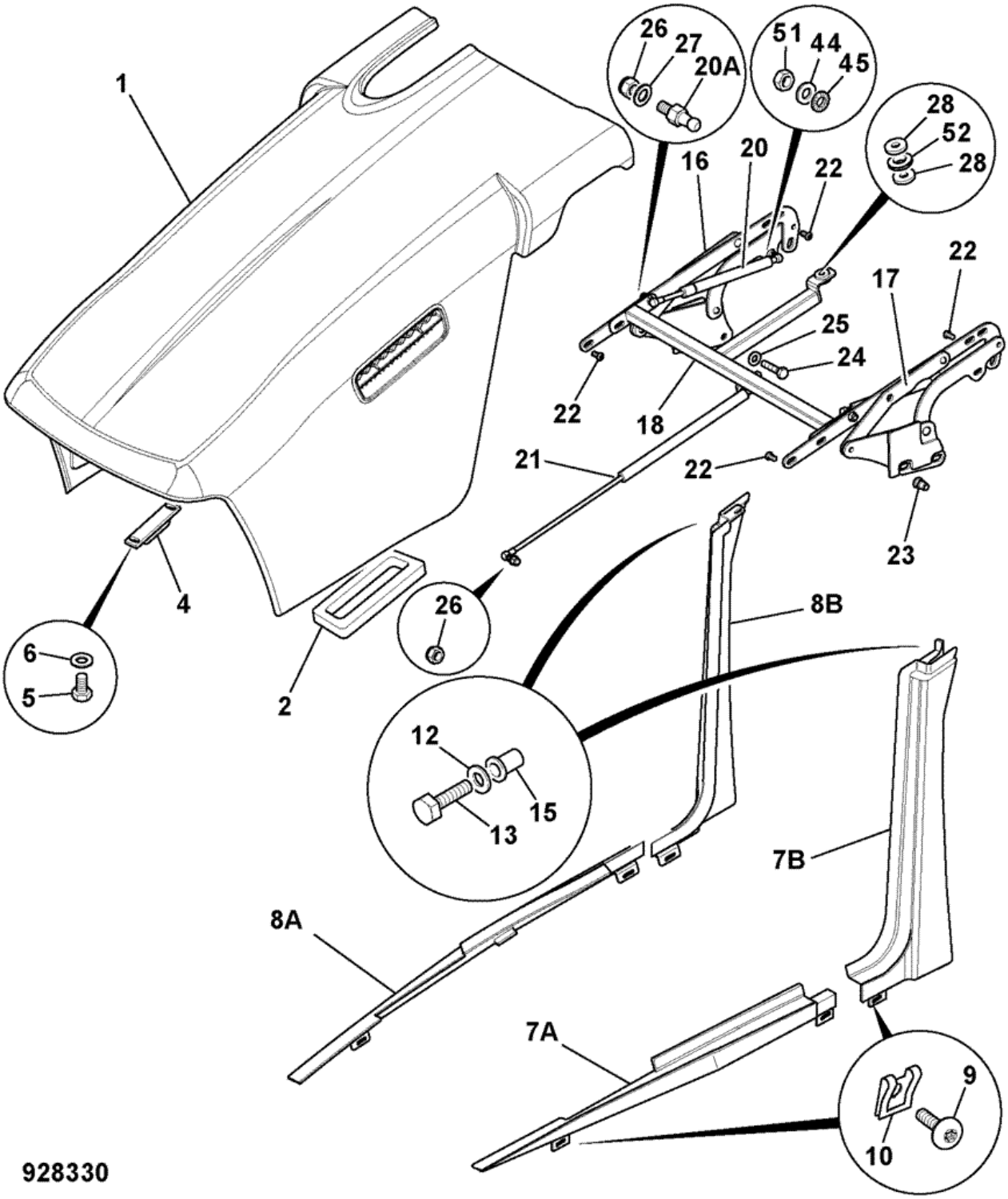


| Item | Part # | Change No | Description | Usage Code | QTY |
|---|---|---|---|---|---|
| 1 | 128/C6611 | <M TBA | Bonnet | A | 1 |
| 1 | 128/C0484 | | Bonnet | B | 1 |
| | | | | | |

| | | | | | |
|---|---|---|---|---|---|
| 1A | :128/15667 | | Vent assembly air induction | A | 1 |
| 1A | :128/C0485 | | Vent assembly air induction | B | 1 |
| 1B | :1430/1206Z | | Screw No 8 x 1 1/4"<br>*to hold 1A to 1* | A | 2 |
| 1B | :1430/1205Z | | Screw No 8x1" | B | 2 |
| 2 | 926/51401 | Superseded | Gasket air intake | | 1 |
| 2 | 332/D5552 | | Seal air filter | | 1 |
| 4 | 332/C0442 | | Catch bonnet striker | | 1 |
| 5 | 1315/0301Z | | Screw hex head M8 X 12 | | 2 |
| 6 | 1420/0007Z | | Washer plain M8 | | 2 |
| 7A | 346/00565 | <M TBA | Rail bonnet lower LH yellow | | 1 |
| 7A | 332/P5275 | | Rail bonnet lower LH yellow | | 1 |
| 7B | 346/00563 | <M TBA | Rail bonnet upper LH yellow | | 1 |
| 7B | 332/P5245 | | Rail bonnet upper LH yellow | | 1 |
| 8A | 346/00566 | <M TBA | Rail bonnet lower RH yellow | | 1 |
| 8A | 332/P5292 | | Rail bonnet lower RH yellow | | 1 |
| 8B | 346/00564 | <M TBA | Rail bonnet upper RH yellow | | 1 |
| 8B | 332/P5260 | | Rail bonnet, upper RH yellow | | 1 |
| 9 | 826/11692 | | Screw Torx M6x35 | | 4 |
| 10 | 826/01465 | | Retainer "U" nut | | 4 |
| 12 | 1420/0006Z | | Washer M6 | | 2 |
| 13 | 1315/0207Z | | Screw M6 x 25mm long | | 2 |
| 15 | 826/01810 | | Nut rivet, M6 open end for 5.5 to 8mm plate | | 2 |
| 16 | 128/14553 | <M TBA | Hinge bonnet RH | | 1 |
| 16 | 128/C1888 | | Hinge bonnet, RH | | 1 |
| 17 | 128/14552 | <M TBA | Hinge bonnet LH | | 1 |
| 17 | 128/C1889 | | Hinge bonnet, LH | | 1 |
| 18 | 335/07952 | | Hinge torsion beam | | 1 |
| 20 | 331/66727 | | Strut gas 235-390 | | 2 |
| 20A | 331/60391 | | Ball fitting 10 X M8 | | 1 |
| 21 | 331/66785 | | Strut gas 585x327 | | 1 |
| 22 | 826/11284 | | Screw M8x16 button head | | 8 |
| 23 | 826/01249 | | Nut rivet M10 open end for 6 to 8.5mm plate | | 4 |
| 24 | 1315/0409Z | | Screw M10x35mm | | 4 |
| 25 | 1420/0008Z | | Washer Plain M10 | | 4 |
| 26 | 1371/0203Z | | Nut | | 3 |
| 27 | 1420/0007Z | | Washer plain M8 | | 4 |
| 28 | 823/10639 | | Washer 9x26x5 | | 2 |
| 44 | 1418/0011Z | | Washer lock | | 2 |
| 45 | 1370/0202Z | | Nut M8 | | 4 |
| 51 | 1370/0201Z | | Nut M8 | | 2 |
| 52 | 2410/0304 | | Grommet | | 1 |

# 9812/0080 B1-7-1 STEP, CAB ACCESS, HYDRAULIC TANK SIDE

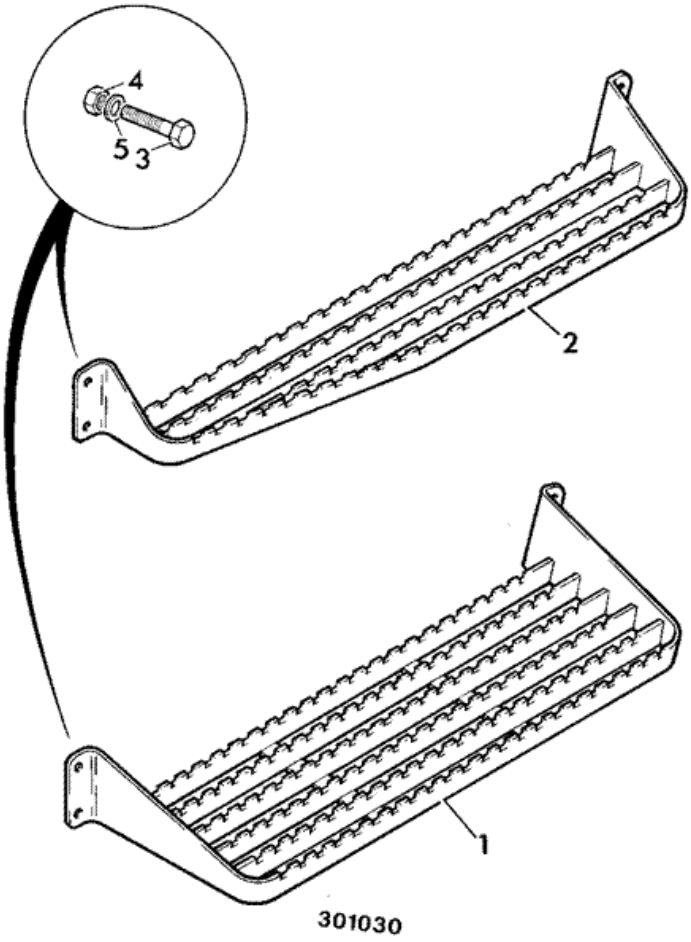


| Item | Part # | Change No | Description | Usage Code | QTY |
|---|---|---|---|---|---|
| 1 | 331/27895 | | Step lower, 214e | | 1 |
| 2 | 331/27897 | | Step upper, 214e | | 1 |
| 3 | 1315/0405Z | | Screw M10 x 20mm long | | 8 |
| 4 | 1370/0303Z | | Nut lock M10 | | 8 |
| 5 | 1420/0008Z | | Washer Plain M10 | | 8 |

Product Catalog \ CONSTRUCTION \ NORTH AMERICA \ CONSTRUCTION / INDUSTRIAL \ BACKHOE LOADER 3CX,4CX,214,215,217 \ 3C PLUS (91HP) , Made in Brazil with Dieselmax/IESA Engine 9812/0080 \ B BODYWORK, CAB, LOADER END \ B02 CAB

# 9812/0080 B2-6-5 SOUNDPROOFING, AND FLOOR MAT, CAB BASE

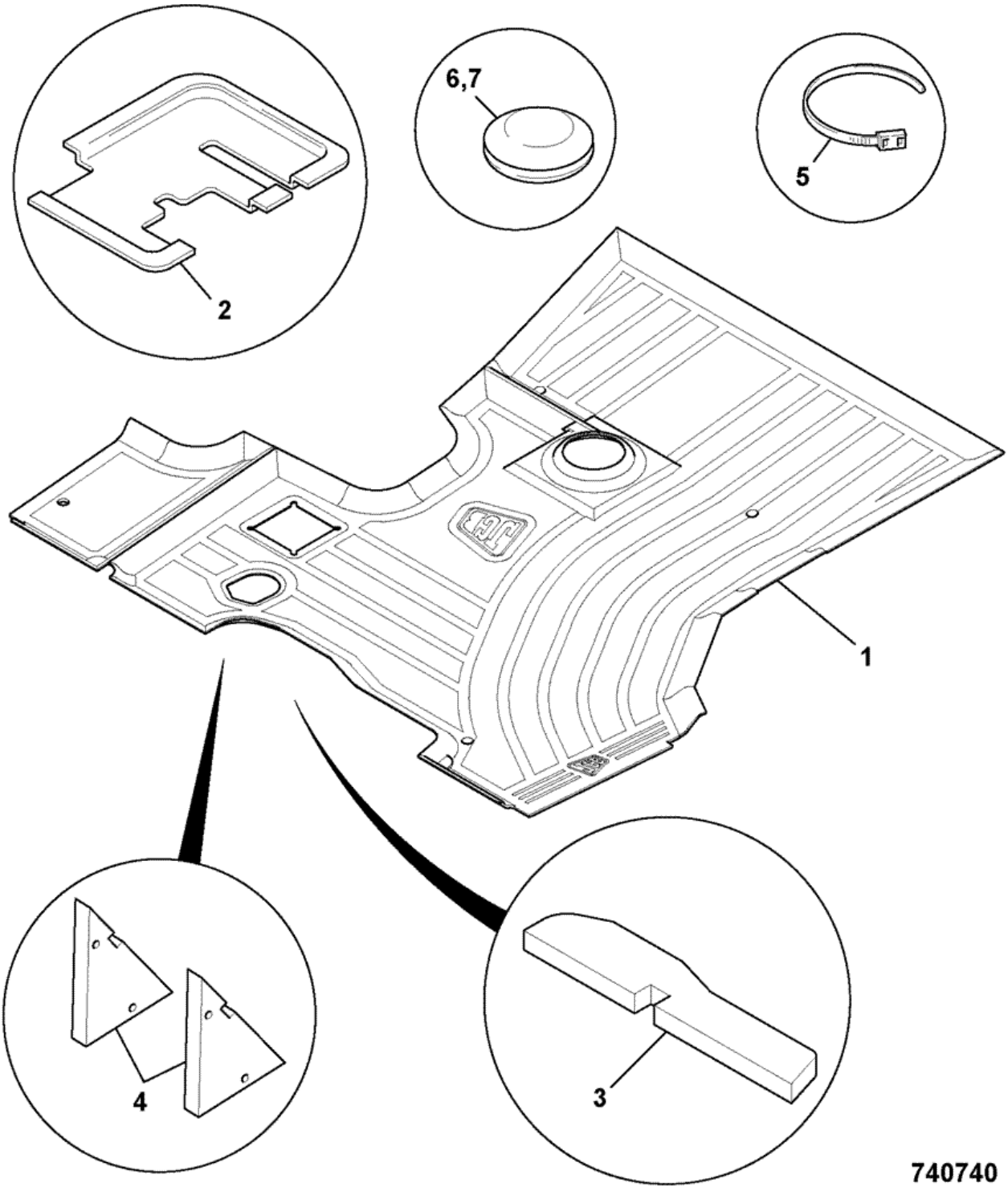


| Item | Part # | Change No | Description | Usage Code | QTY |
|---|---|---|---|---|---|
| | | | Floormat | | |

| | | | | | |
|---|---|---|---|---|---|
| 1 | 123/07620 | <M TBA | *214e only* | | 1 |
| 1 | 332/E6882 | >M TBA | Floormat 3C 14 (Centremount) | | 1 |
| 2 | 123/07940 | | Panel seal support | | 1 |
| 2A | 123/07672 | | Mat soundproofing loader valve | | 1 |
| 3 | 331/60578 | | Seal front bulkhead | | 1 |
| 4 | 123/07720 | | Mat brake cylinder | | 2 |
| 5 | 826/01144 | | Tie cable 200mm long | | 4 |
| 6 | 2410/1109 | | Grommet<br>*drain holes -floor* | | 4 |
| 7 | 2410/1104 | | Grommet blind 11.1mm<br>*front bulkhead* | | 2 |

Product Catalog \ CONSTRUCTION \ NORTH AMERICA \ CONSTRUCTION / INDUSTRIAL \ BACKHOE LOADER 3CX,4CX,214,215,217 \ 3C PLUS (91HP) , Made in Brazil with Dieselmax/IESA Engine 9812/0080 \ B BODYWORK, CAB, LOADER END \ B02 CAB

# 9812/0080 B2-8-1 WASH/WIPE, CANOPY

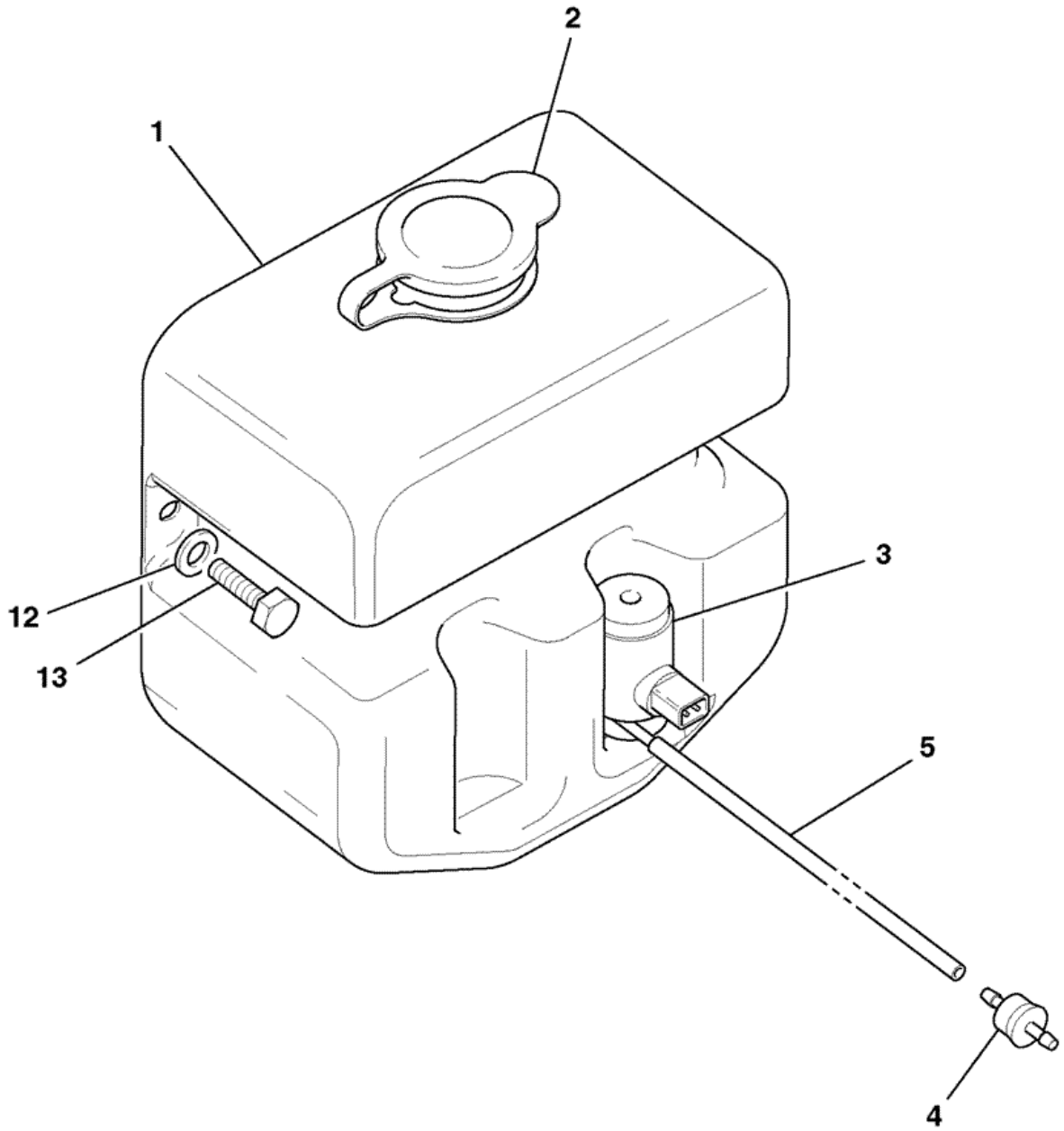


774810

| Item | Part # | Change No | Description | Usage Code | QTY |
|---|---|---|---|---|---|
| 1 | 331/46930 | | Bottle front screen wash<br>*Canopy build single pump* | | 1 |
| | | | | | |

| | | | | | |
|---|---|---|---|---|---|
| 2 | 717/06031 | | Cap washer bottle | | 1 |
| 3 | 714/20600 | | Pump twin motor 12 volt | | 1 |
| 4 | 534/09703 | | Valve non-return | | 1 |
| 5 | 647/02000 | | Tube | | 0 |
| 12 | . | | 'See Remark'<br>*no longer fitted* | | 2 |
| 13 | . | | 'See Remark'<br>*no longer fitted* | | 2 |
| 22 | 826/01144 | | Tie cable 200mm long | | 1 |
| 31 | 715/06200 | | Plug dummy, 2 way sealed | | 1 |
| 32 | 835/10086 | | Plug blanking black,9mm | | 1 |

Product Catalog \ CONSTRUCTION \ NORTH AMERICA \ CONSTRUCTION / INDUSTRIAL \ BACKHOE LOADER 3CX,4CX,214,215,217 \ 3C PLUS (91HP) , Made in Brazil with Dieselmax/IESA Engine 9812/0080 \ B BODYWORK, CAB, LOADER END \ B02 CAB

# 9812/0080 B2-8-2 WASH/WIPE, FRONT & REAR SCREEN

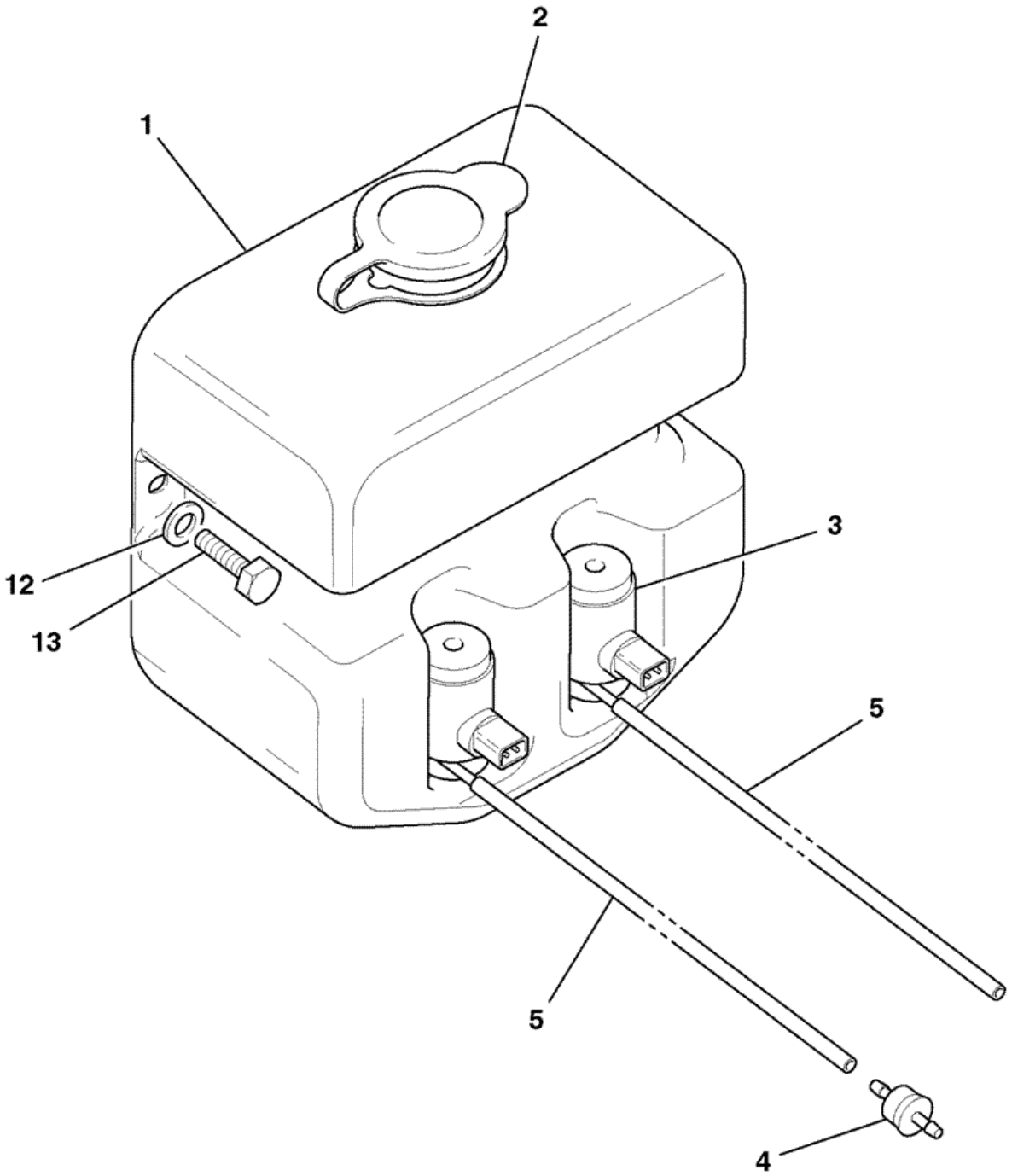


774820

| Item | Part # | Change No | Description | Usage Code | QTY |
|---|---|---|---|---|---|
| 1 | 331/46268 | | Bottle screenwash | | 1 |
| 2 | 717/06031 | | Cap washer bottle | | 1 |
| | | | | | |

| | | | | | |
|---|---|---|---|---|---|
| 3 | 714/20600 | | Pump twin motor 12 volt | | 2 |
| 4 | 534/09703 | | Valve non-return | | 2 |
| 5 | 647/02027 | | Tube 620mm long<br>*620mm long* | | 2 |
| 5 | 647/02000 | | Tube<br>*6200mm roll* | | 0 |
| 12 | . | | 'See Remark'<br>*no longer fitted* | | 2 |
| 13 | . | | 'See Remark'<br>*no longer fitted* | | 2 |
| 22 | 826/01144 | | Tie cable 200mm long | | 1 |
| 23 | 647/02000 | | Tube | | 0 |
| 24 | 331/20304 | | Tube split conduit | | 1 |
| 31 | 255/27003 | | Jet Screen washer | | 1 |

Product Catalog \ CONSTRUCTION \ NORTH AMERICA \ CONSTRUCTION / INDUSTRIAL \ BACKHOE LOADER 3CX,4CX,214,215,217 \ 3C PLUS (91HP) , Made in Brazil with Dieselmax/IESA Engine 9812/0080 \ B BODYWORK, CAB, LOADER END \ B02 CAB

# 9812/0080 B2-8-3 WASH/WIPE, CANOPY,

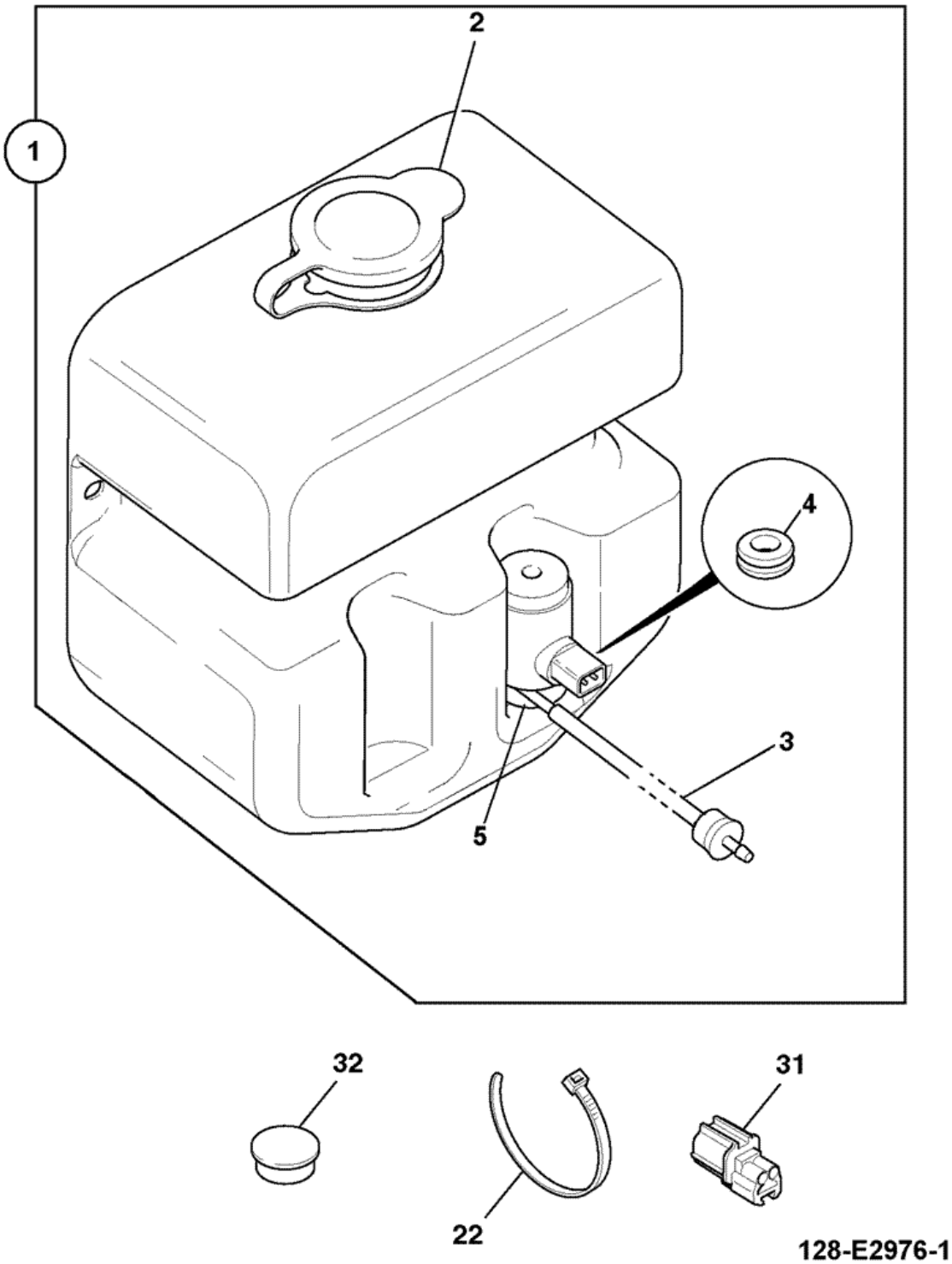


| Item | Part # | Change No | Description | Usage Code | QTY |
|---|---|---|---|---|---|
| 1 | . | | 'See Remark'<br>*128/E2976* | | 1 |
| | | | | | |

| | | | | | |
|---|---|---|---|---|---|
| 2 | :332/G1893 | | Cap blue | | 1 |
| 3 | :332/G1894 | | Tube PVC 600mm | | 1 |
| 4 | :332/G1896 | | Grommet | | 1 |
| 5 | :332/G1897 | | Motor pump | | 1 |
| 22 | 826/01144 | | Tie cable 200mm long | | 1 |
| 31 | 715/06200 | | Plug dummy, 2 way sealed | | 1 |
| 32 | 835/10086 | | Plug blanking black,9mm | | 1 |

Product Catalog \ CONSTRUCTION \ NORTH AMERICA \ CONSTRUCTION / INDUSTRIAL \ BACKHOE LOADER 3CX,4CX,214,215,217 \ 3C PLUS (91HP) , Made in Brazil with Dieselmax/IESA Engine 9812/0080 \ B BODYWORK, CAB, LOADER END \ B02 CAB

# 9812/0080 B2-8-4 WASH/WIPE, FRONT & REAR SCREEN,

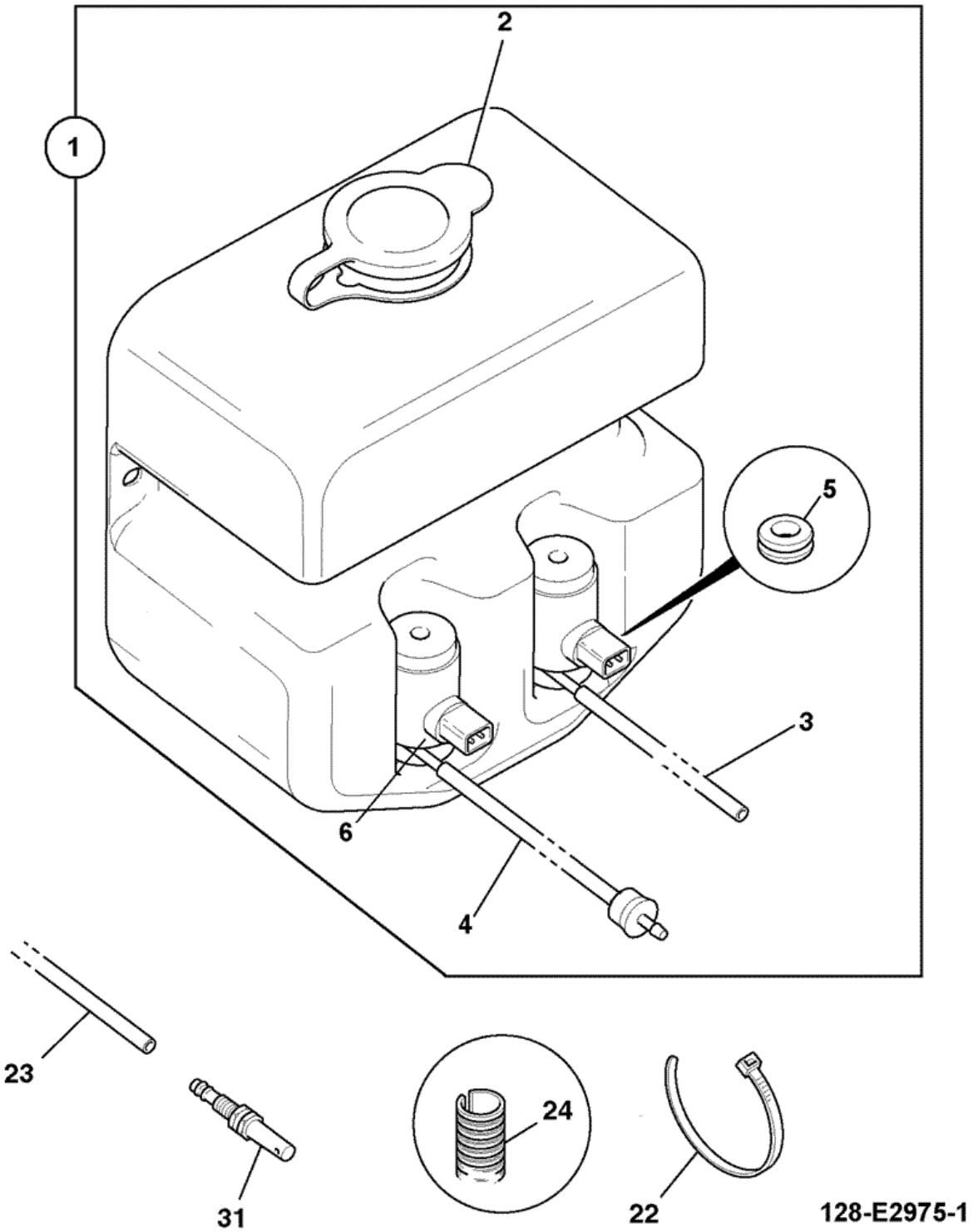


| Item | Part # | Change No | Description | Usage Code | QTY |
|---|---|---|---|---|---|
| 1 | 128/E2975 | | Bottle screen washer bottle cab | | 1 |
| 2 | :332/G1893 | | Cap blue | | 1 |
| | | | | | |

| | | | | | |
|---|---|---|---|---|---|
| 3 | :332/G1894 | | Tube PVC 600mm | | 1 |
| 4 | :332/G1895 | | Tube PVC 600mm with non return valve | | 1 |
| 5 | :332/G1896 | | Grommet | | 2 |
| 6 | :332/G1897 | | Motor pump | | 2 |
| 22 | 826/01144 | | Tie cable 200mm long | | 1 |
| 23 | 647/02000 | | Tube | | 1 |
| 24 | 331/20304 | | Tube split conduit | | 1 |
| 31 | 255/27003 | | Jet Screen washer | | 1 |

Product Catalog \ CONSTRUCTION \ NORTH AMERICA \ CONSTRUCTION / INDUSTRIAL \ BACKHOE LOADER 3CX,4CX,214,215,217 \ 3C PLUS (91HP) , Made in Brazil with Dieselmax/IESA Engine 9812/0080 \ B BODYWORK, CAB, LOADER END \ B03 LOADER, FRONT END

# 9812/0080 B3-4-2 SAFETY STRUT, LOADER ARMS

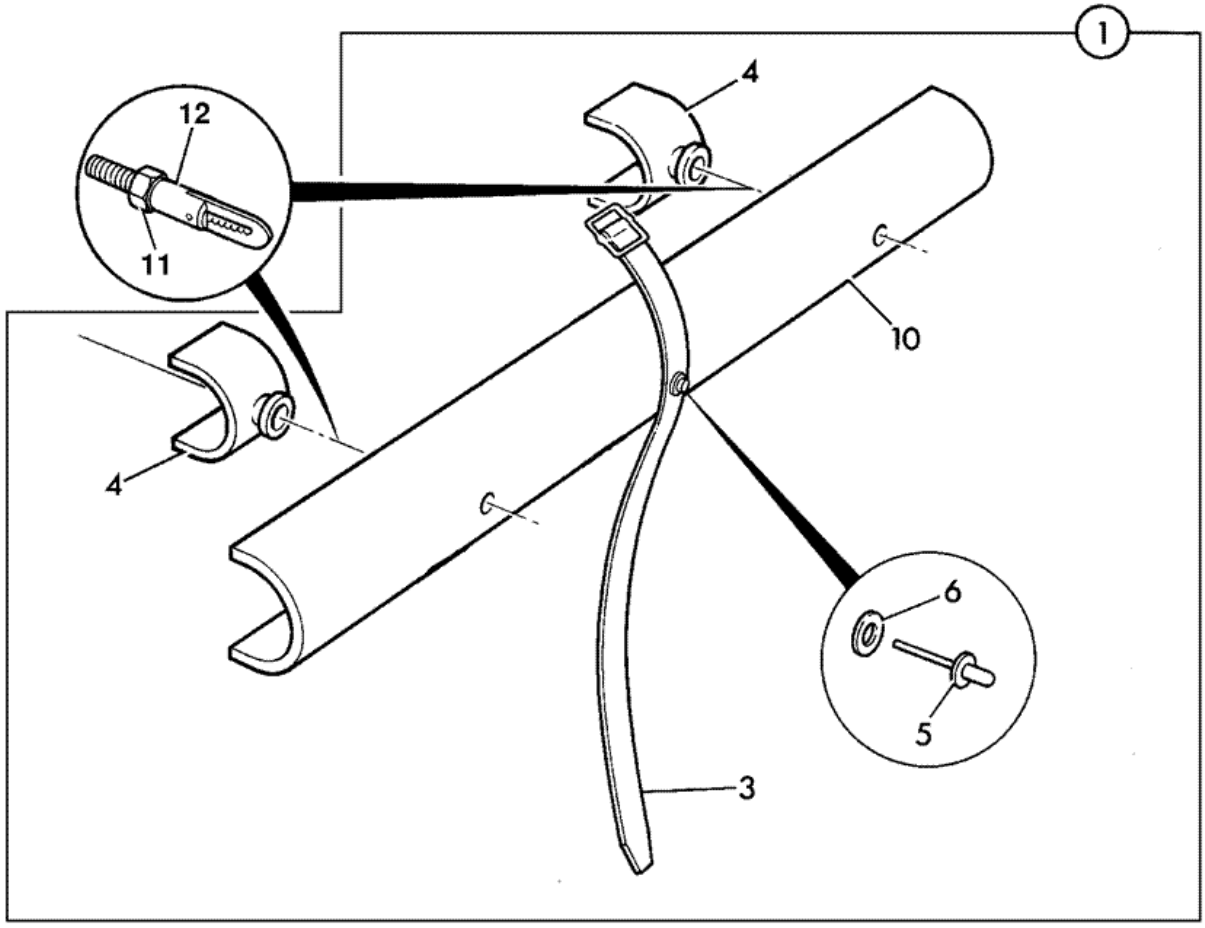


143496

| Item | Part # | Change No | Description | Usage Code | QTY |
|---|---|---|---|---|---|
| 1 | 128/14206 | | Strut safety,assembly loader arms,Tier 2 | | 1 |
| 3 | :123/04744 | | Strap | | 1 |
| | | | | | |

| | | | | | |
|---|---|---|---|---|---|
| 4 | :123/02971 | | Stop | | 2 |
| 5 | :826/01345 | | Rivet pop | | 1 |
| 6 | :1414/0011Z | | Washer 2 BA | | 1 |
| 7 | 123/04734 | | Fastener antiluce | | 2 |
| 10 | :331/39126 | | Strut safety 690mm | | 1 |
| 11 | 1370/0301Z | | Nut | | 2 |
| 12 | 123/07718 | | Mounting strut | | 2 |

Product Catalog \ CONSTRUCTION \ NORTH AMERICA \ CONSTRUCTION / INDUSTRIAL \ BACKHOE LOADER 3CX,4CX,214,215,217 \ 3C PLUS (91HP) , Made in Brazil with Dieselmax/IESA Engine 9812/0080 \ B BODYWORK, CAB, LOADER END \ B03 LOADER, FRONT END

# 9812/0080 B3-5-1 ARMS, LOADER, ANTI-SPILL, LINKAGE

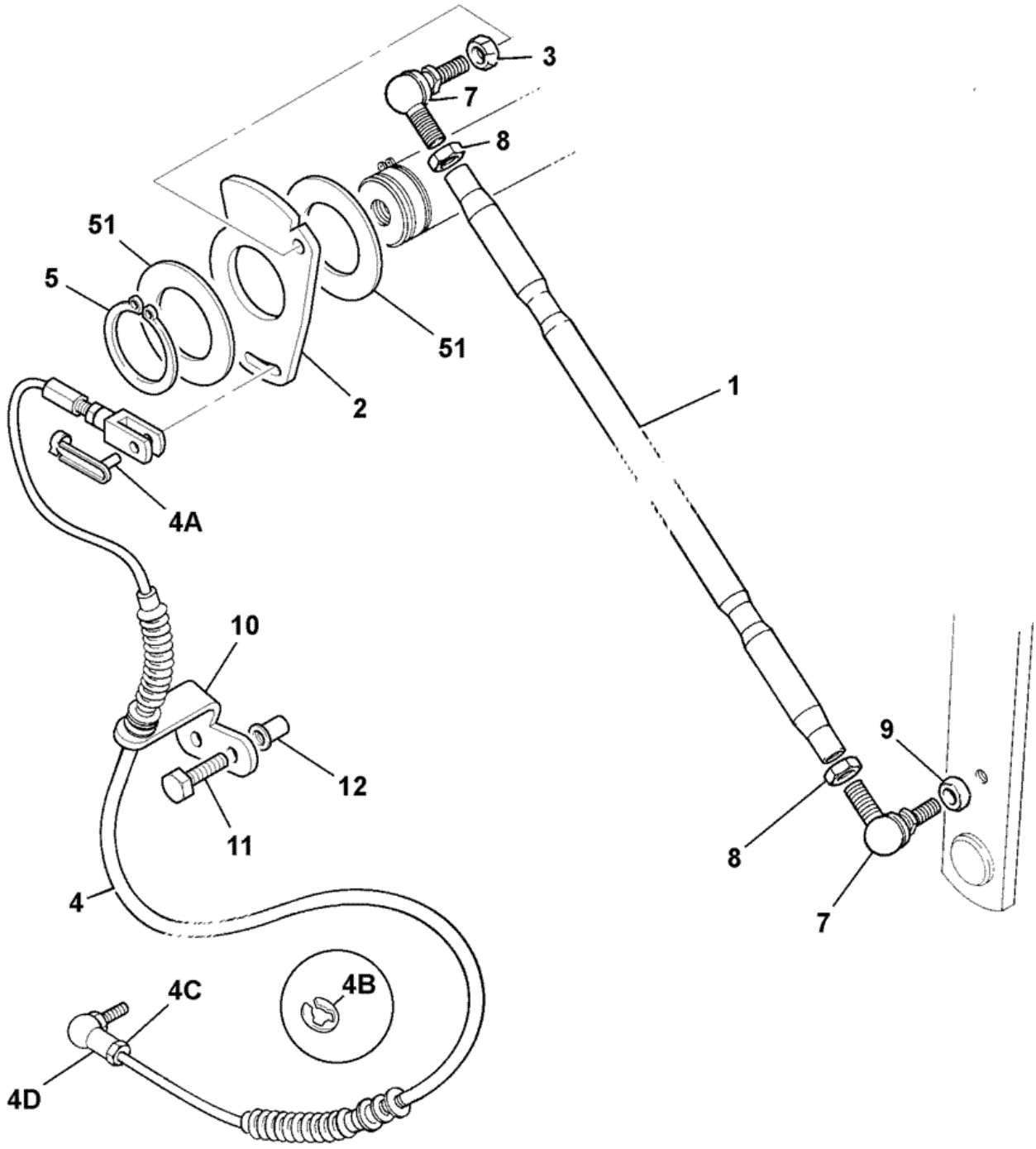


789770

| Item | Part # | Change No | Description | Usage Code | QTY |
|---|---|---|---|---|---|
| 1 | 123/07739 | | Link anti-spill | | 1 |
| 2 | 331/50773 | | Cam plate | | 1 |
| | | | | | |

| | | | | | |
|---|---|---|---|---|---|
| 3 | 1370/0401Z | | Nut | | 1 |
| 4 | 910/60241 | | Cable anti-spill | | 1 |
| 4A | :331/56804 | | Clip M8 spring pin | | 1 |
| 4B | :331/56802 | | Clip "E" | | 1 |
| 4C | :1370/0203Z | | Nut self lock M8 | | 1 |
| 4D | :913/02902 | | Joint ball | | 1 |
| 5 | 821/00517 | | Circlip 60mm pin | | 1 |
| 7 | 913/00049 | | Joint ball M16 | | 2 |
| 8 | 1370/0602Z | | Nut lock | | 2 |
| 9 | 123/07745 | | Spacer | | 1 |
| 10 | 331/51174 | | Bracket anti-spill | | 1 |
| 11 | 1315/0409Z | | Screw M10x35mm | | 2 |
| 12 | 826/01617 | | Nut rivet M10 open end for 8.5 to 11mm plt | | 2 |
| 51 | 823/00471 | | Washer 1.45mm max | | 0 |
| 51 | 819/00099 | | Spacer 5mm | | 0 |
| 51 | 819/00147 | | Spacer 3mm | | 0 |

# 9812/0080 B4-2-1 SLEW/SWING, COMPONENTS

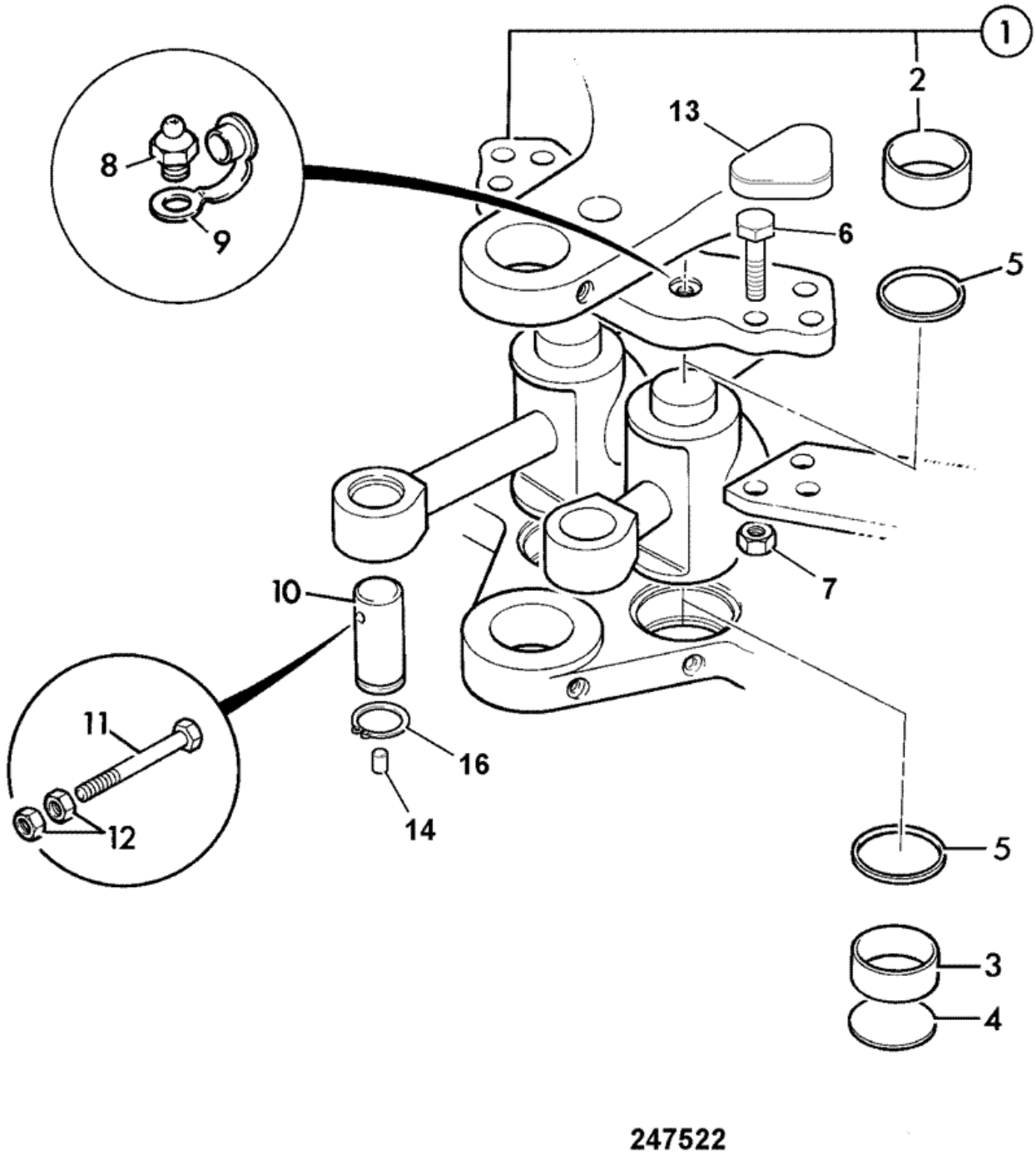

| Item | Part # | Change No | Description | Usage Code | QTY |
|---|---|---|---|---|---|
| 1 | 126/01082 | | Bracket trunnion | | 1 |
| 2 | :808/00388 | | Bearing liner | | 2 |
| 3 | 808/00388 | | Bearing liner | | 2 |
| 4 | 123/05228 | | Disc blanking | | 1 |
| 5 | 123/04237 | | Seal | | 4 |
| 6 | 1316/3818Z | | Bolt M20 x 80 (10.9) | | 6 |
| 7 | 1371/0701Z | | Nut hex M20 high strength | | 6 |
| 8 | 1450/0001 | | Nipple grease, straight 1/8 BSP | | 2 |
| 9 | 835/00017 | | Cap grease nipple | | 2 |
| 10 | 811/90198 | | Pin pivot, 172mm long with groove | | 2 |
| 11 | 1315/3526Z | | Bolt | | 2 |
| 12 | 1370/0402Z | | Nut M12 | | 4 |
| 13 | 123/07540 | | Cap bolt cover | | 2 |
| 14 | 835/00188 | | Plug<br>*Use with item 10.* | | 2 |
| 15 | 823/00604 | | Washer hardened,zinc plated M20 | | 12 |
| 16 | 2203/0067 | | Circlip | | 2 |

Product Catalog \ CONSTRUCTION \ NORTH AMERICA \ CONSTRUCTION / INDUSTRIAL \ BACKHOE LOADER 3CX,4CX,214,215,217 \ 3C PLUS (91HP) , Made in Brazil with Dieselmax/IESA Engine 9812/0080 \ B BODYWORK, CAB, LOADER END \ B04 BACKHOE

# 9812/0080 B4-3-2 KINGPOST CENTREMOUNT, 14' 0" BACKHOE

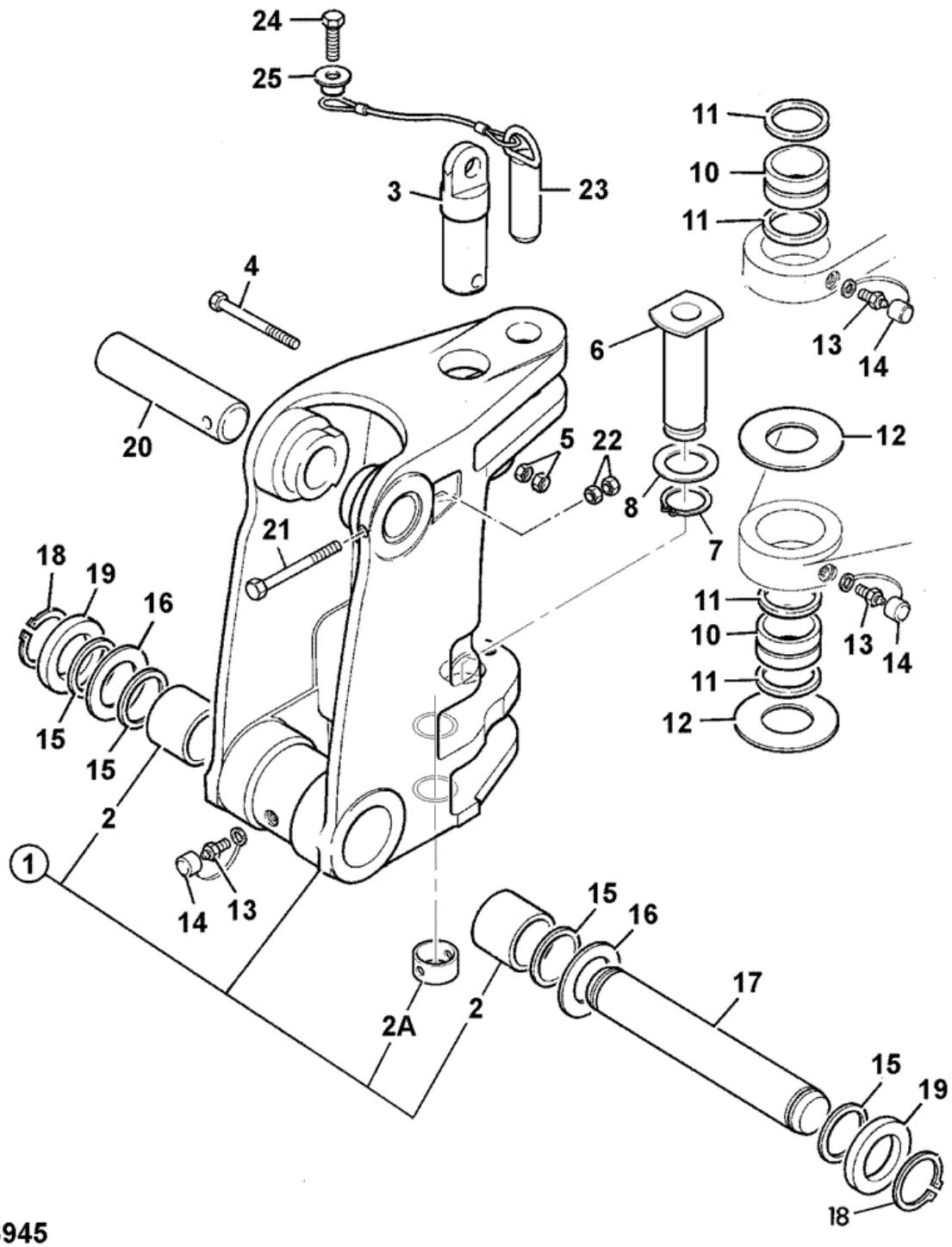


246945

| Item | Part # | Change No | Description | Usage Code | QTY |
|---|---|---|---|---|---|
| 1 | 128/15200 | | Kingpost assembly centrmount 14ft 0ins | | 1 |

| | | | | | |
|---|---|---|---|---|---|
| 2 | :808/00385 | | Bearing liner 70mm OD x 60mm ID. | | 2 |
| 2A | :831/10229 | | Bearing liner | | 4 |
| 3 | 913/10079 | | Pin kingpost top centremount | | 1 |
| 4 | 1315/3524Z | | Bolt M12 x 140 Lg. | | 1 |
| 5 | 1370/0402Z | | Nut M12 | | 2 |
| 6 | 911/40106 | | Pin bottom c/m kingpost | | 1 |
| 7 | 821/10354 | | Circlip | | 1 |
| 8 | 823/10638 | | Shim 82od x 71id x 0.5thk | | 0 |
| 8 | 823/10704 | | Shim 82od x 71id X 1.5thk | | 0 |
| 10 | 831/10211 | | Bearing liner, 70x84x57 slew pivot | | 2 |
| 11 | 813/00456 | | Seal pivot pin grease | | 4 |
| 12 | 823/10270 | | Washer thrust, 71x150x6.05 | | 2 |
| 12 | 998/00007 | | Washer 4mm thrust | | 0 |
| 12 | 998/00006 | | Washer 7mm thust | | 0 |
| 13 | 1450/0001 | | Nipple grease, straight 1/8 BSP | | 3 |
| 14 | 835/00017 | | Cap grease nipple | | 3 |
| 15 | 813/00427 | | Seal grease<br>*Kingpost* | | 2 |
| 16 | 819/00143 | | Shim 1.4mm | | 2 |
| 17 | 811/70098 | | Pin pivot | | 1 |
| 17 | 811/70098A | | Pin pivot, 60X440mm 0.1mm O/S | | 1 |
| 17 | 811/70098B | | Pin pivot, 60X440mm 0.25mm O/S | | 1 |
| 18 | 821/00297 | | Circlip | | 2 |
| 19 | 819/00099 | | Spacer 5mm | | 0 |
| 19 | 819/00144 | | Spacer 6mm | | 0 |
| 19 | 819/00145 | | Spacer 8mm | | 0 |
| 20 | 811/50483 | | Pin pivot<br>*Boom ram pivot* | | 1 |
| 20 | 811/50483A | | Pin pivot, 50X250mm 0.1mm O/S | | 1 |
| 20 | 811/50483B | | Pin pivot, 50X250mm 0.25mm O/S | | 1 |
| 21 | 1315/3523Z | | Bolt M12x130 | | 1 |
| 22 | 1370/0402Z | | Nut M12 | | 2 |
| 23 | 125/81200 | | Pin slewlock | | 1 |
| 24 | 1315/3518Z | | Bolt M12 x 80mm | | 1 |
| 25 | 123/05243 | | Spacer | | 1 |
| 26 | 1370/0403Z | | Nut M12 | | 1 |

# 9812/0080 B4-5-1 DIPPER (STICK), MONO

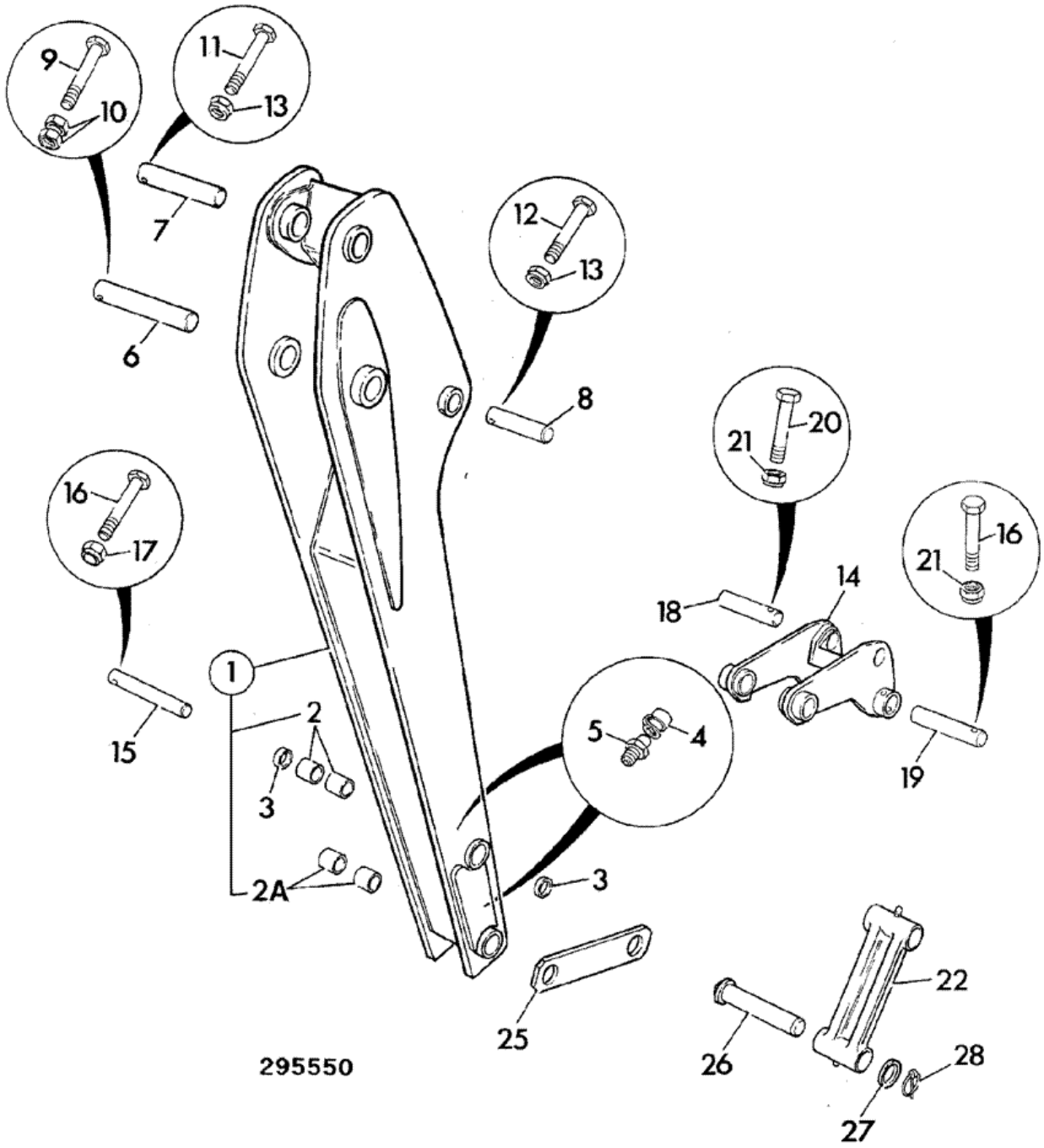


| Item | Part # | Change No | Description | Usage Code | QTY |
|---|---|---|---|---|---|
| 1 | 126/02331 | <M MAY-2009 | Dipper lightlift 2339mm long<br>*Light duty* | | 1 |
| | | | | | |

| | | | | | |
|---|---|---|---|---|---|
| 1 | 128/15167 | >M MAY-2009 | Dipper mono standard lift | | 1 |
| 1 | :829/08117 | | Boss pivot<br>*Bucket/lever pivot* | | 2 |
| 2 | :809/00125 | | Bearing liner 45mm pivot bore | | 2 |
| 2A | 809/00176 | | Bearing liner 44.5IDx55.5ODx50long | | 2 |
| 3 | 813/00425 | | Seal pivot pin grease | | 2 |
| 4 | 835/00017 | | Cap grease nipple | | 2 |
| 5 | 1450/0001 | | Nipple grease, straight 1/8 BSP | | 2 |
| 6 | 811/50372 | | Pin pivot<br>*Boom, dipper pivot* | | 1 |
| 6 | 811/50372A | | Pin pivot 60x350mm, 0.1mm O/S | | 1 |
| 6 | 811/50372B | | Pin pivot 60x350mm, 0.25mm O/S | | 1 |
| 7 | 811/50381 | | Pin pivot<br>*dipper ram eye end pivot. std duty dipper* | | 1 |
| 7 | 811/50381A | | Pin pivot 50x340mm, 0.1mm O/S | | 1 |
| 7 | 811/50381B | | Pin pivot, 50X340mm 0.25mm O/S | | 1 |
| 8 | 811/50375 | | Pin pivot<br>*Bucket ram dump end* | | 1 |
| 9 | 826/01642 | | Capscrew | | 1 |
| 10 | 1370/0403Z | | Nut M12 | | 1 |
| 11 | 1315/3521Z | | Bolt M12x110 | | 1 |
| 12 | 1315/3418Z | | Bolt M10x80 | | 1 |
| 13 | 1370/0303Z | | Nut lock M10<br>*Bucket ram* | | 1 |
| 13 | 1370/0403Z | | Nut M12<br>*Dipper ram* | | 1 |
| 14 | 335/05602 | | Lever tipping, 14'0" 4 holes per side | | 1 |
| 15 | 811/20061 | | Pin pivot 45X300MM | | 1 |
| 16 | 1315/3418Z | | Bolt M10x80 | | 3 |
| 17 | 1370/0303Z | | Nut lock M10 | | 2 |
| 18 | 811/90409 | | Pin Pivot 45 x 206 | | 1 |
| 19 | 811/50369 | | Pin pivot 45X290MM | | 1 |
| 20 | 1315/3419Z | | Bolt M10x90mm | | 1 |
| 21 | 1370/0303Z | | Nut lock M10 | | 2 |
| 22 | . | | 'See Remark'<br>*Tipping link, see B4 index.* | | 1 |
| 25 | 106/50001 | | Strap<br>*Optional* | | 1 |
| 26 | 911/12400 | | Pin pivot | | 2 |
| 27 | 823/00470 | | Washer | | 2 |
| 28 | 826/00512 | | Pin lynch | | 2 |
| 29 | 819/00100 | | Shim 120x60.5x1.4thick | | 0 |

# 9812/0080 B4-6-1 DIPPER (STICK), 214 EXTRADIG

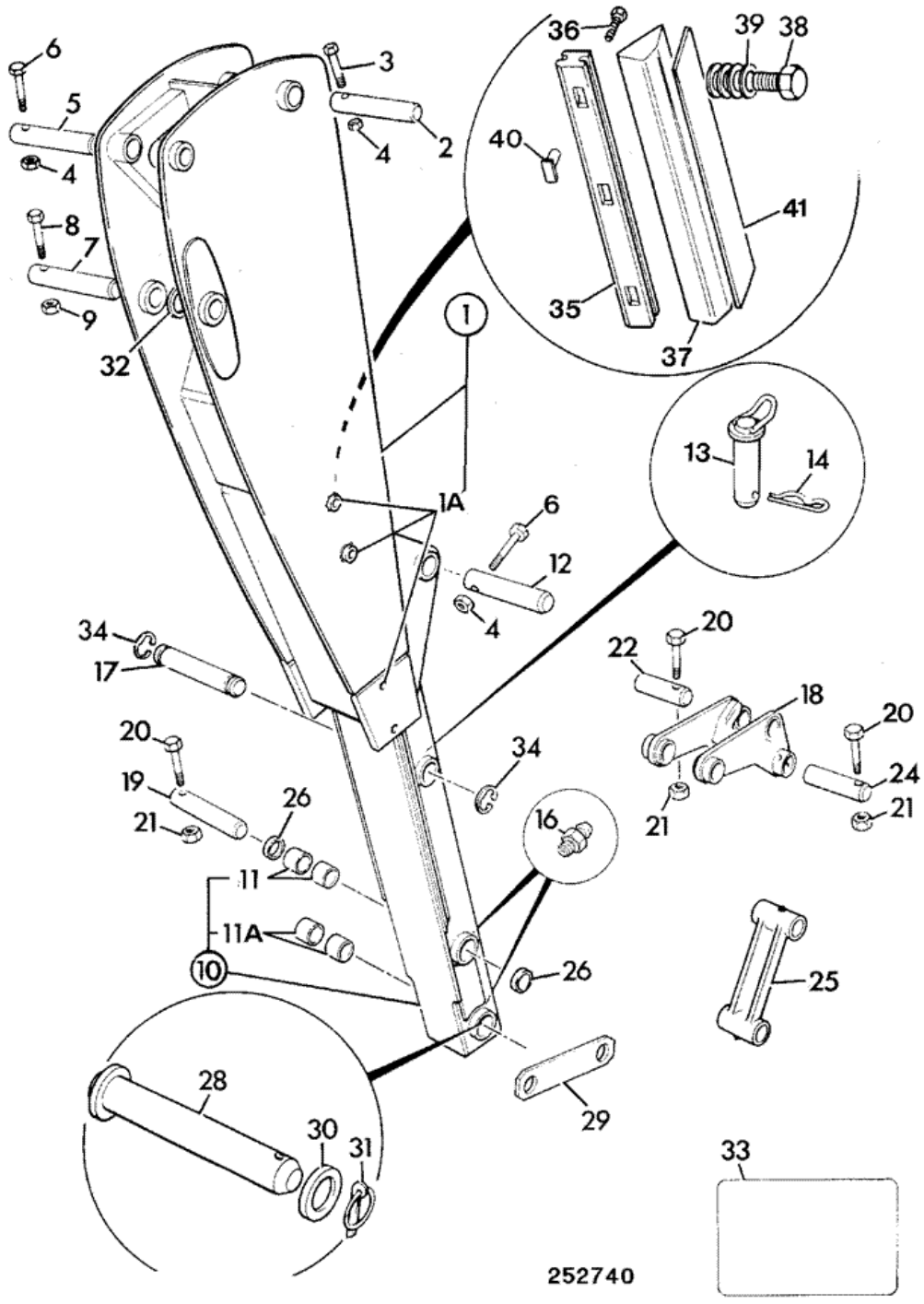


| Item | Part # | Change No | Description | Usage Code | QTY |
|---|---|---|---|---|---|
| 1 | 331/19806 | | Carrier 14' extradig S/L | | 1 |
| 1A | :826/10345 | | Boss wear pad adjuster M20 thread | | 8 |
| | | | | | |

| | | | | | |
|---|---|---|---|---|---|
| 2 | 811/90583 | | Pin pivot | | 1 |
| 3 | 1315/3317Z | | Bolt M8 x75mm long | | 2 |
| 4 | 1370/0203Z | | Nut self lock M8<br>*use with items 2* | | 1 |
| 4 | 1370/0303Z | | Nut lock M10<br>*use with item 12* | | 1 |
| 4 | 1370/0403Z | | Nut M12<br>*For use with item 5* | | 1 |
| 5 | 811/90183 | | Pin pivot | | 1 |
| 5 | 811/90183A | | Pin pivot | | 1 |
| 5 | 811/90183B | | Pin pivot | | 1 |
| 6 | 1315/3418Z | | Bolt M10x80<br>*For use with item 12* | | 1 |
| 6 | 1315/3520Z | | Bolt M12 x 100mm<br>*For use with item 5* | | 1 |
| 7 | 811/50372 | | Pin pivot | | 1 |
| 7 | 811/50372A | | Pin pivot 60x350mm, 0.1mm O/S | | 1 |
| 7 | 811/50372B | | Pin pivot 60x350mm, 0.25mm O/S | | 1 |
| 7A | 823/10536 | | Shim 2mm | | 1 |
| 8 | 826/01642 | | Capscrew | | 1 |
| 9 | 1370/0403Z | | Nut M12 | | 1 |
| 10 | 128/10774 | | Dipper inner | | 1 |
| 10A | :829/01201 | | Boss locking | | 1 |
| 11 | :809/00125 | | Bearing liner 45mm pivot bore<br>*Lever pivot* | | 2 |
| 11A | :809/00176 | | Bearing liner 44.5IDx55.5ODx50long | | 2 |
| 12 | 811/50367 | | Pin pivot | | 1 |
| 13 | 911/40092 | | Pin locking | | 1 |
| 14 | 122/34401 | | Clip | | 1 |
| 16 | 1450/0002 | | Nipple grease, straight 1/4 | | 2 |
| 17 | 811/90585 | | Pin pivot | | 1 |
| 18 | 335/05602 | | Lever tipping, 14'0" 4 holes per side | | 1 |
| 19 | 811/20061 | | Pin pivot 45X300MM | | 1 |
| 20 | 1315/3418Z | | Bolt M10x80<br>*items 19 & 24* | | 2 |
| 20 | 1315/3419Z | | Bolt M10x90mm<br>*item 22* | | 1 |
| 21 | 1370/0303Z | | Nut lock M10 | | 4 |
| 22 | 811/90409 | | Pin Pivot 45 x 206 | | 1 |
| 23 | 1305/3226Z | | Bolt | | 1 |
| 24 | 811/50369 | | Pin pivot 45X290MM | | 1 |
| 25 | . | | 'See Remark'<br>*Tipping link, B4 index* | | 1 |
| 26 | 813/00425 | | Seal pivot pin grease | | 2 |
| 27 | 1416/0008Z | | Washer spring | | 8 |
| 28 | 911/12400 | | Pin pivot | | 2 |
| 29 | 106/50001 | | Strap | | 1 |
| 30 | 823/00470 | | Washer | | 2 |
| 31 | 826/00512 | | Pin lynch | | 2 |
| 32 | 819/00100 | | Shim 120x60.5x1.4thick | | 0 |
| 33 | 817/00502 | | Label greasing | | 1 |
| 34 | 823/00334 | | Clip | | 1 |
| 35 | 123/06189 | | Pad top wear | | 4 |
| 36 | 1318/3410Z | | Bolt | | 8 |

| | | | | | |
|---|---|---|---|---|---|
| 37 | 331/27389 | | Pad wear strip bottom, red | | 4 |
| 38 | 1315/0811Z | | Bolt M20 X 45 long | | 8 |
| 39 | 1370/0702Z | | Nut thin M20 | | 8 |
| 40 | NSP | | None serviced part<br>*Now part of item 35.* | | 8 |
| 41 | 331/30894 | | Plate spreader | | 4 |
| 42 | 123/06256 | | Spacer steel<br>*Fitted between item 36 & 35* | | 8 |
| 42 | 1420/0008Z | | Washer Plain M10<br>*replaces 123/06256* | | 16 |

Product Catalog \ CONSTRUCTION \ NORTH AMERICA \ CONSTRUCTION / INDUSTRIAL \ BACKHOE LOADER 3CX,4CX,214,215,217 \ 3C PLUS (91HP) , Made in Brazil with Dieselmax/IESA Engine 9812/0080 \ B BODYWORK, CAB, LOADER END \ B04 BACKHOE

# 9812/0080 B4-8-1 TIPPING LINK, STANDARD

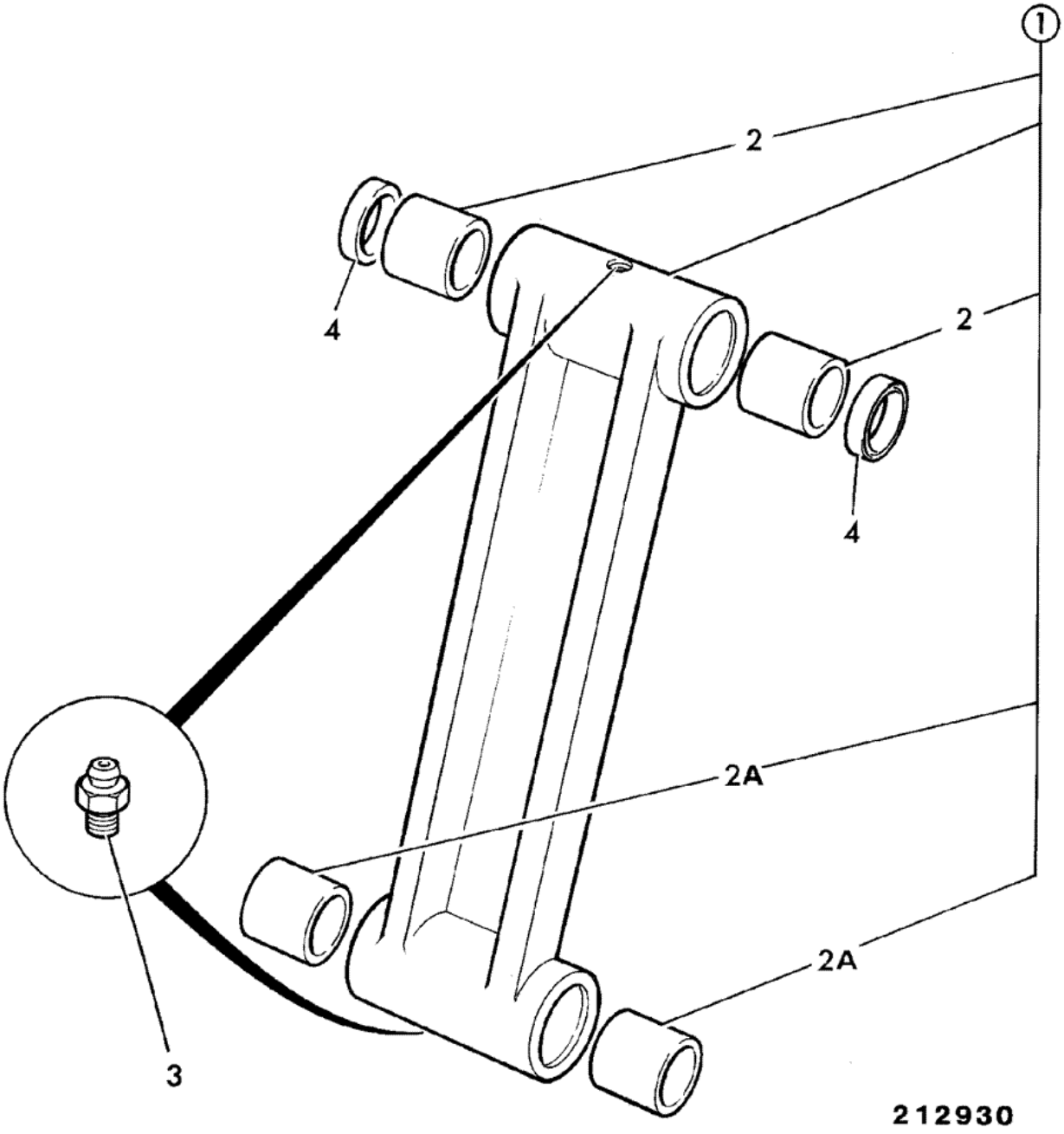


| Item | Part # | Change No | Description | Usage Code | QTY |
|---|---|---|---|---|---|
| 1 | 126/00247 | | Link tipping | | 1 |
| 2 | :809/00125 | | Bearing liner 45mm pivot bore | | 2 |
| 2A | 809/00176 | | Bearing liner 44.5IDx55.5ODx50long | | 2 |
| 3 | 1450/0002 | | Nipple grease, straight 1/4 | | 2 |
| 4 | 813/00425 | | Seal pivot pin grease | | 2 |

Product Catalog \ CONSTRUCTION \ NORTH AMERICA \ CONSTRUCTION / INDUSTRIAL \ BACKHOE LOADER 3CX,4CX,214,215,217 \ 3C PLUS (91HP) , Made in Brazil with Dieselmax/IESA Engine 9812/0080 \ B BODYWORK, CAB, LOADER END \ B05 REFURBISHMENTS

# 9812/0080 B5-3-2 TOOL KIT

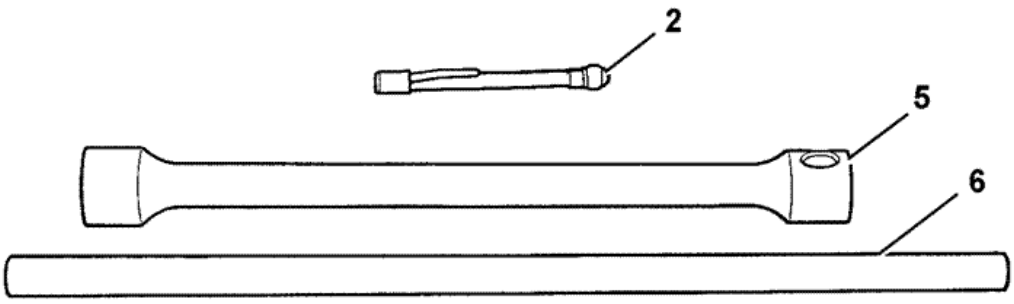


734270

| Item | Part # | Change No | Description | Usage Code | QTY |
|---|---|---|---|---|---|
| 2 | 339/03600 | | Gauge tyre pressure Brazil | | 1 |
| 5 | 339/99928 | | Wheelbrace bar Brazil | | 1 |
| | | | | | |

| | | | | | |
|---|---|---|---|---|---|
| 6 | 339/10102 | | Lever wheel nut wrench Brazil | | 1 |

Product Catalog \ CONSTRUCTION \ NORTH AMERICA \ CONSTRUCTION / INDUSTRIAL \ BACKHOE LOADER 3CX,4CX,214,215,217 \ 3C PLUS (91HP) , Made in Brazil with Dieselmax/IESA Engine 9812/0080 \ B BODYWORK, CAB, LOADER END \ B01 BODYWORK/FRAME

# 9812/0080 B1-13-1 VALVE MOUNTINGS, EXCAVATOR

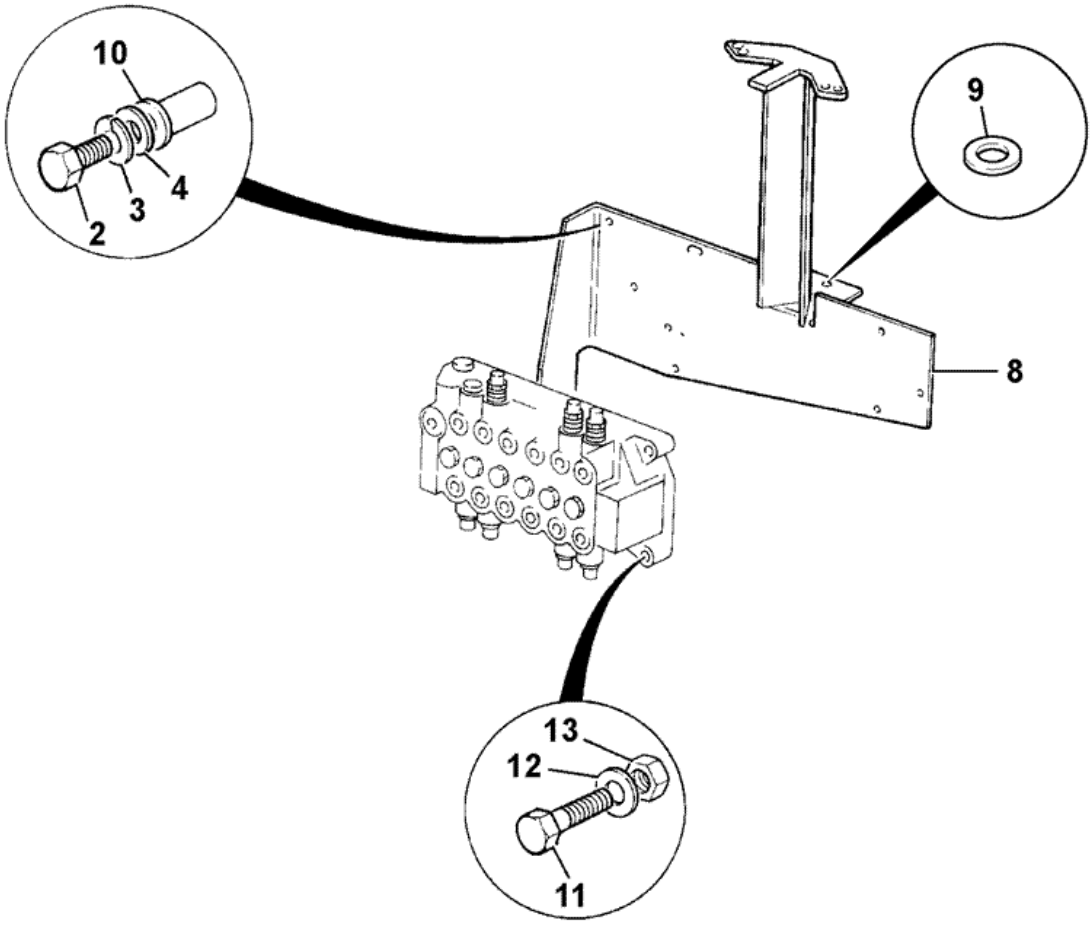


870290

| Item | Part # | Change No | Description | Usage Code | QTY |
|---|---|---|---|---|---|
| 2 | 1315/0410Z | | Bolt M10 x 40 | | 4 |
| 3 | 1425/0008Z | | Washer Spring M10 | | 4 |
| | | | | | |

| | | | | | |
|---|---|---|---|---|---|
| 4 | 1411/0004Z | | Washer | | 4 |
| 8 | 331/19085 | | Mounting excavator valve | | 1 |
| 9 | 1412/0005Z | | Washer plain 1/2" X 41mm OD | | 1 |
| 10 | 826/01249 | | Nut rivet M10 open end for 6 to 8.5mm plate | | 3 |
| 11 | 1315/3414Z | | Bolt M10x60 | | 3 |
| 12 | 1420/0008Z | | Washer Plain M10 | | 3 |
| 13 | 1370/0303Z | | Nut lock M10 | | 3 |

Product Catalog \ CONSTRUCTION \ NORTH AMERICA \ CONSTRUCTION / INDUSTRIAL \ BACKHOE LOADER 3CX,4CX,214,215,217 \ 3C PLUS (91HP) , Made in Brazil with Dieselmax/IESA Engine 9812/0080 \ B BODYWORK, CAB, LOADER END \ B01 BODYWORK/FRAME

# 9812/0080 B1-1-51 CHASSIS CENTREMOUNT, 2WS

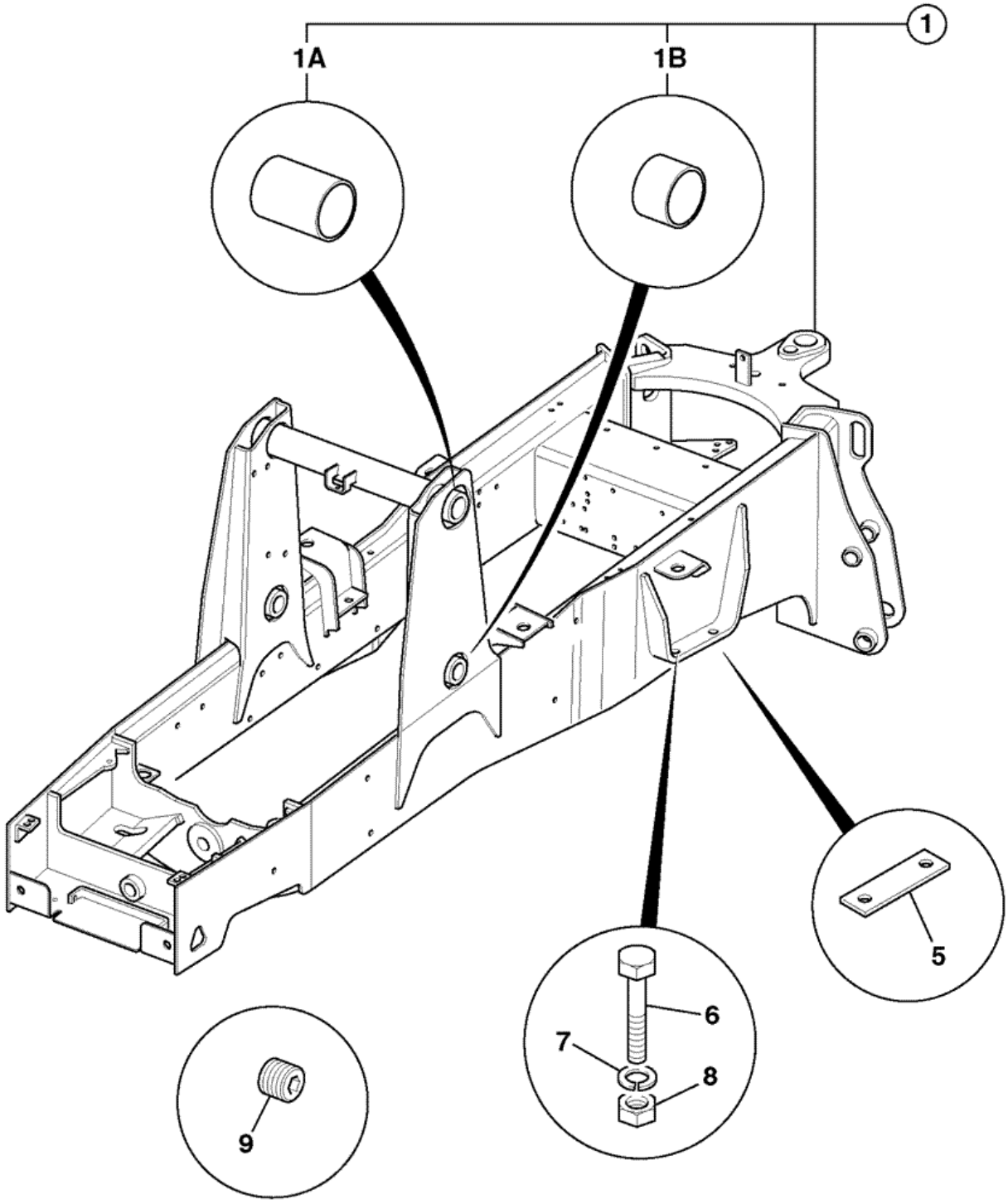


| Item | Part # | Change No | Description | Usage Code | QTY |
|---|---|---|---|---|---|
| 1 | 128/15678 | Superseded | Chassis 2WS centremount | | 1 |
| 1 | 128/C0138 | | Chassis 2WS centremount | | 1 |

| | | | | | |
|---|---|---|---|---|---|
| | | | *Dieselmax* | | |
| 1 | 128/17704 | | Chassis 2WS centremount<br>*IESA engine* | | 1 |
| 1A | :809/00102 | | Bearing liner | | 2 |
| 1B | :809/00093 | | Bearing liner | | 2 |
| 5 | 123/06350 | | Spacer rear axle 25mm<br>*use with 16" Armstrong front wheels* | A | 2 |
| 5 | 331/17737 | | Spacer rear axle 20mm<br>*use with 826/01712 for 17.5" front wheels* | B | 1 |
| 6 | 826/11353 | | Bolt 1"unf X 8" long | | 4 |
| 6 | 826/01712 | | Bolt 1"unf X 9" long<br>*use with 16" Armstrong front wheels* | A | 4 |
| 6 | 826/11352 | | Bolt 1"unf X 9 1/2" long | B | 1 |
| 7 | 826/01714 | | Nut | | 4 |
| 8 | 823/00578 | | Washer | | 4 |
| 9 | 835/10026 | | Plug plastic | | 17 |

Product Catalog \ CONSTRUCTION \ NORTH AMERICA \ CONSTRUCTION / INDUSTRIAL \ BACKHOE LOADER 3CX,4CX,214,215,217 \ 3C PLUS (91HP) , Made in Brazil with Dieselmax/IESA Engine 9812/0080 \ B BODYWORK, CAB, LOADER END \ B01 BODYWORK/FRAME

# 9812/0080 B1-2-10 TANK, HYDRAULIC

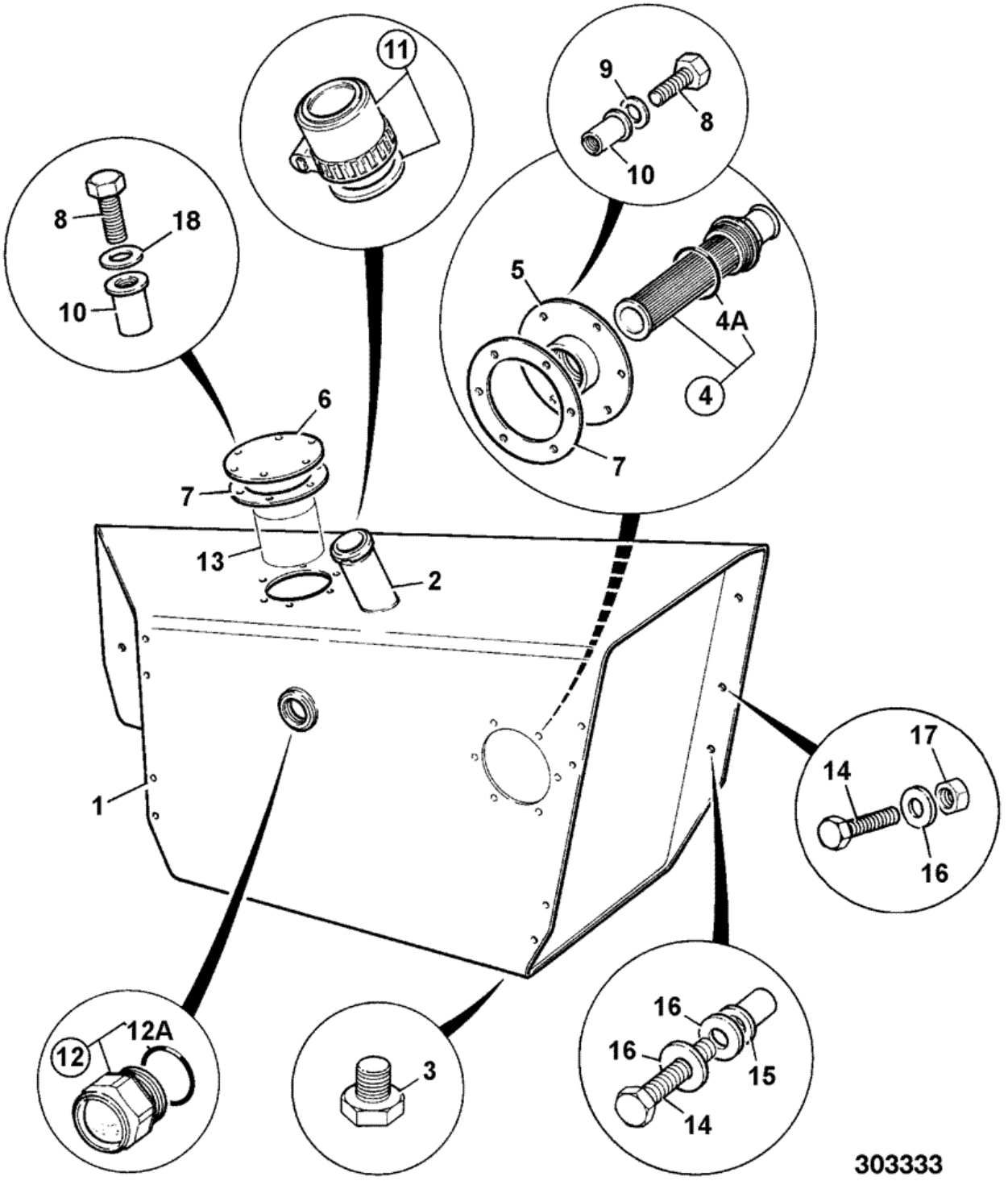


| Item | Part # | Change No | Description | Usage Code | QTY |
|---|---|---|---|---|---|
| 1 | 128/13783 | | Tank hydraulic 214e | | 1 |
| 2 | :NSP | | None serviced part | | 1 |

| | | | | | |
|---|---|---|---|---|---|
| | | | *Replace tank* | | |
| 3 | :32/925390 | | Plug drain | | 1 |
| 3A | :2401/0510 | | O Ring | | 1 |
| 4 | :32/920300 | | Element suction | | 1 |
| 4A | :32/920301 | | O Ring | | 1 |
| 5 | :125/00430 | | Cover | | 1 |
| 6 | :123/06717 | | Cover plate | | 1 |
| 7 | :813/00466 | <M TBA | Gasket | A | 2 |
| 7 | :813/10186 | | Gasket hyd filter cover | B | 2 |
| 8 | :1315/0307Z | | Screw Hexagon M8 X 25 | | 12 |
| 9 | :1420/0007Z | | Washer plain M8 | | 6 |
| 10 | :826/10381 | | Rivet nut M8 closed | | 12 |
| 11 | :32/925421 | <M TBA | Cap filler/breather lockable<br>*available as Service replacement on later machines* | C | 1 |
| 11 | :123/04055 | >M TBA | Cap hydraulic filler non lockable | D | 1 |
| 11A | :123/04056 | | Seal cap | C | 1 |
| 12 | :123/08053 | | Gauge sight | | 1 |
| 12A | ::25/700013 | | O Ring | | 1 |
| 13 | :. | | 'See Remark'<br>*Filter see frame E3-7-1* | | 1 |
| 14 | 1315/0512Z | | Bolt M12 x 50mm | | 6 |
| 15 | 826/01717 | | Nut rivet M12 | | 4 |
| 16 | 823/00589 | | Washer | | 8 |
| 17 | 1370/0403Z | | Nut M12 | | 2 |
| 18 | :1420/0007Z | <M TBA | Washer plain M8 | A | 6 |
| 18 | :823/10874 | | Washer sealing,M8 | B | 6 |

Product Catalog \ CONSTRUCTION \ NORTH AMERICA \ CONSTRUCTION / INDUSTRIAL \ BACKHOE LOADER 3CX,4CX,214,215,217 \ 3C PLUS (91HP) , Made in Brazil with Dieselmax/IESA Engine 9812/0080 \ B BODYWORK, CAB, LOADER END \ B01 BODYWORK/FRAME

# 9812/0080 B1-2-11 GUARD, SUCTION HOSE

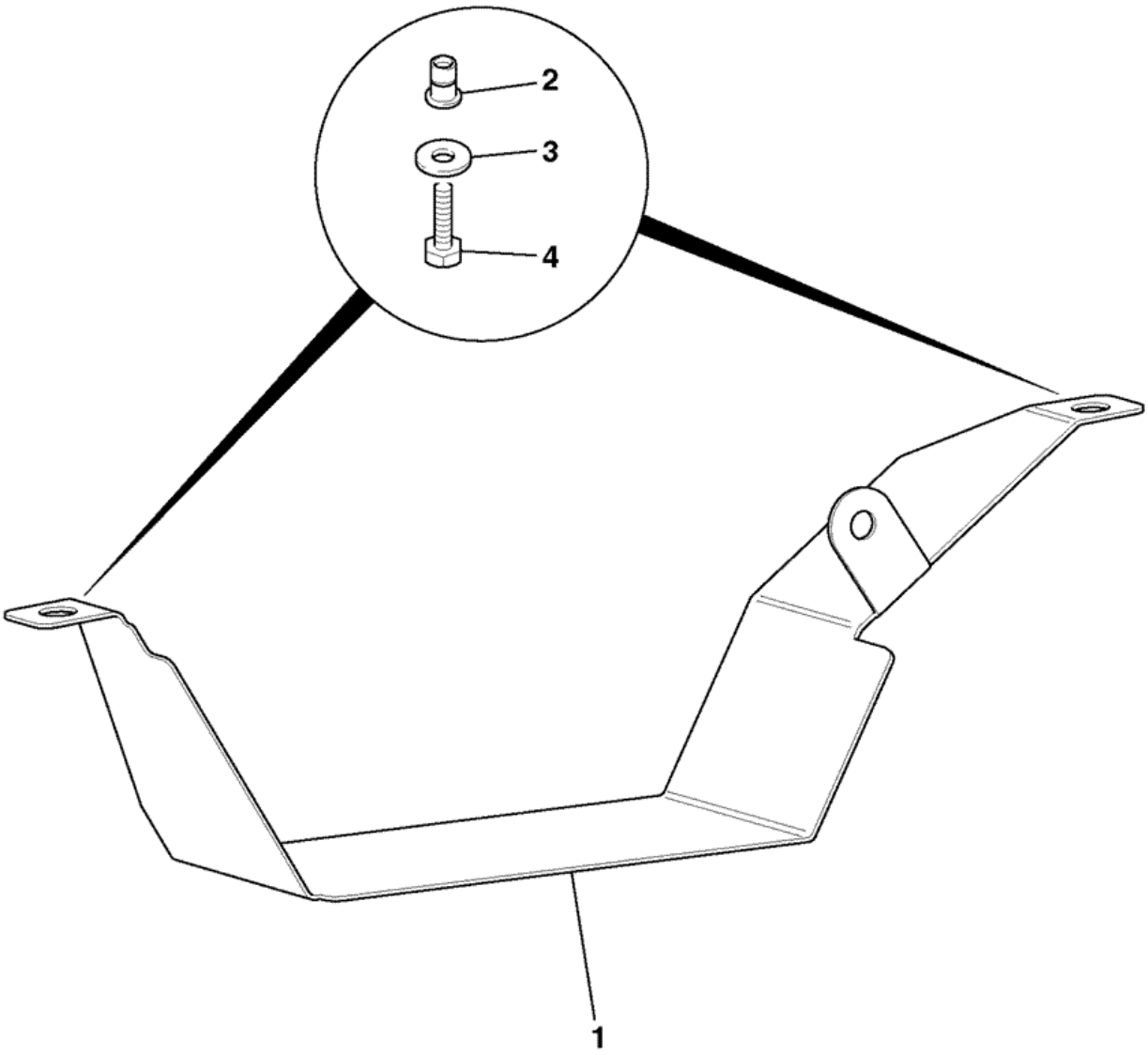


781200

| Item | Part # | Change No | Description | Usage Code | QTY |
|---|---|---|---|---|---|
| 1 | 339/01056 | | Guard suction hose | | 1 |
| 2 | 826/01717 | | Nut rivet M12 | | 2 |
| | | | | | |

| | | | | | |
|---|---|---|---|---|---|
| 3 | 823/00589 | | Washer | | 2 |
| 4 | 1315/3510Z | | Bolt | | 2 |

Product Catalog \ CONSTRUCTION \ NORTH AMERICA \ CONSTRUCTION / INDUSTRIAL \ BACKHOE LOADER 3CX,4CX,214,215,217 \ 3C PLUS (91HP) , Made in Brazil with Dieselmax/IESA Engine 9812/0080 \ B BODYWORK, CAB, LOADER END \ B01 BODYWORK/FRAME

# 9812/0080 B1-3-10 TANK, DIESEL FUEL, 130 LITRES

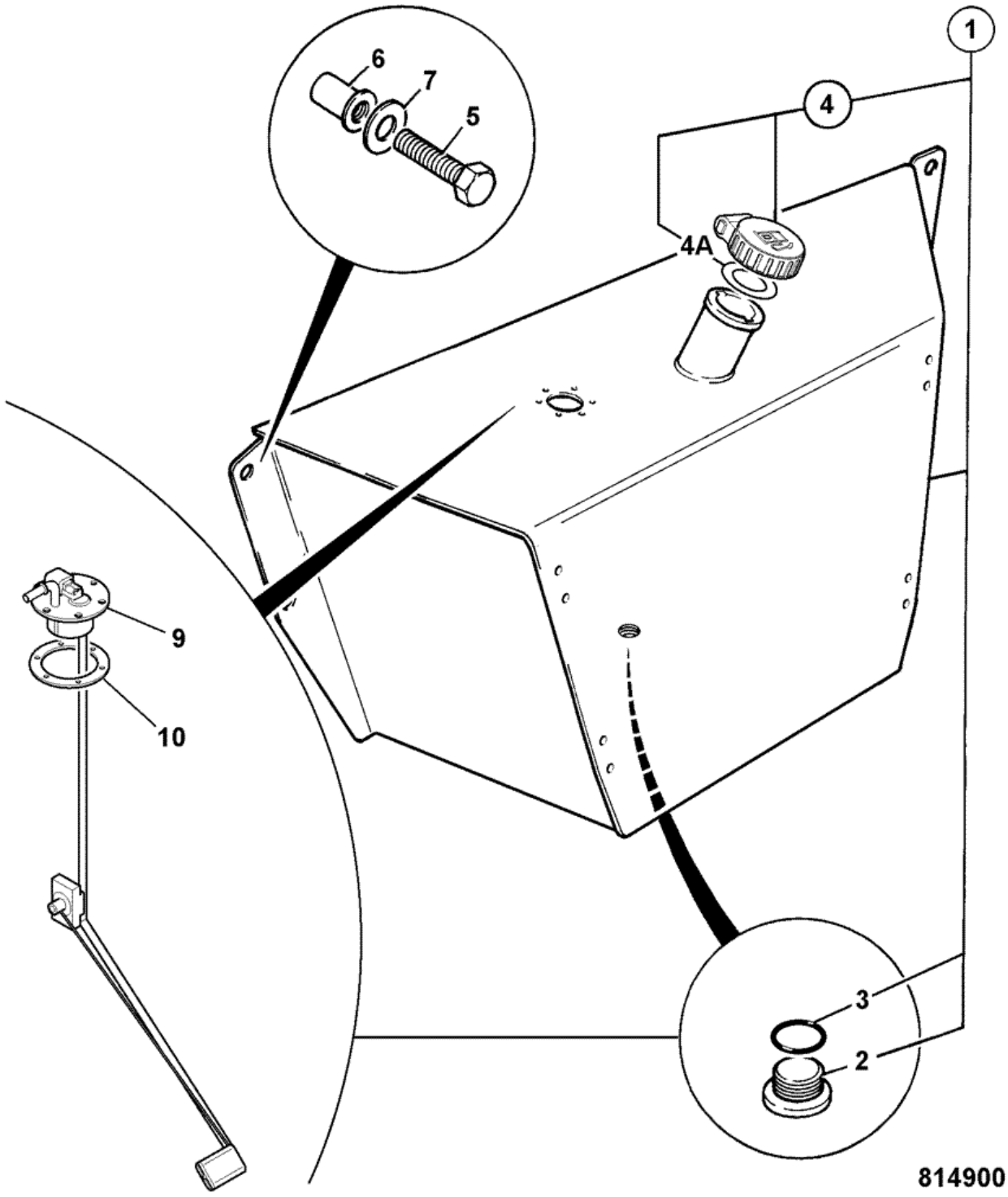


| Item | Part # | Change No | Description | Usage Code | QTY |
|---|---|---|---|---|---|
| 1 | 128/15230 | | Tank diesel, 130 litres | | 1 |
| 2 | :32/925390 | | Plug drain | | 1 |
| | | | | | |

| | | | | | |
|---|---|---|---|---|---|
| 3 | ::2401/0510 | | O Ring | | 1 |
| 4 | :331/45908 | <M TBA | Cap filler, diesel lockable<br>*For key use 701/45501* | | 1 |
| 4 | :123/05892 | | Cap filler, lockable supplied without key<br>*use key 701/45501* | | 1 |
| 4A | ::904/20333 | <M TBA | Seal fuel cap | | 1 |
| 4A | ::123/06343 | | Seal | | 1 |
| 5 | 1315/0512Z | | Bolt M12 x 50mm | | 4 |
| 6 | 826/01717 | | Nut rivet M12 | | 4 |
| 7 | 823/00589 | | Washer | | 4 |
| 8 | :826/00520 | | Screw | | 6 |
| 9 | :716/27600 | | Gauge fuel sender unit | | 1 |
| 10 | :813/10331 | | Gasket sensor, fuel level | | 1 |

# 9812/0080 B1-4-20 STABILISER, CENTREMOUNT

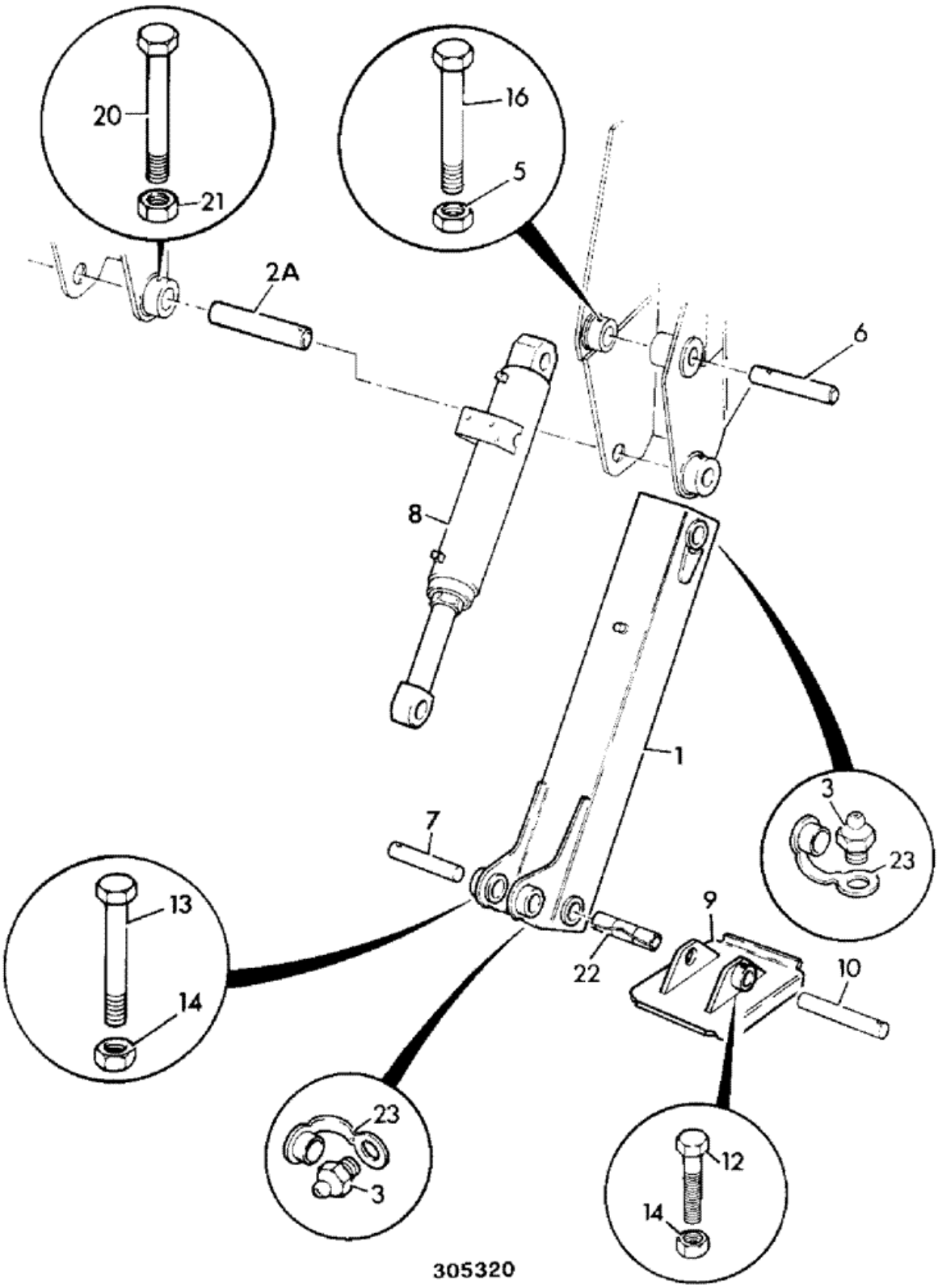

| Item | Part # | Change No | Description | Usage Code | QTY |
|---|---|---|---|---|---|
| 1 | 335/04734 | | Leg stabiliser centremount, Brazil | | 2 |
| 2A | 811/50536 | | Pin pivot | | 2 |
| 2A | 811/50536A | | Pin pivot plus 0.005" | | 2 |
| 2A | 811/50536B | | Pin pivot plus 0.010" | | 2 |
| 3 | 1450/1002 | | Nipple grease 1/4" BSP 90deg. | | 2 |
| 5 | 1370/0403Z | | Nut M12 | | 4 |
| 6 | 811/50565 | | Pin pivot | | 2 |
| 7 | 811/90339 | | Pin black version of 1019/2019 | | 2 |
| 8 | 557/60073 | | Ram stabiliser c. mount 90 X 50 | | 2 |
| 9 | 339/01051 | | Foot dirt Brazil | | 2 |
| 10 | 811/50038 | | Pin 44.5dia x 279.5 | | 2 |
| 12 | 1315/3419Z | | Bolt M10x90mm | | 2 |
| 13 | 1305/3226Z | | Bolt | | 2 |
| 14 | 1340/0203Z | | Nut | | 4 |
| 14 | 1370/0303Z | | Nut lock M10<br>*for item 12* | | 2 |
| 16 | 1315/3519Z | | Bolt M12x90mm | | 2 |
| 20 | 1315/3520Z | | Bolt M12 x 100mm | | 2 |
| 21 | 1370/0403Z | | Nut M12 | | 2 |
| 22 | . | | 'See Remark'<br>*not fitted* | | 1 |
| 23 | 835/00017 | | Cap grease nipple | | 8 |

# 9812/0080 B1-4-30 GUARD, STABILISER RAM, CENTREMOUNT

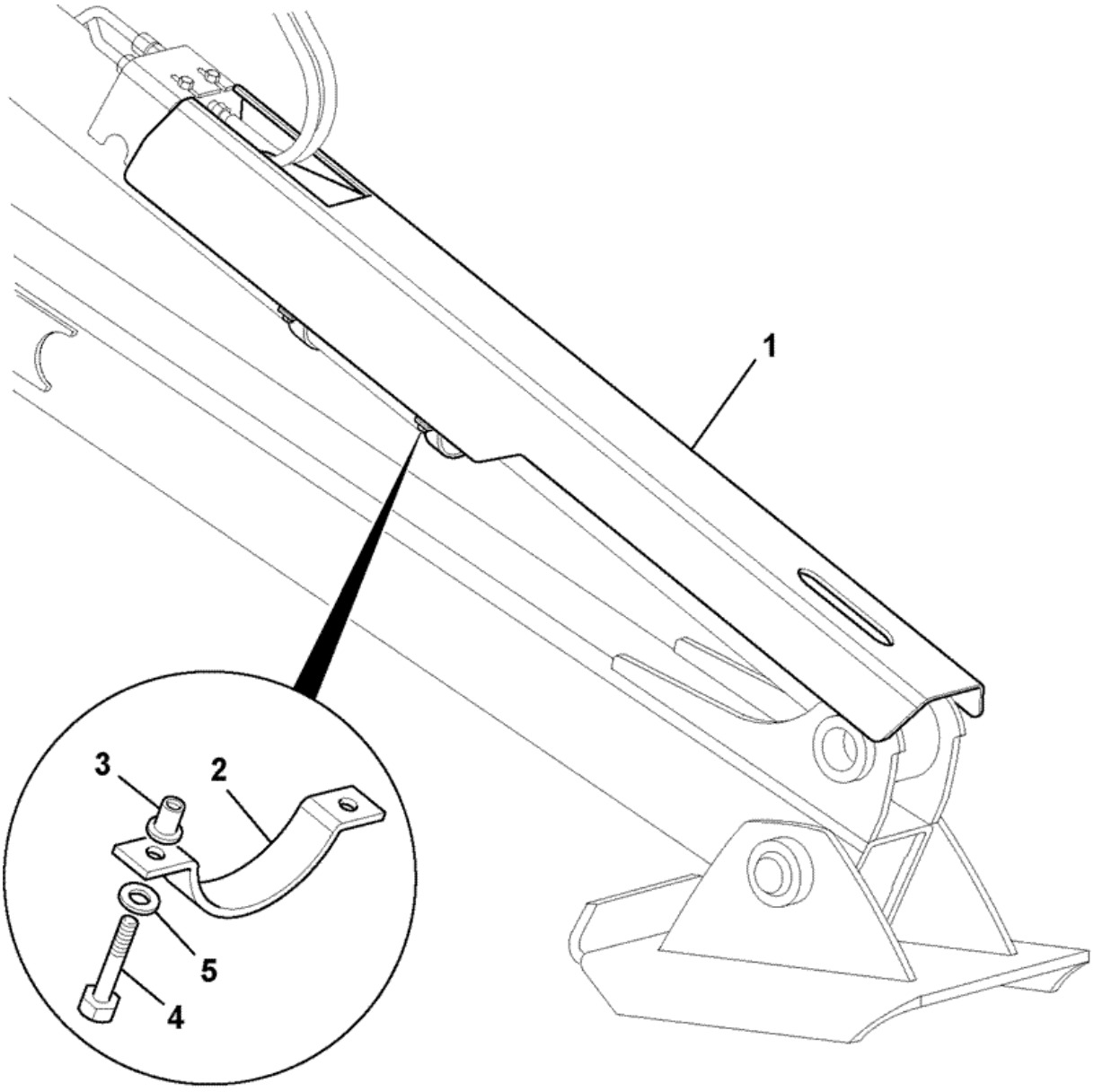


868120

| Item | Part # | Change No | Description | Usage Code | QTY |
|---|---|---|---|---|---|
| 1 | 335/11063 | | Guard stabiliser ram | | 2 |
| 2 | 331/59515 | | Clamp stabiliser guard | | 4 |
| 3 | 826/01681 | | Nut rivet | | 8 |
| 4 | 1315/3510Z | | Bolt | | 8 |
| 5 | 1420/0009Z | | Washer Plain M12 | | 8 |

Product Catalog \ CONSTRUCTION \ NORTH AMERICA \ CONSTRUCTION / INDUSTRIAL \ BACKHOE LOADER 3CX,4CX,214,215,217 \ 3C PLUS (91HP) , Made in Brazil with Dieselmax/IESA Engine 9812/0080 \ B BODYWORK, CAB, LOADER END \ B01 BODYWORK/FRAME

# 9812/0080 B1-6-11 GRILLE, FRONT, 2WS

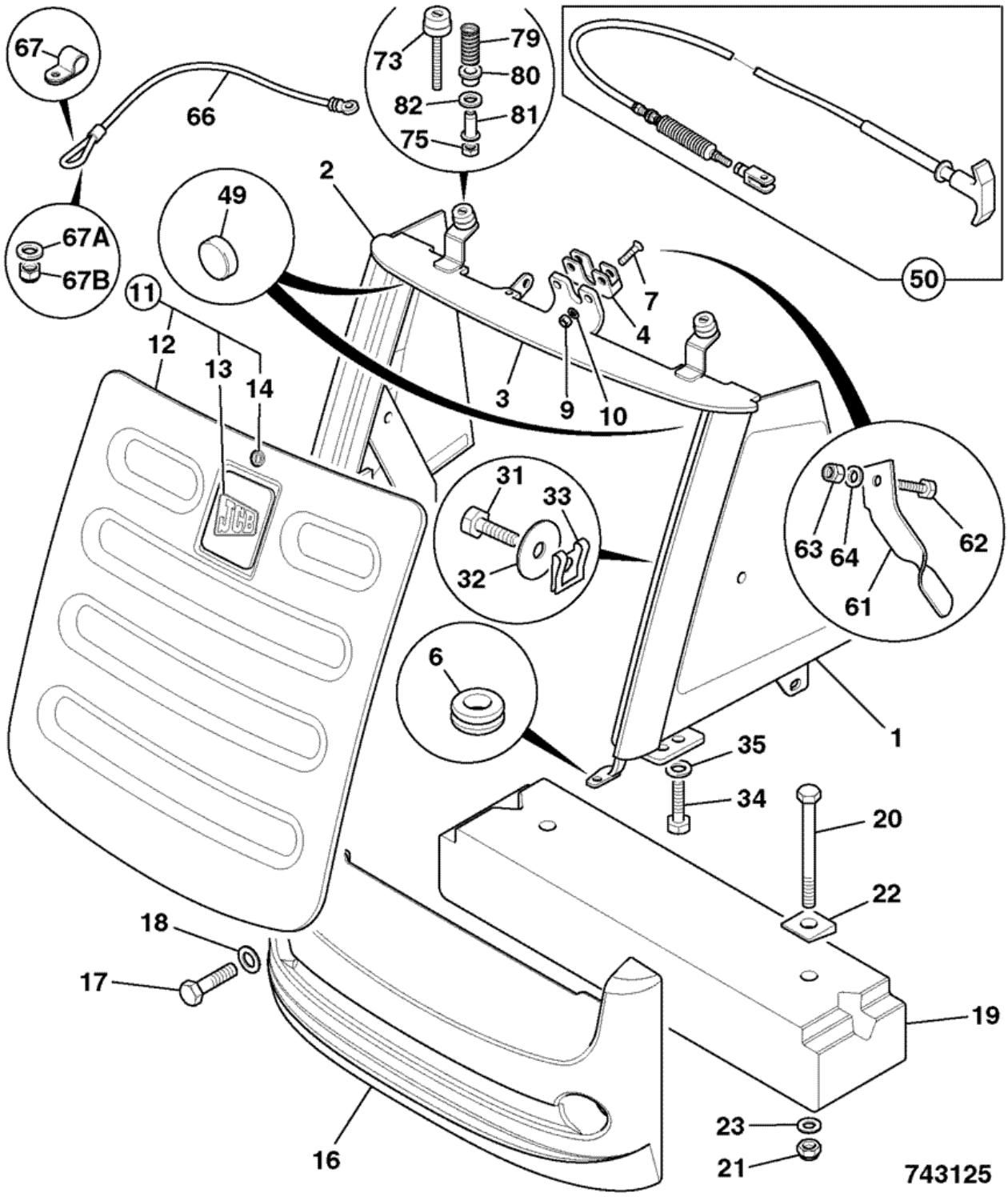


| Item | Part # | Change No | Description | Usage Code | QTY |
|---|---|---|---|---|---|
| 1 | 335/08369 | | Grille side LH 2WS | | 1 |
| 2 | 335/08370 | | Grille side,RH 2WS | | 1 |
| | | | | | |

| | | | | | |
|---|---|---|---|---|---|
| 3 | 335/09817 | | Grille housing, 2WS | | 1 |
| 4 | 331/27126 | | Lock bonnet | | 1 |
| 6 | 2410/0304 | | Grommet | | 2 |
| 7 | 826/01814 | | Screw M8x35 countersunk | | 2 |
| 9 | 1370/0203Z | | Nut self lock M8 | | 2 |
| 10 | 1420/0007Z | | Washer plain M8 | | 2 |
| 11 | N.S.P. | | None serviced part | | 1 |
| 12 | 335/08180 | | Grille front black | | 1 |
| 13 | 817/19661 | | Decal JCB logo 100x100 | | 1 |
| 14 | 162/03434 | | Lock barrel assembly | | 1 |
| 16 | 331/46249 | | Bumper front 46kg<br>*Standard* | | 1 |
| 16 | 331/46250 | | Bumper front 100kg | | 1 |
| 17 | 1315/3816Z | | Bolt M20 x 70 | | 2 |
| 18 | 1420/0012Z | | Washer M20 | | 2 |
| 19 | . | | 'See Remark'<br>*items 19 to 23 not fitted* | | 1 |
| 31 | 1315/0205Z | | Bolt | | 2 |
| 32 | 1411/0001Z | | Washer | | 2 |
| 33 | 826/11392 | | Nut M6 clip on | | 2 |
| 34 | 1315/0408Z | | Bolt M10 x 30 | | 4 |
| 35 | 1420/0008Z | | Washer Plain M10 | | 4 |
| 49 | 926/22100 | | Spacer block | | 2 |
| 50 | 910/60199 | | Cable bonnet release<br>*Cab builds only* | | 1 |
| 61 | 331/48761 | | Lever bonnet release<br>*Canopy builds only* | | 1 |
| 62 | 1315/0205Z | | Bolt<br>*Canopy builds only#* | | 1 |
| 63 | 1370/0103Z | | Nut Self lock M6<br>*Canopy builds only* | | 1 |
| 64 | 1420/0006Z | | Washer M6<br>*Canopy builds only* | | 1 |
| 66 | 331/47156 | | Wire bonnet pull down 1800mm long | | 1 |
| 67 | 821/10227 | | Clip P | | 1 |
| 67A | 1412/0002Z | | Washer | | 1 |
| 67B | 1370/0203Z | | Nut self lock M8 | | 1 |
| 73 | 835/10129 | | Buffer M8x65 | | 2 |
| 75 | 1370/0203Z | | Nut self lock M8 | | 2 |
| 79 | 814/10201 | Superseded | Spring compression | | 2 |
| 79 | 814/10213 | | Spring compression | | 2 |
| 80 | 829/31270 | | Bush | | 2 |
| 81 | 826/01627 | | Nut rivet M8 open end for 8 to 10.5mm plt. | | 2 |
| 82 | 1411/0004Z | | Washer | | 2 |

Product Catalog \ CONSTRUCTION \ NORTH AMERICA \ CONSTRUCTION / INDUSTRIAL \ BACKHOE LOADER 3CX,4CX,214,215,217 \ 3C PLUS (91HP) , Made in Brazil with Dieselmax/IESA Engine 9812/0080 \ B BODYWORK, CAB, LOADER END \ B01 BODYWORK/FRAME

# 9812/0080 B1-6-21 GRILLE, FRONT, 2WS

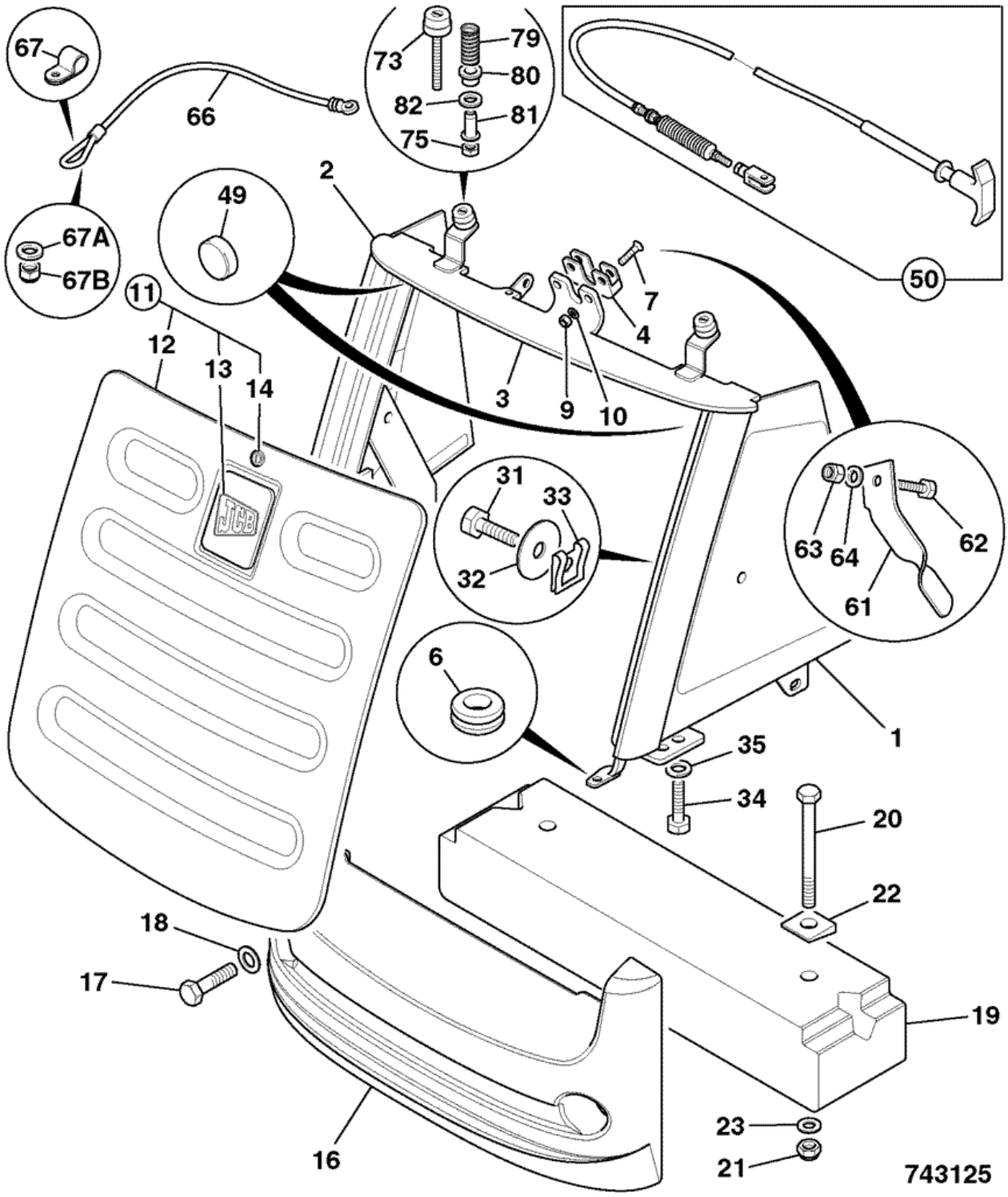


| Item | Part # | Change No | Description | Usage Code | QTY |
|---|---|---|---|---|---|
| 1 | 128/C6734 | | Grille LH side 2WS | | 1 |
| 2 | 128/C6733 | | Grille RH side 2WS | | 1 |
| | | | | | |

| | | | | | |
|---|---|---|---|---|---|
| 3 | 128/C0428 | | Grille housing | | 1 |
| 4 | 331/27126 | | Lock bonnet | | 1 |
| 6 | 2410/0304 | | Grommet | | 2 |
| 7 | 826/01814 | | Screw M8x35 countersunk | | 2 |
| 9 | 1370/0203Z | | Nut self lock M8 | | 2 |
| 10 | 1420/0007Z | | Washer plain M8 | | 2 |
| 11 | 128/14741 | | Grille assembly front | | 1 |
| 12 | :335/08180 | | Grille front black | | 1 |
| 13 | :817/19661 | | Decal JCB logo 100x100 | | 1 |
| 14 | :162/03434 | | Lock barrel assembly | | 1 |
| 16 | 331/46249 | | Bumper front 46kg<br>*Standard* | A | 1 |
| 16 | 331/46250 | | Bumper front 100kg | A | 1 |
| 16 | 331/46251 | | Bumper front 180kg | B | 1 |
| 17 | 1315/3816Z | | Bolt M20 x 70 | A | 2 |
| 17 | 1315/3820Z | | Bolt M20 x 100mm | B | 2 |
| 18 | 1420/0012Z | | Washer M20 | | 2 |
| 19 | 331/34478 | | Counterweight AWS only, 75 Kg<br>*If fitted* | B | 1 |
| 19 | 331/34480 | | Counterweight 2WS only, 156 Kg<br>*If fitted* | B | 1 |
| 20 | 1315/3824Z | | Bolt M20 x 140lg<br>*To fit item 19* | | 2 |
| 21 | 1370/0703Z | | Nut M20<br>*To fit item 19* | | 2 |
| 22 | 823/10429 | | Washer taper M20<br>*To fit item 19* | | 2 |
| 23 | 1420/0012Z | | Washer M20<br>*To fit item 19* | | 2 |
| 31 | 1315/0205Z | | Bolt | | 2 |
| 32 | 1412/0001Z | | Washer | | 2 |
| 33 | 826/11392 | | Nut M6 clip on<br>*supplied with items 1 & 2* | | 2 |
| 34 | 1315/0408Z | | Bolt M10 x 30 | | 4 |
| 35 | 1420/0008Z | | Washer Plain M10 | | 4 |
| 49 | 926/22100 | | Spacer block | | 2 |
| 50 | 332/C7664 | | Cable bonnet release<br>*Cab builds only* | | 1 |
| 50A | 826/01144 | | Tie cable 200mm long<br>*for item 50* | | 1 |
| 61 | 331/48761 | | Lever bonnet release<br>*Canopy builds only* | | 1 |
| 62 | 1315/0205Z | | Bolt<br>*Canopy builds only#* | | 1 |
| 63 | 1370/0103Z | | Nut Self lock M6<br>*Canopy builds only* | | 1 |
| 64 | 1420/0006Z | | Washer M6<br>*Canopy builds only* | | 1 |
| 66 | 331/47156 | | Wire bonnet pull down 1800mm long | | 1 |
| 67 | 821/10227 | | Clip P | | 1 |
| 67A | 1412/0002Z | | Washer | | 1 |
| 67B | 1370/0203Z | | Nut self lock M8 | | 1 |
| 73 | 835/10129 | | Buffer M8x65 | | 2 |
| 75 | 1370/0203Z | | Nut self lock M8 | | 2 |
| 79 | 814/10201 | Superseded | Spring compression | | 2 |

| | | | | | |
|---|---|---|---|---|---|
| 79 | 814/10213 | | Spring compression | | 2 |
| 80 | 829/31270 | | Bush | | 2 |
| 81 | 826/01627 | | Nut rivet M8 open end for 8 to 10.5mm plt. | | 2 |
| 82 | 1411/0004Z | | Washer | | 2 |

# 9812/0080 B1-8-20 MUDGUARDS, REAR, YELLOW

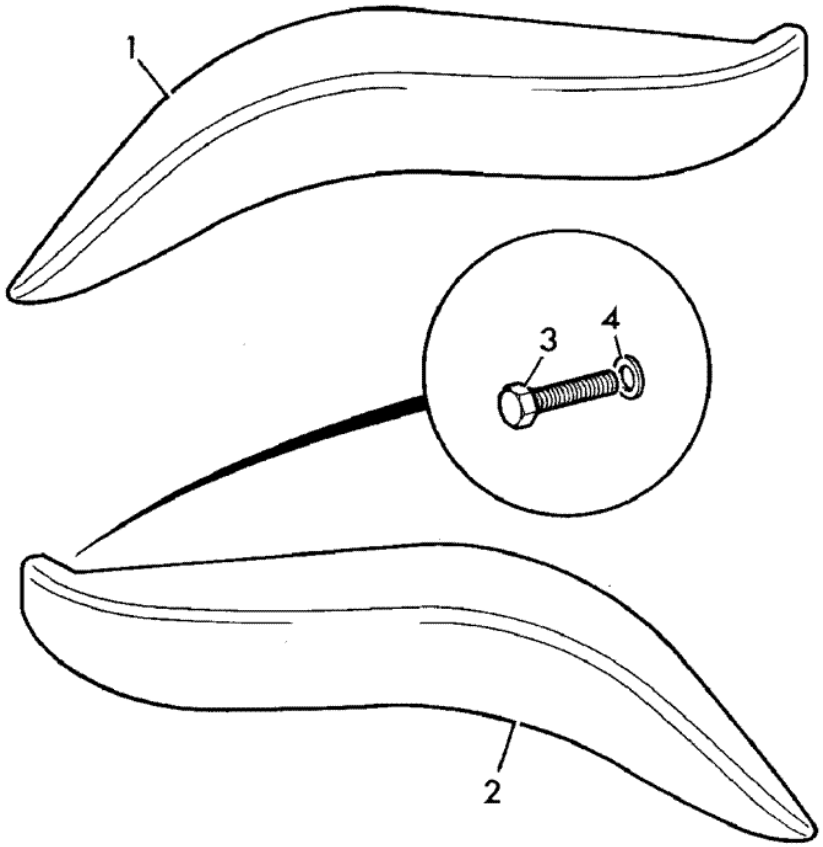


228801

| Item | Part # | Change No | Description | Usage Code | QTY |
|---|---|---|---|---|---|
| 1 | 331/14351 | | Fender left hand, yellow 214e | | 1 |
| 2 | 331/14352 | | Fender right hand, yellow 214e | | 1 |
| 3 | 1315/0205Z | | Bolt | | 10 |
| 4 | 1425/0006Z | | Washer Spring | | 10 |
| 5 | 1412/0001Z | | Washer | | 10 |
| 6 | 826/01101 | | Nut rivet,M6 open ended for 3 to 5.5mm plt | | 10 |

Product Catalog \ CONSTRUCTION \ NORTH AMERICA \ CONSTRUCTION / INDUSTRIAL \ BACKHOE LOADER 3CX,4CX,214,215,217 \ 3C PLUS (91HP) , Made in Brazil with Dieselmax/IESA Engine 9812/0080 \ B BODYWORK, CAB, LOADER END \ B02 CAB

# 9812/0080 B2-1-10 CAB SHELL, UNGLAZED

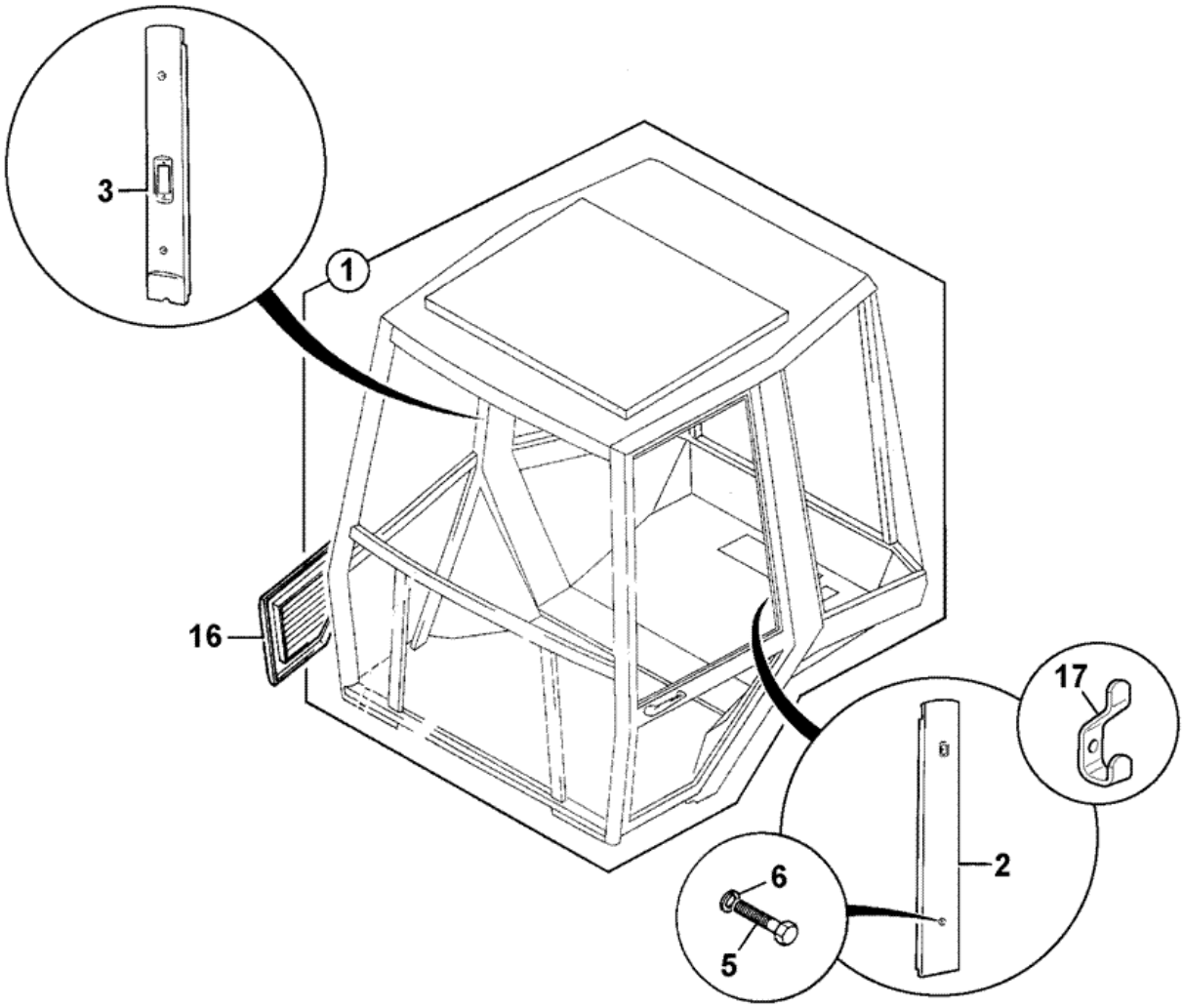


305782

| Item | Part # | Change No | Description | Usage Code | QTY |
|---|---|---|---|---|---|
| 1 | 126/02572 | | Cab shell as supplied | | 1 |
| 1A | :332/F2535 | | Cover blanking sticker 60 dia black polycarbonate | | 1 |

| | | | | | |
|---|---|---|---|---|---|
| | | | *fitted over 32mm hole in rear floorplate* | | |
| 2 | 331/27481 | | Cover left hand B post | | 1 |
| 3 | 331/27482 | | Cover right hand B post | | 1 |
| 4 | :NSP | | None serviced part<br>*Part of items 1 & 2* | | 0 |
| 5 | 826/01561 | | Screw button head M6x45 | | 4 |
| 6 | 823/00554 | | Washer plain | | 4 |
| 6 | 823/00516 | | Washer nylon M6 | | 4 |
| 16 | 123/07467 | | Cover heater | | 1 |
| 16 | 123/07649 | | Cover heaterless cab | | 1 |
| 17 | 142/01083 | | Hook coat | | 1 |
| 18 | 826/01768 | | Screw M6x25mm<br>*Air intake filter* | | 3 |
| 18 | 826/01413 | | Screw M6 x 16mm long pan head<br>*Air intake filter* | | 1 |
| 19 | 123/04791 | | Washer nylon | | 4 |
| 20 | 826/01101 | | Nut rivet,M6 open ended for 3 to 5.5mm plt | | 4 |
| 21 | 926/14500 | | Seal w/screen assy felt<br>*2000mm long. Fit to item 16.* | | 0 |

Product Catalog \ CONSTRUCTION \ NORTH AMERICA \ CONSTRUCTION / INDUSTRIAL \ BACKHOE LOADER 3CX,4CX,214,215,217 \ 3C PLUS (91HP) , Made in Brazil with Dieselmax/IESA Engine 9812/0080 \ B BODYWORK, CAB, LOADER END \ B02 CAB

# 9812/0080 B2-11-3 MIRROR, EXTERNAL & INTERIOR

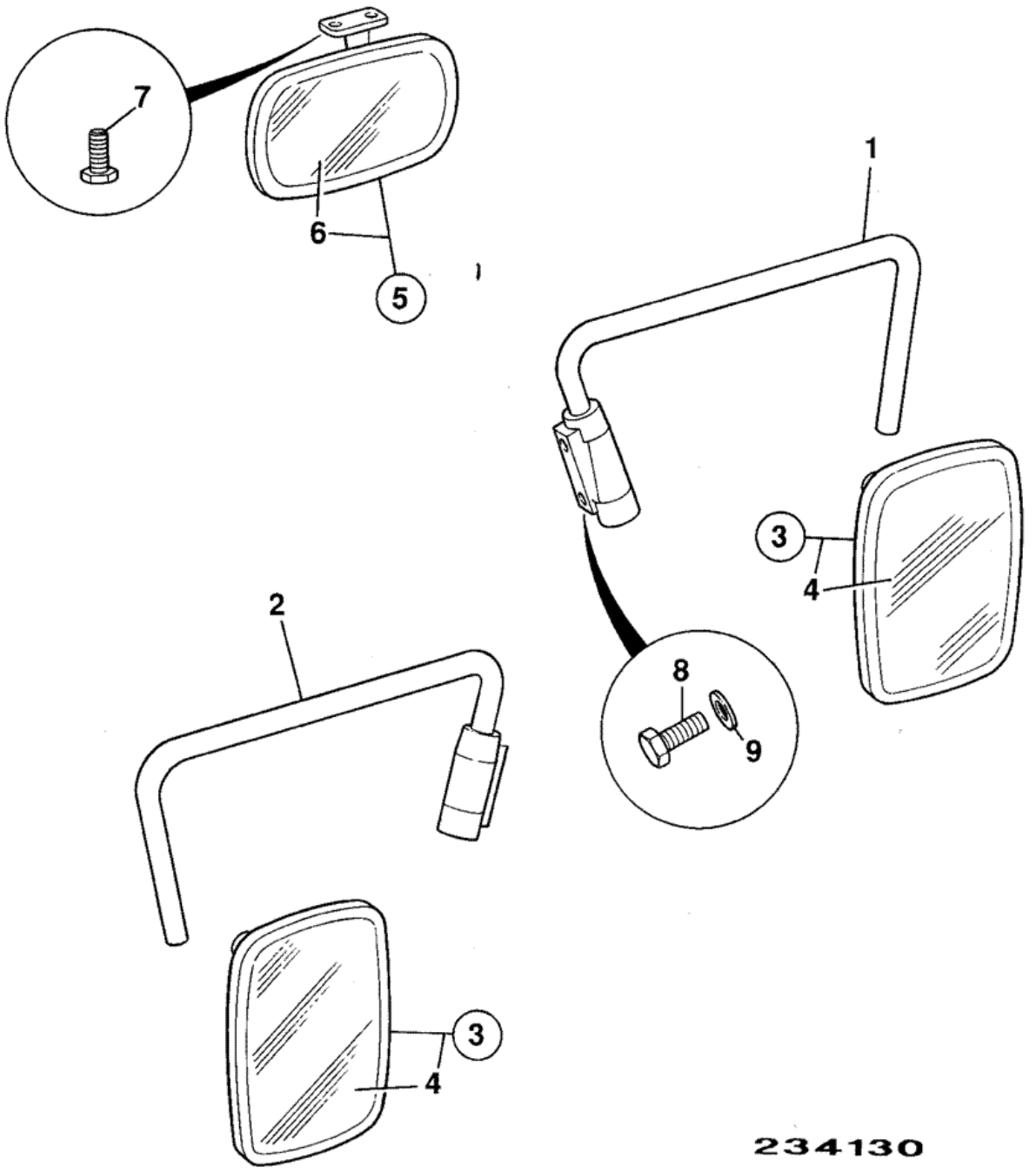


| Item | Part # | Change No | Description | Usage Code | QTY |
|---|---|---|---|---|---|
| 1 | 123/04968 | | Arm right hand mirror | | 1 |
| 2 | 123/04969 | | Arm left hand mirror | | 1 |
| 3 | 123/04970 | | Mirror exterior head assy | | 2 |

| | | | | | |
|---|---|---|---|---|---|
| 4 | :477/01068 | | Mirror | | 1 |
| 5 | 123/04971 | | Mirror interior assembly | | 1 |
| 6 | :123/04975 | | Glass interior mirror | | 1 |
| 7 | 826/01524 | | Screw selftap | | 2 |
| 8 | 826/01559 | | Screw button head socket M6 x 16mm | | 4 |
| 9 | 823/00554 | | Washer plain | | 4 |
| 9A | 823/00597 | | Washer spring | | 4 |
| 10 | 835/00171 | | Plug blanking 7mm<br>*Use inplace of mirror bracket.* | | 8 |

Product Catalog \ CONSTRUCTION \ NORTH AMERICA \ CONSTRUCTION / INDUSTRIAL \ BACKHOE LOADER 3CX,4CX,214,215,217 \ 3C PLUS (91HP) , Made in Brazil with Dieselmax/IESA Engine 9812/0080 \ B BODYWORK, CAB, LOADER END \ B02 CAB

# 9812/0080 B2-1-30 CANOPY

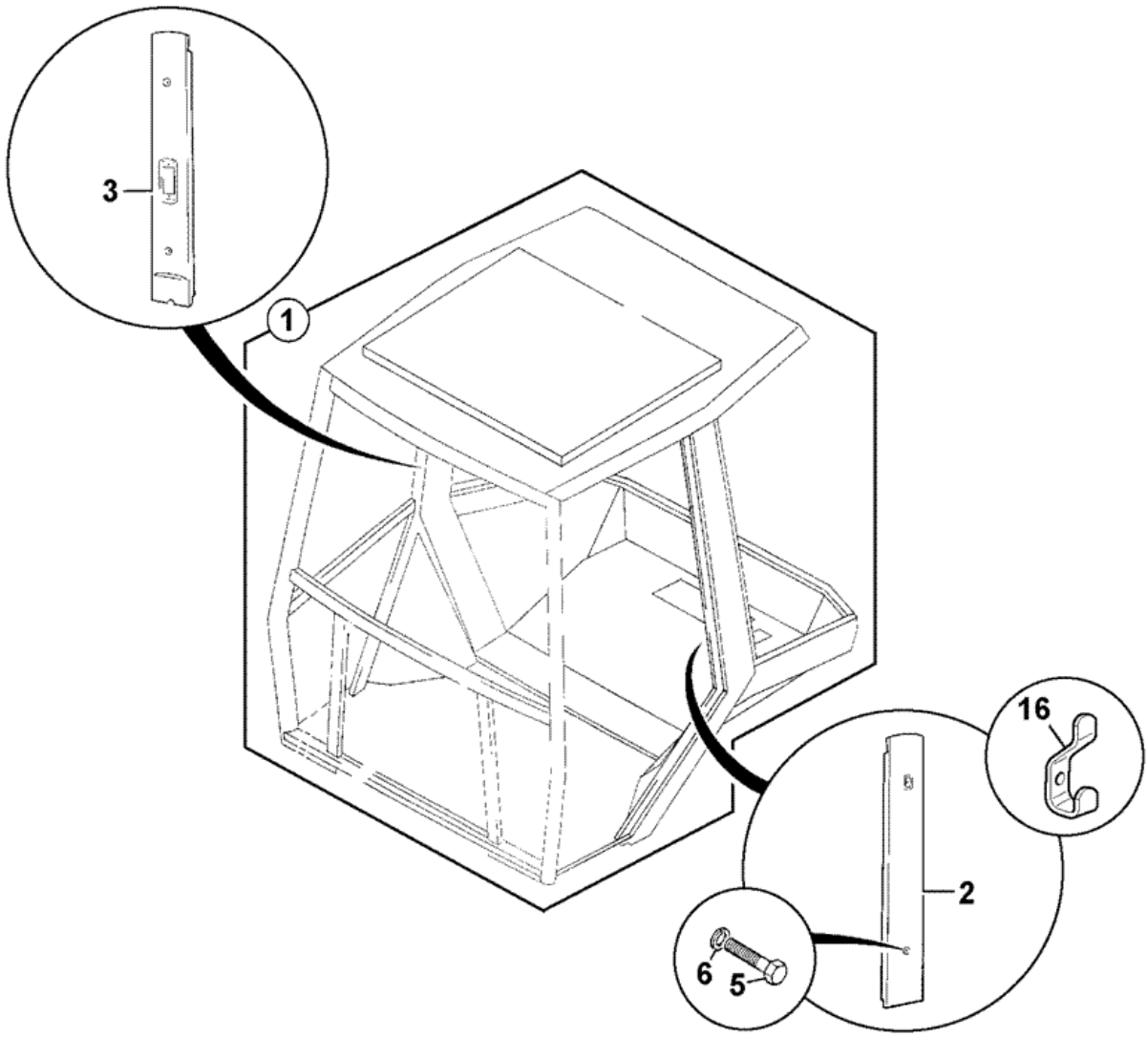


305792

| Item | Part # | Change No | Description | Usage Code | QTY |
|---|---|---|---|---|---|
| 1 | 126/02571 | | Canopy frame | | 1 |
| 1 | :332/F2535 | | Cover blanking sticker 60 dia black polycarbonate | | 1 |

| | | | | | |
|---|---|---|---|---|---|
| | | | *fitted over 32mm hole in rear floorplate* | | |
| 2 | 331/27481 | | Cover left hand B post | | 1 |
| 3 | 331/27482 | | Cover right hand B post | | 1 |
| 5 | 826/01561 | | Screw button head M6x45 | | 4 |
| 5 | 826/01101 | | Nut rivet,M6 open ended for 3 to 5.5mm plt | | 4 |
| 6 | 823/00554 | | Washer plain | | 4 |
| 6 | 823/00516 | | Washer nylon M6 | | 4 |
| 16 | 142/01083 | | Hook coat | | 1 |

Product Catalog \ CONSTRUCTION \ NORTH AMERICA \ CONSTRUCTION / INDUSTRIAL \ BACKHOE LOADER 3CX,4CX,214,215,217 \ 3C PLUS (91HP) , Made in Brazil with Dieselmax/IESA Engine 9812/0080 \ B BODYWORK, CAB, LOADER END \ B02 CAB

# 9812/0080 B2-13-1 CAB REAR VALANCE, CENTREMOUNT

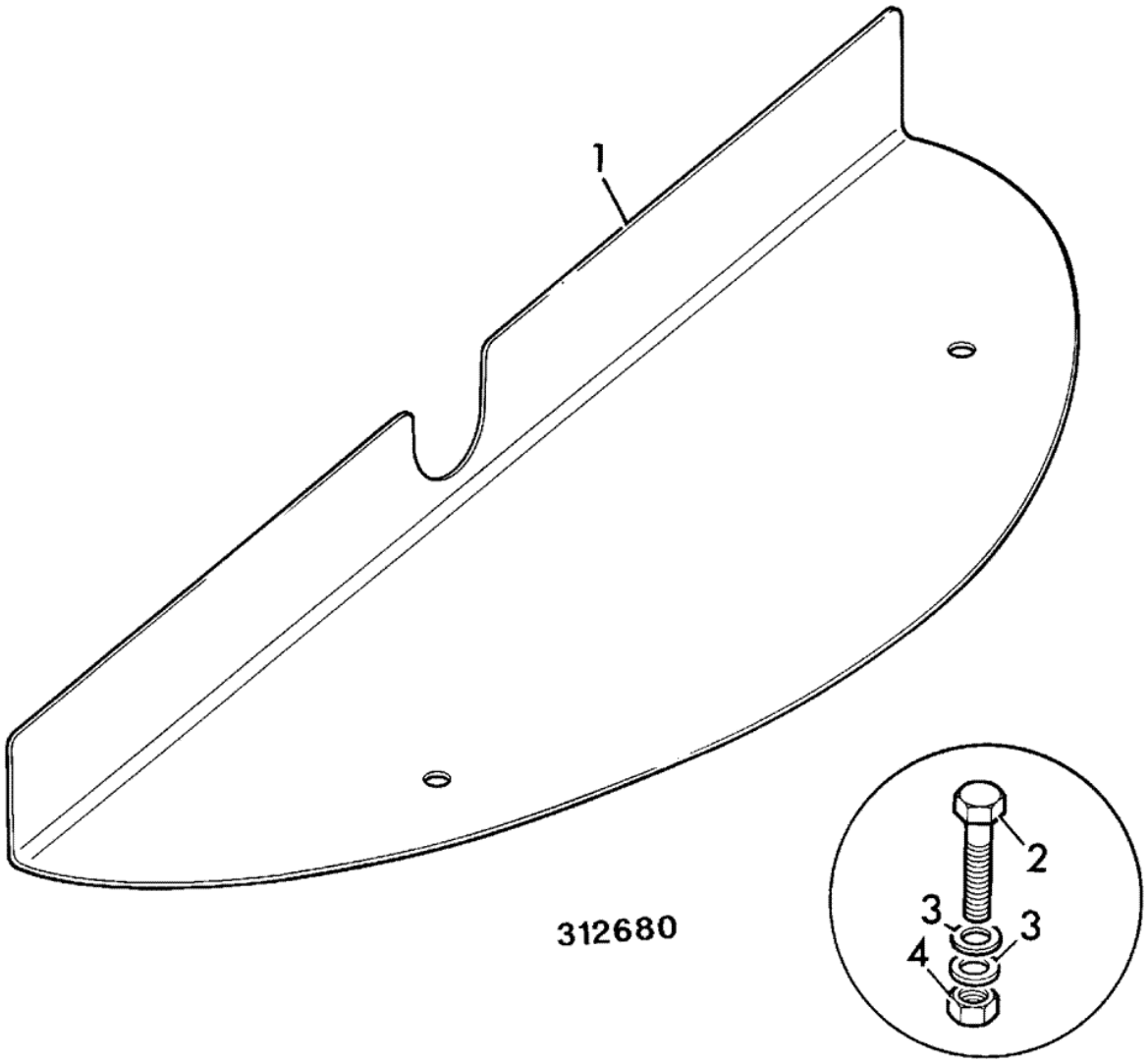


| Item | Part # | Change No | Description | Usage Code | QTY |
|---|---|---|---|---|---|
| 1 | 123/07703 | | Cover rear valance | | 1 |
| 2 | 1315/3313Z | | Bolt M8 X 55 | | 2 |
| 3 | 1420/0007Z | | Washer plain M8 | | 4 |
| 4 | 1370/0203Z | | Nut self lock M8 | | 2 |

Product Catalog \ CONSTRUCTION \ NORTH AMERICA \ CONSTRUCTION / INDUSTRIAL \ BACKHOE LOADER 3CX,4CX,214,215,217 \ 3C PLUS (91HP) , Made in Brazil with Dieselmax/IESA Engine 9812/0080 \ B BODYWORK, CAB, LOADER END \ B02 CAB

# 9812/0080 B2-18-1 DIRECT GLAZING, REPLACEMENT MATERIAL

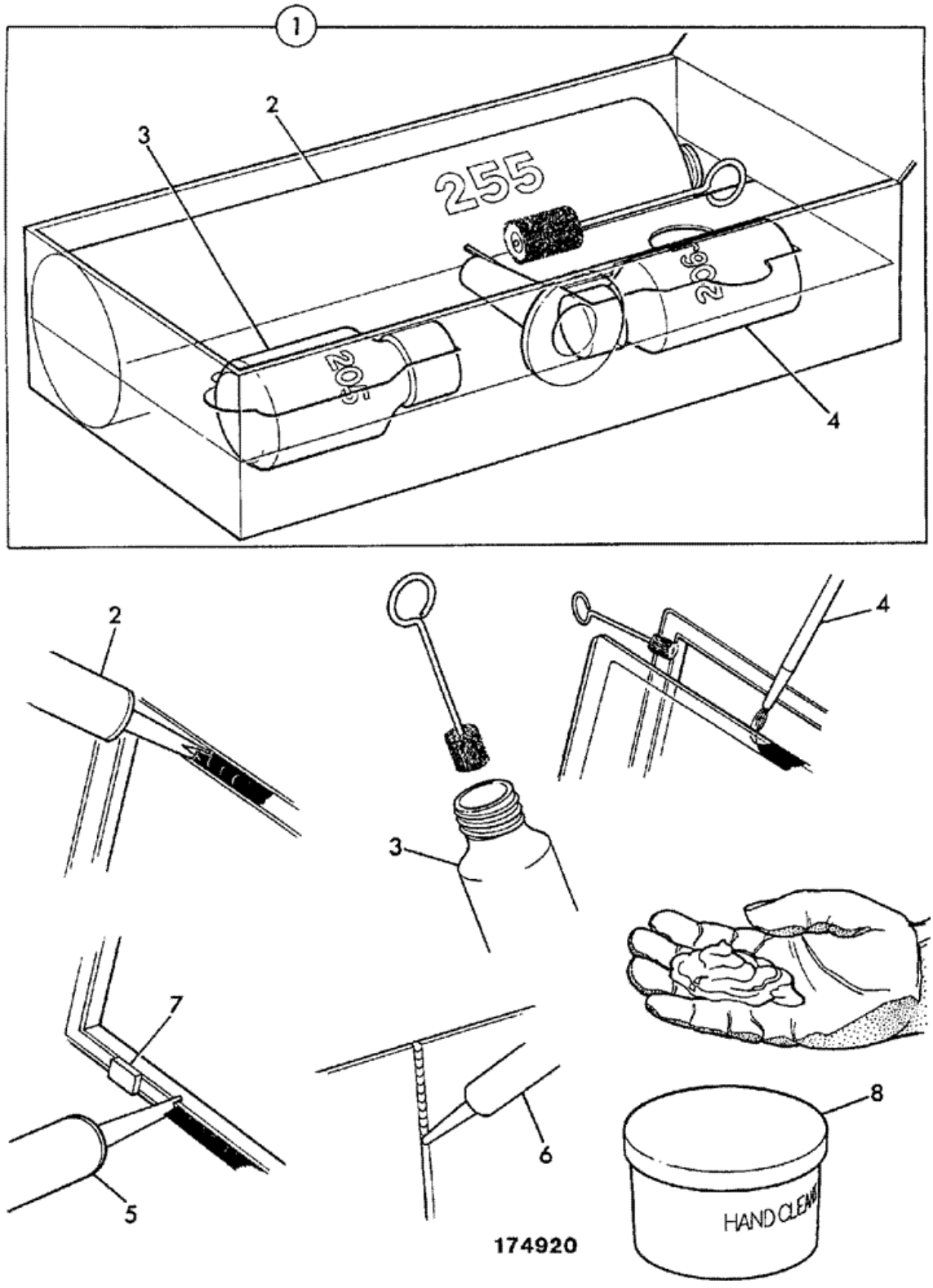


| Item | Part # | Change No | Description | Usage Code | QTY |
|---|---|---|---|---|---|
| 1 | 993/55700 | | Adhesive kit-JCB ultrafast glazing | | 1 |
| 2 | :4103/2109 | | Adhesive JCB ultrafast 310ml cartridge<br>*See foot note 1* | | 0 |
| 3 | :4104/1206 | | Cleaner active wiper 205 30ml | | 0 |
| 3 | :4104/1203 | | Cleaner primer SIKA 205 250ml | | 0 |
| | | | Paint black primer 206J 30ml | | |

| | | | | | |
|---|---|---|---|---|---|
| 4 | :4201/4906 | | *Black ceramic ink band around glass border.* | | 0 |
| 4 | :4201/4911 | | Paint black primer 206J 200gm | | 0 |
| 5 | 4102/2309 | | Sealant black acrylic 221 310ml cartridge | | 0 |
| 6 | 4102/0933 | | Sealant DP2205 clear silicone | | 0 |
| 7 | 926/15500 | | Spacer block | | 34 |
| 7 | 926/22100 | | Spacer block | | 2 |
| 8 | 4104/1310 | | Cleaner hand, polyurethane 454gm/1lb | | 0 |

Product Catalog \ CONSTRUCTION \ NORTH AMERICA \ CONSTRUCTION / INDUSTRIAL \ BACKHOE LOADER 3CX,4CX,214,215,217 \ 3C PLUS (91HP) , Made in Brazil with Dieselmax/IESA Engine 9812/0080 \ B BODYWORK, CAB, LOADER END \ B02 CAB

# 9812/0080 B2-2-11 CAB GLAZING

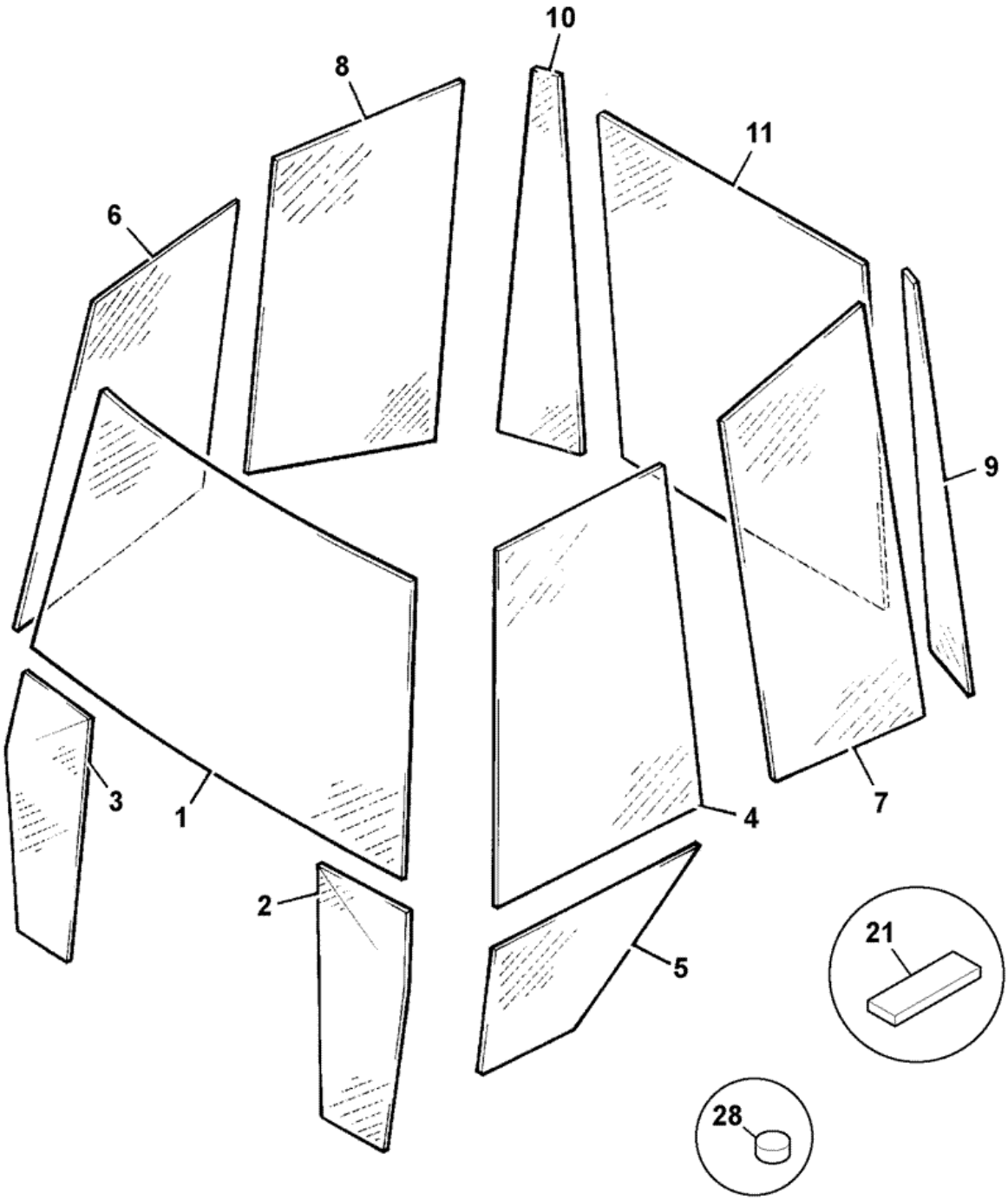


308421

| Item | Part # | Change No | Description | Usage Code | QTY |
|---|---|---|---|---|---|
| 1 | 827/80382 | | Windscreen laminated | | 1 |
| 2 | 827/80371 | | Glass left hand 1/4 light | | 1 |
| | | | | | |

| | | | | | |
|---|---|---|---|---|---|
| 3 | 827/80370 | | Glass right hand 1/4 light | | 1 |
| 4 | 827/80372 | | Glass upper door | | 1 |
| 5 | 827/80369 | | Glass lower door | | 1 |
| 6 | 827/80373 | | Glass right hand front | | 1 |
| 7 | 827/80374 | | Glass left hand window | | 1 |
| 8 | 827/80375 | | Glass right hand window | | 1 |
| 9 | 827/80376 | | Glass left hand sixlight | | 1 |
| 10 | 827/80377 | | Glass right hand sixlight | | 1 |
| 11 | 827/80378 | | Glass rear window | | 1 |
| 21 | 926/15500 | | Spacer block<br>*6X15X4 approx 34/cab* | | 0 |
| 28 | 926/22100 | | Spacer block<br>*front screen* | | 2 |

Product Catalog \ CONSTRUCTION \ NORTH AMERICA \ CONSTRUCTION / INDUSTRIAL \ BACKHOE LOADER 3CX,4CX,214,215,217 \ 3C PLUS (91HP) , Made in Brazil with Dieselmax/IESA Engine 9812/0080 \ B BODYWORK, CAB, LOADER END \ B02 CAB

# 9812/0080 B2-29-1 STORAGE NET

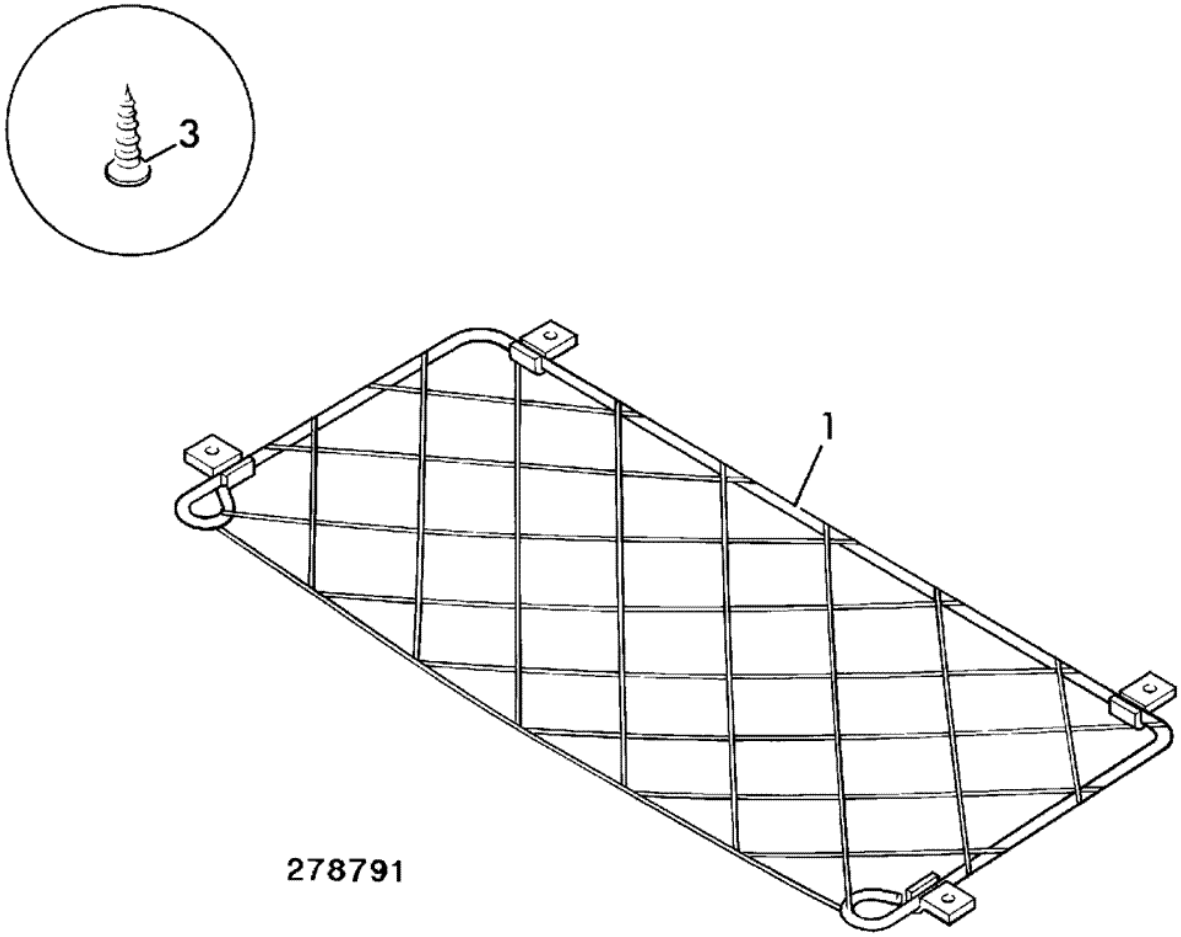


| Item | Part # | Change No | Description | Usage Code | QTY |
|---|---|---|---|---|---|
| 1 | 267/33501 | | Net stowage | | 1 |
| 2 | 826/01533 | | Screw | | 4 |

Product Catalog \ CONSTRUCTION \ NORTH AMERICA \ CONSTRUCTION / INDUSTRIAL \ BACKHOE LOADER 3CX,4CX,214,215,217 \ 3C PLUS (91HP) , Made in Brazil with Dieselmax/IESA Engine 9812/0080 \ B BODYWORK, CAB, LOADER END \ B02 CAB

# 9812/0080 B2-30-1 COVER, BRAKE PEDALS

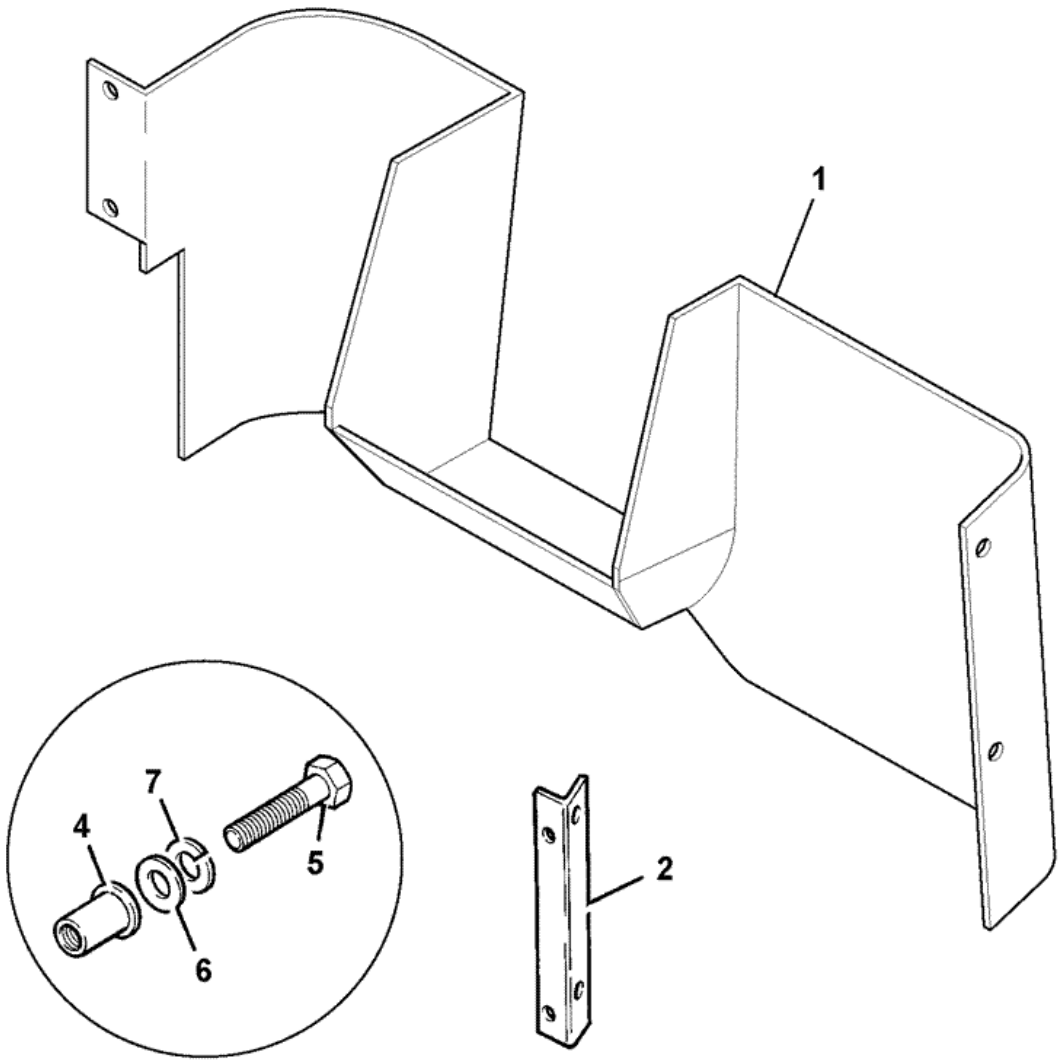


261762

| Item | Part # | Change No | Description | Usage Code | QTY |
|---|---|---|---|---|---|
| 1 | 335/12048 | | Cover brake pedals | | 1 |
| 2 | 123/08076 | | Bracket pedal cover | | 1 |
| | | | | | |

| | | | | | |
|---|---|---|---|---|---|
| 4 | 826/01099 | | Nut rivet,M6 open ended | | 6 |
| 5 | 1315/0205Z | | Bolt | | 6 |
| 6 | 1420/0006Z | | Washer M6 | | 6 |
| 7 | 1425/0006Z | | Washer Spring | | 6 |
| 8 | 926/01100 | | Strip sealing | | 0 |

# 9812/0080 B2-3-21 DOOR

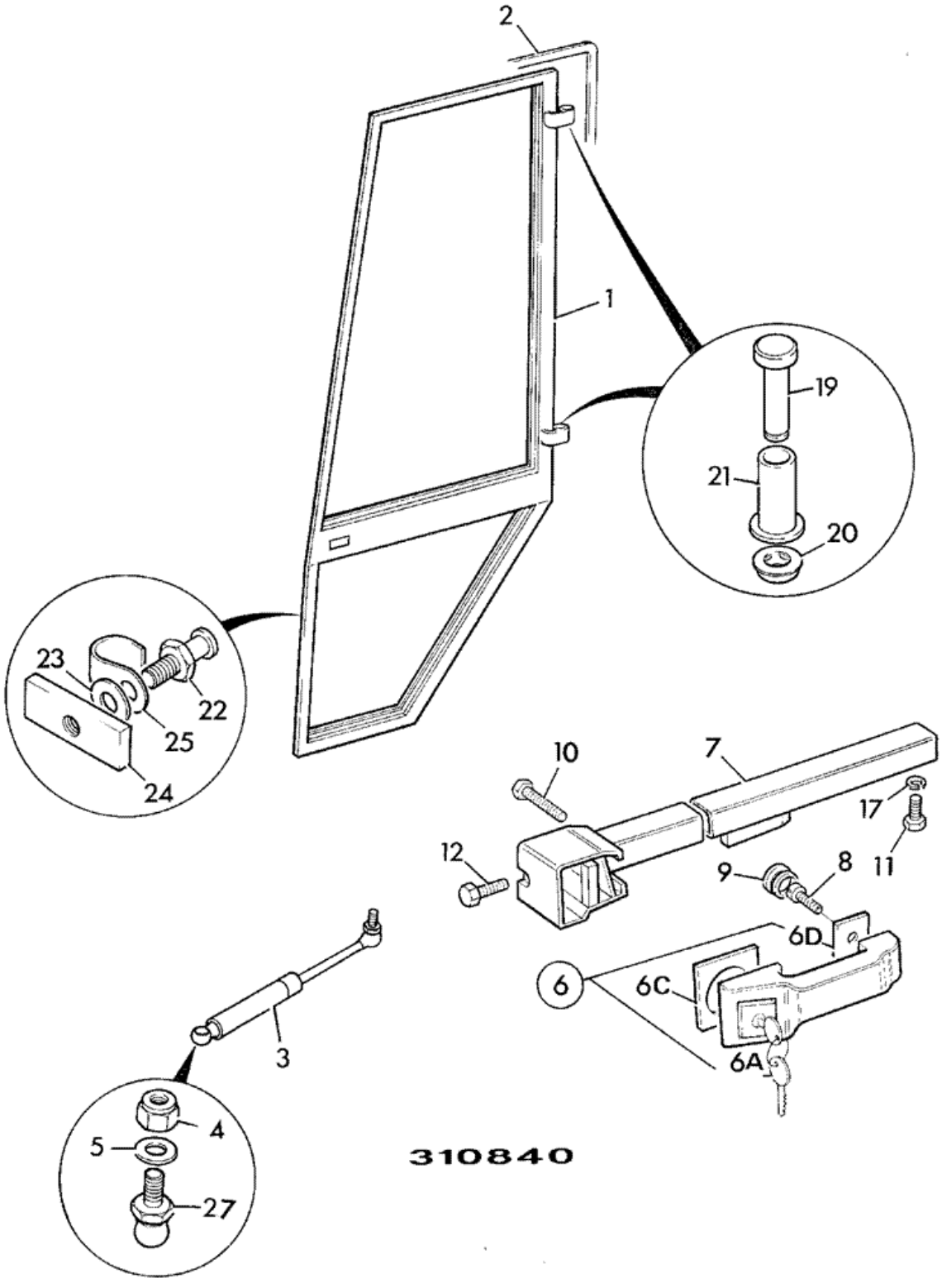

| Item | Part # | Change No | Description | Usage Code | QTY |
|---|---|---|---|---|---|
| 1 | 125/00478 | | Frame door | | 1 |
| 2 | 331/15237 | | Seal | | 0 |
| 3 | 331/14573 | Superseded | Strut door stay | | 1 |
| 3 | 331/66778 | | Strut gas 201-329 | | 1 |
| 4 | 1370/0203Z | | Nut self lock M8 | | 2 |
| 5 | 1417/0007Z | | Washer | | 2 |
| 6 | 123/06547 | | Handle c/w barrel lock only | | 1 |
| 6A | :701/45501 | | Key Door/Ignition Ref 14657 | | 2 |
| 6C | :123/00529 | | Grommet | | 1 |
| 6D | :123/00530 | | Grommet | | 1 |
| 7 | 123/02450 | | Lock door left hand | | 1 |
| 8 | 826/00792 | | Screw | | 2 |
| 9 | 2410/1008 | | Grommet | | 2 |
| 10 | 826/01077 | | Screw | | 3 |
| 11 | 1315/0203Z | | Screw M6x16 | | 1 |
| 12 | 826/01077 | | Screw | | 2 |
| 17 | 1425/0006Z | | Washer Spring | | 1 |
| 19 | 142/00956 | | Pin hinge | | 2 |
| 20 | 142/00957 | | Cap hinge pin | | 2 |
| 21 | 120/92808 | | Bush Hinge | | 2 |
| 22 | 120/77505 | | Bolt closing | | 1 |
| 23 | 1420/0009Z | | Washer Plain M12 | | 1 |
| 24 | 826/00622 | | Nut | | 1 |
| 25 | 140/00618 | | Guard | | 1 |
| 26 | 1370/0103Z | | Nut Self lock M6 | | 2 |
| 27 | 123/06335 | | Joint ball | | 2 |

Product Catalog \ CONSTRUCTION \ NORTH AMERICA \ CONSTRUCTION / INDUSTRIAL \ BACKHOE LOADER 3CX,4CX,214,215,217 \ 3C PLUS (91HP) , Made in Brazil with Dieselmax/IESA Engine 9812/0080 \ B BODYWORK, CAB, LOADER END \ B02 CAB

# 9812/0080 B2-4-11 WINDOW, SIDE, OPENING

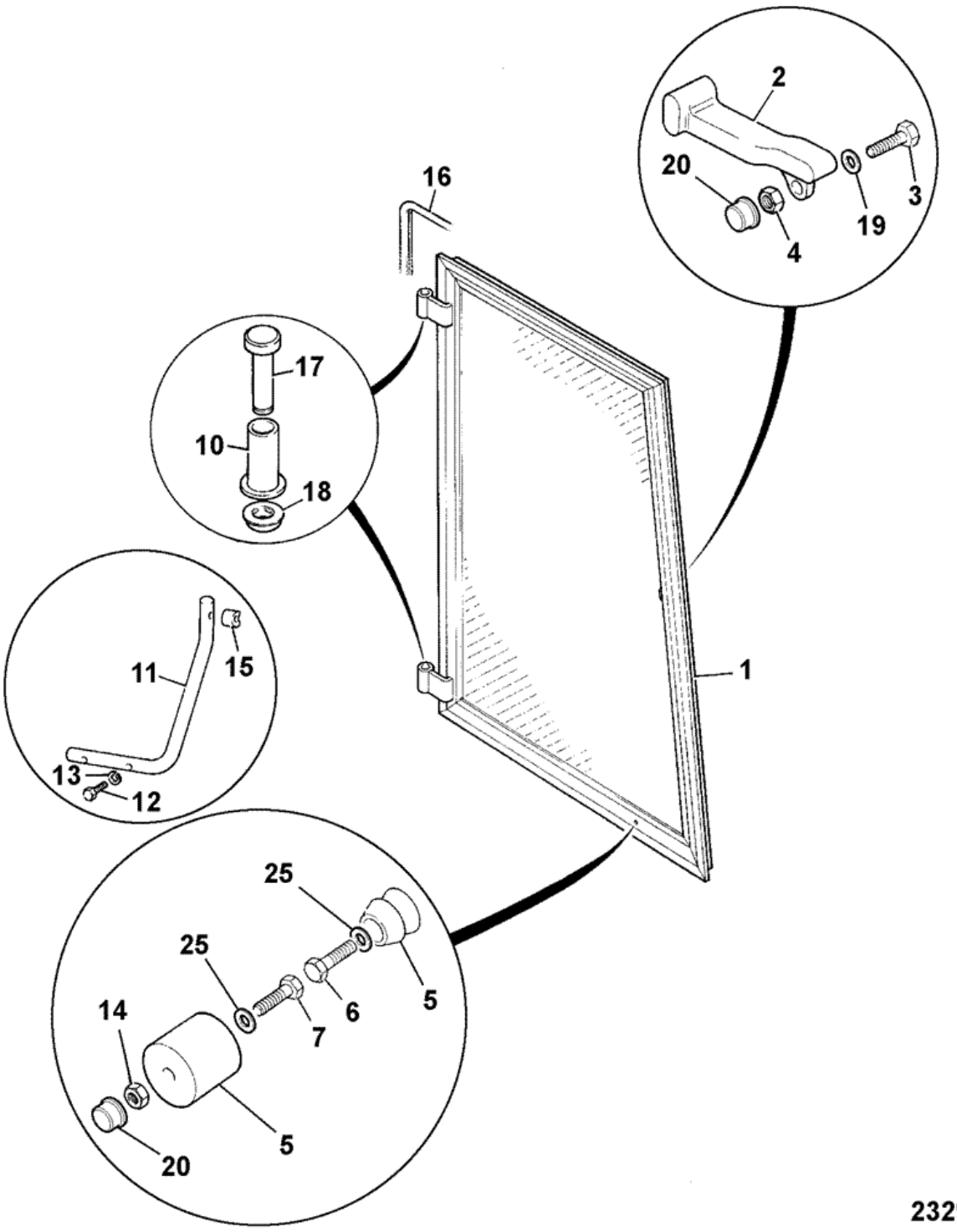


| Item | Part # | Change No | Description | Usage Code | QTY |
|---|---|---|---|---|---|
| 1 | 927/20025 | | Frame window | | 1 |
| 2 | 116/00822 | | Handle | | 1 |
| | | | | | |

| | | | | | |
|---|---|---|---|---|---|
| 3 | 1315/3212Z | | Bolt M6 x 50 | | 1 |
| 4 | 1370/0103Z | | Nut Self lock M6 | | 1 |
| 5 | 826/00670 | | Catch door | | 1 |
| 6 | 1315/0207Z | | Screw M6 x 25mm long | | 1 |
| 7 | 1315/0211Z | | Bolt | | 1 |
| 8 | 1425/0006Z | | Washer Spring | | 1 |
| 9 | 1370/0101Z | | Nut | | 1 |
| 10 | 120/92808 | | Bush Hinge | | 2 |
| 11 | 331/15286 | | Bracket window stop | | 1 |
| 12 | 1315/3312Z | | Bolt | | 2 |
| 13 | 1417/0012Z | | Washer lock | | 2 |
| 14 | 1370/0103Z | | Nut Self lock M6 | | 1 |
| 15 | 331/15288 | | Spacer | | 1 |
| 16 | 331/15238 | | Seal | | 1 |
| 17 | 142/00956 | | Pin hinge | | 2 |
| 18 | 142/00957 | | Cap hinge pin | | 2 |
| 19 | 823/00426 | | Washer | | 1 |
| 20 | 835/00074 | | Cap | | 2 |
| 21 | 1315/0211Z | | Bolt | | 1 |
| 22 | 122/23509 | | Cap Nut M8 | | 2 |
| 23 | 826/01103 | | Nut rivet,M8 open ended | | 2 |
| 24 | 826/01099 | | Nut rivet,M6 open ended | | 1 |
| 25 | 823/00544 | | Washer special | | 2 |

# 9812/0080 B2-5-11 WINDOW, REAR OPENING

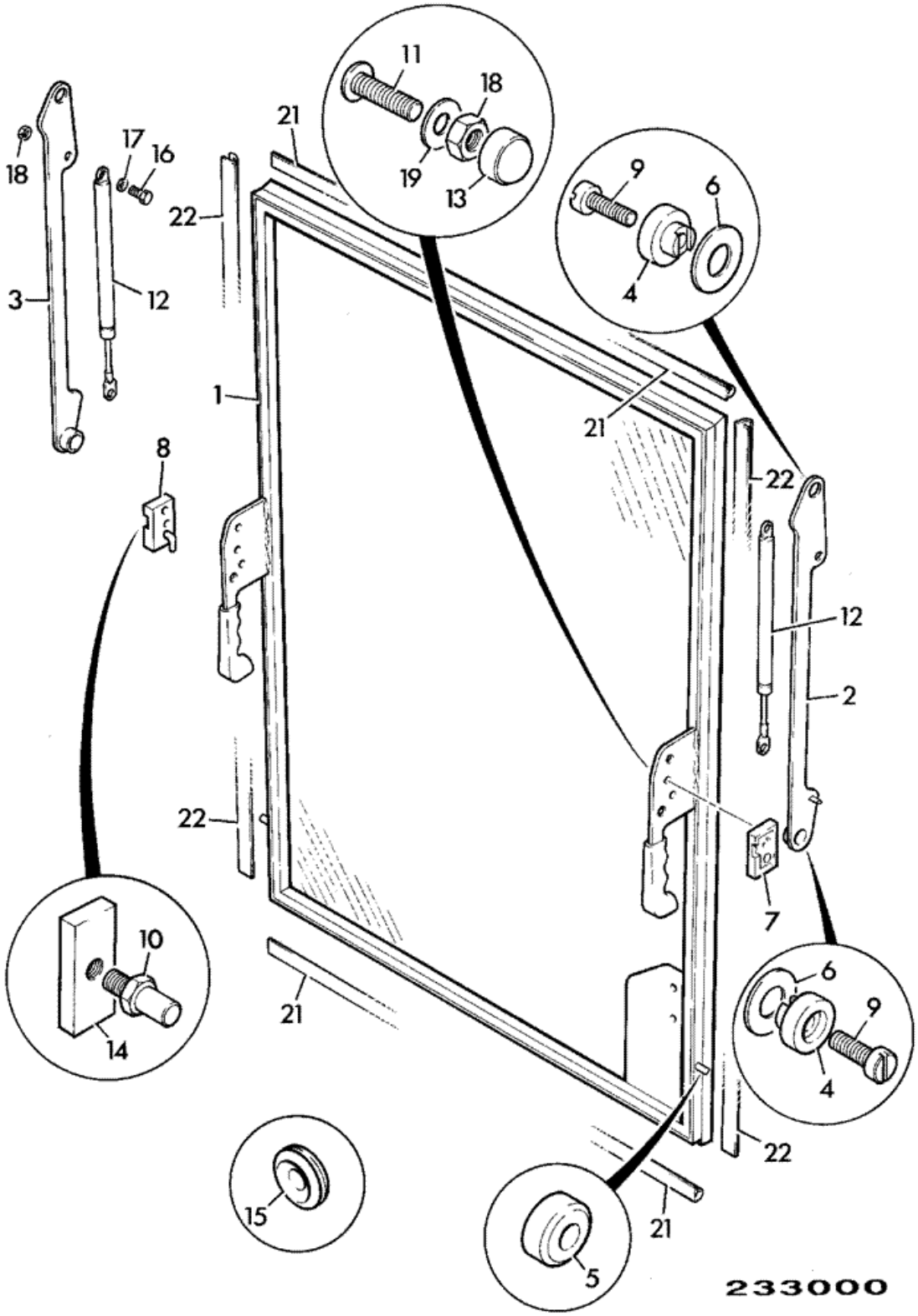

| Item | Part # | Change No | Description | Usage Code | QTY |
|---|---|---|---|---|---|
| 1 | 927/20026 | | Frame rear window | | 1 |
| 2 | 331/15293 | | Bracket left hand rear window | | 1 |
| 3 | 331/15294 | | Bracket right hand rear window | | 1 |
| 4 | 290/00806 | | Clamp | | 4 |
| 5 | 290/00809 | | Roller | | 2 |
| 6 | 823/00538 | | Washer | | 4 |
| 7 | 290/00812 | | Lock left side, | | 1 |
| 7A | 331/28808 | | Cover | | 1 |
| 8 | 290/00813 | | Lock right side | | 1 |
| 8A | 331/28808 | | Cover | | 1 |
| 9 | 826/01515 | | Screw M8 slot head | | 2 |
| 10 | 290/00807 | | Latch bolt | | 2 |
| 11 | . | | 'See Remark'<br>*Csk head Socket screw M8 X 40* | | 4 |
| 12 | 142/00953 | | Strut | | 2 |
| 13 | 122/23509 | | Cap Nut M8 | | 4 |
| 14 | 826/00622 | | Nut | | 2 |
| 15 | . | | 'See Remark'<br>*Grommet* | | 2 |
| 16 | 1315/0307Z | | Screw Hexagon M8 X 25 | | 4 |
| 17 | 1417/0012Z | | Washer lock | | 4 |
| 18 | 1370/0201Z | | Nut M8 | | 4 |
| 19 | 1420/0007Z | | Washer plain M8 | | 4 |
| 21 | 331/15239 | | Seal<br>*Seal top and bottom* | | 2 |
| 22 | 331/15240 | | Seal<br>*Seal, left and right* | | 2 |
| 23 | 1420/0008Z | | Washer Plain M10<br>*item 10* | | 2 |
| 24 | 1411/0004Z | | Washer<br>*item 10* | | 2 |
| 25 | 1370/0301Z | | Nut<br>*item 10* | | 2 |
| 31 | 140/00619 | | Plug rubber stop<br>*See Note 1* | | 2 |
| 32 | 1315/0203Z | | Screw M6x16 | | 2 |
| 33 | 1418/0010Z | | Washer lock | | 2 |
| 34 | 1370/0101Z | | Nut | | 2 |
| 35 | 835/00074 | | Cap | | 2 |
| 38 | 331/15234 | | Plug | | 2 |

*Note 1: items 31 to 38 make rear window stop*

Product Catalog \ CONSTRUCTION \ NORTH AMERICA \ CONSTRUCTION / INDUSTRIAL \ BACKHOE LOADER 3CX,4CX,214,215,217 \ 3C PLUS (91HP) , Made in Brazil with Dieselmax/IESA Engine 9812/0080 \ B BODYWORK, CAB, LOADER END \ B02 CAB

# 9812/0080 B2-6-10 SOUNDPROOFING, CAB ROOF

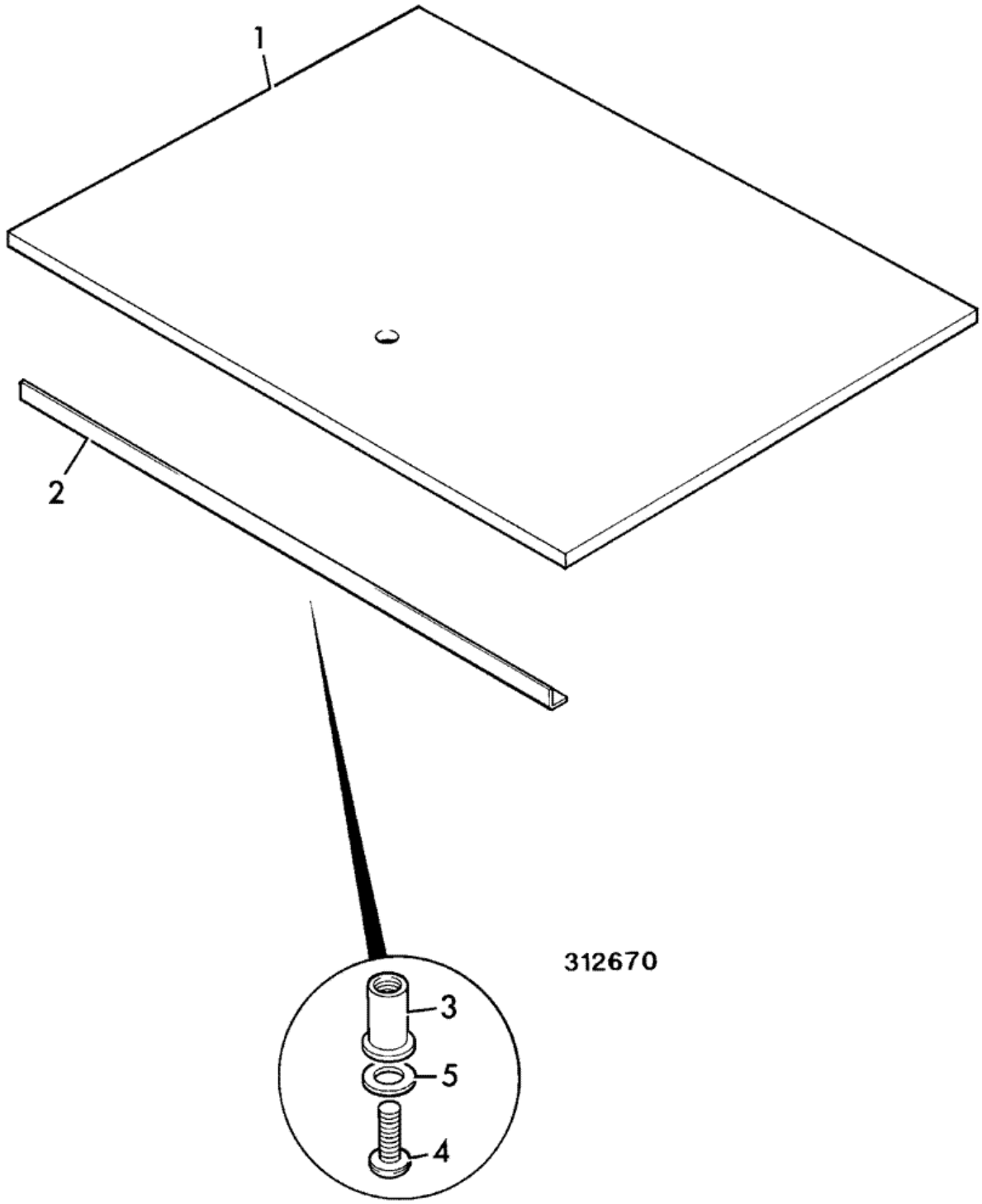


| Item | Part # | Change No | Description | Usage Code | QTY |
|---|---|---|---|---|---|
| 1 | 331/27483 | | Liner roof | | 1 |
| 2 | 123/07694 | | Bracket support | | 1 |

| | | | | | |
|---|---|---|---|---|---|
| 3 | 826/01101 | | Nut rivet,M6 open ended for 3 to 5.5mm plt | | 3 |
| 4 | 826/01768 | | Screw M6x25mm | | 3 |
| 5 | 823/00554 | | Washer plain | | 3 |

Product Catalog \ CONSTRUCTION \ NORTH AMERICA \ CONSTRUCTION / INDUSTRIAL \ BACKHOE LOADER 3CX,4CX,214,215,217 \ 3C PLUS (91HP) , Made in Brazil with Dieselmax/IESA Engine 9812/0080 \ B BODYWORK, CAB, LOADER END \ B02 CAB

# 9812/0080 B2-7-51 SEAT, STATIC

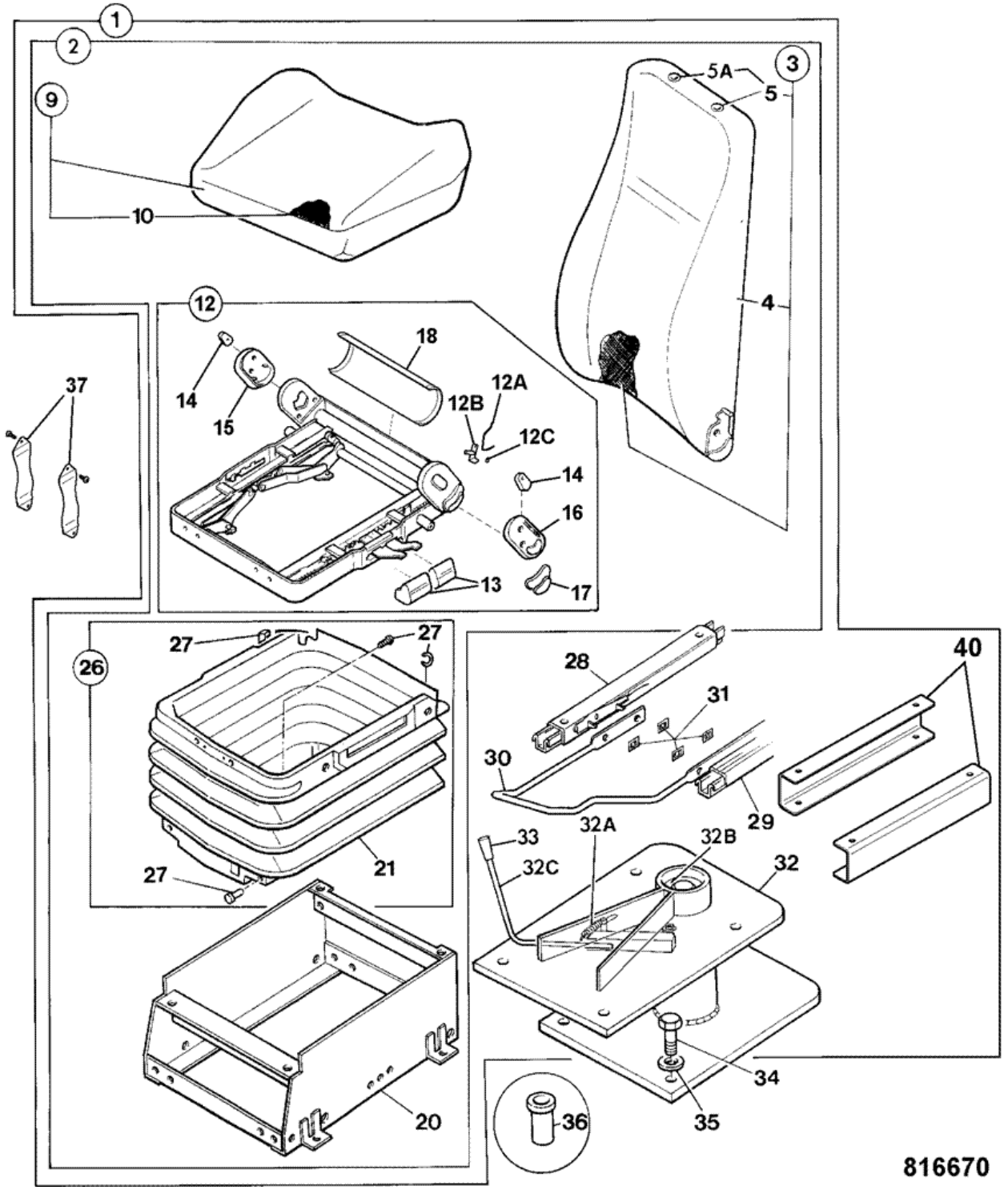


| Item | Part # | Change No | Description | Usage Code | QTY |
|---|---|---|---|---|---|
| 1 | 128/16497 | | Seat assembly static vinyl | | 1 |
| 2 | :40/910460 | | Seat vinyl | | 1 |
| | | | | | |

| | | | | | |
|---|---|---|---|---|---|
| 3 | ::40/910431 | | Cushion vinyl | | 1 |
| 4 | :::40/910397 | | Cover Seat, vinyl | | 1 |
| 5 | :::40/903120 | | Plug headrest | | 2 |
| 5A | :::40/906903 | | Clip headrest | | 2 |
| 9 | ::40/910399 | | Cushion seat assembly, vinyl | | 1 |
| 10 | :::40/910402 | | Cover seat cushion, vinyl | | 1 |
| 12 | ::40/910430 | | Frame assembly | | 1 |
| 12A | :::40/910447 | | Spring Squab handle | | 1 |
| 12B | :::40/910446 | | Handle Squab | | 1 |
| 12C | :::40/910448 | | Circlip height adjuster | | 1 |
| 13 | :::40/910404 | | Handle grip front<br>*Front* | | 2 |
| 13 | :::40/910405 | | Handle grip rear | | 1 |
| 14 | :::40/903108 | | Cap side plate | | 2 |
| 15 | ::40/903109 | | Cover slave right hand sideplate | | 1 |
| 16 | :::40/903110 | | Cover upper left hand sideplate | | 1 |
| 17 | :::40/910406 | | Handle Grip, squab recline | | 1 |
| 18 | :::40/903112 | | Plate cushion frame back | | 1 |
| 20 | ::40/902901 | | Base | | 1 |
| 26 | ::40/905204 | | Kit-bellows | | 1 |
| 27 | :::40/903116 | | Kit bellow fixings | | 1 |
| 28 | :40/910138 | | Slide left hand | | 1 |
| 29 | ::40/910139 | | Slide right hand | | 1 |
| 30 | :40/905205 | | Handle slide rail | | 1 |
| 31 | :40/903125 | | Clip slide rail | | 4 |
| 32 | :40/911069 | | Pedestal assembly | | 1 |
| 32A | ::814/10156 | | Spring | | 1 |
| 32B | ::40/910413 | | Kit-nut & bolt pedestal swivel | | 1 |
| 32C | ::40/910414 | | Handle assembly | | 1 |
| 33 | ::40/910415 | | Handle grip | | 1 |
| 34 | 1315/3409Z | | Bolt M10 x 35 | | 4 |
| 35 | 1420/0008Z | | Washer Plain M10 | | 4 |
| 36 | 826/01105 | | Nut rivet,M10 open ended | | 4 |
| 37 | 40/904700 | | Kit-seat belt 50" long | | 1 |
| 38 | 40/905206 | | Kit-arm rest | | 1 |
| 39 | 40/903700 | | Kit head rest | | 1 |
| 40 | 40/911068 | | Spacer U profile | | 2 |

Product Catalog \ CONSTRUCTION \ NORTH AMERICA \ CONSTRUCTION / INDUSTRIAL \ BACKHOE LOADER 3CX,4CX,214,215,217 \ 3C PLUS (91HP) , Made in Brazil with Dieselmax/IESA Engine 9812/0080 \ B BODYWORK, CAB, LOADER END \ B02 CAB

# 9812/0080 B2-7-61 SEAT, SUSPENSION

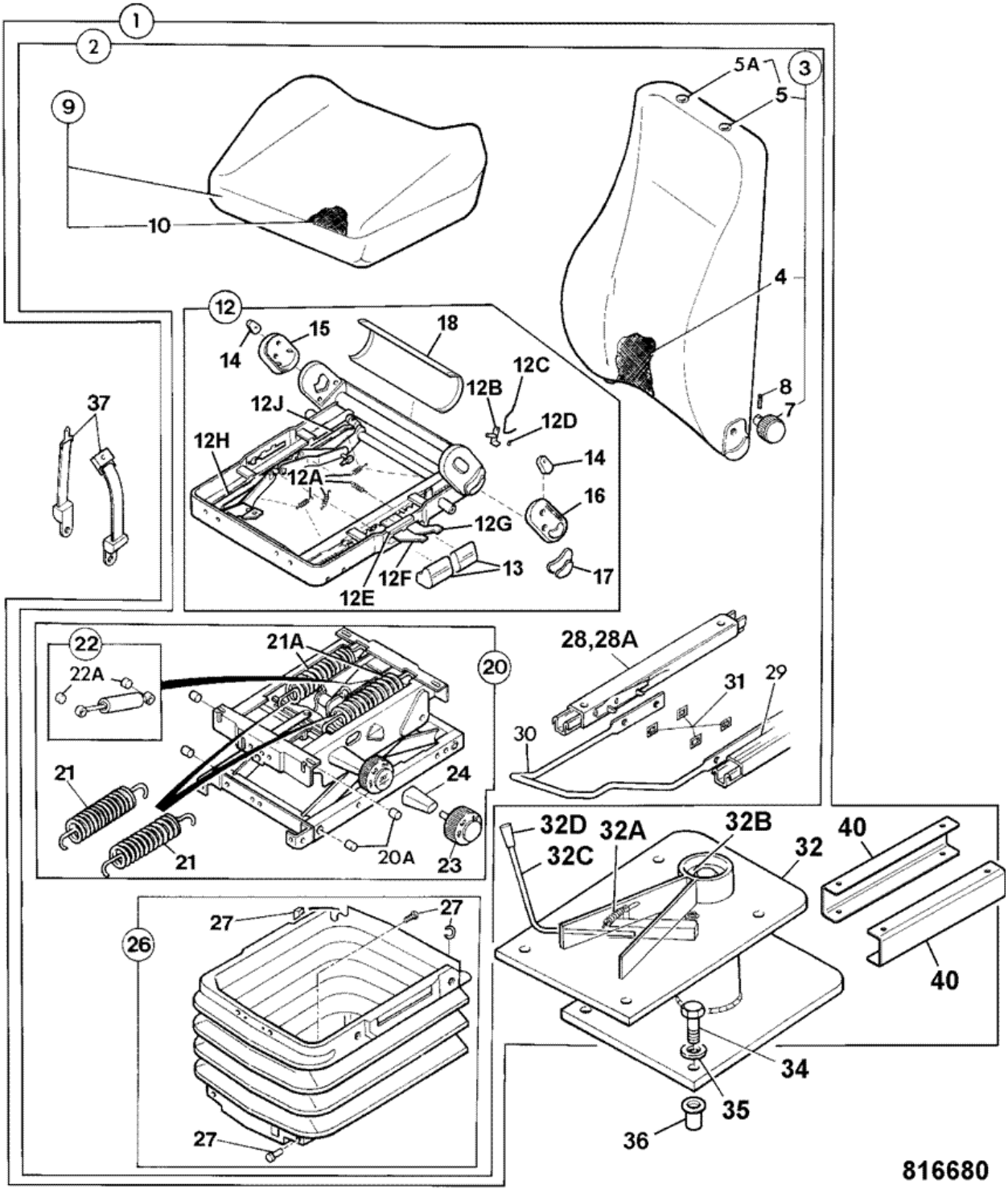


| Item | Part # | Change No | Description | Usage Code | QTY |
|---|---|---|---|---|---|
| 1 | 128/16499 | | Seat assembly suspension cloth | | 1 |
| 1 | 128/16498 | | Seat assembly suspension vinyl | | 1 |
| | | | | | |

| | | | | | |
|---|---|---|---|---|---|
| 2 | :40/910469 | | Seat high back,fabric | | 1 |
| 2 | :40/910470 | | Seat high back,vinyl | | 1 |
| 3 | ::40/910396 | | Kit rear squab assembly cloth | | 1 |
| 3 | ::40/910395 | | Kit seat squab assembly vinyl | | 1 |
| 4 | :::40/910517 | | Cover squab assy fabric high back | | 1 |
| 4 | :::40/910521 | | Cover squab assy Vinyl high back | | 1 |
| 5 | 40/903120 | | Plug headrest | | 2 |
| 5A | 40/906903 | | Clip headrest | | 2 |
| 7 | :::40/903119 | | Knob adjuster | | 1 |
| 8 | :::40/903121 | | Pin tension | | 1 |
| 9 | ::40/910514 | | Cushion seat assy fabric high back | | 1 |
| 9 | ::40/910518 | | Cushion seat assy Vinyl high back | | 1 |
| 10 | :::40/910515 | | Cover seat base fabric high back | | 1 |
| 10 | :::40/910519 | | Cover seat base Vinyl high back | | 1 |
| 12 | ::40/910506 | | Frame seat base | | 1 |
| 12A | :::40/910445 | | Kit-spring 2 lever height rise | | 1 |
| 12B | ::40/910446 | | Handle Squab | | 1 |
| 12C | ::40/910447 | | Spring Squab handle | | 1 |
| 12D | ::40/910448 | | Circlip height adjuster | | 1 |
| 12E | ::40/910141 | | Clip black cushion frame | | 1 |
| 12F | ::40/910142 | | Handle height adjustment front | | 1 |
| 12G | ::40/910143 | | Handle height adjustment rear | | 1 |
| 12H | ::40/910144 | | Adjuster height | | 1 |
| 12J | ::40/910145 | | Adjuster height rear | | 1 |
| 13 | :::40/910404 | | Handle grip front | | 1 |
| 13 | :::40/910405 | | Handle grip rear | | 1 |
| 14 | :::40/903108 | | Cap side plate | | 2 |
| 15 | ::40/903109 | | Cover slave right hand sideplate | | 1 |
| 16 | :::40/903110 | | Cover upper left hand sideplate | | 1 |
| 17 | :::40/910406 | | Handle Grip, squab recline | | 1 |
| 18 | :::40/903112 | | Plate cushion frame back | | 1 |
| 20 | ::40/910526 | | Kit Suspension unit assy | | 1 |
| 21 | :::40/910140 | | Spring | | 2 |
| 21A | :::40/903102 | | Spring tension | | 2 |
| 22 | :::40/906902 | | Damper | | 1 |
| 22A | :::40/906905 | | Bush shock absorber | | 2 |
| 22B | :40/911070 | | Bolt<br>*not supplied with item 22* | | 2 |
| 22C | :40/905208 | | Nut<br>*not supplied with item 22* | | 2 |
| 23 | :::40/910525 | | Knob Damper adjuster | | 1 |
| 24 | :::40/903105 | | Bracket support | | 1 |
| 26 | ::40/905204 | | Kit-bellows | | 1 |
| 27 | :::40/903116 | | Kit bellow fixings | | 1 |
| 28 | :40/910139 | | Slide right hand | | 1 |
| 28A | :40/905207 | | Bolt<br>*Slide to seat* | | 4 |
| 28A | :1315/0305Z | | Screw Hexagon M8 x 20mm long<br>*Slide to pedestal* | | 4 |
| 28A | :1391/3305Z | | Capscrew | | 4 |
| 28A | ::40/910138 | | Slide left hand | | 1 |
| 29 | ::40/910238 | | Adjuster seat angle | | 1 |

| | | | | | |
|---|---|---|---|---|---|
| | | | *Part of item 28* | | |
| 30 | :40/910411 | | Handle slide | | 1 |
| 31 | :40/903125 | | Clip slide rail | | 4 |
| 32 | :40/911069 | | Pedestal assembly | | 1 |
| 32A | ::814/10156 | | Spring | | 1 |
| 32B | ::NSP | | None serviced part | | 1 |
| 32C | ::40/910300 | | Handle assembly | | 1 |
| 32D | ::40/910415 | | Handle grip | | 1 |
| 34 | 1315/3409Z | | Bolt M10 x 35 | | 4 |
| 35 | 1420/0008Z | | Washer Plain M10 | | 4 |
| 36 | 826/01105 | | Nut rivet,M10 open ended | | 4 |
| 37 | 40/904700 | | Kit-seat belt 50" long<br>*Included with seat assy* | | 1 |
| 39 | 40/903700 | | Kit head rest<br>*Not included with seat assy* | | 1 |
| 40 | 40/911068 | | Spacer U profile | | 2 |

Product Catalog \ CONSTRUCTION \ NORTH AMERICA \ CONSTRUCTION / INDUSTRIAL \ BACKHOE LOADER 3CX,4CX,214,215,217 \ 3C PLUS (91HP) , Made in Brazil with Dieselmax/IESA Engine 9812/0080 \ B BODYWORK, CAB, LOADER END \ B03 LOADER, FRONT END

# 9812/0080 B3-1-21 ARMS, LOADER

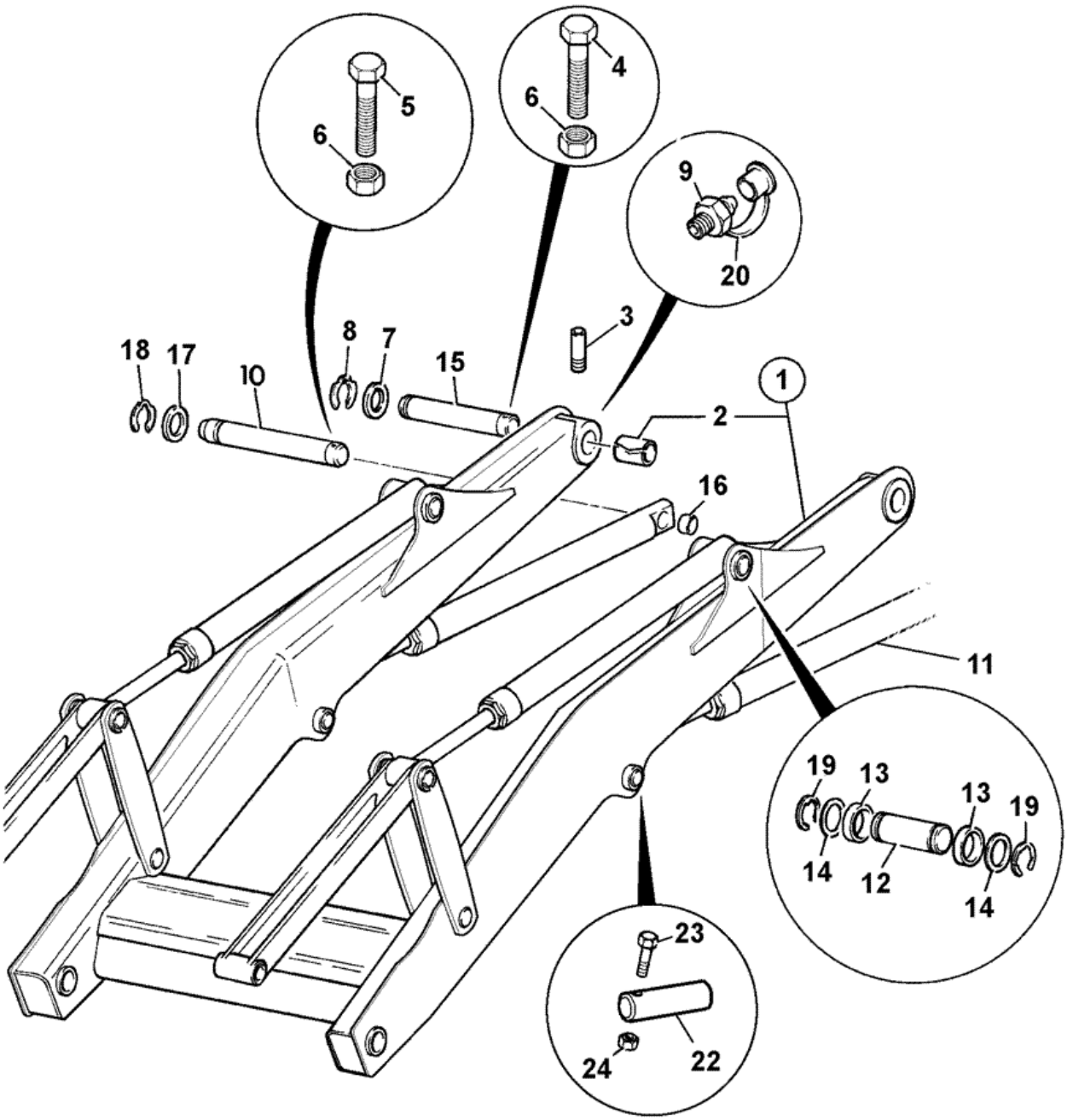


788240

| Item | Part # | Change No | Description | Usage Code | QTY |
|---|---|---|---|---|---|
| 1 | 128/15453 | | Arm loader<br>*Dieselmax engine* | | 1 |
| | | | | | |

| | | | | | |
|---|---|---|---|---|---|
| 1 | 128/13054 | <M TBA | Arm loader, 214e<br>*IESA engine* | | 1 |
| 1 | 128/15453 | >M TBA | Arm loader<br>*IESA engine* | | 1 |
| 2 | :808/00296 | | Bush | | 2 |
| 3 | 653/00162 | | Pipe grease | | 2 |
| 4 | 1315/3524Z | | Bolt M12 x 140 Lg.<br>*loader arm to chassis* | | 2 |
| 5 | 1315/3512Z | | Bolt M12 x 50mm<br>*lift ram to chassis* | | 2 |
| 6 | 1370/0401Z | | Nut | | 4 |
| 7 | 819/00099 | | Spacer 5mm | | 0 |
| 7 | 819/00147 | | Spacer 3mm | | 0 |
| 7 | 823/00471 | | Washer 1.45mm max | | 0 |
| 8 | 821/00517 | | Circlip 60mm pin | | 2 |
| 9 | 1450/1007 | | Nipple grease 45 deg. angle | | 2 |
| 10 | 811/90593 | | Pin pivot, 50.8 diax251 | | 2 |
| 11 | . | | 'See Remark'<br>*lift ram see index E4* | | 1 |
| 12 | 811/90471 | | Pin pivot black | | 2 |
| 13 | 809/10030 | | Bush | | 4 |
| 14 | 819/00049 | | Shim 1.4mm | | 0 |
| 14 | 819/00148 | | Spacer 3mm | | 0 |
| 14 | 823/10347 | | Shim 0.5/0.6mm o/dia 65mm | | 0 |
| 15 | 811/90473 | | Pin pivot black<br>*left hand side* | | 1 |
| 15 | 811/90474 | | Pin pivot black<br>*right hand side (twin circlip groove)* | | 1 |
| 16 | 819/00097 | | Spacer | | 2 |
| 17 | 823/00220 | | Washer 1.40mm thick | | 0 |
| 17 | 819/00097 | | Spacer | | 0 |
| 18 | 826/00874 | | Circlip | | 2 |
| 19 | 823/00334 | | Clip | | 4 |
| 20 | 835/00017 | | Cap grease nipple | | 6 |
| 21 | 2410/1308 | | Grommet blind<br>*use with item 10* | | 2 |
| 22 | 811/90676 | | Pin pivot, 44.35x169<br>*was 811/90484* | | 2 |
| 23 | 1315/3418Z | | Bolt M10x80 | | 2 |
| 24 | 1370/0303Z | | Nut lock M10 | | 2 |

Product Catalog \ CONSTRUCTION \ NORTH AMERICA \ CONSTRUCTION / INDUSTRIAL \ BACKHOE LOADER 3CX,4CX,214,215,217 \ 3C PLUS (91HP) , Made in Brazil with Dieselmax/IESA Engine 9812/0080 \ B BODYWORK, CAB, LOADER END \ B03 LOADER, FRONT END

# 9812/0080 B3-3-21 ARMS, LOADER, SHOVEL LINKAGE

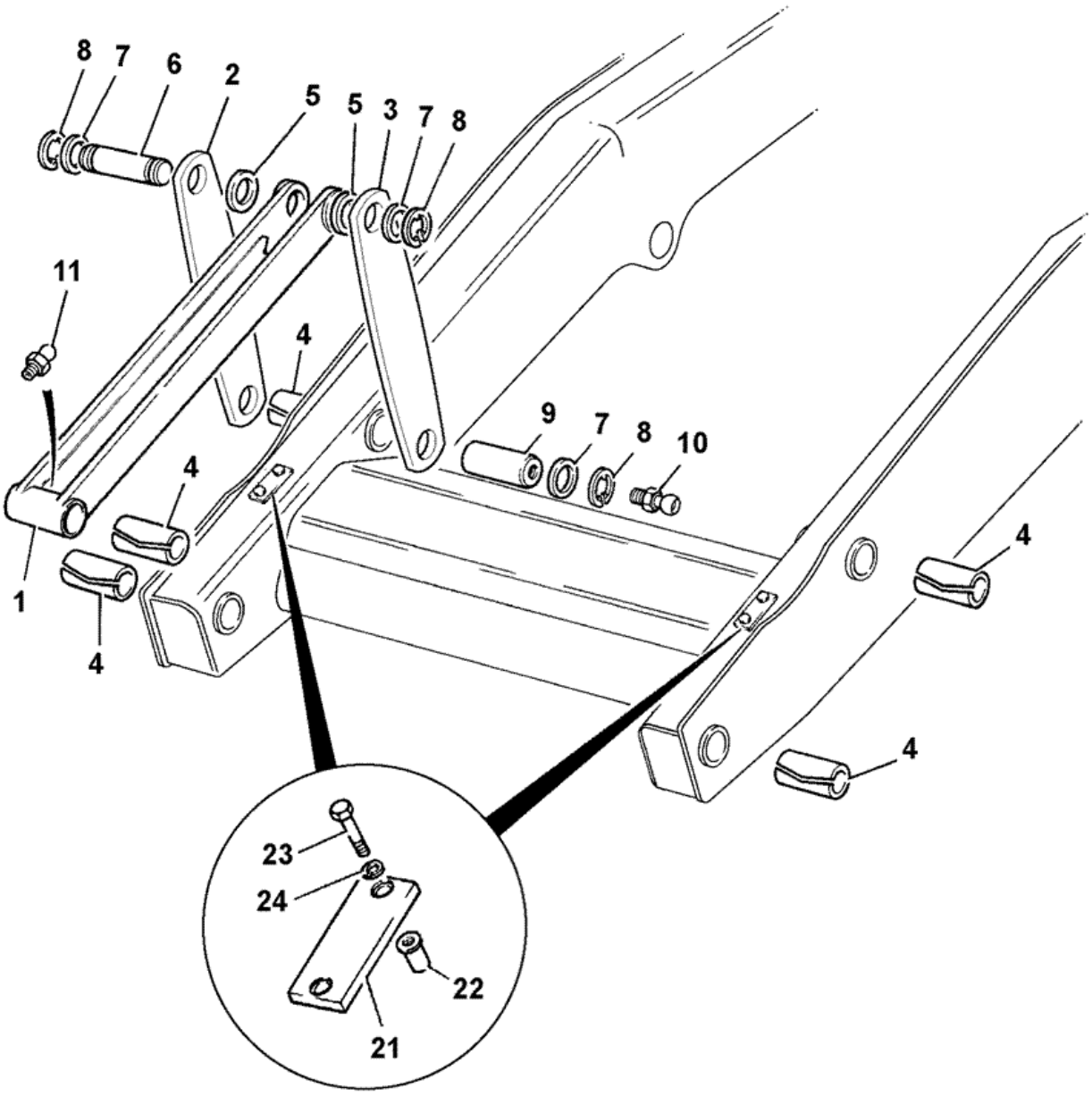


400731

| Item | Part # | Change No | Description | Usage Code | QTY |
|---|---|---|---|---|---|
| 1 | 125/00363 | | Link crowd 595mm long | | 2 |
| 2 | 331/43845 | | Lever crowd, anti spill with tapped hole | | 1 |
| | | | | | |

| | | | | | |
|---|---|---|---|---|---|
| 3 | 331/43841 | | Lever shovel pivot, plain | | 3 |
| 4 | 1208/0023 | | Bush | | 6 |
| 5 | 809/10030 | | Bush | | 4 |
| 6 | 811/90471 | | Pin pivot black | | 2 |
| 7 | 819/00049 | | Shim 1.4mm | | 8 |
| 7 | 823/10347 | | Shim 0.5/0.6mm o/dia 65mm | | 8 |
| 8 | 823/00334 | | Clip | | 8 |
| 9 | 811/90472 | | Pin pivot black | | 2 |
| 10 | 1450/0001 | | Nipple grease, straight 1/8 BSP | | 2 |
| 11 | 1450/0002 | | Nipple grease, straight 1/4 | | 2 |
| 21 | 123/03326 | | Plate shovel stop 12mm | | 2 |
| 22 | 826/01249 | | Nut rivet M10 open end for 6 to 8.5mm plate | | 4 |
| 23 | 1315/0409Z | | Screw M10x35mm | | 4 |
| 24 | 1425/0008Z | | Washer Spring M10<br>*no longer fitted* | | 4 |

# 9812/0080 B4-10-1 BOOM LOCK, IN CAB CONTROLS, 14'0 CENTREMOUNT

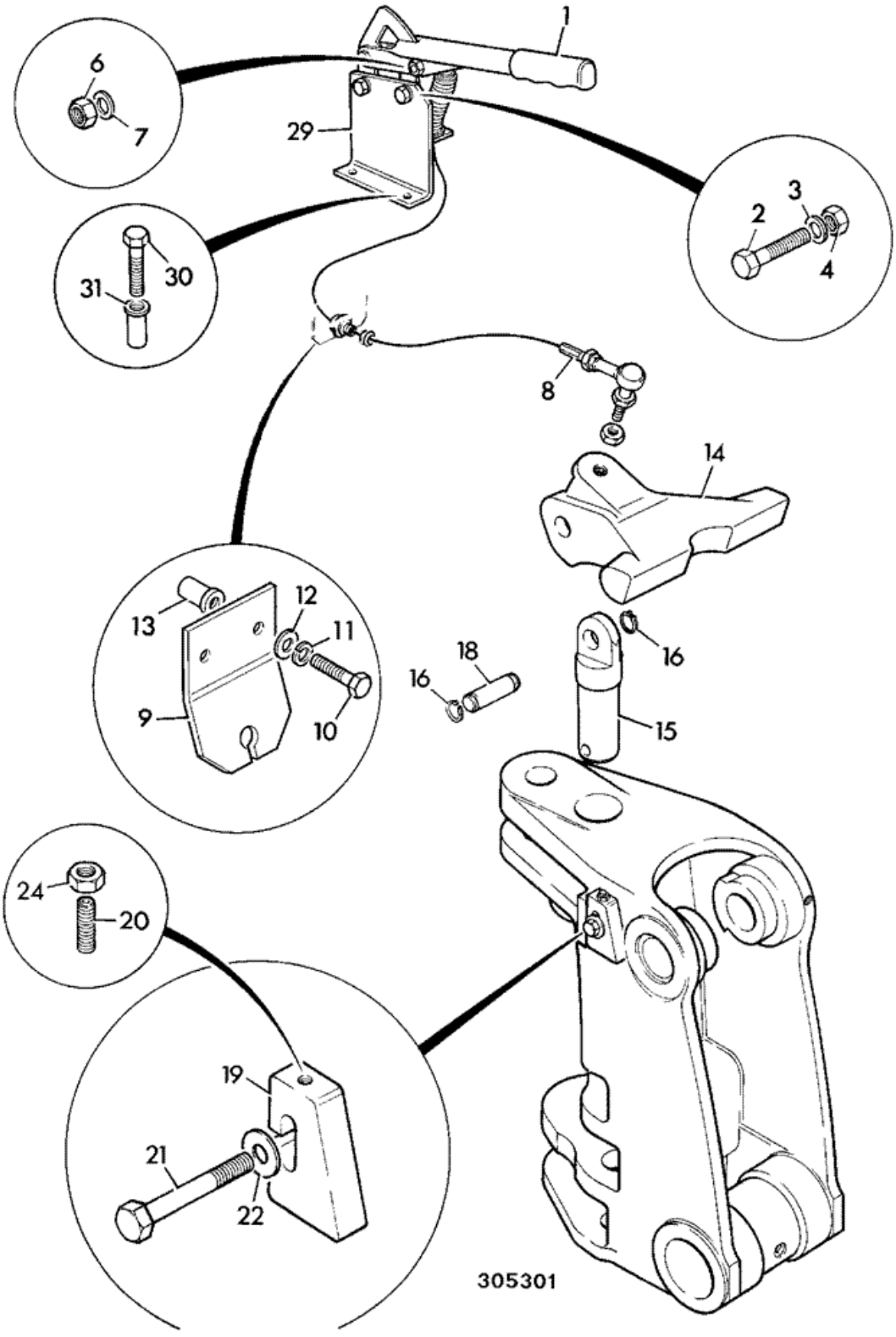


| Item | Part # | Change No | Description | Usage Code | QTY |
|---|---|---|---|---|---|
| 1 | 123/05234 | | Lever boomlock red grip | | 1 |
| 2 | 1315/0307Z | | Screw Hexagon M8 X 25 | | 2 |
| 3 | 1411/0003Z | | Washer medium | | 2 |
| 4 | 1370/0203Z | | Nut self lock M8 | | 2 |
| 6 | 913/05903 | | Pin clevis | | 1 |
| | | | | | |

| | | | | | |
|---|---|---|---|---|---|
| 7 | 913/00005 | | Clip clevis | | 1 |
| 8 | 910/48400 | | Cable assembly boomlock centremount | | 1 |
| 8A | :123/07652 | | Joint ball end | | 1 |
| 9 | 331/30856 | | Bracket reaction | | 1 |
| 10 | 1315/0307Z | | Screw Hexagon M8 X 25 | | 2 |
| 11 | 1425/0007Z | | Washer spring | | 2 |
| 12 | 1420/0007Z | | Washer plain M8 | | 2 |
| 13 | 826/01103 | | Nut rivet,M8 open ended | | 2 |
| 14 | 123/05862 | Superseded | Casting boom lock 14'0 (Yellow) | | 1 |
| 14 | 332/C1897 | | Casting boom lock | | 1 |
| 15 | 913/10079 | | Pin kingpost top centremount | | 1 |
| 16 | 2203/0035 | | Circlip | | 2 |
| 18 | 811/70099 | | Pin boomlock | | 1 |
| 19 | 123/05236 | | Plate boom stop | | 1 |
| 20 | 1390/0412Z | | Screw grub M10x50 long | | 1 |
| 21 | 1315/3814Z | | Bolt M20 x 60mm | | 1 |
| 22 | 823/00491 | | Washer spacer | | 1 |
| 24 | 1370/0302Z | | Nut lock | | 1 |
| 26 | 1450/0001 | | Nipple grease, straight 1/8 BSP<br>*Use with item 15, 18* | | 1 |
| 27 | 835/00017 | | Cap grease nipple | | 1 |
| 28 | 835/00166 | | Plug | | 1 |
| 29 | 331/14484 | | Bracket boomlock cable reaction | | 1 |
| 30 | . | | 'See Remark' | | 2 |
| 31 | . | | 'See Remark' | | 2 |

Product Catalog \ CONSTRUCTION \ NORTH AMERICA \ CONSTRUCTION / INDUSTRIAL \ BACKHOE LOADER 3CX,4CX,214,215,217 \ 3C PLUS (91HP) , Made in Brazil with Dieselmax/IESA Engine 9812/0080 \ B BODYWORK, CAB, LOADER END \ B04 BACKHOE

# 9812/0080 B4-11-1 KINGPOST, BULKHEAD

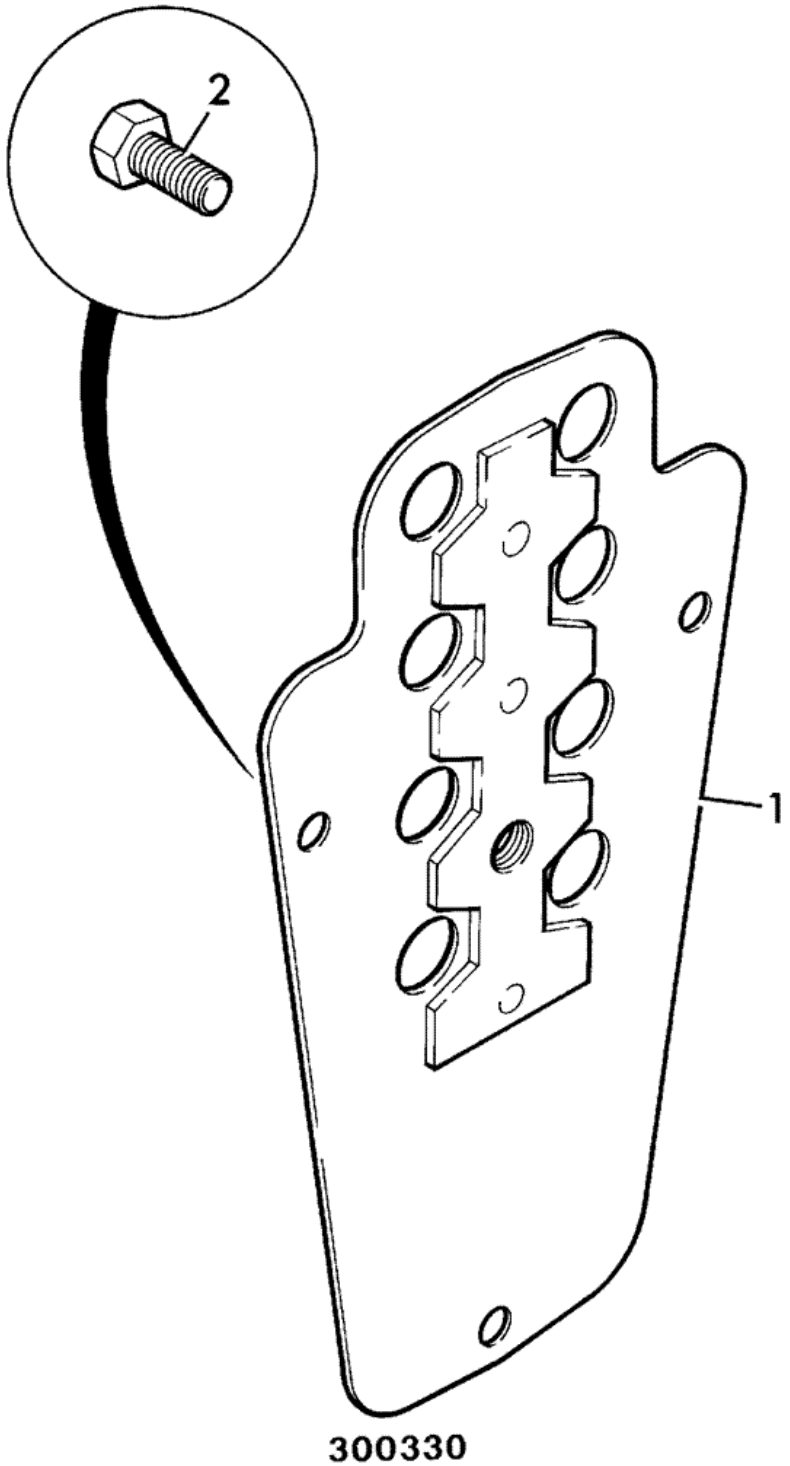


| Item | Part # | Change No | Description | Usage Code | QTY |
|---|---|---|---|---|---|
| 1 | 331/33337 | Superseded | Plate bulkhead,kingpost centremount | | 1 |
| 1 | 331/64233 | | Plate bulkhead, kingpost centremount | | 1 |
| | | | | | |

| | | | | | |
|---|---|---|---|---|---|
| 2 | 1315/0408Z | | Bolt M10 x 30<br>*Was 3 off* | | 2 |

# 9812/0080 B4-12-2 KINGPOST HOSE CLAMPS

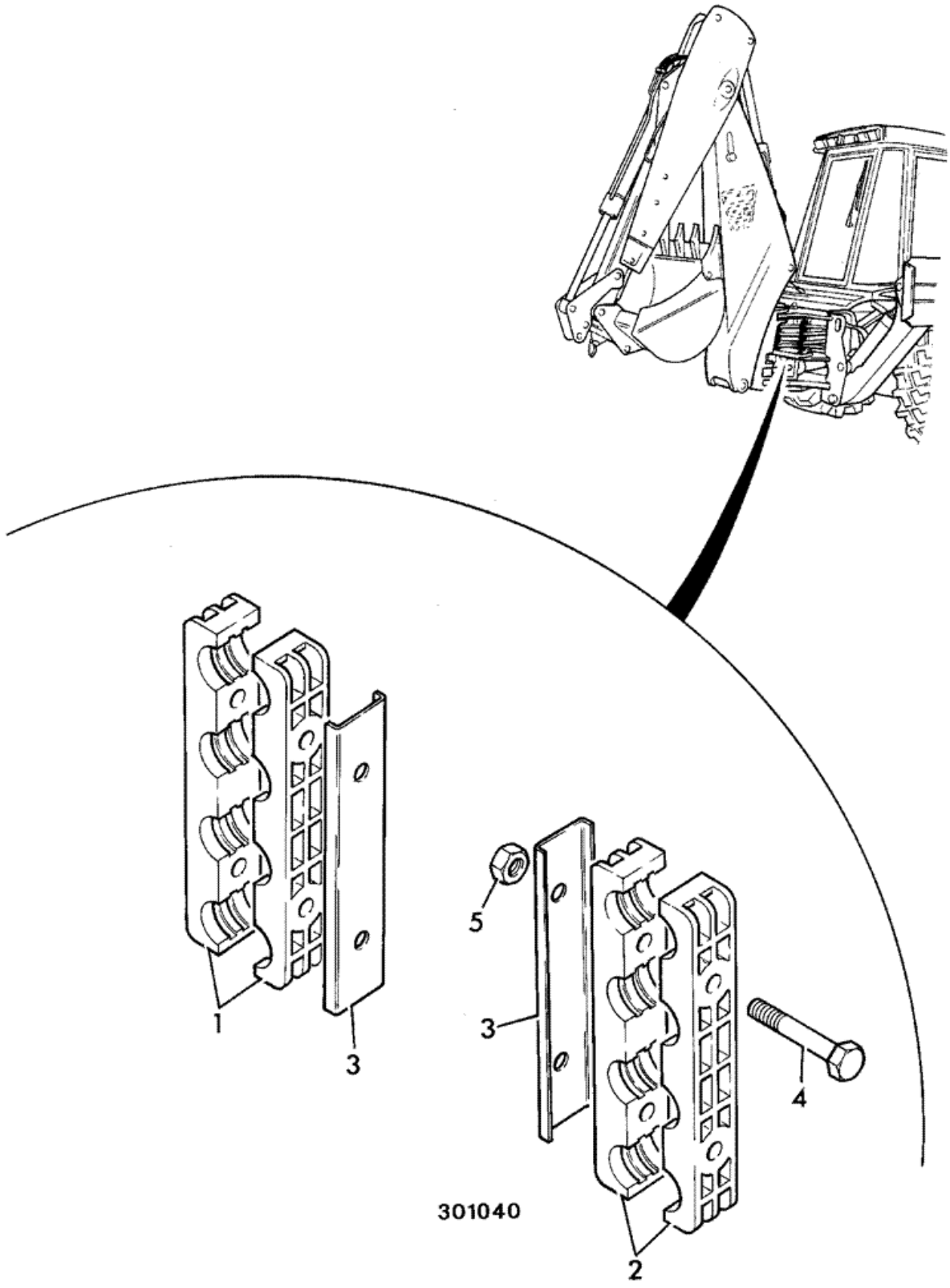

| Item | Part # | Change No | Description | Usage Code | QTY |
|---|---|---|---|---|---|
| 1 | 123/07468 | | Clamp 5/8" top centremount | | 2 |
| 2 | 123/07489 | | Clamp 5/8" middle | | 2 |
| 3 | 123/07469 | | Plate clamp | | 4 |
| 4 | 1315/3414Z | | Bolt M10x60 | | 4 |
| 5 | 1370/0303Z | | Nut lock M10 | | 4 |

Product Catalog \ CONSTRUCTION \ NORTH AMERICA \ CONSTRUCTION / INDUSTRIAL \ BACKHOE LOADER 3CX,4CX,214,215,217 \ 3C PLUS (91HP) , Made in Brazil with Dieselmax/IESA Engine 9812/0080 \ B BODYWORK, CAB, LOADER END \ B04 BACKHOE

# 9812/0080 B4-4-40 BOOM, 14'

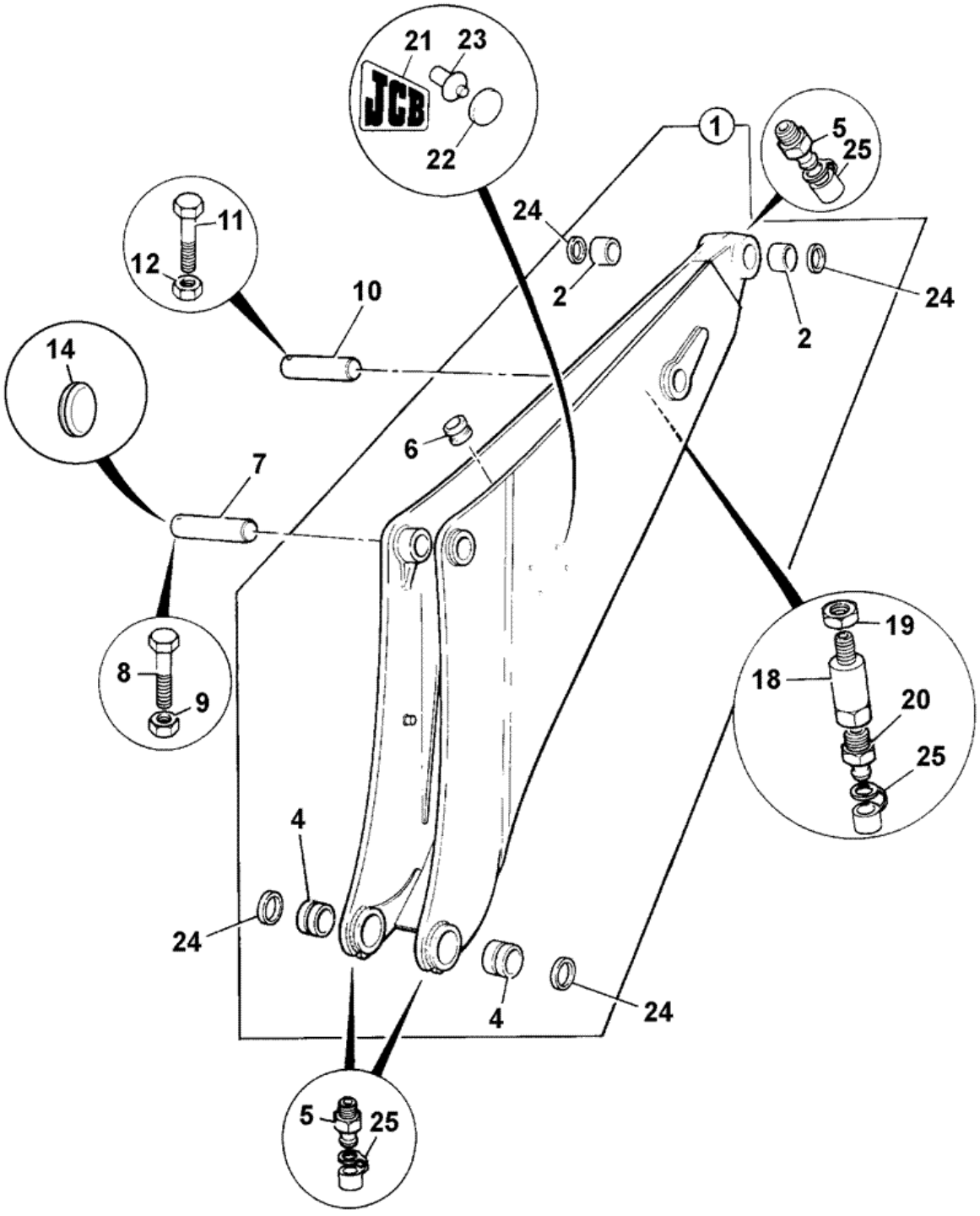


290871

| Item | Part # | Change No | Description | Usage Code | QTY |
|---|---|---|---|---|---|
| 1 | 126/02332 | | Boom 2390mm long | | 1 |
| 2 | :809/00131 | | Bearing liner 60.06IDx70.07ODx62lg | | 2 |
| | | | | | |

| | | | | | |
|---|---|---|---|---|---|
| 4 | :809/00131 | | Bearing liner 60.06IDx70.07ODx62lg | | 2 |
| 5 | 1450/0001 | | Nipple grease, straight 1/8 BSP | | 3 |
| 6 | 830/00314 | | Ferrule rubber | | 6 |
| 7 | 811/50569 | | Pin pivot | | 1 |
| 7 | 811/50569A | | Pin pivot, 60X322mm 0.1mm O/S | | 1 |
| 7 | 811/50569B | | Pin pivot, 60X322mm 0.25mm O/S | | 1 |
| 8 | 1315/3520Z | | Bolt M12 x 100mm | | 1 |
| 9 | 1370/0403Z | | Nut M12 | | 1 |
| 10 | 811/50520 | | Pin pivot | | 1 |
| 10 | 811/50520A | | Pin pivot, 50X275mm 0.1mm O/S | | 1 |
| 10 | 811/50520B | | Pin pivot, 50X275mm 0.25mm O/S | | 1 |
| 11 | 1315/3520Z | | Bolt M12 x 100mm | | 1 |
| 12 | 1370/0403Z | | Nut M12 | | 1 |
| 14 | 2410/1308 | | Grommet blind<br>*fit ti item 7* | | 1 |
| 18 | 816/20049 | | Adapter | | 1 |
| 19 | 826/00871 | | Nut | | 1 |
| 20 | 1450/0001 | | Nipple grease, straight 1/8 BSP | | 1 |
| 21 | 817/17454 | <M TBA | Decal JCB insignia 350mm high | | 2 |
| 21 | 817/17422 | >M TBA | Decal JCB Insignia (Black) | | 2 |
| 22 | 835/00049 | <M TBA | Plug blanking | | 8 |
| 22 | 332/E8179 | >M TBA | Plug blanking 25mm dia<br>*blanks 2X25mm tooling holes* | | 2 |
| 23 | 826/00867 | <M TBA | Rivet logo | | 8 |
| 24 | 813/00427 | | Seal grease | | 4 |
| 25 | 835/00017 | | Cap grease nipple | | 4 |

Product Catalog \ CONSTRUCTION \ NORTH AMERICA \ CONSTRUCTION / INDUSTRIAL \ BACKHOE LOADER 3CX,4CX,214,215,217 \ 3C PLUS (91HP) , Made in Brazil with Dieselmax/IESA Engine 9812/0080 \ B BODYWORK, CAB, LOADER END \ B05 REFURBISHMENTS

# 9812/0080 B5-2-10 DECALS, WARNING, BRAZIL - PORTUGUESE

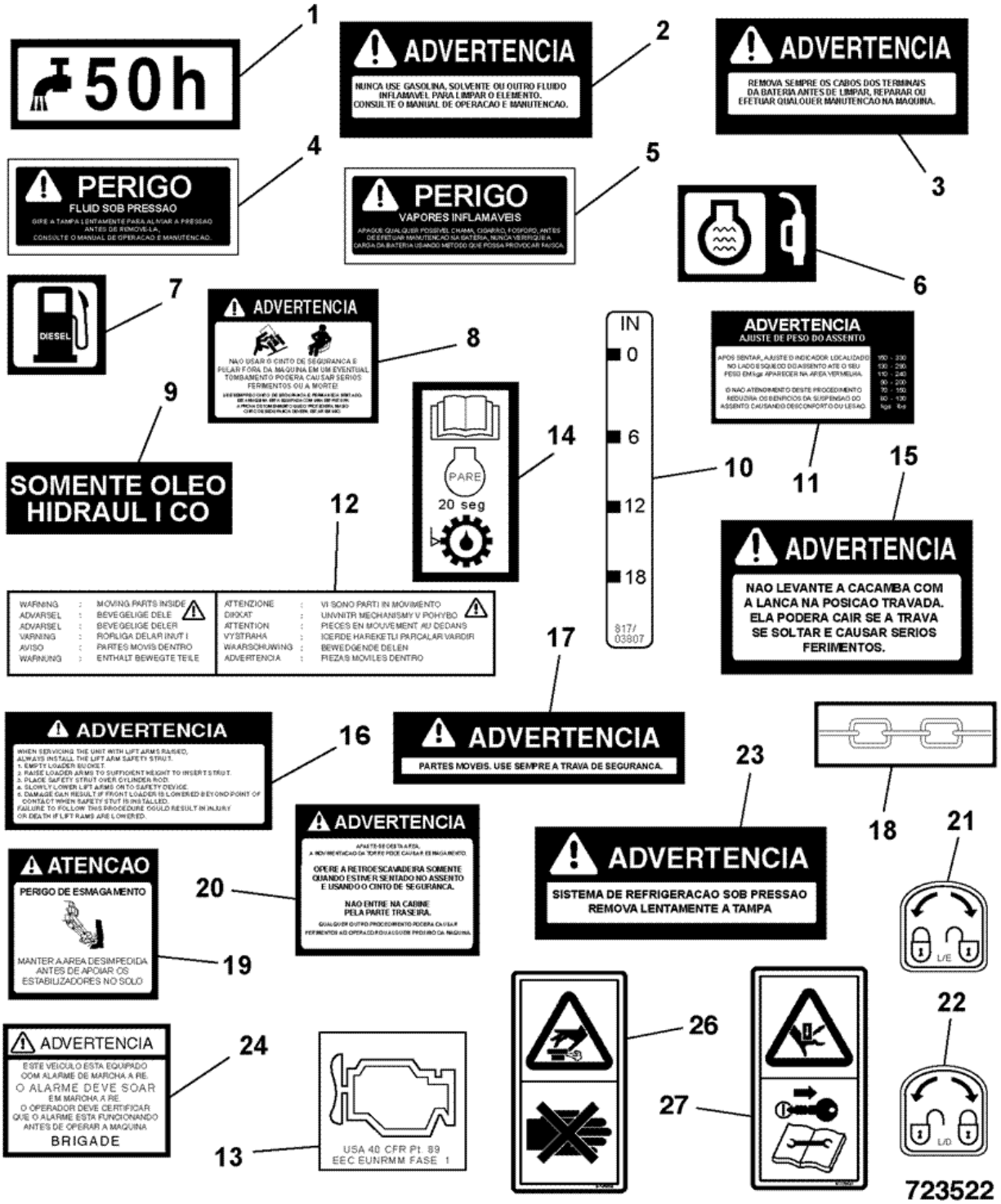


| Item | Part # | Change No | Description | Usage Code | QTY |
|---|---|---|---|---|---|
| 1 | 817/00380 | | Label DRAIN EVERY 50 HOURS | | 2 |

| | | | | | |
|---|---|---|---|---|---|
| 2 | 817/18866 | | Label air filter cleaning portuguese | | 1 |
| 3 | 817/18867 | | Label disconnect battery portuguese | | 1 |
| 4 | 817/18734 | | Label pressurised fluid portuguese | | 2 |
| 5 | 817/18735 | | Label flammable vapours portuguese | | 1 |
| 6 | 817/00824 | | Label filler coolant | | 1 |
| 7 | 817/02305 | | Label Diesel | | 1 |
| 8 | 817/18863 | | Label seatbelt portuguese | | 1 |
| 9 | 817/18732 | | Label hydraulic oil portuguese | | 1 |
| 10 | 817/03807 | | Decal 6in1 clam shovel | | 1 |
| 11 | 817/18862 | | Label seat weight adjstmnt portuguese | | 1 |
| 12 | 817/04776 | | Label warning moving parts inside | | 2 |
| 13 | 817/18733 | | Label engine emission portuguese | | 1 |
| 14 | 817/18728 | | Label transmission oil portuguese | | 1 |
| 15 | 817/18859 | | Label lift restriction portuguese | | 1 |
| 16 | 817/18865 | | Label safety procedure portuguese | | 2 |
| 17 | 817/18864 | | Label crushing hazard portuguese | | 2 |
| 18 | 817/01087 | | Decal tie down (chain) | | 6 |
| 19 | 817/18860 | | Label crushing hazard stabliser,portuguese | | 2 |
| 20 | 817/18861 | | Label crushing hazard,slew portuguese | | 2 |
| 20 | 817/04570 | | Decal 4x4x4 | | 1 |
| 21 | 817/18730 | | Label LH sidepanel lock portuguese | | 1 |
| 22 | 817/18731 | | Label RH sidepanel lock portuguese | | 1 |
| 23 | 817/18858 | | Label pressurised coolant portuguese | | 1 |
| 24 | 817/18473 | | Label Reverse alarm (Portuguese)Brazil | | 1 |
| 25 | 817/18825 | | Label product liability read operator h.book | | 1 |
| 26 | 817/70005 | | Decal warning,hot fluid under pressure | | 1 |
| 27 | 817/70102 | | Decal warning,Moving parts remove key | | 2 |

Product Catalog \ CONSTRUCTION \ NORTH AMERICA \ CONSTRUCTION / INDUSTRIAL \ BACKHOE LOADER 3CX,4CX,214,215,217 \ 3C PLUS (91HP) , Made in Brazil with Dieselmax/IESA Engine 9812/0080 \ B BODYWORK, CAB, LOADER END \ B05 REFURBISHMENTS

# 9812/0080 B5-2-11 DECALS, WARNING, BRAZIL - PORTUGUESE

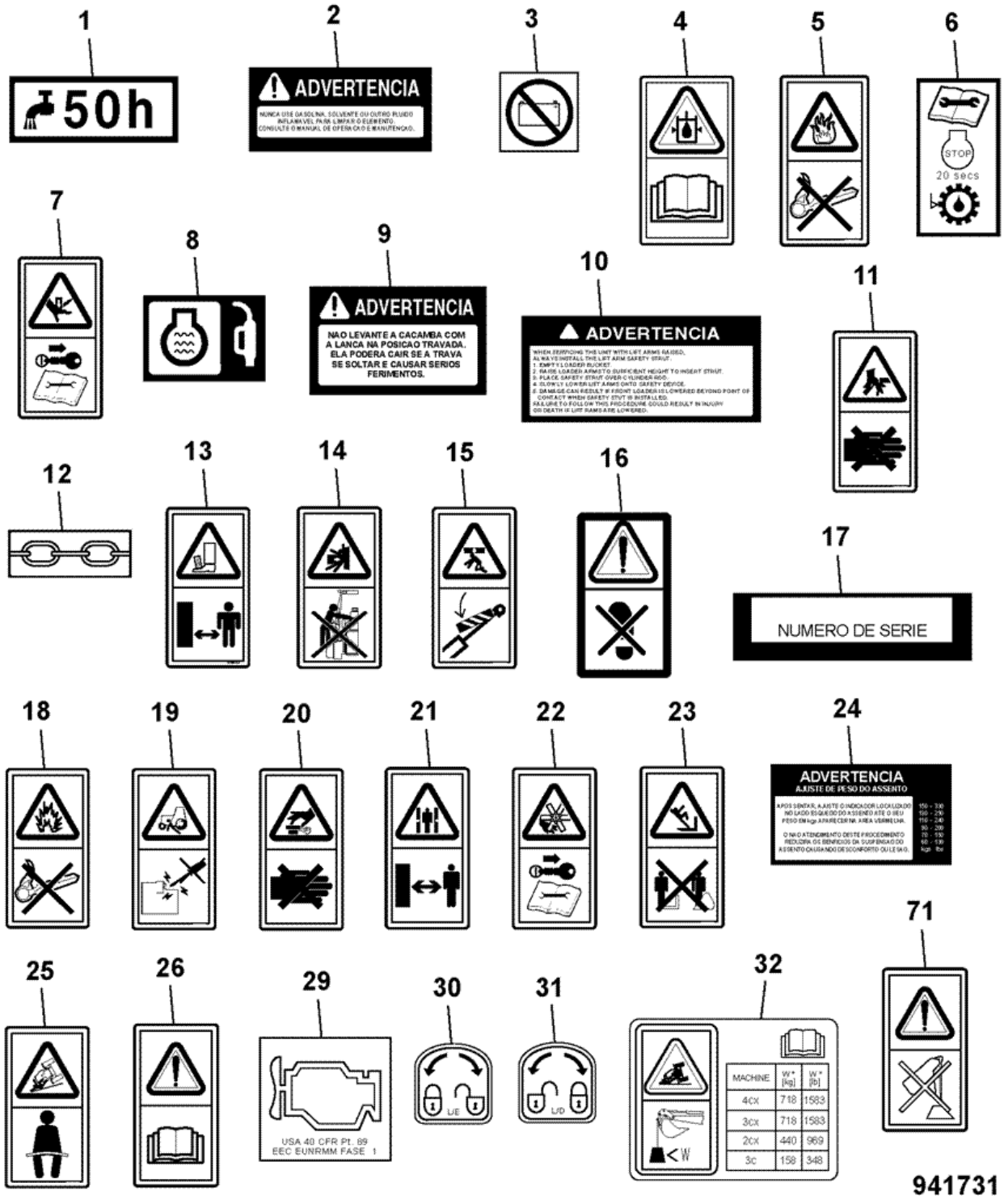


| Item | Part # | Change No | Description | Usage Code | QTY |
|---|---|---|---|---|---|
| 1 | 817/00380 | | Label DRAIN EVERY 50 HOURS | | 1 |

| | | | | | |
|---|---|---|---|---|---|
| 2 | 817/18866 | | Label air filter cleaning portuguese | | 1 |
| 3 | 817/01452 | | Label battery isolator | | 1 |
| 4 | 817/70041 | | Decal Pressure Hazard Read Handbook | | 2 |
| 5 | 817/70025 | | Label fire hazard | | 1 |
| 6 | 817/19906 | | Decal transmission oil 49mm X 24mm | | 1 |
| 7 | 817/70102 | | Decal warning,Moving parts remove key | | 2 |
| 8 | 817/00824 | | Label filler coolant | | 1 |
| 9 | 817/18859 | | Label lift restriction portuguese | | 1 |
| 10 | 817/18865 | | Label safety procedure portuguese | | 2 |
| 11 | 817/70003 | | Label warning hazard to hands | | 2 |
| 12 | 817/01087 | | Decal tie down (chain) | | 6 |
| 13 | 817/70043 | | Decal warning,crush hazard keep a safe distance | | 2 |
| 14 | 817/70018 | | Decal warning,operate from operators seat only | | 2 |
| 15 | 817/70104 | | Decal warning,safety strut | | 2 |
| 16 | 817/70024 | | Label warning do not use as step | | 2 |
| 17 | 817/18729 | | Label serial number hilite | | 1 |
| 18 | 817/70042 | | Decal explosion hazard remove ignitn.source | | 2 |
| 19 | 817/70012 | | Decal Warning,start engine from operators seat | | 1 |
| 20 | 817/70005 | | Decal warning,hot fluid under pressure | | 1 |
| 21 | 817/70027 | | Decal warning,crush danger keep clear | | 2 |
| 22 | 332/A0008 | | Decal Warning-fan blades remove key from ign. | | 1 |
| 23 | 817/70011 | | Decal warning,do not stand on/under bucket/fork | | 2 |
| 24 | 817/18862 | | Label seat weight adjstmnt portuguese | | 1 |
| 25 | 817/70029 | | Decal warning,overturn risk-wear seatbelt | | 1 |
| 26 | 817/70014 | | Decal warning,read manual before operating m/c | | 1 |
| 29 | 817/18733 | | Label engine emission portuguese | | 1 |
| 30 | 817/18730 | | Label LH sidepanel lock portuguese | | 1 |
| 31 | 817/18731 | | Label RH sidepanel lock portuguese | | 1 |
| 32 | 332/E2601 | | Decal safe load, ISO | | 1 |

Product Catalog \ CONSTRUCTION \ NORTH AMERICA \ CONSTRUCTION / INDUSTRIAL \ BACKHOE LOADER 3CX,4CX,214,215,217 \ 3C PLUS (91HP) , Made in Brazil with Dieselmax/IESA Engine 9812/0080 \ B BODYWORK, CAB, LOADER END \ B05 REFURBISHMENTS

# 9812/0080 B5-2-20 DECALS, WARNING, BRAZIL - SPANISH

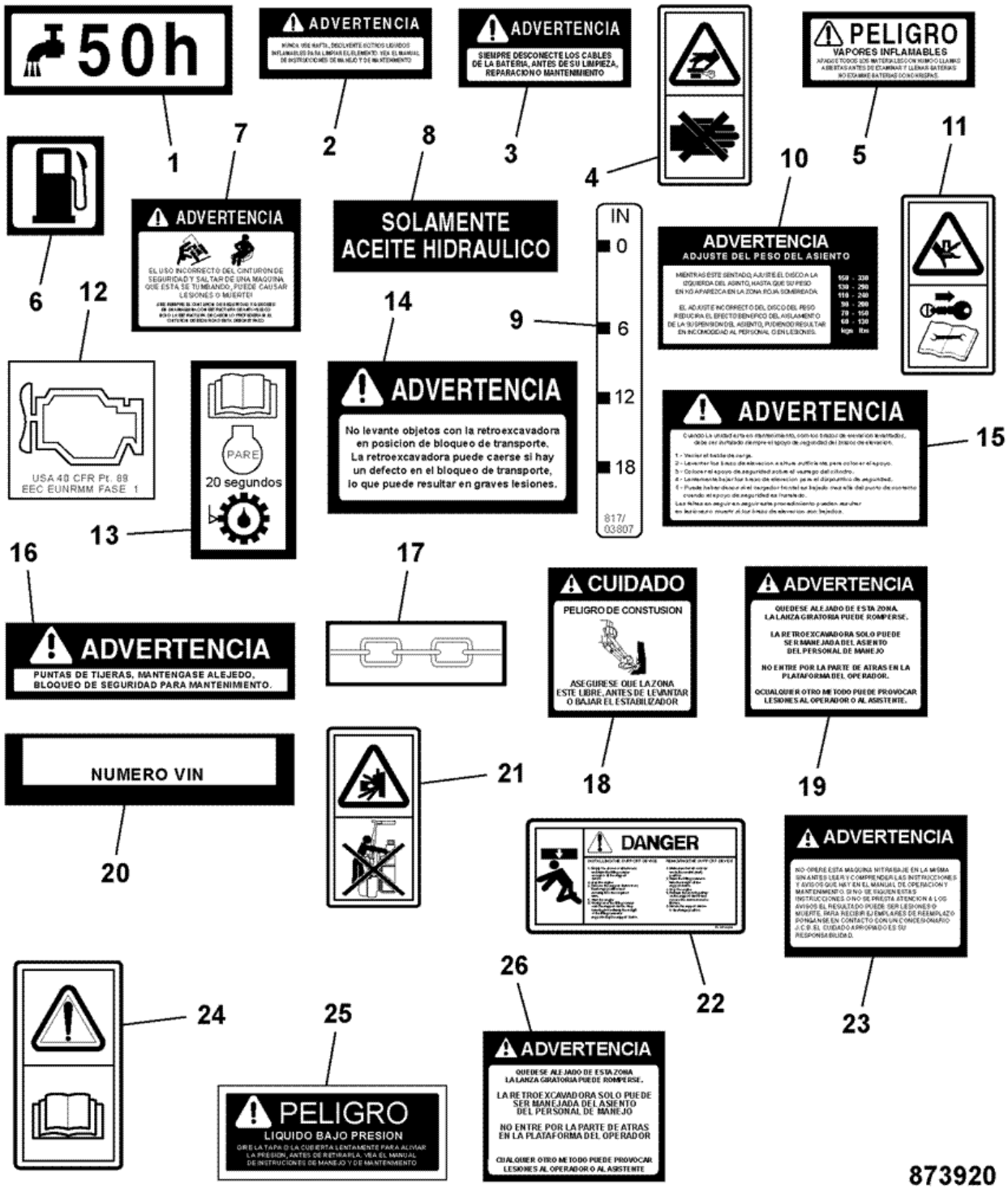


| Item | Part # | Change No | Description | Usage Code | QTY |
|---|---|---|---|---|---|
| 1 | 817/00380 | | Label DRAIN EVERY 50 HOURS | | 2 |
| 2 | 817/19039 | | Label airfilter cleaning Spanish | | 1 |
| | | | | | |

| | | | | | |
|---|---|---|---|---|---|
| 3 | 817/19040 | | Label battery disconnect Spanish | | 1 |
| 4 | 817/70005 | | Decal warning,hot fluid under pressure | | 1 |
| 5 | 817/19042 | | Label flammable vapours Spanish | | 1 |
| 6 | 817/02305 | | Label Diesel | | 1 |
| 7 | 817/19043 | | Label seat belt Spanish | | 1 |
| 8 | 817/19044 | | Label hydraulic oil Spanish | | 1 |
| 9 | 817/03807 | | Decal 6in1 clam shovel | | 1 |
| 10 | 817/19047 | | Label seat height adjust Spanish | | 1 |
| 11 | 817/70102 | | Decal warning,Moving parts remove key | | 2 |
| 12 | 817/18733 | | Label engine emission portuguese | | 1 |
| 13 | 817/19049 | | Label transmission oil Spanish | | 1 |
| 14 | 817/19036 | | Label lift restrict Spanish | | 1 |
| 15 | 817/19037 | | Label safety procedure Spanish | | 2 |
| 16 | 817/19038 | | Label crushing hazard Spanish | | 2 |
| 17 | 817/01087 | | Decal tie down (chain) | | 6 |
| 18 | 817/19045 | | Label crushing hazard Spanish | | 2 |
| 19 | 817/19046 | | Label crushing hazard Spanish | | 2 |
| 20 | 339/40782 | | Label VIN No surroud | | 1 |
| 21 | 817/70018 | | Decal warning,operate from operators seat only | | 1 |
| 22 | 817/70054 | | Decal Strut Guide<br>*no longer fitted* | | 1 |
| 23 | 817/01648 | | Label WARNING Spanish Read operating book | | 1 |
| 24 | 817/18825 | | Label product liability read operator h.book | | 1 |
| 25 | 817/19041 | | Label pressurised fluid Spanish | | 1 |
| 26 | 817/19035 | | Label crushing hazard Spanish<br>*no longer fitted* | | 1 |

Product Catalog \ CONSTRUCTION \ NORTH AMERICA \ CONSTRUCTION / INDUSTRIAL \ BACKHOE LOADER 3CX,4CX,214,215,217 \ 3C PLUS (91HP) , Made in Brazil with Dieselmax/IESA Engine 9812/0080 \ B BODYWORK, CAB, LOADER END \ B05 REFURBISHMENTS

# 9812/0080 B5-2-21 DECALS, WARNING, BRAZIL - SPANISH

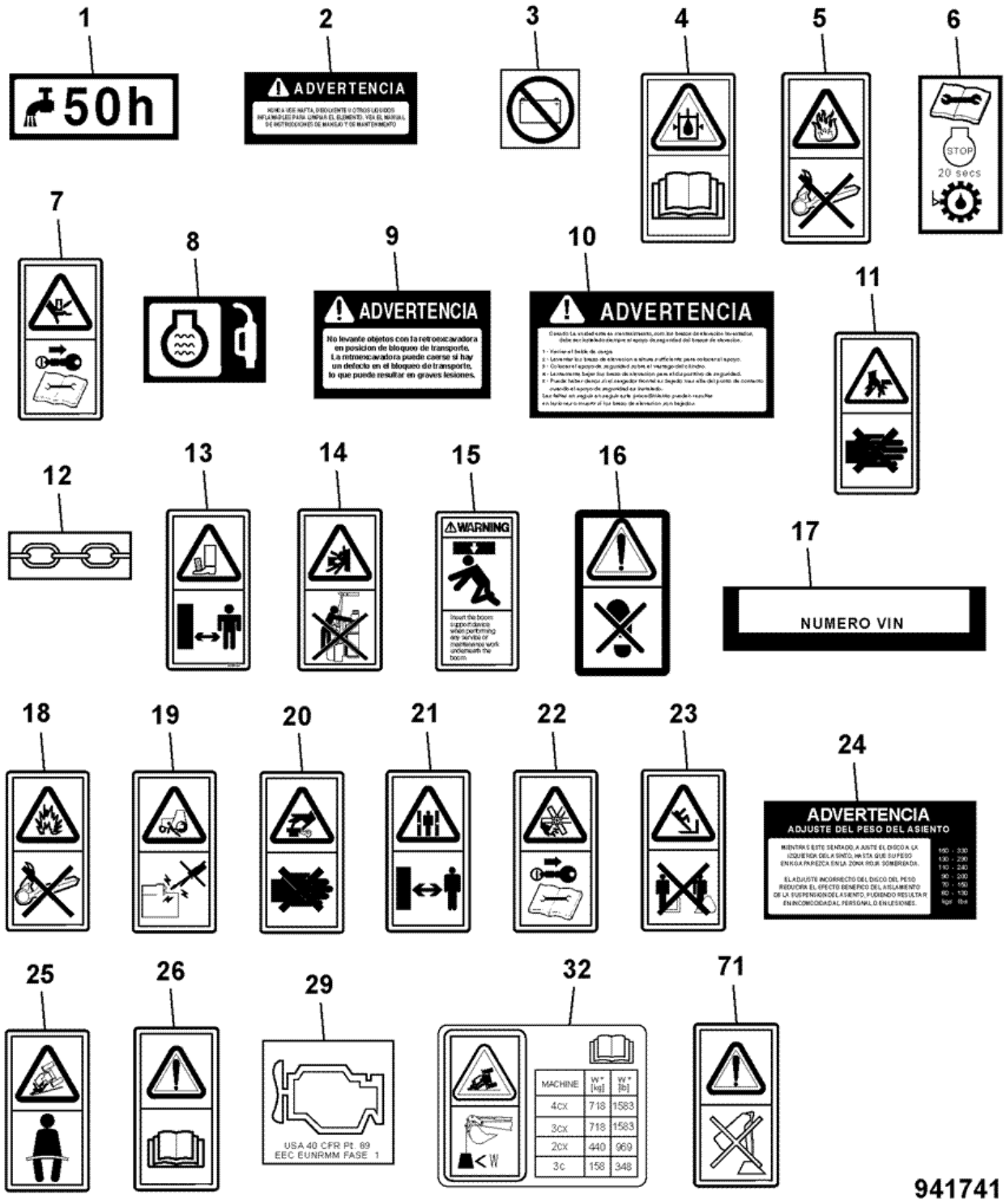


| Item | Part # | Change No | Description | Usage Code | QTY |
|---|---|---|---|---|---|
| 1 | 817/00380 | | Label DRAIN EVERY 50 HOURS | | 1 |
| 2 | 817/19039 | | Label airfilter cleaning Spanish | | 1 |
| | | | | | |

| | | | | | |
|---|---|---|---|---|---|
| 3 | 817/01452 | | Label battery isolator | | 1 |
| 4 | 817/70041 | | Decal Pressure Hazard Read Handbook | | 2 |
| 5 | 817/70025 | | Label fire hazard | | 1 |
| 6 | 817/19906 | | Decal transmission oil 49mm X 24mm | | 1 |
| 7 | 817/70102 | | Decal warning,Moving parts remove key | | 2 |
| 8 | 817/00824 | | Label filler coolant | | 1 |
| 9 | 817/19036 | | Label lift restrict Spanish | | 1 |
| 10 | 817/19037 | | Label safety procedure Spanish | | 2 |
| 11 | 817/70003 | | Label warning hazard to hands | | 2 |
| 12 | 817/01087 | | Decal tie down (chain) | | 6 |
| 13 | 817/70043 | | Decal warning,crush hazard keep a safe distance | | 2 |
| 14 | 817/70018 | | Decal warning,operate from operators seat only | | 2 |
| 15 | 332/S9999 | | Decal boom support | | 2 |
| 16 | 817/70024 | | Label warning do not use as step | | 2 |
| 17 | 339/40782 | | Label VIN No surroud | | 1 |
| 18 | 817/70042 | | Decal explosion hazard remove ignitn.source | | 2 |
| 19 | 817/70012 | | Decal Warning,start engine from operators seat | | 1 |
| 20 | 817/70005 | | Decal warning,hot fluid under pressure | | 1 |
| 21 | 817/70027 | | Decal warning,crush danger keep clear | | 2 |
| 22 | 332/A0008 | | Decal Warning-fan blades remove key from ign. | | 1 |
| 23 | 817/70011 | | Decal warning,do not stand on/under bucket/fork | | 2 |
| 24 | 817/19047 | | Label seat height adjust Spanish | | 1 |
| 25 | 817/70029 | | Decal warning,overturn risk-wear seatbelt | | 1 |
| 26 | 817/70014 | | Decal warning,read manual before operating m/c | | 1 |
| 29 | 817/18733 | | Label engine emission portuguese | | 1 |
| 32 | 332/E2601 | | Decal safe load, ISO | | 1 |

Product Catalog \ CONSTRUCTION \ NORTH AMERICA \ CONSTRUCTION / INDUSTRIAL \ BACKHOE LOADER 3CX,4CX,214,215,217 \ 3C PLUS (91HP) , Made in Brazil with Dieselmax/IESA Engine 9812/0080 \ B BODYWORK, CAB, LOADER END \ B05 REFURBISHMENTS

# 9812/0080 B5-2-50 DECALS, MACHINE, 3C

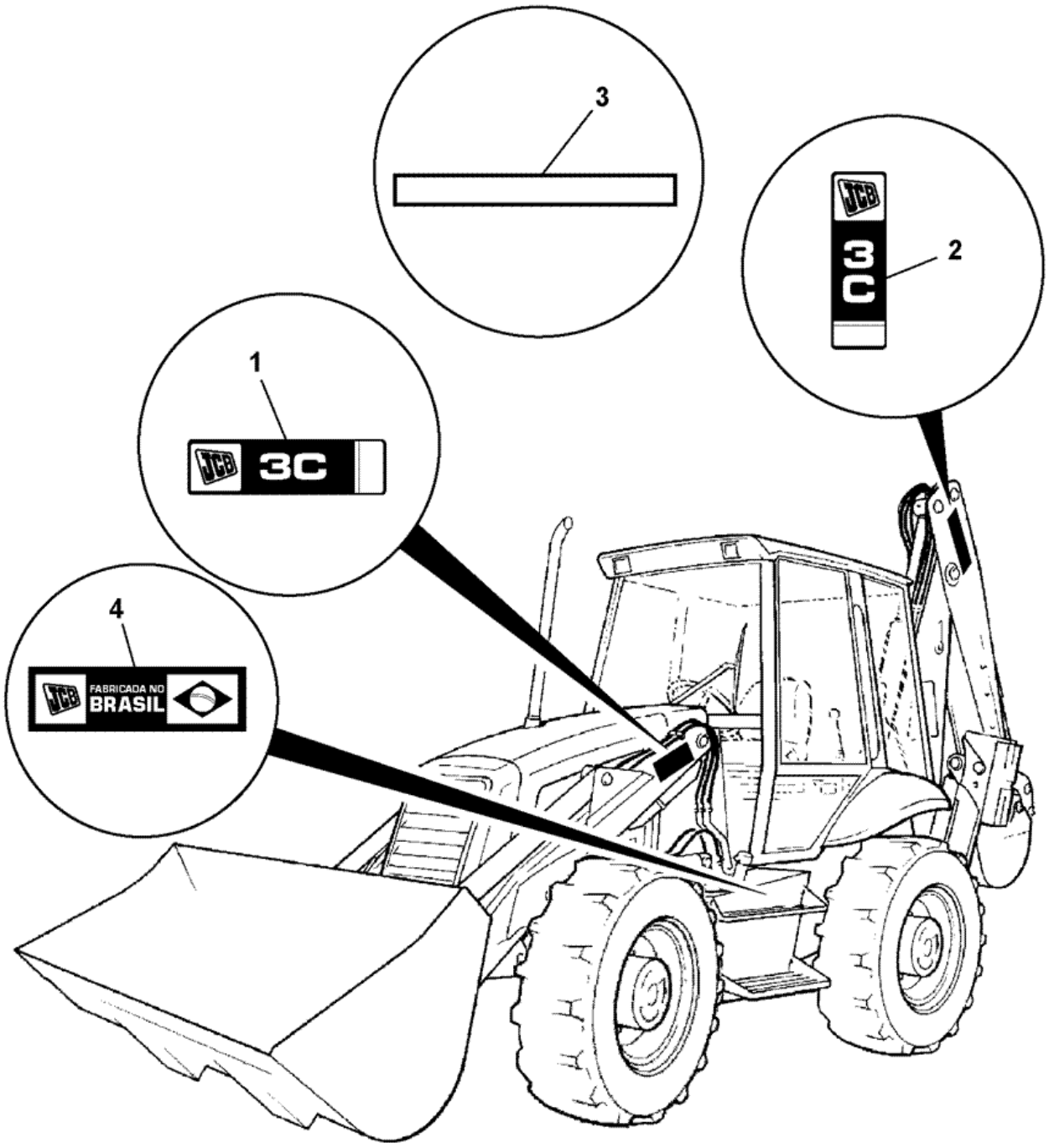


818160

| Item | Part # | Change No | Description | Usage Code | QTY |
|---|---|---|---|---|---|
| 1 | 817/20015 | | Decal 3C 14ft loader arm | | 2 |
| 1 | 817/20575 | | Decal 3C PLUS, loader arm | | 2 |
| | | | | | |

| | | | | | |
|---|---|---|---|---|---|
| 2 | 817/20016 | | Decal 3C 14ft dipper | | 2 |
| 2 | 817/20600 | | Decal 3C PLUS, dipper | | 2 |
| 3 | 817/05232 | | Decal cab rear trim | | 1 |
| 4 | 817/20125 | | Decal Fabricado no Brasil (made in Brazil) | | 1 |

# 9812/0080 B1-10-12 PADS, STREET, STABILISER, CENTREMOUNT

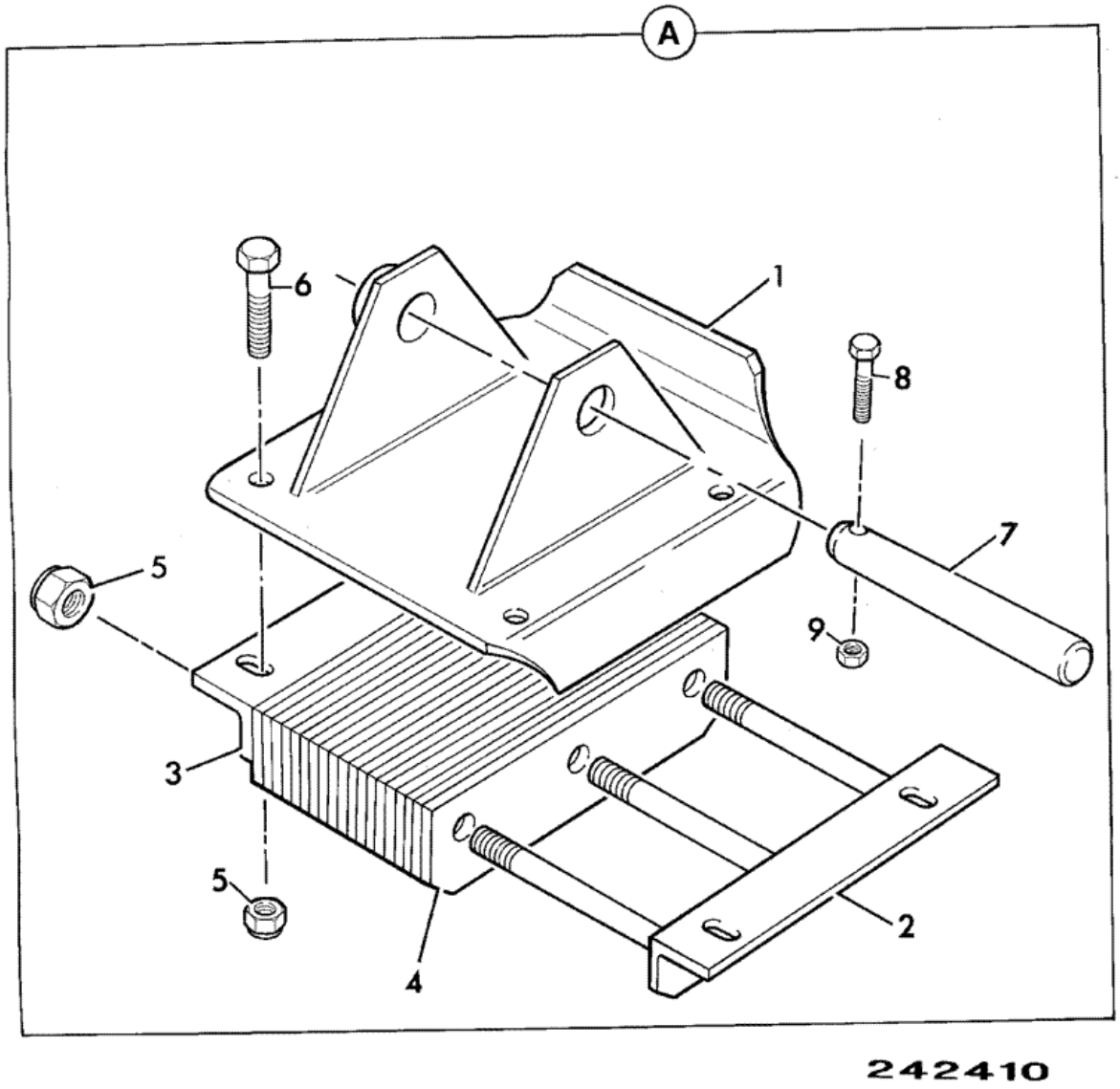


| Item | Part # | Change No | Description | Usage Code | QTY |
|---|---|---|---|---|---|
| A | 126/01644 | | Foot assembly street pad | | 2 |

| | | | | | |
|---|---|---|---|---|---|
| 1 | :125/98100 | | Foot centremount | | 1 |
| 2 | :125/60200 | | Clamp street foot | | 1 |
| 3 | :123/04872 | | Clamp street foot | | 1 |
| 4 | :123/04871 | | Strip rubber | | 19 |
| 5 | :1370/0703Z | | Nut M20 | | 7 |
| 6 | :1315/0810Z | | Bolt M20 x 40 lg | | 4 |
| 7 | 811/50557 | | Pin pivot | | 2 |
| 8 | 1305/3224Z | | Bolt | | 2 |
| 9 | 1340/0203Z | | Nut | | 2 |

# 9812/0080 B1-10-14 PADS, FLIP, STABILISER, CENTREMOUNT

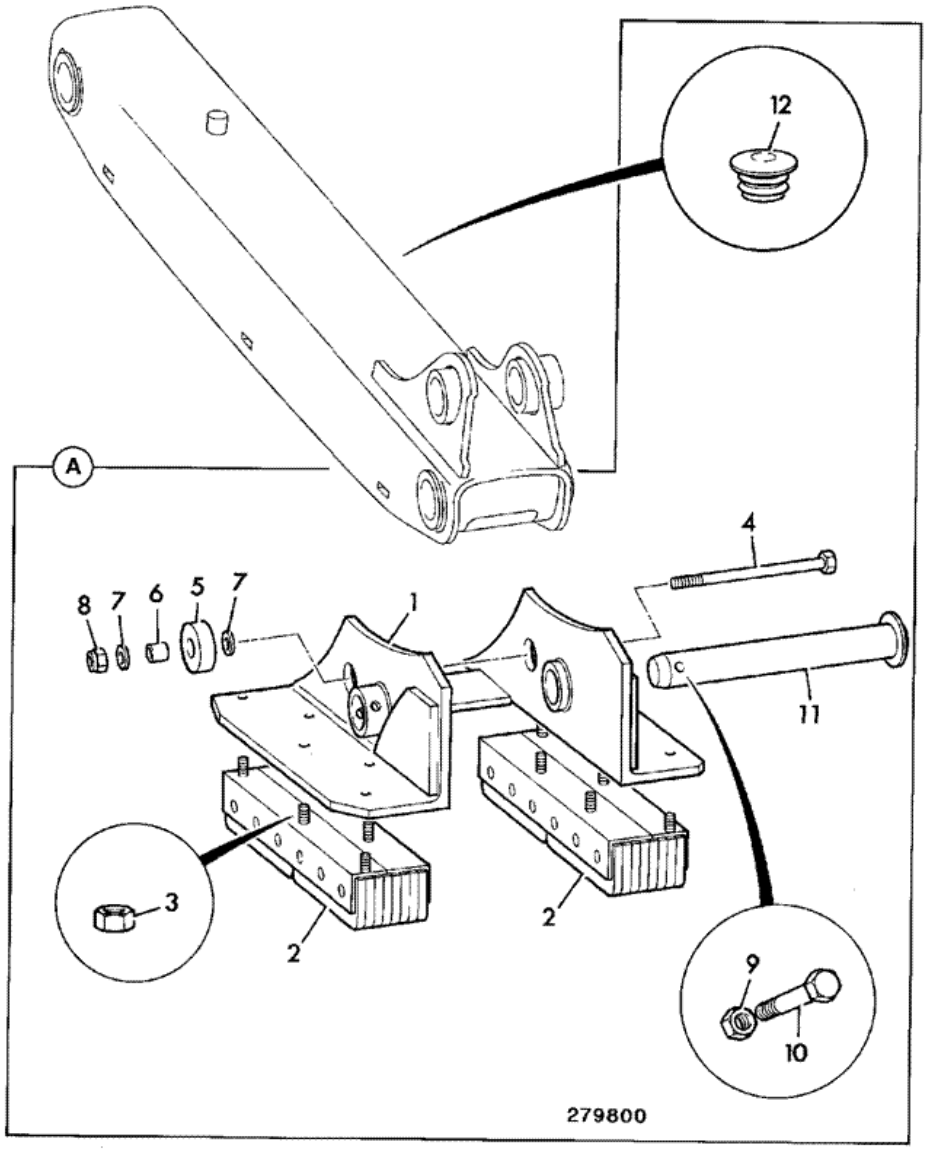


| Item | Part # | Change No | Description | Usage Code | QTY |
|---|---|---|---|---|---|
| A | NSP | | None serviced part | | 1 |

| | | | | | |
|---|---|---|---|---|---|
| 1 | :126/02420 | | Foot right hand flip centremount | | 1 |
| 1 | :126/02421 | | Foot left hand flip centremount | | 1 |
| 2 | ::123/06761 | | Pad street | | 2 |
| 3 | ::1340/1801 | | Nut | | 10 |
| 4 | :1315/3731Z | | Bolt M16 x 220mm | | 2 |
| 5 | 123/06762 | | Roller | | 2 |
| 6 | :123/06763 | | Sleeve | | 2 |
| 7 | :1420/0011Z | | Washer M16 plain | | 2 |
| 8 | :1370/0603Z | | Nut M16 | | 2 |
| 9 | :1370/0403Z | | Nut M12 | | 2 |
| 10 | :1315/3518Z | | Bolt M12 x 80mm | | 2 |
| 11 | :911/31800 | | Pin pivot | | 2 |
| 12 | :835/00174 | | Plug plastic,black | | 2 |

Product Catalog \ CONSTRUCTION \ NORTH AMERICA \ CONSTRUCTION / INDUSTRIAL \ BACKHOE LOADER 3CX,4CX,214,215,217 \ 3C PLUS (91HP) , Made in Brazil with Dieselmax/IESA Engine 9812/0080 \ B BODYWORK, CAB, LOADER END \ B01 BODYWORK/FRAME

# 9812/0080 B1-12-11 COVER PLATES, LOADER TOWER

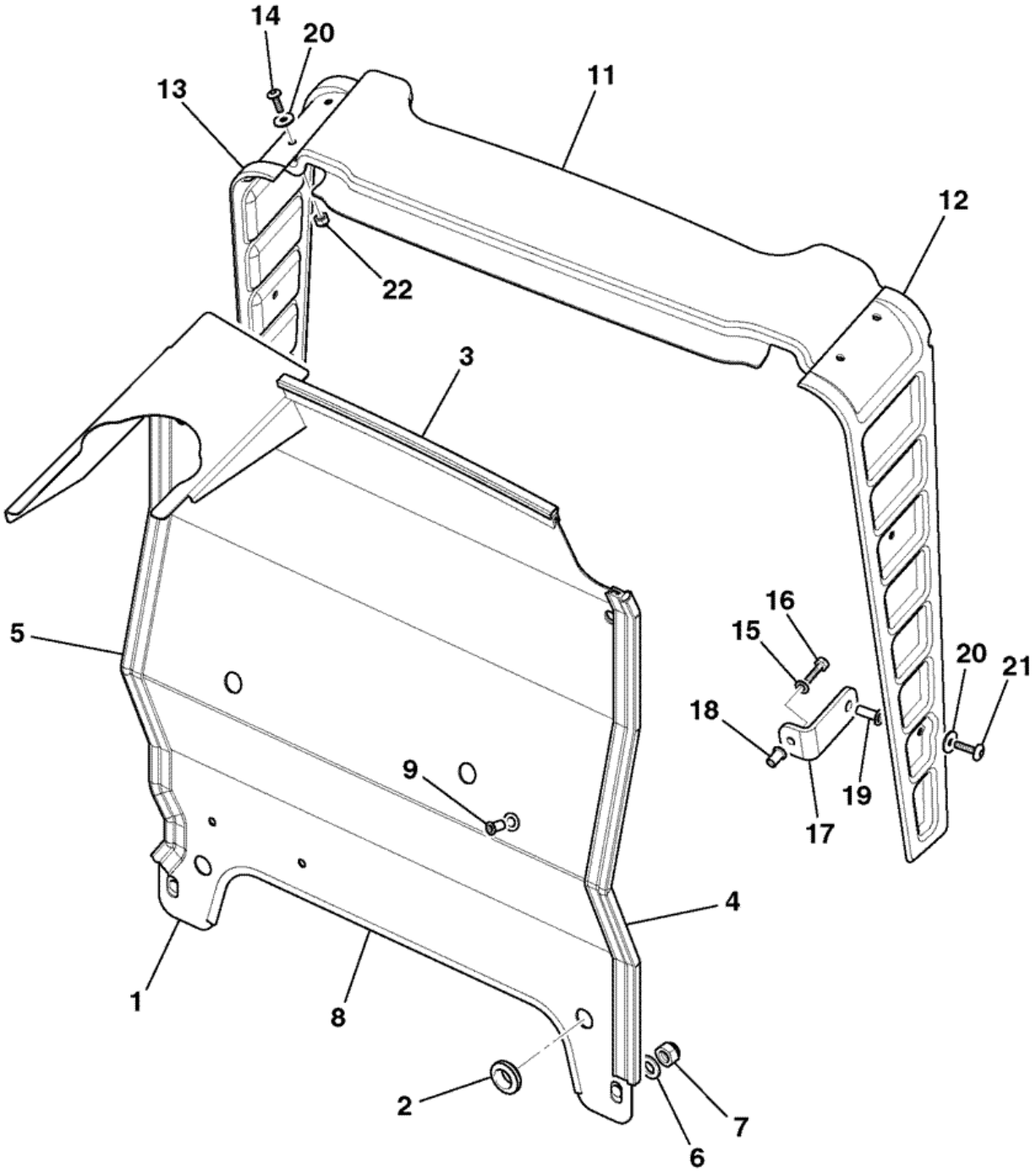


788760

| Item | Part # | Change No | Description | Usage Code | QTY |
|---|---|---|---|---|---|
| 1 | 335/09482 | | Plate tower | | 1 |
| 2 | 2410/0012 | | Grommet | | 2 |
| | | | | | |

| | | | | | |
|---|---|---|---|---|---|
| 3 | 926/01100 | | Strip sealing<br>*approx 357mm long* | | 1 |
| 4 | 926/01100 | | Strip sealing<br>*approx 620mm long* | | 1 |
| 5 | 926/01100 | | Strip sealing<br>*approx 631mm long* | | 1 |
| 6 | 1420/0009Z | | Washer Plain M12 | | 4 |
| 7 | 1370/0403Z | | Nut M12 | | 4 |
| 8 | 926/51601 | | Strip edging 595mm long | | 1 |
| 10 | 2410/1012 | | Grommet | | 1 |
| 11 | 346/00251 | | Moulding tower cover | | 1 |
| 12 | 346/00275 | | Moulding L/H tower moulding | | 1 |
| 13 | 346/00276 | | Moulding R/H tower panel | | 1 |
| 14 | 826/10887 | | Screw button head torx | | 4 |
| 15 | 1420/0007Z | | Washer plain M8 | | 4 |
| 16 | 1315/0305Z | | Screw Hexagon M8 x 20mm long | | 4 |
| 17 | 331/53645 | | Bracket mounting | | 4 |
| 18 | 826/01106 | | Nut rivet,M8 | | 4 |
| 19 | 826/01767 | | Nut rivet M6 closed end for 12mm plate | | 4 |
| 20 | 823/00516 | | Washer nylon M6 | | 8 |
| 21 | 826/01768 | | Screw M6x25mm | | 4 |
| 22 | 826/01728 | | Nut nyloc | | 4 |

Product Catalog \ CONSTRUCTION \ NORTH AMERICA \ CONSTRUCTION / INDUSTRIAL \ BACKHOE LOADER 3CX,4CX,214,215,217 \ 3C PLUS (91HP) , Made in Brazil with Dieselmax/IESA Engine 9812/0080 \ B BODYWORK, CAB, LOADER END \ B01 BODYWORK/FRAME

# 9812/0080 B1-13-11 VALVE MOUNTINGS, LOADER

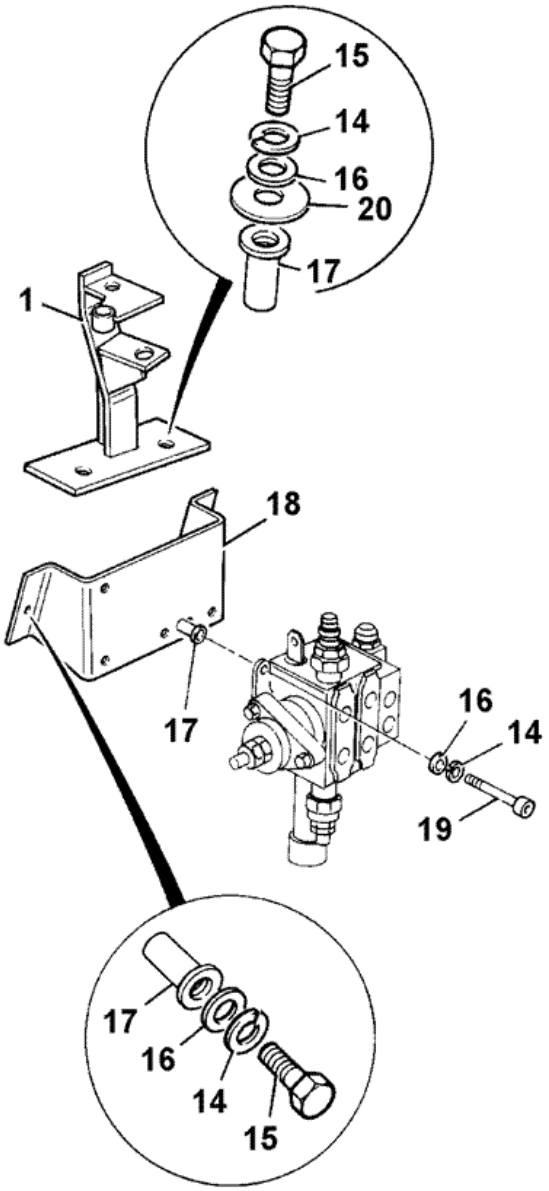


871520

| Item | Part # | Change No | Description | Usage Code | QTY |
|---|---|---|---|---|---|
| 1 | 125/00551 | | Bracket loader lever | | 1 |
| 14 | 1425/0008Z | | Washer Spring M10 | | 8 |
| | | | | | |

| | | | | | |
|---|---|---|---|---|---|
| 15 | 1315/0410Z | | Bolt M10 x 40 | | 5 |
| 16 | 1420/0008Z | | Washer Plain M10 | | 8 |
| 17 | 826/01249 | | Nut rivet M10 open end for 6 to 8.5mm plate | | 8 |
| 18 | 123/07289 | | Plate loader valve mount | | 1 |
| 19 | 1391/3411Z | | Capscrew | | 3 |
| 20 | 1412/0004Z | | Washer | | 2 |

# 9812/0080 B1-13-61 VALVE MOUNTING, LOADER, 3C - 90HP WITH OPTIONAL 36/26 CCR PUMP UPGRADE

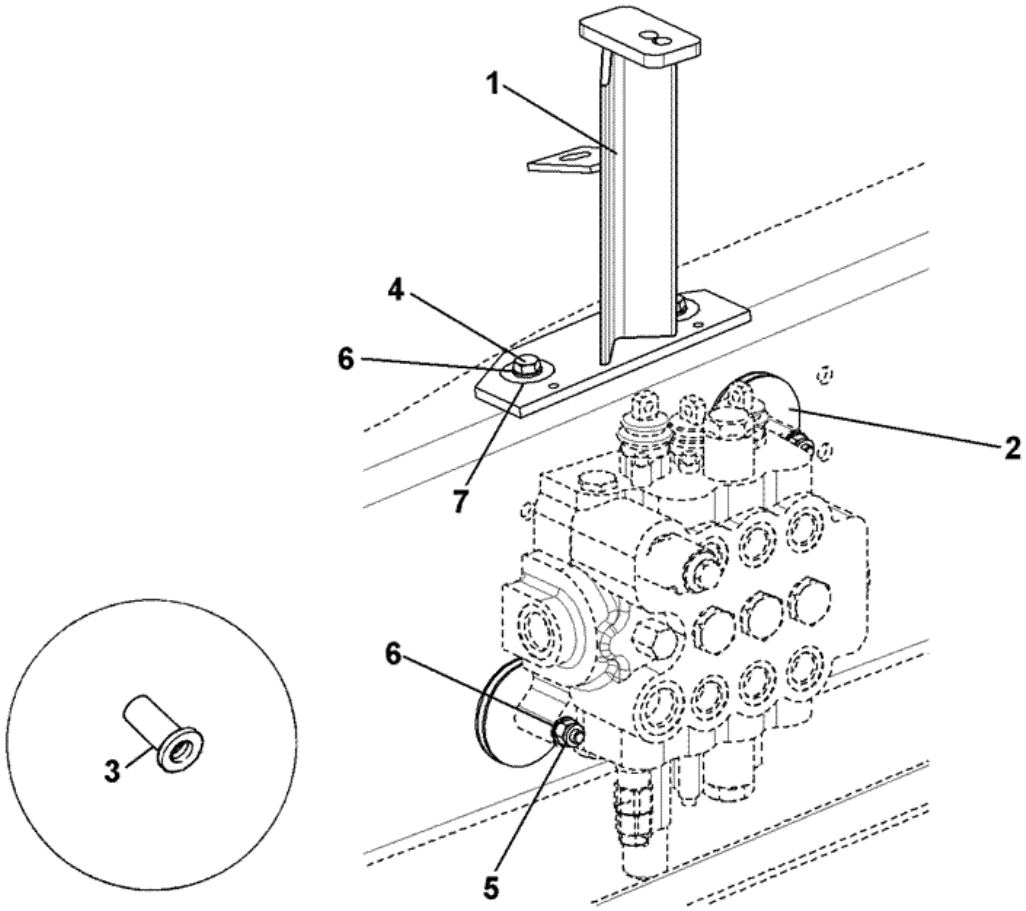


B01-10030-0-A20

| Item | Part # | Change No | Description | Usage Code | QTY |
|---|---|---|---|---|---|
| 1 | 332/P4958 | | Bracket mounting loader lever | | 1 |

| | | | | | |
|---|---|---|---|---|---|
| 2 | 123/03946 | | Mounting rubber | | 3 |
| 3 | 826/01249 | | Nut rivet M10 open end for 6 to 8.5mm plate | | 5 |
| 4 | 1315/0410Z | | Bolt M10 x 40 | | 2 |
| 5 | 1370/0303Z | | Nut lock M10 | | 3 |
| 6 | 1420/0008Z | | Washer Plain M10 | | 5 |
| 7 | 929/14907 | | Washer | | 2 |

Product Catalog \ CONSTRUCTION \ NORTH AMERICA \ CONSTRUCTION / INDUSTRIAL \ BACKHOE LOADER 3CX,4CX,214,215,217 \ 3C PLUS (91HP) , Made in Brazil with Dieselmax/IESA Engine 9812/0080 \ B BODYWORK, CAB, LOADER END \ B01 BODYWORK/FRAME

# 9812/0080 B1-14-11 TOOLBOX

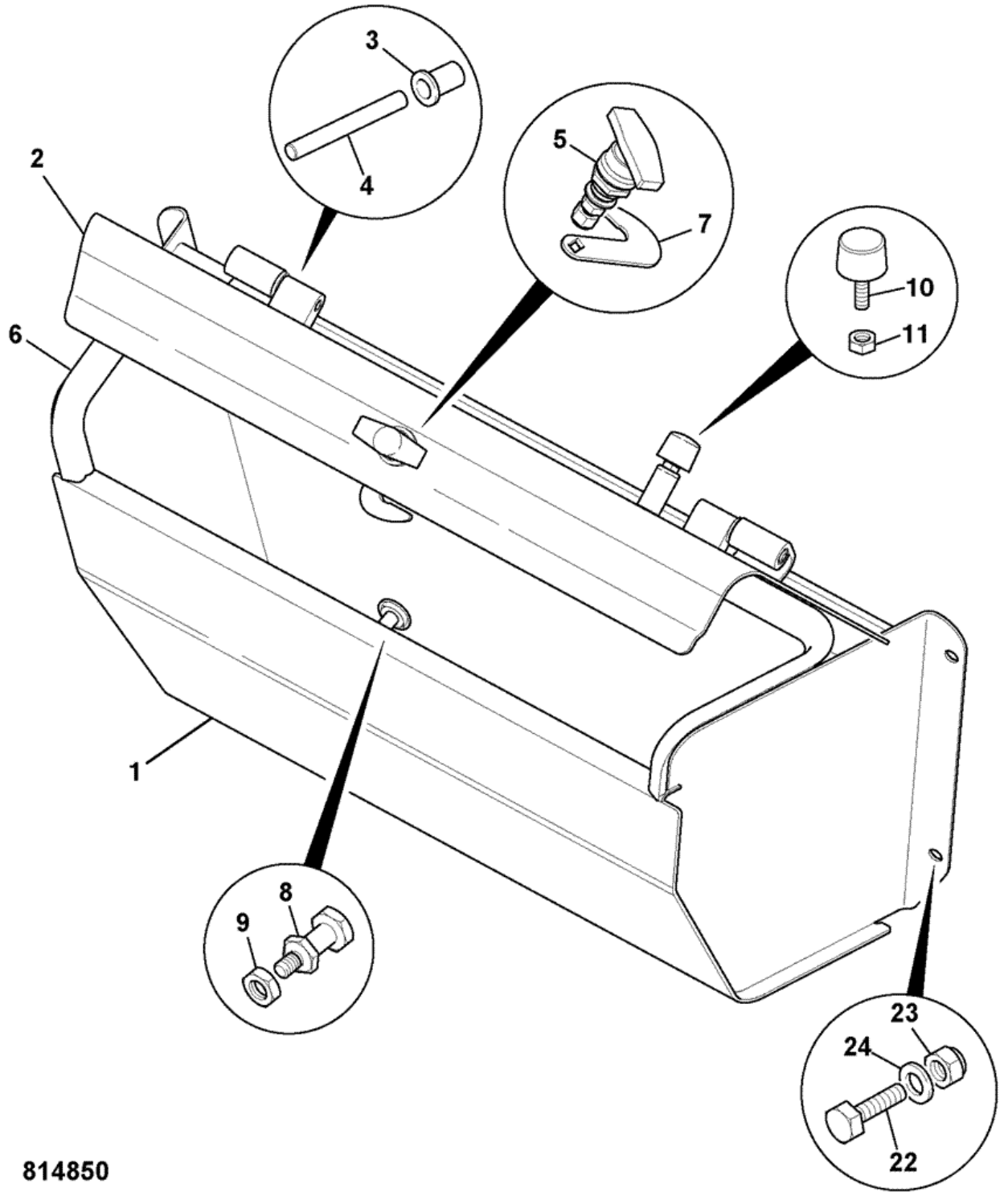


| Item | Part # | Change No | Description | Usage Code | QTY |
|---|---|---|---|---|---|
| A | 128/15526 | | Box tool, assembly | | 1 |
| 1 | :. | | 'See Remark' | | 1 |

| | | | | | |
|---|---|---|---|---|---|
| | | | *NSP* | | |
| 2 | :335/10051 | | Cover toolbox lid | | 1 |
| 3 | :122/67479 | | Bush hinge | | 2 |
| 4 | :123/08089 | | Pin hinge | | 2 |
| 5 | :123/08087 | | Handle locking | | 1 |
| 6 | :904/20357 | | Seal toolbox | | 1 |
| 7 | :331/13500 | | Plate latch | | 1 |
| 8 | :331/36035 | | Spindle latch | | 1 |
| 9 | :1370/0303Z | | Nut lock M10 | | 1 |
| 10 | :123/07243 | | Buffer | | 1 |
| 11 | :1370/0202Z | | Nut M8 | | 1 |
| 22 | 1315/0405Z | | Screw M10 x 20mm long | | 4 |
| 23 | 1370/0303Z | | Nut lock M10 | | 4 |
| 24 | 1420/0008Z | | Washer Plain M10 | | 4 |

Product Catalog \ CONSTRUCTION \ NORTH AMERICA \ CONSTRUCTION / INDUSTRIAL \ BACKHOE LOADER 3CX,4CX,214,215,217 \ 3C PLUS (91HP) , Made in Brazil with Dieselmax/IESA Engine 9812/0080 \ B BODYWORK, CAB, LOADER END \ B02 CAB

# 9812/0080 B2-10-11 CAB MOUNTINGS

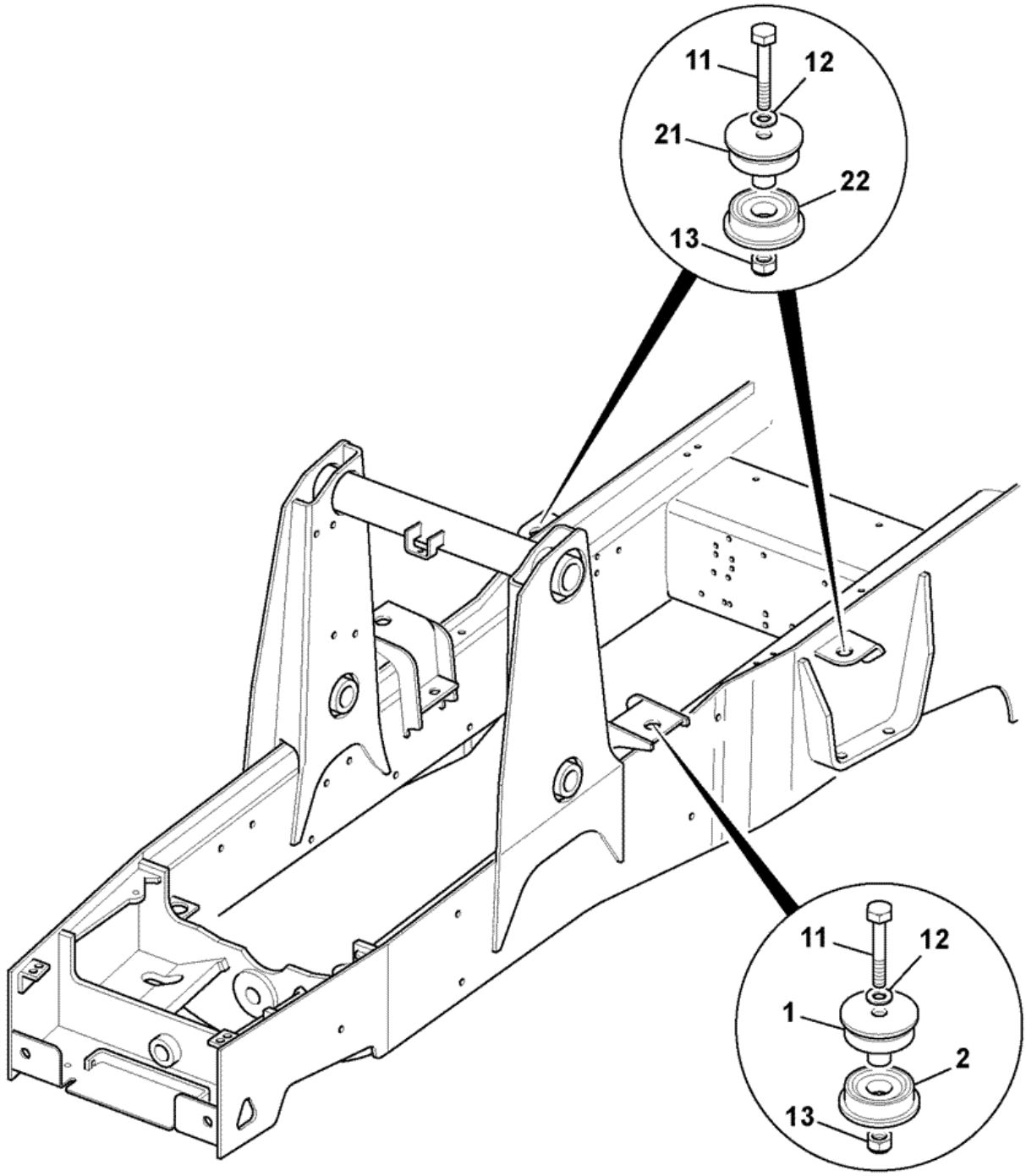


| Item | Part # | Change No | Description | Usage Code | QTY |
|---|---|---|---|---|---|
| 1 | 331/34392 | | Mounting cab upper blue | | 2 |
| 2 | 331/18442 | | Mounting cab lower | | 2 |
| | | | | | |

| | | | | | |
|---|---|---|---|---|---|
| 11 | 1315/3721Z | | Bolt M16 x 110 | | 4 |
| 12 | 1420/0011Z | | Washer M16 plain | | 4 |
| 13 | 1370/0603Z | | Nut M16 | | 4 |
| 21 | 331/34393 | | Mounting cab upper green | | 2 |
| 22 | 331/25996 | | Mounting cab lower red | | 2 |

Product Catalog \ CONSTRUCTION \ NORTH AMERICA \ CONSTRUCTION / INDUSTRIAL \ BACKHOE LOADER 3CX,4CX,214,215,217 \ 3C PLUS (91HP) , Made in Brazil with Dieselmax/IESA Engine 9812/0080 \ B BODYWORK, CAB, LOADER END \ B02 CAB

# 9812/0080 B2-15-21 COVER, LOADER CONTROLS

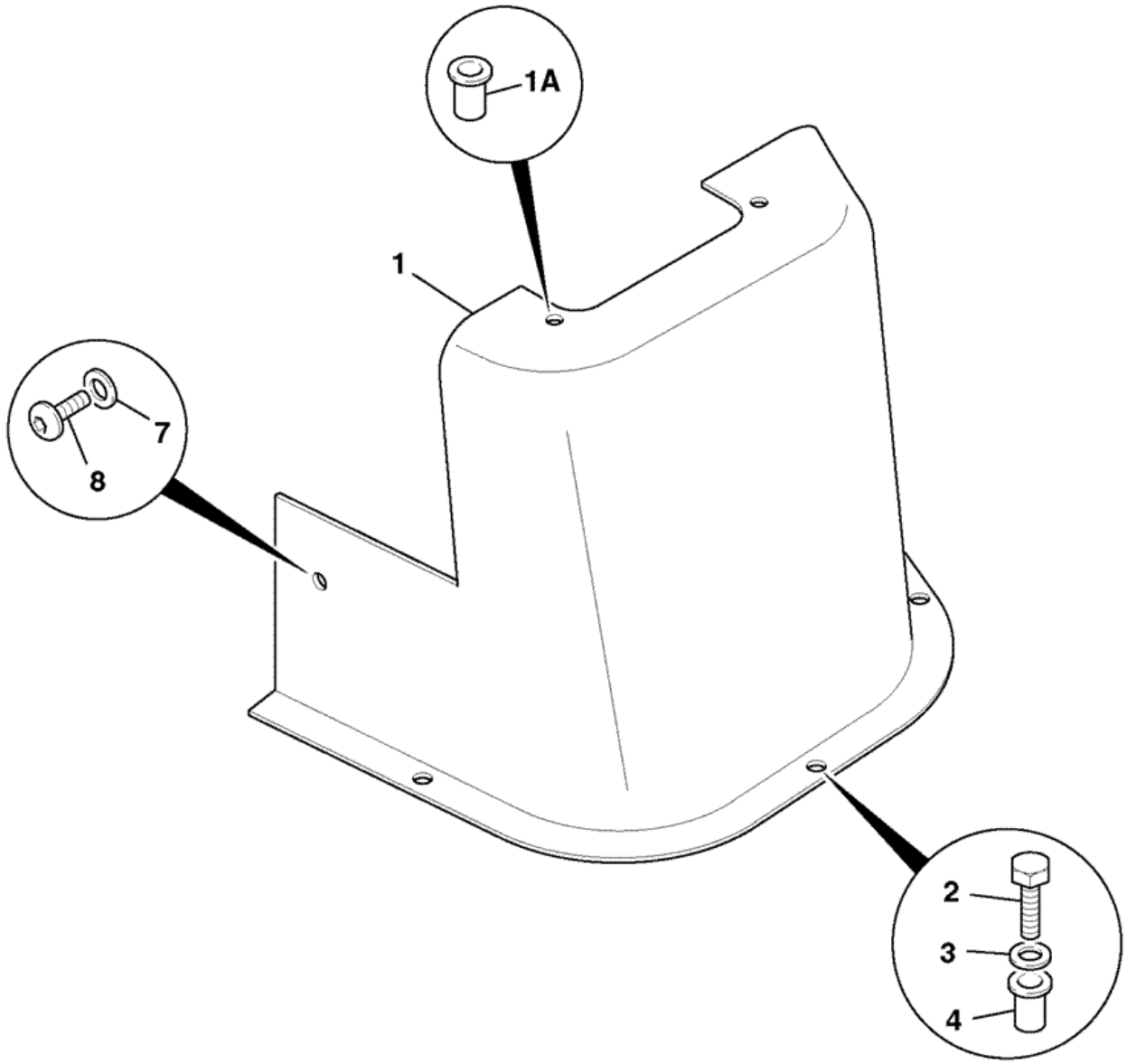


| Item | Part # | Change No | Description | Usage Code | QTY |
|---|---|---|---|---|---|
| 1 | 331/27757 | | Console end cap | | 1 |
| 1A | :826/01232 | | Nut M6 jack | | 2 |
| | | | | | |

| | | | | | |
|---|---|---|---|---|---|
| 2 | 1315/0207Z | | Screw M6 x 25mm long | | 3 |
| 3 | 823/00384 | | Washer | | 3 |
| 4 | 826/01101 | | Nut rivet,M6 open ended for 3 to 5.5mm plt | | 3 |
| 7 | 823/00516 | | Washer nylon M6 | | 1 |
| 8 | 826/01768 | | Screw M6x25mm | | 1 |

Product Catalog \ CONSTRUCTION \ NORTH AMERICA \ CONSTRUCTION / INDUSTRIAL \ BACKHOE LOADER 3CX,4CX,214,215,217 \ 3C PLUS (91HP) , Made in Brazil with Dieselmax/IESA Engine 9812/0080 \ B BODYWORK, CAB, LOADER END \ B02 CAB

# 9812/0080 B2-23-21 CAB ROOF, ECONOMY, ROW & USA

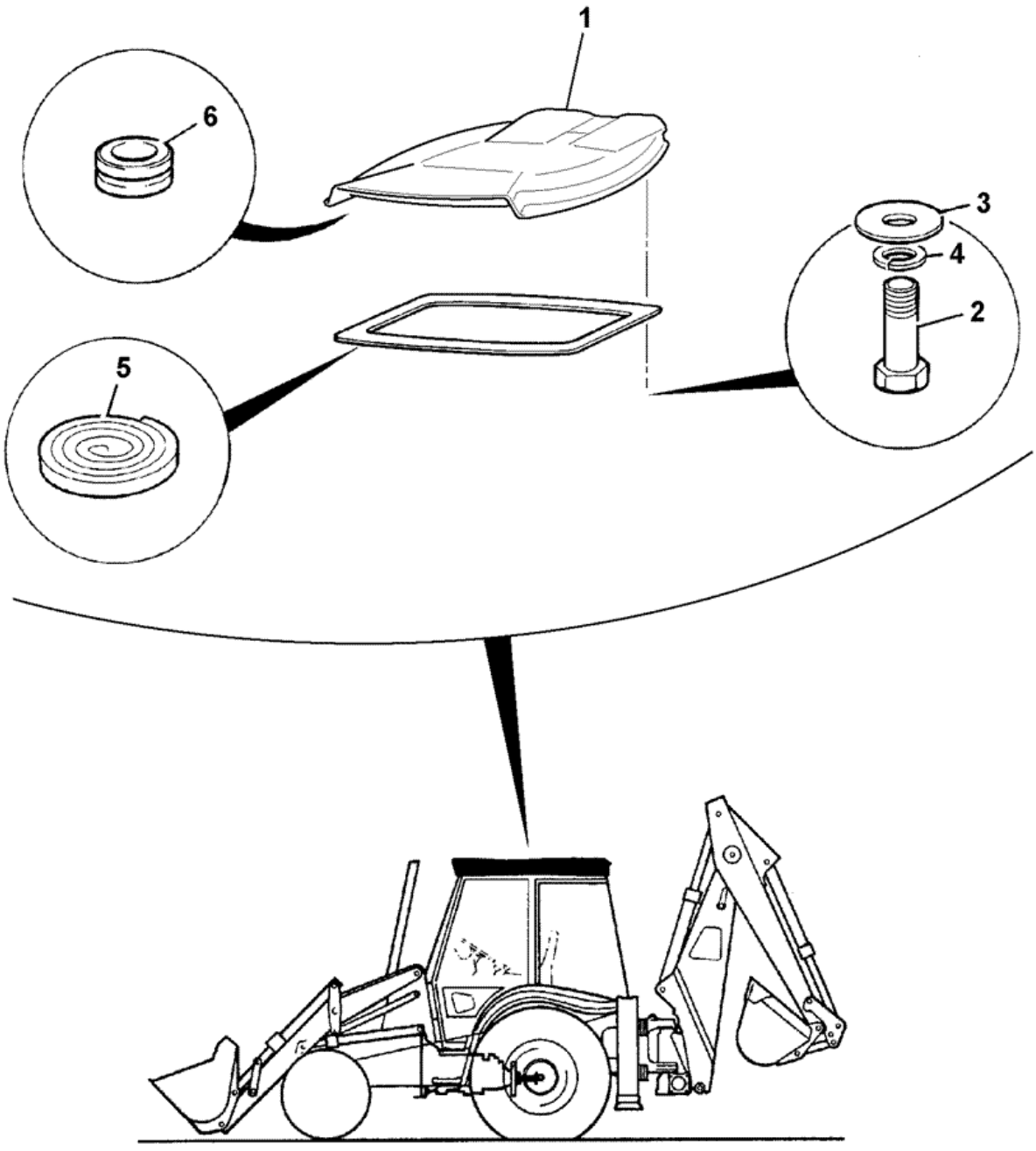


398060

| Item | Part # | Change No | Description | Usage Code | QTY |
|---|---|---|---|---|---|
| 1 | 123/07439 | | Roof cab,USA yellow<br>*Yellow* | | 1 |
| | | | | | |

| | | | | | |
|---|---|---|---|---|---|
| 2 | 1315/0312Z | | Bolt M8x50 | | 4 |
| 3 | 1412/0002Z | | Washer | | 4 |
| 4 | 1425/0007Z | | Washer spring | | 4 |
| 5 | 926/13200 | | Strip foam seal<br>*5000mm* | | 1 |
| 6 | 2410/1302 | | Grommet<br>*aerial & rear washer* | | 2 |
| 6 | 828/10333 | | Plug blanking<br>*rear beacon* | | 1 |
| 15 | 817/18078 | | Decal JCB Logo black | | 1 |

Product Catalog \ CONSTRUCTION \ NORTH AMERICA \ CONSTRUCTION / INDUSTRIAL \ BACKHOE LOADER 3CX,4CX,214,215,217 \ 3C PLUS (91HP) , Made in Brazil with Dieselmax/IESA Engine 9812/0080 \ C ELECTRICS-MACHINE CAB & ENGINE \ C01 ELECTRICS, MAIN MACHINE

# 9812/0080 C1-22-1 LIGHT, INDICATOR

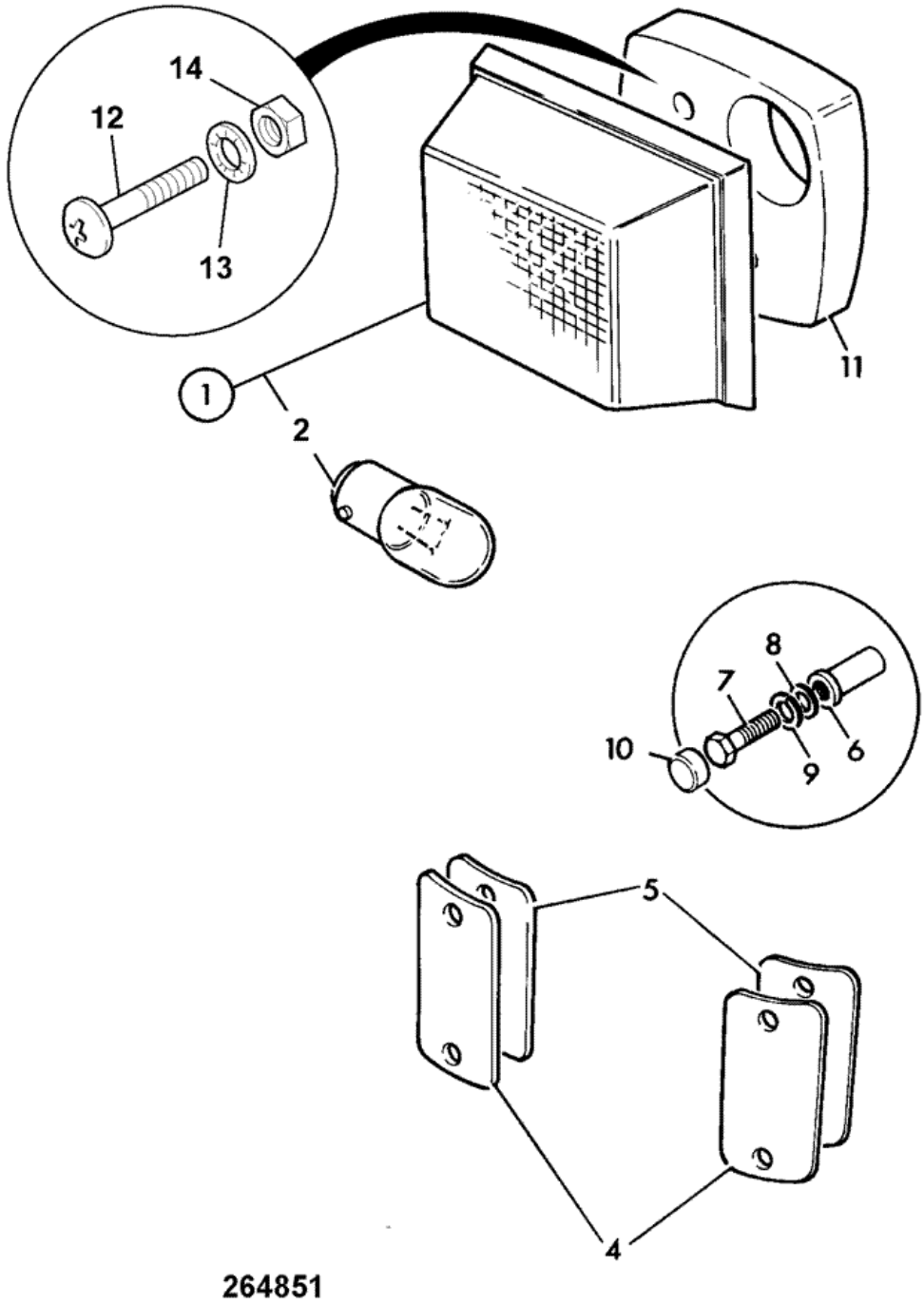


| Item | Part # | Change No | Description | Usage Code | QTY |
|---|---|---|---|---|---|
| 1 | 700/39600 | | Light indicator 12v | | 2 |
| 2 | :720/10005 | | Bulb 12v 21w | | 1 |
| | | | | | |

| | | | | | |
|---|---|---|---|---|---|
| 4 | 331/27358 | | Plate blanking, Headlamp | | 2 |
| 5 | 813/10228 | | Gasket headlamp mount<br>*If fitted* | | 2 |
| 6 | 826/01103 | | Nut rivet,M8 open ended | | 4 |
| 7 | 1315/0305Z | | Screw Hexagon M8 x 20mm long | | 4 |
| 8 | 1420/0007Z | | Washer plain M8 | | 4 |
| 9 | . | | 'See Remark'<br>*Not fitted* | | 0 |
| 10 | 122/23509 | | Cap Nut M8<br>*If fitted* | | 4 |
| 11 | 123/06669 | | Gasket left hand indicator | | 1 |
| 11 | 123/06670 | | Gasket right hand idicator | | 1 |
| 12 | 826/00680 | | Screw | | 4 |
| 13 | 1414/0007Z | | Washer | | 4 |
| 14 | 826/00461 | | Nut M4 | | 4 |

Product Catalog \ CONSTRUCTION \ NORTH AMERICA \ CONSTRUCTION / INDUSTRIAL \ BACKHOE LOADER 3CX,4CX,214,215,217 \ 3C PLUS (91HP) , Made in Brazil with Dieselmax/IESA Engine 9812/0080 \ C ELECTRICS-MACHINE CAB & ENGINE \ C01 ELECTRICS, MAIN MACHINE

# 9812/0080 C1-4-5 LIGHT, HEAD, 12.VOLT, RIGHT HAND DIP, WHITE

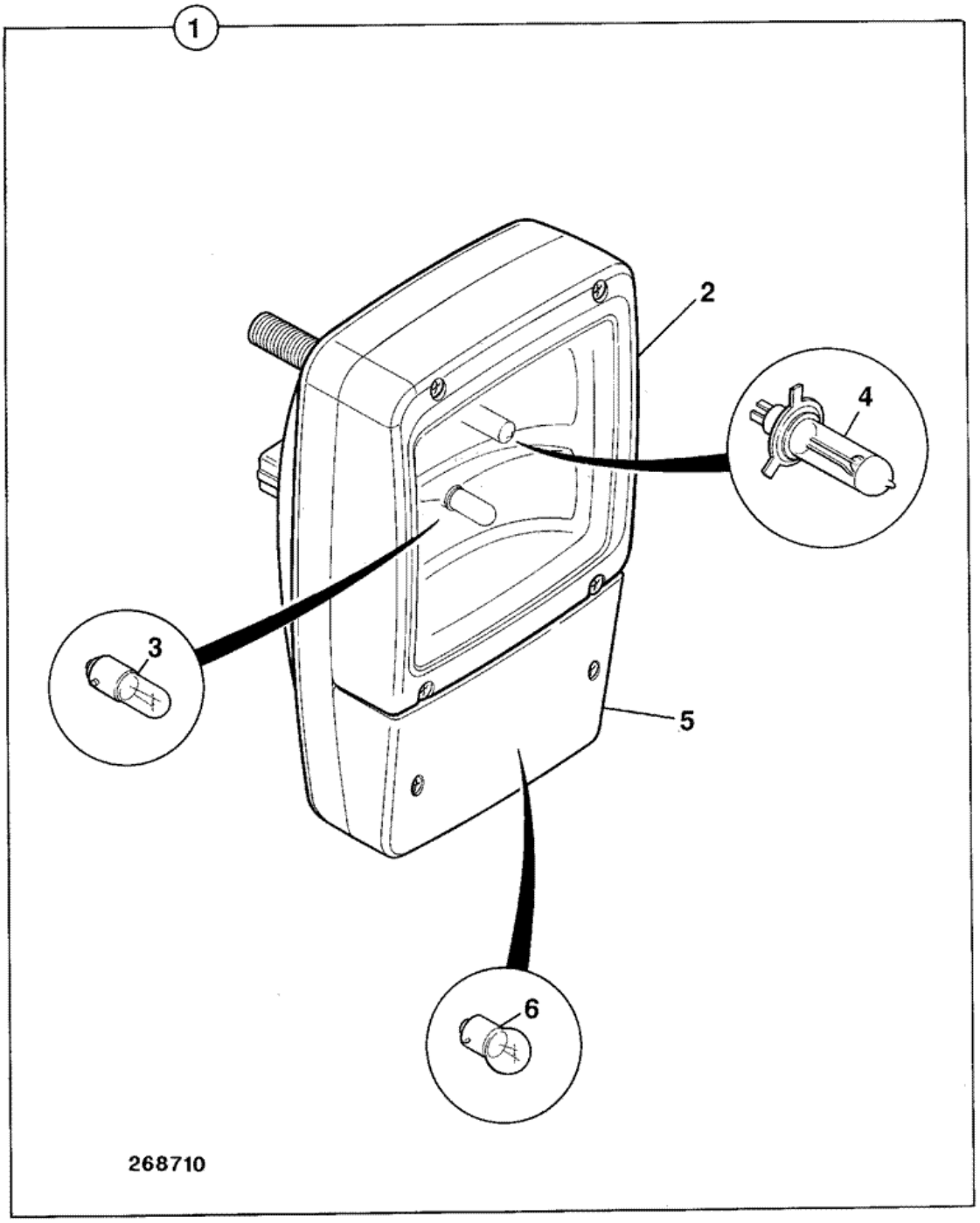


| Item | Part # | Change No | Description | Usage Code | QTY |
|---|---|---|---|---|---|
| 1 | 700/50055 | | Light head assembly right hand dip | | 2 |

| | | | | | |
|---|---|---|---|---|---|
| 2 | :700/38501 | | Lens assembly, headlight | | 1 |
| 3 | :720/10043 | | Bulb side light 12v 4w | | 1 |
| 4 | :720/10061 | | Bulb 12V-55W H3<br>*Main* | | 1 |
| 4 | :720/10068 | | Bulb 12v 55w H7<br>*Dip* | | 1 |
| 5 | :700/38401 | | Lens indicator | | 1 |
| 6 | :720/10002 | | Bulb 12v 21W | | 1 |
| 7 | 835/00075 | | Cap | | 2 |
| 8 | 828/00273 | | Grommet | | 2 |

Product Catalog \ CONSTRUCTION \ NORTH AMERICA \ CONSTRUCTION / INDUSTRIAL \ BACKHOE LOADER 3CX,4CX,214,215,217 \ 3C PLUS (91HP) , Made in Brazil with Dieselmax/IESA Engine 9812/0080 \ C ELECTRICS-MACHINE CAB & ENGINE \ C01 ELECTRICS, MAIN MACHINE

# 9812/0080 C1-5-1 LIGHT, WORKING, CAB FRONT

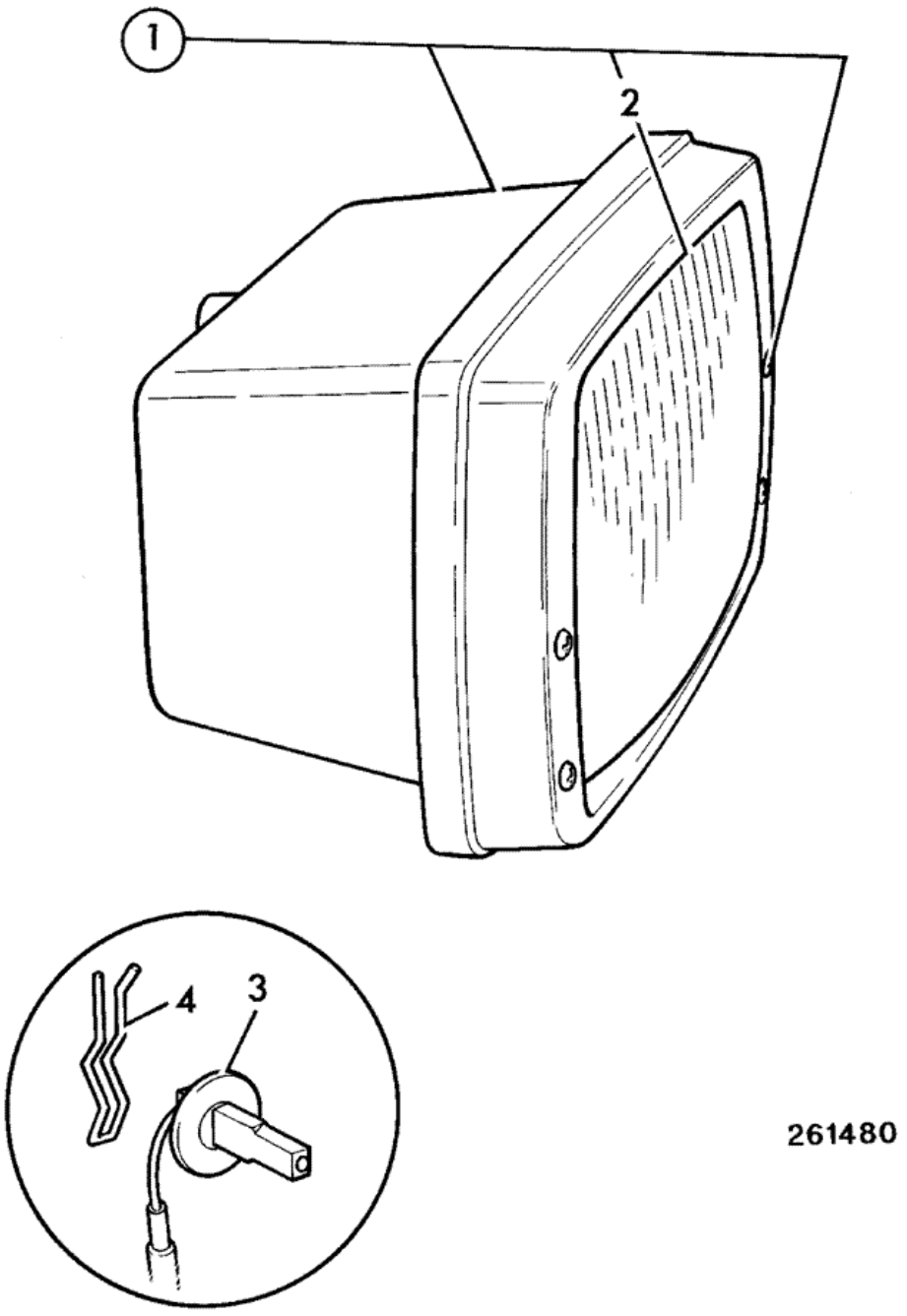


| Item | Part # | Change No | Description | Usage Code | QTY |
|---|---|---|---|---|---|
| 1 | 700/42300 | | Light front working | | 2 |
| 2 | :NSP | | None serviced part | | 1 |
| | | | | | |

| | | | | | |
|---|---|---|---|---|---|
| 3 | :720/10061 | | Bulb 12V-55W H3 | | 2 |
| 4 | :700/10103 | | Spring | | 2 |
| 5 | 826/10538 | | Nut 'U' No 8 | | 4 |
| 6 | 1430/0207 | | Screw | | 4 |

Product Catalog \ CONSTRUCTION \ NORTH AMERICA \ CONSTRUCTION / INDUSTRIAL \ BACKHOE LOADER 3CX,4CX,214,215,217 \ 3C PLUS (91HP) , Made in Brazil with Dieselmax/IESA Engine 9812/0080 \ C ELECTRICS-MACHINE CAB & ENGINE \ C01 ELECTRICS, MAIN MACHINE

# 9812/0080 C1-5-2 LIGHT, WORKING, CAB REAR

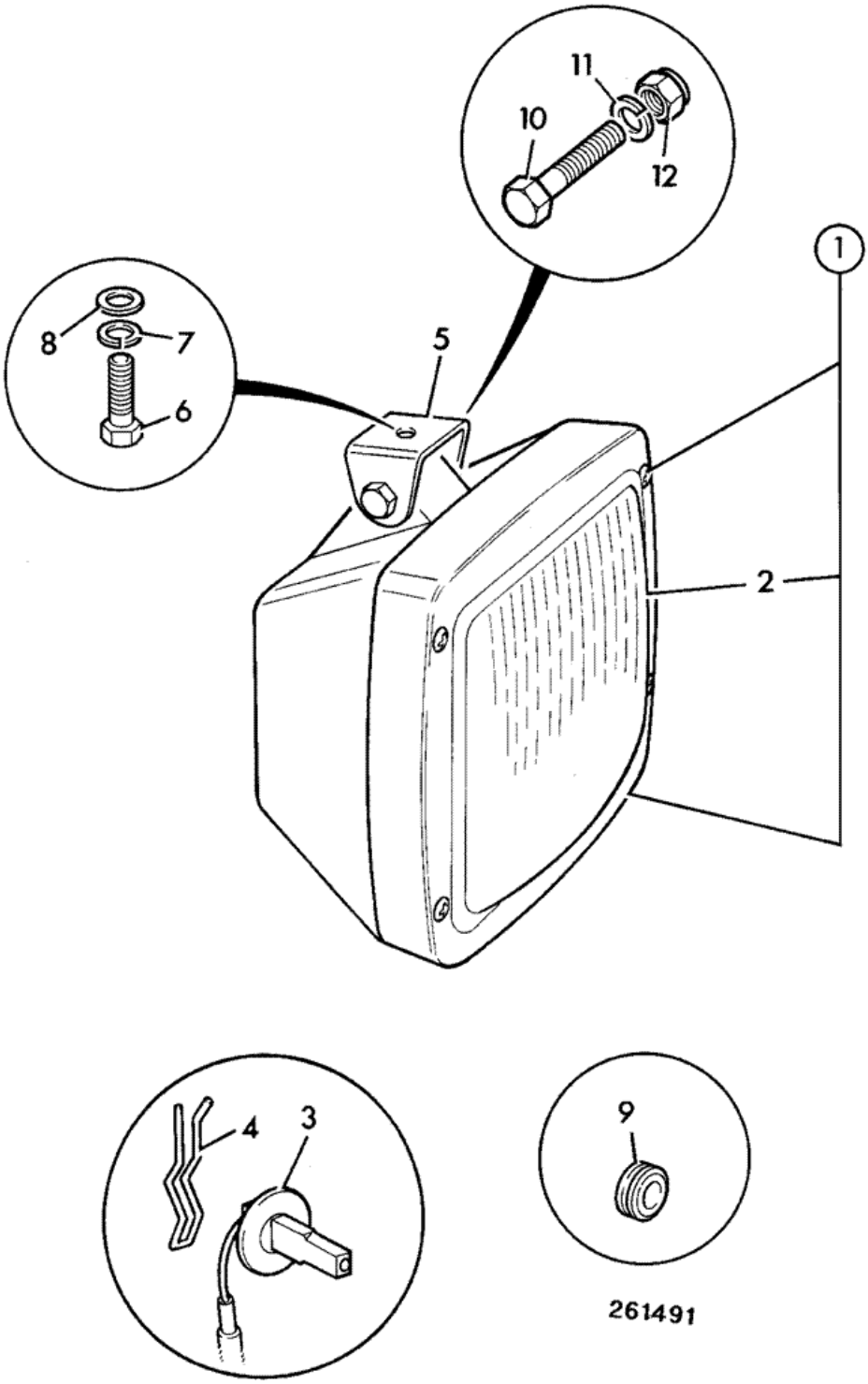


| Item | Part # | Change No | Description | Usage Code | QTY |
|---|---|---|---|---|---|
| 1 | 700/38800 | | Light working | | 0 |
| 2 | :NSP | | None serviced part | | 1 |
| | | | | | |

| | | | | | |
|---|---|---|---|---|---|
| 3 | :720/10061 | | Bulb 12V-55W H3 | | 1 |
| 4 | :700/10103 | | Spring | | 1 |
| 5 | 123/06305 | | Bracket | | 0 |
| 6 | 1315/0305Z | | Screw Hexagon M8 x 20mm long | | 0 |
| 7 | 1425/0007Z | | Washer spring | | 0 |
| 8 | 1420/0007Z | | Washer plain M8 | | 0 |
| 9 | 828/00406 | | Grommet (2 holes)<br>*4-lamp installation* | | 2 |
| 9 | 123/07770 | | Grommet (1 hole)<br>*2-lamp installation* | | 2 |
| 10 | 1315/3313Z | | Bolt M8 X 55 | | 0 |
| 11 | 1413/0003Z | | Washer | | 0 |
| 12 | 1370/0203Z | | Nut self lock M8 | | 0 |
| 13 | 122/23509 | | Cap Nut M8<br>*4-lamp installation (If fitted)* | | 2 |

Product Catalog \ CONSTRUCTION \ NORTH AMERICA \ CONSTRUCTION / INDUSTRIAL \ BACKHOE LOADER 3CX,4CX,214,215,217 \ 3C PLUS (91HP) , Made in Brazil with Dieselmax/IESA Engine 9812/0080 \ C ELECTRICS-MACHINE CAB & ENGINE \ C02 ELECTRICS, ENGINE

# 9812/0080 C2-1-1 SWITCHES & SENDERS

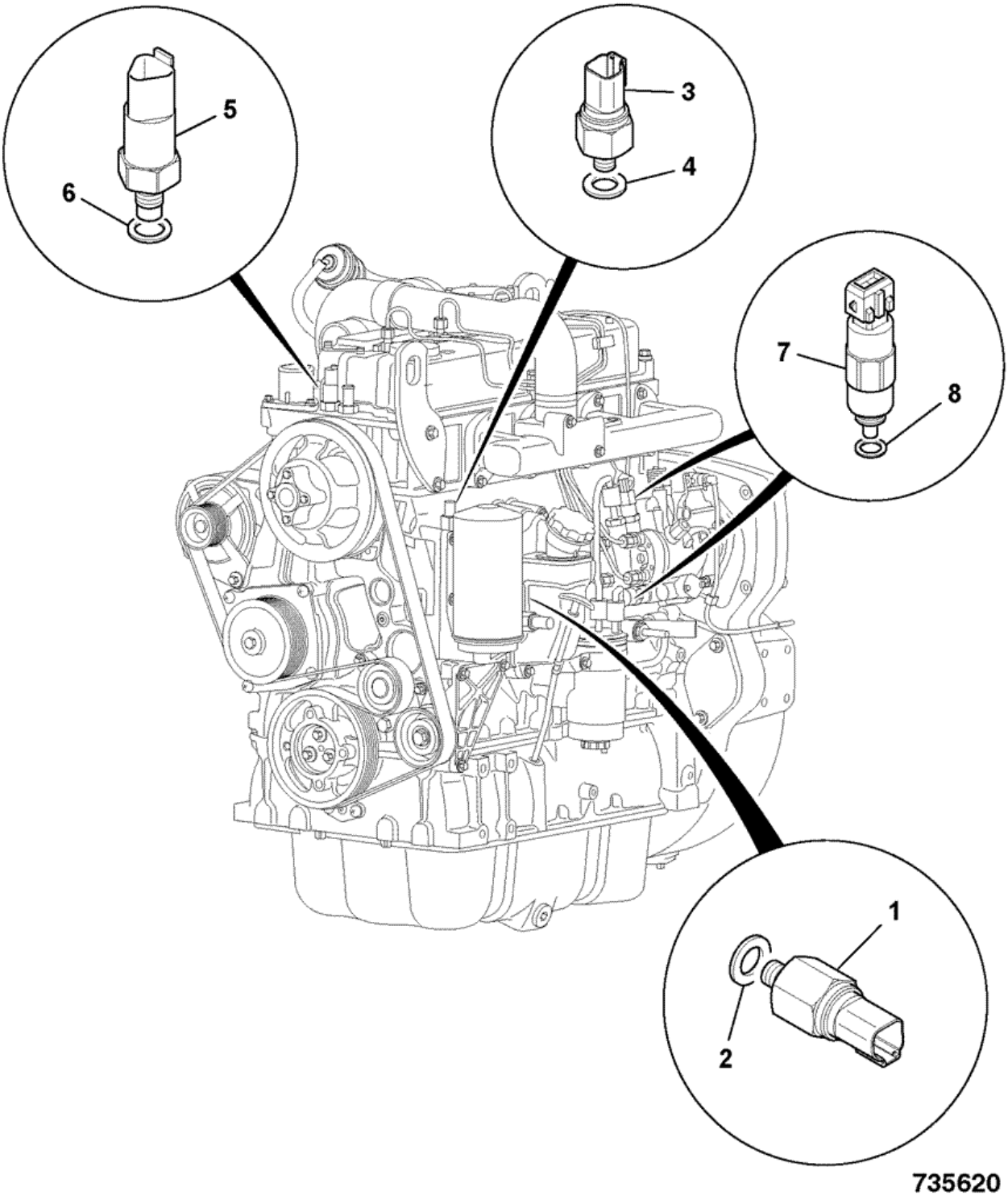


| Item | Part # | Change No | Description | Usage Code | QTY |
|---|---|---|---|---|---|
| 1 | 320/04038 | | Switch engine oil pressure | | 1 |
| 2 | 320/04057 | | Seal bonded | | 1 |
| | | | | | |

| | | | | | |
|---|---|---|---|---|---|
| 3 | 320/04544 | <U0100005 | Switch cold start advance | | 1 |
| 3 | 320/04554 | | Switch cold start advance | | 1 |
| 4 | 320/04521 | | Seal bonded | | 1 |
| 5 | 320/04545 | | Switch temperature sender | | 1 |
| 6 | 320/04521 | | Seal bonded | | 1 |
| 7 | 716/30255 | | Solenoid fuel pump - ESOS cold start advance | | 2 |
| 8 | :17/105202 | | Seal Ring | | 1 |

Product Catalog \ CONSTRUCTION \ NORTH AMERICA \ CONSTRUCTION / INDUSTRIAL \ BACKHOE LOADER 3CX,4CX,214,215,217 \ 3C PLUS (91HP) , Made in Brazil with Dieselmax/IESA Engine 9812/0080 \ C ELECTRICS-MACHINE CAB & ENGINE \ C02 ELECTRICS, ENGINE

# 9812/0080 C2-2-1 ENGINE ELECTRICS, ACCESSORIES

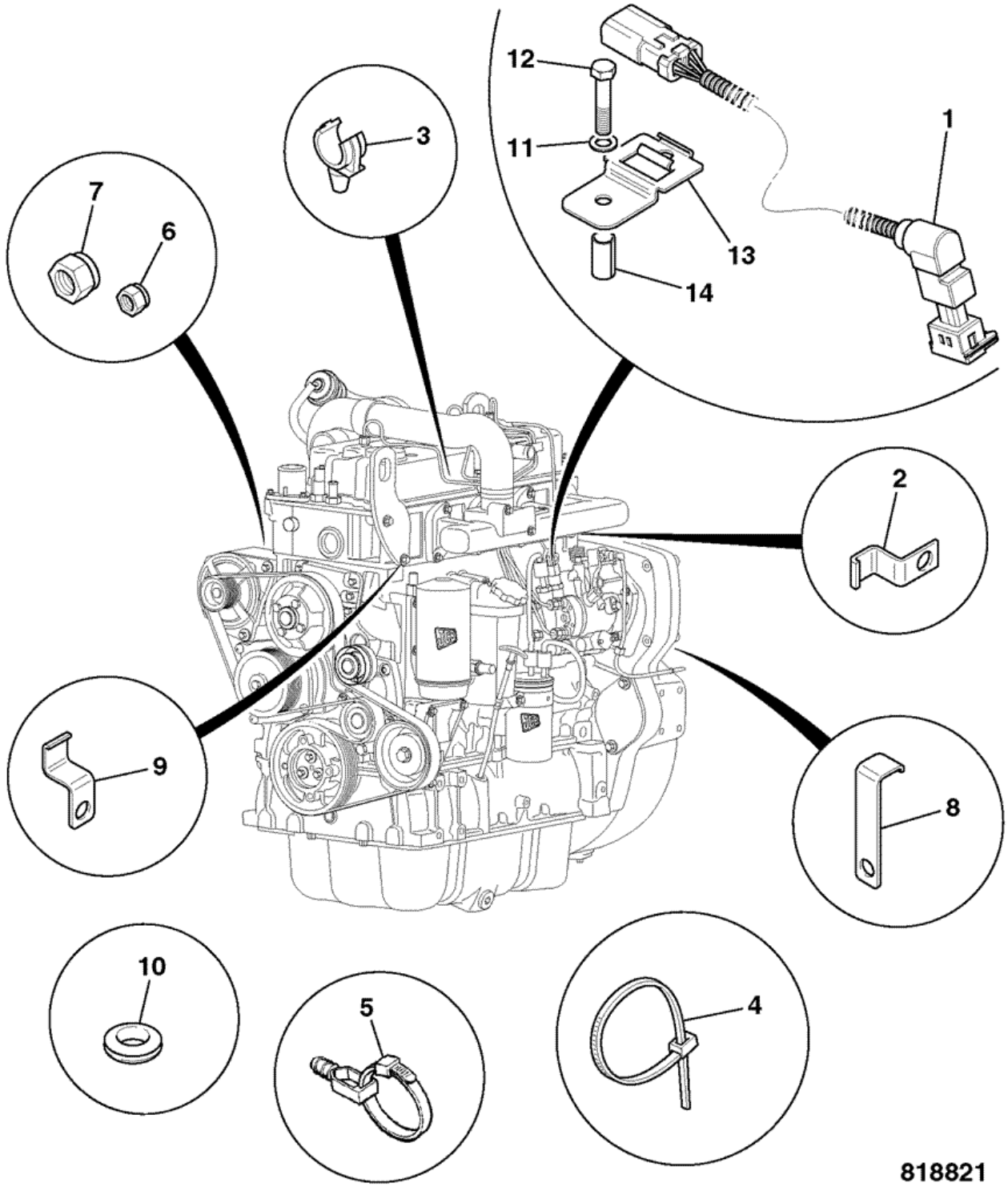


| Item | Part # | Change No | Description | Usage Code | QTY |
|---|---|---|---|---|---|
| 1 | 721/11639 | | Harness ESOS link | | 1 |
| 2 | 821/10321 | | Clip harness | | 2 |
| | | | | | |

| | | | | | |
|---|---|---|---|---|---|
| 3 | 821/00379 | | Clip | | 3 |
| 4 | 826/01144 | | Tie cable 200mm long | | 15 |
| 5 | 826/01347 | | Tie cable c/w mounting 4.6mm x 190mm | | 3 |
| 6 | 826/11430 | | Nut nyloc M5 | | 2 |
| 7 | 826/10826 | | Nut nyloc M8 | | 1 |
| 8 | 123/00195 | | Clip harness support | | 2 |
| 9 | 123/05247 | | Clip cable | | 2 |
| 10 | 2410/0205 | | Grommet hole dia 12.7mm panel thknss 5-6mm | | 6 |
| 11 | 1420/0007Z | | Washer plain M8 | | 1 |
| 12 | 1315/0310Z | | Bolt M8x40 | | 1 |
| 13 | 7210/0067 | | Clip Deutsch DT mounting clip | | 1 |
| 14 | 123/06253 | | Spacer | | 1 |

Product Catalog \ CONSTRUCTION \ NORTH AMERICA \ CONSTRUCTION / INDUSTRIAL \ BACKHOE LOADER 3CX,4CX,214,215,217 \ 3C PLUS (91HP) , Made in Brazil with Dieselmax/IESA Engine 9812/0080 \ C ELECTRICS-MACHINE CAB & ENGINE \ C02 ELECTRICS, ENGINE

# 9812/0080 C2-3-1 STARTER MOTOR, 12.VOLT

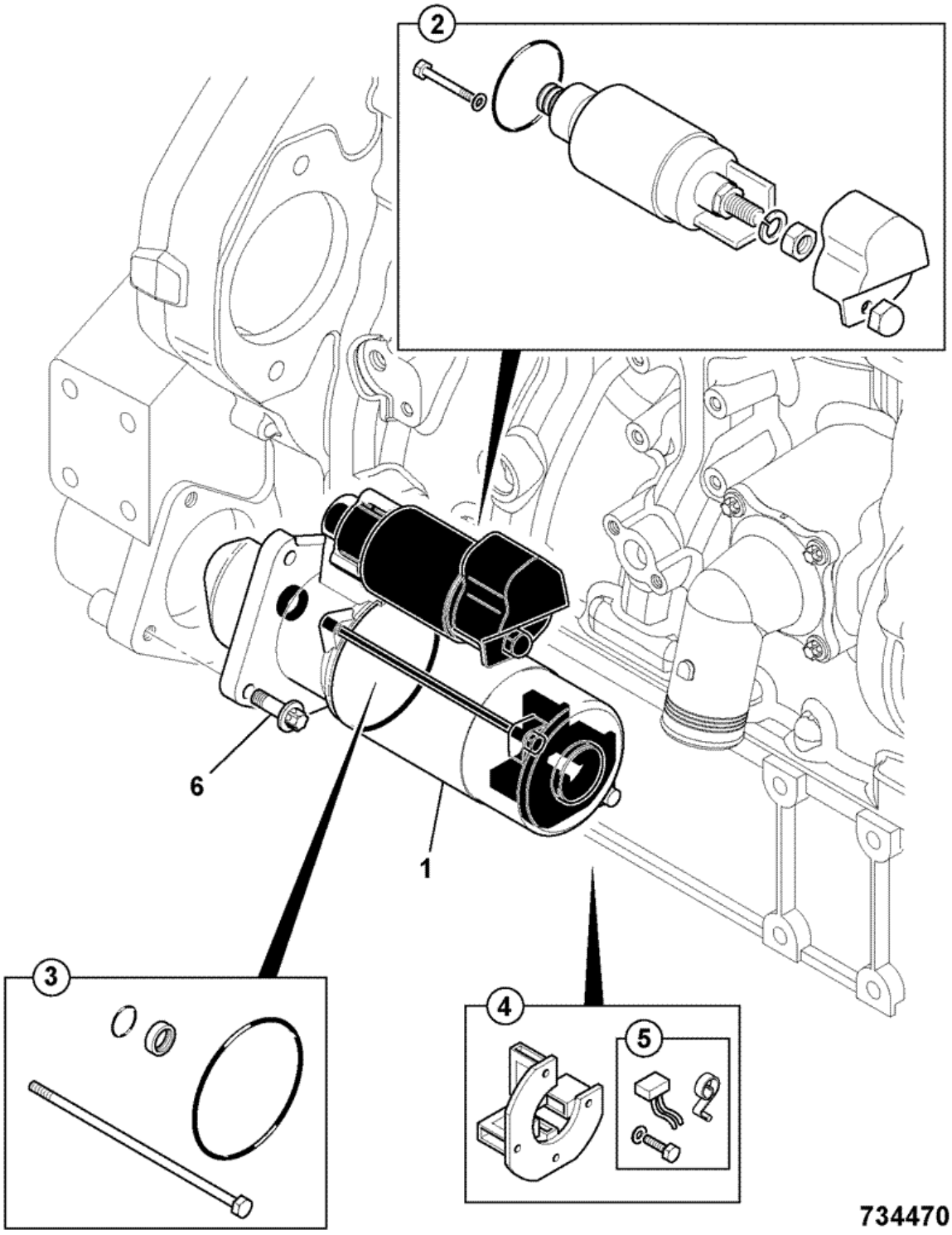


| Item | Part # | Change No | Description | Usage Code | QTY |
|---|---|---|---|---|---|
| 1 | 320/09022 | | Motor starter 12v | | 1 |
| 2 | :714/40302 | | Switch starter solenoid 12 Volt | | 1 |
| | | | | | |

| | | | | | |
|---|---|---|---|---|---|
| 3 | :714/40303 | | Kit-sundry parts | | 1 |
| 4 | :714/40305 | | Brush holder assembly 12volt | | 1 |
| 5 | :714/40306 | | Kit-brush 12 Volt | | 1 |
| 6 | 1319/0408Z | | Screw star drive M10 x 30 | | 3 |

Product Catalog \ CONSTRUCTION \ NORTH AMERICA \ CONSTRUCTION / INDUSTRIAL \ BACKHOE LOADER 3CX,4CX,214,215,217 \ 3C PLUS (91HP) , Made in Brazil with Dieselmax/IESA Engine 9812/0080 \ C ELECTRICS-MACHINE CAB & ENGINE \ C02 ELECTRICS, ENGINE

# 9812/0080 C2-3-2 MOTOR, STARTER, P4001/P4001T BUILDS, NAT ASP & TURBO 8C30/8C31

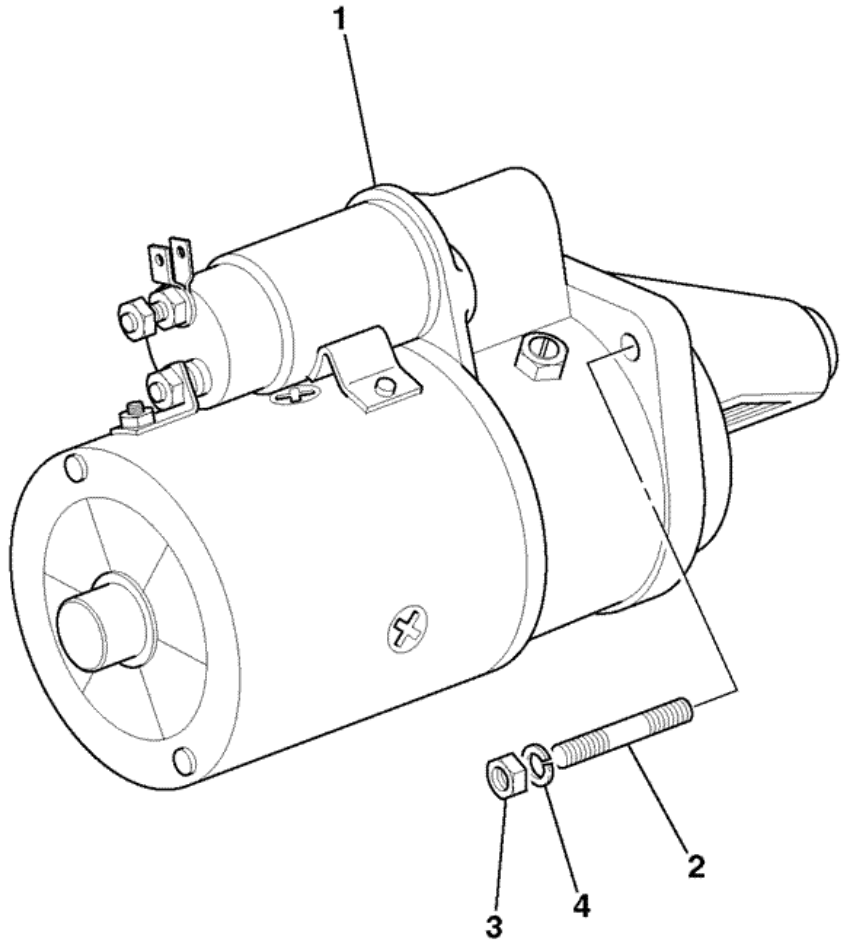


705650

| Item | Part # | Change No | Description | Usage Code | QTY |
|---|---|---|---|---|---|
| 1 | 714/40274 | | Motor starter | | 1 |

| | | | | | |
|---|---|---|---|---|---|
| 2 | 822/00142 | | Stud | | 3 |
| 3 | 1340/0201 | | Nut | | 3 |
| 4 | 1416/0006 | | Washer | | 3 |

Product Catalog \ CONSTRUCTION \ NORTH AMERICA \ CONSTRUCTION / INDUSTRIAL \ BACKHOE LOADER 3CX,4CX,214,215,217 \ 3C PLUS (91HP) , Made in Brazil with Dieselmax/IESA Engine 9812/0080 \ C ELECTRICS-MACHINE CAB & ENGINE \ C02 ELECTRICS, ENGINE

# 9812/0080 C2-4-1 ALTERNATOR, 12VOLT - 95AMP

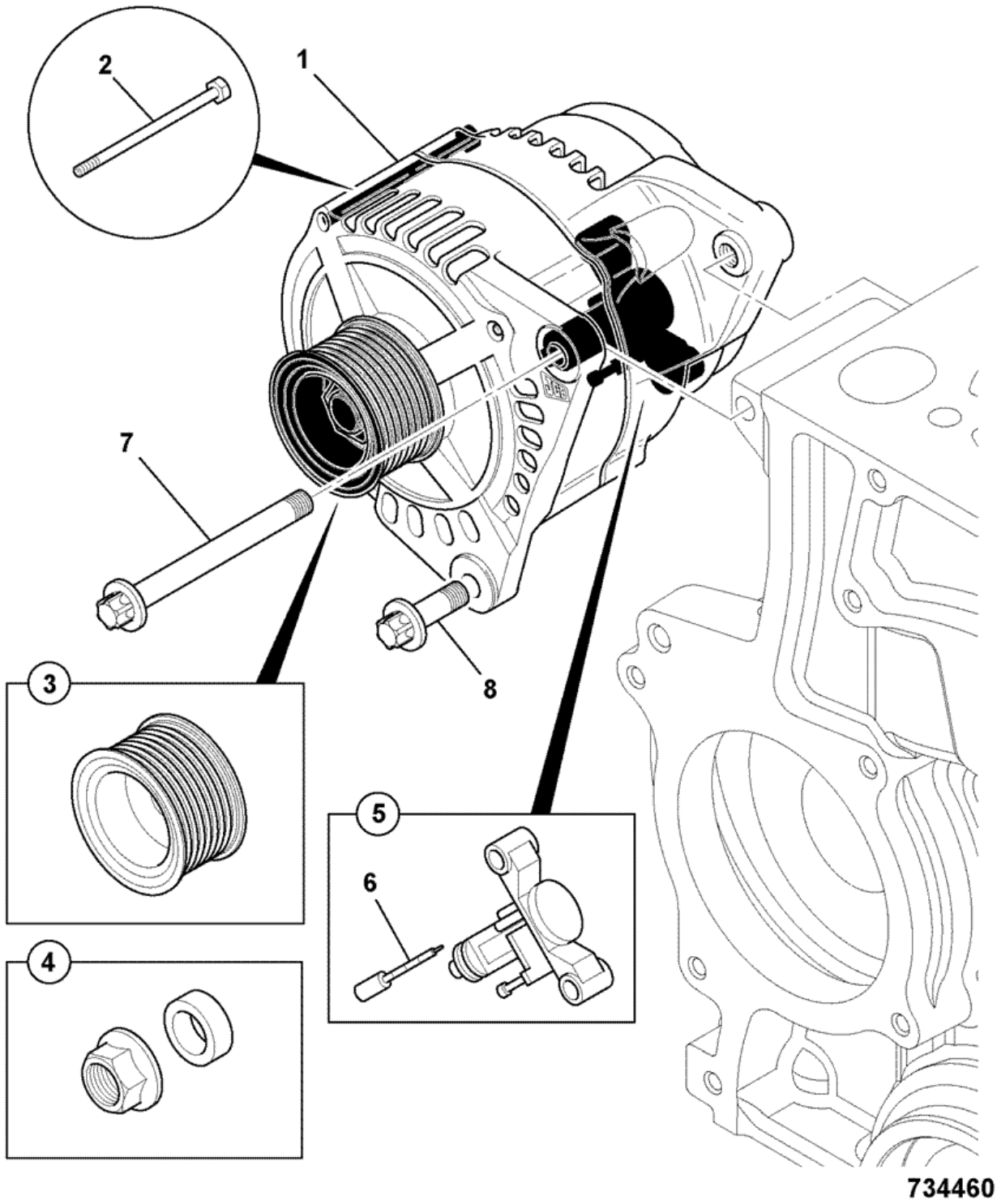


| Item | Part # | Change No | Description | Usage Code | QTY |
|---|---|---|---|---|---|
| 1 | 320/08560 | | Alternator 12V-95AMP | | 1 |
| 2 | :714/40310 | | Kit-through bolt | | 1 |
| | | | | | |

| | | | | | |
|---|---|---|---|---|---|
| 3 | :714/40312 | | Pulley alternator | | 1 |
| 4 | :714/40311 | | Kit-nut & spacer | | 1 |
| 5 | :714/40313 | | Regulator & brush box assembly | | 1 |
| 6 | :714/40314 | | Kit-brush | | 1 |
| 7 | 1319/3422Z | | Bolt star drive M10 x 120 | | 1 |
| 8 | 1319/0408Z | | Screw star drive M10 x 30 | | 1 |

Product Catalog \ CONSTRUCTION \ NORTH AMERICA \ CONSTRUCTION / INDUSTRIAL \ BACKHOE LOADER 3CX,4CX,214,215,217 \ 3C PLUS (91HP) , Made in Brazil with Dieselmax/IESA Engine 9812/0080 \ C ELECTRICS-MACHINE CAB & ENGINE \ C02 ELECTRICS, ENGINE

# 9812/0080 C2-4-2 ALTERNATOR, P4001/P4001T, NAT ASP & TURBO 8C30/8C31

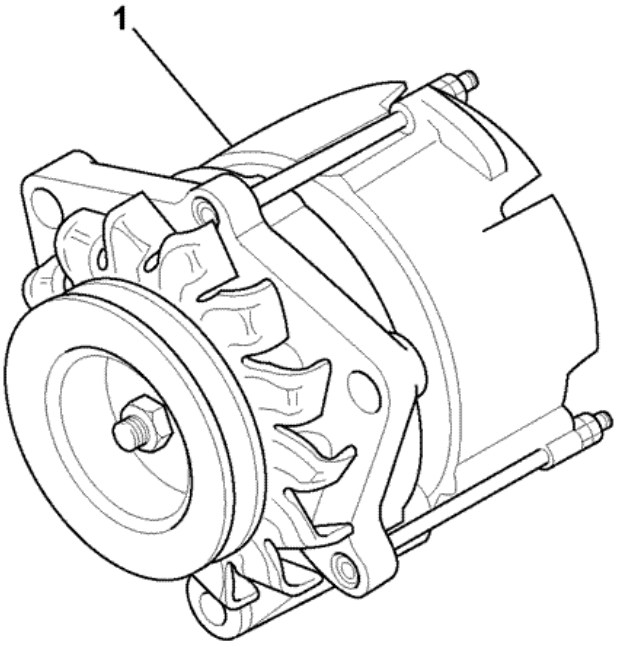


723192

| Item | Part # | Change No | Description | Usage Code | QTY |
|---|---|---|---|---|---|
| 1 | 714/40275 | | Alternator | | 1 |

Product Catalog \ CONSTRUCTION \ NORTH AMERICA \ CONSTRUCTION / INDUSTRIAL \ BACKHOE LOADER 3CX,4CX,214,215,217 \ 3C PLUS (91HP) , Made in Brazil with Dieselmax/IESA Engine 9812/0080 \ C ELECTRICS-MACHINE CAB & ENGINE \ C02 ELECTRICS, ENGINE

# 9812/0080 C2-4-3 ALTERNATOR MOUNTINGS, P4001/P4001T BUILDS, NAT ASP & TURBO 8C30/8C31

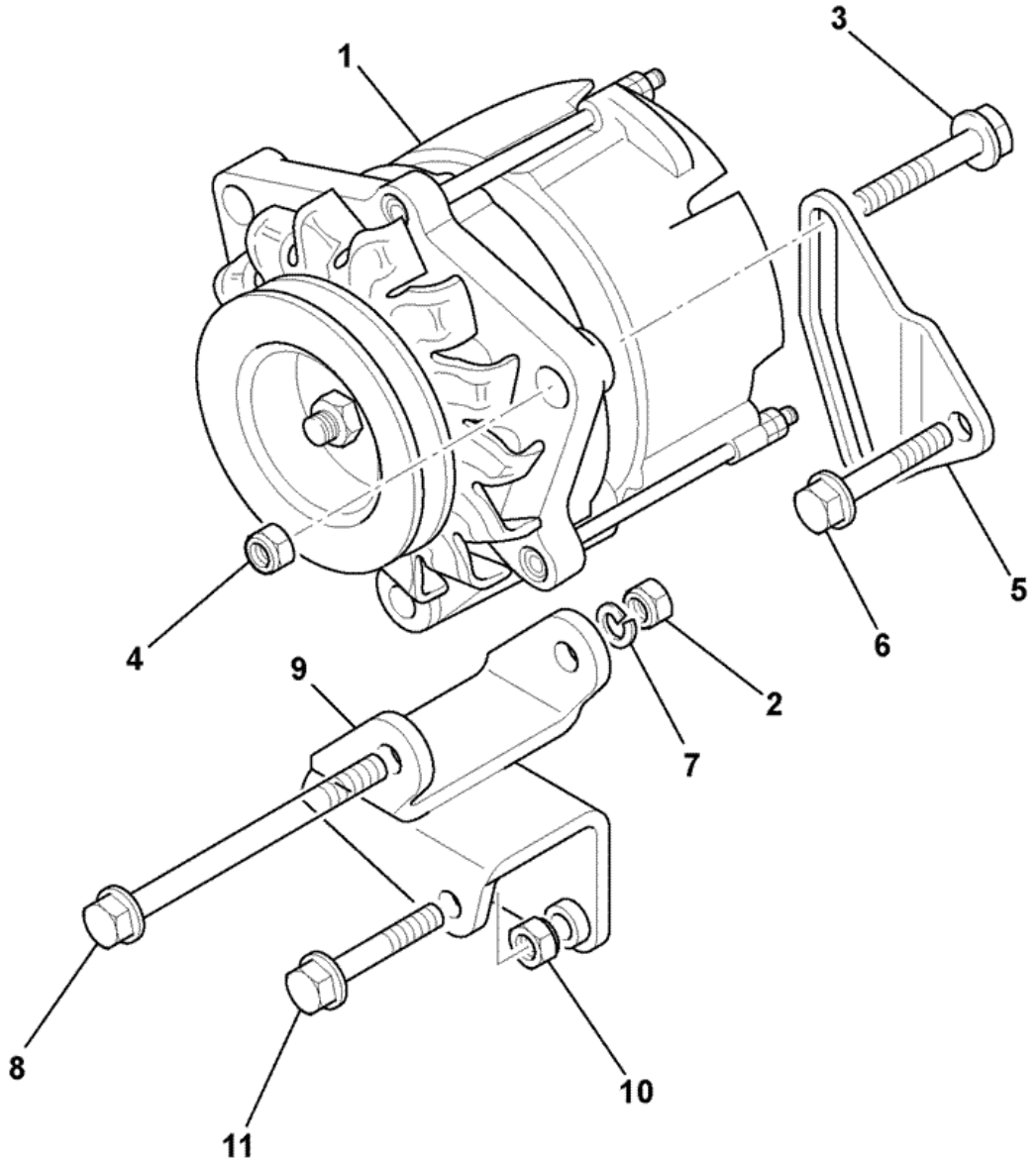


702572

| Item | Part # | Change No | Description | Usage Code | QTY |
|---|---|---|---|---|---|
| | | | 'See Remark' | | |

| | | | | | |
|---|---|---|---|---|---|
| 1 | . | | *For details see frame C2-4-2* | | 1 |
| 2 | 02/103544 | | Nut | | 1 |
| 3 | 02/103597 | | Bolt | | 1 |
| 4 | 02/103748 | | Nut nut | | 1 |
| 5 | 02/103599 | | Arm adjuster | | 1 |
| 6 | 02/103541 | | Bolt | | 1 |
| 7 | 1416/0006 | | Washer | | 1 |
| 8 | 02/103669 | | Bolt | | 1 |
| 9 | 02/103601 | | Bracket | | 1 |
| 10 | 02/103672 | | Nut M12 | | 1 |
| 11 | 02/103749 | | Bolt bolt | | 1 |

Product Catalog \ CONSTRUCTION \ NORTH AMERICA \ CONSTRUCTION / INDUSTRIAL \ BACKHOE LOADER 3CX,4CX,214,215,217 \ 3C PLUS (91HP) , Made in Brazil with Dieselmax/IESA Engine 9812/0080 \ C ELECTRICS-MACHINE CAB & ENGINE \ C02 ELECTRICS, ENGINE

# 9812/0080 C2-5-2 GRID HEATER RELAY, INSTALLATION, TURBO

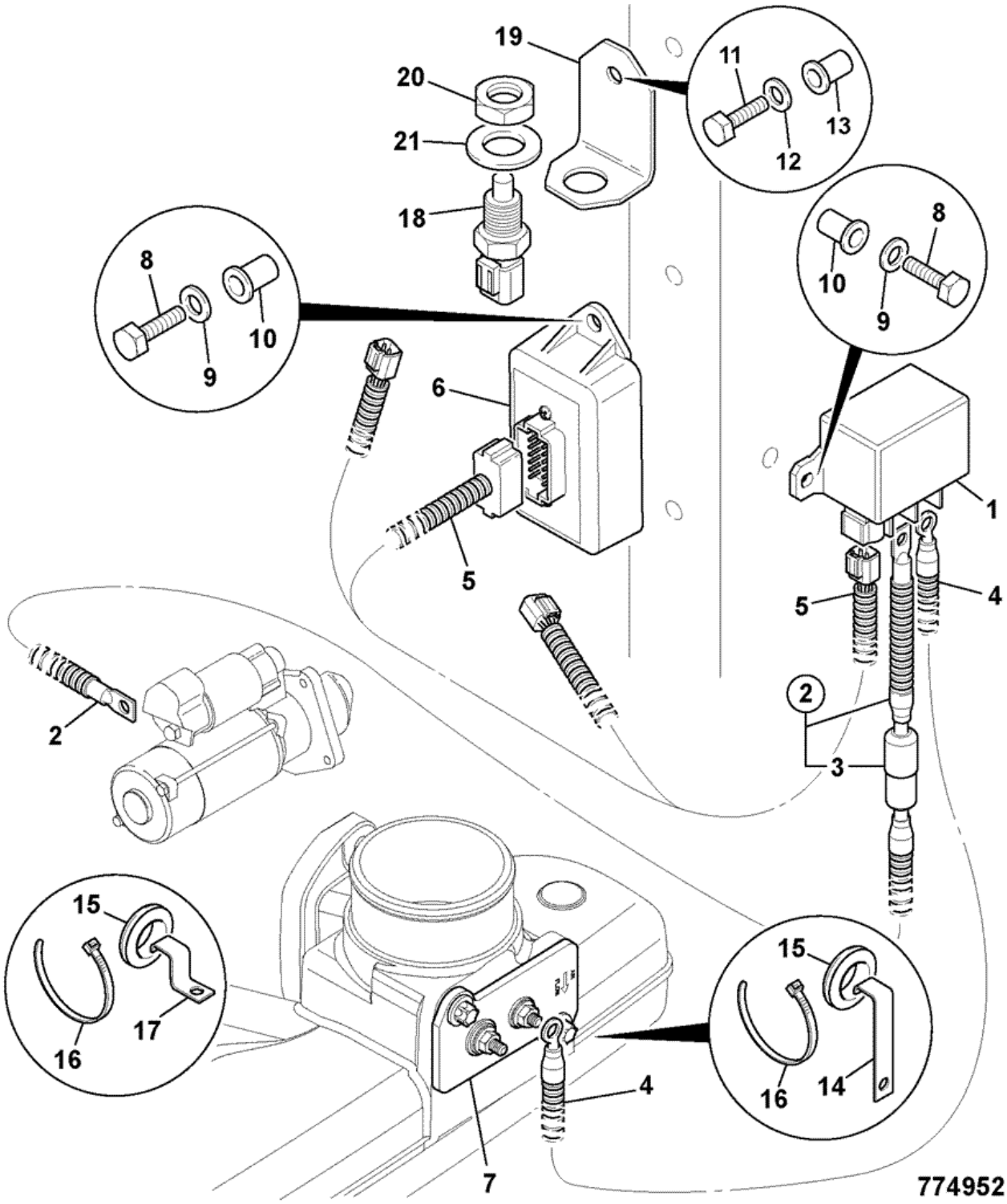


| Item | Part # | Change No | Description | Usage Code | QTY |
|---|---|---|---|---|---|
| 1 | 716/30252 | | Relay grid heater | | 1 |

| | | | | | |
|---|---|---|---|---|---|
| 2 | 718/20232 | | Lead grid heater +ve feed | | 1 |
| 3 | :716/30225 | | Fuse 150Amp MEGAVAL | | 1 |
| 4 | 718/20234 | | Lead grid heater +ve TURBO | | 1 |
| 5 | 721/11846 | | Harness ECU to heater relay | | 1 |
| 6 | 728/26800 | | Unit ECU cold start | | 1 |
| 7 | 320/05527 | | Heater air intake -12v | | 1 |
| 8 | 1315/0203Z | | Screw M6x16 | | 2 |
| 9 | 1420/0006Z | | Washer M6 | | 2 |
| 10 | 826/01316 | | Nut M6 rivet | | 2 |
| 11 | 1315/0307Z | | Screw Hexagon M8 X 25 | | 2 |
| 12 | 1420/0007Z | | Washer plain M8 | | 2 |
| 13 | 826/01106 | | Nut rivet,M8 | | 2 |
| 14 | 123/03965 | | Clip | | 1 |
| 15 | 2410/0205 | | Grommet hole dia 12.7mm panel thknss 5-6mm | | 5 |
| 16 | 826/01144 | | Tie cable 200mm long | | 7 |
| 17 | 123/05247 | | Clip cable | | 4 |
| 18 | 716/30126 | | Sender water temperature | | 1 |
| 19 | 331/48375 | | Bracket sensor mounting | | 1 |
| 20 | 1356/0204Z | | Nut | | 1 |
| 21 | 1420/0013Z | | Washer plain bright | | 1 |

Product Catalog \ CONSTRUCTION \ NORTH AMERICA \ CONSTRUCTION / INDUSTRIAL \ BACKHOE LOADER 3CX,4CX,214,215,217 \ 3C PLUS (91HP) , Made in Brazil with Dieselmax/IESA Engine 9812/0080 \ C ELECTRICS-MACHINE CAB & ENGINE \ C02 ELECTRICS, ENGINE

# 9812/0080 C2-5-4 GRID HEATER RELAY, INSTALLATION, TURBO

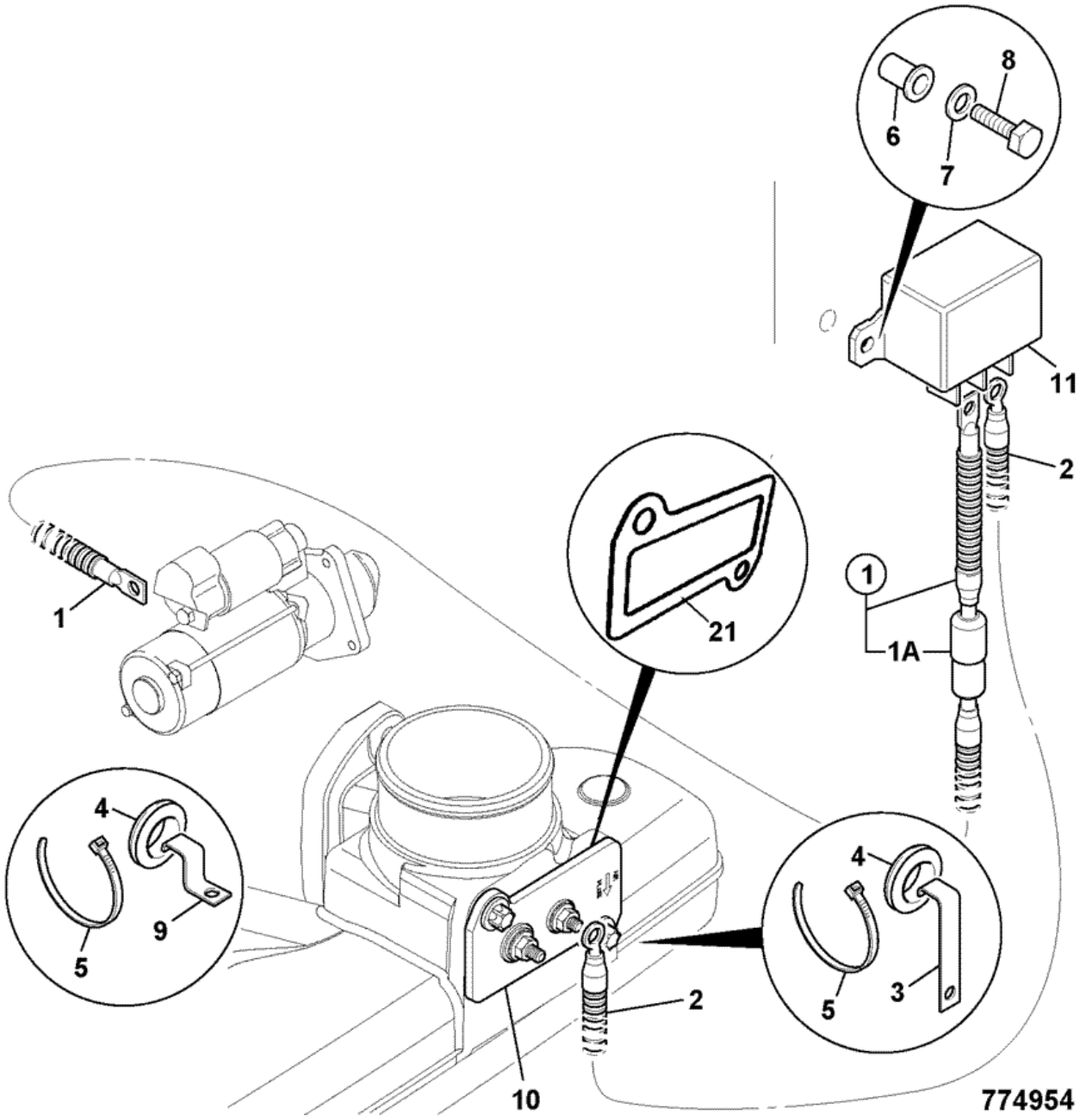


| Item | Part # | Change No | Description | Usage Code | QTY |
|---|---|---|---|---|---|
| 1 | 718/20232 | | Lead grid heater +ve feed | | 1 |

| | | | | | |
|---|---|---|---|---|---|
| 1A | :716/30225 | | Fuse 150Amp MEGAVAL | | 1 |
| 2 | 718/20234 | | Lead grid heater +ve TURBO | | 1 |
| 3 | 123/03965 | | Clip | | 1 |
| 4 | 2410/0205 | | Grommet hole dia 12.7mm panel thknss 5-6mm | | 6 |
| 5 | 826/01144 | | Tie cable 200mm long | | 8 |
| 6 | 826/01316 | | Nut M6 rivet | | 2 |
| 7 | 1420/0006Z | | Washer M6 | | 2 |
| 8 | 1315/0203Z | | Screw M6x16 | | 2 |
| 9 | 123/05247 | | Clip cable | | 5 |
| 10 | 320/05527 | | Heater air intake -12v | | 1 |
| 11 | 716/30252 | | Relay grid heater | | 1 |
| 21 | 320/05567 | | Gasket intake heater | | 1 |

Product Catalog \ CONSTRUCTION \ NORTH AMERICA \ CONSTRUCTION / INDUSTRIAL \ BACKHOE LOADER 3CX,4CX,214,215,217 \ 3C PLUS (91HP) , Made in Brazil with Dieselmax/IESA Engine 9812/0080 \ C ELECTRICS-MACHINE CAB & ENGINE \ C02 ELECTRICS, ENGINE

# 9812/0080 C2-6-1 ENGINE IMMOBILISER, 12.VOLT

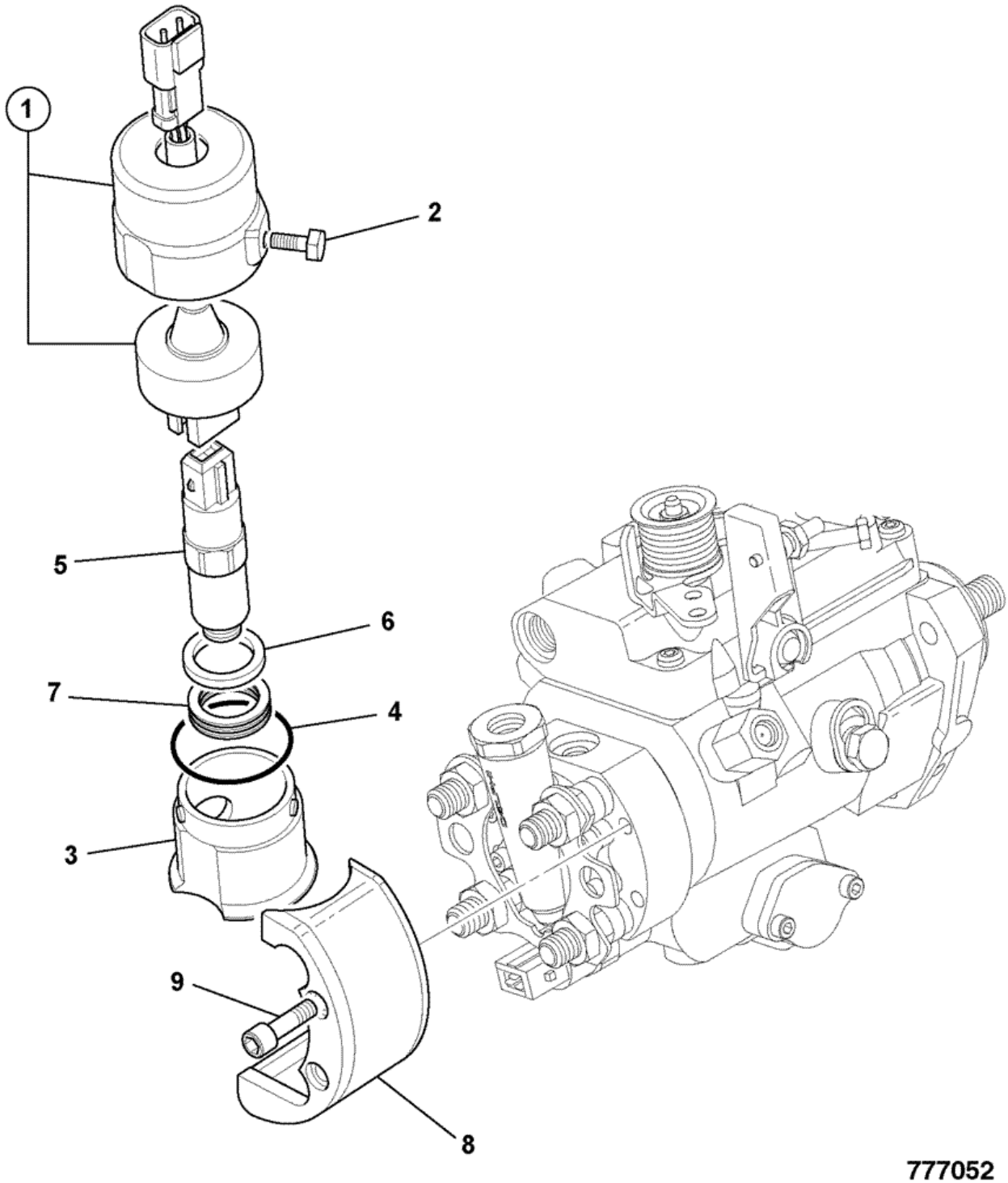


| Item | Part # | Change No | Description | Usage Code | QTY |
|---|---|---|---|---|---|
| 1 | 320/06597 | | Kit-cover immobiliser | | 1 |
| 2 | 826/11068 | | Bolt M6x27 shear | | 1 |
| | | | | | |

| | | | | | |
|---|---|---|---|---|---|
| 3 | 320/06598 | | Base engine immobiliser | | 1 |
| 4 | 320/06595 | | Seal o'ring immobiliser cover | | 1 |
| 5 | 716/30255 | | Solenoid fuel pump - ESOS cold start advance | | 1 |
| 6 | 320/06594 | | Spacer immobiliser | | 1 |
| 7 | 320/06593 | | Spring immobiliser | | 1 |
| 8 | 320/06635 | | Guard immobiliser | | 1 |
| 9 | 826/11318 | | Bolt M6 shear shear @ 11Nm | | 2 |

Product Catalog \ CONSTRUCTION \ NORTH AMERICA \ CONSTRUCTION / INDUSTRIAL \ BACKHOE LOADER 3CX,4CX,214,215,217 \ 3C PLUS (91HP) , Made in Brazil with Dieselmax/IESA Engine 9812/0080 \ C ELECTRICS-MACHINE CAB & ENGINE \ C02 ELECTRICS, ENGINE

# 9812/0080 C2-7-1 ENGINE BLOCK HEATER, 120V

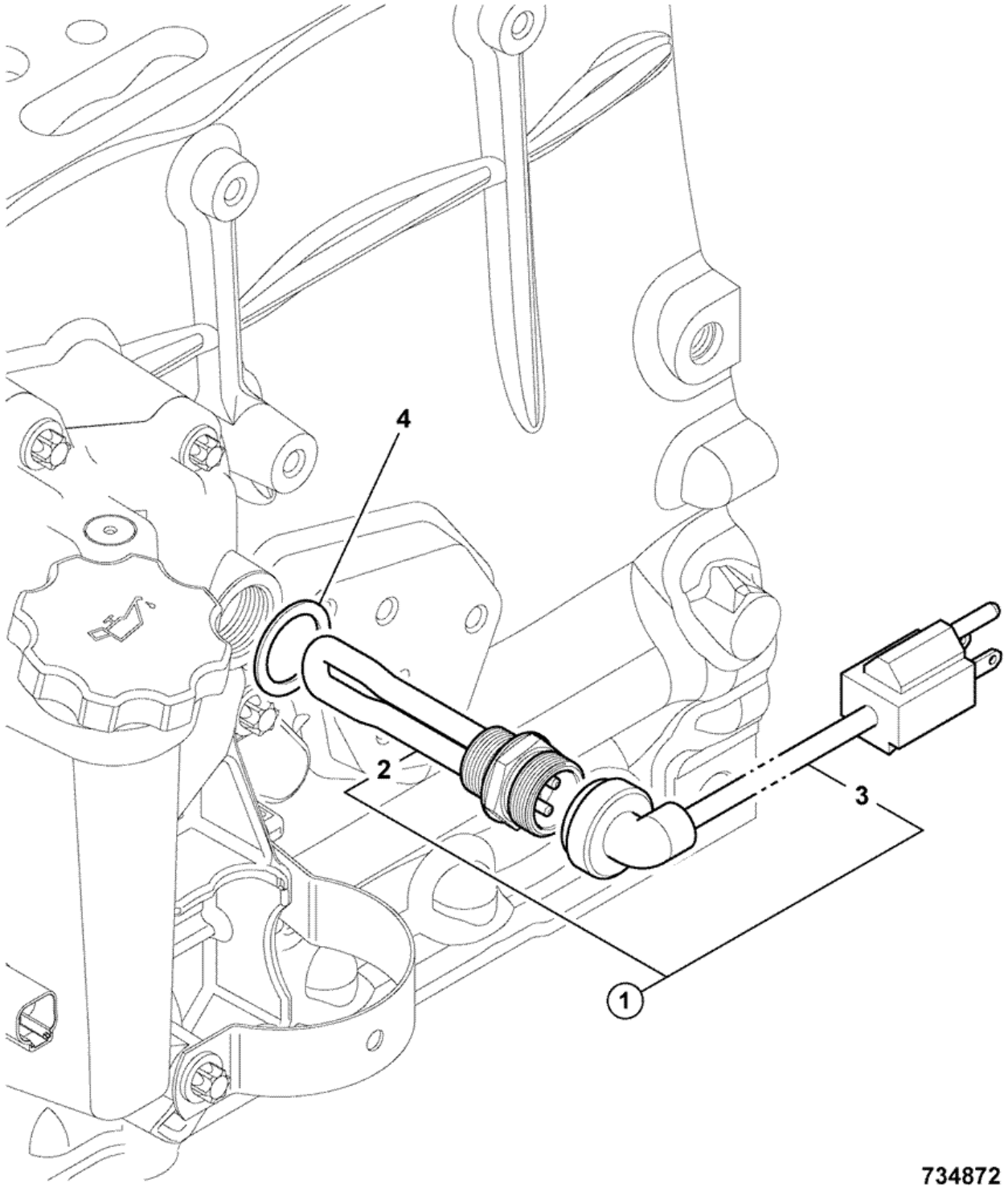


| Item | Part # | Change No | Description | Usage Code | QTY |
|---|---|---|---|---|---|
| 1 | 320/20082 | | Kit-heater engine Block 120V | | 1 |
| 2 | :320/04550 | | Heater cylinder block 1000w - 120v mains | | 1 |
| | | | | | |

| | | | | | |
|---|---|---|---|---|---|
| 3 | :721/11976 | | Harness 120V block heater mains power lead | | 1 |
| 4 | 320/04553 | | Washer copper sealing | | 1 |

Product Catalog \ CONSTRUCTION \ NORTH AMERICA \ CONSTRUCTION / INDUSTRIAL \ BACKHOE LOADER 3CX,4CX,214,215,217 \ 3C PLUS (91HP) , Made in Brazil with Dieselmax/IESA Engine 9812/0080 \ C ELECTRICS-MACHINE CAB & ENGINE \ C03 ELECTRICS, CAB

# 9812/0080 C3-2-4 COVER, COLUMN SWITCH

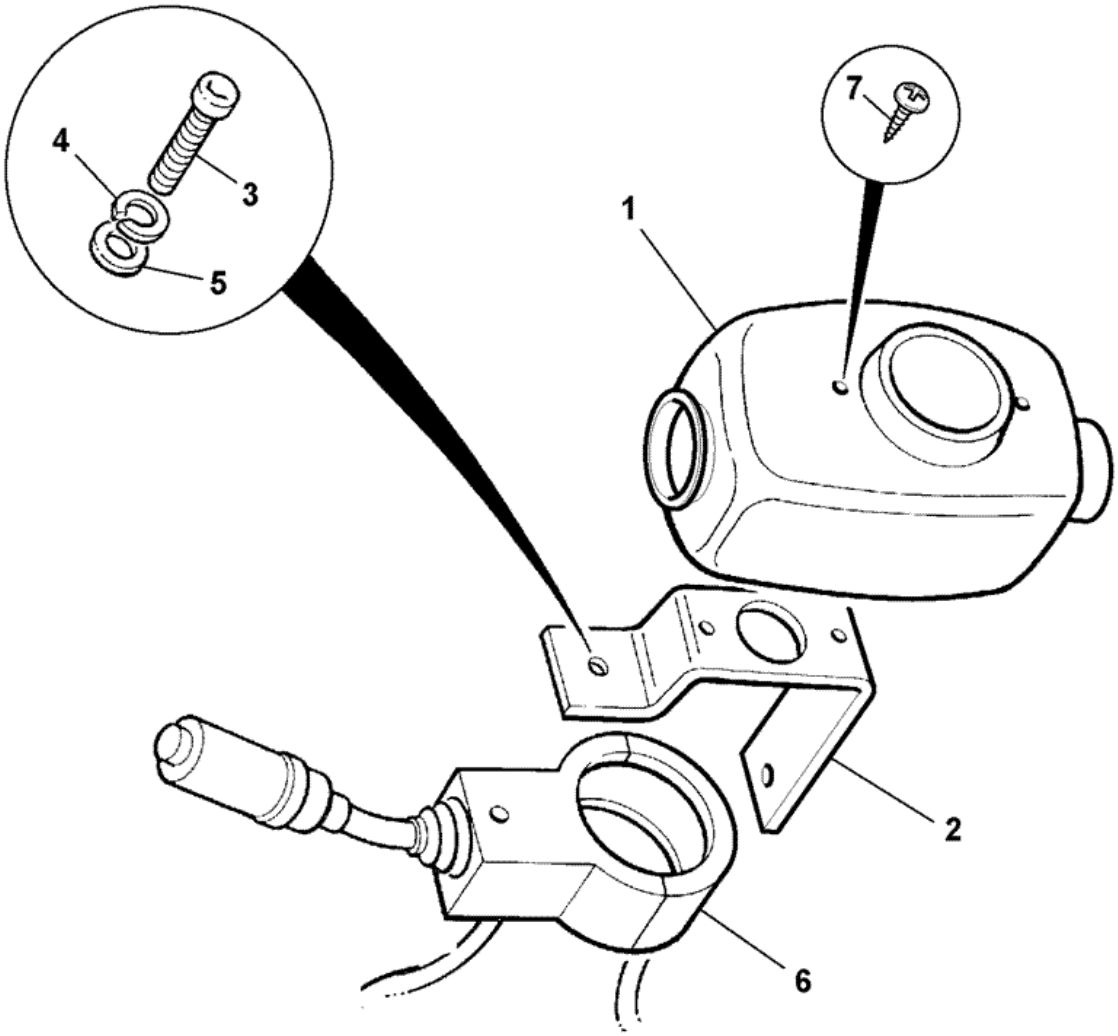


315471

| Item | Part # | Change No | Description | Usage Code | QTY |
|---|---|---|---|---|---|
| 1 | 331/27486 | | Cover column switch | | 1 |
| 2 | 123/05014 | | Bracket switch cover mount | | 1 |
| | | | | | |

| | | | | | |
|---|---|---|---|---|---|
| 3 | 826/01522 | | Screw<br>*Switch mounting to switch* | | 2 |
| 3 | 826/01533 | | Screw<br>*Cover to switch mounting* | | 2 |
| 3 | 826/01130 | | Screw M4 | | 1 |
| 4 | 1425/0005Z | | Washer spring M5 | | 1 |
| 5 | 1420/0005Z | | Washer M5 | | 1 |
| 5 | 1414/0011Z | | Washer 2 BA | | 1 |
| 5 | 1417/0007Z | | Washer | | 1 |
| 6 | . | | 'See Remark'<br>*See C3-4-20* | | 1 |
| 7 | 826/01533 | | Screw | | 2 |

Product Catalog \ CONSTRUCTION \ NORTH AMERICA \ CONSTRUCTION / INDUSTRIAL \ BACKHOE LOADER 3CX,4CX,214,215,217 \ 3C PLUS (91HP) , Made in Brazil with Dieselmax/IESA Engine 9812/0080 \ C ELECTRICS-MACHINE CAB & ENGINE \ C01 ELECTRICS, MAIN MACHINE

# 9812/0080 C1-1-31 HARNESS CAB/CANOPY, MACHINE

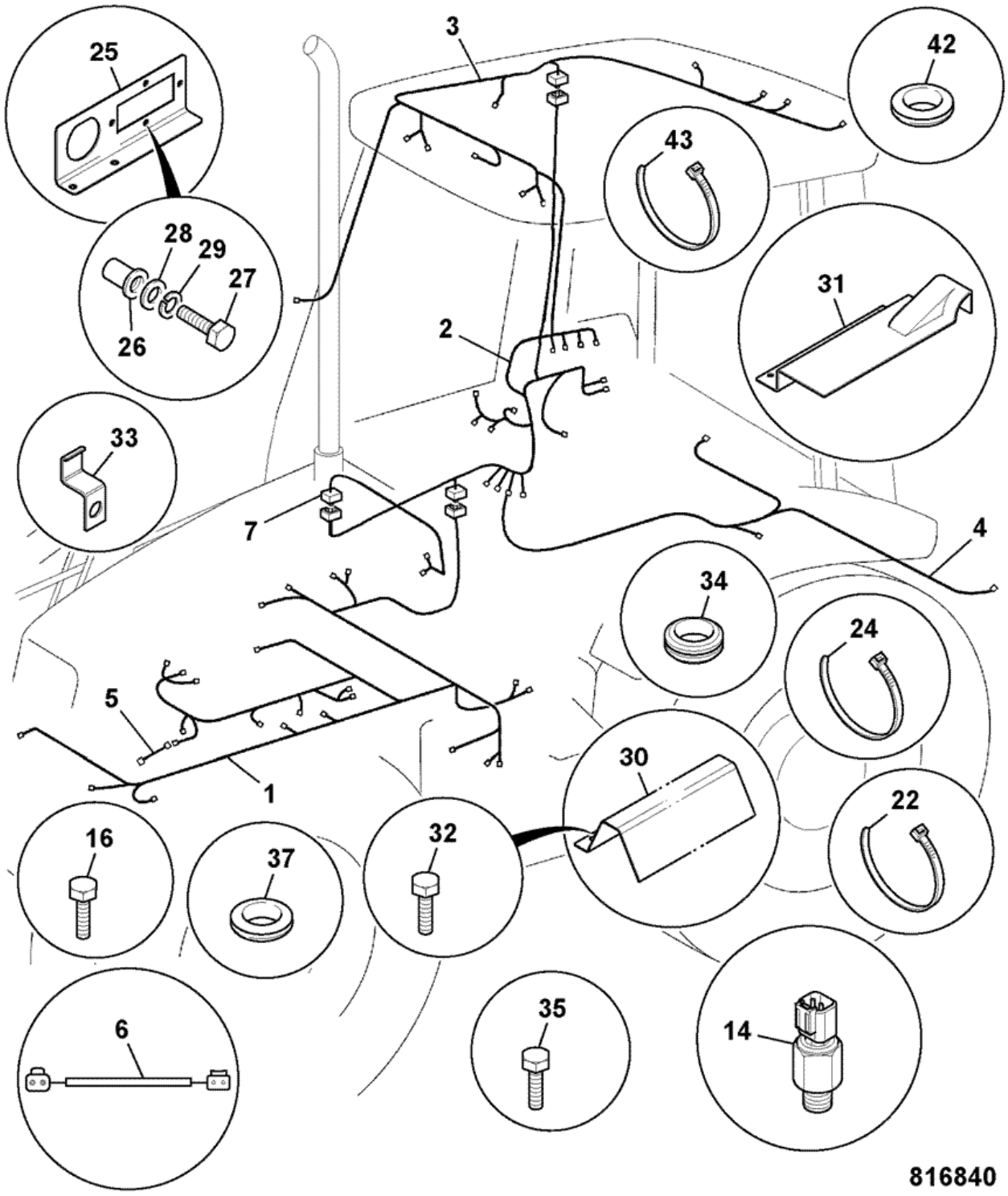


| Item | Part # | Change No | Description | Usage Code | QTY |
|---|---|---|---|---|---|
| 1 | 721/12352 | | Harness chassis<br>*Dieselmax* | | 1 |
| | | | | | |

| | | | | | |
|---|---|---|---|---|---|
| 1 | 721/12488 | | Harness chassis International engine<br>*International engine* | | 1 |
| 2 | 721/11954 | <M TBA | Harness cab panel | | 1 |
| 2 | 721/12250 | <M TBA | Harness console 3C | | 1 |
| 2 | 332/E9417 | | Harness cab, panel | | 1 |
| 3 | 721/10346 | | Harness cab/canopy roof | | 1 |
| 4 | 721/11998 | | Harness rearlamps | | 1 |
| 5 | 721/10383 | | Harness extension headlights | | 1 |
| 6 | 721/12073 | | Harness numberplate light | | 1 |
| 7 | 721/12036 | | Harness aircon link | | 1 |
| 14 | 701/80319 | Superseded | Switch oil pressure,M12 green body,Deutsch | | 1 |
| 14 | 701/80459 | | Switch oil pressure, colour id-red o/d white i/d | | 1 |
| 16 | 826/01520 | | Screw M5 X 20 | | 4 |
| 22 | 826/01144 | | Tie cable 200mm long | | 0 |
| 24 | 826/01347 | | Tie cable c/w mounting 4.6mm x 190mm | | 0 |
| 25 | 331/51990 | | Mounting harness | | 1 |
| 26 | 826/01099 | | Nut rivet,M6 open ended | | 4 |
| 27 | 1315/0203Z | | Screw M6x16 | | 4 |
| 28 | 1420/0006Z | | Washer M6 | | 4 |
| 29 | 1425/0006Z | | Washer Spring | | 4 |
| 30 | 123/07747 | | Cover harness floor | | 1 |
| 31 | 123/07755 | | Cover harness bulkhead | | 1 |
| 32 | 826/00321 | | Screw | | 2 |
| 33 | 123/05247 | | Clip cable | | 2 |
| 34 | 2410/0205 | | Grommet hole dia 12.7mm panel thknss 5-6mm | | 2 |
| 35 | 1315/0407Z | | Bolt M10x25 | | 2 |
| 37 | 828/00273 | | Grommet | | 2 |
| 42 | 2410/0115 | | Grommet<br>*cab roof* | | 1 |
| 43 | 826/01162 | | Tie cable<br>*cab roof* | | 2 |
| 51 | 721/11412 | | Harness link<br>*main harness to loader valve* | | 1 |

Product Catalog \ CONSTRUCTION \ NORTH AMERICA \ CONSTRUCTION / INDUSTRIAL \ BACKHOE LOADER 3CX,4CX,214,215,217 \ 3C PLUS (91HP) , Made in Brazil with Dieselmax/IESA Engine 9812/0080 \ C ELECTRICS-MACHINE CAB & ENGINE \ C01 ELECTRICS, MAIN MACHINE

# 9812/0080 C1-14-1 MOUNTINGS & SUPPORTS, HARNESS

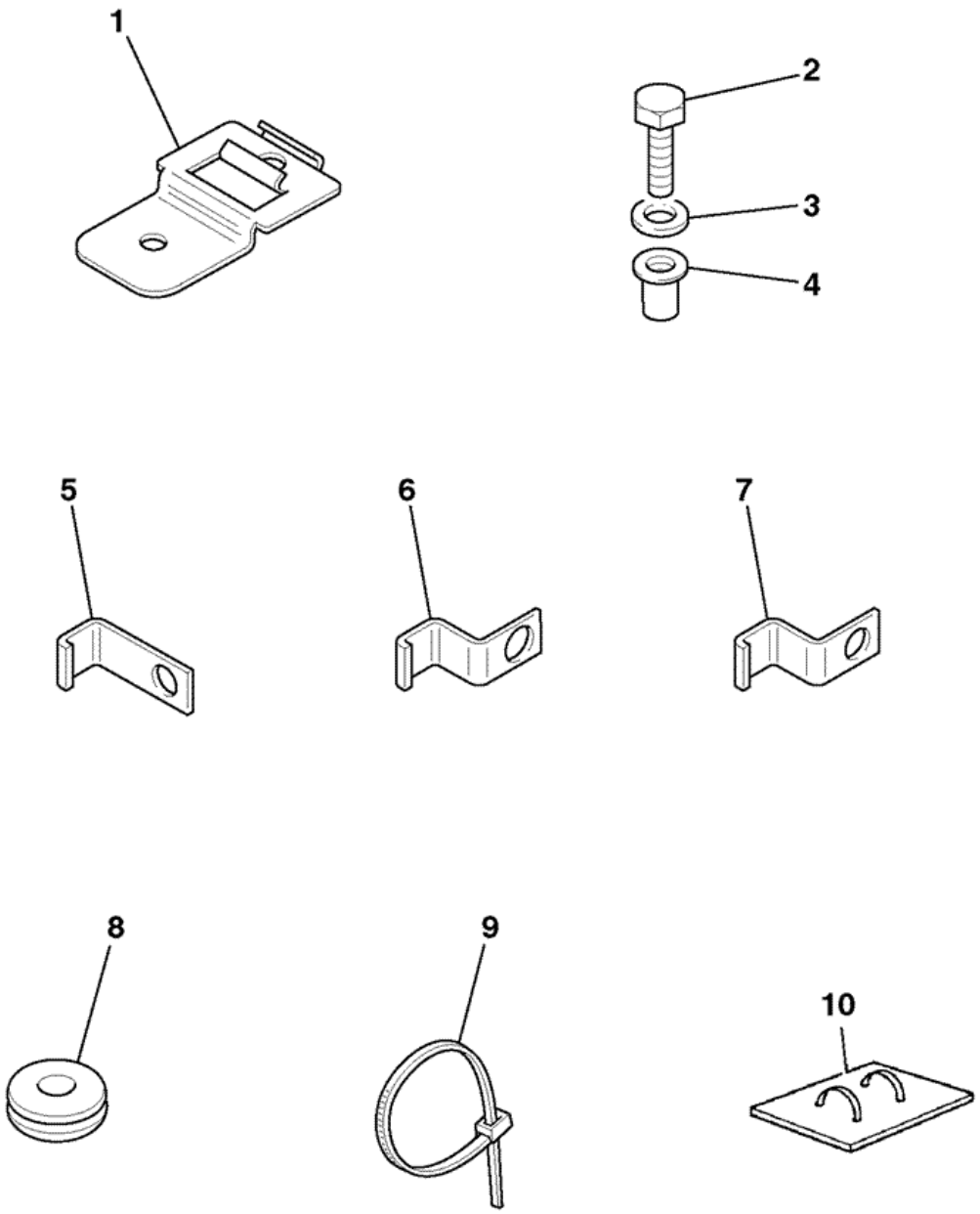


| Item | Part # | Change No | Description | Usage Code | QTY |
|---|---|---|---|---|---|
| 1 | 7210/0067 | | Clip Deutsch DT mounting clip | | 1 |
| 2 | 1315/0307Z | | Screw Hexagon M8 X 25 | | 1 |
| | | | | | |

| | | | | | |
|---|---|---|---|---|---|
| 3 | 1420/0007Z | | Washer plain M8 | | 2 |
| 4 | 826/01627 | | Nut rivet M8 open end for 8 to 10.5mm plt. | | 1 |
| 5 | 123/03965 | | Clip<br>*80mm tall* | | 2 |
| 5 | 123/00195 | | Clip harness support<br>*45mm tall* | | 2 |
| 6 | 123/02569 | | Clip 'S'<br>*13 dia hole* | | 3 |
| 7 | 123/05247 | | Clip cable<br>*10 dia hole 23mm tall* | | 3 |
| 7 | 821/10321 | | Clip harness<br>*10.5 dia hole 35mm tall* | | 2 |
| 8 | 2410/0205 | | Grommet hole dia 12.7mm panel thknss 5-6mm | | 8 |
| 9 | 826/01144 | | Tie cable 200mm long | | 23 |
| 9 | 826/01347 | | Tie cable c/w mounting 4.6mm x 190mm | | 3 |
| 10 | 122/40304 | | Pad cable tie mounting self adhesive | | 1 |

Product Catalog \ CONSTRUCTION \ NORTH AMERICA \ CONSTRUCTION / INDUSTRIAL \ BACKHOE LOADER 3CX,4CX,214,215,217 \ 3C PLUS (91HP) , Made in Brazil with Dieselmax/IESA Engine 9812/0080 \ C ELECTRICS-MACHINE CAB & ENGINE \ C01 ELECTRICS, MAIN MACHINE

# 9812/0080 C1-2-11 BATTERY 12V, CARRIER, JCB DIESELMAX ENGINE

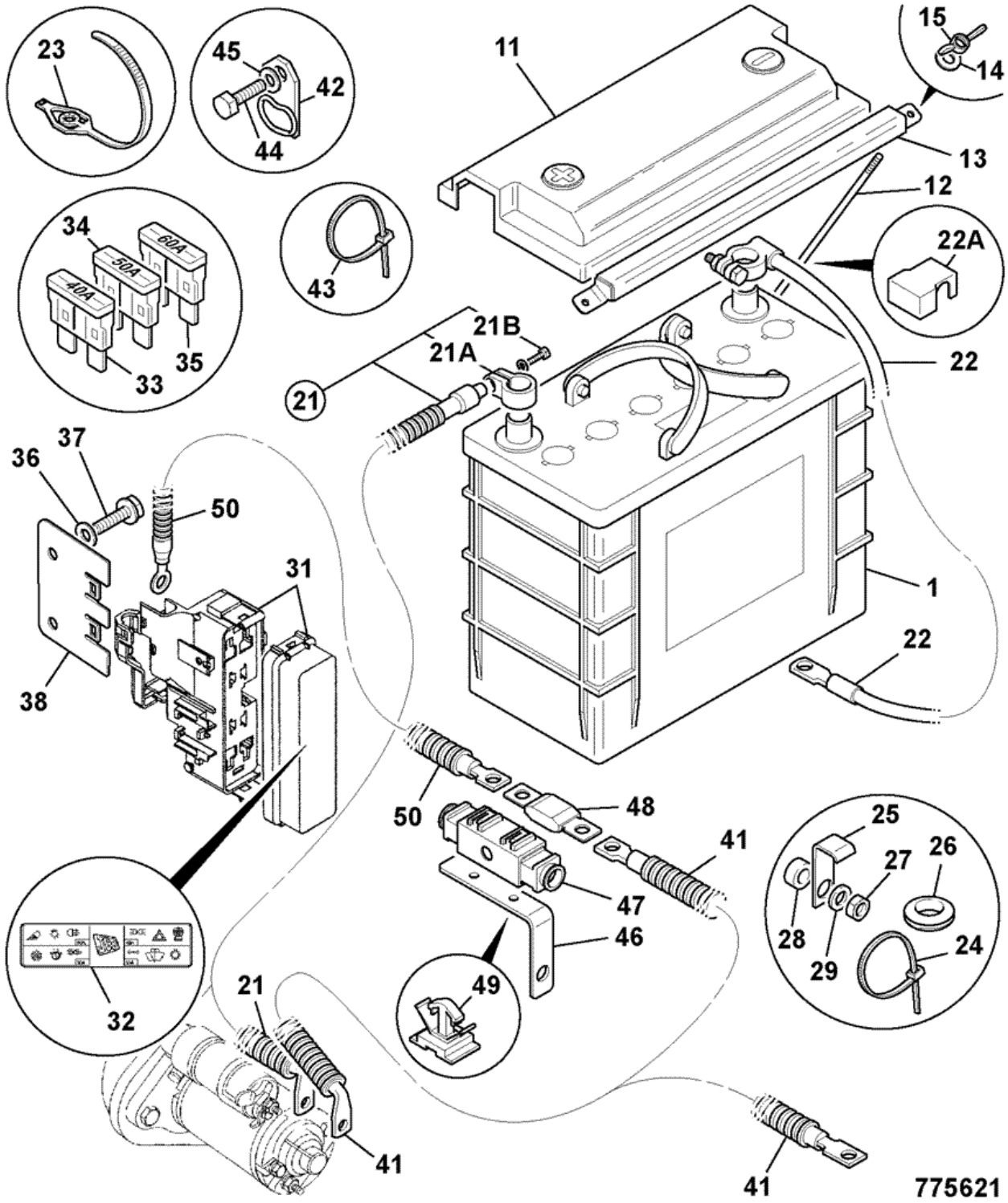


| Item | Part # | Change No | Description | Usage Code | QTY |
|---|---|---|---|---|---|
| | | | Battery type 31 950cc Savannah | | |

| | | | | | |
|---|---|---|---|---|---|
| 1 | 708/10038 | | *Wet battery* | | 1 |
| 11 | 708/10056 | Superseded | Cover battery | | 1 |
| 11 | 332/C3032 | | Cover battery | | 1 |
| 12 | 826/11285 | | Bolt battery, M6x268mm J bolt | | 2 |
| 13 | 260/28401 | | Clamp battery | | 1 |
| 14 | 1420/0006Z | | Washer M6 | | 2 |
| 15 | 826/01115 | | Nut wing | | 2 |
| 21 | 718/20216 | | Lead battery,positive 1600mm x 70sq.mm | | 1 |
| 21 | 332/C2218 | | Lead battery, positive 1600mm x 95sq.mm | | 1 |
| 21A | :998/11023 | | Terminal positive battery lug | | 1 |
| 21B | :998/10912 | | Bolt battery lug M6 | | 1 |
| 22 | 718/20312 | | Lead battery,negative 1800mm x 70sq.mm | | 1 |
| 22 | 332/C2416 | | Lead battery, negative 1800mm x 95sq.mm | | 1 |
| 23 | . | | 'See Remark'<br>*not used in this assembly* | | 5 |
| 24 | 826/01144 | | Tie cable 200mm long | | 3 |
| 25 | . | | 'See Remark'<br>*not used in this assembly* | | 1 |
| 26 | . | | 'See Remark'<br>*not used in this assembly* | | 1 |
| 27 | . | | 'See Remark'<br>*not used in this assembly* | | 1 |
| 28 | . | | 'See Remark'<br>*not used in this assembly* | | 1 |
| 29 | . | | 'See Remark'<br>*not used in this assembly* | | 1 |
| 31 | 716/30077 | | Box fuselink plug 7232/0009, 7232/0008, Terminal 7201/0078 | | 1 |
| 32 | 817/17068 | | Label fuselink box | | 1 |
| 33 | 716/15900 | | Fuse maxi fuse 40Amp | | 1 |
| 34 | 716/30081 | | Fuse maxi fuse 50Amp | | 2 |
| 35 | 716/16400 | | Fuse maxi fuse 60Amp | | 1 |
| 36 | 1420/0007Z | | Washer plain M8 | | 2 |
| 37 | 1317/3305Z | | Bolt flange head M8 x 20 lg | | 2 |
| 38 | 331/42169 | | Bracket fuse link box | | 1 |
| 41 | 718/20218 | | Lead charge | | 1 |
| 42 | 264/36400 | | Clip | | 1 |
| 43 | 826/01144 | | Tie cable 200mm long | | 1 |
| 44 | 1315/0301Z | | Screw hex head M8 X 12 | | 1 |
| 45 | 1420/0007Z | | Washer plain M8 | | 1 |
| 46 | 331/42647 | | Bracket fuse mounting | | 1 |
| 47 | 716/30224 | | Housing fuse holder | | 1 |
| 48 | 716/30225 | | Fuse 150Amp MEGAVAL | | 1 |
| 49 | 826/11189 | | Clip fir-tree | | 2 |
| 50 | 718/20217 | | Lead fuse link | | 1 |

Product Catalog \ CONSTRUCTION \ NORTH AMERICA \ CONSTRUCTION / INDUSTRIAL \ BACKHOE LOADER 3CX,4CX,214,215,217 \ 3C PLUS (91HP) , Made in Brazil with Dieselmax/IESA Engine 9812/0080 \ C ELECTRICS-MACHINE CAB & ENGINE \ C01 ELECTRICS, MAIN MACHINE

# 9812/0080 C1-2-15 BATTERY 12V, CARRIER, JCB DIESELMAX AND IESA ENGINE

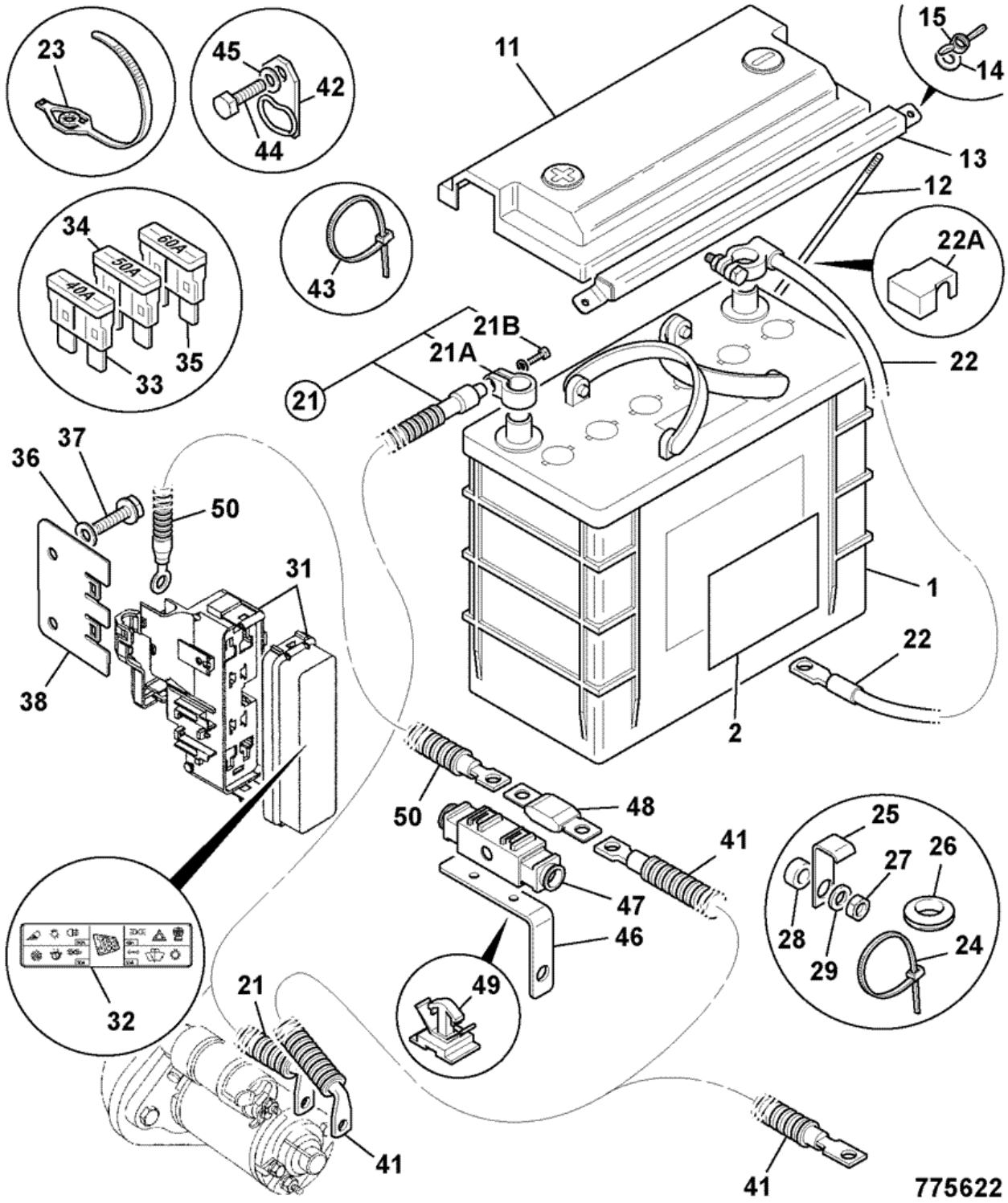


| Item | Part # | Change No | Description | Usage Code | QTY |
|---|---|---|---|---|---|
| 1 | 339/01044 | | Battery 100amp/hr 750cca | | 1 |

| | | | | | |
|---|---|---|---|---|---|
| 2 | 339/01043 | | Decal battery Brazil | | 1 |
| 11 | 332/C3032 | | Cover battery | | 1 |
| 12 | 826/11285 | | Bolt battery, M6x268mm J bolt | | 2 |
| 13 | 260/28401 | | Clamp battery | | 1 |
| 14 | 1420/0006Z | | Washer M6 | | 2 |
| 15 | 826/01115 | | Nut wing | | 2 |
| 21 | 718/20216 | | Lead battery,positive 1600mm x 70sq.mm | | 1 |
| 21A | :998/11023 | | Terminal positive battery lug | | 1 |
| 21B | :998/10912 | | Bolt battery lug M6 | | 1 |
| 22 | 718/56078 | <M TBA | Lead battery negative<br>*IESA* | | 1 |
| 22 | 332/D8306 | >M TBA | Lead battery, negative 1000mm x 70mm sq<br>*IESA* | A | 1 |
| 22 | 718/20312 | <M TBA | Lead battery,negative 1800mm x 70sq.mm<br>*Dieselmax* | | 1 |
| 22 | 332/D7945 | >M TBA | Lead battey, negative 1800mm x 70sq mm<br>*Dieselmax* | A | 1 |
| 22A | :332/D8699 | | Terminal negative battery lug | A | 1 |
| 22B | :331/64594 | | Bolt 1/4"UNC | A | 1 |
| 23 | . | | 'See Remark'<br>*not used in this assembly* | | 5 |
| 24 | 826/01144 | | Tie cable 200mm long | | 3 |
| 25 | . | | 'See Remark'<br>*not used in this assembly* | | 1 |
| 26 | . | | 'See Remark'<br>*not used in this assembly* | | 1 |
| 27 | . | | 'See Remark'<br>*not used in this assembly* | | 1 |
| 28 | . | | 'See Remark'<br>*not used in this assembly* | | 1 |
| 29 | . | | 'See Remark'<br>*not used in this assembly* | | 1 |
| 31 | 716/30077 | | Box fuselink plug 7232/0009, 7232/0008, Terminal 7201/0078 | | 1 |
| 32 | 817/17068 | | Label fuselink box | | 1 |
| 33 | 716/15900 | | Fuse maxi fuse 40Amp | | 1 |
| 34 | 716/30081 | | Fuse maxi fuse 50Amp | | 2 |
| 35 | 716/16400 | | Fuse maxi fuse 60Amp | | 1 |
| 36 | 1420/0007Z | | Washer plain M8 | | 2 |
| 37 | 1317/3305Z | | Bolt flange head M8 x 20 lg | | 2 |
| 38 | 331/42169 | | Bracket fuse link box | | 1 |
| 41 | 718/20218 | | Lead charge | | 1 |
| 42 | 264/36400 | | Clip | | 1 |
| 43 | 826/01144 | | Tie cable 200mm long | | 1 |
| 44 | 1315/0301Z | | Screw hex head M8 X 12 | | 1 |
| 45 | 1420/0007Z | | Washer plain M8 | | 1 |
| 46 | 331/42647 | | Bracket fuse mounting | | 1 |
| 47 | 716/30224 | | Housing fuse holder | | 1 |
| 48 | 716/30225 | | Fuse 150Amp MEGAVAL | | 1 |
| 49 | 826/11189 | | Clip fir-tree | | 2 |
| 50 | 718/20217 | | Lead fuse link | | 1 |

Product Catalog \ CONSTRUCTION \ NORTH AMERICA \ CONSTRUCTION / INDUSTRIAL \ BACKHOE LOADER 3CX,4CX,214,215,217 \ 3C PLUS (91HP) , Made in Brazil with Dieselmax/IESA Engine 9812/0080 \ C ELECTRICS-MACHINE CAB & ENGINE \ C01 ELECTRICS, MAIN MACHINE

# 9812/0080 C1-2-20 ISOLATOR SWITCH, BATTERY

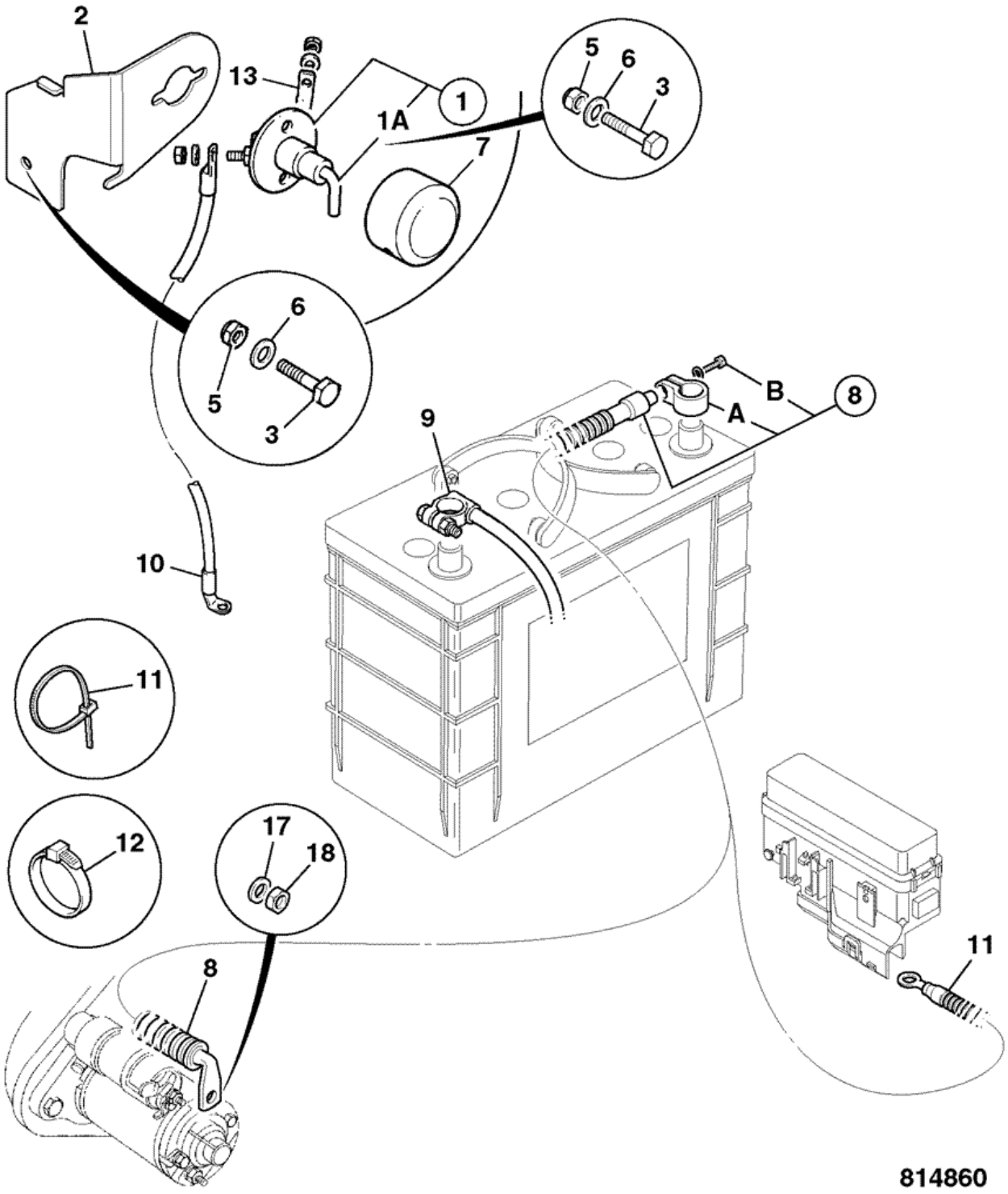


| Item | Part # | Change No | Description | Usage Code | QTY |
|---|---|---|---|---|---|
| 1 | 701/80552 | | Switch isolator | | 1 |
| 1A | :701/80553 | | Key isolator switch | | 1 |
| | | | | | |

| | | | | | |
|---|---|---|---|---|---|
| 2 | 331/51953 | | Bracket mounting battery isolator | | 1 |
| 3 | 1315/0308Z | | Screw M8x30 | | 1 |
| 4 | 1391/3307Z | | Capscrew M8x25mm | | 2 |
| 5 | 1370/0203Z | | Nut self lock M8 | | 3 |
| 6 | 1420/0007Z | | Washer plain M8 | | 2 |
| 7 | 265/00893 | | Cover battery isolator | | 1 |
| 8 | 718/20216 | | Lead battery,positive 1600mm x 70sq.mm | | 1 |
| 8A | :998/11023 | | Terminal positive battery lug | | 1 |
| 8B | :998/10912 | | Bolt battery lug M6 | | 1 |
| 9 | 718/20263 | | Lead battery negative 800mm | | 1 |
| 10 | 718/20264 | | Lead battery negative 2270mm | | 1 |
| 11 | 826/01347 | | Tie cable c/w mounting 4.6mm x 190mm | | 6 |
| 12 | 826/01144 | | Tie cable 200mm long | | 3 |
| 17 | 1370/0201Z | | Nut M8 | | 1 |
| 18 | 1420/0007Z | | Washer plain M8 | | 1 |

Product Catalog \ CONSTRUCTION \ NORTH AMERICA \ CONSTRUCTION / INDUSTRIAL \ BACKHOE LOADER 3CX,4CX,214,215,217 \ 3C PLUS (91HP) , Made in Brazil with Dieselmax/IESA Engine 9812/0080 \ C ELECTRICS-MACHINE CAB & ENGINE \ C01 ELECTRICS, MAIN MACHINE

# 9812/0080 C1-2-21 ISOLATOR SWITCH, BATTERY, JCB DIESELMAX ENGINE

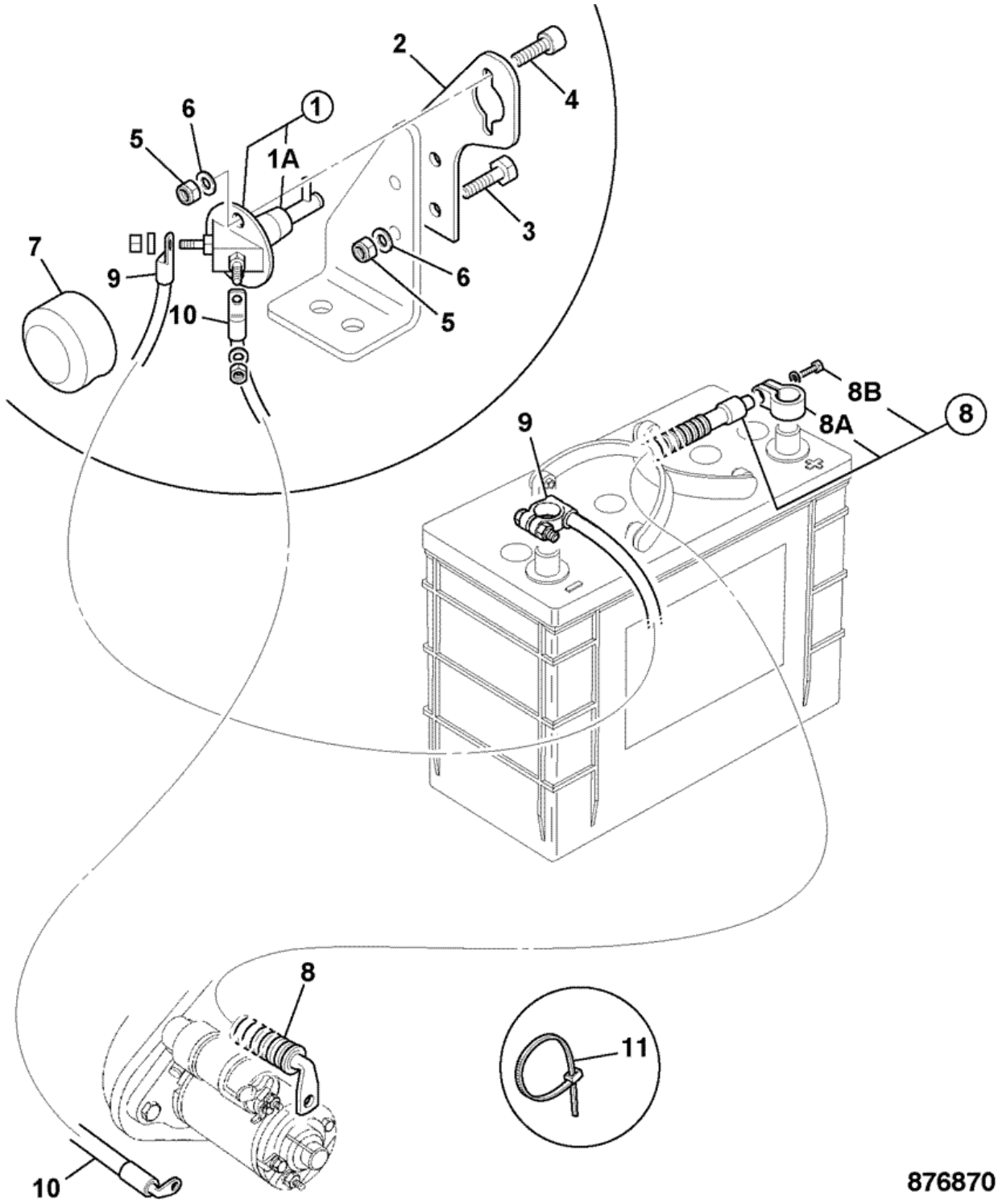


| Item | Part # | Change No | Description | Usage Code | QTY |
|---|---|---|---|---|---|
| 1 | 701/80552 | | Switch isolator | | 1 |

| | | | | | |
|---|---|---|---|---|---|
| 1A | 701/80576 | | Key battery isolator with chain<br>*not supplied with 701/80552* | | 1 |
| 2 | 331/61328 | | Bracket mounting battery isolator | | 1 |
| 3 | 1315/0308Z | | Screw M8x30 | | 2 |
| 4 | 1391/3307Z | | Capscrew M8x25mm | | 2 |
| 5 | 1370/0203Z | | Nut self lock M8 | | 4 |
| 6 | 1420/0007Z | | Washer plain M8 | | 2 |
| 7 | 265/00893 | | Cover battery isolator | | 1 |
| 8 | 718/20216 | | Lead battery,positive 1600mm x 70sq.mm | | 1 |
| 8A | :998/11023 | | Terminal positive battery lug | | 1 |
| 8B | :998/10912 | | Bolt battery lug M6 | | 1 |
| 9 | 706/68400 | | Lead battery,negative 400mm x 70sq.mm | | 1 |
| 10 | 718/20322 | | Lead battery,negative 1800mm x 70sq.mm | | 1 |
| 11 | 826/01347 | | Tie cable c/w mounting 4.6mm x 190mm | | 2 |

Product Catalog \ CONSTRUCTION \ NORTH AMERICA \ CONSTRUCTION / INDUSTRIAL \ BACKHOE LOADER 3CX,4CX,214,215,217 \ 3C PLUS (91HP) , Made in Brazil with Dieselmax/IESA Engine 9812/0080 \ C ELECTRICS-MACHINE CAB & ENGINE \ C01 ELECTRICS, MAIN MACHINE

# 9812/0080 C1-2-22 ISOLATOR SWITCH, BATTERY, JCB DIESELMAX ENGINE

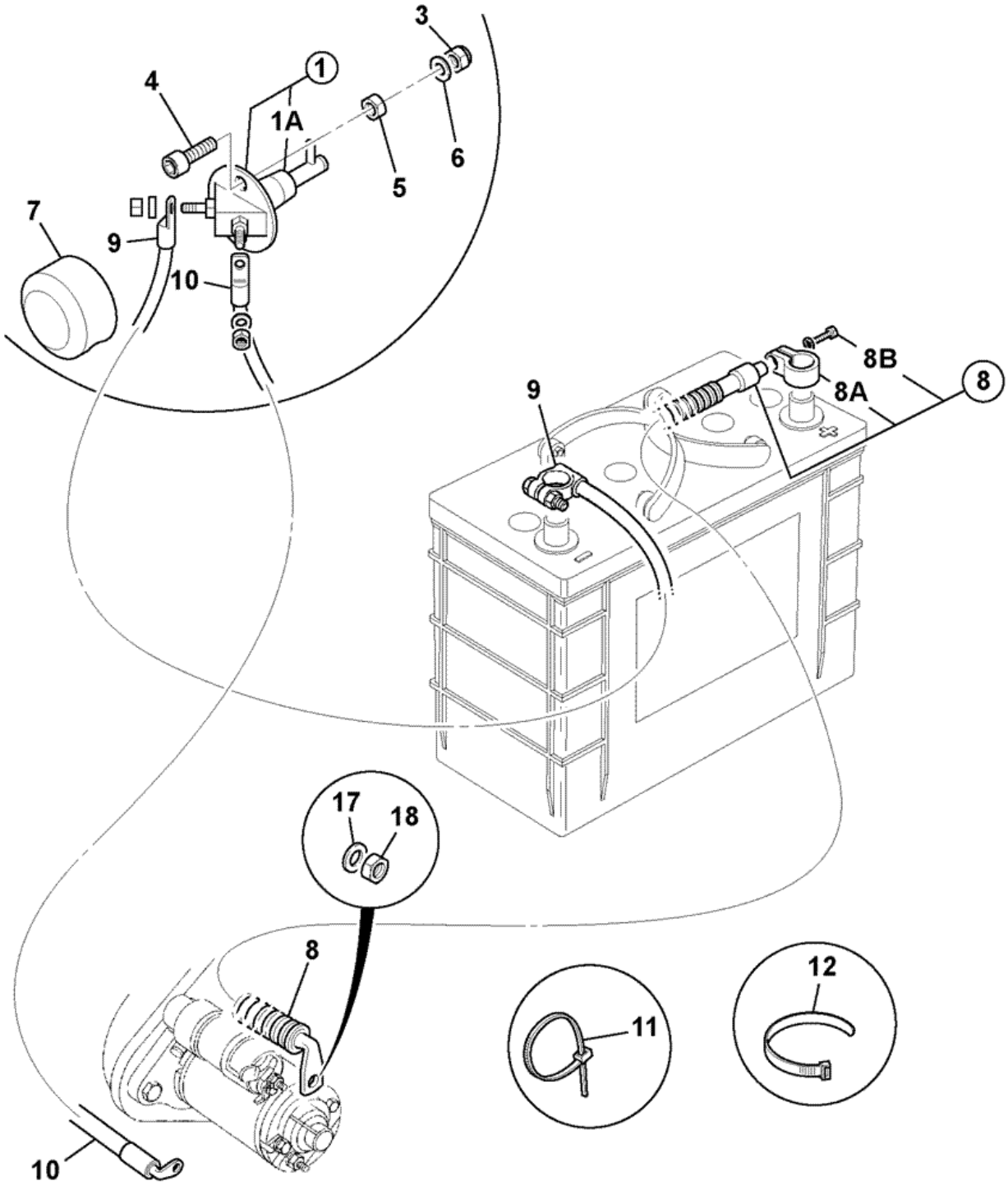


| Item | Part # | Change No | Description | Usage Code | QTY |
|---|---|---|---|---|---|
| 1 | 701/80552 | | Switch isolator | | 1 |

| | | | | | |
|---|---|---|---|---|---|
| 1A | :701/80553 | | Key isolator switch | | 1 |
| 3 | 1370/0203Z | | Nut self lock M8 | | 2 |
| 4 | 1391/3307Z | | Capscrew M8x25mm | | 2 |
| 5 | 1370/0201Z | | Nut M8 | | 2 |
| 6 | 1411/0002Z | | Washer | | 2 |
| 7 | 265/00893 | | Cover battery isolator | | 1 |
| 8 | 718/20216 | | Lead battery,positive 1600mm x 70sq.mm | | 1 |
| 8A | :998/11023 | | Terminal positive battery lug | | 1 |
| 8B | :998/10912 | | Bolt battery lug M6 | | 1 |
| 9 | 706/68400 | | Lead battery,negative 400mm x 70sq.mm | | 1 |
| 10 | 718/20322 | | Lead battery,negative 1800mm x 70sq.mm<br>*Dieselmax* | | 1 |
| 11 | 826/01347 | | Tie cable c/w mounting 4.6mm x 190mm | | 3 |
| 12 | 826/01144 | | Tie cable 200mm long | | 3 |
| 17 | 1370/0201Z | | Nut M8 | | 1 |
| 18 | 1420/0007Z | | Washer plain M8 | | 1 |

Product Catalog \ CONSTRUCTION \ NORTH AMERICA \ CONSTRUCTION / INDUSTRIAL \ BACKHOE LOADER 3CX,4CX,214,215,217 \ 3C PLUS (91HP) , Made in Brazil with Dieselmax/IESA Engine 9812/0080 \ C ELECTRICS-MACHINE CAB & ENGINE \ C01 ELECTRICS, MAIN MACHINE

# 9812/0080 C1-2-31 ISOLATOR SWITCH, BATTERY, INTERNATIONAL ENGINE

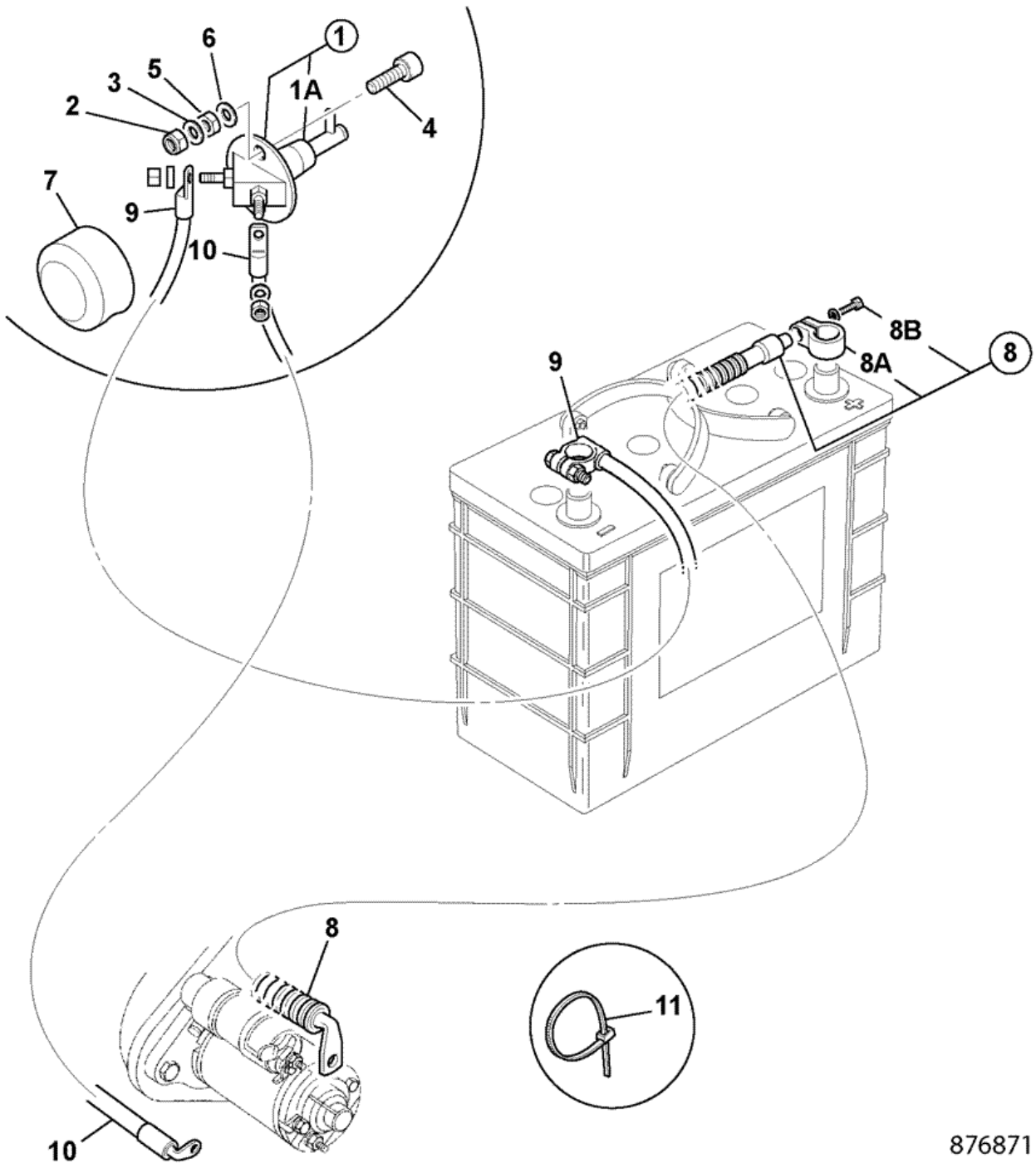


| Item | Part # | Change No | Description | Usage Code | QTY |
|---|---|---|---|---|---|
| 1 | 701/80552 | | Switch isolator | | 1 |

| | | | | | |
|---|---|---|---|---|---|
| 1A | :701/80553 | | Key isolator switch | | 1 |
| 2 | 1411/0002Z | | Washer | | 2 |
| 3 | 1411/0002Z | | Washer | | 2 |
| 4 | 1391/3307Z | | Capscrew M8x25mm | | 2 |
| 5 | 1370/0203Z | | Nut self lock M8 | | 2 |
| 6 | 1420/0007Z | | Washer plain M8 | | 2 |
| 7 | 265/00893 | | Cover battery isolator | | 1 |
| 8 | 718/56127 | | Lead battery, cab positive | | 1 |
| 8A | :998/10911 | | Terminal battery lug | | 1 |
| 8B | :998/10912 | | Bolt battery lug M6 | | 1 |
| 9 | 706/68400 | | Lead battery,negative 400mm x 70sq.mm | | 1 |
| 10 | 718/02500 | | Lead isolator | | 1 |
| 11 | 826/01347 | | Tie cable c/w mounting 4.6mm x 190mm | | 3 |

# 9812/0080 C1-28-1 EARTH LEADS

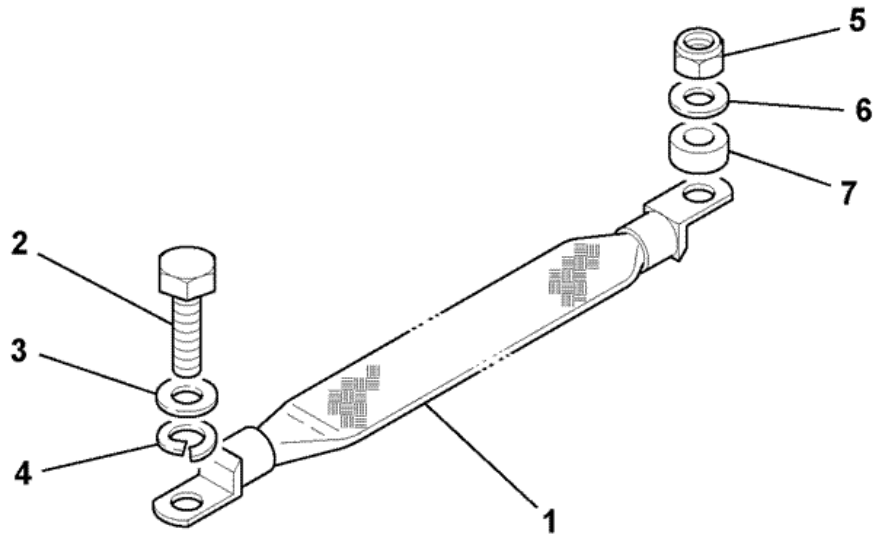


739580

| Item | Part # | Change No | Description | Usage Code | QTY |
|---|---|---|---|---|---|
| 1 | 718/20188 | | Strap earth 400mm<br>*Transmission casing* | | 1 |
| | | | | | |

| | | | | | |
|---|---|---|---|---|---|
| 5 | 1370/0301Z | | Nut | | 1 |
| 6 | 1420/0008Z | | Washer Plain M10 | | 1 |
| 7 | 123/06256 | | Spacer steel | | 1 |

Product Catalog \ CONSTRUCTION \ NORTH AMERICA \ CONSTRUCTION / INDUSTRIAL \ BACKHOE LOADER 3CX,4CX,214,215,217 \ 3C PLUS (91HP) , Made in Brazil with Dieselmax/IESA Engine 9812/0080 \ C ELECTRICS-MACHINE CAB & ENGINE \ C01 ELECTRICS, MAIN MACHINE

# 9812/0080 C1-3-20 LIGHT, REAR, ROOF MOUNTED

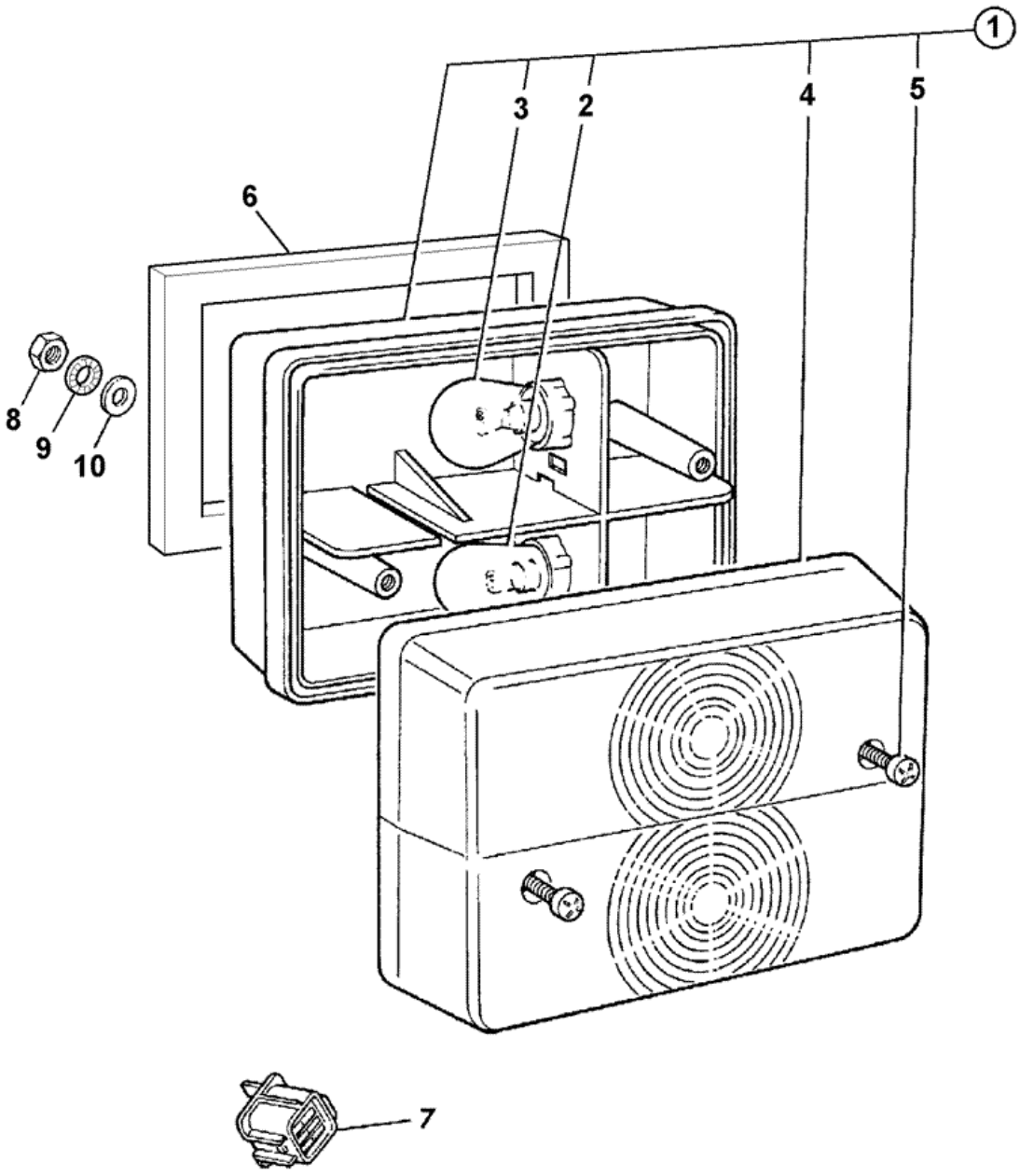


143861

| Item | Part # | Change No | Description | Usage Code | QTY |
|---|---|---|---|---|---|
| 1 | 700/38900 | | Light rear | | 2 |
| 2 | :720/10038 | | Bulb 12v 21/5w | | 1 |
| | | | | | |

| | | | | | |
|---|---|---|---|---|---|
| 3 | :720/10005 | | Bulb 12v 21w | | 1 |
| 4 | :700/38901 | | Lens rear | | 1 |
| 5 | :NSP | | None serviced part | | 1 |
| 6 | 813/00463 | | Gasket rear light | | 2 |
| 7 | 715/06100 | | Plug | | 1 |
| 8 | 1370/0001Z | | Nut M5-8 | | 4 |
| 9 | 1417/0007Z | | Washer | | 4 |
| 10 | 1414/0011Z | | Washer 2 BA | | 4 |

# 9812/0080 C1-9-11 ALARM, REVERSE, INSTALLATION, OPTIONAL

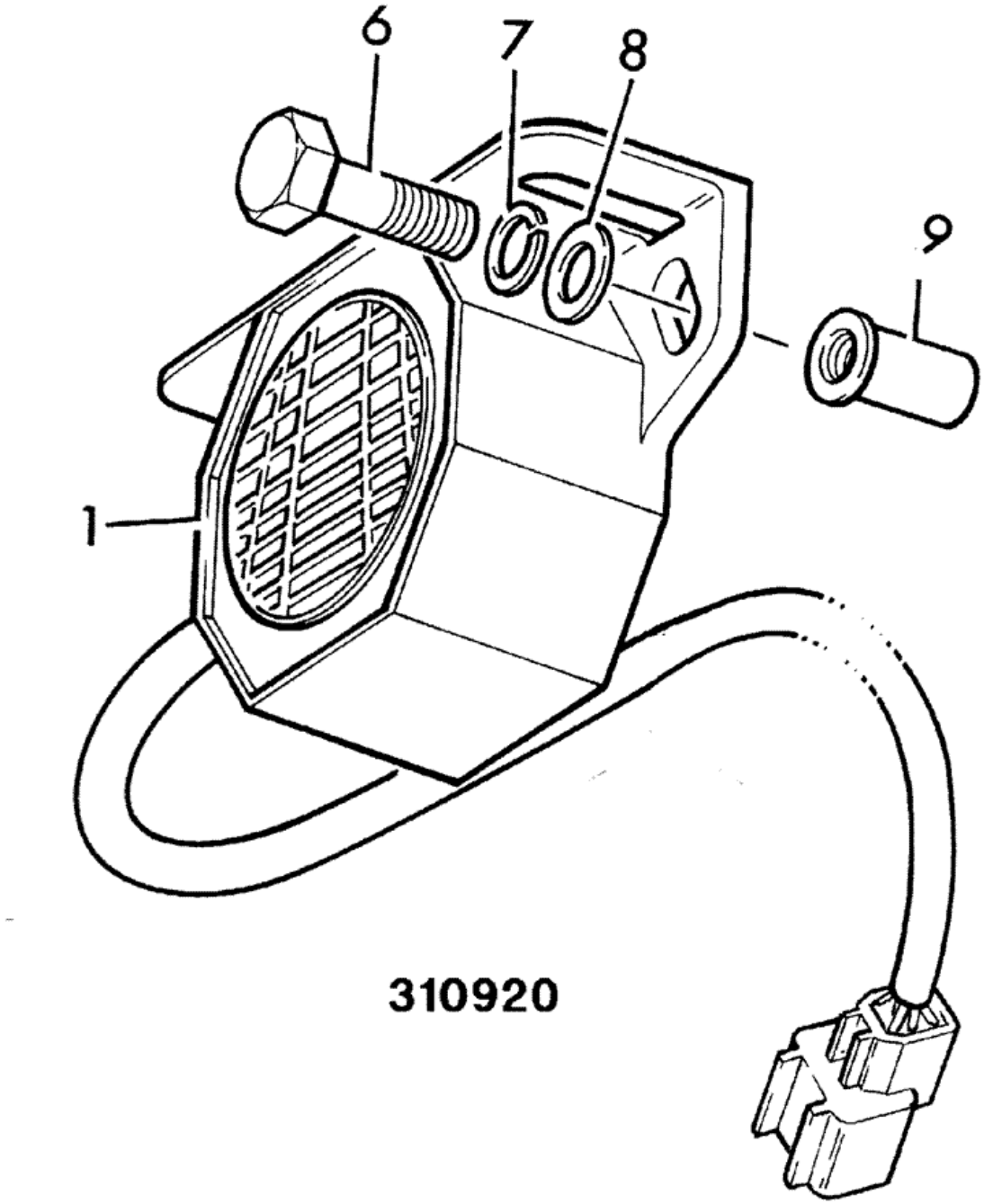

| Item | Part # | Change No | Description | Usage Code | QTY |
|---|---|---|---|---|---|
| 1 | 717/07700 | | Alarm reverse | | 1 |
| 6 | 826/01591 | | Screw | | 2 |
| 7 | 823/00555 | | Washer spring | | 2 |
| 8 | 823/00554 | | Washer plain | | 2 |
| 9 | 826/01101 | | Nut rivet,M6 open ended for 3 to 5.5mm plt | | 2 |
| 11 | 826/01144 | | Tie cable 200mm long | | 2 |
| 12 | 817/18473 | | Label Reverse alarm (Portuguese)Brazil | | 1 |

Product Catalog \ CONSTRUCTION \ NORTH AMERICA \ CONSTRUCTION / INDUSTRIAL \ BACKHOE LOADER 3CX,4CX,214,215,217 \ 3C PLUS (91HP) , Made in Brazil with Dieselmax/IESA Engine 9812/0080 \ C ELECTRICS-MACHINE CAB & ENGINE \ C03 ELECTRICS, CAB

# 9812/0080 C3-1-31 GAUGES AND SWITCHES, SIDE CONSOLE, CANOPY

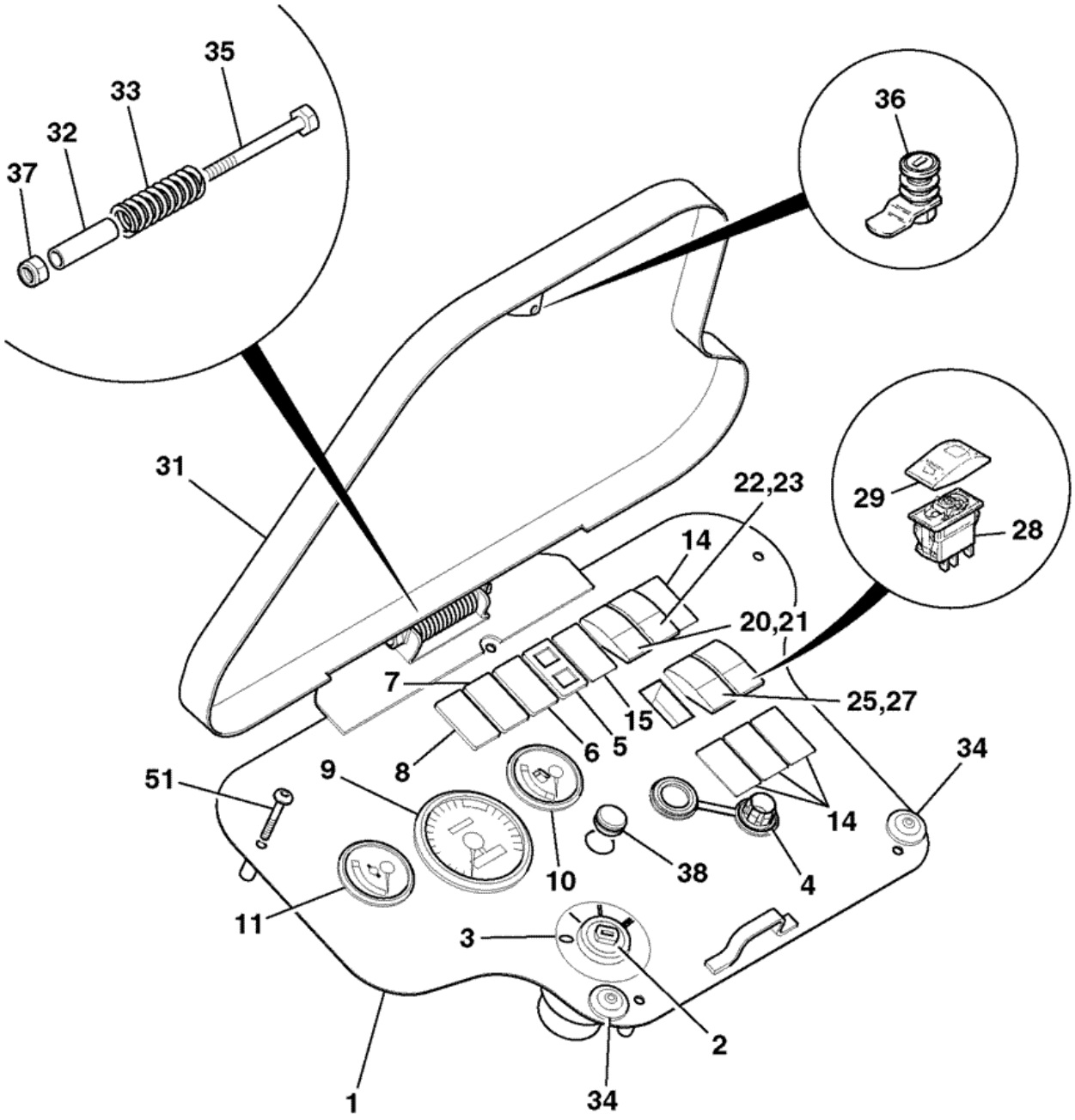


814971

| Item | Part # | Change No | Description | Usage Code | QTY |
|---|---|---|---|---|---|
| 1 | 335/10181 | | Panel instrument | | 1 |

| | | | | | |
|---|---|---|---|---|---|
| 2 | 701/80184 | | Switch ignition (Supplied with x2 Keys) | | 1 |
| 2A | :701/45501 | | Key Door/Ignition Ref 14657 | | 1 |
| 3 | 817/05167 | | Decal ignition switch | | 1 |
| 4 | 715/08100 | | Socket accessory | | 1 |
| 5 | 700/50176 | | Light panel,LED | | 1 |
| 6 | 700/50050 | | Light panel LED eng/trans pressure | | 1 |
| 7 | 700/50051 | | Light panel LED eng/trans temp | | 1 |
| 8 | 700/50052 | | Light panel LED batt charge/park brk | | 1 |
| 9 | 704/50227 | | Gauge tacho and hourmeter | | 1 |
| 9A | :720/10057 | | Bulb 12V 5W Capless | | 1 |
| 9B | :700/50020 | | Cap<br>*cover for bulb* | | 1 |
| 9C | :700/50085 | | Holder bulb | | 1 |
| 10 | 704/50098 | | Gauge fuel level | | 1 |
| 10A | :720/10057 | | Bulb 12V 5W Capless | | 1 |
| 10B | :700/50020 | | Cap<br>*cover for bulb* | | 1 |
| 10C | :700/50085 | | Holder bulb | | 1 |
| 11 | 704/50099 | | Gauge water temp | | 1 |
| 11A | :720/10057 | | Bulb 12V 5W Capless | | 1 |
| 11B | :700/50020 | | Cap<br>*cover for bulb* | | 1 |
| 11C | :700/50085 | | Holder bulb | | 1 |
| 14 | 701/80265 | | Blank | | 4 |
| 15 | 700/50191 | | Light panel LED | | 1 |
| 20 | 701/60004 | | Switch Panel | | 1 |
| 21 | 701/58826 | | Actuator front worklights switch decal | | 1 |
| 22 | 701/60003 | | Switch 12V | | 1 |
| 23 | 701/58854 | | Switch Actuator FrontWiper | | 1 |
| 25 | 701/60000 | | Switch 12V | | 1 |
| 27 | 701/58825 | | Actuator beacon convoy warning | | 1 |
| 28 | 701/60002 | | Switch 12V | | 1 |
| 29 | 701/58827 | | Cover rear working lights switch decal | | 1 |
| 31 | 335/03582 | | Cover vandal | | 1 |
| 32 | 123/07797 | | Spacer | | 1 |
| 33 | 123/07861 | | Spring | | 1 |
| 34 | 828/00261 | | Buffer (stop),rubber | | 2 |
| 35 | 1315/3319Z | | Bolt M8 x 90mm long | | 1 |
| 36 | 123/04686 | | Catch vandal cover | | 1 |
| 37 | 1370/0203Z | | Nut self lock M8 | | 1 |
| 38 | 2410/1108 | | Grommet | | 1 |
| 43 | 701/60000 | | Switch 12V<br>*4WD switch* | | 1 |
| 44 | 701/58822 | | Cover 4wd switch decal<br>*4WD switch* | | 1 |
| 51 | 826/01804 | | Bolt | | 5 |
| 61 | :926/29000 | | Buffer cable cover<br>*fitted to B post* | | 1 |

Product Catalog \ CONSTRUCTION \ NORTH AMERICA \ CONSTRUCTION / INDUSTRIAL \ BACKHOE LOADER 3CX,4CX,214,215,217 \ 3C PLUS (91HP) , Made in Brazil with Dieselmax/IESA Engine 9812/0080 \ C ELECTRICS-MACHINE CAB & ENGINE \ C03 ELECTRICS, CAB

# 9812/0080 C3-1-41 GAUGES AND SWITCHES, SIDE CONSOLE, CAB

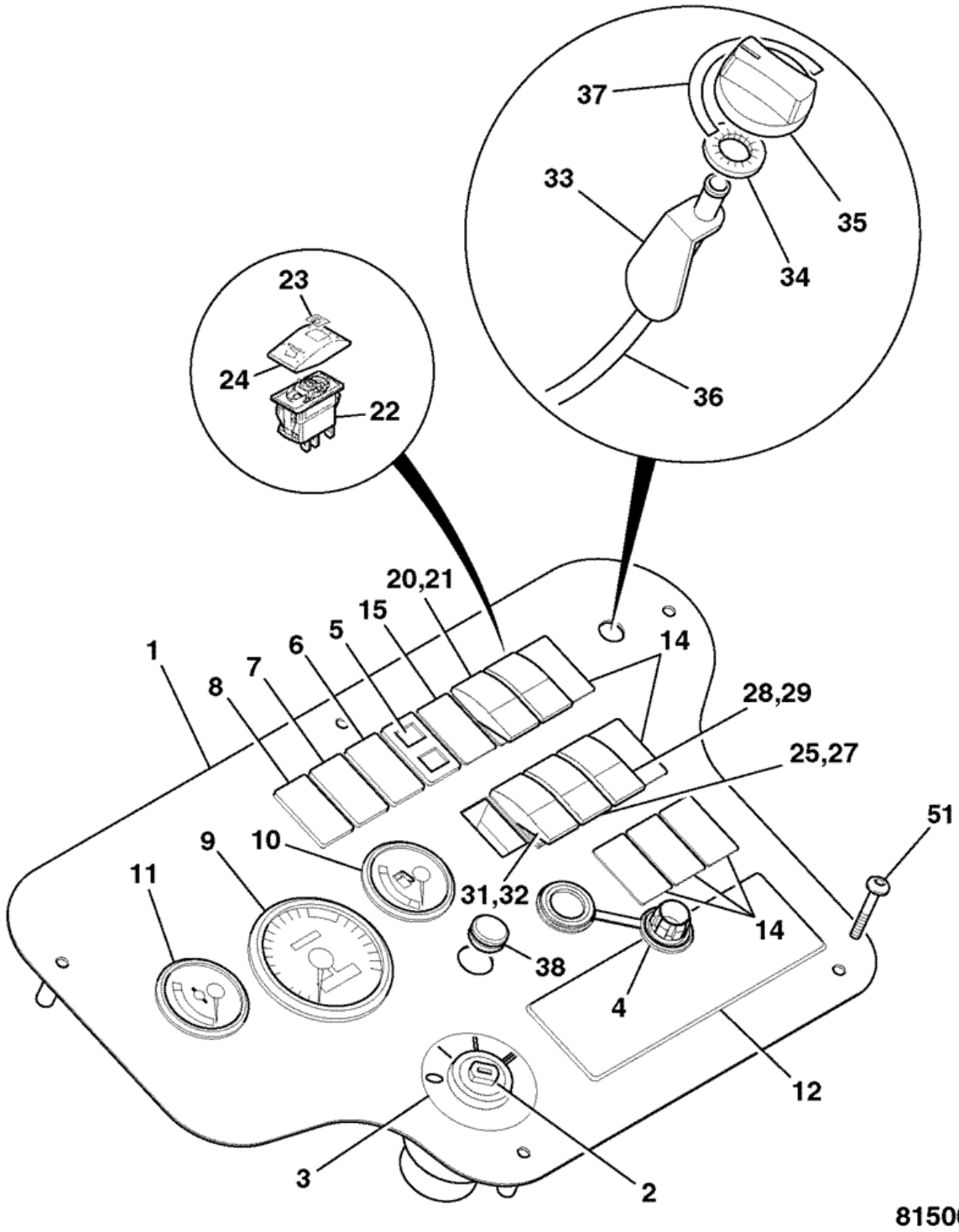


| Item | Part # | Change No | Description | Usage Code | QTY |
|---|---|---|---|---|---|
| 1 | 335/09801 | | Panel switch | | 1 |

| | | | | | |
|---|---|---|---|---|---|
| 2 | 701/80184 | | Switch ignition (Supplied with x2 Keys) | | 1 |
| 2A | :701/45501 | | Key Door/Ignition Ref 14657 | | 1 |
| 3 | 817/05167 | | Decal ignition switch | | 1 |
| 4 | 715/08100 | | Socket accessory | | 1 |
| 5 | 700/50176 | | Light panel,LED | | 1 |
| 6 | 700/50050 | | Light panel LED eng/trans pressure | | 1 |
| 7 | 700/50051 | | Light panel LED eng/trans temp | | 1 |
| 8 | 700/50052 | | Light panel LED batt charge/park brk | | 1 |
| 9 | 704/50227 | | Gauge tacho and hourmeter | | 1 |
| 9A | :720/10057 | | Bulb 12V 5W Capless | | 1 |
| 9B | :700/50020 | | Cap<br>*cover for bulb* | | 1 |
| 9C | :700/50085 | | Holder bulb | | 1 |
| 10 | 704/50098 | | Gauge fuel level | | 1 |
| 10A | :720/10057 | | Bulb 12V 5W Capless | | 1 |
| 10B | :700/50020 | | Cap<br>*cover for bulb* | | 1 |
| 10C | :700/50085 | | Holder bulb | | 1 |
| 11 | 704/50099 | | Gauge water temp | | 1 |
| 11A | :720/10057 | | Bulb 12V 5W Capless | | 1 |
| 11B | :700/50020 | | Cap<br>*cover for bulb* | | 1 |
| 11C | :700/50085 | | Holder bulb | | 1 |
| 12 | 717/08600 | | Cover Radio Blanking | | 1 |
| 14 | 701/80265 | | Blank | | 4 |
| 15 | 700/50191 | >M TBA | Light panel LED | | 1 |
| 20 | 701/60004 | | Switch Panel | | 1 |
| 21 | 701/58826 | | Actuator front worklights switch decal | | 1 |
| 22 | 701/60003 | | Switch 12V | | 1 |
| 23 | 701/58854 | | Switch Actuator FrontWiper | | 1 |
| 24 | 701/58828 | | Actuator wash,wipe switch decal | | 1 |
| 25 | 701/60000 | | Switch 12V | | 1 |
| 27 | 701/58825 | | Actuator beacon convoy warning | | 1 |
| 28 | 701/60002 | | Switch 12V | | 1 |
| 29 | 701/58827 | | Cover rear working lights switch decal | | 1 |
| 31 | 701/60016 | | Switch 3 position 12V | | 1 |
| 32 | 701/58837 | | Decal Reversing Fan switch decal | | 1 |
| 33 | 142/00643 | | Actuator cable operated | | 1 |
| 34 | 826/00711 | | Washer M4'starloc' | | 2 |
| 35 | 162/00832 | | Knob control | | 1 |
| 36 | 910/46900 | | Cable control | | 1 |
| 37 | 817/04021 | | Decal heater | | 1 |
| 38 | 2410/1108 | | Grommet | | 1 |
| 41 | 701/60000 | | Switch 12V<br>*aircon* | | 1 |
| 42 | 701/58831 | | Actuator aircon switch soft touch<br>*aircon* | | 1 |
| 43 | 701/60000 | | Switch 12V<br>*4WD switch* | | 1 |
| 44 | 701/58822 | | Cover 4wd switch decal<br>*4WD switch* | | 1 |
| 51 | 826/01804 | | Bolt | | 5 |

# 9812/0080 C3-17-1 FAN, FACE LEVEL

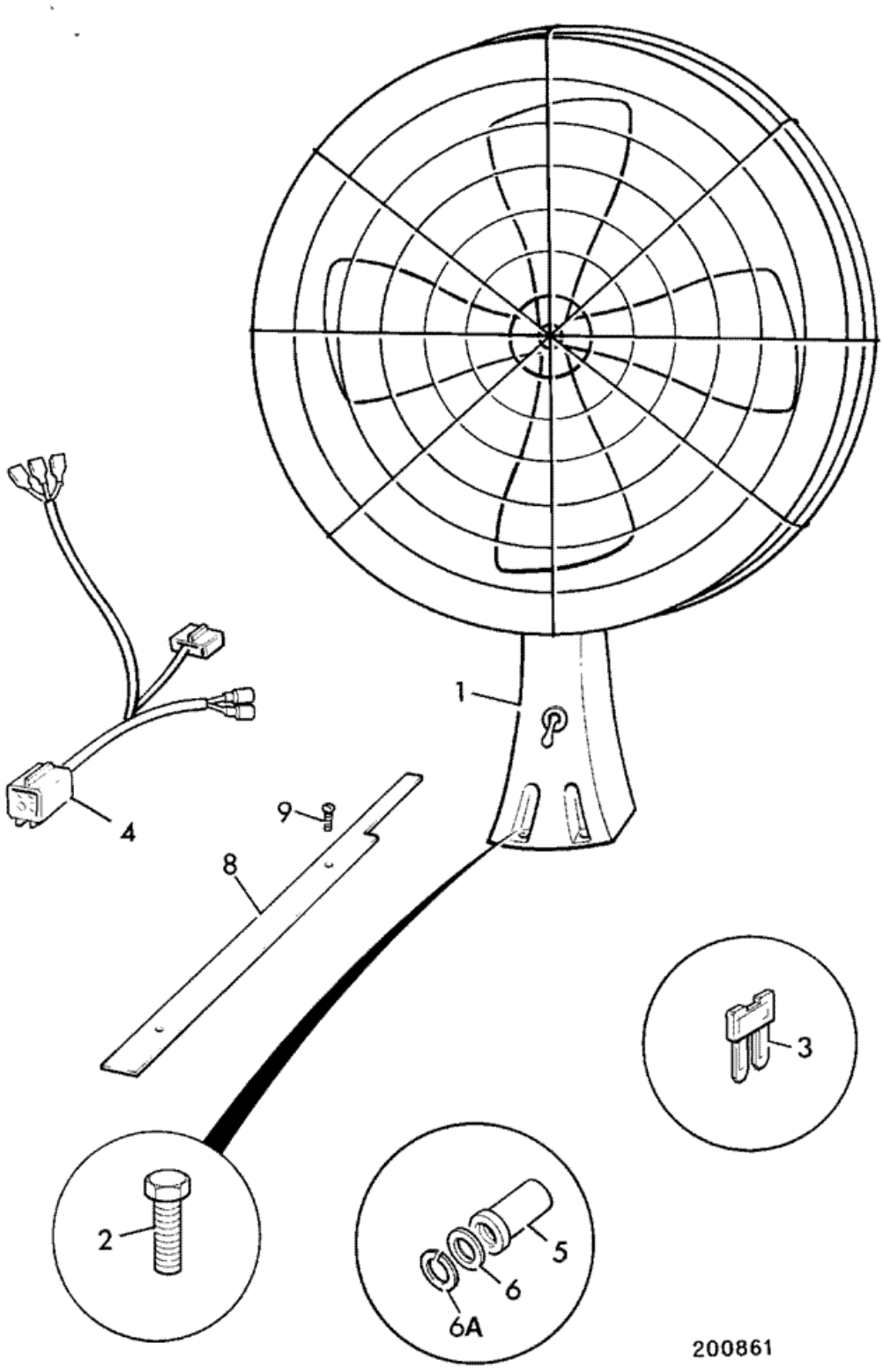

| Item | Part # | Change No | Description | Usage Code | QTY |
|---|---|---|---|---|---|
| 1 | 717/20040 | | Fan face level, l2V | | 1 |
| 2 | 1315/0207Z | | Screw M6 x 25mm long | | 4 |
| 3 | 716/05706 | | Fuse 15 Amp | | 1 |
| 4 | . | | 'See Remark'<br>*not required* | | 1 |
| 5 | 826/01101 | | Nut rivet,M6 open ended for 3 to 5.5mm plt | | 4 |
| 6 | 1420/0006Z | | Washer M6 | | 4 |
| 6A | 1425/0006Z | | Washer Spring | | 4 |
| 7 | . | | 'See Remark'<br>*not fitted* | | 2 |
| 8 | 123/08011 | | Cover fan harness | | 1 |
| 9 | 826/01520 | | Screw M5 X 20 | | 2 |

# 9812/0080 C3-18-1 INTERIOR MOULDINGS, CANOPY BUILDS

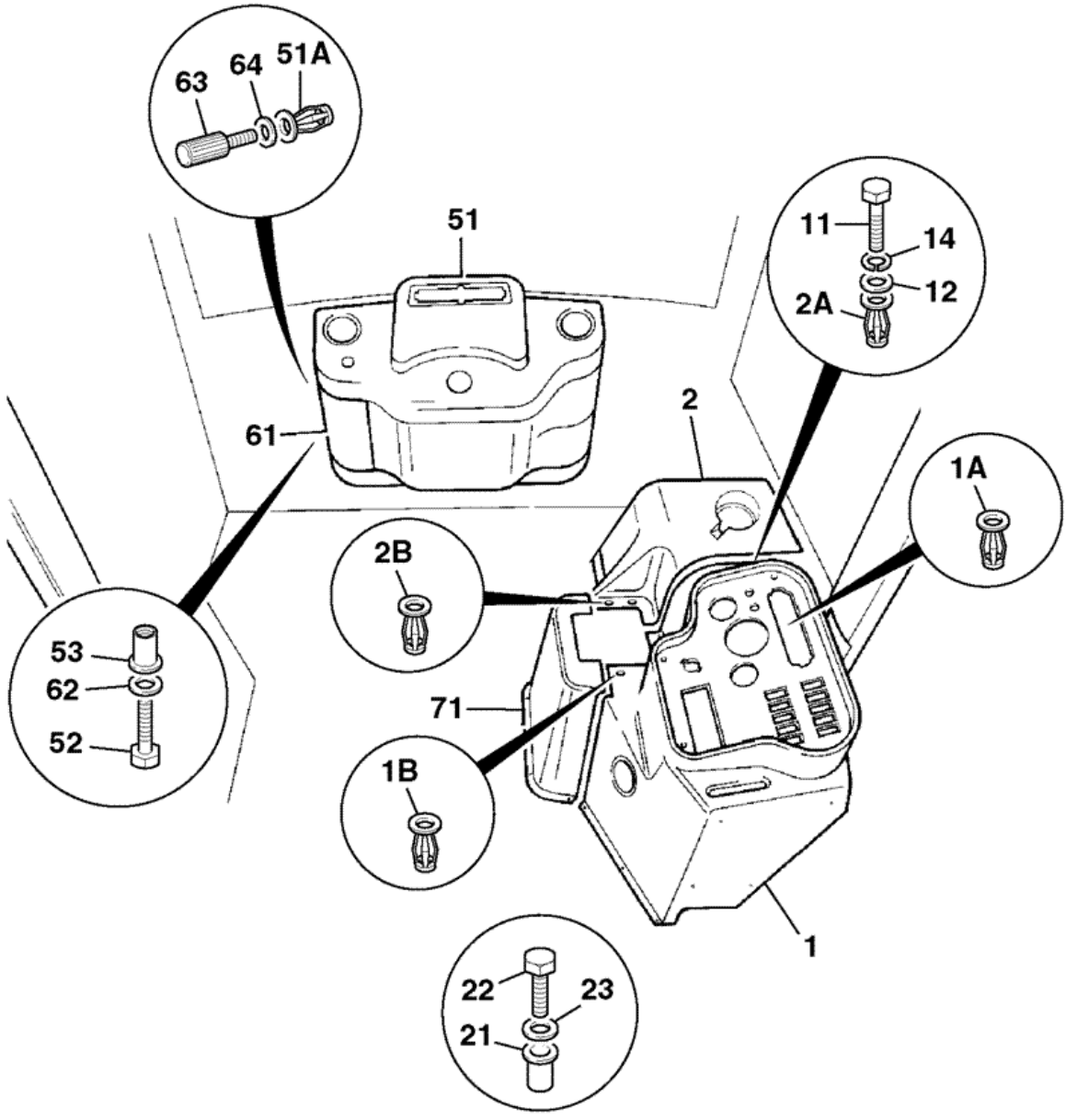


816650

| Item | Part # | Change No | Description | Usage Code | QTY |
|---|---|---|---|---|---|
| 1 | 128/12075 | | Console switch housing | | 1 |

| | | | | | |
|---|---|---|---|---|---|
| 1A | :826/00842 | | Nut M5 jacknut | | 5 |
| 1B | :826/01232 | | Nut M6 jack | | 2 |
| 2 | 331/27478 | | Cover side,canopy loader/landscaper | | 1 |
| 2A | 826/00842 | | Nut M5 jacknut | | 3 |
| 2B | 826/01232 | | Nut M6 jack | | 2 |
| 11 | 1315/0108Z | | Bolt | | 3 |
| 12 | 1420/0005Z | | Washer M5 | | 3 |
| 14 | 1425/0005Z | | Washer spring M5 | | 3 |
| 21 | 826/01101 | | Nut rivet,M6 open ended for 3 to 5.5mm plt | | 6 |
| 22 | 1315/0207Z | | Screw M6 x 25mm long | | 6 |
| 23 | 1420/0006Z | | Washer M6 | | 6 |
| 51 | 128/12074 | | Cover front console canopy | | 1 |
| 51A | :826/00842 | | Nut M5 jacknut | | 2 |
| 52 | 1315/0205Z | | Bolt | | 4 |
| 53 | 826/01099 | | Nut rivet,M6 open ended | | 4 |
| 61 | 331/27718 | | Cover fuse front console | | 1 |
| 62 | 1420/0006Z | | Washer M6 | | 4 |
| 63 | 826/01301 | | Screw thumb 20mm long | | 2 |
| 64 | 826/00711 | | Washer M4'starloc' | | 2 |
| 71 | . | | 'See Remark'<br>*loader valve cover see index B2* | | 1 |

# 9812/0080 C3-4-30 SWITCH, COLUMN, SHUTTLE TRANSMISSION

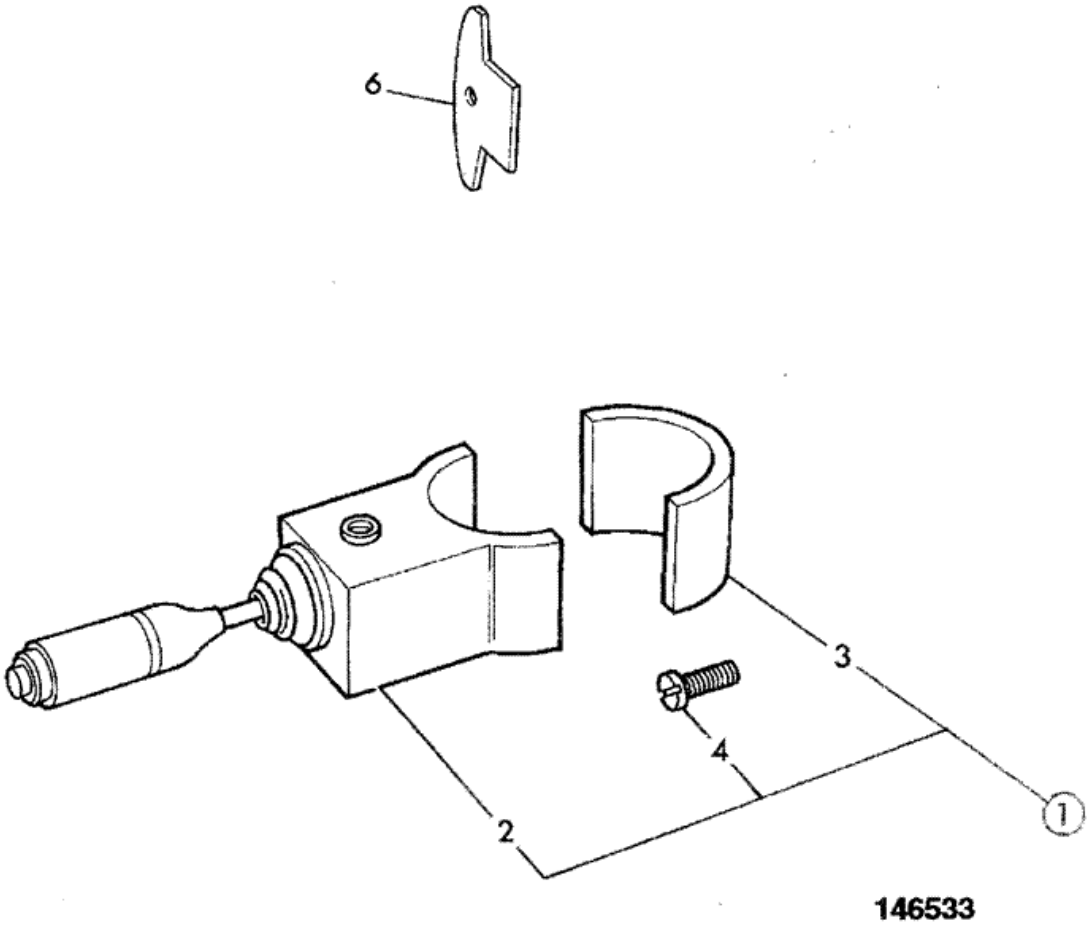


| Item | Part # | Change No | Description | Usage Code | QTY |
|---|---|---|---|---|---|
| 1 | 701/80295 | | Switch column, manual trans | | 1 |
| 2 | :NSP | | None serviced part | | 1 |
| 4 | :1391/3103 | | Screw cap | | 2 |
| 6 | 123/04058 | | Plate retainer | | 1 |

Product Catalog \ CONSTRUCTION \ NORTH AMERICA \ CONSTRUCTION / INDUSTRIAL \ BACKHOE LOADER 3CX,4CX,214,215,217 \ 3C PLUS (91HP) , Made in Brazil with Dieselmax/IESA Engine 9812/0080 \ C ELECTRICS-MACHINE CAB & ENGINE \ C03 ELECTRICS, CAB

# 9812/0080 C3-5-30 HEATER ASSEMBLY

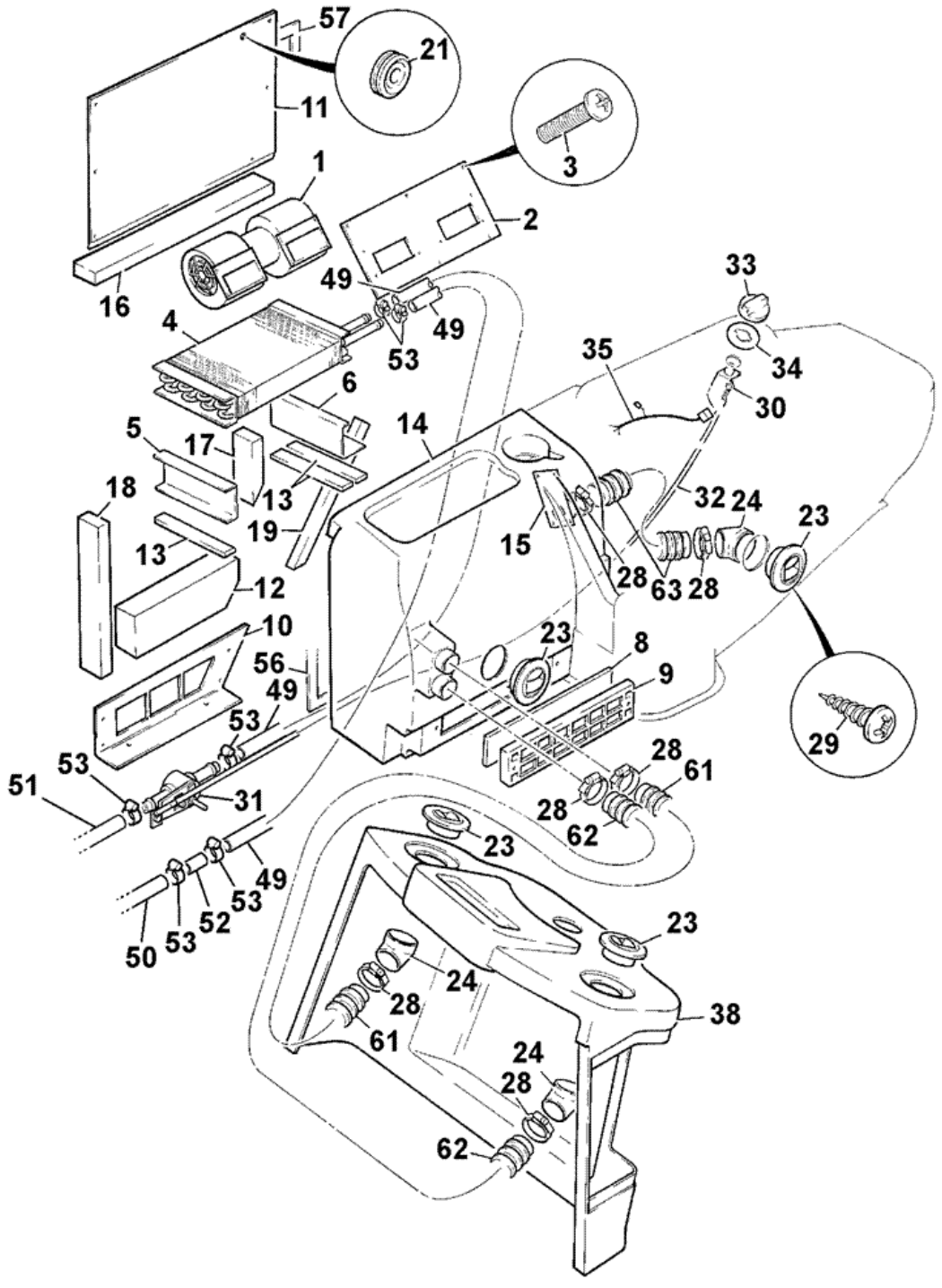


230894

| Item | Part # | Change No | Description | Usage Code | QTY |
|---|---|---|---|---|---|
| A | 128/12670 | | Heater assembly & cover as supplied | | 1 |
| 1 | :142/00603 | | Motor blower | | 1 |
| | | | | | |

| | | | | | |
|---|---|---|---|---|---|
| 2 | 142/00605 | | Plate blower mounting | | 1 |
| 3 | 1360/0604Z | | Screw<br>*Use with items 69 & 70* | | 6 |
| 4 | 142/00601 | | Heater assembly | | 1 |
| 5 | 142/00629 | | Channel | | 1 |
| 6 | 142/00630 | | Channel | | 1 |
| 8 | 141/00843 | | Filter recirculation | | 1 |
| 9 | 142/18400 | | Cover filter | | 1 |
| 10 | 142/00607 | | Plate intake | | 1 |
| 11 | 142/00606 | | Plate blanking | | 1 |
| 12 | 142/00628 | | Filter | | 1 |
| 13 | 190/51912 | | Strip foam | | 3 |
| 14 | 331/30981 | | Console heater unit | | 1 |
| 15 | 123/07780 | | Adapter air vent outlet | | 1 |
| 16 | 142/00617 | | Strip foam | | 1 |
| 17 | 142/00618 | | Strip foam | | 1 |
| 18 | 142/00619 | | Strip foam | | 1 |
| 19 | 142/00620 | | Strip foam | | 1 |
| 21 | 828/00374 | | Grommet | | 1 |
| 23 | 141/00494 | | Vent | | 3 |
| 24 | 141/00495 | | Vent elbow | | 3 |
| 28 | 2201/0009 | | Clip jubilee | | 6 |
| 29 | 1430/1001 | | Screw ST | | 12 |
| 30 | 142/00643 | | Actuator cable operated | | 1 |
| 31 | 142/00644 | | Valve water | | 1 |
| 32 | 910/46900 | | Cable control | | 1 |
| 33 | 162/00832 | | Knob control | | 1 |
| 34 | 817/04021 | | Decal heater | | 1 |
| 35 | 721/00707 | | Harness heater | | 1 |
| 38 | . | | 'See Remark'<br>*See index interior mouldings C3* | | 1 |
| 42 | 816/17109 | | Adapter 3/4NPTF x 16 | | 1 |
| 42 | 816/13380 | | Adapter 1/2NPTF x 16<br>*Tier 2 engine* | | 1 |
| 49 | 648/01917 | | Hose | | 2 |
| 50 | . | | 'See Remark'<br>*Bottom hose see index V* | | 1 |
| 51 | 834/11031 | | Hose heater | | 1 |
| 52 | 123/04950 | | Adapter bulkhead | | 1 |
| 53 | 2201/0005 | | Clip jubilee | | 8 |
| 56 | 926/02300 | | Strip foam roll<br>*For item 14* | | 0 |
| 57 | 926/01100 | | Strip sealing<br>*For item 11* | | 0 |
| 61 | 649/05400 | | Hose 50mm O/D x 44mm<br>*Cut to length* | | 1 |
| 62 | 649/05400 | | Hose 50mm O/D x 44mm<br>*Cut to length* | | 1 |
| 63 | 649/05400 | | Hose 50mm O/D x 44mm<br>*Cut to length* | | 1 |
| 69 | 1414/0007Z | | Washer<br>*Use with item 3* | | 12 |
| 70 | 1358/0603Z | | Nut<br>*Use with item 3* | | 6 |
| | | | | | |

| | | | | | |
|---|---|---|---|---|---|
| 71 | 1315/0108Z | | Bolt<br>*Filter cover* | | 2 |
| 72 | 1414/0011Z | | Washer 2 BA | | 21 |
| 73 | 1315/0105Z | | Bolt M5 x 20mm long | | 19 |

Product Catalog \ CONSTRUCTION \ NORTH AMERICA \ CONSTRUCTION / INDUSTRIAL \ BACKHOE LOADER 3CX,4CX,214,215,217 \ 3C PLUS (91HP) , Made in Brazil with Dieselmax/IESA Engine 9812/0080 \ C ELECTRICS-MACHINE CAB & ENGINE \ C03 ELECTRICS, CAB

# 9812/0080 C3-5-31 HEATER ASSEMBLY

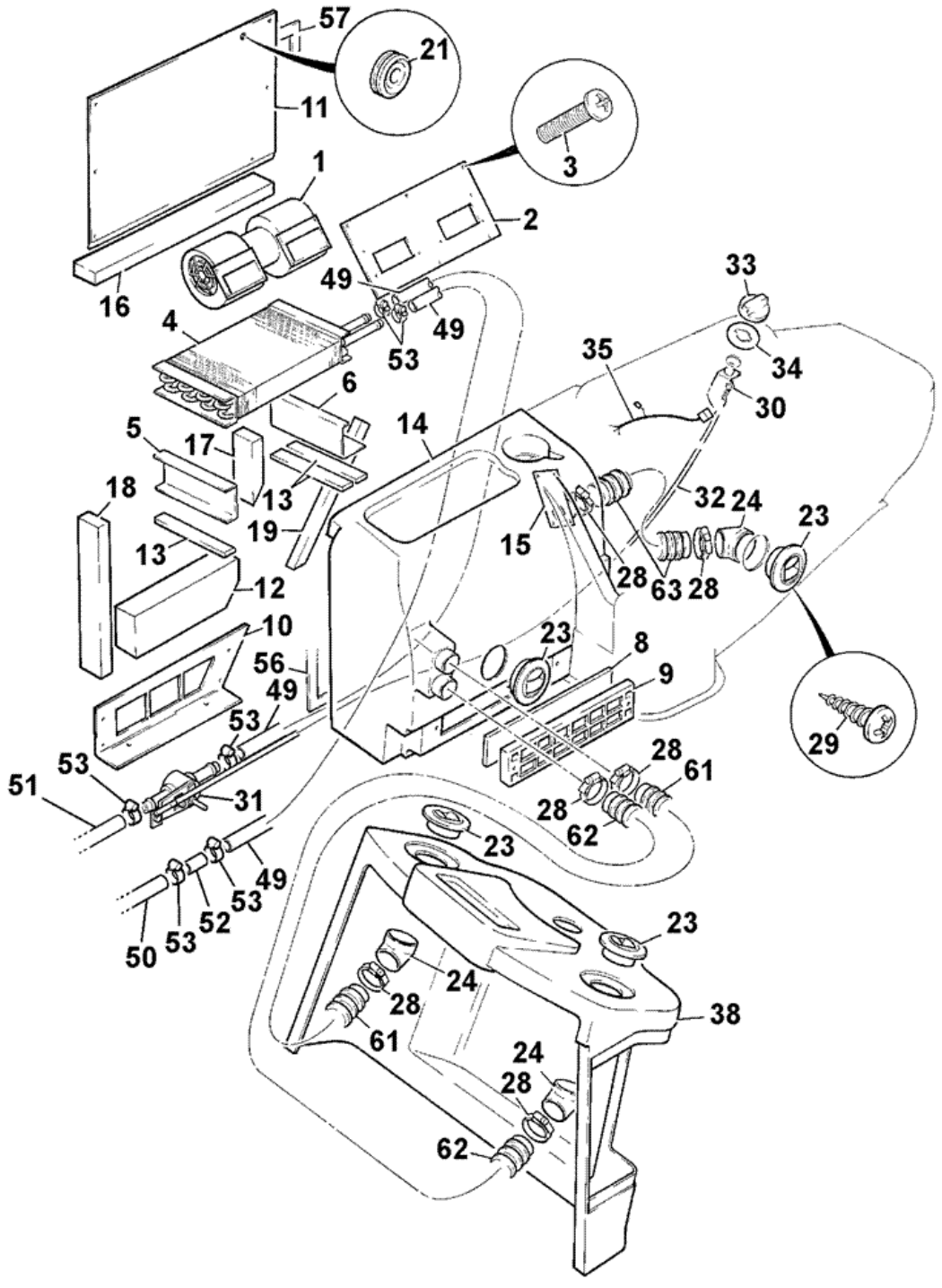


230894

| Item | Part # | Change No | Description | Usage Code | QTY |
|---|---|---|---|---|---|
| A | 128/12670 | | Heater assembly & cover as supplied | | 1 |
| 1 | :142/00603 | | Motor blower | | 1 |
| | | | | | |

| | | | | | |
|---|---|---|---|---|---|
| 2 | 142/00605 | | Plate blower mounting | | 1 |
| 3 | 1360/0604Z | | Screw<br>*Use with items 69 & 70* | | 6 |
| 4 | 142/00601 | | Heater assembly | | 1 |
| 5 | 142/00629 | | Channel | | 1 |
| 6 | 142/00630 | | Channel | | 1 |
| 8 | 141/00843 | | Filter recirculation | | 1 |
| 9 | 142/18400 | | Cover filter | | 1 |
| 10 | 142/00607 | | Plate intake | | 1 |
| 11 | 142/00606 | | Plate blanking | | 1 |
| 12 | 142/00628 | | Filter | | 1 |
| 13 | 190/51912 | | Strip foam | | 3 |
| 14 | 331/30981 | | Console heater unit | | 1 |
| 15 | 123/07780 | | Adapter air vent outlet | | 1 |
| 16 | 142/00617 | | Strip foam | | 1 |
| 17 | 142/00618 | | Strip foam | | 1 |
| 18 | 142/00619 | | Strip foam | | 1 |
| 19 | 142/00620 | | Strip foam | | 1 |
| 21 | 828/00374 | | Grommet | | 1 |
| 23 | 141/00494 | | Vent | | 3 |
| 24 | 141/00495 | | Vent elbow | | 3 |
| 28 | 2201/0009 | | Clip jubilee | | 6 |
| 29 | 1430/1001 | | Screw ST | | 12 |
| 30 | 142/00643 | | Actuator cable operated | | 1 |
| 31 | 142/00644 | | Valve water | | 1 |
| 32 | 910/46900 | | Cable control | | 1 |
| 33 | 162/00832 | | Knob control | | 1 |
| 34 | 817/04021 | | Decal heater | | 1 |
| 35 | 721/00707 | | Harness heater | | 1 |
| 38 | . | | 'See Remark'<br>*See index interior mouldings C3* | | 1 |
| 42 | 816/17109 | | Adapter 3/4NPTF x 16 | | 1 |
| 42 | 816/13380 | | Adapter 1/2NPTF x 16<br>*Tier 2 engine* | | 1 |
| 49 | 648/01917 | | Hose | | 2 |
| 50 | 332/C9130 | | Hose heater 16x1800 | | 1 |
| 51 | 834/11405 | | Hose heater | | 1 |
| 52 | 123/04950 | | Adapter bulkhead | | 1 |
| 53 | 2201/0005 | | Clip jubilee | | 8 |
| 56 | 926/02300 | | Strip foam roll<br>*For item 14* | | 0 |
| 57 | 926/01100 | | Strip sealing<br>*For item 11* | | 0 |
| 61 | 649/05400 | | Hose 50mm O/D x 44mm<br>*Cut to length* | | 1 |
| 62 | 649/05400 | | Hose 50mm O/D x 44mm<br>*Cut to length* | | 1 |
| 63 | 649/05400 | | Hose 50mm O/D x 44mm<br>*Cut to length* | | 1 |
| 69 | 1414/0007Z | | Washer<br>*Use with item 3* | | 12 |
| 70 | 1358/0603Z | | Nut<br>*Use with item 3* | | 6 |
| | | | Bolt | | |

| | | | | | |
|---|---|---|---|---|---|
| 71 | 1315/0108Z | | *Filter cover* | | 2 |
| 72 | 1414/0011Z | | Washer 2 BA | | 21 |
| 73 | 1315/0105Z | | Bolt M5 x 20mm long | | 19 |

Product Catalog \ CONSTRUCTION \ NORTH AMERICA \ CONSTRUCTION / INDUSTRIAL \ BACKHOE LOADER 3CX,4CX,214,215,217 \ 3C PLUS (91HP) , Made in Brazil with Dieselmax/IESA Engine 9812/0080 \ C ELECTRICS-MACHINE CAB & ENGINE \ C03 ELECTRICS, CAB

# 9812/0080 C3-5-40 AIR CONDITIONING, ASSEMBLY ABI

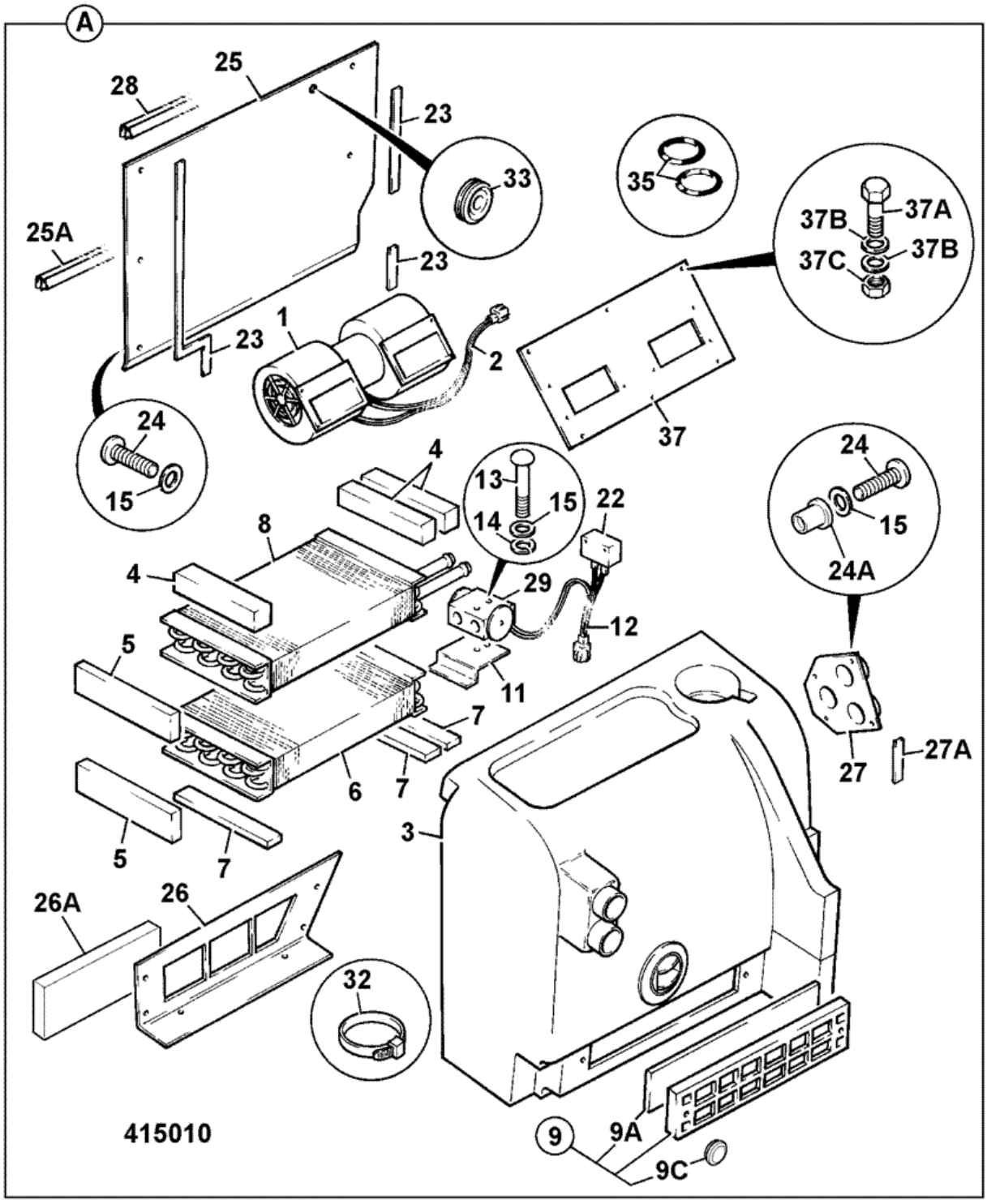


| Item | Part # | Change No | Description | Usage Code | QTY |
|---|---|---|---|---|---|
| A | NSP | | None serviced part | | 1 |
| 1 | :142/00603 | | Motor blower | | 1 |
| | | | | | |

| | | | | | |
|---|---|---|---|---|---|
| 2 | :721/11041 | | Harness heater<br>*See Harnesses index C1* | | 1 |
| 3 | . | | 'See Remark'<br>*See Consoles index C3* | | 1 |
| 4 | :190/51912 | | Strip foam | | 3 |
| 5 | :. | | 'See Remark'<br>*Seal* | | 3 |
| 6 | :142/00904 | | Coil evaporator | | 1 |
| 7 | :190/51912 | | Strip foam | | 3 |
| 8 | :142/00601 | | Heater assembly | | 1 |
| 9 | :142/18400 | | Cover filter | | 1 |
| 9A | :141/00843 | | Filter recirculation | | 1 |
| 9C | 2410/1104 | | Grommet blind 11.1mm<br>*Use with item 9A* | | 2 |
| 11 | :142/00952 | | Bracket expansion valve | | 1 |
| 12 | :NSP | | None serviced part<br>*Harness, use item 22* | | 1 |
| 13 | 1315/0108Z | | Bolt | | 1 |
| 14 | 1425/0005Z | | Washer spring M5 | | 1 |
| 15 | 1420/0005Z | | Washer M5 | | 26 |
| 22 | :142/00902 | | Thermostat | | 1 |
| 23 | :926/02300 | | Strip foam roll | | 0 |
| 24 | :1315/0105Z | | Bolt M5 x 20mm long | | 26 |
| 24A | 826/00842 | | Nut M5 jacknut | | 17 |
| 25 | :142/00606 | | Plate blanking | | 1 |
| 25A | 926/15601 | | Strip foam | | 1 |
| 26 | :142/00607 | | Plate intake | | 1 |
| 26A | 142/00628 | | Filter | | 1 |
| 27 | :142/18300 | | Adapter air outlet | | 1 |
| 27A | 4102/0900 | | Sealant<br>*Use with item 27* | | 0 |
| 28 | :926/01100 | | Strip sealing | | 0 |
| 29 | 142/00903 | | Valve expansion | | 1 |
| 33 | 828/00374 | | Grommet<br>*Use with item 25* | | 1 |
| 35 | 476/14903 | | O Ring | | 2 |
| 37 | 142/00605 | | Plate blower mounting | | 1 |
| 37A | 1360/0604Z | | Screw<br>*Use with item 37* | | 4 |
| 37B | 1414/0007Z | | Washer<br>*Use with item 37* | | 8 |
| 37C | 1358/0603Z | | Nut<br>*Use with item 37* | | 4 |

# 9812/0080 C3-6-30 SWITCHES, FRONT CONSOLE

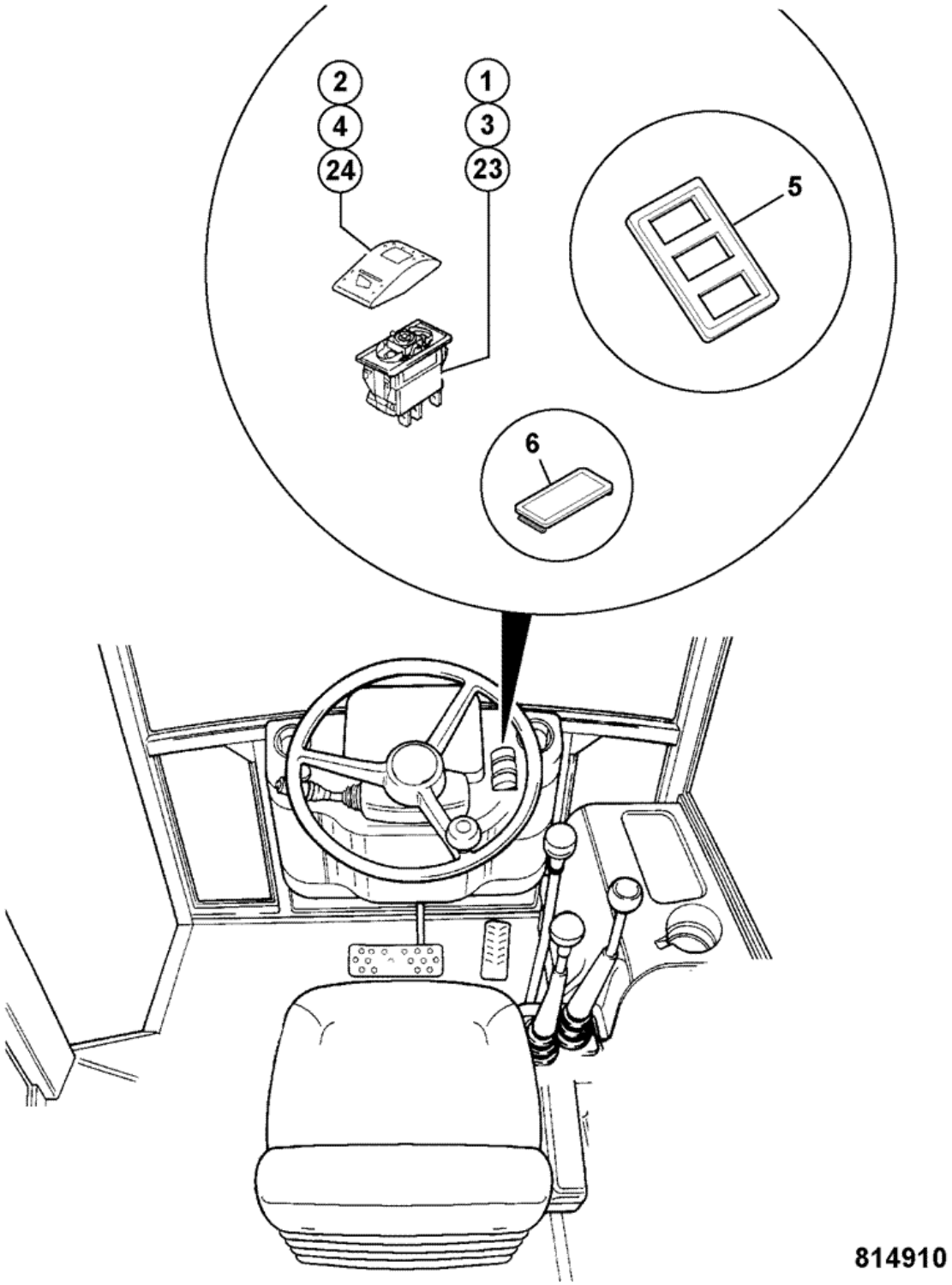


| Item | Part # | Change No | Description | Usage Code | QTY |
|---|---|---|---|---|---|
| 1 | 701/60005 | | Switch hazard 12V | | 1 |
| 2 | 701/58839 | | Cover switch,hazard | | 1 |
| | | | | | |

| | | | | | |
|---|---|---|---|---|---|
| 3 | 701/60006 | | Switch 12V | | 1 |
| 4 | 701/58834 | | Cover indicators switch decal | | 1 |
| 5 | 715/07700 | | Frame switch retaining | | 1 |
| 6 | 701/80265 | | Blank | | 1 |
| 23 | 701/80539 | | Switch panel | | 1 |
| 24 | 701/58936 | | Cover main/dip beam | | 1 |

Product Catalog \ CONSTRUCTION \ NORTH AMERICA \ CONSTRUCTION / INDUSTRIAL \ BACKHOE LOADER 3CX,4CX,214,215,217 \ 3C PLUS (91HP) , Made in Brazil with Dieselmax/IESA Engine 9812/0080 \ C ELECTRICS-MACHINE CAB & ENGINE \ C03 ELECTRICS, CAB

# 9812/0080 C3-7-60 FUSE BOX & RELAYS, SHUTTLE TRANSMISSION

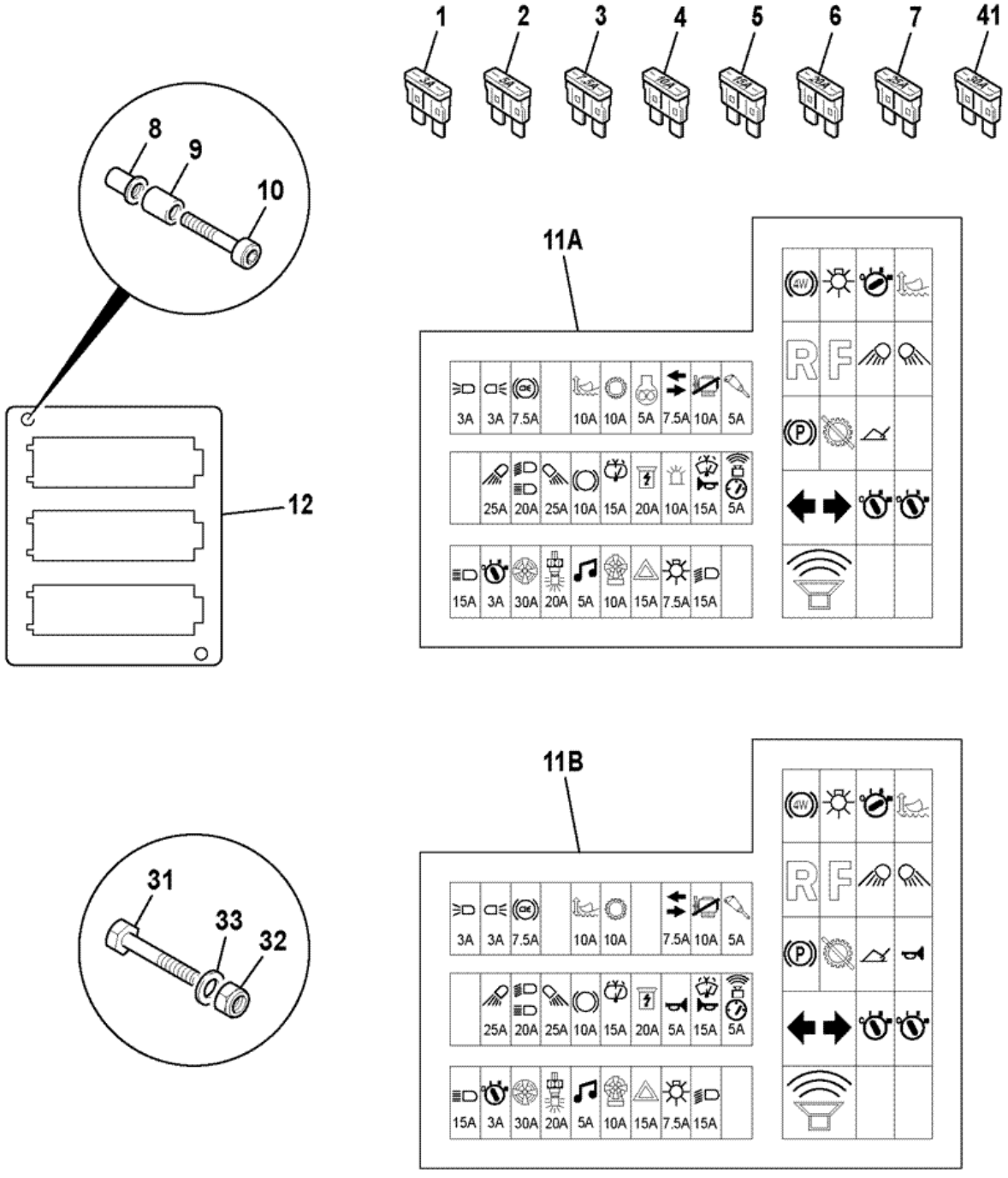


815672

| Item | Part # | Change No | Description | Usage Code | QTY |
|---|---|---|---|---|---|
| 1 | 716/05701 | | Fuse 3 amp | | 3 |

| | | | | | |
|---|---|---|---|---|---|
| 2 | 716/05703 | | Fuse 5 Amp | | 4 |
| 3 | 716/05704 | | Fuse 7.5 Amp | | 3 |
| 4 | 716/05705 | | Fuse 10 amp | | 5 |
| 5 | 716/05706 | | Fuse 15 Amp | | 5 |
| 6 | 716/05707 | | Fuse 20 amp | | 2 |
| 7 | 716/05708 | | Fuse 25 amp | | 2 |
| 8 | 826/01099 | | Nut rivet,M6 open ended | | 2 |
| 9 | 141/00899 | | Spacer threaded | | 2 |
| 10 | 1315/3216Z | | Bolt M6x70 | | 2 |
| 11A | 817/20044 | | Label fuses and relays Dieselmax engines | | 1 |
| 11B | 332/E7326 | | Label fuses and relays IESA engines<br>*IEAS engines* | | 1 |
| 12 | 123/07634 | | Bracket fuse mounting | | 1 |
| 21 | 704/10000 | | Alarm buzzer | | 1 |
| 22 | 716/30285 | Superseded | Relay 12v micro high capacity | | 14 |
| 22 | 332/C3148 | | Relay 12v micro high capacity | | 14 |
| 23 | 716/25800 | | Relay hazard 12v 6x21w | | 1 |
| 31 | 1315/0103Z | | Screw<br>*relay base* | | 2 |
| 32 | 1370/0001Z | | Nut M5-8<br>*relay base* | | 2 |
| 33 | 1418/0007Z | | Washer<br>*relay base* | | 2 |
| 41 | 716/05709 | | Fuse 30 amp | | 1 |

# 9812/0080 C3-8-11 MOTOR, WIPER

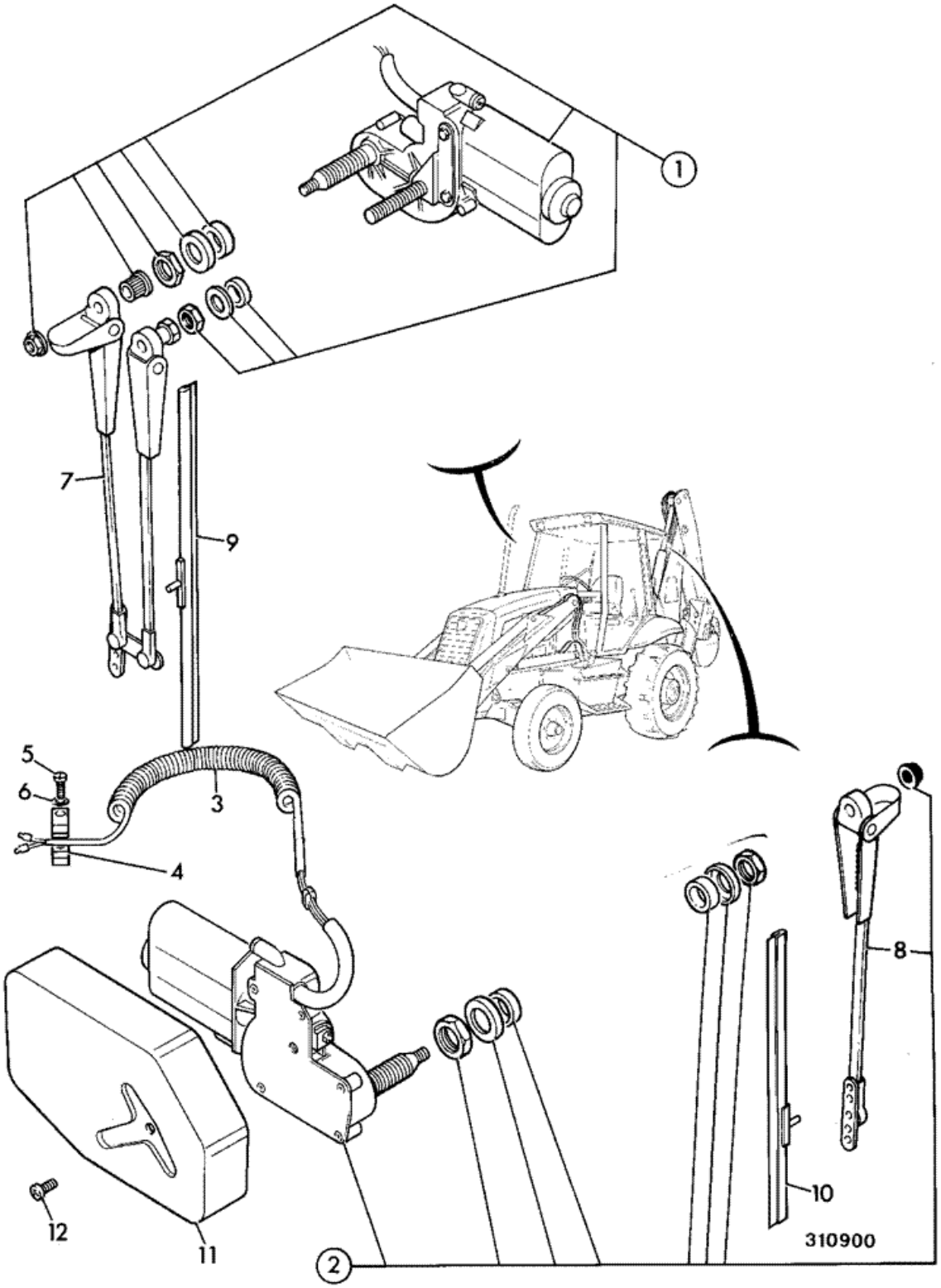

| Item | Part # | Change No | Description | Usage Code | QTY |
|---|---|---|---|---|---|
| 1 | 714/28200 | | Wiper motor (front) | | 1 |
| 2 | 714/28500 | <M TBA | Motor wiper 90 DEG. | A | 1 |
| 2 | 332/R8131 | | Motor wiper, 90deg | B | 1 |
| 3 | 719/80900 | | Harness rear wiper | | 1 |
| 4 | 821/00531 | | Clip 'P' | | 5 |
| 5 | 826/00687 | | Screw | | 5 |
| 6 | 1414/0011Z | | Washer 2 BA | | 2 |
| 7 | 714/04700 | | Arm wiper<br>*Front wiper* | | 1 |
| 8 | 714/05000 | | Arm<br>*rear* | | 1 |
| 9 | 714/14900 | | Blade wiper<br>*front* | | 1 |
| 10 | 714/07700 | | Blade wiper 600mm long<br>*rear* | | 1 |
| 11 | 714/09500 | | Cover | A | 1 |
| 11 | 346/00317 | | Cover wiper motor | B | 1 |
| 12 | 826/00687 | | Screw | | 1 |

Product Catalog \ CONSTRUCTION \ NORTH AMERICA \ CONSTRUCTION / INDUSTRIAL \ BACKHOE LOADER 3CX,4CX,214,215,217 \ 3C PLUS (91HP) , Made in Brazil with Dieselmax/IESA Engine 9812/0080 \ C ELECTRICS-MACHINE CAB & ENGINE \ C01 ELECTRICS, MAIN MACHINE

# 9812/0080 C1-12-10 HORN, SINGLE TONE, FRONT AND REAR

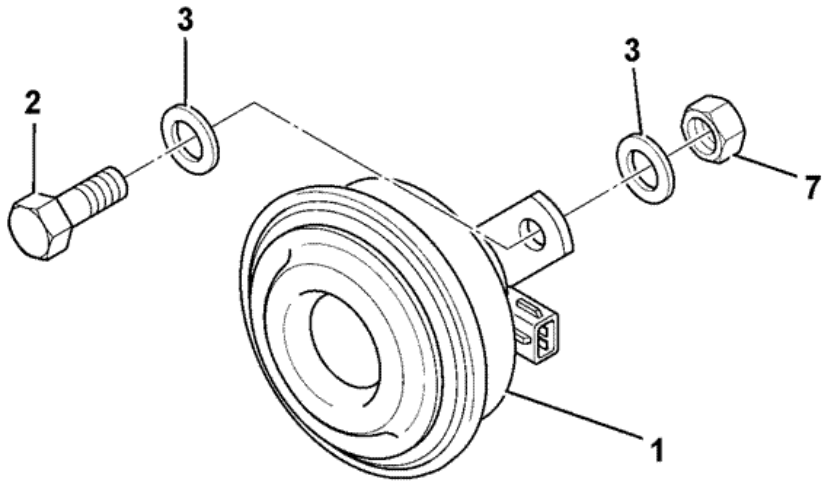


442440

| Item | Part # | Change No | Description | Usage Code | QTY |
|---|---|---|---|---|---|
| 1 | 704/37300 | | Horn disc 12V | | 1 |

| | | | | | |
|---|---|---|---|---|---|
| 2 | 1315/0407Z | | Bolt M10x25 | | 1 |
| 3 | 1420/0008Z | | Washer Plain M10 | | 2 |
| 7 | 1370/0303Z | | Nut lock M10 | | 1 |

Product Catalog \ CONSTRUCTION \ NORTH AMERICA \ CONSTRUCTION / INDUSTRIAL \ BACKHOE LOADER 3CX,4CX,214,215,217 \ 3C PLUS (91HP) , Made in Brazil with Dieselmax/IESA Engine 9812/0080 \ C ELECTRICS-MACHINE CAB & ENGINE \ C03 ELECTRICS, CAB

# 9812/0080 C3-18-11 INTERIOR MOULDINGS, CAB BUILDS

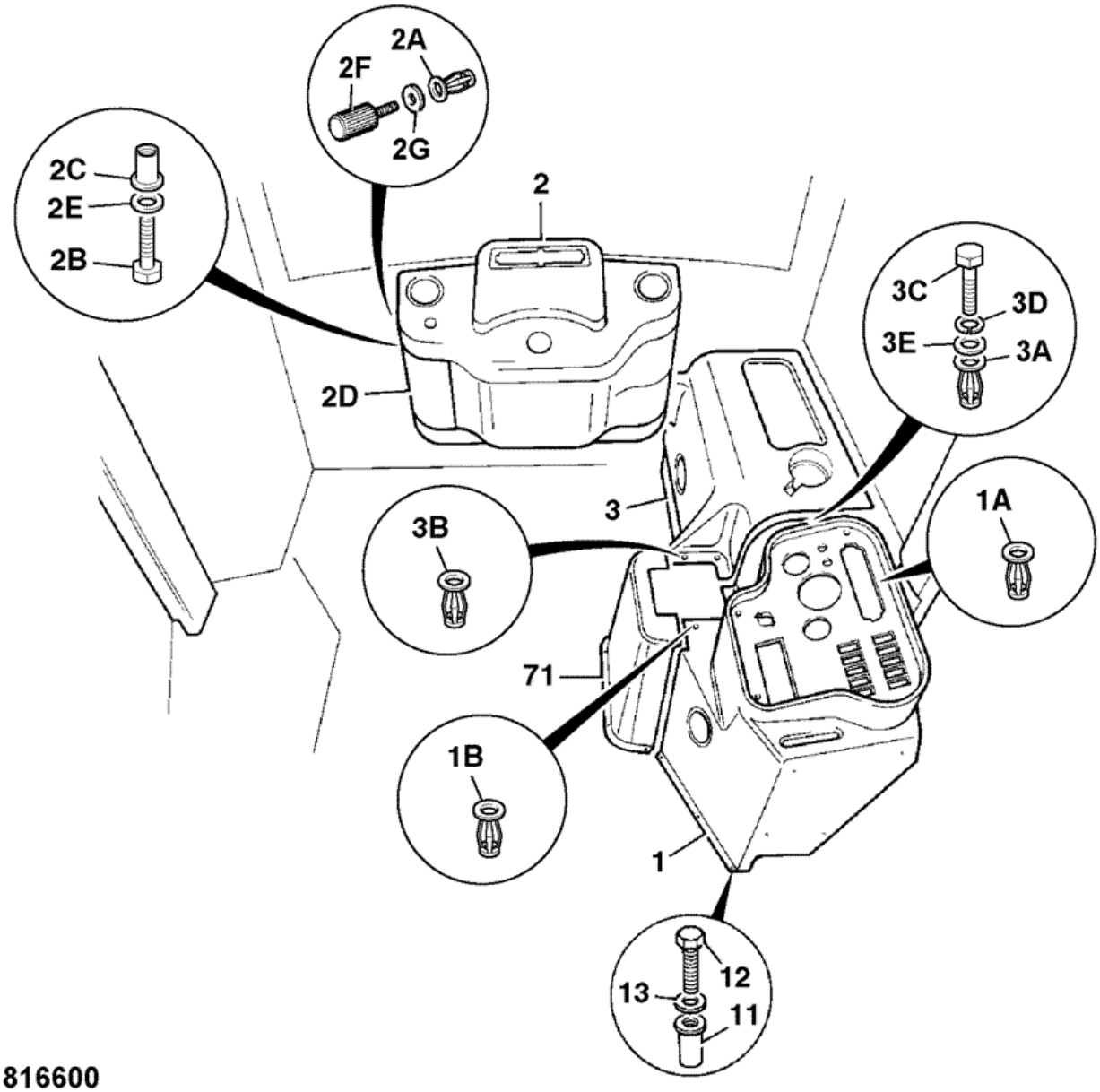


| Item | Part # | Change No | Description | Usage Code | QTY |
|---|---|---|---|---|---|
| 1 | 128/12073 | | Console switch housing heater build | | 1 |
| 1A | :826/00842 | | Nut M5 jacknut | | 5 |
| | | | | | |

| | | | | | |
|---|---|---|---|---|---|
| 1B | :826/01232 | | Nut M6 jack | | 2 |
| 2 | 128/12072 | | Cover front console cab | | 1 |
| 2A | :826/00842 | | Nut M5 jacknut | | 2 |
| 2B | 1315/0205Z | | Bolt | | 4 |
| 2C | 826/01099 | | Nut rivet,M6 open ended | | 41 |
| 2D | 331/27718 | | Cover fuse front console | | 1 |
| 2E | 1420/0006Z | | Washer M6 | | 4 |
| 2F | 826/01301 | | Screw thumb 20mm long | | 2 |
| 2G | 826/00711 | | Washer M4'starloc' | | 2 |
| 3 | 331/30981 | | Console heater unit<br>*heater builds* | | 1 |
| 3 | 346/00106 | | Console aircon unit<br>*air conditioning builds* | | 1 |
| 3A | 826/00842 | | Nut M5 jacknut | | 6 |
| 3B | 826/01232 | | Nut M6 jack | | 2 |
| 3C | 1315/0108Z | | Bolt | | 6 |
| 3D | 1420/0005Z | | Washer M5 | | 6 |
| 3E | 1425/0005Z | | Washer spring M5 | | 6 |
| 11 | 826/01101 | | Nut rivet,M6 open ended for 3 to 5.5mm plt | | 6 |
| 12 | 1315/0207Z | | Screw M6 x 25mm long | | 6 |
| 13 | 1420/0006Z | | Washer M6 | | 6 |
| 71 | . | | 'See Remark'<br>*loader valve cover see index B2* | | 1 |

Product Catalog \ CONSTRUCTION \ NORTH AMERICA \ CONSTRUCTION / INDUSTRIAL \ BACKHOE LOADER 3CX,4CX,214,215,217 \ 3C PLUS (91HP) , Made in Brazil with Dieselmax/IESA Engine 9812/0080 \ C ELECTRICS-MACHINE CAB & ENGINE \ C03 ELECTRICS, CAB

# 9812/0080 C3-19-11 AIR CONDITIONING, INSTALLATION

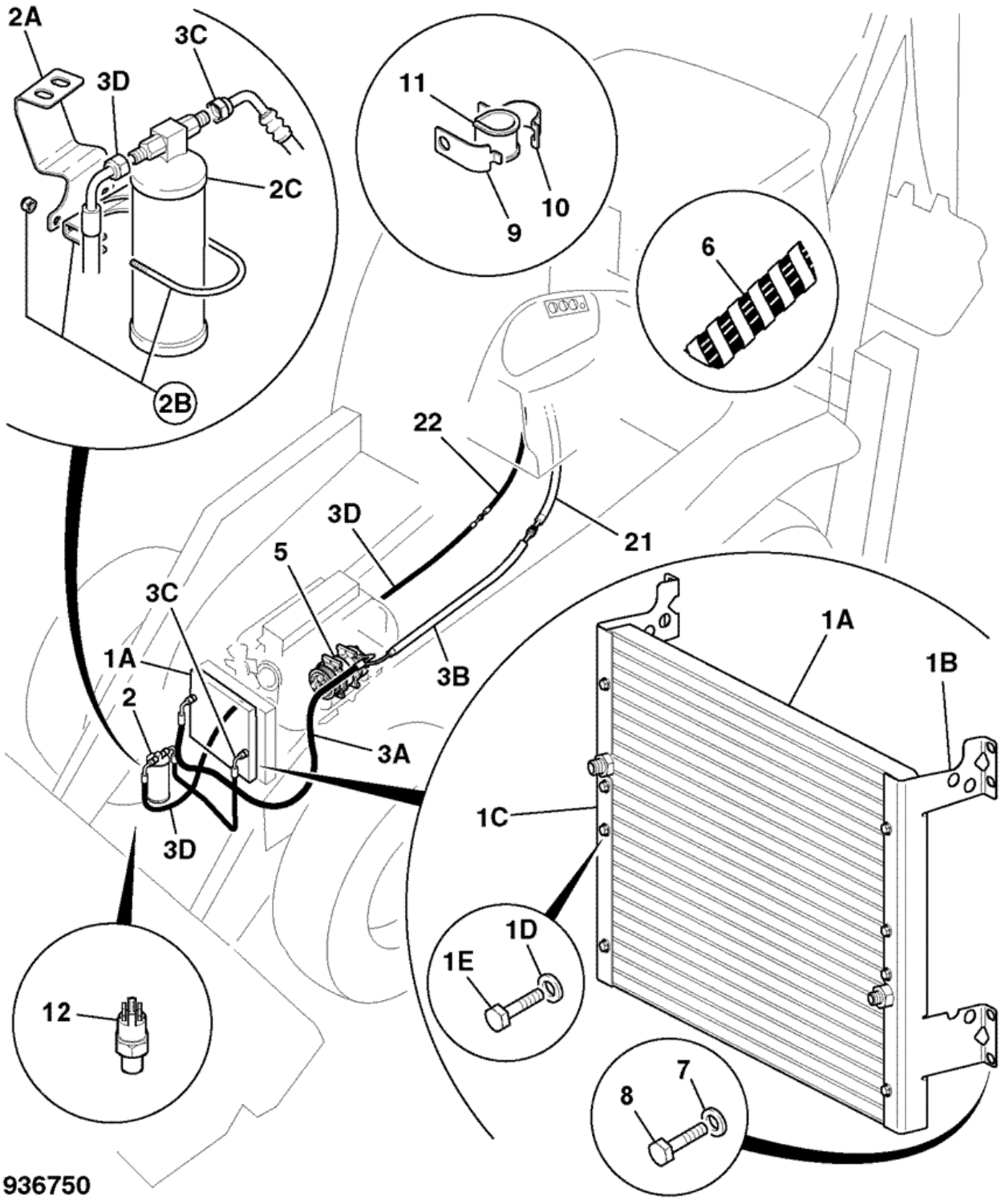


| Item | Part # | Change No | Description | Usage Code | QTY |
|---|---|---|---|---|---|
| 1A | 30/925766 | | Condenser | | 1 |
| 1B | 331/48472 | | Bracket L.H. | | 1 |
| | | | | | |

| | | | | | |
|---|---|---|---|---|---|
| 1C | 331/48470 | | Bracket R.H. | | 1 |
| 1D | 1420/0006Z | | Washer M6 | | 8 |
| 1E | 1315/3210Z | | Bolt | | 8 |
| 2A | 331/46229 | | Bracket mounting receiver/drier | | 1 |
| 2B | 821/00264 | | Clamp exhaust D=79 | | 1 |
| 2C | 30/925633 | | Drier receiver | | 1 |
| 3A | 649/51953 | | Hose cond to comp 1525mm | | 1 |
| 3B | 649/51954 | | Hose comp 1200mm | | 1 |
| 3C | 649/51626 | | Hose aircon evap-rec/drier | | 1 |
| 3D | 649/51955 | | Hose rec.drier 2000mm | | 1 |
| 5 | 320/08562 | | Compressor air conditioning 12v<br>*see section V for installation* | | 1 |
| 6 | 647/12902 | | Tube spiral guard 1000mm long | | 2 |
| 7 | 1420/0007Z | | Washer plain M8 | | 14 |
| 8 | 1315/0307Z | | Screw Hexagon M8 X 25 | | 6 |
| 9 | 821/00214 | | Clamp Base | | 1 |
| 10 | 821/00213 | | Clamp Top | | 1 |
| 11 | 821/00215 | | Insert Clamp | | 1 |
| 12 | 701/58726 | | Switch Binary | | 1 |
| 21 | 649/51389 | | Hose | | 1 |
| 22 | 649/51390 | | Hose | | 1 |

Product Catalog \ CONSTRUCTION \ NORTH AMERICA \ CONSTRUCTION / INDUSTRIAL \ BACKHOE LOADER 3CX,4CX,214,215,217 \ 3C PLUS (91HP) , Made in Brazil with Dieselmax/IESA Engine 9812/0080 \ C ELECTRICS-MACHINE CAB & ENGINE \ C03 ELECTRICS, CAB

# 9812/0080 C3-31-21 IMMOBILISER, INSTALLATION, CAB, KEY OPERATED

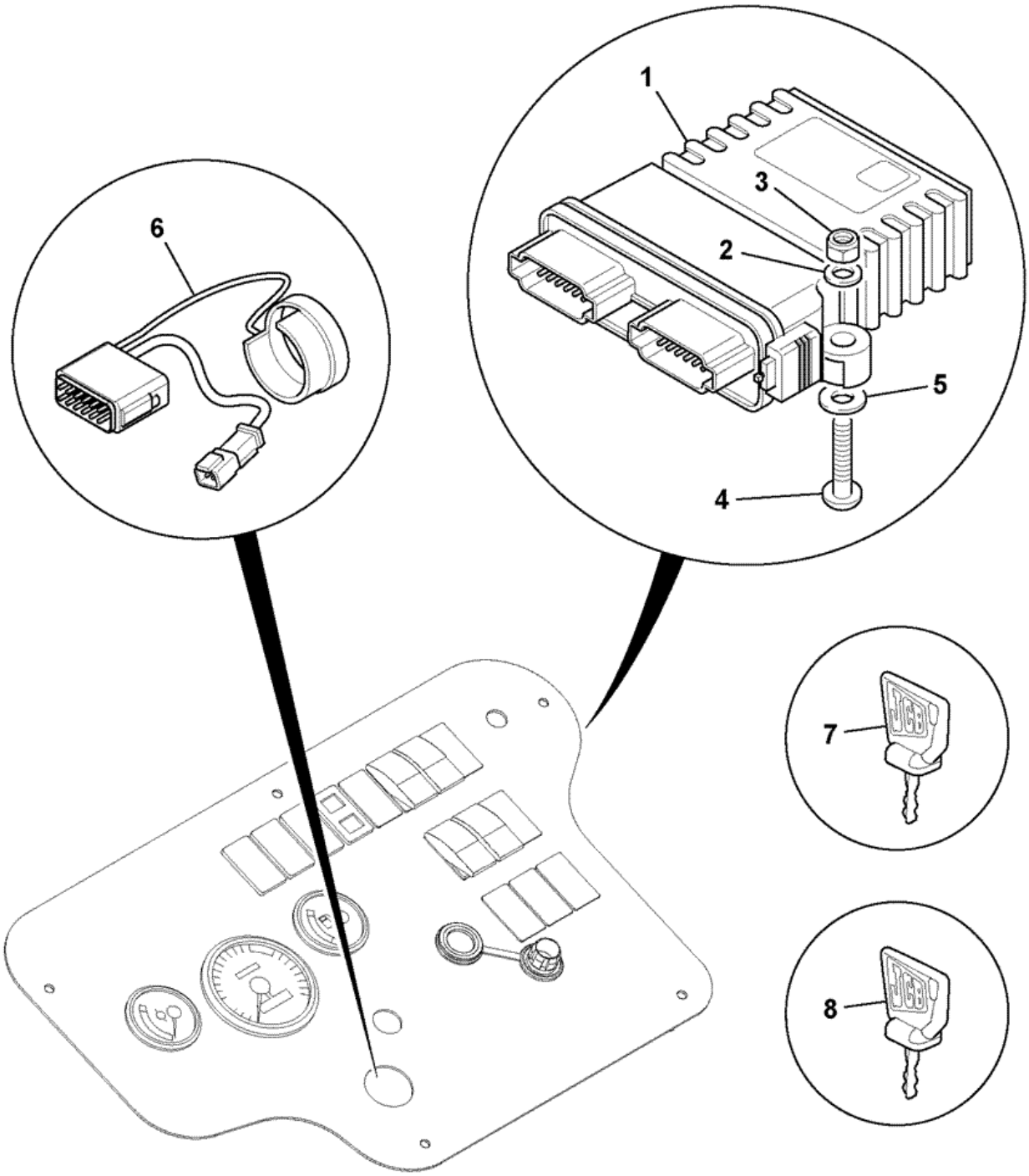


942040

| Item | Part # | Change No | Description | Usage Code | QTY |
|---|---|---|---|---|---|
| 1 | 332/C5822 | | Sensor Immobiliser ECU | | 1 |

| | | | | | |
|---|---|---|---|---|---|
| 2 | 1420/0006D | | Washer M6 plain | | 2 |
| 3 | 1370/0103D | | Nut M6 lock | | 2 |
| 4 | 826/11692 | | Screw Torx M6x35 | | 2 |
| 5 | 1413/0001 | | Washer | | 2 |
| 6 | 332/C6666 | | Aerial Immobiliser Antenna | | 1 |
| 7 | 332/C7608 | | Key Transponder Black | | 2 |
| 8 | 332/C7763 | | Key Transponder Red, Master | | 1 |

Product Catalog \ CONSTRUCTION \ NORTH AMERICA \ CONSTRUCTION / INDUSTRIAL \ BACKHOE LOADER 3CX,4CX,214,215,217 \ 3C PLUS (91HP) , Made in Brazil with Dieselmax/IESA Engine 9812/0080 \ D CONTROLS-MACHINE ENGINE & STEERING \ D01 CONTROLS, MACHINE

# 9812/0080 D1-2-1 SEAL, EXCAVATOR CONTROLS

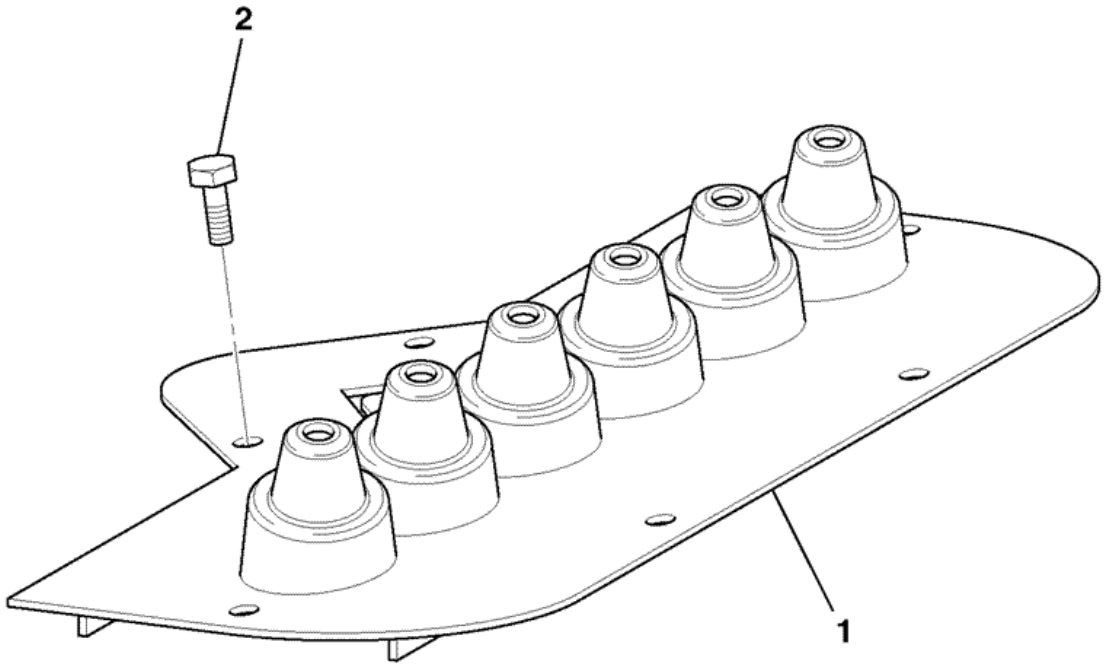


816790

| Item | Part # | Change No | Description | Usage Code | QTY |
|---|---|---|---|---|---|
| 1 | 123/04371 | | Seal excavator controls | | 1 |
| 2 | 826/00687 | | Screw | | 6 |

# 9812/0080 D1-6-1 CONTROLS, LEVER, IN CAB BOOM LOCK

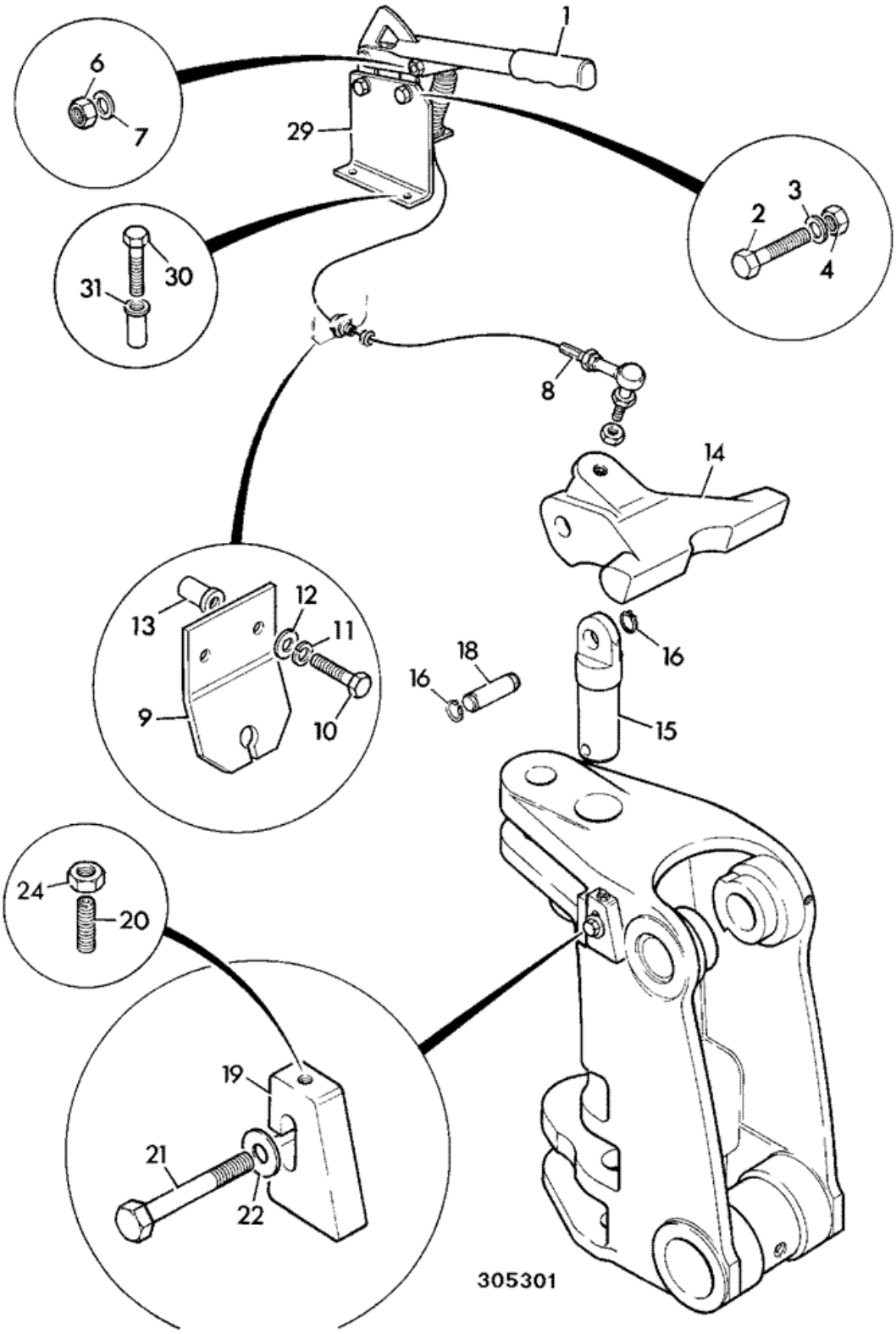

| Item | Part # | Change No | Description | Usage Code | QTY |
|---|---|---|---|---|---|
| 1 | 123/05234 | | Lever boomlock red grip | | 1 |
| 2 | 1315/0307Z | | Screw Hexagon M8 X 25 | | 2 |
| 3 | 1411/0003Z | | Washer medium | | 2 |
| 4 | 1370/0203Z | | Nut self lock M8 | | 2 |
| 6 | 913/05903 | | Pin clevis | | 1 |
| 7 | 913/00005 | | Clip clevis | | 1 |
| 8 | 910/48400 | | Cable assembly boomlock centremount | | 1 |
| 8A | :123/07652 | | Joint ball end | | 1 |
| 9 | 331/30856 | | Bracket reaction | | 1 |
| 10 | 1315/0307Z | | Screw Hexagon M8 X 25 | | 2 |
| 11 | 1425/0007Z | | Washer spring | | 2 |
| 12 | 1420/0007Z | | Washer plain M8 | | 2 |
| 13 | 826/01103 | | Nut rivet,M8 open ended | | 2 |
| 14 | 123/05862 | Superseded | Casting boom lock 14'0 (Yellow) | | 1 |
| 14 | 332/C1897 | | Casting boom lock | | 1 |
| 15 | 913/10079 | | Pin kingpost top centremount | | 1 |
| 16 | 2203/0035 | | Circlip | | 2 |
| 18 | 811/70099 | | Pin boomlock | | 1 |
| 19 | 123/05236 | | Plate boom stop | | 1 |
| 20 | 1390/0412Z | | Screw grub M10x50 long | | 1 |
| 21 | 1315/3814Z | | Bolt M20 x 60mm | | 1 |
| 22 | 823/00491 | | Washer spacer | | 1 |
| 24 | 1370/0302Z | | Nut lock | | 1 |
| 26 | 1450/0001 | | Nipple grease, straight 1/8 BSP<br>*Use with item 15, 18* | | 1 |
| 27 | 835/00017 | | Cap grease nipple | | 1 |
| 28 | 835/00166 | | Plug | | 1 |
| 29 | 331/14484 | | Bracket boomlock cable reaction | | 1 |
| 30 | . | | 'See Remark' | | 2 |
| 31 | . | | 'See Remark' | | 2 |

# 9812/0080 D1-7-2 CONTROL KNOB, LOADER VALVE, SINGLE SWITCH

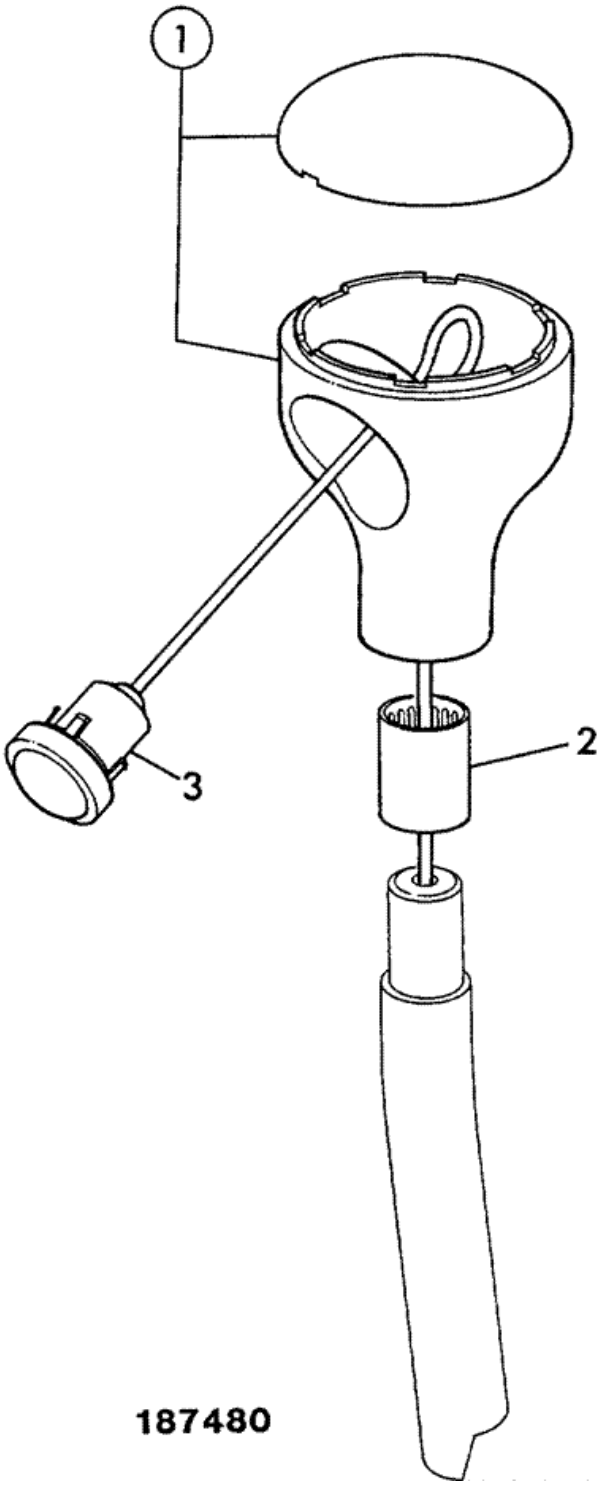


| Item | Part # | Change No | Description | Usage Code | QTY |
|---|---|---|---|---|---|
| 1 | 128/13807 | | Knob assembly 1-switch as supplied | | 1 |
| 2 | :122/67459 | | Ring tolerance | | 1 |
| 3 | :701/42600 | | Switch push button black with microswitch | | 1 |
| 4 | 817/17771 | | Decal loader lever with float, reset<br>*insert into top of knob* | | 1 |

Product Catalog \ CONSTRUCTION \ NORTH AMERICA \ CONSTRUCTION / INDUSTRIAL \ BACKHOE LOADER 3CX,4CX,214,215,217 \ 3C PLUS (91HP) , Made in Brazil with Dieselmax/IESA Engine 9812/0080 \ D CONTROLS-MACHINE ENGINE & STEERING \ D02 CONTROLS, THROTTLE

# 9812/0080 D2-1-1 THROTTLE CONTROL, P4001/P400T

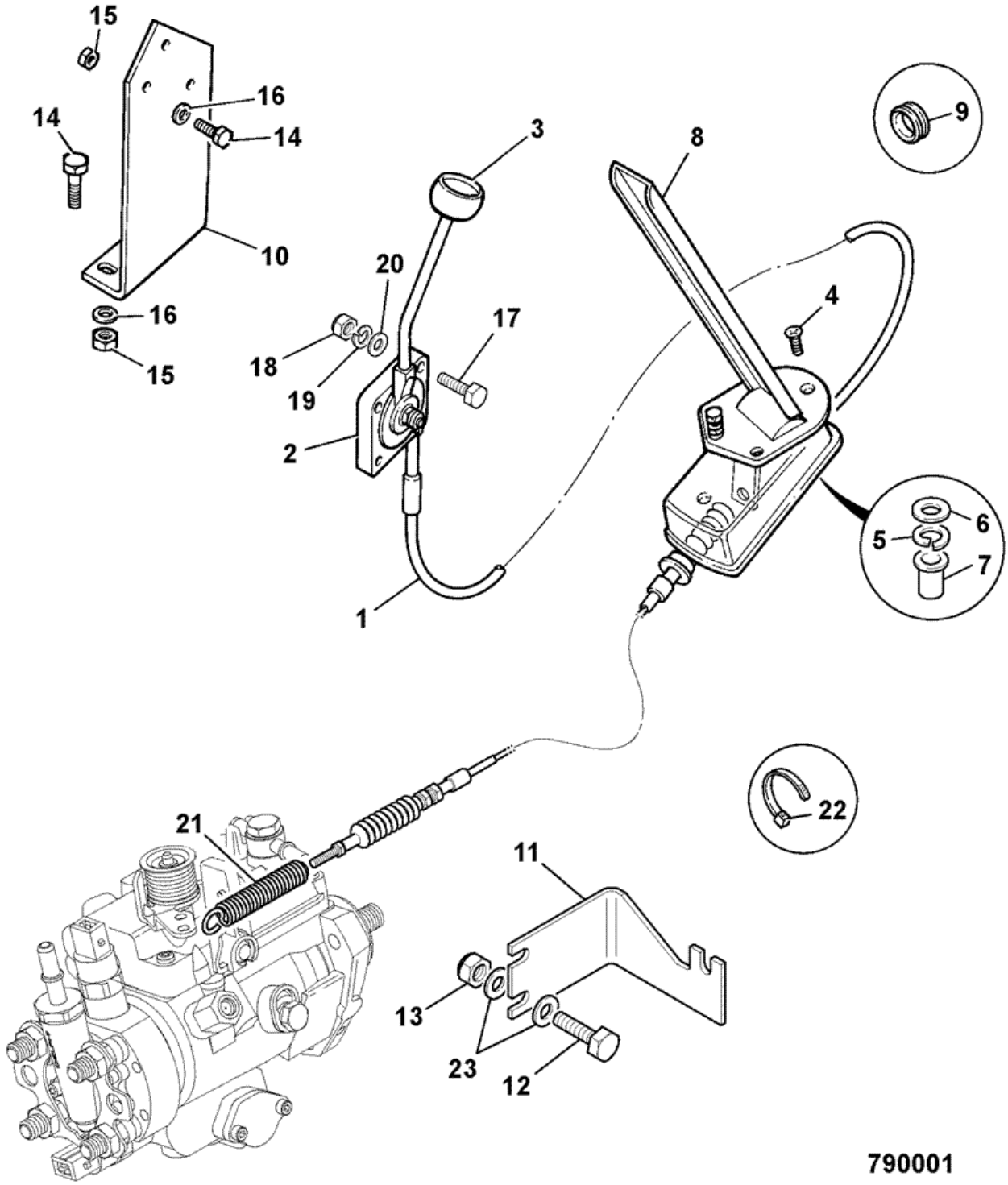


| Item | Part # | Change No | Description | Usage Code | QTY |
|---|---|---|---|---|---|
| 1 | 910/60176 | | Cable throttle control assembly | | 1 |
| 2 | 910/52501 | | Lever assembly throttle control | | 1 |
| | | | | | |

| | | | | | |
|---|---|---|---|---|---|
| 3 | 910/52502 | | Knob red throttle lever | | 1 |
| 4 | 826/01196 | | Screw taptite | | 3 |
| 5 | 1425/0005Z | | Washer spring M5 | | 3 |
| 6 | 1420/0005Z | | Washer M5 | | 3 |
| 7 | 1370/0001Z | | Nut M5-8 | | 3 |
| 8 | 123/07303 | | Pedal assembly throttle control | | 1 |
| 9 | 2410/0213 | | Grommet | | 1 |
| 10 | 142/00773 | | Bracket mounting hand throttle | | 1 |
| 11 | 331/67913 | | Bracket throttle international engine | | 1 |
| 12 | 1315/0205D | | Setscrew M6 x 20mm long | | 2 |
| 13 | 1370/0103D | | Nut M6 lock | | 2 |
| 14 | 1315/0205Z | | Bolt | | 6 |
| 15 | 1370/0103Z | | Nut Self lock M6 | | 6 |
| 16 | 1420/0006Z | | Washer M6 | | 4 |
| 17 | 826/01218 | | Screw raised c/sk. head | | 3 |
| 18 | 1370/0001Z | | Nut M5-8 | | 3 |
| 19 | 1425/0006Z | | Washer Spring | | 3 |
| 20 | 1420/0006D | | Washer M6 plain | | 3 |
| 21 | 814/10179 | | Spring overload | | 1 |
| 22 | 826/01144 | | Tie cable 200mm long | | 3 |
| 23 | 1420/0006D | | Washer M6 plain | | 4 |

Product Catalog \ CONSTRUCTION \ NORTH AMERICA \ CONSTRUCTION / INDUSTRIAL \ BACKHOE LOADER 3CX,4CX,214,215,217 \ 3C PLUS (91HP) , Made in Brazil with Dieselmax/IESA Engine 9812/0080 \ D CONTROLS-MACHINE ENGINE & STEERING \ D02 CONTROLS, THROTTLE

# 9812/0080 D2-2-1 THROTTLE CONTROL, JCB444

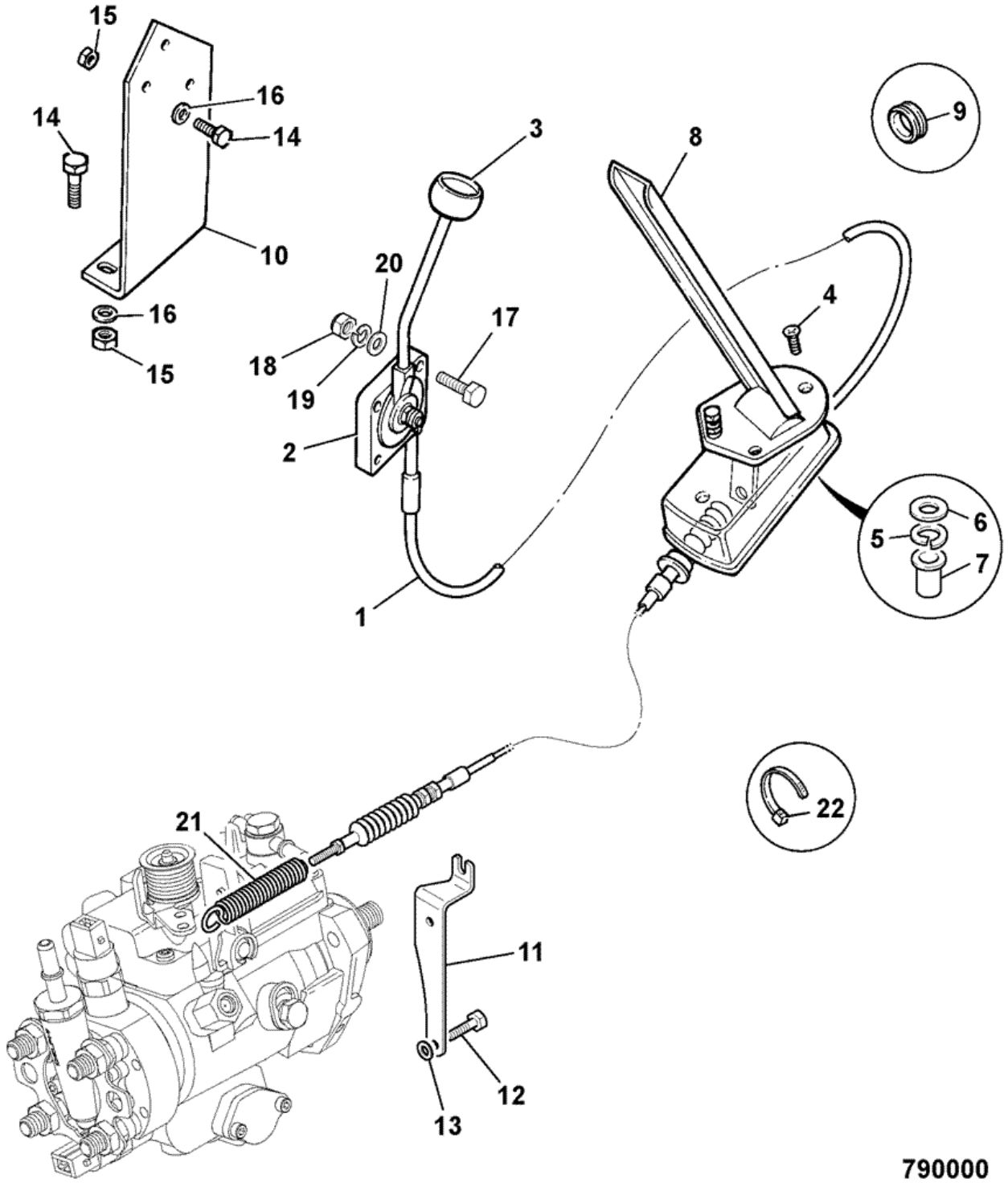


| Item | Part # | Change No | Description | Usage Code | QTY |
|---|---|---|---|---|---|
| 1 | 910/60176 | | Cable throttle control assembly | | 1 |
| 2 | 910/52501 | | Lever assembly throttle control | | 1 |
| | | | | | |

| | | | | | |
|---|---|---|---|---|---|
| 3 | 910/52502 | | Knob red throttle lever | | 1 |
| 4 | 826/01196 | | Screw taptite | | 3 |
| 5 | 1425/0006Z | | Washer Spring | | 3 |
| 6 | 1420/0006D | | Washer M6 plain | | 3 |
| 7 | 826/01101 | | Nut rivet,M6 open ended for 3 to 5.5mm plt | | 3 |
| 8 | 123/07303 | | Pedal assembly throttle control | | 1 |
| 9 | 2410/0013 | | Grommet | | 1 |
| 10 | 142/00773 | | Bracket mounting hand throttle | | 1 |
| 11 | 331/45385 | | Bracket throttle reaction | | 1 |
| 12 | 1315/0307Z | | Screw Hexagon M8 X 25 | | 2 |
| 13 | 1420/0007Z | | Washer plain M8 | | 2 |
| 14 | 1315/0205Z | | Bolt | | 6 |
| 15 | 1370/0103Z | | Nut Self lock M6 | | 6 |
| 16 | 1420/0006Z | | Washer M6 | | 6 |
| 17 | 826/01218 | | Screw raised c/sk. head | | 3 |
| 18 | 1370/0001Z | | Nut M5-8 | | 3 |
| 19 | 1425/0006Z | | Washer Spring | | 3 |
| 20 | 1420/0006D | | Washer M6 plain | | 3 |
| 21 | 814/10179 | | Spring overload | | 1 |
| 22 | 826/01144 | | Tie cable 200mm long | | 3 |

# 9812/0080 D1-1-31 CONTROLS, LOADER, LOADER LIFT, SHOVEL

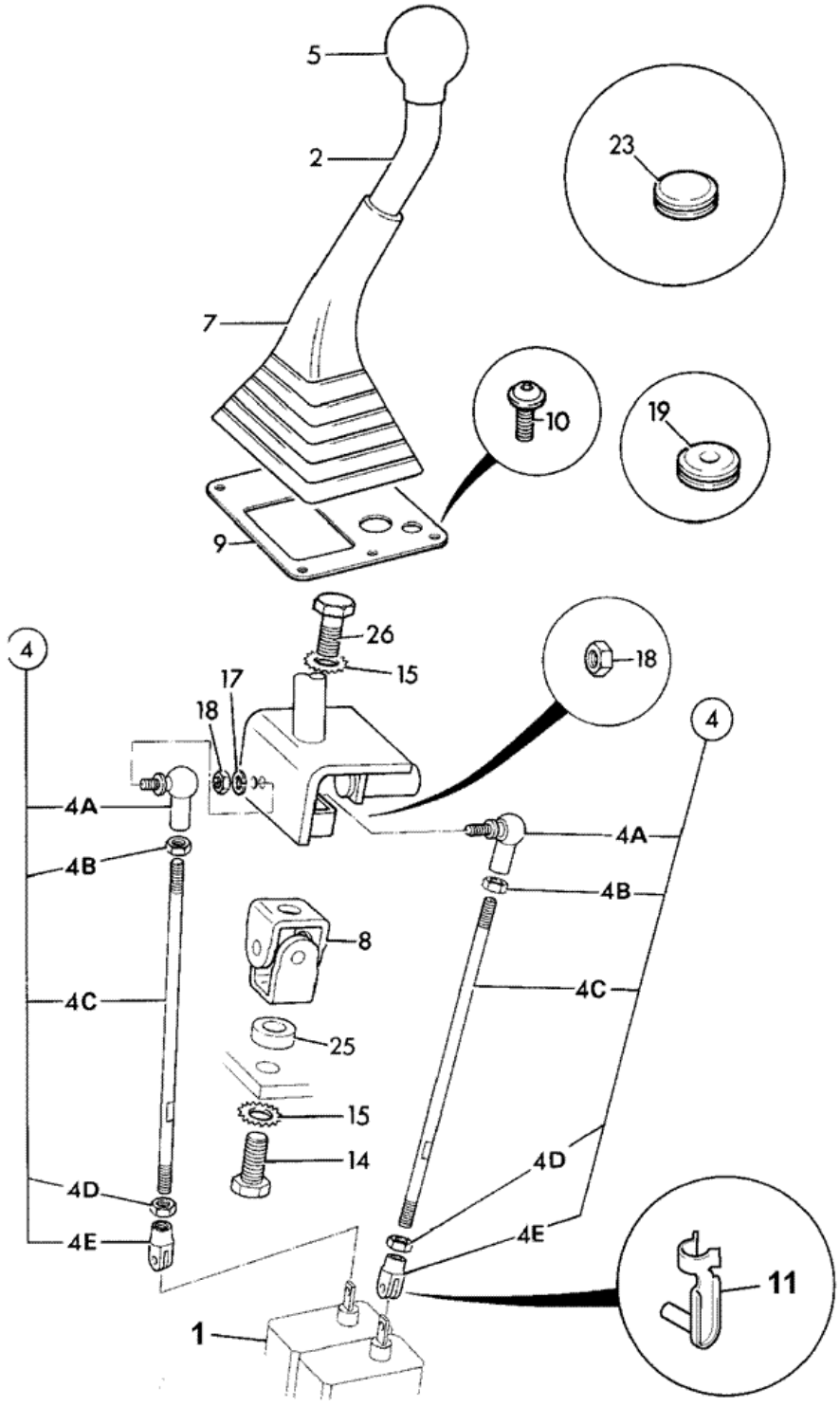


| Item | Part # | Change No | Description | Usage Code | QTY |
|---|---|---|---|---|---|
| | | | 'See Remark' | | |

| | | | | | |
|---|---|---|---|---|---|
| 1 | . | | *Valve, see index E3* | | 1 |
| 2 | 125/00446 | | Lever loader control | | 1 |
| 4 | 913/10060 | | Rod control assembly 266mm long | | 1 |
| 4 | 331/11267 | | Rod control assembly 270mm long | | 1 |
| 4A | :123/08002 | | Joint ball M8 right hand | | 1 |
| 4B | :1370/0202Z | | Nut M8 | | 1 |
| 4C | :. | | 'See Remark'<br>*Control rod. NSP* | | 1 |
| 4D | :826/01108 | | Nut M8 LH thin | | 1 |
| 4E | 913/02903 | | Clevis fork (6mm hole) | | 1 |
| 5 | . | | 'See Remark'<br>*Control knob see index D1* | | 1 |
| 7 | 263/05406 | | Gaiter control single lever | | 1 |
| 8 | 116/00416 | | Joint universal | | 1 |
| 9 | 141/01473 | | Plate gaiter retaining | | 1 |
| 10 | 826/01768 | | Screw M6x25mm | | 5 |
| 10A | 826/01232 | | Nut M6 jack | | 5 |
| 11 | 913/00031 | | Pin spring,6mm clevis | | 2 |
| 14 | 1305/0404Z | | Bolt | | 1 |
| 15 | 1417/0014Z | | Washer star | | 2 |
| 17 | 1420/0007Z | | Washer plain M8 | | 1 |
| 18 | 1370/0203Z | | Nut self lock M8 | | 2 |
| 19 | 828/00325 | | Grommet blind | | 1 |
| 23 | 2410/1312 | | Grommet | | 1 |
| 25 | 266/31702 | | Spacer | | 1 |
| 26 | 1305/0410Z | | Bolt 1/2" x 1.1/2" long | | 1 |
| 27 | 123/07672 | | Mat soundproofing loader valve | | 1 |

Product Catalog \ CONSTRUCTION \ NORTH AMERICA \ CONSTRUCTION / INDUSTRIAL \ BACKHOE LOADER 3CX,4CX,214,215,217 \ 3C PLUS (91HP) , Made in Brazil with Dieselmax/IESA Engine 9812/0080 \ D CONTROLS-MACHINE ENGINE & STEERING \ D01 CONTROLS, MACHINE

# 9812/0080 D1-1-51 CONTROLS, LOADER, AUXILIARY, OPTIONAL

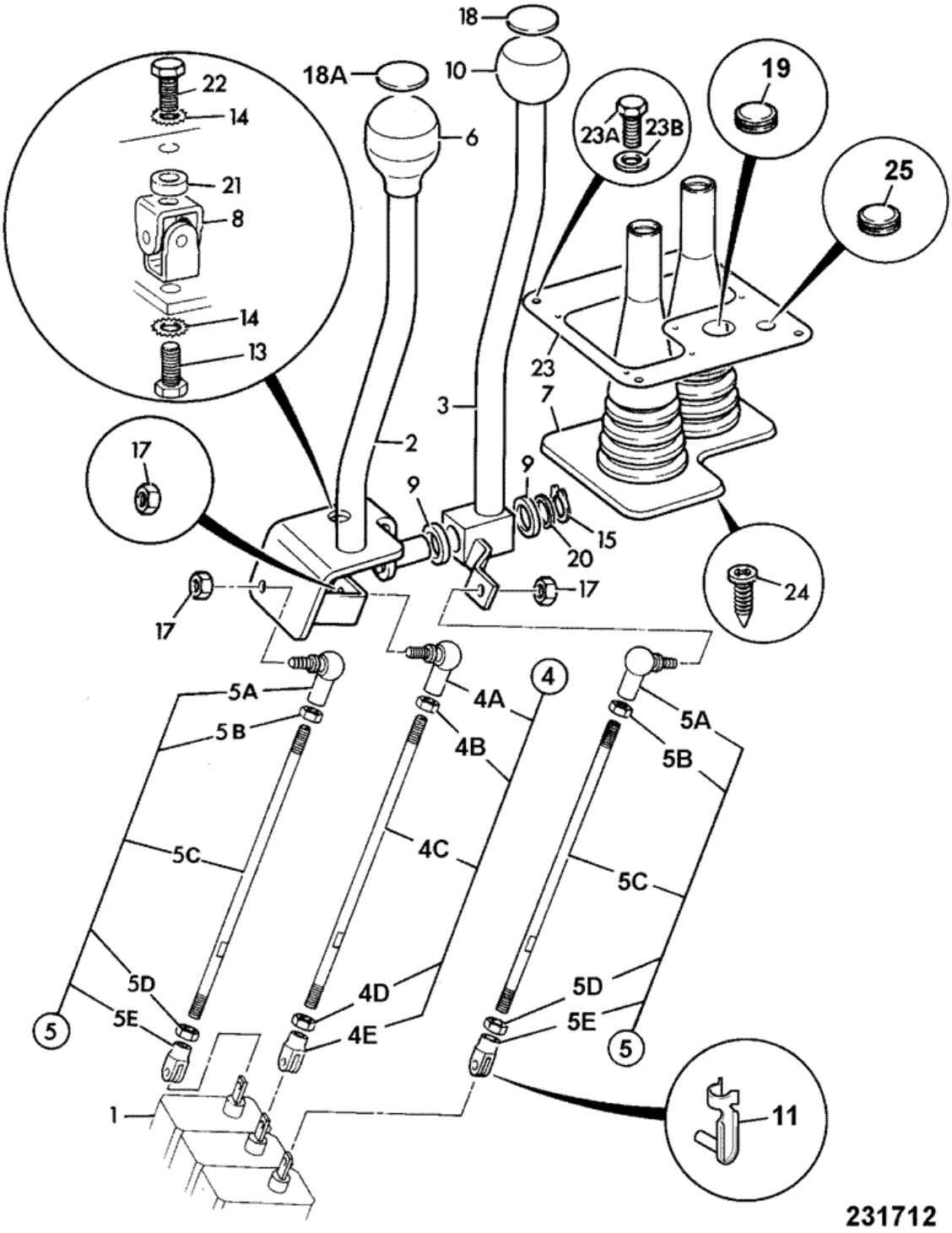


| Item | Part # | Change No | Description | Usage Code | QTY |
|---|---|---|---|---|---|
| | | | 'See Remark' | | |

| | | | | | |
|---|---|---|---|---|---|
| 1 | . | | *For Valve See E3* | | 1 |
| 2 | 125/00446 | | Lever loader control | | 1 |
| 3 | 331/33463 | | Lever Auxiliary Control | | 1 |
| 4 | 913/10060 | | Rod control assembly 266mm long | | 1 |
| 4A | :123/08002 | | Joint ball M8 right hand | | 1 |
| 4B | :1370/0202Z | | Nut M8 | | 1 |
| 4C | :NSP | | None serviced part | | 1 |
| 4D | :826/01108 | | Nut M8 LH thin | | 1 |
| 4E | :913/02903 | | Clevis fork (6mm hole) | | 1 |
| 5 | 331/11267 | | Rod control assembly 270mm long | | 2 |
| 5A | :123/08002 | | Joint ball M8 right hand | | 1 |
| 5B | :1370/0202Z | | Nut M8 | | 1 |
| 5C | :NSP | | None serviced part | | 1 |
| 5D | :826/01108 | | Nut M8 LH thin | | 1 |
| 5E | :913/02903 | | Clevis fork (6mm hole) | | 1 |
| 6 | . | | 'See Remark'<br>*See section D1* | | 1 |
| 7 | 123/07602 | | Gaiter control | | 1 |
| 8 | 116/00416 | | Joint universal | | 1 |
| 9 | 831/00063 | | Bush | | 2 |
| 10 | 331/26977 | | Base Knob | | 1 |
| 10A | 331/30772 | | Knob Top, Silver | | 1 |
| 10B | 122/67459 | | Ring tolerance | | 1 |
| 10C | 142/00610 | | Plug | | 1 |
| 11 | 913/00031 | | Pin spring,6mm clevis | | 3 |
| 13 | 1305/0404Z | | Bolt | | 1 |
| 14 | 1417/0014Z | | Washer star | | 2 |
| 15 | 2203/0022 | | Circlip | | 1 |
| 17 | 1370/0203Z | | Nut self lock M8 | | 2 |
| 18 | 817/17772 | | Label loader aux clamshovel | | 1 |
| 18A | 817/17771 | | Decal loader lever with float, reset<br>*For Item 6* | | 1 |
| 19 | 2410/1312 | | Grommet | | 1 |
| 20 | 1420/0011Z | | Washer M16 plain | | 1 |
| 21 | 266/31702 | | Spacer | | 1 |
| 22 | 1305/0410Z | | Bolt 1/2" x 1.1/2" long | | 1 |
| 23 | 142/00540 | | Plate gaiter retaining | | 1 |
| 23A | 826/01768 | | Screw M6x25mm | | 5 |
| 24 | 142/00680 | | Fastener fir tree | | 7 |
| 25 | 828/00325 | | Grommet blind | | 1 |
| 26 | 826/01232 | | Nut M6 jack | | 5 |

# 9812/0080 D1-1-71 CONTROLS, LOADER LIFT, SHOVEL, 3C - 90HP WITH OPTIONAL 36/26 CCR PUMP UPGRADE

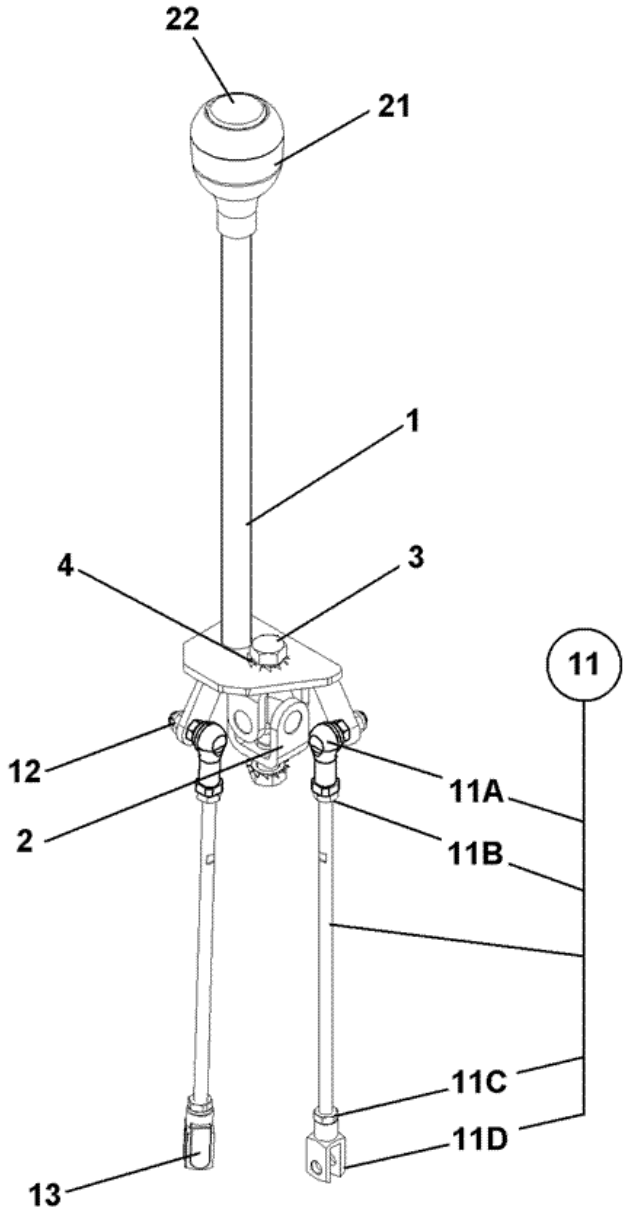


D01-10031-0-A20

| Item | Part # | Change No | Description | Usage Code | QTY |
|---|---|---|---|---|---|
| 1 | 335/08632 | | Lever loader control | | 1 |

| | | | | | |
|---|---|---|---|---|---|
| 2 | 116/00416 | | Joint universal | | 1 |
| 3 | 1305/0404Z | | Bolt | | 2 |
| 4 | 1417/0014Z | | Washer star | | 2 |
| 11 | 128/P1120 | | Rod control 306mm | | 2 |
| 11A | :123/08002 | | Joint ball M8 right hand | | 1 |
| 11B | :1370/0202Z | | Nut M8 | | 1 |
| 11C | :826/01108 | | Nut M8 LH thin | | 1 |
| 11D | :913/02601 | | Clevis fork (8mm hole) | | 1 |
| 12 | 1370/0203Z | | Nut self lock M8 | | 2 |
| 13 | 123/07389 | | Pin spring,8mm clevis | | 1 |
| 21 | 128/13807 | | Knob assembly 1-switch as supplied | | 1 |
| 22 | 817/17771 | | Decal loader lever with float, reset | | 1 |

# 9812/0080 D1-1-74 CONTROLS, LOADER LIFT, SHOVEL, 3C - 90HP WITH OPTIONAL 36/26 PUMP UPGRADE

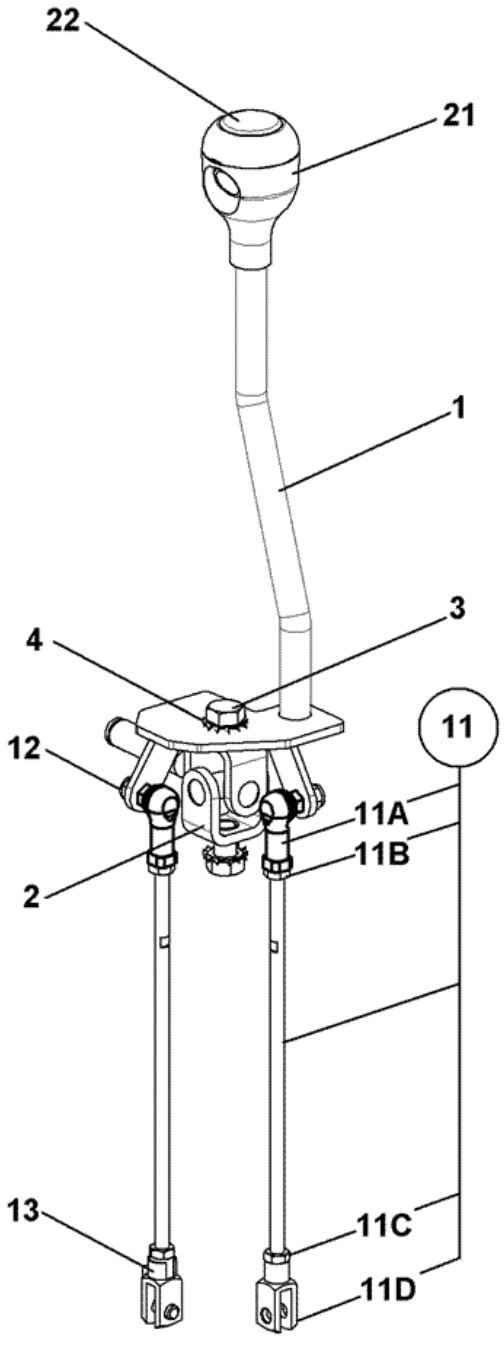


D01-10032-0-A20

| Item | Part # | Change No | Description | Usage Code | QTY |
|---|---|---|---|---|---|
| 1 | 332/P4966 | | Lever loader control | | 1 |

| | | | | | |
|---|---|---|---|---|---|
| 2 | 116/00416 | | Joint universal | | 1 |
| 3 | 1305/0404Z | | Bolt | | 2 |
| 4 | 1417/0014Z | | Washer star | | 2 |
| 11 | 128/P1120 | | Rod control 306mm | | 2 |
| 11A | :123/08002 | | Joint ball M8 right hand | | 1 |
| 11B | :1370/0202Z | | Nut M8 | | 1 |
| 11C | :826/01108 | | Nut M8 LH thin | | 1 |
| 11D | :913/02601 | | Clevis fork (8mm hole) | | 1 |
| 12 | 1370/0203Z | | Nut self lock M8 | | 2 |
| 13 | 123/07389 | | Pin spring,8mm clevis | | 1 |
| 21 | 128/13807 | | Knob assembly 1-switch as supplied | | 1 |
| 22 | 817/17771 | | Decal loader lever with float, reset | | 1 |

Product Catalog \ CONSTRUCTION \ NORTH AMERICA \ CONSTRUCTION / INDUSTRIAL \ BACKHOE LOADER 3CX,4CX,214,215,217 \ 3C PLUS (91HP) , Made in Brazil with Dieselmax/IESA Engine 9812/0080 \ D CONTROLS-MACHINE ENGINE & STEERING \ D01 CONTROLS, MACHINE

# 9812/0080 D1-1-75 CONTROLS, LOADER LIFT, SHOVEL, GAITER, 3C - 90HP WITH OPTIONAL 36/26 CCR PUMP UPGRADE

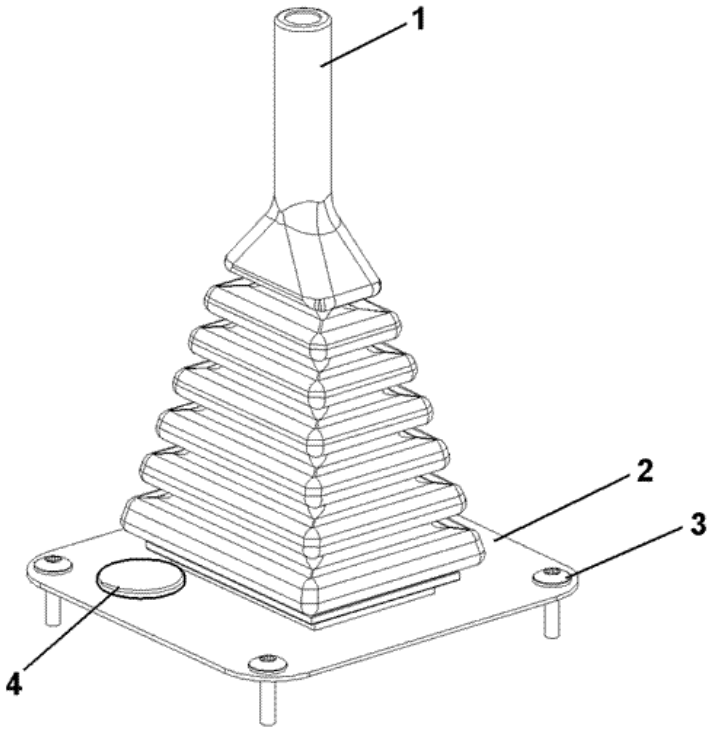


D01-10033-0-A20

| Item | Part # | Change No | Description | Usage Code | QTY |
|---|---|---|---|---|---|
| 1 | 263/05406 | | Gaiter control single lever | | 1 |

| | | | | | |
|---|---|---|---|---|---|
| 2 | 332/P4924 | | Plate gaiter | | 1 |
| 3 | 826/01768 | | Screw M6x25mm | | 5 |
| 4 | 2410/1312 | | Grommet | | 1 |

Product Catalog \ CONSTRUCTION \ NORTH AMERICA \ CONSTRUCTION / INDUSTRIAL \ BACKHOE LOADER 3CX,4CX,214,215,217 \ 3C PLUS (91HP) , Made in Brazil with Dieselmax/IESA Engine 9812/0080 \ D CONTROLS-MACHINE ENGINE & STEERING \ D01 CONTROLS, MACHINE

# 9812/0080 D1-1-77 CONTROLS, LOADER LIFT, SHOVEL, 3RD SPOOL, AUXILIARY

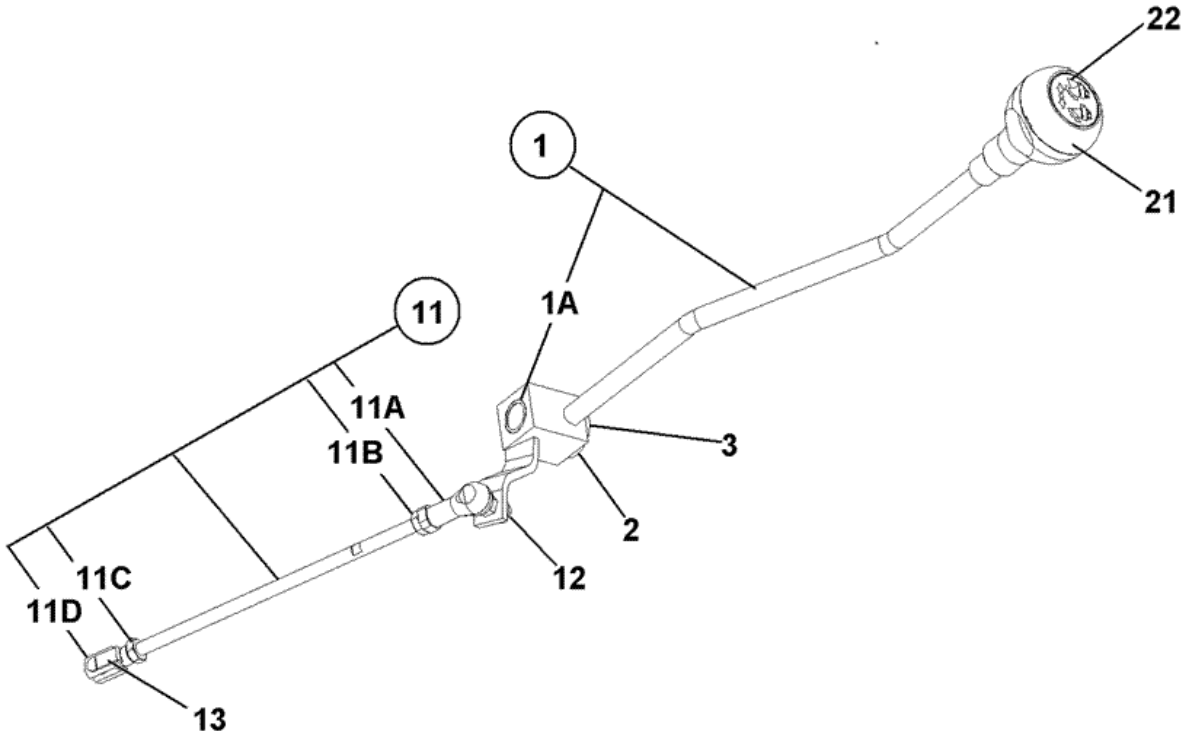


D01-10034-0-A20

| Item | Part # | Change No | Description | Usage Code | QTY |
|---|---|---|---|---|---|
| 1 | 128/13229 | | Lever loader control 3rd spool | | 1 |

| | | | | | |
|---|---|---|---|---|---|
| 1A | :831/00063 | | Bush | | 2 |
| 2 | 1420/0011Z | | Washer M16 plain | | 1 |
| 3 | 2203/0022Z | | Circlip | | 1 |
| 11 | 331/11267 | | Rod control assembly 270mm long | | 1 |
| 11A | :123/08002 | | Joint ball M8 right hand | | 1 |
| 11B | :1370/0202Z | | Nut M8 | | 1 |
| 11C | :826/01108 | | Nut M8 LH thin | | 1 |
| 11D | :913/02903 | | Clevis fork (6mm hole) | | 1 |
| 12 | 1370/0203Z | | Nut self lock M8 | | 1 |
| 13 | 913/00031 | | Pin spring,6mm clevis | | 1 |
| 21 | 128/12635 | | Knob assembly | | 1 |
| 22 | 817/17772 | | Label loader aux clamshovel | | 1 |

# 9812/0080 D1-20-1 CONTROLS, BRAKE PEDAL

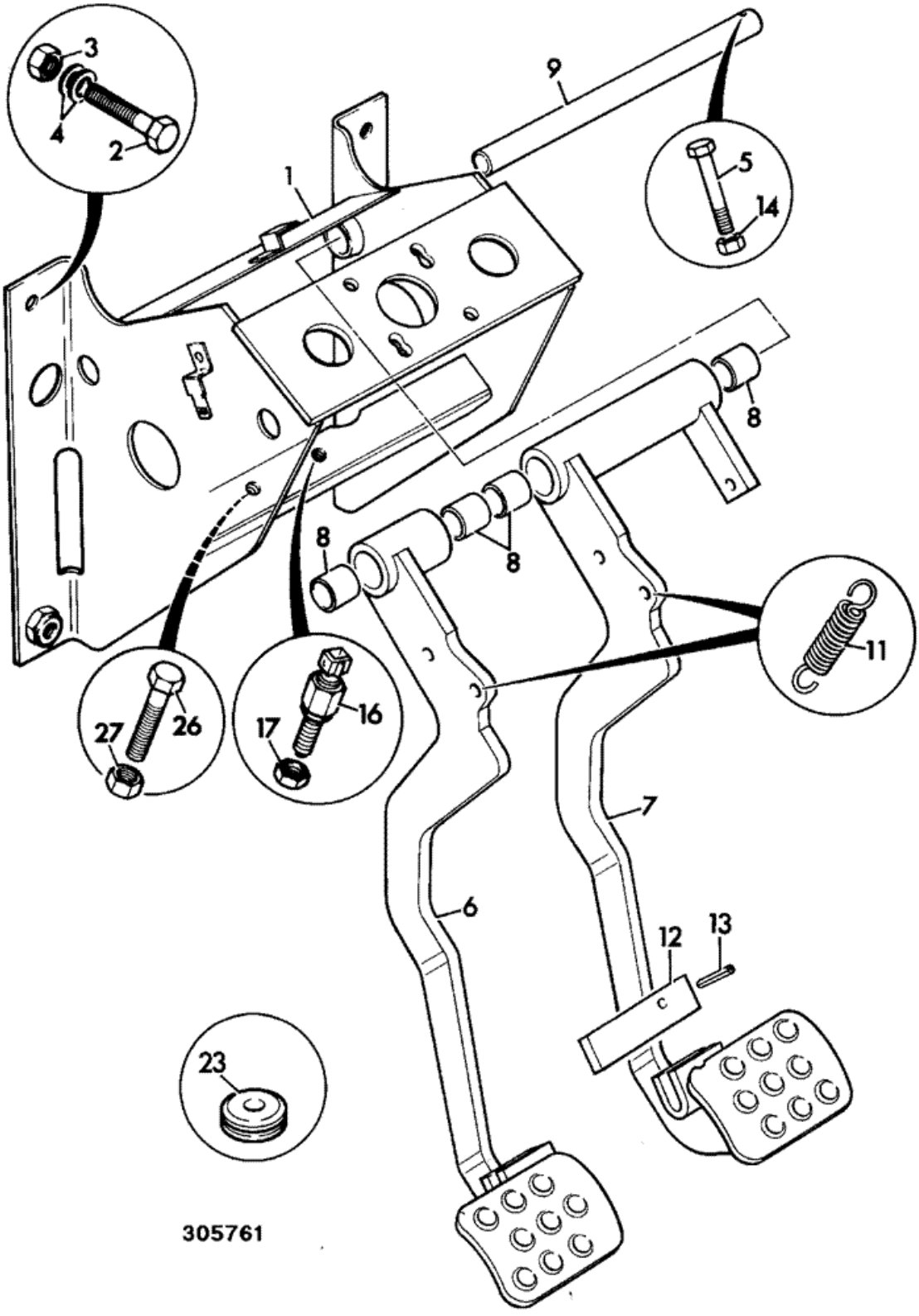

| Item | Part # | Change No | Description | Usage Code | QTY |
|---|---|---|---|---|---|
| 1 | 331/16346 | | Bracket carrier brake pedal 214e & 214Se | | 1 |
| 2 | 1315/0407Z | | Bolt M10x25 | | 4 |
| 3 | 1370/0303Z | | Nut lock M10 | | 4 |
| 4 | 1420/0008Z | | Washer Plain M10 | | 4 |
| 5 | 1315/3212Z | | Bolt M6 x 50 | | 1 |
| 6 | 128/16819 | | Pedal left hand brake | | 1 |
| 7 | 128/16820 | | Pedal right hand brake | | 1 |
| 8 | :831/00065 | | Bush<br>*Part of item 6 & 7* | | 4 |
| 9 | 123/04301 | | Pin pivot, brake pedal | | 1 |
| 10 | 1420/0012Z | | Washer M20<br>*between items 6 & 7* | | 2 |
| 11 | 814/10122 | | Spring tension | | 2 |
| 12 | 331/31649 | | Plate pedal lock | | 1 |
| 13 | 2102/0615 | | Pin tension | | 1 |
| 14 | 1370/0103Z | | Nut Self lock M6 | | 1 |
| 16 | 701/80266 | | Switch footbrake white top | | 1 |
| 17 | 1340/0402Z | | Nut | | 1 |
| 23 | 2410/1113 | | Grommet 31.8 panel hole x 3.5 thk | | 1 |
| 26 | 1315/0410Z | | Bolt M10 x 40 | | 1 |
| 27 | 1370/0302Z | | Nut lock | | 1 |

Product Catalog \ CONSTRUCTION \ NORTH AMERICA \ CONSTRUCTION / INDUSTRIAL \ BACKHOE LOADER 3CX,4CX,214,215,217 \ 3C PLUS (91HP) , Made in Brazil with Dieselmax/IESA Engine 9812/0080 \ D CONTROLS-MACHINE ENGINE & STEERING \ D01 CONTROLS, MACHINE

# 9812/0080 D1-2-10 CONTROLS, EXCAVATOR, & STABILISER

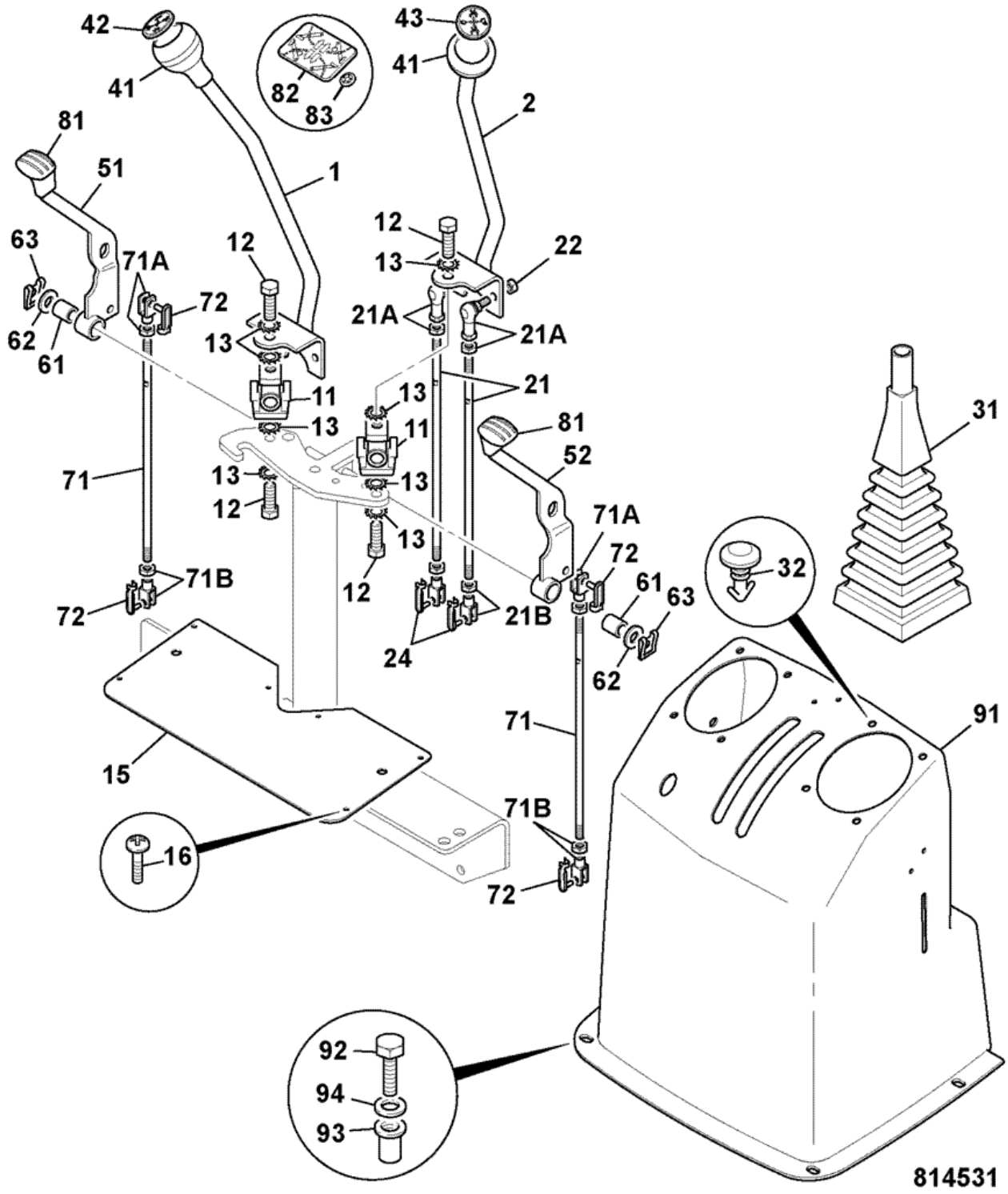


| Item | Part # | Change No | Description | Usage Code | QTY |
|---|---|---|---|---|---|
| 1 | 125/92000 | | Lever excavator control left hand + pattern | | 1 |

| | | | | | |
|---|---|---|---|---|---|
| 2 | 125/92100 | | Lever excavator control right hand + pattern | | 1 |
| 11 | 116/00416 | | Joint universal | | 2 |
| 12 | 1305/0404Z | | Bolt | | 4 |
| 13 | 1417/0014Z | | Washer star | | 8 |
| 15 | 128/10925 | | Plate access, excavator 214e as supplied | | 1 |
| 16 | 1430/1303 | | Screw | | 4 |
| 21 | 331/11275 | | Rod control assembly 343mm long | | 4 |
| 21A | :123/08002 | | Joint ball M8 right hand | | 1 |
| 21A | :1370/0202D | | Nut thin | | 1 |
| 21B | :913/02601 | | Clevis fork (8mm hole) | | 1 |
| 21B | :826/01108 | | Nut M8 LH thin | | 1 |
| 22 | 1370/0203Z | | Nut self lock M8 | | 4 |
| 24 | 123/07389 | | Pin spring,8mm clevis | | 4 |
| 31 | 123/04714 | | Gaiter excavator control | | 2 |
| 32 | 826/00959 | | Fastener drive yellow | | 8 |
| 41 | 128/12635 | | Knob assembly | | 2 |
| 42 | 817/17773 | | Decal LEFT HAND CONTROL JCB & SAE | | 1 |
| 43 | 817/17774 | | Decal RIGHT HAND CONTROL JCB & SAE | | 1 |
| 51 | 331/46281 | | Lever stabiliser left hand | | 1 |
| 52 | 331/46282 | | Lever stabiliser right hand | | 1 |
| 61 | 831/00098 | | Bearing | | 2 |
| 62 | 1420/0008Z | | Washer Plain M10 | | 2 |
| 63 | 913/00026 | | Clip retaining | | 2 |
| 71 | 123/07395 | | Rod stabiliser control | | 2 |
| 71A | :913/01801 | | Clevis M8 | | 1 |
| 71A | :1370/0202D | | Nut thin | | 1 |
| 71B | :913/02601 | | Clevis fork (8mm hole) | | 1 |
| 71B | :826/01108 | | Nut M8 LH thin | | 1 |
| 72 | 123/07389 | | Pin spring,8mm clevis | | 4 |
| 81 | 331/30884 | | Knob throttle/ stabiliser control | | 2 |
| 82 | 817/17770 | | Decal stabiliser control | | 1 |
| 83 | 826/00711 | | Washer M4'starloc' | | 2 |
| 91 | 331/27759 | | Cover excavator | | 1 |
| 92 | 1315/0207Z | | Screw M6 x 25mm long | | 4 |
| 93 | 826/01101 | | Nut rivet,M6 open ended for 3 to 5.5mm plt | | 2 |
| 94 | 823/00384 | | Washer | | 4 |

Product Catalog \ CONSTRUCTION \ NORTH AMERICA \ CONSTRUCTION / INDUSTRIAL \ BACKHOE LOADER 3CX,4CX,214,215,217 \ 3C PLUS (91HP) , Made in Brazil with Dieselmax/IESA Engine 9812/0080 \ D CONTROLS-MACHINE ENGINE & STEERING \ D01 CONTROLS, MACHINE

# 9812/0080 D1-3-20 CONTROLS, AUXILIARY VALVE, BACKHOE, OPTIONAL

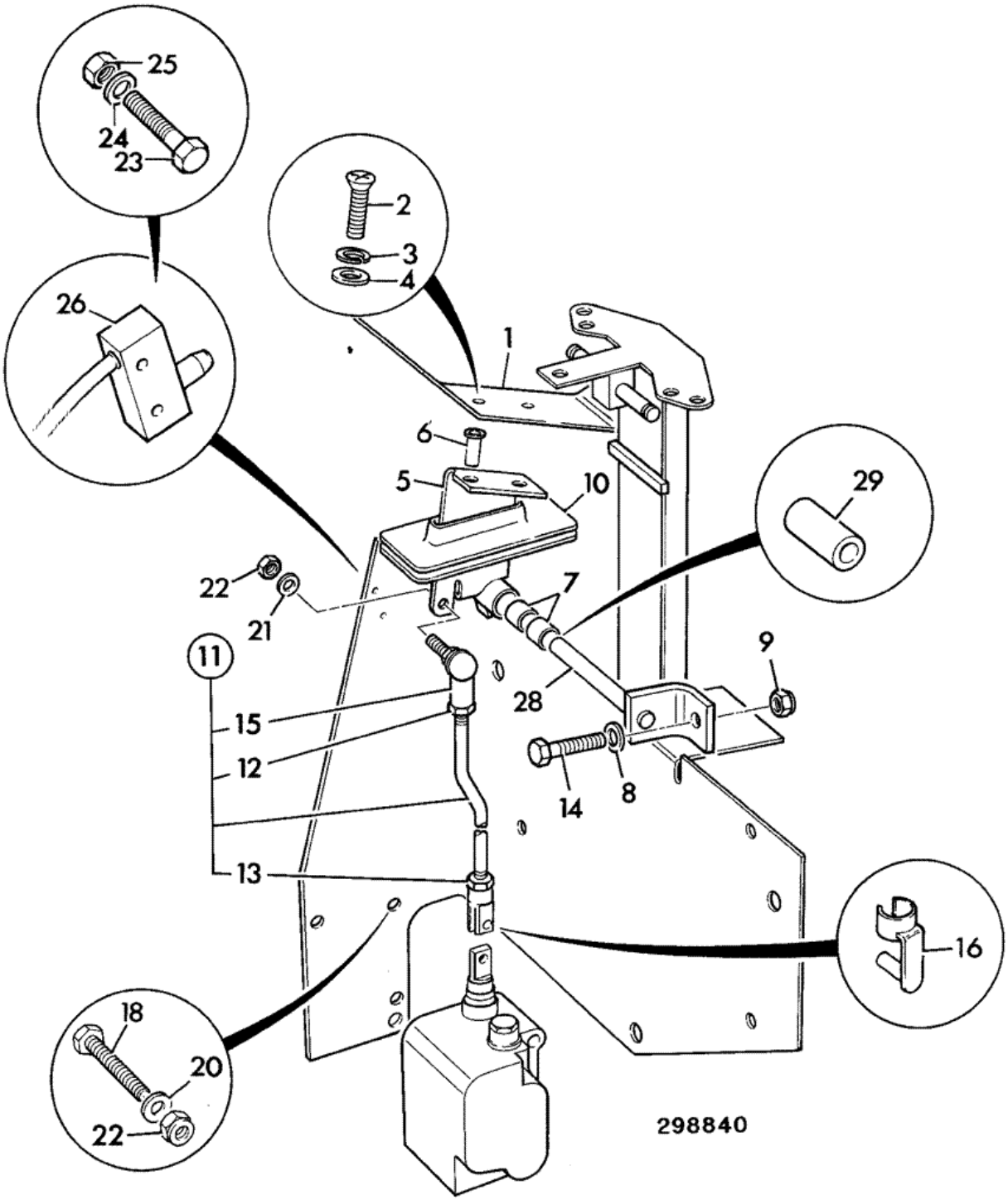


| Item | Part # | Change No | Description | Usage Code | QTY |
|---|---|---|---|---|---|
| 1 | 123/06353 | | Plate aux pedal | | 1 |
| 2 | 826/01591 | | Screw | | 2 |

| | | | | | |
|---|---|---|---|---|---|
| 3 | 1425/0006Z | | Washer Spring | | 2 |
| 4 | 823/00573 | | Washer | | 2 |
| 5 | 128/14679 | | Pivot aux. pedal | | 1 |
| 6 | :826/01101 | | Nut rivet,M6 open ended for 3 to 5.5mm plt | | 2 |
| 7 | :831/00096 | | Bearing | | 2 |
| 8 | 1420/0008Z | | Washer Plain M10 | | 1 |
| 9 | 1370/0303Z | | Nut lock M10 | | 3 |
| 10 | 123/04384 | | Seal aux pedal | | 1 |
| 11 | 913/10303 | | Rod control assembly | | 1 |
| 12 | :1370/0202Z | | Nut M8 | | 1 |
| 13 | :913/01108 | | Nut left hand thread | | 1 |
| 14 | :913/02601 | | Clevis fork (8mm hole) | | 1 |
| 15 | :123/08002 | | Joint ball M8 right hand | | 1 |
| 16 | 123/07389 | | Pin spring,8mm clevis | | 1 |
| 18 | 1315/3410Z | | Bolt M10 x 40 | | 2 |
| 20 | 1420/0008Z | | Washer Plain M10 | | 2 |
| 21 | 1418/0011Z | | Washer lock | | 3 |
| 22 | 1370/0303Z | | Nut lock M10 | | 3 |
| 23 | . | | 'See Remark'<br>*not fitted* | | 2 |
| 24 | . | | 'See Remark'<br>*not fitted* | | 2 |
| 25 | . | | 'See Remark'<br>*not fitted* | | 2 |
| 26 | . | | 'See Remark'<br>*not fitted* | | 1 |
| 28 | 123/07391 | | Bracket pivot | | 1 |
| 29 | 123/07392 | | Spacer | | 1 |

Product Catalog \ CONSTRUCTION \ NORTH AMERICA \ CONSTRUCTION / INDUSTRIAL \ BACKHOE LOADER 3CX,4CX,214,215,217 \ 3C PLUS (91HP) , Made in Brazil with Dieselmax/IESA Engine 9812/0080 \ D CONTROLS-MACHINE ENGINE & STEERING \ D01 CONTROLS, MACHINE

# 9812/0080 D1-4-11 CONTROL, SHOVEL RESET

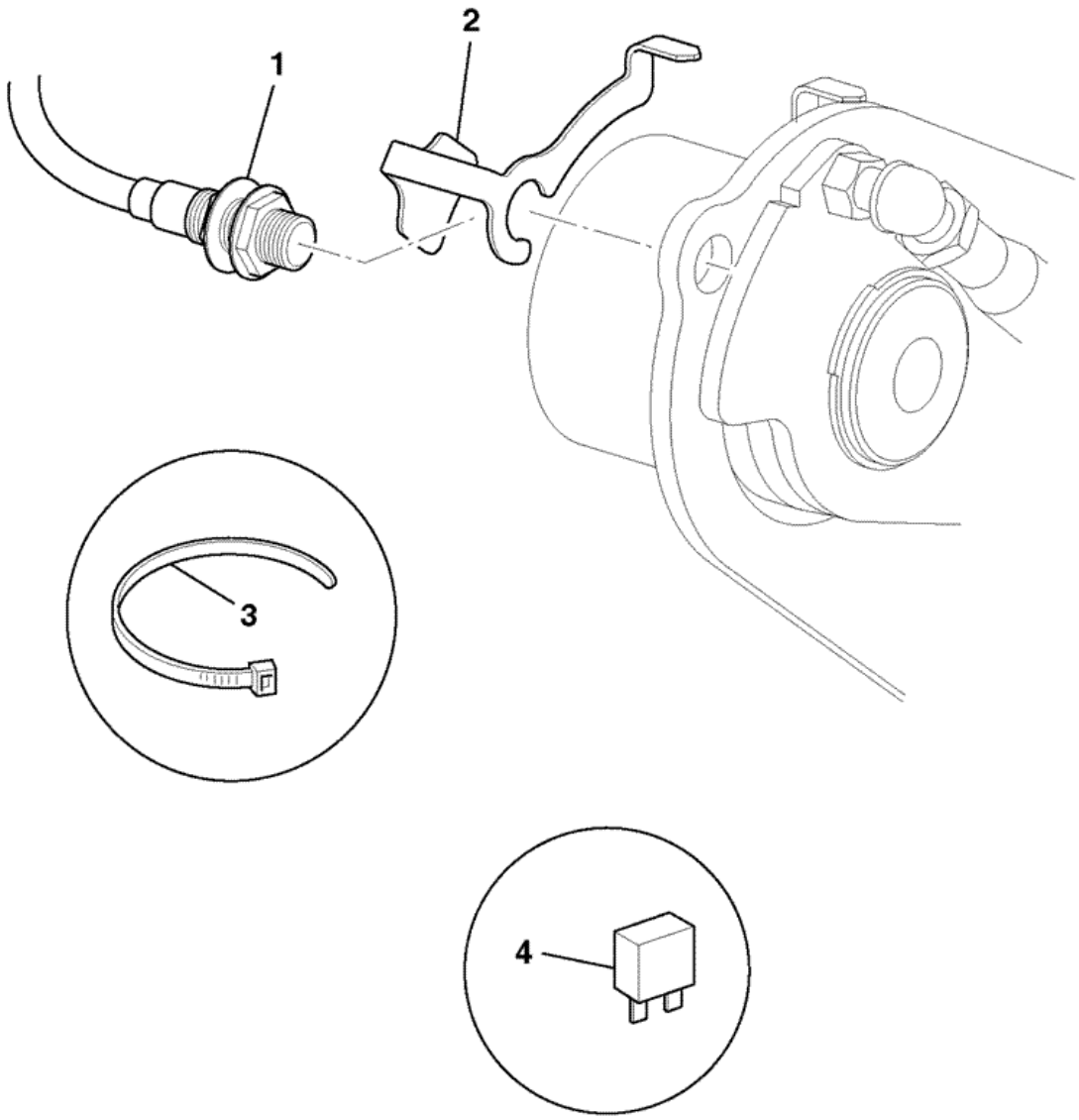


788270

| Item | Part # | Change No | Description | Usage Code | QTY |
|---|---|---|---|---|---|
| 1 | 701/80537 | | Sensor shovel reset | | 1 |
| 2 | 331/52128 | | Bracket level indicator | | 1 |
| | | | | | |

| | | | | | |
|---|---|---|---|---|---|
| 3 | 826/01144 | | Tie cable 200mm long<br>*attach harness to loader pipes* | | 5 |
| 4 | 716/30149 | Superseded | Relay 12v micro<br>*fit to fusebox* | | 1 |
| 4 | 332/C3148 | | Relay 12v micro high capacity | | 1 |
| 5 | 721/11412 | | Harness link<br>*if fitted- main harness to loader valve* | | 1 |

Product Catalog \ CONSTRUCTION \ NORTH AMERICA \ CONSTRUCTION / INDUSTRIAL \ BACKHOE LOADER 3CX,4CX,214,215,217 \ 3C PLUS (91HP) , Made in Brazil with Dieselmax/IESA Engine 9812/0080 \ D CONTROLS-MACHINE ENGINE & STEERING \ D03 COLUMN, STEERING

# 9812/0080 D3-1-11 STEERING COLUMN

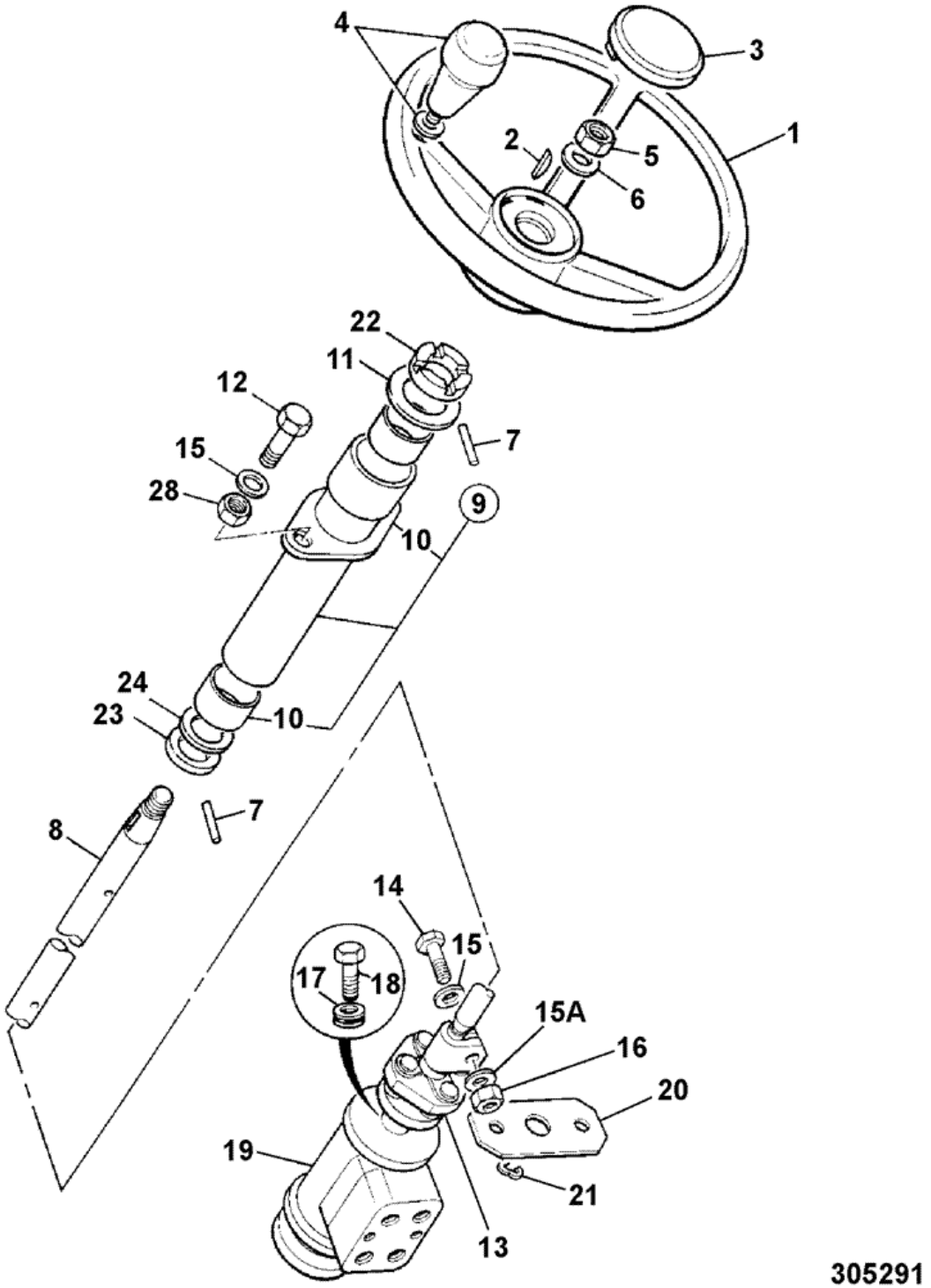


| Item | Part # | Change No | Description | Usage Code | QTY |
|---|---|---|---|---|---|
| 1 | 331/27410 | | Wheel steering | | 1 |
| 2 | G18/2 | | Key | | 1 |
| | | | | | |

| | | | | | |
|---|---|---|---|---|---|
| 3 | 331/27487 | | Cap steering wheel | | 1 |
| 4 | 331/27411 | | Knob spinner<br>*Optional* | | 1 |
| 4A | 331/27488 | | Plug blanking | | 1 |
| 5 | 1340/0602Z | | Nut | | 1 |
| 6 | 1411/0007Z | | Washer 5/8" Medium | | 1 |
| 7 | 2102/0417 | | Pin tension | | 1 |
| 8 | 123/07285 | | Shaft fixed steer column | | 1 |
| 9 | 126/00314 | | Column steering outer | | 1 |
| 10 | :NSP | | None serviced part | | 2 |
| 11 | 1411/0009Z | | Washer | | 1 |
| 12 | 1315/0408Z | | Bolt M10 x 30 | | 2 |
| 13 | 331/36009 | | Coupling | | 1 |
| 14 | 1315/0310Z | | Bolt M8x40 | | 2 |
| 15 | 1420/0008Z | | Washer Plain M10 | | 2 |
| 15A | 1420/0008Z | | Washer Plain M10 | | 2 |
| 16 | 1370/0203Z | | Nut self lock M8 | | 2 |
| 17 | 255/35203 | | Insert mounting | | 4 |
| 18 | 1315/3409Z | | Bolt M10 x 35 | | 4 |
| 18A | 1412/0004Z | | Washer | | 2 |
| 19 | . | | 'See Remark'<br>*See frame E3-10-10* | | 1 |
| 20 | 123/04752 | | Plate retainer | | 1 |
| 21 | 821/00190 | | Clip 'E' | | 1 |
| 22 | 831/00074 | | Bearing thrust | | 1 |
| 23 | 1420/0012Z | | Washer M20 | | 1 |
| 24 | 823/00302 | | Washer 2mm | | 1 |

Product Catalog \ CONSTRUCTION \ NORTH AMERICA \ CONSTRUCTION / INDUSTRIAL \ BACKHOE LOADER 3CX,4CX,214,215,217 \ 3C PLUS (91HP) , Made in Brazil with Dieselmax/IESA Engine 9812/0080 \ D CONTROLS-MACHINE ENGINE & STEERING \ D01 CONTROLS, MACHINE

# 9812/0080 D1-21-10 CONTROL, PARKING BRAKE

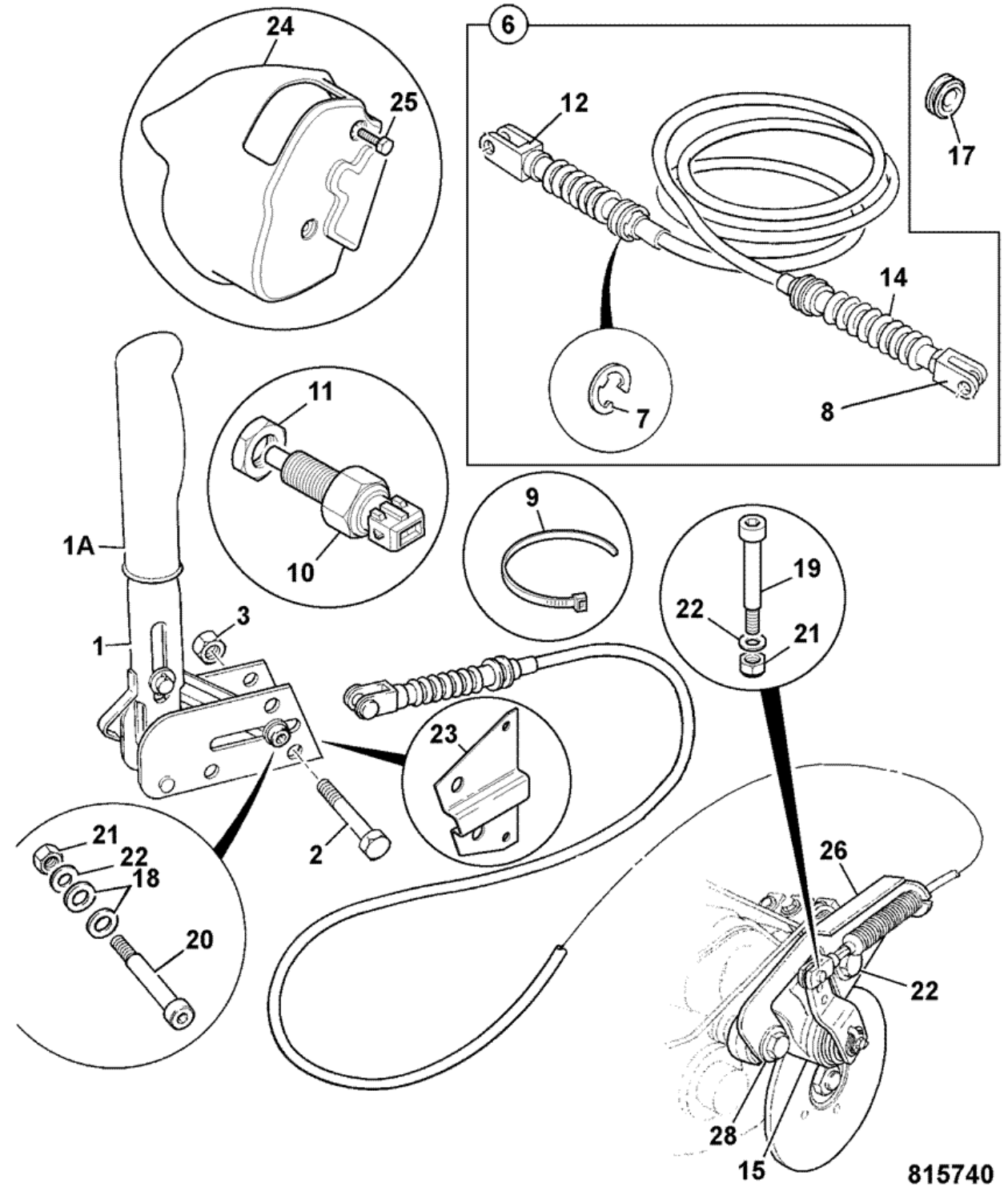


| Item | Part # | Change No | Description | Usage Code | QTY |
|---|---|---|---|---|---|
| 1 | 15/914100 | | Lever parking brake | | 1 |
| 1A | 331/16848 | | Grip hand red | | 1 |
| | | | | | |

| | | | | | |
|---|---|---|---|---|---|
| 2 | 1315/3312Z | | Bolt | | 2 |
| 3 | 1370/0203Z | | Nut self lock M8 | | 2 |
| 5 | 1420/0007Z | | Washer plain M8 | | 2 |
| 6 | 910/60253 | | Cable parkbrake | | 1 |
| 7 | :826/00627 | | Clip 'E' | | 2 |
| 8 | :NSP | | None serviced part | | 1 |
| 9 | 121/77603 | | Tie cable L=300mm x W=7.6mm | | 1 |
| 10 | 701/72500 | | Switch red top | | 1 |
| 11 | 1340/0402Z | | Nut | | 2 |
| 12 | :NSP | | None serviced part | | 1 |
| 14 | :NSP | | None serviced part | | 2 |
| 15 | :. | | 'See Remark'<br>*Parking brake, See page G1-3-1* | | 1 |
| 17 | 123/04561 | | Grommet cable/harness | | 1 |
| 18 | 1420/0007Z | | Washer plain M8 | | 2 |
| 19 | 826/01597 | | Screw shoulder 8 x 20 x M6 | | 1 |
| 20 | 826/01596 | | Capscrew 40mm long | | 1 |
| 21 | 1370/0103Z | | Nut Self lock M6 | | 2 |
| 22 | 1420/0006Z | | Washer M6 | | 2 |
| 23 | 123/07792 | | Bracket brake lever cover | | 1 |
| 24 | 123/07793 | | Cover brake lever | | 1 |
| 25 | 826/01521 | | Screw M6 X 20 | | 2 |
| 26 | 331/58423 | | Bracket reaction, parkbrake | | 1 |
| 27 | 826/10526 | | Bolt | | 2 |
| 28 | 823/00603 | | Washer hardened M16 | | 2 |

# 9812/0080 D1-24-10 CONTROL, GEAR CHANGE

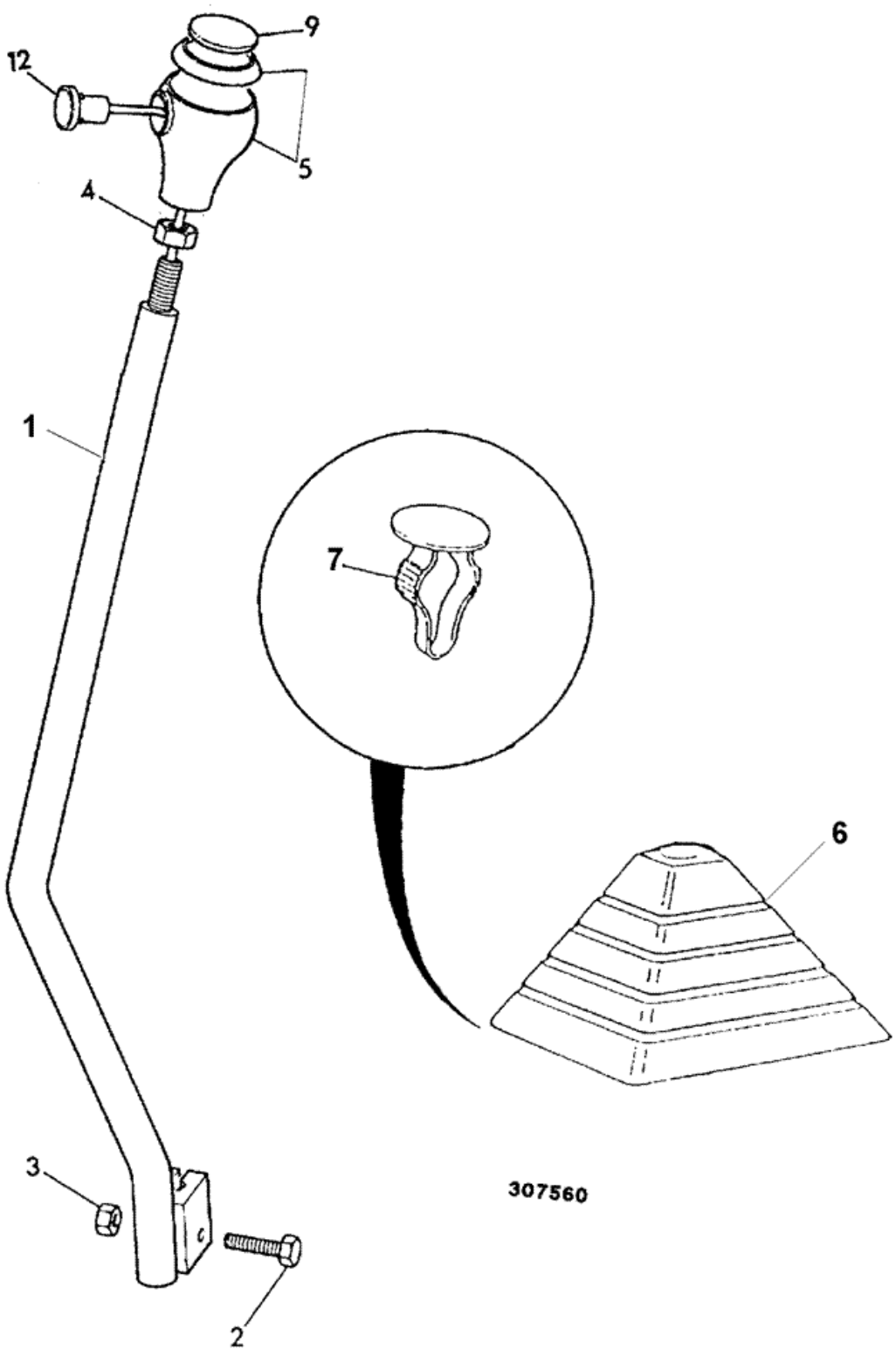

| Item | Part # | Change No | Description | Usage Code | QTY |
|---|---|---|---|---|---|
| 1 | 123/07588 | | Lever gear | | 1 |
| 2 | 1315/3411Z | | Bolt M10 x 45mm | | 1 |
| 3 | 1370/0303Z | | Nut lock M10 | | 1 |
| 4 | 1340/0602Z | | Nut | | 1 |
| 5 | 128/12634 | <M TBA | Knob assembly | | 1 |
| 5 | 128/C0600 | >M TBA | Knob assembly, gearlever black & silver | | 1 |
| 5B | :331/30772 | | Knob Top, Silver | | 1 |
| 6 | 122/67450 | | Gaiter | | 1 |
| 7 | 826/00959 | | Fastener drive yellow | | 4 |
| 9 | 817/17698 | | Decal gearlever knob 4 speed | | 1 |
| 12 | 701/49800 | | Switch micro | | 1 |

Product Catalog \ CONSTRUCTION \ NORTH AMERICA \ CONSTRUCTION / INDUSTRIAL \ BACKHOE LOADER 3CX,4CX,214,215,217 \ 3C PLUS (91HP) , Made in Brazil with Dieselmax/IESA Engine 9812/0080 \ E HYDRAULICS INCLUDING STEERING \ E04 RAMS

# 9812/0080 E4-1-41 RAM, LIFT, 50MM ROD X 80MM CYL

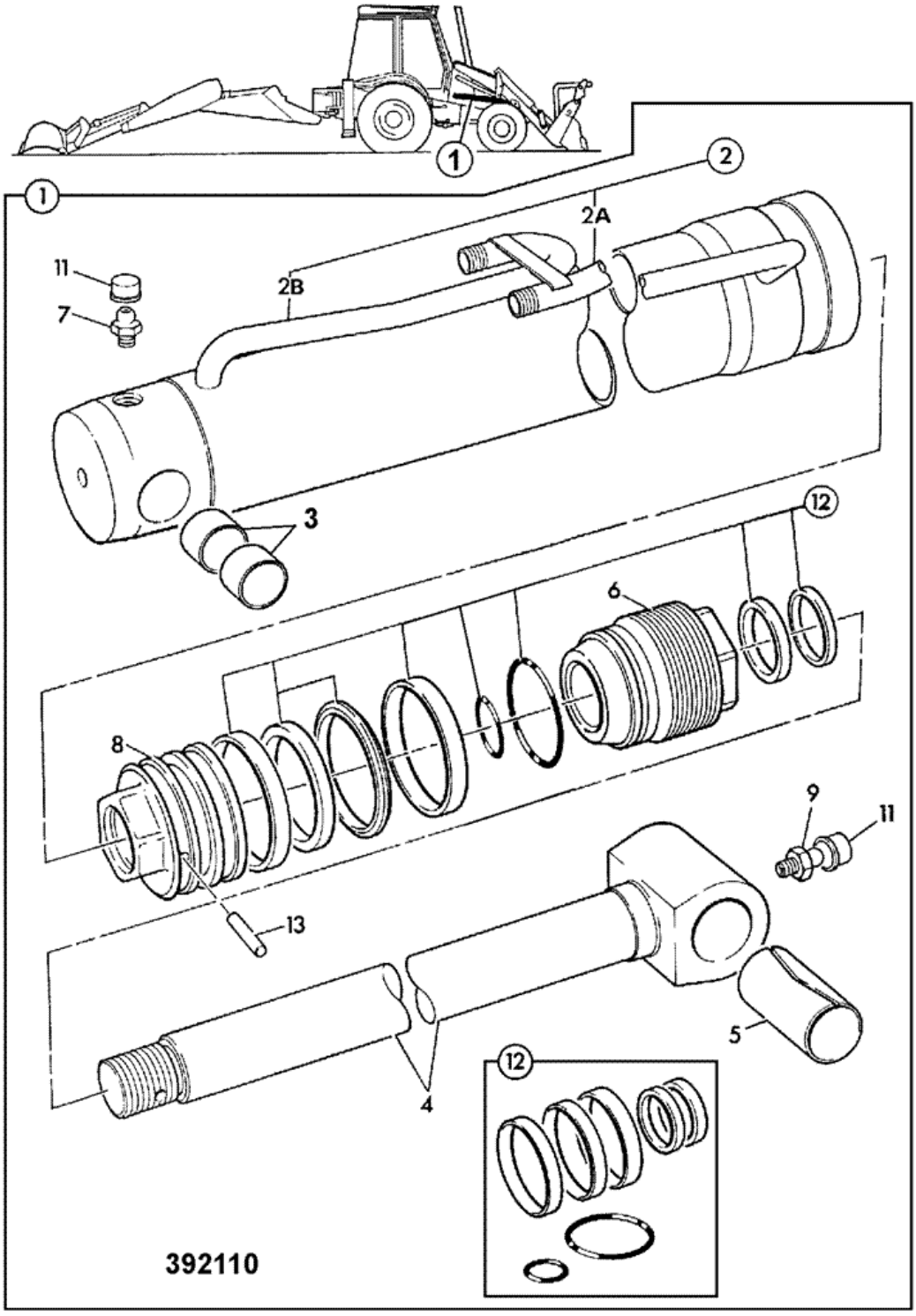


| Item | Part # | Change No | Description | Usage Code | QTY |
|---|---|---|---|---|---|
| 1 | 576/60163 | | Ram loader lift | | 1 |
| 2 | :576/70161 | | Cylinder loader lift | | 1 |
| | | | | | |

| | | | | | |
|---|---|---|---|---|---|
| 2A | ::NSP | | None serviced part | | 1 |
| 2B | ::NSP | | None serviced part | | 1 |
| 3 | :831/10181 | | Bearing 50.94-55.9 | | 1 |
| 4 | :590/40581 | | Rod piston, 50X957 lift ram | | 1 |
| 5 | :1208/0015 | | Bush | | 1 |
| 6 | :594/14279 | | Kit-end cap | | 1 |
| 7 | :1450/0001 | | Nipple grease, straight 1/8 BSP | | 1 |
| 8 | :595/27100 | | Head piston | | 1 |
| 9 | :1450/0001 | | Nipple grease, straight 1/8 BSP | | 1 |
| 11 | :835/00017 | | Cap grease nipple | | 2 |
| 12 | :991/00102 | | Kit seal 50mm rod x 80mm cyl | | 1 |
| 13 | :826/01182 | | Dowel | | 1 |

Product Catalog \ CONSTRUCTION \ NORTH AMERICA \ CONSTRUCTION / INDUSTRIAL \ BACKHOE LOADER 3CX,4CX,214,215,217 \ 3C PLUS (91HP) , Made in Brazil with Dieselmax/IESA Engine 9812/0080 \ E HYDRAULICS INCLUDING STEERING \ E01 HOSE & PIPEWORK

# 9812/0080 E1-9-1 CIRCUIT, DIPPER RAM

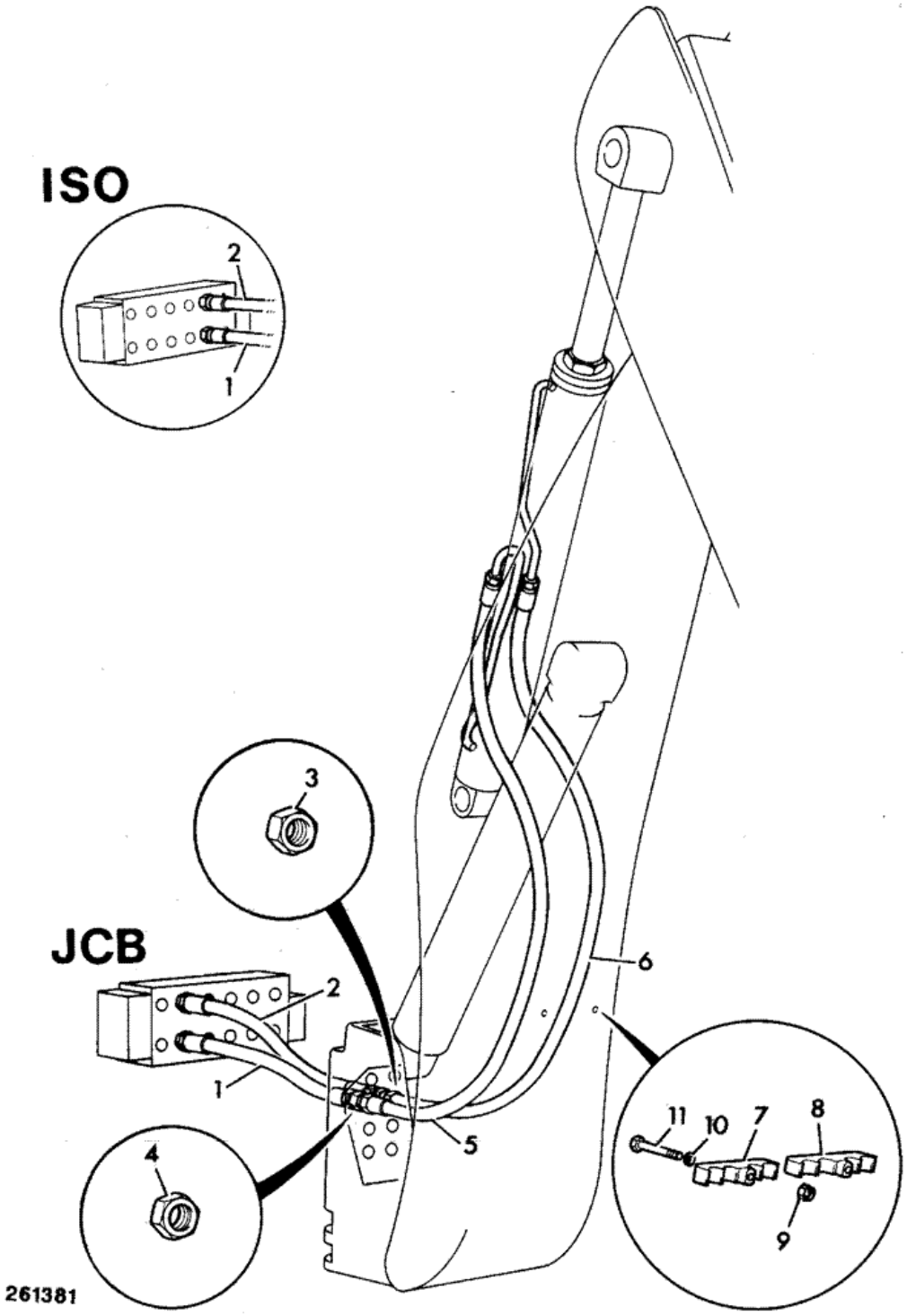


| Item | Part # | Change No | Description | Usage Code | QTY |
|---|---|---|---|---|---|
| 1 | 614/05000 | | Hose 5/8BSPx820 | | 1 |
| 2 | 613/36012 | | Hose 1/2BSPx930 | | 1 |
| | | | | | |

| | | | | | |
|---|---|---|---|---|---|
| 3 | 1356/0204Z | | Nut | | 1 |
| 3A | 1418/0018Z | | Washer lock, internal teeth | | 1 |
| 4 | 1356/0205Z | | Nut | | 1 |
| 4A | 1418/0018Z | | Washer lock, internal teeth | | 1 |
| 5 | 629/26900 | | Hose 5/8 BSP X 2520mm<br>*5/8" BSP* | | 1 |
| 6 | 629/27300 | | Hose 1/2BSP x 2800<br>*1/2" BSP* | | 1 |
| 7 | 123/05836 | | Clamp | | 1 |
| 8 | 123/05836 | | Clamp | | 1 |
| 9 | 1370/0303Z | | Nut lock M10 | | 2 |
| 10 | 1420/0008Z | | Washer Plain M10 | | 8 |
| 11 | 1315/0414Z | | Bolt | | 2 |

Product Catalog \ CONSTRUCTION \ NORTH AMERICA \ CONSTRUCTION / INDUSTRIAL \ BACKHOE LOADER 3CX,4CX,214,215,217 \ 3C PLUS (91HP) , Made in Brazil with Dieselmax/IESA Engine 9812/0080 \ E HYDRAULICS INCLUDING STEERING \ E02 PUMPS

# 9812/0080 E2-1-2 PUMP 36/26 CCR, MAIN HYDRAULIC

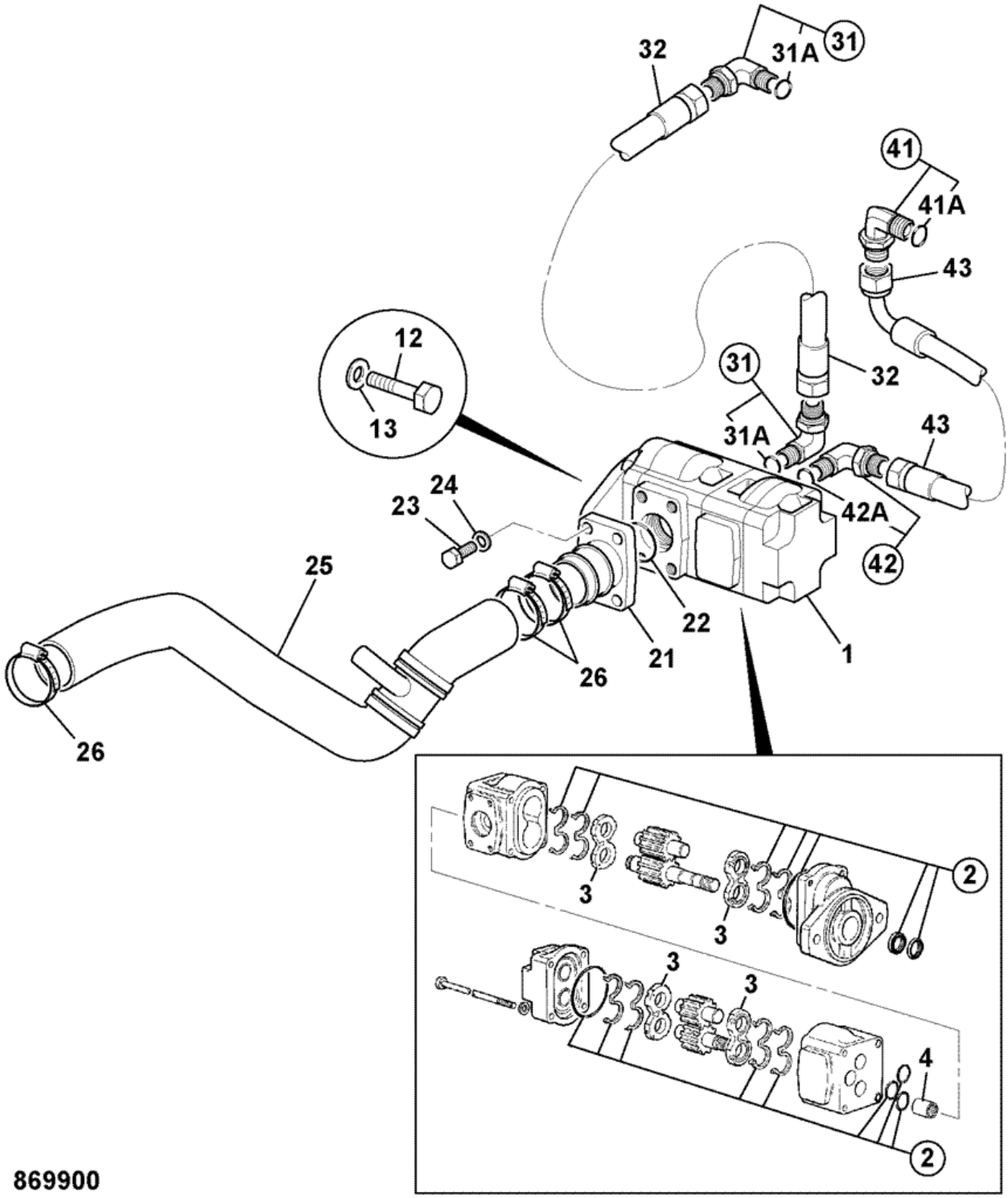


| Item | Part # | Change No | Description | Usage Code | QTY |
|---|---|---|---|---|---|
| 1 | 20/925579 | Superseded | Pump main hydraulic 36/26 cc/r | | 1 |
| 1 | 332/F9029 | | Pump main hydraulic 36/26 cc/rev | | 1 |
| | | | | | |

| | | | | | |
|---|---|---|---|---|---|
| 2 | :20/950906 | | Kit-seal main hydraulic pump | | 1 |
| 3 | :20/902703 | | Kit pressure plates (2 off) | | 2 |
| 4 | :20/903301 | | Coupling splined | | 1 |
| 12 | 1315/0509Z | | Screw M12 x 35mm | | 2 |
| 13 | 1420/0009z | | Washer | | 2 |
| 21 | 903/20774 | | Adaptor Suction port | | 1 |
| 22 | 2401/0218 | | O Ring | | 1 |
| 23 | 1305/1908Z | | Bolt | | 4 |
| 24 | 823/00309 | | Washer hardened | | 4 |
| 25 | 834/10756 | <M TBA | Hose suction hydraulic oil | | 1 |
| 25 | 834/11565 | >M TBA | Hose suction manual transmission | | 1 |
| 26 | 2201/0013 | | Clip jubilee | | 3 |
| 31 | 816/90476 | | Adapter elbow M/M | | 2 |
| 31A | :2401/0508 | | O Ring | | 1 |
| 32 | 614/04700 | | Hose 5/8 X 485L | | 1 |
| 41 | 816/90460 | | Adapter elbow M/M | | 1 |
| 41A | :2401/0507 | | O Ring | | 1 |
| 42 | 816/90638 | | Adapter elbow with test point | | 1 |
| 42A | :2401/0507 | | O Ring | | 1 |
| 43 | 614/24200 | | Hose 5/8"BSP 640mm long | | 1 |

Product Catalog \ CONSTRUCTION \ NORTH AMERICA \ CONSTRUCTION / INDUSTRIAL \ BACKHOE LOADER 3CX,4CX,214,215,217 \ 3C PLUS (91HP) , Made in Brazil with Dieselmax/IESA Engine 9812/0080 \ E HYDRAULICS INCLUDING STEERING \ E02 PUMPS

# 9812/0080 E2-2-1 PUMP, TRANSMISSION, SYNCROSHUTTLE

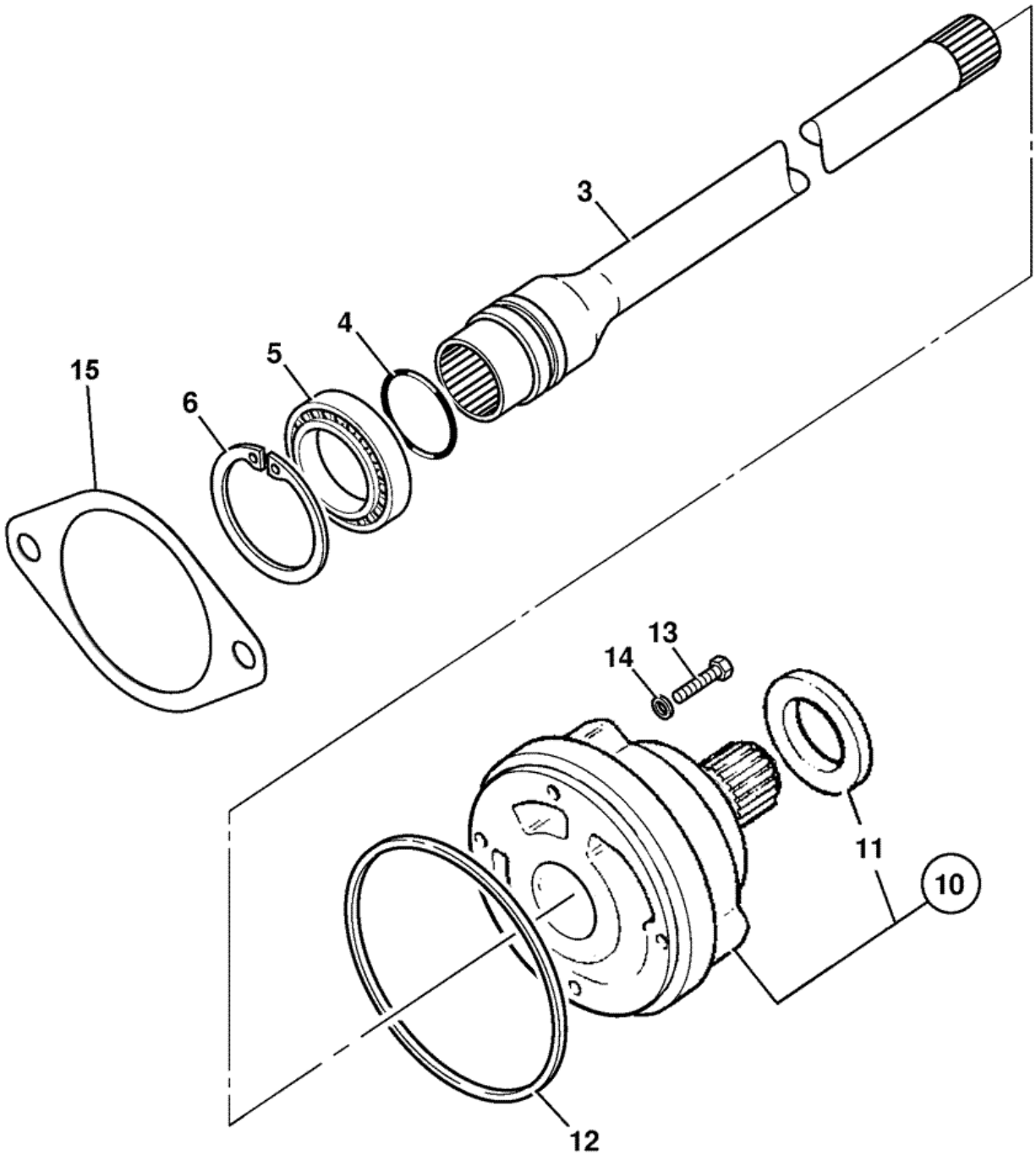


| Item | Part # | Change No | Description | Usage Code | QTY |
|---|---|---|---|---|---|
| 3 | 459/50431 | | Shaft pump drive SS700 gearbox | | 1 |

| | | | | | |
|---|---|---|---|---|---|
| 4 | 904/20210 | | Ring seal | | 1 |
| 5 | 916/10012 | | Bearing ball | | 1 |
| 6 | 2203/1068 | | Circlip internal | | 1 |
| 10 | 20/925552 | | Pump assembly transmission | | 1 |
| 11 | :904/20226 | | Seal transmission pump | | 1 |
| 12 | 813/50041 | | Seal rear | | 1 |
| 13 | 1315/3311Z | | Bolt M8 X 45 | | 4 |
| 14 | 823/00291 | | Washer copper | | 4 |
| 15 | 4102/3402 | | Sealant gasket,Loctite 5910 50ml. container<br>*Was 813/10184 gasket* | | 0 |

# 9812/0080 E3-2-1 VALVE, LOADER, 2 SPOOL, WITH FLOAT

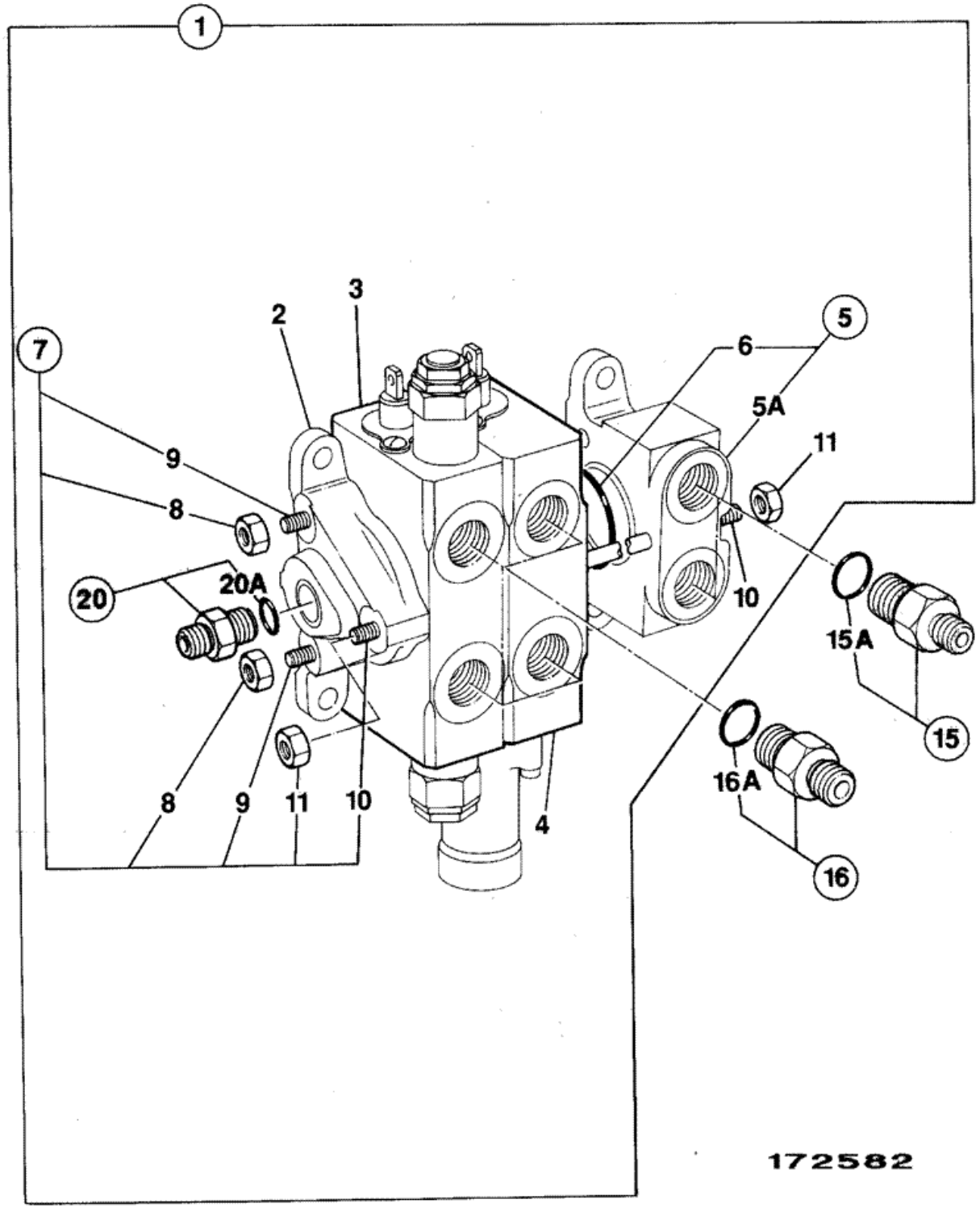

| Item | Part # | Change No | Description | Usage Code | QTY |
|---|---|---|---|---|---|
| 1 | 25/619300 | Superseded | Valve 2 spool loader | | 1 |
| 1 | 25/223696 | | Valve loader, 2 spool with float | | 1 |
| 2 | :25/987006 | | Cover HPCO | | 1 |
| 3 | :25/222717 | | Valve section | | 1 |
| 4 | :25/222714 | | Valve section | | 1 |
| 5 | :25/987007 | | Cover inlet | | 1 |
| 5A | ::NSP | | None serviced part | | 1 |
| 6 | ::25/606812 | | O Ring interface valve sections | | 1 |
| 7 | ::25/607605 | | Kit-tie rod | | 1 |
| 8 | ::25/606817 | | Nut | | 4 |
| 9 | ::25/607606 | | Rod tie | | 2 |
| 10 | ::25/607607 | | Rod tie | | 1 |
| 11 | ::25/606815 | | Nut | | 2 |
| 15 | 1620/0009 | | Adapter<br>*Feed line* | | 1 |
| 15 | 1620/0007 | | Adapter<br>*Return line* | | 1 |
| 15A | :2401/0506 | | O Ring | | 1 |
| 16 | 1620/0005 | | Adapter 3/4"UNF o-ring boss 1/2"BSP male | | 4 |
| 16A | :2401/0506 | | O Ring | | 1 |
| 20 | 1620/0010 | | Adapter includes 'o'ring | | 1 |
| 20A | :2401/0506 | | O Ring | | 1 |

# 9812/0080 E3-7-1 FILTER, HYDRAULIC

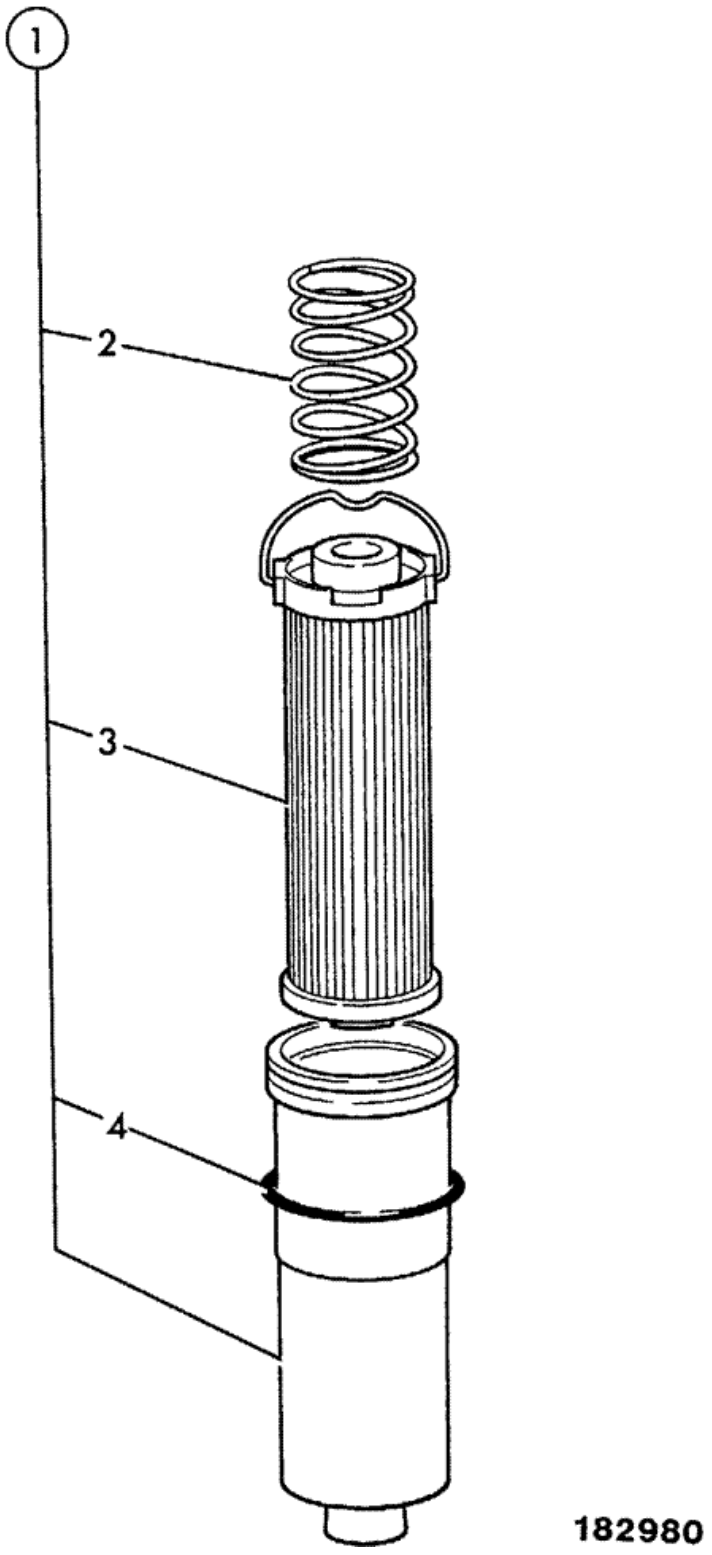

| Item | Part # | Change No | Description | Usage Code | QTY |
|---|---|---|---|---|---|
| 1 | 32/926051 | | Filter hydraulic 5 micro | | 1 |
| 2 | :814/00358 | | Spring | | 1 |
| 3 | 32/925346 | | Element hydraulic filter 12 micron,229mm long<br>*Normal service* | | 1 |
| 3 | :32/926001 | | Element hydraulic filter 5 micron 254 long<br>*System clean, max 50 hours only.* | | 1 |
| 4 | :2403/0224 | | O Ring | | 1 |

# 9812/0080 E3-8-3 LUBRICANTS & FILTERS

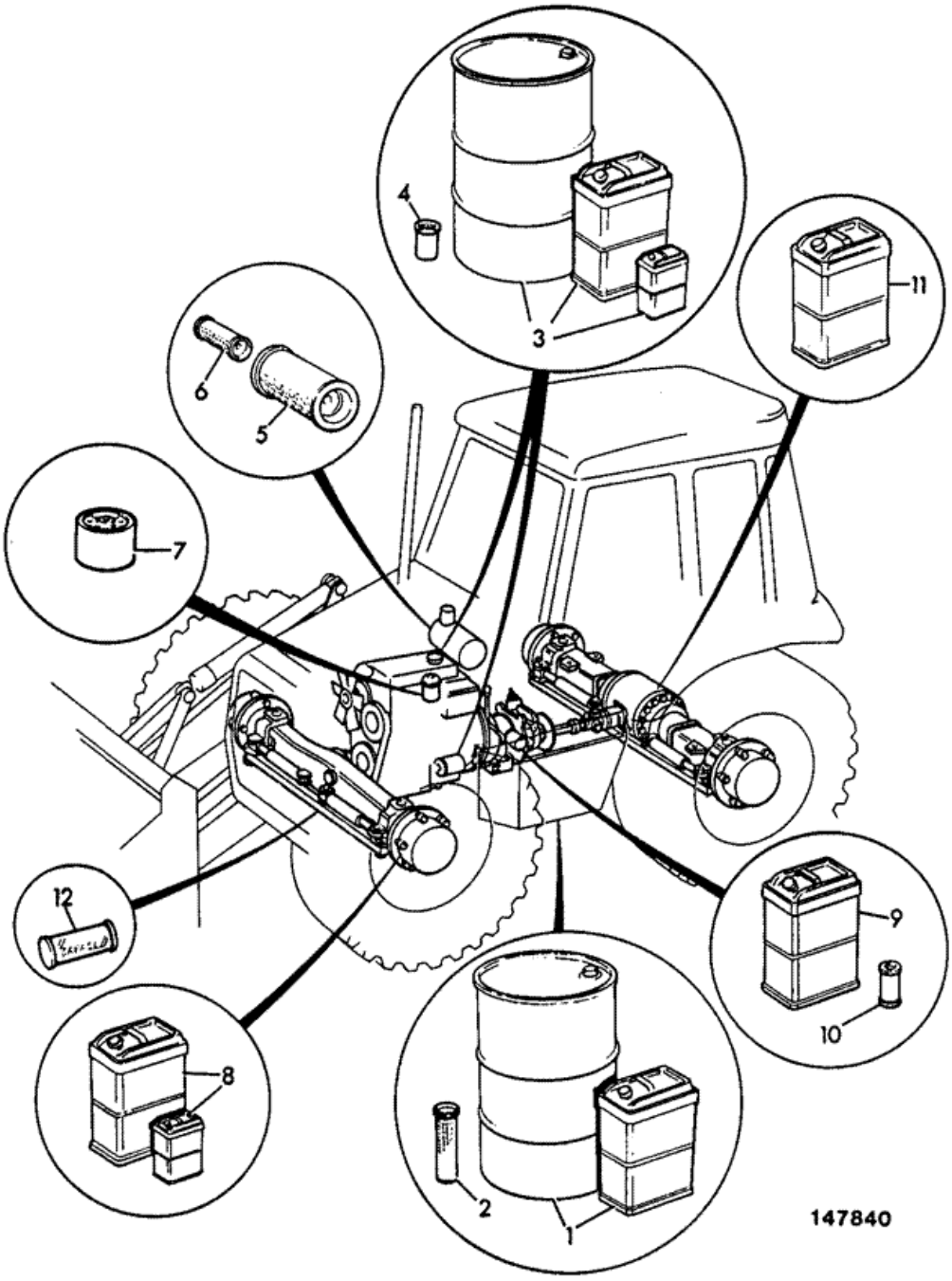

| Item | Part # | Change No | Description | Usage Code | QTY |
|---|---|---|---|---|---|
| 1 | 4002/1023 | | Fluid hydraulic JCB HP32 25 litre<br>*25 litres. Machine capacity 130 litre*<br>*See Note 1* | | 0 |
| 1 | 4002/1024 | | Fluid hydraulic JCB HP32 200 litre | | 0 |
| 1 | 4002/0801 | | Fluid hydraulic 46 5 litre<br>*Optional Hot climate* | | 0 |
| 1 | 4002/0802 | | Fluid hydraulic 46 25 litre<br>*Optional Hot climate* | | 0 |
| 1 | 4002/0803 | | Fluid hydraulic 46 200 litre | | 0 |
| 1 | 4002/1223 | | Fluid hydraulic, 25 litres Biodegradable | | 0 |
| 1 | 4002/1224 | | Fluid hydraulic 205 litres Biodegradable | | 0 |
| 2 | 32/926001 | | Element hydraulic filter 5 micron 254 long | | 1 |
| 2 | 32/925341 | | Element hydraulic filter 5 micron, 254mm long<br>*System clean, max 50 hours only* | | 1 |
| 3 | 4001/1701 | | Oil JCB 10W/30 5 litres | | 0 |
| 3 | 4001/1501 | | Oil 15W/40, 5 litres | | 0 |
| 3 | 4001/1901 | | Oil JCB 20/W50 5 Litre | | 0 |
| 3A | 4001/1702 | | Oil JCB 10W/30 25 litres | | 0 |
| 3A | 4001/1502 | | Oil 15W/40, 25 litres | | 0 |
| 3A | 4001/1902 | | Oil JCB 20/W50 25 Litre | | 0 |
| 3B | 4001/1703 | | Oil JCB 10W/30 200 litres | | 0 |
| 3B | 4001/1502 | | Oil 15W/40, 25 litres | | 0 |
| 3B | 4001/1902 | | Oil JCB 20/W50 25 Litre | | 0 |
| 4 | 320/04133 | | Filter engine oil | | 1 |
| 5 | 32/925682 | | Element air filter main<br>*Engine* | | 1 |
| 6 | 32/925683 | | Element air filter safety<br>*Engine* | | 1 |
| 7 | 320/07057 | | Filter fuel<br>*Engine* | | 1 |
| 8 | 4000/0301 | | Oil HD90 gear 5 litre | | 0 |
| 8 | 4000/0302 | | Oil HD90 gear 25 litre | | 0 |
| 8 | 4000/0303 | | Oil HD 90 gear 200 Litres | | 0 |
| 8 | 4000/0702 | | Oil JCB Special gear 5 litres<br>*Front axle with LSD* | | 0 |
| 8 | 4000/0701 | | Oil Special Gear Oil Plus. 25 litre<br>*Front axles with LSD* | | 0 |
| 8 | 4000/0703 | | Oil Special Gear Oil Plus. 200 litre<br>*Front axle with LSD* | | 0 |
| 9 | 4000/2501 | | Fluid transmission 10W 5 litre | | 0 |
| 9 | 4000/2502 | | Fluid transmission 10W 25 litre | | 0 |
| 9 | 4000/2503 | | Fluid transmission 10W 200 litre | | 1 |
| 10 | 581/18076 | | Element transmission filter 120.7mm long<br>*Manual, Powershift & Autoshift Transmission* | | 1 |
| 11 | 4000/0701 | | Oil Special Gear Oil Plus. 25 litre | | 0 |
| 11 | 4000/0703 | | Oil Special Gear Oil Plus. 200 litre | | 0 |
| 12 | 4003/2007 | | Grease cartridge HP 400 gm | | 0 |
| 12 | 4003/2006 | | Grease HP 12.5kg<br>*12.5 kg* | | 0 |
| 12 | 4003/2010 | | Grease JCB high pressure 50kg | | 0 |
| 12 | 4003/2017 | | Grease HP 400g x 24 | | 0 |
| 13 | 4004/0501 | | Sealant Waxoyl, aerosol | | 0 |
| 13 | 4004/0502 | | Sealant Waxoyl 5 ltr can | | 0 |
| 14 | 4006/0101 | | Fluid anti-freeze 1 Ltr | | 0 |

| | | | | | |
|---|---|---|---|---|---|
| 14 | 4006/0102 | | Fluid anti-freeze 5 litre | | 0 |
| 14 | 4006/0103 | | Fluid anti-freeze 25 Ltr | | 0 |
| 14 | 4006/0104 | | Fluid anti-freeze 200 Ltr | | 0 |
| 15 | 4002/0503 | | Brake fluid, 5 ltr | | 1 |

*Note 1: For all items on this page, Refer to the Service Workshop Manual before use.*

# 9812/0080 E4-3-1 RAM, STEERING, 2WD

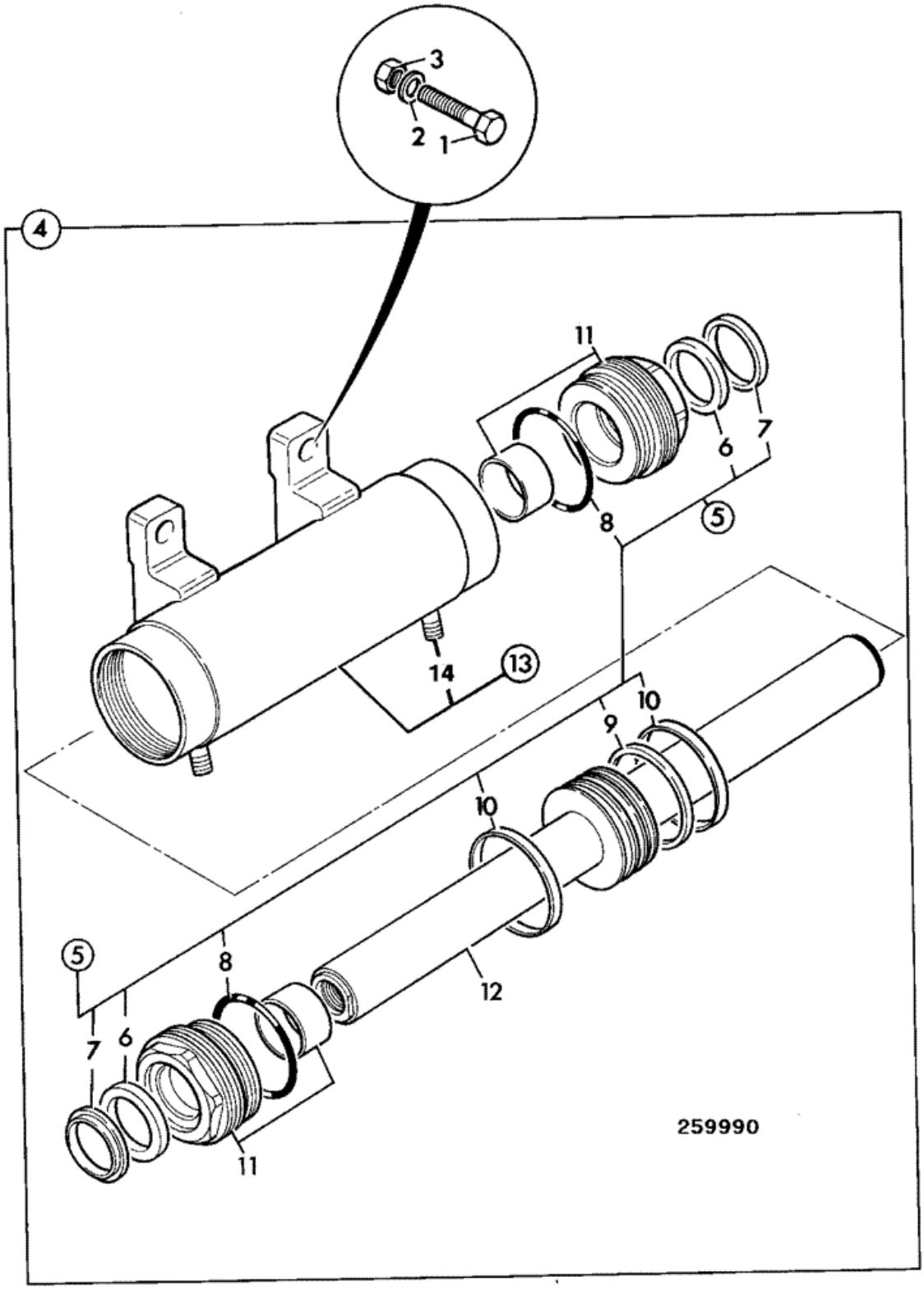

| Item | Part # | Change No | Description | Usage Code | QTY |
|---|---|---|---|---|---|
| 1 | 1315/3721Z | | Bolt M16 x 110 | | 4 |
| 2 | 1420/0011Z | | Washer M16 plain | | 4 |
| 3 | 1370/0603Z | | Nut M16 | | 4 |
| 4 | 573/10031 | | Ram assembly, steer power trackrod | | 1 |
| 5 | :991/00156 | | Kit-seal power track rod ram 75mm cyl x 45mm rod | | 1 |
| 6 | ::2411/0605 | | Seal gland 45mm rod | | 2 |
| 7 | ::2411/8705 | | Seal wiper 45mm rod | | 2 |
| 8 | ::2302/0307 | | O Ring | | 2 |
| 9 | ::2411/1132 | | Seal piston head 75mm | | 1 |
| 10 | ::2411/7975 | | Ring wear 75mm cyl | | 2 |
| 11 | :594/14074 | | Kit-end cap 75mm cyl x 45mm rod | | 2 |
| 12 | :590/40210 | | Rod piston | | 1 |
| 13 | :573/20000 | | Cylinder power track rod 75mm | | 1 |

# 9812/0080 E4-3-2 RAM, STEERING, 4WD

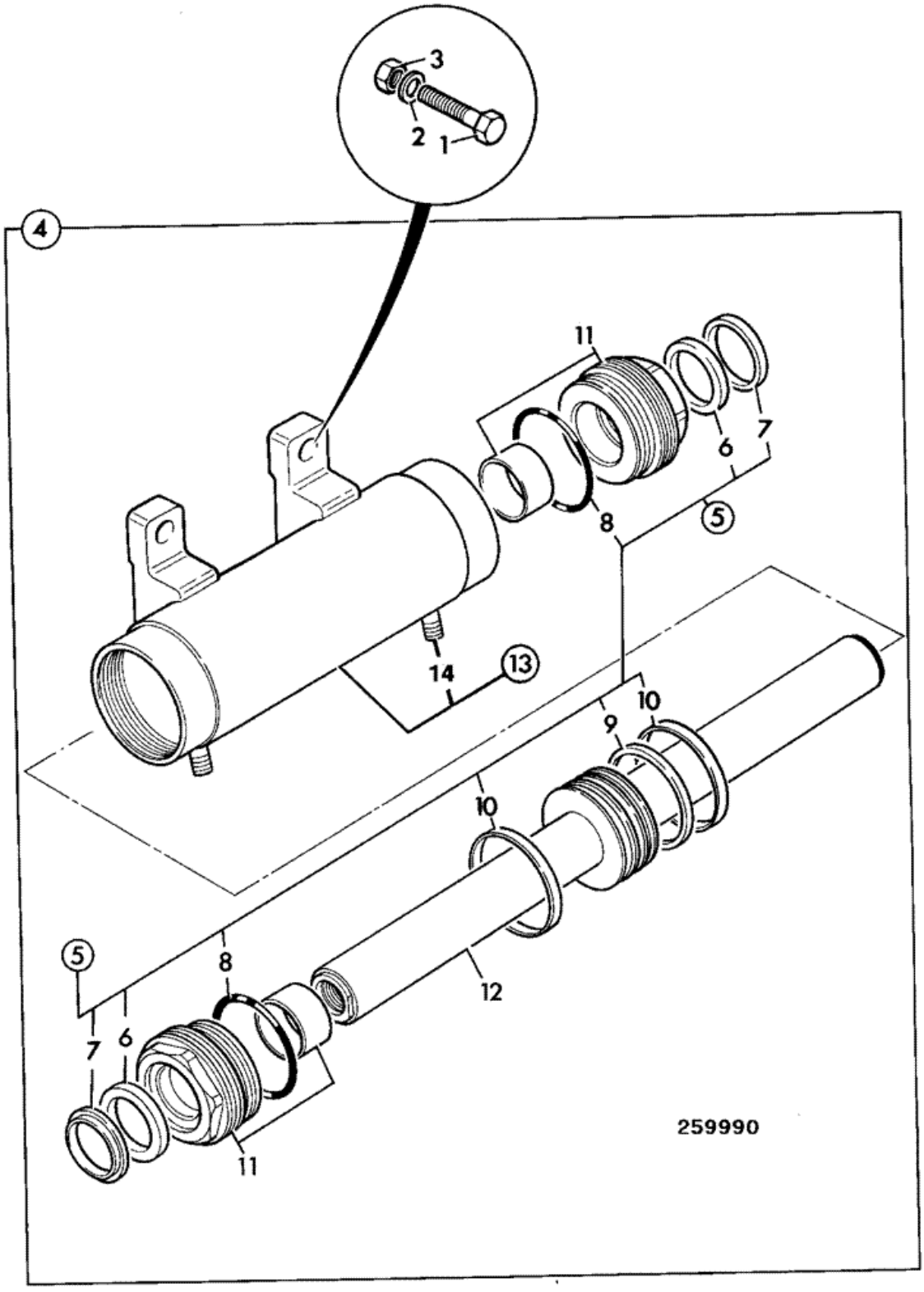

| Item | Part # | Change No | Description | Usage Code | QTY |
|---|---|---|---|---|---|
| 1 | 1315/3818Z | | Bolt M20 x 80mm | | 2 |
| 1 | 1316/3821Z | | Bolt Hex. hd M20x110 | | 2 |
| 2 | 1420/0012Z | | Washer M20<br>*for 1315/3818Z* | | 2 |
| 2 | 1422/0012D | | Washer<br>*for 1316/3812Z* | | 2 |
| 3 | . | | 'See Remark'<br>*Not fitted or required.* | | 0 |
| 4 | 573/10032 | Superseded | Ram steer | | 1 |
| 4 | 573/10061 | | Ram steer Black Export Version | | 1 |
| 5 | :991/00156 | | Kit-seal power track rod ram 75mm cyl x 45mm rod | | 1 |
| 6 | ::2411/0605 | | Seal gland 45mm rod | | 2 |
| 7 | ::2411/8705 | | Seal wiper 45mm rod | | 2 |
| 8 | ::2302/0307 | | O Ring | | 2 |
| 9 | ::2411/1132 | | Seal piston head 75mm | | 1 |
| 10 | ::2411/7975 | | Ring wear 75mm cyl | | 2 |
| 11 | :594/14074 | | Kit-end cap 75mm cyl x 45mm rod | | 2 |
| 12 | :590/40208 | | Rod piston | | 1 |
| 13 | :573/20001 | | Cylinder power track rod 75mm | | 1 |

Product Catalog \ CONSTRUCTION \ NORTH AMERICA \ CONSTRUCTION / INDUSTRIAL \ BACKHOE LOADER 3CX,4CX,214,215,217 \ 3C PLUS (91HP) , Made in Brazil with Dieselmax/IESA Engine 9812/0080 \ E HYDRAULICS INCLUDING STEERING \ E04 RAMS

# 9812/0080 E4-4-2 RAM, CLAMSHOVEL, 6 IN 1

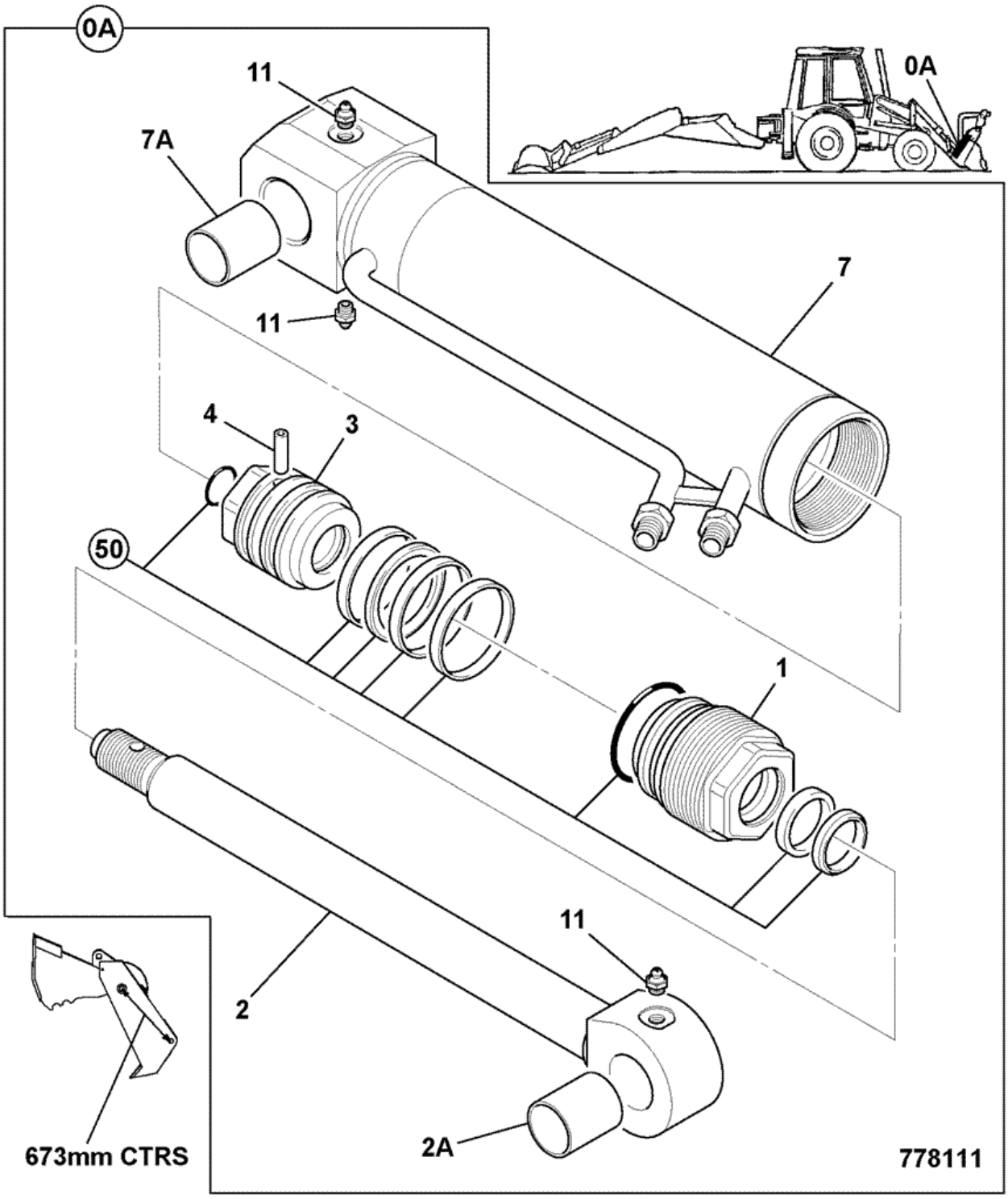


| Item | Part # | Change No | Description | Usage Code | QTY |
|---|---|---|---|---|---|
| A | 556/60331 | Superseded | Ram clamshovel | A | 1 |
| A | 556/60401 | | Ram clamshovel 557 closed centres | B | 1 |
| | | | | | |

| | | | | | |
|---|---|---|---|---|---|
| 1 | :594/14300 | | Cap end cap assembly 70 X 40 | A | 1 |
| 1 | :332/D4842 | | Cap endcap assembly 70 X 40 | B | 1 |
| 2 | :590/40111 | | Rod piston 6in1 shovel | | 1 |
| 2A | ::1207/0011 | | Bush | | 1 |
| 3 | :595/27600 | | Head piston | | 1 |
| 4 | :826/01182 | | Dowel | | 1 |
| 7 | :556/70345 | | Cylinder clamshovel | | 1 |
| 7A | ::1207/0019 | | Bush | | 1 |
| 11 | :1450/0001 | | Nipple grease, straight 1/8 BSP | | 3 |
| 50 | :991/10151 | | Kit seal kit 70 x 40 | A | 1 |
| 50 | :332/D4850 | | Kit seal kit 70X40 | B | 1 |

Product Catalog \ CONSTRUCTION \ NORTH AMERICA \ CONSTRUCTION / INDUSTRIAL \ BACKHOE LOADER 3CX,4CX,214,215,217 \ 3C PLUS (91HP) , Made in Brazil with Dieselmax/IESA Engine 9812/0080 \ E HYDRAULICS INCLUDING STEERING \ E04 RAMS

# 9812/0080 E4-5-1 RAM, BOOM, 110MM CYL X 60MM ROD

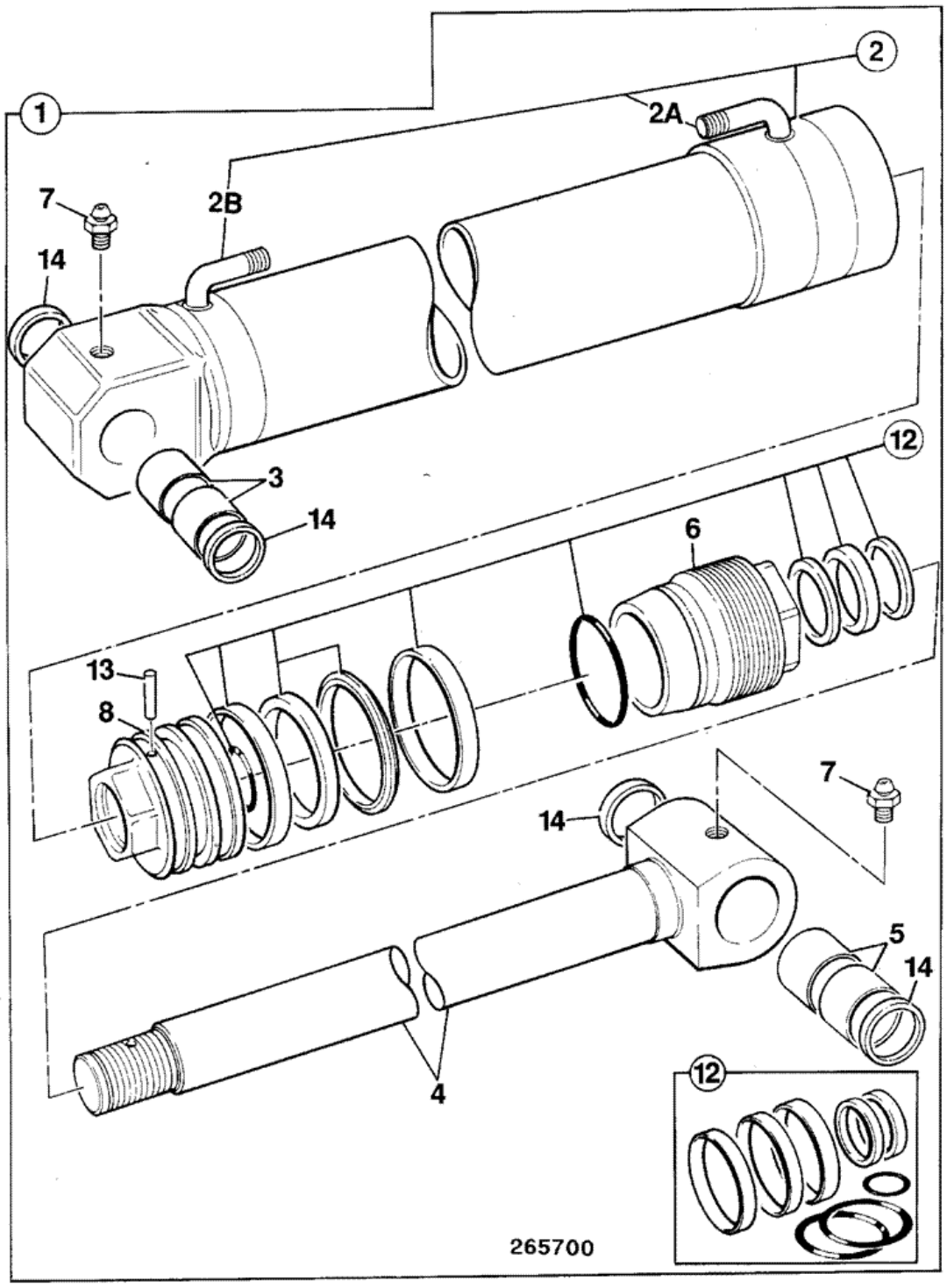


| Item | Part # | Change No | Description | Usage Code | QTY |
|---|---|---|---|---|---|
| 1 | 561/60200 | | Ram assembly, boom | | 1 |
| 2 | :561/70199 | | Cylinder boom, 110X1221 | | 1 |
| | | | | | |

| | | | | | |
|---|---|---|---|---|---|
| 2A | ::NSP | | None serviced part | | 1 |
| 2B | ::NSP | | None serviced part | | 1 |
| 3 | :809/00126 | | Bearing liner 50mm pivot bore | | 2 |
| 4 | :590/40154 | | Rod piston | | 1 |
| 5 | :809/00126 | | Bearing liner 50mm pivot bore | | 2 |
| 6 | :594/14266 | | Kit-end cap 110 x 60 | | 1 |
| 7 | :1450/0001 | | Nipple grease, straight 1/8 BSP | | 1 |
| 8 | :595/10043 | | Head piston | | 1 |
| 9 | :1450/0001 | | Nipple grease, straight 1/8 BSP | | 1 |
| 12 | :991/00110 | | Kit-seal 60mm rod x 110mm cyl | | 1 |
| 13 | :826/01180 | | Dowel | | 1 |
| 14 | :813/00426 | | Seal pivot pin grease 60 x 50 x 5 | | 4 |

Product Catalog \ CONSTRUCTION \ NORTH AMERICA \ CONSTRUCTION / INDUSTRIAL \ BACKHOE LOADER 3CX,4CX,214,215,217 \ 3C PLUS (91HP) , Made in Brazil with Dieselmax/IESA Engine 9812/0080 \ E HYDRAULICS INCLUDING STEERING \ E04 RAMS

# 9812/0080 E4-6-1 RAM, DIPPER, 100MM CYL X 60MM ROD

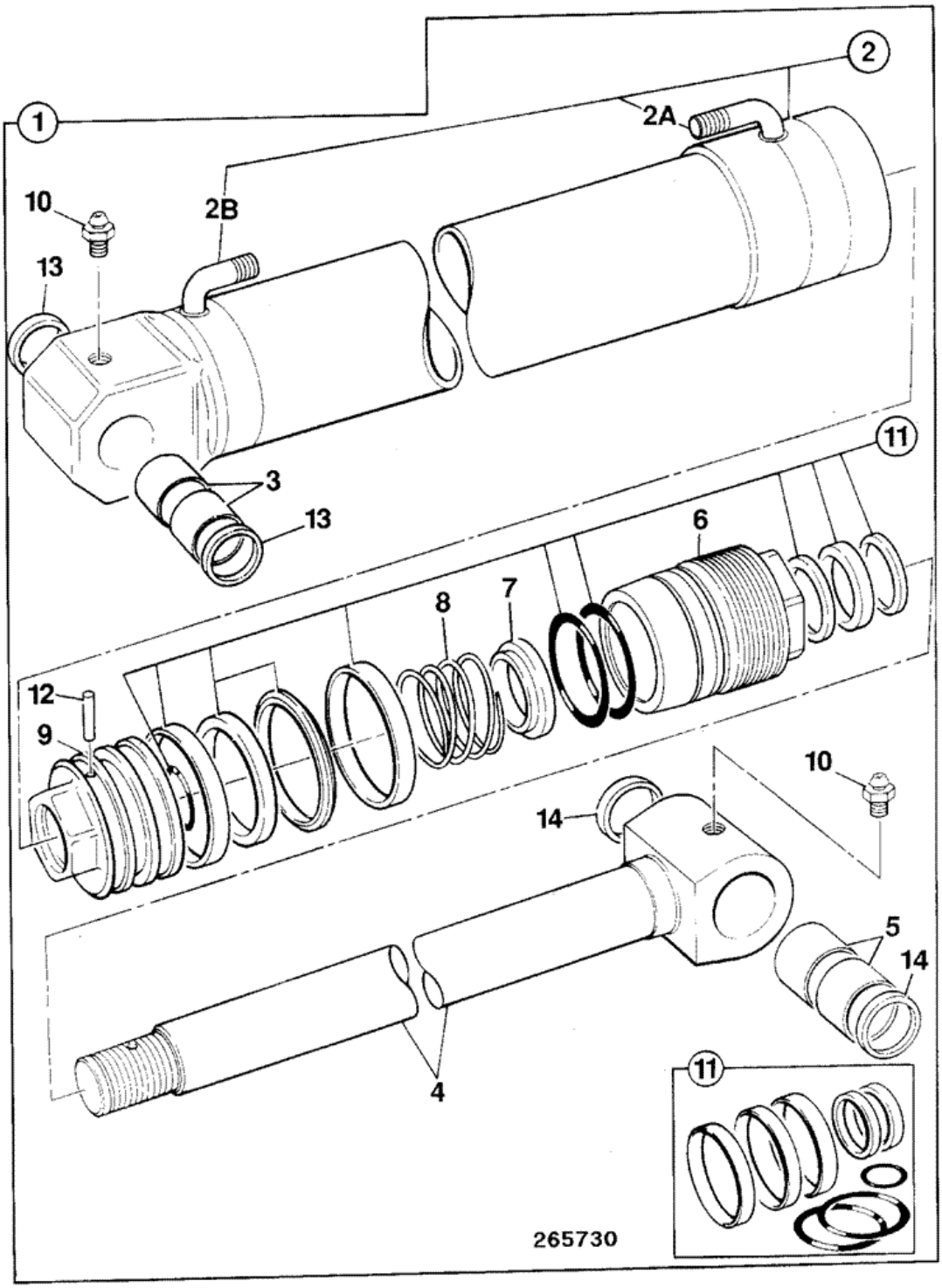


| Item | Part # | Change No | Description | Usage Code | QTY |
|---|---|---|---|---|---|
| 1 | 559/60172 | Superseded | Ram dipper, 100x60 1898OC 1152.5CC | | 1 |
| 1 | 559/60230 | | Ram Dipper, 100x60 1898OC 1152.5CC | | 1 |
| | | | | | |

| | | | | | |
|---|---|---|---|---|---|
| 2 | :559/70171 | Superseded | Cylinder dipper ram | | 1 |
| 2 | :559/70229 | | Cylinder dipper ram | | 1 |
| 2A | ::NSP | | None serviced part | | 1 |
| 2B | ::NSP | | None serviced part | | 1 |
| 3 | :809/00179 | | Bearing 60x70x90L | | 1 |
| 4 | :590/40583 | | Rod piston | | 1 |
| 5 | :809/00127 | | Bearing liner 50mm pivot bore | | 2 |
| 6 | :594/14025 | | Kit-end cap assembly 60mm x 100mm | | 1 |
| 7 | :559/00105 | | Restrictor | | 1 |
| 8 | :559/00104 | | Spring | | 1 |
| 9 | :595/10057 | | Head piston | | 1 |
| 10 | :1450/0001 | | Nipple grease, straight 1/8 BSP | | 2 |
| 11 | :991/00145 | | Kit-seal ram 60mm rod x 100mm cyl<br>*For component parts see fram E4-13-18* | | 1 |
| 12 | :826/01179 | | Dowel | | 1 |
| 13 | :813/00427 | | Seal grease | | 2 |
| 14 | :813/00426 | | Seal pivot pin grease 60 x 50 x 5 | | 2 |

Product Catalog \ CONSTRUCTION \ NORTH AMERICA \ CONSTRUCTION / INDUSTRIAL \ BACKHOE LOADER 3CX,4CX,214,215,217 \ 3C PLUS (91HP) , Made in Brazil with Dieselmax/IESA Engine 9812/0080 \ E HYDRAULICS INCLUDING STEERING \ E04 RAMS

# 9812/0080 E4-7-2 RAM, BUCKET, MONO DIPPER

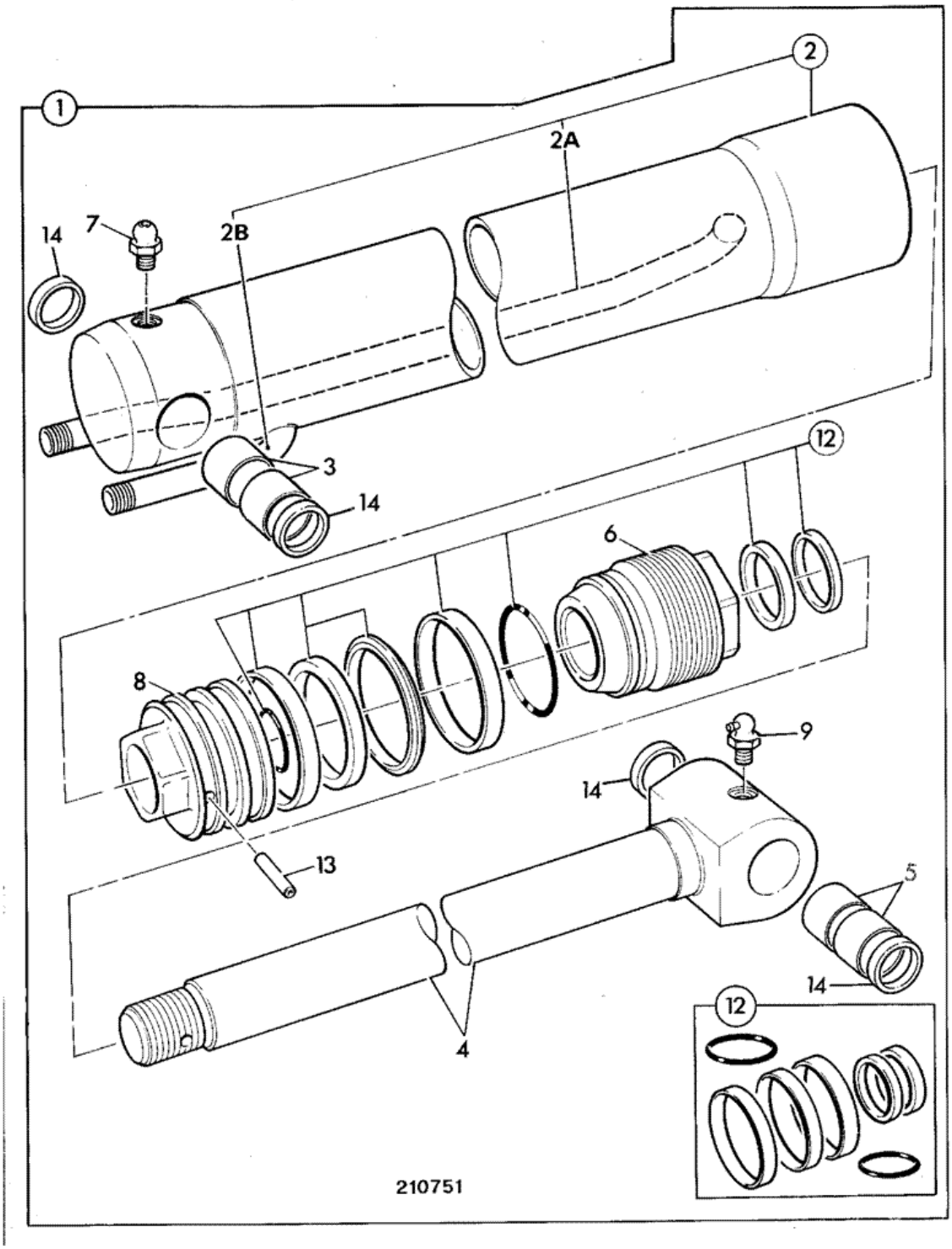


| Item | Part # | Change No | Description | Usage Code | QTY |
|---|---|---|---|---|---|
| 1 | 557/60156 | | Ram assembly bucket 90 X 60 | | 1 |
| 1 | 557/60212 | | Ram assembly, bucket | | 1 |

| | | | | | |
|---|---|---|---|---|---|
| | | | *see E4-7-3 for breakdown* | | |
| 2 | :557/70137 | | Cylinder bucket ram 90mm | | 1 |
| 2A | ::NSP | | None serviced part | | 1 |
| 2B | ::NSP | | None serviced part | | 1 |
| 3 | :809/00125 | | Bearing liner 45mm pivot bore | | 2 |
| 4 | :590/40317 | | Rod piston 60mm | | 1 |
| 5 | :809/00128 | | Bearing liner 45mm pivot bore | | 2 |
| 6 | :594/14287 | | Cap end, 60mm rod x 90mm cylinder | | 1 |
| 7 | :1450/0001 | | Nipple grease, straight 1/8 BSP | | 1 |
| 8 | :595/10061 | | Head piston | | 1 |
| 9 | :1450/1001 | | Nipple grease 90deg. angle | | 1 |
| 12 | :991/00147 | | Kit-seal 90mm cyl x 60mm rod metric rams | | 1 |
| 13 | :826/01179 | | Dowel | | 1 |
| 14 | :813/00425 | | Seal pivot pin grease | | 4 |

# 9812/0080 E1-10-4 CIRCUIT, BUCKET RAM, MONO DIPPER

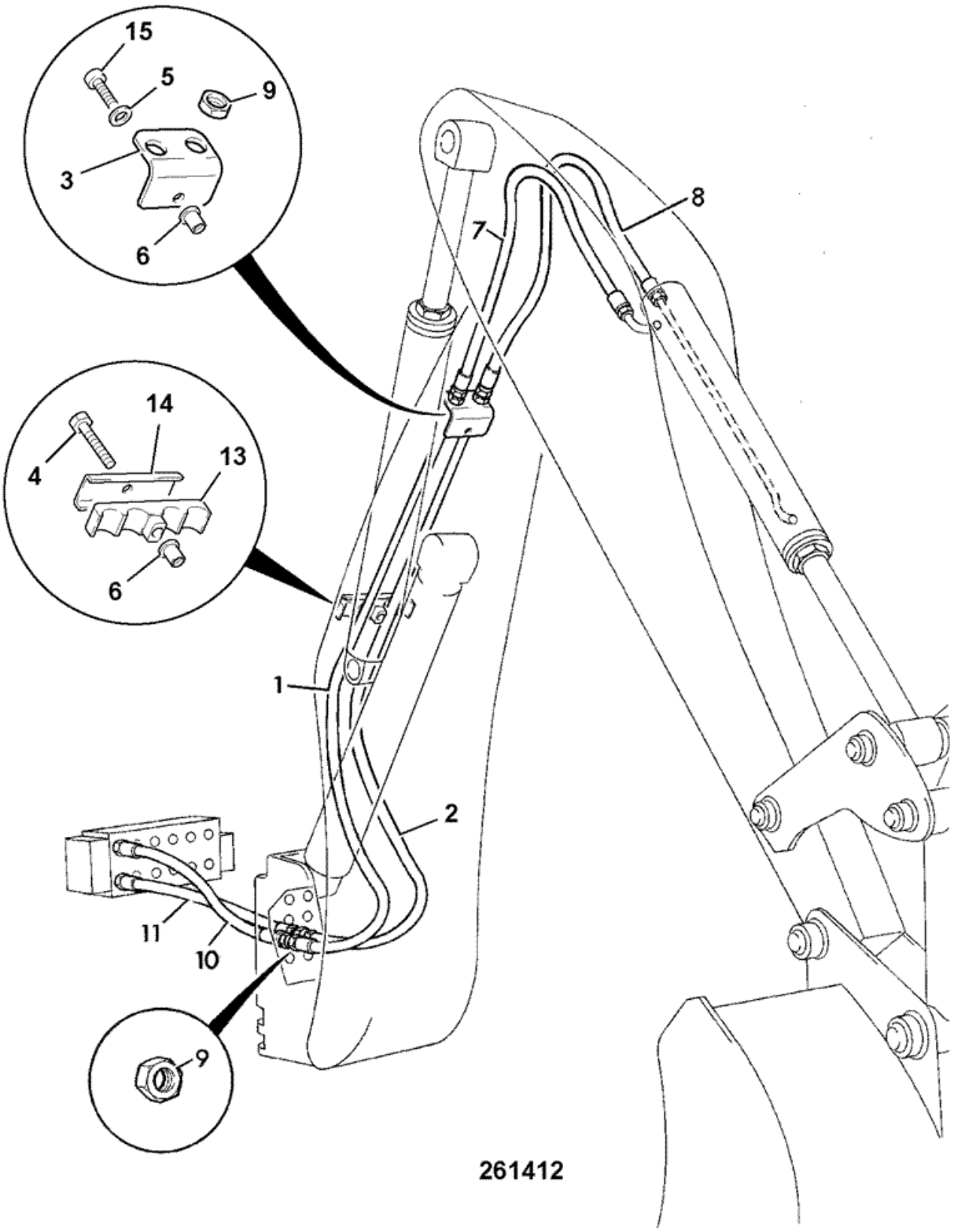

| Item | Part # | Change No | Description | Usage Code | QTY |
|---|---|---|---|---|---|
| 1 | 629/80005 | | Hose | | 1 |
| 1A | 830/00314 | | Ferrule rubber | | 2 |
| 2 | 629/80005 | | Hose | | 1 |
| 3 | 331/14732 | | Plate hose support 2 X 1/2BSP | | 1 |
| 4 | 1315/0414Z | <M TB A | Bolt | | 1 |
| 4 | 1391/3414Z | >M TBA | Capscrew | | 1 |
| 5 | 1420/0008Z | | Washer Plain M10 | | 1 |
| 6 | 826/01249 | | Nut rivet M10 open end for 6 to 8.5mm plate | | 2 |
| 7 | 613/07100 | <M TBA | Hose<br>*680mm long* | | 1 |
| 7 | 332/G1233 | >M TBA | Hose 1/2BSP x 710mm long | | 1 |
| 8 | 613/07100 | <M TBA | Hose<br>*680mm long* | | 1 |
| 8 | 332/G1233 | >M TBA | Hose 1/2BSP x 710mm long | | 1 |
| 9 | 1356/0204Z | | Nut | | 2 |
| 9A | 1418/0018Z | | Washer lock, internal teeth | | 2 |
| 10 | 613/36012 | | Hose 1/2BSPx930 | | 1 |
| 11 | 613/36013 | | Hose 1/2BSP x 815 | | 1 |
| 12 | 123/06256 | | Spacer steel | | 2 |
| 13 | 123/05836 | | Clamp | | 1 |
| 14 | 331/14805 | | Plate clamp backing | | 1 |
| 15 | 1315/3414Z | | Bolt M10x60 | | 1 |

# 9812/0080 E1-1-11 HOSE AND PIPEWORK, LOADER VALVE TO, EXCAVATOR VALVE TO TANK

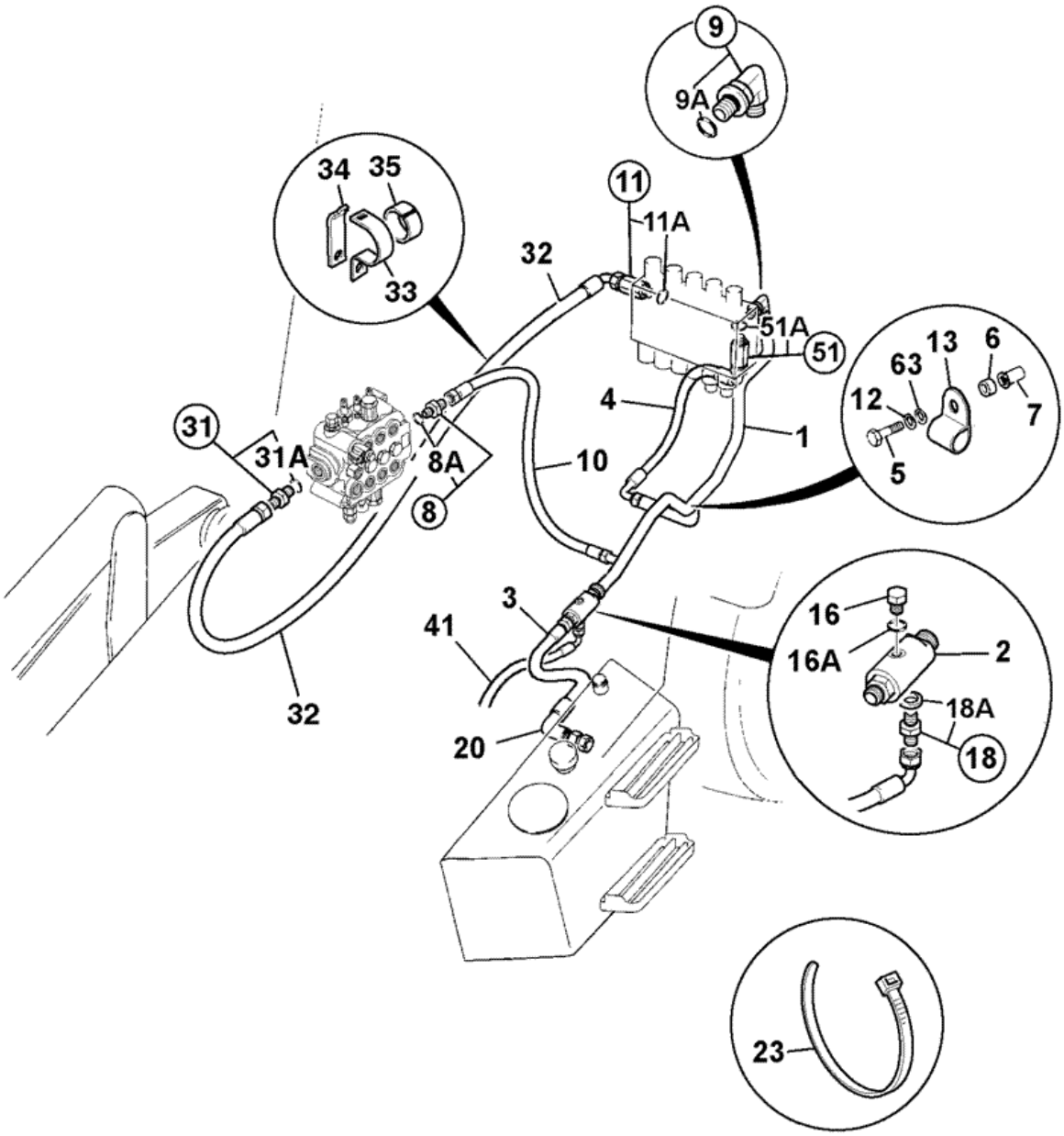


872850

| Item | Part # | Change No | Description | Usage Code | QTY |
|---|---|---|---|---|---|
| 1 | 335/04512 | | Pipe return,centremount | | 1 |

| | | | | | |
|---|---|---|---|---|---|
| 2 | 928/60149 | <M TBA | Valve dual check manifold 2bar-2bar | A | 1 |
| 2 | 332/D7251 | >M TBA | Valve dual check 2bar-2bar | B | 1 |
| 3 | 637/31200 | | Hose 1BSPx650 low pressure | | 1 |
| 4 | 629/80064 | | Hose 3/4BSP x 480mm | | 1 |
| 5 | 1315/0412Z | | Bolt M10 x 1.5 x 50 | | 2 |
| 6 | 829/31263 | | Spacer 10.2x20x16long | | 2 |
| 7 | 826/01249 | | Nut rivet M10 open end for 6 to 8.5mm plate | | 2 |
| 8 | 1620/2056 | | Adaptor | | 1 |
| 8A | :2401/0508 | | O Ring | | 1 |
| 9 | 1620/2060 | | Adapter M/M | | 1 |
| 9A | :2401/0510 | | O Ring | | 1 |
| 10 | 614/80055 | | Hose | | 1 |
| 11 | 1620/2059 | | Adaptor 3/4" includes O-ring 1745/0005 | | 1 |
| 11A | :2401/0508 | | O Ring | | 1 |
| 12 | 1420/0008Z | | Washer Plain M10 | | 2 |
| 13 | 821/10423 | | Clamp pipe | | 2 |
| 16 | 1745/0001 | | Plug 7/16"UNF o ring boss | | 1 |
| 16A | :2401/0503 | | O Ring | | 1 |
| 18 | 816/90007 | <M TBA | Adaptor M/M 5/8" x 3/4" | A | 1 |
| 18 | 1620/2056 | >M TBA | Adaptor | B | 1 |
| 18A | :2401/0506 | | O Ring | A | 1 |
| 18A | :2401/0507 | | O Ring | B | 1 |
| 20 | . | | 'See Remark'<br>*not fitted* | | 1 |
| 23 | 826/01453 | | Tie cable double head | | 2 |
| 31 | 1620/2059 | | Adaptor 3/4" includes O-ring 1745/0005 | | 1 |
| 31A | :2401/0508 | | O Ring | | 1 |
| 32 | 615/48200 | | Hose | | 1 |
| 33 | 821/00183 | | Clamp top | | 1 |
| 34 | 821/00184 | | Clamp base | | 1 |
| 35 | 821/00185 | | Insert clamp | | 1 |
| 41 | 649/51774 | | Hose 5/8x3575mm long | | 1 |
| 51 | 1620/2059 | | Adaptor 3/4" includes O-ring 1745/0005 | | 1 |
| 51A | :2401/0508 | | O Ring | | 1 |
| 60 | 816/90452 | | Adapter elbow M/F 1"BSP | | 1 |
| 61 | 816/90467 | | Cap blanking 1/2"BSP female | | 1 |
| 62 | 816/90163 | | Adapter Elbow M/F | | 1 |
| 63 | 1425/0008Z | | Washer Spring M10 | | 2 |

Product Catalog \ CONSTRUCTION \ NORTH AMERICA \ CONSTRUCTION / INDUSTRIAL \ BACKHOE LOADER 3CX,4CX,214,215,217 \ 3C PLUS (91HP) , Made in Brazil with Dieselmax/IESA Engine 9812/0080 \ E HYDRAULICS INCLUDING STEERING \ E01 HOSE & PIPEWORK

# 9812/0080 E1-1-15 HOSE AND PIPEWORK, LOW FLOW, HIGH PRESSURE CARRYOVER

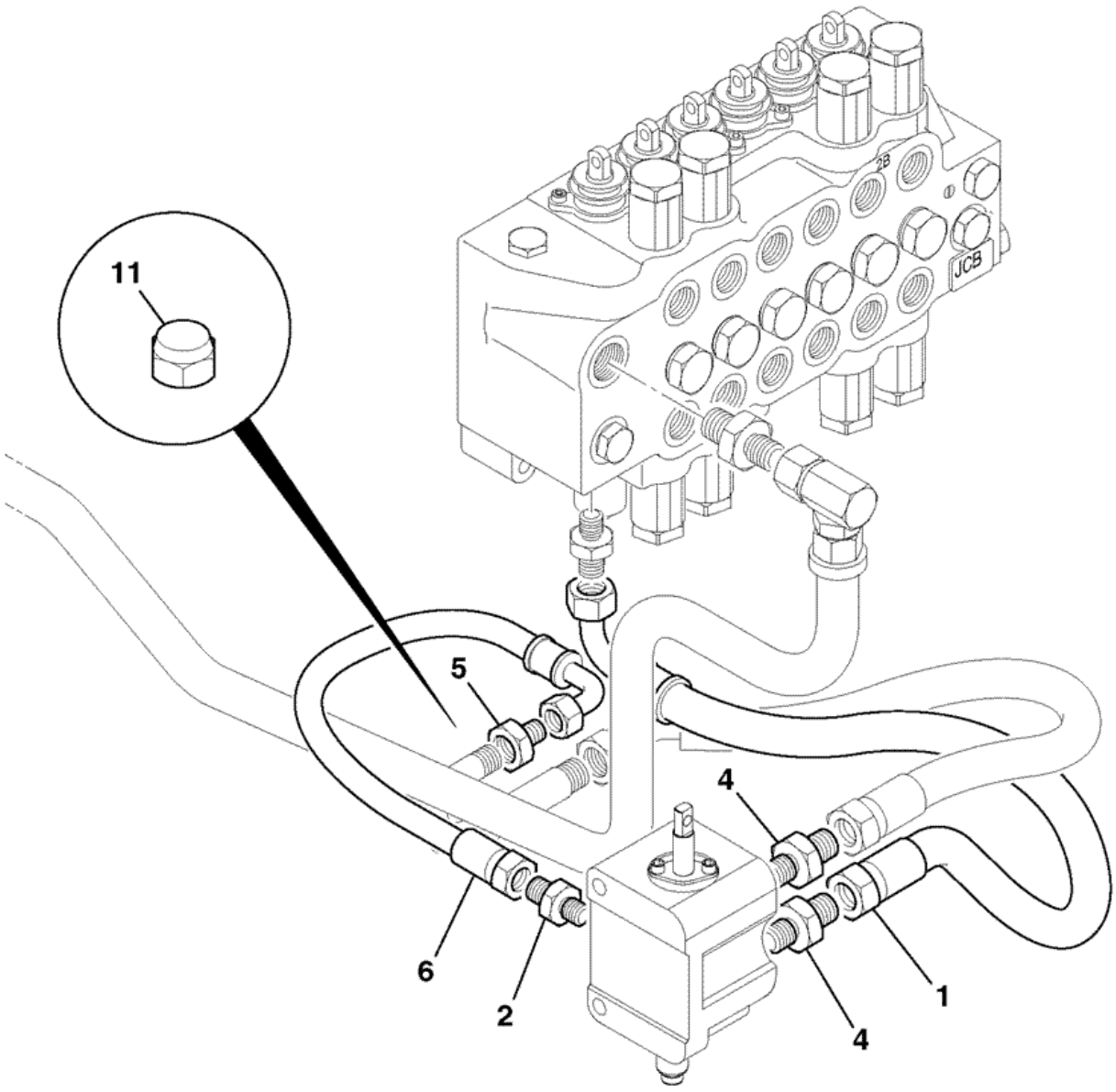


874050

| Item | Part # | Change No | Description | Usage Code | QTY |
|---|---|---|---|---|---|
| 1 | 629/80038 | | Hose 3/4"BSP 780mm | | 1 |

| | | | | | |
|---|---|---|---|---|---|
| 2 | 1620/2056 | | Adaptor | | 1 |
| 2A | :2401/0507 | | O Ring | | 1 |
| 4 | 1620/2058 | | Adaptor M/M includes O-ring 2401/0507 | | 2 |
| 4A | :2401/0507 | | O Ring | | 1 |
| 5 | 816/90180 | | Adapter M/F | | 1 |
| 6 | 614/20200 | | Hose | | 1 |

Product Catalog \ CONSTRUCTION \ NORTH AMERICA \ CONSTRUCTION / INDUSTRIAL \ BACKHOE LOADER 3CX,4CX,214,215,217 \ 3C PLUS (91HP) , Made in Brazil with Dieselmax/IESA Engine 9812/0080 \ E HYDRAULICS INCLUDING STEERING \ E01 HOSE & PIPEWORK

# 9812/0080 E1-1-16 HOSE AND PIPEWORK, LOW FLOW, HIGH PRESSURE CARRYOVER

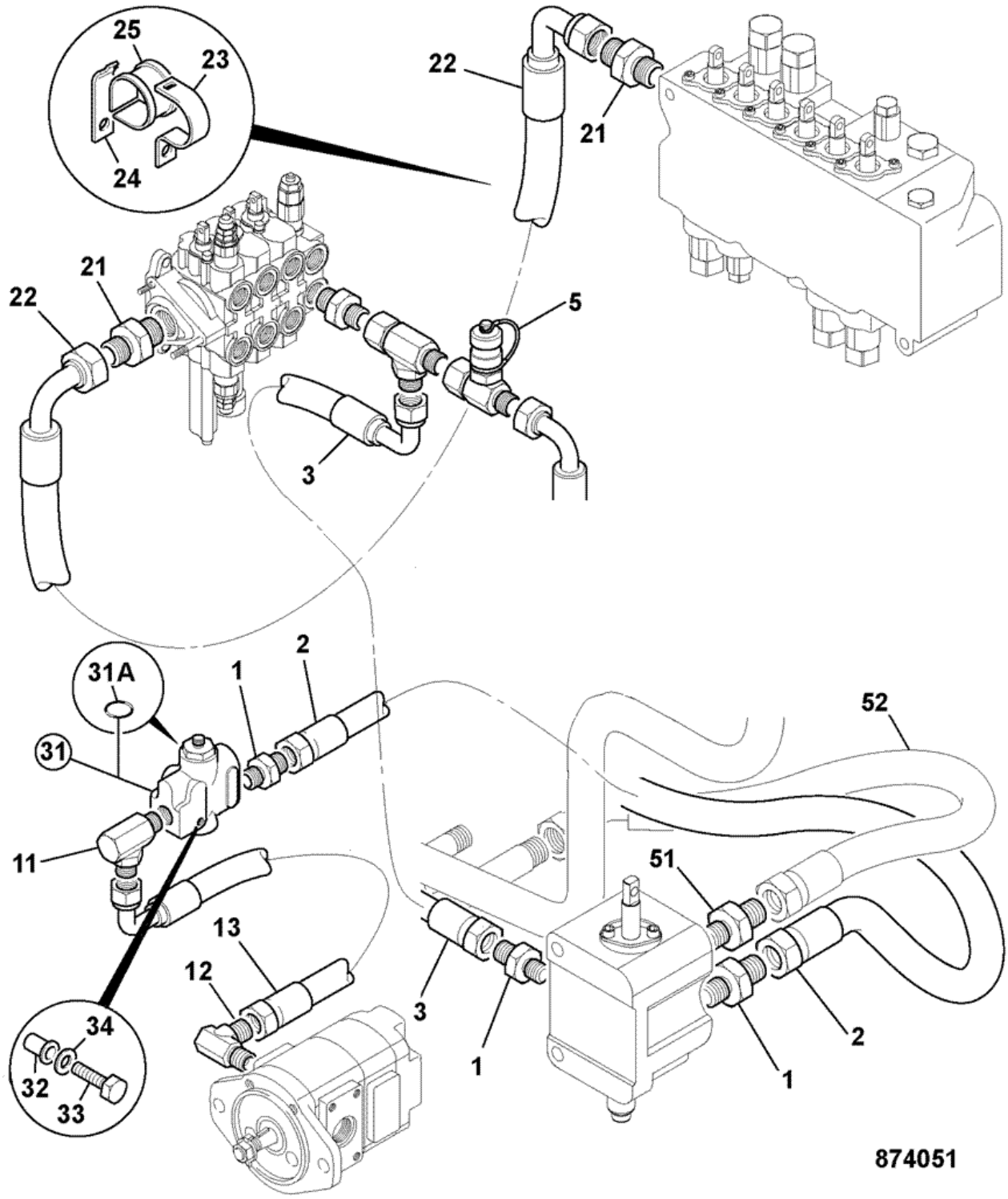


| Item | Part # | Change No | Description | Usage Code | QTY |
|---|---|---|---|---|---|
| 1 | 1620/2056 | | Adaptor | | 3 |

| | | | | | |
|---|---|---|---|---|---|
| 2 | 614/80067 | | Hose | | 1 |
| 3 | 614/24800 | | Hose | | 1 |
| 5 | 816/90427 | | Adapter test point 5/8 BSP | | 1 |
| 11 | 816/90460 | | Adapter elbow M/M | | 1 |
| 12 | 816/90638 | | Adapter elbow with test point | | 1 |
| 13 | 614/80055 | | Hose | | 1 |
| 21 | 1620/2059 | | Adaptor 3/4" includes O-ring 1745/0005 | | 2 |
| 22 | 615/48200 | | Hose | | 1 |
| 23 | 821/00183 | | Clamp top | | 1 |
| 24 | 821/00184 | | Clamp base | | 1 |
| 25 | 821/00185 | | Insert clamp | | 1 |
| 31 | 35/901800 | | Valve priority | | 1 |
| 31A | :35/901701 | | Kit-seal priority valve | | 1 |
| 32 | 826/01106 | | Nut rivet,M8 | | 1 |
| 33 | 1315/3316Z | | Bolt M8 x 70 | | 1 |
| 34 | 1420/0007Z | | Washer plain M8 | | 1 |
| 51 | 1620/2055 | | Adaptor 39.5mm Long. M/M 1/2" x 7/8" | | 1 |
| 52 | 613/07600 | | Hose 1/2"BSP x 570mm | | 1 |

Product Catalog \ CONSTRUCTION \ NORTH AMERICA \ CONSTRUCTION / INDUSTRIAL \ BACKHOE LOADER 3CX,4CX,214,215,217 \ 3C PLUS (91HP) , Made in Brazil with Dieselmax/IESA Engine 9812/0080 \ E HYDRAULICS INCLUDING STEERING \ E01 HOSE & PIPEWORK

# 9812/0080 E1-1-31 HOSE AND PIPEWORK, PUMP TO LOADER VALVE

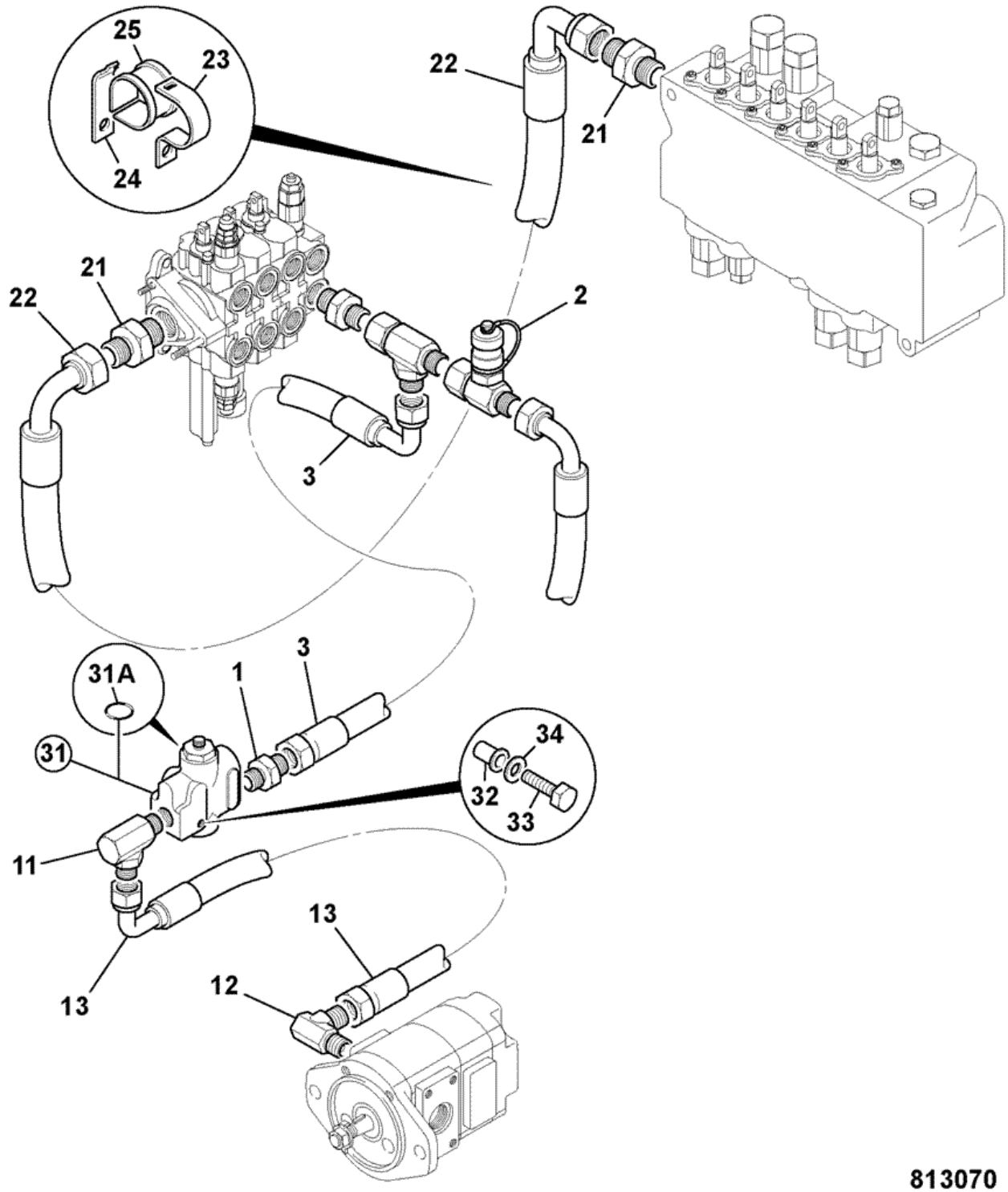


| Item | Part # | Change No | Description | Usage Code | QTY |
|---|---|---|---|---|---|
| 1 | 1620/2056 | | Adaptor | | 1 |

| | | | | | |
|---|---|---|---|---|---|
| 2 | 816/90427 | | Adapter test point 5/8 BSP | | 1 |
| 3 | 614/80055 | | Hose | | 1 |
| 11 | 816/90460 | | Adapter elbow M/M | | 1 |
| 12 | 816/90638 | | Adapter elbow with test point | | 1 |
| 13 | 614/80055 | | Hose | | 1 |
| 21 | 1620/2059 | | Adaptor 3/4" includes O-ring 1745/0005 | | 2 |
| 22 | 615/48200 | | Hose | | 1 |
| 23 | 821/00183 | | Clamp top | | 1 |
| 24 | 821/00184 | | Clamp base | | 1 |
| 25 | 821/00185 | | Insert clamp | | 1 |
| 31 | 35/901800 | | Valve priority | | 1 |
| 31A | :35/901701 | | Kit-seal priority valve | | 1 |
| 32 | 826/01106 | | Nut rivet,M8 | | 1 |
| 33 | 1315/3318Z | | Bolt M8x80mm Long | | 1 |
| 34 | 1420/0007Z | | Washer plain M8 | | 1 |

Product Catalog \ CONSTRUCTION \ NORTH AMERICA \ CONSTRUCTION / INDUSTRIAL \ BACKHOE LOADER 3CX,4CX,214,215,217 \ 3C PLUS (91HP) , Made in Brazil with Dieselmax/IESA Engine 9812/0080 \ E HYDRAULICS INCLUDING STEERING \ E01 HOSE & PIPEWORK

# 9812/0080 E1-1-51 CIRCUIT, HAMMER, EXC. VALVE TO AUX VALVE

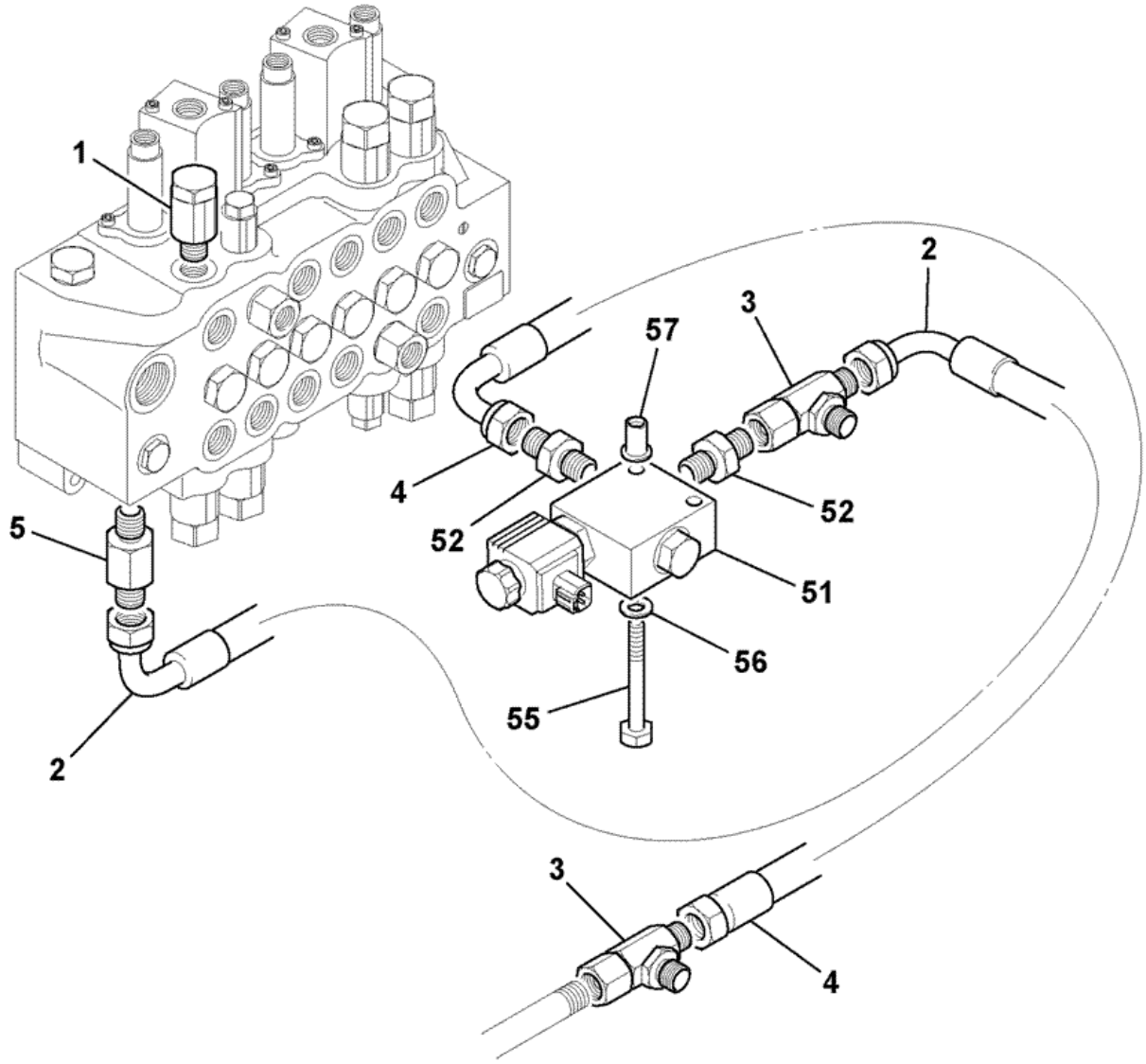


928870

| Item | Part # | Change No | Description | Usage Code | QTY |
|---|---|---|---|---|---|
| 1 | 25/222498 | | Valve relief, 3800/2.5 | | 1 |

| | | | | | |
|---|---|---|---|---|---|
| 2 | 629/80056 | | Hose 3/4 BSP X 600mm | | 1 |
| 3 | 816/90043 | | Adaptor tee M/M/F | | 1 |
| 4 | 629/80041 | | Hose 3/4"BSP 650mm | | 1 |
| 5 | 816/90489 | | Adapter extended M/M | | 1 |
| 51 | 25/221087 | | Valve solenoid normally open | | 1 |
| 52 | 1620/2059 | | Adaptor 3/4" includes O-ring 1745/0005 | | 2 |
| 55 | 1315/3316Z | | Bolt M8 x 70 | | 2 |
| 56 | 1420/0007Z | | Washer plain M8 | | 2 |
| 57 | 826/01106 | | Nut rivet,M8 | | 2 |
| 99 | 128/C0653 | | G.A. CIRCUIT hiflo hpco | | 1 |
| 99 | 128/12263 | | G.A. GA VALVE diverter hammer | | 1 |

# 9812/0080 E1-18-1 COOLER, COMBINATION, RADIATOR/HYDRAULIC, & TRANSMISSION, 2WS JCB DIESELMAX ENGINE

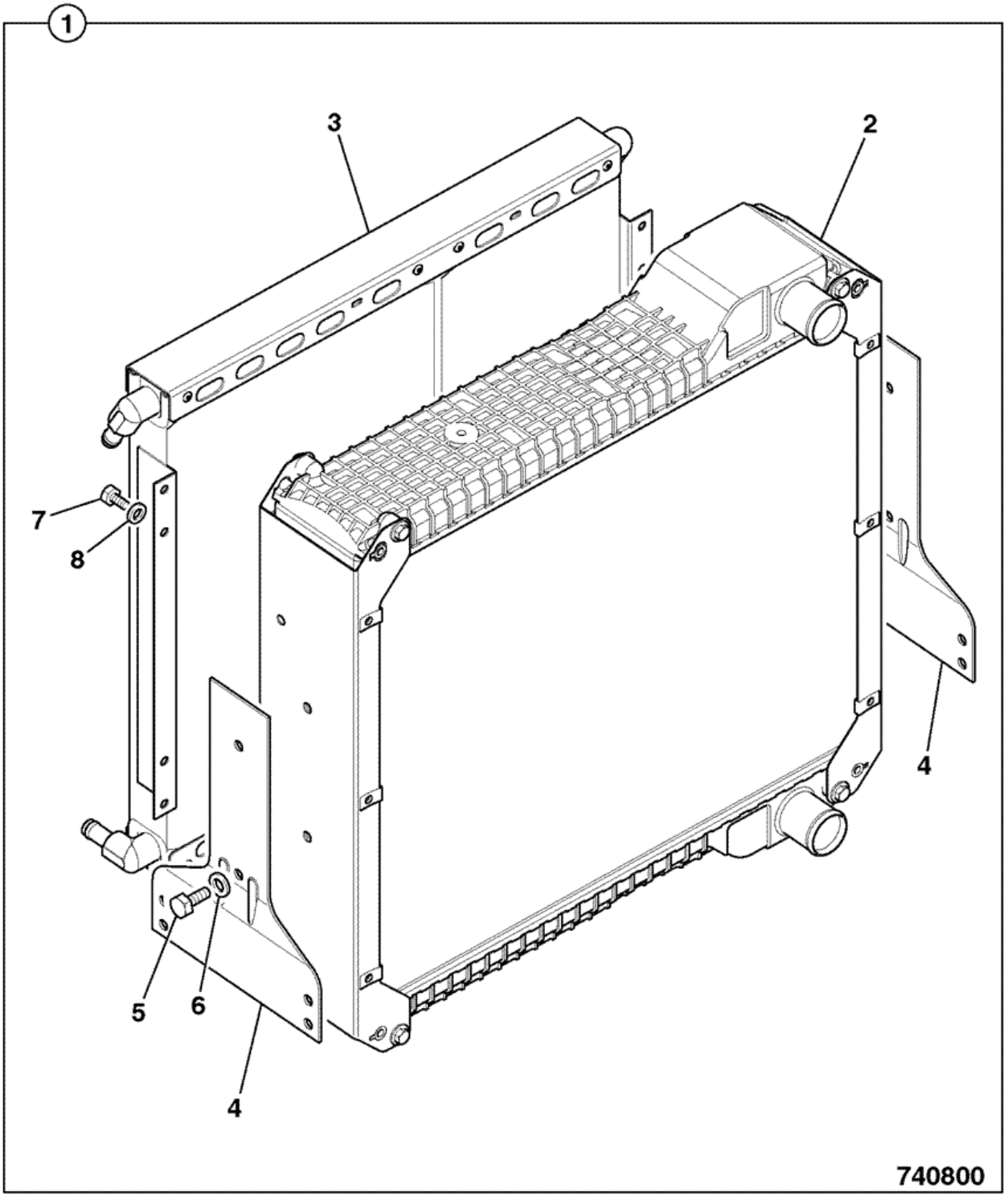

| Item | Part # | Change No | Description | Usage Code | QTY |
|---|---|---|---|---|---|
| 1 | 128/14326 | | Cooler assembly 5row 2ws non CAC | | 1 |
| 2 | :30/915200 | | Radiator assembly, 5row-9fpi Blue spot | | 1 |
| 3 | :30/925615 | | Cooler oil, double 14plates + 21 plates | | 1 |
| 4 | :30/926257 | | Bracket radiator mounting | | 2 |
| 5 | :30/926035 | | Bolt | | 4 |
| 6 | :30/926036 | | Washer | | 4 |
| 7 | 1315/0301Z | | Screw hex head M8 X 12 | | 8 |
| 8 | 826/00846 | | Nut 'u' | | 8 |

Product Catalog \ CONSTRUCTION \ NORTH AMERICA \ CONSTRUCTION / INDUSTRIAL \ BACKHOE LOADER 3CX,4CX,214,215,217 \ 3C PLUS (91HP) , Made in Brazil with Dieselmax/IESA Engine 9812/0080 \ E HYDRAULICS INCLUDING STEERING \ E01 HOSE & PIPEWORK

# 9812/0080 E1-21-2 CIRCUIT, ATTACHMENT, HAMMER

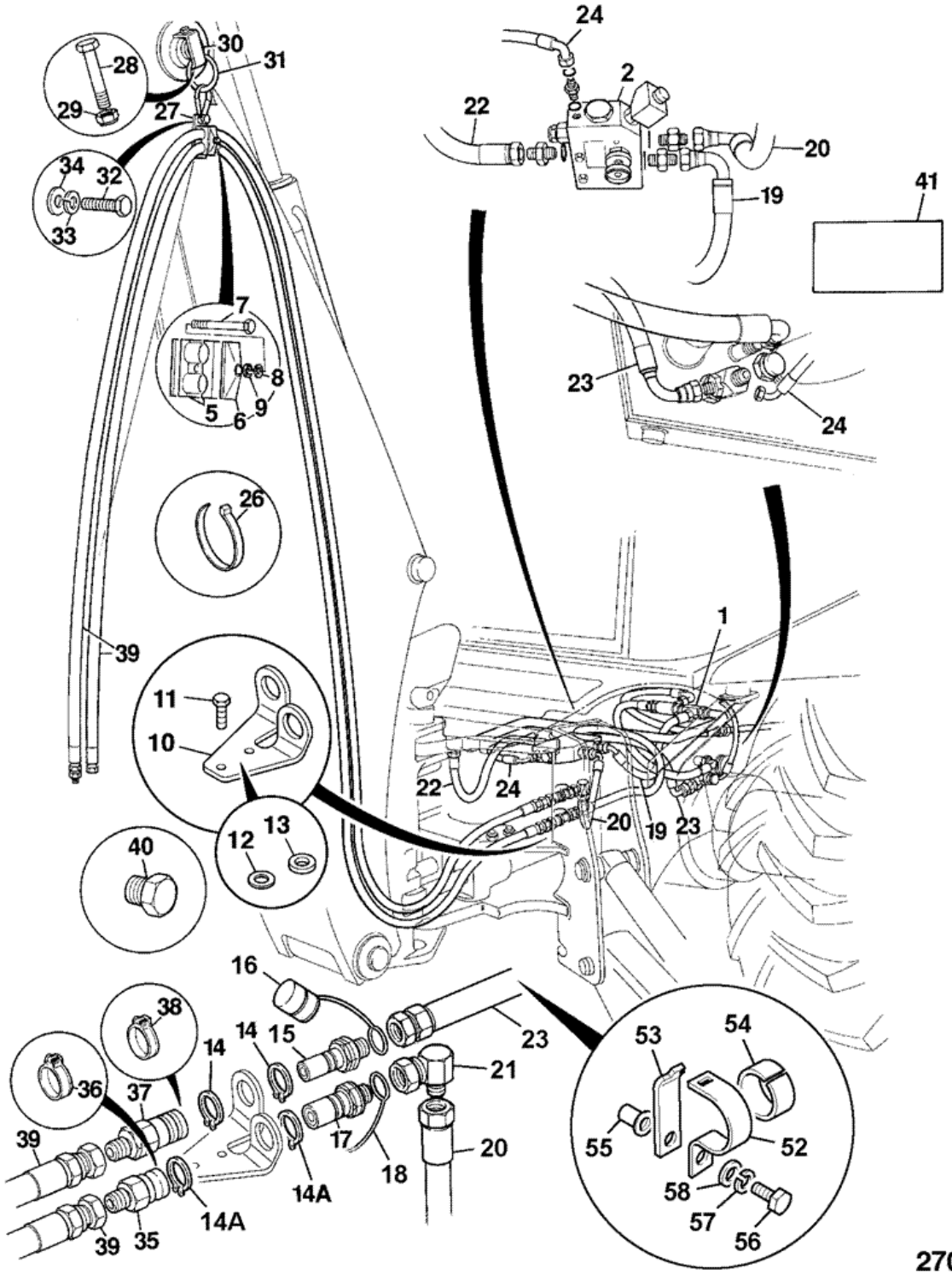


| Item | Part # | Change No | Description | Usage Code | QTY |
|---|---|---|---|---|---|
| 2 | 25/221197 | | Valve solenoid p. flow centre mount hammer<br>*Flow regulator valve, see frame E3-37-1* | | 1 |
| | | | | | |

| | | | | | |
|---|---|---|---|---|---|
| 3 | 25/222498 | | Valve relief, 3800/2.5<br>*fit to excavator valve* | | 1 |
| 4 | . | | 'See Remark'<br>*Electrics, see frame C3-22-1.* | | 1 |
| 5 | 821/00442 | | Clamp body | | 2 |
| 6 | 821/00443 | | Plate cover | | 1 |
| 7 | 1315/3314Z | | Bolt | | 1 |
| 8 | 1425/0007Z | | Washer spring | | 1 |
| 9 | 1420/0007Z | | Washer plain M8 | | 1 |
| 10 | 331/45522 | | Bracket q/r coupling | | 1 |
| 11 | 1315/0409Z | | Screw M10x35mm | | 2 |
| 12 | 1420/0008Z | | Washer Plain M10 | | 3 |
| 13 | 823/10710 | | Spacer nylon | | 1 |
| 14 | 2203/0043 | | Circlip | A | 2 |
| 14A | 2203/0049 | | Circlip | B | 2 |
| 15 | 45/913400 | | Coupling male | A | 1 |
| 16 | 45/910301 | | Cap dirt QRC 3/4" male | A | 1 |
| 17 | 45/913500 | | Coupling male | B | 1 |
| 18 | 45/912501 | | Cap dirt QRC 3/4" BSP male | B | 1 |
| 19 | 629/80041 | | Hose 3/4"BSP 650mm | | 1 |
| 20 | 209/72200 | | Hose 3/4"BSP 500mm | | 1 |
| 21 | 816/90163 | | Adapter Elbow M/F | | 1 |
| 22 | 615/48700 | | Hose 3/4BSP 850mm long | | 1 |
| 23 | 635/80120 | | Hose 3/4BSP 2600mm long | | 1 |
| 24 | 611/20100 | | Hose 1/4BSPx1270 | | 1 |
| 25 | 816/50032 | | Adapter Tee | | 1 |
| 26 | 826/01144 | | Tie cable 200mm long | | 2 |
| 27 | 123/05186 | | Ring support<br>*214* | | 1 |
| 27 | 123/06294 | | Ring support<br>*215* | | 1 |
| 28 | 1315/3524Z | | Bolt M12 x 140 Lg. | | 1 |
| 30 | 123/05187 | | Mounting hook clamp | | 1 |
| 31 | 123/05188 | | Hook 4" spring | | 1 |
| 32 | 1315/0407Z | | Bolt M10x25 | | 1 |
| 33 | 1425/0008Z | | Washer Spring M10 | | 1 |
| 34 | 1420/0008Z | | Washer Plain M10 | | 1 |
| 35 | 45/914100 | | Coupling female | | 1 |
| 36 | 45/908401 | | Cap dirt, QRC 3/4"female | | 1 |
| 37 | 45/914200 | | Coupling female | | 1 |
| 38 | 45/911301 | | Cap dirt QRC 3/4" BSP female | | 1 |
| 39 | 615/05000 | | Hose | | 2 |
| 40 | 816/80011 | | Plug | | 2 |
| 41 | 817/00592 | | Label | | 2 |
| 41A | 817/70021 | | Decal noise warning | | 1 |
| 52 | 821/00183 | | Clamp top | | 2 |
| 53 | 821/00184 | | Clamp base | | 2 |
| 54 | 821/00185 | | Insert clamp | | 2 |
| 55 | 826/01249 | | Nut rivet M10 open end for 6 to 8.5mm plate | | 2 |
| 56 | 1315/0410Z | | Bolt M10 x 40 | | 2 |
| 57 | 1425/0008Z | | Washer Spring M10 | | 2 |
| 58 | 1420/0008Z | | Washer Plain M10 | | 2 |

Product Catalog \ CONSTRUCTION \ NORTH AMERICA \ CONSTRUCTION / INDUSTRIAL \ BACKHOE LOADER 3CX,4CX,214,215,217 \ 3C PLUS (91HP) , Made in Brazil with Dieselmax/IESA Engine 9812/0080 \ E HYDRAULICS INCLUDING STEERING \ E01 HOSE & PIPEWORK

# 9812/0080 E1-23-1 HOSE AND PIPEWORK, HAMMER, FIXED DIPPER, FEED

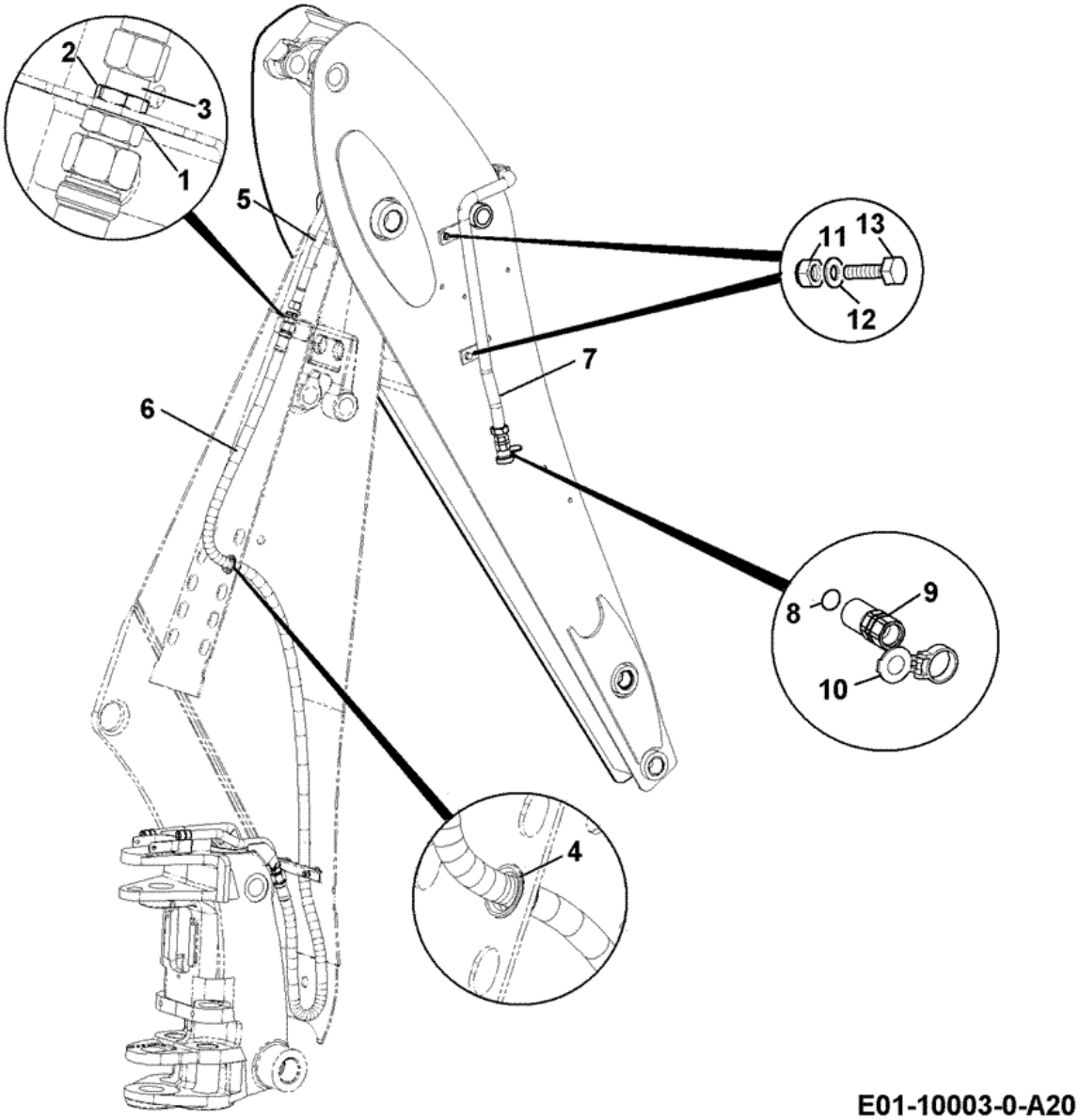


| Item | Part # | Change No | Description | Usage Code | QTY |
|---|---|---|---|---|---|
| 1 | 1418/0018Z | | Washer lock, internal teeth | | 1 |
| 2 | 1356/0205Z | | Nut | | 1 |
| 3 | 816/91044 | | Adaptor bulkhead G3/4A X G5/8A | | 1 |

| | | | | | |
|---|---|---|---|---|---|
| 4 | 830/00314 | | Ferrule rubber | | 1 |
| 5 | 614/00800 | | Hose | | 1 |
| 6 | 629/80235 | | Hose 3/4BSPx2850mm | | 1 |
| 7 | 332/E4852 | | PIPE hammer feed fxd | | 1 |
| 8 | 2401/0508 | | O Ring | | 1 |
| 9 | 45/920047 | | Coupling 1.1/16" 12 UNF female quick release | | 1 |
| 10 | 45/908401 | | Cap dirt, QRC 3/4"female | | 1 |
| 11 | 826/01249 | | Nut rivet M10 open end for 6 to 8.5mm plate | | 2 |
| 12 | 1420/0008Z | | Washer Plain M10 | | 2 |
| 13 | 1315/3409Z | | Bolt M10 x 35 | | 2 |

Product Catalog \ CONSTRUCTION \ NORTH AMERICA \ CONSTRUCTION / INDUSTRIAL \ BACKHOE LOADER 3CX,4CX,214,215,217 \ 3C PLUS (91HP) , Made in Brazil with Dieselmax/IESA Engine 9812/0080 \ E HYDRAULICS INCLUDING STEERING \ E01 HOSE & PIPEWORK

# 9812/0080 E1-2-42 CIRCUIT, LOADER ARM

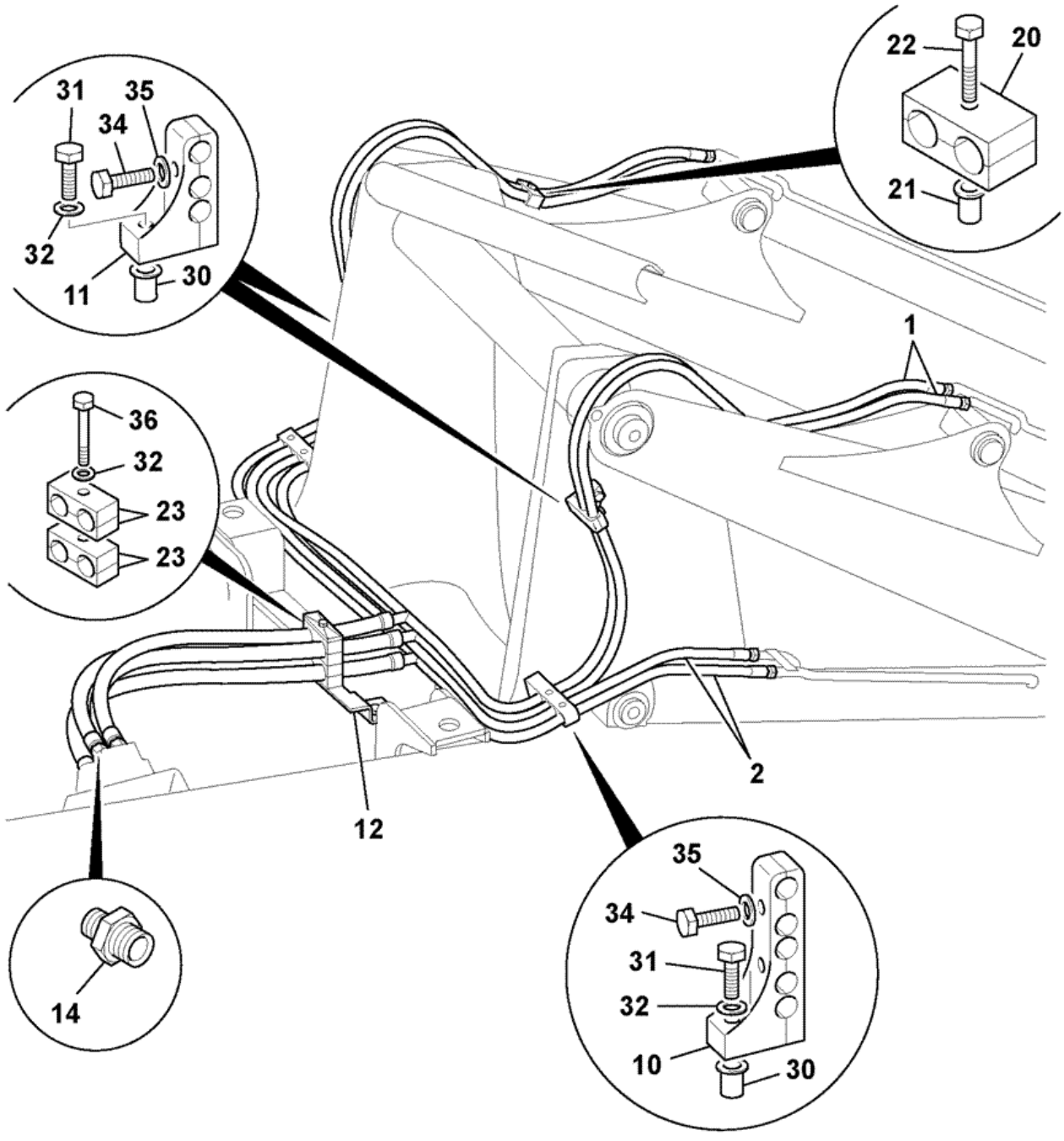


| Item | Part # | Change No | Description | Usage Code | QTY |
|---|---|---|---|---|---|
| 1 | 629/80238 | | Hose tee assembly | | 2 |
| 2 | 629/80237 | | Hose tee assembly | | 2 |
| | | | | | |

| | | | | | |
|---|---|---|---|---|---|
| 10 | 821/10231 | | Clamp assembly 5 hoses | | 2 |
| 11 | 821/10405 | | Clamp assembly 3 hoses | | 2 |
| 12 | 128/16844 | | Bracket hose | | 1 |
| 12A | :826/01249 | | Nut rivet M10 open end for 6 to 8.5mm plate | | 1 |
| 14 | 1620/2054 | | Adapter 1/2BSP X 3/4 SAE | | 4 |
| 20 | 821/10328 | | Clamp twin pipe 18 dia | | 2 |
| 21 | 826/01106 | | Nut rivet,M8 | | 2 |
| 22 | 1315/3311Z | | Bolt M8 X 45 | | 2 |
| 23 | 821/10431 | | Clamp pair | | 2 |
| 30 | 826/01249 | | Nut rivet M10 open end for 6 to 8.5mm plate | | 4 |
| 31 | 1315/3412Z | | Bolt | | 4 |
| 32 | 1420/0008Z | | Washer Plain M10 | | 7 |
| 33 | 1315/0408Z | | Bolt M10 x 30 | | 2 |
| 34 | 1315/0308Z | | Screw M8x30 | | 6 |
| 35 | 1420/0007Z | | Washer plain M8 | | 8 |
| 36 | 1315/3420Z | | Bolt M10 X 100 | | 1 |

Product Catalog \ CONSTRUCTION \ NORTH AMERICA \ CONSTRUCTION / INDUSTRIAL \ BACKHOE LOADER 3CX,4CX,214,215,217 \ 3C PLUS (91HP) , Made in Brazil with Dieselmax/IESA Engine 9812/0080 \ E HYDRAULICS INCLUDING STEERING \ E01 HOSE & PIPEWORK

# 9812/0080 E1-3-40 CIRCUIT, AUXILIARY, LOADER, (3/8" BSP PIPWORK)

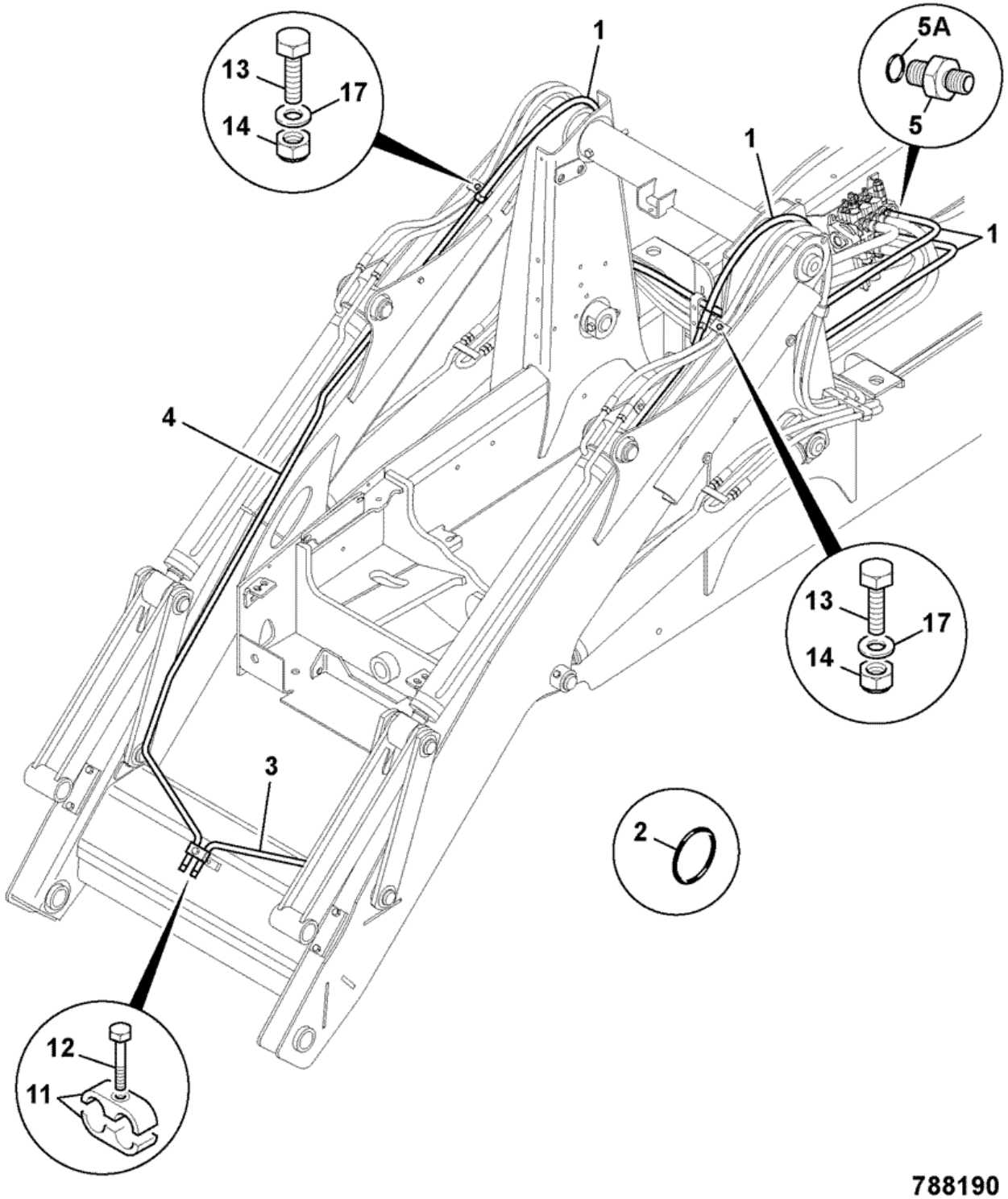


| Item | Part # | Change No | Description | Usage Code | QTY |
|---|---|---|---|---|---|
| 1 | 629/80052 | | Hose | | 2 |

| | | | | | |
|---|---|---|---|---|---|
| 2 | 828/00135 | | O Ring | | 6 |
| 3 | 335/07401 | | Pipe LH auxiliary loader arms | | 1 |
| 4 | 335/07402 | | Pipe RH auxiliary loader arms | | 1 |
| 5 | 1620/2053 | | Adaptor | | 2 |
| 5A | :2401/0506 | | O Ring | | 1 |
| 11 | 821/10389 | | Clamp pipe 6x30x75 | | 1 |
| 11 | 829/31263 | | Spacer 10.2x20x16long | | 1 |
| 12 | 1315/0408Z | | Bolt M10 x 30 | | 1 |
| 13 | 1315/0308Z | | Screw M8x30 | | 2 |
| 14 | 1370/0203Z | | Nut self lock M8 | | 2 |
| 17 | 1420/0007Z | | Washer plain M8 | | 2 |

Product Catalog \ CONSTRUCTION \ NORTH AMERICA \ CONSTRUCTION / INDUSTRIAL \ BACKHOE LOADER 3CX,4CX,214,215,217 \ 3C PLUS (91HP) , Made in Brazil with Dieselmax/IESA Engine 9812/0080 \ E HYDRAULICS INCLUDING STEERING \ E01 HOSE & PIPEWORK

# 9812/0080 E1-4-12 CIRCUIT, COOLER, TRANSMISSION, 2 WHEEL STEER

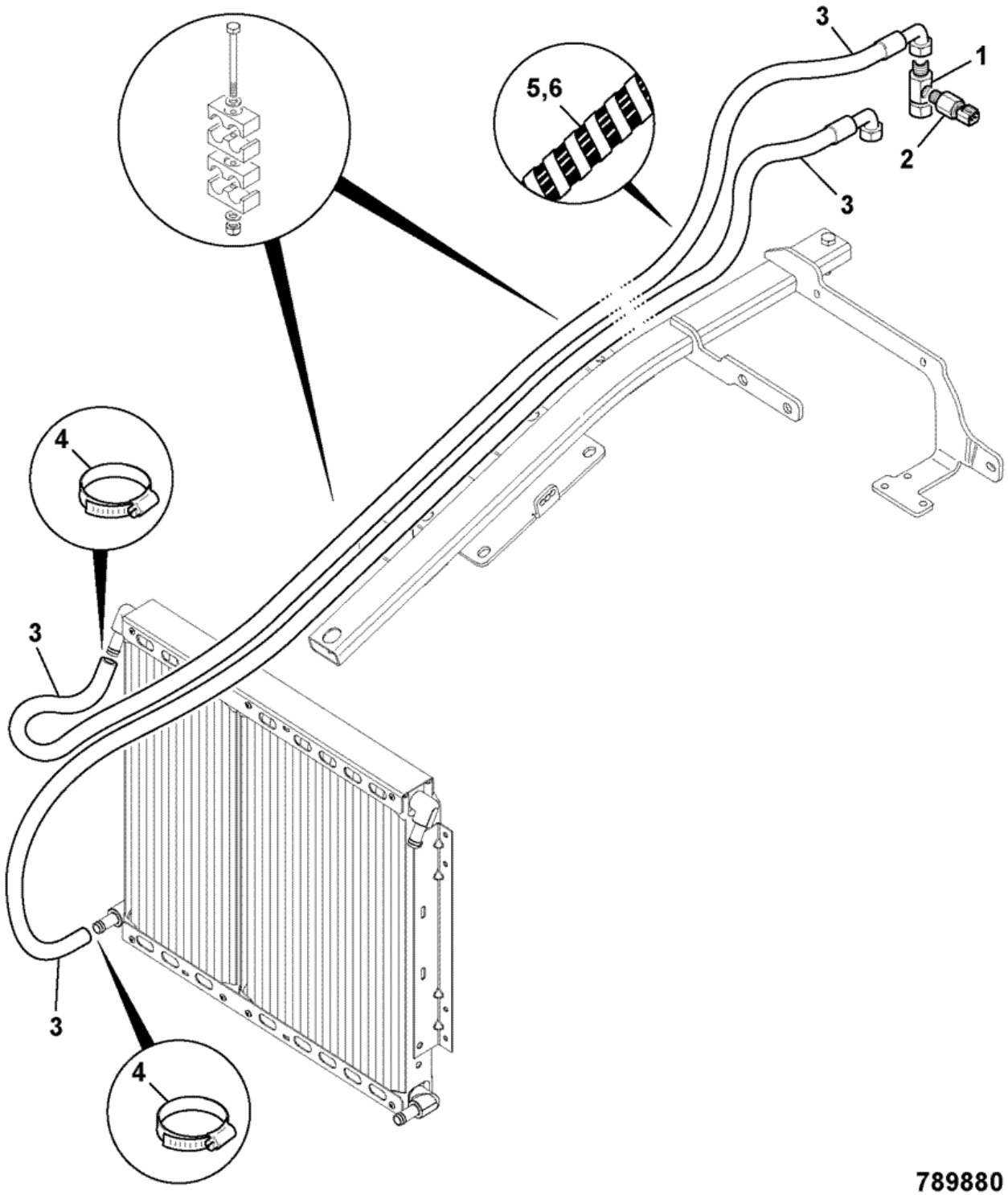


| Item | Part # | Change No | Description | Usage Code | QTY |
|---|---|---|---|---|---|
| | | | 'See Remark' | | |

| | | | | | |
|---|---|---|---|---|---|
| 0 | . | | *see index radiator fittings for centre beam* | | 1 |
| 0 | . | | 'See Remark'<br>*see frame E1-4-31 for clamps* | | 1 |
| 0 | . | | 'See Remark'<br>*see frame E1-18-1 for cooler details* | | 1 |
| 1 | 816/90865 | | Adapter M/F 9/16"tapping | | 1 |
| 2 | 701/80363 | | Switch oil temp 9/16"UNF Deutsch connector | | 1 |
| 3 | 649/51774 | | Hose 5/8x3575mm long | | 2 |
| 4 | 2201/0005 | | Clip jubilee | | 2 |
| 5 | 647/12905 | | Tube spiral guard 800mm long | | 1 |
| 6 | . | | 'See Remark'<br>*see item 5* | | 1 |

Product Catalog \ CONSTRUCTION \ NORTH AMERICA \ CONSTRUCTION / INDUSTRIAL \ BACKHOE LOADER 3CX,4CX,214,215,217 \ 3C PLUS (91HP) , Made in Brazil with Dieselmax/IESA Engine 9812/0080 \ E HYDRAULICS INCLUDING STEERING \ E01 HOSE & PIPEWORK

# 9812/0080 E1-4-23 CIRCUIT, COOLER, HYDRAULIC OIL, 2 WHEEL STEER

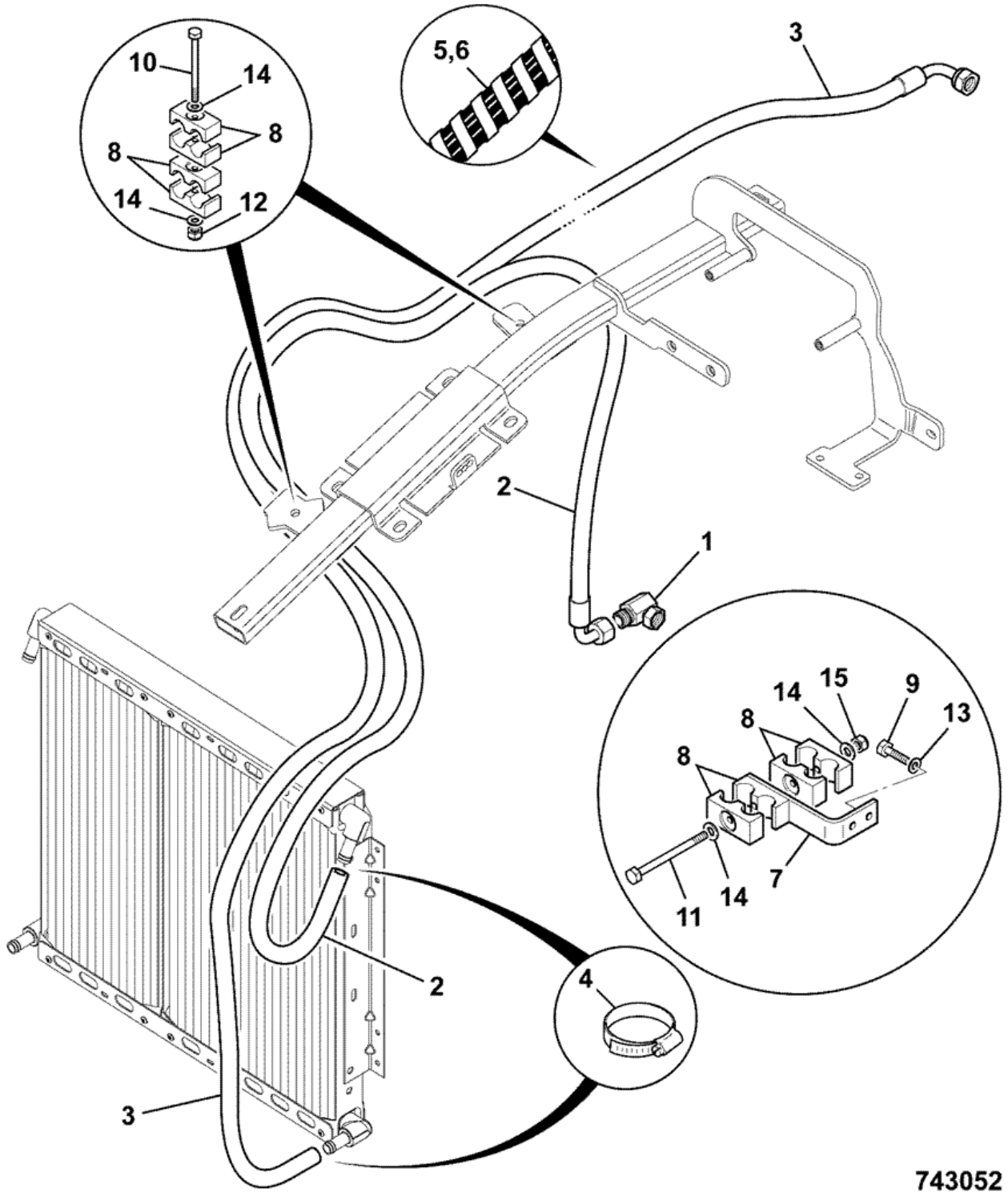


| Item | Part # | Change No | Description | Usage Code | QTY |
|---|---|---|---|---|---|
| | | | 'See Remark' | | |

| | | | | | |
|---|---|---|---|---|---|
| 0 | . | | *see index radiator fittings for centre beam* | | 1 |
| 1 | 816/91017 | | Adapter tee M/F/M G5/8AxG1xG3/8A | | 1 |
| 2 | 649/51774 | | Hose 5/8x3575mm long | | 1 |
| 3 | 649/51774 | | Hose 5/8x3575mm long | | 1 |
| 4 | 2201/0005 | | Clip jubilee | | 2 |
| 5 | 647/12905 | | Tube spiral guard 800mm long<br>*fits onto item 2* | | 1 |
| 6 | 647/12905 | | Tube spiral guard 800mm long<br>*fits onto item 3* | | 1 |
| 7 | 331/45861 | | Bracket hose guide | | 1 |
| 8 | 821/10431 | | Clamp pair | | 8 |
| 9 | 1315/3309Z | | Bolt M8 x 35mm | | 2 |
| 10 | 1315/3419Z | | Bolt M10x90mm | | 2 |
| 11 | 1315/3420Z | | Bolt M10 X 100 | | 2 |
| 12 | 1370/0303Z | | Nut lock M10 | | 2 |
| 13 | 1420/0007Z | | Washer plain M8 | | 2 |
| 14 | 1420/0008Z | | Washer Plain M10 | | 7 |
| 15 | 1370/0303Z | | Nut lock M10<br>*was 826/01249* | | 1 |

Product Catalog \ CONSTRUCTION \ NORTH AMERICA \ CONSTRUCTION / INDUSTRIAL \ BACKHOE LOADER 3CX,4CX,214,215,217 \ 3C PLUS (91HP) , Made in Brazil with Dieselmax/IESA Engine 9812/0080 \ E HYDRAULICS INCLUDING STEERING \ E01 HOSE & PIPEWORK

# 9812/0080 E1-4-32 CIRCUIT, COOLER, HYDRAULIC OIL, 2 WHEEL STEER

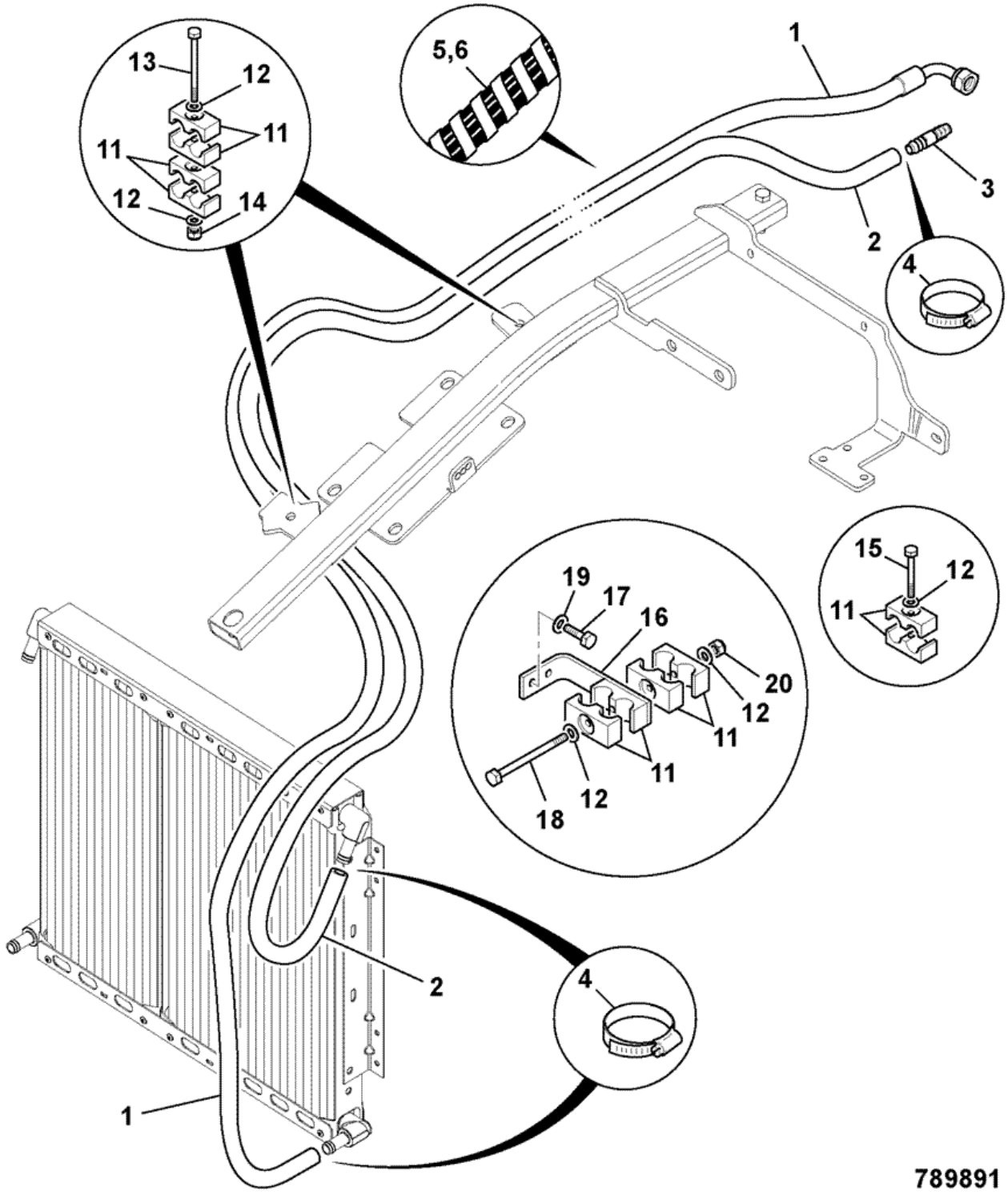


| Item | Part # | Change No | Description | Usage Code | QTY |
|---|---|---|---|---|---|
| | | | 'See Remark' | | |

| | | | | | |
|---|---|---|---|---|---|
| 0 | . | | *see index radiator fittings for centre beam* | | 1 |
| 0 | . | | 'See Remark'<br>*see frame E1-18-1 for cooler details* | | 1 |
| 1 | 649/51774 | | Hose 5/8x3575mm long | | 1 |
| 2 | 649/51775 | | Hose 5/8"BSP 2843mm long | | 1 |
| 3 | 650/10166 | | Adaptor hose connecter 16mm OD | | 1 |
| 4 | 2201/0005 | | Clip jubilee | | 4 |
| 5 | 647/12906 | | Tube spiral guard 900mm long | | 1 |
| 6 | 647/12905 | | Tube spiral guard 800mm long | | 1 |
| 11 | 821/10431 | | Clamp pair | | 8 |
| 12 | 1420/0008Z | | Washer Plain M10 | | 8 |
| 13 | 1315/3419Z | | Bolt M10x90mm | | 2 |
| 14 | 1370/0303Z | | Nut lock M10 | | 2 |
| 15 | 1315/3413Z | | Bolt M10 x 55 | | 2 |
| 16 | 331/45861 | | Bracket hose guide | | 1 |
| 17 | 1315/3309Z | | Bolt M8 x 35mm | | 2 |
| 18 | 1315/3420Z | | Bolt M10 X 100 | | 1 |
| 19 | 1420/0007Z | | Washer plain M8 | | 2 |
| 20 | 1370/0303Z | | Nut lock M10<br>*was 826/01249* | | 1 |

Product Catalog \ CONSTRUCTION \ NORTH AMERICA \ CONSTRUCTION / INDUSTRIAL \ BACKHOE LOADER 3CX,4CX,214,215,217 \ 3C PLUS (91HP) , Made in Brazil with Dieselmax/IESA Engine 9812/0080 \ E HYDRAULICS INCLUDING STEERING \ E01 HOSE & PIPEWORK

# 9812/0080 E1-4-51 CIRCUIT, COOLERS, HYDRAULIC & TRANS, 2WS MANUAL TRANSMISSION

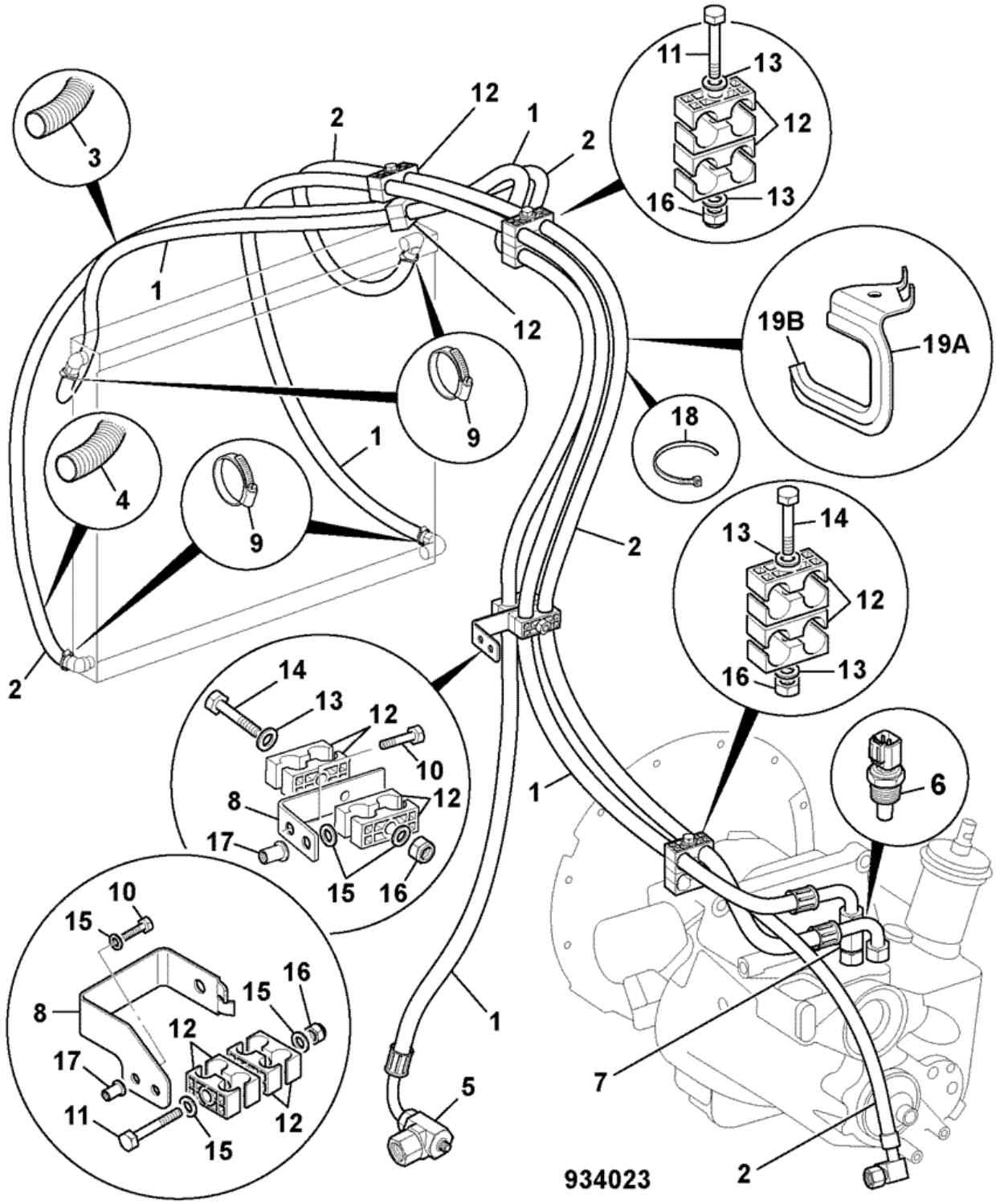


| Item | Part # | Change No | Description | Usage Code | QTY |
|---|---|---|---|---|---|
| 1 | 649/51774 | | Hose 5/8x3575mm long | | 2 |

| | | | | | |
|---|---|---|---|---|---|
| 2 | 332/D1594 | | Hose 5/8x3900mm | | 2 |
| 3 | 647/12905 | | Tube spiral guard 800mm long | | 2 |
| 4 | 647/12902 | | Tube spiral guard 1000mm long<br>*was 332/D6249* | | 2 |
| 5 | 816/91017 | | Adapter tee M/F/M G5/8AxG1xG3/8A | | 1 |
| 6 | 701/80363 | | Switch oil temp 9/16"UNF Deutsch connector | | 1 |
| 7 | 816/90865 | | Adapter M/F 9/16"tapping | | 1 |
| 8 | 331/45861 | <M TBA | Bracket hose guide | | 1 |
| 8 | 332/E5082 | >M TBA | Bracket hose guide | | 1 |
| 9 | 2201/0005 | | Clip jubilee | | 4 |
| 10 | 1315/3309Z | | Bolt M8 x 35mm | | 2 |
| 11 | 1315/3419Z | | Bolt M10x90mm<br>*QTY:A/R* | | 0 |
| 12 | 821/10431 | | Clamp pair | | 8 |
| 13 | 1420/0008Z | | Washer Plain M10 | | 7 |
| 14 | 1315/3420Z | | Bolt M10 X 100<br>*QTY:A/R* | | 0 |
| 15 | 1420/0007Z | | Washer plain M8 | | 2 |
| 16 | 1370/0303Z | | Nut lock M10 | | 3 |
| 17 | 826/01106 | | Nut rivet,M8 | | 2 |
| 18 | 270/00106 | | Tie Cable 385mm long | | 2 |
| 19A | 332/E5084 | >M TBA | Support hose | | 1 |
| 19B | 926/04828 | >M TBA | Strip edging 235mm | | 1 |

Product Catalog \ CONSTRUCTION \ NORTH AMERICA \ CONSTRUCTION / INDUSTRIAL \ BACKHOE LOADER 3CX,4CX,214,215,217 \ 3C PLUS (91HP) , Made in Brazil with Dieselmax/IESA Engine 9812/0080 \ E HYDRAULICS INCLUDING STEERING \ E01 HOSE & PIPEWORK

# 9812/0080 E1-4-95 CIRCUIT, COOLERS, HYDRAULIC & TRANS

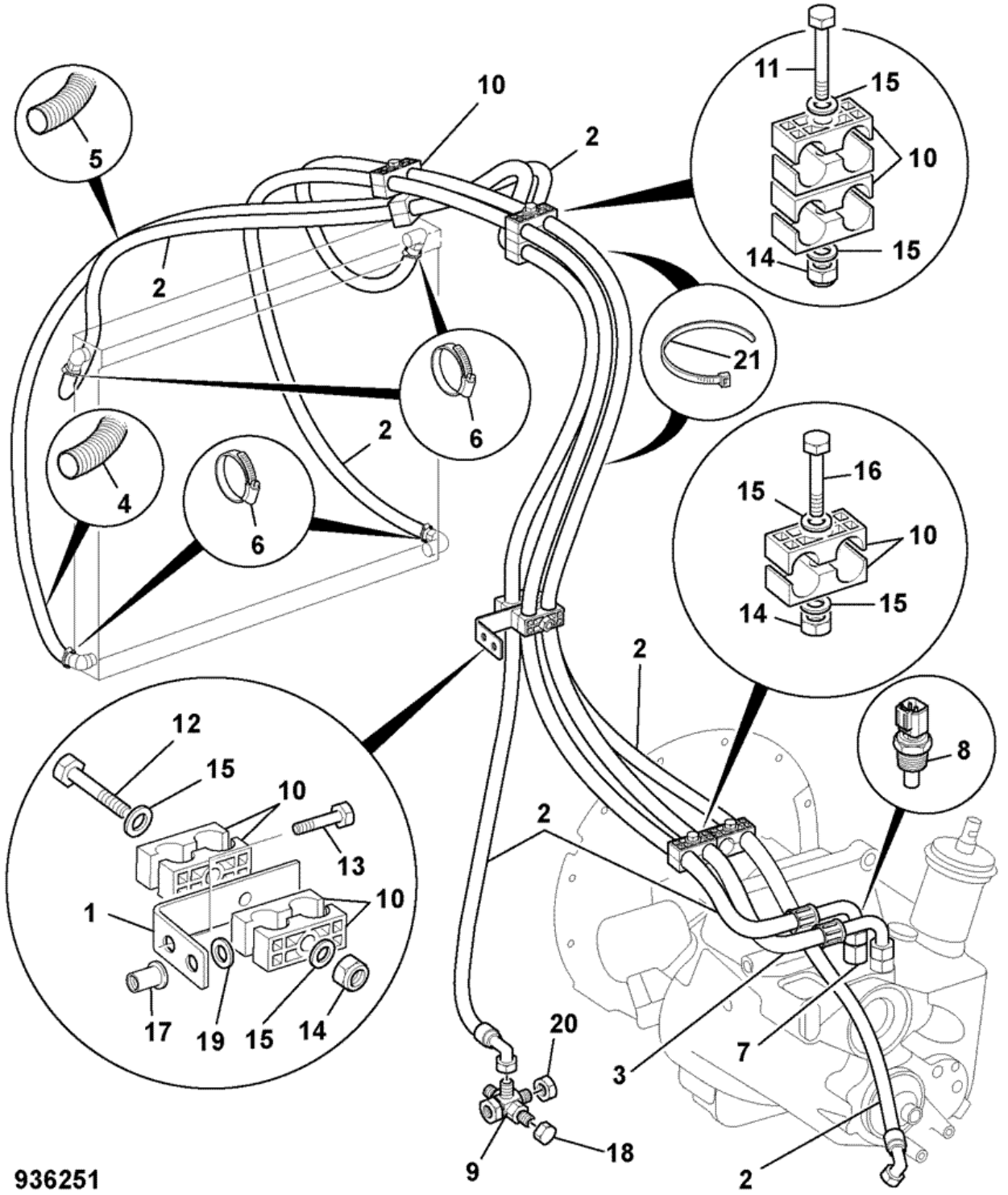


| Item | Part # | Change No | Description | Usage Code | QTY |
|---|---|---|---|---|---|
| 1 | 331/45861 | | Bracket hose guide | | 1 |

| | | | | | |
|---|---|---|---|---|---|
| 2 | 649/51774 | | Hose 5/8x3575mm long | | 3 |
| 3 | 332/D1594 | | Hose 5/8x3900mm | | 1 |
| 4 | 647/12902 | | Tube spiral guard 1000mm long<br>*was 332/D6249* | | 2 |
| 5 | 647/12905 | | Tube spiral guard 800mm long | | 2 |
| 6 | 2201/0005 | | Clip jubilee | | 4 |
| 7 | 816/90865 | | Adapter M/F 9/16"tapping | | 1 |
| 8 | 701/80363 | | Switch oil temp 9/16"UNF Deutsch connector | | 1 |
| 9 | 332/D3321 | | Adapter 5 way | | 1 |
| 10 | 821/10431 | | Clamp pair | | 8 |
| 11 | 1315/3419Z | | Bolt M10x90mm | | 2 |
| 12 | 1315/3420Z | | Bolt M10 X 100 | | 1 |
| 13 | 1315/3309Z | | Bolt M8 x 35mm | | 2 |
| 14 | 1370/0303Z | | Nut lock M10 | | 3 |
| 15 | 1420/0008Z | | Washer Plain M10 | | 8 |
| 16 | 1315/3413Z | | Bolt M10 x 55 | | 2 |
| 17 | 826/01106 | | Nut rivet,M8 | | 2 |
| 18 | 816/90045 | | Cap blanking 1/4"BSP steel | | 1 |
| 19 | 1420/0007Z | | Washer plain M8 | | 2 |
| 20 | 816/90274 | | Cap blanking 3/4"BSP female | | 1 |
| 21 | 270/00106 | | Tie Cable 385mm long | | 2 |

Product Catalog \ CONSTRUCTION \ NORTH AMERICA \ CONSTRUCTION / INDUSTRIAL \ BACKHOE LOADER 3CX,4CX,214,215,217 \ 3C PLUS (91HP) , Made in Brazil with Dieselmax/IESA Engine 9812/0080 \ E HYDRAULICS INCLUDING STEERING \ E01 HOSE & PIPEWORK

# 9812/0080 E1-5-50 CIRCUIT, STEERING, 2WS 2WD

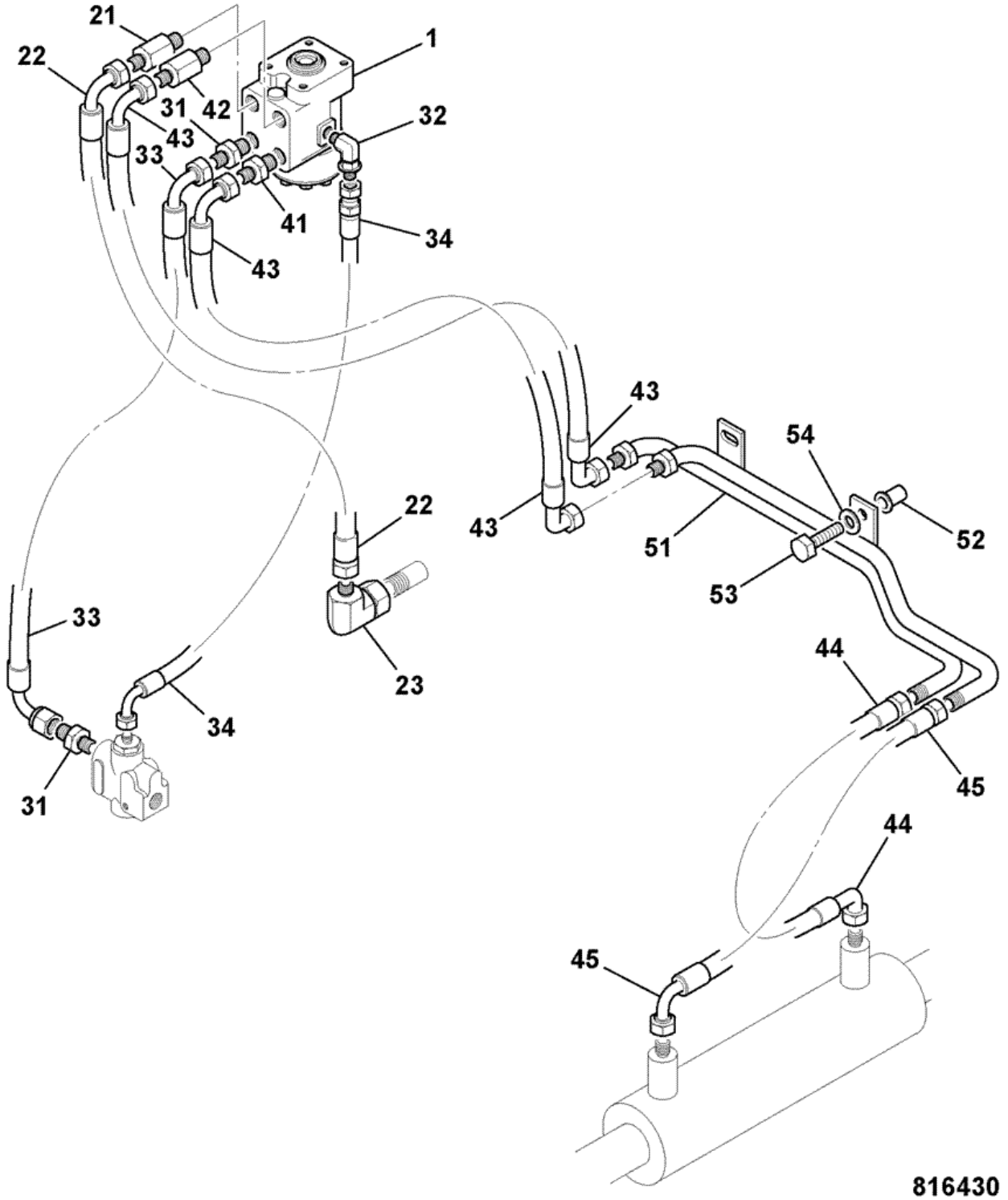


| Item | Part # | Change No | Description | Usage Code | QTY |
|---|---|---|---|---|---|
| 1 | 35/412300 | | Valve steer 250 load sens without anti-shock | | 1 |
| 21 | 816/90488 | | Adapter extended M/M | | 1 |

| | | | | | |
|---|---|---|---|---|---|
| | | | *port T* | | |
| 22 | 612/28800 | | Hose 3/8 BSP x 1010mm | | 1 |
| 23 | 816/90718 | | Adapter elbow M/F | | 1 |
| 31 | 1620/2053 | | Adaptor | | 2 |
| 32 | 816/90459 | | Adapter elbow M/M | | 1 |
| 33 | 612/45800 | | Hose | | 1 |
| 34 | 649/51720 | | Hose 1200 long | | 1 |
| 41 | 1620/2053 | | Adaptor | | 1 |
| 42 | 816/90488 | | Adapter extended M/M | | 1 |
| 43 | 612/47000 | | Hose | | 2 |
| 44 | 612/80113 | | Hose 3/8BSP X 410mm long | | 1 |
| 45 | 612/80114 | | Hose 3/8 BSP X 645mm long | | 1 |
| 51 | 335/09190 | | Pipe steering 2WD/2WS<br>*Dieselmax* | | 1 |
| 51 | 128/E3321 | | Pipe steering 2WD/2WS<br>*IESA* | | 1 |
| 52 | 826/01249 | | Nut rivet M10 open end for 6 to 8.5mm plate | | 2 |
| 53 | 1315/0410Z | | Bolt M10 x 40 | | 2 |
| 54 | 1420/0008Z | | Washer Plain M10 | | 2 |

Product Catalog \ CONSTRUCTION \ NORTH AMERICA \ CONSTRUCTION / INDUSTRIAL \ BACKHOE LOADER 3CX,4CX,214,215,217 \ 3C PLUS (91HP) , Made in Brazil with Dieselmax/IESA Engine 9812/0080 \ E HYDRAULICS INCLUDING STEERING \ E01 HOSE & PIPEWORK

# 9812/0080 E1-5-60 CIRCUIT, STEERING, 2WS 4WD

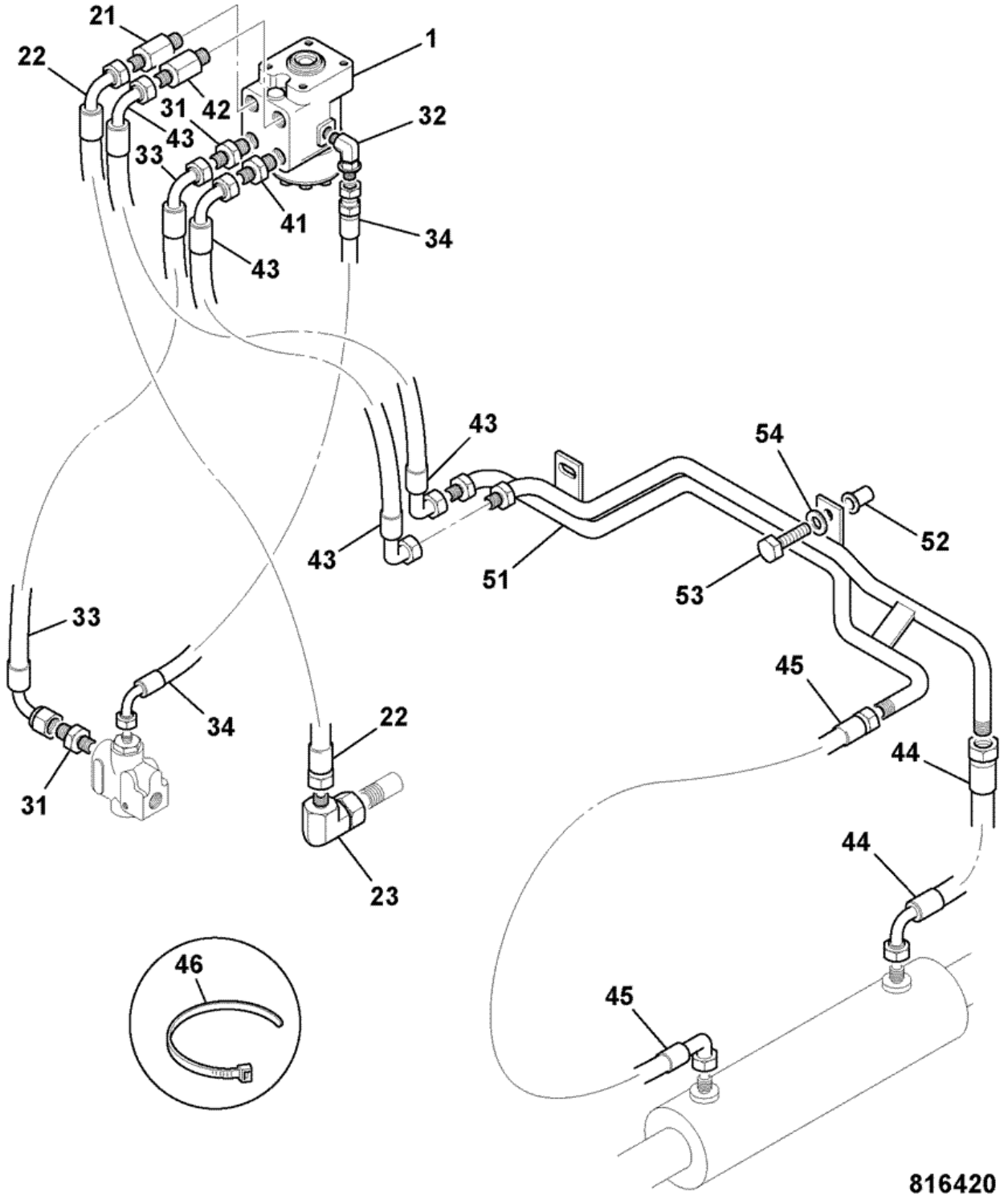


| Item | Part # | Change No | Description | Usage Code | QTY |
|---|---|---|---|---|---|
| 1 | 35/412300 | | Valve steer 250 load sens without anti-shock | | 1 |
| 21 | 816/90488 | | Adapter extended M/M | | 1 |

| | | | | | |
|---|---|---|---|---|---|
| | | | *port T* | | |
| 22 | 612/28800 | | Hose 3/8 BSP x 1010mm | | 1 |
| 23 | 816/90718 | | Adapter elbow M/F | | 1 |
| 31 | 1620/2053 | | Adaptor | | 2 |
| 32 | 816/90459 | | Adapter elbow M/M | | 1 |
| 33 | 612/45800 | | Hose | | 1 |
| 34 | 649/51720 | | Hose 1200 long | | 1 |
| 41 | 1620/2053 | | Adaptor | | 1 |
| 42 | 816/90488 | | Adapter extended M/M | | 1 |
| 43 | 612/47000 | | Hose | | 2 |
| 44 | 612/26500 | | Hose sleeved 3/8BSPx270 | | 1 |
| 45 | 612/80114 | | Hose 3/8 BSP X 645mm long | | 1 |
| 46 | 826/01144 | | Tie cable 200mm long | | 2 |
| 51 | 335/09189 | | Pipe Steering 2WS/4WD<br>*Dieselmax* | | 1 |
| 51 | 128/E3317 | | Pipe steering, 2WS/4WD<br>*IESA* | | 1 |
| 52 | 826/01249 | | Nut rivet M10 open end for 6 to 8.5mm plate | | 2 |
| 53 | 1315/0410Z | | Bolt M10 x 40 | | 2 |
| 54 | 1420/0008Z | | Washer Plain M10 | | 2 |

Product Catalog \ CONSTRUCTION \ NORTH AMERICA \ CONSTRUCTION / INDUSTRIAL \ BACKHOE LOADER 3CX,4CX,214,215,217 \ 3C PLUS (91HP) , Made in Brazil with Dieselmax/IESA Engine 9812/0080 \ E HYDRAULICS INCLUDING STEERING \ E01 HOSE & PIPEWORK

# 9812/0080 E1-6-20 CIRCUIT, SLEW/SWING, CENTREMOUNT

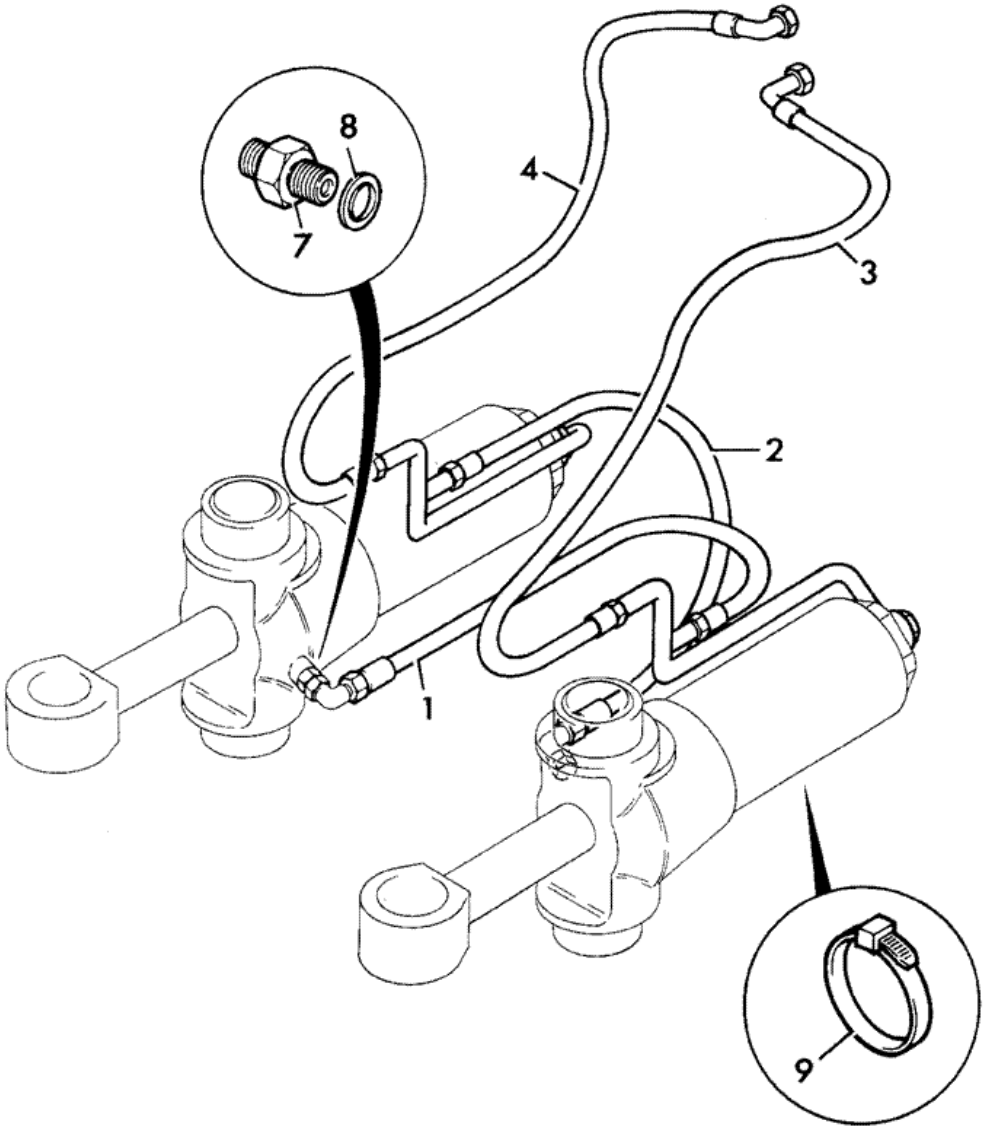


702810

| Item | Part # | Change No | Description | Usage Code | QTY |
|---|---|---|---|---|---|
| 1 | 629/80122 | | Hose 1/4BSP x 650Lg | | 1 |

| | | | | | |
|---|---|---|---|---|---|
| 2 | 629/80122 | | Hose 1/4BSP x 650Lg | | 1 |
| 3 | 612/26600 | | Hose 3/8"BSP x 700mm<br>*was 629/80126* | | 1 |
| 4 | 612/26600 | | Hose 3/8"BSP x 700mm<br>*was 629/80126* | | 1 |
| 7 | 1620/0002 | | Adapter | | 2 |
| 7 | 816/90676 | | Adapter 90deg elbow 9/16 SAE x G1/4 | | 2 |
| 8 | :2401/0505 | | O Ring | | 1 |
| 9 | 826/01144 | | Tie cable 200mm long | | 1 |

Product Catalog \ CONSTRUCTION \ NORTH AMERICA \ CONSTRUCTION / INDUSTRIAL \ BACKHOE LOADER 3CX,4CX,214,215,217 \ 3C PLUS (91HP) , Made in Brazil with Dieselmax/IESA Engine 9812/0080 \ E HYDRAULICS INCLUDING STEERING \ E01 HOSE & PIPEWORK

# 9812/0080 E1-7-30 CIRCUIT, STABILISER, CENTREMOUNT

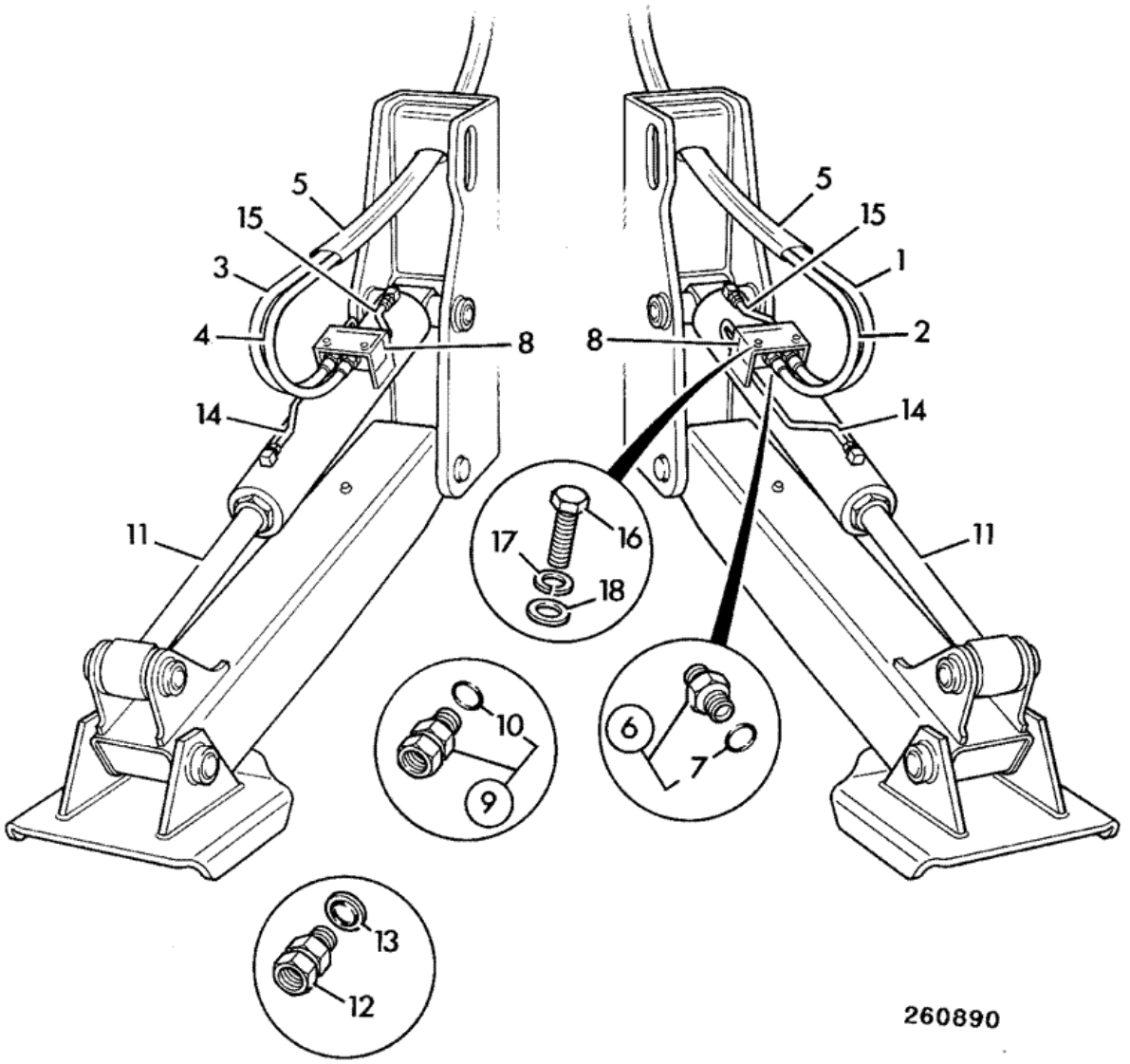


| Item | Part # | Change No | Description | Usage Code | QTY |
|---|---|---|---|---|---|
| 1 | 611/24600 | | Hose 1/4"BSP x 1430mm | | 1 |
| 2 | 611/24600 | | Hose 1/4"BSP x 1430mm | | 1 |
| | | | | | |

| | | | | | |
|---|---|---|---|---|---|
| 3 | 611/24600 | | Hose 1/4"BSP x 1430mm | | 1 |
| 4 | 611/24600 | | Hose 1/4"BSP x 1430mm | | 1 |
| 5 | 647/02703 | | Tube black pvc 2400mm<br>*1350mm long per side.* | | 2 |
| 6 | 1620/2051 | | Adaptor 1/4"BSP x 9/16"SAE | | 4 |
| 7 | :2401/0505 | | O Ring | | 1 |
| 8 | 25/994800 | <M TBA | Valve ram lockout | A | 2 |
| 8 | 332/E3382 | >M TBA | Valve lockout double<br>*no user serviceable parts* | | 2 |
| 8A | :998/10409 | <M TBA | Kit-seal | A | 1 |
| 9 | 816/90009 | | Adapter M/F<br>*item 8 to item 15* | | 2 |
| 10 | :2401/0505 | | O Ring | | 1 |
| 11 | . | | 'See Remark'<br>*Stabiliser ram see section E4* | | 2 |
| 12 | 816/90776 | | Adapter extended M/F<br>*item 8 to item 14* | | 2 |
| 13 | :2401/0505 | | O Ring | | 1 |
| 14 | 653/40114 | | Pipe stabiliser ram R/H rod side<br>*90 X 50 ram* | | 1 |
| 14 | 332/P0621 | | Pipe stabiliser ram L/H rod side<br>*90 X 60 ram* | | 1 |
| 14 | 653/40113 | | Pipe stabiliser ram L/H rod side<br>*90 X 50 ram* | | 1 |
| 14 | 332/P0622 | | Pipe stabiliser ram R/H rod side<br>*90 X 60 ram* | | 1 |
| 15 | 653/40112 | | Pipe stabiliser ram head side | | 2 |
| 16 | 1315/0308Z | | Screw M8x30 | | 4 |
| 17 | . | | 'See Remark'<br>*not fitted* | | 4 |
| 18 | 1420/0007Z | | Washer plain M8 | | 4 |

Product Catalog \ CONSTRUCTION \ NORTH AMERICA \ CONSTRUCTION / INDUSTRIAL \ BACKHOE LOADER 3CX,4CX,214,215,217 \ 3C PLUS (91HP) , Made in Brazil with Dieselmax/IESA Engine 9812/0080 \ E HYDRAULICS INCLUDING STEERING \ E01 HOSE & PIPEWORK

# 9812/0080 E1-8-10 CIRCUIT, BOOM RAM

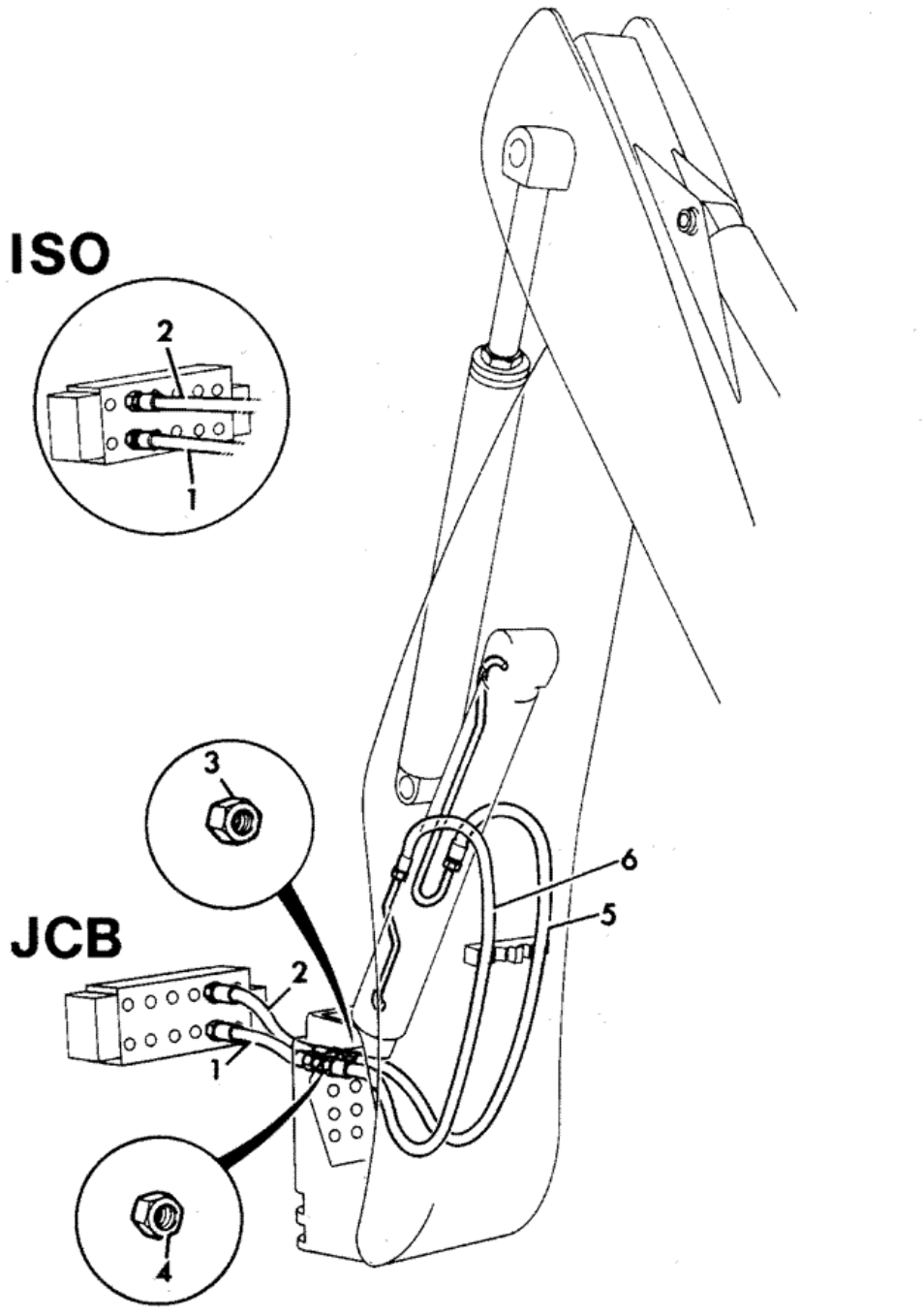


| Item | Part # | Change No | Description | Usage Code | QTY |
|---|---|---|---|---|---|
| 1 | 613/36009 | | Hose 1/2"BSP x 850mm | | 1 |
| 2 | 614/05000 | | Hose 5/8BSPx820 | | 1 |
| | | | | | |

| | | | | | |
|---|---|---|---|---|---|
| 3 | 1356/0204Z | | Nut | | 1 |
| 3A | 1418/0018Z | | Washer lock, internal teeth | | 1 |
| 4 | 1356/0205Z | | Nut | | 1 |
| 4A | 1418/0018Z | | Washer lock, internal teeth | | 1 |
| 5 | 629/27000 | | Hose 5/8BSP X 980mm | | 1 |
| 6 | 629/20600 | | Hose 1/2BSP X 940mm | | 1 |

Product Catalog \ CONSTRUCTION \ NORTH AMERICA \ CONSTRUCTION / INDUSTRIAL \ BACKHOE LOADER 3CX,4CX,214,215,217 \ 3C PLUS (91HP) , Made in Brazil with Dieselmax/IESA Engine 9812/0080 \ E HYDRAULICS INCLUDING STEERING \ E02 PUMPS

# 9812/0080 E2-1-12 PUMP, , 36/26 CCR MAIN HYDRAULIC

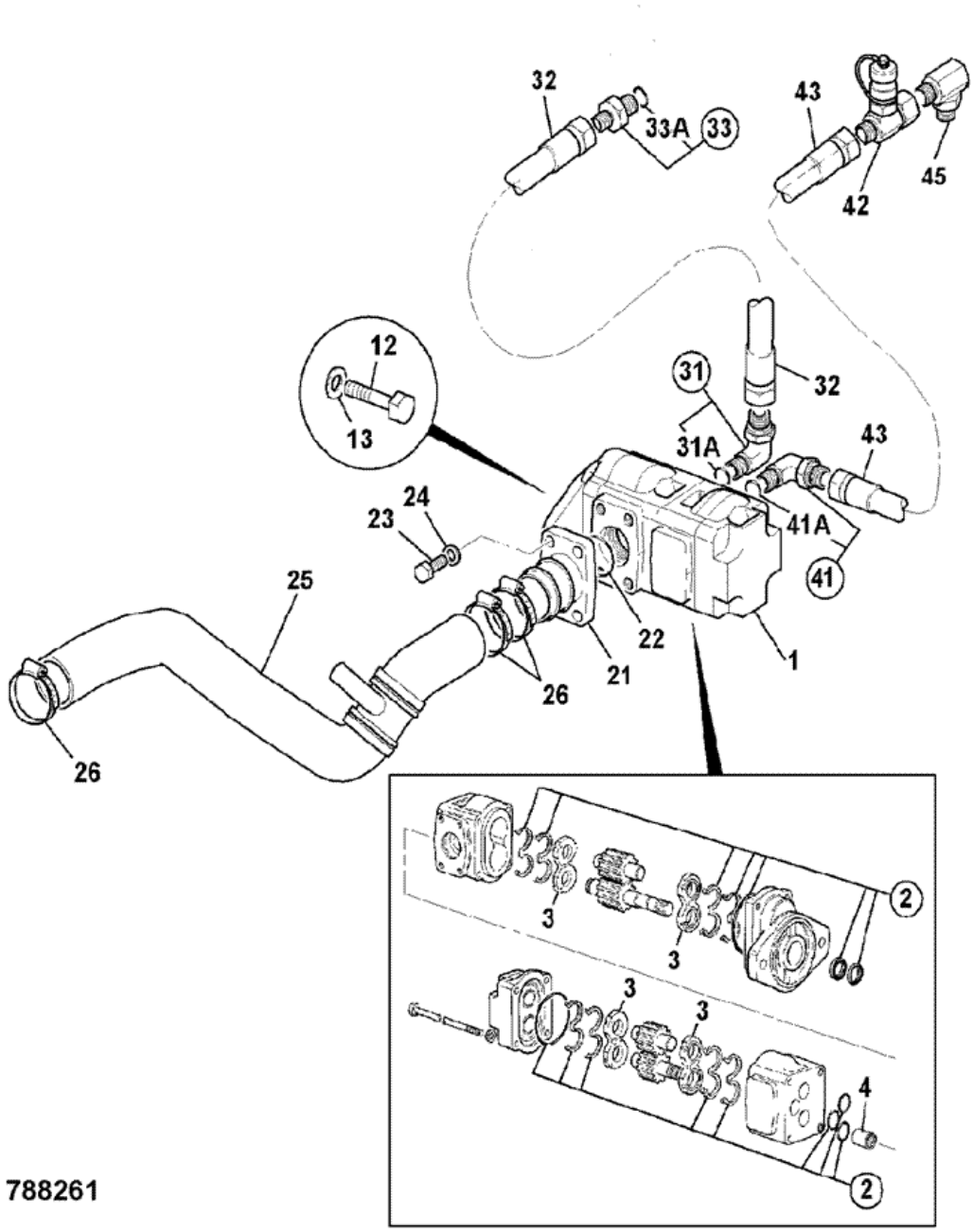


| Item | Part # | Change No | Description | Usage Code | QTY |
|---|---|---|---|---|---|
| 1 | 20/925579 | | Pump main hydraulic 36/26 cc/r | | 1 |
| 2 | :20/950906 | | Kit-seal main hydraulic pump | | 1 |
| | | | | | |

| | | | | | |
|---|---|---|---|---|---|
| 3 | :20/902703 | | Kit pressure plates (2 off) | | 2 |
| 4 | :20/903301 | | Coupling splined | | 1 |
| 12 | 1315/0509Z | | Screw M12 x 35mm | | 2 |
| 13 | 1420/0009Z | | Washer Plain M12 | | 2 |
| 21 | 903/20774 | | Adaptor Suction port | | 1 |
| 22 | 2401/0218 | | O Ring | | 1 |
| 23 | 1305/1908Z | | Bolt | | 4 |
| 24 | 823/00309 | | Washer hardened | | 4 |
| 25 | 834/11565 | | Hose suction manual transmission | | 1 |
| 26 | 2201/0013 | | Clip jubilee | | 3 |
| 31 | 816/90476 | | Adapter elbow M/M | | 2 |
| 31A | :2401/0508 | | O Ring | | 1 |
| 32 | 614/24200 | | Hose 5/8"BSP 640mm long | | 1 |
| 33 | 1620/2057 | | Adaptor | | 1 |
| 33A | :2401/0508 | | O Ring | | 1 |
| 41 | 816/90460 | | Adapter elbow M/M | | 1 |
| 41A | :2401/0507 | | O Ring | | 1 |
| 42 | 816/90427 | | Adapter test point 5/8 BSP | | 1 |
| 43 | 614/80055 | | Hose | | 1 |
| 45 | 816/90460 | | Adapter elbow M/M | | 1 |
| 45A | :2401/0507 | | O Ring | | 1 |

Product Catalog \ CONSTRUCTION \ NORTH AMERICA \ CONSTRUCTION / INDUSTRIAL \ BACKHOE LOADER 3CX,4CX,214,215,217 \ 3C PLUS (91HP) , Made in Brazil with Dieselmax/IESA Engine 9812/0080 \ E HYDRAULICS INCLUDING STEERING \ E03 VALVES & HYDRAULIC FILTERS

# 9812/0080 E3-13-1 VALVE, DIVERTER,

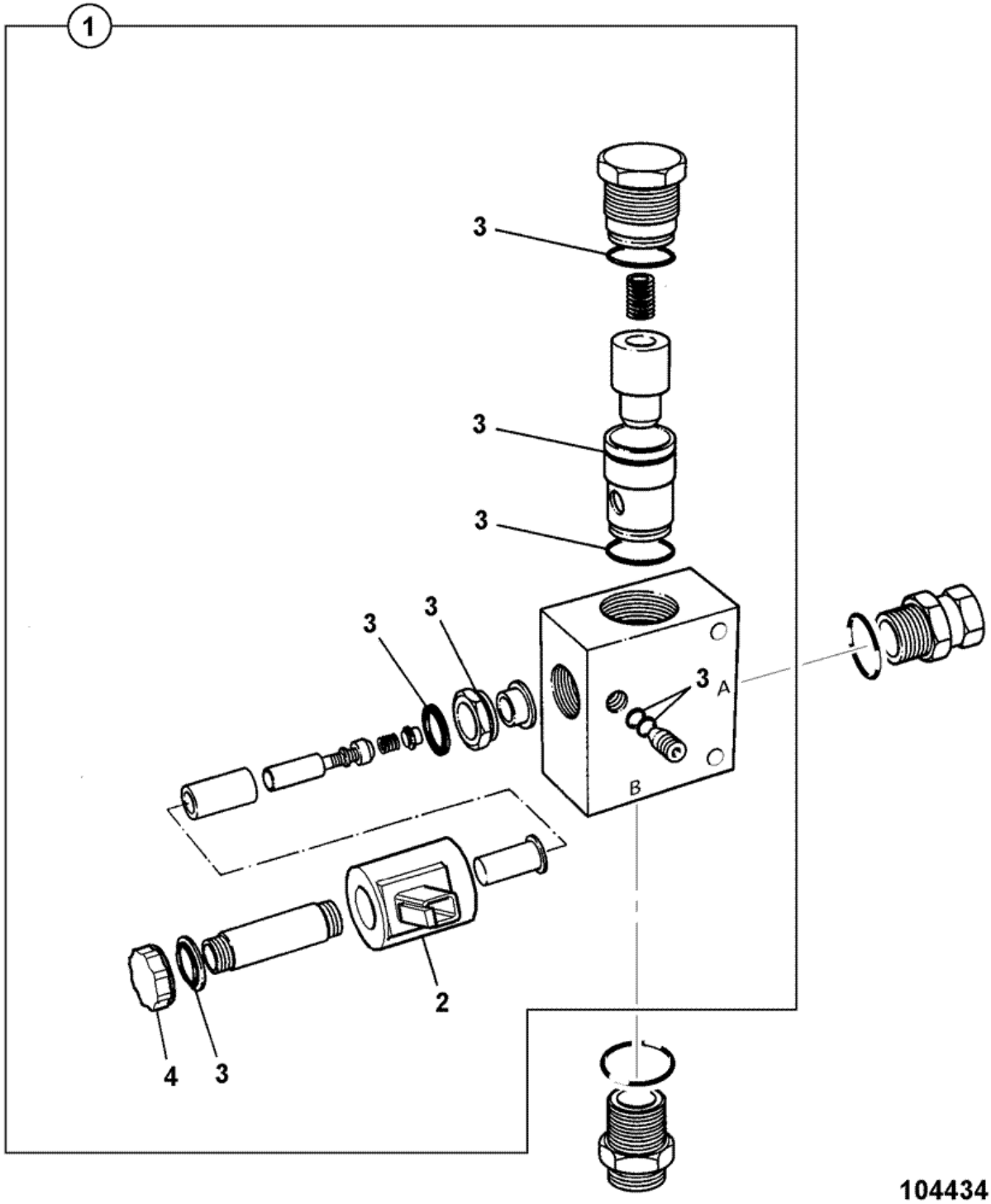


| Item | Part # | Change No | Description | Usage Code | QTY |
|---|---|---|---|---|---|
| 1 | 25/221087 | | Valve solenoid normally open<br>*not on PC machines* | | 1 |
| | | | | | |

| | | | | | |
|---|---|---|---|---|---|
| 2 | :717/20137 | | Coil 12v | | 1 |
| 3 | :25/970603 | | Kit-seal pump offload valve | | 1 |
| 4 | :25/970606 | | Nut | | 1 |
| 5 | :25/970607 | | O Ring | | 1 |

# 9812/0080 E3-2-10 VALVE, LOADER, 3 SPOOL, WITH FLOAT & RESET

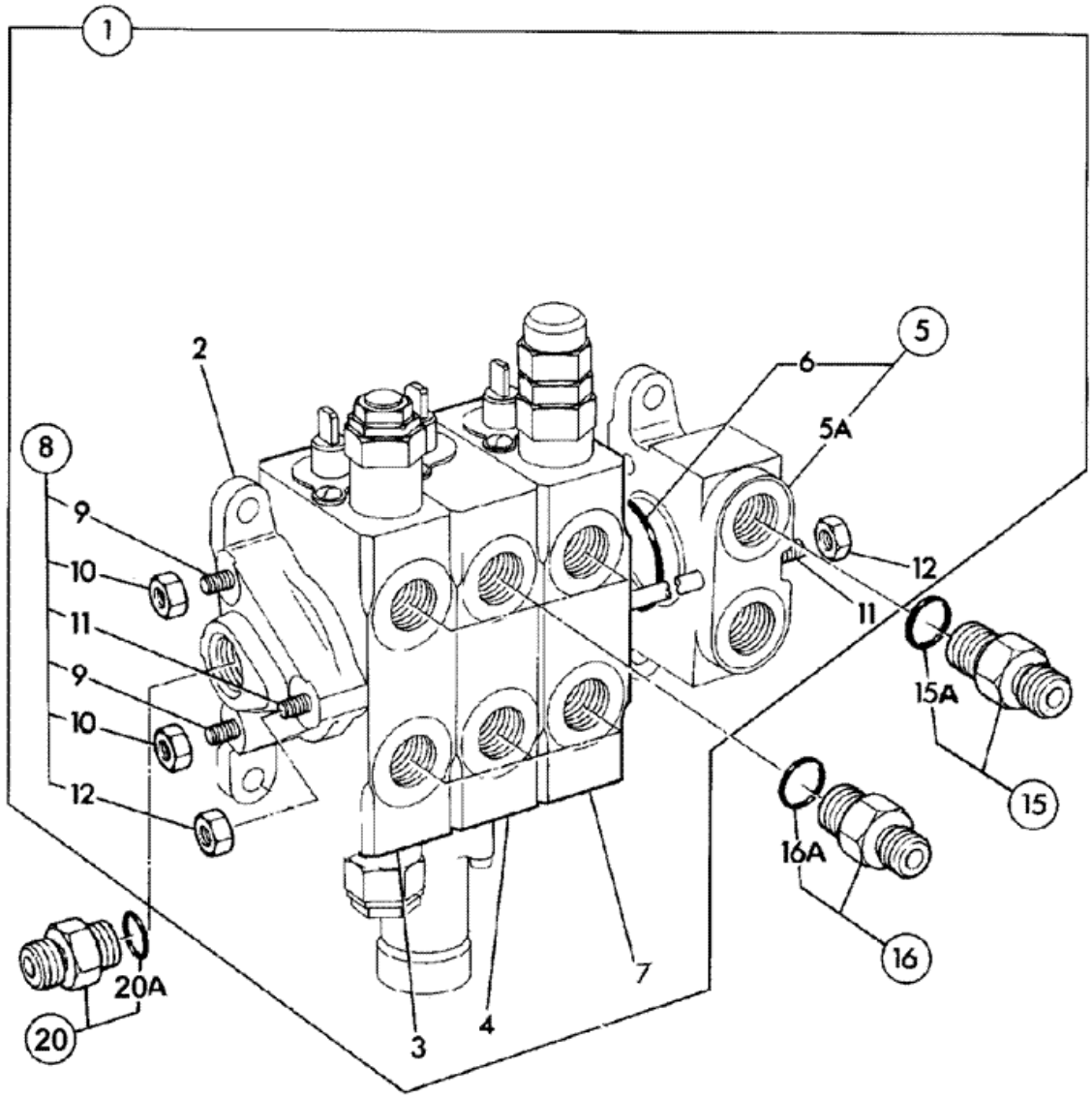


172593

| Item | Part # | Change No | Description | Usage Code | QTY |
|---|---|---|---|---|---|
| 1 | 25/221438 | Superseded | Valve 3spool loader float & reset | | 1 |
| 1 | 25/223695 | | Valve loader, 3 spool float and reset | | 1 |
| 2 | :25/987006 | | Cover HPCO | | 1 |
| 3 | :25/222713 | | Valve section | | 1 |
| 4 | :25/222714 | | Valve section | | 1 |
| | | | | | |

| | | | | | |
|---|---|---|---|---|---|
| 5 | :25/987007 | | Cover inlet | | 1 |
| 5A | ::NSP | | None serviced part | | 1 |
| 6 | ::25/606812 | | O Ring interface valve sections | | 1 |
| 7 | :25/222715 | | Valve section | | 1 |
| 8 | :25/607702 | | Kit-tie rod | | 1 |
| 9 | ::25/607606 | | Rod tie | | 2 |
| 10 | ::25/606817 | | Nut | | 4 |
| 11 | ::25/607704 | | Rod tie | | 1 |
| 12 | ::25/606815 | | Nut | | 2 |
| 15 | 1620/0009 | | Adapter<br>*Feed line* | | 1 |
| 15 | 1620/0007 | | Adapter<br>*Return line* | | 1 |
| 15A | :2401/0506 | | O Ring | | 1 |
| 16 | 1620/0005 | | Adapter 3/4"UNF o-ring boss 1/2"BSP male | | 6 |
| 16A | :2401/0506 | | O Ring | | 1 |
| 20 | 1620/0010 | | Adapter includes 'o'ring | | 1 |
| 20A | :2401/0506 | | O Ring | | 1 |

Product Catalog \ CONSTRUCTION \ NORTH AMERICA \ CONSTRUCTION / INDUSTRIAL \ BACKHOE LOADER 3CX,4CX,214,215,217 \ 3C PLUS (91HP) , Made in Brazil with Dieselmax/IESA Engine 9812/0080 \ E HYDRAULICS INCLUDING STEERING \ E03 VALVES & HYDRAULIC FILTERS

# 9812/0080 E3-2-11 VALVE, LOADER, 3 SPOOL, WITH FLOAT

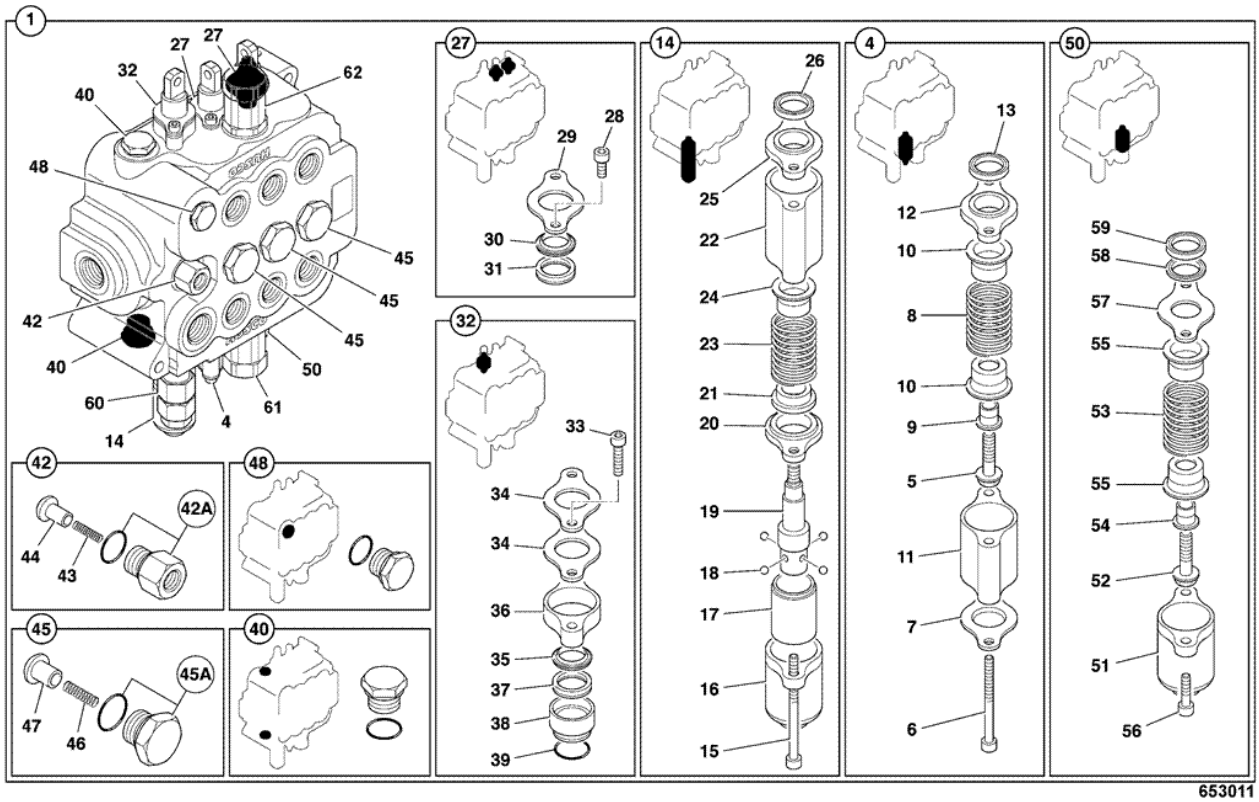


| Item | Part # | Change No | Description | Usage Code | QTY |
|---|---|---|---|---|---|
| 1 | 25/222643 | | Valve 3 spool loader float and reset | | 1 |
| 4 | :25/222411 | | Kit-spool cap | | 1 |
| 5 | ::25/608204 | | Screw spring retainer | | 1 |
| 6 | ::25/608607 | | Capscrew | | 2 |
| 7 | ::25/974606 | | Plate seal | | 1 |
| 8 | ::25/222670 | | Spring | | 1 |
| 9 | ::25/974605 | | Spacer | | 1 |
| 10 | ::25/608201 | | Retainer spring | | 2 |
| 11 | ::25/222671 | | Spacer | | 1 |
| 12 | ::25/975702 | | Plate seal | | 1 |
| 13 | ::25/221208 | | Seal | | 1 |
| 14 | :25/222412 | | Kit-spool end | | 1 |
| 15 | ::25/974622 | | Capscrew | | 2 |
| 16 | ::25/222199 | | Cap spool | | 1 |
| 17 | ::25/222672 | | Sleeve | | 1 |
| 18 | ::25/974621 | | Ball 5mm dia | | 4 |
| 19 | ::25/222673 | | Cap Spool end | | 1 |
| 20 | ::25/222674 | | Plate seal | | 1 |
| 21 | ::25/974615 | | Retainer spring | | 1 |
| 22 | ::25/222675 | | Spacer | | 1 |

| | | | | | |
|---|---|---|---|---|---|
| 23 | ::25/974619 | | Spring | | 1 |
| 24 | ::25/608201 | | Retainer spring | | 1 |
| 25 | ::25/975702 | | Plate seal | | 1 |
| 26 | ::25/221208 | | Seal | | 1 |
| 27 | :25/222660 | | Kit std spool gland | | 2 |
| 28 | ::25/606101 | | Screw | | 2 |
| 29 | ::25/222198 | | Plate seal | | 1 |
| 30 | ::25/222661 | | Wiper seal | | 1 |
| 31 | ::25/221208 | | Seal | | 1 |
| 32 | :25/222669 | | Kit float spool gland | | 1 |
| 33 | ::25/606839 | | Screw | | 2 |
| 34 | ::25/222198 | | Plate seal | | 2 |
| 35 | ::25/222661 | | Wiper seal | | 1 |
| 36 | ::25/974609 | | Spacer | | 1 |
| 37 | ::25/221208 | | Seal | | 1 |
| 38 | ::25/974608 | | Housing seal | | 1 |
| 39 | ::25/974607 | | O Ring | | 1 |
| 40 | :25/606822 | | Plug assembly | | 2 |
| 42 | :25/222414 | | Kit-plug | | 1 |
| 42A | ::25/612835 | | Plug assembly | | 1 |
| 43 | ::25/606117 | | Spring | | 1 |
| 44 | ::25/974645 | | Seat check valve | | 1 |
| 45 | :25/221746 | | Kit-anti-cavitation | | 3 |
| 45A | ::25/606111 | | Cap | | 3 |
| 46 | ::25/606113 | | Spring | | 3 |
| 47 | ::25/606114 | | Seat | | 3 |
| 48 | 25/606823 | | Plug assembly | | 1 |
| 50 | :25/222668 | | Kit Spool cap assembly | | 1 |
| 51 | ::25/222199 | | Cap spool | | 1 |
| 52 | ::25/608204 | | Screw spring retainer | | 1 |
| 53 | ::25/222670 | | Spring | | 1 |
| 54 | ::25/608206 | | Spacer | | 1 |
| 55 | ::25/608201 | | Retainer spring | | 2 |
| 56 | ::25/606110 | | Screw cap | | 2 |
| 57 | ::25/222198 | | Plate seal | | 1 |
| 58 | ::25/222661 | | Wiper seal | | 1 |
| 59 | ::25/221208 | | Seal | | 1 |
| 60 | 25/618901 | | Valve relief | | 1 |
| 60A | 25/618902 | | Kit-repair relief valve | | 1 |
| 61 | 25/222415 | | Valve relief | | 1 |
| 61A | 25/222305 | | Seal ARV service kit | | 1 |
| 62 | 25/222416 | | Valve relief, 4500/2.5 | | 1 |
| 62A | 25/222305 | | Seal ARV service kit | | 1 |

Product Catalog \ CONSTRUCTION \ NORTH AMERICA \ CONSTRUCTION / INDUSTRIAL \ BACKHOE LOADER 3CX,4CX,214,215,217 \ 3C PLUS (91HP) , Made in Brazil with Dieselmax/IESA Engine 9812/0080 \ E HYDRAULICS INCLUDING STEERING \ E03 VALVES & HYDRAULIC FILTERS

# 9812/0080 E3-2-12 VALVE, LOADER, 3 SPOOL, WITH FLOAT AND UNLOADER, BRAZIL BUILDS

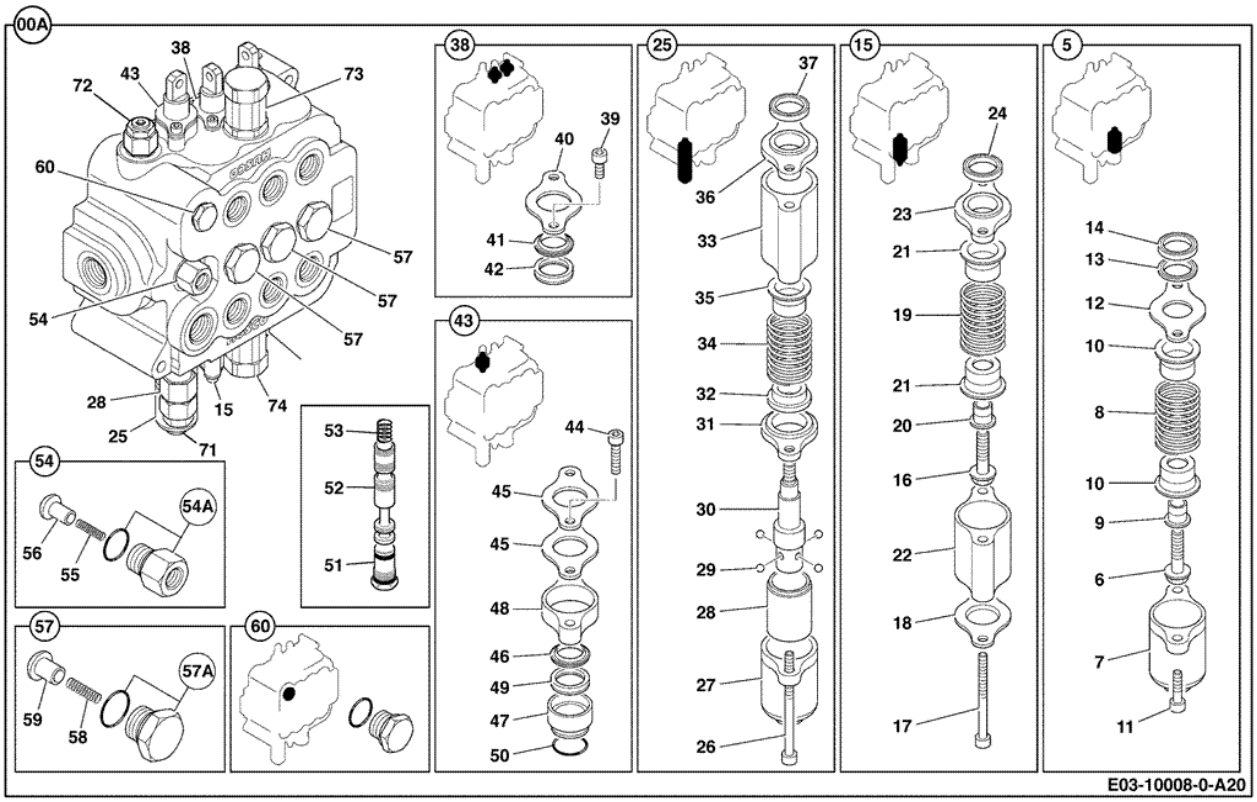


| Item | Part # | Change No | Description | Usage Code | QTY |
|---|---|---|---|---|---|
| 00A | 332/P8700 | | Valve 3 spool with float and unloader | | 1 |
| 5 | :25/222668 | | Kit Spool cap assembly | | 1 |
| 6 | :25/608204 | | Screw spring retainer | | 1 |
| 7 | ::25/222199 | | Cap spool | | 1 |
| 8 | ::25/222670 | | Spring | | 1 |
| 9 | ::25/608206 | | Spacer | | 1 |
| 10 | ::25/608201 | | Retainer spring | | 2 |
| 11 | ::25/606110 | | Screw cap | | 2 |
| 12 | ::25/222198 | | Plate seal | | 1 |
| 13 | ::25/222661 | | Wiper seal | | 1 |
| 14 | ::25/221208 | | Seal | | 1 |
| 15 | :25/222411 | | Kit-spool cap | | 1 |
| 16 | ::25/608204 | | Screw spring retainer | | 1 |
| 17 | ::25/608607 | | Capscrew | | 2 |
| 18 | ::25/974606 | | Plate seal | | 1 |
| 19 | ::25/222670 | | Spring | | 1 |
| 20 | ::25/974605 | | Spacer | | 1 |
| 21 | ::25/608201 | | Retainer spring | | 2 |
| 22 | ::25/222671 | | Spacer | | 1 |
| 23 | ::25/975702 | | Plate seal | | 1 |

| | | | | | |
|---|---|---|---|---|---|
| 24 | ::25/221208 | | Seal | | 1 |
| 25 | :25/222412 | | Kit-spool end | | 1 |
| 26 | ::25/974622 | | Capscrew | | 2 |
| 27 | ::25/222199 | | Cap spool | | 1 |
| 28 | ::25/222672 | | Sleeve | | 1 |
| 29 | ::25/974621 | | Ball 5mm dia | | 4 |
| 30 | ::25/222673 | | Cap Spool end | | 1 |
| 31 | ::25/222674 | | Plate seal | | 1 |
| 32 | ::25/974615 | | Retainer spring | | 1 |
| 33 | ::25/222675 | | Spacer | | 1 |
| 34 | ::25/974619 | | Spring | | 1 |
| 35 | ::25/608201 | | Retainer spring | | 1 |
| 36 | ::25/975702 | | Plate seal | | 1 |
| 37 | ::25/221208 | | Seal | | 1 |
| 38 | :25/222660 | | Kit std spool gland | | 2 |
| 39 | ::25/606101 | | Screw | | 2 |
| 40 | ::25/222198 | | Plate seal | | 1 |
| 41 | ::25/222661 | | Wiper seal | | 1 |
| 42 | ::25/221208 | | Seal | | 1 |
| 43 | :25/222669 | | Kit float spool gland | | 1 |
| 44 | ::25/606839 | | Screw | | 2 |
| 45 | ::25/222198 | | Plate seal | | 2 |
| 46 | ::25/222661 | | Wiper seal | | 1 |
| 47 | ::25/974608 | | Housing seal | | 1 |
| 48 | ::25/974609 | | Spacer | | 1 |
| 49 | ::25/221208 | | Seal | | 1 |
| 50 | ::25/974607 | | O Ring | | 1 |
| 51 | :25/974631 | | Plug assembly | | 1 |
| 52 | :NSP | | None serviced part | | 1 |
| 53 | :25/974629 | | Spring | | 1 |
| 54 | :25/222414 | | Kit-plug | | 1 |
| 54A | ::25/612835 | | Plug assembly | | 1 |
| 55 | ::25/606117 | | Spring | | 1 |
| 56 | ::25/974645 | | Seat check valve | | 1 |
| 57 | :25/221746 | | Kit-anti-cavitation | | 3 |
| 57A | ::25/606111 | | Cap | | 1 |
| 58 | ::25/606113 | | Spring | | 1 |
| 59 | ::25/606114 | | Seat | | 1 |
| 60 | 25/612834 | | Plug shut-off assembly | | 1 |
| 71 | :25/618901 | | Valve relief | | 1 |
| 71A | ::25/618902 | | Kit-repair relief valve | | 1 |
| 72 | :25/974643 | | Valve pilot unloader | | 1 |
| 72A | ::25/974633 | | Kit-seal unloader pilot valve | | 1 |
| 73 | :25/222416 | | Valve relief, 4500/2.5 | | 1 |
| 73A | ::25/222305 | | Seal ARV service kit | | 1 |
| 74 | :25/222415 | | Valve relief | | 1 |
| 74A | ::25/222305 | | Seal ARV service kit | | 1 |

Product Catalog \ CONSTRUCTION \ NORTH AMERICA \ CONSTRUCTION / INDUSTRIAL \ BACKHOE LOADER 3CX,4CX,214,215,217 \ 3C PLUS (91HP) , Made in Brazil with Dieselmax/IESA Engine 9812/0080 \ E HYDRAULICS INCLUDING STEERING \ E03 VALVES & HYDRAULIC FILTERS

# 9812/0080 E3-2-20 VALVE, SECTION, SHOVEL, 2 SPOOL, LOADER VALVE

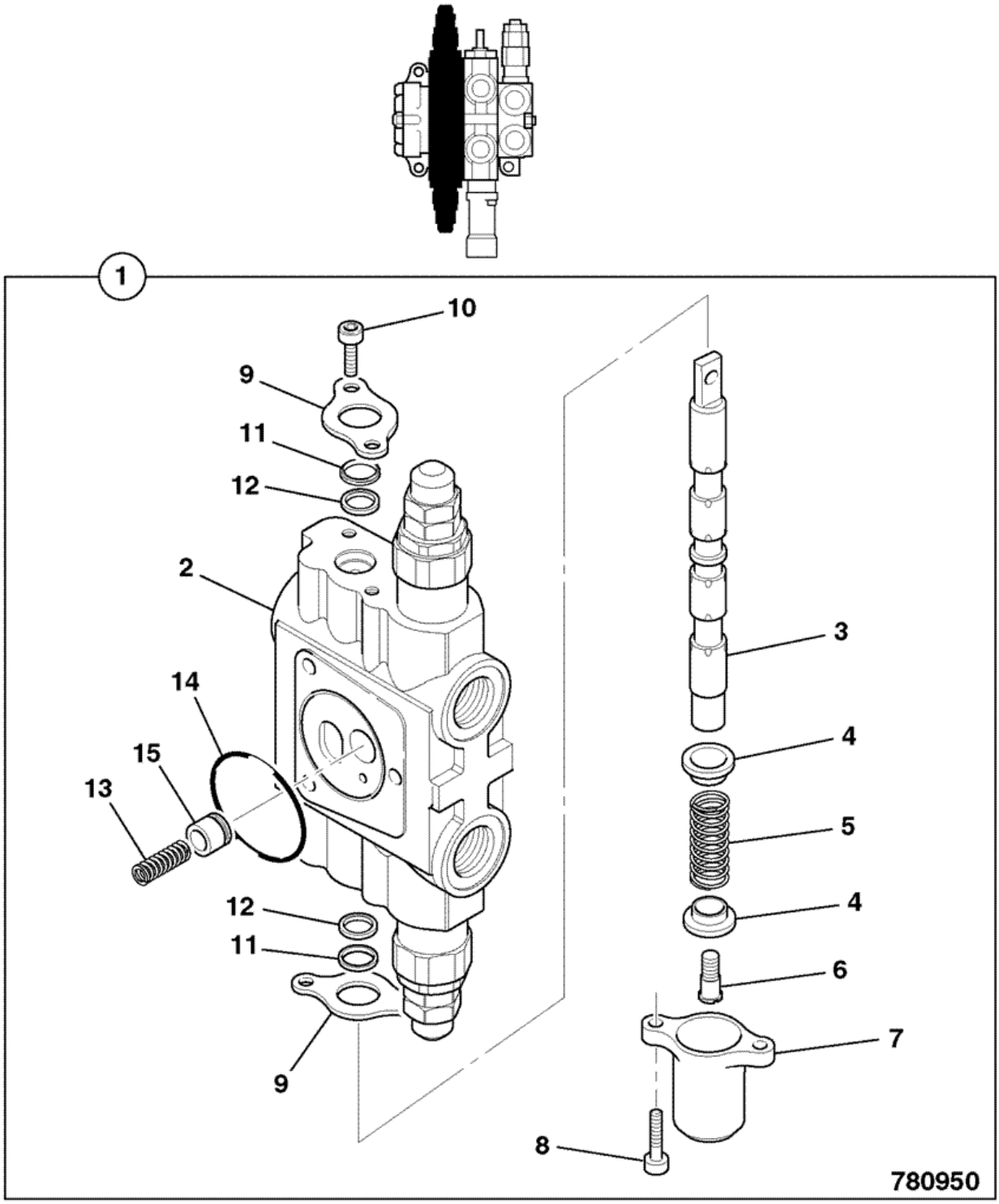


| Item | Part # | Change No | Description | Usage Code | QTY |
|---|---|---|---|---|---|
| 1 | 25/222717 | | Valve section | | 1 |

| | | | | | |
|---|---|---|---|---|---|
| 2 | :NSP | | None serviced part<br>*Spool and body are matched pairs.* | | 1 |
| 3 | :NSP | | None serviced part | | 1 |
| 4 | :25/606834 | | Seat spring | | 2 |
| 5 | :25/606833 | | Spring | | 1 |
| 6 | :25/606828 | | Spool end | | 1 |
| 7 | :25/606846 | | Cap spool | | 1 |
| 8 | :25/606827 | | Screw | | 2 |
| 9 | :25/222718 | | Plate end plate | | 2 |
| 10 | :25/606101 | | Screw | | 2 |
| 11 | :25/221933 | | Seal | | 2 |
| 12 | :25/221934 | | Seal | | 2 |
| 13 | :25/606844 | | Spring | | 1 |
| 14 | :25/606812 | | O Ring interface valve sections | | 1 |
| 15 | :25/606843 | | Poppet | | 1 |

Product Catalog \ CONSTRUCTION \ NORTH AMERICA \ CONSTRUCTION / INDUSTRIAL \ BACKHOE LOADER 3CX,4CX,214,215,217 \ 3C PLUS (91HP) , Made in Brazil with Dieselmax/IESA Engine 9812/0080 \ E HYDRAULICS INCLUDING STEERING \ E03 VALVES & HYDRAULIC FILTERS

# 9812/0080 E3-2-25 VALVE, SECTION, LIFT, 2 & 3 SPOOL, MECHANICAL DETENT, LOADER VALVE

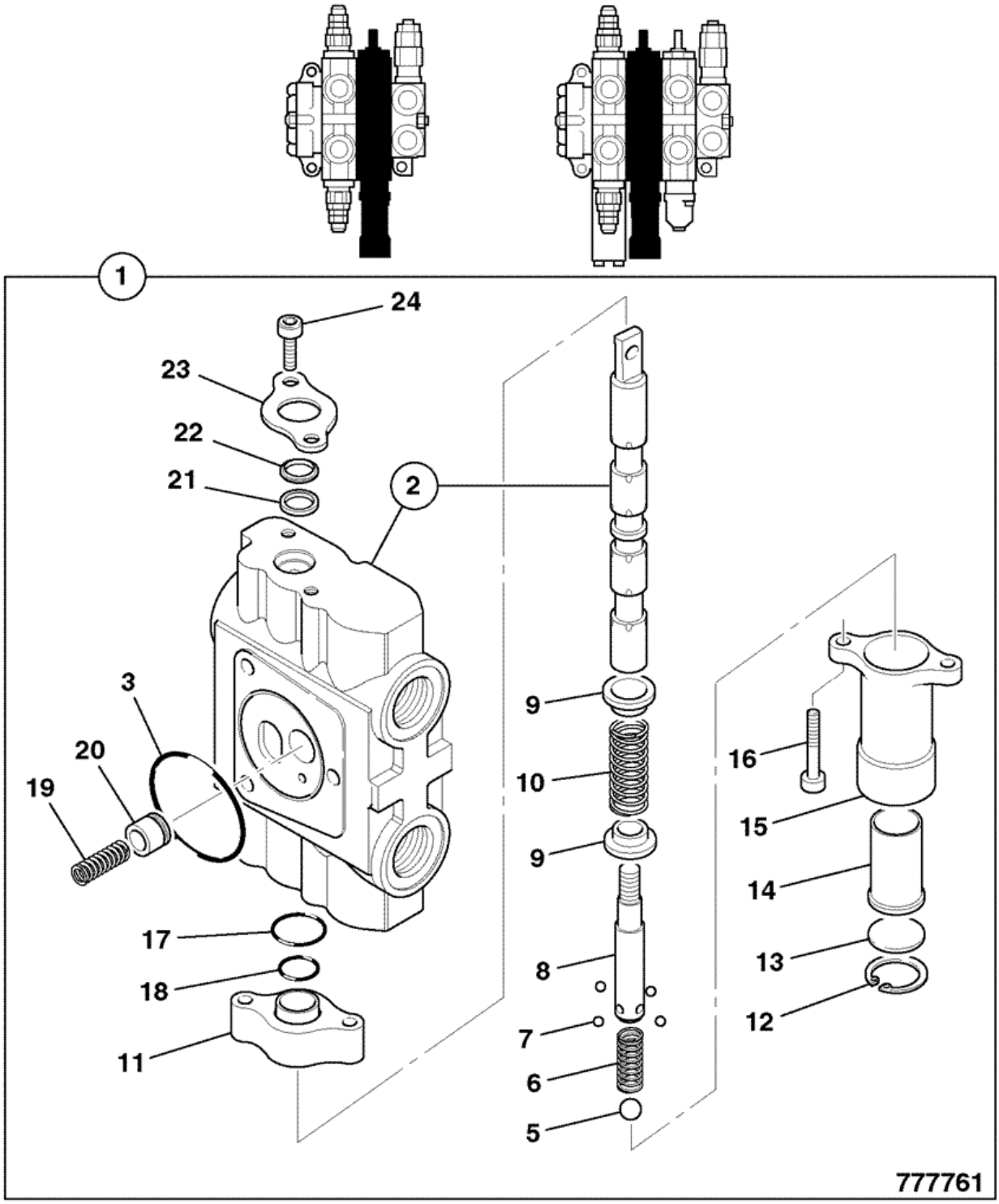


| Item | Part # | Change No | Description | Usage Code | QTY |
|---|---|---|---|---|---|
| 1 | 25/222714 | | Valve section | | 1 |

| | | | | | |
|---|---|---|---|---|---|
| 2 | :NSP | | None serviced part<br>*Spool and body* | | 1 |
| 3 | ::25/606812 | | O Ring interface valve sections | | 1 |
| 4 | :25/607608 | | Kit-end mechanism | | 1 |
| 5 | ::25/607609 | | Ball | | 1 |
| 6 | ::25/607610 | | Spring | | 1 |
| 7 | ::25/607611 | | Ball | | 4 |
| 8 | ::25/607612 | | End spool | | 1 |
| 9 | ::25/606834 | | Seat spring | | 2 |
| 10 | ::25/606833 | | Spring | | 1 |
| 11 | ::25/220374 | | Spacer | | 1 |
| 12 | ::25/606829 | | Retainer | | 1 |
| 13 | ::25/607614 | | Spacer | | 1 |
| 14 | ::25/607615 | | Sleeve | | 1 |
| 15 | ::25/606825 | | Cap detent | | 1 |
| 16 | ::25/607616 | | Capscrew | | 2 |
| 17 | ::25/606837 | | O Ring | | 1 |
| 18 | ::25/606836 | | O Ring | | 1 |
| 19 | :25/606844 | | Spring | | 1 |
| 20 | :25/606843 | | Poppet | | 1 |
| 21 | :25/221934 | | Seal | | 1 |
| 22 | :25/221933 | | Seal | | 1 |
| 23 | :25/222718 | | Plate end plate | | 1 |
| 24 | :25/606101 | | Screw | | 2 |

Product Catalog \ CONSTRUCTION \ NORTH AMERICA \ CONSTRUCTION / INDUSTRIAL \ BACKHOE LOADER 3CX,4CX,214,215,217 \ 3C PLUS (91HP) , Made in Brazil with Dieselmax/IESA Engine 9812/0080 \ E HYDRAULICS INCLUDING STEERING \ E03 VALVES & HYDRAULIC FILTERS

# 9812/0080 E3-2-30 VALVE, LOADER, MAIN RELIEF

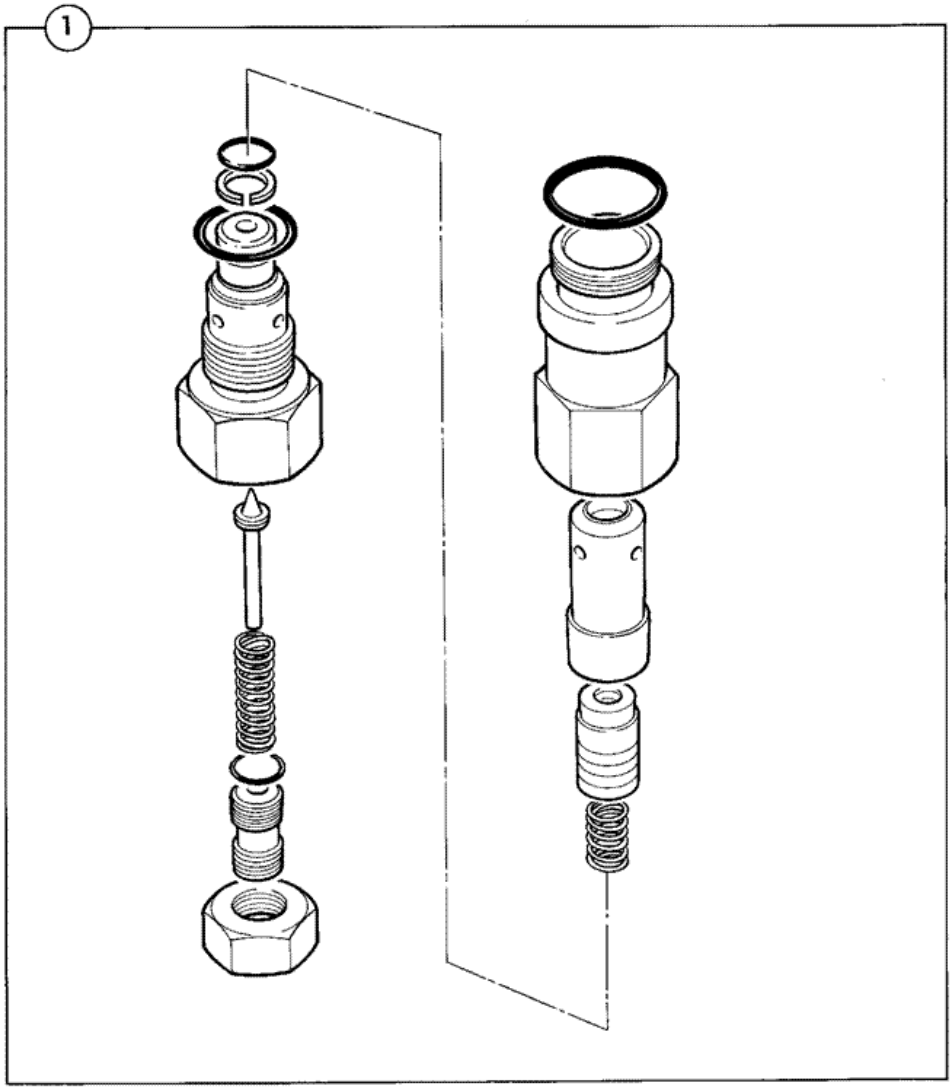


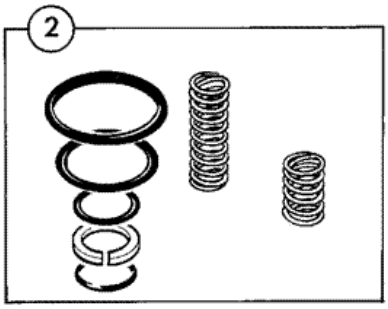


261840

| Item | Part # | Change No | Description | Usage Code | QTY |
|---|---|---|---|---|---|
| 1 | 25/222659 | | Valve assembly main relief | | 1 |
| 2 | :25/618902 | | Kit-repair relief valve | | 1 |

# 9812/0080 E3-2-35 VALVE, LOADER, AUXILIARY RELIEF, 2 & 3 SPOOL

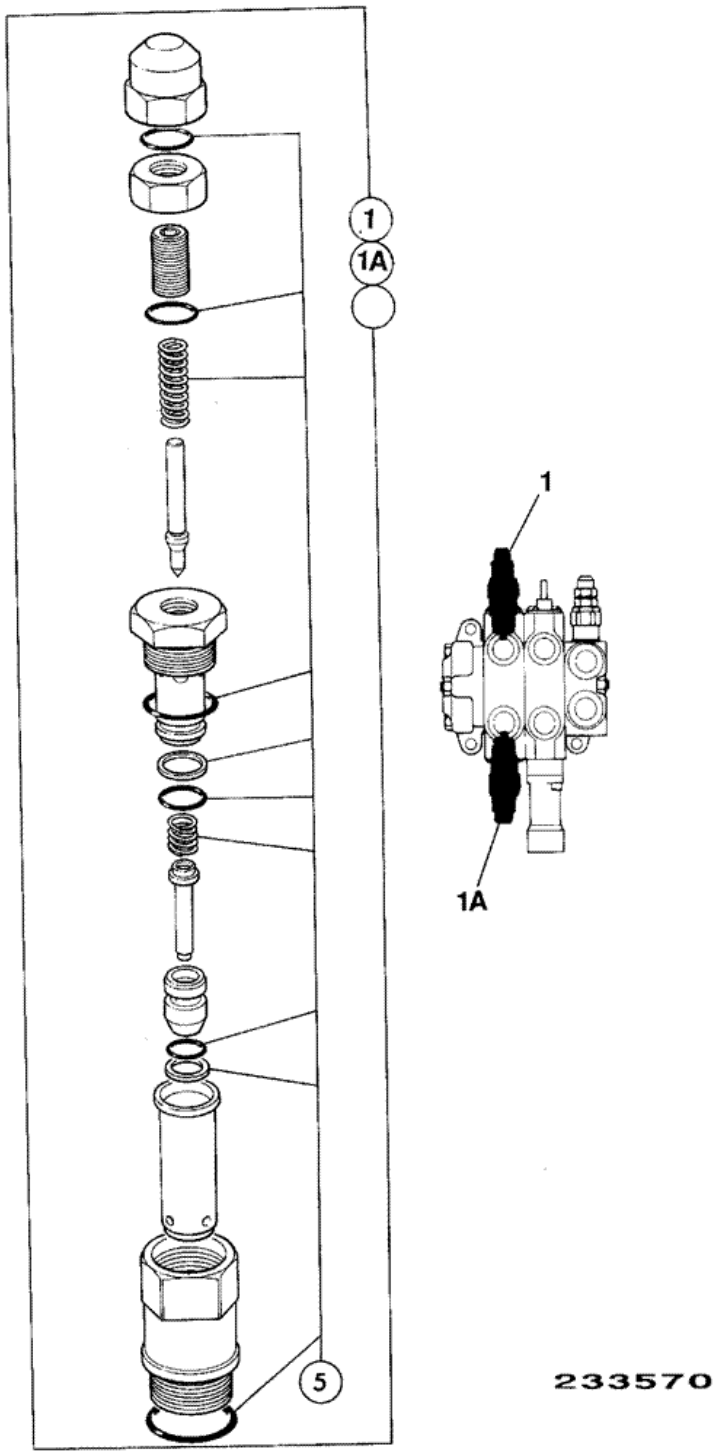


| Item | Part # | Change No | Description | Usage Code | QTY |
|---|---|---|---|---|---|
| | | | Valve auxiliary relief | | |

| | | | | | |
|---|---|---|---|---|---|
| 1 | 25/223705 | | *Top port* | | 1 |
| 1A | 25/223701 | | Valve auxiliary relief<br>*Bottom port* | | 1 |
| 5 | :25/974632 | | Kit-repair | | 1 |

Product Catalog \ CONSTRUCTION \ NORTH AMERICA \ CONSTRUCTION / INDUSTRIAL \ BACKHOE LOADER 3CX,4CX,214,215,217 \ 3C PLUS (91HP) , Made in Brazil with Dieselmax/IESA Engine 9812/0080 \ E HYDRAULICS INCLUDING STEERING \ E03 VALVES & HYDRAULIC FILTERS

# 9812/0080 E3-2-40 VALVE, SECTION, SHOVEL, 3 SPOOL, ELECTRICAL DETENT, LOADER VALVE

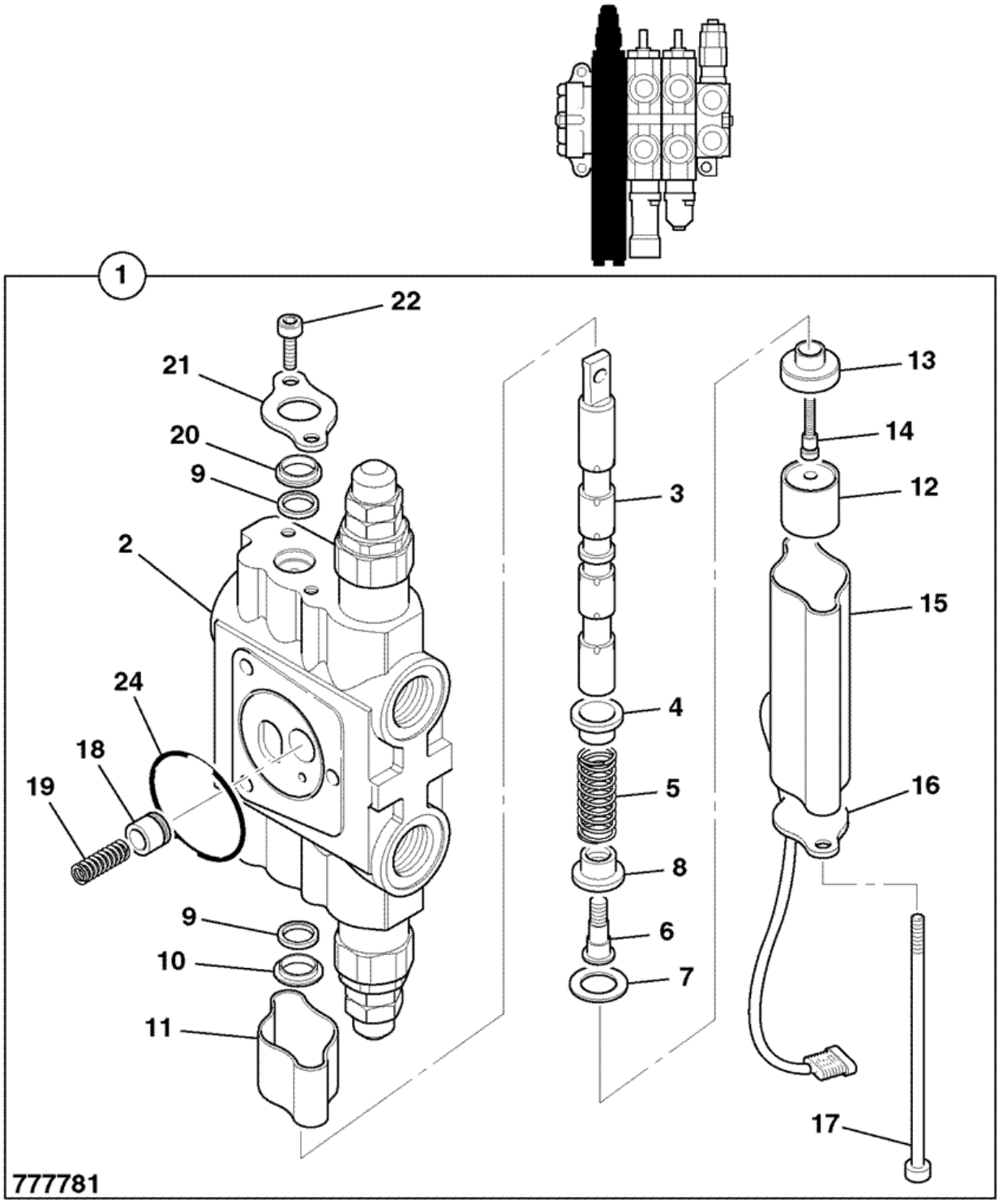


| Item | Part # | Change No | Description | Usage Code | QTY |
|---|---|---|---|---|---|
| 1 | 25/222713 | | Valve section | | 1 |

| | | | | | |
|---|---|---|---|---|---|
| 2 | :NSP | | None serviced part<br>*Body* | | 1 |
| 3 | :NSP | | None serviced part<br>*Spool* | | 1 |
| 4 | :25/606834 | | Seat spring | | 1 |
| 5 | :25/606833 | | Spring | | 1 |
| 6 | :25/621809 | | Screw | | 1 |
| 7 | :25/621807 | | Retainer | | 1 |
| 8 | :25/621808 | | Retainer spring | | 1 |
| 9 | :25/221934 | | Seal | | 2 |
| 10 | :25/612211 | | Retainer | | 1 |
| 11 | :25/612206 | | Cap spool | | 1 |
| 12 | :25/621803 | | Sleeve magnetic | | 1 |
| 13 | :25/621805 | | Housing claper | | 1 |
| 14 | :25/621806 | | Screw clamper housing | | 1 |
| 15 | :25/621804 | | Cap spool | | 1 |
| 16 | :25/612209 | | Plate end cap | | 1 |
| 17 | :25/621802 | | Capscrew | | 2 |
| 18 | :25/606843 | | Poppet | | 1 |
| 19 | :25/606844 | | Spring | | 1 |
| 20 | :25/221933 | | Seal | | 1 |
| 21 | :25/222718 | | Plate end plate | | 1 |
| 22 | :25/606101 | | Screw | | 2 |
| 24 | :25/606812 | | O Ring interface valve sections | | 1 |

Product Catalog \ CONSTRUCTION \ NORTH AMERICA \ CONSTRUCTION / INDUSTRIAL \ BACKHOE LOADER 3CX,4CX,214,215,217 \ 3C PLUS (91HP) , Made in Brazil with Dieselmax/IESA Engine 9812/0080 \ E HYDRAULICS INCLUDING STEERING \ E03 VALVES & HYDRAULIC FILTERS

# 9812/0080 E3-2-50 VALVE, SECTION, AUXILIARY, 3 SPOOL, LOADER VALVE

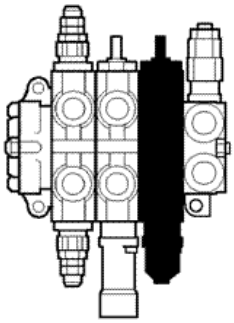

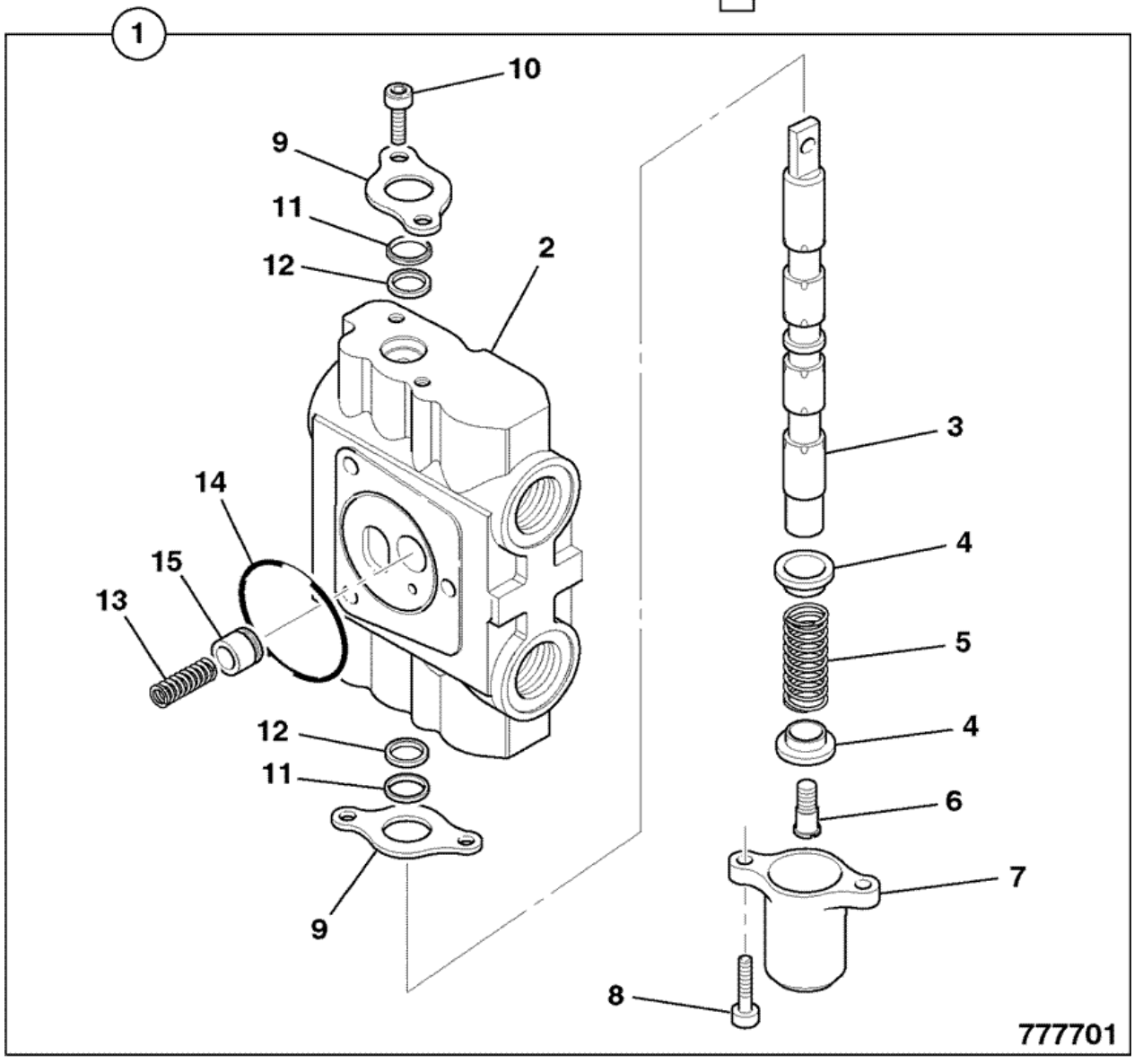


| Item | Part # | Change No | Description | Usage Code | QTY |
|---|---|---|---|---|---|
| 1 | 25/222715 | | Valve section | | 1 |

| | | | | | |
|---|---|---|---|---|---|
| 2 | :NSP | | None serviced part | | 1 |
| 3 | :NSP | | None serviced part | | 1 |
| 4 | :25/606834 | | Seat spring | | 2 |
| 5 | :25/606833 | | Spring | | 1 |
| 6 | :25/606828 | | Spool end | | 1 |
| 7 | :25/606846 | | Cap spool | | 1 |
| 8 | :25/606827 | | Screw | | 2 |
| 9 | :25/222718 | | Plate end plate | | 2 |
| 10 | :25/606101 | | Screw | | 2 |
| 11 | :25/221933 | | Seal | | 2 |
| 12 | :25/221934 | | Seal | | 2 |
| 13 | :25/606844 | | Spring | | 1 |
| 14 | :25/606812 | | O Ring interface valve sections | | 1 |
| 15 | :25/606843 | | Poppet | | 1 |

Product Catalog \ CONSTRUCTION \ NORTH AMERICA \ CONSTRUCTION / INDUSTRIAL \ BACKHOE LOADER 3CX,4CX,214,215,217 \ 3C PLUS (91HP) , Made in Brazil with Dieselmax/IESA Engine 9812/0080 \ E HYDRAULICS INCLUDING STEERING \ E03 VALVES & HYDRAULIC FILTERS

# 9812/0080 E3-2-60 VALVE, LOADER, 3 SPOOL, 3RD PORT BLANKING

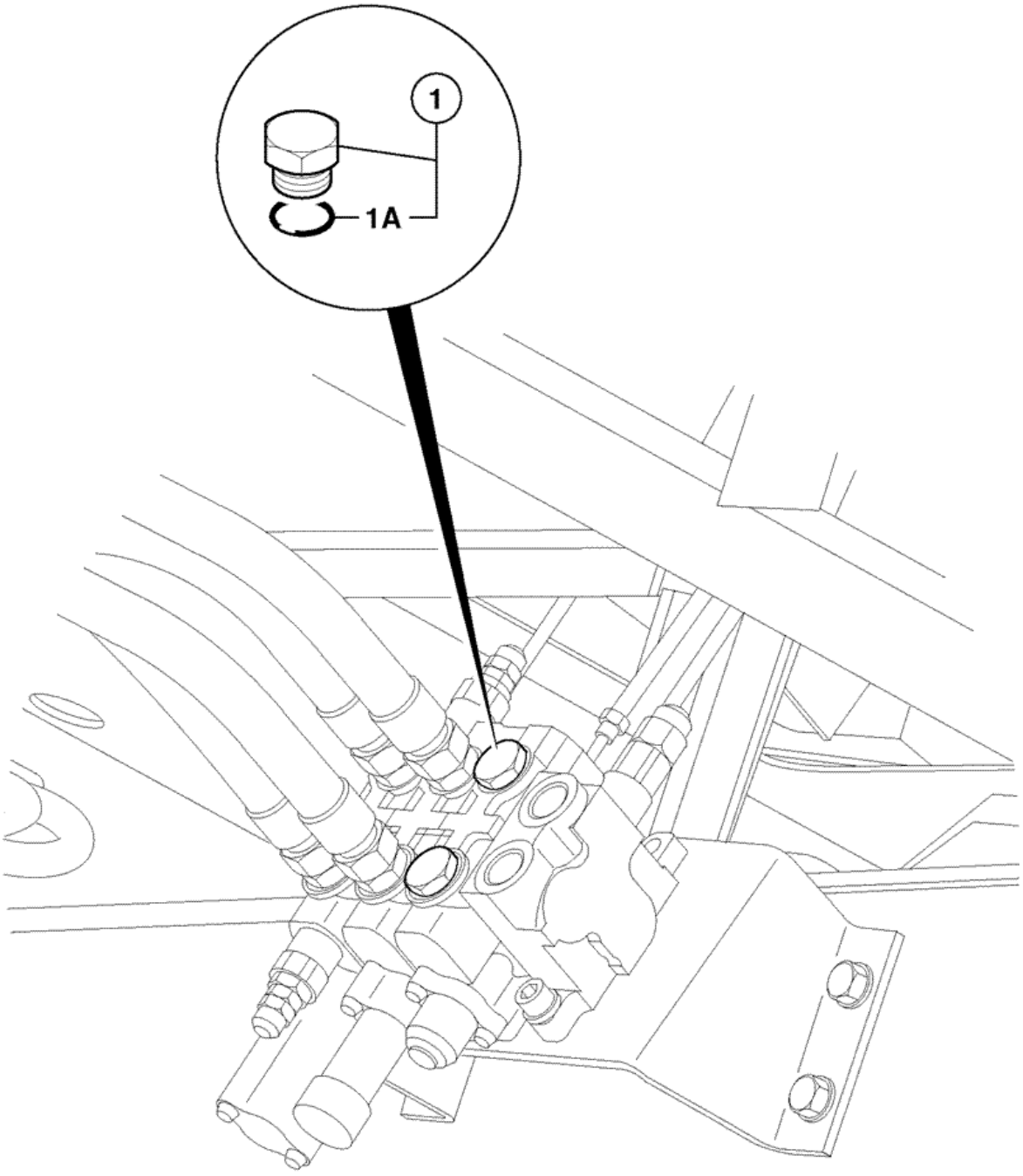


788200

| Item | Part # | Change No | Description | Usage Code | QTY |
|---|---|---|---|---|---|
| 1 | 1745/0003 | | Plug blanking | | 2 |

| | | | | | |
|---|---|---|---|---|---|
| 1A | :2401/0506 | | O Ring | | 1 |

Product Catalog \ CONSTRUCTION \ NORTH AMERICA \ CONSTRUCTION / INDUSTRIAL \ BACKHOE LOADER 3CX,4CX,214,215,217 \ 3C PLUS (91HP) , Made in Brazil with Dieselmax/IESA Engine 9812/0080 \ E HYDRAULICS INCLUDING STEERING \ E03 VALVES & HYDRAULIC FILTERS

# 9812/0080 E3-3-11 VALVE, AUXILIARY, BACKHOE, GEAR PUMP, AUXILIARY & EXTRADIG DIPPER BREAKER

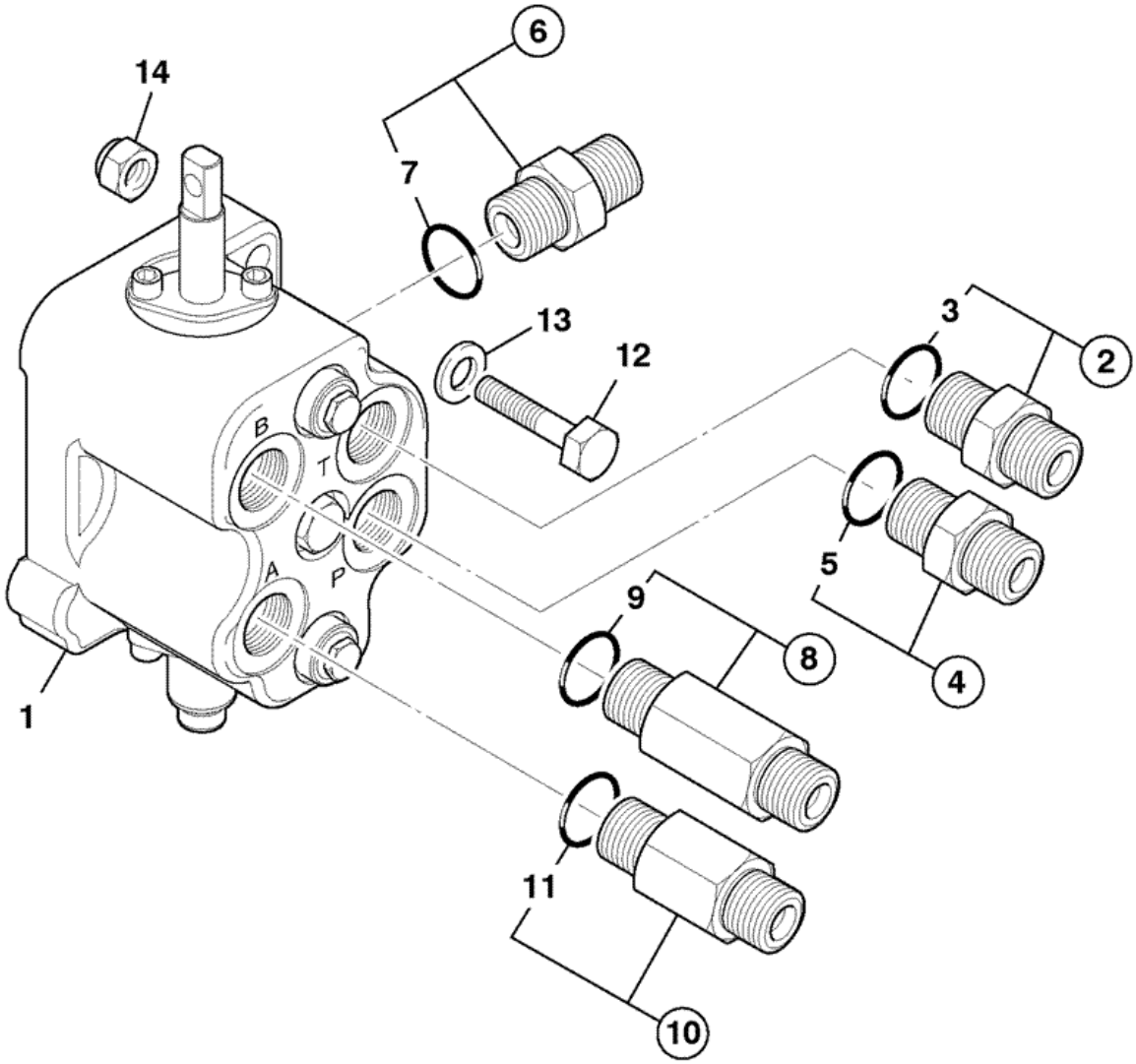


722911

| Item | Part # | Change No | Description | Usage Code | QTY |
|---|---|---|---|---|---|
| 1 | 25/221919 | | Valve 1 spool,auxiliary black | | 1 |

| | | | | | |
|---|---|---|---|---|---|
| 2 | 1620/2058 | | Adaptor M/M includes O-ring 2401/0507<br>*T port* | | 1 |
| 3 | :2401/0507 | | O Ring | | 1 |
| 4 | 1620/2058 | | Adaptor M/M includes O-ring 2401/0507<br>*P port* | | 1 |
| 5 | :2401/0507 | | O Ring | | 1 |
| 6 | 1620/2056 | | Adaptor<br>*HPCO* | | 1 |
| 7 | :2401/0507 | | O Ring | | 1 |
| 8 | 816/90231 | | Adapter extended M/M 7/8"SAE x 1/2"BSP | | 1 |
| 9 | :2401/0507 | | O Ring | | 1 |
| 10 | 1620/2055 | | Adaptor 39.5mm Long. M/M 1/2" x 7/8"<br>*bottom port A* | | 1 |
| 11 | :2401/0507 | | O Ring | | 1 |
| 12 | 1315/3412Z | | Bolt | | 2 |
| 13 | 1420/0008Z | | Washer Plain M10 | | 2 |
| 14 | 1370/0303Z | | Nut lock M10 | | 2 |

Product Catalog \ CONSTRUCTION \ NORTH AMERICA \ CONSTRUCTION / INDUSTRIAL \ BACKHOE LOADER 3CX,4CX,214,215,217 \ 3C PLUS (91HP) , Made in Brazil with Dieselmax/IESA Engine 9812/0080 \ E HYDRAULICS INCLUDING STEERING \ E03 VALVES & HYDRAULIC FILTERS

# 9812/0080 E3-3-22 VALVE, AUXILIARY, COMPONENTS, EXCAVATOR, GEAR PUMP

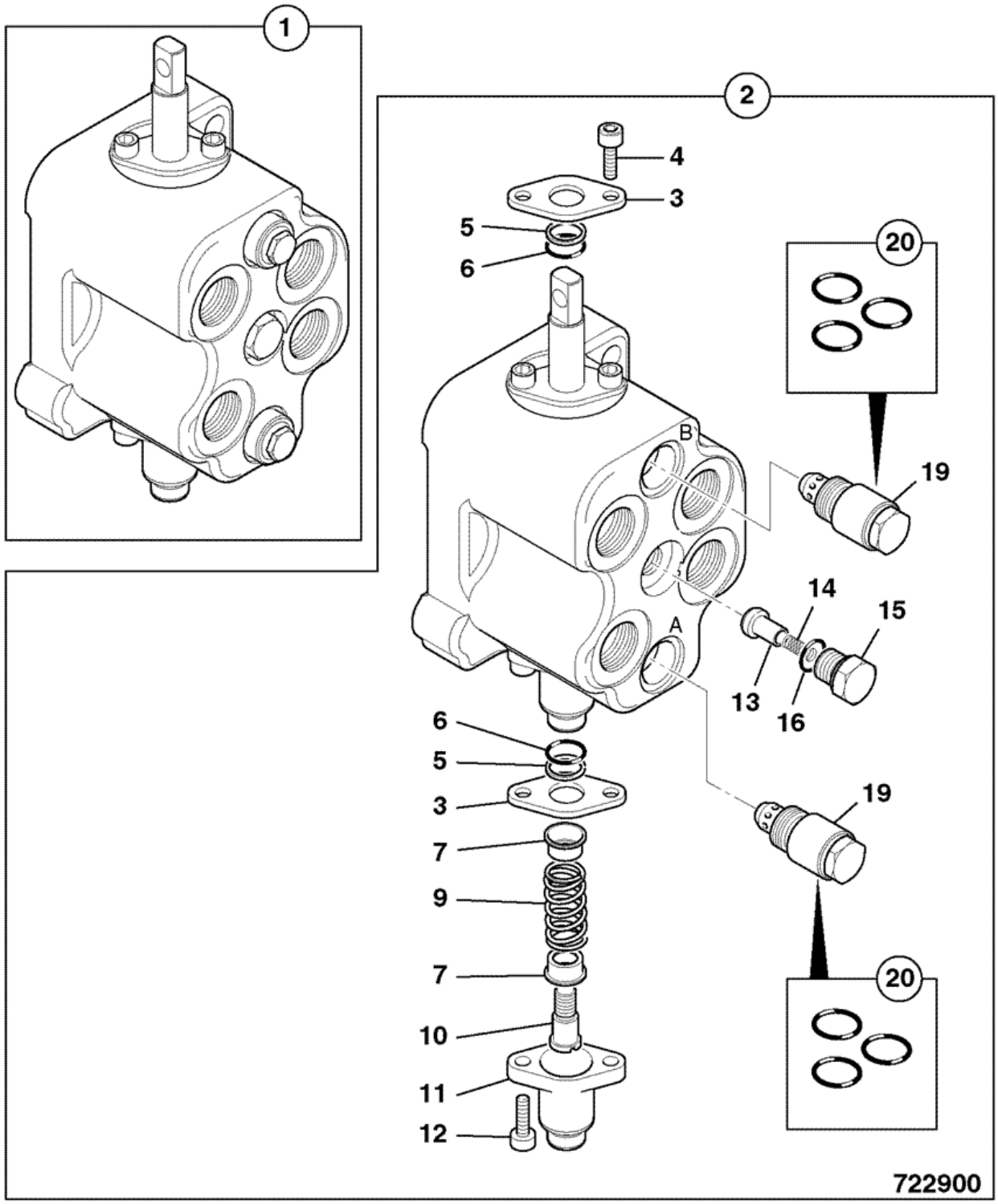


| Item | Part # | Change No | Description | Usage Code | QTY |
|---|---|---|---|---|---|
| | | | Valve 1 spool,auxiliary black | | |

| | | | | | |
|---|---|---|---|---|---|
| 1 | 25/221919 | | *Valve adaptors see E3-3-11* | | 1 |
| 2 | :N.S.P. | | None serviced part<br>*Valve section* | | 1 |
| 3 | ::25/607612 | | End spool | | 2 |
| 4 | ::25/606101 | | Screw | | 2 |
| 5 | ::25/606835 | | Seal wiper | | 2 |
| 6 | ::25/606836 | | O Ring | | 2 |
| 7 | ::25/605124 | | Seat | | 2 |
| 9 | ::25/606833 | | Spring | | 1 |
| 10 | ::25/606828 | | Spool end | | 1 |
| 11 | ::25/606846 | | Cap spool | | 1 |
| 12 | ::25/606827 | | Screw | | 2 |
| 13 | ::25/220924 | | Poppet check valve | | 1 |
| 14 | ::25/220925 | | Spring | | 1 |
| 15 | ::25/220926 | | Plug | | 1 |
| 16 | :::25/607219 | | O Ring | | 1 |
| 19 | ::25/222372 | | Valve relief, 138 bar | port B | 1 |
| 19 | ::25/222371 | | Valve relief 207 bar | port A | 1 |
| 20 | :::25/222370 | | Kit-seal relief valve | | 1 |

# 9812/0080 E3-37-1 VALVE, FLOW REGULATOR, HAMMER CIRCUIT

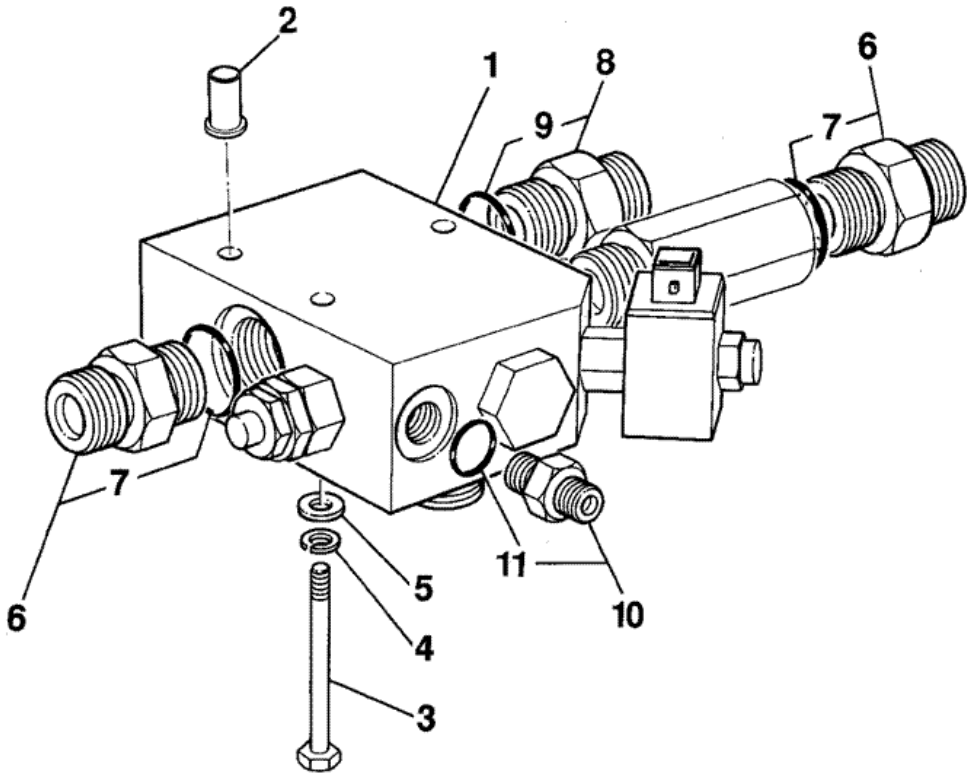


268740

| Item | Part # | Change No | Description | Usage Code | QTY |
|---|---|---|---|---|---|
| 1 | 25/221197 | | Valve solenoid p. flow centre mount hammer | | 1 |

| | | | | | |
|---|---|---|---|---|---|
| 1A | :717/20137 | | Coil 12v<br>*coil only* | | 1 |
| 1B | :25/221755 | | Cartridge<br>*cartridge only* | | 1 |
| 2 | 826/01106 | | Nut rivet,M8 | | 3 |
| 3 | 1315/3318Z | | Bolt M8x80mm Long | | 3 |
| 4 | 1425/0007Z | | Washer spring | | 3 |
| 5 | 1420/0007Z | | Washer plain M8 | | 3 |
| 6 | 1620/2059 | | Adaptor 3/4" includes O-ring 1745/0005<br>*Port CF & P* | | 2 |
| 7 | :2401/0508 | | O Ring | | 1 |
| 8 | 1620/2059 | | Adaptor 3/4" includes O-ring 1745/0005<br>*Port EF* | | 1 |
| 9 | :2401/0508 | | O Ring | | 1 |
| 10 | 1620/2051 | | Adaptor 1/4"BSP x 9/16"SAE<br>*Port T* | | 1 |
| 11 | :2401/0503 | | O Ring | | 1 |
| 12 | 816/00196 | | Cap blanking 3/4"BSP steel | | 1 |

# 9812/0080 E3-5-10 VALVE ADAPTERS, EXCAVATOR, 14'0"

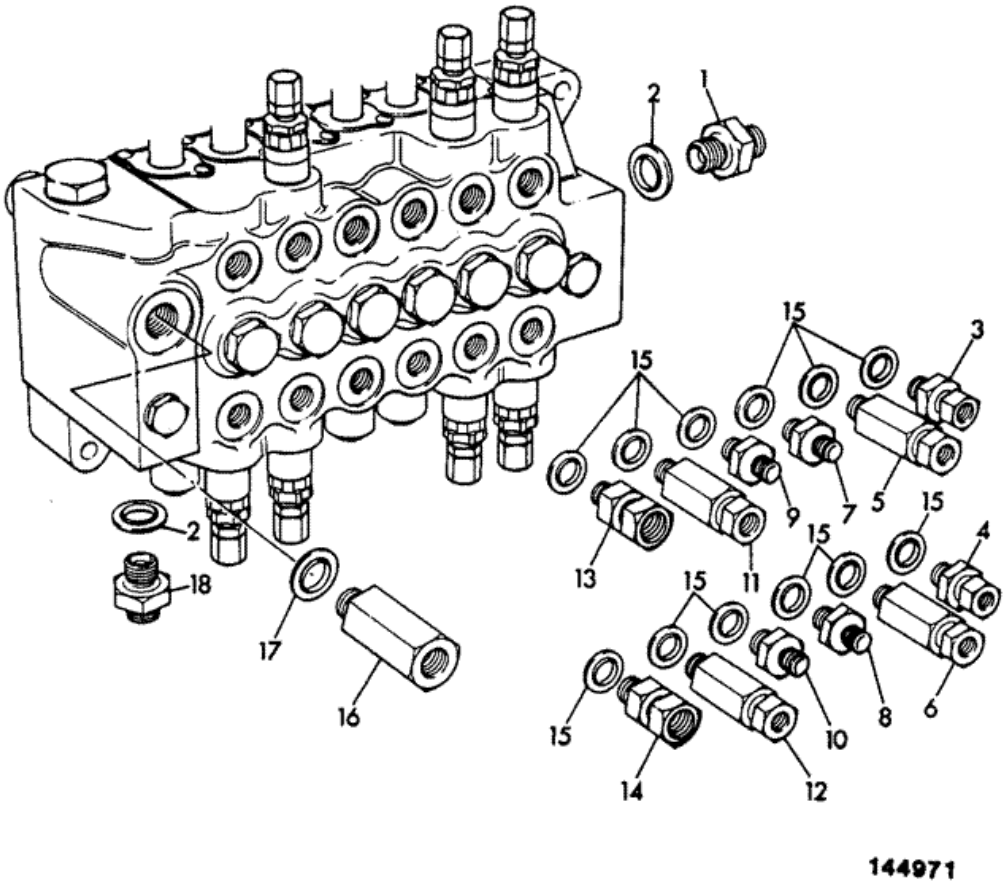

| Item | Part # | Change No | Description | Usage Code | QTY |
|---|---|---|---|---|---|
| 1 | 1620/2059 | | Adaptor 3/4" includes O-ring 1745/0005 | | 1 |
| 2 | :2401/0508 | | O Ring | | 1 |
| 3 | 816/90236 | | Adapter | | 1 |
| 4 | 816/90237 | | Restrictor adapter 3.0mm M/M | | 1 |
| 5 | 1620/2056 | | Adaptor<br>*JCB controls* | | 1 |
| 6 | 816/90352 | | Restrictor adaptr,one way 5.5mm<br>*JCB controls* | | 1 |
| 7 | 816/90234 | | Adapter M/M | | 1 |
| 8 | 816/90365 | | Adapter male/male | | 1 |
| 9 | 816/90234 | | Adapter M/M | | 1 |
| 10 | 816/90365 | | Adapter male/male | | 1 |
| 11 | 816/90283 | | Adaptor Extended<br>*JCB controls* | | 1 |
| 12 | 1620/2056 | | Adaptor<br>*JCB controls* | | 1 |
| 13 | 816/90231 | | Adapter extended M/M 7/8"SAE x 1/2"BSP | | 1 |
| 14 | 1620/2055 | | Adaptor 39.5mm Long. M/M 1/2" x 7/8" | | 1 |
| 15 | 2401/0507 | | O Ring<br>*male end to valve items 3 to 14* | | 1 |
| 15 | 2401/0508 | | O Ring<br>*male end to valve item 18* | | 1 |
| 16 | 1620/2061 | | Adapter M/M | | 1 |
| 17 | 2401/0510 | | O Ring<br>*male end to valve item 16* | | 1 |
| 18 | 1620/2059 | | Adaptor 3/4" includes O-ring 1745/0005 | | 1 |

# 9812/0080 E3-6-21 VALVE-EXCAVATOR, WITH SPOOL GAITERS, CENTREMOUNT,CONTROLLED LEAK

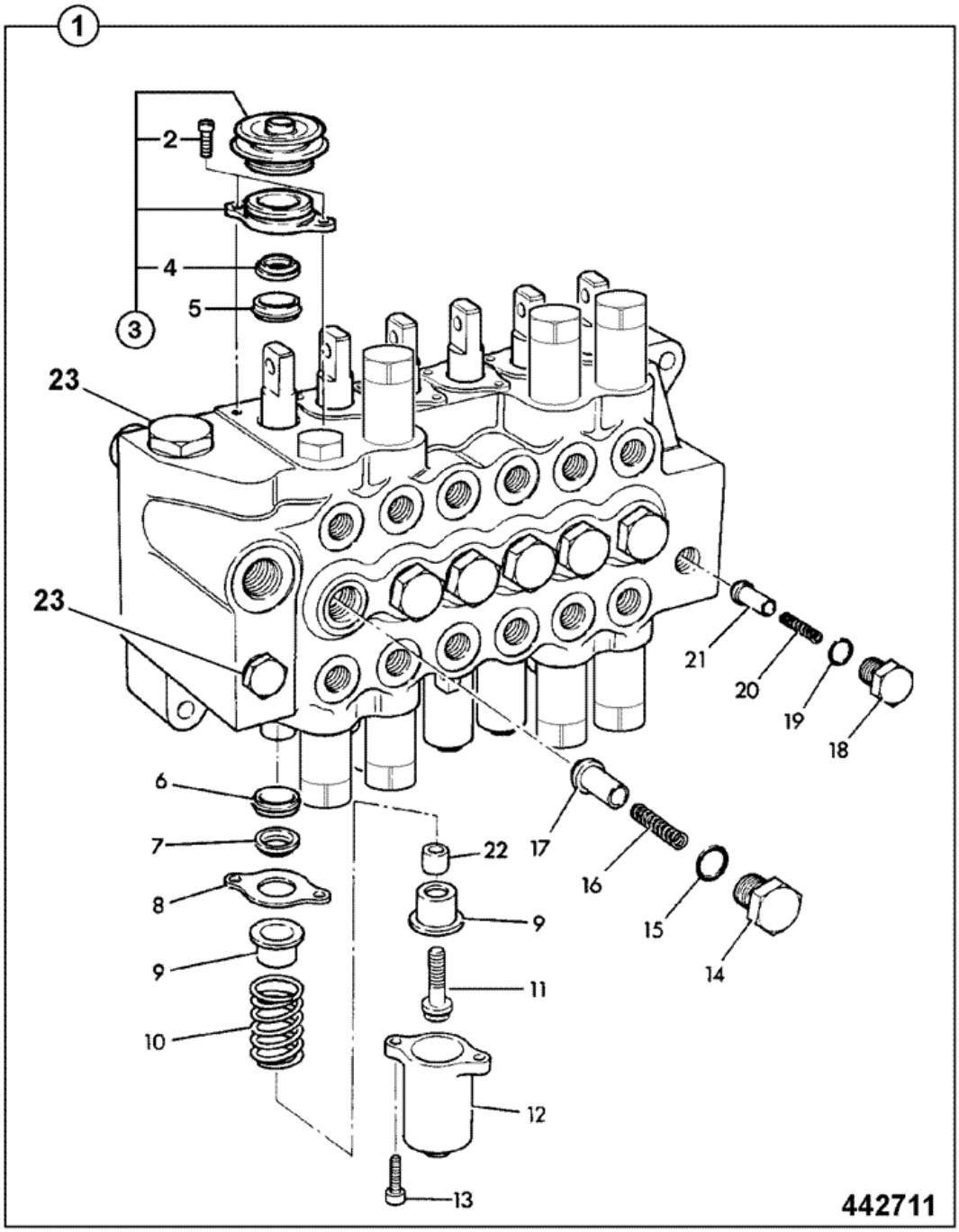


| Item | Part # | Change No | Description | Usage Code | QTY |
|---|---|---|---|---|---|
| 1 | 25/221622 | | Valve 6 spool excavator centremount 14' | | 1 |

| | | | | | |
|---|---|---|---|---|---|
| 2 | :25/975705 | | Screw cap head | | 12 |
| 3 | :25/221745 | | Kit-spool boot | | 6 |
| 4 | :25/975704 | | Wiper | | 6 |
| 5 | :25/221208 | | Seal | | 6 |
| 6 | :25/221208 | | Seal | | 6 |
| 7 | :25/975704 | | Wiper | | 6 |
| 8 | :25/606102 | | Retainer wiper | | 6 |
| 9 | :25/608201 | | Retainer spring | | 12 |
| 10 | :25/608202 | | Spring<br>*Boom, dipper, slew & bucket* | | 4 |
| 10 | :25/608203 | | Spring<br>*Stabiliser* | | 2 |
| 11 | :25/608204 | | Screw spring retainer | | 6 |
| 12 | :25/608205 | | Cover<br>*With drain hole* | | 6 |
| 13 | :25/606110 | | Screw cap | | 12 |
| 14 | :25/606111 | | Cap | | 6 |
| 15 | :25/606112A | | O Ring | | 6 |
| 16 | :25/606113 | | Spring | | 6 |
| 17 | :25/606114 | | Seat | | 6 |
| 18 | :25/606115 | | Cap | | 1 |
| 19 | :25/606116 | | O Ring | | 1 |
| 20 | :25/606117 | | Spring | | 1 |
| 21 | :25/974645 | | Seat check valve | | 1 |
| 22 | :25/608206 | | Spacer | | 6 |
| 23 | :25/606822 | | Plug assembly | | 2 |

Product Catalog \ CONSTRUCTION \ NORTH AMERICA \ CONSTRUCTION / INDUSTRIAL \ BACKHOE LOADER 3CX,4CX,214,215,217 \ 3C PLUS (91HP) , Made in Brazil with Dieselmax/IESA Engine 9812/0080 \ E HYDRAULICS INCLUDING STEERING \ E03 VALVES & HYDRAULIC FILTERS

# 9812/0080 E3-6-22 VALVE-EXCAVATOR, WITHOUT SPOOL GAITER, CENTREMOUNT,CONTROLLED LEAK

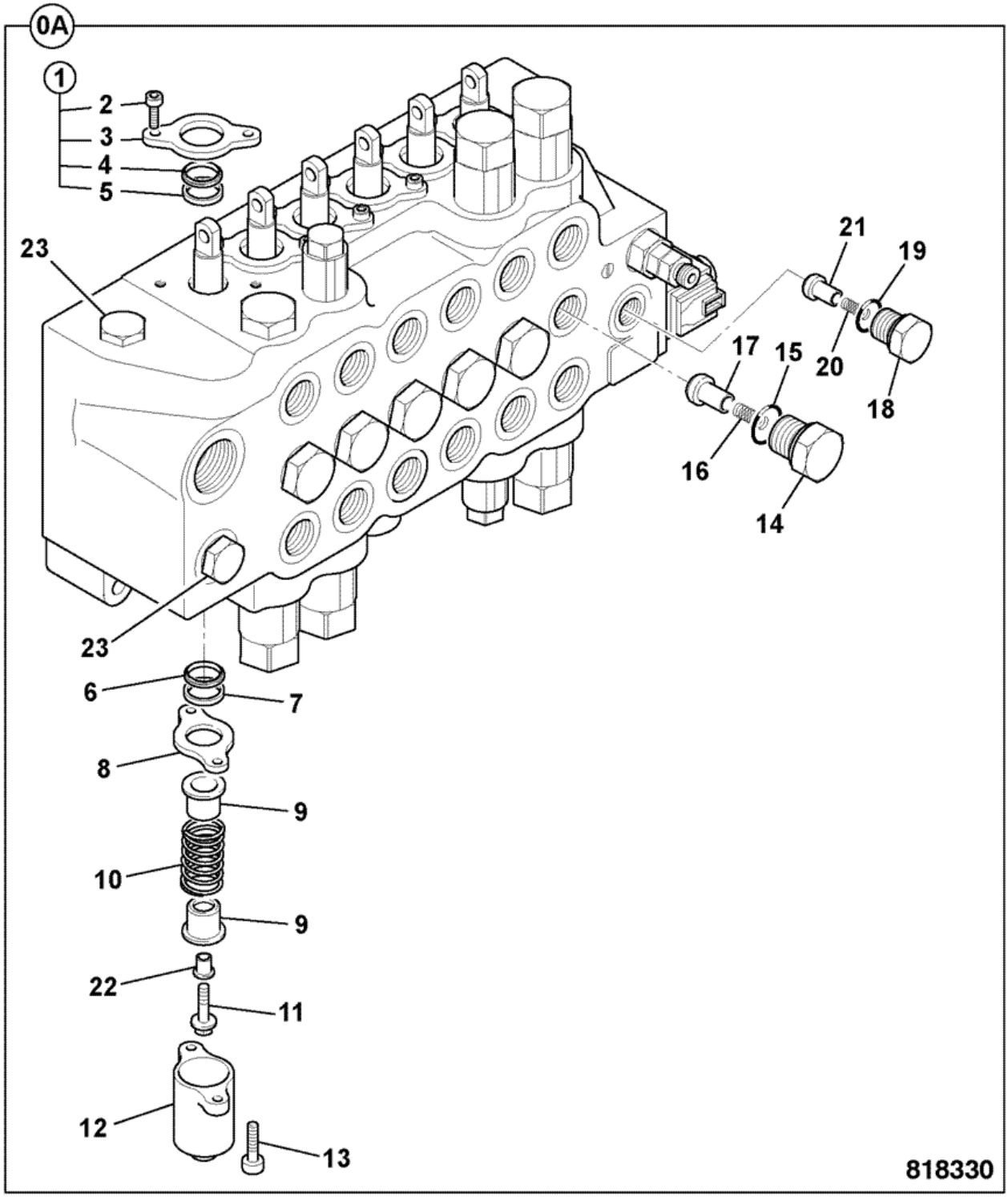


| Item | Part # | Change No | Description | Usage Code | QTY |
|---|---|---|---|---|---|
| A | 25/221622 | | Valve 6 spool excavator centremount 14' | | 1 |

| | | | | | |
|---|---|---|---|---|---|
| 1 | :25/222660 | | Kit std spool gland | | 6 |
| 2 | ::25/606101 | | Screw | | 2 |
| 3 | ::25/222198 | | Plate seal | | 1 |
| 4 | ::25/222661 | | Wiper seal | | 1 |
| 5 | ::25/221208 | | Seal | | 1 |
| 6 | :25/221208 | | Seal | | 6 |
| 7 | :25/222661 | | Wiper seal | | 6 |
| 8 | :25/606102 | | Retainer wiper | | 6 |
| 9 | :25/608201 | | Retainer spring | | 12 |
| 10 | :25/608202 | | Spring<br>*Boom, dipper, slew & bucket* | | 4 |
| 10 | :25/608203 | | Spring<br>*Stabiliser* | | 2 |
| 11 | :25/608204 | | Screw spring retainer | | 6 |
| 12 | :25/608205 | | Cover<br>*With drain hole* | | 6 |
| 13 | :25/606110 | | Screw cap | | 12 |
| 14 | :25/606111 | | Cap | | 6 |
| 15 | :25/606112A | | O Ring | | 6 |
| 16 | :25/606113 | | Spring | | 6 |
| 17 | :25/606114 | | Seat | | 6 |
| 18 | :25/606115 | | Cap | | 1 |
| 19 | :25/606116 | | O Ring | | 1 |
| 20 | :25/606117 | | Spring | | 1 |
| 21 | :25/974645 | | Seat check valve | | 1 |
| 22 | :25/608206 | | Spacer | | 6 |
| 23 | :25/606822 | | Plug assembly | | 2 |

Product Catalog \ CONSTRUCTION \ NORTH AMERICA \ CONSTRUCTION / INDUSTRIAL \ BACKHOE LOADER 3CX,4CX,214,215,217 \ 3C PLUS (91HP) , Made in Brazil with Dieselmax/IESA Engine 9812/0080 \ E HYDRAULICS INCLUDING STEERING \ E03 VALVES & HYDRAULIC FILTERS

# 9812/0080 E3-6-25 VALVE, EXCAVATOR, CENTREMOUNT, RELIEF, CONTROLLED LEAK

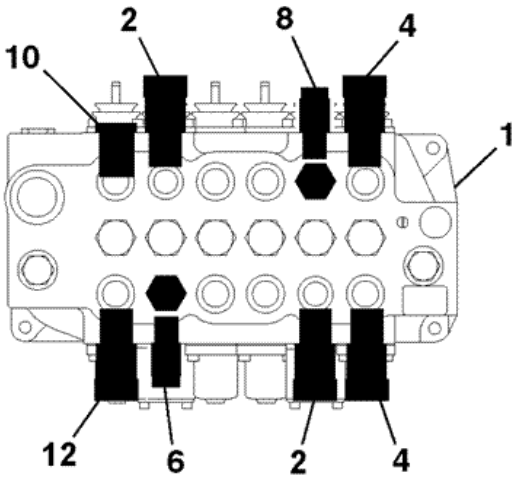


ISO CONTROLS

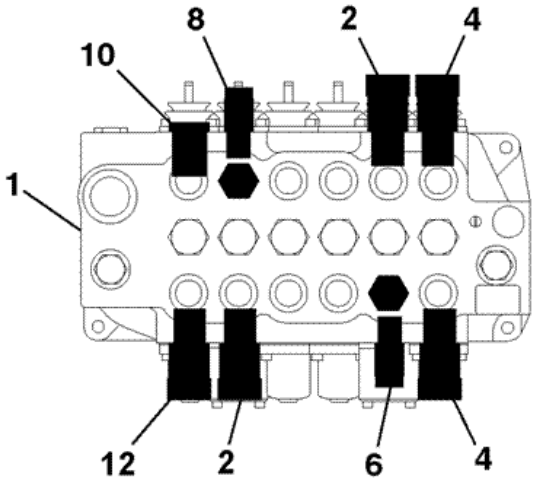


JCB CONTROLS

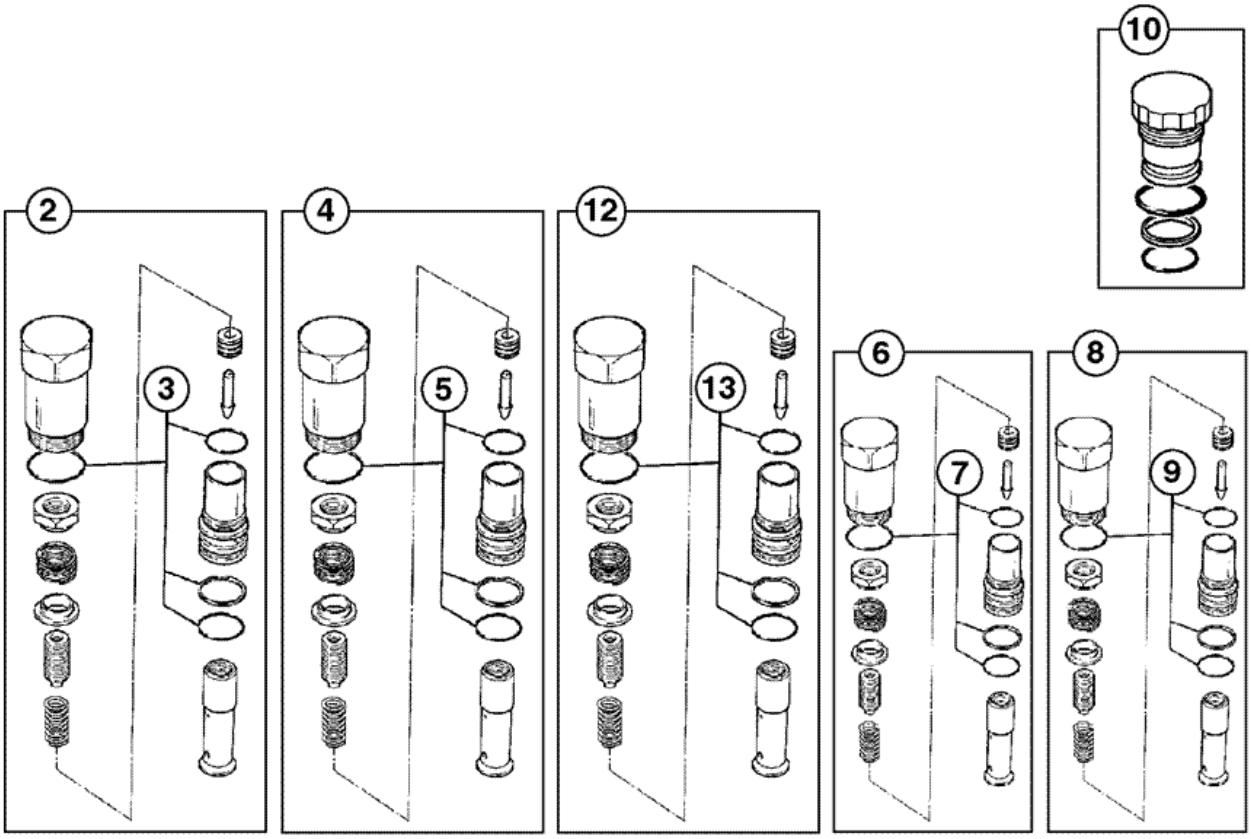


737870

| Item | Part # | Change No | Description | Usage Code | QTY |
|---|---|---|---|---|---|
| 1 | 25/221622 | | Valve 6 spool excavator centremount 14' | | 1 |

| | | | | | |
|---|---|---|---|---|---|
| 2 | :25/222499 | | Valve relief, 3600/2.5 | | 2 |
| 4 | :25/222498 | | Valve relief, 3800/2.5 | | 2 |
| 5 | ::25/222305 | | Seal ARV service kit | | 1 |
| 6 | :25/223082 | | Valve relief 5000/2.5 | | 1 |
| 7 | ::25/222190 | | Kit -RV seal and spring | | 1 |
| 8 | :25/222191 | | Valve relief 3600psi | | 1 |
| 9 | ::25/222192 | | Kit -RV seal and spring | | 1 |
| 10 | :25/609901 | | Plug | | 1 |
| 12 | :25/222499 | | Valve relief, 3600/2.5 | | 1 |
| 13 | ::25/222305 | | Seal ARV service kit | | 1 |

# 9812/0080 E4-14-1 RAM, JAW BUCKET

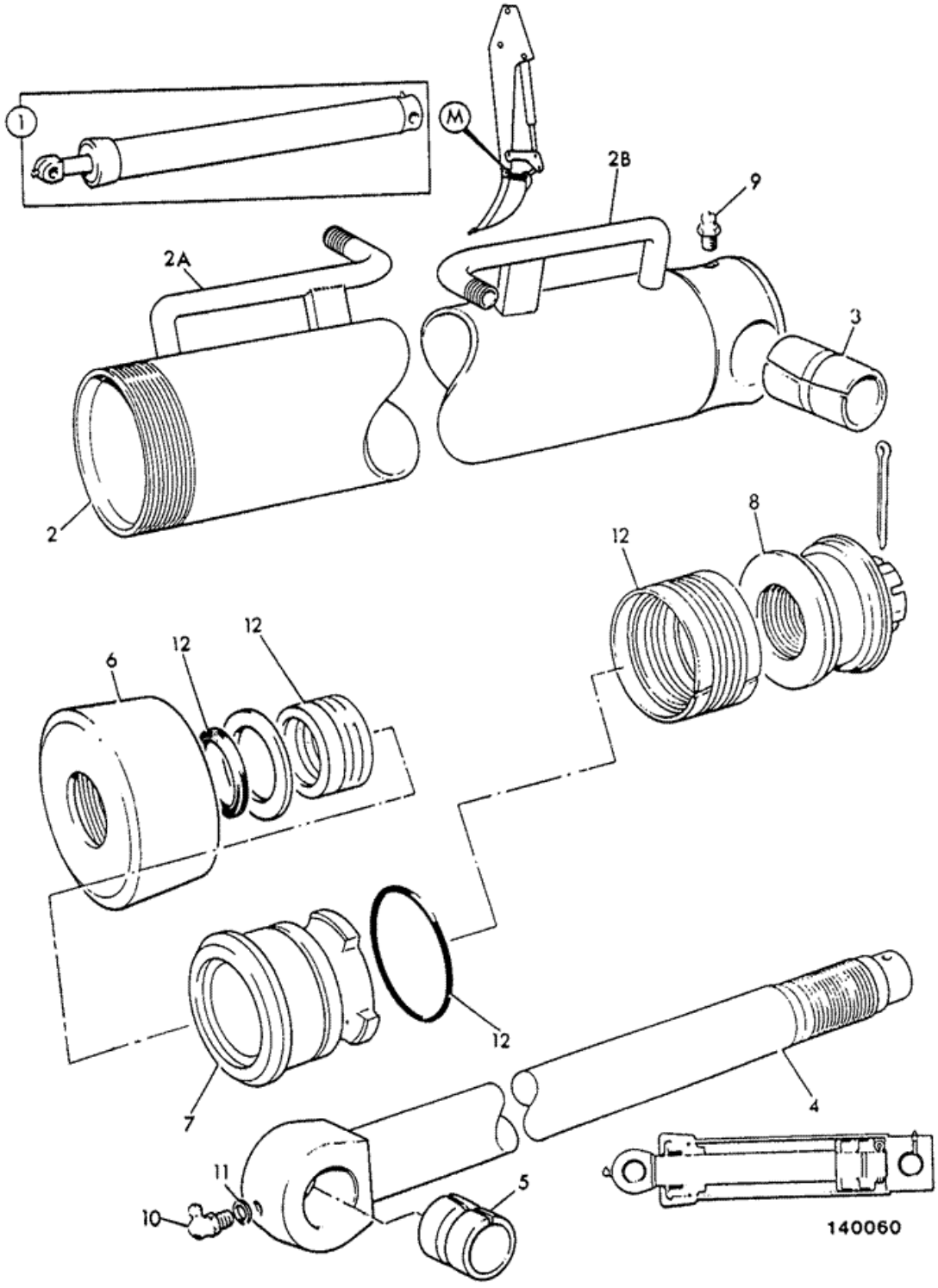

| Item | Part # | Change No | Description | Usage Code | QTY |
|---|---|---|---|---|---|
| 1 | 560/34300 | | Ram Bucket jaw | M | 1 |
| 2 | :560/34400 | | Cylinder | | 1 |
| 2A | ::658/00567 | | Pipe | | 1 |
| 2B | ::658/00567 | | Pipe | | 1 |
| 3 | :1208/0022 | | Bush | | 1 |
| 4 | :560/29000 | | Rod piston | | 1 |
| 5 | :1208/0015 | | Bush | | 1 |
| 6 | :560/19903 | | Cap end | | 1 |
| 7 | :560/19902 | | Gland bearing | | 1 |
| 8 | :560/19901 | | Nut piston head | | 1 |
| 9 | :1450/0001 | | Nipple grease, straight 1/8 BSP | | 1 |
| 10 | :1450/1002 | | Nipple grease 1/4" BSP 90deg. | | 1 |
| 11 | :1403/0001 | | Washer aluminium | | 1 |
| 12 | :991/00003 | | Kit-seal ram 2.0" rod x 4.00" cyl | | 1 |

Product Catalog \ CONSTRUCTION \ NORTH AMERICA \ CONSTRUCTION / INDUSTRIAL \ BACKHOE LOADER 3CX,4CX,214,215,217 \ 3C PLUS (91HP) , Made in Brazil with Dieselmax/IESA Engine 9812/0080 \ E HYDRAULICS INCLUDING STEERING \ E04 RAMS

# 9812/0080 E4-2-21 RAM, SHOVEL, 50MM ROD X 80MM CYL

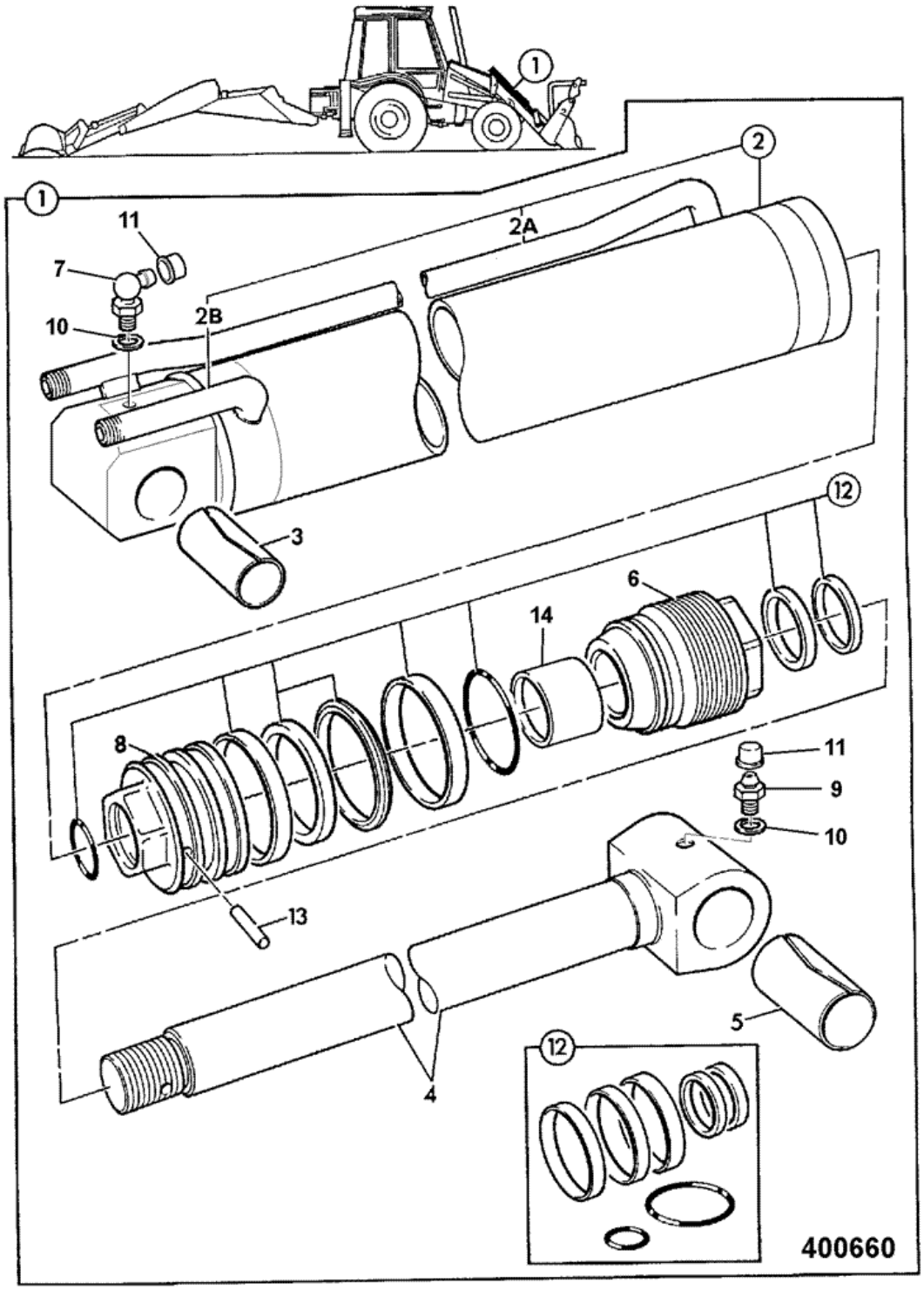


| Item | Part # | Change No | Description | Usage Code | QTY |
|---|---|---|---|---|---|
| 1 | 556/60236 | | Ram assembly, shovel<br>*Standard build* | | 2 |
| | | | | | |

| | | | | | |
|---|---|---|---|---|---|
| 2 | :556/70087 | | Cylinder shovel | | 1 |
| 2A | ::NSP | | None serviced part | | 1 |
| 2B | ::NSP | | None serviced part | | 1 |
| 3 | :1208/0018 | | Bush | | 1 |
| 4 | :590/40260 | | Rod piston Shovel ram 213 | | 1 |
| 4 | :590/40307 | | Rod piston, 40x909 Shovel ram + reset | | 1 |
| 5 | :1208/0015 | | Bush | | 1 |
| 6 | :594/00120 | | Cap end, 70X40 | | 1 |
| 7 | :1450/1001 | | Nipple grease 90deg. angle | | 1 |
| 8 | :595/10027 | | Head piston | | 1 |
| 9 | :1450/0001 | | Nipple grease, straight 1/8 BSP | | 1 |
| 10 | :1403/0001 | | Washer aluminium | | 1 |
| 11 | :835/00017 | | Cap grease nipple | | 2 |
| 12 | :991/00100 | | Kit-seal 70x40 | | 1 |
| 13 | :826/01182 | | Dowel | | 1 |
| 14 | :2411/9004 | | Bearing | | 1 |

# 9812/0080 E4-7-32 RAM, BUCKET, EXTRADIG DIPPER

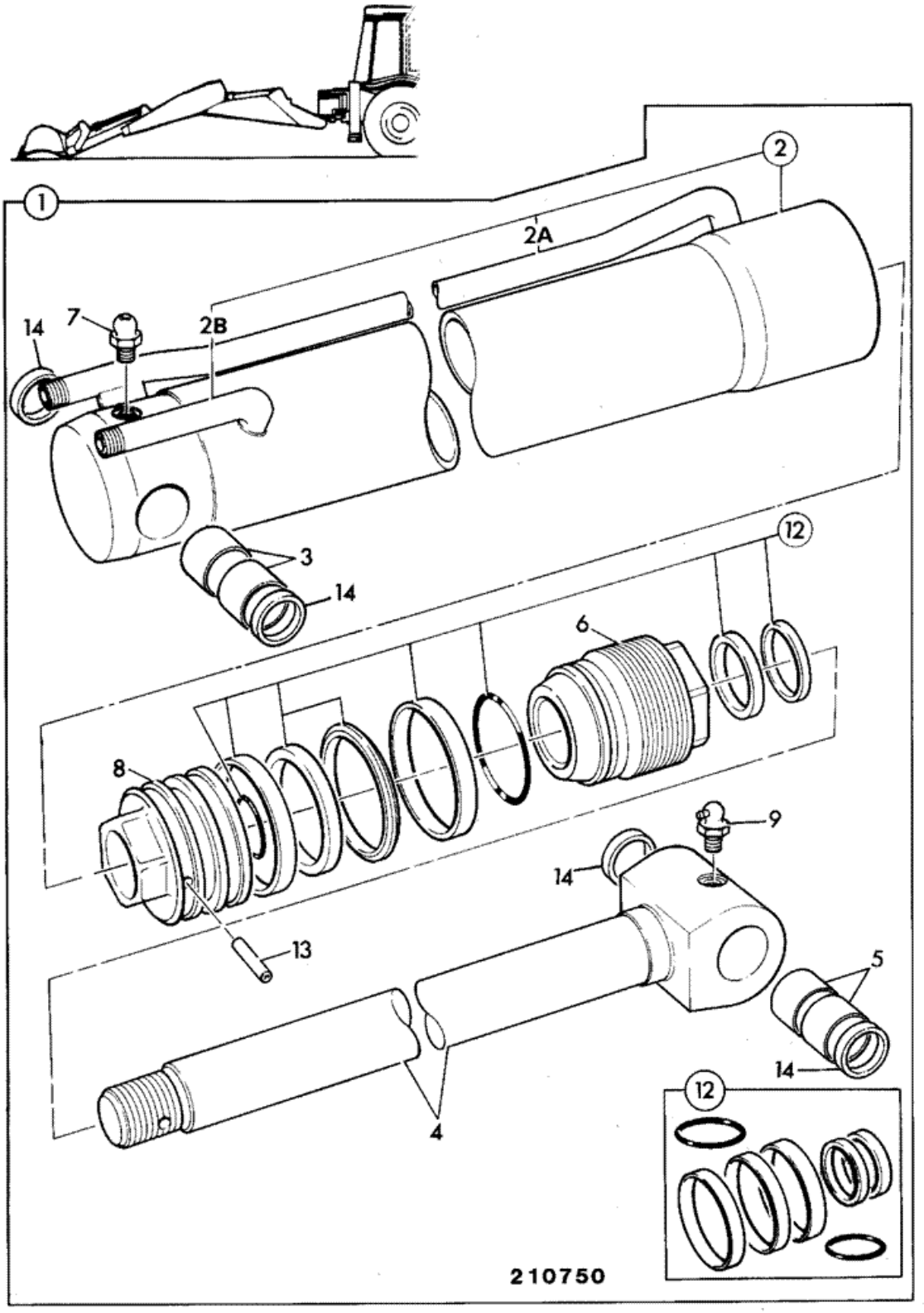

| Item | Part # | Change No | Description | Usage Code | QTY |
|---|---|---|---|---|---|
| 1 | 557/60154 | <M TBA | Ram assembly bucket 90 X 60 | | 1 |
| 1 | 557/60209 | | Ram assembly, bucket 90X60<br>*see E4-7-33 for breakdown* | | 1 |
| 2 | :557/70136 | | Cylinder bucket ram 90mm | | 1 |
| 2A | ::NSP | | None serviced part | | 1 |
| 2B | ::NSP | | None serviced part | | 1 |
| 3 | :809/00125 | | Bearing liner 45mm pivot bore | | 2 |
| 4 | :590/40317 | | Rod piston 60mm | | 1 |
| 5 | :809/00128 | | Bearing liner 45mm pivot bore | | 2 |
| 6 | :594/14287 | | Cap end, 60mm rod x 90mm cylinder | | 1 |
| 7 | :1450/0001 | | Nipple grease, straight 1/8 BSP | | 1 |
| 8 | :595/10061 | | Head piston | | 1 |
| 9 | :1450/1001 | | Nipple grease 90deg. angle | | 1 |
| 12 | :991/00147 | | Kit-seal 90mm cyl x 60mm rod metric rams | | 1 |
| 13 | :826/01179 | | Dowel | | 1 |
| 14 | :813/00425 | | Seal pivot pin grease | | 4 |

# 9812/0080 E4-7-33 RAM, BUCKET, EXTRADIG DIPPER

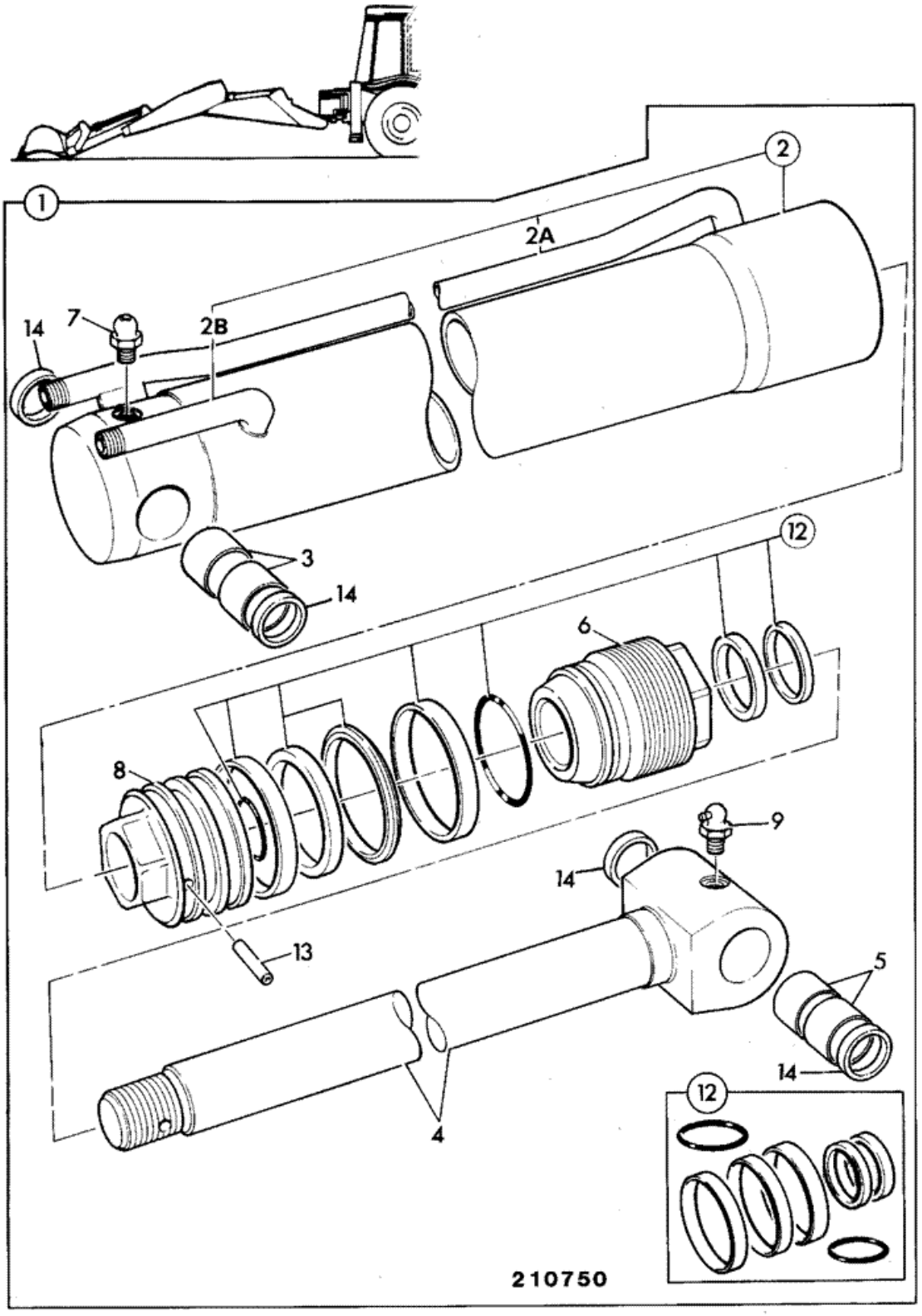

| Item | Part # | Change No | Description | Usage Code | QTY |
|---|---|---|---|---|---|
| 1 | 557/60210 | | Ram assembly, bucket 90 x 60 | | 1 |
| 2 | :557/70136 | | Cylinder bucket ram 90mm | | 1 |
| 2A | ::NSP | | None serviced part | | 1 |
| 2B | ::NSP | | None serviced part | | 1 |
| 3 | :809/00125 | | Bearing liner 45mm pivot bore | | 2 |
| 4 | :590/40317 | | Rod piston 60mm | | 1 |
| 5 | :809/00128 | | Bearing liner 45mm pivot bore | | 2 |
| 6 | :332/E8363 | | Cap end, 60mm rod x 90mm cyl | | 1 |
| 7 | :1450/0001 | | Nipple grease, straight 1/8 BSP | | 1 |
| 8 | :595/10061 | | Head piston | | 1 |
| 9 | :1450/1001 | | Nipple grease 90deg. angle | | 1 |
| 12 | :332/E8224 | =99100147 | Kit Seal 90x60 | | 1 |
| 13 | :826/01179 | | Dowel | | 1 |
| 14 | :813/00425 | | Seal pivot pin grease | | 4 |

# 9812/0080 E4-8-11 RAM, EXTENSION, EXTRADIG DIPPER

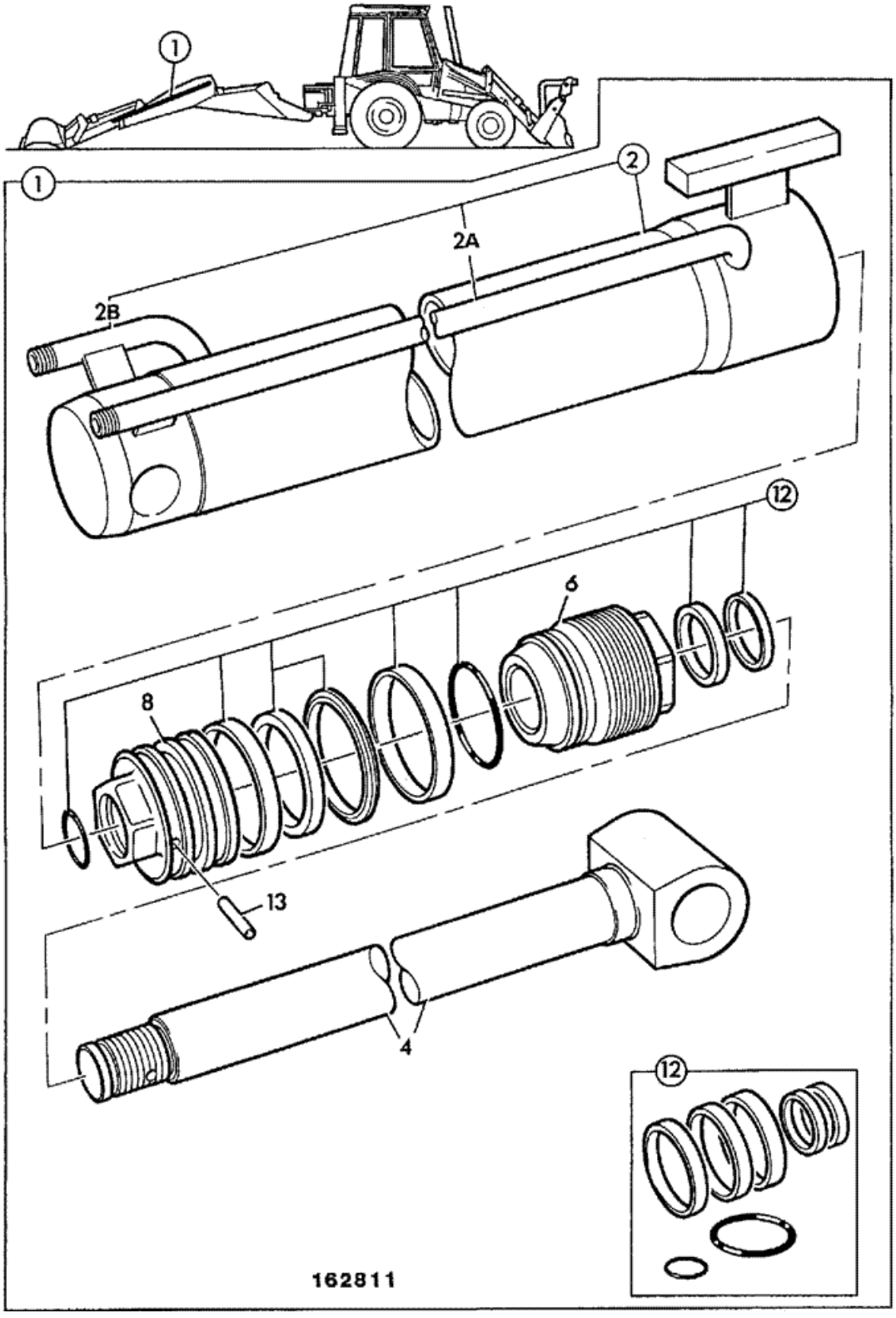

| Item | Part # | Change No | Description | Usage Code | QTY |
|---|---|---|---|---|---|
| 1 | 556/60259 | Superseded | Ram extension extradig dipper | | 1 |
| 1 | 556/60387 | | Ram extension extradig dipper<br>*see page E4-8-12 for breakdown* | | 1 |
| 2 | 556/70258 | | Cylinder extension ram 1244 hole ctr to end | | 1 |
| 2A | ::NSP | | None serviced part | | 1 |
| 2B | ::NSP | | None serviced part | | 1 |
| 4 | :590/40118 | | Rod piston 45mm pivot hole | | 1 |
| 6 | :594/14130 | | Cap end assembly | | 1 |
| 8 | :595/10027 | | Head piston | | 1 |
| 12 | :991/00100 | | Kit-seal 70x40 | | 1 |
| 13 | :826/01182 | | Dowel | | 1 |

# 9812/0080 E4-8-12 RAM, EXTENSION, EXTRADIG DIPPER

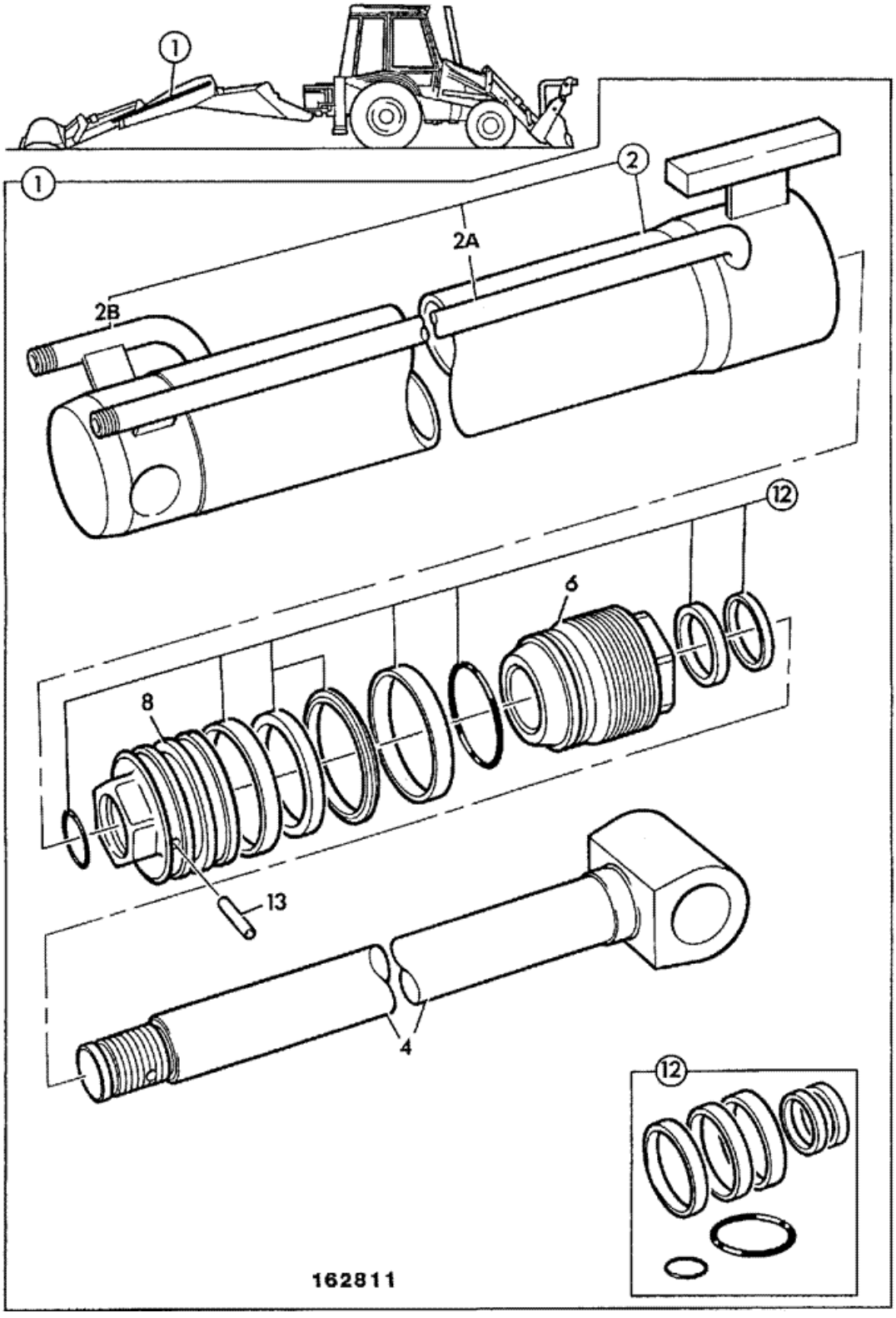

| Item | Part # | Change No | Description | Usage Code | QTY |
|---|---|---|---|---|---|
| 1 | 556/60387 | | Ram extension extradig dipper | | 1 |
| 2 | :556/70382 | | Cylinder extensian ram 1129 hole ctr to end | | 1 |
| 2A | NSP | | None serviced part | | 1 |
| 2B | NSP | | None serviced part | | 1 |
| 4 | :590/40118 | | Rod piston 45mm pivot hole | | 1 |
| 6 | :594/14300 | | Cap end cap assembly 70 X 40 | | 1 |
| 8 | :595/27600 | | Head piston | | 1 |
| 12 | :991/00100 | | Kit-seal 70x40 | | 1 |
| 13 | :826/01182 | | Dowel | | 1 |

Product Catalog \ CONSTRUCTION \ NORTH AMERICA \ CONSTRUCTION / INDUSTRIAL \ BACKHOE LOADER 3CX,4CX,214,215,217 \ 3C PLUS (91HP) , Made in Brazil with Dieselmax/IESA Engine 9812/0080 \ E HYDRAULICS INCLUDING STEERING \ E04 RAMS

# 9812/0080 E4-8-13 RAM, EXTENSION, EXTRADIG DIPPER,

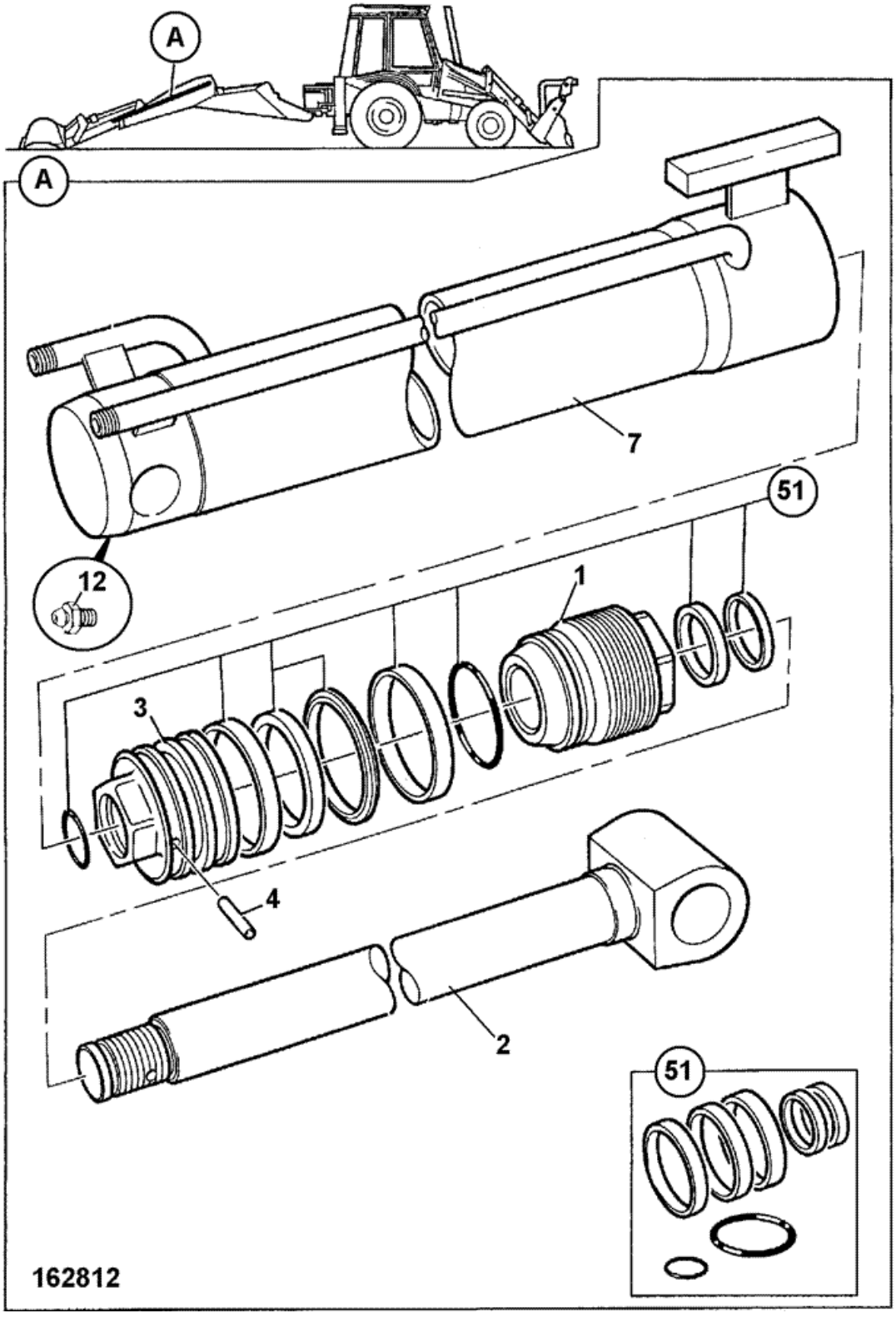

| Item | Part # | Change No | Description | Usage Code | QTY |
|---|---|---|---|---|---|
| A | 556/60435 | | Ram extension 70 x 40 extradig dipper | | 1 |
| 1 | :332/D4842 | | Cap endcap assembly 70 X 40 | | 1 |
| 2 | :590/40118 | | Rod piston 45mm pivot hole | | 1 |
| 3 | :595/27600 | | Head piston | | 1 |
| 4 | :826/01182 | | Dowel | | 1 |
| 7 | :556/70382 | | Cylinder extensian ram 1129 hole ctr to end | | 1 |
| 12 | :1450/0001 | | Nipple grease, straight 1/8 BSP | | 1 |
| 51 | :332/D4850 | = 99100100 | Kit seal kit 70X40 | | 1 |

# 9812/0080 E1-10-13 CIRCUIT, BUCKET RAM, EXTRADIG DIPPER

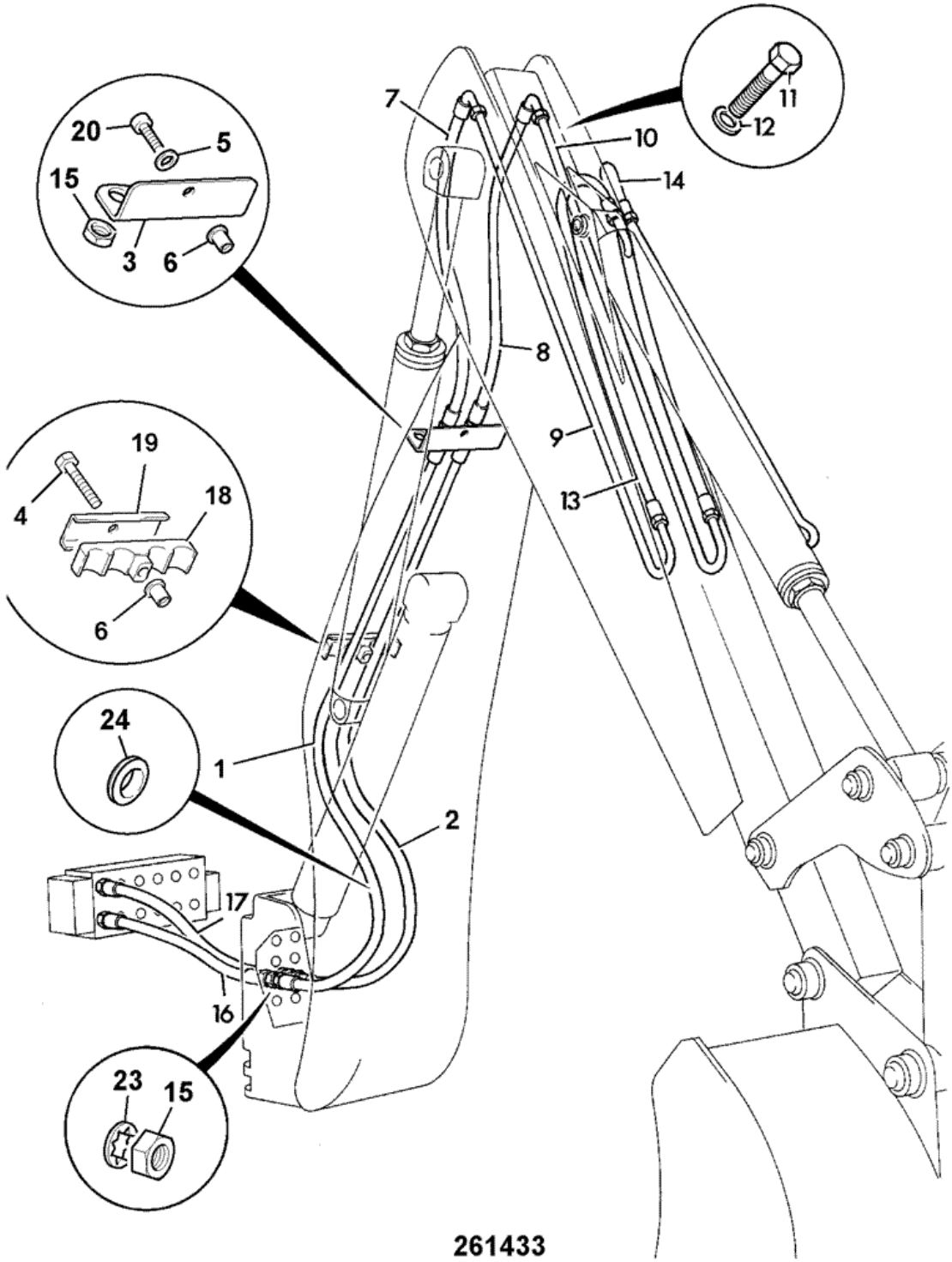


| Item | Part # | Change No | Description | Usage Code | QTY |
|---|---|---|---|---|---|
| 1 | 629/80005 | | Hose | | 1 |

| | | | | | |
|---|---|---|---|---|---|
| 2 | 629/80005 | | Hose | | 1 |
| 3 | 331/14734 | | Plate hose support 4 X 1/2BSP | | 1 |
| 4 | 1315/3414Z | | Bolt M10x60 | | 1 |
| 5 | 823/00377 | | Washer plain M10 | | 1 |
| 6 | 826/01249 | | Nut rivet M10 open end for 6 to 8.5mm plate | | 2 |
| 7 | 613/23100 | | Hose 1/2"BSP x 1015mm | | 1 |
| 8 | 613/23100 | | Hose 1/2"BSP x 1015mm | | 1 |
| 9 | 123/03285 | Superseded | Pipe | | 1 |
| 9 | 128/17337 | | Pipe assembly R.H. | | 1 |
| 10 | 123/03286 | Superseded | Pipe left hand | | 1 |
| 10 | 128/17338 | | Pipe assembly L.H. | | 1 |
| 11 | 1315/0408Z | | Bolt M10 x 30 | | 4 |
| 12 | 1420/0008Z | | Washer Plain M10 | | 4 |
| 13 | 613/05400 | | Hose 1/2BSP x 1100 | | 1 |
| 14 | 613/05400 | | Hose 1/2BSP x 1100 | | 1 |
| 15 | 1356/0204Z | | Nut | | 4 |
| 16 | 477/00338 | | Hose 1/2"BSP x 765mm | | 1 |
| 17 | 613/36012 | | Hose 1/2BSPx930 | | 1 |
| 18 | 123/05836 | | Clamp | | 1 |
| 19 | 331/14805 | | Plate clamp backing | | 1 |
| 20 | 1391/3410Z | | Capscrew | | 1 |
| 23 | 1418/0018Z | | Washer lock, internal teeth | | 2 |
| 24 | 830/00314 | | Ferrule rubber | | 2 |

Product Catalog \ CONSTRUCTION \ NORTH AMERICA \ CONSTRUCTION / INDUSTRIAL \ BACKHOE LOADER 3CX,4CX,214,215,217 \ 3C PLUS (91HP) , Made in Brazil with Dieselmax/IESA Engine 9812/0080 \ E HYDRAULICS INCLUDING STEERING \ E01 HOSE & PIPEWORK

# 9812/0080 E1-11-41 CIRCUIT, AUXILIARY, EXTENTION RAM, EXTRADIG DIPPER

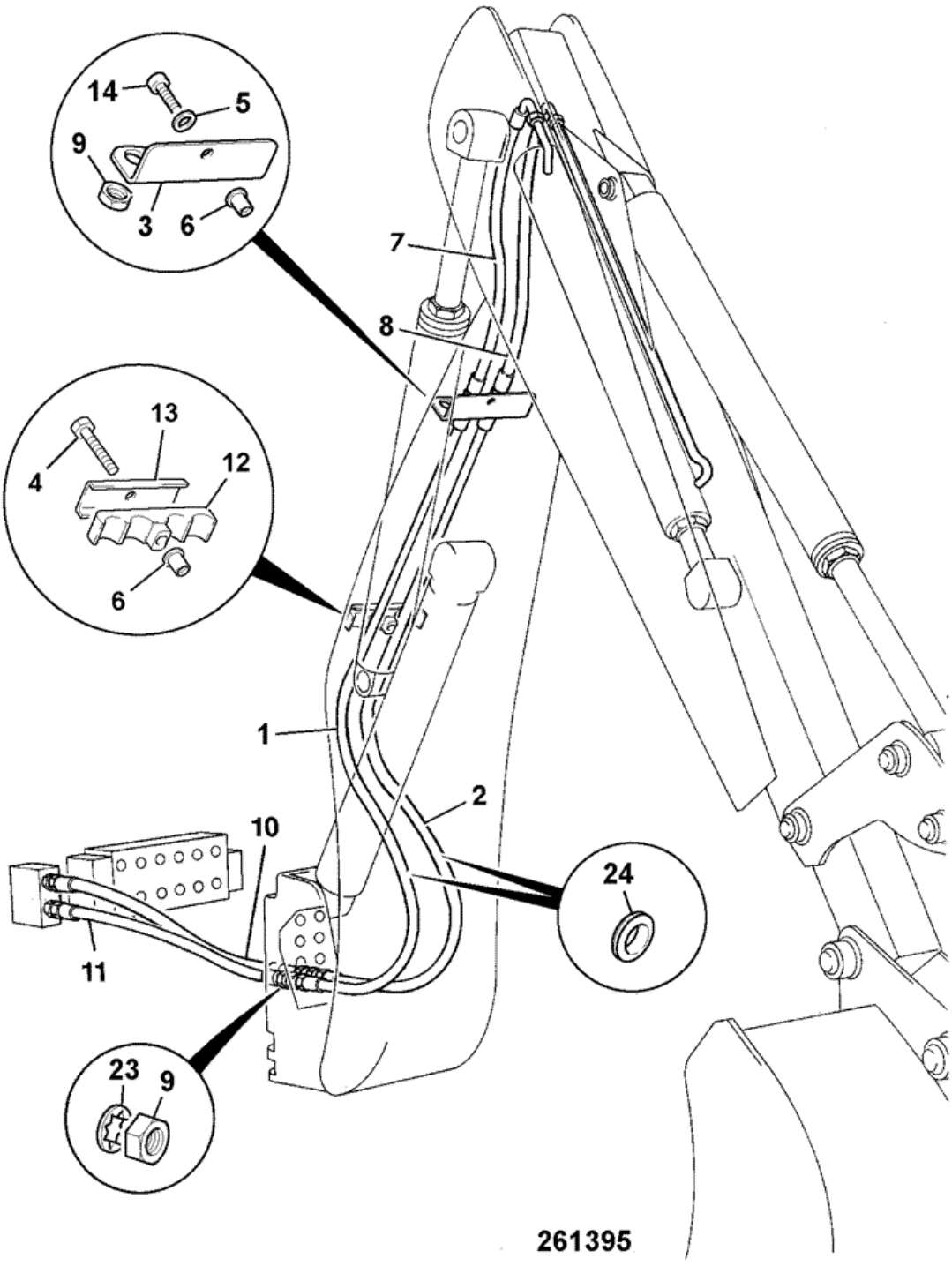


| Item | Part # | Change No | Description | Usage Code | QTY |
|---|---|---|---|---|---|
| 1 | 629/80005 | | Hose | | 1 |

| | | | | | |
|---|---|---|---|---|---|
| 2 | 629/80005 | | Hose | | 1 |
| 3 | 331/14734 | | Plate hose support 4 X 1/2BSP | | 1 |
| 4 | 1315/3414Z | | Bolt M10x60 | | 1 |
| 5 | 823/00377 | | Washer plain M10 | | 1 |
| 6 | 826/01249 | | Nut rivet M10 open end for 6 to 8.5mm plate | | 2 |
| 7 | 613/23100 | | Hose 1/2"BSP x 1015mm | | 1 |
| 8 | 613/23100 | | Hose 1/2"BSP x 1015mm | | 1 |
| 9 | 1356/0204Z | | Nut | | 2 |
| 10 | 613/36009 | | Hose 1/2"BSP x 850mm<br>*Top port* | | 1 |
| 11 | 613/09203 | | Hose 1/2"BSP 1040mm<br>*Bottom port* | | 1 |
| 12 | 123/05836 | | Clamp | | 1 |
| 13 | 331/14805 | | Plate clamp backing | | 1 |
| 14 | 1391/3410Z | | Capscrew | | 1 |
| 23 | 1418/0018Z | | Washer lock, internal teeth | | 2 |
| 24 | 830/00314 | | Ferrule rubber | | 2 |

# 9812/0080 E1-18-51 COOLER, COMBINATION, RADIATOR/HYDRAULIC, & TRANSMISSION, NON CHARGED AIR COOLER

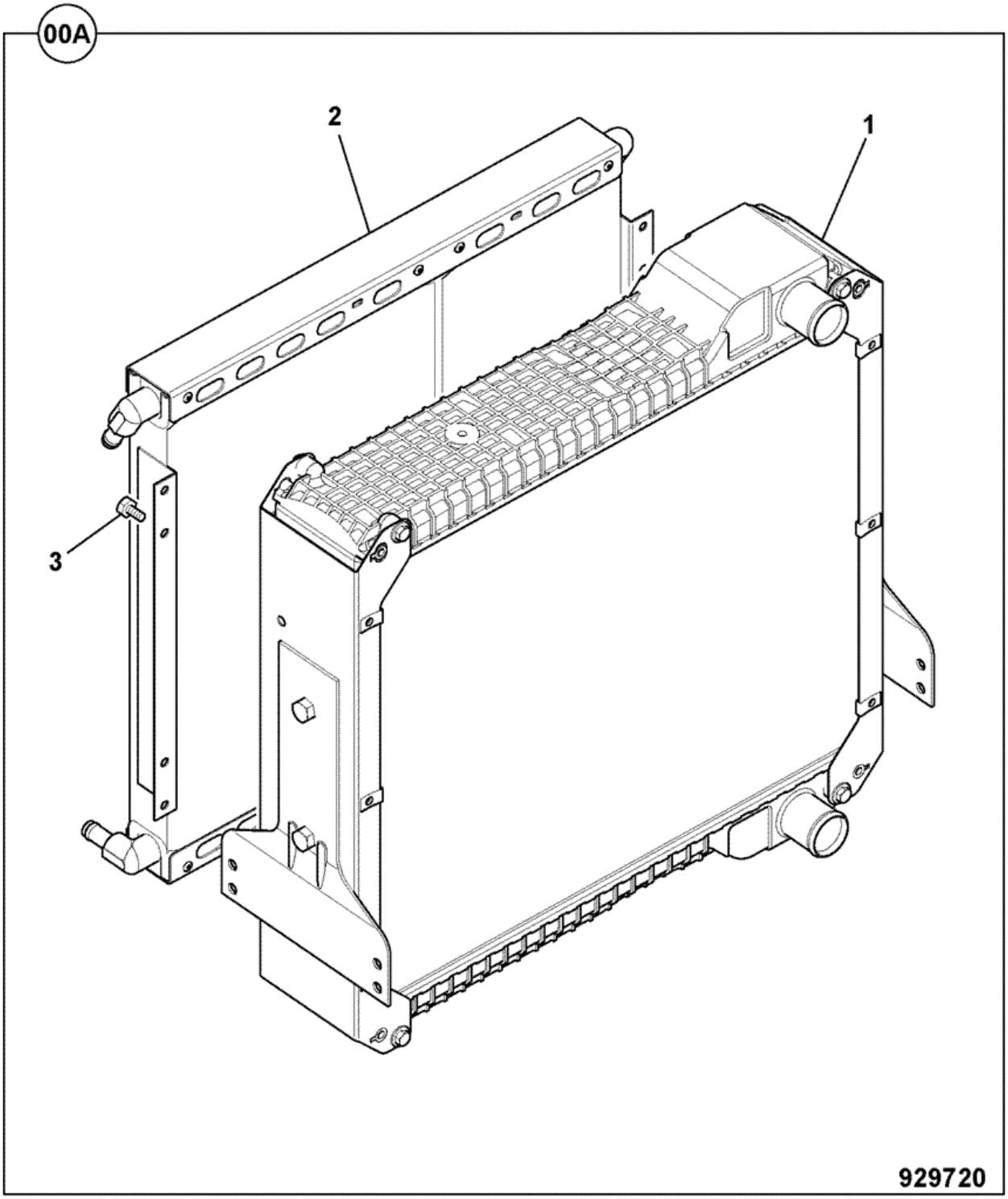

| Item | Part # | Change No | Description | Usage Code | QTY |
|---|---|---|---|---|---|
| A | 128/14326 | | Cooler assembly 5row 2ws non CAC | | 1 |
| 1 | 30/926671 | | Radiator 5row-9fpi | | 1 |
| 2 | :30/925615 | | Cooler oil, double 14plates + 21 plates | | 1 |
| 3 | :02/291015 | | Screw | | 8 |

Product Catalog \ CONSTRUCTION \ NORTH AMERICA \ CONSTRUCTION / INDUSTRIAL \ BACKHOE LOADER 3CX,4CX,214,215,217 \ 3C PLUS (91HP) , Made in Brazil with Dieselmax/IESA Engine 9812/0080 \ E HYDRAULICS INCLUDING STEERING \ E01 HOSE & PIPEWORK

# 9812/0080 E1-23-11 HOSE AND PIPEWORK, HAMMER, FIXED DIPPER, RETURN

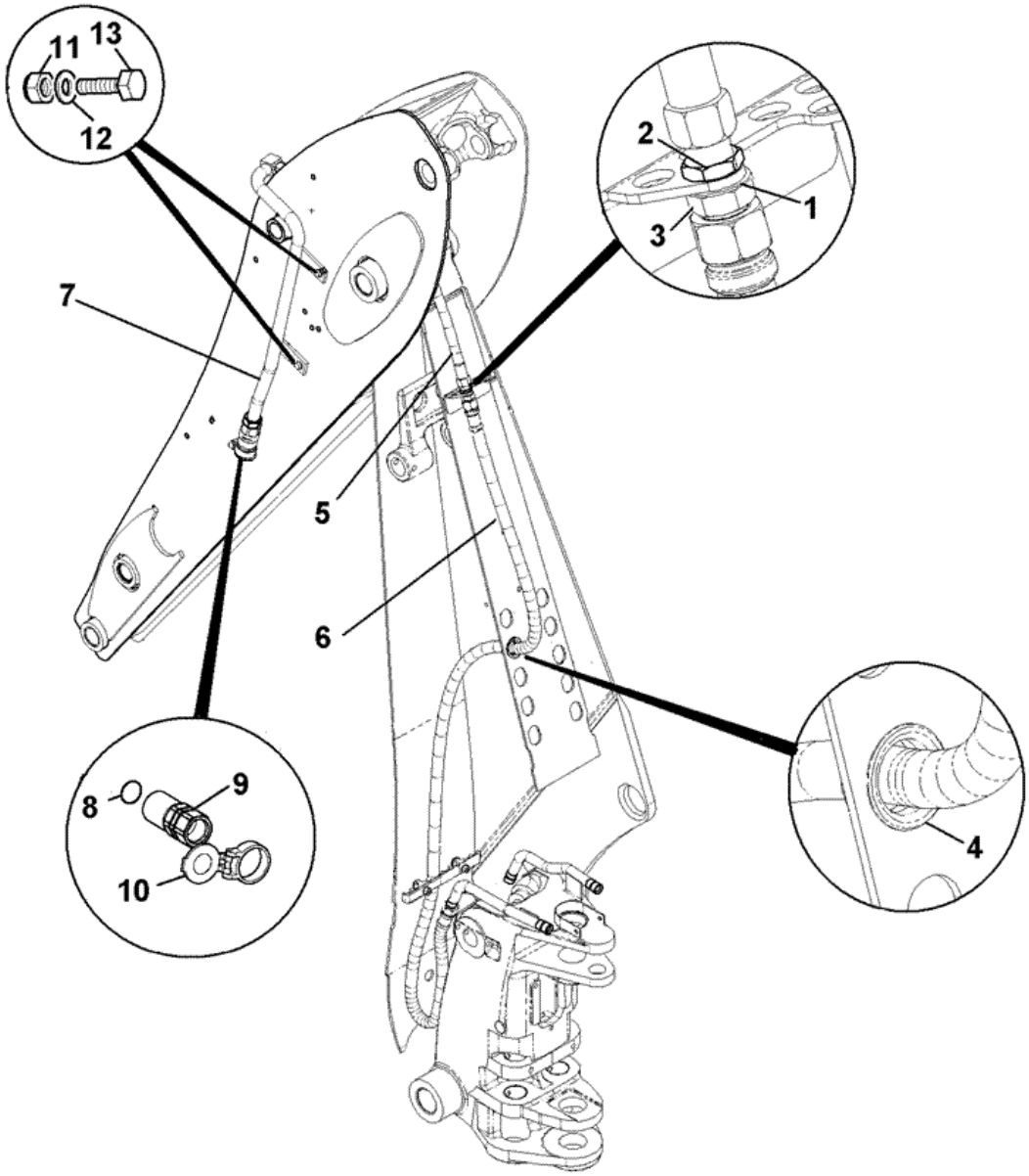


E01-10004-0-A20

| Item | Part # | Change No | Description | Usage Code | QTY |
|---|---|---|---|---|---|
| 1 | 1418/0018Z | | Washer lock, internal teeth | | 1 |

| | | | | | |
|---|---|---|---|---|---|
| 2 | 1356/0205Z | | Nut | | 1 |
| 3 | 816/91044 | | Adaptor bulkhead G3/4A X G5/8A | | 1 |
| 4 | 830/00314 | | Ferrule rubber | | 1 |
| 5 | 614/00800 | | Hose | | 1 |
| 6 | 629/80235 | | Hose 3/4BSPx2850mm | | 1 |
| 7 | 332/E4857 | | PIPE hammer return f | | 1 |
| 8 | 2401/0508 | | O Ring | | 1 |
| 9 | 332/E4161 | | Coupling female 1-1/16 unf female | | 1 |
| 10 | 332/E4179 | | Cap dirt QRC 1" colour blue | | 1 |
| 11 | 826/01249 | | Nut rivet M10 open end for 6 to 8.5mm plate | | 2 |
| 12 | 1420/0008Z | | Washer Plain M10 | | 2 |
| 13 | 1315/3409Z | | Bolt M10 x 35 | | 2 |

Product Catalog \ CONSTRUCTION \ NORTH AMERICA \ CONSTRUCTION / INDUSTRIAL \ BACKHOE LOADER 3CX,4CX,214,215,217 \ 3C PLUS (91HP) , Made in Brazil with Dieselmax/IESA Engine 9812/0080 \ E HYDRAULICS INCLUDING STEERING \ E01 HOSE & PIPEWORK

# 9812/0080 E1-27-20 BOOM RAM PIPEWORK

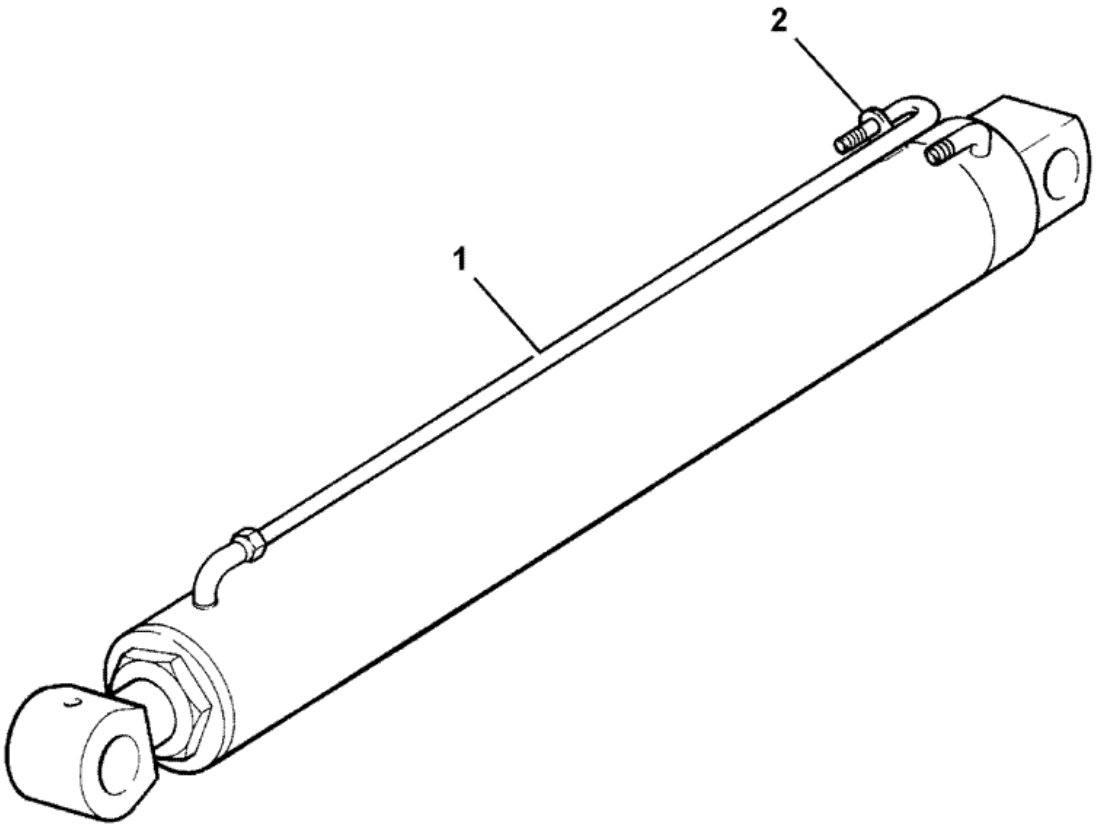


278401

| Item | Part # | Change No | Description | Usage Code | QTY |
|---|---|---|---|---|---|
| 1 | 658/40188 | | Pipe boom ram,rodside | | 1 |
| 2 | 2410/0212 | | Grommet | | 1 |

# 9812/0080 E3-10-10 VALVE, STEERING, 2WS-USA BUILDS, 250 LOAD SENSING

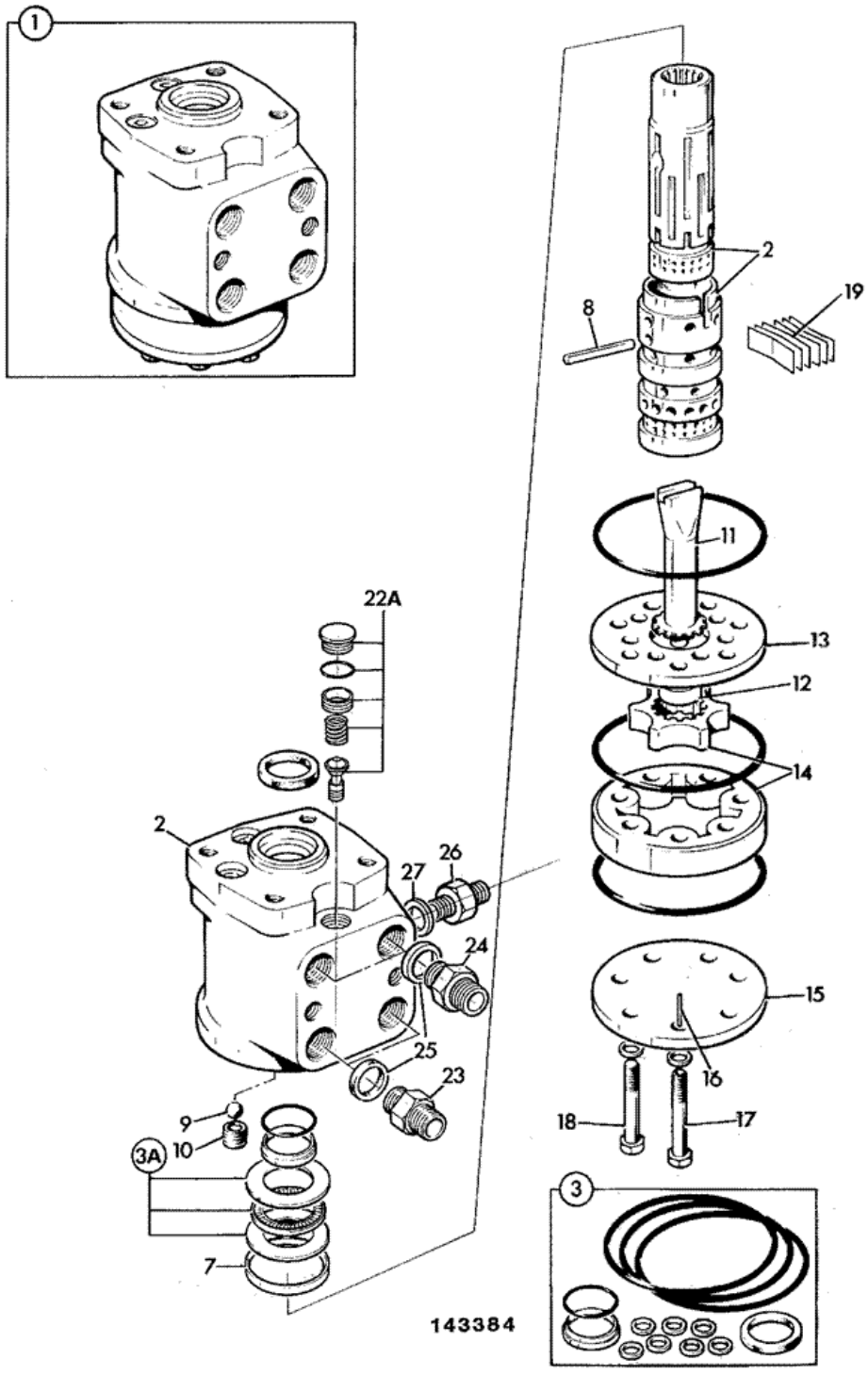


| Item | Part # | Change No | Description | Usage Code | QTY |
|---|---|---|---|---|---|
| 1 | 35/412300 | | Valve steer 250 load sens without anti-shock | | 1 |

| | | | | | |
|---|---|---|---|---|---|
| 2 | :N.S.P. | | None serviced part | | 1 |
| 3 | :35/404202 | | Kit-repair | | 1 |
| 3A | :35/404902 | | Bearing complete | | 1 |
| 7 | :35/400502 | | Ring | | 1 |
| 8 | :35/400507 | | Pin cross | | 1 |
| 9 | :35/400508 | | Ball | | 1 |
| 10 | :35/400510 | | Bush | | 1 |
| 11 | :35/412301 | | Drive | | 1 |
| 12 | :. | | 'See Remark'<br>*Not fitted or required* | | 1 |
| 13 | :35/409301 | | Plate distributor | | 1 |
| 14 | :35/412302 | | Kit-gear | | 1 |
| 15 | :35/400511 | | Plate end | | 1 |
| 16 | :NSP | | None serviced part<br>*Part of item 17* | | 1 |
| 17 | :35/412303 | | Bolt | | 1 |
| 18 | :35/412304 | | Bolt | | 6 |
| 19 | :35/407009 | | Spring kit | | 1 |
| 22A | :35/409303 | | Valve relief assembly | | 1 |
| 23 | 1620/0004 | | Adapter 3/4"UNF SAE "O" ring 3/8"BSP male | | 2 |
| 24 | 816/17072 | | Adapter | | 2 |
| 25 | 2401/0506 | | O Ring<br>*Component part of item 23, 24* | | 1 |
| 26 | 1620/0001 | | Adapter | | 1 |
| 27 | :2401/0503 | | O Ring<br>*Component part of item 26* | | 1 |

Product Catalog \ CONSTRUCTION \ NORTH AMERICA \ CONSTRUCTION / INDUSTRIAL \ BACKHOE LOADER 3CX,4CX,214,215,217 \ 3C PLUS (91HP) , Made in Brazil with Dieselmax/IESA Engine 9812/0080 \ E HYDRAULICS INCLUDING STEERING \ E04 RAMS

# 9812/0080 E4-10-11 RAM, STABILISER, CENTREMOUNT, 90 X 50

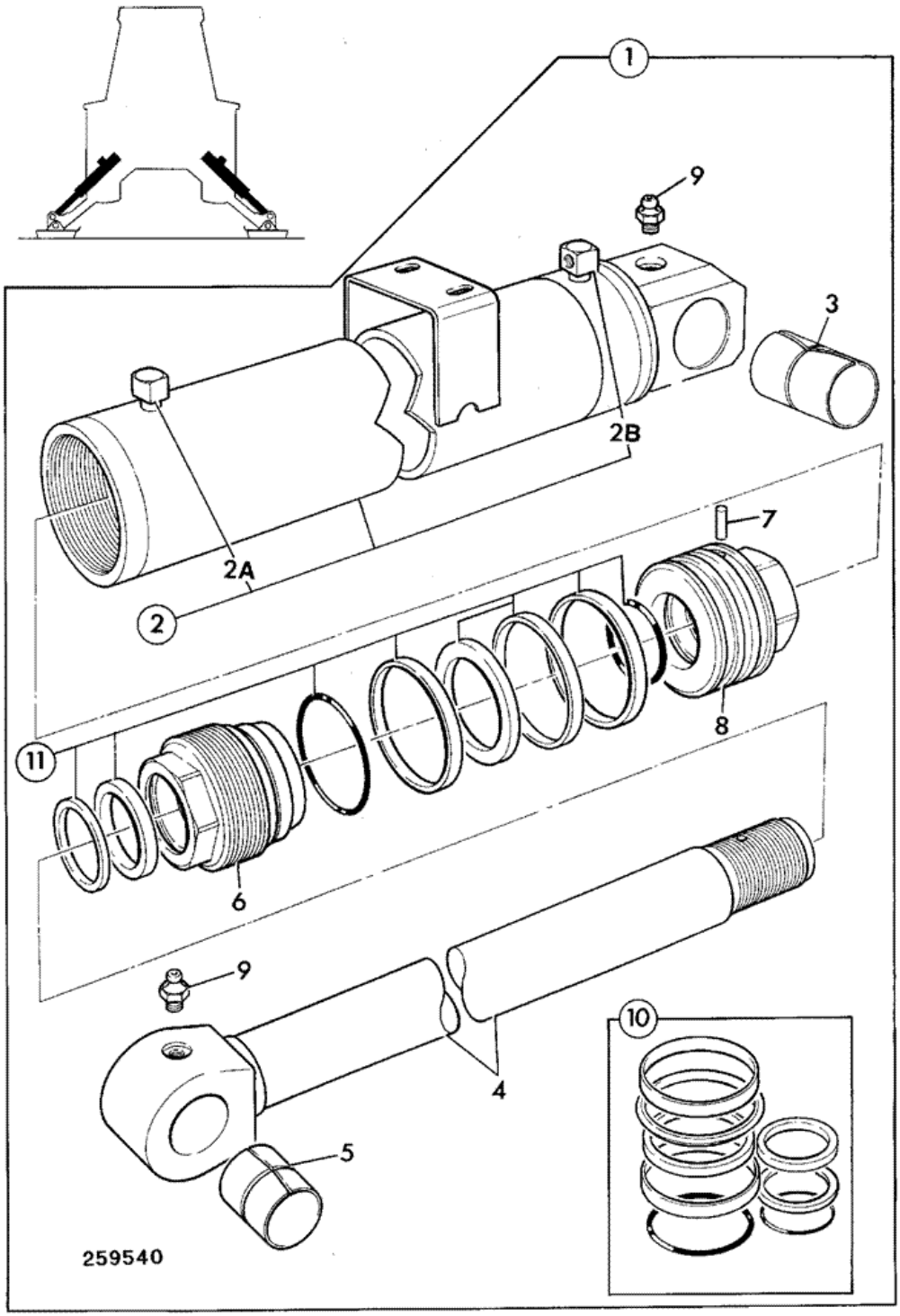


| Item | Part # | Change No | Description | Usage Code | QTY |
|---|---|---|---|---|---|
| 1 | 557/60073 | | Ram stabiliser c. mount 90 X 50 | | 2 |

| | | | | | |
|---|---|---|---|---|---|
| 1 | 128/10902 | | Ram stabiliser sunbelt green<br>*Sunbelt green* | | 2 |
| 2 | :557/70072 | | Cylinder stabiliser centremount | | 1 |
| 2A | ::NSP | | None serviced part | | 1 |
| 2B | ::NSP | | None serviced part | | 1 |
| 3 | :809/10076 | | Bush 50 x 56 x 98 long | | 1 |
| 4 | :590/40259 | | Rod stabililser 50mm x 782 | | 1 |
| 5 | :1208/0015 | | Bush | | 1 |
| 6 | :594/14020 | | Kit-end cap 50mm rod x 90mm cyl | | 1 |
| 7 | :826/01179 | | Dowel | | 1 |
| 8 | :595/10037 | | Head piston | | 1 |
| 9 | :1450/0001 | | Nipple grease, straight 1/8 BSP | | 2 |
| 10 | :991/00103 | | Kit-seal 50mm rod x 90mm cyl<br>*Seal kit components see E4-13-13* | | 1 |

Product Catalog \ CONSTRUCTION \ NORTH AMERICA \ CONSTRUCTION / INDUSTRIAL \ BACKHOE LOADER 3CX,4CX,214,215,217 \ 3C PLUS (91HP) , Made in Brazil with Dieselmax/IESA Engine 9812/0080 \ E HYDRAULICS INCLUDING STEERING \ E04 RAMS

# 9812/0080 E4-10-21 RAM, STABILISER, CENTREMOUNT, 90 X 60, 3C

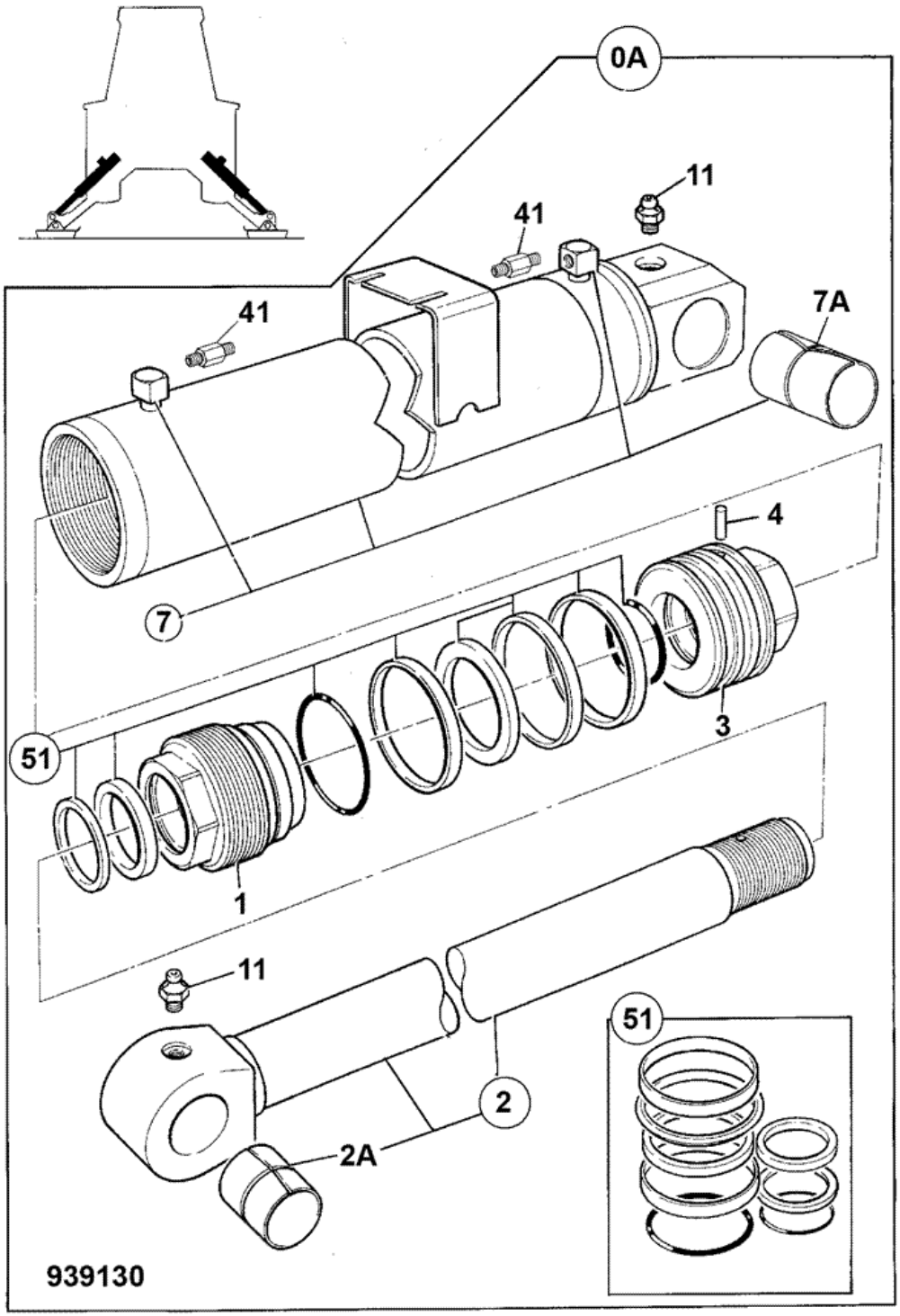


| Item | Part # | Change No | Description | Usage Code | QTY |
|---|---|---|---|---|---|
| A | 557/60198 | Superseded | Ram stabiliser, c/mount 90 x 60 | | 2 |

| | | | | | |
|---|---|---|---|---|---|
| A | 557/60223 | | Ram Stabiliser c/mount 90 x 60<br>*see E4-10-22 for breakdown* | | 2 |
| 1 | :594/14287 | | Cap end, 60mm rod x 90mm cylinder | | 1 |
| 2 | :590/40746 | | Rod 60x782 | | 1 |
| 2A | ::1208/0015 | | Bush | | 1 |
| 3 | :595/10061 | | Head piston | | 1 |
| 4 | :826/01179 | | Dowel | | 1 |
| 7 | :557/70197 | | Cylinder stabiliser, c/mount | | 1 |
| 7A | :1209/0020 | | Bush | | 1 |
| 11 | :1450/0001 | | Nipple grease, straight 1/8 BSP | | 2 |
| 41 | :816/90009 | | Adapter M/F | | 2 |
| 51 | :991/00147 | | Kit-seal 90mm cyl x 60mm rod metric rams | | 1 |

Product Catalog \ CONSTRUCTION \ NORTH AMERICA \ CONSTRUCTION / INDUSTRIAL \ BACKHOE LOADER 3CX,4CX,214,215,217 \ 3C PLUS (91HP) , Made in Brazil with Dieselmax/IESA Engine 9812/0080 \ E HYDRAULICS INCLUDING STEERING \ E04 RAMS

# 9812/0080 E4-10-22 RAM, STABILISER, CENTREMOUNT, 90 X 60

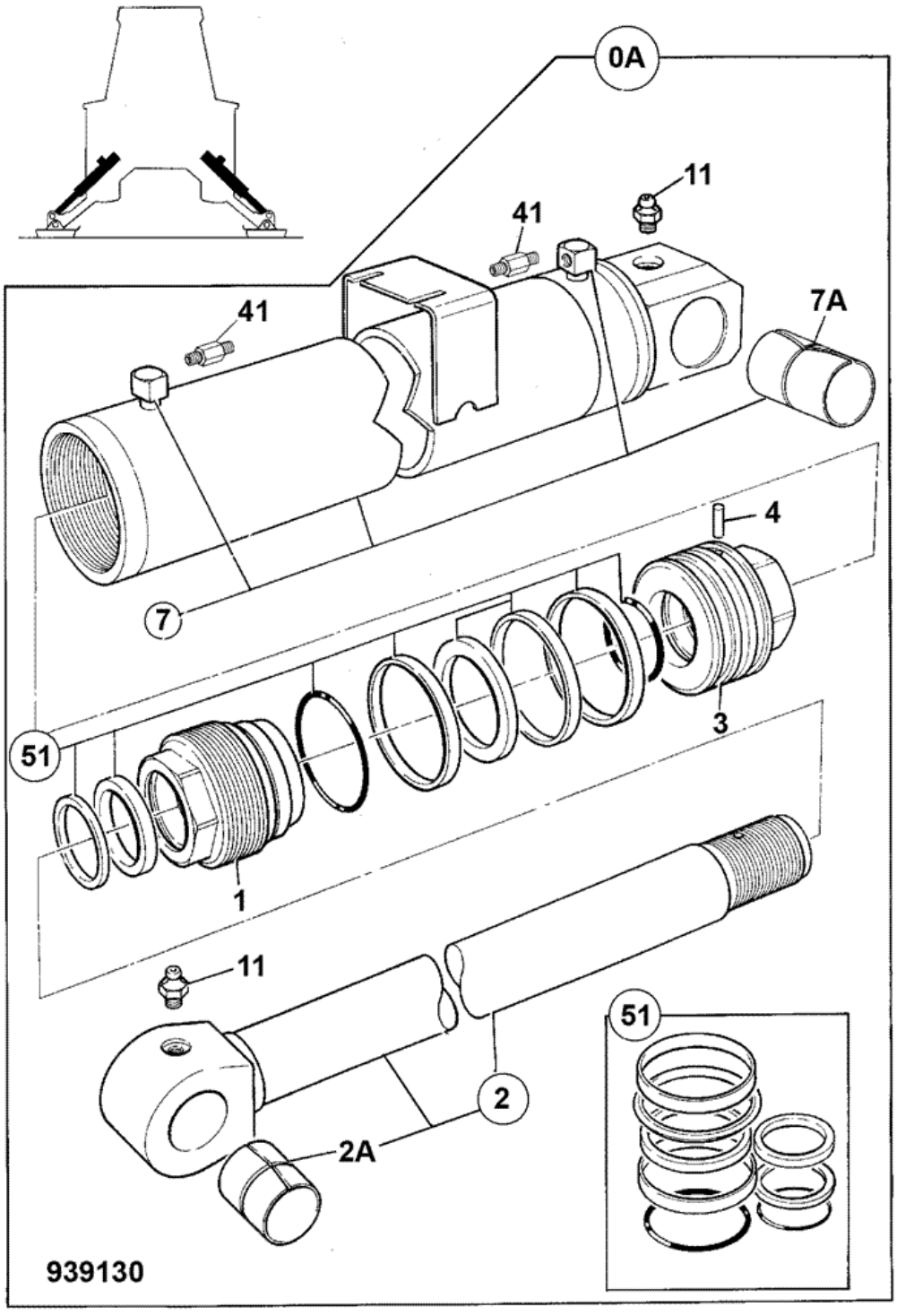


| Item | Part # | Change No | Description | Usage Code | QTY |
|---|---|---|---|---|---|
| A | 557/60223 | | Ram Stabiliser c/mount 90 x 60 | | 2 |

| | | | | | |
|---|---|---|---|---|---|
| 1 | :332/E8363 | | Cap end, 60mm rod x 90mm cyl | | 1 |
| 2 | :590/40776 | | Rod 60x782 | | 1 |
| 2A | ::1208/0015 | | Bush | | 1 |
| 3 | :595/10061 | | Head piston | | 1 |
| 4 | :826/01179 | | Dowel | | 1 |
| 7 | :557/70197 | | Cylinder stabiliser, c/mount | | 1 |
| 7A | :1209/0020 | | Bush | | 1 |
| 11 | :1450/0001 | | Nipple grease, straight 1/8 BSP | | 2 |
| 41 | :816/90009 | | Adapter M/F | | 2 |
| 51 | :332/E8224 | | Kit Seal 90x60 | | 1 |

Product Catalog \ CONSTRUCTION \ NORTH AMERICA \ CONSTRUCTION / INDUSTRIAL \ BACKHOE LOADER 3CX,4CX,214,215,217 \ 3C PLUS (91HP) , Made in Brazil with Dieselmax/IESA Engine 9812/0080 \ E HYDRAULICS INCLUDING STEERING \ E04 RAMS

# 9812/0080 E4-11-11 RAM, SLEW/SWING

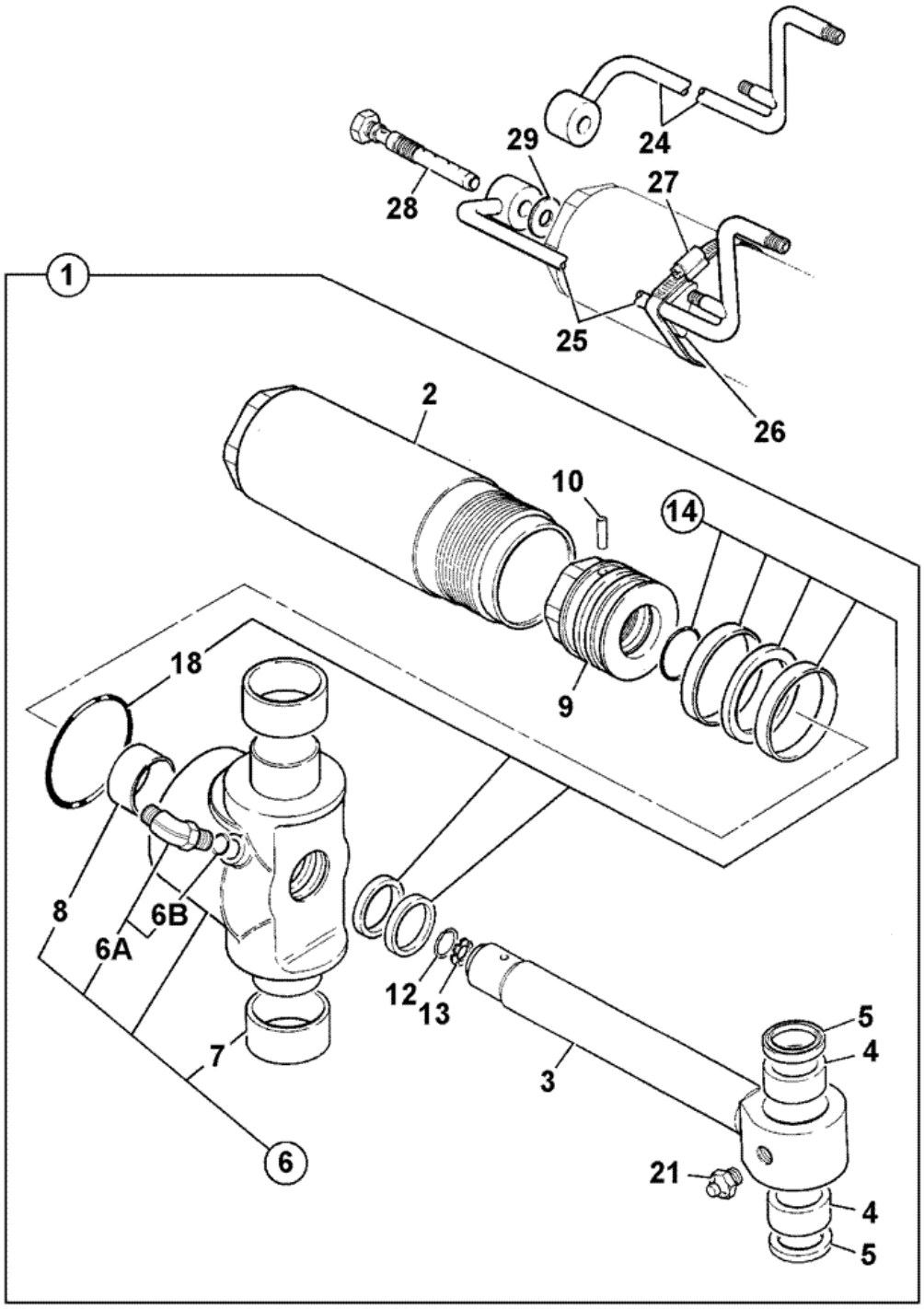


736000

| Item | Part # | Change No | Description | Usage Code | QTY |
|---|---|---|---|---|---|
| 1 | 557/60127 | | Ram slew<br>*item 6A screws into item 6* | | 1 |
| | | | | | |

| | | | | | |
|---|---|---|---|---|---|
| 1 | 128/14671 | | Ram slew sunbelt green<br>*Sunbelt green* | | 1 |
| 2 | :559/70018 | | Cylinder assembly | | 1 |
| 3 | :590/40253 | | Rod piston 50mm. slew ram | | 1 |
| 4 | ::809/00177 | | Bearing 55x65x56 | | 1 |
| 5 | ::813/00460 | | Seal pivot pin 55x65 | | 2 |
| 6 | :594/14274 | | Kit end cap<br>*item 6A screws into item 6* | | 1 |
| 6A | ::816/90676 | | Adapter 90deg elbow 9/16 SAE x G1/4 | | 1 |
| 6B | :::2401/0505 | | O Ring | | 1 |
| 7 | ::809/00137 | | Bearing | | 2 |
| 8 | ::NSP | | None serviced part | | 1 |
| 9 | :595/10037 | | Head piston | | 1 |
| 10 | :826/01180 | | Dowel | | 1 |
| 12 | :821/00462 | | Clip 31.1mm | | 1 |
| 13 | :551/90107 | | Plate orifice 27.4 x 15 x 5.8mm | | 1 |
| 14 | :991/00163 | | Kit-seal 50mm rod x 90mm cyl | | 1 |
| 18 | ::2302/0336 | | O Ring 115 x 5 | | 1 |
| 21 | :1450/0001 | | Nipple grease, straight 1/8 BSP | | 1 |
| 24 | 335/00771 | | Pipe left hand slew centremount | | 1 |
| 25 | 335/00772 | | Pipe right hand slew centremount | | 1 |
| 26 | 821/10425 | | Clamp pipe support | | 2 |
| 27 | 2201/0017 | | Clip worm drive | | 2 |
| 28 | 559/90066 | | Restrictor banjo bolt | | 2 |
| 29 | 1406/0015 | | Washer seal | | 4 |

Product Catalog \ CONSTRUCTION \ NORTH AMERICA \ CONSTRUCTION / INDUSTRIAL \ BACKHOE LOADER 3CX,4CX,214,215,217 \ 3C PLUS (91HP) , Made in Brazil with Dieselmax/IESA Engine 9812/0080 \ F AXLES, WHEELS & TRANSMISSION \ F01 AXLES, FRONT

# 9812/0080 F1-3-1 AXLE PIVOT PIN, & GREASING 2WS, 2WD/4WD

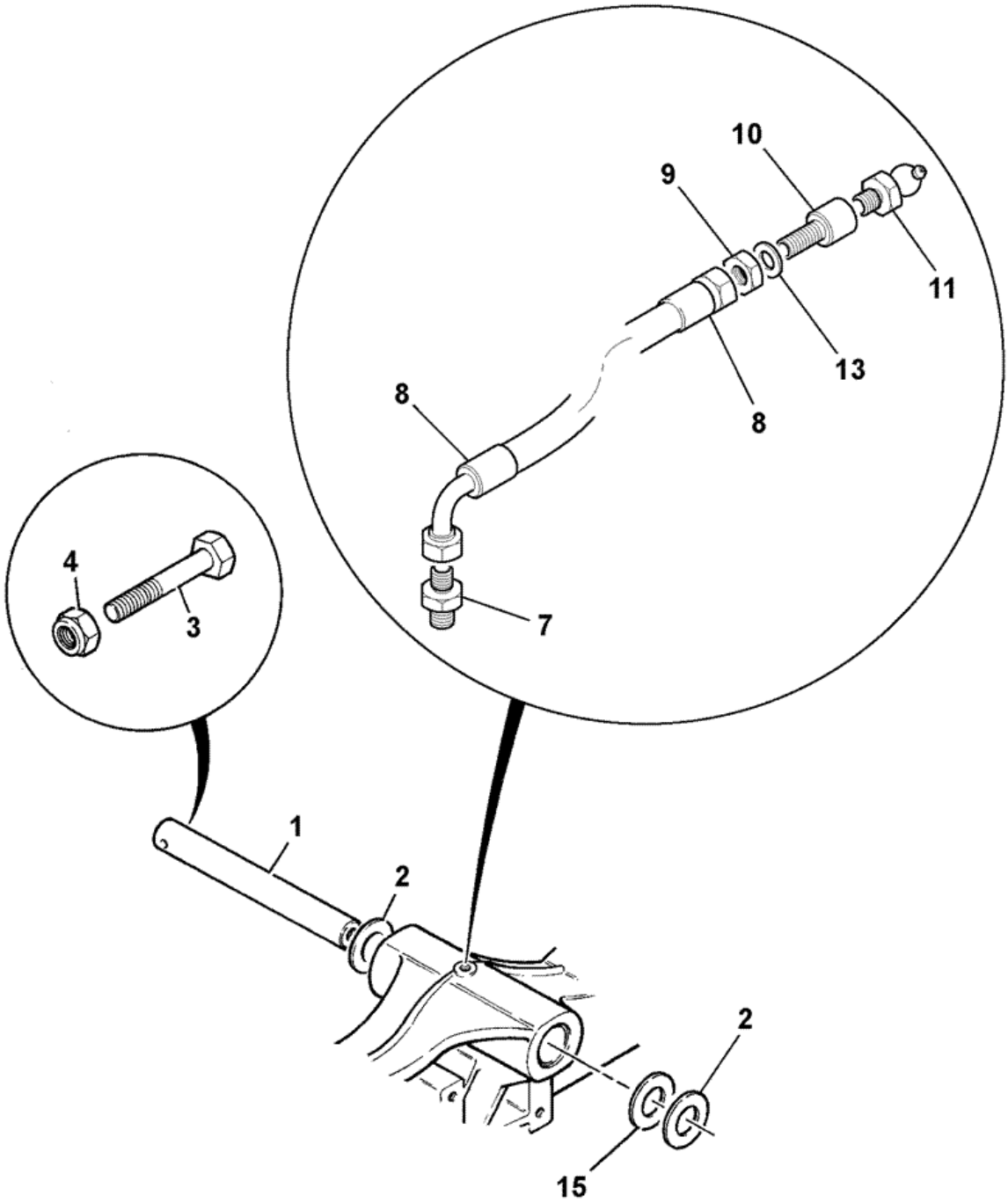


252793

| Item | Part # | Change No | Description | Usage Code | QTY |
|---|---|---|---|---|---|
| 1 | 811/10091 | | Pin axle pivot | | 1 |

| | | | | | |
|---|---|---|---|---|---|
| 2 | 819/00132 | | Spacer grey,50.75 borex3.5mm thick | | 1 |
| 2 | 819/00133 | | Spacer cream, 50.75mm borex4.0mm thick | | 1 |
| 2 | 819/00134 | | Spacer yellow, 50.75mm borex4.5mm thick | | 1 |
| 2 | 819/00135 | | Spacer blue, 50.75mm borex5.0mm thick | | 1 |
| 2 | 819/00136 | | Spacer red, 50.75mm borex5.5mm thick | | 1 |
| 2 | 819/00137 | | Spacer black, 50.75mm borex6.0mm thick | | 1 |
| 3 | 1315/3520Z | | Bolt M12 x 100mm | | 1 |
| 4 | 1370/0403Z | | Nut M12 | | 1 |
| 7 | 1609/0001 | | Adapter | | 1 |
| 8 | 649/52077 | | Hose 1/8BSPx490mm long | | 1 |
| 9 | 826/00871 | | Nut | | 1 |
| 10 | 816/20049 | | Adapter<br>*To suit 10.5mm hole in chassis* | | 1 |
| 11 | 1450/1007 | | Nipple grease 45 deg. angle | | 1 |
| 12 | 835/00017 | | Cap grease nipple | | 1 |
| 13 | 1420/0008Z | | Washer Plain M10 | | 1 |
| 15 | 123/06223 | | Adhesive washer | | 1 |

# 9812/0080 F1-6-1 AXLE ASSEMBLY, 2WS 4WD STEER AXLE, 15.785:1 RATIO 448/57470

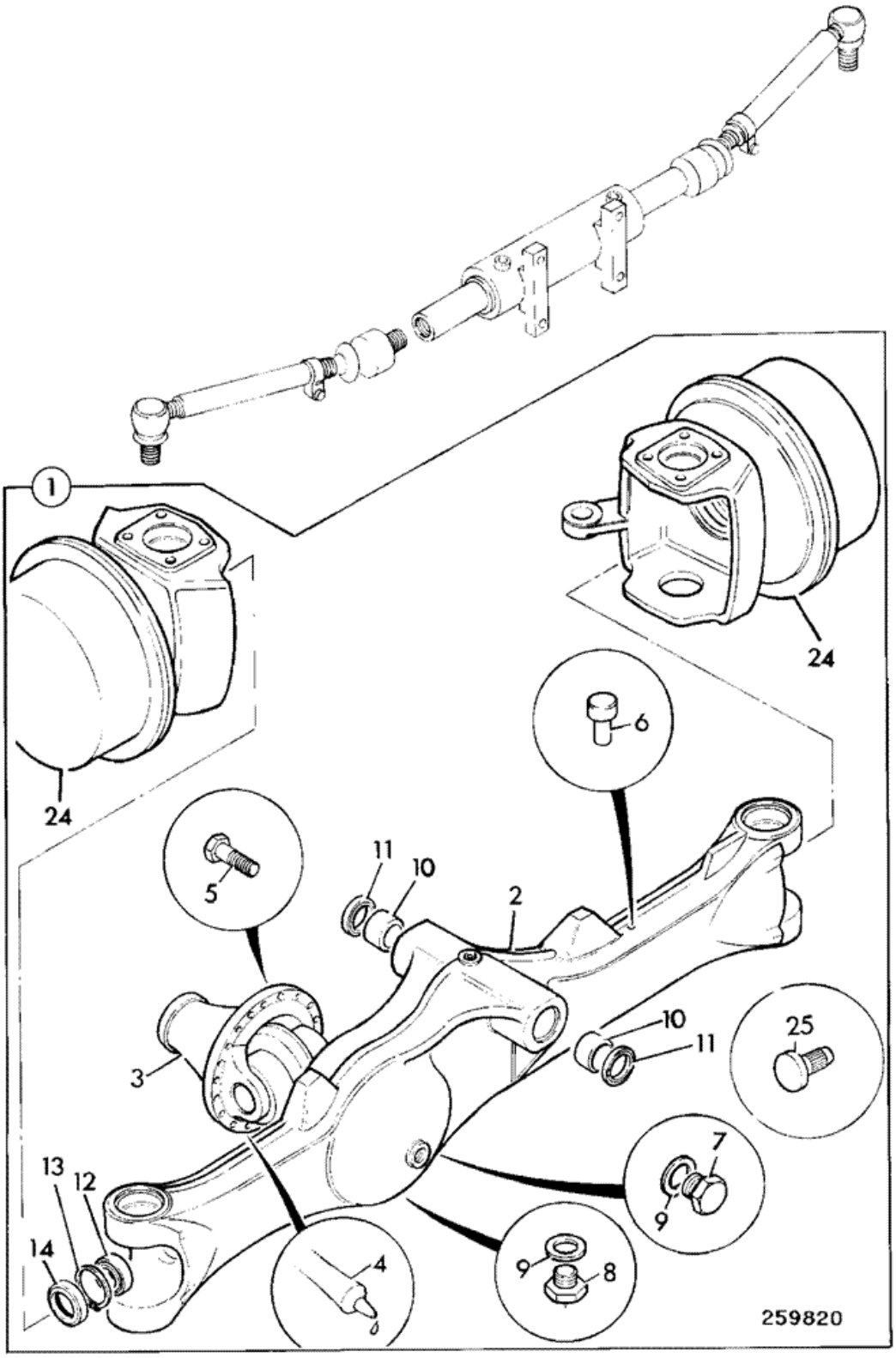


| Item | Part # | Change No | Description | Usage Code | QTY |
|---|---|---|---|---|---|
| 1 | 448/57470 | | Axle assembly pivot mount 15.785:1 4wd<br>*Yellow gloss* | | 1 |
| 2 | :458/20744 | | Casing axle SD55 | | 1 |
| 3 | :. | | 'See Remark'<br>*Diff assembly see frame F1-6-30* | | 1 |
| 4 | :4102/1204 | | Sealant multi-gasket | | 0 |

| | | | | | |
|---|---|---|---|---|---|
| 5 | :826/01434 | | Bolt verbus ripp M10 x 35mm | | 12 |
| 6 | :448/56282 | | Breather spring type M10 x 1.5 thread | | 1 |
| 7 | :816/80037 | | Plug filler | | 1 |
| 8 | :816/80012 | | Plug magnetic 3/4"BSP | | 1 |
| 9 | :1406/0021 | | Seal bonded 3/4" BSP | | 2 |
| 10 | :829/00548 | | Bush | | 2 |
| 11 | :904/06500 | | Seal | | 2 |
| 12 | :907/08400 | | Bearing | | 2 |
| 13 | :2203/1082 | | Circlip | | 2 |
| 14 | :904/50040 | | Seal | | 2 |
| 24 | :. | | 'See Remark'<br>*Wheel hubs see frame F1-6-10, F1-6-20* | | 2 |
| 25 | 123/06718 | | Stop lock 45mm long<br>*Use with 20" rims.* | | 2 |

Product Catalog \ CONSTRUCTION \ NORTH AMERICA \ CONSTRUCTION / INDUSTRIAL \ BACKHOE LOADER 3CX,4CX,214,215,217 \ 3C PLUS (91HP) , Made in Brazil with Dieselmax/IESA Engine 9812/0080 \ F AXLES, WHEELS & TRANSMISSION \ F02 AXLES, REAR

# 9812/0080 F2-2-1 458/10978, YELLOW, AXLE ARM & HUB ASSY

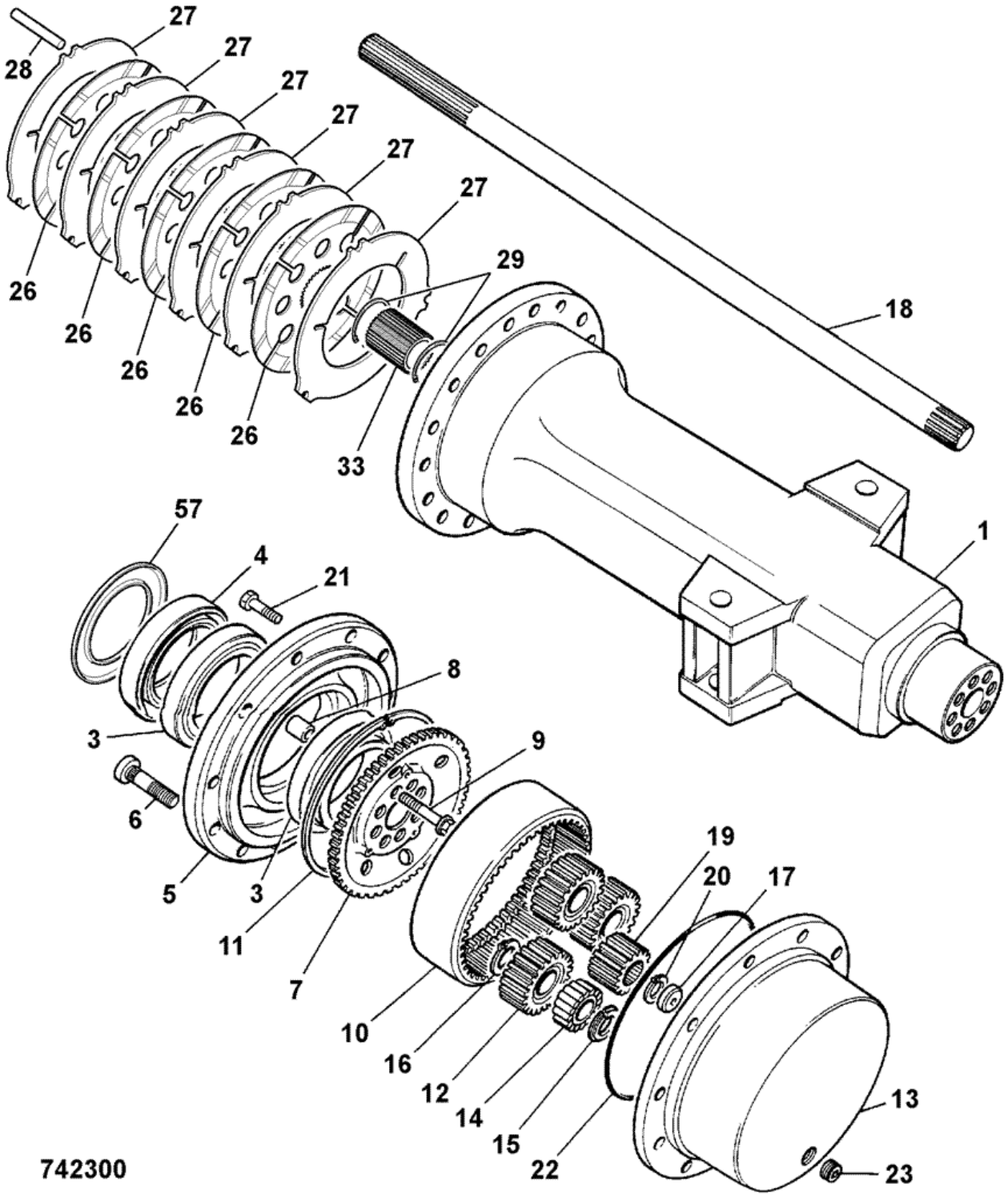


| Item | Part # | Change No | Description | Usage Code | QTY |
|---|---|---|---|---|---|
| A | 458/10978 | | Arm axle arm and hub assembly | | 2 |

| | | | | | |
|---|---|---|---|---|---|
| 1 | :458/20618 | | Casing axle arm pad thickness 139mm | | 1 |
| 3 | :907/20043 | | Bearing taper roller | | 2 |
| 4 | :904/50033 | | Seal oil 127 x 160 x 15.5-17 | | 1 |
| 5 | :458/20446 | | Carrier wheel bearing 5 stud | | 1 |
| 6 | :826/00923 | | Stud wheel | | 5 |
| 7 | :450/12702 | | Carrier annulus | | 1 |
| 8 | :450/12703 | | Dowel hollow | | 8 |
| 9 | :826/01060 | | Bolt M14 x 70mm long | | 8 |
| 10 | :450/10205 | | Gear annulus ring | | 1 |
| 11 | :821/00210 | | Circlip internal square section | | 1 |
| 12 | :450/10206 | | Gear planet | | 3 |
| 13 | :450/10216 | | Carrier planetary hub 5 stud | | 1 |
| 14 | :907/50200 | | Bearing roller, double row | | 3 |
| 15 | :821/00209 | | Circlip | | 6 |
| 16 | :2203/0054 | | Circlip | | 3 |
| 17 | :450/10208 | | Pad thrust | | 1 |
| 18 | :914/60102 | | Shaft rigid driveshaft Without shot peening | | 1 |
| 19 | :450/12403 | | Gear sun | | 1 |
| 20 | :821/00494 | | Circlip External | | 1 |
| 21 | :1321/0407Z | | Bolt coated | | 2 |
| 22 | :828/00196 | | O Ring | | 1 |
| 23 | :826/00425 | | Plug tapered 3/4"-14PTF | | 1 |
| 26 | :458/20353 | | Plate brake friction | | 5 |
| 27 | :458/20285 | | Plate brake counter | | 6 |
| 28 | :450/10213 | | Pin reaction | | 3 |
| 29 | :2203/0071 | | Circlip external | | 2 |
| 33 | :450/10215 | | Carrier brake plate | | 1 |
| 57 | :458/20403 | | Cover plate hub seal | | 1 |

Product Catalog \ CONSTRUCTION \ NORTH AMERICA \ CONSTRUCTION / INDUSTRIAL \ BACKHOE LOADER 3CX,4CX,214,215,217 \ 3C PLUS (91HP) , Made in Brazil with Dieselmax/IESA Engine 9812/0080 \ F AXLES, WHEELS & TRANSMISSION \ F02 AXLES, REAR

# 9812/0080 F2-2-3 458/10980, AXLE ARM & HUB ASSY, 2WS+PS

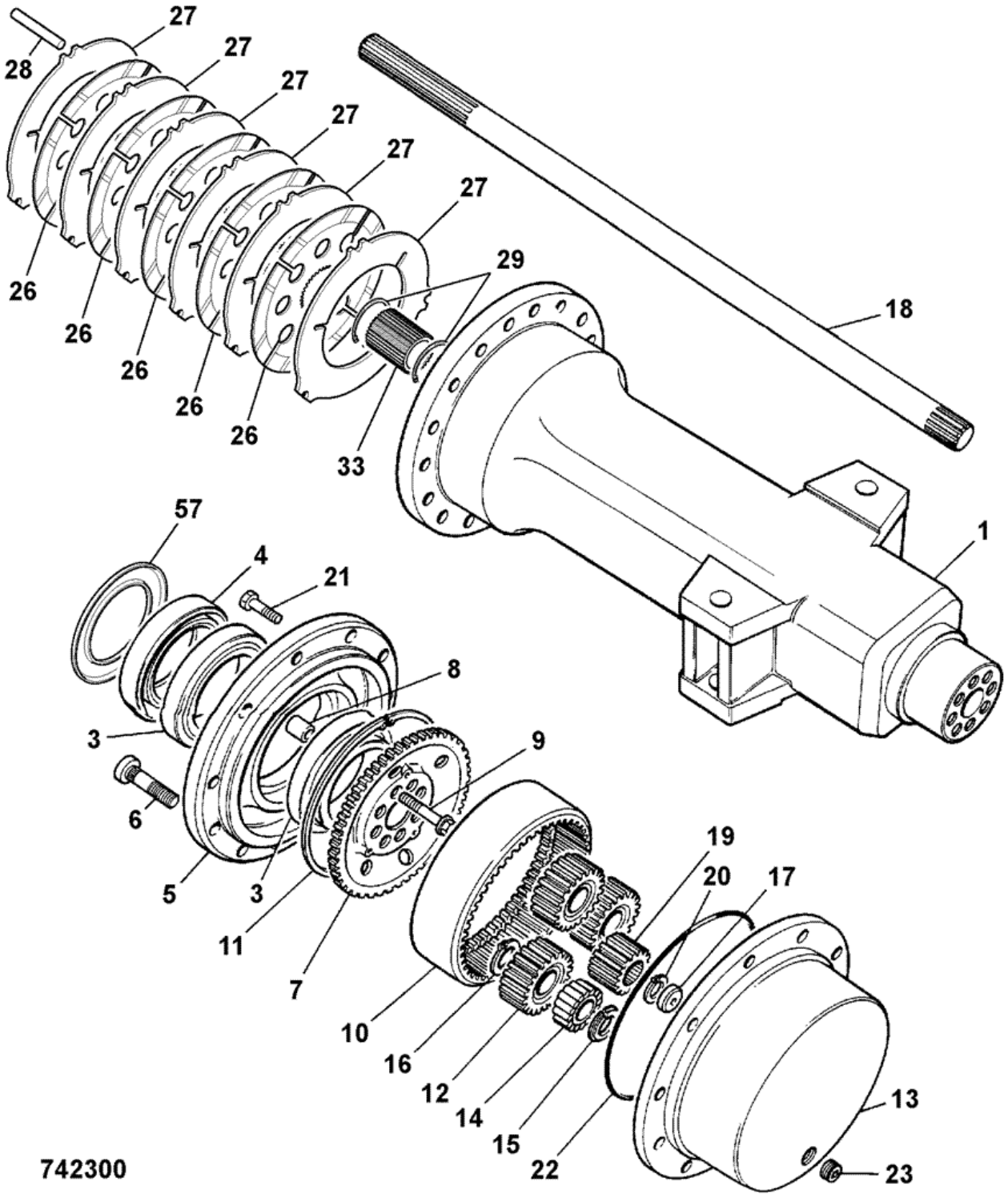


| Item | Part # | Change No | Description | Usage Code | QTY |
|---|---|---|---|---|---|
| A | 458/10980 | | Arm axle arm and hub assembly | | 2 |

| | | | | | |
|---|---|---|---|---|---|
| 1 | :458/20618 | | Casing axle arm pad thickness 139mm | | 1 |
| 3 | :907/20043 | | Bearing taper roller | | 2 |
| 4 | :904/50033 | | Seal oil 127 x 160 x 15.5-17 | | 1 |
| 5 | :458/20446 | | Carrier wheel bearing 5 stud | | 1 |
| 6 | :826/00923 | | Stud wheel | | 5 |
| 7 | :450/12702 | | Carrier annulus | | 1 |
| 8 | :450/12703 | | Dowel hollow | | 8 |
| 9 | :826/01060 | | Bolt M14 x 70mm long | | 8 |
| 10 | :450/10205 | | Gear annulus ring | | 1 |
| 11 | :821/00210 | | Circlip internal square section | | 1 |
| 12 | :450/10206 | | Gear planet | | 3 |
| 13 | :450/10216 | | Carrier planetary hub 5 stud | | 1 |
| 14 | :907/50200 | | Bearing roller, double row | | 3 |
| 15 | :821/00209 | | Circlip | | 6 |
| 16 | :2203/0054 | | Circlip | | 3 |
| 17 | :450/10208 | | Pad thrust | | 1 |
| 18 | :914/60103 | | Shaft rigid driveshaft With shot peening | | 1 |
| 19 | :450/12403 | | Gear sun | | 1 |
| 20 | :821/00494 | | Circlip External | | 1 |
| 21 | :1321/0407Z | | Bolt coated | | 2 |
| 22 | :828/00196 | | O Ring | | 1 |
| 23 | :826/00425 | | Plug tapered 3/4"-14PTF | | 1 |
| 26 | :458/20353 | | Plate brake friction | | 5 |
| 27 | :458/20285 | | Plate brake counter | | 6 |
| 28 | :450/10213 | | Pin reaction | | 3 |
| 29 | :2203/0071 | | Circlip external | | 2 |
| 33 | :450/10215 | | Carrier brake plate | | 1 |
| 57 | :458/20403 | | Cover plate hub seal | | 1 |

Product Catalog \ CONSTRUCTION \ NORTH AMERICA \ CONSTRUCTION / INDUSTRIAL \ BACKHOE LOADER 3CX,4CX,214,215,217 \ 3C PLUS (91HP) , Made in Brazil with Dieselmax/IESA Engine 9812/0080 \ F AXLES, WHEELS & TRANSMISSION \ F02 AXLES, REAR

# 9812/0080 F2-4-1 450/10900, DIFFERENTIAL ASSY

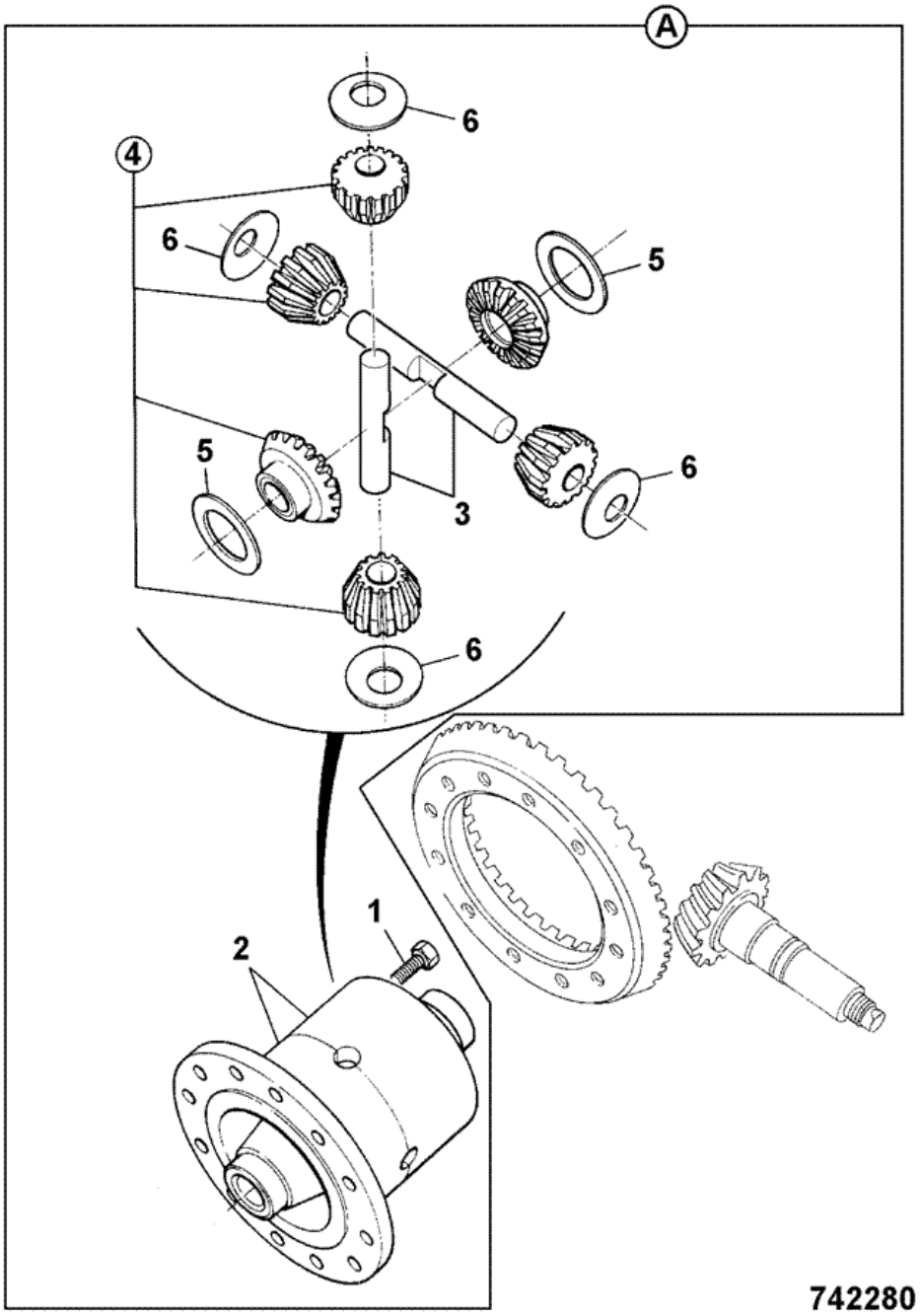


| Item | Part # | Change No | Description | Usage Code | QTY |
|---|---|---|---|---|---|
| A | 450/10900 | | Differential assembly | | 1 |
| 1 | :1315/3418 | | Bolt | | 8 |
| | | | | | |

| | | | | | |
|---|---|---|---|---|---|
| 2 | :450/10800 | | Casing assembly differential | | 1 |
| 3 | :450/10903 | | Pin trunnion 163mm long | | 2 |
| 4 | :450/16900 | | Kit-gear differential | | 1 |
| 5 | :808/00209 | | Washer thrust side gear | | 2 |
| 6 | :808/00210 | | Washer thrust pinion | | 4 |

Product Catalog \ CONSTRUCTION \ NORTH AMERICA \ CONSTRUCTION / INDUSTRIAL \ BACKHOE LOADER 3CX,4CX,214,215,217 \ 3C PLUS (91HP) , Made in Brazil with Dieselmax/IESA Engine 9812/0080 \ F AXLES, WHEELS & TRANSMISSION \ F02 AXLES, REAR

# 9812/0080 F2-4-2 450/26310, DIFFERENTIAL ASSY

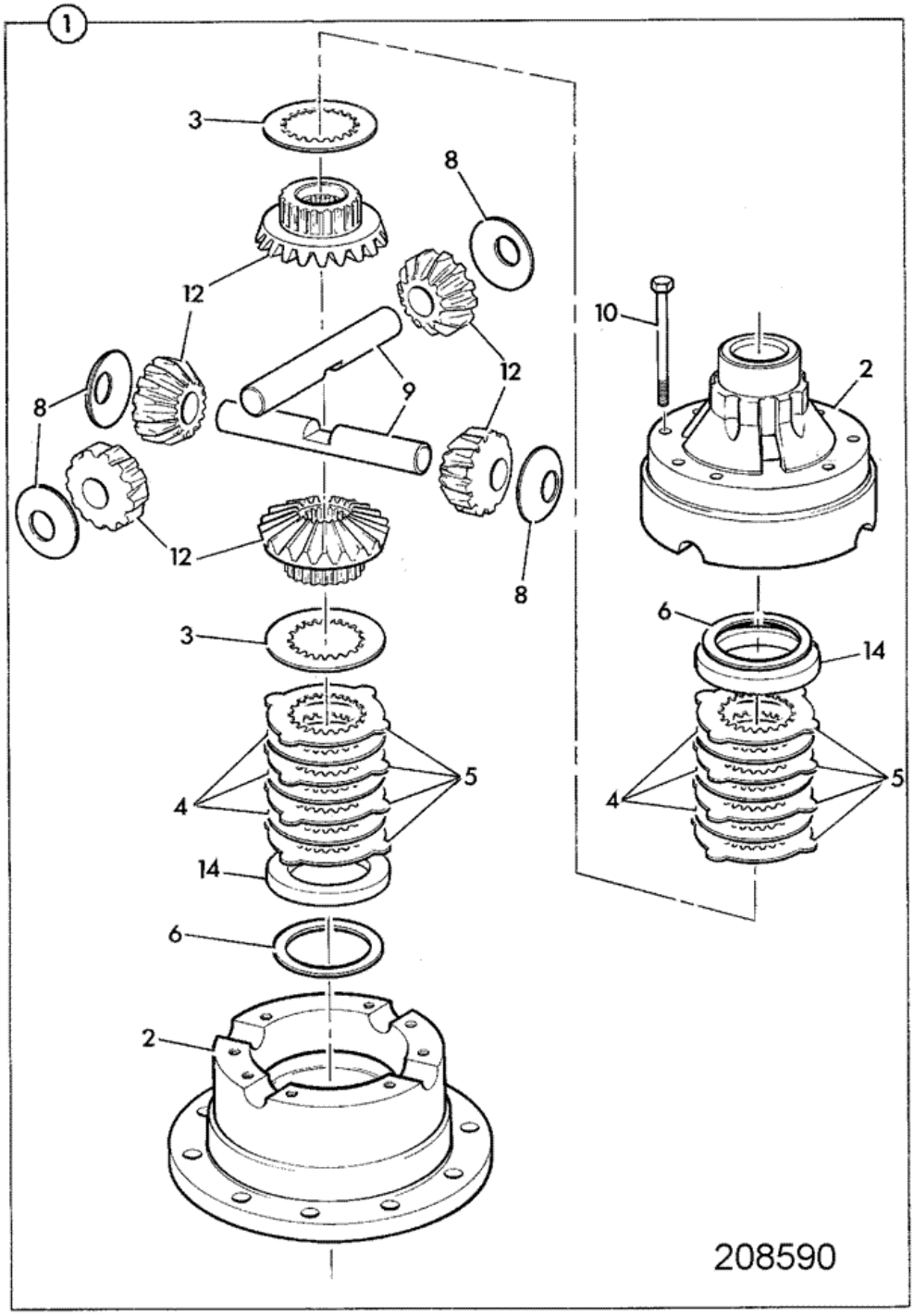


| Item | Part # | Change No | Description | Usage Code | QTY |
|---|---|---|---|---|---|
| 1 | 450/26310 | | Differential LSD assembly 3 working faces | | 1 |
| 2 | :450/20500 | | Casing assembly differential | | 1 |
| | | | | | |

| | | | | | |
|---|---|---|---|---|---|
| 3 | :450/20401 | | Plate pressure | | 2 |
| 4 | :450/20402 | | Plate friction | | 2 |
| 5 | :450/20403 | | Plate counter | | 4 |
| 6 | :921/52100 | | Kit shim | | 2 |
| 8 | :808/00210 | | Washer thrust pinion | | 4 |
| 9 | :450/10903 | | Pin trunnion 163mm long | | 2 |
| 10 | :1315/3418Z | | Bolt M10x80 | | 8 |
| 12 | :450/20600 | | Gear set differential | | 1 |
| 14 | :450/26201 | | Spacer | | 6 |

Product Catalog \ CONSTRUCTION \ NORTH AMERICA \ CONSTRUCTION / INDUSTRIAL \ BACKHOE LOADER 3CX,4CX,214,215,217 \ 3C PLUS (91HP) , Made in Brazil with Dieselmax/IESA Engine 9812/0080 \ F AXLES, WHEELS & TRANSMISSION \ F02 AXLES, REAR

# 9812/0080 F2-7-1 AXLE BREATHER, REMOTE

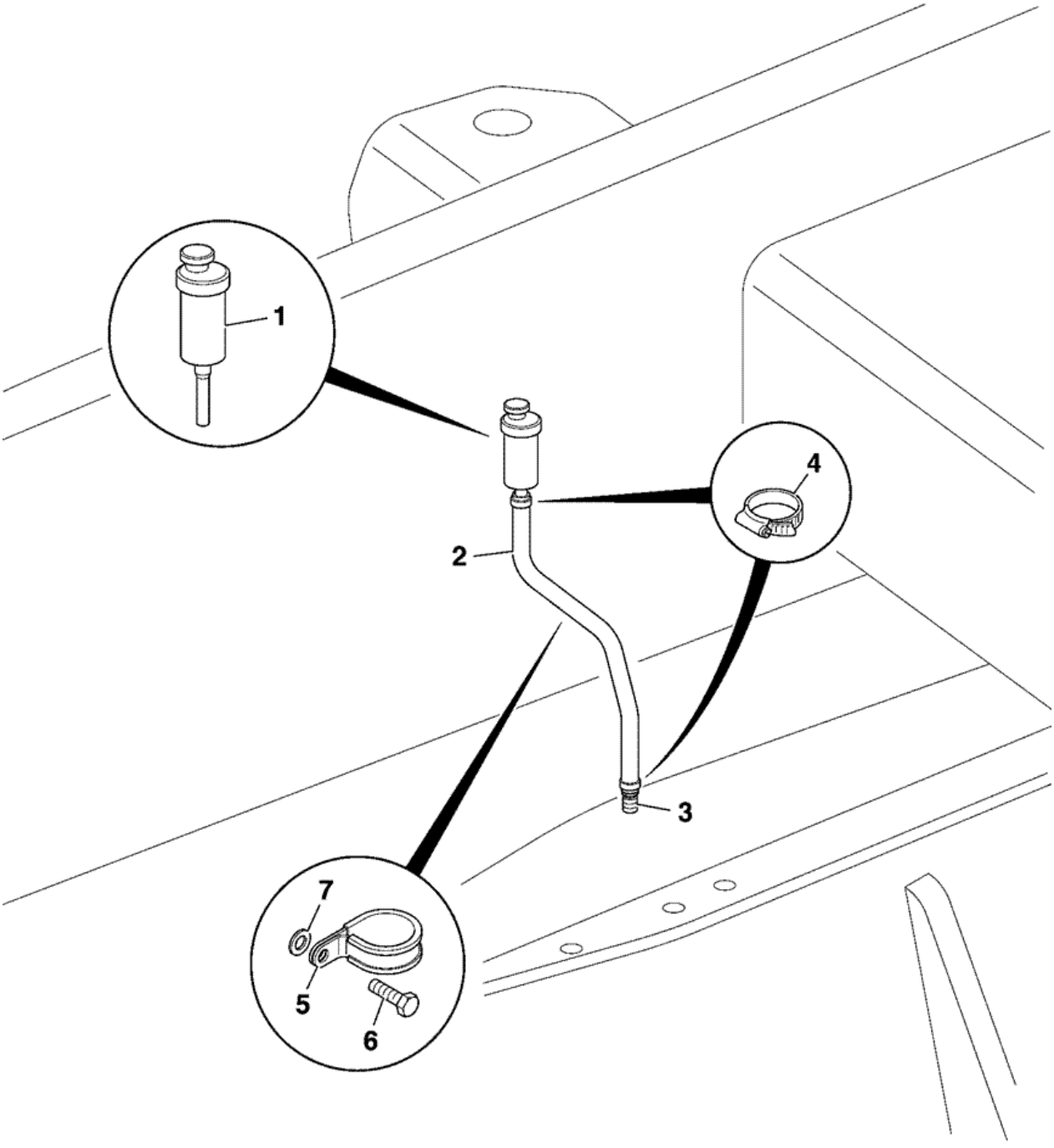


| Item | Part # | Change No | Description | Usage Code | QTY |
|---|---|---|---|---|---|
| 1 | 32/925678 | | Breather<br>*Rear axle* | | 1 |
| | | | | | |

| | | | | | |
|---|---|---|---|---|---|
| 2 | 648/03528 | | Hose 330mm<br>*was 648/21309* | | 1 |
| 3 | 458/20611 | | Adapter | | 1 |
| 4 | 821/00520 | | Clip<br>*not used with 648/03528* | | 2 |
| 5 | 826/01347 | | Tie cable c/w mounting 4.6mm x 190mm<br>*pushes onto stud welded to chassis* | | 1 |
| 6 | . | | 'See Remark'<br>*no longer fitted* | | 1 |
| 7 | . | | 'See Remark'<br>*no longer fitted* | | 1 |

# 9812/0080 F3-1-1 PROPSHAFT, TRANS. / FRONT AXLE, SYNCHOSHUTTLE TRANSMISSIONS

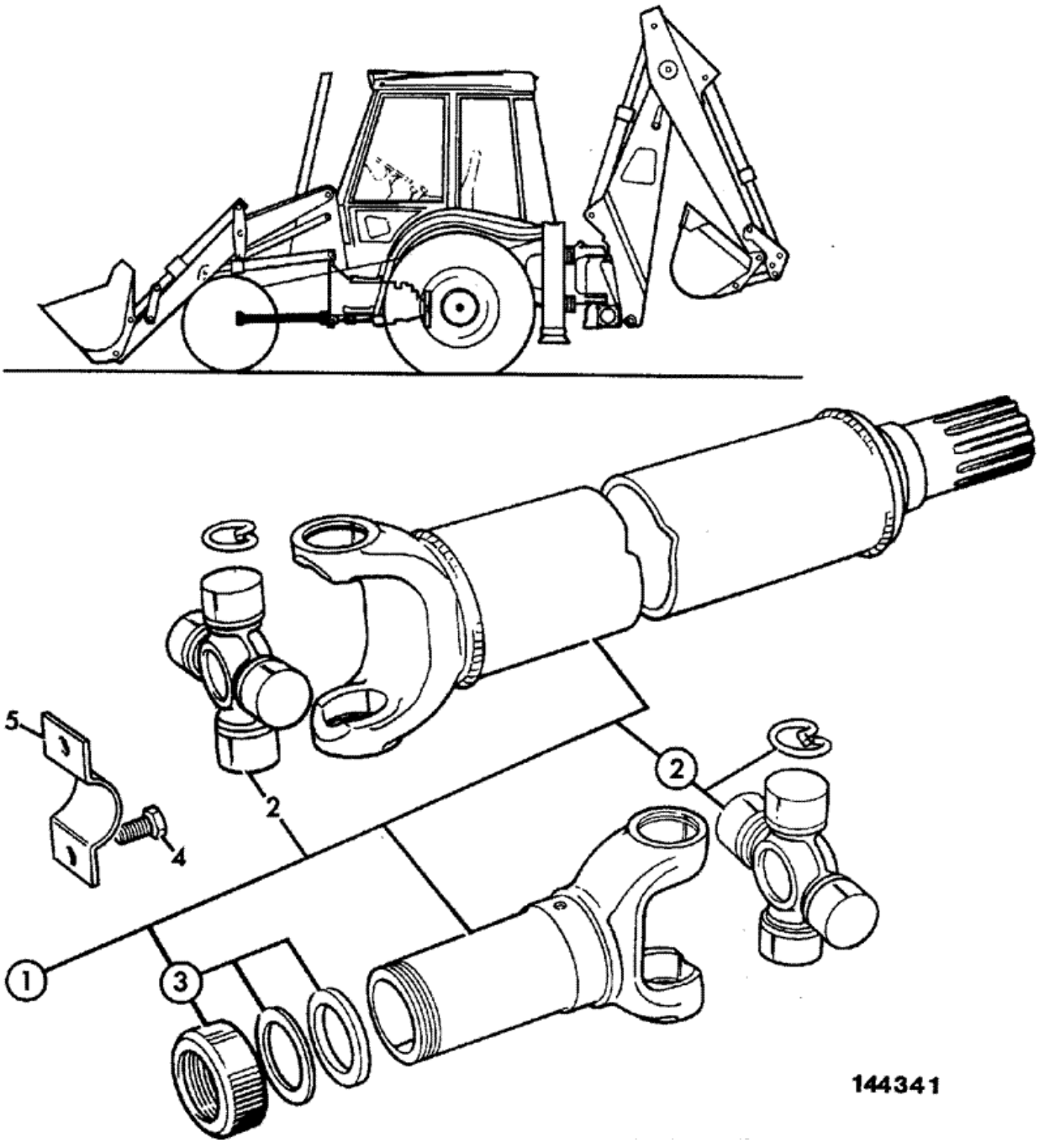

| Item | Part # | Change No | Description | Usage Code | QTY |
|---|---|---|---|---|---|
| 1 | 914/60181 | | Propshaft front | | 1 |
| 2 | :914/56401 | | Kit-spider 106.4 X 34.9 Dia | | 2 |
| 2A | ::816/13275 | | Nipple grease | | 1 |
| 3 | :914/35403 | | Kit-end cap | | 1 |
| 4 | 826/00892 | | Screw special 3/8UNF X 3/4 | | 8 |
| 5 | 116/00525 | | Strap | | 4 |

Product Catalog \ CONSTRUCTION \ NORTH AMERICA \ CONSTRUCTION / INDUSTRIAL \ BACKHOE LOADER 3CX,4CX,214,215,217 \ 3C PLUS (91HP) , Made in Brazil with Dieselmax/IESA Engine 9812/0080 \ F AXLES, WHEELS & TRANSMISSION \ F03 WHEELS, TYRES & PROPSHAFTS

# 9812/0080 F3-2-1 PROPSHAFT, TRANS. / REAR AXLE, SYNCROSHUTTLE

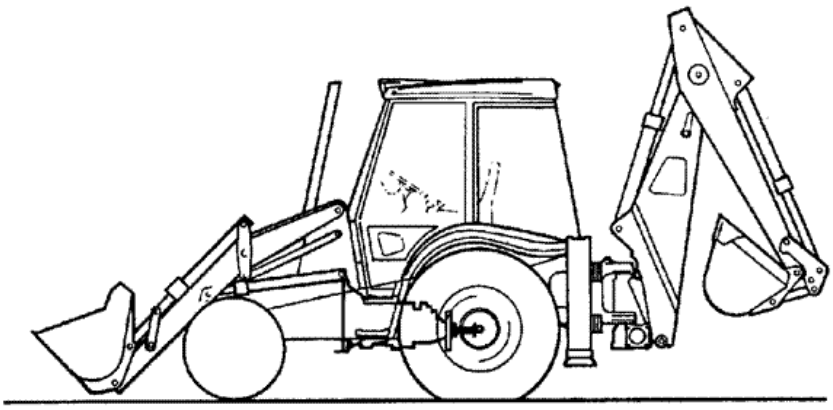

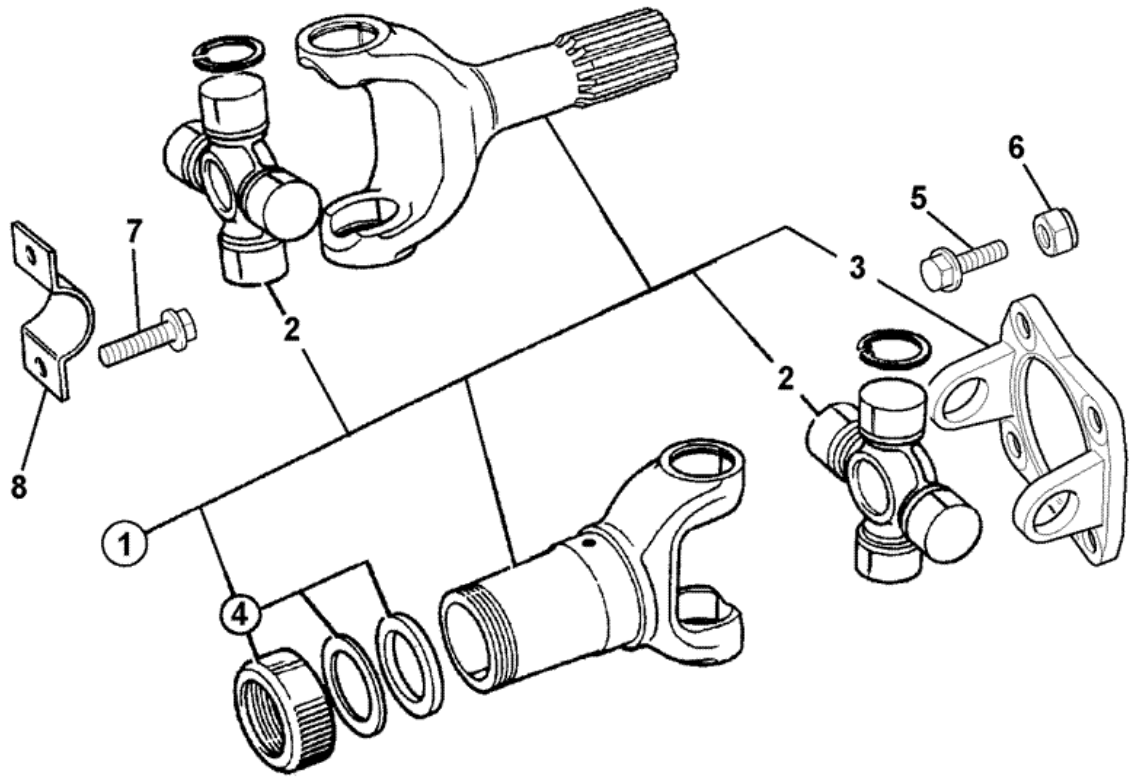


| Item | Part # | Change No | Description | Usage Code | QTY |
|---|---|---|---|---|---|
| | | | Propshaft rear | | |

| | | | | | |
|---|---|---|---|---|---|
| 1 | 914/60265 | | *JCB 444 engine* | | 1 |
| 1 | 914/60187 | | Propshaft rear see TI 2/422<br>*International engine* | | 1 |
| 2 | :914/56401 | | Kit-spider 106.4 X 34.9 Dia | | 2 |
| 2A | ::816/13275 | | Nipple grease | | 1 |
| 3 | NSP | | None serviced part | | 1 |
| 4 | :914/39702 | | Cap dust | | 1 |
| 5 | 1305/0410Z | | Bolt 1/2" x 1.1/2" long | | 4 |
| 6 | 1340/0403Z | | Nut | | 4 |
| 7 | 826/00892 | | Screw special 3/8UNF X 3/4 | | 4 |
| 8 | 116/00525 | | Strap | | 2 |

Product Catalog \ CONSTRUCTION \ NORTH AMERICA \ CONSTRUCTION / INDUSTRIAL \ BACKHOE LOADER 3CX,4CX,214,215,217 \ 3C PLUS (91HP) , Made in Brazil with Dieselmax/IESA Engine 9812/0080 \ F AXLES, WHEELS & TRANSMISSION \ F03 WHEELS, TYRES & PROPSHAFTS

# 9812/0080 F3-4-1 WHEEL & TYRE, FRONT 2WS 4WD, 14X17.5

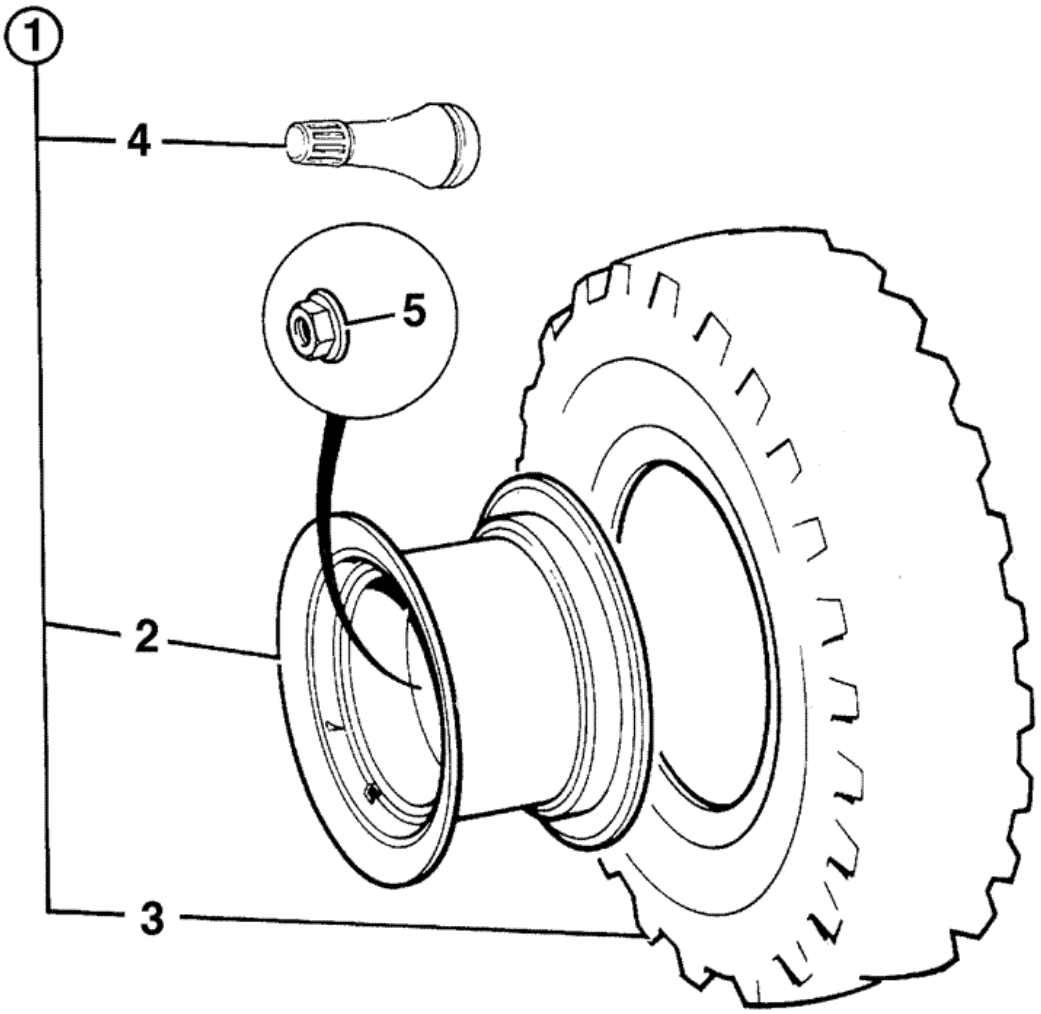


245482

| Item | Part # | Change No | Description | Usage Code | QTY |
|---|---|---|---|---|---|
| 1 | 126/01306 | | Wheel & tyre assembly Armstrong 14x17.5x10 | A | 2 |

| | | | | | |
|---|---|---|---|---|---|
| 1 | 126/01688 | | Wheel & tyre assy Goodyear 14x17.5x10 ply IND | B | 2 |
| 2 | :41/925200 | | Wheel 10.5x17.5 | | 1 |
| 3 | :42/914300 | | Tyre 14x17.5x10pr Armstrong | A | 1 |
| 3 | :42/406100 | | Tyre Goodyear tubeless | B | 1 |
| 4 | :123/05041 | | Valve tyre flexible (Tubeless) | | 1 |
| 5 | 106/40001 | | Nut | | 10 |

Product Catalog \ CONSTRUCTION \ NORTH AMERICA \ CONSTRUCTION / INDUSTRIAL \ BACKHOE LOADER 3CX,4CX,214,215,217 \ 3C PLUS (91HP) , Made in Brazil with Dieselmax/IESA Engine 9812/0080 \ F AXLES, WHEELS & TRANSMISSION \ F03 WHEELS, TYRES & PROPSHAFTS

# 9812/0080 F3-5-2 WHEEL & TYRE, REAR 2WS 19.5LX24

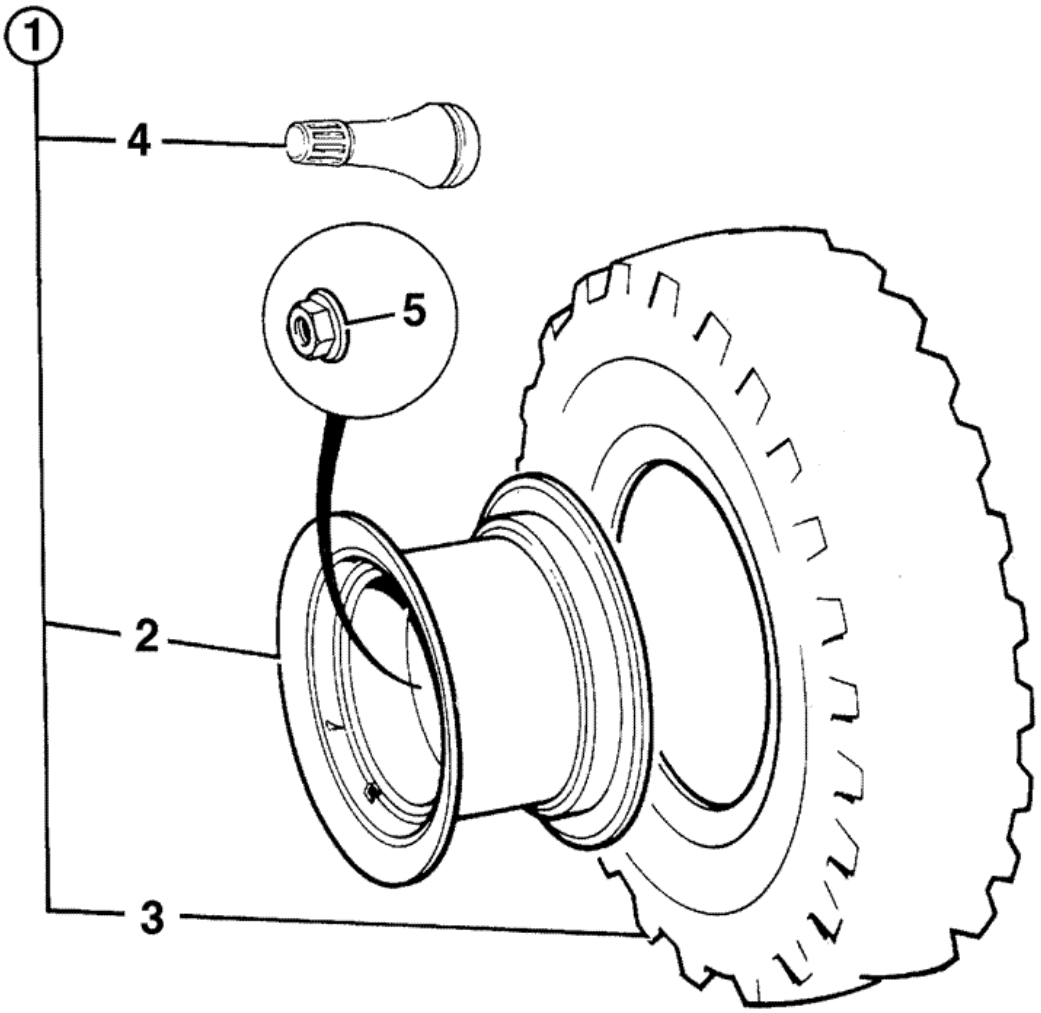


245482

| Item | Part # | Change No | Description | Usage Code | QTY |
|---|---|---|---|---|---|
| 1 | 126/00146 | | Wheel & tyre. Armstrong 19.5Lx24x10pr | A | 2 |
| 1 | 126/00147 | | Wheel & tyre. Armstrong 19.5Lx24x12pr | B | 2 |
| | | | | | |

| | | | | | |
|---|---|---|---|---|---|
| 1 | 126/02367 | | Wheel & tyre assembly IND 19.5Lx24x12 Goodyear | C | 2 |
| 2 | :41/910000 | | Rim wheel 19,5Lx24 | | 1 |
| 3 | :42/914800 | | Tyre 19.5Lx24x10pr Armstrong | A | 1 |
| 3 | :42/914900 | | Tyre 19.5Lx24x12pr Armstrong | B | 1 |
| 3 | :42/413400 | | Tyre 19.5lX24x12 Goodyear industrial | C | 1 |
| 4 | :151/05201 | | Valve | | 1 |
| 5 | :106/40001 | | Nut | | 10 |

Product Catalog \ CONSTRUCTION \ NORTH AMERICA \ CONSTRUCTION / INDUSTRIAL \ BACKHOE LOADER 3CX,4CX,214,215,217 \ 3C PLUS (91HP) , Made in Brazil with Dieselmax/IESA Engine 9812/0080 \ F AXLES, WHEELS & TRANSMISSION \ F05 TRANSMISSIONS SYNCHROSHUTTLE

# 9812/0080 F5-0-1 MOUNTING BRACKET, SYNCROSHUTTLE, INTERNATIONAL ENGINE

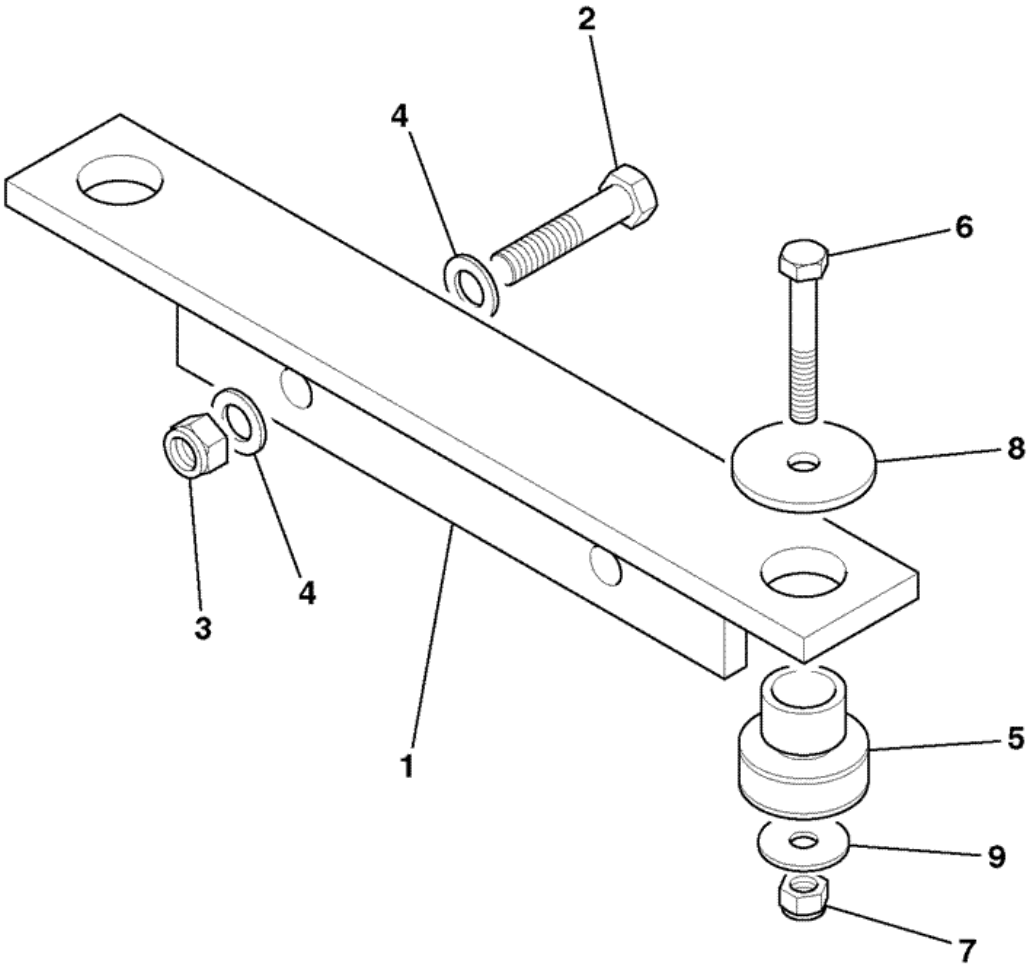


903050

| Item | Part # | Change No | Description | Usage Code | QTY |
|---|---|---|---|---|---|
| 1 | 335/13944 | | Bracket gearbox mounting | | 1 |

| | | | | | |
|---|---|---|---|---|---|
| 2 | 1315/3717Z | | Bolt M16 x 75mm | | 2 |
| 3 | 1370/0603Z | | Nut M16 | | 2 |
| 4 | 1420/0011Z | | Washer M16 plain | | 2 |
| 5 | 123/03138 | | Mounting rubber | | 2 |
| 6 | 1315/3518Z | | Bolt M12 x 80mm | | 2 |
| 7 | 1370/0403Z | | Nut M12 | | 2 |
| 8 | 123/02453 | | Washer rebound | | 2 |
| 9 | 823/00531 | | Washer | | 2 |

Product Catalog \ CONSTRUCTION \ NORTH AMERICA \ CONSTRUCTION / INDUSTRIAL \ BACKHOE LOADER 3CX,4CX,214,215,217 \ 3C PLUS (91HP) , Made in Brazil with Dieselmax/IESA Engine 9812/0080 \ F AXLES, WHEELS & TRANSMISSION \ F05 TRANSMISSIONS SYNCHROSHUTTLE

# 9812/0080 F5-0-3 MOUNTING BRACKET, SYNCROSHUTTLE, JCB DIESELMAX ENGINE

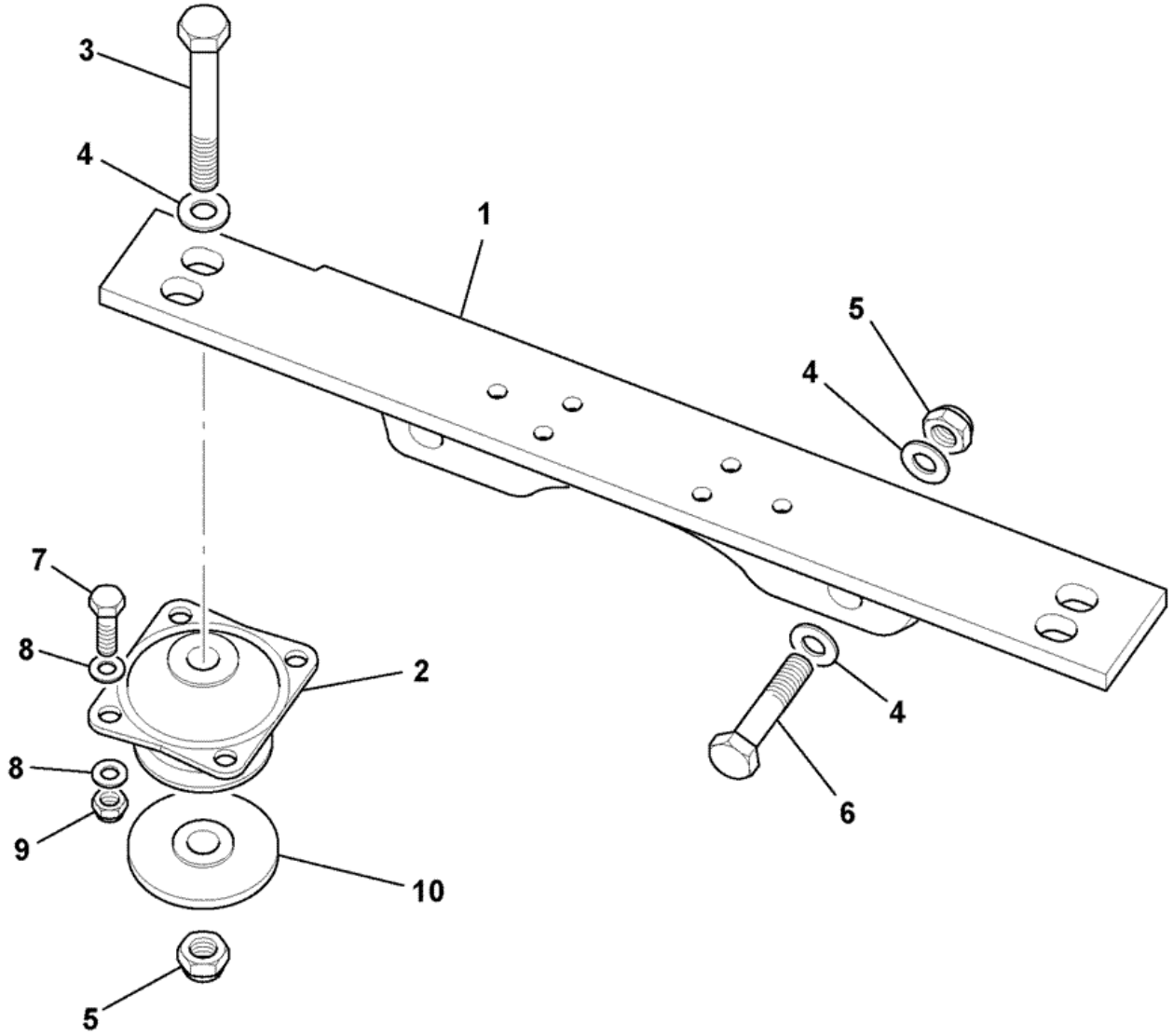


788610

| Item | Part # | Change No | Description | Usage Code | QTY |
|---|---|---|---|---|---|
| 1 | 335/11254 | | Bracket gearbox mounting | | 1 |

| | | | | | |
|---|---|---|---|---|---|
| 2 | 331/40347 | | Mounting resilient | | 2 |
| 3 | 1315/3722Z | | Bolt M16 x 120 | | 2 |
| 4 | 1420/0011Z | | Washer M16 plain | | 6 |
| 5 | 1370/0603Z | | Nut M16 | | 4 |
| 6 | 1315/3717Z | | Bolt M16 x 75mm | | 2 |
| 7 | 1315/3409Z | | Bolt M10 x 35 | | 8 |
| 8 | 1420/0008Z | | Washer Plain M10 | | 16 |
| 9 | 1370/0303Z | | Nut lock M10 | | 8 |
| 10 | 829/31272 | | Washer rebound 16x75x8 | | 2 |

Product Catalog \ CONSTRUCTION \ NORTH AMERICA \ CONSTRUCTION / INDUSTRIAL \ BACKHOE LOADER 3CX,4CX,214,215,217 \ 3C PLUS (91HP) , Made in Brazil with Dieselmax/IESA Engine 9812/0080 \ F AXLES, WHEELS & TRANSMISSION \ F05 TRANSMISSIONS SYNCHROSHUTTLE

# 9812/0080 F5-0-5 MOUNTING, TRANSMISSION, TO JCB DIESELMAX ENGINE

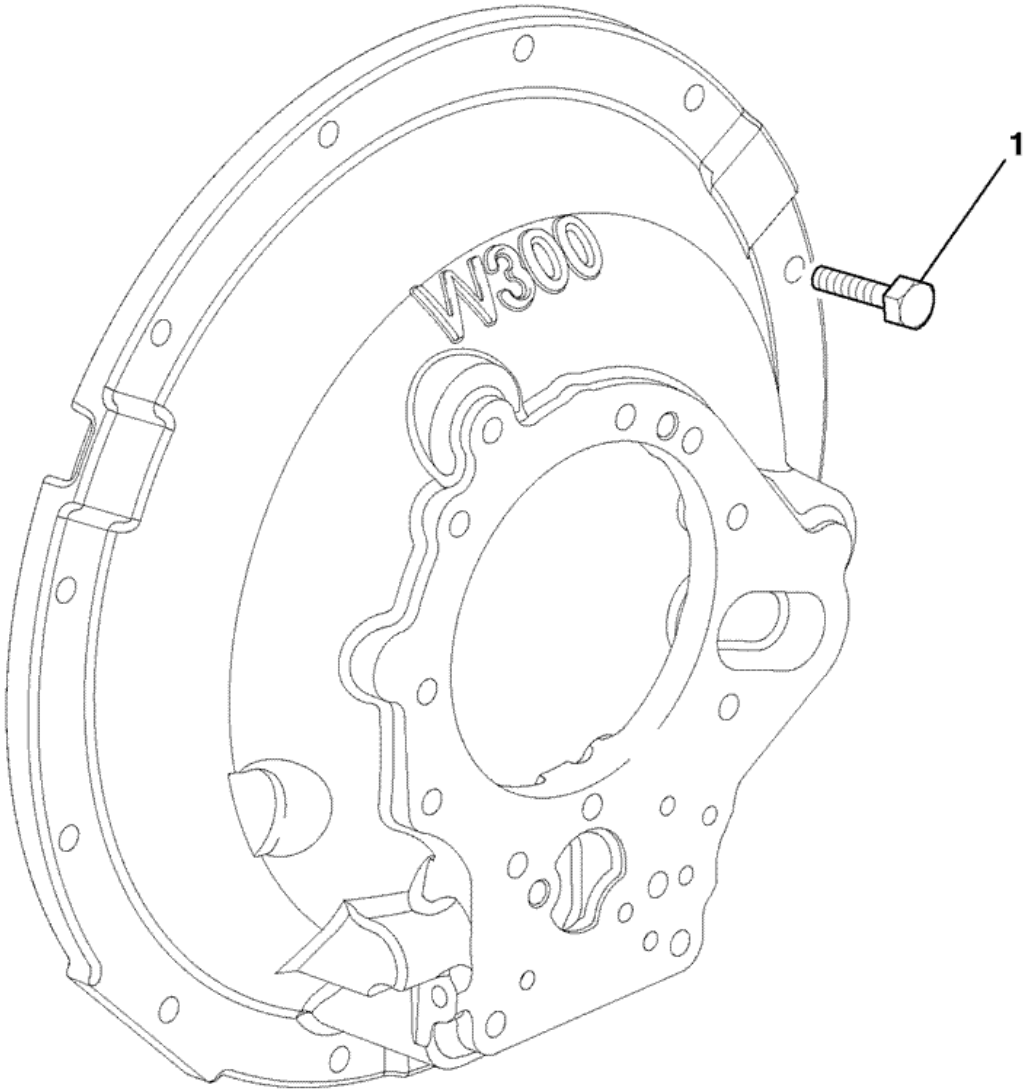


774840

| Item | Part # | Change No | Description | Usage Code | QTY |
|---|---|---|---|---|---|
| 1 | 1315/0409Z | | Screw M10x35mm | | 12 |

Product Catalog \ CONSTRUCTION \ NORTH AMERICA \ CONSTRUCTION / INDUSTRIAL \ BACKHOE LOADER 3CX,4CX,214,215,217 \ 3C PLUS (91HP) , Made in Brazil with Dieselmax/IESA Engine 9812/0080 \ F AXLES, WHEELS & TRANSMISSION \ F05 TRANSMISSIONS SYNCHROSHUTTLE

# 9812/0080 F5-3-1 441/00500 - 4WD, TRANSMISSION ASSY, SYNCROSHUTTLE, INTERNATIONAL ENGINE

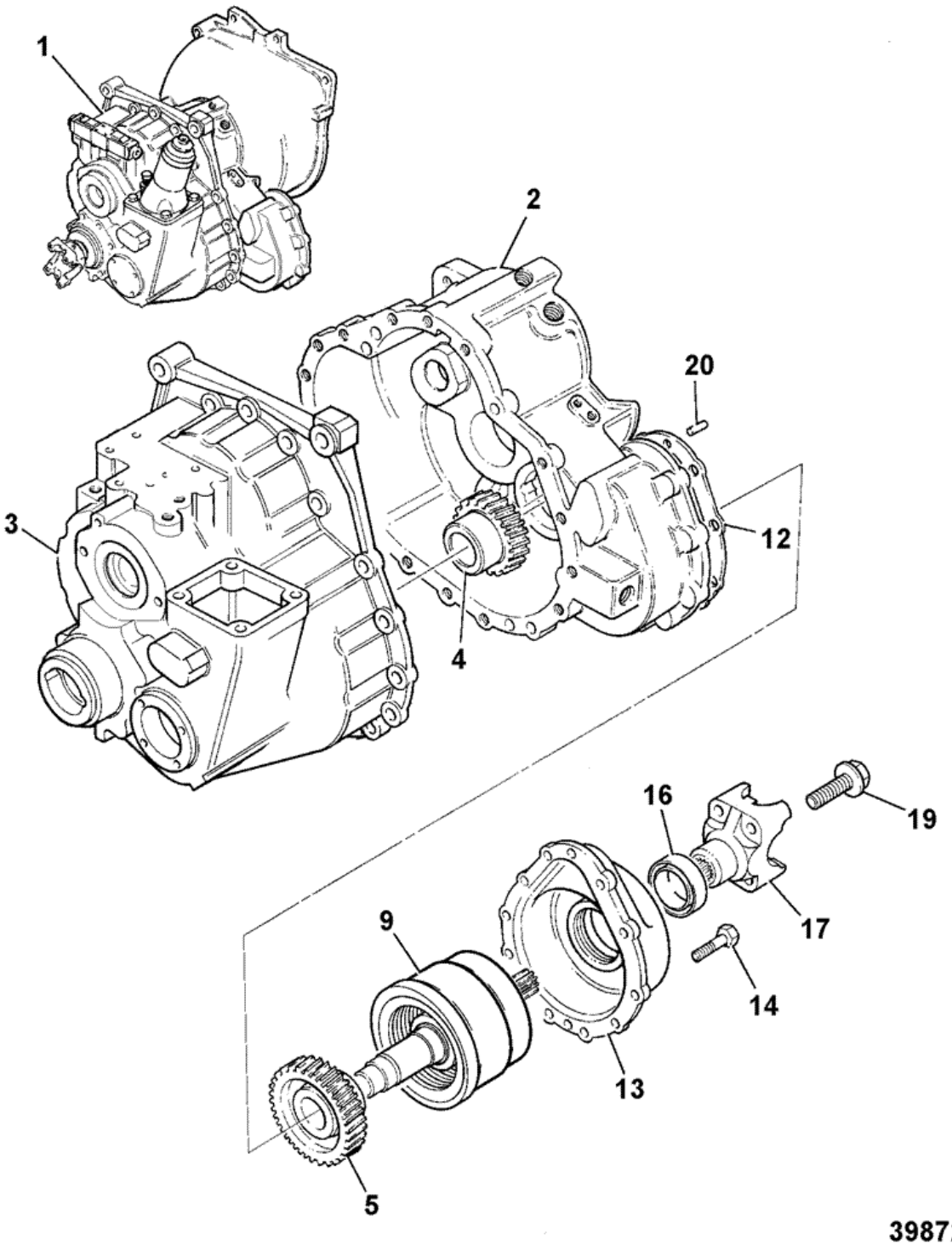


| Item | Part # | Change No | Description | Usage Code | QTY |
|---|---|---|---|---|---|
| 1 | 441/00500 | | Gearbox assembly, SS700 4WD, 1:1.446 | | 1 |

| | | | | | |
|---|---|---|---|---|---|
| 2 | :459/30382 | | Casing front | | 1 |
| 3 | :459/30272 | | Casing rear SS700 4WD | | 1 |
| 3 | :459/M2870 | >G/00500/8 | Casing rear | | 1 |
| 4 | :459/50577 | | Gear input 22 teeth | | 1 |
| 5 | :459/50702 | | Gear output 34 teeth | | 1 |
| 9 | :459/10119 | | Clutch assembly 4WD<br>*For components see frame F5-3-40* | | 1 |
| 12 | :813/50048 | | Gasket | | 1 |
| 13 | :459/30284 | | Cover 4WD | | 1 |
| 14 | :826/01417 | | Bolt | | 10 |
| 16 | :904/20172 | | Seal TRIPLE LIP 53.6 x 80.35 x 12 | | 1 |
| 17 | :459/70133 | | Yoke coupling, 1480 | | 1 |
| 19 | :826/01553 | | Bolt Setscrew | | 1 |
| 20 | :445/14001 | | Dowel | | 2 |

Product Catalog \ CONSTRUCTION \ NORTH AMERICA \ CONSTRUCTION / INDUSTRIAL \ BACKHOE LOADER 3CX,4CX,214,215,217 \ 3C PLUS (91HP) , Made in Brazil with Dieselmax/IESA Engine 9812/0080 \ F AXLES, WHEELS & TRANSMISSION \ F05 TRANSMISSIONS SYNCHROSHUTTLE

# 9812/0080 F5-4-1 441/00760 - 4WD, TRANSMISSION ASSY, SYNCROSHUTTLE, JCB DIESELMAX ENGINE

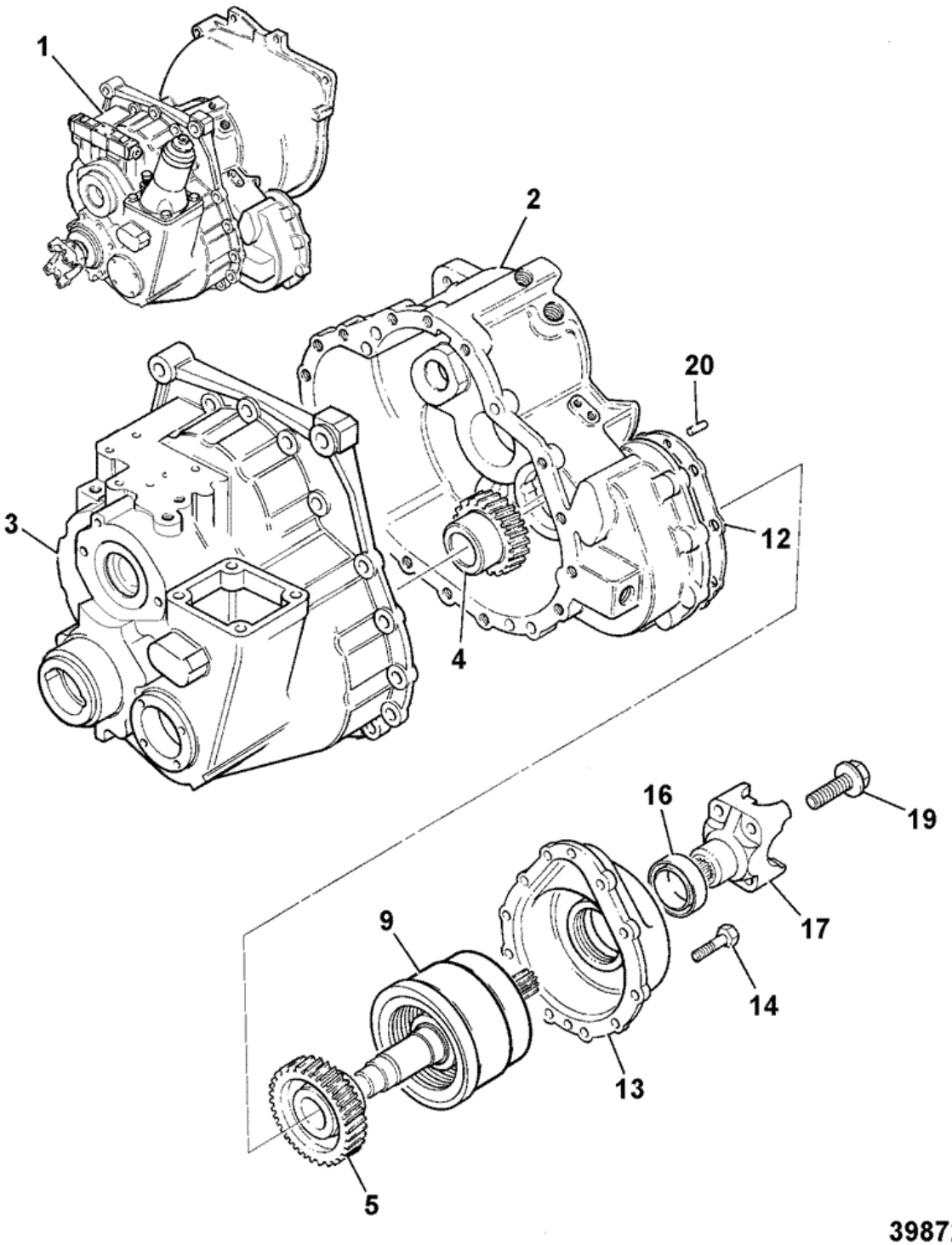


| Item | Part # | Change No | Description | Usage Code | QTY |
|---|---|---|---|---|---|
| 1 | 441/00760 | | Gearbox assembly, 4WD 22/34 drop gears | | 1 |

| | | | | | |
|---|---|---|---|---|---|
| 2 | :459/30382 | <G/00760/1 | Casing front | | 1 |
| 2 | :459/30463 | >G/00760/2 | Casing front | | 1 |
| 3 | :459/30272 | <G/00760/1 | Casing rear SS700 4WD | | 1 |
| 3 | :459/30435 | >G/00760/2 | Casing rear | | 1 |
| 3 | :459/M2870 | >G/00760/7 | Casing rear | | 1 |
| 4 | :459/50577 | | Gear input 22 teeth | | 1 |
| 5 | :459/50702 | | Gear output 34 teeth | | 1 |
| 9 | :459/10119 | | Clutch assembly 4WD<br>*For components see frame F5-3-40* | | 1 |
| 12 | :813/50048 | | Gasket | | 1 |
| 13 | :459/30451 | | Cover 4WD clutch | | 1 |
| 14 | :826/01417 | | Bolt | | 10 |
| 16 | :904/20172 | | Seal TRIPLE LIP 53.6 x 80.35 x 12 | | 1 |
| 17 | :459/70133 | | Yoke coupling, 1480 | | 1 |
| 19 | :826/01553 | | Bolt Setscrew | | 1 |
| 20 | :445/14001 | | Dowel | | 2 |

Product Catalog \ CONSTRUCTION \ NORTH AMERICA \ CONSTRUCTION / INDUSTRIAL \ BACKHOE LOADER 3CX,4CX,214,215,217 \ 3C PLUS (91HP) , Made in Brazil with Dieselmax/IESA Engine 9812/0080 \ F AXLES, WHEELS & TRANSMISSION \ F05 TRANSMISSIONS SYNCHROSHUTTLE

# 9812/0080 F5-9-1 441/M1218 - 4WD-2WS, TRANSMISSION ASSY, SYNCROSHUTTLE

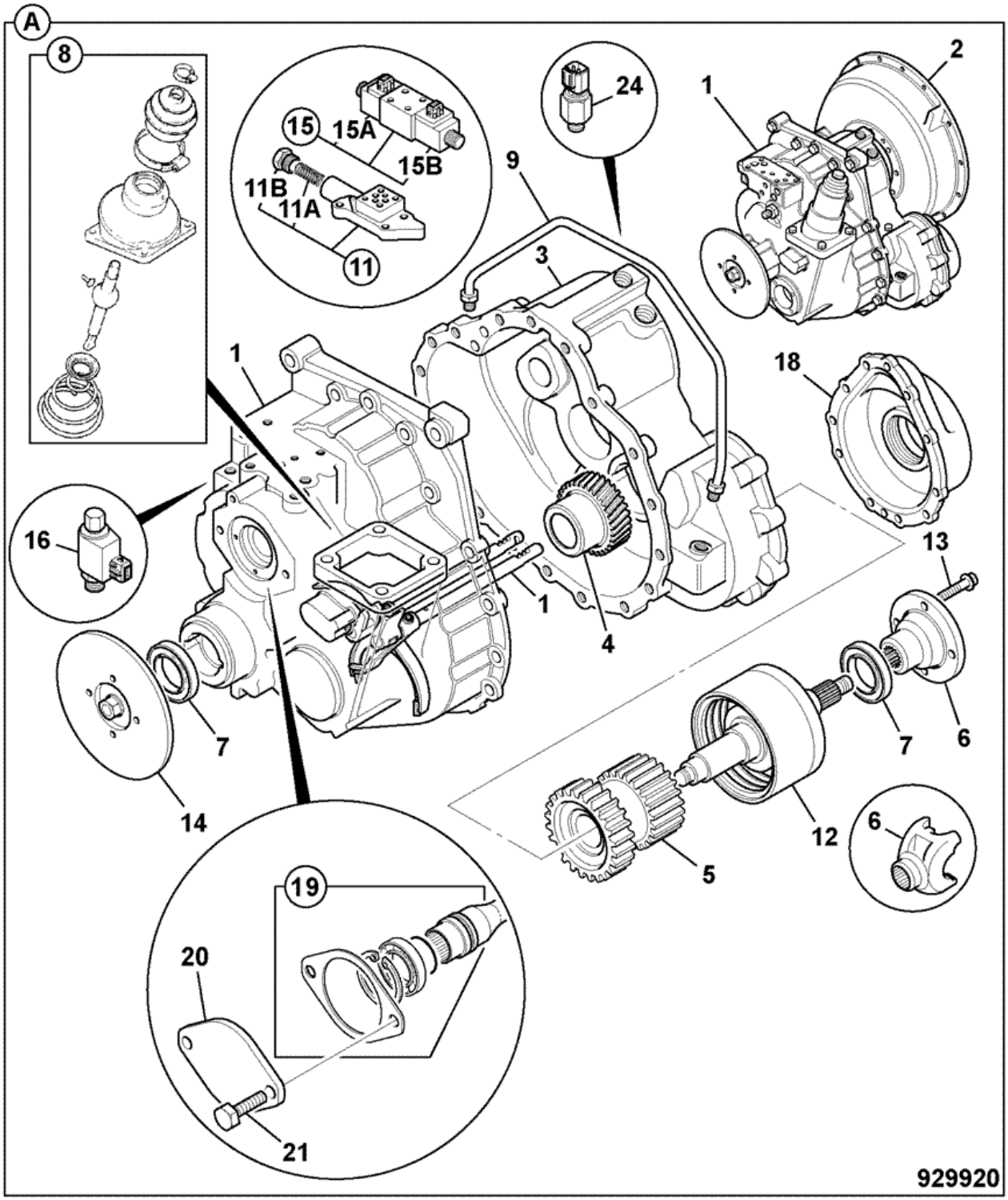


| Item | Part # | Change No | Description | Usage Code | QTY |
|---|---|---|---|---|---|
| A | 441/M1218 | | Gearbox assembly, 4WD-2WS 22/35 drop gears | | 1 |

| | | | | | |
|---|---|---|---|---|---|
| 1 | :441/00230 | | Gearbox common components 4WD<br>*see F5-9-11 for breakdown* | | 1 |
| 2 | :459/30464 | | Housing flywheel | | 1 |
| 3 | :459/30463 | | Casing front | | 1 |
| 4 | :459/50567 | | Gear input, 22 teeth | | 1 |
| 5 | :459/50568 | | Gear output, 35 teeth | | 1 |
| 6 | :459/70133 | | Yoke coupling, 1480 | | 1 |
| 7 | :904/20172 | | Seal TRIPLE LIP 53.6 x 80.35 x 12 | | 2 |
| 8 | :459/10143 | | Lever assembly gear turret<br>*see F5-9-31 for breakdown* | | 1 |
| 9 | :830/11842 | | Pipe assembly 4WD | | 1 |
| 11 | :459/10144 | | Valve Adapter block assy SS700 low ratio | | 1 |
| 12 | :459/10119 | | Clutch assembly 4WD<br>*see F5-9-41 for breakdown* | | 1 |
| 13 | :826/01553 | | Bolt Setscrew | | 1 |
| 14 | :459/70317 | | Yoke coupling - 1480 35 t | | 1 |
| 15 | :25/220998 | | Valve solenoid assembly | | 1 |
| 16 | :25/220804 | <G/M1218/4 | Valve solenoid assembly | | 1 |
| 16 | :25/222913 | >G/M1218/5 | Valve cartridge 2 screw fixing | | 1 |
| 16A | :459/M2855 | <G/M1218/4 | Plate hold down 6mm thick<br>*to hold 25/220804* | | 1 |
| 16B | :1391/3303Z | <G/M1218/4 | Capscrew M8x16<br>*to hold 25/220804* | | 1 |
| 16C | :1391/3101Z | >G/M1218/5 | Capscrew<br>*to hold 25/222913* | | 2 |
| 18 | :459/30451 | | Cover 4WD clutch | | 1 |
| 19 | :459/10151 | | Assembly pump shaft<br>*see F5-9-51 for breakdown* | | 1 |
| 20 | :459/70283 | | Plate blanking | | 1 |
| 21 | :1315/0503Z | | Bolt | | 2 |
| 24 | :701/80626 | | Switch oil pressure M12 | | 1 |

Product Catalog \ CONSTRUCTION \ NORTH AMERICA \ CONSTRUCTION / INDUSTRIAL \ BACKHOE LOADER 3CX,4CX,214,215,217 \ 3C PLUS (91HP) , Made in Brazil with Dieselmax/IESA Engine 9812/0080 \ F AXLES, WHEELS & TRANSMISSION \ F01 AXLES, FRONT

# 9812/0080 F1-10-1 AXLE ASSEMBLY, 2WS 2WD STEER AXLE

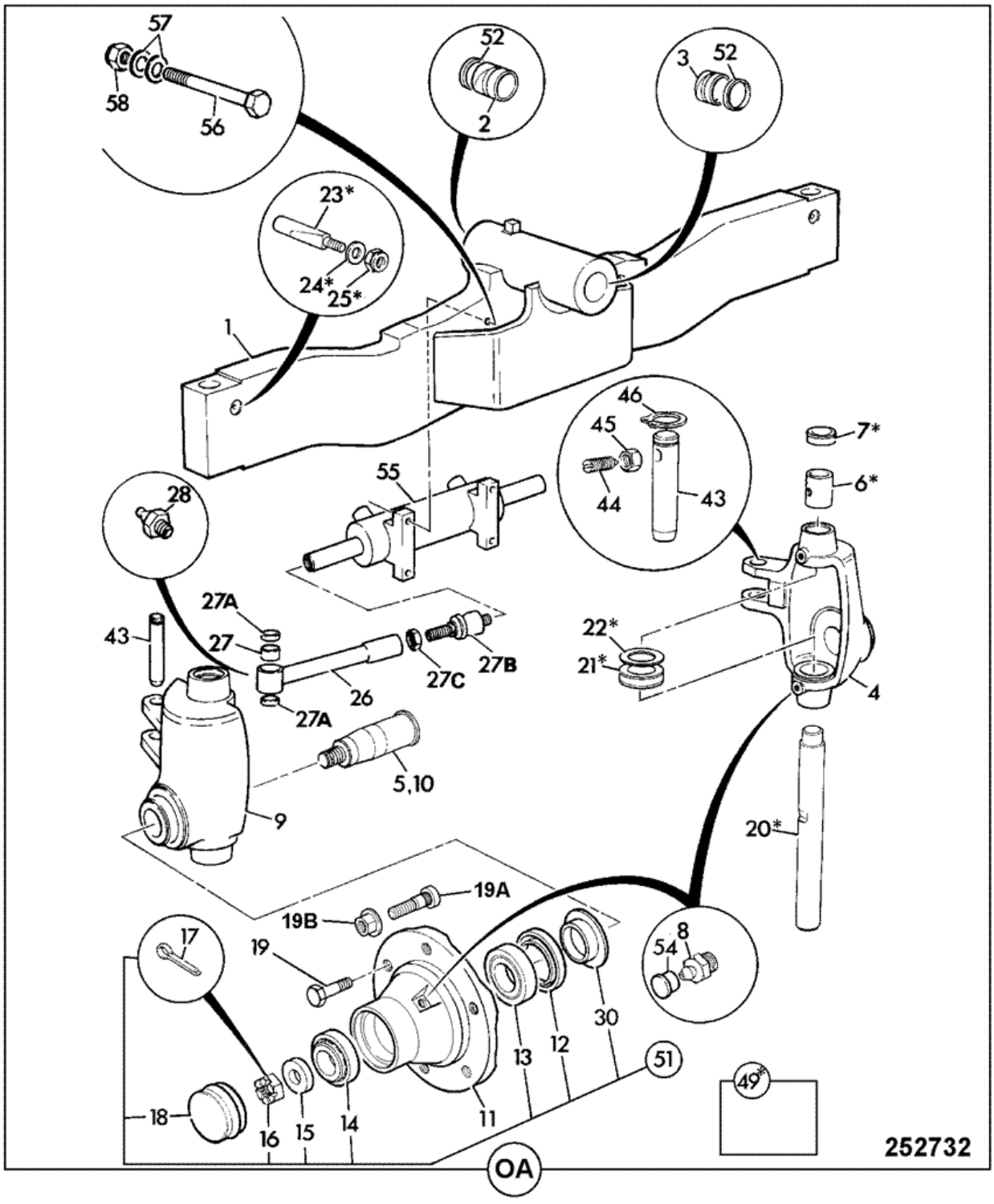


| Item | Part # | Change No | Description | Usage Code | QTY |
|---|---|---|---|---|---|
| 1 | :125/89700 | | Beam 2wd axle | | 1 |

| | | | | | |
|---|---|---|---|---|---|
| 2 | :829/00548 | | Bush | | 1 |
| 3 | :829/00548 | | Bush | | 1 |
| 4 | :123/05460 | | Carrier left hand | | 1 |
| 5 | :120/30003 | | Axle stub | | 1 |
| 6 | ::808/00176 | | Bush | | 4 |
| 7 | ::904/07100 | | Seal | | 4 |
| 8 | :816/60056 | | Nipple grease | | 6 |
| 9 | :123/05461 | | Carrier right hand | | 1 |
| 10 | :120/30003 | | Axle stub | | 1 |
| 11 | :458/20501 | | Hub wheel | | 2 |
| 12 | ::904/06200 | | Seal oil | | 2 |
| 13 | ::907/04100 | | Bearing | | 2 |
| 14 | ::907/05700 | | Bearing | | 2 |
| 15 | ::458/20541 | | Washer thrust slab axle | | 2 |
| 16 | ::1340/0905Z | | Nut | | 1 |
| 17 | ::2103/1112 | | Pin split | | 1 |
| 18 | ::120/30009 | | Cap grease | | 1 |
| 19A | 826/00923 | | Stud wheel | | 12 |
| 19B | 826/01008 | | Nut wheel | | 12 |
| 20 | ::120/30001 | | Pin king | | 2 |
| 21 | ::907/05800 | | Bearing thrust | | 2 |
| 22 | ::921/00807 | | Shim 0.5 | | 0 |
| 22 | ::921/00801 | | Shim 0.6 | | 0 |
| 22 | ::921/00802 | | Shim 0.7 | | 0 |
| 22 | ::921/00803 | | Shim 0.8 | | 0 |
| 22 | ::921/00804 | | Shim 0.9 | | 0 |
| 22 | ::921/00805 | | Shim 1.0 | | 0 |
| 23 | ::120/30002 | | Pin cotter | | 2 |
| 24 | ::1420/0008Z | | Washer Plain M10 | | 2 |
| 25 | ::1370/0303Z | | Nut lock M10 | | 2 |
| 26 | :331/14862 | | Link steer arm | | 2 |
| 27 | :808/00253 | | Bush 33mm long 30mm OD X 25mm ID | | 2 |
| 27A | :904/09300 | | Seal oil | | 4 |
| 27B | :331/14861 | | Joint ball track rod | | 2 |
| 27C | :458/80026 | | Nut lock nut | | 2 |
| 28 | :1450/0001 | | Nipple grease, straight 1/8 BSP | | 2 |
| 30 | ::904/06201 | | Sleeve | | 2 |
| 43 | :811/70012 | | Pin pivot<br>*Track rod* | | 2 |
| 44 | :1390/0408 | | Screw | | 4 |
| 45 | :1370/0301Z | | Nut | | 4 |
| 46 | :2203/0035 | | Circlip | | 4 |
| 49 | :990/99600 | | Kit-king pin<br>*Includes items 6,7,20 to 25* | | 2 |
| 51 | :993/03300 | | Kit-bearing wheel | | 2 |
| 52 | :813/00426 | | Seal pivot pin grease 60 x 50 x 5 | | 2 |
| 54 | :835/00017 | | Cap grease nipple | | 2 |
| 55 | :. | | 'See Remark'<br>*Steer ram see frame E4* | | 1 |
| 56 | :1315/3721Z | | Bolt M16 x 110 | | 4 |
| 57 | :1420/0011Z | | Washer M16 plain | | 4 |
| 58 | :1370/0603Z | | Nut M16 | | 4 |

Product Catalog \ CONSTRUCTION \ NORTH AMERICA \ CONSTRUCTION / INDUSTRIAL \ BACKHOE LOADER 3CX,4CX,214,215,217 \ 3C PLUS (91HP) , Made in Brazil with Dieselmax/IESA Engine 9812/0080 \ F AXLES, WHEELS & TRANSMISSION \ F01 AXLES, FRONT

# 9812/0080 F1-51-1 448/57990, 2WS, 4WD, STEER AXLE ASSY, 14.123:1

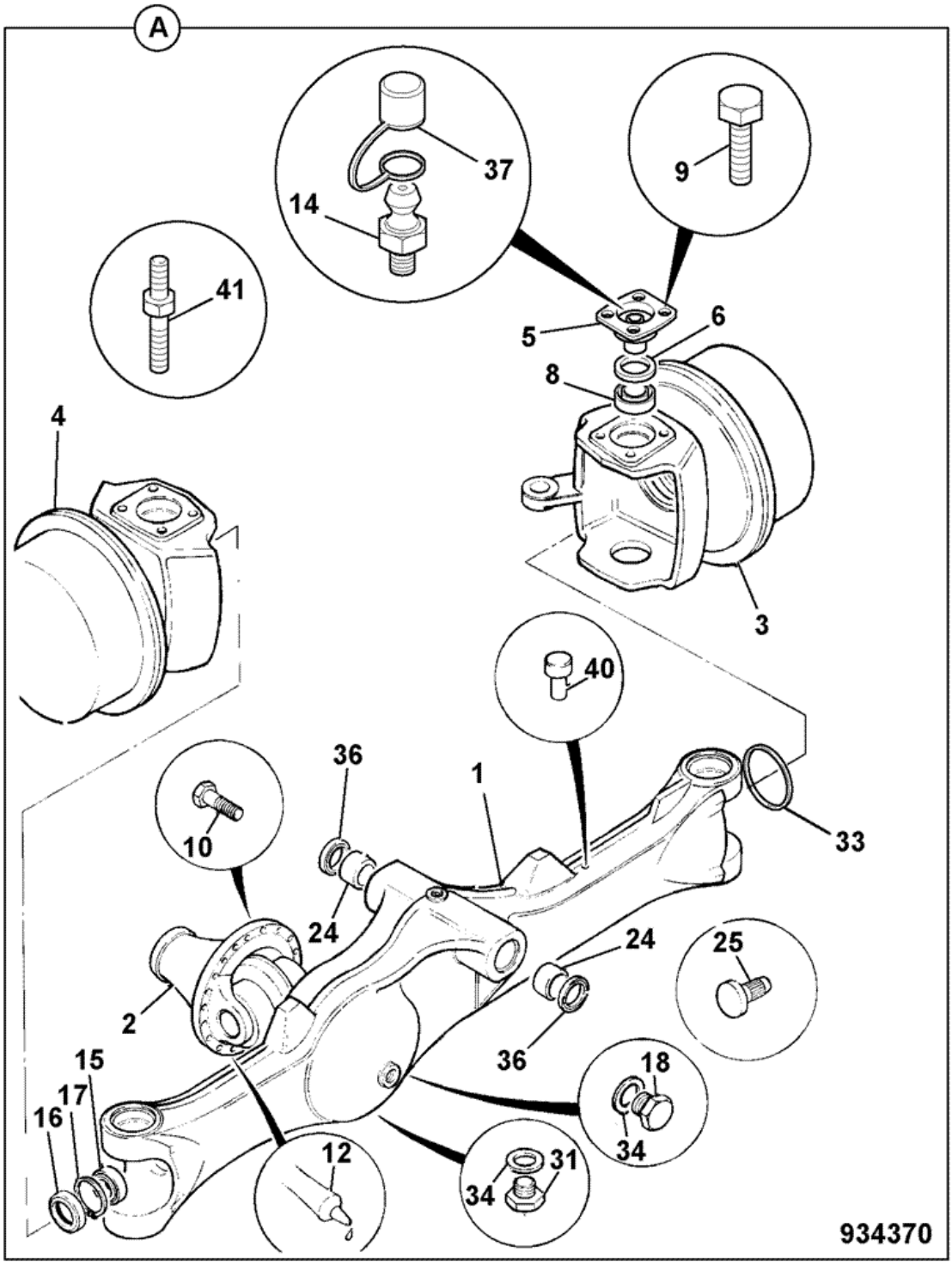


| Item | Part # | Change No | Description | Usage Code | QTY |
|---|---|---|---|---|---|
| A | 448/57990 | | Axle assembly pivot mount 14.123:1 | | 1 |

| | | | | | |
|---|---|---|---|---|---|
| 1 | :458/20744 | | Casing axle SD55 | | 1 |
| 2 | :. | | 'See Remark'<br>*see F1-51-31 for breakdown* | | 1 |
| 3 | :448/42600 | | Assembly wheel hub<br>*see F1-51-11 for breakdown* | | 1 |
| 4 | :448/42700 | | Assembly wheel hub.<br>*see F1-51-21 for breakdown* | | 1 |
| 5 | :458/20061 | | Trunnion | | 4 |
| 6 | :904/06700 | | Seal | | 4 |
| 8 | :907/08300 | | Bearing taper roller | | 4 |
| 9 | :1321/0509 | | Screw | | 8 |
| 10 | :826/01434 | | Bolt verbus ripp M10 x 35mm | | 12 |
| 12 | :4102/1204 | | Sealant multi-gasket<br>*As required* | | 1 |
| 14 | :816/60056 | | Nipple grease | | 4 |
| 15 | :907/08400 | | Bearing | | 2 |
| 16 | :904/50040 | | Seal | | 2 |
| 17 | :2203/1082 | | Circlip | | 2 |
| 18 | :816/80037 | | Plug filler | | 1 |
| 24 | :829/00548 | | Bush | | 2 |
| 31 | :816/80012 | | Plug magnetic 3/4"BSP | | 1 |
| 33 | :448/04802 | | Ring masking | | 2 |
| 34 | :1406/0021 | | Seal bonded 3/4" BSP | | 2 |
| 36 | :904/06500 | | Seal | | 2 |
| 37 | :835/00017 | | Cap grease nipple | | 4 |
| 40 | :448/56282 | | Breather spring type M10 x 1.5 thread | | 1 |
| 41 | . | | 'See Remark'<br>*not used on this assembly* | | 1 |

Product Catalog \ CONSTRUCTION \ NORTH AMERICA \ CONSTRUCTION / INDUSTRIAL \ BACKHOE LOADER 3CX,4CX,214,215,217 \ 3C PLUS (91HP) , Made in Brazil with Dieselmax/IESA Engine 9812/0080 \ F AXLES, WHEELS & TRANSMISSION \ F01 AXLES, FRONT

# 9812/0080 F1-6-10 KNUCKLE, 2WS 4WD STEER AXLE, 15.785:1 RATIO 448/57470

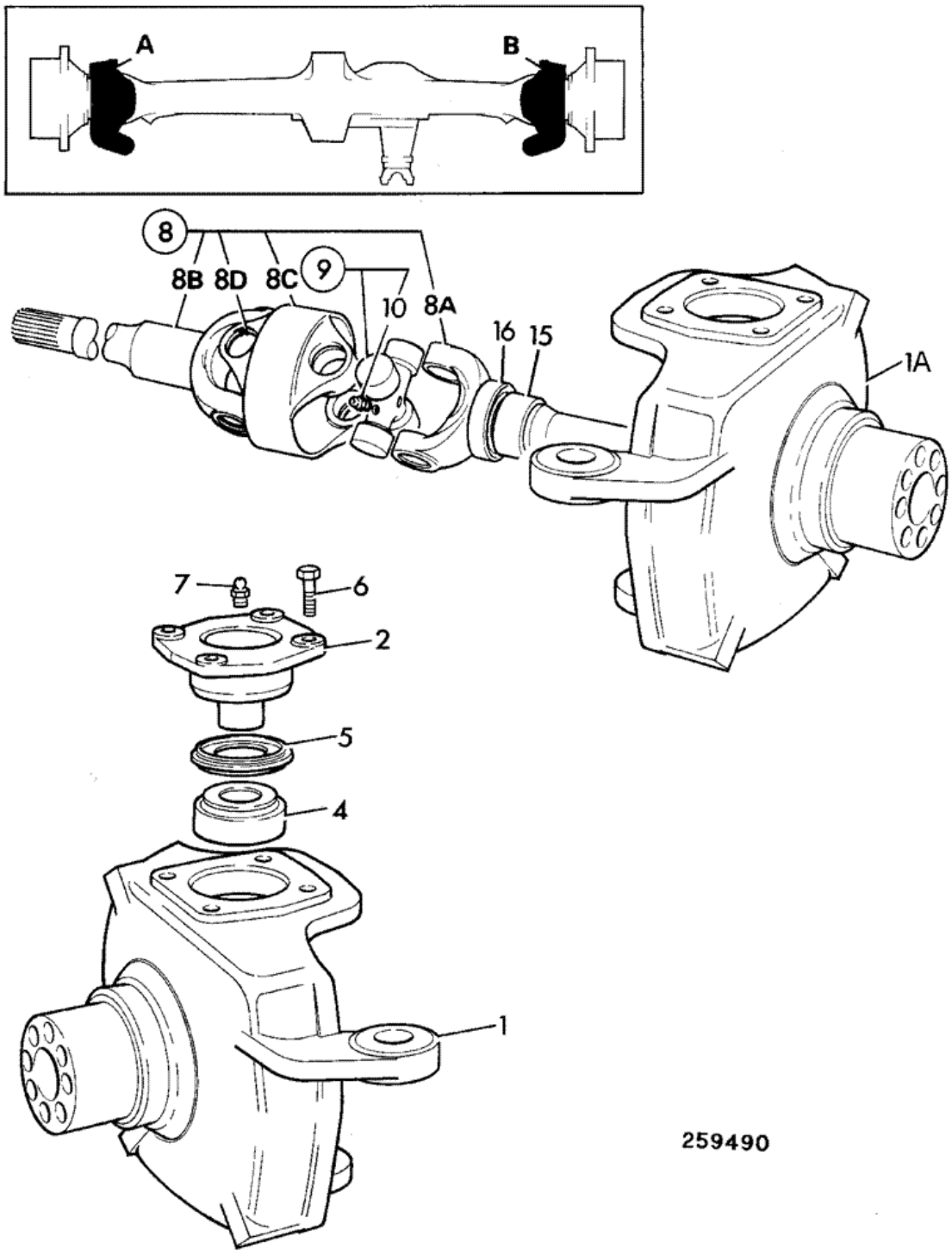


| Item | Part # | Change No | Description | Usage Code | QTY |
|---|---|---|---|---|---|
| 1 | 458/20404 | | Joint knuckle swivel 3CX, LOCKSTOP | A | 1 |

| | | | | | |
|---|---|---|---|---|---|
| 1A | 458/20405 | | Joint knuckle swivel 3CX, LOCKSTOP | B | 1 |
| 2 | 448/42402 | | Trunnion | | 4 |
| 4 | 907/08300 | | Bearing taper roller | | 4 |
| 5 | 904/06700 | | Seal | | 4 |
| 6 | 1321/0509 | | Screw | | 16 |
| 7 | 816/60056 | | Nipple grease<br>*Self Tapping type* | | 4 |
| 8 | 914/86200 | | Shaft drive assembly 1275mm long | A | 1 |
| 8 | 914/86300 | | Shaft drive assembly 825mm long | B | 1 |
| 8A | :914/86201 | | Shaft hub side | AB | 1 |
| 8B | :914/86204 | | Shaft axle side 960.5mm long | A | 1 |
| 8B | :914/86301 | | Shaft axle side 511.5mm long | B | 1 |
| 8C | :914/86203 | | Spacer central | AB | 1 |
| 8D | :914/83303 | | Circlip | AB | 1 |
| 9 | :914/86202 | | Kit-spider | AB | 2 |
| 15 | 917/50200 | | Bearing | | 2 |
| 16 | 904/50047 | | Seal | | 2 |

Product Catalog \ CONSTRUCTION \ NORTH AMERICA \ CONSTRUCTION / INDUSTRIAL \ BACKHOE LOADER 3CX,4CX,214,215,217 \ 3C PLUS (91HP) , Made in Brazil with Dieselmax/IESA Engine 9812/0080 \ F AXLES, WHEELS & TRANSMISSION \ F01 AXLES, FRONT

# 9812/0080 F1-6-20 HUB & COMPONENTS, 2WS 4WD STEER AXLE, 15.785:1 RATIO 448/57470

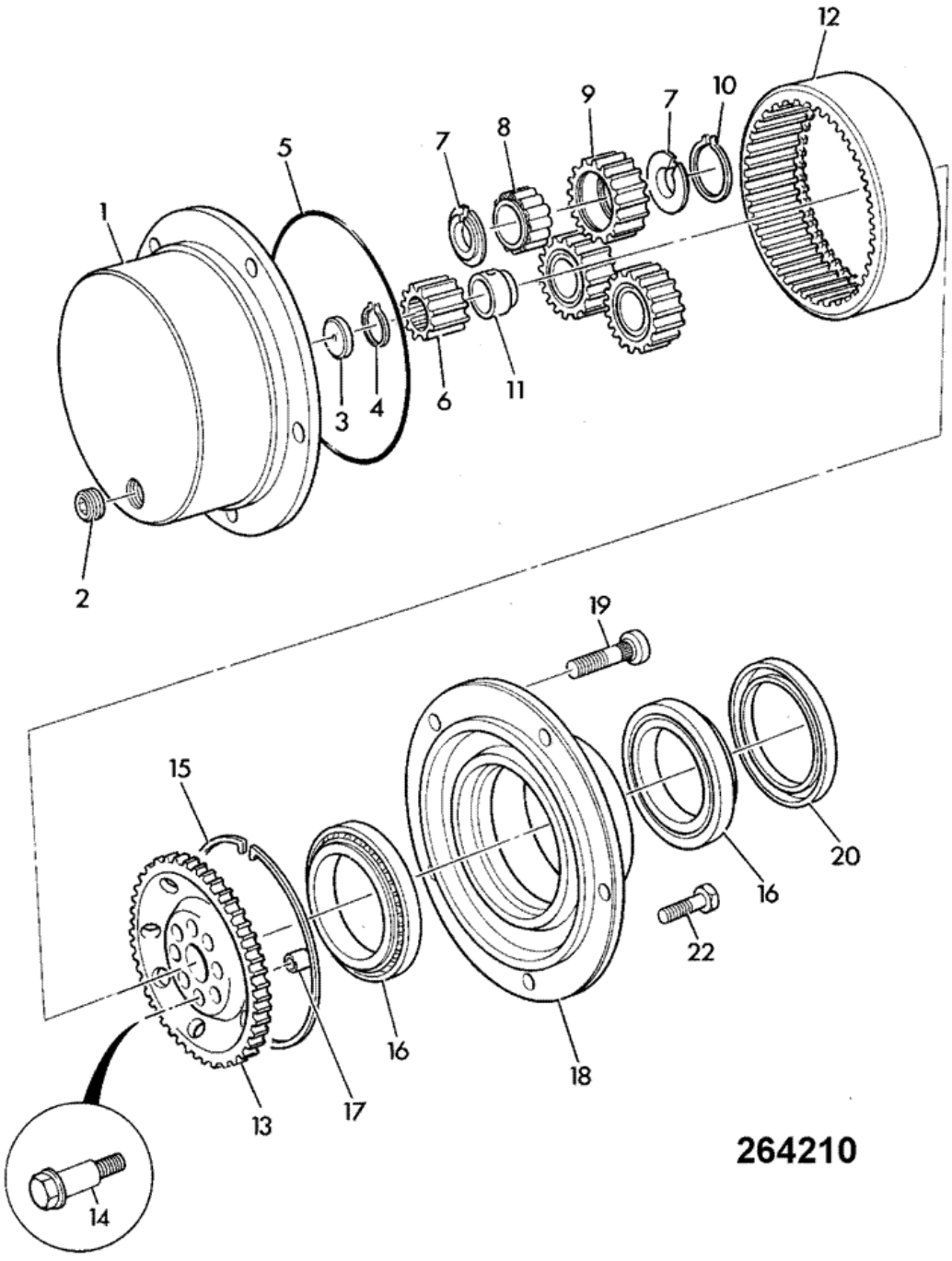


| Item | Part # | Change No | Description | Usage Code | QTY |
|---|---|---|---|---|---|
| 1 | 450/12401 | Superseded | Carrier planetary hub | | 2 |

| | | | | | |
|---|---|---|---|---|---|
| 1 | 450/10216 | | Carrier planetary hub 5 stud | | 2 |
| 2 | 826/00425 | | Plug tapered 3/4"-14PTF | | 2 |
| 3 | 450/10208 | | Pad thrust | | 2 |
| 4 | 821/00216 | | Circlip external | | 2 |
| 5 | 828/00196 | | O Ring | | 2 |
| 6 | 450/12403 | | Gear sun | | 2 |
| 7 | 821/00209 | | Circlip | | 12 |
| 8 | 907/50200 | | Bearing roller, double row | | 6 |
| 9 | 450/10206 | | Gear planet | | 6 |
| 10 | 2203/0054 | | Circlip | | 6 |
| 11 | 921/50000 | | Spacer 32mm long | | 2 |
| 12 | 450/10205 | | Gear annulus ring | | 2 |
| 13 | 450/12702 | | Carrier annulus | | 1 |
| 14 | 826/01060 | | Bolt M14 x 70mm long | | 16 |
| 15 | 821/00210 | | Circlip internal square section | | 2 |
| 16 | 907/52200 | | Bearing | | 4 |
| 17 | 450/12703 | | Dowel hollow | | 16 |
| 18 | 450/10221 | | Hub without studs 5 stud | | 2 |
| 19 | 826/00923 | | Stud wheel | | 10 |
| 20 | 904/50033 | | Seal oil 127 x 160 x 15.5-17 | | 2 |
| 22 | 1321/0407Z | | Bolt coated | | 4 |

Product Catalog \ CONSTRUCTION \ NORTH AMERICA \ CONSTRUCTION / INDUSTRIAL \ BACKHOE LOADER 3CX,4CX,214,215,217 \ 3C PLUS (91HP) , Made in Brazil with Dieselmax/IESA Engine 9812/0080 \ F AXLES, WHEELS & TRANSMISSION \ F01 AXLES, FRONT

# 9812/0080 F1-6-30 DIFFERENTIAL, 2WS 4WD STEER AXLE, 15.785:1 RATIO 448/57470

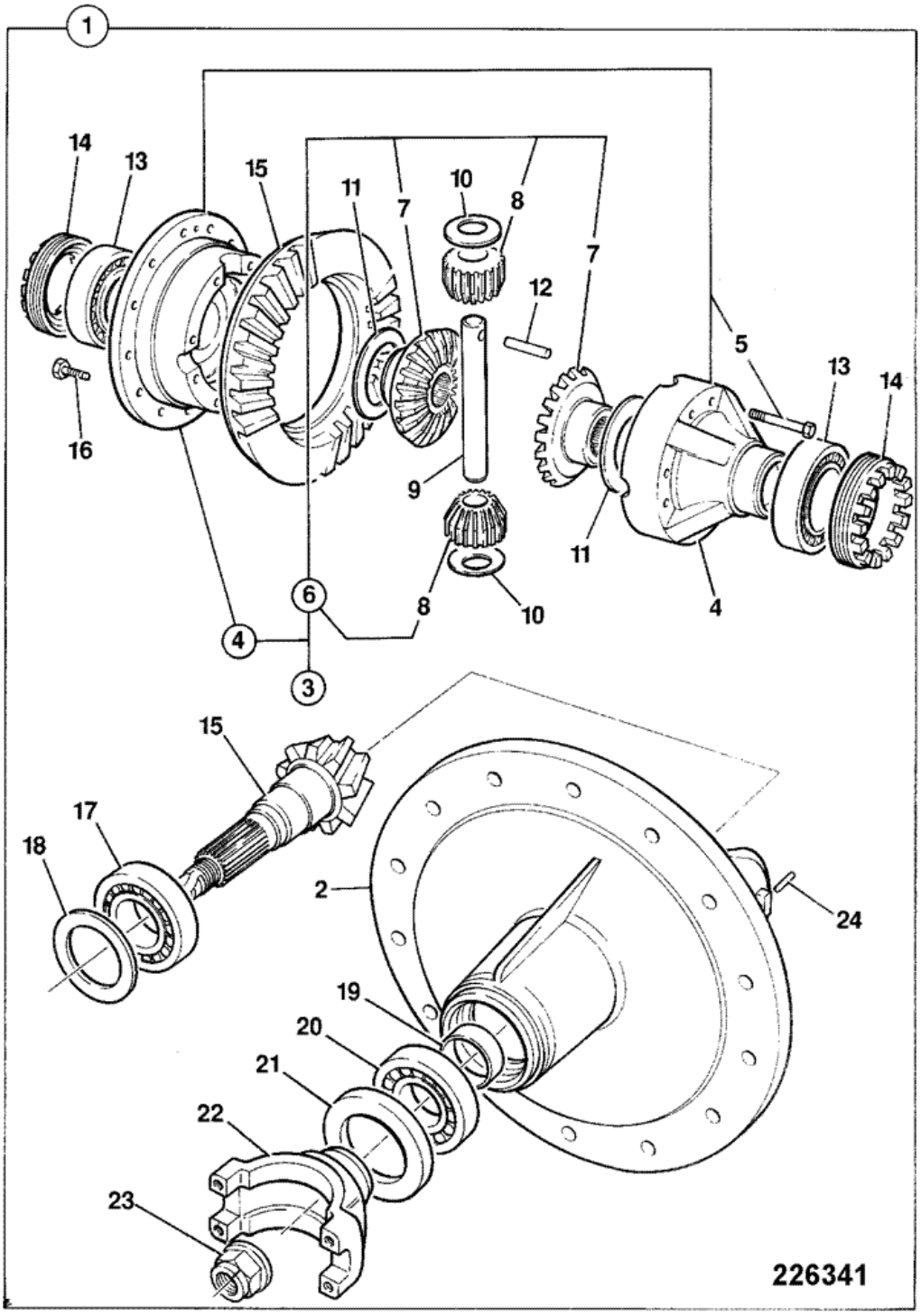


| Item | Part # | Change No | Description | Usage Code | QTY |
|---|---|---|---|---|---|
| | | | Differential assembly 2.923:1 ratio | | |

| | | | | | |
|---|---|---|---|---|---|
| 1 | 458/10600 | <A5747/7 | *to axle 448/57470/7* | A | 1 |
| 1 | 458/M1873 | >A5747/8 | Drivehead assembly<br>*from axle 448/57470/8* | B | 1 |
| 2 | :448/15701 | | Casting drive head yellow | | 1 |
| 3 | :448/36300 | | Differential assembly | | 1 |
| 4 | ::448/23500 | | Differential case | | 1 |
| 5 | :::826/01585 | | Bolt | | 8 |
| 6 | ::448/36400 | | Kit-gear differential | | 1 |
| 7 | :::NSP | | None serviced part | | 2 |
| 8 | :::NSP | | None serviced part | | 2 |
| 9 | ::448/05408 | | Pin trunnion | | 1 |
| 10 | ::808/00210 | | Washer thrust pinion | | 2 |
| 11 | ::808/00209 | | Washer thrust side gear | | 2 |
| 12 | ::2102/0816 | | Pin tension | | 1 |
| 13 | :907/09200 | | Bearing | | 2 |
| 14 | :448/05405 | | Nut adjusting | | 2 |
| 15 | :458/70189 | | Kit-gear c/wheel & pinion 38/13T NLA see TI GEN232 | A | 1 |
| 15 | :458/M1350 | | Gear crownwheel & pinion 13/38 teeth | B | 1 |
| 16 | :826/01084 | | Bolt Verbus ripp M10 x 25mm long | | 12 |
| 17 | :907/09000 | | Bearing | | 1 |
| 18 | :921/01900 | | Kit-shim | | 0 |
| 19 | :921/53300 | | Spacer | | 1 |
| 20 | :907/09100 | | Bearing | | 1 |
| 21 | :904/50023 | | Seal | | 1 |
| 22 | :450/27200 | | Yoke | A | 1 |
| 22 | :458/20813 | | Yoke Coupling | B | 1 |
| 23 | :826/01483 | | Nut stake and washer M24 | A | 1 |
| 23 | :826/01744 | | Nut stake M30 | B | 1 |
| 24 | :826/00818 | | Pin tension | | 2 |

Product Catalog \ CONSTRUCTION \ NORTH AMERICA \ CONSTRUCTION / INDUSTRIAL \ BACKHOE LOADER 3CX,4CX,214,215,217 \ 3C PLUS (91HP) , Made in Brazil with Dieselmax/IESA Engine 9812/0080 \ F AXLES, WHEELS & TRANSMISSION \ F02 AXLES, REAR

# 9812/0080 F2-1-15 450/44790, PD70 PAD MOUNT AXLE, 15.78:1 REVERSE MAXTRAC, HAYES

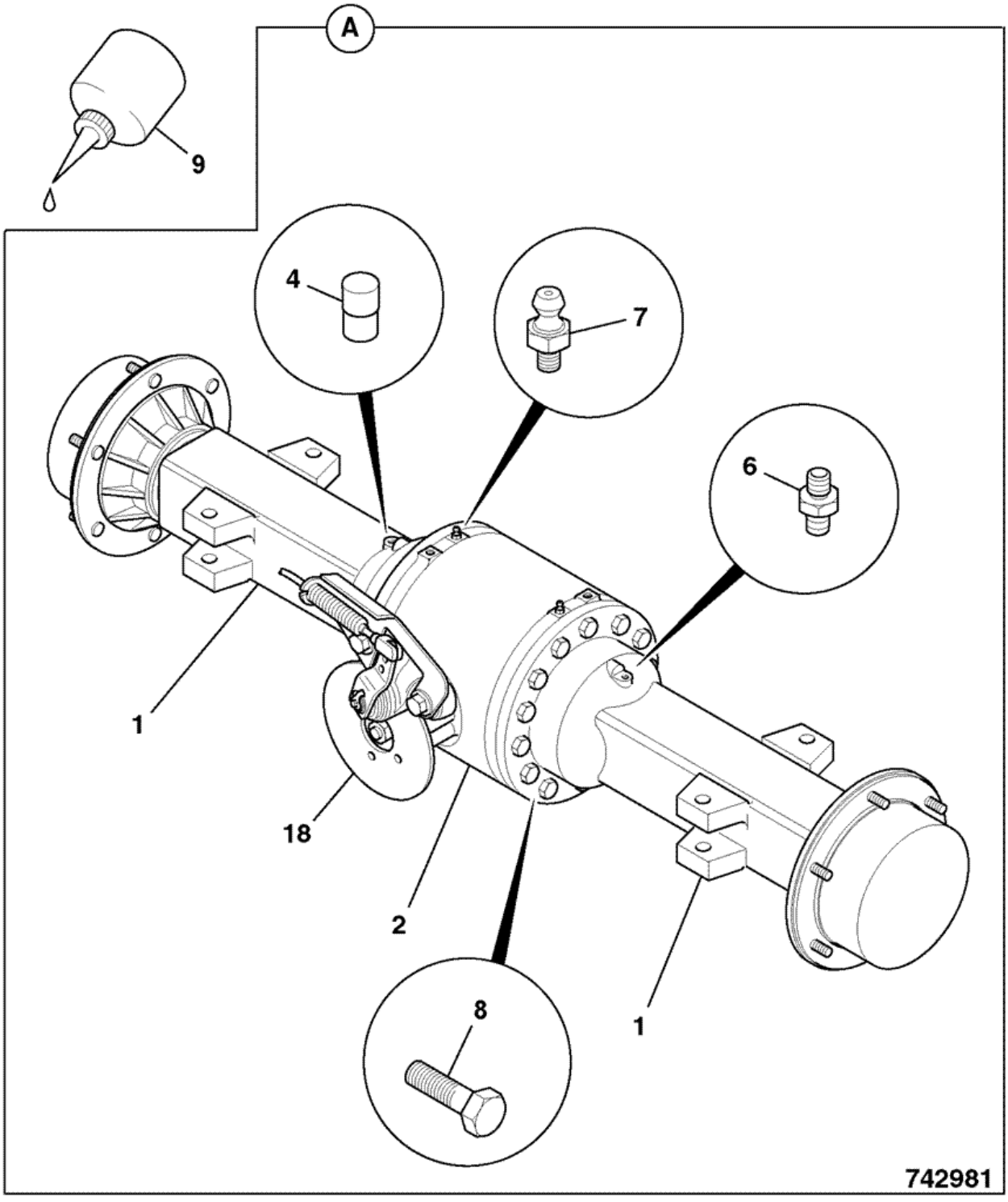


| Item | Part # | Change No | Description | Usage Code | QTY |
|---|---|---|---|---|---|
| A | 450/44790 | | Axle assy, PD70 pad mount 15.78:1 | | 1 |

| | | | | | |
|---|---|---|---|---|---|
| 1 | :458/10978 | | Arm axle arm and hub assembly | | 2 |
| 2 | :458/11212 | | Drivehead assembly 2.923:1<br>*see index F2 for breakdown* | | 1 |
| 4 | :450/13302 | | Plug breather | | 1 |
| 6 | :458/20611 | | Adapter | | 1 |
| 7 | :816/60040 | | Nipple bleed | | 2 |
| 8 | :1321/3716 | | Bolt M16x70L | | 28 |
| 9 | :4102/1212 | | Gasket Multigasket | | 0 |
| 18 | . | | 'See Remark'<br>*See index section G1 & F2* | | 1 |

Product Catalog \ CONSTRUCTION \ NORTH AMERICA \ CONSTRUCTION / INDUSTRIAL \ BACKHOE LOADER 3CX,4CX,214,215,217 \ 3C PLUS (91HP) , Made in Brazil with Dieselmax/IESA Engine 9812/0080 \ F AXLES, WHEELS & TRANSMISSION \ F02 AXLES, REAR

# 9812/0080 F2-1-16 450/44800, PD70 PAD MOUNT AXLE, 15.78:1 REVERSE LSD, HAYES

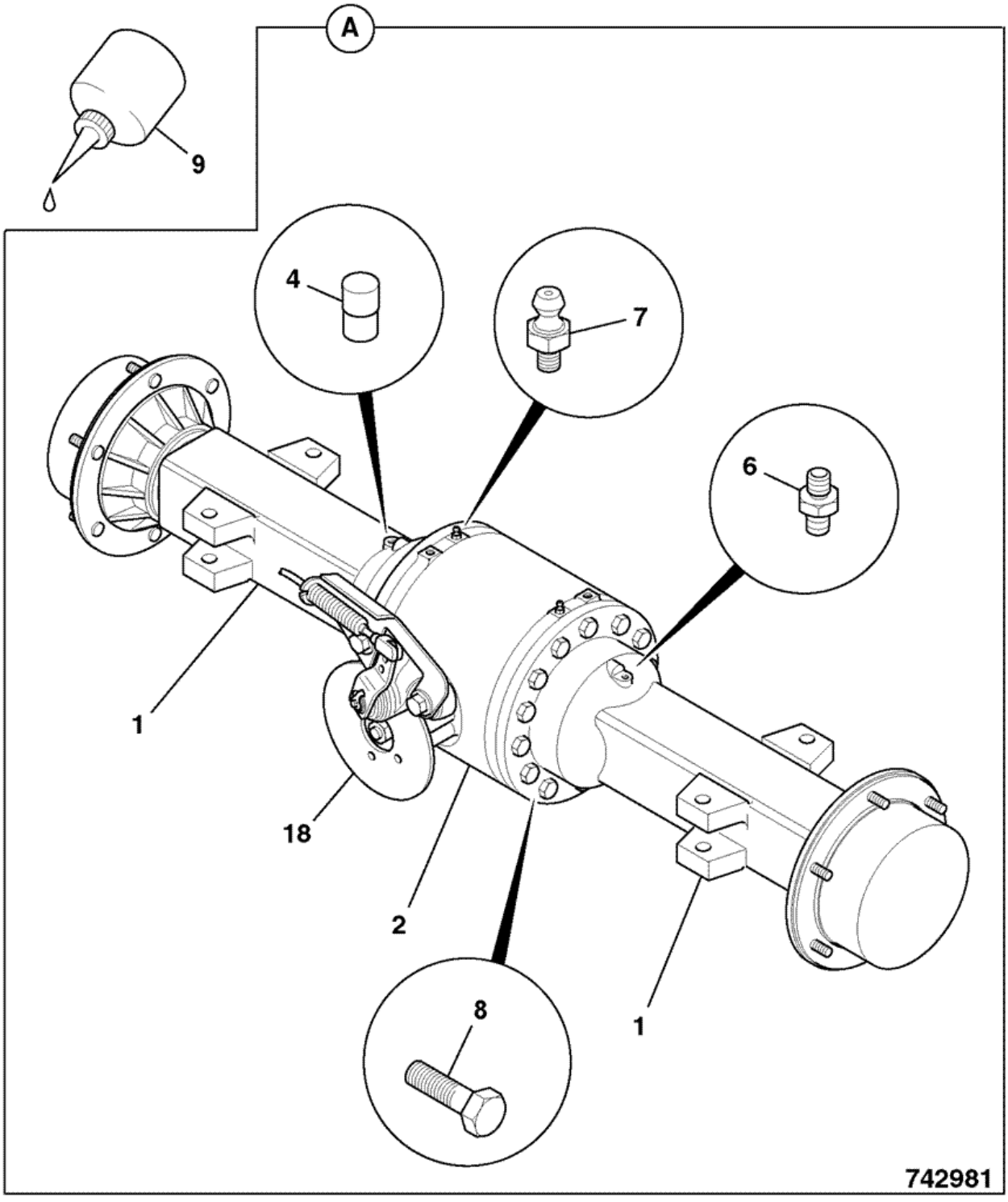


| Item | Part # | Change No | Description | Usage Code | QTY |
|---|---|---|---|---|---|
| A | 450/44800 | | Axle assy, PD70 pad mount 15.78:1 | | 1 |

| | | | | | |
|---|---|---|---|---|---|
| 1 | :458/10978 | | Arm axle arm and hub assembly | | 2 |
| 2 | :458/11213 | | Drivehead assembly, pad mount 2.923:1<br>*see index F2 for breakdown* | | 1 |
| 4 | :450/13302 | | Plug breather | | 1 |
| 6 | :458/20611 | | Adapter | | 1 |
| 7 | :816/60040 | | Nipple bleed | | 2 |
| 8 | :1321/3716 | | Bolt M16x70L | | 28 |
| 9 | :4102/1212 | | Gasket Multigasket | | 0 |
| 18 | . | | 'See Remark'<br>*See index section G1 & F2* | | 1 |

Product Catalog \ CONSTRUCTION \ NORTH AMERICA \ CONSTRUCTION / INDUSTRIAL \ BACKHOE LOADER 3CX,4CX,214,215,217 \ 3C PLUS (91HP) , Made in Brazil with Dieselmax/IESA Engine 9812/0080 \ F AXLES, WHEELS & TRANSMISSION \ F02 AXLES, REAR

# 9812/0080 F2-1-31 450/44840, PD70 PAD MOUNT AXLE, 13.708:1 REVERSE LSD, HAYES

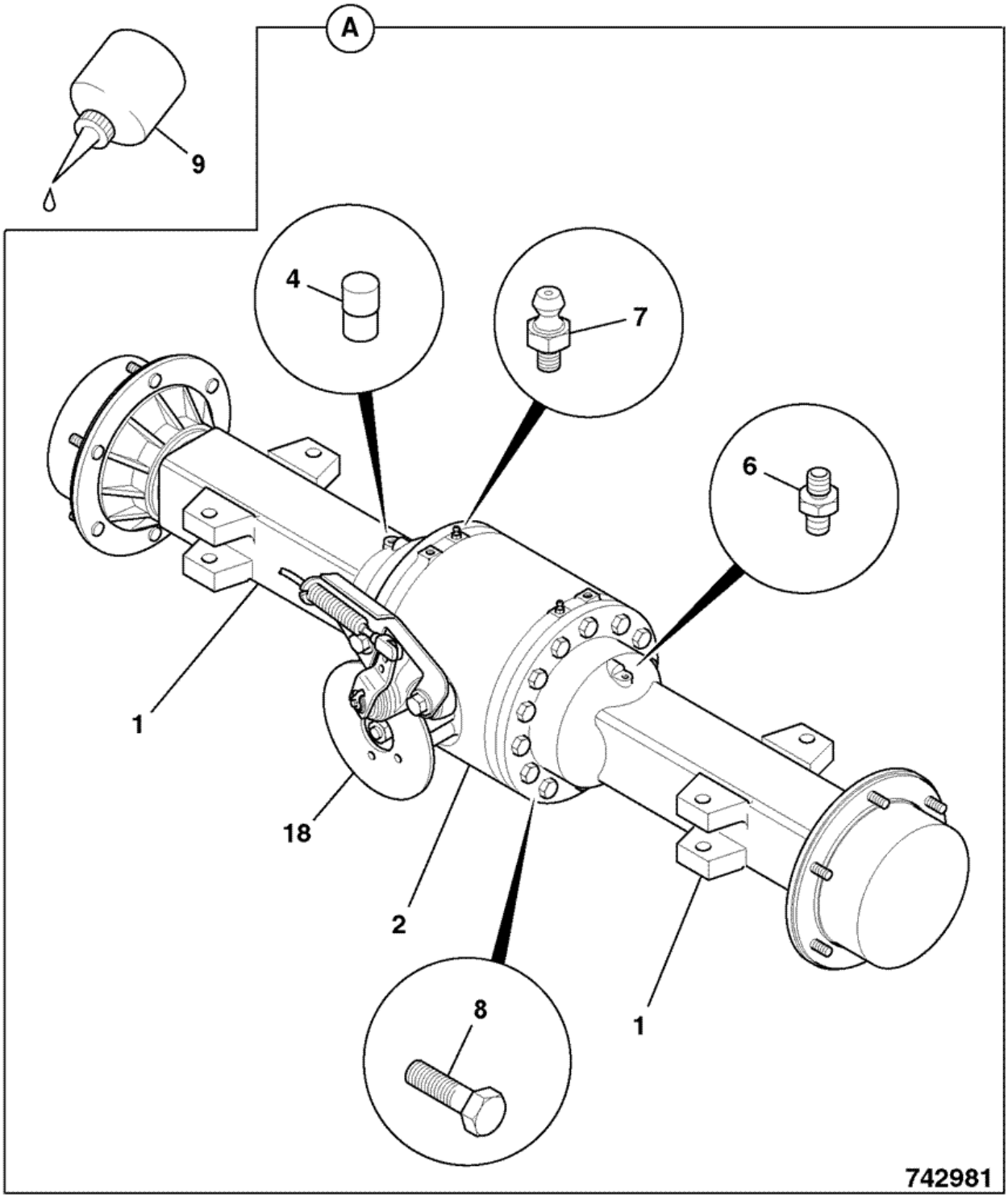


| Item | Part # | Change No | Description | Usage Code | QTY |
|---|---|---|---|---|---|
| A | 450/44840 | | Axle assy, pd70 pad mount 13.708:1 | | 1 |

| | | | | | |
|---|---|---|---|---|---|
| 1 | :458/10980 | | Arm axle arm and hub assembly | | 2 |
| 2 | :458/11181 | | Drivehead assy, pad mount 2.538:1<br>*see index F2 for breakdown* | | 1 |
| 4 | :450/13302 | | Plug breather | | 1 |
| 6 | :458/20611 | | Adapter | | 1 |
| 7 | :816/60040 | | Nipple bleed | | 2 |
| 8 | :1321/3716 | | Bolt M16x70L | | 28 |
| 9 | :4102/1212 | | Gasket Multigasket | | 0 |
| 18 | . | | 'See Remark'<br>*See index section G1 & F2* | | 1 |

Product Catalog \ CONSTRUCTION \ NORTH AMERICA \ CONSTRUCTION / INDUSTRIAL \ BACKHOE LOADER 3CX,4CX,214,215,217 \ 3C PLUS (91HP) , Made in Brazil with Dieselmax/IESA Engine 9812/0080 \ F AXLES, WHEELS & TRANSMISSION \ F02 AXLES, REAR

# 9812/0080 F2-1-32 450/44860, PD70 PAD MOUNT AXLE, 13.7:1 REVERSE MAXTRAC, HAYES

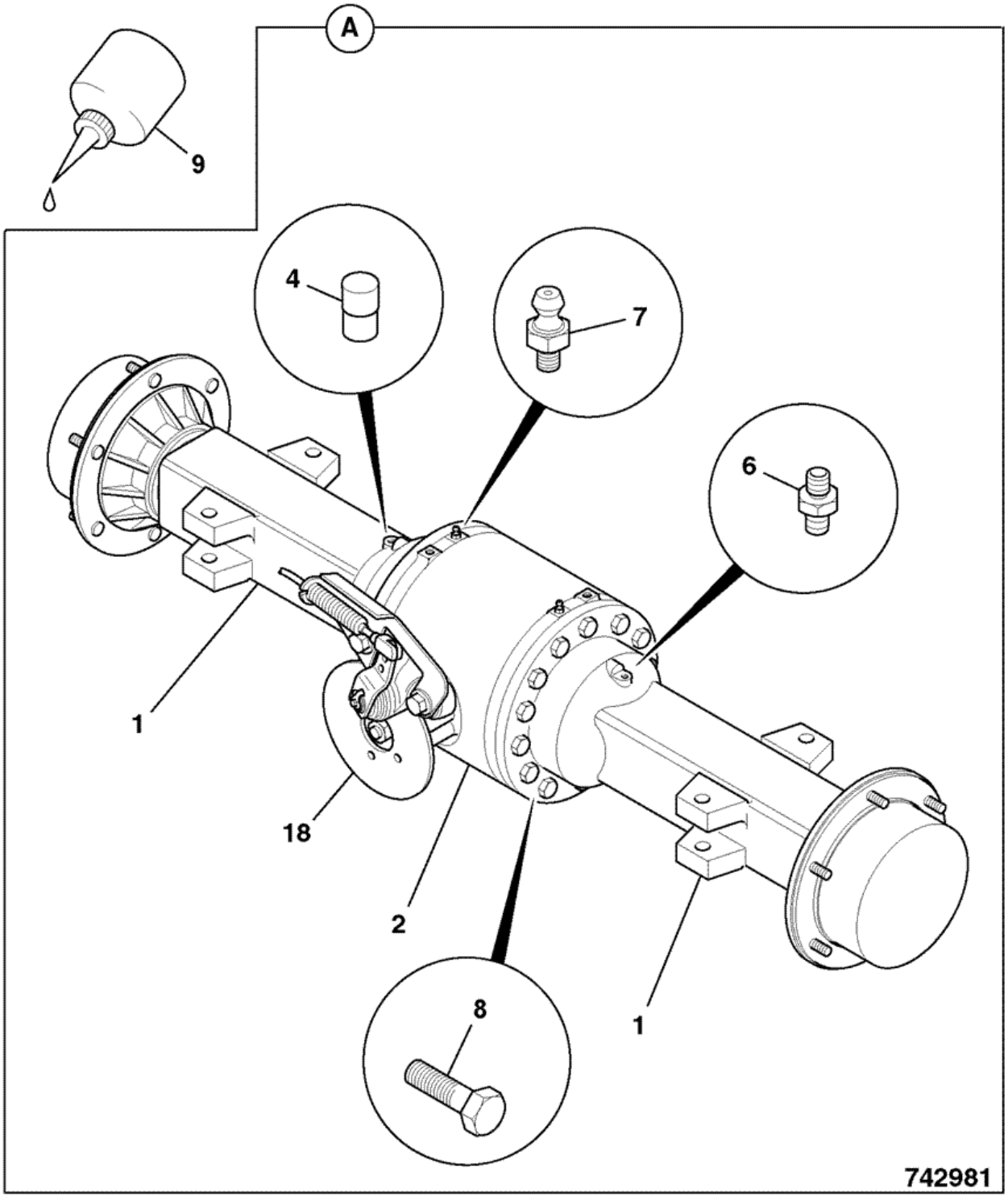


| Item | Part # | Change No | Description | Usage Code | QTY |
|---|---|---|---|---|---|
| A | 450/44860 | | Axle assy, PD70 pad mount 13.7:1 | | 1 |

| | | | | | |
|---|---|---|---|---|---|
| 1 | :458/10980 | | Arm axle arm and hub assembly | | 2 |
| 2 | :458/11182 | | Drivehead assy, pad mount 2.538:1<br>*see index F2 for breakdown* | | 1 |
| 4 | :450/13302 | | Plug breather | | 1 |
| 6 | :458/20611 | | Adapter | | 1 |
| 7 | :816/60040 | | Nipple bleed | | 2 |
| 8 | :1321/3716 | | Bolt M16x70L | | 28 |
| 9 | :4102/1212 | | Gasket Multigasket | | 0 |
| 18 | . | | 'See Remark'<br>*See index section G1 & F2* | | 1 |

Product Catalog \ CONSTRUCTION \ NORTH AMERICA \ CONSTRUCTION / INDUSTRIAL \ BACKHOE LOADER 3CX,4CX,214,215,217 \ 3C PLUS (91HP) , Made in Brazil with Dieselmax/IESA Engine 9812/0080 \ F AXLES, WHEELS & TRANSMISSION \ F02 AXLES, REAR

# 9812/0080 F2-3-29 458/11212, DRIVEHEAD ASSEMBLY

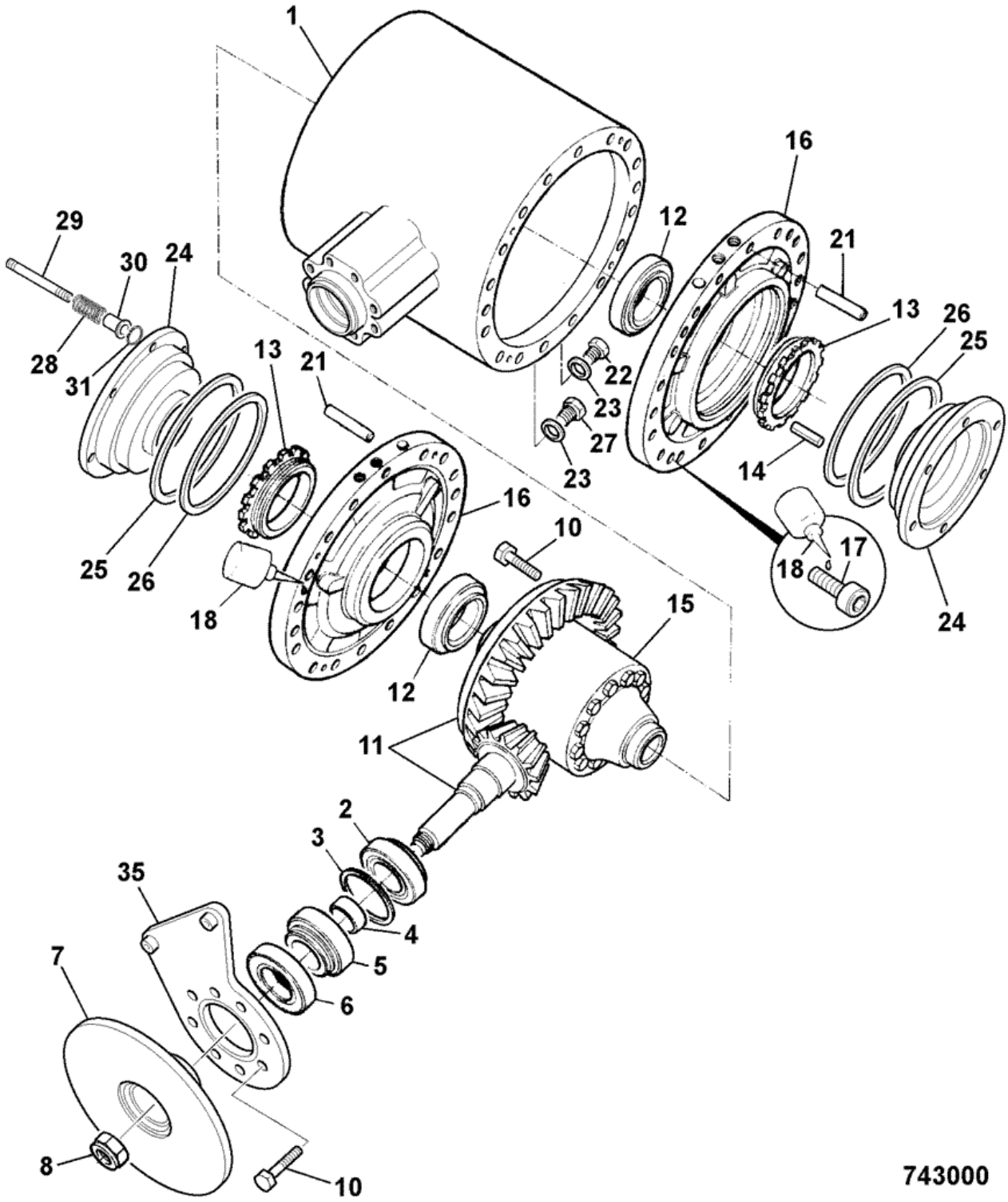


| Item | Part # | Change No | Description | Usage Code | QTY |
|---|---|---|---|---|---|
| A | 458/11212 | | Drivehead assembly 2.923:1 | | 1 |
| 1 | :458/20418 | | Casing drivehead rigid axle | | 1 |
| | | | | | |

| | | | | | |
|---|---|---|---|---|---|
| 2 | :907/09000 | | Bearing | | 1 |
| 3 | :921/01900 | | Kit-shim | | 1 |
| 4 | :921/53400 | | Kit-Spacer | | 1 |
| 5 | :907/08300 | | Bearing taper roller | | 1 |
| 6 | :904/50023 | | Seal | | 1 |
| 7 | :458/20693 | | Disc park brake | | 1 |
| 8 | :826/01744 | | Nut stake M30 | | 1 |
| 10 | :826/01080 | | Bolt | | 20 |
| 11 | :458/70249 | | Gear crownwheel/pinion RH spiral, 13T/38T, M30 | | 1 |
| 12 | :907/50100 | | Bearing taper roller | | 2 |
| 13 | :450/10403 | | Nut side differential | | 2 |
| 14 | :826/00818 | | Pin tension | | 2 |
| 15 | :450/10900 | | Differential assembly<br>*see index F2 for breakdown* | | 1 |
| 16 | :458/20365 | | Housing Brake Piston Controlled Back-Off | | 2 |
| 17 | :1392/3407 | | Capscrew | | 8 |
| 18 | 4102/1212 | | Gasket Multigasket | | 0 |
| 21 | :826/00919 | | Dowel | | 4 |
| 22 | :816/80012 | | Plug magnetic 3/4"BSP | | 1 |
| 23 | :1406/0021 | | Seal bonded 3/4" BSP | | 2 |
| 24 | :458/20371 | | Piston Brake 139.4 bore (was 130mm) | | 2 |
| 25 | :813/50012 | | Seal brake piston | | 2 |
| 26 | :813/50026 | | Seal brake piston (square section) | | 2 |
| 27 | :816/80037 | | Plug filler | | 1 |
| 28 | :814/00365 | | Spring compression | | 6 |
| 29 | :450/18204 | | Pin brake back-off | | 6 |
| 30 | :448/16905 | | Bush tension flanged - external | | 6 |
| 31 | :2203/1020 | | Circlip | | 6 |
| 35 | :458/20511 | | Bracket caliper mount axle | | 1 |

Product Catalog \ CONSTRUCTION \ NORTH AMERICA \ CONSTRUCTION / INDUSTRIAL \ BACKHOE LOADER 3CX,4CX,214,215,217 \ 3C PLUS (91HP) , Made in Brazil with Dieselmax/IESA Engine 9812/0080 \ F AXLES, WHEELS & TRANSMISSION \ F02 AXLES, REAR

# 9812/0080 F2-3-30 458/11213, DRIVEHEAD ASSEMBLY

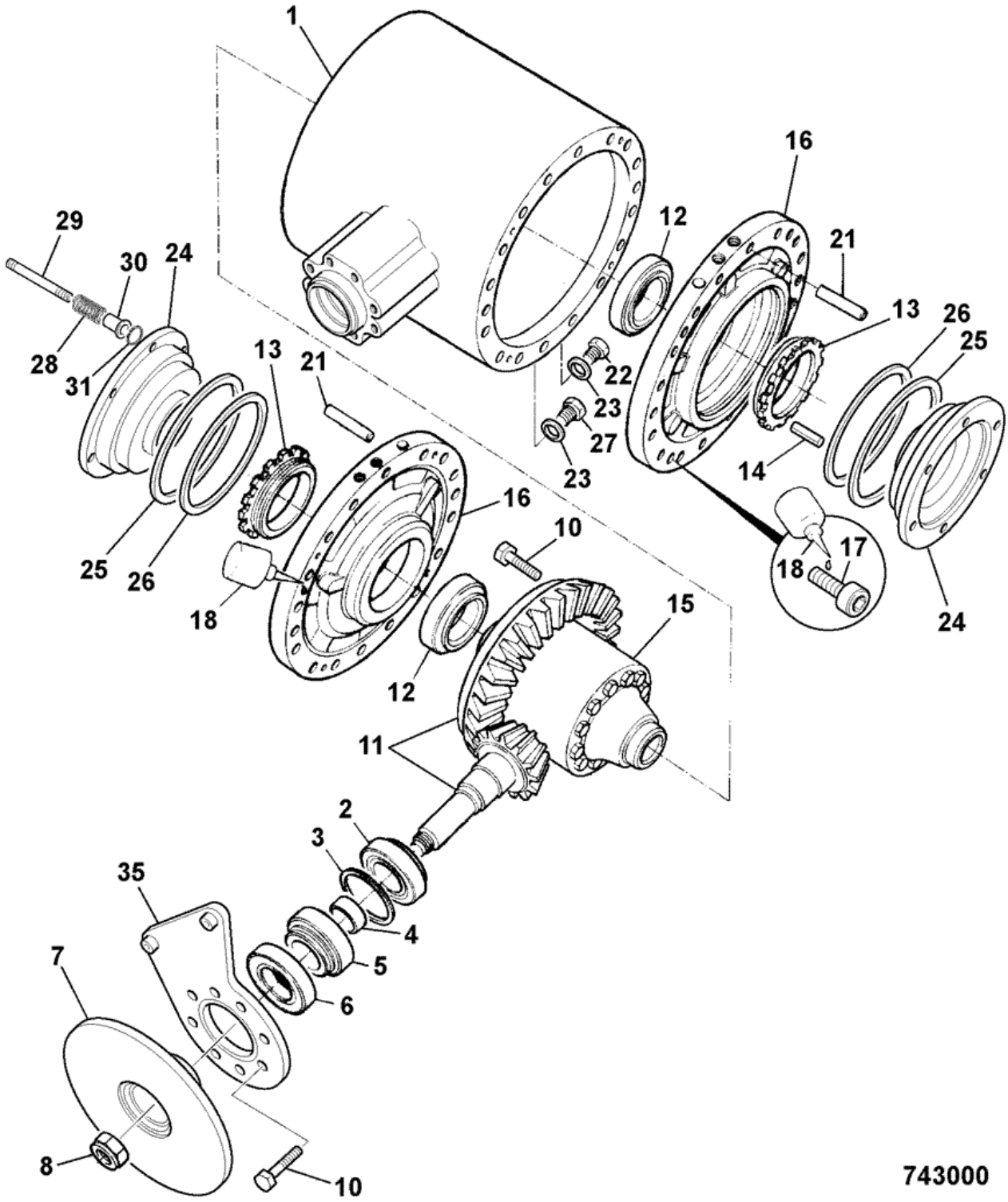


| Item | Part # | Change No | Description | Usage Code | QTY |
|---|---|---|---|---|---|
| A | 458/11213 | | Drivehead assembly, pad mount 2.923:1 | | 1 |
| 1 | :458/20418 | | Casing drivehead rigid axle | | 1 |
| | | | | | |

| | | | | | |
|---|---|---|---|---|---|
| 2 | :907/09000 | | Bearing | | 1 |
| 3 | :921/01900 | | Kit-shim | | 1 |
| 4 | :921/53400 | | Kit-Spacer | | 1 |
| 5 | :907/08300 | | Bearing taper roller | | 1 |
| 6 | :904/50023 | | Seal | | 1 |
| 7 | :458/20693 | | Disc park brake | | 1 |
| 8 | :826/01744 | | Nut stake M30 | | 1 |
| 10 | :826/01080 | | Bolt | | 20 |
| 11 | :458/70249 | | Gear crownwheel/pinion RH spiral, 13T/38T, M30 | | 1 |
| 12 | :907/50100 | | Bearing taper roller | | 2 |
| 13 | :450/10403 | | Nut side differential | | 2 |
| 14 | :826/00818 | | Pin tension | | 2 |
| 15 | :450/26310 | | Differential LSD assembly 3 working faces | | 1 |
| 16 | :458/20365 | | Housing Brake Piston Controlled Back-Off | | 2 |
| 17 | :1392/3407 | | Capscrew | | 8 |
| 18 | 4102/1212 | | Gasket Multigasket | | 0 |
| 21 | :826/00919 | | Dowel | | 4 |
| 22 | :816/80012 | | Plug magnetic 3/4"BSP | | 1 |
| 23 | :1406/0021 | | Seal bonded 3/4" BSP | | 2 |
| 24 | :458/20371 | | Piston Brake 139.4 bore (was 130mm) | | 2 |
| 25 | :813/50012 | | Seal brake piston | | 2 |
| 26 | :813/50026 | | Seal brake piston (square section) | | 2 |
| 27 | :816/80037 | | Plug filler | | 1 |
| 28 | :814/00365 | | Spring compression | | 6 |
| 29 | :450/18204 | | Pin brake back-off | | 6 |
| 30 | :448/16905 | | Bush tension flanged - external | | 6 |
| 31 | :2203/1020 | | Circlip | | 6 |
| 35 | :458/20511 | | Bracket caliper mount axle | | 1 |

Product Catalog \ CONSTRUCTION \ NORTH AMERICA \ CONSTRUCTION / INDUSTRIAL \ BACKHOE LOADER 3CX,4CX,214,215,217 \ 3C PLUS (91HP) , Made in Brazil with Dieselmax/IESA Engine 9812/0080 \ F AXLES, WHEELS & TRANSMISSION \ F02 AXLES, REAR

# 9812/0080 F2-3-37 458/11181, DRIVEHEAD ASSEMBLY,

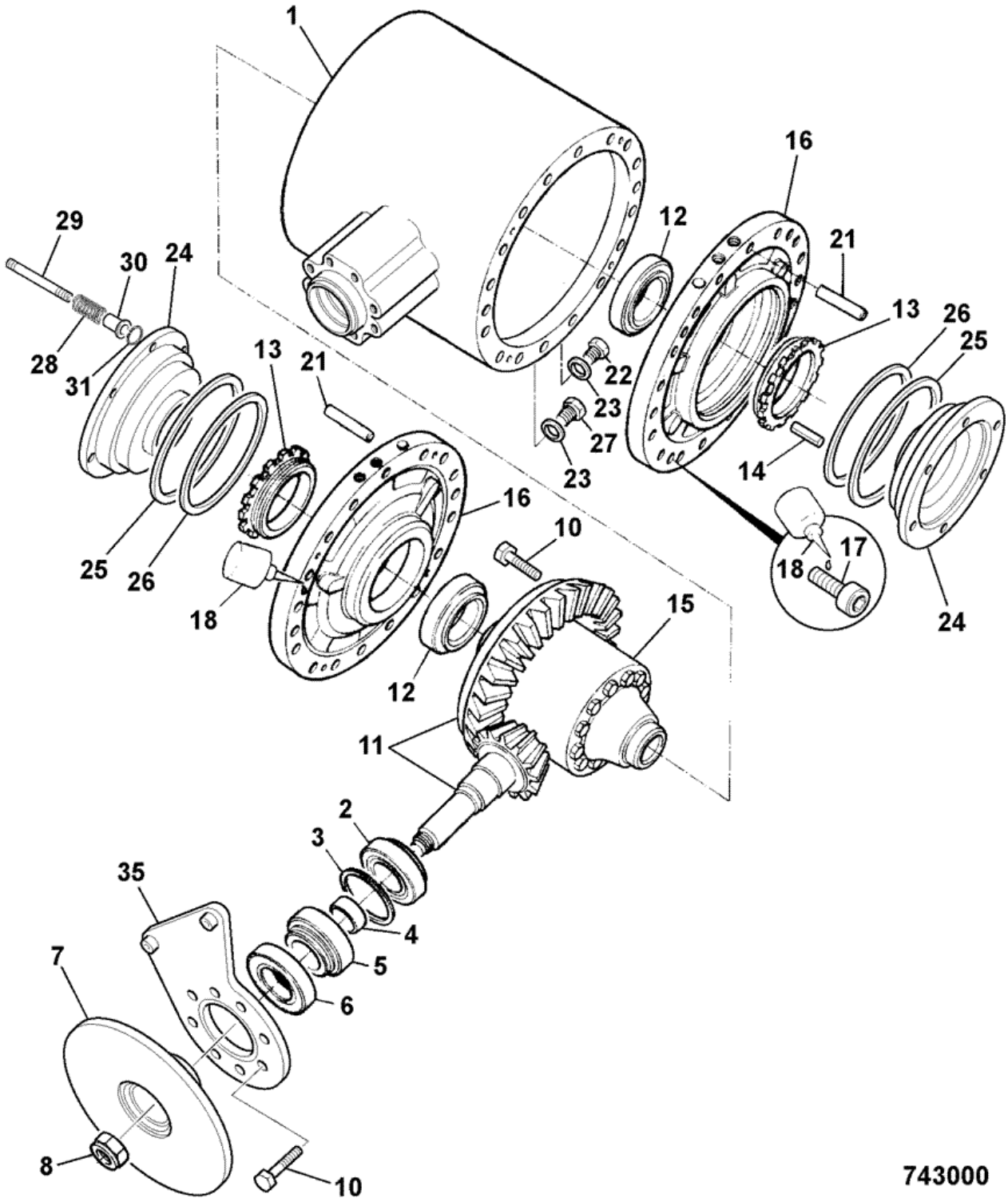


| Item | Part # | Change No | Description | Usage Code | QTY |
|---|---|---|---|---|---|
| A | 458/11181 | | Drivehead assy, pad mount 2.538:1 | | 1 |
| 1 | :458/20418 | | Casing drivehead rigid axle | | 1 |
| | | | | | |

| | | | | | |
|---|---|---|---|---|---|
| 2 | :907/09000 | | Bearing | | 1 |
| 3 | :921/01900 | | Kit-shim | | 1 |
| 4 | :921/53400 | | Kit-Spacer | | 1 |
| 5 | :907/08300 | | Bearing taper roller | | 1 |
| 6 | :904/50023 | | Seal | | 1 |
| 7 | :458/20693 | | Disc park brake | | 1 |
| 8 | :826/01744 | | Nut stake M30 | | 1 |
| 10 | :826/01080 | | Bolt | | 20 |
| 11 | :458/70246 | | Gear crown wheel and pinion | | 1 |
| 12 | :907/50100 | | Bearing taper roller | | 2 |
| 13 | :450/10403 | | Nut side differential | | 2 |
| 14 | :826/00818 | | Pin tension | | 2 |
| 15 | :450/26310 | | Differential LSD assembly 3 working faces<br>*see index F2 for breakdown* | | 1 |
| 16 | :458/20365 | | Housing Brake Piston Controlled Back-Off | | 2 |
| 17 | :1392/3407 | | Capscrew | | 8 |
| 18 | 4102/1212 | | Gasket Multigasket | | 0 |
| 21 | :826/00919 | | Dowel | | 4 |
| 22 | :816/80012 | | Plug magnetic 3/4"BSP | | 1 |
| 23 | :1406/0021 | | Seal bonded 3/4" BSP | | 2 |
| 24 | :458/20371 | | Piston Brake 139.4 bore (was 130mm) | | 2 |
| 25 | :813/50012 | | Seal brake piston | | 2 |
| 26 | :813/50026 | | Seal brake piston (square section) | | 2 |
| 27 | :816/80037 | | Plug filler | | 1 |
| 28 | :814/00365 | | Spring compression | | 6 |
| 29 | :450/18204 | | Pin brake back-off | | 6 |
| 30 | :448/16905 | | Bush tension flanged - external | | 6 |
| 31 | :2203/1020 | | Circlip | | 6 |
| 35 | :458/20511 | | Bracket caliper mount axle | | 1 |

Product Catalog \ CONSTRUCTION \ NORTH AMERICA \ CONSTRUCTION / INDUSTRIAL \ BACKHOE LOADER 3CX,4CX,214,215,217 \ 3C PLUS (91HP) , Made in Brazil with Dieselmax/IESA Engine 9812/0080 \ F AXLES, WHEELS & TRANSMISSION \ F02 AXLES, REAR

# 9812/0080 F2-3-38 458/11182, DRIVEHEAD ASSEMBLY,

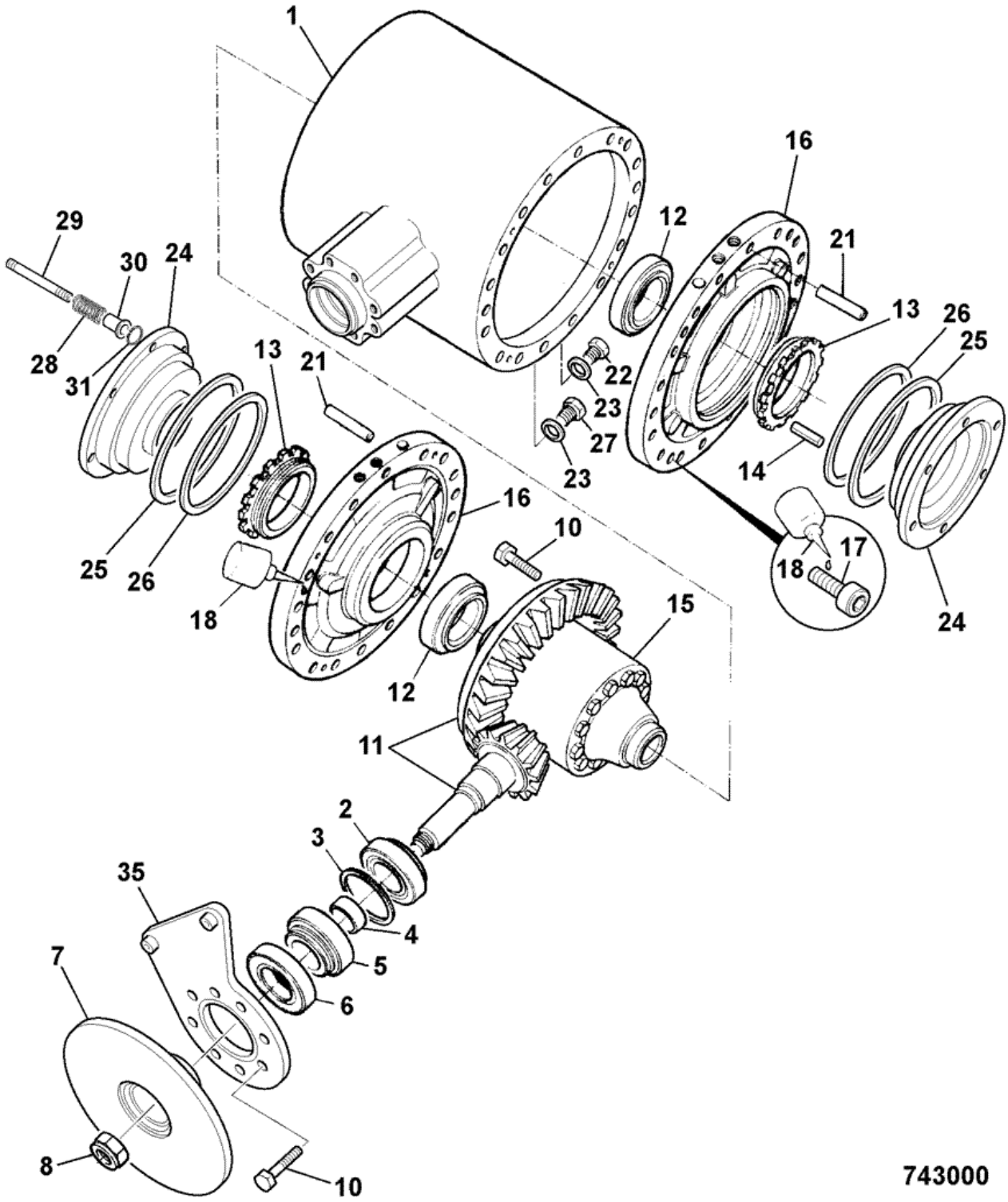


| Item | Part # | Change No | Description | Usage Code | QTY |
|---|---|---|---|---|---|
| A | 458/11182 | | Drivehead assy, pad mount 2.538:1 | | 1 |
| 1 | :458/20418 | | Casing drivehead rigid axle | | 1 |
| | | | | | |

| | | | | | |
|---|---|---|---|---|---|
| 2 | :907/09000 | | Bearing | | 1 |
| 3 | :921/01900 | | Kit-shim | | 1 |
| 4 | :921/53400 | | Kit-Spacer | | 1 |
| 5 | :907/08300 | | Bearing taper roller | | 1 |
| 6 | :904/50023 | | Seal | | 1 |
| 7 | :458/20693 | | Disc park brake | | 1 |
| 8 | :826/01744 | | Nut stake M30 | | 1 |
| 10 | :826/01080 | | Bolt | | 20 |
| 11 | :458/70246 | | Gear crown wheel and pinion | | 1 |
| 12 | :907/50100 | | Bearing taper roller | | 2 |
| 13 | :450/10403 | | Nut side differential | | 2 |
| 14 | :826/00818 | | Pin tension | | 2 |
| 15 | :450/10900 | | Differential assembly<br>*see index F2 for breakdown* | | 1 |
| 16 | :458/20365 | | Housing Brake Piston Controlled Back-Off | | 2 |
| 17 | :1392/3407 | | Capscrew | | 8 |
| 18 | 4102/1212 | | Gasket Multigasket | | 0 |
| 21 | :826/00919 | | Dowel | | 4 |
| 22 | :816/80012 | | Plug magnetic 3/4"BSP | | 1 |
| 23 | :1406/0021 | | Seal bonded 3/4" BSP | | 2 |
| 24 | :458/20371 | | Piston Brake 139.4 bore (was 130mm) | | 2 |
| 25 | :813/50012 | | Seal brake piston | | 2 |
| 26 | :813/50026 | | Seal brake piston (square section) | | 2 |
| 27 | :816/80037 | | Plug filler | | 1 |
| 28 | :814/00365 | | Spring compression | | 6 |
| 29 | :450/18204 | | Pin brake back-off | | 6 |
| 30 | :448/16905 | | Bush tension flanged - external | | 6 |
| 31 | :2203/1020 | | Circlip | | 6 |
| 35 | :458/20511 | | Bracket caliper mount axle | | 1 |

# 9812/0080 F3-3-11 WHEEL & TYRE, FRONT 2WS 2WD, 11LX16

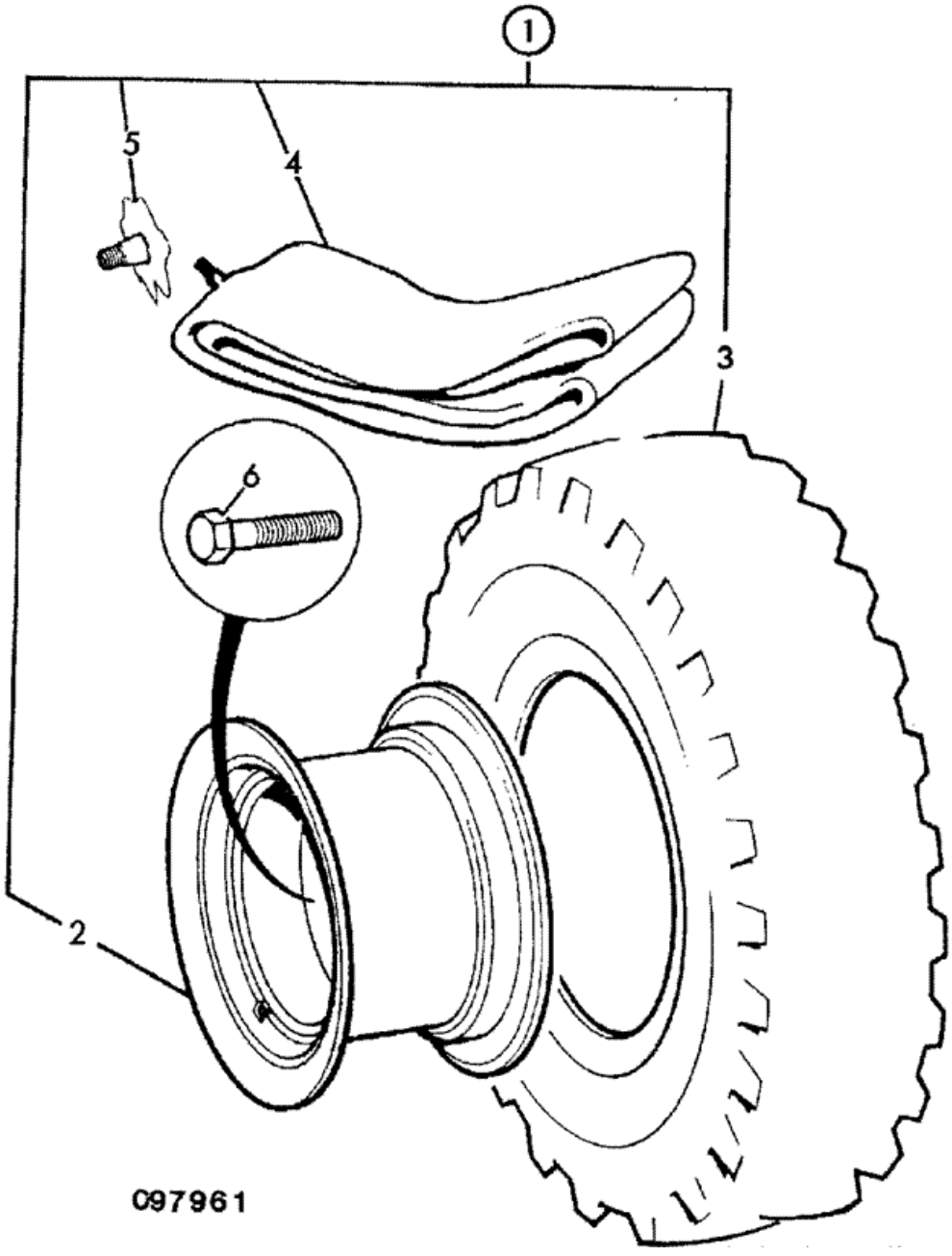


| Item | Part # | Change No | Description | Usage Code | QTY |
|---|---|---|---|---|---|
| 1 | 126/02919 | | Wheel & tyre assembly 11x16 12pr Armstrong | | 2 |
| 2 | :41/931200 | | Wheel rim 8x16 (6 stud) | | 1 |
| 3 | :42/916200 | | Tyre 11Lx16x12pr Armstrong | | 1 |
| 4 | . | | 'See Remark'<br>*Tudeless* | | 1 |
| 5 | :151/05201 | | Valve | | 1 |

| | | | | | |
|---|---|---|---|---|---|
| 6 | 826/01008 | | Nut wheel | | 12 |

# 9812/0080 F3-3-51 WHEEL & TYRE, FRONT 2WS 2WD, LOCAL SOURCED

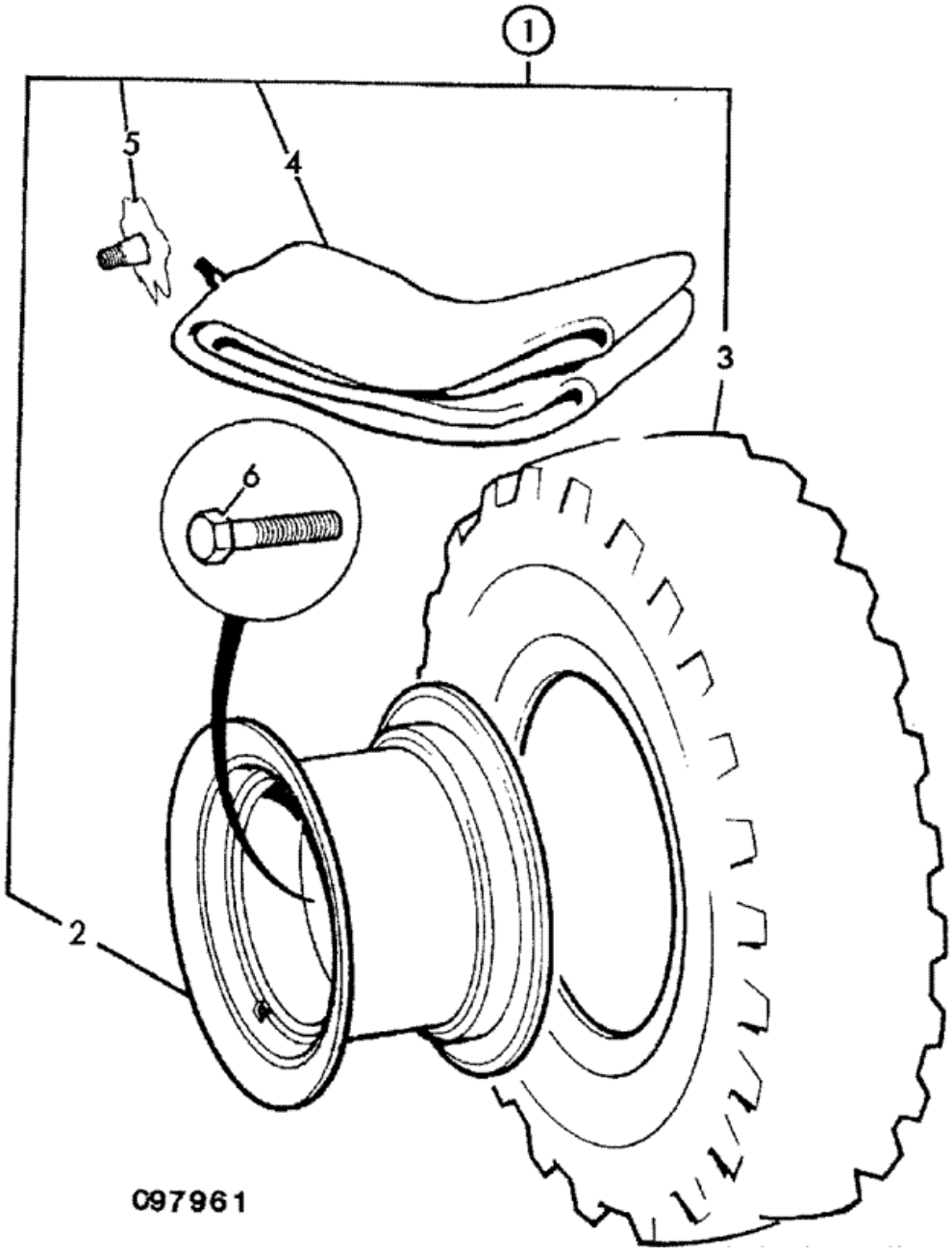


| Item | Part # | Change No | Description | Usage Code | QTY |
|---|---|---|---|---|---|
| 1 | 339/41250 | | Wheel and tyre, 10.5/80X18 10 ply Goodyear | | 2 |
| 2 | :339/41313 | | Wheel rim, W9x18 | | 1 |
| 3 | :339/41401 | | Tyre 10.5/80 X 18 10PR Goodyear | | 1 |
| 4 | :339/41451 | | Tube 10.5/80-18 TR 15 | | 1 |
| 5 | . | | 'See Remark'<br>*not fitted, tubed* | | 1 |

| | | | | | |
|---|---|---|---|---|---|
| 6 | 826/01008 | | Nut wheel | | 12 |

# 9812/0080 F3-4-51 WHEEL & TYRE, FRONT 2WS 4WD, LOCAL SOURCED

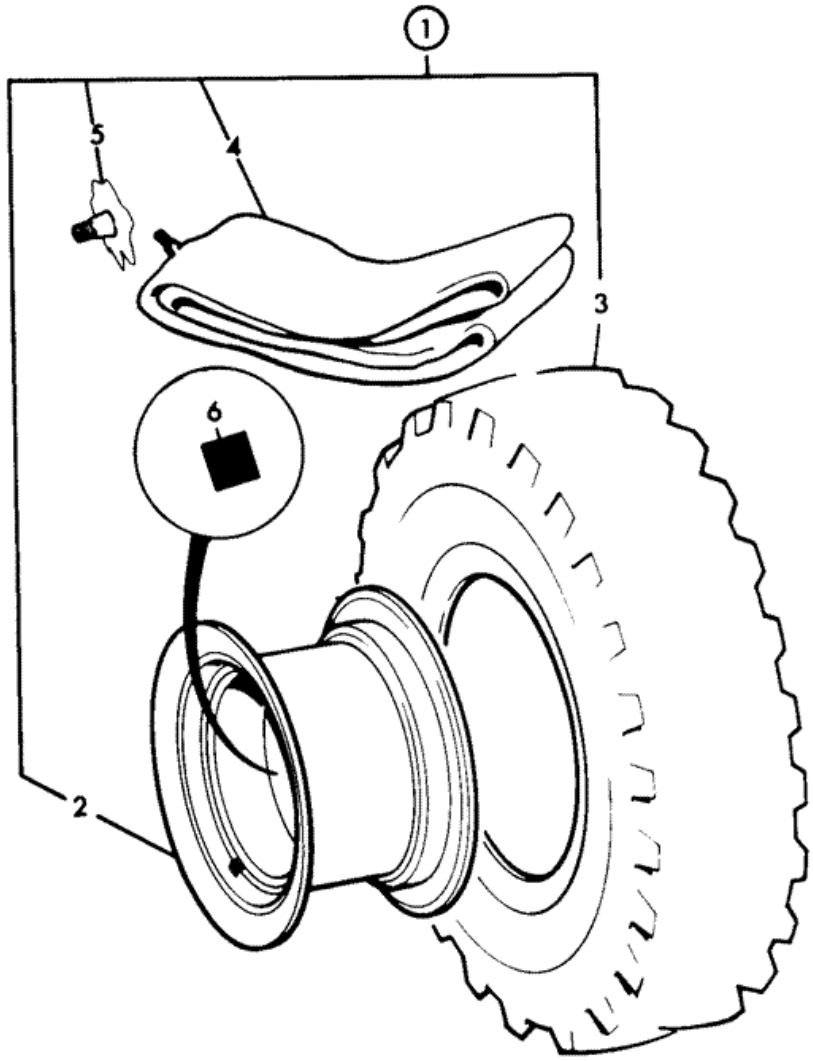


| Item | Part # | Change No | Description | Usage Code | QTY |
|---|---|---|---|---|---|
| 1 | 339/41042 | | Wheel and tyre assembly 14x17.5x10 Titan | A | 2 |
| 1 | 339/41024 | | Wheel and tyre assembly 14x17.5x10 Goodyear | B | 2 |
| 1 | 339/41235 | | Wheel and tyre assembly 12.5/80x18x10 G/year | C | 1 |
| 2 | :339/41274 | | Wheel rim 10.5x17.5L | A B | 1 |
| 2 | :339/41275 | | Wheel rim W9x18 | C | 1 |
| | | | | | |

| | | | | | |
|---|---|---|---|---|---|
| 3 | :42/914300 | | Tyre 14x17.5x10pr Armstrong | A | 1 |
| 3 | :42/406100 | | Tyre Goodyear tubeless | B | 1 |
| 3 | :339/41403 | | Tyre 12.5/80-18 10 PR Goodyear | C | 1 |
| 4 | . | | 'See Remark'<br>*not fitted tubeless* | | 1 |
| 5 | :339/41521 | | Valve | A B C | 1 |

# 9812/0080 F3-5-21 WHEEL & TYRE, REAR 2WS 17.7X24, 2WS 2WD

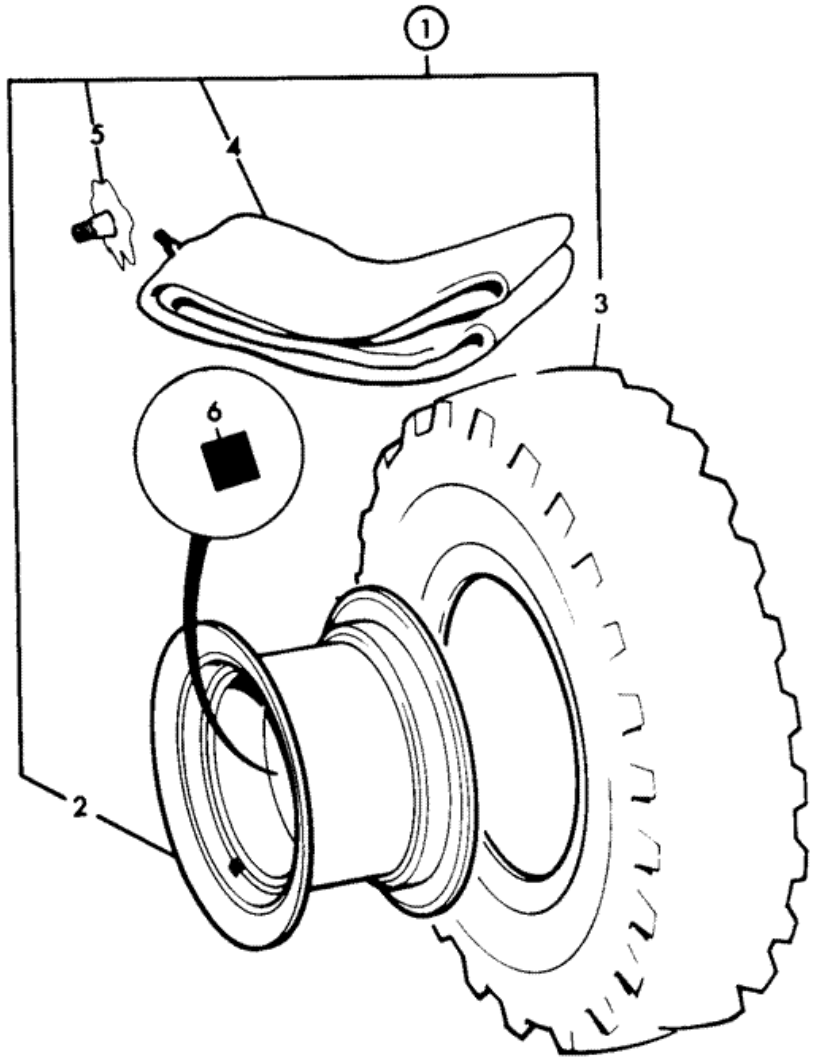


| Item | Part # | Change No | Description | Usage Code | QTY |
|---|---|---|---|---|---|
| 1 | 126/02769 | | Wheel & tyre assembly 17.5x24x10pr | | 2 |
| 2 | :41/931400 | | Wheel rim, 15x24 101mm offset, 5 stud | | 1 |
| 3 | :42/921300 | | Tyre 17.5Lx24x10 pr TITAN | | 1 |
| 4 | :. | | 'See Remark'<br>*not fitted* | | 1 |
| 5 | :151/05201 | | Valve | | 1 |

| | | | | | |
|---|---|---|---|---|---|
| 6 | 106/40001 | | Nut | | 10 |

# 9812/0080 F3-5-51 WHEEL & TYRE, REAR 2WS, LOCAL SOURCED

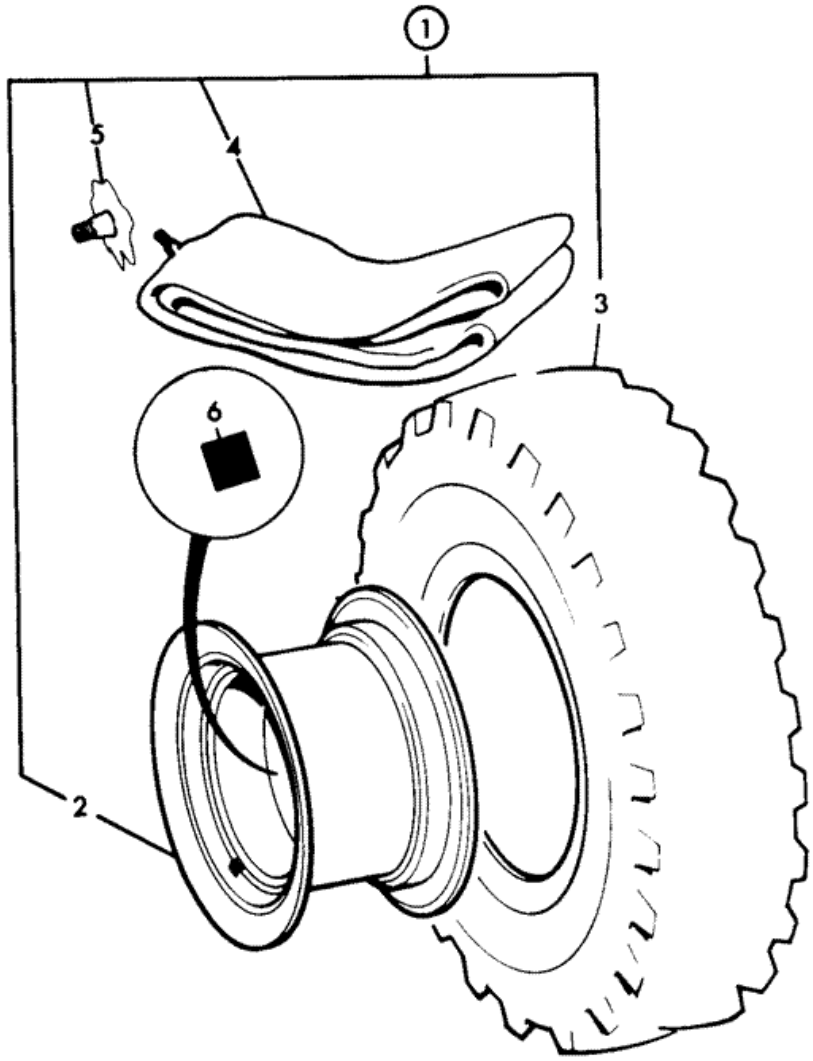


097960

| Item | Part # | Change No | Description | Usage Code | QTY |
|---|---|---|---|---|---|
| 1 | ::339/41203 | | Wheel and tyre assembly 19.5x24x12 G/year | A | 1 |
| 1 | 339/41236 | | Wheel and tyre assembly 17.5x25x12 G/year | B | 2 |
| 1 | 339/41206 | | Wheel and tyre assembly 3 piece rim | D | 1 |
| 1 | 339/41263 | | Wheel and tyre assembly 17.5x25x12 Pirelli | C | 2 |
| 2 | :339/41271 | | Wheel rim DW16x24 | A | 1 |
| | | | | | |

| | | | | | |
|---|---|---|---|---|---|
| 2 | :339/41267 | | Wheel rim 13.00DCx25 | B C | 1 |
| 2 | :339/41190 | | Wheel rim 14.00X25/1.5 3 piece | D | 1 |
| 3 | :42/413400 | | Tyre 19.5lX24x12 Goodyear industrial | A | 1 |
| 3 | :42/400600 | | Tyre 17.5-25X12 ply Goodyear SGL | B D | 1 |
| 3 | :339/41410 | | Tyre 17.5x25x12 PR Pirelli | C | 1 |
| 4 | . | | 'See Remark'<br>*not fitted tubeless* | | 1 |
| 5 | :151/05201 | | Valve | A B C D | 1 |

Product Catalog \ CONSTRUCTION \ NORTH AMERICA \ CONSTRUCTION / INDUSTRIAL \ BACKHOE LOADER 3CX,4CX,214,215,217 \ 3C PLUS (91HP) , Made in Brazil with Dieselmax/IESA Engine 9812/0080 \ F AXLES, WHEELS & TRANSMISSION \ F05 TRANSMISSIONS SYNCHROSHUTTLE

# 9812/0080 F5-0-11 MOUNTING, TRANSMISSION, TO INTERNATIONAL ENGINE

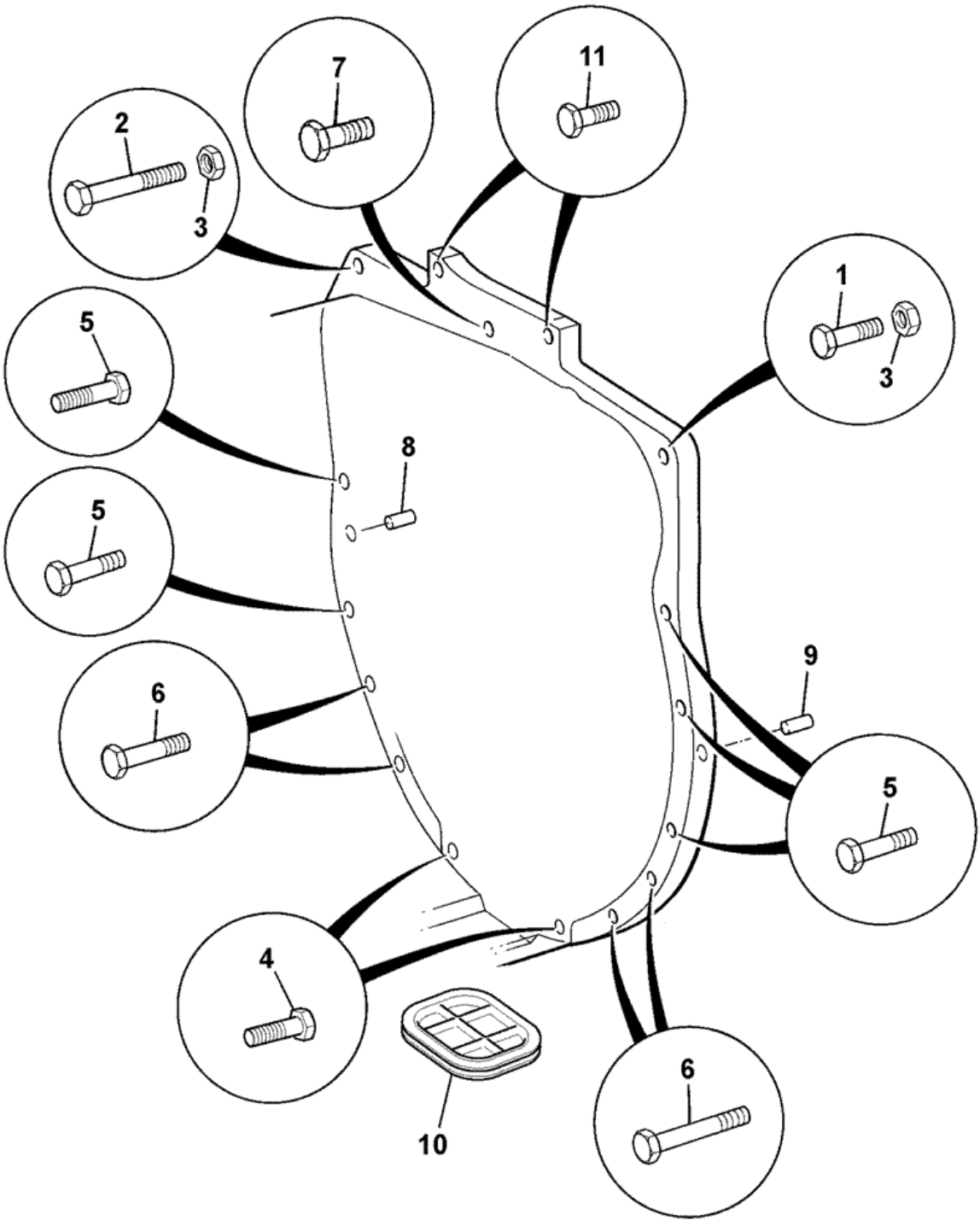


| Item | Part # | Change No | Description | Usage Code | QTY |
|---|---|---|---|---|---|
| 1 | 1318/3512Z | | Bolt M12X50mm long TUF-LOK | | 1 |

| | | | | | |
|---|---|---|---|---|---|
| 2 | 1315/3520Z | | Bolt M12 x 100mm | | 1 |
| 3 | 1370/0403Z | | Nut M12 | | 2 |
| 4 | 1315/0511Z | | Bolt M12 x 45mm | | 2 |
| 5 | 1315/3514Z | | Bolt M12 x 60mm | | 5 |
| 6 | 1315/3516Z | | Bolt M12 x 70mm | | 4 |
| 7 | 1315/0509Z | | Screw M12 x 35mm | | 1 |
| 9 | 02/101270 | | Bolt | | 2 |
| 10 | 445/13703 | | Cover flywheel housing 110mm x 79mm x 17mm | | 1 |
| 11 | 1305/1808Z | | Bolt | | 2 |

Product Catalog \ CONSTRUCTION \ NORTH AMERICA \ CONSTRUCTION / INDUSTRIAL \ BACKHOE LOADER 3CX,4CX,214,215,217 \ 3C PLUS (91HP) , Made in Brazil with Dieselmax/IESA Engine 9812/0080 \ F AXLES, WHEELS & TRANSMISSION \ F05 TRANSMISSIONS SYNCHROSHUTTLE

# 9812/0080 F5-0-30 DIPSTICK & FILLER, SYNCROSHUTTLE, JCB DIESELMAX ENGINE

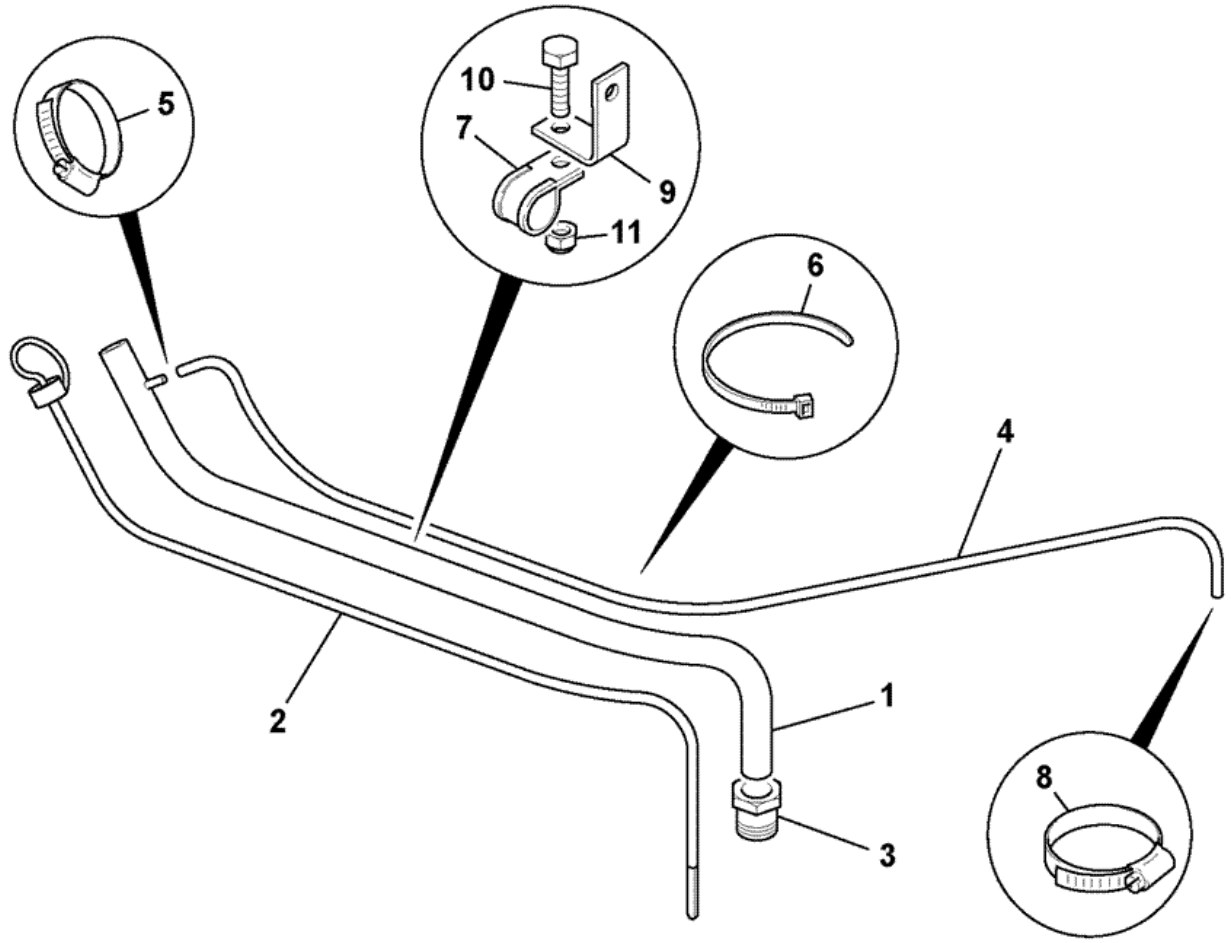


743210

| Item | Part # | Change No | Description | Usage Code | QTY |
|---|---|---|---|---|---|
| 1 | 830/12343 | Superseded | Tube oil filler | | 1 |

| | | | | | |
|---|---|---|---|---|---|
| 1 | 332/D6553 | | Tube oil filler | | 1 |
| 2 | 331/46204 | | Dipstick | | 1 |
| 3 | 155/10600 | | Nut sealastic | | 1 |
| 3A | :904/20334 | | Kit-seal & ferrule | | 1 |
| 4 | 647/02108 | | Tube | | 1 |
| 5 | 821/00433 | | Clip | | 1 |
| 6 | 826/01453 | | Tie cable double head | | 4 |
| 7 | 821/10297 | | Clip P-clip,25mm Dia | | 1 |
| 8 | 821/10319 | | Clip 9.5mm dia pinch type | | 1 |
| 9 | 331/46081 | | Bracket | | 1 |
| 10 | 1315/0305Z | | Screw Hexagon M8 x 20mm long | | 1 |
| 11 | 826/01099 | | Nut rivet,M6 open ended | | 1 |

Product Catalog \ CONSTRUCTION \ NORTH AMERICA \ CONSTRUCTION / INDUSTRIAL \ BACKHOE LOADER 3CX,4CX,214,215,217 \ 3C PLUS (91HP) , Made in Brazil with Dieselmax/IESA Engine 9812/0080 \ F AXLES, WHEELS & TRANSMISSION \ F05 TRANSMISSIONS SYNCHROSHUTTLE

# 9812/0080 F5-0-35 DIPSTICK & FILLER, SYNCROSHUTTLE, INTERNATIONAL ENGINE

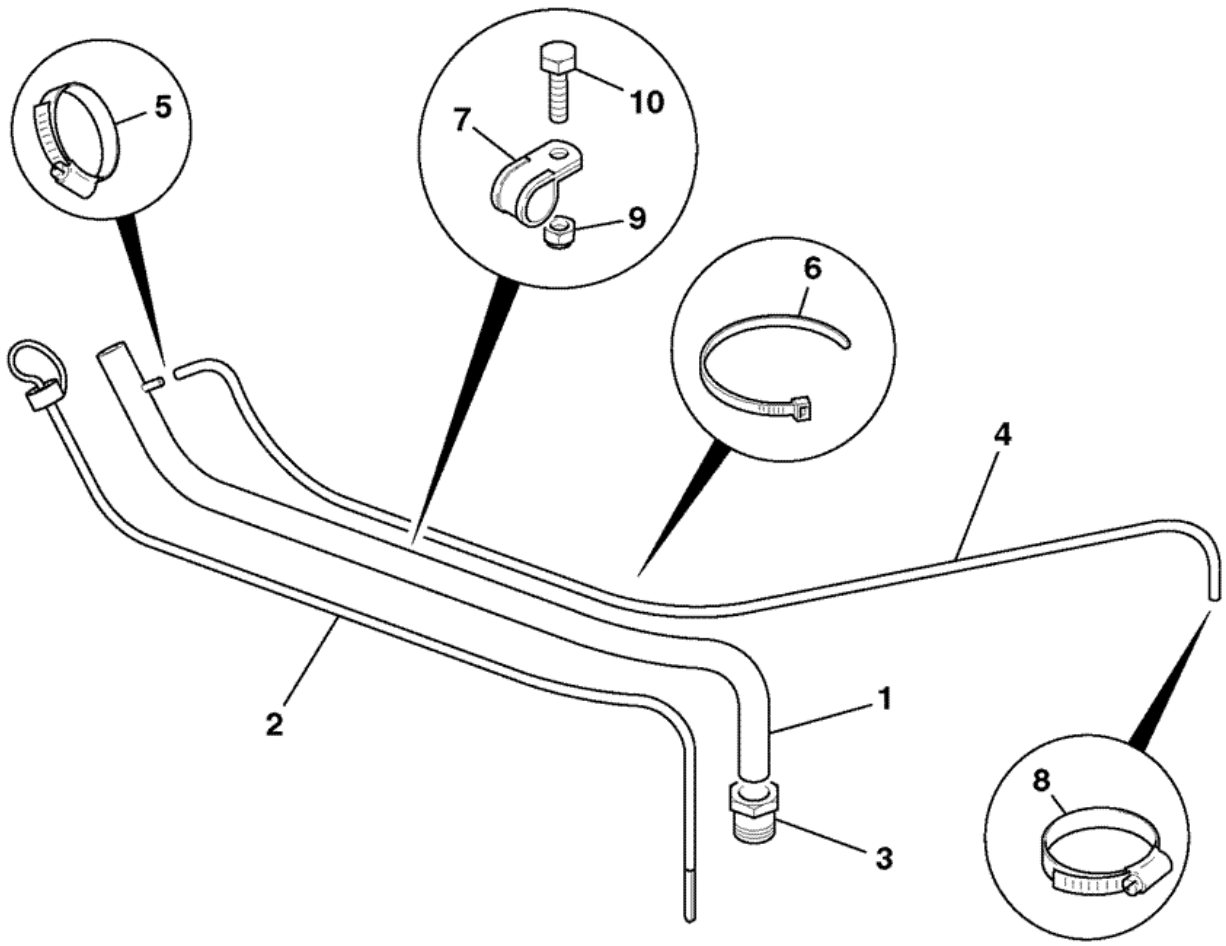


743211

| Item | Part # | Change No | Description | Usage Code | QTY |
|---|---|---|---|---|---|
| 1 | 123/05942 | | Tube filler | | 1 |

| | | | | | |
|---|---|---|---|---|---|
| 2 | 123/06299 | | Dipstick | | 1 |
| 3 | 155/10600 | | Nut sealastic | | 1 |
| 3A | :904/20334 | | Kit-seal & ferrule | | 1 |
| 4 | 647/02108 | | Tube | | 1 |
| 5 | 821/00433 | | Clip | | 1 |
| 6 | 826/01453 | | Tie cable double head | | 4 |
| 7 | 821/10297 | | Clip P-clip,25mm Dia | | 1 |
| 8 | 821/10319 | | Clip 9.5mm dia pinch type | | 1 |
| 9 | 1370/0203Z | | Nut self lock M8 | | 1 |
| 10 | 1315/0305Z | | Screw Hexagon M8 x 20mm long | | 1 |

# 9812/0080 F5-0-40 TORQUE CONVERTER, 84 & 92 HP ENGINES, W300 3.01 RATIO

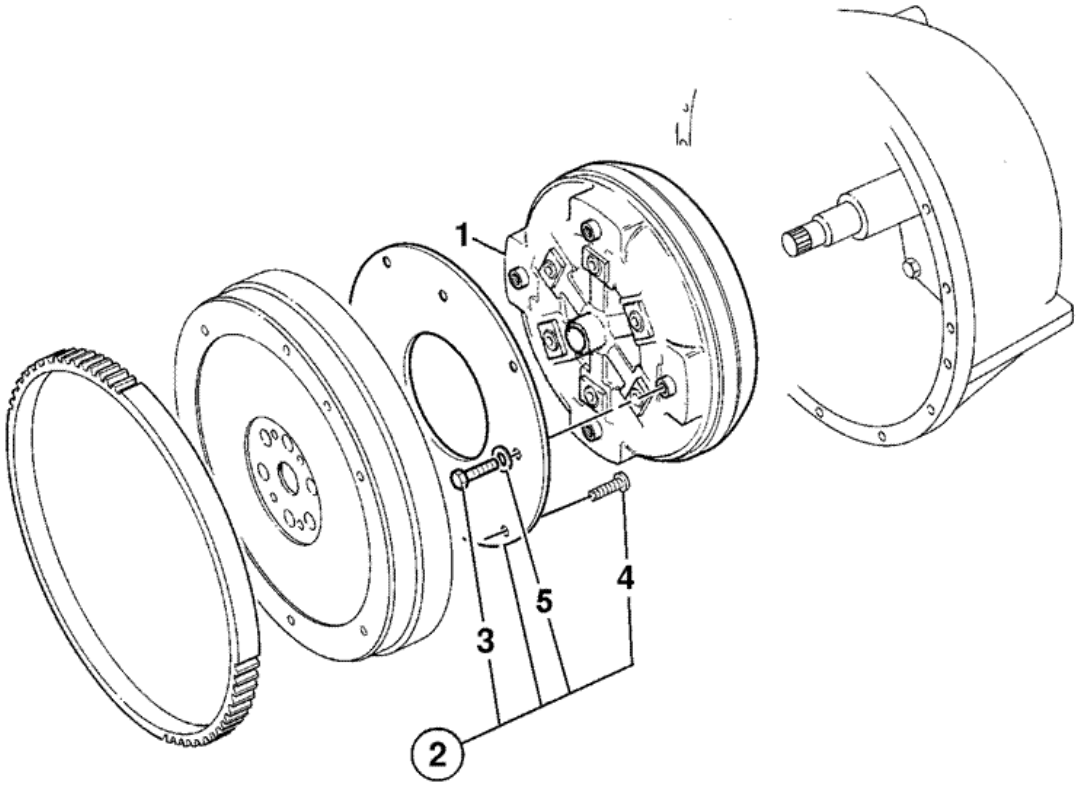


376141

| Item | Part # | Change No | Description | Usage Code | QTY |
|---|---|---|---|---|---|
| 1 | 04/600786 | | Converter W300 3.01 ratio | | 1 |

| | | | | | |
|---|---|---|---|---|---|
| 2 | 04/600864 | | Kit-drive plate torque converter | | 1 |
| 3 | :04/500303 | | Bolt | | 4 |
| 4 | :826/11605 | | Bolt M8 x 30 | | 6 |
| 5 | :823/10297 | | Washer hardened | | 4 |

# 9812/0080 F5-1-11 441/00190 - 2WD-2WS, EXTERNAL COMPONENTS, INTERNATIONAL ENGINE

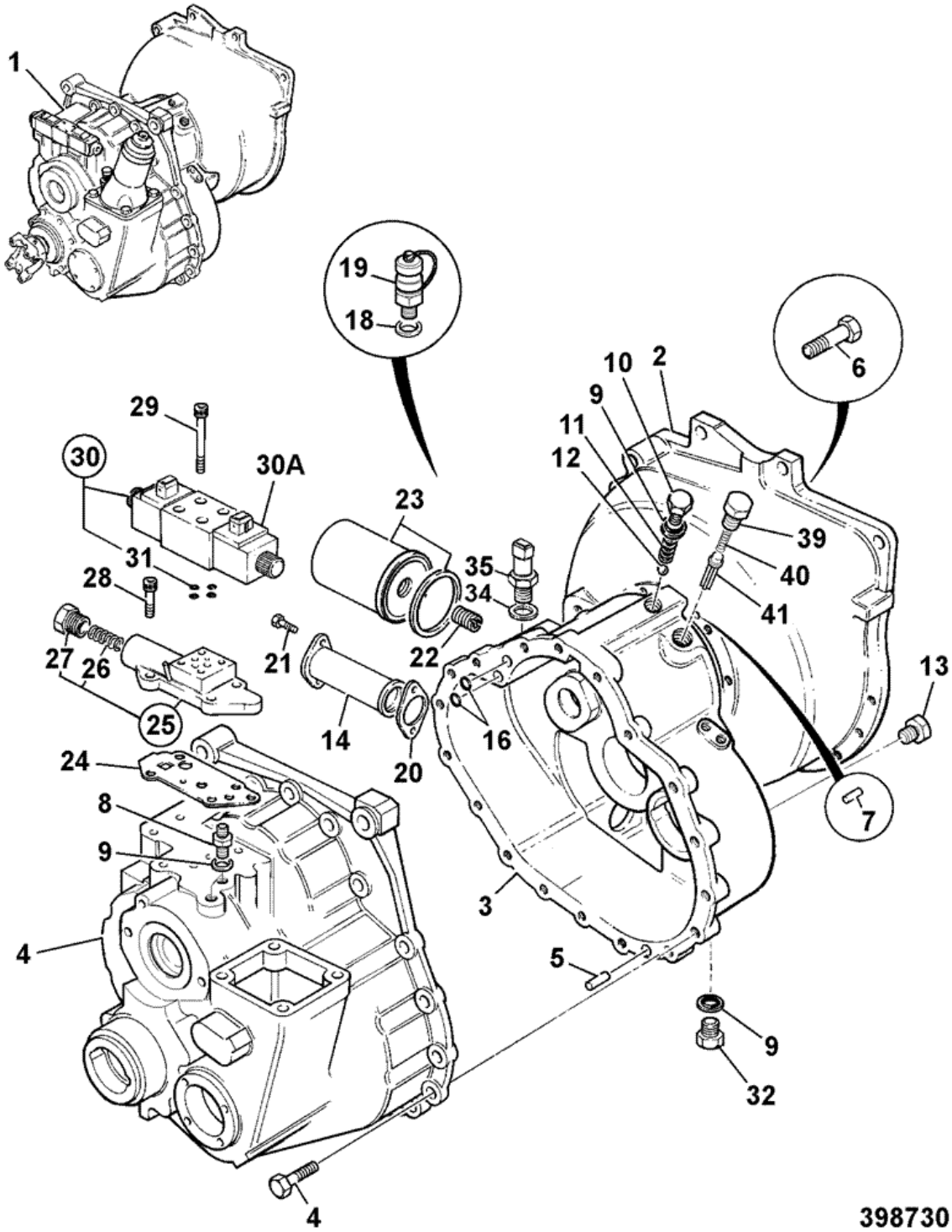


| Item | Part # | Change No | Description | Usage Code | QTY |
|---|---|---|---|---|---|
| 1 | 441/00190 | | Gearbox assembly, SS700 2WD, 35kph | | 1 |

| | | | | | |
|---|---|---|---|---|---|
| 2 | :459/70442 | | Casing flywheel housing | | 1 |
| 3 | :445/76502 | | Casing front | | 1 |
| 4 | :459/30312 | Superseded | Casing rear SS700 2WD | | 1 |
| 4 | :459/M1383 | | Casing rear SS700 2WD | | 1 |
| 5 | :826/01417 | | Bolt | | 18 |
| 6 | :445/14001 | | Dowel | | 2 |
| 7 | :. | | 'See Remark'<br>*Gearbox components see index F5* | | 1 |
| 8 | :1606/0017 | | Adapter 5/8" x 1/2" M/M | | 2 |
| 9 | :1406/0018 | | Seal bonded 1/2" BSP | | 3 |
| 10 | :816/80041 | | Plug 1/2"BSP 25.65mm A/F | | 1 |
| 11 | :814/00222 | | Spring | | 1 |
| 12 | :916/00008 | | Bearing 14dia ball | | 2 |
| 13 | :816/80051 | | Plug 1/8" tapered | | 5 |
| 14 | :32/902200 | | Strainer suction | | 1 |
| 15 | :445/13703 | | Cover flywheel housing 110mm x 79mm x 17mm | | 1 |
| 16 | :828/10222 | | O Ring | | 2 |
| 18 | :1406/0011 | | Seal bonded | | 2 |
| 19 | :45/905000 | | Adapter pressure test 1/4BSP male | | 1 |
| 20 | :813/50027 | | Gasket | | 1 |
| 21 | :1321/0303Z | | Screw M8 x 16 | | 2 |
| 22 | :816/15184 | | Adapter 1/2"BSPx1"UNF | | 1 |
| 23 | :581/18063 | | Element transmission filter 94mm long | | 1 |
| 24 | :813/10175 | | Gasket valve block | | 1 |
| 25 | :459/10144 | | Valve Adapter block assy SS700 low ratio | | 1 |
| 26 | ::814/00412 | | Spring | | 1 |
| 27 | ::816/80063 | | Plug | | 1 |
| 28 | :1392/3207 | | Capscrew | | 4 |
| 29 | :1391/3108Z | | Capscrew M5 X 30mm | | 4 |
| 30 | 25/220998 | | Valve solenoid assembly | | 1 |
| 30A | :25/221054 | | Coil 12V | | 2 |
| 31 | ::35/100801 | | Kit-seal solenoid valve | | 1 |
| 32 | :816/50031 | | Adapter Tee | | 1 |
| 34 | :816/80041 | | Plug 1/2"BSP 25.65mm A/F | | 1 |
| 35 | :701/41600 | | Switch oil pressure M12 red body, AMP | | 1 |
| 38 | 1315/0409Z | | Screw M10x35mm | | 12 |
| 39 | 816/80061 | | Plug | | 1 |
| 40 | 814/10153 | | Spring compression T/C press.maint | | 1 |
| 41 | 459/70168 | | Spool Adapter Solenoid | | 1 |

# 9812/0080 F5-1-21 441/00190 - 2WD-2WS, INTERNAL COMPONENTS, INTERNATIONAL ENGINE

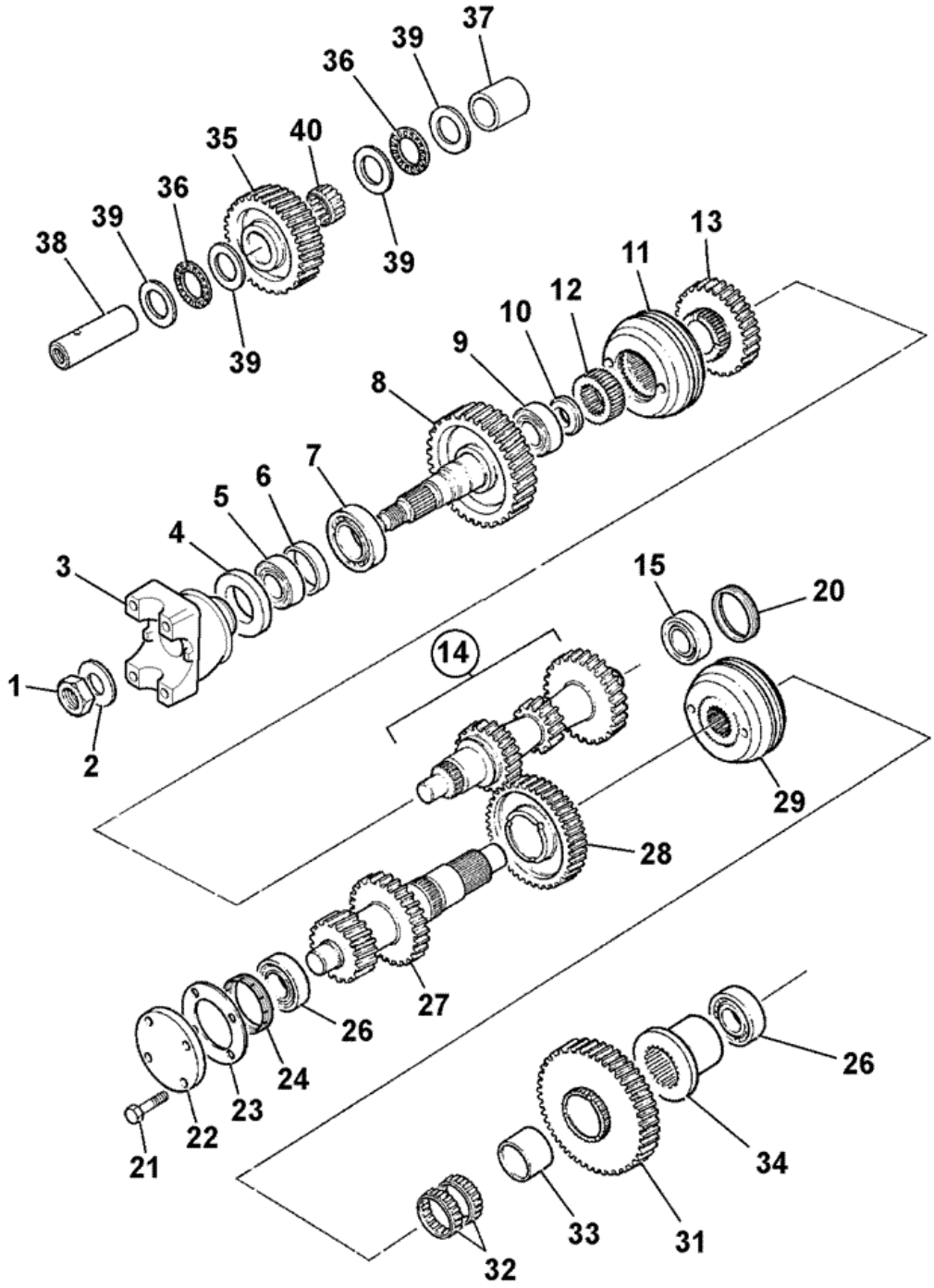


| Item | Part # | Change No | Description | Usage Code | QTY |
|---|---|---|---|---|---|
| 1 | 826/01551 | | Nut Stake M30 (46mm Head) | | 1 |

| | | | | | |
|---|---|---|---|---|---|
| 2 | 460/32202 | | Washer | | 1 |
| 3 | 459/70317 | | Yoke coupling - 1480 35 t | | 1 |
| 4 | 904/20172 | | Seal TRIPLE LIP 53.6 x 80.35 x 12 | | 1 |
| 5 | 907/51600 | | Bearing taper roller | | 1 |
| 6 | 921/53400 | | Kit-Spacer | | 1 |
| 7 | 907/53800 | | Bearing | | 1 |
| 8 | 459/50208 | | Gear transfer 38T SS750 low ratio | | 1 |
| 9 | 907/20005 | | Bearing taper roller | | 1 |
| 10 | 445/64302 | | Spacer mainshaft seal | | 1 |
| 11 | 445/03300 | | Synchroniser assembly | | 1 |
| 12 | 445/03010 | | Sleeve hub shaft<br>*3rd & 4th speed* | | 1 |
| 13 | 459/50206 | | Gear 3rd speed SS750 low ratio | | 1 |
| 14 | 459/50205 | | Gear mainshaft, SS750 | | 1 |
| 15 | 907/52800 | | Bearing 35 x 65 x 18 | | 1 |
| 20 | 459/70275 | | Nut mainshaft setting | | 1 |
| 21 | 826/01416 | | Screw micro-encapsulated | | 4 |
| 22 | 331/23731 | | Cover Layshaft | | 1 |
| 23 | 813/10176 | | Gasket | | 1 |
| 24 | 459/70274 | | Nut layshaft setting | | 1 |
| 26 | 907/09600 | | Bearing 35 x 73 x 24 | | 2 |
| 27 | 459/50188 | | Layshaft low ratio | | 1 |
| 28 | 459/50511 | | Gear 2nd 40t SS700<br>*2nd 40 Teeth* | | 1 |
| 29 | 459/50520 | | Synchroniser assembly | | 1 |
| 31 | 459/50509 | | Gear 1st 44t SS700<br>*1st* | | 1 |
| 32 | 917/02300 | | Bearing | | 2 |
| 33 | 917/00008 | | Bearing inner race | | 1 |
| 34 | 445/03013 | | Spacer | | 1 |
| 35 | 459/50440 | | Gear idler, 35T<br>*35 Teeth* | | 1 |
| 37 | 459/70206 | | Spacer idler gear | | 1 |
| 38 | 459/70087 | | Shaft idler | | 1 |
| 39 | 823/00451 | | Washer thrust | | 4 |
| 40 | 917/02400 | | Bearing needle roller | | 1 |

Product Catalog \ CONSTRUCTION \ NORTH AMERICA \ CONSTRUCTION / INDUSTRIAL \ BACKHOE LOADER 3CX,4CX,214,215,217 \ 3C PLUS (91HP) , Made in Brazil with Dieselmax/IESA Engine 9812/0080 \ F AXLES, WHEELS & TRANSMISSION \ F05 TRANSMISSIONS SYNCHROSHUTTLE

# 9812/0080 F5-1-31 441/00190 - 2WD-2WS, REVERSER UNIT, 459/10097, INTERNATIONAL ENGINE

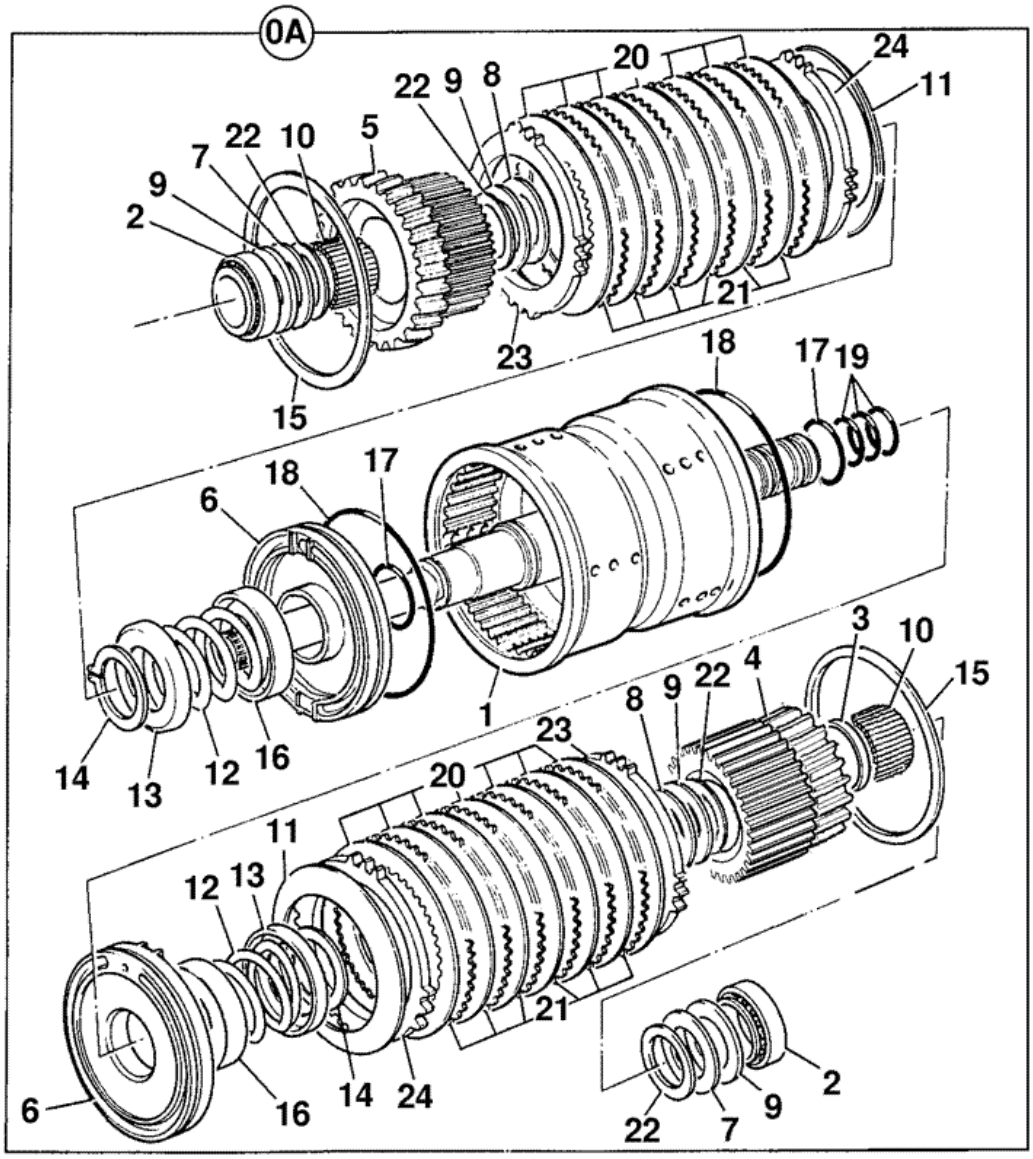


376130

| Item | Part # | Change No | Description | Usage Code | QTY |
|---|---|---|---|---|---|
| A | 459/10097 | | Clutch assembly input, reverser | | 1 |

| | | | | | |
|---|---|---|---|---|---|
| 1 | :459/50503 | | Housing input clutch SS700 | | 1 |
| 2 | :907/20012 | | Bearing taper roller | | 2 |
| 3 | :823/10355 | | Spacer | | 1 |
| 4 | :459/50428 | | Gear 31T & plate carrier | | 1 |
| 5 | :459/50429 | | Gear 22T & plate carrier | | 1 |
| 6 | :459/10096 | | Piston | | 2 |
| 7 | :823/10264 | | Washer thrust | | 2 |
| 8 | :823/10265 | | Washer thrust | | 2 |
| 9 | :917/10006 | | Bearing needle thrust | | 4 |
| 10 | :917/50600 | | Bearing needle roller | | 2 |
| 11 | :814/10115 | | Disc spring, spline | | 2 |
| 12 | :814/00345 | | Spring | | 2 |
| 13 | :823/10266 | | Washer spring retainer | | 2 |
| 14 | :821/00296 | | Circlip external | | 2 |
| 15 | :821/M2136 | | Circlip internal<br>*was 826/10467* | | 2 |
| 16 | :331/16558 | | Plate oil baffle | | 2 |
| 17 | :828/10180 | | O Ring | | 2 |
| 18 | :828/10181 | | O Ring 130mm I/D | | 2 |
| 19 | :904/50024 | | Seal ring | | 4 |
| 20 | :331/16520 | | Plate friction, clutch | | 10 |
| 21 | :331/16516 | | Plate counter, clutch | | 10 |
| 22 | :823/10316 | | Washer thrust bevelled | | 4 |
| 23 | :331/16517 | | Plate pressure, clutch 6.0 mm | | 2 |
| 24 | :331/16519 | | Plate shim, clutch 1.2mm | | 0 |

Product Catalog \ CONSTRUCTION \ NORTH AMERICA \ CONSTRUCTION / INDUSTRIAL \ BACKHOE LOADER 3CX,4CX,214,215,217 \ 3C PLUS (91HP) , Made in Brazil with Dieselmax/IESA Engine 9812/0080 \ F AXLES, WHEELS & TRANSMISSION \ F05 TRANSMISSIONS SYNCHROSHUTTLE

# 9812/0080 F5-1-51 441/00190 - 2WD-2WS, GEAR CHANGE, INTERNATIONAL ENGINE

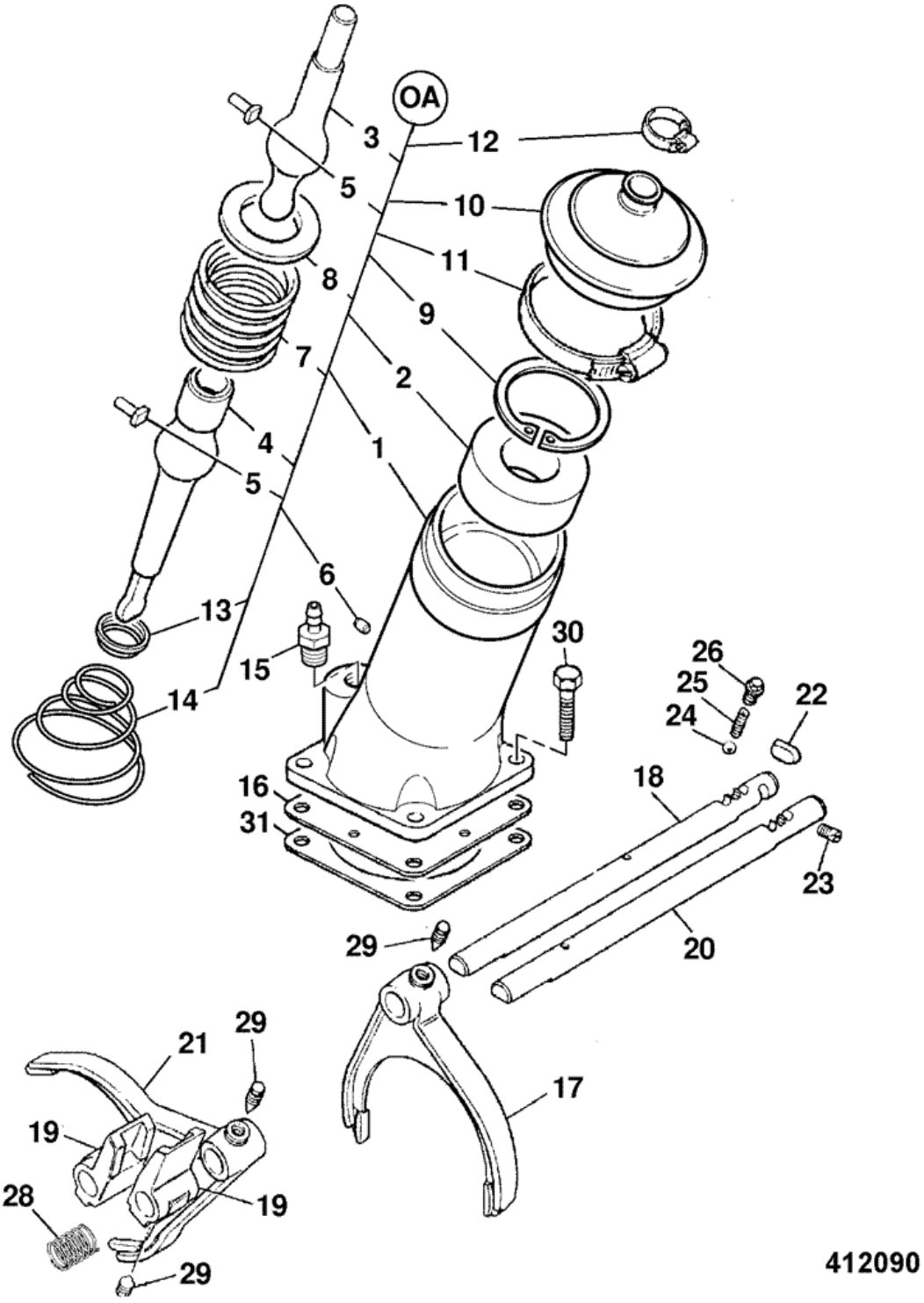


| Item | Part # | Change No | Description | Usage Code | QTY |
|---|---|---|---|---|---|
| A | 459/10143 | | Lever assembly gear turret | | 1 |

| | | | | | |
|---|---|---|---|---|---|
| 1 | :459/30295 | | Housing turret, gear lever | | 1 |
| 2 | :445/10802 | | Seat | | 1 |
| 3 | :445/05501 | | Lever gear | | 1 |
| 4 | :459/70271 | | Lever bottom gearshift | | 1 |
| 5 | :445/03023 | | Pin | | 2 |
| 6 | :835/10036 | | Plug | | 1 |
| 7 | :814/00233 | | Spring | | 1 |
| 8 | :445/10803 | | Washer ball | | 1 |
| 9 | :2203/1080 | | Circlip | | 1 |
| 10 | :331/25566 | | Gaiter gear lever | | 1 |
| 11 | :821/10163 | | Clip worm drive | | 1 |
| 12 | :445/05302 | | Clip | | 1 |
| 13 | :445/03020 | | Retainer spring | | 1 |
| 14 | :814/00221 | | Spring | | 1 |
| 15 | :816/13382 | | Adapter hose | | 1 |
| 16 | :460/17603 | | Baffle | | 1 |
| 17 | 459/30297 | | Fork selector 1st | | 1 |
| 18 | 459/70181 | | Shaft selector<br>*use 459/M2082* | | 1 |
| 18 | 459/M2082 | | Shaft selector | | 1 |
| 19 | 459/70199 | | Block selector | | 2 |
| 20 | 459/70181 | | Shaft selector<br>*use 459/M2082* | | 1 |
| 20 | 459/M2082 | | Shaft selector | | 1 |
| 21 | 459/30299 | | Fork selector 3rd | | 1 |
| 22 | 445/03031 | | Roller baulk | | 1 |
| 23 | 816/80027 | | Plug | | 1 |
| 24 | 916/00006 | | Ball 11mm dia | | 2 |
| 25 | 814/00354 | | Spring | | 2 |
| 26 | 816/80057 | | Plug detent | | 2 |
| 27 | 445/05302 | | Clip | | 2 |
| 28 | 814/00406 | | Spring | | 1 |
| 29 | 445/26110 | | Screw | | 4 |
| 30 | 826/01416 | | Screw micro-encapsulated | | 4 |
| 31 | 813/50042 | | Gasket | | 1 |

# 9812/0080 F5-2-11 441/00750 - 2WD-2WS, EXTERNAL COMPONENTS, JCB DIESELMAX ENGINE

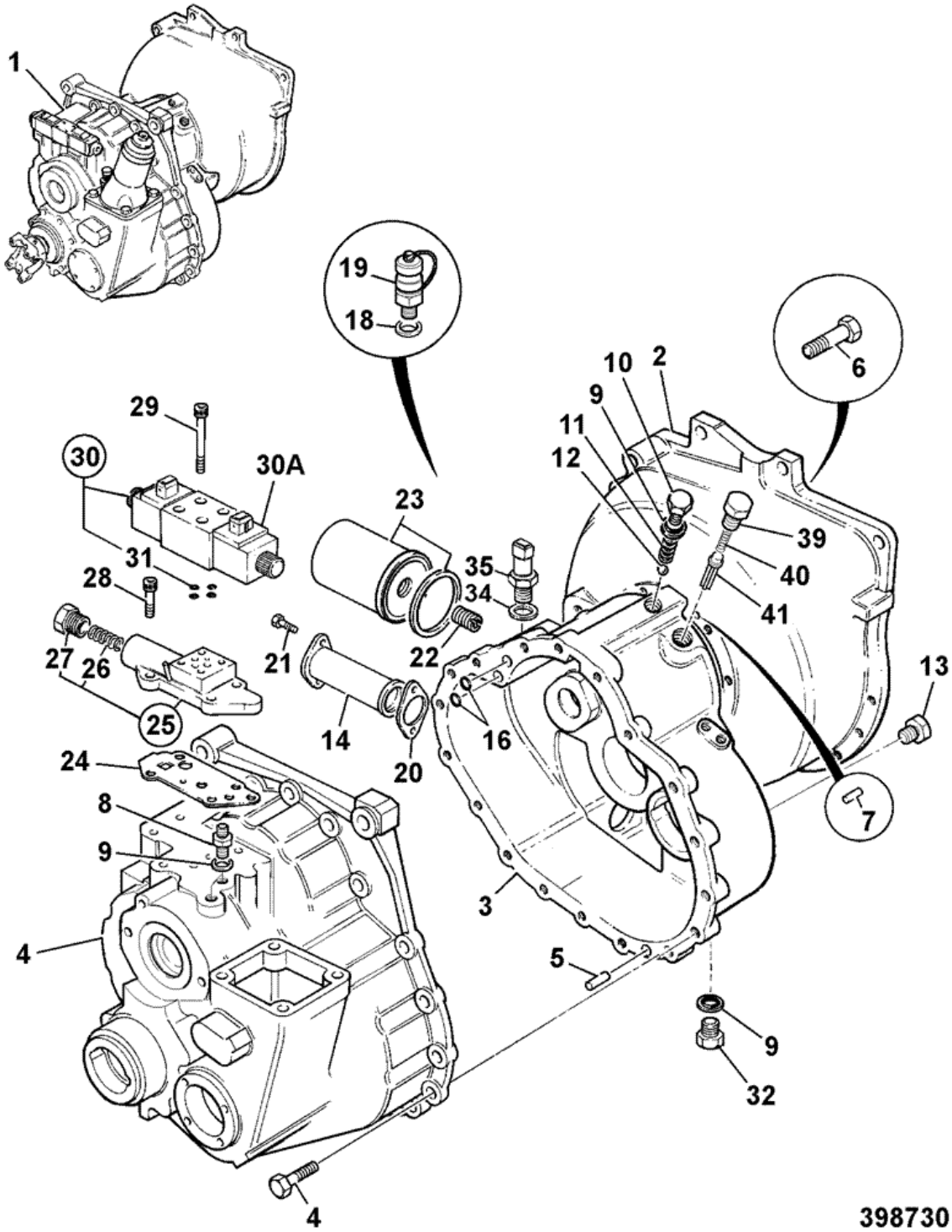


| Item | Part # | Change No | Description | Usage Code | QTY |
|---|---|---|---|---|---|
| 1 | 441/00750 | | Gearbox assembly 2WD | | 1 |

| | | | | | |
|---|---|---|---|---|---|
| 2 | :459/30397 | | Housing flywheel | | 1 |
| 3 | :459/30285 | | Casing front SS700 | | 1 |
| 4 | :459/30312 | Superseded | Casing rear SS700 2WD | | 1 |
| 4 | :459/M1383 | | Casing rear SS700 2WD | | 1 |
| 5 | :826/01417 | | Bolt | | 18 |
| 6 | :445/14001 | | Dowel | | 2 |
| 7 | :. | | 'See Remark'<br>*Gearbox components see index F5* | | 1 |
| 8 | :1606/0017 | | Adapter 5/8" x 1/2" M/M | | 2 |
| 9 | :1406/0018 | | Seal bonded 1/2" BSP | | 3 |
| 10 | :816/80041 | | Plug 1/2"BSP 25.65mm A/F | | 1 |
| 11 | :814/00222 | | Spring | | 1 |
| 12 | :916/00008 | | Bearing 14dia ball | | 2 |
| 13 | :816/80051 | | Plug 1/8" tapered | | 5 |
| 14 | :32/902200 | | Strainer suction | | 1 |
| 15 | :. | | 'See Remark'<br>*no longer fitted* | | 1 |
| 16 | :828/10222 | | O Ring | | 2 |
| 18 | :1406/0011 | | Seal bonded | | 2 |
| 19 | :45/905000 | | Adapter pressure test 1/4BSP male | | 1 |
| 20 | :813/50027 | | Gasket | | 1 |
| 21 | :1321/0303Z | | Screw M8 x 16 | | 2 |
| 22 | :816/15184 | | Adapter 1/2"BSPx1"UNF | | 1 |
| 23 | :581/18076 | | Element transmission filter 120.7mm long | | 1 |
| 24 | :813/10175 | | Gasket valve block | | 1 |
| 25 | :459/10144 | | Valve Adapter block assy SS700 low ratio | | 1 |
| 26 | ::814/00412 | | Spring | | 1 |
| 27 | ::816/80063 | | Plug | | 1 |
| 28 | :1392/3207 | | Capscrew | | 4 |
| 29 | :1391/3108Z | | Capscrew M5 X 30mm | | 4 |
| 30 | 25/220998 | | Valve solenoid assembly | | 1 |
| 30A | :25/221054 | | Coil 12V | | 2 |
| 31 | ::35/100801 | | Kit-seal solenoid valve | | 1 |
| 32 | :816/50031 | | Adapter Tee | | 1 |
| 35 | 701/80319 | Superseded | Switch oil pressure,M12 green body,Deutsch<br>*not supplied with transmission* | | 1 |
| 35 | 701/80626 | | Switch oil pressure M12<br>*not supplied with transmission* | | 1 |
| 35A | 1406/0011 | | Seal bonded | | 1 |
| 36 | :816/80061 | | Plug | | 1 |
| 38 | 1315/0409Z | | Screw M10x35mm | | 12 |
| 39 | 816/80061 | | Plug | | 1 |
| 40 | 814/10153 | | Spring compression T/C press.maint | | 1 |
| 41 | 459/70168 | | Spool Adapter Solenoid | | 1 |

# 9812/0080 F5-2-21 441/00750 - 2WD-2WS, INTERNAL COMPONENTS, JCB DIESELMAX ENGINE

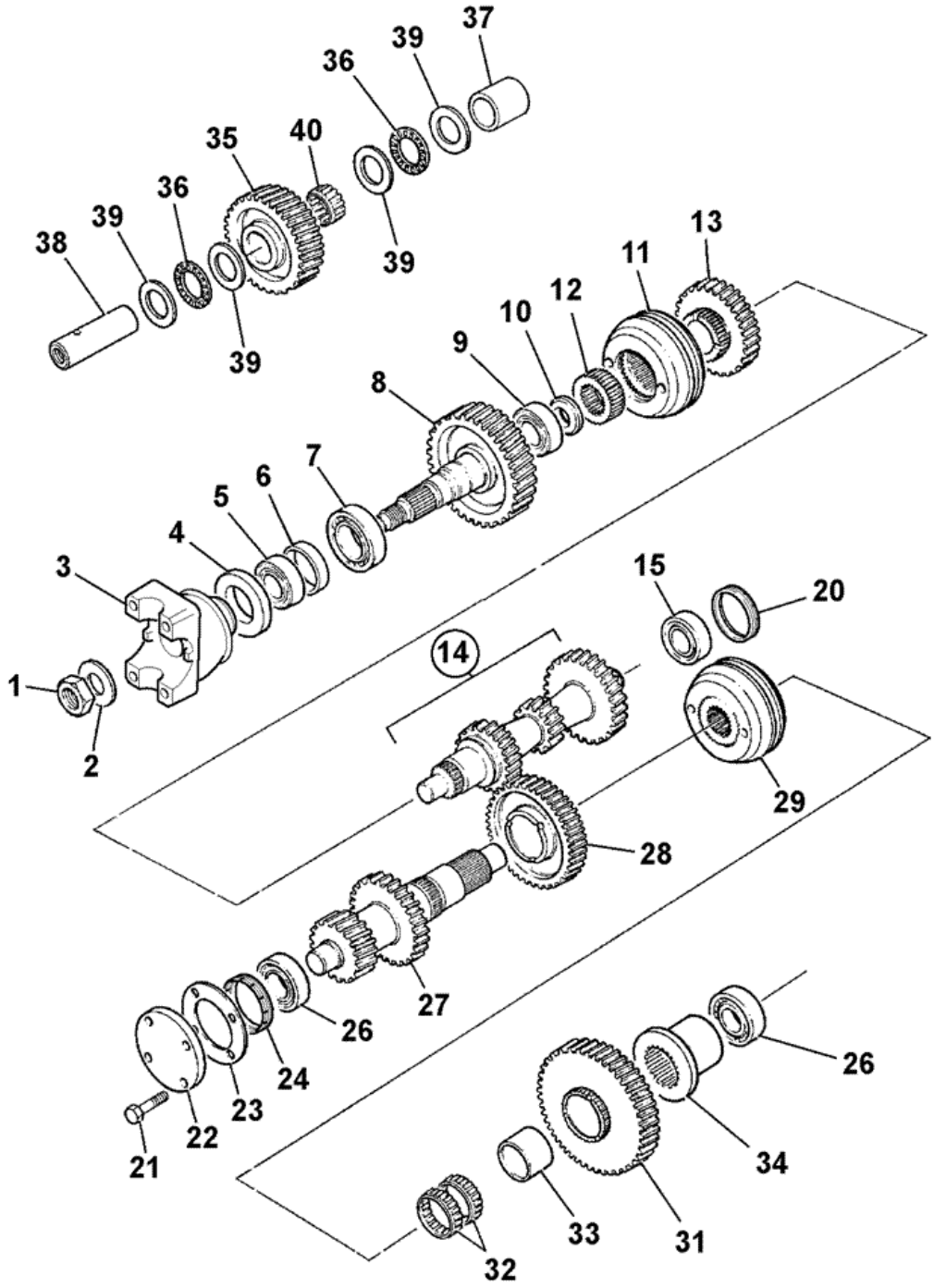


400030

| Item | Part # | Change No | Description | Usage Code | QTY |
|---|---|---|---|---|---|
| 1 | 826/01551 | | Nut Stake M30 (46mm Head) | | 1 |

| | | | | | |
|---|---|---|---|---|---|
| 2 | 460/32202 | | Washer | | 1 |
| 3 | 459/70317 | | Yoke coupling - 1480 35 t | | 1 |
| 4 | 904/20172 | | Seal TRIPLE LIP 53.6 x 80.35 x 12 | | 1 |
| 5 | 907/51600 | | Bearing taper roller | | 1 |
| 6 | 921/53400 | | Kit-Spacer | | 1 |
| 7 | 907/20045 | | Bearing taper roller | | 1 |
| 8 | 459/50208 | | Gear transfer 38T SS750 low ratio | | 1 |
| 9 | 907/20005 | | Bearing taper roller | | 1 |
| 10 | 445/64302 | | Spacer mainshaft seal | | 1 |
| 11 | 445/03300 | | Synchroniser assembly | | 1 |
| 12 | 445/03010 | | Sleeve hub shaft<br>*3rd & 4th speed* | | 1 |
| 13 | 459/50206 | | Gear 3rd speed SS750 low ratio | | 1 |
| 14 | 459/50205 | | Gear mainshaft, SS750 | | 1 |
| 15 | 907/52800 | | Bearing 35 x 65 x 18 | | 1 |
| 20 | 459/70275 | <G/00740/1 | Nut mainshaft setting | | 1 |
| 20 | 459/70378 | >G/00740/2 | Kit graded spacers | | 1 |
| 21 | 826/01416 | <G/00740/1 | Screw micro-encapsulated | | 4 |
| 22 | 331/23731 | <G/00740/1 | Cover Layshaft | | 1 |
| 23 | 813/10176 | <G/00740/1 | Gasket | | 1 |
| 24 | 459/70274 | <G/00740/1 | Nut layshaft setting | | 1 |
| 24 | 459/70379 | >G/00740/1 | Kit graded spacers | | 1 |
| 26 | 907/20049 | | Bearing taper roller | | 2 |
| 27 | 459/50188 | | Layshaft low ratio | | 1 |
| 28 | 459/50511 | | Gear 2nd 40t SS700<br>*2nd 40 Teeth* | | 1 |
| 29 | 459/50520 | | Synchroniser assembly | | 1 |
| 31 | 459/50509 | | Gear 1st 44t SS700<br>*1st* | | 1 |
| 32 | 917/02300 | | Bearing | | 2 |
| 33 | 917/00008 | | Bearing inner race | | 1 |
| 34 | 445/03013 | | Spacer | | 1 |
| 35 | 459/50440 | | Gear idler, 35T<br>*35 Teeth* | | 1 |
| 37 | 459/70206 | | Spacer idler gear | | 1 |
| 38 | 459/70087 | | Shaft idler | | 1 |
| 39 | 823/00451 | | Washer thrust | | 4 |
| 40 | 917/02400 | | Bearing needle roller | | 1 |

# 9812/0080 F5-2-31 441/00750 - 2WD-2WS, REVERSER UNIT, 459/10097, JCB DIESELMAX ENGINE

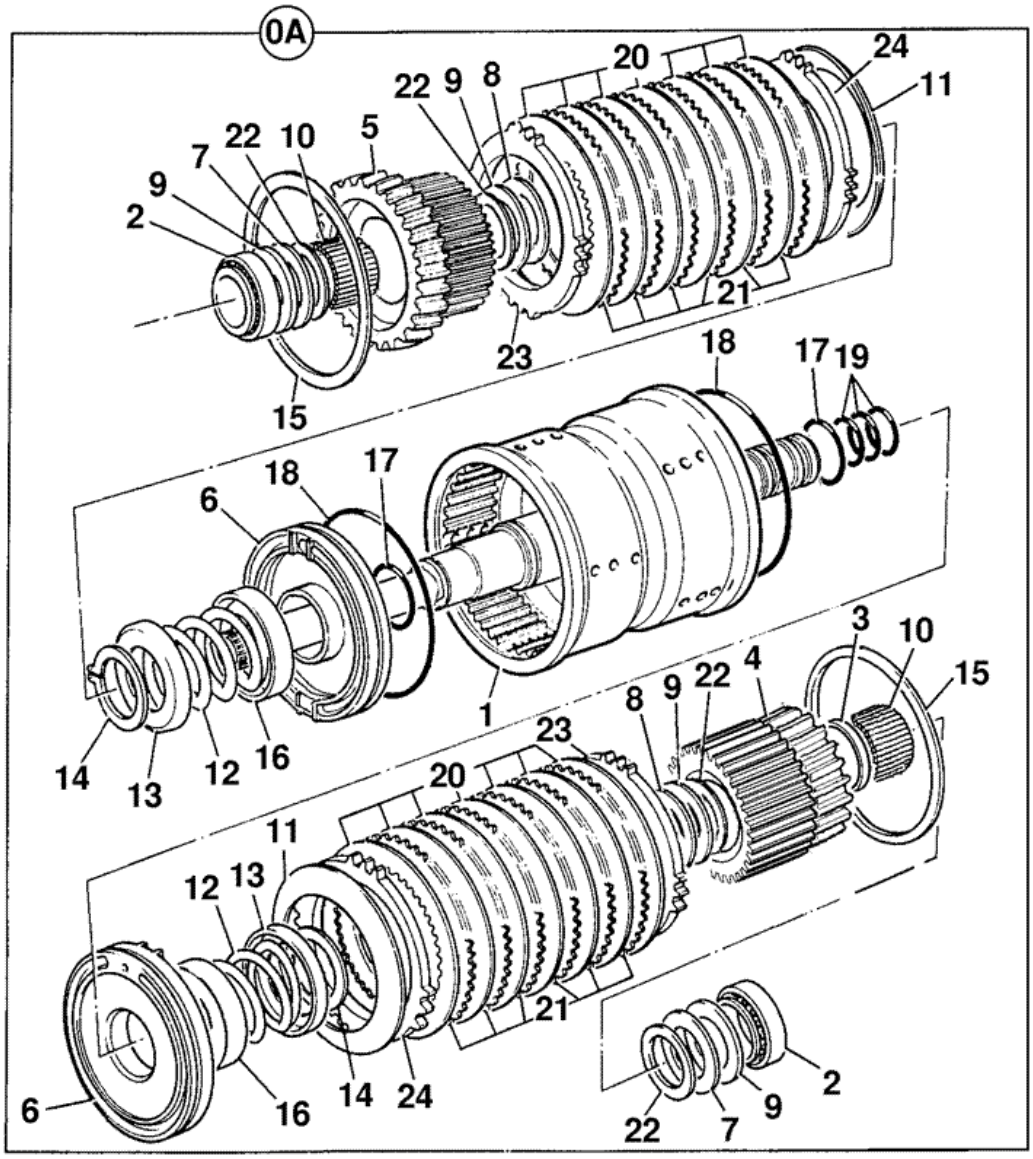


376130

| Item | Part # | Change No | Description | Usage Code | QTY |
|---|---|---|---|---|---|
| A | 459/10097 | | Clutch assembly input, reverser | | 1 |

| | | | | | |
|---|---|---|---|---|---|
| 1 | :459/50503 | | Housing input clutch SS700 | | 1 |
| 2 | :907/20012 | | Bearing taper roller | | 2 |
| 3 | :823/10355 | | Spacer | | 1 |
| 4 | :459/50428 | | Gear 31T & plate carrier | | 1 |
| 5 | :459/50429 | | Gear 22T & plate carrier | | 1 |
| 6 | :459/10096 | | Piston | | 2 |
| 7 | :823/10264 | | Washer thrust | | 2 |
| 8 | :823/10265 | | Washer thrust | | 2 |
| 9 | :917/10006 | | Bearing needle thrust | | 4 |
| 10 | :917/50600 | | Bearing needle roller | | 2 |
| 11 | :814/10115 | | Disc spring, spline | | 2 |
| 12 | :814/00345 | | Spring | | 2 |
| 13 | :823/10266 | | Washer spring retainer | | 2 |
| 14 | :821/00296 | | Circlip external | | 2 |
| 15 | :821/M2136 | | Circlip internal<br>*was 826/10467* | | 2 |
| 16 | :331/16558 | | Plate oil baffle | | 2 |
| 17 | :828/10180 | | O Ring | | 2 |
| 18 | :828/10181 | | O Ring 130mm I/D | | 2 |
| 19 | :904/50024 | | Seal ring | | 4 |
| 20 | :331/16520 | | Plate friction, clutch | | 10 |
| 21 | :331/16516 | | Plate counter, clutch | | 10 |
| 22 | :823/10316 | | Washer thrust bevelled | | 4 |
| 23 | :331/16517 | | Plate pressure, clutch 6.0 mm | | 2 |
| 24 | :331/16519 | | Plate shim, clutch 1.2mm | | 0 |

Product Catalog \ CONSTRUCTION \ NORTH AMERICA \ CONSTRUCTION / INDUSTRIAL \ BACKHOE LOADER 3CX,4CX,214,215,217 \ 3C PLUS (91HP) , Made in Brazil with Dieselmax/IESA Engine 9812/0080 \ F AXLES, WHEELS & TRANSMISSION \ F05 TRANSMISSIONS SYNCHROSHUTTLE

# 9812/0080 F5-2-51 441/00750 - 2WD-2WS, GEAR CHANGE, JCB DIESELMAX ENGINE

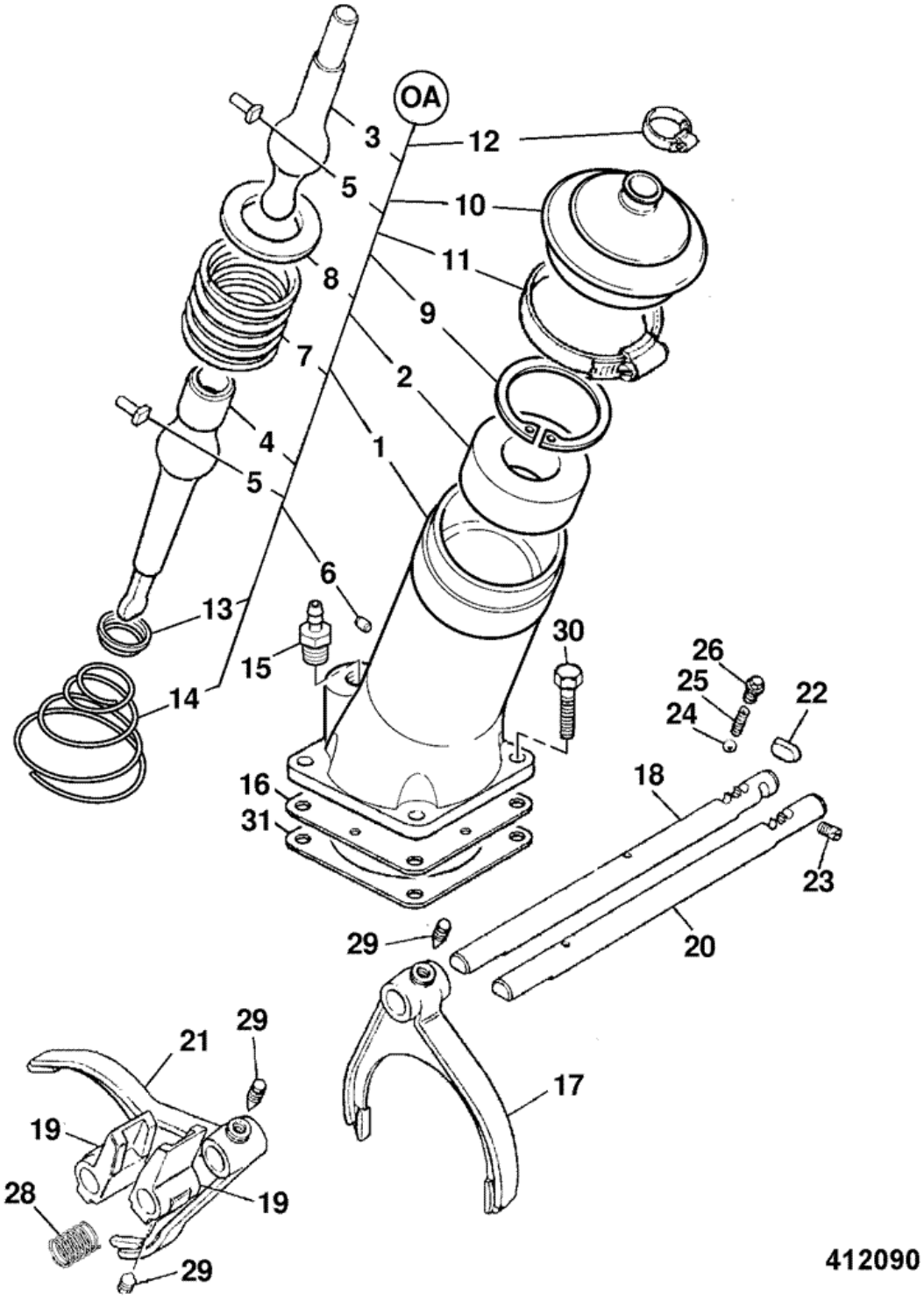


| Item | Part # | Change No | Description | Usage Code | QTY |
|---|---|---|---|---|---|
| A | 459/10143 | | Lever assembly gear turret | | 1 |

| | | | | | |
|---|---|---|---|---|---|
| 1 | :459/30295 | | Housing turret, gear lever | | 1 |
| 2 | :445/10802 | | Seat | | 1 |
| 3 | :445/05501 | | Lever gear | | 1 |
| 4 | :459/70271 | | Lever bottom gearshift | | 1 |
| 5 | :445/03023 | | Pin | | 2 |
| 6 | :835/10036 | | Plug | | 1 |
| 7 | :814/00233 | | Spring | | 1 |
| 8 | :445/10803 | | Washer ball | | 1 |
| 9 | :2203/1080 | | Circlip | | 1 |
| 10 | :331/25566 | | Gaiter gear lever | | 1 |
| 11 | :821/10163 | | Clip worm drive | | 1 |
| 12 | :445/05302 | | Clip | | 1 |
| 13 | :445/03020 | | Retainer spring | | 1 |
| 14 | :814/00221 | | Spring | | 1 |
| 15 | :816/13382 | | Adapter hose | | 1 |
| 16 | :460/17603 | | Baffle | | 1 |
| 17 | 459/30297 | | Fork selector 1st | | 1 |
| 18 | 459/70181 | | Shaft selector<br>*use 459/M2082* | | 1 |
| 18 | 459/M2082 | | Shaft selector | | 1 |
| 19 | 459/70199 | | Block selector | | 2 |
| 20 | 459/70181 | | Shaft selector<br>*use 459/M2082* | | 1 |
| 20 | 459/M2082 | | Shaft selector<br>*use 459/M2082* | | 1 |
| 21 | 459/30299 | | Fork selector 3rd | | 1 |
| 22 | 445/03031 | | Roller baulk | | 1 |
| 23 | 816/80027 | | Plug | | 1 |
| 24 | 916/00006 | | Ball 11mm dia | | 2 |
| 25 | 814/00354 | | Spring | | 2 |
| 26 | 816/80057 | | Plug detent | | 2 |
| 27 | 445/05302 | | Clip | | 2 |
| 28 | 814/00406 | | Spring | | 1 |
| 29 | 445/26110 | | Screw | | 4 |
| 30 | 826/01416 | | Screw micro-encapsulated | | 4 |
| 31 | 813/50042 | | Gasket | | 1 |

Product Catalog \ CONSTRUCTION \ NORTH AMERICA \ CONSTRUCTION / INDUSTRIAL \ BACKHOE LOADER 3CX,4CX,214,215,217 \ 3C PLUS (91HP) , Made in Brazil with Dieselmax/IESA Engine 9812/0080 \ F AXLES, WHEELS & TRANSMISSION \ F05 TRANSMISSIONS SYNCHROSHUTTLE

# 9812/0080 F5-3-11 441/00500 - 4WD, EXTERNAL COMPONENTS, INTERNATIONAL ENGINE

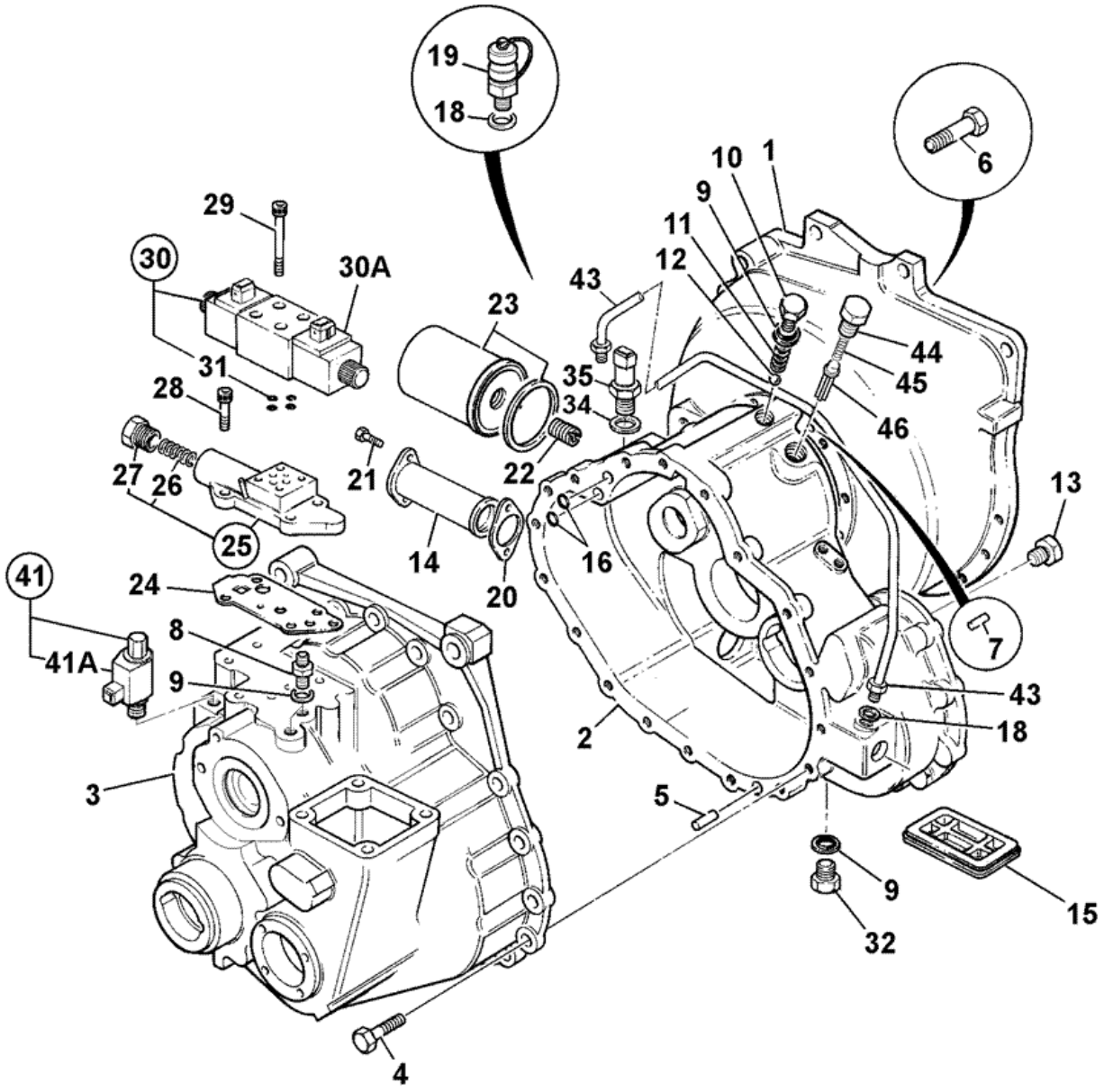


398710

| Item | Part # | Change No | Description | Usage Code | QTY |
|---|---|---|---|---|---|
| 1 | :459/70442 | | Casing flywheel housing | | 1 |

| | | | | | |
|---|---|---|---|---|---|
| 2 | :459/30271 | | Casing front SS700 | | 1 |
| 3 | :459/30272 | <G00500/3 | Casing rear SS700 4WD | A | 1 |
| 3 | :459/30435 | >G00500/4 | Casing rear | B | 1 |
| 3 | :459/M2870 | >G00500/8 | Casing rear | C | 1 |
| 4 | :826/01417 | | Bolt | | 18 |
| 5 | :445/14001 | | Dowel | | 2 |
| 6 | :1315/0409Z | | Screw M10x35mm | | 12 |
| 7 | :445/14001 | | Dowel | | 2 |
| 8 | :1606/0017 | | Adapter 5/8" x 1/2" M/M | | 2 |
| 9 | :1406/0018 | | Seal bonded 1/2" BSP | | 4 |
| 10 | :816/80041 | | Plug 1/2"BSP 25.65mm A/F | | 3 |
| 11 | :814/00222 | | Spring | | 1 |
| 12 | :916/00008 | | Bearing 14dia ball | | 2 |
| 13 | :816/80051 | | Plug 1/8" tapered | | 8 |
| 14 | :32/902200 | | Strainer suction | | 1 |
| 15 | :445/13703 | | Cover flywheel housing 110mm x 79mm x 17mm | | 1 |
| 16 | :828/10222 | | O Ring | | 2 |
| 18 | :1406/0011 | | Seal bonded | | 2 |
| 19 | 45/905000 | | Adapter pressure test 1/4BSP male | | 1 |
| 20 | 813/50027 | | Gasket | | 1 |
| 21 | :1321/0303Z | | Screw M8 x 16 | | 2 |
| 22 | :816/15184 | | Adapter 1/2"BSPx1"UNF | | 1 |
| 23 | :581/18063 | | Element transmission filter 94mm long | | 1 |
| 24 | :813/10175 | | Gasket valve block | | 1 |
| 25 | :459/10144 | | Valve Adapter block assy SS700 low ratio | | 1 |
| 26 | ::814/00412 | | Spring | | 1 |
| 27 | ::816/80063 | | Plug | | 1 |
| 28 | :1392/3207 | | Capscrew | | 4 |
| 29 | :1391/3108Z | | Capscrew M5 X 30mm | | 4 |
| 30 | 25/220998 | | Valve solenoid assembly | | 1 |
| 30A | :25/221054 | | Coil 12V | | 1 |
| 31 | ::35/100801 | | Kit-seal solenoid valve | | 1 |
| 32 | :816/80041 | | Plug 1/2"BSP 25.65mm A/F | | 1 |
| 35 | :701/80319 | | Switch oil pressure,M12 green body,Deutsch | | 1 |
| 35A | 1406/0011 | | Seal bonded | | 1 |
| 40 | :813/50041 | | Seal rear | | 1 |
| 41 | 25/220992 | | Valve solenoid assembly | A | 1 |
| 41 | 25/220804 | | Valve solenoid assembly | B | 1 |
| 41 | 25/222913 | | Valve cartridge 2 screw fixing | C | 1 |
| 41A | :25/221056 | | Coil cartridge valve | A | 1 |
| 41B | :1391/3303Z | | Capscrew M8x16<br>*to hold 25/220804* | B | 1 |
| 41C | :459/M2855 | | Plate hold down 6mm thick<br>*to hold 25/220804* | B | 1 |
| 41D | 1391/3101Z | | Capscrew<br>*to hold 25/222913* | C | 2 |
| 43 | 830/11842 | | Pipe assembly 4WD<br>*740mm long* | | 1 |
| 44 | 816/80061 | | Plug | | 1 |
| 45 | 814/10153 | | Spring compression T/C press.maint | | 1 |
| 46 | 459/70168 | | Spool Adapter Solenoid | | 1 |

Product Catalog \ CONSTRUCTION \ NORTH AMERICA \ CONSTRUCTION / INDUSTRIAL \ BACKHOE LOADER 3CX,4CX,214,215,217 \ 3C PLUS (91HP) , Made in Brazil with Dieselmax/IESA Engine 9812/0080 \ F AXLES, WHEELS & TRANSMISSION \ F05 TRANSMISSIONS SYNCHROSHUTTLE

# 9812/0080 F5-3-21 441/00500 - 4WD, INTERNAL COMPONENTS, JCB DIESELMAX ENGINE

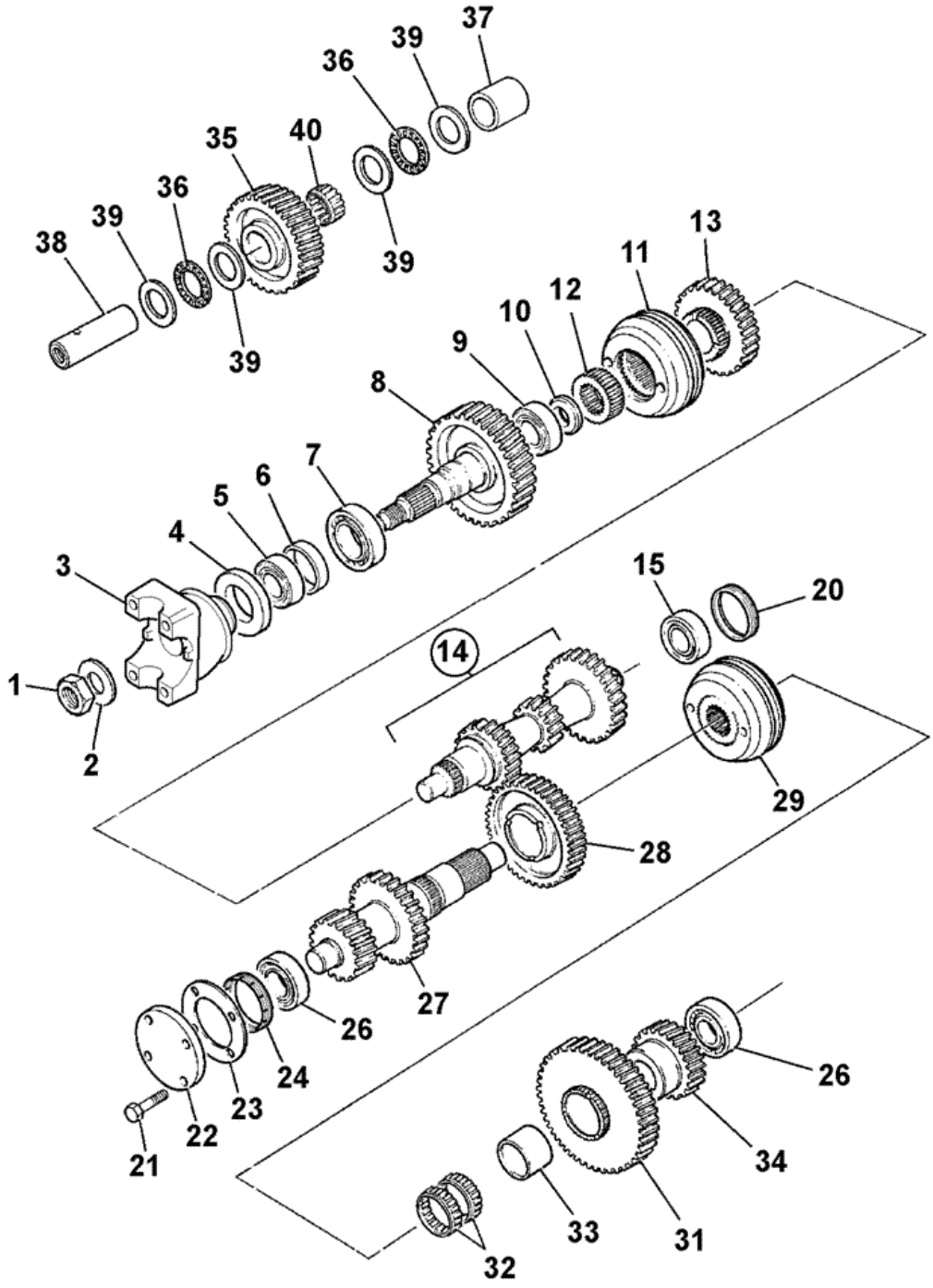


398700

| Item | Part # | Change No | Description | Usage Code | QTY |
|---|---|---|---|---|---|
| 1 | 826/01551 | | Nut Stake M30 (46mm Head) | | 1 |

| | | | | | |
|---|---|---|---|---|---|
| 2 | 460/32202 | | Washer | | 1 |
| 3 | 459/70317 | | Yoke coupling - 1480 35 t | | 1 |
| 4 | 904/20172 | | Seal TRIPLE LIP 53.6 x 80.35 x 12 | | 1 |
| 5 | 907/51600 | | Bearing taper roller | | 1 |
| 6 | 921/53400 | | Kit-Spacer | | 1 |
| 7 | 907/53800 | | Bearing | | 1 |
| 8 | 459/50208 | | Gear transfer 38T SS750 low ratio | | 1 |
| 9 | 907/20005 | | Bearing taper roller | | 1 |
| 10 | 445/64302 | | Spacer mainshaft seal | | 1 |
| 11 | 445/03300 | | Synchroniser assembly | | 1 |
| 12 | 445/03010 | | Sleeve hub shaft<br>*3rd & 4th speed* | | 1 |
| 13 | 459/50206 | | Gear 3rd speed SS750 low ratio | | 1 |
| 14 | 459/50205 | | Gear mainshaft, SS750 | | 1 |
| 15 | 907/52800 | | Bearing 35 x 65 x 18 | | 1 |
| 20 | 459/70275 | | Nut mainshaft setting | | 1 |
| 21 | 826/01416 | | Screw micro-encapsulated | | 4 |
| 22 | 331/23731 | | Cover Layshaft | | 1 |
| 23 | 813/10176 | | Gasket | | 1 |
| 24 | 459/70274 | | Nut layshaft setting | | 1 |
| 26 | 907/09600 | | Bearing 35 x 73 x 24 | | 2 |
| 27 | 459/50188 | | Layshaft low ratio | | 1 |
| 28 | 459/50511 | | Gear 2nd 40t SS700<br>*2nd 40 Teeth* | | 1 |
| 29 | 459/50520 | | Synchroniser assembly | | 1 |
| 31 | 459/50509 | | Gear 1st 44t SS700<br>*1st* | | 1 |
| 32 | 917/02300 | | Bearing | | 2 |
| 33 | 917/00008 | | Bearing inner race | | 1 |
| 34 | . | | 'See Remark'<br>*See frame F5-14-1* | | 1 |
| 35 | 459/50440 | | Gear idler, 35T<br>*35 Teeth* | | 1 |
| 37 | 459/70206 | | Spacer idler gear | | 1 |
| 38 | 459/70087 | | Shaft idler | | 1 |
| 39 | 823/00451 | | Washer thrust | | 4 |
| 40 | 917/02400 | | Bearing needle roller | | 1 |

Product Catalog \ CONSTRUCTION \ NORTH AMERICA \ CONSTRUCTION / INDUSTRIAL \ BACKHOE LOADER 3CX,4CX,214,215,217 \ 3C PLUS (91HP) , Made in Brazil with Dieselmax/IESA Engine 9812/0080 \ F AXLES, WHEELS & TRANSMISSION \ F05 TRANSMISSIONS SYNCHROSHUTTLE

# 9812/0080 F5-3-31 441/00500 - 4WD, REVERSER UNIT, 459/10097, JCB DIESELMAX ENGINE

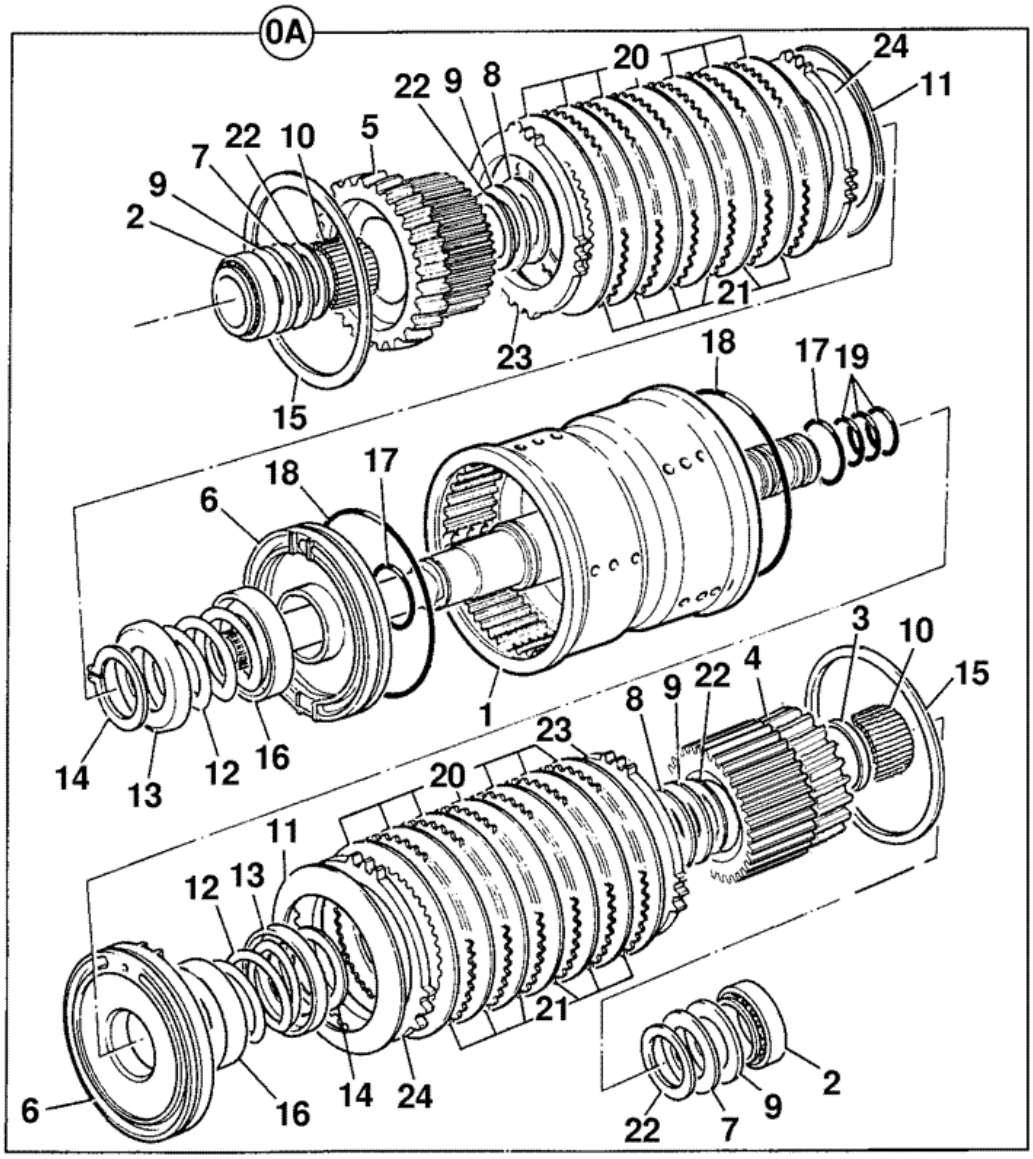


376130

| Item | Part # | Change No | Description | Usage Code | QTY |
|---|---|---|---|---|---|
| A | 459/10097 | | Clutch assembly input, reverser | | 1 |

| | | | | | |
|---|---|---|---|---|---|
| 1 | :459/50503 | | Housing input clutch SS700 | | 1 |
| 2 | :907/20012 | | Bearing taper roller | | 2 |
| 3 | :823/10355 | | Spacer | | 1 |
| 4 | :459/50428 | | Gear 31T & plate carrier | | 1 |
| 5 | :459/50429 | | Gear 22T & plate carrier | | 1 |
| 6 | :459/10096 | | Piston | | 2 |
| 7 | :823/10264 | | Washer thrust | | 2 |
| 8 | :823/10265 | | Washer thrust | | 2 |
| 9 | :917/10006 | | Bearing needle thrust | | 4 |
| 10 | :917/50600 | | Bearing needle roller | | 2 |
| 11 | :814/10115 | | Disc spring, spline | | 2 |
| 12 | :814/00345 | | Spring | | 2 |
| 13 | :823/10266 | | Washer spring retainer | | 2 |
| 14 | :821/00296 | | Circlip external | | 2 |
| 15 | :821/M2136 | | Circlip internal<br>*was 826/10467* | | 2 |
| 16 | :331/16558 | | Plate oil baffle | | 2 |
| 17 | :828/10180 | | O Ring | | 2 |
| 18 | :828/10181 | | O Ring 130mm I/D | | 2 |
| 19 | :904/50024 | | Seal ring | | 4 |
| 20 | :331/16520 | | Plate friction, clutch | | 10 |
| 21 | :331/16516 | | Plate counter, clutch | | 10 |
| 22 | :823/10316 | | Washer thrust bevelled | | 4 |
| 23 | :331/16517 | | Plate pressure, clutch 6.0 mm | | 2 |
| 24 | :331/16519 | | Plate shim, clutch 1.2mm | | 0 |

Product Catalog \ CONSTRUCTION \ NORTH AMERICA \ CONSTRUCTION / INDUSTRIAL \ BACKHOE LOADER 3CX,4CX,214,215,217 \ 3C PLUS (91HP) , Made in Brazil with Dieselmax/IESA Engine 9812/0080 \ F AXLES, WHEELS & TRANSMISSION \ F05 TRANSMISSIONS SYNCHROSHUTTLE

# 9812/0080 F5-3-41 441/00500 - 4WD, 4WD CLUTCH ASSEMBLY, 459/10119, JCB DIESELMAX ENGINE

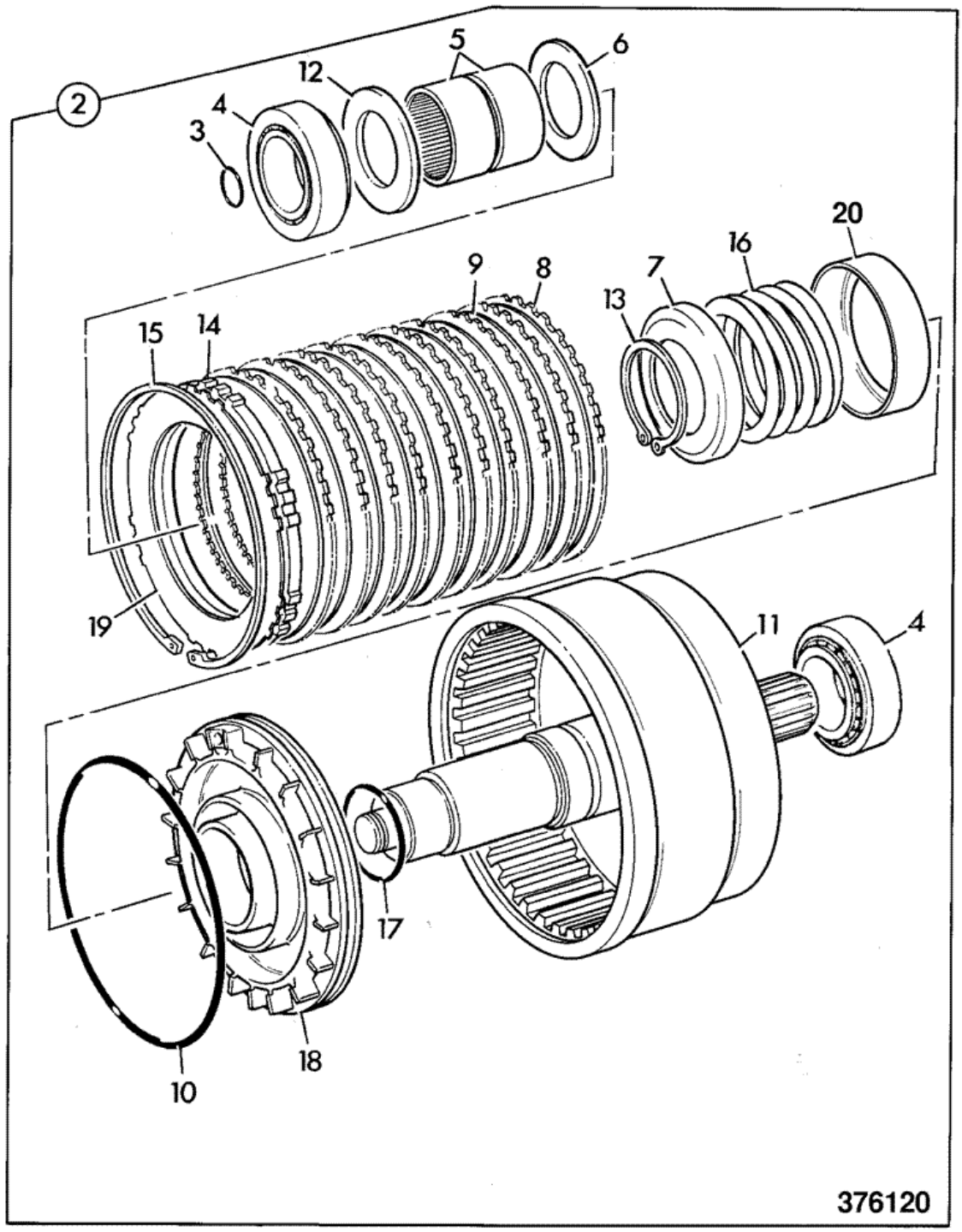


| Item | Part # | Change No | Description | Usage Code | QTY |
|---|---|---|---|---|---|
| 2 | 459/10119 | | Clutch assembly 4WD | | 1 |

| | | | | | |
|---|---|---|---|---|---|
| 3 | :904/14300 | | Seal ring 'TURQUOISE' | | 1 |
| 4 | :907/52800 | | Bearing 35 x 65 x 18 | | 2 |
| 5 | :917/02700 | | Bearing | | 2 |
| 6 | :445/19808 | | Washer thrust, 3.5mm thick phosphated | | 1 |
| 7 | :445/12304 | | Retainer spring | | 1 |
| 8 | :445/12307 | | Plate counter | | 10 |
| 9 | :445/03205 | | Plate friction | | 10 |
| 10 | :828/00414 | | O Ring 123.5mm I/D | | 1 |
| 11 | :459/50483 | | Housing 4wd clutch | | 1 |
| 12 | :823/10364 | | Washer thrust | | 1 |
| 13 | :821/00523 | | Circlip | | 1 |
| 14 | :449/10601 | | Plate pressure 4mm | | 1 |
| 15 | :2203/1115 | | Circlip | | 1 |
| 16 | :814/00297 | | Spring | | 1 |
| 17 | :828/00224 | | O Ring 39.7mm I/D X 3.53mm | | 1 |
| 18 | :445/12316 | | Piston reverser c/w oil baffle | | 1 |
| 19 | :445/12314 | | Shim plate, toothed | | 0 |

Product Catalog \ CONSTRUCTION \ NORTH AMERICA \ CONSTRUCTION / INDUSTRIAL \ BACKHOE LOADER 3CX,4CX,214,215,217 \ 3C PLUS (91HP) , Made in Brazil with Dieselmax/IESA Engine 9812/0080 \ F AXLES, WHEELS & TRANSMISSION \ F05 TRANSMISSIONS SYNCHROSHUTTLE

# 9812/0080 F5-3-51 441/00500 - 4WD, GEAR CHANGE, JCB DIESELMAX ENGINE

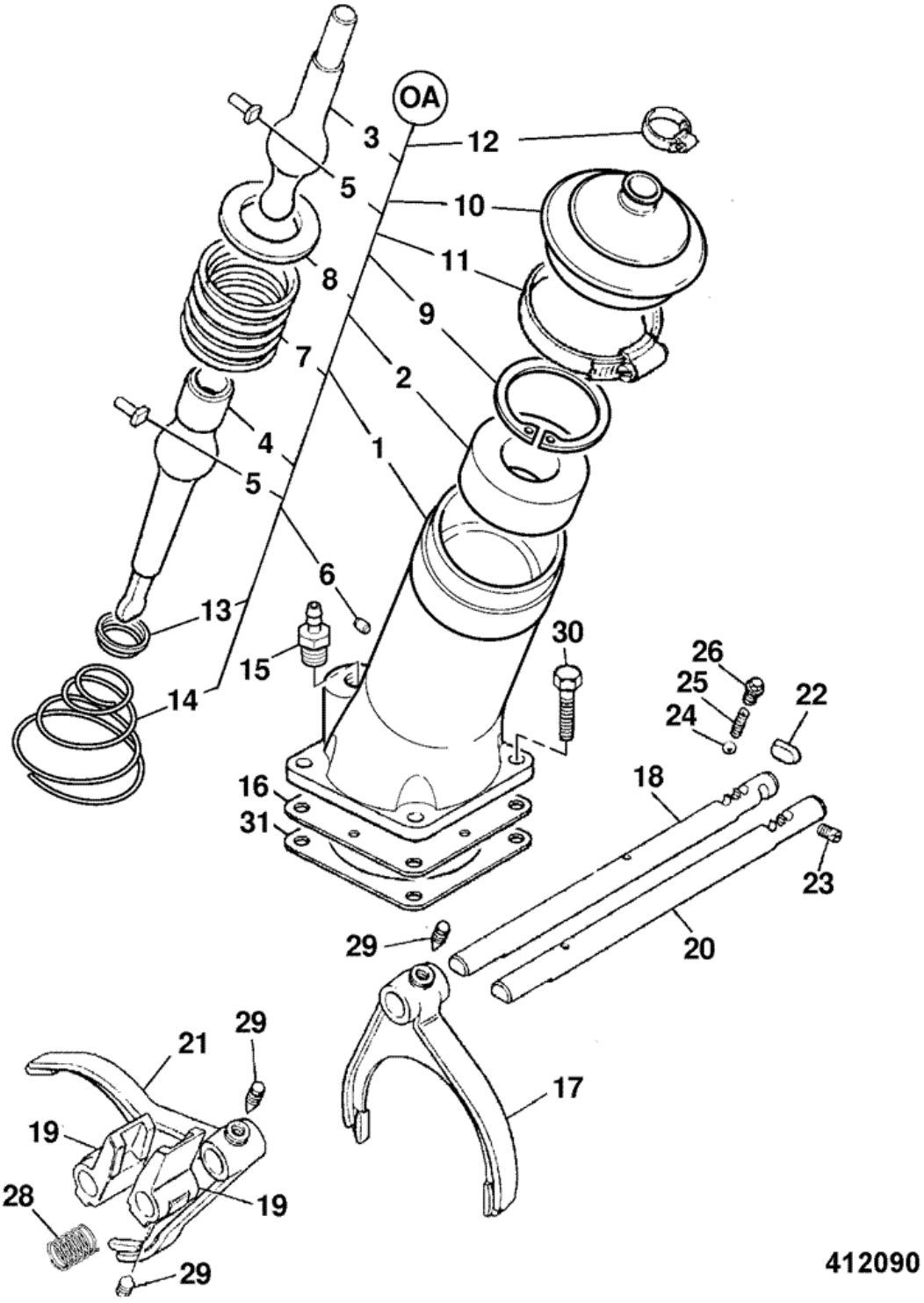


| Item | Part # | Change No | Description | Usage Code | QTY |
|---|---|---|---|---|---|
| A | 459/10143 | | Lever assembly gear turret | | 1 |

| | | | | | |
|---|---|---|---|---|---|
| 1 | :459/30295 | | Housing turret, gear lever | | 1 |
| 2 | :445/10802 | | Seat | | 1 |
| 3 | :445/05501 | | Lever gear | | 1 |
| 4 | :459/70271 | | Lever bottom gearshift | | 1 |
| 5 | :445/03023 | | Pin | | 2 |
| 6 | :835/10036 | | Plug | | 1 |
| 7 | :814/00233 | | Spring | | 1 |
| 8 | :445/10803 | | Washer ball | | 1 |
| 9 | :2203/1080 | | Circlip | | 1 |
| 10 | :331/25566 | | Gaiter gear lever | | 1 |
| 11 | :821/10163 | | Clip worm drive | | 1 |
| 12 | :445/05302 | | Clip | | 1 |
| 13 | :445/03020 | | Retainer spring | | 1 |
| 14 | :814/00221 | | Spring | | 1 |
| 15 | :816/13382 | | Adapter hose | | 1 |
| 16 | :460/17603 | | Baffle | | 1 |
| 17 | 459/30297 | | Fork selector 1st | | 1 |
| 18 | 459/70181 | | Shaft selector<br>*use 459/M2082* | | 1 |
| 18 | 459/M2082 | | Shaft selector | | 1 |
| 19 | 459/70199 | | Block selector | | 2 |
| 20 | 459/70181 | | Shaft selector<br>*use 459/M2082* | | 1 |
| 20 | 459/M2082 | | Shaft selector | | 1 |
| 21 | 459/30299 | | Fork selector 3rd | | 1 |
| 22 | 445/03031 | | Roller baulk | | 1 |
| 23 | 816/80027 | | Plug | | 1 |
| 24 | 916/00006 | | Ball 11mm dia | | 2 |
| 25 | 814/00354 | | Spring | | 2 |
| 26 | 816/80057 | | Plug detent | | 2 |
| 27 | 445/05302 | | Clip | | 2 |
| 28 | 814/00406 | | Spring | | 1 |
| 29 | 445/26110 | | Screw | | 4 |
| 30 | 826/01416 | | Screw micro-encapsulated | | 4 |
| 31 | 813/50042 | | Gasket | | 1 |

# 9812/0080 F5-4-11 441/00760 - 4WD, EXTERNAL COMPONENTS, JCB DIESELMAX ENGINE

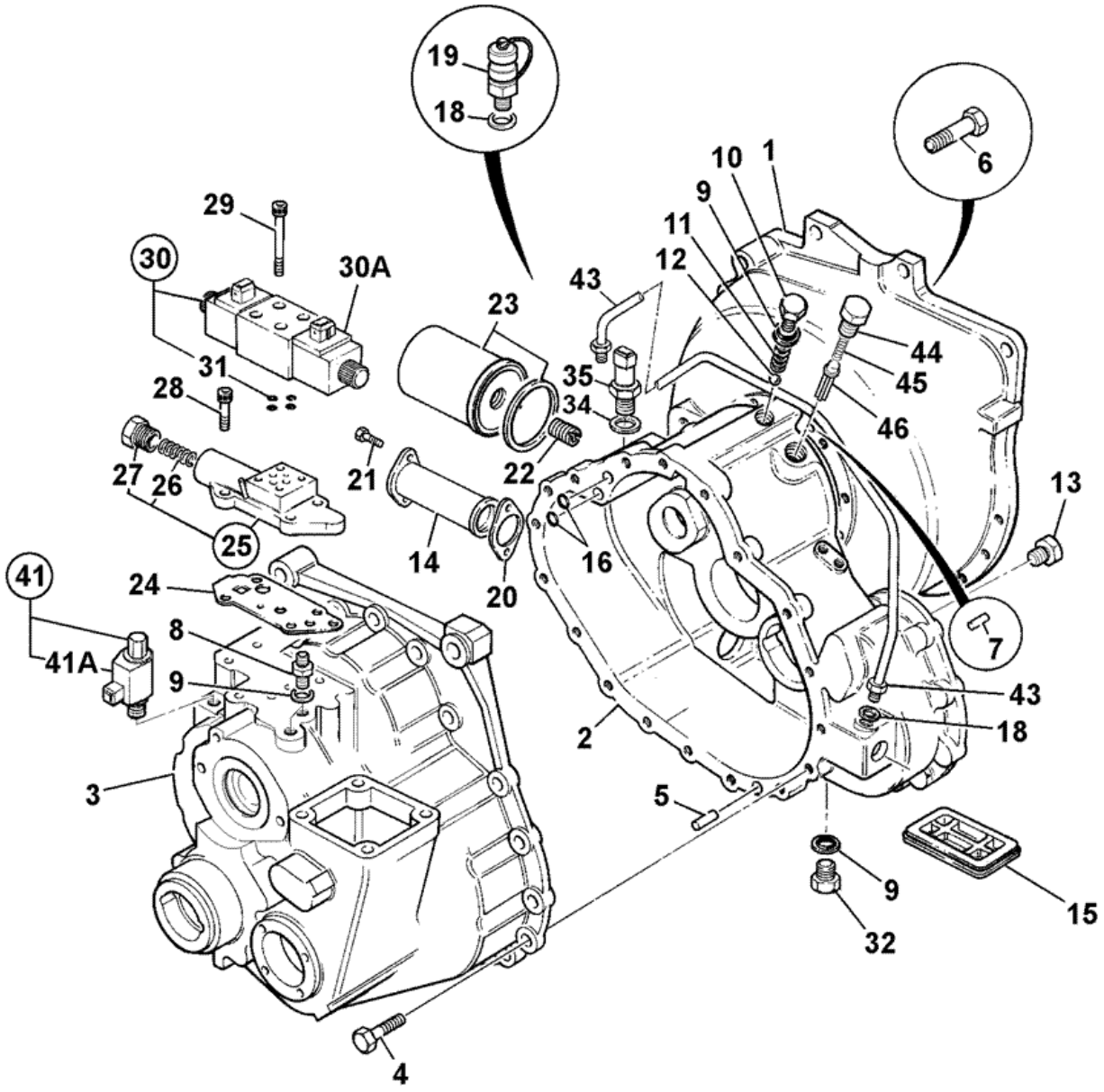


398710

| Item | Part # | Change No | Description | Usage Code | QTY |
|---|---|---|---|---|---|
| 1 | :459/30397 | <G/00760/1 | Housing flywheel | | 1 |

| | | | | | |
|---|---|---|---|---|---|
| 1 | :459/30464 | >G/00760/2 | Housing flywheel | | 1 |
| 2 | :459/30382 | <G/00760/1 | Casing front | | 1 |
| 2 | :459/30463 | >G/00760/2 | Casing front | | 1 |
| 3 | :459/30272 | <G/00760/1 | Casing rear SS700 4WD | | 1 |
| 3 | :459/30435 | >G/00760/2 | Casing rear | | 1 |
| 3 | :459/M2870 | >G/00760/7 | Casing rear | | 1 |
| 4 | :826/01417 | | Bolt | | 18 |
| 5 | :445/14001 | | Dowel | | 2 |
| 6 | :1315/0409Z | | Screw M10x35mm | | 12 |
| 7 | :445/14001 | | Dowel | | 2 |
| 8 | :1606/0017 | | Adapter 5/8" x 1/2" M/M | | 2 |
| 9 | :1406/0018 | | Seal bonded 1/2" BSP | | 4 |
| 10 | :816/80041 | | Plug 1/2"BSP 25.65mm A/F | | 3 |
| 11 | :814/00222 | | Spring | | 1 |
| 12 | :916/00008 | | Bearing 14dia ball | | 2 |
| 13 | :816/80051 | | Plug 1/8" tapered | | 8 |
| 14 | :32/902200 | | Strainer suction | | 1 |
| 15 | :. | | 'See Remark'<br>*no longer fitted* | | 1 |
| 16 | :828/10222 | | O Ring | | 2 |
| 18 | :1406/0011 | | Seal bonded | | 2 |
| 19 | 45/905000 | | Adapter pressure test 1/4BSP male | | 1 |
| 20 | 813/50027 | | Gasket | | 1 |
| 21 | :1321/0303Z | | Screw M8 x 16 | | 2 |
| 22 | :816/15184 | | Adapter 1/2"BSPx1"UNF | | 1 |
| 23 | :581/18076 | | Element transmission filter 120.7mm long | | 1 |
| 24 | :813/10175 | | Gasket valve block | | 1 |
| 25 | :459/10144 | | Valve Adapter block assy SS700 low ratio | | 1 |
| 26 | ::814/00412 | | Spring | | 1 |
| 27 | ::816/80063 | | Plug | | 1 |
| 28 | :1392/3207 | | Capscrew | | 4 |
| 29 | :1391/3108Z | | Capscrew M5 X 30mm | | 4 |
| 30 | 25/220998 | | Valve solenoid assembly | | 1 |
| 30A | :25/221054 | | Coil 12V | | 1 |
| 31 | ::35/100801 | | Kit-seal solenoid valve | | 1 |
| 32 | :816/80041 | | Plug 1/2"BSP 25.65mm A/F | | 1 |
| 35 | :701/80319 | Superseded | Switch oil pressure,M12 green body,Deutsch | | 1 |
| 35 | 701/80359 | | Switch 1/4" BSP Pressure<br>*not supplied with transmission* | | 1 |
| 35 | 701/80626 | | Switch oil pressure M12 | | 1 |
| 35A | 1406/0011 | | Seal bonded | | 1 |
| 40 | :813/50041 | | Seal rear | | 1 |
| 41 | 25/220992 | <G/00760/1 | Valve solenoid assembly | | 1 |
| 41 | 25/220804 | >G/00760/2 | Valve solenoid assembly | | 1 |
| 41 | 25/222913 | >G/00760/7 | Valve cartridge 2 screw fixing | | 1 |
| 41A | :25/221056 | <G/00760/1 | Coil cartridge valve | | 1 |
| 41B | :459/M2855 | >G/00760/2 | Plate hold down 6mm thick<br>*to hold 25/220804* | | 1 |
| 41C | :1391/3303Z | >G/00760/2 | Capscrew M8x16<br>*to hold 25/220804* | | 1 |
| 41D | :1391/3101Z | >G/00760/7 | Capscrew<br>*to hold 25/222913* | | 2 |
| | | | | | |

| | | | | | |
|---|---|---|---|---|---|
| 43 | 830/11842 | | Pipe assembly 4WD<br>*740mm long* | | 1 |
| 44 | 816/80061 | | Plug | | 1 |
| 45 | 814/10153 | | Spring compression T/C press.maint | | 1 |
| 46 | 459/70168 | | Spool Adapter Solenoid | | 1 |

# 9812/0080 F5-4-21 441/00760 - 4WD, INTERNAL COMPONENTS, JCB DIESELMAX ENGINE

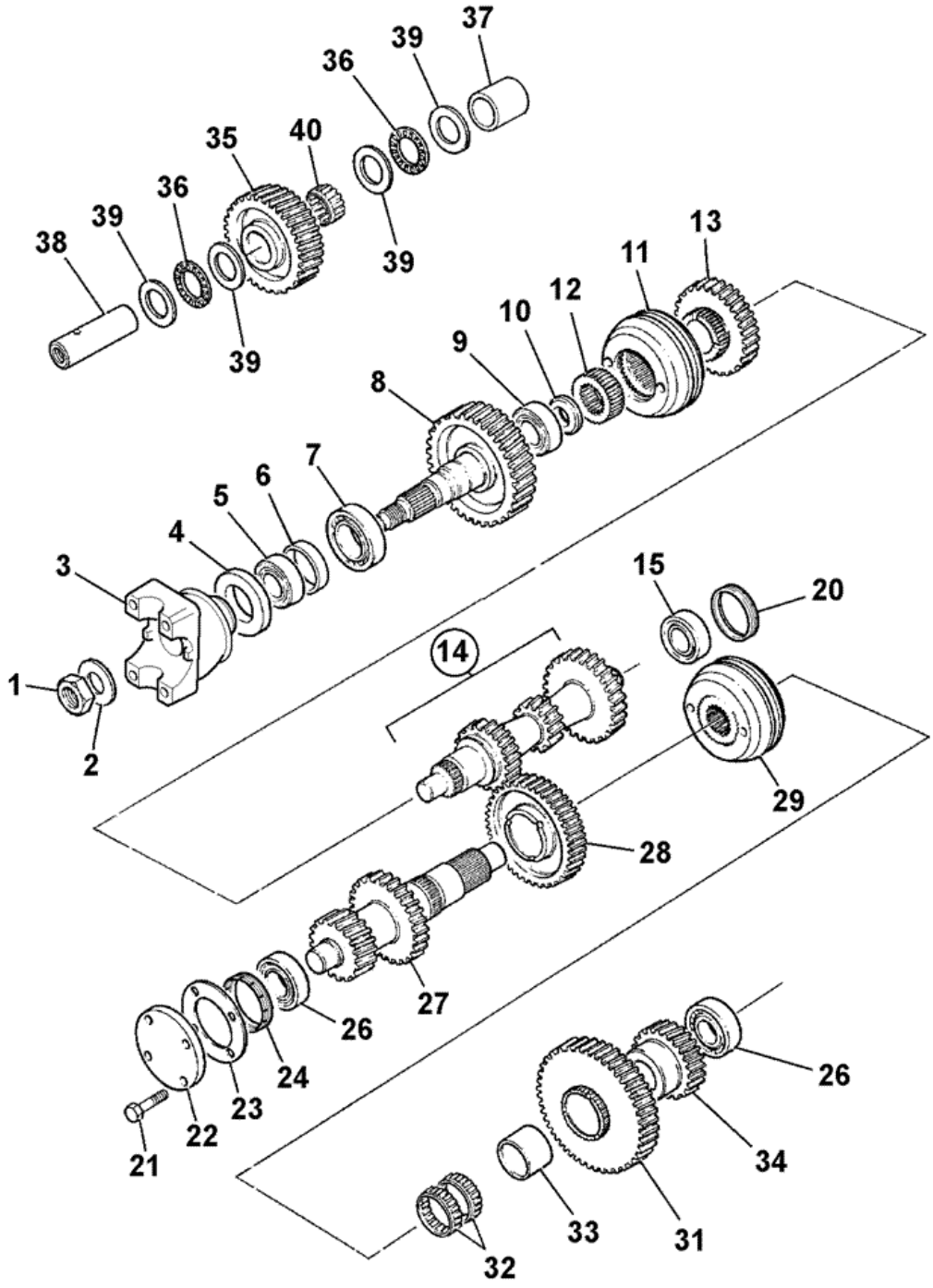


398700

| Item | Part # | Change No | Description | Usage Code | QTY |
|---|---|---|---|---|---|
| 1 | 826/01551 | | Nut Stake M30 (46mm Head) | | 1 |

| | | | | | |
|---|---|---|---|---|---|
| 2 | 460/32202 | | Washer | | 1 |
| 3 | 459/70317 | | Yoke coupling - 1480 35 t | | 1 |
| 4 | 904/20172 | | Seal TRIPLE LIP 53.6 x 80.35 x 12 | | 1 |
| 5 | 907/51600 | | Bearing taper roller | | 1 |
| 6 | 921/53400 | | Kit-Spacer | | 1 |
| 7 | 907/20045 | | Bearing taper roller | | 1 |
| 8 | 459/50208 | | Gear transfer 38T SS750 low ratio | | 1 |
| 9 | 907/20005 | | Bearing taper roller | | 1 |
| 10 | 445/64302 | | Spacer mainshaft seal | | 1 |
| 11 | 445/03300 | | Synchroniser assembly | | 1 |
| 12 | 445/03010 | | Sleeve hub shaft<br>*3rd & 4th speed* | | 1 |
| 13 | 459/50206 | | Gear 3rd speed SS750 low ratio | | 1 |
| 14 | 459/50205 | | Gear mainshaft, SS750 | | 1 |
| 15 | 907/52800 | | Bearing 35 x 65 x 18 | | 1 |
| 20 | 459/70275 | | Nut mainshaft setting | | 1 |
| 21 | 826/01416 | | Screw micro-encapsulated | | 4 |
| 22 | 331/23731 | <G/00680/1 | Cover Layshaft | | 1 |
| 23 | 813/10176 | <G/00680/1 | Gasket | | 1 |
| 24 | 459/70274 | | Nut layshaft setting | | 1 |
| 26 | 907/20049 | | Bearing taper roller | | 2 |
| 27 | 459/50188 | | Layshaft low ratio | | 1 |
| 28 | 459/50511 | | Gear 2nd 40t SS700<br>*2nd 40 Teeth* | | 1 |
| 29 | 459/50520 | | Synchroniser assembly | | 1 |
| 31 | 459/50509 | | Gear 1st 44t SS700<br>*1st* | | 1 |
| 32 | 917/02300 | | Bearing | | 2 |
| 33 | 917/00008 | | Bearing inner race | | 1 |
| 34 | . | | 'See Remark'<br>*See frame F5-1-1* | | 1 |
| 35 | 459/50440 | | Gear idler, 35T | | 1 |
| 36 | 917/51400 | | Bearing | | 2 |
| 37 | 459/70206 | | Spacer idler gear | | 1 |
| 38 | 459/70087 | | Shaft idler | | 1 |
| 39 | 823/00451 | | Washer thrust | | 4 |
| 40 | 917/02400 | | Bearing needle roller | | 1 |

# 9812/0080 F5-4-31 441/00760 - 4WD, REVERSER UNIT, 459/10097, JCB DIESELMAX ENGINE

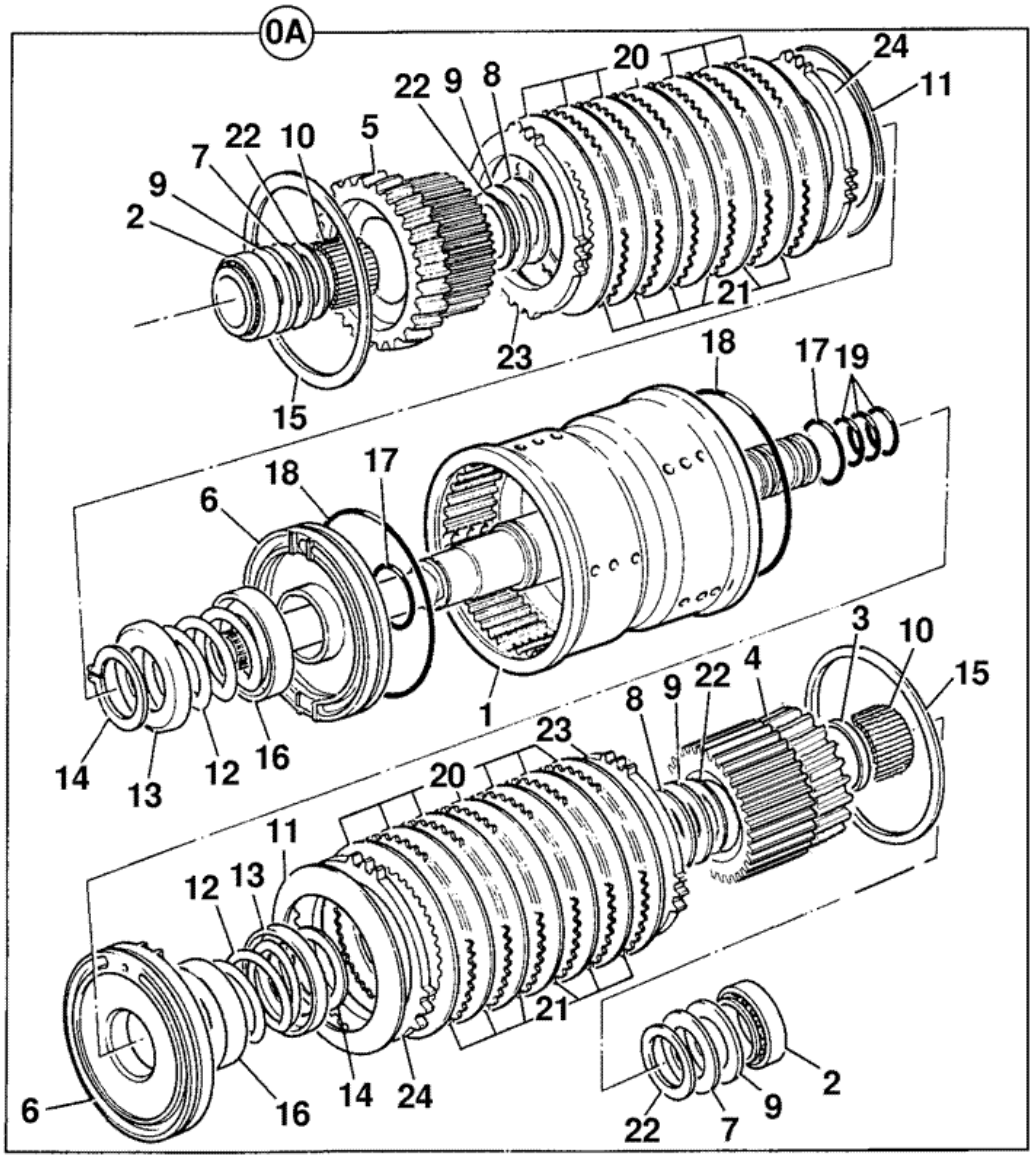


376130

| Item | Part # | Change No | Description | Usage Code | QTY |
|---|---|---|---|---|---|
| A | 459/10097 | | Clutch assembly input, reverser | | 1 |

| | | | | | |
|---|---|---|---|---|---|
| 1 | :459/50503 | | Housing input clutch SS700 | | 1 |
| 2 | :907/20012 | | Bearing taper roller | | 2 |
| 3 | :823/10355 | | Spacer | | 1 |
| 4 | :459/50428 | | Gear 31T & plate carrier | | 1 |
| 5 | :459/50429 | | Gear 22T & plate carrier | | 1 |
| 6 | :459/10096 | | Piston | | 2 |
| 7 | :823/10264 | | Washer thrust | | 2 |
| 8 | :823/10265 | | Washer thrust | | 2 |
| 9 | :917/10006 | | Bearing needle thrust | | 4 |
| 10 | :917/50600 | | Bearing needle roller | | 2 |
| 11 | :814/10115 | | Disc spring, spline | | 2 |
| 12 | :814/00345 | | Spring | | 2 |
| 13 | :823/10266 | | Washer spring retainer | | 2 |
| 14 | :821/00296 | | Circlip external | | 2 |
| 15 | :821/M2136 | | Circlip internal<br>*was 826/10467* | | 2 |
| 16 | :331/16558 | | Plate oil baffle | | 2 |
| 17 | :828/10180 | | O Ring | | 2 |
| 18 | :828/10181 | | O Ring 130mm I/D | | 2 |
| 19 | :904/50024 | | Seal ring | | 4 |
| 20 | :331/16520 | | Plate friction, clutch | | 10 |
| 21 | :331/16516 | | Plate counter, clutch | | 10 |
| 22 | :823/10316 | | Washer thrust bevelled | | 4 |
| 23 | :331/16517 | | Plate pressure, clutch 6.0 mm | | 2 |
| 24 | :331/16519 | | Plate shim, clutch 1.2mm | | 0 |

Product Catalog \ CONSTRUCTION \ NORTH AMERICA \ CONSTRUCTION / INDUSTRIAL \ BACKHOE LOADER 3CX,4CX,214,215,217 \ 3C PLUS (91HP) , Made in Brazil with Dieselmax/IESA Engine 9812/0080 \ F AXLES, WHEELS & TRANSMISSION \ F05 TRANSMISSIONS SYNCHROSHUTTLE

# 9812/0080 F5-4-41 441/00760 - 4WD, 4WD CLUTCH ASSEMBLY, 459/10119, JCB DIESELMAX ENGINE

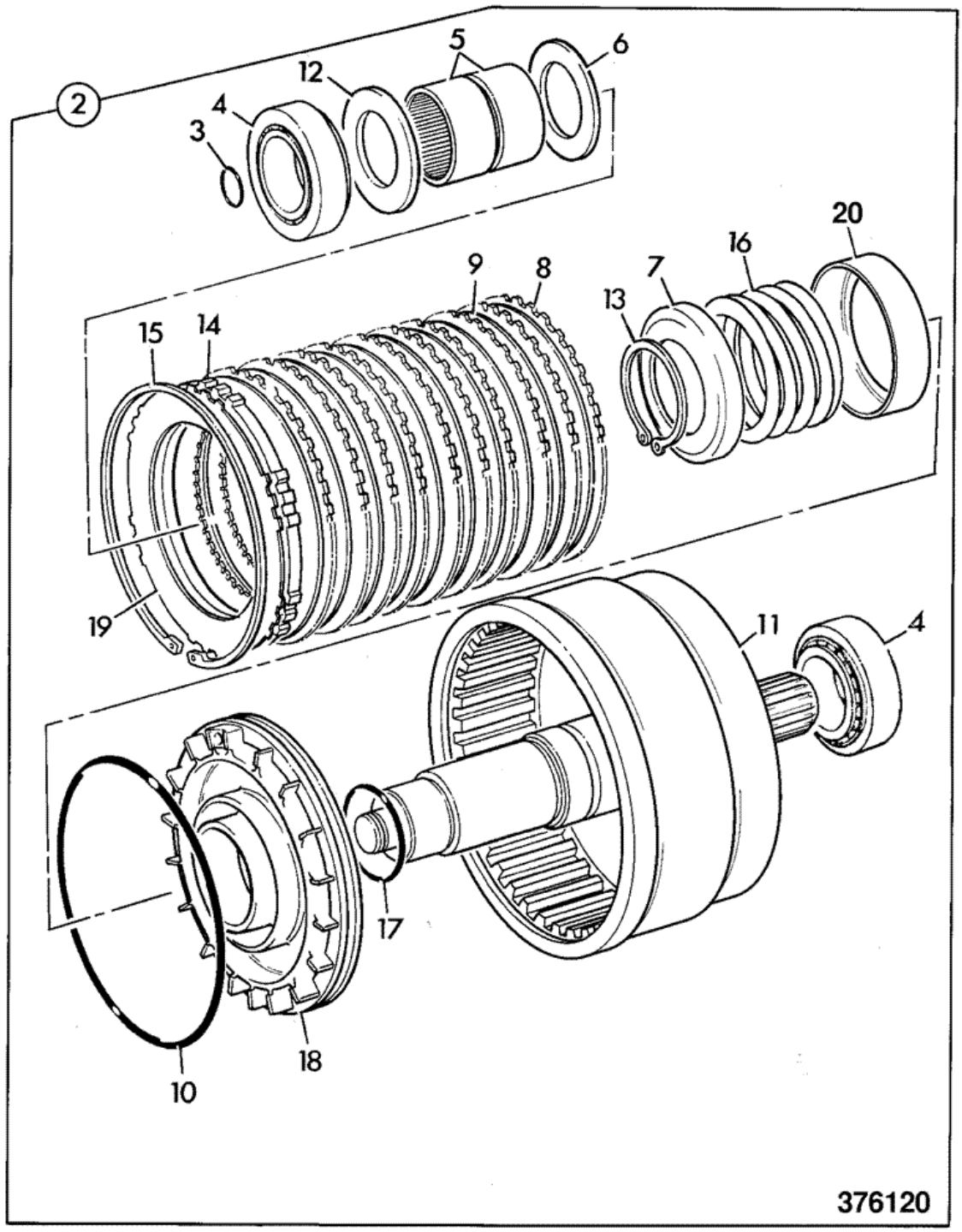


| Item | Part # | Change No | Description | Usage Code | QTY |
|---|---|---|---|---|---|
| 2 | 459/10119 | | Clutch assembly 4WD | | 1 |

| | | | | | |
|---|---|---|---|---|---|
| 3 | :904/14300 | | Seal ring 'TURQUOISE' | | 1 |
| 4 | :907/52800 | | Bearing 35 x 65 x 18 | | 2 |
| 5 | :917/02700 | | Bearing | | 2 |
| 6 | :445/19808 | | Washer thrust, 3.5mm thick phosphated | | 1 |
| 7 | :445/12304 | | Retainer spring | | 1 |
| 8 | :445/12307 | | Plate counter | | 10 |
| 9 | :445/03205 | | Plate friction | | 10 |
| 10 | :828/00414 | | O Ring 123.5mm I/D | | 1 |
| 11 | :459/50483 | | Housing 4wd clutch | | 1 |
| 12 | :823/10364 | | Washer thrust | | 1 |
| 13 | :821/00523 | | Circlip | | 1 |
| 14 | :449/10601 | | Plate pressure 4mm | | 1 |
| 15 | :2203/1115 | | Circlip | | 1 |
| 16 | :814/00297 | | Spring | | 1 |
| 17 | :828/00224 | | O Ring 39.7mm I/D X 3.53mm | | 1 |
| 18 | :445/12316 | | Piston reverser c/w oil baffle | | 1 |
| 19 | :445/12314 | | Shim plate, toothed | | 0 |

Product Catalog \ CONSTRUCTION \ NORTH AMERICA \ CONSTRUCTION / INDUSTRIAL \ BACKHOE LOADER 3CX,4CX,214,215,217 \ 3C PLUS (91HP) , Made in Brazil with Dieselmax/IESA Engine 9812/0080 \ F AXLES, WHEELS & TRANSMISSION \ F05 TRANSMISSIONS SYNCHROSHUTTLE

# 9812/0080 F5-4-51 441/00760 - 4WD, GEAR CHANGE, JCB DIESELMAX ENGINE

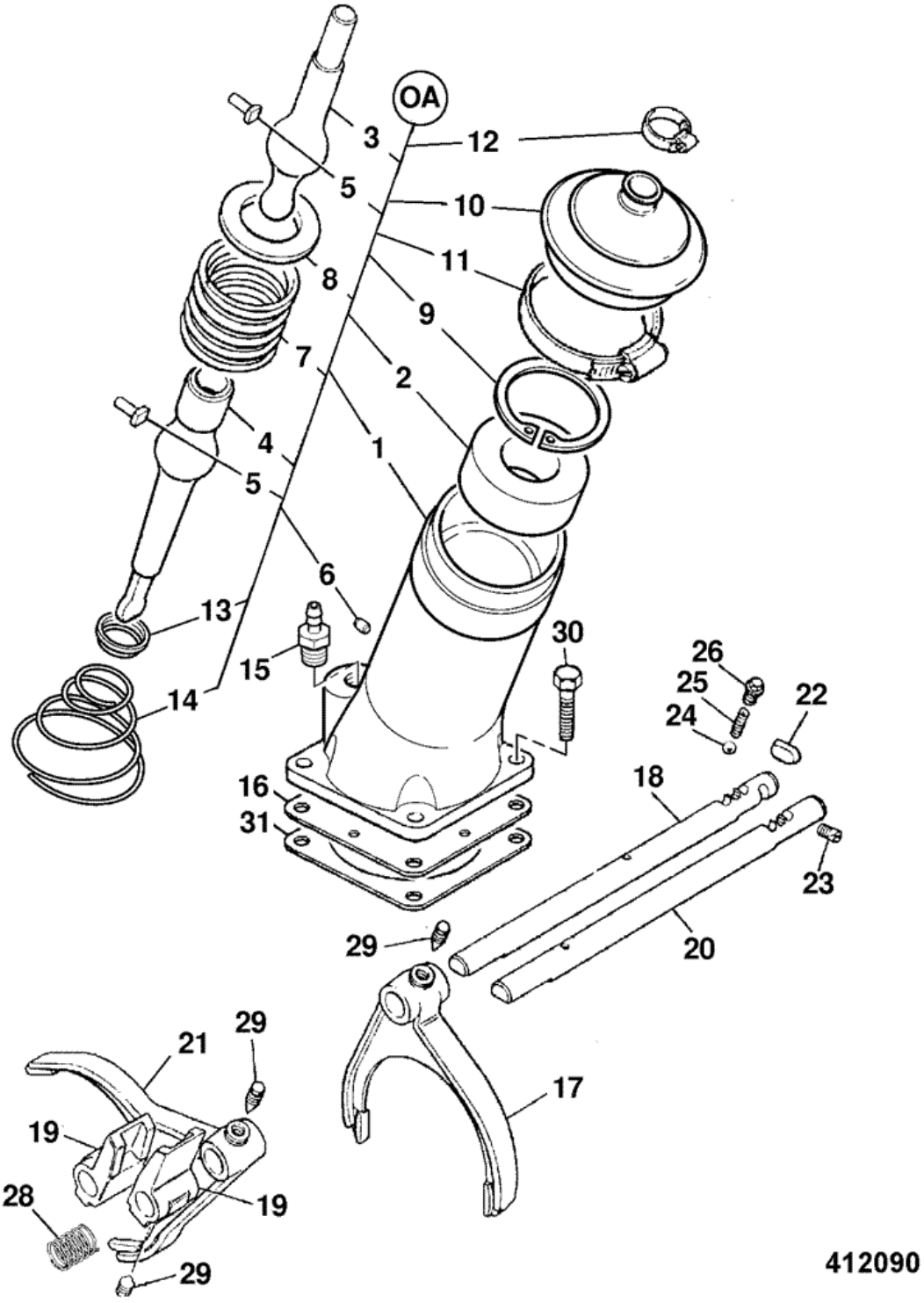


| Item | Part # | Change No | Description | Usage Code | QTY |
|---|---|---|---|---|---|
| A | 459/10143 | | Lever assembly gear turret | | 1 |

| | | | | | |
|---|---|---|---|---|---|
| 1 | :459/30295 | | Housing turret, gear lever | | 1 |
| 2 | :445/10802 | | Seat | | 1 |
| 3 | :445/05501 | | Lever gear | | 1 |
| 4 | :459/70271 | | Lever bottom gearshift | | 1 |
| 5 | :445/03023 | | Pin | | 2 |
| 6 | :835/10036 | | Plug | | 1 |
| 7 | :814/00233 | | Spring | | 1 |
| 8 | :445/10803 | | Washer ball | | 1 |
| 9 | :2203/1080 | | Circlip | | 1 |
| 10 | :331/25566 | | Gaiter gear lever | | 1 |
| 11 | :821/10163 | | Clip worm drive | | 1 |
| 12 | :445/05302 | | Clip | | 1 |
| 13 | :445/03020 | | Retainer spring | | 1 |
| 14 | :814/00221 | | Spring | | 1 |
| 15 | :816/13382 | | Adapter hose | | 1 |
| 16 | :460/17603 | | Baffle | | 1 |
| 17 | 459/30297 | | Fork selector 1st | | 1 |
| 18 | 459/70181 | | Shaft selector<br>*use 459/M2082* | | 1 |
| 18 | 459/M2082 | | Shaft selector | | 1 |
| 19 | 459/70199 | | Block selector | | 2 |
| 20 | 459/70181 | | Shaft selector<br>*use 459/M2082* | | 1 |
| 20 | 459/M2082 | | Shaft selector | | 1 |
| 21 | 459/30299 | | Fork selector 3rd | | 1 |
| 22 | 445/03031 | | Roller baulk | | 1 |
| 23 | 816/80027 | | Plug | | 1 |
| 24 | 916/00006 | | Ball 11mm dia | | 2 |
| 25 | 814/00354 | | Spring | | 2 |
| 26 | 816/80057 | | Plug detent | | 2 |
| 27 | 445/05302 | | Clip | | 2 |
| 28 | 814/00406 | | Spring | | 1 |
| 29 | 445/26110 | | Screw | | 4 |
| 30 | 826/01416 | | Screw micro-encapsulated | | 4 |
| 31 | 813/50042 | | Gasket | | 1 |

Product Catalog \ CONSTRUCTION \ NORTH AMERICA \ CONSTRUCTION / INDUSTRIAL \ BACKHOE LOADER 3CX,4CX,214,215,217 \ 3C PLUS (91HP) , Made in Brazil with Dieselmax/IESA Engine 9812/0080 \ F AXLES, WHEELS & TRANSMISSION \ F05 TRANSMISSIONS SYNCHROSHUTTLE

# 9812/0080 F5-70-1 PUMP & DRIVESHAFT, SYNCROSHUTTLE, GEARPUMP MACHINES

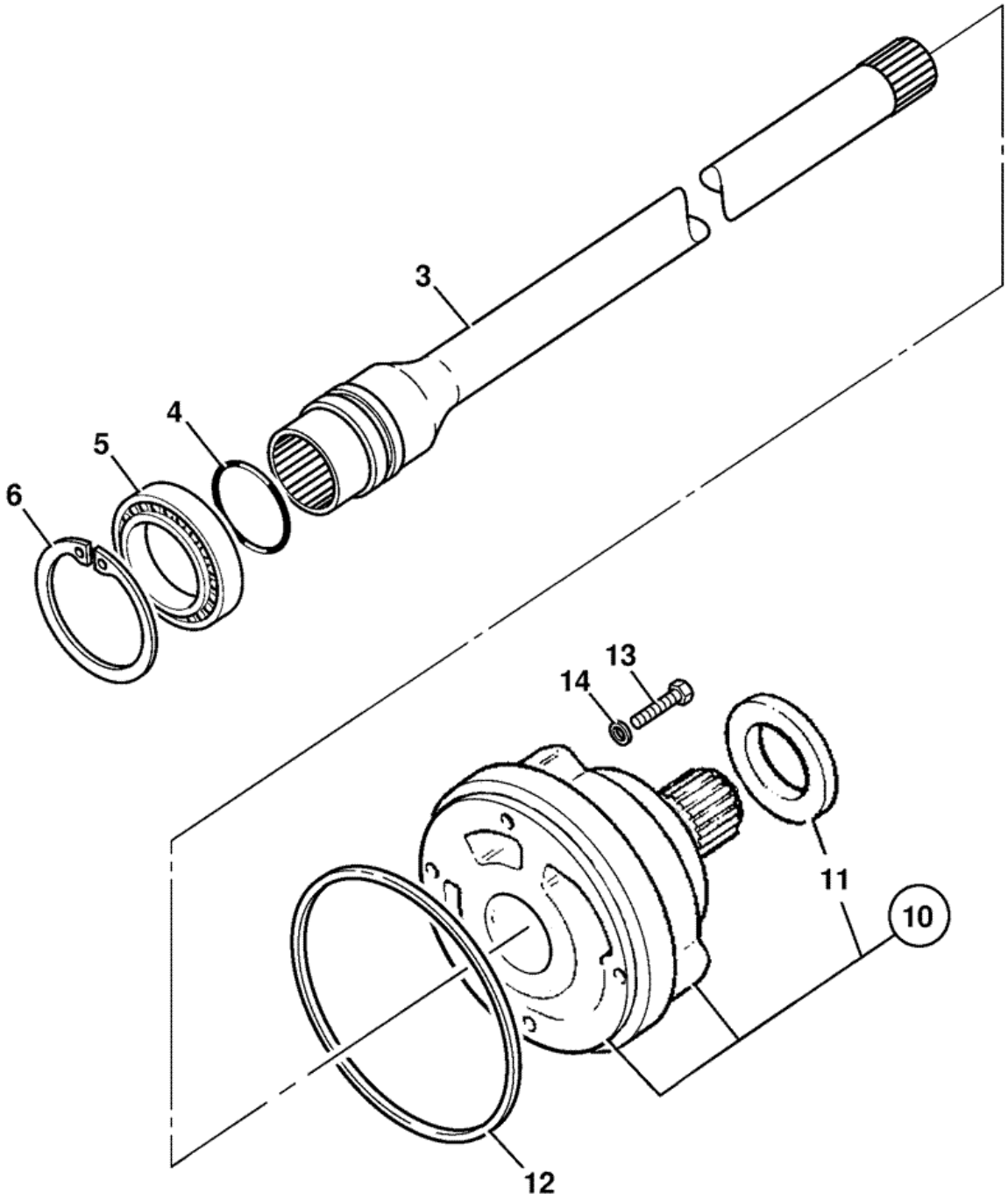


376210

| Item | Part # | Change No | Description | Usage Code | QTY |
|---|---|---|---|---|---|
| 3 | 459/50431 | | Shaft pump drive SS700 gearbox | | 1 |

| | | | | | |
|---|---|---|---|---|---|
| 4 | 904/20210 | | Ring seal | | 1 |
| 5 | 916/10012 | | Bearing ball | | 1 |
| 6 | 2203/1068 | | Circlip internal | | 1 |
| 10 | 20/925552 | | Pump assembly transmission | | 1 |
| 11 | :904/20226 | | Seal transmission pump | | 1 |
| 12 | 813/50041 | | Seal rear | | 1 |
| 13 | 1315/3311Z | | Bolt M8 X 45 | | 4 |
| 14 | 823/00291 | | Washer copper | | 4 |

Product Catalog \ CONSTRUCTION \ NORTH AMERICA \ CONSTRUCTION / INDUSTRIAL \ BACKHOE LOADER 3CX,4CX,214,215,217 \ 3C PLUS (91HP) , Made in Brazil with Dieselmax/IESA Engine 9812/0080 \ F AXLES, WHEELS & TRANSMISSION \ F05 TRANSMISSIONS SYNCHROSHUTTLE

# 9812/0080 F5-9-11 441/M1218 - 4WD-2WS, COMMON COMPONENTS, 460/00230

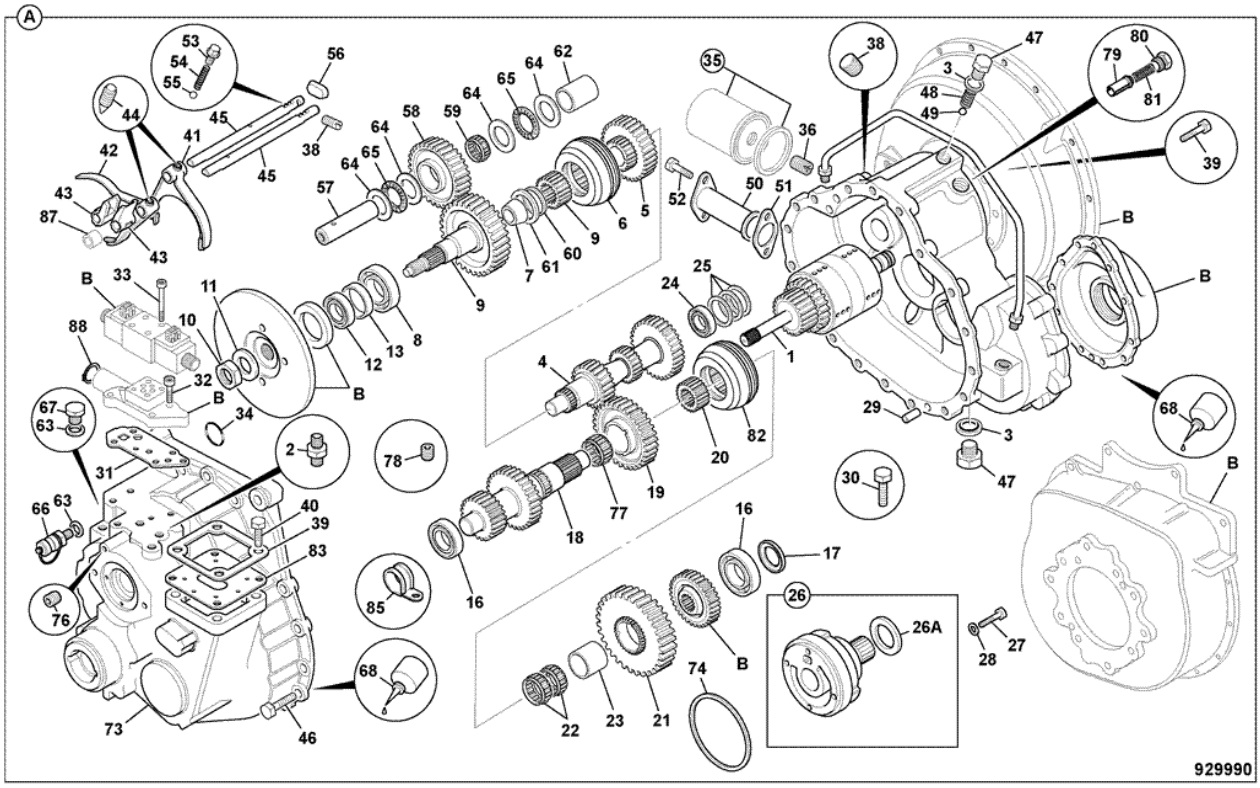


| Item | Part # | Change No | Description | Usage Code | QTY |
|---|---|---|---|---|---|
| A | 441/00230 | | Gearbox common components 4WD | | 1 |
| 1 | :459/10097 | | Clutch assembly input, reverser<br>*see F5-9-21 for breakdown* | | 1 |
| 2 | :1606/0017 | | Adapter 5/8" x 1/2" M/M | | 1 |
| 3 | :1406/0018 | | Seal bonded 1/2" BSP | | 5 |
| 4 | :459/50205 | | Gear mainshaft, SS750 | | 1 |
| 5 | :459/50534 | | Gear 3rd 33T-3.5M | | 1 |
| 6 | :459/50520 | | Synchroniser assembly | | 1 |
| 7 | :907/20005 | | Bearing taper roller | | 1 |
| 8 | :907/20045 | | Bearing taper roller | | 1 |
| 9 | :459/50540 | | Gear Transfere 39T-4M XL_R | | 1 |
| 10 | :826/01551 | | Nut Stake M30 (46mm Head) | | 1 |
| 11 | :460/32202 | | Washer | | 1 |
| 12 | :907/51600 | | Bearing taper roller | | 1 |
| 13 | :921/53400 | | Kit-Spacer | | 1 |
| 16 | :907/20049 | | Bearing taper roller | | 2 |
| 17 | :459/70379 | | Kit graded spacers | | 1 |
| 18 | :459/50541 | | Layshaft 16T 4M & 28T 3.5M - | | 1 |
| 19 | :459/50511 | | Gear 2nd 40t SS700 | | 1 |
| 20 | :445/03010 | | Sleeve hub shaft | | 1 |

| | | | | | |
|---|---|---|---|---|---|
| 21 | :459/50509 | | Gear 1st 44t SS700 | | 1 |
| 22 | :917/02300 | | Bearing | | 5 |
| 23 | :917/00008 | | Bearing inner race | | 1 |
| 24 | :907/52800 | | Bearing 35 x 65 x 18 | | 1 |
| 25 | :459/70378 | | Kit graded spacers | | 1 |
| 26 | :20/925552 | | Pump assembly transmission | | 1 |
| 27 | :1315/3311Z | | Bolt M8 X 45 | | 4 |
| 28 | :823/00291 | | Washer copper | | 4 |
| 29 | :445/14001 | | Dowel | | 6 |
| 30 | :1315/0409Z | | Screw M10x35mm | | 12 |
| 31 | :813/10175 | | Gasket valve block | | 1 |
| 32 | :1392/3207 | | Capscrew | | 4 |
| 33 | :1391/3108Z | | Capscrew M5 X 30mm | | 4 |
| 34 | :828/10222 | | O Ring | | 2 |
| 35 | :581/18076 | | Element transmission filter 120.7mm long | | 1 |
| 36 | :816/15184 | | Adapter 1/2"BSPx1"UNF | | 1 |
| 38 | :816/80052 | | Plug taper 1/4" BSP | | 6 |
| 39 | :813/50042 | | Gasket | | 1 |
| 40 | :826/01361 | | Bolt | | 4 |
| 41 | :459/30297 | | Fork selector 1st | | 1 |
| 42 | :459/30298 | | Fork Selector 3rd | | 1 |
| 43 | :459/70199 | | Block selector | | 2 |
| 44 | :445/26110 | | Screw | | 4 |
| 45 | :459/70181 | | Shaft selector<br>*use 459/M2082* | | 2 |
| 45 | :459/M2082 | | Shaft selector | | 2 |
| 46 | :826/01417 | | Bolt | | 28 |
| 47 | :816/80041 | | Plug 1/2"BSP 25.65mm A/F | | 3 |
| 48 | :814/00222 | | Spring | | 1 |
| 49 | :916/00008 | | Bearing 14dia ball | | 1 |
| 50 | :32/902200 | | Strainer suction | | 1 |
| 51 | :813/50027 | | Gasket | | 1 |
| 52 | :1321/0303Z | | Screw M8 x 16 | | 2 |
| 53 | :816/80057 | | Plug detent | | 2 |
| 54 | :814/00354 | | Spring | | 2 |
| 55 | :916/00006 | | Ball 11mm dia | | 2 |
| 56 | :445/03031 | | Roller baulk | | 1 |
| 57 | :459/70087 | | Shaft idler | | 1 |
| 58 | :459/50440 | | Gear idler, 35T | | 1 |
| 59 | :917/02400 | | Bearing needle roller | | 1 |
| 60 | :445/64302 | | Spacer mainshaft seal | | 1 |
| 61 | :904/50027 | | Seal oil baffle | | 1 |
| 62 | :459/70206 | | Spacer idler gear | | 1 |
| 63 | :1406/0011 | | Seal bonded | | 2 |
| 64 | :823/00451 | | Washer thrust | | 4 |
| 65 | :917/51400 | | Bearing | | 2 |
| 66 | :45/905000 | | Adapter pressure test 1/4BSP male | | 1 |
| 67 | :816/82009 | | Plug | | 1 |
| 68 | :4102/1201 | | Gasket multi | | 0 |
| 69 | :4003/2000 | | Grease high pressure | | 1 |
| 70 | :4101/0302 | | Sealant 50ml | | 0 |
| | | | | | |

| | | | | | |
|---|---|---|---|---|---|
| 73 | :459/30435 | <G/M1218/4 | Casing rear | | 1 |
| 73 | :459/M2870 | >G/M1218/5 | Casing rear | | 1 |
| 74 | :813/50041 | | Seal rear | | 1 |
| 76 | :816/80051 | | Plug 1/8" tapered | | 8 |
| 77 | :917/10000 | | Bearing needle roller | | 1 |
| 78 | :826/10707 | | Screw bleed | | 1 |
| 79 | :459/70168 | | Spool Adapter Solenoid | | 1 |
| 80 | :816/80061 | | Plug | | 1 |
| 81 | :814/10170 | | Spring compression | | 1 |
| 82 | :. | | 'See Remark'<br>*Not fitted to this assembly* | | 1 |
| 83 | :460/17603 | | Baffle | | 1 |
| 85 | :821/10182 | | Clip P-clip | | 1 |
| 87 | :831/10298 | | Bush Selector Fork | | 1 |
| 88 | :821/10223 | | Circlip interna; | | 1 |

Product Catalog \ CONSTRUCTION \ NORTH AMERICA \ CONSTRUCTION / INDUSTRIAL \ BACKHOE LOADER 3CX,4CX,214,215,217 \ 3C PLUS (91HP) , Made in Brazil with Dieselmax/IESA Engine 9812/0080 \ F AXLES, WHEELS & TRANSMISSION \ F05 TRANSMISSIONS SYNCHROSHUTTLE

# 9812/0080 F5-9-41 441/M1218 - 4WD-2WS, CLUTCH, 4WD, 459/10119

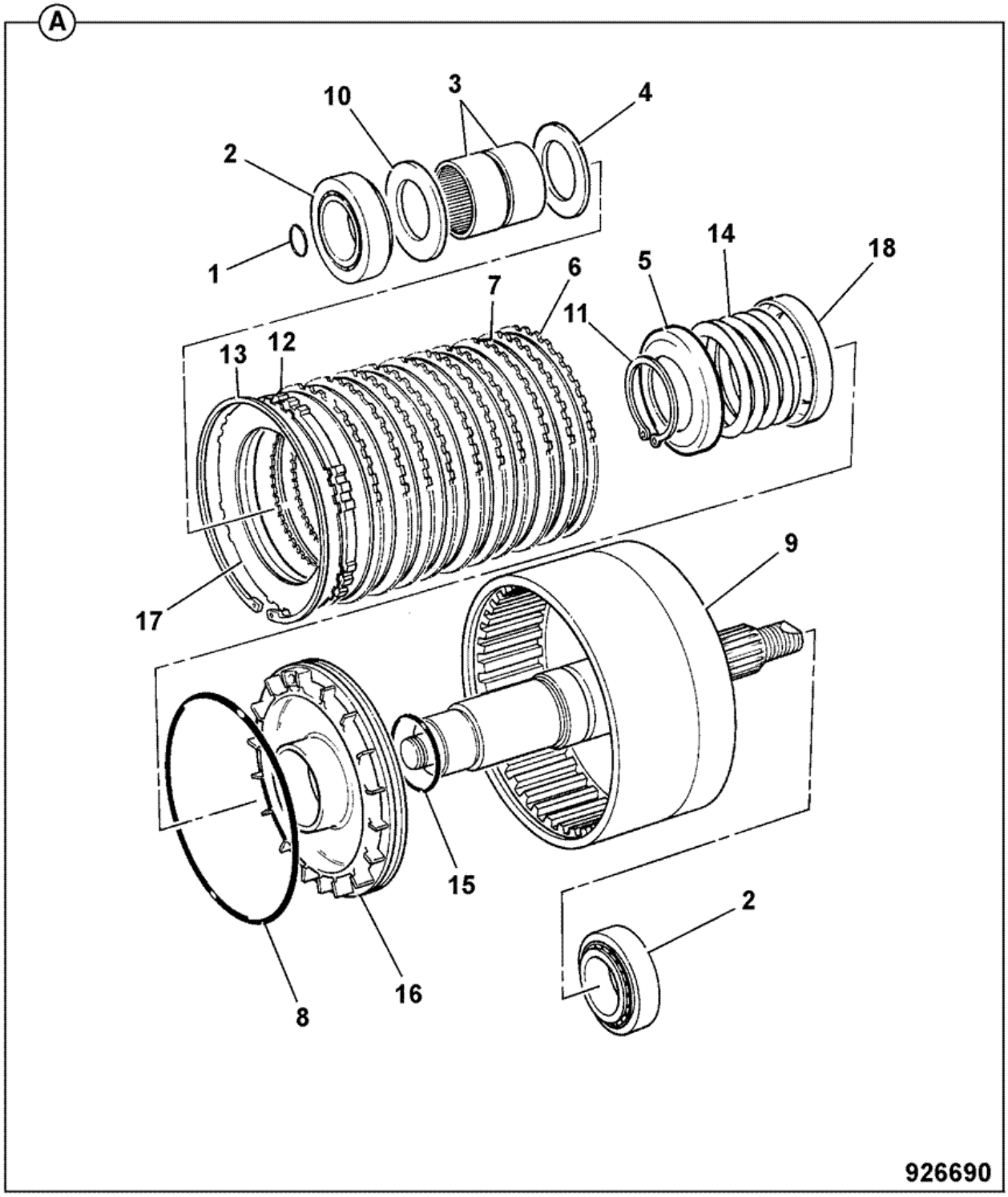


| Item | Part # | Change No | Description | Usage Code | QTY |
|---|---|---|---|---|---|
| A | :459/10119 | | Clutch assembly 4WD | | 1 |

| | | | | | |
|---|---|---|---|---|---|
| 1 | :904/14300 | | Seal ring 'TURQUOISE' | | 1 |
| 2 | :907/52800 | | Bearing 35 x 65 x 18 | | 2 |
| 3 | :917/02700 | | Bearing | | 2 |
| 4 | :445/19808 | | Washer thrust, 3.5mm thick phosphated | | 1 |
| 5 | :445/12304 | | Retainer spring | | 1 |
| 6 | :445/12307 | | Plate counter | | 10 |
| 7 | :445/03205 | | Plate friction | | 10 |
| 8 | :828/00414 | | O Ring 123.5mm I/D | | 1 |
| 9 | :459/50483 | | Housing 4wd clutch | | 1 |
| 10 | :823/10364 | | Washer thrust | | 1 |
| 11 | :821/00523 | | Circlip | | 1 |
| 12 | :331/31560 | | Plate pressure 4mm | | 1 |
| 13 | :2203/1115 | | Circlip | | 1 |
| 14 | :814/00297 | | Spring | | 1 |
| 15 | :828/00224 | | O Ring 39.7mm I/D X 3.53mm | | 1 |
| 16 | :445/73503 | | Piston | | 1 |
| 17 | :445/12314 | | Shim plate, toothed | | 1 |
| 18 | :445/12305 | | Baffle oil | | 1 |

Product Catalog \ CONSTRUCTION \ NORTH AMERICA \ CONSTRUCTION / INDUSTRIAL \ BACKHOE LOADER 3CX,4CX,214,215,217 \ 3C PLUS (91HP) , Made in Brazil with Dieselmax/IESA Engine 9812/0080 \ F AXLES, WHEELS & TRANSMISSION \ F05 TRANSMISSIONS SYNCHROSHUTTLE

# 9812/0080 F5-9-51 441/M1218 - 4WD-2WS, PUMP SHAFT KIT, 459/10151

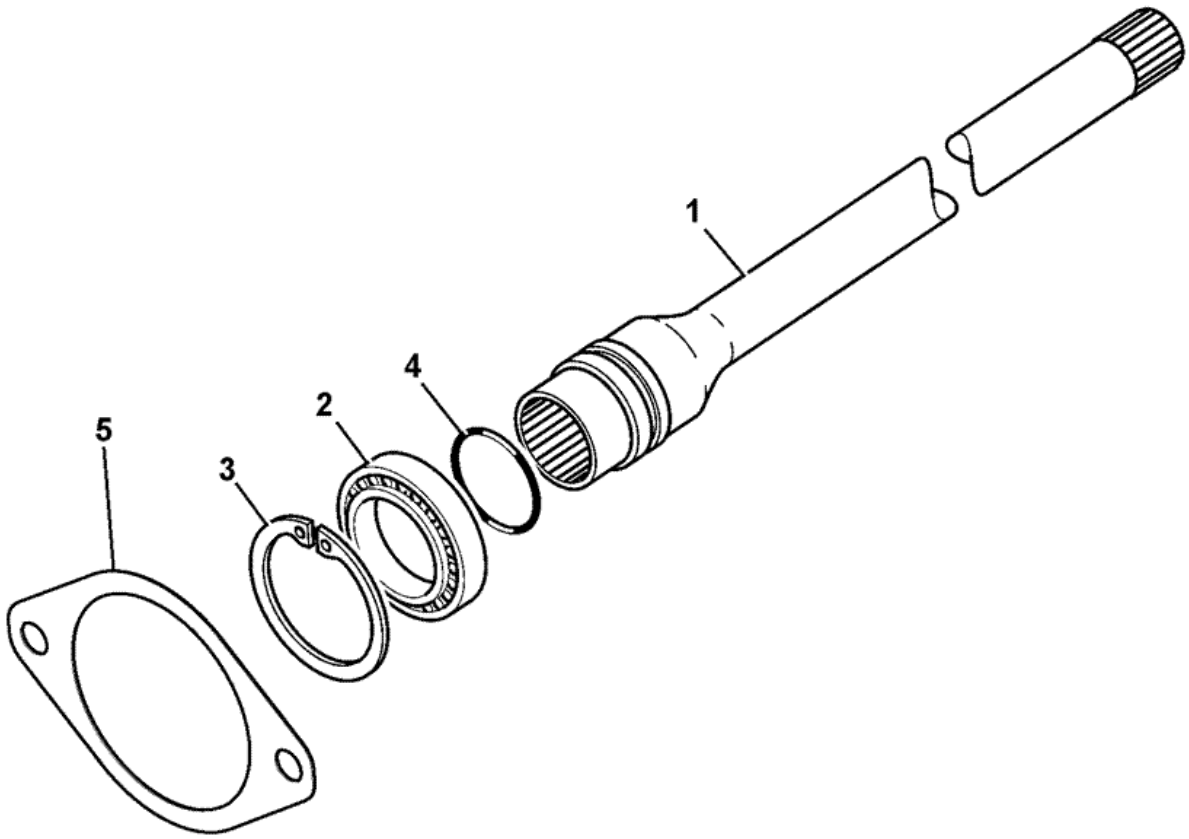


934930

| Item | Part # | Change No | Description | Usage Code | QTY |
|---|---|---|---|---|---|
| A | 459/10151 | | Assembly pump shaft | | 1 |

| | | | | | |
|---|---|---|---|---|---|
| 1 | :459/50431 | | Shaft pump drive SS700 gearbox | | 1 |
| 2 | :916/10012 | | Bearing ball | | 1 |
| 3 | :2203/1068 | | Circlip internal | | 1 |
| 4 | :904/20210 | | Ring seal | | 1 |
| 5 | :813/10184 | | Gasket hyd gear pump PS760 | | 1 |

# 9812/0080 F1-30-10 POWER TRACKROD, 2WS 4WD FRONT

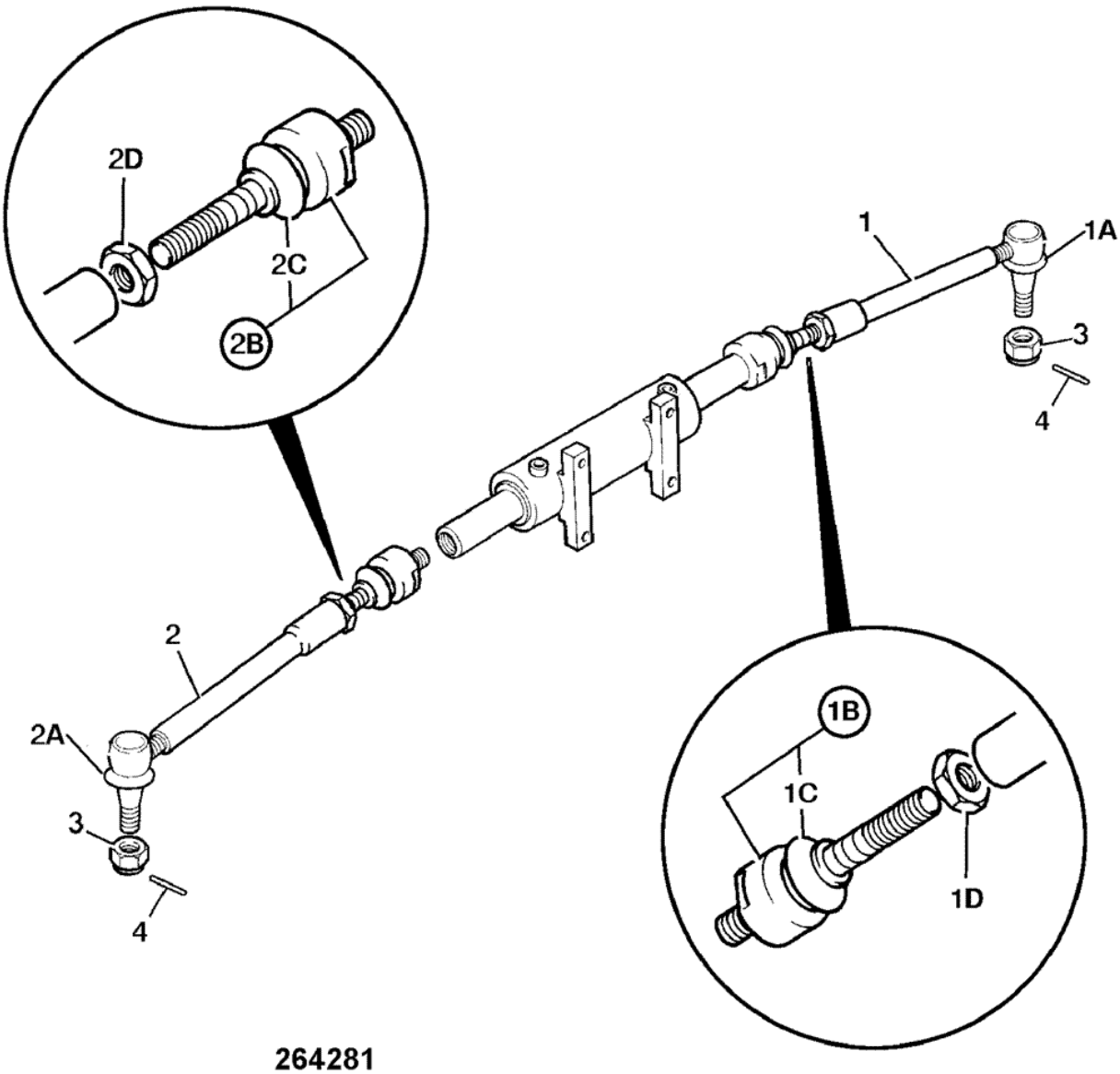


264281

| Item | Part # | Change No | Description | Usage Code | QTY |
|---|---|---|---|---|---|
| 1 | 126/02253 | | Link trackrod M24/M22 | | 1 |
| 1A | :123/07855 | | Gaiter<br>*Trackrod end* | | 1 |
| 1B | :331/14861 | | Joint ball track rod<br>*Ram end* | | 1 |
| 1C | ::123/07689 | | Gaiter | | 1 |
| 1D | :458/80026 | | Nut lock nut | | 1 |
| 2 | 126/02253 | | Link trackrod M24/M22 | | 1 |
| 2A | :123/07855 | | Gaiter<br>*Trackrod end* | | 1 |

| | | | | | |
|---|---|---|---|---|---|
| 2B | :331/14861 | | Joint ball track rod<br>*Ram end* | | 1 |
| 2C | ::123/07689 | | Gaiter | | 1 |
| 2D | :458/80026 | | Nut lock nut | | 1 |
| 3 | 826/01372 | | Nut castle M20 X 1.5 | | 2 |
| 4 | 2103/1112 | | Pin split | | 2 |

Product Catalog \ CONSTRUCTION \ NORTH AMERICA \ CONSTRUCTION / INDUSTRIAL \ BACKHOE LOADER 3CX,4CX,214,215,217 \ 3C PLUS (91HP) , Made in Brazil with Dieselmax/IESA Engine 9812/0080 \ F AXLES, WHEELS & TRANSMISSION \ F01 AXLES, FRONT

# 9812/0080 F1-51-11 448/57999, WHEEL HUB, 448/42600,

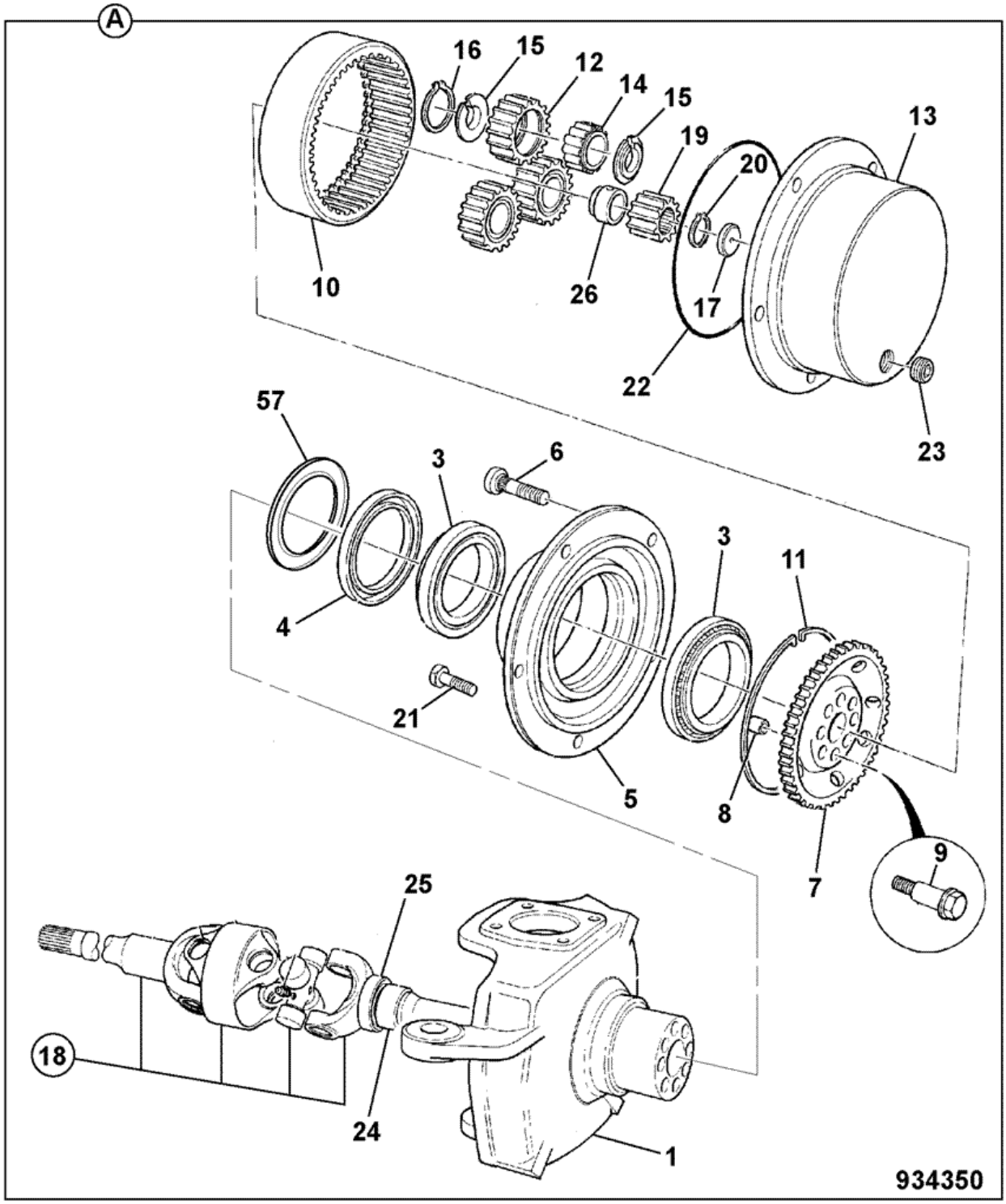


| Item | Part # | Change No | Description | Usage Code | QTY |
|---|---|---|---|---|---|
| A | 448/42600 | | Assembly wheel hub | | 1 |
| 1 | :448/42602 | | Joint knuckle swivel | | 1 |
| | | | | | |

| | | | | | |
|---|---|---|---|---|---|
| 3 | :907/20043 | | Bearing taper roller | | 2 |
| 4 | :904/50033 | | Seal oil 127 x 160 x 15.5-17 | | 1 |
| 5 | :458/20446 | | Carrier wheel bearing 5 stud | | 1 |
| 6 | :826/00923 | | Stud wheel | | 5 |
| 7 | :450/12702 | | Carrier annulus | | 1 |
| 8 | :450/12703 | | Dowel hollow | | 8 |
| 9 | :826/01060 | | Bolt M14 x 70mm long | | 8 |
| 10 | :450/10205 | | Gear annulus ring | | 1 |
| 11 | :821/00210 | | Circlip internal square section | | 1 |
| 12 | :450/10206 | | Gear planet | | 3 |
| 13 | :450/10216 | | Carrier planetary hub 5 stud | | 1 |
| 14 | :907/50200 | | Bearing roller, double row | | 3 |
| 15 | :821/00209 | | Circlip | | 6 |
| 16 | :2203/0054 | | Circlip | | 3 |
| 17 | :450/10208 | | Pad thrust | | 1 |
| 18 | :914/88100 | | Shaft drive assembly 1275mm long<br>*Link* | | 1 |
| 19 | :450/10210 | | Gear sun | | 1 |
| 20 | :821/00494 | | Circlip External | | 1 |
| 21 | :1321/0407Z | | Bolt coated | | 2 |
| 22 | :828/00196 | | O Ring | | 1 |
| 23 | :826/00425 | | Plug tapered 3/4"-14PTF | | 1 |
| 24 | :917/50200 | | Bearing | | 1 |
| 25 | :904/50047 | | Seal | | 1 |
| 26 | :921/50000 | | Spacer 32mm long | | 1 |
| 57 | :458/20403 | | Cover plate hub seal | | 1 |

Product Catalog \ CONSTRUCTION \ NORTH AMERICA \ CONSTRUCTION / INDUSTRIAL \ BACKHOE LOADER 3CX,4CX,214,215,217 \ 3C PLUS (91HP) , Made in Brazil with Dieselmax/IESA Engine 9812/0080 \ F AXLES, WHEELS & TRANSMISSION \ F01 AXLES, FRONT

# 9812/0080 F1-51-21 448/57999, WHEEL HUB, 448/42700,

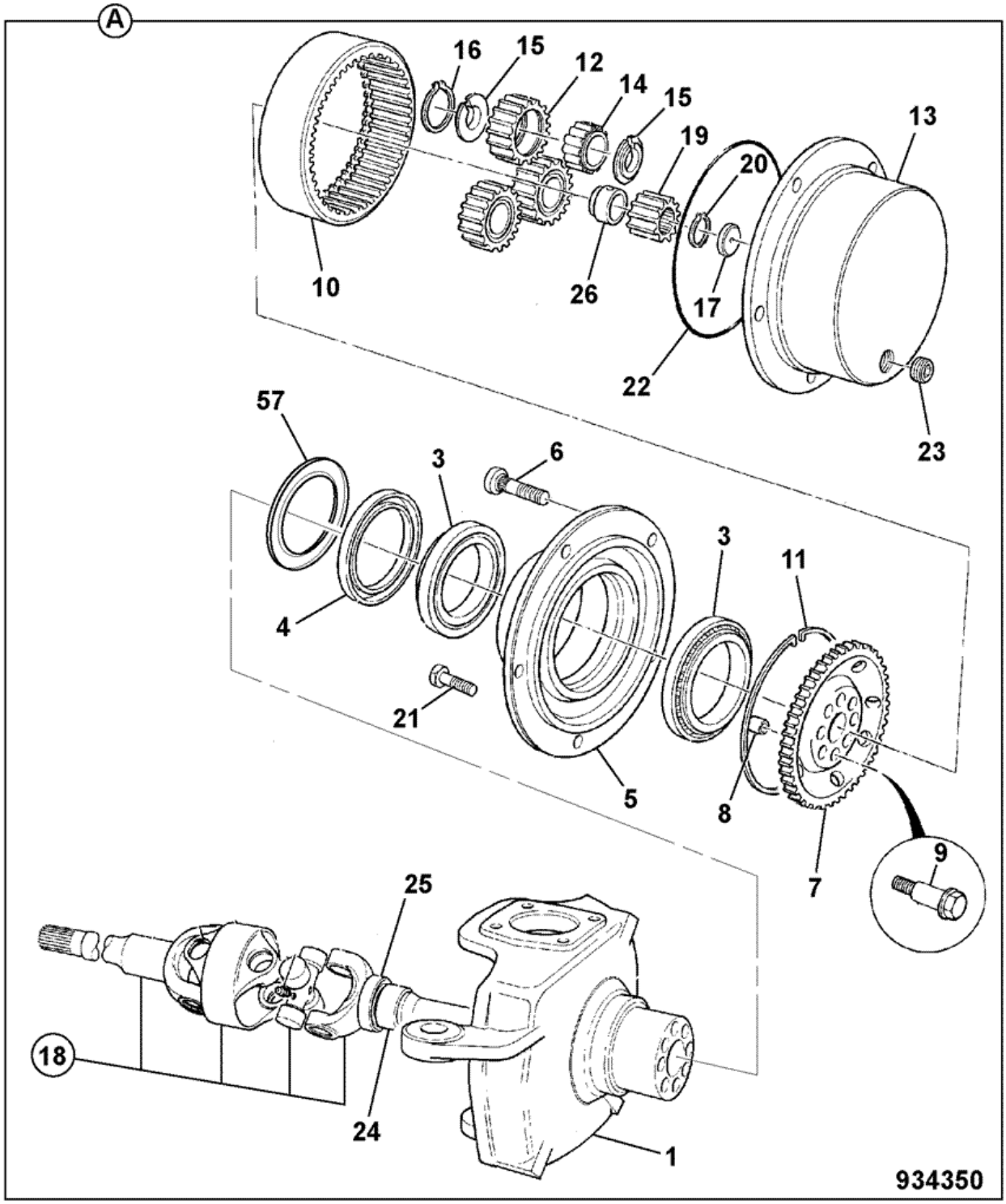


| Item | Part # | Change No | Description | Usage Code | QTY |
|---|---|---|---|---|---|
| A | 448/42700 | | Assembly wheel hub. | | 1 |
| 1 | :448/42703 | | Joint knuckle swivel | | 1 |
| | | | | | |

| | | | | | |
|---|---|---|---|---|---|
| 3 | :907/20043 | | Bearing taper roller | | 2 |
| 4 | :904/50033 | | Seal oil 127 x 160 x 15.5-17 | | 1 |
| 5 | :458/20446 | | Carrier wheel bearing 5 stud | | 1 |
| 6 | :826/00923 | | Stud wheel | | 5 |
| 7 | :450/12702 | | Carrier annulus | | 1 |
| 8 | :450/12703 | | Dowel hollow | | 8 |
| 9 | :826/01060 | | Bolt M14 x 70mm long | | 8 |
| 10 | :450/10205 | | Gear annulus ring | | 1 |
| 11 | :821/00210 | | Circlip internal square section | | 1 |
| 12 | :450/10206 | | Gear planet | | 3 |
| 13 | :450/10216 | | Carrier planetary hub 5 stud | | 1 |
| 14 | :907/50200 | | Bearing roller, double row | | 3 |
| 15 | :821/00209 | | Circlip | | 6 |
| 16 | :2203/0054 | | Circlip | | 3 |
| 17 | :450/10208 | | Pad thrust | | 1 |
| 18 | :914/88200 | | Shaft drive assembly 825mm long<br>*Link* | | 1 |
| 19 | :450/10210 | | Gear sun | | 1 |
| 20 | :821/00494 | | Circlip External | | 1 |
| 21 | :1321/0407Z | | Bolt coated | | 2 |
| 22 | :828/00196 | | O Ring | | 1 |
| 23 | :826/00425 | | Plug tapered 3/4"-14PTF | | 1 |
| 24 | :917/50200 | | Bearing | | 1 |
| 25 | :904/50047 | | Seal | | 1 |
| 26 | :921/50000 | | Spacer 32mm long | | 1 |
| 57 | :458/20403 | | Cover plate hub seal | | 1 |

Product Catalog \ CONSTRUCTION \ NORTH AMERICA \ CONSTRUCTION / INDUSTRIAL \ BACKHOE LOADER 3CX,4CX,214,215,217 \ 3C PLUS (91HP) , Made in Brazil with Dieselmax/IESA Engine 9812/0080 \ F AXLES, WHEELS & TRANSMISSION \ F01 AXLES, FRONT

# 9812/0080 F1-51-31 448/57999, DRIVEHEAD,

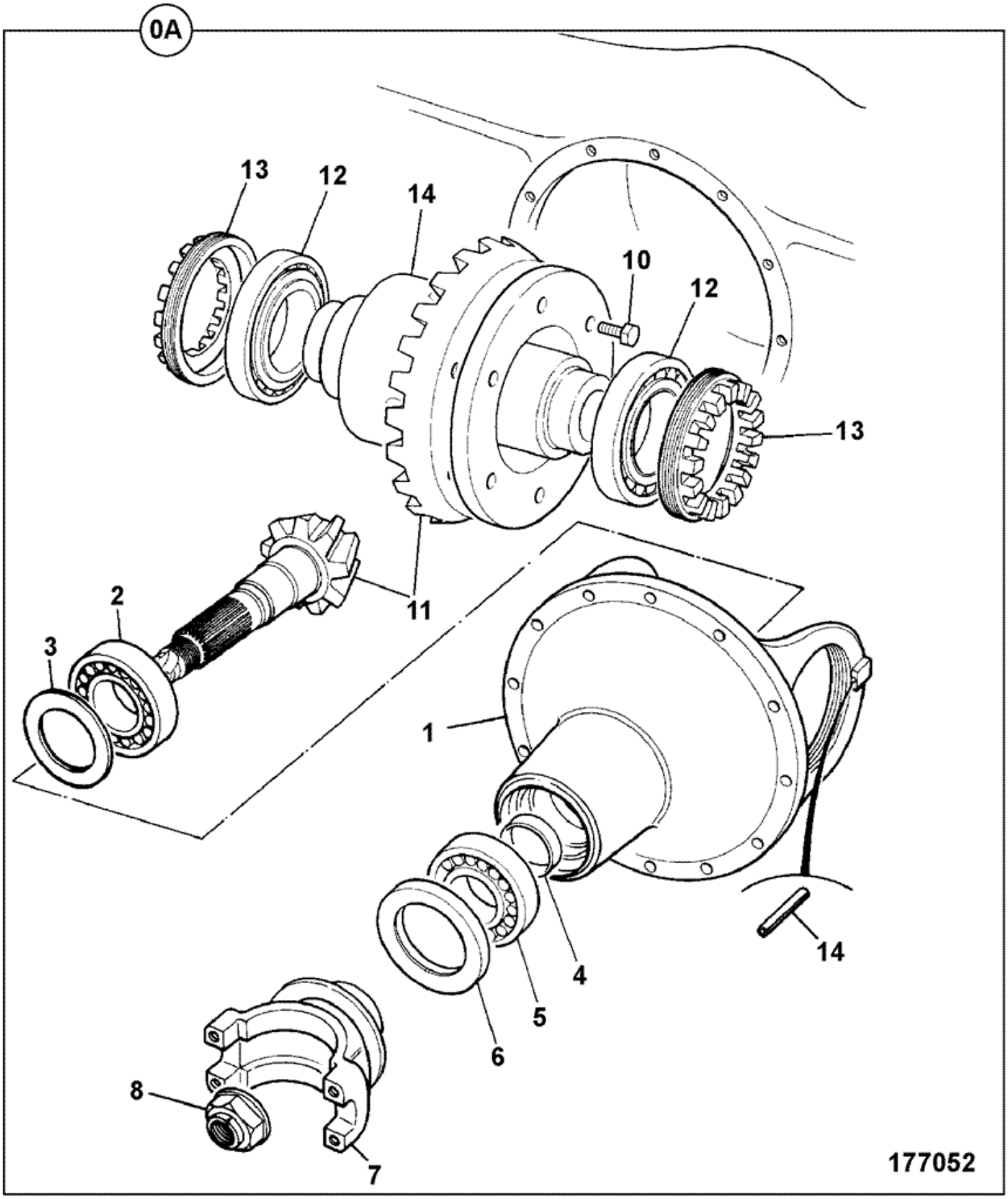


| Item | Part # | Change No | Description | Usage Code | QTY |
|---|---|---|---|---|---|
| A | 458/10728 | <A5799/7 | Drivehead assembly<br>*to axle 448/57990/7* | A | 1 |
| | | | | | |

| | | | | | |
|---|---|---|---|---|---|
| A | 458/M1876 | >A5799/8 | Drivehead assembly<br>*from axle 448/57990/8* | B | 1 |
| 1 | :448/15701 | | Casting drive head yellow | | 1 |
| 2 | :907/09000 | | Bearing | | 1 |
| 3 | :921/01900 | | Kit-shim | | 1 |
| 4 | :921/53300 | | Spacer | | 1 |
| 5 | :907/09100 | | Bearing | | 1 |
| 6 | :904/50023 | | Seal | | 1 |
| 7 | :450/27200 | | Yoke | A | 1 |
| 7 | :458/20816 | | Yoke Coupling | B | 1 |
| 8 | :826/01483 | | Nut stake and washer M24 | A | 1 |
| 8 | :826/01744 | | Nut stake M30 | B | 1 |
| 10 | :826/01084 | | Bolt Verbus ripp M10 x 25mm long | | 12 |
| 11 | :458/70167 | | Gear c/wheel & pinion 13/34T NLA see TI GEN232 | A | 1 |
| 11 | :458/M1766 | | Gear crownwheel & pinion 13/34 | B | 1 |
| 12 | :907/09200 | | Bearing | | 2 |
| 13 | :448/05405 | | Nut adjusting | | 2 |
| 14 | :826/00818 | | Pin tension | | 2 |
| 15 | :458/10723 | | Differential assembly<br>*see F1-51-41 for breakdown* | | 1 |

Product Catalog \ CONSTRUCTION \ NORTH AMERICA \ CONSTRUCTION / INDUSTRIAL \ BACKHOE LOADER 3CX,4CX,214,215,217 \ 3C PLUS (91HP) , Made in Brazil with Dieselmax/IESA Engine 9812/0080 \ F AXLES, WHEELS & TRANSMISSION \ F01 AXLES, FRONT

# 9812/0080 F1-51-41 448/57990, DIFFERENTIAL ASSY, 458/10723

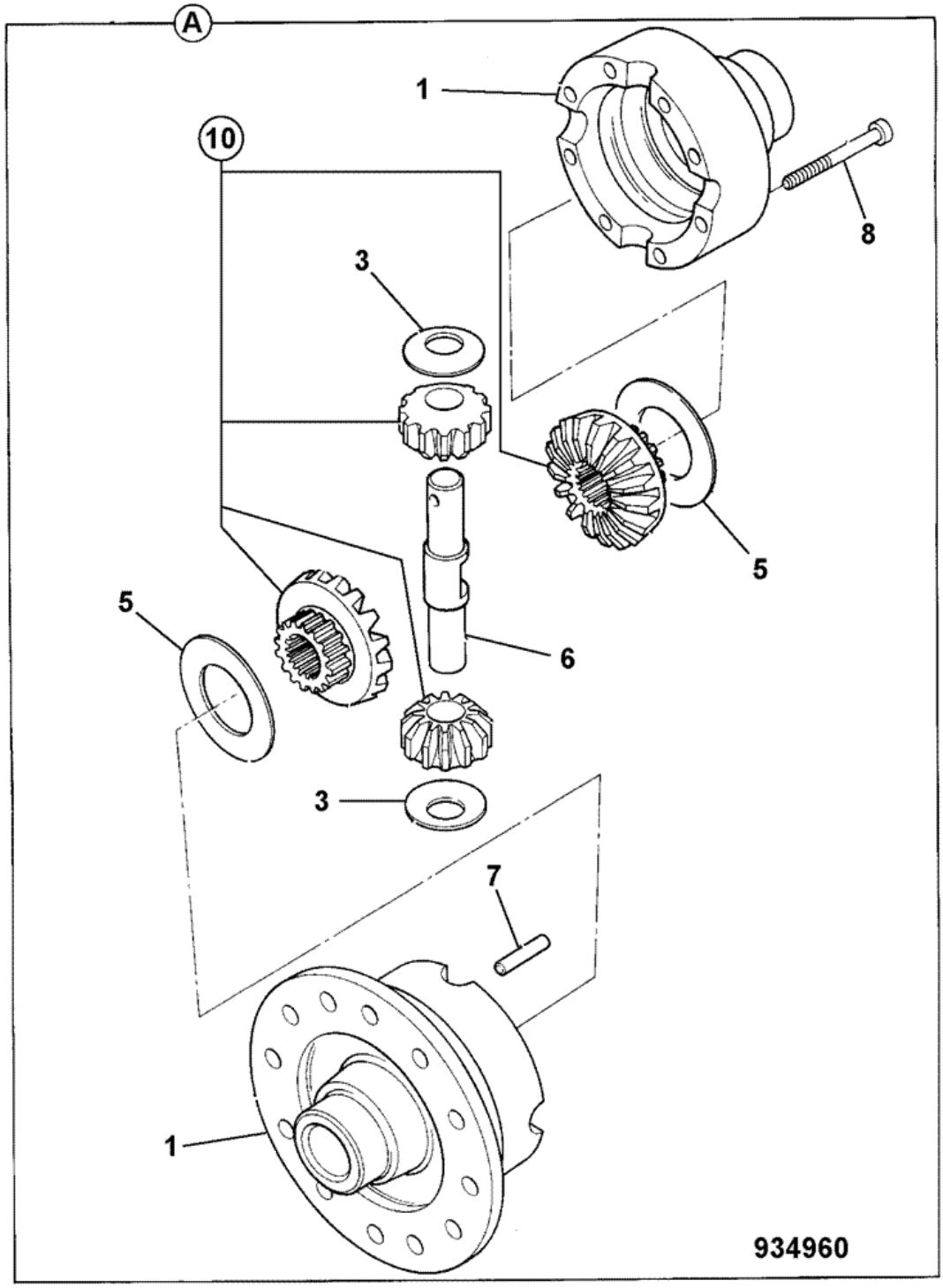


| Item | Part # | Change No | Description | Usage Code | QTY |
|---|---|---|---|---|---|
| A | 458/10723 | | Differential assembly | | 1 |

| | | | | | |
|---|---|---|---|---|---|
| 1 | :458/10724 | | Case differential | | 1 |
| 3 | :808/00210 | | Washer thrust pinion | | 2 |
| 5 | :808/00209 | | Washer thrust side gear | | 2 |
| 6 | :448/05408 | | Pin trunnion | | 1 |
| 7 | :2102/0816 | | Pin tension | | 1 |
| 8 | :826/01585 | | Bolt | | 8 |
| 10 | 448/36400 | | Kit-gear differential | | 1 |

Product Catalog \ CONSTRUCTION \ NORTH AMERICA \ CONSTRUCTION / INDUSTRIAL \ BACKHOE LOADER 3CX,4CX,214,215,217 \ 3C PLUS (91HP) , Made in Brazil with Dieselmax/IESA Engine 9812/0080 \ G BRAKES \ G01 BRAKES

# 9812/0080 G1-3-1 BRAKE, PARKING, SYNCROSHUTTLE

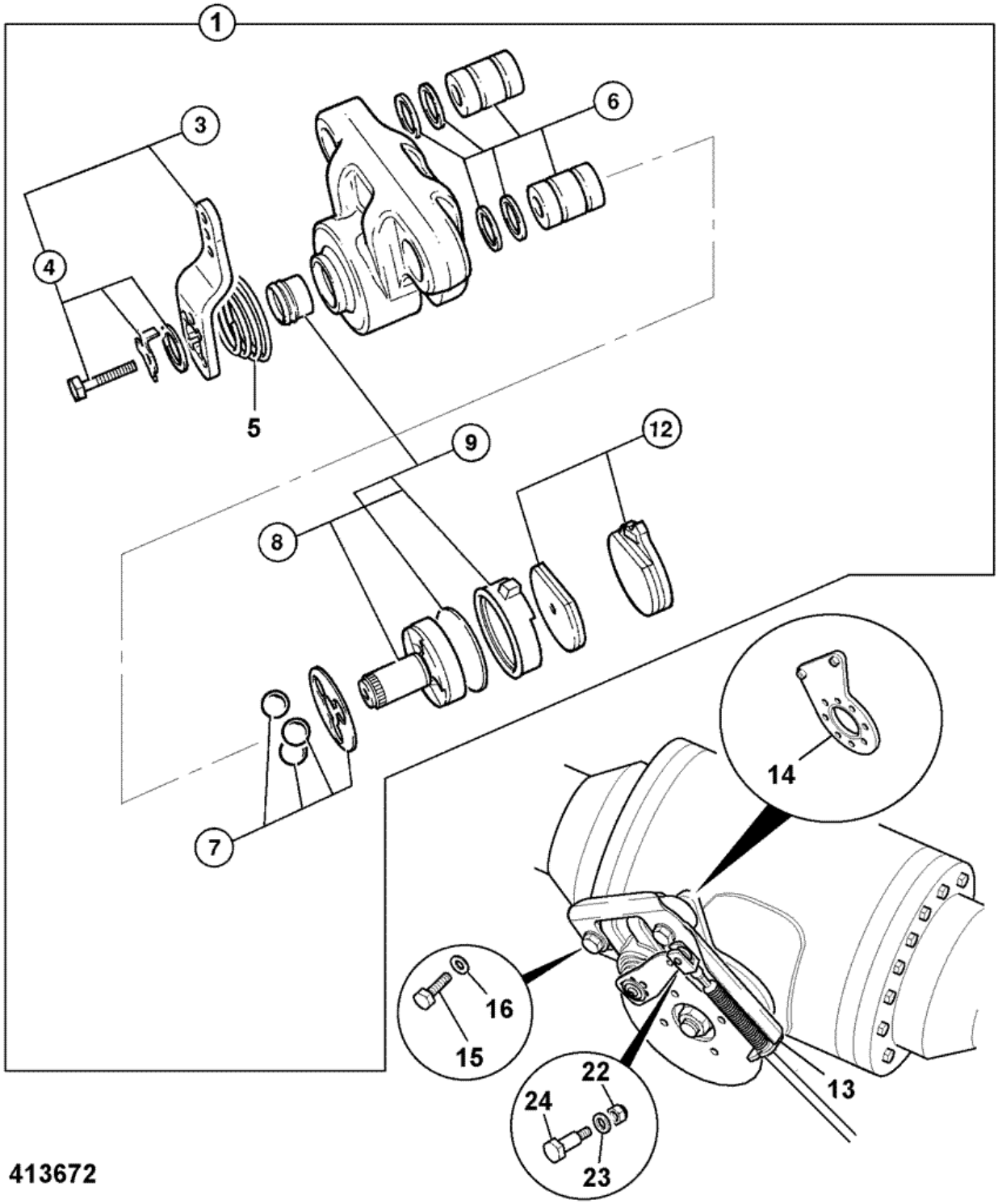


| Item | Part # | Change No | Description | Usage Code | QTY |
|---|---|---|---|---|---|
| 1 | 15/920269 | | Brake caliper, parkbrake Hayes, booted | | 1 |
| 3 | :15/920290 | | Kit-lever | | 1 |
| | | | | | |

| | | | | | |
|---|---|---|---|---|---|
| 4 | ::15/920289 | | Kit-bolt torx head | | 1 |
| 5 | :15/920291 | | Kit-spring | | 1 |
| 6 | :15/920293 | | Kit-bush | | 1 |
| 7 | :478/00844 | | Kit-bearing | | 1 |
| 8 | :15/920294 | | Kit-rotor assembly | | 1 |
| 9 | ::15/920292 | | Kit-seal | | 1 |
| 12 | :15/920103 | | Kit-pad brake pad | | 1 |
| 13 | 331/24632 | | Bracket reaction | | 1 |
| 14 | 458/20511 | | Bracket caliper mount axle | | 1 |
| 15 | 826/10526 | | Bolt | | 2 |
| 16 | 823/00603 | | Washer hardened M16 | | 2 |
| 22 | 1370/0103Z | | Nut Self lock M6 | | 1 |
| 23 | 1420/0006Z | | Washer M6 | | 1 |
| 24 | 826/01597 | <M0906213 | Screw shoulder 8 x 20 x M6 | | 1 |
| 24 | 826/11378 | | Screw shoulder 8 x 12 x M6 | | 1 |

Product Catalog \ CONSTRUCTION \ NORTH AMERICA \ CONSTRUCTION / INDUSTRIAL \ BACKHOE LOADER 3CX,4CX,214,215,217 \ 3C PLUS (91HP) , Made in Brazil with Dieselmax/IESA Engine 9812/0080 \ G BRAKES \ G01 BRAKES

# 9812/0080 G1-1-11 BRAKE, SYSTEM, STANDARD

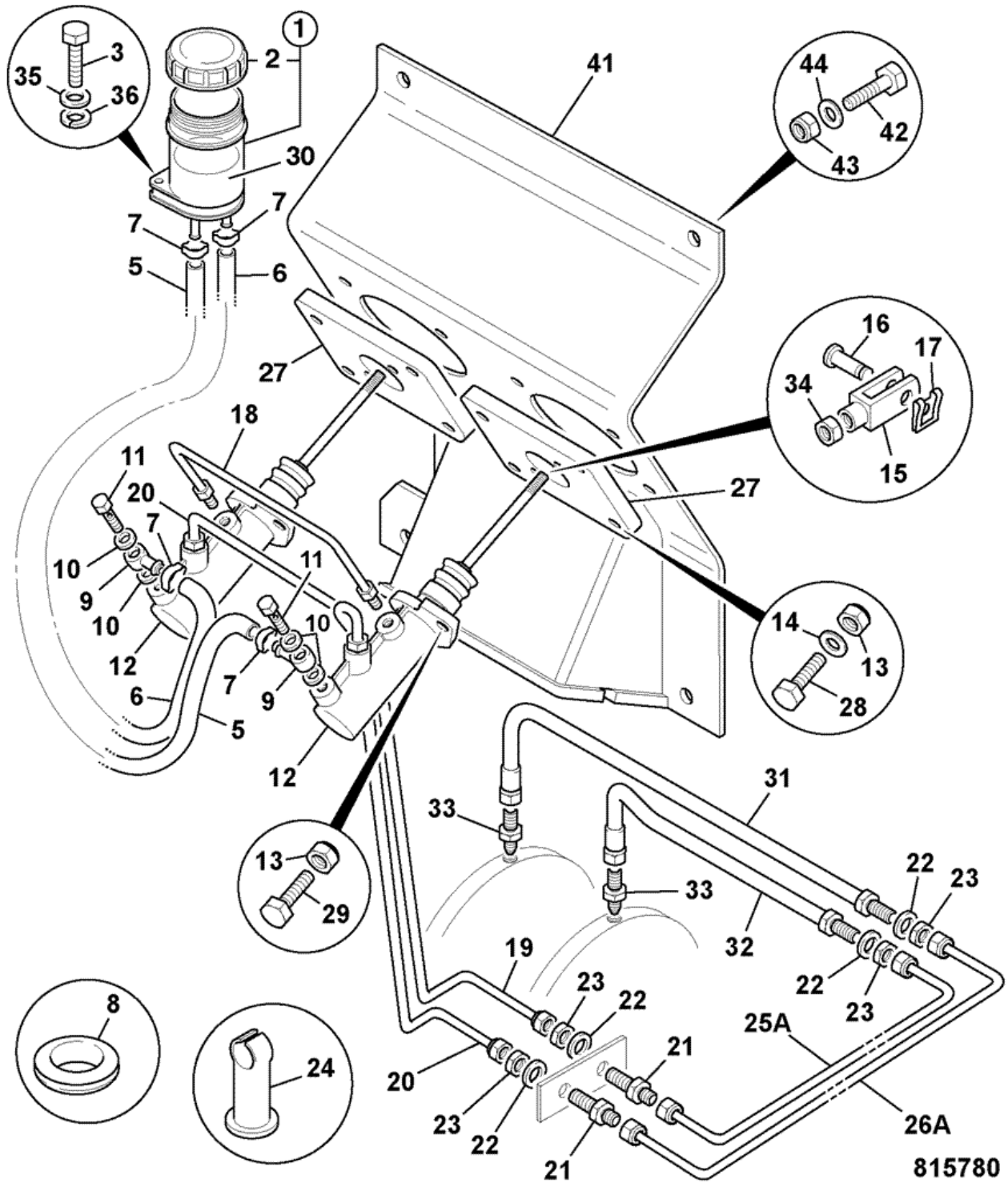


| Item | Part # | Change No | Description | Usage Code | QTY |
|---|---|---|---|---|---|
| 1 | 126/00200 | | Reservoir<br>*Brake* | | 1 |
| | | | | | |

| | | | | | |
|---|---|---|---|---|---|
| 1A | :162/03143 | | Cover reservoir cap | | 1 |
| 1B | ::123/02142 | | Seal splash guard | | 1 |
| 2 | 123/06356 | | Cover brake reservoir | | 1 |
| 3 | 1315/0210Z | | Bolt M6 x 40mm long | | 2 |
| 5 | 332/C1094 | | Hose 6x12x580<br>*580mm long right hand side master cylinder* | | 1 |
| 6 | 332/C1094 | | Hose 6x12x580<br>*580mm long left hand master cylinder* | | 1 |
| 7 | 821/10420 | | Clip ear clip 11.1-13.1 | | 4 |
| 8 | 828/00367 | | Grommet | | 2 |
| 9 | 816/70009 | | Connector banjo | | 2 |
| 10 | 823/00372 | | Washer | | 4 |
| 11 | 816/75016 | | Bolt banjo | | 2 |
| 12 | 15/920111 | <M TBA | Cylinder brake master | | 2 |
| 12 | 15/920402 | >M TBA | Cylinder brake master "Carlisle"<br>*For installation see G1-1-12* | | 2 |
| 12A | :15/920152 | | Kit-repair major | | 1 |
| 13 | 1370/0203Z | | Nut self lock M8 | | 12 |
| 14 | 1420/0007Z | | Washer plain M8 | | 8 |
| 15 | 913/00036 | | Clevis | | 2 |
| 16 | 913/00014 | | Pin clevis | | 2 |
| 17 | 913/00005 | | Clip clevis | | 2 |
| 18 | 123/02516 | | Pipe servo link | | 1 |
| 19 | 123/07854 | | Pipe left hand side | | 1 |
| 20 | 123/07853 | | Pipe right hand side brake | | 1 |
| 21 | 816/15125 | | Connector bulkhead | | 2 |
| 22 | 1417/0014Z | | Washer star | | 6 |
| 23 | 15/106700 | | Nut | | 6 |
| 24 | 821/00069 | | Clip pipe | | 2 |
| 25A | 123/07436 | | Pipe left hand middle | | 1 |
| 26A | 123/07437 | | Pipe right hand middle | | 1 |
| 27 | 123/02719 | | Plate master cyl adapter | | 1 |
| 28 | 1315/0305Z | | Screw Hexagon M8 x 20mm long | | 8 |
| 29 | 1315/0308Z | | Screw M8x30 | | 4 |
| 30 | 4002/0503 | | Brake fluid, 5 ltr | | 0 |
| 31 | 649/51320 | | Hose brake, 760mm | | 1 |
| 32 | 649/51240 | | Hose brake, 580mm | | 1 |
| 33 | 816/15138 | | Adapter M12 x M12 | | 2 |
| 35 | 1420/0006Z | | Washer M6 | | 2 |
| 36 | 1425/0006Z | | Washer Spring | | 2 |
| 41 | 125/00404 | | Bracket master cylinder mounting | | 1 |
| 42 | 1315/0407Z | | Bolt M10x25 | | 4 |
| 43 | 1420/0008Z | | Washer Plain M10 | | 4 |
| 44 | 1370/0303Z | | Nut lock M10 | | 4 |

Product Catalog \ CONSTRUCTION \ NORTH AMERICA \ CONSTRUCTION / INDUSTRIAL \ BACKHOE LOADER 3CX,4CX,214,215,217 \ 3C PLUS (91HP) , Made in Brazil with Dieselmax/IESA Engine 9812/0080 \ G BRAKES \ G01 BRAKES

# 9812/0080 G1-1-12 BRAKE, SYSTEM, STANDARD

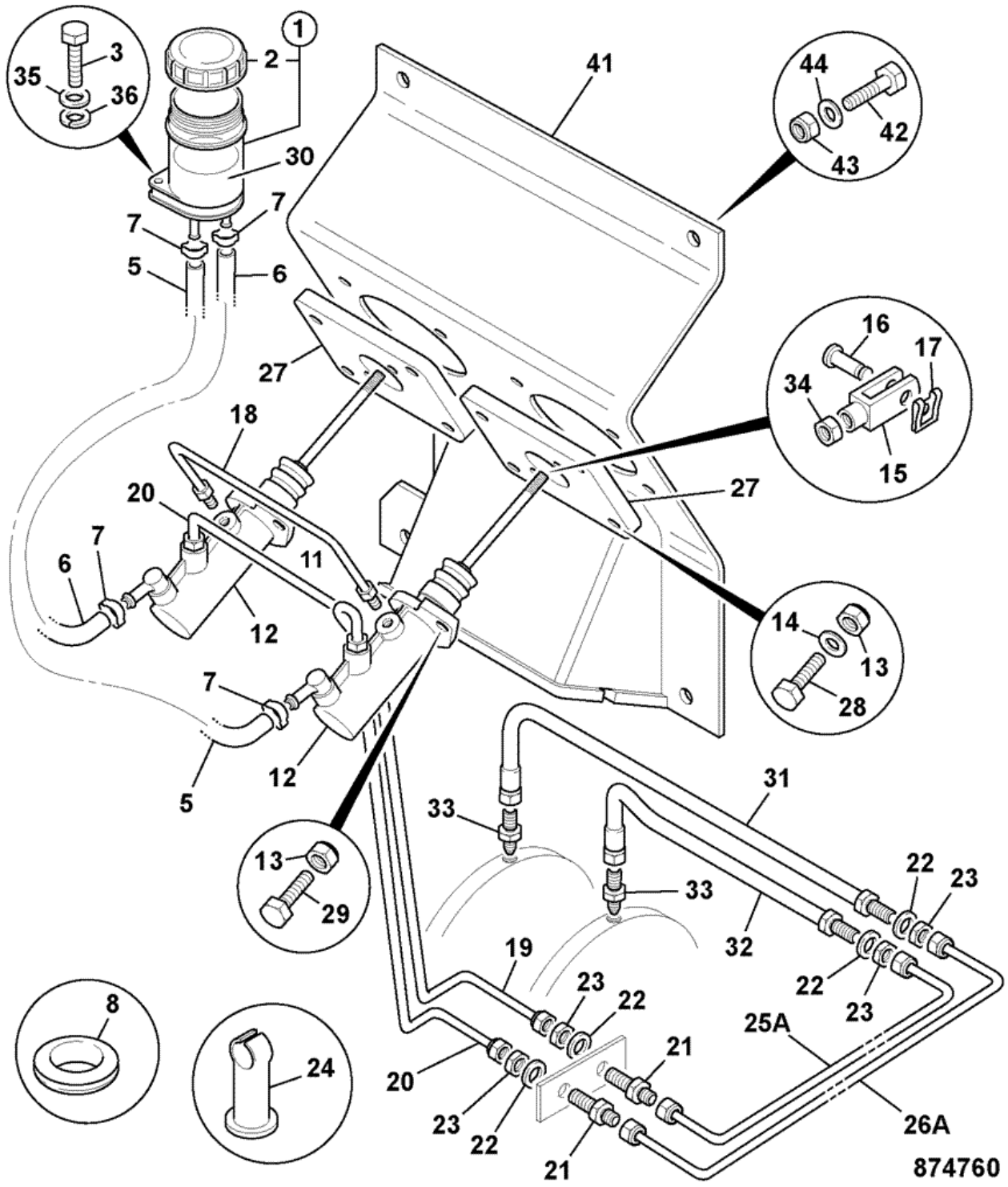


| Item | Part # | Change No | Description | Usage Code | QTY |
|---|---|---|---|---|---|
| 1 | 126/00200 | | Reservoir<br>*Brake* | | 1 |
| | | | | | |

| | | | | | |
|---|---|---|---|---|---|
| 1A | :162/03143 | | Cover reservoir cap | | 1 |
| 1B | ::123/02142 | | Seal splash guard | | 1 |
| 2 | 123/06356 | | Cover brake reservoir | | 1 |
| 3 | 1315/0210Z | | Bolt M6 x 40mm long | | 2 |
| 5 | 332/C1094 | | Hose 6x12x580<br>*580mm long right hand side master cylinder* | | 1 |
| 6 | 332/C1094 | | Hose 6x12x580<br>*580mm long left hand master cylinder* | | 1 |
| 7 | 821/10420 | | Clip ear clip 11.1-13.1 | | 4 |
| 8 | 828/00367 | | Grommet | | 2 |
| 12 | 15/920402 | | Cylinder brake master "Carlisle" | | 2 |
| 13 | 1370/0203Z | | Nut self lock M8 | | 12 |
| 14 | 1420/0007Z | | Washer plain M8 | | 8 |
| 15 | 913/00036 | | Clevis | | 2 |
| 16 | 913/00014 | | Pin clevis | | 2 |
| 17 | 913/00005 | | Clip clevis | | 2 |
| 18 | 123/02516 | | Pipe servo link | | 1 |
| 19 | 123/07854 | | Pipe left hand side | | 1 |
| 20 | 123/07853 | | Pipe right hand side brake | | 1 |
| 21 | 816/15125 | | Connector bulkhead | | 2 |
| 22 | 1417/0014Z | | Washer star | | 6 |
| 23 | 15/106700 | | Nut | | 6 |
| 24 | 821/00069 | | Clip pipe | | 2 |
| 25A | 123/07436 | | Pipe left hand middle | | 1 |
| 26A | 123/07437 | | Pipe right hand middle | | 1 |
| 27 | 123/02719 | | Plate master cyl adapter | | 1 |
| 28 | 1315/0305Z | | Screw Hexagon M8 x 20mm long | | 8 |
| 29 | 1315/0308Z | | Screw M8x30 | | 4 |
| 30 | 4002/0503 | | Brake fluid, 5 ltr | | 0 |
| 31 | 649/51320 | | Hose brake, 760mm | | 1 |
| 32 | 649/51240 | | Hose brake, 580mm | | 1 |
| 33 | 816/15138 | | Adapter M12 x M12 | | 2 |
| 35 | 1420/0006Z | | Washer M6 | | 2 |
| 36 | 1425/0006Z | | Washer Spring | | 2 |
| 41 | 125/00404 | | Bracket master cylinder mounting | | 1 |
| 42 | 1315/0407Z | | Bolt M10x25 | | 4 |
| 43 | 1420/0008Z | | Washer Plain M10 | | 4 |
| 44 | 1370/0303Z | | Nut lock M10 | | 4 |

Product Catalog \ CONSTRUCTION \ NORTH AMERICA \ CONSTRUCTION / INDUSTRIAL \ BACKHOE LOADER 3CX,4CX,214,215,217 \ 3C PLUS (91HP) , Made in Brazil with Dieselmax/IESA Engine 9812/0080 \ G BRAKES \ G01 BRAKES

# 9812/0080 G1-1-21 BRAKE, SYSTEM, REMOTE SERVO

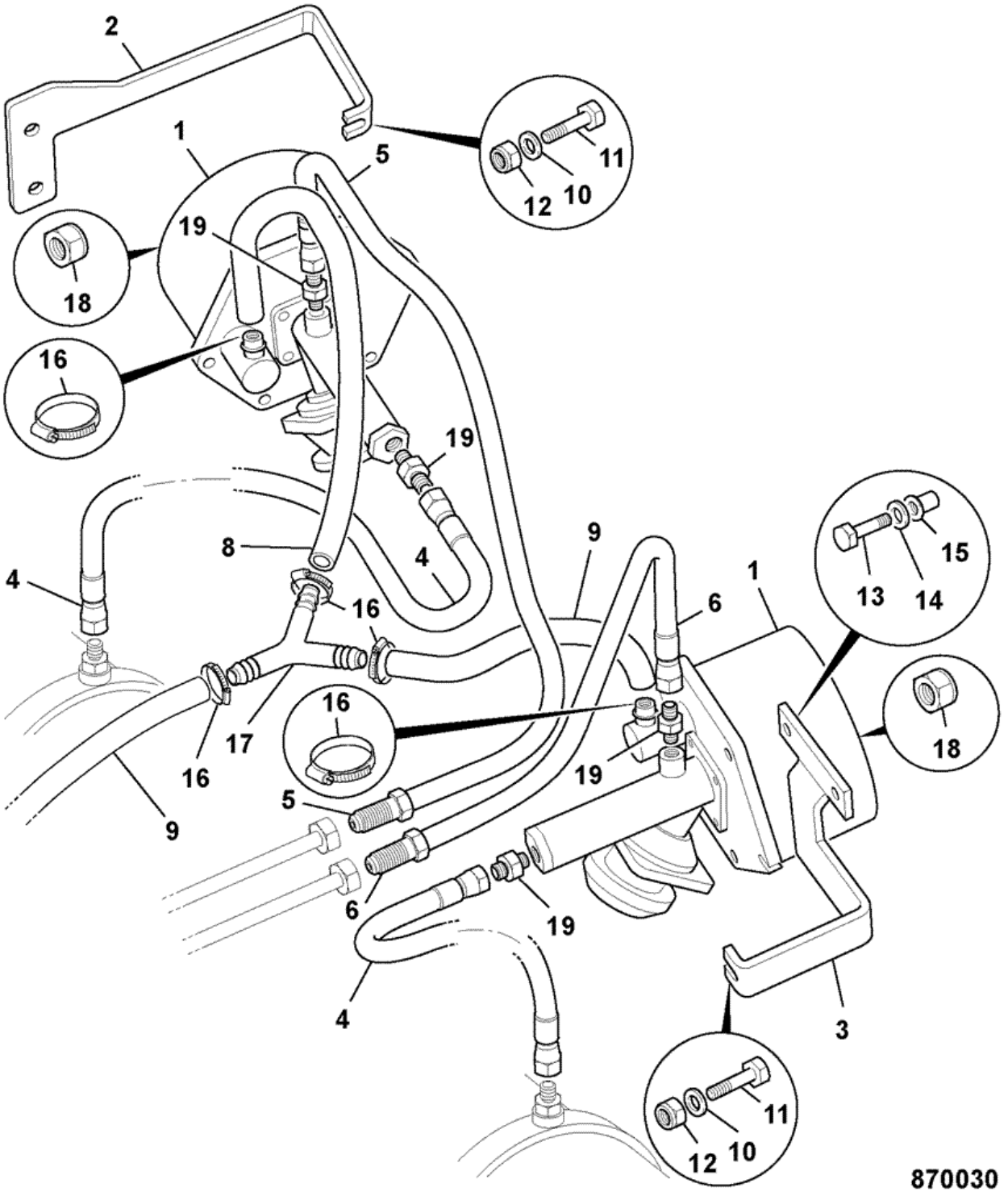


| Item | Part # | Change No | Description | Usage Code | QTY |
|---|---|---|---|---|---|
| 1 | 15/920255 | | Brake Remote Servo | | 2 |
| 2 | 331/59835 | | Mounting servo | | 1 |
| | | | | | |

| | | | | | |
|---|---|---|---|---|---|
| 3 | 331/59833 | | Mounting servo | | 1 |
| 4 | 649/51240 | | Hose brake, 580mm | | 2 |
| 5 | 649/51232 | | Hose | | 1 |
| 6 | 649/21000 | | Hose brake, 350mm | | 1 |
| 7 | 648/31003 | | Hose brake vacuum 9.5mm bore x 400mm | | 1 |
| 8 | 648/31002 | | Hose Vacuum | | 1 |
| 9 | 648/31005 | | Hose vacuum 1350mm long | | 1 |
| 10 | 1420/0005Z | | Washer M5 | | 2 |
| 11 | 1315/0107Z | | Bolt | | 2 |
| 12 | 1370/0003Z | | Nut | | 2 |
| 13 | 1315/0207Z | | Screw M6 x 25mm long | | 2 |
| 14 | 1420/0006Z | | Washer M6 | | 2 |
| 15 | 826/01101 | | Nut rivet,M6 open ended for 3 to 5.5mm plt | | 2 |
| 16 | 2201/0004 | | Clip jubilee | | 5 |
| 17 | 816/60231 | | Connector 3 way | | 1 |
| 18 | 1370/0203Z | | Nut self lock M8 | | 2 |
| 19 | 816/15138 | | Adapter M12 x M12 | | 4 |

Product Catalog \ CONSTRUCTION \ NORTH AMERICA \ CONSTRUCTION / INDUSTRIAL \ BACKHOE LOADER 3CX,4CX,214,215,217 \ 3C PLUS (91HP) , Made in Brazil with Dieselmax/IESA Engine 9812/0080 \ L IESA P4001/P4001T ENGINES FROM S/N 1395000 \ L01 ENGINE BLOCK & SUB-ASSEMBLIES

# 9812/0080 L1-1-1 ENGINE, COMPLETE, NATURALLY ASPIRATED, P4001, 8C88

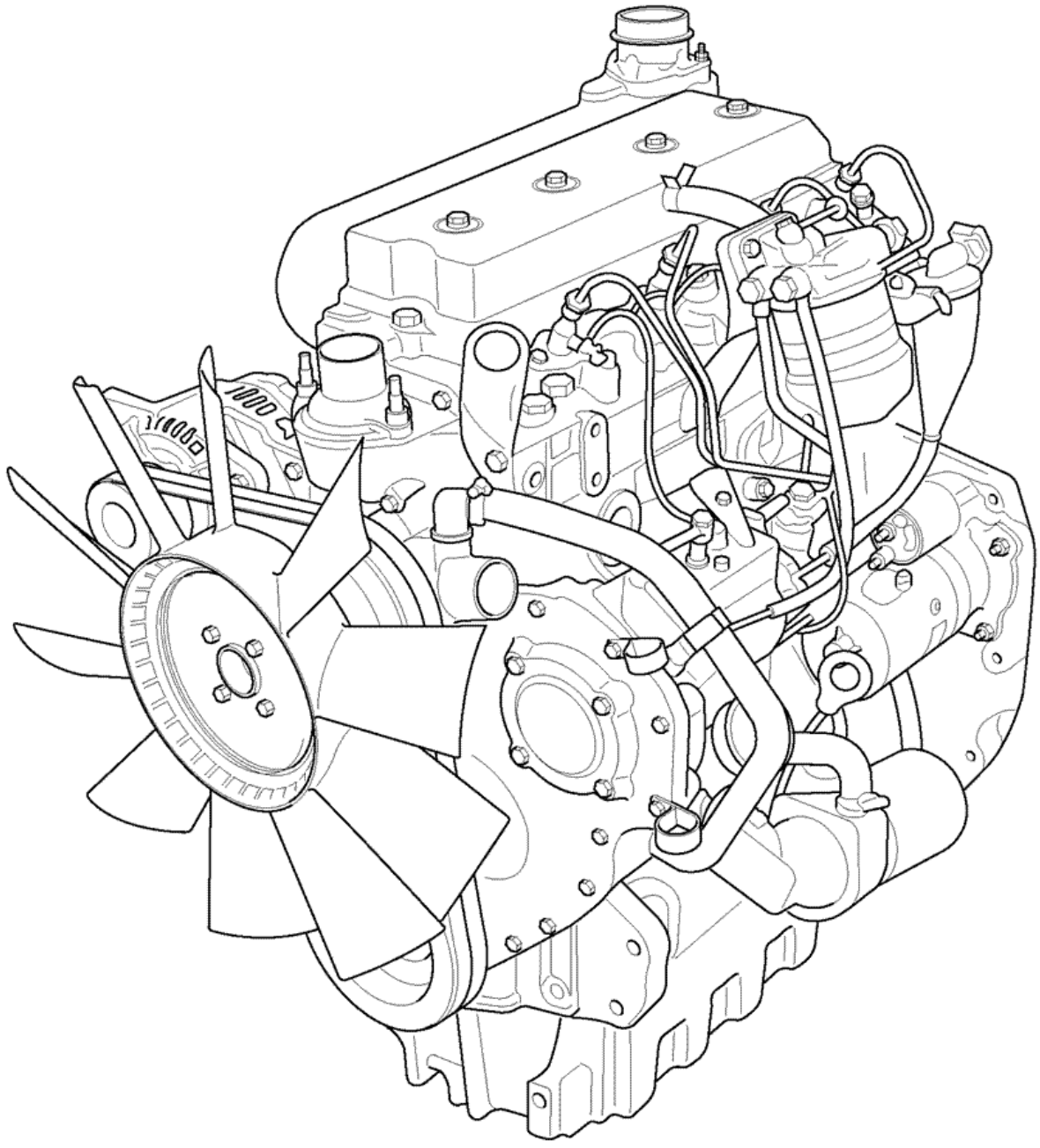

706000

| Item | Part # | Change No | Description | Usage Code | QTY |
|---|---|---|---|---|---|
| 1 | 339/01024 | | Engine naturally aspirated INTERNATIONAL, 75bhp | | 1 |

# 9812/0080 L1-1-2 ENGINE, COMPLETE, TURBOCHARGED, P4001T, 8C89

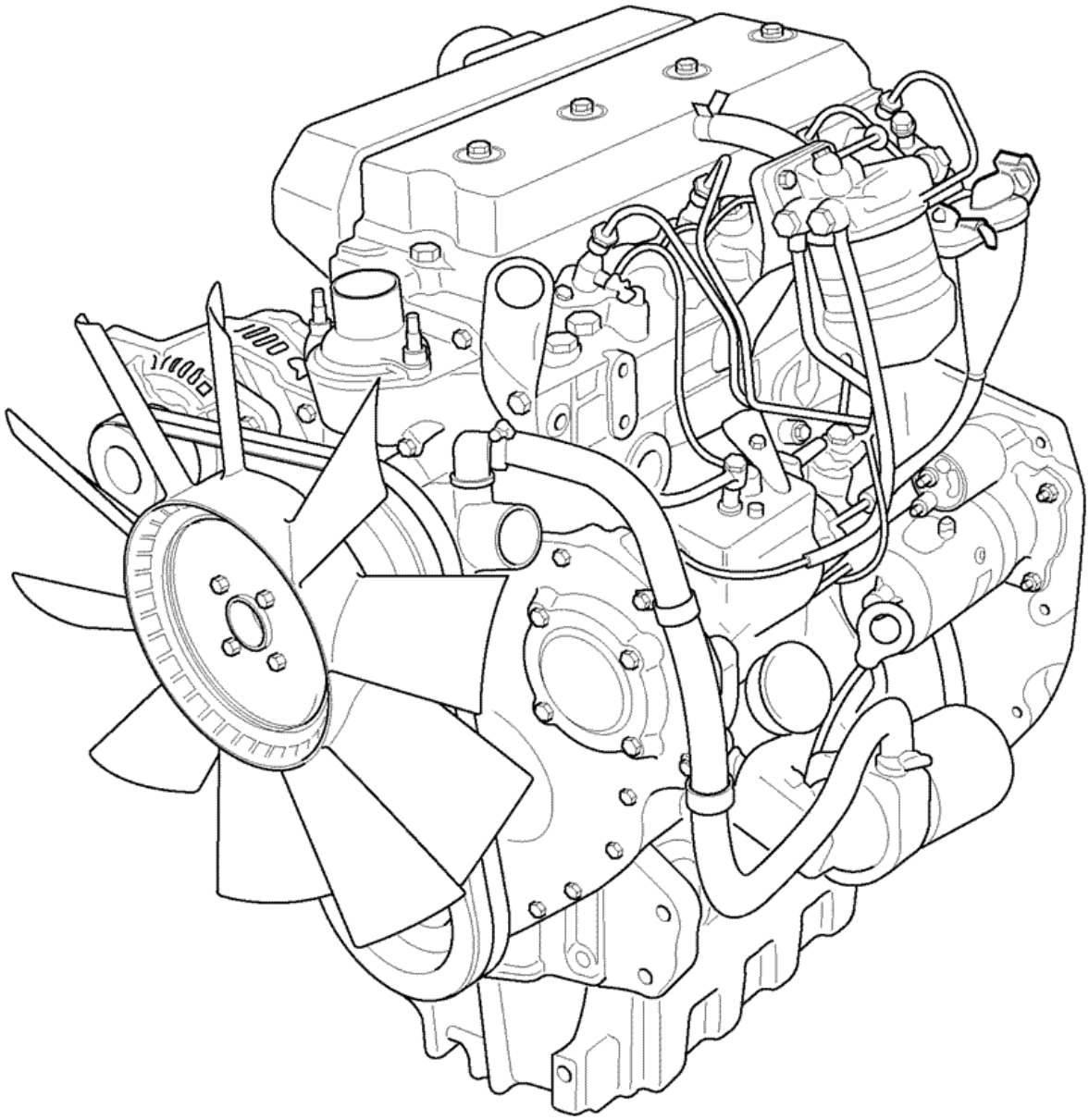

706010

| Item | Part # | Change No | Description | Usage Code | QTY |
|---|---|---|---|---|---|
| 1 | 339/01023 | | Engine turbocharged INTERNATIONAL, 92bhp | | 1 |

Product Catalog \ CONSTRUCTION \ NORTH AMERICA \ CONSTRUCTION / INDUSTRIAL \ BACKHOE LOADER 3CX,4CX,214,215,217 \ 3C PLUS (91HP) , Made in Brazil with Dieselmax/IESA Engine 9812/0080 \ L IESA P4001/P4001T ENGINES FROM S/N 1395000 \ L01 ENGINE BLOCK & SUB-ASSEMBLIES

# 9812/0080 L1-2-1 ENGINE, SHORT, , P4001 8C88

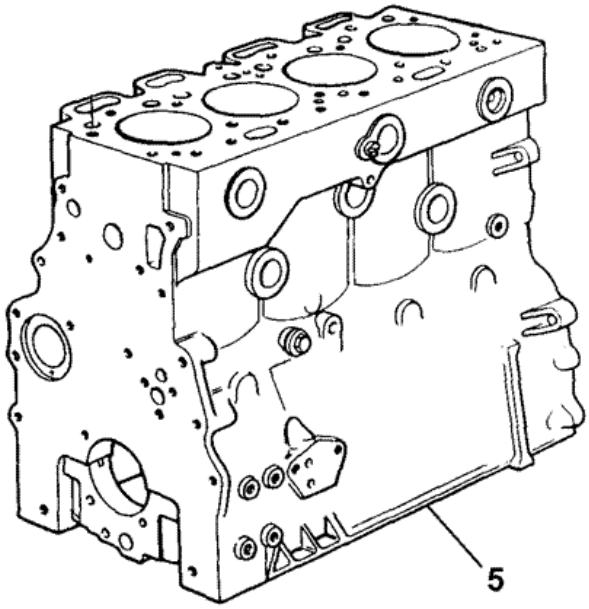


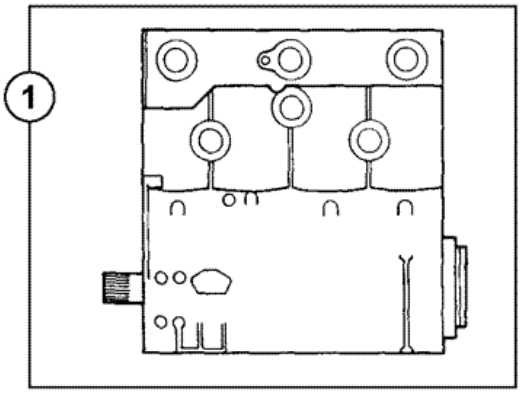


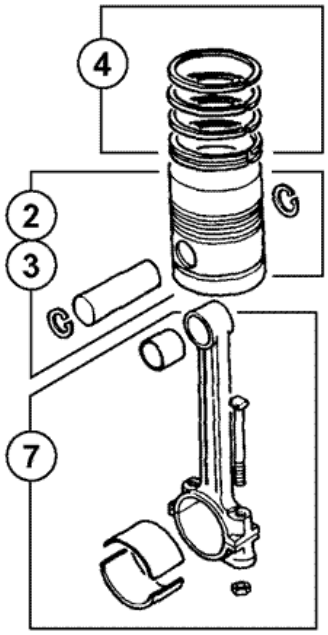


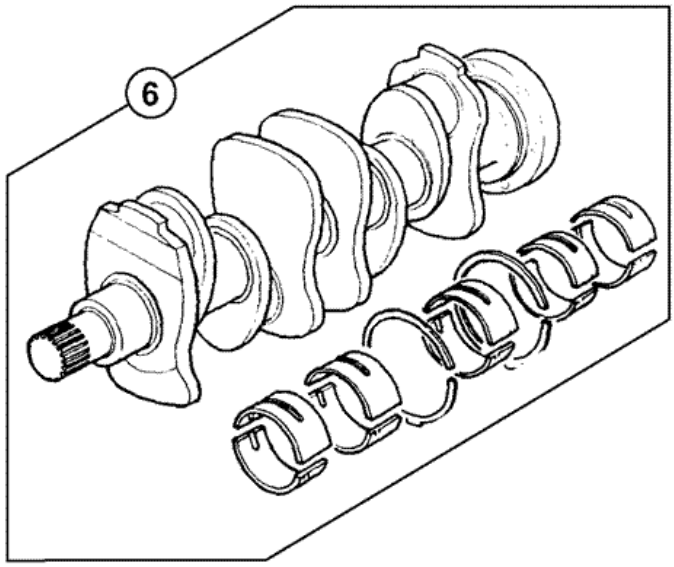


950600

| Item | Part # | Change No | Description | Usage Code | QTY |
|---|---|---|---|---|---|
| 1 | 02/103773 | | Engine partial nat asp | | 1 |
| 2 | :02/103415 | | Piston assembly | | 3 |

| | | | | | |
|---|---|---|---|---|---|
| | | | *Cylinders 1,2 & 3* | | |
| 3 | :02/103701 | | Piston assembly<br>*Cylinder 4 only* | | 1 |
| 4 | :02/103702 | | Kit piston ring | | 4 |
| 5 | :02/103690 | | Block engine 8C30/8C88 | | 1 |
| 6 | :02/103442 | | Kit-crankshaft | | 1 |
| 7 | :02/103417 | | Rod connecting | | 4 |

Product Catalog \ CONSTRUCTION \ NORTH AMERICA \ CONSTRUCTION / INDUSTRIAL \ BACKHOE LOADER 3CX,4CX,214,215,217 \ 3C PLUS (91HP) , Made in Brazil with Dieselmax/IESA Engine 9812/0080 \ L IESA P4001/P4001T ENGINES FROM S/N 1395000 \ L01 ENGINE BLOCK & SUB-ASSEMBLIES

# 9812/0080 L1-2-2 ENGINE, SHORT, , P4001T 8C89

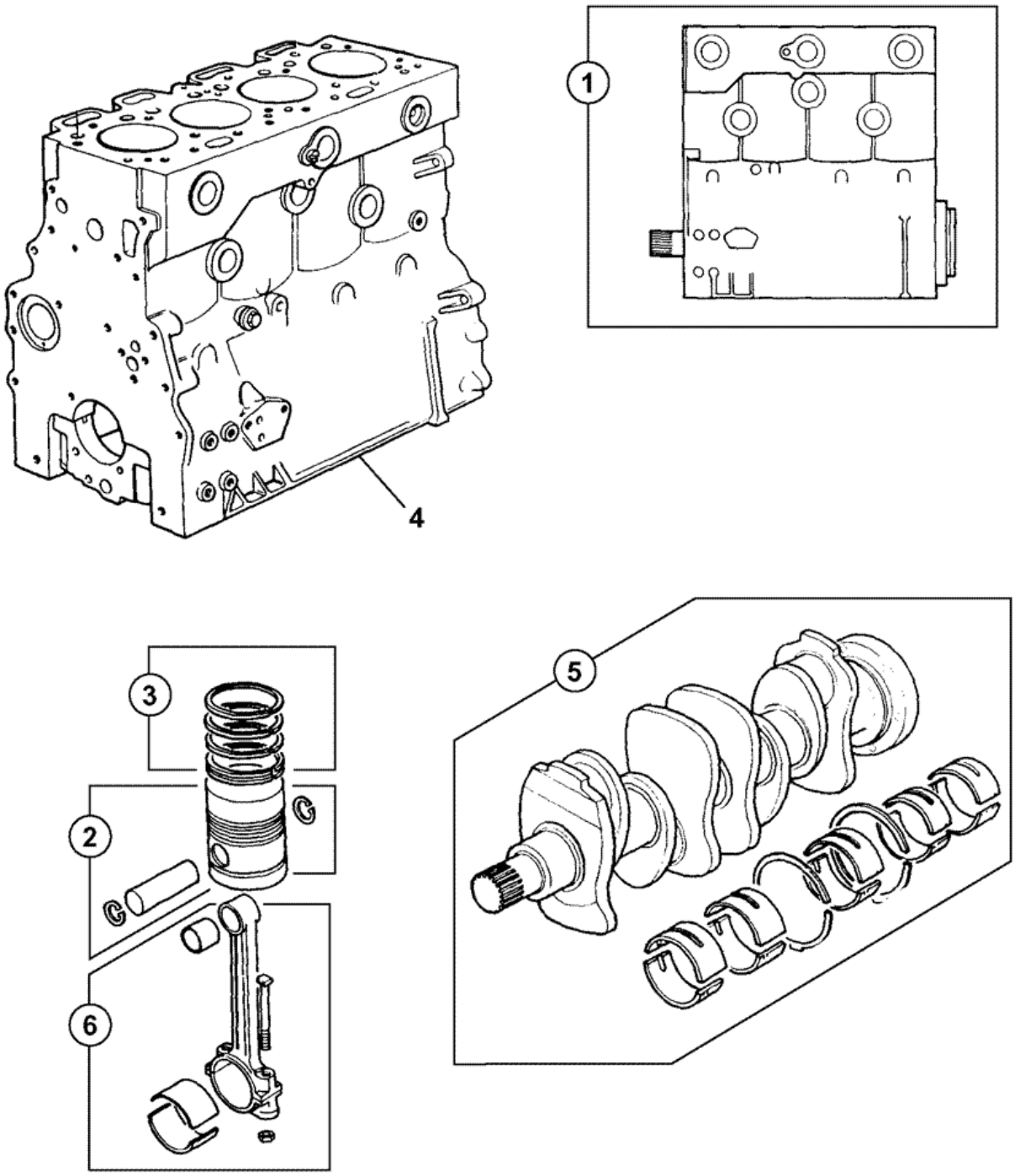


950620

| Item | Part # | Change No | Description | Usage Code | QTY |
|---|---|---|---|---|---|
| 1 | 02/103774 | | Engine partial turbo | | 1 |
| 2 | :02/103423 | | Piston assembly | | 4 |
| | | | | | |

| | | | | | |
|---|---|---|---|---|---|
| 3 | :02/103702 | | Kit piston ring | | 4 |
| 4 | :02/103691 | | Block engine 8C31/8C89 | | 1 |
| 5 | :02/103442 | | Kit-crankshaft | | 1 |
| 6 | :02/103424 | | Rod connecting | | 4 |

# 9812/0080 L1-3-1 BLOCK ASSEMBLY, NATURALLY ASPIRATED, P4001 8C88

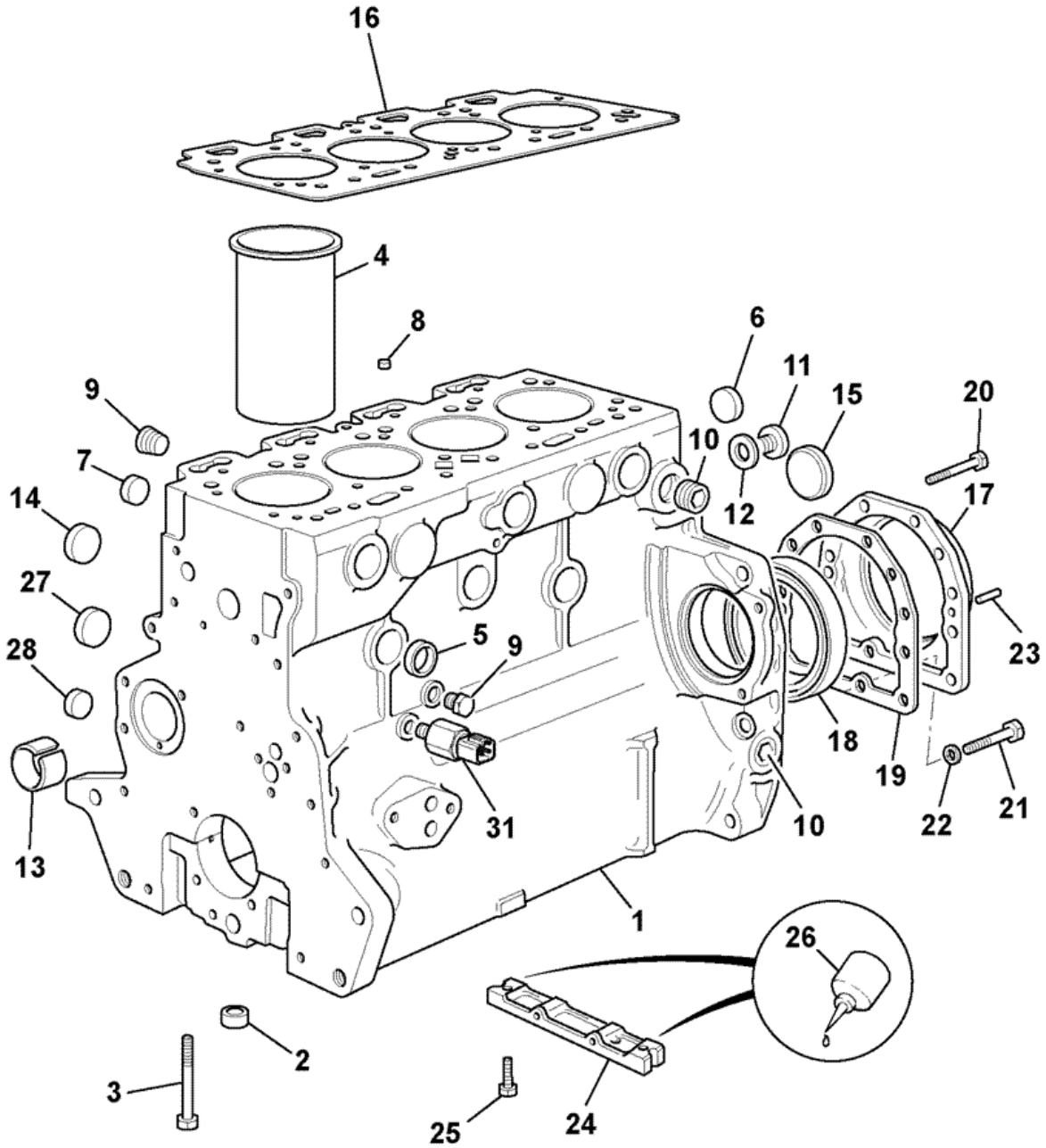


948800

| Item | Part # | Change No | Description | Usage Code | QTY |
|---|---|---|---|---|---|
| 1 | 02/103690 | | Block engine 8C30/8C88 | | 1 |

| | | | | | |
|---|---|---|---|---|---|
| 2 | :02/100101 | | Thimble | | 10 |
| 3 | :02/100102 | | Bolt | | 10 |
| 4 | :02/103401 | | Liner | | 4 |
| 5 | :02/103402 | | Plug | | 5 |
| 6 | :02/103402 | | Plug | | 2 |
| 7 | :02/103404 | | Plug | | 4 |
| 8 | :02/103408 | | Plug | | 1 |
| 9 | :02/103405 | | Plug | | 2 |
| 10 | :02/103410 | | Plug | | 3 |
| 11 | 02/100111 | | Plug | | 1 |
| 12 | 02/103406 | | Washer | | 1 |
| 13 | :02/103409 | | Bush | | 1 |
| 14 | :02/103403 | | Plug | | 4 |
| 15 | 02/103407 | | Plug | | 1 |
| 16 | 02/103707 | | Gasket cylinder head | | 1 |
| 17 | 02/103491 | | Housing rear seal | | 1 |
| 18 | 02/103492 | | Seal | | 1 |
| 19 | 02/103720 | | Gasket gasket | | 1 |
| 20 | 02/103450 | | Bolt | | 12 |
| 21 | 1381/3106 | | Capscrew | | 2 |
| 22 | 02/100307 | | Washer | | 2 |
| 23 | 02/103721 | | Pin guide | | 2 |
| 24 | 02/102167 | | Bridge piece | | 1 |
| 25 | 826/00759 | | Bolt | | 2 |
| 26 | 02/103411 | | Gasket | | 2 |
| 27 | 02/103602 | | Plug | | 1 |
| 28 | 02/100116 | | Plug | | 1 |
| 31 | 701/80327 | | Switch oil pressure 1/8" NPTF Deutsch | | 1 |

# 9812/0080 L1-3-2 BLOCK ASSEMBLY, TURBOCHARGED, P4001T 8C89

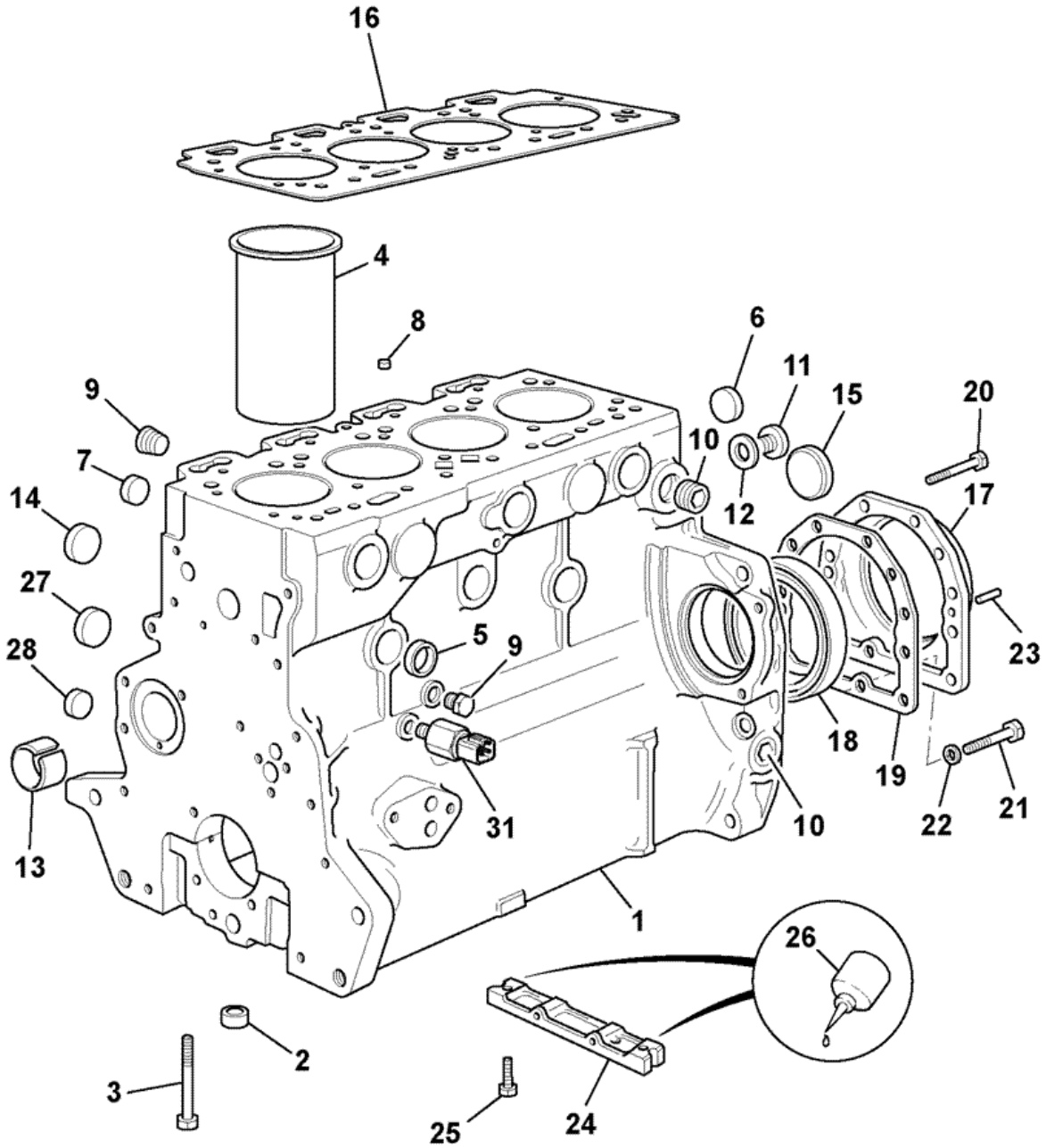


948800

| Item | Part # | Change No | Description | Usage Code | QTY |
|---|---|---|---|---|---|
| 1 | 02/103691 | | Block engine 8C31/8C89 | | 1 |

| | | | | | |
|---|---|---|---|---|---|
| 2 | :02/100101 | | Thimble | | 10 |
| 3 | :02/100102 | | Bolt | | 10 |
| 4 | :02/103401 | | Liner | | 4 |
| 5 | :02/103402 | | Plug | | 5 |
| 6 | :02/103402 | | Plug | | 2 |
| 7 | :02/103404 | | Plug | | 4 |
| 8 | :02/103408 | | Plug | | 1 |
| 9 | :02/103405 | | Plug | | 2 |
| 10 | :02/103410 | | Plug | | 3 |
| 11 | 02/100111 | | Plug | | 1 |
| 12 | 02/103406 | | Washer | | 1 |
| 13 | :02/103409 | | Bush | | 1 |
| 14 | :02/103403 | | Plug | | 4 |
| 15 | 02/103407 | | Plug | | 1 |
| 16 | 02/102174 | | Gasket cylinder head | | 1 |
| 17 | 02/103491 | | Housing rear seal | | 1 |
| 18 | 02/103492 | | Seal | | 1 |
| 19 | 02/103720 | | Gasket gasket | | 1 |
| 20 | 02/103450 | | Bolt | | 12 |
| 21 | 1381/3106 | | Capscrew | | 2 |
| 22 | 02/100307 | | Washer | | 2 |
| 23 | 02/103721 | | Pin guide | | 2 |
| 24 | 02/102167 | | Bridge piece | | 1 |
| 25 | 826/00759 | | Bolt | | 2 |
| 26 | 02/103411 | | Gasket | | 2 |
| 27 | 02/103602 | | Plug | | 1 |
| 28 | 02/100116 | | Plug | | 1 |
| 31 | 701/80327 | | Switch oil pressure 1/8" NPTF Deutsch | | 1 |

Product Catalog \ CONSTRUCTION \ NORTH AMERICA \ CONSTRUCTION / INDUSTRIAL \ BACKHOE LOADER 3CX,4CX,214,215,217 \ 3C PLUS (91HP) , Made in Brazil with Dieselmax/IESA Engine 9812/0080 \ L IESA P4001/P4001T ENGINES FROM S/N 1395000 \ L01 ENGINE BLOCK & SUB-ASSEMBLIES

# 9812/0080 L1-4-1 CRANKSHAFT, BEARINGS, PISTONS & CON-RODS, P4001 NAT-ASP 8C88

| Item | Part # | Change No | Description | Usage Code | QTY |
|---|---|---|---|---|---|
| 1 | 02/103442 | | Kit-crankshaft | | 1 |
| 2 | :02/103437 | | Crankshaft | | 1 |
| 3 | :02/103438 | | Kit-bearing main standard | | 1 |
| 3 | :02/103699 | | Kit-bearing bearing | | 1 |
| 3 | :02/103440 | | Kit-bearing main + .020" | | 1 |
| 3 | :02/103441 | | Kit-bearing main + .030" | | 1 |
| 4 | :02/103665 | | Kit-bearing big-end standard | | 1 |
| 4 | :02/103666 | | Kit-bearing big-end + .010" | | 1 |
| 4 | :02/103667 | | Kit-bearing big-end + .020" | | 1 |
| 4 | :02/103668 | | Kit-bearing big-end + .030" | | 1 |
| 5 | :02/103659 | | Kit-thrust washer standard | | 1 |
| 5 | :02/103660 | | Kit-thrust washer + .0075" | | 1 |
| 6 | 02/190001 | | Gear crankshaft | | 1 |
| 7 | 02/100038 | | Key | | 1 |
| 8 | 02/103415 | | Piston assembly<br>*Cylinders 1,2 & 3* | | 3 |
| 8 | 02/103701 | | Piston assembly<br>*Cylinder 4* | | 1 |
| 9 | :02/103448 | | Circlip | | 8 |
| 10 | :02/103702 | | Kit piston ring | | 4 |
| 11 | 02/103417 | | Rod connecting | | 4 |
| 12 | :02/100127 | | Bolt | | 8 |
| 13 | :02/103446 | | Nut | | 8 |
| 14 | :02/103449 | | Bush | | 4 |

Product Catalog \ CONSTRUCTION \ NORTH AMERICA \ CONSTRUCTION / INDUSTRIAL \ BACKHOE LOADER 3CX,4CX,214,215,217 \ 3C PLUS (91HP) , Made in Brazil with Dieselmax/IESA Engine 9812/0080 \ L IESA P4001/P4001T ENGINES FROM S/N 1395000 \ L01 ENGINE BLOCK & SUB-ASSEMBLIES

# 9812/0080 L1-4-2 CRANKSHAFT, BEARINGS, PISTONS & CON-RODS, P4001T TURBO 8C89

| Item | Part # | Change No | Description | Usage Code | QTY |
|---|---|---|---|---|---|
| 1 | 02/103442 | | Kit-crankshaft | | 1 |
| 2 | :02/103437 | | Crankshaft | | 1 |
| 3 | :02/103438 | | Kit-bearing main standard | | 1 |
| 3 | :02/103699 | | Kit-bearing bearing | | 1 |
| 3 | :02/103440 | | Kit-bearing main + .020" | | 1 |
| 3 | :02/103441 | | Kit-bearing main + .030" | | 1 |
| 4 | :02/103661 | | Kit-bearing big-end standard | | 1 |
| 4 | :02/103662 | | Kit-bearing big-end + .010" | | 1 |
| 4 | :02/103663 | | Kit-bearing big-end + .020" | | 1 |
| 4 | :02/103664 | | Kit-bearing big-end + .030" | | 1 |
| 5 | :02/103659 | | Kit-thrust washer standard | | 1 |
| 5 | :02/103660 | | Kit-thrust washer + .0075" | | 1 |
| 6 | 02/190001 | | Gear crankshaft | | 1 |
| 7 | 02/100038 | | Key | | 1 |
| 8 | 02/103423 | | Piston assembly<br>*Cylinders 1,2,3 & 4* | | 4 |
| 9 | :02/100129 | | Circlip | | 8 |
| 10 | :02/103702 | | Kit piston ring | | 1 |
| 11 | 02/103424 | | Rod connecting | | 4 |
| 12 | :02/100127 | | Bolt | | 8 |
| 13 | :02/103446 | | Nut | | 8 |
| 14 | :02/103447 | | Bush | | 4 |

# 9812/0080 L1-5-1 FANS, PULLEYS, & FAN BELT, P4001/P4001T NAT ASP & TURBO 8C88/8C89

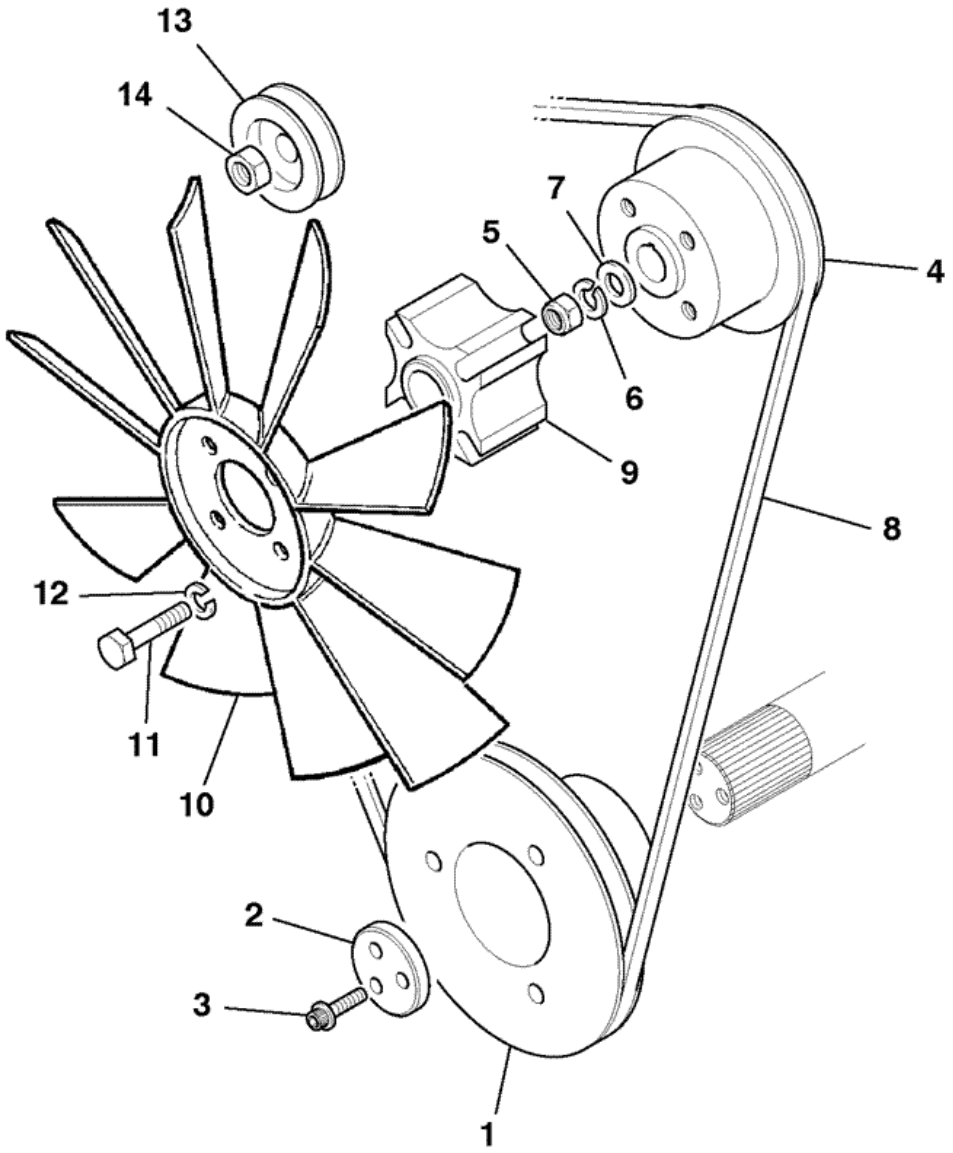


702231

| Item | Part # | Change No | Description | Usage Code | QTY |
|---|---|---|---|---|---|
| 1 | 02/103652 | | Pulley | | 1 |

| | | | | | |
|---|---|---|---|---|---|
| 2 | 02/101812 | | Block Thrust | | 1 |
| 3 | 02/103508 | | Bolt | | 3 |
| 4 | 02/103615 | | Pulley | | 1 |
| 5 | 1340/0601 | | Nut | | 1 |
| 6 | 823/00270 | | Washer spring | | 1 |
| 7 | 1410/0007 | | Washer | | 1 |
| 8 | 02/103600 | | Belt | | 1 |
| 9 | 339/01030 | | Spacer fan | | 1 |
| 10 | 339/01027 | | Fan 18" cooling | | 1 |
| 11 | 1315/3317Z | | Bolt M8 x75mm long | | 4 |
| 12 | 1420/0007Z | | Washer plain M8 | | 4 |
| 13 | 02/103671 | | Pulley water pump | | 1 |
| 14 | 02/103672 | | Nut M12 | | 1 |

Product Catalog \ CONSTRUCTION \ NORTH AMERICA \ CONSTRUCTION / INDUSTRIAL \ BACKHOE LOADER 3CX,4CX,214,215,217 \ 3C PLUS (91HP) , Made in Brazil with Dieselmax/IESA Engine 9812/0080 \ L IESA P4001/P4001T ENGINES FROM S/N 1395000 \ L01 ENGINE BLOCK & SUB-ASSEMBLIES

# 9812/0080 L1-6-1 TIMING CASE, CAMSHAFT & GEARS, P4001 NAT ASP 8C88

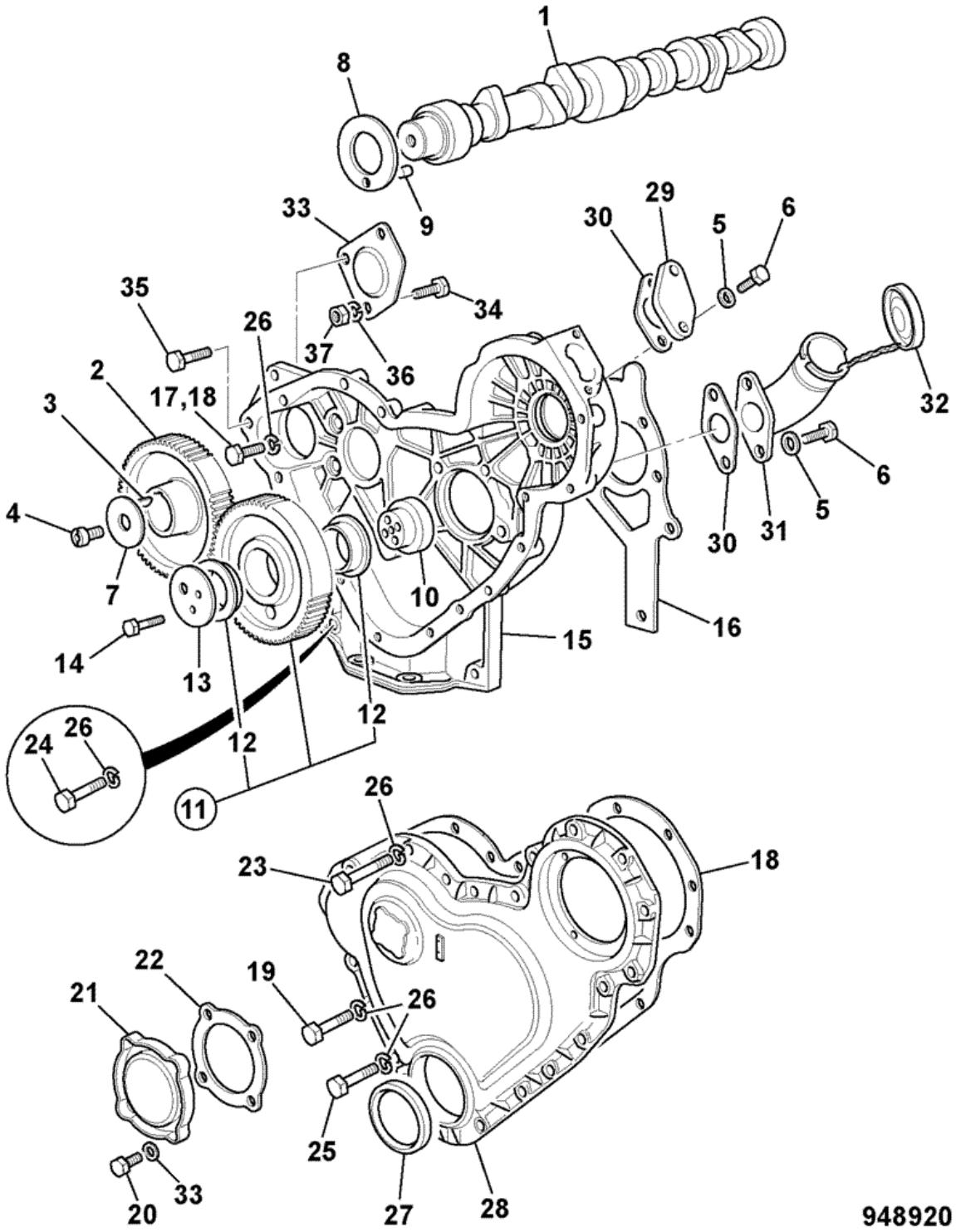


| Item | Part # | Change No | Description | Usage Code | QTY |
|---|---|---|---|---|---|
| 1 | 02/103722 | | Camshaft camshaft | | 1 |

| | | | | | |
|---|---|---|---|---|---|
| 2 | 02/190017 | | Gear camshaft | | 1 |
| 3 | 02/100038 | | Key | | 1 |
| 4 | 02/103493 | | Bolt | | 1 |
| 5 | 1416/0005 | | Washer | | 2 |
| 6 | 1305/0104 | | Bolt | | 2 |
| 7 | 02/103494 | | Washer | | 2 |
| 8 | 02/192046 | | Washer thrust | | 1 |
| 9 | 02/103724 | | Pin guide | | 1 |
| 10 | 02/103725 | | Hub hub | | 1 |
| 11 | 02/190033 | | Gear idler assembly | | 1 |
| 12 | :02/192016 | | Bush | | 2 |
| 13 | 02/103497 | | Plate | | 1 |
| 14 | 02/103498 | | Bolt | | 3 |
| 15 | 02/103694 | | Housing timing case | | 1 |
| 16 | 02/103509 | | Gasket | | 1 |
| 17 | 1305/3106 | | Bolt | | 7 |
| 18 | 02/103510 | | Gasket | | 1 |
| 19 | 1305/3106 | | Bolt | | 14 |
| 20 | 02/103430 | | Bolt | | 4 |
| 21 | 02/103696 | | Cover hole cover | | 1 |
| 22 | 02/100868 | | Gasket | | 1 |
| 23 | 02/103697 | | Bolt bolt | | 1 |
| 24 | 1305/0105 | | Bolt | | 2 |
| 25 | 1305/3118 | | Bolt | | 3 |
| 26 | 1416/0005 | | Washer | | 30 |
| 27 | 02/103429 | | Seal | | 1 |
| 28 | 02/103765 | | Cover cover | | 1 |
| 29 | 02/103434 | | Plate cover | | 1 |
| 30 | 02/103511 | | Gasket | | 2 |
| 31 | 02/103432 | | Filler | | 1 |
| 32 | 02/103698 | | Cap cover | | 1 |
| 33 | 02/100142 | | Plate blanking | | 1 |
| 34 | 826/00030 | | Bolt | | 1 |
| 35 | 1305/3222 | | Bolt | | 2 |
| 36 | 1416/0006 | | Washer | | 3 |
| 37 | 1340/0201 | | Nut | | 3 |

Product Catalog \ CONSTRUCTION \ NORTH AMERICA \ CONSTRUCTION / INDUSTRIAL \ BACKHOE LOADER 3CX,4CX,214,215,217 \ 3C PLUS (91HP) , Made in Brazil with Dieselmax/IESA Engine 9812/0080 \ L IESA P4001/P4001T ENGINES FROM S/N 1395000 \ L01 ENGINE BLOCK & SUB-ASSEMBLIES

# 9812/0080 L1-6-2 TIMING CASE, CAMSHAFT & GEARS, TURBOCHARGED 8C89

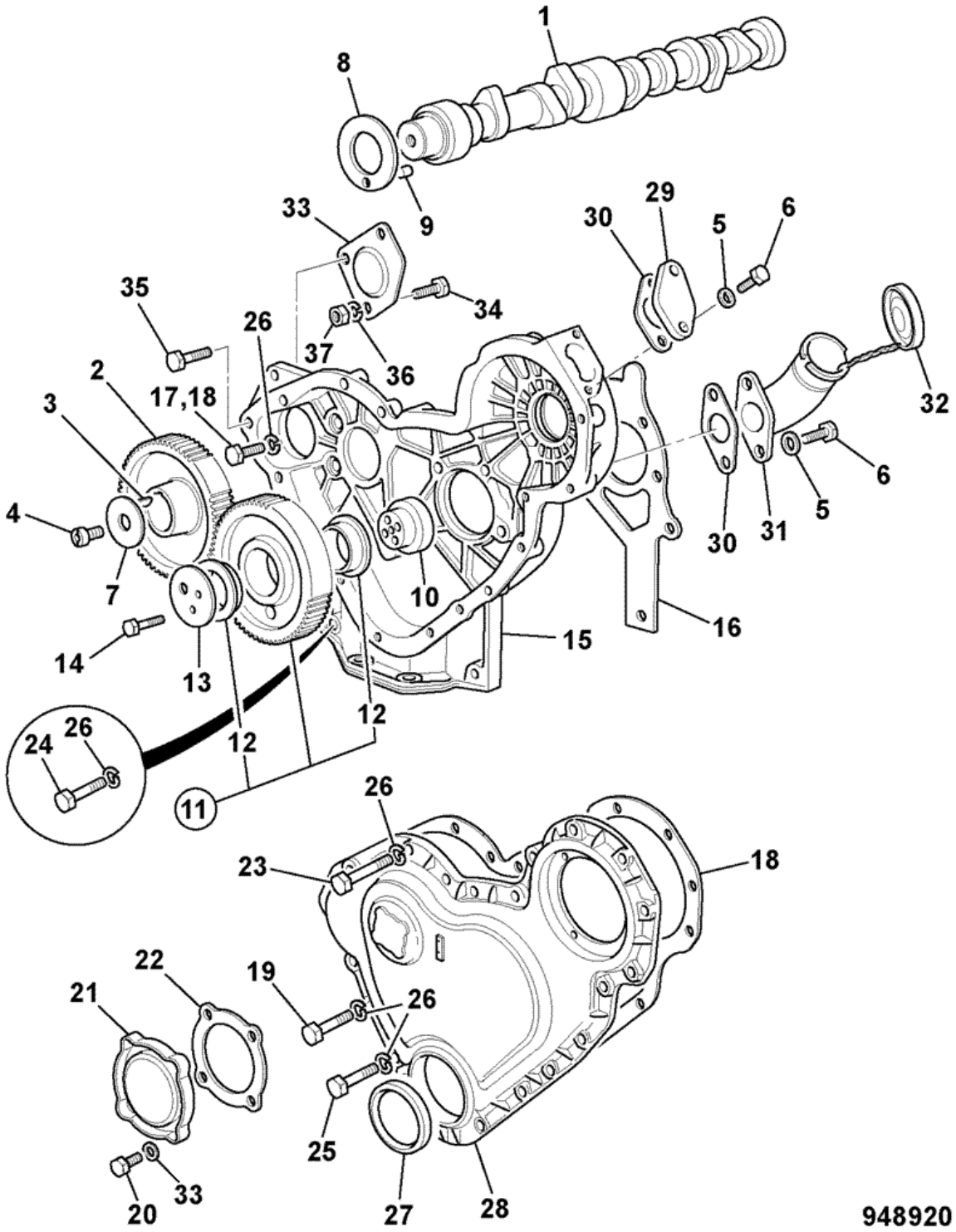


| Item | Part # | Change No | Description | Usage Code | QTY |
|---|---|---|---|---|---|
| 1 | 02/103723 | | Camshaft camshaft | | 1 |

| | | | | | |
|---|---|---|---|---|---|
| 2 | 02/190017 | | Gear camshaft | | 1 |
| 3 | 02/100038 | | Key | | 1 |
| 4 | 02/103493 | | Bolt | | 1 |
| 5 | 1416/0005 | | Washer | | 2 |
| 6 | 1305/0104 | | Bolt | | 2 |
| 7 | 02/103494 | | Washer | | 2 |
| 8 | 02/192046 | | Washer thrust | | 1 |
| 9 | 02/103724 | | Pin guide | | 1 |
| 10 | 02/103725 | | Hub hub | | 1 |
| 11 | 02/190033 | | Gear idler assembly | | 1 |
| 12 | :02/192016 | | Bush | | 2 |
| 13 | 02/103497 | | Plate | | 1 |
| 14 | 02/103498 | | Bolt | | 3 |
| 15 | 02/103695 | | Housing timing case | | 1 |
| 16 | 02/103509 | | Gasket | | 1 |
| 17 | 1305/3106 | | Bolt | | 7 |
| 18 | 02/103510 | | Gasket | | 1 |
| 19 | 1305/3106 | | Bolt | | 14 |
| 20 | 02/103430 | | Bolt | | 4 |
| 21 | 02/103696 | | Cover hole cover | | 1 |
| 22 | 02/100868 | | Gasket | | 1 |
| 23 | 02/103697 | | Bolt bolt | | 1 |
| 24 | 1305/0105 | | Bolt | | 2 |
| 25 | 1305/3118 | | Bolt | | 3 |
| 26 | 1416/0005 | | Washer | | 28 |
| 27 | 02/103429 | | Seal | | 1 |
| 28 | 02/103765 | | Cover cover | | 1 |
| 29 | 02/103434 | | Plate cover | | 1 |
| 30 | 02/103511 | | Gasket | | 2 |
| 31 | 02/103432 | | Filler | | 1 |
| 32 | 02/103698 | | Cap cover | | 1 |
| 33 | 02/100142 | | Plate blanking | | 1 |
| 34 | 826/00030 | | Bolt | | 1 |
| 35 | 1305/3222 | | Bolt | | 2 |
| 36 | 1416/0006 | | Washer | | 3 |
| 37 | 1340/0201 | | Nut | | 3 |

# 9812/0080 L1-7-1 FLYWHEEL, & STARTER RING GEAR, P4001/P4001T, 8C88 & 8C89

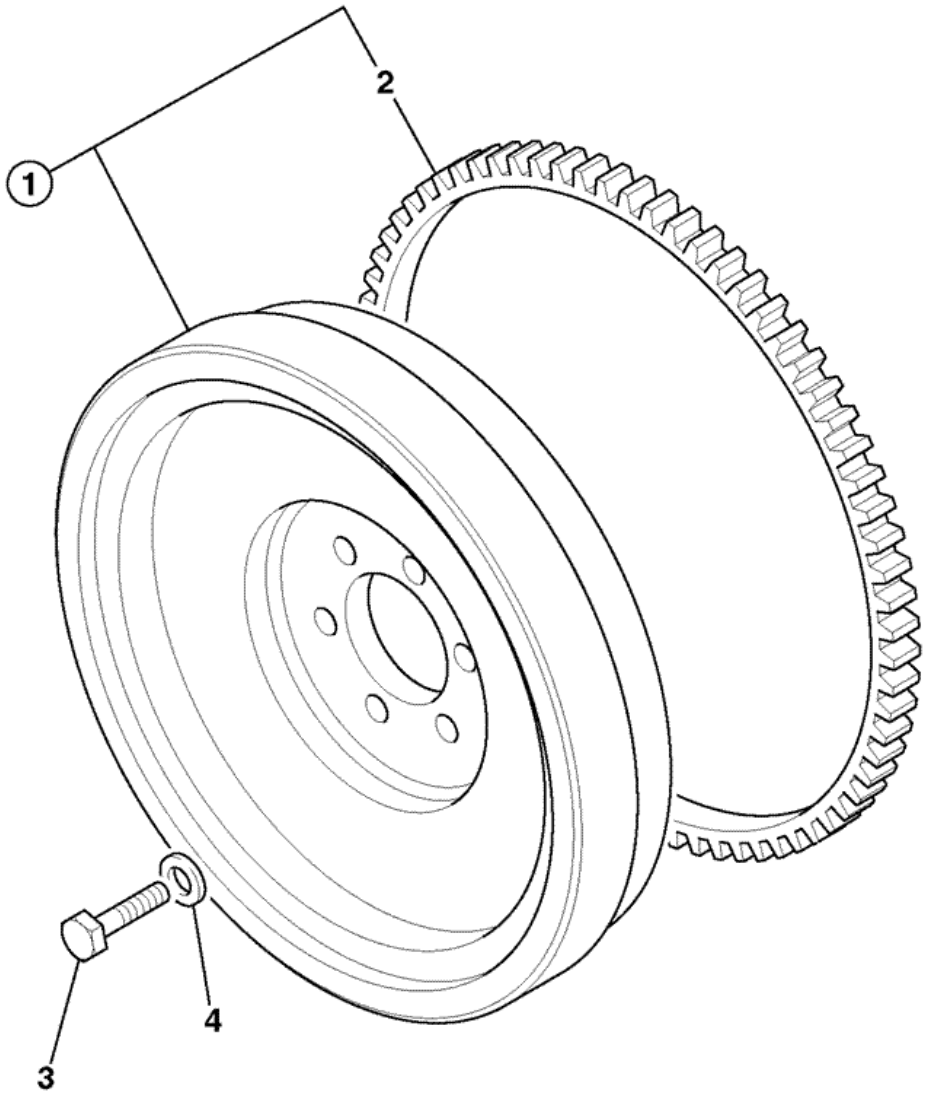


705630

| Item | Part # | Change No | Description | Usage Code | QTY |
|---|---|---|---|---|---|
| 1 | 02/103607 | | Flywheel assembly | | 1 |

| | | | | | |
|---|---|---|---|---|---|
| 2 | :02/100078 | | Gear starter ring | | 1 |
| 3 | 02/103609 | | Bolt | | 6 |
| 4 | 02/100614 | | Washer | | 6 |

# 9812/0080 L1-8-1 ENGINE MOUNTINGS, P4001/P400T 8C88 & 8C89

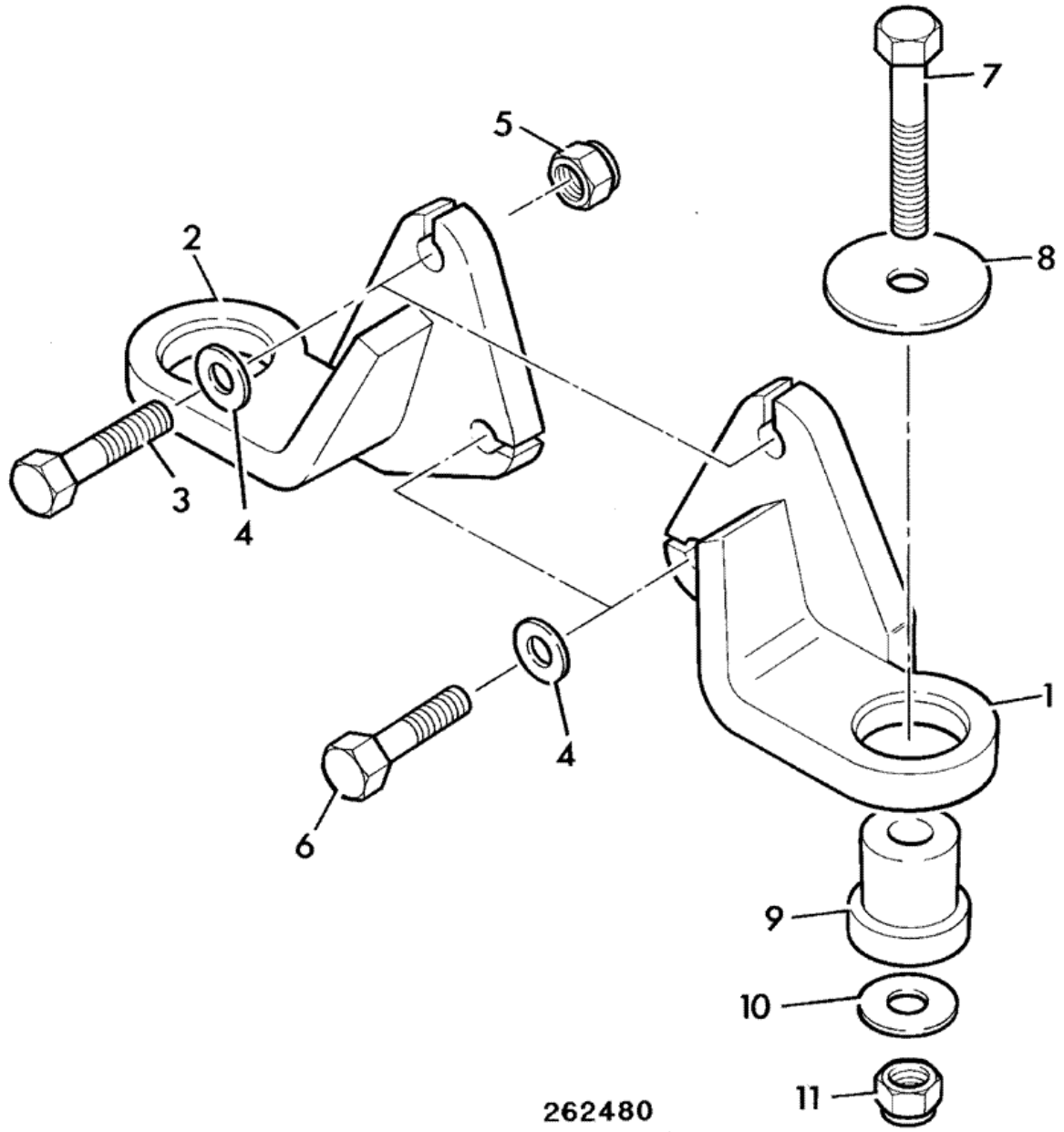


| Item | Part # | Change No | Description | Usage Code | QTY |
|---|---|---|---|---|---|
| 1 | 125/00201 | | Bracket engine mounting left hand | | 1 |

| | | | | | |
|---|---|---|---|---|---|
| 2 | 125/00202 | | Bracket engine mounting right hand | | 1 |
| 3 | 1315/3717Z | | Bolt M16 x 75mm | | 2 |
| 4 | 1370/0603Z | | Nut M16 | | 2 |
| 5 | 1420/0011Z | | Washer M16 plain | | 4 |
| 6 | 1315/0710Z | | Bolt M16 x 40mm | | 2 |
| 7 | 1315/3519Z | | Bolt M12x90mm | | 2 |
| 8 | 123/02453 | | Washer rebound | | 2 |
| 9 | 123/03138 | | Mounting rubber | | 2 |
| 10 | 823/00531 | | Washer | | 2 |
| 11 | 1370/0403Z | | Nut M12 | | 2 |

Product Catalog \ CONSTRUCTION \ NORTH AMERICA \ CONSTRUCTION / INDUSTRIAL \ BACKHOE LOADER 3CX,4CX,214,215,217 \ 3C PLUS (91HP) , Made in Brazil with Dieselmax/IESA Engine 9812/0080 \ L IESA P4001/P4001T ENGINES FROM S/N 1395000 \ L02 CYLINDER HEAD & SUB-ASSEMBLIES

# 9812/0080 L2-1-1 CYLINDER HEAD, NAT ASP, P4001 8C88

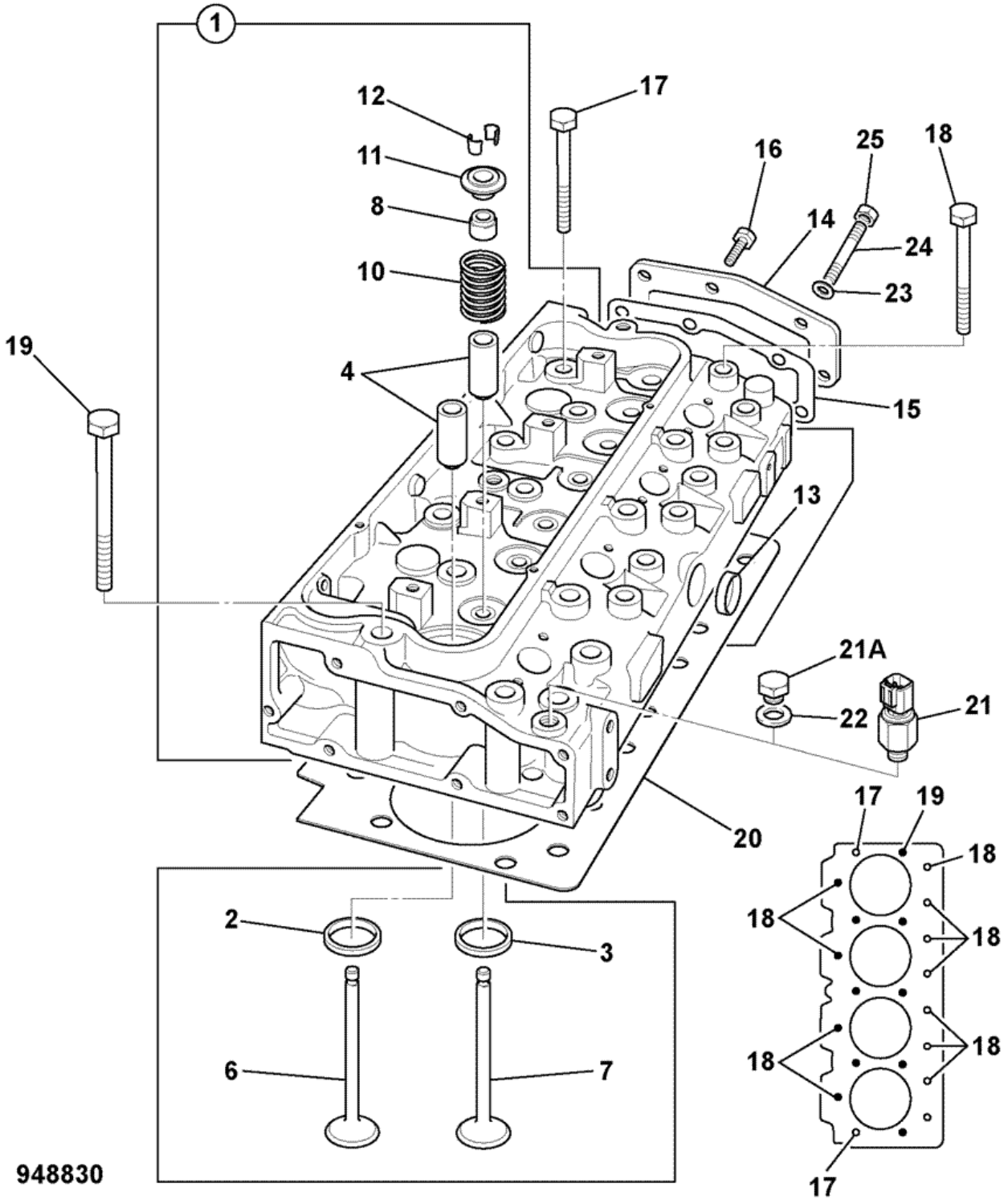


| Item | Part # | Change No | Description | Usage Code | QTY |
|---|---|---|---|---|---|
| 1 | 02/103705 | | Head cylinder | | 1 |
| 2 | :02/103466 | | Insert exhaust | | 4 |
| | | | | | |

| | | | | | |
|---|---|---|---|---|---|
| 3 | :02/103467 | | Insert inlet | | 4 |
| 4 | :02/130064 | | Guide valve<br>*EXHAUST* | | 8 |
| 6 | :02/103710 | | Valve exhaust | | 4 |
| 7 | :02/103709 | | Valve inlet | | 4 |
| 8 | :02/103471 | | Seal | | 8 |
| 9 | :02/100638 | | Seat spring | | 8 |
| 10 | :02/103472 | | Spring outer | | 8 |
| 11 | :02/103474 | | Holder Collet | | 16 |
| 12 | :02/103473 | | Collet | | 16 |
| 13 | :02/103402 | | Plug | | 1 |
| 14 | :02/103478 | | Cover rear | | 1 |
| 15 | :02/103533 | | Gasket | | 1 |
| 16 | :02/103450 | | Bolt | | 4 |
| 17 | 02/103711 | | Bolt 1/2x140 | | 2 |
| 18 | 02/103712 | | Bolt 1/2x119 | | 12 |
| 19 | 02/103713 | | Bolt 1/2x103 | | 8 |
| 20 | 02/103707 | | Gasket cylinder head | | 1 |
| 21 | 701/80317 | | Switch water temperature | | 1 |
| 21A | 02/103603 | | Plug | | 1 |
| 22 | 02/103604 | | Washer | | 1 |
| 23 | 1416/0005 | | Washer | | 4 |
| 24 | 822/00119 | | Stud | | 2 |
| 25 | 1340/0101 | | Nut | | 2 |

Product Catalog \ CONSTRUCTION \ NORTH AMERICA \ CONSTRUCTION / INDUSTRIAL \ BACKHOE LOADER 3CX,4CX,214,215,217 \ 3C PLUS (91HP) , Made in Brazil with Dieselmax/IESA Engine 9812/0080 \ L IESA P4001/P4001T ENGINES FROM S/N 1395000 \ L02 CYLINDER HEAD & SUB-ASSEMBLIES

# 9812/0080 L2-1-2 CYLINDER HEAD, TURBO, P4001T 8C89

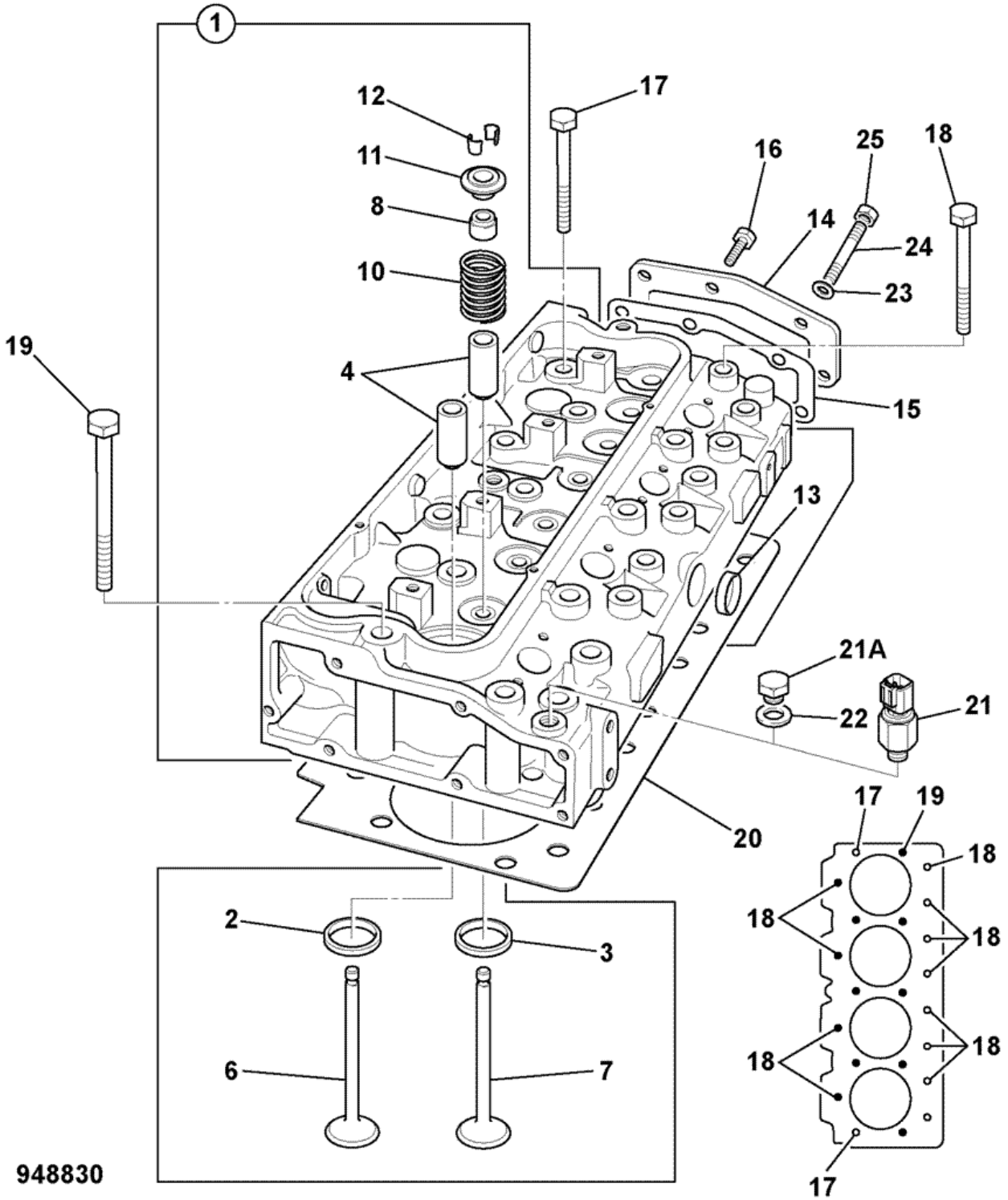


| Item | Part # | Change No | Description | Usage Code | QTY |
|---|---|---|---|---|---|
| 1 | 02/103706 | | Head cylinder | | 1 |
| 2 | :02/103480 | | Insert exhaust | | 4 |
| | | | | | |

| | | | | | |
|---|---|---|---|---|---|
| 3 | :02/103481 | | Insert inlet | | 4 |
| 4 | :02/130064 | | Guide valve<br>*EXHAUST* | | 8 |
| 6 | :02/103710 | | Valve exhaust | | 4 |
| 7 | :02/103708 | | Valve inlet | | 4 |
| 8 | :02/103471 | | Seal | | 8 |
| 9 | :02/100638 | | Seat spring | | 8 |
| 10 | :02/103472 | | Spring outer | | 8 |
| 11 | :02/103474 | | Holder Collet | | 16 |
| 12 | :02/103473 | | Collet | | 16 |
| 13 | :02/103402 | | Plug | | 1 |
| 14 | :02/103478 | | Cover rear | | 1 |
| 15 | :02/103533 | | Gasket | | 1 |
| 16 | :02/103450 | | Bolt | | 4 |
| 17 | 02/103711 | | Bolt 1/2x140 | | 2 |
| 18 | 02/103712 | | Bolt 1/2x119 | | 12 |
| 19 | 02/103713 | | Bolt 1/2x103 | | 8 |
| 20 | 02/103707 | | Gasket cylinder head | | 1 |
| 21 | 701/80317 | | Switch water temperature | | 1 |
| 21A | 02/103603 | | Plug | | 1 |
| 22 | 02/103604 | | Washer | | 1 |
| 23 | 1416/0005 | | Washer | | 4 |
| 24 | 822/00119 | | Stud | | 2 |
| 25 | 1340/0101 | | Nut | | 2 |

Product Catalog \ CONSTRUCTION \ NORTH AMERICA \ CONSTRUCTION / INDUSTRIAL \ BACKHOE LOADER 3CX,4CX,214,215,217 \ 3C PLUS (91HP) , Made in Brazil with Dieselmax/IESA Engine 9812/0080 \ L IESA P4001/P4001T ENGINES FROM S/N 1395000 \ L02 CYLINDER HEAD & SUB-ASSEMBLIES

# 9812/0080 L2-2-1 ROCKER ASSEMBLY, PUSH RODS & TAPPETS, P4001/P4001T NAT ASP & TURBO 8C88/8C89

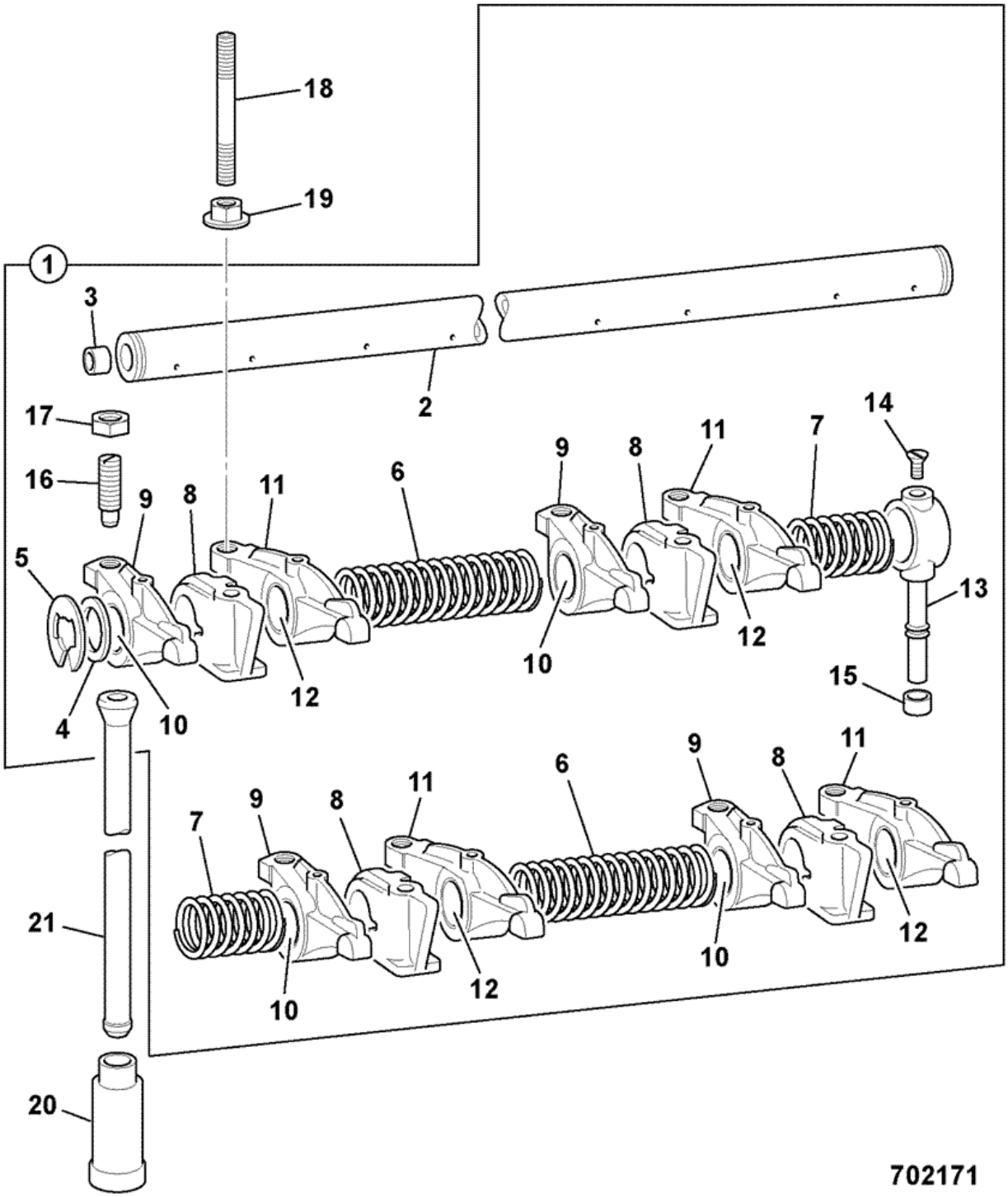


| Item | Part # | Change No | Description | Usage Code | QTY |
|---|---|---|---|---|---|
| 1 | 02/103483 | | Assembly rocker shaft | | 1 |

| | | | | | |
|---|---|---|---|---|---|
| 2 | :02/103484 | | Shaft | | 2 |
| 3 | :02/100152 | | Plug core D=11mm | | 2 |
| 4 | :02/103714 | | Washer washer | | 2 |
| 5 | :02/100287 | | Circlip | | 2 |
| 6 | :02/100028 | | Spring long | | 2 |
| 7 | :02/103717 | | Spring spring | | 2 |
| 8 | :02/103485 | | Bracket | | 4 |
| 9 | :02/103715 | | Lever rocker | | 4 |
| 10 | ::02/192050 | | Bush | | 4 |
| 11 | :02/103716 | | Lever rocker | | 4 |
| 12 | ::02/192050 | | Bush | | 4 |
| 13 | :02/103718 | | Pipe pipe | | 1 |
| 14 | :826/00124 | | Screw | | 1 |
| 15 | 816/60170 | | Olive | | 1 |
| 16 | :02/100032 | | Screw | | 8 |
| 17 | :02/101203 | | Nut lock | | 8 |
| 18 | 02/103489 | | Stud | | 4 |
| 19 | 02/103490 | | Nut | | 4 |
| 20 | 02/103719 | | Tappet tappets | | 8 |
| 21 | 02/103487 | | Rod push | | 8 |

# 9812/0080 L2-3-1 ROCKER COVER, NAT ASP & TURBO, P4001 & P4001T 8C88/8C89

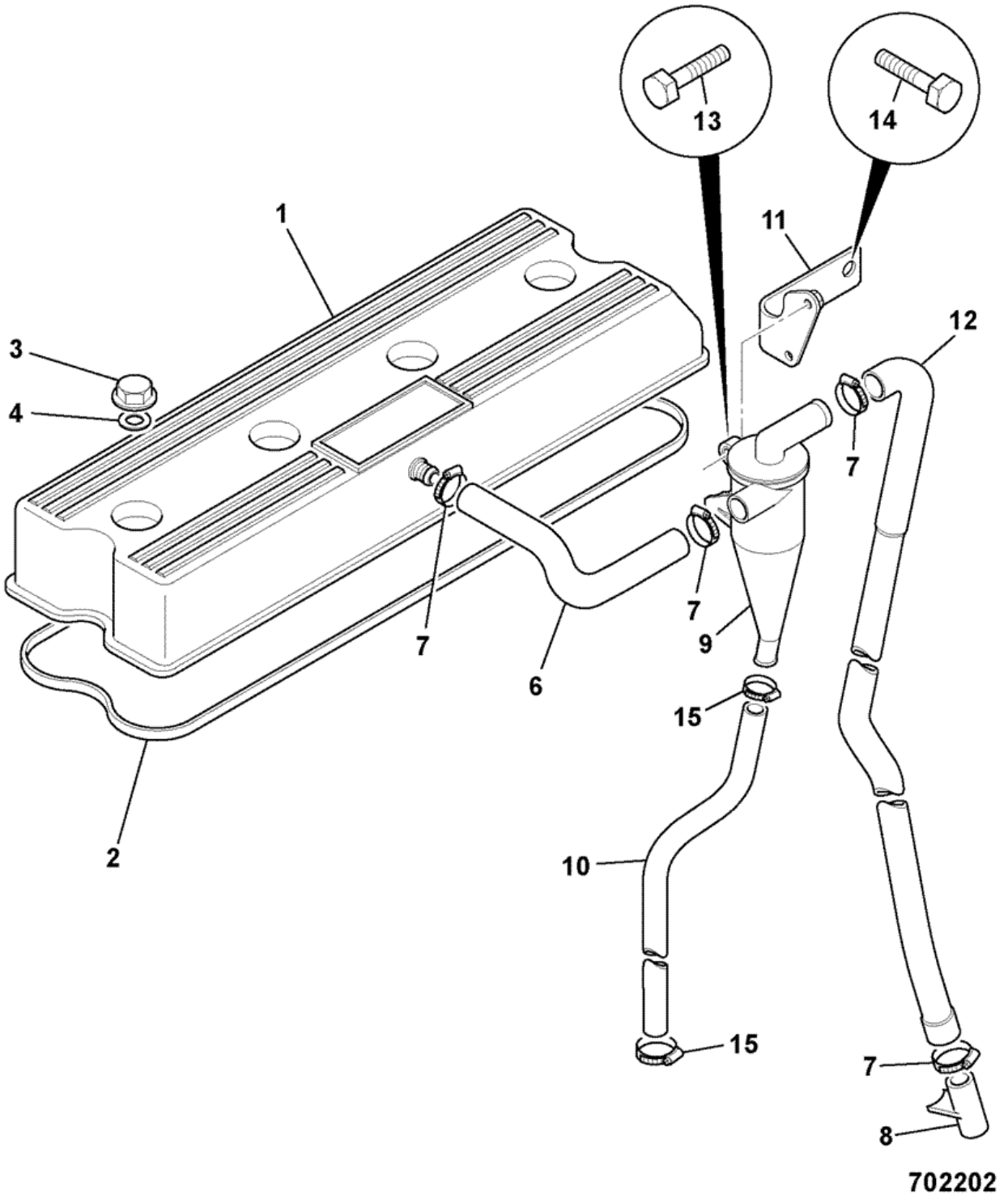


| Item | Part # | Change No | Description | Usage Code | QTY |
|---|---|---|---|---|---|
| 1 | 02/103733 | | Cover cover | | 1 |

| | | | | | |
|---|---|---|---|---|---|
| 2 | 02/103526 | | Gasket | | 1 |
| 3 | 02/103527 | | Nut | | 4 |
| 4 | 02/192069 | | Bush | | 4 |
| 6 | 02/103605 | | Hose | | 1 |
| 7 | 02/103524 | | Clamp | | 4 |
| 8 | 02/100180 | | Pipe | | 1 |
| 9 | 02/103673 | | Valve | | 1 |
| 10 | 02/103674 | | Hose | | 1 |
| 11 | 02/103675 | | Bracket | | 1 |
| 12 | 02/103676 | | Hose | | 1 |
| 13 | 02/103677 | | Bolt | | 2 |
| 14 | 02/103750 | | Bolt bolt | | 2 |
| 15 | 02/103606 | | Clamp | | 2 |

# 9812/0080 L2-4-1 LIFTING PLATES, ENGINE, P4001/P4001T NAT ASP & TURBO 8C88/8C89

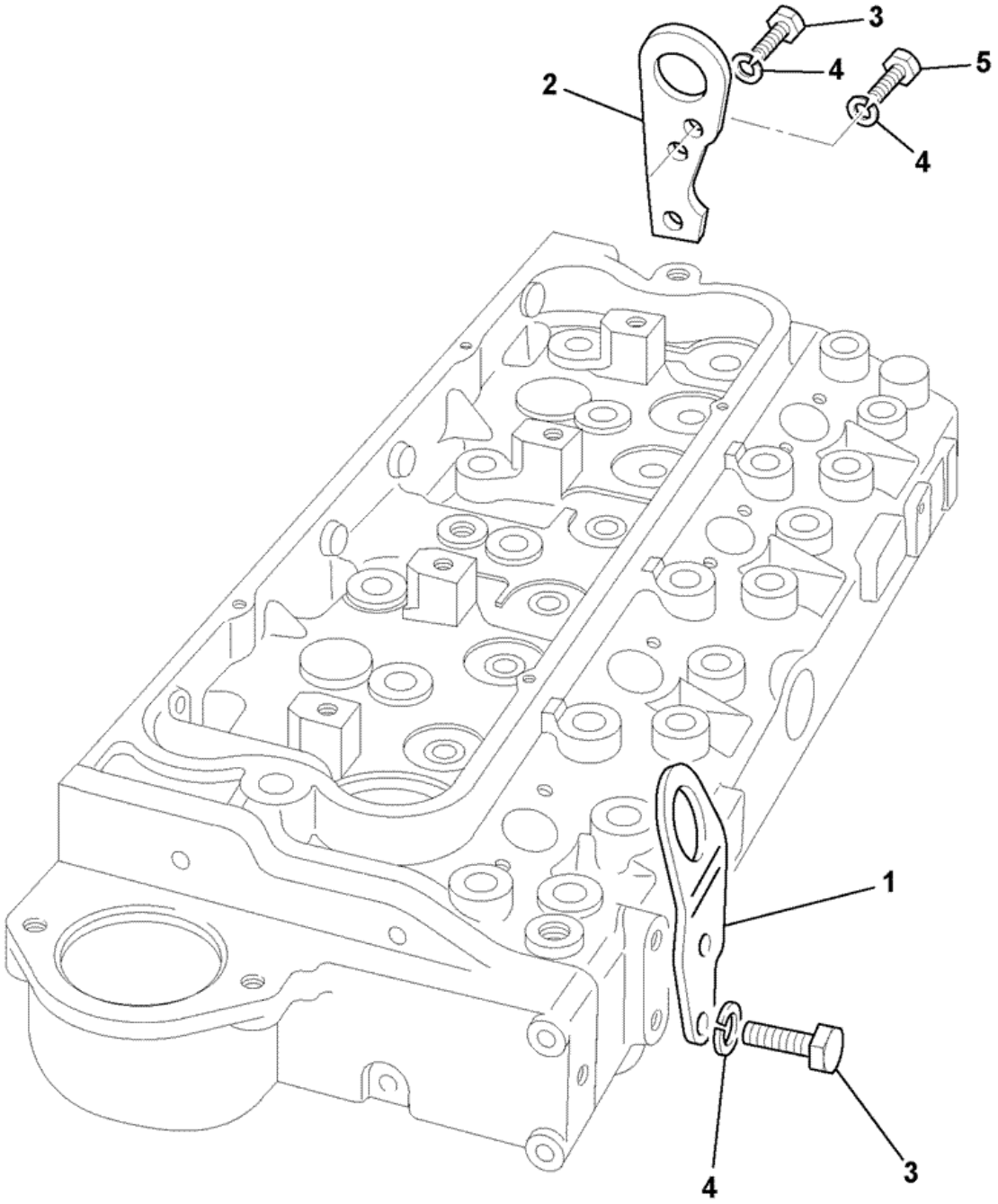


705981

| Item | Part # | Change No | Description | Usage Code | QTY |
|---|---|---|---|---|---|
| 1 | 02/103532 | | Plate lifting | | 1 |

| | | | | | |
|---|---|---|---|---|---|
| 2 | 02/100157 | | Plate lifting | | 1 |
| 3 | 1305/0205 | | Bolt | | 2 |
| 4 | 1416/0006 | | Washer | | 4 |
| 5 | 1305/3207 | | Bolt | | 1 |

Product Catalog \ CONSTRUCTION \ NORTH AMERICA \ CONSTRUCTION / INDUSTRIAL \ BACKHOE LOADER 3CX,4CX,214,215,217 \ 3C PLUS (91HP) , Made in Brazil with Dieselmax/IESA Engine 9812/0080 \ L IESA P4001/P4001T ENGINES FROM S/N 1395000 \ L03 INDUCTION & EXHAUST SYSTEM

# 9812/0080 L3-1-1 MANIFOLD, INDUCTION, NATURALLY ASPIRATED, P4001 8C88

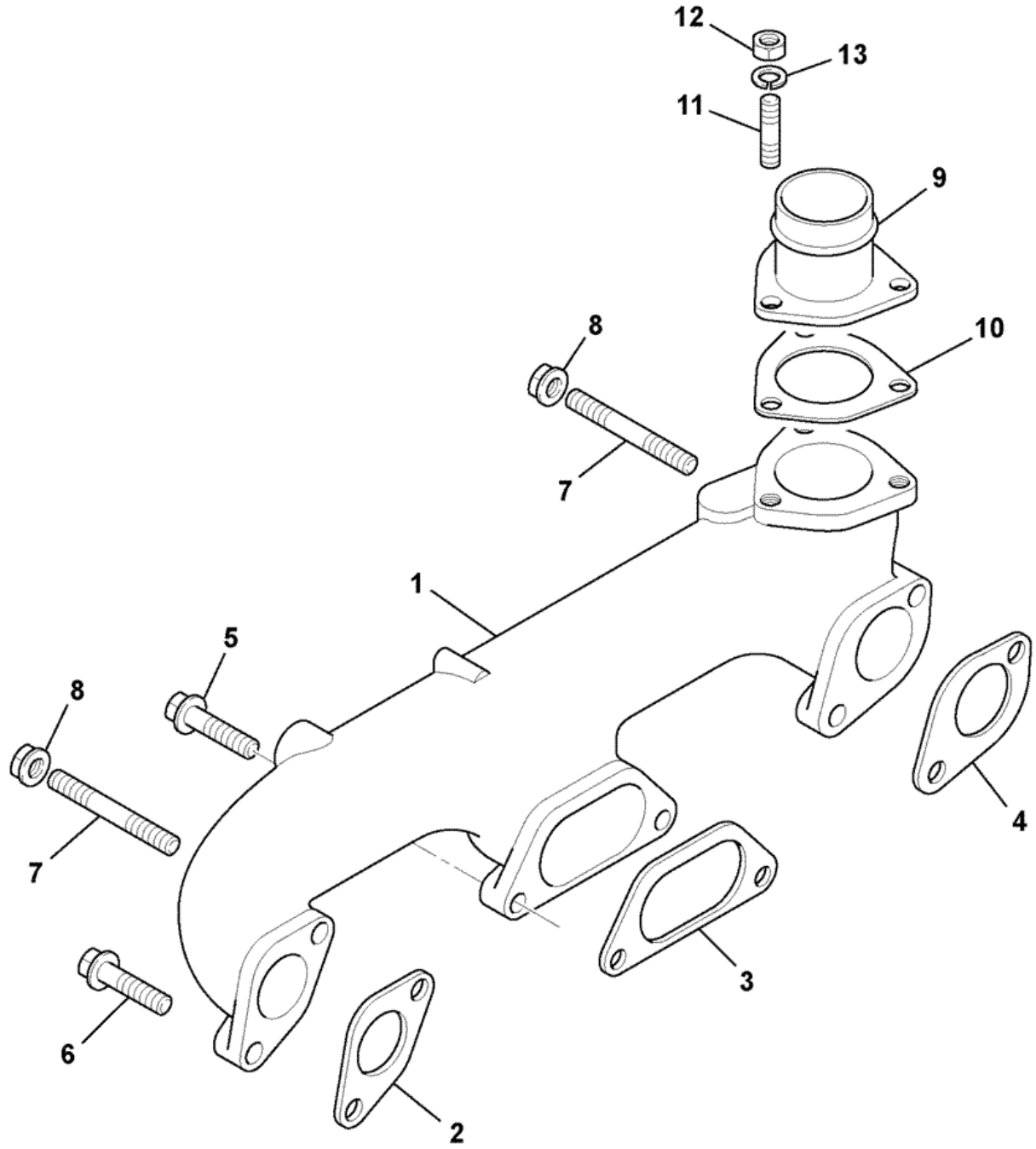


705711

| Item | Part # | Change No | Description | Usage Code | QTY |
|---|---|---|---|---|---|
| 1 | 02/103540 | | Manifold | | 1 |

| | | | | | |
|---|---|---|---|---|---|
| 2 | 02/101408 | | Gasket | | 1 |
| 3 | 02/101409 | | Gasket | | 1 |
| 4 | 02/101407 | | Gasket | | 1 |
| 5 | 02/103738 | | Bolt bolt | | 2 |
| 6 | 02/103541 | | Bolt | | 2 |
| 7 | 02/103542 | | Stud | | 2 |
| 8 | 02/103544 | | Nut | | 2 |
| 9 | 02/103637 | | Connector air inlet | | 1 |
| 10 | 02/103679 | | Gasket | | 1 |
| 11 | 822/00126 | | Stud | | 3 |
| 12 | 1340/0101 | | Nut | | 3 |
| 13 | 1416/0005 | | Washer | | 3 |

Product Catalog \ CONSTRUCTION \ NORTH AMERICA \ CONSTRUCTION / INDUSTRIAL \ BACKHOE LOADER 3CX,4CX,214,215,217 \ 3C PLUS (91HP) , Made in Brazil with Dieselmax/IESA Engine 9812/0080 \ L IESA P4001/P4001T ENGINES FROM S/N 1395000 \ L03 INDUCTION & EXHAUST SYSTEM

# 9812/0080 L3-1-2 MANIFOLD, INDUCTION, TURBOCHARGED, P4001T 8C89

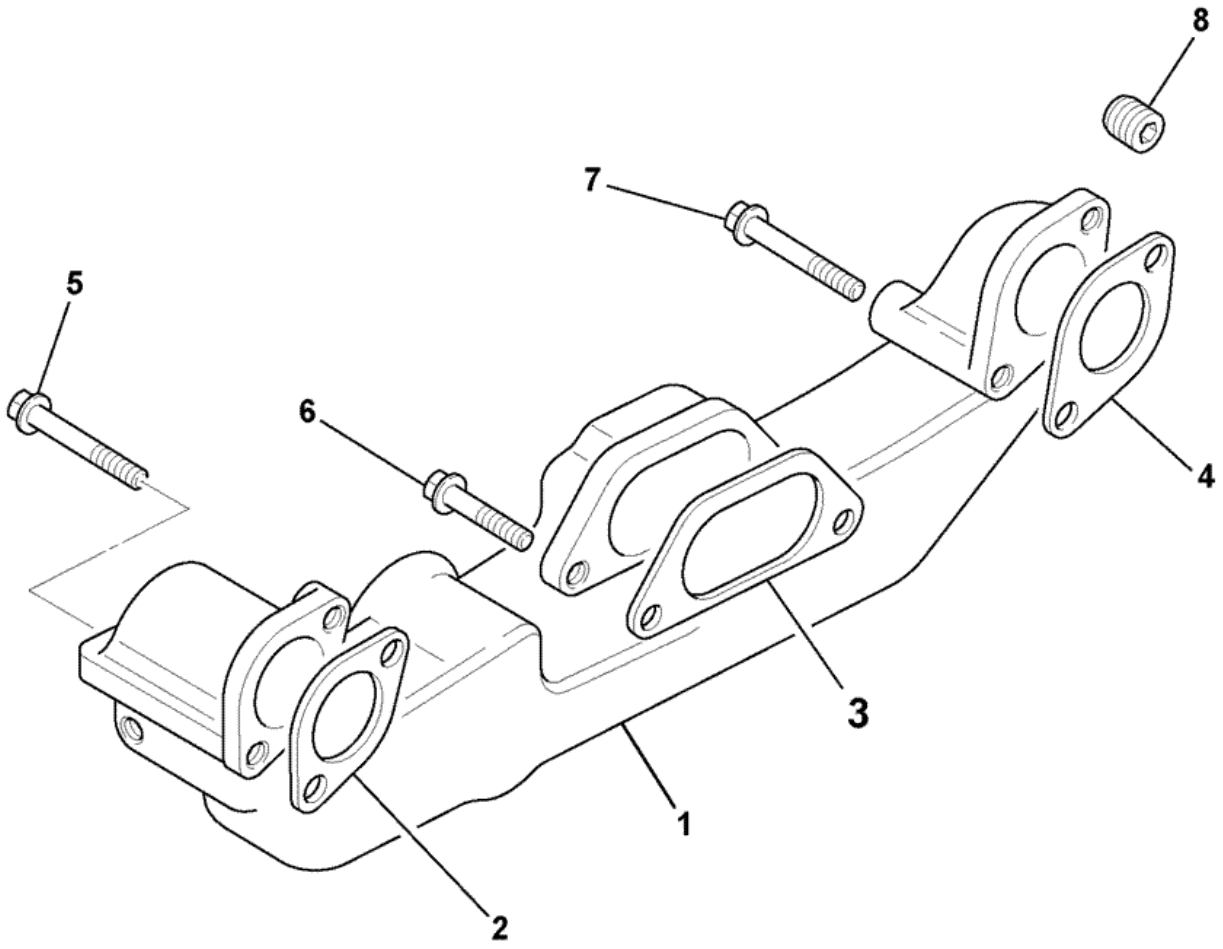


705722

| Item | Part # | Change No | Description | Usage Code | QTY |
|---|---|---|---|---|---|
| 1 | 02/103545 | | Manifold induction | | 1 |

| | | | | | |
|---|---|---|---|---|---|
| 2 | 02/101408 | | Gasket | | 1 |
| 3 | 02/101409 | | Gasket | | 1 |
| 4 | 02/101407 | | Gasket | | 1 |
| 5 | 02/103547 | | Bolt | | 1 |
| 6 | 02/103548 | | Bolt | | 2 |
| 7 | 02/103546 | | Bolt | | 1 |
| 8 | 02/103515 | | Plug | | 1 |

# 9812/0080 L3-2-1 MANIFOLD, EXHAUST, NATURALLY ASPIRATED, P4001 8C88

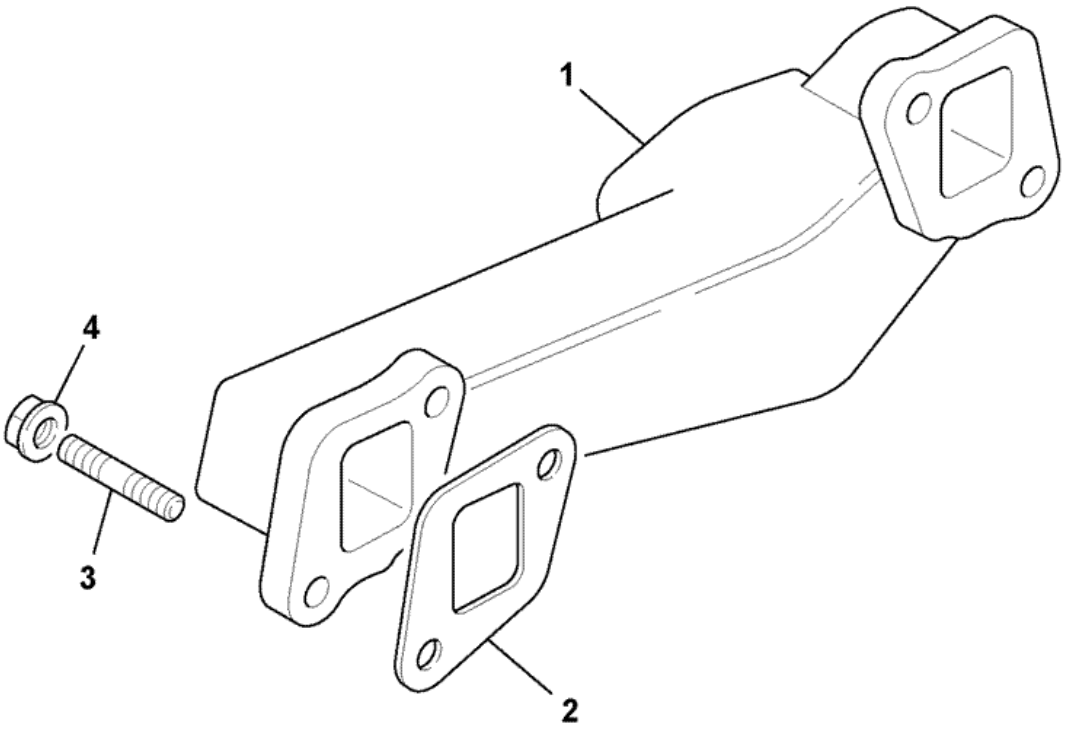


705740

| Item | Part # | Change No | Description | Usage Code | QTY |
|---|---|---|---|---|---|
| 1 | 02/100049 | | Manifold Exhaust | | 1 |

| | | | | | |
|---|---|---|---|---|---|
| 2 | 02/200501 | | Gasket | | 1 |
| 3 | 822/00142 | | Stud | | 4 |
| 4 | 02/103558 | | Nut | | 4 |
| 5 | 02/103681 | | Gasket | | 1 |

Product Catalog \ CONSTRUCTION \ NORTH AMERICA \ CONSTRUCTION / INDUSTRIAL \ BACKHOE LOADER 3CX,4CX,214,215,217 \ 3C PLUS (91HP) , Made in Brazil with Dieselmax/IESA Engine 9812/0080 \ L IESA P4001/P4001T ENGINES FROM S/N 1395000 \ L03 INDUCTION & EXHAUST SYSTEM

# 9812/0080 L3-2-2 MANIFOLD, EXHAUST, TURBOCHARGED, P4001T 8C89

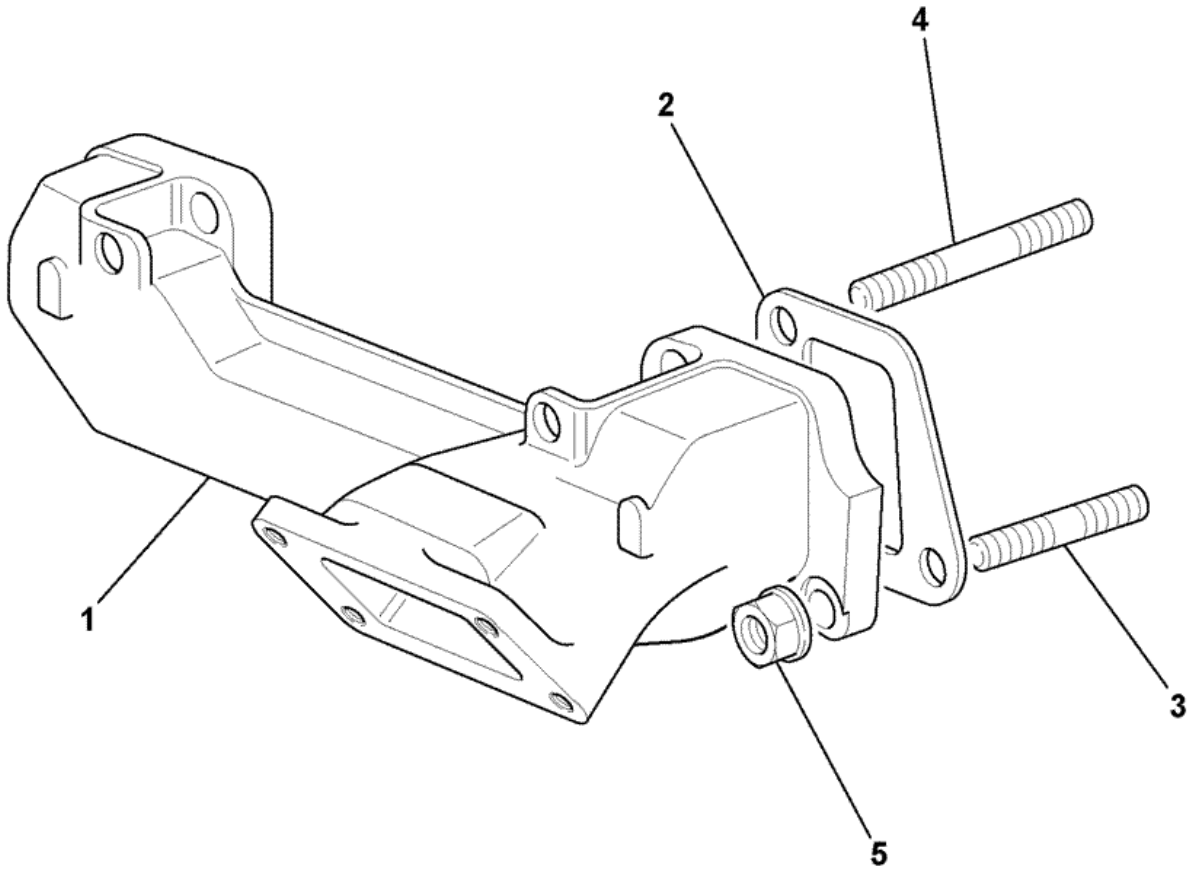


705751

| Item | Part # | Change No | Description | Usage Code | QTY |
|---|---|---|---|---|---|
| 1 | 02/103559 | | Manifold exhaust | | 1 |

| | | | | | |
|---|---|---|---|---|---|
| 2 | 02/200501 | | Gasket | | 2 |
| 3 | 822/00142 | | Stud | | 2 |
| 4 | 02/103542 | | Stud | | 2 |
| 5 | 02/103558 | | Nut | | 4 |

Product Catalog \ CONSTRUCTION \ NORTH AMERICA \ CONSTRUCTION / INDUSTRIAL \ BACKHOE LOADER 3CX,4CX,214,215,217 \ 3C PLUS (91HP) , Made in Brazil with Dieselmax/IESA Engine 9812/0080 \ L IESA P4001/P4001T ENGINES FROM S/N 1395000 \ L03 INDUCTION & EXHAUST SYSTEM

# 9812/0080 L3-3-1 FILTER, AIR, NATURALLY ASPIRATED, P4001, 8C88

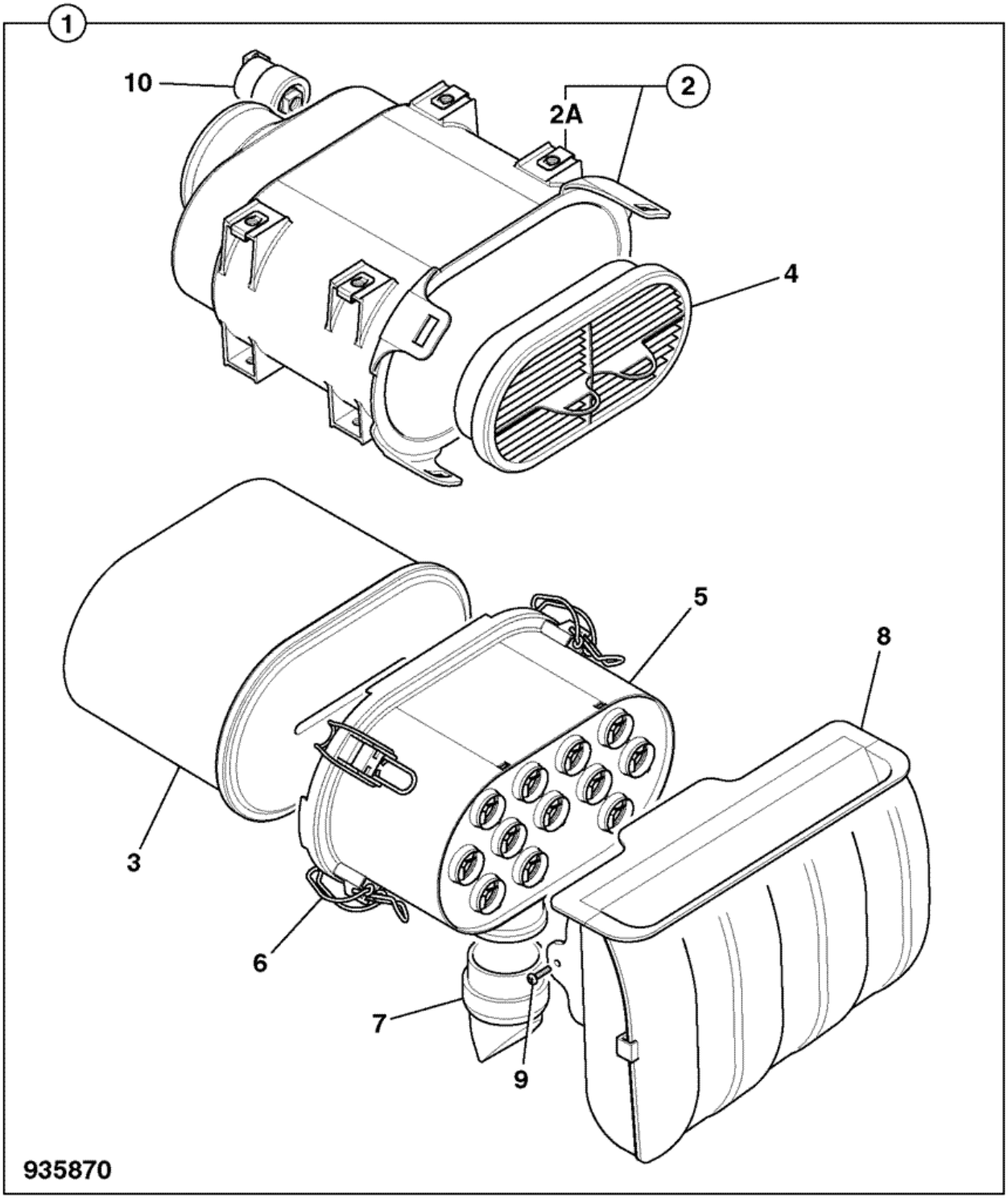


| Item | Part # | Change No | Description | Usage Code | QTY |
|---|---|---|---|---|---|
| 1 | 32/926084 | | Filter air assembly | | 1 |

| | | | | | |
|---|---|---|---|---|---|
| 2 | :N.S.P | | None serviced part | | 1 |
| 2A | :32/926114 | | Nut 'U' | | 1 |
| 3 | :32/925682 | | Element air filter main | | 1 |
| 4 | :32/925683 | | Element air filter safety | | 1 |
| 5 | :32/926113 | | Filter pre-cleaner | | 1 |
| 6 | :32/925364 | | Clip overcentre | | 2 |
| 7 | :32/926115 | Superseded | Valve vacuator | | 1 |
| 7 | :332/D6935 | | Valve vacuator | | 1 |
| 8 | :32/925716 | | Filter air intake | | 1 |
| 9 | :32/925711 | | Screw | | 2 |
| 10 | :32/925686 | | Switch vacuum sensor | | 1 |

Product Catalog \ CONSTRUCTION \ NORTH AMERICA \ CONSTRUCTION / INDUSTRIAL \ BACKHOE LOADER 3CX,4CX,214,215,217 \ 3C PLUS (91HP) , Made in Brazil with Dieselmax/IESA Engine 9812/0080 \ L IESA P4001/P4001T ENGINES FROM S/N 1395000 \ L03 INDUCTION & EXHAUST SYSTEM

# 9812/0080 L3-3-2 FILTER, AIR, TURBOCHARGED, P4001T, 8C89

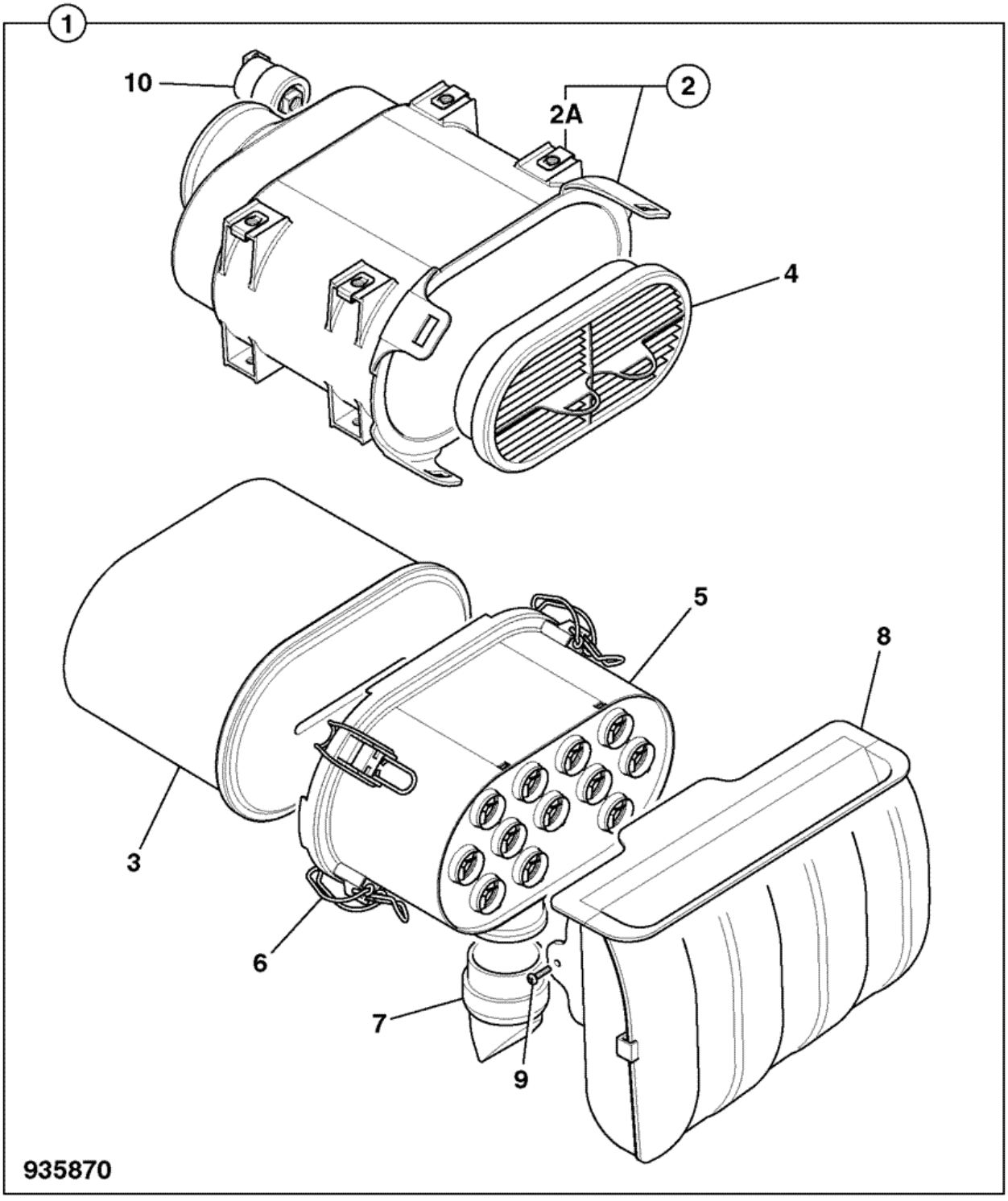


| Item | Part # | Change No | Description | Usage Code | QTY |
|---|---|---|---|---|---|
| 1 | 32/926084 | | Filter air assembly | | 1 |

| | | | | | |
|---|---|---|---|---|---|
| 2 | :N.S.P | | None serviced part | | 1 |
| 2A | :32/926114 | | Nut 'U' | | 1 |
| 3 | :32/925682 | | Element air filter main | | 1 |
| 4 | :32/925683 | | Element air filter safety | | 1 |
| 5 | :32/926113 | | Filter pre-cleaner | | 1 |
| 6 | :32/925364 | | Clip overcentre | | 2 |
| 7 | :32/926115 | Superseded | Valve vacuator | | 1 |
| 7 | :332/D6935 | | Valve vacuator | | 1 |
| 8 | :32/925716 | | Filter air intake | | 1 |
| 9 | :32/925711 | | Screw | | 2 |
| 10 | :32/925686 | | Switch vacuum sensor | | 1 |

Product Catalog \ CONSTRUCTION \ NORTH AMERICA \ CONSTRUCTION / INDUSTRIAL \ BACKHOE LOADER 3CX,4CX,214,215,217 \ 3C PLUS (91HP) , Made in Brazil with Dieselmax/IESA Engine 9812/0080 \ L IESA P4001/P4001T ENGINES FROM S/N 1395000 \ L03 INDUCTION & EXHAUST SYSTEM

# 9812/0080 L3-4-1 SILENCER & EXTENSION, NATURALLY ASPIRATED, P4001, 8C88

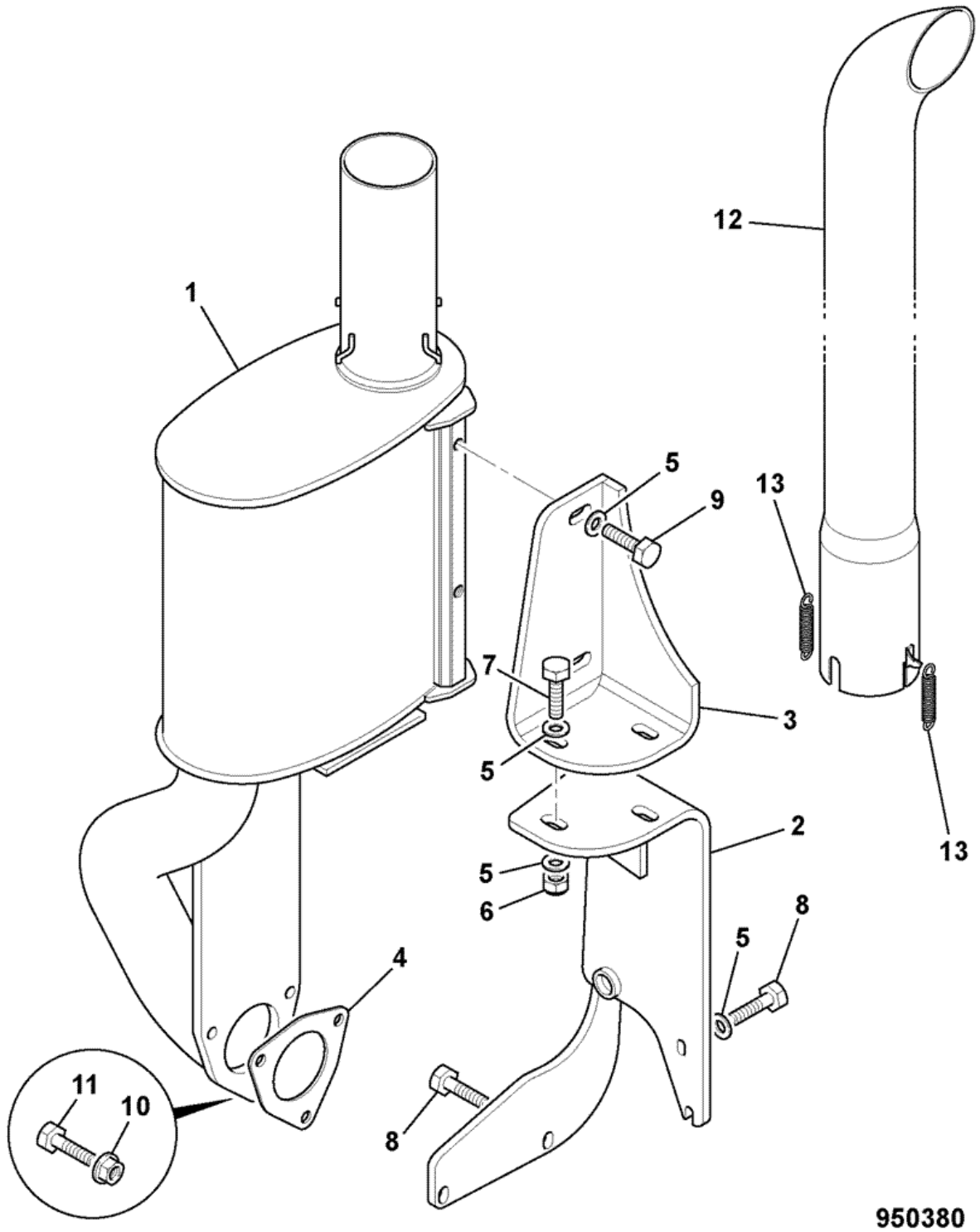


| Item | Part # | Change No | Description | Usage Code | QTY |
|---|---|---|---|---|---|
| 1 | 332/C2867 | Superseded | Silencer nat asp Brazil | | 1 |

| | | | | | |
|---|---|---|---|---|---|
| 1 | 332/P4853 | Superseded | Silencer nat asp Brazil | | 1 |
| 1 | 332/P7709 | | Silencer nat asp Brazil | | 1 |
| 2 | 332/D6707 | Superseded | Bracket mounting exhaust silencer | | 1 |
| 2 | 332/P9461 | | Bracket mounting exhaust silencer | | 1 |
| 3 | 331/55522 | | Bracket exhaust mounting | | 1 |
| 4 | 813/00349 | | Gasket | | 1 |
| 5 | 1420/0008Z | | Washer Plain M10 | | 8 |
| 6 | 1370/0303Z | | Nut lock M10 | | 2 |
| 7 | 1315/0409Z | | Screw M10x35mm | | 2 |
| 8 | 1305/0205Z | | Bolt | | 2 |
| 9 | 1315/0407Z | | Bolt M10x25 | | 2 |
| 10 | 1305/0210Z | | Bolt | | 1 |
| 11 | 1305/0108Z | | Bolt | | 2 |
| 12 | 331/53874 | | Pipe exhaust extension | | 1 |
| 13 | 814/10177 | | Spring extension | | 2 |

Product Catalog \ CONSTRUCTION \ NORTH AMERICA \ CONSTRUCTION / INDUSTRIAL \ BACKHOE LOADER 3CX,4CX,214,215,217 \ 3C PLUS (91HP) , Made in Brazil with Dieselmax/IESA Engine 9812/0080 \ L IESA P4001/P4001T ENGINES FROM S/N 1395000 \ L03 INDUCTION & EXHAUST SYSTEM

# 9812/0080 L3-4-2 SILENCER & EXTENSION, TURBOCHARGED, P4001T, 8C89

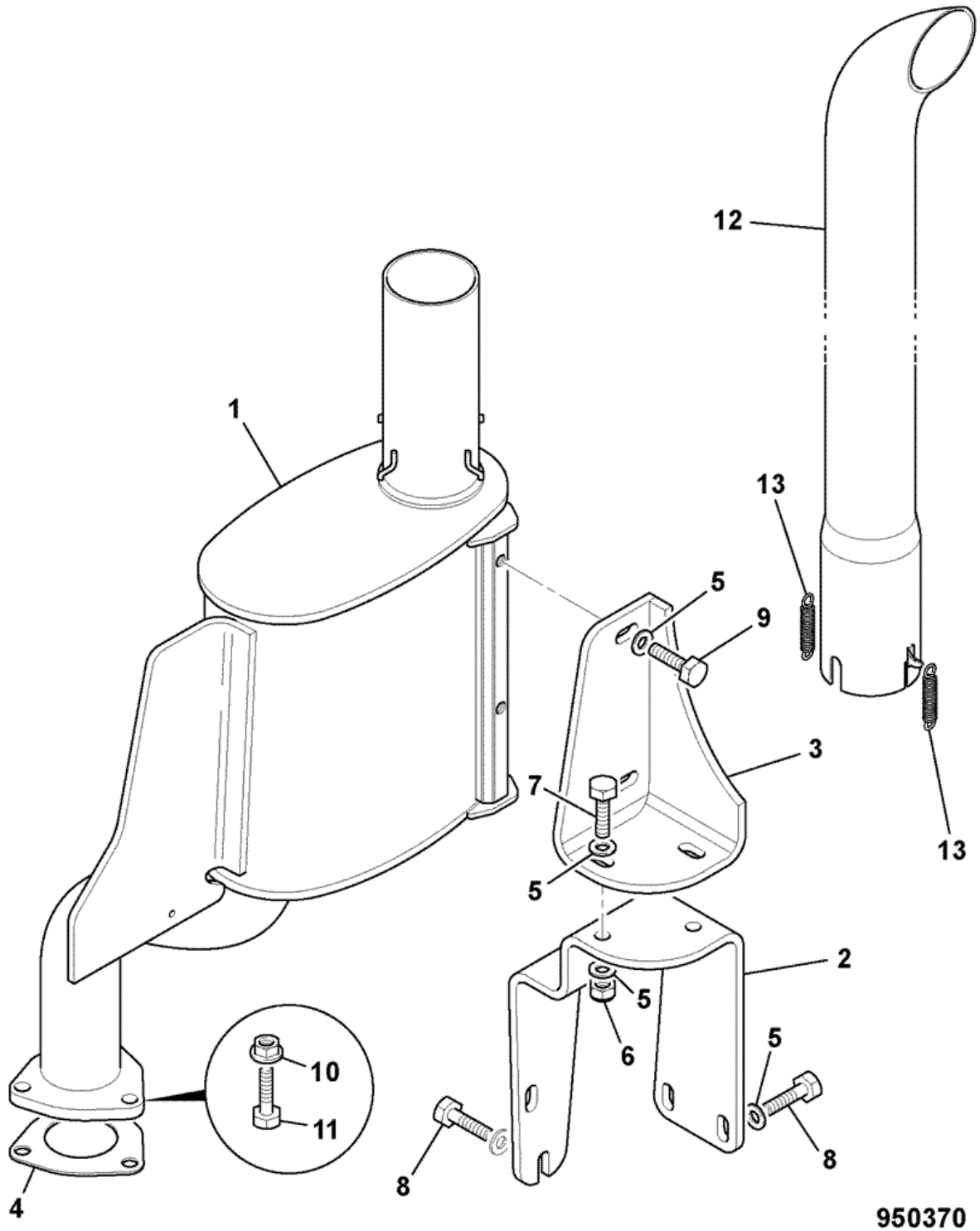


| Item | Part # | Change No | Description | Usage Code | QTY |
|---|---|---|---|---|---|
| 1 | 332/C2872 | Superseded | Silencer exhaust turbo | | 1 |

| | | | | | |
|---|---|---|---|---|---|
| 1 | 332/P5046 | Superseded | Silencer exhaust turbo | | 1 |
| 1 | 332/P9456 | | Silencer exhaust turbo | | 1 |
| 2 | 332/D6707 | Superseded | Bracket mounting exhaust silencer | | 1 |
| 2 | 332/P9461 | | Bracket mounting exhaust silencer | | 1 |
| 3 | 331/55522 | | Bracket exhaust mounting | | 1 |
| 4 | 813/00349 | | Gasket | | 1 |
| 5 | 1420/0008Z | | Washer Plain M10 | | 8 |
| 6 | 1370/0303Z | | Nut lock M10 | | 2 |
| 7 | 1315/0409Z | | Screw M10x35mm | | 2 |
| 8 | 1305/0205Z | | Bolt | | 2 |
| 9 | 1315/0407Z | | Bolt M10x25 | | 2 |
| 10 | 1305/0210Z | | Bolt | | 1 |
| 11 | 1305/0108Z | | Bolt | | 2 |
| 12 | 331/53874 | | Pipe exhaust extension | | 1 |
| 13 | 814/10177 | | Spring extension | | 2 |

# 9812/0080 L3-5-1 AIR INDUCTION HOSES, NATURALLY ASPIRATED, P4001, 8C88

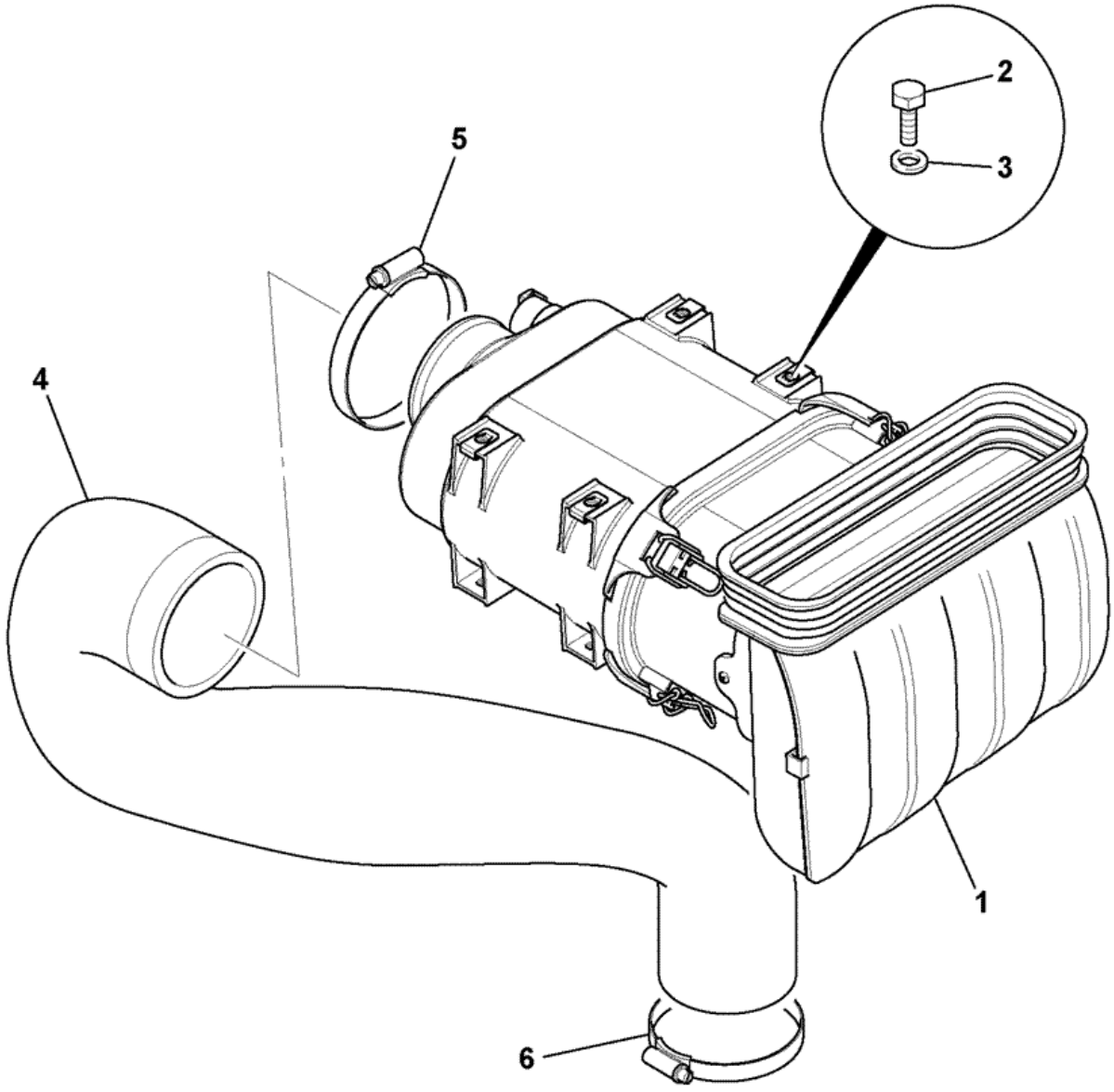


950310

| Item | Part # | Change No | Description | Usage Code | QTY |
|---|---|---|---|---|---|
| | | | 'See Remark' | | |

| | | | | | |
|---|---|---|---|---|---|
| 1 | . | | *Induction filter, see index L3-3-1* | | 1 |
| 2 | 1315/0205Z | | Bolt | | 4 |
| 3 | 1420/0006Z | | Washer M6 | | 4 |
| 4 | 332/C2994 | Superseded | Hose induction n/asp international engine | | 1 |
| 4 | 333/P0728 | >M TBA | Hose induction n/asp international engine | | 1 |
| 5 | 2201/0016 | | Clip jubilee | | 1 |
| 6 | 2201/0015 | | Clip jubilee | | 1 |

# 9812/0080 L3-5-2 AIR INDUCTION HOSES, TURBOCHARGED, P4001T, 8C89

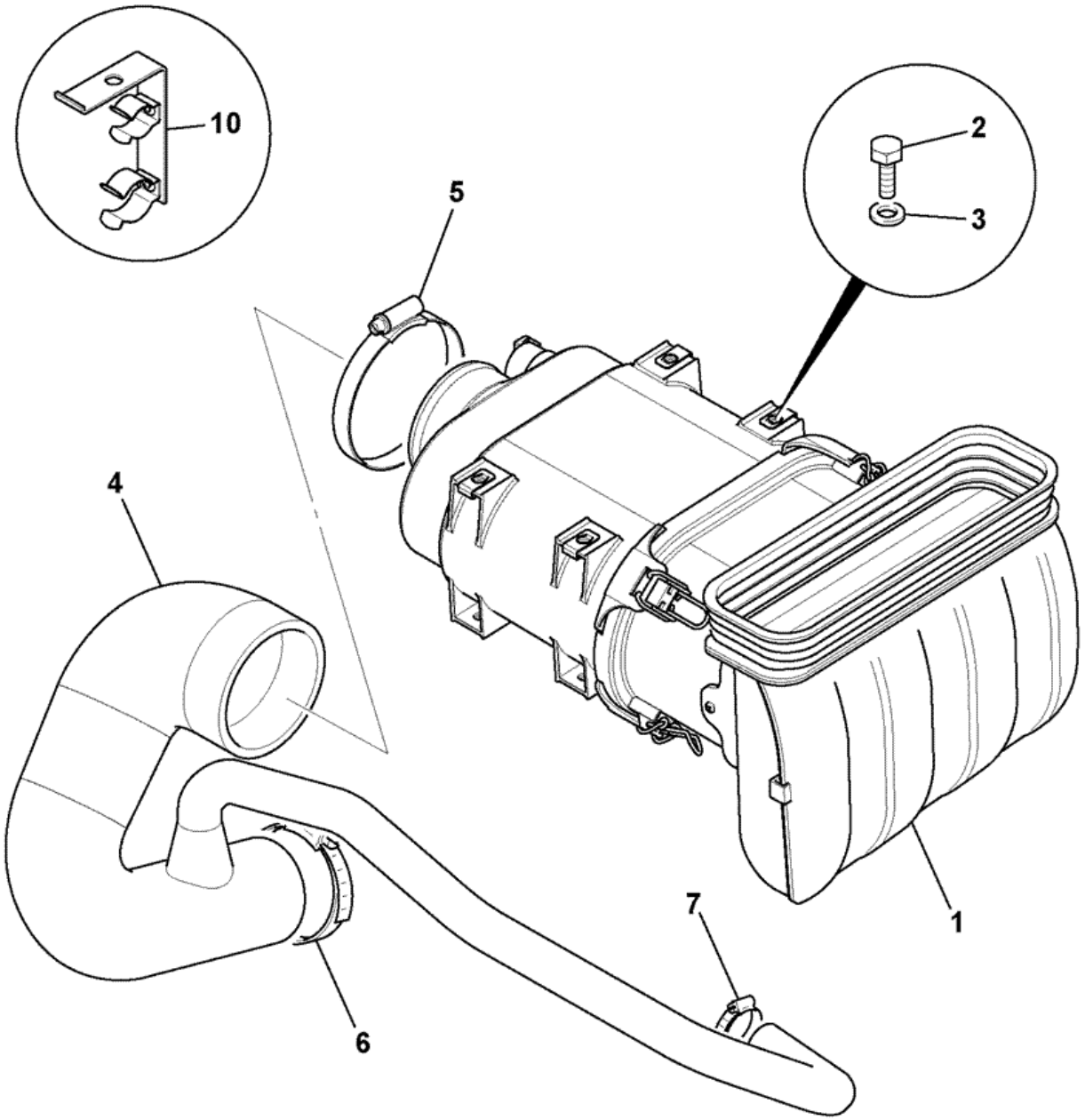


950300

| Item | Part # | Change No | Description | Usage Code | QTY |
|---|---|---|---|---|---|
| | | | 'See Remark' | | |

| | | | | | |
|---|---|---|---|---|---|
| 1 | . | | *Induction filter, see L3-3-2* | | 1 |
| 2 | 1315/0205Z | | Bolt | | 4 |
| 3 | 1420/0006Z | | Washer M6 | | 4 |
| 4 | 332/C2878 | | Hose induction turbo international engine | | 1 |
| 5 | 2201/0016 | | Clip jubilee | | 1 |
| 6 | 2201/0014 | | Clip jubilee | | 1 |
| 7 | 2201/0007 | | Clip jubilee | | 1 |
| 10 | 128/15558 | | Guide hose | | 1 |

Product Catalog \ CONSTRUCTION \ NORTH AMERICA \ CONSTRUCTION / INDUSTRIAL \ BACKHOE LOADER 3CX,4CX,214,215,217 \ 3C PLUS (91HP) , Made in Brazil with Dieselmax/IESA Engine 9812/0080 \ L IESA P4001/P4001T ENGINES FROM S/N 1395000 \ L04 COOLING SYSTEM

# 9812/0080 L4-1-1 PUMP, WATER, NAT ASP & TURB0, P4001/P4001T 8C88/8C89

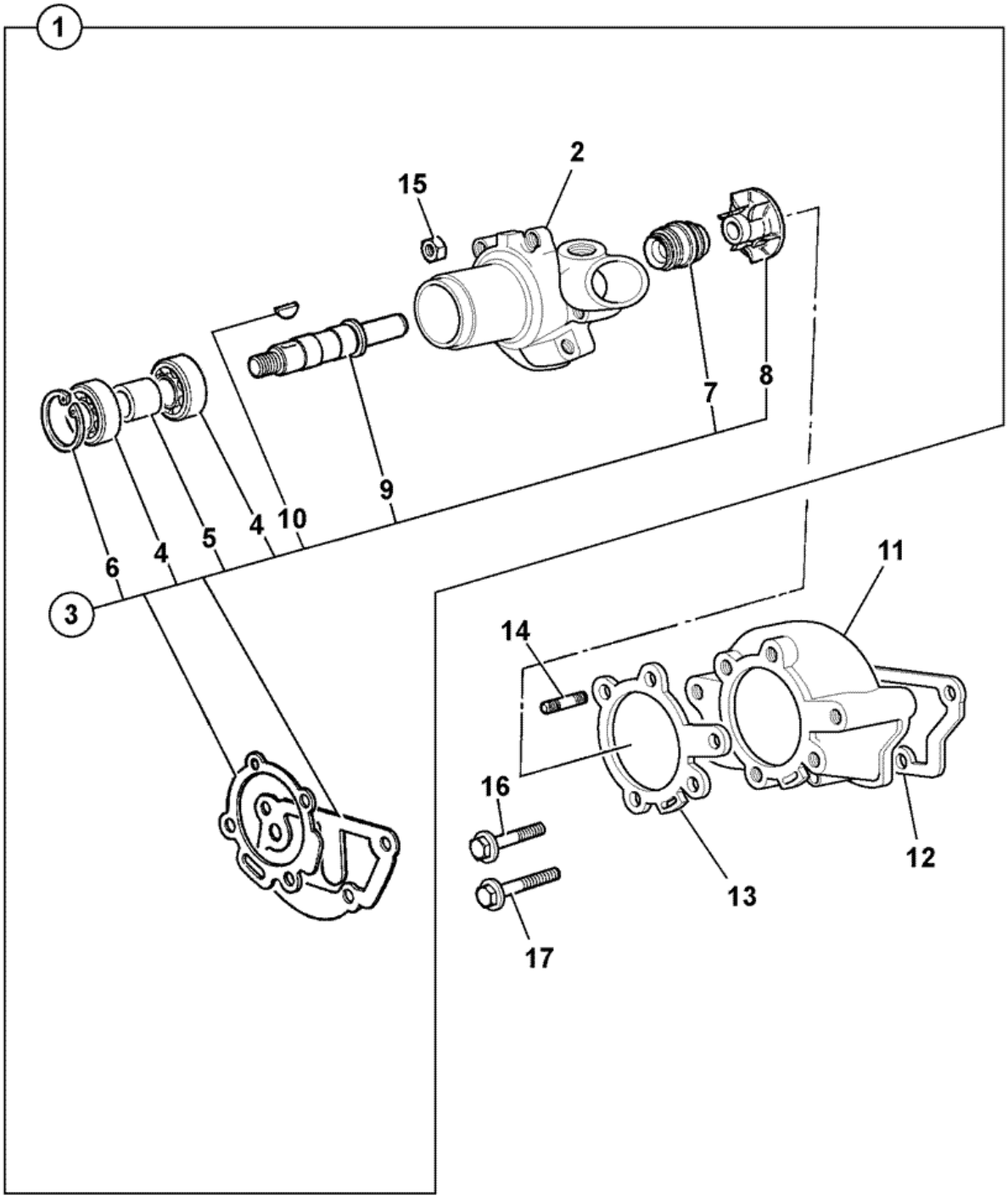


702162

| Item | Part # | Change No | Description | Usage Code | QTY |
|---|---|---|---|---|---|
| 1 | 02/103611 | | Pump water | | 1 |

| | | | | | |
|---|---|---|---|---|---|
| 2 | :NSP | | None serviced part<br>*Front body* | | 1 |
| 3 | :02/103758 | | Kit repair | | 1 |
| 4 | ::NSP | | None serviced part<br>*Bearing* | | 2 |
| 5 | ::NSP | | None serviced part<br>*Spacer* | | 1 |
| 6 | ::2203/1055 | | Circlip internal | | 1 |
| 7 | ::NSP | | None serviced part<br>*Seal* | | 1 |
| 8 | ::NSP | | None serviced part<br>*Impeller* | | 1 |
| 9 | ::NSP | | None serviced part<br>*Shaft* | | 1 |
| 10 | ::02/100096 | | Key | | 1 |
| 11 | :02/103613 | | Body rear | | 1 |
| 12 | :02/103751 | | Gasket water pump | | 1 |
| 13 | :02/103752 | | Gasket water pump | | 1 |
| 14 | :02/103614 | | Stud | | 4 |
| 15 | :1340/0101 | | Nut | | 4 |
| 16 | 1305/3226 | | Bolt L=1.3/4" | | 2 |
| 17 | 1305/3218 | | Bolt | | 2 |

Product Catalog \ CONSTRUCTION \ NORTH AMERICA \ CONSTRUCTION / INDUSTRIAL \ BACKHOE LOADER 3CX,4CX,214,215,217 \ 3C PLUS (91HP) , Made in Brazil with Dieselmax/IESA Engine 9812/0080 \ L IESA P4001/P4001T ENGINES FROM S/N 1395000 \ L04 COOLING SYSTEM

# 9812/0080 L4-2-1 THERMOSTAT, HOUSING, INLET & OUTLET, P4001/P4001T NAT ASP & TURBO 8C88/8C89

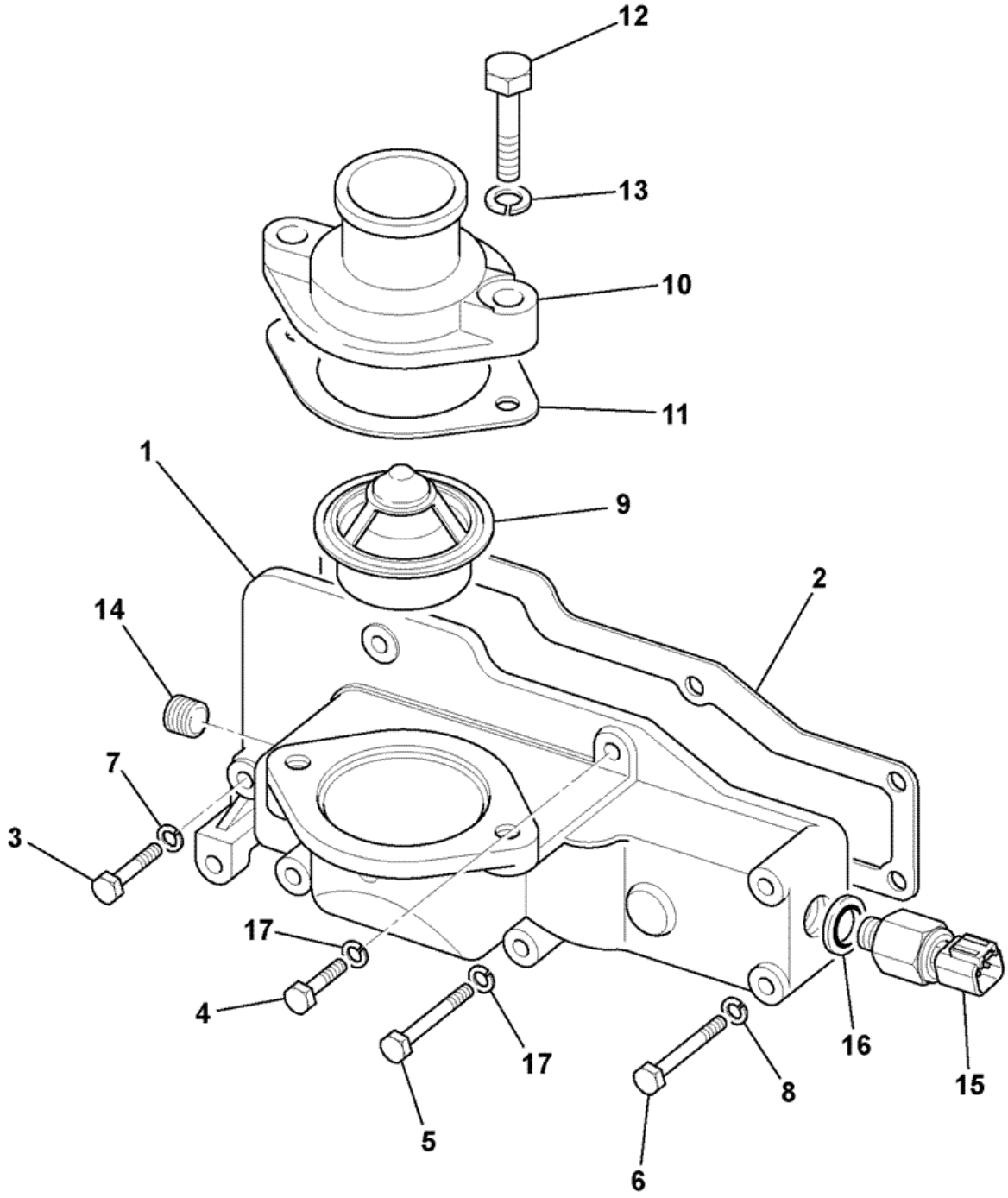


| Item | Part # | Change No | Description | Usage Code | QTY |
|---|---|---|---|---|---|
| 1 | 02/103535 | | Housing | | 1 |

| | | | | | |
|---|---|---|---|---|---|
| 2 | 02/103766 | | Gasket thermostat | | 1 |
| 3 | 1305/3124 | | Bolt | | 2 |
| 4 | 1305/3207 | | Bolt | | 2 |
| 5 | 1305/3107 | | Bolt | | 1 |
| 6 | 1305/3216 | | Bolt | | 2 |
| 7 | 1416/0006 | | Washer | | 1 |
| 8 | 1416/0006 | | Washer | | 1 |
| 9 | 02/103536 | | Thermostat | | 1 |
| 10 | 02/103537 | | Connector | | 3 |
| 11 | 02/103538 | | Gasket | | 1 |
| 12 | 02/103736 | | Bolt bolt | | 2 |
| 13 | 1416/0006 | | Washer | | 2 |
| 14 | 02/103602 | | Plug | | 1 |
| 15 | 716/30126 | | Sender water temperature | | 1 |
| 16 | 02/103604 | | Washer | | 1 |
| 17 | 1416/0005 | | Washer | | 3 |

Product Catalog \ CONSTRUCTION \ NORTH AMERICA \ CONSTRUCTION / INDUSTRIAL \ BACKHOE LOADER 3CX,4CX,214,215,217 \ 3C PLUS (91HP) , Made in Brazil with Dieselmax/IESA Engine 9812/0080 \ L IESA P4001/P4001T ENGINES FROM S/N 1395000 \ L04 COOLING SYSTEM

# 9812/0080 L4-3-1 RADIATOR, FITTINGS & MOUNTINGS, 2WS - 18" FAN

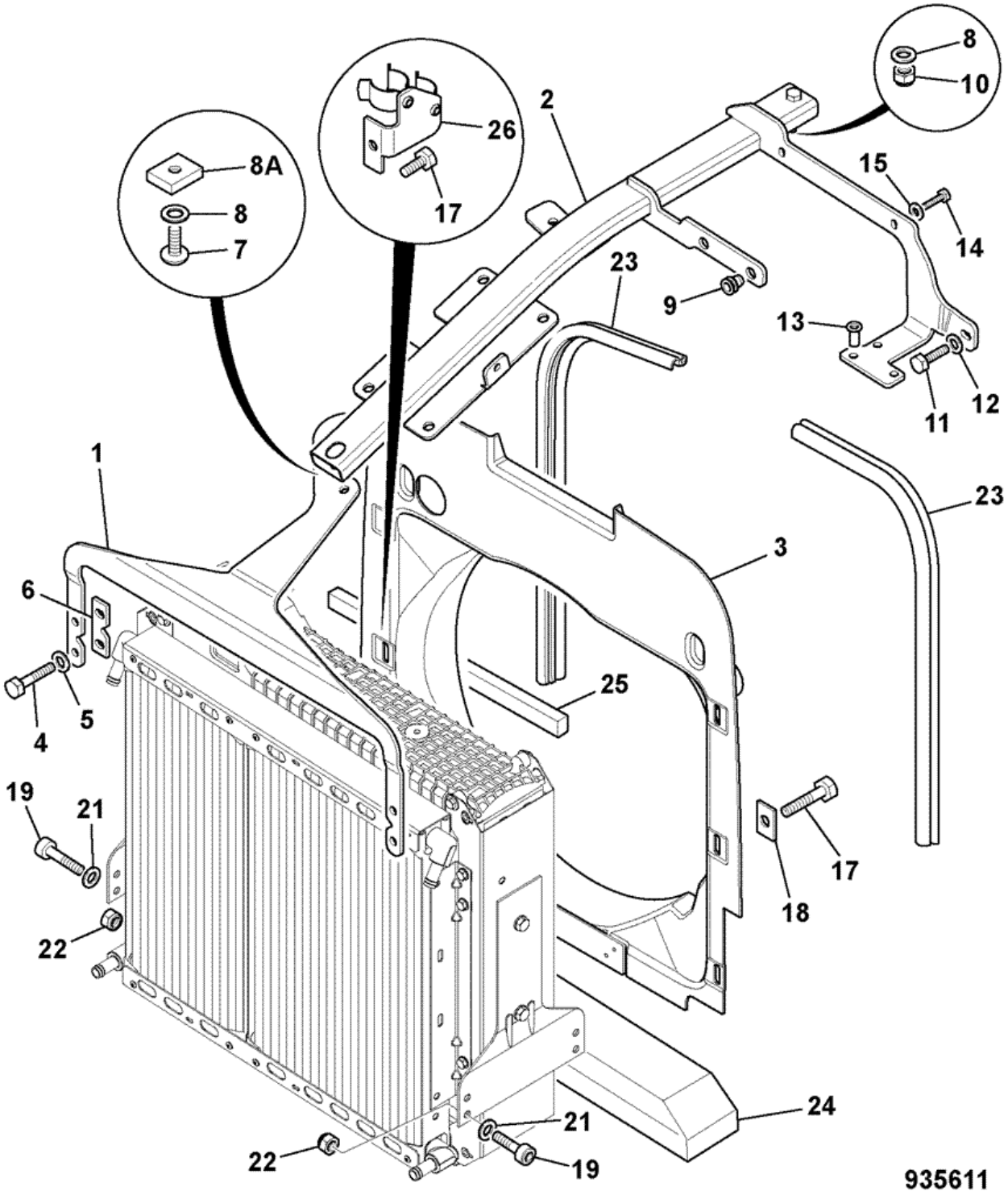


| Item | Part # | Change No | Description | Usage Code | QTY |
|---|---|---|---|---|---|
| 1 | 332/C8208 | | Bracket centre beam mounting front 2ws | | 1 |

| | | | | | |
|---|---|---|---|---|---|
| 2 | 128/C1776 | | Beam centre mounting | | 1 |
| 3 | 346/90037 | | Cowling fan cowl 18" brazil | | 1 |
| 4 | 1315/0307Z | | Screw Hexagon M8 X 25 | | 4 |
| 5 | 1420/0007Z | | Washer plain M8 | | 4 |
| 6 | 331/48338 | | Plate spacer | | 2 |
| 7 | 826/01616 | | Screw M10 x 25mm hex/skt button head | | 1 |
| 8 | 1412/0003Z | | Washer | | 1 |
| 8A | 332/D5851 | | Block clamping | | 1 |
| 9 | 826/01105 | | Nut rivet,M10 open ended | | 2 |
| 10 | 1370/0303Z | | Nut lock M10 | | 1 |
| 11 | 1315/0308Z | | Screw M8x30 | | 1 |
| 12 | 1420/0007Z | | Washer plain M8 | | 1 |
| 13 | 826/01810 | | Nut rivet, M6 open end for 5.5 to 8mm plate | | 3 |
| 14 | 1315/0207Z | | Screw M6 x 25mm long | | 2 |
| 15 | 1411/0001Z | | Washer | | 4 |
| 17 | 1315/0305Z | | Screw Hexagon M8 x 20mm long | | 6 |
| 18 | 123/06362 | | Washer spreader | | 5 |
| 19 | 1391/3409Z | | Capscrew M10 x 35mm | | 4 |
| 21 | 1411/0004Z | | Washer | | 8 |
| 22 | 1370/0303Z | | Nut lock M10 | | 4 |
| 23 | 926/51301 | | Strip sealing L=640mm | | 2 |
| 24 | 331/36060 | | Seal anti-recirculation | | 1 |
| 25 | 331/52016 | | Seal anti-recirculation | | 2 |
| 26 | 128/15495 | | Bracket hose clip assembly | | 1 |

Product Catalog \ CONSTRUCTION \ NORTH AMERICA \ CONSTRUCTION / INDUSTRIAL \ BACKHOE LOADER 3CX,4CX,214,215,217 \ 3C PLUS (91HP) , Made in Brazil with Dieselmax/IESA Engine 9812/0080 \ L IESA P4001/P4001T ENGINES FROM S/N 1395000 \ L04 COOLING SYSTEM

# 9812/0080 L4-3-2 RADIATOR, FITTINGS & MOUNTINGS, 2WS - 20" FAN

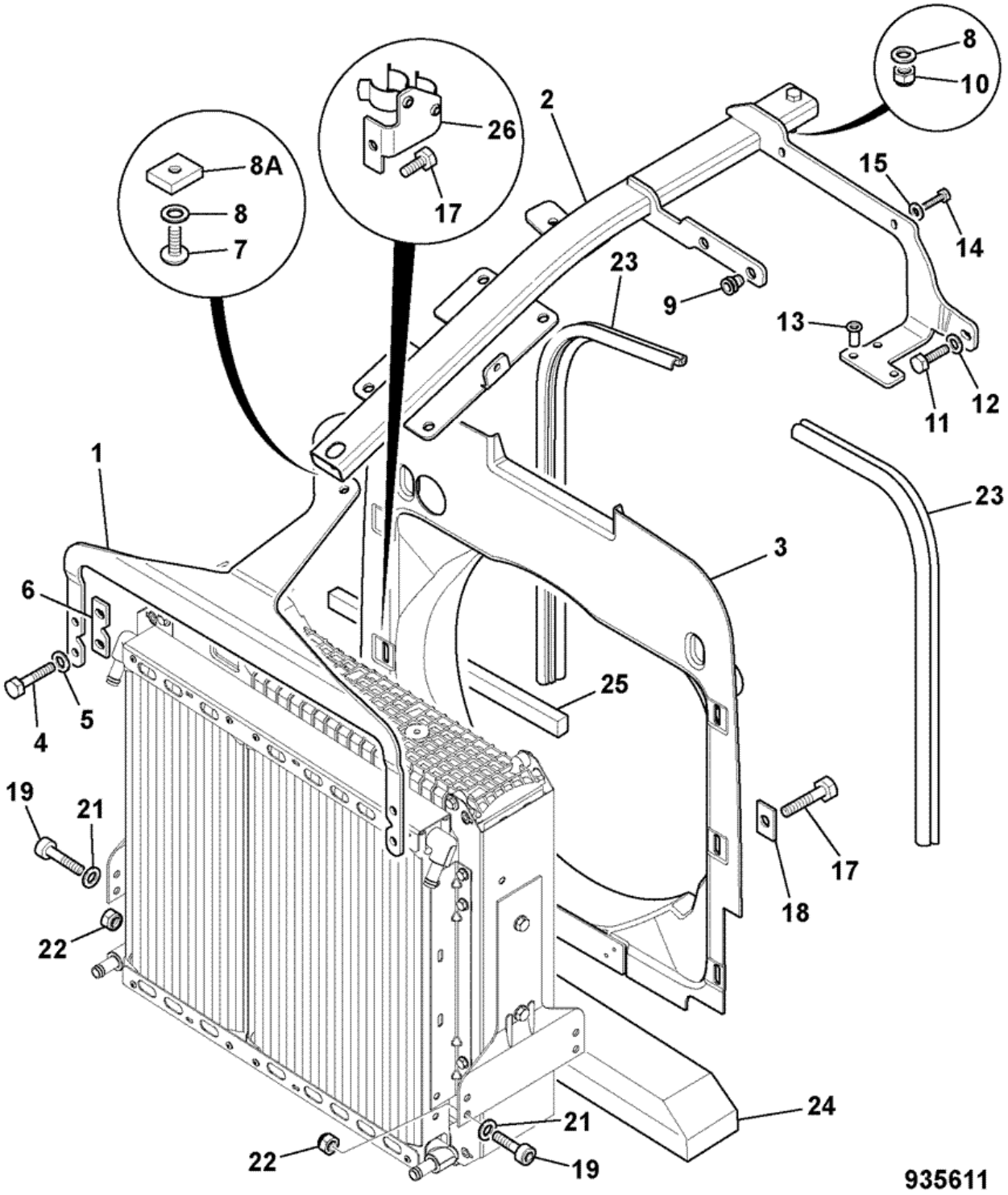


| Item | Part # | Change No | Description | Usage Code | QTY |
|---|---|---|---|---|---|
| 1 | 332/C8208 | | Bracket centre beam mounting front 2ws | | 1 |

| | | | | | |
|---|---|---|---|---|---|
| 2 | 128/C1776 | | Beam centre mounting | | 1 |
| 3 | 332/C1667 | | Cowling fan 20inch 2ws | | 1 |
| 4 | 1315/0307Z | | Screw Hexagon M8 X 25 | | 4 |
| 5 | 1420/0007Z | | Washer plain M8 | | 4 |
| 6 | 331/48338 | | Plate spacer | | 2 |
| 7 | 826/01616 | | Screw M10 x 25mm hex/skt button head | | 1 |
| 8 | 1412/0003Z | | Washer | | 1 |
| 8A | 332/D5851 | | Block clamping | | 1 |
| 9 | 826/01105 | | Nut rivet,M10 open ended | | 2 |
| 10 | 1370/0303Z | | Nut lock M10 | | 1 |
| 11 | 1315/0308Z | | Screw M8x30 | | 1 |
| 12 | 1420/0007Z | | Washer plain M8 | | 1 |
| 13 | 826/01810 | | Nut rivet, M6 open end for 5.5 to 8mm plate | | 3 |
| 14 | 1315/0207Z | | Screw M6 x 25mm long | | 2 |
| 15 | 1411/0001Z | | Washer | | 4 |
| 17 | 1315/0305Z | | Screw Hexagon M8 x 20mm long | | 6 |
| 18 | 123/06362 | | Washer spreader | | 5 |
| 19 | 1391/3409Z | | Capscrew M10 x 35mm | | 4 |
| 21 | 1411/0004Z | | Washer | | 8 |
| 22 | 1370/0303Z | | Nut lock M10 | | 4 |
| 23 | 926/51301 | | Strip sealing L=640mm | | 2 |
| 24 | 331/36060 | | Seal anti-recirculation | | 1 |
| 25 | 331/52016 | | Seal anti-recirculation | | 2 |
| 26 | 128/D5873 | | Clip hose | | 1 |

Product Catalog \ CONSTRUCTION \ NORTH AMERICA \ CONSTRUCTION / INDUSTRIAL \ BACKHOE LOADER 3CX,4CX,214,215,217 \ 3C PLUS (91HP) , Made in Brazil with Dieselmax/IESA Engine 9812/0080 \ L IESA P4001/P4001T ENGINES FROM S/N 1395000 \ L04 COOLING SYSTEM

# 9812/0080 L4-4-1 RADIATOR & HOSES, 2WS - 18" FAN

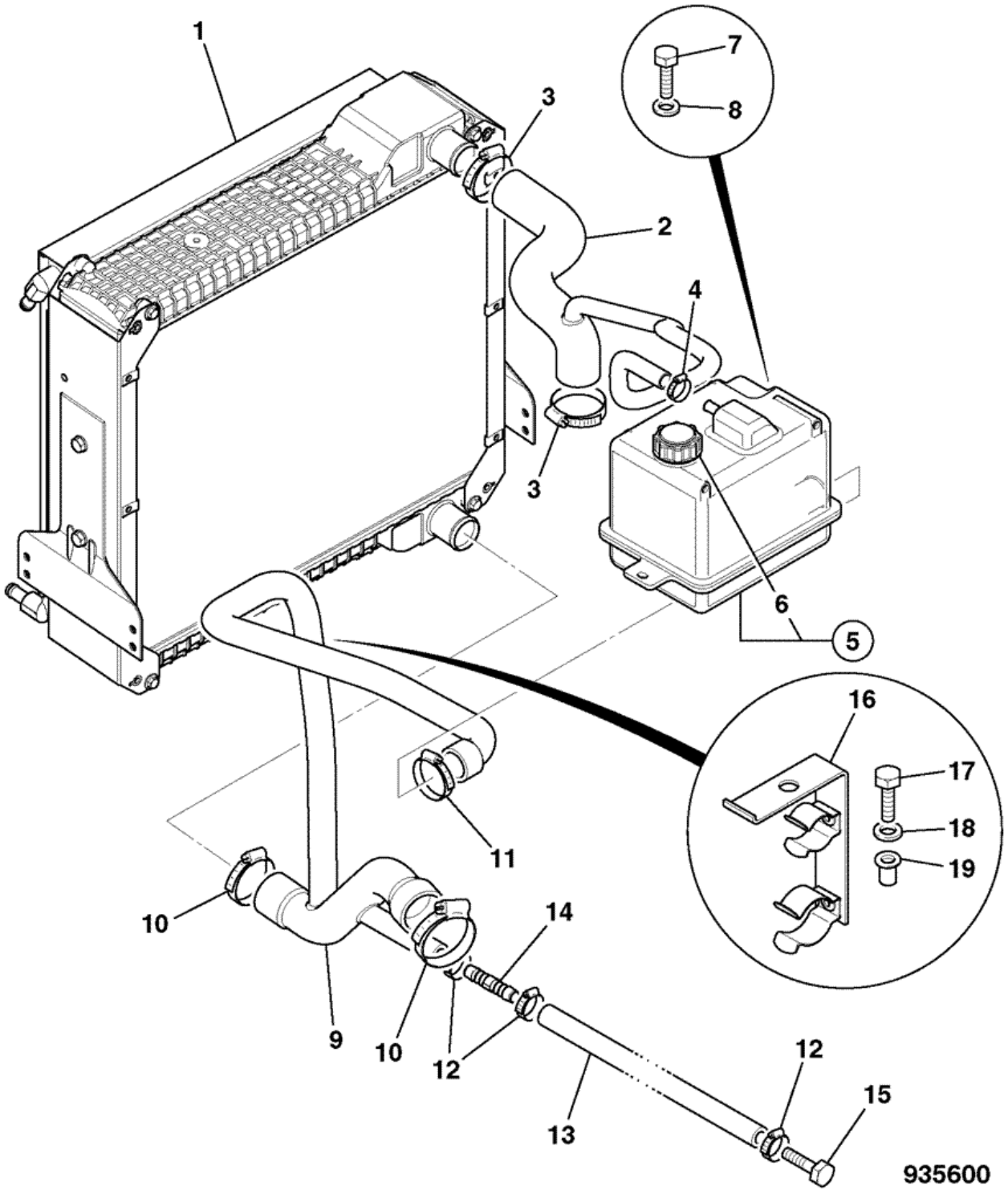


| Item | Part # | Change No | Description | Usage Code | QTY |
|---|---|---|---|---|---|
| 1 | 128/14326 | | Cooler assembly 5row 2ws non CAC<br>*For Service Parts, See frame L4-5-1* | | 1 |
| | | | | | |

| | | | | | |
|---|---|---|---|---|---|
| 2 | 332/C2879 | | Hose top P600 brazil | | 1 |
| 3 | 2201/0011 | | Clip jubilee | | 2 |
| 4 | 2201/0005 | | Clip jubilee | | 1 |
| 5 | 128/15480 | | Tank expansion no sensor assembly | | 1 |
| 6 | :477/00223 | | Cap Expansion Bottle | | 1 |
| 7 | 1315/0310Z | | Bolt M8x40 | | 2 |
| 8 | 1420/0007Z | | Washer plain M8 | | 2 |
| 9 | 332/C2880 | | Hose bottom P600 brazil | | 1 |
| 10 | 2201/0012 | | Clip jubilee | | 2 |
| 11 | 2201/0010 | | Clip jubilee | | 1 |
| 12 | 2201/0006 | | Clip jubilee | | 1 |
| 13 | . | | 'See Remark'<br>*See cab heater circuit* | | 1 |
| 14 | 650/10166 | | Adaptor hose connecter 16mm OD | | 1 |
| 15 | 1315/3714Z | | Bolt M16x60 | | 1 |
| 16 | 128/15558 | | Guide hose | | 1 |
| 17 | 1315/0307Z | | Screw Hexagon M8 X 25 | | 1 |
| 18 | 1420/0007Z | | Washer plain M8 | | 1 |
| 19 | 826/01102 | | Nut rivet,M8 open ended | | 1 |

Product Catalog \ CONSTRUCTION \ NORTH AMERICA \ CONSTRUCTION / INDUSTRIAL \ BACKHOE LOADER 3CX,4CX,214,215,217 \ 3C PLUS (91HP) , Made in Brazil with Dieselmax/IESA Engine 9812/0080 \ L IESA P4001/P4001T ENGINES FROM S/N 1395000 \ L04 COOLING SYSTEM

# 9812/0080 L4-4-2 RADIATOR & HOSES, 2WS - 20" FAN

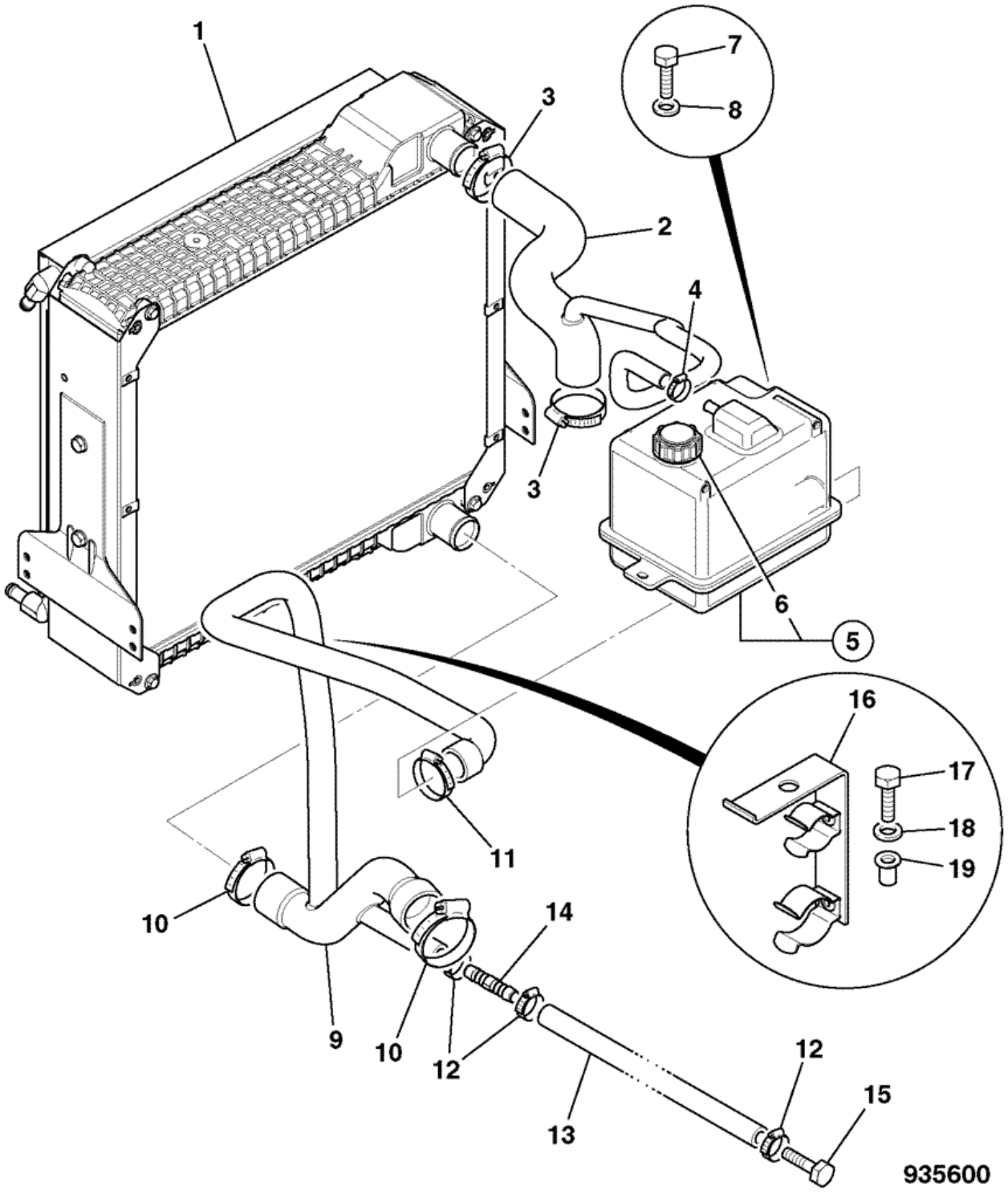


| Item | Part # | Change No | Description | Usage Code | QTY |
|---|---|---|---|---|---|
| 1 | 128/14326 | | Cooler assembly 5row 2ws non CAC<br>*For Service Parts, See frame L4-5-1* | | 1 |
| | | | | | |

| | | | | | |
|---|---|---|---|---|---|
| 2 | 834/11380 | | Hose radiaor top 2ws | | 1 |
| 3 | 2201/0011 | | Clip jubilee | | 2 |
| 4 | 2201/0005 | | Clip jubilee | | 1 |
| 5 | 128/15480 | | Tank expansion no sensor assembly | | 1 |
| 6 | :477/00223 | | Cap Expansion Bottle | | 1 |
| 7 | 1315/0310Z | | Bolt M8x40 | | 2 |
| 8 | 1420/0007Z | | Washer plain M8 | | 2 |
| 9 | 128/C8166 | | Hose bottom 2ws tier @# | | 1 |
| 10 | 2201/0012 | | Clip jubilee | | 2 |
| 11 | 2201/0010 | | Clip jubilee | | 1 |
| 12 | 2201/0006 | | Clip jubilee | | 1 |
| 13 | . | | 'See Remark'<br>*See cab heater circuit* | | 1 |
| 14 | 650/10166 | | Adaptor hose connecter 16mm OD | | 1 |
| 15 | 1315/3714Z | | Bolt M16x60 | | 1 |
| 16 | 128/15558 | | Guide hose | | 1 |
| 17 | 1315/0307Z | | Screw Hexagon M8 X 25 | | 1 |
| 18 | 1420/0007Z | | Washer plain M8 | | 1 |
| 19 | 826/01102 | | Nut rivet,M8 open ended | | 1 |

Product Catalog \ CONSTRUCTION \ NORTH AMERICA \ CONSTRUCTION / INDUSTRIAL \ BACKHOE LOADER 3CX,4CX,214,215,217 \ 3C PLUS (91HP) , Made in Brazil with Dieselmax/IESA Engine 9812/0080 \ L IESA P4001/P4001T ENGINES FROM S/N 1395000 \ L04 COOLING SYSTEM

# 9812/0080 L4-5-1 COMBINATION COOLER, ,

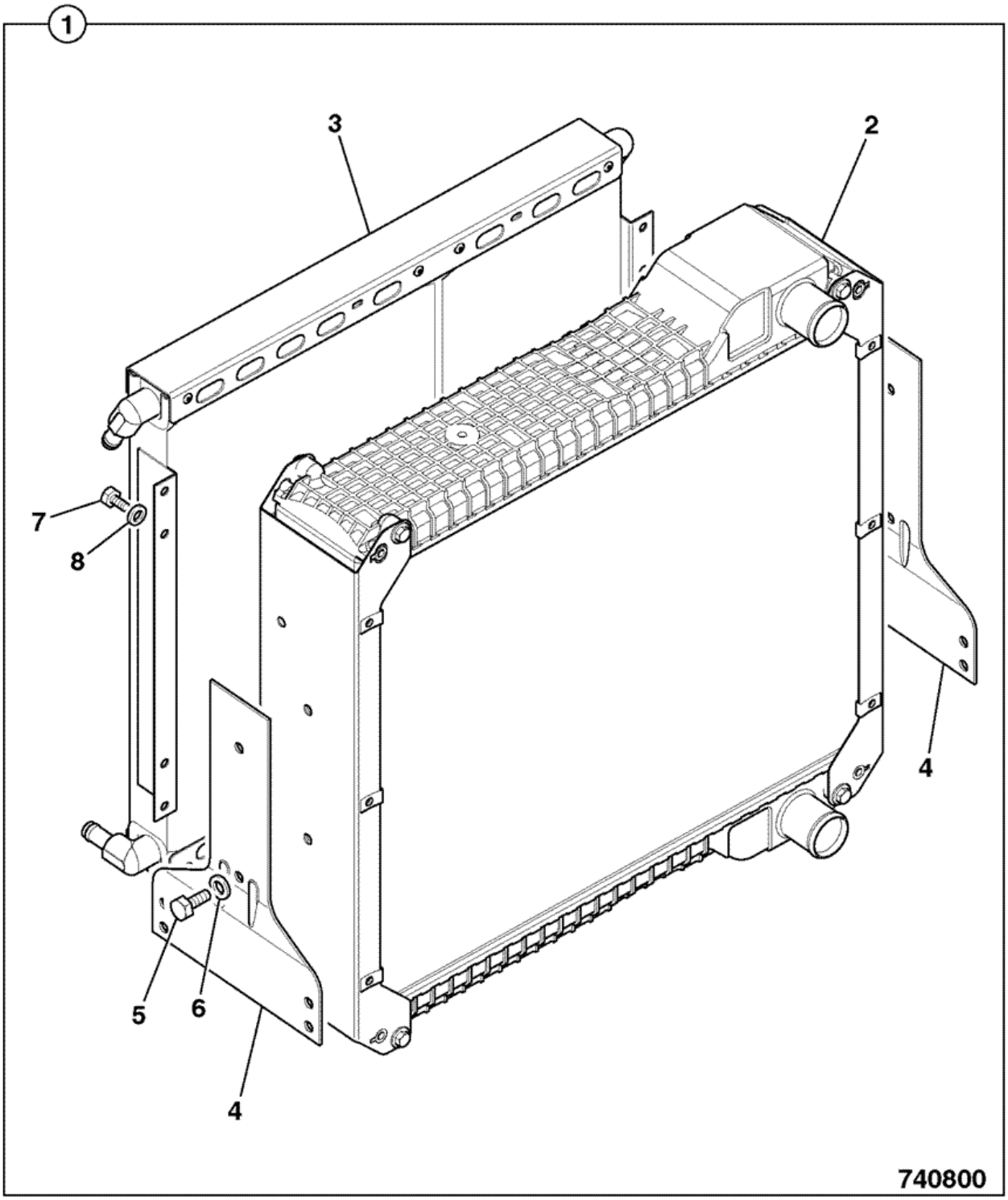


| Item | Part # | Change No | Description | Usage Code | QTY |
|---|---|---|---|---|---|
| 01 | 128/14326 | | Cooler assembly 5row 2ws non CAC | | 1 |
| 02 | :30/915200 | | Radiator assembly, 5row-9fpi Blue spot | | 1 |
| | | | | | |

| | | | | | |
|---|---|---|---|---|---|
| 03 | :30/925615 | | Cooler oil, double 14plates + 21 plates | | 1 |
| 04 | :30/926257 | | Bracket radiator mounting | | 2 |
| 05 | :30/926035 | | Bolt | | 4 |
| 06 | :30/926036 | | Washer | | 4 |
| 07 | 1315/0301Z | | Screw hex head M8 X 12 | | 8 |
| 08 | 826/00846 | | Nut 'u' | | 8 |

Product Catalog \ CONSTRUCTION \ NORTH AMERICA \ CONSTRUCTION / INDUSTRIAL \ BACKHOE LOADER 3CX,4CX,214,215,217 \ 3C PLUS (91HP) , Made in Brazil with Dieselmax/IESA Engine 9812/0080 \ L IESA P4001/P4001T ENGINES FROM S/N 1395000 \ L05 LUBRICATION SYSTEM

# 9812/0080 L5-1-1 SUMP, OIL PUMP, & FITTINGS NAT ASP, P4001 8C88

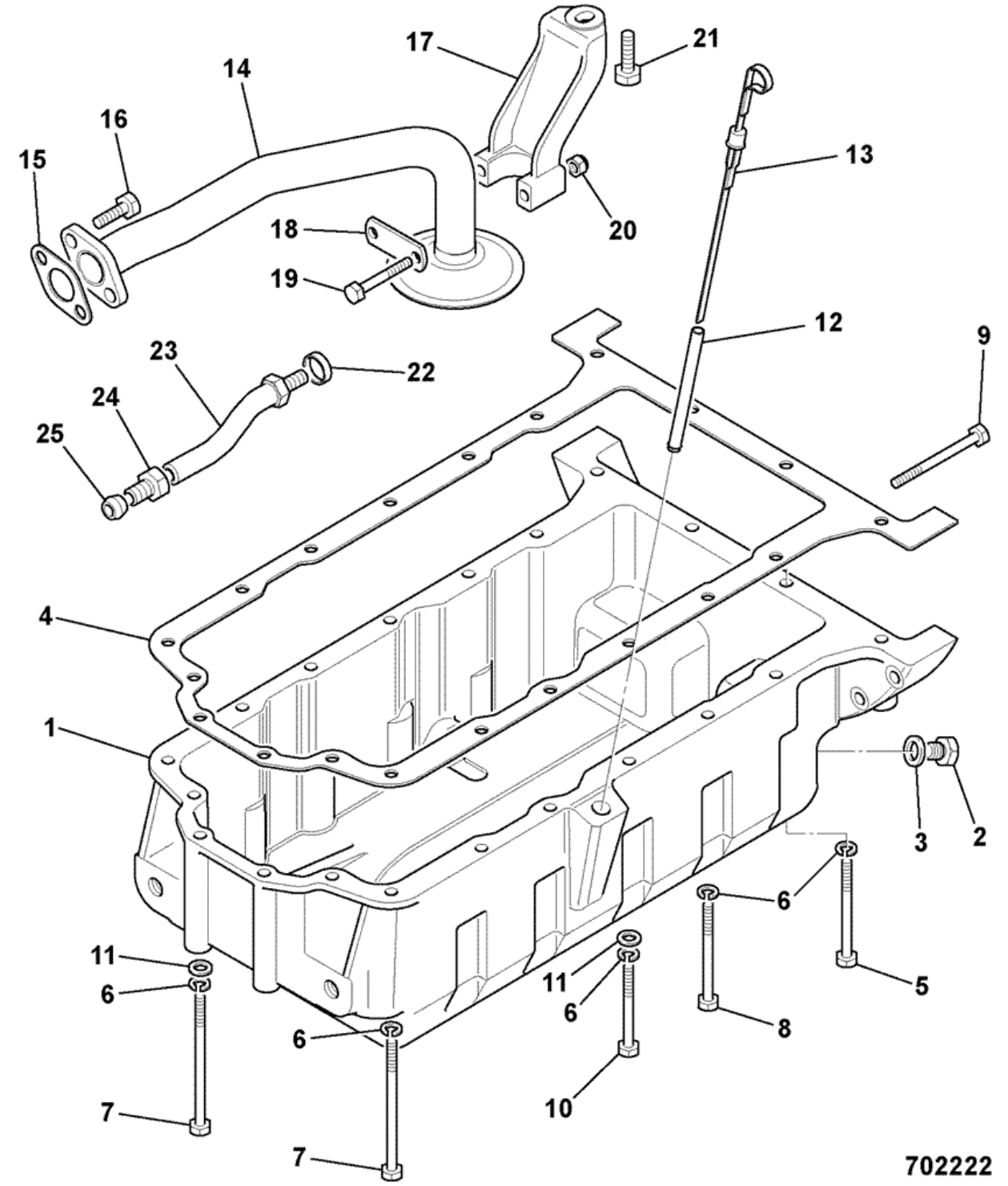


| Item | Part # | Change No | Description | Usage Code | QTY |
|---|---|---|---|---|---|
| 1 | 02/103504 | | Sump | | 1 |

| | | | | | |
|---|---|---|---|---|---|
| 2 | 02/103499 | | Plug | | 1 |
| 3 | 02/103501 | | Washer | | 1 |
| 4 | 02/100060 | | Gasket oil sump | | 1 |
| 5 | 1305/3127Z | | Bolt | | 2 |
| 6 | 1416/0005 | | Washer | | 20 |
| 7 | 1305/3136 | | Bolt | | 6 |
| 8 | 1305/3124 | | Bolt | | 11 |
| 10 | 02/103726 | | Bolt bolt | | 1 |
| 11 | 1410/0002 | | Washer | | 9 |
| 12 | 02/103502 | | Tube dipstick | | 1 |
| 13 | 02/103771 | | Dipstick dipstick | | 1 |
| 14 | 02/103728 | | Pipe suction | | 1 |
| 15 | 02/103507 | | Gasket | | 1 |
| 16 | 02/103506 | | Bolt | | 2 |
| 17 | 02/103649 | | Bracket support | | 1 |
| 18 | 02/103646 | | Plate | | 1 |
| 19 | 02/103657 | | Bolt | | 2 |
| 20 | 02/103654 | | Nut | | 2 |
| 21 | 02/103450 | | Bolt | | 1 |
| 22 | 02/103645 | | O Ring | | 2 |
| 23 | 02/103647 | | Pipe oil suction | | 1 |
| 24 | 02/100316 | | Nut | | 1 |
| 25 | 02/103729 | | Olive olive | | 1 |

Product Catalog \ CONSTRUCTION \ NORTH AMERICA \ CONSTRUCTION / INDUSTRIAL \ BACKHOE LOADER 3CX,4CX,214,215,217 \ 3C PLUS (91HP) , Made in Brazil with Dieselmax/IESA Engine 9812/0080 \ L IESA P4001/P4001T ENGINES FROM S/N 1395000 \ L05 LUBRICATION SYSTEM

# 9812/0080 L5-1-2 SUMP, OIL PUMP, & FITTINGS TURBO, P4001T 8C89

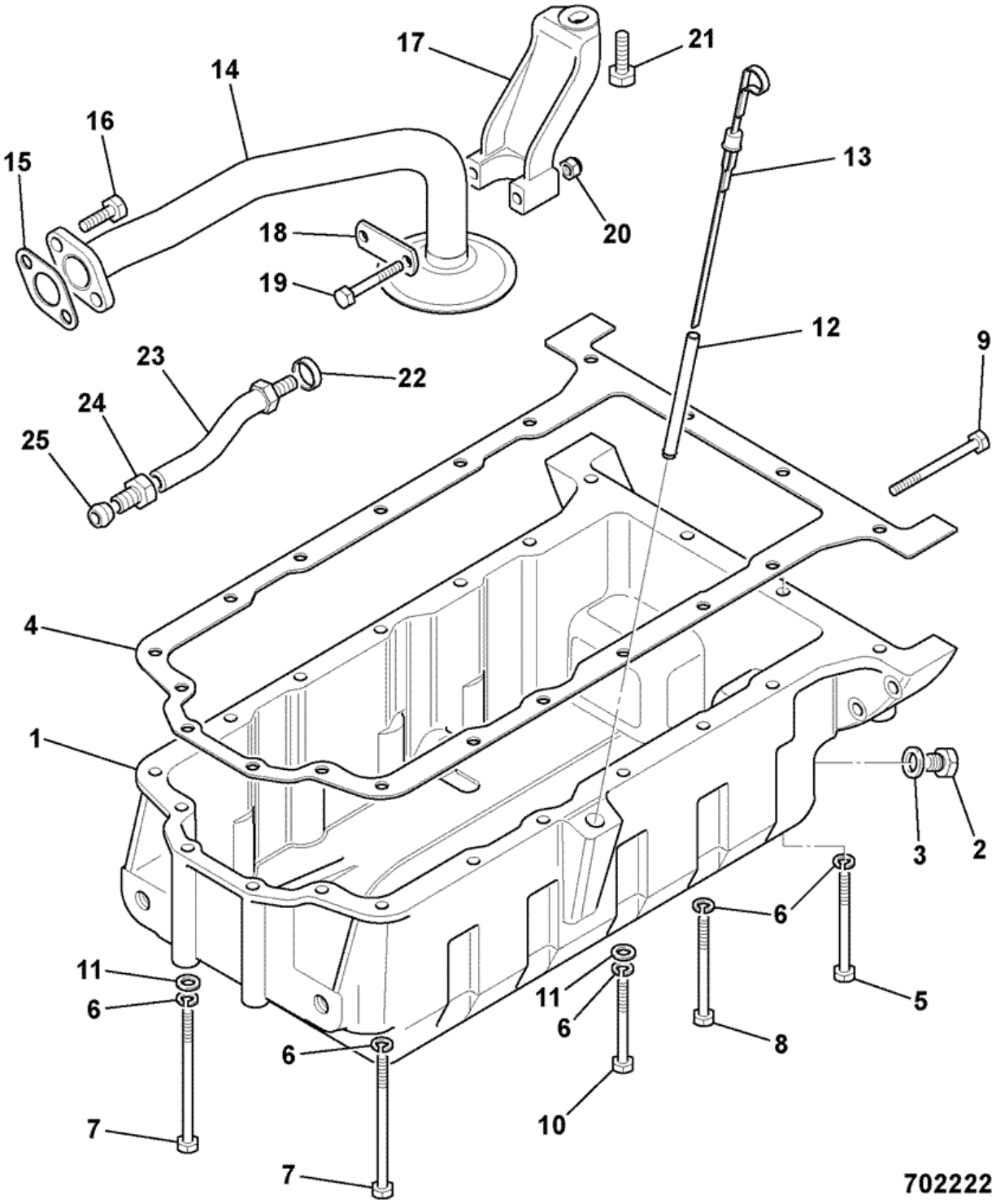


| Item | Part # | Change No | Description | Usage Code | QTY |
|---|---|---|---|---|---|
| 1 | 02/103504 | | Sump | | 1 |

| | | | | | |
|---|---|---|---|---|---|
| 2 | 02/103499 | | Plug | | 1 |
| 3 | 02/103501 | | Washer | | 1 |
| 4 | 02/100060 | | Gasket oil sump | | 1 |
| 5 | 1305/3127Z | | Bolt | | 2 |
| 6 | 1416/0005 | | Washer | | 20 |
| 7 | 1305/3136 | | Bolt | | 6 |
| 8 | 1305/3124 | | Bolt | | 11 |
| 10 | 02/103726 | | Bolt bolt | | 1 |
| 11 | 1410/0002 | | Washer | | 9 |
| 12 | 02/103502 | | Tube dipstick | | 1 |
| 13 | 02/103505 | | Dipstick | | 1 |
| 14 | 02/103650 | | Tube oil suction | | 1 |
| 15 | 02/100873 | | Gasket | | 1 |
| 16 | 02/103506 | | Bolt | | 2 |
| 17 | 02/103649 | | Bracket support | | 1 |
| 18 | 02/103646 | | Plate | | 1 |
| 19 | 02/103657 | | Bolt | | 2 |
| 20 | 02/103654 | | Nut | | 2 |
| 21 | 02/103450 | | Bolt | | 1 |
| 22 | 02/103645 | | O Ring | | 2 |
| 23 | 02/103644 | | Tube oil suction | | 1 |
| 24 | 02/100316 | | Nut | | 1 |
| 25 | 02/103729 | | Olive olive | | 1 |

Product Catalog \ CONSTRUCTION \ NORTH AMERICA \ CONSTRUCTION / INDUSTRIAL \ BACKHOE LOADER 3CX,4CX,214,215,217 \ 3C PLUS (91HP) , Made in Brazil with Dieselmax/IESA Engine 9812/0080 \ L IESA P4001/P4001T ENGINES FROM S/N 1395000 \ L05 LUBRICATION SYSTEM

# 9812/0080 L5-2-1 PUMP, OIL, & RELIEF VALVE, P4001 NAT ASP 8C88

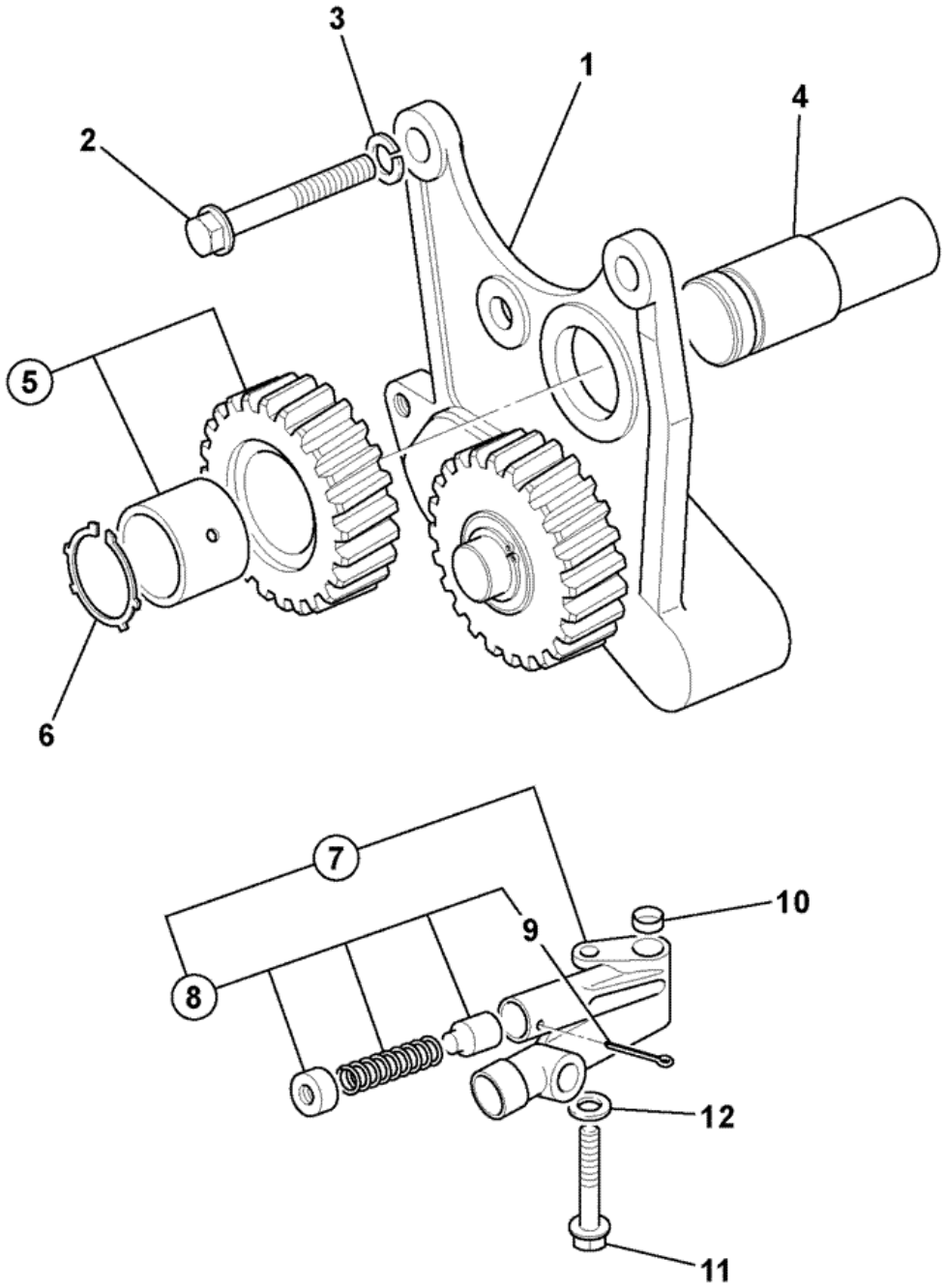


| Item | Part # | Change No | Description | Usage Code | QTY |
|---|---|---|---|---|---|
| 1 | 02/103703 | | Pump oil | | 1 |

| | | | | | |
|---|---|---|---|---|---|
| 2 | 02/103450 | | Bolt | | 3 |
| 3 | 1416/0005Z | | Washer spring - 5/16" Zinc plated | | 3 |
| 4 | 02/100161 | | Shaft idler, oil pump | | 1 |
| 5 | 02/103451 | | Gear | | 1 |
| 6 | 02/103452 | | Circlip | | 1 |
| 7 | 02/103643 | | Valve Relief | | 1 |
| 8 | :02/103454 | | Kit repair | | 1 |
| 9 | ::2103/0710 | | Pin split | | 1 |
| 10 | 02/100319 | | Thimble | | 1 |
| 11 | 02/103458 | | Bolt | | 1 |
| 12 | 1416/0006 | | Washer | | 1 |

Product Catalog \ CONSTRUCTION \ NORTH AMERICA \ CONSTRUCTION / INDUSTRIAL \ BACKHOE LOADER 3CX,4CX,214,215,217 \ 3C PLUS (91HP) , Made in Brazil with Dieselmax/IESA Engine 9812/0080 \ L IESA P4001/P4001T ENGINES FROM S/N 1395000 \ L05 LUBRICATION SYSTEM

# 9812/0080 L5-2-2 PUMP, OIL, & RELIEF VALVE, P4001T TURBO 8C89

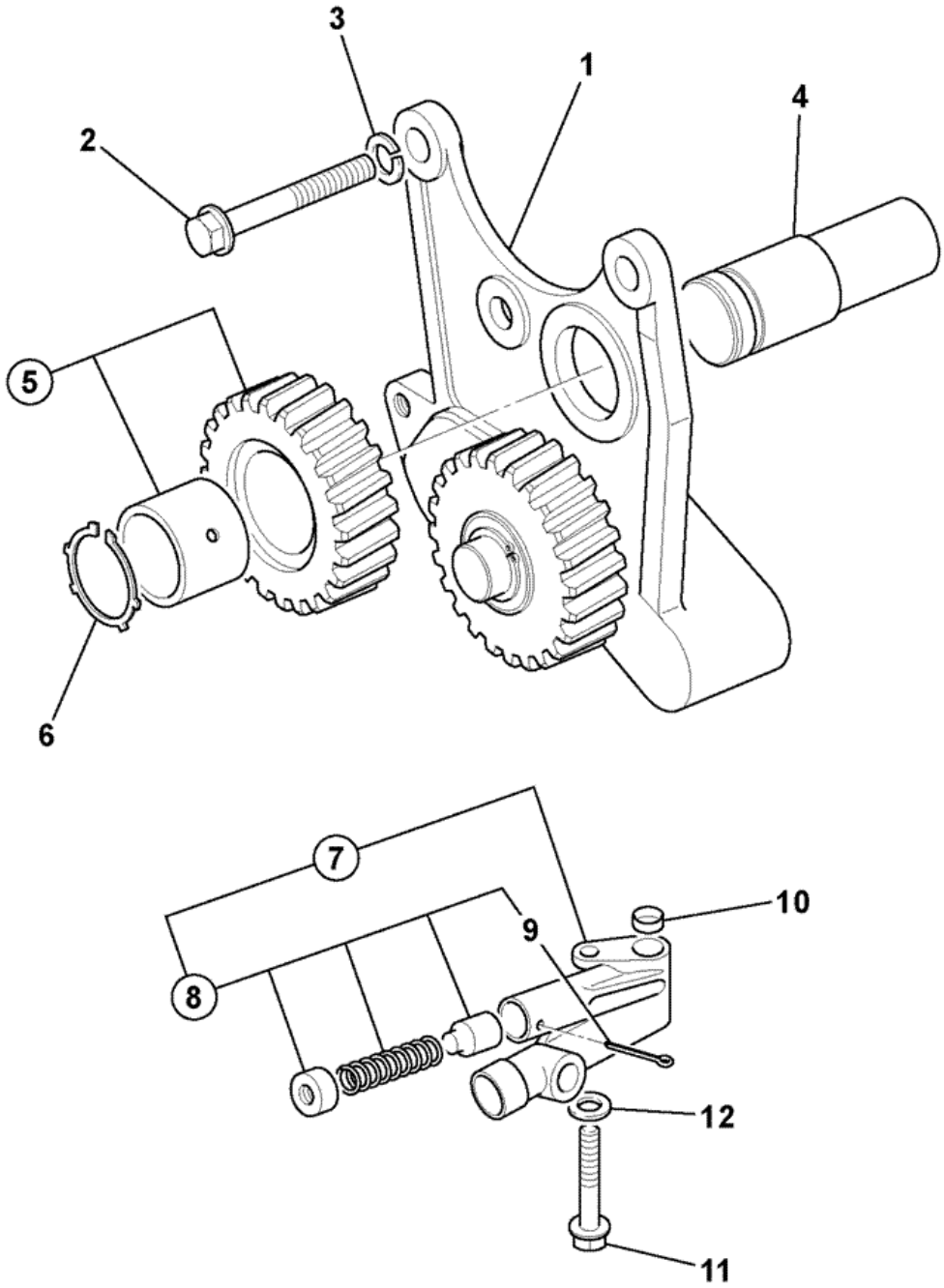


| Item | Part # | Change No | Description | Usage Code | QTY |
|---|---|---|---|---|---|
| 1 | 02/103704 | | Pump oil | | 1 |

| | | | | | |
|---|---|---|---|---|---|
| 2 | 02/103450 | | Bolt | | 3 |
| 3 | 1416/0005Z | | Washer spring - 5/16" Zinc plated | | 3 |
| 4 | 02/100161 | | Shaft idler, oil pump | | 1 |
| 5 | 02/103451 | | Gear | | 1 |
| 6 | 02/103452 | | Circlip | | 1 |
| 7 | 02/103453 | | Valve relief | | 1 |
| 8 | :02/103454 | | Kit repair | | 1 |
| 9 | ::2103/0710 | | Pin split | | 1 |
| 10 | 02/100319 | | Thimble | | 1 |
| 11 | 02/103458 | | Bolt | | 1 |
| 12 | 1416/0006 | | Washer | | 1 |

Product Catalog \ CONSTRUCTION \ NORTH AMERICA \ CONSTRUCTION / INDUSTRIAL \ BACKHOE LOADER 3CX,4CX,214,215,217 \ 3C PLUS (91HP) , Made in Brazil with Dieselmax/IESA Engine 9812/0080 \ L IESA P4001/P4001T ENGINES FROM S/N 1395000 \ L05 LUBRICATION SYSTEM

# 9812/0080 L5-3-1 PISTON COOLING JETS, TURBO, P4001T 8C89

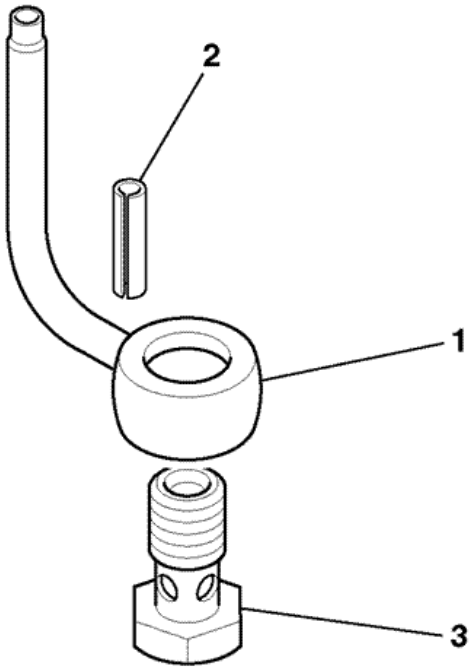


706110

| Item | Part # | Change No | Description | Usage Code | QTY |
|---|---|---|---|---|---|
| 1 | 02/103459 | | Pipe piston cooling | | 1 |

| | | | | | |
|---|---|---|---|---|---|
| 2 | 2102/0403 | | Pin tension | | 1 |
| 3 | 02/103460 | | Valve | | 1 |

# 9812/0080 L5-4-1 FILTER, OIL & COOLER, NAT ASP & TURBO, P4001/P4001T 8C88/8C89

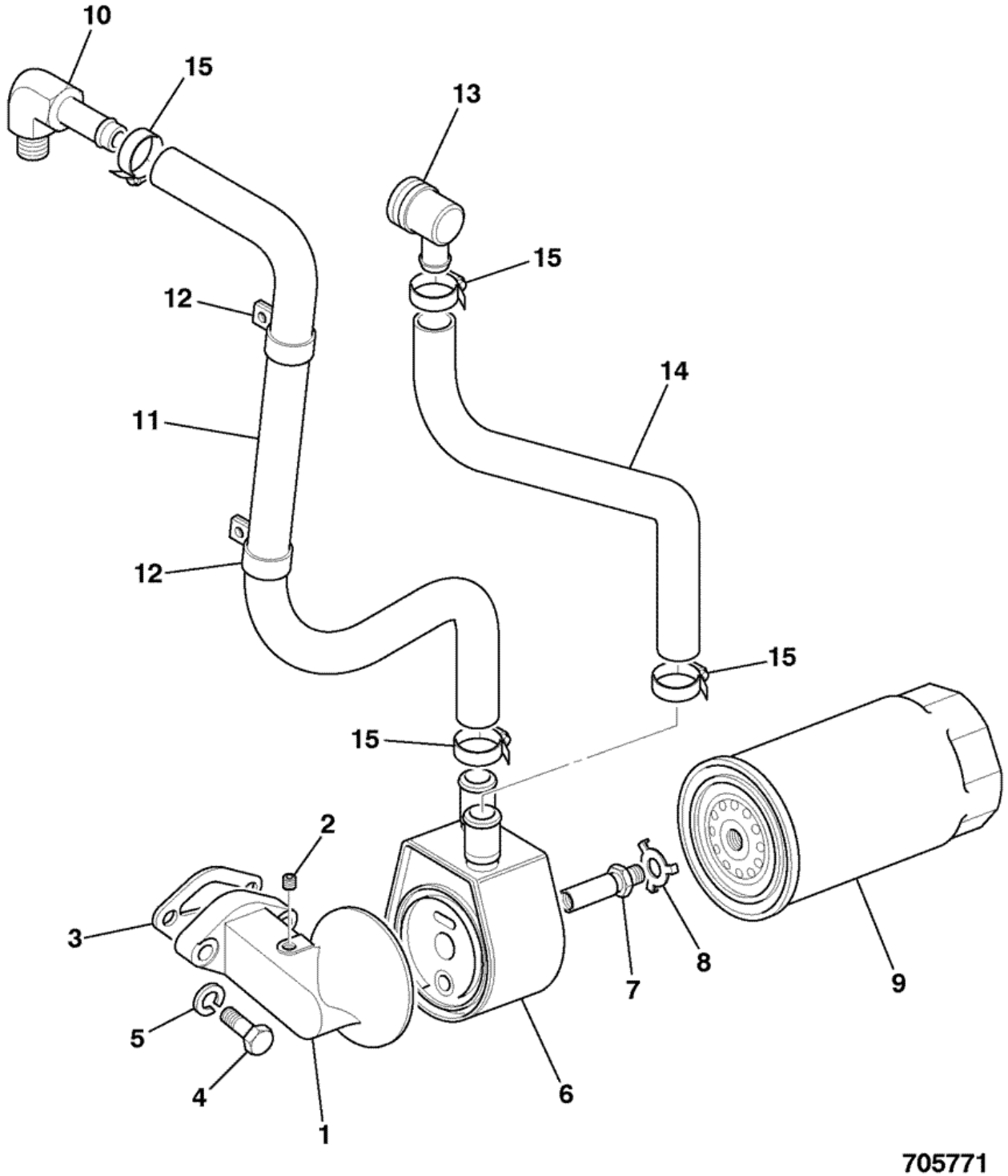


| Item | Part # | Change No | Description | Usage Code | QTY |
|---|---|---|---|---|---|
| 1 | 02/103730 | | Head filter | | 1 |

| | | | | | |
|---|---|---|---|---|---|
| 2 | 02/103515 | | Plug | | 1 |
| 3 | 02/103514 | | Gasket | | 1 |
| 4 | 1305/3308 | | Bolt | | 2 |
| 5 | 823/00280 | | Washer Spring | | 1 |
| 6 | 02/103516 | | Cooler oil | | 1 |
| 7 | 02/103518 | | Connector | | 1 |
| 8 | 02/103517 | | Washer tab washer | | 1 |
| 9 | 02/103513 | | Element oil filter | | 1 |
| 10 | 02/103731 | | Elbow elbow | | 1 |
| 11 | 02/103732 | | Pipe pipe | | 1 |
| 12 | 02/103521 | | Clip | | 2 |
| 13 | 02/103522 | | Adapter elbow | | 1 |
| 14 | 02/103520 | | Hose | | 1 |
| 15 | 02/103524 | | Clamp | | 4 |

Product Catalog \ CONSTRUCTION \ NORTH AMERICA \ CONSTRUCTION / INDUSTRIAL \ BACKHOE LOADER 3CX,4CX,214,215,217 \ 3C PLUS (91HP) , Made in Brazil with Dieselmax/IESA Engine 9812/0080 \ L IESA P4001/P4001T ENGINES FROM S/N 1395000 \ L06 FUEL SYSTEM

# 9812/0080 L6-1-1 PUMP, FUEL INJECTION, NAT ASP, P4001 8C88

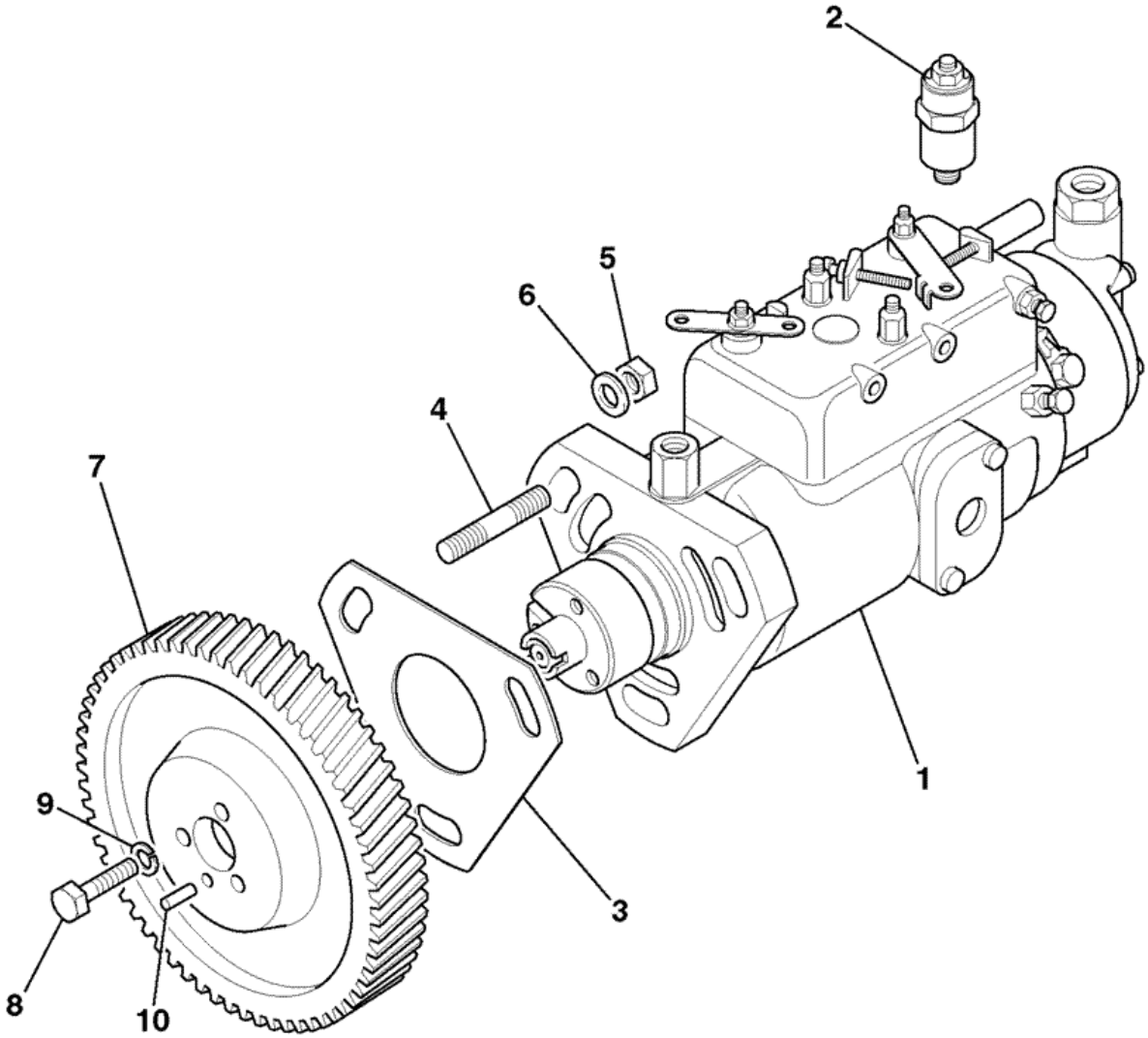


705580

| Item | Part # | Change No | Description | Usage Code | QTY |
|---|---|---|---|---|---|
| 1 | 17/920600 | | Pump fuel injection | | 1 |

| | | | | | |
|---|---|---|---|---|---|
| 2 | :716/30199 | | Solenoid engine stop | | 1 |
| 3 | 02/103552 | | Gasket | | 1 |
| 4 | 02/103553 | | Stud | | 3 |
| 5 | 02/103554 | | Nut | | 3 |
| 6 | 02/101686 | | Washer | | 3 |
| 7 | 02/103767 | | Gear injection pump | | 1 |
| 8 | 1305/0104 | | Bolt | | 3 |
| 9 | 1416/0005 | | Washer | | 3 |
| 10 | 02/130146 | | Dowel | | 1 |

Product Catalog \ CONSTRUCTION \ NORTH AMERICA \ CONSTRUCTION / INDUSTRIAL \ BACKHOE LOADER 3CX,4CX,214,215,217 \ 3C PLUS (91HP) , Made in Brazil with Dieselmax/IESA Engine 9812/0080 \ L IESA P4001/P4001T ENGINES FROM S/N 1395000 \ L06 FUEL SYSTEM

# 9812/0080 L6-1-2 PUMP, FUEL INJECTION, TURBO, P4001T 8C89

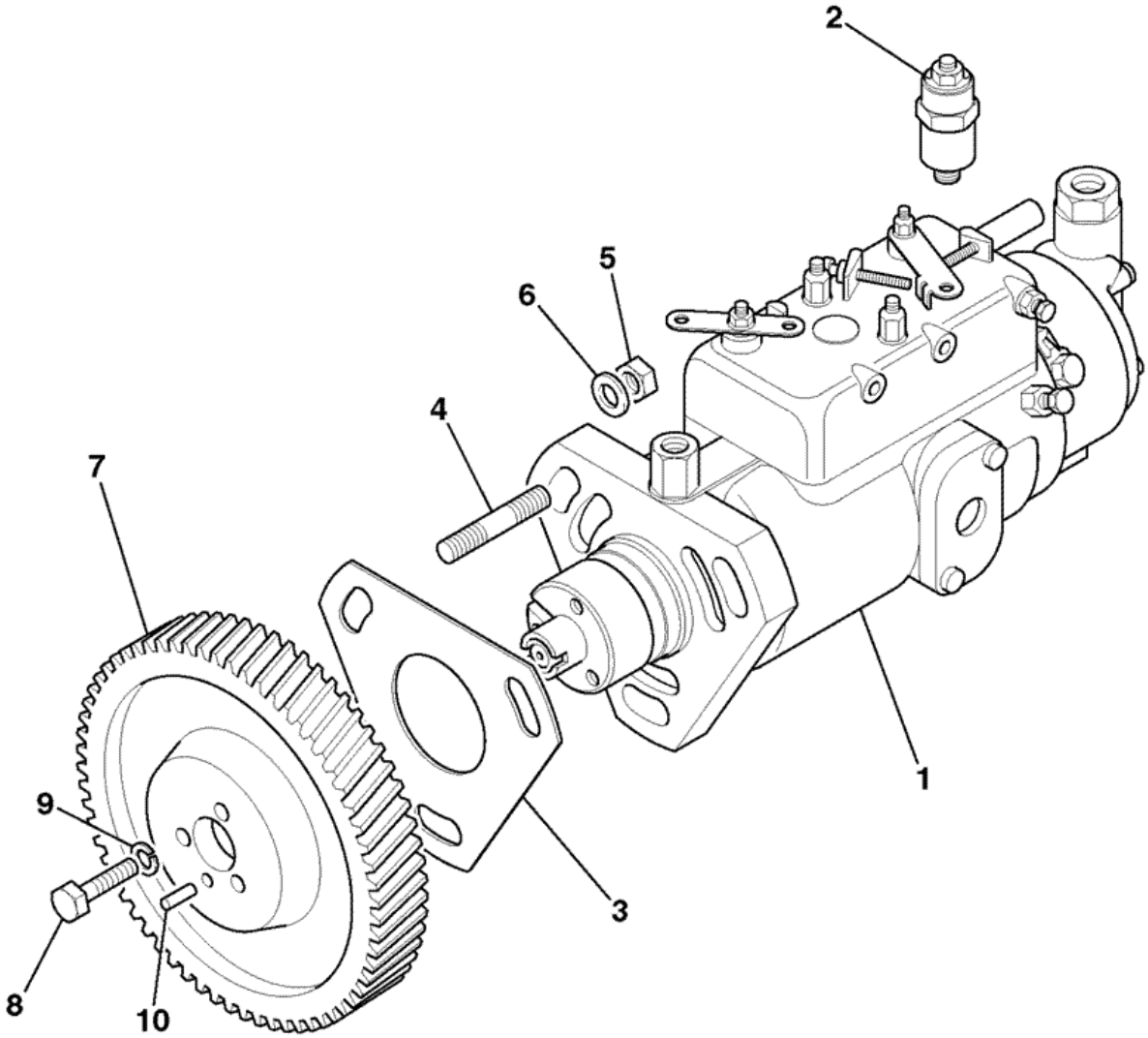


705580

| Item | Part # | Change No | Description | Usage Code | QTY |
|---|---|---|---|---|---|
| 1 | 17/920700 | | Pump fuel injection | | 1 |

| | | | | | |
|---|---|---|---|---|---|
| 2 | :716/30199 | | Solenoid engine stop | | 1 |
| 3 | 02/103552 | | Gasket | | 1 |
| 4 | 02/103553 | | Stud | | 3 |
| 5 | 02/103554 | | Nut | | 3 |
| 6 | 02/101686 | | Washer | | 3 |
| 7 | 02/103556 | | Gear | | 1 |
| 8 | 1305/0104 | | Bolt | | 3 |
| 9 | 1416/0005 | | Washer | | 3 |
| 10 | 02/130146 | | Dowel | | 1 |

Product Catalog \ CONSTRUCTION \ NORTH AMERICA \ CONSTRUCTION / INDUSTRIAL \ BACKHOE LOADER 3CX,4CX,214,215,217 \ 3C PLUS (91HP) , Made in Brazil with Dieselmax/IESA Engine 9812/0080 \ L IESA P4001/P4001T ENGINES FROM S/N 1395000 \ L06 FUEL SYSTEM

# 9812/0080 L6-2-1 INJECTORS, FUEL, & INJECTION PIPES, P4001 NAT ASP 8C88

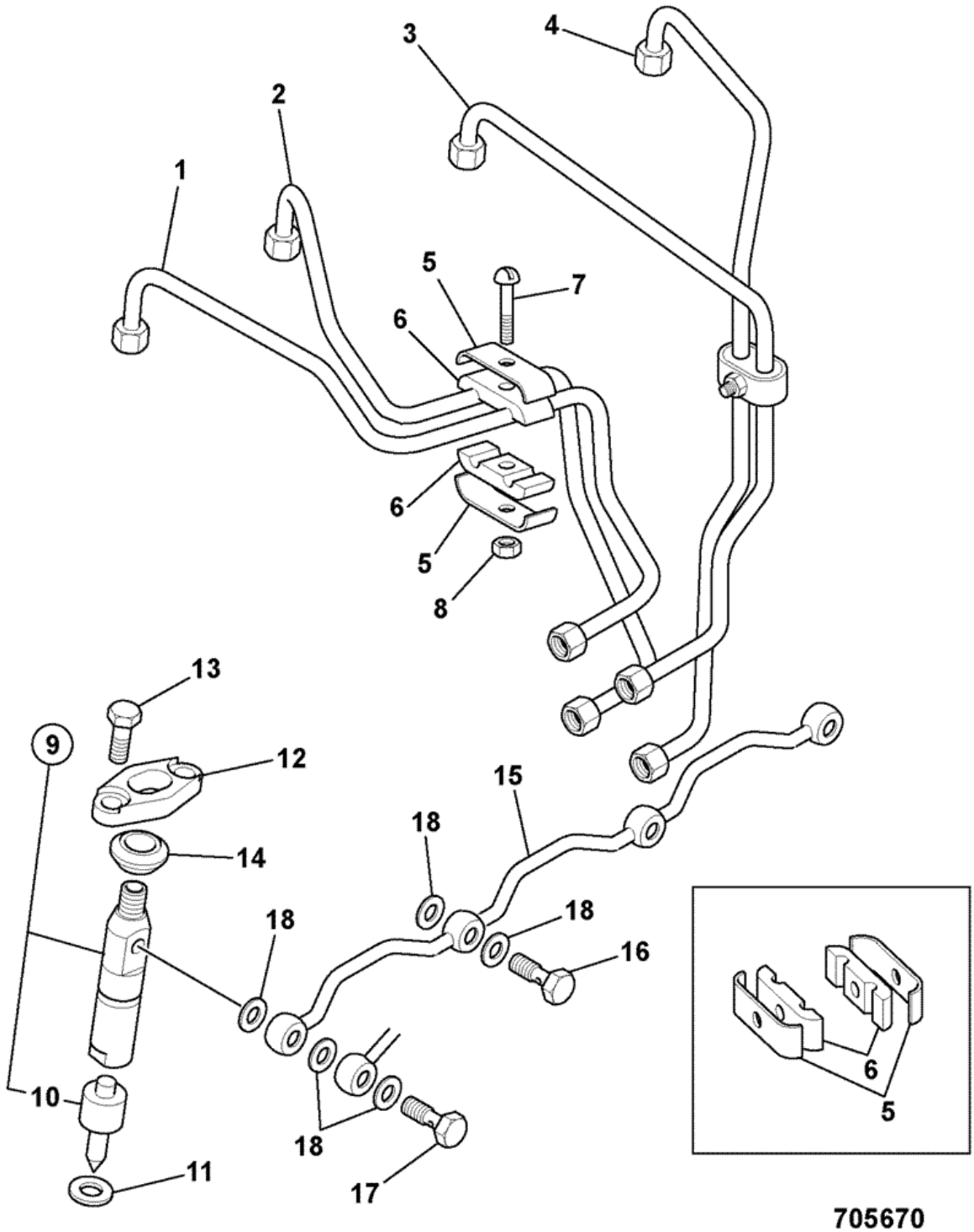


| Item | Part # | Change No | Description | Usage Code | QTY |
|---|---|---|---|---|---|
| 1 | 02/103584 | | Pipe 1 cyl | | 1 |

| | | | | | |
|---|---|---|---|---|---|
| 2 | 02/103585 | | Pipe 2 cyl | | 1 |
| 3 | 02/103586 | | Pipe 3 cyl | | 1 |
| 4 | 02/103587 | | Pipe 4 cyl | | 1 |
| 5 | 02/103746 | | Clip clip | | 4 |
| 6 | 02/103588 | | Damper | | 4 |
| 7 | 02/103747 | | Bolt bolt | | 2 |
| 8 | 02/103590 | | Nut | | 2 |
| 9 | 17/920900 | | Atomiser assembly | | 4 |
| 10 | :17/920901 | | Nozzle | | 1 |
| 11 | 02/103589 | | Washer | | 4 |
| 12 | 02/101392 | | Clamp | | 4 |
| 13 | 1305/3108 | | Bolt | | 8 |
| 14 | 02/103591 | | Seal | | 4 |
| 15 | 02/101391 | | Pipe assembly | | 1 |
| 16 | 02/100290 | | Bolt | | 3 |
| 17 | 02/103576 | | Bolt | | 1 |
| 18 | 02/103577 | | Washer | | 9 |

Product Catalog \ CONSTRUCTION \ NORTH AMERICA \ CONSTRUCTION / INDUSTRIAL \ BACKHOE LOADER 3CX,4CX,214,215,217 \ 3C PLUS (91HP) , Made in Brazil with Dieselmax/IESA Engine 9812/0080 \ L IESA P4001/P4001T ENGINES FROM S/N 1395000 \ L06 FUEL SYSTEM

# 9812/0080 L6-2-2 INJECTORS, FUEL, & INJECTION PIPES, P4001T TURBO 8C89

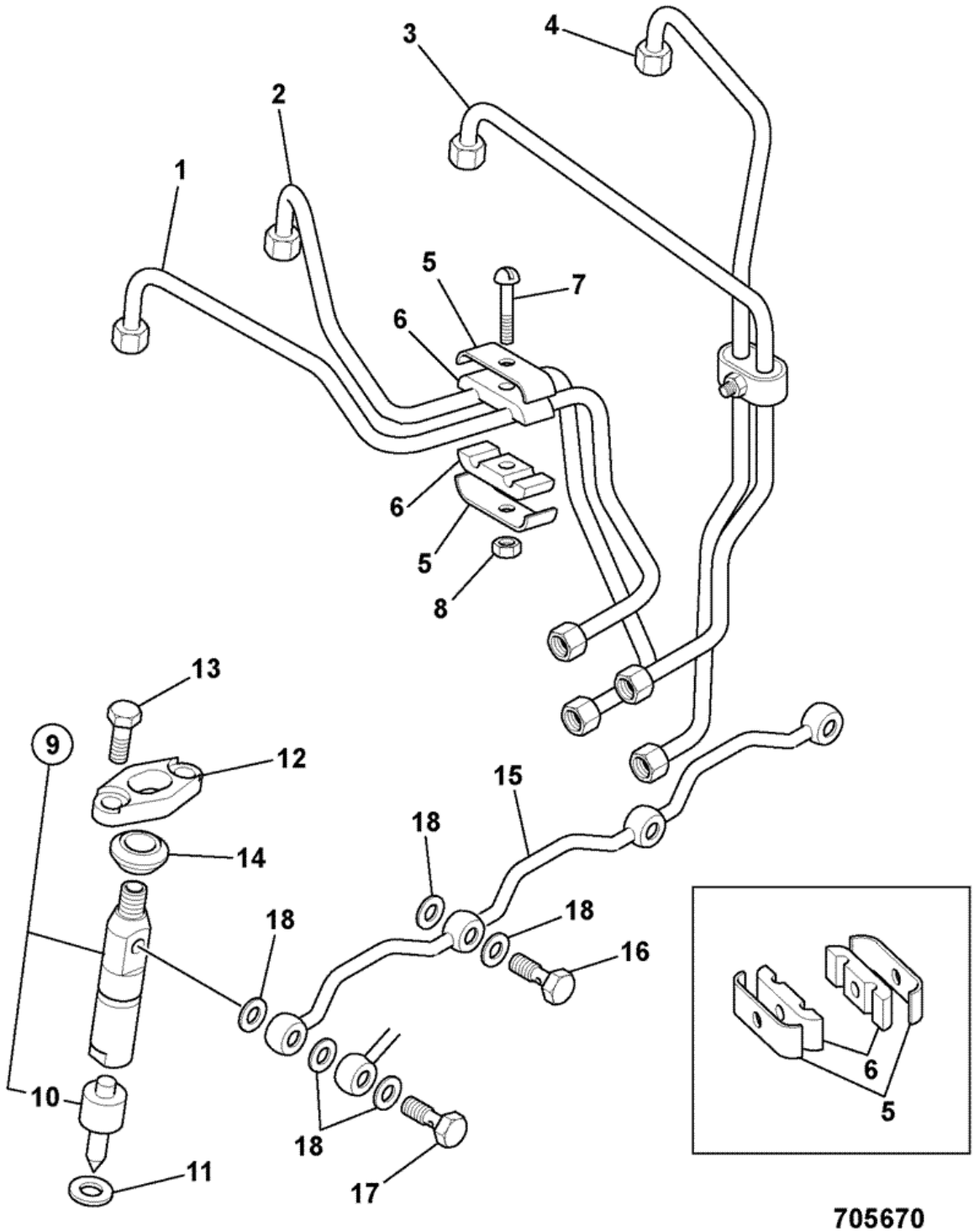


| Item | Part # | Change No | Description | Usage Code | QTY |
|---|---|---|---|---|---|
| 1 | 02/103592 | | Pipe 1 cyl | | 1 |

| | | | | | |
|---|---|---|---|---|---|
| 2 | 02/103593 | | Pipe 2 cyl | | 1 |
| 3 | 02/103594 | | Pipe 3 cyl | | 1 |
| 4 | 02/103745 | | Pipe fuel injection | | 1 |
| 5 | 02/103746 | | Clip clip | | 4 |
| 6 | 02/103588 | | Damper | | 4 |
| 7 | 02/103747 | | Bolt bolt | | 2 |
| 8 | 02/103590 | | Nut | | 2 |
| 9 | 17/921000 | | Atomiser assembly | | 4 |
| 10 | :17/920901 | | Nozzle | | 1 |
| 11 | 02/103589 | | Washer | | 4 |
| 12 | 02/101392 | | Clamp | | 4 |
| 13 | 1305/3108 | | Bolt | | 8 |
| 14 | 02/103591 | | Seal | | 4 |
| 15 | 02/101391 | | Pipe assembly | | 1 |
| 16 | 02/100290 | | Bolt | | 3 |
| 17 | 02/103576 | | Bolt | | 1 |
| 18 | 02/103577 | | Washer | | 9 |

Product Catalog \ CONSTRUCTION \ NORTH AMERICA \ CONSTRUCTION / INDUSTRIAL \ BACKHOE LOADER 3CX,4CX,214,215,217 \ 3C PLUS (91HP) , Made in Brazil with Dieselmax/IESA Engine 9812/0080 \ L IESA P4001/P4001T ENGINES FROM S/N 1395000 \ L06 FUEL SYSTEM

# 9812/0080 L6-3-1 FUEL PIPES, FUEL FEED & RETURN, P4001, NAT/ASPIRATED 8C88

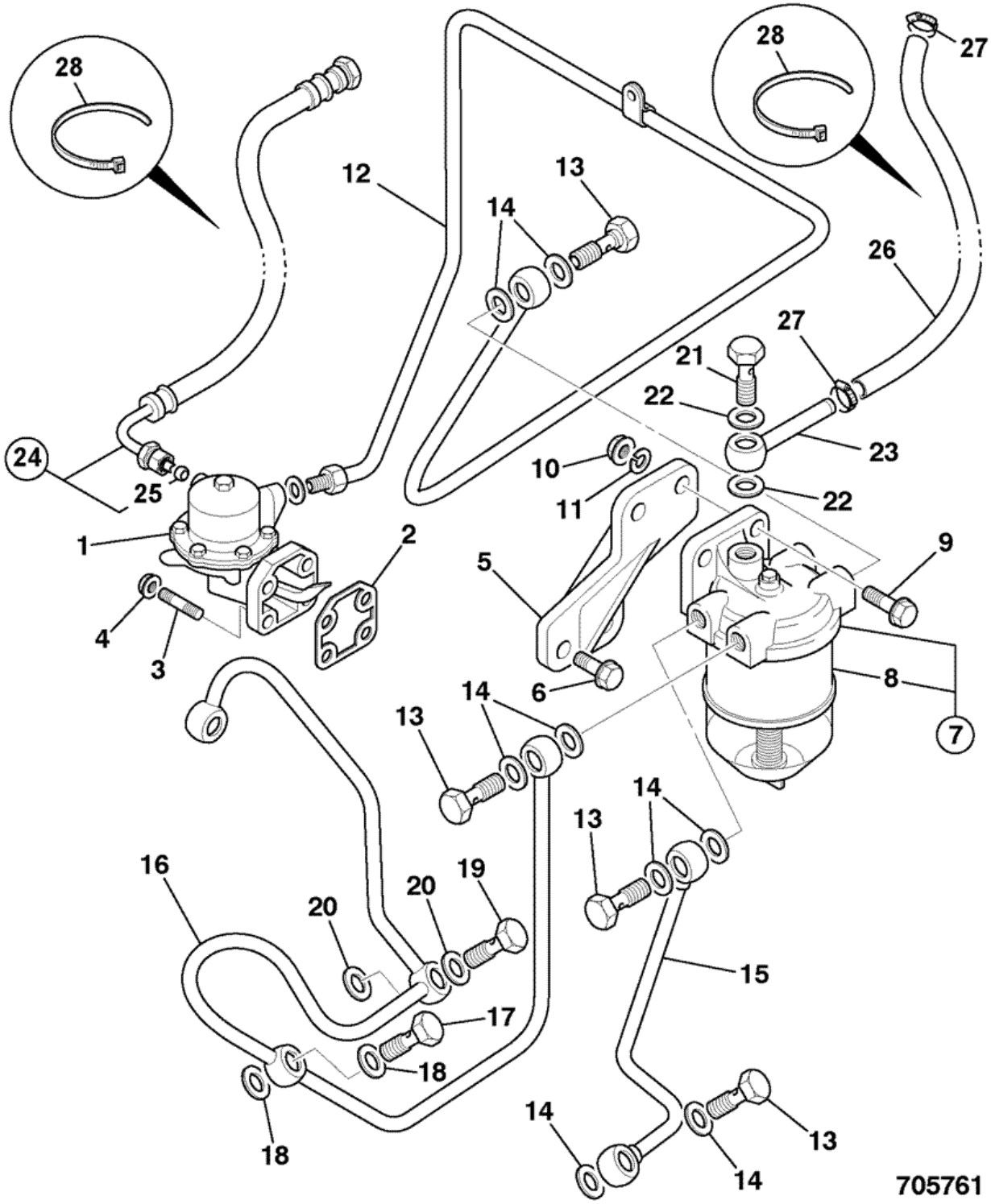


| Item | Part # | Change No | Description | Usage Code | QTY |
|---|---|---|---|---|---|
| 1 | 17/920800 | | Pump fuel lift | | 1 |

| | | | | | |
|---|---|---|---|---|---|
| 2 | 02/103740 | | Gasket gasket | | 1 |
| 3 | 02/103562 | | Stud | | 4 |
| 4 | 02/103554 | | Nut | | 4 |
| 5 | 02/103564 | | Bracket | | 1 |
| 6 | 02/103578 | | Bolt | | 2 |
| 7 | 02/103741 | | Filter filter | | 1 |
| 8 | :32/925587 | | Element fuel filter | | 1 |
| 9 | 02/103548 | | Bolt | | 2 |
| 10 | 02/103544 | | Nut | | 2 |
| 11 | . | | 'See Remark'<br>*No longer required* | | 0 |
| 12 | 02/103571 | | Pipe fuel l/pump to f/filter | | 1 |
| 13 | 02/103569 | | Bolt banjo | | 4 |
| 14 | 02/103570 | | Washer | | 8 |
| 15 | 02/103568 | | Pipe fuel filter to inj/pump | | 1 |
| 16 | 02/103572 | | Pipe fuel inj/pump to f/filter | | 1 |
| 17 | 02/103573 | | Bolt Banjo | | 1 |
| 18 | 02/103575 | | Washer | | 2 |
| 19 | 02/103580 | | Bolt banjo | | 1 |
| 20 | 02/103575 | | Washer | | 2 |
| 21 | 02/103742 | | Bolt bolt | | 1 |
| 22 | 02/103570 | | Washer | | 2 |
| 23 | 02/103768 | | Connector outlet | | 1 |

Product Catalog \ CONSTRUCTION \ NORTH AMERICA \ CONSTRUCTION / INDUSTRIAL \ BACKHOE LOADER 3CX,4CX,214,215,217 \ 3C PLUS (91HP) , Made in Brazil with Dieselmax/IESA Engine 9812/0080 \ L IESA P4001/P4001T ENGINES FROM S/N 1395000 \ L06 FUEL SYSTEM

# 9812/0080 L6-3-2 FUEL PIPES, FUEL FEED & RETURN, P4001T, TURBO 8C89

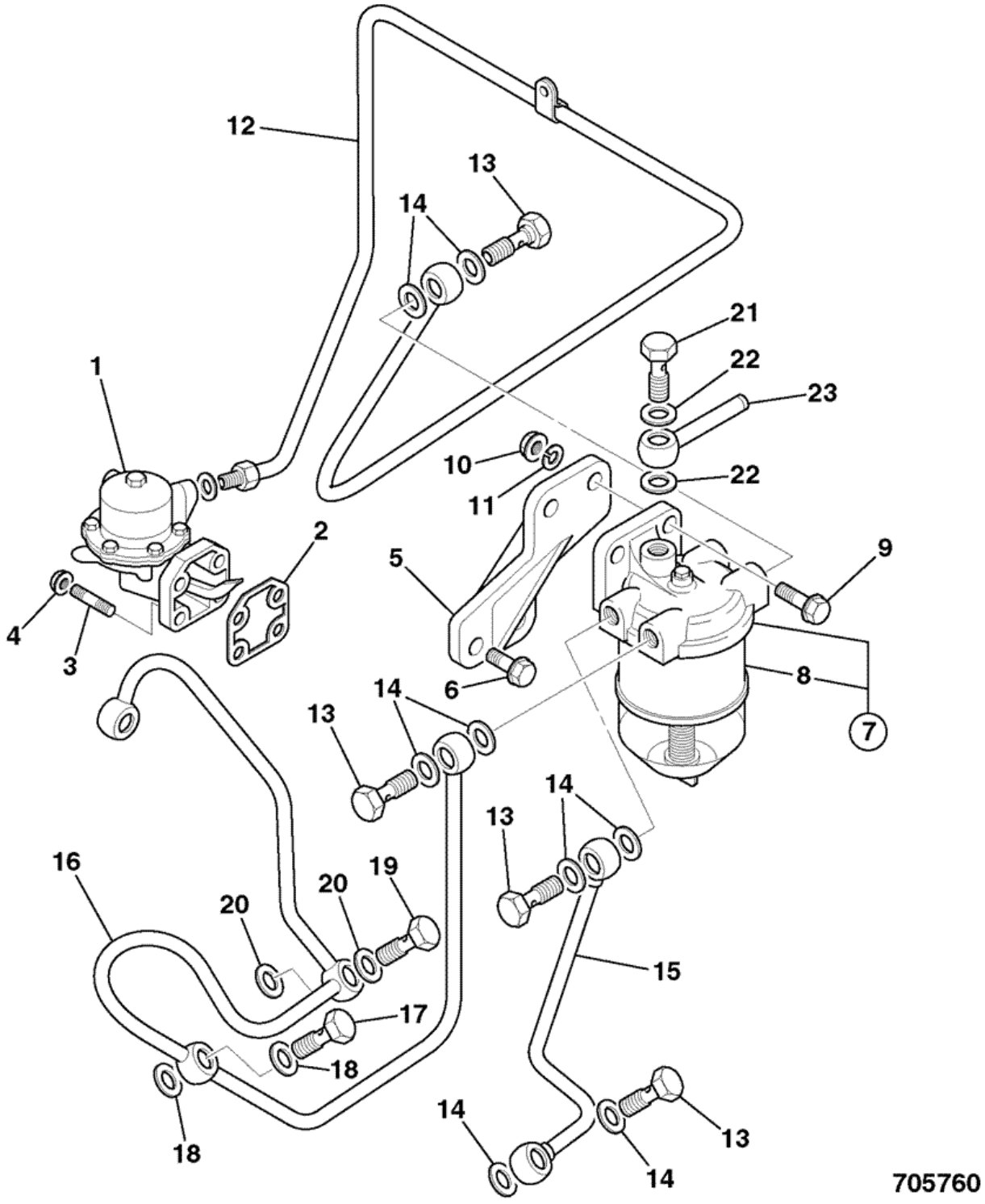


| Item | Part # | Change No | Description | Usage Code | QTY |
|---|---|---|---|---|---|
| 1 | 17/920800 | | Pump fuel lift | | 1 |

| | | | | | |
|---|---|---|---|---|---|
| 2 | 02/103740 | | Gasket gasket | | 1 |
| 3 | 02/103562 | | Stud | | 4 |
| 4 | 02/103554 | | Nut | | 4 |
| 5 | 02/103564 | | Bracket | | 1 |
| 6 | 02/103578 | | Bolt | | 2 |
| 7 | 02/103741 | | Filter filter | | 1 |
| 8 | :32/925587 | | Element fuel filter | | 1 |
| 9 | 02/103548 | | Bolt | | 2 |
| 10 | 02/103544 | | Nut | | 2 |
| 11 | . | | 'See Remark'<br>*No longer required* | | 0 |
| 12 | 02/103571 | | Pipe fuel l/pump to f/filter | | 1 |
| 13 | 02/103569 | | Bolt banjo | | 4 |
| 14 | 02/103570 | | Washer | | 8 |
| 15 | 02/103568 | | Pipe fuel filter to inj/pump | | 1 |
| 16 | 02/103572 | | Pipe fuel inj/pump to f/filter | | 1 |
| 17 | 02/103573 | | Bolt Banjo | | 1 |
| 18 | 02/103575 | | Washer | | 2 |
| 19 | 02/103580 | | Bolt banjo | | 1 |
| 20 | 02/103575 | | Washer | | 2 |
| 21 | 02/103742 | | Bolt bolt | | 1 |
| 22 | 02/103570 | | Washer | | 2 |
| 23 | 02/103768 | | Connector outlet | | 1 |

Product Catalog \ CONSTRUCTION \ NORTH AMERICA \ CONSTRUCTION / INDUSTRIAL \ BACKHOE LOADER 3CX,4CX,214,215,217 \ 3C PLUS (91HP) , Made in Brazil with Dieselmax/IESA Engine 9812/0080 \ L IESA P4001/P4001T ENGINES FROM S/N 1395000 \ L06 FUEL SYSTEM

# 9812/0080 L6-4-1 FUEL HEATER & PIPE, NAT ASP & TURBO, P4001 P4001T, 8C88/8C89

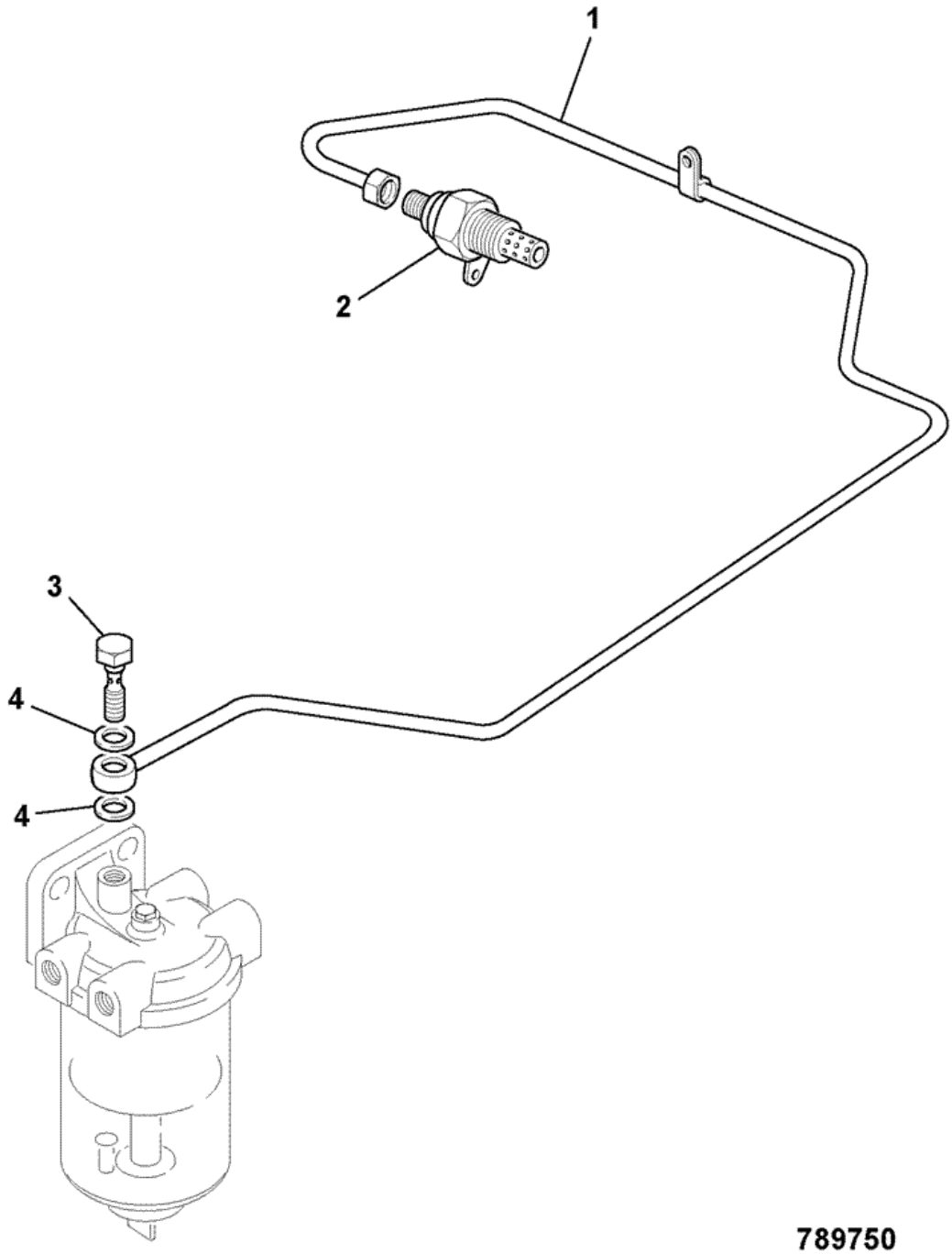


| Item | Part # | Change No | Description | Usage Code | QTY |
|---|---|---|---|---|---|
| 1 | 02/103686 | | Pipe fuel heater | | 1 |

| | | | | | |
|---|---|---|---|---|---|
| 2 | 02/103739 | | Plug glow plug | | 1 |
| 3 | 02/103569 | | Bolt banjo | | 1 |
| 4 | 02/103570 | | Washer | | 2 |

Product Catalog \ CONSTRUCTION \ NORTH AMERICA \ CONSTRUCTION / INDUSTRIAL \ BACKHOE LOADER 3CX,4CX,214,215,217 \ 3C PLUS (91HP) , Made in Brazil with Dieselmax/IESA Engine 9812/0080 \ L IESA P4001/P4001T ENGINES FROM S/N 1395000 \ L06 FUEL SYSTEM

# 9812/0080 L6-5-1 FUEL PIPES, FUEL TANK TO FILTER, P4001/P4001T NAT ASP & TURBO 8C88/8C89

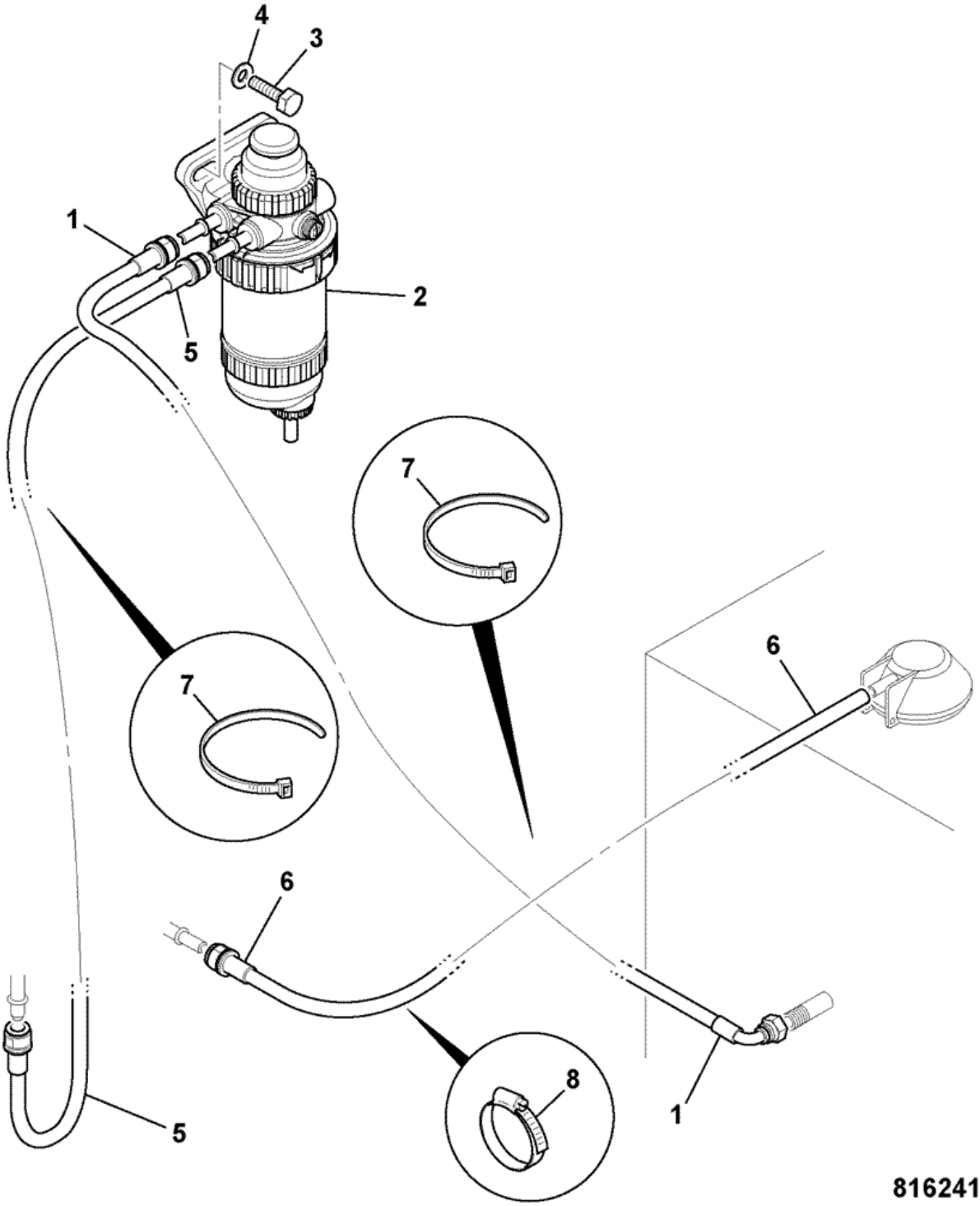


| Item | Part # | Change No | Description | Usage Code | QTY |
|---|---|---|---|---|---|
| 1 | 649/51784 | | Hose diesel fuel L=1850 | | 1 |

| | | | | | |
|---|---|---|---|---|---|
| 2 | 32/925914 | | Filter fuel sediment 30m reverse flow<br>*For Service Parts, See Index L6-6-1* | | 1 |
| 3 | 1315/0410Z | | Bolt M10 x 40 | | 2 |
| 4 | 1420/0008Z | | Washer Plain M10 | | 2 |
| 5 | 649/52236 | | Hose fuel hose 1200Lg | | 1 |
| 6 | 648/03505 | | Hose 8mm bore x1620mm | | 1 |
| 7 | 826/01144 | | Tie cable 200mm long | | 7 |
| 8 | 821/00520 | | Clip | | 2 |

Product Catalog \ CONSTRUCTION \ NORTH AMERICA \ CONSTRUCTION / INDUSTRIAL \ BACKHOE LOADER 3CX,4CX,214,215,217 \ 3C PLUS (91HP) , Made in Brazil with Dieselmax/IESA Engine 9812/0080 \ L IESA P4001/P4001T ENGINES FROM S/N 1395000 \ L06 FUEL SYSTEM

# 9812/0080 L6-6-1 FILTER,30 MICRON, FUEL SEDIMENT, WITH HAND PRIMER

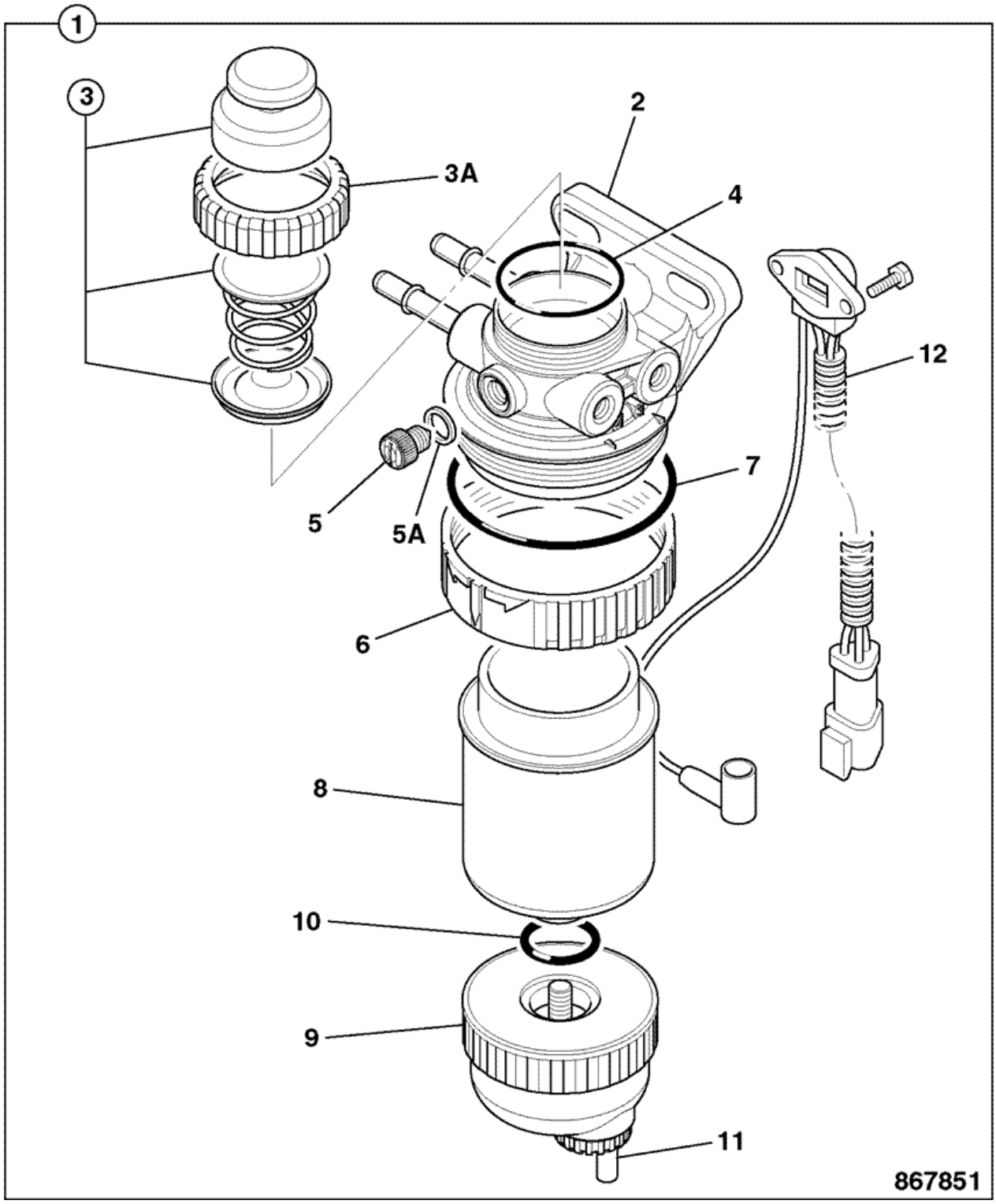


| Item | Part # | Change No | Description | Usage Code | QTY |
|---|---|---|---|---|---|
| | | | | | |

| | | | | | |
|---|---|---|---|---|---|
| 1 | 32/925914 | | Filter fuel sediment 30m reverse flow | | 1 |
| 2 | :NSP | | None serviced part | | 1 |
| 3 | :32/926045 | | Kit-hand primer reverse flow | | 1 |
| 3A | :32/926044 | | Ring cap locking | | 1 |
| 4 | :32/925906 | | Seal | | 1 |
| 5 | :32/926040 | | Plug air vent | | 1 |
| 5A | :32/925973 | | O Ring | | 1 |
| 6 | :32/921002 | | Ring retaining | | 1 |
| 7 | :32/921003 | | Seal dust | | 1 |
| 8 | :32/925915 | | Element fuel filter reverse flow<br>*STANDARD* | | 1 |
| 9 | :32/925708 | | Bowl assembly | | 1 |
| 10 | :32/925733 | | Seal o'ring | | 1 |
| 11 | :32/925818 | | Kit-drain valve c/w wif sensor & seal | | 1 |
| 12 | :32/925709 | | Kit-sensor water in fuel | | 1 |

Product Catalog \ CONSTRUCTION \ NORTH AMERICA \ CONSTRUCTION / INDUSTRIAL \ BACKHOE LOADER 3CX,4CX,214,215,217 \ 3C PLUS (91HP) , Made in Brazil with Dieselmax/IESA Engine 9812/0080 \ L IESA P4001/P4001T ENGINES FROM S/N 1395000 \ L07 AUXILIARY EQUIPMENT

# 9812/0080 L7-1-1 TURBOCHARGER, P4001T 8C89

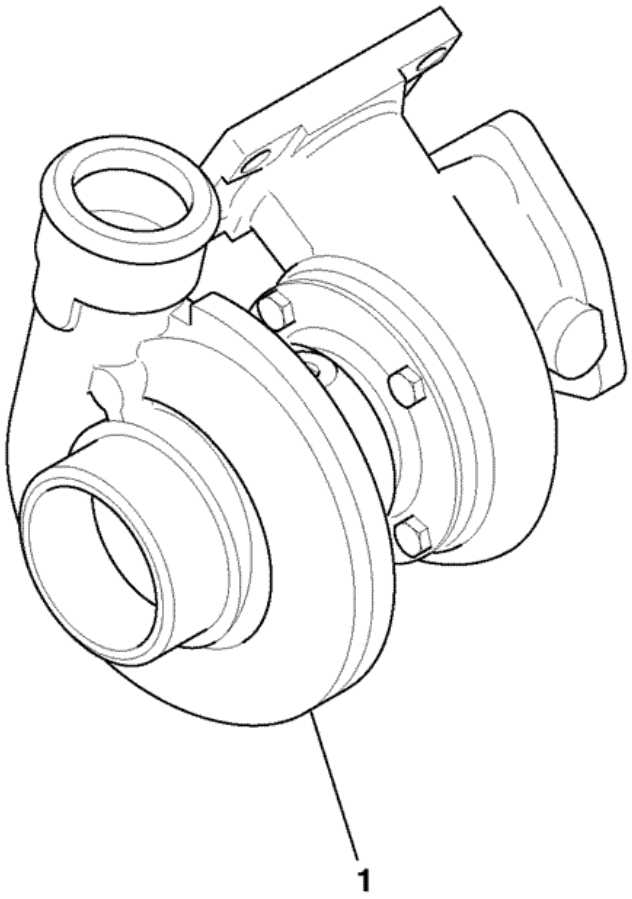


706170

| Item | Part # | Change No | Description | Usage Code | QTY |
|---|---|---|---|---|---|
| 1 | 02/103618 | | Turbocharger | | 1 |

Product Catalog \ CONSTRUCTION \ NORTH AMERICA \ CONSTRUCTION / INDUSTRIAL \ BACKHOE LOADER 3CX,4CX,214,215,217 \ 3C PLUS (91HP) , Made in Brazil with Dieselmax/IESA Engine 9812/0080 \ L IESA P4001/P4001T ENGINES FROM S/N 1395000 \ L07 AUXILIARY EQUIPMENT

# 9812/0080 L7-2-1 TURBOCHARGER, PIPEWORK & MOUNTINGS, P4001T, 8C89

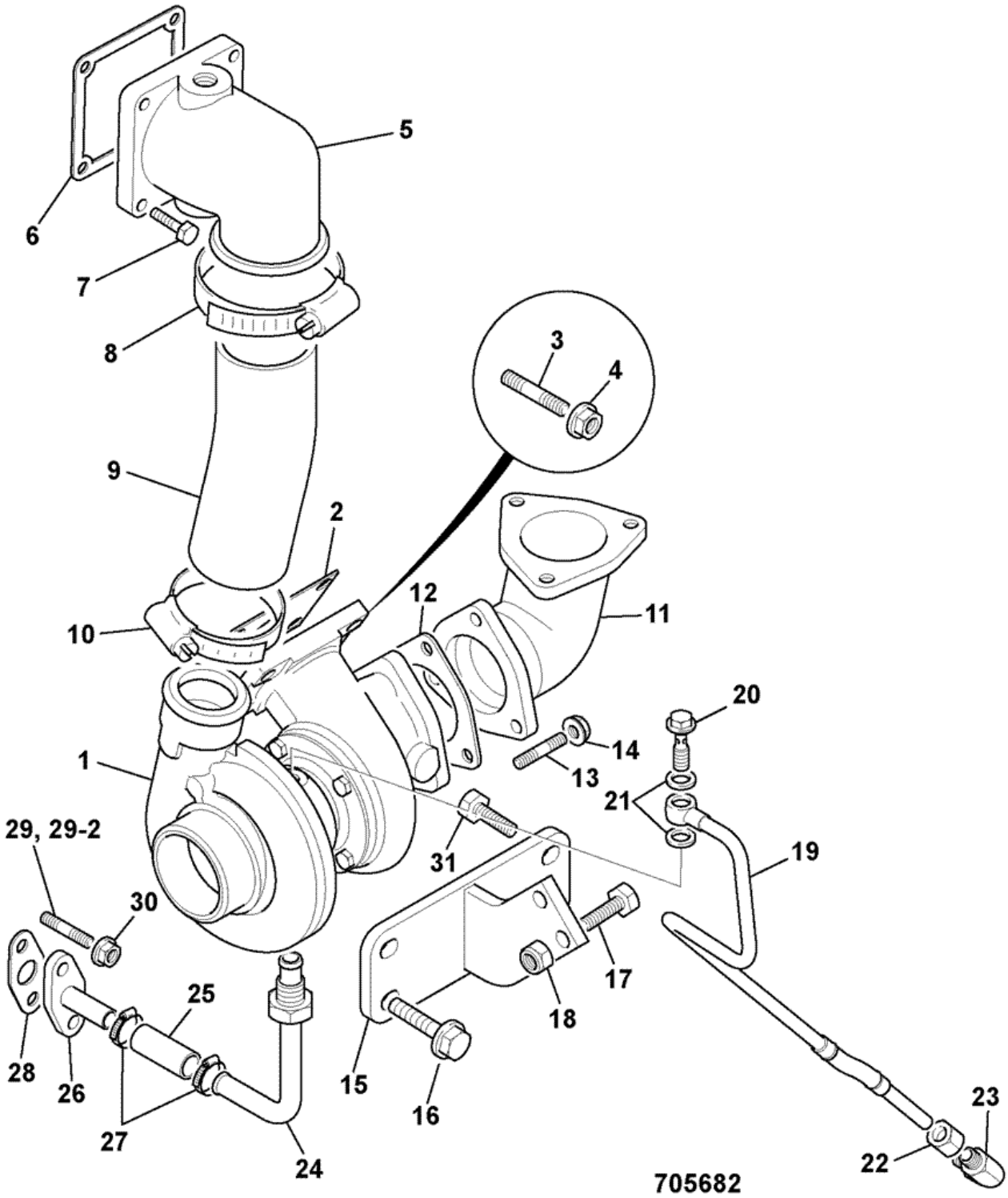


| Item | Part # | Change No | Description | Usage Code | QTY |
|---|---|---|---|---|---|
| 1 | 02/103618 | | Turbocharger | | 1 |

| | | | | | |
|---|---|---|---|---|---|
| 2 | TBA | | Part number Not Yet Known | | 4 |
| 3 | 826/01200 | | Stud | | 4 |
| 4 | 02/103619 | | Nut | | 4 |
| 5 | 02/103629 | | Diffuser | | 1 |
| 6 | 02/103764 | | Gasket gasket | | 1 |
| 7 | 02/103450 | | Bolt | | 4 |
| 8 | 02/103760 | | Clamp clamp | | 1 |
| 9 | 02/103627 | | Hose | | 1 |
| 10 | 02/103628 | | Clamp | | 2 |
| 11 | 02/103633 | | Elbow | | 1 |
| 12 | 02/103631 | | Gasket | | 1 |
| 13 | 02/291002 | | Stud | | 3 |
| 14 | 02/103759 | | Nut nut | | 3 |
| 15 | 02/103634 | | Bracket support | | 1 |
| 16 | 02/103450 | | Bolt | | 1 |
| 17 | 02/103541 | | Bolt | | 2 |
| 18 | TBA | | Part number Not Yet Known | | 1 |
| 19 | 02/103624 | | Pipe | | 1 |
| 20 | 02/103683 | | Bolt banjo | | 1 |
| 21 | 02/103761 | | Washer sealing | | 2 |
| 22 | TBA | | Part number Not Yet Known | | 1 |
| 23 | 02/103622 | | Connector elbow | | 1 |
| 24 | 02/103623 | | Pipe | | 1 |
| 25 | 02/100684 | | Hose oil drain | | 1 |
| 26 | 02/103620 | | Pipe | | 1 |
| 27 | 02/103524 | | Clamp | | 2 |
| 28 | 02/101253 | | Gasket | | 1 |
| 29 | 02/103562 | | Stud | | 1 |
| 29 | 822/00122 | | Stud | | 1 |
| 30 | 02/103554 | | Nut | | 2 |
| 31 | 02/103762 | | Bolt bolt | | 2 |

Product Catalog \ CONSTRUCTION \ NORTH AMERICA \ CONSTRUCTION / INDUSTRIAL \ BACKHOE LOADER 3CX,4CX,214,215,217 \ 3C PLUS (91HP) , Made in Brazil with Dieselmax/IESA Engine 9812/0080 \ L IESA P4001/P4001T ENGINES FROM S/N 1395000 \ L08 GASKET SETS

# 9812/0080 L8-1-1 GASKET SET, TOP, P4001/P400T 8C88/8C89

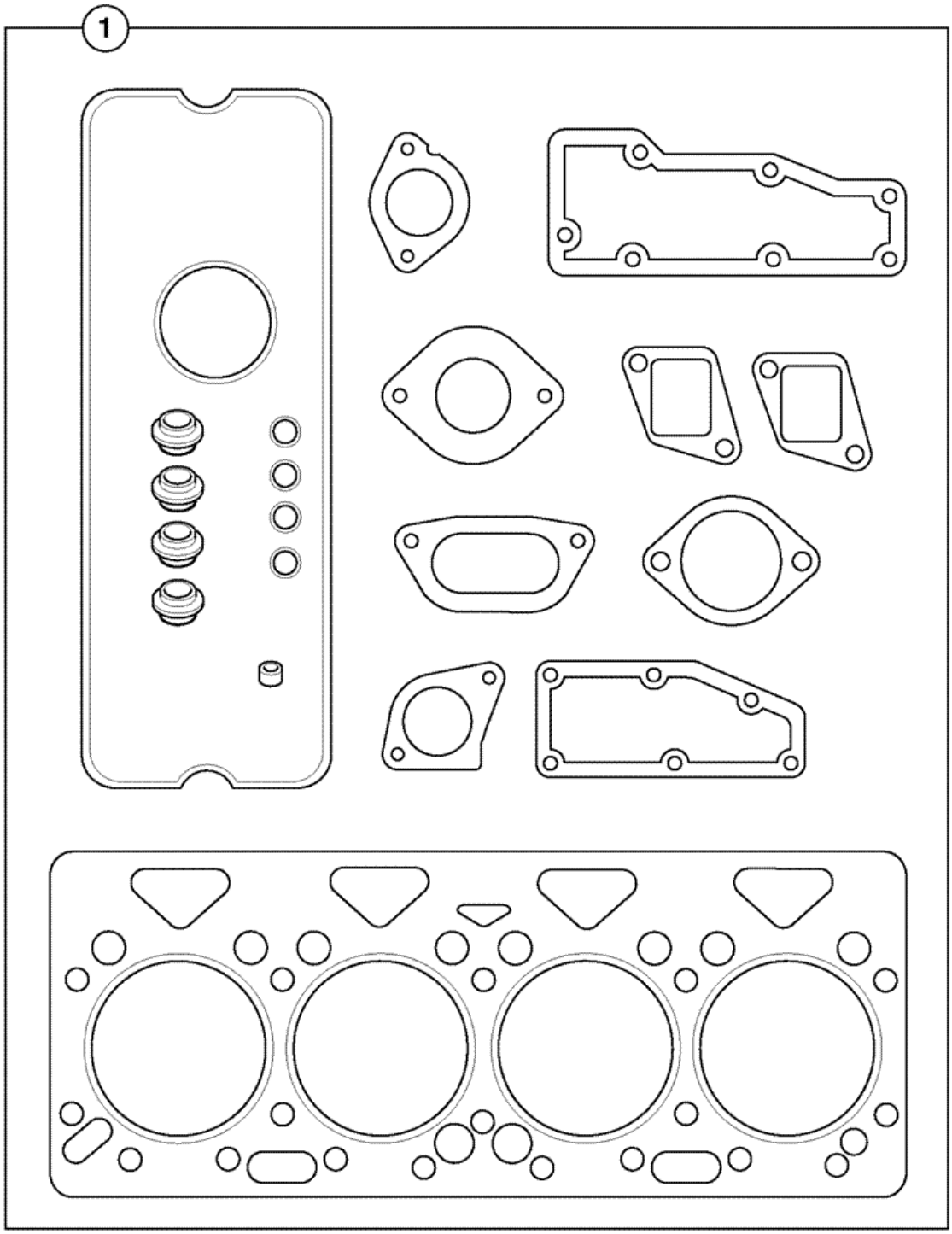


702490

| Item | Part # | Change No | Description | Usage Code | QTY |
|---|---|---|---|---|---|
| 1 | 02/103688 | | Gasket set upper | | 1 |

Product Catalog \ CONSTRUCTION \ NORTH AMERICA \ CONSTRUCTION / INDUSTRIAL \ BACKHOE LOADER 3CX,4CX,214,215,217 \ 3C PLUS (91HP) , Made in Brazil with Dieselmax/IESA Engine 9812/0080 \ L IESA P4001/P4001T ENGINES FROM S/N 1395000 \ L08 GASKET SETS

# 9812/0080 L8-2-1 GASKET SET, BOTTOM, P4001/P4001T 8C88/8C89

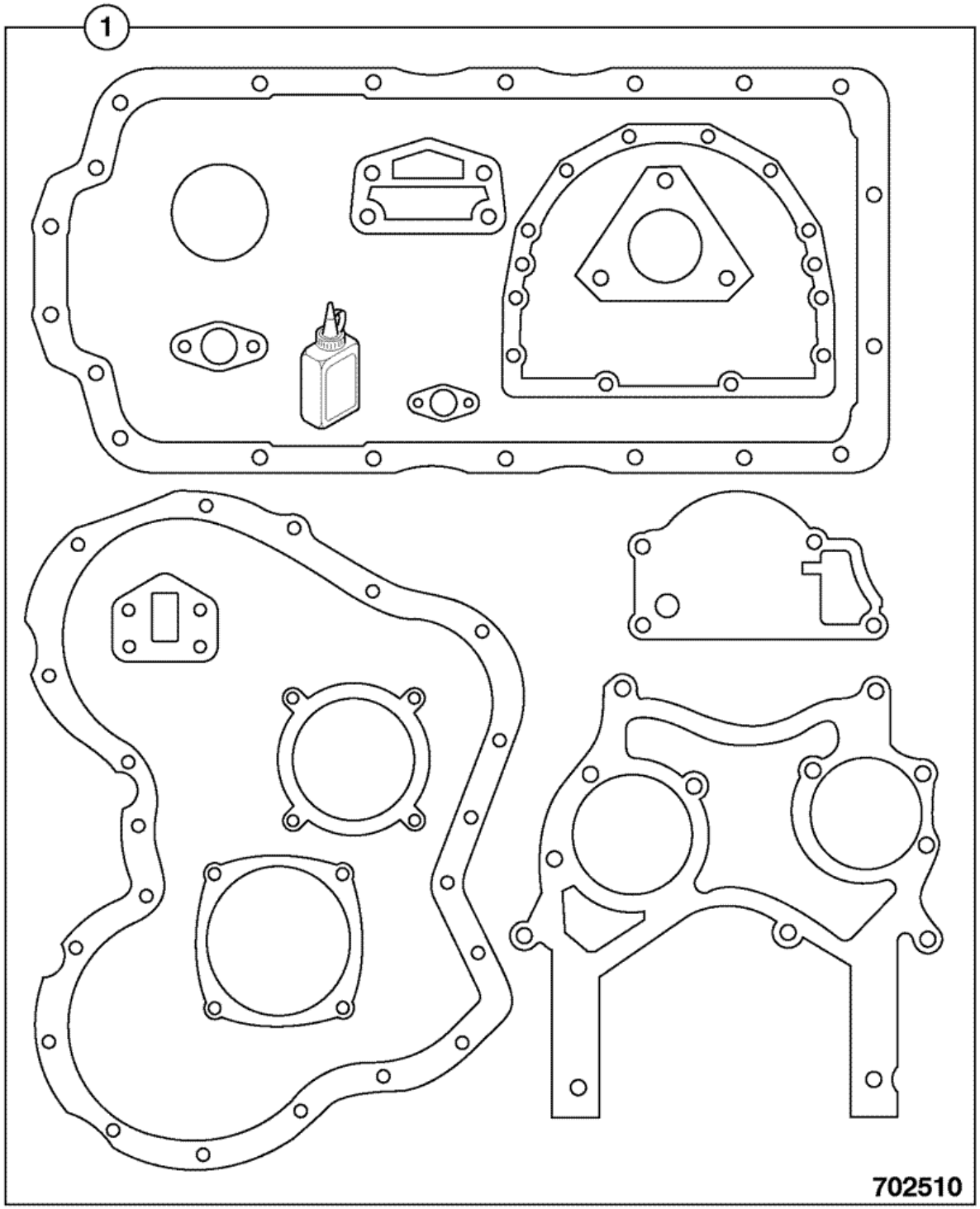


| Item | Part # | Change No | Description | Usage Code | QTY |
|---|---|---|---|---|---|
| 1 | 02/103689 | | Gasket set lower | | 1 |

Product Catalog \ CONSTRUCTION \ NORTH AMERICA \ CONSTRUCTION / INDUSTRIAL \ BACKHOE LOADER 3CX,4CX,214,215,217 \ 3C 14 (84HP) , Made in Brazil with Dieselmax/IESA Engine 9812/0080 \ V JCB444 ENGINE INSTALLATION COMPONENTS \ V46 RADIATOR FITTINGS & MOUNTINGS

# 9812/0080 V46-11-1 RADIATOR NON CAC, FITTINGS & MOUNTINGS, 2WS - 20" FAN

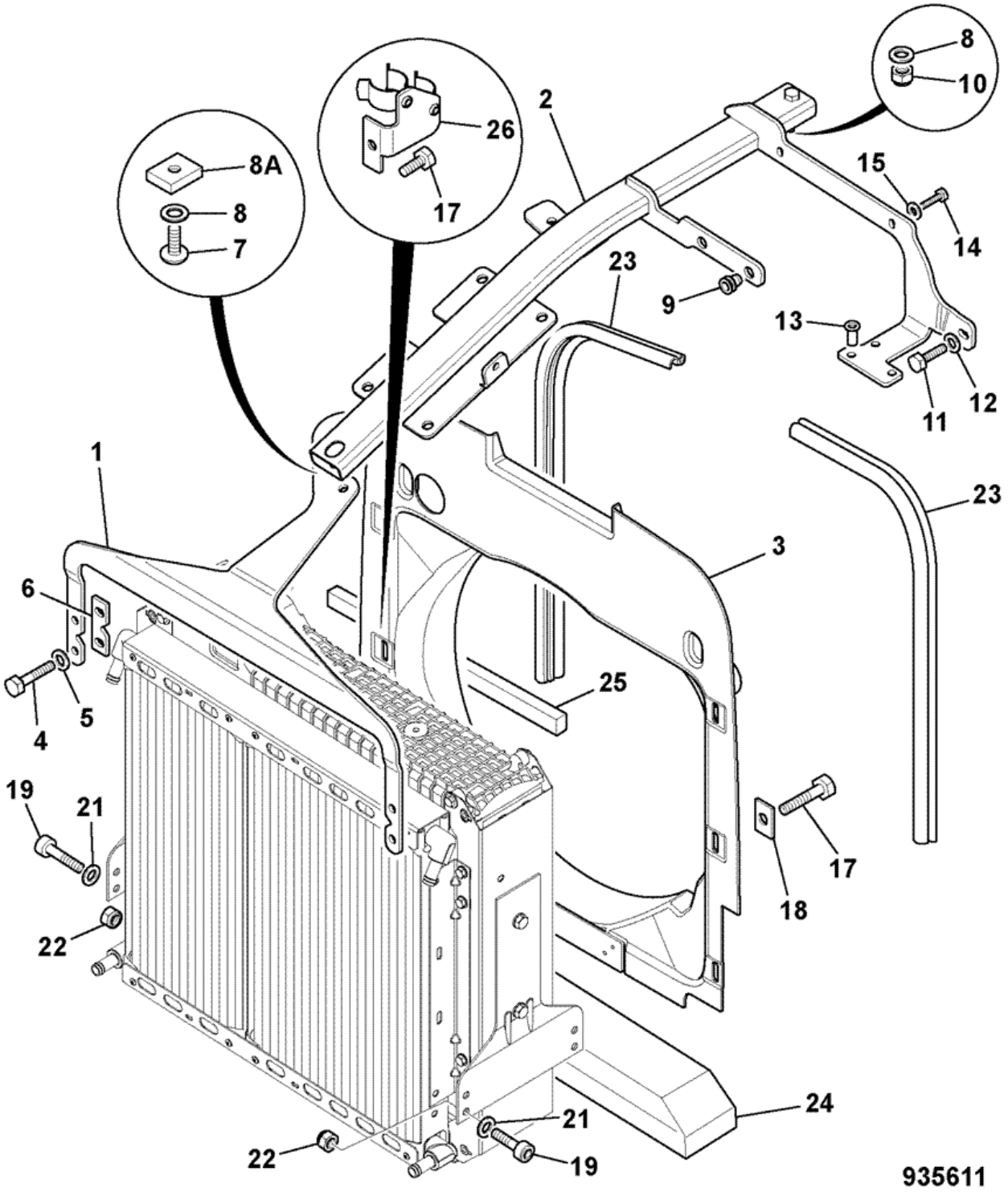


| Item | Part # | Change No | Description | Usage Code | QTY |
|---|---|---|---|---|---|
| 1 | 332/C8208 | | Bracket centre beam mounting front 2ws | | 1 |

| | | | | | |
|---|---|---|---|---|---|
| 2 | 128/C1776 | | Beam centre mounting | | 1 |
| 3 | 332/C1667 | | Cowling fan 20inch 2ws | | 1 |
| 4 | 1315/0307Z | | Screw Hexagon M8 X 25 | | 4 |
| 5 | 1420/0007Z | | Washer plain M8 | | 4 |
| 6 | 331/48338 | | Plate spacer | | 2 |
| 7 | 826/01616 | | Screw M10 x 25mm hex/skt button head | | 1 |
| 8 | 1412/0003Z | | Washer | | 1 |
| 8A | 332/D5851 | | Block clamping | | 1 |
| 9 | 826/01105 | | Nut rivet,M10 open ended | | 2 |
| 10 | 1370/0303Z | | Nut lock M10 | | 1 |
| 11 | 1315/0308Z | | Screw M8x30 | | 1 |
| 12 | 1420/0007Z | | Washer plain M8 | | 1 |
| 13 | 826/01810 | | Nut rivet, M6 open end for 5.5 to 8mm plate | | 3 |
| 14 | 1315/0207Z | | Screw M6 x 25mm long | | 2 |
| 15 | 1411/0001Z | | Washer | | 4 |
| 17 | 1315/0305Z | | Screw Hexagon M8 x 20mm long | | 6 |
| 18 | 123/06362 | | Washer spreader | | 5 |
| 19 | 1391/3409Z | | Capscrew M10 x 35mm | | 4 |
| 21 | 1411/0004Z | | Washer | | 8 |
| 22 | 1370/0303Z | | Nut lock M10 | | 4 |
| 23 | 926/51301 | | Strip sealing L=640mm | | 2 |
| 24 | 331/36060 | | Seal anti-recirculation | | 1 |
| 25 | 331/52016 | | Seal anti-recirculation | | 2 |
| 26 | 128/D5873 | | Clip hose | | 1 |

Product Catalog \ CONSTRUCTION \ NORTH AMERICA \ CONSTRUCTION / INDUSTRIAL \ BACKHOE LOADER 3CX,4CX,214,215,217 \ 3C 14 (84HP) , Made in Brazil with Dieselmax/IESA Engine 9812/0080 \ V JCB444 ENGINE INSTALLATION COMPONENTS \ V47 COMBINATION COOLERS

# 9812/0080 V47-1-1 COMBINATION COOLER, 2WS ASSEMBLY

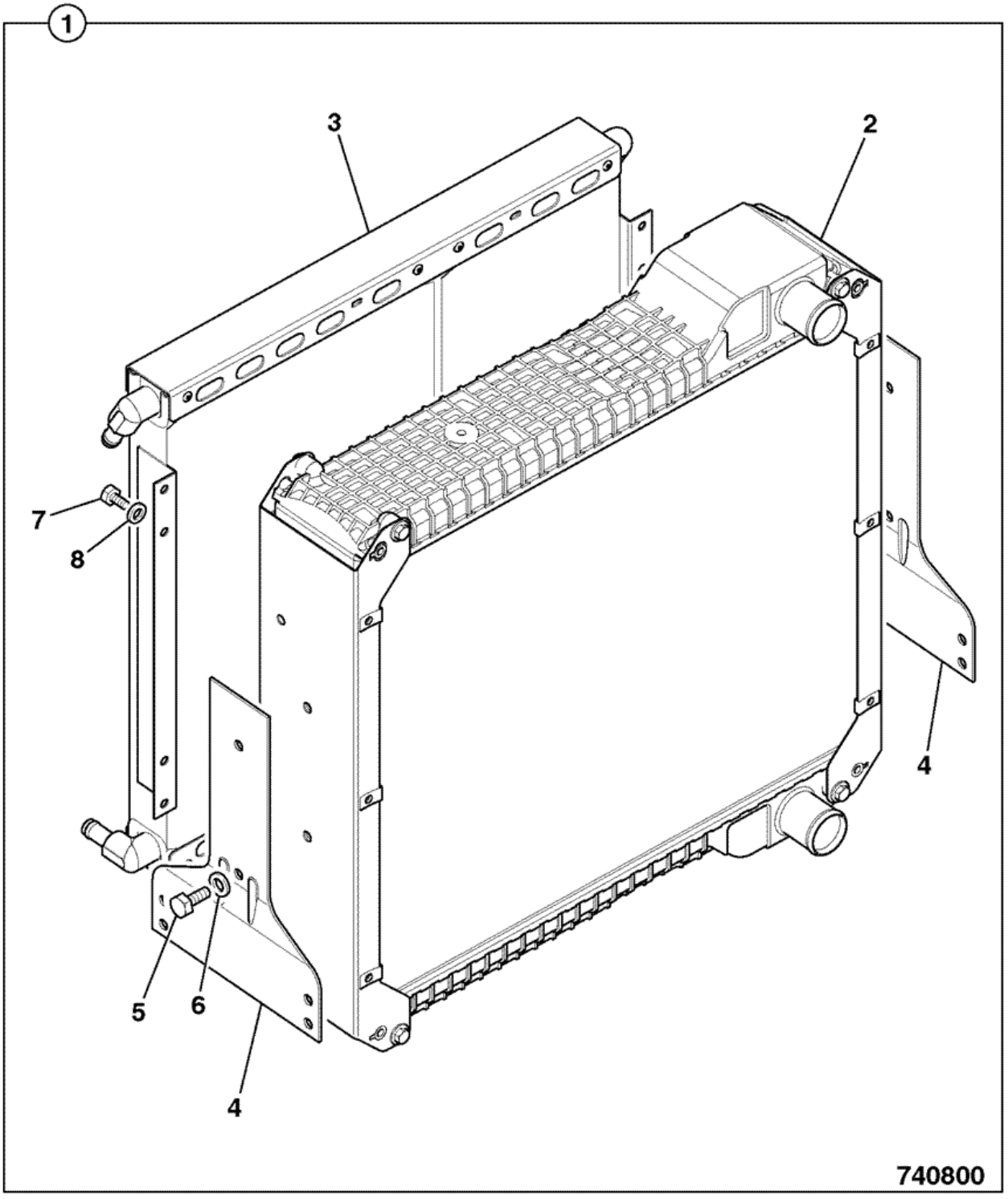


| Item | Part # | Change No | Description | Usage Code | QTY |
|---|---|---|---|---|---|
| 1 | 128/14326 | | Cooler assembly 5row 2ws non CAC | | 1 |

| | | | | | |
|---|---|---|---|---|---|
| 2 | :30/915200 | | Radiator assembly, 5row-9fpi Blue spot | | 1 |
| 3 | :30/925615 | | Cooler oil, double 14plates + 21 plates | | 1 |
| 4 | :30/926257 | | Bracket radiator mounting | | 2 |
| 5 | :30/926035 | | Bolt | | 4 |
| 6 | :30/926036 | | Washer | | 4 |
| 7 | 1315/0301Z | | Screw hex head M8 X 12 | | 8 |
| 8 | 826/00846 | | Nut 'u' | | 8 |

Product Catalog \ CONSTRUCTION \ NORTH AMERICA \ CONSTRUCTION / INDUSTRIAL \ BACKHOE LOADER 3CX,4CX,214,215,217 \ 3C 14 (84HP) , Made in Brazil with Dieselmax/IESA Engine 9812/0080 \ V JCB444 ENGINE INSTALLATION COMPONENTS \ V49 FRONT END DRIVE

# 9812/0080 V49-20-1 LOWER IDLER PULLEY, SMALL

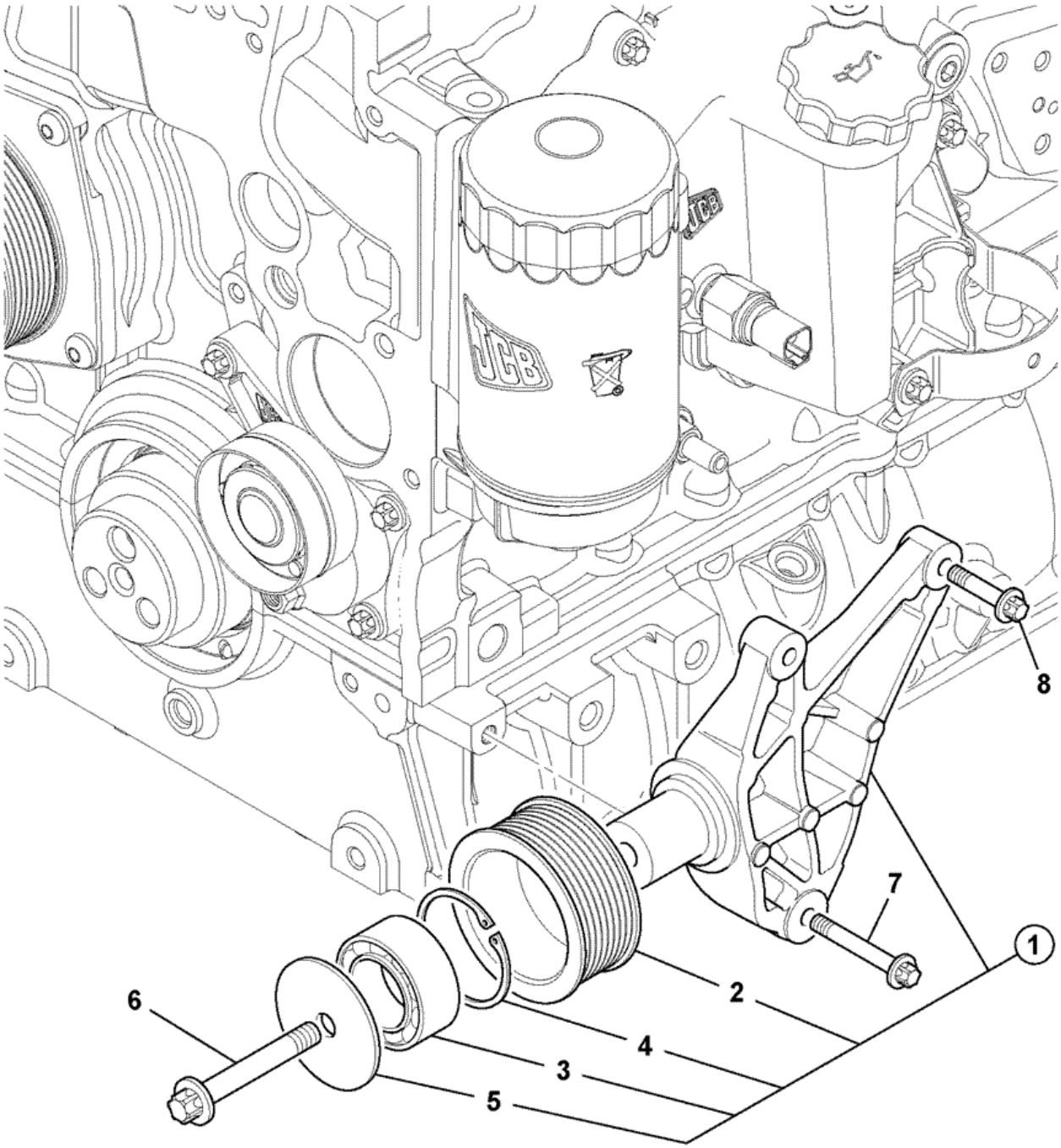


736420

| Item | Part # | Change No | Description | Usage Code | QTY |
|---|---|---|---|---|---|
| 1 | 320/08586 | | Pulley lower idler assembly | | 1 |
| 2 | :NSP | | None serviced part | | 1 |
| | | | | | |

| | | | | | |
|---|---|---|---|---|---|
| 3 | :320/08595 | | Bearing idler pulley | | 1 |
| 4 | :320/08594 | | Circlip | | 1 |
| 5 | :320/08593 | | Washer idler retainer | | 1 |
| 6 | 826/10613 | | Screw flanged M10 X 50 | | 1 |
| 7 | 1319/0309Z | | Screw star drive M8 x 35 | | 2 |
| 8 | 1319/0311Z | | Screw star drive M8 x 45 | | 1 |

Product Catalog \ CONSTRUCTION \ NORTH AMERICA \ CONSTRUCTION / INDUSTRIAL \ BACKHOE LOADER 3CX,4CX,214,215,217 \ 3C 14 (84HP) , Made in Brazil with Dieselmax/IESA Engine 9812/0080 \ V JCB444 ENGINE INSTALLATION COMPONENTS \ V51 FUEL SEDIMENT FILTERS

# 9812/0080 V51-5-1 FILTER, FUEL SEDIMENT, 2WS & AWS

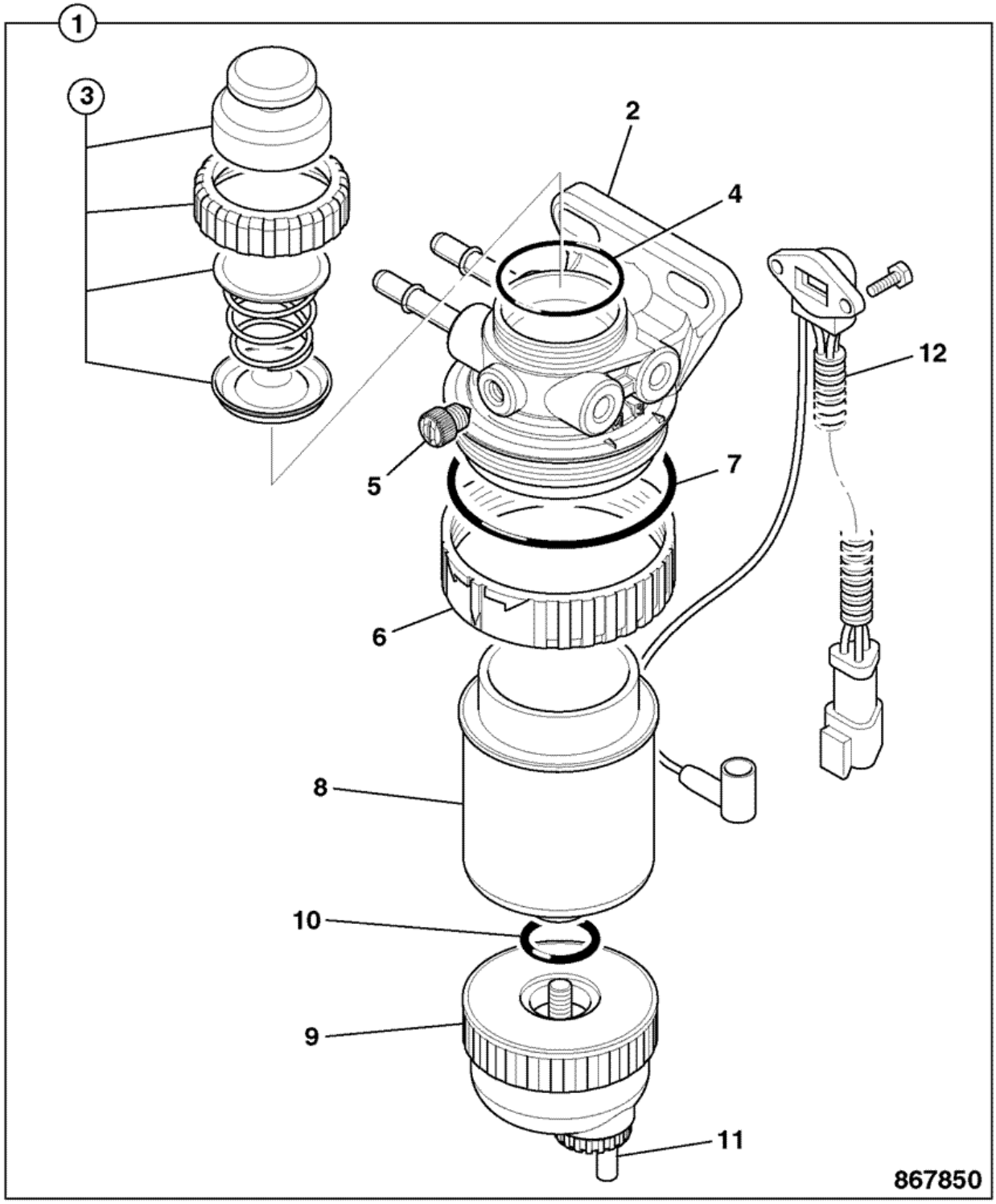


| Item | Part # | Change No | Description | Usage Code | QTY |
|---|---|---|---|---|---|
| 1 | 32/925914 | | Filter fuel sediment 30m reverse flow | | 1 |
| 2 | :NSP | | None serviced part | | 1 |
| | | | | | |

| | | | | | |
|---|---|---|---|---|---|
| 3 | :32/926045 | | Kit-hand primer reverse flow | | 1 |
| 4 | :32/925906 | | Seal | | 1 |
| 5 | :32/925973 | | O Ring | | 1 |
| 6 | :32/921002 | | Ring retaining | | 1 |
| 7 | :32/921003 | | Seal dust | | 1 |
| 8 | :32/925915 | | Element fuel filter reverse flow | | 1 |
| 9 | :32/925708 | | Bowl assembly | | 1 |
| 10 | :32/925733 | | Seal o'ring | | 1 |
| 11 | :32/925818 | | Kit-drain valve c/w wif sensor & seal | | 1 |
| 12 | :32/925709 | | Kit-sensor water in fuel | | 1 |

Product Catalog \ CONSTRUCTION \ NORTH AMERICA \ CONSTRUCTION / INDUSTRIAL \ BACKHOE LOADER 3CX,4CX,214,215,217 \ 3C 14 (84HP) , Made in Brazil with Dieselmax/IESA Engine 9812/0080 \ V JCB444 ENGINE INSTALLATION COMPONENTS \ V57 ENGINE OIL DRAIN

# 9812/0080 V57-1-1 ENGINE OIL DRAIN

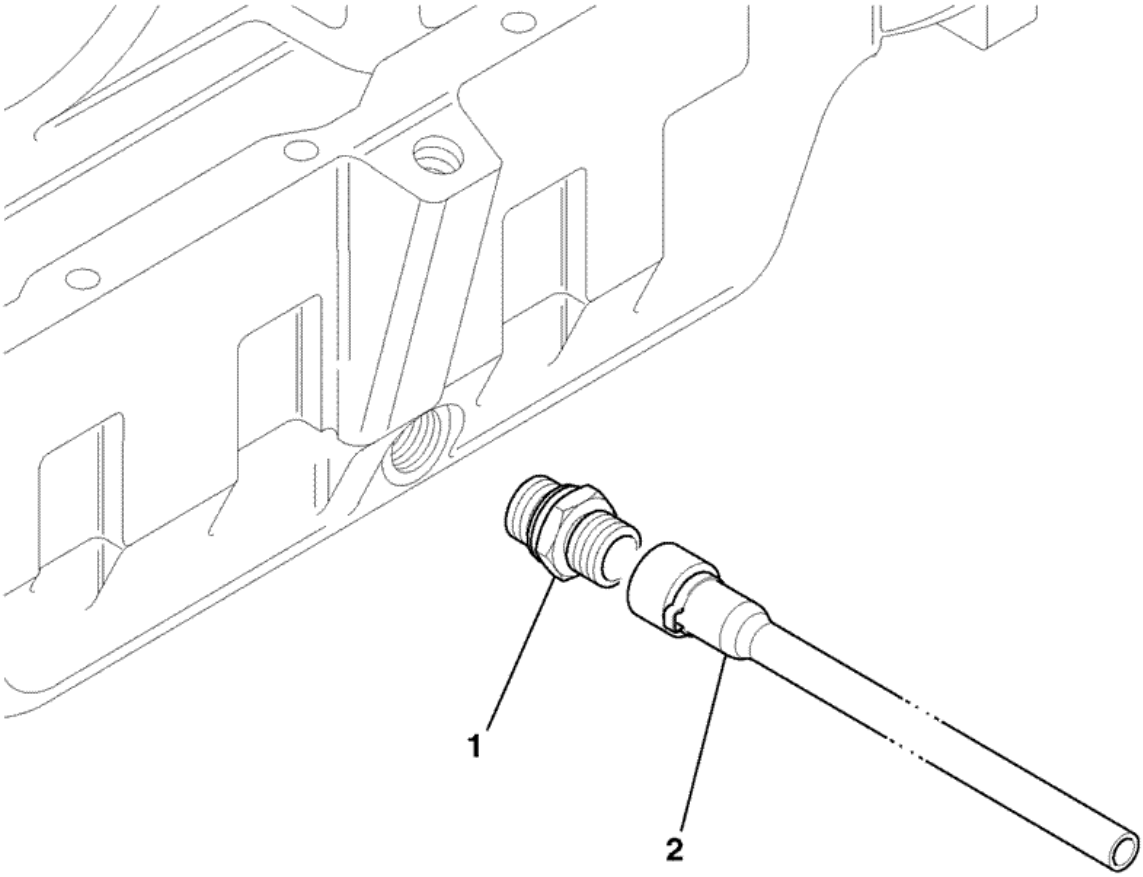


873161

| Item | Part # | Change No | Description | Usage Code | QTY |
|---|---|---|---|---|---|
| 1 | 25/222662 | | Plug oil drain | | 1 |
| 2 | 332/C3428 | | Tube oil sump drain | | 1 |

Product Catalog \ CONSTRUCTION \ NORTH AMERICA \ CONSTRUCTION / INDUSTRIAL \ BACKHOE LOADER 3CX,4CX,214,215,217 \ 3C PLUS (91HP) , Made in Brazil with Dieselmax/IESA Engine 9812/0080 \ V JCB444 ENGINE INSTALLATION COMPONENTS \ V42 ENGINE MOUNTINGS

# 9812/0080 V42-1-1 ENGINE MOUNTINGS, 2WS

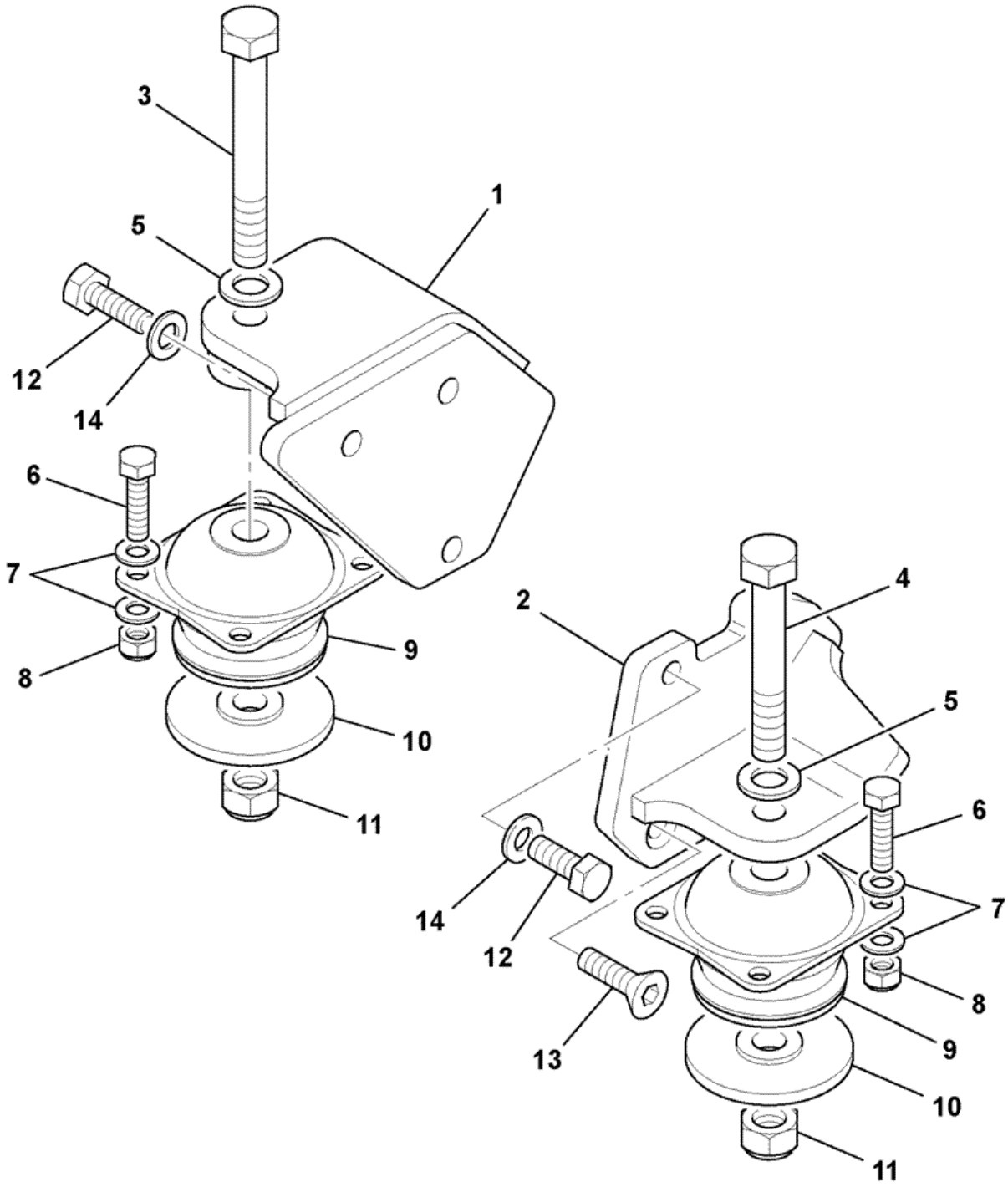


742160

| Item | Part # | Change No | Description | Usage Code | QTY |
|---|---|---|---|---|---|
| 1 | 335/08918 | | Bracket engine mounting right hand | | 1 |
| 2 | 335/08805 | | Bracket engine mounting left hand | | 1 |
| | | | | | |

| | | | | | |
|---|---|---|---|---|---|
| 3 | 1315/3724Z | | Bolt M16 x 140 | | 1 |
| 4 | 1315/3722Z | | Bolt M16 x 120 | | 1 |
| 5 | 1420/0011Z | | Washer M16 plain | | 2 |
| 6 | 1315/3410Z | | Bolt M10 x 40 | | 8 |
| 7 | 1420/0008Z | | Washer Plain M10 | | 16 |
| 8 | 1370/0303Z | | Nut lock M10 | | 8 |
| 9 | 331/40347 | | Mounting resilient | | 2 |
| 10 | 829/31165 | Superseded | Washer rebound 16x80x9.5 | | 2 |
| 10 | 829/31272 | | Washer rebound 16x75x8 | | 2 |
| 11 | 1370/0603Z | | Nut M16 | | 2 |
| 12 | 1315/0509Z | | Screw M12 x 35mm | | 6 |
| 13 | 1420/0009Z | | Washer Plain M12 | | 6 |
| 14 | 826/11274 | | Screw M12x35 countersunk head | | 2 |

Product Catalog \ CONSTRUCTION \ NORTH AMERICA \ CONSTRUCTION / INDUSTRIAL \ BACKHOE LOADER 3CX,4CX,214,215,217 \ 3C PLUS (91HP) , Made in Brazil with Dieselmax/IESA Engine 9812/0080 \ V JCB444 ENGINE INSTALLATION COMPONENTS \ V43 AIR FILTERS

# 9812/0080 V43-1-1 FILTER, AIR, 2WS

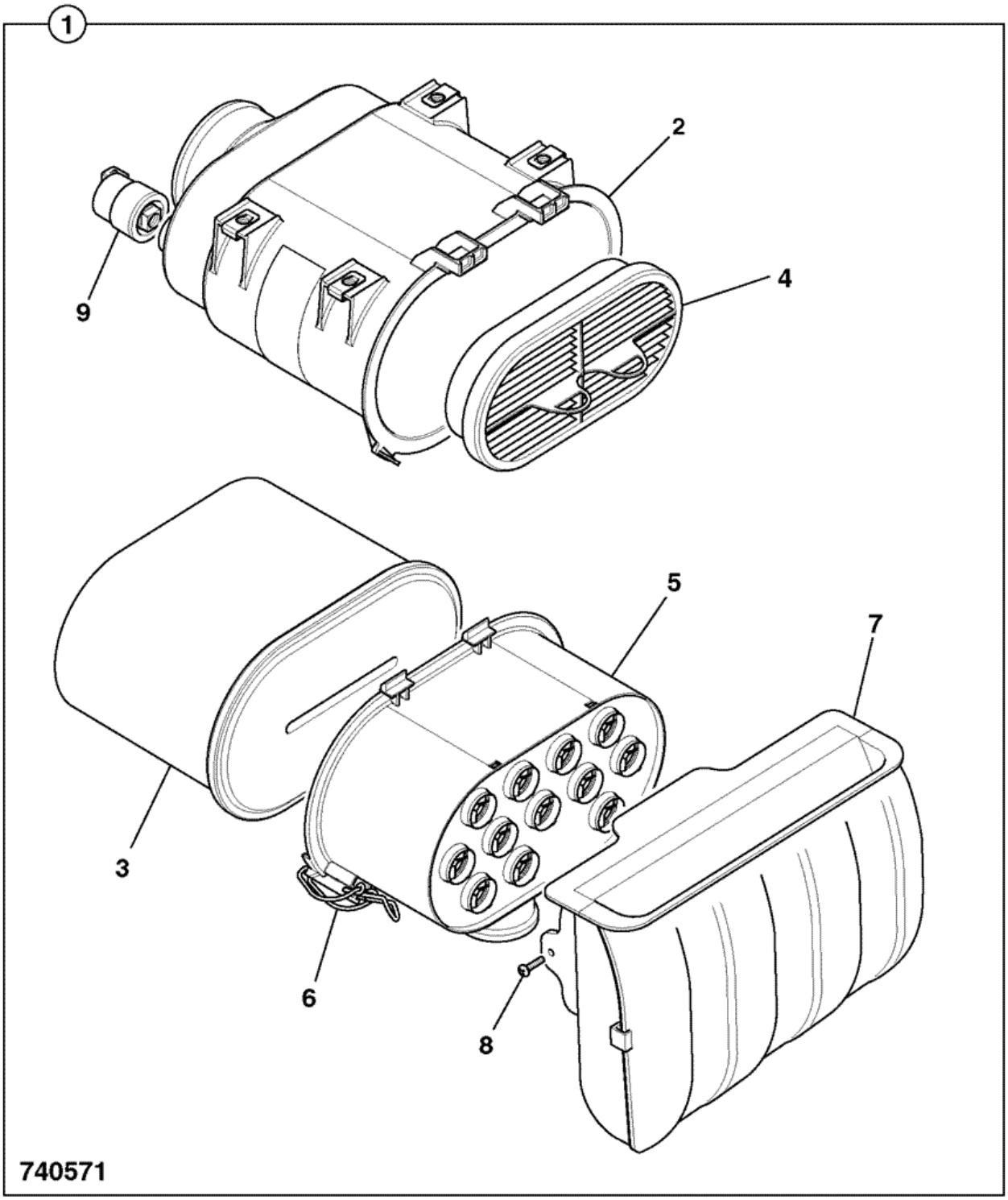


| Item | Part # | Change No | Description | Usage Code | QTY |
|---|---|---|---|---|---|
| 1 | 32/925684 | | Filter air assembly | | 1 |
| 2 | :N.S.P | | None serviced part | | 1 |
| | | | | | |

| | | | | | |
|---|---|---|---|---|---|
| 3 | :32/925682 | | Element air filter main | | 1 |
| 4 | :32/925683 | | Element air filter safety | | 1 |
| 5 | :580/12174 | | Filter pre-cleaner | | 1 |
| 6 | :32/925364 | | Clip overcentre | | 2 |
| 7 | :32/925716 | | Filter air intake | | 1 |
| 8 | :32/925711 | | Screw | | 2 |
| 9 | :32/925686 | | Switch vacuum sensor | | 1 |

Product Catalog \ CONSTRUCTION \ NORTH AMERICA \ CONSTRUCTION / INDUSTRIAL \ BACKHOE LOADER 3CX,4CX,214,215,217 \ 3C PLUS (91HP) , Made in Brazil with Dieselmax/IESA Engine 9812/0080 \ V JCB444 ENGINE INSTALLATION COMPONENTS \ V43 AIR FILTERS

# 9812/0080 V43-2-1 FILTER, AIR, 2WS

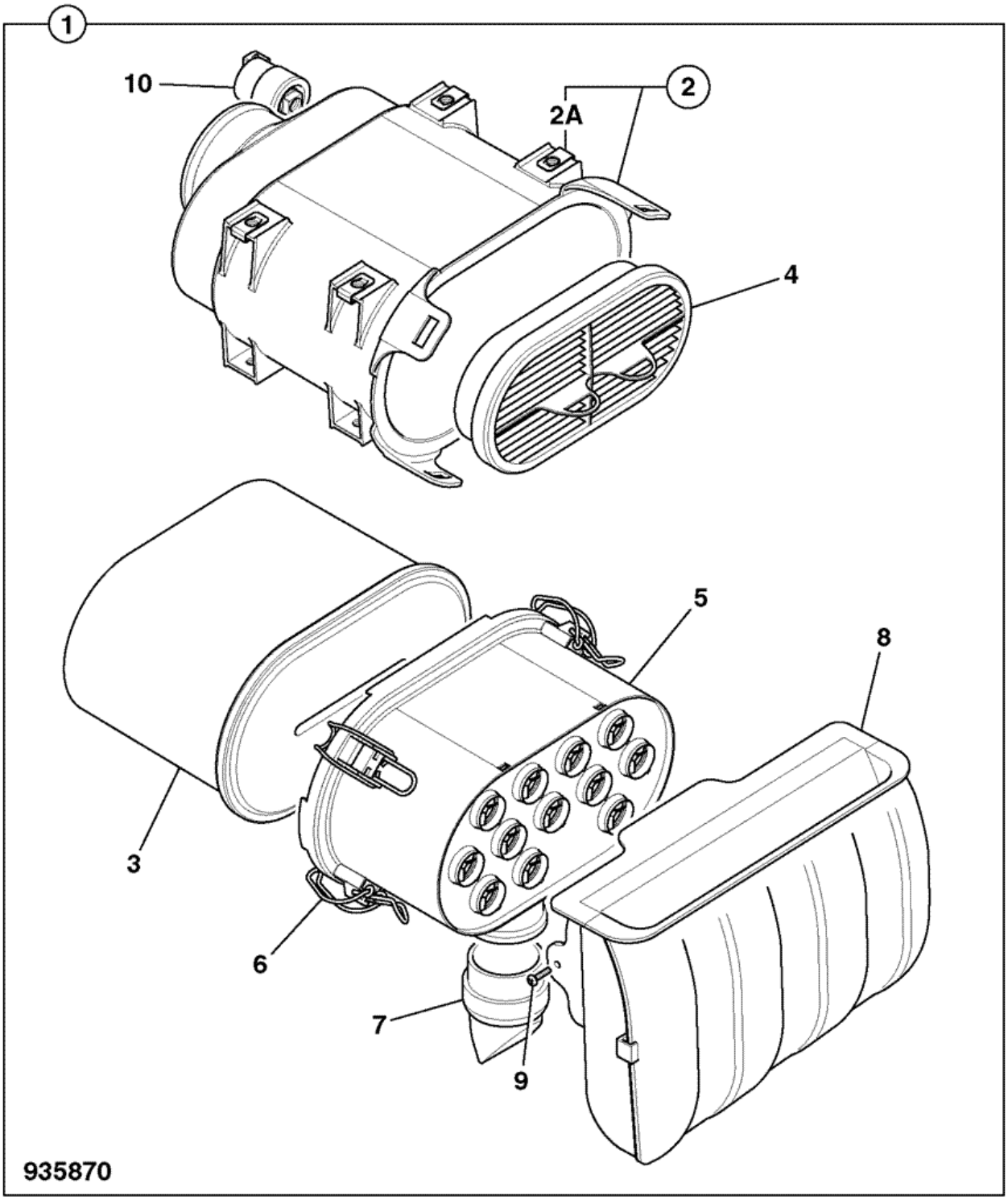


| Item | Part # | Change No | Description | Usage Code | QTY |
|---|---|---|---|---|---|
| 1 | 32/926084 | | Filter air assembly | | 1 |
| 2 | :N.S.P | | None serviced part | | 1 |
| | | | | | |

| | | | | | |
|---|---|---|---|---|---|
| 2A | :32/926114 | | Nut 'U' | | 1 |
| 3 | :32/925682 | | Element air filter main | | 1 |
| 4 | :32/925683 | | Element air filter safety | | 1 |
| 5 | :32/926113 | | Filter pre-cleaner | | 1 |
| 6 | :32/925364 | | Clip overcentre | | 2 |
| 7 | :32/926115 | Superseded | Valve vacuator | | 1 |
| 7 | :332/D6935 | | Valve vacuator | | 1 |
| 8 | :32/925716 | | Filter air intake | | 1 |
| 9 | :32/925711 | | Screw | | 2 |
| 10 | :32/925686 | | Switch vacuum sensor | | 1 |

Product Catalog \ CONSTRUCTION \ NORTH AMERICA \ CONSTRUCTION / INDUSTRIAL \ BACKHOE LOADER 3CX,4CX,214,215,217 \ 3C PLUS (91HP) , Made in Brazil with Dieselmax/IESA Engine 9812/0080 \ V JCB444 ENGINE INSTALLATION COMPONENTS \ V44 AIR INDUCTION HOSES

# 9812/0080 V44-4-1 AIR INDUCTION HOSES, 2WS TURBO

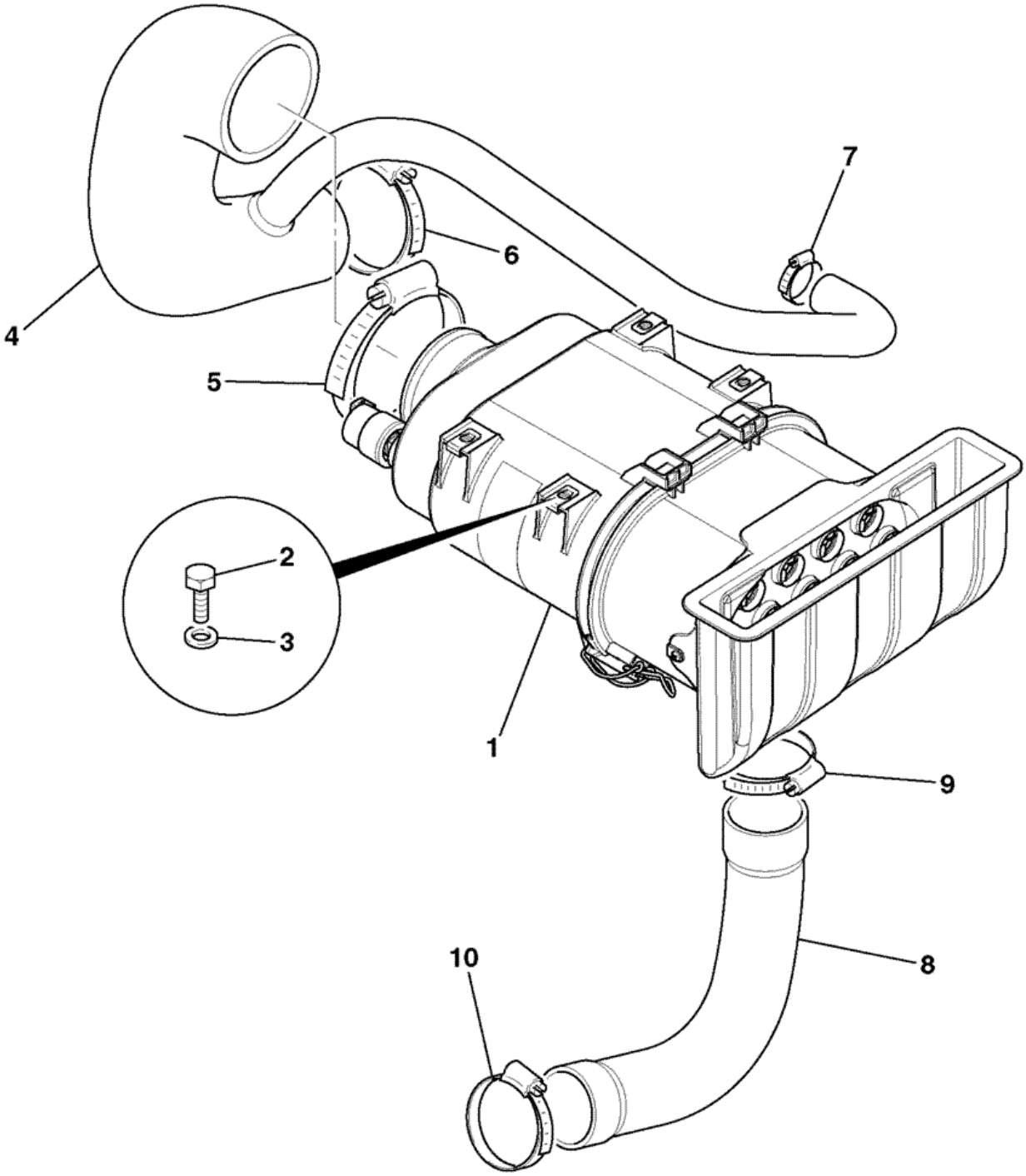


788340

| Item | Part # | Change No | Description | Usage Code | QTY |
|---|---|---|---|---|---|
| 1 | . | | 'See Remark'<br>*See Index* | | 1 |
| | | | | | |

| | | | | | |
|---|---|---|---|---|---|
| 2 | 1315/0205Z | | Bolt | | 4 |
| 3 | 1420/0006Z | | Washer M6 | | 4 |
| 4 | 834/11203 | | Hose air induction 2ws turbo | | 1 |
| 5 | 2201/0016 | | Clip jubilee | | 1 |
| 6 | 2201/0014 | | Clip jubilee | | 1 |
| 7 | 2201/0007 | | Clip jubilee | | 1 |
| 8 | 834/11028 | | Hose air scavenge 2ws | | 1 |
| 9 | 2201/0012 | | Clip jubilee | | 1 |
| 10 | 2201/0013 | | Clip jubilee | | 1 |

Product Catalog \ CONSTRUCTION \ NORTH AMERICA \ CONSTRUCTION / INDUSTRIAL \ BACKHOE LOADER 3CX,4CX,214,215,217 \ 3C PLUS (91HP) , Made in Brazil with Dieselmax/IESA Engine 9812/0080 \ V JCB444 ENGINE INSTALLATION COMPONENTS \ V44 AIR INDUCTION HOSES

# 9812/0080 V44-6-1 AIR INDUCTION HOSES, 2WS TURBO

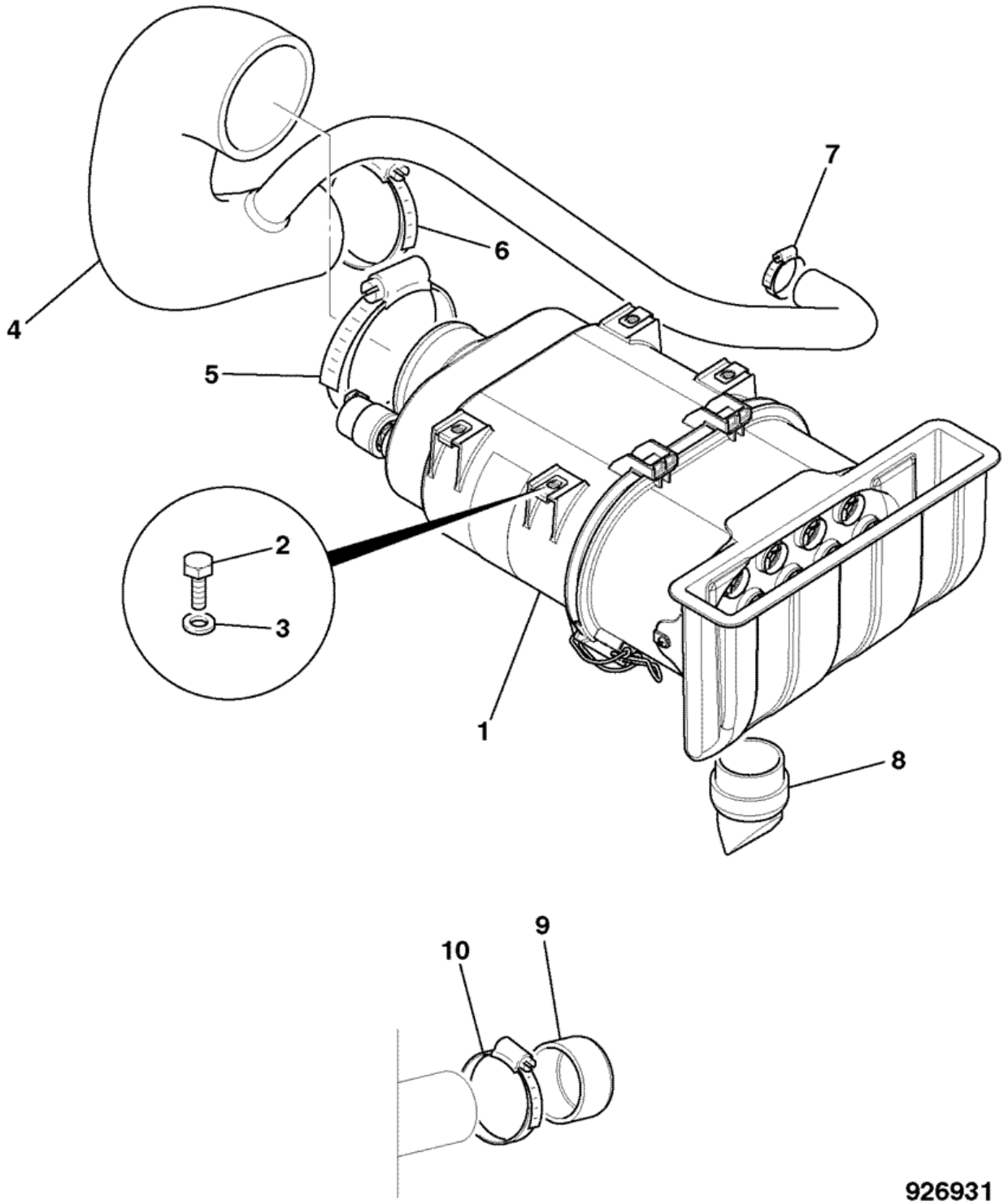


| Item | Part # | Change No | Description | Usage Code | QTY |
|---|---|---|---|---|---|
| 1 | . | | 'See Remark'<br>*See Index* | | 1 |
| | | | | | |

| | | | | | |
|---|---|---|---|---|---|
| 2 | 1315/0205Z | | Bolt | | 4 |
| 3 | 1420/0006Z | | Washer M6 | | 4 |
| 4 | 834/11383 | | Hose air induction turbo 2WS | | 1 |
| 5 | 2201/0016 | | Clip jubilee | | 1 |
| 6 | 2201/0014 | | Clip jubilee | | 1 |
| 7 | 2201/0007 | | Clip jubilee | | 1 |
| 8 | 332/C4909 | | Valve vacuum dump | | 1 |
| 9 | 835/10114 | | Cap PVC flexible | | 1 |
| 10 | 2201/0012 | | Clip jubilee | | 2 |

Product Catalog \ CONSTRUCTION \ NORTH AMERICA \ CONSTRUCTION / INDUSTRIAL \ BACKHOE LOADER 3CX,4CX,214,215,217 \ 3C 14 (84HP) , Made in Brazil with Dieselmax/IESA Engine 9812/0080 \ V JCB444 ENGINE INSTALLATION COMPONENTS \ V45 EXHAUST SYSTEMS

# 9812/0080 V45-1-2 SILENCER & EXTENSION, 2WS NAT/ASP

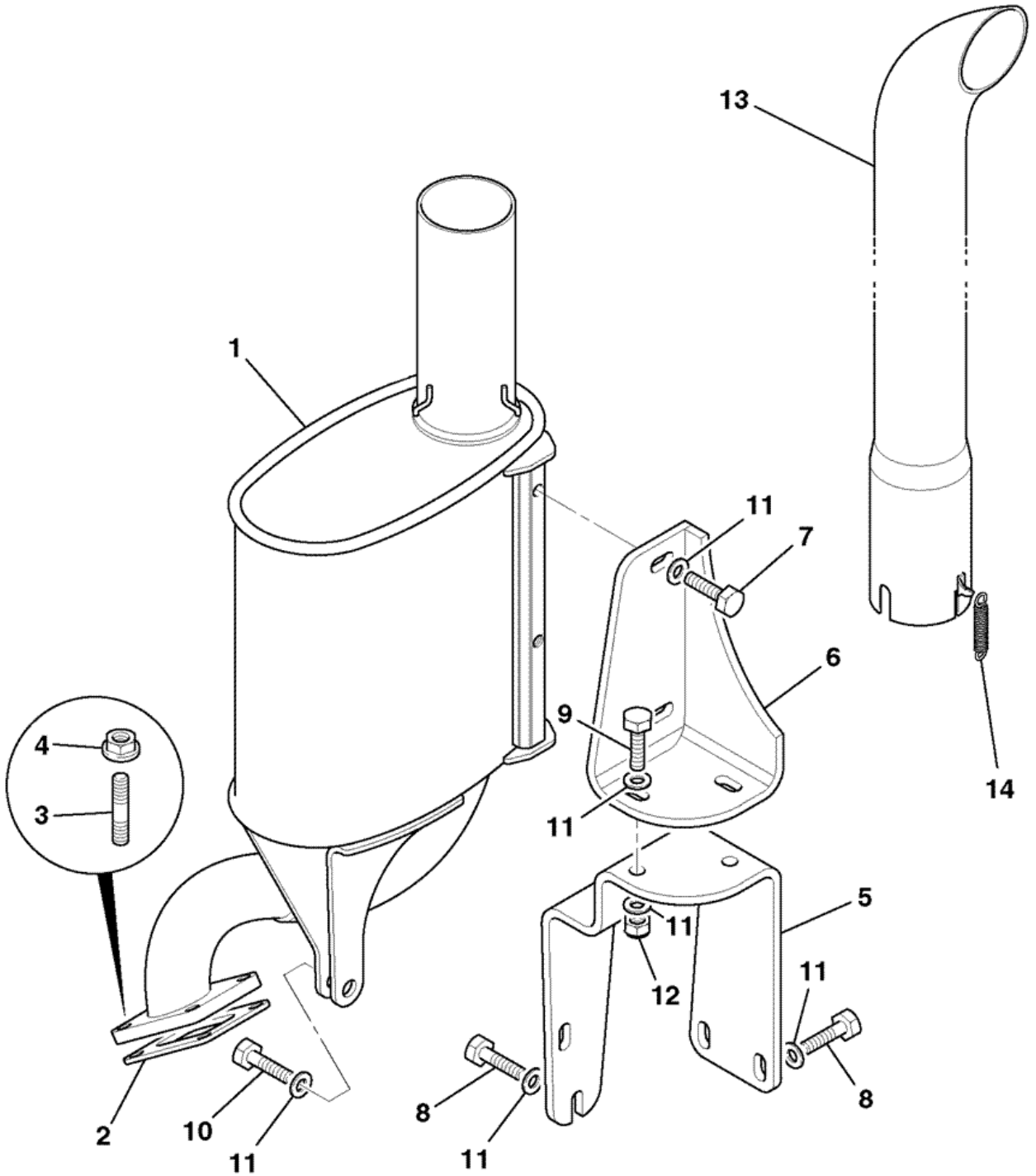


742684

| Item | Part # | Change No | Description | Usage Code | QTY |
|---|---|---|---|---|---|
| 1 | 331/60549 | | Silencer exhaust | | 1 |

| | | | | | |
|---|---|---|---|---|---|
| 2 | 320/06006 | | Gasket | | 1 |
| 3 | 320/07063 | | Stud M8 X 1.25 | | 4 |
| 4 | 02/291116 | | Nut | | 4 |
| 5 | 331/44900 | | Bracket exhaust mounting | | 1 |
| 6 | 331/55522 | | Bracket exhaust mounting | | 1 |
| 7 | 1315/0407Z | | Bolt M10x25 | | 2 |
| 8 | 1315/0408Z | | Bolt M10 x 30 | | 4 |
| 9 | 1315/0409Z | | Screw M10x35mm | | 2 |
| 10 | 1315/0410Z | | Bolt M10 x 40 | | 1 |
| 11 | 1420/0008Z | | Washer Plain M10 | | 11 |
| 12 | 1370/0303Z | | Nut lock M10 | | 2 |
| 13 | 331/53874 | | Pipe exhaust extension | | 1 |
| 14 | 814/10177 | | Spring extension | | 2 |

Product Catalog \ CONSTRUCTION \ NORTH AMERICA \ CONSTRUCTION / INDUSTRIAL \ BACKHOE LOADER 3CX,4CX,214,215,217 \ 3C 14 (84HP) , Made in Brazil with Dieselmax/IESA Engine 9812/0080 \ V JCB444 ENGINE INSTALLATION COMPONENTS \ V46 RADIATOR FITTINGS & MOUNTINGS

# 9812/0080 V46-1-3 RADIATOR, FITTINGS & MOUNTINGS, 2WS

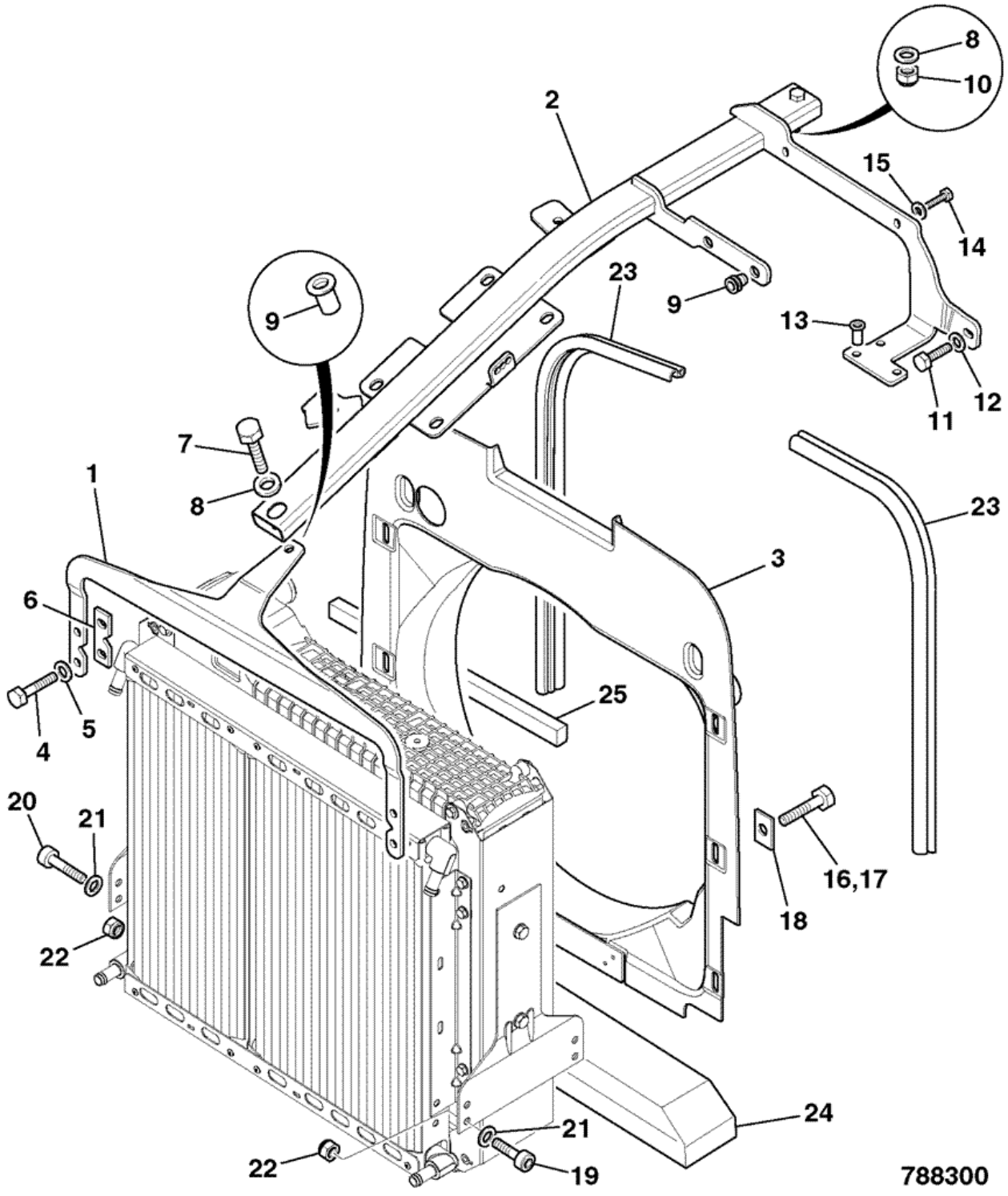


| Item | Part # | Change No | Description | Usage Code | QTY |
|---|---|---|---|---|---|
| 1 | 331/44276 | | Bracket centre beam mounting front 2WS | | 1 |

| | | | | | |
|---|---|---|---|---|---|
| 2 | 335/10222 | | Beam centre mounting | | 1 |
| 3 | 346/00104 | <M.TBA | Cowling fan 20" 2ws | | 1 |
| 3 | 332/C1667 | >M.TBA | Cowling fan 20inch 2ws | | 1 |
| 4 | 1315/0307Z | | Screw Hexagon M8 X 25 | | 4 |
| 5 | 1420/0007Z | | Washer plain M8 | | 4 |
| 6 | 331/48338 | | Plate spacer | | 2 |
| 7 | 1315/0414Z | | Bolt | | 1 |
| 8 | 1420/0008Z | | Washer Plain M10 | | 2 |
| 9 | 826/01105 | | Nut rivet,M10 open ended | | 3 |
| 10 | 1370/0303Z | | Nut lock M10 | | 1 |
| 11 | 1315/0308Z | | Screw M8x30 | | 1 |
| 12 | 1420/0007Z | | Washer plain M8 | | 1 |
| 13 | 826/01810 | | Nut rivet, M6 open end for 5.5 to 8mm plate | | 1 |
| 14 | 1315/0207Z | | Screw M6 x 25mm long | | 2 |
| 15 | 1411/0001Z | | Washer | | 4 |
| 16 | 1315/0307Z | | Screw Hexagon M8 X 25 | | 4 |
| 17 | 1315/0305Z | | Screw Hexagon M8 x 20mm long | | 2 |
| 18 | 123/06362 | | Washer spreader | | 6 |
| 19 | 1391/3409Z | | Capscrew M10 x 35mm | | 2 |
| 20 | 1391/3410Z | | Capscrew | | 2 |
| 21 | 1411/0004Z | | Washer | | 8 |
| 22 | 1370/0303Z | | Nut lock M10 | | 4 |
| 23 | 926/51301 | | Strip sealing L=640mm | | 2 |
| 24 | 331/36060 | | Seal anti-recirculation | | 1 |
| 25 | 331/52016 | | Seal anti-recirculation | | 2 |

Product Catalog \ CONSTRUCTION \ NORTH AMERICA \ CONSTRUCTION / INDUSTRIAL \ BACKHOE LOADER 3CX,4CX,214,215,217 \ 3C 14 (84HP) , Made in Brazil with Dieselmax/IESA Engine 9812/0080 \ V JCB444 ENGINE INSTALLATION COMPONENTS \ V47 COMBINATION COOLERS

# 9812/0080 V47-11-1 COMBINATION COOLER, ASSEMBLY 2WS 20" FAN, NON CAC

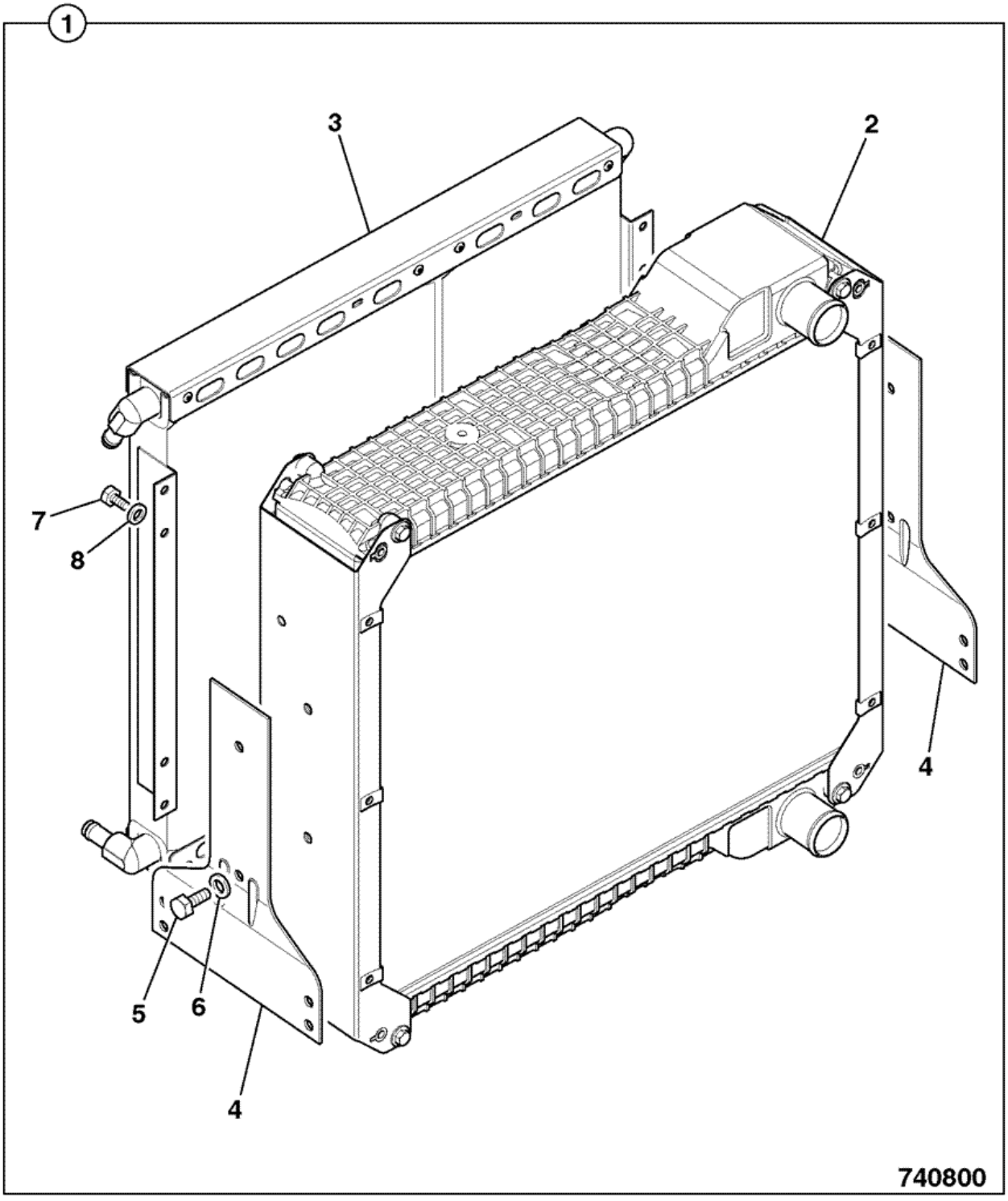


| Item | Part # | Change No | Description | Usage Code | QTY |
|---|---|---|---|---|---|
| 1 | 128/14326 | | Cooler assembly 5row 2ws non CAC | | 1 |

| | | | | | |
|---|---|---|---|---|---|
| 2 | :30/915200 | | Radiator assembly, 5row-9fpi Blue spot | | 1 |
| 3 | :30/925615 | | Cooler oil, double 14plates + 21 plates | | 1 |
| 4 | :30/926257 | | Bracket radiator mounting | | 2 |
| 5 | :30/926035 | | Bolt | | 4 |
| 6 | :30/926036 | | Washer | | 4 |
| 7 | 1315/0301Z | | Screw hex head M8 X 12 | | 8 |
| 8 | 826/00846 | | Nut 'u' | | 8 |

# 9812/0080 V48-11-1 RADIATOR & HOSES, 2WS-20" FAN NON CAC, T2/T3

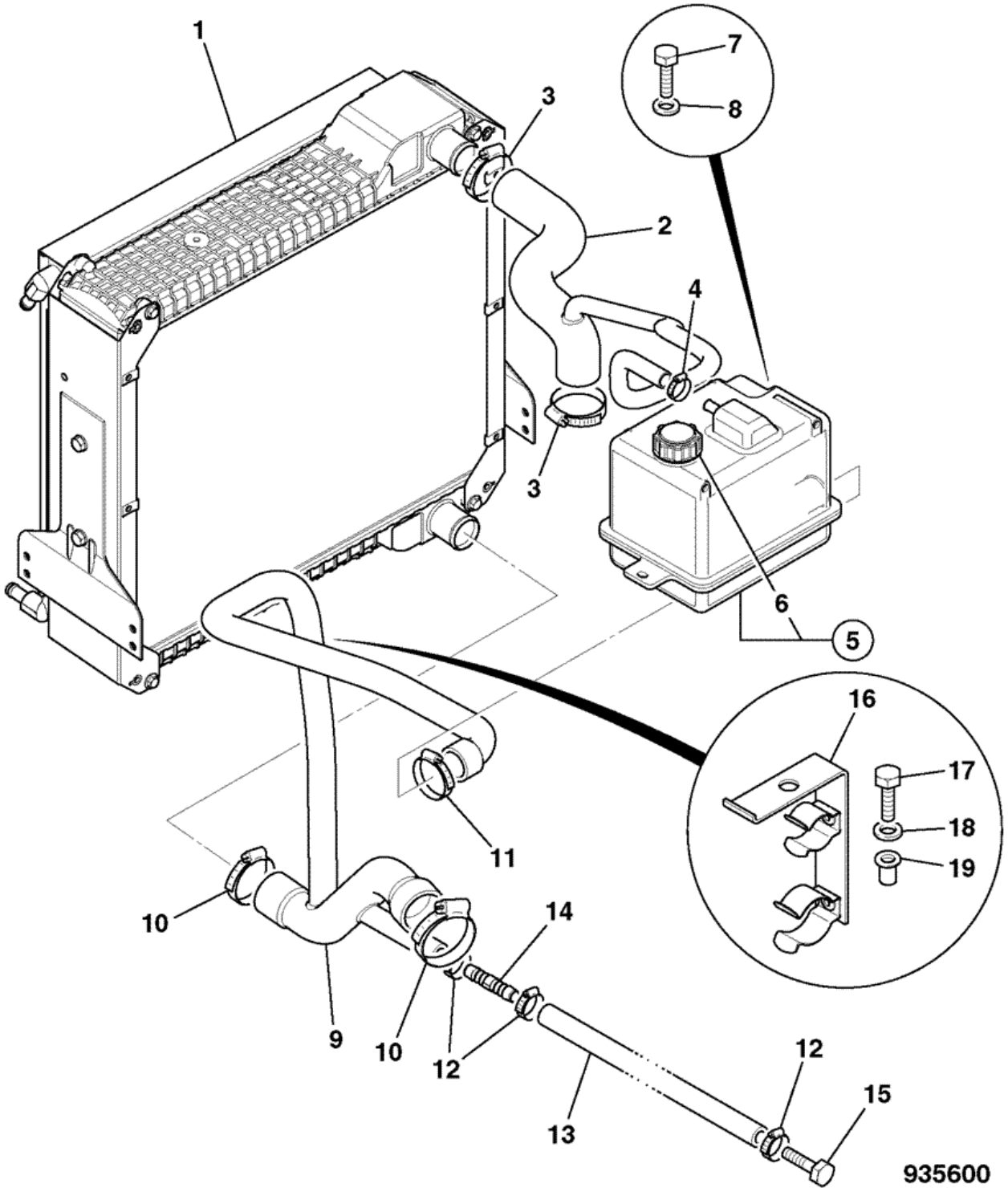


| Item | Part # | Change No | Description | Usage Code | QTY |
|---|---|---|---|---|---|
| | | | Cooler assembly 5row 2ws non CAC | | |

| | | | | | |
|---|---|---|---|---|---|
| 1 | 128/14326 | | *For Service Parts, See frame V47-11-1* | | 1 |
| 2 | 834/11380 | | Hose radiaor top 2ws | | 1 |
| 3 | 2201/0011 | | Clip jubilee | | 2 |
| 4 | 2201/0005 | | Clip jubilee | | 1 |
| 5 | 128/15480 | | Tank expansion no sensor assembly | | 1 |
| 6 | :477/00223 | | Cap Expansion Bottle | | 1 |
| 7 | 1315/0310Z | | Bolt M8x40 | | 2 |
| 8 | 1420/0007Z | | Washer plain M8 | | 2 |
| 9 | 128/C8166 | | Hose bottom 2ws tier @# | | 1 |
| 10 | 2201/0012 | | Clip jubilee | | 2 |
| 11 | 2201/0010 | | Clip jubilee | | 1 |
| 12 | 2201/0006 | | Clip jubilee | | 1 |
| 13 | . | | 'See Remark'<br>*See Cab Heater Circuit* | | 1 |
| 14 | 650/10166 | | Adaptor hose connecter 16mm OD<br>*Heater Builds* | | 1 |
| 15 | 1315/3714Z | | Bolt M16x60<br>*Heaterless Builds* | | 1 |
| 16 | 128/15558 | | Guide hose | | 1 |
| 17 | 1315/0307Z | | Screw Hexagon M8 X 25 | | 1 |
| 18 | 1420/0007Z | | Washer plain M8 | | 1 |
| 19 | 826/01102 | | Nut rivet,M8 open ended | | 1 |

Product Catalog \ CONSTRUCTION \ NORTH AMERICA \ CONSTRUCTION / INDUSTRIAL \ BACKHOE LOADER 3CX,4CX,214,215,217 \ 3C 14 (84HP) , Made in Brazil with Dieselmax/IESA Engine 9812/0080 \ V JCB444 ENGINE INSTALLATION COMPONENTS \ V48 RADIATOR & HOSES

# 9812/0080 V48-5-1 RADIATOR & HOSES, 2WS BUILDS

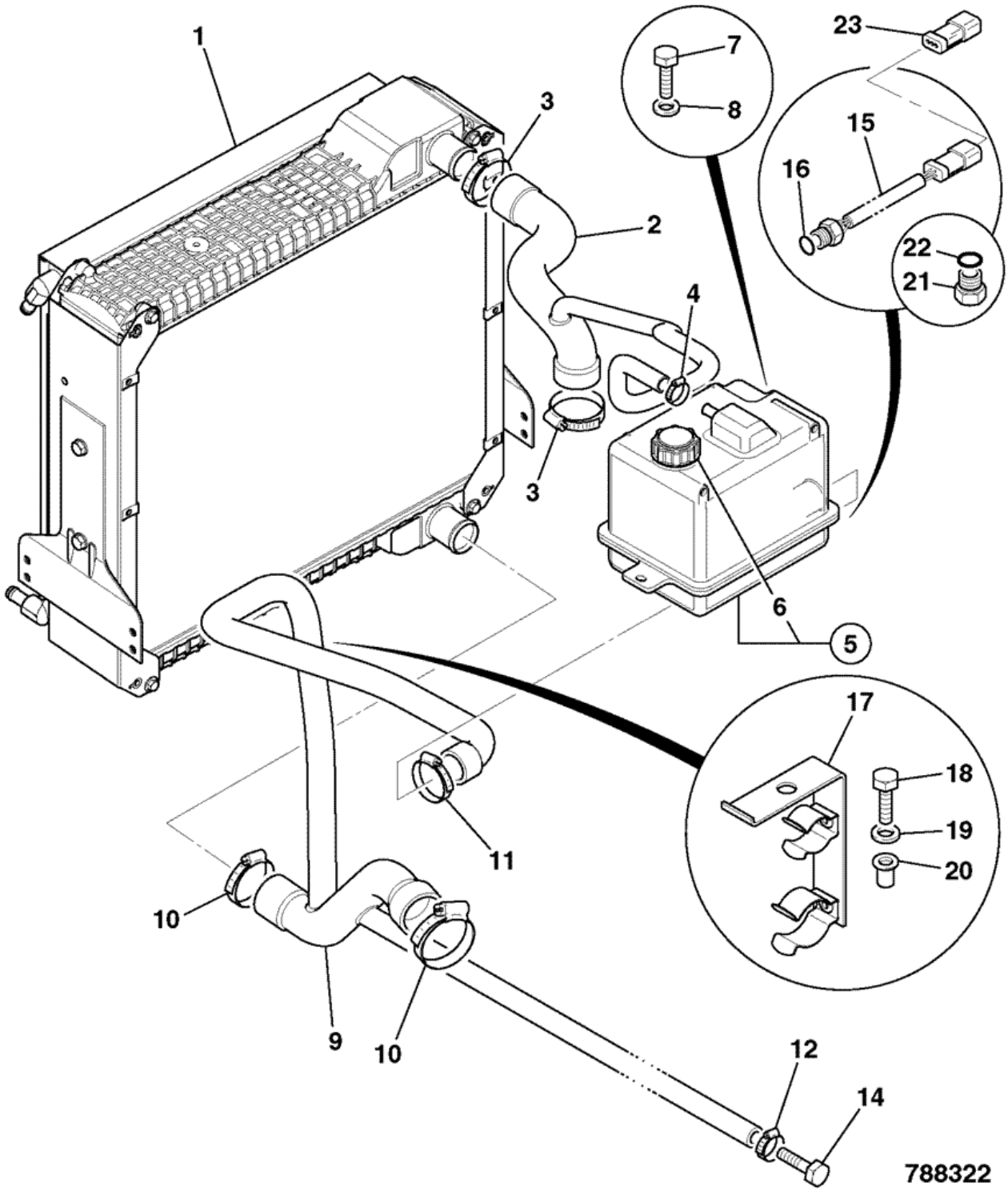


| Item | Part # | Change No | Description | Usage Code | QTY |
|---|---|---|---|---|---|
| 1 | 128/14326 | | Cooler assembly 5row 2ws non CAC<br>*For Service Parts, See frame V47-1-1* | | 1 |
| | | | | | |

| | | | | | |
|---|---|---|---|---|---|
| 2 | 834/11195 | | Hose radiator top 2ws | | 1 |
| 3 | 2201/0011 | | Clip jubilee | | 2 |
| 4 | 2201/0005 | | Clip jubilee | | 1 |
| 5 | 128/15479 | | Tank expansion for sensor assembly | | 1 |
| 6 | :477/00223 | | Cap Expansion Bottle | | 1 |
| 7 | 1315/0310Z | | Bolt M8x40 | | 2 |
| 8 | 1420/0007Z | | Washer plain M8 | | 2 |
| 9 | 834/10991 | | Hose radiator bottom 2ws | | 1 |
| 10 | 2201/0012 | | Clip jubilee | | 2 |
| 11 | 2201/0010 | | Clip jubilee | | 1 |
| 12 | 2201/0006 | | Clip jubilee | | 1 |
| 13 | 2201/0005 | | Clip jubilee | | 1 |
| 14 | 1315/3714Z | | Bolt M16x60 | | 1 |
| 15 | 701/80513 | <M.TBA | Sensor water level<br>*see bulletin 2/487* | | 1 |
| 16 | :828/10310 | <M.TBA | O Ring | | 1 |
| 17 | 128/15558 | | Guide hose | | 1 |
| 18 | 1315/0307Z | | Screw Hexagon M8 X 25 | | 1 |
| 19 | 1420/0007Z | | Washer plain M8 | | 1 |
| 20 | 826/01102 | | Nut rivet,M8 open ended | | 1 |
| 21 | 816/90702 | >M.TBA | Plug 1/2"UNF with O-Ring | | 1 |
| 22 | :2401/0504 | >M.TBA | O Ring | | 1 |
| 23 | 715/20029 | >M.TBA | Plug blanking 3-way deutsch DTM | | 1 |

Product Catalog \ CONSTRUCTION \ NORTH AMERICA \ CONSTRUCTION / INDUSTRIAL \ BACKHOE LOADER 3CX,4CX,214,215,217 \ 3C 14 (84HP) , Made in Brazil with Dieselmax/IESA Engine 9812/0080 \ V JCB444 ENGINE INSTALLATION COMPONENTS \ V48 RADIATOR & HOSES

# 9812/0080 V48-7-1 RADIATOR & HOSES

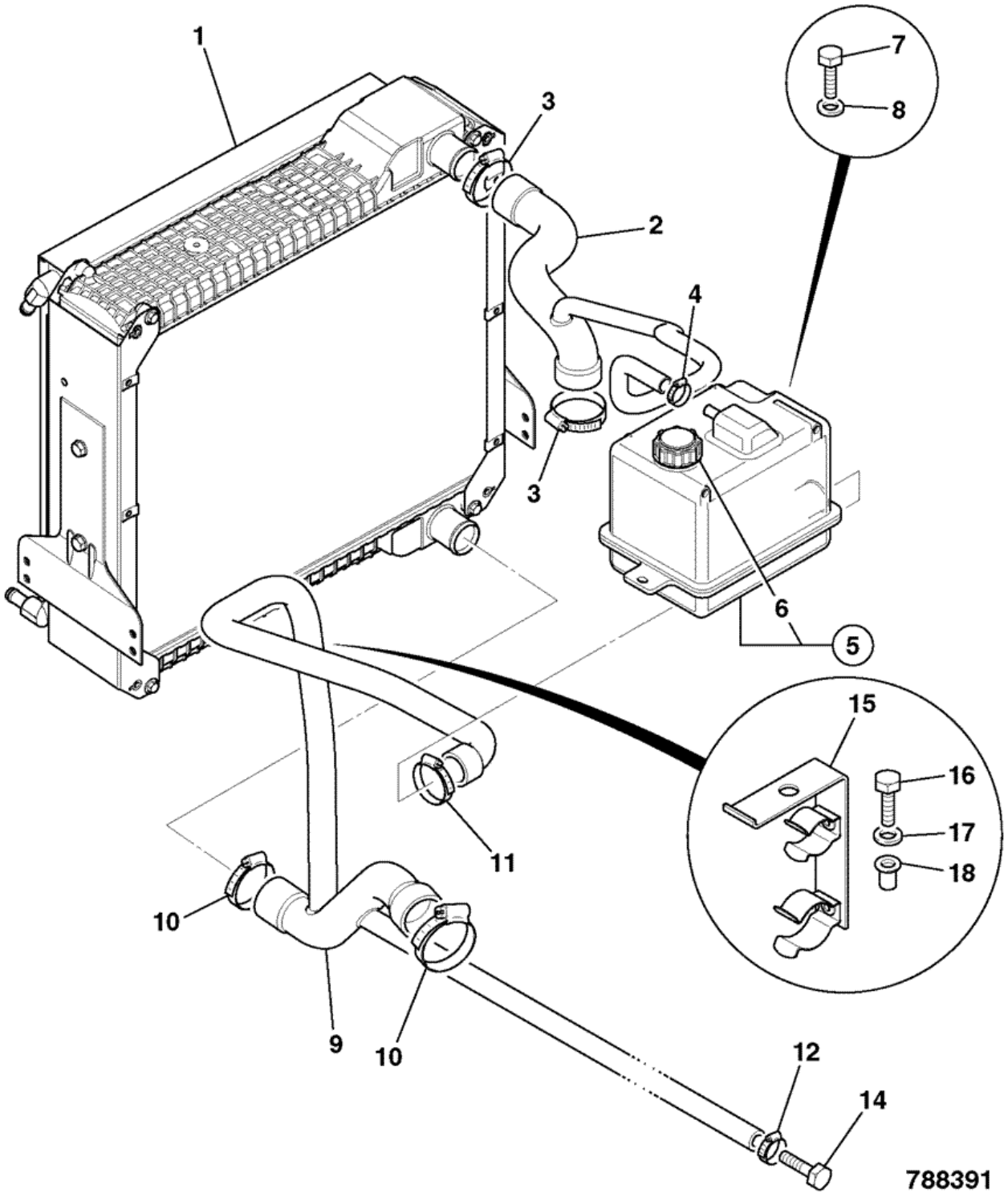


| Item | Part # | Change No | Description | Usage Code | QTY |
|---|---|---|---|---|---|
| 1 | 128/14326 | | Cooler assembly 5row 2ws non CAC<br>*For Service Parts, See frame V47-1-1* | | 1 |
| | | | | | |

| | | | | | |
|---|---|---|---|---|---|
| 2 | 834/11195 | | Hose radiator top 2ws | | 1 |
| 3 | 2201/0011 | | Clip jubilee | | 2 |
| 4 | 2201/0005 | | Clip jubilee | | 1 |
| 5 | 128/15480 | | Tank expansion no sensor assembly | | 1 |
| 6 | :477/00223 | | Cap Expansion Bottle | | 1 |
| 7 | 1315/0310Z | | Bolt M8x40 | | 2 |
| 8 | 1420/0007Z | | Washer plain M8 | | 2 |
| 9 | 834/10991 | | Hose radiator bottom 2ws | | 1 |
| 10 | 2201/0012 | | Clip jubilee | | 2 |
| 11 | 2201/0010 | | Clip jubilee | | 1 |
| 12 | 2201/0006 | | Clip jubilee | | 1 |
| 13 | 2201/0005 | | Clip jubilee | | 1 |
| 14 | 1315/3714Z | | Bolt M16x60 | | 1 |
| 15 | 128/15558 | | Guide hose | | 1 |
| 16 | 1315/0307Z | | Screw Hexagon M8 X 25 | | 1 |
| 17 | 1420/0007Z | | Washer plain M8 | | 1 |
| 18 | 826/01102 | | Nut rivet,M8 open ended | | 1 |

Product Catalog \ CONSTRUCTION \ NORTH AMERICA \ CONSTRUCTION / INDUSTRIAL \ BACKHOE LOADER 3CX,4CX,214,215,217 \ 3C 14 (84HP) , Made in Brazil with Dieselmax/IESA Engine 9812/0080 \ V JCB444 ENGINE INSTALLATION COMPONENTS \ V49 FRONT END DRIVE

# 9812/0080 V49-1-1 COOLING FAN & SPACER, 2WS BUILDS

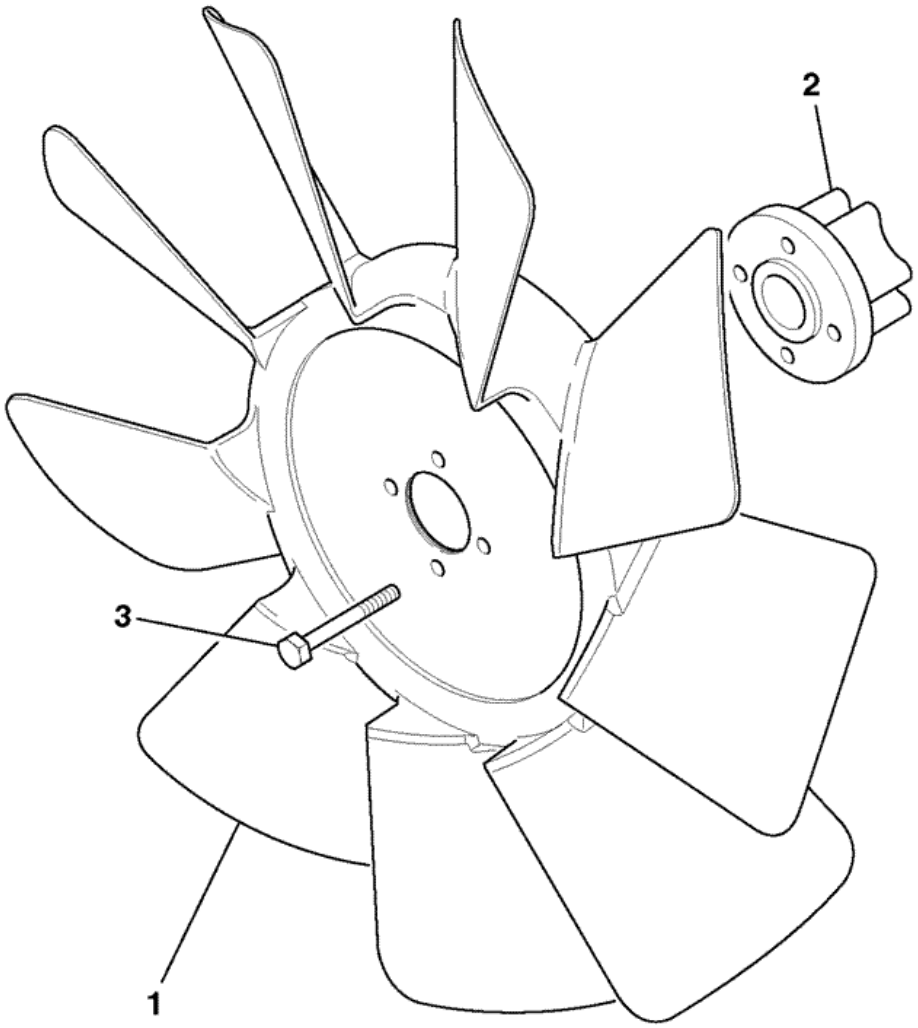


774920

| Item | Part # | Change No | Description | Usage Code | QTY |
|---|---|---|---|---|---|
| 1 | 30/925526 | | Fan D=20" puller | | 1 |
| 2 | 331/47063 | | Spacer fan T=42.5mm | | 1 |
| | | | | | |

| | | | | | |
|---|---|---|---|---|---|
| 3 | 1315/3315Z | | Bolt star drive M8 x 65mm | | 4 |

Product Catalog \ CONSTRUCTION \ NORTH AMERICA \ CONSTRUCTION / INDUSTRIAL \ BACKHOE LOADER 3CX,4CX,214,215,217 \ 3C 14 (84HP) , Made in Brazil with Dieselmax/IESA Engine 9812/0080 \ V JCB444 ENGINE INSTALLATION COMPONENTS \ V49 FRONT END DRIVE

# 9812/0080 V49-3-1 FRONT END DRIVE, ACCESSORIES, NON AIRCON

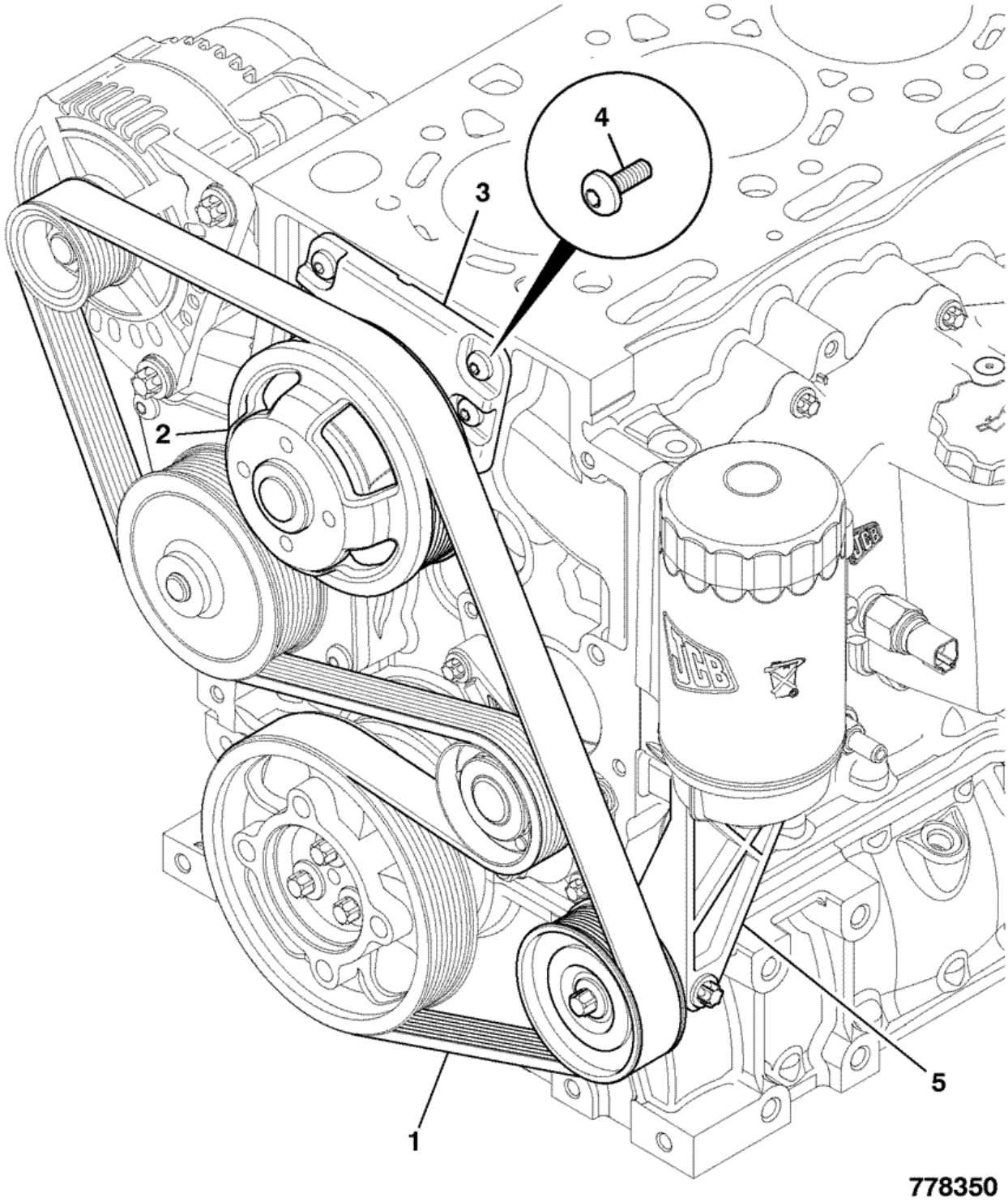


| Item | Part # | Change No | Description | Usage Code | QTY |
|---|---|---|---|---|---|
| 1 | 320/08598 | | Belt drive L=1835 | | 1 |

| | | | | | |
|---|---|---|---|---|---|
| 2 | 320/08572 | | Pulley fan, D=166 ratio 1:1 | | 1 |
| 3 | 320/08500 | | Hub fan drive assembly | | 1 |
| 4 | 320/08541 | | Screw pan head M8 x 20 | | 1 |
| 5 | . | | 'See Remark'<br>*See frame V49-20-1* | | 1 |

Product Catalog \ CONSTRUCTION \ NORTH AMERICA \ CONSTRUCTION / INDUSTRIAL \ BACKHOE LOADER 3CX,4CX,214,215,217 \ 3C 14 (84HP) , Made in Brazil with Dieselmax/IESA Engine 9812/0080 \ V JCB444 ENGINE INSTALLATION COMPONENTS \ V49 FRONT END DRIVE

# 9812/0080 V49-4-1 FRONT END DRIVE, ACCESSORIES, AIR CONDITIONING

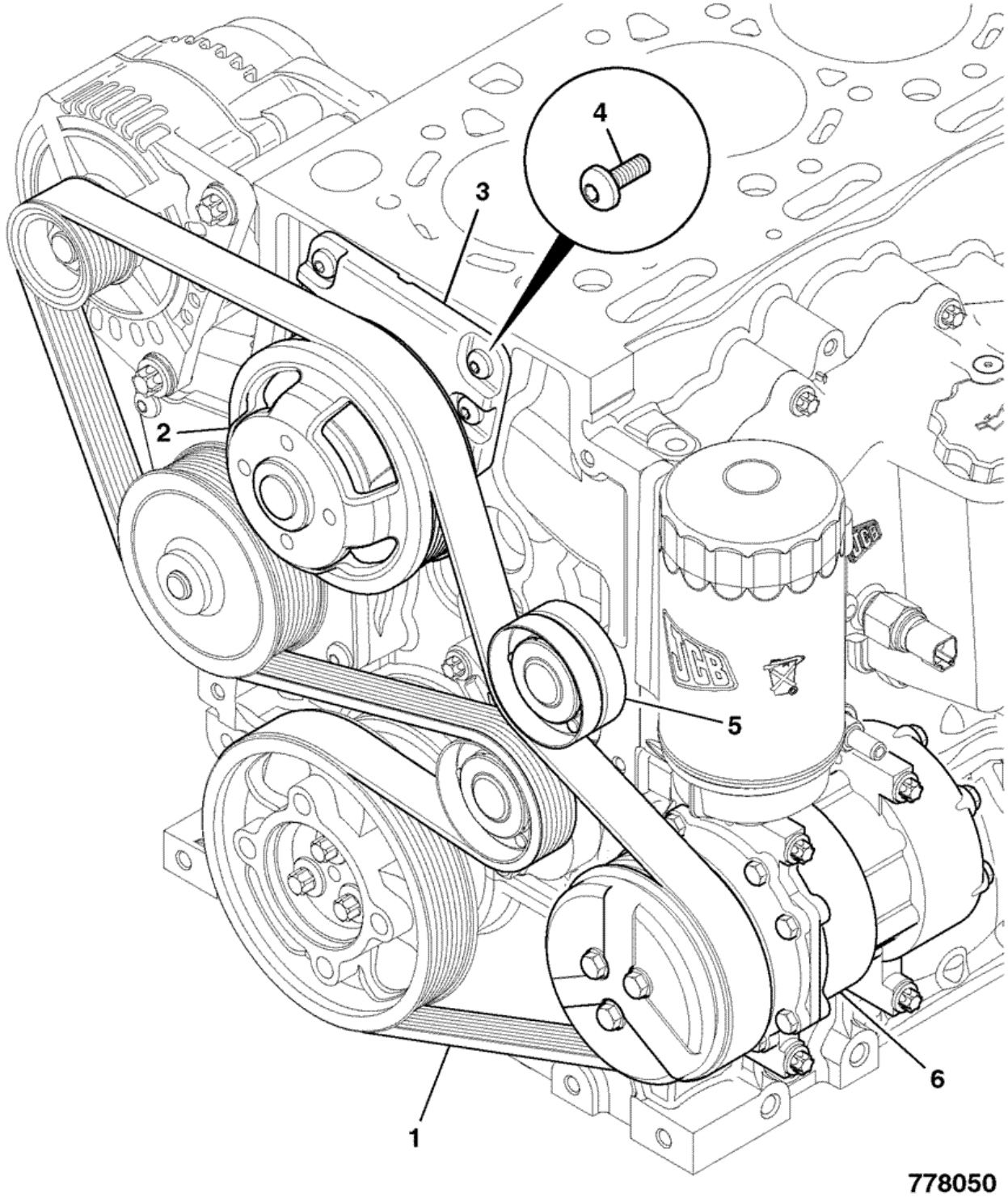


| Item | Part # | Change No | Description | Usage Code | QTY |
|---|---|---|---|---|---|
| 1 | 320/08603 | | Belt drive L=1988 | | 1 |

| | | | | | |
|---|---|---|---|---|---|
| 2 | 320/08572 | | Pulley fan, D=166 ratio 1:1 | | 1 |
| 3 | 320/08500 | | Hub fan drive assembly | | 1 |
| 4 | 320/08541 | | Screw pan head M8 x 20 | | 4 |
| 5 | 320/08530 | | Pulley idler long | | 1 |
| 6 | . | | 'See Remark'<br>*Refer to frame V56-1-1* | | 1 |

Product Catalog \ CONSTRUCTION \ NORTH AMERICA \ CONSTRUCTION / INDUSTRIAL \ BACKHOE LOADER 3CX,4CX,214,215,217 \ 3C 14 (84HP) , Made in Brazil with Dieselmax/IESA Engine 9812/0080 \ V JCB444 ENGINE INSTALLATION COMPONENTS \ V49 FRONT END DRIVE

# 9812/0080 V49-6-2 FRONT END DRIVE, ACCESSORIES, AIR CONDITIONING

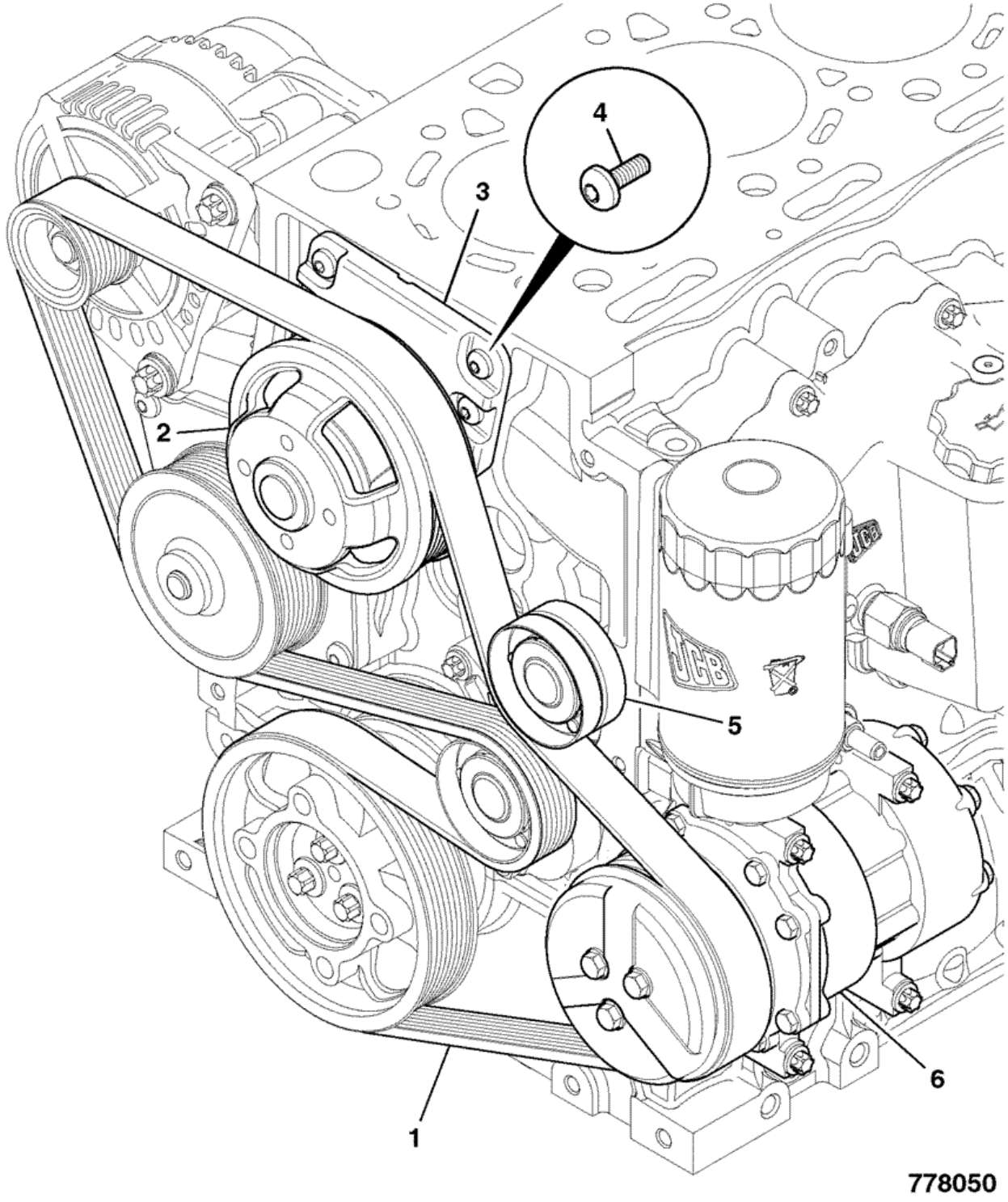


| Item | Part # | Change No | Description | Usage Code | QTY |
|---|---|---|---|---|---|
| 1 | 320/08608 | | Belt drive L=2002 | | 1 |

| | | | | | |
|---|---|---|---|---|---|
| 2 | 320/08583 | | Pulley cooling fan 1.16:1 D=143mm | | 1 |
| 3 | 320/08500 | | Hub fan drive assembly | | 1 |
| 4 | 320/08541 | | Screw pan head M8 x 20 | | 4 |
| 5 | 320/08530 | | Pulley idler long | | 1 |
| 6 | . | | 'See Remark'<br>*Refer to frame V56-1-1* | | 1 |

Product Catalog \ CONSTRUCTION \ NORTH AMERICA \ CONSTRUCTION / INDUSTRIAL \ BACKHOE LOADER 3CX,4CX,214,215,217 \ 3C 14 (84HP) , Made in Brazil with Dieselmax/IESA Engine 9812/0080 \ V JCB444 ENGINE INSTALLATION COMPONENTS \ V50 LOW PRESSURE FUEL SYSTEM

# 9812/0080 V50-2-1 FUEL PIPES, FUEL TANK TO FILTER

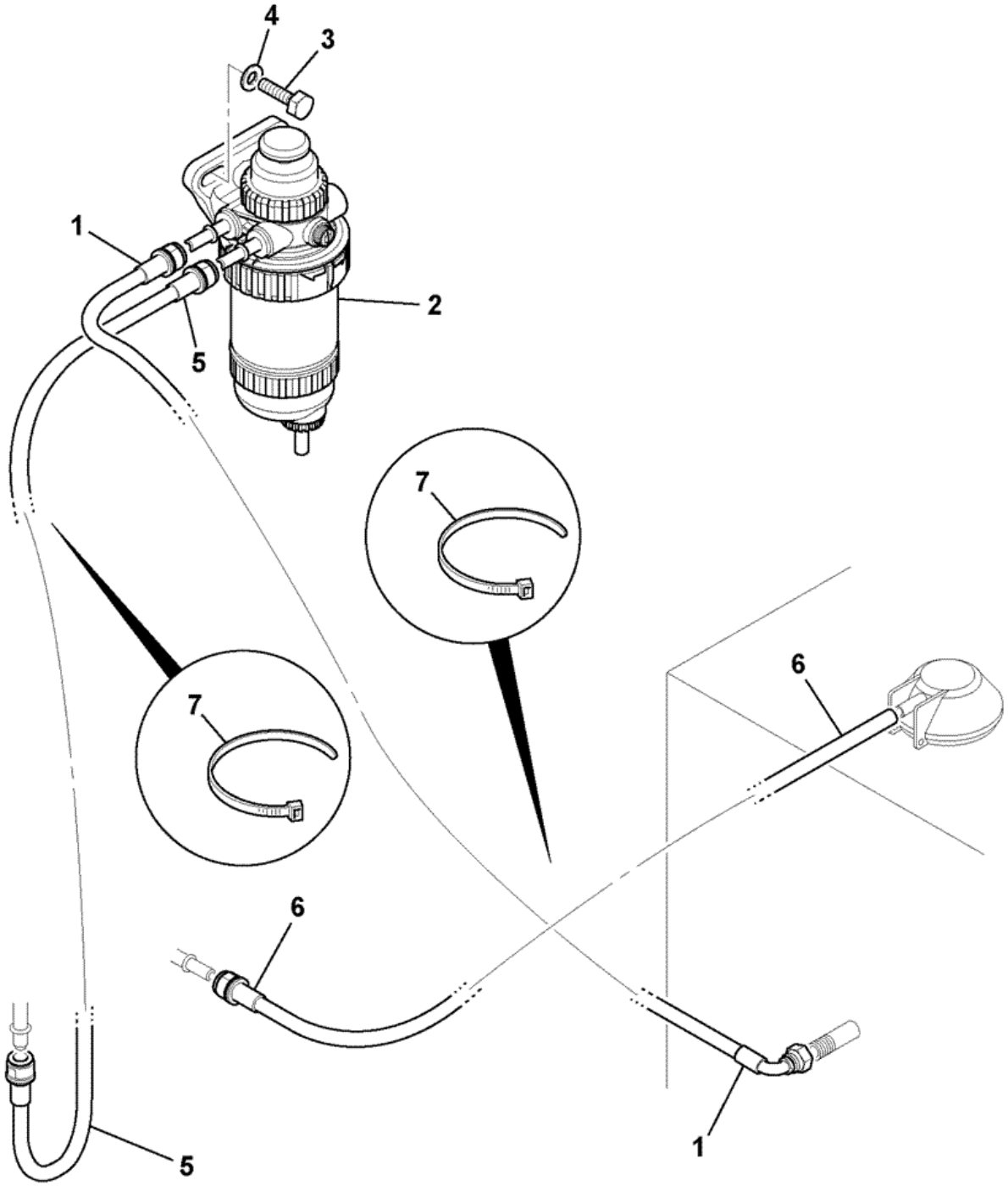


| Item | Part # | Change No | Description | Usage Code | QTY |
|---|---|---|---|---|---|
| 1 | 649/51784 | | Hose diesel fuel L=1850 | | 1 |
| 2 | 32/925765 | | Filter fuel sediment 30 micron | | 1 |

| | | | | | |
|---|---|---|---|---|---|
| | | | *For Service Parts, See Index* | | |
| 3 | 1315/0408Z | | Bolt M10 x 30 | | 2 |
| 4 | 1420/0008Z | | Washer Plain M10 | | 2 |
| 5 | 649/51777 | | Hose diesel fuel L=1600mm | | 1 |
| 6 | 649/51854 | | Hose diesel fuel500mm L=1500mm | | 1 |
| 7 | 826/01144 | | Tie cable 200mm long | | 5 |

Product Catalog \ CONSTRUCTION \ NORTH AMERICA \ CONSTRUCTION / INDUSTRIAL \ BACKHOE LOADER 3CX,4CX,214,215,217 \ 3C 14 (84HP) , Made in Brazil with Dieselmax/IESA Engine 9812/0080 \ V JCB444 ENGINE INSTALLATION COMPONENTS \ V52 EXHAUSTER SERVO BRAKES

# 9812/0080 V52-1-1 EXHAUSTER, SERVO BRAKES

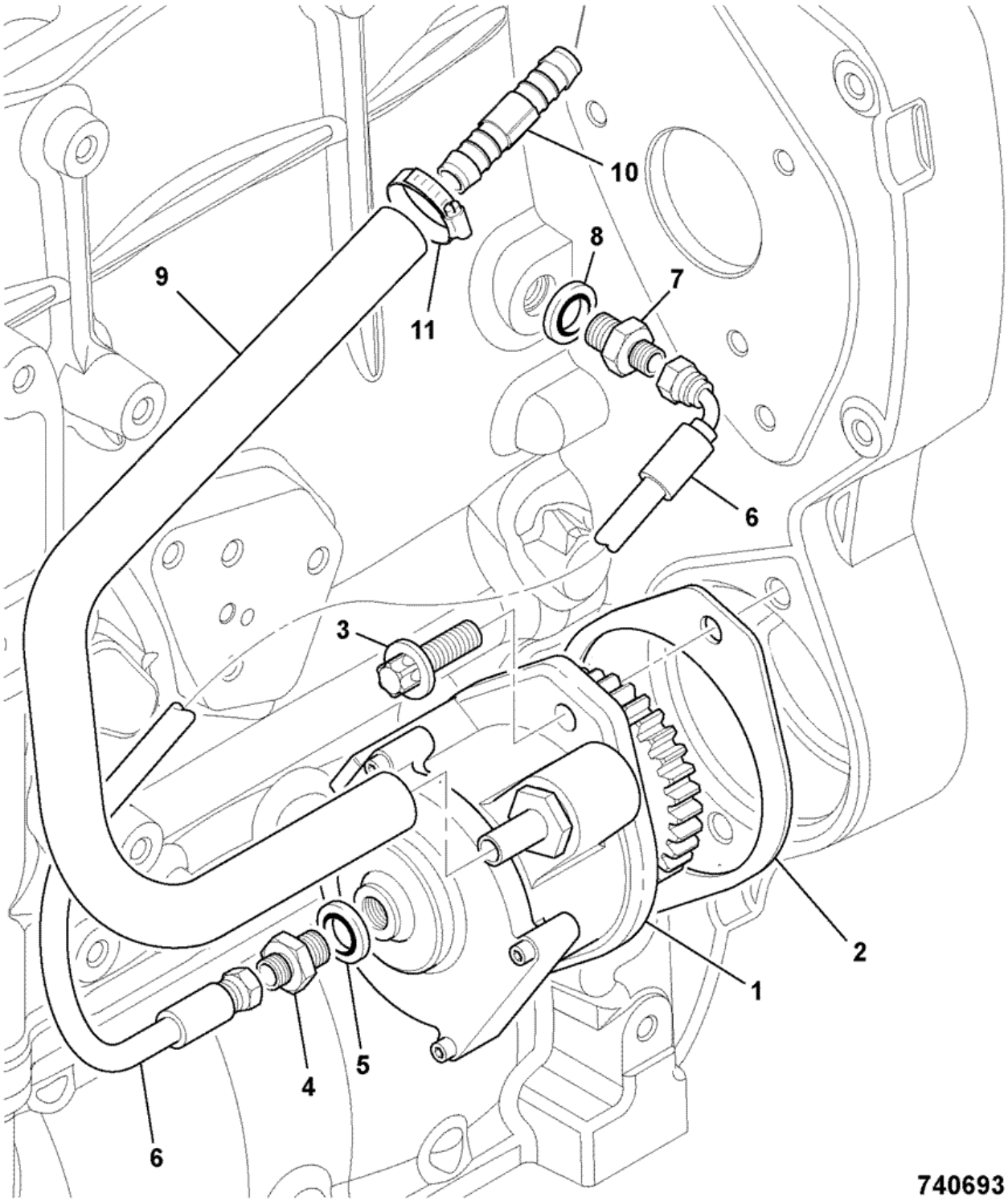


| Item | Part # | Change No | Description | Usage Code | QTY |
|---|---|---|---|---|---|
| 1 | 160/15137 | | Exhauster assembly | | 1 |
| 2 | 813/10143 | | Gasket | | 1 |
| | | | | | |

| | | | | | |
|---|---|---|---|---|---|
| 3 | 1319/0408Z | | Screw star drive M10 x 30 | | 2 |
| 4 | 816/90727 | | Adapter 3mm restricting | | 1 |
| 5 | 823/10633 | | Washer bonded 1/4"BSP with centering lip | | 1 |
| 6 | 649/51208 | | Hose exhauster | | 1 |
| 7 | 816/90768 | | Adapter 1/8"BSP-M12 | | 1 |
| 8 | 320/04521 | | Seal bonded | | 1 |
| 9 | 648/31003 | | Hose brake vacuum 9.5mm bore x 400mm | | 1 |
| 10 | 650/10205 | | Connector hose | | 1 |
| 11 | 2201/0004 | | Clip jubilee | | 2 |

Product Catalog \ CONSTRUCTION \ NORTH AMERICA \ CONSTRUCTION / INDUSTRIAL \ BACKHOE LOADER 3CX,4CX,214,215,217 \ 3C 14 (84HP) , Made in Brazil with Dieselmax/IESA Engine 9812/0080 \ V JCB444 ENGINE INSTALLATION COMPONENTS \ V55 OIL LEVEL DIPSTICK & TUBE

# 9812/0080 V55-1-1 OIL LEVEL DIPSTICK, & TUBE, STANDARD

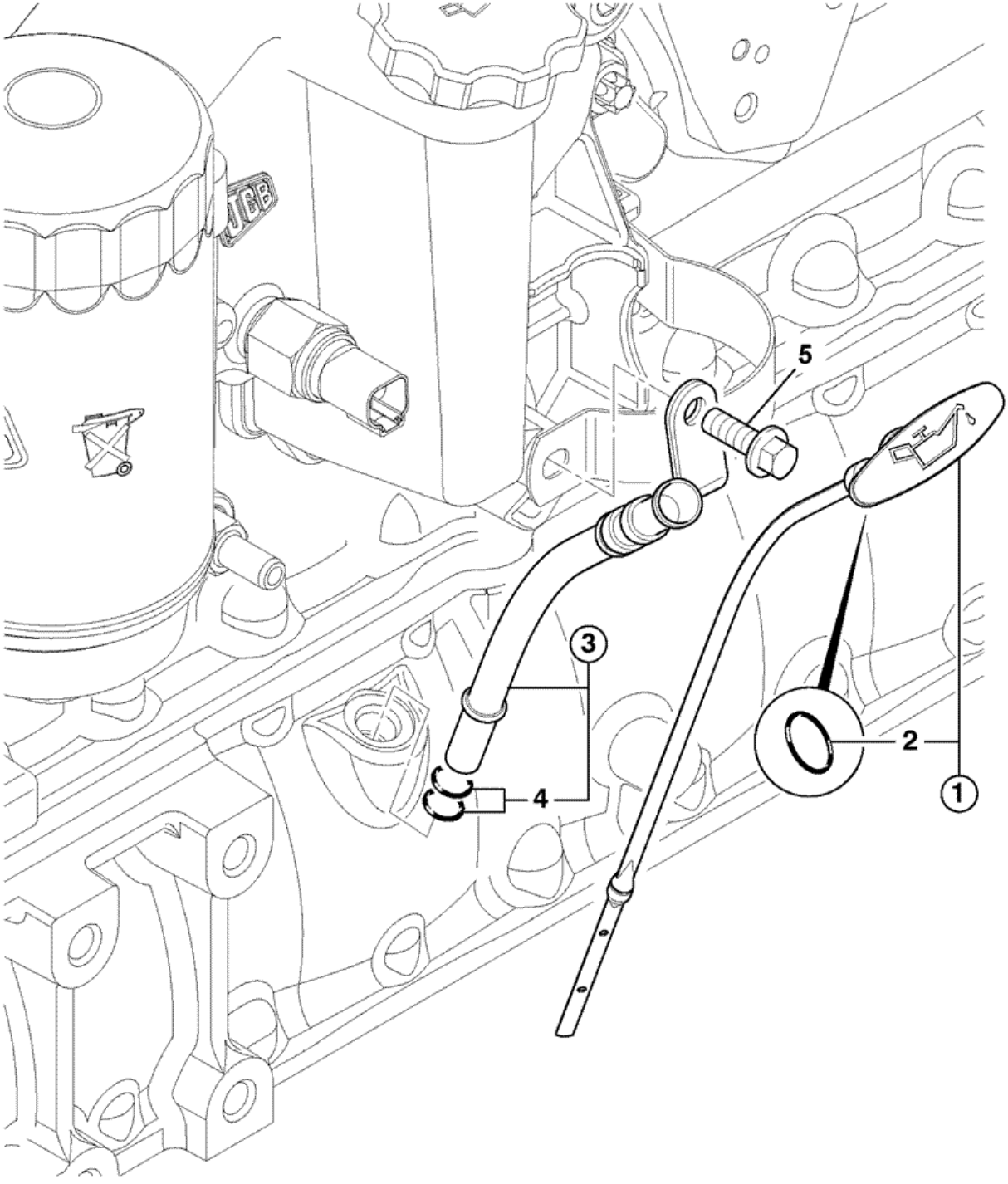


| Item | Part # | Change No | Description | Usage Code | QTY |
|---|---|---|---|---|---|
| 1 | 320/04196 | | Dipstick engine oil short | | 1 |

| | | | | | |
|---|---|---|---|---|---|
| 2 | :320/04129 | | O Ring | | 1 |
| 3 | 320/04195 | | Tube engine oil dipstick short | | 1 |
| 4 | :320/04127 | | O Ring | | 2 |
| 5 | 1317/3305Z | | Bolt flange head M8 x 20 lg | | 1 |

Product Catalog \ CONSTRUCTION \ NORTH AMERICA \ CONSTRUCTION / INDUSTRIAL \ BACKHOE LOADER 3CX,4CX,214,215,217 \ 3C 14 (84HP) , Made in Brazil with Dieselmax/IESA Engine 9812/0080 \ V JCB444 ENGINE INSTALLATION COMPONENTS \ V55 OIL LEVEL DIPSTICK & TUBE

# 9812/0080 V55-1-2 OIL LEVEL DIPSTICK, & TUBE, STANDARD

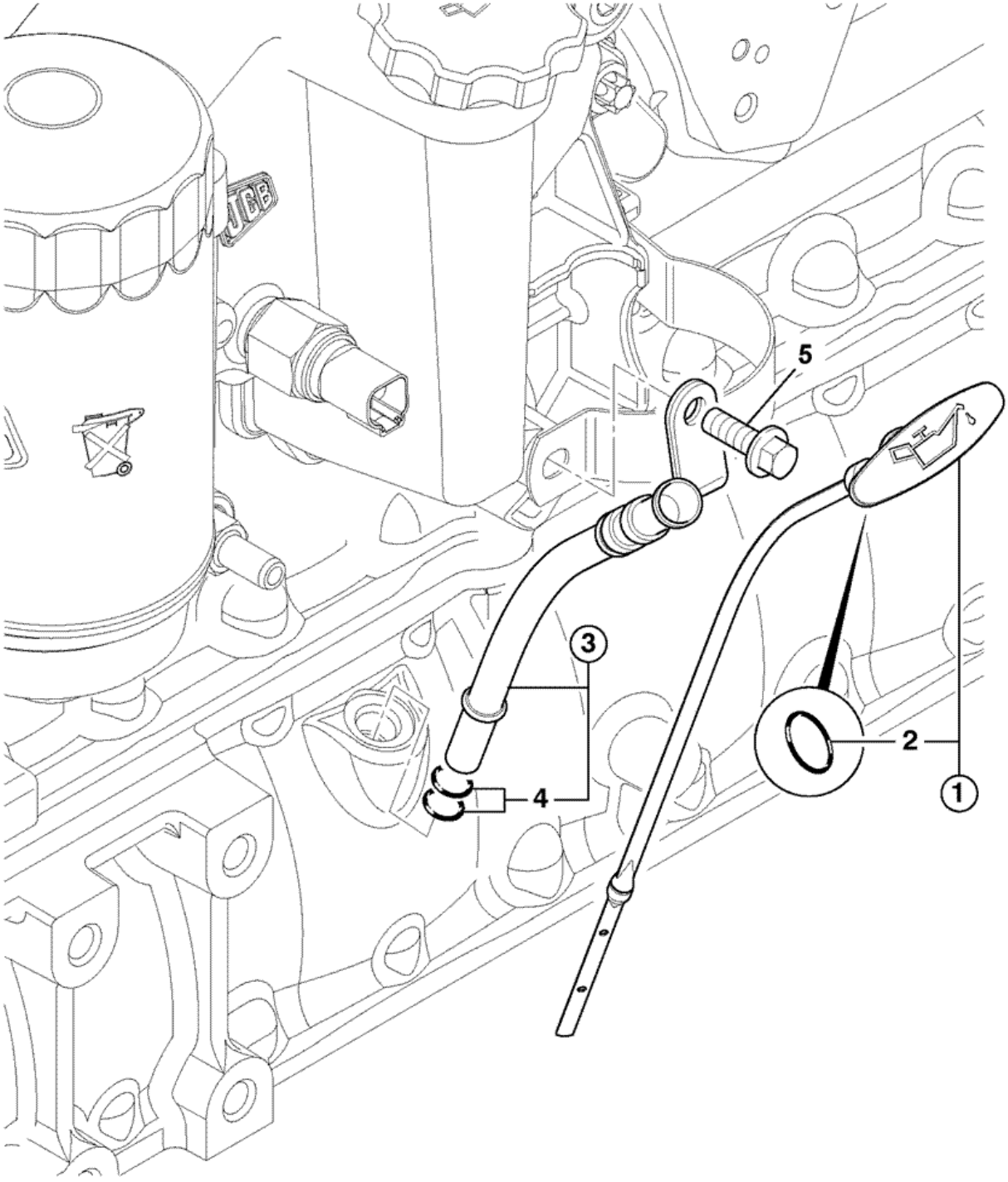


| Item | Part # | Change No | Description | Usage Code | QTY |
|---|---|---|---|---|---|
| 1 | 320/04249 | | Dipstick short | | 1 |

| | | | | | |
|---|---|---|---|---|---|
| 2 | :320/04129 | | O Ring | | 1 |
| 3 | 320/04195 | | Tube engine oil dipstick short | | 1 |
| 4 | :320/04127 | | O Ring | | 2 |
| 5 | 1317/3305Z | | Bolt flange head M8 x 20 lg | | 1 |

Product Catalog \ CONSTRUCTION \ NORTH AMERICA \ CONSTRUCTION / INDUSTRIAL \ BACKHOE LOADER 3CX,4CX,214,215,217 \ 3C 14 (84HP) , Made in Brazil with Dieselmax/IESA Engine 9812/0080 \ V JCB444 ENGINE INSTALLATION COMPONENTS \ V56 AIR CONDITIONING COMPRESSOR

# 9812/0080 V56-1-1 COMPRESSOR, AIR CONDITIONING

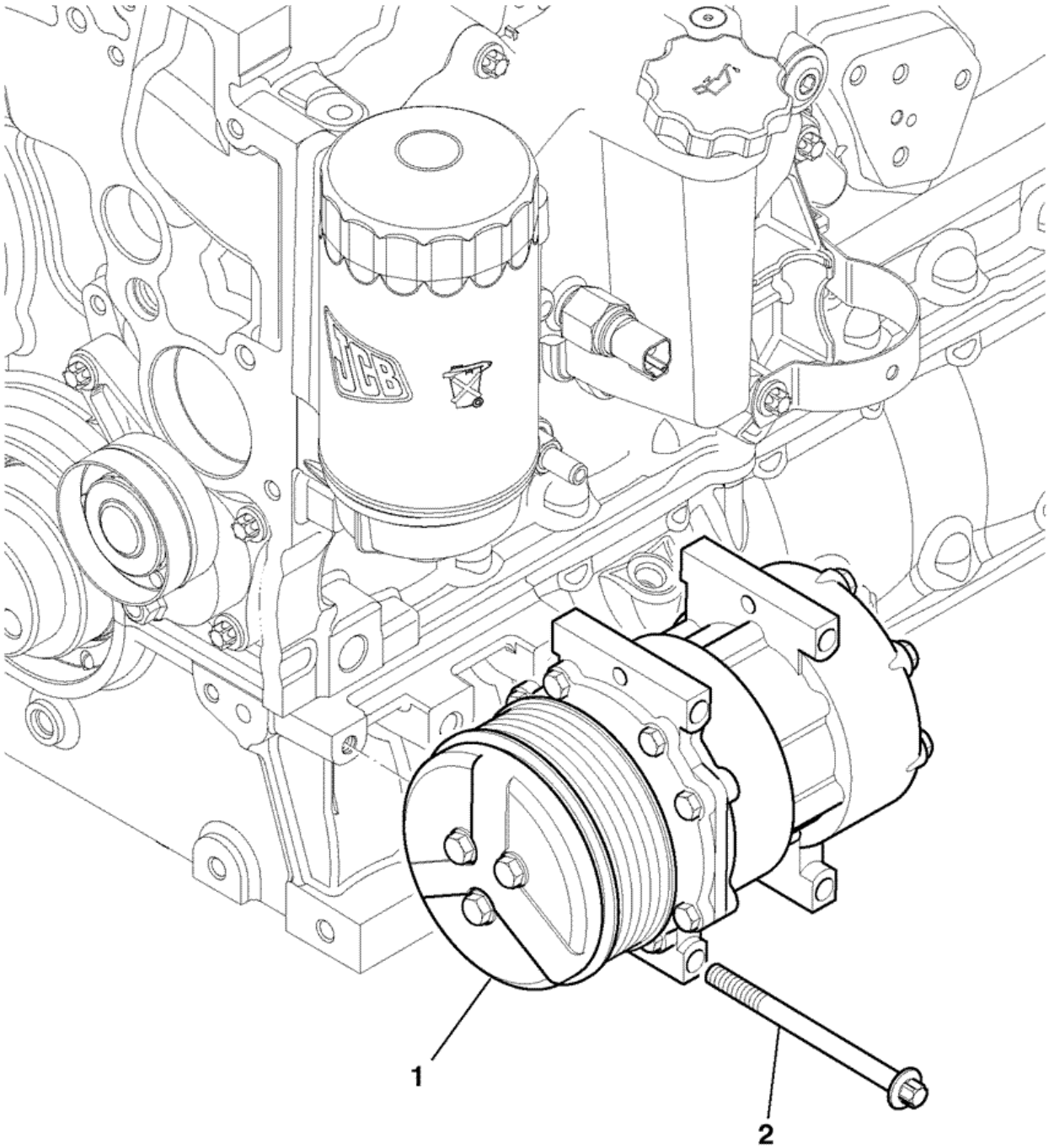


735741

| Item | Part # | Change No | Description | Usage Code | QTY |
|---|---|---|---|---|---|
| 1 | 320/08562 | | Compressor air conditioning 12v | | 1 |
| 2 | 1319/3320Z | | Bolt star drive M8 x 100mm | | 3 |

Product Catalog \ CONSTRUCTION \ NORTH AMERICA \ CONSTRUCTION / INDUSTRIAL \ BACKHOE LOADER 3CX,4CX,214,215,217 \ 3C PLUS (91HP) , Made in Brazil with Dieselmax/IESA Engine 9812/0080 \ V JCB444 ENGINE INSTALLATION COMPONENTS \ V41 ENGINE ASSEMBLYS

# 9812/0080 V41-10-1 ENGINE ASSEMBLY, 320/40064, 91BHP, SEE CATALOGUE 9802/2940

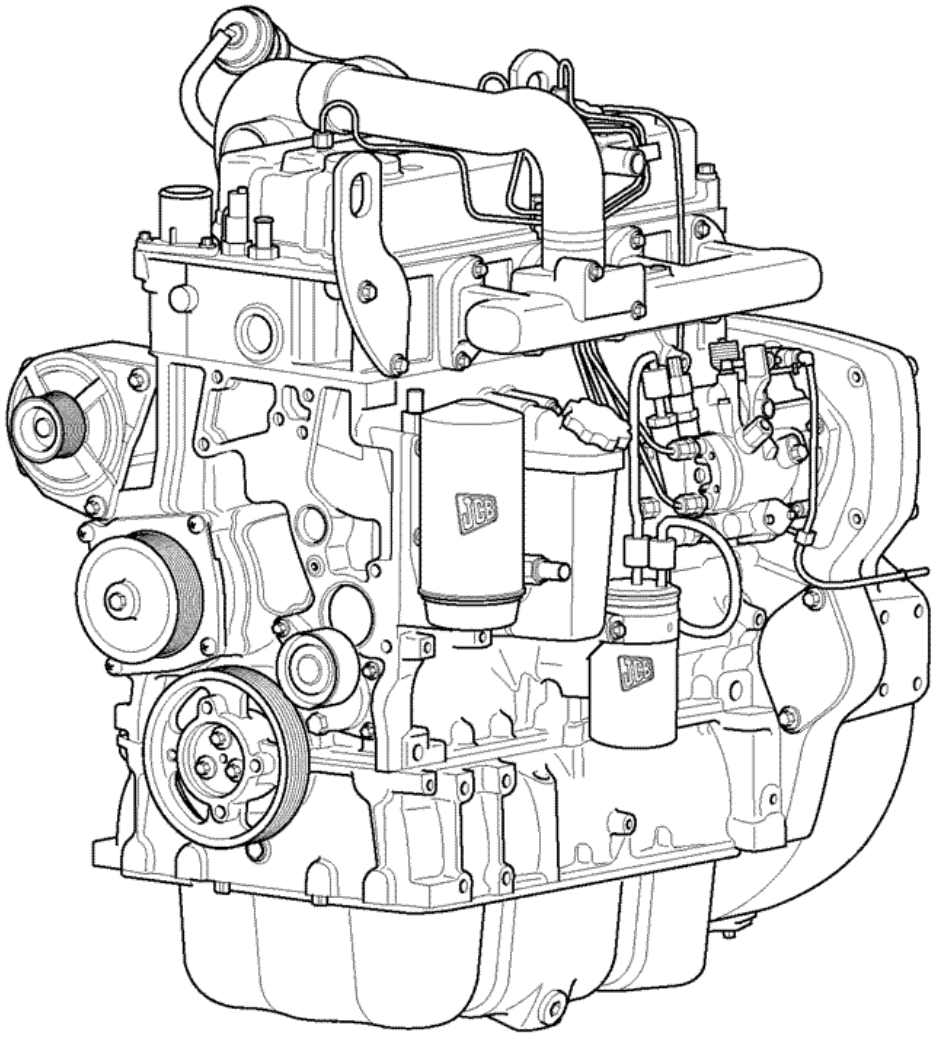

742570

| Item | Part # | Change No | Description | Usage Code | QTY |
|---|---|---|---|---|---|
| | | | Engine complete 91bhp-12v turbo W300 T/C | | |

| | | | | | |
|---|---|---|---|---|---|
| 1 | 320/40064 | | *For Service Parts, refer to 9802/2940* | | 1 |

Product Catalog \ CONSTRUCTION \ NORTH AMERICA \ CONSTRUCTION / INDUSTRIAL \ BACKHOE LOADER 3CX,4CX,214,215,217 \ 3C PLUS (91HP) , Made in Brazil with Dieselmax/IESA Engine 9812/0080 \ V JCB444 ENGINE INSTALLATION COMPONENTS \ V41 ENGINE ASSEMBLYS

# 9812/0080 V41-11-1 ENGINE ASSEMBLY, 320/40241, 91BHP, SEE CATALOGUE 9802/2940

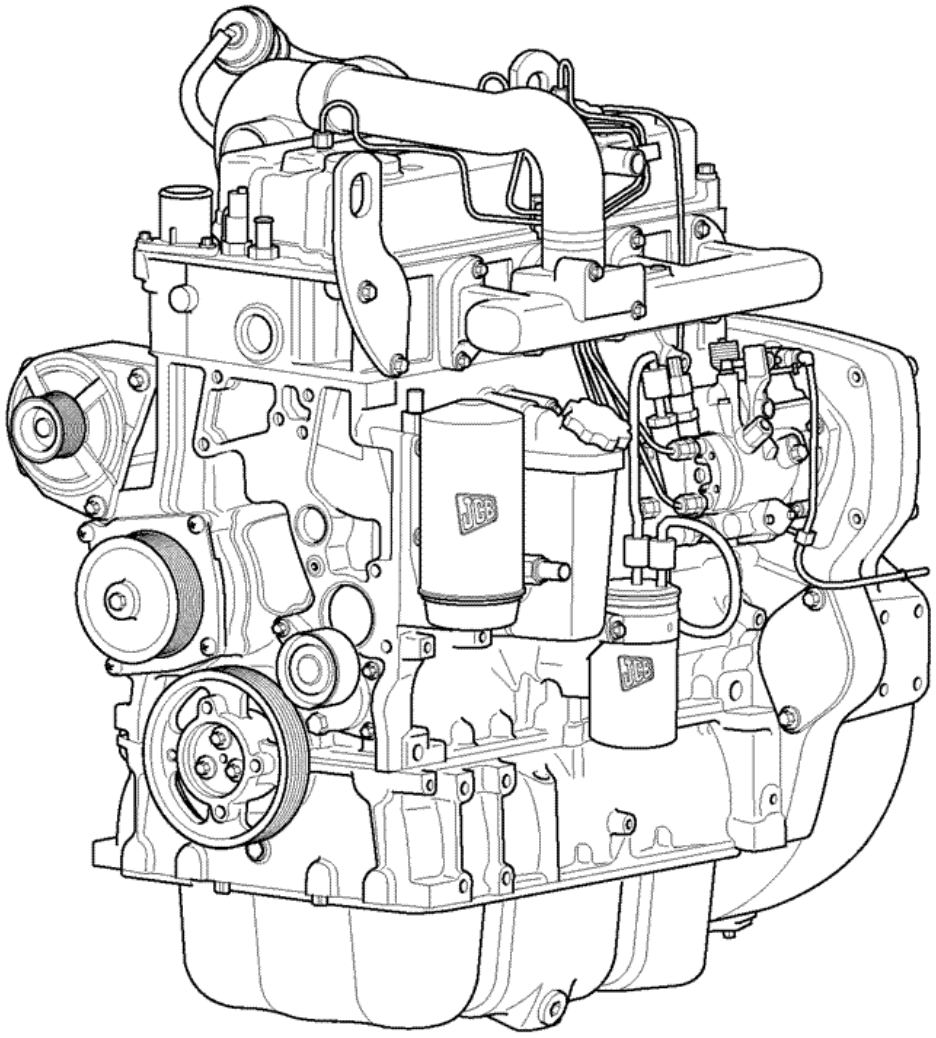

742570

| Item | Part # | Change No | Description | Usage Code | QTY |
|---|---|---|---|---|---|
| | | | Engine assembly 68kW 12v | | |

| | | | | | |
|---|---|---|---|---|---|
| 1 | 320/40241 | | *For Service Parts, refer to 9802/2940* | | 1 |