Parts Book

RUTHZIL TRATOR COMERCIAL DE PEÇAS LTDA 11 97083-6812 ROLANDO

3C 214 JCB

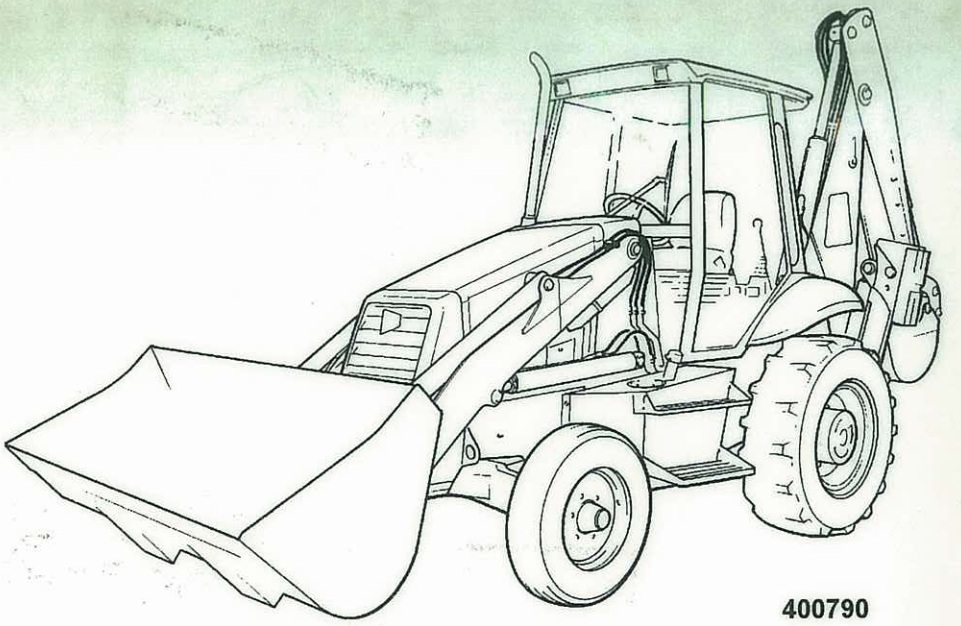

400790

JCB 214e/3C 14ft

OWNER PARTS BOOK
M0907001 to M0919999



A Product of Hard Work

Model JCB 214e/3C 14ft

OWNER PARTS BOOK
M0907001 to M0919999
Publication No. 9810/0024E Issue 3

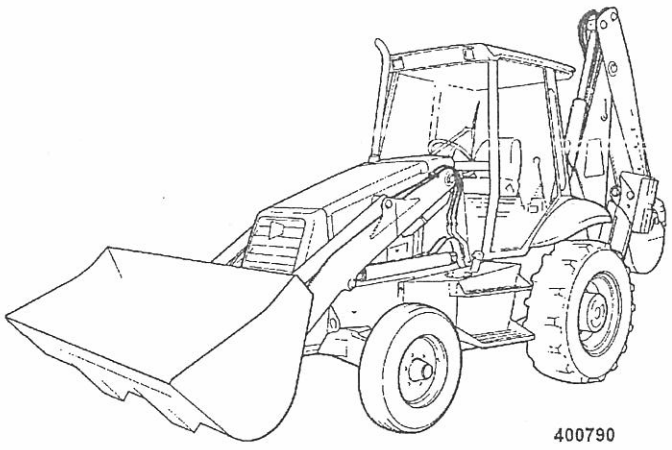

400790

Printed in England

OWNER PARTS BOOK

M0907001 to M0919999
Model JCB 214e/3C 14ft

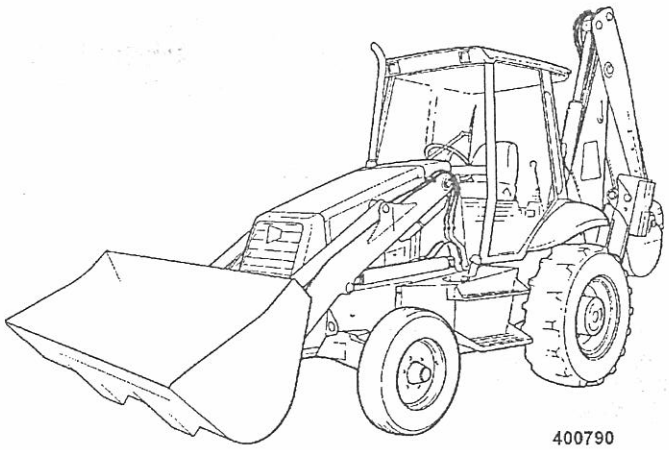

400790

ATTACHMENTS	A
BODYWORK, CAB, LOADER END	B
ELECTRICS-MACHINE, CAB & ENGINE	C
CONTROLS-MACHINE, ENGINE & STEERING	D
HYDRAULICS & AIR INCLUDING, STEERING	E
AXLES, WHEELS & TRANSMISSION	F
BRAKES	G
JCB444 ENGINE INSTALLATION, COMPONENTS	V

214e/3C 14

TITLE	PAGE NUMBER	CHANGE NUMBER
A ATTACHMENTS		
SHOVELS	A1	
SHOVEL, CLAM, 6 IN 1, 2350MM (7'8.5") WIDE, QUICKHITCH	A1-8-2	
SHOVEL, CLAM, 6 IN 1, 7'4" WIDE 1.0M3	A1-7-3	
SHOVEL, G.P 1.0M3, 2253MM (7'4") WIDE	A1-1-1	
SHOVEL, G.P 1.0M3, 2253MM (7'4") WIDE, HEAVY DUTY	A1-1-6	
BUCKETS	A2	
ATTACHMENTS, BACKHOE, RIPPER TOOTH, & TAPERED DITCHING BUCKET	A2-2-1	
BUCKET, DEEP PROFILE	A2-1-6	
BUCKET, EXCAVATOR, HEAVY DUTY AND, HEAVY DUTY-HIGH CAPACITY	A2-1-7	
BUCKET, GENERAL PURPOSE, BOLT ON TEETH	A2-1-3	
BUCKET, HEAVY DUTY, BOLT ON TEETH	A2-1-14	
ATTACHMENTS	A3	
BREAKER, ASSEMBLY, HAMMERMASTER 260 MK2, WITH SIDE PLATES	A3-3-1	
BREAKER, DETAILS, HAMMERMASTER 260 MK2	A3-3-11	
FORK FRAMES & FORKS, INDUSTRIAL	A3-8-1	
FORK LIFT, 6 IN 1 CLAM SHOVEL, MOUNTED 1.2M3	A3-1-4	
GUARD, TOOTH, OPTIONAL, 2253MM (7'4") WIDE SHOVELS	A3-2-3	
QUICKHITCH, ATTACHMENT, BACKHOE	A3-24-5	
QUICKHITCH, MANUAL	A3-6-10	
TOOTH & TOEPLATE, OPTIONS, SHOVELS	A3-7-1	
B BODYWORK, CAB, LOADER END		
BODYWORK/FRAME	B1	
BONNET ASSEMBLY, 2WS	B1-5-2	M TBA on
	B1-5-1	To M TBA
CHASSIS CENTREMOUNT, 2WS	B1-1-51	
COVER PLATES, LOADER TOWER	B1-12-11	
GRILLE, FRONT, 2WS	B1-6-11	
GUARD, STABILISER RAM, CENTREMOUNT	B1-4-30	
MUDGUARDS, REAR, BLACK	B1-8-30	
MUDGUARDS, REAR, YELLOW	B1-8-20	
STABILISER, CENTREMOUNT, 214E	B1-4-20	
STEP, CAB ACCESS, HYDRAULIC TANK SIDE	B1-7-1	
TANK, DIESEL FUEL, 130 LITRES	B1-3-10	
TANK, HYDRAULIC	B1-2-10	
TOOLBOX	B1-14-11	
VALVE MOUNTINGS, EXCAVATOR & LOADER	B1-13-1	
CAB	B2	
CAB GLAZING	B2-2-11	
CAB MOUNTINGS	B2-10-11	
CAB REAR VALANCE, CENTREMOUNT	B2-13-1	
CAB ROOF, ECONOMY, ROW & USA	B2-23-21	
CAB SHELL, UNGLAZED	B2-1-10	
CANOPY	B2-1-30	
COVER, BRAKE PEDALS	B2-30-1	
COVER, LOADER CONTROLS	B2-15-21	
DIRECT GLAZING, REPLACEMENT MATERIAL	B2-18-1	
DOOR	B2-3-21	
MIRROR, EXTERNAL & INTERIOR	B2-11-3	
SEAT, STATIC	B2-7-51	
SEAT, SUSPENSION	B2-7-61	
SOUNDPROOFING, AND FLOOR MAT, CAB BASE	B2-6-5	
SOUNDPROOFING, CAB ROOF	B2-6-10	
STORAGE NET	B2-29-1	
WASH/WIPE, CANOPY	B2-8-1	
WASH/WIPE, FRONT & REAR SCREEN	B2-8-2	
WINDOW, REAR OPENING	B2-5-11	
WINDOW, SIDE, OPENING	B2-4-11	
LOADER, FRONT END	B3	
ARMS, LOADER	B3-1-21	
ARMS, LOADER, ANTI-SPILL, LINKAGE	B3-5-1	
ARMS, LOADER, SHOVEL LINKAGE	B3-3-21	

TITLE	PAGE NUMBER	CHANGE NUMBER
SAFETY STRUT, LOADER ARMS	B3-4-2	
BACKHOE	**B4**	
OOM, 14'	B4-4-40	
ONTROLS, LEVER, IN CAB	B4-10-31	
OOM LOCK		
IPPER (STICK), MONO	B4-5-40	
IPPER (STICK), 214 EXTRADIG	B4-6-1	
NGPOST CENTREMOUNT, 14' BACKHOE	B4-3-1	To M0908102
	B4-3-2	M0908103 on
KINGPOST HOSE CLAMPS	B4-12-2	
NGPOST, BULKHEAD, GEAR PUMP	B4-11-1	
EW/SWING, COMPONENTS	B4-2-1	
TIPPING LINK, STANDARD	B4-8-1	
PPING LINK, WITH LIFTING HOOK	B4-8-30	
PPING LINK, WITH LIFTING SHACKLE	B4-8-10	
REFURBISHMENTS	**B5**	
DECAL, MACHINE, SUNBELT, BONNET/BOOM	B5-2-60	
DECAL, MACHINE, 3C 14 & 3C-LL	B5-2-50	
ECALS, EXCAVATOR, CASE STYLE, 214E	B5-1-10	
ECALS, EXCAVATOR, FORD STYLE	B5-1-11	
ABEL, WARNING, EXPORT MACHINES	B5-2-20	
ABEL, WARNING, 214, 215, 217, USA	B5-2-25	
OOL KIT	B5-3-2	

TITLE	PAGE NUMBER	CHANGE NUMBER
C ELECTRICS-MACHINE, CAB & ENGINE		
ELECTRICS, MAIN MACHINE	**C1**	
ALARM, REVERSE, INSTALLATION, OPTIONAL	C1-9-11	
BATTERY 12V, CARRIER, USA	C1-2-14	M TBA on
	C1-2-11	To M TBA
EARTH LEADS	C1-28-1	
HARNESS CAB CANOPY, MACHINE	C1-1-31	
HORN, SINGLE TONE, FRONT AND REAR	C1-12-10	
ISOLATOR SWITCH, BATTERY	C1-2-21	M TBA on
	C1-2-20	To M TBA
LIGHT, HEAD, 12.VOLT, RIGHT HAND DIP, WHITE	C1-4-5	
LIGHT, INDICATOR	C1-22-1	
LIGHT, REAR, ROOF MOUNTED	C1-3-20	
LIGHT, WORKING, CAB FRONT	C1-5-1	
LIGHT, WORKING, CAB REAR	C1-5-2	
MOUNTINGS & SUPPORTS, HARNESS	C1-14-1	
ELECTRICS, ENGINE	**C2**	
ALTERNATOR, 12VOLT - 95AMP	C2-4-1	
ENGINE BLOCK HEATER, 120V	C2-7-1	
ENGINE IMMOBILISER, 12.VOLT	C2-6-1	
ENGINE SHUT-OFF, SOLENOID LINK	C2-2-1	
GRID HEATER RELAY, INSTALLATION, NATURALLY ASPIRATED	C2-5-1	
GRID HEATER RELAY, INSTALLATION, TURBO	C2-5-2	
STARTER MOTOR, 12.VOLT	C2-3-1	
SWITCHES & SENDERS	C2-1-1	
ELECTRICS, CAB	**C3**	
AIR CONDITIONING, ASSEMBLY ABI	C3-5-40	
COVER, COLUMN SWITCH, 214E	C3-2-4	
FAN, FACE LEVEL	C3-17-1	
FAN, FACE LEVEL, OPTIONAL	C3-17-11	
FUSE BOX & RELAYS, SHUTTLE TRANSMISSION	C3-7-60	
GAUGES AND SWITCHES, SIDE CONSOLE, CAB	C3-1-41	
GAUGES AND SWITCHES, SIDE CONSOLE, CANOPY	C3-1-31	
HARNESS, HAMMER ATTACHMENT	C3-22-1	
HEATER ASSEMBLY	C3-5-30	
INTERIOR MOULDINGS, CAB BUILDS	C3-18-11	
INTERIOR MOULDINGS, CANOPY BUILDS	C3-18-1	
MOTOR, WIPER	C3-8-11	
RADIO INSTALLATION	C3-11-11	
SWITCH, COLUMN, SHUTTLE TRANSMISSION, 214E	C3-4-30	
SWITCHES, FRONT CONSOLE	C3-6-30	

TITLE	PAGE NUMBER	CHANGE NUMBER
D CONTROLS-MACHINE, ENGINE & STEERING		
CONTROLS, MACHINE	**D1**	
CONTROL KNOB, LOADER VALVE, SINGLE SWITCH	D1-7-2	
CONTROL, GEAR CHANGE	D1-24-10	
CONTROL, PARKING BRAKE	D1-21-10	
CONTROL, SHOVEL RESET	D1-4-11	
CONTROLS, AUXILIARY VALVE, BACKHOE, OPTIONAL	D1-3-20	
CONTROLS, AUXILIARY, CASE SYSTEM, 214E	D1-3-30	
CONTROLS, BRAKE PEDAL, 214E	D1-20-1	
CONTROLS, EXCAVATOR, & STABILISER, ISO & SAE PATTERN	D1-2-10	
CONTROLS, EXCAVATOR, CASE SYSTEM, 214E	D1-2-11	
CONTROLS, EXCAVATOR, FORD STYLE, 214E	D1-2-81	
	D1-2-91	
CONTROLS, LEVER, IN CAB BOOM LOCK	D1-6-31	
CONTROLS, LOADER, AUXILIARY, OPTIONAL	D1-1-51	
CONTROLS, LOADER, LOADER LIFT, SHOVEL	D1-1-31	
CONTROLS, STABILISER, CASE OR FORD	D1-2-61	
COVER, CASE CONTROLS, EXCAVATOR	D1-2-71	
SEAL, EXCAVATOR CONTROLS	D1-2-1	

TITLE	PAGE NUMBER	CHANGE NUMBER
CONTROLS, ENGINE	**D2**	
THROTTLE CONTROL	D2-3-1	
COLUMN, STEERING	**D3**	
STEERING COLUMN, 214E	D3-1-11	
E HYDRAULICS & AIR INCLUDING, STEERING		
HOSE & PIPEWORK	**E1**	
BOOM RAM PIPEWORK	E1-27-20	
CIRCUIT, ATTACHMENT, HAMMER	E1-21-2	
CIRCUIT, AUXILIARY, EXTENTION RAM, EXTRADIG DIPPER 214E	E1-11-41	
CIRCUIT, AUXILIARY, LOADER, (3/8" BSP PIPWORK)	E1-3-40	
CIRCUIT, BOOM RAM, 214, 215, 217	E1-8-10	
CIRCUIT, BUCKET RAM, EXTRADIG DIPPER, 214	E1-10-13	
CIRCUIT, BUCKET RAM, MONO DIPPER, 214E	E1-10-4	
CIRCUIT, COOLER, HYDRAULIC OIL, 2 WHEEL STEER	E1-4-32	
CIRCUIT, COOLER, TRANSMISSION, 2 WHEEL STEER	E1-4-12	
CIRCUIT, DIPPER RAM, 214, 215, 217	E1-9-1	
CIRCUIT, LOADER ARM	E1-2-41	To M908483
CIRCUIT, LOADER ARM	E1-2-42	M908484 on
CIRCUIT, LOADER LIFT, SUSPENSION, GEAR PUMP MACHINES	E1-34-21	
CIRCUIT, SLEW/SWING, CENTREMOUNT	E1-6-20	
CIRCUIT, STABILISER, CENTREMOUNT, 214E	E1-7-30	
CIRCUIT, STEERING, PRIORITY VALVE	E1-5-2	
CIRCUIT, STEERING, 2WS 2WD, 214E	E1-5-50	
CIRCUIT, STEERING, 2WS 4WD, 214E	E1-5-60	
COOLER, COMBINATION, RADIATOR/HYDRAULIC, & TRANSMISSION, 2WS	E1-18-1	
HOSE AND PIPEWORK, LOADER VALVE TO, EXCAVATOR VALVE TO TANK	E1-1-11	
HOSE AND PIPEWORK, LOFLO, HIGH PRESSURE CARRYOVER	E1-1-25	
HOSE AND PIPEWORK, PUMP TO LOADER VALVE, 214E	E1-1-31	
PUMP/MOTOR & PUMP DRIVE	**E2**	
PUMP 29/23 CCR, MAIN HYDRAULIC	E2-1-11	
PUMP, TRANSMISSION, SYNCROSHUTTLE	E2-2-1	
VALVES & HYDRAULIC FILTERS	**E3**	
FILTER, HYDRAULIC	E3-7-1	
LUBRICANTS & FILTERS	E3-8-3	

TITLE	PAGE NUMBER	CHANGE NUMBER
VALVE ADAPTERS. EXCAVATOR, 14'0"	E3-5-10	
VALVE-EXCAVATOR, WITH SPOOL GAITERS, CENTREMOUNT,CONTROLLED LEAK	E3-6-21	
VALVE-EXCAVATOR, WITHOUT SPOOL GAITER, CENTREMOUNT,CONTROLLED LEAK	E3-6-22	
VALVE-LOADER 3 SPOOL, 3RD PORT BLANKING	E3-2-60	
VALVE-LOADER, 2 SPOOL, WITH FLOAT	E3-2-1	
VALVE-LOADER, 3 SPOOL, WITH FLOAT & RESET	E3-2-10	
VALVE, AUXILIARY, BACKHOE, GEAR PUMP, AUXILIARY & EXTRADIG DIPPER BREAKER	E3-3-11	
VALVE, AUXILIARY, COMPONENTS, EXCAVATOR, GEAR PUMP	E3-3-22	
VALVE, EXCAVATOR, CENTREMOUNT, RELIEF, CONTROLLED LEAK	E3-6-25	
VALVE, FLOW REGULATOR, HAMMER CIRCUIT	E3-37-1	
VALVE, LOADER, AUXILIARY RELIEF, 2 & 3 SPOOL	E3-2-35	
VALVE, LOADER, MAIN RELIEF	E3-2-30	
VALVE, SECTION, AUXILIARY, 3 SPOOL, LOADER VALVE	E3-2-50	
VALVE, SECTION, LIFT, 2 & 3 SPOOL, MECHANICAL DETENT, LOADER VALVE	E3-2-25	
VALVE, SECTION, SHOVEL, 2 SPOOL, LOADER VALVE	E3-2-20	
VALVE, SECTION, SHOVEL, 3 SPOOL, ELECTRICAL DETENT, LOADER VALVE	E3-2-40	
VALVE, STEERING, 2WS-USA BUILDS, 250 LOAD SENSING	E3-10-10	
RAMS	**E4**	
RAM, BOOM, STANDARD LIFT, 110MM CYL X 60MM ROD	E4-5-1	
RAM, BUCKET, 214 EXTRADIG DIPPER	E4-7-31	To M0908074
	E4-7-32	M0908075 on
RAM, BUCKET, 214 MONO DIPPER	E4-7-1	To M0908074
	E4-7-2	M0908075 on
RAM, DIPPER, 100MM CYL X 60MM ROD	E4-6-70	
RAM, EXTENSION, EXTRADIG DIPPER, 214E	E4-8-11	
RAM, JAW BUCKET	E4-14-1	
RAM, LIFT, STANDARD, 50MM ROD X 80MM CYL	E4-1-41	
RAM, SHOVEL, 50MM ROD X 80MM CYL	E4-2-21	
RAM, SLEW/SWING, 214E	E4-11-11	
RAM, STABILISER, CENTREMOUNT, 214E	E4-10-11	
RAM, STEERING, 2WD	E4-3-1	
RAM, STEERING, 4WD	E4-3-2	
F AXLES, WHEELS & TRANSMISSION		
AXLES, FRONT	**F1**	
AXLE ASSEMBLY, 2WS 2WD STEER AXLE	F1-10-1	
AXLE ASSEMBLY, 2WS 4WD STEER AXLE, 15.785:1 RATIO 448/57470 & 448/57480	F1-6-1	
AXLE PIVOT PIN, & GREASING 2WS, 2WD/4WD	F1-3-1	
DIFFERENTIAL, 2WS 4WD STEER AXLE, 15.785:1 RATIO 448/57470 & 448/57480	F1-6-30	
HUB & COMPONENTS, 2WS 4WD STEER AXLE, 15.785:1 RATIO 448/57470 & 448/57480	F1-6-20	
KNUCKLE, 2WS 4WD STEER AXLE, 15.785:1 RATIO 448/57470 & 448/57480	F1-6-10	
AXLES, REAR	**F2**	
AXLE BREATHER, REMOTE	F2-7-1	
450/26310, DIFFERENTIAL ASSY, 2WS	F2-4-2	
450/44800, PD70 PAD MOUNT AXLE, 15.78:1 REVERSE LSD. 2WS+SS	F2-1-16	
450/44810, PD70 PAD MOUNT AXLE, 15.78:1 REVERSE LSD. 2WS+SS	F2-1-23	
458/10951, DRIVEHEAD ASSEMBLY, 2WS+SS	F2-3-10	
458/10978, AXLE ARM & HUB ASSY, 2WS+SS	F2-2-1	

TITLE	PAGE NUMBER	CHANGE NUMBER
458/10979, AXLE ARM & HUB ASSY, 2WS+SS	F2-2-2	
458/11213, DRIVEHEAD ASSEMBLY, 2WS+SS	F2-3-30	
WHEELS, TYRES & PROPSHAFTS	**F3**	
PROPSHAFT, TRANS. / FRONT AXLE, SYNCHOSHUTTLE TRANSMISSIONS	F3-1-1	
PROPSHAFT, TRANS. / REAR AXLE, SYNCROSHUTTLE	F3-2-1	
WHEEL & TYRE, ASSEMBLY, REAR, 2WS 2WD 17.5X24 X 10 PLY	F3-5-21	
WHEEL & TYRE, FRONT 2WS 2WD 11LX16	F3-3-11	
WHEEL & TYRE, FRONT 2WS 4WD, 14X17.5	F3-4-1	
WHEEL & TYRE, REAR 2WS 19. 5LX24	F3-5-2	
TRANSMISSIONS SYNCROSHUTTLE	**F5**	
DIPSTICK & FILLER, SYNCROSHUTTLE, MANUAL	F5-0-30	
MOUNTING BRACKET, SYNCROSHUTTLE, MANUAL	F5-0-3	
MOUNTING, TRANSMISSION, TO ENGINE	F5-0-5	
PUMP & DRIVESHAFT, SYNCROSHUTTLE, GEARPUMP MACHINES	F5-70-1	
TORQUE CONVERTER, 84 & 92 HP ENGINES, W300 3.01 RATIO	F5-0-40	
441/00680 - 4WD-2WS, EXTERNAL COMPONENTS	F5-4-11	
441/00680 - 4WD-2WS, GEAR CHANGE	F5-4-51	
441/00680 - 4WD-2WS, INTERNAL COMPONENTS	F5-4-21	
441/00680 - 4WD-2WS, REVERSER UNIT, 459/10097	F5-4-31	
441/00680 - 4WD-2WS, TRANSMISSION ASSY, SYNCROSHUTTLE	F5-4-1	
441/00680 - 4WD-2WS, 4WD CLUTCH ASSEMBLY, 459/10119	F5-4-41	
441/00740 - 2WD-2WS, EXTERNAL COMPONENTS	F5-2-11	
441/00740 - 2WD-2WS, GEAR CHANGE	F5-2-51	
441/00740 - 2WD-2WS, INTERNAL COMPONENTS	F5-2-21	
441/00740 - 2WD-2WS, REVERSER UNIT, 459/10097	F5-2-31	
441/00750 - 2WD-2WS, EXTERNAL COMPONENTS	F5-7-11	G441/00750/3 on
441/00750 - 2WD-2WS, GEAR CHANGE	F5-7-51	G441/00750/3 on
441/00750 - 2WD-2WS, INTERNAL COMPONENTS	F5-7-21	G441/00750/3 on
441/00750 - 2WD-2WS, REVERSER UNIT, 459/10097	F5-7-31	G441/00750/3 on
441/00760 - 4WD-2WS, EXTERNAL COMPONENTS	F5-8-11	G441/00760/3 on
441/00760 - 4WD-2WS, GEAR CHANGE	F5-8-51	G441/00760/3 on
441/00760 - 4WD-2WS, INTERNAL COMPONENTS	F5-8-21	G441/00760/3 on
441/00760 - 4WD-2WS, REVERSER UNIT, 459/10097	F5-8-31	G441/00760/3 on
441/00760 - 4WD-2WS, TRANSMISSION ASSY, SYNCROSHUTTLE	F5-8-1	G441/00760/
441/00760 - 4WD-2WS, 4WD CLUTCH ASSEMBLY, 459/10119	F5-8-41	G441/00760/3
G BRAKES		
BRAKES	**G1**	
BRAKE, PARKING, SYNCROSHUTTLE	G1-3-1	
BRAKE, SYSTEM, REMOTE SERVO	G1-1-21	
BRAKE, SYSTEM, STANDARD, 214E	G1-1-12	M TBA on
	G1-1-11	To M TBA
V JCB444 ENGINE INSTALLATION, COMPONENTS		
ENGINE ASSEMBLYS	**V41**	
ENGINE ASSEMBLY, 320/40031, 82.5BHP, SEE CATALOGUE 9802/2910	V41-4-1	
ENGINE ASSEMBLY, 320/40069, 91BHP	V41-12-1	
ENGINE MOUNTINGS	**V42**	
ENGINE MOUNTINGS, 2WS	V42-1-1	

TITLE	PAGE NUMBER	CHANGE NUMBER
AIR FILTERS	V43	
ILTER, AIR, 2WS & AWS	V43-1-1	
AIR INDUCTION HOSES	V44	
IR INDUCTION HOSES, 2WS URBO	V44-4-1	
EXHAUST SYSTEMS	V45	
ILENCER & EXTENSION, 2WS & AWS TURBO, 91/99BHP	V45-2-1	To M.TBA
	V45-2-3	
SILENCER & EXTENSION, 2WS IAT/ASP	V45-1-1	To M.TBA
	V45-1-2	
RADIATOR FITTINGS & MOUNTINGS	V46	
RADIATOR, FITTINGS & MOUNTINGS, 2WS	V46-1-3	
RADIATOR & HOSES	V48	
RADIATOR & HOSES	V48-7-1	
RADIATOR & HOSES, 2WS BUILDS	V48-3-1	To M907480
	V48-5-1	M907481 on
	V48-8-1	
FRONT END DRIVE	V49	
COOLING FAN & SPACER, 2WS BUILDS	V49-1-1	
FRONT END DRIVE, ACCESSORY, WITH COOLING FAN	V49-3-1	
FRONT END DRIVE, ACCESSORY, WITH COOLING FAN	V49-5-2	
FRONT END DRIVE, ACCESSORY, WITH COOLING FAN & AIR CONDITIONING	V49-4-1	
	V49-6-2	
	V49-8-2	
LOWER IDLER PULLEY, SMALL	V49-20-1	
LOW PRESSURE FUEL SYSTEM	V50	
FUEL PIPES, FUEL TANK TO FILTER	V50-2-1	
FUEL SEDIMENT FILTERS	V51	
FILTER ELEMENT, FUEL SEDIMENT, COLD CLIMATE	V51-4-1	To M908881
FILTER, FUEL SEDIMENT	V51-3-1	To M908881
FILTER, FUEL SEDIMENT, 2WS & AWS	V51-5-1	M908882 on
EXHAUSTER SERVO BRAKES	V52	
EXHAUSTER, SERVO BRAKES	V52-1-1	
OIL LEVEL DIPSTICK & TUBE	V55	
OIL LEVEL DIPSTICK, & TUBE, STANDARD	V55-1-1	
AIR CONDITIONING COMPRESSOR	V56	
COMPRESSOR, AIR CONDITIONING	V56-1-1	
ENGINE OIL DRAIN	V57	
ENGINE OIL DRAIN	V57-1-1	

A

- A1 SHOVELS
- A2 BUCKETS
- A3 ATTACHMENTS

9812/0020

A1-1-1 SHOVEL, G.P 1.0M3, 2253MM (7'4") WIDE

ISSUE

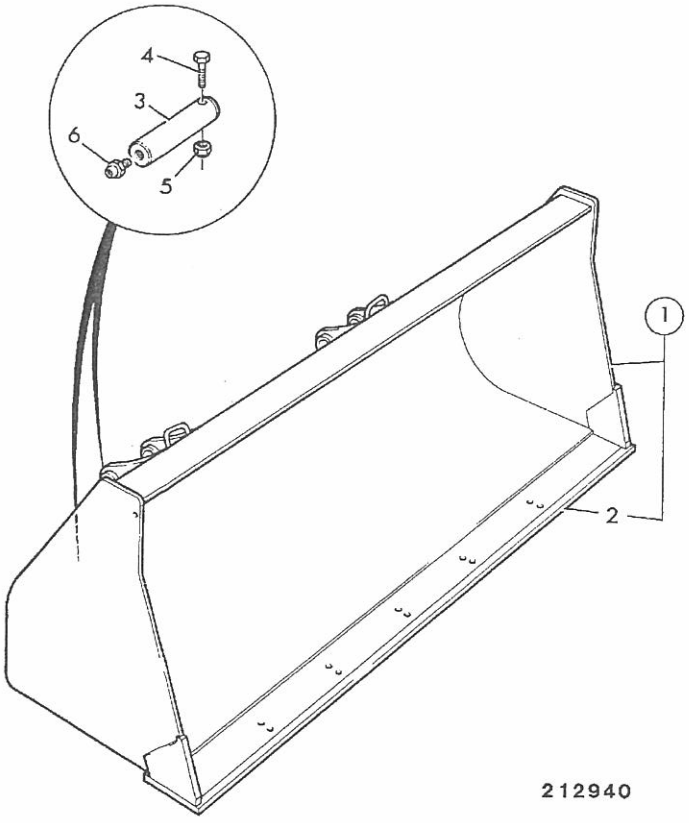

212940

ITEM	PART NO	CHANGE NO	DESCRIPTION	REMARKS	USAGE CODE	QTY
1	125/00365		Shovel, GP 1.0m3, 7'4" wide			1
2	123/04023		:Toeplate			1
3	811/80001		Pin, pivot			4
4	1305/3222Z		Bolt, 3/8"UNF x 3"			4
5	1340/0203Z		Nut			4
6	1450/0002		Nipple, grease, straight, 1/4			4

9812/0020

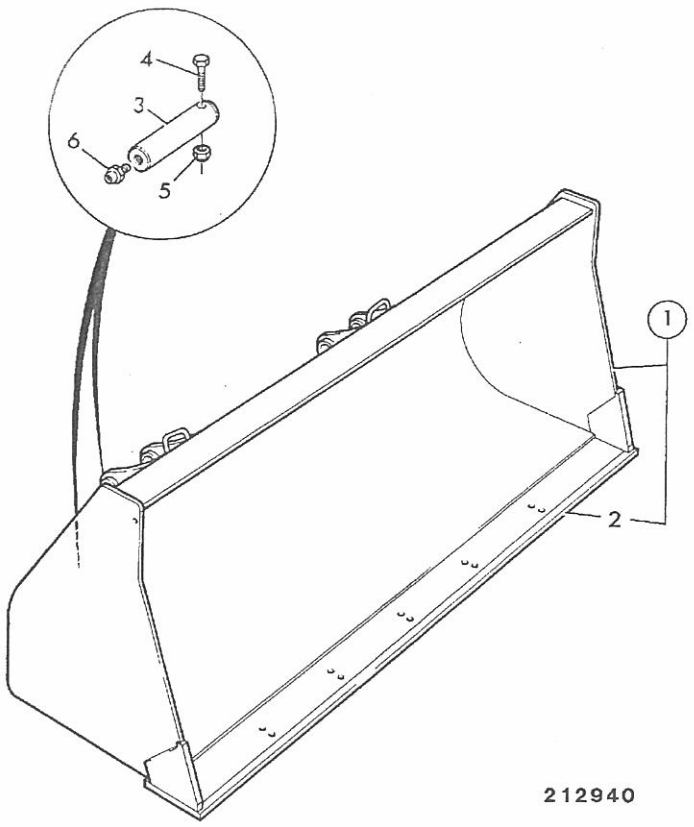

212940

ITEM	PART NO	CHANGE NO	DESCRIPTION	REMARKS	USAGE CODE	QTY
1	125/00474		Shovel, GP 1.0m3 7'4" wide, heavy duty			1
2	123/04256		:Toeplate			1
3	811/80001		Pin, pivot			4
4	1305/3222Z		Bolt, 3/8"UNF x 3"			4
5	1340/0203Z		Nut			4
6	1450/0002		Nipple, grease, straight, 1/4			4

9812/0020U

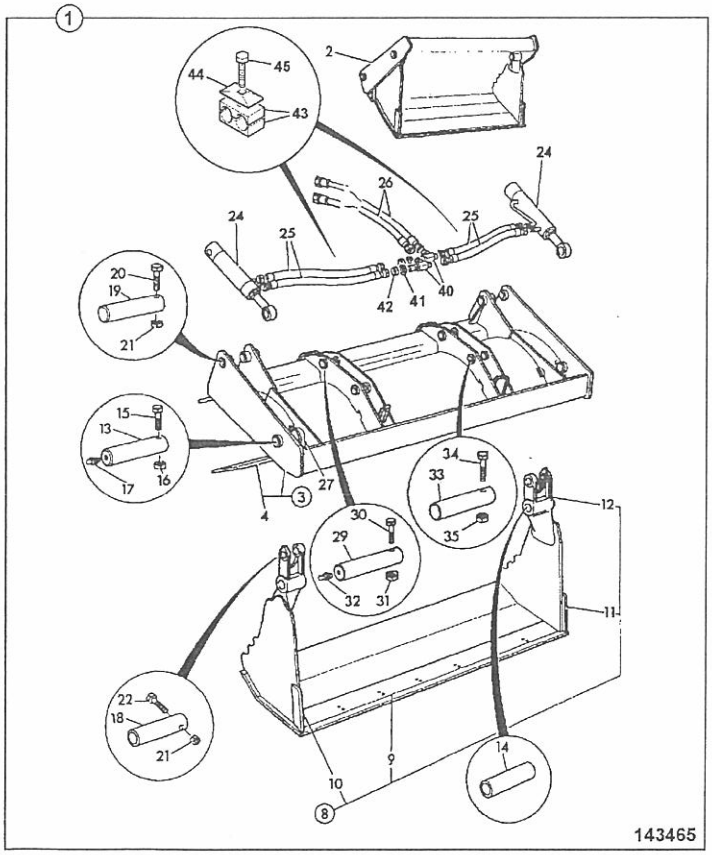

143465

ITEM	PART NO	CHANGE NO	DESCRIPTION	REMARKS	USAGE CODE	QTY
1	128/15366		Shovel, 6 in 1 clam, 1.0m3, 7'4" wide			1
2	NSP		:None serviced part			1
3	335/09513		:Blade, back,1.0m3 7'4"wide			1
3A	123/05919		::Bracket, indicator			1
4	531/38111		::Toeplate, 2253mm (7'4") wide			1
8	125/50200		:Jaw, clamshovel			1
9	123/04145		::Toeplate, 6 in 1 shovel, 7'4" wide			1
10	123/04423		::Sidecutter, right hand			1
11	123/04422		::Sidecutter, left hand			1
12	123/04274		::Pivot, casting, right hand			1
	123/04275		::Pivot, casting, left hand			1
13	811/90469		:Pin, pivot, 44.45x213mm, black			2
13A	811/90469A		:Pin, pivot, 0.10mm o/s			2
13B	811/90469B		:Pin, pivot, 0.25mm o/s			2
14	1208/0023		:Bush			2
15	1305/3226Z		:Bolt			2
16	1340/0204Z		:Nut, philidas thin			2
17	1450/1001		:Nipple, grease, 90deg. angle			2
18	811/90478		:Pin, pivot, black			2
18A	811/90478A		:Pin, pivot,black, 0.1mm oversize			2
18B	811/90478B		:Pin, pivot,black, 0.25mm oversize			2

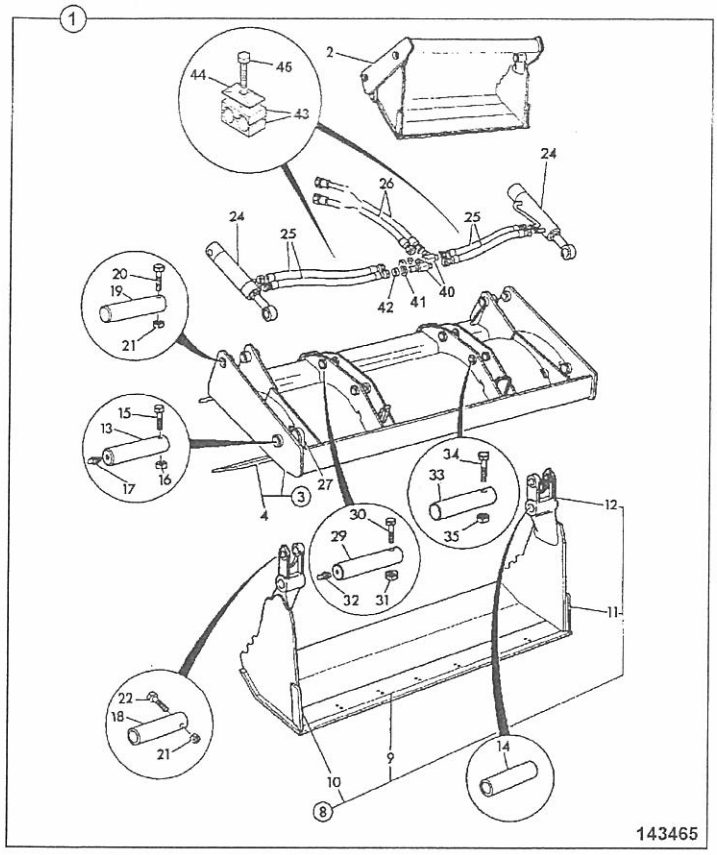

ITEM	PART NO	CHANGE NO	DESCRIPTION	REMARKS	USAGE CODE	QTY
19	811/90485		:Pin, pivot, black			
20	1305/3222Z		:Bolt, 3/8"UNF x 3"			2
21	1340/0203Z		:Nut			
22	1305/3226Z		:Bolt			
24	556/60331		:Ram, clamshovel	For components see index E4-4-2		2
25	612/21600		:Hose			4
26	612/80156		Hose, 3/8 BSP 800mm	not supplied with shovel		
27	817/03807		:Decal, 6in1 clam shovel			
29	811/90483		Pin, pivot, black			
30	1305/3222Z		Bolt, 3/8"UNF x 3"			2
31	1340/0203Z		Nut			4
32	1450/0001		Nipple, grease, straight, 1/8 BSP			
33	811/90483		Pin, pivot, black			
34	1305/3222Z		Bolt, 3/8"UNF x 3"			
35	1340/0203Z		Nut			2
40	816/90801		:Adapter, tee,bulkhead, 3/8"M/M/M			
41	1417/0016Z		:Washer			
42	1356/0203Z		:Nut, backing			
43	821/00347		:Clamp, twin			2
44	821/00169		:Plate, cover			
45	1315/0309Z		:Setscrew, M8x35			

9812/0020U

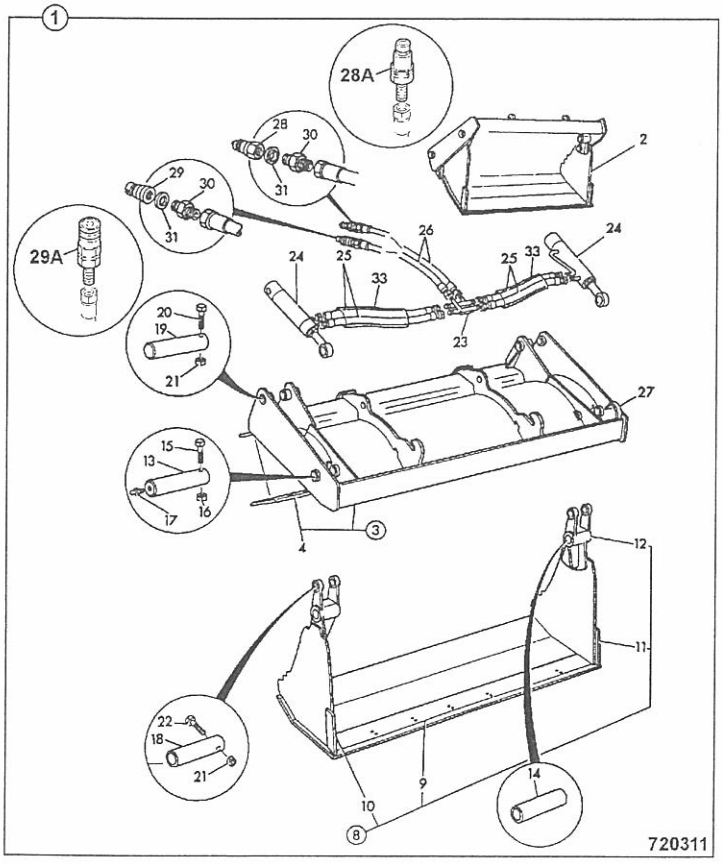

ITEM	PART NO	CHANGE NO	DESCRIPTION	REMARKS	USAGE CODE	QTY
1	126/00581		Shovel, 6 in 1 quickhitch, 2350mm (7'8.5") wide	1.0m3 SAE struck capacity.		1
2	NSP		:None serviced part			1
3	125/00173		:Blade, back quickhitch, 2350mm (7'8.5") wide	1.0m3 SAE struck capacity.		1
4	123/02362		::Toeplate, 2343mm long			1
8	125/50100		:Jaw, clamshovel, 2350mm (7'8.5") wide			1
9	123/04144		::Toeplate, 6 in 1, 7'8" wide			1
10	123/04423		::Sidecutter, right hand			1
11	123/04422		::Sidecutter, left hand			1
12	123/04274		::Pivot, casting, right hand			1
	123/04275		::Pivot, casting, left hand			1
13	811/80007		:Pin, pivot			2
13A	811/80007A		:Pin, pivot, 0.1mm oversize			2
13B	811/80007B		:Pin, pivot, 0.25mm oversize			2
14	1208/0023		:Bush			2
15	1305/3226Z		:Bolt			2
16	1340/0204Z		:Nut, philidas thin			2
17	1450/1001		:Nipple, grease, 90deg. angle			2
18	811/50398		:Pin, pivot			2
18A	811/50398A		:Pin, pivot, 0.1mm oversize			2
18B	811/50398B		:Pin, pivot, 0.25mm oversize			2
19	811/80018		:Pin, pivot			2
20	1305/3222Z		:Bolt, 3/8"UNF x 3"			2
21	1340/0203Z		:Nut			5

9812/0020U

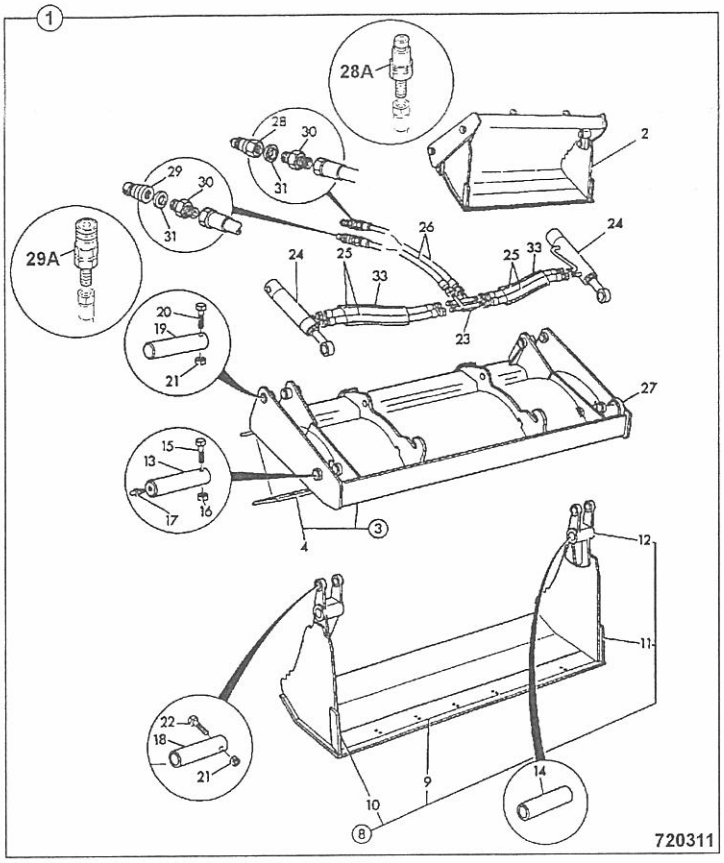

ITEM	PART NO	CHANGE NO	DESCRIPTION	REMARKS	USAGE CODE	QTY
22	1305/3226Z		:Bolt			2
23	123/05538	Superseded	:Pipe, assembly, backblade			1
	335/13748		:Pipe, assembly, backblade			1
24	556/60331		:Ram, clamshovel	For components see index E4		2
25	612/07700		:Hose			4
26	612/00800		:Hose			2
27	817/03808		:Label, indicator			1
28	45/910700		:Coupling, 3/8" BSP male, quick hitch			1
28A	45/920067		:Coupling, 3/8"BSP male, quick release			1
29	45/910600		:Coupling, 3/8" BSP female, quick release			1
29A	45/920066		:Coupling, 3/8"BSP female, quick release			1
30	1604/0003		:Adapter, male/male			2
	1612/0003		Adapter, male/female			2
31	1406/0015		:Washer, seal			2
33	.		'See Remark'	Not fitted		

A

- A1 SHOVELS
- ● A2 BUCKETS
- A3 ATTACHMENTS

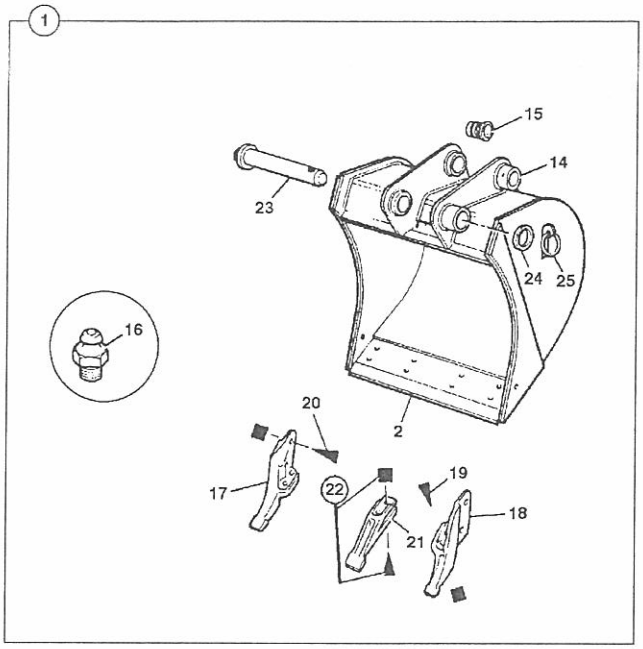

078281

ITEM	PART NO	CHANGE NO	DESCRIPTION	REMARKS	USAGE CODE	QTY
1	980/89993		Bucket, 600mm		G	1
	980/89994		Bucket, 800mm		H	
2	331/49470		:Toeplate, 600mm bucket		G	
	331/49472		:Toeplate, 800mm bucket		H	1
14	NSP		None serviced part			
15	G65/0		:Bush, pivot		G & H	
16	1450/0001		:Nipple, grease, straight, 1/8 BSP		G & H	4
17	531/03208		:Sidecutter, double flange, right hand		G & H	1
18	531/03209		:Sidecutter, double flange, left hand		G & H	1
19	826/00303		:Ploughbolt		G & H	
	1340/0701Z		:Nut		G & H	4
20	1305/0714Z		:Bolt		G & H	
	1340/0701Z		:Nut		G & H	
21	531/03205		:Tooth		G & H	A/R
22	826/00303		:Ploughbolt		G & H	A/
	1340/0701Z		:Nut		G & H	A/
23	911/12400		Pin, pivot		G & H	2
24	823/00470		Washer		G & H	
25	826/00512		Pin, lynch		G & H	

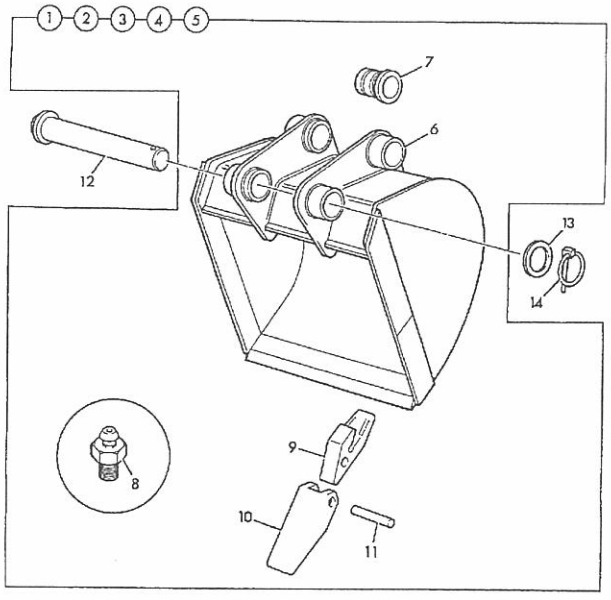

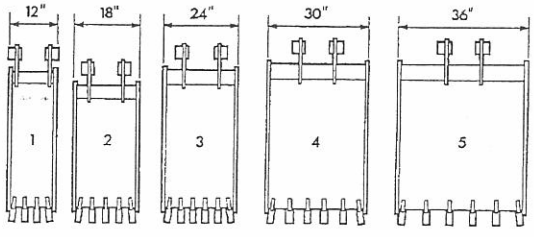

190570

ITEM	PART NO	CHANGE NO	DESCRIPTION	REMARKS	USAGE CODE	QTY
1	980/33100		Bucket, 12"		A	1
2	980/33200		Bucket, 18"		B	
3	980/33300		Bucket, 24"		C	
4	980/33400		Bucket, 30"		D	1
5	980/33500		Bucket, 36"		E	
6	1096/2004		:Boss, pivot		ABCDE	
7	G65/0		:Bush, pivot		ABCDE	4
8	1450/0001		:Nipple, grease, straight, 1/8 BSP		ABCDE	4
9	980/68209		:Adapter, tooth		ABCDE	A/R
10	980/33101		:Tooth, tip		ABCDE	A/
11	980/33603		:Pin, flex		ABCDE	A/R
12	911/12400		Pin, pivot		BCDE	2
	911/16600		Pin, pivot, 305mm		A	
13	823/00470		Washer		ABCDE	2
14	826/00512		Pin, lynch		ABCDE	2

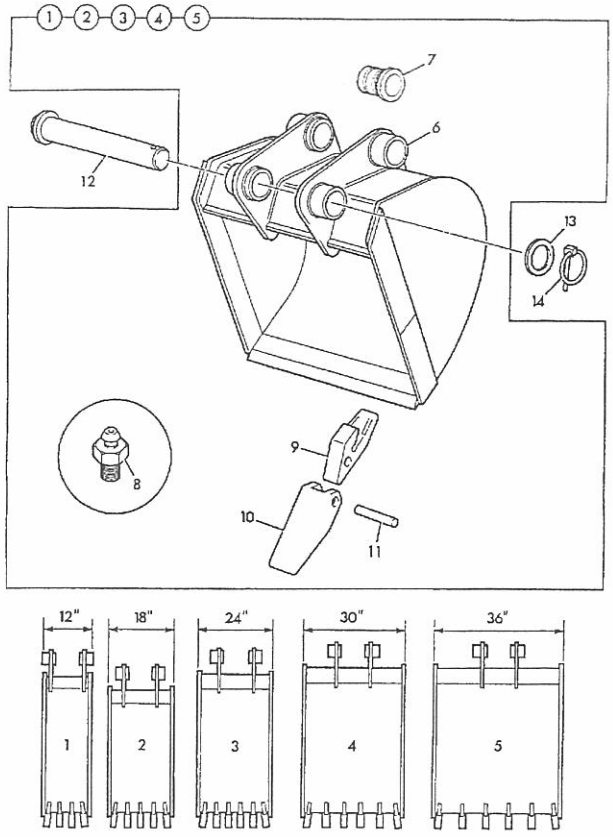

190570

ITEM	PART NO	CHANGE NO	DESCRIPTION	REMARKS	USAGE CODE	QT
1	980/88295		Bucket, 305mm wide		A	
1A	980/84403		:Toeplate, 12"			
2	980/88296		Bucket, 457mm wide		B	
	980/88400		Bucket, HIGH CAPACITY 18", heavy duty			
2A	980/84407		:Toeplate, 18"			
3	980/88297		Bucket, 610mm wide		C	
	980/88299		Bucket, 610mm wide, HD high capacity			
3A	980/84411		:Toeplate, 24"			
4	980/88298		Bucket, 762mm wide		D	
	980/88300		Bucket, 762mm wide, HD high capacity			
4A	980/84415		:Toeplate, 30"			
5	980/88302		Bucket, 914mm wide		E	
	980/88301		Bucket, 914mm wide, HD high capacity			
5A	980/84419		:Toeplate, 36"			
6	1096/2004		:Boss, pivot		ABCDE	
7	G65/0		:Bush, pivot		ABCDE	
8	1450/0001		:Nipple, grease, straight, 1/8 BSP		ABCDE	
9	980/68209		:Adapter, tooth		ABCDE	A/F
10	980/33601		:Tooth, tip-forged		ABCDE	A/F
11	980/33603		:Pin, flex		ABCDE	A/F
12	911/12400		Pin, pivot		ABCDE	2
13	823/00470		Washer		ABCDE	2
14	826/00512		Pin, lynch		ABCDE	2

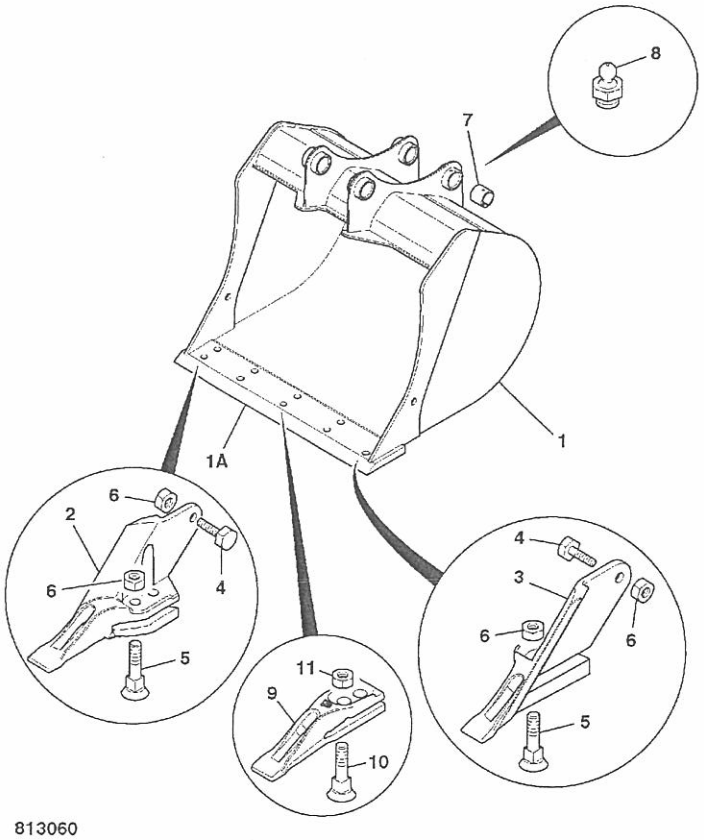

813060

ITEM	PART NO	CHANGE NO	DESCRIPTION	REMARKS	USAGE CODE	QTY
1	980/89983		Bucket, 450mm deep profile		A	1
	980/90010		Bucket, 600mm heavy duty		B	1
	980/90011		Bucket, 800mm heavy duty		C	1
1A	531/23301		:Toeplate, 18" bucket		A	1
	331/49470		:Toeplate, 600mm bucket		B	1
	331/49472		:Toeplate, 800mm bucket		C	1
2	531/03208		:Sidecutter, double flange, right hand		A to C	1
3	531/03209		:Sidecutter, double flange, left hand		A to C	1
4	1305/0714Z		:Bolt		A to C	2
5	826/00303		:Ploughbolt		A to C	4
6	1340/0701Z		:Nut		A to C	6
7	G65/0		:Bush, pivot		A to C	4
8	1450/0001		:Nipple, grease, straight, 1/8 BSP		A to C	4
9	531/03205		:Tooth		A to C	A/R
10	826/00303		:Ploughbolt		A to C	A/R
11	1340/0701Z		:Nut		A to C	A/R

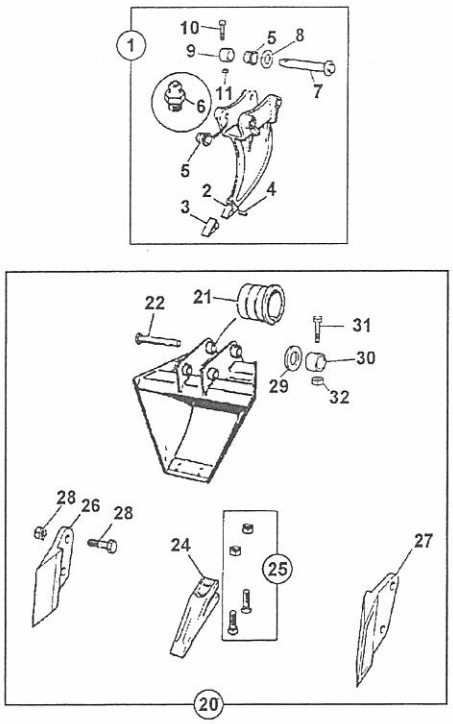

425160

ITEM	PART NO	CHANGE NO	DESCRIPTION	REMARKS	USAGE CODE	QTY
1	529/03000		Attachment, ripper tooth, cast		A	1
2	529/03102		:Holder, tooth,ripper casting	Welded	A	1
3	529/03001		:Tooth, tip		A	1
4	529/03002		:Pin, flex		A	1
5	G65/0		:Bush, pivot		A	
6	1450/0001		:Nipple, grease, straight, 1/8 BSP		A	1
7	911/12400		:Pin, pivot		A	2
8	823/00470		:Washer		A	2
9	123/06668		:Collar		A	
10	1315/3416Z		:Bolt, hex. head		A	2
11	1371/0303Z		:Nut		A	2
20	531/02700		Bucket, taper, 15" to 66"		G	
21	G65/0		:Bush, pivot		G	4
22	911/12400		:Pin, pivot		G	2
24	531/03205		:Tooth		G	A/R
25	826/00303		:Ploughbolt		G	1
	1340/0701Z		:Nut		G	1
26	535/00103		:Sidecutter		G	
27	535/00102		:Sidecutter		G	1
28	990/14900		:Bolt, with nut		G	4
29	823/00470		:Washer		G	2
30	123/06668		:Collar		G	2
31	1315/3416Z		:Bolt, hex. head		G	2
32	1371/0303Z		:Nut		G	2

A

- A1 SHOVELS
- A2 BUCKETS
- ● A3 ATTACHMENTS

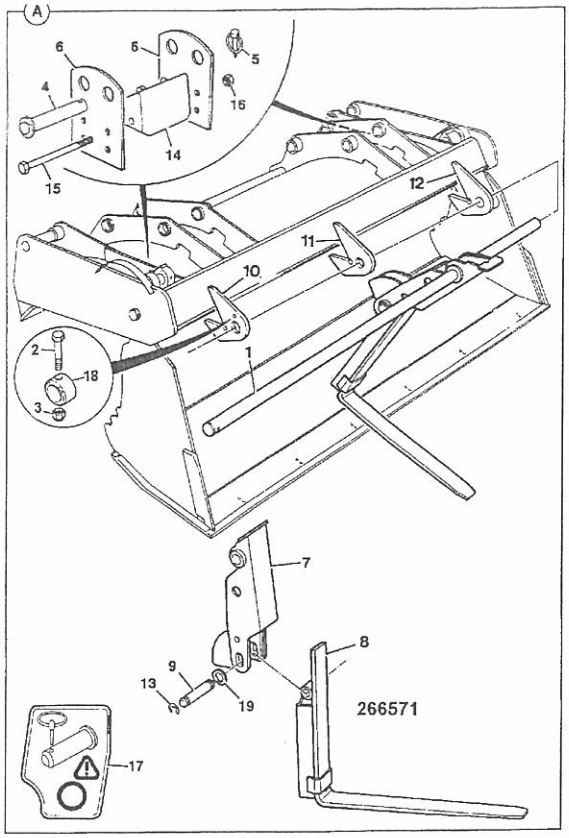

ITEM	PART NO	CHANGE NO	DESCRIPTION	REMARKS	USAGE CODE	QTY
1	123/06667		Pin, pivot			1
2	1315/3416Z		Bolt, hex. head			2
3	1370/0303Z		Nut, lock, M10			2
4	123/00932		Pin, pivot			2
5	826/00600		Pin, linch			2
6	123/06279		Bracket, fork retaining			4
7	125/00412		Carrier, link arm, 1.2mm shovel			2
8	123/04827		Fork			2
9	811/70109		Pin, pivot			2
10	123/04293		Bracket, fork rail support			1
11	123/04294		Bracket, fork rail support			1
12	123/04293		Bracket, fork rail support			1
13	821/00309		Clip, 'E'			4
14	123/06296		Block, rubber pad			2
15	1315/3424Z		Bolt			2
16	1370/0303Z		Nut, lock, M10			2
17	817/04503		Decal			2
18	123/06668		Collar			2
19	823/00569		Spacer			4

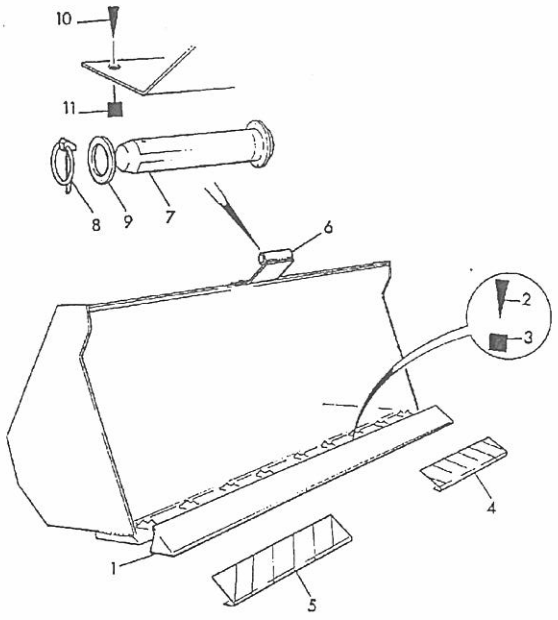

059862

ITEM	PART NO	CHANGE NO	DESCRIPTION	REMARKS	USAGE CODE	QTY
1	120/73800		Guard, tooth			1
2	1305/0414Z		Bolt			2
3	1340/0403Z		Nut	Welded to guard		2
4	817/00054		Label, outline sticker L.H.			1
5	817/00055		Label, outline sticker R.H.			1
6	120/87300		Bracket			1
7	911/12400		Pin, pivot			1
8	826/00512		Pin, lynch			1
9	823/00470		Washer			1
10	1305/0410Z		Bolt, 1/2" x 1.1/2" long			2
11	1340/0403Z		Nut			2

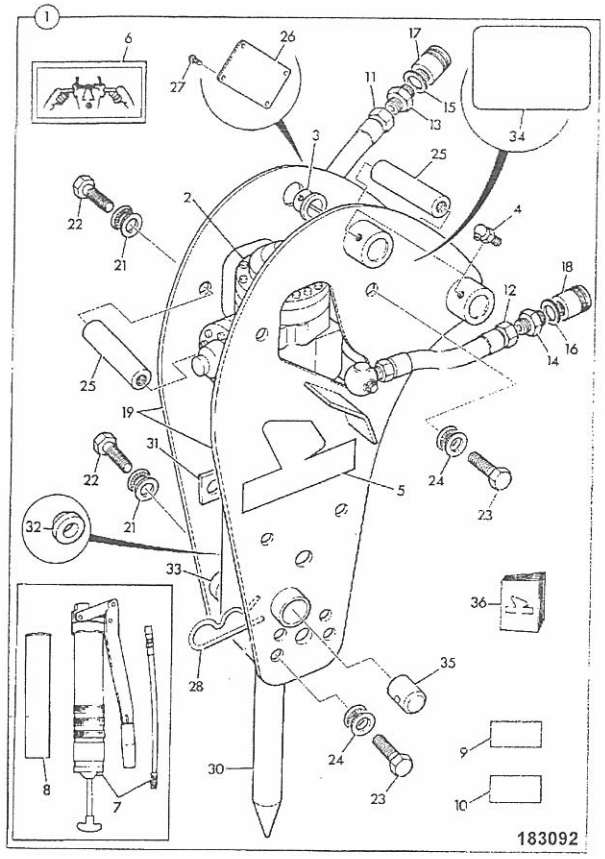

ITEM	PART NO	CHANGE NO	DESCRIPTION	REMARKS	USAGE CODE	QTY
1	980/30100		Breaker, hammermaster, 260 MK2			1
2	903/05600		:Breaker, hammermaster, JCB260	For components see frame A3-3-11		1
3	G65/0		:Bush, pivot			4
4	1450/0001		:Nipple, grease, straight, 1/8 BSP			4
5	993/30802		:Decal, hammermaster 260			2
6	817/00592		:Label			1
7	992/11300		:Tool, grease gun			1
8	4003/1109		:Cartridge, grease			1
9	817/02727		:Decal, warning			1
10	993/50003		:Decal, greasing			1
11	607/00200		:Hose			1
12	607/00200		:Hose			1
13	1604/0006		:Adapter, 3/4" BSP M/M			1
14	1606/0012		:Adapter			1
15	1406/0021		:Seal, bonded 3/4" BSP			1
16	1406/0026		:Washer, seal			1
17	45/904400		:Coupling, male			1
18	45/904600		:Coupling, male 1" BSP, quick release			1
19	903/05621		:Kit-side plates, assembly, left hand/right hand			1
21	903/05622		:Washer, lock			6
22	903/05623		:Bolt			6
23	903/05623		:Bolt			6
24	903/05622		:Washer, lock			6

A3-3-1 BREAKER, ASSEMBLY, HAMMERMASTER 260 MK2, WITH SIDE PLATES ISSUE

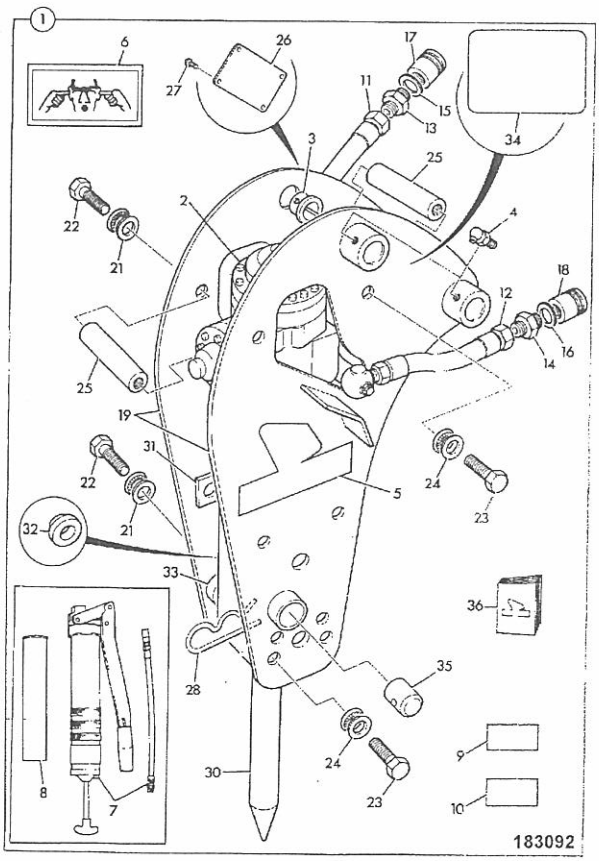

ITEM	PART NO	CHANGE NO	DESCRIPTION	REMARKS	USAGE CODE	QTY
25	903/05624		:Spacer, tube			2
26	N.S.P.		:None serviced part			1
27	N.S.P.		:None serviced part			4
28	903/05408		:Clip, R			1
30	903/03202		:Tool, chisel			1
	903/03201		:Tool, moil point			1
31	903/05627		:Spacer			1
32	980/00901		:Spacer			1
33	903/05628		:Bush, fixing			1
34	817/02837		:Decal, hammermaster 260, caution			1
35	903/03248		:Buffer			1
36	9801/0170		:Manual, SMALL HAMER MANUAL., HM160 TO HM850			1
37	817/19810		Decal, HM260			2

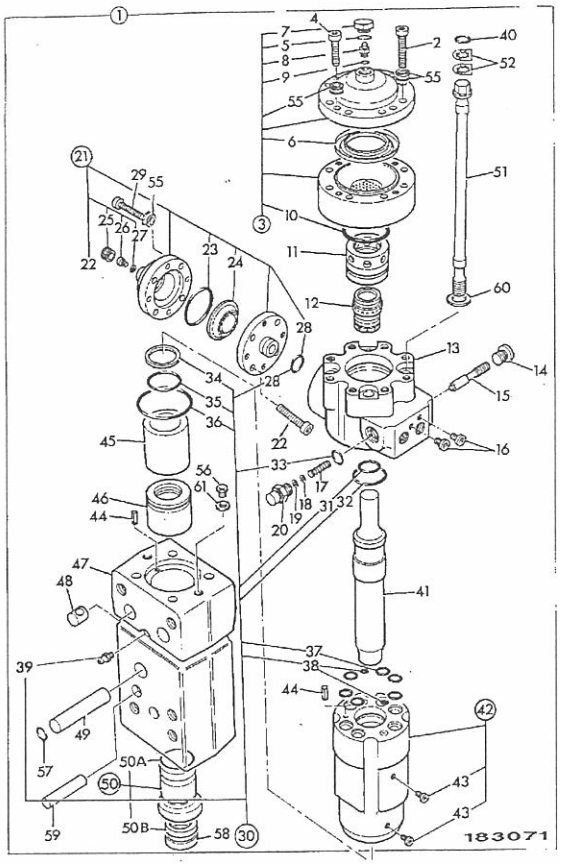

ITEM	PART NO	CHANGE NO	DESCRIPTION	REMARKS	USAGE CODE	QTY
1	903/05600		Breaker, hammermaster, JCB260			1
2	903/05617		:Capscrew			8
3	903/05601		:Accumulator, assembly, low pressure			1
4	903/05618		::Capscrew			4
5	903/04612		::O Ring			1
6	903/05631		::Diaphragm			1
7	903/05450		::Plug			1
8	903/03210		::Plug, filler			1
9	903/03211		::Seal			1
10	903/03212		::O Ring			1
11	903/05612		:Cover, distributor			1
12	903/05611		:Distributor			1
13	903/05603		:Housing, valve			1
14	903/03216		:Plug			1
15	903/03217		:Spool, pressure adjusting			1
16	903/04712		:Plug			2
17	903/03219		:Spring			1
18	903/04739		:Shim, 1.0mm			1
19	903/03221		:Shim, 0.5mm			1
20	903/03222		:Cap, spring			1
21	903/05602		:Accumulator, assembly, high pressure			1
22	903/05630		::Capscrew			4
23	.		::'See Remark'	Not required use only 903/05629.		
24	903/05629		::Diaphragm			1

A3-3-11 BREAKER, DETAILS, HAMMERMASTER 260 MK2 ISSUE 1

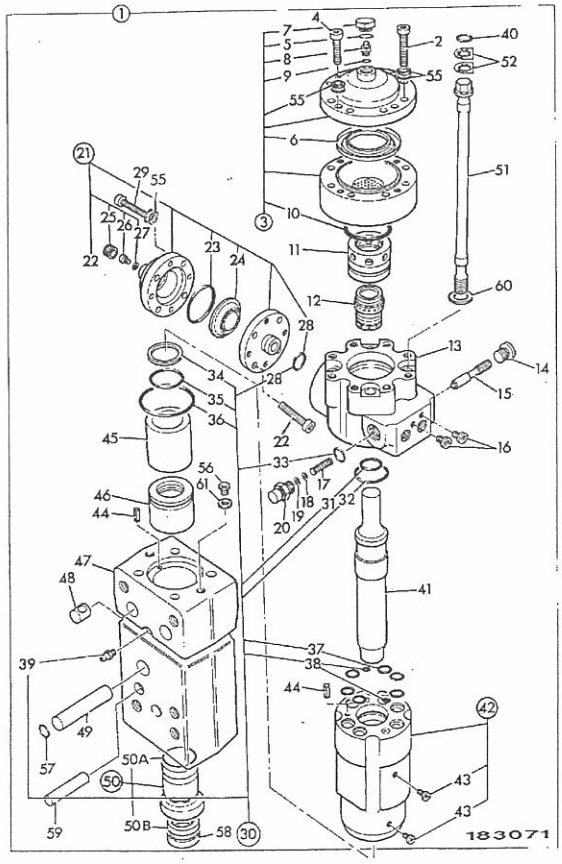

ITEM	PART NO	CHANGE NO	DESCRIPTION	REMARKS	USAGE CODE	QTY
25	903/05450		::Plug			1
26	903/03210		::Plug, filler			1
27	903/03211		::Seal			1
28	903/03226		::O Ring			1
29	903/05618		:Capscrew			4
30	903/05632		:Kit-seal			1
31	903/03228		::Seal			1
32	903/03229		::O Ring			1
33	903/05615		::Seal			1
34	903/03231		::Seal			1
35	903/03232		::Seal, wiper			1
36	903/03233		::Seal			1
37	903/03234		::O Ring			6
38	903/03235		::O Ring			2
39	1450/0002		::Nipple, grease, straight, 1/4			1
40	903/03226		::O Ring			4
41	903/05605		:Piston			1
42	903/05604		:Cylinder	HM260, HM260Q		1
	983/10334		:Cylinder, HM260L & HM260LQ, short stroke			1
43	903/03238		::Plug			2
44	903/04634		:Pin, dowel			2
45	903/05608		:Ring, thrust			1
46	903/05607		:Bush, upper tool			1
47	903/05606		:Head, front			1
48	903/03243		:Nut			4

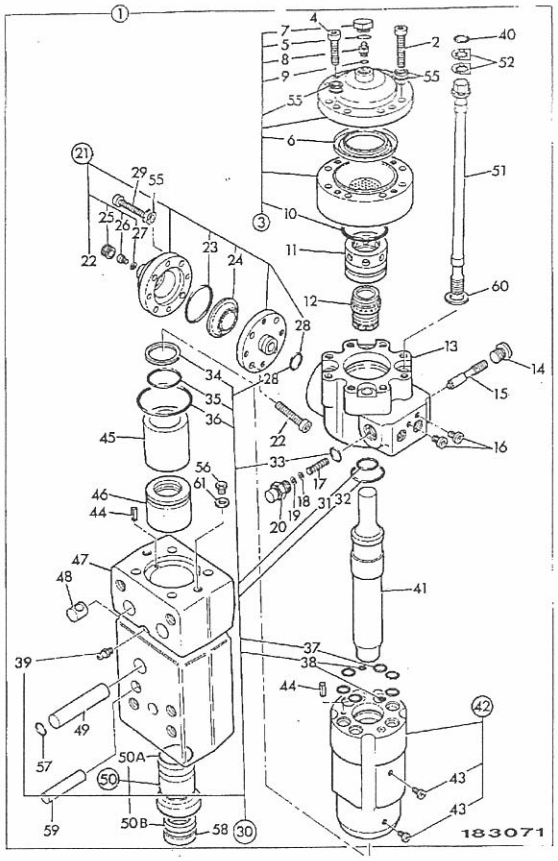

ITEM	PART NO	CHANGE NO	DESCRIPTION	REMARKS	USAGE CODE	QTY
49	903/05609		:Pin, retaining			1
50	903/03254		:Bush, lower tool			1
50A	903/05233		::O Ring			1
50B	903/05633		::Seal, wiper			1
51	903/05610		:Rod, tie			4
52	903/03247		:Plate, lock			8
53	903/05614		:Plug, flange			1
54	903/05616		:O Ring			2
55	903/03249		:Washer, lock			24
56	903/05614	To H260650	:Plug, flange			1
	903/04737		Plug			1
57	903/05616		:O Ring			2
58	903/05619		:Plug, dust			1
59	903/05154		:Pin, split			2
60	903/05620		:Washer			4
61	903/04735		:Washer, lock			1
62	903/03218	To H260650	:Plug			1
	903/05056		:Plug			1

9812/0020U

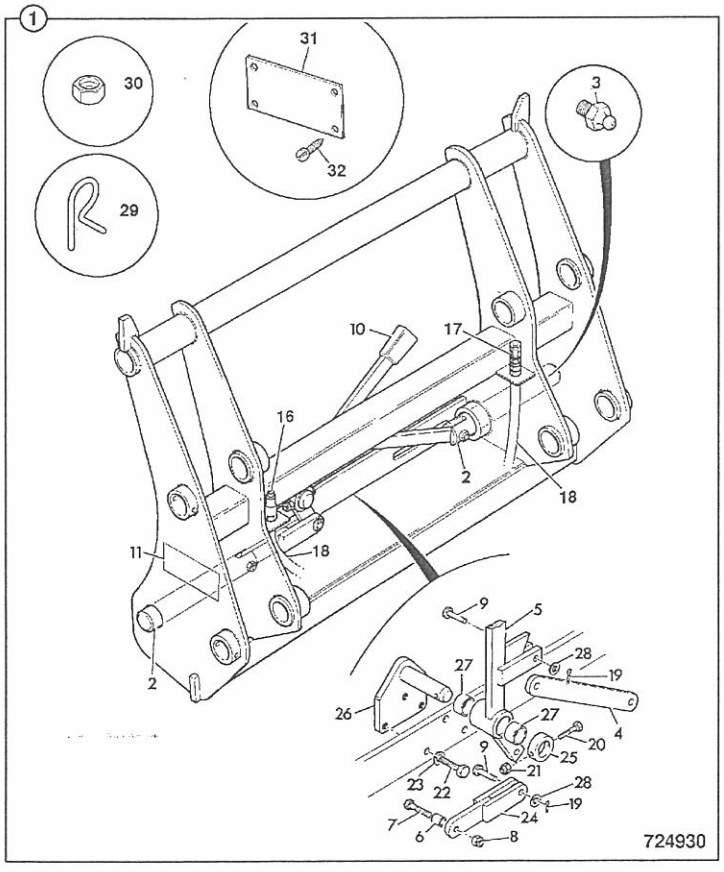

ITEM	PART NO	CHANGE NO	DESCRIPTION	REMARKS	USAGE CODE	QTY
0A	980/89601		Attachment, Quickhitch			1
1	335/06316		:Quickhitch, loader			1
2	980/11401		:Pin, pivot			2
3	1450/0001A		:Nipple, grease			2
4	980/84223		:Link, LONG			1
5	980/86033		:Handle			1
6	980/82200		:Spacer, 22mm long			2
7	1315/3419Z		:Bolt, M10x90mm			2
8	1370/0303Z		:Nut, lock, M10			2
9	980/84225		:Pin			3
10	123/01256		:Handle, grip			1
11	N.S.P		:None serviced part			1
13	45/920067		:Coupling, 3/8"BSP male, quick release			1
14	45/920066		:Coupling, 3/8"BSP female, quick release			1
15	612/07600		:Hose, high pressure, 3/8", L=610			2
16	2103/0709		:Pin, split			2
17	1315/3213Z		:Bolt, M6x55			1
18	1370/0103Z		:Nut, Self lock, M6			1
19	1315/0507Z		:Bolt			3
20	1425/0009Z		:Washer, Spring M12			3
21	980/86035		:Link, short			1
22	980/84224		:Boss			1
23	980/86034		:Bracket			1
24	980/11402		:Bush			1
25	1420/0008Z		:Washer, Plain M10			2

9812/0020U

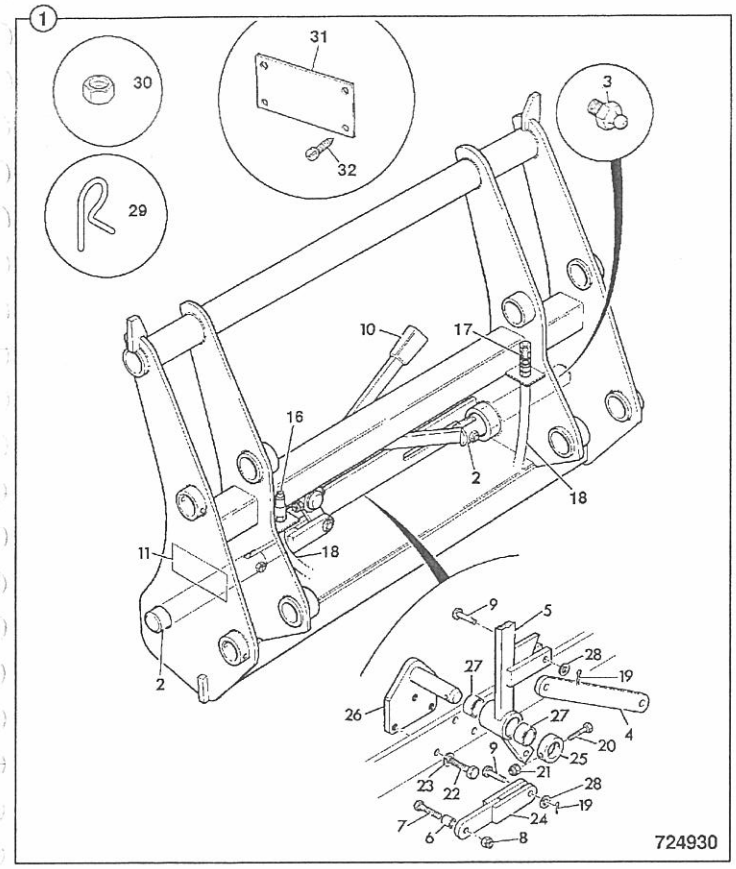

ITEM	PART NO	CHANGE NO	DESCRIPTION	REMARKS	USAGE CODE	QTY
26	826/00479		:Clip, 'R'			
27	1356/0203Z		:Nut, backing			
28	817/19231		:Label, 1.1M3 Max.			
29	826/10511		:Fastener			

9812/0020L

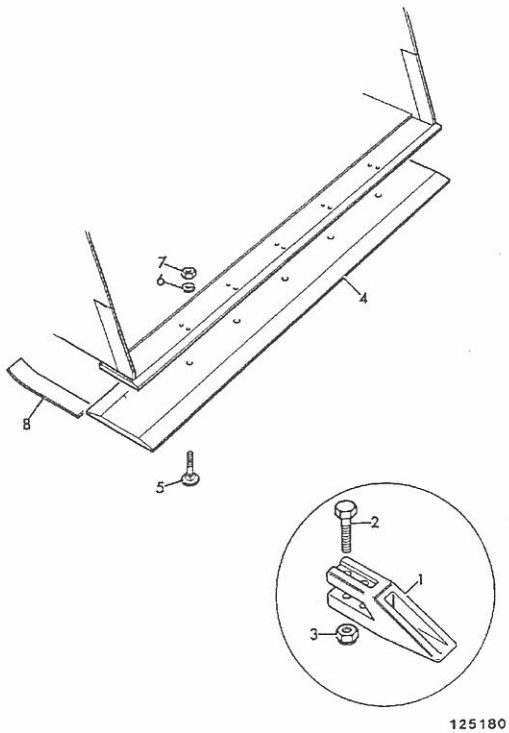

ITEM	PART NO	CHANGE NO	DESCRIPTION	REMARKS	USAGE CODE	QTY
1	531/03205		Tooth			A/R
2	826/00303		Ploughbolt	2 per tooth		A/R
3	1340/0701Z		Nut			A/R
4	993/99391		Toeplate, 8 hole, bolt on type, 295mm x 2235mm long	double cutting edge		1
	993/99189		Toeplate, 8 hole, bolt on type, 295mm x 2350mm long	double cutting edge		1
	990/69901		Toeplate, 2438mm (8'0") wide	double cutting edge		1
5	826/00217		Ploughbolt			A/R
6	1416/0011		Washer			A/R
7	1340/0701Z		Nut			A/R

9812/0020U

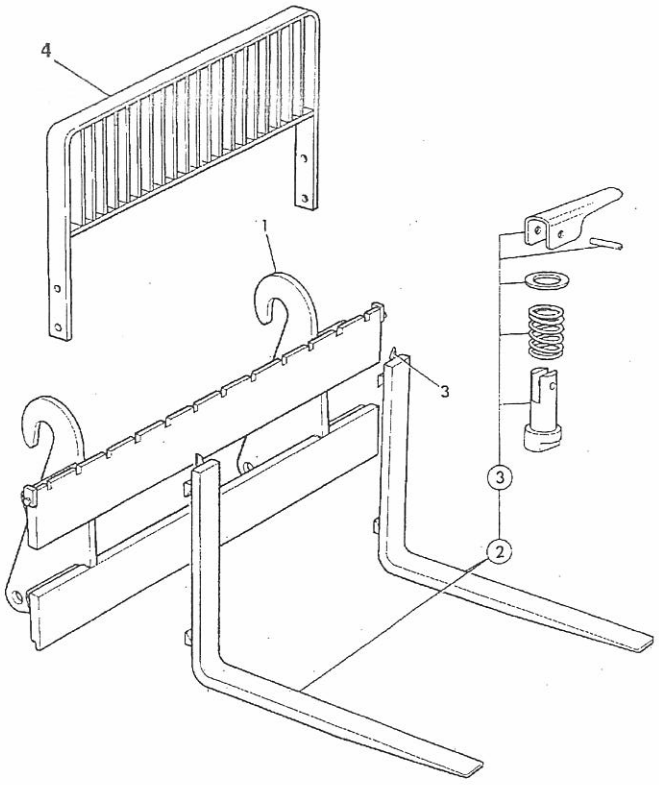

251310

ITEM	PART NO	CHANGE NO	DESCRIPTION	REMARKS	USAGE CODE	QTY
1	980/07200		Frame, fork			1
2	123/01374		Fork, 2T S.W.L.			1PR
3	993/51100		Kit-fork retention, Class 2 fork			-
4	980/14200		Guard, load			-

9812/0020U

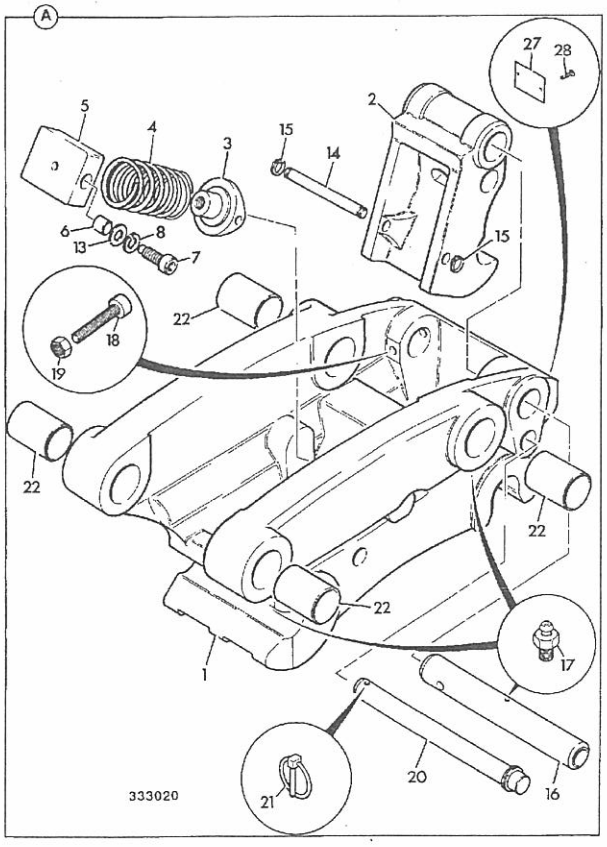

ITEM	PART NO	CHANGE NO	DESCRIPTION	REMARKS	USAGE CODE	QTY
0A	980/88833		Kit-quickhitch, mechanical			1
1	128/10412		:Body, c/w bearings, quickhitch			1
2	123/07757		:Latch			1
3	123/07772		:Pivot, quickhitch			1
4	814/10143		:Spring, off-pins quichhitch			1
5	128/10413		:Block, pivot c/w bearings			1
6	831/00137		::Bush			2
7	123/07761		:Bolt, trunnion			2
8	1425/0014Z		:Washer			2
13	1420/0012Z		:Washer			2
14	123/07762		:Pin, pivot			1
15	826/00614		:Circlip			2
16	811/50578		:Pin, pivot			1
17	1450/0001		:Nipple, grease, straight, 1/8 BSP			5
18	1391/3419Z		:Capscrew			1
19	1370/0303Z		:Nut, lock, M10			1
20	123/07763		:Pin, lock			1
21	826/00600		:Pin, linch			1
22	809/00192		:Bearing			4
27	123/09001		:Plate, SWL 1ton			1
28	826/00562		:Screw, hammer drive			2

9812/0020U

B

- B1 BODYWORK/FRAME
- B2 CAB
- B3 LOADER, FRONT END
- B4 BACKHOE
- B5 REFURBISHMENTS

9812/0020L

B1-1-51 CHASSIS CENTREMOUNT, 2WS

ISSUE 1

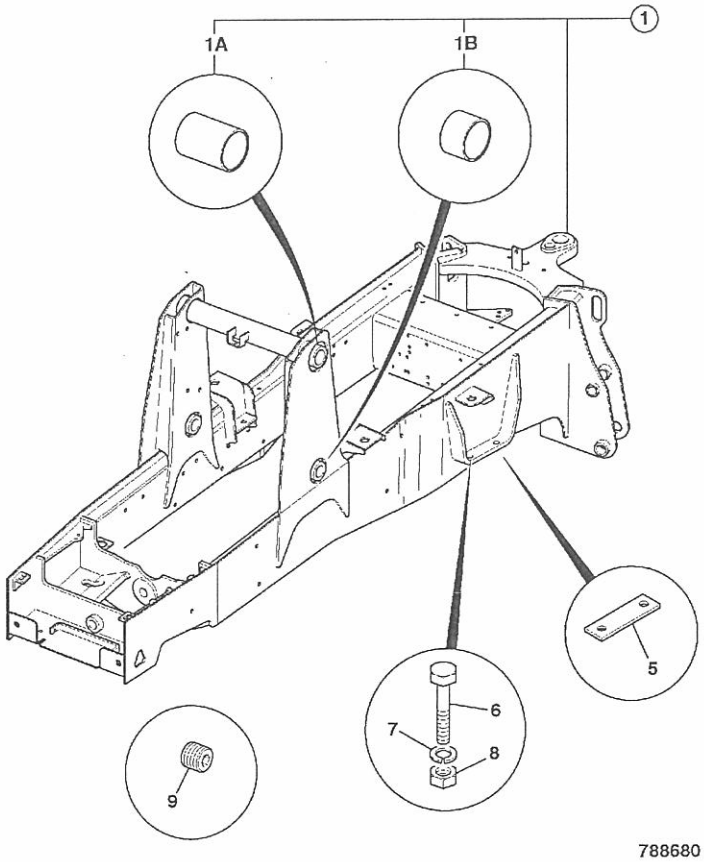

788680

ITEM	PART NO	CHANGE NO	DESCRIPTION	REMARKS	USAGE CODE	QTY
1	128/15678		Chassis, 2WS centremount			1
1A	809/00102		:Bearing, liner			2
1B	809/00093		:Bearing, liner			2
5	123/06350		Spacer, rear axle, 25mm	use with 16" Titan OR 20" front wheels	A	2
	331/17737		Spacer, rear axle, 20mm	use with 826/01712 for 17.5" front wheels	B	2
6	826/11353		Bolt, 1"unf X 8" long			4
	826/01712		Bolt, 1"unf X 9" long	16" Titan or 20" front wheels	A	4
	826/11352		Bolt, 1"unf X 9 1/2" long	17.5" front wheels	B	4
7	826/01714		Nut			4
8	823/00578		Washer			4
9	835/10026		Plug, plastic			17

B1-2-10 TANK, HYDRAULIC

ISSUE

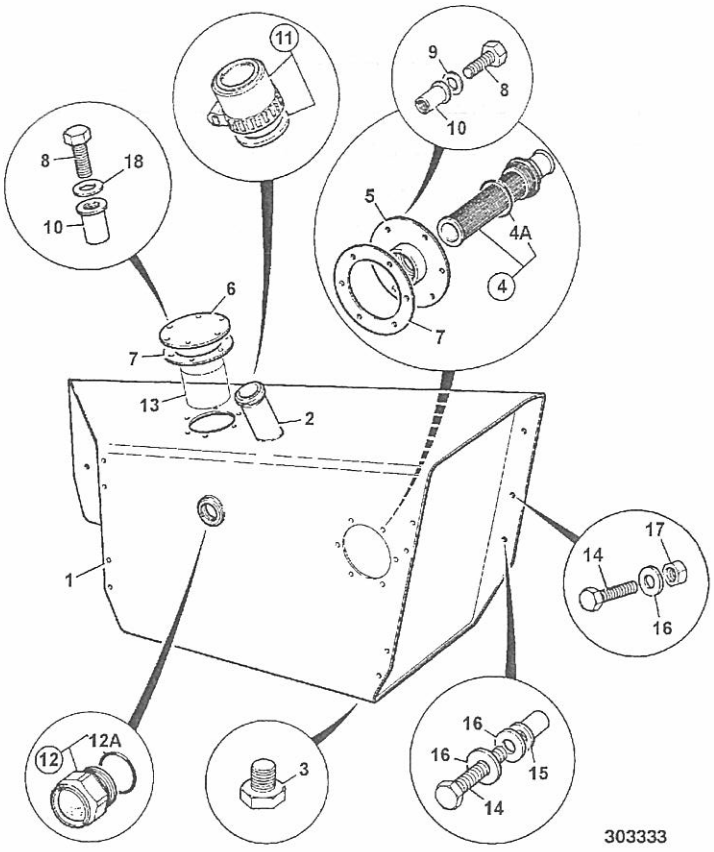

303333

ITEM	PART NO	CHANGE NO	DESCRIPTION	REMARKS	USAGE CODE	QTY
1	128/13783		Tank, hydraulic 214e			1
2	NSP		:None serviced part	Replace tank		1
3	32/925390		:Plug, drain			
3A	2401/0510		:O Ring			1
4	32/920300		:Element, suction			1
4A	32/920301		:O Ring			
5	125/00430		:Cover			1
6	123/06717		:Cover, plate			1
7	813/00466	To M TBA	:Gasket		A	
	813/10186		:Gasket, hyd filter cover		B	1
8	1315/0307Z		:Screw, M8 X 25			12
9	1420/0007Z		:Washer, plain, M8			
10	826/10381		:Rivet, nut M8 closed			12
11	32/925421		:Cap, filler/breather			1
11A	123/04056		:Seal, cap			
12	123/08053		:Gauge, sight			1
12A	25/700013		::O Ring			1
13	.		:'See Remark'	Filter see frame E3-7-1		
14	1315/0512Z		Bolt, M12 x 50mm			6
15	826/01717		Nut, rivet, M12			4
16	823/00589		Washer			8
17	1370/0403Z		Nut, M12			2
18	1420/0007Z	To M TBA	:Washer, plain, M8		A	6
	823/10874		:Washer, sealing,M8		B	6

9812/0020L

B1-3-10 TANK, DIESEL FUEL, 130 LITRES

ISSUE 1

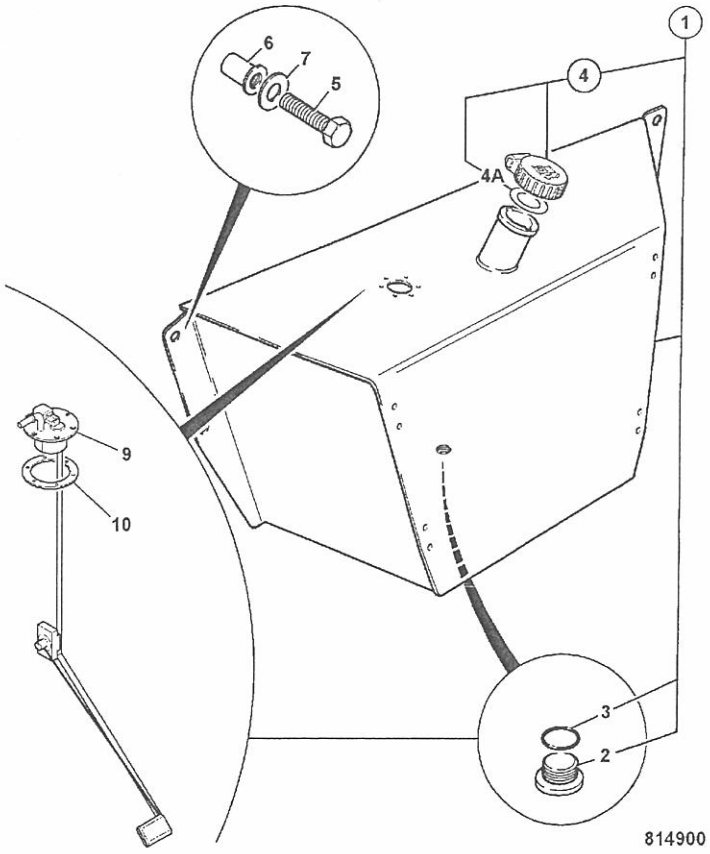

814900

ITEM	PART NO	CHANGE NO	DESCRIPTION	REMARKS	USAGE CODE	QTY
1	128/15230		Tank, diesel, 130 litres			1
2	32/925390		:Plug, drain			1
3	2401/0510		::O Ring			1
4	331/45908	To M TBA	:Cap, filler, diesel, lockable	For key use 701/45501		1
	123/05892		:Cap, filler, lockable, supplied without key	For key use 701/45501		1
4A	904/20333	To M TBA	:Seal, fuel cap			1
	123/06343		::Seal			1
5	1315/0512Z		Bolt, M12 x 50mm			4
6	826/01717		Nut, rivet, M12			4
7	823/00589		Washer			4
8	826/00520		:Screw			6
9	716/27600		:Gauge, fuel sender unit			1
10	103/77101		:Gasket			1

9812/0020C

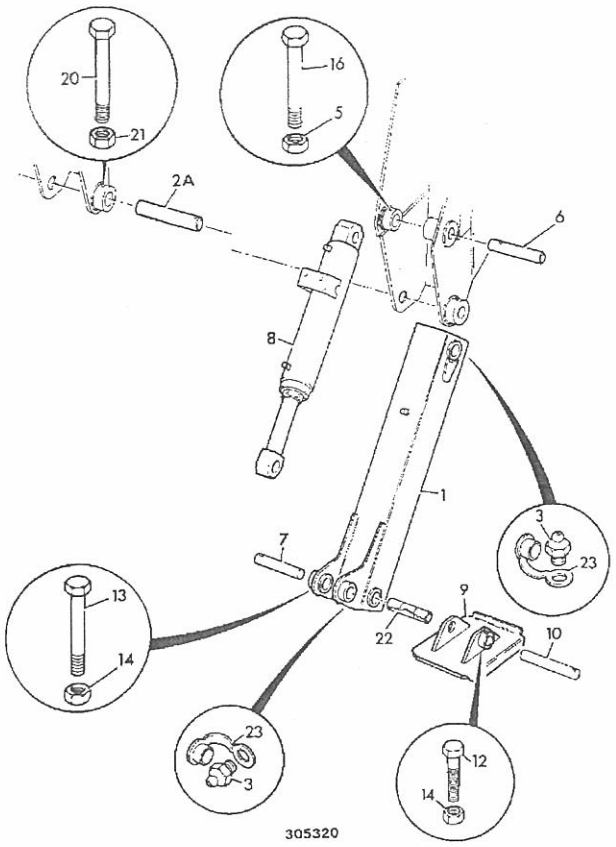

ITEM	PART NO	CHANGE NO	DESCRIPTION	REMARKS	USAGE CODE	QTY
1	335/08204		Leg, stabiliser, centre mount	U.K. sourced		2
	335/05813		Leg, stabiliser,cntrmount, Savannah only	U.S.A. sourced		2
2A	811/50536		Pin, pivot			2
	811/50536A		Pin, pivot, plus 0.005"			2
	811/50536B		Pin, pivot, plus 0.010"			2
3	1450/1002		Nipple, grease, 1/4" BSP 90deg.			2
5	1370/0403Z		Nut, M12			4
6	811/50565		Pin, pivot			2
7	811/90339		Pin, black version of, 1019/2019			2
8	557/60073		Ram, stabiliser c. mount, 90 X 50			2
9	125/98000		Foot, dirt			2
10	811/50557		Pin, pivot			2
12	1305/3224Z		Bolt			2
13	1305/3226Z		Bolt			2
14	1340/0203Z		Nut			6
16	1315/3518Z		Bolt, M12 x 80mm			2
20	1315/3520Z		Bolt, M12 x 100mm			2
21	1370/0403Z		Nut, M12			2
23	835/00017		Cap, grease nipple			8

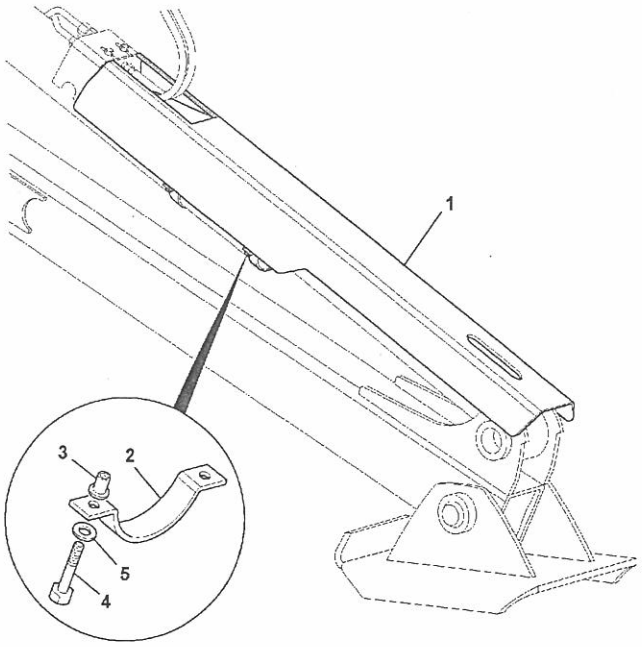

ITEM	PART NO	CHANGE NO	DESCRIPTION	REMARKS	USAGE CODE	QTY
1	335/11063		Guard, stabiliser ram			2
2	331/59515		Clamp, stabiliser guard			4
3	826/01681		Nut, rivet			8
4	1315/3510Z		Bolt			8
5	1420/0009Z		Washer, Plain M12			8

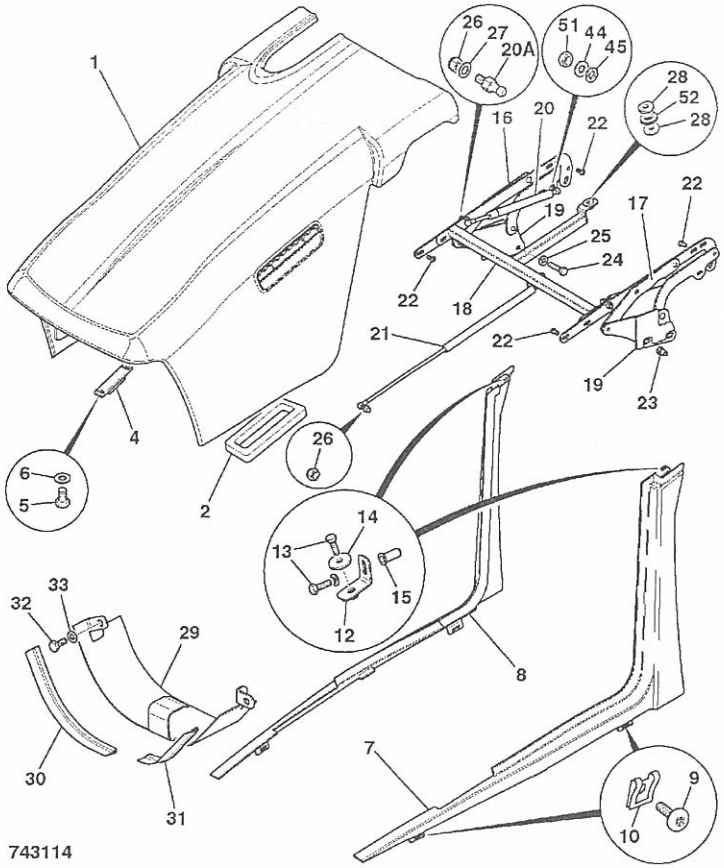

ITEM	PART NO	CHANGE NO	DESCRIPTION	REMARKS	USAGE CODE	QTY
1	346/90001	Superseded	Bonnet			1
	346/90019		Bonnet			
	346/00372		Bonnet, sunbelt green	Sunbelt green		A/R
1A	346/00071		:Grille, side, air induction			1
1B	826/11263		:Screw, self tapper	holds item 1A to item 1		
2	926/51401		Gasket, air intake			1
4	*331/26981		Catch, bonnet			1
5	1315/0301Z		Screw, hex head, M8 X 12			2
6	1420/0007Z		Washer, plain, M8			2
7	346/00064		Rail, bonnet LH, 2ws			1
	346/00375		Rail, bonnet LH,2ws, sunbelt green	Sunbelt green		A/R
8	346/00065		Rail, bonnet RH, 2ws			1
	346/00376		Rail, bonnet RH,2ws, sunbelt green	Sunbelt green		A/R
9	826/01768		Screw, M6x25mm			6
10	826/01465		Retainer, "U" nut			6
12	331/47298		Bracket, upper rail			2
13	1315/0205Z		Bolt			4
14	823/00030		Washer, 25mm o/dia, 7mm i/dia			1
15	826/01810		Nut, rivet, M6 open end, for 5.5 to 8mm plt			4
16	128/14553		Hinge, bonnet RH			1
17	128/14552		Hinge, bonnet LH			1
18	335/07952		Hinge, torsion beam			1
19	*331/45146	To April 06	Mounting, bonnet hinge			2

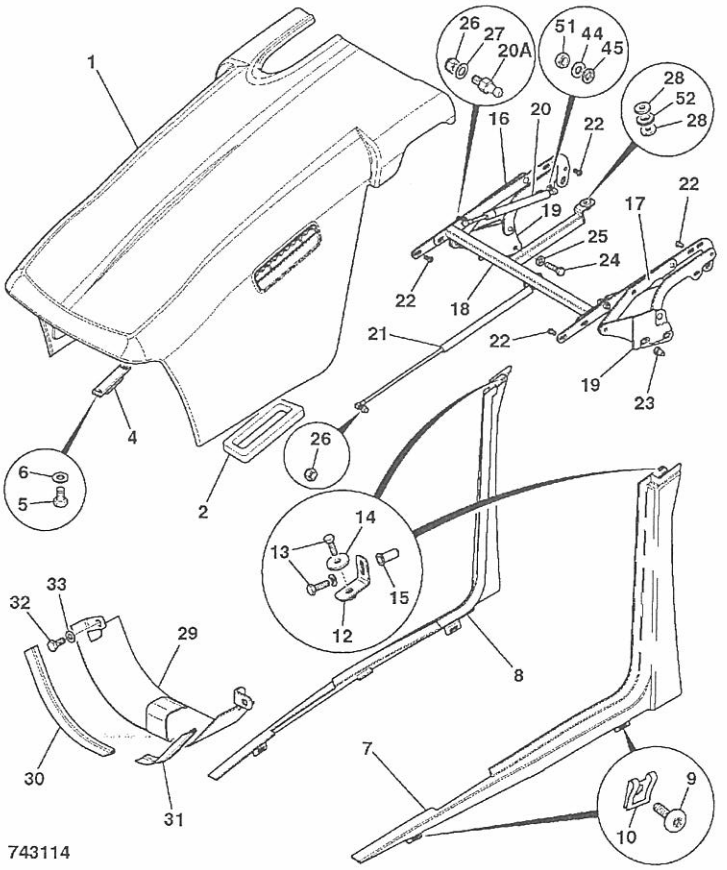

ITEM	PART NO	CHANGE NO	DESCRIPTION	REMARKS	USAGE CODE	QTY
20	*331/60675	Superseded	Strut, gas 244-390	see item 20A		2
	331/66727		Strut, gas 235-390			2
20A	*331/60391		Ball, fitting 10 X M8			2
21	331/47026	Superseded	Strut, gas 335-585			1
	331/66785		Strut, gas 585x327			1
22	826/11284		Screw, M8x16, button head			4
23	826/01249		Nut, M10 rivet			2
24	1315/0409Z		Screw, hex. head			4
25	1420/0008Z		Washer, Plain M10			4
26	1371/0203Z		Nut			2
27	1420/0007Z		Washer, plain, M8			2
28	823/10639		Washer, 9x26x5			2
29	.		'See Remark'	only used on 4WS		
44	1418/0011Z		Washer, lock			2
45	1370/0202Z		Nut, M8			4
51	1370/0201Z		Nut, M8			2
52	2410/0304		Grommet			2



ITEM	PART NO	CHANGE NO	DESCRIPTION	REMARKS	USAGE CODE	QTY
1	346/90019		Bonnet			1
	346/00372		Bonnet, sunbelt green	Sunbelt green		1
1A	346/00071		:Grille, side, air induction			1
1B	826/11263		:Screw, self tapper	to hold 1A to 1		2
2	926/51401		Gasket, air intake			1
4	331/26981		Catch, bonnet			1
5	1315/0301Z		Screw, hex head, M8 X 12			2
6	1420/0007Z		Washer, plain, M8			2
7A	346/00565		Rail, bonnet lower LH, yellow			1
	128/17750		Rail, bonnet lower LH, Sunbelt green			1
7B	346/00563		Rail, bonnet upper LH, yellow			1
	128/17742		Rail, bonnet upper LH, Sunbelt green			1
8A	346/00566		Rail, bonnet lower RH, yellow			1
	128/17752		Rail, bonnet lower RH, Sunbelt green			1
8B	346/00564		Rail, bonnet upper RH, yellow			1
	128/17746		Rail, bonnet upper RH, Sunbelt green			1
9	826/11692		Screw, Torx M6x35			4
10	826/01465		Retainer, "U" nut			4
12	1420/0006Z		Washer, M6			2
13	1315/0207Z		Screw, M6 x 25mm long			2
15	826/01810		Nut, rivet, M6 open end, for 5.5 to 8mm plt			2

B1-5-2 BONNET ASSEMBLY, 2WS ISSUE 1



ITEM	PART NO	CHANGE NO	DESCRIPTION	REMARKS	USAGE CODE	QTY
16	128/14553		Hinge, bonnet RH			1
17	128/14552		Hinge, bonnet LH			1
18	335/07952		Hinge, torsion beam			1
20	331/66727		Strut, gas 235-390			2
20A	331/60391		Ball, fitting 10 X M8			1
21	331/66785		Strut, gas 585x327			1
22	826/11284		Screw, M8x16, button head			8
23	826/01249		Nut, M10 rivet			4
24	1315/0409Z		Screw, hex. head			4
25	1420/0008Z		Washer, Plain M10			4
26	1371/0203Z		Nut			3
27	1420/0007Z		Washer, plain, M8			4
28	823/10639		Washer, 9x26x5			2
44	1418/0011Z		Washer, lock			2
45	1370/0202Z		Nut, M8			4
51	1370/0201Z		Nut, M8			2
52	2410/0304		Grommet			1

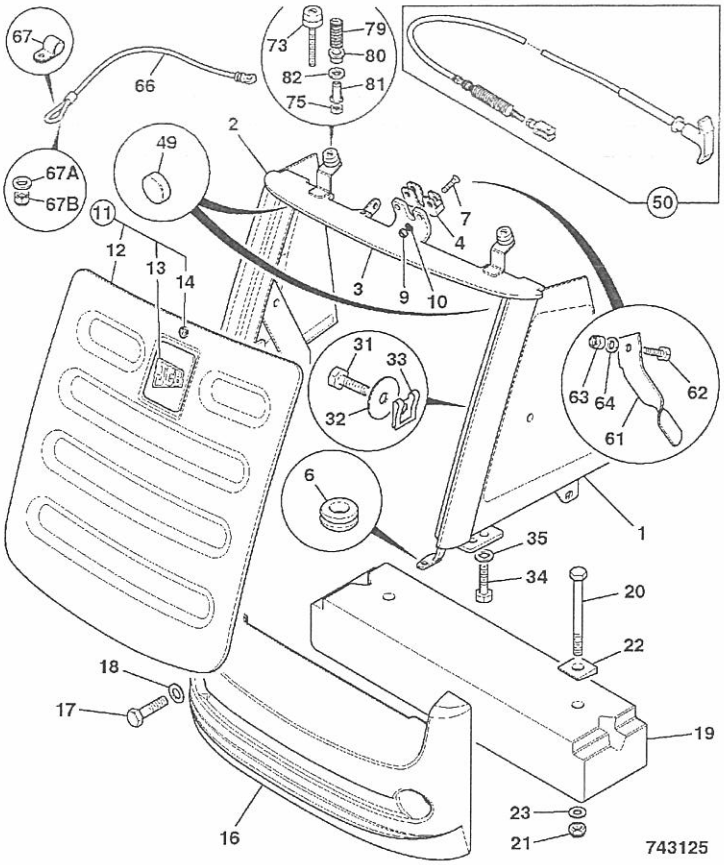

ITEM	PART NO	CHANGE NO	DESCRIPTION	REMARKS	USAGE CODE	QTY
1	335/08369		Grille, side LH, 2WS			1
2	335/08370		Grille, side,RH, 2WS			1
3	335/09817	To M TBA	Grille, housing, 2WS			1
	335/12435		Grille, housing,2WS			1
4	331/27126		Lock, bonnet			1
6	2410/0304		Grommet			1
7	826/01814		Screw, M8x35 countersunk			2
9	1370/0203Z		Nut, self lock, M8			2
10	1420/0007Z		Washer, plain, M8			2
11	N.S.P.		None serviced part			
12	335/08180		Grille, front, black			1
13	817/19661		Decal, JCB logo, 100x100			1
14	*162/03434		Lock, Cover			
16	331/46249		Bumper, front 46kg	Standard	A	1
	331/46250		Bumper, front 100kg		A	1
	331/46251		Bumper, front 180kg		B	
17	1315/3816Z		Bolt, M20 x 70		A	2
	1315/3820Z		Bolt		B	2
18	1420/0012Z		Washer			2
19	331/34478		Counterweight, 75 Kg	If fitted	B	1
	331/34480		Counterweight, 156 Kg	If fitted	B	1
20	1315/3824Z		Bolt, M20 x 140lg	To fit item 19		2
21	1370/0703Z		Nut, M20	To fit item 19		2
22	823/10429		Washer, taper M20	To fit item 19		2
23	1420/0012Z		Washer	To fit item 19		2
31	1315/0205Z		Bolt			2

B1-6-11 GRILLE, FRONT, 2WS ISSUE

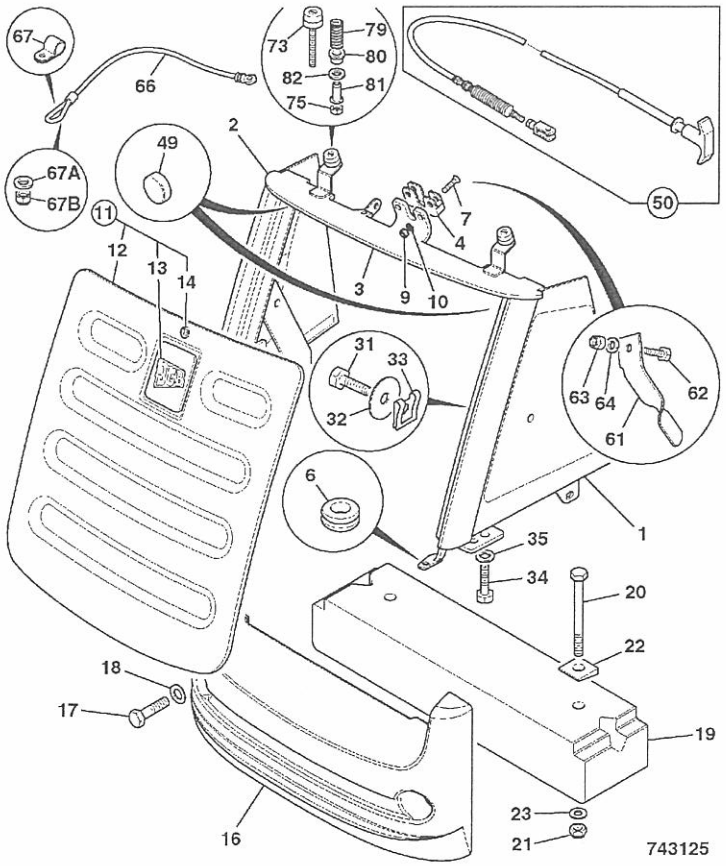

ITEM	PART NO	CHANGE NO	DESCRIPTION	REMARKS	USAGE CODE	QTY
32	*1412/0001Z		Washer			2
33	826/11392		Nut, M6 clip on			2
34	1315/0408Z		Bolt, M10x30			4
35	1420/0008Z		Washer, Plain M10			4
49	926/22100		Spacer, block			2
50	910/60199		Cable, bonnet release	Cab builds only		1
61	331/48761		Lever, bonnet release	Canopy builds only		1
62	1315/0205Z		Bolt	Canopy builds only#		1
63	1370/0103Z		Nut, Self lock, M6	Canopy builds only		1
64	1420/0006Z		Washer, M6	Canopy builds only		1
66	331/47156		Wire, bonnet pull down, 1800mm long			
67	821/10227		Clip, P			1
67A	1412/0002Z		Washer			1
67B	1370/0203Z		Nut, self lock, M8			1
73	835/10129		Buffer, M8x65			1
75	*1370/0203Z		Nut, self lock, M8			2
79	814/10201	Superseded	Spring, compression			2
	814/10213		Spring, compression			1
80	829/31270		Bush			2
81	826/01627		Nut, rivet			2
82	1411/0004Z		Washer			1

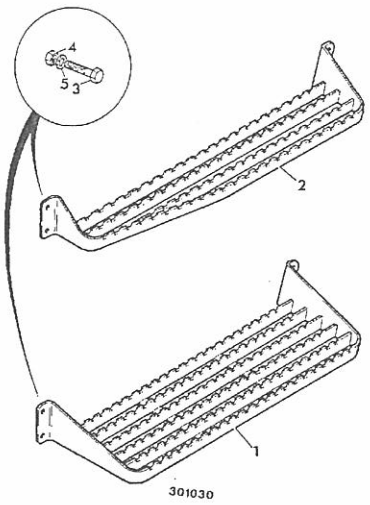

ITEM	PART NO	CHANGE NO	DESCRIPTION	REMARKS	USAGE CODE	QTY
1	331/27895		Step, lower, 214e			1
2	331/27897		Step, upper, 214e			1
3	1315/0405Z		Screw, M10 x 20mm long			8
4	1370/0303Z		Nut, lock, M10			8
5	1420/0008Z		Washer, Plain M10			8

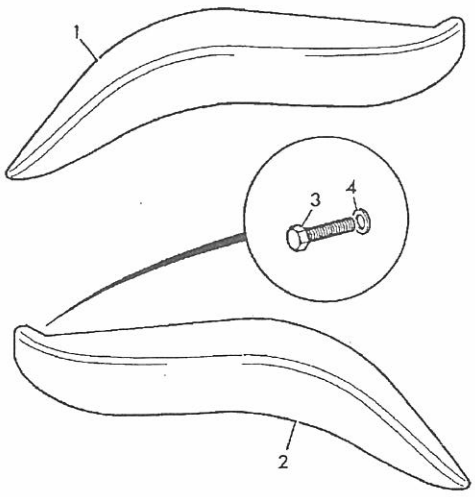

ITEM	PART NO	CHANGE NO	DESCRIPTION	REMARKS	USAGE CODE	QTY
1	331/14351		Fender, left hand, yellow, 214e			1
2	331/14352		Fender, right hand, yellow, 214e			1
3	1315/0205Z		Bolt			10
4	1425/0006Z		Washer, Spring			10
5	1412/0001Z		Washer			10
6	826/01101		Nut, rivet,M6 open ended, for 3 to 5.5mm plt			10

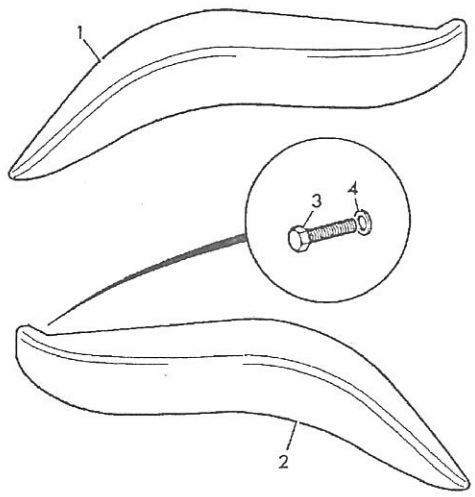

228801

ITEM	PART NO	CHANGE NO	DESCRIPTION	REMARKS	USAGE CODE	QTY
1	*331/16218		Fender, left hand Rear, black			
2	*331/16219		Fender, right hand rear, black			
3	1315/0205Z		Bolt			1
4	1425/0006Z		Washer, Spring			12
5	1412/0001Z		Washer			12
6	826/01101		Nut, rivet,M6 open ended, for 3 to 5.5mm plt			1

9812/0020U

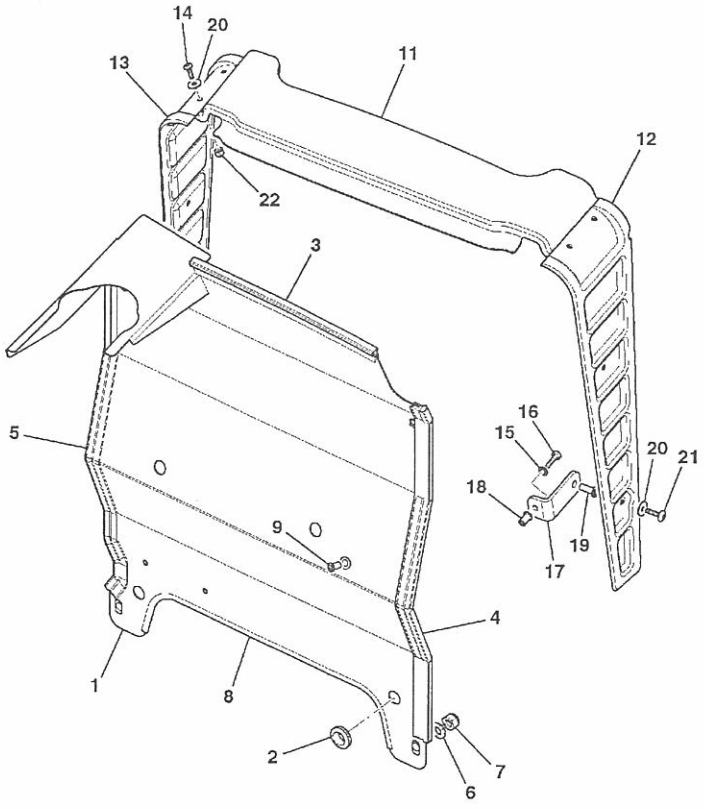

788760

ITEM	PART NO	CHANGE NO	DESCRIPTION	REMARKS	USAGE CODE	QTY
1	335/09482		Plate, tower			1
2	2410/0012		Grommet			2
3	926/01100		Strip, sealing	approx 357mm long		1
4	926/01100		Strip, sealing	approx 620mm long		1
5	926/01100		Strip, sealing	approx 631mm long		1
6	1420/0009Z		Washer, Plain M12			4
7	1370/0403Z		Nut, M12			4
8	926/51601		Strip, edging 595mm long			1
10	2410/1012		Grommet			1
11	346/00251		Moulding, tower cover			1
12	346/00275		Moulding, L/H tower moulding			1
13	346/00276		Moulding, R/H tower panel			1
14	826/10887		Screw, button head, torx			4
15	1420/0007Z		Washer, plain, M8			4
16	1315/0305Z		Screw, M8 x 20mm long			4
17	331/53645		Bracket, mounting			4
18	826/01106		Nut, rivet,M8			4
19	826/01767		Nut, Rivet (Bollhoff)			4
20	823/00516		Washer, nylon, M6			8
21	826/01768		Screw, M6x25mm			4
22	826/01728		Nut, nyloc			4

9812/0020U

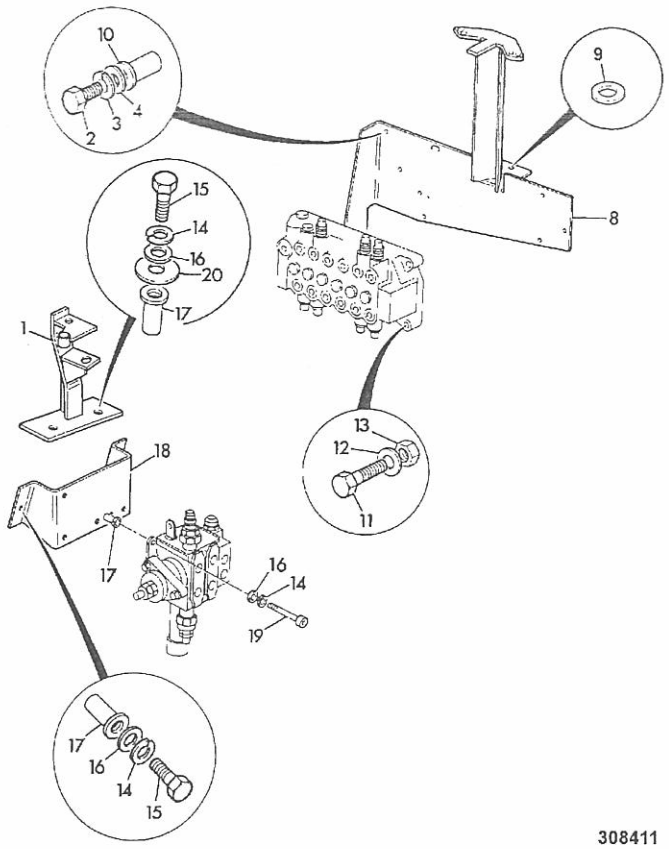

308411

ITEM	PART NO	CHANGE NO	DESCRIPTION	REMARKS	USAGE CODE	QTY
1	125/00551		Bracket, loader lever			1
2	1315/0410Z		Bolt, M10 x 40			4
3	1425/0008Z		Washer, Spring M10			4
4	1411/0004Z		Washer			4
8	331/19085		Mounting, excavator valve			1
9	1412/0005Z		Washer, plain			1
10	826/01249		Nut, M10 rivet			3
11	1315/3414Z		Bolt			3
12	1420/0008Z		Washer, Plain M10			3
13	1370/0303Z		Nut, lock, M10			3
14	1425/0008Z		Washer, Spring M10			8
15	1315/0410Z		Bolt, M10 x 40			5
16	1420/0008Z		Washer, Plain M10			8
17	826/01249		Nut, M10 rivet			8
18	123/07289		Plate, loader valve mount			1
19	1391/3411Z		Capscrew			3
20	1412/0004Z		Washer			2

9812/0020U

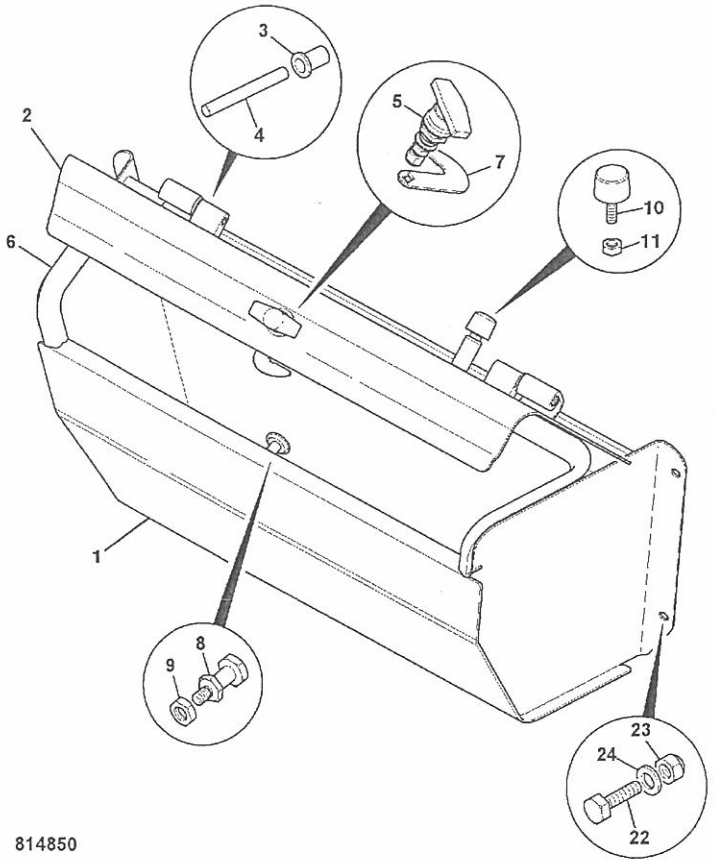

814850

ITEM	PART NO	CHANGE NO	DESCRIPTION	REMARKS	USAGE CODE	QTY
0A	128/15526		Box, tool, assembly			1
1	.		:'See Remark'	NSP		1
2	335/10051		:Cover, toolbox lid			1
3	122/67479		:Bush, hinge			2
4	123/08089		:Pin, hinge			2
5	123/08087		:Handle, locking			1
6	904/20357		:Seal, toolbox			1
7	331/13500		:Plate, latch			1
8	331/36035		:Spindle, latch			1
9	1370/0303Z		:Nut, lock, M10			1
10	123/07243		:Buffer			1
11	1370/0202Z		:Nut, M8			1
22	1315/0405Z		Screw, M10 x 20mm long			4
23	1370/0303Z		Nut, lock, M10			4
24	1420/0008Z		Washer, Plain M10			4

B

B1 BODYWORK/FRAME
B2 CAB
B3 LOADER, FRONT END
B4 BACKHOE
B5 REFURBISHMENTS

9812/0020U

B2-1-10 CAB SHELL, UNGLAZED

ISSUE

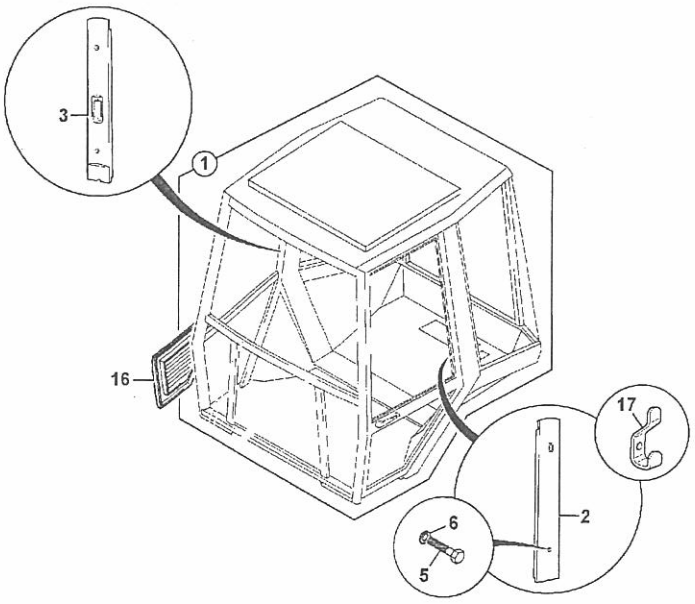

ITEM	PART NO	CHANGE NO	DESCRIPTION	REMARKS	USAGE CODE	QTY
1	126/02572		Cab, shell as supplied			1
2	331/27481		Cover, left hand B post			1
3	331/27482		Cover, right hand B post			1
4	NSP		:None serviced part	Part of items 1 & 2		
5	826/01561		Screw, button head, M6x45			4
6	823/00554		Washer, plain			4
	823/00516		Washer, nylon, M6			4
16	123/07467		Cover, heater			1
	123/07649		Cover, heaterless cab			1
17	142/01083		Hook, coat			1
18	826/01768		Screw, M6x25mm	Air intake filter		3
	826/01413		Screw, M6 x 16mm long, pan head	Air intake filter		1
19	123/04791		Washer, nylon			4
20	826/01101		Nut, rivet,M6 open ended, for 3 to 5.5mm plt			4
21	926/14500		Seal, w/screen assy, felt	2000mm long. Fit to item 16.		a/r

305782

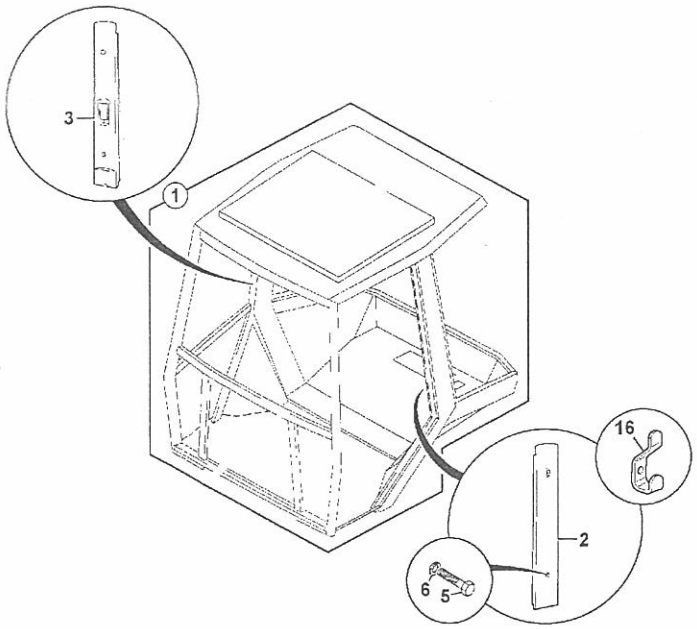

ITEM	PART NO	CHANGE NO	DESCRIPTION	REMARKS	USAGE CODE	QTY
1	126/02571		Canopy, frame			1
2	331/27481		Cover, left hand B post			1
3	331/27482		Cover, right hand B post			1
5	826/01561		Screw, button head, M6x45			4
	826/01101		Nut, rivet,M6 open ended, for 3 to 5.5mm plt			4
6	823/00554		Washer, plain			4
	823/00516		Washer, nylon, M6			4
16	142/01083		Hook, coat			1

305792

9812/0020U

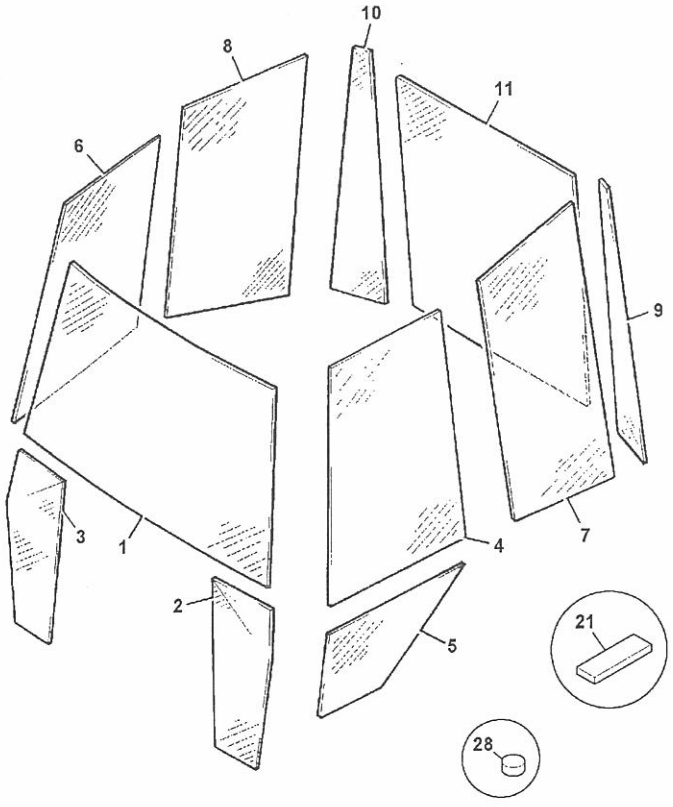

ITEM	PART NO	CHANGE NO	DESCRIPTION	REMARKS	USAGE CODE	QTY
1	827/80382		Windscreen, laminated			1
	827/80383		Windscreen, toughened, Savannah production			1
2	827/80371		Glass, left hand 1/4 light			1
3	827/80370		Glass, right hand 1/4 light			1
4	827/80372		Glass, upper door			1
5	827/80369		Glass, lower door			1
6	827/80373		Glass, right hand front			1
7	827/80374		Glass, left hand window			1
8	827/80375		Glass, right hand window			1
9	827/80376		Glass, left hand sixlight			1
10	827/80377		Glass, right hand sixlight			1
11	827/80378		Glass, rear window			1
21	926/15500		Spacer, block	6X15X4 approx 34/ cab		A/R
28	926/22100		Spacer, block	front screen		2

308421

9812/0020U

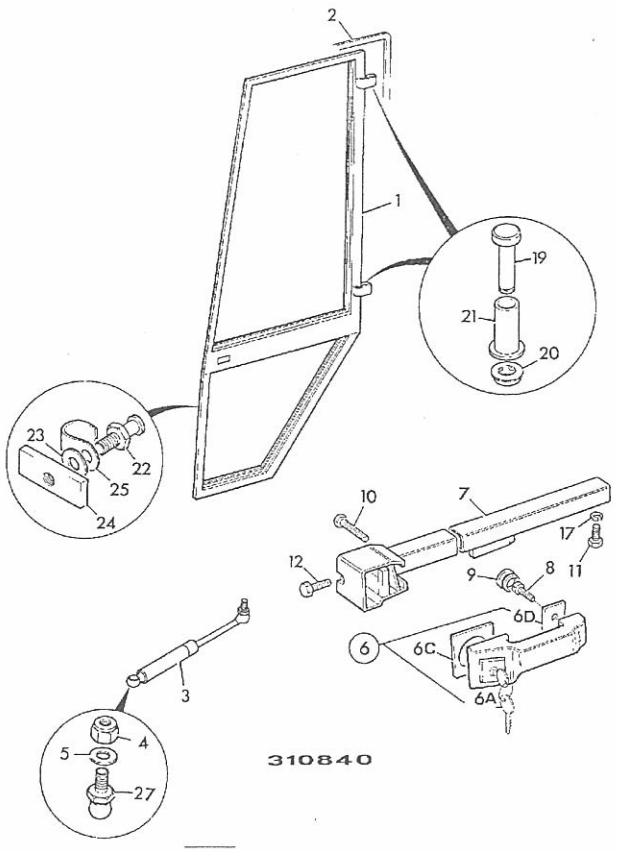

ITEM	PART NO	CHANGE NO	DESCRIPTION	REMARKS	USAGE CODE	QTY
1	125/00478		Frame, door			1
2	331/15237		Seal			A/F
3	331/14573	Superseded	Strut, door stay			1
	331/66778		Strut, gas 201-329			1
4	1370/0203Z		Nut, self lock, M8			2
5	1417/0007Z		Washer			2
6	123/06547		Handle, c/w barrel lock only			1
6A	701/45501		:Key, Door/Ignition, Ref 14657			2
6C	123/00529		:Grommet			1
6D	123/00530		:Grommet			1
7	123/02450		Lock, door, left hand			1
8	826/00792		Screw			2
9	2410/1008		Grommet			2
10	826/01077		Screw			3
11	1315/0203Z		Screw, M6x16			1
12	826/01077		Screw			2
17	1425/0006Z		Washer, Spring			1
19	142/00956		Pin, hinge			2
20	142/00957		Cap, hinge pin			2
21	120/92808		Bush, Hinge			2
22	120/77505		Bolt, closing			1
23	1420/0009Z		Washer, Plain M12			1
24	*826/00622		Nut			1
25	140/00618		Guard			1
26	1370/0103Z		Nut, Self lock, M6			2

B2-3-21 DOOR

ISSUE

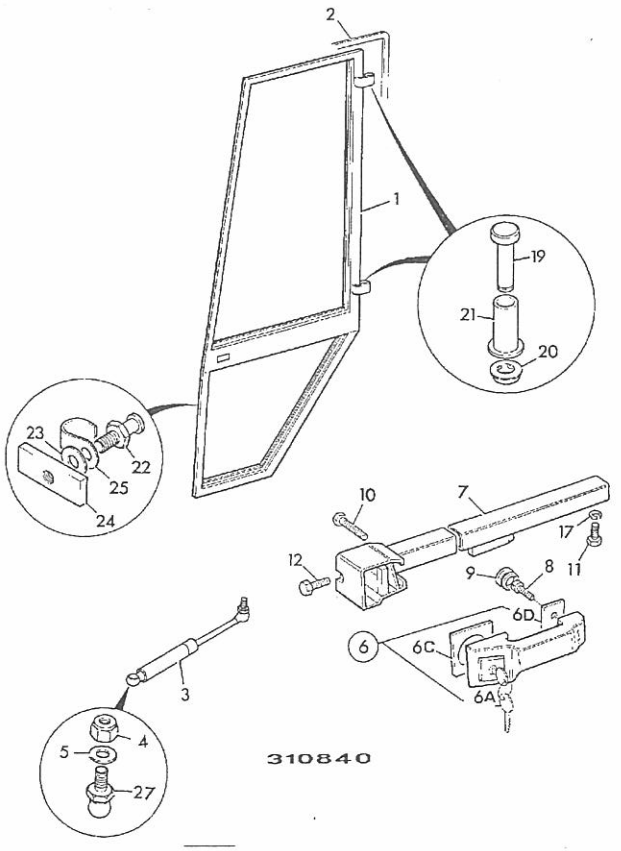

ITEM	PART NO	CHANGE NO	DESCRIPTION	REMARKS	USAGE CODE	QTY
27	123/06335		Joint, ball			2

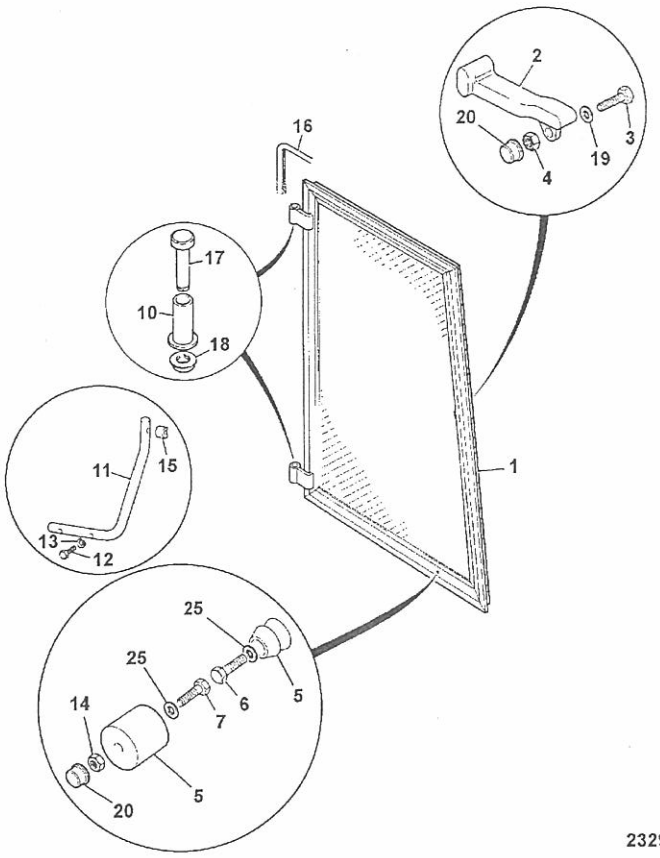

232941

ITEM	PART NO	CHANGE NO	DESCRIPTION	REMARKS	USAGE CODE	QTY
1	927/20025		Frame, window			1
2	116/00822		Handle			1
3	1315/3212Z		Bolt			1
4	1370/0103Z		Nut, Self lock, M6			1
5	826/00670		Catch, door			1
6	1315/0207Z		Screw, M6 x 25mm long			1
7	1315/0211Z		Bolt			1
8	1425/0006Z		Washer, Spring			1
9	1370/0101Z		Nut			1
10	120/92808		Bush, Hinge			2
11	331/15286		Bracket, window stop			1
12	1315/3312Z		Bolt			2
13	1417/0012Z		Washer, lock			2
14	1370/0103Z		Nut, Self lock, M6			1
15	331/15288		Spacer			1
16	331/15238		Seal			1
17	142/00956		Pin, hinge			2
18	142/00957		Cap, hinge pin			2
19	823/00426		Washer			1
20	835/00074		Cap			2
21	1315/0211Z		Bolt			1
22	122/23509		Cap			2
23	826/01103		Nut, rivet,M8 open ended			2
24	826/01099		Nut, rivet,M6 open ended			1
25	823/00544		Washer, special			2

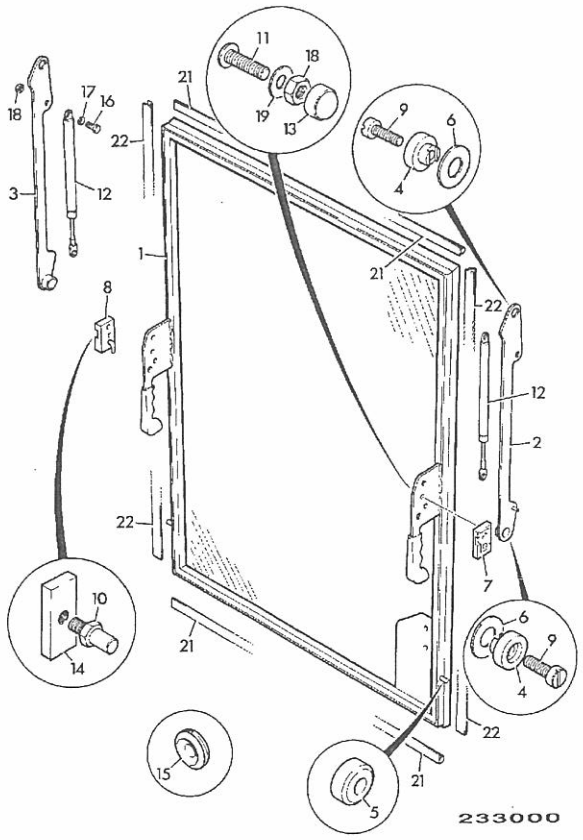

233000

ITEM	PART NO	CHANGE NO	DESCRIPTION	REMARKS	USAGE CODE	QTY
1	927/20026		Frame, rear window			1
2	331/15293		Bracket, left hand, rear window			1
3	331/15294		Bracket, right hand, rear window			1
4	290/00806		Clamp			4
5	290/00809		Roller			2
6	823/00538		Washer			4
7	290/00812		Lock, left side,			1
7A	331/28808		Cover			1
8	290/00813		Lock, right side			1
8A	331/28808		Cover			1
9	826/01515		Screw, M8 slot head			2
10	290/00807		Latch, bolt			2
11	.		'See Remark'	Csk head Socket screw M8 X 40		4
12	142/00953		Strut			2
13	122/23509		Cap			4
14	826/00622		Nut			2
15	.		'See Remark'	Grommet		2
16	1315/0307Z		Screw, M8 X 25			4
17	1417/0012Z		Washer, lock			4
18	1370/0201Z		Nut, M8			4
19	1420/0007Z		Washer, plain, M8			4
21	331/15239		Seal	Seal top and bottom		2
22	331/15240		Seal	Seal, left and right		2
23	1420/0008Z		Washer, Plain M10	item 10		2

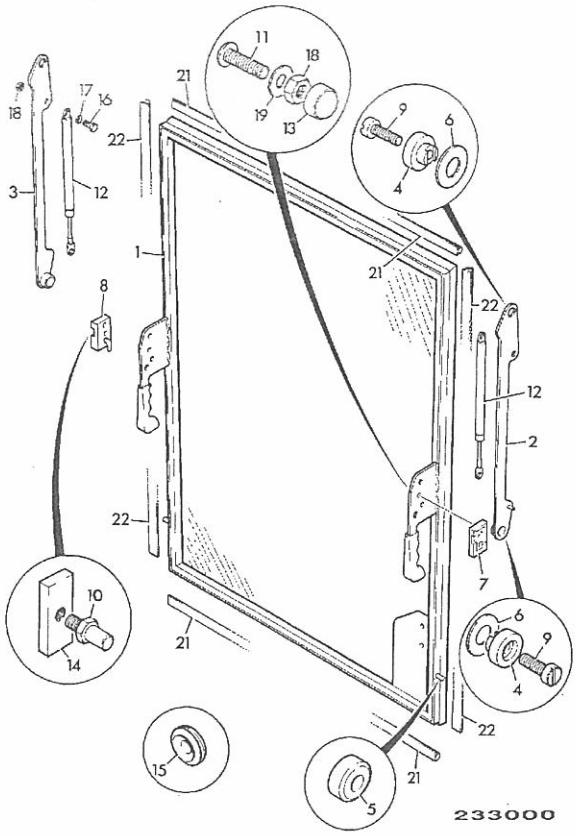

ITEM	PART NO	CHANGE NO	DESCRIPTION	REMARKS	USAGE CODE	QTY
24	1411/0004Z		Washer	item 10		2
25	1370/0301Z		Nut	item 10		2
31	140/00619		Plug, rubber, stop	See Note 1		.
32	1315/0203Z		Screw, M6x16			2
33	1418/0010Z		Washer, lock			2
34	1370/0101Z		Nut			.
35	835/00074		Cap			2
38	331/15234		Plug			2

Note 1: items 31 to 38 make rear window stop

9812/0020U

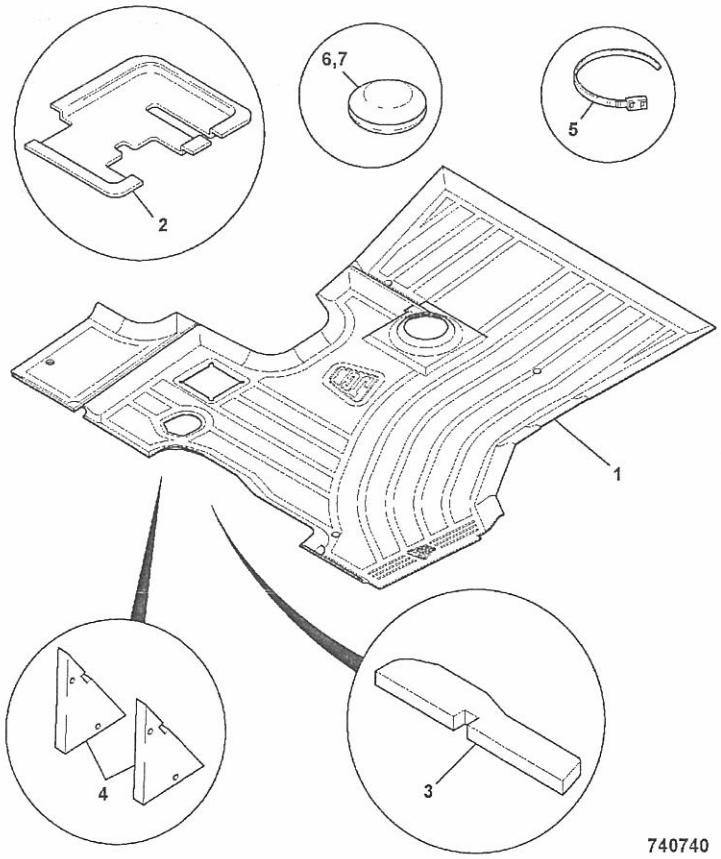

ITEM	PART NO	CHANGE NO	DESCRIPTION	REMARKS	USAGE CODE	QTY
1	123/07620		Floormat	214e only		1
	331/44561		Floormat, loader/ landscaper	loader landscaper only		1
2	123/07940		Panel, seal support			1
2A	123/07672		Mat, soundproofing, loader valve			1
3	331/60578		Seal, front bulkhead			1
4	123/07720		Mat, brake cylinder			2
5	826/01144		Tie, cable, 200mm long			4
6	2410/1109		Grommet	drain holes -floor		4
7	2410/1104		Grommet, blind, 11.1mm	front bulkhead		2
8	2410/1013		Grommet, 31.8mm.	floor RHS, loader landscaper only		1

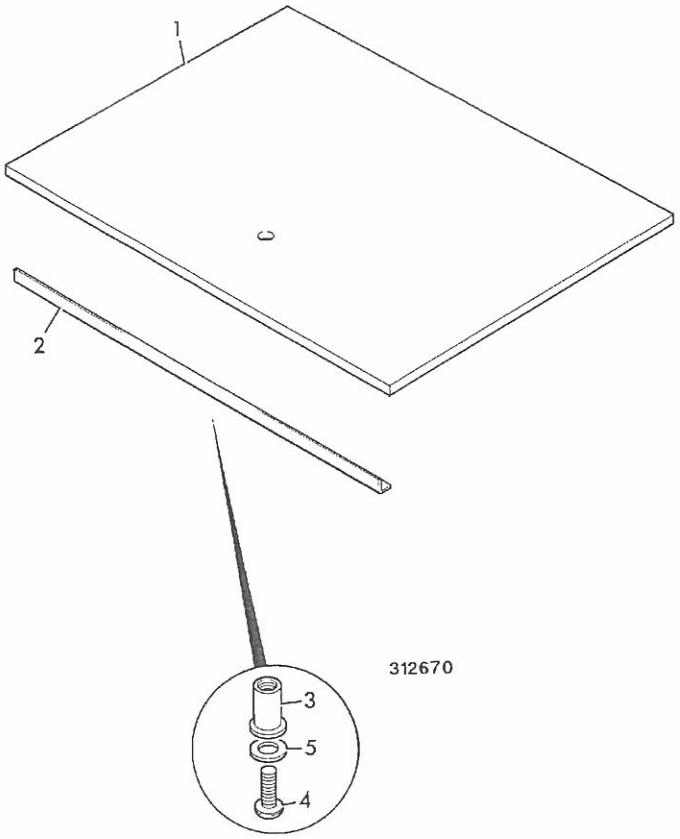

ITEM	PART NO	CHANGE NO	DESCRIPTION	REMARKS	USAGE CODE	QTY
1	331/27483		Liner, roof			1
2	123/07694		Bracket, support			1
3	826/01101		Nut, rivet,M6 open ended, for 3 to 5.5mm plt			3
4	826/01768		Screw, M6x25mm			3
5	823/00554		Washer, plain			3

9812/0020U

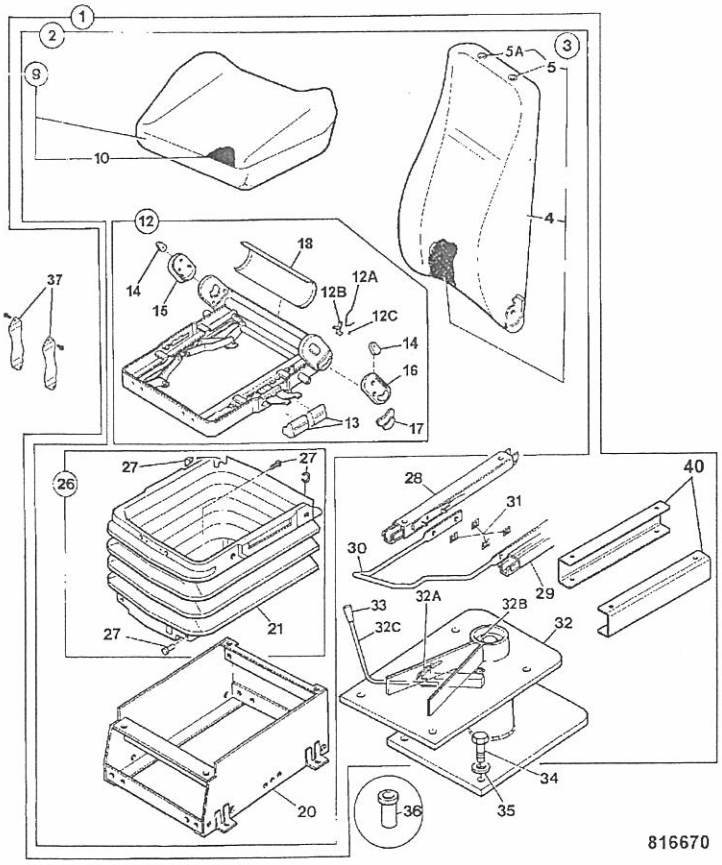

ITEM	PART NO	CHANGE NO	DESCRIPTION	REMARKS	USAGE CODE	QTY
1	128/16497		Seat, assembly static, vinyl			1
2	40/910460		:Seat, vinyl			1
3	40/910431		::Cushion, vinyl			1
4	40/910397		:::Cover, Seat, vinyl			1
5	40/903120		:::Plug, headrest			2
5A	40/906903		:::Clip, headrest			2
9	40/910399		::Cushion, seat assembly, vinyl			1
10	40/910402		:::Cover, seat cushion, vinyl			1
12	40/910430		::Frame, assembly			1
12A	40/910447		:::Spring, Squab handle			1
12B	40/910446		:::Handle, Squab			1
12C	40/910448		:::Circlip, height adjuster			1
13	40/910404		:::Handle, grip, front	Front		2
	40/910405		:::Handle, grip, rear			1
14	40/903108		:::Cap, side plate			2
15	40/903109		::Cover, slave, right hand sideplate			1
16	40/903110		:::Cover, upper, left hand sideplate			1
17	40/910406		:::Handle, Grip, squab recline			1
18	40/903112		:::Plate, cushion frame back			1
20	40/902901		::Base			1
26	40/905204		::Kit-bellows			1
27	40/903116		:::Kit, bellow fixings			1
28	40/910138		:Slide, left hand			1

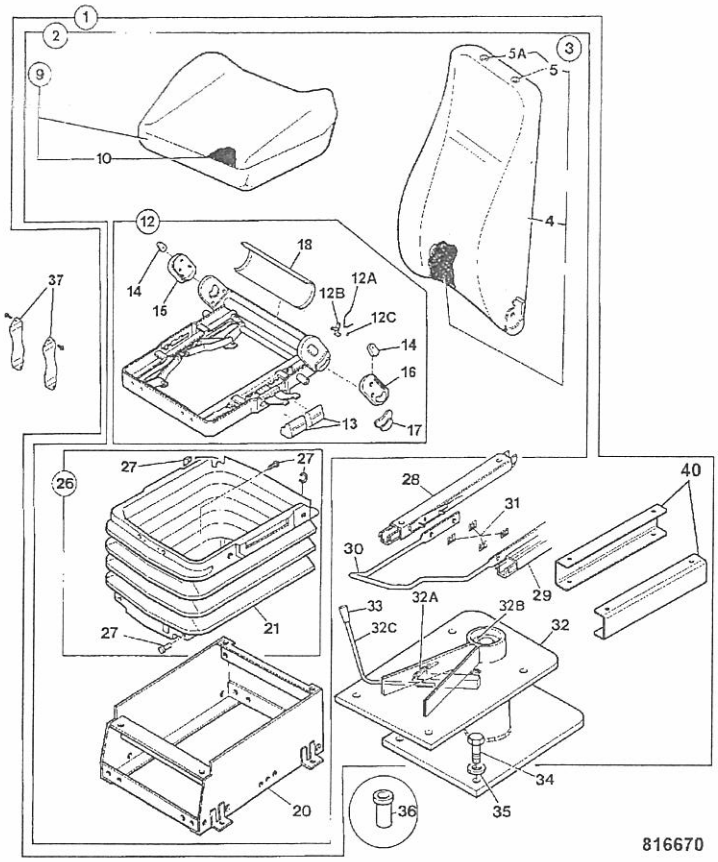

816670

ITEM	PART NO	CHANGE NO	DESCRIPTION	REMARKS	USAGE CODE	QT
29	40/910139		::Slide, right hand			
30	40/905205		:Handle, slide rail			
31	40/903125		:Clip, slide rail			
32	40/911069		:Pedestal, assembly			
32A	814/10156		::Spring			
32B	40/910413		::Kit-nut & bolt, pedestal swivel			
32C	40/910414		::Handle, assembly			
33	40/910415		::Handle, grip			
34	1315/3409Z		Bolt			
35	1420/0008Z		Washer, Plain M10			
36	826/01105		Nut, rivet,M10 open ended			
37	40/904700		Kit-seat belt, 50" long			
38	40/905206		Kit-arm rest			
39	40/903700		Kit, head rest			
40	40/911068		Spacer, U profile			

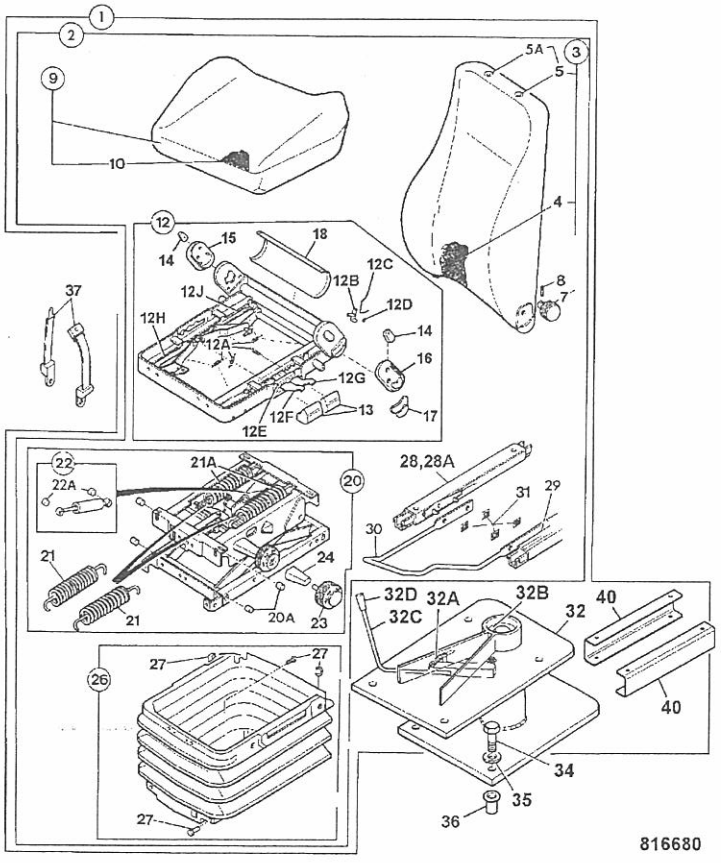

816680

ITEM	PART NO	CHANGE NO	DESCRIPTION	REMARKS	USAGE CODE	QTY
1	128/16499		Seat, assembly suspension, cloth			1
	128/16498		Seat, assembly suspension, vinyl			1
2	40/910469		:Seat, high back,fabric			1
	40/910470		:Seat, high back,vinyl			1
3	40/910396		::Kit, rear squab assembly, cloth			1
	40/910520		::Cushion, squab assy, Vinyl high back			1
4	40/910517		:::Cover, squab assy, fabric high back			1
	40/910521		:::Cover, squab assy, Vinyl high back			1
5	40/903120		Plug, headrest			2
5A	40/906903		Clip, headrest			2
7	40/903119		:::Knob, adjuster			1
8	40/903121		:::Pin, tension			1
9	40/910514		::Cushion, seat assy, fabric high back			1
	40/910518		::Cushion, seat assy, Vinyl high back			1
10	40/910515		:::Cover, seat base, fabric high back			1
	40/910519		:::Cover, seat base, Vinyl high back			1
12	40/910506		::Frame, seat base			1
12A	40/910445		:::Kit-spring, 2 lever height rise			1
12B	40/910446		::Handle, Squab			1
12C	40/910447		::Spring, Squab handle			1

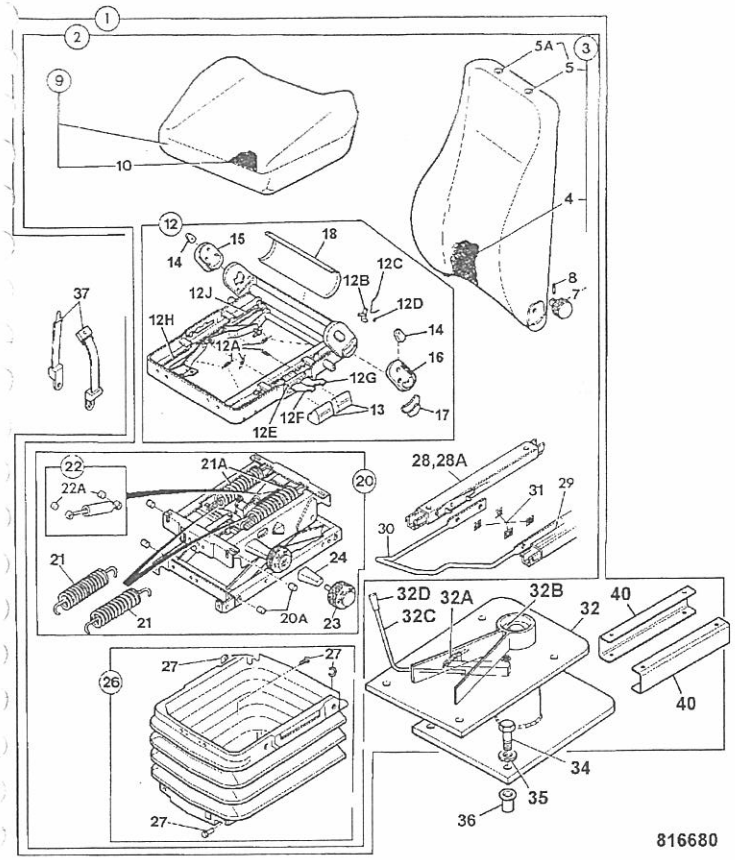

ITEM	PART NO	CHANGE NO	DESCRIPTION	REMARKS	USAGE CODE	QTY
12D	40/910448		::Circlip, height adjuster			1
12E	40/910141		::Clip, black, cushion frame			1
12F	40/910142		::Handle, height adjustment, front			1
12G	40/910143		::Handle, height adjustment, rear			1
12H	40/910144		::Adjuster, height			1
12J	40/910145		::Adjuster, height, rear			1
13	40/910404		:::Handle, grip, front			1
	40/910405		:::Handle, grip, rear			1
14	40/903108		:::Cap, side plate			2
15	40/903109		::Cover, slave, right hand sideplate			1
16	40/903110		:::Cover, upper, left hand sideplate			1
17	40/910406		:::Handle, Grip, squab recline			1
18	40/903112		:::Plate, cushion frame back			1
20	40/910526		::Kit, Suspension unit assy			1
21	40/910140		:::Spring			2
21A	40/903102		:::Spring, tension			2
22	40/906902		:::Damper			1
22A	40/906905		:::Bush, shock absorber			2
22B	40/911070		:Bolt	not supplied with item 22		2
22C	40/905208		:Nut	not supplied with item 22		2
23	40/910525		:::Knob, Damper adjuster			1

9812/0020U

B2-7-61 SEAT, SUSPENSION ISSUE 1

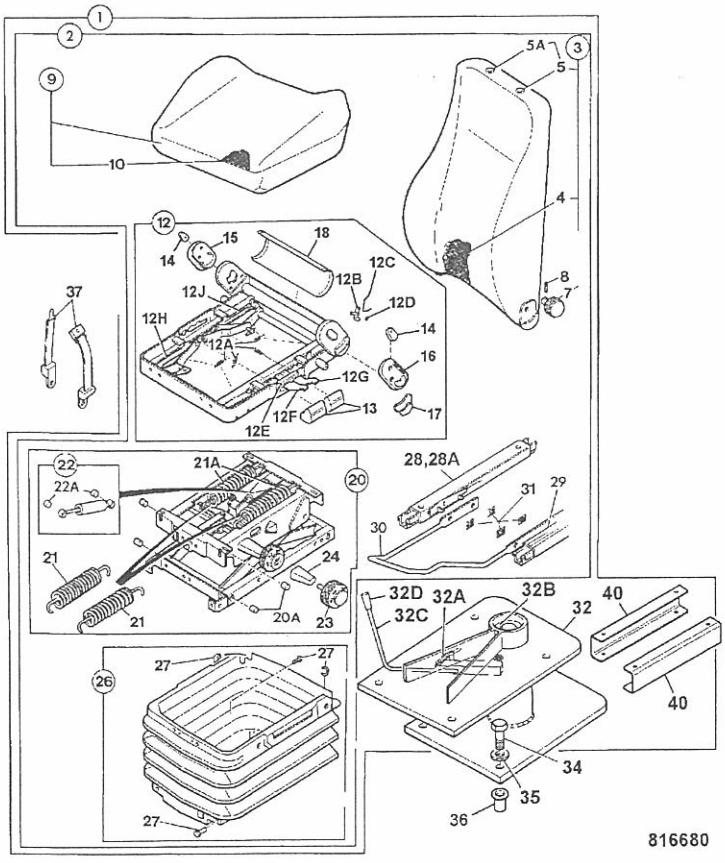

ITEM	PART NO	CHANGE NO	DESCRIPTION	REMARKS	USAGE CODE	QTY
24	40/903105		:::Bracket, support			1
26	40/905204		::Kit-bellows			1
27	40/903116		:::Kit, bellow fixings			1
28	40/910139		:Slide, right hand			1
28A	40/905207		:Bolt	Slide to seat		4
	1315/0305Z		:Screw, M8 x 20mm long	Slide to pedestal		4
	1391/3305Z		:Capscrew			4
	40/910138		::Slide, left hand			1
29	40/910238		::Adjuster, seat angle	Part of item 28		1
30	40/910411		:Handle, slide			1
31	40/903125		:Clip, slide rail			4
32	40/911069		:Pedestal, assembly			1
32A	814/10156		::Spring			1
32B	NSP		::None serviced part			1
32C	40/910300		::Handle, assembly			1
32D	40/910415		::Handle, grip			1
34	1315/3409Z		Bolt			4
35	1420/0008Z		Washer, Plain M10			4
36	826/01105		Nut, rivet,M10 open ended			4
37	40/904700		Kit-seat belt, 50" long	Included with seat assy		1
39	40/903700		Kit, head rest	Not included with seat assy		1
40	40/911068		Spacer, U profile			2

9812/0020U

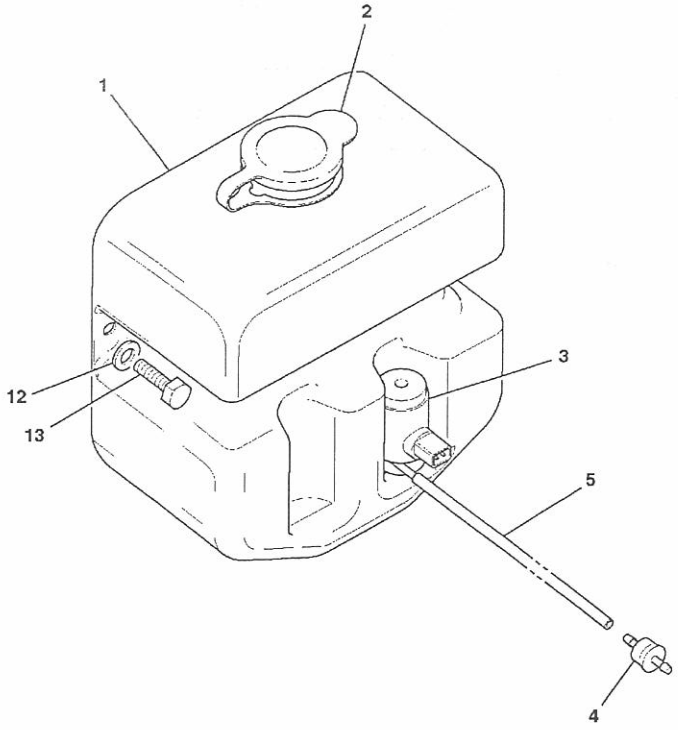

774810

ITEM	PART NO	CHANGE NO	DESCRIPTION	REMARKS	USAGE CODE	QT
1	331/46930		Bottle, front screen wash	Canopy build single pump		
2	717/06031		Cap, washer bottle			
3	714/20600		Pump, twin motor, 12 volt			
4	534/09703		Valve, non-return			
5	647/02000		Tube			A/F
12	.		'See Remark'	no longer fitted		
13	.		'See Remark'	no longer fitted		
22	826/01144		Tie, cable, 200mm long			
31	715/06200		Plug, dummy, 2 way sealed			
32	835/10086		Plug, blanking, black,9mm			

9812/0020

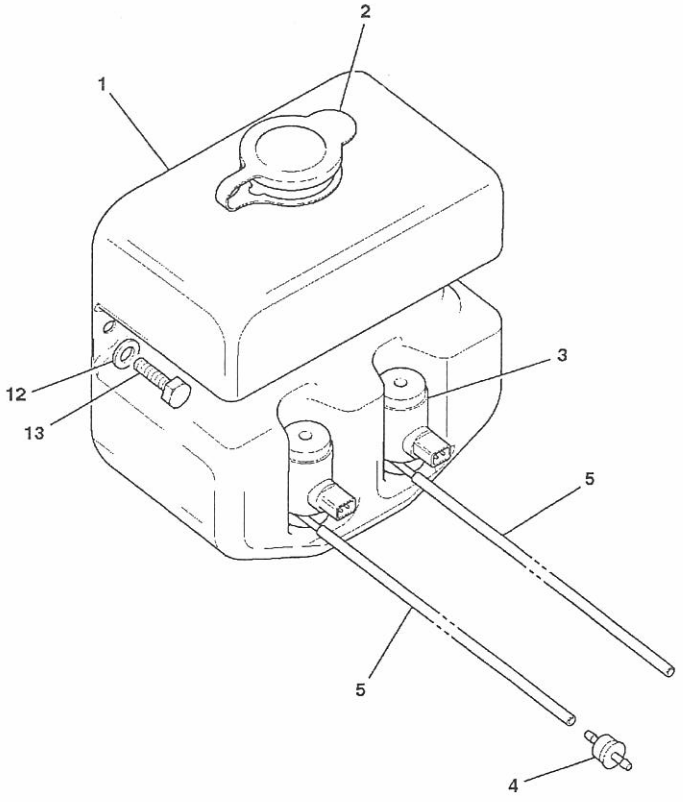

774820

ITEM	PART NO	CHANGE NO	DESCRIPTION	REMARKS	USAGE CODE	QTY
1	331/46268		Bottle, screenwash			1
2	717/06031		Cap, washer bottle			
3	714/20600		Pump, twin motor, 12 volt			2
4	534/09703		Valve, non-return			2
5	647/02027		Tube, 620mm long	620mm long		2
	647/02000		Tube	6200mm roll		A/R
12	.		'See Remark'	no longer fitted		2
13	.		'See Remark'	no longer fitted		2
22	826/01144		Tie, cable, 200mm long			1
23	647/02000		Tube			A/R
24	331/20304		Tube, split, conduit			1
31	255/27003		Jet, Screen washer			1

9812/0020

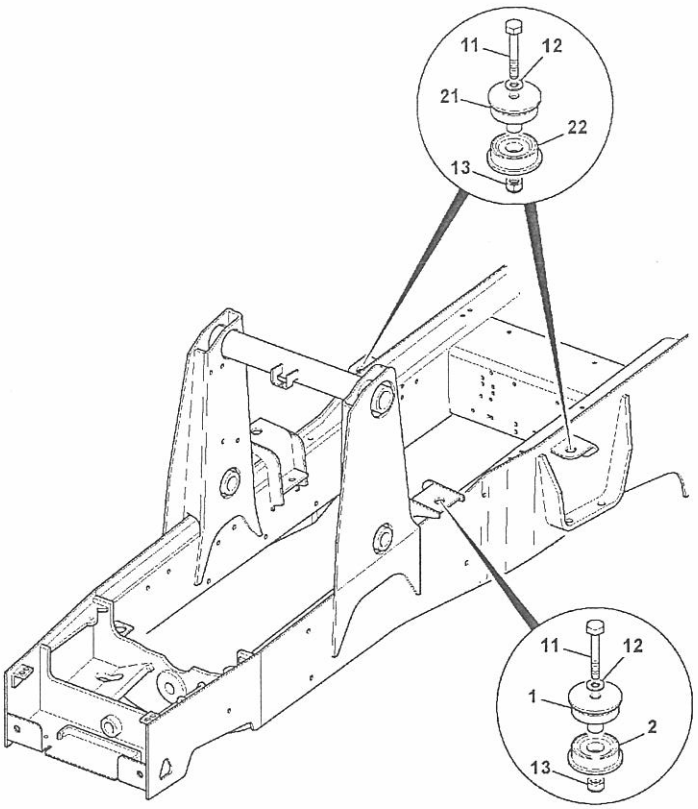

814810

ITEM	PART NO	CHANGE NO	DESCRIPTION	REMARKS	USAGE CODE	QTY
1	331/34392		Mounting, cab upper, blue			2
2	331/18442		Mounting, cab, lower			2
11	1315/3721Z		Bolt			4
12	1420/0011Z		Washer, M16 plain			4
13	1370/0603Z		Nut, M16			4
21	331/34393		Mounting, cab upper, green			2
22	331/25996		Mounting, cab lower, red			2

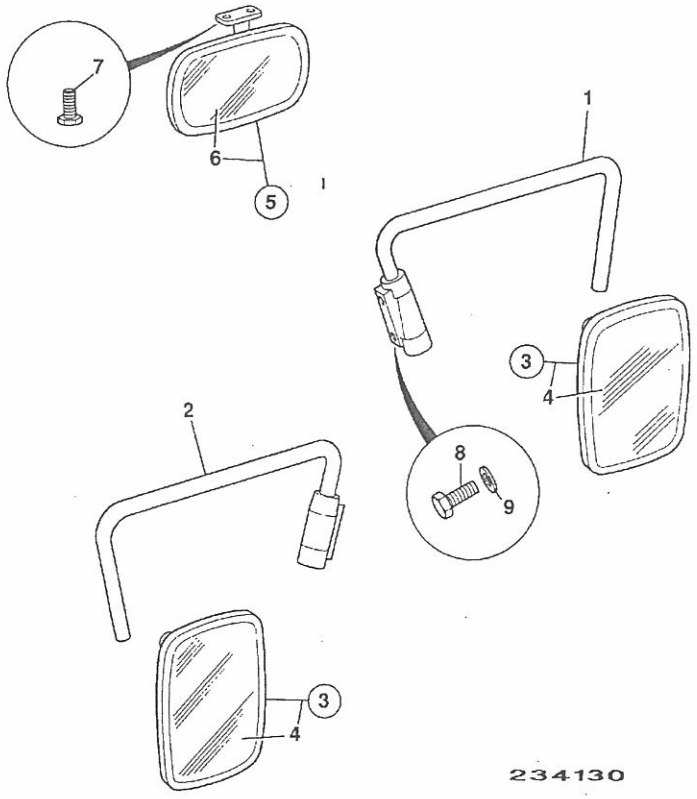

234130

ITEM	PART NO	CHANGE NO	DESCRIPTION	REMARKS	USAGE CODE	QTY
1	123/04968		Arm, right hand mirror			1
2	123/04969		Arm, left hand mirror			1
3	123/04970		Mirror, exterior head assy			2
4	477/01068		:Mirror			1
5	123/04971		Mirror, interior assembly			1
6	123/04975		:Glass, interior mirror			1
7	826/01525		Screw			2
8	826/01559		Screw, M6 x 16mm long, button head socket			4
9	823/00554		Washer, plain			4
9A	823/00597		Washer, spring			4
10	835/00171		Plug, blanking, 7mm	Use inplace of mirror bracket.		8

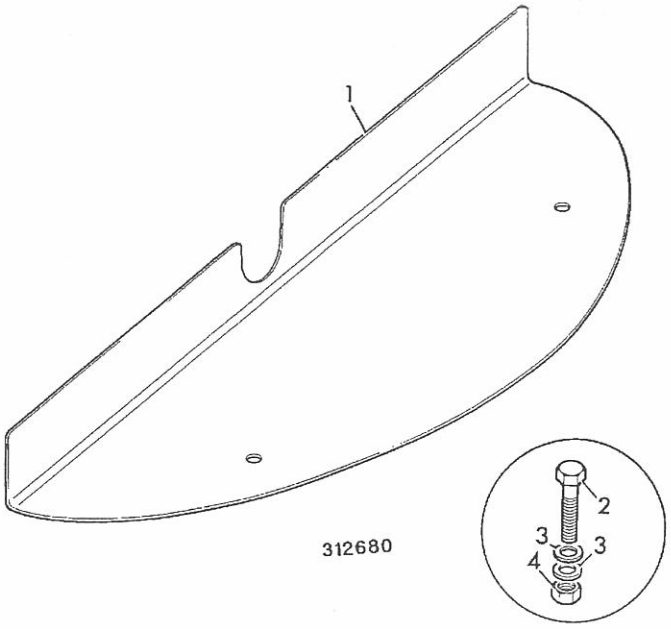

ITEM	PART NO	CHANGE NO	DESCRIPTION	REMARKS	USAGE CODE	QTY
1	123/07703		Cover, rear valance			1
2	1315/3313Z		Bolt, M8 X 55			
3	1420/0007Z		Washer, plain, M8			
4	1370/0203Z		Nut, self lock, M8			2

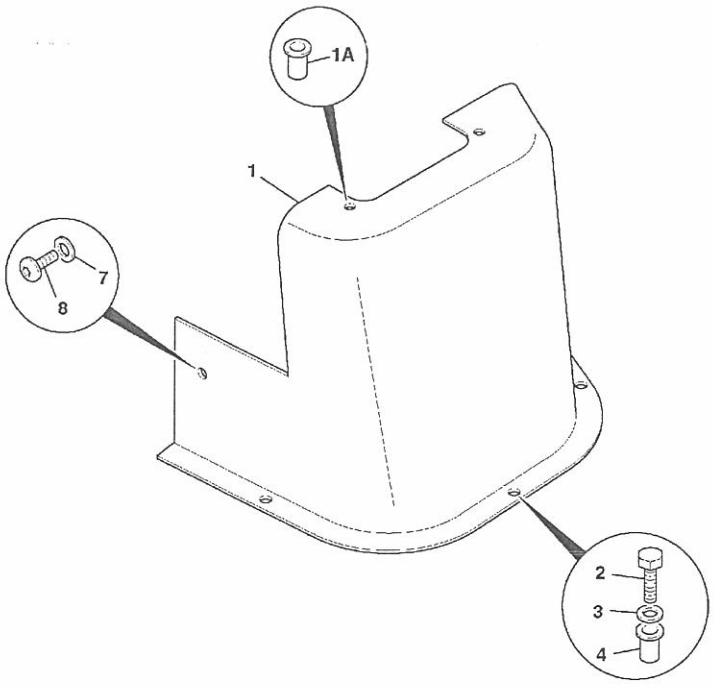

ITEM	PART NO	CHANGE NO	DESCRIPTION	REMARKS	USAGE CODE	QTY
1	*128/12088		Console, loader controls			1
1A	826/01232		Nut, M6 jack			2
2	1315/0207Z		Screw, M6 x 25mm long			3
3	823/00384		Washer			3
4	826/01101		Nut, rivet,M6 open ended, for 3 to 5.5mm plt			3
7	823/00516		Washer, nylon, M6			1
8	826/01768		Screw, M6x25mm			1

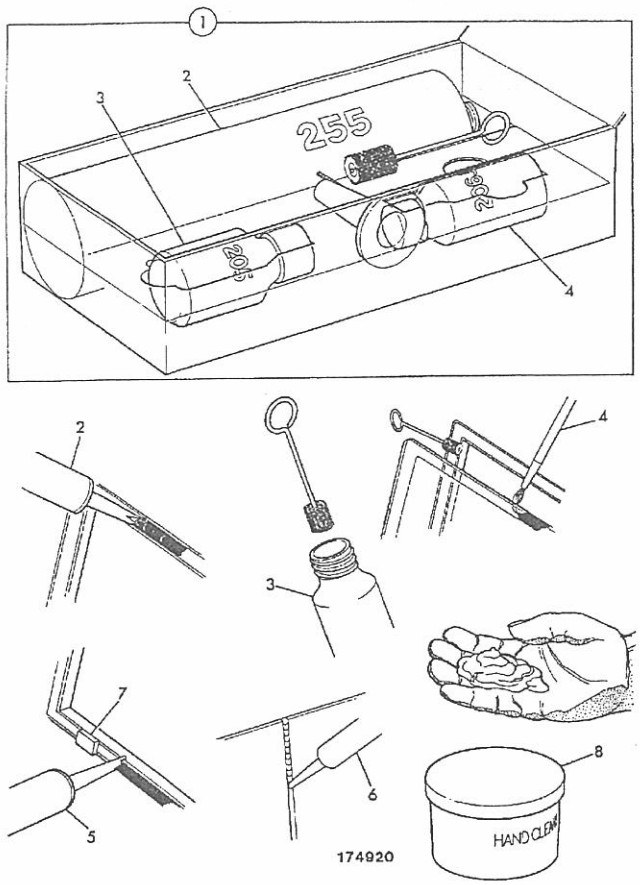

ITEM	PART NO	CHANGE NO	DESCRIPTION	REMARKS	USAGE CODE	QTY
1	993/55700		Adhesive, kit-JCB ultrafast, glazing			1
2	4103/2109		:Adhesive, JCB ultrafast, 310ml cartridge	See foot note 1		A/R
3	4104/1206		:Cleaner, active wiper 205, 30ml			A/R
	4104/1203		:Cleaner, primer SIKA 205, 250ml			A/R
4	4201/4906		:Paint, black primer 206J, 30ml	Black ceramic ink band around glass border.		A/R
	4201/4911		:Paint, black primer 206J, 200gm			A/R
5	4102/2309		Sealant, black acrylic 221, 310ml cartridge			A/R
6	4102/0933		Sealant, DP2205 clear, silicone			A/R
7	926/15500		Spacer, block			34
	926/22100		Spacer, block			2
8	4104/1310		Cleaner, hand, polyurethane, 454gm/1lb			A/R

9812/0020U

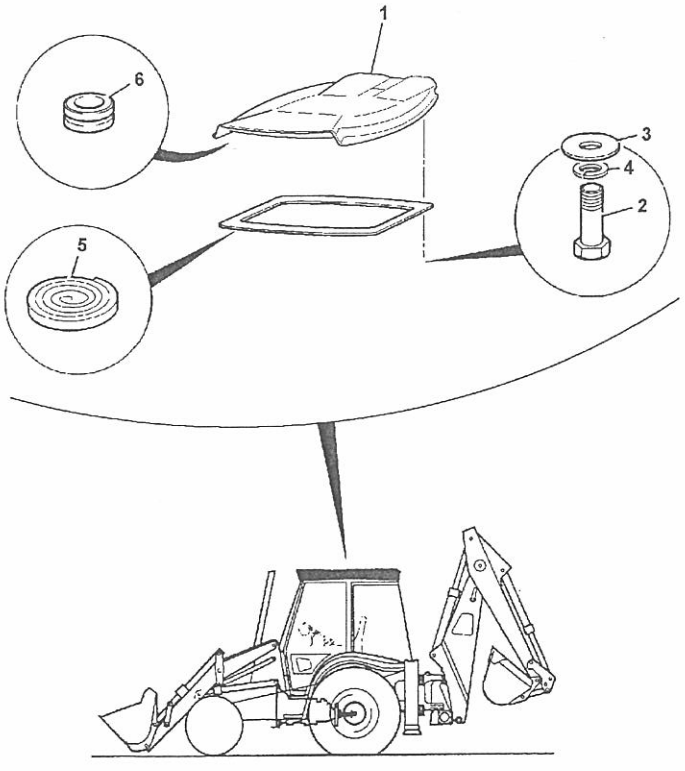

ITEM	PART NO	CHANGE NO	DESCRIPTION	REMARKS	USAGE CODE	QTY
1	123/07439		Roof, cab,USA, yellow	Yellow		1
	123/07832		Roof, cab,USA, black	Black		1
2	1315/0312Z		Bolt			4
3	1412/0002Z		Washer			4
4	1425/0007Z		Washer, spring			4
5	926/13200		Strip, foam seal	5000mm		1
6	2410/1302		Grommet	aerial & rear washer		2
	828/10333		Plug, blanking	rear beacon		1
15	817/18078		Decal, cab roof front, black			1

ITEM	PART NO	CHANGE NO	DESCRIPTION	REMARKS	USAGE CODE	QTY
1	267/33501		Net, stowage			1
2	826/01533		Screw			

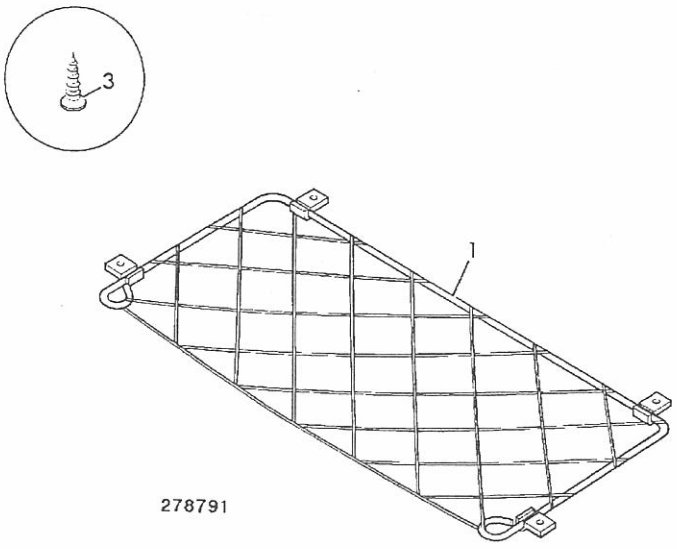

ITEM	PART NO	CHANGE NO	DESCRIPTION	REMARKS	USAGE CODE	QTY
1	123/08075	To M908654	Cover			1
	335/12048		Cover, brake pedals			1
2	123/08076		Bracket, pedal cover			1
4	826/01099		Nut, rivet,M6 open ended			6
5	1315/0205Z		Bolt			6
6	1420/0006Z		Washer, M6			6
7	1425/0006Z		Washer, Spring			6
8	926/01100		Strip, sealing			A/R

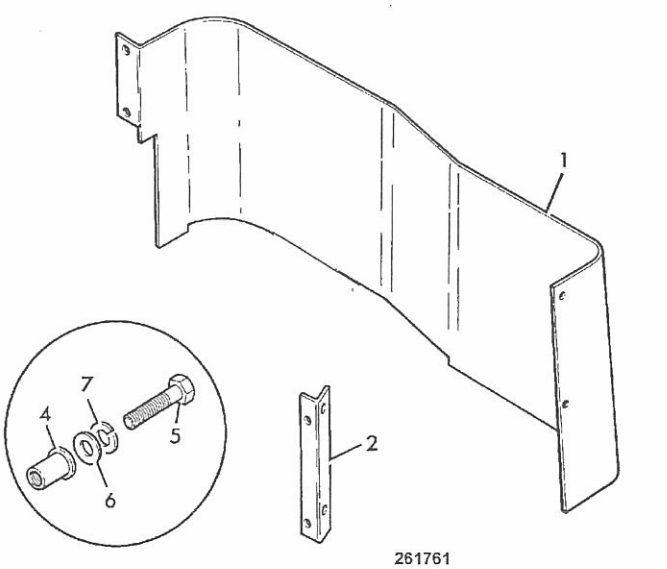

B

- B1 BODYWORK/FRAME
- B2 CAB
- ● B3 LOADER, FRONT END
- B4 BACKHOE
- B5 REFURBISHMENTS

9812/0020L

B3-1-21 ARMS, LOADER

ISSUE 1

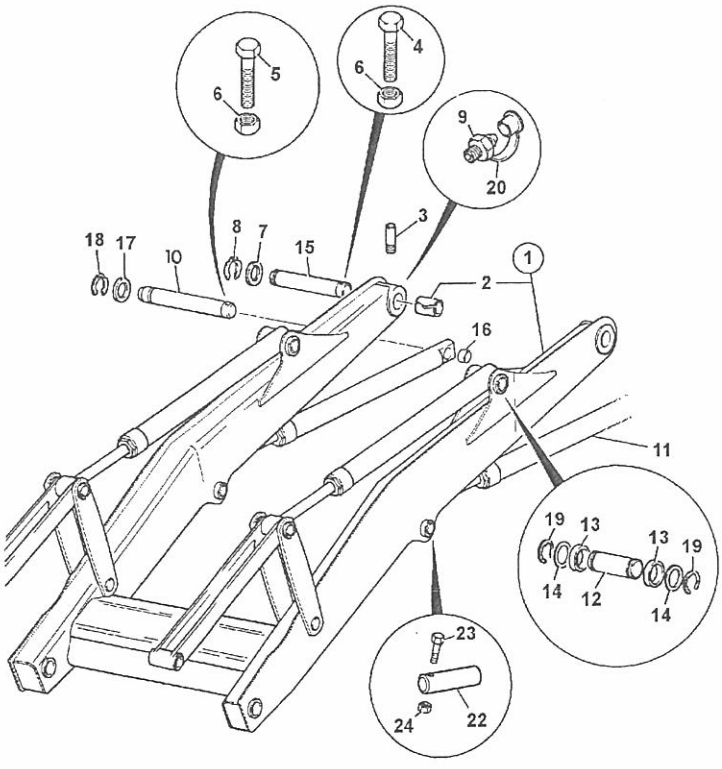

788240

ITEM	PART NO	CHANGE NO	DESCRIPTION	REMARKS	USAGE CODE	QTY
1	128/15453		Arm, loader			1
2	808/00296		:Bush			2
3	653/00162		Pipe, grease			2
4	1315/3524Z		Bolt, M12 x 140 Lg.	loader arm to chassis		2
5	1315/3521Z		Bolt, M12x110	lift ram to chassis		2
6	1370/0401Z		Nut			4
7	819/00099		Spacer, 5mm			A/R
	819/00147		Spacer, 3mm			A/R
	823/00471		Washer, 1.45mm max			A/R
8	821/00517		Circlip, 60mm pin			2
9	1450/1007		Nipple, grease, 45 deg. angle			2
10	811/90593		Pin, pivot, 50.8 diax251			2
11	.		'See Remark'	lift ram see index E4		1
12	811/90471		Pin, pivot, black			2
13	809/10030		Bush			4
14	819/00049		Shim, 1.4mm			A/R
	819/00148		Spacer, 3mm			A/R
	823/10347		Shim, 0.5/0.6mm, o/dia 65mm			A/R
15	811/90473		Pin, pivot, black	left hand side		1
	811/90474		Pin, pivot, black	right hand side (twin circlip groove)		1
16	819/00097		Spacer			2
17	823/00220		Washer, 1.40mm thick			A/R
	819/00097		Spacer			A/R

9812/0020U

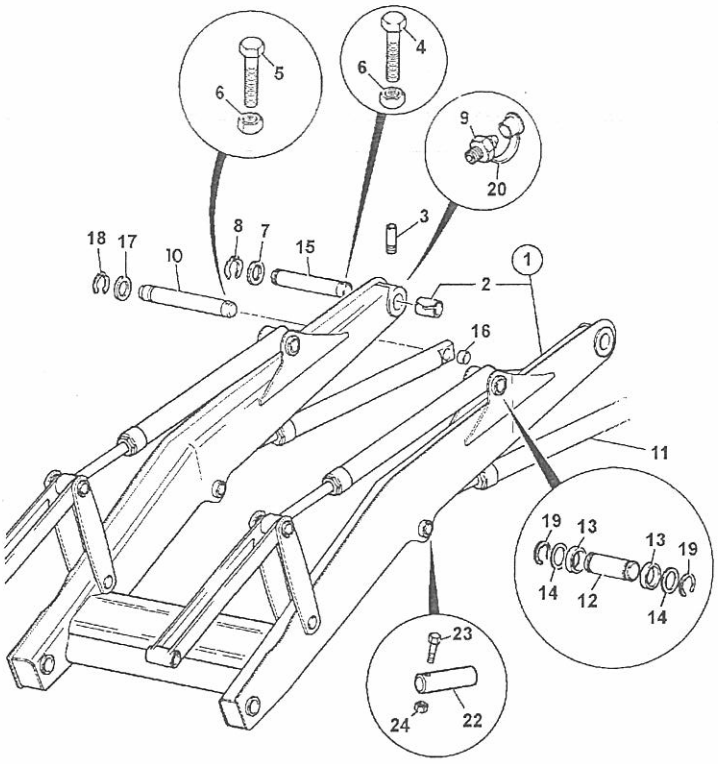

788240

ITEM	PART NO	CHANGE NO	DESCRIPTION	REMARKS	USAGE CODE	QTY
18	826/00874		Circlip			2
19	823/00334		Clip			
20	835/00017		Cap, grease nipple			
21	2410/1308		Grommet, blind	use with item 10		2
22	811/90676		Pin, pivot, 44.35x169	was 811/90484		
23	1315/3418Z		Bolt, M10x80			
24	1370/0303Z		Nut, lock, M10			2

9812/0020

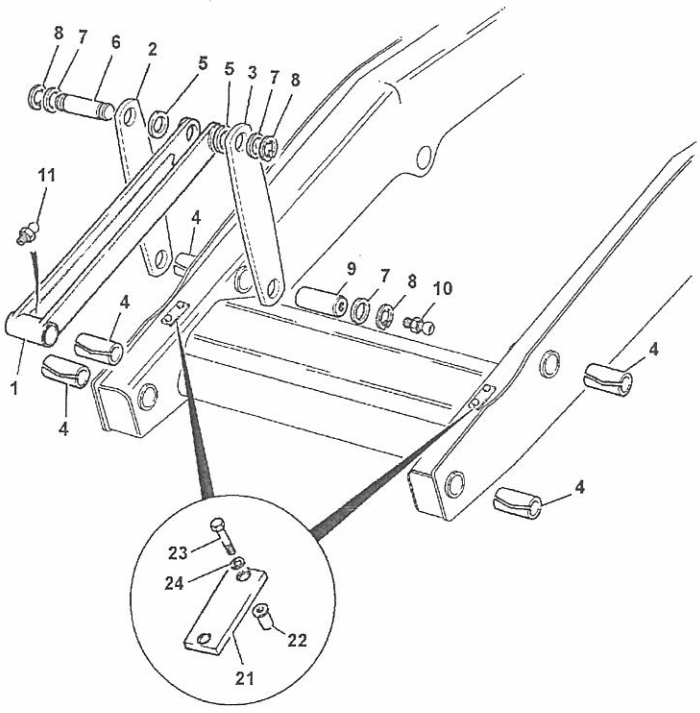

400731

ITEM	PART NO	CHANGE NO	DESCRIPTION	REMARKS	USAGE CODE	QTY
1	125/00363		Link, crowd, 595mm long			2
2	331/43845		Lever, crowd, anti spill, with tapped hole			1
3	331/43841		Lever, shovel pivot, plain			3
4	1208/0023		Bush			6
5	809/10030		Bush			4
6	811/90471		Pin, pivot, black			2
7	819/00049		Shim, 1.4mm			6
	823/10347		Shim, 0.5/0.6mm, o/dia 65mm			8
8	823/00334		Clip			8
9	811/90472		Pin, pivot, black			2
10	1450/0001		Nipple, grease, straight, 1/8 BSP			2
11	1450/0002		Nipple, grease, straight, 1/4			2
21	123/03326		Plate, shovel stop, 12mm			2
22	826/01249		Nut, M10 rivet			4
23	1315/0409Z		Screw, hex. head			4
24	1425/0008Z		Washer, Spring M10			4

9812/0020

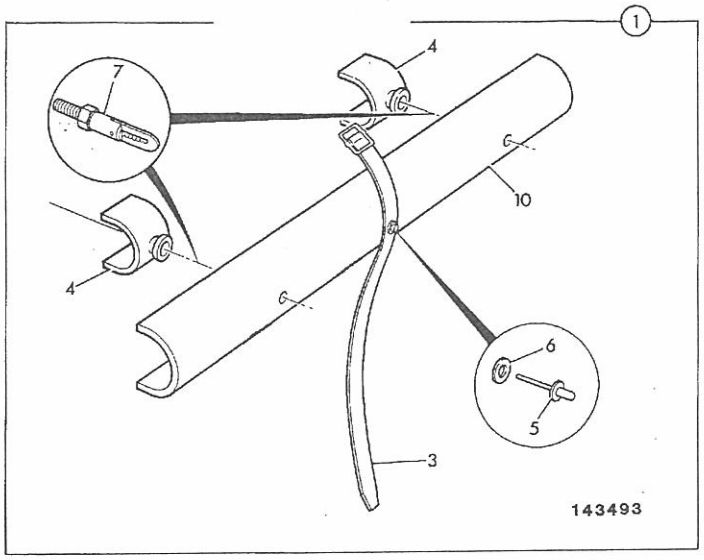

ITEM	PART NO	CHANGE NO	DESCRIPTION	REMARKS	USAGE CODE	QTY
1	128/14206		Strut, safety,assembly, loader arms,Tier 2			1
3	123/04744		:Strap			1
4	123/02971		:Stop			2
5	826/01345		:Rivet, pop			1
6	1414/0011Z		:Washer, 2 BA			1
7	123/04734		Fastener, antiluce			2
10	331/39126		:Strut, safety, 690mm			1
11	1370/0301Z		Nut			2

9812/0020U

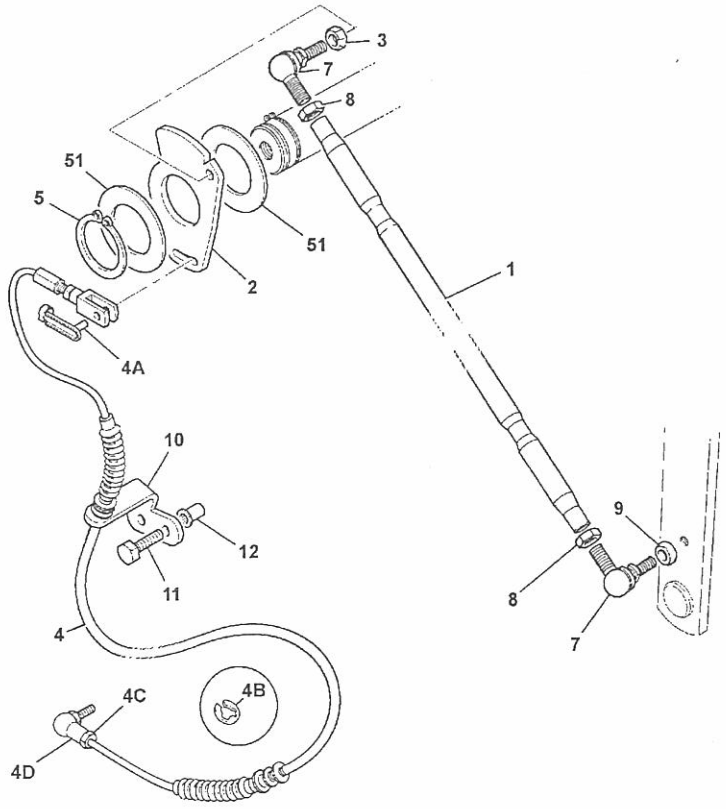

ITEM	PART NO	CHANGE NO	DESCRIPTION	REMARKS	USAGE CODE	QTY
1	123/07739		Link, anti-spill	Standard		1
	331/14676		Link, anti-spill, sunbelt green	Sunbelt green		A/R
2	331/50773		Cam, plate			1
3	1370/0401Z		Nut			1
4	910/60241		Cable, anti-spill			1
4A	331/56804		:Clip, M8 spring pin			1
4B	331/56802		:Clip, "E"			1
4C	1370/0203Z		:Nut, self lock, M8			1
4D	913/02902		:Joint, ball			1
5	821/00517		Circlip, 60mm pin			1
7	913/00049		Joint, ball, M16			2
8	1370/0602Z		Nut, lock			2
9	123/07745		Spacer			1
10	331/51174		Bracket, anti-spill			1
11	1315/0409Z		Screw, hex. head			2
12	826/01617		Nut, rivet M10			2
51	823/00471		Washer, 1.45mm max			A/R
	819/00099		Spacer, 5mm			A/R
	819/00147		Spacer, 3mm			A/R

789770

B

- B1 BODYWORK/FRAME
- B2 CAB
- B3 LOADER, FRONT END
- ● B4 BACKHOE
- B5 REFURBISHMENTS

9812/0020

B4-2-1 SLEW/SWING, COMPONENTS

ISSUE

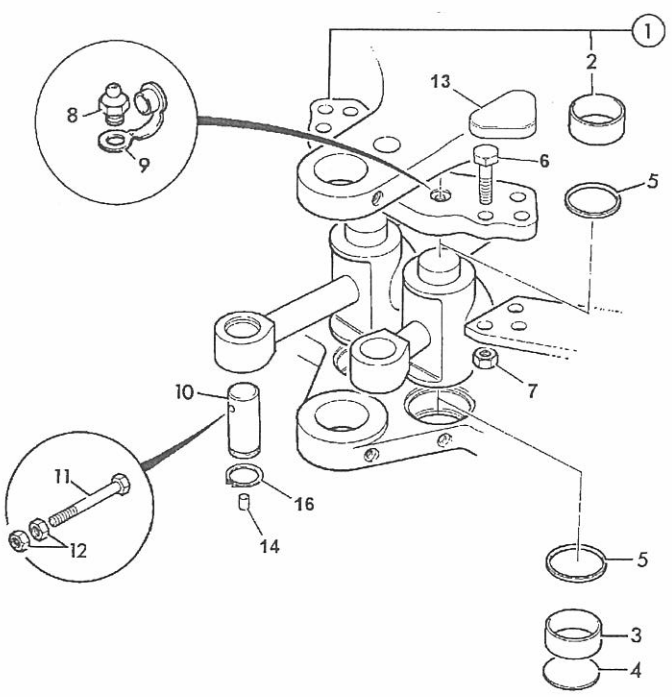

247522

ITEM	PART NO	CHANGE NO	DESCRIPTION	REMARKS	USAGE CODE	QTY
1	126/01082		Bracket, trunnion			1
2	808/00388		:Bearing, liner			2
3	808/00388		Bearing, liner			1
4	123/05228		Disc, blanking			1
5	123/04237		Seal			4
6	1316/3818Z		Bolt, M20 x 80 (10.9)			6
7	1371/0701Z		Nut, hex M20, high strength			6
8	1450/0001		Nipple, grease, straight, 1/8 BSP			2
9	835/00017		Cap, grease nipple			2
10	811/90198		Pin, pivot, 172mm long, with groove			2
11	1315/3526Z		Bolt			2
12	1370/0402Z		Nut, M12			4
13	123/07540		Cap, bolt cover			2
14	835/00188		Plug	Use with item 10.		2
15	823/00604		Washer, hardened,zinc plated, M20			12
16	2203/0067		Circlip			2

9812/0020

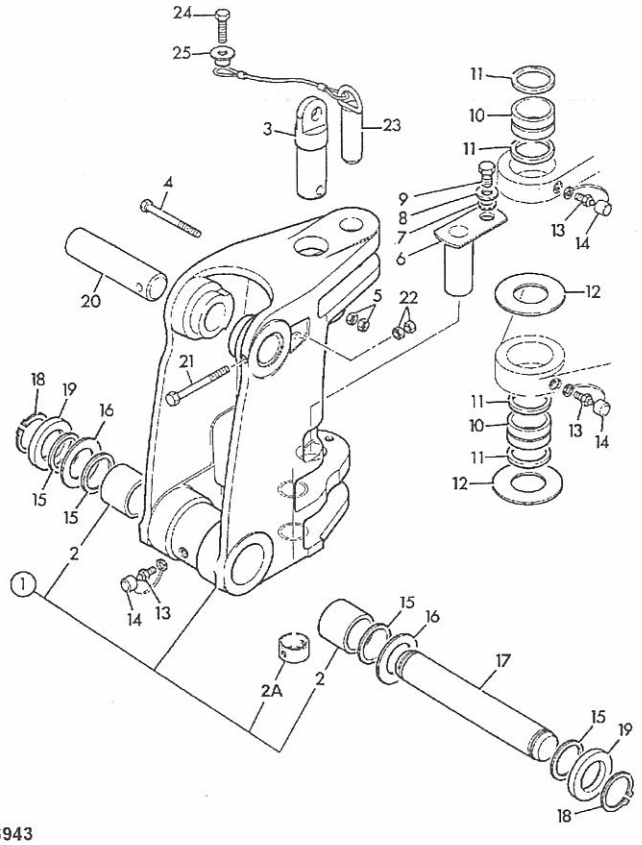

246943

ITEM	PART NO	CHANGE NO	DESCRIPTION	REMARKS	USAGE CODE	QTY
1	128/10728		Kingpost, 14' backhoe, centremount			1
2	808/00385		:Bearing, liner, 70mm OD x 60mm ID.			2
2A	831/10229		:Bearing, liner			4
3	913/10079		Pin, kingpost top, centremount			1
	811/90173		Pin, kingpost top, Sunbelt Green	Sunbelt green		A/R
4	1315/3524Z		Bolt, M12 x 140 Lg.			1
5	1370/0402Z		Nut, M12			2
6	913/10080		Pin, kingpost bottom			1
7	123/05226		Spacer			1
8	1412/0005Z		Washer, plain			1
9	826/11163		Bolt, M12x30			1
10	831/10211		Bearing, liner, 70x84x57, slew pivot			2
11	813/00456		Seal, pivot pin grease			4
12	823/10270		Washer, thrust, 71x150x6.05			2
	998/00007		Washer, 4mm thrust			A/R
	998/00006		Washer, 7mm thust			A/R
13	1450/0001		Nipple, grease, straight, 1/8 BSP			3
14	835/00017		Cap, grease nipple			3
15	813/00427		Seal, grease	Kingpost		2
16	819/00143		Shim, 1.4mm			2
17	811/70098		Pin, pivot			1

9812/0020U

B4-3-1 KINGPOST CENTREMOUNT, 14' 0" BACKHOE ISSUE 1

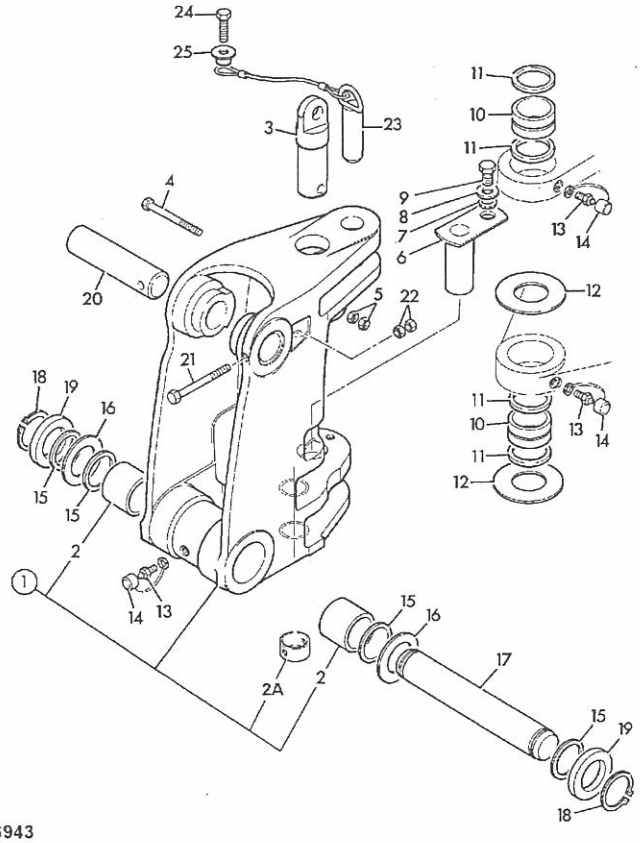

246943

ITEM	PART NO	CHANGE NO	DESCRIPTION	REMARKS	USAGE CODE	QTY
	811/70098A		Pin, pivot, 60X440mm, 0.1mm O/S			1
	811/70098B		Pin, pivot, 60X440mm, 0.25mm O/S			1
18	821/00297		Circlip			2
19	819/00099		Spacer, 5mm			A/R
	819/00144		Spacer, 6mm			A/R
	819/00145		Spacer, 8mm			A/R
20	811/50483		Pin, pivot	Boom ram pivot		1
	811/50483A		Pin, pivot, 50X250mm, 0.1mm O/S			1
	811/50483B		Pin, pivot, 50X250mm, 0.25mm O/S			1
21	1315/3523Z		Bolt, M12x130			1
22	1370/0402Z		Nut, M12			2
23	125/81200		Pin, slewlock			1
24	1315/3518Z		Bolt, M12 x 80mm			1
25	123/05243		Spacer			1
26	1370/0403Z		Nut, M12			1

9812/0020U

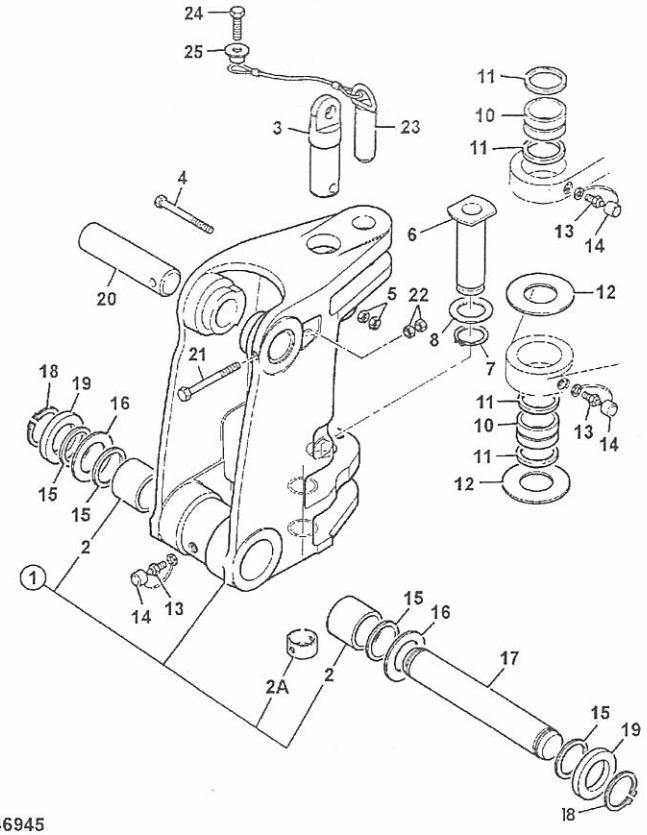

246945

ITEM	PART NO	CHANGE NO	DESCRIPTION	REMARKS	USAGE CODE	QTY
1	128/15200		Kingpost, assembly, centrmount 14ft 0ins			1
2	808/00385		:Bearing, liner, 70mm OD x 60mm ID.			2
2A	831/10229		:Bearing, liner			4
3	913/10079		Pin, kingpost top, centremount			1
	811/90173		Pin, kingpost top, Sunbelt Green	Sunbelt green		A/R
4	1315/3524Z		Bolt, M12 x 140 Lg.			1
5	1370/0402Z		Nut, M12			2
6	911/40106		Pin, bottom c/m kingpost			1
	911/40132		Pin, kingpost bottom, sunbelt green	Sunbelt green		A/R
7	821/10354		Circlip			1
8	823/10638		Shim, 82od x 71id x 0.5thk			A/R
	823/10704		Shim, 82od x 71id X 1. 5thk			A/R
10	831/10211		Bearing, liner, 70x84x57, slew pivot			2
11	813/00456		Seal, pivot pin grease			4
12	823/10270		Washer, thrust, 71x150x6. 05			2
	998/00007		Washer, 4mm thrust			A/R
	998/00006		Washer, 7mm thust			A/R
13	1450/0001		Nipple, grease, straight, 1/ 8 BSP			3
14	835/00017		Cap, grease nipple			3
15	813/00427		Seal, grease	Kingpost		2
16	819/00143		Shim, 1.4mm			2

9812/0020U

B4-3-2 KINGPOST CENTREMOUNT, 14' 0" BACKHOE ISSUE

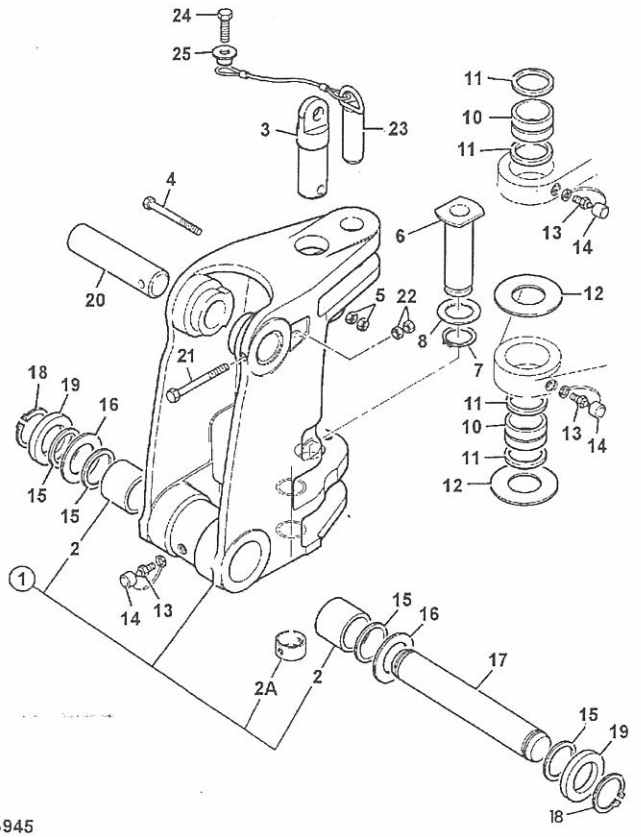

246945

ITEM	PART NO	CHANGE NO	DESCRIPTION	REMARKS	USAGE CODE	QTY
17	811/70098		Pin, pivot			1
	811/70098A		Pin, pivot, 60X440mm, 0. 1mm O/S			1
	811/70098B		Pin, pivot, 60X440mm, 0. 25mm O/S			1
18	821/00297		Circlip			2
19	819/00099		Spacer, 5mm			A/R
	819/00144		Spacer, 6mm			A/R
	819/00145		Spacer, 8mm			A/R
20	811/50483		Pin, pivot	Boom ram pivot		1
	811/50483A		Pin, pivot, 50X250mm, 0. 1mm O/S			1
	811/50483B		Pin, pivot, 50X250mm, 0. 25mm O/S			1
21	1315/3523Z		Bolt, M12x130			1
22	1370/0402Z		Nut, M12			2
23	125/81200		Pin, slewlock			1
24	1315/3518Z		Bolt, M12 x 80mm			1
25	123/05243		Spacer			1
26	1370/0403Z		Nut, M12			1

9812/0020L

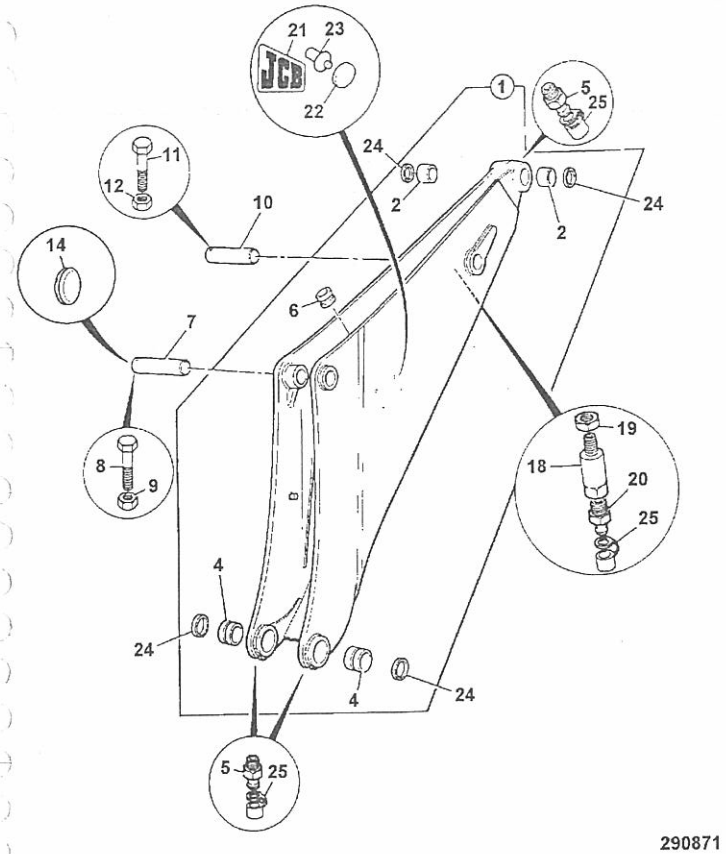

290871

ITEM	PART NO	CHANGE NO	DESCRIPTION	REMARKS	USAGE CODE	QTY
1	126/02332		Boom, 2390mm long			1
2	809/00131		:Bearing, liner, 60. 06IDx70.07ODx62lg			2
4	809/00131		:Bearing, liner, 60. 06IDx70.07ODx62lg			2
5	1450/0001		Nipple, grease, straight, 1/ 8 BSP			3
6	830/00314		Ferrule, rubber			6
7	811/50569		Pin, pivot			1
	811/50569A		Pin, pivot, 60X322mm, 0. 1mm O/S			1
	811/50569B		Pin, pivot, 60X322mm, 0. 25mm O/S			1
8	1315/3520Z		Bolt, M12 x 100mm			1
9	1370/0403Z		Nut, M12			1
10	811/50520		Pin, pivot			1
	811/50520A		Pin, pivot, 50X275mm, 0. 1mm O/S			1
	811/50520B		Pin, pivot, 50X275mm, 0. 25mm O/S			1
11	1315/3520Z		Bolt, M12 x 100mm			1
12	1370/0403Z		Nut, M12			1
14	2410/1308		Grommet, blind	fit ti item 7		1
18	816/20049		Adapter			1
19	826/00871		Nut			1
20	1450/0001		Nipple, grease, straight, 1/ 8 BSP			1
21	817/17454		Decal, JCB insignia, 350mm high			2
22	835/00049		Plug, blanking			8

B4-4-40 BOOM, 14' ISSUE 1

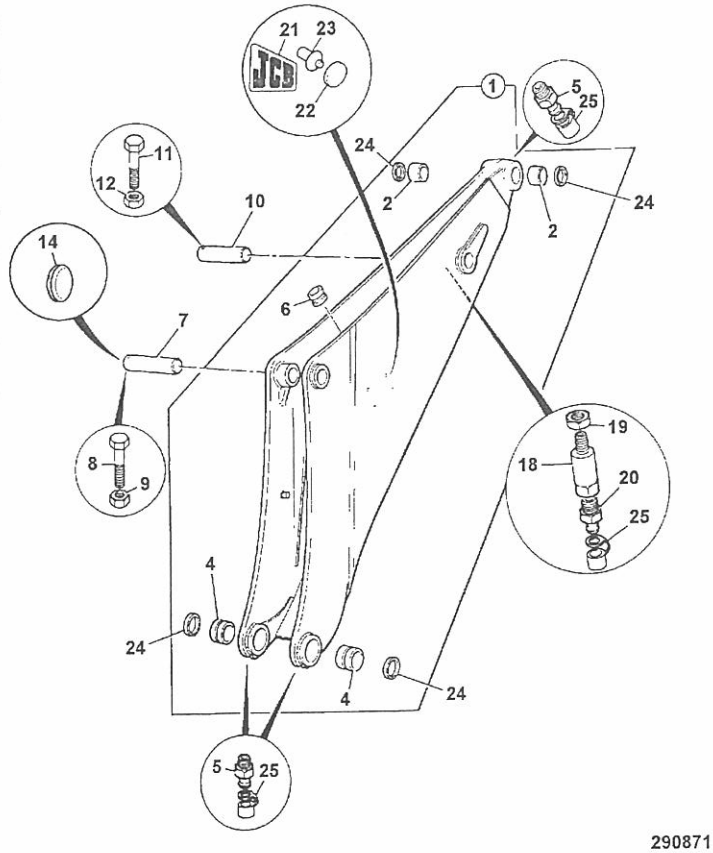

290871

ITEM	PART NO	CHANGE NO	DESCRIPTION	REMARKS	USAGE CODE	QTY
23	826/00867		Rivet, logo			8
24	813/00427		Seal, grease			4
25	835/00017		Cap, grease nipple			4

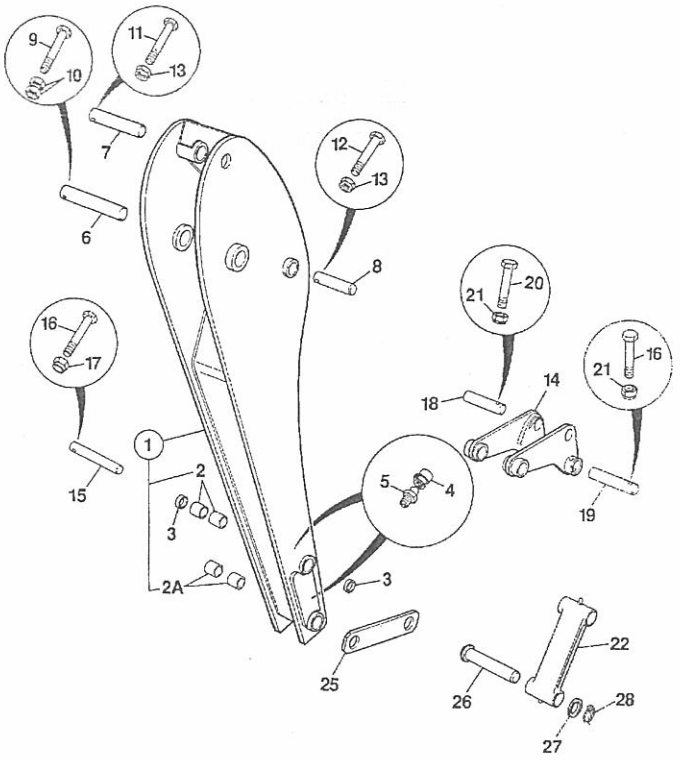

237080

ITEM	PART NO	CHANGE NO	DESCRIPTION	REMARKS	USAGE CODE	QTY
1	128/15167		Dipper, mono standard lift			1
	829/08117		:Boss, pivot	Bucket/lever pivot		2
2	809/00125		:Bearing, liner, 45mm pivot bore			2
2A	809/00176		Bearing, liner, 44.5IDx55.5ODx50long			2
3	813/00425		Seal, pivot pin grease			2
4	835/00017		Cap, grease nipple			2
5	1450/0001		Nipple, grease, straight, 1/8 BSP			2
6	811/50372		Pin, pivot	Boom, dipper pivot		1
	811/50372A		Pin, pivot, 60x350mm, 0.1mm O/S			1
	811/50372B		Pin, pivot, 60x350mm, 0.25mm O/S			1
6A	823/10536		Shim, 2mm			1
7	811/50381		Pin, pivot	dipper ram eye end pivot. std duty dipper		1
	811/50381A		Pin, pivot, 50x340mm, 0.1mm O/S			1
	811/50381B		Pin, pivot, 50X340mm, 0.25mm O/S			1
8	811/50375		Pin, pivot	Bucket ram dump end		1
9	826/01642		Capscrew			1
10	1370/0403Z		Nut, M12			1
11	1315/3521Z		Bolt, M12x110			1
12	1315/3418Z		Bolt, M10x80			1
13	1370/0303Z		Nut, lock, M10	Bucket ram		1

B4-5-40 DIPPER (STICK), MONO

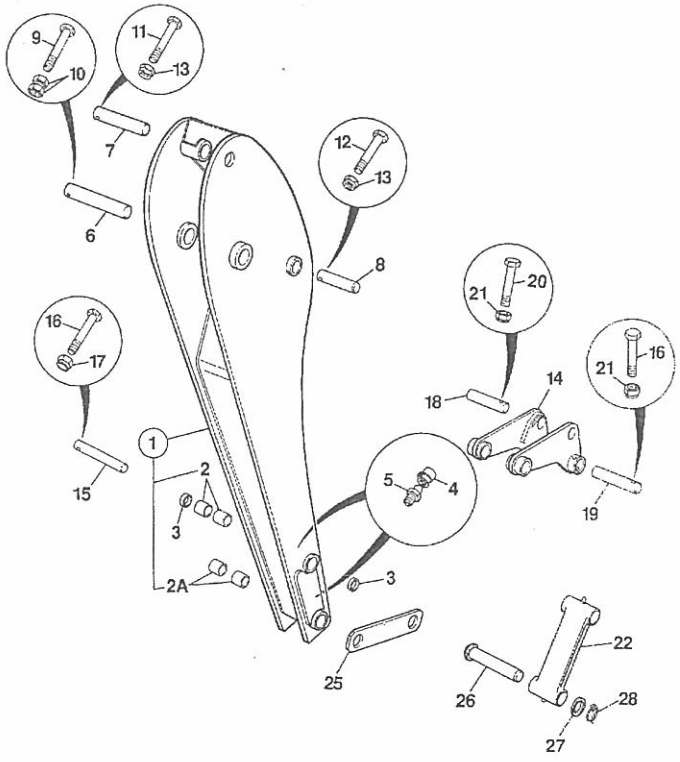

237080

ITEM	PART NO	CHANGE NO	DESCRIPTION	REMARKS	USAGE CODE	QTY
	1370/0403Z		Nut, M12	Dipper ram		1
14	335/05602		Lever, tipping, 14'0", 4 holes per side			1
	335/05601		Lever, tipping, 14'0", 3 holes per side			1
15	811/20061		Pin, pivot			1
16	1315/3418Z		Bolt, M10x80			3
17	1370/0303Z		Nut, lock, M10			2
18	811/90409		Pin, Pivot 45 x 206			1
19	811/50369		Pin, pivot			1
20	1315/3419Z		Bolt, M10x90mm			1
21	1370/0303Z		Nut, lock, M10			2
22	.		'See Remark'	Tipping link, see B4 index.		1
25	106/50001		Strap	Optional		1
26	911/12400		Pin, pivot			2
27	823/00470		Washer			2
28	826/00512		Pin, lynch			2
29	819/00100		Shim, 120x60.5x1.4thick			A/R

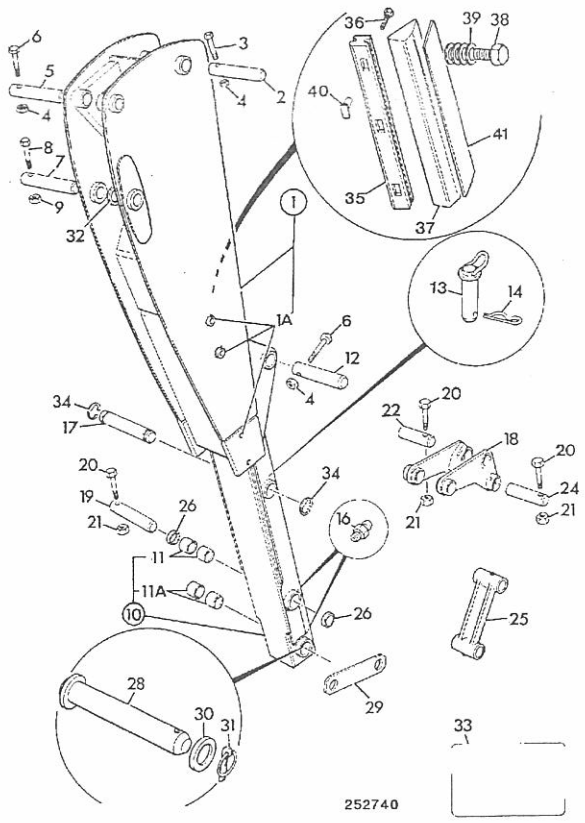

ITEM	PART NO	CHANGE NO	DESCRIPTION	REMARKS	USAGE CODE	QTY
1	331/19807		Carrier, 14' extradig			1
1A	826/10345		:Boss, wear pad adjuster, M20 thread			8
2	811/90583		Pin, pivot			1
3	1315/3317Z		Bolt, M8x75			2
4	1370/0203Z		Nut, self lock, M8	use with item 2		1
	1370/0303Z		Nut, lock, M10	use with item 12		1
	1370/0403Z		Nut, M12	For use with item 5		1
5	811/90183		Pin, pivot			1
	811/90183A		Pin, pivot			1
	811/90183B		Pin, pivot			1
6	1315/3418Z		Bolt, M10x80	For use with item 12		1
	1315/3520Z		Bolt, M12 x 100mm	For use with item 5		1
7	811/50372		Pin, pivot			1
	811/50372A		Pin, pivot, 60x350mm, 0.1mm O/S			1
	811/50372B		Pin, pivot, 60x350mm, 0.25mm O/S			1
7A	823/10536		Shim, 2mm			1
8	826/01642		Capscrew			1
9	1370/0403Z		Nut, M12			1
10	128/10774		Dipper, inner			1
10A	829/01201		:Boss, locking			1
11	809/00125		:Bearing, liner, 45mm pivot bore	Lever pivot		2
11A	809/00176		:Bearing, liner, 44.5IDx55.5ODx50long			2
12	811/50367		Pin, pivot			1

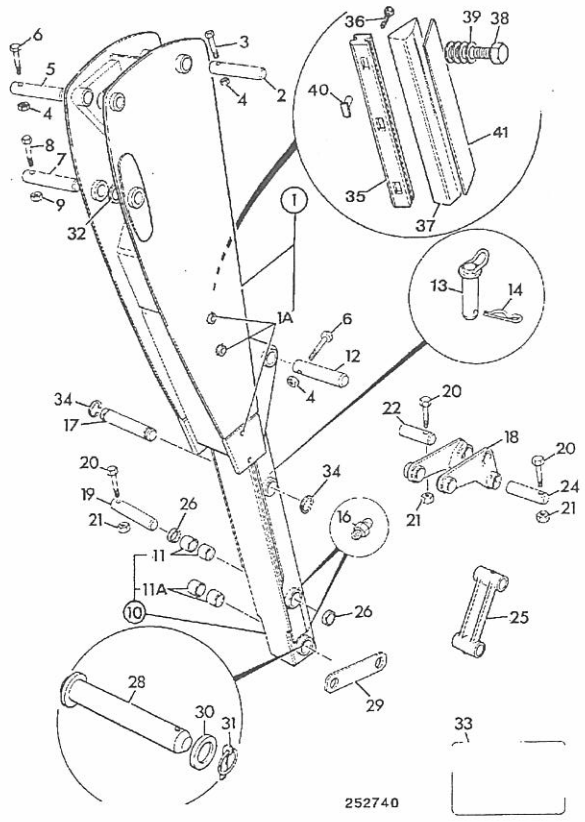

ITEM	PART NO	CHANGE NO	DESCRIPTION	REMARKS	USAGE CODE	QTY
13	911/40092		Pin, locking			1
14	122/34401		Clip			1
16	1450/0002		Nipple, grease, straight, 1/4			2
17	811/90585		Pin, pivot			1
18	335/05602		Lever, tipping, 14'0", 4 holes per side			1
	335/05601		Lever, tipping, 14'0", 3 holes per side			1
19	811/20061		Pin, pivot			1
20	1315/3418Z		Bolt, M10x80	items 19 & 24		2
	1315/3419Z		Bolt, M10x90mm	item 22		1
21	1370/0303Z		Nut, lock, M10			4
22	811/90409		Pin, Pivot 45 x 206			1
23	1305/3226Z		Bolt			1
24	811/50369		Pin, pivot			1
25	.		'See Remark'	Tipping link, B4 index		1
26	813/00425		Seal, pivot pin grease			2
27	1416/0008Z		Washer, spring			8
28	911/12400		Pin, pivot			2
29	106/50001		Strap			1
30	823/00470		Washer			2
31	826/00512		Pin, lynch			2
32	819/00100		Shim, 120x60.5x1.4thick			A/R
33	817/00502		Label, greasing			1
34	823/00334		Clip			1
35	123/06189		Pad, top wear			4

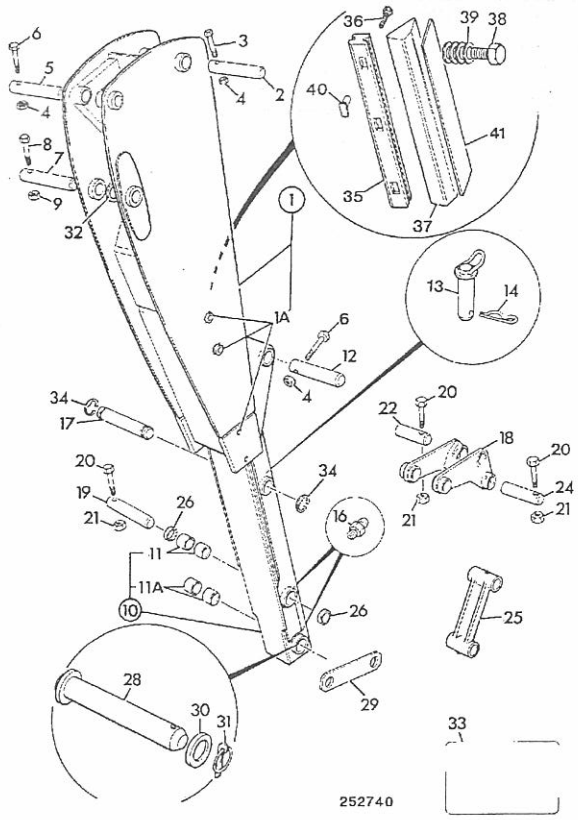

ITEM	PART NO	CHANGE NO	DESCRIPTION	REMARKS	USAGE CODE	QTY
36	1318/3410Z		Bolt			8
37	331/27389		Pad, wear strip, bottom, red			4
38	1315/0811Z		Bolt, M20 X 45 long			8
39	1370/0702Z		Nut, thin M20			8
40	NSP		None serviced part	Now part of item 35.		8
41	331/30894		Plate, spreader			4
42	123/06256		Spacer, steel	Fitted between item 36 & 35		8
	1420/0008Z		Washer, Plain M10	replaces 123/06256		16

9812/0020L

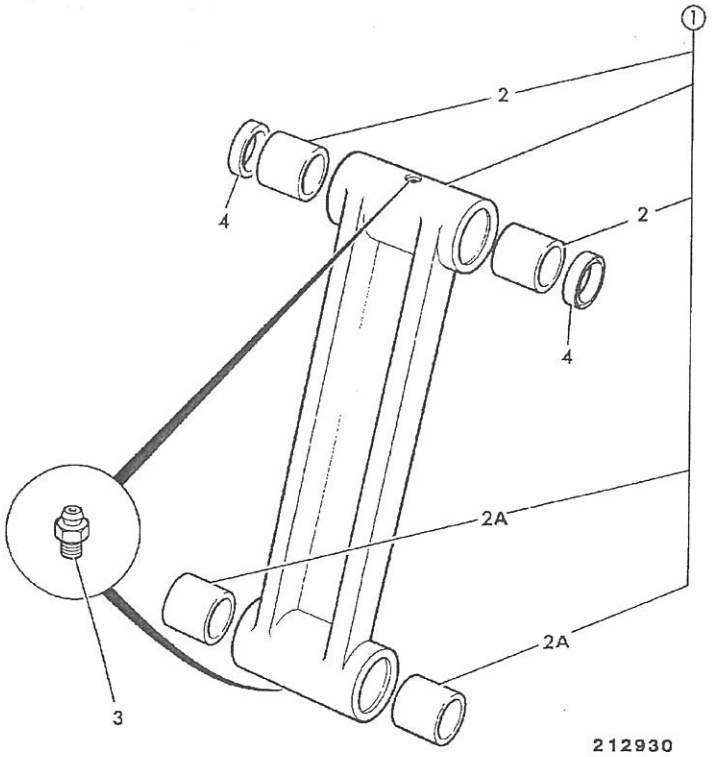

ITEM	PART NO	CHANGE NO	DESCRIPTION	REMARKS	USAGE CODE	QTY
1	126/00247		Link, tipping			1
2	809/00125		:Bearing, liner, 45mm pivot bore			2
2A	809/00176		Bearing, liner, 44.5IDx55.5ODx50long			2
3	1450/0002		Nipple, grease, straight, 1/4			2
4	813/00425		Seal, pivot pin grease			2

9812/0020L

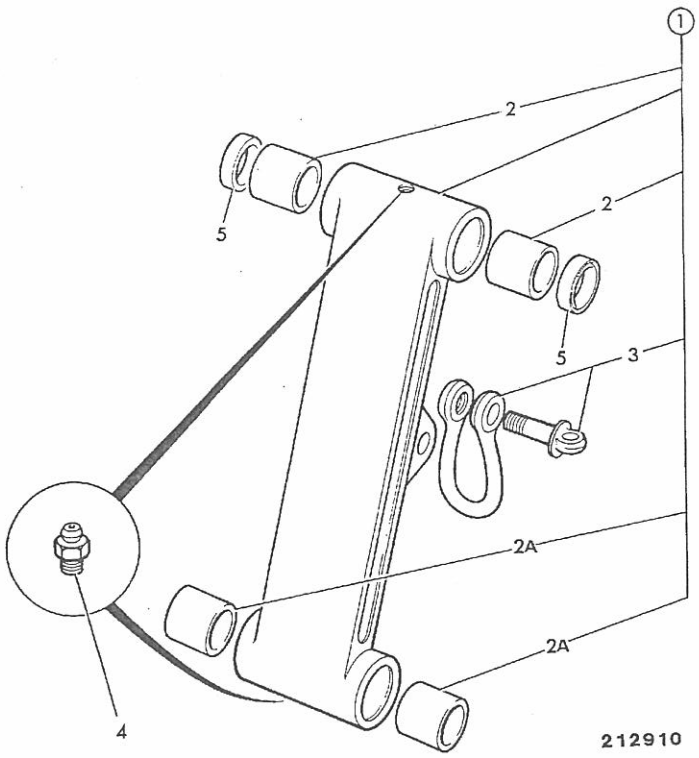

ITEM	PART NO	CHANGE NO	DESCRIPTION	REMARKS	USAGE CODE	QTY
1	126/00248		Link, tipping, c/w lifting eye			1
2	809/00125		:Bearing, liner, 45mm pivot bore			2
2A	809/00129		:Bearing, liner, 44.5IDx55.5ODx50long	Link to bucket pivot		2
3	918/66900		:Link, bow. 1 TON SWL			1
4	1450/0001		Nipple, grease, straight, 1/8 BSP			2
5	813/00425		Seal, pivot pin grease	Link to lever pivot		2

9812/0020U

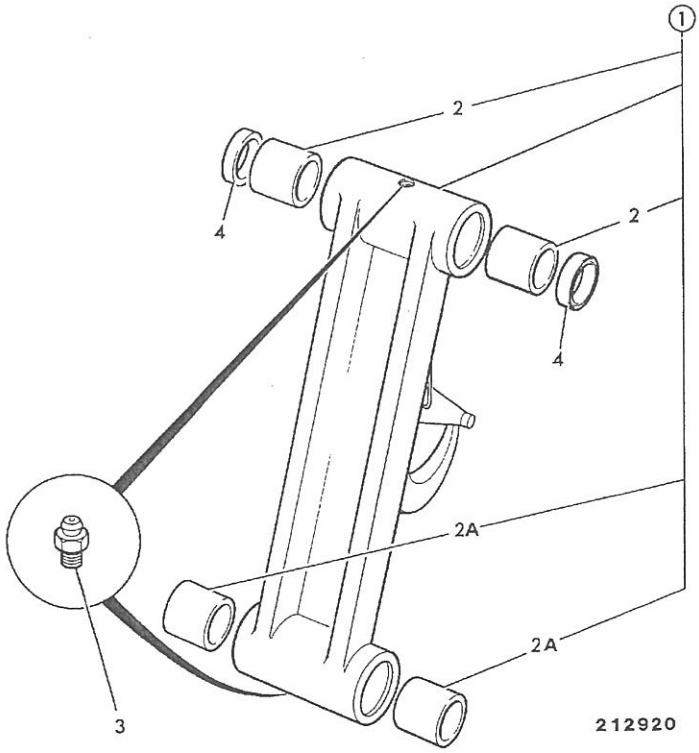

ITEM	PART NO	CHANGE NO	DESCRIPTION	REMARKS	USAGE CODE	QTY
1	126/00249		Link, tipping, MAX S.W.L. '5ton'			1
1A	918/02101		:Kit-repair			1
	998/11259		:Kit-repair, marked with letter Y			1
2	809/00125		:Bearing, liner, 45mm pivot bore	Link to lever pivot		2
2A	809/00129		:Bearing, liner, 44.5IDx55.5ODx50long	Link to bucket pivot		2
3	1450/0002		Nipple, grease, straight, 1/4			2
4	813/00425		Seal, pivot pin grease	Link to lever pivot		2

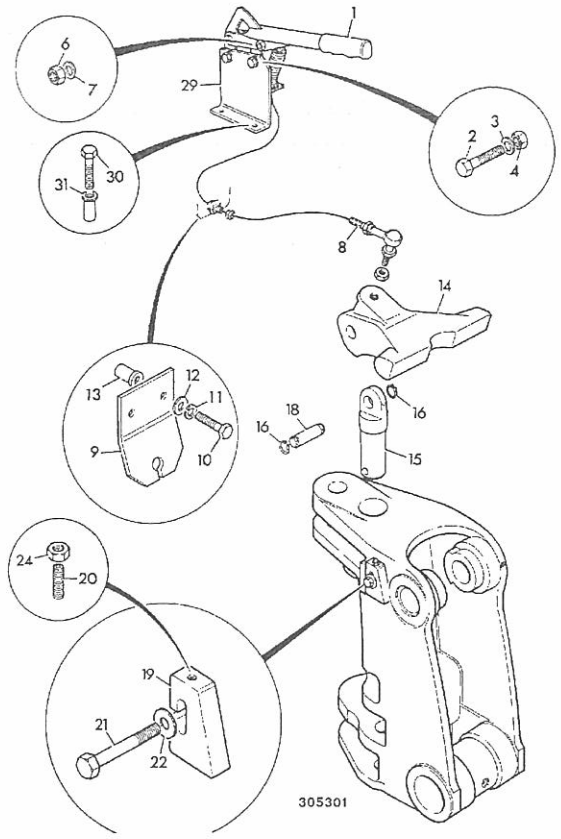

ITEM	PART NO	CHANGE NO	DESCRIPTION	REMARKS	USAGE CODE	QTY
1	123/05234		Lever, boomlock, red grip			1
2	1315/0307Z		Screw, M8 X 25			2
3	1411/0003Z		Washer, medium			2
4	1370/0203Z		Nut, self lock, M8			2
6	913/05903		Pin, clevis			1
7	913/00005		Clip, clevis			1
8	910/48400		Cable, assembly, boomlock centremount			1
8A	123/07652		Joint, ball end			1
9	331/30856		Bracket, reaction			1
10	1315/0307Z		Screw, M8 X 25			2
11	1425/0007Z		Washer, spring			2
12	1420/0007Z		Washer, plain, M8			2
13	826/01103		Nut, rivet,M8 open ended			2
14	123/05862		Casting, boom lock, 14'0 (Yellow)			1
15	913/10079		Pin, kingpost top, centremount			1
16	2203/0035		Circlip			2
18	811/70099		Pin, boomlock			1
19	123/05236		Plate, boom stop			1
20	1390/0412Z		Screw, grub, M10x50 long			1
21	1315/3814Z		Bolt, M20 x 60mm			1
22	823/00491		Washer, spacer			1
24	1370/0302Z		Nut, lock			1
26	1450/0001		Nipple, grease, straight, 1/8 BSP	Use with item 15, 18		1
27	835/00017		Cap, grease nipple			1

B4-10-31 CONTROLS, LEVER, IN CAB BOOM LOCK ISSUE 1

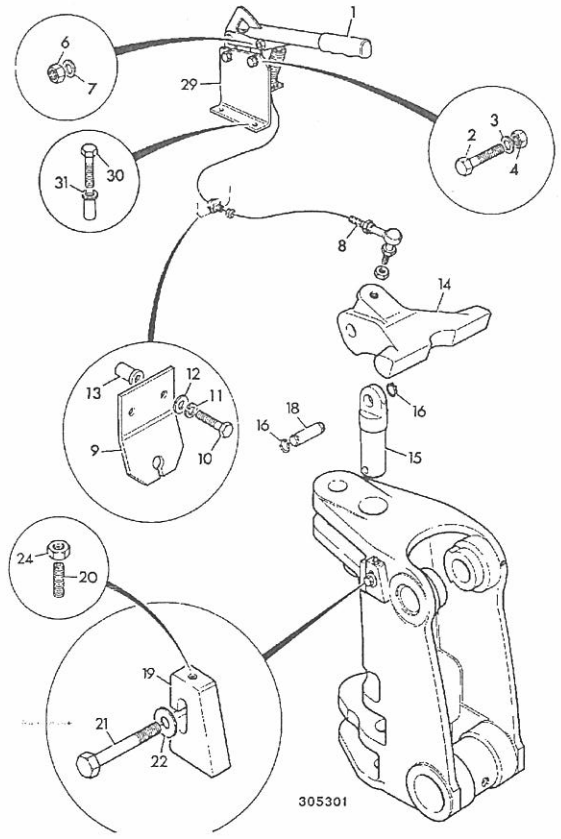

ITEM	PART NO	CHANGE NO	DESCRIPTION	REMARKS	USAGE CODE	QTY
28	835/00166		Plug			1
29	331/14484		Bracket, boomlock, cable reaction			1
30	.		'See Remark'			2
31	.		'See Remark'			2

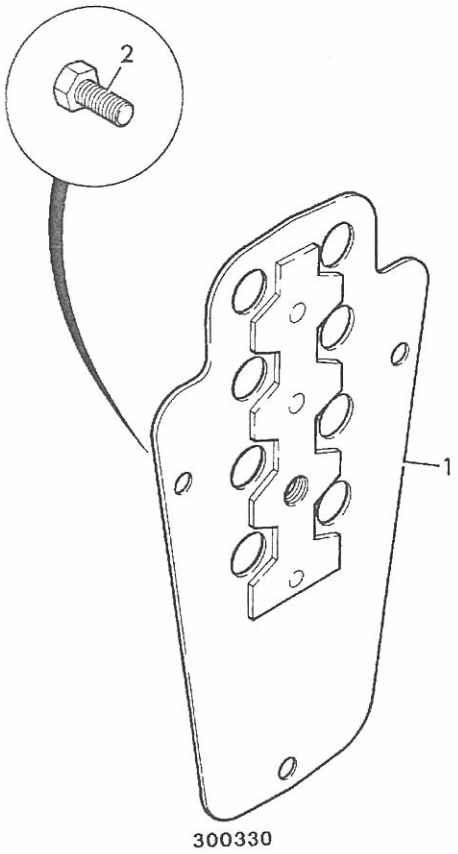

ITEM	PART NO	CHANGE NO	DESCRIPTION	REMARKS	USAGE CODE	QTY
1	331/33337	Superseded	Plate, bulkhead,kingpost, centremount			1
	331/64233		Plate, bulkhead, kingpost, centremount			1
2	1315/0408Z		Bolt, M10x30	Was 3 off		2

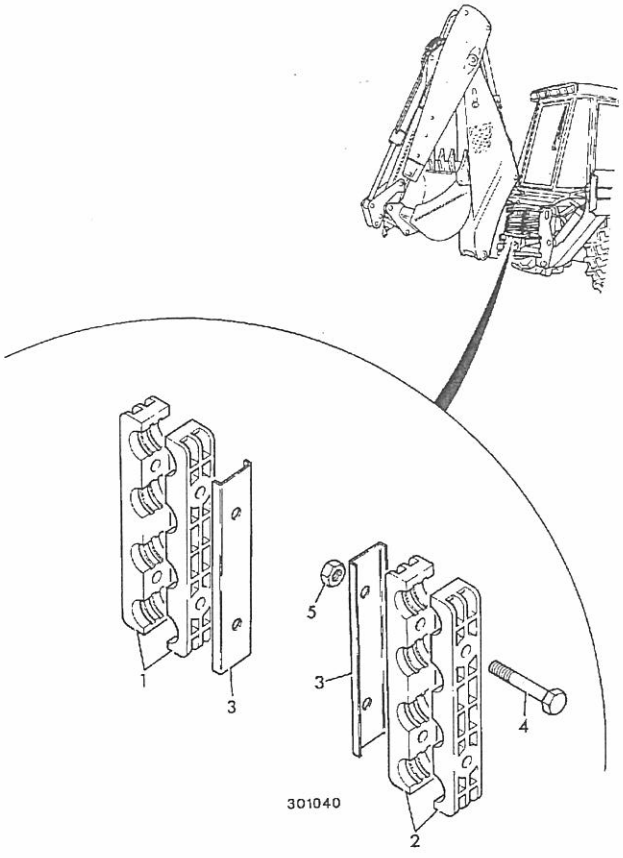

ITEM	PART NO	CHANGE NO	DESCRIPTION	REMARKS	USAGE CODE	QTY
1	123/07468		Clamp, 5/8" top, centremount			2
2	123/07489		Clamp, 5/8" middle			2
3	123/07469		Plate, clamp			4
4	1315/3414Z		Bolt			4
5	1370/0303Z		Nut, lock, M10			4

B

- B1 BODYWORK/FRAME
- B2 CAB
- B3 LOADER, FRONT END
- B4 BACKHOE
- ● B5 REFURBISHMENTS

9812/0020U

B5-1-10 DECALS, EXCAVATOR, CASE STYLE, 214e

ISSUE 1

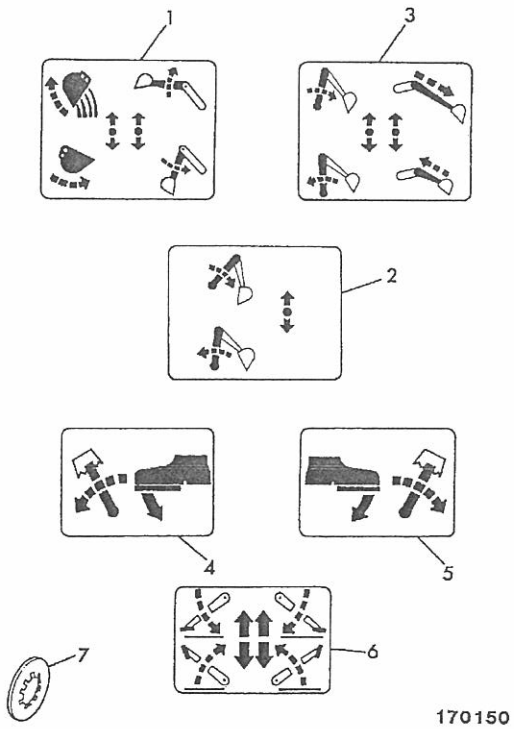

170150

ITEM	PART NO	CHANGE NO	DESCRIPTION	REMARKS	USAGE CODE	QTY
1	817/17777		Decal, l hand case control, bucket & dipper			1
2	817/17779		Decal, r hand case control, boom			1
3	817/17778		Decal, r hand case control, boom & auxiliary			1
4	817/17780		Decal, l hand foot control, case			1
5	817/17781		Decal, r hand foot control, case			1
6	817/17770		Decal, stabiliser control			1

ITEM	PART NO	CHANGE NO	DESCRIPTION	REMARKS	USAGE CODE	QTY
1	817/01238		Decal, left hand, Ford type controls			1
2	817/01239		Decal, right hand, Ford type controls			1
3	817/01196		Decal, stabiliser, centre mount m/c's.			1
4	826/00711		Washer, 'starloc'			6

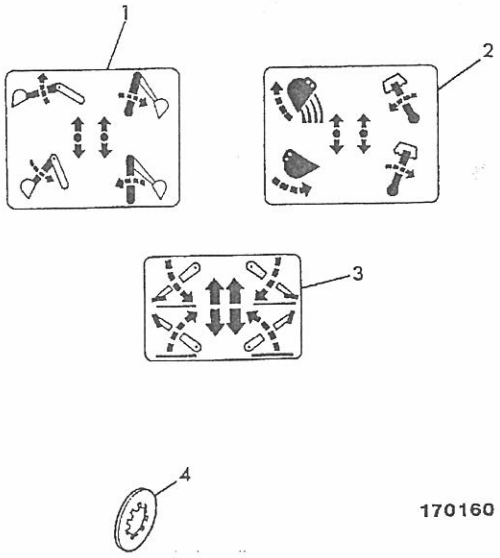

170160

9812/0020U

ITEM	PART NO	CHANGE NO	DESCRIPTION	REMARKS	USAGE CODE	QTY
1	817/01087		Decal, tie down (chain)			4
2	817/70005		Decal, warning,hot fluid, under pressure			1
3	817/70102		Decal, Warning,Moving parts, remove key			2
4	817/19906		Decal, transmission oil, 49mm X 24mm			1
5	817/00380		Label, DRAIN EVERY 50 HOURS			1
6	817/70024		Label, warning, do not use as step			1
7	817/18825		Label, product liability, read operator h.book			1

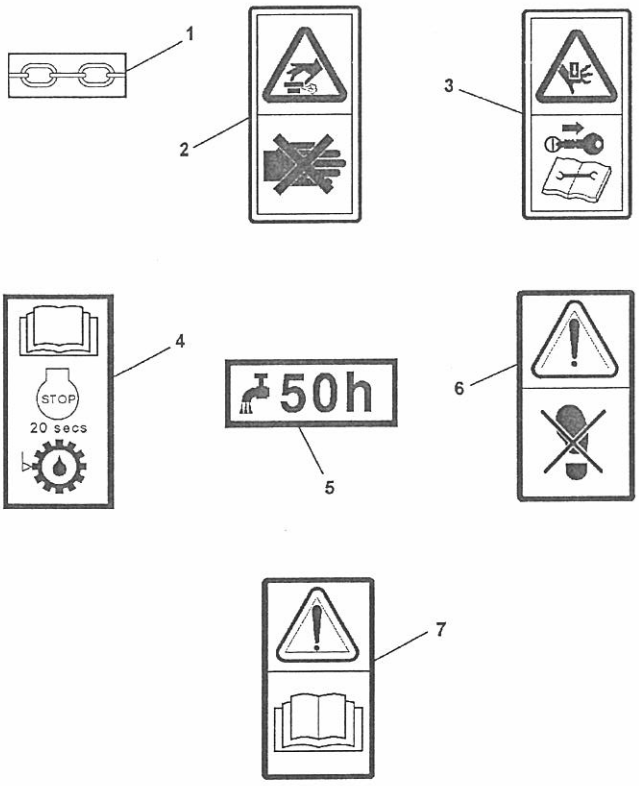

775190

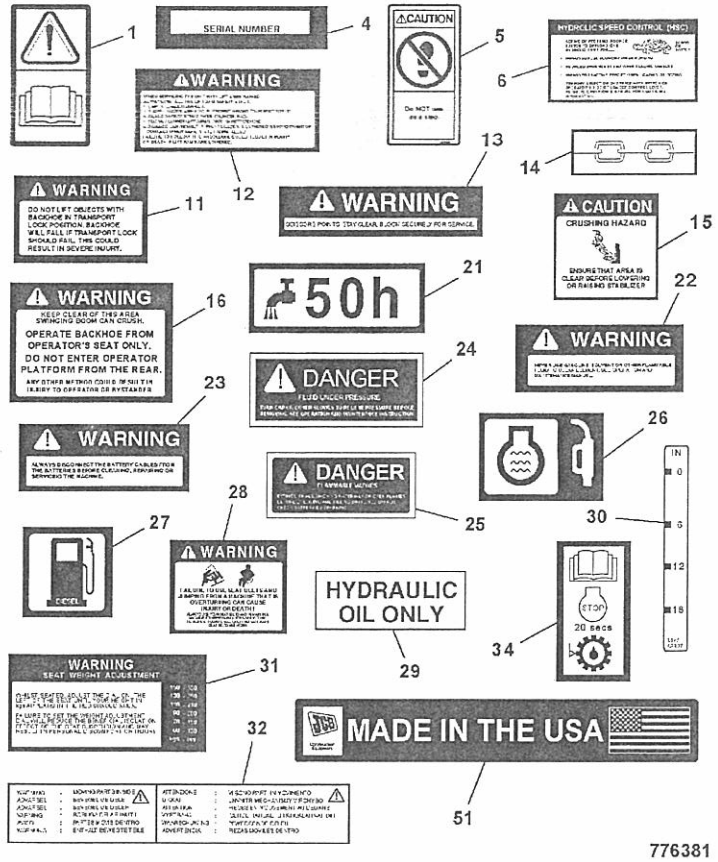

ITEM	PART NO	CHANGE NO	DESCRIPTION	REMARKS	USAGE CODE	QTY
1	817/18825		Label, product liability, read operator h.book			1
4	817/05155		Label, hi-lite, chassis stamp			1
5	817/70068		Decal, Do not use as a step			1
6	817/03403		Decal, hyd speed control			1
11	817/00484		Label, warning, boom lock			1
12	817/00491		Label, warning, servicing			2
13	817/00492		Label, loader arm, scissor point			2
14	817/01087		Decal, tie down (chain)			6
15	817/03238		Label, crushing hazard, stabilisers			2
16	817/04137		Label, crushing hazard, backhoe slew			2
21	817/00380		Label, DRAIN EVERY 50 HOURS			2
22	817/00493		Decal, warning, cleaning fluid			1
23	817/00495		Decal, warning, disconnect battery			1
24	817/00497		Label, danger, fluid under pressure			2
25	817/00498		Label, danger, flammable vapors			1
26	817/00824		Label, filler coolant			1
27	817/02305		Label, Diesel			1
28	817/03236		Label, Warning, overturn			1
29	817/03237		Label, hydraulic oil only			1
30	817/03807		Decal, 6in1 clam shovel			1

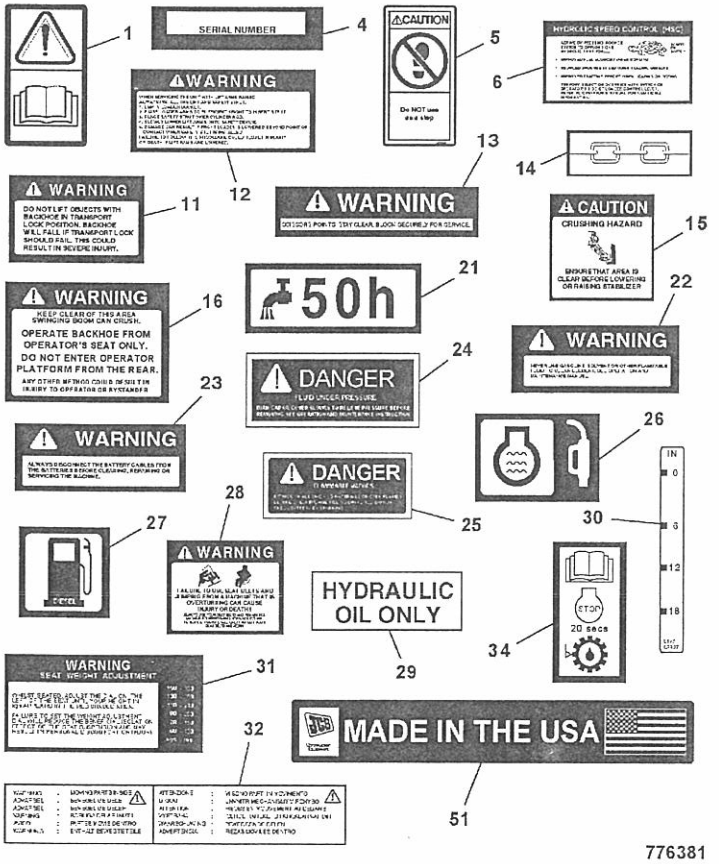

ITEM	PART NO	CHANGE NO	DESCRIPTION	REMARKS	USAGE CODE	QTY
31	817/04636		Decal, seat weight adjust.			1
32	817/04776		Label, warning, moving parts inside			2
34	817/19906		Decal, transmission oil, 49mm X 24mm			1
51	817/19890		Label, Made in the USA	fix to fuel and hydraulic tanks		2

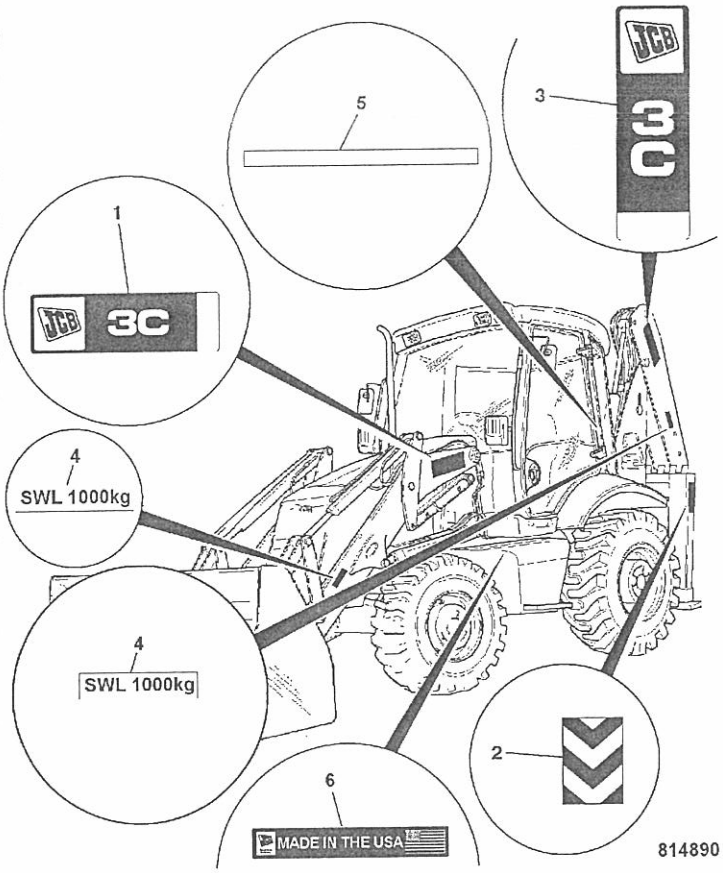

ITEM	PART NO	CHANGE NO	DESCRIPTION	REMARKS	USAGE CODE	QTY
1	817/20015		Decal, 3C 14ft, loader arm			2
	817/20018		Decal, 3C LL, (loader arm)	214e LL		2
2	-		'See Remark'	not fitted		1
3	817/20016		Decal, 3C 14ft, dipper			2
4	817/01208		Label, safe lifting, loader arm	dipper & loader arm 214e		2
5	817/05232		Decal, cab rear trim	cab base rear 214e		1
6	817/19890		Label, Made in the USA	fix to diesel and hydraulic tanks		2

9812/0020U

ITEM	PART NO	CHANGE NO	DESCRIPTION	REMARKS	USAGE CODE	QTY
1	817/17156		Decal, Sunbelt logo,boom	for boom		2
2	817/17157		Decal, Sunbelt logo, bonnet	for bonnet		1



9812/0020L

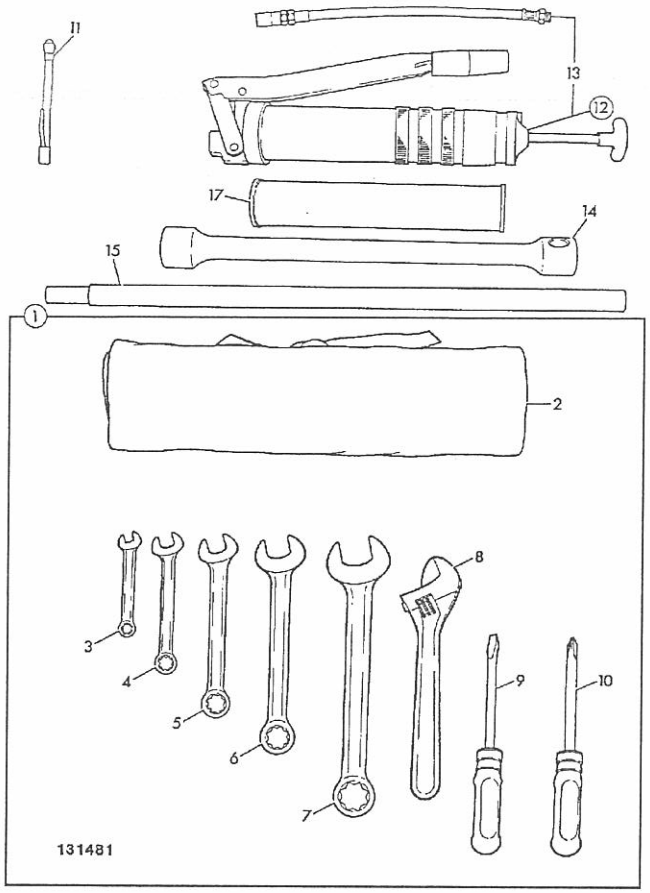

ITEM	PART NO	CHANGE NO	DESCRIPTION	REMARKS	USAGE CODE	QTY
1	915/10300		Kit-tool			1
2	270/48800		:Bag, tool			1
3	825/99842		:Spanner, 10mm combination			1
4	825/99843		:Spanner, 11mm combination			1
5	825/99844		:Spanner, 13mm combination			1
6	825/99845		:Spanner, 17mm combination			1
7	825/99846		:Spanner, 19mm combination			1
8	825/99821		:Spanner, adjustable, 10in.			1
9	825/99808		:Screwdriver			1
10	825/99839		:Tool, posidriver			1
11	915/03600		Gauge, tyre pressure			1
12	992/11300		Tool, grease gun			1
13	915/07301		:Connector, flexible			1
14	825/99928		Tool, wrench wheel nut, 28.83-28.57mm A/F			1
15	915/10100		Bar, telescopic tommy			1
17	4003/1327		Grease, cartridge, 400g			1

C

- C1 ELECTRICS, MAIN MACHINE
- C2 ELECTRICS, ENGINE
- C3 ELECTRICS, CAB

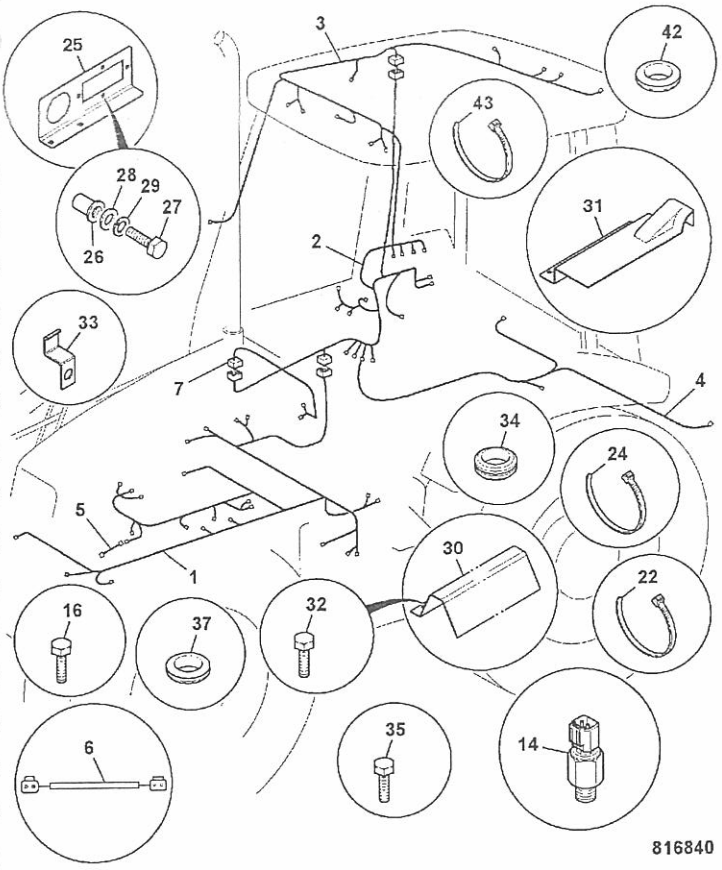

ITEM	PART NO	CHANGE NO	DESCRIPTION	REMARKS	USAGE CODE	QTY
1	721/11953	Superseded	Harness, chassis			1
	721/12352		Harness, chassis			1
2	721/11954	To M0908882	Harness, cab panel	214e/3C		1
	721/12250		Harness, console 3C	214e/3C		1
	721/12132	To M0908882	Harness, console 3C LL	214eLL/3C LL		1
	721/12261		Harness, console 3C LL	214eLL/3C LL		1
3	721/10346		Harness, cab/canopy roof			1
4	721/11998		Harness, rearlamps			1
5	721/10383		Harness, extension, headlights			1
6	721/12073		Harness, numberplate light			1
7	721/12036		Harness, aircon link			1
14	701/80319	Superseded	Switch, oil pressure,M12, green body,Deutsch			1
	701/80459		Switch, oil pressure, colour, id-red o/d white i/d			1
16	826/01520		Screw, M5 X 20			4
22	826/01144		Tie, cable, 200mm long			A/R
24	826/01347		Tie, cable c/w mounting, 4. 6mm x 190mm			A/R
25	331/51990		Mounting, harness			1
26	826/01099		Nut, rivet,M6 open ended			4
27	1315/0203Z		Screw, M6x16			4
28	1420/0006Z		Washer, M6			4
29	1425/0006Z		Washer, Spring			4
30	123/07747		Cover, harness, floor			1
31	123/07755		Cover, harness, bulkhead			1
32	826/00321		Screw			2

C1-1-31 HARNESS CAB CANOPY, MACHINE ISSUE 1

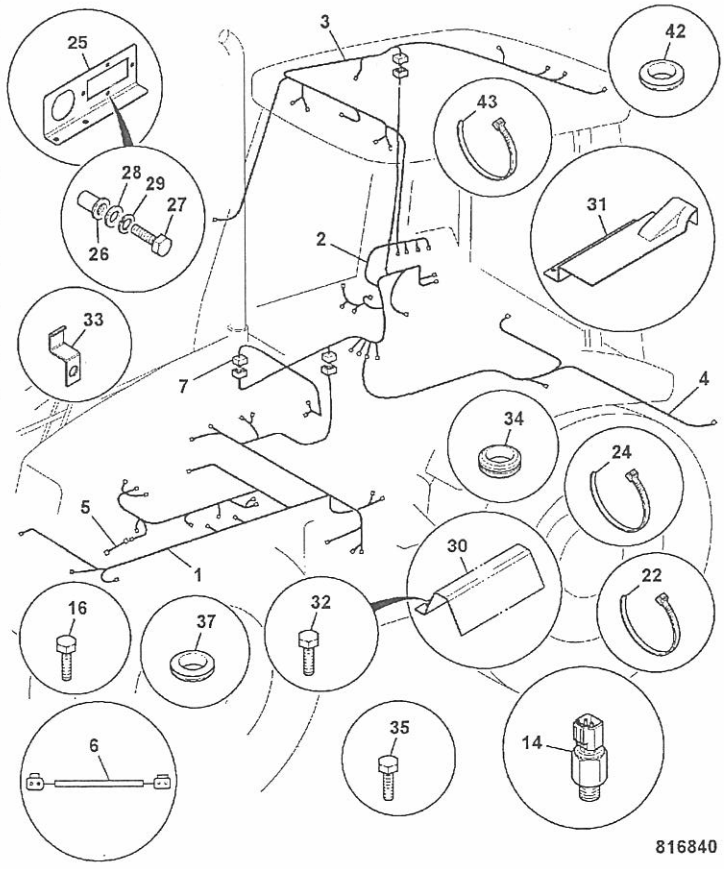

ITEM	PART NO	CHANGE NO	DESCRIPTION	REMARKS	USAGE CODE	QTY
33	123/05247		Clip, cable			2
34	2410/0205		Grommet, hole dia 12. 7mm, panel thknss 5-6mm			2
35	1315/0407Z		Bolt, M10x25			2
37	828/00273		Grommet			2
42	2410/0115		Grommet	cab roof		1
43	826/01162		Tie, cable	cab roof		2
51	721/11412		Harness, link	main harness to loader valve		1

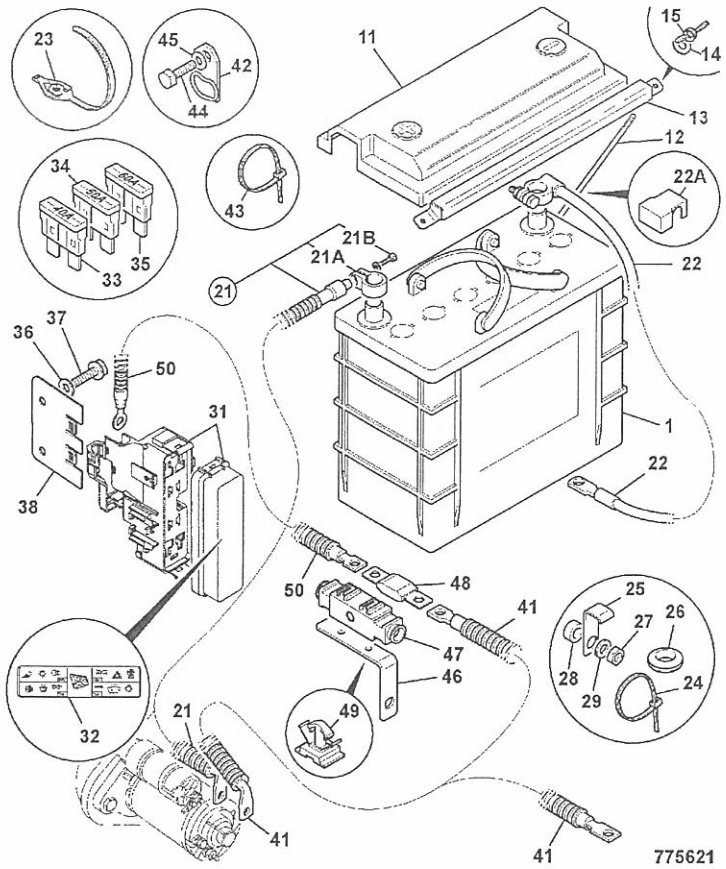

ITEM	PART NO	CHANGE NO	DESCRIPTION	REMARKS	USAGE CODE	QTY
1	708/10038		Battery, type 31 950cc, Savannah	Wet battery		1
11	708/10056		Cover, battery			1
12	826/11285		Bolt, battery, M6x268mm, J bolt			2
13	260/28401		Clamp, battery			1
14	1420/0006Z		Washer, M6			2
15	826/01115		Nut, wing			2
21	718/20216		Lead, battery,positive, 1600mm x 70sq.mm			1
21A	998/11023		:Terminal, battery lug			1
21B	998/10912		:Bolt, battery lug, M6			1
22	706/68400		Lead, battery,negative, 400mm x 70sq.mm			1
23	826/01347		Tie, cable c/w mounting, 4.6mm x 190mm			5
24	826/01144		Tie, cable, 200mm long			3
25	123/05247		Clip, cable			1
26	2410/0205		Grommet, hole dia 12.7mm, panel thknss 5-6mm			1
27	1370/0301Z		Nut			1
28	123/06256		Spacer, steel			1
29	1420/0008Z		Washer, Plain M10			1
31	716/30077		Box, fuselink			1
32	817/17068		Label, fuselink box			1
33	716/15900		Fuse, maxi fuse 40Amp			1
34	716/30081		Fuse, maxi fuse 50Amp			2
35	716/16400		Fuse, maxi fuse 60Amp			1
36	1420/0007Z		Washer, plain, M8			2

9812/0020L

C1-2-11 BATTERY 12V, CARRIER, USA ISSUE

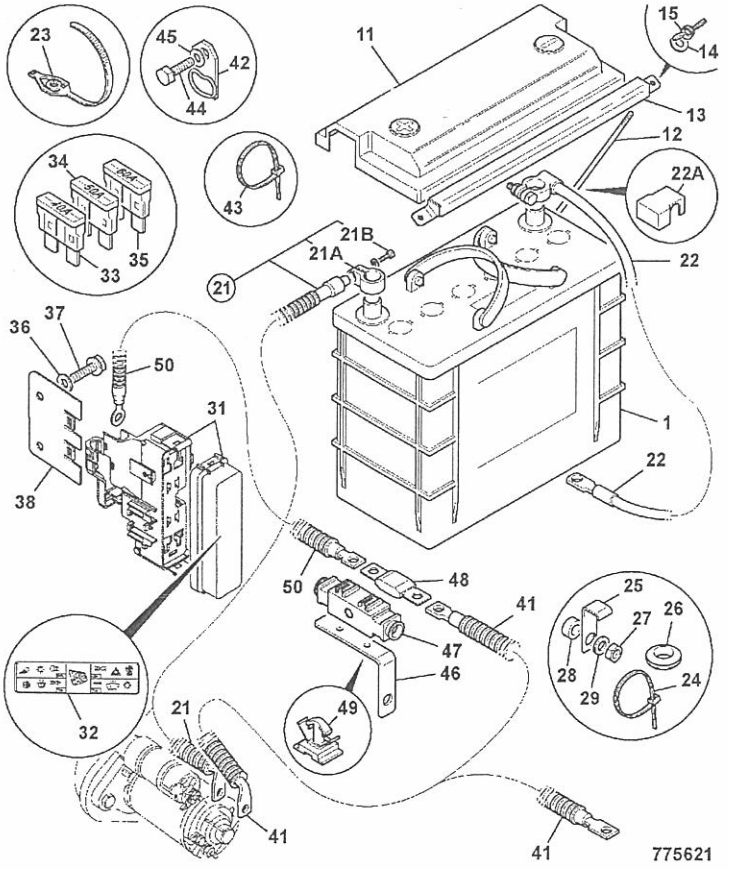

ITEM	PART NO	CHANGE NO	DESCRIPTION	REMARKS	USAGE CODE	QTY
37	1317/3305Z		Bolt, flange head, M8 x 20 lg			2
38	331/42169		Bracket, fuse link box			1
41	718/20218		Lead, charge			1
42	264/36400		Clip			1
43	826/01144		Tie, cable, 200mm long			1
44	1315/0301Z		Screw, hex head, M8 X 12			1
45	1420/0007Z		Washer, plain, M8			1
46	331/42647		Bracket, fuse mounting			1
47	716/30224		Housing, fuse holder			1
48	716/30225		Fuse, 150Amp MEGAVAL			1
49	826/11189		Clip, fir-tree			2
50	718/20217		Lead, fuse link			1

9812/0020L

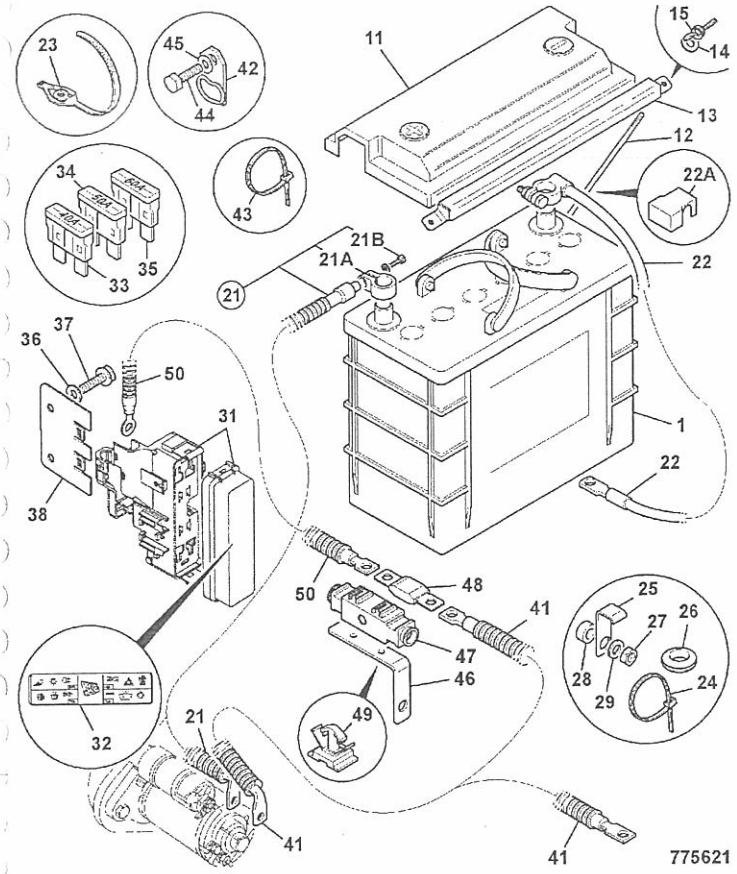

ITEM	PART NO	CHANGE NO	DESCRIPTION	REMARKS	USAGE CODE	QTY
1	708/10038		Battery, type 31 950cc, Savannah	Wet battery		1
11	708/10056		Cover, battery			1
12	826/11285		Bolt, battery, M6x268mm, J bolt			2
13	260/28401		Clamp, battery			1
14	1420/0006Z		Washer, M6			2
15	826/01115		Nut, wing			2
21	718/20216		Lead, battery,positive, 1600mm x 70sq.mm			1
21A	998/11023		:Terminal, battery lug			1
21B	998/10912		:Bolt, battery lug, M6			1
22	718/20312		Lead, battery,negative, 1800mm x 70sq.mm			1
23	826/01347		Tie, cable c/w mounting, 4. 6mm x 190mm	not required		5
24	826/01144		Tie, cable, 200mm long			3
25	123/05247		Clip, cable	not required		1
26	2410/0205		Grommet, hole dia 12. 7mm, panel thknss 5-6mm	not required		1
27	1370/0301Z		Nut	not required		1
28	123/06256		Spacer, steel	not required		1
29	1420/0008Z		Washer, Plain M10	not required		1
31	716/30077		Box, fuselink			1
32	817/17068		Label, fuselink box			1
33	716/15900		Fuse, maxi fuse 40Amp			1
34	716/30081		Fuse, maxi fuse 50Amp			2
35	716/16400		Fuse, maxi fuse 60Amp			1
36	1420/0007Z		Washer, plain, M8			2

C1-2-14 BATTERY 12V, CARRIER, USA ISSUE 1

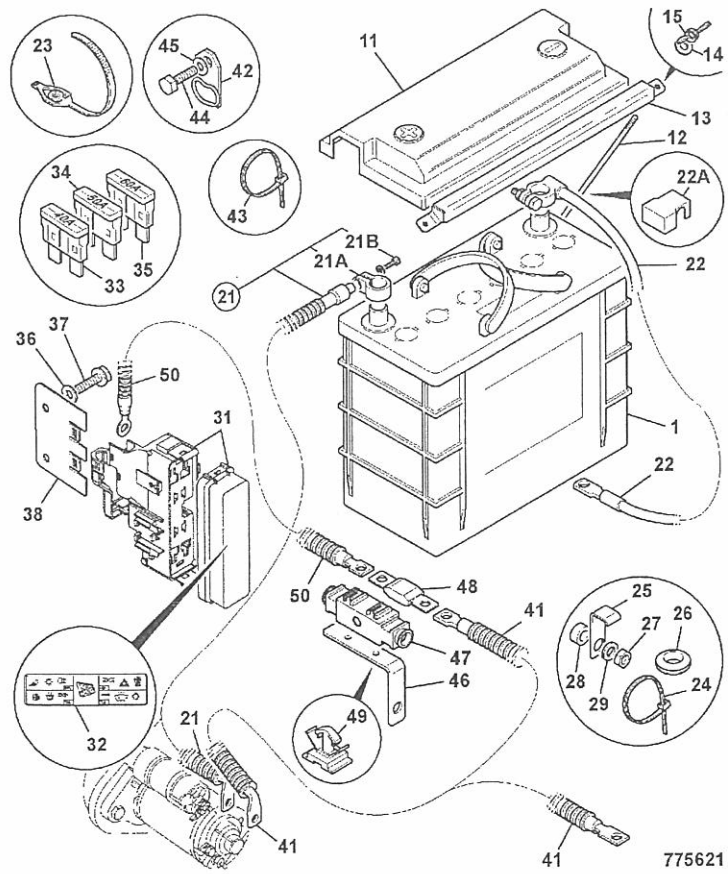

ITEM	PART NO	CHANGE NO	DESCRIPTION	REMARKS	USAGE CODE	QTY
37	1317/3305Z		Bolt, flange head, M8 x 20 lg			2
38	331/42169		Bracket, fuse link box			1
41	718/20218		Lead, charge			1
42	264/36400		Clip			1
43	826/01144		Tie, cable, 200mm long			1
44	1315/0301Z		Screw, hex head, M8 X 12			1
45	1420/0007Z		Washer, plain, M8			1
46	331/42647		Bracket, fuse mounting			1
47	716/30224		Housing, fuse holder			1
48	716/30225		Fuse, 150Amp MEGAVAL			1
49	826/11189		Clip, fir-tree			2
50	718/20217		Lead, fuse link			1

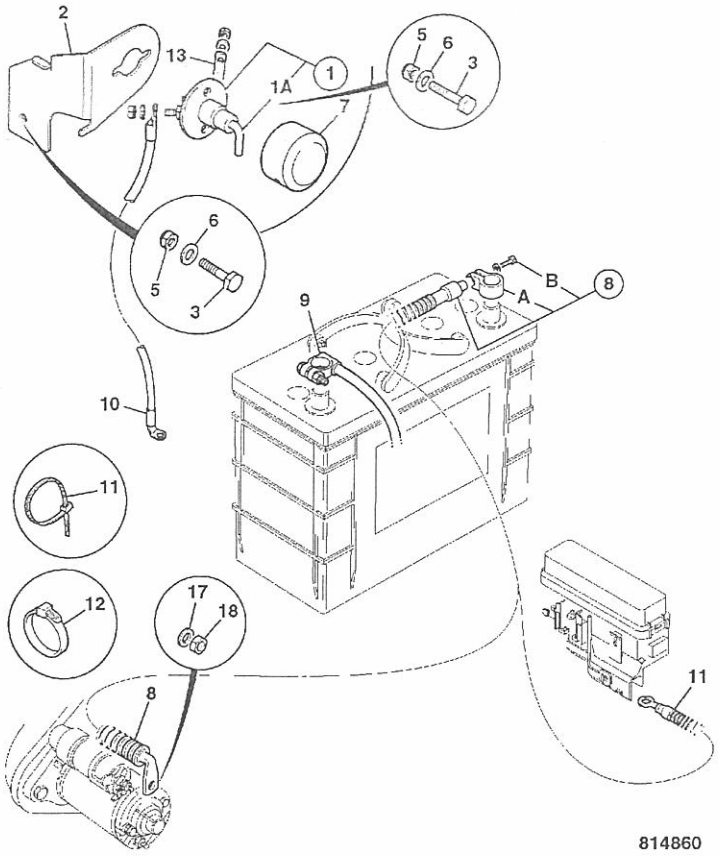

814860

ITEM	PART NO	CHANGE NO	DESCRIPTION	REMARKS	USAGE CODE	QTY
1	701/80552		Switch, isolator			1
1A	701/80553		:Key, isolator switch			1
2	331/51953		Bracket, mounting, battery isolator			1
3	1315/0308Z		Screw, M8x30			1
4	1391/3307Z		Capscrew			2
5	1370/0203Z		Nut, self lock, M8			3
6	1420/0007Z		Washer, plain, M8			2
7	265/00893		Cover, battery isolator			1
8	718/20216		Lead, battery,positive, 1600mm x 70sq.mm			1
8A	998/11023		:Terminal, battery lug			1
8B	998/10912		:Bolt, battery lug, M6			1
9	718/20263		Lead, battery negative, 800mm			1
10	718/20264		Lead, battery negative, 2270mm			1
11	826/01347		Tie, cable c/w mounting, 4.6mm x 190mm			6
12	826/01144		Tie, cable, 200mm long			3
17	1370/0201Z		Nut, M8			1
18	1420/0007Z		Washer, plain, M8			1

9812/0020L

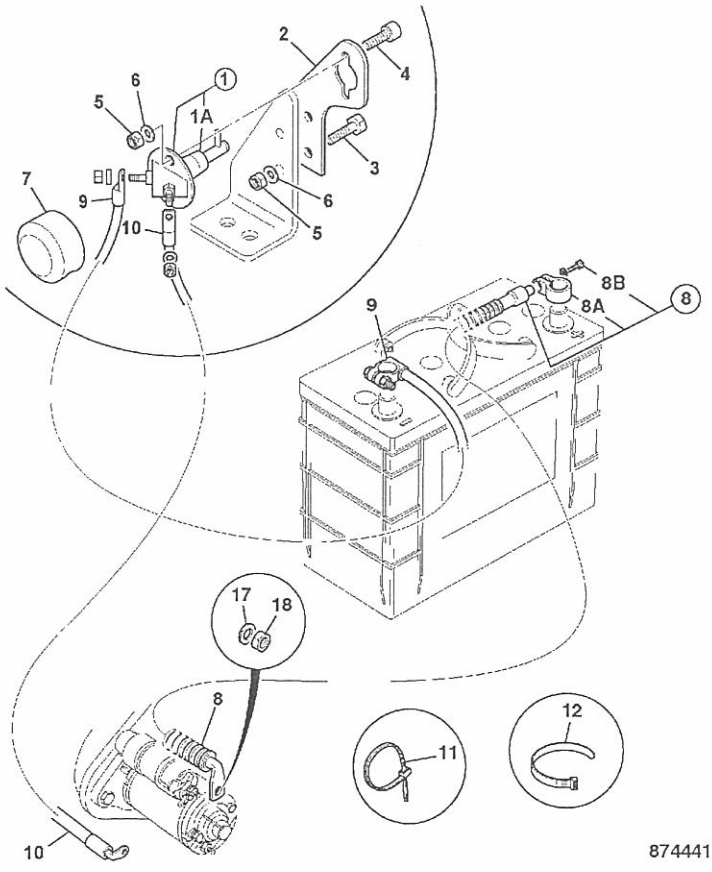

874441

ITEM	PART NO	CHANGE NO	DESCRIPTION	REMARKS	USAGE CODE	QTY
1	701/80552		Switch, isolator			1
1A	701/80553		:Key, isolator switch			1
2	331/61328		Bracket, mounting, battery isolator			1
3	1315/0308Z		Screw, M8x30			2
4	1391/3307Z		Capscrew			2
5	1370/0203Z		Nut, self lock, M8			4
6	1420/0007Z		Washer, plain, M8			2
7	265/00893		Cover, battery isolator			1
8	718/20216		Lead, battery,positive, 1600mm x 70sq.mm			1
8A	998/11023		:Terminal, battery lug			1
8B	998/10912		:Bolt, battery lug, M6			1
9	706/68400		Lead, battery,negative, 400mm x 70sq.mm			1
10	718/20322		Lead, battery,negative, 1800mm x 70sq.mm			1
11	826/01347		Tie, cable c/w mounting, 4.6mm x 190mm			3
12	826/01144		Tie, cable, 200mm long			3
17	1370/0201Z		Nut, M8			1
18	1420/0007Z		Washer, plain, M8			1

9812/0020U

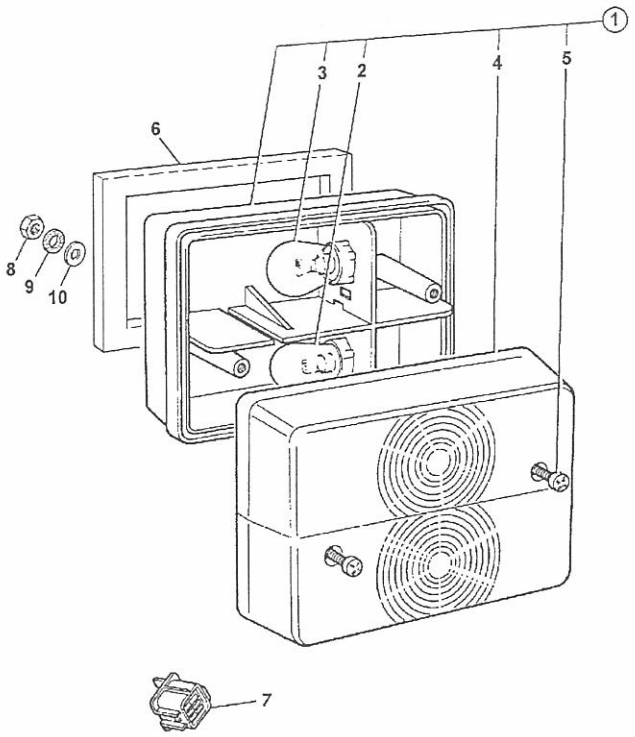

143861

ITEM	PART NO	CHANGE NO	DESCRIPTION	REMARKS	USAGE CODE	QTY
1	700/38900		Light, rear			2
2	720/10038		:Bulb, 12v 21/5w			1
3	720/10005		:Bulb, 12v 21w			1
4	700/38901		:Lens, rear			1
5	NSP		:None serviced part			1
6	813/00463		Gasket, rear light			2
7	715/06100		Plug			1
8	1370/0001Z		Nut, M5-8			4
9	1417/0007Z		Washer			4
10	1414/0011Z		Washer, 2 BA			4

9812/0020U

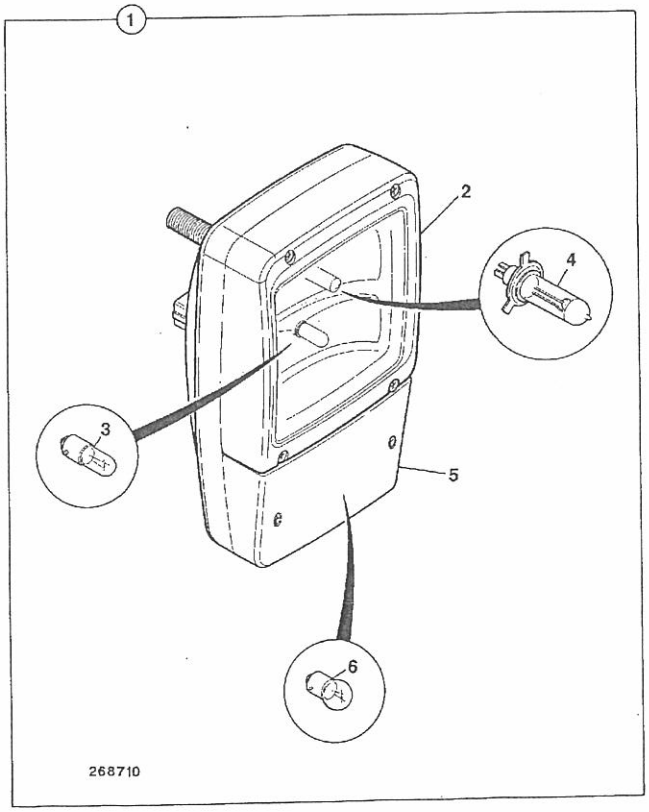

ITEM	PART NO	CHANGE NO	DESCRIPTION	REMARKS	USAGE CODE	QTY
1	700/38500		Light, head assembly, right hand dip			2
2	700/38501		:Lens, assembly, headlight			1
3	720/10043		:Bulb, side light, 12v 4w			1
4	720/10061		:Bulb, 12V-55W H3	Main		1
	720/10068		:Bulb, 12v 55w H7	Dip		1
5	700/38401		:Lens, indicator			1
6	720/10002		:Bulb, 12v 21W			1
7	835/00075		Cap			2
8	828/00273		Grommet			2

9812/0020U

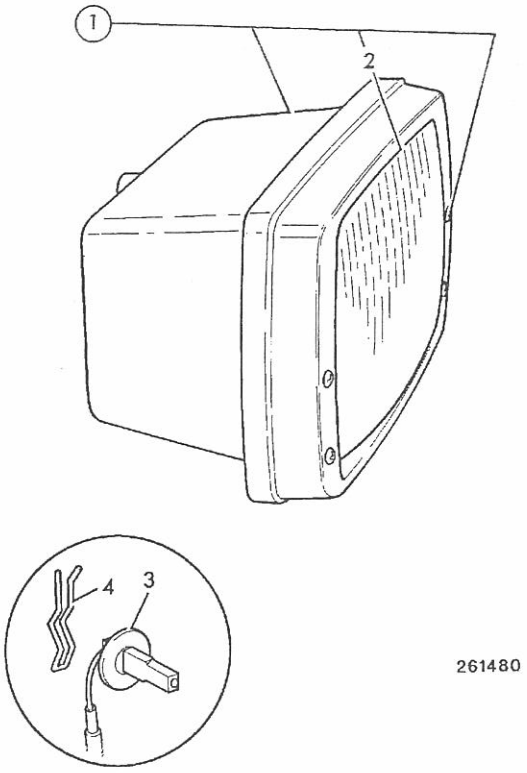

261480

ITEM	PART NO	CHANGE NO	DESCRIPTION	REMARKS	USAGE CODE	QTY
1	700/42300		Light, front working			2
2	NSP		:None serviced part			.
3	720/10061		:Bulb, 12V-55W H3			2
4	700/10103		:Spring			2
5	826/10538		Nut, 'U', No 8			4
6	1430/0207		Screw			4

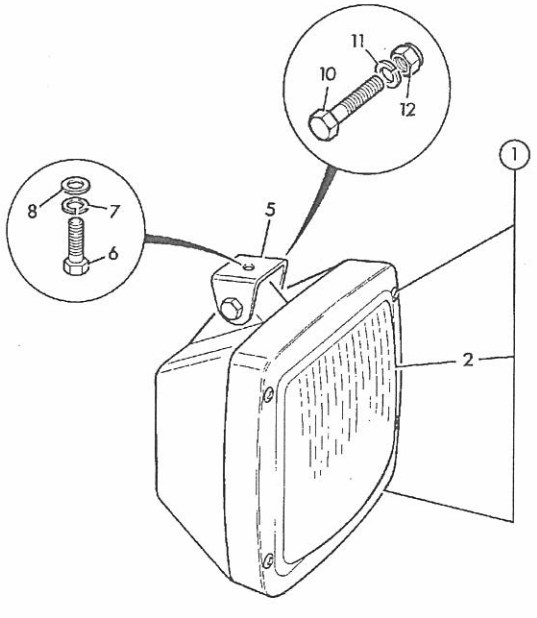

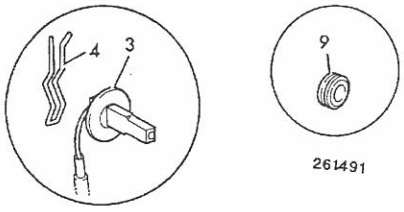

261491

ITEM	PART NO	CHANGE NO	DESCRIPTION	REMARKS	USAGE CODE	QTY
1	700/38800		Light, working			A/R
2	NSP		:None serviced part			1
3	720/10061		:Bulb, 12V-55W H3			1
4	700/10103		:Spring			.
5	123/06305		Bracket			A/R
6	1315/0305Z		Screw, M8 x 20mm long			A/R
7	1425/0007Z		Washer, spring			A/R
8	1420/0007Z		Washer, plain, M8			A/R
9	828/00406		Grommet, (2 holes)	4-lamp installation		2
	123/07770		Grommet, (1 hole)	2-lamp installation		.
10	1315/3313Z		Bolt, M8 X 55			A/R
11	1413/0003Z		Washer			A/R
12	1370/0203Z		Nut, self lock, M8			A/R
13	122/23509		Cap	4-lamp installation (If fitted)		2

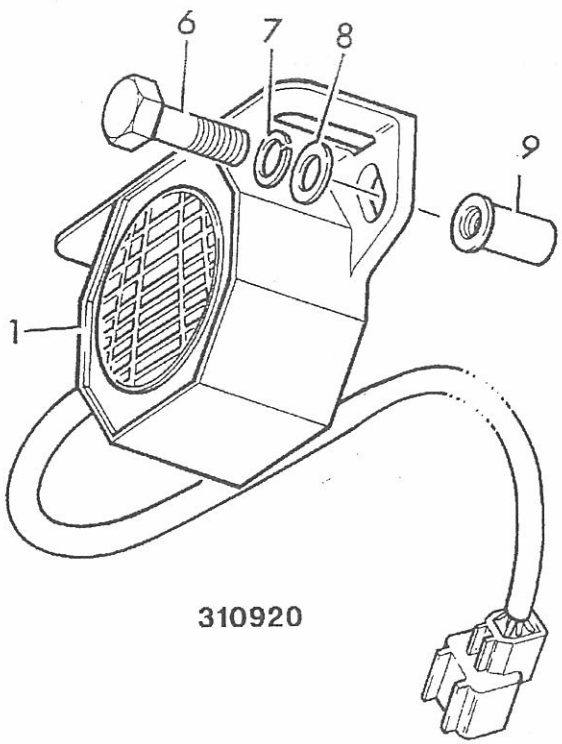

310920

ITEM	PART NO	CHANGE NO	DESCRIPTION	REMARKS	USAGE CODE	QTY
1	717/07700		Alarm, reverse			1
6	826/01591		Screw			2
7	823/00555		Washer, spring			2
8	823/00554		Washer, plain			2
9	826/01101		Nut, rivet,M6 open ended, for 3 to 5.5mm plt			2
11	826/01144		Tie, cable, 200mm long			2

9812/0020U

ITEM	PART NO	CHANGE NO	DESCRIPTION	REMARKS	USAGE CODE	QTY
1	704/37300		Horn, disc 12V			1
2	1315/0407Z		Bolt, M10x25			1
3	1420/0008Z		Washer, Plain M10			2
7	1370/0303Z		Nut, lock, M10			1

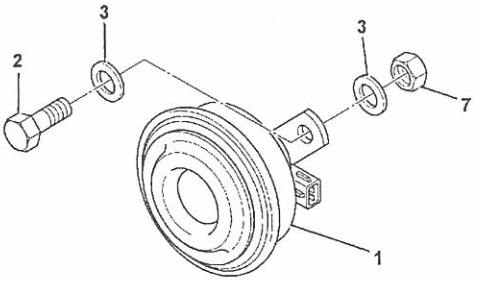

442440

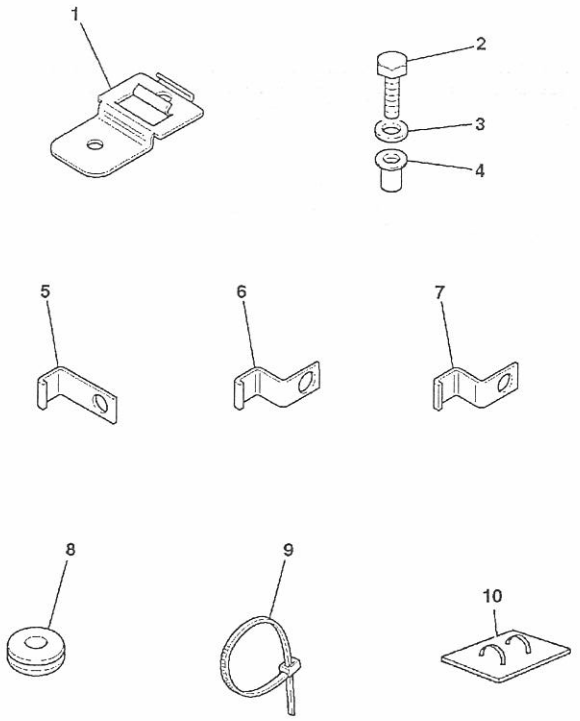

445410

ITEM	PART NO	CHANGE NO	DESCRIPTION	REMARKS	USAGE CODE	C
1	7210/0067		Clip, Deutsch DT Mtg Clip			
2	1315/0307Z		Screw, M8 X 25			
3	1420/0007Z		Washer, plain, M8			
4	826/01627		Nut, rivet			
5	123/03965		Clip	80mm tall		
	123/00195		Clip, harness support	45mm tall		
6	123/02569		Clip, 'S'	13 dia hole		
7	123/05247		Clip, cable	10 dia hole 23mm tall		
	821/10321		Clip, harness	10.5 dia hole 35mm tall		
8	2410/0205		Grommet, hole dia 12. 7mm, panel thknss 5-6mm			
9	826/01144		Tie, cable, 200mm long			
	826/01347		Tie, cable c/w mounting, 4. 6mm x 190mm			
10	122/40304		Pad, cable tie mounting, self adhesive			

9812/00

C1-22-1 LIGHT, INDICATOR

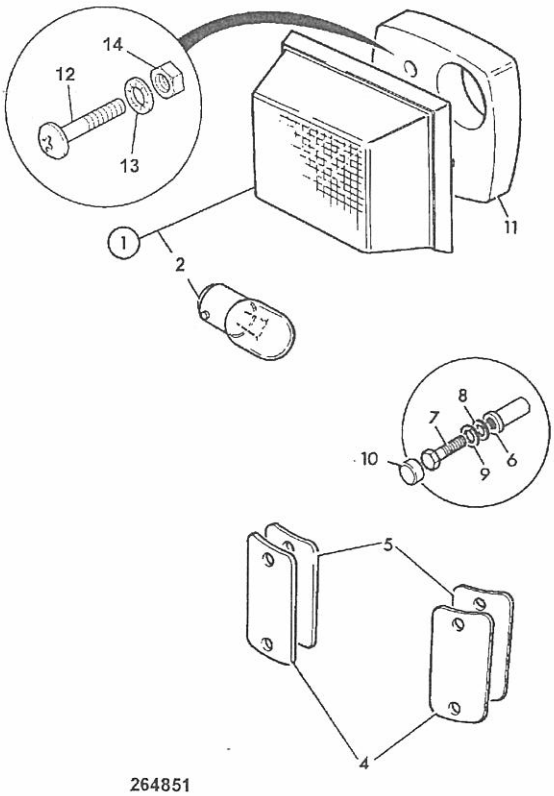

264851

ITEM	PART NO	CHANGE NO	DESCRIPTION	REMARKS	USAGE CODE	QT
1	700/39600		Light, indicator, 12v			
2	720/10005		:Bulb, 12v 21w			
4	331/27358		Plate, blanking, Headlamp			
5	813/10228		Gasket, headlamp mount	If fitted		
6	826/01103		Nut, rivet,M8 open ended			
7	1315/0305Z		Screw, M8 x 20mm long			
8	1420/0007Z		Washer, plain, M8			
9	.		'See Remark'	Not fitted		
10	122/23509		Cap	If fitted		
11	123/06669		Gasket, left hand indicator			
	123/06670		Gasket, right hand idicator			
12	826/00680		Screw			
13	1414/0007Z		Washer			
14	826/00461		Nut, M4			

9812/002

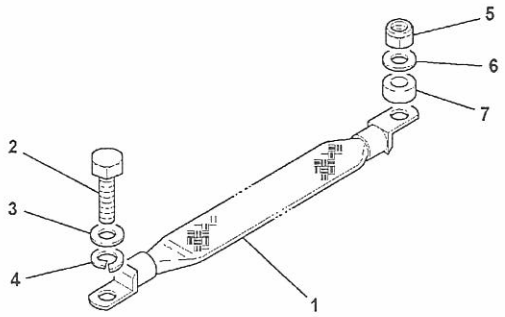

ITEM	PART NO	CHANGE NO	DESCRIPTION	REMARKS	USAGE CODE	QTY
1	718/20188		Strap, earth 400mm	Transmission casing		1
5	*1370/0301Z		Nut			1
6	*1420/0008Z		Washer, Plain M10			1
7	123/06256		Spacer, steel			1
8	718/56105		Strap, Braided Earth, 400mm long	crossover pipes		1

739580

C

- C1 ELECTRICS, MAIN MACHINE
- ● C2 ELECTRICS, ENGINE
- C3 ELECTRICS, CAB

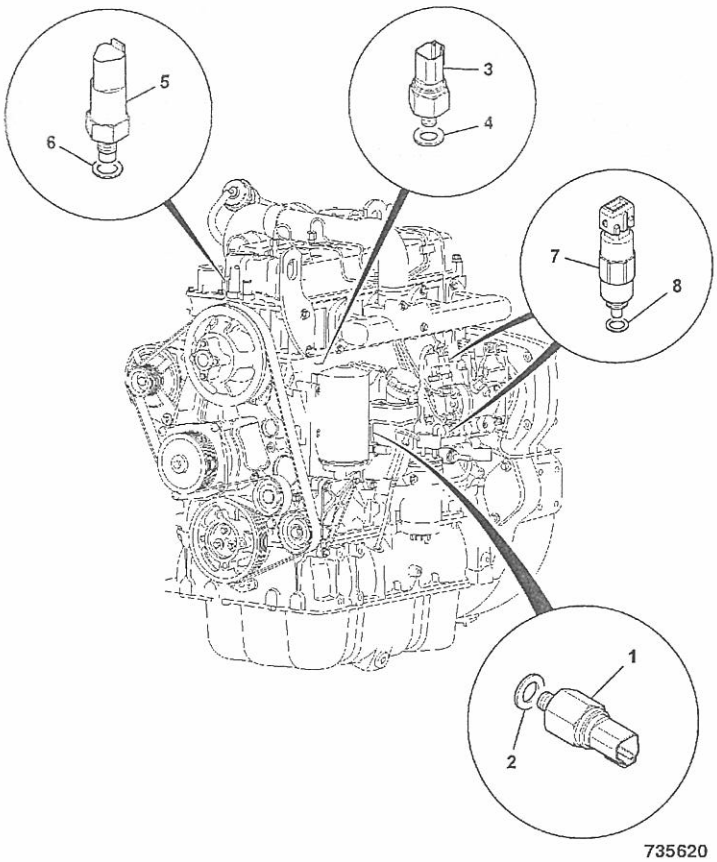

735620

ITEM	PART NO	CHANGE NO	DESCRIPTION	REMARKS	USAGE CODE	QTY
1	320/04038		Switch, engine oil pressure			1
2	320/04057		Seal, bonded			1
3	320/04544	To U0100005	Switch, cold start advance			1
	320/04554		Switch, cold start advance			1
4	320/04521		Seal, bonded			1
5	320/04545		Switch, temperature sender			1
6	320/04521		Seal, bonded			1
7	716/30255		Solenoid, fuel pump - ESOS, cold start advance			2
8	17/105202		:Seal, Ring			1

9812/0020U

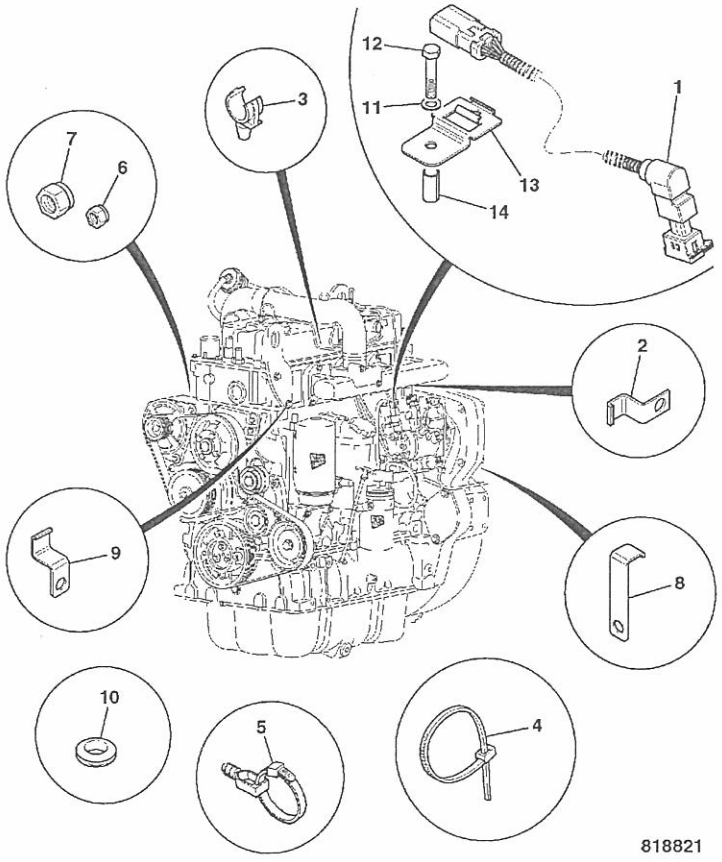

818821

ITEM	PART NO	CHANGE NO	DESCRIPTION	REMARKS	USAGE CODE	QTY
1	721/11639		Harness, ESOS link			1
2	821/10321		Clip, harness			2
3	821/00379		Clip			3
4	826/01144		Tie, cable, 200mm long			15
5	826/01347		Tie, cable c/w mounting, 4.6mm x 190mm			3
6	826/11430		Nut, nyloc M5			2
7	826/10826		Nut, nyloc M8			1
8	123/00195		Clip, harness support			2
9	123/05247		Clip, cable			2
10	2410/0205		Grommet, hole dia 12.7mm, panel thknss 5-6mm			6
11	*1420/0007Z		Washer, plain, M8			1
12	*1315/0310Z		Bolt, M8x40			1
13	7210/0067		Clip, Deutsch DT Mtg Clip			1
14	*123/06253		Spacer			1

9812/0020U

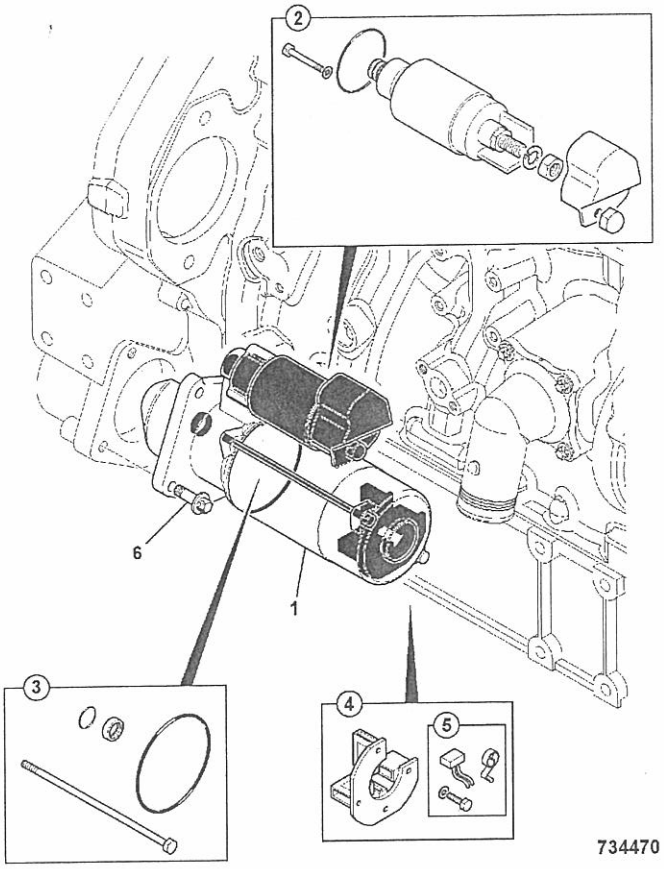

ITEM	PART NO	CHANGE NO	DESCRIPTION	REMARKS	USAGE CODE	QTY
1	320/09026		Motor, starter - 12v			1
2	714/40302		:Switch, starter solenoid, 12 Volt			1
3	714/40303		:Kit-sundry parts			1
4	714/40305		:Brush, holder assembly, 12volt			1
5	714/40306		:Kit-brush, 12 Volt			1
6	1319/0408Z		Screw, star drive, M10 x 30			3

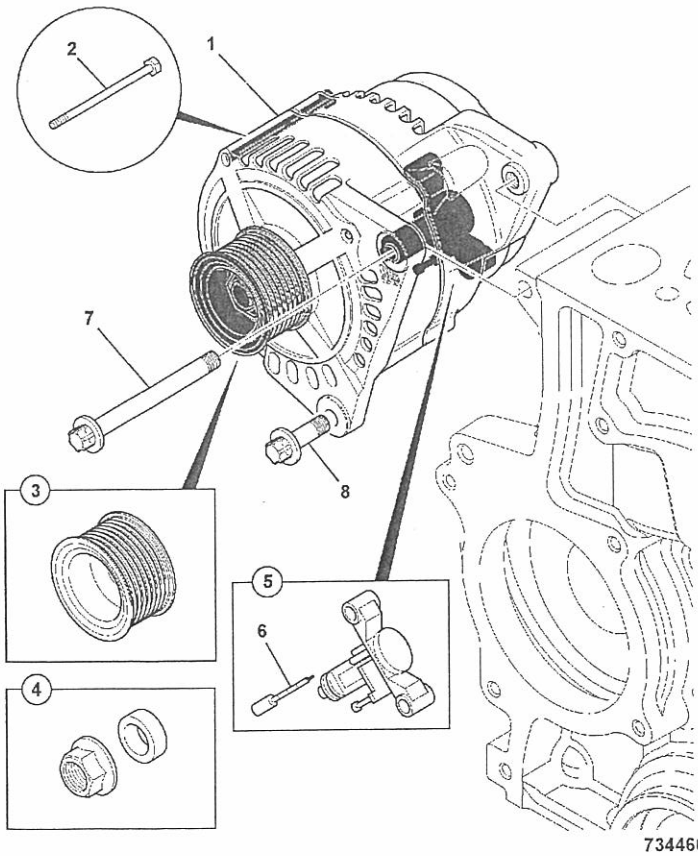

ITEM	PART NO	CHANGE NO	DESCRIPTION	REMARKS	USAGE CODE	QTY
1	320/08560		Alternator, 12V-95AMP			1
2	714/40310		:Kit-through bolt			1
3	714/40312		:Pulley, alternator			1
4	714/40311		:Kit-nut & spacer			1
5	714/40313		:Regulator, & brush box, assembly			1
6	714/40314		:Kit-brush			1
7	1319/3422Z		Bolt, star drive, M10 x 120			1
8	1319/0408Z		Screw, star drive, M10 x 30			1

C2-5-1 GRID HEATER RELAY, INSTALLATION, NATURALLY ASPIRATED

ISSUE

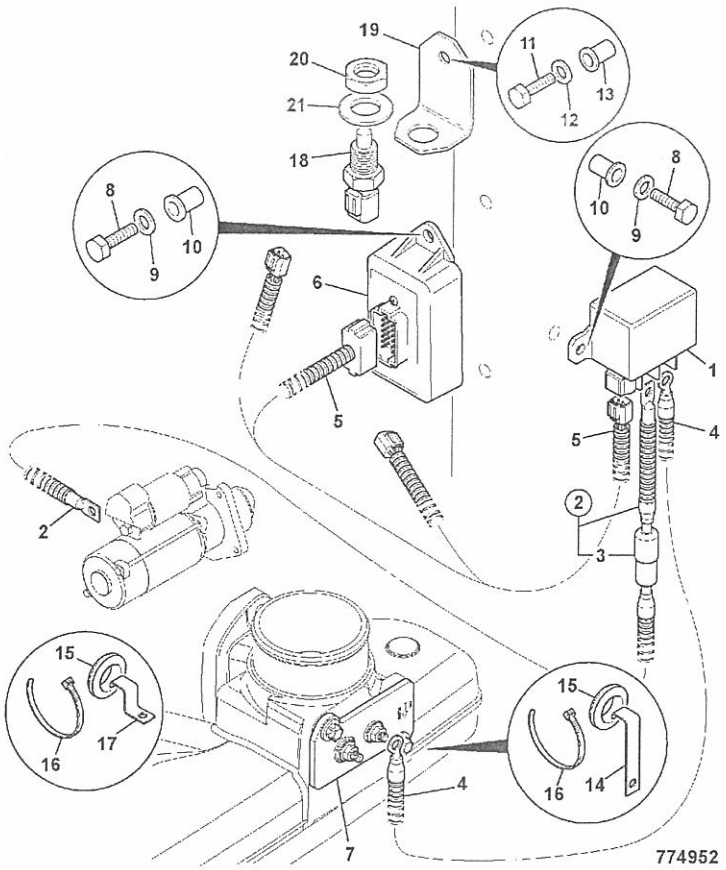

ITEM	PART NO	CHANGE NO	DESCRIPTION	REMARKS	USAGE CODE	QTY
1	716/30252		Relay, grid heater			1
2	718/20232		Lead, grid heater +ve, feed			1
3	716/30225		:Fuse, 150Amp MEGAVAL			1
4	718/20233		Lead, grid heater +ve, NA			1
5	721/11846		Harness, ECU to heater relay			1
6	728/26800		Unit, ECU, cold start			1
7	320/05527		Heater, air intake -12v			1
8	1315/0203Z		Screw, M6x16			2
9	1420/0006Z		Washer, M6			2
10	826/01316		Nut, M6 rivet			2
11	1315/0307Z		Screw, M8 X 25			2
12	1420/0007Z		Washer, plain, M8			2
13	826/01106		Nut, rivet,M8			2
14	123/03965		Clip			1
15	2410/0205		Grommet, hole dia 12. 7mm, panel thknss 5-6mm			5
16	826/01144		Tie, cable, 200mm long			7
17	123/05247		Clip, cable			4
18	716/30126		Sender, water temperature			1
19	331/48375		Bracket, sensor mounting			1
20	1356/0204Z		Nut			1
21	1420/0013Z		Washer, plain bright			1

C2-5-2 GRID HEATER RELAY, INSTALLATION, TURBO

ISSUE

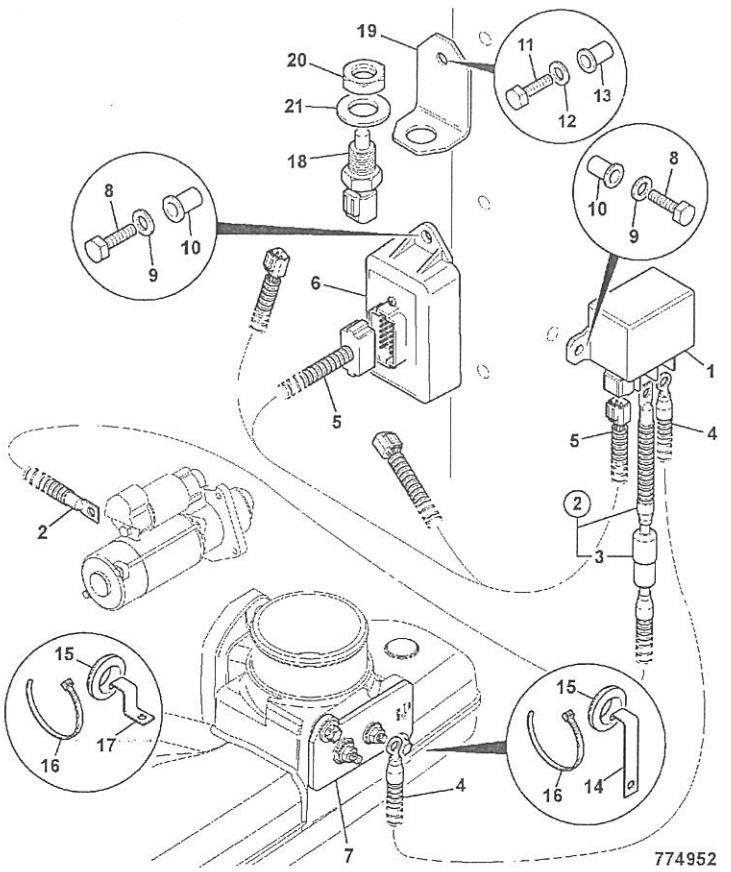

ITEM	PART NO	CHANGE NO	DESCRIPTION	REMARKS	USAGE CODE	QTY
1	716/30252		Relay, grid heater			1
2	718/20232		Lead, grid heater +ve, feed			1
3	716/30225		:Fuse, 150Amp MEGAVAL			1
4	718/20234		Lead, grid heater +ve, TURBO			1
5	721/11846		Harness, ECU to heater relay			1
6	728/26800		Unit, ECU, cold start			1
7	320/05527		Heater, air intake -12v			1
8	1315/0203Z		Screw, M6x16			2
9	1420/0006Z		Washer, M6			2
10	826/01316		Nut, M6 rivet			2
11	1315/0307Z		Screw, M8 X 25			2
12	1420/0007Z		Washer, plain, M8			2
13	826/01106		Nut, rivet,M8			2
14	123/03965		Clip			1
15	2410/0205		Grommet, hole dia 12. 7mm, panel thknss 5-6mm			5
16	826/01144		Tie, cable, 200mm long			7
17	123/05247		Clip, cable			4
18	716/30126		Sender, water temperature			1
19	331/48375		Bracket, sensor mounting			1
20	1356/0204Z		Nut			1
21	1420/0013Z		Washer, plain bright			1

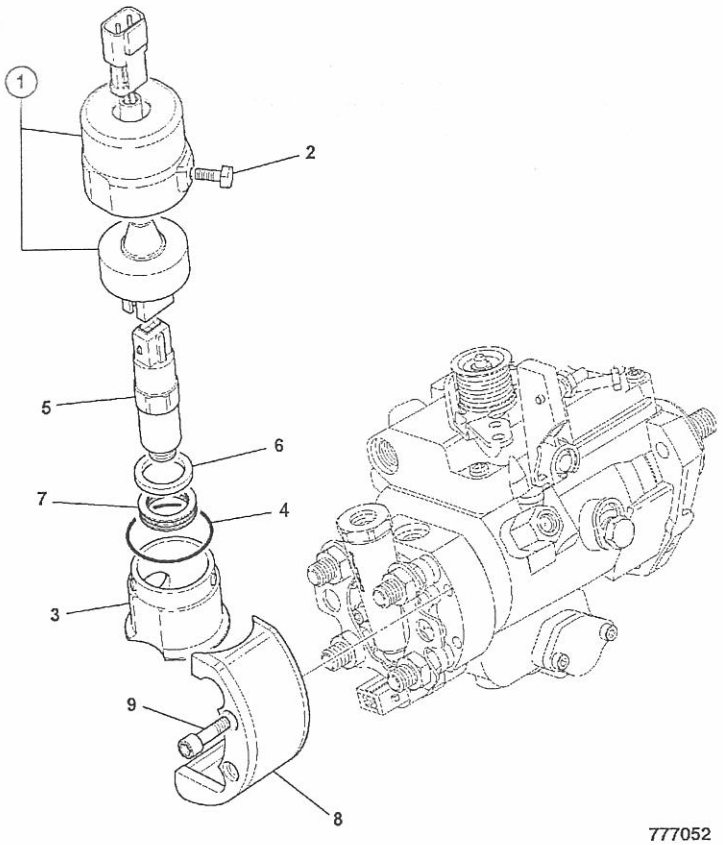

777052

ITEM	PART NO	CHANGE NO	DESCRIPTION	REMARKS	USAGE CODE	QTY
1	320/06597		Kit-cover, immobiliser			1
2	826/11068		Bolt, M6x27 shear			1
3	320/06598		Base, engine immobiliser			1
4	320/06595		Seal, o'ring, immobiliser cover			1
5	716/30255		Solenoid, fuel pump - ESOS, cold start advance			1
6	320/06594		Spacer, immobiliser			1
7	320/06593		Spring, immobiliser			1
8	320/06635		Guard, immobiliser			1
9	826/11318		Bolt, M6 shear, shear @ 11Nm			2

9812/0020U

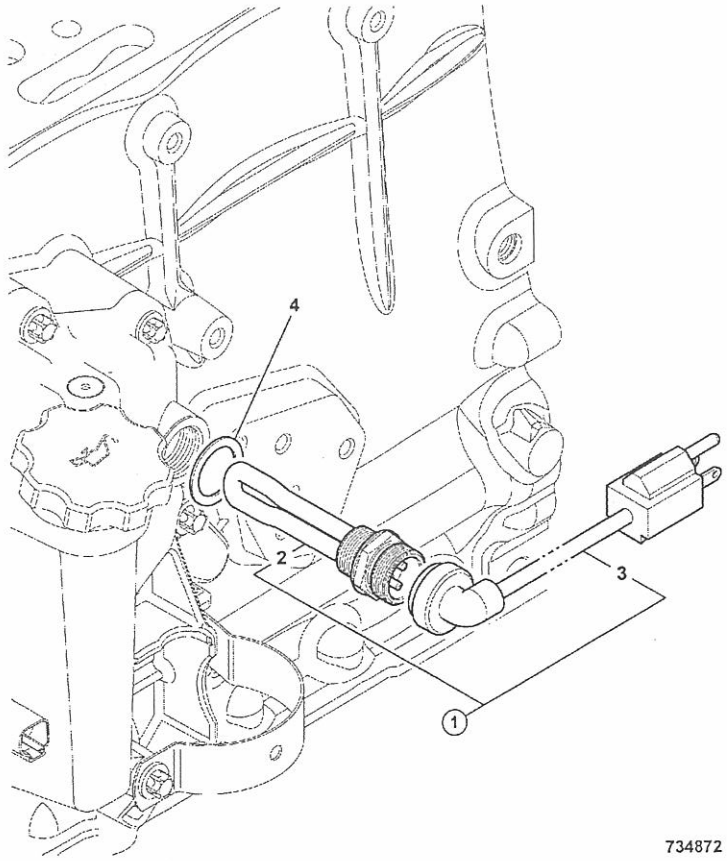

734872

ITEM	PART NO	CHANGE NO	DESCRIPTION	REMARKS	USAGE CODE	QTY
1	320/20082		Kit-heater, engine Block, 120V			1
2	320/04550		:Heater, cylinder block, 1000w - 120v mains			1
3	721/11976		:Harness, 120V block heater, mains power lead			1
4	320/04553		Washer, copper sealing			1

C

- C1 ELECTRICS, MAIN MACHINE
- C2 ELECTRICS, ENGINE
- ● C3 ELECTRICS, CAB

9812/0020U

C3-1-31 GAUGES AND SWITCHES, SIDE CONSOLE, CANOPY

ISSUE

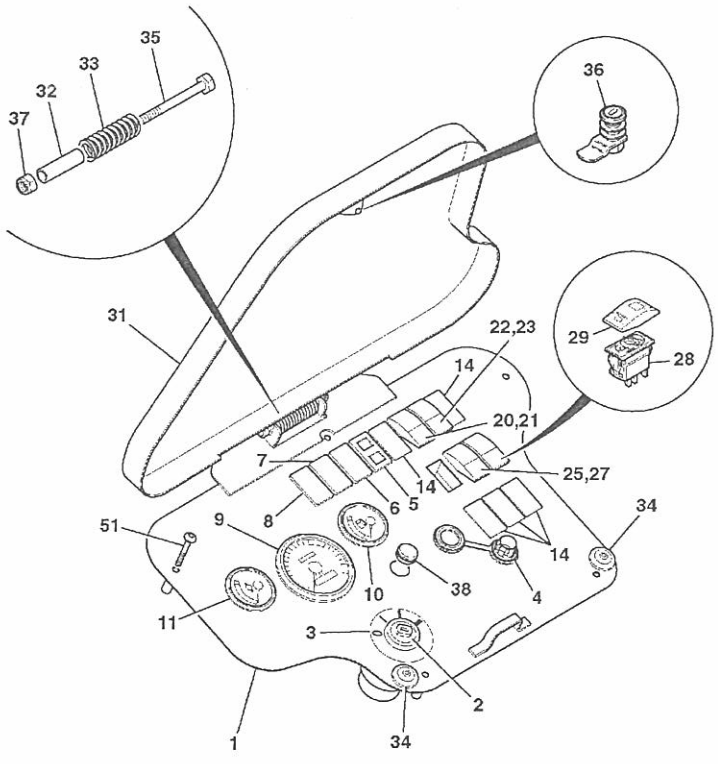

814970

ITEM	PART NO	CHANGE NO	DESCRIPTION	REMARKS	USAGE CODE	QTY
1	335/10181		Panel, instrument			1
2	701/80184		Switch, ignition			1
2A	701/45501		:Key, Door/Ignition, Ref 14657			1
3	817/05167		Decal, ignition switch			1
4	715/08100		Socket, accessory			1
5	700/50176		Light, panel,LED			1
6	700/50050		Light, panel LED, eng/ trans pressure			1
7	700/50051		Light, panel LED, eng/ trans temp			1
8	700/50052		Light, panel LED, batt charge/park brk			1
9	704/50185	Superseded	Gauge, tacho/hour meter			1
	704/50227		Gauge, tacho and hourmeter			1
9A	720/10057		:Bulb, 12V 5W, Capless			1
9B	700/50020		:Cap	cover for bulb		1
9C	700/50085		:Holder, bulb			1
10	704/50098		Gauge, fuel level			1
10A	720/10057		:Bulb, 12V 5W, Capless			1
10B	700/50020		:Cap	cover for bulb		1
10C	700/50085		:Holder, bulb			1
11	704/50099		Gauge, water temp			1
11A	720/10057		:Bulb, 12V 5W, Capless			1
11B	700/50020		:Cap	cover for bulb		1
11C	700/50085		:Holder, bulb			1
14	701/80265		Blank			6

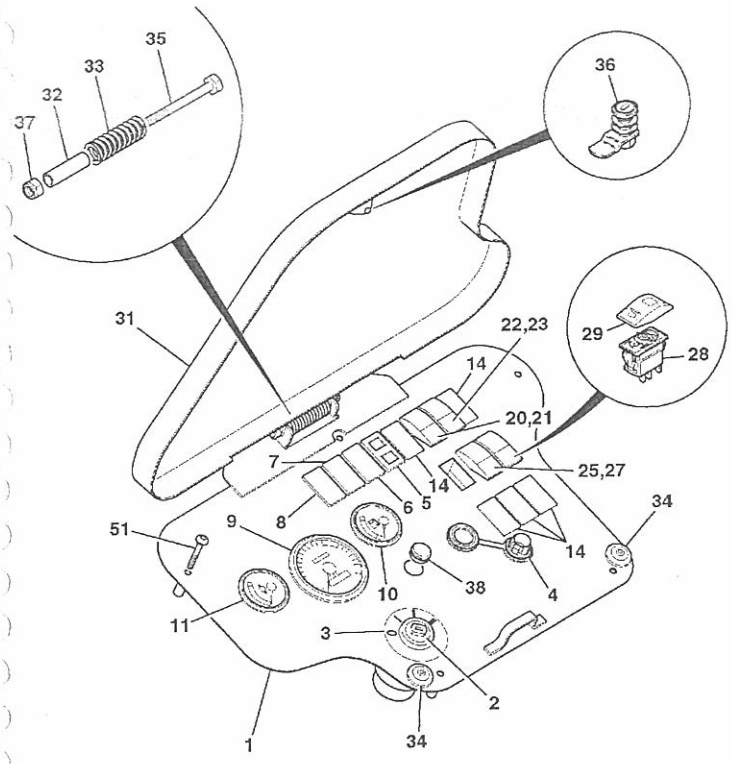

814970

ITEM	PART NO	CHANGE NO	DESCRIPTION	REMARKS	USAGE CODE	QTY
20	701/60004		Switch, 12V			1
21	701/58826		Actuator, front worklights, switch decal			1
22	701/60003		Switch, 12V			1
23	701/58854		Decal, Wiper windscreen			1
25	701/60000		Switch, 12V			1
27	701/58825		Actuator, beacon, convoy warning			1
28	701/60002		Switch, 12V			1
29	701/58827		Cover, rear working lights, switch decal			1
31	335/03582		Cover, vandal			1
32	123/07797		Spacer			1
33	123/07861		Spring			1
34	828/00261		Buffer, (stop),rubber			2
35	1315/3319Z		Bolt, M8 x 90mm long			1
36	123/04686		Catch, vandal cover			1
37	1370/0203Z		Nut, self lock, M8			1
38	2410/1108		Grommet			1
43	701/60000		Switch, 12V	4WD switch		1
44	701/58822		Cover, 4wd switch decal	4WD switch		1
51	826/01804		Bolt			5
61	926/29000		:Buffer, cable cover	fitted to B post		1

9812/0020U

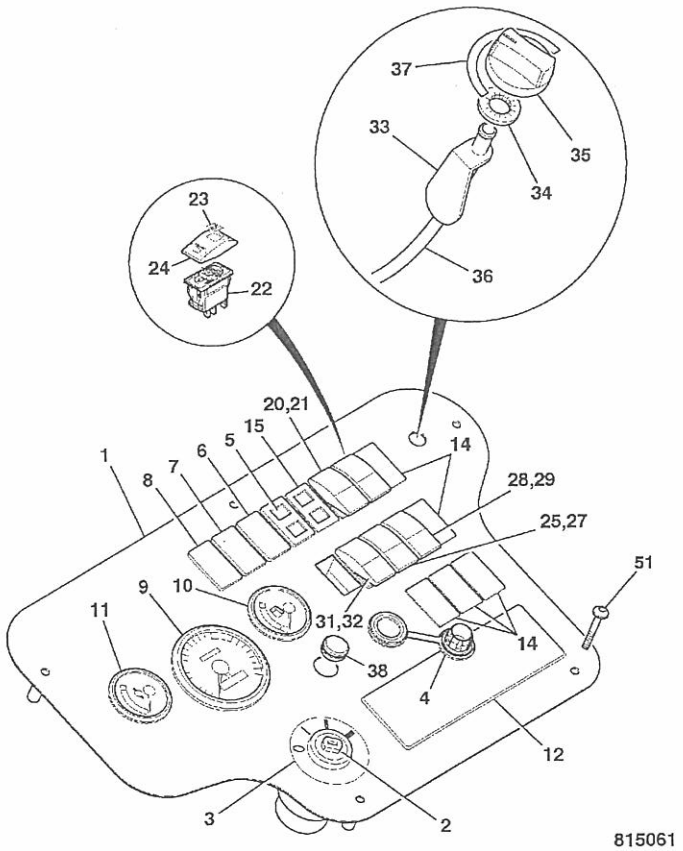

815061

ITEM	PART NO	CHANGE NO	DESCRIPTION	REMARKS	USAGE CODE	QTY
1	335/09801		Panel, switch			1
2	701/80184		Switch, ignition			1
2A	701/45501		:Key, Door/Ignition, Ref 14657			1
3	817/05167		Decal, ignition switch			1
4	715/08100		Socket, accessory			1
5	700/50176		Light, panel,LED			1
6	700/50050		Light, panel LED, eng/ trans pressure			1
7	700/50051		Light, panel LED, eng/ trans temp			1
8	700/50052		Light, panel LED, batt charge/park brk			1
9	704/50185	Superseded	Gauge, tacho/hour meter			1
	704/50227		Gauge, tacho and hourmeter			1
9A	720/10057		:Bulb, 12V 5W, Capless			1
9B	700/50020		:Cap	cover for bulb		1
9C	700/50085		:Holder, bulb			1
10	704/50098		Gauge, fuel level			1
10A	720/10057		:Bulb, 12V 5W, Capless			1
10B	700/50020		:Cap	cover for bulb		1
10C	700/50085		:Holder, bulb			1
11	704/50099		Gauge, water temp			1
11A	720/10057		:Bulb, 12V 5W, Capless			1
11B	700/50020		:Cap	cover for bulb		1
11C	700/50085		:Holder, bulb			1
12	717/08600		Cover, Radio Blanking			1

9812/0020U

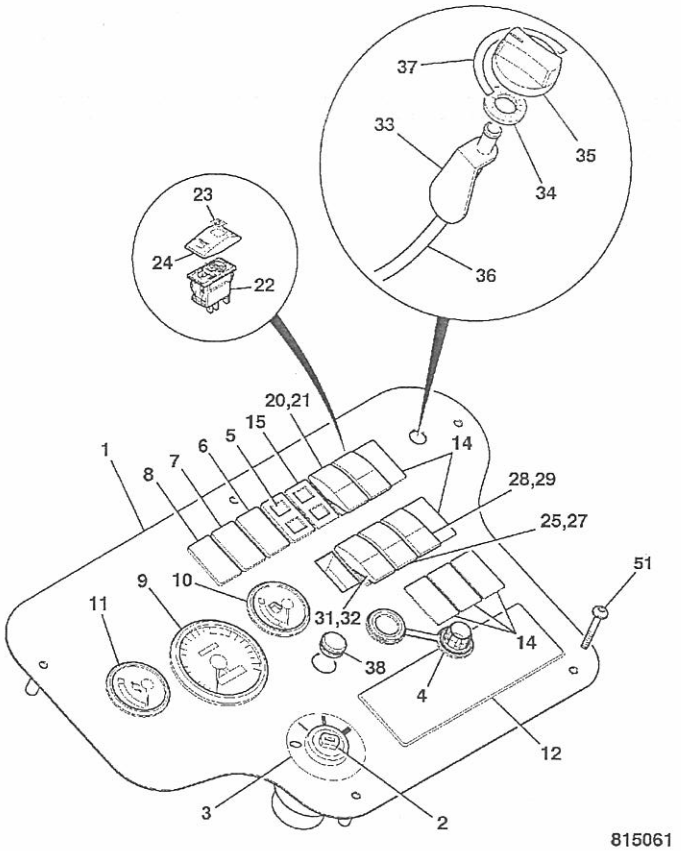

815061

ITEM	PART NO	CHANGE NO	DESCRIPTION	REMARKS	USAGE CODE	QTY
14	701/80265		Blank			6
15	700/50191	M0908883 on	Light, panel LED			
20	701/60004		Switch, 12V			
21	701/58826		Actuator, front worklights, switch decal			1
22	701/60003		Switch, 12V			1
23	701/58854		Decal, Wiper windscreen			1
24	701/58828		Cover, wash,wipe, switch decal			
25	701/60000		Switch, 12V			
27	701/58825		Actuator, beacon, convoy warning			1
28	701/60002		Switch, 12V			
29	701/58827		Cover, rear working lights, switch decal			1
31	701/60016		Switch, 3 position, 12V			1
32	701/58837		Actuator, heater blower speed, switch decal			1
33	142/00643		Actuator, cable operated			1
34	826/00711		Washer, 'starloc'			2
35	162/00832		Knob, control			1
36	910/46900		Cable, control			1
37	817/04021		Decal, heater			
38	2410/1108		Grommet			1
41	701/60000		Switch, 12V	aircon		1
42	701/58831		Actuator, aircon switch, soft touch	aircon		
43	701/60000		Switch, 12V	4WD switch		1
44	701/58822		Cover, 4wd switch decal	4WD switch		1

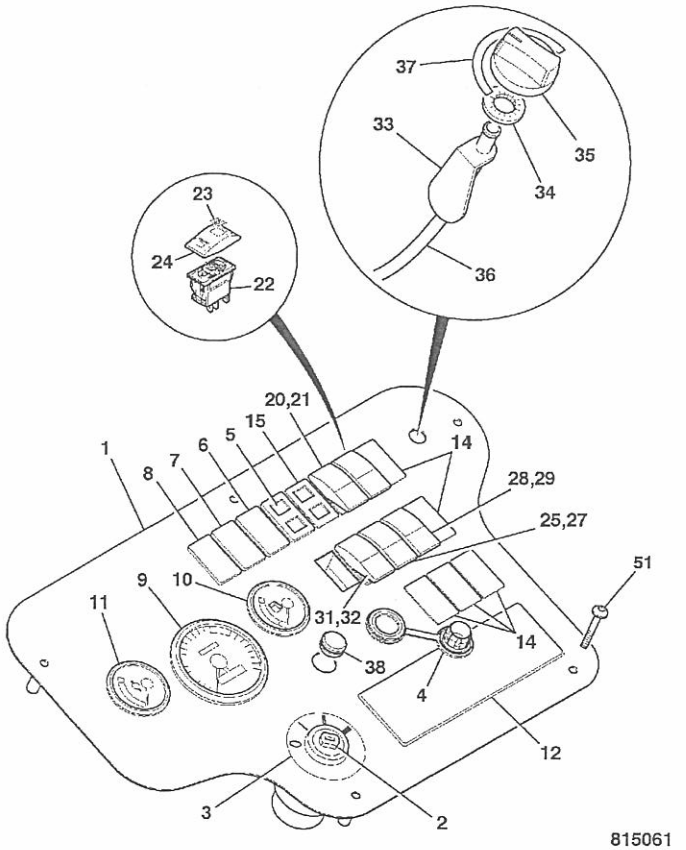

815061

ITEM	PART NO	CHANGE NO	DESCRIPTION	REMARKS	USAGE CODE	QTY
51	826/01804		Bolt			5

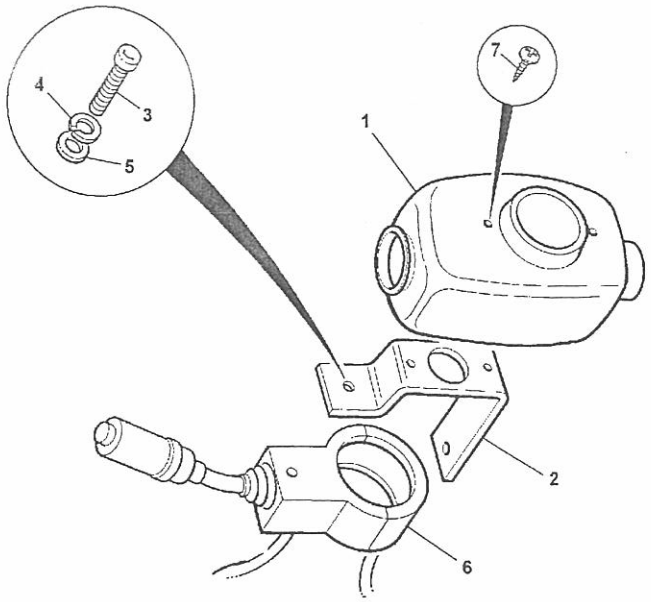

315471

ITEM	PART NO	CHANGE NO	DESCRIPTION	REMARKS	USAGE CODE	QTY
1	331/27486		Cover, column switch			1
2	123/05014		Bracket, switch cover mount			1
3	826/01522		Screw	Switch mounting to switch		2
	826/01533		Screw	Cover to switch mounting		2
	826/01130		Screw, M4			1
4	1425/0005Z		Washer, spring, M5			1
5	1420/0005Z		Washer, M5			1
	1414/0011Z		Washer, 2 BA			1
	1417/0007Z		Washer			1
6	.		'See Remark'	See C3-4-20		1
7	826/01533		Screw			2

9812/0020U

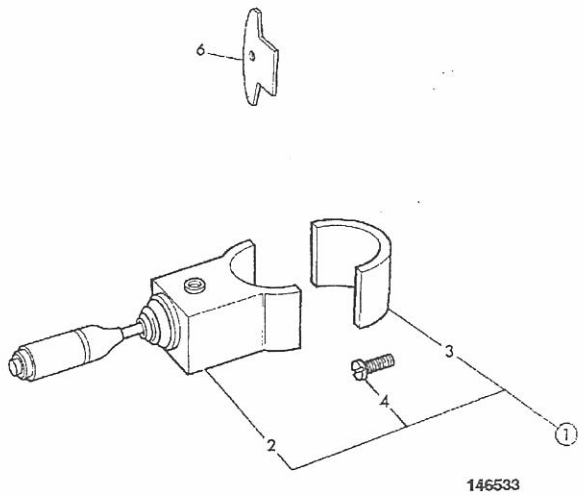

146533

ITEM	PART NO	CHANGE NO	DESCRIPTION	REMARKS	USAGE CODE	QTY
1	701/80295		Switch, column, manual trans			1
2	NSP		:None serviced part			1
4	1391/3103		:Screw, cap			2
6	123/04058		Plate, retainer			1

9812/0020U

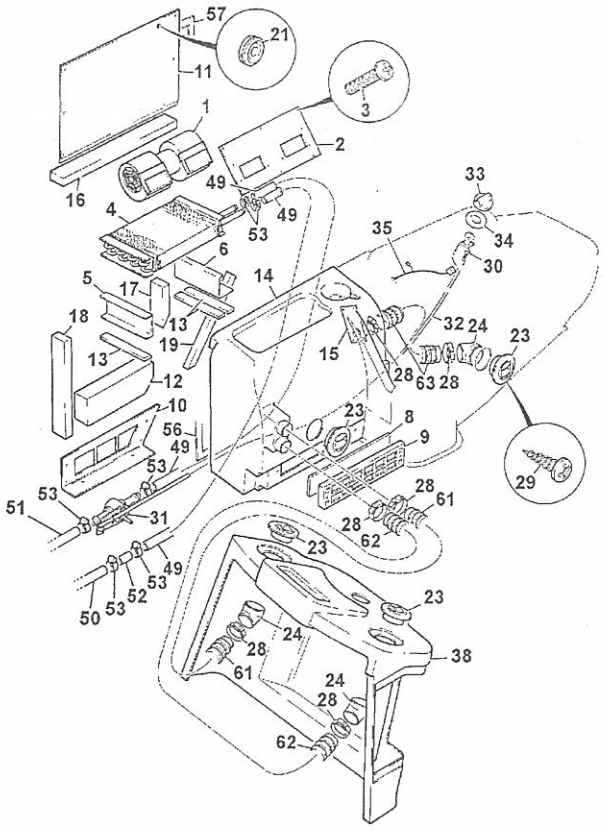

230894

ITEM	PART NO	CHANGE NO	DESCRIPTION	REMARKS	USAGE CODE	QTY
0A	128/12670		Heater, assembly & cover, as supplied			1
1	142/00603		Motor, blower			1
2	142/00605		Plate, blower mounting			1
3	1360/0604Z		Screw	Use with items 69 & 70		4
4	142/00601		Heater, assembly			1
5	142/00629		Channel			1
6	142/00630		Channel			1
8	141/00843		Filter, recirculation			1
9	142/18400		Cover, filter			1
10	142/00607		Plate, intake			1
11	142/00606		Plate, blanking			1
12	142/00628		Filter			1
13	190/51912		Strip, foam			3
14	331/30981		Console, heater unit			1
15	123/07780		Adapter, air vent outlet			1
16	142/00617		Strip, foam			1
17	142/00618		Strip, foam			1
18	142/00619		Strip, foam			1
19	142/00620		Strip, foam			1
21	828/00374		Grommet			2
23	141/00494		Vent			6
24	141/00495		Vent, elbow			3
28	2201/0009		Clip, jubilee			6
29	1430/1001		Screw, ST			1
30	142/00643		Actuator, cable operated			1

C3-5-30 HEATER ASSEMBLY ISSUE

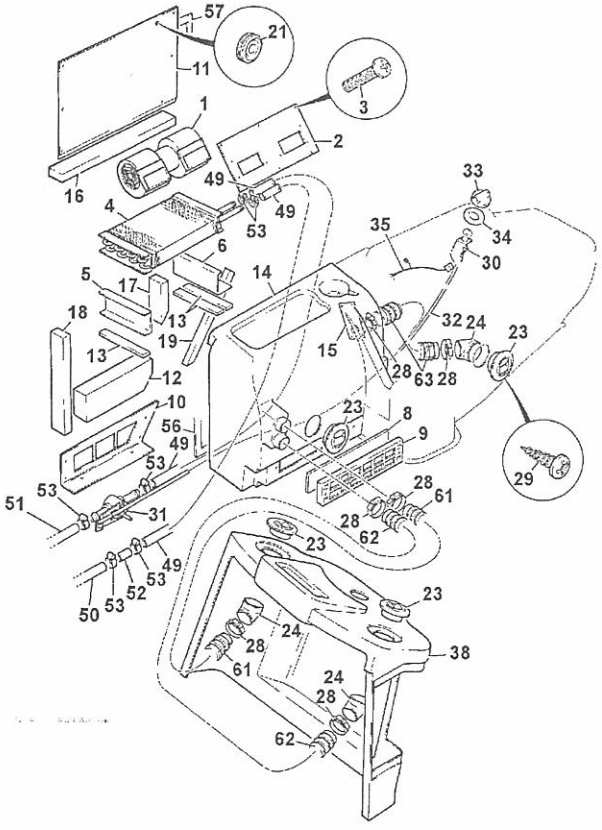

230894

ITEM	PART NO	CHANGE NO	DESCRIPTION	REMARKS	USAGE CODE	QTY
31	142/00644		Valve, water			1
32	910/46900		Cable, control			1
33	162/00832		Knob, control			1
34	817/04021		Decal, heater			1
35	721/00707		Harness, heater			1
38	.		'See Remark'	See index interior mouldings C3		*
42	816/17109		Adapter, 3/4NPTF x 16			1
	816/13380		Adapter, 1/2NPTF x 16	Tier 2 engine		1
49	648/01917		Hose			2
50	.	To M TBA	'See Remark'	Bottom hose see index V		1
	30/926999	M TBA on	Hose, 5/8x1800mm	item 53 not required with this hose		1
51	834/11031	Superseded	Hose, heater			1
	834/11405	To M TBQ	Hose, heater			1
	30/926996	M TBA on	Hose, 5/8 engine to heater	item 53 not required with this hose		1
52	123/04950		Adapter, bulkhead			1
53	2201/0005		Clip, jubilee			8
56	926/02300		Strip, foam, roll	For item 14		A/R
57	926/01100		Strip, sealing	For item 11		A/R
61	649/05400		Hose	Cut to length		1
62	649/05400		Hose	Cut to length		1
63	649/05400		Hose	Cut to length		1
69	1414/0007Z		Washer	Use with item 3		12
70	1358/0603Z		Nut	Use with item 3		6

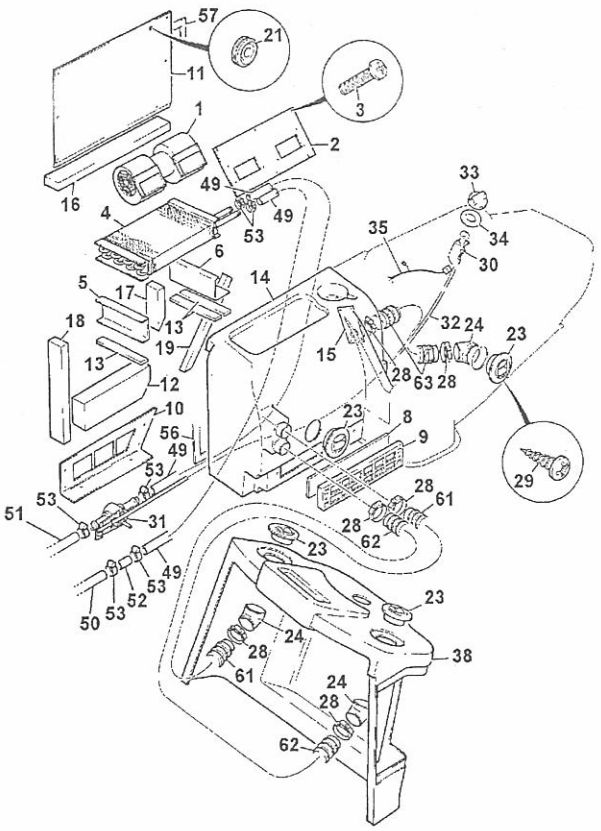

ITEM	PART NO	CHANGE NO	DESCRIPTION	REMARKS	USAGE CODE	QTY
71	1315/0108Z		Bolt	Filter cover		2
72	1414/0011Z		Washer, 2 BA			21
73	1315/0105Z		Bolt, M5 x 20mm long			19

9812/0020U

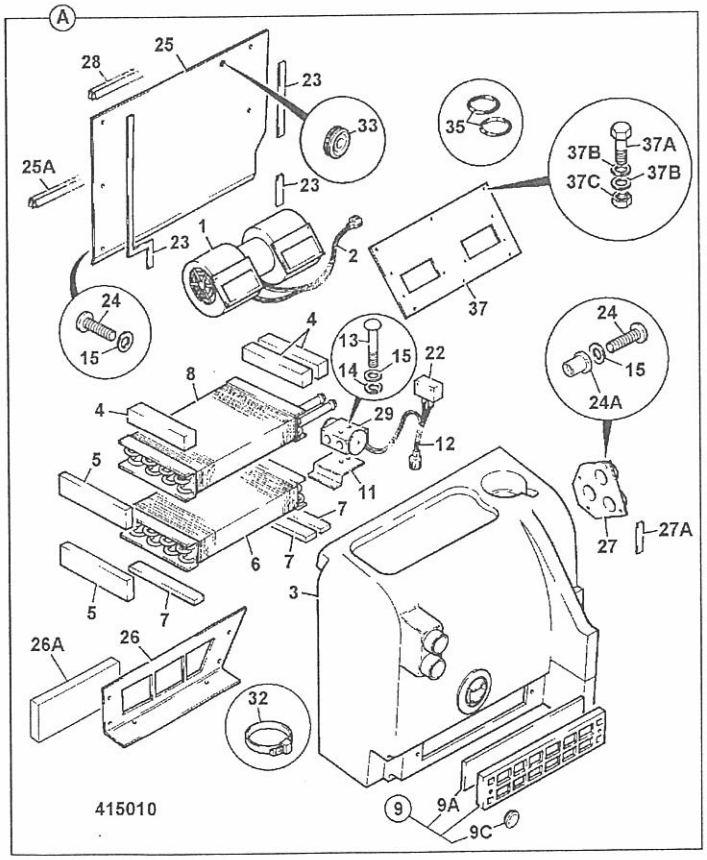

ITEM	PART NO	CHANGE NO	DESCRIPTION	REMARKS	USAGE CODE	QTY
0A	NSP		None serviced part			1
1	142/00603		:Motor, blower			1
2	721/11041		:Harness, heater	See Harnesses index C1		1
3	.		'See Remark'	See Consoles index C3		1
4	190/51912		:Strip, foam			3
5	.		:'See Remark'	Seal		3
6	142/00904		:Coil, evaporator			1
7	190/51912		:Strip, foam			3
8	142/00601		:Heater, assembly			1
9	142/18400		:Cover, filter			1
9A	141/00843		:Filter, recirculation			1
9C	2410/1104		Grommet, blind, 11.1mm	Use with item 9A		2
11	142/00952		:Bracket, expansion valve			1
12	NSP		:None serviced part	Harness, use item 22		1
13	1315/0108Z		Bolt			1
14	1425/0005Z		Washer, spring, M5			1
15	1420/0005Z		Washer, M5			26
22	142/00902		:Thermostat			1
23	926/02300		:Strip, foam, roll			A/R
24	1315/0105Z		:Bolt, M5 x 20mm long			26
24A	826/00842		Nut, M5 jacknut			17
25	142/00606		:Plate, blanking			1
25A	926/15601		Strip, foam			1
26	142/00607		:Plate, intake			1
26A	142/00628		Filter			1

9812/0020U

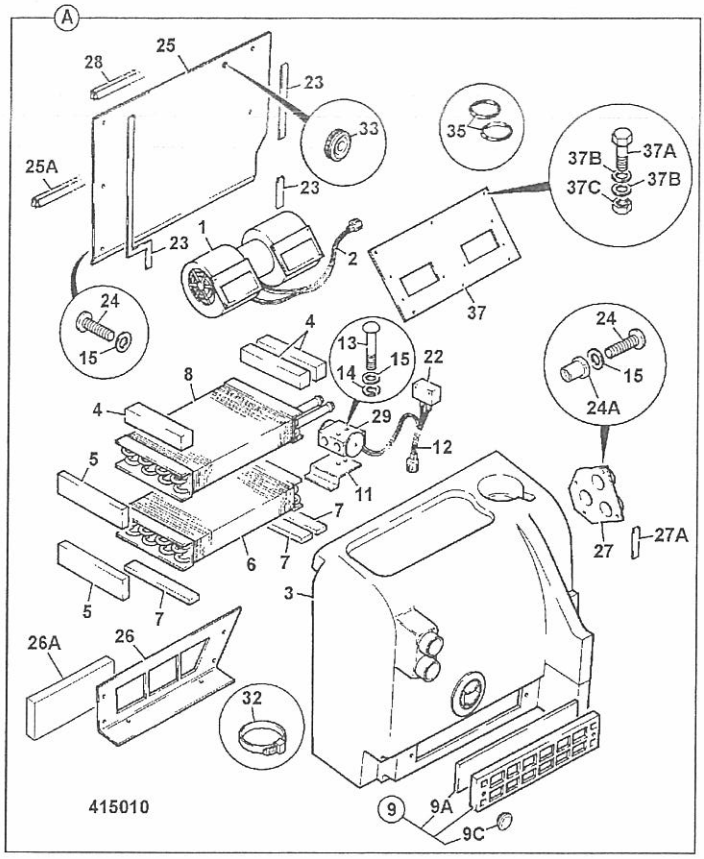

ITEM	PART NO	CHANGE NO	DESCRIPTION	REMARKS	USAGE CODE	QTY
27	142/18300		:Adapter, air outlet			1
27A	4102/0900		Sealant	Use with item 27		A/R
28	926/01100		:Strip, sealing			A/R
29	142/00903		Valve, expansion			1
33	828/00374		Grommet	Use with item 25		1
35	476/14903		O Ring			1
37	142/00605		Plate, blower mounting			1
37A	1360/0604Z		Screw	Use with item 37		4
37B	1414/0007Z		Washer	Use with item 37		
37C	1358/0603Z		Nut	Use with item 37		4

9812/0020L

C3-6-30 SWITCHES, FRONT CONSOLE

ISSUE 1

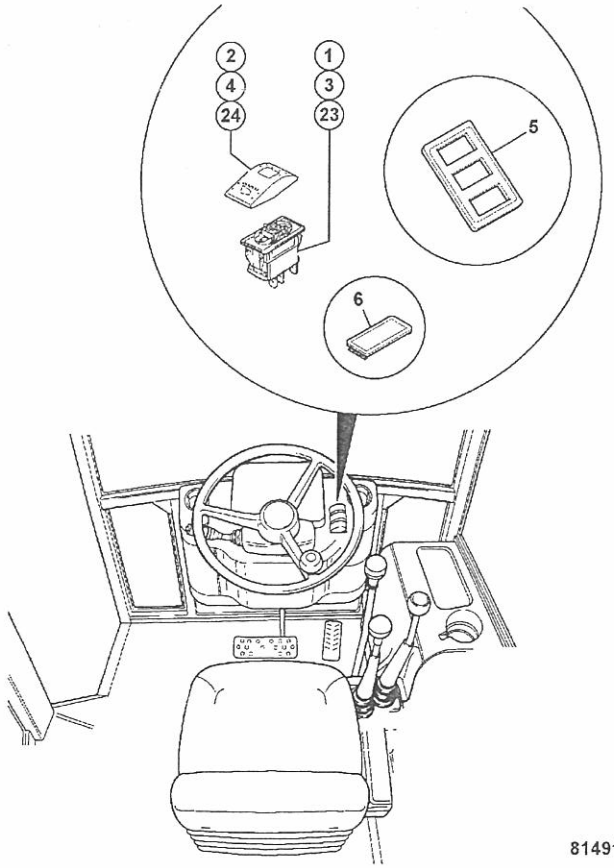

ITEM	PART NO	CHANGE NO	DESCRIPTION	REMARKS	USAGE CODE	QTY
1	701/60005		Switch, hazard, 12V			1
2	701/58839		Cover, switch,hazard			1
3	701/60006		Switch, 12V			1
4	701/58834		Cover, indicators, switch decal			1
5	715/07700		Frame, switch retaining			1
6	701/80265		Blank			1
23	701/80539		Switch, panel			1
24	701/58936		Cover, main/dip beam			1

9812/0020U

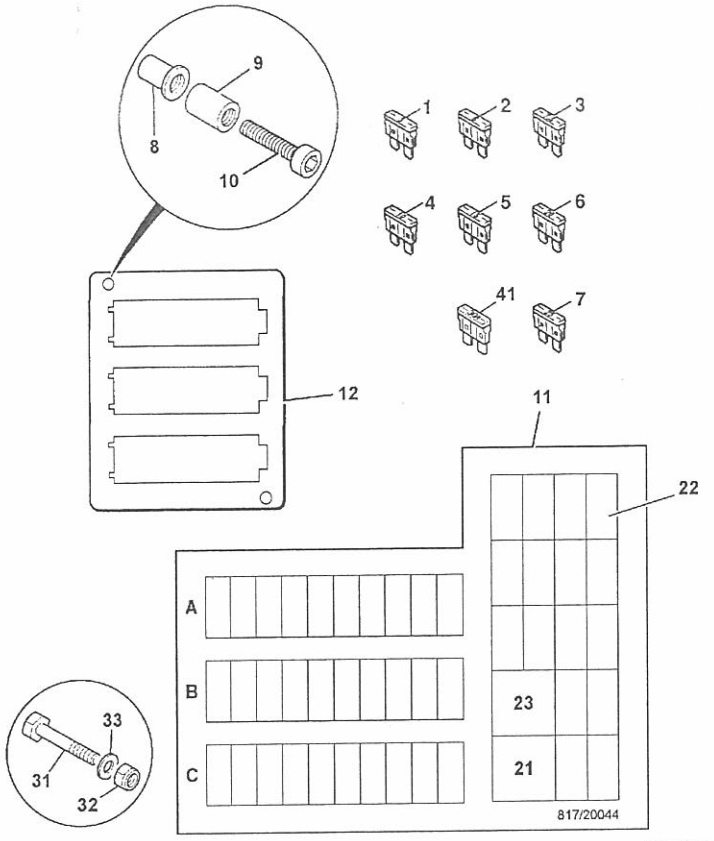

815671

ITEM	PART NO	CHANGE NO	DESCRIPTION	REMARKS	USAGE CODE	QTY
1	716/05701		Fuse, 3 amp			3
2	716/05703		Fuse, 5 Amp			4
3	716/05704		Fuse, 7.5 Amp			3
4	716/05705		Fuse, 10 amp			5
5	716/05706		Fuse, 15 Amp			5
6	716/05707		Fuse, 20 amp			2
7	716/05708		Fuse, 25 amp			2
8	826/01099		Nut, rivet,M6 open ended			2
9	141/00899		Spacer, threaded			2
10	1315/3216Z		Bolt, M6x70			2
11	817/20044		Label, fuses and relays			1
12	123/07634		Bracket, fuse mounting			1
21	704/10000		Alarm, buzzer			1
22	716/30285		Relay, 12v micro, high capacity			14
23	716/25800		Relay, hazard, 12v 6x21w			1
31	1315/0103Z		Screw	relay base		2
32	1370/0001Z		Nut, M5-8	relay base		2
33	1418/0007Z		Washer	relay base		2
41	716/05709		Fuse, 30 amp			1

9812/0020U

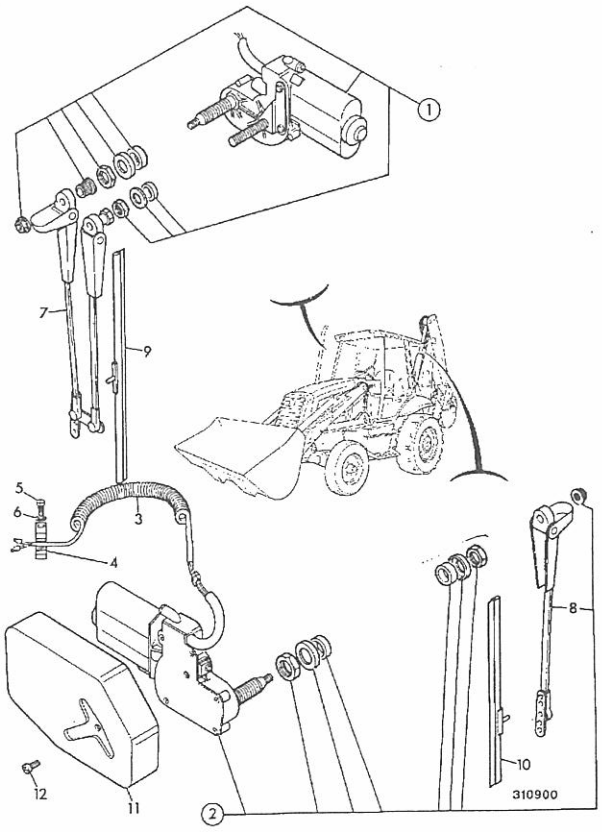

ITEM	PART NO	CHANGE NO	DESCRIPTION	REMARKS	USAGE CODE	QTY
1	714/28200		Wiper, motor (front)			1
2	714/28500		Motor, wiper, 90 DEG.			1
3	719/80900		Harness, rear wiper			1
4	821/00531		Clip, 'P'			5
5	826/00687		Screw			5
6	1414/0011Z		Washer, 2 BA			2
7	714/04700		Arm, wiper	Front wiper		1
8	714/05000		Arm	rear		1
9	714/14900		Blade, wiper	front		1
10	714/07700		Blade, wiper	rear		1
11	714/09500		Cover			1
12	826/00687		Screw			1

9812/0020U

C3-11-11 RADIO INSTALLATION

ISSUE

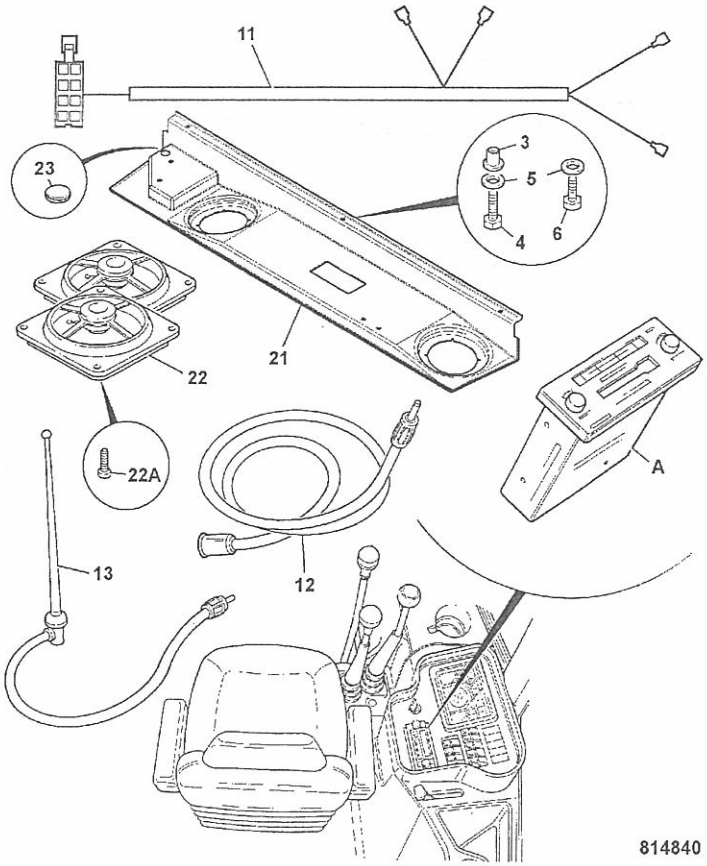

814840

ITEM	PART NO	CHANGE NO	DESCRIPTION	REMARKS	USAGE CODE	QTY
0A	.		'See Remark'	see API 183 for replacement		1
3	826/01101		Nut, rivet,M6 open ended, for 3 to 5.5mm plt			5
4	826/01768		Screw, M6x25mm			2
5	823/00516		Washer, nylon, M6			2
6	826/01520		Screw, M5 X 20			1
7	826/10887		Screw, button head, torx			2
8	823/00554		Washer, plain			5
11	721/11357		Harness, speakers			1
12	717/11100		Lead, aerial extension			1
13	717/00500		Aerial			1
21	331/54258		Console, speaker			1
22	717/20020		Speaker, (2 speakers/ grilles, + fixings)			1
22A	1430/0207		:Screw			8
23	2410/1009		Grommet			1

9812/0020L

C3-17-1 FAN, FACE LEVEL

ISSUE 1

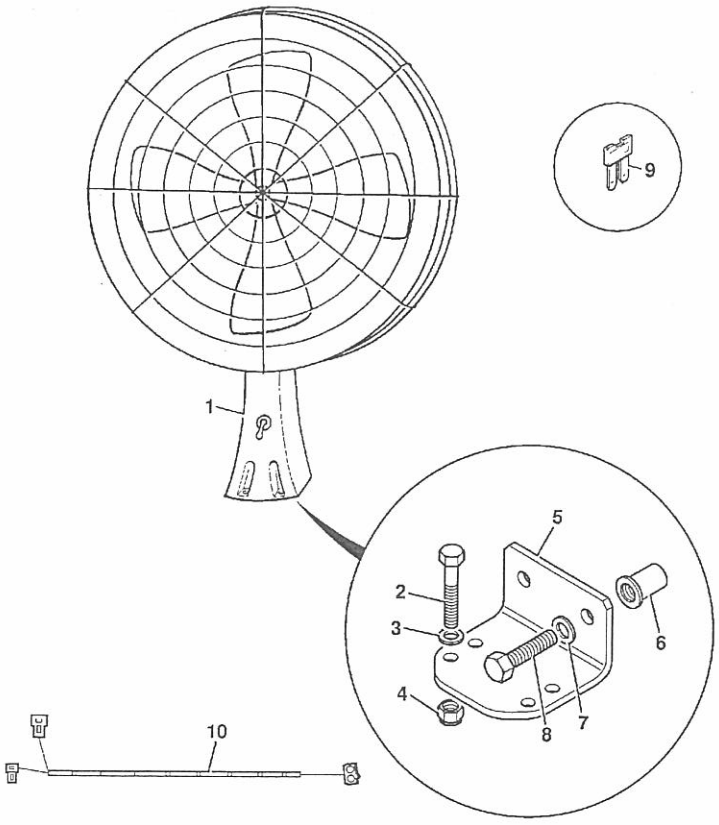

422800

ITEM	PART NO	CHANGE NO	DESCRIPTION	REMARKS	USAGE CODE	QTY
1	717/20040		Fan, face level, I2V			1
2	826/01554		Bolt			4
3	1420/0007Z		Washer, plain, M8			4
4	1370/0203Z		Nut, self lock, M8			4
5	331/31006		Bracket, fan mounting			1
6	826/01105		Nut, rivet,M10 open ended			2
7	1420/0008Z		Washer, Plain M10			2
8	1315/0408Z		Bolt, M10x30			2
9	716/05706		Fuse, 15 Amp			1
10	721/11224		Harness, face level fan			1

9812/0020U

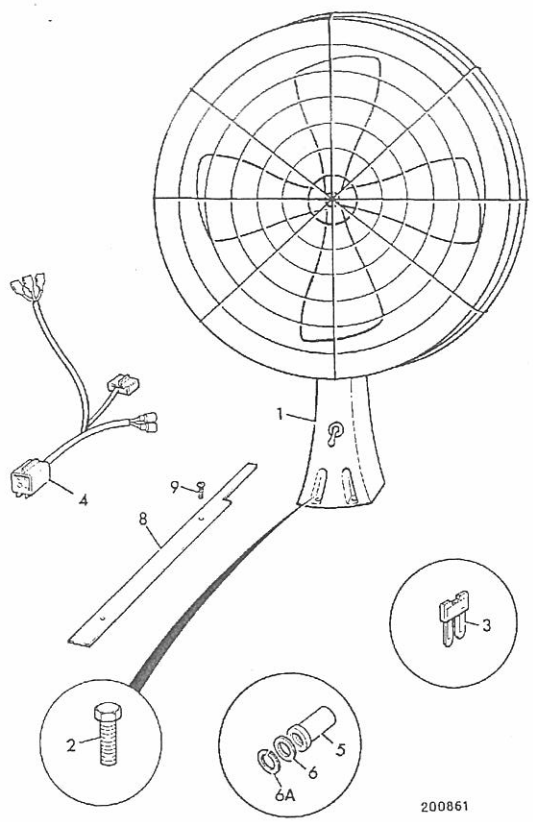

ITEM	PART NO	CHANGE NO	DESCRIPTION	REMARKS	USAGE CODE	QTY
1	717/04200		Fan, 12 volt			1
2	1315/0207Z		Screw, M6 x 25mm long			4
3	716/05706		Fuse, 15 Amp			1
4	.		'See Remark'	Not fitted		1
5	826/01101		Nut, rivet,M6 open ended, for 3 to 5.5mm plt			4
6	1420/0006Z		Washer, M6			4
6A	1425/0006Z		Washer, Spring			4
7	.		'See Remark'	Not fitted		
8	123/08011		Cover, fan harness			1
9	826/01520		Screw, M5 X 20			2

9812/0020U

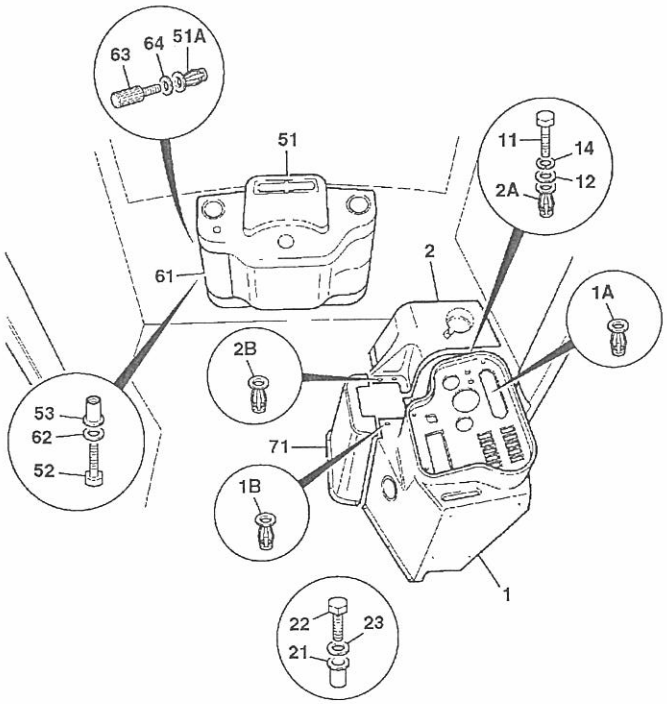

ITEM	PART NO	CHANGE NO	DESCRIPTION	REMARKS	USAGE CODE	QTY
1	*128/12075		Console, switch housing			1
1A	826/00842		:Nut, M5 jacknut			5
1B	826/01232		:Nut, M6 jack			2
2	331/27478		Cover, side,canopy, loader/landscaper			1
2A	826/00842		Nut, M5 jacknut			3
2B	826/01232		Nut, M6 jack			2
11	1315/0108Z		Bolt			3
12	1420/0005Z		Washer, M5			3
14	1425/0005Z		Washer, spring, M5			3
21	826/01101		Nut, rivet,M6 open ended, for 3 to 5.5mm plt			6
22	1315/0207Z		Screw, M6 x 25mm long			6
23	1420/0006Z		Washer, M6			6
51	331/27480		Cover, front console, graphite colour			1
51A	826/00842		Nut, M5 jacknut			2
52	1315/0205Z		Bolt			4
53	826/01099		Nut, rivet,M6 open ended			4
61	331/27718		Cover, fuse, front console			1
62	1420/0006Z		Washer, M6			4
63	826/01301		Screw, thumb 20mm long			2
64	826/00711		Washer, 'starloc'			2
71	.		'See Remark'	loader valve cover see index B2		1

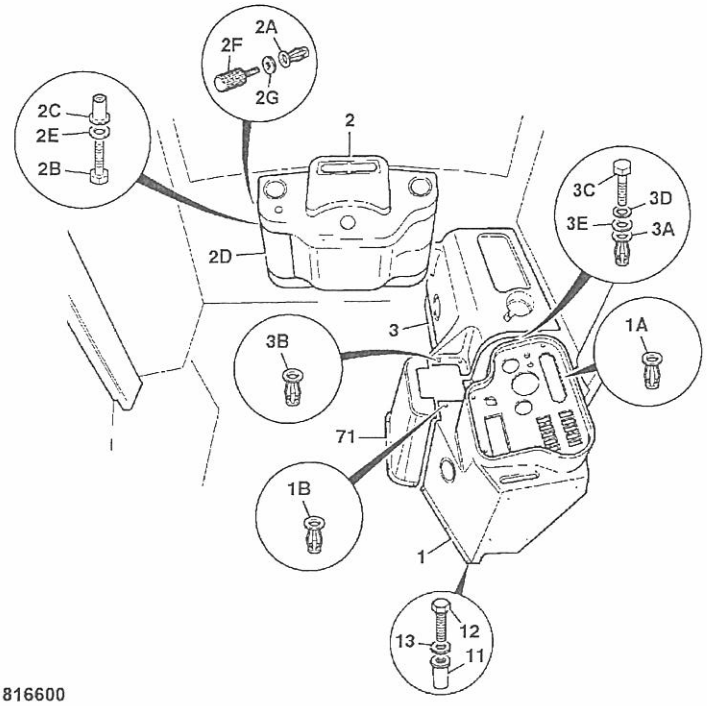

816600

ITEM	PART NO	CHANGE NO	DESCRIPTION	REMARKS	USAGE CODE	QTY
1	331/27485		Console, switch housing, heater build			1
1A	826/00842		Nut, M5 jacknut			5
1B	826/01232		Nut, M6 jack			4
2	331/27484		Cover, front console, graphite colour			1
2A	826/00842		Nut, M5 jacknut			1
2B	1315/0205Z		Bolt			1
2C	826/01099		Nut, rivet,M6 open ended			41
2D	331/27718		Cover, fuse, front console			1
2E	1420/0006Z		Washer, M6			1
2F	826/01301		Screw, thumb 20mm long			2
2G	826/00711		Washer, 'starloc'			1
3	331/30981		Console, heater unit	heater builds		
	346/00106		Console, aircon unit	air conditioning builds		1
3A	826/00842		Nut, M5 jacknut			6
3B	826/01232		Nut, M6 jack			2
3C	1315/0108Z		Bolt			1
3D	1420/0005Z		Washer, M5			6
3E	1425/0005Z		Washer, spring, M5			5
11	826/01101		Nut, rivet,M6 open ended, for 3 to 5.5mm plt			1
12	1315/0207Z		Screw, M6 x 25mm long			1
13	1420/0006Z		Washer, M6			6
71	.		'See Remark'	loader valve cover see index B2		1

9812/0020

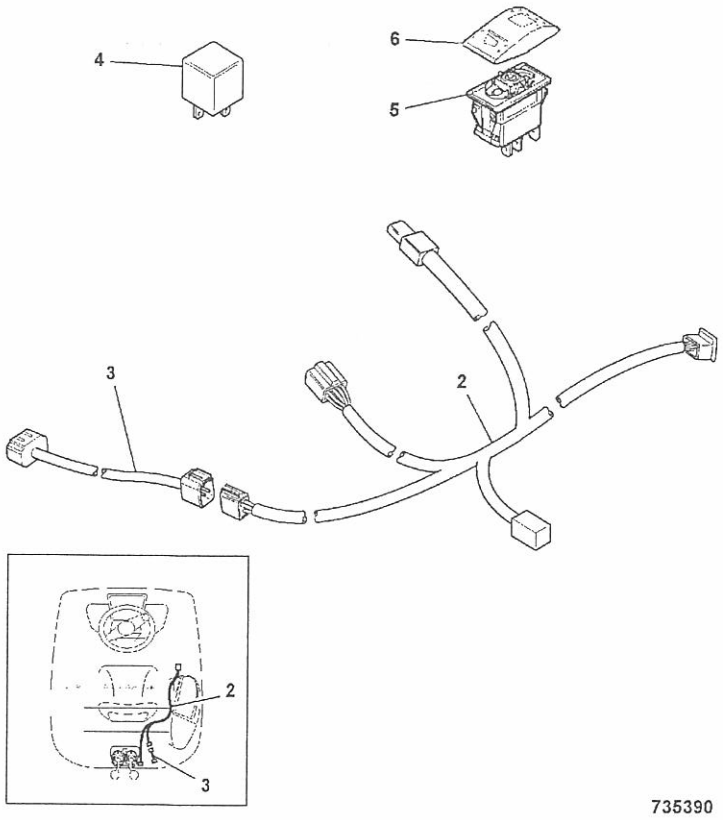

735390

ITEM	PART NO	CHANGE NO	DESCRIPTION	REMARKS	USAGE CODE	QTY
2	721/11719		Harness, auxiliary hammer/ jaw			1
	721/11143		Harness, 214e hammer	214e only		1
3	721/11388		Harness, link			1
4	716/30149		Relay, 12v micro			2
5	701/60002		Switch, 12V			1
6	701/58832		Cover, rockbreaker switch, soft touch			1

D

- D1 CONTROLS, MACHINE
- D2 CONTROLS, ENGINE
- D3 COLUMN, STEERING

9812/0020U

D1-1-31 CONTROLS, LOADER, LOADER LIFT, SHOVEL

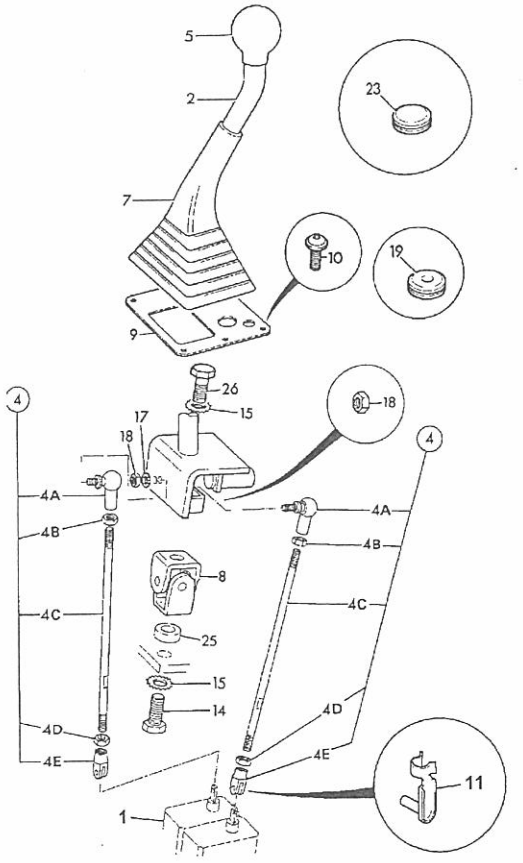

308442

ITEM	PART NO	CHANGE NO	DESCRIPTION	REMARKS	USAGE CODE	QTY
1	.		'See Remark'	Valve, see index E3		1
2	125/00446		Lever, loader control			1
4	913/10060		Rod, control assembly, 266mm long			1
	331/11267		Rod, control assembly, 270mm long			1
4A	123/08002		:Joint, ball, M8 right hand			1
4B	1370/0202Z		:Nut, M8			1
4C	.		:'See Remark'	Control rod. NSP		1
4D	826/01108		:Nut, LH thin			1
4E	913/02903		Clevis, fork (6mm hole)			1
5	.		'See Remark'	Control knob see index D1		1
7	263/05406		Gaiter, control, single lever			1
8	331/34525		Joint, universal, control linkage			1
9	141/01473		Plate, gaiter retaining			1
10	826/01768		Screw, M6x25mm			5
10A	826/01232		Nut, M6 jack			5
11	913/00031		Pin, spring,6mm clevis			2
14	1305/0404Z		Bolt			1
15	1417/0014Z		Washer, star			2
17	1420/0007Z		Washer, plain, M8			1
18	1370/0203Z		Nut, self lock, M8			1
19	828/00325		Grommet, blind			2
23	2410/1312		Grommet			1
25	266/31702		Spacer			1
26	1305/0410Z		Bolt, 1/2" x 1.1/2" long			1

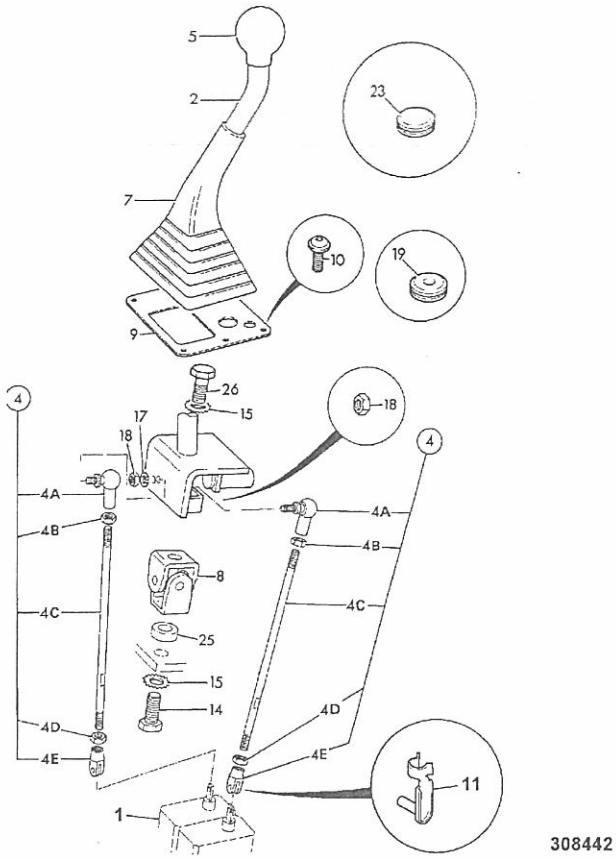

308442

ITEM	PART NO	CHANGE NO	DESCRIPTION	REMARKS	USAGE CODE	QTY
27	123/07672		Mat, soundproofing, loader valve			1

9812/0020L

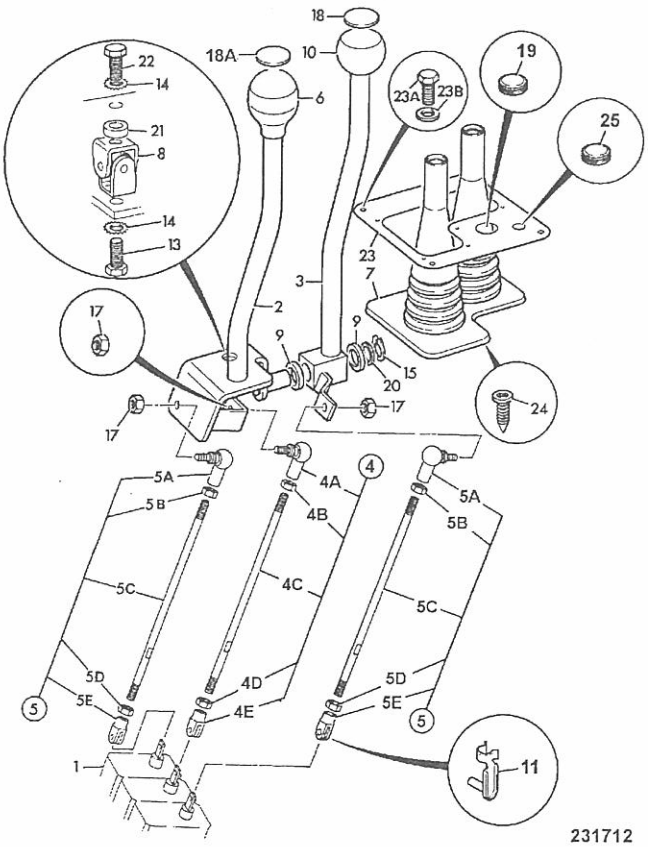

231712

ITEM	PART NO	CHANGE NO	DESCRIPTION	REMARKS	USAGE CODE	QTY
1	.		'See Remark'	For Valve See E3		1
2	125/00446		Lever, loader control			1
3	331/33463		Lever, Auxiliary Control			1
4	913/10060		Rod, control assembly, 266mm long			1
4A	123/08002		:Joint, ball, M8 right hand			1
4B	1370/0202Z		:Nut, M8			1
4C	NSP		:None serviced part			1
4D	826/01108		:Nut, LH thin			1
4E	913/02903		:Clevis, fork (6mm hole)			1
5	331/11267		Rod, control assembly, 270mm long			2
5A	123/08002		:Joint, ball, M8 right hand			1
5B	1370/0202Z		:Nut, M8			1
5C	NSP		:None serviced part			1
5D	826/01108		:Nut, LH thin			1
5E	913/02903		:Clevis, fork (6mm hole)			1
6	.		'See Remark'	See D1-7-1		1
7	123/07602		Gaiter, control			1
8	331/34525		Joint, universal, control linkage			1
9	831/00063		Bush			2
10	331/26977		Base, Knob			1
10A	331/30772		Knob, Top, Silver			1
10B	122/67459		Ring, tolerance			1
10C	142/00610		Plug			1
11	913/00031		Pin, spring,6mm clevis			3
13	1305/0404Z		Bolt			1

9812/0020U

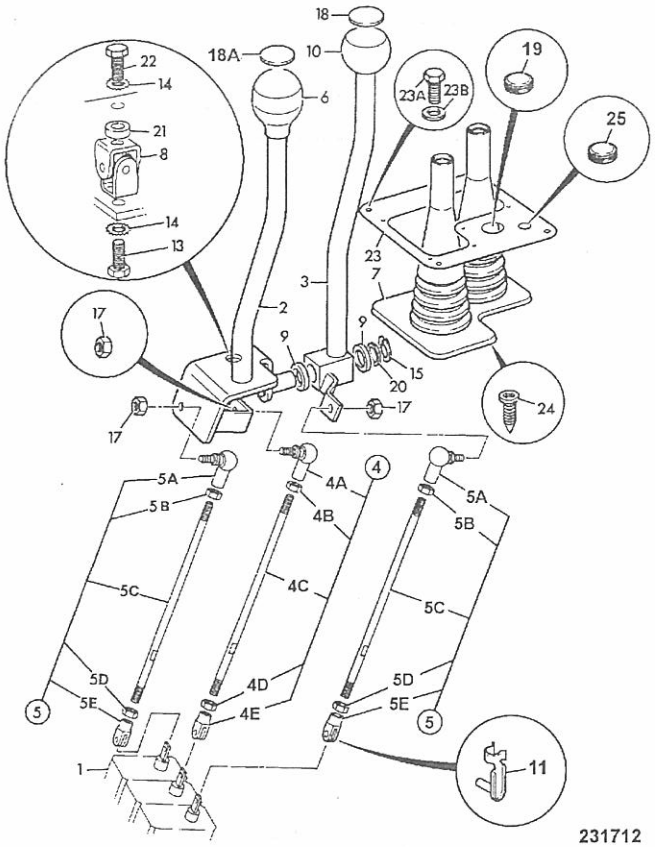

231712

ITEM	PART NO	CHANGE NO	DESCRIPTION	REMARKS	USAGE CODE	QTY
14	1417/0014Z		Washer, star			2
15	2203/0022		Circlip			1
17	1370/0203Z		Nut, self lock, M8			2
18	817/17772		Label, loader aux, clamshovel			1
18A	817/17771		Decal, loader lever, with float, reset	For Item 6		1
19	2410/1312		Grommet			1
20	1420/0011Z		Washer, M16 plain			1
21	266/31702		Spacer			1
22	1305/0410Z		Bolt, 1/2" x 1.1/2" long			1
23	142/00540		Plate, gaiter retaining			1
23A	826/01768		Screw, M6x25mm			5
24	142/00680		Fastener, fir tree			7
25	828/00325		Grommet, blind			1
26	826/01232		Nut, M6 jack			5

9812/0020U

D1-2-1 SEAL, EXCAVATOR CONTROLS

ISSUE 1

ITEM	PART NO	CHANGE NO	DESCRIPTION	REMARKS	USAGE CODE	QTY
1	123/04371		Seal, excavator controls			1
2	826/00687		Screw			6

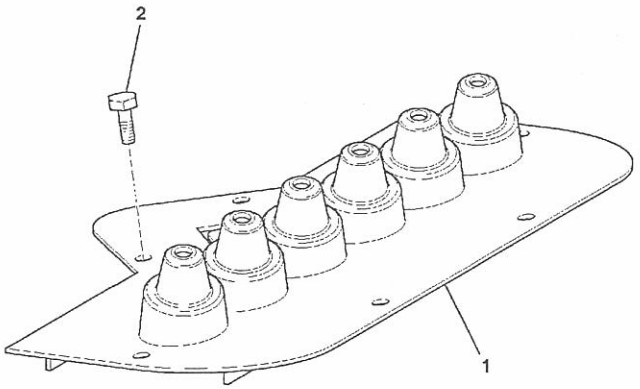

816790

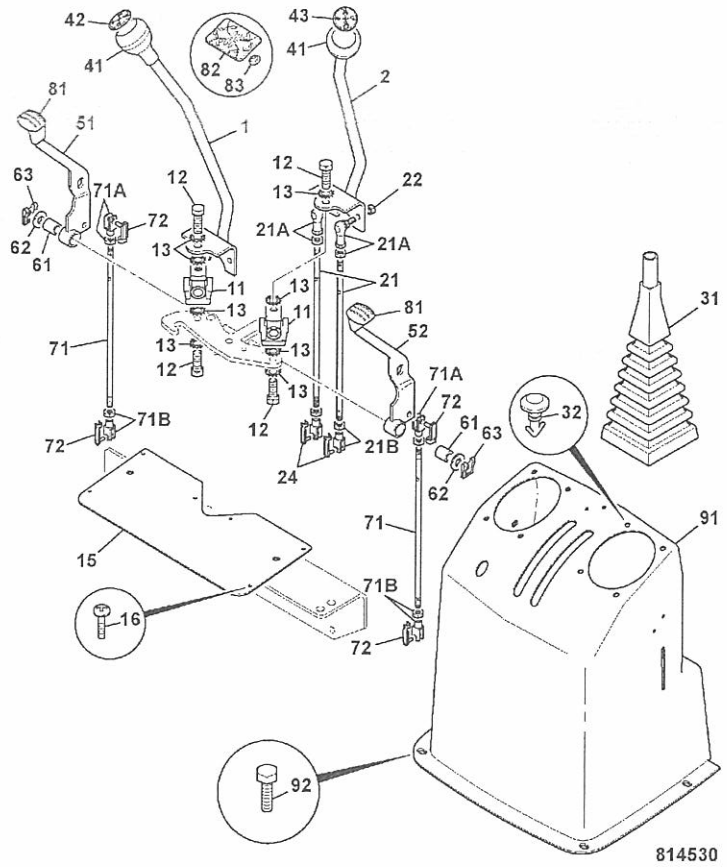

ITEM	PART NO	CHANGE NO	DESCRIPTION	REMARKS	USAGE CODE	QTY
1	125/92000		Lever, excavator control, left hand + pattern			1
2	125/92100		Lever, excavator control, right hand + pattern			1
11	331/34525		Joint, universal, control linkage			2
12	1305/0404Z		Bolt			1
13	1417/0014Z		Washer, star			8
15	128/10925		Plate, access, excavator, 214e as supplied			1
16	1430/1303		Screw			1
21	331/11275		Rod, control assembly, 343mm long			1
21A	123/08002		:Joint, ball, M8 right hand			1
	1370/0202D		:Nut, thin			1
21B	913/02601		:Clevis, fork (8mm hole)			1
	826/01108		:Nut, LH thin			1
22	1370/0203Z		Nut, self lock, M8			4
24	123/07389		Pin, spring,8mm clevis			4
31	123/04714		Gaiter, excavator control			1
32	826/00959		Fastener, drive, yellow			8
41	128/12635		Knob, assembly			2
42	817/17773		Decal, LEFT HAND CONTROL, JCB & SAE	SAE		1
	817/17775		Decal, left hand control, ISO	ISO		1
43	817/17774		Decal, RIGHT HAND CONTROL, JCB & SAE	SAE		1
	817/17776		Decal, right hand control, ISO	ISO		1

D1-2-10 CONTROLS, EXCAVATOR, & STABILISER, ISO & SAE PATTERN ISSUE

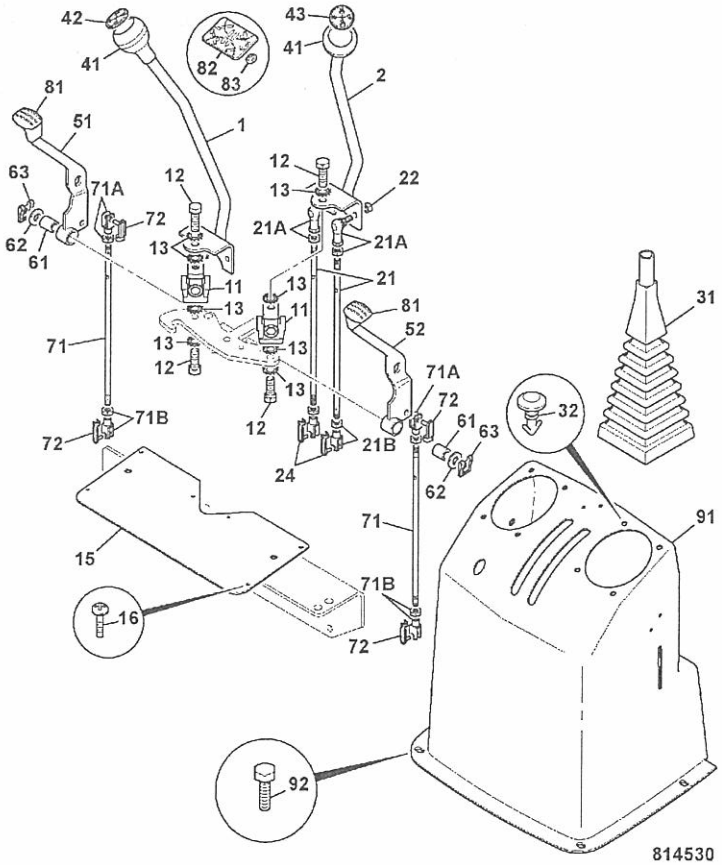

ITEM	PART NO	CHANGE NO	DESCRIPTION	REMARKS	USAGE CODE	QTY
51	331/46281		Lever, stabiliser, left hand			1
52	331/46282		Lever, stabiliser, right hand			1
61	831/00098		Bearing			2
62	1420/0008Z		Washer, Plain M10			2
63	913/00026		Clip, retaining			2
71	123/07395		Rod, stabiliser control			2
71A	913/01801		:Clevis, M8			1
	1370/0202D		:Nut, thin			1
71B	913/02601		:Clevis, fork (8mm hole)			1
	826/01108		:Nut, LH thin			1
72	123/07389		Pin, spring,8mm clevis			4
81	331/30884		Knob, throttle/, stabiliser control			2
82	817/17770		Decal, stabiliser control			1
83	826/00711		Washer, 'starloc'			2
91	331/27759		Cover, excavator			1
92	1315/0207Z		Screw, M6 x 25mm long			4

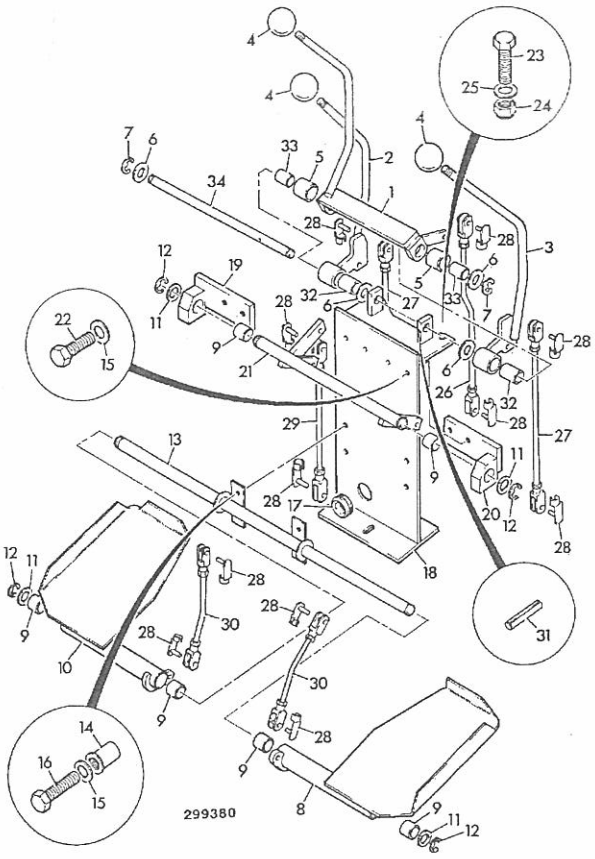

ITEM	PART NO	CHANGE NO	DESCRIPTION	REMARKS	USAGE CODE	QTY
1	123/07412		Lever, bucket			1
2	123/07410		Lever, dipper			1
3	123/07411		Lever, boom			1
4	123/03257		Knob, control			3
5	123/07413		Spacer, 25mm			2
6	1420/0011Z		Washer, M16 plain			4
7	821/00519		Clip, 'E'			2
8	123/07405		Pedal, left hand slew			1
9	831/00137		Bush			6
10	123/07406		Pedal, right hand slew			1
11	123/07421		Spacer, 3mm			4
12	821/00190		Clip, 'E'			4
13	123/07404		Shaft, lever pivot			1
14	826/01102		Nut, rivet,M8 open ended			4
15	1422/0007		Washer, hardened			8
16	1315/0308Z		Screw, M8x30			4
17	828/00365		Grommet			1
18	123/07403		Mounting, excavator valve			1
19	123/07409		Bracket, pivot mounting, right hand			1
20	123/07408		Bracket, pivot mounting, left hand			1
21	123/07407		Pin, pedal pivot			1
22	1315/0307Z		Screw, M8 X 25			4
23	1315/0509Z		Screw, M12 x 35mm			2
24	1370/0403Z		Nut, M12			2
25	1420/0009Z		Washer, Plain M12			2

D1-2-11 CONTROLS, EXCAVATOR, CASE SYSTEM, 214e ISSUE 1

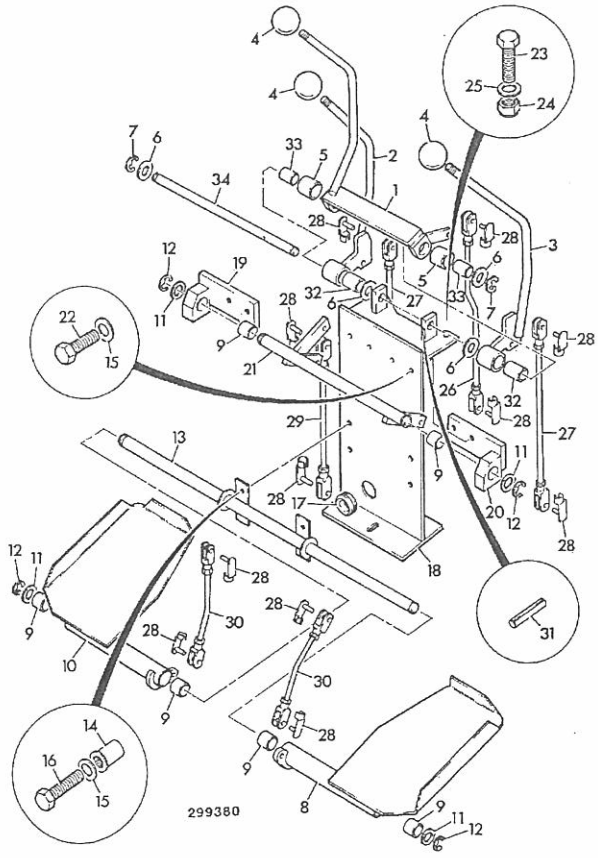

ITEM	PART NO	CHANGE NO	DESCRIPTION	REMARKS	USAGE CODE	QTY
26	123/07419		Rod, control, 345mm			1
27	123/07402		Rod, control, 345mm			2
28	123/07389		Pin, spring,8mm clevis			12
29	123/07401		Rod, control, 270mm			1
30	123/07399		Rod, control, 149mm			2
31	2102/0513		Pin, tension			1
32	831/00064		Bush, self lubricating			2
33	831/00121		Bearing, self lubricating			2
34	123/07420		Pin, lever pivot			1

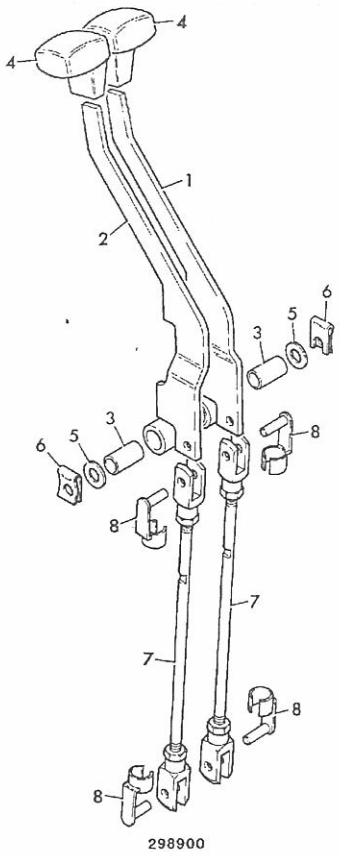

ITEM	PART NO	CHANGE NO	DESCRIPTION	REMARKS	USAGE CODE	QTY
1	331/46282		Lever, stabiliser, right hand			1
2	331/46281		Lever, stabiliser, left hand			1
3	831/00098		Bearing			4
4	331/30884		Knob, throttle/, stabiliser control			2
5	1420/0008Z		Washer, Plain M10			2
6	913/00026		Clip, retaining			2
7	123/07395		Rod, stabiliser control			2
8	123/07389		Pin, spring,8mm clevis			4

9812/0020

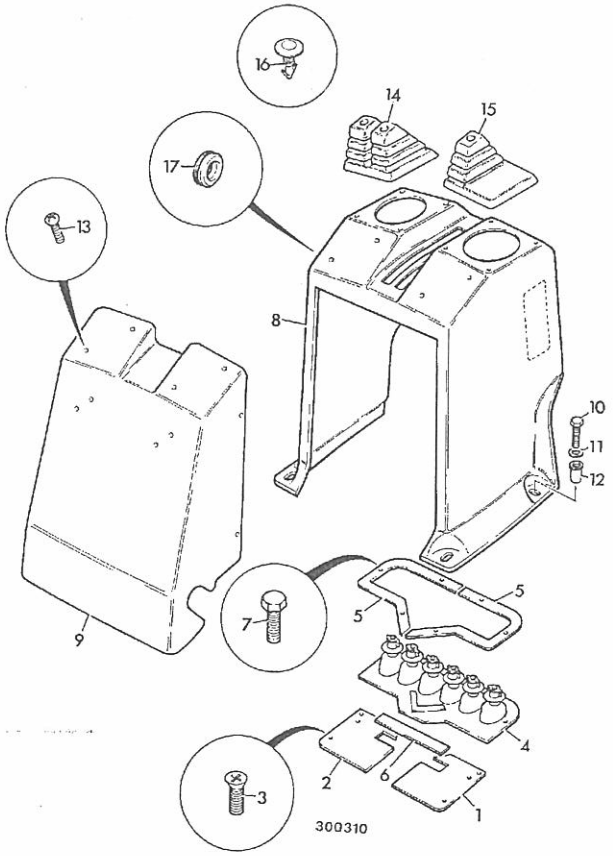

ITEM	PART NO	CHANGE NO	DESCRIPTION	REMARKS	USAGE CODE	QTY
1	123/07902		Plate, access, left hand			1
2	123/07903		Plate, access, right hand			1
3	1430/1303		Screw			4
4	123/07416		Seal, Case, excavator controls			1
5	123/07417		Plate, clamp, Case controls			2
6	123/07418		Seal			2
7	826/00687		Screw			6
8	331/27760		Cover, excavator, Case controls			1
9	123/07906		Cover, case controls			1
10	1315/0207Z		Screw, M6 x 25mm long			4
11	823/00384		Washer			4
12	826/01101		Nut, rivet,M6 open ended, for 3 to 5.5mm plt			4
13	1430/0202		Screw, No 8x1/2"			4
14	123/03255		Gaiter, double			1
15	123/03256		Gaiter, single lever			1
16	826/00959		Fastener, drive, yellow			8

9812/0020U

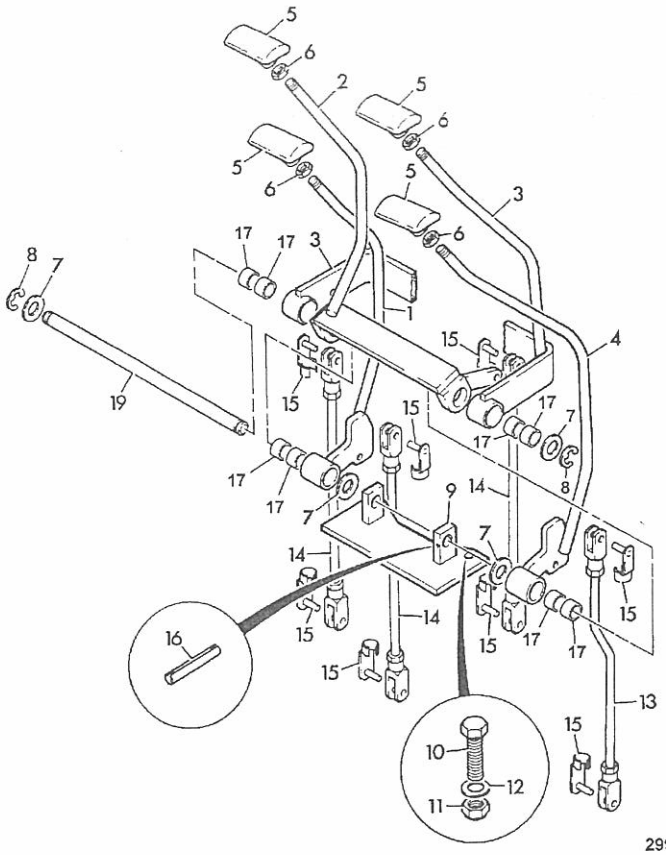

299391

ITEM	PART NO	CHANGE NO	DESCRIPTION	REMARKS	USAGE CODE	QTY
1	128/10354		Lever, c/w bearing, Dipper, Ford controls	includes 2 X item 17		1
2	128/10364		Lever, c/w bearing, Boom, Ford controls	includes 2 X item 17		1
3	128/10363		Lever, c/w bearing, Bucket, Ford controls	includes 2 X item 17		1
4	128/10355		Lever, c/w bearing, Slew, Ford controls	includes 2 X item 17		1
5	123/05204		Knob, control			4
6	1340/0402Z		Nut			4
7	1420/0011Z		Washer, M16 plain			4
8	821/00519		Clip, 'E'			2
9	123/07427		Bracket, lever mounting			1
10	1315/0509Z		Screw, M12 x 35mm			2
11	1370/0403Z		Nut, M12			2
12	1420/0009Z		Washer, Plain M12			2
13	123/07419		Rod, control, 345mm			1
14	123/07402		Rod, control, 345mm			3
15	123/07389		Pin, spring,8mm clevis			8
16	2102/0513		Pin, tension			1
17	831/00121		:Bearing, self lubricating			8
19	123/07420		Pin, lever pivot			1

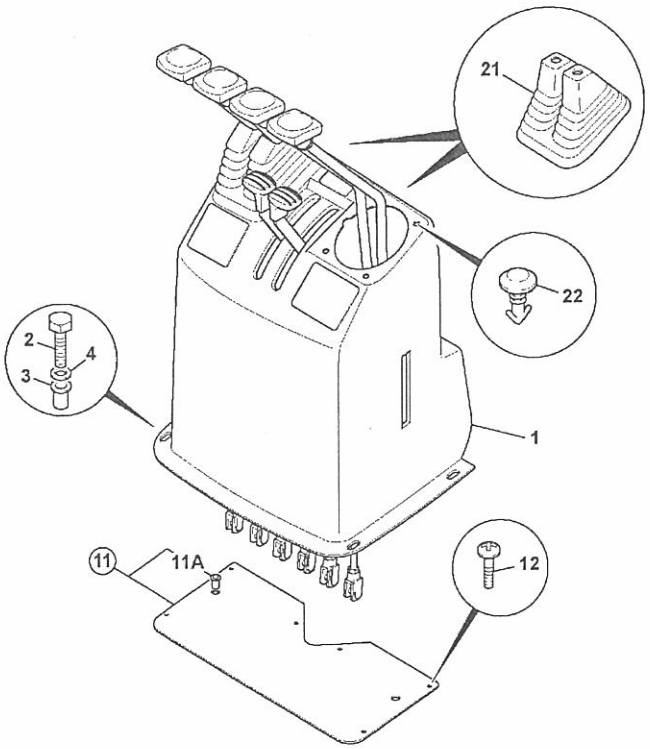

813090

ITEM	PART NO	CHANGE NO	DESCRIPTION	REMARKS	USAGE CODE	QTY
1	331/27759		Cover, excavator			1
2	1315/0207Z		Screw, M6 x 25mm long			4
3	826/01101		Nut, rivet,M6 open ended, for 3 to 5.5mm plt			2
4	823/00384		Washer			4
11	128/10925		Plate, access, excavator, 214e as supplied			1
11A	826/01101		:Nut, rivet,M6 open ended, for 3 to 5.5mm plt			2
12	1430/1303		Screw			4
21	123/03255		Gaiter, double			2
22	826/00959		Fastener, drive, yellow			8

D1-3-20 CONTROLS, AUXILIARY VALVE, BACKHOE, OPTIONAL

ISSUE

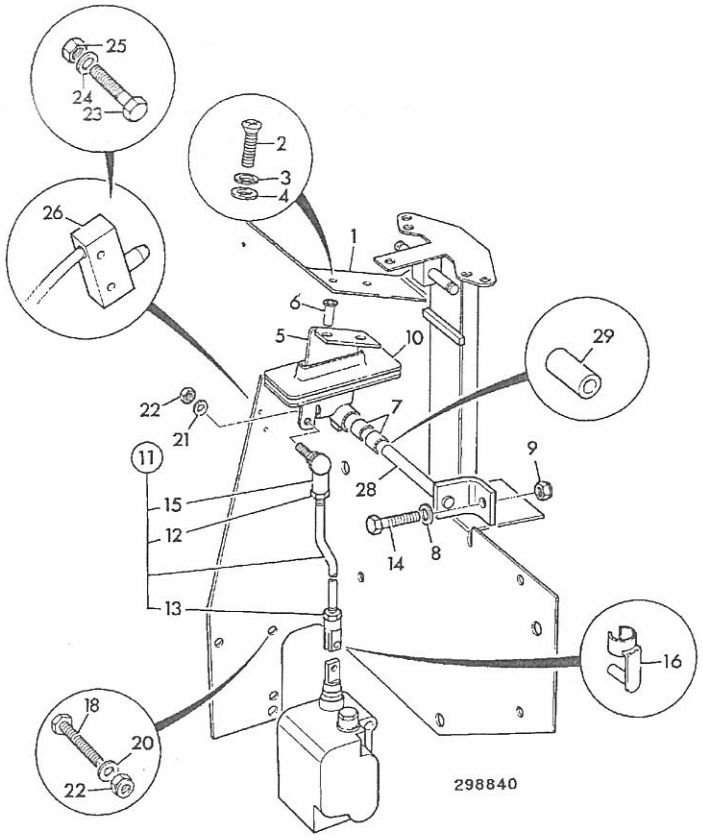

ITEM	PART NO	CHANGE NO	DESCRIPTION	REMARKS	USAGE CODE	QTY
1	123/06353		Plate, aux pedal			1
2	826/01591		Screw			1
3	1425/0006Z		Washer, Spring			1
4	823/00573		Washer			2
5	128/14679		Pivot, aux. pedal			1
6	826/01101		:Nut, rivet,M6 open ended, for 3 to 5.5mm plt			1
7	831/00096		:Bearing			1
8	1420/0008Z		Washer, Plain M10			1
9	1370/0303Z		Nut, lock, M10			3
10	123/04384		Seal, aux pedal			1
11	913/10303		Rod, control assembly			1
12	1370/0202Z		:Nut, M8			1
13	913/01108		:Nut, left hand thread			1
14	913/02601		:Clevis, fork (8mm hole)			1
15	123/08002		:Joint, ball, M8 right hand			1
16	123/07389		Pin, spring,8mm clevis			1
18	1315/3410Z		Bolt			2
20	1420/0008Z		Washer, Plain M10			2
21	1418/0011Z		Washer, lock			1
22	1370/0303Z		Nut, lock, M10			3
23	.		'See Remark'	not fitted		2
24	.		'See Remark'	not fitted		1
25	.		'See Remark'	not fitted		2
26	.		'See Remark'	not fitted		1
28	123/07391		Bracket, pivot			1
29	123/07392		Spacer			1

D1-3-30 CONTROLS, AUXILIARY, CASE SYSTEM, 214e

ISSUE

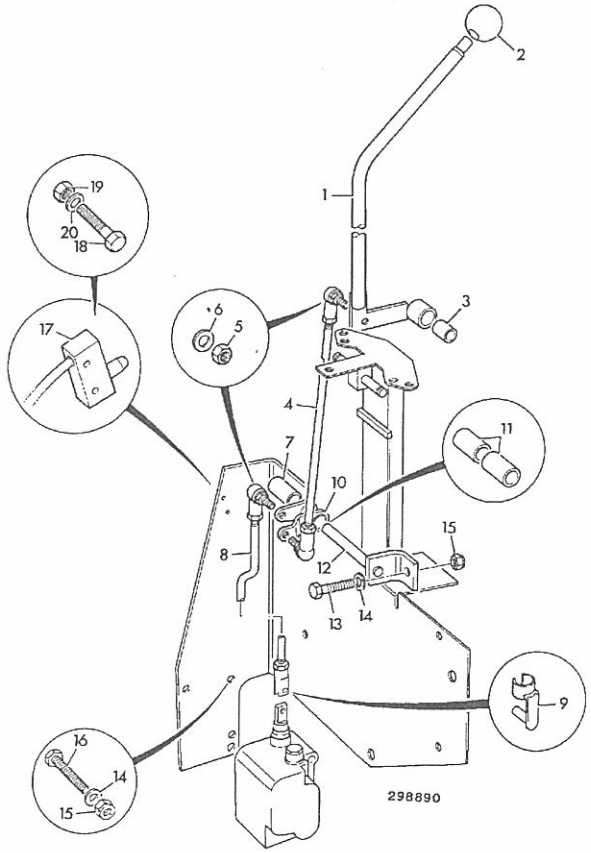

ITEM	PART NO	CHANGE NO	DESCRIPTION	REMARKS	USAGE CODE	QTY
1	123/03449		Lever, control			1
2	123/03257		Knob, control			1
3	831/00064		Bush, self lubricating			1
4	331/11273		Rod, control assembly, 339mm long			1
4A	123/08002		:Joint, ball, M8 right hand			1
	1370/0202D		:Nut, thin			1
4B	123/08001		:Joint, ball end, M8 left hand thread			1
	826/01108		:Nut, LH thin			1
5	1370/0203Z		Nut, self lock, M8			3
6	1418/0011Z		Washer, lock			3
7	123/07392		Spacer			1
8	913/10303		Rod, control assembly			1
8A	123/08002		:Joint, ball, M8 right hand			1
	1370/0202D		:Nut, thin			1
8B	913/02601		:Clevis, fork (8mm hole)			1
	913/01108		:Nut, left hand thread			1
9	123/07389		Pin, spring,8mm clevis			1
10	123/07397		Lever, crank			1
11	831/00096		Bearing			2
12	123/07391		Bracket, pivot			1
13	1315/0408Z		Bolt, M10x30			1
14	1420/0008Z		Washer, Plain M10			3
15	1370/0303Z		Nut, lock, M10			3
16	1315/0410Z		Bolt, M10 x 40			2

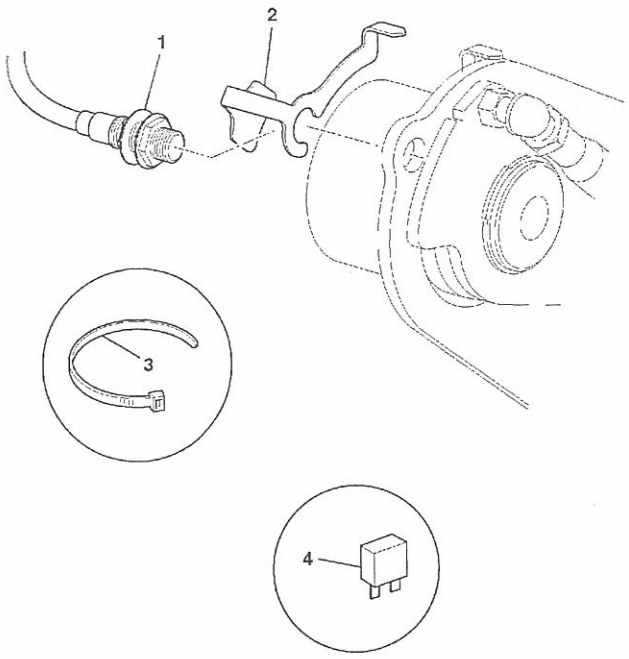

788270

ITEM	PART NO	CHANGE NO	DESCRIPTION	REMARKS	USAGE CODE	QTY
1	701/80537		Sensor, shovel reset			1
2	331/52128		Bracket, level indicator			1
3	826/01144		Tie, cable, 200mm long	attach harness to loader pipes		5
4	716/30149		Relay, 12v micro	fit to fusebox		1
5	721/11412		Harness, link	if fitted- main harness to loader valve		1

9812/0020U

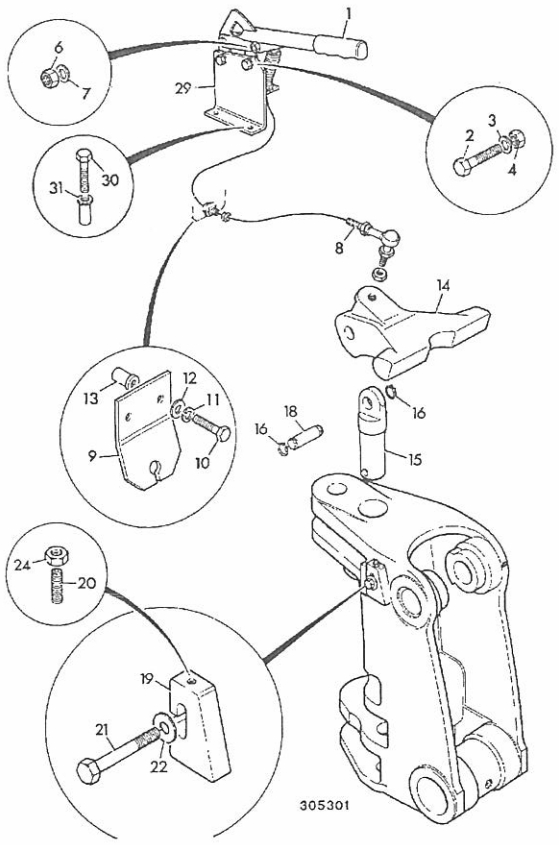

ITEM	PART NO	CHANGE NO	DESCRIPTION	REMARKS	USAGE CODE	QTY
1	123/05234		Lever, boomlock, red grip			1
2	1315/0307Z		Screw, M8 X 25			2
3	1411/0003Z		Washer, medium			2
4	1370/0203Z		Nut, self lock, M8			2
6	913/05903		Pin, clevis			1
7	913/00005		Clip, clevis			1
8	910/48400		Cable, assembly, boomlock centremount			1
8A	123/07652		:Joint, ball end			1
9	331/30856		Bracket, reaction			1
10	1315/0307Z		Screw, M8 X 25			2
11	1425/0007Z		Washer, spring			2
12	1420/0007Z		Washer, plain, M8			2
13	826/01103		Nut, rivet,M8 open ended			2
14	123/05862		Casting, boom lock, 14'0 (Yellow)			1
15	913/10079		Pin, kingpost top, centremount			1
16	2203/0035		Circlip			2
18	811/70099		Pin, boomlock			1
19	123/05236		Plate, boom stop			1
20	1390/0412Z		Screw, grub, M10x50 long			1
21	1315/3814Z		Bolt, M20 x 60mm			1
22	823/00491		Washer, spacer			1
24	1370/0302Z		Nut, lock			1
26	1450/0001		Nipple, grease, straight, 1/8 BSP	Use with item 15, 18		1
27	835/00017		Cap, grease nipple			1

9812/0020L

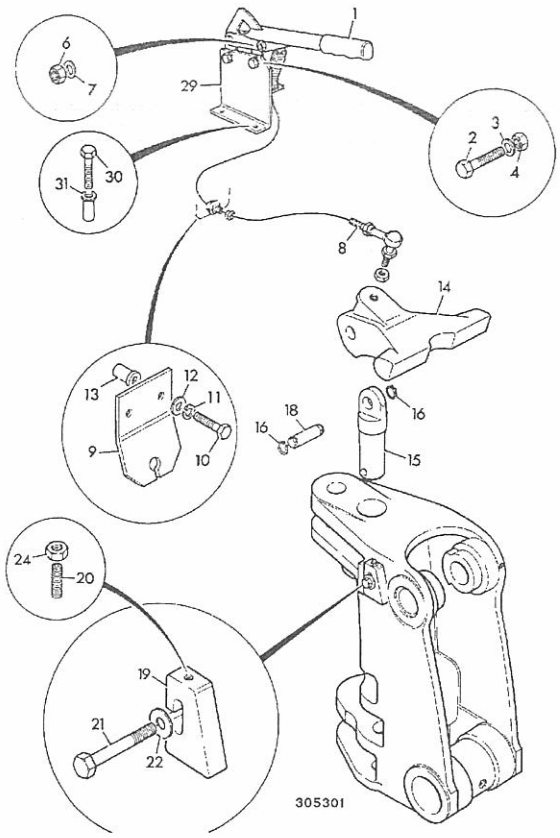

ITEM	PART NO	CHANGE NO	DESCRIPTION	REMARKS	USAGE CODE	QTY
28	835/00166		Plug			1
29	331/14484		:Bracket, boomlock, cable reaction			1
30	.		'See Remark'			1
31	.		'See Remark'			1

9812/0020

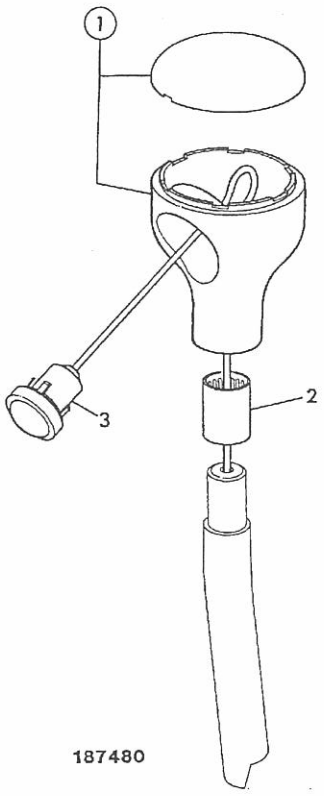

ITEM	PART NO	CHANGE NO	DESCRIPTION	REMARKS	USAGE CODE	QTY
1	128/13807		Knob, assembly 1-switch, as supplied			1
2	122/67459		:Ring, tolerance			1
3	701/42600		:Switch, push button black, with microswitch			1
4	817/17771		Decal, loader lever, with float, reset	insert into top of knob		1

9812/0020

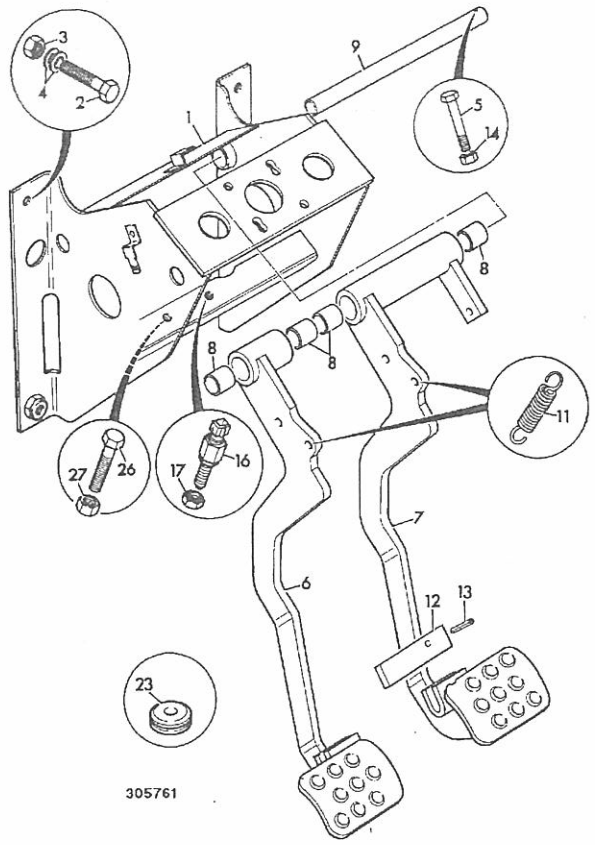

ITEM	PART NO	CHANGE NO	DESCRIPTION	REMARKS	USAGE CODE	QTY
1	331/16346		Bracket, carrier brake pedal, 214e & 214Se			1
2	1315/0407Z		Bolt, M10x25			4
3	1370/0303Z		Nut, lock, M10			4
4	1420/0008Z		Washer, Plain M10			4
5	1315/3212Z		Bolt			1
6	128/12148	To M908654	Pedal, left hand brake, 214e			1
	128/16819		Pedal, left hand brake			1
7	128/12149	To M908654	Pedal, right hand brake, 214e			1
	128/16820		Pedal, right hand brake			1
8	831/00065		:Bush	Part of item 6 & 7		4
9	123/04301		Pin, pivot, brake pedal			1
10	1420/0012Z		Washer	between items 6 & 7		2
11	814/10122		Spring, tension			2
12	121/32501		Plate, lock			1
13	2102/0615		Pin, tension			1
14	1370/0103Z		Nut, Self lock, M6			1
16	701/80266		Switch, footbrake			1
17	1340/0402Z		Nut			1
23	2410/1113		Grommet			1
26	1315/0410Z		Bolt, M10 x 40			1
27	1370/0302Z		Nut, lock			1

9812/0020U

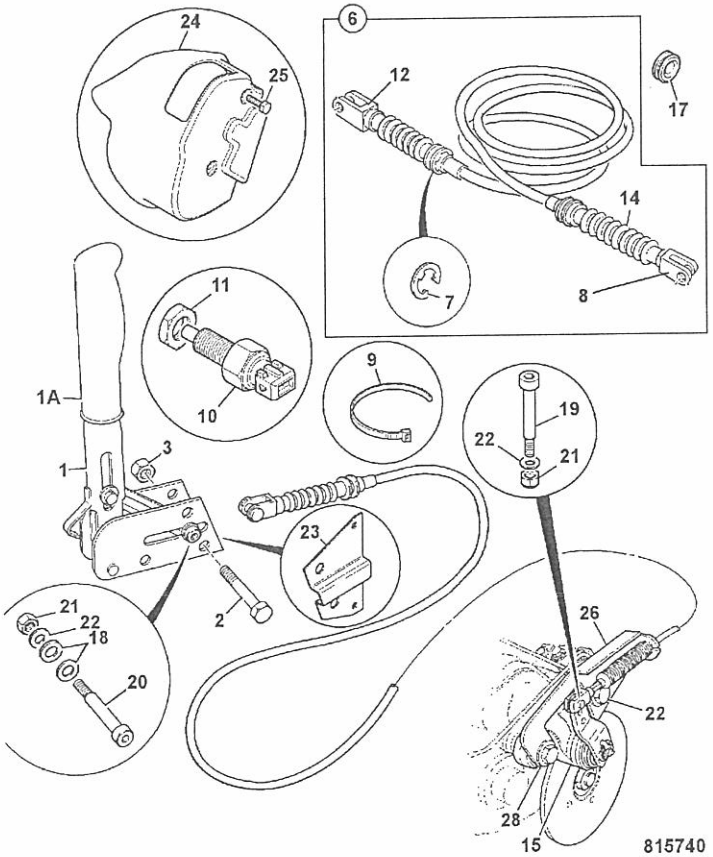

ITEM	PART NO	CHANGE NO	DESCRIPTION	REMARKS	USAGE CODE	QTY
1	15/914100		Lever, parking brake			1
1A	331/16848		Grip, hand, red			1
2	1315/3312Z		Bolt			2
3	1370/0203Z		Nut, self lock, M8			2
5	1420/0007Z		Washer, plain, M8			2
6	910/60253		Cable, parkbrake			1
7	826/00627		:Clip, 'E'			2
8	NSP		:None serviced part			1
9	121/77603		Tie, cable, L=300mm x W=7.6mm			1
10	701/72500		Switch			1
11	1340/0402Z		Nut			2
12	NSP		:None serviced part			1
14	NSP		:None serviced part			2
15	.		:'See Remark'	Parking brake, See page G1-3-1		1
17	123/04561		Grommet, cable/harness			1
18	1420/0007Z		Washer, plain, M8			2
19	826/01597		Screw, shoulder, 8 x 20 x M6			1
20	826/01596		Capscrew, 40mm long			1
21	1370/0103Z		Nut, Self lock, M6			2
22	1420/0006Z		Washer, M6			2
23	123/07792		Bracket, brake lever cover			1
24	123/07793		Cover, brake lever			1
25	826/01521		Screw, M6 X 20			2
26	331/58423		Bracket, reaction, parkbrake			1

9812/0020U

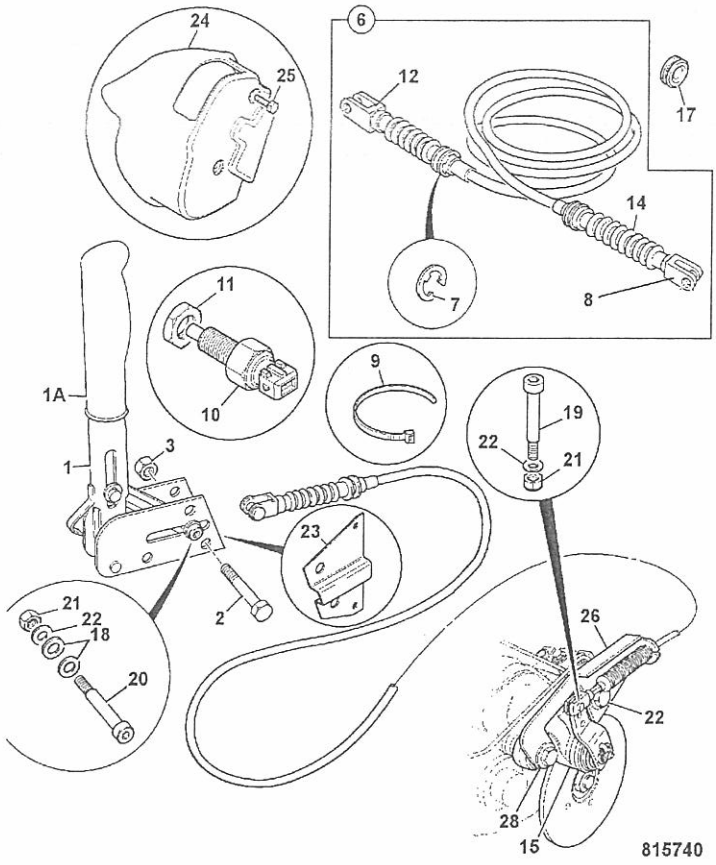

ITEM	PART NO	CHANGE NO	DESCRIPTION	REMARKS	USAGE CODE	QTY
27	826/10526		Bolt			2
28	823/00603		Washer, hardened, M16			1

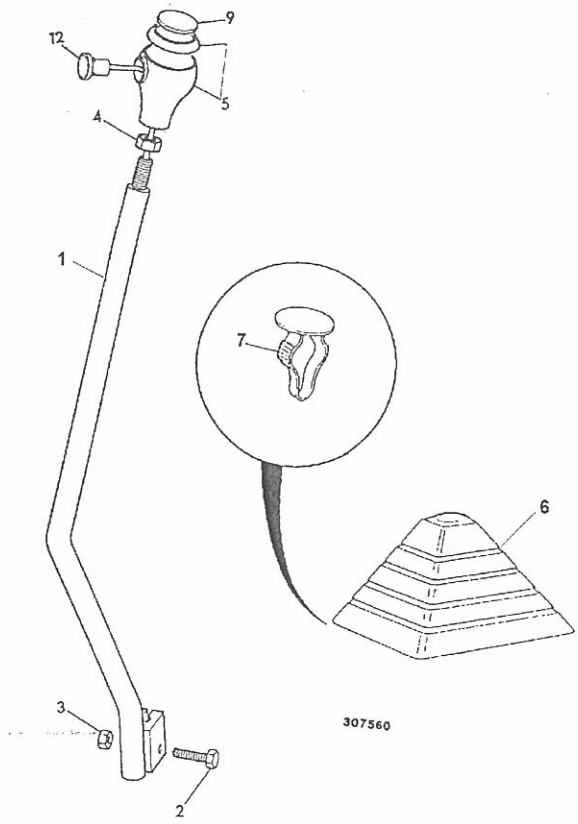

ITEM	PART NO	CHANGE NO	DESCRIPTION	REMARKS	USAGE CODE	QTY
1	123/07588		Lever, gear			1
2	1315/3411Z		Bolt, M10 x 45mm			1
3	1370/0303Z		Nut, lock, M10			1
4	1340/0602Z		Nut			1
5	128/12634		Knob, assembly			1
5B	331/30772		:Knob, Top, Silver			1
6	122/67450		Gaiter			1
7	826/00959		Fastener, drive, yellow			4
9	817/17698		Decal, gearlever knob, 4 speed			1
12	701/49800		Switch, micro			1

D

D1 CONTROLS, MACHINE
D2 CONTROLS, ENGINE
D3 COLUMN, STEERING

9812/0020U

D2-3-1 THROTTLE CONTROL



ITEM	PART NO	CHANGE NO	DESCRIPTION	REMARKS	USAGE CODE	QTY
1	910/60176		Cable, throttle control, assembly			1
2	910/52501		Lever, assembly, throttle control			1
3	910/52502		Knob, red, throttle lever			1
4	826/01196		Screw, taptite			3
5	1425/0005Z		Washer, spring, M5			3
6	1420/0005Z		Washer, M5			3
7	1370/0001Z		Nut, M5-8			3
8	123/07303		Pedal, assembly, throttle control			1
9	2410/0213		Grommet			1
10	142/00773		Bracket, mounting, hand throttle			1
11	331/45385		Bracket, throttle reaction			1
12	1315/0307Z		Screw, M8 X 25			2
13	1420/0007Z		Washer, plain, M8			2
14	1315/0205Z		Bolt			6
15	1370/0103Z		Nut, Self lock, M6			6
16	1420/0006Z		Washer, M6			6
17	826/01218		Screw, raised c/sk. head			3
18	1370/0001Z		Nut, M5-8			3
19	1425/0005Z		Washer, spring, M5			3
20	1425/0005Z		Washer, spring, M5			3
21	814/10179		Spring, overload			1
22	826/01144		Tie, cable, 200mm long			3

D

- D1 CONTROLS, MACHINE
- D2 CONTROLS, ENGINE
- D3 COLUMN, STEERING

9812/0020U

D3-1-11 STEERING COLUMN, 214e

ISSUE 1

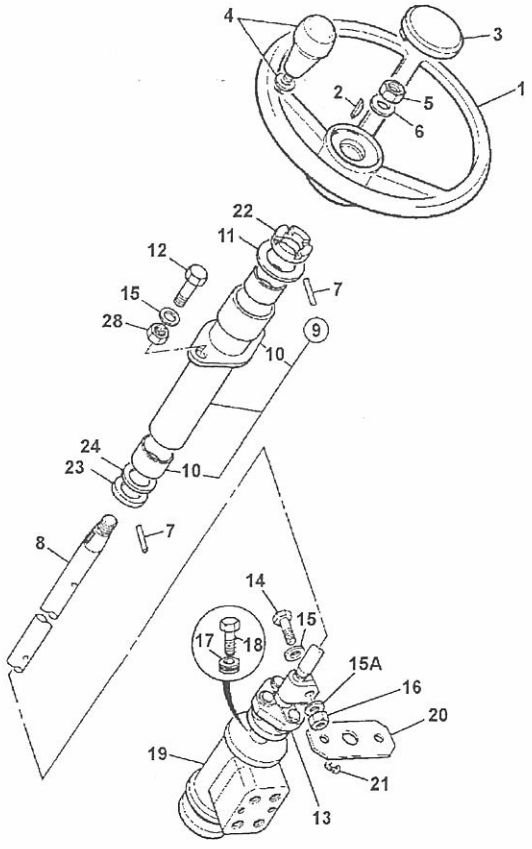

305291

ITEM	PART NO	CHANGE NO	DESCRIPTION	REMARKS	USAGE CODE	QTY
1	331/27410		Wheel, steering			1
2	G18/2		Key			1
3	331/27487		Cap, steering wheel			1
4	331/27411		Knob, spinner	Optional		1
4A	331/27488		Plug, blanking			1
5	1340/0602Z		Nut			1
6	1411/0007Z		Washer			1
7	2102/0417		Pin, tension			1
8	123/07285		Shaft, fixed steer column			1
9	126/00314		Column, steering outer			1
10	NSP		:None serviced part			2
11	1411/0009Z		Washer			1
12	1315/0408Z		Bolt, M10x30			2
13	331/36009		Coupling			1
14	1315/0310Z		Bolt, M8x40			2
15	1420/0008Z		Washer, Plain M10			2
15A	1420/0008Z		Washer, Plain M10			2
16	1370/0203Z		Nut, self lock, M8			2
17	255/35203		Insert, mounting			4
18	1315/3409Z		Bolt			4
18A	1412/0004Z		Washer			2
19	.		'See Remark'	See frame E3-10-10		1
20	123/04752		Plate, retainer			1
21	821/00190		Clip, 'E'			1
22	831/00074		Bearing, thrust			1
23	1420/0012Z		Washer			1

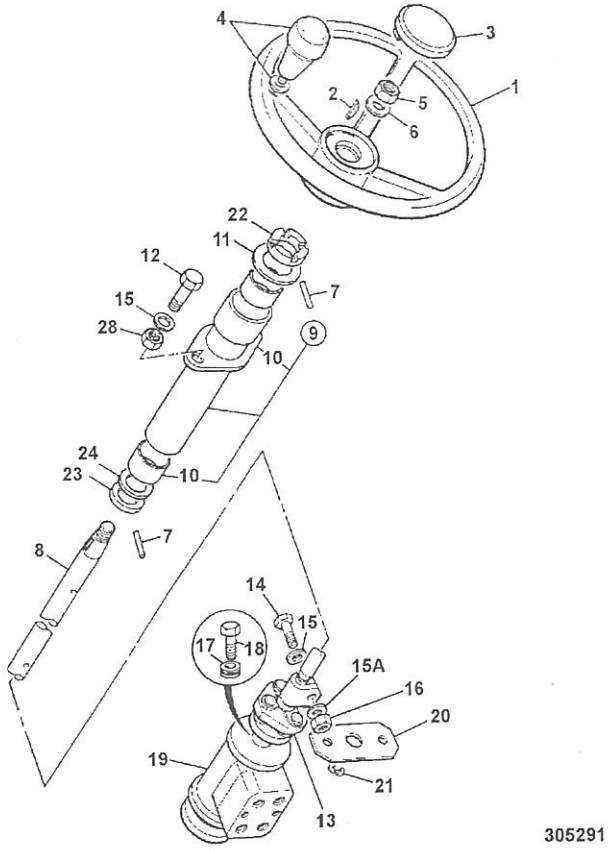

305291

ITEM	PART NO	CHANGE NO	DESCRIPTION	REMARKS	USAGE CODE	QTY
24	823/00302		Washer, 2mm			1

9812/0020U

E

- E1 HOSE & PIPEWORK
- E2 PUMP/MOTOR & PUMP DRIVE
- E3 VALVES & HYDRAULIC FILTERS
- E4 RAMS

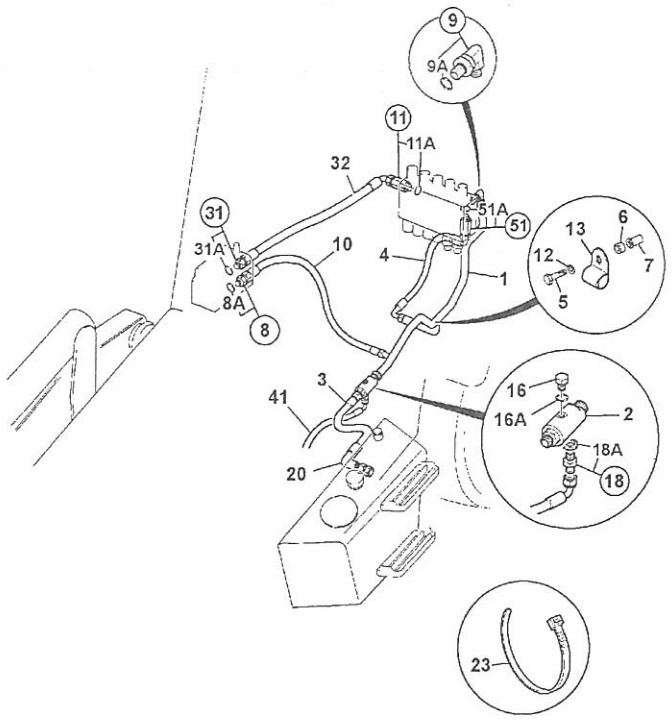

785800

ITEM	PART NO	CHANGE NO	DESCRIPTION	REMARKS	USAGE CODE	QTY
1	335/04512		Pipe, return,centremount			1
2	928/60149		Valve, dual check manifold, 2bar-2bar			
3	637/31200		Hose, 1BSPx650, low pressure			
4	629/80064		Hose, 3/4BSP x 480mm			
5	1315/3412Z		Bolt			
6	829/31263		Spacer, 10.2x20x16long			2
7	826/01249		Nut, M10 rivet			2
8	1620/2057		Adapter			
8A	2401/0508		:O Ring			1
9	1620/2060		Adapter, M/M			
9A	2401/0510		:O Ring			
10	614/80055		Hose			1
11	1620/2059		Adapter, 3/4" x M26			
11A	2401/0508		:O Ring			
12	1420/0008Z		Washer, Plain M10			2
13	821/10423		Clamp, pipe			2
16	816/90007		Adapter, M/M			
16A	2401/0506		:O Ring			1
18	1745/0001		Plug, 7/16"UNF, o ring boss			1
18A	2401/0503		:O Ring			1
20	.		'See Remark'	not fitted		
23	826/01453		Tie, cable, double head			2
31	1620/2059		Adapter, 3/4" x M26			1
31A	2401/0508		:O Ring			
32	615/48200		Hose			

E1-1-11 HOSE AND PIPEWORK, LOADER VALVE TO, EXCAVATOR VALVE TO TANK ISSUE

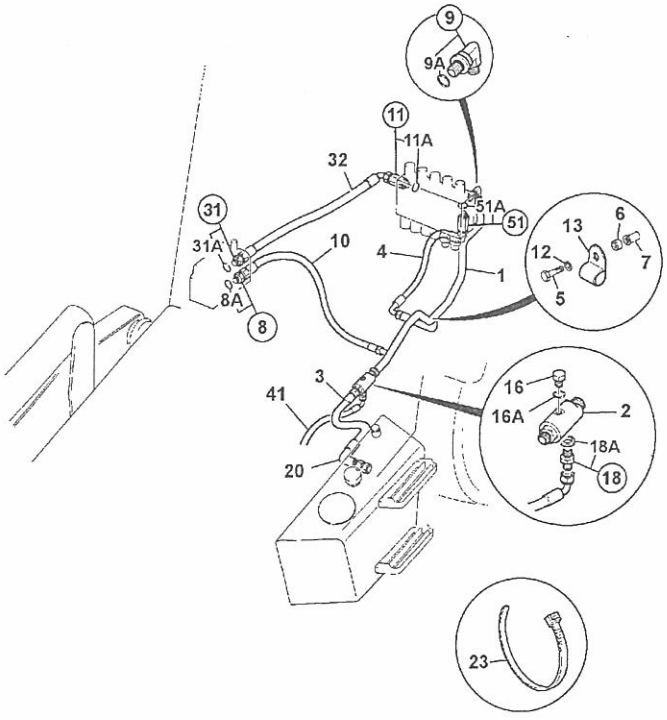

785800

ITEM	PART NO	CHANGE NO	DESCRIPTION	REMARKS	USAGE CODE	QTY
33	821/00183		Clamp, top			1
34	821/00184		Clamp, base			1
35	821/00185		Insert, clamp			1
41	649/51774		Hose, 5/8"BSP 3575mm long			1
51	1620/2059		Adapter, 3/4" x M26			2
51A	2401/0508		:O Ring			1



ITEM	PART NO	CHANGE NO	DESCRIPTION	REMARKS	USAGE CODE	QTY
1	629/80038		Hose, 3/4"BSP 780mm			1
2	1620/2056		Adapter			1
2A	2401/0507		:O Ring			1
4	1620/2058		Adapter, M/M			2
4A	2401/0507		:O Ring			1
5	816/90180		Adapter, M/F			1
6	614/20200		Hose			1

9812/0020U

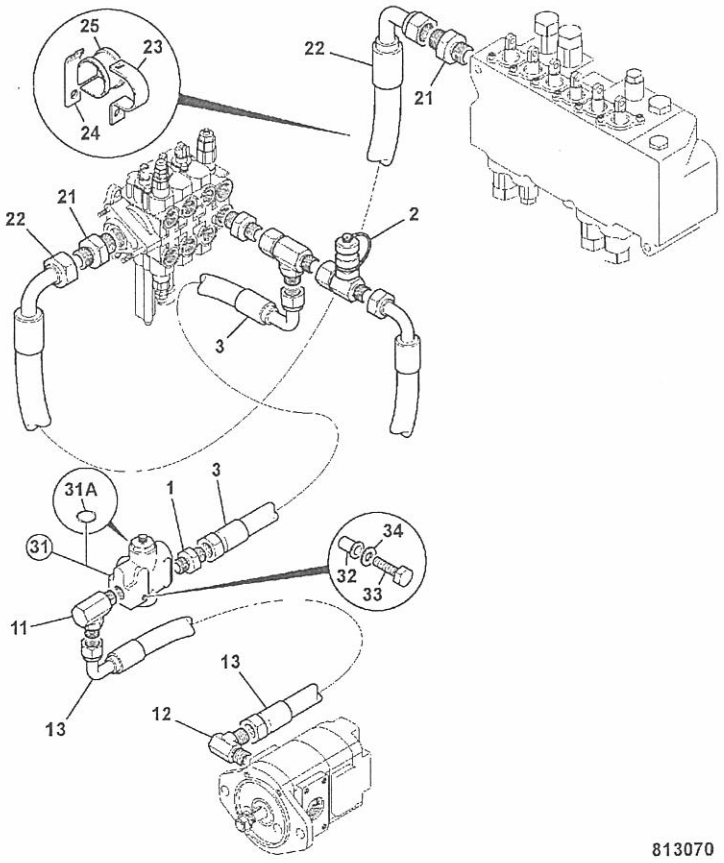

813070

ITEM	PART NO	CHANGE NO	DESCRIPTION	REMARKS	USAGE CODE	QTY
1	1620/2056		Adapter			1
2	816/90427		Adapter, test point 5/8 BSP			1
3	614/80055		Hose			1
11	816/90460		Adapter, elbow M/M			1
12	816/90638		Adapter, elbow, with test point			1
13	614/80055		Hose			1
21	1620/2059		Adapter, 3/4" x M26			2
22	615/48200		Hose			1
23	821/00183		Clamp, top			1
24	821/00184		Clamp, base			1
25	821/00185		Insert, clamp			1
31	35/901800		Valve, priority			1
31A	35/901701		:Kit-seal, priority valve			1
32	826/01106		Nut, rivet,M8			1
33	1315/3318Z		Bolt, M8x80mm Long			1
34	1420/0007Z		Washer, plain, M8			1

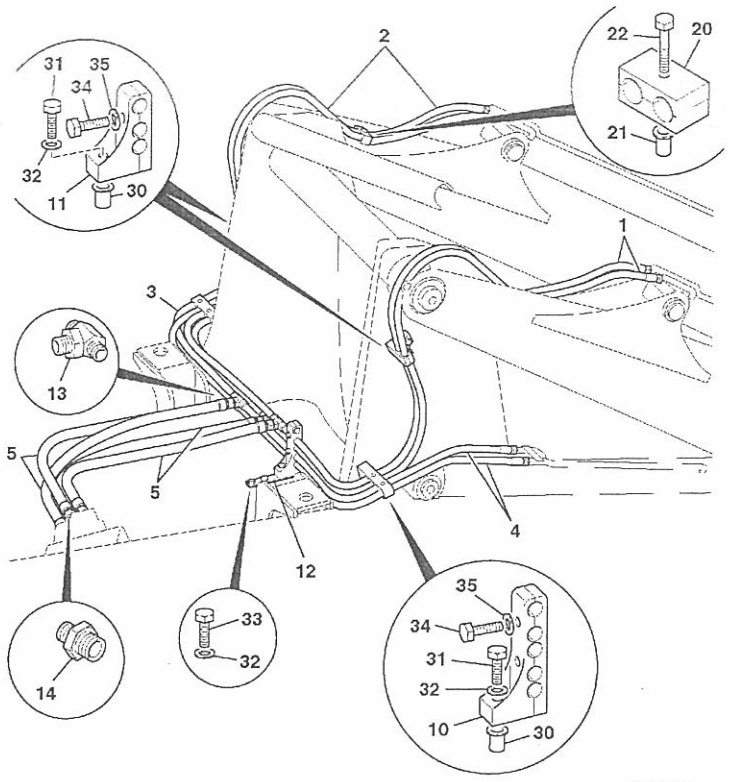

788210

ITEM	PART NO	CHANGE NO	DESCRIPTION	REMARKS	USAGE CODE	QTY
1	629/80159		Hose			2
2	629/80219		Hose, 3/8BSP X 1965mm			
3	629/80220		Hose, 3/8BSP X 890mm			
4	629/80217		Hose, 3/8BSP X 1350mm			2
5	613/01200		Hose			
10	821/10231		Clamp, assembly			
11	821/10405		Clamp, hose			2
12	331/52183		Bracket, pipe support			
13	816/90839		Adapter, tee			
14	1620/2054		Adapter			4
20	821/10328		Clamp, twin			
21	826/01106		Nut, rivet,M8			
22	1315/3311Z		Bolt, M8 X 45			2
30	826/01249		Nut, M10 rivet			
31	1315/3412Z		Bolt			
32	1420/0008Z		Washer, Plain M10			7
33	1315/0408Z		Bolt, M10x30			
34	1315/0308Z		Screw, M8x30			
35	1420/0007Z		Washer, plain, M8			10

9812/0020

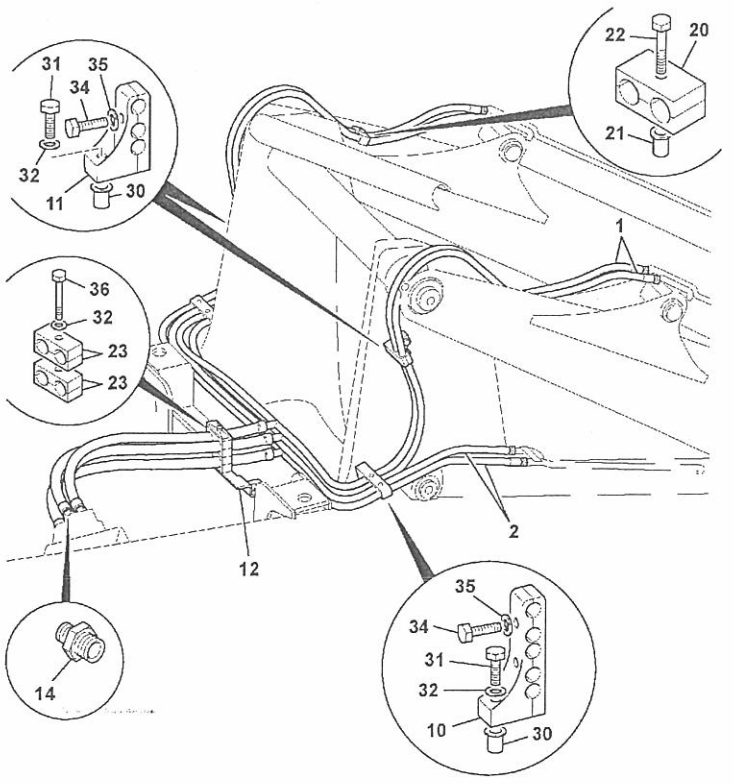

788211

ITEM	PART NO	CHANGE NO	DESCRIPTION	REMARKS	USAGE CODE	QTY
1	629/80238		Hose, tee assembly			
2	629/80237		Hose, tee assembly			
10	821/10231		Clamp, assembly			
11	821/10405		Clamp, hose			
12	128/16844		Bracket, hose			
12A	826/01249		:Nut, M10 rivet			
14	1620/2054		Adapter			
20	821/10328		Clamp, twin			
21	826/01106		Nut, rivet,M8			
22	1315/3311Z		Bolt, M8 X 45			
23	821/10431		Clamp, pair			
30	826/01249		Nut, M10 rivet			
31	1315/3412Z		Bolt			
32	1420/0008Z		Washer, Plain M10			
33	1315/0408Z		Bolt, M10x30			
34	1315/0308Z		Screw, M8x30			
35	1420/0007Z		Washer, plain, M8			
36	1315/3420Z		Bolt, M10 X 100			

9812/0020

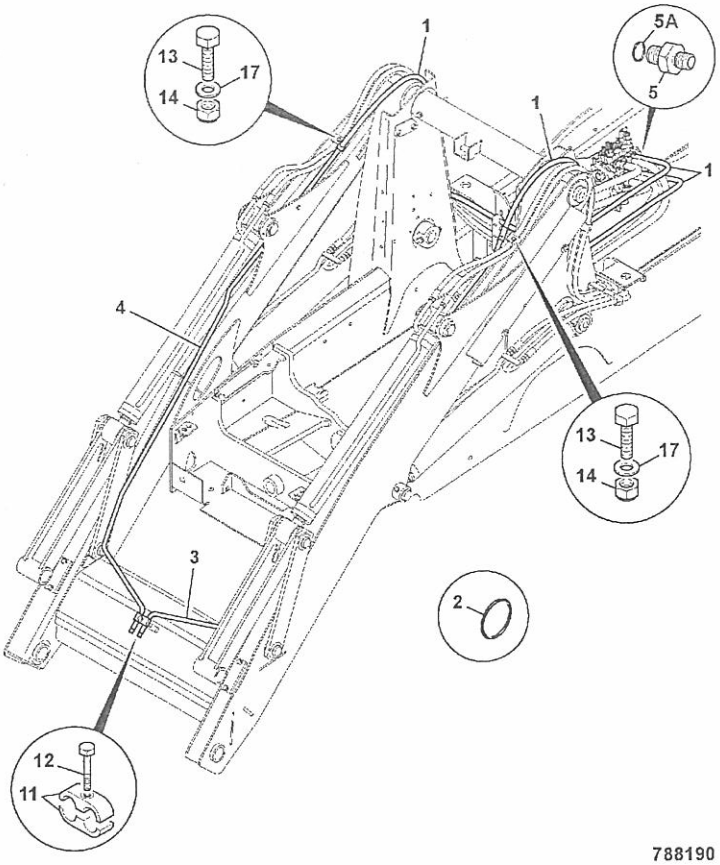

788190

ITEM	PART NO	CHANGE NO	DESCRIPTION	REMARKS	USAGE CODE	QTY
1	629/80052		Hose			2
2	828/00135		O Ring			6
3	335/07401		Pipe, LH auxiliary, loader arms			1
4	335/07402		Pipe, RH auxiliary, loader arms			1
5	1620/2053		Adapter			2
5A	2401/0506		:O Ring			1
11	821/10389		Clamp, pipe, 6x30x75			1
	829/31263		Spacer, 10.2x20x16long			1
12	1315/0408Z		Bolt, M10x30			1
13	1315/0308Z		Screw, M8x30			2
14	1370/0203Z		Nut, self lock, M8			2
17	1420/0007Z		Washer, plain, M8			2

9812/0020U

E1-4-12 CIRCUIT, COOLER, TRANSMISSION, 2 WHEEL STEER

ISSUE 1

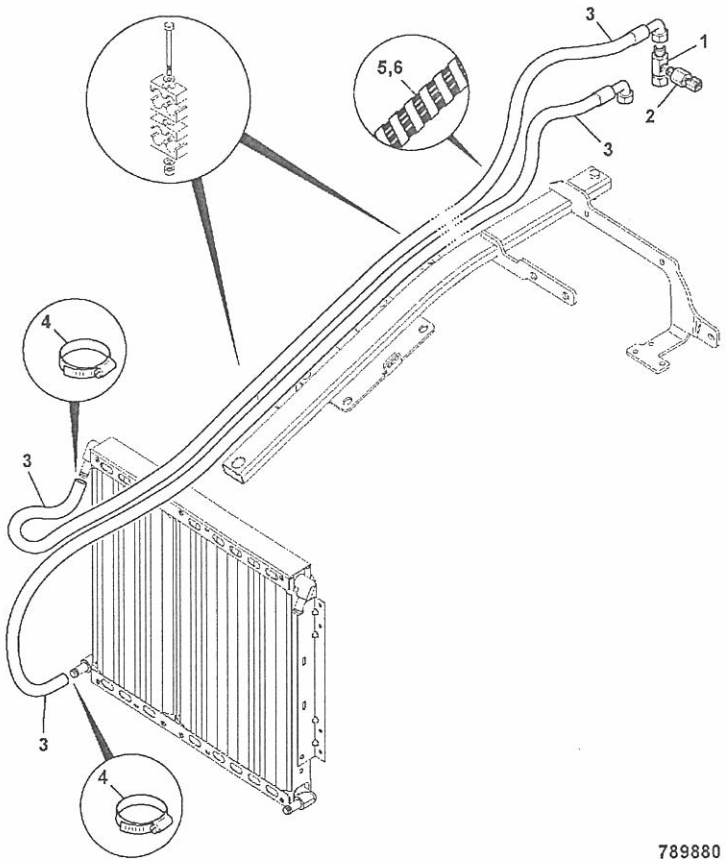

789880

ITEM	PART NO	CHANGE NO	DESCRIPTION	REMARKS	USAGE CODE	QTY
0	.		'See Remark'	see index radiator fittings for centre beam		1
	.		'See Remark'	see frame E1-4-31 for clamps		1
	.		'See Remark'	see frame E1-18-1 for cooler details		1
1	816/90865		Adapter, M/F 9/16"tapping			1
2	701/80363		Switch, oil temp 9/16"UNF, Deutsch connector			1
3	649/51774		Hose, 5/8"BSP 3575mm long			2
4	2201/0005		Clip, jubilee			2
5	647/12906		Tube, spiral guard, 900mm long			1
6	647/12906		Tube, spiral guard, 900mm long			1

9812/0020U

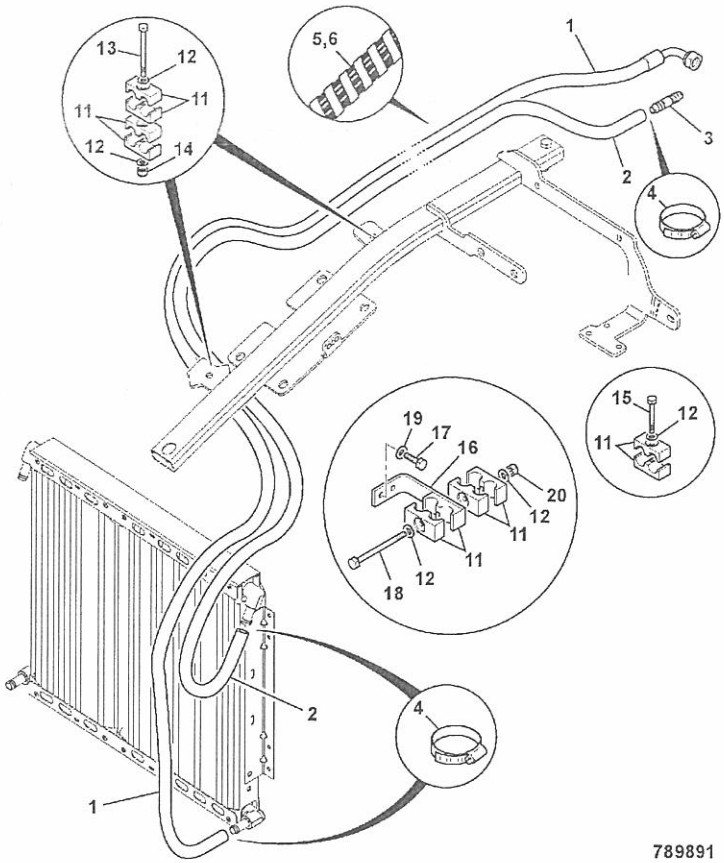

789891

ITEM	PART NO	CHANGE NO	DESCRIPTION	REMARKS	USAGE CODE	QTY
0	.		'See Remark'	see index radiator fittings for centre beam		1
	.		'See Remark'	see frame E1-18-1 for cooler details		
1	649/51774		Hose, 5/8"BSP 3575mm long			
2	649/51775		Hose, 5/8"BSP 2843mm long			
3	650/10166		Adapter, hose connecter, 16mm OD			
4	2201/0005		Clip, jubilee			
5	647/12906		Tube, spiral guard, 900mm long			
6	647/12905		Tube, spiral guard, 800mm long			
11	821/10431		Clamp, pair			
12	1420/0008Z		Washer, Plain M10			
13	1315/3419Z		Bolt, M10x90mm			2
14	1370/0303Z		Nut, lock, M10			
15	1315/3413Z		Bolt, M10 x 55			
16	331/45861		Bracket, hose guide			1
17	1315/3309Z		Bolt, M8 x 35mm			
18	1315/3420Z		Bolt, M10 X 100			
19	1420/0007Z		Washer, plain, M8			2
20	1370/0303Z		Nut, lock, M10	was 826/01249		

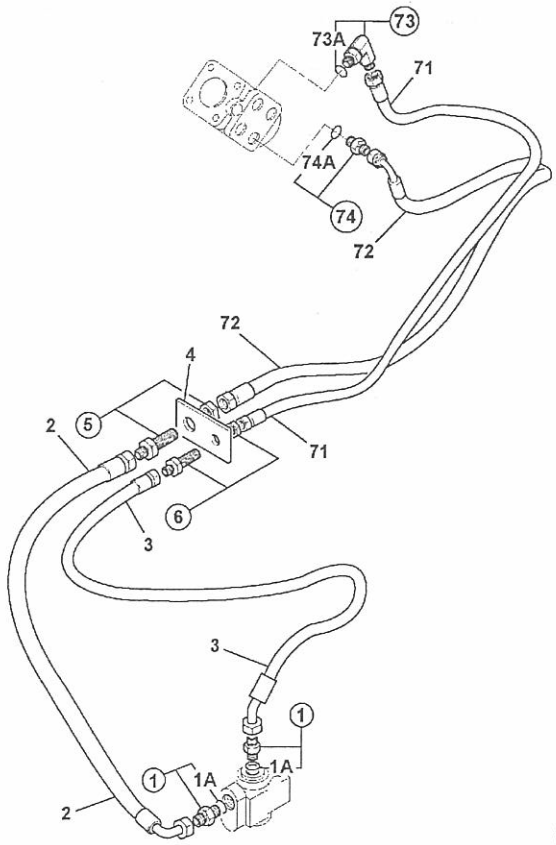

910410

ITEM	PART NO	CHANGE NO	DESCRIPTION	REMARKS	USAGE CODE	QTY
1	1620/2053		Adapter			1
1A	2401/0506		:O Ring			
2	612/33400		Hose, 3/8"HP x 850mm, STR - 90			
3	611/27000		Hose			
4	332/C3460		Plate, bulkhead			1
5	816/10023		Adapter, bulkhead			
6	816/10143		Adapter			
71	611/01100		Hose			1
72	612/24800		Hose			
73	816/90459		Adapter, elbow M/M			
73A	2401/0503		:O Ring			
74	1620/2053		Adapter			
74A	2401/0506		:O Ring			

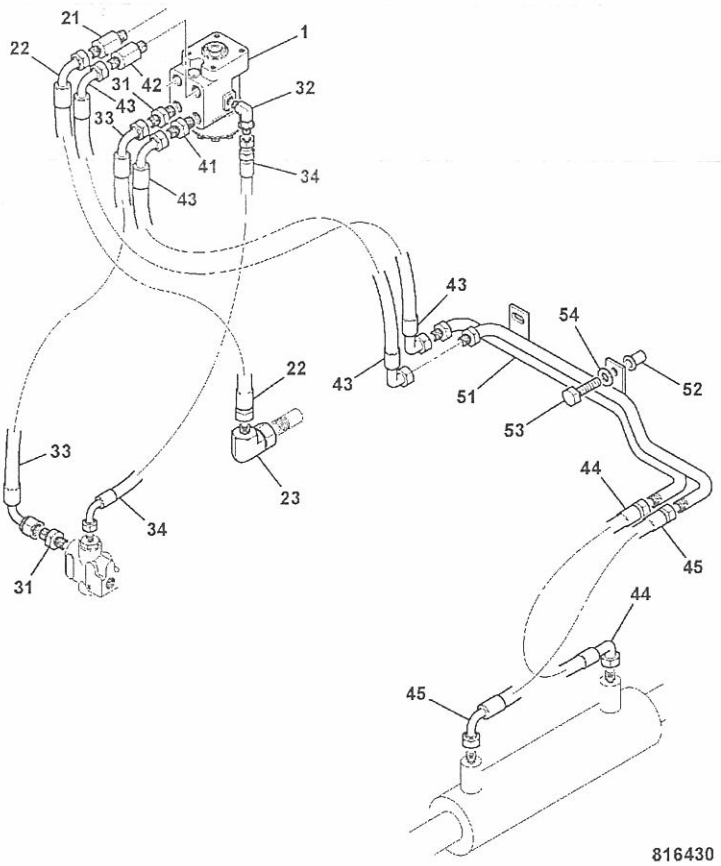

816430

ITEM	PART NO	CHANGE NO	DESCRIPTION	REMARKS	USAGE CODE	QTY
1	35/412300		Valve, steer 250 load sens, without anti-shock			1
21	816/90488		Adapter, extended M/M	port T		1
22	612/28800		Hose, 3/8 BSP x 1010mm			1
23	816/90718		Adapter, elbow, M/F			1
31	1620/2053		Adapter			2
32	816/90459		Adapter, elbow M/M			1
33	*612/45800		Hose			1
34	649/51720		Hose, 1200 long			1
41	1620/2053		Adapter			1
42	816/90488		Adapter, extended M/M			1
43	612/47000		Hose			2
44	612/80113		Hose, 3/8BSP X 410mm long			1
45	612/80114		Hose, 3/8 BSP X 645mm long			1
51	335/09190		Pipe, steering 2WD/2WS			1
52	826/01249		Nut, M10 rivet			2
53	1315/0410Z		Bolt, M10 x 40			2
54	1420/0008Z		Washer, Plain M10			2

9812/0020U

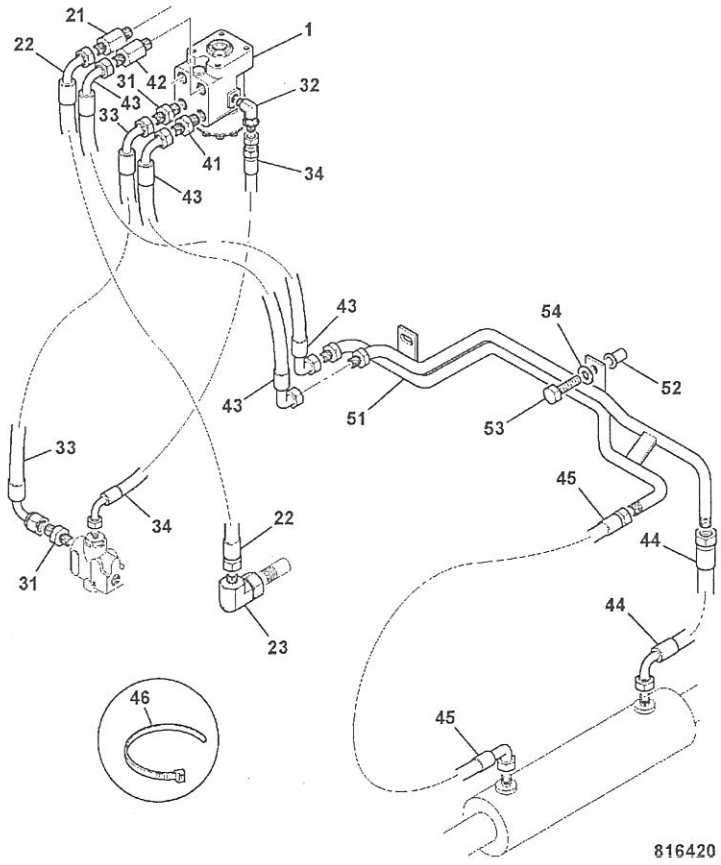

816420

ITEM	PART NO	CHANGE NO	DESCRIPTION	REMARKS	USAGE CODE	QTY
1	35/412300		Valve, steer 250 load sens, without anti-shock			1
21	816/90488		Adapter, extended M/M	port T		1
22	612/28800		Hose, 3/8 BSP x 1010mm			1
23	816/90718		Adapter, elbow, M/F			1
31	1620/2053		Adapter			2
32	816/90459		Adapter, elbow M/M			1
33	612/45800		Hose			1
34	649/51720		Hose, 1200 long			1
41	1620/2053		Adapter			1
42	816/90488		Adapter, extended M/M			1
43	612/47000		Hose			2
44	612/26500		Hose, sleeved			1
45	612/80114		Hose, 3/8 BSP X 645mm long			1
46	826/01144		Tie, cable, 200mm long			2
51	335/09189		Pipe, Steering 2WS/4WD			1
52	826/01249		Nut, M10 rivet			2
53	1315/0410Z		Bolt, M10 x 40			2
54	1420/0008Z		Washer, Plain M10			2

9812/0020U

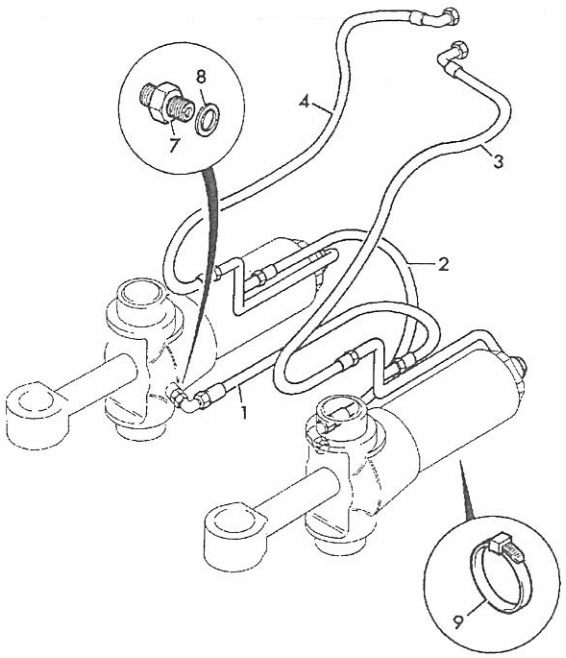

702810

ITEM	PART NO	CHANGE NO	DESCRIPTION	REMARKS	USAGE CODE	QTY
1	629/80122		Hose, 1/4BSP x 650Lg			1
2	629/80122		Hose, 1/4BSP x 650Lg			
3	629/80126		Hose, 3/8BSP x 700Lg			
4	629/80126		Hose, 3/8BSP x 700Lg			1
7	1620/0002		Adapter			1
8	828/00237		:O Ring			
9	826/01144		Tie, cable, 200mm long			1

9812/0020

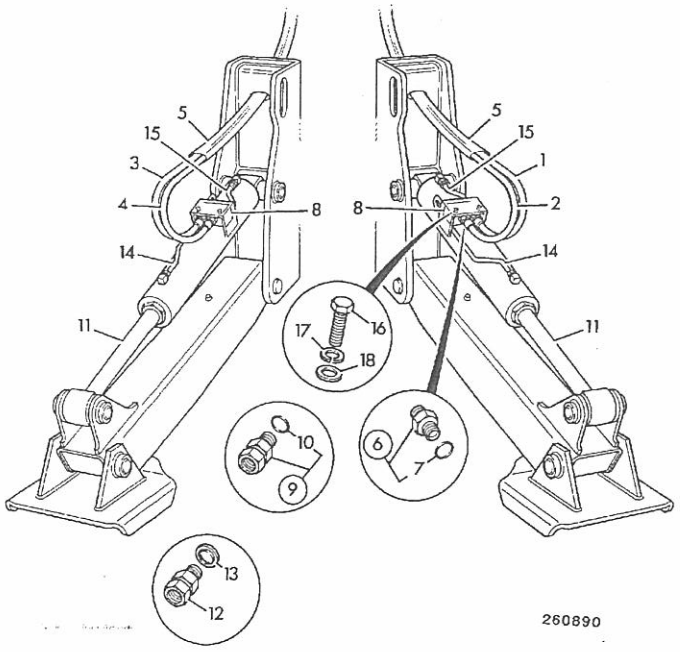

260890

ITEM	PART NO	CHANGE NO	DESCRIPTION	REMARKS	USAGE CODE	QTY
1	611/24600		Hose, 1/4"BSP 1430mm long			1
2	611/24600		Hose, 1/4"BSP 1430mm long			1
3	611/24600		Hose, 1/4"BSP 1430mm long			1
4	611/24600		Hose, 1/4"BSP 1430mm long			1
5	647/02703		Tube, black pvc, 2400mm	1350mm long per side.		2
6	1620/2051		Adapter			4
7	2401/0505		:O Ring			1
8	25/994800		Valve, ram lockout			2
8A	998/10409		:Kit-seal			1
9	816/90009		Adapter, M/F	item 8 to item 15		2
10	2401/0505		:O Ring			1
11	.		'See Remark'	Stabiliser ram see section E4		2
12	816/90776		Adapter, extended M/F	item 8 to item 14		2
13	2401/0505		:O Ring			1
14	653/40114		Pipe, stabiliser ram, L/H rod side			1
	653/40113		Pipe, stabiliser ram, R/H rod side			1
15	653/40112		Pipe, stabiliser ram, head side			2
16	1315/0308Z		Screw, M8x30			4
17	.		'See Remark'	not fitted		4
18	1420/0007Z		Washer, plain, M8			4

9812/0020

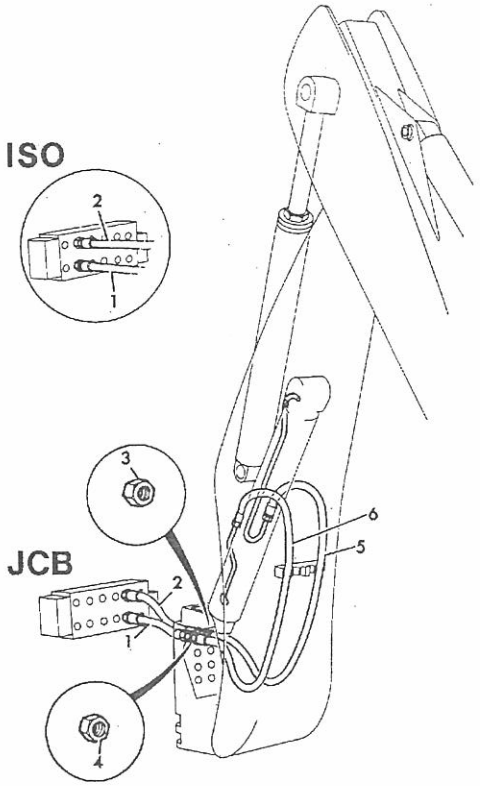

261831

ITEM	PART NO	CHANGE NO	DESCRIPTION	REMARKS	USAGE CODE	QTY
1	613/36009		Hose, 1/2"BSP 850mm		JCB	1
	613/28400		Hose		ISO	1
2	614/05000		Hose, 5/8BSPx820		JCB	1
	614/05001		Hose		ISO	1
3	1356/0204Z		Nut			1
3A	1418/0018Z		Washer, lock, internal teeth			1
4	1356/0205Z		Nut			1
4A	1418/0018Z		Washer, lock, internal teeth			1
5	629/27000		Hose, 5/8BSP X 980mm	14' machines		1
	629/26600		Hose	15' & 17' machines		1
6	629/20600		Hose, 1/2BSP X 940mm	14' machines		1
	629/26900		Hose, 5/8 BSP X 2520mm	15' & 17' machines		1

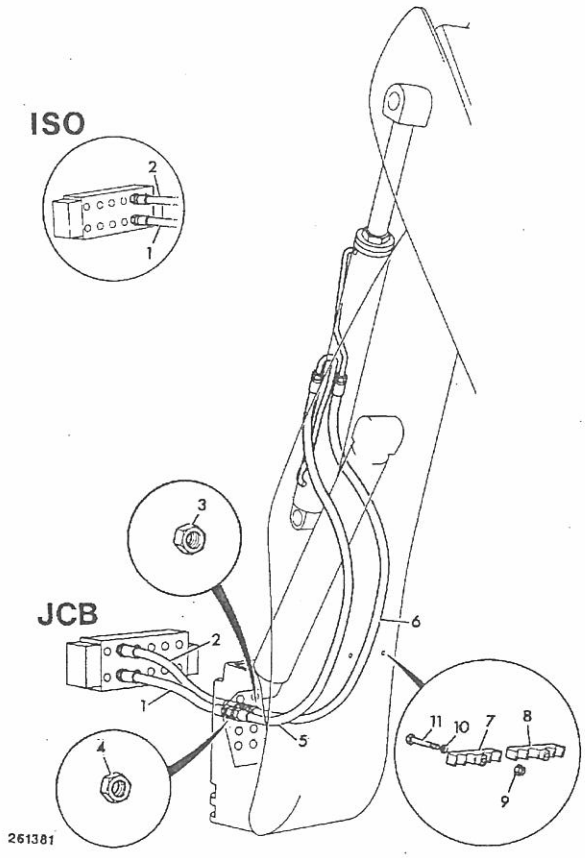

261381

ITEM	PART NO	CHANGE NO	DESCRIPTION	REMARKS	USAGE CODE	QTY
1	614/05000		Hose, 5/8BSPx820		JCB	1
	614/04900		Hose		ISO	1
2	613/36012		Hose, 1/2BSPx930		JCB	1
	613/09202		Hose, 1/2BSPx815		ISO	1
3	1356/0204Z		Nut			1
3A	1418/0018Z		Washer, lock, internal teeth			1
4	1356/0205Z		Nut			1
4A	1418/0018Z		Washer, lock, internal teeth			1
5	629/26900		Hose, 5/8 BSP X 2520mm	5/8" BSP		1
6	629/27300		Hose	1/2" BSP		1
7	123/05836		Clamp			1
8	123/05836		Clamp			1
9	1370/0303Z		Nut, lock, M10			2
10	1420/0008Z		Washer, Plain M10			8
11	1315/0414Z		Bolt			2

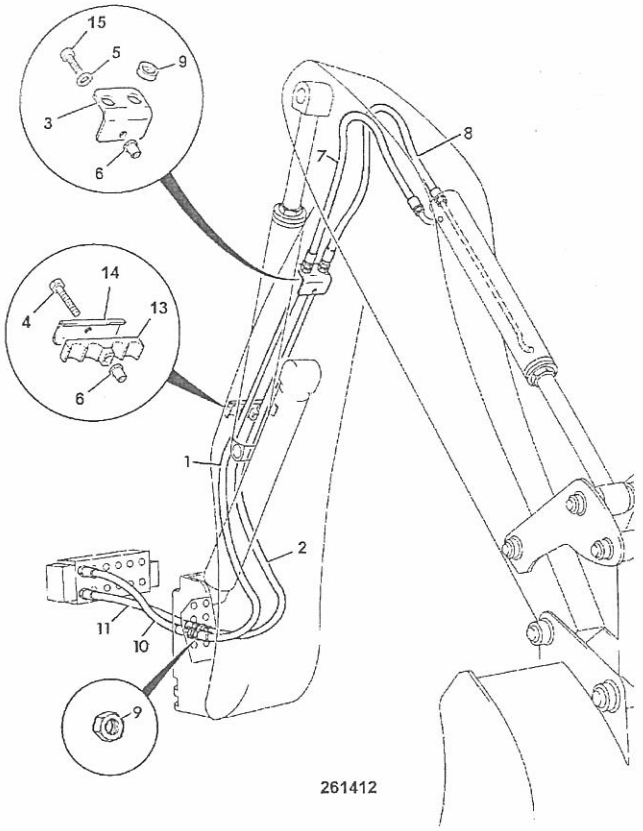

ITEM	PART NO	CHANGE NO	DESCRIPTION	REMARKS	USAGE CODE	QTY
1	629/80005		Hose			1
2	629/80005		Hose			1
3	331/14732		Plate, adapter, 2 hose			1
4	1315/0414Z		Bolt			1
5	1420/0008Z		Washer, Plain M10			1
6	826/01249		Nut, M10 rivet			2
7	613/07100		Hose	680mm long		1
8	613/07100		Hose	680mm long		1
9	1356/0204Z		Nut			1
10	613/36012		Hose, 1/2BSPx930			1
11	613/36013		Hose			1
12	123/06256		Spacer, steel			1
13	123/05836		Clamp			1
14	331/14805		Plate, clamp backing			1
15	1315/3414Z		Bolt			1

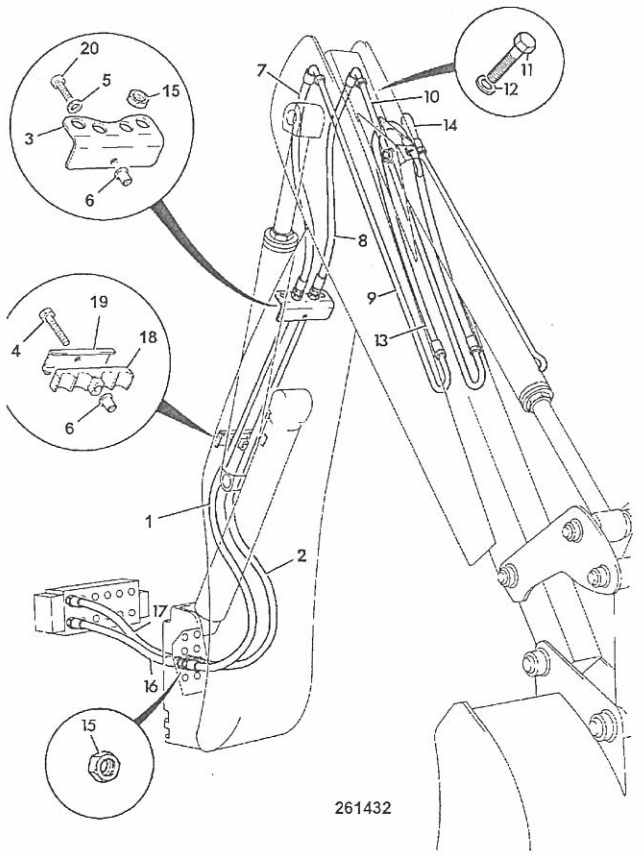

ITEM	PART NO	CHANGE NO	DESCRIPTION	REMARKS	USAGE CODE	QTY
1	629/80005		Hose			1
2	629/80005		Hose			1
3	331/14734		Plate, adapter, 4 hose			1
4	1315/3414Z		Bolt			1
5	*823/00377		Washer, plain M10			1
6	826/01249		Nut, M10 rivet			2
7	613/23100		Hose			1
8	613/23100		Hose			1
9	123/03285	Superseded	Pipe			1
	128/17337		Pipe, assembly R.H.			1
10	123/03286	Superseded	Pipe, left hand			1
	128/17338		Pipe, assembly L.H.			1
11	1315/0408Z		Bolt, M10x30			4
12	1420/0008Z		Washer, Plain M10			4
13	613/05400		Hose			1
14	613/05400		Hose			1
15	1356/0004Z		Nut, 1/2" B.S.P.			4
16	477/00338		Hose, 1/2"BSP x 765mm			1
17	613/36012		Hose, 1/2BSPx930			1
18	123/05836		Clamp			1
19	331/14805		Plate, clamp backing			1
20	1391/3410Z		Capscrew			1

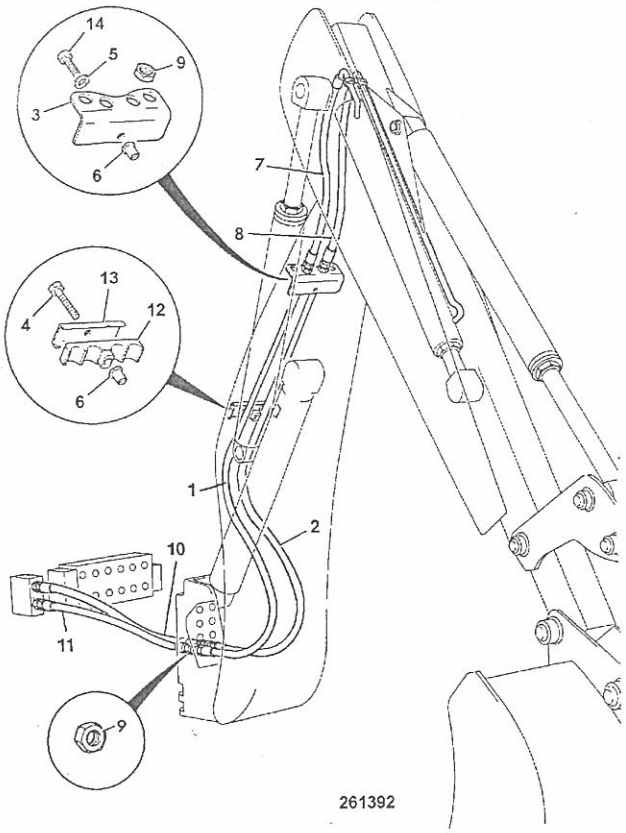

ITEM	PART NO	CHANGE NO	DESCRIPTION	REMARKS	USAGE CODE	QTY
1	629/80005		Hose			1
2	629/80005		Hose			1
3	331/14734		Plate, adapter, 4 hose			1
4	1315/3414Z		Bolt			1
5	*823/00377		Washer, plain M10			1
6	826/01249		Nut, M10 rivet			2
7	613/23100		Hose			1
8	613/23100		Hose			1
9	1356/0204Z		Nut			2
10	613/36009		Hose, 1/2"BSP 850mm	Top port		1
11	613/09203		Hose, 1/2"BSP 1040mm	Bottom port		1
12	123/05836		Clamp			1
13	331/14805		Plate, clamp backing			1
14	1391/3410Z		Capscrew			1

9812/0020U

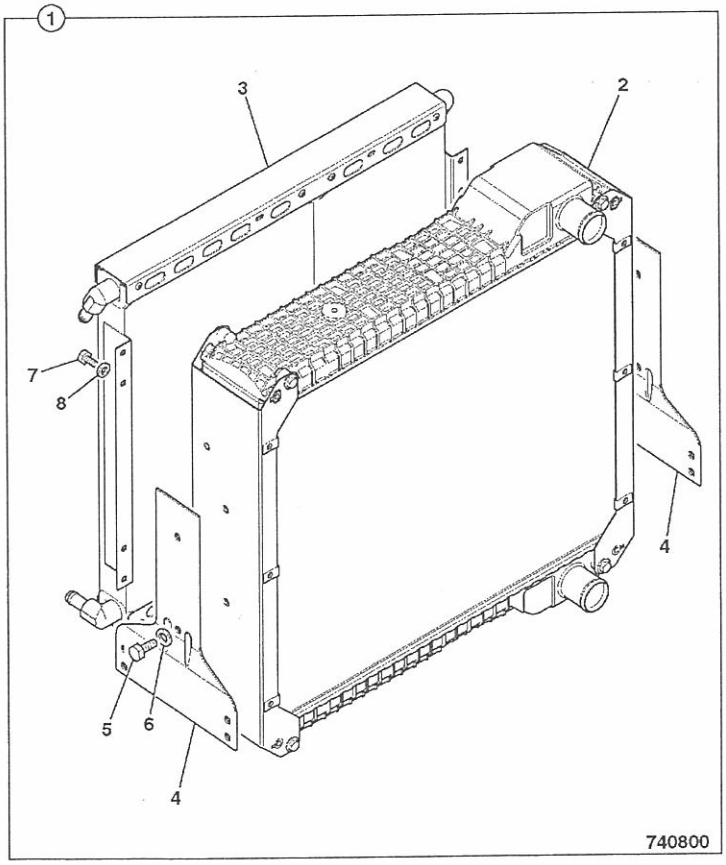

ITEM	PART NO	CHANGE NO	DESCRIPTION	REMARKS	USAGE CODE	QTY
1	128/14326		Cooler, assembly 5row, 2ws			1
2	30/915200		:Radiator, assembly, 5row-9fpi, Blue spot			1
3	30/925615		:Cooler, oil, double, 14plates + 21 plates			1
4	30/926257		:Bracket, radiator mounting			2
5	30/926035		:Bolt			4
6	30/926036		:Washer			4
7	1315/0301Z		Screw, hex head, M8 X 12			8
8	826/00846		Nut			8

9812/0020U

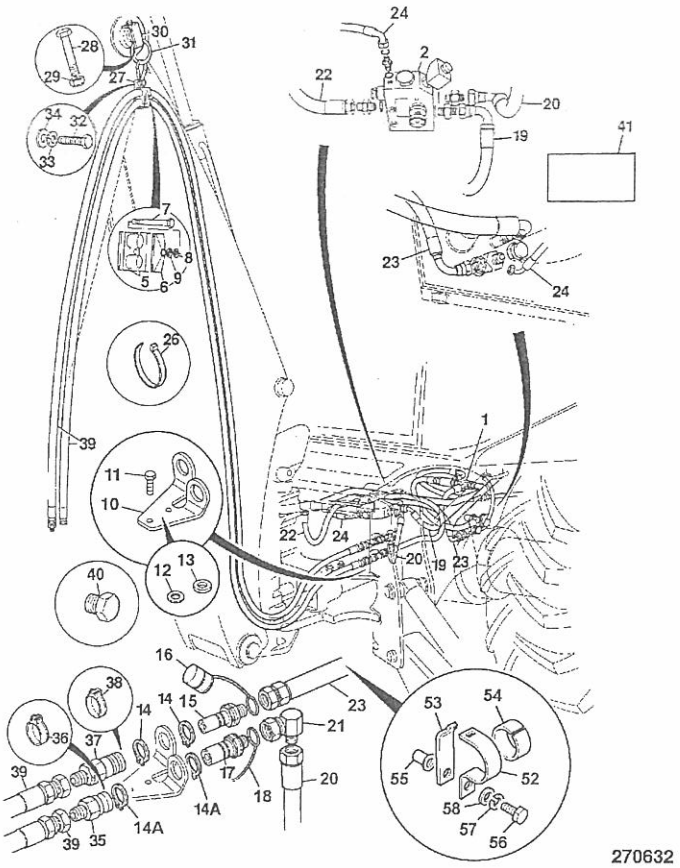

ITEM	PART NO	CHANGE NO	DESCRIPTION	REMARKS	USAGE CODE	QTY
2	25/221197		Valve, solenoid p. flow, centre mount hammer	Flow regulator valve, see frame E3-37-1		1
3	25/222498		Valve, relief, 3800/2.5	fit to excavator valve		1
4	.		'See Remark'	Electrics, see frame C3-22-1.		1
5	821/00442		Clamp, body			4
6	821/00443		Plate, cover			4
7	1315/3314Z		Bolt			4
8	1425/0007Z		Washer, spring			4
9	1420/0007Z		Washer, plain, M8			4
10	331/45522		Bracket, q/r coupling			1
11	1315/0409Z		Screw, hex. head			2
12	1420/0008Z		Washer, Plain M10			2
13	823/10710		Spacer, nylon			2
14	2203/0043		Circlip		A	2
14A	2203/0049		Circlip		B	2
15	45/913400		Coupling, male		A	1
16	45/910301		Cap, dirt QRC, 3/4" male		A	1
17	45/913500		Coupling, male		B	1
18	45/912501		Cap, dirt QRC, 3/4" BSP male		B	1
19	629/80041		Hose, 3/4"BSP 650mm			1
20	209/72200		Hose, 3/4"BSP 500mm			1
21	816/90163		Adapter, Elbow M/F			1
22	615/48700		Hose, 3/4BSP 850mm long			1

E1-21-2 CIRCUIT, ATTACHMENT, HAMMER ISSUE

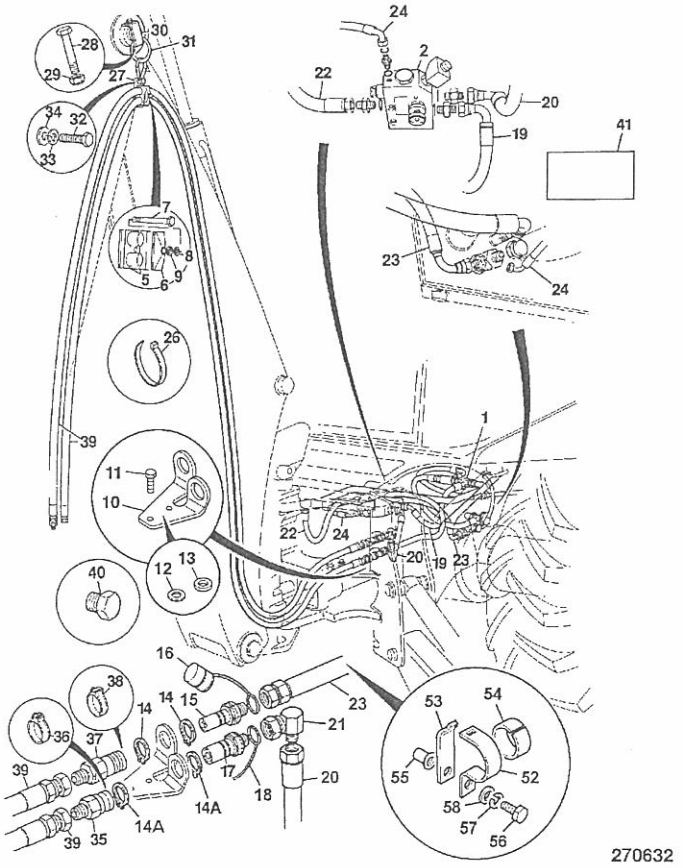

ITEM	PART NO	CHANGE NO	DESCRIPTION	REMARKS	USAGE CODE	QTY
23	635/80120		Hose, 3/4BSP 2600mm long			1
24	611/20100		Hose, 1/4BSPx1270			1
25	816/50032		Adapter, Tee			1
26	826/01144		Tie, cable, 200mm long			2
27	123/05186		Ring, support	214		1
	123/06294		Ring, support	215		1
28	1315/3524Z		Bolt, M12 x 140 Lg.			1
30	123/05187		Mounting, hook clamp			1
31	123/05188		Hook, 4" spring			1
32	1315/0407Z		Bolt, M10x25			1
33	1425/0008Z		Washer, Spring M10			1
34	1420/0008Z		Washer, Plain M10			1
35	45/914100		Coupling, female			1
36	45/908401		Cap, dirt, QRC 3/4"female			1
37	45/914200		Coupling, female			1
38	45/911301		Cap, dirt QRC, 3/4" BSP female			1
39	615/05000		Hose			2
40	816/80011		Plug			2
41	817/00592		Label			2
41A	817/70021		Decal, noise warning			1
52	821/00183		Clamp, top			2
53	821/00184		Clamp, base			2
54	821/00185		Insert, clamp			2
55	826/01249		Nut, M10 rivet			2
56	1315/0410Z		Bolt, M10 x 40			2

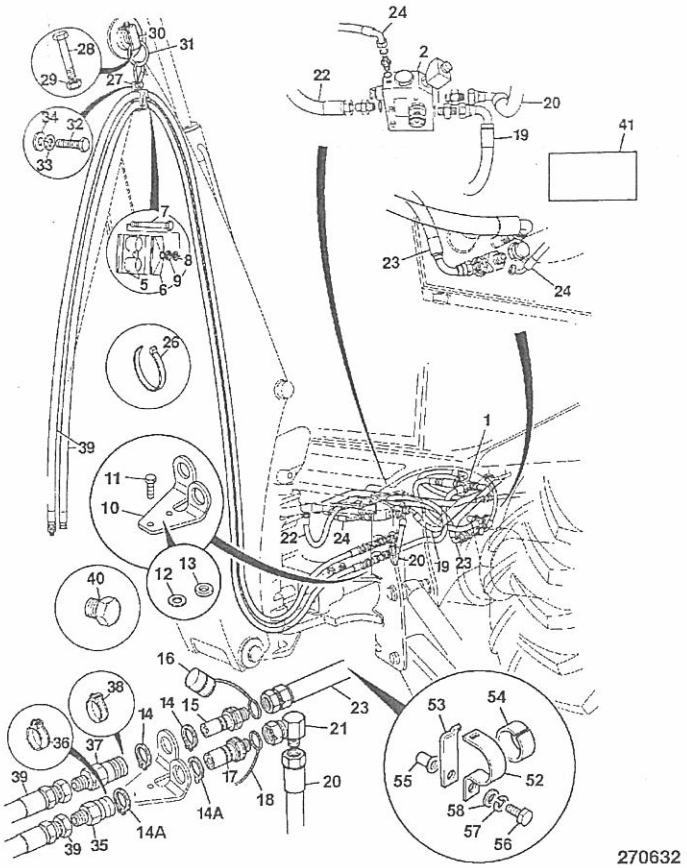

270632

ITEM	PART NO	CHANGE NO	DESCRIPTION	REMARKS	USAGE CODE	QTY
57	1425/0008Z		Washer, Spring M10			2
58	1420/0008Z		Washer, Plain M10			2

9812/0020U

E1-27-20 BOOM RAM PIPEWORK

ISSUE 1

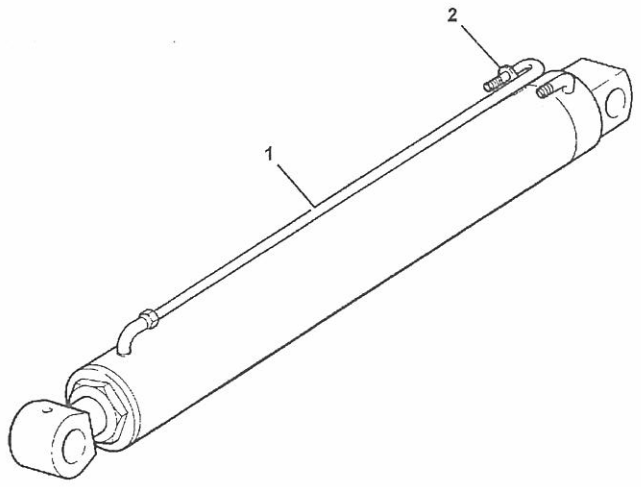

278401

ITEM	PART NO	CHANGE NO	DESCRIPTION	REMARKS	USAGE CODE	QTY
1	658/40188		Pipe, boom ram,rodside			1
2	2410/0212		Grommet			1

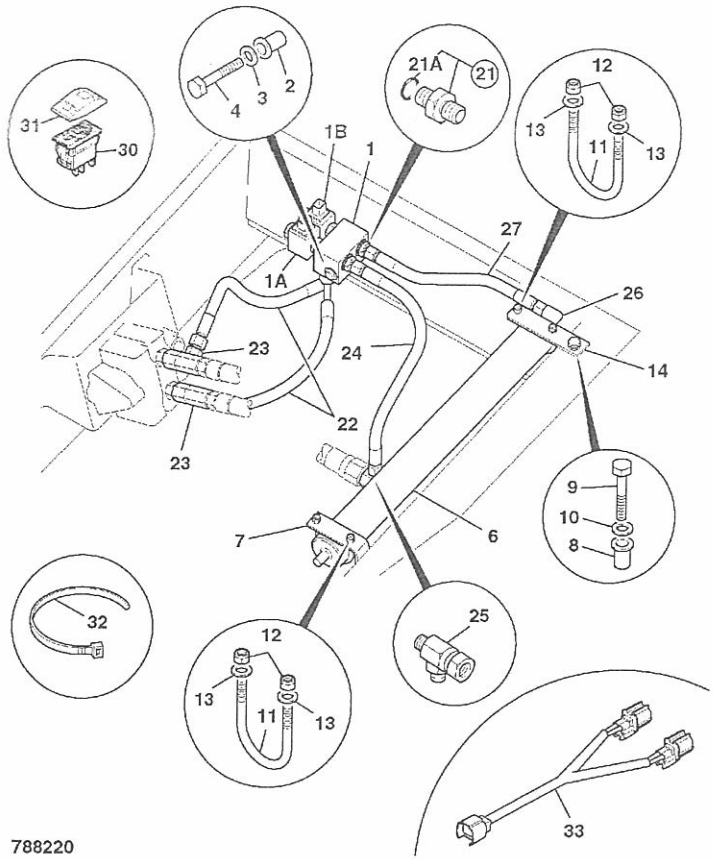

ITEM	PART NO	CHANGE NO	DESCRIPTION	REMARKS	USAGE CODE	QTY
1	25/221063		Valve, solenoid			1
1A	717/20137		:Coil, 12v			
	25/983803		:Cartridge, Spool, Normally Closed			
1B	717/20137		:Coil, 12v			
	928/60084		:Valve, Valve Solenoid, (no coil)			1
2	826/01102		Nut, rivet,M8 open ended			
3	1420/0007Z		Washer, plain, M8			1
4	1315/3320Z		Bolt			
6	32/925845		Accumulator, discharged	discharged		
7	331/52662		Mounting, accumulator			1
8	826/01249		Nut, M10 rivet			
9	1315/0408Z		Bolt, M10x30			
10	1420/0008Z		Washer, Plain M10			2
11	826/01797		Bolt, 'U'			
12	1370/0103Z		Nut, Self lock, M6			
13	1420/0006Z		Washer, M6			4
14	331/54920		Mounting, accumulator			
21	1620/2053		Adapter			
21A	2401/0506		:O Ring			1
22	612/21200		Hose, 3/8" BSP 520mm long			
23	816/90144		Adapter, T			2
24	612/00100		Hose			
25	816/90143		Adapter, tee, F/M/M			1
26	816/90542		Adapter, elbow			
27	612/07700		Hose			

E1-34-21 CIRCUIT, LOADER LIFT, SUSPENSION, GEAR PUMP MACHINES ISSUE

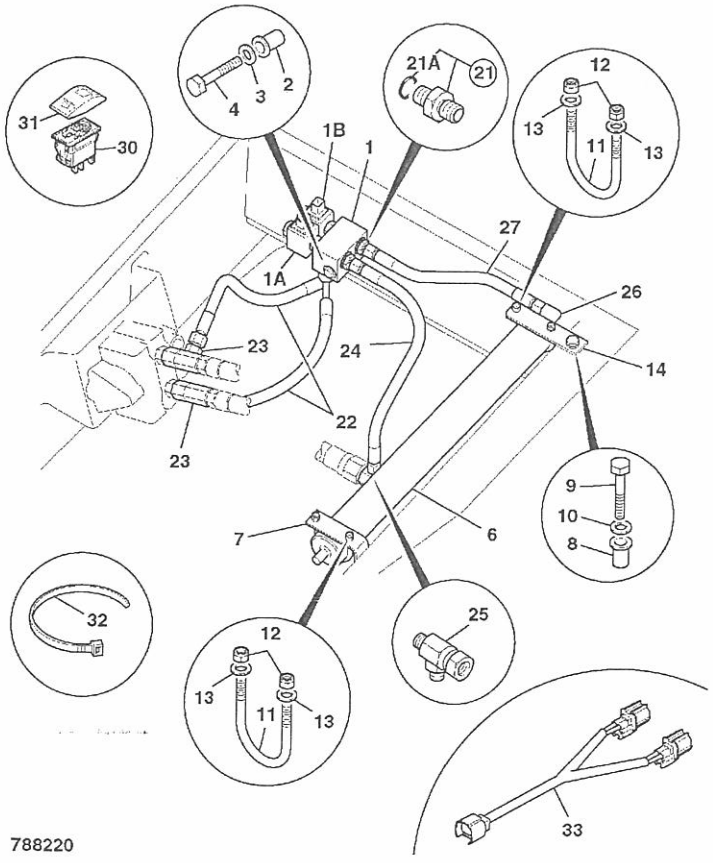

ITEM	PART NO	CHANGE NO	DESCRIPTION	REMARKS	USAGE CODE	QTY
30	701/60000		Switch, 12V			
31	701/58842		Cover, SRS switch, soft touch			1
32	826/01144		Tie, cable, 200mm long			3
33	721/12035		Harness, SRS			

E

E1 HOSE & PIPEWORK
E2 PUMP/MOTOR & PUMP DRIVE
E3 VALVES & HYDRAULIC FILTERS
E4 RAMS

9812/0020U

E2-1-11 PUMP 29/23 CCR, MAIN HYDRAULIC

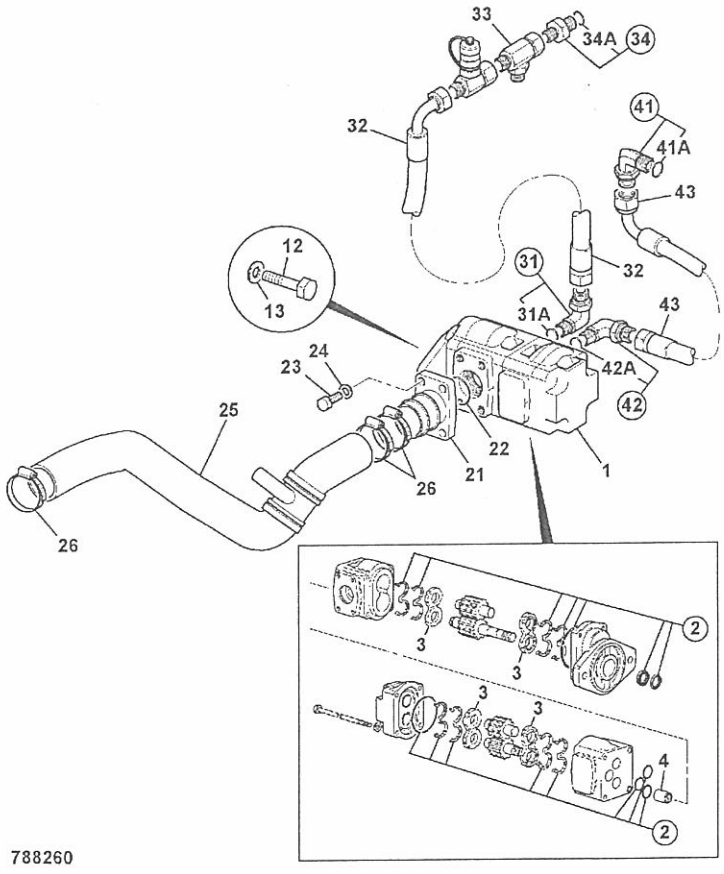

788260

ITEM	PART NO	CHANGE NO	DESCRIPTION	REMARKS	USAGE CODE	QTY
1	20/925586		Pump, main hydraulic, 29/23 cc rev			1
2	20/950906		:Kit-seal, main hydraulic pump			1
3	20/902703		:Kit, pressure plates, (2 off)			2
4	20/903301		:Coupling, splined			1
12	1315/0509Z		Screw, M12 x 35mm			2
13	1420/0009Z		Washer, Plain M12			2
21	903/20774		Adapter, suction port			1
22	2401/0218		O Ring			1
23	1305/1908Z		Bolt			4
24	823/00309		Washer, hardened			4
25	834/10756		Hose, suction, hydraulic oil			1
26	2201/0013		Clip, jubilee			3
31	816/90476		Adapter, elbow M/M			1
31A	2401/0508		:O Ring			1
32	614/80055		Hose			1
33	816/90011		Adapter, tee , F/M/M			1
34	1620/2056		Adapter			1
34A	2401/0507		:O Ring			1
41	816/90460		Adapter, elbow M/M			1
41A	2401/0507		:O Ring			1
42	816/90638		Adapter, elbow, with test point			1
42A	2401/0507		:O Ring			1
43	614/80055		Hose			1

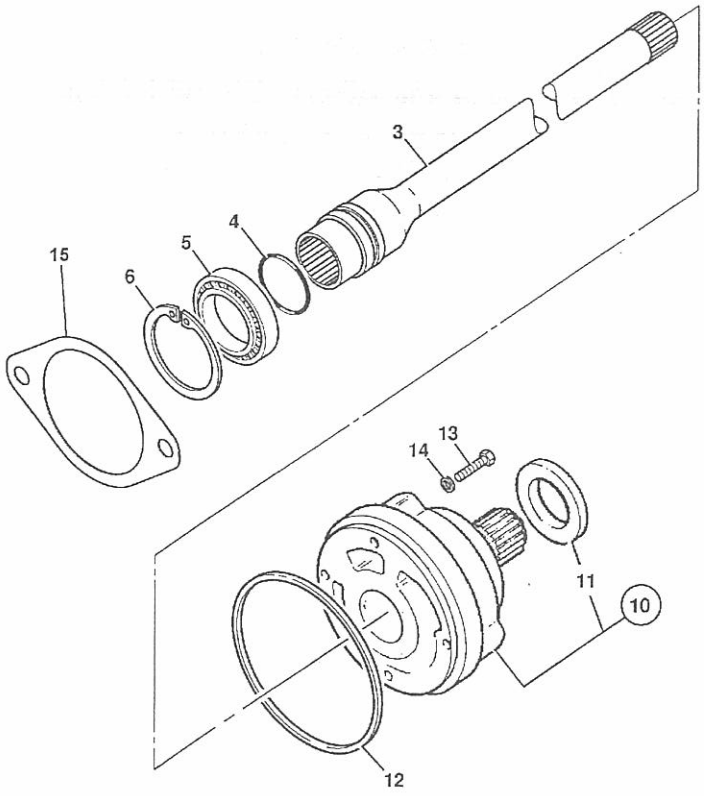

376211

ITEM	PART NO	CHANGE NO	DESCRIPTION	REMARKS	USAGE CODE	QTY
3	459/50431		Shaft, pump drive, SS700 gearbox			1
4	904/20210		Ring, seal			1
5	916/10012		Bearing, ball			1
6	2203/1068		Circlip, internal			1
10	20/925552		Pump, assembly, transmission			1
11	904/20226		:Seal, transmission pump			1
12	813/50041		Seal, rear			1
13	1315/3311Z		Bolt, M8 X 45			4
14	823/00291		Washer, copper			4
15	4102/3402		Sealant, gasket,Loctite 5910, 50ml. container	Was 813/10184 gasket		A/R

E

- E1 HOSE & PIPEWORK
- E2 PUMP/MOTOR & PUMP DRIVE
- ● E3 VALVES & HYDRAULIC FILTERS
- E4 RAMS

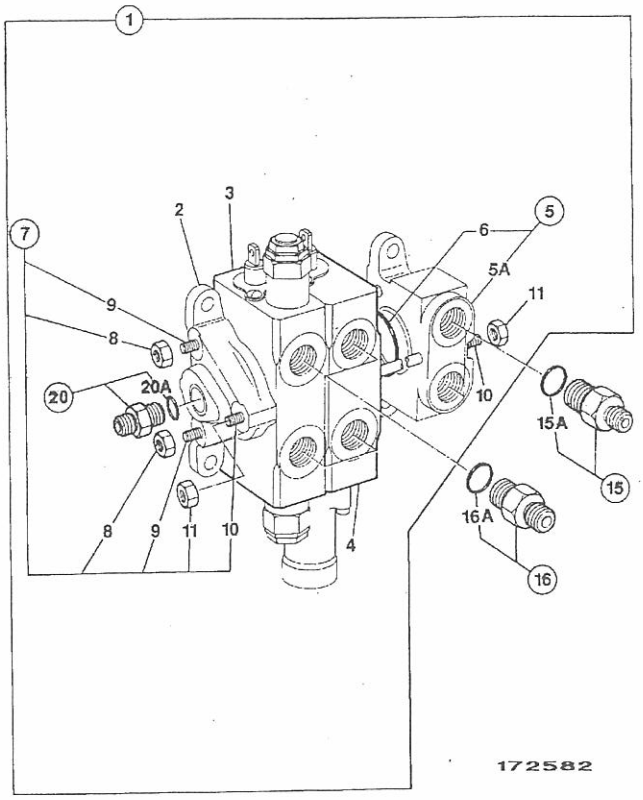

ITEM	PART NO	CHANGE NO	DESCRIPTION	REMARKS	USAGE CODE	QTY
1	25/619300	Superseded	Valve, 2 spool loader			1
	25/223696		Valve, loader, 2 spool, with float			1
2	25/987006		:Cover, HPCO			1
3	25/222717		:Valve, section			1
4	25/222714		:Valve, section			1
5	25/987007		:Cover, inlet			1
5A	NSP		::None serviced part			1
6	25/606812		::O Ring, interface, valve sections			1
7	25/607605		::Kit-tie rod			1
8	25/606817		::Nut			4
9	25/607606		::Rod, tie			2
10	25/607607		::Rod, tie			1
11	25/606815		::Nut			2
15	1620/0009		Adapter	Feed line		1
	1620/0007		Adapter	Return line		1
15A	2401/0506		:O Ring			1
16	1620/0005		Adapter, 3/4"UNF o-ring boss, 1/2"BSP male			4
16A	2401/0506		:O Ring			1
20	1620/0010		Adapter, includes 'o'ring			1
20A	2401/0506		:O Ring			1

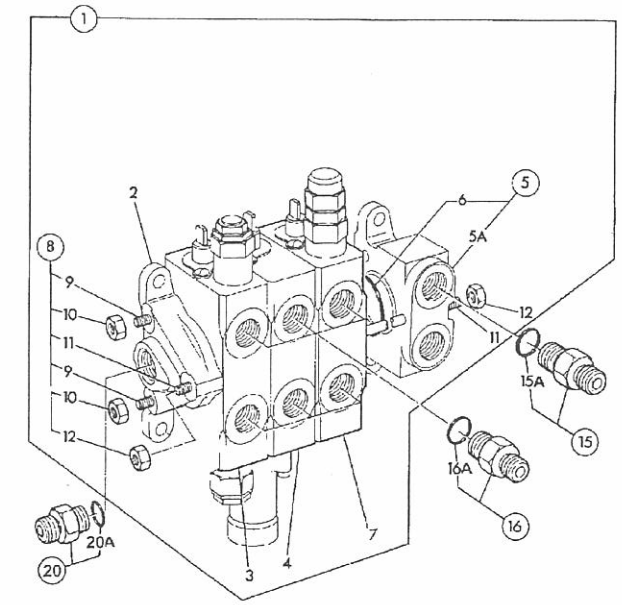

ITEM	PART NO	CHANGE NO	DESCRIPTION	REMARKS	USAGE CODE	QTY
1	25/223695		Valve, loader, 3 spool, float and reset			1
2	25/987006		:Cover, HPCO			1
3	25/222713		:Valve, section			1
4	25/222714		:Valve, section			1
5	25/987007		:Cover, inlet			1
5A	NSP		::None serviced part			1
6	25/606812		::O Ring, interface, valve sections			1
7	25/222715		:Valve, section			1
8	25/607702		:Kit-tie rod			1
9	25/607606		::Rod, tie			2
10	25/606817		::Nut			4
11	25/607704		::Rod, tie			1
12	25/606815		::Nut			2
15	1620/0009		Adapter	Feed line		1
	1620/0007		Adapter	Return line		1
15A	2401/0506		:O Ring			1
16	1620/0005		Adapter, 3/4"UNF o-ring boss, 1/2"BSP male			6
16A	2401/0506		:O Ring			1
20	1620/0010		Adapter, includes 'o'ring			1
20A	2401/0506		:O Ring			1

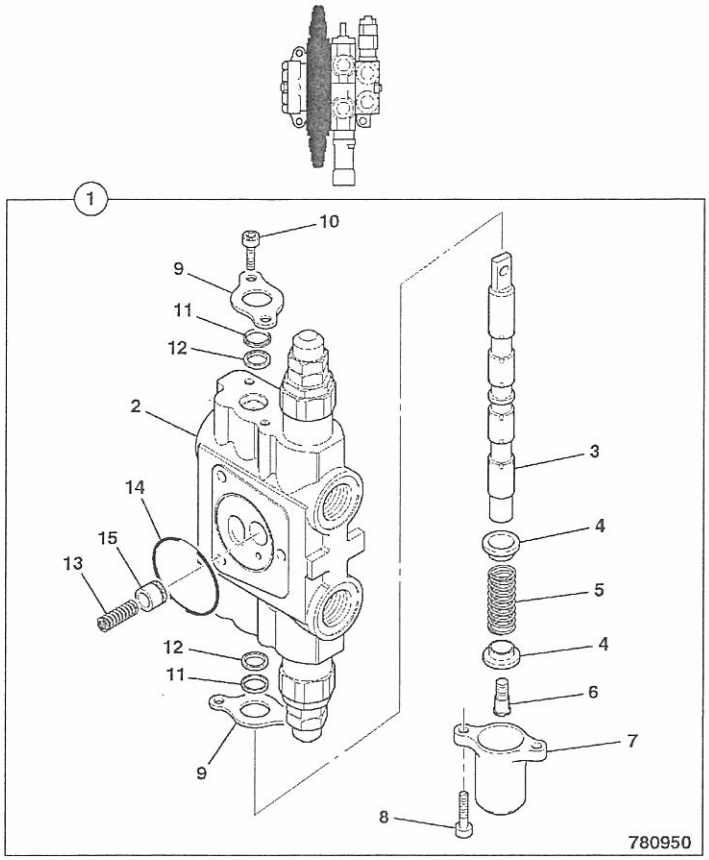

ITEM	PART NO	CHANGE NO	DESCRIPTION	REMARKS	USAGE CODE	QTY
1	25/222717		Valve, section			1
2	NSP		:None serviced part	Spool and body are matched pairs.		1
3	NSP		:None serviced part			1
4	25/606834		:Seat, spring			2
5	25/606833		:Spring			1
6	25/606828		:Spool, end			1
7	25/606846		:Cap, spool			1
8	25/606827		:Screw			2
9	25/222718		:Plate, end plate			2
10	25/606101		:Screw			2
11	25/221933		:Seal			2
12	25/221934		:Seal			2
13	25/606844		:Spring			1
14	25/606812		:O Ring, interface, valve sections			1
15	25/606843		:Poppet			1

9812/0020U

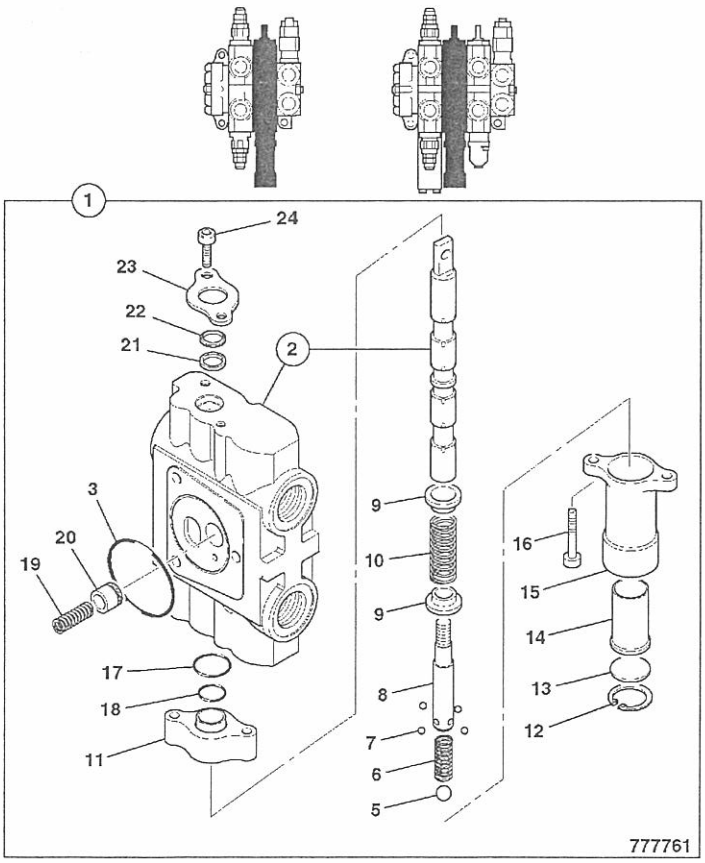

ITEM	PART NO	CHANGE NO	DESCRIPTION	REMARKS	USAGE CODE	QTY
1	25/222714		Valve, section			1
2	NSP		:None serviced part	Spool and body		1
3	25/606812		::O Ring, interface, valve sections			1
4	25/607608		:Kit-end mechanism			1
5	25/607609		::Ball			1
6	25/607610		::Spring			1
7	25/607611		::Ball			4
8	25/607612		::End, spool			1
9	25/606834		::Seat, spring			2
10	25/606833		::Spring			1
11	25/220374		::Spacer			1
12	25/606829		::Retainer			1
13	25/607614		::Spacer			1
14	25/607615		::Sleeve			1
15	25/606825		::Cap, detent			1
16	25/607616		::Capscrew			2
17	25/606837		::O Ring			1
18	25/606836		::O Ring			1
19	25/606844		:Spring			1
20	25/606843		:Poppet			1
21	25/221934		:Seal			1
22	25/221933		:Seal			1
23	25/222718		:Plate, end plate			1
24	25/606101		:Screw			2

9812/0020U

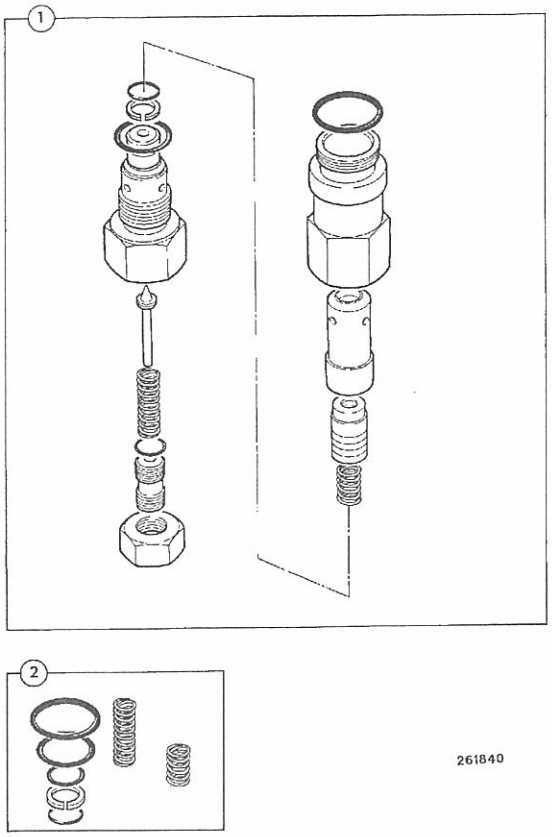

ITEM	PART NO	CHANGE NO	DESCRIPTION	REMARKS	USAGE CODE	QTY
1	25/222659		Valve, assembly, main relief			1
2	25/618902		:Kit-repair, relief valve			1

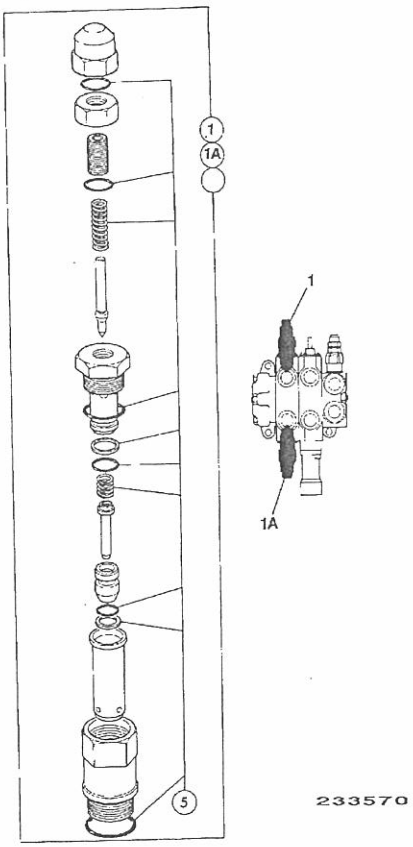

ITEM	PART NO	CHANGE NO	DESCRIPTION	REMARKS	USAGE CODE	QTY
1	*25/223705		Valve, auxiliary relief	Top port		1
1A	*25/223701		Valve, auxiliary relief	Bottom port		1
5	25/974632		:Kit-repair			1

E3-2-40 VALVE, SECTION, SHOVEL, 3 SPOOL, ELECTRICAL DETENT, LOADER VALVE

ISSUE

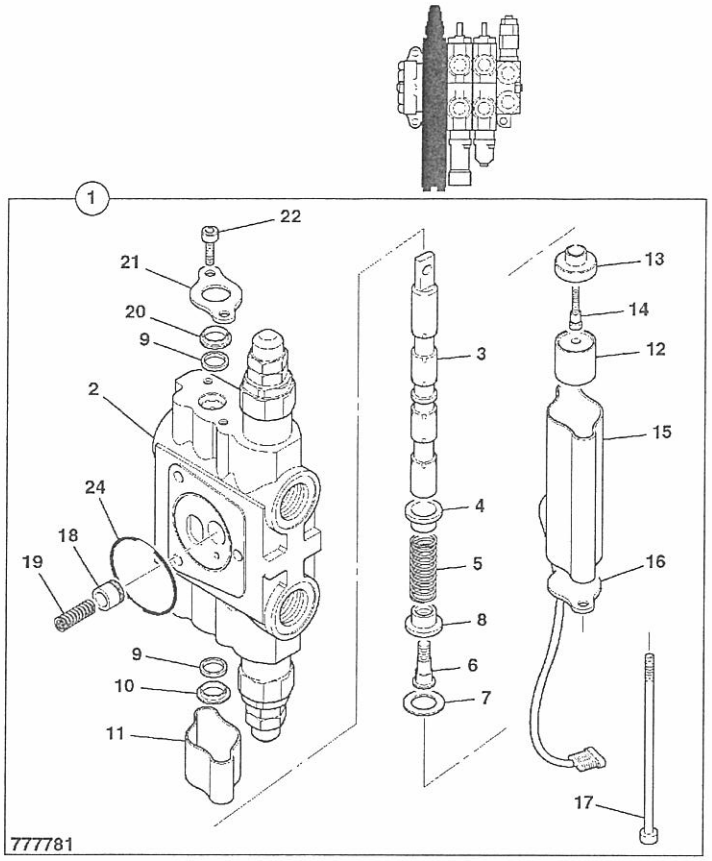

ITEM	PART NO	CHANGE NO	DESCRIPTION	REMARKS	USAGE CODE	QTY
1	25/222713		Valve, section			1
2	NSP		:None serviced part	Body		1
3	NSP		:None serviced part	Spool		
4	25/606834		:Seat, spring			1
5	25/606833		:Spring			1
6	25/621809		:Screw			
7	25/621807		:Retainer			1
8	25/621808		:Retainer, spring			1
9	25/221934		:Seal			1
10	25/612211		:Retainer			1
11	25/612206		:Cap, spool			1
12	25/621803		:Sleeve, magnetic			
13	25/621805		:Housing, claper			1
14	25/621806		:Screw, clamper housing			1
15	25/621804		:Cap, spool			1
16	25/612209		:Plate, end cap			1
17	25/621802		:Capscrew			2
18	25/606843		:Poppet			1
19	25/606844		:Spring			1
20	*25/221933		:Seal			1
21	*25/222718		:Plate, end plate			1
22	*25/606101		:Screw			2
24	25/606812		:O Ring, interface, valve sections			1

9812/0020U

E3-2-50 VALVE, SECTION, AUXILIARY, 3 SPOOL, LOADER VALVE

ISSUE 1

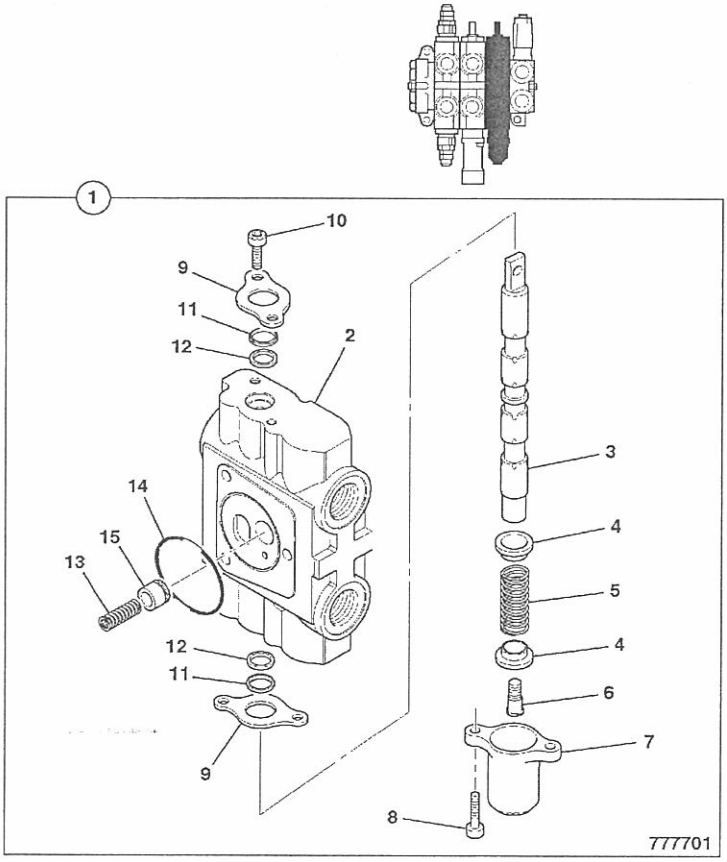

ITEM	PART NO	CHANGE NO	DESCRIPTION	REMARKS	USAGE CODE	QTY
1	25/222715		Valve, section			1
2	NSP		:None serviced part			1
3	NSP		:None serviced part			1
4	25/606834		:Seat, spring			2
5	25/606833		:Spring			1
6	25/606828		:Spool, end			1
7	25/606846		:Cap, spool			1
8	25/606827		:Screw			2
9	25/222718		:Plate, end plate			2
10	25/606101		:Screw			1
11	25/221933		:Seal			2
12	25/221934		:Seal			2
13	25/606844		:Spring			1
14	25/606812		:O Ring, interface, valve sections			1
15	25/606843		:Poppet			1

9812/0020U

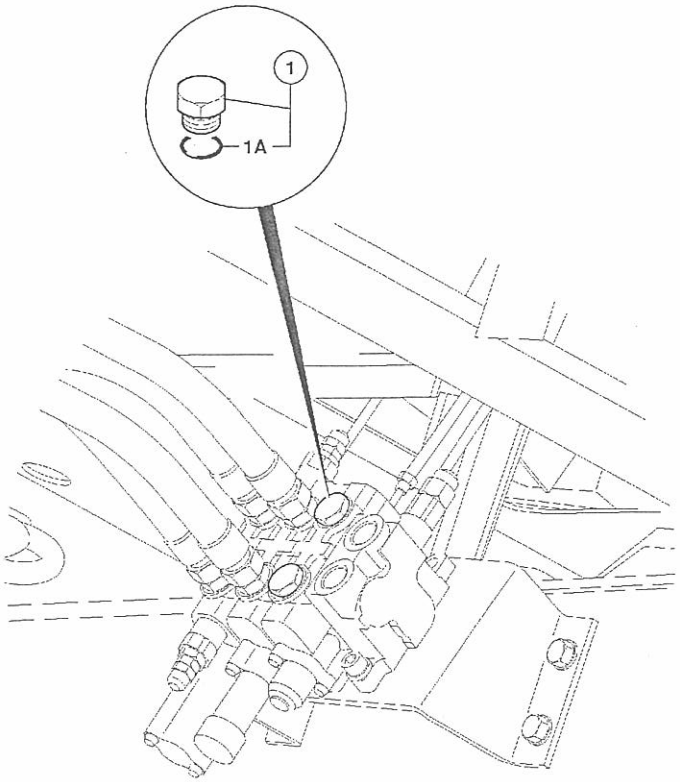

788200

ITEM	PART NO	CHANGE NO	DESCRIPTION	REMARKS	USAGE CODE	QTY
1	1745/0003		Plug, blanking			2
1A	2401/0506		:O Ring			1

9812/0020U

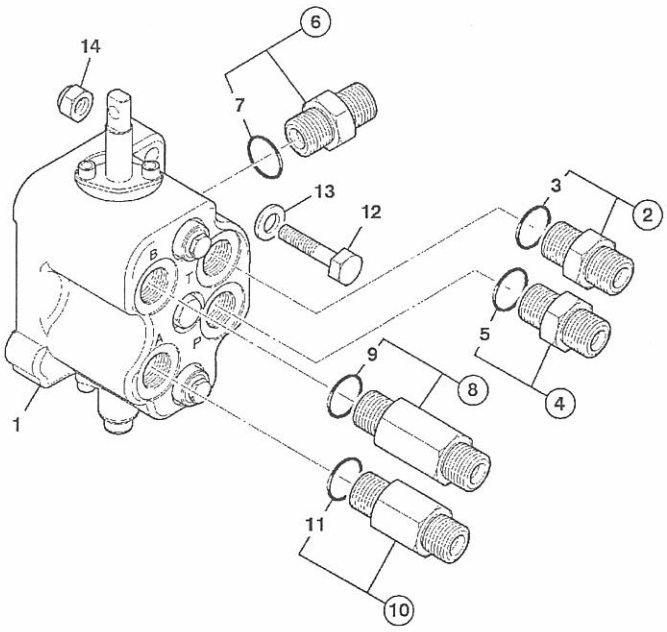

722911

ITEM	PART NO	CHANGE NO	DESCRIPTION	REMARKS	USAGE CODE	QTY
1	25/221919		Valve, 1 spool,auxiliary, black			1
2	1620/2058		Adapter, M/M	T port		1
	816/90650		Adapter, extended,70mm lg	Breaker, extradig		1
3	2401/0507		:O Ring			1
4	1620/2058		Adapter, M/M	P port		1
5	2401/0507		:O Ring			1
6	1620/2056		Adapter	HPCO		1
7	2401/0507		:O Ring			1
8	816/90651		Adapter, extended, 100mm lg.	Top port		1
	816/90231		Adapter, extended M/M, 7/8"SAE x 1/2"BSP	214e only		1
9	2401/0507		:O Ring			1
10	816/90650		Adapter, extended,70mm lg	Bottom port		1
	1620/2055		Adapter, 39.5mm lg. M/M	bottom port A		1
11	2401/0507		:O Ring			1
12	1315/3412Z		Bolt			2
13	1420/0008Z		Washer, Plain M10			2
14	1370/0303Z		Nut, lock, M10			2

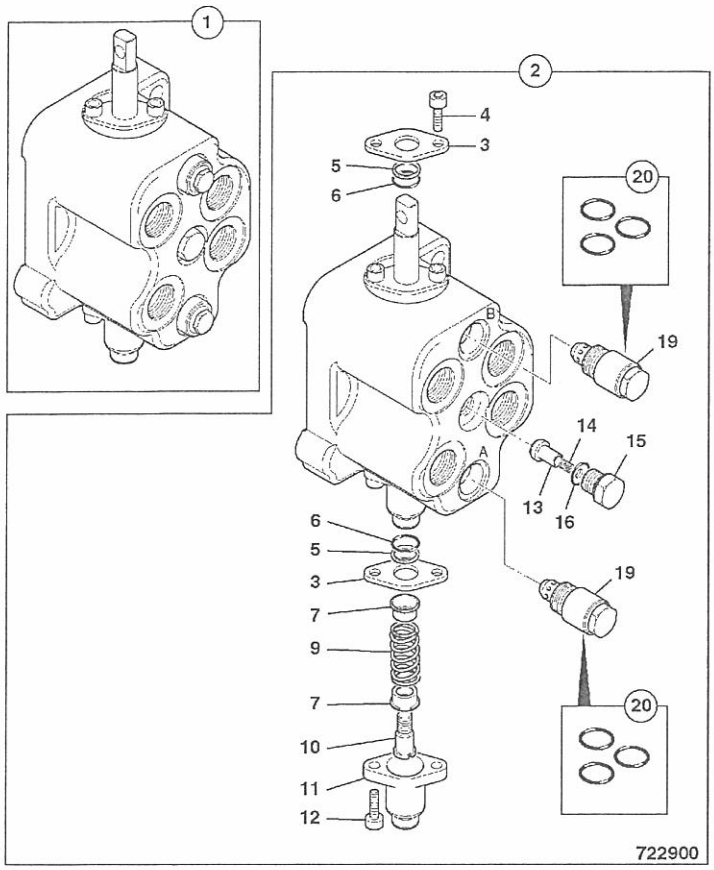

ITEM	PART NO	CHANGE NO	DESCRIPTION	REMARKS	USAGE CODE	QTY
1	25/221919		Valve, 1 spool,auxiliary, black	Valve adaptors see E3-3-11		1
	25/221920		Valve, 1 spool,auxiliary, powerslide, yellow	Valve adaptors see E3-3-6		1
2	N.S.P.		:None serviced part	Valve section		1
3	25/607612		::End, spool			2
4	25/606101		::Screw			2
5	25/606835		::Seal, wiper			2
6	25/606836		::O Ring			2
7	25/605124		::Seat			2
9	25/606833		::Spring			1
10	25/606828		::Spool, end			1
11	25/606846		::Cap, spool			1
12	25/606827		::Screw			1
13	25/220924		::Poppet, check valve			1
14	25/220925		::Spring			1
15	25/220926		::Plug			1
16	25/607219		:::O Ring			1
19	25/222372		::Valve, relief, 138 bar	Use with valve 25/221919	port B	1
	25/222371		::Valve, relief 207 bar	Use with valve 25/221919	port A	1
	25/222371		Valve, relief 207 bar	use with valve 25/221920	ports A B	2
20	25/222370		:::Kit-seal, relief valve			1

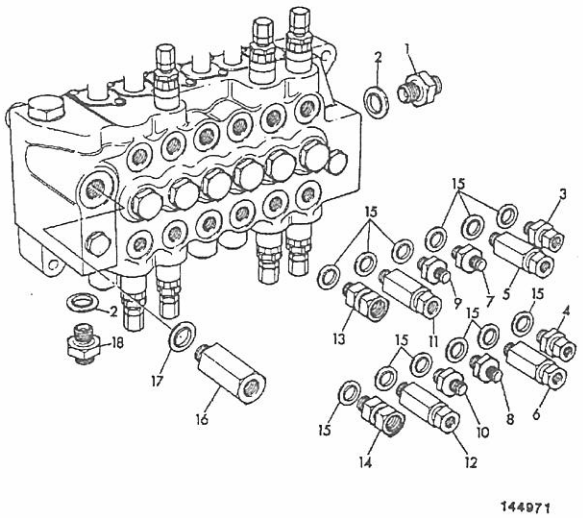

ITEM	PART NO	CHANGE NO	DESCRIPTION	REMARKS	USAGE CODE	QTY
1	1620/2059		Adapter, 3/4" x M26			1
2	2401/0508		:O Ring			1
3	816/90236		Adapter			1
4	816/90237		Restrictor, adapter 3.0mm M/M			1
5	1620/2056		Adapter	JCB controls		1
	816/90352		Restrictor, adaptr,one way 5.5mm	ISO controls		1
6	816/90352		Restrictor, adaptr,one way 5.5mm	JCB controls		1
	1620/2056		Adapter	ISO controls		1
7	816/90234		Adapter, M/M			1
8	816/90365		Adapter, male/male			1
9	816/90234		Adapter, M/M			1
10	816/90365		Adapter, male/male			1
11	816/90283		Adapter, extended M/M	JCB controls		1
	816/90510		Adapter, extended M/M	ISO controls		1
12	1620/2056		Adapter	JCB controls		1
	816/90352		Restrictor, adaptr,one way 5.5mm	ISO controls		1
13	816/90231		Adapter, extended M/M, 7/8"SAE x 1/2"BSP			1
14	1620/2055		Adapter, 39.5mm lg. M/M			1
15	2401/0507		O Ring	male end to valve items 3 to 14		1
	2401/0508		O Ring	male end to valve item 18		1
16	1620/2061		Adapter, M/M			1

ITEM	PART NO	CHANGE NO	DESCRIPTION	REMARKS	USAGE CODE	QTY
17	2401/0510		O Ring	male end to valve item 16		1
18	1620/2059		Adapter, 3/4" x M26			1

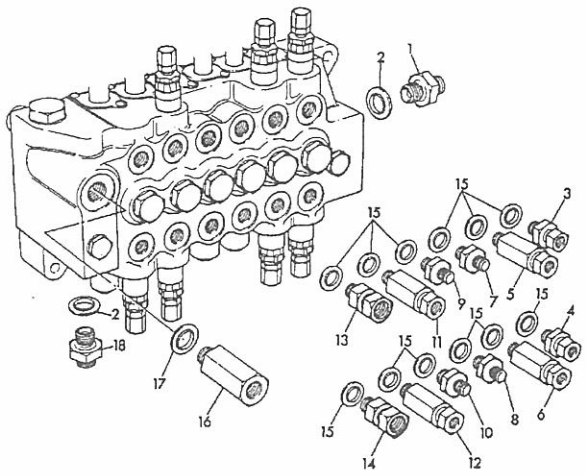

9812/0020U

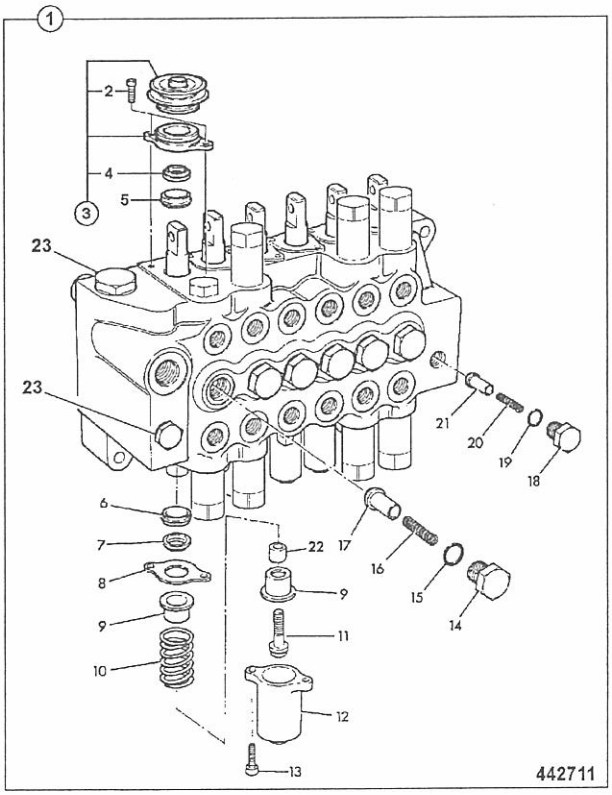

ITEM	PART NO	CHANGE NO	DESCRIPTION	REMARKS	USAGE CODE	QTY
1	25/221622		Valve, 6 spool excavator, centremount 14'			1
2	25/975705		:Screw			12
3	25/221745		:Kit-spool boot			6
4	25/975704		:Wiper			6
5	25/221208		:Seal			6
6	25/221208		:Seal			6
7	25/975704		:Wiper			6
8	25/606102		:Retainer, wiper			6
9	25/608201		:Retainer, spring			12
10	25/608202		:Spring	Boom, dipper, slew & bucket		4
	25/608203		:Spring	Stabiliser		2
11	25/608204		:Screw, spring retainer			6
12	25/608205		:Cover	With drain hole		6
13	25/606110		:Screw, cap			12
14	25/606111		:Cap			6
15	25/606112A		:O Ring			6
16	25/606113		:Spring			6
17	25/606114		:Seat			6
18	25/606115		:Cap			1
19	25/606116		:O Ring			1
20	25/606117		:Spring			1
21	25/974645		:Seat, check valve			1
22	25/608206		:Spacer			6
23	25/606822		:Plug, assembly			2

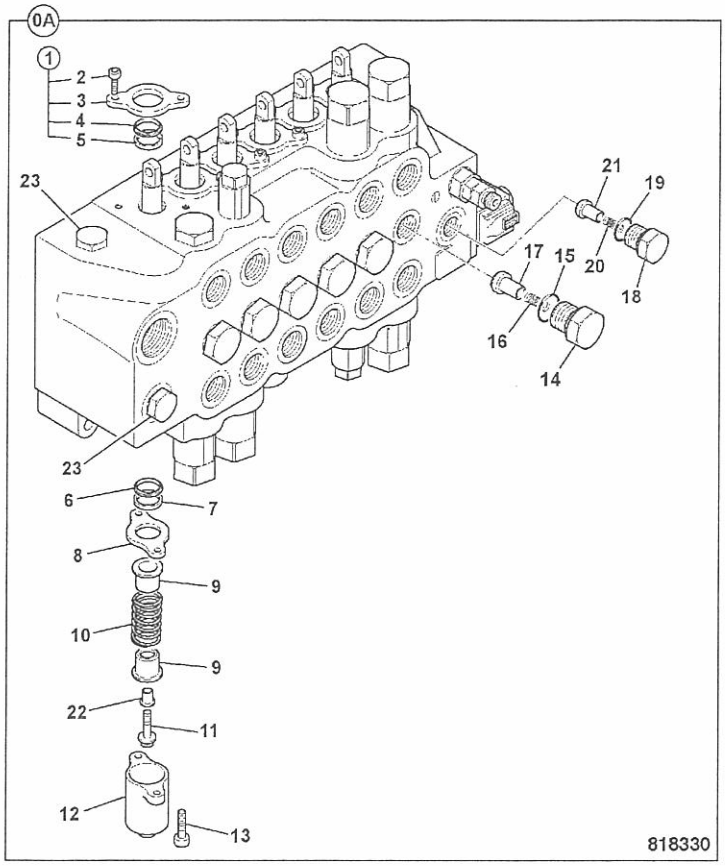

ITEM	PART NO	CHANGE NO	DESCRIPTION	REMARKS	USAGE CODE	QTY
0A	25/221622		Valve, 6 spool excavator, centremount 14'			1
1	25/222660		:Kit, std spool gland			6
2	25/606101		::Screw			2
3	25/222198		::Plate, seal			
4	25/222661		::Wiper			
5	25/221208		::Seal			1
6	25/221208		:Seal			
7	25/222661		:Wiper			6
8	25/606102		:Retainer, wiper			6
9	25/608201		:Retainer, spring			1
10	25/608202		:Spring	Boom, dipper, slew & bucket		
	25/608203		:Spring	Stabiliser		
11	25/608204		:Screw, spring retainer			6
12	25/608205		:Cover	With drain hole		6
13	25/606110		:Screw, cap			1
14	25/606111		:Cap			6
15	25/606112A		:O Ring			6
16	25/606113		:Spring			6
17	25/606114		:Seat			6
18	25/606115		:Cap			1
19	25/606116		:O Ring			
20	25/606117		:Spring			1
21	25/974645		:Seat, check valve			1
22	25/608206		:Spacer			6
23	25/606822		:Plug, assembly			2

9812/0020L

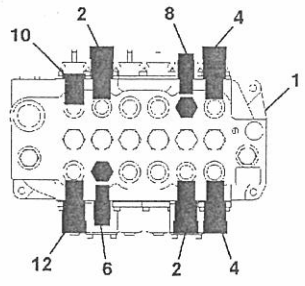

ISO CONTROLS

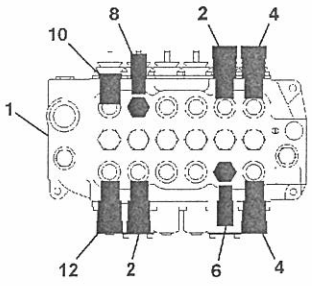

JCB CONTROLS

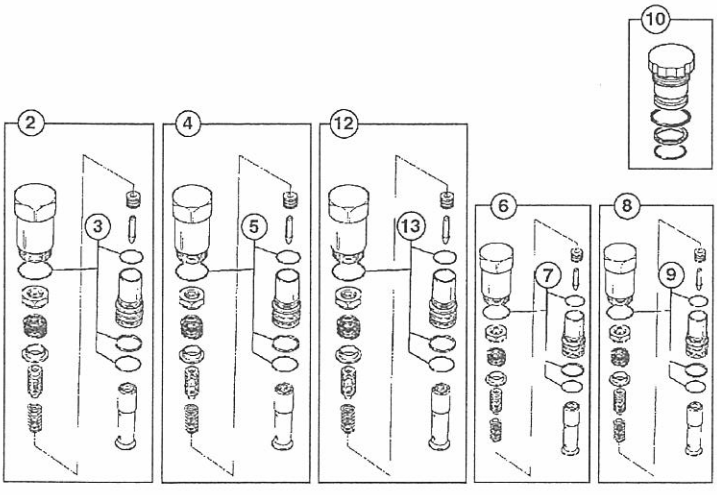

ITEM	PART NO	CHANGE NO	DESCRIPTION	REMARKS	USAGE CODE	QTY
1	25/221622		Valve, 6 spool excavator, centremount 14'			1
2	25/222499		:Valve, relief, 3600/2.5			2
4	25/222498		:Valve, relief, 3800/2.5			2
5	25/222305		::Seal, ARV service kit			1
6	25/223082		:Valve, relief, 5000/2.5			1
7	25/222190		::Kit, -RV seal and spring			1
8	25/222191		:Valve, relief 3600psi			1
9	25/222192		::Kit, -RV seal and spring			1
10	25/609901		:Plug			1
12	25/222499		:Valve, relief, 3600/2.5			1
13	25/222305		::Seal, ARV service kit			1

9812/0020L

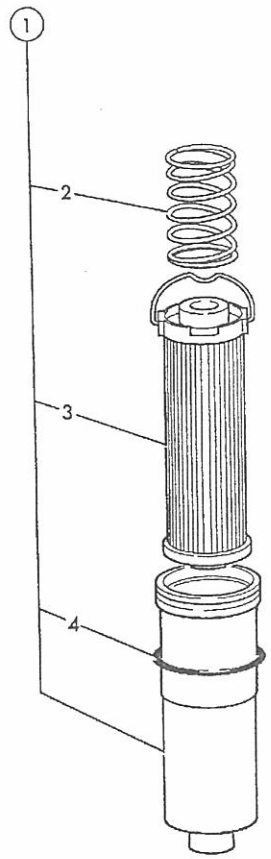

182980

ITEM	PART NO	CHANGE NO	DESCRIPTION	REMARKS	USAGE CODE	QTY
1	581/18075		Filter, hydraulic, 5 micron			1
2	814/00358		:Spring			1
3	32/925346		Element, hydraulic filter, 12 micron,229mm long	Normal service		1
	32/925341		:Element, hydraulic filter, 5 micron, 254mm long	System clean, max 50 hours only.		1
4	2403/0224		:O Ring			1

9812/0020U

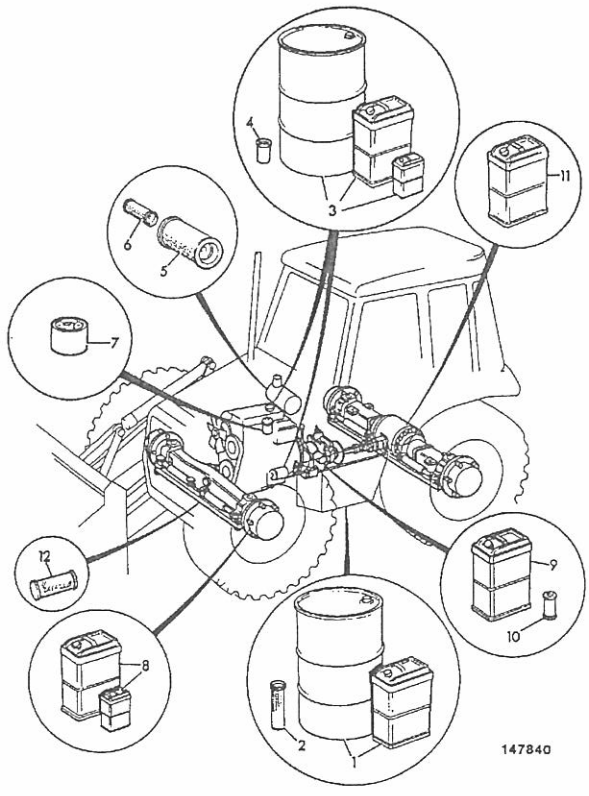

147840

ITEM	PART NO	CHANGE NO	DESCRIPTION	REMARKS	USAGE CODE	QTY
1	4002/1023		Fluid, hydraulic JCB HP32, 25 litre	See Note 1 25 litres. Machine capacity 130 litre		A/R
	4002/1024		Fluid, hydraulic JCB HP32, 200 litre			a/r
	4002/0801		Fluid, hydraulic 46, 5 litre	Optional Hot climate		a/r
	4002/0802		Fluid, hydraulic 46, 25 litre	Optional Hot climate		a/r
	4002/0803		Fluid, hydraulic 46, 200 litre			a/r
	4002/1223		Fluid, hydraulic, 25 litres, Biodegradable			a/r
	4002/1224		Fluid, hydraulic 205 litres, Biodegradable			a/r
2	32/925346		Element, hydraulic filter, 12 micron,229mm long			1
	32/925341		Element, hydraulic filter, 5 micron, 254mm long	System clean, max 50 hours only		1
3	4001/1701		Oil, JCB 10W/30, 5 litres			A/R
	4001/1501		Oil, 15W/40, 5 litres			A/R
	4001/1901		Oil, JCB 20/W50, 5 Litre			A/R
3A	4001/1702		Oil, JCB 10W/30, 25 litres			A/R
	4001/1502		Oil, 15W/40, 25 litres			A/R
	4001/1902		Oil, JCB 20/W50, 25 Litre			A/R
3B	4001/1703		Oil, JCB 10W/30, 200 litres			A/R
	4001/1502		Oil, 15W/40, 25 litres			A/R
	4001/1902		Oil, JCB 20/W50, 25 Litre			A/R
4	320/04133		Filter, engine oil			1

Note 1: For all items on this page, Refer to the Service Workshop Manual before use.

9812/0020U

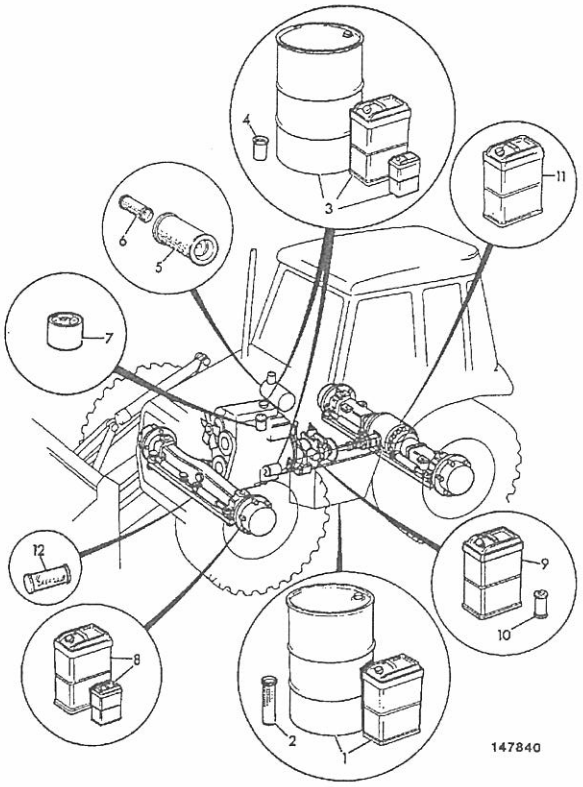

ITEM	PART NO	CHANGE NO	DESCRIPTION	REMARKS	USAGE CODE	QTY
5	32/925682		Element, air filter, main	Engine		
6	32/925683		Element, air filter, safety	Engine		1
7	320/07057		Filter, fuel	Engine		
8	4000/0301		Oil, HD90 gear, 5 litre			A/R
	4000/0302		Oil, HD90 gear, 25 litre			A/R
	4000/0303		Oil, HD 90 gear, 200 Litres			A/
	4000/0702		Oil, JCB Special gear, 5 litres	Front axle with LSD		A/R
	4000/0701		Oil, Special Gear Oil, Plus. 25 litre	Front axles with LSD		A/R
	4000/0703		Oil, Special Gear Oil, Plus. 200 litre	Front axle with LSD		A/
9	4000/2501		Fluid, transmission 10W, 5 litre			A/
	4000/2502		Fluid, transmission 10W, 25 litre			A/
	4000/2503		Fluid, transmission 10W, 200 litre			
10	*581/18076		Element, transmission filter, 120.7mm long	Manual, Powershift & Autoshift Transmission		1
11	4000/0701		Oil, Special Gear Oil, Plus. 25 litre			A/R
	4000/0703		Oil, Special Gear Oil, Plus. 200 litre			A/R
12	4003/2007		Grease, cartridge, HP 400 gm			A/R
	4003/2006		Grease, HP 12.5kg	12.5 kg		A/R
	4003/2010		Grease, JCB high pressure, 50kg			A/R

9812/0020C

E3-8-3 LUBRICANTS & FILTERS ISSUE

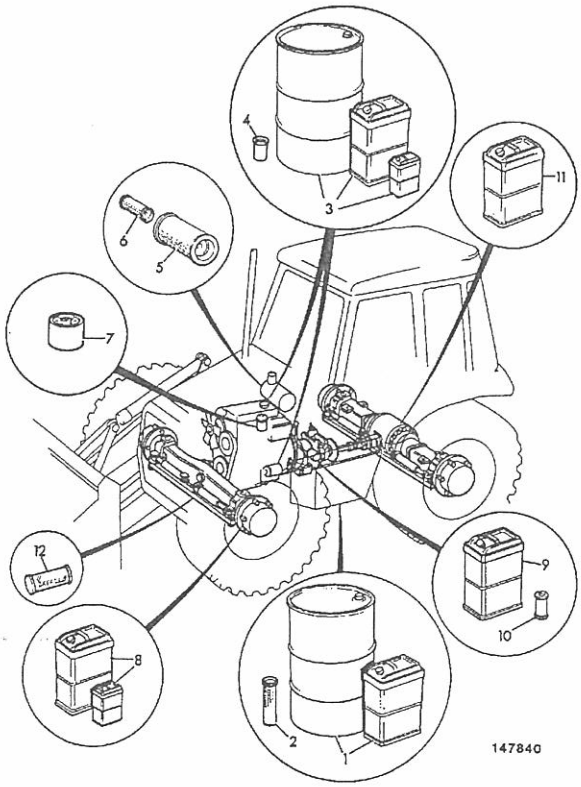

ITEM	PART NO	CHANGE NO	DESCRIPTION	REMARKS	USAGE CODE	QTY
	4003/2017		Grease, HP, 400g x 24			A/R
13	4004/0501		Sealant, Waxoyl, aerosol			A/R
	4004/0502		Sealant, Waxoyl, 5 ltr can			A/R
14	4006/0101		Fluid, anti-freeze, 1 Ltr			A/R
	4006/0102		Fluid, anti-freeze, 5 litre			A/R
	4006/0103		Fluid, anti-freeze, 25 Ltr			A/R
	4006/0104		Fluid, anti-freeze, 200 Ltr			A/R
15	4002/0503		Brake, fluid, 5 ltr			1

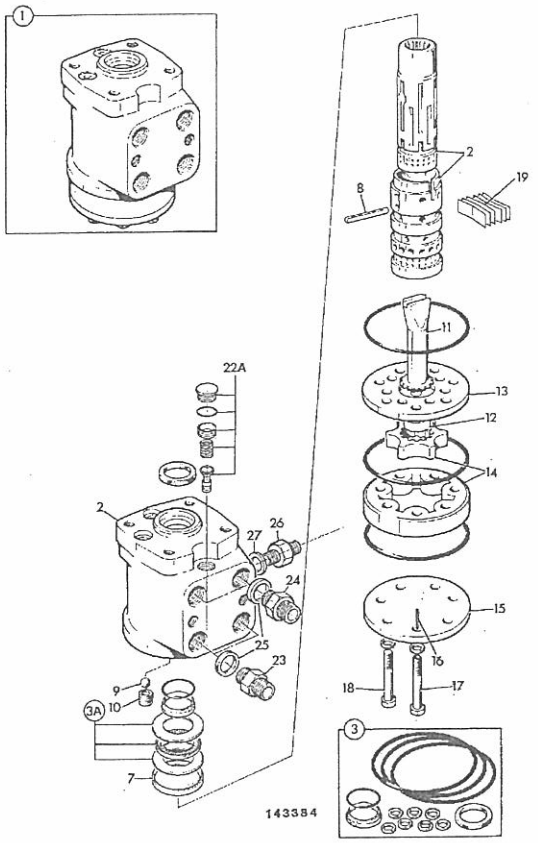

ITEM	PART NO	CHANGE NO	DESCRIPTION	REMARKS	USAGE CODE	QTY
1	35/412300		Valve, steer 250 load sens, without anti-shock			1
2	N.S.P.		:None serviced part			1
3	35/404202		:Kit-repair			1
3A	35/404902		:Bearing, complete			1
7	35/400502		:Ring			1
8	35/400507		:Pin, cross			1
9	35/400508		:Ball			1
10	35/400510		:Bush			1
11	35/412301		:Drive			1
12	.		:'See Remark'	Not fitted or required		1
13	35/409301		:Plate, distributor			1
14	35/412302		:Kit-gear			1
15	35/400511		:Plate, end			1
16	NSP		:None serviced part	Part of item 17		1
17	35/412303		:Bolt			1
18	35/412304		:Bolt			6
19	35/407009		:Spring, kit			1
22A	35/409303		:Valve, relief assembly			1
23	1620/0004		Adapter, 3/4"UNF SAE "O" ring, 3/8"BSP male			2
24	816/17072		Adapter			2
25	2401/0506		O Ring	Component part of item 23, 24		1
26	1620/0001		Adapter			1
27	828/00237		:O Ring	Component part of item 26		1

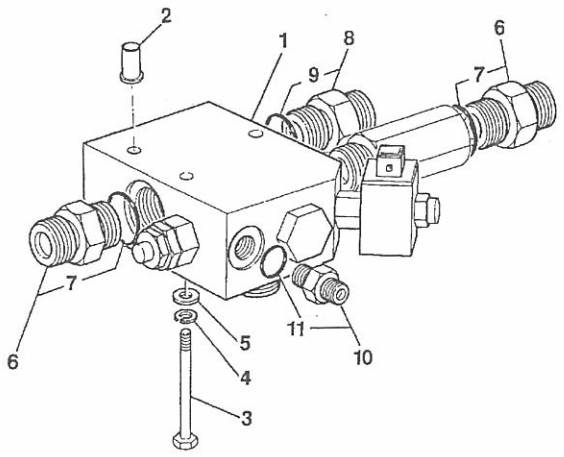

ITEM	PART NO	CHANGE NO	DESCRIPTION	REMARKS	USAGE CODE	QTY
1	25/221197		Valve, solenoid p. flow, centre mount hammer			1
1A	717/20137		:Coil, 12v	coil only		1
1B	25/221755		:Cartridge	cartridge only		1
2	826/01106		Nut, rivet,M8			3
3	1315/3318Z		Bolt, M8x80mm Long			3
4	1425/0007Z		Washer, spring			3
5	1420/0007Z		Washer, plain, M8			3
6	1620/2059		Adapter, 3/4" x M26	Port CF & P		2
7	2401/0508		:O Ring			1
8	1620/2059		Adapter, 3/4" x M26	Port EF		1
9	2401/0508		:O Ring			1
10	1620/2051		Adapter	Port T		1
11	2401/0503		:O Ring			1
12	816/00196		Cap, blanking 3/4"BSP, steel			1

268740

E

- E1 HOSE & PIPEWORK
- E2 PUMP/MOTOR & PUMP DRIVE
- E3 VALVES & HYDRAULIC FILTERS
- ● E4 RAMS

9812/0020U

E4-1-41 RAM, LIFT, STANDARD, 50MM ROD X 80MM CYL

ISSUE 1

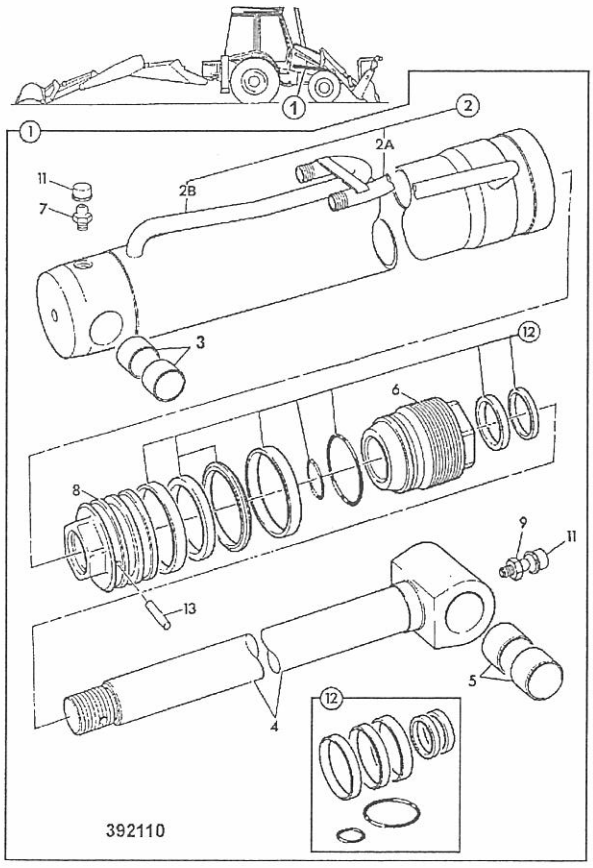

ITEM	PART NO	CHANGE NO	DESCRIPTION	REMARKS	USAGE CODE	QTY
1	576/60163		Ram, loader lift	Standard		1
	128/16080		Ram, loader lift, sunbelt green	Sunbelt green		A/R
2	576/70161		:Cylinder, loader lift			1
2A	NSP		::None serviced part			1
2B	NSP		::None serviced part			1
3	831/10181		:Bearing, 50.94-55.9			1
4	590/40581		:Rod, piston, 50X957, lift ram			1
5	1208/0015		:Bush			1
6	594/14279		:Kit-end cap			1
7	1450/0001		:Nipple, grease, straight, 1/8 BSP			1
8	595/27100		:Head, piston			1
9	1450/0001		:Nipple, grease, straight, 1/8 BSP			1
11	835/00017		:Cap, grease nipple			2
12	991/00102		:Kit, seal, 50mm rod x 80mm cyl			1
13	826/01182		:Dowel			1

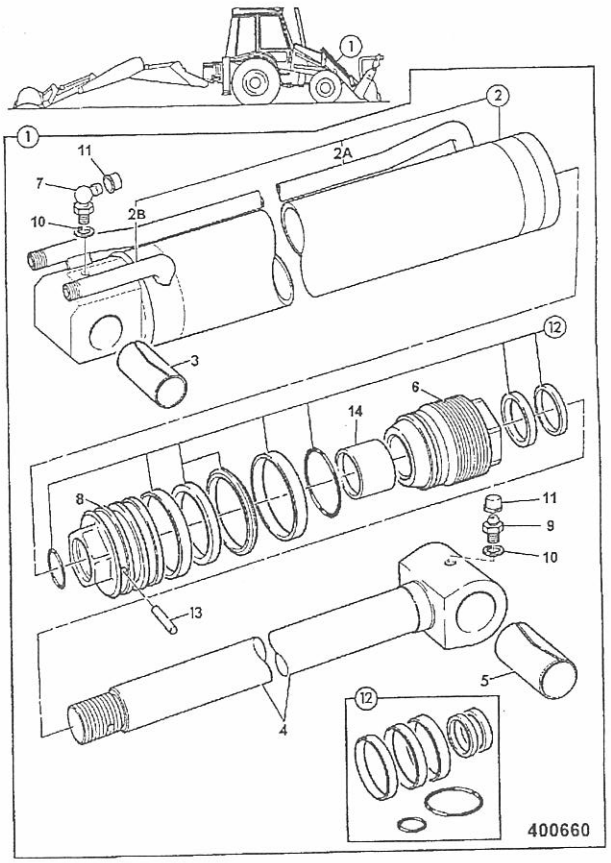

ITEM	PART NO	CHANGE NO	DESCRIPTION	REMARKS	USAGE CODE	QTY
1	556/60236		Ram, assembly, shovel	Standard build		2
	128/10634		Ram, shovel, sunbelt green	Sunbelt green		A/R
2	556/70087		:Cylinder, shovel			1
2A	NSP		::None serviced part			1
2B	NSP		::None serviced part			1
3	1208/0018		:Bush			1
4	590/40260		:Rod, piston, Shovel ram 213			1
	590/40307		:Rod, piston, 40x909, Shovel ram + reset			1
5	1208/0015		:Bush			1
6	594/00120		:Cap, end, 70X40			1
7	1450/1001		:Nipple, grease, 90deg. angle			1
8	595/10027		:Head, piston			1
9	1450/0001		:Nipple, grease, straight, 1/8 BSP			1
10	1403/0001		:Washer, aluminium			1
11	835/00017		:Cap, grease nipple			2
12	991/00100		:Kit-seal, 70x40			1
13	826/01182		:Dowel			1
14	2411/9004		:Bearing			1

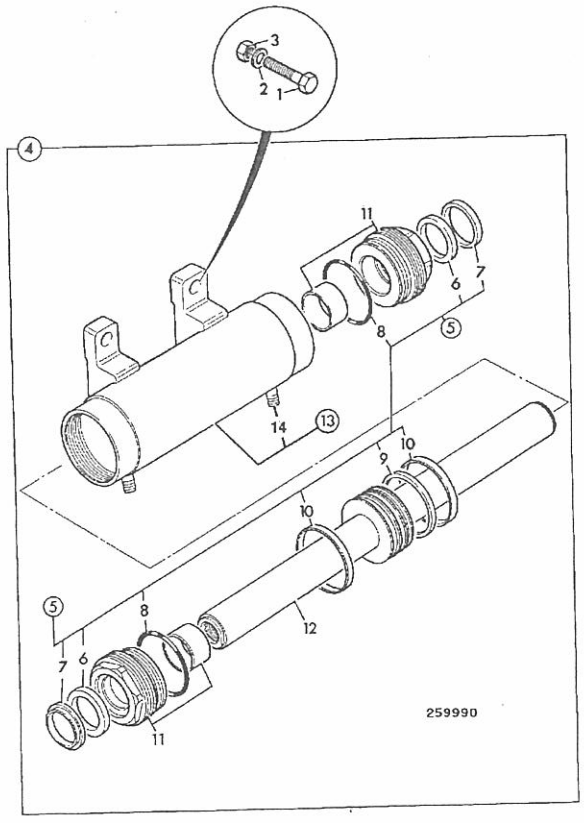

ITEM	PART NO	CHANGE NO	DESCRIPTION	REMARKS	USAGE CODE	QTY
1	1315/3721Z		Bolt			4
2	1420/0011Z		Washer, M16 plain			4
3	1370/0603Z		Nut, M16			4
4	573/10031		Ram, assembly, steer, power trackrod			1
5	991/00156		:Kit-seal, power track rod ram, 75mm cyl x 45mm rod			1
6	2411/0605		::Seal, gland, 45mm rod			2
7	2411/8705		::Seal, wiper, 45mm rod			2
8	2302/0307		::O Ring			2
9	2411/1132		::Seal, piston head, 75mm cyl			1
10	2411/7975		::Ring, wear, 75mm cyl			2
11	594/14074		:Kit-end cap, 75mm cyl x 45mm rod			2
12	590/40210		:Rod, piston			1
13	573/20000		:Cylinder, power track rod, 75mm			1

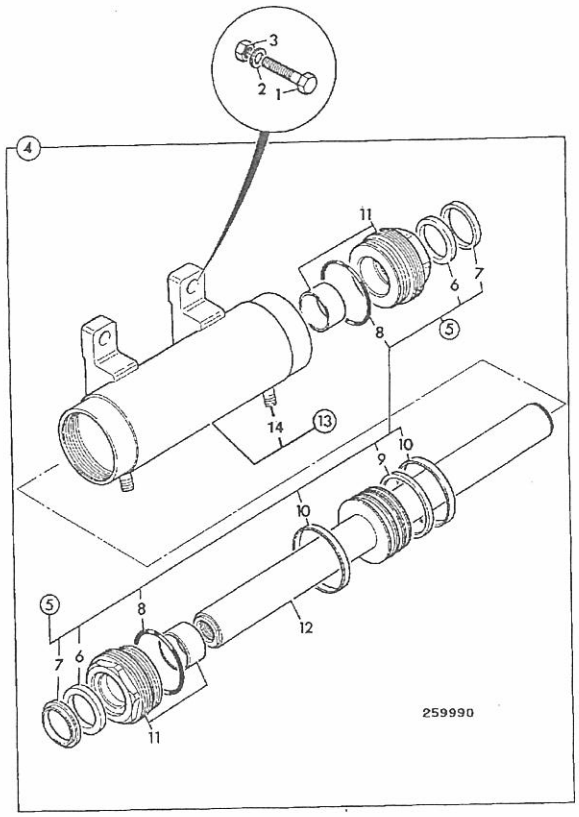

ITEM	PART NO	CHANGE NO	DESCRIPTION	REMARKS	USAGE CODE	QTY
1	1315/3818Z		Bolt, M20 x 80mm			2
	1316/3821Z		Bolt, Hex. hd, M20x110			2
2	1420/0012Z		Washer	for 1315/3818Z		2
	1422/0012D		Washer	for 1316/3821Z		2
3	.		'See Remark'	Not fitted or required.		
4	573/10032	Superseded	Ram, steer			1
	573/10061		Ram, steer, Black Export Version			1
	573/10003	Superseded	Ram, steer power trackrod	NLA use 573/10032		1
	573/10061		Ram, steer, Black Export Version			1
5	991/00156		:Kit-seal, power track rod ram, 75mm cyl x 45mm rod			1
6	2411/0605		::Seal, gland, 45mm rod			2
7	2411/8705		::Seal, wiper, 45mm rod			2
8	2302/0307		::O Ring			2
9	2411/1132		::Seal, piston head, 75mm cyl			1
10	2411/7975		::Ring, wear, 75mm cyl			2
11	594/14074		:Kit-end cap, 75mm cyl x 45mm rod			2
12	590/40208		:Rod, piston			1
13	573/20001		:Cylinder, power track rod, 75mm			1

9812/0020U

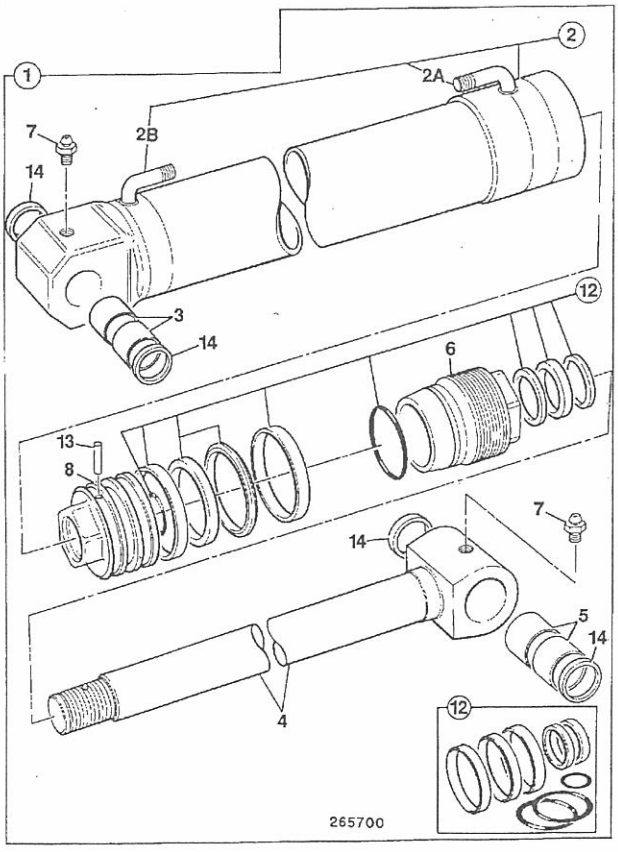

ITEM	PART NO	CHANGE NO	DESCRIPTION	REMARKS	USAGE CODE	QTY
1	561/60200		Ram, assembly, boom			1
	128/14110		Ram, boom (red)	Loxam red colour		A/R
	128/14111		Ram, boom, Sunbelt green	Sunbelt green colour		A/R
2	561/70199		:Cylinder, boom, 110X1221			1
2A	NSP		::None serviced part			1
2B	NSP		::None serviced part			1
3	809/00126		:Bearing, liner, 50mm pivot bore			2
4	590/40154		:Rod, piston			1
5	809/00126		:Bearing, liner, 50mm pivot bore			2
6	594/14266		:Kit-end cap, 110 x 60			1
7	1450/0001		:Nipple, grease, straight, 1/8 BSP			1
8	595/10043		:Head, piston			1
9	1450/0001		:Nipple, grease, straight, 1/8 BSP			1
12	991/00110		:Kit-seal, 60mm rod x 110mm cyl			1
13	826/01180		:Dowel			1
14	813/00426		:Seal, pivot pin grease			4

9812/0020U

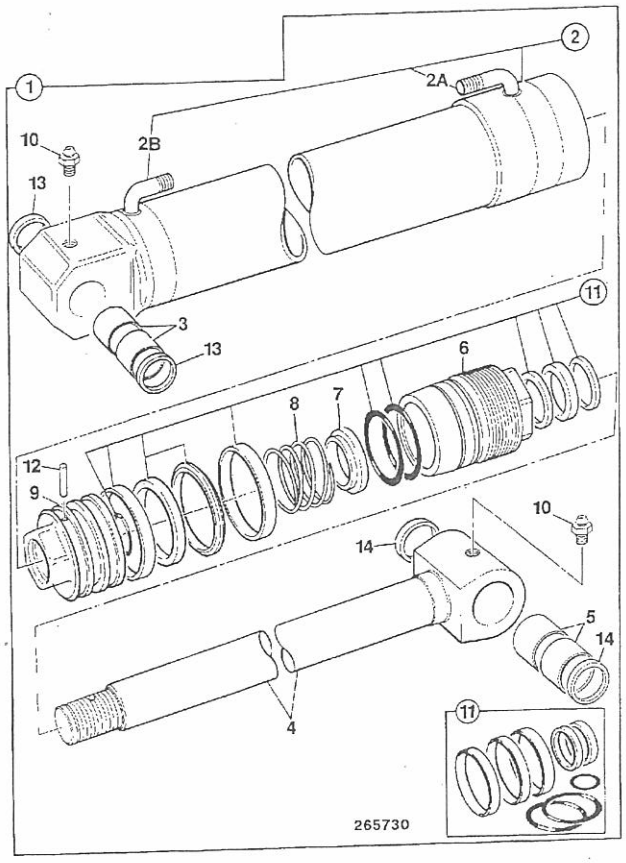

ITEM	PART NO	CHANGE NO	DESCRIPTION	REMARKS	USAGE CODE	QTY
1	559/60194		Ram, dipper, 100 x 60 x 1152.5cc	Standard		1
	128/14515		Ram, dipper, sunbelt green	Sunbelt green		A/R
2	559/70193		:Cylinder, dipper			1
2A	NSP		::None serviced part			1
2B	NSP		::None serviced part			1
3	809/00179		:Bearing, 60x70x90L			1
4	590/40583		:Rod, piston			1
5	809/00126		:Bearing, liner, 50mm pivot bore			2
6	594/14022		:Cap, end,assembly, 60mm x 100mm			1
7	559/00105		:Restrictor			1
8	559/00104		:Spring			1
9	595/27722		:Head, piston, assembly			1
10	1450/0001		:Nipple, grease, straight, 1/8 BSP			2
11	991/00145		:Kit-seal, ram, 60mm rod x 100mm cyl			1
12	826/01179		:Dowel			1
13	813/00427		:Seal, grease			2
14	813/00426		:Seal, pivot pin grease			2

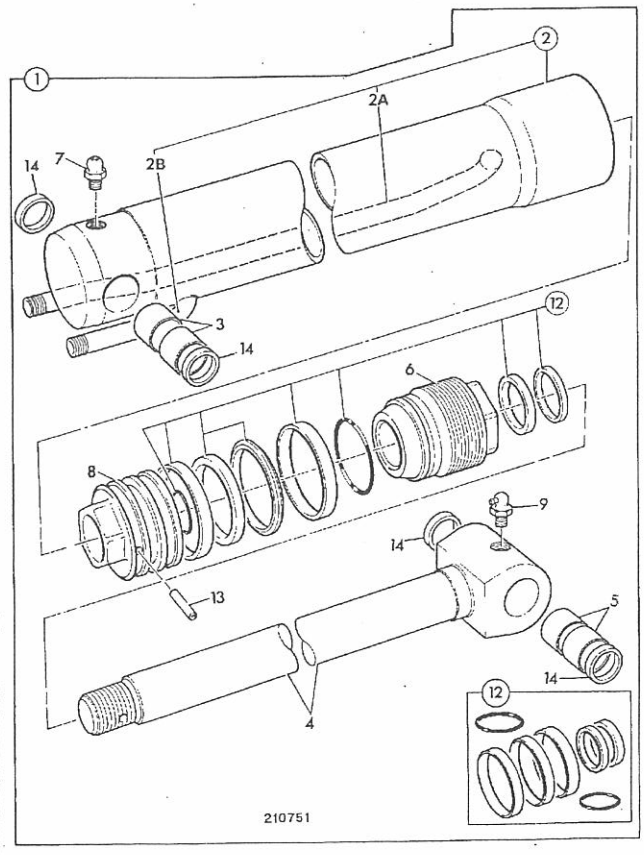

ITEM	PART NO	CHANGE NO	DESCRIPTION	REMARKS	USAGE CODE	QTY
1	557/60061	Superseded	Ram, assembly, bucket, mono dipper			1
	557/60156		Ram, assembly bucket, 90 X 60	see E4-7-2 for breakdown		1
2	557/70031		:Cylinder, bucket ram, 90mm			1
2A	NSP		::None serviced part			1
2B	NSP		::None serviced part			1
3	809/00125		:Bearing, liner, 45mm pivot bore			2
4	590/40317		:Rod, piston 60mm			1
5	809/00128		:Bearing, liner, 45mm pivot bore			2
6	594/14053		:Cap, end, 60mm rod x 90mm cyl			1
7	1450/0001		:Nipple, grease, straight, 1/8 BSP			1
8	595/10061		:Head, piston			1
9	1450/1001		:Nipple, grease, 90deg. angle			1
12	991/00147		:Kit-seal, 90mm cyl x 60mm rod, metric rams			1
13	826/01179		:Dowel			1
14	813/00425		:Seal, pivot pin grease			4

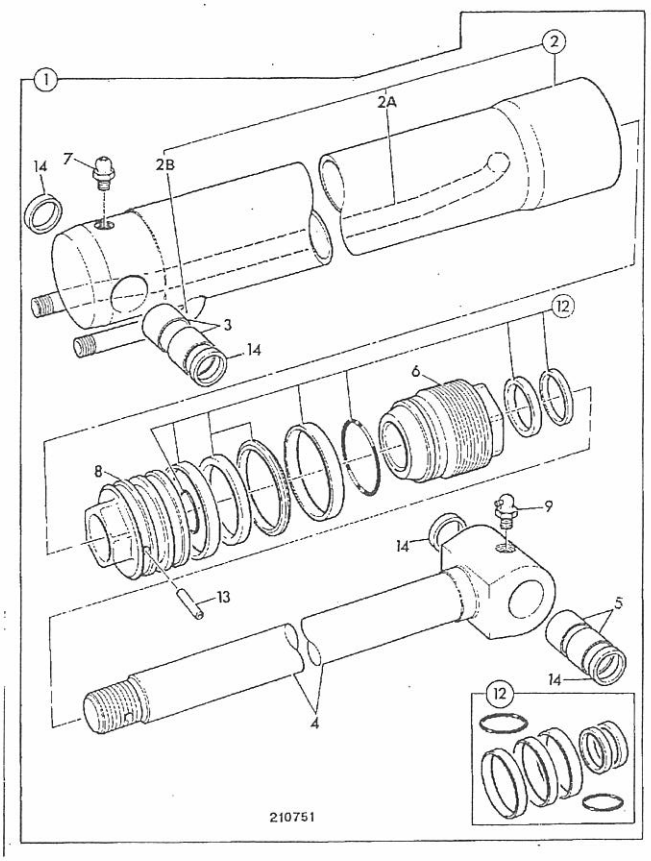

ITEM	PART NO	CHANGE NO	DESCRIPTION	REMARKS	USAGE CODE	QTY
1	557/60156		Ram, assembly bucket, 90 X 60			1
2	557/70137		:Cylinder, bucket ram, 90mm			1
2A	NSP		::None serviced part			
2B	NSP		::None serviced part			1
3	809/00125		:Bearing, liner, 45mm pivot bore			
4	590/40317		:Rod, piston 60mm			
5	809/00128		:Bearing, liner, 45mm pivot bore			
6	594/14287		:Cap, end, 60mm rod, x 90mm cylinder			
7	1450/0001		:Nipple, grease, straight, 1/8 BSP			
8	595/10061		:Head, piston			
9	1450/1001		:Nipple, grease, 90deg. angle			
12	991/00147		:Kit-seal, 90mm cyl x 60mm rod, metric rams			
13	826/01179		:Dowel			
14	813/00425		:Seal, pivot pin grease			4

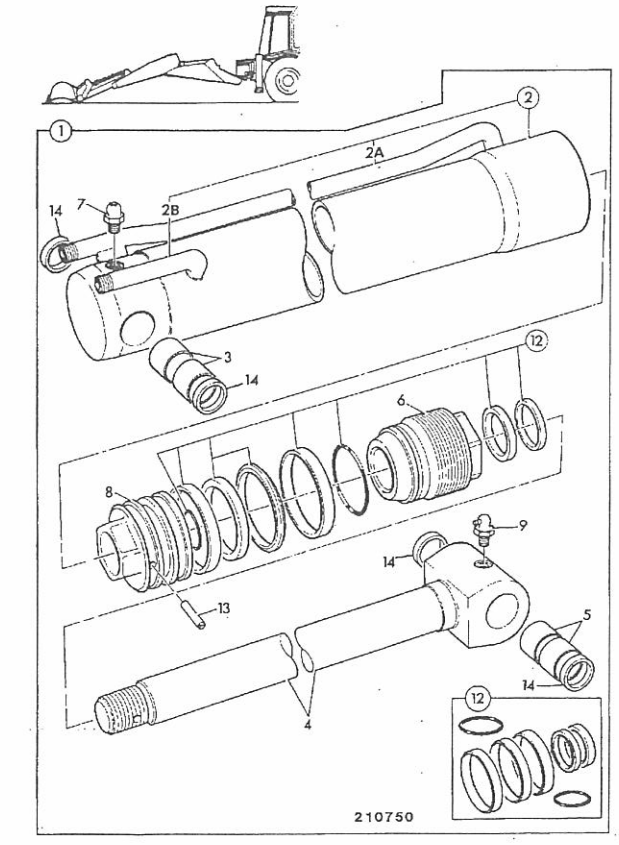

ITEM	PART NO	CHANGE NO	DESCRIPTION	REMARKS	USAGE CODE	QTY
1	557/60060	Superseded	Ram, assembly, bucket			1
	557/60154		Ram, assembly bucket, 90 X 60	see E4-7-32 for breakdown		1
2	557/70030		:Cylinder, bucket ram, 90mm			1
2A	NSP		::None serviced part			1
2B	NSP		::None serviced part			1
3	809/00125		:Bearing, liner, 45mm pivot bore			2
4	590/40317		:Rod, piston 60mm			1
5	809/00128		:Bearing, liner, 45mm pivot bore			2
6	594/14053		:Cap, end, 60mm rod x 90mm cyl			1
7	1450/0001		:Nipple, grease, straight, 1/8 BSP			1
8	595/10061		:Head, piston			1
9	1450/1001		:Nipple, grease, 90deg. angle			1
12	991/00147		:Kit-seal, 90mm cyl x 60mm rod, metric rams			1
13	826/01179		:Dowel			1
14	813/00425		:Seal, pivot pin grease			4

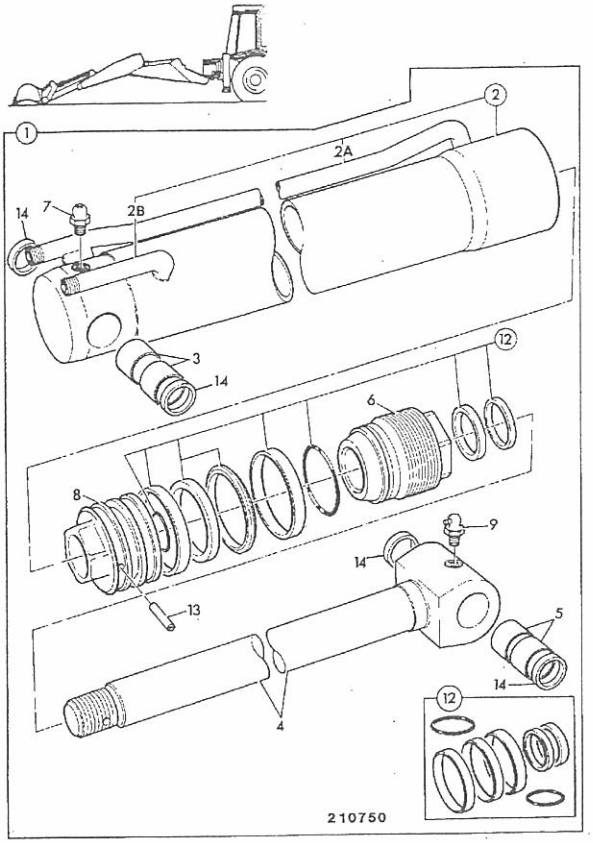

ITEM	PART NO	CHANGE NO	DESCRIPTION	REMARKS	USAGE CODE	QTY
1	557/60154		Ram, assembly bucket, 90 X 60			1
2	557/70136		:Cylinder, bucket ram, 90mm			1
2A	NSP		::None serviced part			1
2B	NSP		::None serviced part			1
3	809/00125		:Bearing, liner, 45mm pivot bore			2
4	590/40317		:Rod, piston 60mm			1
5	809/00128		:Bearing, liner, 45mm pivot bore			2
6	594/14287		:Cap, end, 60mm rod, x 90mm cylinder			1
7	1450/0001		:Nipple, grease, straight, 1/8 BSP			1
8	595/10061		:Head, piston			1
9	1450/1001		:Nipple, grease, 90deg. angle			1
12	991/00147		:Kit-seal, 90mm cyl x 60mm rod, metric rams			1
13	826/01179		:Dowel			1
14	813/00425		:Seal, pivot pin grease			4

9812/0020U

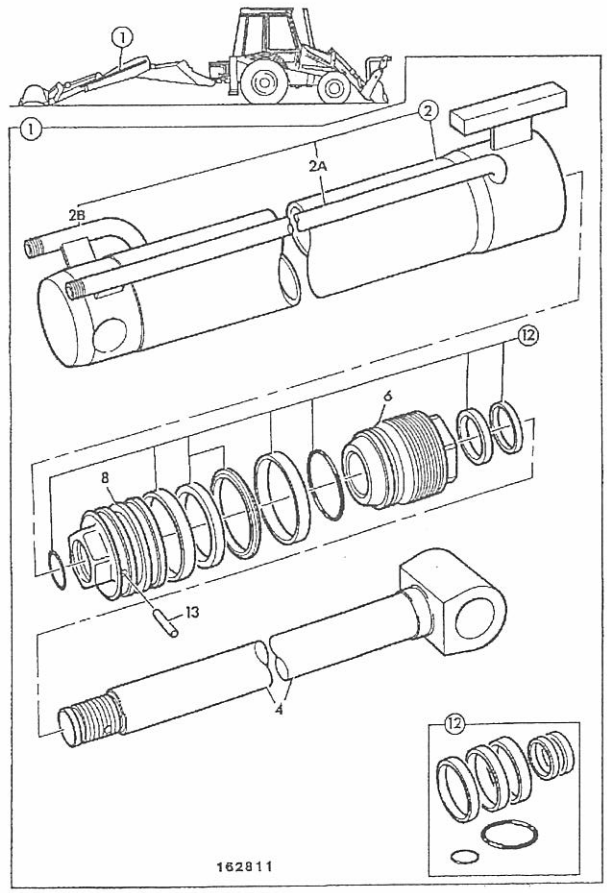

ITEM	PART NO	CHANGE NO	DESCRIPTION	REMARKS	USAGE CODE	QTY
1	556/60259		Ram, extension, extradig dipper			1
2	556/70258		Cylinder, extension, extradig dipper			1
2A	NSP		::None serviced part			1
2B	NSP		::None serviced part			1
4	590/40118		:Rod, piston, 45mm pivot hole			1
6	594/14130		:Cap, end assembly			1
8	595/10027		:Head, piston			1
12	991/00100		:Kit-seal, 70x40			1
13	826/01182		:Dowel			1

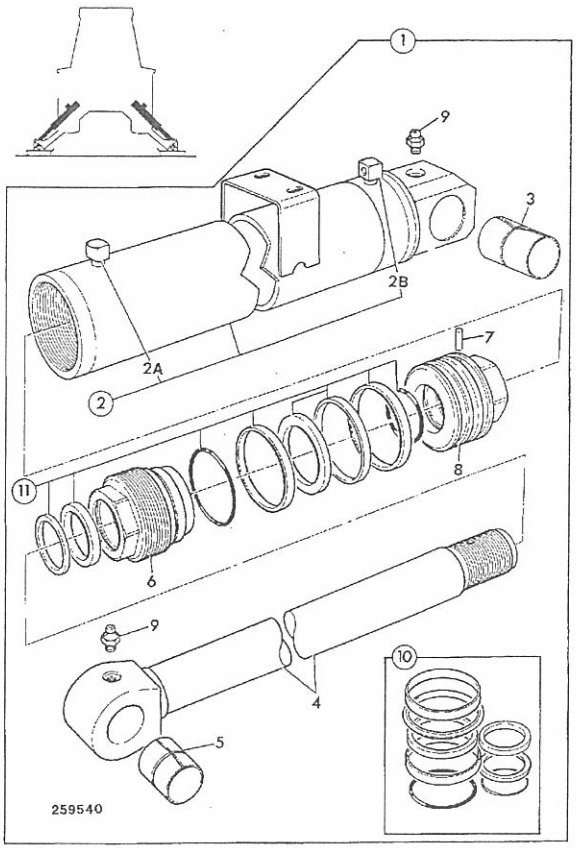

ITEM	PART NO	CHANGE NO	DESCRIPTION	REMARKS	USAGE CODE	QT
1	557/60073		Ram, stabiliser c. mount, 90 X 50	Standard		
	128/10902		Ram, stabiliser, sunbelt green	Sunbelt green		A
2	557/70072		:Cylinder, stabiliser, centremount			
2A	NSP		::None serviced part			
2B	NSP		::None serviced part			
3	809/10076		:Bush, 50 x 56 x 98 long			1
4	590/40259		:Rod, stabililser, 50mm x 782			
5	1208/0015		:Bush			
6	594/14020		:Kit-end cap, 50mm rod x 90mm cyl			
7	826/01179		:Dowel			
8	595/10037		:Head, piston			1
9	1450/0001		:Nipple, grease, straight, 1/8 BSP			2
10	991/00103		:Kit-seal, 50mm rod x 90mm cyl	Seal kit components see E4-13-13		1

9812/0020U

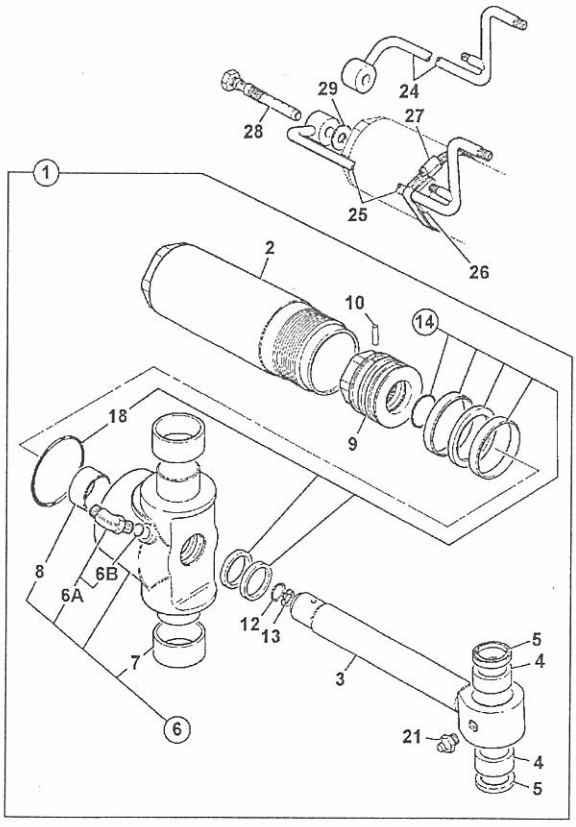

736000

ITEM	PART NO	CHANGE NO	DESCRIPTION	REMARKS	USAGE CODE	QT
1	557/60127		Ram, slew	item 6A screws into item 6		
	128/14671		Ram, slew, sunbelt green	Sunbelt green		A/
2	559/70018		:Cylinder, assembly			1
3	590/40253		:Rod, piston, 50mm. slew ram			1
4	809/00177		::Bearing, 55x65x56			1
5	813/00460		::Seal, pivot pin, 55x65			
6	594/14274		:Kit, end cap	item 6A screws into item 6		
6A	816/90676		::Adapter, 90deg elbow, 9/16 SAE x G1/4			
6B	2401/0505		:::O Ring			
7	809/00137		::Bearing			2
8	NSP		::None serviced part			1
9	595/10037		:Head, piston			
10	826/01180		:Dowel			2
12	821/00462		:Clip			1
13	551/90107		:Plate, orifice			
14	991/00163		:Kit-seal, 50mm rod x 90mm cyl			2
18	2302/0336		::O Ring, 115 x 5			2
21	1450/0001		:Nipple, grease, straight, 1/8 BSP			1
24	335/00771		Pipe, left hand slew, centremount			1
25	335/00772		Pipe, right hand slew, centremount			1
26	821/10425		Clamp, pipe support			2

9812/0020U

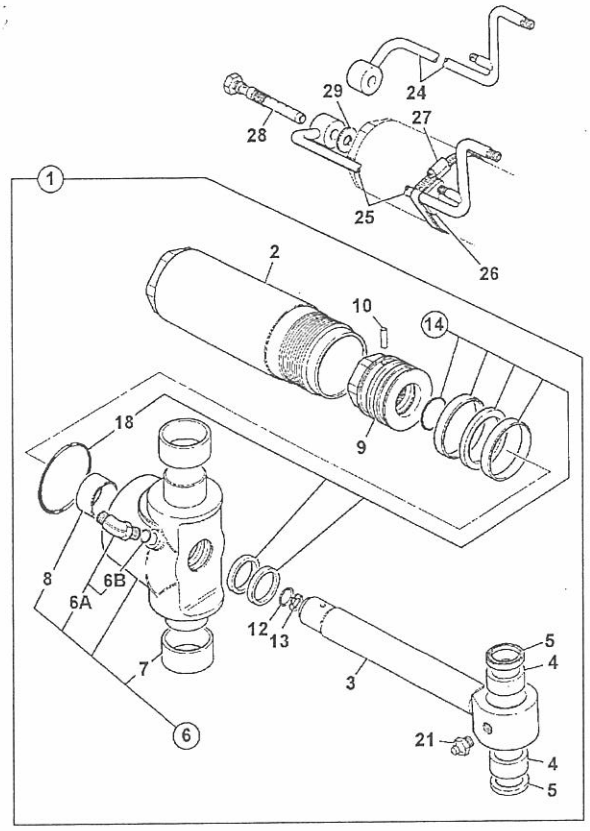

736000

ITEM	PART NO	CHANGE NO	DESCRIPTION	REMARKS	USAGE CODE	QTY
27	2201/0017		Clip, worm drive			2
28	559/90066		Restrictor, banjo bolt			2
29	1406/0015		Washer, seal			4

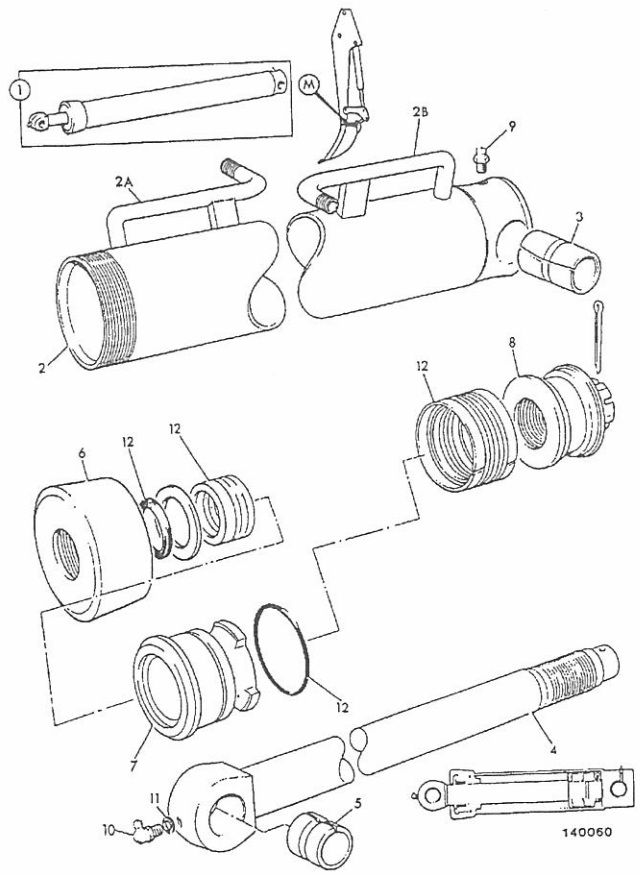

140060

ITEM	PART NO	CHANGE NO	DESCRIPTION	REMARKS	USAGE CODE	QTY
1	560/34300		Ram, Bucket jaw		M	1
2	560/34400		:Cylinder			1
2A	658/00567		::Pipe			1
2B	658/00567		::Pipe			1
3	1208/0022		:Bush			1
4	560/29000		:Rod, piston			1
5	1208/0015		:Bush			1
6	560/19903		:Cap, end			1
7	560/19902		:Gland, bearing			1
8	560/19901		:Nut, piston head			1
9	1450/0001		:Nipple, grease, straight, 1/8 BSP			1
10	1450/1002		:Nipple, grease, 1/4" BSP 90deg.			1
11	1403/0001		:Washer, aluminium			1
12	991/00003		:Kit-seal, ram, 2.0" rod x 4.00" cyl			1

F

- F1 AXLES, FRONT
- F2 AXLES, REAR
- F3 WHEELS, TYRES & PROPSHAFTS
- F5 TRANSMISSIONS SYNCROSHUTTLE

9812/0020L

F1-3-1 AXLE PIVOT PIN, & GREASING 2WS, 2WD/4WD

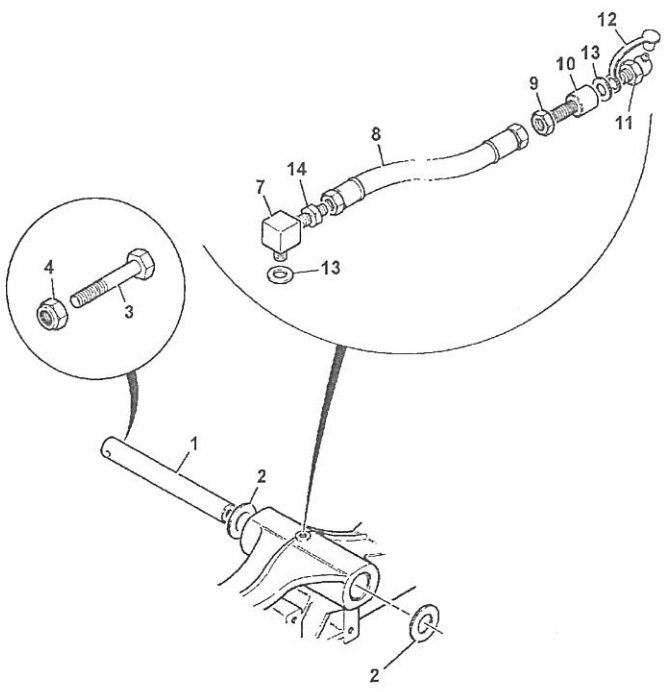

252792

ITEM	PART NO	CHANGE NO	DESCRIPTION	REMARKS	USAGE CODE	QTY
1	811/10091		Pin, axle pivot			1
2	819/00132		Spacer, 50mmx115mmx3.5mm			1
	819/00133		Spacer, 50mmx115mmx4.0mm			1
	819/00134		Spacer, 50mmx115mmx4.5mm			1
	819/00135		Spacer, 50mmx115mmx5.0mm			1
	819/00136		Spacer, 50mmx115mmx5.5mm			
	819/00137		Spacer, 50mmx115mmx6.0mm			
3	1315/3520Z		Bolt, M12 x 100mm			
4	1370/0403Z		Nut, M12			1
7	1609/0001		Adapter			1
8	649/50023	To MAR05	Hose			
	649/41900	Superseded	Hose			
	649/52077		Hose, 1/8BSPx490mm long			1
9	826/00871		Nut			1
10	816/20070	To MAR05	Adapter	To suit 16.3mm hole in chassis		
	816/20049		Adapter	To suit 10.5mm hole in chassis		1
11	1450/1007		Nipple, grease, 45 deg. angle			1
12	835/00017		Cap, grease nipple			1
13	.		'See Remark'	Not fitted		
14	.		'See Remark'	Not fitted		

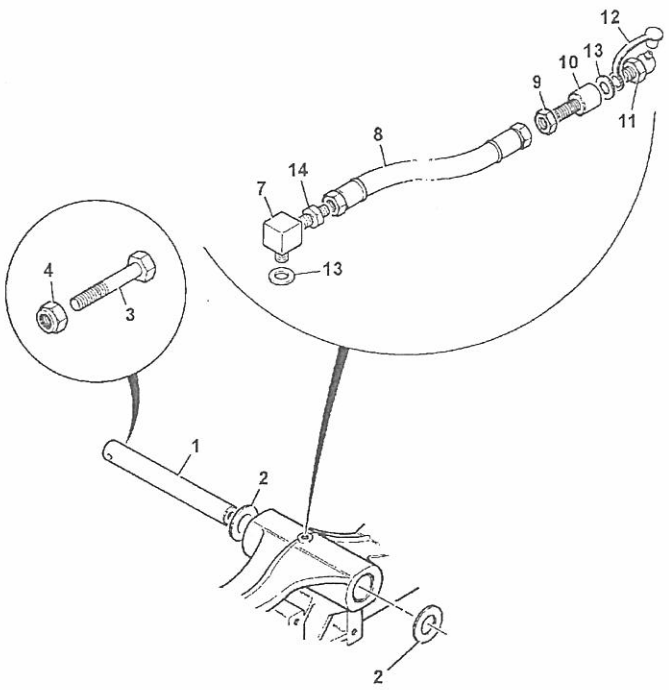

252792

ITEM	PART NO	CHANGE NO	DESCRIPTION	REMARKS	USAGE CODE	QTY
15	123/06223		Adhesive, washer			2

9812/0020U

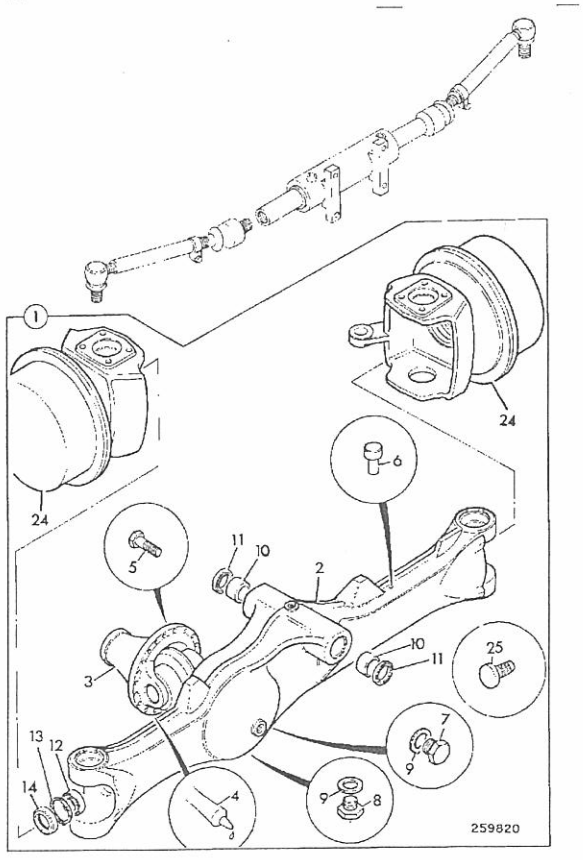

ITEM	PART NO	CHANGE NO	DESCRIPTION	REMARKS	USAGE CODE	QTY
1	448/57470		Axle, assembly pivot mount, 15.785:1 4wd			1
	448/57480		Axle, assy, pivot mount, 15.78:1 4wd	NLA use 448/57570		1
2	458/20744		:Casing, axle, SD55			1
3	.		:'See Remark'	Diff assembly see frame F1-6-30		1
4	4102/1204		:Sealant, multi-gasket			A/R
5	826/01434		:Bolt, verbus ripp, M10 x 35mm			12
6	448/56282		:Breather, spring type, M10 x 1.5 thread			1
7	816/80037		:Plug, filler			1
8	816/80012		:Plug, magnetic, 3/4"BSP			1
9	1406/0021		:Seal, bonded 3/4" BSP			2
10	829/00548		:Bush			2
11	813/00426		:Seal, pivot pin grease			2
12	907/08400		:Bearing			2
13	2203/1082		:Circlip			2
14	904/50040		:Seal			2
24	.		:'See Remark'	Wheel hubs see frame F1-6-10, F1-6-20		2
25	123/06718		Stop, lock, 45mm long	Use with 20" rims.		2

9812/0020U

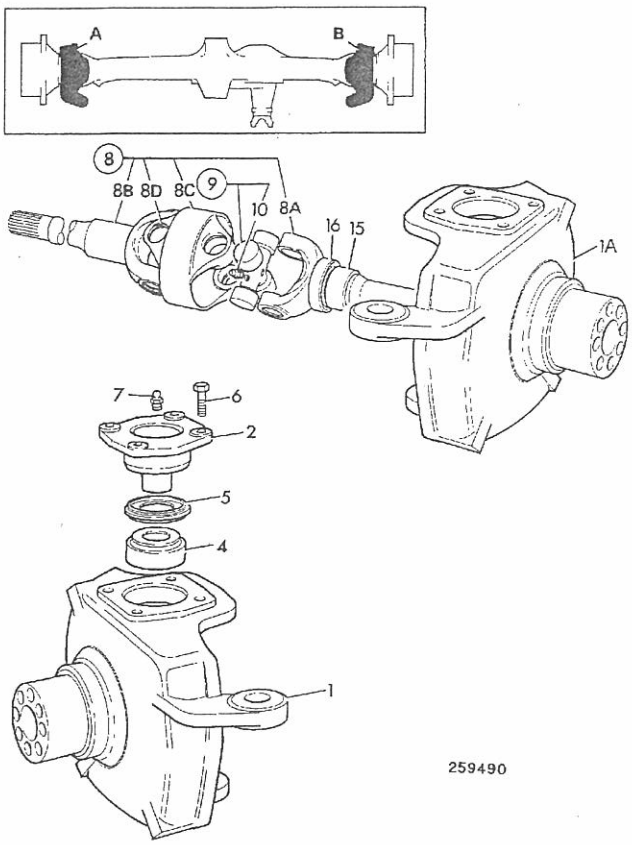

ITEM	PART NO	CHANGE NO	DESCRIPTION	REMARKS	USAGE CODE	QTY
1	458/20404		Joint, knuckle swivel, 3CX, LOCKSTOP		A	1
1A	458/20405		Joint, knuckle swivel, 3CX, LOCKSTOP		B	1
2	448/42402		Trunnion			2
4	907/08300		Bearing, taper roller			4
5	904/06700		Seal			2
6	1321/0509		Screw			16
7	816/60056		Nipple, grease	Self Tapping type		4
8	914/86200		Shaft, drive assembly, 1275mm long		A	1
	914/86300		Shaft, drive assembly, 825mm long		B	1
8A	914/86201		:Shaft, hub side		AB	1
8B	914/86204		:Shaft, axle side, 960.5mm long		A	1
	914/86301		:Shaft, axle side, 511.5mm long		B	1
8C	914/86203		:Spacer, central		AB	1
8D	914/83303		:Circlip		AB	2
9	914/86202		:Kit-spider		AB	2
15	917/50200		Bearing			2
16	904/50047		Seal			2

9812/0020L

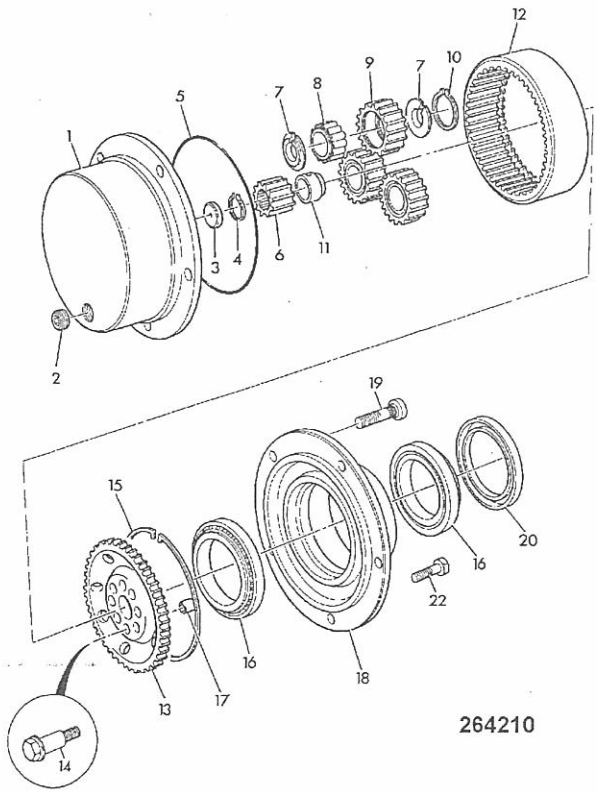

ITEM	PART NO	CHANGE NO	DESCRIPTION	REMARKS	USAGE CODE	QTY
1	450/12401		Carrier, planetary hub			2
2	826/00425		Plug, tapered, 3/4"-14PTF			2
3	450/10208		Pad, thrust			2
4	821/00216		Circlip, external			2
5	828/00196		O Ring			2
6	450/12403		Gear, sun			2
7	821/00209		Circlip			12
8	907/50200		Bearing, roller, double row			6
9	450/10206		Gear, planet			6
10	2203/0054		Circlip			6
11	921/50000		Spacer, 32mm long			2
12	450/10205		Gear, annulus ring			2
13	450/12702		Carrier, annulus			1
14	826/01060		Bolt, M14 x 70mm long			16
15	821/00210		Circlip, internal, square section			2
16	907/52200		Bearing			4
17	450/12703		Dowel, hollow			16
18	450/10221		Hub, without studs, 5 stud			2
19	826/00923		Stud, wheel			10
20	904/50033		Seal, oil, 127 x 160 x 15.5-17			2
22	1321/0407Z		Bolt, coated			4

9812/0020L

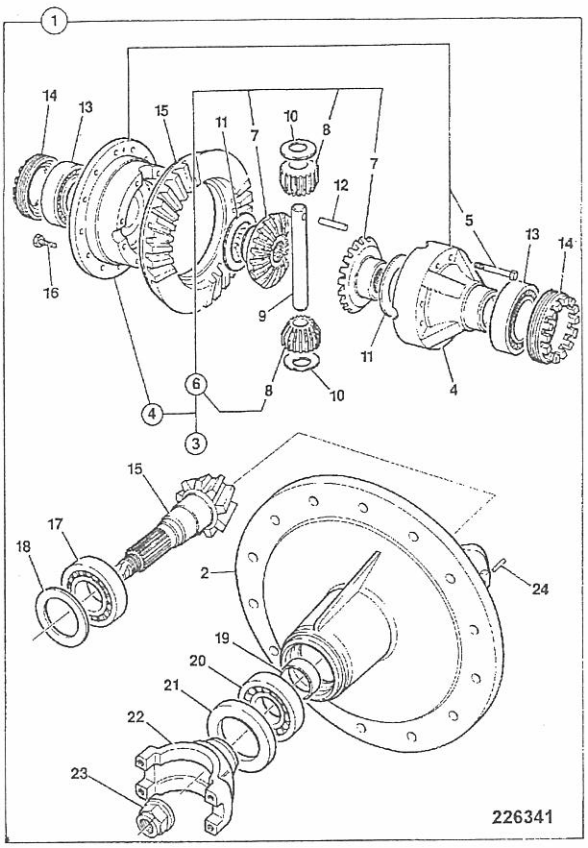

ITEM	PART NO	CHANGE NO	DESCRIPTION	REMARKS	USAGE CODE	QTY
1	458/10600		Differential, assembly, 2.923:1 ratio			1
2	448/15701		:Casting, drive head, yellow			1
3	448/36300		:Differential, assembly			1
4	448/23500		::Differential, case			1
5	826/01585		:::Bolt			8
6	448/36400		::Kit-gear, differential			1
7	NSP		:::None serviced part			2
8	NSP		:::None serviced part			2
9	448/05408		::Pin, trunnion			1
10	808/00210		::Washer, thrust, pinion			2
11	808/00209		::Washer, thrust, side gear			2
12	2102/0816		::Pin, tension			1
13	907/09200		:Bearing			2
14	448/05405		:Nut, adjusting			2
15	458/70189		:Kit-gear, crownwheel & pinion, 38/13T			1pr
16	826/01084		:Bolt, Verbus ripp, M10 x 25mm long			12
17	907/09000		:Bearing			1
18	921/01900		:Kit-shim			A/R
19	921/53300		:Spacer			1
20	907/09100		:Bearing			1
21	904/50023		:Seal			1
22	450/27200		:Yoke			1
23	826/01483		:Nut, stake and washer, M24			1

9812/0020U

F1-6-30 DIFFERENTIAL, 2WS 4WD STEER AXLE, 15.785:1 RATIO 448/57470 & 448/57480 ISSUE 1

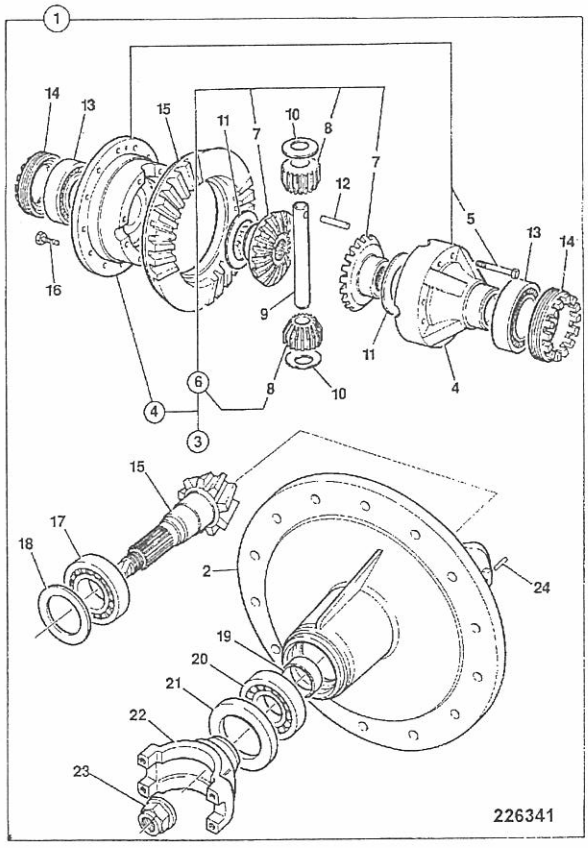

ITEM	PART NO	CHANGE NO	DESCRIPTION	REMARKS	USAGE CODE	QTY
24	826/00818		:Pin, tension			2

9812/0020U

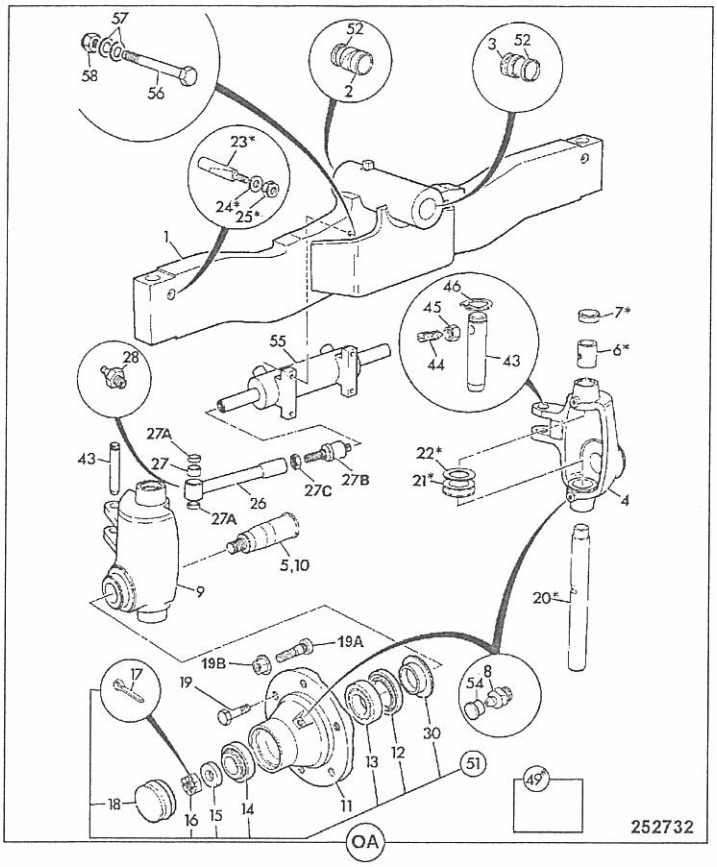

ITEM	PART NO	CHANGE NO	DESCRIPTION	REMARKS	USAGE CODE	QTY
0A	128/12482		Axle, assembly,2WS 2WD			1
	128/12601		Axle, assembly,2WS 2WD	NLA use 128/12482		1
1	125/89700		:Beam, 2wd axle			1
2	829/00548		:Bush			4
3	829/00548		:Bush			4
4	123/05460		:Carrier, left hand			1
5	120/30003		:Axle, stub			
6	808/00176		::Bush			4
7	904/07100		::Seal			4
8	816/60056		:Nipple, grease			
9	123/05461		:Carrier, right hand			1
10	120/30003		:Axle, stub			1
11	458/20501		:Hub, wheel			1
12	904/06200		::Seal, oil			2
13	907/04100		::Bearing			2
14	907/05700		::Bearing			1
15	458/20541		::Washer, thrust, slab axle			2
16	1340/0905Z		::Nut			1
17	2103/1112		::Pin, split			1
18	120/30009		::Cap, grease			1
19A	826/00923		Stud, wheel			12
19B	826/01008		Nut, wheel			12
20	120/30001		::Pin, king			2
21	907/05800		::Bearing, thrust			2
22	921/00807		::Shim, 0.5			A/R
	921/00801		::Shim, 0.6			A/R

9812/0020L

F1-10-1 AXLE ASSEMBLY, 2WS 2WD STEER AXLE ISSUE

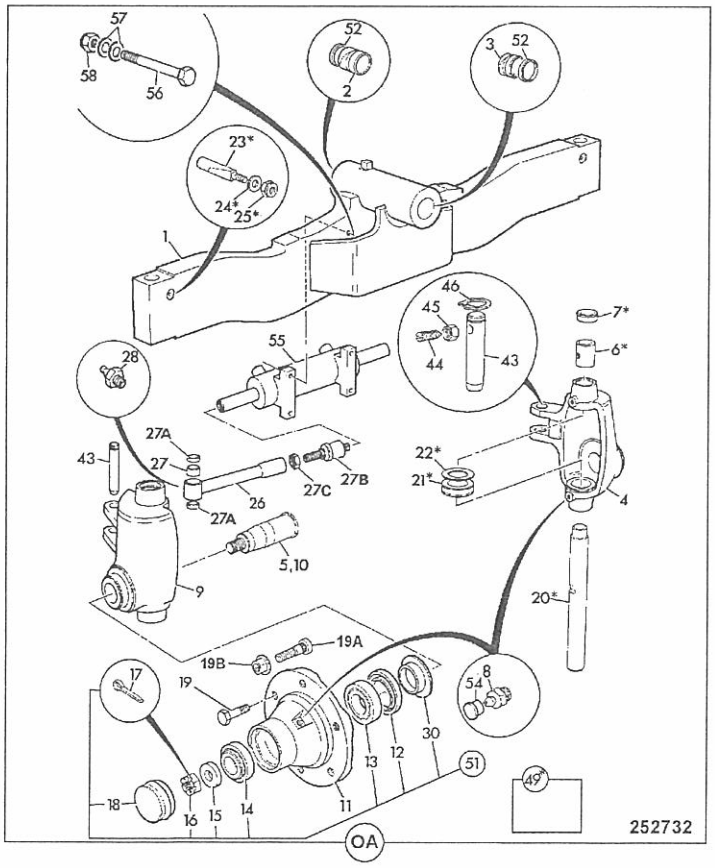

ITEM	PART NO	CHANGE NO	DESCRIPTION	REMARKS	USAGE CODE	QTY
	921/00802		::Shim, 0.7			A/R
	921/00803		::Shim, 0.8			A/R
	921/00804		::Shim, 0.9			A/R
	921/00805		::Shim, 1.0			A/R
23	120/30002		::Pin, cotter			2
24	1420/0008Z		::Washer, Plain M10			2
25	1370/0303Z		::Nut, lock, M10			2
26	331/14862		:Link, steer arm			2
27	808/00253		:Bush, 33mm long, 30mm OD X 25mm ID			2
27A	904/09300		:Seal, oil			4
27B	331/14861		:Joint, ball, track rod			2
27C	458/80026		:Nut, lock nut			2
28	1450/0001		:Nipple, grease, straight, 1/8 BSP			2
30	904/06201		::Sleeve			2
43	811/70012		:Pin, pivot	Track rod		2
44	1390/0408		:Screw			4
45	1370/0301Z		:Nut			4
46	2203/0035		:Circlip			4
49	990/99600		:Kit-king pin	Includes items 6,7, 20 to 25		1
51	993/03300		:Kit-bearing, wheel			2
52	813/00426		:Seal, pivot pin grease			2
54	835/00017		:Cap, grease nipple			2
55	.		:'See Remark'	Steer ram see frame E4		1
56	1315/3721Z		:Bolt			4

9812/0020U

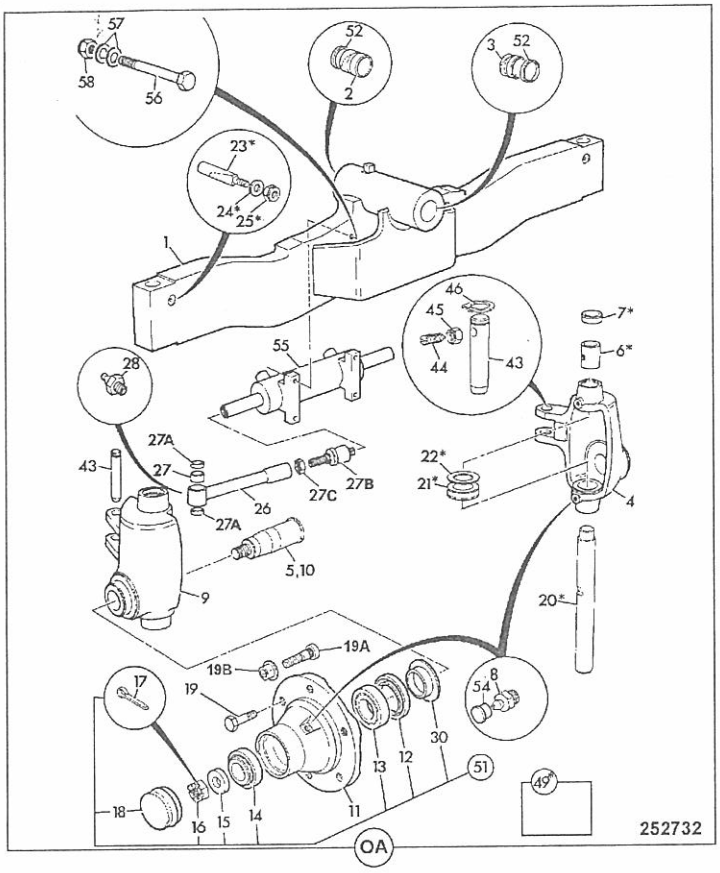

ITEM	PART NO	CHANGE NO	DESCRIPTION	REMARKS	USAGE CODE	QTY
57	1420/0011Z		:Washer, M16 plain			4
58	1370/0603Z		:Nut, M16			4

F

- F1 AXLES, FRONT
- ● F2 AXLES, REAR
- F3 WHEELS, TYRES & PROPSHAFTS
- F5 TRANSMISSIONS SYNCROSHUTTLE

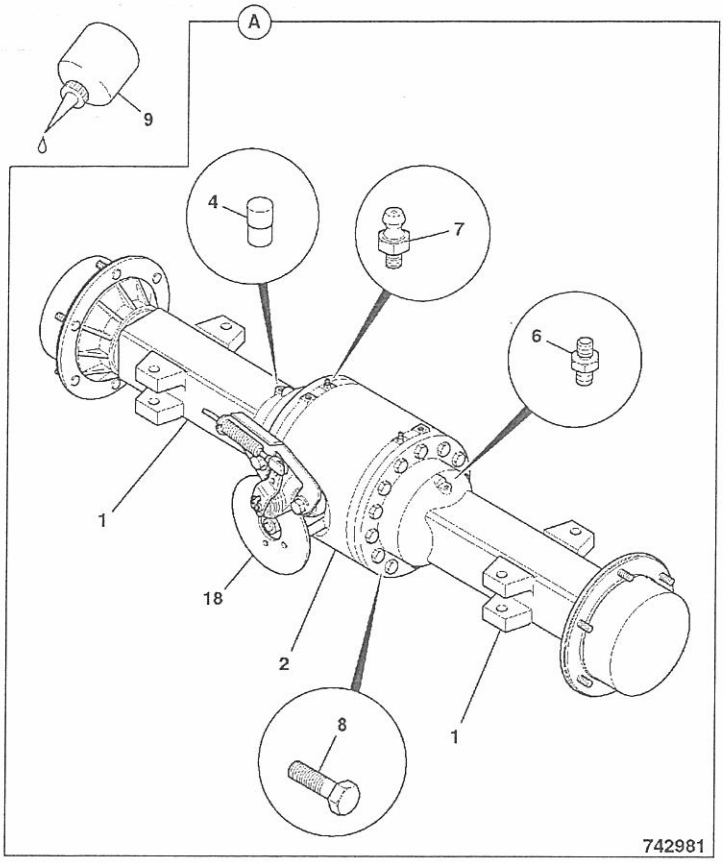

ITEM	PART NO	CHANGE NO	DESCRIPTION	REMARKS	USAGE CODE	QTY
0A	450/44800		Axle, assy, PD70 pad mount, 15.78:1			1
1	458/10978		:Arm, axle arm and hub, assembly			2
2	458/10951	To A/44800/2	:Differential, assy. PD70 pad mount, 2.923:1	see index F2 for breakdown		1
	458/11213	A/44800/3 on	:Drivehead, assembly, pad mount, 2.923:1	see index F2 for breakdown		1
4	450/13302		:Plug, breather			1
6	458/20611		:Adapter			1
7	816/60040		:Nipple, bleed			1
8	1321/3716		:Bolt, M16x70L			2
9	4102/1212		:Gasket, Multigasket			A/R
18	.		'See Remark'	See index section G1 & F2		1

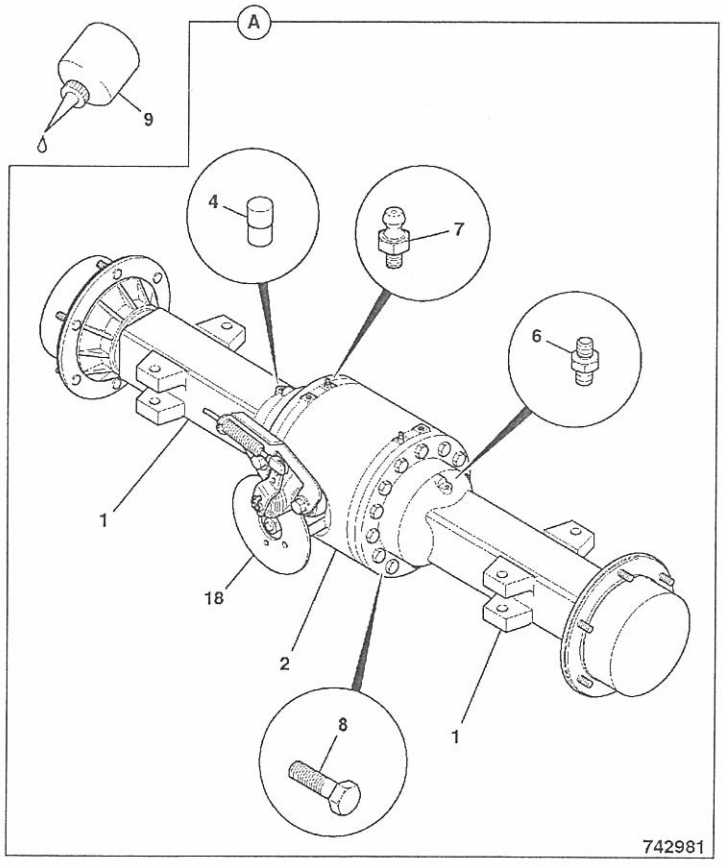

ITEM	PART NO	CHANGE NO	DESCRIPTION	REMARKS	USAGE CODE	QTY
0A	450/44810		Axle, assy, PD70 pad mount, 15.78:1	NLA use 450/44800		1
1	458/10979		:Arm, axle arm and hub, assembly			2
2	458/10951	To A/44810/2	:Differential, assy. PD70 pad mount, 2.923:1	see index F2 for breakdown		1
	458/11213	A/44810/3 on	:Drivehead, assembly, pad mount, 2.923:1	see index F2 for breakdown		1
4	450/13302		:Plug, breather			1
6	458/20611		:Adapter			1
7	816/60040		:Nipple, bleed			2
8	1321/3716		:Bolt, M16x70L			2
9	4102/1212		:Gasket, Multigasket			A/R
18	.		'See Remark'	See index section G1 & F2		1

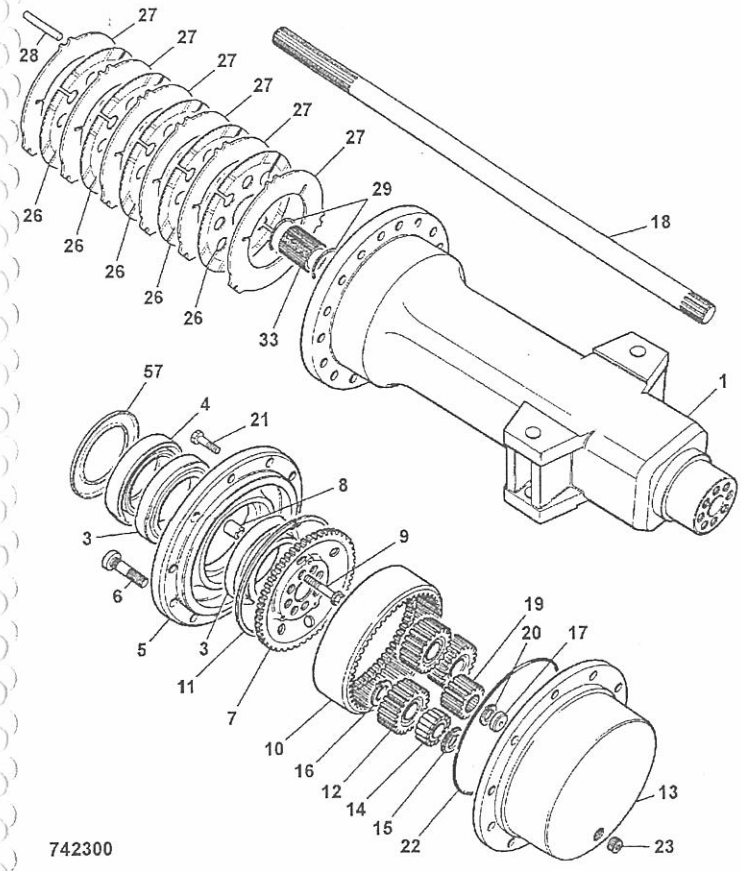

ITEM	PART NO	CHANGE NO	DESCRIPTION	REMARKS	USAGE CODE	QTY
0A	458/10978		Arm, axle arm and hub, assembly			2
1	458/20618		:Casing, axle arm, pad thickness 139mm			1
3	907/20043		:Bearing, taper roller			2
4	904/50033		:Seal, oil, 127 x 160 x 15. 5-17			1
5	458/20446		:Carrier, wheel bearing, 5 stud			1
6	826/00923		:Stud, wheel			5
7	450/12702		:Carrier, annulus			1
8	450/12703		:Dowel, hollow			8
9	826/01060		:Bolt, M14 x 70mm long			8
10	450/10205		:Gear, annulus ring			1
11	821/00210		:Circlip, internal, square section			1
12	450/10206		:Gear, planet			3
13	450/10216		:Carrier, planetary hub, 5 stud yellow			1
14	907/50200		:Bearing, roller, double row			3
15	821/00209		:Circlip			6
16	2203/0054		:Circlip			3
17	450/10208		:Pad, thrust			1
18	914/60102		:Shaft, rigid driveshaft, Without shot peening			1
19	450/12403		:Gear, sun			1
20	821/00494		:Circlip, External			1
21	1321/0407Z		:Bolt, coated			2
22	828/00196		:O Ring			1

F2-2-1 458/10978, AXLE ARM & HUB ASSY, 2WS+SS ISSUE 1

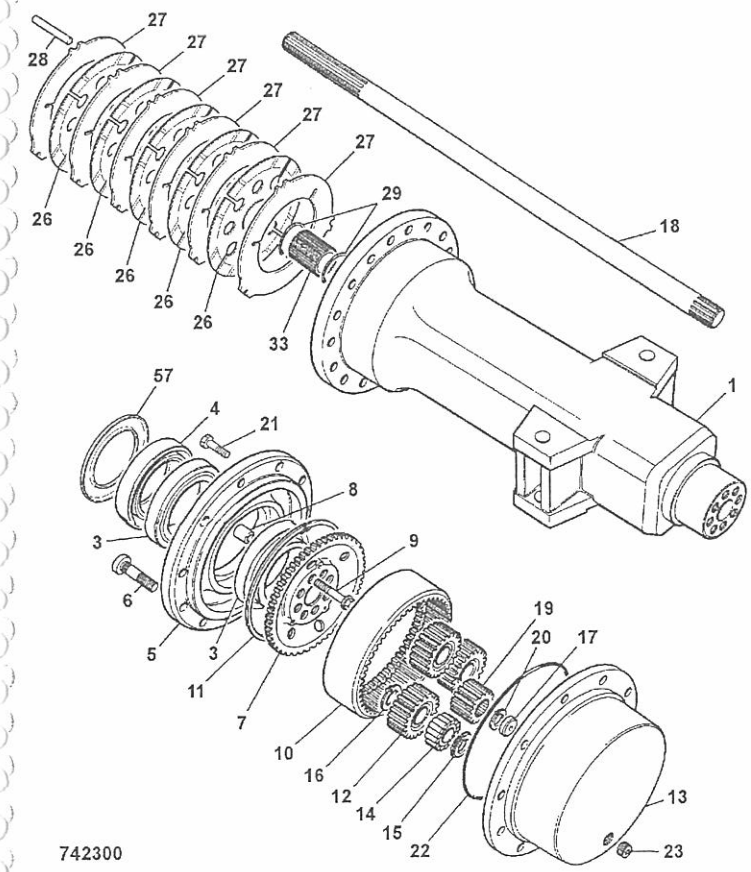

ITEM	PART NO	CHANGE NO	DESCRIPTION	REMARKS	USAGE CODE	QTY
23	826/00425		:Plug, tapered, 3/4"-14PTF			1
26	458/20353		:Plate, brake friction			5
27	458/20285		:Plate, brake counter			6
28	450/10213		:Pin, reaction			3
29	2203/0071		:Circlip, external			2
33	450/10215		:Carrier, brake plate			1
57	458/20403		:Cover, plate, hub seal			1

9812/0020U

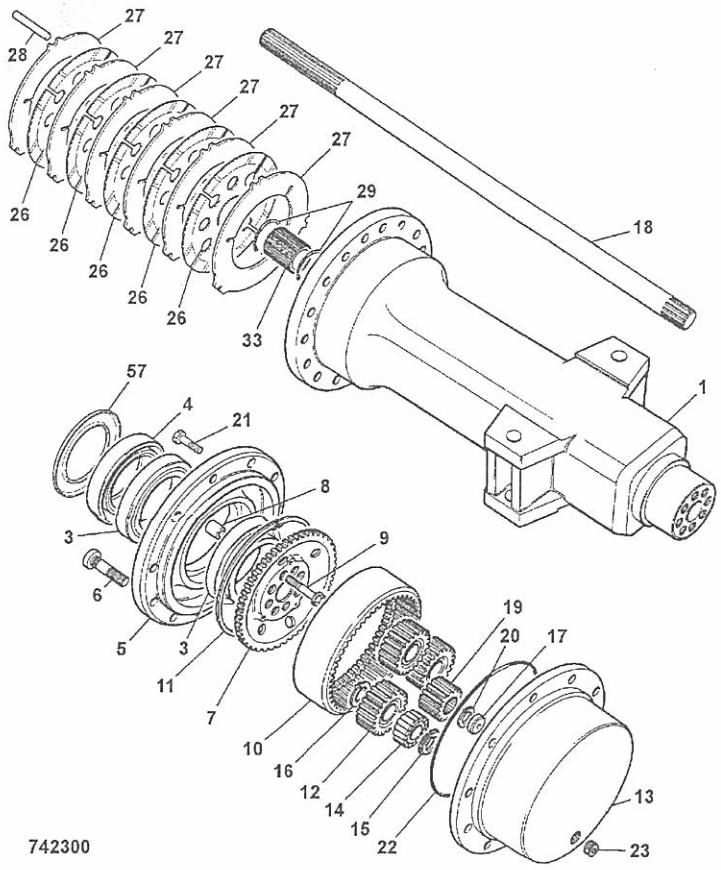

ITEM	PART NO	CHANGE NO	DESCRIPTION	REMARKS	USAGE CODE	QTY
0A	458/10979		Arm, axle arm and hub, assembly			2
1	458/20618		:Casing, axle arm, pad thickness 139mm			1
3	907/20043		:Bearing, taper roller			2
4	904/50033		:Seal, oil, 127 x 160 x 15. 5-17			1
5	458/20446		:Carrier, wheel bearing, 5 stud			1
6	826/00923		:Stud, wheel			5
7	450/12702		:Carrier, annulus			1
8	450/12703		:Dowel, hollow			4
9	826/01060		:Bolt, M14 x 70mm long			8
10	450/10205		:Gear, annulus ring			1
11	821/00210		:Circlip, internal, square section			1
12	450/10206		:Gear, planet			3
13	448/56121		:Carrier, planetary hub, black			1
14	907/50200		:Bearing, roller, double row			3
15	821/00209		:Circlip			6
16	2203/0054		:Circlip			3
17	450/10208		:Pad, thrust			1
18	914/60102		:Shaft, rigid driveshaft, Without shot peening			1
19	450/12403		:Gear, sun			1
20	821/00494		:Circlip, External			1
21	1321/0407Z		:Bolt, coated			1
22	828/00196		:O Ring			1

F2-2-2 458/10979, AXLE ARM & HUB ASSY, 2WS+SS ISSUE 1

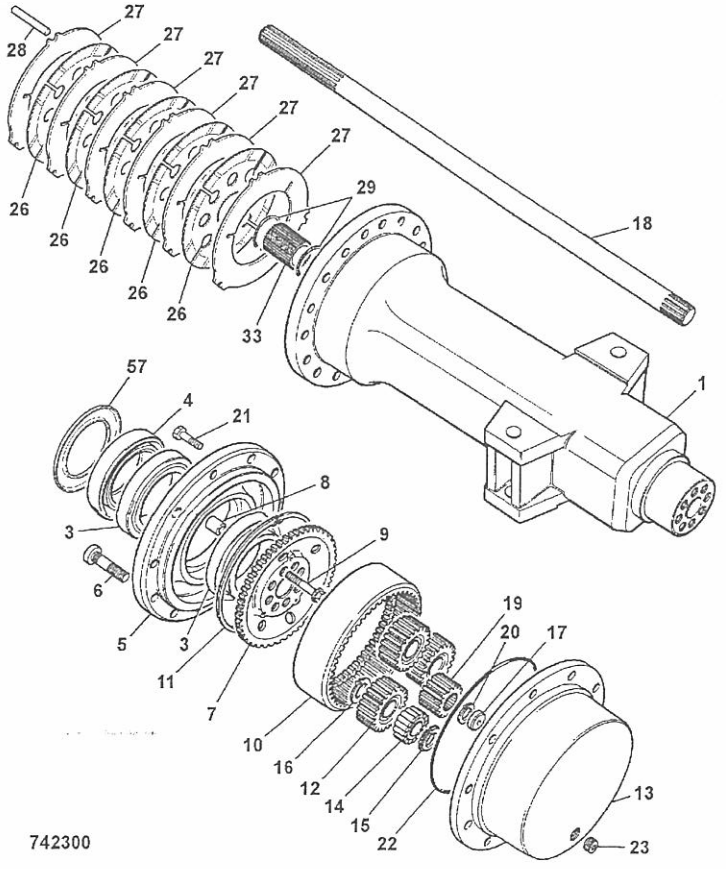

ITEM	PART NO	CHANGE NO	DESCRIPTION	REMARKS	USAGE CODE	QTY
23	826/00425		:Plug, tapered, 3/4"-14PTF			1
26	458/20353		:Plate, brake friction			5
27	458/20285		:Plate, brake counter			6
28	450/10213		:Pin, reaction			3
29	2203/0071		:Circlip, external			2
33	450/10215		:Carrier, brake plate			1
57	458/20403		:Cover, plate, hub seal			2

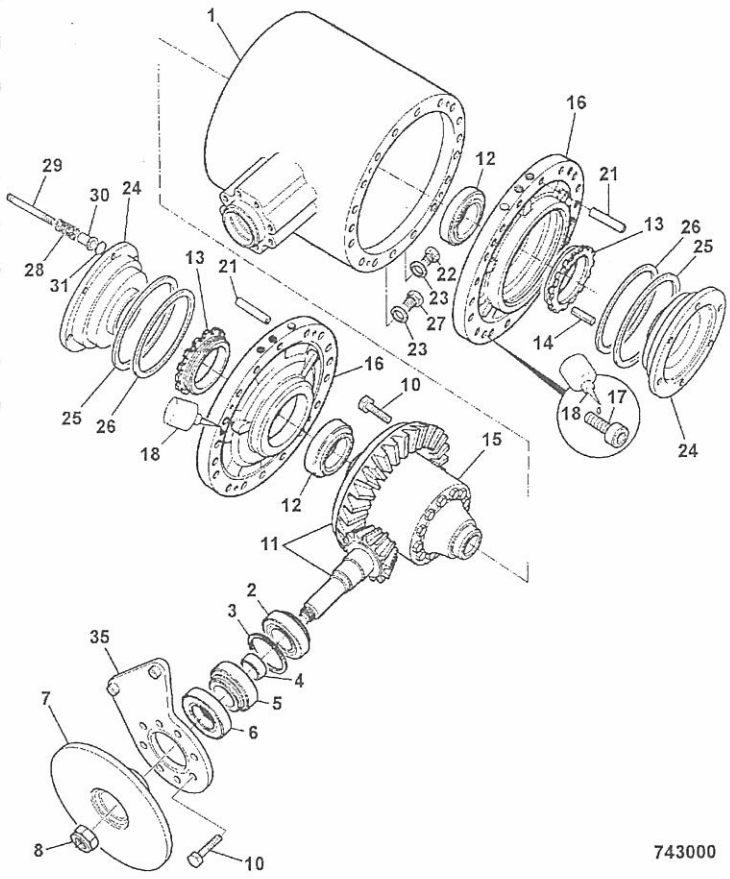

ITEM	PART NO	CHANGE NO	DESCRIPTION	REMARKS	USAGE CODE	QTY
0A	458/10951		Differential, assy. PD70 pad mount, 2.923:1			1
1	458/20418		:Casing, drivehead, rigid axle			1
2	907/09000		:Bearing			1
3	921/01900		:Kit-shim			1
4	921/53400		:Kit-Spacer			1
5	907/08300		:Bearing, taper roller			1
6	904/50023		:Seal			1
7	458/20693		:Disc, park brake			1
8	826/01744		:Nut, stake, M30			1
10	826/01080		:Bolt			20
11	458/20668	Superseded	:Gear, crown wheel & pinion, 13/38T			1
	458/70258		:Gear, Crown Wheel & Pinion, 13/38T			1
12	907/50100		:Bearing, taper roller			2
13	450/10403		:Nut, side differential			2
14	826/00818		:Pin, tension			2
15	450/26310		:Differential, LSD assembly, 3 working faces			1
16	458/20365		:Housing, Brake Piston, Controlled Back-Off			2
17	1392/3407		:Capscrew			8
18	4102/1212		Gasket, Multigasket			A/R
21	826/00919		:Dowel			4
22	816/80012		:Plug, magnetic, 3/4"BSP			1
23	1406/0021		:Seal, bonded 3/4" BSP			2
24	458/20371		:Piston, Brake			2

F2-3-10 458/10951, DRIVEHEAD ASSEMBLY, 2WS+SS ISSUE 1

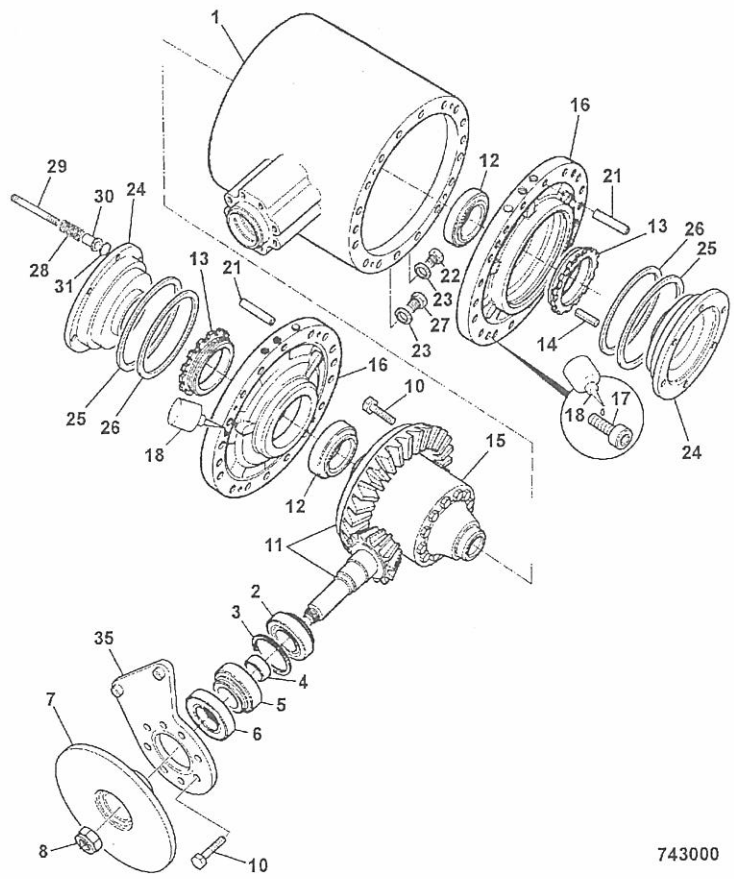

ITEM	PART NO	CHANGE NO	DESCRIPTION	REMARKS	USAGE CODE	QTY
25	813/50012		:Seal, brake piston			2
26	813/50026		:Seal, brake piston			2
27	816/80037		:Plug, filler			1
28	814/00365		:Spring, compression			6
29	450/18204		:Pin, brake back-off			6
30	448/16905		:Bush, tension, flanged - external			6
31	2203/1020		:Circlip			6
35	458/20511		:Bracket, caliper mount, axle			1

9812/0020U

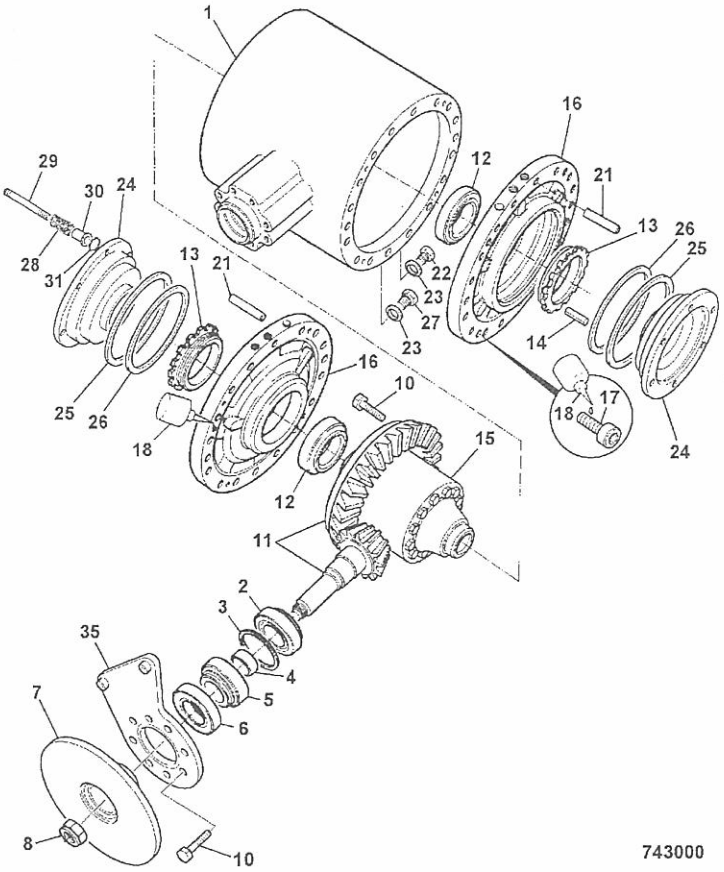

ITEM	PART NO	CHANGE NO	DESCRIPTION	REMARKS	USAGE CODE	QTY
0A	458/11213		Drivehead, assembly, pad mount, 2.923:1			1
1	458/20418		:Casing, drivehead, rigid axle			1
2	907/09000		:Bearing			1
3	921/01900		:Kit-shim			1
4	921/53400		:Kit-Spacer			1
5	907/08300		:Bearing, taper roller			1
6	904/50023		:Seal			1
7	458/20693		:Disc, park brake			1
8	826/01744		:Nut, stake, M30			1
10	826/01080		:Bolt			20
11	458/70249		:Gear, crownwheel/pinion RH, spiral, 13T/38T, M30			1
12	907/50100		:Bearing, taper roller			2
13	450/10403		:Nut, side differential			2
14	826/00818		:Pin, tension			2
15	450/26310		:Differential, LSD assembly, 3 working faces			1
16	458/20365		:Housing, Brake Piston, Controlled Back-Off			2
17	1392/3407		:Capscrew			8
18	4102/1212		Gasket, Multigasket			A/R
21	826/00919		:Dowel			4
22	816/80012		:Plug, magnetic, 3/4"BSP			1
23	1406/0021		:Seal, bonded 3/4" BSP			2
24	458/20371		:Piston, Brake			2
25	813/50012		:Seal, brake piston			2

F2-3-30 458/11213, DRIVEHEAD ASSEMBLY, 2WS+SS ISSUE

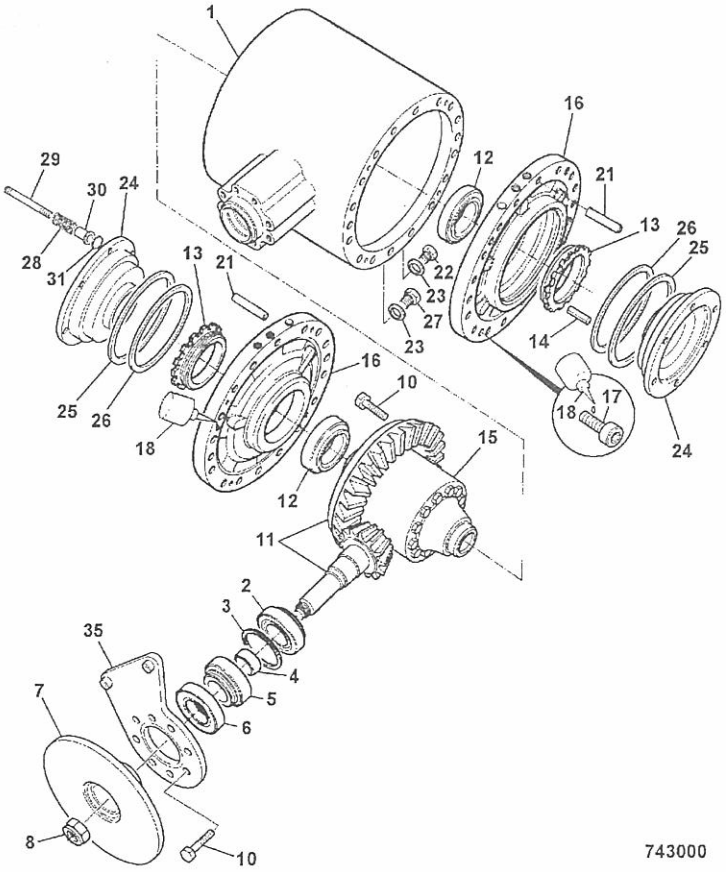

ITEM	PART NO	CHANGE NO	DESCRIPTION	REMARKS	USAGE CODE	QTY
26	813/50026		:Seal, brake piston			2
27	816/80037		:Plug, filler			1
28	814/00365		:Spring, compression			6
29	450/18204		:Pin, brake back-off			6
30	448/16905		:Bush, tension, flanged - external			6
31	2203/1020		:Circlip			6
35	458/20511		:Bracket, caliper mount, axle			1

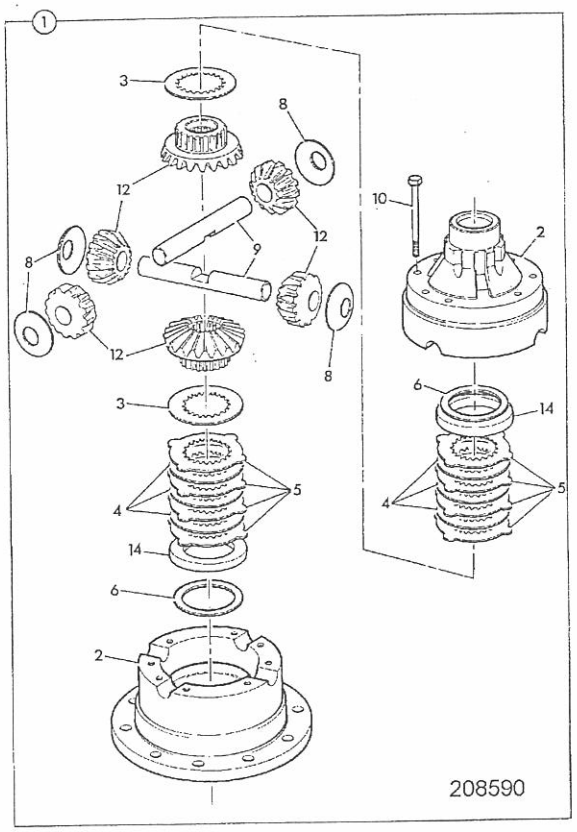

ITEM	PART NO	CHANGE NO	DESCRIPTION	REMARKS	USAGE CODE	QTY
1	450/26310		Differential, LSD assembly, 3 working faces			1
2	450/20500		:Casing, assembly, differential			1
3	450/20401		:Plate, pressure			2
4	450/20402		:Plate, friction			2
5	450/20403		:Plate, counter			4
6	921/52100		:Kit, shim			2
8	808/00210		:Washer, thrust, pinion			4
9	450/10903		:Pin, trunnion			2
10	1315/3418Z		:Bolt, M10x80			8
12	450/20600		:Gear, set, differential			1
14	450/26201		:Spacer			6

9812/0020U

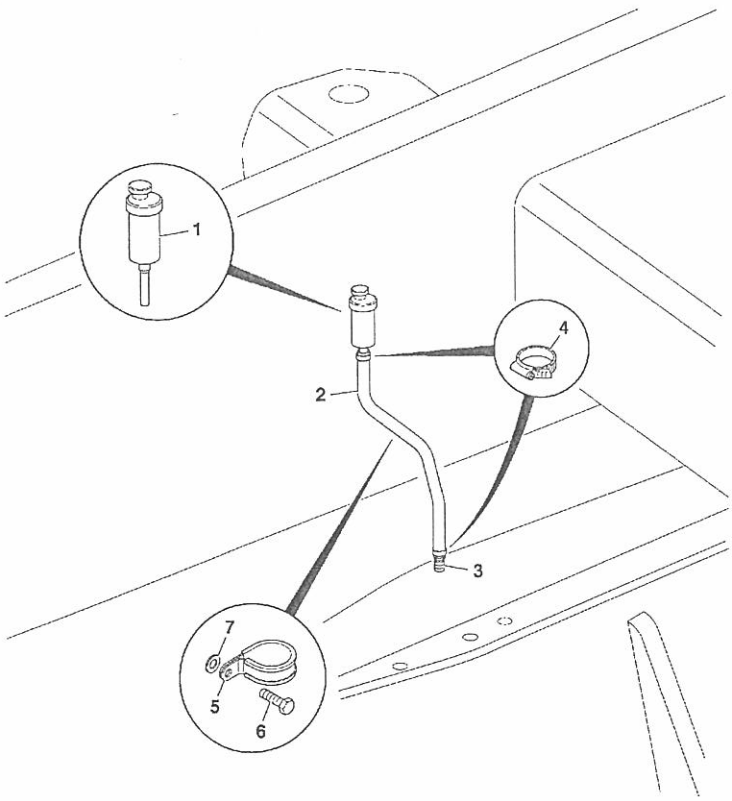

736092

ITEM	PART NO	CHANGE NO	DESCRIPTION	REMARKS	USAGE CODE	QTY
1	32/925678		Breather	Rear axle		1
2	648/03528		Hose	was 648/21309		1
3	458/20611		Adapter			1
4	821/00520		Clip	not used with 648/03528		2
5	826/01347		Tie, cable c/w mounting, 4.6mm x 190mm	pushes onto stud welded to chassis		1
6	.		'See Remark'	no longer fitted		1
7	.		'See Remark'	no longer fitted		1

F

F1 AXLES, FRONT
F2 AXLES, REAR
● F3 WHEELS, TYRES & PROPSHAFTS
F5 TRANSMISSIONS SYNCROSHUTTLE

F3-1-1 PROPSHAFT, TRANS. / FRONT AXLE, SYNCHOSHUTTLE TRANSMISSIONS

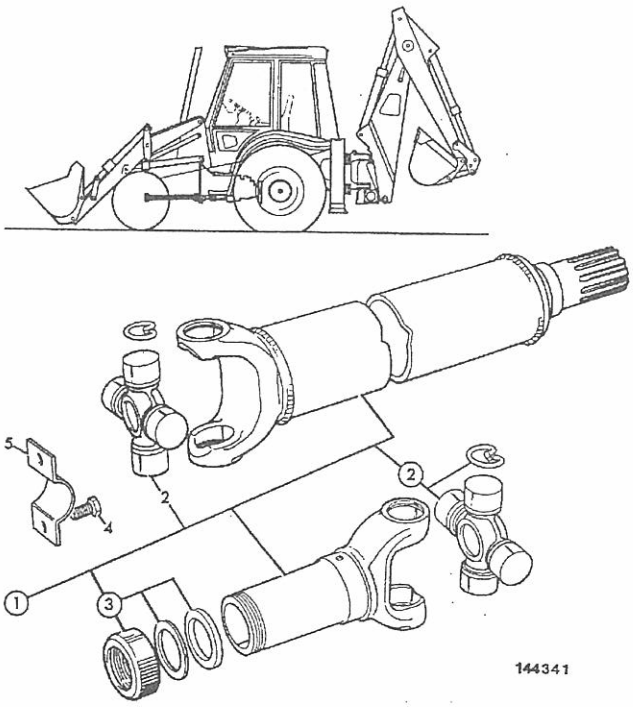

ITEM	PART NO	CHANGE NO	DESCRIPTION	REMARKS	USAGE CODE	QTY
1	914/60181		Propshaft, front			1
2	914/56401		:Kit-spider, 106.4 X 34.9 Dia			2
3	914/35403		:Kit-end cap			1
4	826/00892		Screw, special			4
5	116/00525		Strap			2

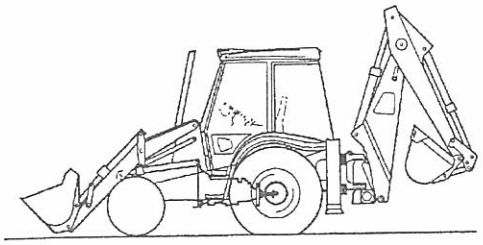

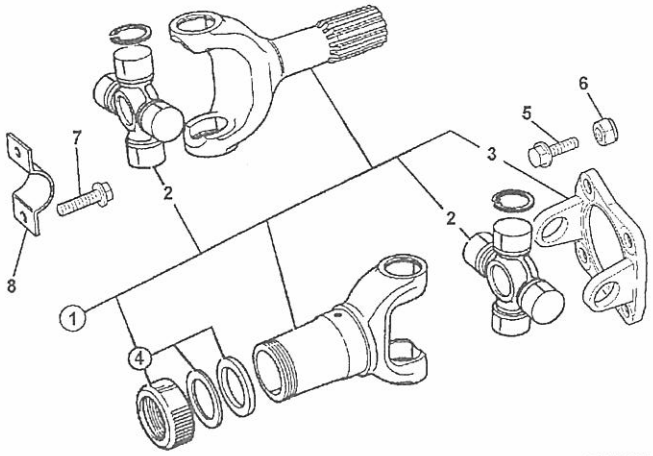

393081

ITEM	PART NO	CHANGE NO	DESCRIPTION	REMARKS	USAGE CODE	QTY
1	914/60265		Propshaft, rear			1
2	914/56401		:Kit-spider, 106.4 X 34.9 Dia			2
3	NSP		None serviced part			1
4	914/39702		:Cap, dust			1
5	1305/0410Z		Bolt, 1/2" x 1.1/2" long			4
6	1340/0403Z		Nut			4
7	826/00892		Screw, special			4
8	116/00525		Strap			2

9812/0020U

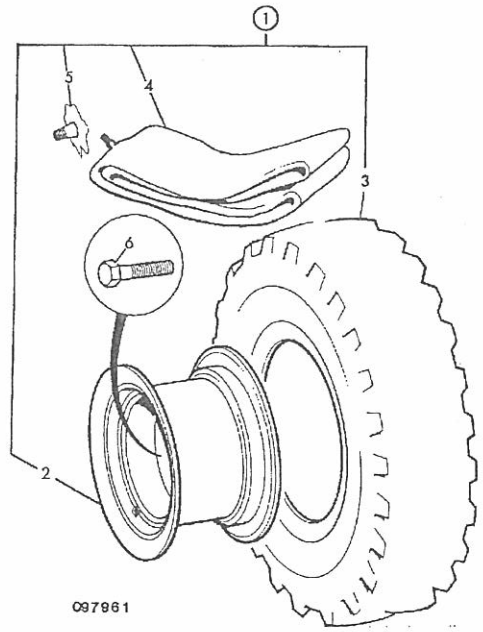

097961

ITEM	PART NO	CHANGE NO	DESCRIPTION	REMARKS	USAGE CODE	QTY
1	128/15268		Wheel, and tyre, Firestone, Industrial		A	2
	126/02919		Wheel, & tyre assembly, 11x16 12pr Armstrong		B	2
	331/68685		Wheel, and tyre, Galaxy, 11Lx16x12pr		C	2
2	41/931200		:Wheel, rim, 8x16 (6 stud)			1
3	42/925288		:Tyre, 11Lx16x12PR, Firestone		A	1
	42/916200		:Tyre, 11Lx16x12pr, Armstrong		B	1
	42/925393		:Tyre, 11Lx16x12pr, Galaxy		C	1
4	.		'See Remark'	Tubeless		1
5	151/05201		:Valve			1
6	826/01008		Nut, wheel			12

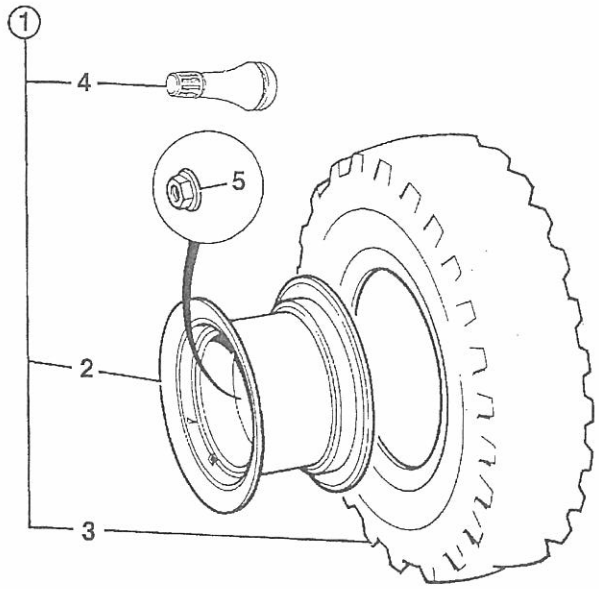

245482

ITEM	PART NO	CHANGE NO	DESCRIPTION	REMARKS	USAGE CODE	QTY
1	126/01306		Wheel, & tyre assembly, Armstrong 14x17.5x10		A	2
	126/01688		Wheel, & tyre assy Goodyear, 14x17.5x10 ply IND		B	2
	128/15257		Wheel, and tyre, Firestone, Industrial		C	2
	331/68697		Wheel, anf tyred, Galaxy, 14x17.5x10pr		D	2
2	41/925200		:Wheel, 10.5x17.5			1
3	42/914300		:Tyre, 14x17.5x10pr, Armstrong		A	1
	42/406100		:Tyre, Goodyear, tubeless		B	1
	42/925291		:Tyre, 14x17.5x10PR, Firestone		C	1
	42/925395		:Tyre, 14x17.5x10pr, Galaxy		D	1
4	*123/05041		:Valve, tyre, flexible (Tubeless)			1
5	106/40001		Nut			1

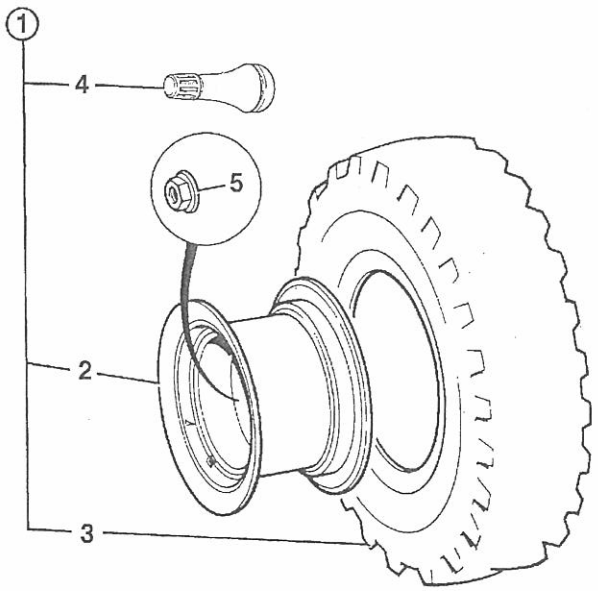

245482

ITEM	PART NO	CHANGE NO	DESCRIPTION	REMARKS	USAGE CODE	QTY
1	126/00146		Wheel, & tyre. Armstrong, 19.5Lx24x10pr		A	2
	126/00147		Wheel, & tyre. Armstrong, 19.5Lx24x12pr		B	2
	126/02367		Wheel, & tyre assembly IND, 19.5Lx24x12 Goodyear		C	2
	126/02610		Wheel, & tyre assy 19. 5x24, 10pr IND Firestone		D	2
	126/02611		Wheel, & tyre assy 19. 5Lx24, 12pr IND Firestone		E	2
	331/68620		Wheel, and tyre, Galaxy, 19.5Lx24x10pr		F	2
	331/68636		Wheel, amd tyre, Galaxy, 19.5Lx24x12pr		G	2
2	41/910000		:Rim, wheel, 19,5Lx24			1
3	42/914800		:Tyre, 19.5Lx24x10pr, Armstrong		A	1
	42/914900		:Tyre, 19.5Lx24x12pr, Armstrong		B	1
	42/413400		:Tyre, 19.5lX24x12, Goodyear industrial		C	1
	42/414000		:Tyre, 19.5x24x10, Industrial Goodyear		C	
	42/304600		:Tyre, 19.5x24x10 pr IND, Firestone		D	
	42/304700		:Tyre, 19.5Lx24x12pr, Firestone		E	
	42/925388		:Tyre, 19.5Lx24x10PR, Galaxy		F	
	42/925389		:Tyre, 19.5Lx24x12PR, Galaxy		G	

ITEM	PART NO	CHANGE NO	DESCRIPTION	REMARKS	USAGE CODE	QTY
4	151/05201		:Valve			1
5	106/40001		:Nut			10

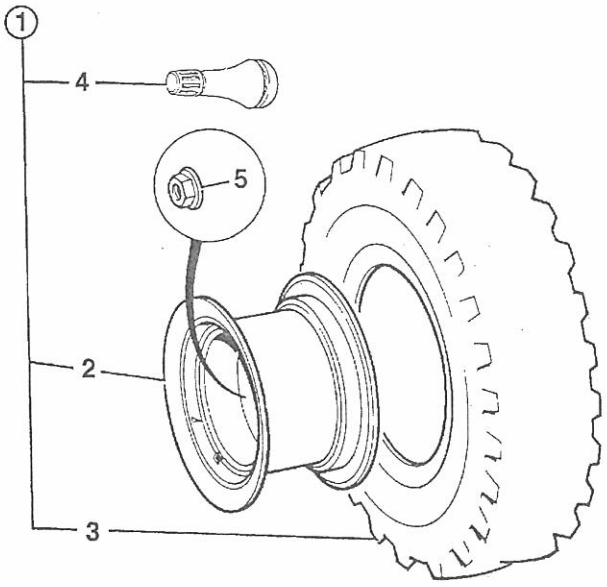

245482

9812/0020U

ITEM	PART NO	CHANGE NO	DESCRIPTION	REMARKS	USAGE CODE	QTY
1	126/02769		Wheel, & tyre assembly, 17.5x24x10pr			2
2	41/931400		:Wheel, rim, 15x24, 101mm offset, 5 stud			1
3	42/921300		:Tyre, 17.5Lx24x10 pr, TITAN			1
4	.		:'See Remark'			1
5	151/05201		:Valve			1
6	106/40001		Nut			10

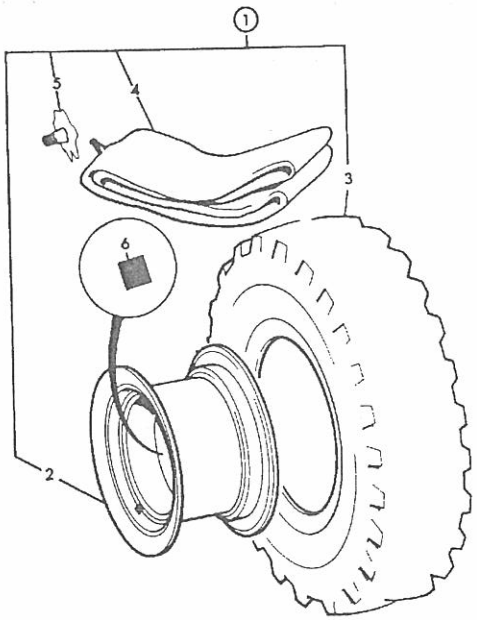

097960

F

- F1 AXLES, FRONT
- F2 AXLES, REAR
- F3 WHEELS, TYRES & PROPSHAFTS
- ● F5 TRANSMISSIONS SYNCROSHUTTLE

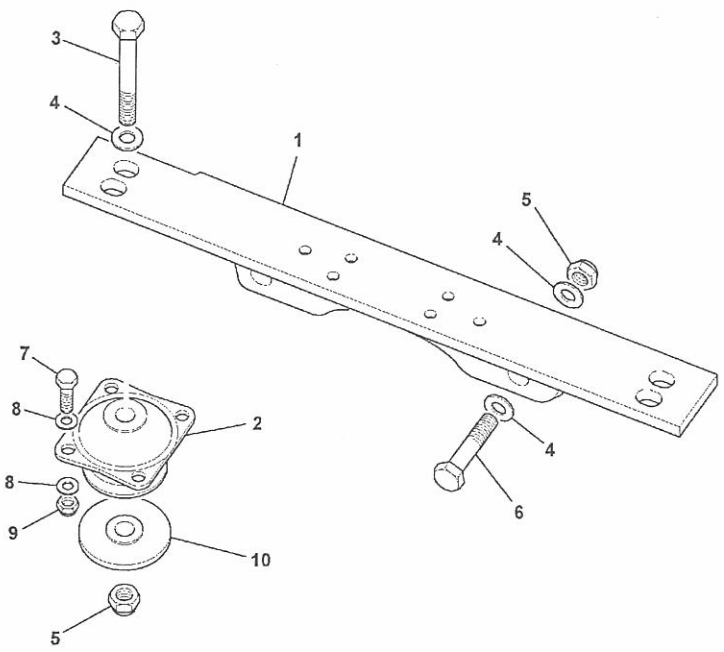

ITEM	PART NO	CHANGE NO	DESCRIPTION	REMARKS	USAGE CODE	QTY
1	335/11254		Bracket, gearbox mounting			
2	331/40347		Mounting, resilient			2
3	1315/3722Z		Bolt, M16 x 120lg			
4	1420/0011Z		Washer, M16 plain			
5	1370/0603Z		Nut, M16			4
6	1315/3717Z		Bolt, M16 x 75mm			
7	1315/3409Z		Bolt			
8	1420/0008Z		Washer, Plain M10			16
9	1370/0303Z		Nut, lock, M10			
10	829/31272		Washer, rebound, 16x75x8			

788610

ITEM	PART NO	CHANGE NO	DESCRIPTION	REMARKS	USAGE CODE	QTY
1	1315/0409Z		Screw, hex. head			12

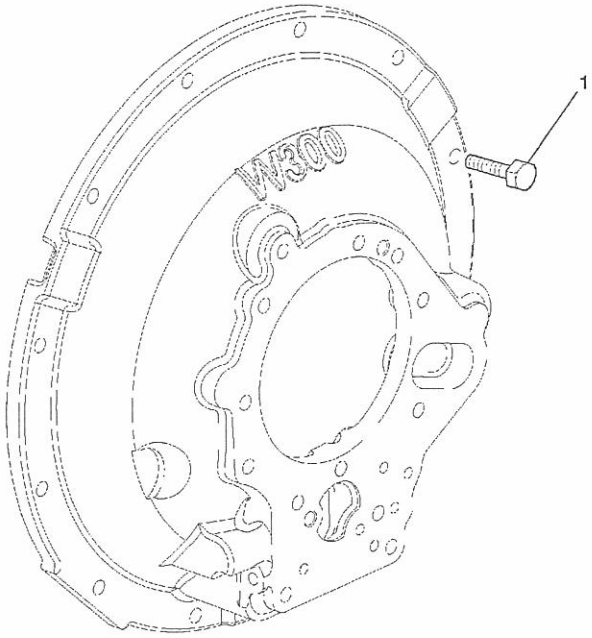

774840

9812/0020U

ITEM	PART NO	CHANGE NO	DESCRIPTION	REMARKS	USAGE CODE	QTY
	830/12343		Tube, oil filler			1
2	331/46204		Dipstick			1
3	155/10600		Nut, sealastic			1
3A	904/20334		:Kit-seal & ferrule			1
4	647/02108		Tube			1
5	821/00433		Clip			1
6	826/01453		Tie, cable, double head			4
7	821/10297		Clip, P-clip,25mm Dia			1
8	821/10319		Clip, 9.5mm dia pinch type			1
9	331/46081		Bracket			1
10	1315/0305Z		Screw, M8 x 20mm long			1
11	826/01099		Nut, rivet,M6 open ended			1

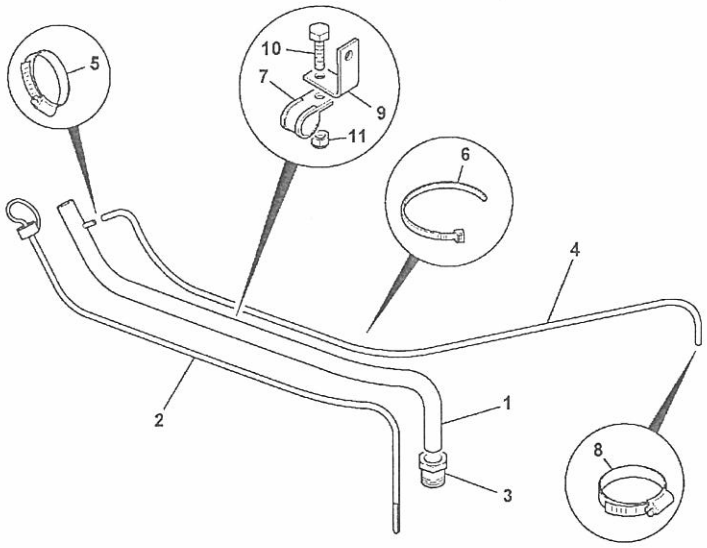

743210

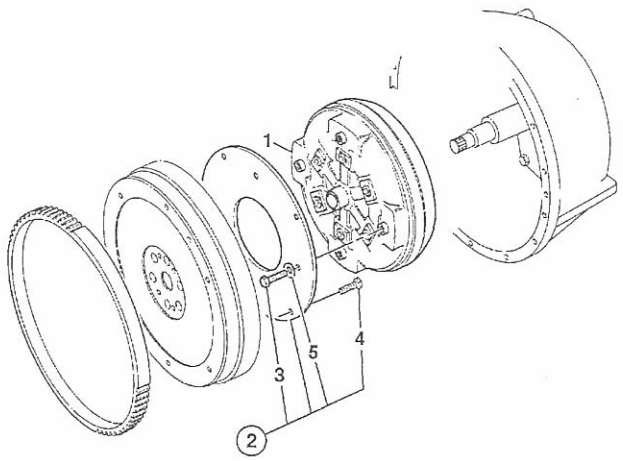

ITEM	PART NO	CHANGE NO	DESCRIPTION	REMARKS	USAGE CODE	QTY
1	04/600786		Converter, W300 3.01 ratio			1
2	04/600136	Superseded	Kit-drive plate, torque converter, See TI 2/479		A	1
	04/600864		Kit-drive plate, torque converter		B	1
3	04/500303		:Bolt			1
4	04/501702		:Bolt, M8 X 20		A	6
	826/11605		:Bolt, M8 x 30		B	6
5	823/10297		:Washer, hardened			1

376141

9812/0020

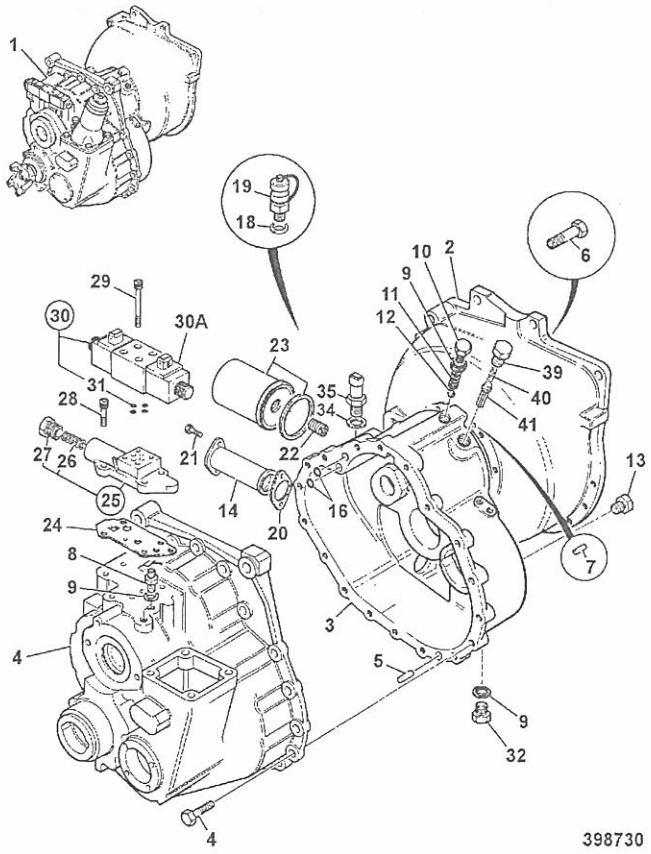

398730

ITEM	PART NO	CHANGE NO	DESCRIPTION	REMARKS	USAGE CODE	QTY
1	441/00740		Gearbox, assembly, 2WD			1
2	459/30397	To G00740/1	:Housing, flywheel			1
	459/30464	G00740/2 on	:Housing, flywheel			
3	459/30285	To G00740/1	:Casing, front, SS700			1
	459/30466	G00740/2 on	:Casing, front, SS700			1
4	459/30312	To G00740/1	:Casing, rear, SS700 2WD			
	459/30467	G00740/2 on	:Casing, rear SS700 2WD			1
5	826/01417		:Bolt			18
6	445/14001		:Dowel			2
7	.		:'See Remark'	Gearbox components see index F5		1
8	1606/0017		:Adapter, 5/8" x 1/2" M/M			2
9 *	1406/0018		:Seal, bonded, 1/2" BSP			3
10	816/80041		:Plug			1
11	814/00222		:Spring			1
12	916/00008		:Bearing, 14dia ball			2
13	816/80051		:Plug, 1/8" tapered			5
14	32/902200		:Strainer, suction			1
15	.		:'See Remark'	no longer fitted		1
16 *	828/10222		:O Ring			2
18 *	1406/0011		:Seal, bonded			2
19	45/905000		:Adapter, pressure test, 1/4BSP male			1
20 *	813/50027		:Gasket			1
21	1321/0303Z		:Screw, M8 x 16			2
22	816/15184		:Adapter, 1/2"BSPx1"UNF			1

9812/0020

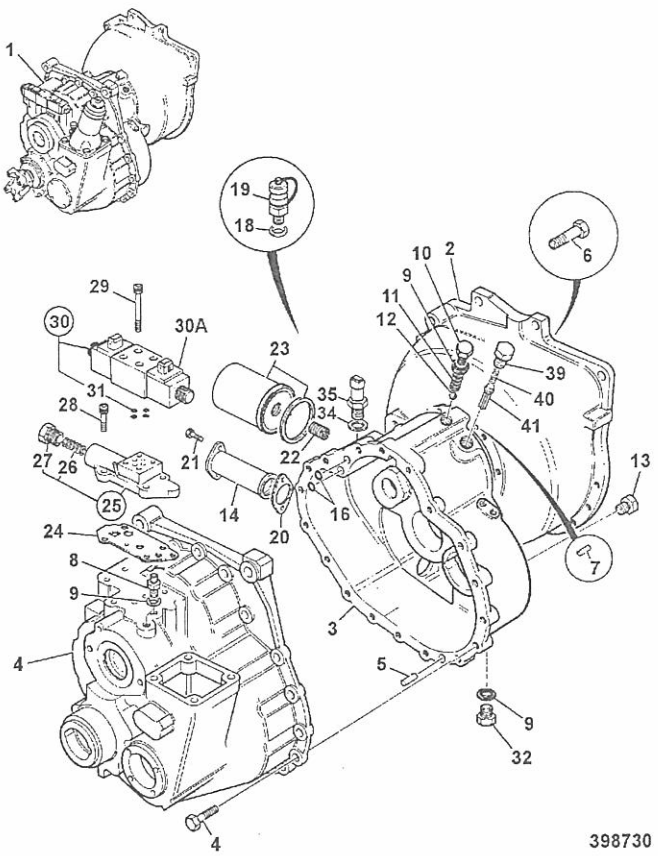

398730

ITEM	PART NO	CHANGE NO	DESCRIPTION	REMARKS	USAGE CODE	QTY
23	581/18076		:Element, transmission filter, 120.7mm long			1
24 *	813/10175		:Gasket, valve block			1
25	459/10144		:Valve, Adapter block assy, SS700 low ratio			1
26	814/00412		::Spring			1
27	816/80063		::Plug			1
28	1392/3207		:Capscrew			4
29	1391/3108Z		:Capscrew			4
30	25/220998		Valve, solenoid assembly			1
30A	25/221054		:Coil, 12V			2
31 *	35/100801		::Kit-seal, solenoid valve			1
32	816/50031		:Adapter, Tee			1
35	701/80319		Switch, oil pressure,M12, green body,Deutsch	not supplied with transmission		1
35A *	1406/0011		Seal, bonded			1
36	816/80061		:Plug			1
38	1315/0409Z		Screw, hex. head			12
39	816/80061		Plug			1
40	814/10153		Spring, compression, T/C press.maint			1
41	459/70168		Spool, Adapter Solenoid			1

9812/0020U

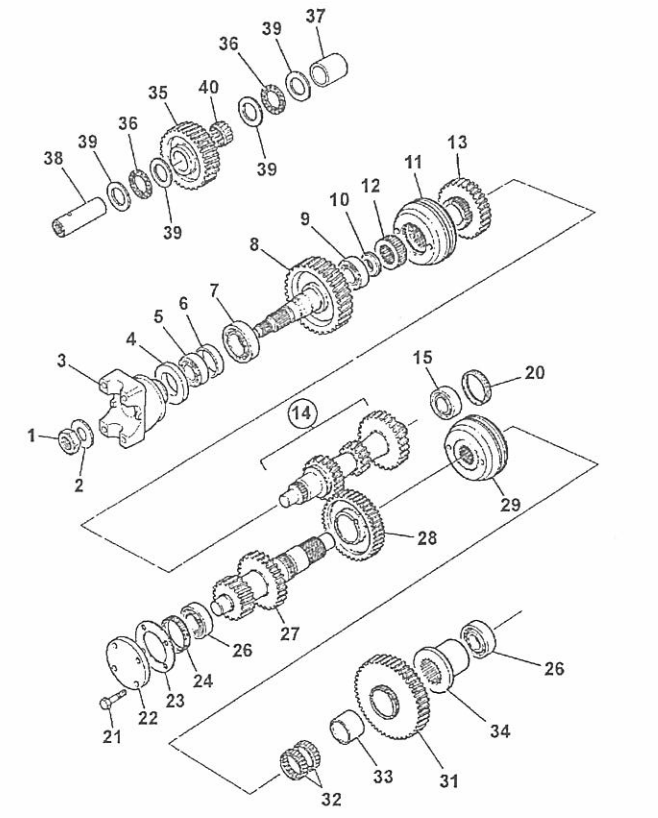

400030

ITEM	PART NO	CHANGE NO	DESCRIPTION	REMARKS	USAGE CODE	QTY
1	826/01551		Nut, Stake M30, (46mm Head)			1
2	460/32202		Washer			1
3	459/70317		Yoke, coupling - 1480, 35 teeth			1
4 *	904/20172		Seal, TRIPLE LIP, 53.6 x 80.35 x 12			1
5	907/51600		Bearing, taper roller			1
6	921/53400		Kit-Spacer			1
7	907/20045		Bearing, taper roller			1
8	459/50208		Gear, transfer 38T, SS750 low ratio			1
9	907/20005		Bearing, taper roller			1
10	445/64302		Spacer, mainshaft seal			1
11	445/03300		Synchroniser, assembly			1
12	445/03010		Sleeve, hub shaft	3rd & 4th speed		1
13	459/50206		Gear, 3rd speed, SS750 low ratio			1
14	459/50205		Gear, mainshaft, SS750			1
15	907/52800		Bearing, 35 x 65 x 18			1
20	459/70275	To G/00740/1	Nut, mainshaft setting			1
	459/70378	G/00740/2 on	Kit, graded spacers			1
21	826/01416	To G/00740/1	Screw, micro-encapsulated			4
22	331/23731	To G/00740/1	Cover, Layshaft			1
23 *	813/10176	To G/00740/1	Gasket			1
24	459/70274	To G/00740/1	Nut, layshaft setting			1
	459/70379	G/00740/1 on	Kit, graded spacers			1
26	907/20049	Superseded	Bearing, taper roller			2

9812/0020U

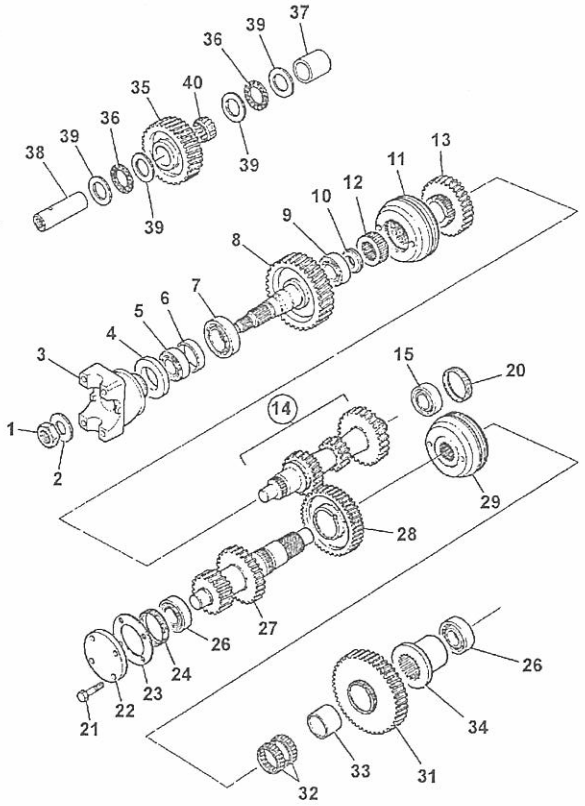

400030

ITEM	PART NO	CHANGE NO	DESCRIPTION	REMARKS	USAGE CODE	QTY
	907/20049		Bearing, taper roller			2
27	459/50188		Layshaft, low ratio			1
28	459/50511		Gear, 2nd, 40t SS700	2nd 40 Teeth		
29	459/50520		Synchroniser, assembly			1
31	459/50509		Gear, 1st, 44t SS700	1st		1
32	917/02300		Bearing			
33	917/00008		Bearing, inner race			1
34	445/03013		Spacer			1
35	459/50440		Gear, idler, 35T	35 Teeth		
37	459/70206		Spacer, idler gear			1
38	459/70087		Shaft, idler			1
39	823/00451		Washer, thrust			
40	917/02400		Bearing, needle roller			1

9812/0020U

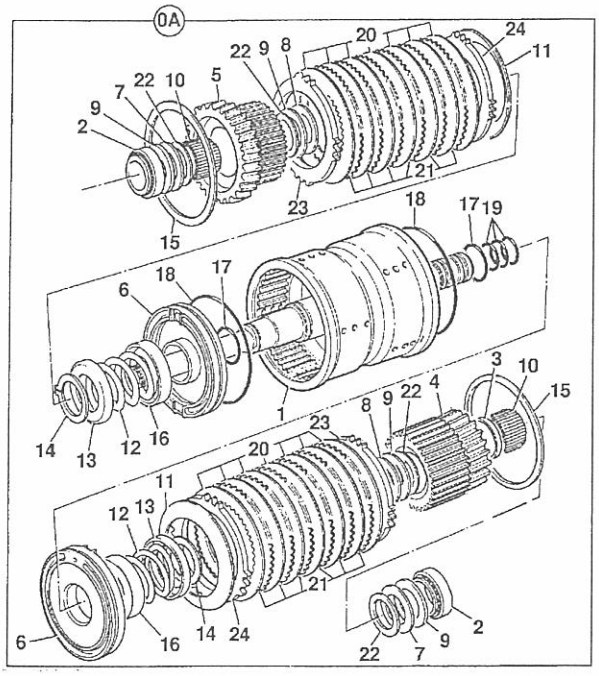

376130

ITEM	PART NO	CHANGE NO	DESCRIPTION	REMARKS	USAGE CODE	QTY
0A	459/10097		Clutch, assembly, input, reverser			1
1	459/50503		:Housing, input clutch, SS700			1
2	907/20012		:Bearing, taper roller			2
3	823/10355		:Spacer			1
4	459/50428		:Gear, 31T & plate carrier			1
5	459/50429		:Gear, 22T & plate carrier			
6	459/10096		:Piston			2
7	823/10264		:Washer, thrust			2
8	823/10265		:Washer, thrust			2
9	917/10006		:Bearing, needle thrust			4
10	917/50600		:Bearing, needle roller			2
11	814/10115		:Disc, spring, spline, PS860			2
12	814/00345		:Spring			2
13	823/10266		:Washer, spring retainer			2
14	821/00296		:Circlip, external			2
15	826/10467		:Circlip, internal			2
16	331/16558		:Plate, oil baffle			2
17 *	828/10180		:O Ring			2
18 *	828/10181		:O Ring			2
19 *	904/50024		:Seal, ring			2
20	331/16520		:Plate, friction, clutch			10
21	331/16516		:Plate, counter, clutch			10
22	823/10316		:Washer, thrust, bevelled			2
23	331/16517		:Plate, pressure, clutch, 6.0 mm			2

9812/0020U

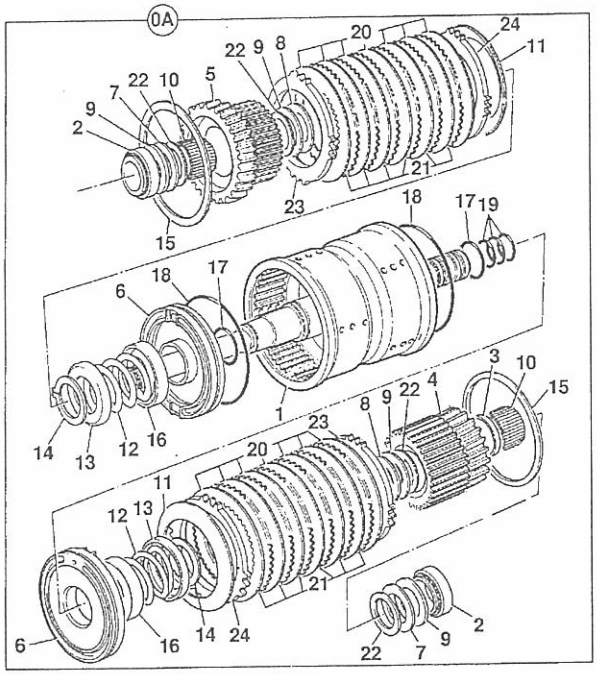

376130

ITEM	PART NO	CHANGE NO	DESCRIPTION	REMARKS	USAGE CODE	QTY
24	331/16519		:Plate, shim, clutch, 1.2mm			a/r

9812/0020U

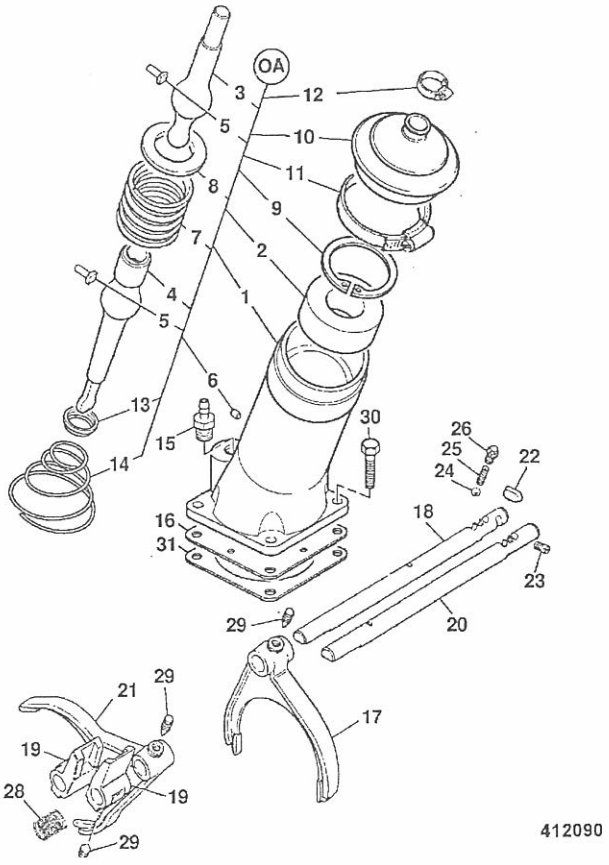

412090

ITEM	PART NO	CHANGE NO	DESCRIPTION	REMARKS	USAGE CODE	QTY
0A	459/10143		Lever, assembly, gear turret			1
1	459/30295		:Housing, turret, gear lever			1
2	445/10802		:Seat			1
3	445/05501		:Lever, gear			1
4	459/70271		:Lever, bottom gearshift			1
5	445/03023		:Pin			2
6	835/10036		:Plug			1
7	814/00233		:Spring			1
8	445/10803		:Washer, ball			1
9	2203/1080		:Circlip			1
10	331/25566		:Gaiter, gear lever			1
11	821/10163		:Clip, worm drive			1
12	445/05302		:Clip			1
13	445/03020		:Retainer, spring			1
14	814/00221		:Spring			1
15	816/13382		:Adapter, hose			1
16	460/17603		:Baffle			1
17	459/30297		Fork, selector 1st			1
18	459/70181		Shaft, selector			1
19	459/70199		Block, selector			2
20	459/70181		Shaft, selector			1
21	459/30299		Fork, selector 3rd			1
22	445/03031		Roller, baulk			1
23	816/80027		Plug			1
24	916/00006		Ball, 11mm dia			2
25	814/00354		Spring			2

9812/0020U

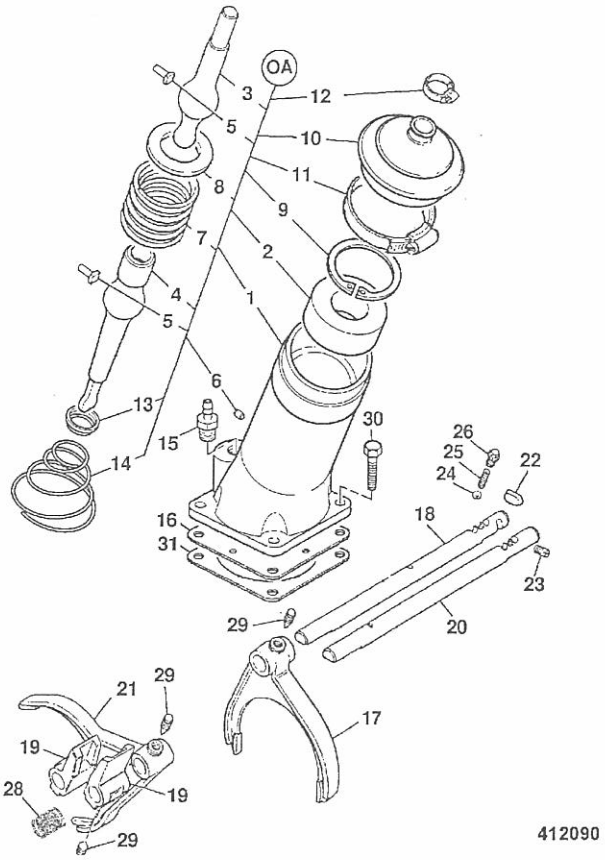

412090

ITEM	PART NO	CHANGE NO	DESCRIPTION	REMARKS	USAGE CODE	QTY
26	816/80057		Plug, detent			2
27	445/05302		Clip			4
28	814/00406		Spring			1
29	445/26110		Screw			4
30	826/01416		Screw, micro-encapsulated			4
31	813/50042		Gasket			1

9812/0020

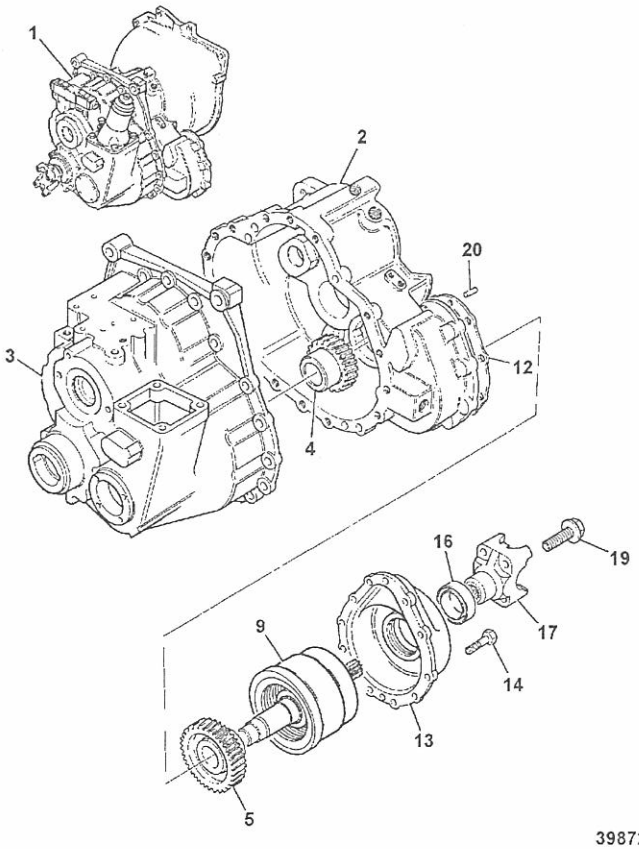

398720

ITEM	PART NO	CHANGE NO	DESCRIPTION	REMARKS	USAGE CODE	QTY
1	441/00680		Gearbox, assembly, 4WD, 22/34 drop gears			1
2	459/30382	To G/00680/1	:Casing, front			1
	459/30463	G/00680/2 on	:Casing, front			1
3	459/30272	To G/00680/1	:Casing, rear, SS700 4WD			1
	459/30435	G/00680/2 on	:Casing, rear			1
4	459/50577		:Gear, input 22 teeth			1
5	459/50702		:Gear, output 34 teeth			1
9	459/10119		:Clutch, assembly 4WD	For components see frame F5-3-40		1
12	813/50048		:Gasket			1
13	459/30451		:Cover, 4WD clutch			1
14	826/01417		:Bolt			10
16 *	904/20172		:Seal, TRIPLE LIP, 53.6 x 80.35 x 12			1
17	459/70133		:Yoke, coupling, 1480, 32 teeth			1
19	826/01553		:Bolt, Setscrew			1
20	445/14001		:Dowel			2

9812/0020

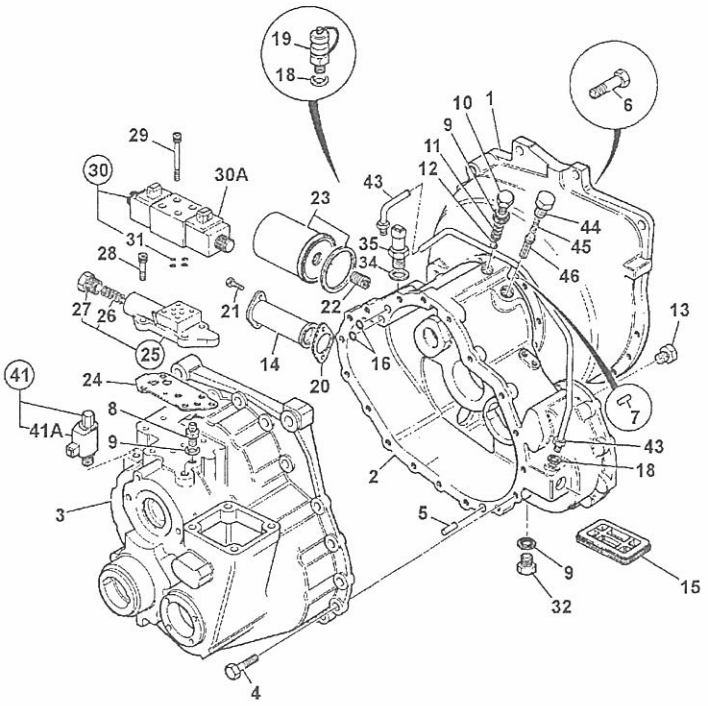

398710

ITEM	PART NO	CHANGE NO	DESCRIPTION	REMARKS	USAGE CODE	QTY
1	459/30397	To G/00680/1	:Housing, flywheel			1
	459/30464	G/00680/2 on	:Housing, flywheel			1
2	459/30382	To G/00680/1	:Casing, front			1
	459/30463	G/00680/2 on	:Casing, front			1
3	459/30272	To G/00680/1	:Casing, rear, SS700 4WD			1
	459/30435	G/00680/2 on	:Casing, rear			1
4	826/01417		:Bolt			18
5	445/14001		:Dowel			2
6	1315/0409Z		:Screw, hex. head			12
7	445/14001		:Dowel			2
8	1606/0017		:Adapter, 5/8" x 1/2" M/M			2
9 *	1406/0018		:Seal, bonded, 1/2" BSP			4
10	816/80041		:Plug			3
11	814/00222		:Spring			1
12	916/00008		:Bearing, 14dia ball			2
13	816/80051		:Plug, 1/8" tapered			8
14	32/902200		:Strainer, suction			1
15	.		:'See Remark'	no longer fitted		1
16 *	828/10222		:O Ring			2
18 *	1406/0011		:Seal, bonded			2
19	45/905000		Adapter, pressure test, 1/4BSP male			1
20 *	813/50027		Gasket			1
21	1321/0303Z		:Screw, M8 x 16			2
22	816/15184		:Adapter, 1/2"BSPx1"UNF			1
23	*581/18076		:Element, transmission filter, 120.7mm long			1

9812/0020U

F5-4-11 441/00680 - 4WD-2WS, EXTERNAL COMPONENTS ISSUE 1

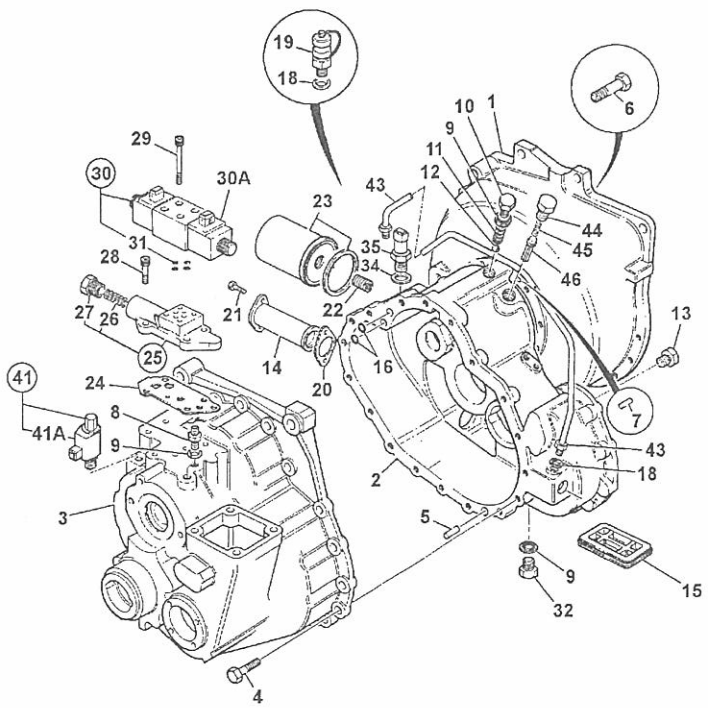

398710

ITEM	PART NO	CHANGE NO	DESCRIPTION	REMARKS	USAGE CODE	QTY
24 *	813/10175		:Gasket, valve block			1
25	459/10144		:Valve, Adapter block assy, SS700 low ratio			1
26	814/00412		::Spring			1
27	816/80063		::Plug			1
28	1392/3207		:Capscrew			4
29	1391/3108Z		:Capscrew			4
30	25/220998		Valve, solenoid assembly			1
30A	25/221054		:Coil, 12V			1
31 *	35/100801		::Kit-seal, solenoid valve			1
32	816/80041		:Plug			1
35	701/80319	Superseded	:Switch, oil pressure,M12, green body,Deutsch			1
	701/80459		Switch, oil pressure, colour, id-red o/d white i/d			1
35A*	1406/0011		Seal, bonded			1
40 *	813/50041		:Seal, rear			1
41	25/220992	To G/00680/1	Valve, solenoid assembly			1
	25/220804	G/00680/2 on	Valve, solenoid assembly			1
41A	25/221056	To G/00680/1	:Coil, cartridge valve			1
43	830/11842		Pipe, assembly 4WD	740mm long		1
44	816/80061		Plug			1
45	814/10153		Spring, compression, T/C press.maint			1
46	459/70168		Spool, Adapter Solenoid			1

9812/0020U

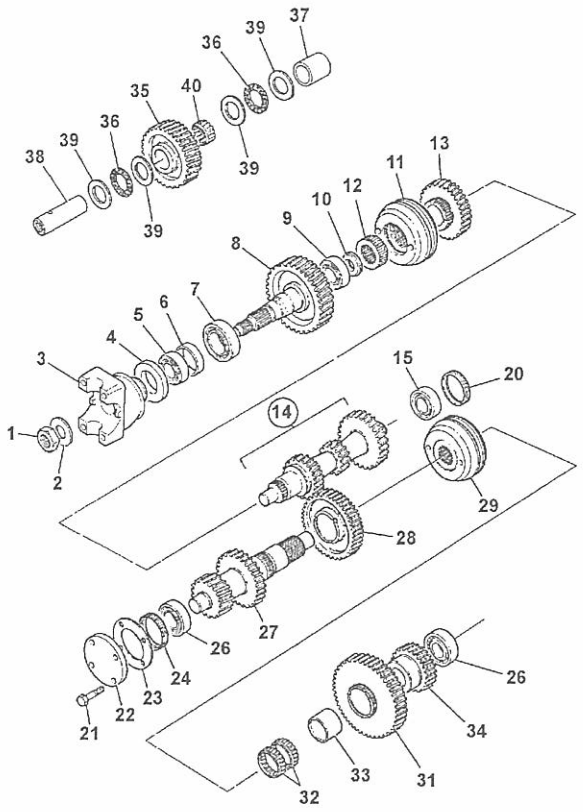

398700

ITEM	PART NO	CHANGE NO	DESCRIPTION	REMARKS	USAGE CODE	QTY
1	826/01551		Nut, Stake M30, (46mm Head)			1
2	460/32202		Washer			1
3	459/70317		Yoke, coupling - 1480, 35 teeth			1
4 *	904/20172		Seal, TRIPLE LIP, 53.6 x 80.35 x 12			1
5	907/51600		Bearing, taper roller			1
6	921/53400		Kit-Spacer			1
7	907/20045		Bearing, taper roller			1
8	459/50208		Gear, transfer 38T, SS750 low ratio			1
9	907/20005		Bearing, taper roller			1
10	445/64302		Spacer, mainshaft seal			1
11	445/03300		Synchroniser, assembly			1
12	445/03010		Sleeve, hub shaft	3rd & 4th speed		1
13	459/50206		Gear, 3rd speed, SS750 low ratio			1
14	459/50205		Gear, mainshaft, SS750			1
15	907/52800		Bearing, 35 x 65 x 18			1
20	459/70275	To G/00680/1	Nut, mainshaft setting			1
	459/70378	G/00680/2 on	Kit, graded spacers			1
21	826/01416	To G/00680/1	Screw, micro-encapsulated			4
22	331/23731	To G/00680/1	Cover, Layshaft			1
23 *	813/10176	To G/00680/1	Gasket			1
24	459/70274	To G/00680/1	Nut, layshaft setting			1
	459/70379	G/00680/2 on	Kit, graded spacers			1
26	907/20049		Bearing, taper roller			2

9812/0020U

F5-4-21 441/00680 - 4WD-2WS, INTERNAL COMPONENTS ISSUE

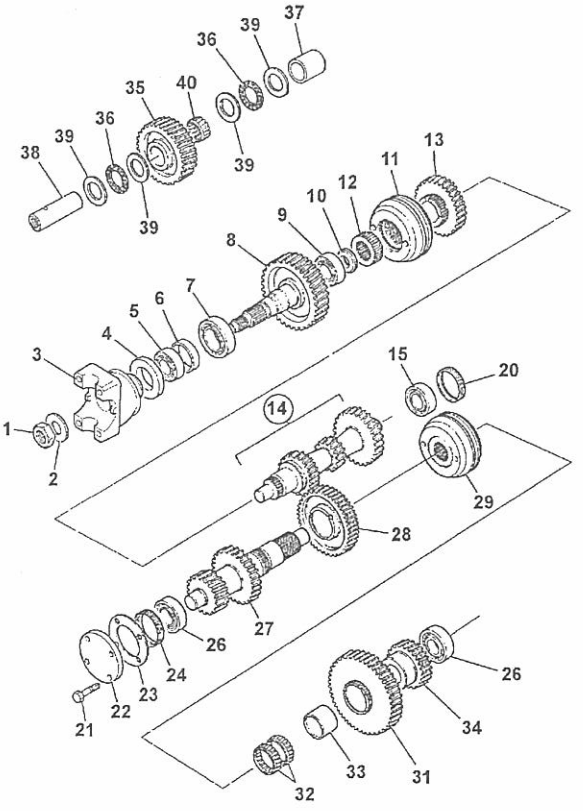

398700

ITEM	PART NO	CHANGE NO	DESCRIPTION	REMARKS	USAGE CODE	QTY
27	459/50188		Layshaft, low ratio			1
28	459/50511		Gear, 2nd, 40t SS700	2nd 40 Teeth		1
29	459/50520		Synchroniser, assembly			1
31	459/50509		Gear, 1st, 44t SS700	1st		1
32	917/02300		Bearing			2
33	917/00008		Bearing, inner race			1
34	.		'See Remark'	See frame F5-1-1		1
35	459/50440		Gear, idler, 35T			1
36	917/51400		Bearing			2
37	459/70206		Spacer, idler gear			1
38	459/70087		Shaft, idler			1
39	823/00451		Washer, thrust			4
40	917/02400		Bearing, needle roller			1

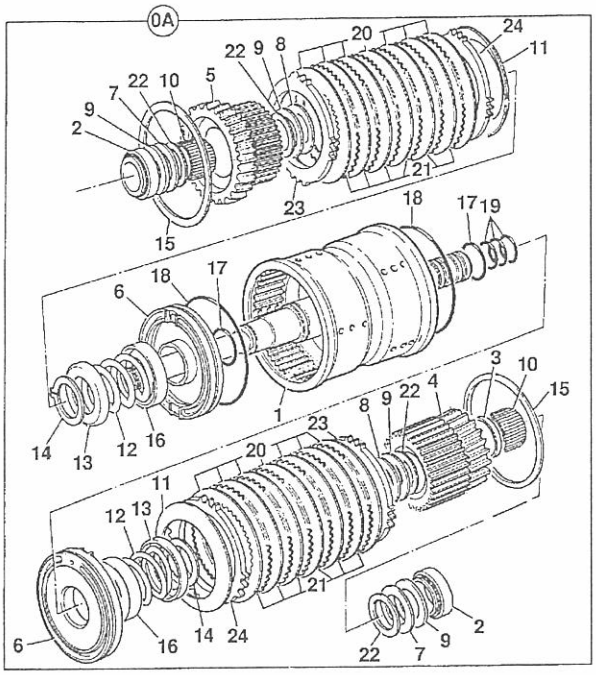

376130

ITEM	PART NO	CHANGE NO	DESCRIPTION	REMARKS	USAGE CODE	QTY
0A	459/10097		Clutch, assembly, input, reverser			1
1	459/50503		:Housing, input clutch, SS700			1
2	907/20012		:Bearing, taper roller			2
3	823/10355		:Spacer			1
4	459/50428		:Gear, 31T & plate carrier			1
5	459/50429		:Gear, 22T & plate carrier			1
6	459/10096		:Piston			2
7	823/10264		:Washer, thrust			2
8	823/10265		:Washer, thrust			2
9	917/10006		:Bearing, needle thrust			4
10	917/50600		:Bearing, needle roller			2
11	814/10115		:Disc, spring, spline, PS860			2
12	814/00345		:Spring			2
13	823/10266		:Washer, spring retainer			2
14	821/00296		:Circlip, external			2
15	826/10467		:Circlip, internal			2
16	331/16558		:Plate, oil baffle			2
17 *	828/10180		:O Ring			2
18 *	828/10181		:O Ring			2
19 *	904/50024		:Seal, ring			4
20	331/16520		:Plate, friction, clutch			10
21	331/16516		:Plate, counter, clutch			10
22	823/10316		:Washer, thrust, bevelled			4
23	331/16517		:Plate, pressure, clutch, 6.0 mm			2

F5-4-31 441/00680 - 4WD-2WS, REVERSER UNIT, 459/10097 ISSUE 1

ITEM	PART NO	CHANGE NO	DESCRIPTION	REMARKS	USAGE CODE	QTY
24	331/16519		:Plate, shim, clutch, 1.2mm			a/r

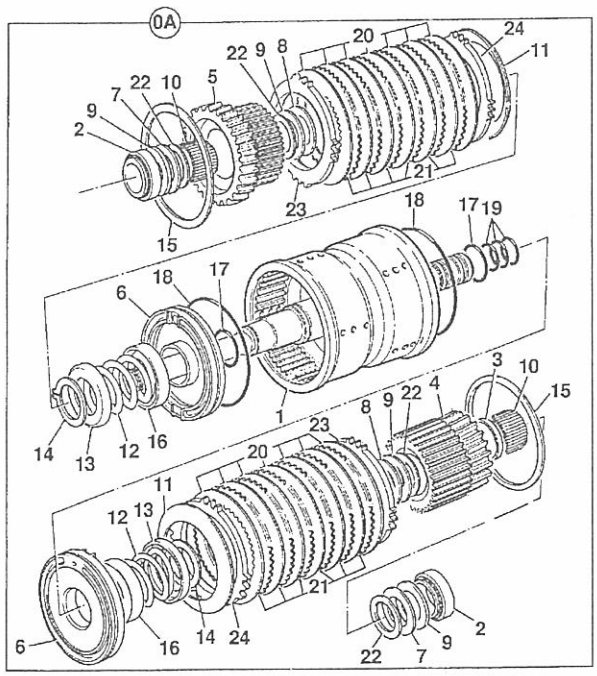

376130

9812/0020U

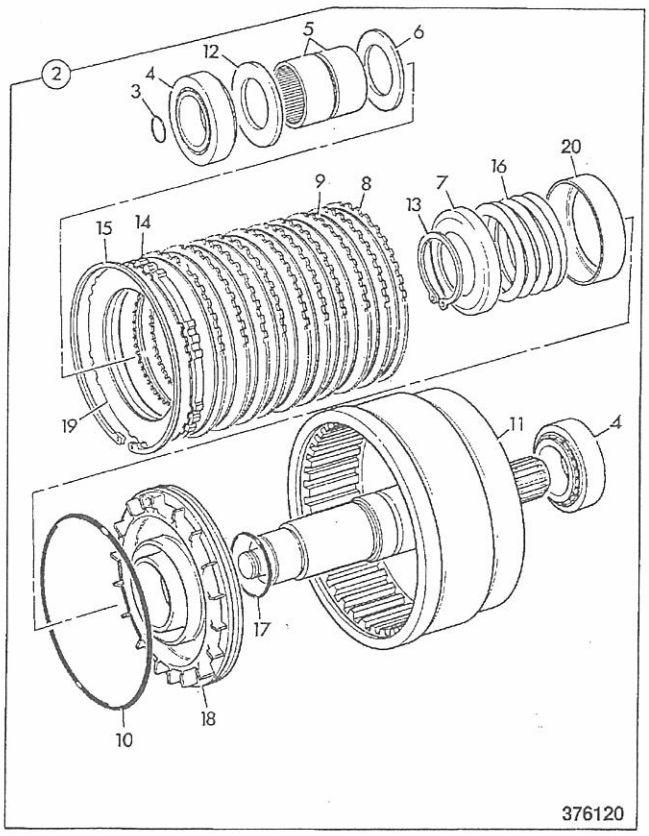

ITEM	PART NO	CHANGE NO	DESCRIPTION	REMARKS	USAGE CODE	QTY
2	459/10119		Clutch, assembly 4WD			1
3 *	904/14300		:Seal, ring, 'TURQUOISE'			1
4	907/52800		:Bearing, 35 x 65 x 18			1
5	917/02700		:Bearing			2
6	445/19808		:Washer, thrust, 3.5mm thick, phosphated			1
7	445/12304		:Retainer, spring			1
8	445/12307		:Plate, counter			1
9	445/03205		:Plate, friction			10
10 *	828/00414		:O Ring			1
11	459/50483		:Housing, 4wd clutch			1
12	823/10364		:Washer, thrust			1
13	821/00523		:Circlip			1
14	449/10601		:Plate, pressure, 4mm			1
15	2203/1115		:Circlip			1
16	814/00297		:Spring			1
17 *	828/00224		:O Ring			1
18	445/12316		:Piston, reverser, c/w oil baffle			1
19	445/12314		:Shim, plate, toothed			A/R

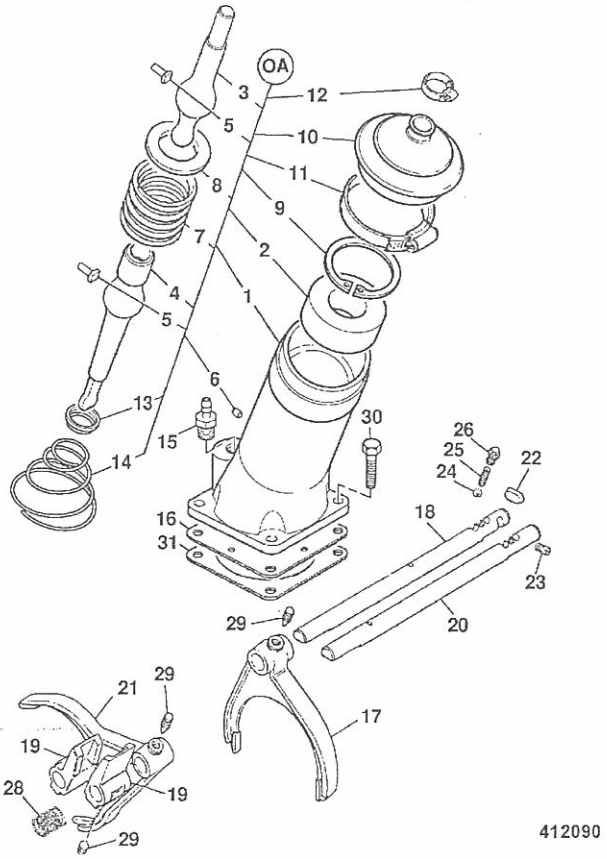

ITEM	PART NO	CHANGE NO	DESCRIPTION	REMARKS	USAGE CODE	QTY
0A	459/10143		Lever, assembly, gear turret			1
1	459/30295		:Housing, turret, gear lever			1
2	445/10802		:Seat			1
3	445/05501		:Lever, gear			1
4	459/70271		:Lever, bottom gearshift			1
5	445/03023		:Pin			2
6	835/10036		:Plug			1
7	814/00233		:Spring			1
8	445/10803		:Washer, ball			1
9	2203/1080		:Circlip			1
10	331/25566		:Gaiter, gear lever			1
11	821/10163		:Clip, worm drive			1
12	445/05302		:Clip			1
13	445/03020		:Retainer, spring			1
14	814/00221		:Spring			1
15	816/13382		:Adapter, hose			1
16	460/17603		:Baffle			1
17	459/30297		Fork, selector 1st			1
18	459/70181		Shaft, selector			1
19	459/70199		Block, selector			1
20	459/70181		Shaft, selector			1
21	459/30299		Fork, selector 3rd			1
22	445/03031		Roller, baulk			2
23	816/80027		Plug			1
24	916/00006		Ball, 11mm dia			2
25	814/00354		Spring			1

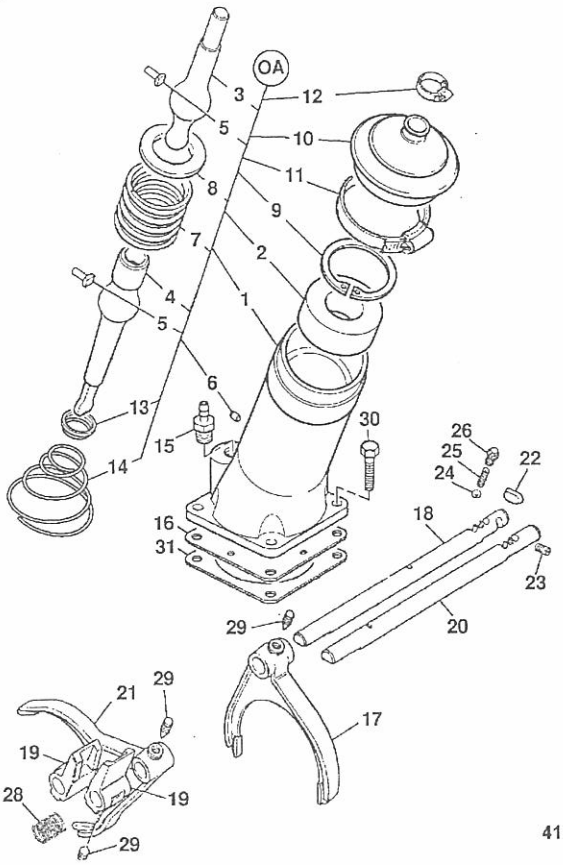

ITEM	PART NO	CHANGE NO	DESCRIPTION	REMARKS	USAGE CODE	QTY
26	816/80057		Plug, detent			2
27	445/05302		Clip			2
28	814/00406		Spring			1
29	445/26110		Screw			4
30	826/01416		Screw, micro-encapsulated			4
31	813/50042		Gasket			1

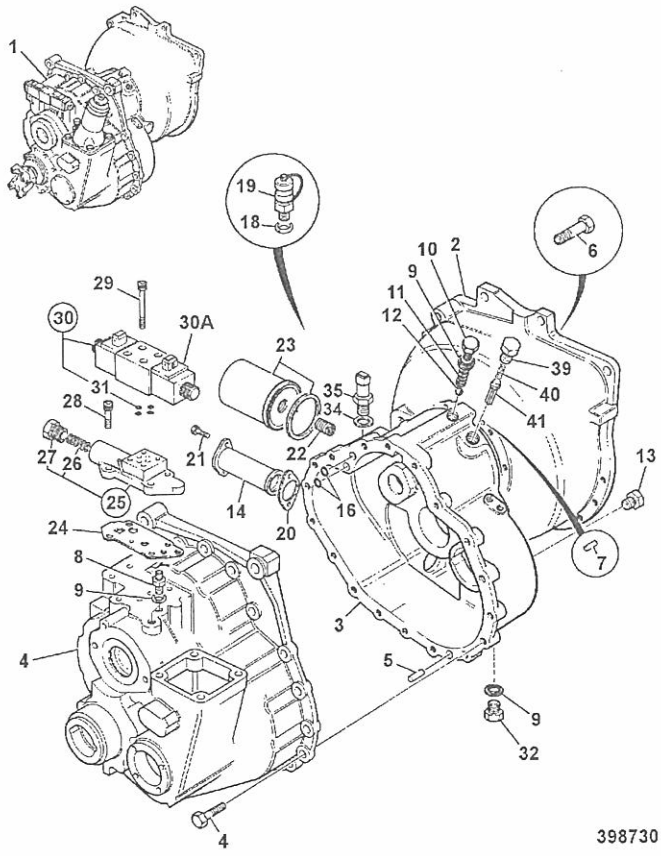

ITEM	PART NO	CHANGE NO	DESCRIPTION	REMARKS	USAGE CODE	QTY
1	441/00750		Gearbox, assembly 2WD			1
2	459/30464		:Housing, flywheel			1
3	459/30466		:Casing, front, SS700			1
4	459/30467		:Casing, rear SS700 2WD			1
5	826/01417		:Bolt			18
6	445/14001		:Dowel			2
7	.		:'See Remark'	Gearbox components see index F5		1
8	1606/0017		:Adapter, 5/8" x 1/2" M/M			2
9	1406/0018		:Seal, bonded, 1/2" BSP			3
10	816/80041		:Plug			1
11	814/00222		:Spring			1
12	916/00008		:Bearing, 14dia ball			2
13	816/80051		:Plug, 1/8" tapered			5
14	32/902200		:Strainer, suction			1
15	.		:'See Remark'	no longer fitted		1
16	828/10222		:O Ring			2
18	1406/0011		:Seal, bonded			2
19	45/905000		:Adapter, pressure test, 1/4BSP male			1
20 *	813/50027		:Gasket			1
21	1321/0303Z		:Screw, M8 x 16			2
22	816/15184		:Adapter, 1/2"BSPx1"UNF			1
23	581/18076		:Element, transmission filter, 120.7mm long			1
24 *	813/10175		:Gasket, valve block			1

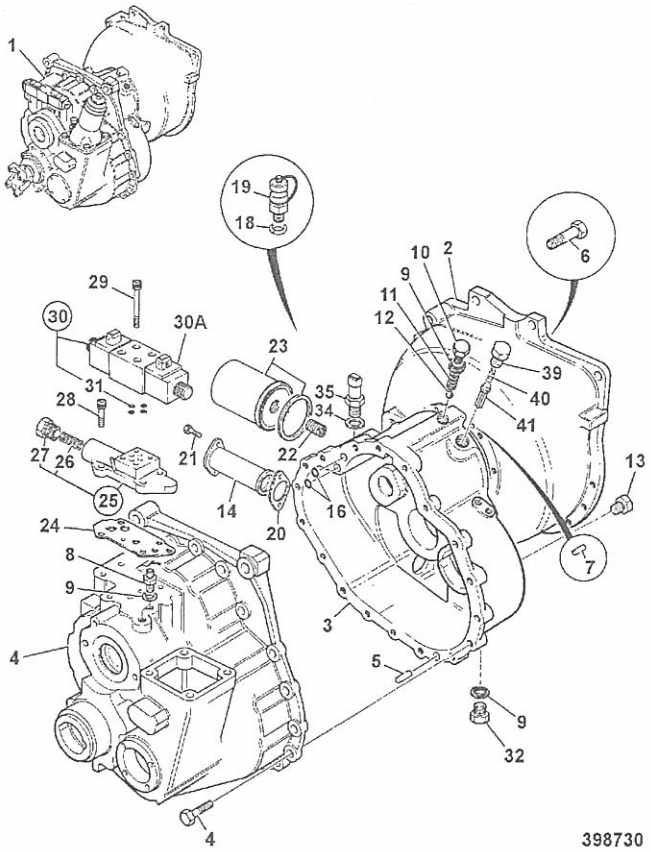

398730

ITEM	PART NO	CHANGE NO	DESCRIPTION	REMARKS	USAGE CODE	QTY
25	459/10144		:Valve, Adapter block assy, SS700 low ratio			1
26	814/00412		::Spring			1
27	816/80063		::Plug			1
28	1392/3207		:Capscrew			1
29	1391/3108Z		:Capscrew			4
30	25/220998		Valve, solenoid assembly			1
30A	25/221054		:Coil, 12V			1
31 *	35/100801		::Kit-seal, solenoid valve			1
32	816/50031		:Adapter, Tee			1
35	701/80319	Superseded	Switch, oil pressure,M12, green body,Deutsch	not supplied with transmission		1
	701/80459		Switch, oil pressure, colour, id-red o/d white i/d	not supplied with transmission		1
35A *	1406/0011		Seal, bonded			1
36	816/80061		:Plug			1
38	1315/0409Z		Screw, hex. head			12
39	816/80061		Plug			1
40	814/10153		Spring, compression, T/C press.maint			1
41	459/70168		Spool, Adapter Solenoid			1

9812/0020

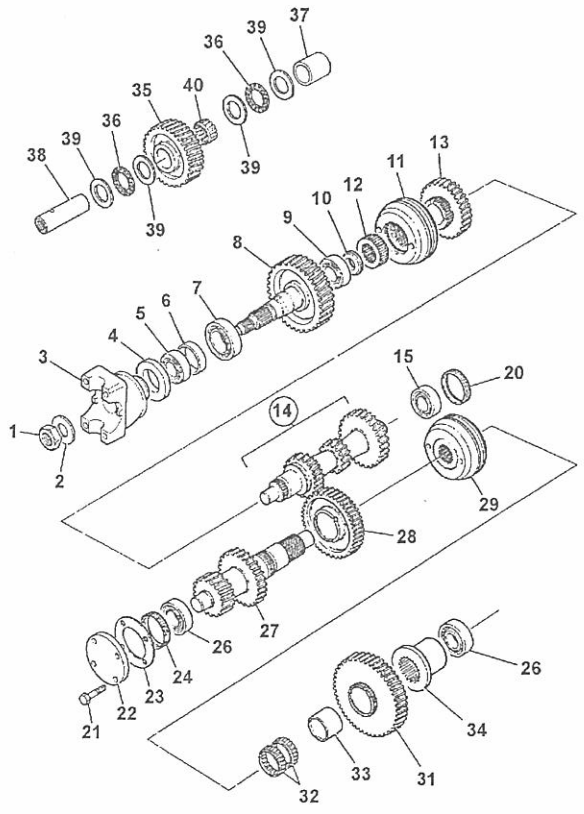

400030

ITEM	PART NO	CHANGE NO	DESCRIPTION	REMARKS	USAGE CODE	QTY
1	826/01551		Nut, Stake M30, (46mm Head)			1
2	460/32202		Washer			1
3	459/70317		Yoke, coupling - 1480, 35 teeth			1
4 *	904/20172		Seal, TRIPLE LIP, 53.6 x 80.35 x 12			1
5	907/51600		Bearing, taper roller			1
6	921/53400		Kit-Spacer			1
7	907/20045		Bearing, taper roller			1
8	459/50208		Gear, transfer 38T, SS750 low ratio			1
9	907/20005		Bearing, taper roller			1
10	445/64302		Spacer, mainshaft seal			1
11	445/03300		Synchroniser, assembly			1
12	445/03010		Sleeve, hub shaft	3rd & 4th speed		1
13	459/50206		Gear, 3rd speed, SS750 low ratio			1
14	459/50205		Gear, mainshaft, SS750			1
15	907/52800		Bearing, 35 x 65 x 18			1
20	459/70378		Kit, graded spacers			1
21	.		'See Remark'	not fitted		
22	.		'See Remark'	not fitted		
23	.		'See Remark'	not fitted		
24	459/70379		Kit, graded spacers			1
26	907/20049		Bearing, taper roller			2
27	459/50188		Layshaft, low ratio			1
28	459/50511		Gear, 2nd, 40t SS700	2nd 40 Teeth		1

9812/0020L

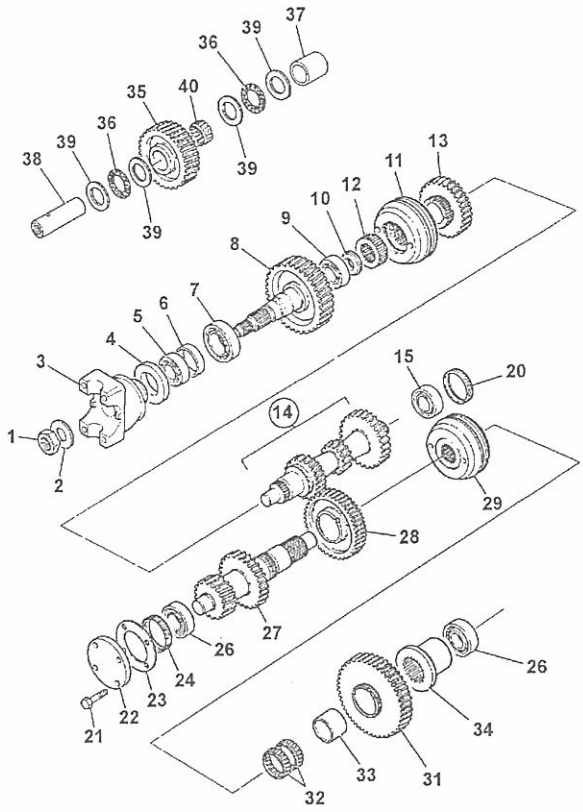

400030

ITEM	PART NO	CHANGE NO	DESCRIPTION	REMARKS	USAGE CODE	QTY
29	459/50520		Synchroniser, assembly			1
31	459/50509		Gear, 1st, 44t SS700	1st		1
32	917/02300		Bearing			2
33	917/00008		Bearing, inner race			1
34	445/03013		Spacer			1
35	459/50440		Gear, idler, 35T	35 Teeth		1
37	459/70206		Spacer, idler gear			1
38	459/70087		Shaft, idler			1
39	823/00451		Washer, thrust			4
40	917/02400		Bearing, needle roller			1

9812/0020U

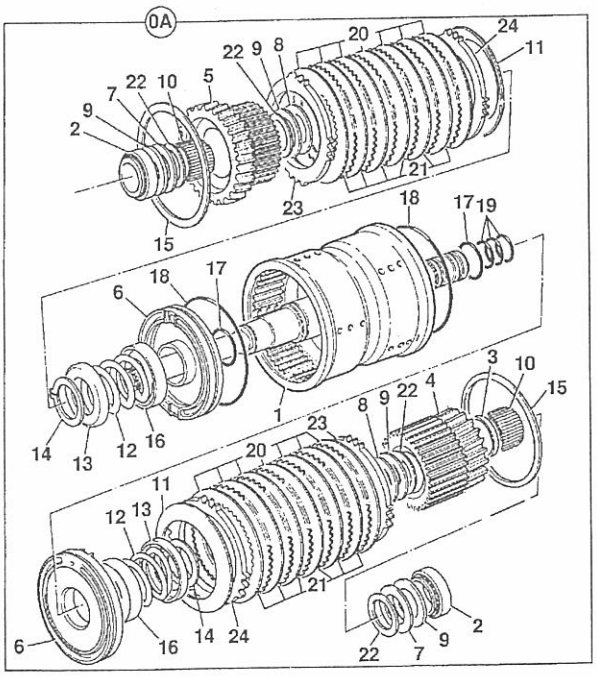

376130

ITEM	PART NO	CHANGE NO	DESCRIPTION	REMARKS	USAGE CODE	QTY
0A	459/10097		Clutch, assembly, input, reverser			1
1	459/50503		:Housing, input clutch, SS700			1
2	907/20012		:Bearing, taper roller			2
3	823/10355		:Spacer			1
4	459/50428		:Gear, 31T & plate carrier			1
5	459/50429		:Gear, 22T & plate carrier			1
6	459/10096		:Piston			2
7	823/10264		:Washer, thrust			2
8	823/10265		:Washer, thrust			2
9	917/10006		:Bearing, needle thrust			4
10	917/50600		:Bearing, needle roller			2
11	814/10115		:Disc, spring, spline, PS860			2
12	814/00345		:Spring			2
13	823/10266		:Washer, spring retainer			2
14	821/00296		:Circlip, external			2
15	826/10467		:Circlip, internal			2
16	331/16558		:Plate, oil baffle			2
17 *	828/10180		:O Ring			2
18 *	828/10181		:O Ring			2
19 *	904/50024		:Seal, ring			4
20	331/16520		:Plate, friction, clutch			10
21	331/16516		:Plate, counter, clutch			10
22	823/10316		:Washer, thrust, bevelled			4
23	331/16517		:Plate, pressure, clutch, 6.0 mm			2

9812/0020U

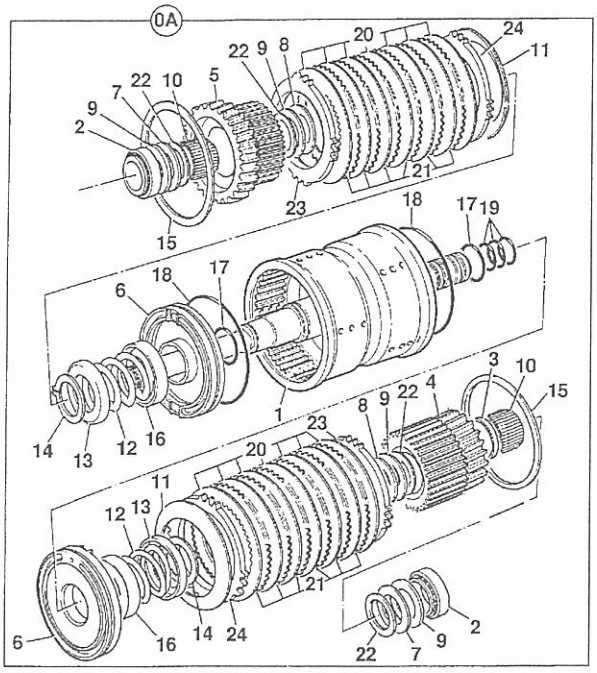

ITEM	PART NO	CHANGE NO	DESCRIPTION	REMARKS	USAGE CODE	QTY
24	331/16519		:Plate, shim, clutch, 1.2mm			a/r

376130

9812/0020

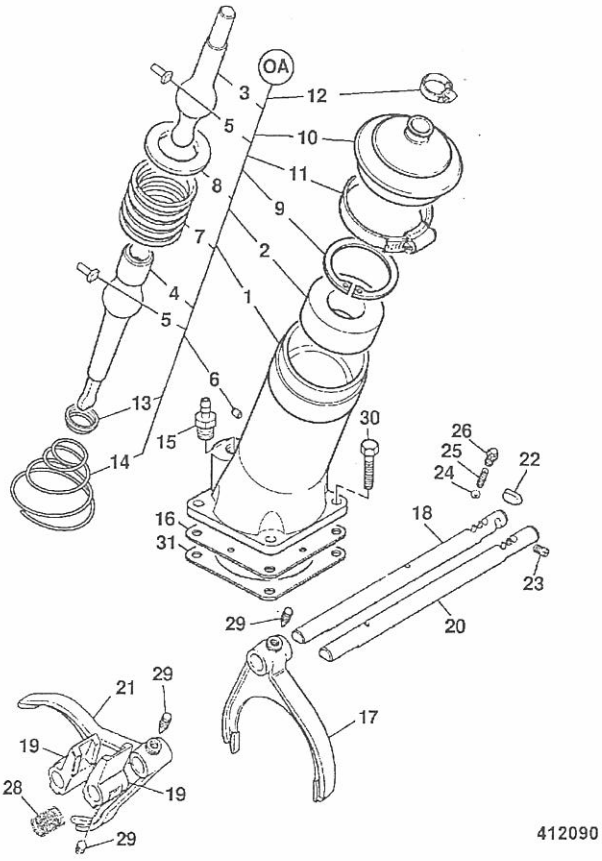

412090

ITEM	PART NO	CHANGE NO	DESCRIPTION	REMARKS	USAGE CODE	QTY
0A	459/10143		Lever, assembly, gear turret			1
1	459/30295		:Housing, turret, gear lever			1
2	445/10802		:Seat			1
3	445/05501		:Lever, gear			1
4	459/70271		:Lever, bottom gearshift			1
5	445/03023		:Pin			2
6	835/10036		:Plug			1
7	814/00233		:Spring			1
8	445/10803		:Washer, ball			1
9	2203/1080		:Circlip			1
10	331/25566		:Gaiter, gear lever			1
11	821/10163		:Clip, worm drive			1
12	445/05302		:Clip			1
13	445/03020		:Retainer, spring			1
14	814/00221		:Spring			1
15	816/13382		:Adapter, hose			1
16	460/17603		:Baffle			1
17	459/30297		Fork, selector 1st			1
18	459/70181		Shaft, selector			1
19	459/70199		Block, selector			2
20	459/70181		Shaft, selector			1
21	459/30299		Fork, selector 3rd			1
22	445/03031		Roller, baulk			1
23	816/80027		Plug			1
24	916/00006		Ball, 11mm dia			2
25	814/00354		Spring			2

9812/0020

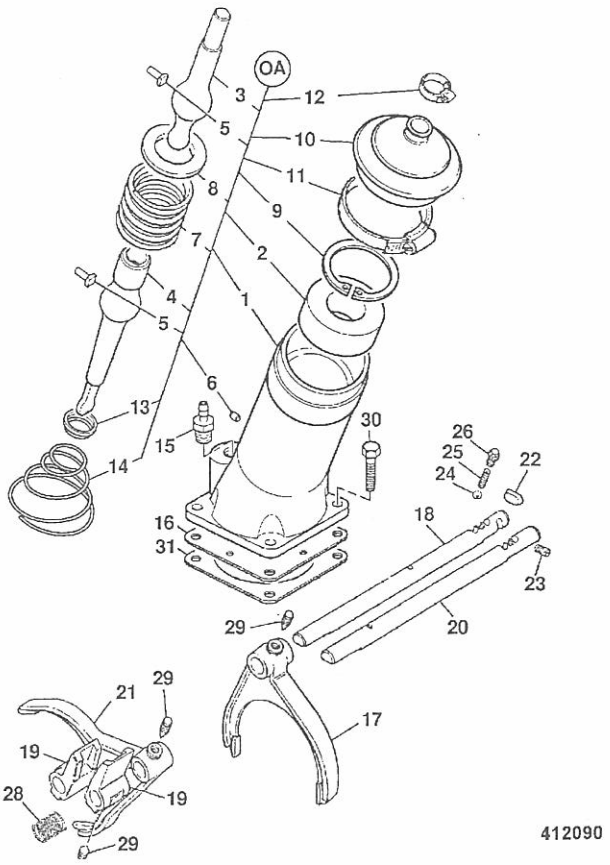

412090

ITEM	PART NO	CHANGE NO	DESCRIPTION	REMARKS	USAGE CODE	QTY
26	816/80057		Plug, detent			2
27	445/05302		Clip			2
28	814/00406		Spring			1
29	445/26110		Screw			4
30	826/01416		Screw, micro-encapsulated			4
31	813/50042		Gasket			1

9812/0020U

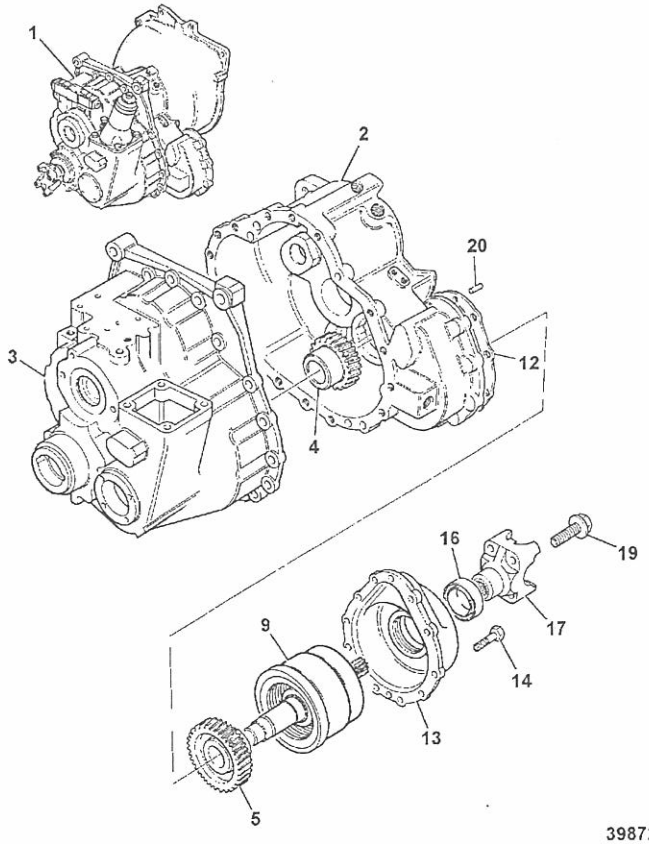

398720

ITEM	PART NO	CHANGE NO	DESCRIPTION	REMARKS	USAGE CODE	QTY
1	441/00760		Gearbox, assembly, 4WD, 22/34 drop gears			1
2	459/30463		:Casing, front			1
3	459/30435		:Casing, rear			1
4	459/50577		:Gear, input 22 teeth			1
5	459/50702		:Gear, output 34 teeth			1
9	459/10119		:Clutch, assembly 4WD	For components see frame F5-3-40		1
12	813/50048		:Gasket			1
13	459/30451		:Cover, 4WD clutch			1
14	826/01417		:Bolt			10
16 *	904/20172		:Seal, TRIPLE LIP, 53.6 x 80.35 x 12			1
17	459/70133		:Yoke, coupling, 1480, 32 teeth			1
19	826/01553		:Bolt, Setscrew			1
20	445/14001		:Dowel			2

9812/0020U

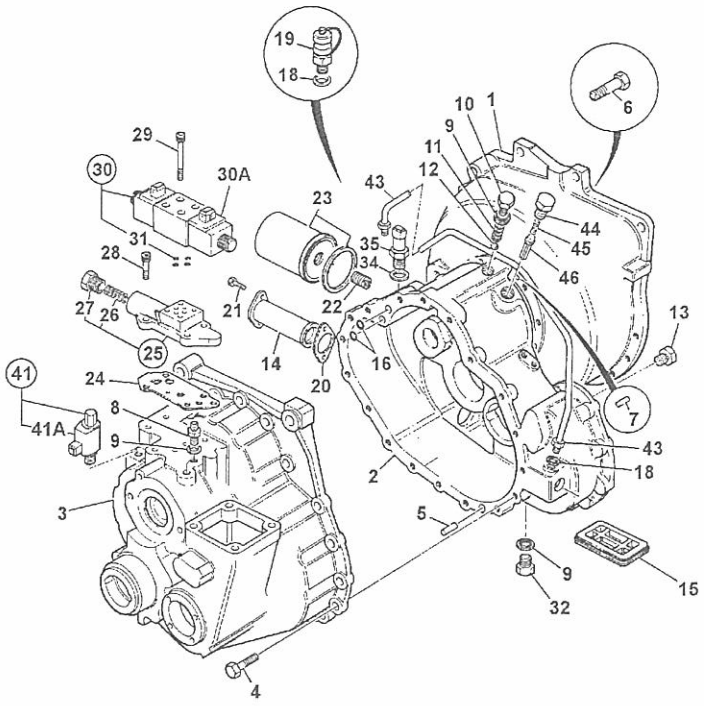

ITEM	PART NO	CHANGE NO	DESCRIPTION	REMARKS	USAGE CODE	QTY
1	459/30464		:Housing, flywheel			1
2	459/30463		:Casing, front			1
3	459/30435		:Casing, rear			1
4	826/01417		:Bolt			18
5	445/14001		:Dowel			2
6	1315/0409Z		:Screw, hex. head			1
7	445/14001		:Dowel			2
8	1606/0017		:Adapter, 5/8" x 1/2" M/M			2
9 *	1406/0018		:Seal, bonded, 1/2" BSP			3
10	816/80041		:Plug			3
11	814/00222		:Spring			1
12	916/00008		:Bearing, 14dia ball			1
13	816/80051		:Plug, 1/8" tapered			2
14	32/902200		:Strainer, suction			1
15	.		:'See Remark'	no longer fitted		
16 *	828/10222		:O Ring			2
18 *	1406/0011		:Seal, bonded			2
19	45/905000		Adapter, pressure test, 1/4BSP male			1
20 *	813/50027		Gasket			1
21	1321/0303Z		:Screw, M8 x 16			2
22	816/15184		:Adapter, 1/2"BSPx1"UNF			1
23	581/18076		:Element, transmission filter, 120.7mm long			1
24 *	813/10175		:Gasket, valve block			1
25	459/10144		:Valve, Adapter block assy, SS700 low ratio			1
26	814/00412		::Spring			1

F5-8-11 441/00760 - 4WD-2WS, EXTERNAL COMPONENTS ISSUE

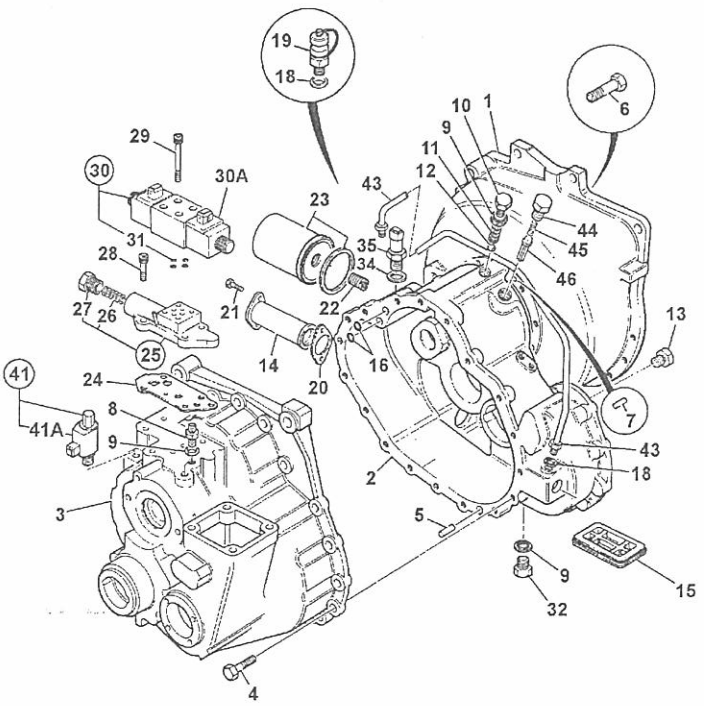

ITEM	PART NO	CHANGE NO	DESCRIPTION	REMARKS	USAGE CODE	QTY
27	816/80063		::Plug			1
28	1392/3207		:Capscrew			4
29	1391/3108Z		:Capscrew			1
30	25/220998		Valve, solenoid assembly			1
30A	25/221054		:Coil, 12V			1
31 *	35/100801		::Kit-seal, solenoid valve			1
32	816/80041		:Plug			2
35	701/80319	Superseded	:Switch, oil pressure,M12, green body,Deutsch			1
	701/80459		Switch, oil pressure, colour, id-red o/d white i/d	not supplied with transmission		1
35A *	1406/0011		Seal, bonded			1
40 *	813/50041		:Seal, rear			1
41	25/220804		Valve, solenoid assembly			1
43	830/11842		Pipe, assembly 4WD	740mm long		1
44	816/80061		Plug			1
45	814/10153		Spring, compression, T/C press.maint			1
46	459/70168		Spool, Adapter Solenoid			1

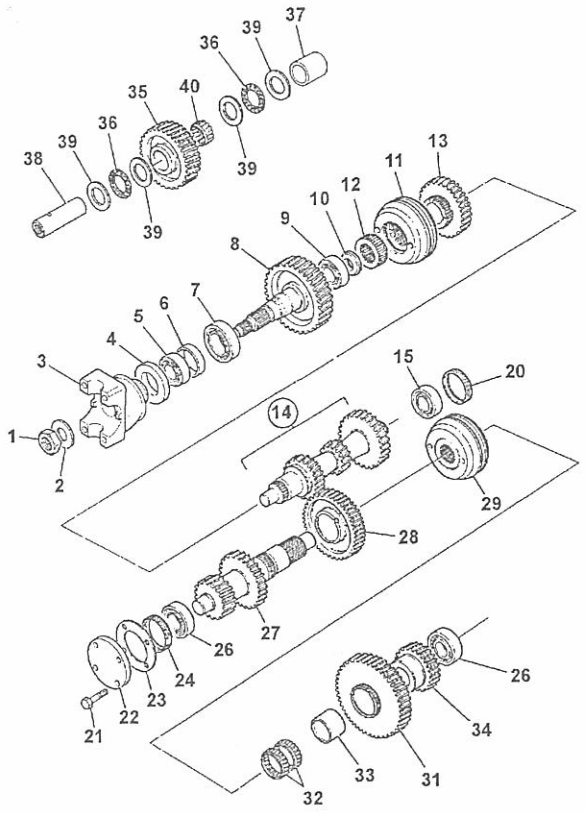

398700

ITEM	PART NO	CHANGE NO	DESCRIPTION	REMARKS	USAGE CODE	QTY
1	826/01551		Nut, Stake M30, (46mm Head)			1
2	460/32202		Washer			1
3	459/70317		Yoke, coupling - 1480, 35 teeth			1
4 *	904/20172		Seal, TRIPLE LIP, 53.6 x 80.35 x 12			1
5	907/51600		Bearing, taper roller			1
6	921/53400		Kit-Spacer			1
7	907/20045		Bearing, taper roller			1
8	459/50208		Gear, transfer 38T, SS750 low ratio			1
9	907/20005		Bearing, taper roller			1
10	445/64302		Spacer, mainshaft seal			1
11	445/03300		Synchroniser, assembly			1
12	445/03010		Sleeve, hub shaft	3rd & 4th speed		1
13	459/50206		Gear, 3rd speed, SS750 low ratio			1
14	459/50205		Gear, mainshaft, SS750			1
15	907/52800		Bearing, 35 x 65 x 18			1
20	459/70378		Kit, graded spacers			1
21	.		'See Remark'	not fitted		
22	.		'See Remark'	not fitted		
23	.		'See Remark'	not fitted		
24	459/70379		Kit, graded spacers			1
26	907/20049		Bearing, taper roller			2
27	459/50188		Layshaft, low ratio			1
28	459/50511		Gear, 2nd, 40t SS700	2nd 40 Teeth		1

9812/0020U

F5-8-21 441/00760 - 4WD-2WS, INTERNAL COMPONENTS ISSUE 1

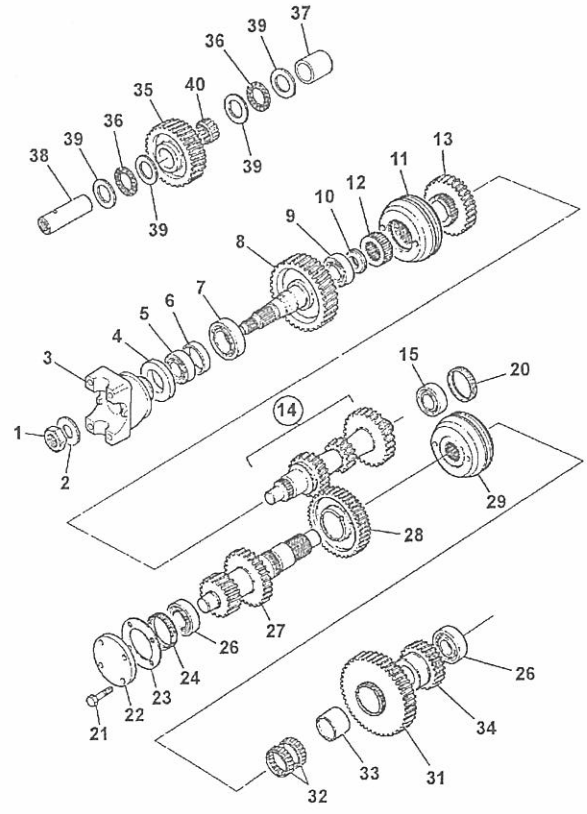

398700

ITEM	PART NO	CHANGE NO	DESCRIPTION	REMARKS	USAGE CODE	QTY
29	459/50520		Synchroniser, assembly			1
31	459/50509		Gear, 1st, 44t SS700	1st		1
32	917/02300		Bearing			2
33	917/00008		Bearing, inner race			1
34	.		'See Remark'	See frame F5-1-1		1
35	459/50440		Gear, idler, 35T			1
36	917/51400		Bearing			2
37	459/70206		Spacer, idler gear			1
38	459/70087		Shaft, idler			1
39	823/00451		Washer, thrust			4
40	917/02400		Bearing, needle roller			1

9812/0020U

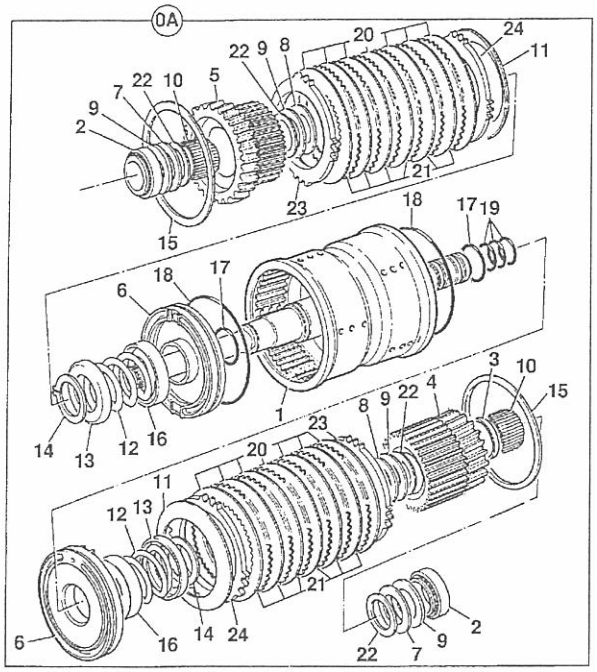

376130

ITEM	PART NO	CHANGE NO	DESCRIPTION	REMARKS	USAGE CODE	QTY
0A	459/10097		Clutch, assembly, input, reverser			1
1	459/50503		:Housing, input clutch, SS700			1
2	907/20012		:Bearing, taper roller			1
3	823/10355		:Spacer			1
4	459/50428		:Gear, 31T & plate carrier			1
5	459/50429		:Gear, 22T & plate carrier			1
6	459/10096		:Piston			2
7	823/10264		:Washer, thrust			1
8	823/10265		:Washer, thrust			1
9	917/10006		:Bearing, needle thrust			4
10	917/50600		:Bearing, needle roller			1
11	814/10115		:Disc, spring, spline, PS860			1
12	814/00345		:Spring			1
13	823/10266		:Washer, spring retainer			2
14	821/00296		:Circlip, external			2
15	826/10467		:Circlip, internal			1
16	331/16558		:Plate, oil baffle			2
17 *	828/10180		:O Ring			2
18 *	828/10181		:O Ring			1
19 *	904/50024		:Seal, ring			4
20	331/16520		:Plate, friction, clutch			10
21	331/16516		:Plate, counter, clutch			1
22	823/10316		:Washer, thrust, bevelled			4
23	331/16517		:Plate, pressure, clutch, 6.0 mm			2

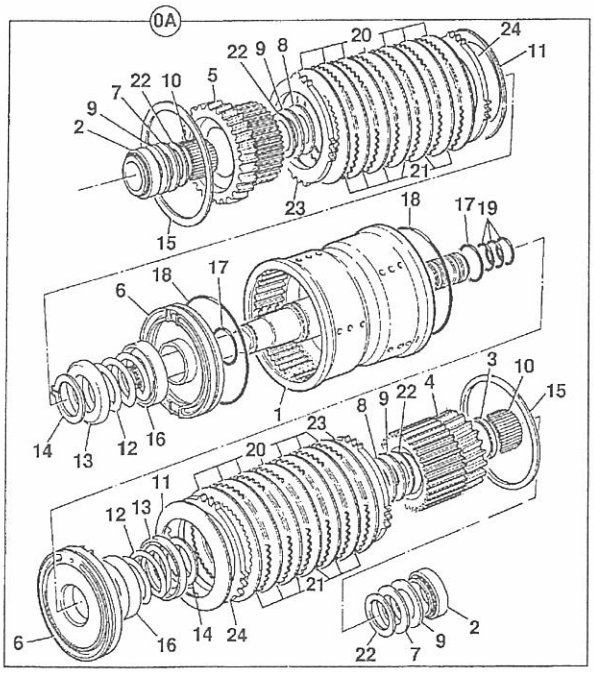

ITEM	PART NO	CHANGE NO	DESCRIPTION	REMARKS	USAGE CODE	QTY
24	331/16519		:Plate, shim, clutch, 1.2mm			a/r

376130

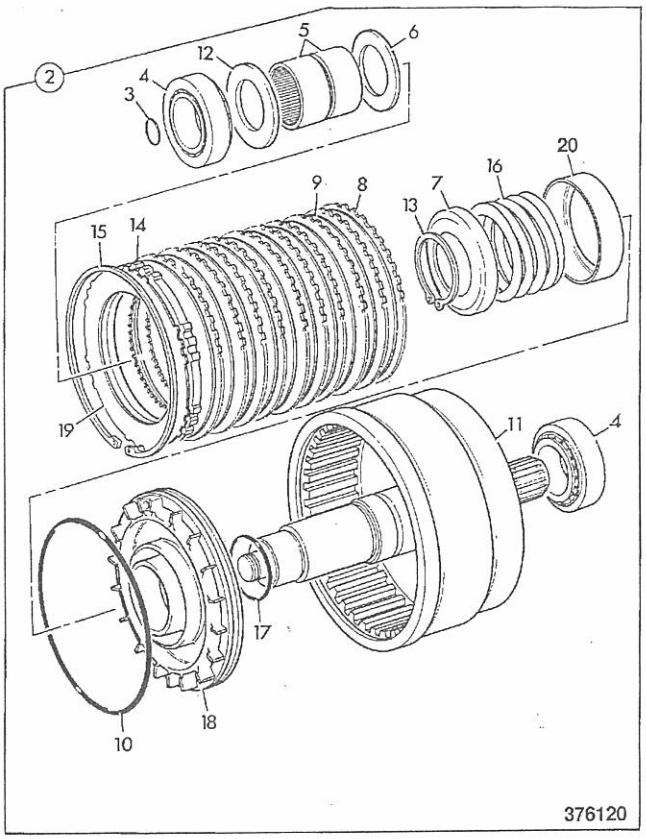

ITEM	PART NO	CHANGE NO	DESCRIPTION	REMARKS	USAGE CODE	QTY
2	459/10119		Clutch, assembly 4WD			1
3	904/14300		:Seal, ring, 'TURQUOISE'			1
4	907/52800		:Bearing, 35 x 65 x 18			2
5	917/02700		:Bearing			2
6	445/19808		:Washer, thrust, 3.5mm thick, phosphated			1
7	445/12304		:Retainer, spring			1
8	445/12307		:Plate, counter			10
9	445/03205		:Plate, friction			10
10 *	828/00414		:O Ring			1
11	459/50483		:Housing, 4wd clutch			1
12	823/10364		:Washer, thrust			1
13	821/00523		:Circlip			1
14	449/10601		:Plate, pressure, 4mm			1
15	2203/1115		:Circlip			1
16	814/00297		:Spring			1
17 *	828/00224		:O Ring			1
18	445/12316		:Piston, reverser, c/w oil baffle			1
19	445/12314		:Shim, plate, toothed			A/R

9812/0020U

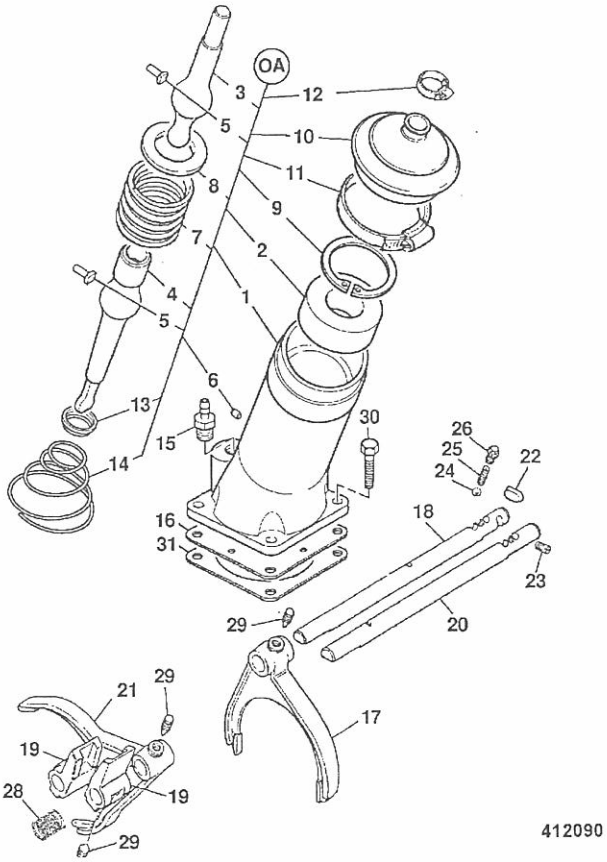

ITEM	PART NO	CHANGE NO	DESCRIPTION	REMARKS	USAGE CODE	QTY
0A	459/10143		Lever, assembly, gear turret			1
1	459/30295		:Housing, turret, gear lever			1
2	445/10802		:Seat			1
3	445/05501		:Lever, gear			1
4	459/70271		:Lever, bottom gearshift			1
5	445/03023		:Pin			2
6	835/10036		:Plug			1
7	814/00233		:Spring			1
8	445/10803		:Washer, ball			1
9	2203/1080		:Circlip			1
10	331/25566		:Gaiter, gear lever			1
11	821/10163		:Clip, worm drive			1
12	445/05302		:Clip			1
13	445/03020		:Retainer, spring			1
14	814/00221		:Spring			1
15	816/13382		:Adapter, hose			1
16	460/17603		:Baffle			1
17	459/30297		Fork, selector 1st			1
18	459/70181		Shaft, selector			1
19	459/70199		Block, selector			2
20	459/70181		Shaft, selector			1
21	459/30299		Fork, selector 3rd			1
22	445/03031		Roller, baulk			1
23	816/80027		Plug			1
24	916/00006		Ball, 11mm dia			2
25	814/00354		Spring			2

9812/0020U

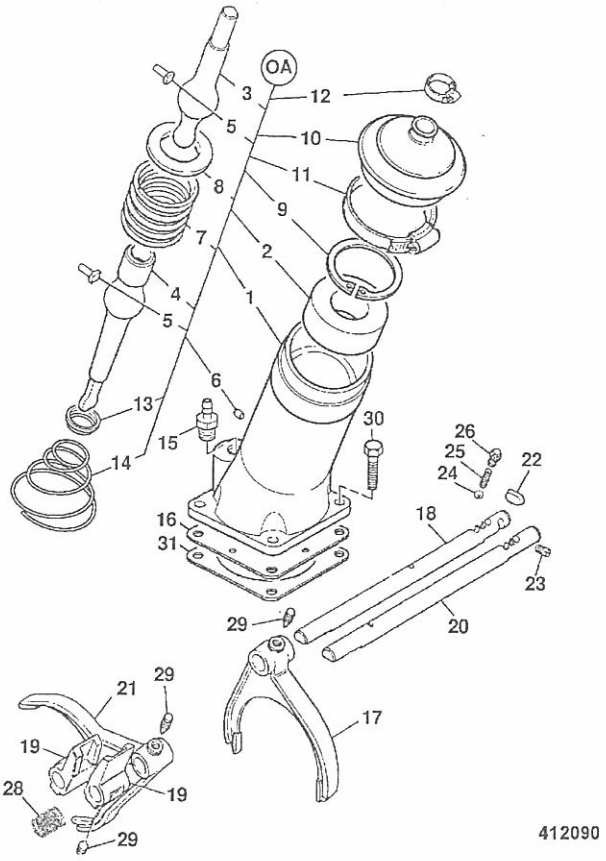

412090

ITEM	PART NO	CHANGE NO	DESCRIPTION	REMARKS	USAGE CODE	QTY
26	816/80057		Plug, detent			2
27	445/05302		Clip			4
28	814/00406		Spring			
29	445/26110		Screw			4
30	826/01416		Screw, micro-encapsulated			4
31	813/50042		Gasket			1

9812/0020L

F5-70-1 PUMP & DRIVESHAFT, SYNCROSHUTTLE, GEARPUMP MACHINES

ISSUE

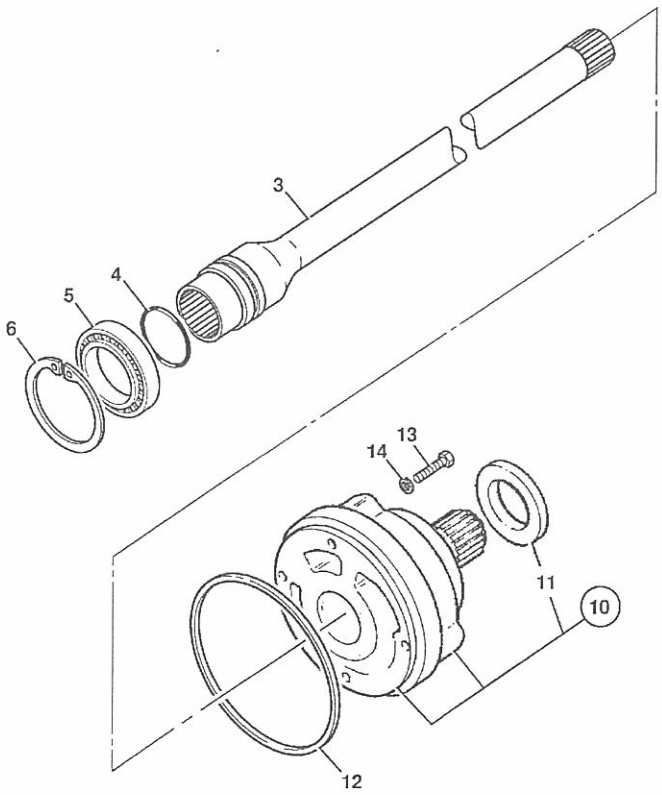

376210

ITEM	PART NO	CHANGE NO	DESCRIPTION	REMARKS	USAGE CODE	QTY
3	459/50431		Shaft, pump drive, SS700 gearbox			1
4 *	904/20210		Ring, seal			1
5	916/10012		Bearing, ball			1
6	2203/1068		Circlip, internal			1
10	20/925552		Pump, assembly, transmission			1
11 *	904/20226		:Seal, transmission pump			1
12 *	813/50041		Seal, rear			1
13	1315/3311Z		Bolt, M8 X 45			4
14 *	823/00291		Washer, copper			4

9812/0020U

G

G1 BRAKES

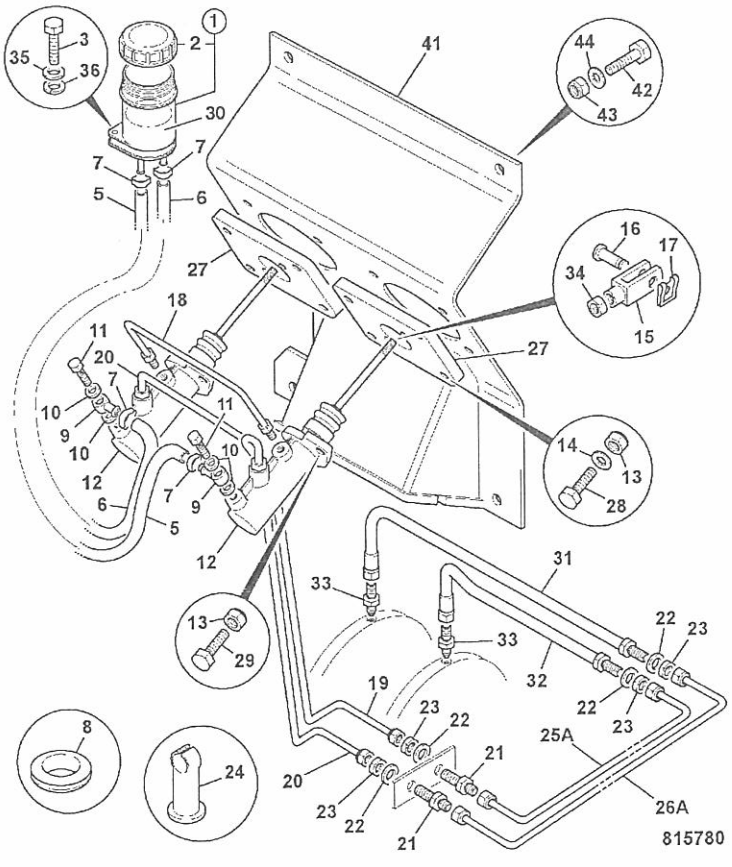

ITEM	PART NO	CHANGE NO	DESCRIPTION	REMARKS	USAGE CODE	QTY
1	126/00200		Reservoir	Brake		1
1A	162/03143		:Cover, reservoir cap			1
1B	123/02142		::Seal, splash guard			1
2	123/06356		Cover, brake reservoir			1
3	1315/0210Z		Bolt, M6 x 40mm long			2
5	*332/C1096		Hose, 6x12x680	680mm long right hand side master cylinder		1
6	*332/C1096		Hose, 6x12x680	680mm long left hand master cylinder		1
7	*821/10420		Clip, ear clip, 11.1-13.1			4
8	828/00367		Grommet			2
9	816/70009		Connector, banjo			2
10	823/00372		Washer			4
11	816/75016		Bolt, banjo			2
12	15/920111	To M TBA	Cylinder, brake master			2
	15/920402	M TBA on	Cylinder, brake master, "Carlisle"	For installation see G1-1-12		2
12A	15/920152	To M TBA	:Kit-repair, major	For 15/920111 only		1
13	1370/0203Z		Nut, self lock, M8			12
14	1420/0007Z		Washer, plain, M8			8
15	913/00036		Clevis			2
16	913/00014		Pin, clevis			2
17	913/00005		Clip, clevis			2
18	123/02516		Pipe, servo link			1
19	123/07854		Pipe, left hand side			1
20	123/07853		Pipe, right hand side, brake			1

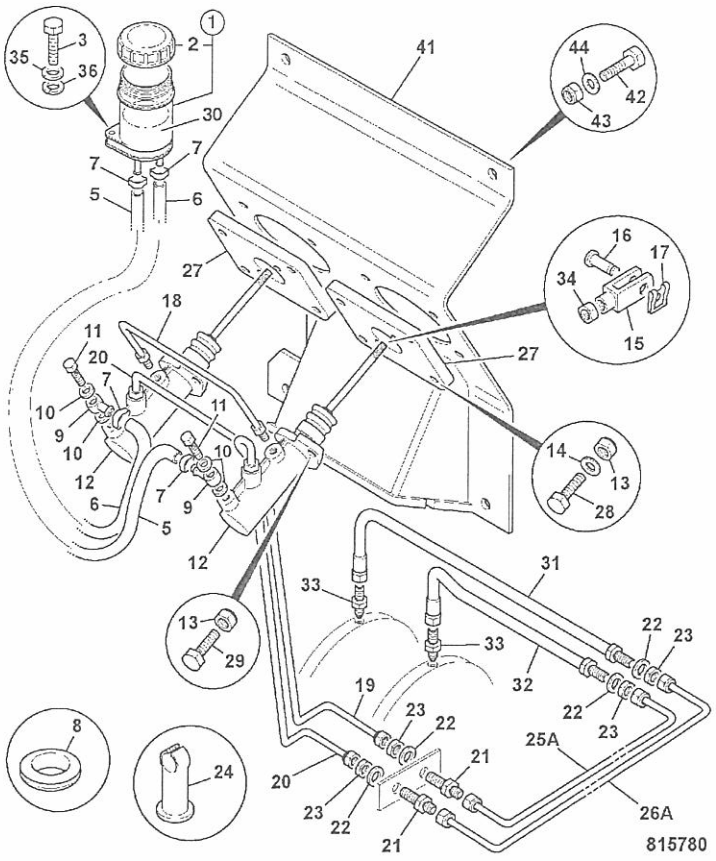

ITEM	PART NO	CHANGE NO	DESCRIPTION	REMARKS	USAGE CODE	QTY
21	816/15125		Adapter, bulkhead			2
22	1417/0014Z		Washer, star			
23	15/106700		Nut			
24	821/00069		Clip, pipe			2
25A	123/07436		Pipe, left hand middle			
26A	123/07437		Pipe, right hand middle			
27	123/02719		Plate, master cyl adapter			1
28	1315/0305Z		Screw, M8 x 20mm long			
29	1315/0308Z		Screw, M8x30			
30	4002/0503		Brake, fluid, 5 ltr			A/R
31	649/51320		Hose, brake			
32	649/51240		Hose, brake			
33	816/15138		Adapter, M12 x M12			2
35	1420/0006Z		Washer, M6			
36	1425/0006Z		Washer, Spring			
41	125/00404		Bracket, master cylinder, mounting			1
42	1315/0407Z		Bolt, M10x25			4
43	1420/0008Z		Washer, Plain M10			4
44	1370/0303Z		Nut, lock, M10			

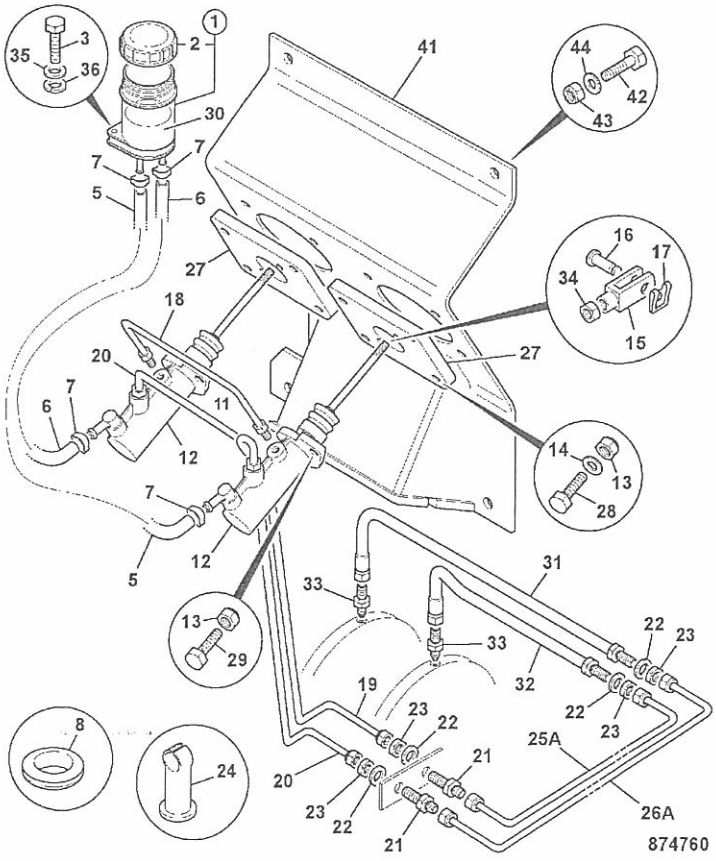

ITEM	PART NO	CHANGE NO	DESCRIPTION	REMARKS	USAGE CODE	QTY
1	126/00200		Reservoir	Brake		1
1A	162/03143		:Cover, reservoir cap			1
1B	123/02142		::Seal, splash guard			
2	123/06356		Cover, brake reservoir			1
3	1315/0210Z		Bolt, M6 x 40mm long			2
5	*332/C1094		Hose, 6x12x580	580mm long right hand side master cylinder		1
6	*332/C1094		Hose, 6x12x580	580mm long left hand master cylinder		1
7	*821/10420		Clip, ear clip, 11.1-13.1			
8	828/00367		Grommet			2
12	15/920402		Cylinder, brake master, "Carlisle"			2
13	1370/0203Z		Nut, self lock, M8			12
14	1420/0007Z		Washer, plain, M8			6
15	913/00036		Clevis			2
16	913/00014		Pin, clevis			2
17	913/00005		Clip, clevis			2
18	123/02516		Pipe, servo link			1
19	123/07854		Pipe, left hand side			1
20	123/07853		Pipe, right hand side, brake			1
21	816/15125		Adapter, bulkhead			2
22	1417/0014Z		Washer, star			6
23	15/106700		Nut			6
24	821/00069		Clip, pipe			2
25A	123/07436		Pipe, left hand middle			1

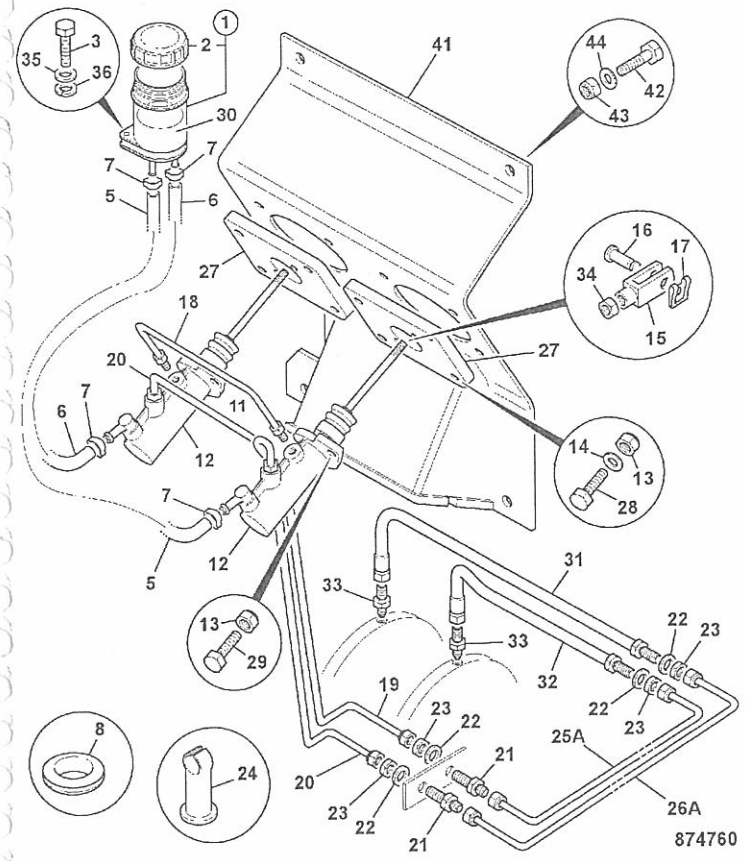

ITEM	PART NO	CHANGE NO	DESCRIPTION	REMARKS	USAGE CODE	QTY
26A	123/07437		Pipe, right hand middle			1
27	123/02719		Plate, master cyl adapter			1
28	1315/0305Z		Screw, M8 x 20mm long			8
29	1315/0308Z		Screw, M8x30			4
30	4002/0503		Brake, fluid, 5 ltr			A/R
31	649/51320		Hose, brake			1
32	649/51240		Hose, brake			1
33	816/15138		Adapter, M12 x M12			2
35	1420/0006Z		Washer, M6			2
36	1425/0006Z		Washer, Spring			2
41	125/00404		Bracket, master cylinder, mounting			1
42	1315/0407Z		Bolt, M10x25			4
43	1420/0008Z		Washer, Plain M10			4
44	1370/0303Z		Nut, lock, M10			4

9812/0020U

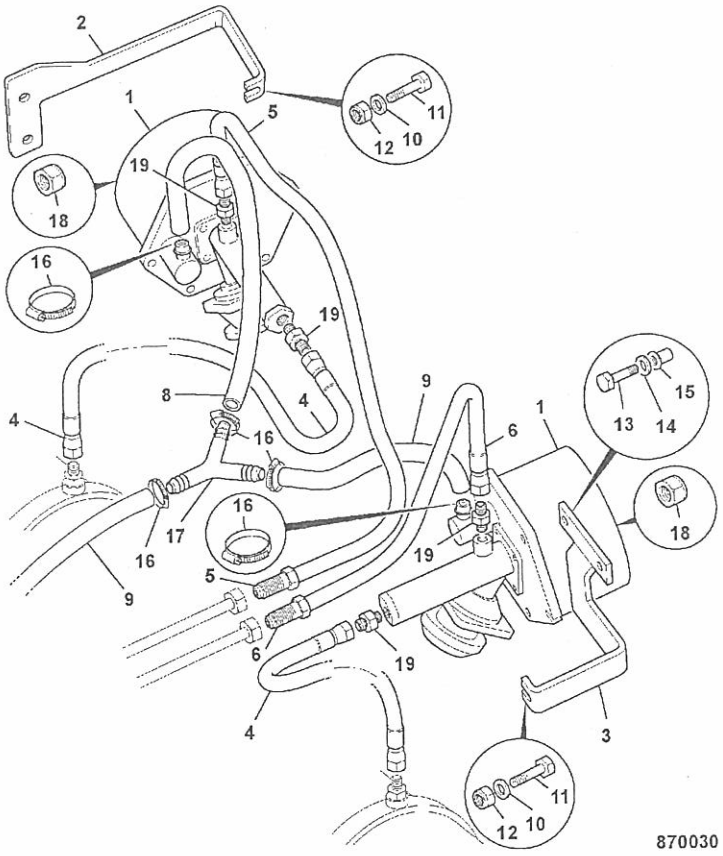

ITEM	PART NO	CHANGE NO	DESCRIPTION	REMARKS	USAGE CODE	QTY
1	15/920255		Brake, Remote Servo			2
2	331/59835		Mounting, servo			1
3	331/59833		Mounting, servo			1
4	649/51240		Hose, brake			2
5	649/51232		Hose			1
6	649/21000		Hose, brake			1
7	648/31003		Hose, brake vacuum, 9.5mm bore x 400mm			1
8	648/31002		Hose, Vacuum			1
9	648/31005		Hose, vacuum 1350mm long			1
10	1420/0005Z		Washer, M5			2
11	1315/0107Z		Bolt			2
12	1370/0003Z		Nut			2
13	1315/0207Z		Screw, M6 x 25mm long			2
14	1420/0006Z		Washer, M6			2
15	826/01101		Nut, rivet,M6 open ended, for 3 to 5.5mm plt			2
16	2201/0004		Clip, jubilee			5
17	816/60231		Connector, 3 way			1
18	1370/0203Z		Nut, self lock, M8			2
19	816/15138		Adapter, M12 x M12			4

9812/0020U

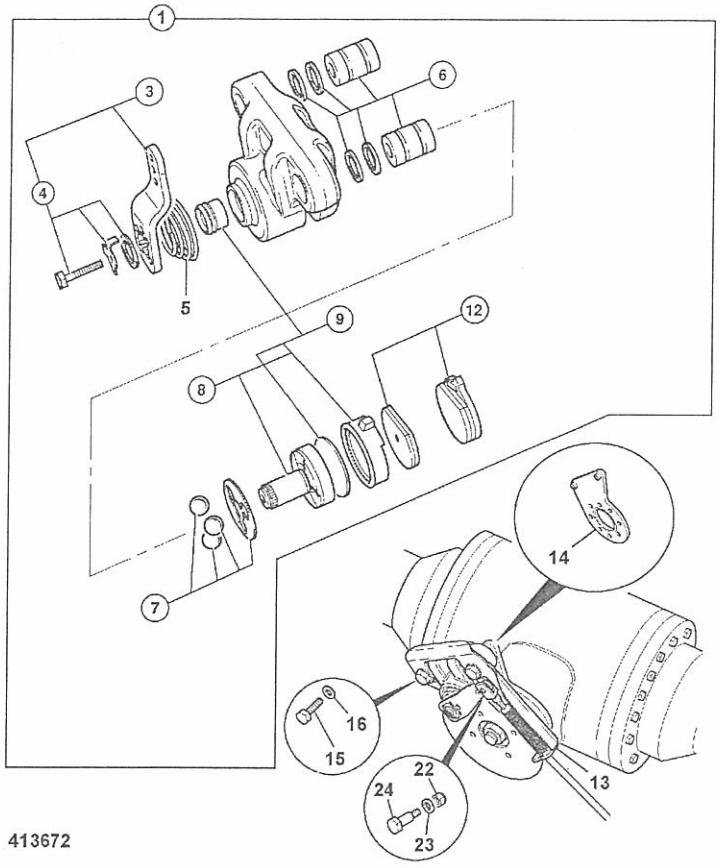

413672

ITEM	PART NO	CHANGE NO	DESCRIPTION	REMARKS	USAGE CODE	QTY
1	15/920269		Brake, caliper, parkbrake, Hayes, booted			1
3	15/920290		:Kit-lever			1
4	15/920289		::Kit-bolt, torx head			1
5	15/920291		:Kit-spring			1
6	15/920293		:Kit-bush			1
7	478/00844		:Kit-bearing			1
8	15/920294		:Kit-rotor, assembly			1
9	15/920292		::Kit-seal			1
12	15/920103		:Kit-pad, brake Pad			1
13	331/24632		Bracket, reaction			1
14	458/20511		Bracket, caliper mount, axle			1
15	826/10526		Bolt			2
16	823/00603		Washer, hardened, M16			4
22	1370/0103Z		Nut, Self lock, M6			1
23	1420/0006Z		Washer, M6			1
24	826/01597	To M0906213	Screw, shoulder, 8 x 20 x M6			1
	826/11378		Screw, shoulder, 8 x 12 x M6			1

V

- V41 ENGINE ASSEMBLYS
- V42 ENGINE MOUNTINGS
- V43 AIR FILTERS
- V44 AIR INDUCTION HOSES
- V45 EXHAUST SYSTEMS
- V46 RADIATOR FITTINGS & MOUNTINGS
- V48 RADIATOR & HOSES
- V49 FRONT END DRIVE
- V50 LOW PRESSURE FUEL SYSTEM
- V51 FUEL SEDIMENT FILTERS
- V52 EXHAUSTER SERVO BRAKES
- V55 OIL LEVEL DIPSTICK & TUBE
- V56 AIR CONDITIONING COMPRESSOR
- V57 ENGINE OIL DRAIN

ITEM	PART NO	CHANGE NO	DESCRIPTION	REMARKS	USAGE CODE	QTY
1	320/40031		Engine, assembly 84. 5bhp-12v, W300 T/C SAE HSG.	For Service Parts, Refer to 9802/2910		1

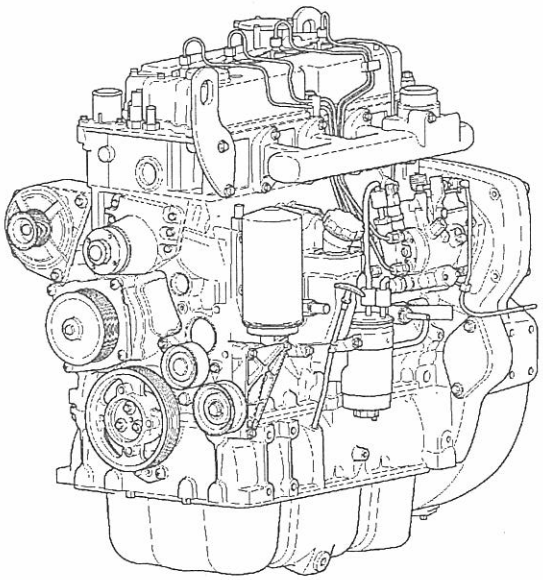

741840

ITEM	PART NO	CHANGE NO	DESCRIPTION	REMARKS	USAGE CODE	QTY
	320/40069		Engine, assembly 91bhp-12v, turbo W300 T/C	For Service Parts, refer to 9802/2940		1

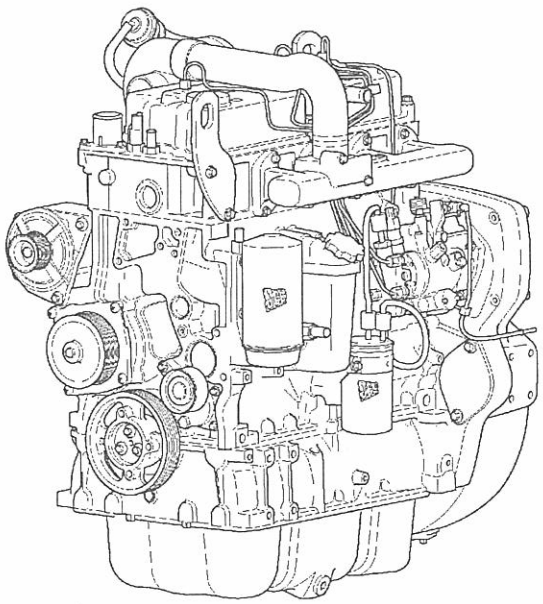

742570

V

- V41 ENGINE ASSEMBLYS
- ● V42 ENGINE MOUNTINGS
- V43 AIR FILTERS
- V44 AIR INDUCTION HOSES
- V45 EXHAUST SYSTEMS
- V46 RADIATOR FITTINGS & MOUNTINGS
- V48 RADIATOR & HOSES
- V49 FRONT END DRIVE
- V50 LOW PRESSURE FUEL SYSTEM
- V51 FUEL SEDIMENT FILTERS
- V52 EXHAUSTER SERVO BRAKES
- V55 OIL LEVEL DIPSTICK & TUBE
- V56 AIR CONDITIONING COMPRESSOR
- V57 ENGINE OIL DRAIN

V42-1-1 ENGINE MOUNTINGS, 2WS

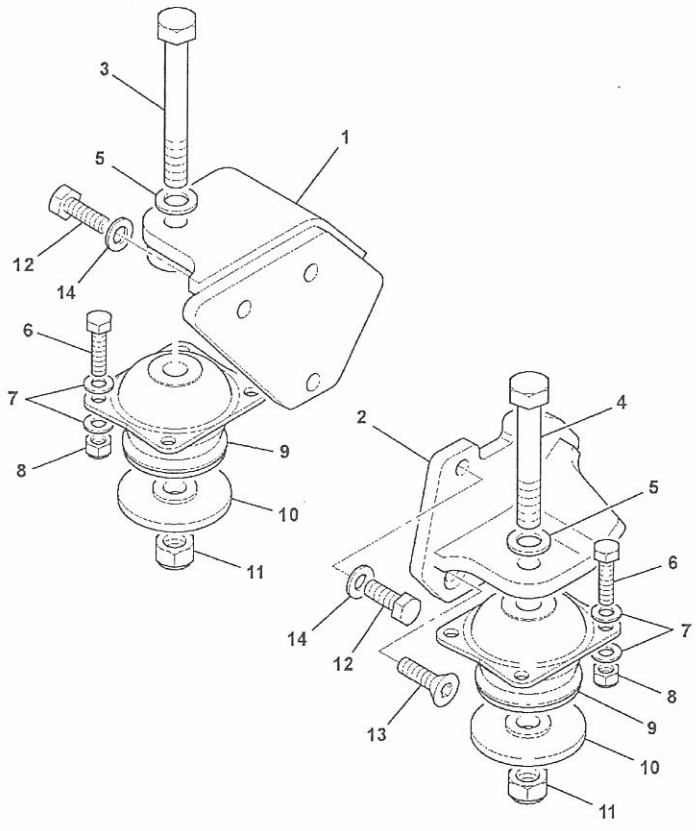

742160

ITEM	PART NO	CHANGE NO	DESCRIPTION	REMARKS	USAGE CODE	QTY
	335/08918		Bracket, engine mounting, right hand			1
2	335/08805		Bracket, engine mounting, left hand			1
3	1315/3724Z		Bolt, M16 x 140			1
4	1315/3722Z		Bolt, M16 x 120lg			1
5	1420/0011Z		Washer, M16 plain			4
6	1315/3410Z		Bolt			8
7	1420/0008Z		Washer, Plain M10			16
8	1370/0303Z		Nut, lock, M10			8
9	331/40347		Mounting, resilient			4
10	829/31165	Superseded	Washer, rebound, 16x80x9.5			2
	829/31272		Washer, rebound, 16x75x8			2
11	1370/0603Z		Nut, M16			2
12	1315/0509Z		Screw, M12 x 35mm			6
13	1420/0009Z		Washer, Plain M12			6
14	826/11274		Screw, M12x35, countersunk head			2

V

V41 ENGINE ASSEMBLYS
V42 ENGINE MOUNTINGS
● V43 AIR FILTERS
V44 AIR INDUCTION HOSES
V45 EXHAUST SYSTEMS
V46 RADIATOR FITTINGS & MOUNTINGS
V48 RADIATOR & HOSES
V49 FRONT END DRIVE
V50 LOW PRESSURE FUEL SYSTEM
V51 FUEL SEDIMENT FILTERS
V52 EXHAUSTER SERVO BRAKES
V55 OIL LEVEL DIPSTICK & TUBE
V56 AIR CONDITIONING COMPRESSOR
V57 ENGINE OIL DRAIN

V43-1-1 FILTER, AIR, 2WS & AWS

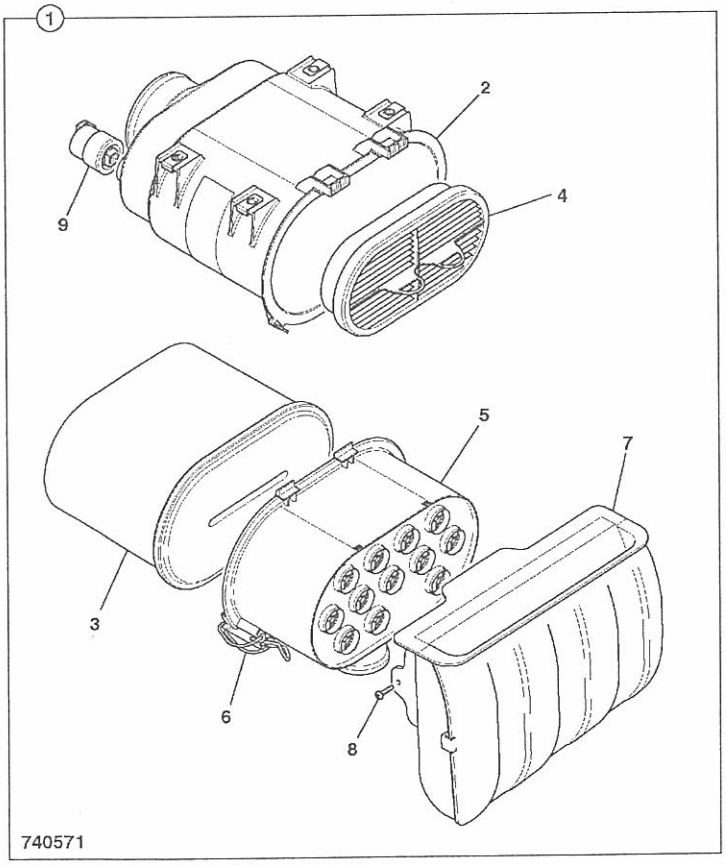

ITEM	PART NO	CHANGE NO	DESCRIPTION	REMARKS	USAGE CODE	QTY
1	32/925684		Filter, air, assembly			1
2	N.S.P		:None serviced part			1
3	32/925682		:Element, air filter, main			1
4	32/925683		:Element, air filter, safety			1
5	580/12174		:Filter, pre-cleaner			1
6	32/925364		:Clip, overcentre			2
7	32/925716		:Filter, air intake			1
8	32/925711		:Screw			2
9	32/925686		:Switch, vacuum sensor			1

V

V41 ENGINE ASSEMBLYS
V42 ENGINE MOUNTINGS
V43 AIR FILTERS
● V44 AIR INDUCTION HOSES
V45 EXHAUST SYSTEMS
V46 RADIATOR FITTINGS & MOUNTINGS
V48 RADIATOR & HOSES
V49 FRONT END DRIVE
V50 LOW PRESSURE FUEL SYSTEM
V51 FUEL SEDIMENT FILTERS
V52 EXHAUSTER SERVO BRAKES
V55 OIL LEVEL DIPSTICK & TUBE
V56 AIR CONDITIONING COMPRESSOR
V57 ENGINE OIL DRAIN

V44-4-1 AIR INDUCTION HOSES, 2WS TURBO

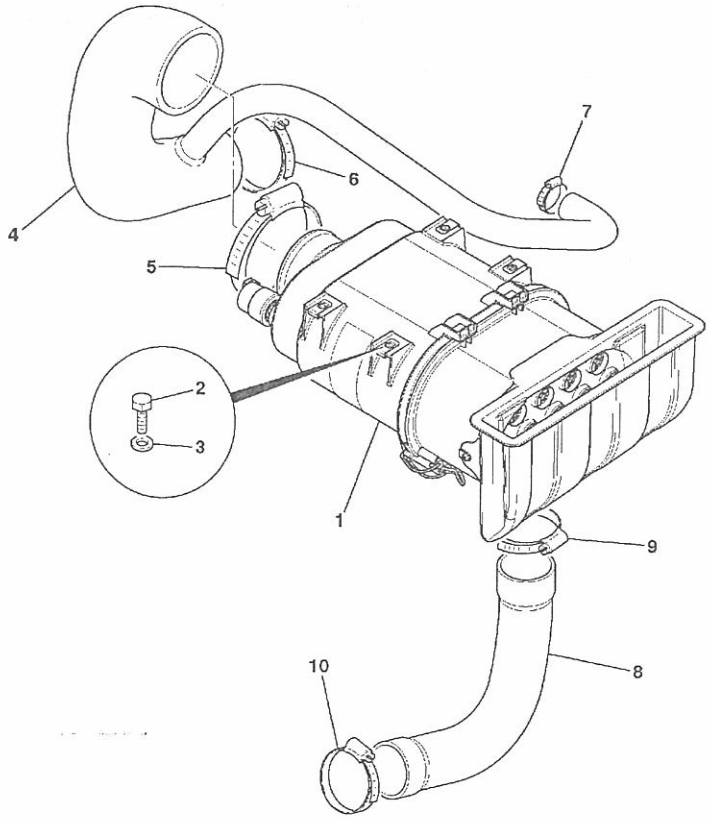

788340

ITEM	PART NO	CHANGE NO	DESCRIPTION	REMARKS	USAGE CODE	QTY
1	.		'See Remark'	See Index		1
2	1315/0205Z		Bolt			4
3	1420/0006Z		Washer, M6			4
4	*834/11203		Hose, air induction, 2ws turbo			1
5	2201/0016		Clip, jubilee			1
6	2201/0014		Clip, jubilee			1
7	2201/0007		Clip, jubilee			1
8	834/11028		Hose, air scavenge, 2ws			1
9	2201/0012		Clip, jubilee			1
10	2201/0013		Clip, jubilee			1

V

V41 ENGINE ASSEMBLYS
V42 ENGINE MOUNTINGS
V43 AIR FILTERS
V44 AIR INDUCTION HOSES
● V45 EXHAUST SYSTEMS
V46 RADIATOR FITTINGS & MOUNTINGS
V48 RADIATOR & HOSES
V49 FRONT END DRIVE
V50 LOW PRESSURE FUEL SYSTEM
V51 FUEL SEDIMENT FILTERS
V52 EXHAUSTER SERVO BRAKES
V55 OIL LEVEL DIPSTICK & TUBE
V56 AIR CONDITIONING COMPRESSOR
V57 ENGINE OIL DRAIN

9812/0020U

V45-1-1 SILENCER & EXTENSION, 2WS NAT/ASP

ISSUE 1

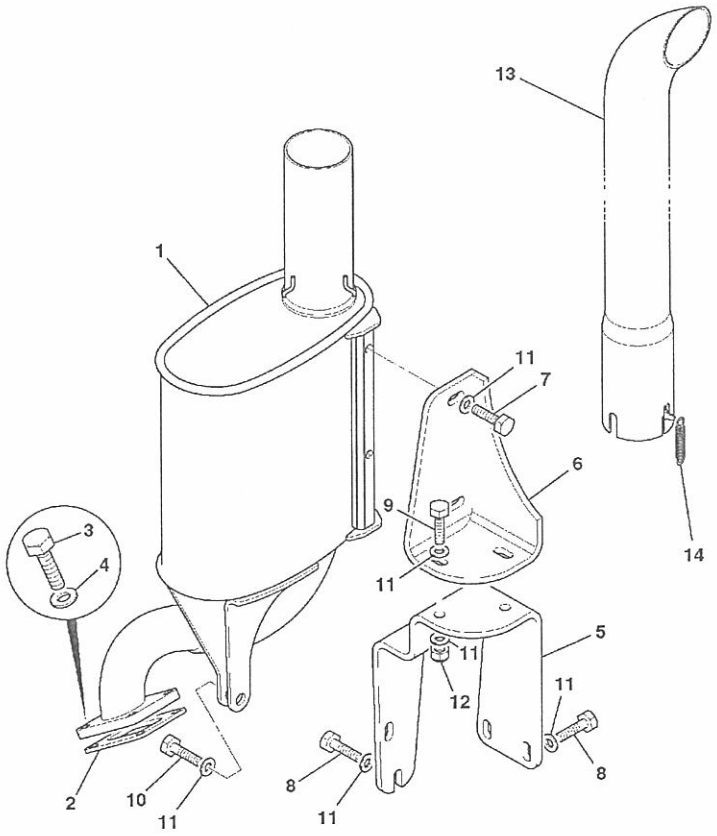

742683

ITEM	PART NO	CHANGE NO	DESCRIPTION	REMARKS	USAGE CODE	QTY
1	331/41426		Silencer, nat/asp exhaust			1
2	320/06006		Gasket			1
3	1315/0307Z		Screw, M8 X 25			4
4	1411/0002Z		Washer			4
5	331/44900		Bracket, exhaust mounting			1
6	331/44901		Bracket, exhaust mounting			1
7	1315/0407Z		Bolt, M10x25			2
8	1315/0408Z		Bolt, M10x30			4
9	1315/0409Z		Screw, hex. head			2
10	1315/0410Z		Bolt, M10 x 40			1
11	1420/0008Z		Washer, Plain M10			11
12	1370/0303Z		Nut, lock, M10			2
13	331/38960		Pipe, exhaust extension			1
14	814/10177		Spring, extension			1

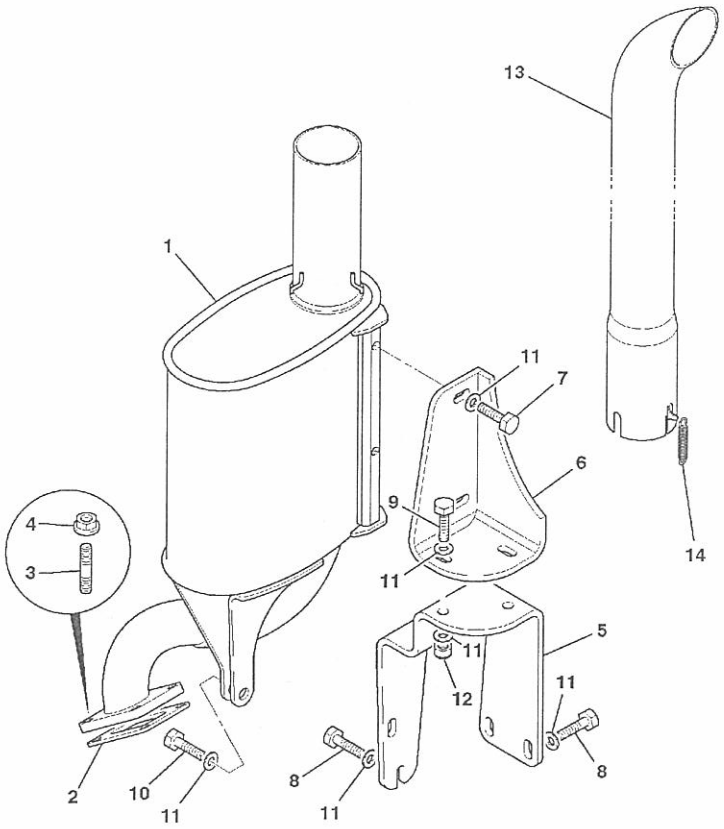

742684

ITEM	PART NO	CHANGE NO	DESCRIPTION	REMARKS	USAGE CODE	QTY
1	331/41426		Silencer, nat/asp exhaust			1
2	320/06006		Gasket			1
3	320/07063		Stud, M8 X 1.25			
4	02/291116		Nut			4
5	331/44900		Bracket, exhaust mounting			1
6	331/44901		Bracket, exhaust mounting			
7	1315/0407Z		Bolt, M10x25			2
8	1315/0408Z		Bolt, M10x30			1
9	1315/0409Z		Screw, hex. head			
10	1315/0410Z		Bolt, M10 x 40			1
11	1420/0008Z		Washer, Plain M10			1
12	1370/0303Z		Nut, lock, M10			
13	*331/53874		Pipe, exhaust extension			1
14	*814/10177		Spring, extension			2

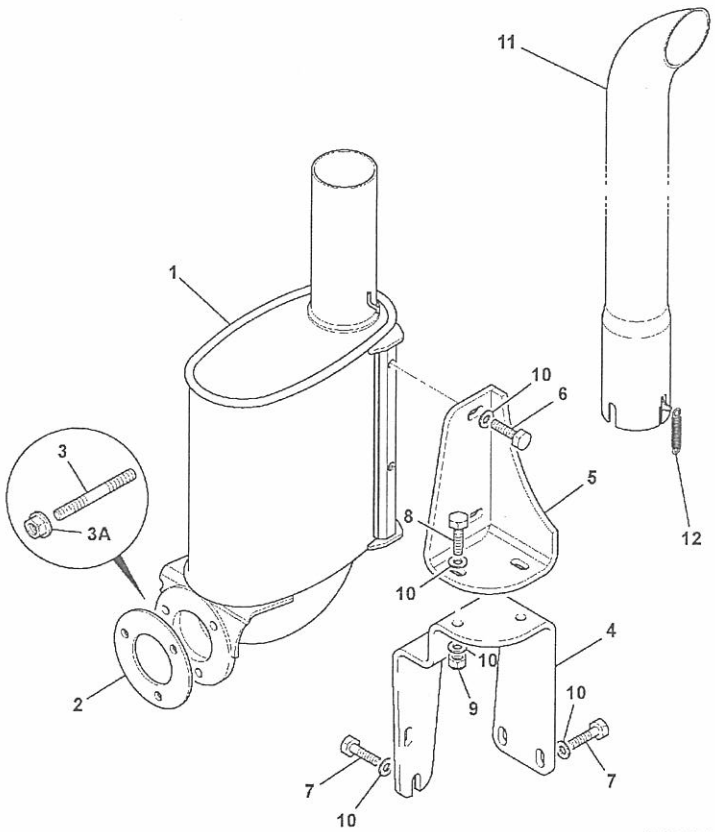

742692

ITEM	PART NO	CHANGE NO	DESCRIPTION	REMARKS	USAGE CODE	QTY
1	331/40186		Silencer, turbo exhaust			1
2	813/10258		Gasket, exhaust			1
3	826/11002	Superseded	Stud, M10			
	826/11384		Stud, M10 X 37			1
3A	02/291135		Nut, anti-seize			3
4	331/44900		Bracket, exhaust mounting			
5	331/44901		Bracket, exhaust mounting			1
6	1315/0407Z		Bolt, M10x25			2
7	1315/0408Z		Bolt, M10x30			7
8	1315/0409Z		Screw, hex. head			2
9	1370/0303Z		Nut, lock, M10			2
10	1420/0008Z		Washer, Plain M10			8
11	331/38960		Pipe, exhaust extension			1
12	814/10177		Spring, extension			1

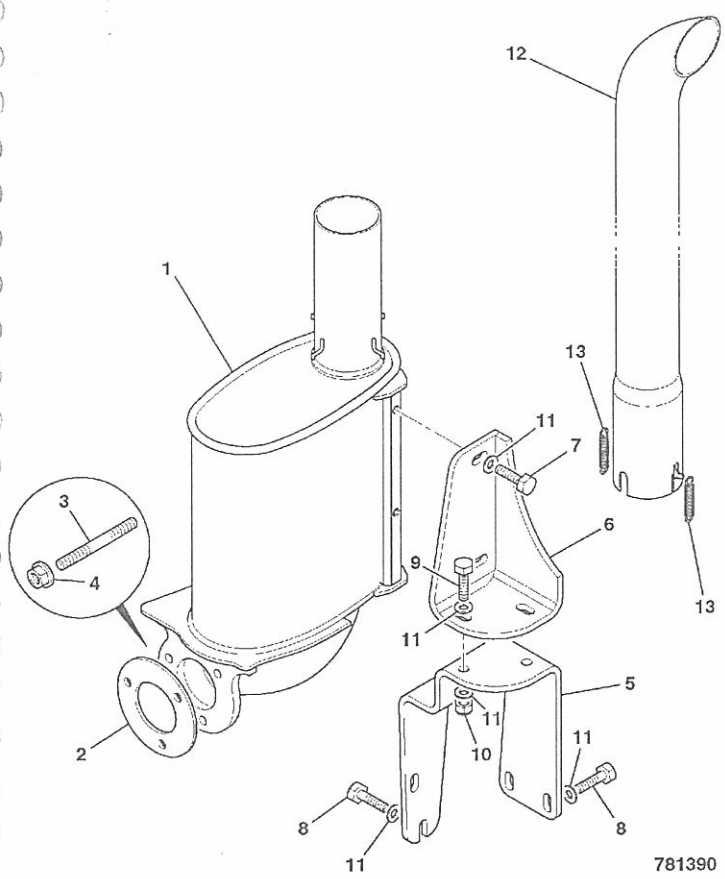

ITEM	PART NO	CHANGE NO	DESCRIPTION	REMARKS	USAGE CODE	QTY
1	331/52383		Silencer, exhaust			1
2	813/10258		Gasket, exhaust			1
3	826/11384		Stud, M10 X 37			3
4	02/291135		Nut, anti-seize			3
5	331/44900		Bracket, exhaust mounting			1
6	331/55522		Bracket, exhaust mounting			1
7	1315/0407Z		Bolt, M10x25			2
8	1315/0408Z		Bolt, M10x30			4
9	1315/0409Z		Screw, hex. head			2
10	1370/0303Z		Nut, lock, M10			2
11	1420/0008Z		Washer, Plain M10			10
12	331/53874		Pipe, exhaust extension			1
13	814/10177		Spring, extension			2

V

V41 ENGINE ASSEMBLYS
V42 ENGINE MOUNTINGS
V43 AIR FILTERS
V44 AIR INDUCTION HOSES
V45 EXHAUST SYSTEMS
● V46 RADIATOR FITTINGS & MOUNTINGS
V48 RADIATOR & HOSES
V49 FRONT END DRIVE
V50 LOW PRESSURE FUEL SYSTEM
V51 FUEL SEDIMENT FILTERS
V52 EXHAUSTER SERVO BRAKES
V55 OIL LEVEL DIPSTICK & TUBE
V56 AIR CONDITIONING COMPRESSOR
V57 ENGINE OIL DRAIN

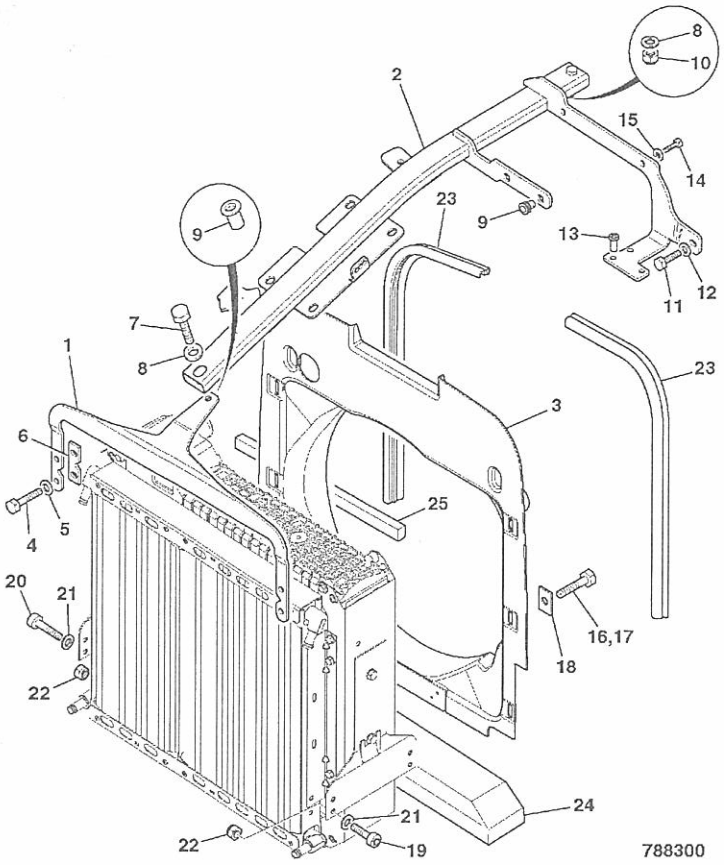

ITEM	PART NO	CHANGE NO	DESCRIPTION	REMARKS	USAGE CODE	QTY
1	331/44276		Bracket, centre beam mounting, front 2WS			1
2	335/10222		Beam, centre mounting			1
3	346/00104		Cowling, fan 20", 2ws			1
4	1315/0307Z		Screw, M8 X 25			4
5	1420/0007Z		Washer, plain, M8			4
6	331/48338		Plate, spacer			2
7	1315/0414Z		Bolt			2
8	1420/0008Z		Washer, Plain M10			2
9	826/01105		Nut, rivet,M10 open ended			2
10	1370/0303Z		Nut, lock, M10			1
11	1315/0308Z		Screw, M8x30			1
12	1420/0007Z		Washer, plain, M8			1
13	826/01810		Nut, rivet, M6 open end, for 5.5 to 8mm plt			2
14	1315/0207Z		Screw, M6 x 25mm long			2
15	1411/0001Z		Washer			4
16	1315/0307Z		Screw, M8 X 25			4
17	1315/0305Z		Screw, M8 x 20mm long			2
18	123/06362		Washer, spreader			6
19	1391/3409Z		Capscrew, M10 x 35mm			2
20	1391/3410Z		Capscrew			2
21	1411/0004Z		Washer			8
22	1370/0303Z		Nut, lock, M10			4
23	926/51301		Strip, sealing, L=640mm			1
24	331/36060		Seal, anti-recirculation			1
25	331/52016		Seal, anti-recirculation			2

V

V41 ENGINE ASSEMBLYS
V42 ENGINE MOUNTINGS
V43 AIR FILTERS
V44 AIR INDUCTION HOSES
V45 EXHAUST SYSTEMS
V46 RADIATOR FITTINGS & MOUNTINGS
● V48 RADIATOR & HOSES
V49 FRONT END DRIVE
V50 LOW PRESSURE FUEL SYSTEM
V51 FUEL SEDIMENT FILTERS
V52 EXHAUSTER SERVO BRAKES
V55 OIL LEVEL DIPSTICK & TUBE
V56 AIR CONDITIONING COMPRESSOR
V57 ENGINE OIL DRAIN

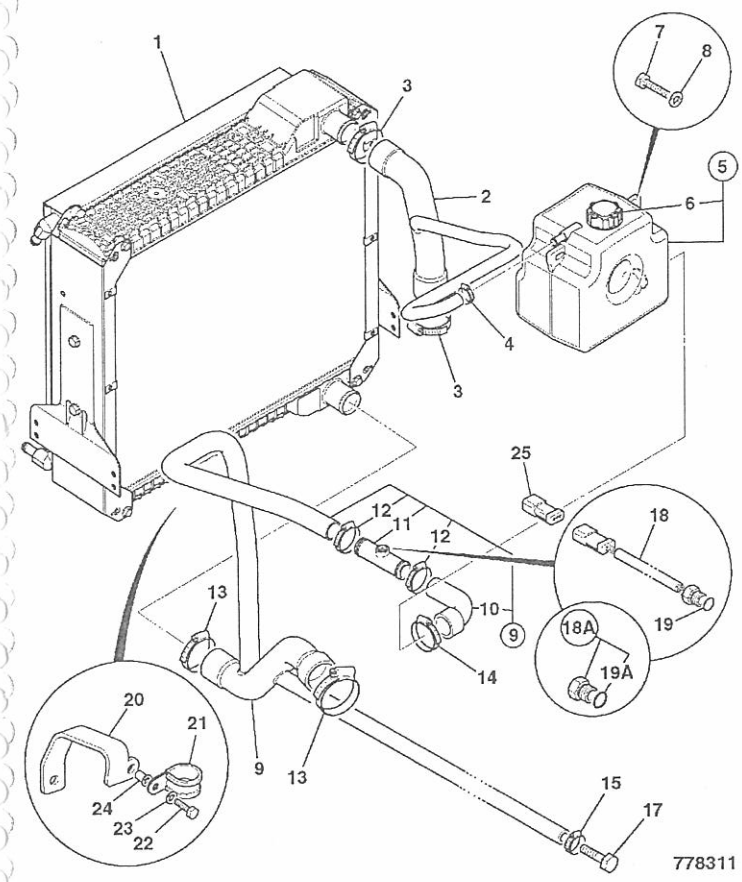

ITEM	PART NO	CHANGE NO	DESCRIPTION	REMARKS	USAGE CODE	QTY
1	128/14326		Cooler, assembly 5row, 2ws	For Service Parts, See frame V47-1-1		1
2	834/10989		Hose, radiator top, 2ws			1
3	2201/0011		Clip, jubilee			2
4	2201/0005		Clip, jubilee			1
5	128/15313		Tank, coolant expansion			1
6	477/00223		Cap, pressure assembly			1
7	1315/0310Z		Bolt, M8x40			2
8	1420/0007Z		Washer, plain, M8			2
9	128/15196		Hose, radiator bottom 2ws, assembly			1
10	834/11106		:Hose, elbow			1
11	335/09126		:Housing, water level sensor			1
12	2201/0007		:Clip, jubilee			2
13	2201/0012		Clip, jubilee			2
14	2201/0010		Clip, jubilee			1
15	2201/0006		Clip, jubilee			1
17	1315/3714Z		Bolt			1
18	701/80513	Superseded	Sensor, water level	see bulletin 2/487		1
	*M.S.S		Multi Supersession	See Note 1 Part N.L.A use 18A & 25		1
18A	*816/90702		Plug, 1/2"UNF with O-Ring			1
19	828/10310		:O Ring			1
19A	*2401/0504		:O Ring			1

Note 1: Part No Longer Available use Blanking plug 816/90702 in Tank and 715/20029 to plug harness

V48-3-1 RADIATOR & HOSES, 2WS BUILDS ISSUE 2

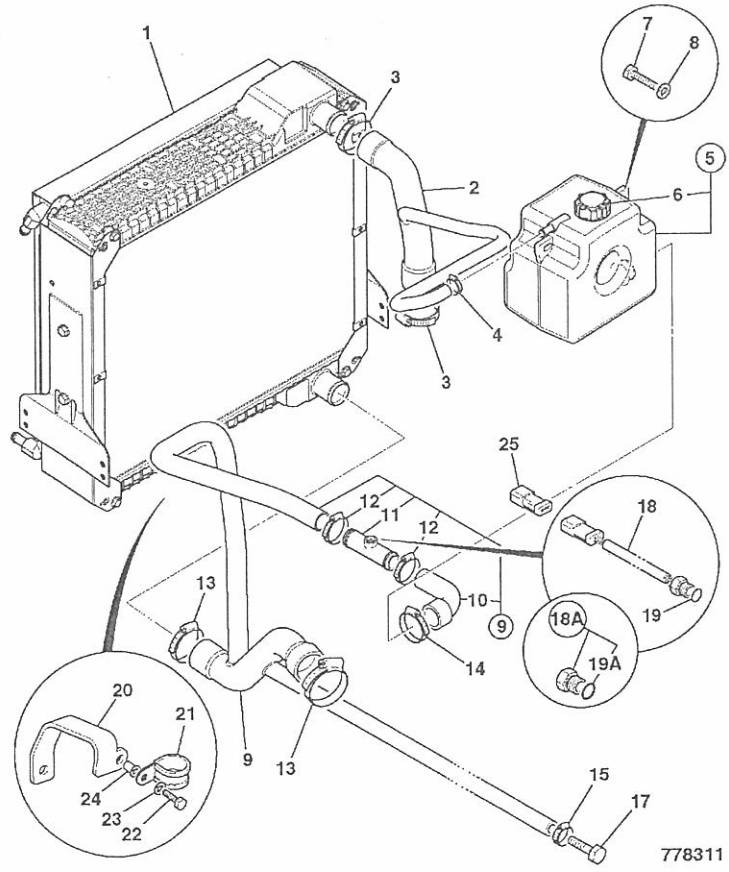

ITEM	PART NO	CHANGE NO	DESCRIPTION	REMARKS	USAGE CODE	QTY
20	331/50633		Bracket, support, bottom hose			1
21	821/00377		Clip, 'P', 30mm diameter			1
22	1315/0307Z		Screw, M8 X 25			1
23	1420/0007Z		Washer, plain, M8			1
24	826/01102		Nut, rivet,M8 open ended			1
25	*715/20029		Plug, blanking 3-way, deutsch DTM			1

9812/0020U

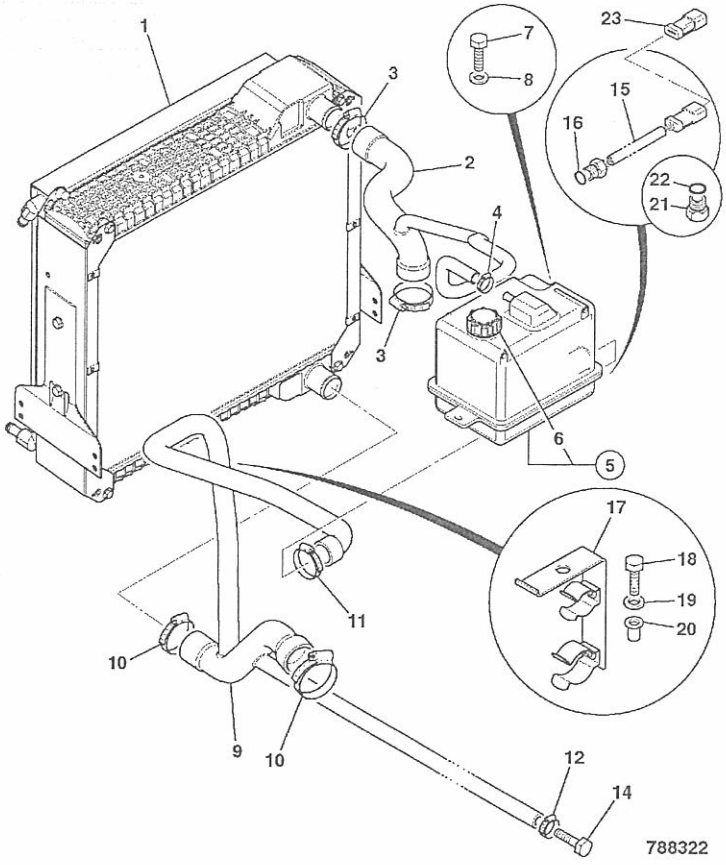

ITEM	PART NO	CHANGE NO	DESCRIPTION	REMARKS	USAGE CODE	QTY
1	128/14326		Cooler, assembly 5row, 2ws	For Service Parts, See frame V47-1-1		1
2	834/11195		Hose, radiator top, 2ws			1
3	2201/0011		Clip, jubilee			4
4	2201/0005		Clip, jubilee			1
5	128/15479		Tank, expansion for sensor, assembly			1
6	477/00223		:Cap, pressure assembly			1
7	1315/0310Z		Bolt, M8x40			2
8	1420/0007Z		Washer, plain, M8			2
9	834/10991		Hose, radiator bottom, 2ws			1
10	2201/0012		Clip, jubilee			2
11	2201/0010		Clip, jubilee			1
12	2201/0006		Clip, jubilee			1
14	1315/3714Z		Bolt			1
15	*701/80513	Superseded	Sensor, water level	see bulletin 2/487		1
	*M.S.S		Multi Supersession	See Note 1 Part N.L.A use items 21 & 23		1
16	*828/10310	To M.TBA	:O Ring			1
17	128/15558		Guide, hose			1
18	1315/0307Z		Screw, M8 X 25			1
19	1420/0007Z		Washer, plain, M8			1
20	826/01102		Nut, rivet,M8 open ended			1
21	*816/90702	M.TBA on	Plug, 1/2"UNF with O-Ring			1
22	*2401/0504	M.TBA on	:O Ring			1

Note 1: Part No Longer Available use Blanking plug 816/90702 in Tank and 715/20029 to plug harness

V48-5-1 RADIATOR & HOSES, 2WS BUILDS ISSUE

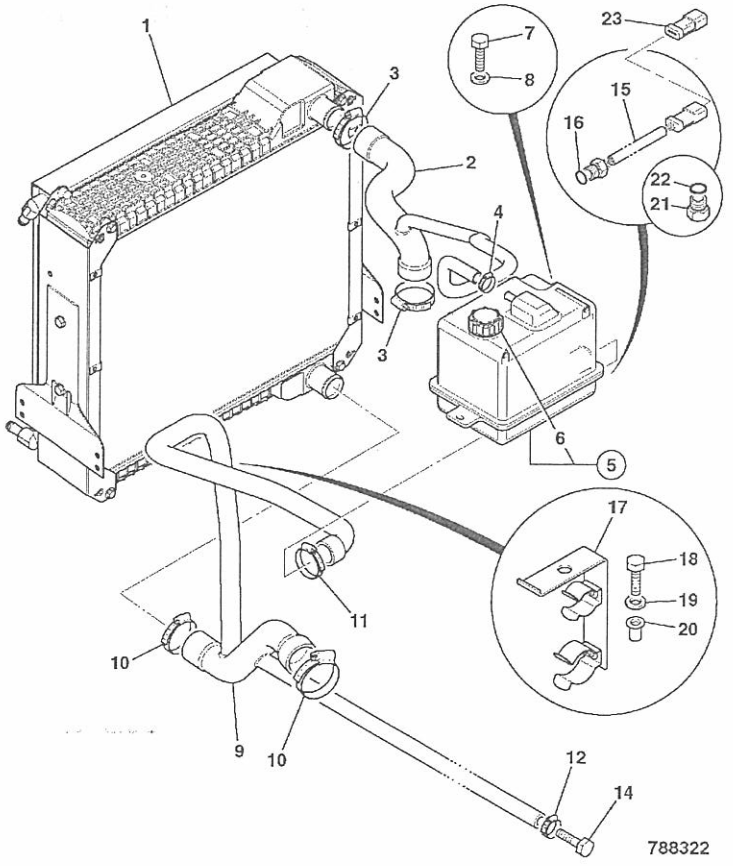

ITEM	PART NO	CHANGE NO	DESCRIPTION	REMARKS	USAGE CODE	QTY
23	*715/20029	M.TBA on	Plug, blanking 3-way, deutsch DTM			1

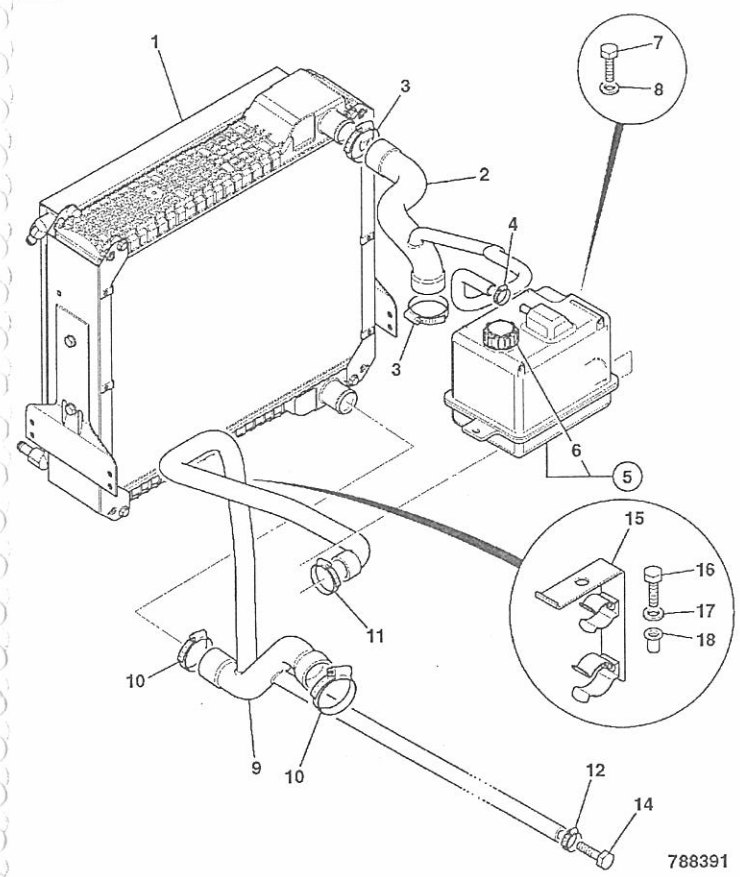

ITEM	PART NO	CHANGE NO	DESCRIPTION	REMARKS	USAGE CODE	QTY
1	128/14326		Cooler, assembly 5row, 2ws	For Service Parts, See frame V47-1-1		1
2	*834/11195	To M.TBA	Hose, radiator top, 2ws			1
	*834/11380		Hose, radiaor top, 2wsON INSERT AT JUNC			1
3	2201/0011		Clip, jubilee			2
4	2201/0005		Clip, jubilee			1
5	128/15480		Tank, expansion no sensor, assembly			1
6	477/00223		:Cap, pressure assembly			1
7	1315/0310Z		Bolt, M8x40			2
8	1420/0007Z		Washer, plain, M8			2
9	*834/10991	To M.TBA	Hose, radiator bottom, 2ws			1
	*834/11557		Hose, radiator bottom, 2ws			1
10	2201/0012		Clip, jubilee			2
11	2201/0010		Clip, jubilee			1
12	2201/0006		Clip, jubilee			1
13	2201/0005		Clip, jubilee			1
14	1315/3714Z		Bolt			1
15	128/15558		Guide, hose			1
16	1315/0307Z		Screw, M8 X 25			1
17	1420/0007Z		Washer, plain, M8			1
18	826/01102		Nut, rivet,M8 open ended			1

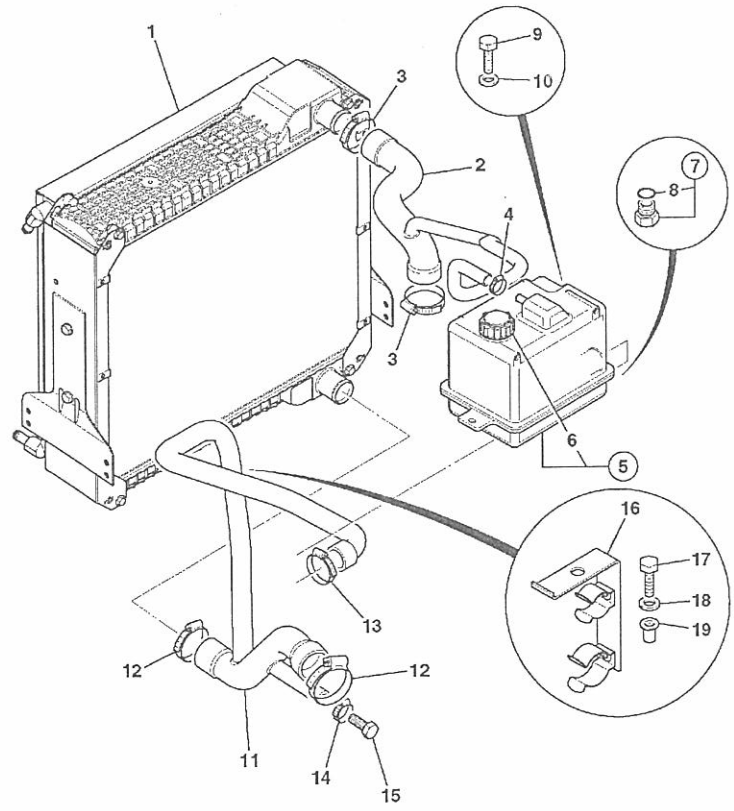

ITEM	PART NO	CHANGE NO	DESCRIPTION	REMARKS	USAGE CODE	QTY
1	128/14326		Cooler, assembly 5row, 2ws	For Service Parts, See frame V47-1-1		1
2	834/11380		Hose, radiaor top, 2wsON INSERT AT JUNC			1
3	2201/0011		Clip, jubilee			2
4	2201/0005		Clip, jubilee			1
5	128/15479		Tank, expansion for sensor, assembly			1
6	477/00223		:Cap, pressure assembly			1
7	816/90702		Plug, 1/2"UNF with O-Ring			1
8	2401/0504		:O Ring			1
9	1315/0310Z		Bolt, M8x40			2
10	1420/0007Z		Washer, plain, M8			2
11	834/11557		Hose, radiator bottom, 2ws			1
12	2201/0012		Clip, jubilee			2
13	2201/0010		Clip, jubilee			1
14	2201/0006		Clip, jubilee			1
15	1315/3714Z		Bolt			1
16	128/15558		Guide, hose			1
17	1315/0307Z		Screw, M8 X 25			1
18	1420/0007Z		Washer, plain, M8			1
19	826/01102		Nut, rivet,M8 open ended			1

V

V41 ENGINE ASSEMBLYS
V42 ENGINE MOUNTINGS
V43 AIR FILTERS
V44 AIR INDUCTION HOSES
V45 EXHAUST SYSTEMS
V46 RADIATOR FITTINGS & MOUNTINGS
V48 RADIATOR & HOSES
V49 FRONT END DRIVE
V50 LOW PRESSURE FUEL SYSTEM
V51 FUEL SEDIMENT FILTERS
V52 EXHAUSTER SERVO BRAKES
V55 OIL LEVEL DIPSTICK & TUBE
V56 AIR CONDITIONING COMPRESSOR
V57 ENGINE OIL DRAIN

V49-1-1 COOLING FAN & SPACER, 2WS BUILDS

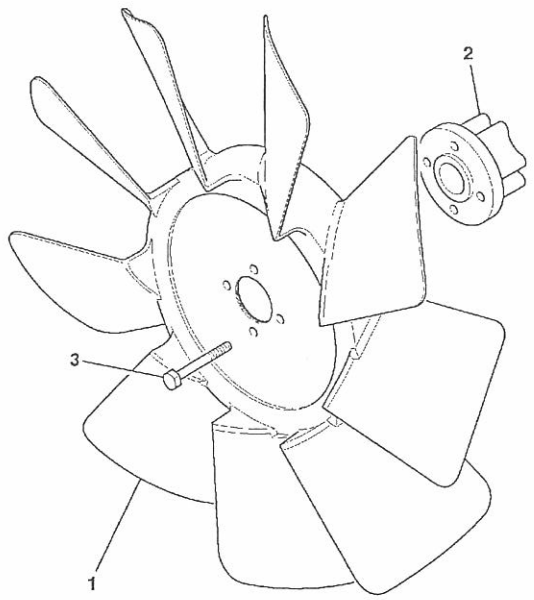

ITEM	PART NO	CHANGE NO	DESCRIPTION	REMARKS	USAGE CODE	QTY
1	30/925526		Fan, D=20 inch			1
2	331/47063		Spacer, fan, T=42.5mm			1
3	1315/3315Z		Bolt, star drive, M8 x 65mm			4

774920

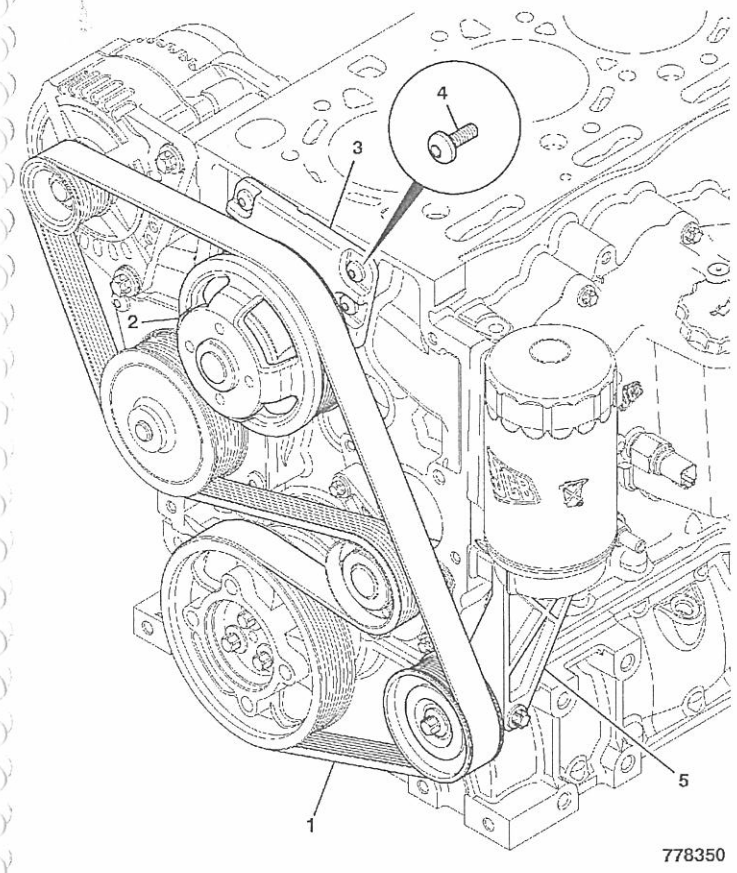

778350

ITEM	PART NO	CHANGE NO	DESCRIPTION	REMARKS	USAGE CODE	QTY
1	320/08598		Belt, drive, L=1835			1
2	320/08572		Pulley, fan, D=166, ratio 1:1			1
3	320/08500		Hub, fan drive, assembly			1
4	320/08541		Screw, pan head, M8 x 20			1
5	.		'See Remark'	See frame V49-20-1		1

9812/0020U

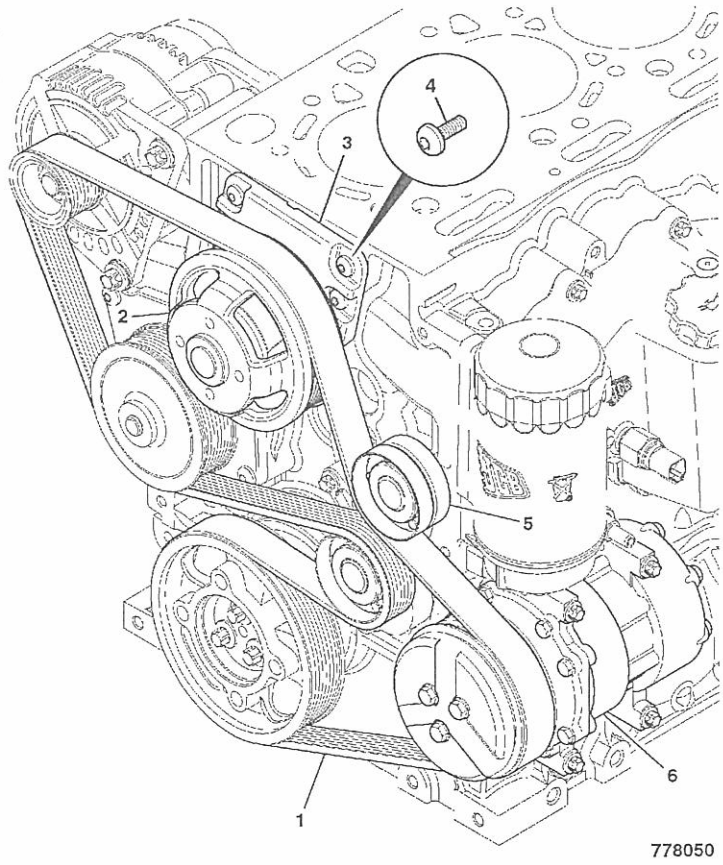

778050

ITEM	PART NO	CHANGE NO	DESCRIPTION	REMARKS	USAGE CODE	QTY
1	320/08603		Belt, drive, L=1988			1
2	320/08572		Pulley, fan, D=166, ratio 1:1			1
3	320/08500		Hub, fan drive, assembly			1
4	320/08541		Screw, pan head, M8 x 20			4
5	320/08530		Pulley, idler, long			1
6	.		'See Remark'	Refer to frame V56-1-1		1

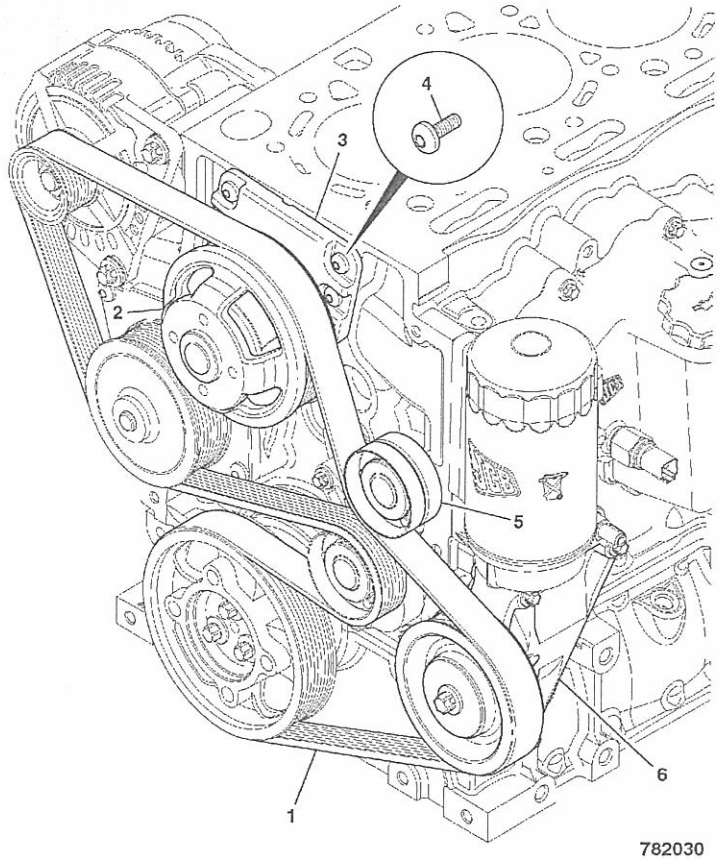

782030

ITEM	PART NO	CHANGE NO	DESCRIPTION	REMARKS	USAGE CODE	QTY
1	320/08608		Belt, drive, L=2002			1
2	320/08583		Pulley, cooling fan 1.16:1, D=143mm			1
3	320/08500		Hub, fan drive, assembly			1
4	320/08541		Screw, pan head, M8 x 20			4
5	320/08530		Pulley, idler, long			1
6	.		'See Remark'	Refer to frame V49-21-1		1

9812/0020

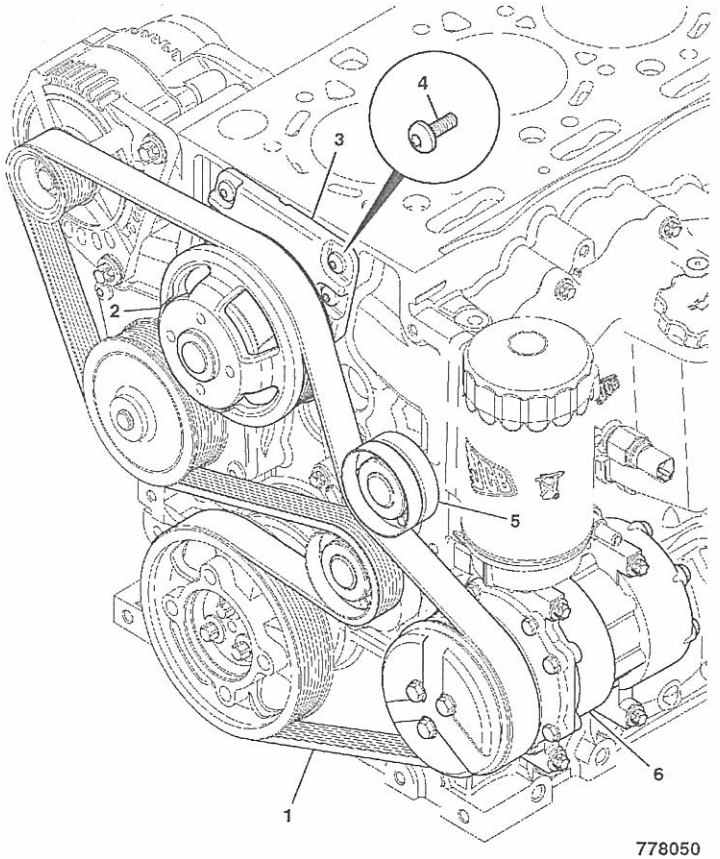

778050

ITEM	PART NO	CHANGE NO	DESCRIPTION	REMARKS	USAGE CODE	QTY
1	320/08608		Belt, drive, L=2002			1
2	320/08583		Pulley, cooling fan 1.16:1, D=143mm			1
3	320/08500		Hub, fan drive, assembly			1
4	320/08541		Screw, pan head, M8 x 20			4
5	320/08530		Pulley, idler, long			1
6	.		'See Remark'	Refer to frame V56-1-1		1

9812/0020

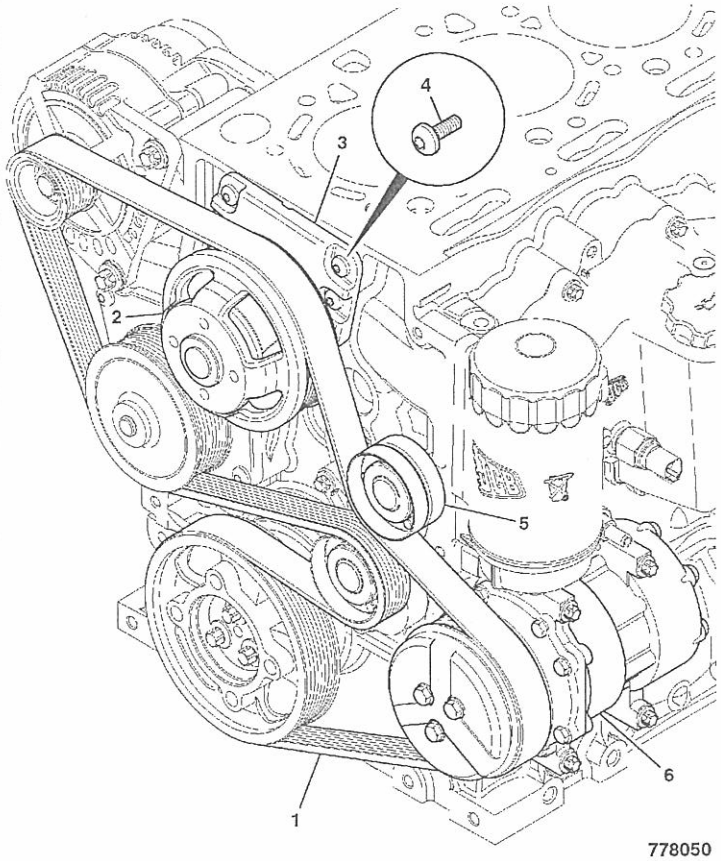

778050

ITEM	PART NO	CHANGE NO	DESCRIPTION	REMARKS	USAGE CODE	QTY
1	320/08609		Belt, drive, L=1995			1
2	320/08503		Pulley, cooling fan 1.25:1, D=133mm			1
3	320/08500		Hub, fan drive, assembly			1
4	320/08541		Screw, pan head, M8 x 20			4
5	320/08530		Pulley, idler, long			1
6	.		'See Remark'	Refer to frame V56-1-1		1

9812/0020U

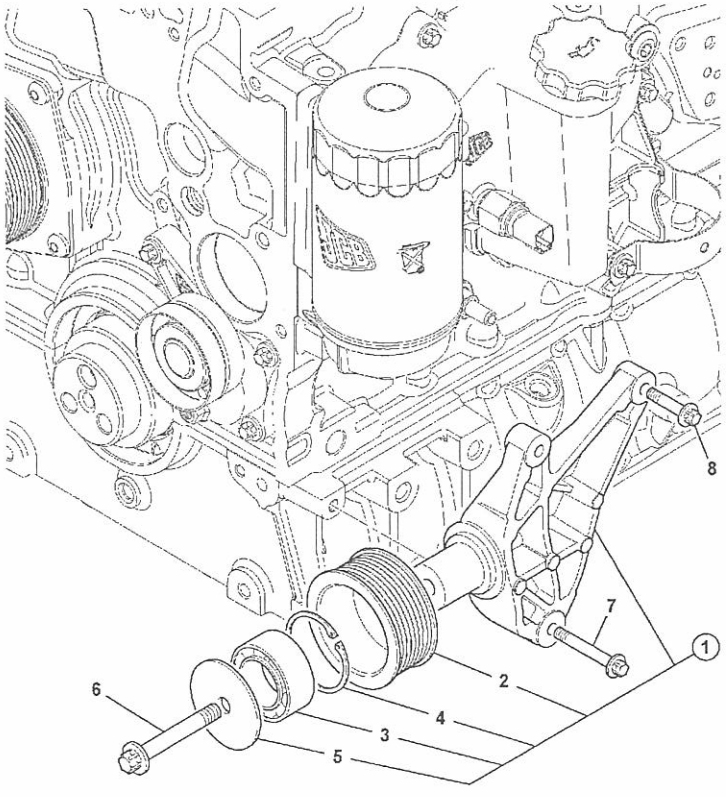

736420

ITEM	PART NO	CHANGE NO	DESCRIPTION	REMARKS	USAGE CODE	QTY
1	320/08586		Pulley, lower idler, assembly			1
2	320/08592		:Pulley, idler, D=79mm			1
3	320/08595		:Bearing, idler pulley			1
4	320/08594		:Circlip			1
5	320/08593		:Washer, idler retainer			1
6	1319/0412Z		Screw, star drive, M10 x 50			1
7	1319/0309Z		Screw, star drive, M8 x 35			2
8	1319/0311Z		Screw, star drive, M8 x 45			1

9812/0020U

V

V41 ENGINE ASSEMBLYS
V42 ENGINE MOUNTINGS
V43 AIR FILTERS
V44 AIR INDUCTION HOSES
V45 EXHAUST SYSTEMS
V46 RADIATOR FITTINGS & MOUNTINGS
V48 RADIATOR & HOSES
V49 FRONT END DRIVE
V50 LOW PRESSURE FUEL SYSTEM
V51 FUEL SEDIMENT FILTERS
V52 EXHAUSTER SERVO BRAKES
V55 OIL LEVEL DIPSTICK & TUBE
V56 AIR CONDITIONING COMPRESSOR
V57 ENGINE OIL DRAIN

V50-2-1 FUEL PIPES, FUEL TANK TO FILTER

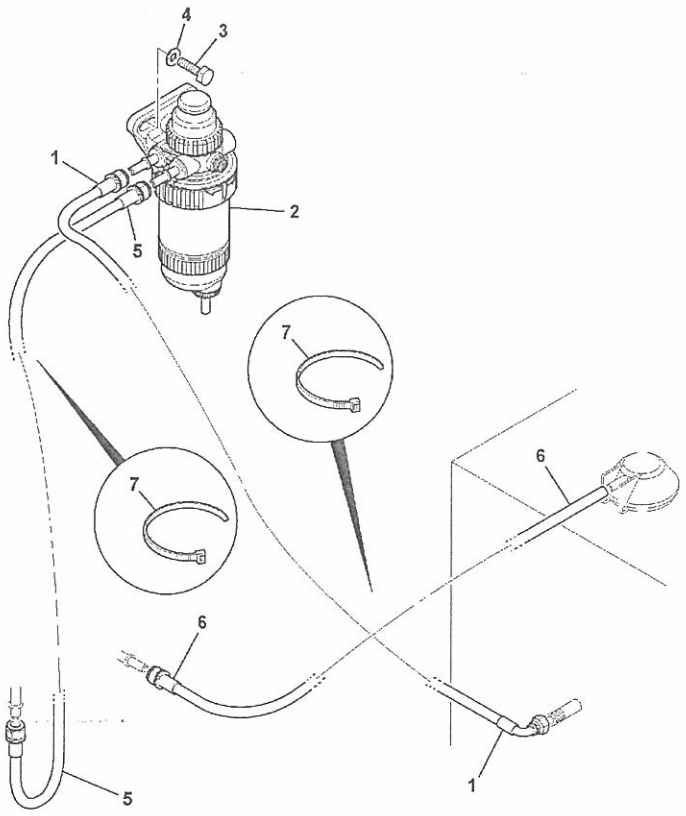

816240

ITEM	PART NO	CHANGE NO	DESCRIPTION	REMARKS	USAGE CODE	QTY
1	649/51784		Hose, diesel fuel, L=1850			1
2	32/925765		Filter, fuel sediment, 30 micron	For Service Parts, See Index		1
3	1315/0408Z		Bolt, M10x30			2
4	1420/0008Z		Washer, Plain M10			2
5	649/51777		Hose, diesel fuel, L=1600mm			1
6	649/51854		Hose, diesel fuel500mm, L=1500mm			1
7	826/01144		Tie, cable, 200mm long			5

V

V41 ENGINE ASSEMBLYS
V42 ENGINE MOUNTINGS
V43 AIR FILTERS
V44 AIR INDUCTION HOSES
V45 EXHAUST SYSTEMS
V46 RADIATOR FITTINGS & MOUNTINGS
V48 RADIATOR & HOSES
V49 FRONT END DRIVE
V50 LOW PRESSURE FUEL SYSTEM
● V51 FUEL SEDIMENT FILTERS
V52 EXHAUSTER SERVO BRAKES
V55 OIL LEVEL DIPSTICK & TUBE
V56 AIR CONDITIONING COMPRESSOR
V57 ENGINE OIL DRAIN

V51-3-1 FILTER, FUEL SEDIMENT



ITEM	PART NO	CHANGE NO	DESCRIPTION	REMARKS	USAGE CODE	QTY
1	32/925765		Filter, fuel sediment, 30 micron			1
2	32/925710		:Kit-primer			1
3	32/921002		:Ring, retaining			1
4	32/921003		:Seal, dust			1
5	32/925694		:Element, fuel sediment/ water, assembly 30 microns			1
6	32/925708		:Bowl, assembly			1
7	32/925733		:Seal, o'ring			1
8	32/925817		:Kit-drain valve, with seal			1

ITEM	PART NO	CHANGE NO	DESCRIPTION	REMARKS	USAGE CODE	QTY
1	32/925705		Element, fuel sediment/ water, 150 microns			1
2	32/925733		Seal, o'ring			1

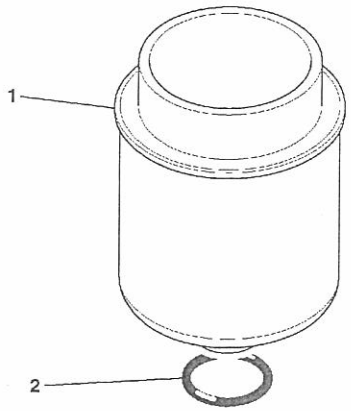

781081

9812/0020

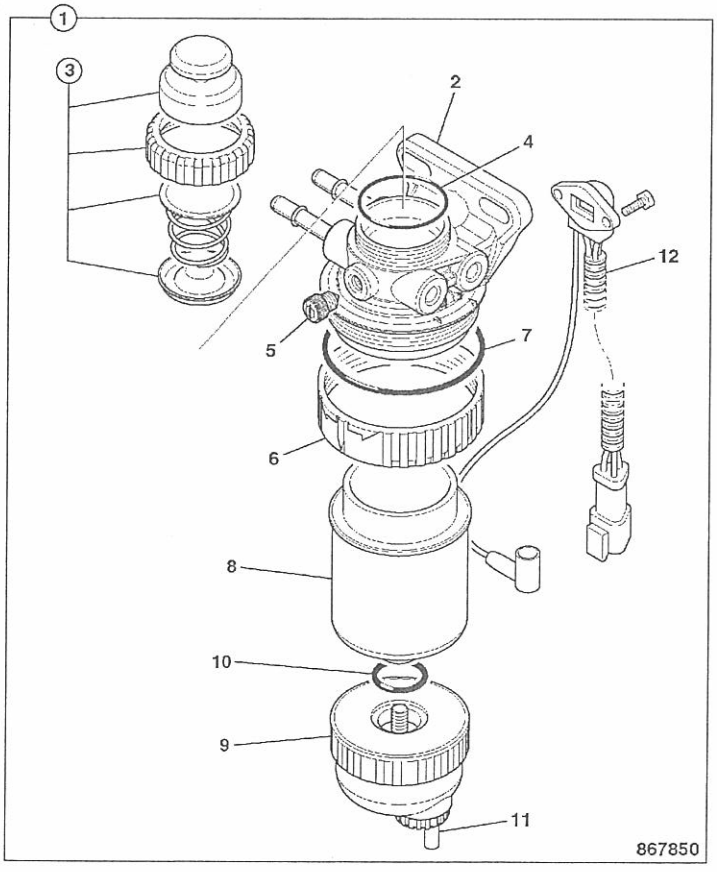

867850

ITEM	PART NO	CHANGE NO	DESCRIPTION	REMARKS	USAGE CODE	QTY
1	32/925914		Filter, fuel sediment 30m, reverse flow			1
2	NSP		:None serviced part			
3	*32/926045		:Kit-hand primer, reverse flow			1
4	32/925906		:Seal			1
5	32/925973		:O Ring			1
6	32/921002		:Ring, retaining			1
7	32/921003		:Seal, dust			1
8	32/925915		:Element, fuel filter, reverse flow			1
9	32/925708		:Bowl, assembly			1
10	32/925733		:Seal, o'ring			1
11	32/925818		:Kit-drain valve, c/w wif sensor, & seal			1
12	32/925709		:Kit-sensor, water in fuel			1

9812/0020

V

V41 ENGINE ASSEMBLYS
V42 ENGINE MOUNTINGS
V43 AIR FILTERS
V44 AIR INDUCTION HOSES
V45 EXHAUST SYSTEMS
V46 RADIATOR FITTINGS & MOUNTINGS
V48 RADIATOR & HOSES
V49 FRONT END DRIVE
V50 LOW PRESSURE FUEL SYSTEM
V51 FUEL SEDIMENT FILTERS
V52 EXHAUSTER SERVO BRAKES
V55 OIL LEVEL DIPSTICK & TUBE
V56 AIR CONDITIONING COMPRESSOR
V57 ENGINE OIL DRAIN

9812/0020U

V52-1-1 EXHAUSTER, SERVO BRAKES

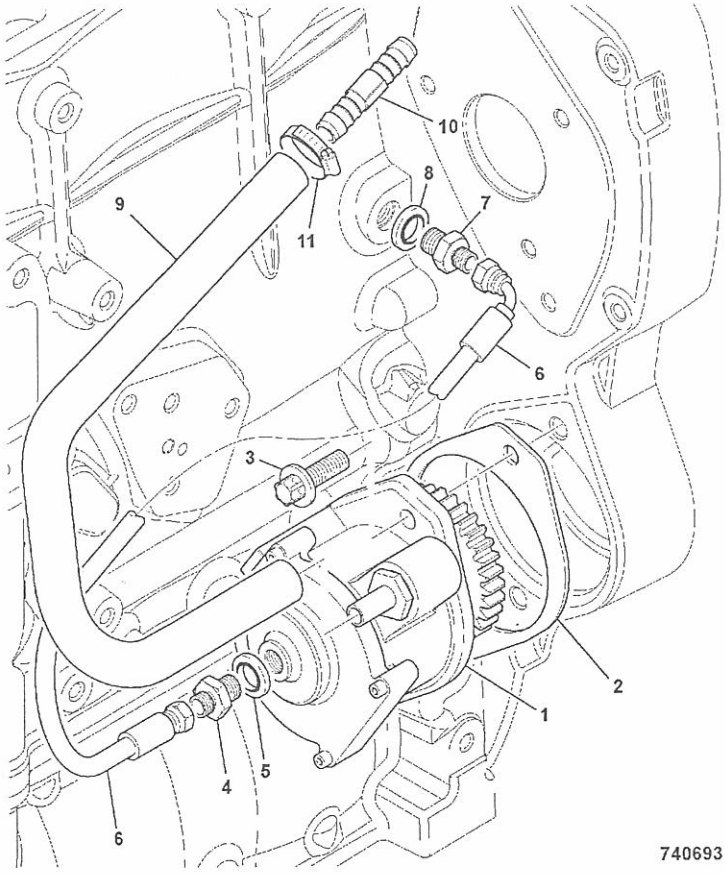

740693

ITEM	PART NO	CHANGE NO	DESCRIPTION	REMARKS	USAGE CODE	QTY
1	160/15137		Exhauster, assembly			1
2	813/10143		Gasket			1
3	1319/0408Z		Screw, star drive, M10 x 30			2
4	816/90727		Adapter, 3mm restricting			1
5	823/10633		Washer, bonded 1/4"BSP, with centering lip			1
6	649/51208		Hose, exhauster			1
7	816/90768		Adapter, 1/8"BSP-M12			1
8	320/04521		Seal, bonded			1
9	648/31003		Hose, brake vacuum, 9.5mm bore x 400mm			1
10	650/10205		Connector, hose			1
11	2201/0004		Clip, jubilee			2

V

V41 ENGINE ASSEMBLYS
V42 ENGINE MOUNTINGS
V43 AIR FILTERS
V44 AIR INDUCTION HOSES
V45 EXHAUST SYSTEMS
V46 RADIATOR FITTINGS & MOUNTINGS
V48 RADIATOR & HOSES
V49 FRONT END DRIVE
V50 LOW PRESSURE FUEL SYSTEM
V51 FUEL SEDIMENT FILTERS
V52 EXHAUSTER SERVO BRAKES
● V55 OIL LEVEL DIPSTICK & TUBE
V56 AIR CONDITIONING COMPRESSOR
V57 ENGINE OIL DRAIN

9812/0020U

V55-1-1 OIL LEVEL DIPSTICK, & TUBE, STANDARD

ISSUE

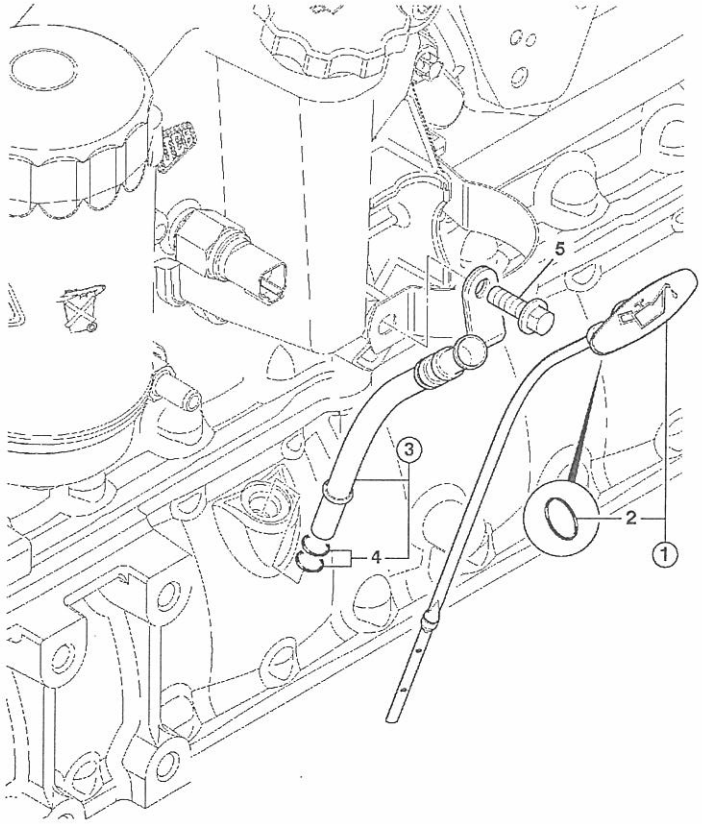

734741

ITEM	PART NO	CHANGE NO	DESCRIPTION	REMARKS	USAGE CODE	QTY
1	320/04196		Dipstick, engine oil short			1
2	320/04129		:O Ring			1
3	320/04195		Tube, engine oil dipstick, short			1
4	320/04127		:O Ring			1
5	1317/3305Z		Bolt, flange head, M8 x 20 lg			1

V

V41 ENGINE ASSEMBLYS
V42 ENGINE MOUNTINGS
V43 AIR FILTERS
V44 AIR INDUCTION HOSES
V45 EXHAUST SYSTEMS
V46 RADIATOR FITTINGS & MOUNTINGS
V48 RADIATOR & HOSES
V49 FRONT END DRIVE
V50 LOW PRESSURE FUEL SYSTEM
V51 FUEL SEDIMENT FILTERS
V52 EXHAUSTER SERVO BRAKES
V55 OIL LEVEL DIPSTICK & TUBE
● V56 AIR CONDITIONING COMPRESSOR
V57 ENGINE OIL DRAIN

9812/0020U

V56-1-1 COMPRESSOR, AIR CONDITIONING

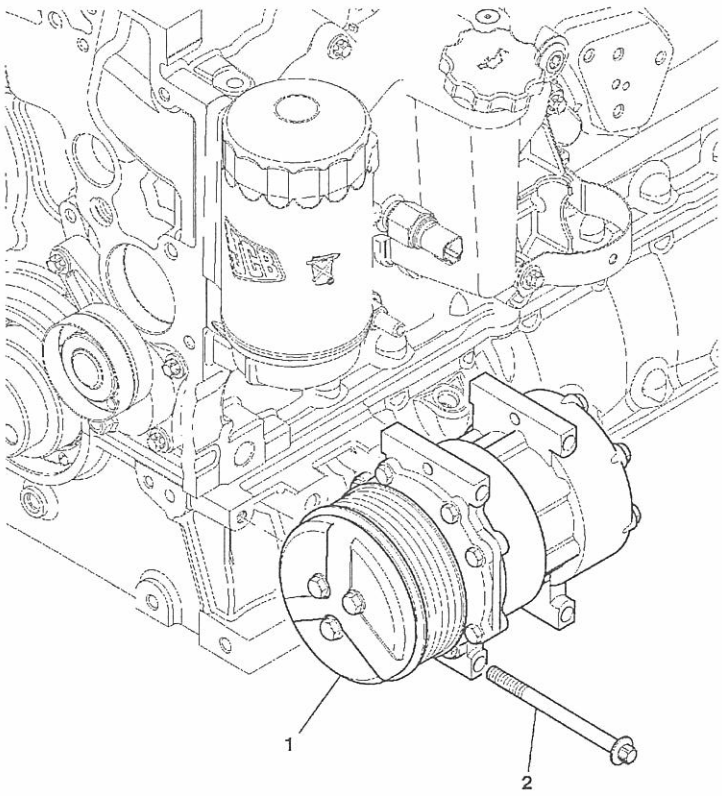

735741

ITEM	PART NO	CHANGE NO	DESCRIPTION	REMARKS	USAGE CODE	QTY
1	320/08562		Compressor, air conditioning, 12v			1
2	1319/3320Z		Bolt, star drive, M8 x 100mm			3

V

V41 ENGINE ASSEMBLYS
V42 ENGINE MOUNTINGS
V43 AIR FILTERS
V44 AIR INDUCTION HOSES
V45 EXHAUST SYSTEMS
V46 RADIATOR FITTINGS & MOUNTINGS
V48 RADIATOR & HOSES
V49 FRONT END DRIVE
V50 LOW PRESSURE FUEL SYSTEM
V51 FUEL SEDIMENT FILTERS
V52 EXHAUSTER SERVO BRAKES
V55 OIL LEVEL DIPSTICK & TUBE
V56 AIR CONDITIONING COMPRESSOR
● V57 ENGINE OIL DRAIN

V57-1-1 ENGINE OIL DRAIN

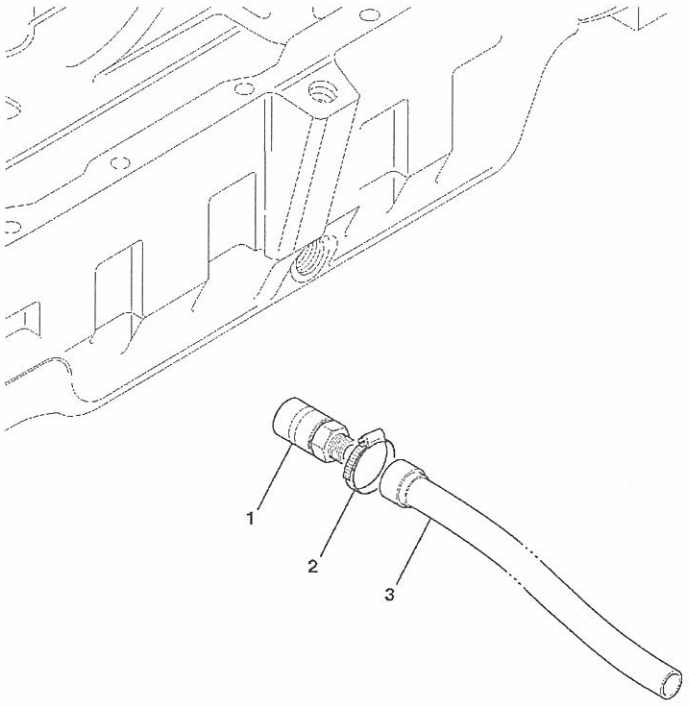

ITEM	PART NO	CHANGE NO	DESCRIPTION	REMARKS	USAGE CODE	QTY
1	25/222662		Plug, oil drain			1
2	2201/0004		Clip, jubilee			1
3	647/06100		Tube, pvc	600mm Length required		A/R

873160

DESCRIPTION	PAGE NUMBER	ITEM NUMBER
A		
Adapter, 1/8"BSP-M12	V52-1-1	7
Adapter, 3mm restricting	V52-1-1	4
Alternator, 12V-95AMP	C2-4-1	1
B		
Base, engine immobiliser	C2-6-1	3
Battery, type 31 950cc, Savannah	C1-2-11	1
Battery, type 31 950cc, Savannah	C1-2-14	1
Beam, centre mounting	V46-1-3	2
Bearing, idler pulley	V49-20-1	3
Belt, drive, L=1835	V49-3-1	1
Belt, drive, L=1988	V49-4-1	1
Belt, drive, L=1995	V49-8-2	1
Belt, drive, L=2002	V49-5-2	1
Belt, drive, L=2002	V49-6-2	1
Bolt	D2-3-1	14
Bolt	E1-18-1	5
Bolt	V42-1-1	6
Bolt	V44-4-1	2
Bolt	V46-1-3	7
Bolt	V48-3-1	17
Bolt	V48-5-1	14
Bolt	V48-7-1	14
Bolt	V48-8-1	15
Bolt, flange head, M8 x 20 lg	V55-1-1	5
Bolt, star drive, M10 x 120	C2-4-1	7
Bolt, star drive, M8 x 100mm	V56-1-1	2
Bolt, star drive, M8 x 65mm	V49-1-1	3
Bolt, M10 x 40	V45-1-1	10
Bolt, M10 x 40	V45-1-2	10
Bolt, M10x25	V45-1-1	7
Bolt, M10x25	V45-1-2	7
Bolt, M10x25	V45-2-1	6
Bolt, M10x25	V45-2-3	7
Bolt, M10x30	V45-1-1	8
Bolt, M10x30	V45-1-2	8
Bolt, M10x30	V45-2-1	7
Bolt, M10x30	V45-2-3	8
Bolt, M10x30	V50-2-1	3
Bolt, M16 x 120lg	V42-1-1	4
Bolt, M16 x 140	V42-1-1	3
Bolt, M6 shear, shear @ 11Nm	C2-6-1	9
Bolt, M6x27 shear	C2-6-1	2
Bolt, M8x40	C2-2-1	12
Bolt, M8x40	V48-3-1	7
Bolt, M8x40	V48-5-1	7
Bolt, M8x40	V48-7-1	7
Bolt, M8x40	V48-8-1	9
Bottle, front screen wash	B2-8-1	1
Bottle, screenwash	B2-8-2	1
Bowl, assembly	V51-3-1	6
Bowl, assembly	V51-5-1	9
Bracket, centre beam mounting, front 2WS	V46-1-3	1
Bracket, engine mounting, left hand	V42-1-1	2
Bracket, engine mounting, right hand	V42-1-1	1
Bracket, exhaust mounting	V45-1-1	6
Bracket, exhaust mounting	V45-1-1	5
Bracket, exhaust mounting	V45-1-2	6
Bracket, exhaust mounting	V45-1-2	5
Bracket, exhaust mounting	V45-2-1	5
Bracket, exhaust mounting	V45-2-1	4
Bracket, exhaust mounting	V45-2-3	6
Bracket, exhaust mounting	V45-2-3	5
Bracket, mounting, hand throttle	D2-3-1	10
Bracket, radiator mounting	E1-18-1	4
Bracket, sensor mounting	C2-5-1	19
Bracket, sensor mounting	C2-5-2	19
Bracket, support, bottom hose	V48-3-1	20
Bracket, throttle reaction	D2-3-1	11
Brake, caliper, parkbrake, Hayes, booted	G1-3-1	1
Brush, holder assembly, 12volt	C2-3-1	4
C		
Cable, throttle control, assembly	D2-3-1	1
Cap, pressure assembly	V48-3-1	6
Cap, pressure assembly	V48-5-1	6
Cap, pressure assembly	V48-7-1	6
Cap, pressure assembly	V48-8-1	6
Capscrew	V46-1-3	20
Capscrew, M10 x 35mm	V46-1-3	19
Circlip	V49-20-1	4
Clip	C2-2-1	3
Clip	C2-5-1	14
Clip	C2-5-2	14
Clip, 'P', 30mm diameter	V48-3-1	21
Clip, cable	C2-2-1	9
Clip, cable	C2-5-1	17
Clip, cable	C2-5-2	17
Clip, harness	C2-2-1	2
Clip, harness support	C2-2-1	8
Clip, jubilee	V44-4-1	10
Clip, jubilee	V44-4-1	9

DESCRIPTION	PAGE NUMBER	ITEM NUMBER
Clip, jubilee	V44-4-1	7
Clip, jubilee	V44-4-1	6
Clip, jubilee	V44-4-1	5
Clip, jubilee	V48-3-1	4
Clip, jubilee	V48-3-1	3
Clip, jubilee	V48-3-1	12
Clip, jubilee	V48-3-1	15
Clip, jubilee	V48-3-1	14
Clip, jubilee	V48-3-1	13
Clip, jubilee	V48-5-1	10
Clip, jubilee	V48-5-1	4
Clip, jubilee	V48-5-1	3
Clip, jubilee	V48-5-1	12
Clip, jubilee	V48-5-1	11
Clip, jubilee	V48-7-1	4
Clip, jubilee	V48-7-1	3
Clip, jubilee	V48-7-1	13
Clip, jubilee	V48-7-1	12
Clip, jubilee	V48-7-1	11
Clip, jubilee	V48-7-1	10
Clip, jubilee	V48-8-1	4
Clip, jubilee	V48-8-1	3
Clip, jubilee	V48-8-1	14
Clip, jubilee	V48-8-1	13
Clip, jubilee	V48-8-1	12
Clip, jubilee	V52-1-1	11
Clip, jubilee	V57-1-1	2
Clip, overcentre	V43-1-1	6
Clip, Deutsch DT Mtg Clip	C2-2-1	13
Compressor, air conditioning, 12v	V56-1-1	1
Connector, hose	V52-1-1	10
Cooler, assembly 5row, 2ws	E1-18-1	1
Cooler, assembly 5row, 2ws	V48-3-1	1
Cooler, assembly 5row, 2ws	V48-5-1	1
Cooler, assembly 5row, 2ws	V48-7-1	1
Cooler, assembly 5row, 2ws	V48-8-1	1
Cooler, oil, double, 14plates + 21 plates	E1-18-1	3
Cowling, fan 20", 2ws	V46-1-3	3
D		
Dipstick, engine oil short	V55-1-1	1
E		
Element, air filter, main	V43-1-1	3
Element, air filter, safety	V43-1-1	4
Element, fuel filter, reverse flow	V51-5-1	8
Element, fuel sediment/water, assembly 30 mic	V51-3-1	5
Element, fuel sediment/water, 150 microns	V51-4-1	1
Engine, assembly 84.5bhp-12v, W300 T/C SAE HS	V41-4-1	1
Engine, assembly 91bhp-12v, turbo W300 T/C	V41-12-1	1
Exhauster, assembly	V52-1-1	1
F		
Fan, D=20 inch	V49-1-1	1
Fender, left hand Rear, black	B1-8-30	1
Fender, left hand, yellow, 214e	B1-8-20	1
Fender, right hand rear, black	B1-8-30	2
Fender, right hand, yellow, 214e	B1-8-20	2
Filter, air intake	V43-1-1	7
Filter, air, assembly	V43-1-1	1
Filter, fuel sediment 30m, reverse flow	V51-5-1	1
Filter, fuel sediment, 30 micron	V50-2-1	2
Filter, fuel sediment, 30 micron	V51-3-1	1
Filter, pre-cleaner	V43-1-1	5
Frame, rear window	B2-5-11	1
Frame, window	B2-4-11	1
Fuse, 150Amp MEGAVAL	C2-5-1	3
Fuse, 150Amp MEGAVAL	C2-5-2	3
G		
Gasket	V45-1-1	2
Gasket	V45-1-2	2
Gasket	V52-1-1	2
Gasket, exhaust	V45-2-1	2
Gasket, exhaust	V45-2-3	2
Grille, housing, 2WS	B1-6-11	3
Grille, housing,2WS	B1-6-11	3
Grille, side LH, 2WS	B1-6-11	1
Grille, side,RH, 2WS	B1-6-11	2
Grommet	D2-3-1	9
Grommet, hole dia 12.7mm, panel thknss 5-6mm	C2-2-1	10
Grommet, hole dia 12.7mm, panel thknss 5-6mm	C2-5-1	15
Grommet, hole dia 12.7mm, panel thknss 5-6mm	C2-5-2	15
Guard, immobiliser	C2-6-1	8
Guide, hose	V48-5-1	17
Guide, hose	V48-7-1	15
Guide, hose	V48-8-1	16

DESCRIPTION	PAGE NUMBER	ITEM NUMBER
H		
Harness, ECU to heater relay	C2-5-1	5
Harness, ECU to heater relay	C2-5-2	5
Harness, ESOS link	C2-2-1	1
Harness, 120V block heater, mains power lead	C2-7-1	3
Heater, air intake -12v	C2-5-1	7
Heater, air intake -12v	C2-5-2	7
Heater, cylinder block, 1000w - 120v mains	C2-7-1	2
Hose, air induction, 2ws turbo	V44-4-1	4
Hose, air scavenge, 2ws	V44-4-1	8
Hose, brake vacuum, 9.5mm bore x 400mm	V52-1-1	9
Hose, diesel fuel, L=1600mm	V50-2-1	5
Hose, diesel fuel, L=1850	V50-2-1	1
Hose, diesel fuel500mm, L=1500mm	V50-2-1	6
Hose, elbow	V48-3-1	10
Hose, exhauster	V52-1-1	6
Hose, radiaor top, 2wsON INSERT AT JUNC	V48-7-1	2
Hose, radiaor top, 2wsON INSERT AT JUNC	V48-8-1	2
Hose, radiator bottom 2ws, assembly	V48-3-1	9
Hose, radiator bottom, 2ws	V48-5-1	9
Hose, radiator bottom, 2ws	V48-7-1	9
Hose, radiator bottom, 2ws	V48-7-1	9
Hose, radiator bottom, 2ws	V48-8-1	11
Hose, radiator top, 2ws	V48-3-1	2
Hose, radiator top, 2ws	V48-5-1	2
Hose, radiator top, 2ws	V48-7-1	2
Housing, water level sensor	V48-3-1	11
Hub, fan drive, assembly	V49-3-1	3
Hub, fan drive, assembly	V49-4-1	3
Hub, fan drive, assembly	V49-5-2	3
Hub, fan drive, assembly	V49-6-2	3
Hub, fan drive, assembly	V49-8-2	3
K		
Kit-brush	C2-4-1	6
Kit-brush, 12 Volt	C2-3-1	5
Kit-cover, immobiliser	C2-6-1	1
Kit-drain valve, c/w wif sensor, & seal	V51-5-1	11
Kit-drain valve, with seal	V51-3-1	8
Kit-hand primer, reverse flow	V51-5-1	3
Kit-heater, engine Block, 120V	C2-7-1	1
Kit-nut & spacer	C2-4-1	4
Kit-pad, brake Pad	G1-3-1	12
Kit-primer	V51-3-1	2
Kit-sensor, water in fuel	V51-5-1	12
Kit-sundry parts	C2-3-1	3
Kit-through bolt	C2-4-1	2
Knob, red, throttle lever	D2-3-1	3
L		
Lead, grid heater +ve, feed	C2-5-1	2
Lead, grid heater +ve, feed	C2-5-2	2
Lead, grid heater +ve, NA	C2-5-1	4
Lead, grid heater +ve, TURBO	C2-5-2	4
Lever, assembly, throttle control	D2-3-1	2
Lever, loader control	D1-1-31	2
M		
Motor, starter - 12v	C2-3-1	1
Mounting, resilient	V42-1-1	9
Multi Supersession	V48-5-1	15
N		
None serviced part	B1-6-11	11
None serviced part	V51-5-1	2
Nut	C2-5-1	20
Nut	C2-5-2	20
Nut	E1-18-1	8
Nut	V45-1-2	4
Nut, anti-seize	V45-2-3	4
Nut, lock, M10	V42-1-1	8
Nut, lock, M10	V45-1-1	12
Nut, lock, M10	V45-1-2	12
Nut, lock, M10	V45-2-1	9
Nut, lock, M10	V45-2-3	10
Nut, lock, M10	V46-1-3	10
Nut, lock, M10	V46-1-3	22
Nut, nyloc M5	C2-2-1	6
Nut, nyloc M8	C2-2-1	7
Nut, rivet, M6 open end, for 5.5 to 8mm plt	V46-1-3	13
Nut, rivet,M10 open ended	V46-1-3	9
Nut, rivet,M8	C2-5-1	13
Nut, rivet,M8	C2-5-2	13
Nut, rivet,M8 open ended	V48-3-1	24
Nut, rivet,M8 open ended	V48-5-1	20
Nut, rivet,M8 open ended	V48-7-1	18
Nut, rivet,M8 open ended	V48-8-1	19
Nut, M16	V42-1-1	11

DESCRIPTION	PAGE NUMBER	ITEM NUMBER
Nut, M5-8	D2-3-1	7
Nut, M5-8	D2-3-1	18
Nut, M6 rivet	C2-5-1	10
Nut, M6 rivet	C2-5-2	10
Nut, Self lock, M6	D2-3-1	15
O		
O Ring	V48-3-1	19
O Ring	V48-3-1	19
O Ring	V48-5-1	22
O Ring	V48-5-1	16
O Ring	V48-8-1	8
O Ring	V51-5-1	5
O Ring	V55-1-1	4
O Ring	V55-1-1	2
P		
Pedal, assembly, throttle control	D2-3-1	8
Pipe, exhaust extension	V45-1-1	13
Pipe, exhaust extension	V45-1-2	13
Pipe, exhaust extension	V45-2-1	11
Pipe, exhaust extension	V45-2-3	12
Plate, spacer	V46-1-3	6
Plug, blanking 3-way, deutsch DTM	V48-3-1	25
Plug, blanking 3-way, deutsch DTM	V48-5-1	23
Plug, oil drain	V57-1-1	1
Plug, 1/2"UNF with O-Ring	V48-3-1	18
Plug, 1/2"UNF with O-Ring	V48-5-1	21
Plug, 1/2"UNF with O-Ring	V48-8-1	7
Pulley, alternator	C2-4-1	3
Pulley, cooling fan 1.16:1, D=143mm	V49-5-2	2
Pulley, cooling fan 1.16:1, D=143mm	V49-6-2	2
Pulley, cooling fan 1.25:1, D=133mm	V49-8-2	2
Pulley, fan, D=166, ratio 1:1	V49-3-1	2
Pulley, fan, D=166, ratio 1:1	V49-4-1	2
Pulley, idler, long	V49-4-1	5
Pulley, idler, long	V49-5-2	5
Pulley, idler, long	V49-6-2	5
Pulley, idler, long	V49-8-2	5
Pulley, idler, D=79mm	V49-20-1	2
Pulley, lower idler, assembly	V49-20-1	1
R		
Radiator, assembly, 5row-9fpi, Blue spot	E1-18-1	2
Regulator, & brush box, assembly	C2-4-1	5
Relay, grid heater	C2-5-1	1
Relay, grid heater	C2-5-2	1
Ring, retaining	V51-3-1	3
Ring, retaining	V51-5-1	6
S		
Screw	V43-1-1	8
Screw, hex head, M8 X 12	E1-18-1	7
Screw, hex. head	V45-1-1	9
Screw, hex. head	V45-1-2	9
Screw, hex. head	V45-2-1	8
Screw, hex. head	V45-2-3	9
Screw, pan head, M8 x 20	V49-3-1	4
Screw, pan head, M8 x 20	V49-4-1	4
Screw, pan head, M8 x 20	V49-5-2	4
Screw, pan head, M8 x 20	V49-6-2	4
Screw, pan head, M8 x 20	V49-8-2	4
Screw, raised c/sk. head	D2-3-1	17
Screw, star drive, M10 x 30	C2-3-1	6
Screw, star drive, M10 x 30	C2-4-1	8
Screw, star drive, M10 x 30	V52-1-1	3
Screw, star drive, M10 x 50	V49-20-1	6
Screw, star drive, M8 x 35	V49-20-1	7
Screw, star drive, M8 x 45	V49-20-1	8
Screw, taptite	D2-3-1	4
Screw, M12 x 35mm	V42-1-1	12
Screw, M12x35, countersunk head	V42-1-1	14
Screw, M6 x 25mm long	V46-1-3	14
Screw, M6x16	C2-5-1	8
Screw, M6x16	C2-5-2	8
Screw, M8 x 20mm long	V46-1-3	17
Screw, M8 X 25	C2-5-1	11
Screw, M8 X 25	C2-5-2	11
Screw, M8 X 25	D2-3-1	12
Screw, M8 X 25	V45-1-1	3
Screw, M8 X 25	V46-1-3	4
Screw, M8 X 25	V46-1-3	16
Screw, M8 X 25	V48-3-1	22
Screw, M8 X 25	V48-5-1	18
Screw, M8 X 25	V48-7-1	16
Screw, M8 X 25	V48-8-1	17
Screw, M8x30	V46-1-3	11
Seal	V51-5-1	4
Seal, anti-recirculation	V46-1-3	25
Seal, anti-recirculation	V46-1-3	24
Seal, bonded	C2-1-1	6
Seal, bonded	C2-1-1	4
Seal, bonded	C2-1-1	2

DESCRIPTION	PAGE NUMBER	ITEM NUMBER
Seal, bonded	V52-1-1	8
Seal, dust	V51-3-1	4
Seal, dust	V51-5-1	7
Seal, o'ring	V51-3-1	7
Seal, o'ring	V51-4-1	2
Seal, o'ring	V51-5-1	10
Seal, o'ring, immobiliser cover	C2-6-1	4
Seal, Ring	C2-1-1	8
Seat, assembly suspension, cloth	B2-7-61	1
Seat, assembly suspension, vinyl	B2-7-61	1
Sender, water temperature	C2-5-1	18
Sender, water temperature	C2-5-2	18
Sensor, water level	V48-3-1	18
Sensor, water level	V48-5-1	15
Shovel, 6 in 1 quickhitch, 2350mm (7'8.5") wi	A1-8-2	1
Silencer, exhaust	V45-2-3	1
Silencer, nat/asp exhaust	V45-1-1	1
Silencer, nat/asp exhaust	V45-1-2	1
Silencer, turbo exhaust	V45-2-1	1
Solenoid, fuel pump - ESOS, cold start advanc	C2-1-1	7
Solenoid, fuel pump - ESOS, cold start advanc	C2-6-1	5
Spacer	C2-2-1	14
Spacer, fan, T=42.5mm	V49-1-1	2
Spacer, immobiliser	C2-6-1	6
Spring, extension	V45-1-1	14
Spring, extension	V45-1-2	14
Spring, extension	V45-2-1	12
Spring, extension	V45-2-3	13
Spring, immobiliser	C2-6-1	7
Spring, overload	D2-3-1	21
Strip, sealing, L=640mm	V46-1-3	23
Stud, M10	V45-2-1	3
Stud, M10 X 37	V45-2-3	3
Stud, M8 X 1.25	V45-1-2	3
Switch, cold start advance	C2-1-1	3
Switch, engine oil pressure	C2-1-1	1
Switch, starter solenoid, 12 Volt	C2-3-1	2
Switch, temperature sender	C2-1-1	5
Switch, vacuum sensor	V43-1-1	9
T		
Tank, coolant expansion	V48-3-1	5
Tank, expansion for sensor, assembly	V48-5-1	5
Tank, expansion for sensor, assembly	V48-8-1	5
Tank, expansion no sensor, assembly	V48-7-1	5
Tie, cable c/w mounting, 4.6mm x 190mm	C2-2-1	5
Tie, cable, 200mm long	C2-2-1	4
Tie, cable, 200mm long	C2-5-1	16
Tie, cable, 200mm long	C2-5-2	16
Tie, cable, 200mm long	D2-3-1	22
Tie, cable, 200mm long	V50-2-1	7
Tube, engine oil dipstick, short	V55-1-1	3
Tube, pvc	V57-1-1	3
Tyre, 19.5x24x10 pr IND, Firestone	F3-5-2	3
U		
Unit, ECU, cold start	C2-5-1	6
Unit, ECU, cold start	C2-5-2	6
V		
Valve, section	E3-2-20	1
Valve, section	E3-2-25	1
Valve, section	E3-2-40	1
W		
Washer	E1-18-1	6
Washer	V45-1-1	4
Washer	V46-1-3	21
Washer	V46-1-3	15
Washer, bonded 1/4"BSP, with centering lip	V52-1-1	5
Washer, copper sealing	C2-7-1	4
Washer, idler retainer	V49-20-1	5
Washer, plain bright	C2-5-1	21
Washer, plain bright	C2-5-2	21
Washer, plain, M8	C2-2-1	11
Washer, plain, M8	C2-5-1	12
Washer, plain, M8	C2-5-2	12
Washer, plain, M8	D2-3-1	13
Washer, plain, M8	V46-1-3	5
Washer, plain, M8	V46-1-3	12
Washer, plain, M8	V48-3-1	23
Washer, plain, M8	V48-3-1	8
Washer, plain, M8	V48-5-1	8
Washer, plain, M8	V48-5-1	19
Washer, plain, M8	V48-7-1	8
Washer, plain, M8	V48-7-1	17
Washer, plain, M8	V48-8-1	18
Washer, plain, M8	V48-8-1	10
Washer, rebound, 16x75x8	V42-1-1	10
Washer, spreader	V46-1-3	18

DESCRIPTION	PAGE NUMBER	ITEM NUMBER
Washer, spring, M5	D2-3-1	20
Washer, spring, M5	D2-3-1	19
Washer, spring, M5	D2-3-1	5
Washer, M16 plain	V42-1-1	5
Washer, M5	D2-3-1	6
Washer, M6	C2-5-1	9
Washer, M6	C2-5-2	9
Washer, M6	D2-3-1	16
Washer, M6	V44-4-1	3
Washer, Plain M10	V42-1-1	7
Washer, Plain M10	V45-1-1	11
Washer, Plain M10	V45-1-2	11
Washer, Plain M10	V45-2-1	10
Washer, Plain M10	V45-2-3	11
Washer, Plain M10	V46-1-3	8
Washer, Plain M10	V50-2-1	4
Washer, Plain M12	V42-1-1	13