CATERPILLAR®

SEBP3428-04
June 2002

RUTHZIL TRATOR COMERCIAL DE PEÇAS LTDA 11 97083-6812 ROLANDO

Parts Manual

SIS

See "General Information" for New Parts Manual Features.

216, 226, 232, 242 Skid Steer Loader

4NZ3400-Up (Machine)
5FZ6700-Up (Machine)
CAB1-Up (Machine)
CMB1-Up (Machine)
3NW21000-Up (Engine)
CSD1-Up (Engine)

Powered By 3024C, 3034 Engine
This Parts Manual is also Available in .PDF Format on Compact Disc (CD-ROM) - Caterpillar Form Number SERP3428

Product and Dealer Information

Note: For product identification plate locations, see the section “Product Identification Information” in the Operation and Maintenance Manual.

Delivery Date: _____

Product Information

Model: _____

Product Identification Number: _____

Engine Serial Number: _____

Transmission Serial Number: _____

Generator Serial Number: _____

Attachment Serial Numbers: _____

Attachment Information: _____

Customer Equipment Number: _____

Dealer Equipment Number: _____

Dealer Information

Name: _____ Branch: _____

Address: _____

_____

_____

	Dealer Contact	Phone Number	Hours
Sales:	_____	_____	_____
Parts:	_____	_____	_____
Service:	_____	_____	_____

Informations produit et concessionnaire

Nota: Voir l'emplacement de la plaque signalétique du produit au chapitre "Informations produit" du guide d'utilisation et d'entretien.

Date de livraison: _____

Informations produit

Modèle: _____

Numéro d'identification produit: _____

Numéro de série du moteur: _____

Numéro de série de la boîte de vitesses: _____

Numéro de série de l'alternateur: _____

Numéros de série d'équipement: _____

Informations sur l'équipement: _____

Numéro matériel client: _____

Numéro matériel concessionnaire: _____

Informations concessionnaire

Nom: _____ Agence: _____

Adresse: _____

_____

_____

	Contact concessionnaire	Numéro de téléphone	Heures
Ventes:			
Pièces:			
Service:			

Información del Producto/Distribuidor

Nota: Para saber la ubicación de las placas de identificación del producto, ver la sección “Información sobre identificación del producto” en el Manual de Operación y Mantenimiento.

Fecha de entrega: _____

Información del producto

Modelo: _____

Número de identificación del producto: _____

Número de serie del motor: _____

Número de serie de la transmisión: _____

Número de serie del generador: _____

Números de serie de los accesorios: _____

Información sobre los accesorios: _____

Número del equipo del cliente: _____

Número del equipo del distribuidor: _____

Información del distribuidor

Nombre: _____ Sucursal: _____

Dirección: _____

_____

_____

	Comunicación con el distribuidor	Número de teléfono	Horas
Ventas:	_____	_____	_____
Piezas:	_____	_____	_____
Servicio:	_____	_____	_____

Informações Sobre Produto e Revendedor

Nota: Para localizações da placa de identificação do produto, consulte a seção, “Informações Sobre Identificação do Produto” no Manual de Operação e Manutenção.

Data de Entrega: _____

Informações Sobre o Produto

Modelo: _____

Número de Identificação do Produto: _____

Número de Série do Motor: _____

Número de Série da Transmissão: _____

Número de Série do Gerador: _____

Números de Série de Acessórios: _____

Informações Sobre Acessórios: _____

Número do Equipamento do Cliente: _____

Número do Equipamento do Revendedor: _____

Informações Sobre o Revendedor

Nome: _____ Filial: _____

Endereço: _____

_____

_____

	Contato do Revendedor	Telefone	Horas
Vendas:	_____	_____	_____
Peças:	_____	_____	_____
Serviço:	_____	_____	_____

Produkt- und Händlerinformation

Anmerkung: Für die Lage der Produkt-Identnummer und Seriennummern siehe Abschnitt "Produkt-Identinformation" im Betriebs- und Wartungshandbuch.

Lieferdatum: _____

Produkt-Identinformation

Modell: _____

Produkt-Identnummer: _____

Seriennummer des Motors: _____

Seriennummer des Getriebes: _____

Seriennummer des Generators: _____

Seriennummern der Arbeitsgeräte: _____

Arbeitsgeräteinformation: _____

Kundennummer: _____

Händlernummer: _____

Händlerinformation

Name: _____ Niederlassung: _____

Adresse: _____

_____

_____

	Kontaktperson beim Händler	Telefon	Dienststunden
Verkauf:	_____	_____	_____
Ersatzteile:	_____	_____	_____
Service:	_____	_____	_____

Informazioni sul prodotto e sul concessionario

Nota: Per le ubicazioni della targhetta informativa sul prodotto, vedere la sezione “Informazioni sull’identificazione del prodotto” nel Manuale di funzionamento e manutenzione.

Data di Consegna: _____

Informazioni sul prodotto

Modello: _____

Numero di identificazione del prodotto: _____

Numero di serie del motore: _____

Numero di serie della trasmissione: _____

Numero di serie del generatore: _____

Numeri di serie dell’attrezzatura: _____

Informazioni sull’attrezzatura: _____

Numero di riferimento cliente: _____

Numero di riferimento concessionario: _____

Informazioni sul concessionario

Nome: _____ Filiale: _____

Indirizzo: _____

_____

_____

	Persona da contattare	Numero telefonico	Orario
Vendite:	_____	_____	_____
Ricambi:	_____	_____	_____
Servizio:	_____	_____	_____

TABLE OF CONTENTS

Name	Page
GENERAL INFORMATION	A22
REPAIR ALTERNATIVES	A45
SUPPLEMENTAL COOLANT ADDITIVES	A51
MAINTENANCE PARTS	A57
INDEX	A86
MACHINE ARRANGEMENT	1
CHASSIS AR	1
COMMON AR	3
ENGINE ARRANGEMENT	5
ENGINE AR-PRIMARY	5
INSTALLATION AR-ENGINE	7
BASIC ENGINE	11
CAMSHAFT GP	11
COVER GP-FRONT HOUSING	13
COVER GP-VALVE MECHANISM	14
CRANKSHAFT GP	18
CYLINDER BLOCK GP	22
CYLINDER HEAD GP	26
DRAIN GP-ENGINE OIL	30
FASTENER GP-ENGINE	32
FLYWHEEL GP	33
HOUSING GP-FLYWHEEL	35
HOUSING GP-FRONT	38
LIFTING GP-ENGINE	44
MOUNTING GP-ALTERNATOR	46
MOUNTING GP-ENGINE	47
MOUNTING GP-FAN	49
MOUNTING GP-STARTING MOTOR	50
PAN GP-OIL	52
PISTON & ROD GP	58
PLUG GP-CYLINDER BLOCK	60
PULLEY GP-CRANKSHAFT	61
PULLEY GP-WATER PUMP	63
VALVE MECHANISM GP	64
LUBRICATION SYSTEM	66
FILTER GP-ENGINE OIL	66
PUMP GP-ENGINE OIL	67
COOLING SYSTEM	68
CONNECTION GP-WATER	68
FAN GP-BLOWER	70
PLUG GP-WATER LINES	72
PUMP GP-WATER	73
RADIATOR & HYD OIL COOLER GP	78
RADIATOR & OIL COOLER MTG GP	86
AIR INLET AND EXHAUST SYSTEM	94
AIR CLEANER GP	94
LINES GP-AIR	96
MANIFOLD GP-EXHAUST	98
MANIFOLD GP-INLET	100
MOUNTING GP-MUFFLER	101
MUFFLER GP	105
FUEL SYSTEM	108
CONTROL GP-GOVERNOR	108
FILTER & LINES GP-FUEL	112
FILTER GP-FUEL	114
FILTER GP-WATER SEP & FUEL	116
FITTING GP-FUEL LINES	117
GOVERNOR GP	118
LINES GP-FUEL	120
PUMP & MTG GP-FUEL TRANSFER	128
PUMP GP-FUEL INJECTION	130
SEPARATOR GP-WATER	135
ELECTRICAL AND STARTING SYSTEM	136
ALTERNATOR GP-CHARGING	136
BATTERY GP	140
CONNECTION GP-ELECTRICAL	142
CONTROL GP-INTERLOCK	144
COVER GP-FUSE PANEL	145
ELECTRONICS GP-WORK TOOL	146
GLOW PLUG GP	147
HEATER GP-JACKET WATER	149
LAMP GP-FLOOD	152
LAMP GP-HEAD & SIGNAL	154
LAMP GP-PANEL ILLUMINATION	156
LAMP GP-SIGNAL	157
LAMP GP-STOP & TAIL	158
LAMP GP-WARNING BEACON	159
LIGHTING AR-STOP & FLOOD	161
LIGHTING GP-FRONT	162
LIGHTING GP-REAR	163
LIGHTING GP-ROADING	166
LIGHTING GP-WARNING BEACON	173
MODULE GP-WARNING INDICATOR	174
SENSOR GP-TEMP & PRESS	175
SERVICE GP-WORK TOOL	176
SOLENOID GP-SHUTOFF	177
STARTING MOTOR GP-ELECTRIC	178
SWITCH GP-PRESSURE	181
SWITCH GP-TEMPERATURE	183
WARNING GP-BACKUP	184
WIRING GP-CAB	186
WIRING GP-CHASSIS	190
WIRING GP-ENGINE	194
WIRING GP-REAR LIGHTING	196
WIRING GP-WORK TOOL	198

TABLE OF CONTENTS

Name	Page
POWER TRAIN	204
AXLE GP	204
CONTROL GP-PARKING BRAKE	206
DRIVE GP-TANDEM	210
FILTER & MTG GP-HYDRAULIC	213
FILTER GP-OIL	214
LINES GP-HYDRAULIC FILTER	216
LINES GP-HYDROSTATIC	220
MANIFOLD GP-RETURN	224
MOTOR & MTG GP-HYDROSTATIC	228
MOTOR GP-PISTON	230
MOUNTING GP-PUMP	232
POWER TRAIN AR	234
PUMP & MTG GP-HYDROSTATIC	236
PUMP GP-PISTON	238
WHEEL & TIRE AR	242
WHEEL & TIRE GP	251
FRAME AND BODY	252
BUMPER GP-REAR	252
CONVERSION AR-ROADING	253
CONVERSION GP-ROADING	255
COUNTERWEIGHT GP	258
ENCLOSURE GP-ENGINE	264
FRAME GP-BLADE	268
FRAME GP-LOADER	270
LIFTING GP-MACHINE	274
MOUNTING GP-ROADING LIGHTS	278
PANEL GP-SIDE	280
SUPPRESSION GP-SOUND	282
HYDRAULIC SYSTEM	284
ACCUMULATOR & MTG GP-HYDRAULIC	284
CONTROL GP-HANDLE	285
CONTROL GP-PILOT OPERATED HYD	289
CYLINDER & MTG GP-BLADE	300
CYLINDER & MTG GP-GRAPPLE	301
CYLINDER GP-BLADE	303
CYLINDER GP-BUCKET	304
CYLINDER GP-GRAPPLE	305
CYLINDER GP-LIFT	307
CYLINDER GP-TILT	310
HYDRAULIC AR	312
LINES GP-BUCKET	316
LINES GP-CONNECTING	320
LINES GP-GRAPPLE	322
LINES GP-HYDRAULIC FAN	326
LINES GP-HYDRAULIC OIL COOLER	330
LINES GP-LIFT CYLINDER	334
LINES GP-PILOT	342
LINES GP-PUMP	350
LINES GP-TILT CYLINDER	354
LINES GP-WORK TOOL	362
MOTOR & MTG GP-HYDRAULIC FAN	366
MOTOR GP-GEAR	368
MOUNTING GP-CYLINDER	371
PLUG GP-PILOT VALVE	372
PUMP & MTG GP-WORK TOOL	373
PUMP GP-GEAR	375
TANK & MTG GP-HYDRAULIC	376
TANK GP-HYDRAULIC	378
VALVE & MTG GP-CONTROL	380
VALVE & MTG GP-DIVERTER	387
VALVE GP-BANK 2	389
VALVE GP-CHECK	390
VALVE GP-CONTROL	392
VALVE GP-MODULATING	402
VALVE GP-PILOT	403
VALVE GP-RELIEF	406
VALVE GP-SOLENOID	410
IMPLEMENTS	412
CONTROL GP-WORK TOOL	412
GUIDE GP-LINES	417
WORK TOOLS	418
ARM GP-MATERIAL HANDLING	418
BAR GP-TOOTH	419
BLADE AR	425
BLADE GP	426
BUCKET AR-DIRT	427
BUCKET AR-GENERAL PURPOSE	429
BUCKET AR-GRAPPLE	431
BUCKET AR-LIGHT MATERIAL	437
BUCKET AR-MULTIPURPOSE	438
BUCKET AS-DIRT	440
BUCKET AS-GENERAL PURPOSE	442
BUCKET AS-LIGHT MATERIAL	444
BUCKET GP-GRAPPLE	445
BUCKET GP-MULTIPURPOSE	447
BUCKET GP-UTILITY	449
CARRIAGE AS-FORK	451
COUPLER GP-QUICK	452
COVER GP-LINES	454
EDGE GP-CUTTING	455
FORK AR-GRAPPLE	463
FORK GP-GRAPPLE	465
FORK GP-PALLET	468
FORK GP-UTILITY	471
GRAPPLE GP-UTILITY	474
HANDLE & PIN GP-COUPLER	477
HANDLE GP-COUPLER	479
KIT-ROADING PLATE & MOUNTING	481
KIT-SNOW REMOVAL CONVERSION	483
LOCK GP-QUICK COUPLER	484
PUMP GP-DIAPHRAGM	485
SPRING GP-BLADE	486
STEP GP-MATERIAL HANDLING ARM	487

TABLE OF CONTENTS

Name	Page	Name	Page
STRAINER GP-WATER	489		
TANK & MTG GP-WATER	490		
TANK GP-WATER	493		
TOOTH GP-UNI	496		
OPERATOR STATION	497		
ARMREST & MOUNTING GP	497		
ARMREST GP	498		
BOX GP-STORAGE	500		
CANOPY GP-ROPS	501		
COVER GP-CAB	502		
COVER GP-CONSOLE	503		
DOOR & MTG GP-CAB	506		
DOOR GP-CAB	518		
DUCT GP-DEFROST	522		
FILTER GP-CAB AIR	523		
FLOOR MAT	524		
GAUGE & WARNING GP	525		
GUARD GP-ROPS/FOPS	527		
HEADLINER-CAB	528		
HEATER & MTG GP-CAB	529		
HEATER GP-CAB	534		
HORN GP-ELECTRIC	537		
INSTALLATION AR-HEATER	538		
KIT-CAB DOOR & MOUNTING	540		
LINER GP-CAB	544		
LINES GP-HEATER	546		
MIRROR & MTG GP-REAR VIEW	548		
MOTOR GP-WINDOW WIPER	549		
MOUNTING GP-ROPS	550		
OPERATOR AR-CANOPY	551		
PANEL AR-INSTRUMENT	551		
PANEL GP-INSTRUMENT	552		
PEDAL GP-GOVERNOR	556		
PLATFORM GP-OPERATOR	559		
SEAL GP-CAB	561		
SEAT & MOUNTING GP	564		
SEAT BELT GP	566		
SEAT GP-SUSPENSION	571		
SPRING GP-GAS	572		
VISOR GP-CAB	573		
WINDOW GP-CAB	575		
SERVICE EQUIPMENT AND SUPPLIES	588		
FILM GP	588		
MOUNTING GP-REGISTRATION	594		
PLATE & FILM GP	595		
PART NUMBER INDEX	B1		

TABLE DES MATIÈRES

Désignation	Page
GÉNÉRALITÉS	A25
OPTIONS DE RÉPARATION	A46
ADDITIFS POUR LIQUIDE DE REFROIDISSEMENT	A52
PIÈCES DE RECHANGE	A61
INDEX	A94
MACHINE COMPLÈTE	1
VERSION DE CHASSIS	1
VERSION NORMALE	3
MOTEUR COMPLET	5
MOTEUR (VERSION PRINCIPALE)	5
MONTAGE DE MOTEUR (VERSION)	7
MOTEUR DE BASE	11
ARBRE A CAMES (ASS)	11
COUVERCLE DE CARTER AV (ASS)	13
CACHE-SOUPAPES (ASS)	14
VILEBREQUIN (ASS)	18
BLOC-CYLINDRES (ASS)	22
CULASSE (ASS)	26
VIDANGE-HUILE DE MOTEUR (ASS)	30
BOULONNERIE - MOTEUR (ASS)	32
VOLANT MOTEUR (ASS)	33
CARTER DE VOLANT (ASS)	35
CARTER AV (ASS)	38
OEILLETONS DE LEVAGE MOTEUR (ASS)	44
MONTAGE D'ALTERNATEUR (ASS)	46
MONTAGE DE MOTEUR (ASS)	47
MONTAGE DE VENTILATEUR (ASS)	49
DÉMARREUR - MONTAGE (ASS)	50
HUILE MOTEUR - CARTER (ASS)	52
PISTON ET BIELLE (ASS)	58
BOUCHON - BLOC-CYLINDRES	60
VILEBREQUIN - POULIE (ASS)	61
POULIE DE POMPE À EAU (ASS)	63
CULBUTERIE (ASS)	64
CIRCUIT DE GRAISSAGE	66
FILTRE À HUILE MOTEUR (ASS)	66
POMPE A HUILE MOTEUR (ASS)	67
CIRCUIT DE REFROIDISSEMENT	68
RACCORD D'EAU (ASS)	68
VENTILATEUR SOUFFLANT (ASS)	70
BOUCHON DES CANALISATIONS D'EAU (ASS)	72
POMPE A EAU (ASS)	73
RADIATEUR ET REFROIDISSEUR D'HUILE HYDRAULIQUE (ASS)	78
RADIATEUR ET REFROIDISSEUR D'HUILE-MONTAGE (ASS)	86
CIRCUIT D'ADMISSION D'AIR ET D'ÉCHAPPEMENT	94
FILTRE A AIR (ASS)	94
CANALISATIONS D'AIR (ASS)	96
COLLECTEUR D'ÉCHAPPEMENT (ASS)	98
COLLECTEUR D'ADMISSION (ASS)	100
MONTAGE DE SILENCIEUX (ASS)	101
SILENCIEUX (ASS)	105
CIRCUIT DE CARBURANT	108
COMMANDE DE RÉGULATEUR (ASS)	108
FILTRE ET CANALISATIONS DE CARBURANT (ASS)	112
FILTRE A CARBURANT (ASS)	114
FILTRE DE SÉPARATEUR D'EAU ET DE CARBURANT (ASS)	116
RACCORD - CANALISATIONS DE CARBURANT (ASS)	117
REGULATEUR (ASS)	118
CANALISATIONS DE CARBURANT (ASS)	120
POMPE D'ALIMENTATION ET MONTAGE (ASS)	128
POMPE D'INJECTION DE CARBURANT (ASS)	130
SÉPARATEUR D'EAU (ASS)	135
CIRCUIT ÉLECTRIQUE ET DE DÉMARRAGE	136
ALTERNATEUR DE CHARGE (ASS)	136
BATTERIE (ASS)	140
BRANCHEMENT ÉLECTRIQUE (ASS)	142
COMMANDE D'INTERVERROUILLAGE (ASS)	144
COUVERCLE - PANNEAU DE FUSIBLES (ASS)	145
ÉLECTRONIQUE DE L'OUTIL DE TRAVAIL (ASS)	146
BOUGIE DE PRÉCHAUFFAGE (ASS)	147
EAU DES CHEMISES - RECHAUFFEUR (ASS)	149
LAMPE - PHARE (ASS)	152
LAMPE - PHARE ET CLIGNOTANT	154
LAMPE - ÉCLAIRAGE TABLEAU (ASS)	156
LAMPE - CLIGNOTANT DE DIRECTION (ASS)	157
FEUX ARRIÈRE ET FEUX D'ARRÊT	158
LAMPE - GYROPHARE (ASS)	159

TABLE DES MATIÈRES

Désignation	Page
ECLAIRAGE - ARRÊT ET PROJECTEURS (VERSION)	161
ECLAIRAGE AV (ASS)	162
ECLAIRAGE AR (ASS)	163
ÉCLAIRAGE - FEUX DE ROUTE (ASS)	166
ÉCLAIRAGE - GYROPHARE (ASS)	173
MODULE - TÉMOIN (ASS)	174
CAPTEUR - TEMP. ET PRESSION (ASS)	175
ENTRETIEN DE L'OUTIL DE TRAVAIL (ASS)	176
SOLÉNOÏDE D'ARRÊT (ASS)	177
DÉMARREUR ÉLECTRIQUE (ASS)	178
MANOCONTACT	181
BOUTON DE TEMPÉRATURE	183
AVERTISSEUR DE RECUL (ASS)	184
CABLAGE DE CABINE (ASS)	186
CABLAGE DE CHASSIS (ASS)	190
CABLAGE DE MOTEUR (ASS)	194
CABLAGE D'ECLAIRAGE ARRIERE (ASS)	196
CÂBLAGE - OUTIL DE TRAVAIL (ASS)	198
TRANSMISSION	204
ESSIEU (ASS)	204
COMMANDE DE FREIN DE STATIONNEMENT (ASS)	206
ENTRAINEMENT EN TANDEM (ASS)	210
FILTRE À HUILE HYDRAULIQUE ET MONTAGE (ASS)	213
FILTRE A HUILE (ASS)	214
CANALISATIONS DE FILTRE HYDRAULIQUE	216
CANALISATIONS HYDROSTATIQUES (ASS)	220
COLLECTEUR-RETOUR (ASS)	224
MOTEUR ET MONTAGE - HYDROSTATIQUE (ASS)	228
GROUPE DE MOTEUR A PISTONS	230
MONTAGE DE POMPE (ASS)	232
TRANSMISSION (VERSION)	234
POMPE HYDROSTATIQUE ET MONTAGE (ASS)	236
POMPE A PISTONS (ASS)	238
ROUE ET PNEU (VERSION)	242
ROUE ET PNEU (ASS)	251
CHÂSSIS ET BENNE	252
PARE-CHOCS AR (ASS)	252
VERSION DE TRANSFORMATION POUR DÉPLACEMENT ROUTIER	253
GROUPE DE TRANSFORMATION - DÉPLACEMENT ROUTIER	255
CONTREPOIDS (ASS)	258
CARENAGE DE MOTEUR (ASS)	264
BÂTI DE LAME (ASS)	268
BATI - CHARGEUSE (ASS)	270
MACHINE DE LEVAGE	274
MONTAGE DE FEUX DE DÉPLACEMENT SUR ROUTE (ASS)	278
PANNEAU LATERAL (ASS)	280
INSONORISATION (ASS)	282
CIRCUIT HYDRAULIQUE	284
ACCUMULATEUR ET MONTAGE - HYDRAULIQUE (ASS)	284
COMMANDE DE POIGNÉE (ASS)	285
COMMANDE HYDRAULIQUE PILOTE (ASS)	289
VÉRIN ET MONTAGE DE LAME (ASS)	300
VÉRIN ET MONTAGE DE PINCE (ASS)	301
VÉRIN DE LAME (ASS)	303
VERIN DE GODET (ASS)	304
PINCE - VÉRIN (ASS)	305
VÉRIN DE LEVAGE (ASS)	307
VÉRIN D'INCLINAISON (ASS)	310
VERSION HYDRAULIQUE	312
ECLAIRAGE DE GODET (ASS)	316
CANALISATIONS - BRANCHEMENT (ASS)	320
PINCE - CANALISATIONS (ASS)	322
CANALISATIONS HYDRAULIQUES DE VENTILATEUR (ASS)	326
CANALISATIONS DE REFROIDISSEUR D'HUILE HYDR. (ASS)	330
CANALISATIONS DE VÉRIN DE LEVAGE (ASS)	334
CANALISATIONS A COMMANDE PILOTE (ASS)	342
CANALISATIONS DE POMPE (ASS)	350
CANALISATIONS DU VÉRIN D'INCLINAISON (ASS)	354
CANALISATIONS - OUTIL DE TRAVAIL (ASS)	362
MOTEUR ET MONTAGE DE VENTILATEUR HYDRAULIQUE (ASS)	366
MOTEUR À ENGRENAGES (ASS)	368
MONTAGE DE VÉRIN (ASS)	371
BOUCHON DE SOUPAPE PILOTE (ASS)	372
POMPE ET MONTAGE - OUTIL DE TRAVAIL (ASS)	373
POMPE A ENGRENAGES (ASS)	375
RÉSERVOIR HYDRAULIQUE ET MONTAGE (ASS)	376
RÉSERVOIR HYDRAULIQUE (ASS)	378
DISTRIBUTEUR ET MONTAGE (ASS)	380
SOUPAPE DE DÉRIVATION ET MONTAGE	387

TABLE DES MATIÈRES

Désignation	Page
DISTRIBUTEUR DOUBLE ÉLÉMENT (ASS)	389
CLAPET DE RETENUE (ENS)	390
DISTRIBUTEUR (ASS)	392
SOUPAPE DE MODULATION (ASS)	402
SOUPAPE PILOTE (ASS)	403
CLAPET DE DECHARGE (ASS)	406
SOUPAPE - SOLÉNOÏDE (ASS)	410
ÉQUIPEMENTS	412
COMMANDE - OUTIL DE TRAVAIL (ASS)	412
GUIDE - CANALISATIONS (ASS)	417
OUTILS DE TRAVAIL	418
BRAS DE MANUTENTION (ASS)	418
BARRE-DENTS (ASS)	419
LAME (VERSION)	425
LAME (ASS)	426
GODET - SALETÉ (VERSION)	427
GODET NORMAL (VERSION)	429
GODET - PINCE (VERSION)	431
GODET - MATÉRIAUX MEUBLES (VERSION)	437
GODET TOUS-TRAVAUX (VERSION)	438
GODET - SALETÉ (ENS)	440
GODET NORMAL (ENS)	442
GODET POUR MATERIAUX MEUBLES (ENS)	444
GODET - PINCE (ASS)	445
GODET TOUS-TRAVAUX (ASS)	447
GODET POUR TRAVAUX DE SERVITUDE (ASS)	449
TABLIER DE FOURCHE (ENS)	451
COUPLEUR EXPRESS (ASS)	452
COUVERCLE-CANALISATIONS (ASS)	454
LAME DE COUPE (ASS)	455
FOURCHE - PINCE (VERSION)	463
FOURCHE - PINCE (ASS)	465
FOURCHE PALLETTE (ASS)	468
FOURCHE-RÉSEAU PUBLIC (ASS)	471
PINCE-RÉSEAU PUBLIC (ASS)	474
POIGNÉE ET AXE DE COUPLEUR (ASS)	477
POIGNÉE DE COUPLEUR (ASS)	479
KIT DE PLAQUE DE DÉPLACEMENT ROUTIER ET MONTAGE	481
KIT DE TRANSFORMATION D'ENLÈVEMENT DE LA NEIGE	483
VERROUILLAGE DE COUPLEUR EXPRESS (ASS)	484
POMPE - DIAPHRAGME (ASS)	485
RESSORT DE LAME (ASS)	486
MARCHEPIED-BRAS DE MANUTENTION (ASS)	487
TAMIS D'EAU (ASS)	489
RÉSERVOIR D'EAU ET MONTAGE (ASS)	490
RÉSERVOIR D'EAU (ASS)	493
DENT MONOBLOC (ASS)	496
POSTE DE CONDUITE	497
ACCOUDOIR ET MONTAGE (ASS)	497
ACCOUDOIR (ASS)	498
COFFRE DE RANGEMENT (ASS)	500
TOÎT ROPS (ASS)	501
COUVERCLE - CABINE (ASS)	502
COUVERCLE DE LA CONSOLE (ASS)	503
PORTE DE CABINE ET MONTAGE (ASS)	506
PORTIÈRE DE CABINE (ASS)	518
GAINE DU DÉGIVREUR (ASS)	522
FILTRE À AIR DE CABINE (ASS)	523
TAPIS DE PLANCHER	524
INDICATEURS ET TÉMOINS LUMINEUX (ASS)	525
PROTECTION DE ROPS/FOPS (ASS)	527
CAPITONNAGE	528
CHAUFFAGE ET MONTAGE - CABINE (ASS)	529
CHAUFFAGE DE CABINE (ASS)	534
KLAXON ÉLECTRIQUE (ASS)	537
VERSION DE MONTAGE DE RÉCHAUFFEUR	538
KIT DE PORTE DE CABINE ET MONTAGE	540
CABINE - REVÊTEMENT (ASS)	544
CANALISATIONS DE CHAUFFAGE (ASS)	546
RÉTROVISEUR ET MONTAGE (ASS)	548
MOTEUR D'ESSUIE-GLACE (ASS)	549
MONTAGE DU TOIT ROPS (ASS)	550
CABINE AVEC PAVILLON (VERSION)	551
VERSION DE TABLEAU DE BORD	551
TABLEAU DE BORD (ASS)	552
RÉGULATEUR - PÉDALE (ASS)	556
PLATE-FORME DE CABINE	559
JOINT DE CABINE (ASS)	561
SIÈGE ET MONTAGE (ASS)	564
CEINTURE DE SECURITE (ASS)	566
SIÈGE AVEC SUSPENSION (ASS)	571
RESSORT-GAZ (ASS)	572
RETROVISEUR - CABINE (ASS)	573
VITRE DE CABINE (ASS)	575
MATÉRIEL ET FOURNITURES D'ENTRETIEN	588
PLAQUE SIGNALÉTIQUE (ASS)	588
MONTAGE - IMMATRICULATION (ASS)	594

TABLE DES MATIÈRES

Désignation	Page	Désignation	Page
PLAQUES SIGNALETIQUES ET AUTOCOLLANTS (ASS)	595		
INDEX DE NUMÉROS DE PIÈCES	B1		

CONTENIDO

Nombre	Página
INFORMACIÓN GENERAL	A29
ALTERNATIVAS DE REPARACIÓN	A47
ADITIVOS DE REFRIGERANTE SUPLEMENTARIOS	A53
PIEZAS DE MANTENIMIENTO	A66
INDICE	A102
CONFIGURACION DE LA MAQUINA	1
CHASIS (CONFIG)	1
CONFIGURACIÓN COMÚN	3
CONFIGURACION DE MOTOR	5
MOTOR PRIMARIO (CONFIG)	5
CONFIGURACIÓN DE INSTALACIÓN DEL MOTOR	7
MOTOR BASICO	11
ÁRBOL DE LEVAS (GR)	11
TAPA DE LA CAJA DELANTERA (GR)	13
TAPA DEL MECANISMO DE VÁLVULAS (GR)	14
CIGÜEÑAL (GR)	18
BLOQUE MOTOR (GR)	22
CULATA DE CILINDROS (GR)	26
DRENAJE DEL ACEITE DE MOTOR	30
TORNILLERÍA DEL MOTOR (GR)	32
VOLANTE (GR)	33
VOLANTE - CAJA DE (GR)	35
CAJA DELANTERA (GR)	38
CÁNCAMOS DE LEVANTAMIENTO DEL MOTOR (GR)	44
MONTAJE DEL ALTERNADOR (GR)	46
MONTAJE DEL MOTOR (GR)	47
MONTAJE DEL VENTILADOR (GR)	49
MONTAJE DE MOTOR DE ARRANQUE (GR)	50
CÁRTER - COLECTOR DEL (GR)	52
PISTÓN Y BIELA (GR)	58
TAPÓN DEL BLOQUE MOTOR (GR)	60
CIGÜEÑAL - POLEA DE (GR)	61
GRUPO, MANIJA, BOMBA DE AGUA	63
MECANISMO DE VÁLVULAS (GR)	64
SISTEMA DE LUBRICACION	66
FILTRO DE ACEITE DEL MOTOR (GR)	66
BOMBA DE ACEITE DEL MOTOR (GR)	67
SISTEMA DE ENFRIAMIENTO	68
AGUA - CONEXIÓN DE (GR)	68
SOPLADOR - VENTILADOR (GR)	70
TAPÓN DE LAS TUBERÍAS DE AGUA (GR)	72
BOMBA DE AGUA (GR)	73
RADIADOR Y ENFRIADOR DE ACEITE HIDRÁULICO (GR)	78
MONTAJE DE RADIADOR Y ENFRIAMIENTO DE ACEITE (GR)	86
SISTEMA DE ESCAPE Y ADMISION DE AIRE	94
FILTRO DE AIRE (GR)	94
AIRE - TUBERÍAS DE (GR)	96
MÚLTIPLE DE ESCAPE (GR)	98
MÚLTIPLE DE ADMISIÓN (GR)	100
MONTAJE DEL SILENCIADOR (GR)	101
SILENCIADOR (GR)	105
SISTEMA DE COMBUSTIBLE	108
CONTROL DE REGULADOR (GR)	108
FILTRO Y TUBERÍAS DE COMBUSTIBLE (GR)	112
FILTRO DE COMBUSTIBLE (GR)	114
FILTRO DE COMBUSTIBLE Y SEPARADOR DE AGUA (GR)	116
CONEXIÓN DE ENGRASE DE LAS TUBERÍAS DE COMBUSTIBLE	117
REGULADOR (GR)	118
TUBERÍAS DE COMBUSTIBLE (GR)	120
BOMBA DE TRANSFERENCIA DE COMBUSTIBLE Y MONTAJE (GR)	128
BOMBA DE INYECCIÓN DE COMBUSTIBLE (GR)	130
SEPARADOR DE AGUA (GR)	135
SISTEMA DE ARRANQUE ELECTRICO	136
CARGA - ALTERNADOR DE (GR)	136
BATERÍA (GR)	140
CONEXIÓN ELÉCTRICA (GR)	142
CONTROL DE TRABA (GR)	144
CUBIERTO DEL PANEL DE FUSIBLES (GR)	145
ELECTRONICA DE HERRAMIENTAS (GR)	146
BUJÍA INCANDESCENTE (GR)	147
AGUA DE LAS CAMISAS - CALENTADOR DEL (GR)	149
REFLECTOR (GR)	152
LÁMPARA DE LUZ DELANTERA Y DE SEÑAL (GR)	154
LÁMPARA DE ILUMINACIÓN DEL PANEL (GR)	156
LUZ DE SEÑAL DE GIRO (GR)	157

* NO HAY TRADUCCION DISPONIBLE EN EL MOMENTO DE LA IMPRESION

CONTENIDO

Nombre	Página
LUCES DE PARADA Y COLA (GR)	158
LÁMPARA DE BALIZA DE ADVERTENCIA (GR)	159
LUCES DE PARADA Y REFLECTORES (CONFIG)	161
LUCES DELANTERAS (GR)	162
LUCES TRASERAS (GR)	163
LUCES DE DESPLAZAMIENTO (GR)	166
LUZ DE BALIZA (GR)	173
MÓDULO INDICADOR DE ADVERTENCIA (GR)	174
*SENSOR GP-TEMP & PRESS	175
SERVICIO DE HERRAMIENTA (GR)	176
SOLENOIDE DE CORTE	177
MOTOR DE ARRANQUE ELÉCTRICO (GR)	178
INTERRUPTOR DE PRESIÓN (GR)	181
INTERRUPTOR PARA LA TEMPERATURA (GR)	183
RETROCESO - ALARMA DE (GR)	184
CABLES DE LA CABINA (GR)	186
CABLES DEL CHASIS (GR)	190
CABLES DEL MOTOR (GR)	194
ALAMBRADO DE LUCES TRASERAS (GR)	196
CABLES DE LA HERRAMIENTA DE TRABAJO (GR)	198
TREN DE FUERZA	204
EJE (GR)	204
CONTROL DEL FRENO DE ESTACIONAMIENTO	206
MANDO TANDEM (GR)	210
FILTRO DE ACEITE HIDRÁULICO Y MONTAJE (GR)	213
FILTRO DE ACEITE (GR)	214
TUBERIAS DEL FILTRO HIDRAULICO (GR)	216
TUBERÍAS HIDROSTÁTICAS (GR)	220
RETORNO EN EL MULTIPLE(GR)	224
MOTOR HIDROSTATICO Y MONTAJE (GR)	228
PISTONES DEL MOTOR (GR)	230
MONTAJE DE LA BOMBA (GR)	232
TREN DE FUERZA (CONFIG)	234
HIDROSTATICO, BOMBA Y GRUPO DE MONTAJE	236
BOMBA DE PISTONES (GR)	238
RUEDA Y LLANTA (CONFIG)	242
RUEDA Y NEUMÁTICO (GR)	251
BASTIDOR Y CAJA	252
PARAGOLPES TRASERO (GR)	252
CONFIGURACIÓN DE TRANSFORMACIÓN PARA CARRETERA	253
CONVERSION PARA DESPLAZAMIENTO POR CARRETERA (GR)	255
CONTRAPESO (GR)	258
COMPARTIMIENTO DEL MOTOR (GR)	264
BASTIDOR DE HOJA (GR)	268
BASTIDOR DEL CARGADOR (GR)	270
LEVANTAMIENTO DE LA MÁQUINA (GR)	274
MONTAJE DE LUCES DE DESPLAZAMIENTO POR CARRETERA (GR)	278
PANEL LATERAL (GR)	280
INSONORIZADOR (GR)	282
SISTEMA HIDRAULICO	284
ACUMULADOR HIDRAULICO Y MONTAJE (GR)	284
CONTROL DE MANIJA (GR)	285
CONTROL HIDRÁULICO DE OPERACIÓN PILOTO (GR)	289
CILINDRO Y MONTAJE DE LA HOJA (GR)	300
MONTAJE DEL CILINDRO DEL GARFIO (GR)	301
CILINDRO DE LA HOJA (GR)	303
CILINDRO DE CUCHARÓN (GR)	304
CILINDRO DE GARFIO (GR)	305
CILINDRO DE LEVANTAMIENTO (GR)	307
INCLINACIÓN HORIZONTAL - CILINDRO DE (GR)	310
HIDRÁULICA (CONFIG)	312
TUBERÍAS DEL CUCHARÓN (GR)	316
TUBERIAS DE CONEXION (GR)	320
TUBERÍAS DEL GARFIO (GR)	322
TUBERÍAS HIDRÁULICAS DEL VENTILADOR (GR)	326
TUBERÍAS DEL ENFRIADOR DE ACEITE HIDRÁULICO (GR)	330
CILINDRO DE LEVANTAMIENTO - TUBERÍAS DEL (GR)	334
TUBERÍAS CON SERVOMANDO (GR)	342
BOMBA - TUBERÍAS DE (GR)	350
TUBERÍAS DEL CILINDRO DE INCLINACIÓN (GR)	354
TUBERIAS DE LA HERRAMIENTA DE TRABAJO	362
MOTOR Y MONTAJE DE VENTILADOR HIDRAULICO (GR)	366
MOTOR DE ENGRANAJES (GR)	368
MONTAJE DE CILINDRO (GR)	371
TAPON DE LA VALVULA PILOTO (GR)	372

* NO HAY TRADUCCION DISPONIBLE EN EL MOMENTO DE LA IMPRESION

CONTENIDO

Nombre	Página
BOMBA Y MONTAJE DE LA HERRAMIENTA DE TRABAJO (GR)	373
BOMBA DE ENGRANAJES (GR)	375
TANQUE HIDRÁULICO Y MONTAJE (GR)	376
TANQUE HIDRÁULICO (GR)	378
VÁLVULA DE CONTROL Y MONTAJE (GR)	380
VÁLVULA DE DERIVACIÓN Y MONTAJE (GR)	387
VÁLVULAS HIDRÁULICAS - GRUPO DE 2	389
VÁLVULA DE RETENCIÓN (GR)	390
VÁLVULA DE CONTROL (GR)	392
VÁLVULA DE MODULACIÓN (GR)	402
VÁLVULA PILOTO (GR)	403
VÁLVULA DE ALIVIO (GR)	406
VÁLVULA DE SOLENOIDE (GR)	410
IMPLEMENTOS	412
CONTROL DE LA HERRAMIENTA DE TRABAJO (GR)	412
TUBERIAS DE LA GUIA (GR)	417
HERRAMIENTAS	418
AGUILÓN TELESCÓPICO (GR)	418
BARRA-DIENTE(GR)	419
HOJA (CONFIG)	425
HOJA (GR)	426
CUCHARON PARA TIERRA (CONF)	427
CUCHARÓN DE USO GENERAL (CONFIG)	429
CUCHARON DE GARFIO (CONF)	431
CUCHARÓN PARA MATERIALES LIVIANOS (CONFIG)	437
CUCHARÓN DE USO MÚLTIPLE (CONFIG)	438
CUCHARON PARA TIERRA (CONJ)	440
CUCHARÓN DE USO GENERAL (CONJ)	442
CUCHARÓN PARA MATERIALES LIVIANOS	444
CUCHARON DE GARFIO (GR)	445
CUCHARÓN DE USO MÚLTIPLE (GR)	447
CUCHARÓN UTILITARIO (GR)	449
PORTAHORQUILLAS (CONJ)	451
ACOPLADOR RÁPIDO (GR)	452
TAPA DE TUBERIAS (GR)	454
CUCHILLA (GR)	455
HORQUILLA DE GARFIO (CONF)	463
HORQUILLA DE GARFIO (GR)	465
HORQUILLA PARA TARIMAS (GR)	468
HORQUILLA DE UTILIDAD (GR)	471
GARFIO DE UTILIDAD (GR)	474
GRUPO DE MANIJA Y PIN-ACOPLADOR	477
ACOPLADOR DE MANIJA	479
JUEGO-PLACA DE DESPLAZAMIENTO Y MONTAJE	481
JUEGO-CONVERSION PARA REMOCION DE NIEVE	483
TRABA-ACOPLADOR RAPIDO (GR)	484
BOMBA DEL DIAFRAGMA (GR)	485
RESORTE DE HOJA (GR)	486
ESCALON DE BRAZO DE MANEJO DE MATERIALES (GR)	487
COLADOR DEL AGUA (GR)	489
MONTAJE DEL TANQUE DE AGUA (GR)	490
TANQUE DEL AGUA (GR)	493
DIENTE DE UNA PIEZA (UNI-TOOTH) (GR)	496
ESTACION DEL OPERADOR	497
POSABRAZOS Y MONTAJE (GR)	497
POSABRAZOS (GR)	498
CAJA DE ALMACENAMIENTO	500
TOLDO ROPS (GR)	501
TAPA DE LA CABINA (GR)	502
TAPA DE LA CONSOLA (GR)	503
PUERTA Y MONTAJE DE CABINA (GR)	506
PUERTA DE CABINA	518
CONDUCTO DEL DESEMPAÑADOR (GR)	522
FILTRO DE AIRE DE LA CABINA (GR)	523
ALFOMBRILLA DEL PISO	524
INDICADORES Y ADVERTENCIA (GR)	525
PROTECTOR DE ROPS/FOPS	527
REVESTIMIENTO DEL TECHO DE LA CABINA	528
CALEFACCIÓN Y MONTAJE DE LA CABINA (GR)	529
CALEFACCIÓN DE LA CABINA (GR)	534
BOCINA ELÉCTRICA (GR)	537
CONFIGURACIÓN DE INSTALACIÓN, CALENTADOR	538
JUEGO, PUERTA DE CABINA Y MONTAJE	540
REVESTIMIENTO DE LA CABINA (GR)	544
TUBERÍAS DE LA CALEFACCIÓN (GR)	546
RETROVISOR Y MONTAJE (GR)	548
MOTOR-LIMPIAPARABRISAS (GR)	549
MONTAJE DE LA ESTRUCTURA ROPS (GR)	550

* NO HAY TRADUCCION DISPONIBLE EN EL MOMENTO DE LA IMPRESION

CONTENIDO

Nombre	Página	Nombre	Página
CABINA DEL OPERADOR CON TECHO TIPO TOLDO (CONFIG)	551		
TABLERO DE INSTRUMENTOS (CONFIG)	551		
TABLERO DE INSTRUMENTOS (GR)	552		
REGULADOR - PEDAL DEL (GR)	556		
PLATAFORMA DE LA CABINA	559		
SELLO DE CABINA (GR)	561		
ASIENTO Y MONTAJE (GR)	564		
CINTURÓN DE SEGURIDAD (GR)	566		
SUSPENSIÓN - ASIENTO CON (GR)	571		
RESORTE DE GAS (GR)	572		
VISERA (GR)	573		
VENTANA DE LA CABINA (GR)	575		
EQUIPO DE SERVICIO Y SUMINISTROS	588		
ETIQUETA DE ADVERTENCIA (GR)	588		
MONTAJE-REGISTRO (GR)	594		
CALCOMANÍAS Y PLACAS DE IDENTIFICACIÓN (GR)	595		
INDICE DE NUMEROS DE PIEZA	B1		

* NO HAY TRADUCCION DISPONIBLE EN EL MOMENTO DE LA IMPRESION

ÍNDICE

Designação	Página
INFORMAÇÃO GERAL	A33
ALTERNATIVAS DE REPARO	A48
ADITIVOS SUPLEMENTARES DO LÍQUIDO ARREFECEDOR	A54
PEÇAS DE MANUTENÇÃO	A71
ÍNDICE	A110
ARRANJO DA MÁQUINA	1
CHASSI	1
ARRANJO BÁSICO	3
ARRANJO DO MOTOR	5
MOTOR PRIMÁRIO	5
GRUPO DE INSTALAÇÃO - MOTOR	7
MOTOR BÁSICO	11
EIXO-COMANDO DE VÁLVULA	11
TAMPA - CAIXA DIANTEIRA	13
TAMPA - MECANISMO DAS VÁLVULAS	14
VIRABREQUIM	18
BLOCO DO MOTOR	22
CABEÇOTE DO MOTOR	26
DRENO - ÓLEO DO MOTOR	30
FIXADORES - MOTOR	32
VOLANTE DO MOTOR	33
CAIXA DO VOLANTE DO MOTOR	35
CAIXA DIANTEIRA	38
LEVANTAMENTO DO MOTOR	44
MONTAGEM - ALTERNADOR	46
MONTAGEM - MOTOR	47
MONTAGEM - VENTILADOR	49
MONTAGEM - MOTOR DE ARRANQUE	50
CÁRTER DO ÓLEO DO MOTOR	52
PISTÃO E BIELA	58
BUJÃO DO BLOCO DO CILINDRO	60
POLIA DO VIRABREQUIM	61
GRUPO DE POLIA - BOMBA DE ÁGUA	63
MECANISMO DAS VÁLVULAS	64
SISTEMA DE LUBRIFICAÇÃO	66
FILTRO - ÓLEO DO MOTOR	66
BOMBA DE ÓLEO - MOTOR	67
SISTEMA DE ARREFECIMENTO	68
CONEXÃO - TUBO D'ÁGUA	68
VENTILADOR DE SOPRO	70
BUJÃO - TUBULAÇÕES DE ÁGUA	72
BOMBA DE ÁGUA	73
RADIADOR E ARREFECEDOR DO ÓLEO HIDRÁULICO	78
RADIADOR E ARREFECEDOR DE ÓLEO - MONTAGEM	86
SISTEMA DE ADMISSÃO DE AR E DE ESCAPE	94
PURIFICADOR DE AR	94
TUBOS - AR	96
COLETOR DE ESCAPE	98
COLETOR DE ADMISSÃO	100
MONTAGEM - SILENCIADOR	101
SILENCIADOR	105
SISTEMA DE COMBUSTÍVEL	108
CONTROLE DO GOVERNADOR	108
FILTRO E TUBOS - COMBUSTÍVEL	112
FILTRO - COMBUSTÍVEL	114
FILTRO DE COMBUSTÍVEL E SEPARADOR DE ÁGUA	116
CONEXÃO - TUBOS DE COMBUSTÍVEL	117
GOVERNADOR	118
TUBOS - COMBUSTÍVEL	120
BOMBA E MONTAGEM - TRANSFERÊNCIA DE COMBUSTÍVEL	128
BOMBA DE INJEÇÃO DO COMBUSTÍVEL	130
SEPARADOR DE ÁGUA	135
SISTEMA ELÉTRICO E DE PARTIDA	136
ALTERNADOR DE CORRENTE	136
BATERIA	140
CONEXÃO - ELÉTRICA	142
CONTROLE DE TRAVAMENTO	144
TAMPA DO PAINEL DO FUSÍVEL	145
SISTEMA ELETRÔNICO-FERRAMENTA DE TRABALHO	146
VELA DE AQUECIMENTO; VELA INCANDESCENTE	147
AQUECEDOR DA ÁGUA DO MOTOR	149
LÂMPADA - FAROL	152
LÂMPADA DIANTEIRA E DE SINAL	154
LÂMPADA - ILUMINAÇÃO DO PAINEL	156
LÂMPADA - SINALIZAÇÃO	157
LUZ TRASEIRA E DE FREIO	158
LUZ GIRATÓRIA DE ALARME	159
ILUMINAÇÃO - FREIOS E FARÓIS	161
ILUMINAÇÃO - DIANTEIRA	162
ILUMINAÇÃO - TRASEIRA	163
ILUMINAÇÃO - RODOVIÁRIA	166
SIST. DE ILUMINAÇÃO - PISCA-PISCA GIRATÓRIO DE ADVERTÊNCIA	173
MÓDULO - INDICADOR DE ALARME	174

ÍNDICE

Designação	Página
SENSOR DE PRESSÃO E TEMPERATURA	175
GR. DE SERVIÇO- FERRAMENTA DE TRABALHO	176
SOLENÓIDE DE PARADA	177
MOTOR ELÉTRICO DE PARTIDA	178
INTERRUPTOR - PRESSÃO	181
INTERRUPTOR - TEMPERATURA	183
ALARME DE MARCHA À RÉ	184
CABOS/FIOS ELÉTRICOS - CABINE	186
CABOS/FIOS ELÉTRICOS - CHASSI	190
CABOS/FIOS ELÉTRICOS - MOTOR	194
CABOS E FIOS ELÉTRICOS-LUZES TRASEIRAS	196
CABOS/FIOS ELÉTRICOS - FERRAMENTAS DE TRABALHO	198
TREM DE FORÇA	204
EIXO	204
CONTROLE DO FREIO DE ESTACIONAMENTO	206
COMANDO DO TANDEM	210
FILTRO HIDRÁULICO E MONTAGEM	213
FILTRO - ÓLEO	214
TUBOS - FILTRO HIDRÁULICO	216
TUBOS - SISTEMA HIDROSTÁTICO	220
COLETOR - RETORNO	224
MOTOR HIDROSTÁTICO E MONTAGEM	228
MOTOR - PISTÃO	230
MONTAGEM - BOMBA	232
TREM DE FORÇA	234
BOMBA E MONTAGEM - HIDROSTÁTICA	236
BOMBA DE PISTÃO	238
RODA E PNEU	242
CHASSI E CARROCERIA	252
PÁRA-CHOQUE TRASEIRO	252
GRUPO DE CONVERSÃO - ARRANJO RODOVIÁRIO	253
GR. DE CONVERSÃO - OPERAÇÃO RODOVIÁRIA	255
CONTRAPESO	258
COBERTURA DO MOTOR	264
ARMAÇÃO - LÂMINA	268
CHASSI DIANTEIRO	270
LEVANTAMENTO DA MÁQUINA	274
MONTAGEM - LUZES PARA ILUMINAÇÃO RODOVIÁRIA	278
PAINEL LATERAL	280
REDUÇÃO DE RUÍDO	282
SISTEMA HIDRÁULICO	284
ACUMULADOR HIDRÁULICO E MONTAGEM	284
CONTROLE-CABO	285
CONTROLE HIDRÁULICO DE OPERAÇÃO PILOTO	289
CILINDRO DA LÂMINA E MONTAGEM	300
CILINDRO E MONTAGEM - PINÇA	301
CILINDRO DA LÂMINA	303
CILINDRO DA CAÇAMBA	304
CILINDRO DA GARRA	305
CILINDRO DE LEVANTAMENTO	307
CILINDRO DE INCLINAÇÃO	310
COMANDO HIDRÁULICO	312
TUBOS - CAÇAMBA	316
TUBOS DE CONEXÃO	320
TUBOS - GARRA	322
TUBOS - VENTILADOR HIDRÁULICOS	326
TUBOS - ARREFECEDOR DE ÓLEO HIDRÁULICO	330
TUBOS - CILINDRO DE LEVANTAMENTO	334
TUBOS - CIRCUITO PILOTO	342
TUBOS - BOMBA	350
TUBOS - CILINDRO DE INCLINAÇÃO	354
TUBOS - FERRAMENTA DE TRABALHO	362
MOTOR E MONTAGEM - VENTILADOR HIDRÁULICO	366
MOTOR - ENGRENAGENS	368
MONTAGEM - CILINDRO	371
BUJÃO DA VÁLVULA PILOTO	372
BOMBA DA FERRAMENTA DE TRABALHO E MONTAGEM	373
BOMBA DE ENGRENAGENS	375
TANQUE DE ÓLEO HIDRÁULICO E MONTAGEM	376
TANQUE HIDRÁULICO	378
VÁLVULA DE CONTROLE E MONTAGEM	380
VÁLVULA DESVIADORA E MONTAGEM	387
GRUPO DE VÁLVULAS DE CONTROLE - DUPLO	389
VÁLVULA DE RETENÇÃO	390
VÁLVULA DE CONTROLE	392
VÁLVULA DE MODULAÇÃO	402
VÁLVULA DE CONTROLE PILOTO	403
VÁLVULA DE ALÍVIO	406
VÁLVULA SOLENÓIDE	410
ACESSÓRIOS	412
CONTROLE DA FERRAMENTA DE TRABALHO	412

ÍNDICE

Designação	Página
GUIA - TUBOS	417
FERRAMENTAS DE TRABALHO	418
BRAÇO - MANIPULADOR DE MATERIAIS	418
BARRA - DENTE	419
LÂMINA	425
CAÇAMBA PARA TERRA	427
CAÇAMBA - PARA APLICAÇAO GERAL	429
CAÇAMBA - GARRA	431
CAÇAMBA PARA MATERIAL LEVE	437
CAÇAMBA DE MÚLTIPLAS APLICAÇÕES	438
CAÇAMBA PARA TERRA	440
CAÇAMBA PARA APLICAÇÃO GERAL	442
CACAMBA PARA MATERIAL LEVE	444
CAÇAMBA - GARRA	445
CAÇAMBA DE MÚLTIPLAS APLICAÇÕES	447
CAÇAMBA PARA SERVIÇOS GERAIS	449
SUPORTE - GARFO	451
ACOPLADOR RÁPIDO	452
TAMPA - TUBULAÇÕES	454
BORDA CORTANTE	455
GARFO DA GARRA	463
GARFO DE PALETAS	468
GARFO - SERVIÇOS PÚBLICOS	471
GARRA - SERVIÇOS PÚBLICOS	474
ALÇA E PINO - ACOPLADOR	477
ALÇA - ACOPLADOR	479
JOGO-PLACA DE RODAGEM E MONTAGEM	481
JOGO-CONVERSÃO DE REMOÇÃO DE NEVE	483
TRAVA - ACOPLADOR RÁPIDO	484
BOMBA DE DIAFRAGMA	485
MOLA - LÂMINA	486
DEGRAU - BRAÇO DE MANIPULAÇÃO DE MATERIAIS	487
TELA FILTRANTE - ÁGUA	489
TANQUE DE ÁGUA E MONTAGEM	490
TANQUE DE ÁGUA	493
UNI-DENTE	496
POSTO DO OPERADOR	497
ENCOSTO DO BRAÇO E MONTAGEM	497
BRAÇO DO ASSENTO	498
CAIXA DE ARMAZENAMENTO	500
TOLDO - ESTRUTURA ROPS	501
TAMPA - CABINE	502
TAMPA - CONSOLO	503
PORTA E MONTAGEM-CABINA	506
PORTA DA CABINE	518
DUCTO DO DESEMBAÇADOR	522
FILTRO - AR DA CABINE	523
TAPETE	524
INDICADOR E ALARME	525
PROTETOR - ROPS/FOPS	527
PROJETOR SUPERIOR DA CABINE	528
AQUECEDOR DA CABINE E MONTAGEM	529
AQUECEDOR DA CABINE	534
BUZINA ELÉTRICA	537
INSTALAÇÃO - AQUECEDOR	538
JOGO - PORTA DA CABINE E MONTAGEM	540
REVESTIMENTO DA CABINE	544
TUBOS - AQUECEDOR	546
ESPELHO RETROVISOR E MONTAGEM	548
MOTOR - LIMPADOR DO VIDRO	549
MONTAGEM - ESTRUTURA ROPS	550
CABINE - TOLDO	551
PAINEL DE INSTRUMENTOS	551
PEDAL DO GOVERNADOR	556
PLATAFORMA DO OPERADOR	559
RETENTOR-CABINE	561
ASSENTO E MONTAGEM	564
CINTO DE SEGURANÇA	566
ASSENTO COM SUSPENSÃO	571
MOLA A GÁS	572
PÁRA-SOL DA CABINE	573
JANELA DA CABINE	575
EQUIPAMENTO DE SERVIÇO E SUPRIMENTOS	588
DECALQUE	588
MONTAGEM DA PLACA DE REGISTRO	594
PLACA E DECALQUE	595
ÍNDICE DE NÚMERO DE PEÇA	B1

INHALTSVERZEICHNIS

Bezeichnung	Seite
ALLGEMEINE HINWEISE	A37
REPARATURALTERNATIVEN	A49
KÜHLMITTELZUSATZ	A55
WARTUNGSTEILE	A76
STICHWORTVERZEICHNIS	A118
MASCHINE	1
FAHRGESTELL	1
GRUNDAUSFÜHRUNG	3
MOTOR	5
MOTORAUSFÜHRUNG	5
MOTOR-EINBAUSATZ	7
MOTOR - GRUNDAUSFÜHRUNG	11
NOCKENWELLE	11
STIRNRADGEHÄUSEDECKEL	13
VENTILDECKEL	14
KURBELWELLE	18
MOTORBLOCK	22
ZYLINDERKOPF	26
MOTORÖLABLASS	30
MOTOR-HALTETEILE	32
SCHWUNGRAD	33
SCHWUNGRADGEHÄUSE	35
STIRNRADGEHÄUSE	38
MOTORHUBÖSE	44
DREHSTROMGENERATOR - BEFESTIGUNG	46
MOTORAUFLAGER	47
LÜFTERBEFESTIGUNG	49
STARTERMOTORAUFHÄNGUNG	50
ÖLWANNE	52
PLEUELSTANGE UND KOLBEN	58
ZYLINDERBLOCKSCHRAUBE	60
KURBELWELLEN-RIEMENSCHEIBE	61
WASSERPUMPE - RIEMENSCHEIBE	63
VENTILSTEUERUNG	64
SCHMIERSYSTEM	66
ÖLFILTER	66
SCHMIERPUMPE	67
KÜHLSYSTEM	68
KÜHLWASSERANSCHLUSS	68
DRUCKLÜFTER	70
WASSERLEITUNGSSTOPFEN	72
KÜHLWASSERPUMPE	73
KÜHLER UND HYDRAULIKÖLKÜHLER	78
KÜHLER U. ÖLKÜHLERBEFESTIGUNG	86
LUFTANSAUG- UND ABGASSYSTEM	94
LUFTREINIGER	94
DRUCKLUFTLEITUNGEN	96
AUSPUFFKRÜMMER	98
ANSAUGKRÜMMER	100
SCHALLDÄMPFERSTÜTZEN	101
SCHALLDÄMPFER	105
KRAFTSTOFFSYSTEM	108
REGLERSTEUERUNG	108
KRAFTSTOFFILTER UND LEITUNGEN	112
KRAFTSTOFFILTER	114
WASSERABSCHEIDER- U. KRAFTSTOFFILTER	116
ANSCHLUSSSTÜCK (KRAFTSTOFFLEITUNGEN)	117
REGLER	118
KRAFTSTOFFLEITUNGEN	120
KRAFTSTOFFÖRDERPUMPE UND BEFESTIGUNGSTEILE	128
KRAFTSTOFFEINSPRITZPUMPE	130
WASSERABSCHEIDER	135
ELEKTRISCHE ANLAGE UND STARTSYSTEM	136
DREHSTROMGENERATOR	136
BATTERIE	140
ANSCHLUSS, ELEKTR.	142
VERRIEGELUNGSSTEUERUNG	144
SICHERUNGSTAFEL - ABDECKUNG	145
ARBEITSGERÄTEELEKTRONIK	146
GLÜHKERZE	147
UMLAUFKÜHLWASSERHEIZUNG	149
ARBEITSLEUCHTEN	152
SCHEINWERFER U. RICHTUNGSLEUCHTE	154
INSTRUMENTENTAFELLEUCHTE	156
BLINKLEUCHTE	157
BREMS- UND RÜCKLEUCHTE	158
RUNDUM-KENNLEUCHTE	159
BREMS- U. ARBEITSLEUCHTEN	161
FRONTBELEUCHTUNG	162
HECKBELEUCHTUNG	163
BELEUCHTUNGSANLAGE (STRASSENAUSRÜSTUNG)	166
RUNDUM-KENNLEUCHTE	173
WARNANZEIGEMODUL	174

* ÜBERSETZUNG ZUM ZEITPUNKT DER DRUCKLEGUNG NICHT VORHANDEN

INHALTSVERZEICHNIS

Bezeichnung	Seite
TEMPERATUR- U. DRUCKSENSOR	175
SERVICEWERKZEUG	176
ABSTELLMAGNETSPULE	177
STARTERMOTOR	178
DRUCKSCHALTER	181
TEMPERATURSCHALTER	183
RÜCKFAHRWARNHORN	184
FAHRERHAUSVERDRAHTUNG	186
FAHRGESTELLVERDRAHTUNG	190
MOTORVERDRAHTUNG	194
HECKBELEUCHTUNGSVERDRAHTUNG	196
ARBEITSGERÄT - VERDRAHTUNG	198
KRAFTSÜBERTRAGUNG	204
ACHSE	204
FESTSTELLBREMSGESTÄNGE	206
TANDEMANTRIEB	210
HYDRAULIKFILTER UND BEFESTIGUNGSTEILE	213
ÖLFILTER	214
HYDRAULIKFILTERLEITUNGEN	216
HYDROSTATIKLEITUNGEN	220
RÜCKLAUFVENTIL - VERTEILER	224
HYDROSTATIKMOTOR U. BEFESTIGUNG	228
KOLBENMOTOR	230
PUMPENAUFHÄNGUNG	232
KRAFTÜBERTRAGUNG	234
HYDROSTATIKPUMPE U. BEFESTIGUNG	236
KOLBENPUMPE	238
RAD UND REIFEN	242
RAHMEN UND FAHRGESTELL	252
HECKSTOSSSTANGE	252
UMBAUSATZ - FÜR STRASSENVERKEHR	253
STRASSENFAHRT - UMRÜSTSATZ	255
GEGENGEWICHT	258
MOTORVERKLEIDUNG	264
*FRAME GP-BLADE	268
LADERRAHMEN	270
MASCHINENHUBÖSE	274
BELEUCHTUNG FÜR STRASSENFAHRT - BEFESTIGUNG	278
SEITENVERKLEIDUNG	280
SCHALLDÄMPFUNG	282
HYDRAULIKSYSTEM	284
HYDRAULIKDRUCKSPEICHER U. BEFESTIGUNG	284
STEUERHEBEL	285
HYDRAULIKBEDIENUNG (MIT VORSTEUERUNG)	289
SCHILDZYLINDER U. BEFESTIGUNGSTEILE	300
GREIFERZYLINDER U. -BEFESTIGUNG	301
SCHILDZYLINDER	303
SCHAUFELZYLINDER	304
GREIFERZYLINDER	305
HUBZYLINDER	307
KIPPZYLINDER	310
HYDRAULIKSYSTEM	312
SCHAUFELLEITUNGEN	316
ANSCHLUSSLEITUNGEN	320
GREIFERLEITUNGEN	322
HYDRAULIKLÜFTERLEITUNGEN	326
HYDRAULIKÖLKÜHLERLEITUNGEN	330
HUBZYLINDERLEITUNGEN	334
VORSTEUERLEITUNGEN	342
HYDRAULIKPUMPE UND LEITUNGEN	350
NEIGEZYLINDERLEITUNGEN	354
ARBEITSGERÄT - LEITUNGEN	362
HYDRAULIKKÜHLERMOTOR U. BEFESTIGUNG	366
MOTORANTRIEB	368
ZYLINDERAUFHÄNGUNG	371
VORSTEUERVENTILSTOPFEN	372
ARBEITSGERÄTEPUMPE U. BEFESTIGUNG	373
ZAHNRADPUMPE	375
HYDRAULIKTANK UND BEFESTIGUNGSTEILE	376
HYDRAULIKTANK	378
STEUERVENTIL UND BEFESTIGUNGSTEILE	380
VERTEILERVENTIL U. BEFESTIGUNGSTEILE	387
VENTILSATZ (2-VENTIL)	389
SPERRVENTIL	390
STEUERVENTIL	392
MODULATORVENTIL	402
VORSTEUERVENTIL	403
ÜBERDRUCKVENTIL	406
MAGNETVENTIL	410
ARBEITSGERÄTE	412
ARBEITSGERÄTESTEUERUNG	412
LEITUNGSFÜHRUNG	417
ARBEITSGERÄTE	418
TRAGARM	418
ZAHNBALKEN	419

* ÜBERSETZUNG ZUM ZEITPUNKT DER DRUCKLEGUNG NICHT VORHANDEN

INHALTSVERZEICHNIS

Bezeichnung	Seite
SCHILD	425
ERDSCHAUFEL	427
KOMBISCHAUFEL	429
GREIFERSCHAUFEL	431
LEICHTGUTSCHAUFEL	437
KOMBISCHAUFEL	438
ERDSCHAUFEL	440
UNIVERSALSCHAUFEL	442
LEICHTGUTSCHAUFEL	444
GREIEFERSCHAUFEL	445
KOMBISCHAUFEL	447
MEHRZWECKSCHAUFEL	449
GABELTRÄGER	451
SCHNELLWECHSELEINRICHTUNG	452
LEITUNGSABDECKUNG	454
SCHNEIDMESSER	455
GREIFERGABEL	463
PALETTENGABEL	468
MEHRZWECKGABEL	471
MEHRZWECKGREIFER	474
GRIFF U. BOLZEN - ANSCHLUSS	477
ANSCHLUSSGRIFF	479
STRASSENFAHRTSCHILD UND BEFESTIGUNG	481
SCHNEERÄUM-UMRÜSTSATZ	483
SCHNELLWECHSELEINRICHTUNGSSPERRE	484
MEMBRANPUMPE	485
SCHILDFEDERN	486
TRAGARMSTUFE	487
WASSERSIEBEINSATZ	489
WASSERTANK U. BEFESTIGUNGSTEILE	490
WASSERTANK	493
UNIVERSAL-ZAHNSPITZE	496
FAHRERHAUS	497
ARNLEHNE U. BEFESTIGUNG	497
ARMLEHNE	498
VERSTAUKASTEN	500
ÜBERROLLSCHUTZ - OFFENES FAHRERHAUS	501
FAHRERHAUSABDECKUNG	502
STEUERKONSOLENABDECKUNG	503
FAHRERHAUSTÜR U. BEFESTIGUNG	506
FAHRERHAUSTÜR	518
ENTFROSTERKANAL	522
FAHRERHAUSLUFTFILTER	523
FUSSMATTE	524
WARNANZEIGENSATZ	525
VERKLEIDUNG - ÜBERROLLSCHUTZ/ STEINSCHLAGSCHUTZ	527
KOPFLEISTE - FAHRERHAUS	528
FAHRERHAUSHEIZUNG U. BEFESTIGUNGSTEILE	529
FAHRERHAUSHEIZUNG	534
WARNHORN, ELEKTR.	537
*INSTALLATION AR-HEATER	538
FAHRERHAUSTÜR U. BEFESTIGUNG	540
FAHRERHAUSAUSKLEIDUNG	544
HEIZUNGSLEITUNGEN	546
RÜCKSPIEGEL U. BEFESTIGUNG	548
SCHEIBENWISCHERMOTOR	549
ÜBERROLLSCHUTZAUFLAGER	550
FAHRERHAUSDACH	551
INSTRUMENTENTAFEL	551
GASPEDAL	556
FAHRERPLATTFORM	559
FAHERHAUSDICHTUNG	561
FAHRERSITZ UND UNTERBAU	564
SICHERHEITSGURT	566
SCHWINGSITZ	571
GASFEDERGRUPPE	572
FAHRERHAUS, SONNENBLENDE	573
FAHRERHAUSFENSTER	575
WARTUNGSAUSRÜSTUNG UND -ZUBEHÖR	588
AUFKLEBER	588
TYPENSCHILDBEFESTIGUNG	594
SCHILD UND AUFKLEBER	595
ERSATZTEILNUMMERNINDEX	B1

* ÜBERSETZUNG ZUM ZEITPUNKT DER DRUCKLEGUNG NICHT VORHANDEN

INDICE

Nome	Pagina
INFORMAZIONI GENERALI	A41
ALTERNATIVE DI RIPARAZIONE	A50
ADDITIVI SUPPLEMENTARI PER LIQ. DI RAFFREDDAMENTO	A56
RICAMBI PER MANUTENZIONE	A81
INDICE	A126
CONFIGURAZIONE DELLA MACCHINA	1
TEALIO - CONFIG	1
COMUNE - CONFIG	3
CONFIGURAZIONE DEL MOTORE	5
MOTORE PRINCIPALE	5
MONTAGGIO - MOTORE	7
MOTORE BASE	11
ALBERO A CAMME - GR	11
COPERCHIO SCATOLA ANTERIORE - GR	13
COPERCHIO MECCANISMO VALVOLE - GR	14
ALBERO MOTORE - GR	18
MONOBLOCCO - GR	22
TESTA CILINDRO - GR	26
SCARICO DELL'OLIO MOTORE - GR	30
FERMO DEL MOTORE	32
VOLANO - GR	33
SCATOLA VOLANO - GR	35
SCATOLA ANTERIORE - GR	38
SOLLEVAMENTO MOTORE - GR	44
MONTAGGIO -ALTERNATORE	46
MONTAGGIO MOTORE - GR	47
MONTAGGIO DELLA VENTOLA	49
MONTAGGIO MOTORINO D'AVVIAMENTO - GR	50
COPPA OLIO - GR	52
PISTONE E BIELLA - GR	58
TAPPO - MONOBLOCCO	60
PULEGGIA ALBERO MOTORE - GR	61
PULEGGIA DELLA POMPA DELL'ACQUA - GR	63
MECCANISMO VALVOLA - GR	64
SISTEMA DI LUBRIFICAZIONE	66
FILTRO OLIO MOTORE	66
POMPA OLIO MOTORE - GR	67
SISTEMA DI RAFFREDDAMENTO	68
RACCORDO ACQUA	68
VENTOLA DELL'ARIAZIONE	70
TAPPO DELLE TUBAZIONI DELL'ACQUA	72
POMPA ACQUA - GR	73
RADIATORE E SCAMBIATORE D'OLIO	78
RADIATORE E SCAMBIATORE DI CALORE DELL'OLIO MONTAGGIO - GR	86
SISTEMA ARIA D'ASPIRAZIONE E SCARICO	94
FILTRO ARIA - GR	94
TUBAZIONI ARIA - GR	96
COLLETTORE SCARICO - GR	98
COLLETTORE ASPIRAZIONE - GR	100
MONTAGGIO SILENZIATORE - GR	101
MARMITTA - GR	105
IMPIANTO ALIMENTAZIONE CARBURANTE	108
CONTROLLO REGOLATORE - GR	108
FILTRO E TUBAZIONI DEL CARBURANTE	112
FILTRO-CARBURANTE	114
FILTRO SEPARATORE CARBURANTE/ ACQUA	116
RACCORDO DELL TUBAZIONI DEL CARBURANTE	117
REGOLATORE	118
TUBAZIONI CARBURANTE - GR	120
POMPA D'ALIMENTAZIONE CARBURANTE E MONTAGGIO	128
POMPA INIEZIONE CARBURANTE - GR	130
SEPARATORE DELL'ACQUA	135
SISTEMA ELETTRICO E D'AVVIAMENTO	136
ALTERNATORE DI CARICA - GR	136
BATTERIA	140
ATTACCO ELETTRICO	142
COMANDO INTEBLOCCO - GR	144
COPERCHIO PANNELLO FUSIBILI - GR	145
ELETTRONICA ATTREZZATURA - GR	146
CANDELETTA DI PRERISCALDAMENTO	147
RISCALDATORE DELL'ACQUA DI CAMICIA	149
LUCI DI LAVORO - GR	152
FANALE ANTERIORE E SEGNALE DI DIREZIONE - GR	154
LAMPADA D'ILLUMINAZIONE PANNELLO - GR	156

* TRADUZIONE NON DISPONIBILE A TEMPO DELLA PUBBLICAZIONE

INDICE

Nome	Pagina
LAMPADA - SEGNALE	157
LAMPADA D'ARRESTO E DI CODA - GR	158
LAMPADA FARO ROTANTE - GR	159
LUCI D'ARRESTO E DI LAVORO - CONFIG	161
LUCI ANTERIORI - GR	162
LUCI POSTERIORI - GR	163
LUCI STRADALI	166
LUCI FARO ROTANTE - GR	173
MODULO INDICATORE D'AVVERTENZA - GR	174
PRESSOSTATO E SENSORE TEMPERATURA - GR	175
SERVIZIO ATTREZZATURA -GR	176
SOLENOIDE DI ARRESTO	177
MOTORINO AVVIAMENTO ELETTRICO - GR	178
PRESSOSTATO - GR	181
INTERRUTTORE DELLA TEMPERATURA	183
ALLARME DI RETROMARCIA - GR	184
CABLAGGIO - CABINA	186
CABLAGGIO DEL TELAIO - GP	190
CABLAGGIO DEL MOTORE	194
CABLAGGIO LUCI POSTERIORI - GR	196
CABLAGGIO DELL'ATTREZZATURA - GR	198
APPARATO PROPULSORE	204
ASSALE GR	204
COMANDO DEL FRENO DI PARCHEGGIO	206
ALBERO A TANDEM - GR	210
FILTRO IDRAULICO E MONTAGGIO - GR	213
FILTRO DELL'OLIO	214
TUBAZIONI FILTRO IRDAULICO - GR	216
TUBAZIONI IDROSTATICHE - GR	220
COLLETTORE DI RITORNO - GR	224
MOTORE E MONTAGGIO IDROSTATICO - GR	228
MOTORE IDRAULICO A PISTONE	230
MONTAGGIO POMPA - GR	232
TRASMISSIONE	234
POMPA IDROSTATICA E MONTAGGIO - GR	236
POMPA A PISTONE	238
RUOTA E PNEUMATICO - CONFIG	242
RUOTA E PNEUMATICO - GR	251
TELAIO E CARROZZERIA	252
PARAURTI POSTERIORE - GR	252
CONVERSIONE MESSA SU STRADA - CONFIG	253
CONVERSIONE MESSA SU STRADA - GR	255
CONTRAPPESO - GR	258
COMPARTIMENTO - MOTORE	264
TELAIO LAMA - GR	268
TELAIO CARICATORE - GR	270
DISPOSITIVO SOLLEVAMENTO MACCHINA - GR	274
MONTAGGIO LUCI STRADALI - GR	278
PANNELLO LATERALE - GR	280
INSONORIZZAZIONE	282
SISTEMA IDRAULICO	284
ACCUMULATORE IDRAULICO E MONTAGGIO - GR	284
COMANDO A MANIGLIA - GR	285
COMANDO IDRAULICO AZIONATO DA CIRCUITO PILOTA - GR	289
CILINDRO E MONTAGGIO DELLA LAMA	300
CILINDRO E MONTAGGIO RAFFIO - GR	301
CILINDRO LAMA - GR	303
CILINDRO BENNA - GR	304
CILINDRO DEL RAFFIO	305
CILINDRO DI SOLLEVAMENTO	307
CILINDRO D'INCLINAZIONE	310
COMANDO IDRAULICO	312
TUBAZIONI DELLA BENNA	316
TUBAZIONI DI COLLEGAMENTO - GR	320
TUBAZIONI DEL RAFFIO	322
TUBAZIONI VENTOLA IDRAULICA - GR	326
TUBAZIONI DELLO SCAMBIATORE DI CALORE DELL'OLIO IDRAULICO	330
TUBAZIONI CILINDRO DI SOLLEVAMENTO - GR	334
TUBAZIONI CIRCUITO PILOTA - GR	342
TUBAZIONI POMPA - GR	350
TUBAZIONI CILINDRO D'INCLINAZIONE - GR	354
TUBAZIONI ATTREZZATURA - GR	362
MOTORE E MONTAGGIO VENTOLA IDRAULICA - GR	366
MOTORE AD INGRANAGGI - GR	368
MONTAGGIO - CILINDRO	371
TAPPO VALVOLA PILOTA - GR	372
POMPA E MONTAGGIO DELL'ATTREZZATURA - GR	373
POMPA AD INGRANAGGI	375

* TRADUZIONE NON DISPONIBILE A TEMPO DELLA PUBBLICAZIONE

INDICE

Nome	Pagina
SERBATOIO E GRUPPO MONTAGGIO-IDRAULICO	376
SERBATOIO IDRAULICO	378
VALVOLA DI COMANDO E MONTAGGIO	380
VALVOLA DI DISTRIBUZIONE E MONTAGGIO - GR	387
VALVOLA 2 DEL BANCO - GR	389
VALVOLA DI RITEGNO - GR	390
VALVOLA DI CONTROLLO - GR	392
VALVOLA MODULATRICE	402
VALVOLA PILOTA - GR	403
VALVOLA LIMITATRICE DI PRESSIONE - GR	406
VALVOLA A SOLENOIDE - GR	410
ATTREZATURA	412
COMANDO ATTREZZATURA - GR	412
GUIDA TUBAZIONI - GR	417
ATTREZZATURA	418
BRACCIO MOVIMENTAZIONE MATERIALE - GR	418
BARRA SCARPETTA - GR	419
LAMA	425
BENNA TERRICCIO - CONFIG	427
BENNA PER USO GENERALE - CONFIG	429
BENNA A RAFFIO - CONFIG	431
BENNA PER MATERIALE LEGGERO - CONFIG	437
BENNA MULTIUSO - CONFIG	438
BENNA TERRICCIO	440
BENNA PER USO GENERALE	442
BENNA PER MATERIALE LEGGERO	444
BENNA A RAFFIO - GR	445
BENNA MULTIUSO - GR	447
TELAIO FORCA	451
ATTACCO RAPIDO - GR	452
COPERTURA TUBAZIONI - GR	454
TAGLIENTE	455
FORCA RAFFIO - CONFIG	463
FORCA RAFFIO - GR	465
FORCA PALLET - GR	468
FORCA MULTIUSO - GR	471
RAFFIO MULTIUSO - GR	474
MANIGLIA E PERNO DELL'ATTACCO - GR	477
MANIGLIA DELL'ATTACCO - GR	479
KIT - TARGA DI CIRCOLAZIONE STRADALE E MONTAGGIO	481
KIT - CONVERSIONE RIMOZIONE NEVE	483
BLOCCO PER L'ATTACCO RAPIDO - GR	484
POMPA A DIAFRAMMA - GR	485
MOLLA DELLA LAMA -GR	486
GRADINO DEL BRACCIO MOVIMENTAZIONE MATERIALE	487
FILTRO A RETE DELL'ACQUA - GR	489
SERBATOIO E GRUPPO MONTAGGIO-ACQUA	490
SERBATOIO DELL'ACQUA - GR	493
MONODENTE	496
POSTAZIONE DELL'OPERATORE	497
BRACCIOLO E MONTAGGIO - GR	497
BRACCIOLO	498
CONTENITORE PORTAOGGETTI - GR	500
*CANOPY GP-ROPS	501
COPERTURA CABINA - GR	502
COPERCHIO CONSOLE - GR	503
PORTIERA E MONTAGGIO CABINA - GR	506
PORTIERA CABINA - GR	518
CONDOTTO SBRINATORE - GR	522
FILTRO - ARIA CABINA	523
TAPPETO	524
INDICATORE E ALLARME - GR	525
PROTEZIONE ROPS/FOPS - GR	527
RIVESTIMENTO CABINA	528
RISCALDAMENTO DELLA CABINA E MONTAGGIO	529
RISCALDAMENTO CABINA - GR	534
AVVISATORE ACUSTICO-ELETTRICO	537
INSTALLAZIONE DEL RISCALDATORE - CONFIG	538
KIT - PORTA DELLA CABINA E MONTAGGIO	540
CAMICIA DELLA CABINA	544
GRUPPO TUBAZIONI-RISCALDAMENTO	546
SPECCHIO RETROVISORE E BULLONERIA - GR	548
MOTORINO DEL TERGICRISTALLO	549
MONTAGGIO ROPS - GR	550
TETTUCCIO POSTAZIONE OPERATOR - CONFIG	551
QUADRO STRUMENTI - CONFIG	551
QUADRO STRUMENTI	552
PEDALE DEL REGOLATORE	556
PIATTAFORMA - OPERATORE	559
TENUTA CABINA - GR	561
SEDILE E MONTAGGIO	564
CINTURA DI SICUREZZA - GR	566

* TRADUZIONE NON DISPONIBILE A TEMPO DELLA PUBBLICAZIONE

INDICE

Nome	Pagina	Nome	Pagina
SEDILE - MOLLE	571		
MOLLA A GAS	572		
PARASOLE CABINA - GP	573		
FINESTRINO DELLA CABINA	575		
ATTREZZATURA E FORNITURE DI MANUTENZIONE	588		
DECALCOMANIA - GR	588		
BULLONERIA DI REGOLAZIONE - GR	594		
TARGHETTE E DECALCOMANIA - GR	595		
INDICE DEI CODICI RICAMBI	B1		

* TRADUZIONE NON DISPONIBILE A TEMPO DELLA PUBBLICAZIONE

GENERAL INFORMATION

1. MACHINE IDENTIFICATION

Caterpillar machines are identified by Product Identification Numbers (PIN). Some components included in a machine may be identified by Serial Numbers (S/N). Typical components that will be serialized include engines, transmissions, bulldozers, and rippers. The machine and engine are further identified by arrangement numbers and in some cases modification numbers. These numbers are shown on the product identification plate(s) and on the master plate in the operator's compartment.

Caterpillar dealers need all of these numbers to determine accurate parts identification.

SIS ***New Feature***

Effective First Quarter 2001 the Caterpillar Product Identification Number (PIN) will change from 8 to 17 characters. In an effort to provide uniform equipment identification, Caterpillar and other construction equipment manufacturers are moving to comply with the latest version of the product identification numbering standard. Non-road machine PINs are defined by ISO 10261. The new PIN format will apply to all Caterpillar machines and generator sets. The PIN plates and frame marking will display the 17 character PIN. The new format will look like the following:

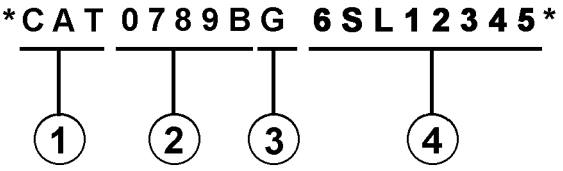

Where:

1. Caterpillar's World Manufacturing Code (characters 1-3)

2. Machine Descriptor (characters 4-8)

3. Check Character (character 9)

4. Machine Indicator Section (MIS) or Product Sequence Number (characters 10-17). These were previously referred to as the Serial Number.

Machines and generator sets produced before First Quarter 2001 will maintain their 8 character PIN format.

Components such as engines, transmissions, axles, etc. and work tools will continue to use an 8 character Serial Number (S/N).

2. ORDERING PARTS

⚠ WARNING

When replacement parts are required for this product Caterpillar recommends using Caterpillar replacement parts or parts with equivalent specifications including, but not limited to, physical dimensions, type, strength and material.

Failure to heed this warning can lead to premature failures, product damage, personal injury or death.

Quality Caterpillar replacement parts are available from Caterpillar dealers throughout the world. Their parts inventories are up to date and include all parts normally required to protect your investment in Caterpillar machines. Dealers may offer repair kits or remanufactured parts to allow selection of the most effective repair alternative for a particular situation. When ordering parts, your order should specify the quantity, part number, part name, and the serial number/product identification number of the machine for which the parts are needed.

3. PARTS MANUAL ORGANIZATION

Product information in this manual is presented as "information elements" that represent all of the components for the specific model. Engine Arrangement and Seat Group are examples of information elements. The information elements are organized alphabetically by part name and secondarily by part number within each major section of the manual.

4. TABLE OF CONTENTS

SIS ***New Feature***

A table of contents (TOC) is found at the beginning of the manual. The TOC lists each section of the manual with a complete list of all information elements organized as they appear in the manual. Page numbers are provided for quick reference to detailed parts identification illustrations and serviceable consist lists.

5. MAINTENANCE PARTS INDEX

The Maintenance Parts Index, located near the beginning of the manual, references most frequently used maintenance part numbers, providing description, quantity, usage and page number. This information is organized alphabetically by part description.

6. INDEX

The index located near the front of the manual is an alphabetical listing of all information elements included in the manual. Page numbers are provided for quick reference to detailed parts identification illustrations and serviceable consist lists.

7. PART NUMBER INDEX

A numerical index listing all part numbers and the corresponding page number(s) appears at the back of the manual.

8. CAPTIONS

Captions located at the top of each page of an information element identify the part number and part name along with additional descriptive information. PIN and S/N information found in each caption should be used to select correct information for a specific machine. Field replacement options, identification of optional attachment components, and where used ("part of") information is also provided.

SIS ***New Feature***

The first line of a caption is shown in larger type font to indicate the beginning of an information element. Captions for additional pages that may be required to illustrate an information element will be shown in standard type font and will include the term *(contd.)* .

9. NON-SERVICED PARTS

SIS ***New Feature***

In some instances it is necessary to display non-serviced parts that are a link to a lower level serviceable consist lists. These non-serviced part numbers are shown in *italic* type indicating that they are not available.

10. PARTS LIST REFERENCE NUMBERS

SIS ***New Feature***

Numbers shown in the Ref No column correspond to numbers used in the associated graphic(s). An alphabetic suffix may be added to a reference number to identify lower level consist items. Numbers shown in the Graphic Ref column refer to the graphic number identifier displayed in the lower left corner of each illustration. The Graphic Ref number may be used in combination with the item Ref No to determine the correct part number. There may be intentional omission of a Ref No in a consist list as information is updated to reflect the latest serviceable part numbers.

11. INDENTED PART NAMES

When a part name is indented in a parts list, it is part of (included in) the group or assembly under which it is indented.

12. ILLUSTRATION REFERENCE LETTERS

When necessary, illustrations contain reference letters (A, B, C etc.) that are intended to track lines and harnesses from one point to another. They are also used to show where to reconnect illustrations that have been separated.

13. ABBREVIATIONS AND SYMBOLS

O.D. – Outside Diameter
I.D. – Inside Diameter
A – Not Part Of This Group
B – Use As Required
C – Change From Previous Type
D – Order By The Meter
E – Order By The Centimeter
F – Not Shown
G – Order By The Inch
I – See Hose Fabrication Guide
M – Metric Part
R – Remfg Part May Be Available
Y – Separate Illustration
Z – Not Serviced Separately

NOTE:

Continuing improvement and advancement of product design may cause changes to your machine which may not be included in this publication. Whenever a question arises regarding your Caterpillar product or this publication, please consult your Caterpillar dealer for the latest available information.

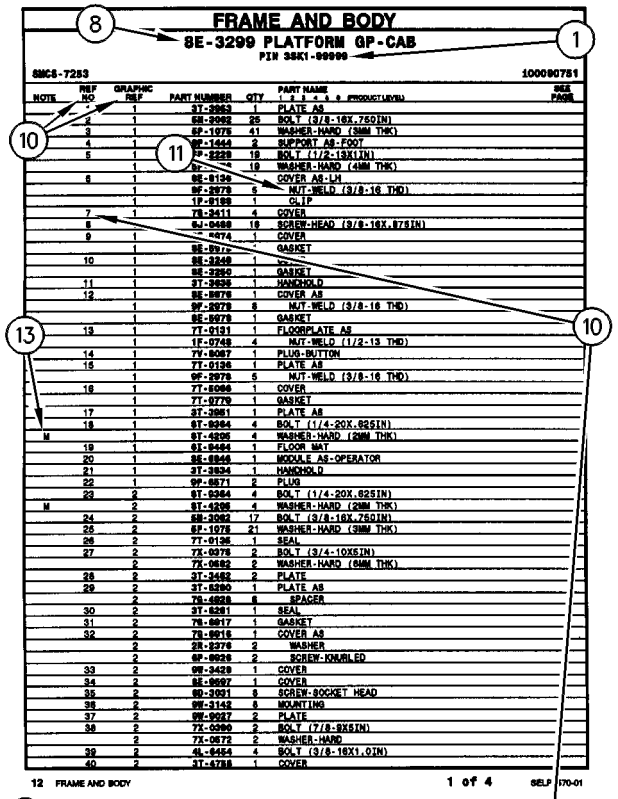
FRAME AND BODY
8E-3299 PLATFORM GP-CAB
PIN 38K1-99999
SMCS-7283
100090751
12 FRAME AND BODY
1 of 4
SELP4570-01

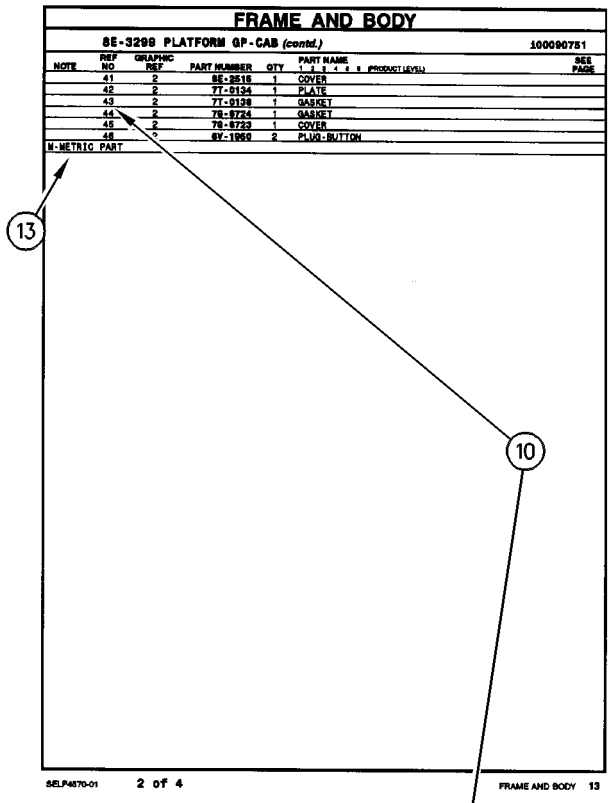
FRAME AND BODY
8E-3299 PLATFORM GP-CAB (contd.)
100090751
SELP4570-01
2 of 4
FRAME AND BODY 13

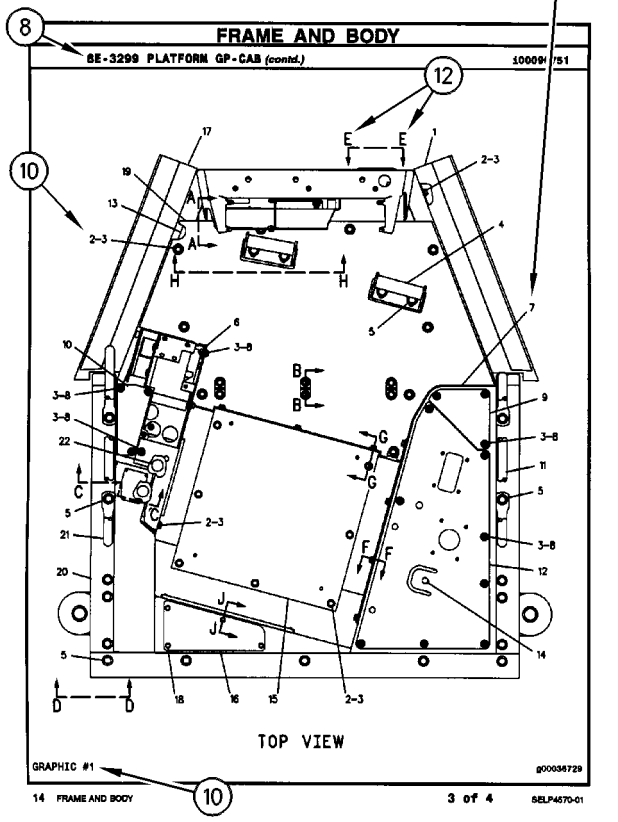
FRAME AND BODY
8E-3299 PLATFORM GP-CAB (contd.)
TOP VIEW
GRAPHIC #1
g00036729
14 FRAME AND BODY
3 of 4
SELP4570-01

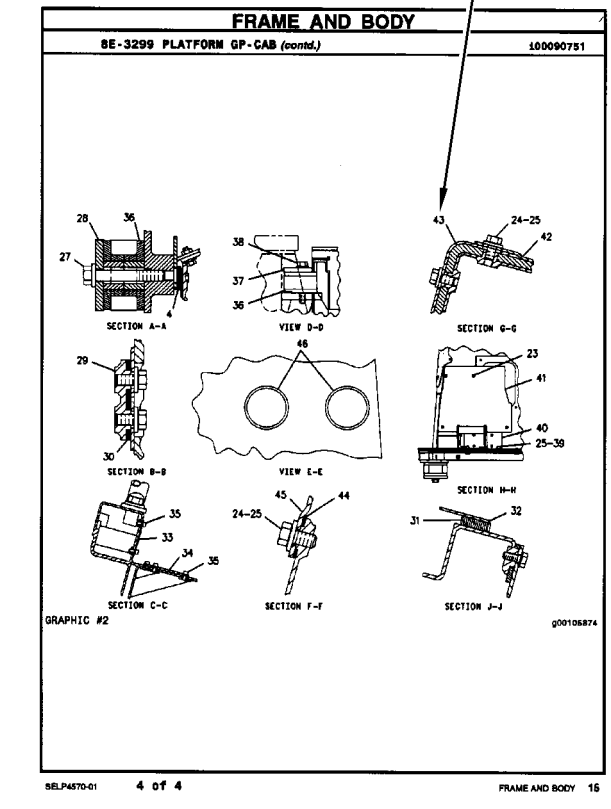
FRAME AND BODY
8E-3299 PLATFORM GP-CAB (contd.)
100090751
SECTION A-A
VIEW D-D
SECTION G-G
SECTION B-B
VIEW E-E
SECTION H-H
SECTION C-C
SECTION F-F
SECTION J-J
GRAPHIC #2
g00105874
SELP4570-01
4 of 4
FRAME AND BODY 16

1. IDENTIFICATION DE LA MACHINE

Toutes les machines Caterpillar portent un numéro d'identification (PIN). Certains composants des machines peuvent porter des numéros de série (S/N). En général, parmi les composants qui portent des numéros de série il y a les moteurs, les transmissions, les bulldozers et les rippers. En plus, la machine et le moteur peuvent recevoir des numéros de version, et dans certains cas, de modification. Ces numéros figurent sur les plaques de numéro de série et sur la plaque signalétique principale qui se trouve dans le poste de conduite.

Les concessionnaires Caterpillar doivent connaître tous ces numéros pour identifier correctement les pièces.

SIS *Nouvelle Caractéristique*

À partir du premier trimestre 2001, le numéro d'identification produit (PIN) Caterpillar passe de 8 à 17 caractères. Afin de permettre une identification uniforme des matériels, Caterpillar et d'autres constructeurs de machines de travaux publics s'efforcent de se conformer à la norme la plus récente portant sur les numéros d'identification des produits. Les numéros d'identification (PIN) de machines de chantier sont définis par la norme ISO 10261. Le nouveau format du numéro d'identification est valable pour toutes les machines et tous les groupes électrogènes Caterpillar. Le numéro d'identification produit (PIN) figurant sur la plaque et sur le châssis se composera de 17 caractères. Le nouveau format ressemblera à ceci:

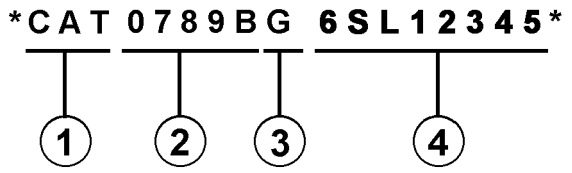

Il se décomposera de la façon suivante:

1. Code international de fabrication de Caterpillar (caractères 1 à 3)

2. Descriptif de la machine (caractères 4 à 8)

3. Contrôle (caractère 9)

4. Indicateur machine (MIS) ou numéro de séquence produit (caractères 10 à 17). Ceux-ci étaient auparavant désignés sous le terme de numéro de série.

Les machines et les groupes électrogènes construits avant le premier trimestre 2001 garderont le format à 8 caractères du numéro d'identification produit (PIN).

Les organes tels que les moteurs, les boîtes de vitesses, les essieux, etc., continueront d'être désignés par un numéro de série (S/N) à 8 caractères.

2. COMMANDE DE PIÈCES

⚠ DANGER

Lorsqu'il faut remplacer des pièces de rechange pour ce produit Caterpillar recommande d'utiliser les pièces de rechange Caterpillar ou les pièces qui ont des spécifications équivalentes dont les dimensions physiques, le type, la force et le matériau. Ces équivalences ne se limitent pas à l'énoncé précédent.

L'inobservation de cette mise en garde peut entraîner des défaillances prématurées, des dommages au produit, des blessures ou même la mort.

Les concessionnaires Caterpillar fournissent dans le monde entier des pièces de rechange de qualité Caterpillar. Leurs stocks de pièces sont constamment réapprovisionnés et comptent toutes les pièces nécessaires pour assurer la bonne marche de vos machines Caterpillar. Certains concessionnaires proposent également des kits de réparation ou des pièces rénovées, ce qui permet de choisir la solution la plus économique dans une situation donnée. Lors des commandes de pièces, mentionner la quantité, le numéro et la désignation des pièces ainsi que le numéro de série ou le numéro d'identification (PIN) de la machine pour laquelle ces pièces sont requises.

3. ORGANISATION DU CATALOGUE DE PIÈCES

Les renseignements sur les produits sont présentés sous forme de "Information element" (élément d'information) représentant tous les composants d'un modèle donné. "Engine Arrangement" (version de moteur) et "Seat Group" (assemblage de siège)" sont des exemples d'éléments d'information. Les éléments d'information sont classés par ordre alphabétique par la désignation standard des pièces et par numéros de pièces dans chaque partie importante du manuel.

4. TABLE DES MATIÈRES

Nouvelle Caractéristique

La table des matières se trouve au début du manuel. La table des matières fournit la liste de tous les chapitres du manuel avec une liste complète de tous les éléments d'information classés par ordre d'apparition dans le manuel. Les numéros de page sont fournis afin que l'utilisateur puisse trouver rapidement les illustrations détaillées concernant l'identification des pièces et les listes des pièces d'entretien.

5. INDEX DES PIÈCES D'ENTRETIEN

La rubrique "Index des pièces d'entretien" qui se trouve au début du manuel renvoie aux pièces d'entretien les plus fréquemment utilisées en précisant la désignation, la quantité, là où la pièce est utilisée et le numéro de page. Ces pièces sont classés par ordre alphabétique.

6. INDEX

L'index qui se trouve vers le début du manuel est une liste alphabétique de tous les éléments d'information du manuel. Les numéros de page sont fournis afin que l'utilisateur puisse trouver rapidement les illustrations détaillées concernant l'identification des pièces et les listes des pièces d'entretien.

7. INDEX DES NUMÉROS DE PIÈCES

Une liste numérique de tous les numéros de pièces et des pages correspondantes se trouve à la fin du manuel.

8. LÉGENDES

Les légendes qui se trouvent en haut de chaque page de chaque élément d'information fournissent le numéro de pièce, la désignation ainsi que des renseignements supplémentaires sur les pièces. Les renseignements concernant les numéros de série (S/N) qui se trouvent dans chaque légende doivent être utilisés pour sélectionner les informations correctes pour un moteur donné. Les informations concernant les options de remplacement sur le chantier, l'identification des composants des équipements offerts en option et les lieux d'application sont aussi fournies.

Nouvelle Caractéristique

Les lettres de la première ligne d'une légende sont présentées en police plus grande afin d'indiquer le début d'une unité d'information. Les légendes qui pourraient être requises pour des pages supplémentaires afin d'illustrer une unité d'information seront présentées en police standard et comprendront le terme (à suivre).

9. PIÈCES NON FOURNIES

Nouvelle Caractéristique

Dans certains cas, il est nécessaire d'indiquer les pièces non fournies qui sont en aval de la liste des pièces d'entretien. Les numéros des pièces non fournies dans la liste des pièces et les légendes seront en italique pour signaler qu'ils ne sont pas disponibles.

10. NUMÉROS DE RÉFÉRENCE DE LA LISTE DES PIÈCES

Nouvelle Caractéristique

Les numéros indiqués dans la colonne des numéros de références correspondent aux numéros utilisés dans les illustrations auxquelles ils sont associés. Un suffixe alphabétique peut être ajouté à un numéro de référence pour identifier la liste des articles en aval. Les numéros indiqués dans la colonne de référence de l'illustration renvoient à l'identification du numéro affiché dans le coin inférieur gauche de chaque illustration. Le numéro de référence de l'illustration pourrait être utilisé avec le numéro de référence de l'article pour déterminer le numéro de pièce correct. Il peut y avoir une omission intentionnelle d'un numéro de référence dans une liste de pièces suite à la mise à jour des informations en vue de refléter les numéros de pièces les plus récentes.

11. DÉSIGNATIONS DE PIÈCES EN RETRAIT

Lorsqu'une désignation de pièce est en retrait, cela veut dire que l'article en regard fait partie de l'ensemble sous lequel il figure.

12. LETTRES DE RÉFÉRENCE DES ILLUSTRATIONS

Quand cela est nécessaire, les illustrations comportent des lettres de référence (A, B, C, etc.) pour montrer le trajet des canalisations et faisceaux de câbles d'un point à l'autre. Elles sont utilisées également pour indiquer où relier les illustrations séparées auparavant.

13. ABRÉVIATIONS ET SYMBOLES

O.D. – Diamètre extérieur
I.D. – Diamètre intérieur
A – Ne fait pas partie de ce groupe
B – Utiliser selon besoin
C – Modification
D – Commander par mètre
E – Commander par centimètre
F – Non représenté
G – Commander par pouce
I – Voir "Hose Fabrication Guide"
M – Pièce métrique
R – Pièce rénovée éventuellement disponible
Y – Illustration séparée
Z – Non fourni séparément

NOTA:

En raison du progrès technique et des améliorations continuelles apportées au matériel, votre machine comporte peut-être des modifications qui n'apparaissent pas dans la présente publication. En cas de doute sur un détail de votre machine Caterpillar ou sur le texte de la présente publication, adressez-vous à votre concessionnaire Caterpillar.

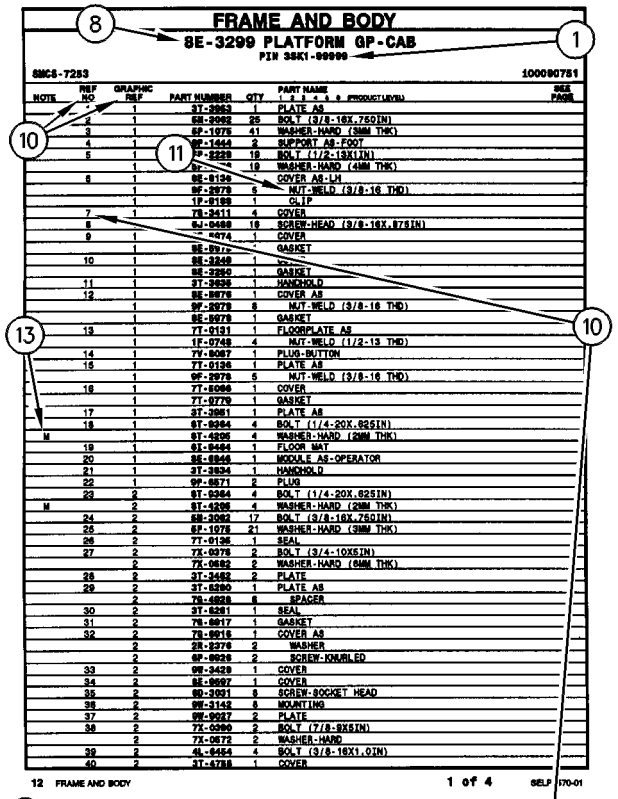

FRAME AND BODY

8E-3299 PLATFORM GP-CAB

PIN 38K1-99999

SMCS-7283 100090751

NOTE	REF NO	GRAPHIC REF	PART NUMBER	QTY	PART NAME 1 2 3 4 5 6 (PRODUCT LEVEL)	SEE PAGE
	1	1	3T-3953	1	PLATE AS	
	2	1	5B-3062	25	BOLT (3/8-16X.750IN)	
	3	1	6P-1075	41	WASHER-HARD (9MM THK)	
	4	1	9F-1444	2	SUPPORT AS-FOOT	
	5	1	7P-2229	19	BOLT (1/2-13X1IN)	
		1	6P-[illegible]	19	WASHER-HARD (4MM THK)	
	6	1	8E-8194	1	COVER AS-LH	
		1	9F-2979	5	NUT-WELD (3/8-16 THD)	
		1	1P-8199	1	CLIP	
	7	1	7S-2411	4	COVER	
	8		5J-0468	19	SCREW-HEAD (3/8-16X.875IN)	
	9	1	[illegible]-4674	1	COVER	
		1	8E-8972	1	GASKET	
	10	1	8E-3248	1	[illegible]	
		1	8E-3250	1	GASKET	
	11	1	3T-3939	1	HANDHOLD	
	12	1	8E-8978	1	COVER AS	
		1	9F-2978	8	NUT-WELD (3/8-16 THD)	
		1	8E-8978	1	GASKET	
	13	1	7T-0131	1	FLOORPLATE AS	
		1	1F-0748	4	NUT-WELD (1/2-13 THD)	
	14	1	7Y-8087	1	PLUG-BUTTON	
	15	1	7T-0136	1	PLATE AS	
		1	9F-2979	5	NUT-WELD (3/8-16 THD)	
	16	1	7T-8098	1	COVER	
		1	7T-0779	1	GASKET	
	17	1	3T-3951	1	PLATE AS	
	18	1	9T-9364	4	BOLT (1/4-20X.625IN)	
M		1	9T-4205	4	WASHER-HARD (2MM THK)	
	19	1	9S-9464	1	FLOOR MAT	
	20	1	8E-8946	1	MODULE AS-OPERATOR	
	21	1	3T-3934	1	HANDHOLD	
	22	1	9P-8871	2	PLUG	
	23	2	9T-9364	4	BOLT (1/4-20X.625IN)	
M		2	9T-4205	4	WASHER-HARD (2MM THK)	
	24	2	5B-3062	17	BOLT (3/8-16X.750IN)	
	25	2	6P-1075	21	WASHER-HARD (9MM THK)	
	26	2	7T-0136	1	SEAL	
	27	2	7X-0378	2	BOLT (3/4-10X5IN)	
		2	7X-0682	2	WASHER-HARD (6MM THK)	
	28	2	3T-3482	2	PLATE	
	29	2	3T-8290	1	PLATE AS	
		2	7S-4888	6	SPACER	
	30	2	3T-8291	1	SEAL	
	31	2	7S-8817	1	GASKET	
	32	2	7S-8916	1	COVER AS	
		2	2R-2376	2	WASHER	
		2	6P-8826	2	SCREW-KNURLED	
	33	2	9W-3429	1	COVER	
	34	2	8E-9697	1	COVER	
	35	2	9D-3991	8	SCREW-SOCKET HEAD	
	36	2	9W-3142	8	MOUNTING	
	37	2	9W-9027	2	PLATE	
	38	2	7X-0390	2	BOLT (7/8-9X6IN)	
		2	7X-0672	2	WASHER-HARD	
	39	2	9L-8454	4	BOLT (3/8-16X1.0IN)	
	40	2	3T-4788	1	COVER	

12 FRAME AND BODY 1 of 4 SELP4570-01

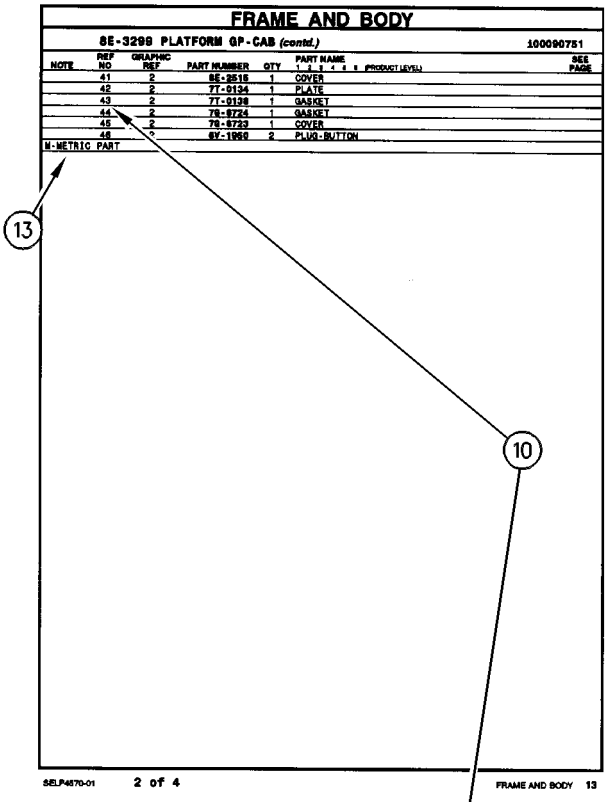

FRAME AND BODY

8E-3299 PLATFORM GP-CAB (contd.) 100090751

NOTE	REF NO	GRAPHIC REF	PART NUMBER	QTY	PART NAME 1 2 3 4 5 6 (PRODUCT LEVEL)	SEE PAGE
	41	2	8E-2515	1	COVER	
	42	2	7T-0134	1	PLATE	
	43	2	7T-0138	1	GASKET	
	44	2	7S-8724	1	GASKET	
	45	2	7S-8723	1	COVER	
	46	[illegible]	6V-1958	2	PLUG-BUTTON	
M-METRIC PART						

SELP4570-01 2 of 4 FRAME AND BODY 13

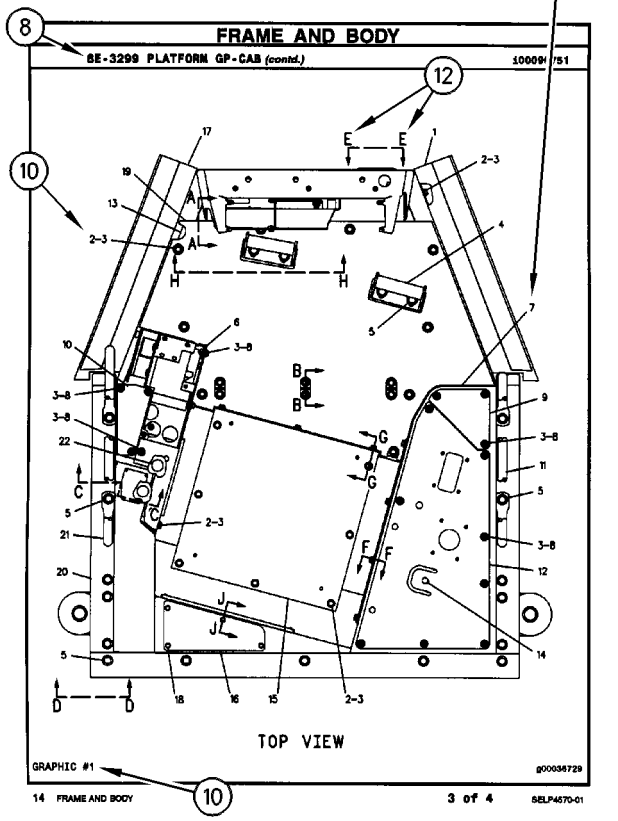

FRAME AND BODY

8E-3299 PLATFORM GP-CAB (contd.) 100090751

TOP VIEW

GRAPHIC #1 g00036729

14 FRAME AND BODY 3 of 4 SELP4570-01

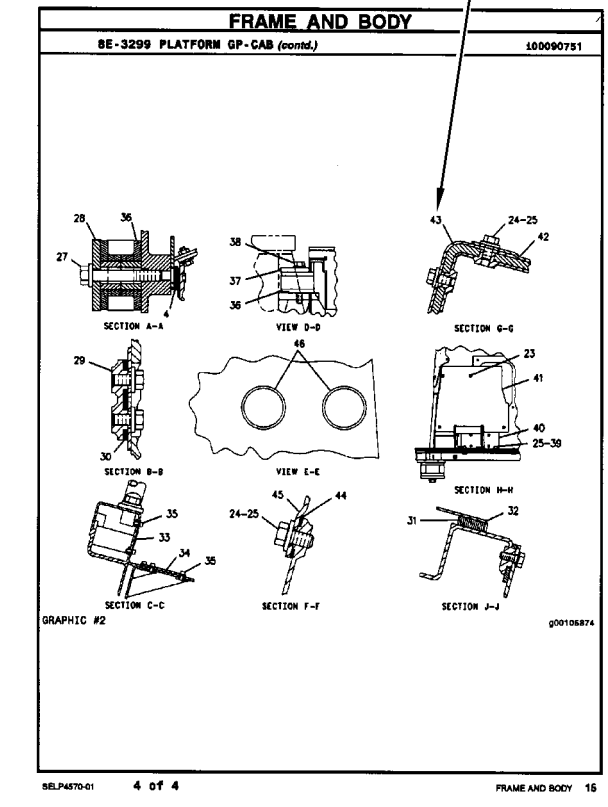

FRAME AND BODY

8E-3299 PLATFORM GP-CAB (contd.) 100090751

SECTION A-A VIEW D-D SECTION G-G

SECTION B-B VIEW E-E SECTION H-H

SECTION C-C SECTION F-F SECTION J-J

GRAPHIC #2 g00105874

SELP4570-01 4 of 4 FRAME AND BODY 16

1. MÁQUINAS

Las máquinas Caterpillar se identifican con Números de Identificación del Producto (PIN). Algunos componentes incluídos en la máquina pueden estar identificados con Números de Serie (N/S). Los componentes que tienen típicamente esta identificación incluyen motores, transmisiones, hojas topadoras y desgarradores. La máquina y el motor se identifican además con Números de Configuración y en algunos casos, Números de Modificación. Estos números están en las placas de identificación del producto o en la placa principal en la cabina del operador.

Los distribuidores Caterpillar necesitan estos números para identificar con exactitud los números de piezas de repuesto.

SIS *Nueva Característica*

A partir del primer trimestre del 2001, el Número de Identificación de Producto (PIN) de Caterpillar cambiará de 8 a 17 caracteres. Para hacer más uniforme el método de identificación de equipos, Caterpillar y otros fabricantes de equipo de construcción han tomado medidas para cumplir con la versión más reciente de la norma de numeración de identificación de productos. Los Números de Identificación de Producto para máquinas que no se operan en carreteras son definidos por la norma ISO 10261. El nuevo formato PIN corresponderá a todas las máquinas y grupos electrógenos Caterpillar. Las placas y los caracteres PIN estampados en el bastidor mostrarán el PIN de 17 caracteres. El nuevo formato tendrá la apariencia siguiente:

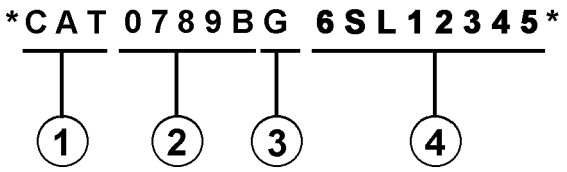

Significado de los caracteres:

1. Código de Fabricación Mundial de Caterpillar (caracteres 1-3)

2. Sección Descriptor de la Máquina (caracteres 4-8)

3. Carácter de Verificación (carácter 9)

4. Sección Indicador de la Máquina (MIS) o Número de Secuencia de Producto (caracteres 10-17). Anteriormente, estos caracteres constituían el Número de Serie.

Las máquinas y grupos electrógenos producidos antes del primer semestre del 2001 mantendrán su formato PIN de 8 caracteres.

Los componentes como motores, transmisiones, ejes, herramientas de trabajo, etc., continuarán usando un Número de Serie (S/N) de 8 caracteres.

2. COMO PEDIR REPUESTOS

⚠ ADVERTENCIA

Cuando se necesiten piezas de repuesto para este producto, Caterpillar recomienda usar piezas de repuesto Caterpillar o piezas que tengan especificaciones equivalentes incluyendo, pero sin estar limitadas a, dimensiones físicas, tipo, fortaleza y material.

El no hacer caso de esta advertencia puede llevar a fallas prematuras, daños al producto y lesiones graves o mortales.

Las piezas de repuesto Caterpillar de calidad están a la disposición de los distribuidores Caterpillar en todo el mundo. Sus existencias actualizadas incluyen todas las piezas normalmente requeridas para proteger su inversión en máquinas Caterpillar. Los distribuidores pueden tener juegos de reparación o piezas remanufacturadas para permitir la selección de la mejor alternativa de reparación en un caso en particular. Al pedir piezas de repuesto, especifique en su pedido la cantidad, el número de pieza, el nombre de la pieza y el número de serie/número de identificación del producto, de la máquina para la cual se necesitan estas piezas.

3. ORGANIZACION DEL MANUAL DE PIEZAS

La información sobre el producto, se presenta en este manual, como "elementos de información" que representan todos los componentes de un modelo específico. Las configuraciones de motores y los grupos de asientos son ejemplos de elementos de información. Los elementos de información están organizados primeramente por nombres de piezas en orden alfabético y en segundo lugar, por el número de pieza dentro de cada sección principal del manual.

4. CONTENIDO

Nueva Característica

La página de Contenido se encuentra al principio del manual. El Contenido indica cada sección del manual con una lista completa de todos los elementos de información organizados en el orden que aparecen en el manual. Los números de página proporcionan una referencia rápida a las ilustraciones detalladas de identificación de piezas y a las listas de componentes de repuesto de dichas piezas.

5. ÍNDICE DE PIEZAS DE MANTENIMIENTO

Al principio de este catálogo se encuentra un índice de los números de piezas utilizadas más frecuentemente para el mantenimiento, que incluye descripción, cantidad necesaria, lugar de utilización y número de página. Esta información está organizada alfabéticamente, por descripción de la pieza.

6. ÍNDICE

El Índice, ubicado cerca del principio del manual, es una lista en orden alfabético de todos los elementos de información incluídos en el manual. Los números de página proporcionan una referencia rápida a las ilustraciones detalladas de identificación de piezas y a las listas de componentes de repuesto de dichas piezas.

7. INDICE NUMÉRICO DE PIEZAS

Un índice numérico de piezas con el correspondiente número de página aparece al final de este catálogo.

8. TÍTULOS

Los títulos ubicados en la parte superior de cada página de elementos de información identifican el número y el nombre de la pieza junto con información descriptiva adicional para ayudar al usuario a determinar las piezas necesarias para una máquina en particular. También se suministra información sobre las opciones de reparación en el campo, la identificación de componentes de accesorios optativos y el lugar de ubicación de la pieza ("es parte de").

Nueva Característica

La primera línea del título se muestra con un tipo de letra más grande para indicar el comienzo de un elemento de información. Si se requieren páginas adicionales para ilustrar un elemento de información, los títulos se muestran con un tipo de letra normal y la continuación se indica entre paréntesis.

9. PIEZAS QUE NO SE SUMINISTRAN COMO REPUESTO

Nueva Característica

En algunos casos es necesario indicar piezas que no se suministran como repuesto pero que pueden estar conectadas a listas de componentes de otras piezas de repuesto. En tal caso, dichas piezas se muestran en cursiva para indicar que no son piezas disponibles.

10. NÚMEROS DE REFERENCIA

Nueva Característica

Los números en la columna de No. de Referencia corresponden a los números indicados en la ilustración que pertenece a ese número de pieza. Los números que tienen un sufijo alfabético identifican artículos de las listas de componentes de piezas. Los números en la columna de Referencia de la ilustración se identifican en la esquina inferior izquierda de cada ilustración. Para determinar el número de pieza correcto se puede utilizar tanto el No. de Referencia de la ilustración como el No. de Referencia del artículo. A medida que se actualiza la información para indicar los más recientes números de piezas de repuesto, puede omitirse intencionalmente un No. de Referencia en una lista de componentes de piezas.

11. NOMBRES DE PIEZA SANGRADOS

Cuando el nombre de una pieza está sangrado en una lista, significa que esta pieza forma parte del grupo o conjunto del renglón inmediatamente superior.

12. LETRAS DE REFERENCIA DE ILUSTRACIONES

Las ilustraciones contienen algunas veces letras de referencia (A, B, C etc.) cuyo propósito es seguir el trayecto de líneas y mazos de cables de un punto a otro. También se utilizan para mostrar dónde volver a unir ilustraciones que se habían separado.

13. ABREVIATURAS Y SIMBOLOS

O.D. – Diámetro exterior
I.D. – Diámetro interior
A – No es pieza de este grupo
B – Utilizado según la demanda
C – Indica cambio
D – Se pide por metro
E – Se pide por centímetro
F – No se muestra
G – Se pide por pulgada
I – Ver "Hose Fabrication Guide"
M – Pieza métrica
R – Puede estar disponible como pieza remanufacturada
Y – Ilustración separada
Z – No se suministra por separado

NOTA:

Las contínuas mejoras y adelantos en diseño podrían originar cambios a su máquina que no se incluyen en esta publicación. Cuando tenga alguna pregunta acerca de su producto Caterpillar o de esta publicación, consulte al distribuidor Caterpillar para obtener la información más reciente.

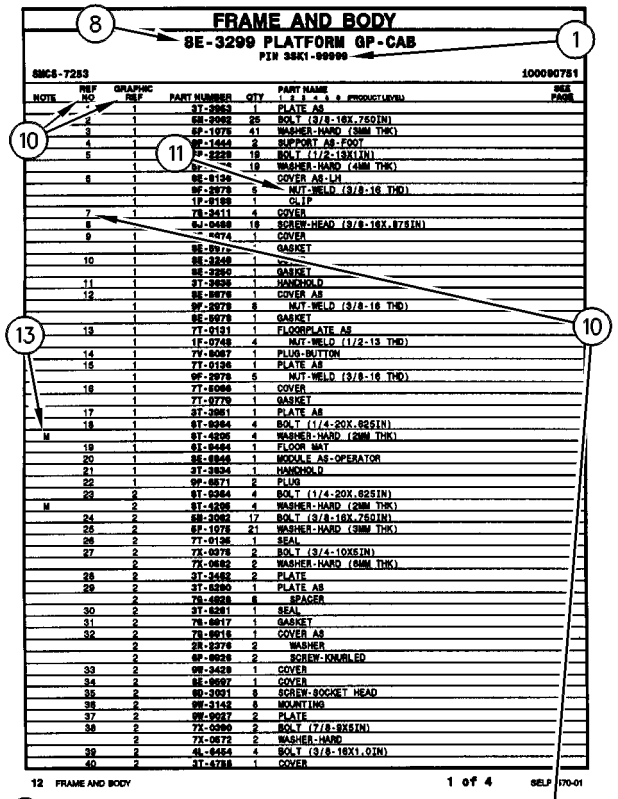

FRAME AND BODY

8E-3299 PLATFORM GP-CAB

PIN 38K1-99999

SMCS-7283 100090751

NOTE	REF NO	GRAPHIC REF	PART NUMBER	QTY	PART NAME 1 2 3 4 5 6 (PRODUCT LEVEL)	SEE PAGE
	1	1	3T-3953	1	PLATE AS	
	2	1	6B-3062	25	BOLT (3/8-16X.750IN)	
	3	1	6P-1075	41	WASHER-HARD (9MM THK)	
	4	1	9F-1444	2	SUPPORT AS-FOOT	
	5	1	7P-2229	19	BOLT (1/2-13X1IN)	
		1	6P-[illegible]	19	WASHER-HARD (4MM THK)	
	6	1	8E-8194	1	COVER AS-LH	
		1	9F-2979	5	NUT-WELD (3/8-16 THD)	
		1	1P-8199	1	CLIP	
	7	1	7S-2411	4	COVER	
	8		6J-0468	19	SCREW-HEAD (3/8-16X.875IN)	
	9	1	[illegible]-4674	1	COVER	
		1	8E-8972	1	GASKET	
	10	1	8E-3248	1	[illegible]	
		1	8E-3250	1	GASKET	
	11	1	3T-3939	1	HANDHOLD	
	12	1	8E-8978	1	COVER AS	
		1	9F-2978	8	NUT-WELD (3/8-16 THD)	
		1	8E-8978	1	GASKET	
	13	1	7T-0131	1	FLOORPLATE AS	
		1	1F-0748	4	NUT-WELD (1/2-13 THD)	
	14	1	7V-8087	1	PLUG-BUTTON	
	15	1	7T-0136	1	PLATE AS	
		1	9F-2979	5	NUT-WELD (3/8-16 THD)	
	16	1	7T-8098	1	COVER	
		1	7T-0779	1	GASKET	
	17	1	3T-3951	1	PLATE AS	
	18	1	6T-8364	4	BOLT (1/4-20X.625IN)	
M		1	6T-4205	4	WASHER-HARD (2MM THK)	
	19	1	6X-8464	1	FLOOR MAT	
	20	1	8E-8946	1	MODULE AS-OPERATOR	
	21	1	3T-3934	1	HANDHOLD	
	22	1	9P-8871	2	PLUG	
	23	2	6T-8364	4	BOLT (1/4-20X.625IN)	
M		2	6T-4205	4	WASHER-HARD (2MM THK)	
	24	2	6B-3062	17	BOLT (3/8-16X.750IN)	
	25	2	6P-1075	21	WASHER-HARD (9MM THK)	
	26	2	7T-0136	1	SEAL	
	27	2	7X-0378	2	BOLT (3/4-10X5IN)	
		2	7X-0682	2	WASHER-HARD (6MM THK)	
	28	2	3T-3482	2	PLATE	
	29	2	3T-8290	1	PLATE AS	
		2	7S-4888	6	SPACER	
	30	2	3T-8291	1	SEAL	
	31	2	7S-8817	1	GASKET	
	32	2	7S-8916	1	COVER AS	
		2	2R-2376	2	WASHER	
		2	6P-8826	2	SCREW-KNURLED	
	33	2	9W-3429	1	COVER	
	34	2	8E-8897	1	COVER	
	35	2	9D-3931	8	SCREW-SOCKET HEAD	
	36	2	9W-3142	8	MOUNTING	
	37	2	9W-9027	2	PLATE	
	38	2	7X-0360	2	BOLT (7/8-9X5IN)	
		2	7X-0672	2	WASHER-HARD	
	39	2	6L-4454	4	BOLT (3/8-16X1.0IN)	
	40	2	3T-4788	1	COVER	

12 FRAME AND BODY 1 of 4 SELP4570-01

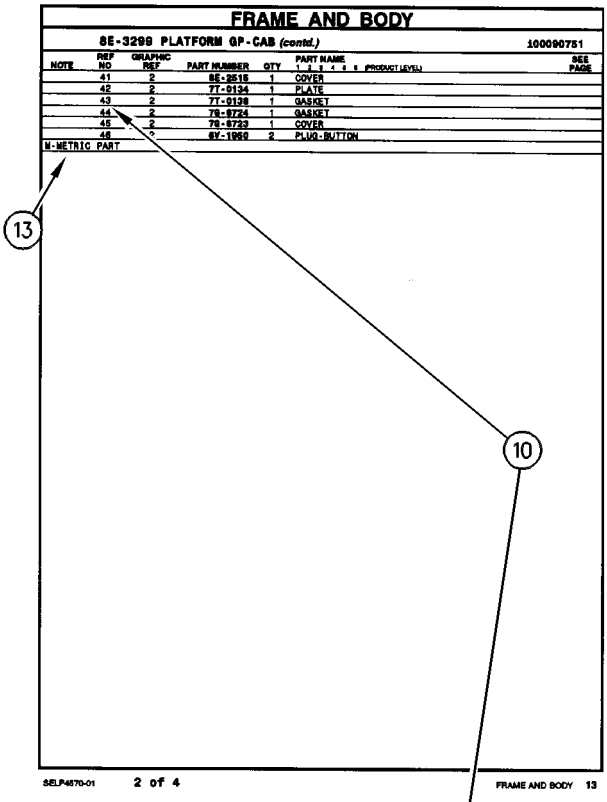

FRAME AND BODY

8E-3299 PLATFORM GP-CAB (contd.) 100090751

NOTE	REF NO	GRAPHIC REF	PART NUMBER	QTY	PART NAME 1 2 3 4 5 6 (PRODUCT LEVEL)	SEE PAGE
	41	2	8E-2515	1	COVER	
	42	2	7T-0134	1	PLATE	
	43	2	7T-0138	1	GASKET	
	44	2	7S-8724	1	GASKET	
	45	2	7S-8723	1	COVER	
	46	[illegible]	6V-1958	2	PLUG-BUTTON	
M-METRIC PART						

SELP4570-01 2 of 4 FRAME AND BODY 13

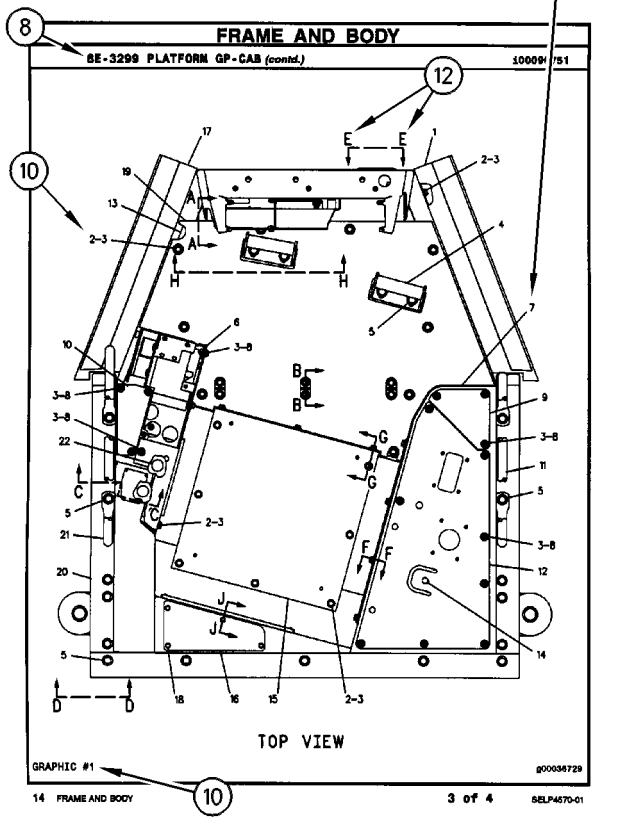

FRAME AND BODY

8E-3299 PLATFORM GP-CAB (contd.) 100090751

TOP VIEW

GRAPHIC #1 g00036729

14 FRAME AND BODY 3 of 4 SELP4570-01

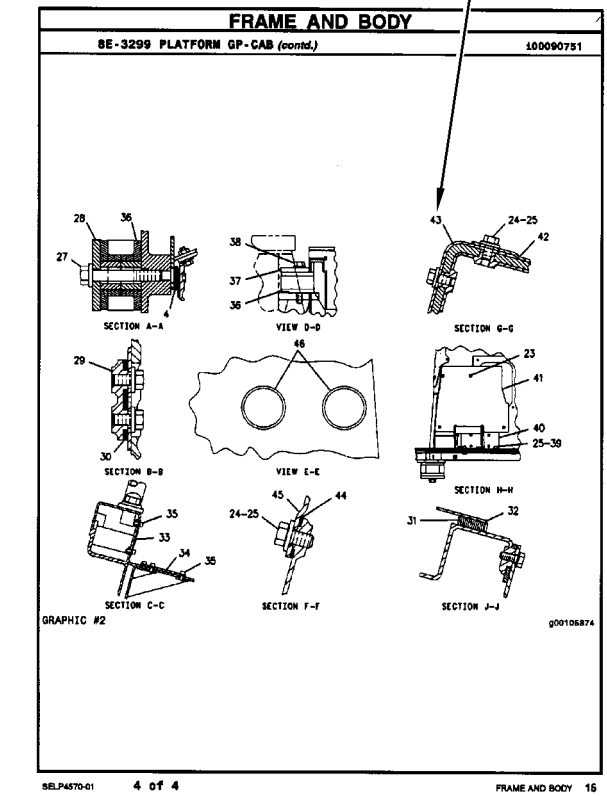

FRAME AND BODY

8E-3299 PLATFORM GP-CAB (contd.) 100090751

SECTION A-A VIEW D-D SECTION G-G

SECTION B-B VIEW E-E SECTION H-H

SECTION C-C SECTION F-F SECTION J-J

GRAPHIC #2 g00105874

SELP4570-01 4 of 4 FRAME AND BODY 16

1. IDENTIFICAÇÃO DA MÁQUINA

As máquinas Caterpillar são identificadas pelos Números de Informação do Produto (PIN). Alguns componentes incluídos numa máquina podem ser identificados por Números de Série (S/N). Componentes típicos que serão enumerados com números de série incluem motores, transmissões, lâminas e ríperes. Além do número de série, a máquina e o motor são ainda identificados por números de arranjo e, em alguns casos, números de modificações. Tais números encontram-se na(s) placa(s) de identificação do produto e na placa mestre no compartimento do operador.

Novidades

A partir do primeiro trimestre de 2001 o Número de Identificação de Produto da Caterpillar (PIN) vai mudar de 8 para 17 caracteres. Esforçando-se para fornecer uma identificação uniforme de equipamentos, a Caterpillar e outros fabricantes de equipamento de construção estão mudando para atender a versão mais atualizada do padrão de identificação de produtos. Os números de PIN para produtos de aplicações não rodoviárias são definidos pela ISO 10261. O novo formato de número PIN será adotado em todas as máquinas e grupos geradores Caterpillar. As placas e as marcações do chassi mostrarão os 17 dígitos de PIN. O novo formato terá a seguinte disposição:

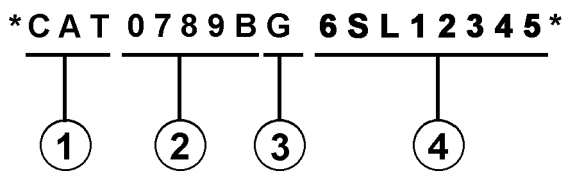

Onde:

1. Código de Fabricação Mundial da Caterpillar (dígitos 1-3)

2. Descrição da Máquina (dígitos 4-8)

3. Dígito de Verificação (dígito 9)

4. Seção de Indicador da Máquina (MIS) ou Número de Seqüência de Produto (dígitos 10-17). Estes eram anteriormente chamados de Número de Série.

Máquinas e grupos geradores produzidos antes do primeiro trimestre de 2001 manterão o formato de 8 caracteres de PIN.

Componentes como motores, transmissões, eixos, ferramentas de trabalho, etc. continuarão a usar Número de Série (S/N) com oito caracteres.

2. COMO OBTER PEÇAS

⚠ CUIDADO

Quando peças de substituição são exigidas para este produto, a Caterpillar recomenda a utilização de peças de substituição Caterpillar ou peças com as especificações equivalentes incluindo, mas não limitadas, à dimensões físicas, tipos, resistência e materiais.

A inobservância desta advertência poderá resultar em falhas prematuras, danos ao produto, ferimentos ou morte.

As Peças de Reposição de Qualidade Caterpillar encontram-se disponíveis nos revendedores Caterpillar no mundo inteiro. Seus estoques de peças são atualizados e incluem todas as peças normalmente necessárias para proteger seu investimento em máquinas Caterpillar. Alguns revendedores podem oferecer jogos de reparo ou peças de troca/remanufaturadas disponíveis como uma opção da alternativa de reparo mais eficaz para uma situação específica. Ao encomendar peças, seu pedido deve especificar a quantidade, o número e o nome da peça e o número de série/número de identificação do produto referentes à máquina para a qual as peças se destinam.

3. ORGANIZAÇÃO DO MANUAL DE PEÇAS

A informação do produto neste manual é apresentada em forma de "elementos de informação" que representam todos os componentes para o modelo específico. Arranjo de Motor e Grupo de Assento são exemplos de elementos de informação. Os elementos de informação são organizados em ordem alfabética por nome de peça ou secundariamente, por número de peça incluído em cada seção principal do manual.

4. LISTA DE CONTEÚDOS

Novidades

A Lista de Conteúdos (TOC) se encontra no princípio do manual. A Lista de Conteúdos (TOC) relaciona em cada seção do manual uma lista completa com todos os elementos de informação organizados conforme aparecem no manual. Números de página são fornecidos para que se tenha referência rápida de ilustrações de peças detalhadas e listas de conteúdos que podem receber serviço de manutenção.

5. ÍNDICE DE PEÇAS DE MANUTENÇÃO

O Índice de Peças de Manutenção, localizado perto do princípio do manual, faz referência aos números de peça de manutenção usados com maior frequência, fornecendo uma descrição, a quantidade, o uso e o número de página. Esta informação é organizada com a descrição da peça em ordem alfabética.

6. ÍNDICE

O Índice localizado perto do princípio do manual, consiste de uma lista em ordem alfabética de todos os elementos de informação incluídos no manual. Números de página são fornecidos para que se tenha referência rápida de ilustrações de peças detalhadas e listas de conteúdos que podem receber serviço de manutenção.

7. ÍNDICE DE NÚMERO DE PEÇA

Um índice numérico relacionando todos os números de peça e a(s) página(s) correspondentes, aparece no final do manual.

8. LEGENDAS

As legendas localizadas na parte de cima de cada página de um elemento de informação identifica o número de peça e o nome da peça, juntamente com informação descritiva adicional. Informações sobre o Número de Informação do Produto (PIN) e o Número de Série (S/N) encontradas em cada legenda devem ser usadas para selecionar a informação correta sobre uma máquina específica. Opções de substituição no campo, identificação de componentes de acessórios opcionais e informações sobre onde são utilizados ("parte de") são também fornecidas.

SIS ***Novidades***

A primeira linha de uma legenda é indicada em tipo maior para indicar o princípio de um elemento de informação. Legendas para páginas adicionais que podem ser necessárias para ilustrar um elemento de informação serão apresentadas em tipo padrão e incluirão o termo *(continua)* .

9. NÃO DISPONÍVEL SEPARADAMENTE

SIS ***Novidades***

Em alguns casos, é necessário mostrar peças não disponíveis separadamente que têm uma ligação com listas de conteúdos de nível inferior que podem receber serviço de manutenção. Os números de peça destes componentes não disponíveis aparecerão em *itálico* , a fim de indicar que não estão disponíveis.

10. NÙMEROS DE REFERÊNCIA À LISTA DE PEÇAS

SIS ***Novidades***

Os números indicados na coluna Ref No (No. de Referência) correspondem-se aos números usados no(s) gráfico(s) correspondente(s). Um sufixo com letras pode ser acrescentado a um número de referência para identificar itens de conteúdo de nível inferior. Os números indicados na coluna Graphic Ref (Referência de Gráfico) referem-se ao identificador de número de gráfico presente no canto esquerdo inferior de cada ilustração. O número de Referência de Gráfico pode ser usado em combinação com o item Ref No para determinar-se o número de peça correto. Poderá haver omissão intencional de um número de referência (Ref No) de uma lista de conteúdos uma vez que as informações são atualizadas para refletir os números de peça mais recentes que podem receber serviço de manutenção.

11. NOMES DE PEÇAS DESALINHADOS

Quando um nome de peça encontra-se desalinhado numa lista de peças, significa que tal item faz parte do (está incluído no) grupo ou conjunto sob o qual está relacionado.

12. LETRAS DE REFERÊNCIA NAS ILUSTRAÇÕES

Quando necessário, as ilustrações contêm letras de referência (A, B, C, etc.) que são utilizadas para seguir tubulações e cabos elétricos de um ponto a outro. Também foram utilizadas para indicar onde se pode reconectar as ilustrações que foram separadas.

13. ABREVIAÇÕES E SÍMBOLOS

O.D. – "Outside Diameter" (Diâmetro Externo)
I.D. – "Inside Diameter" (Diâmetro Interno)
A – Não faz parte deste grupo
B – Use conforme necessário
C – Indica modificação
D – Vendido por metro
E – Vendido por centímetro
F – Não ilustrado
G – Vendido por polegada
I – Consulte o seu revendedor quanto a mangueira
M – Peça métrica
R – Peça remanufaturada pode estar disponível; consulte o seu revendedor Cat
Y – Ilustração separada
Z – Não disponível separadamente

NOTA:

Os contínuos aperfeiçoamentos e avanços no projeto do produto podem ocasionar modificações em sua máquina que talvez ainda não estejam incluídas nesta publicação. Sempre que surgirem dúvidas quanto a um produto Caterpillar ou quanto à presente publicação, consulte o seu revendedor Caterpillar para obter as informações mais recentes disponíveis.

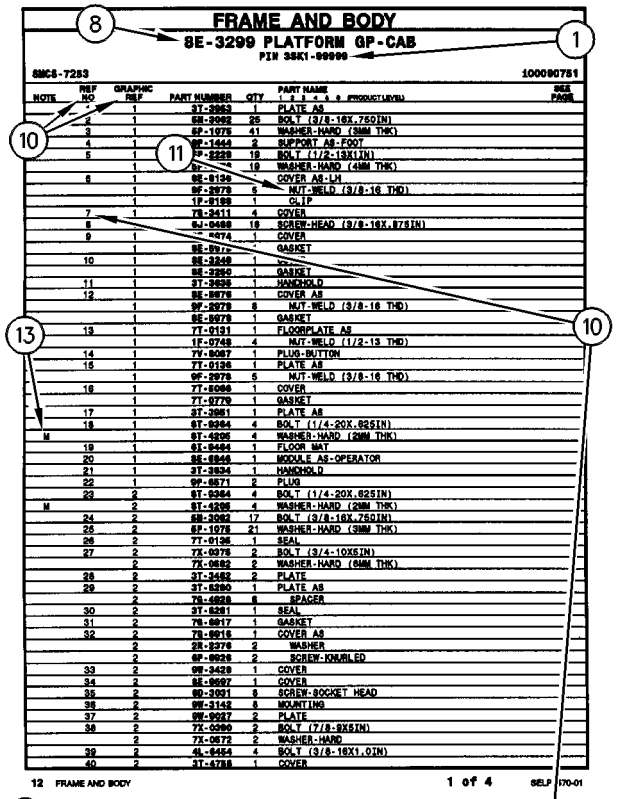

FRAME AND BODY

8E-3299 PLATFORM GP-CAB

PIN 38K1-99999

SMCS-7283 100090751

NOTE	REF NO	GRAPHIC REF	PART NUMBER	QTY	PART NAME 1 2 3 4 5 6 (PRODUCT LEVEL)	SEE PAGE
	1	1	3T-3953	1	PLATE AS	
	2	1	6B-3062	25	BOLT (3/8-16X.750IN)	
	3	1	6P-1075	41	WASHER-HARD (9MM THK)	
	4	1	9F-1444	2	SUPPORT AS-FOOT	
	5	1	7P-2229	19	BOLT (1/2-13X1IN)	
		1	6P-[illegible]	19	WASHER-HARD (4MM THK)	
	6	1	8E-8134	1	COVER AS-LH	
		1	9F-2979	5	NUT-WELD (3/8-16 THD)	
		1	1P-8188	1	CLIP	
	7	1	7S-3411	4	COVER	
	8		6J-0468	19	SCREW-HEAD (3/8-16X.875IN)	
	9	1	[illegible]474	1	COVER	
		1	8E-8972	1	GASKET	
	10	1	8E-3248	1	[illegible]	
		1	8E-3250	1	GASKET	
	11	1	3T-3939	1	HANDHOLD	
	12	1	8E-8978	1	COVER AS	
		1	9F-2978	8	NUT-WELD (3/8-16 THD)	
		1	8E-8978	1	GASKET	
	13	1	7T-0131	1	FLOORPLATE AS	
		1	1F-0748	4	NUT-WELD (1/2-13 THD)	
	14	1	7V-8087	1	PLUG-BUTTON	
	15	1	7T-0136	1	PLATE AS	
		1	9F-2979	5	NUT-WELD (3/8-16 THD)	
	16	1	7T-8098	1	COVER	
		1	7T-0779	1	GASKET	
	17	1	3T-3951	1	PLATE AS	
	18	1	6T-8364	4	BOLT (1/4-20X.625IN)	
M		1	9T-4205	4	WASHER-HARD (2MM THK)	
	19	1	8X-8464	1	FLOOR MAT	
	20	1	8E-8946	1	MODULE AS-OPERATOR	
	21	1	3T-3934	1	HANDHOLD	
	22	1	9P-8871	2	PLUG	
	23	2	6T-8364	4	BOLT (1/4-20X.625IN)	
M		2	9T-4205	4	WASHER-HARD (2MM THK)	
	24	2	6B-3062	17	BOLT (3/8-16X.750IN)	
	25	2	6P-1075	21	WASHER-HARD (9MM THK)	
	26	2	7T-0136	1	SEAL	
	27	2	7X-0378	2	BOLT (3/4-10X5IN)	
		2	7X-0682	2	WASHER-HARD (6MM THK)	
	28	2	3T-3482	2	PLATE	
	29	2	3T-8290	1	PLATE AS	
		2	7S-4838	6	SPACER	
	30	2	3T-8291	1	SEAL	
	31	2	7S-8817	1	GASKET	
	32	2	7S-8916	1	COVER AS	
		2	2R-2376	2	WASHER	
		2	6P-8826	2	SCREW-KNURLED	
	33	2	9W-3429	1	COVER	
	34	2	8E-8937	1	COVER	
	35	2	9D-3931	8	SCREW-SOCKET HEAD	
	36	2	9W-3142	8	MOUNTING	
	37	2	9W-9027	2	PLATE	
	38	2	7X-0360	2	BOLT (7/8-9X6IN)	
		2	7X-0672	2	WASHER-HARD	
	39	2	6L-4454	4	BOLT (3/8-16X1.0IN)	
	40	2	3T-4788	1	COVER	

12 FRAME AND BODY 1 of 4 SELP4570-01

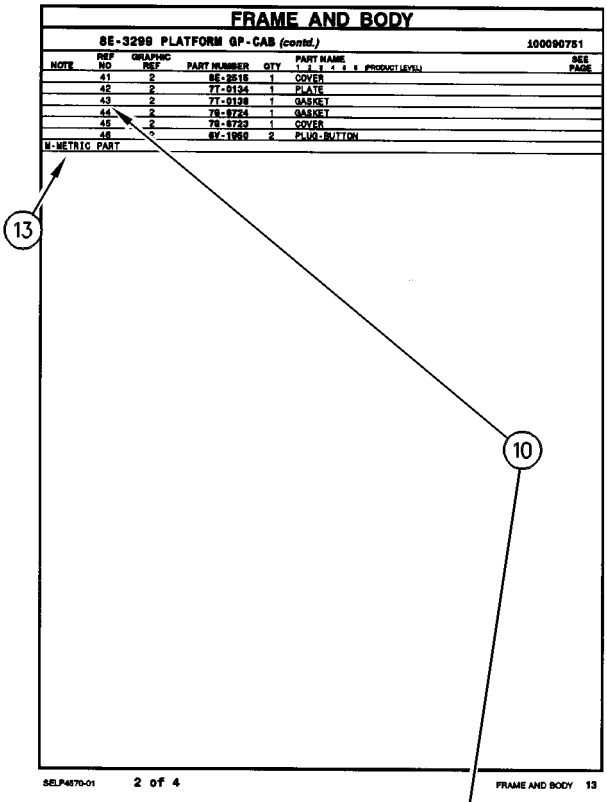

FRAME AND BODY

8E-3299 PLATFORM GP-CAB (contd.) 100090751

NOTE	REF NO	GRAPHIC REF	PART NUMBER	QTY	PART NAME 1 2 3 4 5 6 (PRODUCT LEVEL)	SEE PAGE
	41	2	8E-2515	1	COVER	
	42	2	7T-0134	1	PLATE	
	43	2	7T-0138	1	GASKET	
	44	2	7S-8724	1	GASKET	
	45	2	7S-8723	1	COVER	
	46	[illegible]	6V-1958	2	PLUG-BUTTON	
M-METRIC PART						

SELP4570-01 2 of 4 FRAME AND BODY 13

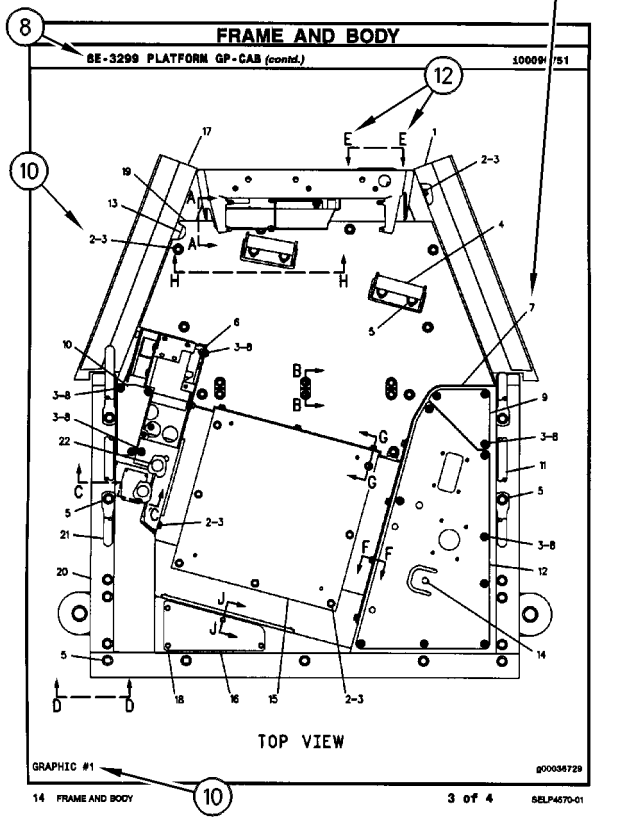

FRAME AND BODY

8E-3299 PLATFORM GP-CAB (contd.) 100090751

TOP VIEW

GRAPHIC #1 g00036729

14 FRAME AND BODY 3 of 4 SELP4570-01

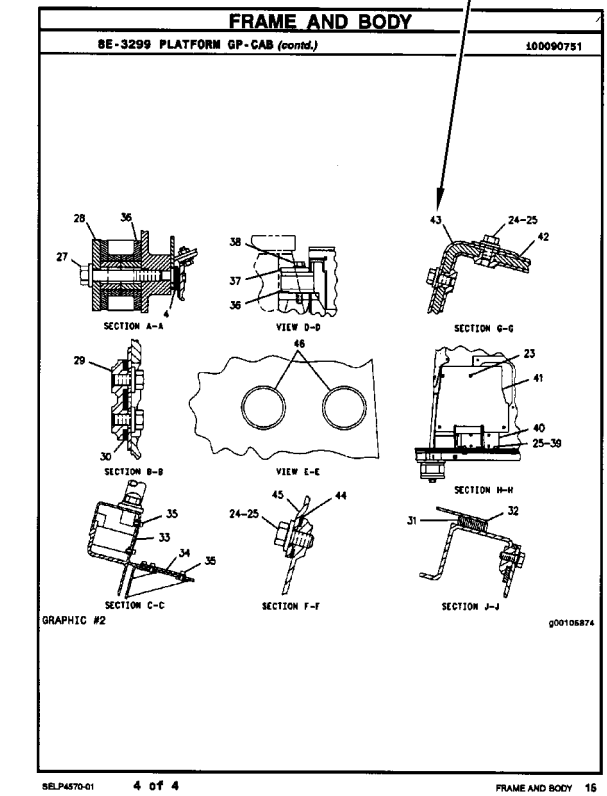

FRAME AND BODY

8E-3299 PLATFORM GP-CAB (contd.) 100090751

SECTION A-A VIEW D-D SECTION G-G

SECTION B-B VIEW E-E SECTION H-H

SECTION C-C SECTION F-F SECTION J-J

GRAPHIC #2 g00105874

SELP4570-01 4 of 4 FRAME AND BODY 16

ALLGEMEINE HINWEISE

1. MASCHINENKENNZEICHNUNG

Caterpillar-Maschinen sind mit PRODUCT IDENTIFICATION NUMBERS (PIN) (Produkt-Identnummern) gekennzeichnet. Einige Baugruppen, z.B. Motoren, Getriebe, Planierschilde und Aufreißer, sind mit SERIAL NUMBERS (S/N) (Seriennummern) gekennzeichnet. An der Maschine und am Motor befinden sich außerdem ARRANGEMENT NUMBERS (Ausrüstungsnummern) sowie in einigen Fällen MODIFICATION NUMBERS (Änderungsnummern). Sie befinden sich auf den PIN-Schildern und auf dem Typenschild im Fahrerhaus.

Bei Ersatzteilbestellungen müssen dem Händler alle diese Nummern zur Verfügung gestellt werden.

SIS ***Neu im Parts Manual***

Vom ersten Quartal 2001 ab wird die Caterpillar Produkt-Identnummer (PIN) von 8 auf 17 Zeichen geändert. Um zur Standardisierung der Produkt-Identnummer beizutragen, sind Caterpillar und andere Baumaschinenhersteller bestrebt, die aktuellste Norm zur Produkt-Identnummerierung einzuführen. Produkt-Identnummern für Baumaschinen sind durch ISO 10261 definiert. Das neue Format der Produkt-Identnummern gilt für alle Caterpillar-Maschinen und -Stromaggregate. Die Produkt-Identschilder und -Identrahmenmarkierung enthalten die aus 17 Zeichen bestehende Identnummer. Das neue Format hat folgende Abschnitte:

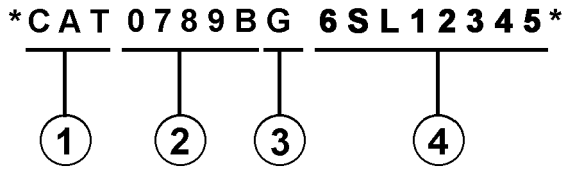

Abschnitte:

1. Caterpillars weltweiter Herstellungscode (Zeichen 1-3)

2. Modell (Zeichen 4-8)

3. Kontrollzeichen (Zeichen 9)

4. Maschinenspezifische Kennung (MIS) oder Produktsequenznummer (Zeichen 10-17). Diese wurde früher als Seriennummer bezeichnet.

Für vor dem ersten Quartal 2001 hergestellte Maschinen und Stromaggregate wird das aus 8 Zeichen bestehende PIN-Format beibehalten.

Bauteile wie z.B. Motoren, Getriebe, Achsen sowie Arbeitsgeräte werden weiterhin eine aus 8 Zeichen bestehende Seriennummer (S/N) aufweisen.

2. BESTELLEN VON ERSATZTEILEN

⚠ WARNUNG

Wenn für diese Maschine Ersatzteile benötigt werden, empfiehlt Caterpillar, ausschließlich Caterpillar-Ersatzteile oder solche zu verwenden, die die gleichen technischen Merkmale hinsichtlich Typ, Festigkeit, Werkzeugeigenschaften und die gleichen Maße aufweisen.

Bei Nichtbeachtung dieser Warnung besteht Verletzungs- oder sogar Lebensgefahr! Ferner kann Nichtbeachtung vorzeitige Ausfälle der Teile und Beschädigung der Maschine zur Folge haben.

Original Caterpillar-Ersatzteile können weltweit bei jedem Caterpillar-Händlern bestellt werden. Die umfangreichen Händlerlager enthalten normalerweise alle Teile, die Sie für Ihre Caterpillar-Maschine benötigen. Einige Händler bieten Reparatursätze, Austausch- oder werküberholte Teile an, so daß Sie eine Auswahl unter verschiedenen Reparaturmöglichkeiten treffen können. Ihre Bestellung muß folgende Angaben enthalten: Anzahl der benötigten Teile, Bestellnummer, Bezeichnung des Teils, Serien-Nr./Produkt-Ident-Nr., Ausrüstungs-Nr. und Änderungs-Nr. der Maschine, für die diese Teile benötigt werden.

3. AUFBAU DES PARTS MANUAL

Die Produktinformationen für alle Komponenten eines bestimmten Modells sind in INFORMATION ELEMENTS (Informationseinheiten) gegliedert. ENGINE ARRANGEMENT (Motorausführung) und SEAT GROUP (Fahrersitz) sind Beispiele für solche Informationseinheiten. Sie sind innerhalb jeder Gruppe alphabetisch, entsprechend der Ersatzteilbezeichnung, und zusätzlich numerisch, entsprechend der Ersatzteilnummer, geordnet.

ALLGEMEINE HINWEISE

4. INHALTSVERZEICHNIS

SIS *Neu im Parts Manual*

Das Inhaltsverzeichnis befindet sich am Anfang des Buches. Im Inhaltsverzeichnis werden die einzelnen Abschnitte des Buches aufgeführt. Die Abschnitte enthalten eine vollständige Aufstellung aller Informationseinheiten. Diese sind entsprechend ihrem Erscheinen im Buch geordnet. Das Inhaltsverzeichnis enthält Seitenangaben für Schnellverweise auf detaillierte Abbildungen und Teillisten.

5. INDEX FÜR WARTUNGSTEILE

Der Index für Wartungsteile vorn im Buch enthält die Bestellnummern, Seitenangaben, Mengenangaben und Informationen über den Einsatzbereich für die am häufigsten benötigten Ersatzteile. Die Angaben sind alphabetisch entsprechend der Teilebezeichnung geordnet.

6. INDEX

Der Index vorn im Buch enthält eine alphabetische Liste aller Informationseinheiten. Er enthält Seitenangaben für Schnellverweise auf detaillierte Abbildungen und Teillisten.

7. INDEX FÜR BESTELLNUMMERN

Hinten im Buch befindet sich ein numerischer Index, mit allen Bestellnummern und dem Hinweis auf die Seite, auf der sich die betreffende Abbildung befindet.

8. ÜBERSCHRIFTEN

Die Überschriften, die sich oben auf den Seiten der Informationseinheiten befinden, enthalten Bestellnummern, Ersatzteilbezeichnungen und zusätzliche beschreibende Informationen. Produkt-Ident- und Seriennummern in den Überschriften sollten zur Auswahl der richtigen Informationen für die betreffende Maschine verwendet werden. Die Überschriften enthalten außerdem Informationen über möglichen Außendienstersatz, mögliche Baugerätekomponenten und die Baugruppe, zu der das Teil gehört.

SIS *Neu im Parts Manual*

Die erste Zeile einer Überschrift erscheint in einer größeren Schriftart, um den Anfang einer Informationseinheit zu kennzeichnen. Überschriften für zusätzliche Seiten, die zur Erläuterung einer Informationseinheit notwendig sind, erscheinen in normaler Schriftart und enthalten den Begriff "(contd.)".

9. NICHT EINZELN LIEFERBARE TEILE

SIS *Neu im Parts Manual*

In einigen Fällen ist es notwendig nicht lieferbare Teile, die selbst mit einer eigenen Teilliste im Buch vertreten sind, aufzuführen. Die Bestellnummern dieser nicht einzeln lieferbaren Teile erscheinen kursiv, wodurch angezeigt wird, daß sie nur in Verbindung mit anderen Teilen lieferbar sind.

10. REFERENZNUMMER FÜR ERSATZTEILE

SIS *Neu im Parts Manual*

Die Zahlen, die in der Spalte "Ref No" aufgeführt sind, stimmen mit den Zahlen in den beigefügten Abbildungen überein. Ein Buchstaben-Suffix kann zu einer Referenznummer hinzugefügt werden, um zu kennzeichnen, daß das Teil mit einer eigenen Teilliste im Buch aufgeführt ist. Die in der Spalte "Graphic Ref" angeführten Zahlen verweisen auf die Identifikationsnummer der Abbildung, die sich in der linken unteren Ecke der Abbildung befindet. Diese Nummer kann zusammen mit der Referenznummer des Teils angegeben werden, um die richtige Ersatzteilnummer zu ermitteln. Referenznummern können absichtlich weggelassen werden, da die Nummern der lieferbaren Ersatzteile ständig aktualisiert werden.

11. EINGERÜCKTE BEZEICHNUNGEN

Wenn eine Bezeichnung eingerückt ist, wird dadurch angezeigt, daß das Teil zu einer Baugruppe gehört, unter deren Bezeichnung es eingerückt ist.

12. REFERENZBUCHSTABEN

Falls erforderlich sind in den Abbildungen Referenzbuchstaben enthalten (z.B. A, B, C, usw.), die Leitungen und Kabelbäume von einem Punkt zum anderen verfolgen. Außerdem geben sie die Stelle an, an der getrennte Abbildungen fortgesetzt werden.

13. ABKÜRZUNGEN UND SYMBOLE

O.D. – Außendurchmesser
I.D. – Innendurchmesser
A – kein Teil dieser Gruppe
B – nach Bedarf verwenden
C – Hinweis auf eine Änderung
D – in Meter-Länge bestellen
E – in Zentimeter-Länge bestellen
F – nicht gezeigt
G – in Zoll-Länge bestellen
I – siehe "Hose Fabrication Guide"
M – metrisches Teil
R – werküberholtes Teil unter Umständen lieferbar
Y – separate Abbildung
Z – nicht einzeln lieferbar

ANMERKUNG:

Ständig vorgenommene Verbesserungen und Weiterentwicklungen an Ihrer Maschine können Änderungen verursachen, die in der vorliegenden Ausgabe noch nicht berücksichtigt sind. Fragen zu Ihrer Caterpillar-Maschine oder diesem Ersatzteilbuch beantwortet Ihr Caterpillar-Händler.

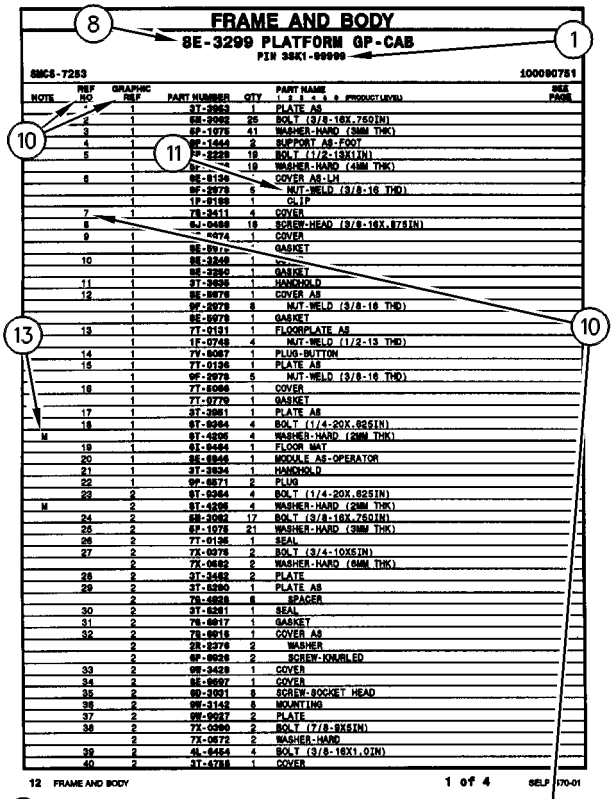

FRAME AND BODY

8E-3299 PLATFORM GP-CAB

PIN 38K1-99999

SMCS-7283 100090751

NOTE	REF NO	GRAPHIC REF	PART NUMBER	QTY	PART NAME 1 2 3 4 5 6 (PRODUCT LEVEL)	SEE PAGE
	1	1	3T-3953	1	PLATE AS	
	2	1	5B-3062	25	BOLT (3/8-16X.750IN)	
	3	1	6P-1075	41	WASHER-HARD (9MM THK)	
	4	1	9F-1444	2	SUPPORT AS-FOOT	
	5	1	7P-2229	19	BOLT (1/2-13X1IN)	
		1	6P-[illegible]	19	WASHER-HARD (4MM THK)	
	6	1	8E-8194	1	COVER AS-LH	
		1	9F-2979	5	NUT-WELD (3/8-16 THD)	
		1	1P-8199	1	CLIP	
	7	1	7S-2411	4	COVER	
	8		5J-0468	19	SCREW-HEAD (3/8-16X.875IN)	
	9	1	[illegible]-4674	1	COVER	
		1	8E-8972	1	GASKET	
	10	1	8E-3248	1	[illegible]	
		1	8E-3250	1	GASKET	
	11	1	3T-3939	1	HANDHOLD	
	12	1	8E-8978	1	COVER AS	
		1	9F-2978	8	NUT-WELD (3/8-16 THD)	
		1	8E-8979	1	GASKET	
	13	1	7T-0131	1	FLOORPLATE AS	
		1	1F-0748	4	NUT-WELD (1/2-13 THD)	
	14	1	7V-8087	1	PLUG-BUTTON	
	15	1	7T-0136	1	PLATE AS	
		1	9F-2979	5	NUT-WELD (3/8-16 THD)	
	16	1	7T-8098	1	COVER	
		1	7T-0779	1	GASKET	
	17	1	3T-3951	1	PLATE AS	
	18	1	9T-9364	4	BOLT (1/4-20X.625IN)	
M		1	9T-4205	4	WASHER-HARD (2MM THK)	
	19	1	9S-9464	1	FLOOR MAT	
	20	1	8E-8946	1	MODULE AS-OPERATOR	
	21	1	3T-3934	1	HANDHOLD	
	22	1	9P-8871	2	PLUG	
	23	2	9T-9364	4	BOLT (1/4-20X.625IN)	
M		2	9T-4205	4	WASHER-HARD (2MM THK)	
	24	2	5B-3062	17	BOLT (3/8-16X.750IN)	
	25	2	6P-1075	21	WASHER-HARD (9MM THK)	
	26	2	7T-0136	1	SEAL	
	27	2	7X-0378	2	BOLT (3/4-10X5IN)	
		2	7X-0682	2	WASHER-HARD (6MM THK)	
	28	2	3T-3482	2	PLATE	
	29	2	3T-8290	1	PLATE AS	
		2	7S-4888	6	SPACER	
	30	2	3T-8291	1	SEAL	
	31	2	7S-8817	1	GASKET	
	32	2	7S-8916	1	COVER AS	
		2	2R-2376	2	WASHER	
		2	6P-8826	2	SCREW-KNURLED	
	33	2	9W-3429	1	COVER	
	34	2	8E-9697	1	COVER	
	35	2	9D-3931	8	SCREW-SOCKET HEAD	
	36	2	9W-3142	8	MOUNTING	
	37	2	9W-9027	2	PLATE	
	38	2	7X-0360	2	BOLT (7/8-9X6IN)	
		2	7X-0672	2	WASHER-HARD	
	39	2	9L-4454	4	BOLT (3/8-16X1.0IN)	
	40	2	3T-4788	1	COVER	

12 FRAME AND BODY 1 of 4 SELP4570-01

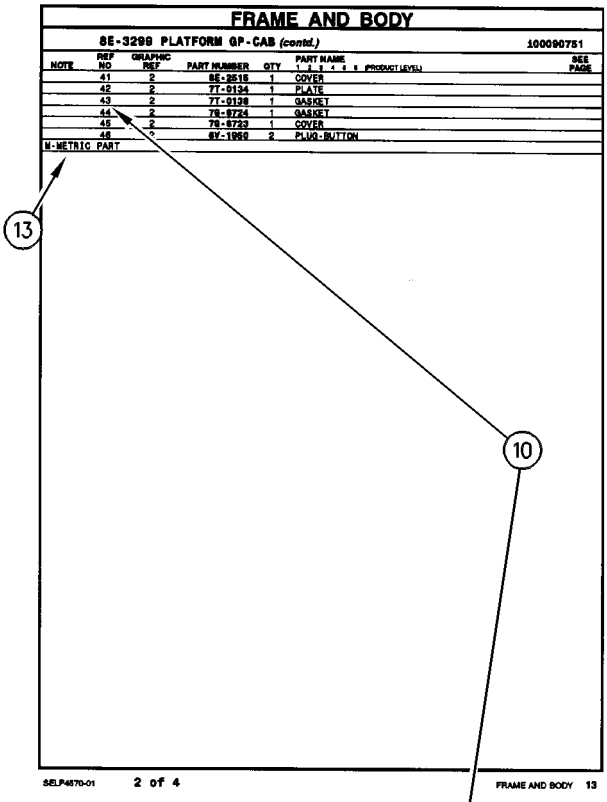

FRAME AND BODY

8E-3299 PLATFORM GP-CAB (contd.) 100090751

NOTE	REF NO	GRAPHIC REF	PART NUMBER	QTY	PART NAME 1 2 3 4 5 6 (PRODUCT LEVEL)	SEE PAGE
	41	2	8E-2515	1	COVER	
	42	2	7T-0134	1	PLATE	
	43	2	7T-0138	1	GASKET	
	44	2	7S-8724	1	GASKET	
	45	2	7S-8723	1	COVER	
	46	[illegible]	6V-1958	2	PLUG-BUTTON	
M-METRIC PART						

SELP4570-01 2 of 4 FRAME AND BODY 13

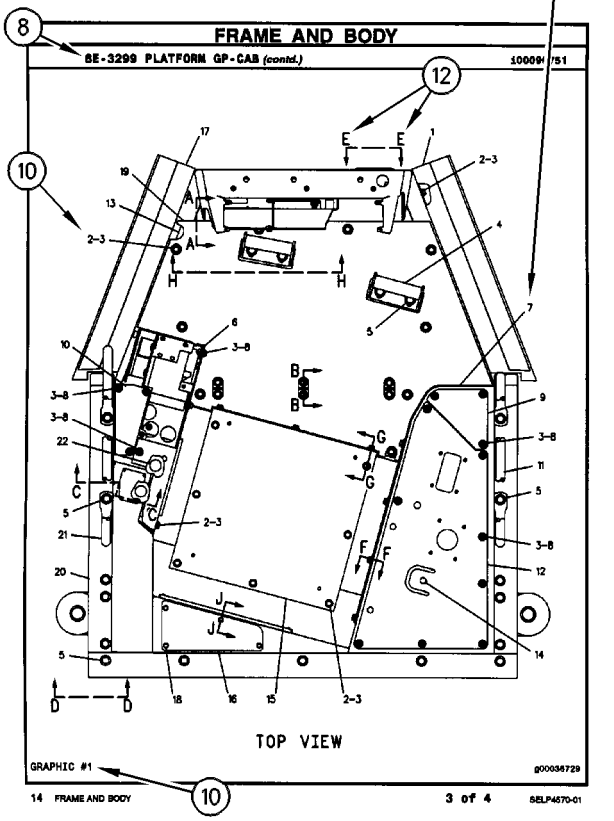

FRAME AND BODY

8E-3299 PLATFORM GP-CAB (contd.) 100090751

TOP VIEW

GRAPHIC #1 g00036729

14 FRAME AND BODY 3 of 4 SELP4570-01

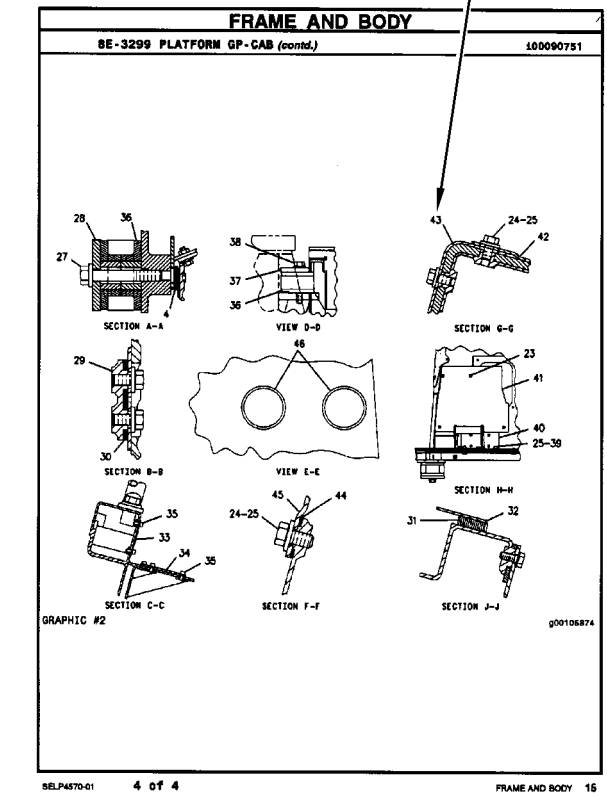

FRAME AND BODY

8E-3299 PLATFORM GP-CAB (contd.) 100090751

SECTION A-A VIEW D-D SECTION G-G

SECTION B-B VIEW E-E SECTION H-H

SECTION C-C SECTION F-F SECTION J-J

GRAPHIC #2 g00105874

SELP4570-01 4 of 4 FRAME AND BODY 16

1. IDENTIFICAZIONE DELLA MACCHINA

Le macchine Caterpillar sono identificate dal numero di informazione del prodotto (PIN). Certi componenti inclusi nella macchina possono essere identificati dal numero di serie (S/N). I componenti che normalmente hanno un numero di serie sono i motori, le trasmissioni, le lame ed i ripper. La macchina ed il motore sono anche identificati dai numeri di configurazione (arrangement) ed in qualche caso dai numeri di modifica. Questi numeri sono riportati sulla targhetta di identificazione del prodotto e nella targhetta principale nel compartimento operatore.

I concessionari Caterpillar necessitano di tutti questi numeri per assicurare l'accurata identificazione delle parti di ricambio.

A partire dal primo trimestre del 2001, il Numero di Identificazione del Prodotto Caterpillar (PIN) passerà da 8 a 17 caratteri. Nell'impegno diretto ad offrire una modalità comune di identificazione delle apparecchiature, la Caterpillar ed altri produttori di macchinari da costruzione si stanno attivando per uniformarsi all'ultima versione dello standard di numerazione per la identificazione dei prodotti. I PIN delle macchine per movimento terra sono definiti nello standard ISO 10261. Il nuovo formato del PIN verrà usato per tutte le macchine e tutti i gruppi elettrogeni Caterpillar. Le targhette con il PIN e le stampigliature sui telai riporteranno il PIN a 17 caratteri. Il nuovo formato si presenta come segue:

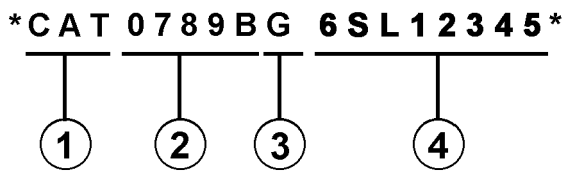

Dove:

1. è l'identificativo mondiale della produzione Caterpillar (caratteri 1-3)

2. è il descrittivo della macchina (caratteri 4-8)

3. è un carattere di controllo (character 9)

4. è la Sezione di Identificazione della Macchina (MIS) o il numero sequenziale del prodotto (caratteri 10-17). Questi caratteri costituivano in precedenza il Numero di Serie.

Le macchine ed i gruppi elettrogeni prodotti prima del primo trimestre 2001 avranno ancora il PIN nel formato ad 8 caratteri.

Gli altri componenti quali motori, trasmissioni, assali, ecc., e le attrezzature, continueranno ad usare un Numero di Serie (S/N) ad 8 caratteri.

2. ORDINAZIONE DEI RICAMBI

⚠ ATTENZIONE

Quando servono ricambi per questo prodotto, la Caterpillar raccomanda di usare ricambi originali Caterpillar o ricambi con specifiche equivalenti che comprendono, ma non si limitano a, dimensioni fisiche, tipo, resistenza e materiale.

La mancata osservanza di questa avvertenza può comportare guasti prematuri, danni al prodotto, lesioni personali o la morte.

I ricambi originali della Caterpillar sono disponibili presso i concessionari Caterpillar in tutto il mondo. I magazzini ricambi dei concessionari sono sempre aggiornati e sono provvisti di tutti i ricambi di normale consumo necessari a proteggere l'investimento fatto nelle macchine Caterpillar. Alcuni concessionari offrono anche kit di riparazione o ricambi revisionati in modo che sia possibile selezionare l'alternativa di riparazione più adatta alla particolare situazione. Nell'ordinare i ricambi occorre indicare la quantità, il numero di riferimento, la descrizione ed il numero di serie/numero di identificazione del prodotto della macchina di cui si necessitano i ricambi.

3. ORGANIZZAZIONE DEL MANUALE DEI RICAMBI

Le informazioni sul prodotto in questo manuale sono presentate come "elementi di informazione" che rappresentano tutti i componenti per il modello specifico. La configurazione (arrangement) del motore ed il Gruppo sedile sono esempi degli elementi di informazione. Gli elementi di informazione sono organizzati in ordine alfabetico per descrizione e successivamente per numero di riferimento all'interno di ciascuna sezione principale del manuale.

4. TABELLA DEI CONTENUTI

SIS *Novità*

Un indice (TOC) si trova all'inizio del manuale. Questo indice riporta ciascuna sezione del manuale con una lista completa di tutti gli elementi di informazione organizzati come appaiono nel manuale. I numeri delle pagine sono indicati per un rapido rilevamento delle illustrazioni di identificazione dettagliata delle parti e delle liste delle parti fornite.

5. INDICE DELLE PARTI DI MANUTENZIONE

L'indice delle parti di manutenzione, situato all'inizio del manuale, indica i numeri di riferimento delle parti di manutenzione più usate, le descrizioni, la quantità, l'uso ed il numero di pagina. Queste informazioni sono organizzate in ordine alfabetico per descrizione delle parti.

6. INDICE

L'indice situato vicino alla parte frontale del manuale è una lista in ordine alfabetico di tutti gli elementi di informazione inclusi in questo manuale. I numeri di pagina sono previsti per una ricerca rapida delle illustrazioni di identificazione dei ricambi e delle liste delle parti fornite.

7. INDICE DEI NUMERI DI RIFERIMENTO

Nella parte posteriore del manuale dei ricambi è riportato un indice numerico che include tutti i numeri di riferimento ed i corrispondenti numeri di pagina.

8. TITOLI

I titoli situati nella parte alta di ciascuna pagina dell'elemento di informazione identifica il numero di riferimento e la descrizione insieme alle informazioni descrittive addizionali. Le informazioni relative al PIN ed al S/N trovate in ciascun titolo devono essere usate per selezionare la corretta informazione per una macchina specifica. Sono anche indicate le opzioni di sostituzione, le identificazioni dei componenti degli accessori a richiesta e le informazioni di dove usati ("parte di").

SIS *Novità*

La prima linea di un titolo è riportata in caratteri più larghi per indicare l'inizio di un elemento di informazione. I titoli per le pagine addizionali, che possono essere necessarie per illustrare un elemento di informazione, saranno portati con caratteri standard ed includeranno il termine (continua).

9. RICAMBI NON FORNITI

SIS *Novità*

In certi casi è necessario riportare i ricambi non forniti che sono collegati ad una lista di livello inferiore di parti fornite. Questi numeri di riferimento di parti non fornite sono indicati in lettere italiche che significa che essi non sono disponibili.

10. NUMERI DI RIFERIMENTO DELLE LISTE DELLE PARTI

SIS *Novità*

I numeri mostrati nella colonna Numero di riferimento corrispondono ai numeri usati nei grafici associati. Un suffisso alfabetico può essere aggiunto ad un numero di riferimento per identificare dei componenti di livello inferiore. I numeri mostrati nella colonna Riferimento Grafico si riferiscono a degli identificatori del numero di grafico riportato all'angolo in basso a sinistra di ciascuna illustrazione. Il numero di riferimento del grafico può essere usato insieme con il numero di riferimento del componente per determinare il corretto numero di riferimento. Ci potrebbero essere delle omissioni intenzionali del Numero di riferimento in una lista poichè le informazioni sono aggiornate per riflettere i numeri di riferimento aggiornati delle parti fornibili.

11. DESCRIZIONE DEL COMPONENTE LATERALE

Quando una descrizione è riportata lateralmente in una lista, essa indica che è parte di (inclusa in) un gruppo sotto il quale è posta lateralmente.

12. LETTERE DI RIFERIMENTO DELLE ILLUSTRAZIONI

Quando necessario, le illustrazioni contengono delle lettere di riferimento (A, B, C, ecc.) che sono usate per collegare un punto ad un altro. Esse sono anche usate per mostrare dove ricollegare le illustrazioni che sono state separate.

13. ABBREVIAZIONI E SIMBOLI

O.D. – Diametro esterno
I.D. – Diametro interno
A – Non fa parte di questo gruppo
B – Usato come richiesto
C – Cambiato rispetto al tipo precedente
D – Ordinare a metro
E – Ordinare in centimetro
F – Non mostrato
G – Ordinare in pollici
I – Vedere la guida di costruzione dei tubi
M – Parte metrica
R – Potrebbe essere disponibile un componente revisionato
Y – Illustrazione separata
Z – Non fornito separatamente

NOTA

Il continuo miglioramento del disegno del prodotto può causare delle variazioni della vostra macchina che non sono incluse in questa pubblicazione. Ogni volta che esiste un dubbio relativamente alla macchina o a questa pubblicazione, rivolgersi al concessionario Caterpillar per le informazioni più aggiornate disponibili.

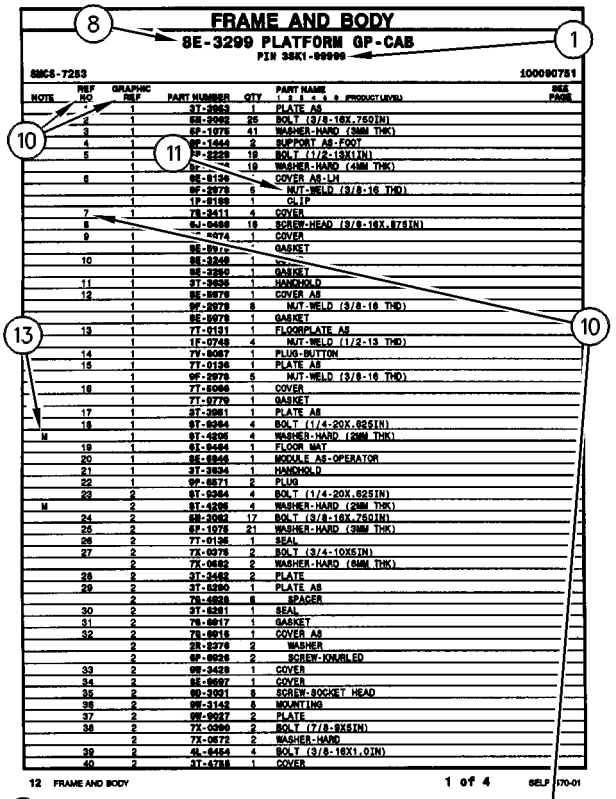

FRAME AND BODY

8E-3299 PLATFORM GP-CAB

PIN 38K1-99999

SMCS-7283 100090751

NOTE	REF NO	GRAPHIC REF	PART NUMBER	QTY	PART NAME 1 2 3 4 5 6 (PRODUCT LEVEL)	SEE PAGE
	1	1	3T-3953	1	PLATE AS	
	2	1	5B-3062	25	BOLT (3/8-16X.750IN)	
	3	1	6P-1075	41	WASHER-HARD (9MM THK)	
	4	1	9F-1444	2	SUPPORT AS-FOOT	
	5	1	5P-2329	19	BOLT (1/2-13X1IN)	
		1	6P-[illegible]	19	WASHER-HARD (4MM THK)	
	6	1	8E-8194	1	COVER AS-LH	
		1	9F-2979	5	NUT-WELD (3/8-16 THD)	
		1	1P-8199	1	CLIP	
	7	1	7S-3411	4	COVER	
	8		5J-0468	19	SCREW-HEAD (3/8-16X.875IN)	
	9	1	[illegible]474	1	COVER	
		1	8E-8972	[illegible]	GASKET	
	10	1	8E-3248	1	[illegible]	
		1	8E-3250	1	GASKET	
	11	1	3T-3939	1	HANDHOLD	
	12	1	8E-8978	1	COVER AS	
		1	9F-2978	8	NUT-WELD (3/8-16 THD)	
		1	8E-8978	1	GASKET	
	13	1	7T-0131	1	FLOORPLATE AS	
		1	1F-0748	4	NUT-WELD (1/2-13 THD)	
	14	1	7V-8087	1	PLUG-BUTTON	
	15	1	7T-0136	1	PLATE AS	
		1	9F-2979	5	NUT-WELD (3/8-16 THD)	
	16	1	7T-8098	1	COVER	
		1	7T-0779	1	GASKET	
	17	1	3T-3951	1	PLATE AS	
	18	1	9T-9364	4	BOLT (1/4-20X.625IN)	
M		1	9T-4205	4	WASHER-HARD (2MM THK)	
	19	1	9X-9464	1	FLOOR MAT	
	20	1	8E-8946	1	MODULE AS-OPERATOR	
	21	1	3T-3934	1	HANDHOLD	
	22	1	9P-8871	2	PLUG	
	23	2	9T-9364	4	BOLT (1/4-20X.625IN)	
M		2	9T-4205	4	WASHER-HARD (2MM THK)	
	24	2	5B-3062	17	BOLT (3/8-16X.750IN)	
	25	2	6P-1075	21	WASHER-HARD (9MM THK)	
	26	2	7T-0136	1	SEAL	
	27	2	7X-0378	2	BOLT (3/4-10X5IN)	
		2	7X-0682	2	WASHER-HARD (6MM THK)	
	28	2	3T-3482	2	PLATE	
	29	2	3T-8290	1	PLATE AS	
		2	7S-4898	6	SPACER	
	30	2	3T-8291	1	SEAL	
	31	2	7S-8017	1	GASKET	
	32	2	7S-8016	1	COVER AS	
		2	2R-2376	2	WASHER	
		2	6P-8026	2	SCREW-KNURLED	
	33	2	9W-3429	1	COVER	
	34	2	8E-9697	1	COVER	
	35	2	9D-3091	8	SCREW-SOCKET HEAD	
	36	2	9W-3142	8	MOUNTING	
	37	2	9W-9027	2	PLATE	
	38	2	7X-0360	2	BOLT (7/8-9X5IN)	
		2	7X-0672	2	WASHER-HARD	
	39	2	9L-4454	4	BOLT (3/8-16X1.0IN)	
	40	2	3T-4788	1	COVER	

12 FRAME AND BODY 1 of 4 SELP4570-01

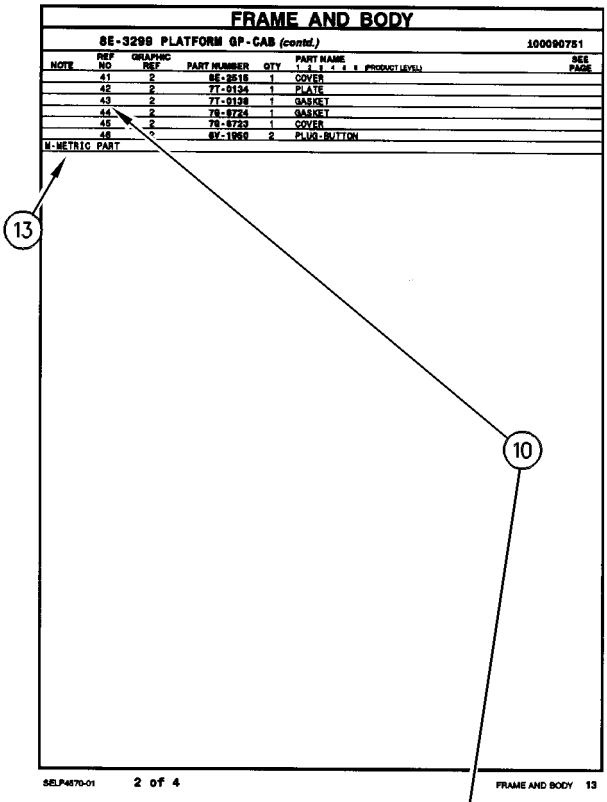

FRAME AND BODY

8E-3299 PLATFORM GP-CAB (contd.) 100090751

NOTE	REF NO	GRAPHIC REF	PART NUMBER	QTY	PART NAME 1 2 3 4 5 6 (PRODUCT LEVEL)	SEE PAGE
	41	2	8E-2515	1	COVER	
	42	2	7T-0134	1	PLATE	
	43	2	7T-0138	1	GASKET	
	44	2	7S-8724	1	GASKET	
	45	2	7S-8723	1	COVER	
	46	[illegible]	6V-1958	2	PLUG-BUTTON	
M-METRIC PART						

SELP4570-01 2 of 4 FRAME AND BODY 13

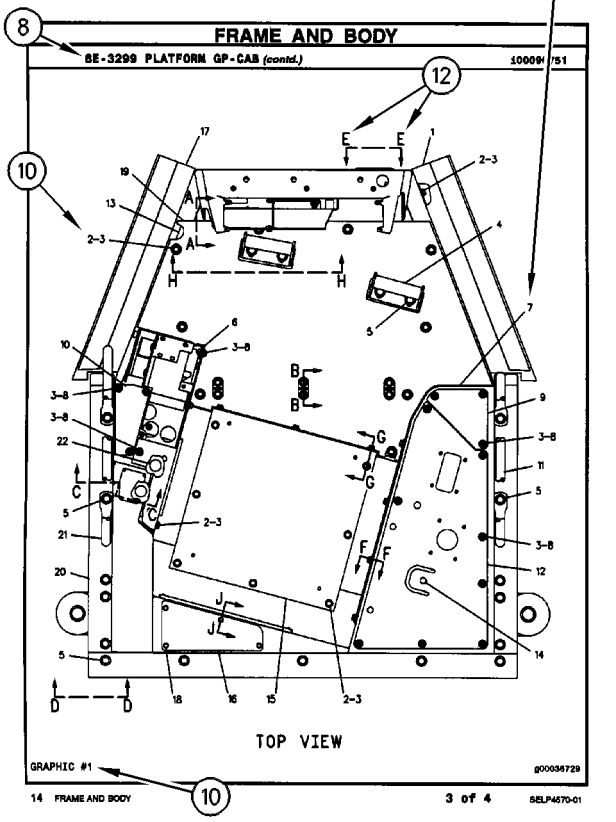

FRAME AND BODY

8E-3299 PLATFORM GP-CAB (contd.) 100090751

TOP VIEW

GRAPHIC #1 g00036729

14 FRAME AND BODY 3 of 4 SELP4570-01

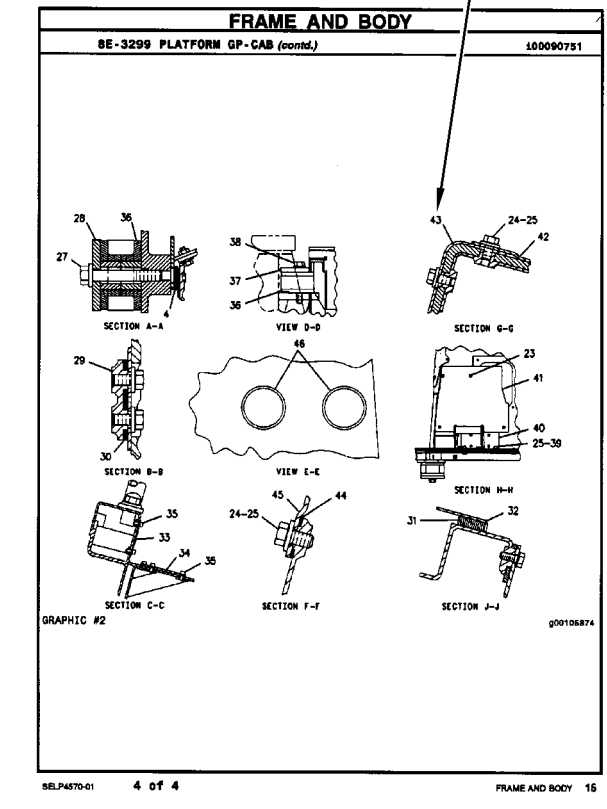

FRAME AND BODY

8E-3299 PLATFORM GP-CAB (contd.) 100090751

SECTION A-A VIEW D-D SECTION G-G

SECTION B-B VIEW E-E SECTION H-H

SECTION C-C SECTION F-F SECTION J-J

GRAPHIC #2 g00105874

SELP4570-01 4 of 4 FRAME AND BODY 16

REMANUFACTURED COMPONENTS

As an option when making repairs consider Caterpillar Remanufactured Components. Components that are available through the Caterpillar Remanufactured Program are identified three ways in the parts book:

- with the letter R in the note field of the parts list
- with an R* at the beginning of the first line of the caption
- with an *R at the end of the first line of the caption

Typical components included in the Remanufacturing Program include:

ALTERNATORS
CONNECTING RODS
CRANKSHAFTS - UNDERSIZE
CRANKSHAFTS - UPGRADE TO NEW
CYLINDER HEADS
ELECTRONIC CONTROL MODULES (ECM)
ELECTRONIC SENSORS
FUEL INJECTORS
FUEL NOZZLES
FUEL PUMPS
GOVERNORS
OIL PUMPS
PISTONS
SHORT BLOCKS
STARTERS
TURBOCHARGERS - COMPLETE
TURBOCHARGER CARTRIDGES
WATER PUMPS

Caterpillar Remanufactured engines for many engine arrangements are also available.

OPTIONS DE RÉPARATION

COMPOSANTS RÉNOVÉS

Comme option de réparation, considérer les composants rénovés Caterpillar. Les composants disponibles dans le cadre du programme Caterpillar de composants rénovés sont identifiés de trois façons dans le catalogue de pièces:

- avec la lettre "R" dans l'espace note de la liste des pièces
- avec R* au début de la première ligne des légendes
- avec *R à la fin de la première ligne des légendes

Les composants suivants figurent parmi les composants typiques du programme de rénovation:

ALTERNATEURS
BIELLES
VILEBREQUINS - SOUS-DIMENSIONNÉS
VILEBREQUINS - REMIS À NEUF
CULASSES
MODULES DE COMMANDE ÉLECTRONIQUE (ECM)
CAPTEURS ÉLECTRONIQUES
INJECTEURS
TÊTES D'INJECTEURS
POMPES À CARBURANT
RÉGULATEURS
POMPES À HUILE
PISTONS
BLOCS EMBIELLÉS
DÉMARREURS
TURBOCOMPRESSEURS - COMPLETS
CARTOUCHES DE TURBOCOMPRESSEUR
POMPES À EAU

Des moteurs rénovés sont aussi disponibles pour plusieurs versions de moteur.

COMPONENTES REMANUFACTURADOS

Al hacer reparaciones, tenga en cuenta la opción de Componentes Remanufacturados Caterpillar. Los componentes que están disponibles por medio del programa de Productos Remanufacturados Caterpillar se identifican de tres maneras en el manual de piezas:

- con la letra R en el espacio de Nota de la lista de piezas
- con una R* al comienzo de la primera línea de la leyenda
- con una *R al final de la primera línea de la leyenda

Los componentes que se incluyen típicamente en el Programa de Productos Remanufacturados son:

ALTERNADORES
BIELAS
CIGÜEÑALES - BAJOMEDIDA
CIGÜEÑALES - REMANUFACTURADOS A NUEVO
CULATAS
MÓDULOS DE CONTROL ELECTRÓNICO (ECM)
SENSORES ELECTRONICOS
INYECTORES
BOQUILLAS
BOMBAS DE COMBUSTIBLE
REGULADORES
BOMBAS DE ACEITE
PISTONES
MONOBLOQUES
MOTORES DE ARRANQUE
TURBOCOMPRESORES - COMPLETOS
NÚCLEOS DE TURBOCOMPRESOR
BOMBAS DE AGUA

También hay disponibles motores Remanufacturados Caterpillar para muchas de las configuraciones de motores.

ALTERNATIVAS DE REPARO

COMPONENTES REMANUFATURADOS

Considere o uso de Componentes Remanufaturados Caterpillar ao efetuar reparos. Os componentes disponíveis através do Programa de Remanufatura Caterpillar são identificados de três formas no manual de peças:

- com um R na área da nota da lista de peças
- com um R* no princípio da primeira linha da legenda
- com um *R no final da primeira linha da legenda

Os componentes típicos que constam no Programa de Remanufatura incluem:

ALTERNADORES
BIELAS
VIRABREQUINS - SUBMEDIDAS
VIRABREQUINS - ATUALIZAÇÃO
CABEÇOTES
MÓDULOS DE CONTROLE ELETRÔNICO (ECM)
SENSORES ELETRÔNICOS
INJETORES DE COMBUSTÍVEL
BICOS DE ABASTECIMENTO DE COMBUSTÍVEL
BOMBAS DE COMBUSTÍVEL
GOVERNADORES
BOMBAS DE ÓLEO
PISTÕES
BLOCOS BÁSICOS DO MOTOR
MOTORES DE PARTIDA
TURBOALIMENTADORES - COMPLETOS
CARTUCHOS DE TURBOALIMENTADORES
BOMBAS D'ÁGUA

Motores Remanufaturados Caterpillar também encontram-se disponíveis para diversos arranjos de motor.

WERKÜBERHOLTE AT-PRODUKTE

Bei Reparaturen sollten werküberholte AT-Produkte von Caterpillar in Betracht gezogen werden. Die durch das AT-Programm von Caterpillar erhältlichen Teile sind im Parts Book auf drei verschiedene Arten gekennzeichnet:

- mit dem Buchstaben R in der Spalte NOTE der Ersatzteilliste
- mit einem R* am Anfang der ersten Zeile der Überschrift
- mit einem *R am Ende der ersten Zeile der Überschrift

Das AT-Programm umfaßt u.a. folgende Produkte:

DREHSTROMGENERATOREN
PLEUELSTANGEN
KURBELWELLEN - MIT UNTERMASS
KURBELWELLEN - MIT ORIGINALMASS
ZYLINDERKÖPFE
ELEKTRONISCHE STEUEREINHEITEN (EMC)
ELEKTRONISCHE SENSOREN
PUMPENDÜSEN
EINSPRITZDÜSEN
KRAFTSTOFFPUMPEN
DREHZAHLREGLER
ÖLPUMPEN
KOLBEN
TEILMOTOREN
ANLASSER
TURBOLADER - KOMPLETT
TURBOLADERLAUFZEUGE
KÜHLWASSERPUMPEN

Viele Motoren können durch werküberholte AT-Motoren von Caterpillar ersetzt werden.

COMPONENTI RICOSTRUITI

Come opzione di riparazione, considerare i componenti Caterpillar rifabbricati. I componenti disponibili tramite il programma di ricostruzione Caterpillar sono contrassegnati in tre modi diversi nel libro dei ricambi:

- mediante la lettera R nel settore delle note dell'elenco dei ricambi
- mediante la lettera R* all'inizio della prima riga della leggenda
- mediante la lettera *R alla fine della prima riga della leggenda

Tra i componenti tipici inclusi nel programma di rifabbricazione ci sono:

ALTERNATORI
BIELLE
ALBERI A GOMITO - MINORATI
ALBERI A GOMITO - RIPRISTINATI A NUOVO
TESTATE MOTORE
MODULI DI COMANDO ELETTRONICI (ECM)
SENSORI ELETTRONICI
INIETTORI DI COMBUSTIBILE
UGELLI PER COMBUSTIBILE
POMPE PER COMBUSTIBILE
REGOLATORI
POMPE OLIO
PISTONI
MONOBLOCCHI CORTI
MOTORINI DI AVVIAMENTO
TURBOCOMPRESSORI - COMPLETI
CARTUCCE DI TURBOCOMPRESSORI
POMPE ACQUA

I motori Caterpillar rifabbricati sono ora disponibili per molte versioni di motori.

SUPPLEMENTAL COOLANT ADDITIVES

CUSTOMER BENEFITS:

Protects against cavitation, foam, erosion, corrosion, and scale buildup in cooling systems.

- Provides measured coolant conditioner.

DESCRIPTION:

Additives deplete from the coolant with normal operation. For this reason, Supplemental Coolant Additives (SCA) must be added to all heavy duty coolants at regular intervals. In addition, when not using a fully formulated, pre-charged antifreeze, like Caterpillar's DEAC, an initial charge of SCA must be added to the cooling system. The amount of SCA added to the system is dependent on the capacity of the system.

The SCA for initial fill is provided as a liquid. SCA's for maintenance intervals are available in liquid form and as a spin-on element. (No Spin-on available for 3600 Family of Engines)

NOTE:

The amount of SCA added at initial fill is not the same as the amount added at maintenance intervals.

The coolant additive elements can be used with any ethylene or propylene glycol type antifreeze which meets ASTM D4985 or ASTM D5345 Specifications.

NOTE:

For use with standard heavy duty coolant only, not for use with Extended Life Coolant.

PARTS NEEDED:

Cooling System Capacity		Liquid SCA at Initial Fill	Liquid SCA at Maintenance*	Spin-on SCA Maintenance Element*
Liters	Gallons			
22-30	(6-8)	3P-2044 (1)	6V-3542 (1)	111-2370 (1)
30-38	(8-10)	3P-2044 (1) 6V-3542 (1)	111-2372 (1)	111-2369 (1)
38-49	(10-13)	3P-2044 (1) 8T-1589 (1)	111-2372 (1)	111-2369 (1)
49-64	(13-17)	3P-2044 (2)	8T-1589 (1)	9N-3368 (1)
64-83	(17-22)	3P-2044 (2) 8T-1589 (1)	111-2372 (1) 6V-3542 (1)	111-2371 (1)
83-114	(22-30)	3P-2044 (3) 8T-1589 (1)	3P-2044 (1)	9N-3718 (1)
114-163	(30-43)	3P-2044 (5)	3P-2044 (1) 6V-3542 (1)	111-2371 (2)
163-242	(43-64)	3P-2044 (8)	3P-2044 (2)	9N-3718 (2)

** Normal maintenance period is 250 hrs. See your Operation and Maintenance Manual for complete coolant maintenance instructions.*

( ) Indicates quantity required.

ADDITIFS POUR LIQUIDE DE REFROIDISSEMENT

AVANTAGES POUR LE CLIENT

L'additif protège contre la cavitation, la mousse, l'érosion, la corrosion et l'accumulation de dépôts dans le circuit de refroidissement.

- L'additif complémentaire fournit une quantité mesurée d'additif.

DESCRIPTION:

Les additifs s'épuisent pendant l'utilisation du moteur. C'est pourquoi l'on doit ajouter de l'additif au liquide de refroidissement/antigel pour moteurs diesel à intervalles réguliers. En plus, si l'on n'utilise pas de l'antigel entièrement formulé et pré-chargé comme le liquide de refroidissement/antigel Caterpillar pour moteurs diesel, une quantité initiale d'additif doit être ajoutée au circuit de refroidissement. La quantité d'additif à ajouter au circuit dépend de la contenance du circuit.

L'additif pour le remplissage initial est fourni sous forme liquide. L'additif pour l'entretien ultérieur est disponible sous forme liquide et sous forme d'élément à visser. (Il n'y a pas d'élément à visser pour les moteurs de la famille 3600).

NOTA:

La quantité d'additif à ajouter au remplissage initial diffère de la quantité à ajouter aux intervalles d'entretien.

Les éléments d'additif peuvent être utilisés avec tout antigel de type éthylène ou propylène-glycol conforme à la norme ASTM D4985 ou ASTM D5345.

NOTA:

A utiliser uniquement avec du liquide de refroidissement pour moteurs diesel et non avec le liquide de refroidissement longue durée.

PIÈCES NÉCESSAIRES:

Contenance du circuit de refroidissement		Additif liquide au remplissage initial	Additif liquide aux intervalles d'entretien*	Elément d'additif à visser aux intervalles d'entretien*
Litres	Gallons U.S.			
22-30	(6-8)	3P-2044 (1)	6V-3542 (1)	111-2370 (1)
30-38	(8-10)	3P-2044 (1) 6V-3542 (1)	111-2372 (1)	111-2369 (1)
38-49	(10-13)	3P-2044 (1) 8T-1589 (1)	111-2372 (1)	111-2369 (1)
49-64	(13-17)	3P-2044 (2)	8T-1589 (1)	9N-3368 (1)
64-83	(17-22)	3P-2044 (2) 8T-1589 (1)	111-2372 (1) 6V-3542 (1)	111-2371 (1)
83-114	(22-30)	3P-2044 (3) 8T-1589 (1)	3P-2044 (1)	9N-3718 (1)
114-163	(30-43)	3P-2044 (5)	3P-2044 (1) 6V-3542 (1)	111-2371 (2)
163-242	(43-64)	3P-2044 (8)	3P-2044 (2)	9N-3718 (2)

** L'intervalle d'entretien normal est de 250 heures-service. Voir le Guide d'utilisation et d'entretien pour de plus amples renseignements concernant l'entretien du circuit de refroidissement.*

( ) Indique la quantité exigée.

ADITIVOS DE REFRIGERANTE SUPLEMENTARIOS

VENTAJAS PARA EL USUARIO:

Protegen contra la cavitación, la formación de espuma, la corrosión y la acumulación de escamas en los sistemas de enfriamiento.

- Suministra un acondicionador dosificado de refrigerante.

DESCRIPCIÓN:

Los aditivos en el refrigerante se agotan con la operación normal. Por esta razón, se debe agregar Aditivo de refrigerante suplementario (SCA) a todos los refrigerantes para servicio pesado, a intervalos regulares. Además, cuando no se usa un anticongelante de precarga completo, tal como el DEAC de Caterpillar, es necesario agregar una cantidad de aditivo de refrigerante suplementario inicial al sistema de enfriamiento. La cantidad de aditivo que se debe agregar depende de la capacidad del sistema.

El SCA de llenado inicial es líquido. El que se usa para el mantenimiento está disponible tanto en líquido como en un elemento enroscable. (No hay elemento enroscable disponible para la Familia de Motores 3600).

NOTA:

La cantidad de aditivo de llenado inicial no es la misma que se agrega en los intervalos de mantenimiento.

Los elementos de aditivo de refrigerante se pueden usar con cualquier anticongelante de tipo glicol etilénico o propílico que esté de acuerdo con las especificaciones de las normas ASTM D4985 o ASTM D5345.

NOTA:

Se debe utilizar únicamente con refrigerante estándar para servicio pesado; no se debe usar con Refrigerante de Larga Duración.

PIEZAS NECESARIAS:

Capacidad del Sistema de Enfriamiento		SCA líquido de llenado inicial	SCA líquido de mantenimiento*	Elemento de mantenimiento enroscable*
litros	gal EE.UU.			
22-30	6-8	3P-2044 (1)	6V-3542 (1)	111-2370 (1)
30-38	8-10	3P-2044 (1) 6V-3542 (1)	111-2372 (1)	111-2369 (1)
38-49	10-13	3P-2044 (1) 8T-1589 (1)	111-2372 (1)	111-2369 (1)
49-64	13-17	3P-2044 (2)	8T-1589 (1)	9N-3368 (1)
64-83	17-22	3P-2044 (2) 8T-1589 (1)	111-2372 (1) 6V-3542 (1)	111-2371 (1)
83-114	22-30	3P-2044 (3) 8T-1589 (1)	3P-2044 (1)	9N-3718 (1)
114-163	30-43	3P-2044 (5)	3P-2044 (1) 6V-3542 (1)	111-2371 (2)
163-242	43-64	3P-2044 (8)	3P-2044 (2)	9N-3718 (2)

** El período normal de mantenimiento es de 250 horas. Para ver las instrucciones completas sobre el mantenimiento del refrigerante, consulte el Manual de Operación y Mantenimiento.*

( ) Indica la cantidad necesaria.

ADITIVOS SUPLEMENTARES DO LÍQUIDO ARREFECEDOR

BENEFÍCIOS PARA O CLIENTE:

Protege contra cavitação, espuma, erosão, corrosão e acúmulo de crostas nos sistemas de arrefecimento.

- Fornece uma quantidade pré-determinada de condicionador de arrefecimento.

DESCRIÇÃO:

Com a operação normal, os aditivos se esgotam do líquido arrefecedor. Por isso, Aditivos Suplementares do Líquido Arrefecedor (SCA) devem ser acrescentados a todos os líquidos arrefecedores para serviço pesado em intervalos regulares. Além disso, quando um anticongelante pré-carregado, totalmente formulado não for usado, como o DEAC Caterpillar, uma carga inicial de SCA deve ser acrescentada ao sistema de arrefecimento. A quantidade de SCA acrescentada ao sistema depende da capacidade do sistema.

O SCA para abastecimento inicial é fornecido em forma de líquido. Os aditivos suplementares (SCA) para intervalos de manutenção estão à disposição em forma líquida e como um elemento com roscas. (Exceto os Motores da Família 3600)

NOTA:

A quantidade de SCA adicionada no abastecimento inicial não é a mesma que a acrescentada nos intervalos de manutenção.

Os elementos do aditivo do líquido arrefecedor podem ser usados com qualquer tipo de anticongelante etileno ou propileno que satisfaz as Especificações ASTM D4985 ou ASTM D5345.

NOTA:

Para uso apenas com líquido arrefecedor para serviço pesado padrão, não deve ser usado com Líquido Arrefecedor de Vida Longa.

PEÇAS NECESSÁRIAS:

Capacidade do Sistema de Arrefecimento		Líquido SCA Durante Abastecimento Inicial	Líquido SCA Durante Manutenção*	Elemento de Manutenção de SCA com Roscas*
Litros	Galões			
22-30	6-8	3P-2044 (1)	6V-3542 (1)	111-2370 (1)
30-38	8-10	3P-2044 (1) 6V-3542 (1)	111-2372 (1)	111-2369 (1)
38-49	10-13	3P-2044 (1) 8T-1589 (1)	111-2372 (1)	111-2369 (1)
49-64	13-17	3P-2044 (2)	8T-1589 (1)	9N-3368 (1)
64-83	17-22	3P-2044 (2) 8T-1589 (1)	111-2372 (1) 6V-3542 (1)	111-2371 (1)
83-114	22-30	3P-2044 (3) 8T-1589 (1)	3P-2044 (1)	9N-3718 (1)
114-163	30-43	3P-2044 (5)	3P-2044 (1) 6V-3542 (1)	111-2371 (2)
163-242	43-64	3P-2044 (8)	3P-2044 (2)	9N-3718 (2)

** O período normal de manutenção é de 250 horas. Consulte o Manual de Operação e Manutenção para obter instruções completas quanto à manutenção do líquido arrefecedor.*

( ) Indica a quantidade exigida.

KÜHLMITTELZUSATZ

VORTEILE FÜR DEN KUNDEN:

Schutz gegen Kavitation, Schaumbildung, Erosion, Korrosion und Kesselsteinbildung in Kühlsystemen.

- Richtig dosierter Kühlmittelzusatz

BESCHREIBUNG:

Additive erschöpfen sich während des Motorbetriebs. Deshalb muß allen HD-Kühlmitteln regelmäßig Kühlmittelzusatz beigefügt werden. Wenn bei Erstfüllung kein vollwertiges Fertigkühlmittel, wie das Frostschutz- und Kühlmittel für Dieselmotoren von Caterpiller (DEAC), verwendet wird, muß bei Erstfüllung Kühlmittelzusatz beigefügt werden. Wieviel Kühlmittelzusatz beigefügt werden muß, hängt vom Inhalt des Kühlsystems ab.

Für Erstfüllung ist Kühlmittelzusatz nur in flüssiger Form erhältlich. Für Wartungsintervalle ist Kühlmittelzusatz in flüssiger Form und als Zusatzelement erhältlich. (Für die Motorbaureihe 3600 sind keine Zusatzelemente erhältlich.)

ANMERKUNG:

Die Kühlmittelmenge bei Erstfüllung ist nicht die gleiche Menge, die bei Wartungsintervallen beigefügt werden muß.

Die Kühlmittelzusatzelemente können mit allen Frostschutzmitteln auf Ethylen- oder Propylenglykolbasis verwendet werden, die den Standards nach ASTM D4985 oder ASTM D5345 entsprechen.

ANMERKUNG:

Den Kühlmittelzusatz nicht mit Langzeitkühlmittel (ELC) von Caterpillar verwenden. Der Kühlmittelzusatz ist nur für HD-Kühlmittel bestimmt.

TEILEBEZEICHNUNG:

Kühlsysteminhalt		Kühlmittelzusatz bei Erstfüllung	Flüssiger Kühlmittelzusatz bei Wartung*	Kühlmittelzusatzelement bei Wartung*
Liter	US-Gall.			
22-30	(6-8)	3P-2044 (1)	6V-3542 (1)	111-2370 (1)
30-38	(8-10)	3P-2044 (1) 6V-3542 (1)	111-2372 (1)	111-2369 (1)
38-49	(10-13)	3P-2044 (1) 8T-1589 (1)	111-2372 (1)	111-2369 (1)
49-64	(13-17)	3P-2044 (2)	8T-1589 (1)	9N-3368 (1)
64-83	(17-22)	3P-2044 (2) 8T-1589 (1)	111-2372 (1) 6V-3542 (1)	111-2371 (1)
83-114	(22-30)	3P-2044 (3) 8T-1589 (1)	3P-2044 (1)	9N-3718 (1)
114-163	(30-43)	3P-2044 (5)	3P-2044 (1) 6V-3542 (1)	111-2371 (2)
163-242	(43-64)	3P-2044 (8)	3P-2044 (2)	9N-3718 (2)

** Der normale Wartungsintervall beträgt 250 Betriebsstunden. Für vollständige Anweisungen zur Wartung des Kühlsystems, siehe Betriebs- und Wartungshandbuch.*

( ) Erforderliche Anzahl

ADDITIVI SUPPLEMENTARI PER LIQ. DI RAFFREDDAMENTO

VANTAGGI PER IL CLIENTE

Protegge contro la cavitazione, la schiuma, la corrosione e l'accumulo di scorie negli impianti di raffreddamento.

- Fornisce un inibitore del liquido di raffreddamento dosato.

DESCRIZIONE

Gli additivi nel liquido di raffreddamento si esauriscono con il normale uso. Perciò gli additivi supplementari del liquido di raffreddamento (supplemental coolant additives - SCA) devono essere aggiunti a tutti i liquidi di raffreddamento per impieghi gravosi ad intervalli regolari. Inoltre, se non si utilizza un antigelo a piena formula e precaricato, come l'antigelo Caterpillar DEAC, occorre aggiungere una carica iniziale di SCA all'impianto di raffreddamento. La quantità di SCA da aggiungere all'impianto dipende dalla capienza dell'impianto stesso.

Il prodotto SCA per il riempimento iniziale viene fornito in forma liquida e come elemento per la manutenzione periodica (elemento avvitabile non disponibile per i motori serie 3600).

NOTA:

La quantità iniziale di SCA al riempimento iniziale non è la stessa aggiunta durante la manutenzione periodica.

Gli elementi di additivo del liquido di raffreddamento possono essere utilizzati con qualsiasi tipo di antigelo al glicole di etilene o di propilene che sia conforme alle specifiche ASTM D4985 o ASTM D5345.

NOTA:

Da utilizzare solamente con liquido di raffreddamento per impieghi gravosi standard. Non deve essere utilizzato con il liquido di raffreddamento a lunga durata (Extended Life Coolant).

QUANTITÀ OCCORRENTI

Capacità del circuito di raffreddamento		SCA liquido - riempimento iniziale	SCA liquido alla manutenzione*	Elemento SCA di manutenzione*
Litri	Galloni			
22-30	(6-8)	3P-2044 (1)	6V-3542 (1)	111-2370 (1)
30-38	(8-10)	3P-2044 (1) 6V-3542 (1)	111-2372 (1)	111-2369 (1)
38-49	(10-13)	3P-2044 (1) 8T-1589 (1)	111-2372 (1)	111-2369 (1)
49-64	(13-17)	3P-2044 (2)	8T-1589 (1)	9N-3368 (1)
64-83	(17-22)	3P-2044 (2) 8T-1589 (1)	111-2372 (1) 6V-3542 (1)	111-2371 (1)
83-114	(22-30)	3P-2044 (3) 8T-1589 (1)	3P-2044 (1)	9N-3718 (1)
114-163	(30-43)	3P-2044 (5)	3P-2044 (1) 6V-3542 (1)	111-2371 (2)
163-242	(43-64)	3P-2044 (8)	3P-2044 (2)	9N-3718 (2)

** L'intervallo normale di manutenzione è ogni 250 ore. Consultare il manuale d'uso e manutenzione (Operation and Maintenance Manual) per le complete istruzioni sulla manutenzione riguardanti il liquido di raffreddamento.*

( ) Indica la quantità necessaria.

MAINTENANCE PARTS

DESCRIPTION	PART NUMBER	QTY	WHERE USED	PAGE
AIR INLET AND EXHAUST SYSTEM				
ELEMENT AS (PRIMARY)	134-8726	1	AIR CLEANER GP	94
		1	AIR CLEANER GP	95
ELEMENT AS (SECONDARY)	140-2334	1	AIR CLEANER GP	94
		1	AIR CLEANER GP	95
INDICATOR-AIR (FILTER SERVICE)	150-5030	1	LINES GP-AIR	96
VALVE-VACUATOR	112-9717	1	AIR CLEANER GP	94
		1	AIR CLEANER GP	95
BASIC ENGINE				
CAP-DUST	8C-3445	1	DRAIN GP-ENGINE OIL	30
		1	DRAIN GP-ENGINE OIL	31
CAP-OIL	170-7666	1	COVER GP-VALVE MECHANISM	14
CAP-OIL FILLER	217-7358	1	PAN GP-OIL	54
FILTER-OIL	150-4140	1	PAN GP-OIL	54
GASKET (VALVE BRACKET)	217-2752	1	VALVE MECHANISM GP	65
GASKET-VALVE COVER	159-0082	1	COVER GP-VALVE MECHANISM	14
GAUZE	153-5939	1	COVER GP-VALVE MECHANISM	16
HOSE (FUMES DISPOSAL)	153-0104	1	COVER GP-VALVE MECHANISM	14
PLUG-OIL	165-3605	1	PAN GP-OIL	54
SEAL	153-5933	1	PAN GP-OIL	54
VALVE-DRAIN	144-9961	1	PAN GP-OIL	54
	170-7614	1	PAN GP-OIL	52
WASHER	153-6832	2	PAN GP-OIL	54
COOLING SYSTEM				
CAP AS-RADIATOR	036-1865	1	RADIATOR & HYD OIL COOLER GP	80
	126-5027	1	RADIATOR & HYD OIL COOLER GP	78
CAP-VENTED	169-6715	1	RADIATOR & HYD OIL COOLER GP	82
		1	RADIATOR & HYD OIL COOLER GP	84
		1	RADIATOR & OIL COOLER MTG GP	86
		1	RADIATOR & OIL COOLER MTG GP	90
COCK	153-5967	1	PUMP GP-WATER	76
GASKET	198-8555	1	CONNECTION GP-WATER	68
GASKET-COVER	154-1828	1	PUMP GP-WATER	76
HOSE	142-8867	1	RADIATOR & HYD OIL COOLER GP	84
		1	RADIATOR & OIL COOLER MTG GP	86
		1	RADIATOR & OIL COOLER MTG GP	90
	142-8868	1	RADIATOR & HYD OIL COOLER GP	84
		1	RADIATOR & OIL COOLER MTG GP	86
		1	RADIATOR & OIL COOLER MTG GP	90
REGULATOR-WATER TEMPERATURE	4W-8063	1	PUMP GP-WATER	73
	154-1826	1	PUMP GP-WATER	76

MAINTENANCE PARTS

DESCRIPTION	PART NUMBER	QTY	WHERE USED	PAGE
ELECTRICAL AND STARTING SYSTEM				
BATTERY (12 VOLT)	9X-5408	1	BATTERY GP	141
	153-5656	1	BATTERY GP	140
BELT-DRIVE	9X-8139	1	LAMP GP-WARNING BEACON	160
CAP AS-DUST	133-6517	1	HEATER GP-JACKET WATER	150
		1	HEATER GP-JACKET WATER	151
CIRCUIT BREAKER AS (30 AMP)	147-1773	1	WIRING GP-CHASSIS	190
FUSE (10 AMP)	113-8490	1	WARNING GP-BACKUP	184
		9	WIRING GP-CAB	186
FUSE (15 AMP)	113-8491	2	WIRING GP-CAB	186
		2	WIRING GP-WORK TOOL	198
		2	WIRING GP-WORK TOOL	200
		2	WIRING GP-WORK TOOL	202
LAMP GP-HEAD & SIGNAL	3E-7584	2	LIGHTING GP-ROADING	166
		2	LIGHTING GP-ROADING	170
LAMP-HEAD (12 VOLT)	9W-3324	1	LAMP GP-HEAD & SIGNAL	154
LAMP (12 V) (TURN)	9W-3326	1	LAMP GP-SIGNAL	157
LAMP (12 VOLT)	9X-8118	1	LAMP GP-WARNING BEACON	160
	084-4348	1	LAMP GP-STOP & TAIL	158
	189-3610	2	LAMP GP-PANEL ILLUMINATION	156
LAMP (12 VOLT)(55 WATT)	9W-0607	1	LAMP GP-FLOOD	152
		1	LAMP GP-FLOOD	153
LAMP (12V)	100-3246	1	LAMP GP-HEAD & SIGNAL	154
LAMP (12V) (SIGNAL)	5G-3244	1	LAMP GP-HEAD & SIGNAL	154
LAMP (12V) (STOP AND TAIL)	084-4348	1	LAMP GP-SIGNAL	157
LENS	146-2438	1	LAMP GP-SIGNAL	157
	165-4895	1	LAMP GP-STOP & TAIL	158
LENS-AMBER	9X-8121	1	LAMP GP-WARNING BEACON	160
	100-3250	1	LAMP GP-HEAD & SIGNAL	154
LENS AS	100-3248	1	LAMP GP-HEAD & SIGNAL	154
PLUG-GLOW	172-4585	4	GLOW PLUG GP	148
	177-7559	4	GLOW PLUG GP	147
PULLER-MINIFUSE	116-7471	1	COVER GP-FUSE PANEL	145
REFLECTOR	9R-1499	2	LIGHTING GP-REAR	163
RELAY AS	146-4323	2	WIRING GP-CAB	186
		2	WIRING GP-WORK TOOL	198
		2	WIRING GP-WORK TOOL	200
		2	WIRING GP-WORK TOOL	202
V-BELT	5L-3834	1	ALTERNATOR GP-CHARGING	136
FRAME AND BODY				
BREATHER	9G-5127	2	FRAME GP-LOADER	270
	124-2831	2	FRAME GP-LOADER	272
FITTING-GREASE (1/8-27 THD)	3B-8488	2	FRAME GP-LOADER	270
	3B-8489	1	FRAME GP-BLADE	268
PLUG-MAGNETIC	3S-9182	5	FRAME GP-LOADER	270
		5	FRAME GP-LOADER	272
REFLECTOR	9R-1499	2	MOUNTING GP-ROADING LIGHTS	278

MAINTENANCE PARTS

DESCRIPTION	PART NUMBER	QTY	WHERE USED	PAGE
FUEL SYSTEM				
CAP AS-FUEL	142-8828	1	LINES GP-FUEL	120
		1	LINES GP-FUEL	122
		1	LINES GP-FUEL	124
		1	LINES GP-FUEL	126
FILTER ELEMENT AS-FUEL	159-6102	1	FILTER GP-FUEL	114
FILTER ELEMENT-FUEL	156-1200	1	FILTER GP-WATER SEP & FUEL	116
FILTER ELEMENT-WATER	131-1812	1	SEPARATOR GP-WATER	135
FILTER GP-FUEL	138-3096	1	FILTER & LINES GP-FUEL	112
GASKET	121-3221	1	FILTER & LINES GP-FUEL	112
KIT-BOWL SEAL	128-8614	1	FILTER GP-WATER SEP & FUEL	116
SEAL (FUEL FILTER)	101-3743	1	FILTER GP-FUEL	114
HYDRAULIC SYSTEM				
CAP AS-HYDRAULIC	142-8937	1	TANK GP-HYDRAULIC	378
		1	TANK GP-HYDRAULIC	379
CAP-DUST	6V-0852	1	LINES GP-PILOT	344
		1	LINES GP-PILOT	346
		1	LINES GP-PUMP	350
		1	LINES GP-PUMP	352
FITTING-GREASE	3B-8489	1	CYLINDER & MTG GP-BLADE	300
		2	CYLINDER & MTG GP-GRAPPLE	301
FITTING-GREASE (1/8-27 THD)	3B-8489	1	CYLINDER GP-BUCKET	304
		1	CYLINDER GP-GRAPPLE	305
		1	CYLINDER GP-GRAPPLE	306
		1	CYLINDER GP-TILT	310
		1	CYLINDER GP-TILT	311
		2	MOUNTING GP-CYLINDER	371
KIT-SEAL	107-7491	1	VALVE GP-CHECK	390
SEAL-O-RING (19.18MM ID)	2M-9780	1	LINES GP-GRAPPLE	322
IMPLEMENTS				
FITTING-GREASE	3B-8489	10	CONTROL GP-WORK TOOL	414
FITTING-GREASE (1/8-27 THD)	3B-8488	2	CONTROL GP-WORK TOOL	414
	3B-8489	10	CONTROL GP-WORK TOOL	412
LUBRICATION SYSTEM				
FILTER AS-ENGINE OIL	7W-2327	1	FILTER GP-ENGINE OIL	66
OPERATOR STATION				
BLADE AS-WIPER	161-7524	1	DOOR GP-CAB	518
		1	DOOR GP-CAB	520
FILTER	142-9291	1	FILTER GP-CAB AIR	523
FUSE (10 AMP)	113-8490	1	HORN GP-ELECTRIC	537
FUSE (20 AMP)	113-8492	1	HEATER & MTG GP-CAB	529
		1	HEATER & MTG GP-CAB	530
		1	HEATER & MTG GP-CAB	532
LAMP GP-DOME	084-4277	1	GAUGE & WARNING GP	526
LAMP (12V)	7X-9065	1	GAUGE & WARNING GP	526
RELAY AS	115-1615	1	HEATER GP-CAB	534

MAINTENANCE PARTS

DESCRIPTION	PART NUMBER	QTY	WHERE USED	PAGE
POWER TRAIN				
CAP-DUST	6V-0852	5	LINES GP-HYDROSTATIC	220
		5	LINES GP-HYDROSTATIC	222
	8C-3451	1	FILTER GP-OIL	214
FILTER AS-OIL	1G-8878	1	FILTER GP-OIL	214
FILTER GP-OIL	191-9784	1	FILTER & MTG GP-HYDRAULIC	213
SERVICE EQUIPMENT AND SUPPLIES				
LAMP (12 VOLTS)	7M-9957	1	MOUNTING GP-REGISTRATION	594
WORK TOOLS				
FITTING-GREASE	3B-8489	2	BLADE GP	426
FITTING-GREASE (1/8-27 THD)	3B-8489	4	BUCKET GP-GRAPPLE	445
		4	BUCKET GP-GRAPPLE	446
		2	BUCKET GP-MULTIPURPOSE	447
		2	BUCKET GP-MULTIPURPOSE	448
		4	FORK GP-GRAPPLE	465
		4	FORK GP-GRAPPLE	466
SCREEN	119-1414	1	STRAINER GP-WATER	489

PIÈCES DE RECHANGE

DESCRIPTION	NUMÉRO DE PIECÈS	QTÉ	DOMAINE D'APPLICATION	PAGE
CHÂSSIS ET BENNE				
BOUCHON AIMANTÉ	3S-9182	5	BATI - CHARGEUSE (ASS)	270
		5	BATI - CHARGEUSE (ASS)	272
GRAISSEUR (FILET 1/8-27)	3B-8488	2	BATI - CHARGEUSE (ASS)	270
	3B-8489	1	BÂTI DE LAME (ASS)	268
RÉFLECTEUR	9R-1499	2	MONTAGE DE FEUX DE DÉPLACEMENT SUR ROUTE (ASS)	278
RENIFLARD	9G-5127	2	BATI - CHARGEUSE (ASS)	270
	124-2831	2	BATI - CHARGEUSE (ASS)	272
CIRCUIT D'ADMISSION D'AIR ET D'ÉCHAPPEMENT				
ELEMENT (ENS) (AUXILIAIRE)	140-2334	1	FILTRE A AIR (ASS)	94
		1	FILTRE A AIR (ASS)	95
ELEMENT (ENS) (PRINCIPAL)	134-8726	1	FILTRE A AIR (ASS)	94
		1	FILTRE A AIR (ASS)	95
INDICATEUR D'AIR (ENTRETIEN DU FILTRE)	150-5030	1	CANALISATIONS D'AIR (ASS)	96
SOUPAPE DE PURIFICATION	112-9717	1	FILTRE A AIR (ASS)	94
		1	FILTRE A AIR (ASS)	95
CIRCUIT DE CARBURANT				
BOUCHON DE CARBURANT (ENS)	142-8828	1	CANALISATIONS DE CARBURANT (ASS)	120
		1	CANALISATIONS DE CARBURANT (ASS)	122
		1	CANALISATIONS DE CARBURANT (ASS)	124
		1	CANALISATIONS DE CARBURANT (ASS)	126
BOURRELET D'ÉTANCHÉITÉ (FILTRE À CARBURANT)	101-3743	1	FILTRE A CARBURANT (ASS)	114
ÉLÉMENT DE FILTRE À CARBURANT	156-1200	1	FILTRE DE SÉPARATEUR D'EAU ET DE CARBURANT (ASS)	116
ÉLÉMENT DE FILTRE À EAU	131-1812	1	SÉPARATEUR D'EAU (ASS)	135
ÉLÉMENT DE FILTRE (ENS)-CARBURANT	159-6102	1	FILTRE A CARBURANT (ASS)	114
FILTRE A CARBURANT (ASS)	138-3096	1	FILTRE ET CANALISATIONS DE CARBURANT (ASS)	112
JOINT PLAT	121-3221	1	FILTRE ET CANALISATIONS DE CARBURANT (ASS)	112
KIT DE JOINT DE FILTRE	128-8614	1	FILTRE DE SÉPARATEUR D'EAU ET DE CARBURANT (ASS)	116
CIRCUIT DE GRAISSAGE				
FILTRE A HUILE MOTEUR (ENS)	7W-2327	1	FILTRE À HUILE MOTEUR (ASS)	66

PIÈCES DE RECHANGE

DESCRIPTION	NUMÉRO DE PIECÈS	QTÉ	DOMAINE D'APPLICATION	PAGE
CIRCUIT DE REFROIDISSEMENT				
BOUCHON À ÉVENT	169-6715	1	RADIATEUR ET REFROIDISSEUR D'HUILE HYDRAULIQUE (ASS)	82
		1	RADIATEUR ET REFROIDISSEUR D'HUILE HYDRAULIQUE (ASS)	84
		1	RADIATEUR ET REFROIDISSEUR D'HUILE-MONTAGE (ASS)	86
		1	RADIATEUR ET REFROIDISSEUR D'HUILE-MONTAGE (ASS)	90
BOUCHON DE RADIATEUR (ENS)	036-1865	1	RADIATEUR ET REFROIDISSEUR D'HUILE HYDRAULIQUE (ASS)	80
	126-5027	1	RADIATEUR ET REFROIDISSEUR D'HUILE HYDRAULIQUE (ASS)	78
FLEXIBLE	142-8867	1	RADIATEUR ET REFROIDISSEUR D'HUILE HYDRAULIQUE (ASS)	84
		1	RADIATEUR ET REFROIDISSEUR D'HUILE-MONTAGE (ASS)	86
		1	RADIATEUR ET REFROIDISSEUR D'HUILE-MONTAGE (ASS)	90
	142-8868	1	RADIATEUR ET REFROIDISSEUR D'HUILE HYDRAULIQUE (ASS)	84
		1	RADIATEUR ET REFROIDISSEUR D'HUILE-MONTAGE (ASS)	86
		1	RADIATEUR ET REFROIDISSEUR D'HUILE-MONTAGE (ASS)	90
JOINT DE COUVERCLE	154-1828	1	POMPE A EAU (ASS)	76
JOINT PLAT	198-8555	1	RACCORD D'EAU (ASS)	68
ROBINET	153-5967	1	POMPE A EAU (ASS)	76
THERMOSTAT-TEMPÉRATURE D'EAU	4W-8063	1	POMPE A EAU (ASS)	73
	154-1826	1	POMPE A EAU (ASS)	76

PIÈCES DE RECHANGE

DESCRIPTION	NUMÉRO DE PIECÈS	QTÉ	DOMAINE D'APPLICATION	PAGE
CIRCUIT ÉLECTRIQUE ET DE DÉMARRAGE				
AMPOULE (12 V)	100-3246	1	LAMPE - PHARE ET CLIGNOTANT	154
AMPOULE (12 V) (SIGNAL)	5G-3244	1	LAMPE - PHARE ET CLIGNOTANT	154
AMPOULE (12 V) (STOP ET ARRIÈRE)	084-4348	1	LAMPE - CLIGNOTANT DE DIRECTION (ASS)	157
AMPOULE (12 VOLTS)	9X-8118	1	LAMPE - GYROPHARE (ASS)	160
	084-4348	1	FEUX ARRIÈRE ET FEUX D'ARRÊT	158
	189-3610	2	LAMPE - ÉCLAIRAGE TABLEAU (ASS)	156
AMPOULE (12 VOLTS) (CLIGNOTANT)	9W-3326	1	LAMPE - CLIGNOTANT DE DIRECTION (ASS)	157
AMPOULE (12 VOLTS)(55 WATTS)	9W-0607	1	LAMPE - PHARE (ASS)	152
		1	LAMPE - PHARE (ASS)	153
BATTERIE (12 VOLTS)	9X-5408	1	BATTERIE (ASS)	141
	153-5656	1	BATTERIE (ASS)	140
BOUGIE DE PRÉCHAUFFAGE	172-4585	4	BOUGIE DE PRÉCHAUFFAGE (ASS)	148
	177-7559	4	BOUGIE DE PRÉCHAUFFAGE (ASS)	147
CHAPEAU ANTI-POUSSIERE	133-6517	1	EAU DES CHEMISES - RECHAUFFEUR (ASS)	150
		1	EAU DES CHEMISES - RECHAUFFEUR (ASS)	151
COURROIE TRAPEZOIDALE	5L-3834	1	ALTERNATEUR DE CHARGE (ASS)	136
DISJONCTEUR (ENS) (30A)	147-1773	1	CABLAGE DE CHASSIS (ASS)	190
ENTRAÎNEMENT POUR COURROIE	9X-8139	1	LAMPE - GYROPHARE (ASS)	160
EXTRACTEUR DE MINI-FUSIBLE	116-7471	1	COUVERCLE - PANNEAU DE FUSIBLES (ASS)	145
FUSIBLE (10A)	113-8490	1	AVERTISSEUR DE RECUL (ASS)	184
		9	CABLAGE DE CABINE (ASS)	186
FUSIBLE (15A)	113-8491	2	CÂBLAGE - OUTIL DE TRAVAIL (ASS)	198
		2	CÂBLAGE - OUTIL DE TRAVAIL (ASS)	200
		2	CÂBLAGE - OUTIL DE TRAVAIL (ASS)	202
		2	CABLAGE DE CABINE (ASS)	186
LAMPE - FEUX AV (12 VOLTS)	9W-3324	1	LAMPE - PHARE ET CLIGNOTANT	154
LAMPE - PHARE ET CLIGNOTANT	3E-7584	2	ÉCLAIRAGE - FEUX DE ROUTE (ASS)	166
		2	ÉCLAIRAGE - FEUX DE ROUTE (ASS)	170
LENTILLE	146-2438	1	LAMPE - CLIGNOTANT DE DIRECTION (ASS)	157
	165-4895	1	FEUX ARRIÈRE ET FEUX D'ARRÊT	158
LENTILLE (ENS)	100-3248	1	LAMPE - PHARE ET CLIGNOTANT	154
LENTILLE ORANGE	9X-8121	1	LAMPE - GYROPHARE (ASS)	160
	100-3250	1	LAMPE - PHARE ET CLIGNOTANT	154
RÉFLECTEUR	9R-1499	2	ECLAIRAGE AR (ASS)	163
RELAIS (ENS)	146-4323	2	CÂBLAGE - OUTIL DE TRAVAIL (ASS)	198
		2	CÂBLAGE - OUTIL DE TRAVAIL (ASS)	200
		2	CÂBLAGE - OUTIL DE TRAVAIL (ASS)	202
		2	CABLAGE DE CABINE (ASS)	186

PIÈCES DE RECHANGE

DESCRIPTION	NUMÉRO DE PIECÈS	QTÉ	DOMAINE D'APPLICATION	PAGE
CIRCUIT HYDRAULIQUE				
BOUCHON HYDRAULIQUE (ENS)	142-8937	1	RÉSERVOIR HYDRAULIQUE (ASS)	378
		1	RÉSERVOIR HYDRAULIQUE (ASS)	379
GRAISSEUR	3B-8489	1	VÉRIN ET MONTAGE DE LAME (ASS)	300
		2	VÉRIN ET MONTAGE DE PINCE (ASS)	301
GRAISSEUR (FILET 1/8-27)	3B-8489	2	MONTAGE DE VÉRIN (ASS)	371
		1	PINCE - VÉRIN (ASS)	305
		1	PINCE - VÉRIN (ASS)	306
		1	VERIN DE GODET (ASS)	304
		1	VÉRIN D'INCLINAISON (ASS)	310
		1	VÉRIN D'INCLINAISON (ASS)	311
JOINT TORIQUE (DIA INT 19,18MM)	2M-9780	1	PINCE - CANALISATIONS (ASS)	322
KIT DE JOINTS	107-7491	1	CLAPET DE RETENUE (ENS)	390
PARE-POUSSIERE	6V-0852	1	CANALISATIONS A COMMANDE PILOTE (ASS)	344
		1	CANALISATIONS A COMMANDE PILOTE (ASS)	346
		1	CANALISATIONS DE POMPE (ASS)	350
		1	CANALISATIONS DE POMPE (ASS)	352
ÉQUIPEMENTS				
GRAISSEUR	3B-8489	10	COMMANDE - OUTIL DE TRAVAIL (ASS)	414
GRAISSEUR (FILET 1/8-27)	3B-8488	2	COMMANDE - OUTIL DE TRAVAIL (ASS)	414
	3B-8489	10	COMMANDE - OUTIL DE TRAVAIL (ASS)	412
MATÉRIEL ET FOURNITURES D'ENTRETIEN				
AMPOULE (12 VOLTS)	7M-9957	1	MONTAGE - IMMATRICULATION (ASS)	594
MOTEUR DE BASE				
BOUCHON DE GOULOTTE DE REMPLISSAGE D'HUILE	217-7358	1	HUILE MOTEUR - CARTER (ASS)	54
BOUCHON D'HUILE	165-3605	1	HUILE MOTEUR - CARTER (ASS)	54
	170-7666	1	CACHE-SOUPAPES (ASS)	14
BOURRELET D'ÉTANCHÉITÉ	153-5933	1	HUILE MOTEUR - CARTER (ASS)	54
FILTRE À HUILE	150-4140	1	HUILE MOTEUR - CARTER (ASS)	54
FLEXIBLE (ÉVACUATION DES GAZ DE CARTER)	153-0104	1	CACHE-SOUPAPES (ASS)	14
JOINT-CACHE-SOUPAPES	159-0082	1	CACHE-SOUPAPES (ASS)	14
JOINT PLAT (SUPPORT DE VALVE)	217-2752	1	CULBUTERIE (ASS)	65
PARE-POUSSIERE	8C-3445	1	VIDANGE-HUILE DE MOTEUR (ASS)	30
		1	VIDANGE-HUILE DE MOTEUR (ASS)	31
RONDELLE	153-6832	2	HUILE MOTEUR - CARTER (ASS)	54
SOUPAPE DE VIDANGE	144-9961	1	HUILE MOTEUR - CARTER (ASS)	54
	170-7614	1	HUILE MOTEUR - CARTER (ASS)	52
TOILE	153-5939	1	CACHE-SOUPAPES (ASS)	16

PIÈCES DE RECHANGE

DESCRIPTION	NUMÉRO DE PIECÈS	QTÉ	DOMAINE D'APPLICATION	PAGE
OUTILS DE TRAVAIL				
ÉCRAN	119-1414	1	TAMIS D'EAU (ASS)	489
GRAISSEUR	3B-8489	2	LAME (ASS)	426
GRAISSEUR (FILET 1/8-27)	3B-8489	4	FOURCHE - PINCE (ASS)	465
		4	FOURCHE - PINCE (ASS)	466
		4	GODET - PINCE (ASS)	445
		4	GODET - PINCE (ASS)	446
		2	GODET TOUS-TRAVAUX (ASS)	447
		2	GODET TOUS-TRAVAUX (ASS)	448
POSTE DE CONDUITE				
AMPOULE (12V)	7X-9065	1	INDICATEURS ET TÉMOINS LUMINEUX (ASS)	526
BALAI D'ESSUIE-GLACE (ENS)	161-7524	1	PORTIÈRE DE CABINE (ASS)	518
		1	PORTIÈRE DE CABINE (ASS)	520
FILTRE	142-9291	1	FILTRE À AIR DE CABINE (ASS)	523
FUSIBLE (10A)	113-8490	1	KLAXON ÉLECTRIQUE (ASS)	537
FUSIBLE (20 A)	113-8492	1	CHAUFFAGE ET MONTAGE - CABINE (ASS)	529
		1	CHAUFFAGE ET MONTAGE - CABINE (ASS)	530
		1	CHAUFFAGE ET MONTAGE - CABINE (ASS)	532
PLAFONNIER (ASS)	084-4277	1	INDICATEURS ET TÉMOINS LUMINEUX (ASS)	526
RELAIS (ENS)	115-1615	1	CHAUFFAGE DE CABINE (ASS)	534
TRANSMISSION				
FILTRE A HUILE (ASS)	191-9784	1	FILTRE À HUILE HYDRAULIQUE ET MONTAGE (ASS)	213
FILTRE À HUILE (ENS)	1G-8878	1	FILTRE A HUILE (ASS)	214
PARE-POUSSIERE	6V-0852	5	CANALISATIONS HYDROSTATIQUES (ASS)	220
		5	CANALISATIONS HYDROSTATIQUES (ASS)	222
	8C-3451	1	FILTRE A HUILE (ASS)	214

PIEZAS DE MANTENIMIENTO

DESCRIPCION	NUMERO DE PIEZA	CANT	SE UTILIZA EN	PAGINA
BASTIDOR Y CAJA				
CONEXIÓN DE ENGRASE (ROSCA DE 1/8-27)	3B-8488	2	BASTIDOR DEL CARGADOR (GR)	270
	3B-8489	1	BASTIDOR DE HOJA (GR)	268
REFLECTOR	9R-1499	2	MONTAJE DE LUCES DE DESPLAZAMIENTO POR CARRETERA (GR)	278
RESPIRADERO	9G-5127	2	BASTIDOR DEL CARGADOR (GR)	270
	124-2831	2	BASTIDOR DEL CARGADOR (GR)	272
TAPÓN MAGNÉTICO	3S-9182	5	BASTIDOR DEL CARGADOR (GR)	270
		5	BASTIDOR DEL CARGADOR (GR)	272
EQUIPO DE SERVICIO Y SUMINISTROS				
LÁMPARA (12 VOLTIOS)	7M-9957	1	MONTAJE-REGISTRO (GR)	594
ESTACION DEL OPERADOR				
FILTRO	142-9291	1	FILTRO DE AIRE DE LA CABINA (GR)	523
FUSIBLE (10 A)	113-8490	1	BOCINA ELÉCTRICA (GR)	537
FUSIBLE (20 A)	113-8492	1	CALEFACCIÓN Y MONTAJE DE LA CABINA (GR)	529
		1	CALEFACCIÓN Y MONTAJE DE LA CABINA (GR)	530
		1	CALEFACCIÓN Y MONTAJE DE LA CABINA (GR)	532
HOJA DE LIMPIAPARABRISAS (CONJ)	161-7524	1	PUERTA DE CABINA	518
		1	PUERTA DE CABINA	520
LÁMPARA DEL TECHO (GR)	084-4277	1	INDICADORES Y ADVERTENCIA (GR)	526
LÁMPARA (12 VOLTIOS)	7X-9065	1	INDICADORES Y ADVERTENCIA (GR)	526
RELÉ (CONJ)	115-1615	1	CALEFACCIÓN DE LA CABINA (GR)	534
HERRAMIENTAS				
CONEXIÓN DE ENGRASE	3B-8489	2	HOJA (GR)	426
CONEXIÓN DE ENGRASE (ROSCA DE 1/8-27)	3B-8489	4	CUCHARON DE GARFIO (GR)	445
		4	CUCHARON DE GARFIO (GR)	446
		2	CUCHARÓN DE USO MÚLTIPLE (GR)	447
		2	CUCHARÓN DE USO MÚLTIPLE (GR)	448
		4	HORQUILLA DE GARFIO (GR)	465
		4	HORQUILLA DE GARFIO (GR)	466
REJILLA	119-1414	1	COLADOR DEL AGUA (GR)	489
IMPLEMENTOS				
CONEXIÓN DE ENGRASE	3B-8489	10	CONTROL DE LA HERRAMIENTA DE TRABAJO (GR)	414
CONEXIÓN DE ENGRASE (ROSCA DE 1/8-27)	3B-8488	2	CONTROL DE LA HERRAMIENTA DE TRABAJO (GR)	414
	3B-8489	10	CONTROL DE LA HERRAMIENTA DE TRABAJO (GR)	412

PIEZAS DE MANTENIMIENTO

DESCRIPCION	NUMERO DE PIEZA	CANT	SE UTILIZA EN	PAGINA
MOTOR BASICO				
ARANDELA	153-6832	2	CÁRTER - COLECTOR DEL (GR)	54
EMPAQUETADURA PARA CUBIERTA DE VÁLVULA	159-0082	1	TAPA DEL MECANISMO DE VÁLVULAS (GR)	14
EMPAQUETADURA (SOPORTE DE VÁLVULA)	217-2752	1	MECANISMO DE VÁLVULAS (GR)	65
FILTRO DE ACEITE	150-4140	1	CÁRTER - COLECTOR DEL (GR)	54
GASA	153-5939	1	TAPA DEL MECANISMO DE VÁLVULAS (GR)	16
MANGUERA (ELIMINACION DE GASES)	153-0104	1	TAPA DEL MECANISMO DE VÁLVULAS (GR)	14
SELLO	153-5933	1	CÁRTER - COLECTOR DEL (GR)	54
TAPA-ACEITE	170-7666	1	TAPA DEL MECANISMO DE VÁLVULAS (GR)	14
TAPA CONTRA EL POLVO	8C-3445	1	DRENAJE DEL ACEITE DE MOTOR	30
		1	DRENAJE DEL ACEITE DE MOTOR	31
TAPA DEL TUBO DE LLENADO DE ACEITE	217-7358	1	CÁRTER - COLECTOR DEL (GR)	54
TAPON DE ACEITE	165-3605	1	CÁRTER - COLECTOR DEL (GR)	54
VÁLVULA DE DRENAJE	144-9961	1	CÁRTER - COLECTOR DEL (GR)	54
	170-7614	1	CÁRTER - COLECTOR DEL (GR)	52
SISTEMA DE ARRANQUE ELECTRICO				
BATERÍA (12 VOLTIOS)	9X-5408	1	BATERÍA (GR)	141
	153-5656	1	BATERÍA (GR)	140
BUJIA INCANDESCENTE	172-4585	4	BUJÍA INCANDESCENTE (GR)	148
	177-7559	4	BUJÍA INCANDESCENTE (GR)	147
CORREA TRAPEZOIDAL	5L-3834	1	CARGA - ALTERNADOR DE (GR)	136
CRISTAL	146-2438	1	LUZ DE SEÑAL DE GIRO (GR)	157
	165-4895	1	LUCES DE PARADA Y COLA (GR)	158
DISYUNTOR (CONJ) (30 A)	147-1773	1	CABLES DEL CHASIS (GR)	190
EXTRACTOR DE MINIFUSIBLES	116-7471	1	CUBIERTO DEL PANEL DE FUSIBLES (GR)	145
FUSIBLE (10 A)	113-8490	9	CABLES DE LA CABINA (GR)	186
		1	RETROCESO - ALARMA DE (GR)	184
FUSIBLE (15 A)	113-8491	2	CABLES DE LA CABINA (GR)	186
		2	CABLES DE LA HERRAMIENTA DE TRABAJO (GR)	198
		2	CABLES DE LA HERRAMIENTA DE TRABAJO (GR)	200
		2	CABLES DE LA HERRAMIENTA DE TRABAJO (GR)	202
LÁMPARA DE FARO DELANTERO (12 VOLTIOS)	9W-3324	1	LÁMPARA DE LUZ DELANTERA Y DE SEÑAL (GR)	154
LÁMPARA DE LUZ DELANTERA Y DE SEÑAL (GR)	3E-7584	2	LUCES DE DESPLAZAMIENTO (GR)	166
		2	LUCES DE DESPLAZAMIENTO (GR)	170
LÁMPARA (12 VOLTIOS)	9X-8118	1	LÁMPARA DE BALIZA DE ADVERTENCIA (GR)	160
	084-4348	1	LUCES DE PARADA Y COLA (GR)	158
	189-3610	2	LÁMPARA DE ILUMINACIÓN DEL PANEL (GR)	156
LÁMPARA (12 VOLTIOS) (DE GIRO)	9W-3326	1	LUZ DE SEÑAL DE GIRO (GR)	157
LÁMPARA (12 VOLTIOS)(55 VATIOS)	9W-0607	1	REFLECTOR (GR)	152

PIEZAS DE MANTENIMIENTO

DESCRIPCION	NUMERO DE PIEZA	CANT	SE UTILIZA EN	PAGINA
		1	REFLECTOR (GR)	153
LÁMPARA (12V)	100-3246	1	LÁMPARA DE LUZ DELANTERA Y DE SEÑAL (GR)	154
LÁMPARA (12V) (PARADA Y COLA)	084-4348	1	LUZ DE SEÑAL DE GIRO (GR)	157
LÁMPARA (12V) (SEÑAL)	5G-3244	1	LÁMPARA DE LUZ DELANTERA Y DE SEÑAL (GR)	154
LENTE AMBAR	9X-8121	1	LÁMPARA DE BALIZA DE ADVERTENCIA (GR)	160
	100-3250	1	LÁMPARA DE LUZ DELANTERA Y DE SEÑAL (GR)	154
MANDO DE CORREA	9X-8139	1	LÁMPARA DE BALIZA DE ADVERTENCIA (GR)	160
REFLECTOR	9R-1499	2	LUCES TRASERAS (GR)	163
RELÉ (CONJ)	146-4323	2	CABLES DE LA CABINA (GR)	186
		2	CABLES DE LA HERRAMIENTA DE TRABAJO (GR)	198
		2	CABLES DE LA HERRAMIENTA DE TRABAJO (GR)	200
		2	CABLES DE LA HERRAMIENTA DE TRABAJO (GR)	202
TAPA CONTRA EL POLVO (CONJ)	133-6517	1	AGUA DE LAS CAMISAS - CALENTADOR DEL (GR)	150
		1	AGUA DE LAS CAMISAS - CALENTADOR DEL (GR)	151
VIDRIO (CONJ)	100-3248	1	LÁMPARA DE LUZ DELANTERA Y DE SEÑAL (GR)	154
SISTEMA DE COMBUSTIBLE				
ELEMENTO DE FILTRO DE AGUA	131-1812	1	SEPARADOR DE AGUA (GR)	135
ELEMENTO DE FILTRO DE COMBUSTIBLE	156-1200	1	FILTRO DE COMBUSTIBLE Y SEPARADOR DE AGUA (GR)	116
ELEMENTO DE FILTRO DE COMBUSTIBLE (CONJ)	159-6102	1	FILTRO DE COMBUSTIBLE (GR)	114
EMPAQUETADURA	121-3221	1	FILTRO Y TUBERÍAS DE COMBUSTIBLE (GR)	112
FILTRO DE COMBUSTIBLE (GR)	138-3096	1	FILTRO Y TUBERÍAS DE COMBUSTIBLE (GR)	112
JUEGO DE SELLO DE TAZA	128-8614	1	FILTRO DE COMBUSTIBLE Y SEPARADOR DE AGUA (GR)	116
SELLO (FILTRO DE COMBUSTIBLE)	101-3743	1	FILTRO DE COMBUSTIBLE (GR)	114
TAPA DEL COMBUSTIBLE(CONJ)	142-8828	1	TUBERÍAS DE COMBUSTIBLE (GR)	120
		1	TUBERÍAS DE COMBUSTIBLE (GR)	122
		1	TUBERÍAS DE COMBUSTIBLE (GR)	124
		1	TUBERÍAS DE COMBUSTIBLE (GR)	126

PIEZAS DE MANTENIMIENTO

DESCRIPCION	NUMERO DE PIEZA	CANT	SE UTILIZA EN	PAGINA
SISTEMA DE ENFRIAMIENTO				
EMPAQUETADURA	198-8555	1	AGUA - CONEXIÓN DE (GR)	68
GRIFO	153-5967	1	BOMBA DE AGUA (GR)	76
JUNTA DE LA TAPA DE VÁLVULAS	154-1828	1	BOMBA DE AGUA (GR)	76
MANGUERA	142-8867	1	MONTAJE DE RADIADOR Y ENFRIAMIENTO DE ACEITE (GR)	86
		1	MONTAJE DE RADIADOR Y ENFRIAMIENTO DE ACEITE (GR)	90
		1	RADIADOR Y ENFRIADOR DE ACEITE HIDRÁULICO (GR)	84
	142-8868	1	MONTAJE DE RADIADOR Y ENFRIAMIENTO DE ACEITE (GR)	86
		1	MONTAJE DE RADIADOR Y ENFRIAMIENTO DE ACEITE (GR)	90
		1	RADIADOR Y ENFRIADOR DE ACEITE HIDRÁULICO (GR)	84
REGULADOR DE TEMPERATURA DEL AGUA	4W-8063	1	BOMBA DE AGUA (GR)	73
	154-1826	1	BOMBA DE AGUA (GR)	76
TAPA CON RESPIRADERO	169-6715	1	MONTAJE DE RADIADOR Y ENFRIAMIENTO DE ACEITE (GR)	86
		1	MONTAJE DE RADIADOR Y ENFRIAMIENTO DE ACEITE (GR)	90
		1	RADIADOR Y ENFRIADOR DE ACEITE HIDRÁULICO (GR)	82
		1	RADIADOR Y ENFRIADOR DE ACEITE HIDRÁULICO (GR)	84
TAPA DE RADIADOR (CONJ)	036-1865	1	RADIADOR Y ENFRIADOR DE ACEITE HIDRÁULICO (GR)	80
	126-5027	1	RADIADOR Y ENFRIADOR DE ACEITE HIDRÁULICO (GR)	78
SISTEMA DE ESCAPE Y ADMISION DE AIRE				
ELEMENTO (CONJ) (PRIMARIO)	134-8726	1	FILTRO DE AIRE (GR)	94
		1	FILTRO DE AIRE (GR)	95
ELEMENTO (CONJ) (SECUNDARIO(A))	140-2334	1	FILTRO DE AIRE (GR)	94
		1	FILTRO DE AIRE (GR)	95
INDICADOR-AIRE (SERVICIO DEL FILTRO)	150-5030	1	AIRE - TUBERÍAS DE (GR)	96
VALVULA DE PURGA	112-9717	1	FILTRO DE AIRE (GR)	94
		1	FILTRO DE AIRE (GR)	95
SISTEMA DE LUBRICACION				
FILTRO DE ACEITE DEL MOTOR (CONJ)	7W-2327	1	FILTRO DE ACEITE DEL MOTOR (GR)	66

PIEZAS DE MANTENIMIENTO

DESCRIPCION	NUMERO DE PIEZA	CANT	SE UTILIZA EN	PAGINA
SISTEMA HIDRAULICO				
CONEXIÓN DE ENGRASE	3B-8489	1	CILINDRO Y MONTAJE DE LA HOJA (GR)	300
		2	MONTAJE DEL CILINDRO DEL GARFIO (GR)	301
CONEXIÓN DE ENGRASE (ROSCA DE 1/8-27)	3B-8489	1	CILINDRO DE CUCHARÓN (GR)	304
		1	CILINDRO DE GARFIO (GR)	305
		1	CILINDRO DE GARFIO (GR)	306
		1	INCLINACIÓN HORIZONTAL - CILINDRO DE (GR)	310
		1	INCLINACIÓN HORIZONTAL - CILINDRO DE (GR)	311
		2	MONTAJE DE CILINDRO (GR)	371
JUEGO DE SELLOS	107-7491	1	VÁLVULA DE RETENCIÓN (GR)	390
SELLO ANULAR (19,18 MM DIAMETRO INTERIOR)	2M-9780	1	TUBERÍAS DEL GARFIO (GR)	322
TAPA CONTRA EL POLVO	6V-0852	1	BOMBA - TUBERÍAS DE (GR)	350
		1	BOMBA - TUBERÍAS DE (GR)	352
		1	TUBERÍAS CON SERVOMANDO (GR)	344
		1	TUBERÍAS CON SERVOMANDO (GR)	346
TAPA HIDRAULICA (CONJ)	142-8937	1	TANQUE HIDRÁULICO (GR)	378
		1	TANQUE HIDRÁULICO (GR)	379
TREN DE FUERZA				
FILTRO DE ACEITE (CONJ)	1G-8878	1	FILTRO DE ACEITE (GR)	214
FILTRO DE ACEITE (GR)	191-9784	1	FILTRO DE ACEITE HIDRÁULICO Y MONTAJE (GR)	213
TAPA CONTRA EL POLVO	6V-0852	5	TUBERÍAS HIDROSTÁTICAS (GR)	220
		5	TUBERÍAS HIDROSTÁTICAS (GR)	222
	8C-3451	1	FILTRO DE ACEITE (GR)	214

PEÇAS DE MANUTENÇÃO

DESCRIÇÃO	NÚMERO DE PEÇA	QUANT	UTILIZADA EM	PÁGINA
ACESSÓRIOS				
GRAXEIRA	3B-8489	10	CONTROLE DA FERRAMENTA DE TRABALHO	414
GRAXEIRA (ROSCA 1/8-27 POL)	3B-8488	2	CONTROLE DA FERRAMENTA DE TRABALHO	414
	3B-8489	10	CONTROLE DA FERRAMENTA DE TRABALHO	412
CHASSI E CARROCERIA				
BUJÃO MAGNÉTICO	3S-9182	5	CHASSI DIANTEIRO	270
		5	CHASSI DIANTEIRO	272
GRAXEIRA (ROSCA 1/8-27 POL)	3B-8488	2	CHASSI DIANTEIRO	270
	3B-8489	1	ARMAÇÃO - LÂMINA	268
REFLETOR	9R-1499	2	MONTAGEM - LUZES PARA ILUMINAÇÃO RODOVIÁRIA	278
RESPIRO	9G-5127	2	CHASSI DIANTEIRO	270
	124-2831	2	CHASSI DIANTEIRO	272
EQUIPAMENTO DE SERVIÇO E SUPRIMENTOS				
LÂMPADA (12 VOLTS)	7M-9957	1	MONTAGEM DA PLACA DE REGISTRO	594
FERRAMENTAS DE TRABALHO				
GRAXEIRA	3B-8489	2	LÂMINA	426
GRAXEIRA (ROSCA 1/8-27 POL)	3B-8489	4	CAÇAMBA - GARRA	445
		4	CAÇAMBA - GARRA	446
		2	CAÇAMBA DE MÚLTIPLAS APLICAÇÕES	447
		2	CAÇAMBA DE MÚLTIPLAS APLICAÇÕES	448
		4	GARFO DA GARRA	465
		4	GARFO DA GARRA	466
TELA FILTRANTE	119-1414	1	TELA FILTRANTE - ÁGUA	489
MOTOR BÁSICO				
ARRUELA	153-6832	2	CÁRTER DO ÓLEO DO MOTOR	54
BUJÃO - ÓLEO	165-3605	1	CÁRTER DO ÓLEO DO MOTOR	54
FILTRO	153-5939	1	TAMPA - MECANISMO DAS VÁLVULAS	16
FILTRO - ÓLEO	150-4140	1	CÁRTER DO ÓLEO DO MOTOR	54
JUNTA - TAMPA DA VÁLVULA	159-0082	1	TAMPA - MECANISMO DAS VÁLVULAS	14
JUNTA (SUPORTE DE VÁLVULA)	217-2752	1	MECANISMO DAS VÁLVULAS	65
MANGUEIRA (ELIMINAÇÃO DE VAPORES)	153-0104	1	TAMPA - MECANISMO DAS VÁLVULAS	14
RETENTOR	153-5933	1	CÁRTER DO ÓLEO DO MOTOR	54
TAMPA - BOCAL DE ENCHIMENTO DE ÓLEO	217-7358	1	CÁRTER DO ÓLEO DO MOTOR	54
TAMPA CONTRA POEIRA	8C-3445	1	DRENO - ÓLEO DO MOTOR	30
		1	DRENO - ÓLEO DO MOTOR	31
TAMPA-ÓLEO	170-7666	1	TAMPA - MECANISMO DAS VÁLVULAS	14
VÁLVULA DE DRENAGEM	144-9961	1	CÁRTER DO ÓLEO DO MOTOR	54
	170-7614	1	CÁRTER DO ÓLEO DO MOTOR	52

PEÇAS DE MANUTENÇÃO

DESCRIÇÃO	NÚMERO DE PEÇA	QUANT	UTILIZADA EM	PÁGINA
POSTO DO OPERADOR				
FILTRO	142-9291	1	FILTRO - AR DA CABINE	523
FUSÍVEL (10 A)	113-8490	1	BUZINA ELÉTRICA	537
FUSÍVEL (20 A)	113-8492	1	AQUECEDOR DA CABINE E MONTAGEM	529
		1	AQUECEDOR DA CABINE E MONTAGEM	530
		1	AQUECEDOR DA CABINE E MONTAGEM	532
LÂMINA DO LIMPADOR DE PÁRA-BRISA	161-7524	1	PORTA DA CABINE	518
		1	PORTA DA CABINE	520
LÂMPADA - TETO	084-4277	1	INDICADOR E ALARME	526
LÂMPADA (12 V)	7X-9065	1	INDICADOR E ALARME	526
RELÉ (CONJ)	115-1615	1	AQUECEDOR DA CABINE	534
SISTEMA DE ADMISSÃO DE AR E DE ESCAPE				
ELEMENTO (PRIMÁRIO)	134-8726	1	PURIFICADOR DE AR	94
		1	PURIFICADOR DE AR	95
ELEMENTO (SECUNDÁRIO)	140-2334	1	PURIFICADOR DE AR	94
		1	PURIFICADOR DE AR	95
INDICADOR - AR (SERVIÇO DE FILTRO)	150-5030	1	TUBOS - AR	96
VÁLVULA PURIFICADORA	112-9717	1	PURIFICADOR DE AR	94
		1	PURIFICADOR DE AR	95

PEÇAS DE MANUTENÇÃO

DESCRIÇÃO	NÚMERO DE PEÇA	QUANT	UTILIZADA EM	PÁGINA
SISTEMA DE ARREFECIMENTO				
JUNTA	198-8555	1	CONEXÃO - TUBO D'ÁGUA	68
JUNTA - TAMPA	154-1828	1	BOMBA DE ÁGUA	76
MANGUEIRA	142-8867	1	RADIADOR E ARREFECEDOR DE ÓLEO - MONTAGEM	86
		1	RADIADOR E ARREFECEDOR DE ÓLEO - MONTAGEM	90
		1	RADIADOR E ARREFECEDOR DO ÓLEO HIDRÁULICO	84
	142-8868	1	RADIADOR E ARREFECEDOR DE ÓLEO - MONTAGEM	86
		1	RADIADOR E ARREFECEDOR DE ÓLEO - MONTAGEM	90
		1	RADIADOR E ARREFECEDOR DO ÓLEO HIDRÁULICO	84
REGULADOR DE TEMPERATURA DA ÁGUA	4W-8063	1	BOMBA DE ÁGUA	73
	154-1826	1	BOMBA DE ÁGUA	76
TAMPA - RADIADOR	036-1865	1	RADIADOR E ARREFECEDOR DO ÓLEO HIDRÁULICO	80
	126-5027	1	RADIADOR E ARREFECEDOR DO ÓLEO HIDRÁULICO	78
TAMPA COM RESPIRO	169-6715	1	RADIADOR E ARREFECEDOR DE ÓLEO - MONTAGEM	86
		1	RADIADOR E ARREFECEDOR DE ÓLEO - MONTAGEM	90
		1	RADIADOR E ARREFECEDOR DO ÓLEO HIDRÁULICO	82
		1	RADIADOR E ARREFECEDOR DO ÓLEO HIDRÁULICO	84
TORNEIRA	153-5967	1	BOMBA DE ÁGUA	76
SISTEMA DE COMBUSTÍVEL				
ELEMENTO - FILTRO DE COMBUSTÍVEL	159-6102	1	FILTRO - COMBUSTÍVEL	114
ELEMENTO DO FILTRO DE COMBUSTÍVEL	156-1200	1	FILTRO DE COMBUSTÍVEL E SEPARADOR DE ÁGUA	116
ELEMENTO FILTRANTE-ÁGUA	131-1812	1	SEPARADOR DE ÁGUA	135
FILTRO - COMBUSTÍVEL	138-3096	1	FILTRO E TUBOS - COMBUSTÍVEL	112
JOGO DE VEDADOR DA CAÇAMBA	128-8614	1	FILTRO DE COMBUSTÍVEL E SEPARADOR DE ÁGUA	116
JUNTA	121-3221	1	FILTRO E TUBOS - COMBUSTÍVEL	112
RETENTOR (FILTRO DE COMBUSTÍVEL)	101-3743	1	FILTRO - COMBUSTÍVEL	114
TAMPA - TANQUE DE COMBUSTÍVEL	142-8828	1	TUBOS - COMBUSTÍVEL	120
		1	TUBOS - COMBUSTÍVEL	122
		1	TUBOS - COMBUSTÍVEL	124
		1	TUBOS - COMBUSTÍVEL	126
SISTEMA DE LUBRIFICAÇÃO				
FILTRO - ÓLEO DO MOTOR	7W-2327	1	FILTRO - ÓLEO DO MOTOR	66

PEÇAS DE MANUTENÇÃO

DESCRIÇÃO	NÚMERO DE PEÇA	QUANT	UTILIZADA EM	PÁGINA
SISTEMA ELÉTRICO E DE PARTIDA				
BATERIA (12 V)	9X-5408	1	BATERIA	141
	153-5656	1	BATERIA	140
CORREIA DE COMANDO	9X-8139	1	LUZ GIRATÓRIA DE ALARME	160
CORREIA EM V	5L-3834	1	ALTERNADOR DE CORRENTE	136
DISJUNTOR AUTOMÁTICO DE CIRCUITO (30 A)	147-1773	1	CABOS/FIOS ELÉTRICOS - CHASSI	190
FAROL DIANTEIRO (12 V)	9W-3324	1	LÂMPADA DIANTEIRA E DE SINAL	154
FUSÍVEL (10 A)	113-8490	1	ALARME DE MARCHA À RÉ	184
		9	CABOS/FIOS ELÉTRICOS - CABINE	186
FUSÍVEL (15 A)	113-8491	2	CABOS/FIOS ELÉTRICOS - CABINE	186
		2	CABOS/FIOS ELÉTRICOS - FERRAMENTAS DE TRABALHO	198
		2	CABOS/FIOS ELÉTRICOS - FERRAMENTAS DE TRABALHO	200
		2	CABOS/FIOS ELÉTRICOS - FERRAMENTAS DE TRABALHO	202
LÂMPADA DIANTEIRA E DE SINAL	3E-7584	2	ILUMINAÇÃO - RODOVIÁRIA	166
		2	ILUMINAÇÃO - RODOVIÁRIA	170
LÂMPADA (12 V)	9X-8118	1	LUZ GIRATÓRIA DE ALARME	160
	084-4348	1	LUZ TRASEIRA E DE FREIO	158
	189-3610	2	LÂMPADA - ILUMINAÇÃO DO PAINEL	156
LÂMPADA (12 V) (VIRADA)	9W-3326	1	LÂMPADA - SINALIZAÇÃO	157
LÂMPADA (12 VOLTS - 55 WATTS)	9W-0607	1	LÂMPADA - FAROL	152
		1	LÂMPADA - FAROL	153
LÂMPADA (12V)	100-3246	1	LÂMPADA DIANTEIRA E DE SINAL	154
LÂMPADA (12V) (PARADA E TRASEIRA)	084-4348	1	LÂMPADA - SINALIZAÇÃO	157
LÂMPADA (12V) (SINAL)	5G-3244	1	LÂMPADA DIANTEIRA E DE SINAL	154
LENTE	100-3248	1	LÂMPADA DIANTEIRA E DE SINAL	154
	146-2438	1	LÂMPADA - SINALIZAÇÃO	157
	165-4895	1	LUZ TRASEIRA E DE FREIO	158
LENTE ÂMBAR	9X-8121	1	LUZ GIRATÓRIA DE ALARME	160
	100-3250	1	LÂMPADA DIANTEIRA E DE SINAL	154
REFLETOR	9R-1499	2	ILUMINAÇÃO - TRASEIRA	163
RELÉ (CONJ)	146-4323	2	CABOS/FIOS ELÉTRICOS - CABINE	186
		2	CABOS/FIOS ELÉTRICOS - FERRAMENTAS DE TRABALHO	198
		2	CABOS/FIOS ELÉTRICOS - FERRAMENTAS DE TRABALHO	200
		2	CABOS/FIOS ELÉTRICOS - FERRAMENTAS DE TRABALHO	202
SACADOR - MINIFUSÍVEL	116-7471	1	TAMPA DO PAINEL DO FUSÍVEL	145
TAMPA CONTRA POEIRA	133-6517	1	AQUECEDOR DA ÁGUA DO MOTOR	150
		1	AQUECEDOR DA ÁGUA DO MOTOR	151
VELA DE AQUECIMENTO	172-4585	4	VELA DE AQUECIMENTO; VELA INCANDESCENTE	148
	177-7559	4	VELA DE AQUECIMENTO; VELA INCANDESCENTE	147

PEÇAS DE MANUTENÇÃO

DESCRIÇÃO	NÚMERO DE PEÇA	QUANT	UTILIZADA EM	PÁGINA
SISTEMA HIDRÁULICO				
GRAXEIRA	3B-8489	1	CILINDRO DA LÂMINA E MONTAGEM	300
		2	CILINDRO E MONTAGEM - PINÇA	301
GRAXEIRA (ROSCA 1/8-27 POL)	3B-8489	1	CILINDRO DA CAÇAMBA	304
		1	CILINDRO DA GARRA	305
		1	CILINDRO DA GARRA	306
		1	CILINDRO DE INCLINAÇÃO	310
		1	CILINDRO DE INCLINAÇÃO	311
		2	MONTAGEM - CILINDRO	371
JOGO DE RETENTOR	107-7491	1	VÁLVULA DE RETENÇÃO	390
RETENTOR DE ANEL-O (19,18MM ID)	2M-9780	1	TUBOS - GARRA	322
TAMPA - HIDRÁULICO	142-8937	1	TANQUE HIDRÁULICO	378
		1	TANQUE HIDRÁULICO	379
TAMPA CONTRA POEIRA	6V-0852	1	TUBOS - BOMBA	350
		1	TUBOS - BOMBA	352
		1	TUBOS - CIRCUITO PILOTO	344
		1	TUBOS - CIRCUITO PILOTO	346
TREM DE FORÇA				
FILTRO - ÓLEO	1G-8878	1	FILTRO - ÓLEO	214
	191-9784	1	FILTRO HIDRÁULICO E MONTAGEM	213
TAMPA CONTRA POEIRA	6V-0852	5	TUBOS - SISTEMA HIDROSTÁTICO	220
		5	TUBOS - SISTEMA HIDROSTÁTICO	222
	8C-3451	1	FILTRO - ÓLEO	214

WARTUNGSTEILE

BESCHREIBUNG	ERSATZTEIL-NUMMER	MENGE	VERWENDET IN	SEITE
ARBEITSGERÄTE				
SCHMIERNIPPEL	3B-8489	10	ARBEITSGERÄTESTEUERUNG	414
		2	SCHILD	426
SCHMIERNIPPEL (1/8-27-GEWINDE)	3B-8488	2	ARBEITSGERÄTESTEUERUNG	414
	3B-8489	10	ARBEITSGERÄTESTEUERUNG	412
		4	GREIEFERSCHAUFEL	445
		4	GREIEFERSCHAUFEL	446
		4	GREIFERGABEL	465
		4	GREIFERGABEL	466
		2	KOMBISCHAUFEL	447
		2	KOMBISCHAUFEL	448
SCREEN	119-1414	1	WASSERSIEBEINSATZ	489

WARTUNGSTEILE

BESCHREIBUNG	ERSATZTEIL-NUMMER	MENGE	VERWENDET IN	SEITE
ELEKTRISCHE ANLAGE UND STARTSYSTEM				
ABDECKGLAS	100-3248	1	SCHEINWERFER U. RICHTUNGSLEUCHTE	154
	146-2438	1	BLINKLEUCHTE	157
	165-4895	1	BREMS- UND RÜCKLEUCHTE	158
ABDECKGLAS (GELB)	9X-8121	1	RUNDUM-KENNLEUCHTE	160
	100-3250	1	SCHEINWERFER U. RICHTUNGSLEUCHTE	154
BATTERIE (12 V)	9X-5408	1	BATTERIE	141
	153-5656	1	BATTERIE	140
GLÜHKERZE	172-4585	4	GLÜHKERZE	148
	177-7559	4	GLÜHKERZE	147
KEILRIEMEN	5L-3834	1	DREHSTROMGENERATOR	136
LAUFBAND UND ANTRIEB	9X-8139	1	RUNDUM-KENNLEUCHTE	160
LEUCHTE (12 V)	9X-8118	1	RUNDUM-KENNLEUCHTE	160
	084-4348	1	BREMS- UND RÜCKLEUCHTE	158
	189-3610	2	INSTRUMENTENTAFELLEUCHTE	156
	100-3246	1	SCHEINWERFER U. RICHTUNGSLEUCHTE	154
LEUCHTE (12 V) (BREMS- U. HECKLEUCHTE)	084-4348	1	BLINKLEUCHTE	157
LEUCHTE (12 V) (RECHTS- U. LINKSWENDUNG)	9W-3326	1	BLINKLEUCHTE	157
LEUCHTE (12 V) (SIGNAL)	5G-3244	1	SCHEINWERFER U. RICHTUNGSLEUCHTE	154
LEUCHTE (12 V)(55 W)	9W-0607	1	ARBEITSLEUCHTEN	152
		1	ARBEITSLEUCHTEN	153
MINISICHERUNGSZIEHER	116-7471	1	SICHERUNGSTAFEL - ABDECKUNG	145
REFLEKTOR	9R-1499	2	HECKBELEUCHTUNG	163
RELAIS	146-4323	2	ARBEITSGERÄT - VERDRAHTUNG	198
		2	ARBEITSGERÄT - VERDRAHTUNG	200
		2	ARBEITSGERÄT - VERDRAHTUNG	202
		2	FAHRERHAUSVERDRAHTUNG	186
SCHEINWERFER U. RICHTUNGSLEUCHTE	3E-7584	2	BELEUCHTUNGSANLAGE (STRASSENAUSRÜSTUNG)	166
		2	BELEUCHTUNGSANLAGE (STRASSENAUSRÜSTUNG)	170
SCHEINWERFER (12 V)	9W-3324	1	SCHEINWERFER U. RICHTUNGSLEUCHTE	154
SICHERUNG (10 A)	113-8490	9	FAHRERHAUSVERDRAHTUNG	186
		1	RÜCKFAHRWARNHORN	184
SICHERUNG (15 A)	113-8491	2	ARBEITSGERÄT - VERDRAHTUNG	198
		2	ARBEITSGERÄT - VERDRAHTUNG	200
		2	ARBEITSGERÄT - VERDRAHTUNG	202
		2	FAHRERHAUSVERDRAHTUNG	186
STAUBKAPPE	133-6517	1	UMLAUFKÜHLWASSERHEIZUNG	150
		1	UMLAUFKÜHLWASSERHEIZUNG	151
UNTERBRECHER (30 A)	147-1773	1	FAHRGESTELLVERDRAHTUNG	190

WARTUNGSTEILE

BESCHREIBUNG	ERSATZTEIL-NUMMER	MENGE	VERWENDET IN	SEITE
FAHRERHAUS				
FAHRERHAUSBELEUCHTUNG	084-4277	1	WARNANZEIGENSATZ	526
FILTER	142-9291	1	FAHRERHAUSLUFTFILTER	523
LEUCHTE (12 V)	7X-9065	1	WARNANZEIGENSATZ	526
RELAIS	115-1615	1	FAHRERHAUSHEIZUNG	534
SCHEIBENWISCHERBLATT	161-7524	1	FAHRERHAUSTÜR	518
		1	FAHRERHAUSTÜR	520
SICHERUNG (10 A)	113-8490	1	WARNHORN, ELEKTR.	537
SICHERUNG (20 A)	113-8492	1	FAHRERHAUSHEIZUNG U. BEFESTIGUNGSTEILE	529
		1	FAHRERHAUSHEIZUNG U. BEFESTIGUNGSTEILE	530
		1	FAHRERHAUSHEIZUNG U. BEFESTIGUNGSTEILE	532
HYDRAULIKSYSTEM				
DICHTUNGSSATZ	107-7491	1	SPERRVENTIL	390
HYDRAULIKÖL-TANKKAPPE	142-8937	1	HYDRAULIKTANK	378
		1	HYDRAULIKTANK	379
O-RING-DICHTUNG (19,18 MM ID)	2M-9780	1	GREIFERLEITUNGEN	322
SCHMIERNIPPEL	3B-8489	2	GREIFERZYLINDER U. -BEFESTIGUNG	301
		1	SCHILDZYLINDER U. BEFESTIGUNGSTEILE	300
SCHMIERNIPPEL (1/8-27-GEWINDE)	3B-8489	2	ZYLINDERAUFHÄNGUNG	371
		1	GREIFERZYLINDER	305
		1	GREIFERZYLINDER	306
		1	KIPPZYLINDER	310
		1	KIPPZYLINDER	311
		1	SCHAUFELZYLINDER	304
STAUBKAPPE	6V-0852	1	HYDRAULIKPUMPE UND LEITUNGEN	350
		1	HYDRAULIKPUMPE UND LEITUNGEN	352
		1	VORSTEUERLEITUNGEN	344
		1	VORSTEUERLEITUNGEN	346
KRAFTSTOFFSYSTEM				
DICHTUNG	121-3221	1	KRAFTSTOFFILTER UND LEITUNGEN	112
DICHTUNG (KRAFTSTOFFILTER)	101-3743	1	KRAFTSTOFFILTER	114
KRAFTSTOFFFILTEREINSATZ	159-6102	1	KRAFTSTOFFILTER	114
KRAFTSTOFFILTER	138-3096	1	KRAFTSTOFFILTER UND LEITUNGEN	112
KRAFTSTOFFILTERELEMENT	156-1200	1	WASSERABSCHEIDER- U. KRAFTSTOFFILTER	116
SCHALENDICHTUNGSSATZ	128-8614	1	WASSERABSCHEIDER- U. KRAFTSTOFFILTER	116
TANKKAPPE	142-8828	1	KRAFTSTOFFLEITUNGEN	120
		1	KRAFTSTOFFLEITUNGEN	122
		1	KRAFTSTOFFLEITUNGEN	124
		1	KRAFTSTOFFLEITUNGEN	126
WASSERFILTERELEMENT	131-1812	1	WASSERABSCHEIDER	135

WARTUNGSTEILE

BESCHREIBUNG	ERSATZTEIL-NUMMER	MENGE	VERWENDET IN	SEITE
KRAFTSÜBERTRAGUNG				
ÖLFILTER	1G-8878	1	ÖLFILTER	214
	191-9784	1	HYDRAULIKFILTER UND BEFESTIGUNGSTEILE	213
STAUBKAPPE	6V-0852	5	HYDROSTATIKLEITUNGEN	220
		5	HYDROSTATIKLEITUNGEN	222
	8C-3451	1	ÖLFILTER	214
KÜHLSYSTEM				
DICHTUNG	198-8555	1	KÜHLWASSERANSCHLUSS	68
HAHN	153-5967	1	KÜHLWASSERPUMPE	76
KAPPE MIT ENTLÜFTER	169-6715	1	KÜHLER U. ÖLKÜHLERBEFESTIGUNG	86
		1	KÜHLER U. ÖLKÜHLERBEFESTIGUNG	90
		1	KÜHLER UND HYDRAULIKÖLKÜHLER	82
		1	KÜHLER UND HYDRAULIKÖLKÜHLER	84
KÜHLERKAPPE	036-1865	1	KÜHLER UND HYDRAULIKÖLKÜHLER	80
	126-5027	1	KÜHLER UND HYDRAULIKÖLKÜHLER	78
SCHLAUCHLEITUNG	142-8867	1	KÜHLER U. ÖLKÜHLERBEFESTIGUNG	86
		1	KÜHLER U. ÖLKÜHLERBEFESTIGUNG	90
		1	KÜHLER UND HYDRAULIKÖLKÜHLER	84
	142-8868	1	KÜHLER U. ÖLKÜHLERBEFESTIGUNG	86
		1	KÜHLER U. ÖLKÜHLERBEFESTIGUNG	90
		1	KÜHLER UND HYDRAULIKÖLKÜHLER	84
VENTILDECKELDICHTUNG	154-1828	1	KÜHLWASSERPUMPE	76
WASSERTEMPERATURREGLER	4W-8063	1	KÜHLWASSERPUMPE	73
	154-1826	1	KÜHLWASSERPUMPE	76
LUFTANSAUG- UND ABGASSYSTEM				
ELEMENT (AUSFALLSCHUTZ)	140-2334	1	LUFTREINIGER	94
		1	LUFTREINIGER	95
ELEMENT (HAUPTELEMENT)	134-8726	1	LUFTREINIGER	94
		1	LUFTREINIGER	95
ENTLEERUNGSVENTIL	112-9717	1	LUFTREINIGER	94
		1	LUFTREINIGER	95
LUFTANZEIGE (FILTERWARTUNG)	150-5030	1	DRUCKLUFTLEITUNGEN	96
MOTOR - GRUNDAUSFÜHRUNG				
ABLASSVENTIL	144-9961	1	ÖLWANNE	54
	170-7614	1	ÖLWANNE	52
DICHTUNG	153-5933	1	ÖLWANNE	54
DICHTUNG (VENTILHALTERUNG)	217-2752	1	VENTILSTEUERUNG	65
GAZE	153-5939	1	VENTILDECKEL	16
ÖLEINFÜLLKAPPE	217-7358	1	ÖLWANNE	54
ÖLFILTER	150-4140	1	ÖLWANNE	54
ÖLKAPPE	170-7666	1	VENTILDECKEL	14
ÖLSCHRAUBE	165-3605	1	ÖLWANNE	54
SCHLAUCHLEITUNG (ENTDUNSTER)	153-0104	1	VENTILDECKEL	14
STAUBKAPPE	8C-3445	1	MOTORÖLABLASS	30
		1	MOTORÖLABLASS	31
UNTERLEGSCHEIBE	153-6832	2	ÖLWANNE	54
VENTILDECKELDICHTUNG	159-0082	1	VENTILDECKEL	14

WARTUNGSTEILE

BESCHREIBUNG	ERSATZTEIL-NUMMER	MENGE	VERWENDET IN	SEITE
RAHMEN UND FAHRGESTELL				
ENTLÜFTER	9G-5127	2	LADERRAHMEN	270
	124-2831	2	LADERRAHMEN	272
MAGNETSTOPFEN	3S-9182	5	LADERRAHMEN	270
		5	LADERRAHMEN	272
REFLEKTOR	9R-1499	2	BELEUCHTUNG FÜR STRASSENFAHRT - BEFESTIGUNG	278
SCHMIERNIPPEL (1/8-27-GEWINDE)	3B-8488	2	LADERRAHMEN	270
	3B-8489	1	*FRAME GP-BLADE	268
SCHMIERSYSTEM				
ÖLFILTER	7W-2327	1	ÖLFILTER	66
WARTUNGSAUSRÜSTUNG UND -ZUBEHÖR				
LEUCHTE (12 V)	7M-9957	1	TYPENSCHILDBEFESTIGUNG	594

RICAMBI PER MANUTENZIONE

DESCRIZIONE	NUMERO DEL RICAMBIO	QTÀ	DOVE USATI	PAGINA
APPARATO PROPULSORE				
FILTRO DELL'OLIO	1G-8878	1	FILTRO DELL'OLIO	214
	191-9784	1	FILTRO IDRAULICO E MONTAGGIO - GR	213
TAPPO ANTIPOLVERE	6V-0852	5	TUBAZIONI IDROSTATICHE - GR	220
		5	TUBAZIONI IDROSTATICHE - GR	222
	8C-3451	1	FILTRO DELL'OLIO	214
ATTREZATURA				
INGRASSATORE	3B-8489	10	COMANDO ATTREZZATURA - GR	414
INGRASSATORE (FILETTATURA 1/8-27)	3B-8488	2	COMANDO ATTREZZATURA - GR	414
	3B-8489	10	COMANDO ATTREZZATURA - GR	412
ATTREZZATURA				
INGRASSATORE	3B-8489	2	LAMA	426
INGRASSATORE (FILETTATURA 1/8-27)	3B-8489	4	BENNA A RAFFIO - GR	445
		4	BENNA A RAFFIO - GR	446
		2	BENNA MULTIUSO - GR	447
		2	BENNA MULTIUSO - GR	448
		4	FORCA RAFFIO - GR	465
		4	FORCA RAFFIO - GR	466
RETINA	119-1414	1	FILTRO A RETE DELL'ACQUA - GR	489
ATTREZZATURA E FORNITURE DI MANUTENZIONE				
LAMPADA (12 VOLT)	7M-9957	1	BULLONERIA DI REGOLAZIONE - GR	594
IMPIANTO ALIMENTAZIONE CARBURANTE				
ELEMENTO DEL FILTRO DEL CARBURANTE	156-1200	1	FILTRO SEPARATORE CARBURANTE/ACQUA	116
ELEMENTO FILTRANTE DEL CARBURANTE	159-6102	1	FILTRO-CARBURANTE	114
ELEMENTO FILTRANTE DELL'ACQUA	131-1812	1	SEPARATORE DELL'ACQUA	135
FILTRO-CARBURANTE	138-3096	1	FILTRO E TUBAZIONI DEL CARBURANTE	112
GUARNIZIONE	121-3221	1	FILTRO E TUBAZIONI DEL CARBURANTE	112
KIT - GUARNIZIONE DEL BICCHIERINO	128-8614	1	FILTRO SEPARATORE CARBURANTE/ACQUA	116
TAPPO DEL SERBATOIO CARBURANTE	142-8828	1	TUBAZIONI CARBURANTE - GR	120
		1	TUBAZIONI CARBURANTE - GR	122
		1	TUBAZIONI CARBURANTE - GR	124
		1	TUBAZIONI CARBURANTE - GR	126
TENUTA (FILTRO DEL CARBURANTE)	101-3743	1	FILTRO-CARBURANTE	114

RICAMBI PER MANUTENZIONE

DESCRIZIONE	NUMERO DEL RICAMBIO	QTÀ	DOVE USATI	PAGINA
MOTORE BASE				
FILTRO DELL'OLIO	150-4140	1	COPPA OLIO - GR	54
GARZA	153-5939	1	COPERCHIO MECCANISMO VALVOLE - GR	16
GUARNIZIONE COPERCHIO VALVOLE	159-0082	1	COPERCHIO MECCANISMO VALVOLE - GR	14
GUARNIZIONE (STAFFA DELLA VALVOLA)	217-2752	1	MECCANISMO VALVOLA - GR	65
RONDELLA	153-6832	2	COPPA OLIO - GR	54
TAPPO - BOCCHETTONE DI RIEMPIMENTO DELL'OLIO	217-7358	1	COPPA OLIO - GR	54
TAPPO ANTIPOLVERE	8C-3445	1	SCARICO DELL'OLIO MOTORE - GR	30
		1	SCARICO DELL'OLIO MOTORE - GR	31
TAPPO DELL'OLIO	165-3605	1	COPPA OLIO - GR	54
	170-7666	1	COPERCHIO MECCANISMO VALVOLE - GR	14
TENUTA	153-5933	1	COPPA OLIO - GR	54
TUBO FLESSIBILE (SCARICO FUMI)	153-0104	1	COPERCHIO MECCANISMO VALVOLE - GR	14
VALVOLA DI SCARICO	144-9961	1	COPPA OLIO - GR	54
	170-7614	1	COPPA OLIO - GR	52
POSTAZIONE DELL'OPERATORE				
FILTRO	142-9291	1	FILTRO - ARIA CABINA	523
FUSIBILE (10 A)	113-8490	1	AVVISATORE ACUSTICO-ELETTRICO	537
FUSIBILE (20 A)	113-8492	1	RISCALDAMENTO DELLA CABINA E MONTAGGIO	529
		1	RISCALDAMENTO DELLA CABINA E MONTAGGIO	530
		1	RISCALDAMENTO DELLA CABINA E MONTAGGIO	532
LAMPADA (12V)	7X-9065	1	INDICATORE E ALLARME - GR	526
LUCE INTERNA	084-4277	1	INDICATORE E ALLARME - GR	526
RELÈ	115-1615	1	RISCALDAMENTO CABINA - GR	534
SPAZZOLA - TERGICRISTALLO	161-7524	1	PORTIERA CABINA - GR	518
		1	PORTIERA CABINA - GR	520
SISTEMA ARIA D'ASPIRAZIONE E SCARICO				
ELEMENTO (PRIMARIO)	134-8726	1	FILTRO ARIA - GR	94
		1	FILTRO ARIA - GR	95
ELEMENTO (SECONDARIO)	140-2334	1	FILTRO ARIA - GR	94
		1	FILTRO ARIA - GR	95
INDICATORE D'INTASAMENTO (MANUTENZIONE FILTRI)	150-5030	1	TUBAZIONI ARIA - GR	96
VALVOLA DI SCARICO	112-9717	1	FILTRO ARIA - GR	94
		1	FILTRO ARIA - GR	95
SISTEMA DI LUBRIFICAZIONE				
FILTRO-OLIO MOTORE	7W-2327	1	FILTRO OLIO MOTORE	66

RICAMBI PER MANUTENZIONE

DESCRIZIONE	NUMERO DEL RICAMBIO	QTÀ	DOVE USATI	PAGINA
SISTEMA DI RAFFREDDAMENTO				
GUARNIZIONE	198-8555	1	RACCORDO ACQUA	68
GUARNIZIONE DEL COPERCHIO	154-1828	1	POMPA ACQUA - GR	76
REGOLATORE DELLA TEMPERATURA DELL'ACQUA	4W-8063	1	POMPA ACQUA - GR	73
	154-1826	1	POMPA ACQUA - GR	76
RUBINETTO	153-5967	1	POMPA ACQUA - GR	76
TAPPO A SFIATO	169-6715	1	RADIATORE E SCAMBIATORE DI CALORE DELL'OLIO MONTAGGIO - GR	86
		1	RADIATORE E SCAMBIATORE DI CALORE DELL'OLIO MONTAGGIO - GR	90
		1	RADIATORE E SCAMBIATORE D'OLIO	82
		1	RADIATORE E SCAMBIATORE D'OLIO	84
TAPPO DEL RADIATORE	036-1865	1	RADIATORE E SCAMBIATORE D'OLIO	80
	126-5027	1	RADIATORE E SCAMBIATORE D'OLIO	78
TUBO FLESSIBILE	142-8867	1	RADIATORE E SCAMBIATORE DI CALORE DELL'OLIO MONTAGGIO - GR	86
		1	RADIATORE E SCAMBIATORE DI CALORE DELL'OLIO MONTAGGIO - GR	90
		1	RADIATORE E SCAMBIATORE D'OLIO	84
	142-8868	1	RADIATORE E SCAMBIATORE DI CALORE DELL'OLIO MONTAGGIO - GR	86
		1	RADIATORE E SCAMBIATORE DI CALORE DELL'OLIO MONTAGGIO - GR	90
		1	RADIATORE E SCAMBIATORE D'OLIO	84
SISTEMA ELETTRICO E D'AVVIAMENTO				
BATTERIA (12 VOLT)	9X-5408	1	BATTERIA	141
	153-5656	1	BATTERIA	140
CANDELETTA DI PRERISCALDAMENTO	172-4585	4	CANDELETTA DI PRERISCALDAMENTO	148
	177-7559	4	CANDELETTA DI PRERISCALDAMENTO	147
CATARIFRANGENTE	9R-1499	2	LUCI POSTERIORI - GR	163
CINGHIA A V	5L-3834	1	ALTERNATORE DI CARICA - GR	136
CINGHIA DI COMANDO	9X-8139	1	LAMPADA FARO ROTANTE - GR	160
ESTRATTORE FUSIBILI	116-7471	1	COPERCHIO PANNELLO FUSIBILI - GR	145
FANALE ANTERIORE E SEGNALE DI DIREZIONE - GR	3E-7584	2	LUCI STRADALI	166
		2	LUCI STRADALI	170
FANALE ANTERIORE (12 VOLT)	9W-3324	1	FANALE ANTERIORE E SEGNALE DI DIREZIONE - GR	154
FUSIBILE (10 A)	113-8490	1	ALLARME DI RETROMARCIA - GR	184
		9	CABLAGGIO - CABINA	186
FUSIBILE (15 A)	113-8491	2	CABLAGGIO - CABINA	186
		2	CABLAGGIO DELL'ATTREZZATURA - GR	198
		2	CABLAGGIO DELL'ATTREZZATURA - GR	200
		2	CABLAGGIO DELL'ATTREZZATURA - GR	202
INTERRUTTORE DI CIRCUITO (30 A)	147-1773	1	CABLAGGIO DEL TELAIO - GP	190
LAMPADA (12 V) (SVOLTA)	9W-3326	1	LAMPADA - SEGNALE	157
LAMPADA (12 VOLT)	9X-8118	1	LAMPADA FARO ROTANTE - GR	160

RICAMBI PER MANUTENZIONE

DESCRIZIONE	NUMERO DEL RICAMBIO	QTÀ	DOVE USATI	PAGINA
	084-4348	1	LAMPADA D'ARRESTO E DI CODA - GR	158
	189-3610	2	LAMPADA D'ILLUMINAZIONE PANNELLO - GR	156
LAMPADA (12 VOLT)(55 WATT)	9W-0607	1	LUCI DI LAVORO - GR	152
		1	LUCI DI LAVORO - GR	153
LAMPADA (12V)	100-3246	1	FANALE ANTERIORE E SEGNALE DI DIREZIONE - GR	154
LAMPADA (12V) (ARRESTO E POSTERIORI)	084-4348	1	LAMPADA - SEGNALE	157
LAMPADA (12V) (SEGNALE DI DIREZIONE)	5G-3244	1	FANALE ANTERIORE E SEGNALE DI DIREZIONE - GR	154
LENTE	100-3248	1	FANALE ANTERIORE E SEGNALE DI DIREZIONE - GR	154
	146-2438	1	LAMPADA - SEGNALE	157
	165-4895	1	LAMPADA D'ARRESTO E DI CODA - GR	158
LENTE COLOR AMBRA	9X-8121	1	LAMPADA FARO ROTANTE - GR	160
	100-3250	1	FANALE ANTERIORE E SEGNALE DI DIREZIONE - GR	154
RELÈ	146-4323	2	CABLAGGIO - CABINA	186
		2	CABLAGGIO DELL'ATTREZZATURA - GR	198
		2	CABLAGGIO DELL'ATTREZZATURA - GR	200
		2	CABLAGGIO DELL'ATTREZZATURA - GR	202
TAPPO ANTIPOLVERE	133-6517	1	RISCALDATORE DELL'ACQUA DI CAMICIA	150
		1	RISCALDATORE DELL'ACQUA DI CAMICIA	151
SISTEMA IDRAULICO				
GUARNIZIONE AD ANELLO (19,18MM DI)	2M-9780	1	TUBAZIONI DEL RAFFIO	322
INGRASSATORE	3B-8489	1	CILINDRO E MONTAGGIO DELLA LAMA	300
		2	CILINDRO E MONTAGGIO RAFFIO - GR	301
INGRASSATORE (FILETTATURA 1/8-27)	3B-8489	1	CILINDRO BENNA - GR	304
		1	CILINDRO DEL RAFFIO	305
		1	CILINDRO DEL RAFFIO	306
		1	CILINDRO D'INCLINAZIONE	310
		1	CILINDRO D'INCLINAZIONE	311
		2	MONTAGGIO - CILINDRO	371
KIT - TENUTA	107-7491	1	VALVOLA DI RITEGNO - GR	390
TAPPO ANTIPOLVERE	6V-0852	1	TUBAZIONI CIRCUITO PILOTA - GR	344
		1	TUBAZIONI CIRCUITO PILOTA - GR	346
		1	TUBAZIONI POMPA - GR	350
		1	TUBAZIONI POMPA - GR	352
TAPPO SERBATOIO IDRAULICO	142-8937	1	SERBATOIO IDRAULICO	378
		1	SERBATOIO IDRAULICO	379

RICAMBI PER MANUTENZIONE

DESCRIZIONE	NUMERO DEL RICAMBIO	QTÀ	DOVE USATI	PAGINA
TELAIO E CARROZZERIA				
CATARIFRANGENTE	9R-1499	2	MONTAGGIO LUCI STRADALI - GR	278
INGRASSATORE (FILETTATURA 1/8-27)	3B-8488	2	TELAIO CARICATORE - GR	270
	3B-8489	1	TELAIO LAMA - GR	268
SFIATATOIO	9G-5127	2	TELAIO CARICATORE - GR	270
	124-2831	2	TELAIO CARICATORE - GR	272
TAPPO MAGNETICO	3S-9182	5	TELAIO CARICATORE - GR	270
		5	TELAIO CARICATORE - GR	272

INDEX

Name	Page
A	
ACCUMULATOR & MTG GP-HYDRAULIC	284
AIR CLEANER GP	94
	95
ALTERNATOR GP-CHARGING	136
	138
ARM GP-MATERIAL HANDLING	418
ARMREST & MOUNTING GP	497
ARMREST GP	498
AXLE GP	204
B	
BAR GP-TOOTH	419
	420
	421
	422
	423
	424
	425
BATTERY GP	140
	141
BATTERY (12 VOLT)	140
	141
BELT-DRIVE	160
BLADE AR	425
BLADE AS-WIPER	518
	520
BLADE GP	426
BOWL AS-WATER COLLECTION	116
BOX GP-STORAGE	500
BREATHER	270
	272
BUCKET AR-DIRT	427
	428
BUCKET AR-GENERAL PURPOSE	429
	430
	431
BUCKET AR-GRAPPLE	431
	432
	433
	434
	435
	436
BUCKET AR-LIGHT MATERIAL	437
BUCKET AR-MULTIPURPOSE	438
	439
BUCKET AS-DIRT	440
	441
BUCKET AS-GENERAL PURPOSE	442
	443
BUCKET AS-LIGHT MATERIAL	444
BUCKET GP-GRAPPLE	445
	446
BUCKET GP-MULTIPURPOSE	447
	448
BUCKET GP-UTILITY	449
	450
BUMPER GP-REAR	252
C	
CAMSHAFT GP	11
	12
CANOPY GP-ROPS	501
CAP AS-DUST	150
	151
CAP AS-FUEL	120
	122
	124
	126
CAP AS-HYDRAULIC	378
	379
CAP AS-RADIATOR	78
	80
CAP-DUST	30
	31
	214
	220
	222
	344
	346
	350
	352
CAP-OIL	14
CAP-OIL FILLER	54
CAP-VENTED	82
	84
	86
	90
CARRIAGE AS-FORK	451
CHASSIS AR	1
	2
CIRCUIT BREAKER AS (30 AMP)	190
COCK	76
COMMON AR	3
	4
CONNECTION GP-ELECTRICAL	142
	143
CONNECTION GP-WATER	68
	69
CONNECTOR GP	226
CONTROL GP-GOVERNOR	108
	110
CONTROL GP-HANDLE	285
	286
	287
	288
CONTROL GP-INTERLOCK	144

INDEX

Name	Page
CONTROL GP-PARKING BRAKE	206
	208
CONTROL GP-PILOT OPERATED HYD	289
	290
	291
	292
	293
	294
	295
	296
	297
	298
	299
CONTROL GP-WORK TOOL	412
	414
CONVERSION AR-ROADING	253
	254
CONVERSION GP-ROADING	255
	256
COUNTERWEIGHT GP	258
	259
	260
	261
	262
COUPLER GP-QUICK	452
	453
COVER GP-CAB	502
COVER GP-CONSOLE	503
	504
COVER GP-FRONT HOUSING	13
COVER GP-FUSE PANEL	145
COVER GP-LINES	454
COVER GP-VALVE MECHANISM	14
	16
CRANKSHAFT GP	18
	20
CYLINDER & MTG GP-BLADE	300
CYLINDER & MTG GP-GRAPPLE	301
	302
CYLINDER BLOCK GP	22
	23
	24
CYLINDER GP-BLADE	303
CYLINDER GP-BUCKET	304
CYLINDER GP-GRAPPLE	305
	306
CYLINDER GP-LIFT	307
	308
	309
CYLINDER GP-TILT	310
	311
CYLINDER HEAD GP	26
	27
	28
	29

D

Name	Page
DOOR & MTG GP-CAB	506
	510
	512
	516
DOOR GP-CAB	518
	520
DRAIN GP-ENGINE OIL	30
	31
DRIVE GP-TANDEM	210
	212
DUCT GP-DEFROST	522

E

Name	Page
EDGE GP-CUTTING	455
	456
	457
	458
	459
	460
	461
	462
ELECTRONICS GP-WORK TOOL	146
ELEMENT AS (PRIMARY)	94
	95
ELEMENT AS (SECONDARY)	94
	95
ENCLOSURE GP-ENGINE	264
	266
ENGINE AR-PRIMARY	5
	6

F

Name	Page
FAN GP-BLOWER	70
	71
FASTENER GP-ENGINE	32
FILM GP	588
	590
	592
	593
FILM-IDENTIFICATION (GROUP & SEQUENCE NO.)	536
FILM-INSTRUCTION (ALTERNATE EXIT)	518
	520
	580
	584
	586
FILM-NOTICE	256
FILM-WARNING (CLEARANCE)	254
FILTER	523
FILTER & LINES GP-FUEL	112
FILTER & MTG GP-HYDRAULIC	213

INDEX

Name	Page
FILTER AS-ENGINE OIL	66
FILTER AS-OIL	214
FILTER ELEMENT AS-FUEL	114
FILTER ELEMENT-FUEL	116
FILTER ELEMENT-WATER	135
FILTER GP-CAB AIR	523
FILTER GP-ENGINE OIL	66
FILTER GP-FUEL	112
	114
	115
FILTER GP-OIL	213
	214
FILTER GP-WATER SEP & FUEL	116
FILTER-OIL	54
FITTING GP-FUEL LINES	117
FITTING-GREASE	300
	301
	414
	426
FITTING-GREASE (1/8-27 THD)	268
	270
	304
	305
	306
	310
	311
	371
	412
	414
	445
	446
	447
	448
	465
	466
FLASHER AS-SIGNAL	166
	170
FLOOR MAT	524
FLYWHEEL GP	33
	34
FORK AR-GRAPPLE	463
	464
FORK GP-GRAPPLE	465
	466
	467
FORK GP-PALLET	468
	469
	470
FORK GP-UTILITY	471
	472
	473
FRAME GP-BLADE	268
FRAME GP-LOADER	270
	272
FUSE (10 AMP)	184
	186
	537
FUSE (15 AMP)	186
	198
	200
	202
FUSE (20 AMP)	529
	530
	532

G

GASKET	68
	112
GASKET-COVER	76
GASKET (VALVE BRACKET)	65
GASKET-VALVE COVER	14
GAUGE & WARNING GP	525
GAUGE & WARNING GP–RH	526
GAUZE	16
GLOW PLUG GP	147
	148
GOVERNOR GP	118
GRAPPLE GP-UTILITY	474
	476
GUARD GP-ROPS/FOPS	527
GUIDE GP-LINES	417

H

HANDLE & PIN GP-COUPLER–LH	477
HANDLE & PIN GP-COUPLER–RH	478
HANDLE GP-COUPLER–LH	479
HANDLE GP-COUPLER–RH	480
HEADLINER-CAB	528
HEATER & MTG GP-CAB	529
	530
	532
HEATER GP-CAB	534
	536
HEATER GP-JACKET WATER	149
	150
	151
HORN GP-ELECTRIC	537
	538
HOSE	84
	86
	90
HOSE (FUMES DISPOSAL)	14
HOUSING GP-FLYWHEEL	35
	36
HOUSING GP-FRONT	38
	40
	42
HYDRAULIC AR	312

INDEX

Name	Page
	313
	314
	315
I	
INDICATOR-AIR (FILTER SERVICE)	96
INSTALLATION AR-ENGINE	7
	8
	9
	10
INSTALLATION AR-HEATER	538
K	
KIT-BOWL SEAL	116
KIT-CAB DOOR & MOUNTING	540
	542
KIT-CONNECTING PLUG (12 PIN)	186
	190
KIT-CONNECTING PLUG (2 PIN)	186
	190
	196
	494
	538
KIT-CONNECTING PLUG (3 PIN)	166
	170
	186
	190
	506
	512
KIT-CONNECTING PLUG (4 PIN)	166
	170
	186
	190
KIT-CONNECTING PLUG (6 PIN)	166
	170
	190
KIT-CONNECTING PLUG (8 PIN)	186
	190
	494
KIT-FUEL PUMP	112
KIT-RECEPTACLE (12 PIN)	174
	190
KIT-RECEPTACLE (2 PIN)	166
	170
	182
	184
	190
	270
	398
	403
	410
	538
KIT-RECEPTACLE (3 PIN)	166
	186
	196
	378
	379
	502
	506
	510
	512
	516
KIT-RECEPTACLE (4 PIN)	156
	157
	158
	166
	170
	186
	190
	272
	278
	387
	388
	549
KIT-RECEPTACLE (6 PIN)	154
	166
	170
	186
	190
	285
	286
	552
KIT-RECEPTACLE (8 PIN)	186
	190
	198
	200
	202
	287
	288
	494
KIT-ROADING PLATE & MOUNTING	481
	482
KIT-ROD BEARING	18
KIT-SEAL	390
KIT-SNOW REMOVAL CONVERSION	483
KIT-WATER BASE	116
	135
KNOB	573
L	
LAMP GP-DOME	526
LAMP GP-FLOOD	152
	153
LAMP GP-HEAD & SIGNAL	154
	166
	170
LAMP GP-PANEL ILLUMINATION	156

INDEX

Name	Page
LAMP GP-SIGNAL	157
LAMP GP-STOP & TAIL	158
LAMP GP-WARNING BEACON	159
	160
LAMP-HEAD (12 VOLT)	154
LAMP (12 V) (TURN)	157
LAMP (12 VOLT)	156
	158
	160
LAMP (12 VOLTS)	594
LAMP (12 VOLT)(55 WATT)	152
	153
LAMP (12V)	154
	526
LAMP (12V) (SIGNAL)	154
LAMP (12V) (STOP AND TAIL)	157
LENS	157
	158
LENS-AMBER	154
	160
LENS AS	154
LIFTING GP-ENGINE	44
	45
LIFTING GP-MACHINE	274
	275
	276
	277
LIGHTING AR-STOP & FLOOD	161
LIGHTING GP-FRONT	162
LIGHTING GP-REAR	163
	164
LIGHTING GP-ROADING	166
	170
LIGHTING GP-WARNING BEACON	173
LINER GP-CAB	544
LINES GP-AIR	96
	97
LINES GP-BUCKET	316
	318
LINES GP-CONNECTING	320
LINES GP-FUEL	120
	122
	124
	126
LINES GP-GRAPPLE	322
	324
LINES GP-HEATER	546
	547
LINES GP-HYDRAULIC FAN	326
	327
	328
	329
LINES GP-HYDRAULIC FILTER	216
	218
LINES GP-HYDRAULIC OIL COOLER	330
	331
	332
LINES GP-HYDROSTATIC	220
	222
LINES GP-LIFT CYLINDER	334
	336
	338
	340
LINES GP-PILOT	342
	344
	346
	348
LINES GP-PUMP	350
	352
LINES GP-TILT CYLINDER	354
	356
	358
	360
LINES GP-WORK TOOL	362
	364
LOCK GP-QUICK COUPLER	484

M

MANIFOLD GP-EXHAUST	98
	99
MANIFOLD GP-INLET	100
MANIFOLD GP-RETURN	224
	226
MIRROR & MTG GP-REAR VIEW	548
MODULE GP-WARNING INDICATOR	174
MOTOR & MTG GP-HYDRAULIC FAN	366
	367
MOTOR & MTG GP-HYDROSTATIC	228
	229
MOTOR GP-GEAR	368
	369
	370
MOTOR GP-PISTON	230
MOTOR GP-WINDOW WIPER	549
MOUNTING GP-ALTERNATOR	46
MOUNTING GP-CYLINDER	371
MOUNTING GP-ENGINE	47
	48
MOUNTING GP-FAN	49
MOUNTING GP-MUFFLER	101
	102
	103
	104
MOUNTING GP-PUMP	232
	233
MOUNTING GP-REGISTRATION	594
MOUNTING GP-ROADING LIGHTS	278
MOUNTING GP-ROPS	550
MOUNTING GP-STARTING MOTOR	50

INDEX

Name	Page
	51
MUFFLER GP	105
	106

O

OPERATOR AR-CANOPY	551

P

PAN GP-OIL	52
	54
PANEL AR-INSTRUMENT	551
PANEL GP-INSTRUMENT	552
	555
PANEL GP-SIDE	280
	281
PEDAL GP-GOVERNOR	556
	557
	558
PISTON & ROD GP	58
	59
PLATE & FILM GP	597
	606
	608
	610
	611
	612
	613
	614
	616
	618
	619
PLATE & FILM GP–ARABIC	598
PLATE & FILM GP–CHINESE	598
PLATE & FILM GP–CZECHOSLOVAKIAN	599
PLATE & FILM GP–DANISH	599
PLATE & FILM GP–DUTCH	599
PLATE & FILM GP–ENGLISH	595
PLATE & FILM GP–FINNISH	600
PLATE & FILM GP–FRENCH	600
PLATE & FILM GP–GERMAN	601
	620
PLATE & FILM GP–GREEK	601
	620
PLATE & FILM GP–HEBREW	602
PLATE & FILM GP–HUNGARIAN	624
PLATE & FILM GP–ICELANDIC	602
	621
PLATE & FILM GP–INDONESIAN	603
	621
PLATE & FILM GP–ITALIAN	603
	622
PLATE & FILM GP–JAPANESE	604
PLATE & FILM GP–NORWEGIAN	604
	622
PLATE & FILM GP–POLISH	605
	623
PLATE & FILM GP–PORTUGUESE	605
PLATE & FILM GP–RUSSIAN	623
PLATE & FILM GP–SPANISH	596
PLATE & FILM GP–SWEDISH	607
PLATE & FILM GP–TURKISH	607
PLATFORM GP-OPERATOR	559
	560
PLUG-GLOW	147
	148
PLUG GP-CYLINDER BLOCK	60
PLUG GP-PILOT VALVE	372
PLUG GP-WATER LINES	72
PLUG-MAGNETIC	270
	272
PLUG-OIL	54
POWER TRAIN AR	234
	235
PULLER-MINIFUSE	145
PULLEY GP-CRANKSHAFT	61
	62
PULLEY GP-WATER PUMP	63
PUMP & MTG GP-FUEL TRANSFER	128
PUMP & MTG GP-HYDROSTATIC	236
	237
PUMP & MTG GP-WORK TOOL	373
	374
PUMP GP-DIAPHRAGM	485
PUMP GP-ENGINE OIL	67
PUMP GP-FUEL INJECTION	130
	132
PUMP GP-FUEL PRIMING	115
PUMP GP-GEAR	375
PUMP GP-PISTON	238
	240
PUMP GP-WATER	73
	74
	76

R

RADIATOR & HYD OIL COOLER GP	78
	80
	82
	84
RADIATOR & OIL COOLER MTG GP	86
	90
	92
REFLECTOR	163
	278
REGULATOR-WATER TEMPERATURE	73
	76
RELAY AS	186

INDEX

Name	Page
	198
	200
	202
	534
RELAY AS (12 VOLT)	190
	196

S

SCREEN	489
SEAL	54
SEAL (FUEL FILTER)	114
SEAL GP-CAB	561
	562
	563
SEAL-O-RING (19.18MM ID)	322
SEAT & MOUNTING GP	564
	565
SEAT BELT GP	566
	567
	568
	569
	570
SEAT GP-SUSPENSION	571
SENSOR GP-TEMP & PRESS	175
SEPARATOR GP-WATER	135
SERVICE GP-WORK TOOL	176
SOFTWARE GP-WORK TOOL	146
SOLENOID GP-SHUTOFF	177
SPRING GP-BLADE	486
SPRING GP-GAS	572
STARTING MOTOR GP-ELECTRIC	178
	179
	180
STEP GP-MATERIAL HANDLING ARM	487
	488
STRAINER GP-WATER	489
SUN VISOR	573
	574
SUPPRESSION GP-SOUND	282
	283
SWITCH AS-KEY START	525
SWITCH AS-PRESSURE	214
SWITCH AS-3 POSITION (HEATER FAN)	534
SWITCH GP-PRESSURE	182
SWITCH GP-PRESSURE–OIL	181
SWITCH GP-TEMPERATURE–WATER	183
SWITCH-PRESSURE (OIL)	181

T

TANK & MTG GP-HYDRAULIC	376
	377
TANK & MTG GP-WATER	490
TANK GP-HYDRAULIC	378
	379
TANK GP-WATER	493
	494
TIRE (10-16.5 8 PLY) (CATERPILLAR)	248
	250
TIRE (265-521 8 PLY) (CATERPILLAR)	247
	248
	249
TIRE (31 X 15.50-15 8 PLY) (CATERPILLAR)	244
TOOTH GP-UNI	496

V

V-BELT	136
VALVE & MTG GP-CONTROL	380
	381
	382
	383
	384
	385
	386
VALVE & MTG GP-DIVERTER	387
	388
VALVE AS-FLUID SAMPLING	214
VALVE-DRAIN	52
	54
VALVE GP-BANK 2	389
VALVE GP-CHECK	390
VALVE GP-CONTROL	392
	394
	396
	398
	400
VALVE GP-MODULATING	402
VALVE GP-PILOT	403
	404
	405
VALVE GP-RELIEF	406
	407
	408
	409
VALVE GP-SHUTOFF	226
VALVE GP-SOLENOID	410
VALVE MECHANISM GP	64
	65
VALVE-SHUTOFF	224
	226
	546
VALVE-VACUATOR	94
	95
VISOR GP-CAB	573
	574

INDEX

Name	Page	Name	Page

W

WARNING GP-BACKUP 184
WASHER 54
WHEEL & TIRE AR 242
243
244
245
246
247
248
249
250
251
WHEEL & TIRE GP 251
WHEEL AS (7.50-16 SOLID TIRE) (CATERPILLAR) 245
251
WINDOW GP-CAB 575
580
582
583
584
586
WINDOW GP-CAB–LH 578
WINDOW GP-CAB–RH 576
WIRING GP-CAB 186
WIRING GP-CHASSIS 190
WIRING GP-ENGINE 194
195
WIRING GP-REAR LIGHTING 196
WIRING GP-WORK TOOL 198
200
202

INDEX

Désignation	Page

A

ACCOUDOIR (ASS)	498
ACCOUDOIR ET MONTAGE (ASS)	497
ACCUMULATEUR ET MONTAGE - HYDRAULIQUE (ASS)	284
ALTERNATEUR DE CHARGE (ASS)	136
	138
AMPOULE (12 V)	154
AMPOULE (12 V) (SIGNAL)	154
AMPOULE (12 V) (STOP ET ARRIÈRE)	157
AMPOULE (12 VOLTS)	156
	158
	160
	594
AMPOULE (12 VOLTS) (CLIGNOTANT)	157
AMPOULE (12 VOLTS)(55 WATTS)	152
	153
AMPOULE (12V)	526
ARBRE A CAMES (ASS)	11
	12
AUTOCOLLANT DE MISE EN GARDE (DÉGAGEMENT)	254
AUTOCOLLANT D'IDENTIFICATION (ASSEMBLAGE ET NO DE SÉQUENCE)	536
AVERTISSEUR DE RECUL (ASS)	184

B

BALAI D'ESSUIE-GLACE (ENS)	518
	520
BARRE-DENTS (ASS)	419
	420
	421
	422
	423
	424
	425
BATI - CHARGEUSE (ASS)	270
BATI - CHARGEUSE (ASS)	272
BÂTI DE LAME (ASS)	268
BATTERIE (ASS)	140
BATTERIE (ASS)	141
BATTERIE (12 VOLTS)	140
	141
BLOC-CYLINDRES (ASS)	22
	23
	24
BOUCHON - BLOC-CYLINDRES	60
BOUCHON À ÉVENT	82
	84
	86
	90
BOUCHON AIMANTÉ	270
	272
BOUCHON DE CARBURANT (ENS)	120
	122
	124
	126
BOUCHON DE GOULOTTE DE REMPLISSAGE D'HUILE	54
BOUCHON DE RADIATEUR (ENS)	78
	80
BOUCHON DE SOUPAPE PILOTE (ASS)	372
BOUCHON DES CANALISATIONS D'EAU (ASS)	72
BOUCHON D'HUILE	54
BOUCHON D'HUILE	14
BOUCHON HYDRAULIQUE (ENS)	378
	379
BOUGIE DE PRÉCHAUFFAGE	147
	148
BOUGIE DE PRÉCHAUFFAGE (ASS)	147
	148
BOULONNERIE - MOTEUR (ASS)	32
BOURRELET D'ÉTANCHÉITÉ	54
BOURRELET D'ÉTANCHÉITÉ (FILTRE À CARBURANT)	114
BOUTON	573
BOUTON DE TEMPÉRATURE	183
BRANCHEMENT ÉLECTRIQUE (ASS)	142
	143
BRAS DE MANUTENTION (ASS)	418

C

CABINE - REVÊTEMENT (ASS)	544
CABINE AVEC PAVILLON (VERSION)	551
CÂBLAGE - OUTIL DE TRAVAIL (ASS)	198
	200
	202
CABLAGE DE CABINE (ASS)	186
CABLAGE DE CHASSIS (ASS)	190
CABLAGE DE MOTEUR (ASS)	194
	195
CABLAGE D'ECLAIRAGE ARRIERE (ASS)	196
CACHE-SOUPAPES (ASS)	14
	16
CANALISATIONS - BRANCHEMENT (ASS)	320
CANALISATIONS - OUTIL DE TRAVAIL (ASS)	362
	364
CANALISATIONS A COMMANDE PILOTE (ASS)	342
	344
	346
	348
CANALISATIONS D'AIR (ASS)	96
	97
CANALISATIONS DE CARBURANT (ASS)	120
CANALISATIONS DE CARBURANT (ASS)	122

INDEX

Désignation	Page
	124
	126
CANALISATIONS DE CHAUFFAGE (ASS)	546
	547
CANALISATIONS DE FILTRE HYDRAULIQUE	216
	218
CANALISATIONS DE POMPE (ASS)	350
	352
CANALISATIONS DE REFROIDISSEUR D'HUILE HYDR. (ASS)	330
	331
	332
CANALISATIONS DE VÉRIN DE LEVAGE (ASS)	334
	336
	338
	340
CANALISATIONS DU VÉRIN D'INCLINAISON (ASS)	354
	356
	358
	360
CANALISATIONS HYDRAULIQUES DE VENTILATEUR (ASS)	326
	327
	328
	329
CANALISATIONS HYDROSTATIQUES (ASS)	220
	222
CAPITONNAGE	528
CAPTEUR - TEMP. ET PRESSION (ASS)	175
CARENAGE DE MOTEUR (ASS)	264
	266
CARTER AV (ASS)	38
	40
	42
CARTER DE VOLANT (ASS)	35
	36
CEINTURE DE SECURITE (ASS)	566
	567
	568
	569
	570
CHAPEAU ANTI-POUSSIERE	150
	151
CHAUFFAGE DE CABINE (ASS)	536
CHAUFFAGE DE CABINE (ASS)	534
CHAUFFAGE ET MONTAGE - CABINE (ASS)	529
	530
	532
CLAPET DE DECHARGE (ASS)	406
	407
	408
	409
CLAPET DE RETENUE (ENS)	390
CLIGNOTANT (ENS)	166
	170
COFFRE DE RANGEMENT (ASS)	500
COLLECTEUR D'ADMISSION (ASS)	100
COLLECTEUR D'ÉCHAPPEMENT (ASS)	98
	99
COLLECTEUR-RETOUR (ASS)	224
	226
COMMANDE - OUTIL DE TRAVAIL (ASS)	414
COMMANDE - OUTIL DE TRAVAIL (ASS)	412
COMMANDE DE FREIN DE STATIONNEMENT (ASS)	206
	208
COMMANDE DE POIGNÉE (ASS)	285
	286
	287
	288
COMMANDE DE RÉGULATEUR (ASS)	108
	110
COMMANDE D'INTERVERROUILLAGE (ASS)	144
COMMANDE HYDRAULIQUE PILOTE (ASS)	289
	290
	291
	292
	293
	294
	295
	296
	297
	298
	299
CONNEXION (ASS)	226
CONTACTEUR DE DÉMARRAGE À CLÉ (ENS)	525
CONTREPOIDS (ASS)	258
	259
	260
	261
	262
COUPLEUR EXPRESS (ASS)	452
	453
COURROIE TRAPEZOIDALE	136
COUVERCLE - CABINE (ASS)	502
COUVERCLE - PANNEAU DE FUSIBLES (ASS)	145
COUVERCLE-CANALISATIONS (ASS)	454
COUVERCLE DE CARTER AV (ASS)	13
COUVERCLE DE LA CONSOLE (ASS)	503
	504
CULASSE (ASS)	26
	27
	28
	29
CULBUTERIE (ASS)	64

INDEX

Désignation	Page
	65
CUVETTE-ACCUMULATION D'EAU (ENS)	116

D

Désignation	Page
DÉMARREUR - MONTAGE (ASS)	50
	51
DÉMARREUR ÉLECTRIQUE (ASS)	178
	179
	180
DENT MONOBLOC (ASS)	496
DISJONCTEUR (ENS) (30A)	190
DISTRIBUTEUR (ASS)	392
	394
	396
	398
	400
DISTRIBUTEUR DOUBLE ÉLÉMENT (ASS)	389
DISTRIBUTEUR ET MONTAGE (ASS)	380
	381
	382
	383
	384
	385
	386

E

Désignation	Page
EAU DES CHEMISES - RECHAUFFEUR (ASS)	149
	150
	151
ECLAIRAGE - ARRÊT ET PROJECTEURS (VERSION)	161
ÉCLAIRAGE - FEUX DE ROUTE (ASS)	166
	170
ÉCLAIRAGE - GYROPHARE (ASS)	173
ECLAIRAGE AR (ASS)	163
	164
ECLAIRAGE AV (ASS)	162
ECLAIRAGE DE GODET (ASS)	316
	318
ÉCRAN	489
ÉLECTRONIQUE DE L'OUTIL DE TRAVAIL (ASS)	146
ÉLÉMENT DE FILTRE À CARBURANT	116
ÉLÉMENT DE FILTRE À EAU	135
ÉLÉMENT DE FILTRE (ENS)-CARBURANT	114
ELEMENT (ENS) (AUXILIAIRE)	94
	95
ELEMENT (ENS) (PRINCIPAL)	94
	95
ENSEMBLE DE ROUE (7.50-16 PNEU PLEIN) (CATERPILLAR)	245
	251
ENTRAINEMENT EN TANDEM (ASS)	210
	212
ENTRAÎNEMENT POUR COURROIE	160
ENTRETIEN DE L'OUTIL DE TRAVAIL (ASS)	176
ESSIEU (ASS)	204
EXTRACTEUR DE MINI-FUSIBLE	145

F

Désignation	Page
FEUX ARRIÈRE ET FEUX D'ARRÊT	158
FILTRE	523
FILTRE A AIR (ASS)	95
FILTRE A AIR (ASS)	94
FILTRE À AIR DE CABINE (ASS)	523
FILTRE A CARBURANT (ASS)	112
	114
FILTRE A CARBURANT (ASS)	115
FILTRE À HUILE	54
FILTRE A HUILE (ASS)	213
	214
FILTRE À HUILE (ENS)	214
FILTRE À HUILE HYDRAULIQUE ET MONTAGE (ASS)	213
FILTRE À HUILE MOTEUR (ASS)	66
FILTRE A HUILE MOTEUR (ENS)	66
FILTRE DE SÉPARATEUR D'EAU ET DE CARBURANT (ASS)	116
FILTRE ET CANALISATIONS DE CARBURANT (ASS)	112
FLEXIBLE	84
	86
	90
FLEXIBLE (ÉVACUATION DES GAZ DE CARTER)	14
FOURCHE - PINCE (ASS)	465
	466
	467
FOURCHE - PINCE (VERSION)	463
	464
FOURCHE PALLETTE (ASS)	468
	469
	470
FOURCHE-RÉSEAU PUBLIC (ASS)	471
	472
	473
FUSIBLE (10A)	184
	186
	537
FUSIBLE (15A)	186
	198
	200
	202
FUSIBLE (20 A)	529
	530
	532

INDEX

Désignation	Page
G	
GAINE DU DÉGIVREUR (ASS)	522
GODET - MATÉRIAUX MEUBLES (VERSION)	437
GODET - PINCE (ASS)	445
GODET - PINCE (ASS)	446
GODET - PINCE (VERSION)	431
	432
	433
	434
	435
	436
GODET - SALETÉ (ENS)	440
	441
GODET - SALETÉ (VERSION)	427
	428
GODET NORMAL (ENS)	442
	443
GODET NORMAL (VERSION)	429
	430
	431
GODET POUR MATERIAUX MEUBLES (ENS)	444
GODET POUR TRAVAUX DE SERVITUDE (ASS)	449
	450
GODET TOUS-TRAVAUX (ASS)	447
	448
GODET TOUS-TRAVAUX (VERSION)	438
	439
GRAISSEUR	300
	301
	414
	426
GRAISSEUR (FILET 1/8-27)	268
	270
	304
	305
	306
	310
	311
	371
	412
	414
	445
	446
	447
	448
	465
	466
GROUPE DE MOTEUR A PISTONS	230
GROUPE DE TRANSFORMATION - DÉPLACEMENT ROUTIER	255
	256
GUIDE - CANALISATIONS (ASS)	417

Désignation	Page
H	
HUILE MOTEUR - CARTER (ASS)	52
	54
I	
INDICATEUR D'AIR (ENTRETIEN DU FILTRE)	96
INDICATEURS ET TÉMOINS LUMINEUX (ASS)	525
	526
INSONORISATION (ASS)	282
	283
INTERRUPTEUR - 3 POSITIONS (ENS) (VENTILATEUR DE CHAUFFAGE)	534
J	
JOINT-CACHE-SOUPAPES	14
JOINT DE CABINE (ASS)	561
	562
	563
JOINT DE COUVERCLE	76
JOINT PLAT	68
	112
JOINT PLAT (SUPPORT DE VALVE)	65
JOINT TORIQUE (DIA INT 19,18MM)	322
K	
KIT DE BOUGIE (12 BROCHES)	186
	190
KIT DE BOUGIE (2 BROCHES)	186
	190
	196
	494
	538
KIT DE BOUGIE (3 BROCHES)	166
	170
	186
	190
	506
	512
KIT DE BOUGIE (4 BROCHES)	166
	170
	186
	190
KIT DE BOUGIE (6 BROCHES)	166
	170
	190
KIT DE BOUGIE (8 BROCHES)	186
	190
	494
KIT DE COUSSINET DE BIELLE	18
KIT DE JOINT DE FILTRE	116

INDEX

Désignation	Page
KIT DE JOINTS	390
KIT DE PLAQUE DE DÉPLACEMENT ROUTIER ET MONTAGE	481
	482
KIT DE POMPE À CARBURANT	112
KIT DE PORTE DE CABINE ET MONTAGE	540
	542
KIT DE PRISE FEMELLE (12 BROCHES)	174
	190
KIT DE PRISE FEMELLE (2 BROCHES)	166
	170
	182
	184
	190
	270
	398
	403
	410
	538
KIT DE PRISE FEMELLE (3 BROCHES)	166
	186
	196
	378
	379
	502
	506
	510
	512
	516
KIT DE PRISE FEMELLE (4 BROCHES)	156
	157
	158
	166
	170
	186
	190
	272
	278
	387
	388
	549
KIT DE PRISE FEMELLE (6 BROCHES)	154
	166
	170
	186
	190
	285
	286
	552
KIT DE PRISE FEMELLE (8 BROCHES)	186
	190
	198
	200
	202
	287
	288
	494
KIT DE TRANSFORMATION D'ENLÈVEMENT DE LA NEIGE	483
KLAXON ÉLECTRIQUE (ASS)	537
KLAXON ÉLECTRIQUE (ASS)	538

L

LAME (ASS)	426
LAME DE COUPE (ASS)	455
	456
	457
	458
	459
	460
	461
	462
LAME (VERSION)	425
LAMPE - CLIGNOTANT DE DIRECTION (ASS)	157
LAMPE - ÉCLAIRAGE TABLEAU (ASS)	156
LAMPE - FEUX AV (12 VOLTS)	154
LAMPE - GYROPHARE (ASS)	159
	160
LAMPE - PHARE (ASS)	152
LAMPE - PHARE (ASS)	153
LAMPE - PHARE ET CLIGNOTANT	154
	166
	170
LENTILLE	157
	158
LENTILLE (ENS)	154
LENTILLE ORANGE	154
	160
LOGICIEL (ASS)-OUTIL DE TRAVAIL	146

M

MACHINE DE LEVAGE	274
	275
	276
	277
MANOCONTACT	181
	182
MANOCONTACT (ENS)	214
MANOCONTACT (HUILE)	181
MARCHEPIED-BRAS DE MANUTENTION (ASS)	487
	488
MODULE - TÉMOIN (ASS)	174
MONTAGE - IMMATRICULATION (ASS)	594
MONTAGE D'ALTERNATEUR (ASS)	46
MONTAGE DE FEUX DE DÉPLACEMENT SUR ROUTE (ASS)	278

INDEX

Désignation	Page
MONTAGE DE MOTEUR (ASS)	47
	48
MONTAGE DE MOTEUR (VERSION)	7
	8
	9
	10
MONTAGE DE POMPE (ASS)	232
	233
MONTAGE DE SILENCIEUX (ASS)	101
	102
	103
	104
MONTAGE DE VENTILATEUR (ASS)	49
MONTAGE DE VÉRIN (ASS)	371
MONTAGE DU TOIT ROPS (ASS)	550
MOTEUR À ENGRENAGES (ASS)	368
	369
	370
MOTEUR D'ESSUIE-GLACE (ASS)	549
MOTEUR ET MONTAGE - HYDROSTATIQUE (ASS)	228
	229
MOTEUR ET MONTAGE DE VENTILATEUR HYDRAULIQUE (ASS)	366
	367
MOTEUR (VERSION PRINCIPALE)	5
	6

O

OEILLETONS DE LEVAGE MOTEUR (ASS)	44
	45

P

PANNEAU LATERAL (ASS)	280
	281
PARE-CHOCS AR (ASS)	252
PARE-POUSSIERE	30
	31
	214
	220
	222
	344
	346
	350
	352
PARE-SOLEIL	573
	574
PINCE - CANALISATIONS (ASS)	322
PINCE - CANALISATIONS (ASS)	324
PINCE - VÉRIN (ASS)	305
	306
PINCE-RÉSEAU PUBLIC (ASS)	474
	476
PISTON ET BIELLE (ASS)	58
	59
PLAFONNIER (ASS)	526
PLAQUE SIGNALÉTIQUE (ASS)	588
	590
	592
	593
PLAQUE SIGNALÉTIQUE (REMARQUE)	256
PLAQUES SIGNALETIQUES ET AUTOCOLLANTS (ASS)	595
	596
	597
	598
	599
	600
	601
	602
	603
	604
	605
	606
	607
	608
	610
	611
	612
	613
	614
	616
	618
	619
	620
	621
	622
	623
	624
PLATE-FORME DE CABINE	559
	560
PNEU (10-16.5 8 PLIS) (CATERPILLAR)	248
	250
PNEU (265-521 8 PLIS) (CATERPILLAR)	247
	248
	249
PNEU (31 X 15.50-15 8 PLIS) (CATERPILLAR)	244
POIGNÉE DE COUPLEUR (ASS)	479
	480
POIGNÉE ET AXE DE COUPLEUR (ASS)	477
	478
POMPE - DIAPHRAGME (ASS)	485
POMPE A EAU (ASS)	73
	74
	76
POMPE A ENGRENAGES (ASS)	375
POMPE A HUILE MOTEUR (ASS)	67
POMPE A PISTONS (ASS)	238

INDEX

Désignation	Page
	240
POMPE D'ALIMENTATION ET MONTAGE (ASS)	128
POMPE D'AMORÇAGE DE CARBURANT (ASS)	115
POMPE D'INJECTION DE CARBURANT (ASS)	130
	132
POMPE ET MONTAGE - OUTIL DE TRAVAIL (ASS)	373
	374
POMPE HYDROSTATIQUE ET MONTAGE (ASS)	236
	237
PORTE DE CABINE ET MONTAGE (ASS)	506
	510
	512
	516
PORTIÈRE DE CABINE (ASS)	518
	520
POULIE DE POMPE À EAU (ASS)	63
PROTECTION DE ROPS/FOPS (ASS)	527

R

RACCORD - CANALISATIONS DE CARBURANT (ASS)	117
RACCORD D'EAU (ASS)	68
	69
RADIATEUR ET REFROIDISSEUR D'HUILE HYDRAULIQUE (ASS)	78
	80
	82
	84
RADIATEUR ET REFROIDISSEUR D'HUILE-MONTAGE (ASS)	86
	90
	92
RÉFLECTEUR	163
	278
RÉGULATEUR - PÉDALE (ASS)	556
	557
	558
REGULATEUR (ASS)	118
RELAIS (ENS)	186
	198
	200
	202
	534
RELAIS (ENS) (12 VOLTS)	190
	196
RENIFLARD	270
	272
RÉSERVOIR D'EAU (ASS)	493
	494
RÉSERVOIR D'EAU ET MONTAGE (ASS)	490
RÉSERVOIR HYDRAULIQUE (ASS)	378
RÉSERVOIR HYDRAULIQUE (ASS)	379
RÉSERVOIR HYDRAULIQUE ET MONTAGE (ASS)	376
	377
RESSORT DE LAME (ASS)	486
RESSORT-GAZ (ASS)	572
RETROVISEUR - CABINE (ASS)	573
	574
RÉTROVISEUR ET MONTAGE (ASS)	548
ROBINET	76
ROBINET-ÉCHANTILLON DE LIQUIDE (ENS)	214
RONDELLE	54
ROTATION DE LA ROUE DU VENTILATEUR SOUFFLANT (ISSUE DE SECOURS)	518
	520
	580
	584
	586
ROUE ET PNEU (ASS)	251
ROUE ET PNEU (VERSION)	245
	246
	247
ROUE ET PNEU (VERSION)	242
	243
	244
	248
	249
	250
ROUE ET PNEU (VERSION)	248
	249
	250
	251

S

SÉPARATEUR D'EAU (ASS)	135
SIÈGE AVEC SUSPENSION (ASS)	571
SIÈGE ET MONTAGE (ASS)	564
	565
SILENCIEUX (ASS)	105
	106
SOLÉNOÏDE D'ARRÊT (ASS)	177
SOUPAPE - SOLÉNOÏDE (ASS)	410
SOUPAPE D'ARRÊT	224
	226
	546
SOUPAPE D'ARRÊT (ASS)	226
SOUPAPE DE DÉRIVATION ET MONTAGE	387
	388
SOUPAPE DE MODULATION (ASS)	402
SOUPAPE DE PURIFICATION	94
	95
SOUPAPE DE VIDANGE	52

INDEX

Désignation	Page
	54
SOUPAPE PILOTE (ASS)	403
	404
	405
SUPPORT DE SÉPARATEUR D'EAU	135
SUPPORT DE SÉPARATEUR D'EAU	116

T

TABLEAU DE BORD (ASS)	552
TABLEAU DE BORD (ASS)	555
TABLIER DE FOURCHE (ENS)	451
TAMIS D'EAU (ASS)	489
TAPIS DE PLANCHER	524
THERMOSTAT-TEMPÉRATURE D'EAU	73
	76
TOILE	16
TOÎT ROPS (ASS)	501
TRANSMISSION (VERSION)	234
	235

V

VENTILATEUR SOUFFLANT (ASS)	70
	71
VERIN DE GODET (ASS)	304
VÉRIN DE LAME (ASS)	303
VÉRIN DE LEVAGE (ASS)	307
	308
	309
VÉRIN D'INCLINAISON (ASS)	310
	311
VÉRIN ET MONTAGE DE LAME (ASS)	300
VÉRIN ET MONTAGE DE PINCE (ASS)	301
	302
VERROUILLAGE DE COUPLEUR EXPRESS (ASS)	484
VERSION DE CHASSIS	1
	2
VERSION DE MONTAGE DE RÉCHAUFFEUR	538
VERSION DE TABLEAU DE BORD	551
VERSION DE TRANSFORMATION POUR DÉPLACEMENT ROUTIER	253
	254
VERSION HYDRAULIQUE	312
	313
	314
	315
VERSION NORMALE	3
	4
VIDANGE-HUILE DE MOTEUR (ASS)	30
	31
VILEBREQUIN - POULIE (ASS)	61
	62
VILEBREQUIN (ASS)	18
	20
VITRE DE CABINE (ASS)	575
	576
	578
	580
	582
	583
	584
	586
VOLANT MOTEUR (ASS)	33
	34

INDICE

Nombre	Página

A

ACOPLADOR DE MANIJA 479, 480
ACOPLADOR RÁPIDO (GR) 452, 453
ACUMULADOR HIDRAULICO Y MONTAJE (GR) 284
AGUA - CONEXIÓN DE (GR) 68, 69
AGUA DE LAS CAMISAS - CALENTADOR DEL (GR) 149, 150, 151
AGUILÓN TELESCÓPICO (GR) 418
AIRE - TUBERÍAS DE (GR) 97
AIRE - TUBERÍAS DE (GR) 96
ALAMBRADO DE LUCES TRASERAS (GR) 196
ALFOMBRILLA DEL PISO 524
ARANDELA 54
ÁRBOL DE LEVAS (GR) 11, 12
ASIENTO Y MONTAJE (GR) 564, 565

B

BARRA-DIENTE(GR) 419, 420, 421, 422, 423, 424, 425
BASTIDOR DE HOJA (GR) 268
BASTIDOR DEL CARGADOR (GR) 270
BASTIDOR DEL CARGADOR (GR) 272
BATERÍA (GR) 140
BATERÍA (GR) 141
BATERÍA (12 VOLTIOS) 140, 141
BLOQUE MOTOR (GR) 22, 23, 24
BOCINA ELÉCTRICA (GR) 538
BOCINA ELÉCTRICA (GR) 537
BOMBA - TUBERÍAS DE (GR) 350, 352
BOMBA DE ACEITE DEL MOTOR (GR) 67
BOMBA DE AGUA (GR) 73, 74, 76
BOMBA DE CEBADO DE COMBUSTIBLE (GR) 115
BOMBA DE ENGRANAJES (GR) 375
BOMBA DE INYECCIÓN DE COMBUSTIBLE (GR) 130, 132
BOMBA DE PISTONES (GR) 238, 240
BOMBA DE TRANSFERENCIA DE COMBUSTIBLE Y MONTAJE (GR) 128
BOMBA DEL DIAFRAGMA (GR) 485
BOMBA Y MONTAJE DE LA HERRAMIENTA DE TRABAJO (GR) 373, 374
BUJIA INCANDESCENTE 147, 148
BUJÍA INCANDESCENTE (GR) 147, 148

C

CABINA DEL OPERADOR CON TECHO TIPO TOLDO (CONFIG) 551
CABLES DE LA CABINA (GR) 186
CABLES DE LA HERRAMIENTA DE TRABAJO (GR) 198, 200, 202
CABLES DEL CHASIS (GR) 190
CABLES DEL MOTOR (GR) 194, 195
CAJA DE ALMACENAMIENTO 500
CAJA DELANTERA (GR) 38, 40, 42
CALCOMANÍA DE ADVERTENCIA 256
CALCOMANÍA DE ADVERTENCIA (ESPACIO) . . . 254
CALCOMANÍA DE ADVERTENCIA (SALIDA ALTERNATIVA) 518, 520, 580, 584, 586
CALCOMANÍA DE IDENTIFICACIÓN (NUMERO DE GRUPO Y SECUENCIA) 536
CALCOMANÍAS Y PLACAS DE IDENTIFICACIÓN (GR) 595, 596, 597, 598, 599, 600, 601, 602, 603

* NO HAY TRADUCCION DISPONIBLE EN EL MOMENTO DE LA IMPRESION

INDICE

Nombre	Página
	604
	605
	606
	607
	608
	610
	611
	612
	613
	614
	616
	618
	619
	620
	621
	622
	623
	624
CALEFACCIÓN DE LA CABINA (GR)	534
CALEFACCIÓN DE LA CABINA (GR)	536
CALEFACCIÓN Y MONTAJE DE LA CABINA (GR)	529
CALEFACCIÓN Y MONTAJE DE LA CABINA (GR)	530
	532
CÁNCAMOS DE LEVANTAMIENTO DEL MOTOR (GR)	44
	45
CARGA - ALTERNADOR DE (GR)	136
	138
CÁRTER - COLECTOR DEL (GR)	52
	54
CHASIS (CONFIG)	1
	2
CIGÜEÑAL - POLEA DE (GR)	61
	62
CIGÜEÑAL (GR)	18
	20
CILINDRO DE CUCHARÓN (GR)	304
CILINDRO DE GARFIO (GR)	305
	306
CILINDRO DE LA HOJA (GR)	303
CILINDRO DE LEVANTAMIENTO - TUBERÍAS DEL (GR)	334
	336
	338
	340
CILINDRO DE LEVANTAMIENTO (GR)	307
	308
	309
CILINDRO Y MONTAJE DE LA HOJA (GR)	300
CINTURÓN DE SEGURIDAD (GR)	566
	567
	568
	569
	570
COLADOR DEL AGUA (GR)	489
COMPARTIMIENTO DEL MOTOR (GR)	264
	266
CONDUCTO DEL DESEMPAÑADOR (GR)	522
CONEXIÓN DE ENGRASE	300
	301
	414
	426
CONEXIÓN DE ENGRASE DE LAS TUBERÍAS DE COMBUSTIBLE	117
CONEXIÓN DE ENGRASE (ROSCA DE 1/8-27)	268
	270
	304
	305
	306
	310
	311
	371
	412
	414
	445
	446
	447
	448
	465
	466
CONEXIÓN ELÉCTRICA (GR)	142
	143
CONFIGURACIÓN COMÚN	3
	4
CONFIGURACIÓN DE INSTALACIÓN, CALENTADOR	538
CONFIGURACIÓN DE INSTALACIÓN DEL MOTOR	7
	8
	9
	10
CONFIGURACIÓN DE TRANSFORMACIÓN PARA CARRETERA	253
	254
CONMUTADOR DE 3 POSICIONES (CONJ) (VENTILADOR CALENTADOR)	534
CONTRAPESO (GR)	258
	259
	260
	261
	262
CONTROL DE LA HERRAMIENTA DE TRABAJO (GR)	412

* NO HAY TRADUCCION DISPONIBLE EN EL MOMENTO DE LA IMPRESION

INDICE

Nombre	Página
CONTROL DE LA HERRAMIENTA DE TRABAJO (GR)	414
CONTROL DE MANIJA (GR)	285
CONTROL DE MANIJA (GR)	286
	287
	288
CONTROL DE REGULADOR (GR)	108
	110
CONTROL DE TRABA (GR)	144
CONTROL DEL FRENO DE ESTACIONAMIENTO	206
	208
CONTROL HIDRÁULICO DE OPERACIÓN PILOTO (GR)	289
	290
	291
	292
	293
	294
	295
	296
	297
	298
	299
CONVERSION PARA DESPLAZAMIENTO POR CARRETERA (GR)	255
	256
CORREA TRAPEZOIDAL	136
CRISTAL	157
	158
CUBIERTO DEL PANEL DE FUSIBLES (GR)	145
CUCHARON DE GARFIO (CONF)	431
	432
	433
	434
	435
	436
CUCHARON DE GARFIO (GR)	445
	446
CUCHARÓN DE USO GENERAL (CONFIG)	429
	430
	431
CUCHARÓN DE USO GENERAL (CONJ)	442
	443
CUCHARÓN DE USO MÚLTIPLE (CONFIG)	438
	439
CUCHARÓN DE USO MÚLTIPLE (GR)	447
	448
CUCHARÓN PARA MATERIALES LIVIANOS	444
CUCHARÓN PARA MATERIALES LIVIANOS (CONFIG)	437
CUCHARON PARA TIERRA (CONF)	427
	428
CUCHARON PARA TIERRA (CONJ)	440
	441
CUCHARÓN UTILITARIO (GR)	449
	450
CUCHILLA (GR)	455
	456
	457
	458
	459
	460
	461
	462
CULATA DE CILINDROS (GR)	26
	27
	28
	29

D

DIENTE DE UNA PIEZA (UNI-TOOTH) (GR)	496
DISYUNTOR (CONJ) (30 A)	190
DRENAJE DEL ACEITE DE MOTOR	30
	31

E

EJE (GR)	204
ELECTRONICA DE HERRAMIENTAS (GR)	146
ELEMENTO (CONJ) (PRIMARIO)	94
	95
ELEMENTO (CONJ) (SECUNDARIO(A))	94
	95
ELEMENTO DE FILTRO DE AGUA	135
ELEMENTO DE FILTRO DE COMBUSTIBLE	116
ELEMENTO DE FILTRO DE COMBUSTIBLE (CONJ)	114
EMPAQUETADURA	68
	112
EMPAQUETADURA PARA CUBIERTA DE VÁLVULA	14
EMPAQUETADURA (SOPORTE DE VÁLVULA)	65
ESCALON DE BRAZO DE MANEJO DE MATERIALES (GR)	487
	488
ETIQUETA DE ADVERTENCIA (GR)	588
	590
	592
	593
EXTRACTOR DE MINIFUSIBLES	145

* NO HAY TRADUCCION DISPONIBLE EN EL MOMENTO DE LA IMPRESION

INDICE

Nombre	Página

F

FILTRO 523
FILTRO DE ACEITE 54
FILTRO DE ACEITE (CONJ) 214
FILTRO DE ACEITE DEL MOTOR (CONJ) 66
FILTRO DE ACEITE DEL MOTOR (GR) 66
FILTRO DE ACEITE (GR) 213
214
FILTRO DE ACEITE HIDRÁULICO Y MONTAJE (GR) 213
FILTRO DE AIRE DE LA CABINA (GR) 523
FILTRO DE AIRE (GR) 94
FILTRO DE AIRE (GR) 95
FILTRO DE COMBUSTIBLE (GR) 112
114
115
FILTRO DE COMBUSTIBLE Y SEPARADOR DE AGUA (GR) 116
FILTRO Y TUBERÍAS DE COMBUSTIBLE (GR) 112
FUSIBLE (10 A) 184
186
537
FUSIBLE (15 A) 186
198
200
202
FUSIBLE (20 A) 529
530
532

G

GARFIO DE UTILIDAD (GR) 474
476
GASA 16
GRIFO 76
GRUPO DE CONEXION 226
GRUPO DE MANIJA Y PIN-ACOPLADOR 477
478
GRUPO, MANIJA, BOMBA DE AGUA 63

H

HIDRÁULICA (CONFIG) 312
313
314
315
HIDROSTATICO, BOMBA Y GRUPO DE MONTAJE 236
237
HOJA (CONFIG) 425
HOJA DE LIMPIAPARABRISAS (CONJ) 518
520
HOJA (GR) 426
HORQUILLA DE GARFIO (CONF) 463
464
HORQUILLA DE GARFIO (GR) 465
HORQUILLA DE GARFIO (GR) 466
467
HORQUILLA DE UTILIDAD (GR) 471
472
473
HORQUILLA PARA TARIMAS (GR) 468
469
470

I

INCLINACIÓN HORIZONTAL - CILINDRO DE (GR) 310
311
INDICADOR-AIRE (SERVICIO DEL FILTRO) 96
INDICADORES Y ADVERTENCIA (GR) 525
526
INSONORIZADOR (GR) 282
283
INTERRUPTOR DE ARRANQUE CON LLAVE (CONJ) 525
INTERRUPTOR DE PRESIÓN (ACEITE) 181
INTERRUPTOR DE PRESIÓN (CONJ) 214
INTERRUPTOR DE PRESIÓN (GR) 181
INTERRUPTOR DE PRESIÓN (GR) 182
INTERRUPTOR PARA LA TEMPERATURA (GR) 183

J

JUEGO-CONVERSION PARA REMOCION DE NIEVE 483
JUEGO DE BASE DEL SEPARADOR DE AGUA 116
135
JUEGO DE BOMBA DE COMBUSTIBLE 112
JUEGO DE COJINETES DE BIELA 18
JUEGO DE ENCHUFE (12 CLAVIJAS) 186
190
JUEGO DE ENCHUFE (2 CLAVIJAS) 186
190
196
494
538
JUEGO DE ENCHUFE (3 CLAVIJAS) 166
170
186
190

* NO HAY TRADUCCION DISPONIBLE EN EL MOMENTO DE LA IMPRESION

INDICE

Nombre	Página
	506
	512
JUEGO DE ENCHUFE (4 CLAVIJAS)	166
	170
	186
	190
JUEGO DE ENCHUFE (6 CLAVIJAS)	166
	170
	190
JUEGO DE ENCHUFE (8 CLAVIJAS)	186
	190
	494
JUEGO DE RECEPTÁCULO (12 CLAVIJAS)	174
	190
JUEGO DE RECEPTÁCULO (2 CLAVIJAS)	166
	170
	182
	184
	190
	270
	398
	403
	410
	538
JUEGO DE RECEPTÁCULO (3 CLAVIJAS)	166
	186
	196
	378
	379
	502
	506
	510
	512
	516
JUEGO DE RECEPTÁCULO (4 CLAVIJAS)	156
	157
	158
	166
	170
	186
	190
	272
	278
	387
	388
	549
JUEGO DE RECEPTÁCULO (6 CLAVIJAS)	154
	166
	170
	186
	190
	285
	286
	552
JUEGO DE RECEPTÁCULO (8 CLAVIJAS)	186
	190
	198
	200
	202
	287
	288
	494
JUEGO DE SELLO DE TAZA	116
JUEGO DE SELLOS	390
JUEGO-PLACA DE DESPLAZAMIENTO Y MONTAJE	481
	482
JUEGO, PUERTA DE CABINA Y MONTAJE	540
	542
JUNTA DE LA TAPA DE VÁLVULAS	76

L

LÁMPARA DE BALIZA DE ADVERTENCIA (GR)	159
	160
LÁMPARA DE FARO DELANTERO (12 VOLTIOS)	154
LÁMPARA DE ILUMINACIÓN DEL PANEL (GR)	156
LÁMPARA DE LUZ DELANTERA Y DE SEÑAL (GR)	154
	170
LÁMPARA DE LUZ DELANTERA Y DE SEÑAL (GR)	166
LÁMPARA DEL TECHO (GR)	526
LÁMPARA (12 VOLTIOS)	156
	158
	160
	526
	594
LÁMPARA (12 VOLTIOS) (DE GIRO)	157
LÁMPARA (12 VOLTIOS)(55 VATIOS)	152
	153
LÁMPARA (12V)	154
LÁMPARA (12V) (PARADA Y COLA)	157
LÁMPARA (12V) (SEÑAL)	154
LENTE AMBAR	154
	160
LEVANTAMIENTO DE LA MÁQUINA (GR)	274
	275
	276
	277
LUCES DE DESPLAZAMIENTO (GR)	166
	170
LUCES DE PARADA Y COLA (GR)	158

* NO HAY TRADUCCION DISPONIBLE EN EL MOMENTO DE LA IMPRESION

INDICE

Nombre	Página
LUCES DE PARADA Y REFLECTORES (CONFIG)	161
LUCES DELANTERAS (GR)	162
LUCES TRASERAS (GR)	163 164
LUZ DE BALIZA (GR)	173
LUZ DE SEÑAL DE GIRO (GR)	157

M

MANDO DE CORREA	160
MANDO TANDEM (GR)	210 212
MANGUERA	84 86 90
MANGUERA (ELIMINACION DE GASES)	14
MECANISMO DE VÁLVULAS (GR)	64 65
MÓDULO INDICADOR DE ADVERTENCIA (GR)	174
MONTAJE DE CILINDRO (GR)	371
MONTAJE DE LA BOMBA (GR)	232 233
MONTAJE DE LA ESTRUCTURA ROPS (GR)	550
MONTAJE DE LUCES DE DESPLAZAMIENTO POR CARRETERA (GR)	278
MONTAJE DE MOTOR DE ARRANQUE (GR)	50 51
MONTAJE DE RADIADOR Y ENFRIAMIENTO DE ACEITE (GR)	86 90 92
MONTAJE DEL ALTERNADOR (GR)	46
MONTAJE DEL CILINDRO DEL GARFIO (GR)	301 302
MONTAJE DEL MOTOR (GR)	47 48
MONTAJE DEL SILENCIADOR (GR)	101 102 103 104
MONTAJE DEL TANQUE DE AGUA (GR)	490
MONTAJE DEL VENTILADOR (GR)	49
MONTAJE-REGISTRO (GR)	594
MOTOR DE ARRANQUE ELÉCTRICO (GR)	178 179 180
MOTOR DE ENGRANAJES (GR)	368 369 370
MOTOR HIDROSTATICO Y MONTAJE (GR)	228 229
MOTOR-LIMPIAPARABRISAS (GR)	549
MOTOR PRIMARIO (CONFIG)	5 6
MOTOR Y MONTAJE DE VENTILADOR HIDRAULICO (GR)	366 367
MÚLTIPLE DE ADMISIÓN (GR)	100
MÚLTIPLE DE ESCAPE (GR)	98 99

N

NEUMATICO (*10-16.5 8 PLY) (CATERPILLAR)	248 250
NEUMATICO (*265-521 8 PLY) (CATERPILLAR)	247 248 249
NEUMATICO (*31 X 15.50-15 8 PLY) (CATERPILLAR)	244

P

PANEL LATERAL (GR)	280 281
PARAGOLPES TRASERO (GR)	252
PERILLA	573
PISTÓN Y BIELA (GR)	58 59
PISTONES DEL MOTOR (GR)	230
PLATAFORMA DE LA CABINA	559 560
PORTAHORQUILLAS (CONJ)	451
POSABRAZOS (GR)	498
POSABRAZOS Y MONTAJE (GR)	497
PROTECTOR DE ROPS/FOPS	527
PUERTA DE CABINA	518 520
PUERTA Y MONTAJE DE CABINA (GR)	506 510 512 516

R

RADIADOR Y ENFRIADOR DE ACEITE HIDRÁULICO (GR)	78 80 82 84
RECIPIENTE DE RECOLECCION DE AGUA (CONJ)	116

* NO HAY TRADUCCION DISPONIBLE EN EL MOMENTO DE LA IMPRESION

INDICE

Nombre	Página
REFLECTOR	163, 278
REFLECTOR (GR)	152, 153
REGULADOR - PEDAL DEL (GR)	556, 557, 558
REGULADOR DE TEMPERATURA DEL AGUA	73, 76
REGULADOR (GR)	118
REJILLA	489
RELÉ (CONJ)	186, 198, 200, 202, 534
RELÉ (CONJ) (12 VOLTIOS)	190, 196
RESORTE DE GAS (GR)	572
RESORTE DE HOJA (GR)	486
RESPIRADERO	270, 272
RETORNO EN EL MULTIPLE(GR)	224, 226
RETROCESO - ALARMA DE (GR)	184
RETROVISOR Y MONTAJE (GR)	548
REVESTIMIENTO DE LA CABINA (GR)	544
REVESTIMIENTO DEL TECHO DE LA CABINA	528
RUEDA Y LLANTA (CONFIG)	245, 246, 247, 248, 249, 250, 251
RUEDA Y LLANTA (CONFIG)	242, 243, 244
RUEDA Y NEUMÁTICO (GR)	251
RUEDA (*7.50-16 SOLID TIRE) (CATERPILLAR)	245, 251
SELLO	54
SELLO ANULAR (19,18 MM DIAMETRO INTERIOR)	322
SELLO DE CABINA (GR)	561, 562, 563
SELLO (FILTRO DE COMBUSTIBLE)	114
SEÑAL DESTELLADOR (CONJ)	166, 170
*SENSOR GP-TEMP & PRESS	175
SEPARADOR DE AGUA (GR)	135
SERVICIO DE HERRAMIENTA (GR)	176
SILENCIADOR (GR)	105, 106
SOFTWARE DE HERRAMIENTA (GR)	146
SOLENOIDE DE CORTE	177
SOPLADOR - VENTILADOR (GR)	70, 71
SUSPENSIÓN - ASIENTO CON (GR)	571
TABLERO DE INSTRUMENTOS (CONFIG)	551
TABLERO DE INSTRUMENTOS (GR)	552, 555
TANQUE DEL AGUA (GR)	493, 494
TANQUE HIDRÁULICO (GR)	378
TANQUE HIDRÁULICO (GR)	379
TANQUE HIDRÁULICO Y MONTAJE (GR)	376, 377
TAPA-ACEITE	14
TAPA CON RESPIRADERO	82, 84, 86, 90
TAPA CONTRA EL POLVO	30, 31, 214, 220, 222, 344, 346, 350, 352
TAPA CONTRA EL POLVO (CONJ)	150, 151
TAPA DE LA CABINA (GR)	502
TAPA DE LA CAJA DELANTERA (GR)	13
TAPA DE LA CONSOLA (GR)	503, 504
TAPA DE RADIADOR (CONJ)	78, 80
TAPA DE TUBERIAS (GR)	454
TAPA DEL COMBUSTIBLE(CONJ)	120, 122, 124, 126
TAPA DEL MECANISMO DE VÁLVULAS (GR)	16

S

T

* NO HAY TRADUCCION DISPONIBLE EN EL MOMENTO DE LA IMPRESION

INDICE

Nombre	Página
TAPA DEL MECANISMO DE VÁLVULAS (GR)	14
TAPA DEL TUBO DE LLENADO DE ACEITE	54
TAPA HIDRAULICA (CONJ)	378
TAPA HIDRAULICA (CONJ)	379
TAPON DE ACEITE	54
TAPON DE LA VALVULA PILOTO (GR)	372
TAPÓN DE LAS TUBERÍAS DE AGUA (GR)	72
TAPÓN DEL BLOQUE MOTOR (GR)	60
TAPÓN MAGNÉTICO	270
	272
TOLDO ROPS (GR)	501
TORNILLERÍA DEL MOTOR (GR)	32
TRABA-ACOPLADOR RAPIDO (GR)	484
TREN DE FUERZA (CONFIG)	234
	235
TUBERÍAS CON SERVOMANDO (GR)	342
	344
	346
	348
TUBERÍAS DE COMBUSTIBLE (GR)	120
	122
	124
	126
TUBERIAS DE CONEXION (GR)	320
TUBERÍAS DE LA CALEFACCIÓN (GR)	546
	547
TUBERIAS DE LA GUIA (GR)	417
TUBERIAS DE LA HERRAMIENTA DE TRABAJO	362
	364
TUBERÍAS DEL CILINDRO DE INCLINACIÓN (GR)	354
	356
	358
	360
TUBERÍAS DEL CUCHARÓN (GR)	316
	318
TUBERÍAS DEL ENFRIADOR DE ACEITE HIDRÁULICO (GR)	330
	331
	332
TUBERIAS DEL FILTRO HIDRAULICO (GR)	216
	218
TUBERÍAS DEL GARFIO (GR)	322
	324
TUBERÍAS HIDRÁULICAS DEL VENTILADOR (GR)	326
	327
	328
	329
TUBERÍAS HIDROSTÁTICAS (GR)	220
	222

Nombre	Página
V	
VÁLVULA DE ALIVIO (GR)	406
	407
	408
	409
VÁLVULA DE CONTROL (GR)	392
	394
	396
	398
	400
VÁLVULA DE CONTROL Y MONTAJE (GR)	380
	381
	382
	383
	384
	385
	386
VÁLVULA DE CORTE	224
	226
	546
VÁLVULA DE CORTE (GR)	226
VÁLVULA DE DERIVACIÓN Y MONTAJE (GR)	387
	388
VÁLVULA DE DRENAJE	52
	54
VÁLVULA DE MODULACIÓN (GR)	402
VALVULA DE MUESTRA DE FLUIDO (CONJ)	214
VALVULA DE PURGA	94
	95
VÁLVULA DE RETENCIÓN (GR)	390
VÁLVULA DE SOLENOIDE (GR)	410
VÁLVULA PILOTO (GR)	403
	404
	405
VÁLVULAS HIDRÁULICAS - GRUPO DE 2	389
VENTANA DE LA CABINA (GR)	575
	576
	578
	580
	582
	583
	584
	586
VIDRIO (CONJ)	154
VISERA	573
	574
VISERA (GR)	573
	574
VOLANTE - CAJA DE (GR)	35
	36
VOLANTE (GR)	33
	34

* NO HAY TRADUCCION DISPONIBLE EN EL MOMENTO DE LA IMPRESION

ÍNDICE

Designação	Página

A

ACOPLADOR RÁPIDO 452, 453
ACUMULADOR HIDRÁULICO E MONTAGEM . . . 284
ALARME DE MARCHA À RÉ 184
ALÇA - ACOPLADOR 479, 480
ALÇA E PINO - ACOPLADOR 477, 478
ALTERNADOR DE CORRENTE 136, 138
AQUECEDOR DA ÁGUA DO MOTOR 149, 150, 151
AQUECEDOR DA CABINE 534, 536
AQUECEDOR DA CABINE E MONTAGEM 529, 530, 532
ARMAÇÃO - LÂMINA 268
ARRANJO BÁSICO 3, 4
ARRUELA 54
ASSENTO COM SUSPENSÃO 571
ASSENTO E MONTAGEM 564, 565

B

BARRA - DENTE 419, 420, 421, 422, 423, 424, 425
BATERIA 140, 141
BATERIA (12 V) 140, 141
BLOCO DO MOTOR 22, 23, 24
BOMBA DA FERRAMENTA DE TRABALHO E MONTAGEM 373, 374
BOMBA DE ÁGUA 73, 74, 76
BOMBA DE DIAFRAGMA 485
BOMBA DE ENGRENAGENS 375
BOMBA DE ESCORVA DO COMBUSTÍVEL 115
BOMBA DE INJEÇÃO DO COMBUSTÍVEL 130, 132
BOMBA DE ÓLEO - MOTOR 67
BOMBA DE PISTÃO 238, 240
BOMBA E MONTAGEM - HIDROSTÁTICA 236, 237
BOMBA E MONTAGEM - TRANSFERÊNCIA DE COMBUSTÍVEL 128
BORDA CORTANTE 455, 456, 457, 458, 459, 460, 461, 462
BRAÇO - MANIPULADOR DE MATERIAIS 418
BRAÇO DO ASSENTO 498
BUJÃO - ÓLEO 54
BUJÃO - TUBULAÇÕES DE ÁGUA 72
BUJÃO DA VÁLVULA PILOTO 372
BUJÃO DO BLOCO DO CILINDRO 60
BUJÃO MAGNÉTICO 270, 272
BUZINA ELÉTRICA 537, 538

C

CABEÇOTE DO MOTOR 26, 27, 28, 29
CABINE - TOLDO 551
CABOS E FIOS ELÉTRICOS-LUZES TRASEIRAS 196
CABOS/FIOS ELÉTRICOS - CABINE 186
CABOS/FIOS ELÉTRICOS - CHASSI 190
CABOS/FIOS ELÉTRICOS - FERRAMENTAS DE TRABALHO 198, 200, 202
CABOS/FIOS ELÉTRICOS - MOTOR 194, 195
CAÇAMBA - GARRA 431, 432, 433, 434, 435, 436, 445, 446
CAÇAMBA - PARA APLICAÇAO GERAL 429, 430, 431
CAÇAMBA DE MÚLTIPLAS APLICAÇÕES 438

ÍNDICE

Designação	Página
	439
	447
	448
CAÇAMBA PARA APLICAÇÃO GERAL	442
	443
CACAMBA PARA MATERIAL LEVE	444
CAÇAMBA PARA MATERIAL LEVE	437
CAÇAMBA PARA SERVIÇOS GERAIS	449
	450
CAÇAMBA PARA TERRA	427
	428
	440
	441
CAIXA DE ARMAZENAMENTO	500
CAIXA DIANTEIRA	38
	40
	42
CAIXA DO VOLANTE DO MOTOR	35
	36
CÁRTER DO ÓLEO DO MOTOR	52
	54
CHASSI	1
	2
CHASSI DIANTEIRO	270
	272
CHAVE INTERRUPTORA DE PARTIDA	525
CILINDRO DA CAÇAMBA	304
CILINDRO DA GARRA	305
	306
CILINDRO DA LÂMINA	303
CILINDRO DA LÂMINA E MONTAGEM	300
CILINDRO DE INCLINAÇÃO	310
	311
CILINDRO DE LEVANTAMENTO	307
	308
	309
CILINDRO E MONTAGEM - PINÇA	301
	302
CINTO DE SEGURANÇA	566
	567
	568
	569
	570
COBERTURA DO MOTOR	264
	266
COLETOR - RETORNO	224
	226
COLETOR DE ADMISSÃO	100
COLETOR DE ESCAPE	98
	99
COMANDO DO TANDEM	210
	212
COMANDO HIDRÁULICO	312
	313
	314
	315
CONECTOR	226
CONEXÃO - ELÉTRICA	142
	143
CONEXÃO - TUBO D'ÁGUA	68
	69
CONEXÃO - TUBOS DE COMBUSTÍVEL	117
CONTRAPESO	258
	259
	260
	261
	262
CONTROLE-CABO	285
	286
	287
	288
CONTROLE DA FERRAMENTA DE TRABALHO	412
	414
CONTROLE DE TRAVAMENTO	144
CONTROLE DO FREIO DE ESTACIONAMENTO	206
	208
CONTROLE DO GOVERNADOR	108
	110
CONTROLE HIDRÁULICO DE OPERAÇÃO PILOTO	289
	290
	291
	292
	293
	294
	295
	296
	297
	298
	299
CORREIA DE COMANDO	160
CORREIA EM V	136

D

DECALQUE	588
	590
	592
	593
DECALQUE - ADVERTÊNCIA (FOLGA)	254
DECALQUE - AVISO	256
DECALQUE - IDENTIFICAÇÃO (NO. DE SEQÜÊNCIA E GRUPO)	536
DECALQUE - INSTRUÇÃO (SAÍDA DE EMERGÊNCIA)	518
	520
	580
	584

ÍNDICE

Designação	Página
	586
DEGRAU - BRAÇO DE MANIPULAÇÃO DE MATERIAIS	487
	488
DISJUNTOR AUTOMÁTICO DE CIRCUITO (30 A)	190
DRENO - ÓLEO DO MOTOR	30
	31
DUCTO DO DESEMBAÇADOR	522

E

EIXO	204
EIXO-COMANDO DE VÁLVULA	11
	12
ELEMENTO - FILTRO DE COMBUSTÍVEL	114
ELEMENTO DO FILTRO DE COMBUSTÍVEL	116
ELEMENTO FILTRANTE-ÁGUA	135
ELEMENTO (PRIMÁRIO)	94
	95
ELEMENTO (SECUNDÁRIO)	94
	95
ENCOSTO DO BRAÇO E MONTAGEM	497
ESPELHO RETROVISOR E MONTAGEM	548

F

FAROL DIANTEIRO (12 V)	154
FILTRO	16
	523
FILTRO - AR DA CABINE	523
FILTRO - COMBUSTÍVEL	112
	114
	115
FILTRO - ÓLEO	54
	213
	214
FILTRO - ÓLEO DO MOTOR	66
FILTRO DE COMBUSTÍVEL E SEPARADOR DE ÁGUA	116
FILTRO E TUBOS - COMBUSTÍVEL	112
FILTRO HIDRÁULICO E MONTAGEM	213
FIXADORES - MOTOR	32
FUSÍVEL (10 A)	184
	186
	537
FUSÍVEL (15 A)	186
	198
	200
	202
FUSÍVEL (20 A)	529
	530
	532

Designação	Página

G

GARFO - SERVIÇOS PÚBLICOS	471
	472
	473
GARFO DA GARRA	463
	464
	465
	466
	467
GARFO DE PALETAS	468
	469
	470
GARRA - SERVIÇOS PÚBLICOS	474
	476
GOVERNADOR	118
GR. DE CONVERSÃO - OPERAÇÃO RODOVIÁRIA	255
	256
GR. DE SERVIÇO- FERRAMENTA DE TRABALHO	176
GRAXEIRA	300
	301
	414
	426
GRAXEIRA (ROSCA 1/8-27 POL)	268
	270
	304
	305
	306
	310
	311
	371
	412
	414
	445
	446
	447
	448
	465
	466
GRUPO DE CONVERSÃO - ARRANJO RODOVIÁRIO	253
	254
GRUPO DE INSTALAÇÃO - MOTOR	7
	8
	9
	10
GRUPO DE POLIA - BOMBA DE ÁGUA	63
GRUPO DE VÁLVULAS DE CONTROLE - DUPLO	389
GUIA - TUBOS	417

ÍNDICE

Designação	Página
I	
ILUMINAÇÃO - DIANTEIRA	162
ILUMINAÇÃO - FREIOS E FARÓIS	161
ILUMINAÇÃO - RODOVIÁRIA	166
	170
ILUMINAÇÃO - TRASEIRA	163
	164
INDICADOR - AR (SERVIÇO DE FILTRO)	96
INDICADOR E ALARME	525
	526
INSTALAÇÃO - AQUECEDOR	538
INTERRUPTOR - PRESSÃO	181
	182
	214
INTERRUPTOR - PRESSÃO (ÓLEO)	181
INTERRUPTOR - TEMPERATURA	183
INTERRUPTOR - 3 POSIÇÕES (VENTILADOR DO AQUECEDOR)	534
J	
JANELA DA CABINE	575
	576
	578
	580
	582
	583
	584
	586
JOGO - BOMBA DE COMBUSTÍVEL	112
JOGO - PORTA DA CABINE E MONTAGEM	540
	542
JOGO-CONVERSÃO DE REMOÇÃO DE NEVE	483
JOGO DE BASE DO SEPARADOR DE ÁGUA	116
	135
JOGO DE MANCAL DA BIELA	18
JOGO DE RECEPTÁCULO (12 PINOS)	174
	190
JOGO DE RECEPTÁCULO (2 PINOS)	166
	170
	182
	184
	190
	270
	398
	403
	410
	538
JOGO DE RECEPTÁCULO (3 PINOS)	166
	186
	196
	378
	379
	502
	506
	510
	512
	516
JOGO DE RECEPTÁCULO (4 PINOS)	156
	157
	158
	166
	170
	186
	190
	272
	278
	387
	388
	549
JOGO DE RECEPTÁCULO (6 PINOS)	154
	166
	170
	186
	190
	285
	286
	552
JOGO DE RECEPTÁCULO (8 PINOS)	186
	190
	198
	200
	202
	287
	288
	494
JOGO DE RETENTOR	390
JOGO DE TOMADA DE CONEXÃO (12 PINOS)	186
	190
JOGO DE TOMADA DE CONEXÃO (2 PINOS)	186
	190
	196
	494
	538
JOGO DE TOMADA DE CONEXÃO (3 PINOS)	166
	170
	186
	190
	506
	512
JOGO DE TOMADA DE CONEXÃO (4 PINOS)	166
	170
	186
	190
JOGO DE TOMADA DE CONEXÃO (6 PINOS)	166
	170
	190

ÍNDICE

Designação	Página
JOGO DE TOMADA DE CONEXÃO (8 PINOS)	186, 190, 494
JOGO DE VEDADOR DA CAÇAMBA	116
JOGO-PLACA DE RODAGEM E MONTAGEM	481, 482
JUNTA	68, 112
JUNTA - TAMPA	76
JUNTA - TAMPA DA VÁLVULA	14
JUNTA (SUPORTE DE VÁLVULA)	65

L

LÂMINA	425, 426
LÂMINA DO LIMPADOR DE PÁRA-BRISA	518, 520
LÂMPADA - FAROL	152, 153
LÂMPADA - ILUMINAÇÃO DO PAINEL	156
LÂMPADA - SINALIZAÇÃO	157
LÂMPADA - TETO	526
LÂMPADA DIANTEIRA E DE SINAL	154, 166, 170
LÂMPADA (12 V)	156, 158, 160, 526
LÂMPADA (12 V) (VIRADA)	157
LÂMPADA (12 VOLTS)	594
LÂMPADA (12 VOLTS - 55 WATTS)	152, 153
LÂMPADA (12V)	154
LÂMPADA (12V) (PARADA E TRASEIRA)	157
LÂMPADA (12V) (SINAL)	154
LENTE	154, 157, 158
LENTE ÂMBAR	154, 160
LEVANTAMENTO DA MÁQUINA	274, 275, 276, 277
LEVANTAMENTO DO MOTOR	44, 45
LUZ GIRATÓRIA DE ALARME	159, 160
LUZ TRASEIRA E DE FREIO	158

M

MAÇANETA	573
MANGUEIRA	84, 86, 90
MANGUEIRA (ELIMINAÇÃO DE VAPORES)	14
MECANISMO DAS VÁLVULAS	64, 65
MÓDULO - INDICADOR DE ALARME	174
MOLA - LÂMINA	486
MOLA A GÁS	572
MONTAGEM - ALTERNADOR	46
MONTAGEM - BOMBA	232, 233
MONTAGEM - CILINDRO	371
MONTAGEM - ESTRUTURA ROPS	550
MONTAGEM - LUZES PARA ILUMINAÇÃO RODOVIÁRIA	278
MONTAGEM - MOTOR	47, 48
MONTAGEM - MOTOR DE ARRANQUE	50, 51
MONTAGEM - SILENCIADOR	101, 102, 103, 104
MONTAGEM - VENTILADOR	49
MONTAGEM DA PLACA DE REGISTRO	594
MOTOR - ENGRENAGENS	368, 369, 370
MOTOR - LIMPADOR DO VIDRO	549
MOTOR - PISTÃO	230
MOTOR E MONTAGEM - VENTILADOR HIDRÁULICO	366, 367
MOTOR ELÉTRICO DE PARTIDA	178, 179, 180
MOTOR HIDROSTÁTICO E MONTAGEM	228, 229
MOTOR PRIMÁRIO	5, 6

P

PAINEL DE INSTRUMENTOS	551, 552, 555
PAINEL LATERAL	280, 281
PÁRA-CHOQUE TRASEIRO	252
PÁRA-SOL	573, 574
PÁRA-SOL DA CABINE	573, 574
PEDAL DO GOVERNADOR	556

ÍNDICE

Designação	Página
	557
	558
PISCA-PISCA-SINALIZAÇÃO	166
	170
PISTÃO E BIELA	58
	59
PLACA E DECALQUE	595
	596
	597
	598
	599
	600
	601
	602
	603
	604
	605
	606
	607
	608
	610
	611
	612
	613
	614
	616
	618
	619
	620
	621
	622
	623
	624
PLATAFORMA DO OPERADOR	559
	560
PNEU (10-16,5 8 PLY) (CATERPILLAR)	248
	250
PNEU (265-521 8 PLY) (CATERPILLAR)	247
	248
	249
PNEU (31 X 15,50-15 8 PLY) (CATERPILLAR)	244
POLIA DO VIRABREQUIM	61
	62
PORTA DA CABINE	518
	520
PORTA E MONTAGEM-CABINA	506
	510
	512
	516
PROJETOR SUPERIOR DA CABINE	528
PROTETOR - ROPS/FOPS	527
PURIFICADOR DE AR	94
	95

R

Designação	Página
RADIADOR E ARREFECEDOR DE ÓLEO - MONTAGEM	86
	90
	92
RADIADOR E ARREFECEDOR DO ÓLEO HIDRÁULICO	78
	80
	82
	84
REDUÇÃO DE RUÍDO	282
	283
REFLETOR	163
	278
REGULADOR DE TEMPERATURA DA ÁGUA	73
	76
RELÉ (CONJ)	186
	198
	200
	202
	534
RELÉ (CONJ) (12 V)	190
	196
RESERVATÓRIO - ARMAZENAGEM DE ÁGUA	116
RESPIRO	270
	272
RETENTOR	54
RETENTOR-CABINE	561
	562
	563
RETENTOR DE ANEL-O (19,18MM ID)	322
RETENTOR (FILTRO DE COMBUSTÍVEL)	114
REVESTIMENTO DA CABINE	544
RODA COMPLETA (PNEU SÓLIDO DE 7,50 - 16) (CATERPILLAR)	245
	251
RODA E PNEU	242
	243
	244
	245
	246
	247
	248
	249
	250
	251

S

Designação	Página
SACADOR - MINIFUSÍVEL	145
SENSOR DE PRESSÃO E TEMPERATURA	175
SEPARADOR DE ÁGUA	135
SILENCIADOR	105

ÍNDICE

Designação	Página
	106
SIST. DE ILUMINAÇÃO - PISCA-PISCA GIRATÓRIO DE ADVERTÊNCIA	173
SISTEMA ELETRÔNICO-FERRAMENTA DE TRABALHO	146
SOFTWARE-FERRAMENTA DE TRABALHO	146
SOLENÓIDE DE PARADA	177
SUPORTE - GARFO	451

T

TAMPA - BOCAL DE ENCHIMENTO DE ÓLEO	54
TAMPA - CABINE	502
TAMPA - CAIXA DIANTEIRA	13
TAMPA - CONSOLO	503
	504
TAMPA - HIDRÁULICO	378
	379
TAMPA - MECANISMO DAS VÁLVULAS	14
	16
TAMPA - RADIADOR	78
	80
TAMPA - TANQUE DE COMBUSTÍVEL	120
	122
	124
	126
TAMPA - TUBULAÇÕES	454
TAMPA COM RESPIRO	82
	84
	86
	90
TAMPA CONTRA POEIRA	30
	31
	150
	151
	214
	220
	222
	344
	346
	350
	352
TAMPA DO PAINEL DO FUSÍVEL	145
TAMPA-ÓLEO	14
TANQUE DE ÁGUA	493
	494
TANQUE DE ÁGUA E MONTAGEM	490
TANQUE DE ÓLEO HIDRÁULICO E MONTAGEM	376
	377
TANQUE HIDRÁULICO	378
	379
TAPETE	524
TELA FILTRANTE	489
TELA FILTRANTE - ÁGUA	489
TOLDO - ESTRUTURA ROPS	501
TORNEIRA	76
TRAVA - ACOPLADOR RÁPIDO	484
TREM DE FORÇA	234
	235
TUBOS - AQUECEDOR	546
	547
TUBOS - AR	96
	97
TUBOS - ARREFECEDOR DE ÓLEO HIDRÁULICO	330
	331
	332
TUBOS - BOMBA	350
	352
TUBOS - CAÇAMBA	316
	318
TUBOS - CILINDRO DE INCLINAÇÃO	354
	356
	358
	360
TUBOS - CILINDRO DE LEVANTAMENTO	334
	336
	338
	340
TUBOS - CIRCUITO PILOTO	342
	344
	346
	348
TUBOS - COMBUSTÍVEL	120
	122
	124
	126
TUBOS - FERRAMENTA DE TRABALHO	362
	364
TUBOS - FILTRO HIDRÁULICO	216
	218
TUBOS - GARRA	322
	324
TUBOS - SISTEMA HIDROSTÁTICO	220
	222
TUBOS - VENTILADOR HIDRÁULICOS	326
	327
	328
	329
TUBOS DE CONEXÃO	320

U

UNI-DENTE	496

V

VÁLVULA - AMOSTRA DE FLUIDOS	214
VÁLVULA DE ALÍVIO	406

ÍNDICE

Designação	Página
	407
	408
	409
VÁLVULA DE CONTROLE	392
	394
	396
	398
	400
VÁLVULA DE CONTROLE E MONTAGEM	380
	381
	382
	383
	384
	385
	386
VÁLVULA DE CONTROLE PILOTO	403
	404
	405
VÁLVULA DE DRENAGEM	52
	54
VÁLVULA DE MODULAÇÃO	402
VÁLVULA DE PARADA	224
	226
	546
VÁLVULA DE RETENÇÃO	390
VÁLVULA DESVIADORA E MONTAGEM	387
	388
VÁLVULA PURIFICADORA	94
	95
VÁLVULA SOLENÓIDE	410
VELA DE AQUECIMENTO	147
	148
VELA DE AQUECIMENTO; VELA INCANDESCENTE	147
	148
VENTILADOR DE SOPRO	70
	71
VIRABREQUIM	18
	20
VOLANTE DO MOTOR	33
	34

STICHWORTVERZEICHNIS

Bezeichnung	Seite

A

ABDECKGLAS	154, 157, 158
ABDECKGLAS (GELB)	154, 160
ABLASSVENTIL	52, 54
ABSPERRVENTIL	224, 226, 546
ABSTELLMAGNETSPULE	177
ACHSE	204
ANSAUGKRÜMMER	100
ANSCHLUSS, ELEKTR.	142, 143
ANSCHLUSSGRIFF	479, 480
ANSCHLUSSGRUPPE	226
ANSCHLUSSLEITUNGEN	320
ANSCHLUSSSTÜCK (KRAFTSTOFFLEITUNGEN)	117
ARBEITSGERÄT - LEITUNGEN	362, 364
ARBEITSGERÄT - VERDRAHTUNG	198, 200, 202
ARBEITSGERÄTEELEKTRONIK	146
ARBEITSGERÄTEPUMPE U. BEFESTIGUNG	373, 374
ARBEITSGERÄTESTEUERUNG	412, 414
ARBEITSLEUCHTEN	152, 153
ARMLEHNE	498
ARNLEHNE U. BEFESTIGUNG	497
AUFKLEBER	256, 588, 590, 592, 593
AUSPUFFKRÜMMER	98, 99

B

BATTERIE	140, 141
BATTERIE (12 V)	140, 141
BELEUCHTUNG FÜR STRASSENFAHRT - BEFESTIGUNG	278
BELEUCHTUNGSANLAGE (STRASSENAUSRÜSTUNG)	166, 170
BLINKLEUCHTE	157
BREMS- U. ARBEITSLEUCHTEN	161
BREMS- UND RÜCKLEUCHTE	158

D

DICHTUNG	54, 68, 112
DICHTUNG (KRAFTSTOFFILTER)	114
DICHTUNG (VENTILHALTERUNG)	65
DICHTUNGSSATZ	390
DREHSTROMGENERATOR	136, 138
DREHSTROMGENERATOR - BEFESTIGUNG	46
DREIWEGESCHALTER (HEIZGEBLÄSE)	534
DRUCKLÜFTER	70, 71
DRUCKLUFTLEITUNGEN	96, 97
DRUCKSCHALTER	181, 182, 214
DRUCKSCHALTER (ÖL)	181

E

ELEMENT (AUSFALLSCHUTZ)	94, 95
ELEMENT (HAUPTELEMENT)	94, 95
ENTFROSTERKANAL	522
ENTLEERUNGSVENTIL	94, 95
ENTLÜFTER	270, 272
ERDSCHAUFEL	427, 428, 440, 441

F

FAHERHAUSDICHTUNG	561, 562, 563
FAHRERHAUS, SONNENBLENDE	573, 574
FAHRERHAUSABDECKUNG	502
FAHRERHAUSAUSKLEIDUNG	544

* ÜBERSETZUNG ZUM ZEITPUNKT DER DRUCKLEGUNG NICHT VORHANDEN

STICHWORTVERZEICHNIS

Bezeichnung	Seite
FAHRERHAUSBELEUCHTUNG	526
FAHRERHAUSDACH	551
FAHRERHAUSFENSTER	575
	576
	578
	580
	582
	583
	584
	586
FAHRERHAUSHEIZUNG	534
	536
FAHRERHAUSHEIZUNG U. BEFESTIGUNGS-TEILE	529
	530
	532
FAHRERHAUSLUFTFILTER	523
FAHRERHAUSTÜR	518
	520
FAHRERHAUSTÜR U. BEFESTIGUNG	506
	510
	512
	516
	540
	542
FAHRERHAUSVERDRAHTUNG	186
FAHRERPLATTFORM	559
	560
FAHRERSITZ UND UNTERBAU	564
	565
FAHRGESTELL	1
	2
FAHRGESTELLVERDRAHTUNG	190
FESTSTELLBREMSGESTÄNGE	206
	208
FILTER	523
*FRAME GP-BLADE	268
FRONTBELEUCHTUNG	162
FUSSMATTE	524

G

GABELTRÄGER	451
GASFEDERGRUPPE	572
GASPEDAL	556
	557
	558
GAZE	16
GEGENGEWICHT	258
	259
	260
	261
	262
GLÜHKERZE	147
	148
GREIEFERSCHAUFEL	445
	446
GREIFERGABEL	463
	464
	465
	466
	467
GREIFERLEITUNGEN	322
	324
GREIFERSCHAUFEL	431
	432
	433
	434
	435
	436
GREIFERZYLINDER	305
	306
GREIFERZYLINDER U. -BEFESTIGUNG	301
	302
GRIFF U. BOLZEN - ANSCHLUSS	477
	478
GRUNDAUSFÜHRUNG	3
	4

H

HAHN	76
HECKBELEUCHTUNG	163
	164
HECKBELEUCHTUNGSVERDRAHTUNG	196
HECKSTOSSSTANGE	252
HEIZUNGSLEITUNGEN	546
	547
HUBZYLINDER	307
	308
	309
HUBZYLINDERLEITUNGEN	334
	336
	338
	340
HYDRAULIKBEDIENUNG (MIT VORSTEUE-RUNG)	289
	290
	291
	292
	293
	294
	295
	296
	297
	298

* ÜBERSETZUNG ZUM ZEITPUNKT DER DRUCKLEGUNG NICHT VORHANDEN

STICHWORTVERZEICHNIS

Bezeichnung	Seite
	299
HYDRAULIKDRUCKSPEICHER U. BEFESTIGUNG	284
HYDRAULIKFILTER UND BEFESTIGUNGSTEILE	213
HYDRAULIKFILTERLEITUNGEN	216
	218
HYDRAULIKKÜHLERMOTOR U. BEFESTIGUNG	366
	367
HYDRAULIKLÜFTERLEITUNGEN	326
	327
	328
	329
HYDRAULIKÖL-TANKKAPPE	378
	379
HYDRAULIKÖLKÜHLERLEITUNGEN	330
	331
	332
HYDRAULIKPUMPE UND LEITUNGEN	350
	352
HYDRAULIKSYSTEM	312
	313
	314
	315
HYDRAULIKTANK	378
	379
HYDRAULIKTANK UND BEFESTIGUNGSTEILE	376
	377
HYDROSTATIKLEITUNGEN	220
	222
HYDROSTATIKMOTOR U. BEFESTIGUNG	228
	229
HYDROSTATIKPUMPE U. BEFESTIGUNG	236
	237

I

IDENTIFIZIERUNGS-AUFKLEBER (GRUPPEN- U. SEQUENZNR.)	536
*INSTALLATION AR-HEATER	538
INSTRUKTIONS-AUFKLEBER (NOTAUSGANG)	518
	520
	580
	584
	586
INSTRUMENTENTAFEL	551
	552
	555
INSTRUMENTENTAFELLEUCHTE	156

K

KAPPE MIT ENTLÜFTER	82
	84
	86
	90
KEILRIEMEN	136
KIPPZYLINDER	310
	311
KNOPF	573
KOLBENMOTOR	230
KOLBENPUMPE	238
	240
KOMBISCHAUFEL	429
	430
	431
	438
	439
	447
	448
KOPFLEISTE - FAHRERHAUS	528
KRAFTSTOFF-ENTLÜFTUNGSPUMPE	115
KRAFTSTOFFEINSPRITZPUMPE	130
	132
KRAFTSTOFFFILTEREINSATZ	114
KRAFTSTOFFILTER	112
	114
	115
KRAFTSTOFFILTER UND LEITUNGEN	112
KRAFTSTOFFILTERELEMENT	116
KRAFTSTOFFLEITUNGEN	120
	122
	124
	126
KRAFTSTOFFÖRDERPUMPE UND BEFESTIGUNGSTEILE	128
KRAFTSTOFFPUMPEN-EINBAUSATZ	112
KRAFTÜBERTRAGUNG	234
	235
KÜHLER U. ÖLKÜHLERBEFESTIGUNG	86
	90
	92
KÜHLER UND HYDRAULIKÖLKÜHLER	78
	80
	82
	84
KÜHLERKAPPE	78
	80
KÜHLWASSERANSCHLUSS	68
	69
KÜHLWASSERPUMPE	73
	74
	76
KURBELWELLE	18

* ÜBERSETZUNG ZUM ZEITPUNKT DER DRUCKLEGUNG NICHT VORHANDEN

STICHWORTVERZEICHNIS

Bezeichnung	Seite
	20
KURBELWELLEN-RIEMENSCHEIBE	61
	62

L

LADERRAHMEN	270
	272
LAUFBAND UND ANTRIEB	160
LEICHTGUTSCHAUFEL	437
	444
LEITUNGSABDECKUNG	454
LEITUNGSFÜHRUNG	417
LEUCHTE (12 V)	154
	156
	158
	160
	526
	594
LEUCHTE (12 V) (BREMS- U. HECKLEUCHTE)	157
LEUCHTE (12 V) (RECHTS- U. LINKSWENDUNG)	157
LEUCHTE (12 V) (SIGNAL)	154
LEUCHTE (12 V)(55 W)	152
	153
LUFTANZEIGE (FILTERWARTUNG)	96
LÜFTERBEFESTIGUNG	49
LUFTREINIGER	94
	95

M

MAGNETSTOPFEN	270
	272
MAGNETVENTIL	410
MASCHINENHUBÖSE	274
	275
	276
	277
MEHRZWECKGABEL	471
	472
	473
MEHRZWECKGREIFER	474
	476
MEHRZWECKSCHAUFEL	449
	450
MEMBRANPUMPE	485
MINISICHERUNGSZIEHER	145
MODULATORVENTIL	402
MOTOR-EINBAUSATZ	7
	8
	9
	10
MOTOR-HALTETEILE	32
MOTORANTRIEB	368
	369
	370
MOTORAUFLAGER	47
	48
MOTORAUSFÜHRUNG	5
	6
MOTORBLOCK	22
	23
	24
MOTORHUBÖSE	44
	45
MOTORÖLABLASS	30
	31
MOTORVERDRAHTUNG	194
	195
MOTORVERKLEIDUNG	264
	266

N

NEIGEZYLINDERLEITUNGEN	354
	356
	358
	360
NOCKENWELLE	11
	12

O

O-RING-DICHTUNG (19,18 MM ID)	322
ÖLEINFÜLLKAPPE	54
ÖLFILTER	54
	66
	213
	214
ÖLKAPPE	14
ÖLSCHRAUBE	54
ÖLWANNE	52
	54

P

PALETTENGABEL	468
	469
	470
PLEUELLAGER-EINBAUSATZ	18
PLEUELSTANGE UND KOLBEN	58
	59
PROBEENTNAHMEVENTIL F. WARTUNGSFL.	214

* ÜBERSETZUNG ZUM ZEITPUNKT DER DRUCKLEGUNG NICHT VORHANDEN

STICHWORTVERZEICHNIS

Bezeichnung	Seite
PUMPENAUFHÄNGUNG	232
	233

R

RAD UND REIFEN	242
	243
	244
	245
	246
	247
	248
	249
	250
	251
REFLEKTOR	163
	278
REGLER	118
REGLERSTEUERUNG	108
	110
RELAIS	186
	198
	200
	202
	534
RELAIS (12 V)	190
	196
RÜCKFAHRWARNHORN	184
RÜCKLAUFVENTIL - VERTEILER	224
	226
RÜCKSPIEGEL U. BEFESTIGUNG	548
RUNDUM-KENNLEUCHTE	159
	160
	173

S

SCHALENDICHTUNGSSATZ	116
SCHALLDÄMPFER	105
	106
SCHALLDÄMPFERSTÜTZEN	101
	102
	103
	104
SCHALLDÄMPFUNG	282
	283
SCHAUFELLEITUNGEN	316
	318
SCHAUFELZYLINDER	304
SCHEIBENWISCHERBLATT	518
	520
SCHEIBENWISCHERMOTOR	549
SCHEINWERFER U. RICHTUNGSLEUCHTE	154
	166
	170
SCHEINWERFER (12 V)	154
SCHILD	425
	426
SCHILD UND AUFKLEBER	595
	596
	597
	598
	599
	600
	601
	602
	603
	604
	605
	606
	607
	608
	610
	611
	612
	613
	614
	616
	618
	619
	620
	621
	622
	623
	624
SCHILDFEDERN	486
SCHILDZYLINDER	303
SCHILDZYLINDER U. BEFESTIGUNGSTEILE	300
SCHLAUCHLEITUNG	84
	86
	90
SCHLAUCHLEITUNG (ENTDUNSTER)	14
SCHMIERNIPPEL	300
	301
	414
	426
SCHMIERNIPPEL (1/8-27-GEWINDE)	371
	412
	414
	445
	446
	447
	448
	465
	466
SCHMIERNIPPEL (1/8-27-GEWINDE)	268

* ÜBERSETZUNG ZUM ZEITPUNKT DER DRUCKLEGUNG NICHT VORHANDEN

STICHWORTVERZEICHNIS

Bezeichnung	Seite
	270
SCHMIERNIPPEL (1/8-27-GEWINDE)	304
	305
	306
	310
	311
SCHMIERPUMPE	67
SCHNEERÄUM-UMRÜSTSATZ	483
SCHNEIDMESSER	455
	456
	457
	458
	459
	460
	461
	462
SCHNELLWECHSELEINRICHTUNG	452
	453
SCHNELLWECHSELEINRICHTUNGSSPERRE	484
SCHWINGSITZ	571
SCHWUNGRAD	33
	34
SCHWUNGRADGEHÄUSE	35
	36
SCREEN	489
SEITENVERKLEIDUNG	280
	281
SENSORANSCHLUSSSATZ (12POLIG)	186
	190
SENSORANSCHLUSSSATZ (2POLIG)	186
	190
	196
	494
	538
SENSORANSCHLUSSSATZ (3POLIG)	166
	170
	186
	190
	506
	512
SENSORANSCHLUSSSATZ (4 POLIG)	166
	170
SENSORANSCHLUSSSATZ (4 POLIG)	186
	190
SENSORANSCHLUSSSATZ (6POLIG)	166
	170
	190
SENSORANSCHLUSSSATZ (8POLIG)	186
	190
	494
SERVICEWERKZEUG	176
SICHERHEITSGURT	566
	567
	568
	569
	570
SICHERUNG (10 A)	184
	186
	537
SICHERUNG (15 A)	186
	198
	200
	202
SICHERUNG (20 A)	529
	530
	532
SICHERUNGSTAFEL - ABDECKUNG	145
SIGNALBLINKER	166
	170
SOFTWARE - ARBEITSGERÄT	146
SONNENBLENDE	573
	574
SPERRVENTIL	390
STARTERMOTOR	178
	179
	180
STARTERMOTORAUFHÄNGUNG	50
	51
STARTSCHLÜSSELSCHALTER	525
STAUBKAPPE	30
	31
	150
	151
	214
	220
	222
	344
	346
	350
	352
STECKDOSEN - EINBAUSATZ (12POLIG)	174
	190
STECKDOSEN - EINBAUSATZ (2POLIG)	166
	170
	182
	184
	190
	398
	403
	410
	538
STECKDOSEN - EINBAUSATZ (2POLIG)	270
STECKDOSEN - EINBAUSATZ (3POLIG)	166
	186
	196

* ÜBERSETZUNG ZUM ZEITPUNKT DER DRUCKLEGUNG NICHT VORHANDEN

STICHWORTVERZEICHNIS

Bezeichnung	Seite
	378
	379
	502
	506
	510
	512
	516
STECKDOSEN - EINBAUSATZ (4 POLIG)	157
	158
	278
	387
	388
STECKDOSEN - EINBAUSATZ (4 POLIG)	156
	166
	170
	186
	190
	272
	549
STECKDOSEN - EINBAUSATZ (6POLIG)	154
	166
	170
	186
	190
	285
	286
	552
STECKDOSEN - EINBAUSATZ (8POLIG)	186
	190
	198
	200
	202
	287
	288
	494
STEUERHEBEL	285
	286
	287
	288
STEUERKONSOLENABDECKUNG	503
	504
STEUERVENTIL	392
	394
	396
	398
	400
STEUERVENTIL UND BEFESTIGUNGSTEILE	380
	381
	382
	383
	384
	385
	386
STIRNRADGEHÄUSE	38
	40
	42
STIRNRADGEHÄUSEDECKEL	13
STRASSENFAHRT - UMRÜSTSATZ	255
	256
STRASSENFAHRTSCHILD UND BEFESTIGUNG	481
	482

T

TANDEMANTRIEB	210
	212
TANKKAPPE	120
	122
	124
	126
TEMPERATUR- U. DRUCKSENSOR	175
TEMPERATURSCHALTER	183
*TIRE (*10-16.5 8 PLY) (CATERPILLAR)	248
	250
*TIRE (*265-521 8 PLY) (CATERPILLAR)	247
	248
	249
*TIRE (*31 X 15.50-15 8 PLY) (CATERPILLAR)	244
TRAGARM	418
TRAGARMSTUFE	487
	488
TYPENSCHILDBEFESTIGUNG	594

U

ÜBERDRUCKVENTIL	406
	407
	408
	409
ÜBERROLLSCHUTZ - OFFENES FAHRERHAUS	501
ÜBERROLLSCHUTZAUFLAGER	550
UMBAUSATZ - FÜR STRASSENVERKEHR	253
	254
UMLAUFKÜHLWASSERHEIZUNG	149
	150
	151
UNIVERSAL-ZAHNSPITZE	496
UNIVERSALSCHAUFEL	442
	443
UNTERBRECHER (30 A)	190
UNTERLEGSCHEIBE	54

* ÜBERSETZUNG ZUM ZEITPUNKT DER DRUCKLEGUNG NICHT VORHANDEN

STICHWORTVERZEICHNIS

Bezeichnung	Seite
V	
VENTILDECKEL	14, 16
VENTILDECKELDICHTUNG	14, 76
VENTILSATZ (2-VENTIL)	389
VENTILSTEUERUNG	64, 65
VERKLEIDUNG - ÜBERROLLSCHUTZ/ STEINSCHLAGSCHUTZ	527
VERRIEGELUNGSSTEUERUNG	144
VERSTAUKASTEN	500
VERTEILERVENTIL U. BEFESTIGUNGSTEILE	387, 388
VORSTEUERLEITUNGEN	342, 344, 346, 348
VORSTEUERVENTIL	403, 404, 405
VORSTEUERVENTILSTOPFEN	372
W	
WARNANZEIGEMODUL	174
WARNANZEIGENSATZ	525, 526
WARNAUFKLEBER (*CLEARANCE)	254
WARNHORN, ELEKTR.	537
WARNHORN, ELEKTR.	538
WASSERABSCHEIDER	135
WASSERABSCHEIDER - EINBAUSATZ	116, 135
WASSERABSCHEIDER- U. KRAFTSTOFFILTER	116
WASSERAUFFANGSCHALE	116
WASSERFILTERELEMENT	135
WASSERLEITUNGSSTOPFEN	72
WASSERPUMPE - RIEMENSCHEIBE	63
WASSERSIEBEINSATZ	489
WASSERTANK	493, 494
WASSERTANK U. BEFESTIGUNGSTEILE	490
WASSERTEMPERATURREGLER	73, 76
*WHEEL AS (*7.50-16 SOLID TIRE) (CATERPILLAR)	245, 251
Z	
ZAHNBALKEN	419, 420, 421, 422, 423, 424, 425
ZAHNRADPUMPE	375
ZYLINDERAUFHÄNGUNG	371
ZYLINDERBLOCKSCHRAUBE	60
ZYLINDERKOPF	26, 27, 28, 29

* ÜBERSETZUNG ZUM ZEITPUNKT DER DRUCKLEGUNG NICHT VORHANDEN

INDICE

Nome	Pagina

A

ACCUMULATORE IDRAULICO E MONTAGGIO - GR 284
ALBERO A CAMME - GR 11, 12
ALBERO A TANDEM - GR 210, 212
ALBERO MOTORE - GR 18, 20
ALLARME DI RETROMARCIA - GR 184
ALTERNATORE DI CARICA - GR 136, 138
ASSALE GR 204
ATTACCO ELETTRICO 142, 143
ATTACCO RAPIDO - GR 452, 453
AVVISATORE ACUSTICO-ELETTRICO 537, 538

B

BARRA SCARPETTA - GR 419, 420, 421, 422, 423, 424, 425
BATTERIA 140, 141
BATTERIA (12 VOLT) 140, 141
BENNA A RAFFIO - CONFIG 431, 432, 433, 434, 435, 436
BENNA A RAFFIO - GR 445, 446
BENNA MULTIUSO - CONFIG 438, 439
BENNA MULTIUSO - GR 447, 448, 449, 450
BENNA PER MATERIALE LEGGERO 444
BENNA PER MATERIALE LEGGERO - CONFIG 437
BENNA PER USO GENERALE 442, 443
BENNA PER USO GENERALE - CONFIG 429, 430, 431
BENNA TERRICCIO 440, 441
BENNA TERRICCIO - CONFIG 427, 428
BLOCCO PER L'ATTACCO RAPIDO - GR 484
BRACCIO MOVIMENTAZIONE MATERIALE - GR 418
BRACCIOLO 498
BRACCIOLO E MONTAGGIO - GR 497
BULLONERIA DI REGOLAZIONE - GR 594

C

CABLAGGIO - CABINA 186
CABLAGGIO DEL MOTORE 194, 195
CABLAGGIO DEL TELAIO - GP 190
CABLAGGIO DELL'ATTREZZATURA - GR 198, 200, 202
CABLAGGIO LUCI POSTERIORI - GR 196
CAMICIA DELLA CABINA 544
CANDELETTA DI PRERISCALDAMENTO 147, 148
*CANOPY GP-ROPS 501
CATARIFRANGENTE 163, 278
CILINDRO BENNA - GR 304
CILINDRO DEL RAFFIO 305, 306
CILINDRO DI SOLLEVAMENTO 307, 308, 309
CILINDRO D'INCLINAZIONE 310, 311
CILINDRO E MONTAGGIO DELLA LAMA 300
CILINDRO E MONTAGGIO RAFFIO - GR 301, 302
CILINDRO LAMA - GR 303
CINGHIA A V 136
CINGHIA DI COMANDO 160
CINTURA DI SICUREZZA - GR 566, 567, 568, 569, 570
COLLETTORE ASPIRAZIONE - GR 100
COLLETTORE DI RITORNO - GR 224, 226
COLLETTORE SCARICO - GR 98, 99

* TRADUZIONE NON DISPONIBILE A TEMPO DELLA PUBBLICAZIONE

INDICE

Nome	Pagina
COMANDO A MANIGLIA - GR	285
	286
	287
	288
COMANDO ATTREZZATURA - GR	412
	414
COMANDO DEL FRENO DI PARCHEGGIO	206
	208
COMANDO IDRAULICO	312
	313
	314
	315
COMANDO IDRAULICO AZIONATO DA CIRCUITO PILOTA - GR	289
	290
	291
	292
	293
	294
	295
	296
	297
	298
	299
COMANDO INTEBLOCCO - GR	144
COMPARTIMENTO - MOTORE	264
	266
COMUNE - CONFIG	3
	4
CONDOTTO SBRINATORE - GR	522
*CONNECTOR GP	226
CONTENITORE PORTAOGGETTI - GR	500
CONTRAPPESO - GR	258
	259
	260
	261
	262
CONTROLLO REGOLATORE - GR	108
	110
CONVERSIONE MESSA SU STRADA - CONFIG	253
	254
CONVERSIONE MESSA SU STRADA - GR	255
	256
COPERCHIO CONSOLE - GR	503
	504
COPERCHIO MECCANISMO VALVOLE - GR	14
	16
COPERCHIO PANNELLO FUSIBILI - GR	145
COPERCHIO SCATOLA ANTERIORE - GR	13
COPERTURA CABINA - GR	502
COPERTURA TUBAZIONI - GR	454
COPPA OLIO - GR	52
	54

D

Nome	Pagina
DECALCOMANIA - GR	588
	590
	592
	593
DECALCOMANIE-ATTENZIONE (DISTANZA/GIOCO)	254
DECALCOMANIE-IDENTIFICAZIONE (NO. GRUPPO E SEQUENZA)	536
DECALCOMANIE-ISTRUZIONI (USCITA ALTERNATIVA)	518
	520
	580
	584
	586
DISPOSITIVO SOLLEVAMENTO MACCHINA - GR	274
	275
	276
	277

E

Nome	Pagina
ELEMENTO DEL FILTRO DEL CARBURANTE	116
ELEMENTO FILTRANTE DEL CARBURANTE	114
ELEMENTO FILTRANTE DELL'ACQUA	135
ELEMENTO (PRIMARIO)	94
	95
ELEMENTO (SECONDARIO)	94
	95
ELETTRONICA ATTREZZATURA - GR	146
ESTRATTORE FUSIBILI	145
ETICHETTA D'AVVERTENZA	256

F

Nome	Pagina
FANALE ANTERIORE E SEGNALE DI DIREZIONE - GR	154
	166
	170
FANALE ANTERIORE (12 VOLT)	154
FERMO DEL MOTORE	32
FILTRO	523
FILTRO - ARIA CABINA	523
FILTRO A RETE DELL'ACQUA - GR	489
FILTRO ARIA - GR	94
	95
FILTRO-CARBURANTE	112
	114
	115

* TRADUZIONE NON DISPONIBILE A TEMPO DELLA PUBBLICAZIONE

INDICE

Nome	Pagina
FILTRO DELL'OLIO	54, 213, 214
FILTRO E TUBAZIONI DEL CARBURANTE	112
FILTRO IDRAULICO E MONTAGGIO - GR	213
FILTRO OLIO MOTORE	66
FILTRO-OLIO MOTORE	66
FILTRO SEPARATORE CARBURANTE/ ACQUA	116
FINESTRINO DELLA CABINA	575, 576, 578, 580, 582, 583, 584, 586
FORCA MULTIUSO - GR	471, 472, 473
FORCA PALLET - GR	468, 469, 470
FORCA RAFFIO - CONFIG	463, 464
FORCA RAFFIO - GR	465, 466, 467
FUSIBILE (10 A)	184, 186, 537
FUSIBILE (15 A)	186, 198, 200, 202
FUSIBILE (20 A)	529, 530, 532

G

Nome	Pagina
GARZA	16
GRADINO DEL BRACCIO MOVIMENTAZIONE MATERIALE	487, 488
GRUPPO TUBAZIONI-RISCALDAMENTO	546, 547
GUARNIZIONE	68, 112
GUARNIZIONE AD ANELLO (19,18MM DI)	322
GUARNIZIONE COPERCHIO VALVOLE	14
GUARNIZIONE DEL COPERCHIO	76
GUARNIZIONE (STAFFA DELLA VALVOLA)	65
GUIDA TUBAZIONI - GR	417

I

Nome	Pagina
INDICATORE D'INTASAMENTO (MANUTENZIONE FILTRI)	96
INDICATORE E ALLARME - GR	525, 526
INGRASSATORE	300, 301, 414, 426
INGRASSATORE (FILETTATURA 1/8-27)	268, 270, 304, 305, 306, 310, 311, 371, 412, 414, 445, 446, 447, 448, 465, 466
INSONORIZZAZIONE	282, 283
INSTALLAZIONE DEL RISCALDATORE - CONFIG	538
INTERRUTTORE - PRESSIONE	214
INTERRUTTORE A PRESSIONE (OLIO)	181
INTERRUTTORE A TRE POSIZIONI (VENTOLA DEL RISCALDAMENTO)	534
INTERRUTTORE D'AVVIAMENTO A CHIAVE	525
INTERRUTTORE DELLA TEMPERATURA	183
INTERRUTTORE DI CIRCUITO (30 A)	190

K

Nome	Pagina
KIT - BASE DELL'ACQUA	116, 135
KIT - CONVERSIONE RIMOZIONE NEVE	483
KIT - GUARNIZIONE DEL BICCHIERINO	116
KIT - POMPA CARBURANTE	112
KIT - PORTA DELLA CABINA E MONTAGGIO	540, 542
KIT - TAPPO CONNETTORE (12 TERMINALI)	186, 190
KIT - TAPPO CONNETTORE (2 TERMINALI)	186, 190

* TRADUZIONE NON DISPONIBILE A TEMPO DELLA PUBBLICAZIONE

INDICE

Nome	Pagina
	196
	494
	538
KIT - TAPPO CONNETTORE (3 TERMINALI)	166
	170
	186
	190
	506
	512
KIT - TAPPO CONNETTORE (4 TERMINALI)	166
	170
	186
	190
KIT - TAPPO CONNETTORE (6 TERMINALI)	166
	170
	190
KIT - TAPPO CONNETTORE (8 TERMINALI)	186
	190
	494
KIT - TARGA DI CIRCOLAZIONE STRADALE E MONTAGGIO	481
	482
KIT - TENUTA	390
KIT-BRONZINE DI BIELLA	18
KIT-PRESA (12 TERMINALI)	174
	190
KIT-PRESA (2 TERMINALI)	166
	170
	182
	184
	190
	270
	398
	403
	410
	538
KIT-PRESA (3 TERMINALI)	166
	186
	196
	378
	379
	502
	506
	510
	512
	516
KIT-PRESA (4 TERMINALI)	156
	157
	158
	166
	170
	186
	190
	272
	278
	387
	388
	549
KIT-PRESA (6 TERMINALI)	154
	166
	170
	186
	190
	285
	286
	552
KIT-PRESA (8 TERMINALI)	186
	190
	198
	200
	202
	287
	288
	494

L

LAMA	425
	426
LAMPADA - SEGNALE	157
LAMPADA D'ARRESTO E DI CODA - GR	158
LAMPADA D'ILLUMINAZIONE PANNELLO - GR	156
LAMPADA FARO ROTANTE - GR	159
	160
LAMPADA (12 V) (SVOLTA)	157
LAMPADA (12 VOLT)	156
	158
	160
	594
LAMPADA (12 VOLT)(55 WATT)	152
	153
LAMPADA (12V)	154
	526
LAMPADA (12V) (ARRESTO E POSTERIORI)	157
LAMPADA (12V) (SEGNALE DI DIREZIONE)	154
LAMPEGGIATORE	166
	170
LENTE	154
	157
	158
LENTE COLOR AMBRA	154
	160
LUCE INTERNA	526
LUCI ANTERIORI - GR	162
LUCI D'ARRESTO E DI LAVORO - CONFIG	161

* TRADUZIONE NON DISPONIBILE A TEMPO DELLA PUBBLICAZIONE

INDICE

Nome	Pagina
LUCI DI LAVORO - GR	152
	153
LUCI FARO ROTANTE - GR	173
LUCI POSTERIORI - GR	163
	164
LUCI STRADALI	166
	170
M	
MANIGLIA DELL'ATTACCO - GR	479
	480
MANIGLIA E PERNO DELL'ATTACCO - GR	477
	478
MARMITTA - GR	105
	106
MECCANISMO VALVOLA - GR	64
	65
MODULO INDICATORE D'AVVERTENZA - GR	174
MOLLA A GAS	572
MOLLA DELLA LAMA -GR	486
MONOBLOCCO - GR	22
	23
	24
MONODENTE	496
MONTAGGIO - CILINDRO	371
MONTAGGIO - MOTORE	7
	8
	9
	10
MONTAGGIO -ALTERNATORE	46
MONTAGGIO DELLA VENTOLA	49
MONTAGGIO LUCI STRADALI - GR	278
MONTAGGIO MOTORE - GR	47
	48
MONTAGGIO MOTORINO D'AVVIAMENTO - GR	50
	51
MONTAGGIO POMPA - GR	232
	233
MONTAGGIO ROPS - GR	550
MONTAGGIO SILENZIATORE - GR	101
	102
	103
	104
MOTORE AD INGRANAGGI - GR	368
	369
	370
MOTORE E MONTAGGIO IDROSTATICO - GR	228
	229
MOTORE E MONTAGGIO VENTOLA IDRAULICA - GR	366
	367
MOTORE IDRAULICO A PISTONE	230
MOTORE PRINCIPALE	5
	6
MOTORINO AVVIAMENTO ELETTRICO - GR	178
	179
	180
MOTORINO DEL TERGICRISTALLO	549
P	
PANNELLO LATERALE - GR	280
	281
PARASOLE	573
	574
PARASOLE CABINA - GP	573
	574
PARAURTI POSTERIORE - GR	252
PEDALE DEL REGOLATORE	556
	557
	558
PIATTAFORMA - OPERATORE	559
	560
PISTONE E BIELLA - GR	58
	59
PNEUMATICO (10-16.5 A 8 TELE) (CATERPILLAR)	248
	250
PNEUMATICO (265-521 A 8 TELE) (CATERPILLAR)	247
	248
	249
PNEUMATICO (31 X 15.50-15 A 8 TELE) (CATERPILLAR)	244
POMELLO	573
POMPA - ADESCAMENTO CARBURANTE	115
POMPA A DIAFRAMMA - GR	485
POMPA A PISTONE	238
	240
POMPA ACQUA - GR	73
	74
	76
POMPA AD INGRANAGGI	375
POMPA D'ALIMENTAZIONE CARBURANTE E MONTAGGIO	128
POMPA E MONTAGGIO DELL'ATTREZZATURA - GR	373
	374
POMPA IDROSTATICA E MONTAGGIO - GR	236
	237
POMPA INIEZIONE CARBURANTE - GR	130

* TRADUZIONE NON DISPONIBILE A TEMPO DELLA PUBBLICAZIONE

INDICE

Nome	Pagina
	132
POMPA OLIO MOTORE - GR	67
PORTIERA CABINA - GR	518
	520
PORTIERA E MONTAGGIO CABINA - GR	506
	510
	512
	516
PRESSOSTATO - GR	181
	182
PRESSOSTATO E SENSORE TEMPERATURA - GR	175
PROTEZIONE ROPS/FOPS - GR	527
PULEGGIA ALBERO MOTORE - GR	61
	62
PULEGGIA DELLA POMPA DELL'ACQUA - GR	63

Q

QUADRO STRUMENTI	552
	555
QUADRO STRUMENTI - CONFIG	551

R

RACCORDO ACQUA	68
	69
RACCORDO DELL TUBAZIONI DEL CARBURANTE	117
RADIATORE E SCAMBIATORE DI CALORE DELL'OLIO MONTAGGIO - GR	86
	90
	92
RADIATORE E SCAMBIATORE D'OLIO	78
	80
	82
	84
RAFFIO MULTIUSO - GR	474
	476
REGOLATORE	118
REGOLATORE DELLA TEMPERATURA DELL'ACQUA	73
	76
RELÈ	186
	198
	200
	202
	534
RELÈ (12 VOLT)	190
	196
RETINA	489
RISCALDAMENTO CABINA - GR	534
	536
RISCALDAMENTO DELLA CABINA E MONTAGGIO	529
	530
	532
RISCALDATORE DELL'ACQUA DI CAMICIA	149
	150
	151
RIVESTIMENTO CABINA	528
RONDELLA	54
RUBINETTO	76
RUOTA E PNEUMATICO - CONFIG	242
	243
	244
	245
	246
	247
	248
	249
	250
	251
RUOTA E PNEUMATICO - GR	251
RUOTA (PNEUMATICO SOLIDO 7.50-16) (CATERPILLAR)	245
	251

S

SCARICO DELL'OLIO MOTORE - GR	30
	31
SCATOLA ANTERIORE - GR	38
	40
	42
SCATOLA VOLANO - GR	35
	36
SEDILE - MOLLE	571
SEDILE E MONTAGGIO	564
	565
SEPARATORE DELL'ACQUA	135
SERBATOIO DELL'ACQUA - GR	493
	494
SERBATOIO E GRUPPO MONTAGGIO-ACQUA	490
SERBATOIO E GRUPPO MONTAGGIO-IDRAULICO	376
	377
SERBATOIO IDRAULICO	378
	379
SERVIZIO ATTREZZATURA -GR	176
SFIATATOIO	270
	272
SOFTWARE ATTREZZATURA - GR	146
SOLENOIDE DI ARRESTO	177

* TRADUZIONE NON DISPONIBILE A TEMPO DELLA PUBBLICAZIONE

INDICE

Nome	Pagina
SOLLEVAMENTO MOTORE - GR	44
	45
SPAZZOLA - TERGICRISTALLO	518
	520
SPECCHIO RETROVISORE E BULLONERIA - GR	548

T

TAGLIENTE	455
	456
	457
	458
	459
	460
	461
	462
TAPPETO	524
TAPPO - BOCCHETTONE DI RIEMPIMENTO DELL'OLIO	54
TAPPO - MONOBLOCCO	60
TAPPO A SFIATO	82
	84
	86
	90
TAPPO ANTIPOLVERE	30
	31
	150
	151
	214
	220
	222
	344
	346
	350
	352
TAPPO DEL RADIATORE	78
	80
TAPPO DEL SERBATOIO CARBURANTE	120
	122
	124
	126
TAPPO DELLE TUBAZIONI DELL'ACQUA	72
TAPPO DELL'OLIO	14
	54
TAPPO MAGNETICO	270
	272
TAPPO SERBATOIO IDRAULICO	378
	379
TAPPO VALVOLA PILOTA - GR	372
TARGHETTE E DECALCOMANIA - GR	595
	596
	597
	598
	599
	600
	601
	602
	603
	604
	605
	606
	607
	608
	610
	611
	612
	613
	614
	616
	618
	619
	620
	621
	622
	623
	624
TEALIO - CONFIG	1
	2
TELAIO CARICATORE - GR	270
	272
TELAIO FORCA	451
TELAIO LAMA - GR	268
TENUTA	54
TENUTA CABINA - GR	561
	562
	563
TENUTA (FILTRO DEL CARBURANTE)	114
TESTA CILINDRO - GR	26
	27
	28
	29
TETTUCCIO POSTAZIONE OPERATOR - CONFIG	551
TRASMISSIONE	234
	235
TUBAZIONI ARIA - GR	96
	97
TUBAZIONI ATTREZZATURA - GR	362
	364
TUBAZIONI CARBURANTE - GR	120
	122
	124
	126
TUBAZIONI CILINDRO DI SOLLEVAMENTO - GR	334

* TRADUZIONE NON DISPONIBILE A TEMPO DELLA PUBBLICAZIONE

INDICE

Nome	Pagina
	336
	338
	340
TUBAZIONI CILINDRO D'INCLINAZIONE - GR	354
	356
	358
	360
TUBAZIONI CIRCUITO PILOTA - GR	342
	344
	346
	348
TUBAZIONI DEL RAFFIO	322
	324
TUBAZIONI DELLA BENNA	316
	318
TUBAZIONI DELLO SCAMBIATORE DI CALORE DELL'OLIO IDRAULICO	330
	331
	332
TUBAZIONI DI COLLEGAMENTO - GR	320
TUBAZIONI FILTRO IRDAULICO - GR	216
	218
TUBAZIONI IDROSTATICHE - GR	220
	222
TUBAZIONI POMPA - GR	350
	352
TUBAZIONI VENTOLA IDRAULICA - GR	326
	327
	328
	329
TUBO FLESSIBILE	84
	86
	90
TUBO FLESSIBILE (SCARICO FUMI)	14

V

Nome	Pagina
VALVOLA A SOLENOIDE - GR	410
VALVOLA-ARRESTO	224
	226
	546
VALVOLA D'ARRESTO	226
VALVOLA DI CAMPIONATURA	214
VALVOLA DI COMANDO E MONTAGGIO	380
	381
	382
	383
	384
	385
	386
VALVOLA DI CONTROLLO - GR	392
	394
	396
	398
	400
VALVOLA DI DISTRIBUZIONE E MONTAGGIO - GR	387
	388
VALVOLA DI RITEGNO - GR	390
VALVOLA DI SCARICO	52
	54
	94
	95
VALVOLA LIMITATRICE DI PRESSIONE - GR	406
	407
	408
	409
VALVOLA MODULATRICE	402
VALVOLA PILOTA - GR	403
	404
	405
VALVOLA 2 DEL BANCO - GR	389
VASCETTA COLLEZIONE ACQUA	116
VENTOLA DELL'ARIAZIONE	70
	71
VOLANO - GR	33
	34

* TRADUZIONE NON DISPONIBILE A TEMPO DELLA PUBBLICAZIONE

MEMORANDA

MACHINE ARRANGEMENT

191-2902 CHASSIS AR

S/N: CMB1-UP

PART OF 191-2900 COMMON AR

SMCS-7000 **i01747075**

NOTE	PART NUMBER	QTY	PART NAME 1 2 3 4 5 6 (PRODUCT LEVEL)	SEE PAGE
Y	*142-9400*	1	BUMPER GP-REAR	252
Y	*215-3980*	1	CONTROL GP-GOVERNOR	110
Y	*191-9599*	1	CONTROL GP-WORK TOOL	414
Y	*142-8803*	1	ENCLOSURE GP-ENGINE	264
Y	*191-9575*	1	FRAME GP-LOADER	270
Y	*156-9809*	1	GUIDE GP-LINES	417
Y	*212-6626*	1	LINES GP-FUEL	126
Y	*142-9334*	1	MOUNTING GP-ROPS	550
Y	*210-4699*	1	OPERATOR AR-CANOPY	551
Y	*207-9789*	1	PLATFORM GP-OPERATOR	560
Y	*177-3403*	1	SPRING GP-GAS	572
Y	*195-6723*	1	WINDOW GP-CAB (TOP & REAR)	584
Y	*193-8375*	1	WIRING GP-CAB	186
Y	*190-8001*	1	WIRING GP-CHASSIS	190
Y	*197-6900*	1	WIRING GP-ENGINE	194

Y-SEPARATE ILLUSTRATION

<END>

191-9602 CHASSIS AR

S/N: CAB1-UP

PART OF 191-9600 COMMON AR

SMCS-7000 **i01753255**

NOTE	PART NUMBER	QTY	PART NAME 1 2 3 4 5 6 (PRODUCT LEVEL)	SEE PAGE
Y	*142-8803*	1	ENCLOSURE GP-ENGINE	264
Y	*142-9334*	1	MOUNTING GP-ROPS	550
Y	*142-9400*	1	BUMPER GP-REAR	252
Y	*156-9809*	1	GUIDE GP-LINES	417
Y	*177-3403*	1	SPRING GP-GAS	572
Y	*190-8001*	1	WIRING GP-CHASSIS	190
Y	*191-9575*	1	FRAME GP-LOADER	270
Y	*191-9599*	1	CONTROL GP-WORK TOOL	414
Y	*193-8375*	1	WIRING GP-CAB	186
Y	*195-6723*	1	WINDOW GP-CAB (TOP & REAR)	584
Y	*197-8466*	1	WIRING GP-ENGINE	195
Y	*202-9022*	1	LINES GP-FUEL	124
Y	*207-9789*	1	PLATFORM GP-OPERATOR	560
Y	*210-4699*	1	OPERATOR AR-CANOPY	551
Y	*215-3980*	1	CONTROL GP-GOVERNOR	110

Y-SEPARATE ILLUSTRATION

<END>

MACHINE ARRANGEMENT

200-0802 CHASSIS AR

S/N: 4NZ3400-UP

PART OF 200-0800 COMMON AR

SMCS-7000 **i01653355**

NOTE	PART NUMBER	QTY	PART NAME 1 2 3 4 5 6 (PRODUCT LEVEL)	SEE PAGE
Y	*142-9400*	1	BUMPER GP-REAR	252
Y	*215-3980*	1	CONTROL GP-GOVERNOR	110
Y	*142-8799*	1	CONTROL GP-WORK TOOL	412
Y	*142-8803*	1	ENCLOSURE GP-ENGINE	264
Y	*199-5375*	1	FRAME GP-LOADER	272
Y	*156-9809*	1	GUIDE GP-LINES	417
Y	*201-7779*	1	LINES GP-FUEL	122
Y	*142-9334*	1	MOUNTING GP-ROPS	550
Y	*191-9799*	1	OPERATOR AR-CANOPY	551
Y	*207-9789*	1	PLATFORM GP-OPERATOR	560
Y	*177-3403*	1	SPRING GP-GAS	572
Y	*193-8375*	1	WIRING GP-CAB	186
Y	*190-8001*	1	WIRING GP-CHASSIS	190
Y	*197-8466*	1	WIRING GP-ENGINE	195

Y-SEPARATE ILLUSTRATION

<END>

200-1002 CHASSIS AR

S/N: 5FZ6700-UP

PART OF 200-1000 COMMON AR

SMCS-7000 **i01627221**

NOTE	PART NUMBER	QTY	PART NAME 1 2 3 4 5 6 (PRODUCT LEVEL)	SEE PAGE
Y	*142-9400*	1	BUMPER GP-REAR	252
Y	*192-2657*	1	CONTROL GP-GOVERNOR	108
Y	*142-8799*	1	CONTROL GP-WORK TOOL	412
Y	*142-8803*	1	ENCLOSURE GP-ENGINE	264
Y	*199-5375*	1	FRAME GP-LOADER	272
Y	*156-9809*	1	GUIDE GP-LINES	417
Y	*142-8821*	1	LINES GP-FUEL	120
Y	*142-9334*	1	MOUNTING GP-ROPS	550
Y	*191-9799*	1	OPERATOR AR-CANOPY	551
Y	*192-2672*	1	PLATFORM GP-OPERATOR	559
			—OR—	
CY	*207-9789*	1	PLATFORM GP-OPERATOR	560
Y	*177-3403*	1	SPRING GP-GAS	572
Y	*193-8375*	1	WIRING GP-CAB	186
Y	*190-8001*	1	WIRING GP-CHASSIS	190
Y	*197-6900*	1	WIRING GP-ENGINE	194

C-CHANGE FROM PREVIOUS TYPE
Y-SEPARATE ILLUSTRATION

<END>

MACHINE ARRANGEMENT

191-2900 COMMON AR

S/N: CMB1-UP

SMCS-7000 **i01706465**

NOTE	PART NUMBER	QTY	PART NAME 1 2 3 4 5 6 (PRODUCT LEVEL)	SEE PAGE
Y	*191-2902*	1	CHASSIS AR	1
Y	**144-6194**	1	ENGINE AR-PRIMARY	5
Y	*191-9565*	1	FILM GP	592
Y	*216-6136*	1	HYDRAULIC AR	315
Y	*219-4375*	1	INSTALLATION AR-ENGINE	9
Y	*190-7954*	1	PLATE & FILM GP	608
Y	*191-2901*	1	POWER TRAIN AR	234

Y-SEPARATE ILLUSTRATION

<END>

191-9600 COMMON AR

S/N: CAB1-UP

SMCS-7000 **i01706495**

NOTE	PART NUMBER	QTY	PART NAME 1 2 3 4 5 6 (PRODUCT LEVEL)	SEE PAGE
Y	*191-9602*	1	CHASSIS AR	1
Y	*191-9685*	1	FILM GP	593
Y	*191-9606*	1	HYDRAULIC AR	312
Y	*219-4385*	1	INSTALLATION AR-ENGINE	10
Y	*190-7954*	1	PLATE & FILM GP	608
Y	*191-9601*	1	POWER TRAIN AR	234

Y-SEPARATE ILLUSTRATION

<END>

200-0800 COMMON AR

S/N: 4NZ3400-UP

SMCS-7000 **i01614156**

NOTE	PART NUMBER	QTY	PART NAME 1 2 3 4 5 6 (PRODUCT LEVEL)	SEE PAGE
Y	*200-0802*	1	CHASSIS AR	2
Y	*158-7499*	1	FILM GP	588
Y	*200-0806*	1	HYDRAULIC AR	314
Y	*200-0805*	1	INSTALLATION AR-ENGINE	7
Y	*195-6765*	1	PLATE & FILM GP	616
Y	*200-0801*	1	POWER TRAIN AR	234

Y-SEPARATE ILLUSTRATION

<END>

MACHINE ARRANGEMENT

200-1000 COMMON AR

S/N: 5FZ6700-UP

SMCS-7000 **i01627042**

NOTE	PART NUMBER	QTY	PART NAME 1 2 3 4 5 6 (PRODUCT LEVEL)	SEE PAGE
Y	*200-1002*	1	CHASSIS AR	2
Y	*142-8830*	1	COUNTERWEIGHT GP	258
Y	**144-6194**	1	ENGINE AR-PRIMARY	5
Y	*166-8833*	1	FILM GP	590
Y	*200-1006*	1	HYDRAULIC AR	314
Y	*200-1005*	1	INSTALLATION AR-ENGINE	8
Y	*195-6765*	1	PLATE & FILM GP	616
Y	*200-1001*	1	POWER TRAIN AR	235

Y-SEPARATE ILLUSTRATION

<END>

ENGINE ARRANGEMENT

144-6194 ENGINE AR-PRIMARY

S/N: 3NW21000-UP

43KW

PART OF 191-2900, 200-1000 COMMON AR

SMCS-1000 **i01600500**

NOTE	PART NUMBER	QTY	PART NAME 1 2 3 4 5 6 (PRODUCT LEVEL)	SEE PAGE
Y	*171-2824*	1	CAMSHAFT GP	11
Y	*164-7622*	1	CONNECTION GP-WATER	68
Y	*164-7623*	1	COVER GP-FRONT HOUSING	13
Y	*153-0115*	1	COVER GP-VALVE MECHANISM	14
Y	*171-4663*	1	CRANKSHAFT GP	18
Y	*171-2792*	1	CYLINDER BLOCK GP	22
Y	*171-2803*	1	CYLINDER HEAD GP	27
Y	*166-3759*	1	FASTENER GP-ENGINE	32
Y	*164-7629*	1	FILTER & LINES GP-FUEL	112
Y	*164-7616*	1	FILTER GP-ENGINE OIL	66
Y	*153-0077*	1	FLYWHEEL GP	33
Y	*153-0524*	1	GLOW PLUG GP	147
Y	**171-2929**	1	GOVERNOR GP	118
Y	*153-1014*	1	HOUSING GP-FLYWHEEL	35
Y	*171-2823*	1	HOUSING GP-FRONT	38
Y	*153-0561*	1	LIFTING GP-ENGINE	44
Y	*153-1006*	1	FITTING GP-FUEL LINES	117
Y	*165-4961*	1	MANIFOLD GP-EXHAUST	99
Y	*164-7624*	1	MANIFOLD GP-INLET	100
Y	*153-1176*	1	MOUNTING GP-ALTERNATOR	46
Y	*164-7613*	1	MOUNTING GP-STARTING MOTOR	50
Y	*202-3185*	1	PAN GP-OIL	52
Y	*137-6391*	1	PISTON & ROD GP	58
Y	*153-0693*	1	PLUG GP-CYLINDER BLOCK	60
Y	*164-7633*	1	PLUG GP-WATER LINES	72
Y	*153-0319*	1	PULLEY GP-CRANKSHAFT	61
Y	*165-4958*	1	PUMP GP-FUEL INJECTION	130
Y	*171-2948*	1	PUMP GP-ENGINE OIL	67
Y	*153-0165*	1	PUMP GP-WATER	73
Y	*164-8388*	1	SWITCH GP-TEMPERATURE	183
Y	*153-0564*	1	SOLENOID GP-SHUTOFF	177
Y	*171-4613*	1	SWITCH GP-PRESSURE (OIL)	181
Y	*171-2808*	1	VALVE MECHANISM GP	64
			AVAILABLE GASKET KIT(S):	
	173-1339	1	KIT-GASKET (BOTTOM)	
	153-1217	1	KIT-GASKET (TOP)	

Y-SEPARATE ILLUSTRATION

ENGINE ARRANGEMENT

179-1808 ENGINE AR-PRIMARY

S/N: CSD1-UP
38 BRAKE KW (51 BHP) AT 3000 RPM
AN ATTACHMENT

SMCS-1000 **i01649023**

NOTE	PART NUMBER	QTY	PART NAME 1 2 3 4 5 6 (PRODUCT LEVEL)	SEE PAGE
Y	*217-7143*	1	CAMSHAFT GP	12
Y	*217-2778*	1	CONNECTION GP-ELECTRICAL	142
Y	*217-5884*	1	CONNECTION GP-ELECTRICAL	143
Y	*217-5867*	1	COVER GP-VALVE MECHANISM	16
Y	*217-1447*	1	CRANKSHAFT GP	20
Y	*217-7395*	1	CYLINDER BLOCK GP	24
Y	*217-2746*	1	CYLINDER HEAD GP	29
Y	*217-7221*	1	FLYWHEEL GP	34
Y	*217-5795*	1	SENSOR GP-TEMP & PRESS	175
Y	*154-1933*	1	GLOW PLUG GP	148
Y	*217-7238*	1	HOUSING GP-FLYWHEEL	36
Y	*217-7118*	1	HOUSING GP-FRONT	42
Y	*154-1877*	1	LIFTING GP-ENGINE	45
Y	*160-3568*	1	MANIFOLD GP-EXHAUST	98
Y	*154-2435*	1	MOUNTING GP-FAN	49
Y	*217-7748*	1	MOUNTING GP-STARTING MOTOR	51
Y	*217-7360*	1	PAN GP-OIL	54
Y	*217-1480*	1	PISTON & ROD GP	59
Y	*217-2777*	1	PULLEY GP-CRANKSHAFT	62
Y	*217-7832*	1	PULLEY GP-WATER PUMP	63
Y	*217-2764*	1	PUMP GP-FUEL INJECTION	132
Y	*176-7711*	1	PUMP & MTG GP-FUEL TRANSFER	128
Y	*217-7384*	1	PUMP GP-WATER	76
Y	*217-2753*	1	VALVE MECHANISM GP	65

Y-SEPARATE ILLUSTRATION

ENGINE ARRANGEMENT

200-0805 INSTALLATION AR-ENGINE

S/N: 4NZ3400-UP

PART OF 200-0800 COMMON AR

SMCS-1000 **i01729214**

NOTE	PART NUMBER	QTY	PART NAME 1 2 3 4 5 6 (PRODUCT LEVEL)	SEE PAGE
Y	*142-8857*	1	AIR CLEANER GP	94
Y	*202-9017*	1	ALTERNATOR GP-CHARGING	138
Y	*206-0034*	1	DRAIN GP-ENGINE OIL	31
Y	*201-7798*	1	LINES GP-AIR	96
Y	*205-3184*	1	MOUNTING GP-ENGINE	48
Y	*217-0571*	1	MOUNTING GP-MUFFLER	104
Y	*201-7800*	1	RADIATOR & OIL COOLER MTG GP	92
Y	*138-2219*	1	STARTING MOTOR GP-ELECTRIC (INCLUDES MOUNTING)	178
			S/N: 4NZ3400-3409	
Y	*213-6381*	1	STARTING MOTOR GP-ELECTRIC	180
			S/N: 4NZ3410-UP	

Y-SEPARATE ILLUSTRATION

ENGINE ARRANGEMENT

200-1005 INSTALLATION AR-ENGINE

S/N: 5FZ6700-UP

PART OF 200-1000 COMMON AR

SMCS-1000 **i01757854**

NOTE	PART NUMBER	QTY	PART NAME 1 2 3 4 5 6 (PRODUCT LEVEL)	SEE PAGE
Y	*142-8857*	1	AIR CLEANER GP	94
Y	*142-9108*	1	ALTERNATOR GP-CHARGING	136
Y	*152-4858*	1	DRAIN GP-ENGINE OIL	30
Y	*205-9934*	1	LINES GP-AIR	97
Y	*142-8850*	1	MOUNTING GP-ENGINE	47
Y	*205-8779*	1	MOUNTING GP-MUFFLER	102
			S/N: 5FZ6700-8036	
Y	*214-6292*	1	MOUNTING GP-MUFFLER	103
			S/N: 5FZ8037-UP	
Y	*142-8859*	1	RADIATOR & OIL COOLER MTG GP	86
			S/N: 5FZ6700-7169	
Y	*185-9949*	1	RADIATOR & OIL COOLER MTG GP	90
			S/N: 5FZ7170-UP	
Y	*154-3995*	1	STARTING MOTOR GP-ELECTRIC	179

Y-SEPARATE ILLUSTRATION

ENGINE ARRANGEMENT

219-4375 INSTALLATION AR-ENGINE

S/N: CMB1-UP

PART OF 191-2900 COMMON AR

SMCS-1000 **i01742730**

NOTE	PART NUMBER	QTY	PART NAME 1 2 3 4 5 6 (PRODUCT LEVEL)	SEE PAGE
Y	*219-4386*	1	AIR CLEANER GP	95
Y	*142-9108*	1	ALTERNATOR GP-CHARGING	136
Y	*152-4858*	1	DRAIN GP-ENGINE OIL	30
Y	*205-9934*	1	LINES GP-AIR	97
Y	*142-8850*	1	MOUNTING GP-ENGINE	47
Y	*214-6292*	1	MOUNTING GP-MUFFLER	103
Y	*220-8123*	1	RADIATOR & HYD OIL COOLER GP	84
Y	*154-3995*	1	STARTING MOTOR GP-ELECTRIC	179

Y-SEPARATE ILLUSTRATION

ENGINE ARRANGEMENT

219-4385 INSTALLATION AR-ENGINE

S/N: CAB1-UP

PART OF 191-9600 COMMON AR

SMCS-1000 **i01742785**

NOTE	PART NUMBER	QTY	PART NAME 1 2 3 4 5 6 (PRODUCT LEVEL)	SEE PAGE
Y	*219-4386*	1	AIR CLEANER GP	95
Y	*142-9108*	1	ALTERNATOR GP-CHARGING	136
Y	*152-4858*	1	DRAIN GP-ENGINE OIL	30
Y	*205-9934*	1	LINES GP-AIR	97
Y	*142-8850*	1	MOUNTING GP-ENGINE	47
Y	*217-0571*	1	MOUNTING GP-MUFFLER	104
Y	*219-4387*	1	RADIATOR & HYD OIL COOLER GP	82
Y	*154-3995*	1	STARTING MOTOR GP-ELECTRIC	179

Y-SEPARATE ILLUSTRATION

BASIC ENGINE

171-2824 CAMSHAFT GP

S/N: 3NW21000-UP

PART OF 144-6194 ENGINE AR-PRIMARY

SMCS-1210, 1211, 1212 **i01349765**

NOTE	REF NO	GRAPHIC REF	PART NUMBER	QTY	PART NAME 1 2 3 4 5 6 (PRODUCT LEVEL)	SEE PAGE
	1	1	**100-4841**	2	BOLT (M6X1.0X10MM)	
	2	1	**152-6866**	1	GEAR-IDLER (59 TEETH)	
	3	1	**152-6867**	2	BUSHING	
	4	1	**152-6868**	2	WASHER (32X50X2.4)	
	5	1	**152-6869**	1	SEAL-O-RING	
	6	1	**173-9855**	1	CAMSHAFT AS	
	7	1	**152-6862**	1	PLUG	
	8	1	**152-6863**	1	GEAR-CAMSHAFT (60 TEETH)	
	9	1	**152-6864**	1	KEY-WOODRUFF	
	10	1	**164-7606**	1	PLATE	
F		1	**152-6560**	1	BUSHING	

F-NOT SHOWN

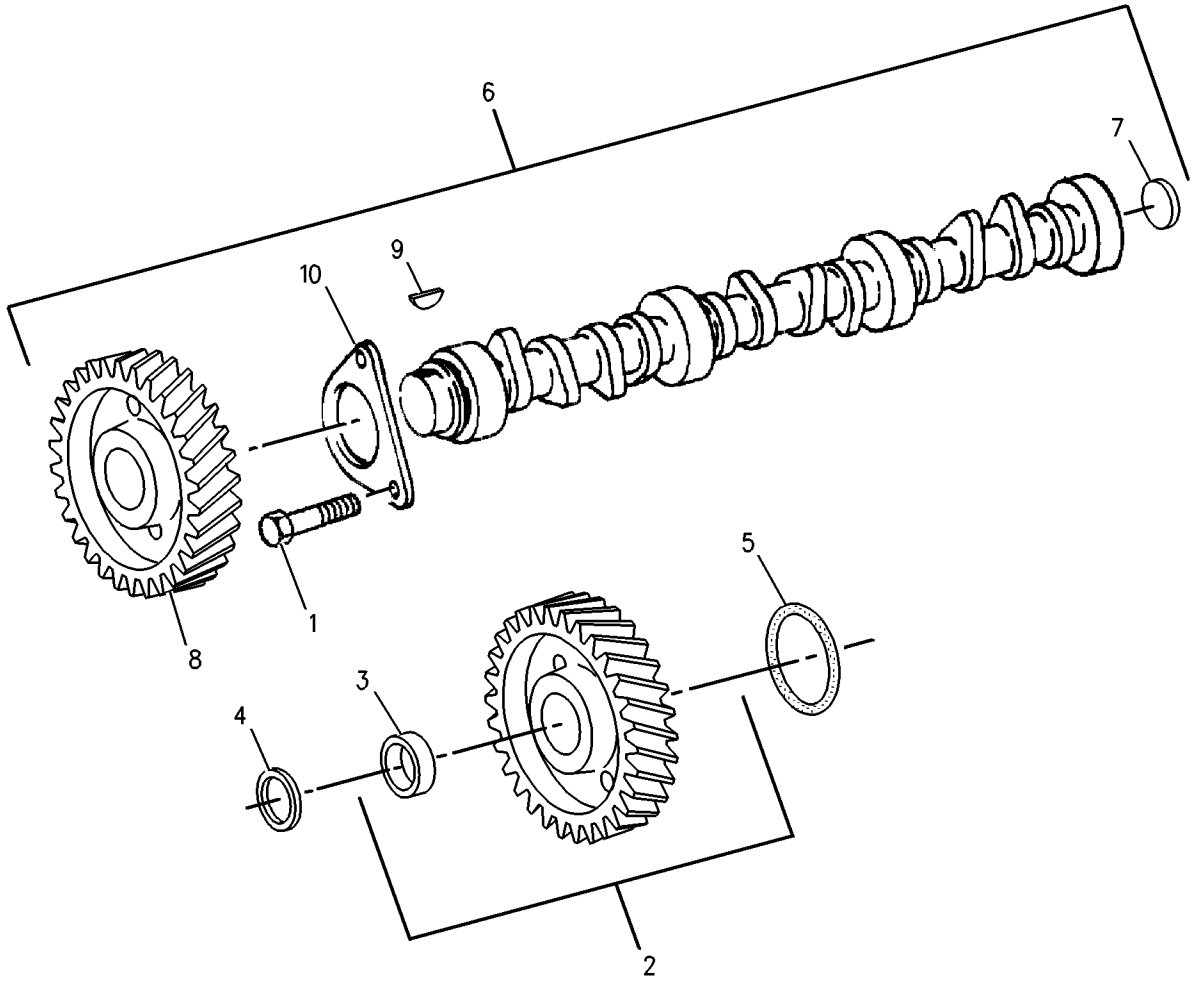

GRAPHIC #1 g00690432

BASIC ENGINE

217-7143 CAMSHAFT GP

S/N: CSD1-UP
PART OF 179-1808 ENGINE AR-PRIMARY
AN ATTACHMENT

SMCS-1210, 1211, 1212 **i01649084**

NOTE	REF NO	GRAPHIC REF	PART NUMBER	QTY	PART NAME 1 2 3 4 5 6 (PRODUCT LEVEL)	SEE PAGE
	1	1	**217-7174**	1	TAPPET	
	2	1	**217-7139**	1	CAMSHAFT AS	
	3	1	**153-6492**	1	KEY-WOODRUFF	
	4	1	**183-3606**	1	SPACER	
	5	1	**154-4508**	1	GEAR-CAMSHAFT (66 TEETH)	
	6	1	**154-4505**	1	BEARING	

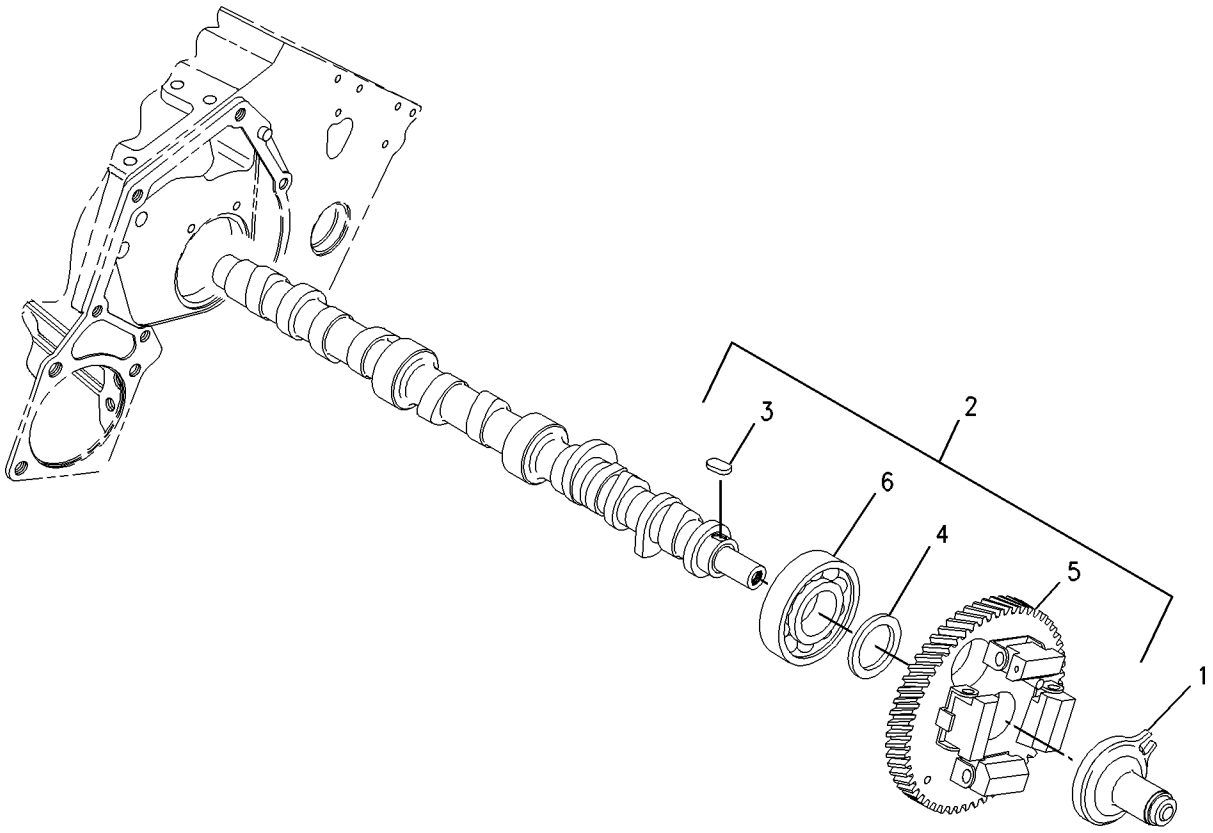

GRAPHIC #1 g00852594

BASIC ENGINE

164-7623 COVER GP-FRONT HOUSING

S/N: 3NW21000-UP

PART OF 144-6194 ENGINE AR-PRIMARY

SMCS-1166 **i01465461**

NOTE	REF NO	GRAPHIC REF	PART NUMBER	QTY	PART NAME 1 2 3 4 5 6 (PRODUCT LEVEL)	SEE PAGE
	1	1	**6I-0291**	2	NUT (M8X1.25)	
	2	1	**103-5687**	2	BOLT (M10X1.5X85MM)	
	3	1	**6I-0594**	2	NUT (M10X1.5)	
	4	1	**100-4463**	2	BOLT (M10X1.5X80MM)	

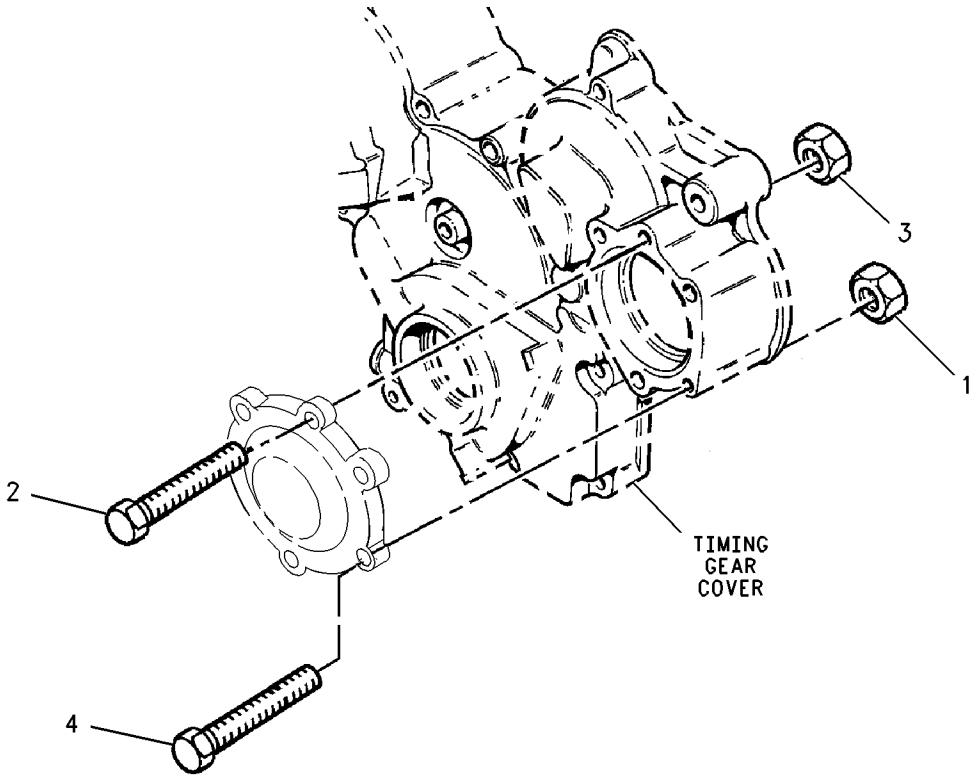

GRAPHIC #1 g00731638

BASIC ENGINE

153-0115 COVER GP-VALVE MECHANISM

S/N: 3NW21000-UP

PART OF 144-6194 ENGINE AR-PRIMARY

SMCS-1107 **i01520202**

NOTE	REF NO	GRAPHIC REF	PART NUMBER	QTY	PART NAME 1 2 3 4 5 6 (PRODUCT LEVEL)	SEE PAGE
	1	1	**4B-4281**	3	WASHER (16.8X33X2.5MM THK)	
	2	1	**067-6006**	1	PLUG	
	3	1	**5D-1026**	2	CLAMP-HOSE	
	4	1	**101-3675**	3	SEAL	
	5	1	**153-0104**	1	HOSE (FUMES DISPOSAL)	
	6	1	**153-0105**	1	SPRING	
	7	1	**153-0106**	1	PLATE	
	8	1	**180-2428**	1	DIAPHRAGM	
	9	1	**153-0108**	1	COVER	
	10	1	**170-7666**	1	CAP-OIL	
	11	1	**153-0112**	3	NUT	
	12	1	**153-0117**	4	BOLT (4X10)	
	13	1	**195-9244**	1	COVER-VALVE	
	14	1	**159-0082**	1	GASKET-VALVE COVER	

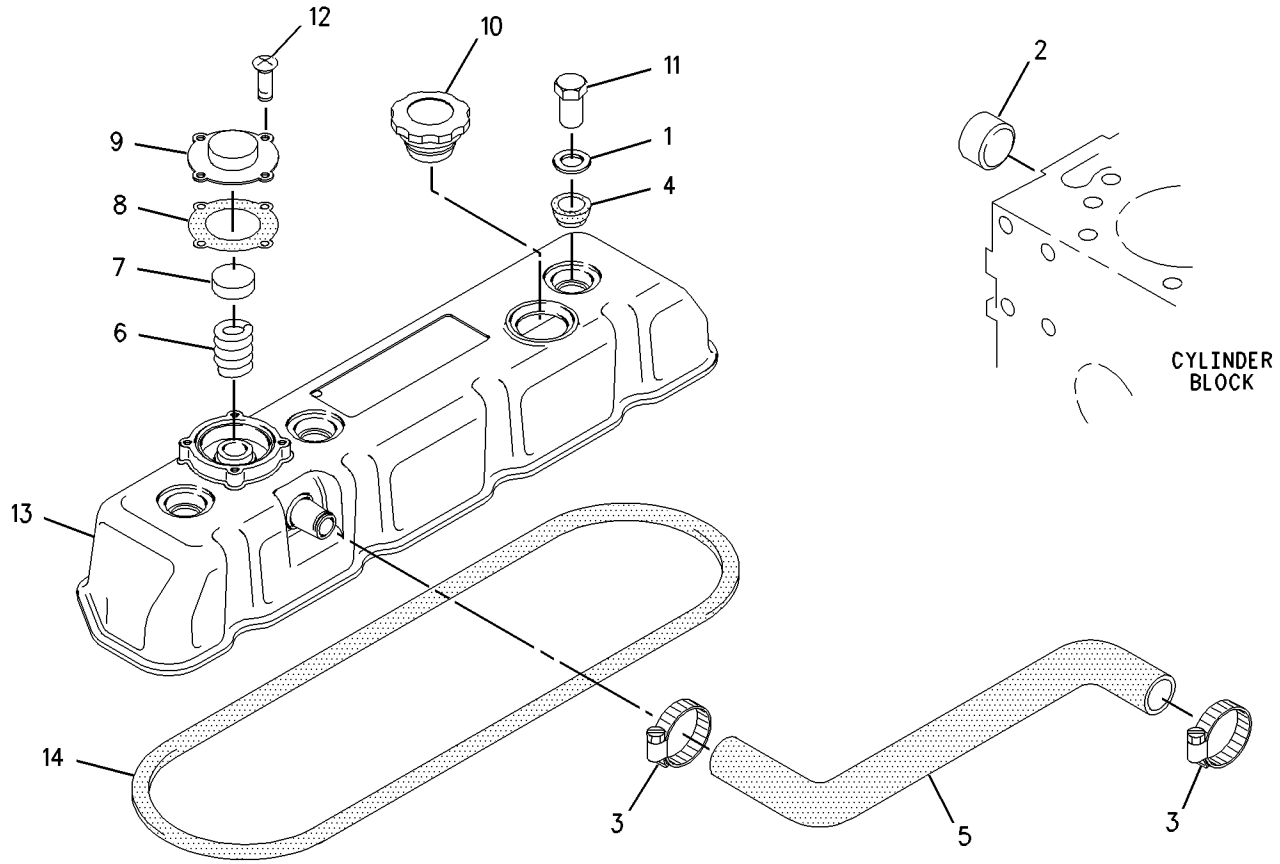

GRAPHIC #1 g00792510

MEMORANDA

217-5867 COVER GP-VALVE MECHANISM

S/N: CSD1-UP
PART OF 179-1808 ENGINE AR-PRIMARY
AN ATTACHMENT

SMCS-1107 **i01649078**

NOTE	REF NO	GRAPHIC REF	PART NUMBER	QTY	PART NAME 1 2 3 4 5 6 (PRODUCT LEVEL)	SEE PAGE
	1	1	**153-5961**	2	BOLT	
	2	1	**153-5962**	3	BOLT	
	3	1	**154-1347**	4	NUT	
	4	1	**154-1351**	4	SEAL-NUT	
	5	1	**217-5858**	1	COVER AS-VALVE	
	6	1	**153-5939**	1	GAUZE	
	7	1	**153-7640**	2	BOLT	
	8	1	**217-5859**	1	VALVE-BREATHER	
	9	1	**217-5860**	4	BOLT	
	10	1	**217-5861**	1	PLATE-RETAINING	
	11	1	**217-5862**	6	BOLT	
	12	1	**217-5863**	1	CONNECTION-AIR	
	13	1	**217-5864**	1	GASKET	
	14	1	**217-5866**	1	SEAL	

217-5867 **COVER GP-VALVE MECHANISM** *(contd.)* **i01649078**

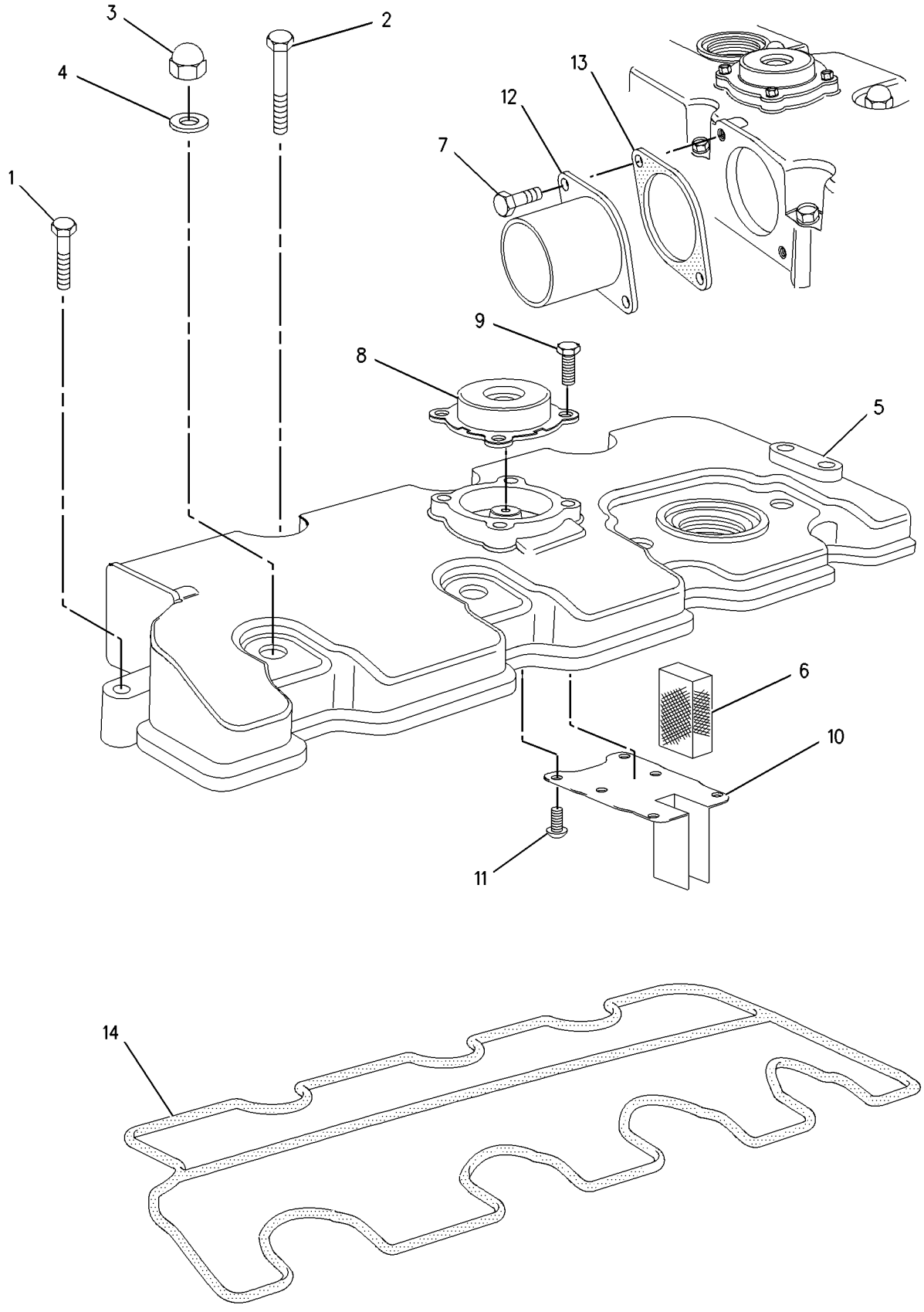

GRAPHIC #1 g00852550

BASIC ENGINE

171-4663 CRANKSHAFT GP

S/N: 3NW21000-UP

PART OF 144-6194 ENGINE AR-PRIMARY

SMCS-1202 **i01441327**

NOTE	REF NO	GRAPHIC REF	PART NUMBER	QTY	PART NAME 1 2 3 4 5 6 (PRODUCT LEVEL)	SEE PAGE
	1	1	**1B-8735**	1	KEY-WOODRUFF	
	2	1	**152-6790**	1	CRANKSHAFT GP	
	3	1	**152-6791**	1	KIT-BEARING	
	4	1	**152-6795**	1	KIT-ROD BEARING	
	5	1	**152-6799**	1	WASHER-THRUST	
	6	1	**152-6801**	1	GEAR-CRANKSHAFT (30 TEETH)	

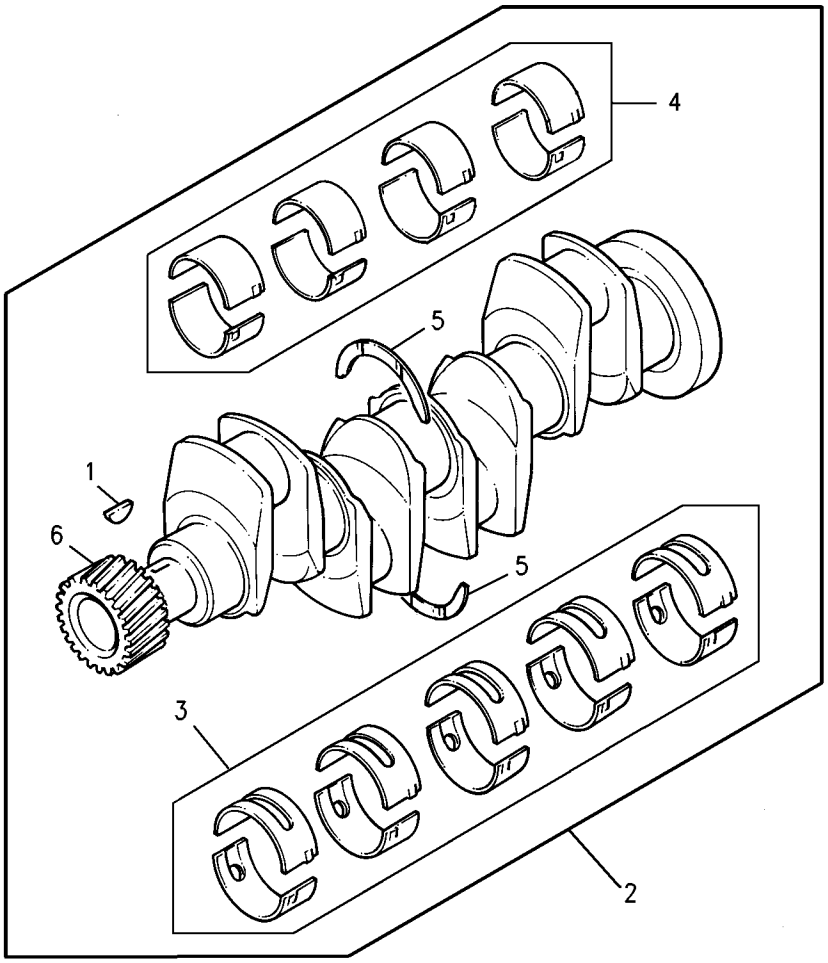

GRAPHIC #1 g00754842

MEMORANDA

BASIC ENGINE

217-1447 CRANKSHAFT GP

S/N: CSD1-UP
PART OF 179-1808 ENGINE AR-PRIMARY
AN ATTACHMENT

SMCS-1202 **i01649053**

NOTE	REF NO	GRAPHIC REF	PART NUMBER	QTY	PART NAME 1 2 3 4 5 6 (PRODUCT LEVEL)	SEE PAGE
	1	1	**154-0181**	1	BEARING AS-CAP	
	2	1	**154-0386**	1	BEARING AS-CAP	
	3	1	**154-0388**	1	BEARING AS-CAP	
	4	1	**154-0389**	1	BEARING AS-CAP	
					(EACH BEARING AS INCLUDES)	
	5	1	**153-5402**	2	DOWEL	
	6	1	**154-0385**	2	BOLT	
	7	1	**154-1201**	1	CRANKSHAFT GP	
	7A	1	**154-1202**	1	GEAR-CRANKSHAFT (33 TEETH)	
	7B	1	**153-5518**	1	KEY	
	8	1	**154-1203**	1	KIT-CRANKSHAFT BEARING	
	9	1	**154-1230**	1	WASHER-THRUST	
	10	1	**154-1231**	2	WASHER-THRUST	
	11	1	**156-6971**	3	BOLT	
	12	1	**183-1336**	1	BOLT	

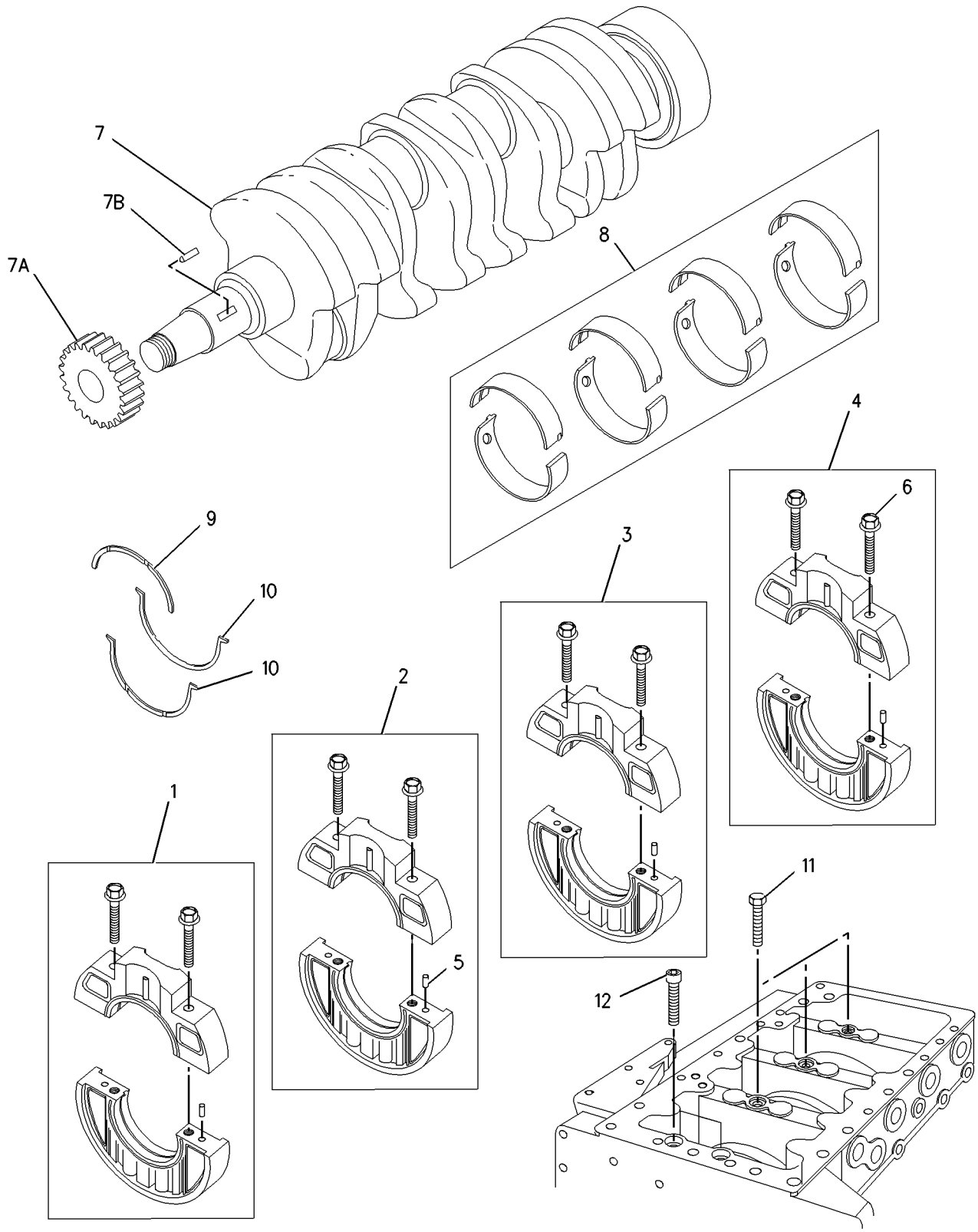

GRAPHIC #1 g00852638

BASIC ENGINE

171-2792 CYLINDER BLOCK GP

S/N: 3NW21000-UP

PART OF 144-6194 ENGINE AR-PRIMARY

SMCS-1201 **i01504898**

NOTE	REF NO	GRAPHIC REF	PART NUMBER	QTY	PART NAME 1 2 3 4 5 6 (PRODUCT LEVEL)	SEE PAGE
Y	1	1	**205-5490**	1	CYLINDER BLOCK GP	23
	2	1	**152-6555**	2	DOWEL	
	3	1	**152-6556**	1	SEAL	

Y-SEPARATE ILLUSTRATION

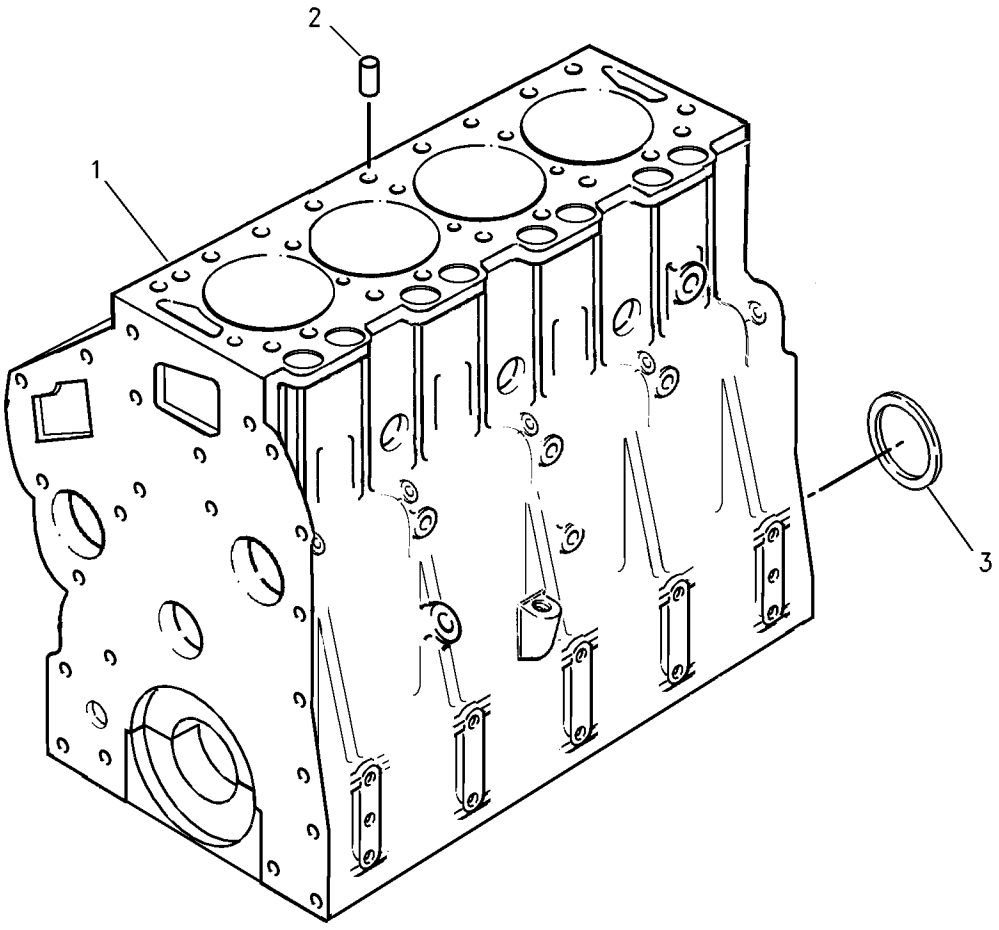

GRAPHIC #1 g00587353

BASIC ENGINE

205-5490 CYLINDER BLOCK GP

S/N: 3NW21000-UP

PART OF 171-2792 CYLINDER BLOCK GP

SMCS-1201 **i01504900**

NOTE	REF NO	GRAPHIC REF	PART NUMBER	QTY	PART NAME 1 2 3 4 5 6 (PRODUCT LEVEL)	SEE PAGE
	1	1	**1N-3762**	1	PLUG-CUP	
	2	1	**1W-8438**	1	WASHER	
	3	1	**9F-2247**	11	PLUG-PIPE	
	4	1	**9Y-5015**	4	PLUG-FREEZE	
	5	1	**067-6006**	2	PLUG	
	6	1	**067-6007**	1	PLUG	
	7	1	**067-9509**	2	PLUG	
	8	1	**069-1124**	1	PLUG	
	9	1	**118-9145**	1	CONNECTOR	
	10	1	**152-6557**	2	SEAL	
	11	1	**152-6558**	10	BOLT	
	12	1	**152-6559**	1	SHAFT	
	13	1	**152-6561**	4	SEAL	
	14	1	**153-0562**	1	ADAPTER	
	15	1	**175-4921**	1	BUSHING	
	16	1	**188-5102**	3	PLUG	

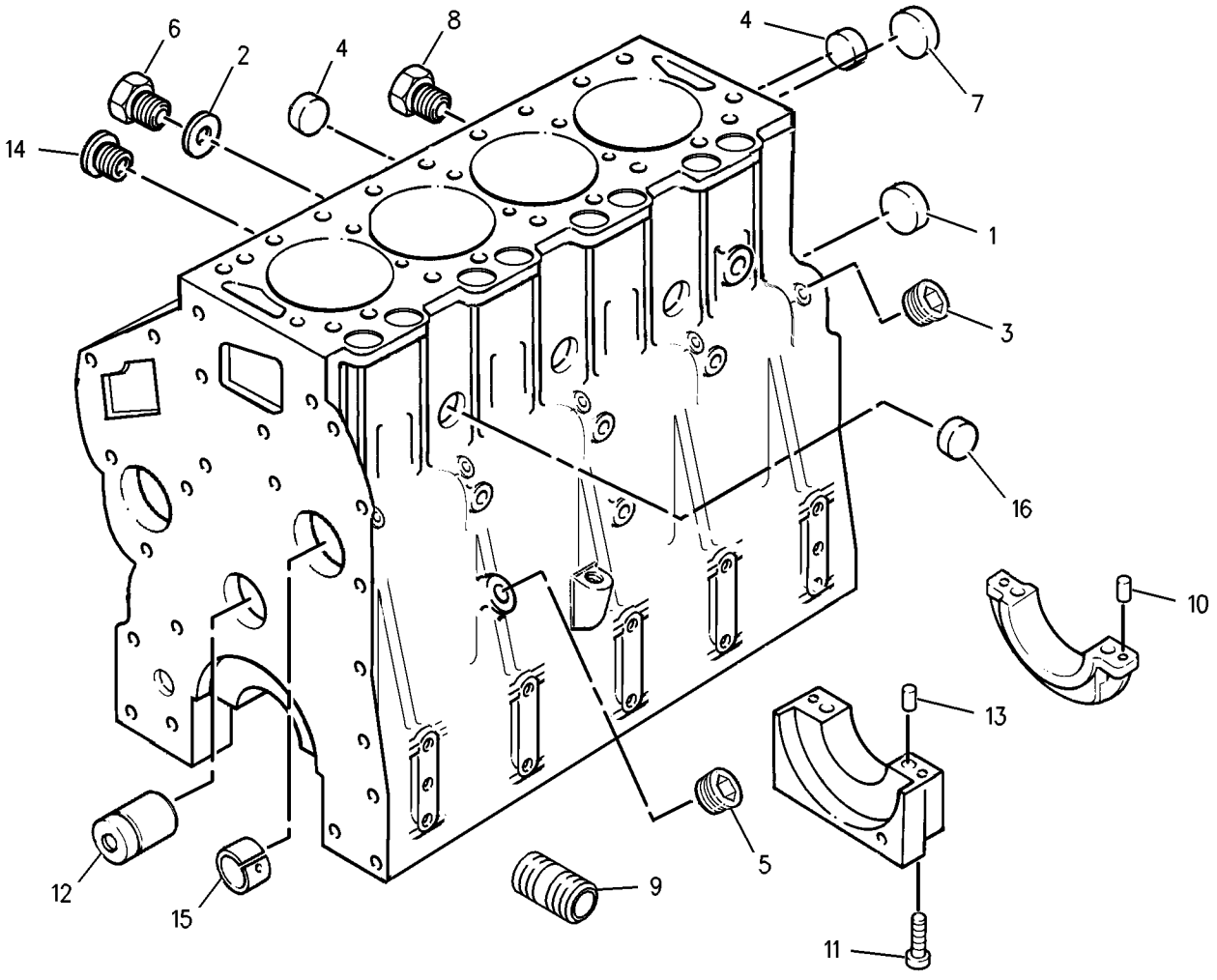

GRAPHIC #1 g00781206

BASIC ENGINE

217-7395 CYLINDER BLOCK GP

S/N: CSD1-UP
PART OF 179-1808 ENGINE AR-PRIMARY
AN ATTACHMENT

SMCS-1201 **i01649090**

NOTE	REF NO	GRAPHIC REF	PART NUMBER	QTY	PART NAME 1 2 3 4 5 6 (PRODUCT LEVEL)	SEE PAGE
	1	1	**153-5390**	1	BALL BEARING	
	2	1	**153-5391**	1	PLUG	
	3	1	**153-6838**	2	BOLT	
	4	1	**154-0178**	1	SEAL	
	5	1	**215-2620**	1	GASKET	
	6	1	**154-0391**	1	PLATE	
	7	1	**183-1165**	1	PLUG-SEALING	
	8	1	**153-5394**	2	DOWEL	
	9	1	**153-5395**	2	DOWEL	
	10	1	**153-5396**	2	PIN	
	11	1	**183-1163**	1	STUD	
	12	1	**183-1164**	1	STUD	
	13	1	**154-0176**	1	BUSHING	
	14	1	**154-0177**	1	BUSHING	
	15	1	**217-5771**	1	SHAFT	
	16	1	**183-1168**	1	BUSHING	
	17	1	**217-5770**	2	PLUG	
	18	1	**153-5402**	2	DOWEL	
	19	1	**154-0175**	2	PLUG	
	20	1	**153-5386**	3	PLUG	
	21	1	**154-0393**	3	STUD	
	22	1	**153-5387**	3	PLUG	

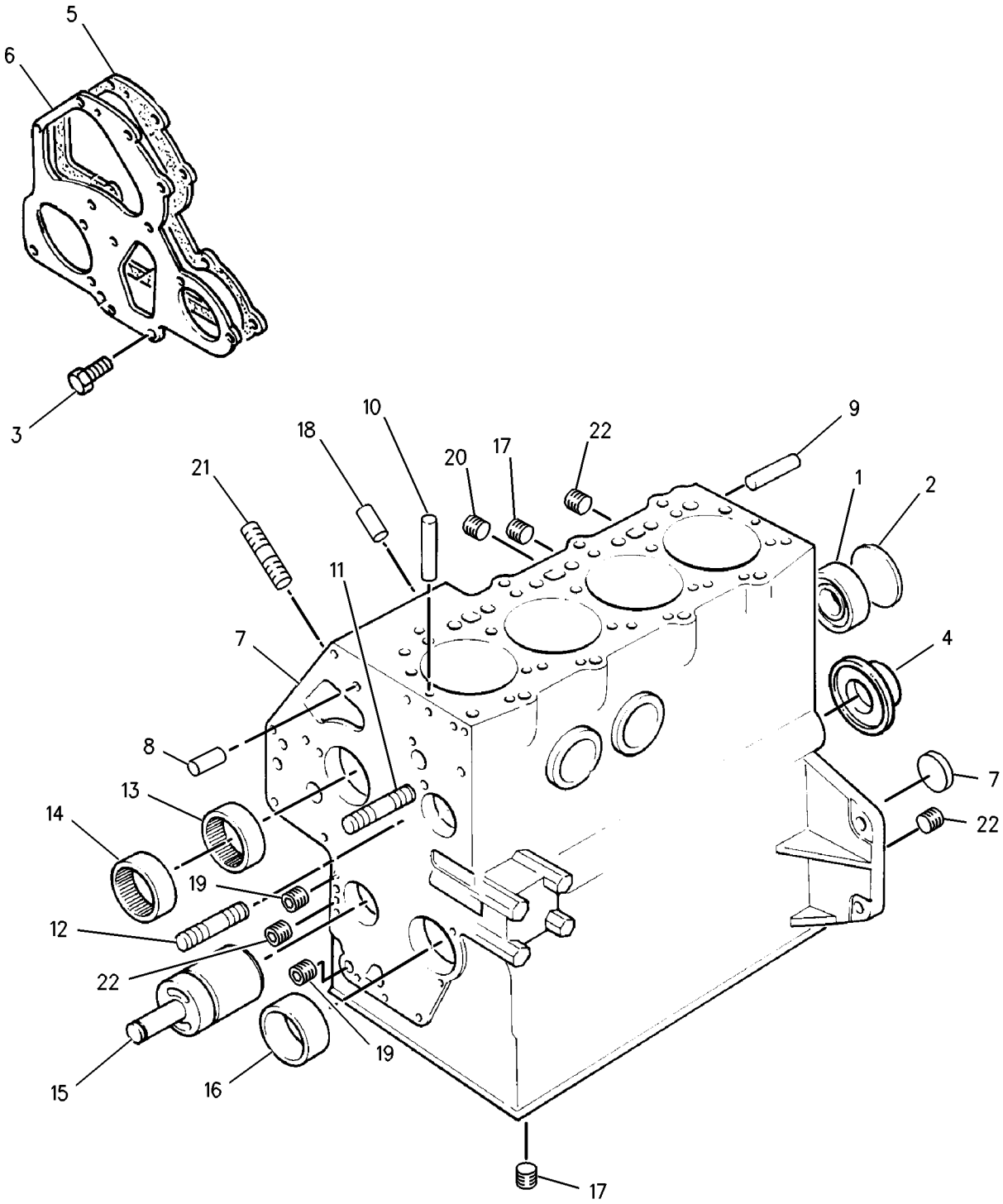

GRAPHIC #1 g00852600

164-7597 CYLINDER HEAD GP

S/N: 3NW21000-UP

PART OF 171-2803 CYLINDER HEAD GP

SMCS-1100, 1101, 1103, 1104, 1105, 1108, 1109, 1115, 1117, 1121, 1124, 1125

i01469137

NOTE	REF NO	GRAPHIC REF	PART NUMBER	QTY	PART NAME 1 2 3 4 5 6 (PRODUCT LEVEL)	SEE PAGE
	1	1	**7W-2501**	1	PLUG	
	2	1	**152-9857**	4	VALVE-EXHAUST	
	3	1	**152-9858**	8	SPRING	
	4	1	**152-9859**	8	CAP	
	5	1	**152-9860**	16	COTTER	
	6	1	**188-8633**	8	GUIDE-VALVE	
	7	1	**192-6335**	8	SEAL-GUIDE	
	8	1	**188-8636**	4	INSERT-EXHAUST	
	9	1	**188-8637**	4	INSERT-INLET	
	10	1	**188-9044**	4	VALVE-INLET	
	11	1	**2B-0858**	4	PLUG-PIPE	
	12	1	**9Y-5015**	2	PLUG-FREEZE	

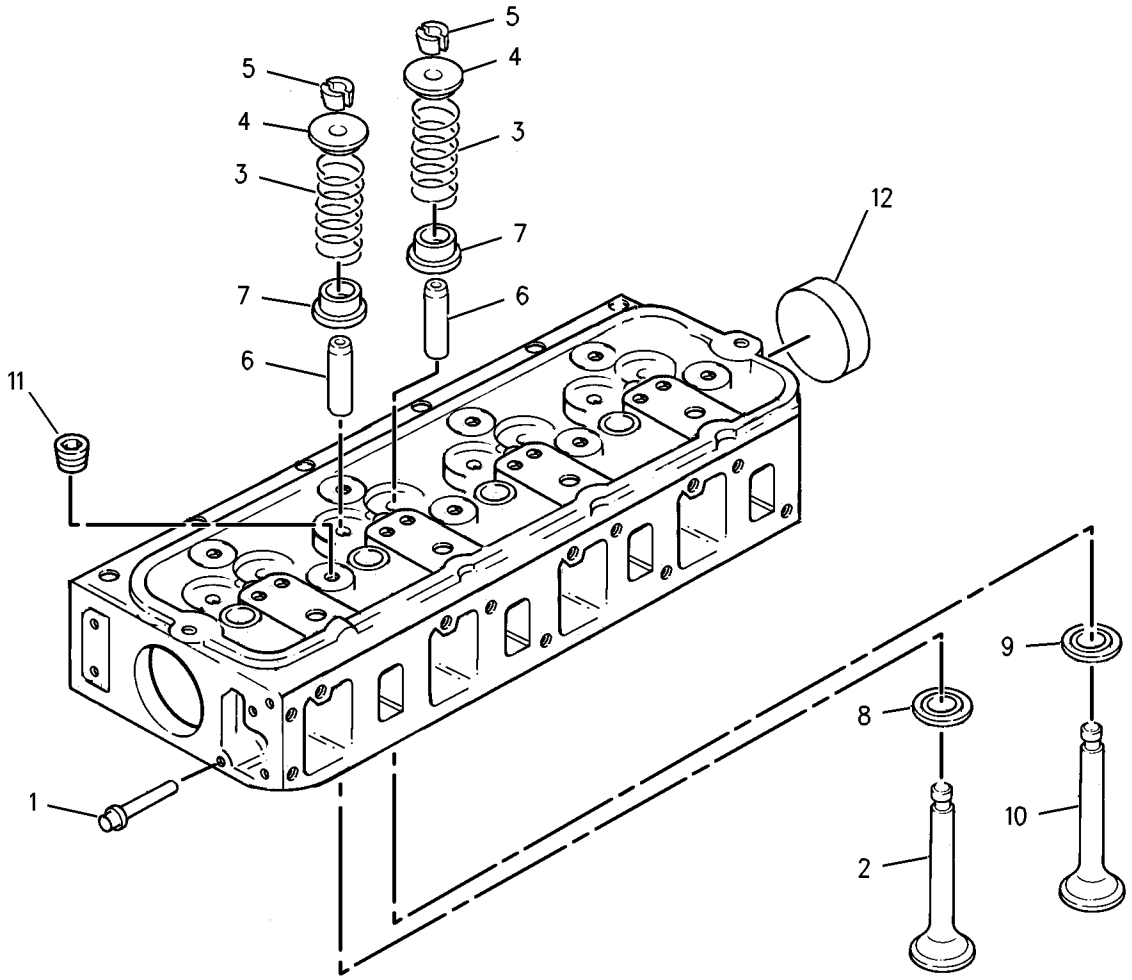

GRAPHIC #1

g00686609

171-2803 CYLINDER HEAD GP

S/N: 3NW21000-UP

PART OF 144-6194 ENGINE AR-PRIMARY

SMCS-1100, 1101, 1103, 1104, 1105, 1108, 1109, 1115, 1117, 1121, 1124, 1125

i01330104

NOTE	REF NO	GRAPHIC REF	PART NUMBER	QTY	PART NAME 1 2 3 4 5 6 (PRODUCT LEVEL)	SEE PAGE
Y	1	1	**164-7597**	1	CYLINDER HEAD GP	26
	2	1	**152-9864**	1	GASKET-CYLINDER HEAD	
	3	1	**152-9863**	4	BOLT	
	4	1	**152-9862**	14	BOLT	

Y-SEPARATE ILLUSTRATION

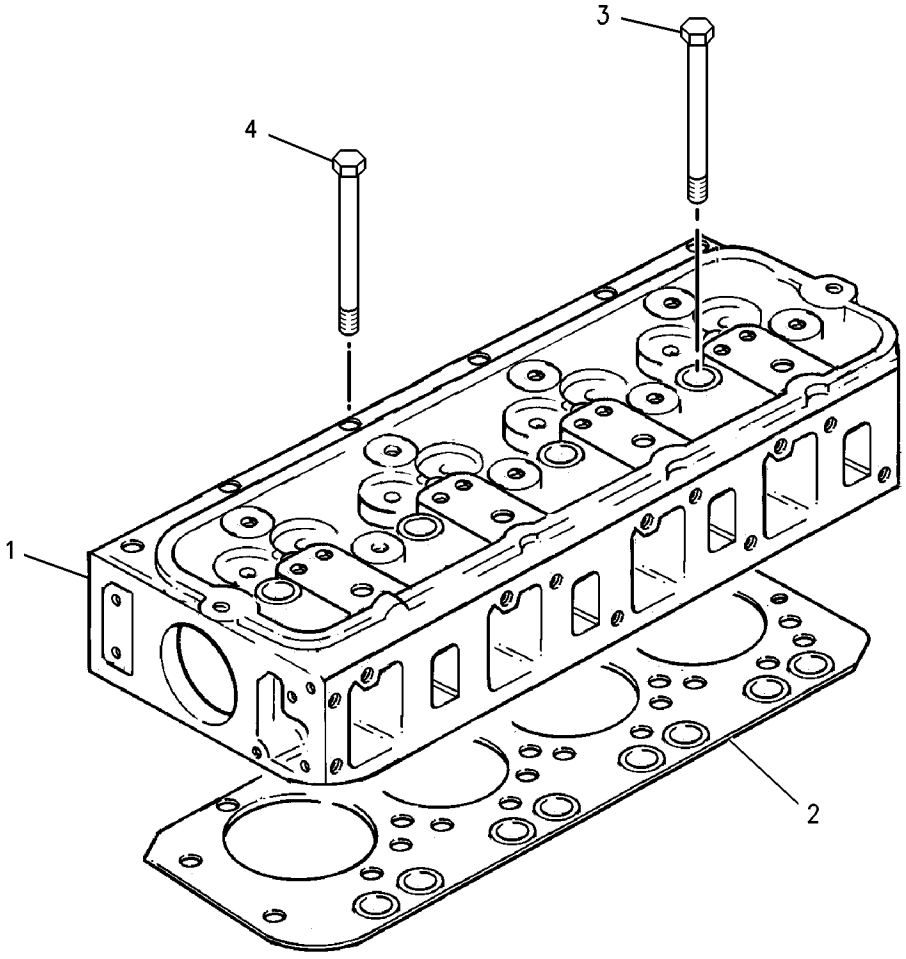

GRAPHIC #1

g00705000

217-1481 CYLINDER HEAD GP

S/N: CSD1-UP
PART OF 217-2746 CYLINDER HEAD GP
AN ATTACHMENT

SMCS-1100, 1101, 1103, 1104, 1105, 1108, 1109, 1115, 1117, 1121, 1124, 1125

i01649050

NOTE	REF NO	GRAPHIC REF	PART NUMBER	QTY	PART NAME 1 2 3 4 5 6 (PRODUCT LEVEL)	SEE PAGE
	1	1	**153-5382**	6	PLUG	
	2	1	**153-5552**	6	PLUG	
	3	1	**153-5553**	7	PLUG	
	4	1	**153-5554**	4	SEAL (EXHAUST)	
	5	1	**153-5556**	16	PIN-COTTER	
	6	1	**153-5557**	8	CAP	
	7	1	**153-5558**	8	SPRING	
	8	1	**153-5559**	4	SEAL (INLET)	
	9	1	**154-0887**	3	PLUG	
	10	1	**154-0888**	4	VALVE-INLET	
	11	1	**154-0889**	4	VALVE-EXHAUST	
	12	1	**154-0890**	4	INSERT	

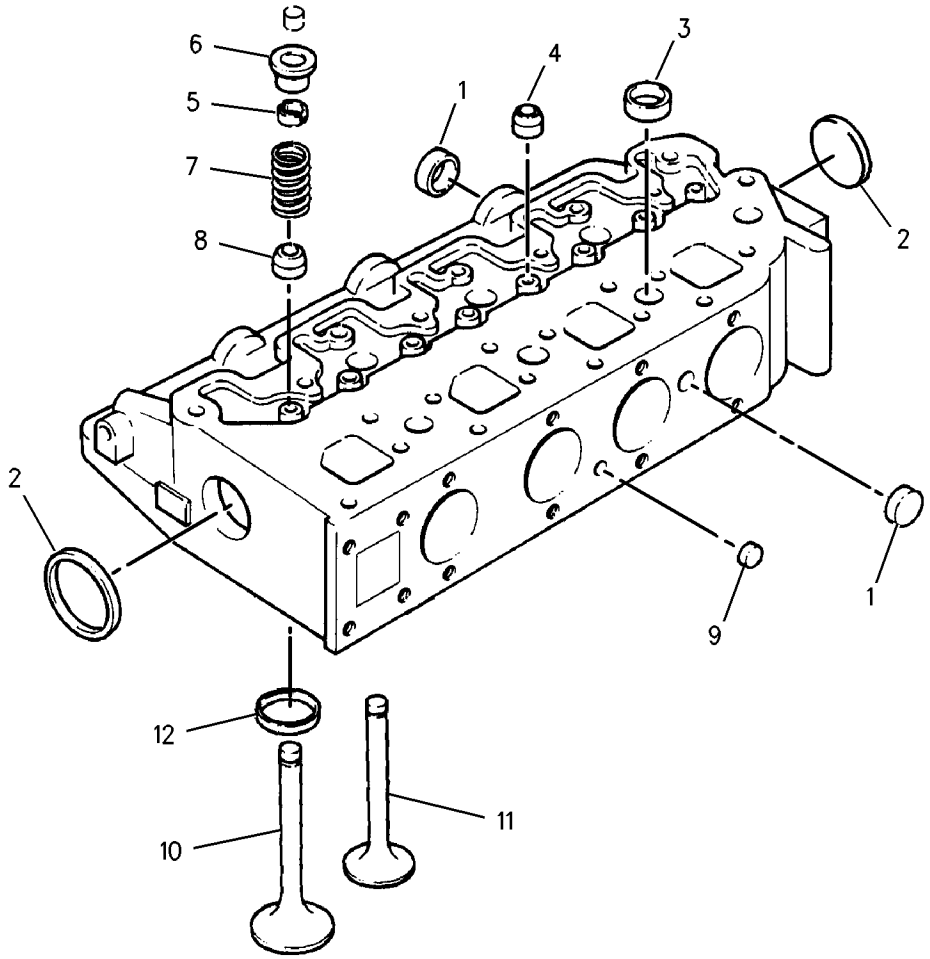

GRAPHIC #1

g00702747

217-2746 CYLINDER HEAD GP

S/N: CSD1-UP
PART OF 179-1808 ENGINE AR-PRIMARY
AN ATTACHMENT

SMCS-1100, 1101, 1103, 1104, 1105, 1108, 1109, 1115, 1117, 1121, 1124, 1125

i01649064

NOTE	REF NO	GRAPHIC REF	PART NUMBER	QTY	PART NAME 1 2 3 4 5 6 (PRODUCT LEVEL)	SEE PAGE
	1	1	**153-5573**	8	CAP	
	2	1	**156-6988**	14	BOLT	
	3	1	**156-6989**	4	BOLT	
	4	1	**160-7626**	2	STUD	
	5	1	**183-3213**	2	STUD	
Y	6	1	**217-1481**	1	CYLINDER HEAD GP	28
B	7	1	**217-2743**	1	GASKET (0.4MM THK)	
B		1	**217-2744**	1	GASKET (0.5MM THK)	

B-USE AS REQUIRED
Y-SEPARATE ILLUSTRATION

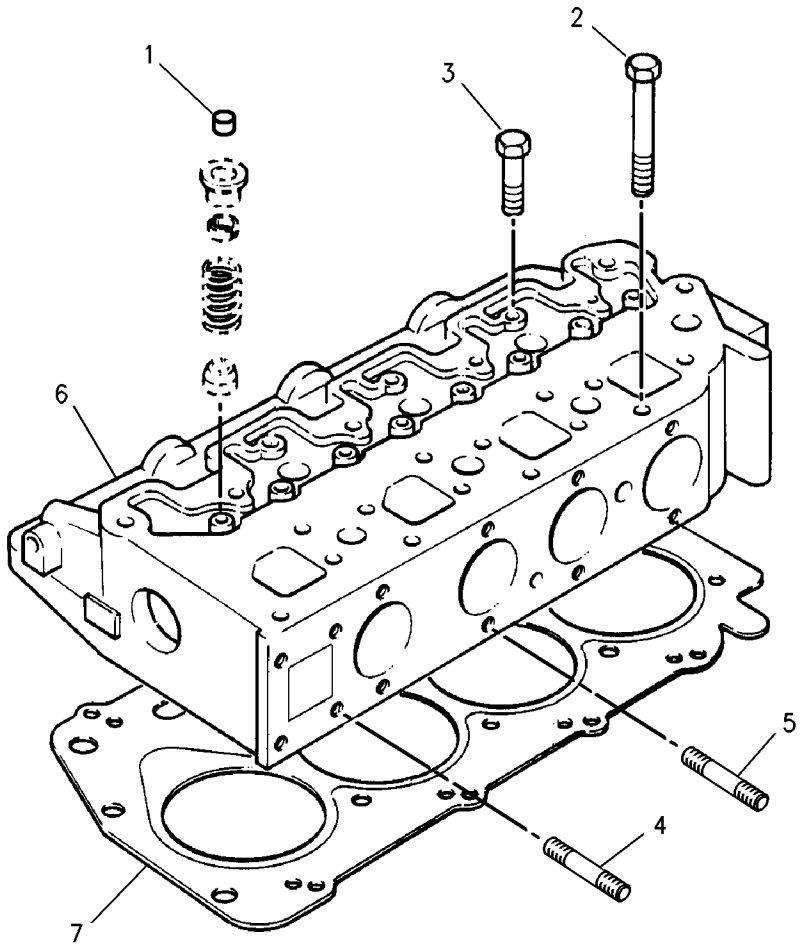

GRAPHIC #1

g00852319

BASIC ENGINE

152-4858 DRAIN GP-ENGINE OIL

S/N: CAB1-UP; CMB1-UP; 5FZ6700-UP

PART OF 200-1005, 219-4375, 219-4385 INSTALLATION AR-ENGINE

SMCS-1302 **i01456120**

NOTE	REF NO	GRAPHIC REF	PART NUMBER	QTY	PART NAME 1 2 3 4 5 6 (PRODUCT LEVEL)	SEE PAGE
	1	1	**5D-1026**	1	CLAMP-HOSE	
	2	1	**5P-3422**	1	TEE-PIPE	
	3	1	**6N-2944**	1	PLUG	
	4	1	**8C-3445**	1	CAP-DUST	
	5	1	**159-8336**	1	VALVE-SAMPLING	
BE	6	1	**5P-1517**		HOSE (42CM)	

B-USE AS REQUIRED
E-ORDER BY THE CENTIMETER

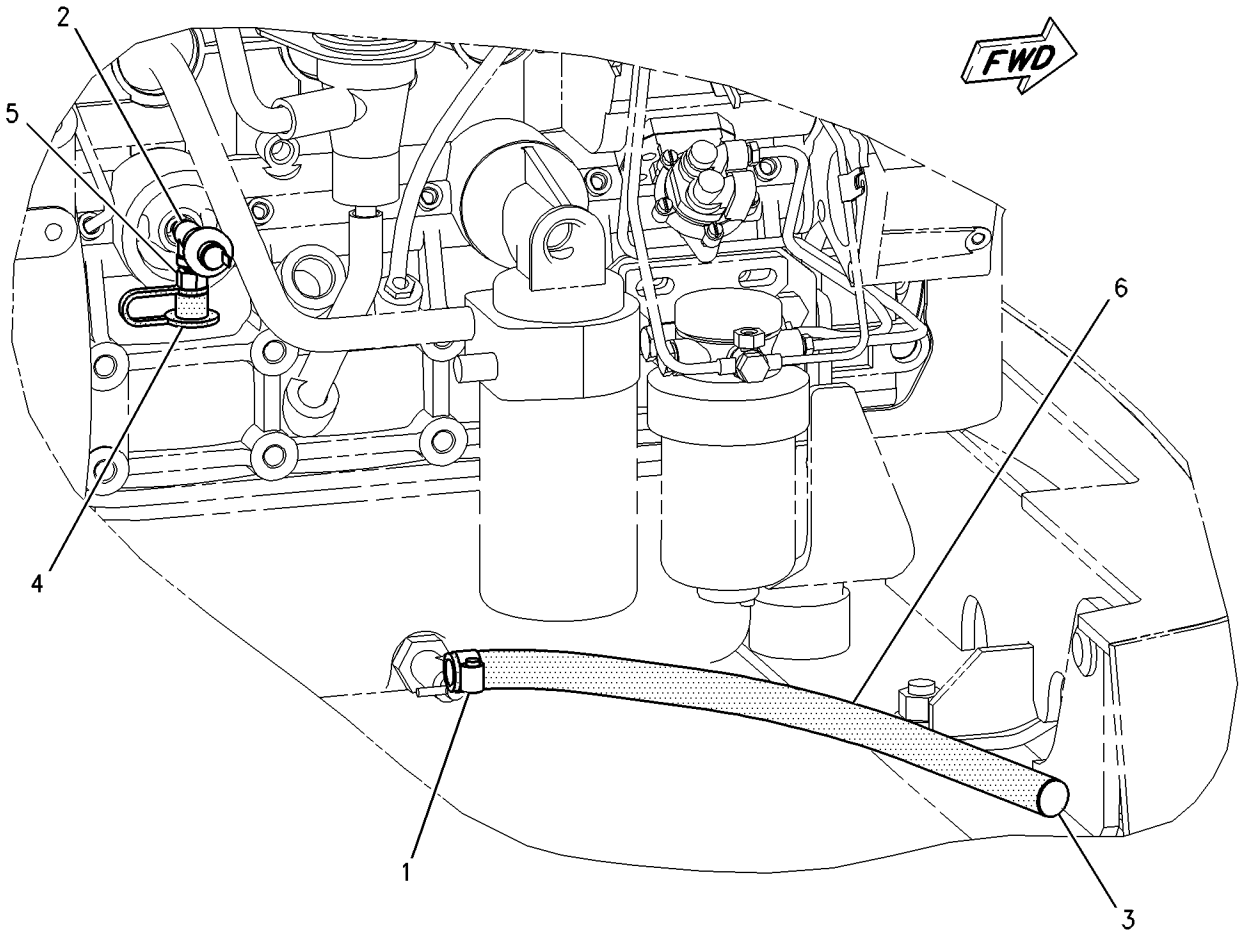

GRAPHIC #1 g00761853

206-0034 DRAIN GP-ENGINE OIL

S/N: 4NZ3400-UP

PART OF 200-0805 INSTALLATION AR-ENGINE

SMCS-1302 **i01584839**

NOTE	REF NO	GRAPHIC REF	PART NUMBER	QTY	PART NAME 1 2 3 4 5 6 (PRODUCT LEVEL)	SEE PAGE
	1	1	**5P-4961**	2	CLAMP-HOSE	
	2	1	**8C-3445**	1	CAP-DUST	
	3	1	**102-6496**	1	ADAPTER	
	4	1	**110-2570**	1	CAP	
	5	1	**159-8336**	1	VALVE-SAMPLING	
BE	6	1	**5P-1442**		HOSE (35CM)	
	7	1	**5P-3422**	1	TEE-PIPE	
BE	8	1	**5P-1420**		HOSE (80CM)	
	9	1	**5G-9495**	1	CAP	

B-USE AS REQUIRED
E-ORDER BY THE CENTIMETER

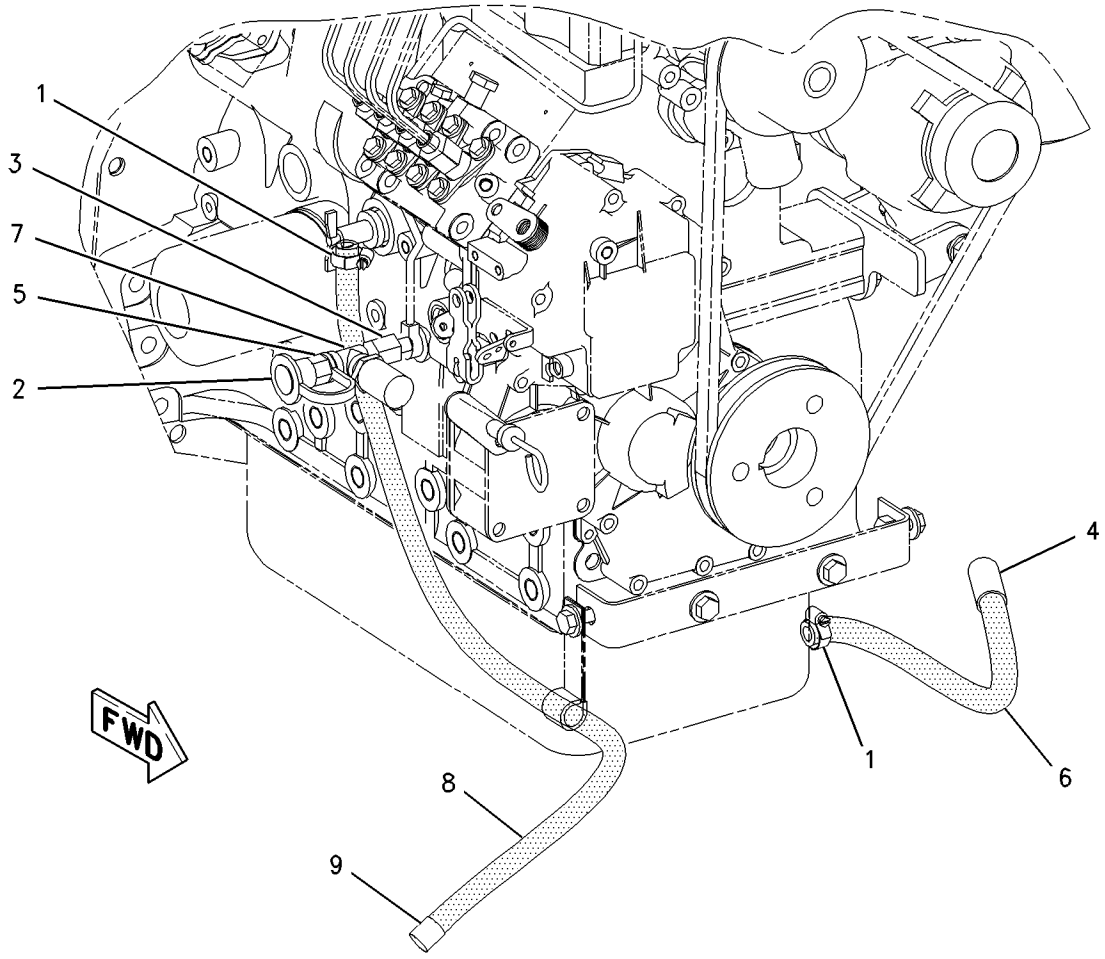

GRAPHIC #1 g00824030

166-3759 FASTENER GP-ENGINE

S/N: 3NW21000-UP

PART OF 144-6194 ENGINE AR-PRIMARY

SMCS-1000 **i01117543**

NOTE	REF NO	GRAPHIC REF	PART NUMBER	QTY	PART NAME 1 2 3 4 5 6 (PRODUCT LEVEL)	SEE PAGE
	1	1	**166-3760**	2	CLIP	
					1 CLIP MOUNTS TO TOP REAR OF INLET MANIFOLD, HORIZONTALLY FORWARD	
					(ON TOP OF BREATHER TUBE IF USED), SECURING THE WIRING HARNESS.	
					1 CLIP MOUNTS ON BOTTOM REARMOST OF THE INLET MANIFOLD BOLTS.(15% REARWARD FROM VERTICAL)	

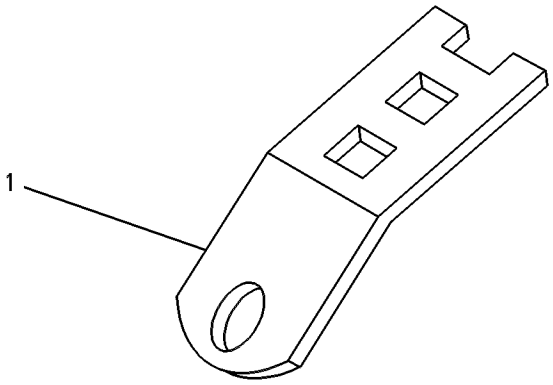

GRAPHIC #1 g00562121

BASIC ENGINE

153-0077 FLYWHEEL GP

S/N: 3NW21000-UP

PART OF 144-6194 ENGINE AR-PRIMARY

SMCS-1156, 1158 **i01465561**

NOTE	REF NO	GRAPHIC REF	PART NUMBER	QTY	PART NAME 1 2 3 4 5 6 (PRODUCT LEVEL)	SEE PAGE
	1	1	**153-0072**	1	FLYWHEEL AS	
	1A	1	**032-8139**	1	GEAR-STARTER (112 TEETH)	
	2	1	**153-0073**	8	BOLT	

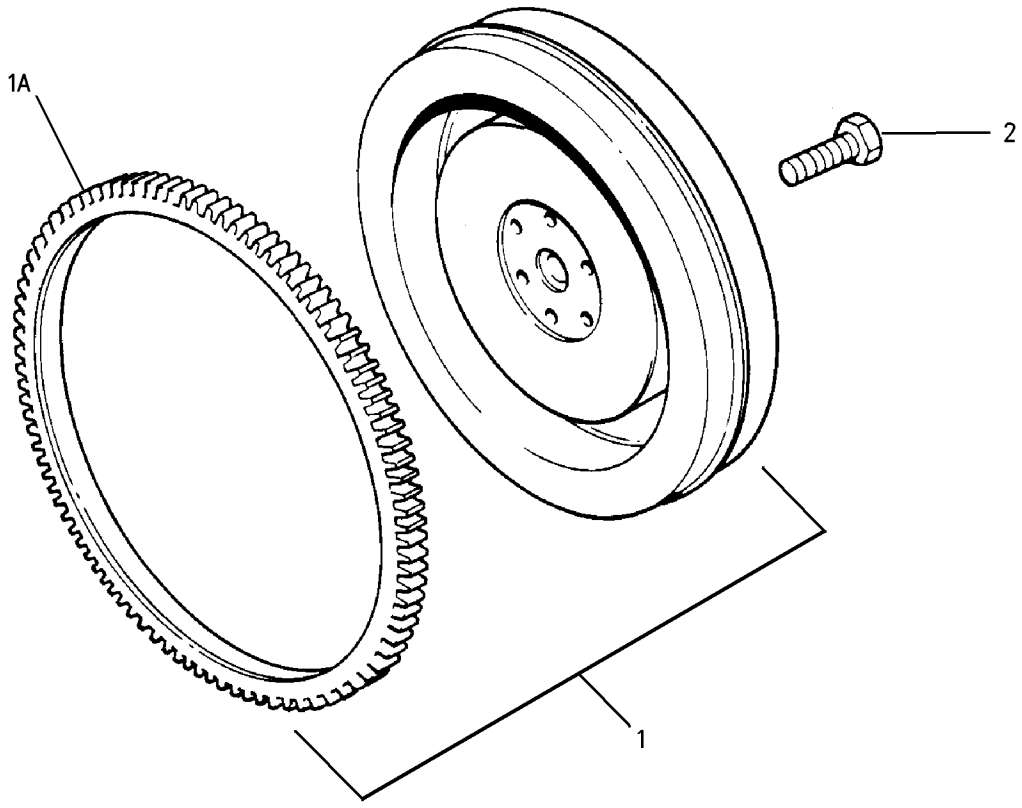

GRAPHIC #1 g00712172

217-7221 FLYWHEEL GP

S/N: CSD1-UP
PART OF 179-1808 ENGINE AR-PRIMARY
AN ATTACHMENT

SMCS-1156, 1158 **i01649085**

NOTE	REF NO	GRAPHIC REF	PART NUMBER	QTY	PART NAME 1 2 3 4 5 6 (PRODUCT LEVEL)	SEE PAGE
	1	1	**138-7446**	1	FLYWHEEL AS	
	1A	1	**154-2405**	1	GEAR-STARTER (126 TEETH)	
	2	1	**154-2406**	6	BOLT	

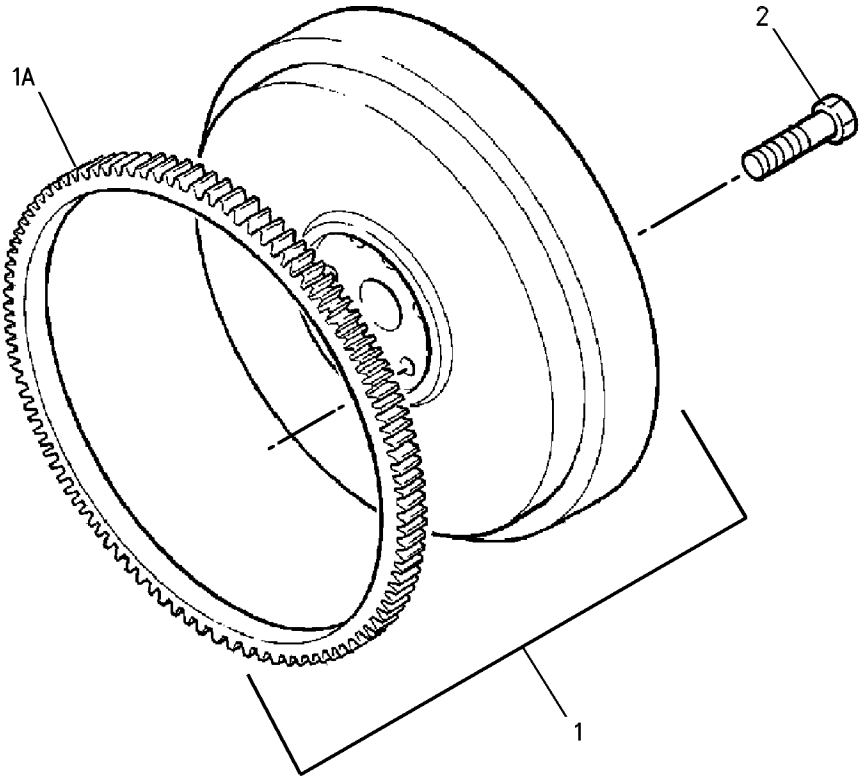

GRAPHIC #1 g00640776

153-1014 HOUSING GP-FLYWHEEL

S/N: 3NW21000-UP

PART OF 144-6194 ENGINE AR-PRIMARY

SMCS-1157 **i01465576**

NOTE	REF NO	GRAPHIC REF	PART NUMBER	QTY	PART NAME 1 2 3 4 5 6 (PRODUCT LEVEL)	SEE PAGE
	1	1	**6I-0423**	8	BOLT (M12X1.75X30MM)	
	2	1	**163-1627**	1	HOUSING-FLYWHEEL	
	3	1	**153-1013**	2	DOWEL	
	4	1	**6I-0631**	2	BOLT (M6X1.0X12MM)	
	5	1	**102-1957**	1	PLATE	

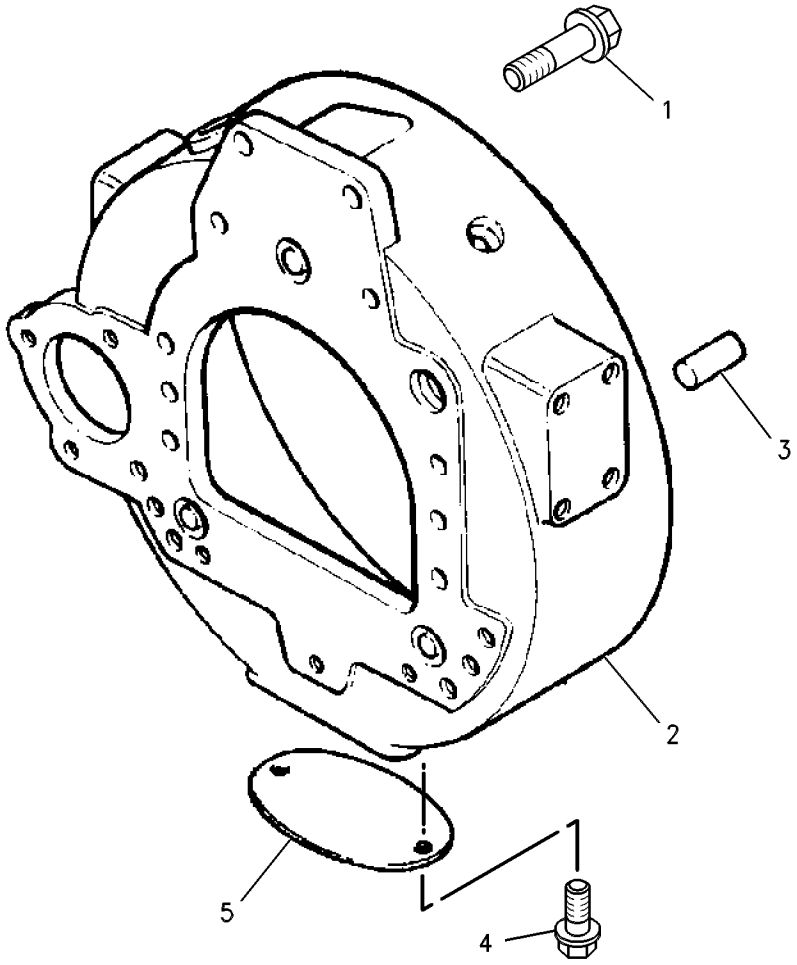

GRAPHIC #1 g00547979

BASIC ENGINE

217-7238 HOUSING GP-FLYWHEEL

S/N: CSD1-UP
PART OF 179-1808 ENGINE AR-PRIMARY
AN ATTACHMENT

SMCS-1157 **i01649087**

NOTE	REF NO	GRAPHIC REF	PART NUMBER	QTY	PART NAME 1 2 3 4 5 6 (PRODUCT LEVEL)	SEE PAGE
	1	1	**217-7225**	1	HOUSING-FLYWHEEL	
	2	1	**138-7402**	6	BOLT	
	3	1	**153-6375**	10	BOLT	
	4	1	**153-6868**	3	BOLT	
	5	1	**154-2394**	1	PLATE	
	6	1	**154-2395**	1	PLUG	
	7	1	**154-2403**	4	WASHER	
	8	1	**165-2142**	2	BOLT	
	9	1	**138-7162**	4	BOLT	
	10	1	**166-2338**	4	NUT	

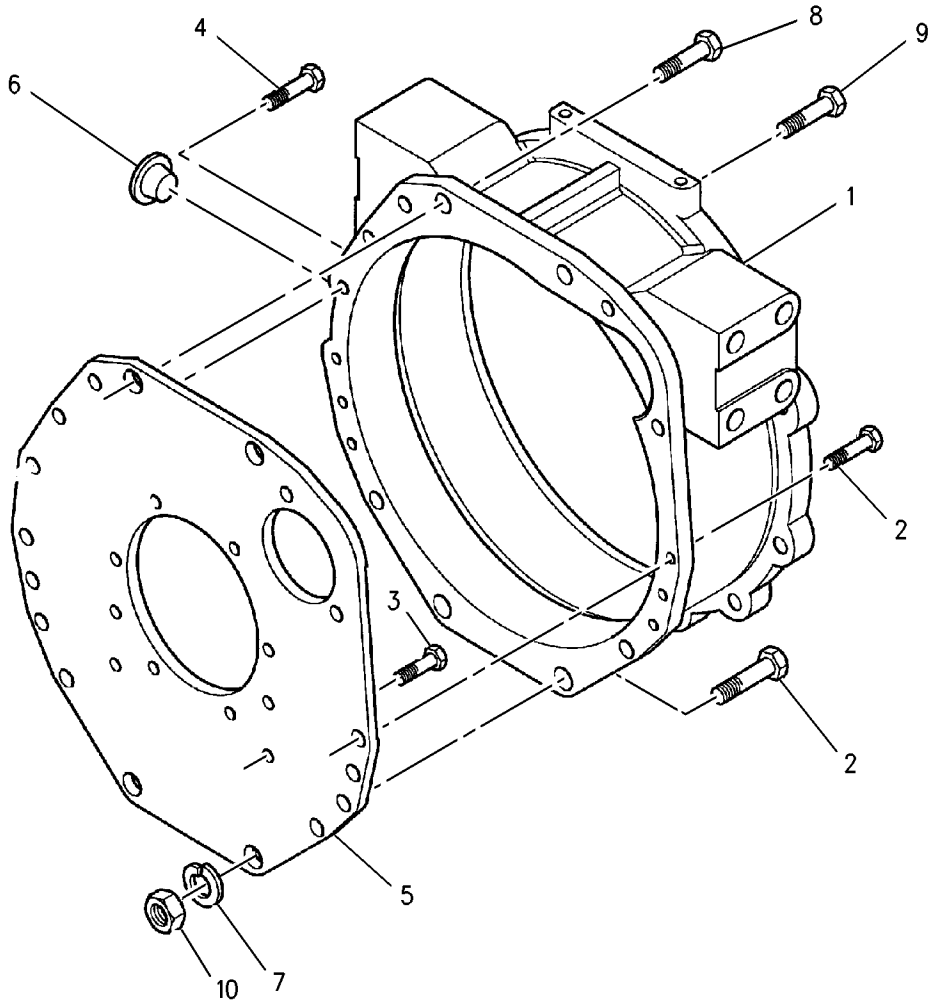

GRAPHIC #1 g00852718

MEMORANDA

BASIC ENGINE

171-2823 HOUSING GP-FRONT

S/N: 3NW21000-UP

PART OF 144-6194 ENGINE AR-PRIMARY

SMCS-1151, 1160, 1162, 1166, 3108 **i01465583**

NOTE	REF NO	GRAPHIC REF	PART NUMBER	QTY	PART NAME 1 2 3 4 5 6 (PRODUCT LEVEL)	SEE PAGE
	1	1	**195-3786**	1	PLATE	
	2	1	**6I-0217**	7	BOLT (M8X1.25X20MM)	
	3	1	**6I-0254**	1	BOLT (M8X1.25X30MM)	
	4	1	**6I-0291**	2	NUT (M8X1.25)	
	5	1	**6I-0512**	1	GASKET	
	6	1	**6I-0839**	5	BOLT (M8X1.25X70MM)	
	7	1	**6I-4037**	1	PLATE	
	8	1	**6I-4374**	1	BOLT	
	10	1	**101-3805**	1	BOLT (M8X1.25X90MM)	
	11	1	**112-2370**	2	STUD	
	12	1	**124-3815**	4	BOLT (M8X16X1.25MM)	
	13	1	**152-6730**	1	BOLT (M8X1.25X120MM)	
	14	1	**195-3709**	1	GASKET	
	15	1	**152-6738**	1	GASKET-HOUSING	
	16	1	**152-6739**	1	SEAL	
	17	1	**152-6743**	2	DOWEL	
	18	1	**195-3710**	1	HOUSING AS-FRONT	
	18A	1	**152-6740**	1	PLUG	
	18B	1	**152-6735**	1	SLEEVE	
	19	1	**101-3691**	2	PLUG	
F		1	**178-5019**	1	PLUG	
F		1	**7W-4724**	1	WASHER-SEAL	
F		1	**100-3751**	1	BOLT (M8X1.25X65MM)	

F-NOT SHOWN

171-2823 **HOUSING GP-FRONT** *(contd.)* **i01465583**

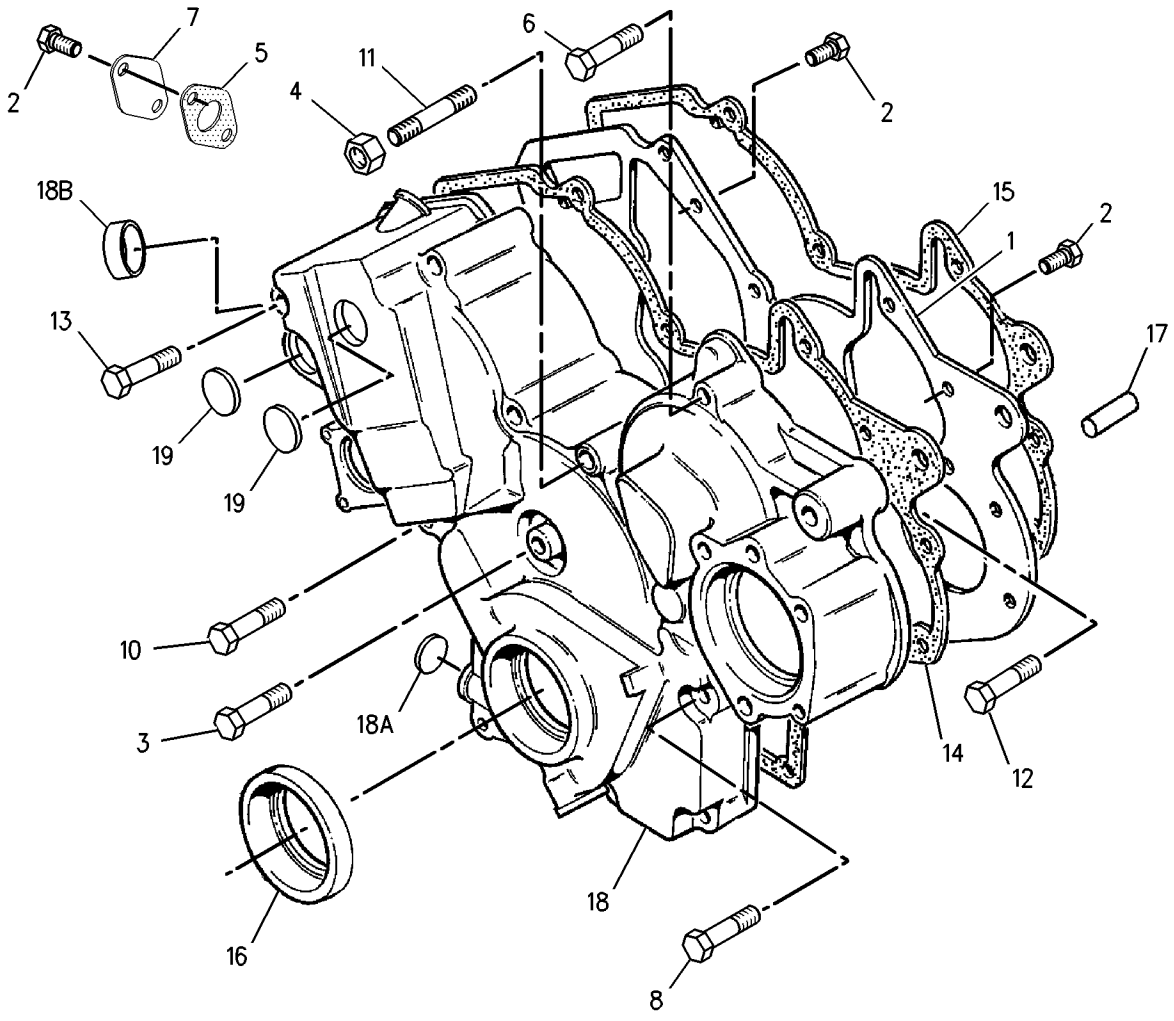

GRAPHIC #1 g00731987

217-7110 HOUSING GP-FRONT

S/N: CSD1-UP
PART OF 217-7118 HOUSING GP-FRONT
AN ATTACHMENT

SMCS-1151, 1160, 1162, 1166, 3108 **i01701866**

NOTE	REF NO	GRAPHIC REF	PART NUMBER	QTY	PART NAME 1 2 3 4 5 6 (PRODUCT LEVEL)	SEE PAGE
	1	1	**133-5512**	1	NUT	
	2	1	**153-5960**	1	NUT	
	3	1	**154-1396**	1	CLIP	
	4	1	**154-1401**	1	ARM	
	5	1	**154-1403**	1	SEAL-O-RING	
	6	1	**154-1405**	1	LEVER	
	7	1	**154-1408**	1	WASHER	
	8	1	**154-1410**	2	SEAL-O-RING	
	9	1	**154-1411**	1	CLIP	
	10	1	**154-1412**	1	BRACKET	
	11	1	**154-1416**	1	SPRING	
	12	1	**166-5268**	1	LEVER	
	13	1	**154-1637**	1	ARM	
	14	1	**154-1638**	1	SEAL-O-RING	
	15	1	**154-1639**	1	CLIP	
	16	1	**154-1641**	1	SPRING	
	17	1	**154-1672**	1	HOUSING-FRONT	
	18	1	**154-1673**	1	PIN	
	19	1	**154-1675**	1	SEAL	
	20	1	**155-8009**	1	BOLT	
	21	1	**158-7936**	2	BOLT	
	22	1	**162-2207**	1	NUT	
	23	1	**154-1636**	2	NUT	
	24	1	**183-3572**	2	BOLT	
	25	1	**191-0542**	1	SHAFT	
	26	1	**217-7104**	1	KIT-LEVER	
	27	1	**217-5794**	1	LEVER	
	28	1	**217-7103**	1	LEVER	
	29	1	**217-7108**	1	SPRING	

217-7110 **HOUSING GP-FRONT** *(contd.)* **i01701866**

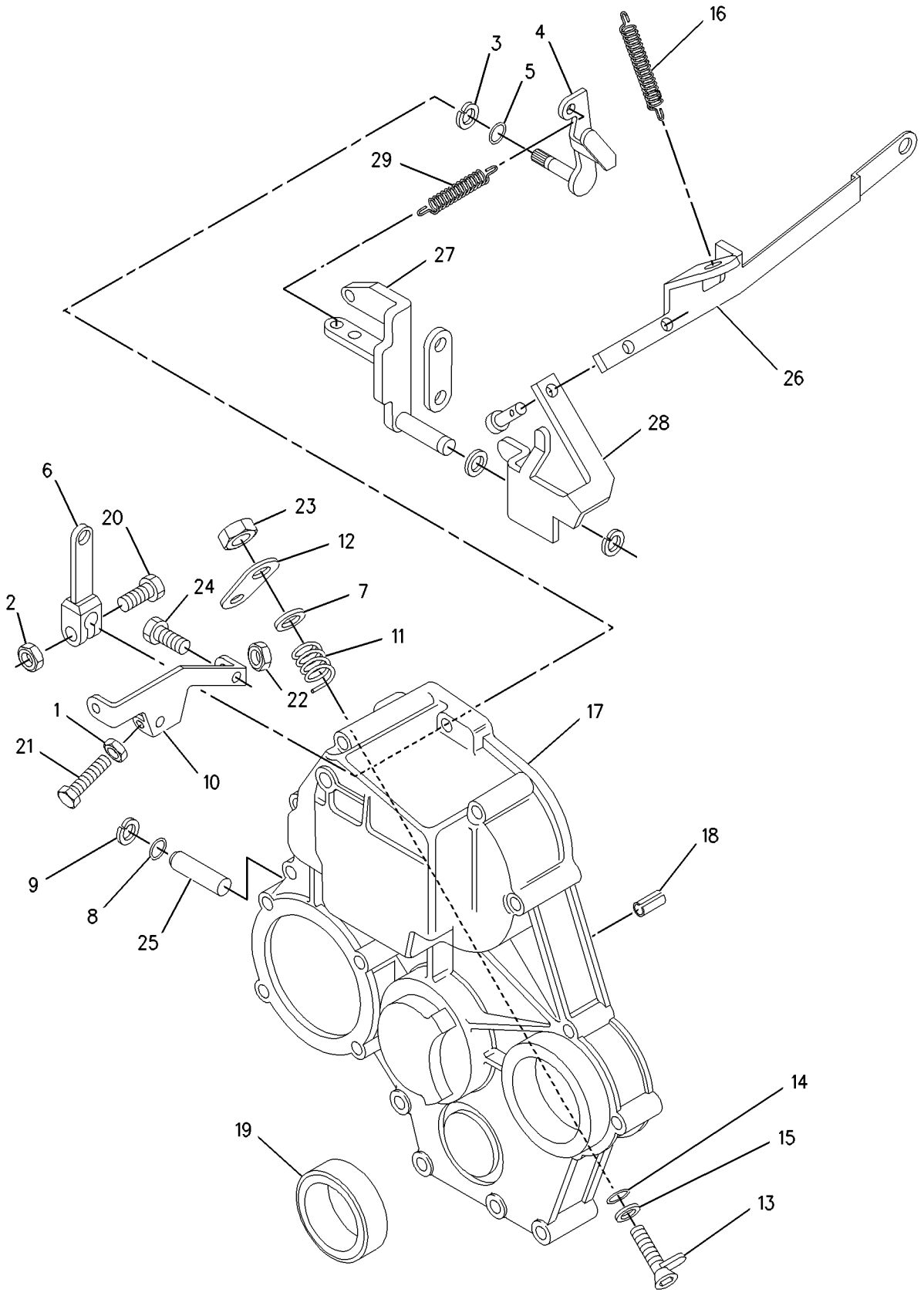

GRAPHIC #1 g00852899

217-7118 HOUSING GP-FRONT

S/N: CSD1-UP
PART OF 179-1808 ENGINE AR-PRIMARY
AN ATTACHMENT

SMCS-1151, 1160, 1162, 1166, 3108 **i01649082**

NOTE	REF NO	GRAPHIC REF	PART NUMBER	QTY	PART NAME 1 2 3 4 5 6 (PRODUCT LEVEL)	SEE PAGE
	1	1	**139-5511**	1	CAP	
	2	1	**153-5960**	1	NUT	
	3	1	**153-5962**	3	BOLT	
	4	1	**153-6838**	4	BOLT	
	5	1	**153-6856**	7	BOLT	
	6	1	**153-7983**	1	PIN	
	7	1	**153-7985**	1	WASHER	
	8	1	**153-7987**	1	WASHER	
	9	1	**154-1676**	1	GEAR AS (62 TEETH)	
	10	1	**154-1677**	3	BUSHING	
	11	1	**154-1678**	3	DOWEL	
	12	1	**154-1679**	1	SPRING	
	13	1	**154-1680**	1	PLATE	
	14	1	**158-7936**	1	BOLT	
	15	1	**162-2207**	1	NUT	
	16	1	**165-2139**	2	BOLT	
	17	1	**191-9296**	1	BOLT	
	18	1	**191-9297**	1	NUT	
	19	1	**200-0807**	1	BRACKET	
	20	1	**215-2621**	1	GASKET	
	21	1	**217-7102**	1	SPRING	
Y	22	1	**217-7110**	1	HOUSING GP-FRONT	40
	23	1	**217-7111**	1	BOLT AS	
	24	1	**153-7987**	1	WASHER	
	25	1	**212-0743**	1	NUT	
	26	1	**212-0744**	1	SEAL-O-RING	
	27	1	**212-0745**	1	BOLT	
	28	1	**212-0747**	1	RING-RETAINING	
	29	1	**217-7115**	1	BOLT	
	30	1	**211-7739**	1	KIT-CAP (TAMPER RESISTANT)	

Y-SEPARATE ILLUSTRATION

217-7118 **HOUSING GP-FRONT** *(contd.)* **i01649082**

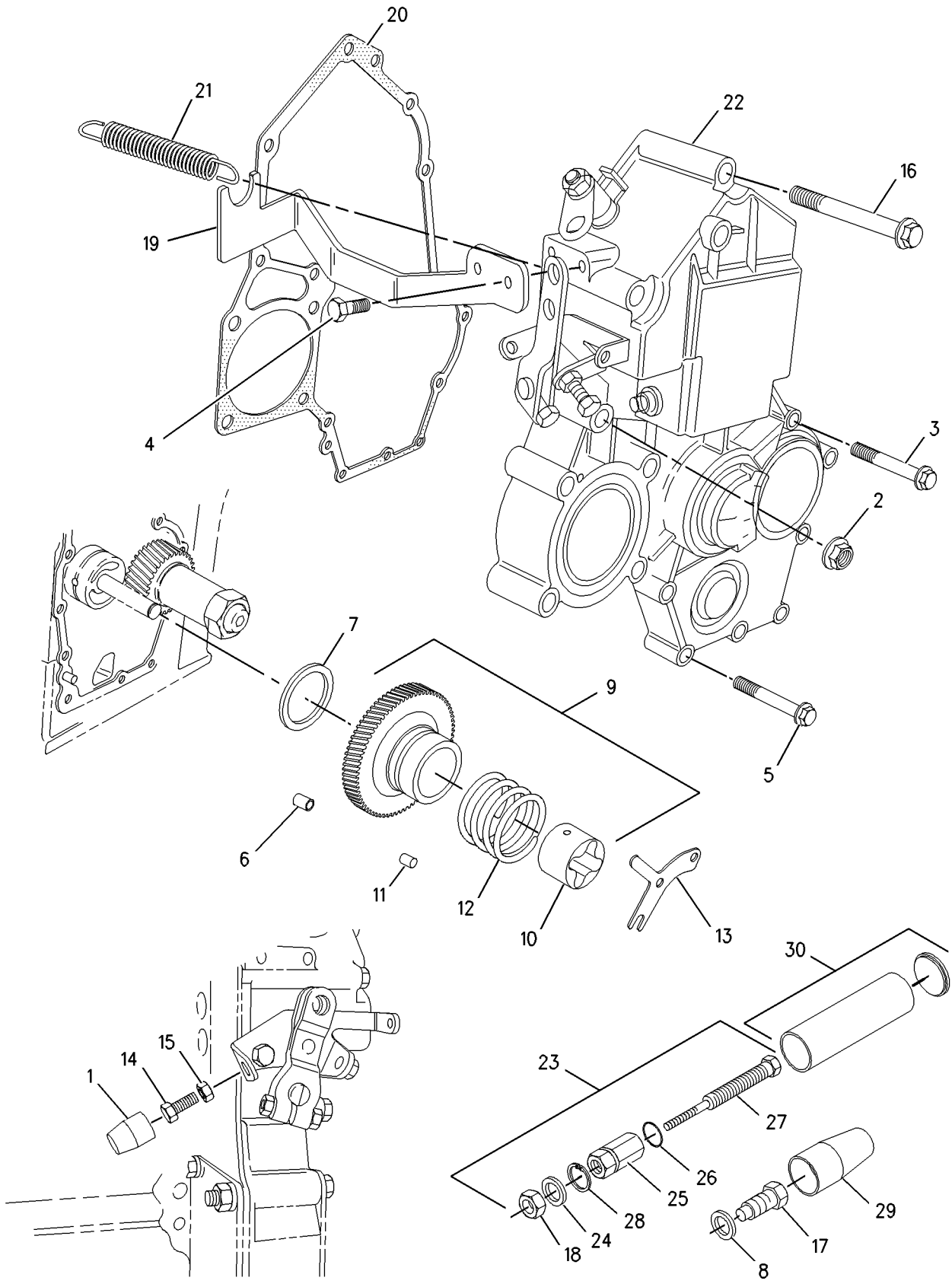

GRAPHIC #1 g00852834

153-0561 LIFTING GP-ENGINE

S/N: 3NW21000-UP

PART OF 144-6194 ENGINE AR-PRIMARY

SMCS-1122 **i01465591**

NOTE	REF NO	GRAPHIC REF	PART NUMBER	QTY	PART NAME 1 2 3 4 5 6 (PRODUCT LEVEL)	SEE PAGE
	1	1	**100-4458**	4	BOLT (M8X1.25X14MM)	
	2	1	**153-0563**	2	PLATE	

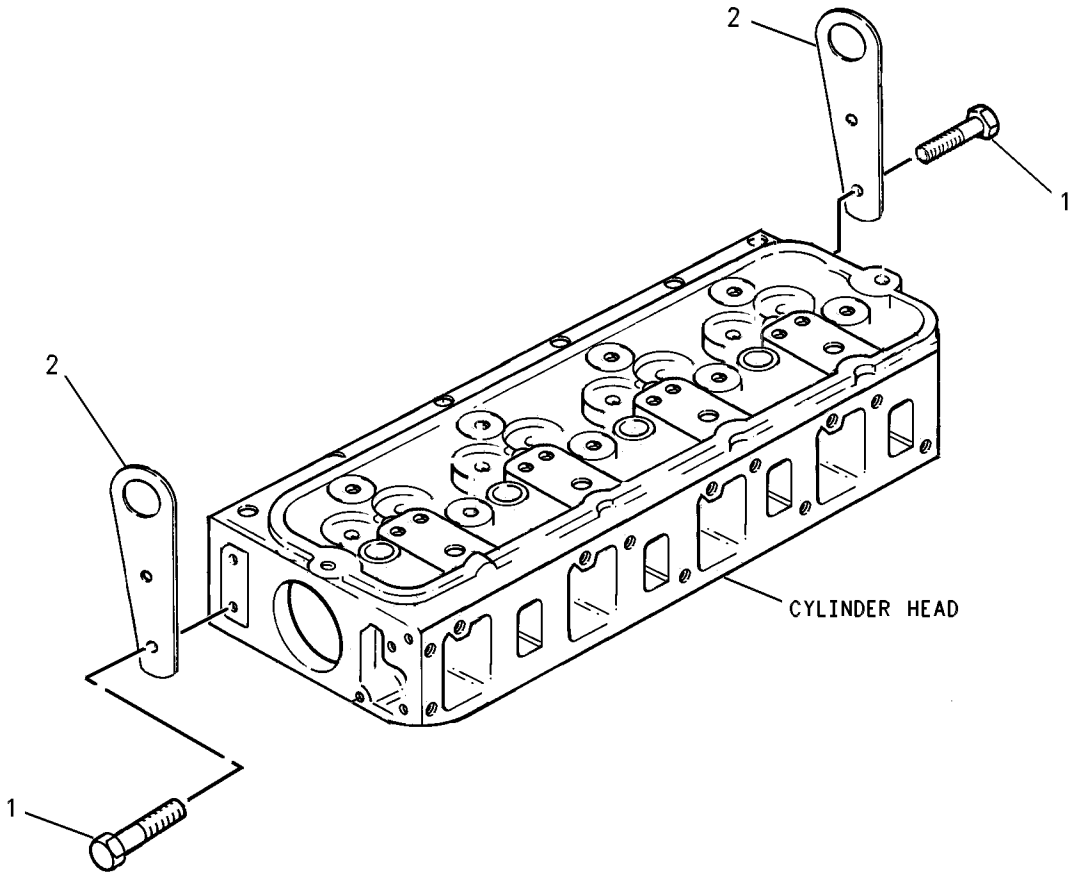

GRAPHIC #1 g00420478

BASIC ENGINE

154-1877 LIFTING GP-ENGINE

S/N: CSD1-UP
PART OF 179-1808 ENGINE AR-PRIMARY
AN ATTACHMENT

SMCS-1122 **i00896317**

NOTE	REF NO	GRAPHIC REF	PART NUMBER	QTY	PART NAME 1 2 3 4 5 6 (PRODUCT LEVEL)	SEE PAGE
	1	1	**153-6374**	2	PLATE	
	2	1	**153-6375**	2	BOLT	

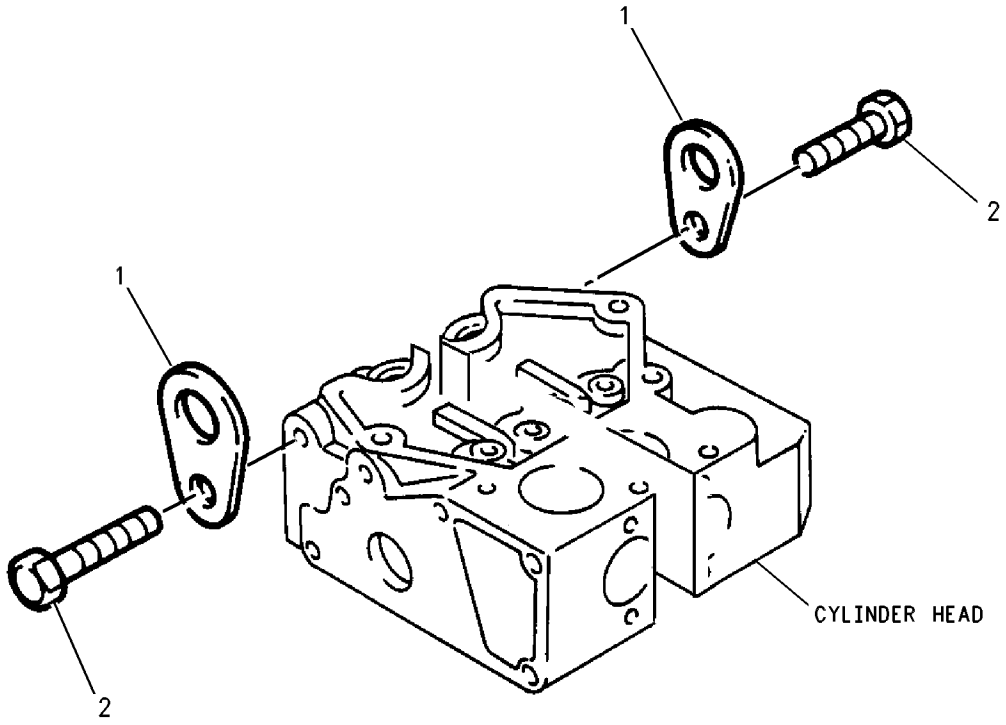

GRAPHIC #1 g00464043

153-1176 MOUNTING GP-ALTERNATOR

S/N: 3NW21000-UP

PART OF 144-6194 ENGINE AR-PRIMARY

SMCS-1405 **i01465592**

NOTE	REF NO	GRAPHIC REF	PART NUMBER	QTY	PART NAME 1 2 3 4 5 6 (PRODUCT LEVEL)	SEE PAGE
	1	1	**6I-0454**	1	BOLT (M10X1.5X70MM)	

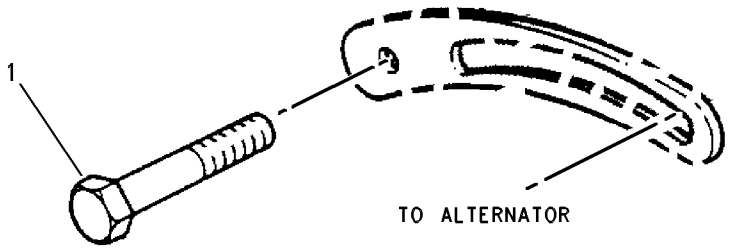

GRAPHIC #1 g00560981

142-8850 MOUNTING GP-ENGINE

S/N: CAB1-UP; CMB1-UP; 5FZ6700-UP

PART OF 200-1005, 219-4375, 219-4385 INSTALLATION AR-ENGINE

SMCS-1152, 1153, 1154 **i01670588**

NOTE	REF NO	GRAPHIC REF	PART NUMBER	QTY	PART NAME 1 2 3 4 5 6 (PRODUCT LEVEL)	SEE PAGE
	1	1	**9W-6226**	1	SLEEVE	
	2	1	**9W-8096**	2	MOUNT	
	3	1	**142-8853**	1	BRACKET AS	
	4	1	**142-8854**	2	BRACKET AS	
	5	1	**152-5878**	2	MOUNT AS	
	6	1	**165-7095**	2	WASHER	
M	7	1	**129-3180**	1	LOCKNUT (M12X1.75 THD)	
	8	1	**5P-1076**	2	WASHER-HARD (13.5X30X4MM THK)	
	9	1	**8T-4122**	2	WASHER-HARD (17X32X3.5MM THK)	
M	10	1	**8T-4132**	2	NUT (M16X2 THD)	
M	11	1	**8T-4139**	4	BOLT (M12X1.75X30MM)	
M	12	1	**7X-2556**	2	BOLT (M16X2X100MM)	
M	13	1	**8T-4192**	8	BOLT (M12X1.75X25MM)	
	14	1	**8T-4223**	12	WASHER-HARD (13.5X25.5X3MM THK)	
M	15	1	**8T-5041**	1	BOLT (M12X1.75X120MM)	

M-METRIC PART

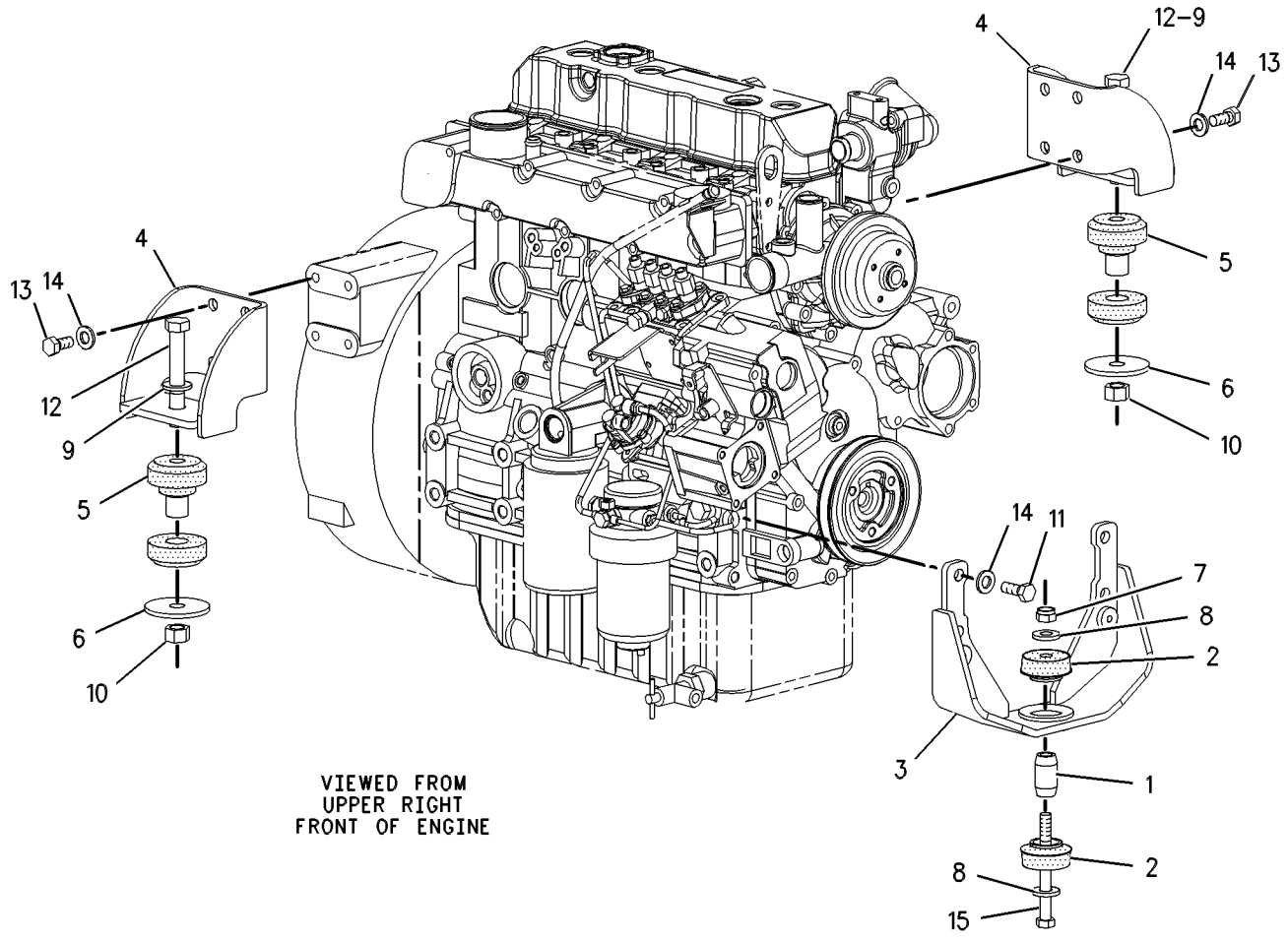

GRAPHIC #1 g00558844

BASIC ENGINE

205-3184 MOUNTING GP-ENGINE

S/N: 4NZ3400-UP

PART OF 200-0805 INSTALLATION AR-ENGINE

SMCS-1152, 1153, 1154 **i01761520**

NOTE	REF NO	GRAPHIC REF	PART NUMBER	QTY	PART NAME 1 2 3 4 5 6 (PRODUCT LEVEL)	SEE PAGE
	1	1	**142-8854**	2	BRACKET AS	
	2	1	**211-9061**	3	MOUNT AS	
	3	1	**205-3185**	1	BRACKET AS	
M	4	1	**141-5453**	8	BOLT-HEX HEAD	
	5	1	**165-7095**	6	WASHER (16.5X71.5X3MM THK)	
M	6	1	**7X-2475**	1	BOLT (M16X2X130MM)	
	7	1	**8T-4122**	11	WASHER-HARD (17X32X3.5MM THK)	
M	8	1	**8T-4132**	3	NUT (M16X2 THD)	
M	9	1	**7X-2556**	2	BOLT (M16X2X100MM)	
M	10	1	**8T-4192**	8	BOLT (M12X1.75X25MM)	
	11	1	**8T-4223**	8	WASHER-HARD (13.5X25.5X3MM THK)	

M-METRIC PART

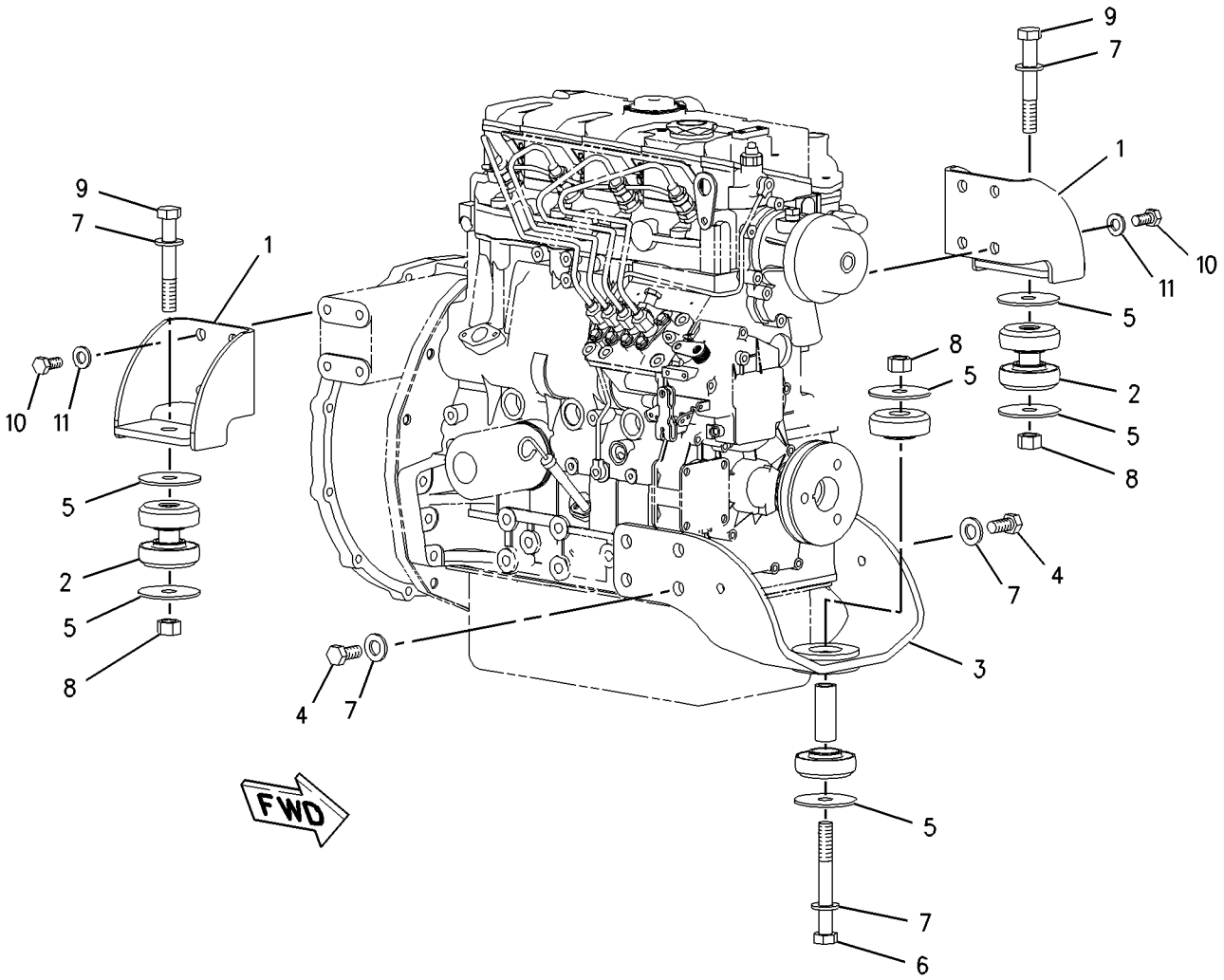

GRAPHIC #1 g00901118

154-2435 MOUNTING GP-FAN

S/N: CSD1-UP
PART OF 179-1808 ENGINE AR-PRIMARY
AN ATTACHMENT

SMCS-1356 **i00897568**

NOTE	REF NO	GRAPHIC REF	PART NUMBER	QTY	PART NAME 1 2 3 4 5 6 (PRODUCT LEVEL)	SEE PAGE
	1	1	**153-7640**	4	BOLT	
	2	1	**154-2433**	1	PLATE	

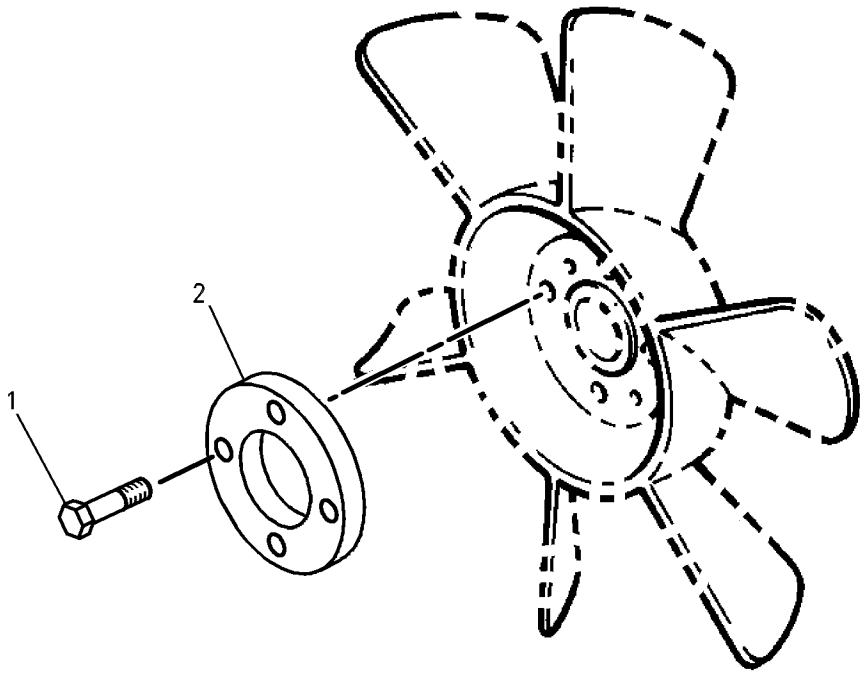

GRAPHIC #1 g00485543

164-7613 MOUNTING GP-STARTING MOTOR

S/N: 3NW21000-UP

PART OF 144-6194 ENGINE AR-PRIMARY

SMCS-1453 **i01250594**

NOTE	REF NO	GRAPHIC REF	PART NUMBER	QTY	PART NAME 1 2 3 4 5 6 (PRODUCT LEVEL)	SEE PAGE
	1	1	**6I-0364**	3	STUD	

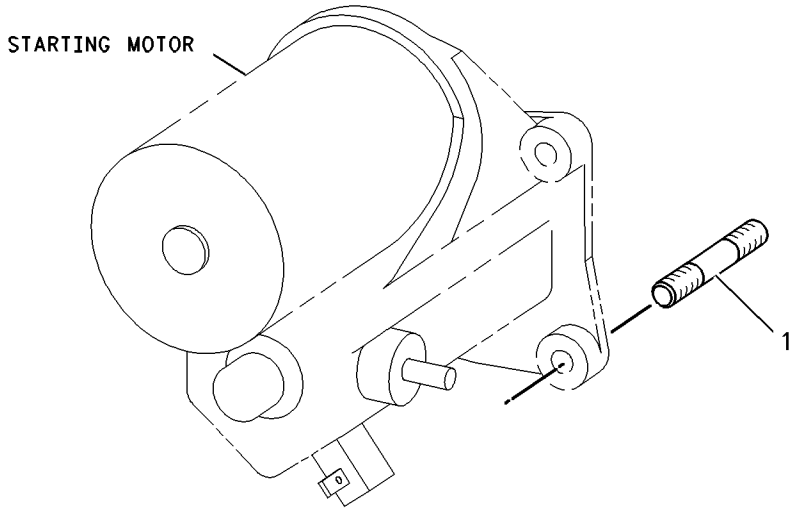

GRAPHIC #1 g00666136

217-7748 MOUNTING GP-STARTING MOTOR

S/N: CSD1-UP
PART OF 179-1808 ENGINE AR-PRIMARY
AN ATTACHMENT

SMCS-1453 **i01649094**

NOTE	REF NO	GRAPHIC REF	PART NUMBER	QTY	PART NAME 1 2 3 4 5 6 (PRODUCT LEVEL)	SEE PAGE
	1	1	**067-6366**	5	WASHER (M8)	
	2	1	**136-9164**	2	STUD	
	3	1	**153-6375**	5	BOLT	
	4	1	**217-7317**	5	BRACKET	

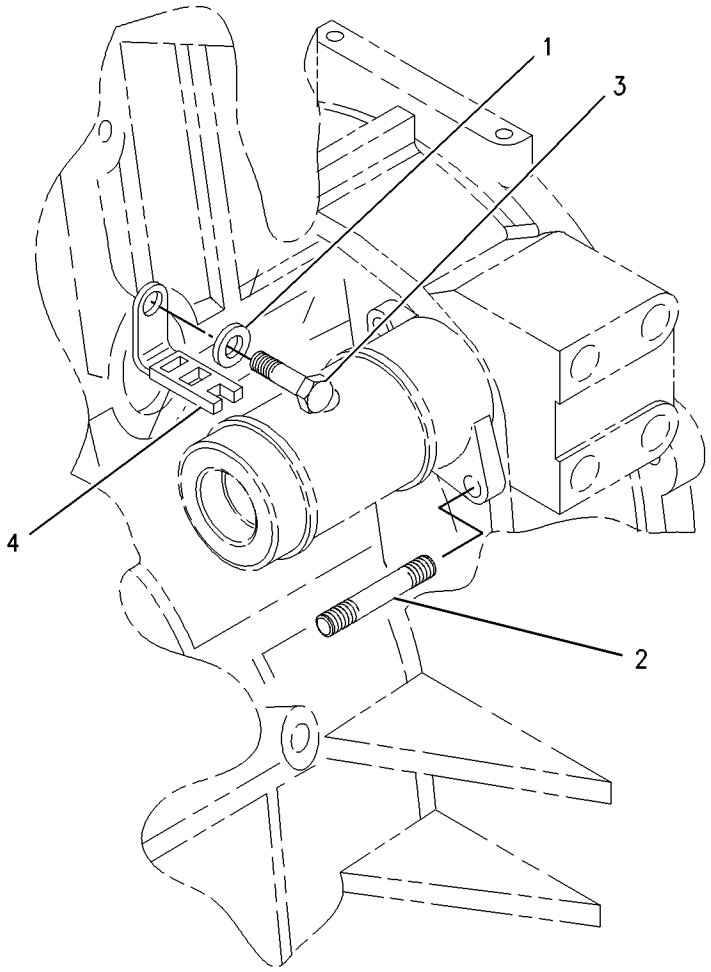

GRAPHIC #1 g00852574

BASIC ENGINE

202-3185 PAN GP-OIL

S/N: 3NW21000-UP

PART OF 144-6194 ENGINE AR-PRIMARY

SMCS-1302 **i01472754**

NOTE	REF NO	GRAPHIC REF	PART NUMBER	QTY	PART NAME 1 2 3 4 5 6 (PRODUCT LEVEL)	SEE PAGE
	1	1	**6I-0217**	1	BOLT (M8X1.25X20MM)	
	2	1	**6I-0289**	1	PLUG	
	3	1	**6I-1064**	1	SEAL-O-RING	
	4	1	**6I-1497**	1	SEAL	
	5	1	**7W-2632**	1	WASHER (1.6MM THK)	
	6	1	**101-3771**	1	BOLT	
	7	1	**114-4363**	1	BOLT (M8X1.25X12MM)	
	8	1	**153-0083**	1	CLIP	
	9	1	**153-0084**	1	TUBE AS	
	10	1	**170-7611**	1	TUBE AS-GAUGE	
	11	1	**6I-4079**	1	NUT	
	12	1	**170-7612**	1	GAUGE-OIL LEVEL	
	13	1	**170-7614**	1	VALVE-DRAIN	
	14	1	**170-7615**	1	SEAL-O-RING	
	15	1	**202-0919**	1	PAN-OIL	
	16	1	**202-0920**	1	GASKET	
	17	1	**202-0921**	24	BOLT	

202-3185 **PAN GP-OIL** *(contd.)* **i01472754**

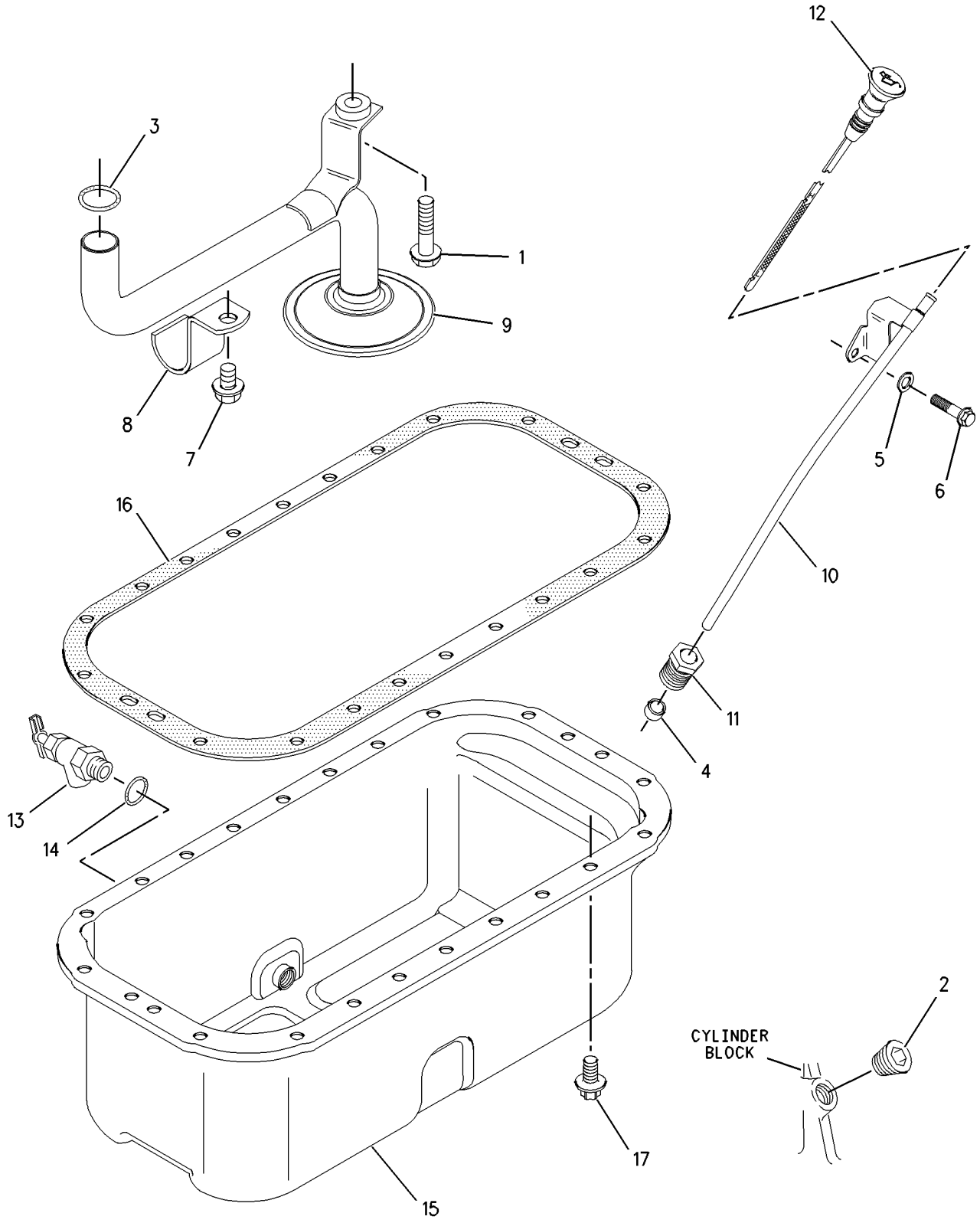

GRAPHIC #1 g00770673

217-7360 PAN GP-OIL

S/N: CSD1-UP
PART OF 179-1808 ENGINE AR-PRIMARY
AN ATTACHMENT

SMCS-1302 **i01649048**

NOTE	REF NO	GRAPHIC REF	PART NUMBER	QTY	PART NAME 1 2 3 4 5 6 (PRODUCT LEVEL)	SEE PAGE
	1	1	**144-9961**	1	VALVE-DRAIN	
	2	2	**150-4140**	1	FILTER-OIL	
	3	2	**153-5933**	1	SEAL	
	4	3	**153-5936**	2	WASHER	
	5	1	**153-6832**	2	WASHER	
	6	1	**153-6833**	30	BOLT	
	7	1	**153-6835**	1	SEAL-O-RING	
	8	1,2	**153-6838**	3	BOLT	
	9	2	**153-6841**	2	SEAL-O-RING	
	10	3	**153-6848**	1	COVER	
	11	3	**153-6849**	1	SPRING	
	12	3	**153-6850**	1	COLLAR	
	13	3	**153-6851**	1	CLIP	
	14	3	**153-6853**	1	SEAL-O-RING	
	15	2	**153-6879**	1	CONNECTION	
	16	3	**153-6881**	1	BOLT	
	17	3	**154-1941**	1	ROTOR	
	18	3	**154-1942**	1	VALVE-RELIEF	
	19	1	**154-1945**	1	PAN-OIL	
	20	1	**154-1947**	1	PIPE-OIL	
	21	1	**154-1948**	1	STRAINER	
	22	3	**154-2353**	1	TUBE AS-OIL	
	23	2	**155-8084**	1	WASHER	
	24	2	**156-7347**	1	TUBE AS	
B	25	3	**160-4150**	1	SHIM (.1 MM THK)	
B		3	**160-4151**	1	SHIM (.15 MM THK)	
B		3	**160-4152**	1	SHIM (.2 MM THK)	
B		3	**160-4153**	1	SHIM (.5 MM THK)	
	29	1	**165-3605**	1	PLUG-OIL	
	30	1	**215-2605**	1	GASKET	
	31	1	**217-7352**	1	COVER-VALVE	
	32	2	**217-7357**	1	GAUGE-OIL (DIPSTICK)	
	33	2	**217-7358**	1	CAP-OIL FILLER	

B-USE AS REQUIRED

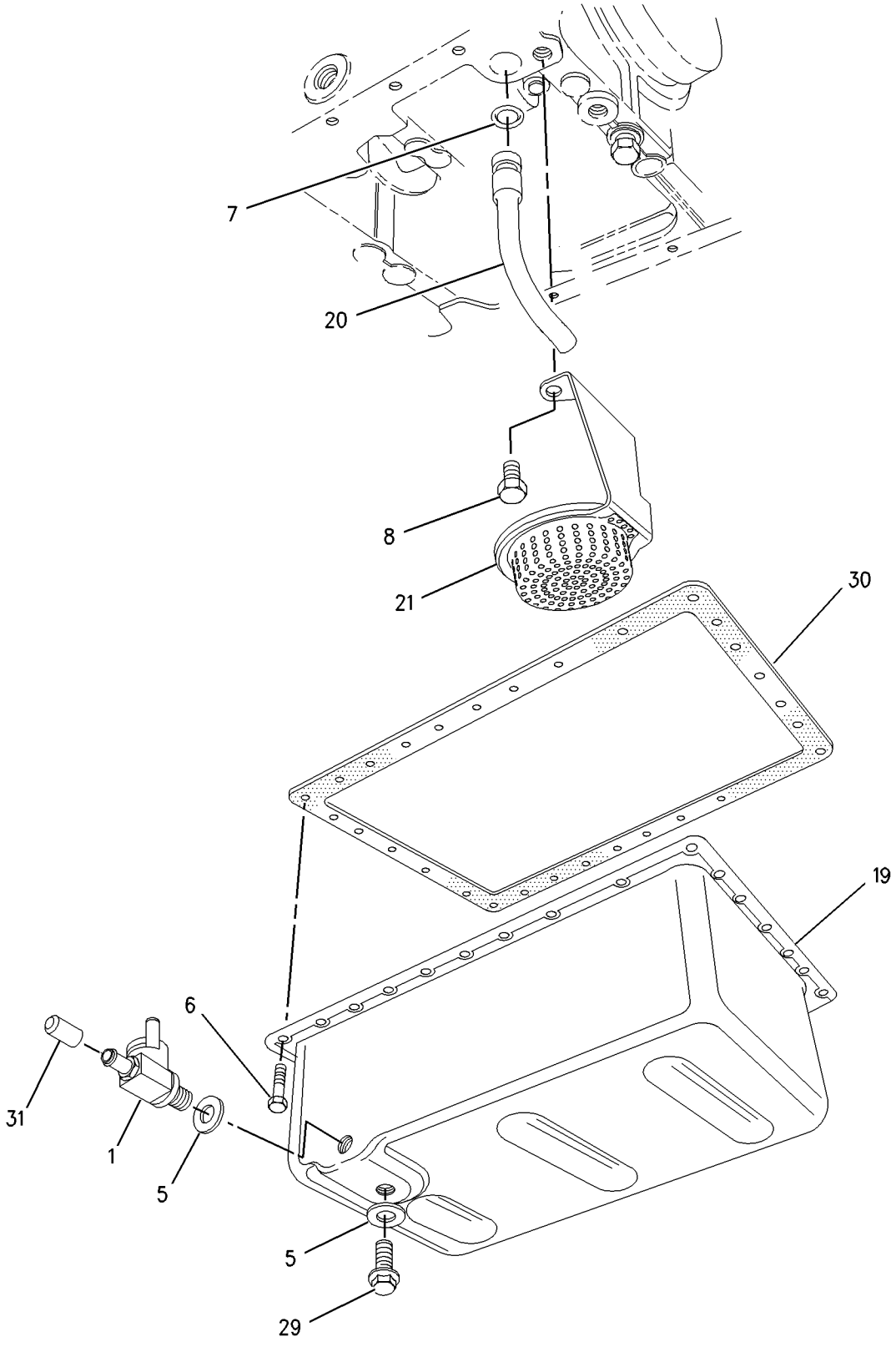

GRAPHIC #1 g00852736

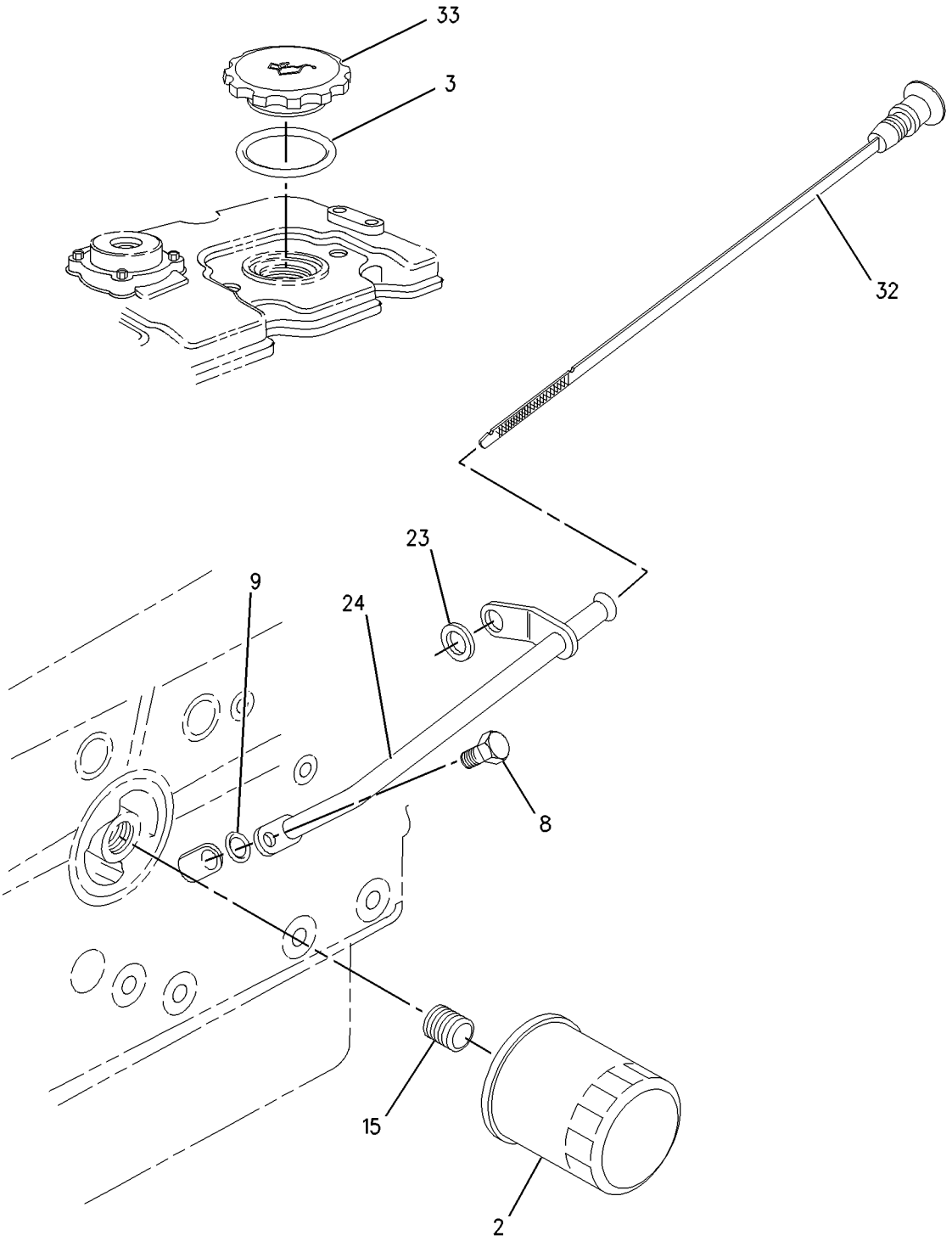

GRAPHIC #2 g00852737

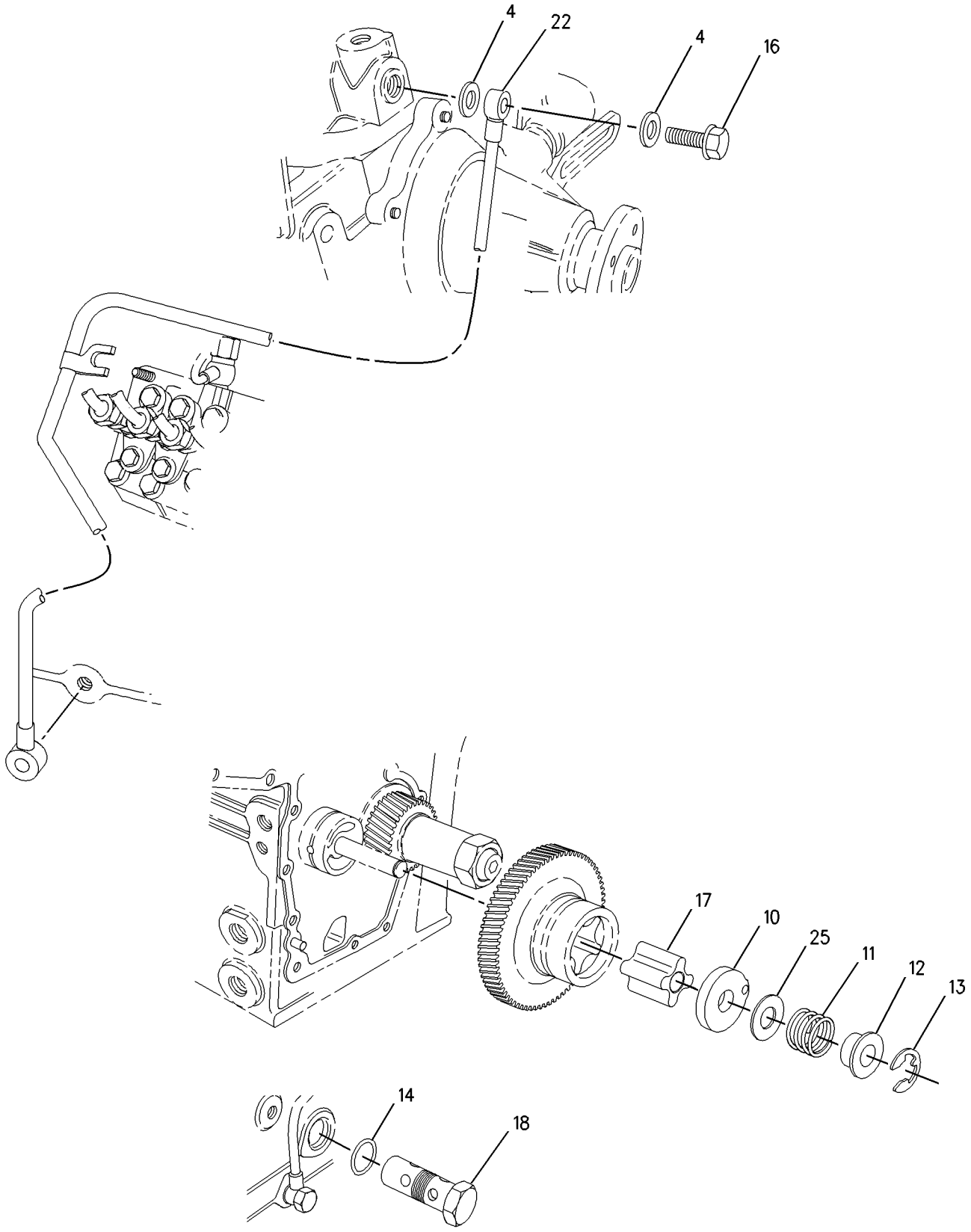

GRAPHIC #3 g00852738

137-6391 PISTON & ROD GP

S/N: 3NW21000-UP
17.5:1 RATIO
PART OF 144-6194 ENGINE AR-PRIMARY

SMCS-1225 **i01574585**

NOTE	REF NO	GRAPHIC REF	PART NUMBER	QTY	PART NAME 1 2 3 4 5 6 (PRODUCT LEVEL)	SEE PAGE
	1	1	**190-8377**	1	PISTON AS	
	2	1	**153-1029**	4	KIT-PISTON RING	
J	3	1	**201-9884**	4	ROD AS-CONNECTING (B)	
					—OR—	
J		1	**201-9885**	4	ROD AS-CONNECTING (D)	
					—OR—	
J		1	**201-9886**	4	ROD AS-CONNECTING (F)	
					(EACH ROD AS INCLUDES)	
	4	1	**201-9887**	2	BOLT	
	5	1	**188-8543**	1	BUSHING	

J-ENSURE THAT CORRECT ROD LENGTH IS FITTED

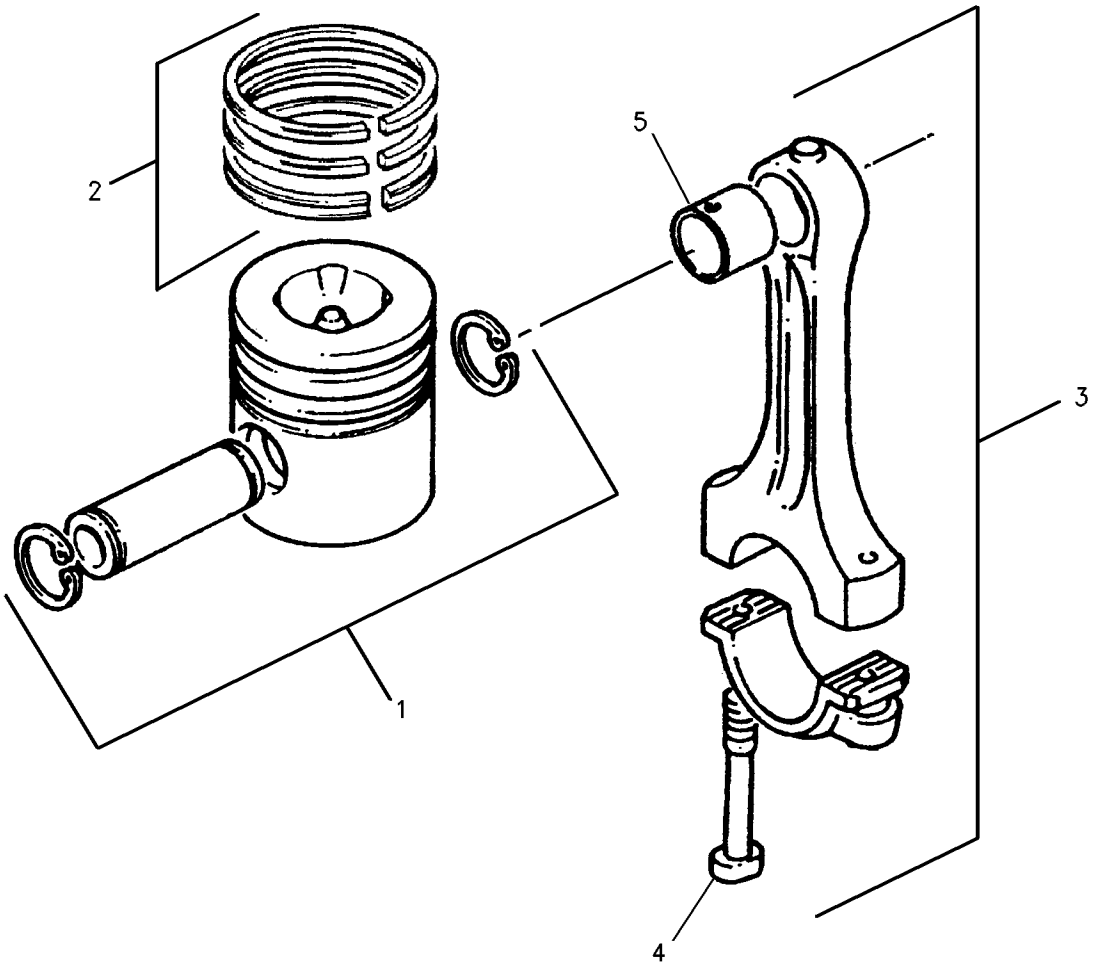

GRAPHIC #1 g00765077

BASIC ENGINE

217-1480 PISTON & ROD GP

S/N: CSD1-UP
PART OF 179-1808 ENGINE AR-PRIMARY
AN ATTACHMENT

SMCS-1225 **i01707241**

NOTE	REF NO	GRAPHIC REF	PART NUMBER	QTY	PART NAME 1 2 3 4 5 6 (PRODUCT LEVEL)	SEE PAGE
	1	1	**146-7808**	4	KIT-BEARING	
	2	1	**154-0867**	4	ROD AS-CONNECTING	
					(EACH INCLUDES)	
	3	1	**154-0869**	1	BUSHING	
	4	1	**154-0870**	2	BOLT	
	5	1	**154-0871**	2	NUT	
	6	1	**154-0873**	4	PIN	
	7	1	**154-0874**	8	CLIP	
	8	1	*217-1451*	4	PISTON AS	
					(EACH INCLUDES)	
	9	1	**217-1456**	1	KIT-PISTON RING	
					(EACH KIT INCLUDES COMPLETE SET OF RINGS FOR ONE PISTON)	

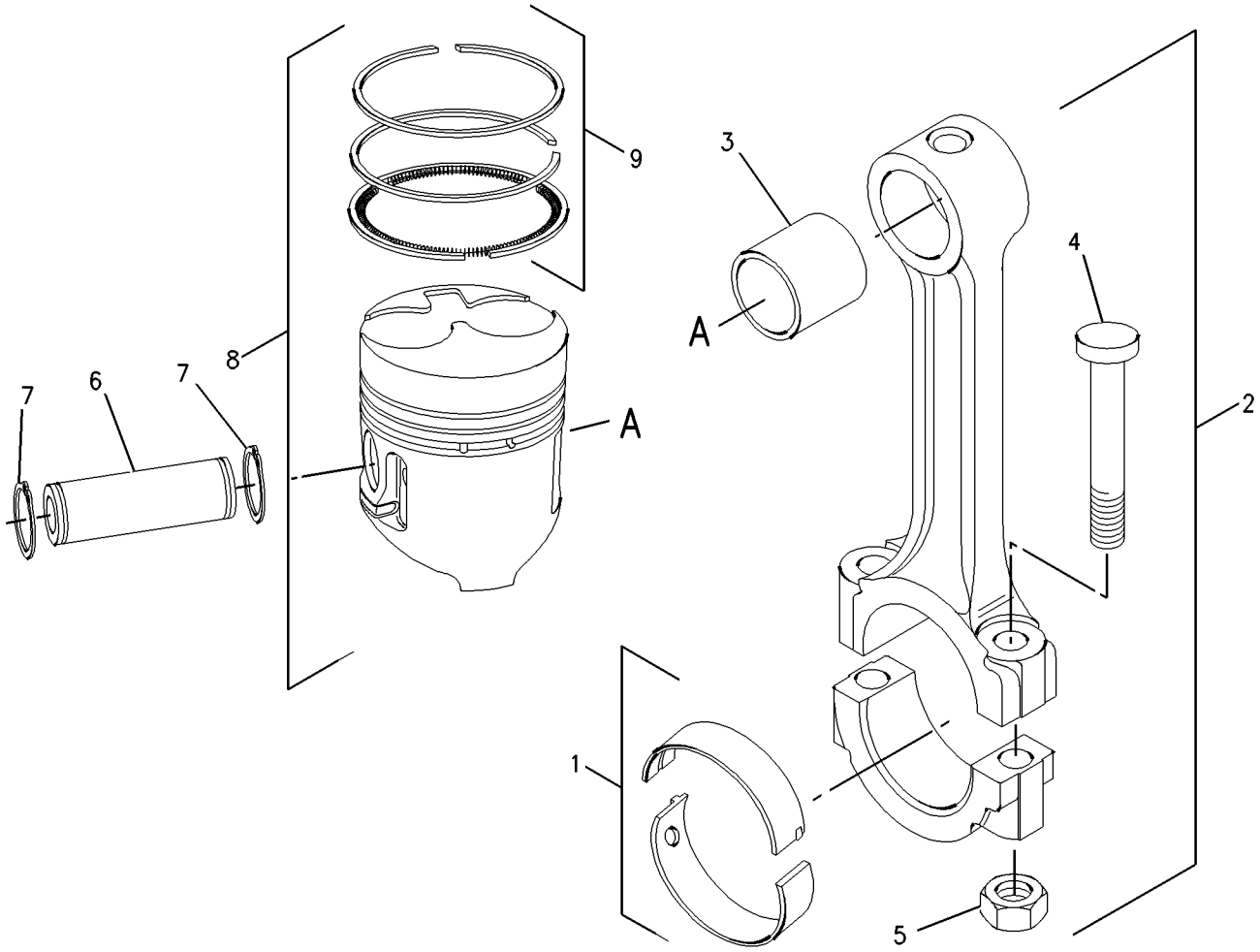

GRAPHIC #1 g00852672

BASIC ENGINE

153-0693 PLUG GP-CYLINDER BLOCK

S/N: 3NW21000-UP

PART OF 144-6194 ENGINE AR-PRIMARY

SMCS-1201 **i01471923**

NOTE	REF NO	GRAPHIC REF	PART NUMBER	QTY	PART NAME 1 2 3 4 5 6 (PRODUCT LEVEL)	SEE PAGE
	1	1	**069-1124**	1	PLUG	

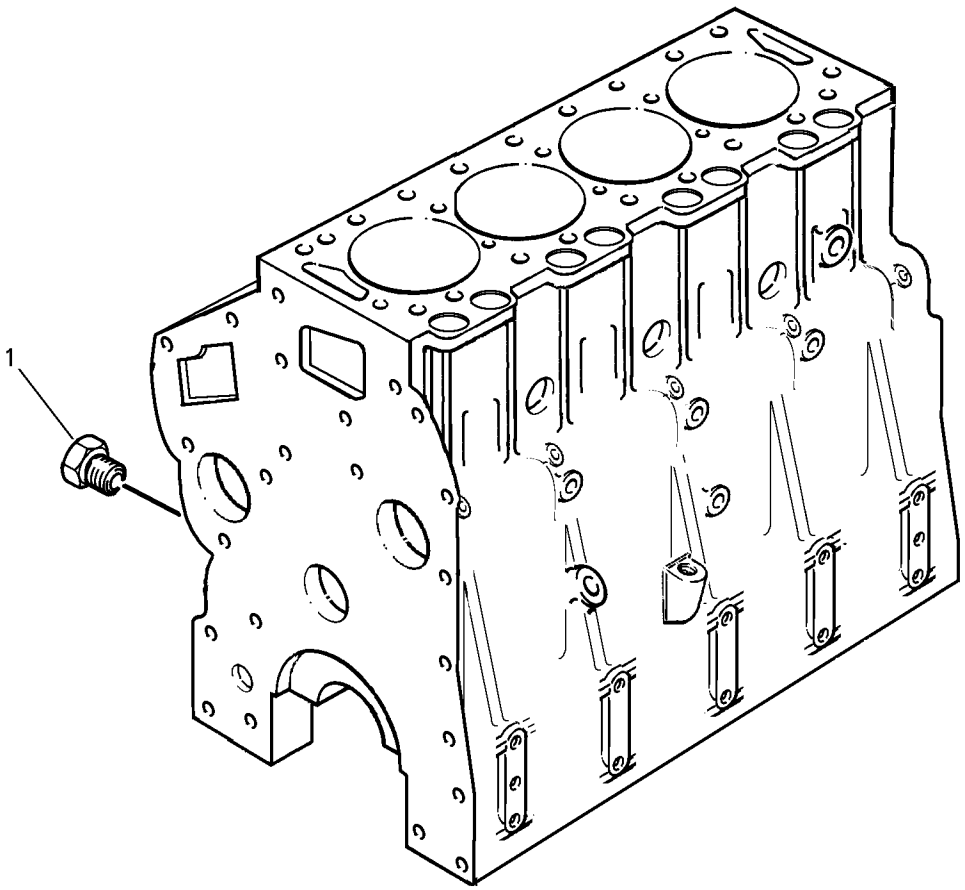

GRAPHIC #1 g00557449

BASIC ENGINE

153-0319 PULLEY GP-CRANKSHAFT

S/N: 3NW21000-UP

PART OF 144-6194 ENGINE AR-PRIMARY

SMCS-1205 **i01349647**

NOTE	REF NO	GRAPHIC REF	PART NUMBER	QTY	PART NAME 1 2 3 4 5 6 (PRODUCT LEVEL)	SEE PAGE
	1	1	**1B-8736**	1	KEY-WOODRUFF	
	2	1	**153-0314**	1	WASHER	
	3	1	**153-0317**	1	SCREW	
	4	1	**188-1052**	1	PULLEY-CRANKSHAFT	

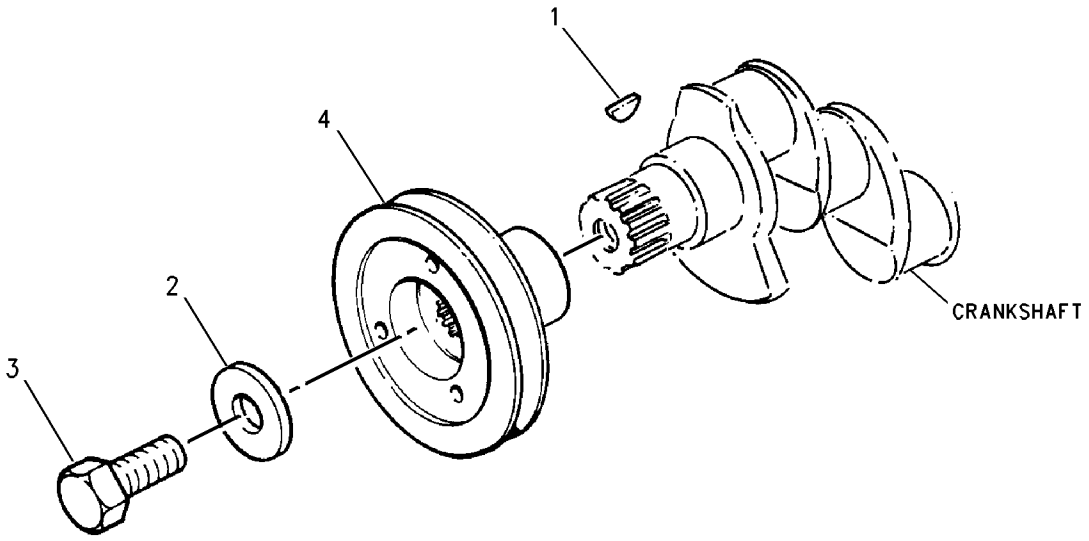

GRAPHIC #1 g00712414

217-2777 PULLEY GP-CRANKSHAFT

S/N: CSD1-UP
PART OF 179-1808 ENGINE AR-PRIMARY
AN ATTACHMENT

SMCS-1205 **i01649069**

NOTE	REF NO	GRAPHIC REF	PART NUMBER	QTY	PART NAME 1 2 3 4 5 6 (PRODUCT LEVEL)	SEE PAGE
	1	1	**153-5592**	4	NUT	
	2	1	**153-6492**	1	KEY-WOODRUFF	
	3	1	**153-6494**	1	GASKET	
	4	1	**153-6497**	1	SEAL-O-RING	
	5	1	**154-1880**	1	NUT	
	6	1	**154-1882**	2	PLATE	
	7	1	**180-6115**	4	BOLT	
	8	1	**217-2776**	1	PULLEY-CRANKSHAFT	

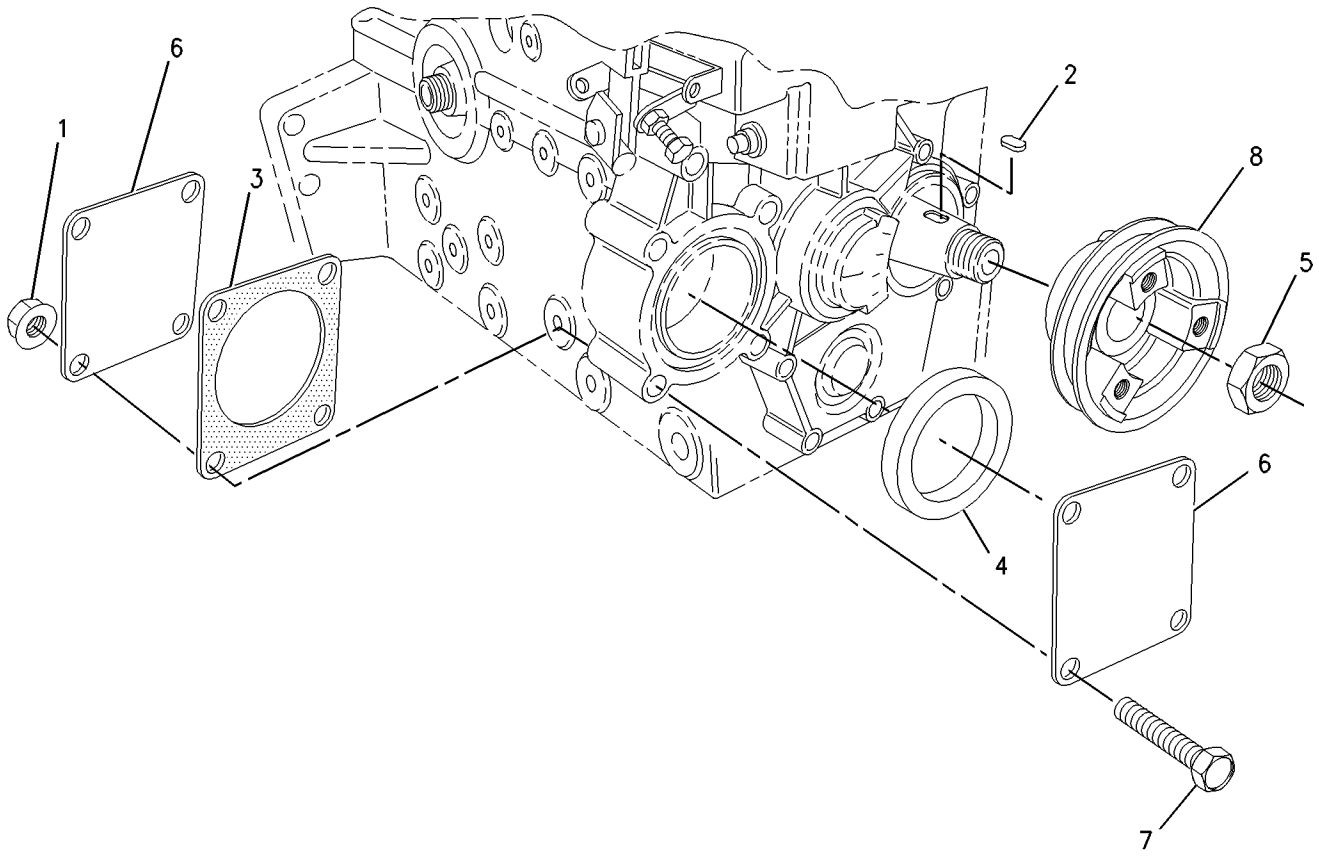

GRAPHIC #1 g00852781

BASIC ENGINE

217-7832 PULLEY GP-WATER PUMP

S/N: CSD1-UP
PART OF 179-1808 ENGINE AR-PRIMARY
AN ATTACHMENT

SMCS-1384 **i01649097**

NOTE	REF NO	GRAPHIC REF	PART NUMBER	QTY	PART NAME 1 2 3 4 5 6 (PRODUCT LEVEL)	SEE PAGE
	1	1	**154-1822**	1	PULLEY-WATER PUMP	

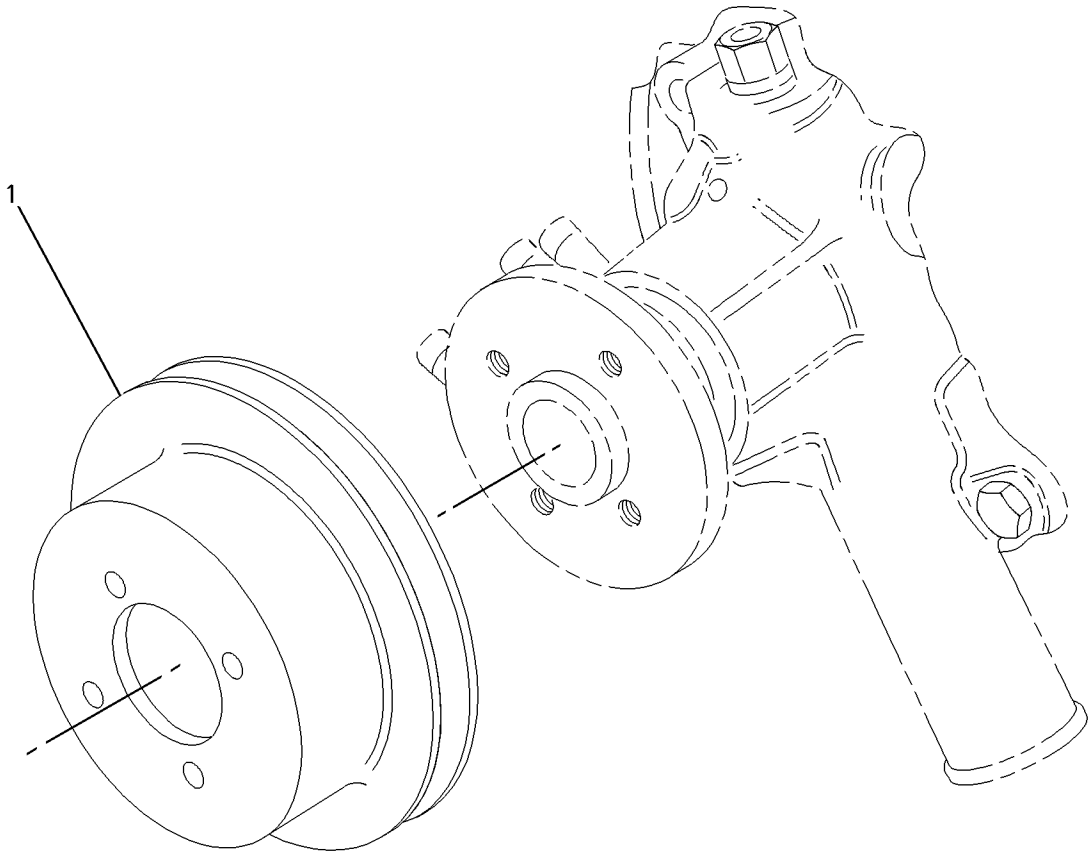

GRAPHIC #1 g00852560

171-2808 VALVE MECHANISM GP

S/N: 3NW21000-UP

PART OF 144-6194 ENGINE AR-PRIMARY

SMCS-1102, 1112, 1121, 1123, 1208, 1209 **i01423846**

NOTE	REF NO	GRAPHIC REF	PART NUMBER	QTY	PART NAME 1 2 3 4 5 6 (PRODUCT LEVEL)	SEE PAGE
	1	1	**6I-0291**	4	NUT (M8X1.25)	
	2	1	**152-6572**	1	ROCKER ARM AS	
	3	1	**152-6573**	1	SHAFT AS-ROCKER	
	4	1	**032-8062**	2	PLUG	
	5	1	**152-6574**	1	PIN	
	6	1	**152-6576**	3	SPRING	
	7	1	**152-6577**	8	BOLT	
	8	1	**152-6579**	2	SPACER	
	9	1	**152-6580**	2	CLIP	
	10	1	**152-6605**	8	LEVER AS	
	11	1	**191-9288**	4	BRACKET	
	12	1	**191-9289**	4	BRACKET	
	13	1	**152-6578**	8	NUT	
	14	1	**152-6581**	8	BOLT (M6X1.0X55MM)	
	15	1	**152-6582**	3	PLATE AS	
	16	1	**152-6584**	8	PUSHROD	
	17	1	**176-0633**	8	TAPPET	

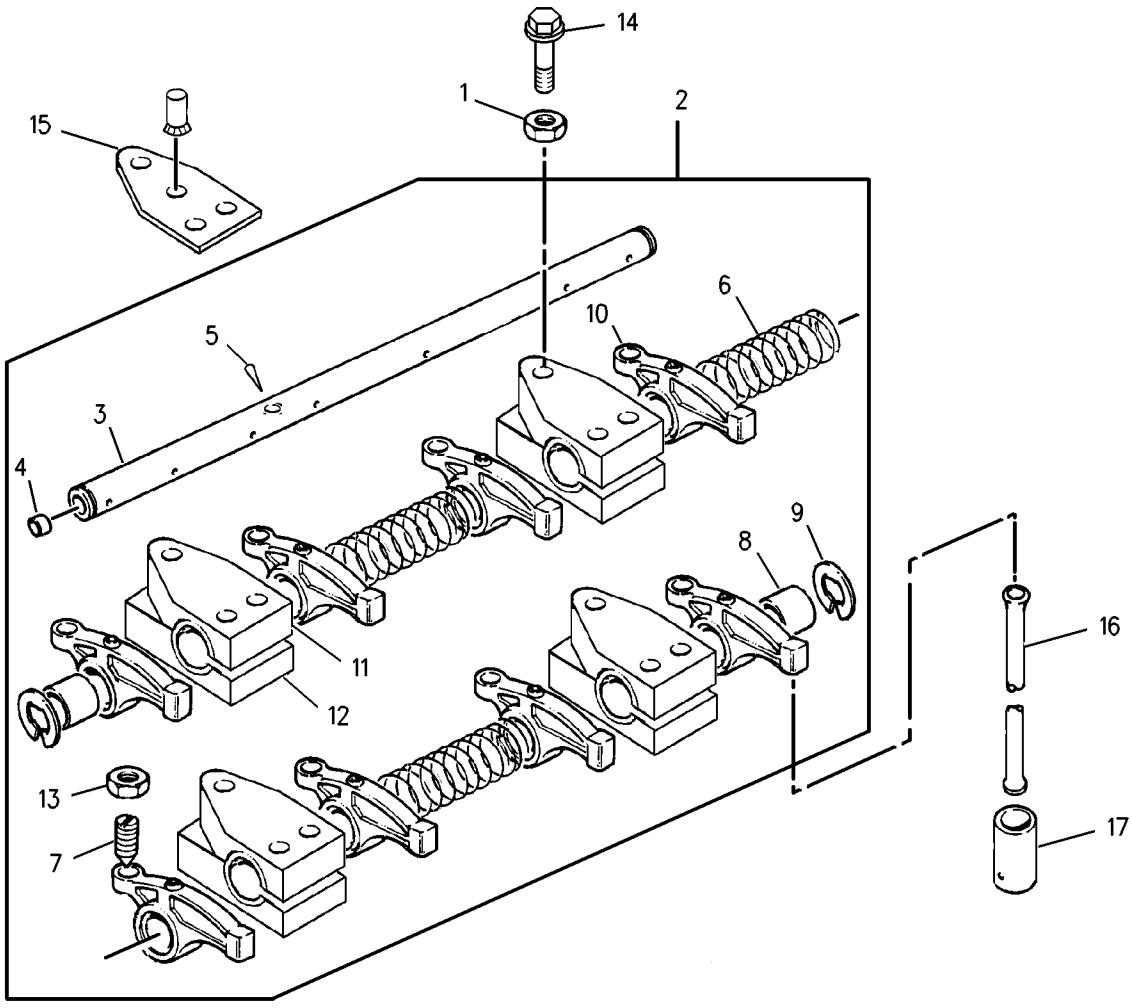

GRAPHIC #1 g00747444

217-2753 VALVE MECHANISM GP

S/N: CSD1-UP
PART OF 179-1808 ENGINE AR-PRIMARY
AN ATTACHMENT

SMCS-1102, 1112, 1121, 1123, 1208, 1209 **i01649067**

NOTE	REF NO	GRAPHIC REF	PART NUMBER	QTY	PART NAME 1 2 3 4 5 6 (PRODUCT LEVEL)	SEE PAGE
	1	1	**217-2749**	1	ROCKER ARM AS	
	2	1	**153-5587**	8	SCREW-ADJUSTING	
	3	1	**153-5590**	8	NUT	
	4	1	**153-6835**	1	SEAL-O-RING	
	5	1	**154-1240**	4	LEVER-RH	
	6	1	**154-1241**	4	LEVER-LH	
	7	1	**154-1242**	3	SPRING	
	8	1	**154-1243**	6	WASHER	
	9	1	**206-3499**	1	SHAFT-ROCKER ARM	
	10	1	**153-5961**	2	BOLT	
	11	1	**153-7988**	4	NUT	
	12	1	**154-1246**	4	STUD	
	13	1	**154-1248**	8	ROD	
	14	1	**154-1249**	8	TAPPET	
	15	1	**217-2752**	1	GASKET (VALVE BRACKET)	

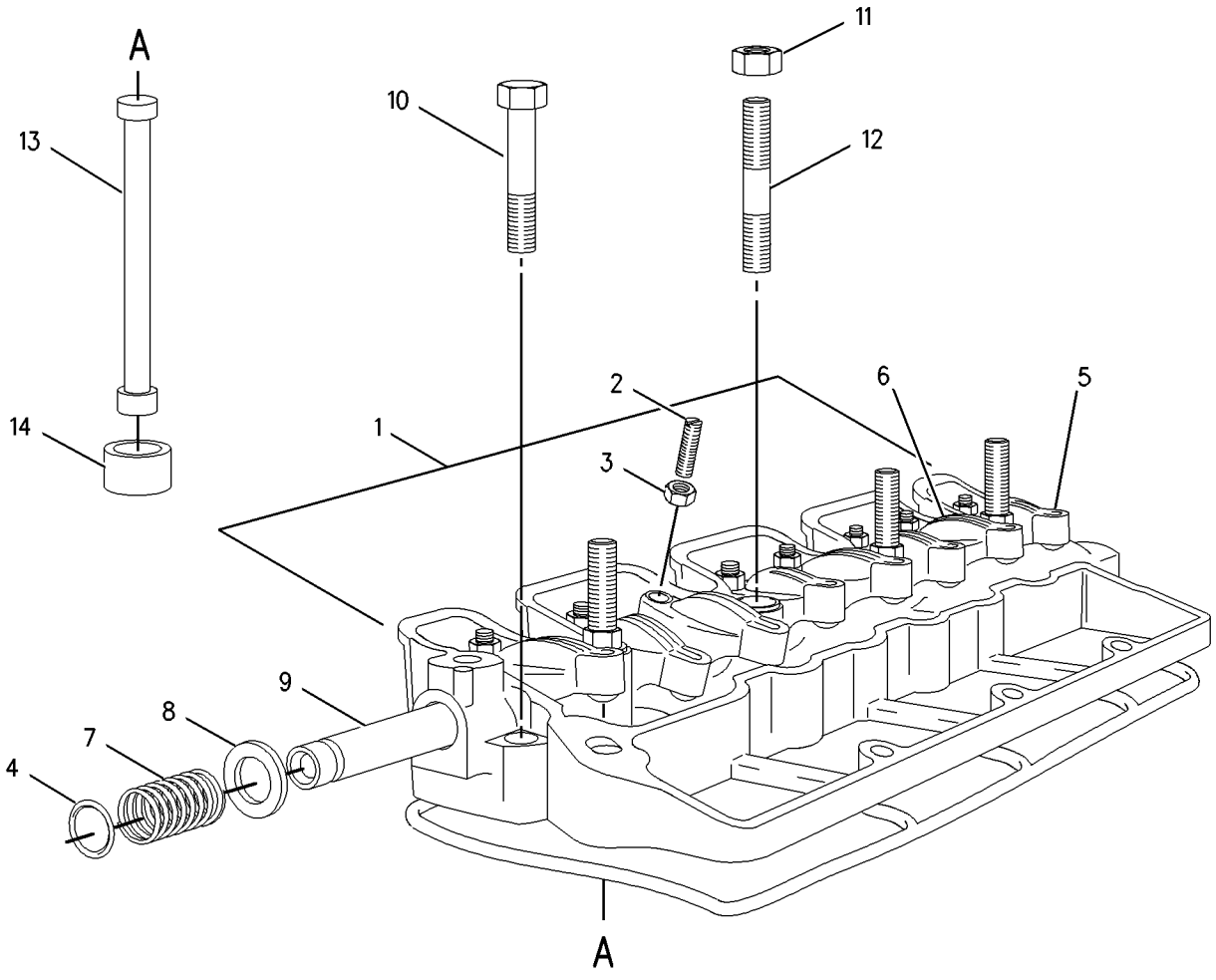

GRAPHIC #1 g00852633

164-7616 FILTER GP-ENGINE OIL

S/N: 3NW21000-UP

PART OF 144-6194 ENGINE AR-PRIMARY

SMCS-1308 **i01493721**

NOTE	REF NO	GRAPHIC REF	PART NUMBER	QTY	PART NAME 1 2 3 4 5 6 (PRODUCT LEVEL)	SEE PAGE
	1	1	**6I-1200**	1	SEAL-O-RING	
	2	1	**7W-2327**	1	FILTER AS-ENGINE OIL	
	3	1	**118-9145**	1	CONNECTOR	
	4	1	**204-2097**	1	HEAD AS-OIL FILTER	
	5	1	**164-7619**	1	SEAL-O-RING	
	6	1	**164-7620**	1	SEAL-O-RING	
	7	1	**164-7621**	1	BOLT	

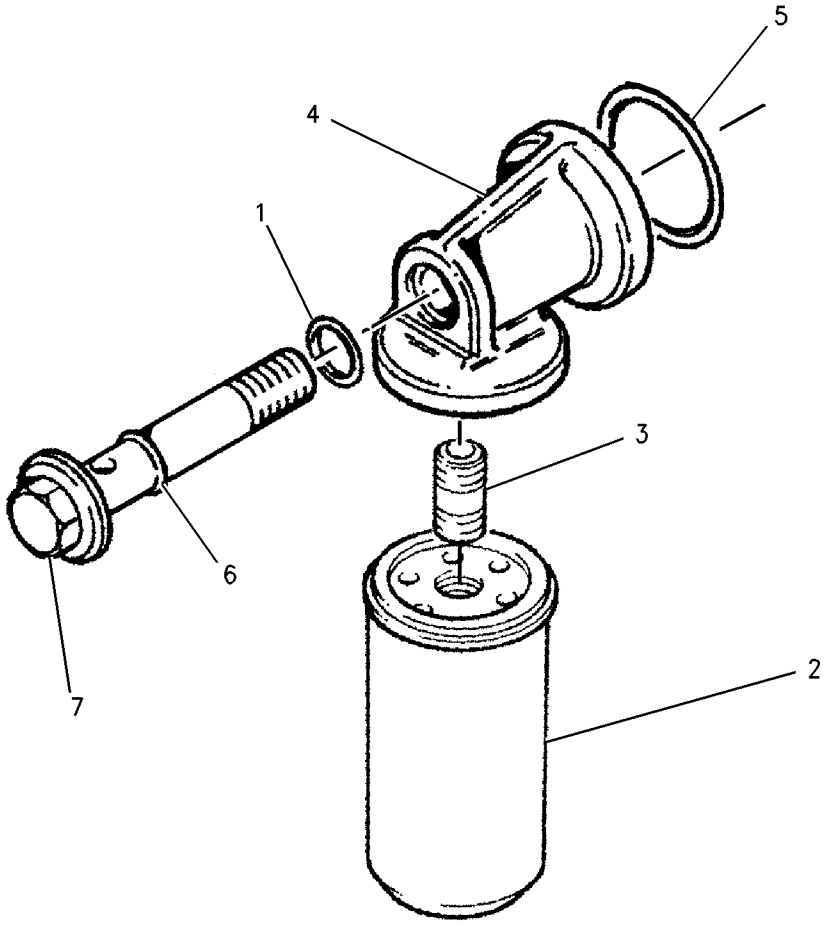

GRAPHIC #1 g00713911

171-2948 PUMP GP-ENGINE OIL

S/N: 3NW21000-UP

PART OF 144-6194 ENGINE AR-PRIMARY

SMCS-1304 **i01454341**

NOTE	REF NO	GRAPHIC REF	PART NUMBER	QTY	PART NAME 1 2 3 4 5 6 (PRODUCT LEVEL)	SEE PAGE
	2	1	**153-0983**	3	BOLT (M6X1.0X25MM)	
	3	1	**153-0985**	1	SEAL-O-RING	
	4	1	**153-0988**	1	VALVE AS	
	5	1	**153-0989**	1	PLUNGER	
	6	1	**153-0991**	1	SPRING	
	7	1	**153-0992**	1	CLIP	
	8	1	**188-9071**	1	PUMP AS-OIL	

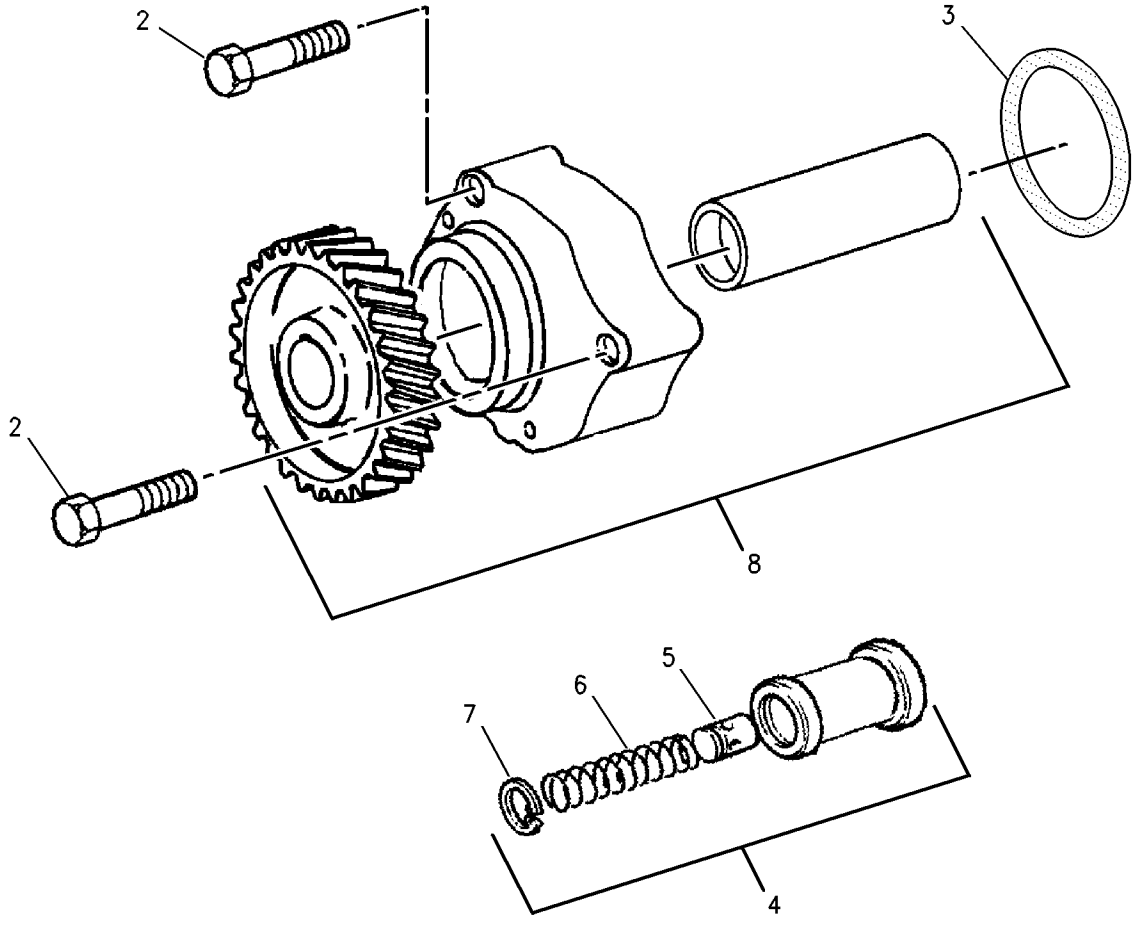

GRAPHIC #1 g00760832

164-7622 CONNECTION GP-WATER

S/N: 3NW21000-UP
PART OF 144-6194 ENGINE AR-PRIMARY
TYPE 1

SMCS-1380 **i01588985**

NOTE	REF NO	GRAPHIC REF	PART NUMBER	QTY	PART NAME 1 2 3 4 5 6 (PRODUCT LEVEL)	SEE PAGE
	1	1	**171-1187**	1	CONNECTOR	
	2	1	**123-2899**	2	BOLT (M10X1.5X40MM)	
	3	1	**198-8555**	1	GASKET	

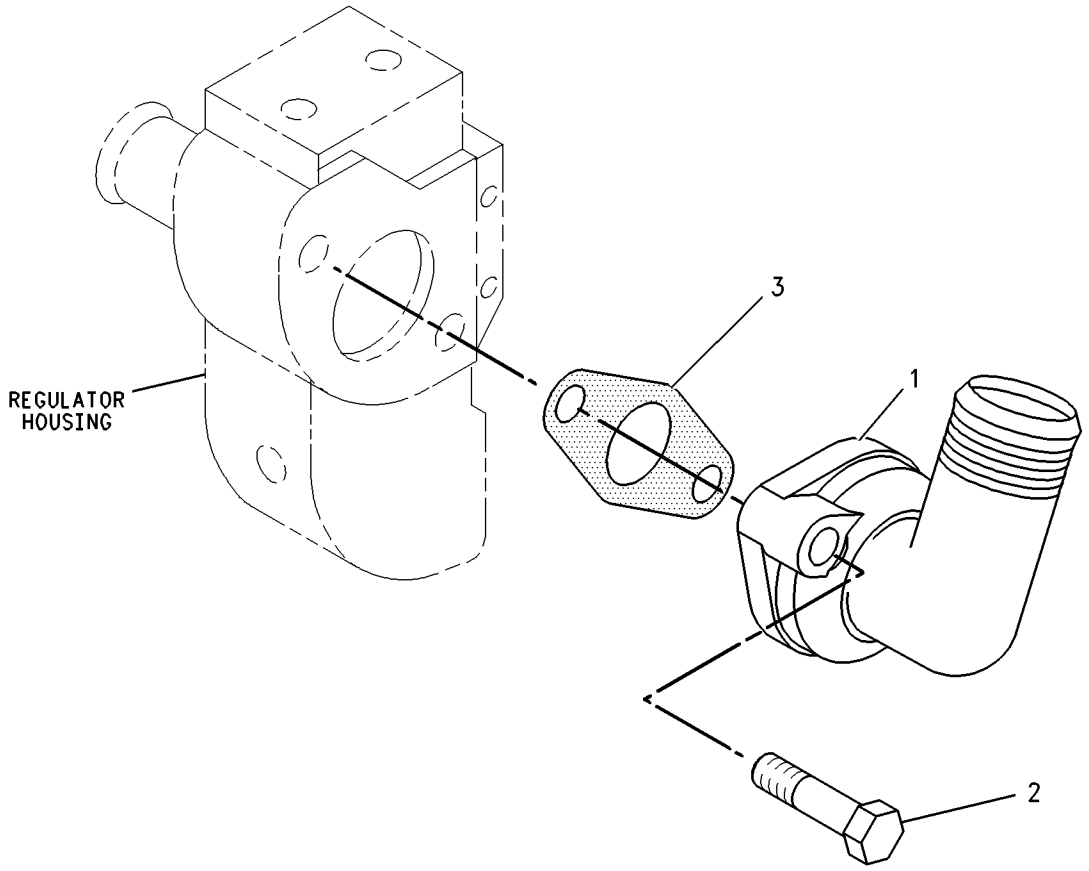

GRAPHIC #1 g00823942

164-7622 CONNECTION GP-WATER

S/N: 3NW21000-UP
PART OF 144-6194 ENGINE AR-PRIMARY
TYPE 2

SMCS-1380 **i01510216**

NOTE	REF NO	GRAPHIC REF	PART NUMBER	QTY	PART NAME 1 2 3 4 5 6 (PRODUCT LEVEL)	SEE PAGE
	1	1	**203-4740**	1	CONNECTION AS	
	1A	1	**203-4743**	1	SEAL	
	2	1	**123-2899**	2	BOLT (M10X1.5X40MM)	

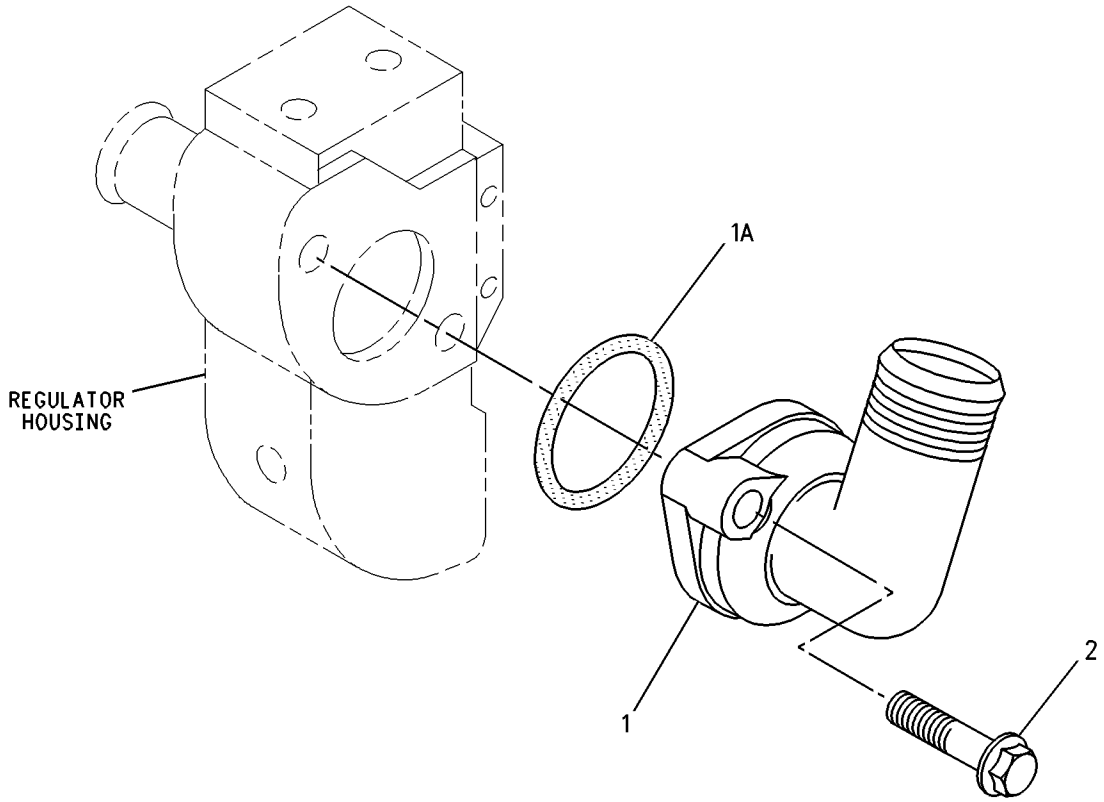

GRAPHIC #1 g00773503

COOLING SYSTEM

142-8864 FAN GP-BLOWER

S/N: 5FZ6700-UP

PART OF 142-8860 RADIATOR & HYD OIL COOLER GP

SMCS-1356, 1360 **i01135070**

NOTE	REF NO	GRAPHIC REF	PART NUMBER	QTY	PART NAME 1 2 3 4 5 6 (PRODUCT LEVEL)	SEE PAGE
	1	1	**142-8865**	1	FAN AS	
	2	1	**142-8870**	1	ADAPTER	
	3	1	**8T-4224**	4	WASHER-HARD (2MM THK)	
M	4	1	**8T-4908**	4	BOLT (M8X1.25X25MM)	

M-METRIC PART

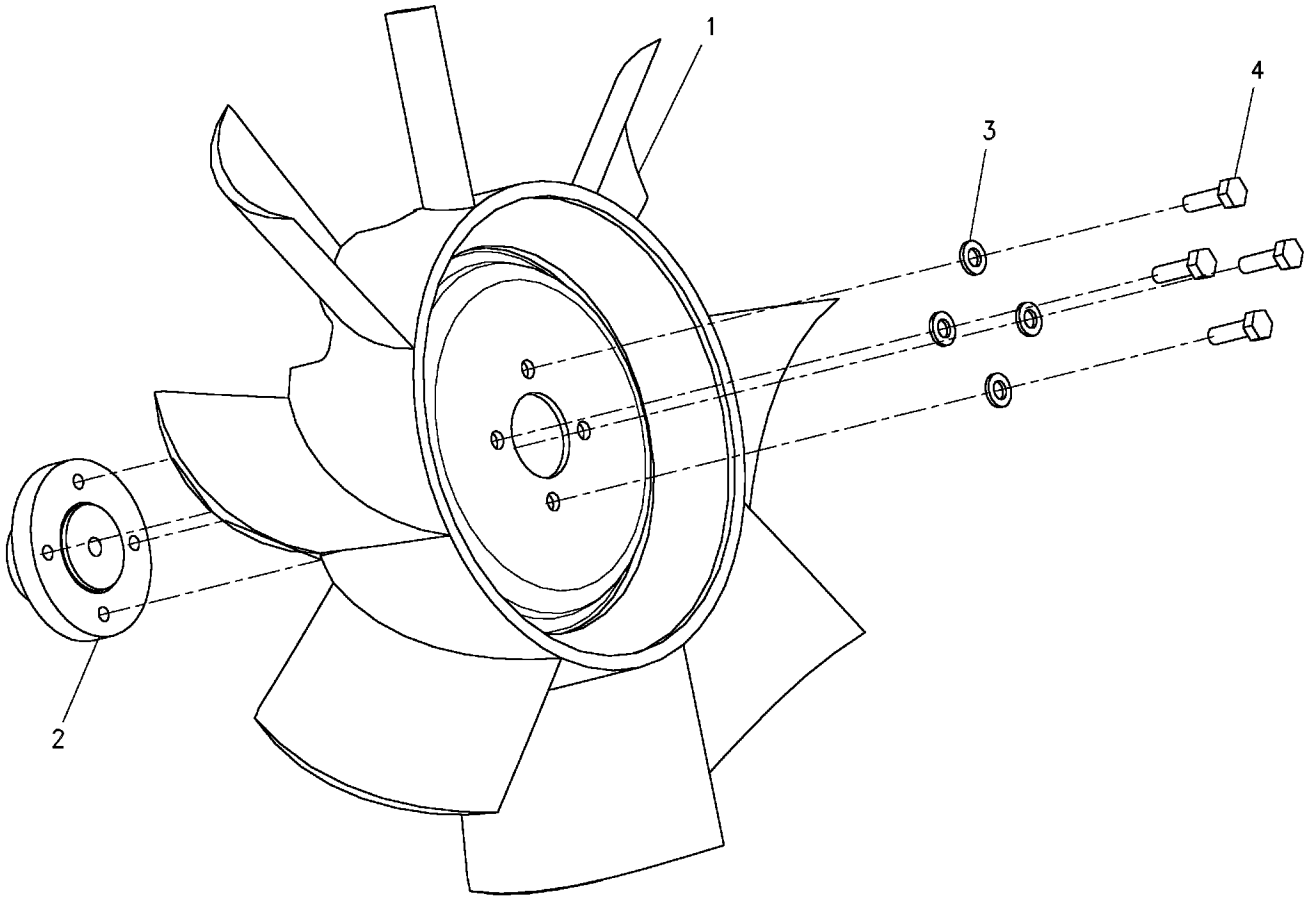

GRAPHIC #1 g00605081

COOLING SYSTEM

202-9014 FAN GP-BLOWER

S/N: CAB1-UP; CMB1-UP; 4NZ3400-UP; 5FZ7170-UP

PART OF 201-7803 RADIATOR & HYD OIL COOLER GP

SMCS-1356, 1360 **i01565148**

NOTE	REF NO	GRAPHIC REF	PART NUMBER	QTY	PART NAME 1 2 3 4 5 6 (PRODUCT LEVEL)	SEE PAGE
	1	1	**205-2325**	1	ADAPTER	
	2	1	**205-3727**	1	FAN AS	
	3	1	**8T-4224**	4	WASHER-HARD (8.8X16X2MM THK)	
M	4	1	**8T-4908**	4	BOLT (M8X1.25X25MM)	

M-METRIC PART

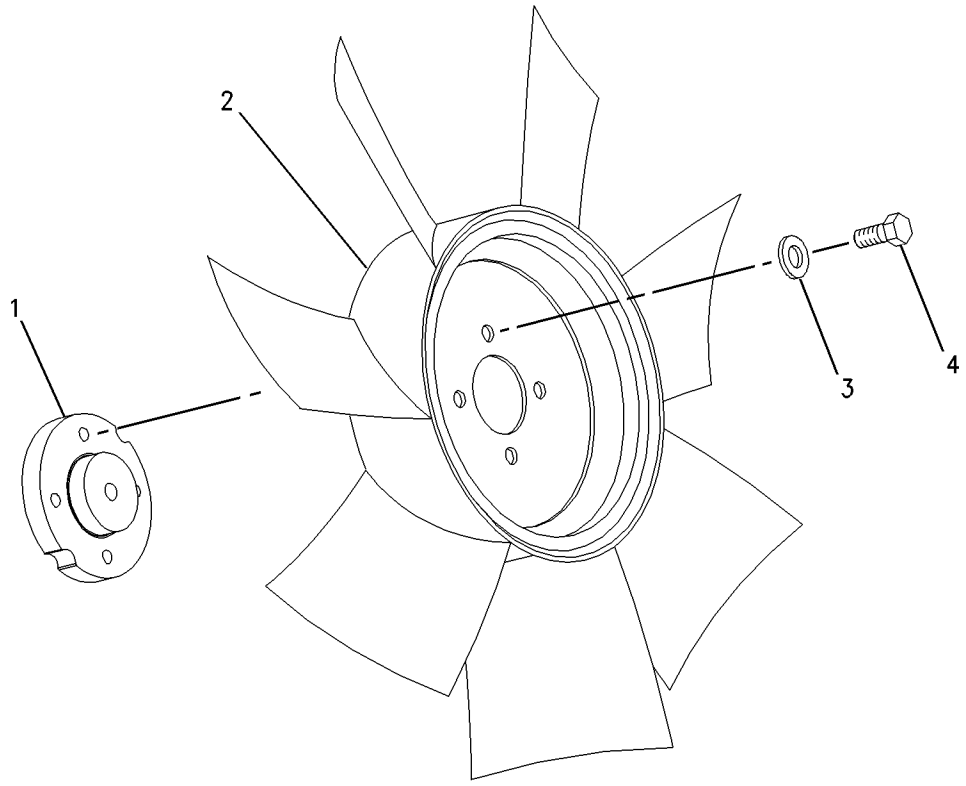

GRAPHIC #1 g00828169

COOLING SYSTEM

164-7633 PLUG GP-WATER LINES

S/N: 3NW21000-UP

PART OF 144-6194 ENGINE AR-PRIMARY

SMCS-1393 **i01082708**

NOTE	REF NO	GRAPHIC REF	PART NUMBER	QTY	PART NAME 1 2 3 4 5 6 (PRODUCT LEVEL)	SEE PAGE
	1	1	**7M-7410**	1	PLUG	

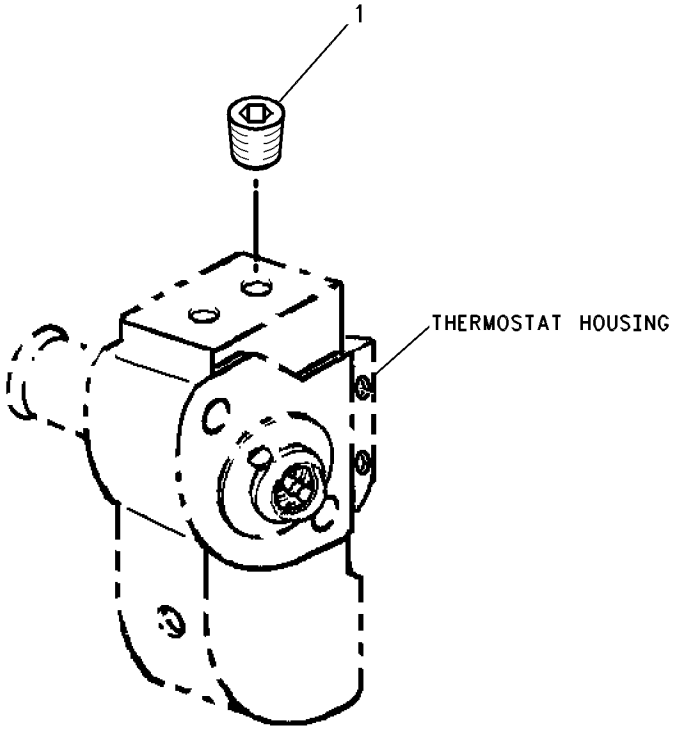

GRAPHIC #1 g00558658

COOLING SYSTEM

153-0165 PUMP GP-WATER

S/N: 3NW21000-UP

PART OF 144-6194 ENGINE AR-PRIMARY

SMCS-1361 **i01349468**

NOTE	REF NO	GRAPHIC REF	PART NUMBER	QTY	PART NAME 1 2 3 4 5 6 (PRODUCT LEVEL)	SEE PAGE
	1	1	**4W-8063**	1	REGULATOR-WATER TEMPERATURE	
	2	1	**6I-0291**	6	NUT	
	3	1	**6I-0631**	4	BOLT (M6X1.0X12MM)	
	4	1	**100-3753**	4	STUD	
	5	1	**124-3815**	1	BOLT (M6X1.0X12MM)	
	6	1	**127-2836**	2	CLAMP-HOSE	
	7	1	**153-0160**	1	GASKET-HOUSING	
	8	1	**173-1284**	1	HOUSING-REGULATOR	
	9	1	**153-0164**	1	PUMP GP-WATER	
	9A	1	**153-0178**	1	SEAL-O-RING	
	9B	1	**153-0177**	1	SEAL-O-RING	
	10	1	**153-0176**	1	HOSE	
	12	1	**153-0162**	1	SPACER	
	13	1	**153-0163**	1	PULLEY	
	14	1	**178-2452**	1	GASKET-WATER PUMP	

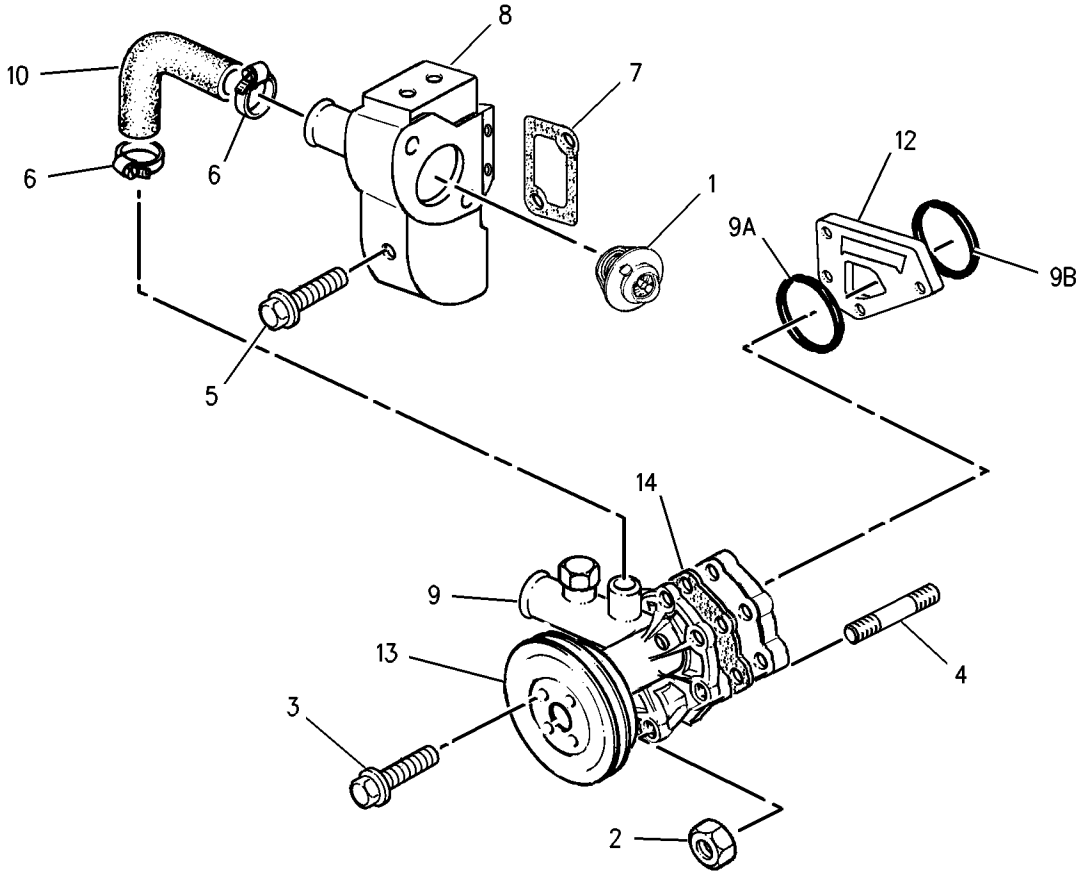

GRAPHIC #1 g00712354

154-1816 PUMP GP-WATER

S/N: CSD1-UP
PART OF 217-7384 PUMP GP-WATER
AN ATTACHMENT

SMCS-1361 **i01705193**

NOTE	REF NO	GRAPHIC REF	PART NUMBER	QTY	PART NAME 1 2 3 4 5 6 (PRODUCT LEVEL)	SEE PAGE
	1	1	**154-1818**	1	PLATE	
	2	1	**154-1819**	1	GASKET-WATER PUMP	
	3	1	**154-1820**	3	BOLT	
	4	1	**217-7381**	1	PLUG	

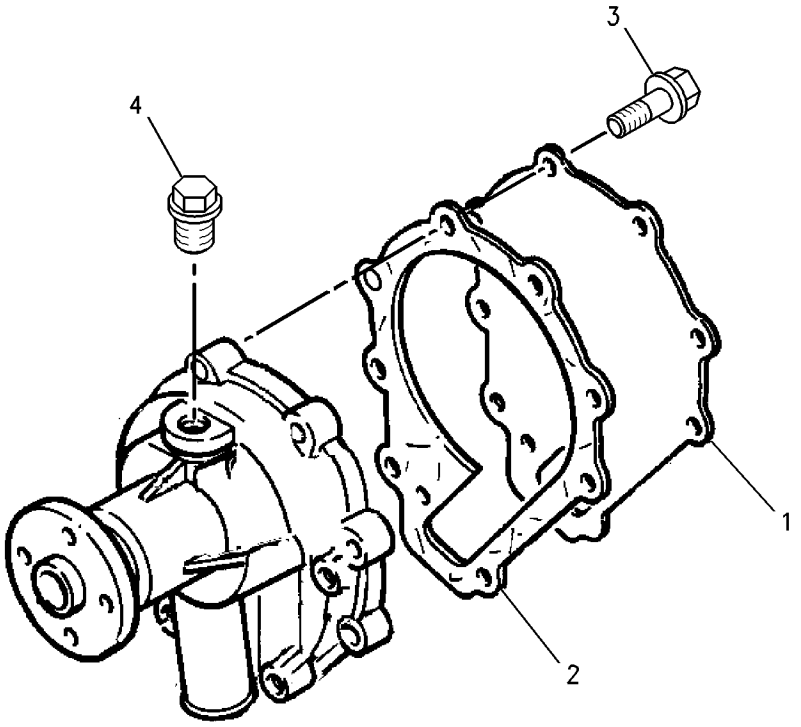

GRAPHIC #1 g00702044

MEMORANDA

217-7384 PUMP GP-WATER

S/N: CSD1-UP
PART OF 179-1808 ENGINE AR-PRIMARY
AN ATTACHMENT

SMCS-1361 **i01649089**

NOTE	REF NO	GRAPHIC REF	PART NUMBER	QTY	PART NAME 1 2 3 4 5 6 (PRODUCT LEVEL)	SEE PAGE
Y	1	1	**154-1816**	1	PUMP GP-WATER	74
	2	1	**217-7381**	1	PLUG	
	3	1	**154-1823**	1	HOSE	
	4	1	**153-5960**	3	NUT	
	5	1	**154-2700**	1	HOUSING-REGULATOR	
	6	1	**153-5967**	1	COCK	
	7	1	**153-6856**	2	BOLT	
	8	1	**154-1826**	1	REGULATOR-WATER TEMPERATURE	
	9	1	**154-1828**	1	GASKET-COVER	
	10	1	**165-2141**	2	BOLT	
	11	1	**215-2616**	1	GASKET (WATER PUMP)	
	12	1	**215-2617**	1	GASKET	
	13	1	**217-7379**	1	HOUSING	
	14	1	**154-1824**	2	CLAMP-HOSE	
	15	1	**153-5961**	4	BOLT	

Y-SEPARATE ILLUSTRATION

217-7384 **PUMP GP-WATER** ***(contd.)*** **i01649089**

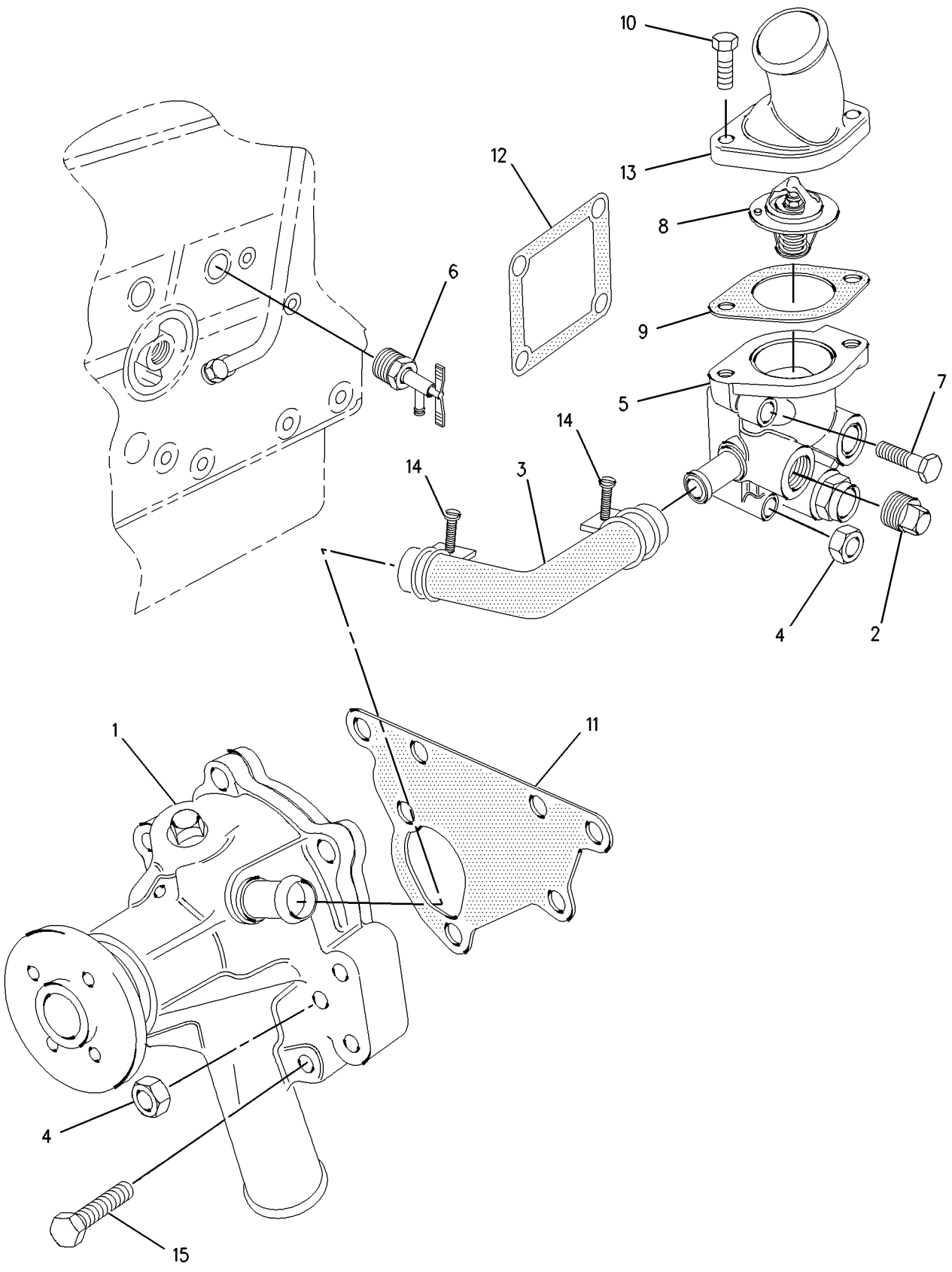

GRAPHIC #1 g00852511

COOLING SYSTEM

142-8860 RADIATOR & HYD OIL COOLER GP

S/N: 5FZ6700-7169

PART OF 142-8859 RADIATOR & OIL COOLER MTG GP

SMCS-1351, 1356, 1386 **i01627498**

NOTE	REF NO	GRAPHIC REF	PART NUMBER	QTY	PART NAME 1 2 3 4 5 6 (PRODUCT LEVEL)	SEE PAGE
	1	1	**1Q-6031**	1	GAUGE-SIGHT	
	2	1	**6V-0394**	1	CONNECTOR-PORT	
	3	1	**069-4080**	1	FITTING-COUPLING	
	4	1	**126-5027**	1	CAP AS-RADIATOR	
	5	1	**142-8861**	1	RADIATOR & HYD OIL COOLER AS	
	6	1	**142-8862**	1	SHROUD AS	
	7	1	**142-8863**	1	GUARD AS-FAN	
Y	8	1	*142-8864*	1	FAN GP-BLOWER	70
Y	9	1	**188-0128**	1	MOTOR GP-GEAR (FAN)	368
I	10	1	**142-8969**	1	HOSE AS	
	11	1	*148-8347*	2	ELBOW GP	
					(EACH INCLUDES)	
		1	**6V-9007**	1	ELBOW	
		1	**3D-2824**	1	SEAL-O-RING	
		1	**6V-9746**	1	SEAL-O-RING	
	12	1	*148-8385*	1	ELBOW GP	
		1	**3J-7354**	1	SEAL-O-RING	
		1	**4J-5477**	1	SEAL-O-RING	
		1	**6V-9000**	1	ELBOW	
	13	1	*148-8390*	2	ELBOW GP	
					(EACH INCLUDES)	
		1	**6V-8626**	1	ELBOW	
		1	**2M-9780**	1	SEAL-O-RING	
		1	**7J-9108**	1	SEAL-O-RING	
	14	1	**4J-7533**	1	SEAL-O-RING	
	15	1	**7M-7410**	1	PLUG (3/8-18 NPTF)	
	16	1	**7X-7729**	10	WASHER (11X25X3MM THK)	
	17	1	**8T-4121**	6	WASHER-HARD (11X21X2.5MM THK)	
M	18	1	**8T-4133**	5	NUT (M10X1.5 THD)	
M	19	1	**8T-4196**	11	BOLT (M10X1.5X35MM)	
	20	1	**8T-4224**	1	WASHER-HARD (8.8X16X2MM THK)	
M	21	1	**8T-7547**	1	BOLT (M8X1.25X30MM)	

I-SEE HOSE FABRICATION GUIDE
M-METRIC PART
Y-SEPARATE ILLUSTRATION

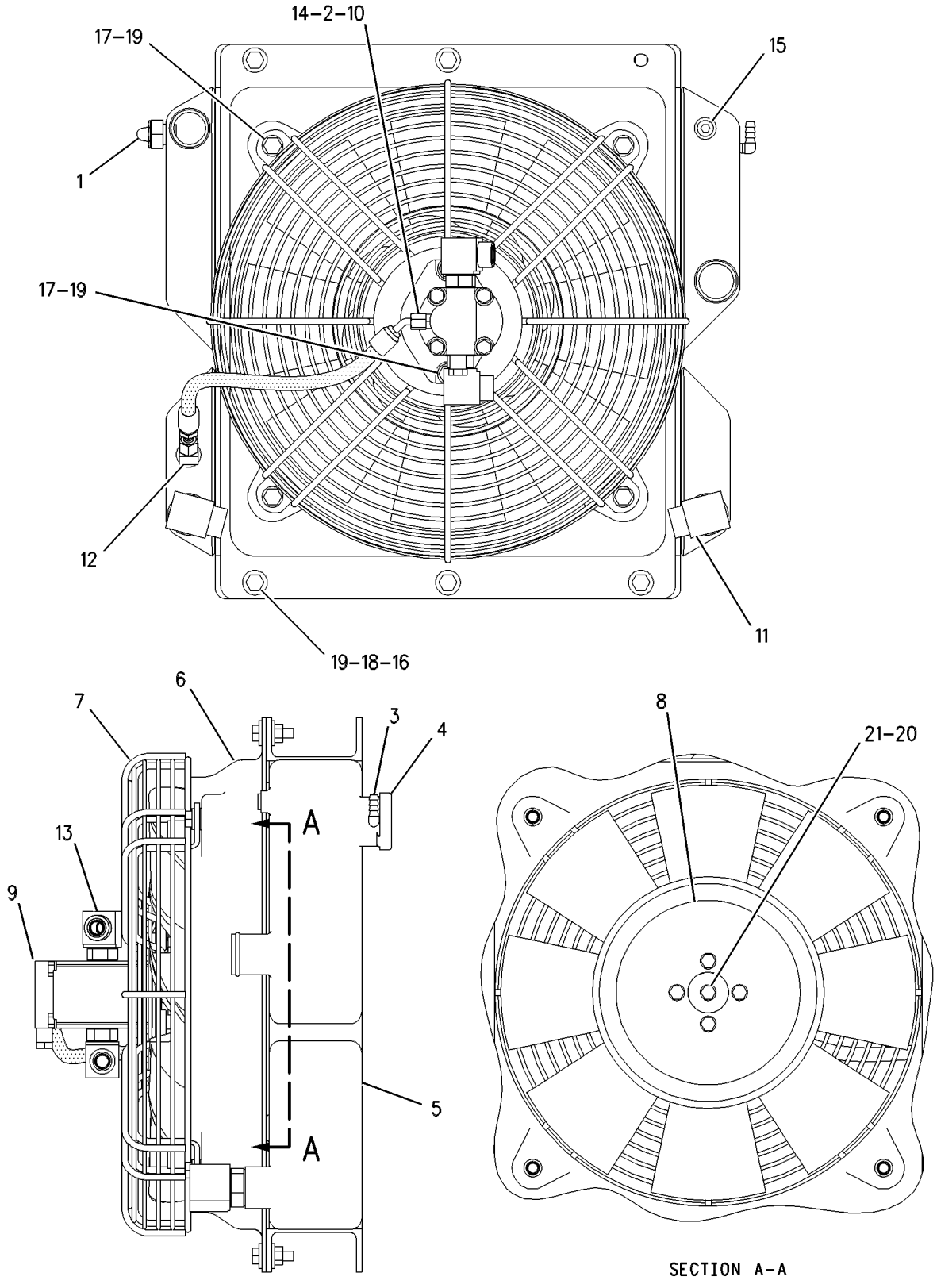

GRAPHIC #1

g00609519

201-7803 RADIATOR & HYD OIL COOLER GP

S/N: CAB1-UP; CMB1-UP; 4NZ3400-UP; 5FZ7170-UP

PART OF 219-4387, 220-8123 RADIATOR & HYD OIL COOLER GP, 185-9949, 201-7800 RADIATOR & OIL COOLER MTG GP

SMCS-1351, 1356, 1386 **i01678528**

NOTE	REF NO	GRAPHIC REF	PART NUMBER	QTY	PART NAME 1 2 3 4 5 6 (PRODUCT LEVEL)	SEE PAGE
	1	1	**036-1865**	1	CAP AS-RADIATOR	
	2	1	**069-4080**	1	FITTING-COUPLING	
	3	1	**142-8861**	1	RADIATOR & HYD OIL COOLER AS	
	4	1	**202-9013**	1	SHROUD AS	
Y	5	1	*202-9014*	1	FAN GP-BLOWER	71
	6	1	**207-6154**	1	GAUGE-SIGHT	
	7	1	**208-4704**	1	GUARD AS-FAN	
	8	1	**7M-7410**	1	PLUG (3/8-18 NPTF)	
	9	1	**7X-7729**	10	WASHER (11X25X3MM THK)	
	10	1	**8T-4121**	4	WASHER-HARD (11X21X2.5MM THK)	
M	11	1	**8T-4133**	5	NUT (M10X1.5 THD)	
M	12	1	**8T-4196**	9	BOLT (M10X1.5X35MM)	

M-METRIC PART
Y-SEPARATE ILLUSTRATION

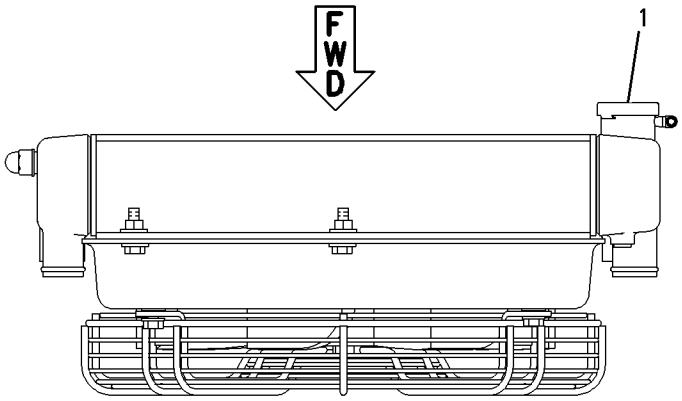

TOP VIEW

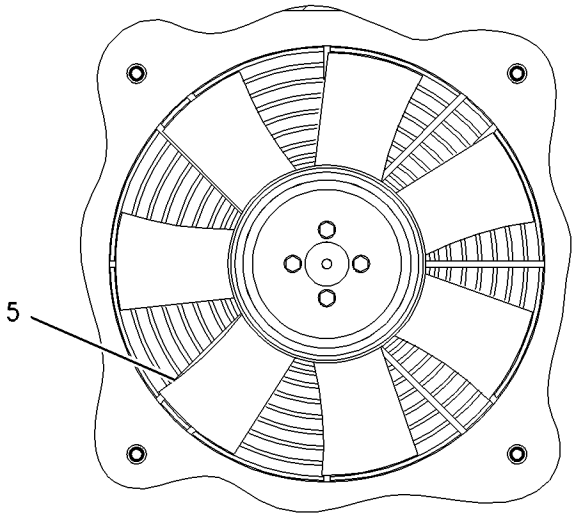

SECTION A-A

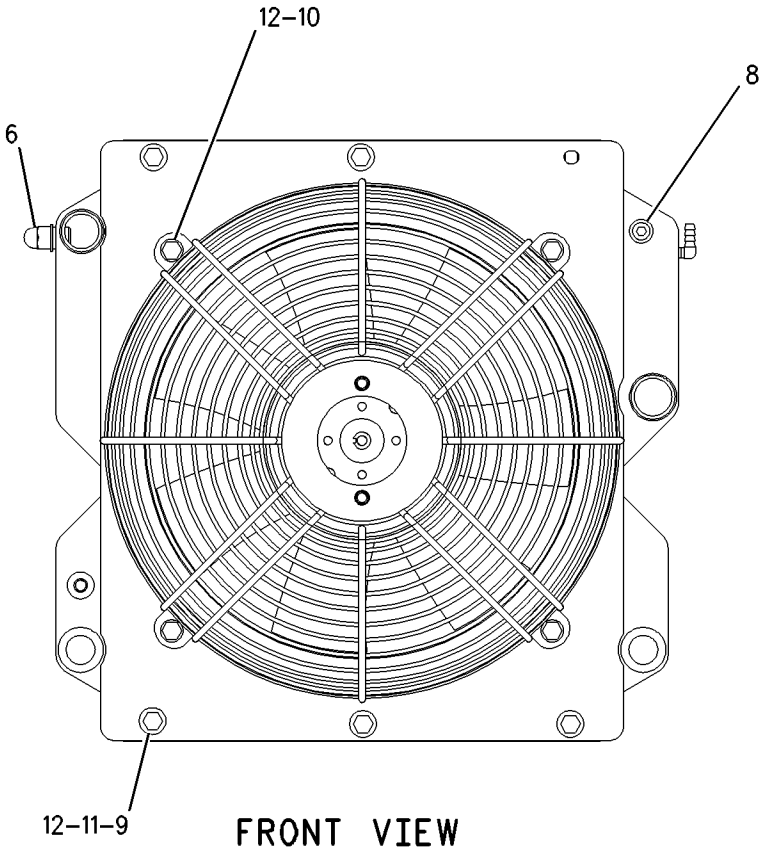

FRONT VIEW

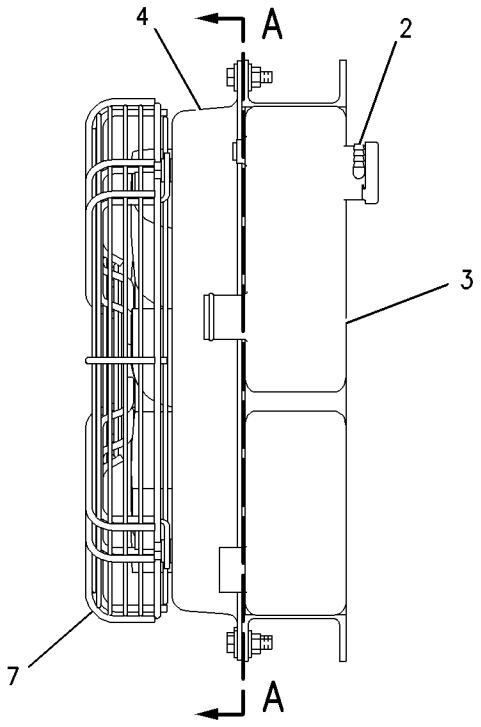

LEFT SIDE VIEW

GRAPHIC #1

g00866562

219-4387 RADIATOR & HYD OIL COOLER GP

S/N: CAB1-UP

PART OF 219-4385 INSTALLATION AR-ENGINE

SMCS-1351, 1356, 1386 **i01742794**

NOTE	REF NO	GRAPHIC REF	PART NUMBER	QTY	PART NAME 1 2 3 4 5 6 (PRODUCT LEVEL)	SEE PAGE
	1	1	**8T-4983**	4	CLAMP-HOSE	
	2	1	**124-6264**	2	CLAMP-HOSE	
	3	1	**142-8866**	1	RECOVERY GP-COOLANT	
	3A	1	**169-6715**	1	CAP-VENTED	
	4	1	**222-5723**	1	HOSE	
Y	5	1	*201-7803*	1	RADIATOR & HYD OIL COOLER GP	80
	6	1	**205-4585**	1	HOSE	
	7	1	**205-6383**	1	TUBE	
	8	1	**211-3443**	1	HOSE	
	9	1	**143-4535**	1	CLIP (SLOT)	
	10	1	**143-4536**	1	CLIP (TAB)	
	11	1	**1P-4278**	2	CLAMP-HOSE	
	12	1	**4K-8864**	5	CLIP	
	13	1	**5P-2369**	1	CLIP	
	14	1	**7X-7729**	14	WASHER (11X25X3MM THK)	
	15	1	**8T-4121**	4	WASHER-HARD (11X21X2.5MM THK)	
M	16	1	**8T-4133**	7	NUT (M10X1.5 THD)	
M	17	1	**8T-4136**	1	BOLT (M10X1.5X25MM)	
M	18	1	**8T-4137**	2	BOLT (M10X1.5X20MM)	
M	19	1	**8T-4196**	1	BOLT (M10X1.5X35MM)	
	20	1	**8T-4224**	2	WASHER-HARD (8.8X16X2MM THK)	
M	21	1	**8T-5005**	1	BOLT (M10X1.50X70MM)	
M	22	1	**8T-5091**	2	BOLT (M8X1.25X20MM)	
M	23	1	**8T-6466**	5	BOLT (M10X1.50X60MM)	
E	24	1	**5P-1420**		HOSE (236CM)	

E-ORDER BY THE CENTIMETER
M-METRIC PART
Y-SEPARATE ILLUSTRATION

219-4387 RADIATOR & HYD OIL COOLER GP *(contd.)* i01742794

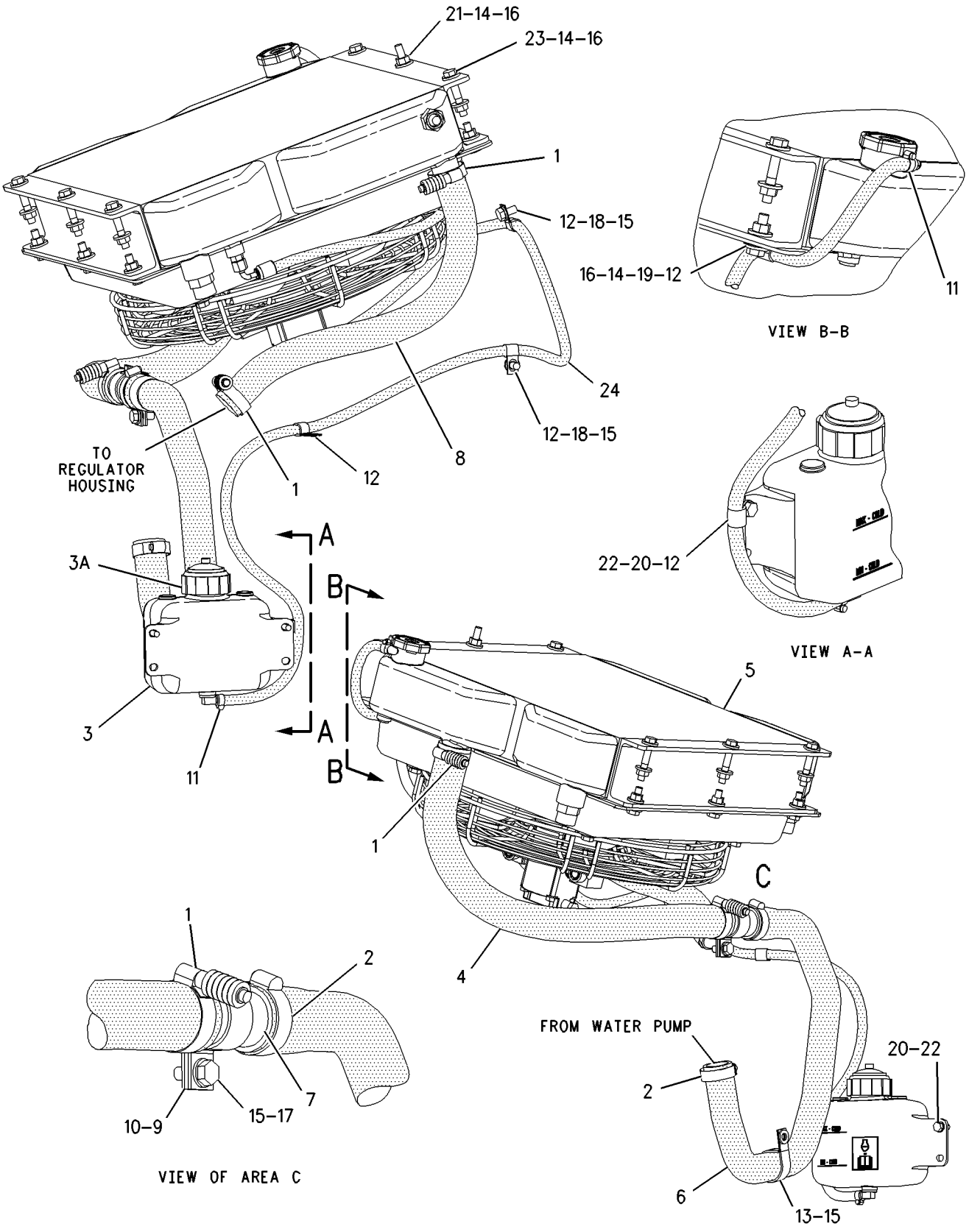

GRAPHIC #1 g00895085

220-8123 RADIATOR & HYD OIL COOLER GP

S/N: CMB1-UP

PART OF 219-4375 INSTALLATION AR-ENGINE

SMCS-1351, 1356, 1386 **i01742770**

NOTE	REF NO	GRAPHIC REF	PART NUMBER	QTY	PART NAME 1 2 3 4 5 6 (PRODUCT LEVEL)	SEE PAGE
	1	1	**124-6264**	3	CLAMP-HOSE	
	2	1	**142-8866**	1	RECOVERY GP-COOLANT	
	2A	1	**169-6715**	1	CAP-VENTED	
	3	1	**142-8867**	1	HOSE	
	4	1	**142-8868**	1	HOSE	
Y	5	1	*201-7803*	1	RADIATOR & HYD OIL COOLER GP	80
	6	1	**1P-4278**	2	CLAMP-HOSE	
	7	1	**4K-8864**	5	CLIP	
	8	1	**7X-7729**	14	WASHER (11X25X3MM THK)	
	9	1	**8T-4121**	2	WASHER-HARD (11X21X2.5MM THK)	
M	10	1	**8T-4133**	7	NUT (M10X1.5 THD)	
M	11	1	**8T-4137**	2	BOLT (M10X1.5X20MM)	
M	12	1	**8T-4196**	1	BOLT (M10X1.5X35MM)	
	13	1	**8T-4224**	2	WASHER-HARD (8.8X16X2MM THK)	
M	14	1	**8T-5005**	1	BOLT (M10X1.50X70MM)	
M	15	1	**8T-5091**	2	BOLT (M8X1.25X20MM)	
M	16	1	**8T-6466**	5	BOLT (M10X1.50X60MM)	
	17	1	**5P-1420**		HOSE (236CM)	
	18	1	**8T-4983**	1	CLAMP-HOSE	

M-METRIC PART
Y-SEPARATE ILLUSTRATION

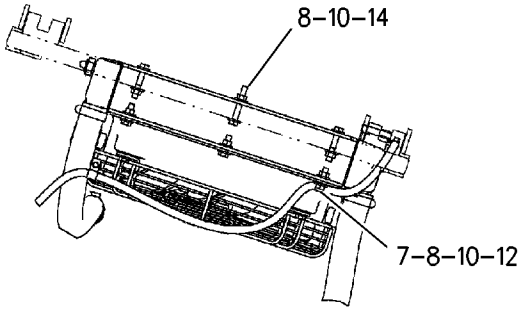

SECTION C–C

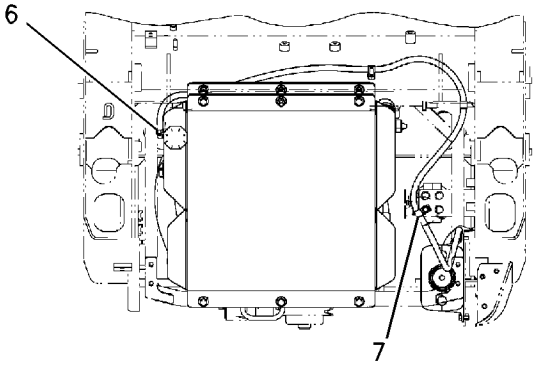

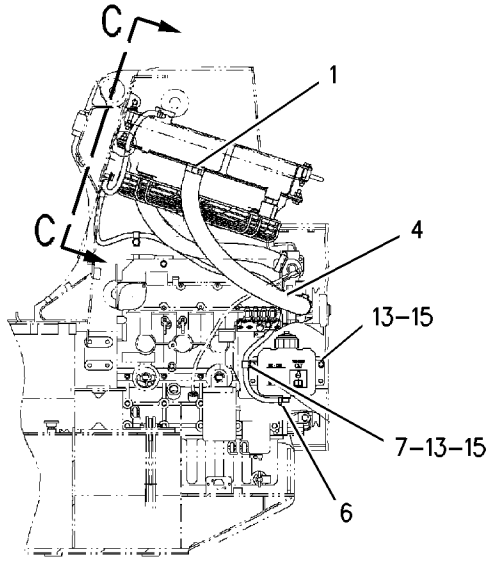

SECTION B–B

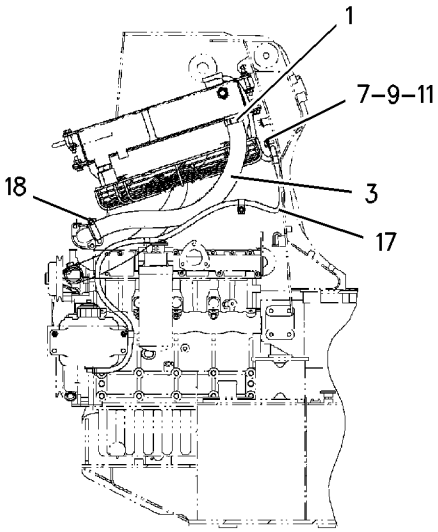

SECTION A–A

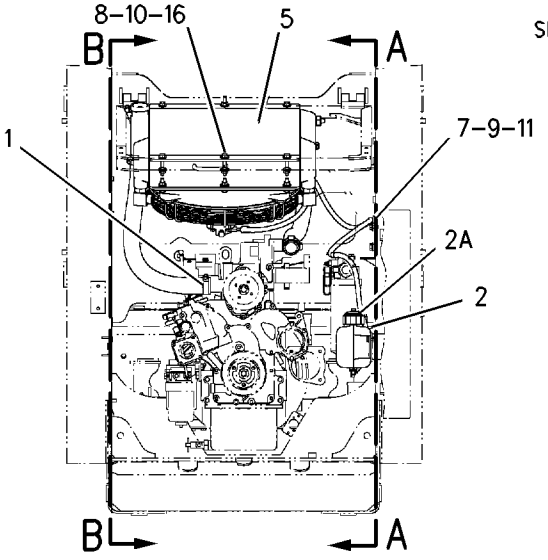

GRAPHIC #1 g00857537

142-8859 RADIATOR & OIL COOLER MTG GP

S/N: 5FZ6700-7169

PART OF 200-1005 INSTALLATION AR-ENGINE

SMCS-1351, 1354 **i01512665**

NOTE	REF NO	GRAPHIC REF	PART NUMBER	QTY	PART NAME 1 2 3 4 5 6 (PRODUCT LEVEL)	SEE PAGE
	1	1	**124-6264**	4	CLAMP-HOSE	
Y	2	1	*142-8860*	1	RADIATOR & HYD OIL COOLER GP	78
	3	1	**142-8866**	1	RECOVERY GP-COOLANT	
	3A	1	**169-6715**	1	CAP-VENTED	
	4	1	**142-8867**	1	HOSE	
	5	1	**142-8868**	1	HOSE	
	6	1,2	**1P-4278**	2	CLAMP-HOSE	
	7	1,2	**4K-8864**	5	CLIP	
	8	1,2	**7X-7729**	14	WASHER (11X25X3MM THK)	
	9	1	**8T-4121**	2	WASHER-HARD (11X21X2.5MM THK)	
M	10	1,2	**8T-4133**	7	NUT (M10X1.5 THD)	
M	11	1	**8T-4137**	2	BOLT (M10X1.5X20MM)	
M	12	2	**8T-4196**	1	BOLT (M10X1.5X35MM)	
	13	1	**8T-4224**	2	WASHER-HARD (8.8X16X2MM THK)	
M	14	2	**8T-5091**	2	BOLT (M8X1.25X20MM)	
M	15	1	**8T-5005**	1	BOLT (M10X1.50X70MM)	
M	16	1	**8T-6466**	5	BOLT (M10X1.50X60MM)	
E	17	1	**5P-1420**		HOSE (204CM)	
	18	1	**8T-4983**	1	CLAMP-HOSE (32-54 MM RANGE)	

E-ORDER BY THE CENTIMETER
M-METRIC PART
Y-SEPARATE ILLUSTRATION

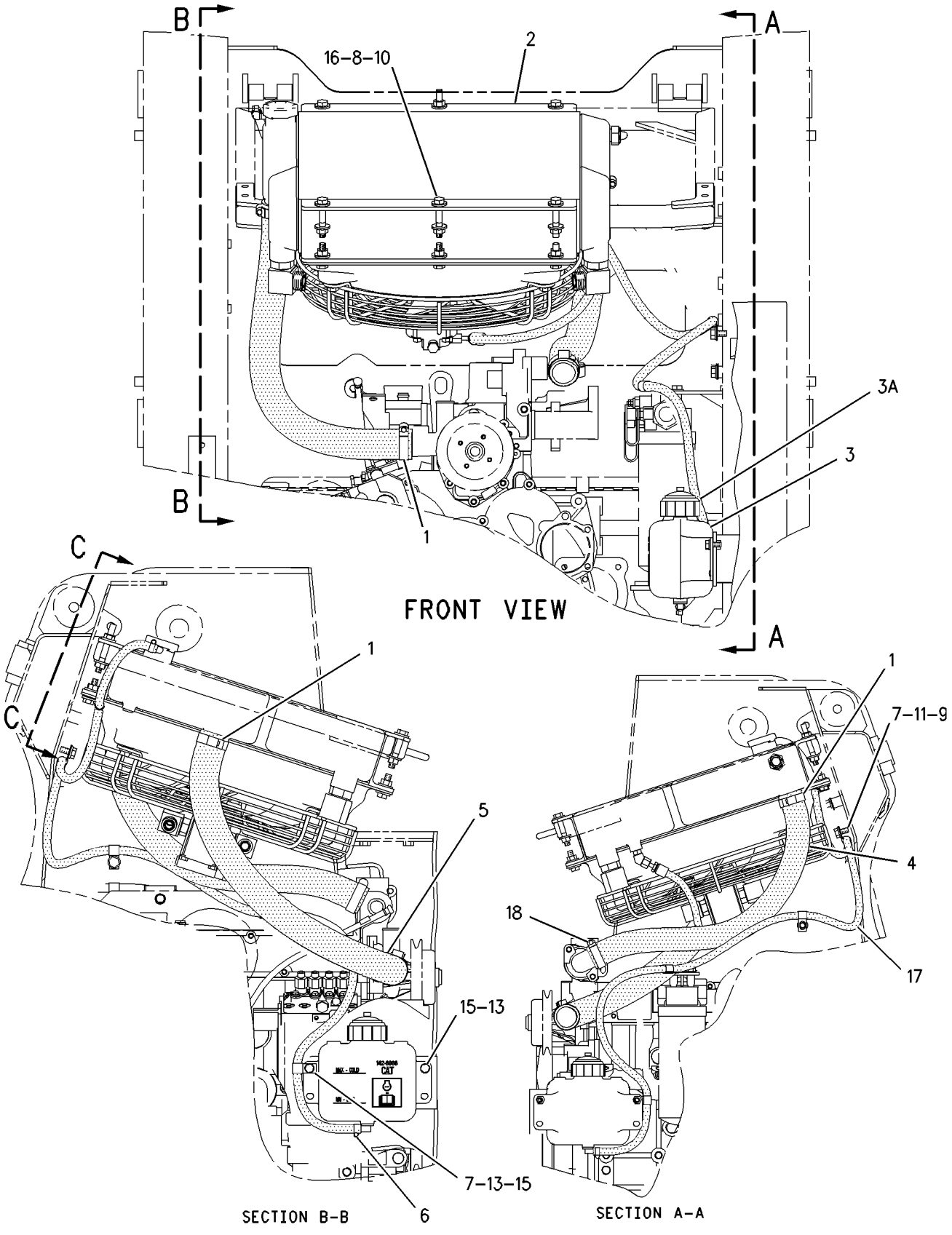

GRAPHIC #1

g00785043

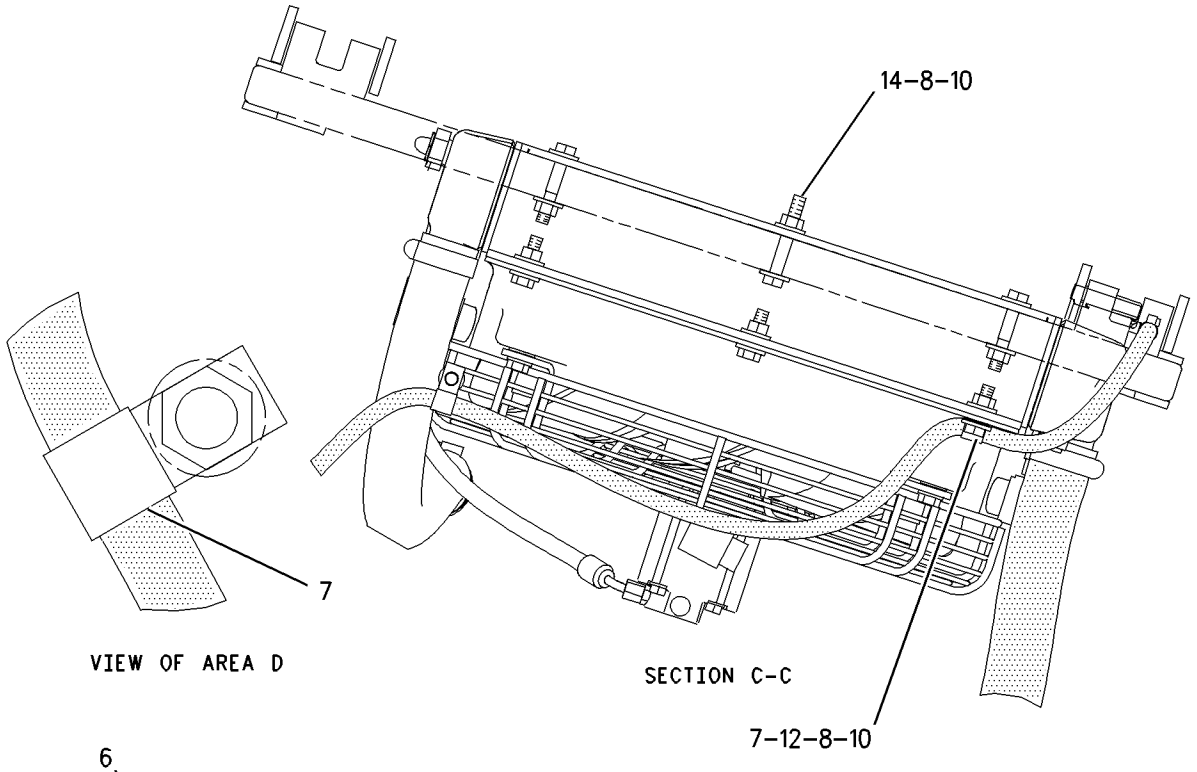

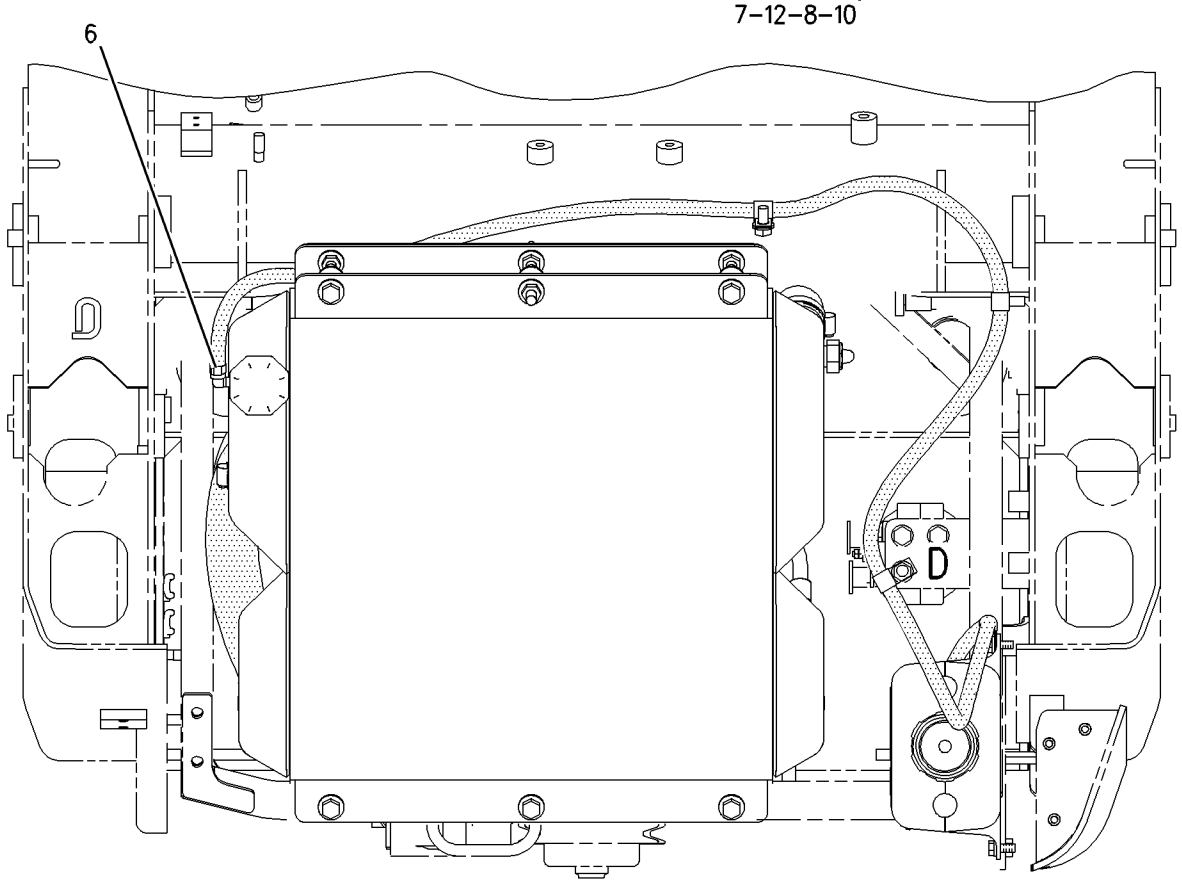

TOP VIEW

GRAPHIC #2 g00705035

MEMORANDA

185-9949 RADIATOR & OIL COOLER MTG GP

S/N: 5FZ7170-UP

PART OF 200-1005 INSTALLATION AR-ENGINE

SMCS-1351, 1354 **i01660435**

NOTE	REF NO	GRAPHIC REF	PART NUMBER	QTY	PART NAME 1 2 3 4 5 6 (PRODUCT LEVEL)	SEE PAGE
	1	1	**124-6264**	3	CLAMP-HOSE	
	2	1	**142-8866**	1	RECOVERY GP-COOLANT	
	2A	1	**169-6715**	1	CAP-VENTED	
	3	1	**142-8867**	1	HOSE	
	4	1	**142-8868**	1	HOSE	
Y	5	1	*201-7803*	1	RADIATOR & HYD OIL COOLER GP	80
	6	1	**1P-4278**	2	CLAMP-HOSE	
	7	1	**4K-8864**	5	CLIP	
	8	1	**7X-7729**	14	WASHER (11X25X3MM THK)	
	9	1	**8T-4121**	2	WASHER-HARD (11X21X2.5MM THK)	
M	10	1	**8T-4133**	7	NUT (M10X1.5 THD)	
M	11	1	**8T-4137**	2	BOLT (M10X1.5X20MM)	
M	12	1	**8T-4196**	1	BOLT (M10X1.5X35MM)	
	13	1	**8T-4224**	2	WASHER-HARD (8.8X16X2MM THK)	
M	14	1	**8T-5005**	1	BOLT (M10X1.50X70MM)	
M	15	1	**8T-5091**	2	BOLT (M8X1.25X20MM)	
M	16	1	**8T-6466**	5	BOLT (M10X1.50X60MM)	
	17	1	**5P-1420**		HOSE (204CM)	
	18	1	**8T-4986**	1	CLAMP-HOSE	

M-METRIC PART
Y-SEPARATE ILLUSTRATION

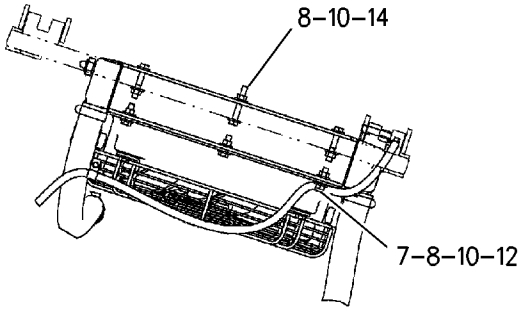

SECTION C-C

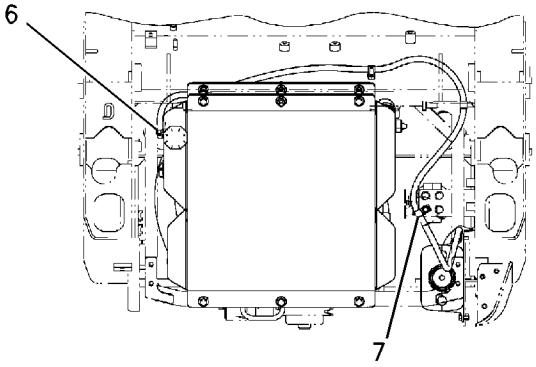

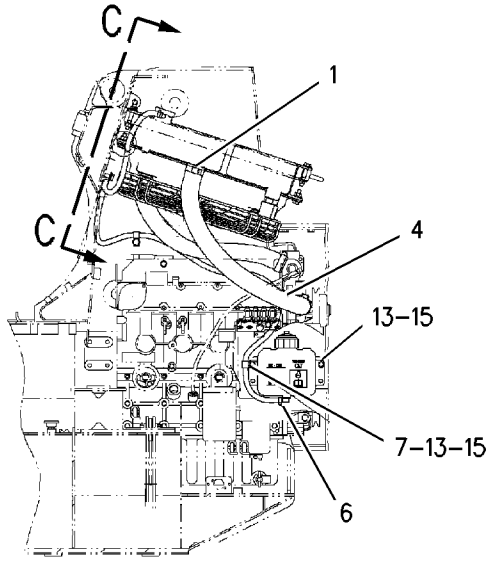

SECTION B-B

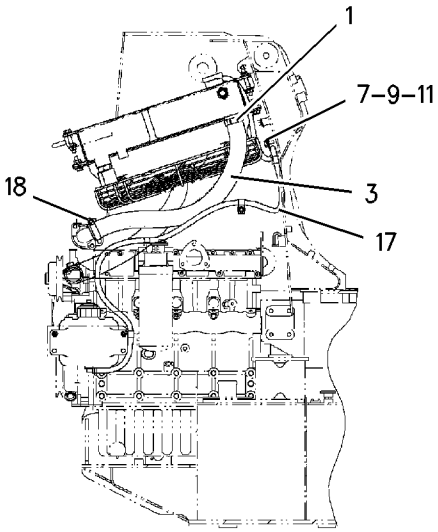

SECTION A-A

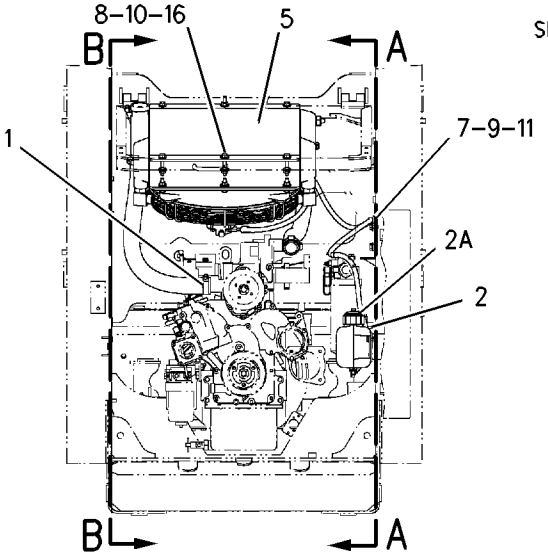

GRAPHIC #1

g00857537

COOLING SYSTEM

201-7800 RADIATOR & OIL COOLER MTG GP

S/N: 4NZ3400-UP

PART OF 200-0805 INSTALLATION AR-ENGINE

SMCS-1351, 1354 **i01741852**

NOTE	REF NO	GRAPHIC REF	PART NUMBER	QTY	PART NAME 1 2 3 4 5 6 (PRODUCT LEVEL)	SEE PAGE
	1	1	**8T-4983**	4	CLAMP-HOSE	
	2	1	**124-6264**	2	CLAMP-HOSE	
	3	1	**142-8866**	1	RECOVERY GP-COOLANT	
	4	1	**222-5723**	1	HOSE	
Y	5	1	*201-7803*	1	RADIATOR & HYD OIL COOLER GP	80
	6	1	**205-4585**	1	HOSE	
	7	1	**205-6383**	1	TUBE	
	8	1	**211-3443**	1	HOSE	
	9	1	**143-4535**	1	CLIP (SLOT)	
	10	1	**143-4536**	1	CLIP (TAB)	
	11	1	**1P-4278**	2	CLAMP-HOSE	
	12	1	**4K-8864**	5	CLIP	
	13	1	**5P-2369**	1	CLIP	
	14	1	**7X-7729**	14	WASHER (11X25X3MM THK)	
	15	1	**8T-4121**	4	WASHER-HARD (11X21X2.5MM THK)	
M	16	1	**8T-4133**	7	NUT (M10X1.5 THD)	
M	17	1	**8T-4136**	1	BOLT (M10X1.5X25MM)	
M	18	1	**8T-4137**	2	BOLT (M10X1.5X20MM)	
M	19	1	**8T-4196**	1	BOLT (M10X1.5X35MM)	
	20	1	**8T-4224**	2	WASHER-HARD (8.8X16X2MM THK)	
M	21	1	**8T-5005**	1	BOLT (M10X1.50X70MM)	
M	22	1	**8T-5091**	2	BOLT (M8X1.25X20MM)	
M	23	1	**8T-6466**	5	BOLT (M10X1.50X60MM)	
E	24	1	**5P-1420**		HOSE (204CM)	

E-ORDER BY THE CENTIMETER
M-METRIC PART
Y-SEPARATE ILLUSTRATION

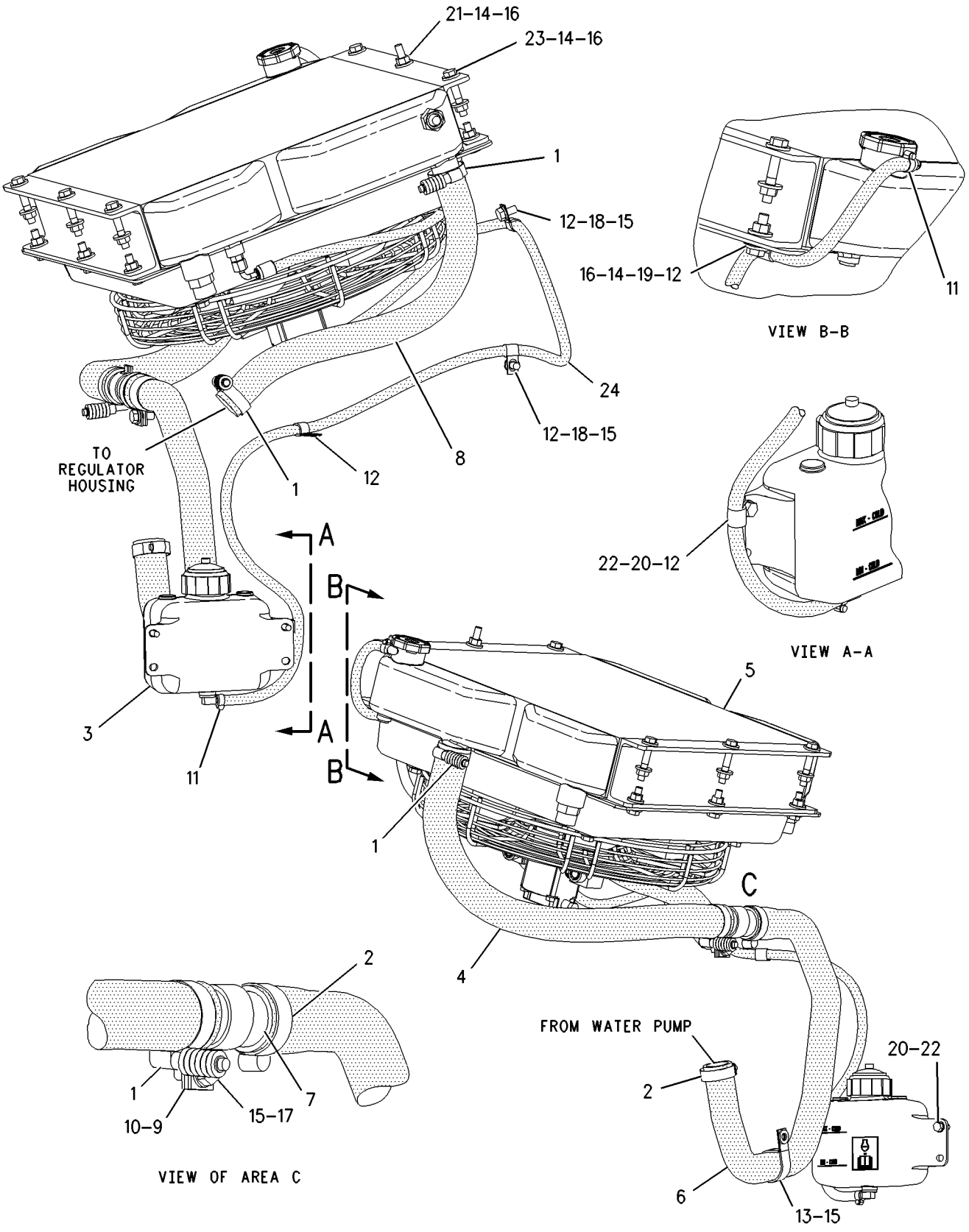

GRAPHIC #1 g00900632

AIR INLET AND EXHAUST SYSTEM

142-8857 AIR CLEANER GP

S/N: 4NZ3400-UP; 5FZ6700-UP

PART OF 200-0805, 200-1005 INSTALLATION AR-ENGINE

SMCS-1051 **i01226294**

NOTE	REF NO	GRAPHIC REF	PART NUMBER	QTY	PART NAME 1 2 3 4 5 6 (PRODUCT LEVEL)	SEE PAGE
	1	1	*152-4897*	1	AIR CLEANER GP	
		1	**140-2331**	1	AIR CLEANER GP	
	2	1	**112-9717**	1	VALVE-VACUATOR	
	3	1	**134-8726**	1	ELEMENT AS (PRIMARY)	
	4	1	**140-2334**	1	ELEMENT AS (SECONDARY)	
	5	1	**152-4891**	1	BAND-MOUNTING	
	6	1	**5P-4116**	2	WASHER (2MM THK)	
M	7	1	**8T-4908**	2	BOLT (M8X1.25X25MM)	

M-METRIC PART

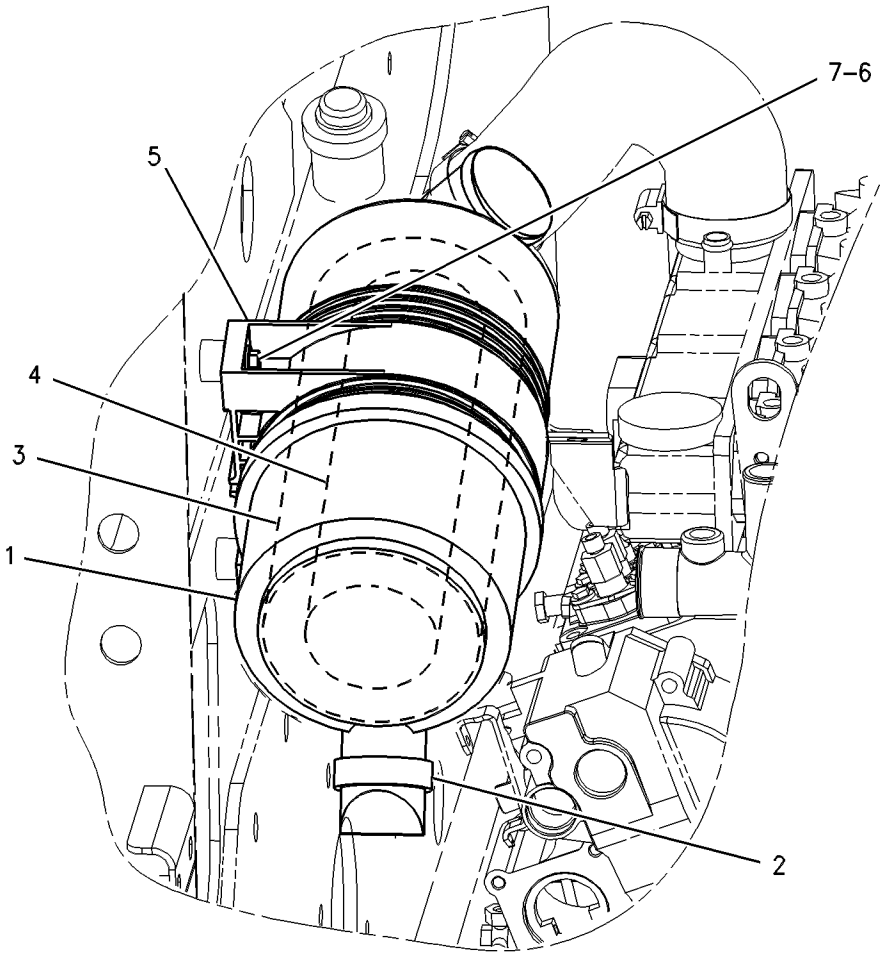

GRAPHIC #1 g00559501

AIR INLET AND EXHAUST SYSTEM

219-4386 AIR CLEANER GP

S/N: CAB1-UP; CMB1-UP

PART OF 219-4375, 219-4385 INSTALLATION AR-ENGINE

SMCS-1051 **i01742778**

NOTE	REF NO	GRAPHIC REF	PART NUMBER	QTY	PART NAME 1 2 3 4 5 6 (PRODUCT LEVEL)	SEE PAGE
	1	1	*152-4897*	1	AIR CLEANER GP	
		1	**140-2331**	1	AIR CLEANER GP	
	2	1	**112-9717**	1	VALVE-VACUATOR	
	3	1	**134-8726**	1	ELEMENT AS (PRIMARY)	
	4	1	**140-2334**	1	ELEMENT AS (SECONDARY)	
	5	1	**152-4891**	1	BAND-MOUNTING	
	6	1	**5P-4116**	2	WASHER-HARD (8.8X20.5X2MM THK)	
M	7	1	**5C-7261**	2	NUT (M8X1.25 THD)	

M-METRIC PART

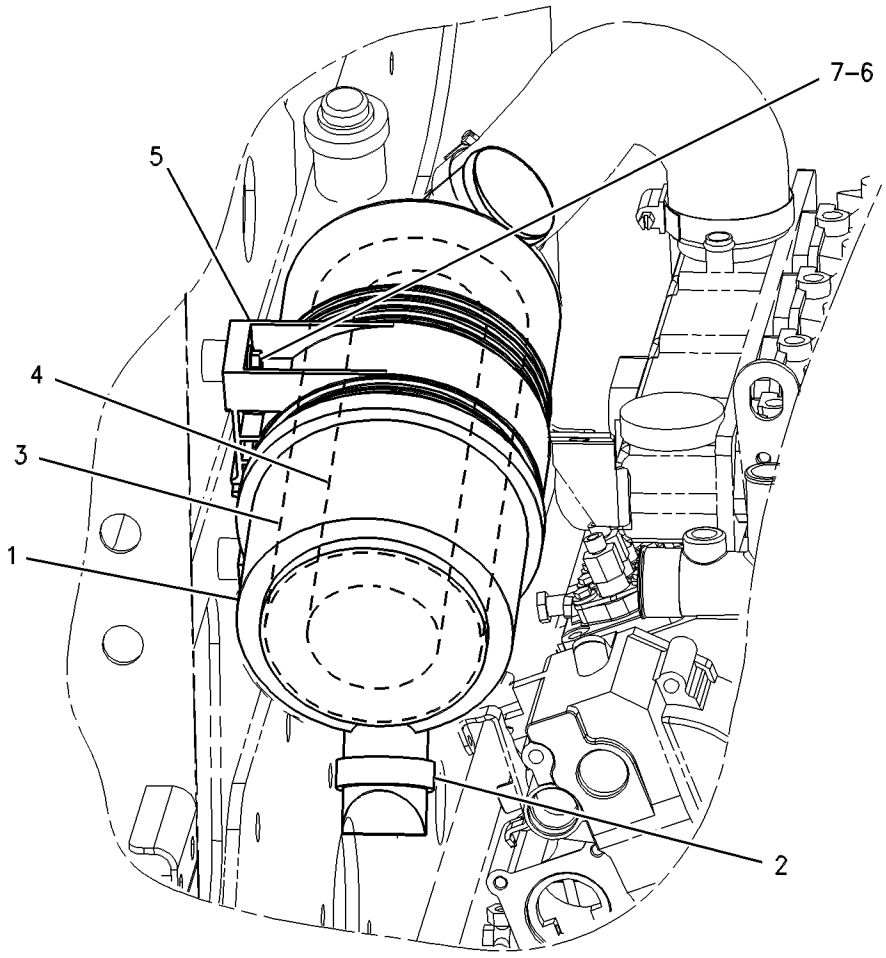

GRAPHIC #1 g00559501

AIR INLET AND EXHAUST SYSTEM

201-7798 LINES GP-AIR

S/N: 4NZ3400-UP

PART OF 200-0805 INSTALLATION AR-ENGINE

SMCS-1071, 7452 **i01565126**

NOTE	REF NO	GRAPHIC REF	PART NUMBER	QTY	PART NAME 1 2 3 4 5 6 (PRODUCT LEVEL)	SEE PAGE
	1	1	**5P-4868**	1	CLAMP (HOSE)	
	2	1	**123-0275**	1	FITTING	
	3	1	**150-5030**	1	INDICATOR-AIR (FILTER SERVICE)	
	4	1	**201-7796**	1	HOSE-AIR	
	5	1	**205-1627**	1	BRACKET	
	6	1	**096-6166**	2	WASHER-HARD (4.5X9X1MM THK)	
	7	1	**4D-8123**	1	CLIP	
	8	1	**5P-0597**	1	CLAMP-HOSE	
M	9	1	**8T-7852**	2	BOLT	
D	10	1	**6V-1363**		HOSE (.7M)	

D-ORDER BY THE METER
M-METRIC PART

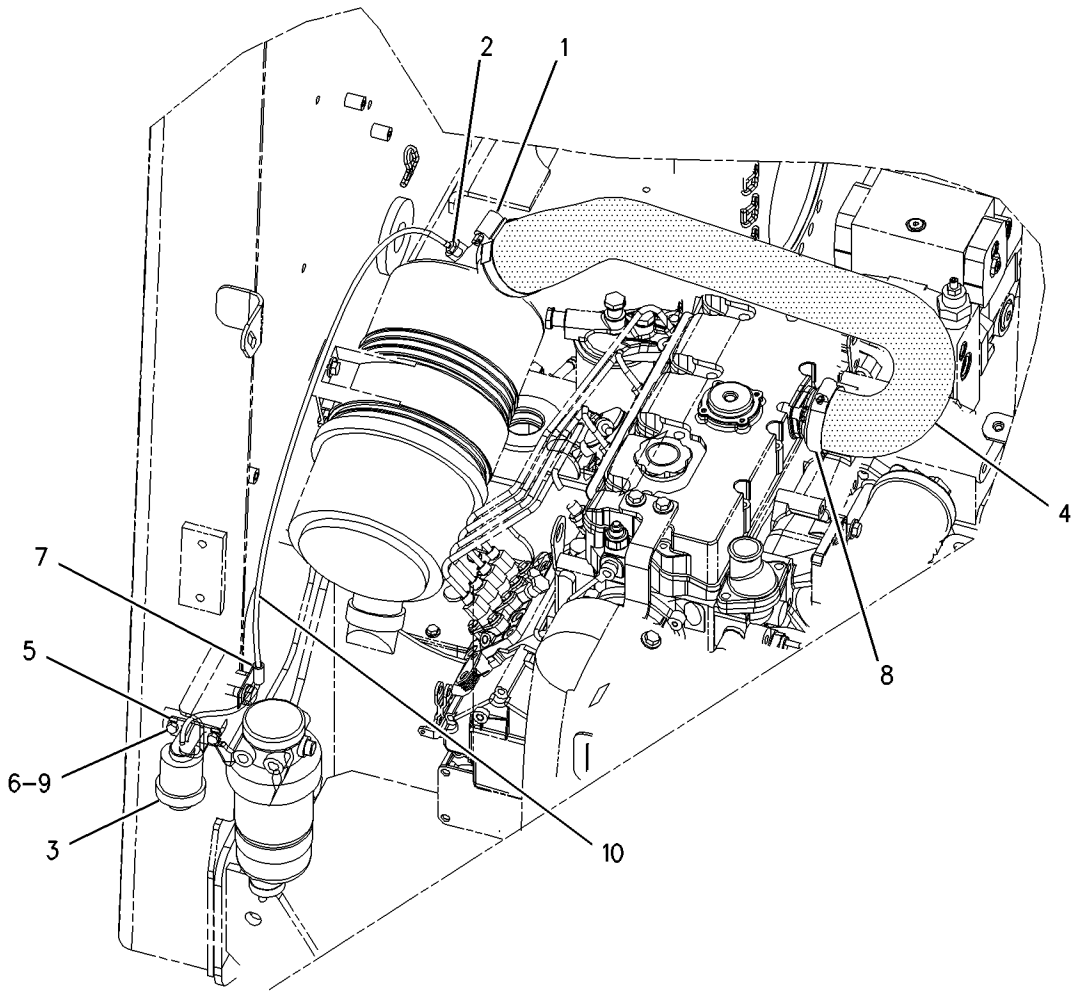

GRAPHIC #1 g00827114

AIR INLET AND EXHAUST SYSTEM

205-9934 LINES GP-AIR

S/N: CAB1-UP; CMB1-UP; 5FZ6700-UP

PART OF 200-1005, 219-4375, 219-4385 INSTALLATION AR-ENGINE

SMCS-1071, 7452 **i01563309**

NOTE	REF NO	GRAPHIC REF	PART NUMBER	QTY	PART NAME 1 2 3 4 5 6 (PRODUCT LEVEL)	SEE PAGE
	1	1	**5P-4868**	2	CLAMP (HOSE)	
	2	1	**123-0275**	1	FITTING	
	3	1	**142-8849**	1	HOSE	
	4	1	**150-5030**	1	INDICATOR-AIR	
	5	1	**205-1627**	1	BRACKET	
	6	1	**096-6166**	2	WASHER-HARD (4.5X9X1MM THK)	
	7	1	**4D-8123**	1	CLIP	
M	8	1	**8T-7852**	2	BOLT	
D	9	1	**6V-1363**	1	HOSE (.7M)	

D-ORDER BY THE METER
M-METRIC PART

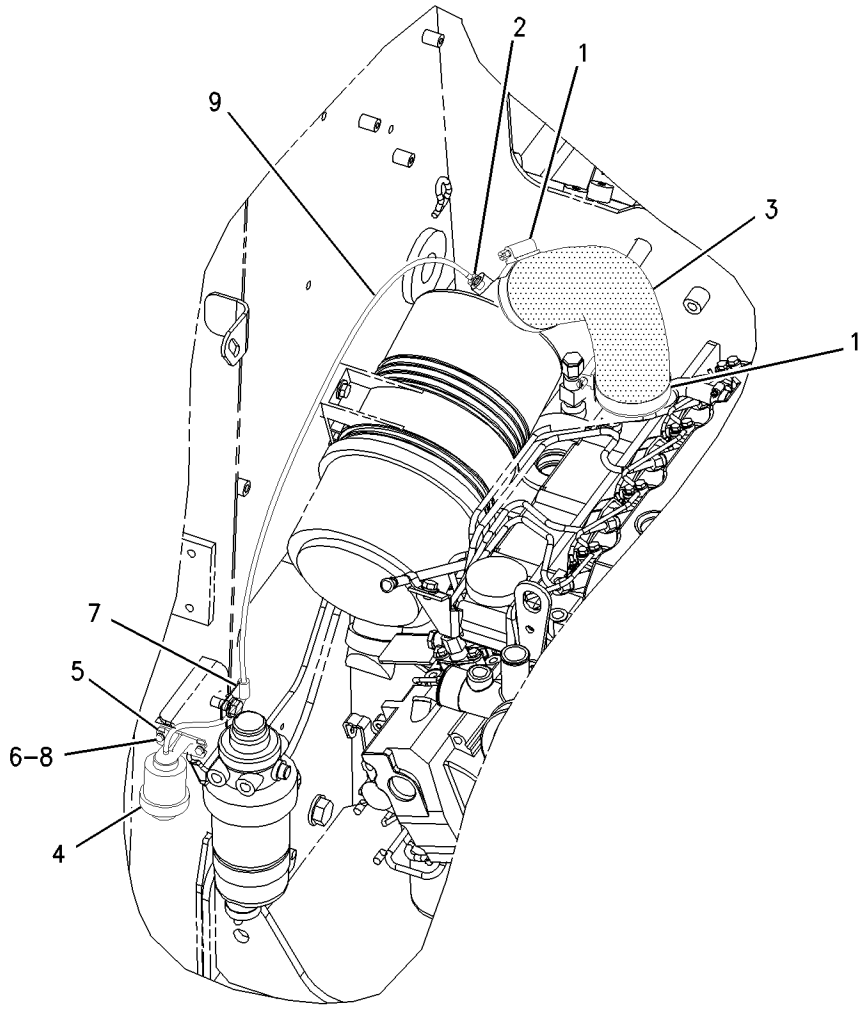

GRAPHIC #1 g00815307

AIR INLET AND EXHAUST SYSTEM

160-3568 MANIFOLD GP-EXHAUST

S/N: CSD1-UP
PART OF 179-1808 ENGINE AR-PRIMARY
AN ATTACHMENT

SMCS-1059 **i00898196**

NOTE	REF NO	GRAPHIC REF	PART NUMBER	QTY	PART NAME 1 2 3 4 5 6 (PRODUCT LEVEL)	SEE PAGE
	1	1	**153-5592**	2	NUT	
	2	1	**154-2426**	1	MANIFOLD-EXHAUST	
	3	1	**154-2427**	1	GASKET-EXHAUST	
	4	1	**154-2428**	6	BOLT	

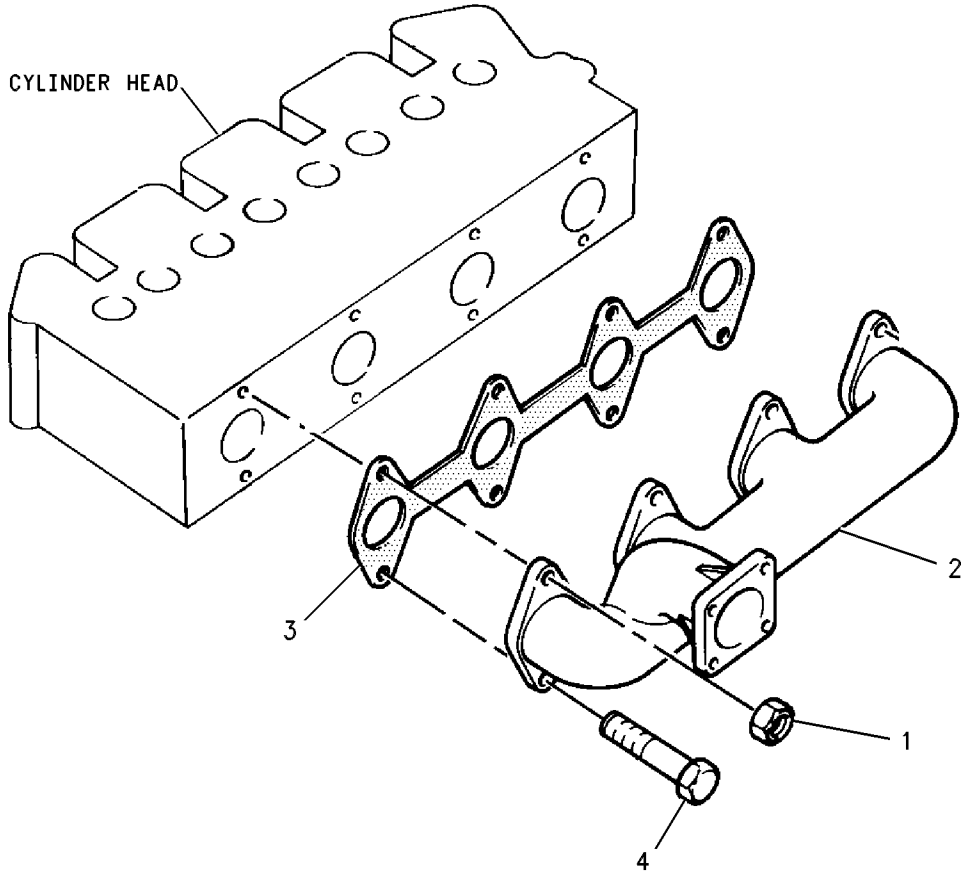

GRAPHIC #1 g00483759

AIR INLET AND EXHAUST SYSTEM

165-4961 MANIFOLD GP-EXHAUST

S/N: 3NW21000-UP

PART OF 144-6194 ENGINE AR-PRIMARY

SMCS-1059 **i01412193**

NOTE	REF NO	GRAPHIC REF	PART NUMBER	QTY	PART NAME 1 2 3 4 5 6 (PRODUCT LEVEL)	SEE PAGE
	1	1	**173-0427**	1	GASKET-EXHAUST	
	2	1	**164-7627**	1	MANIFOLD-EXHAUST	
	3	1	**164-7628**	8	BOLT	

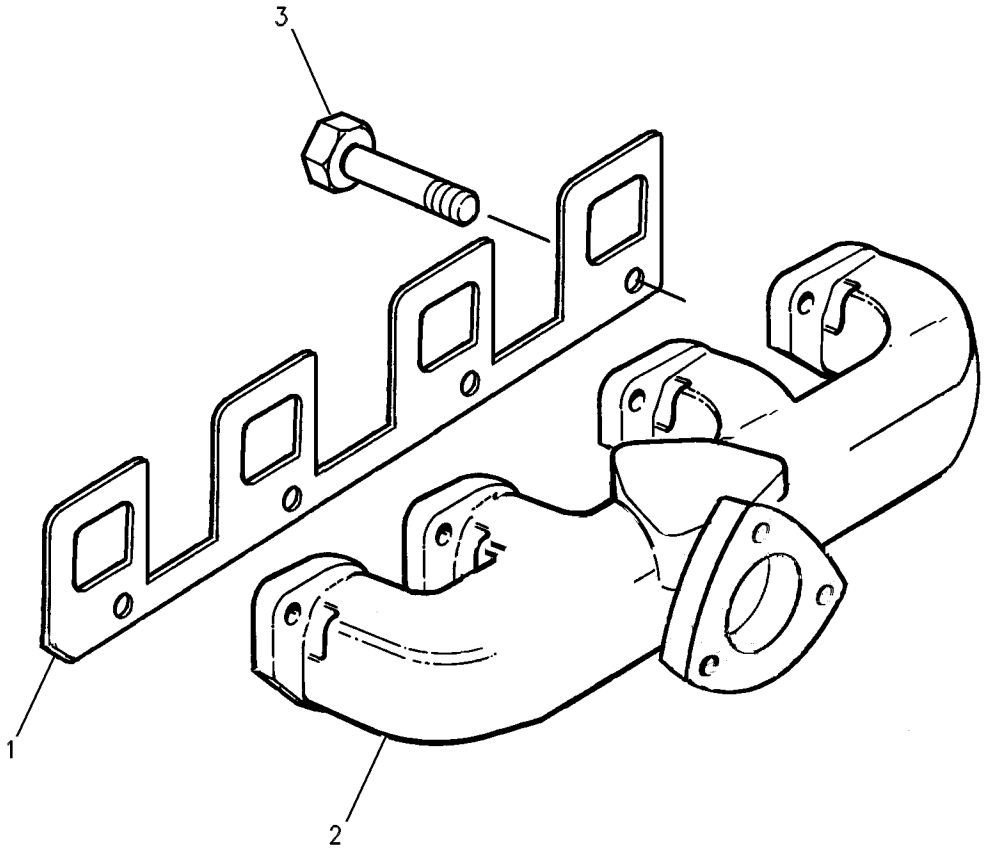

GRAPHIC #1 g00561443

AIR INLET AND EXHAUST SYSTEM

164-7624 MANIFOLD GP-INLET

S/N: 3NW21000-UP

PART OF 144-6194 ENGINE AR-PRIMARY

SMCS-1058 **i01068877**

NOTE	REF NO	GRAPHIC REF	PART NUMBER	QTY	PART NAME 1 2 3 4 5 6 (PRODUCT LEVEL)	SEE PAGE
	1	1	**6I-0293**	7	BOLT	
	2	1	**6I-4709**	1	BOLT	
	3	1	**153-0405**	1	GASKET-MANIFOLD	
	4	1	**164-7625**	1	MANIFOLD AS-INLET	
	5	1	**1N-3762**	1	PLUG-CUP	

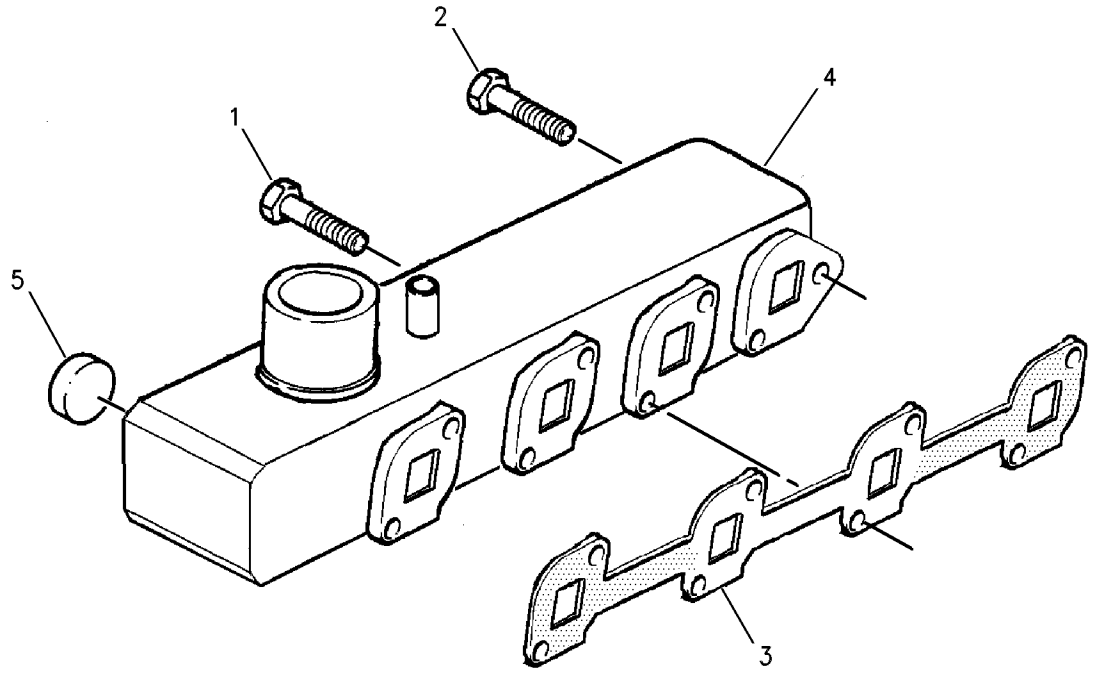

GRAPHIC #1 g00561410

AIR INLET AND EXHAUST SYSTEM

201-7793 MOUNTING GP-MUFFLER

S/N: 4NZ3400-3409

PART OF 200-0805 INSTALLATION AR-ENGINE

SMCS-1062 **i01559912**

NOTE	REF NO	GRAPHIC REF	PART NUMBER	QTY	PART NAME 1 2 3 4 5 6 (PRODUCT LEVEL)	SEE PAGE
	1	1	**153-7920**	1	GASKET	
Y	2	1	*201-7794*	1	MUFFLER GP	105
	3	1	**5P-4116**	4	WASHER-HARD (8.8X20.5X2MM THK)	
	4	1	**8T-4121**	3	WASHER-HARD (11X21X2.5MM THK)	
M	5	1	**8T-4133**	3	NUT (M10X1.5 THD)	
M	6	1	**8T-4908**	4	BOLT (M8X1.25X25MM)	

M-METRIC PART
Y-SEPARATE ILLUSTRATION

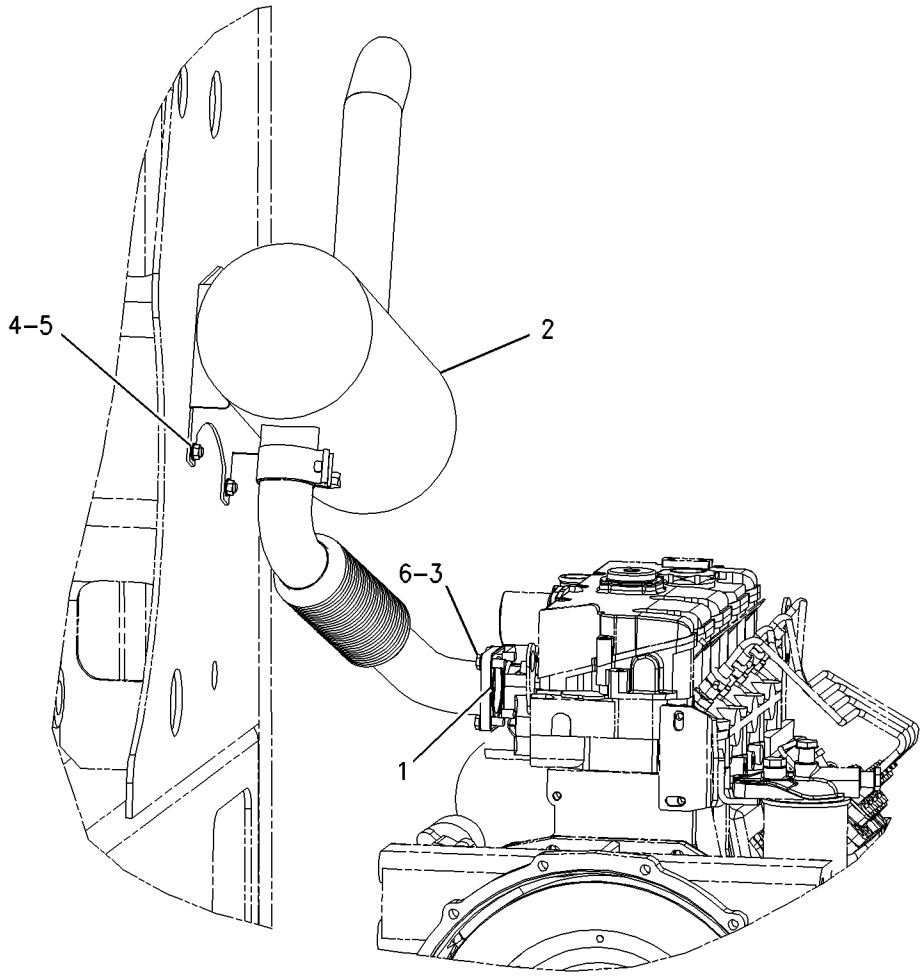

GRAPHIC #1 g00826926

AIR INLET AND EXHAUST SYSTEM

205-8779 MOUNTING GP-MUFFLER

S/N: 5FZ6700-8036

PART OF 200-1005 INSTALLATION AR-ENGINE

SMCS-1062 **i01561952**

NOTE	REF NO	GRAPHIC REF	PART NUMBER	QTY	PART NAME 1 2 3 4 5 6 (PRODUCT LEVEL)	SEE PAGE
	1	1	**8T-4121**	6	WASHER-HARD (11X21X2.5MM THK)	
M	2	1	**8T-4133**	1	NUT (M10X1.5 THD)	
M	3	1	**8T-4195**	3	BOLT (M10X1.5X30MM)	
	4	1	**140-2349**	1	GASKET	
	5	1	*205-8780*	1	MUFFLER GP	
		1	**202-9716**	1	MUFFLER AS	
	6	1	**142-8816**	1	ELBOW AS-EXHAUST	
	7	1	**142-8818**	1	CLAMP-BENT BOLT	

M-METRIC PART

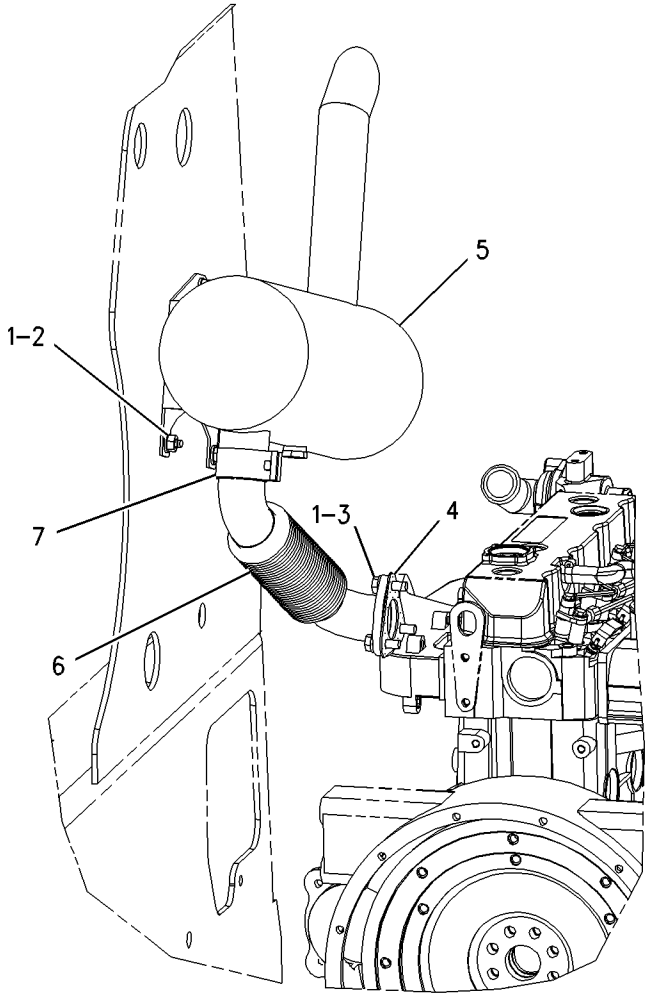

GRAPHIC #1 g00815099

AIR INLET AND EXHAUST SYSTEM

214-6292 MOUNTING GP-MUFFLER

S/N: CMB1-UP; 5FZ7170-UP

PART OF 200-1005, 219-4375 INSTALLATION AR-ENGINE

SMCS-1062 **i01727347**

NOTE	REF NO	GRAPHIC REF	PART NUMBER	QTY	PART NAME 1 2 3 4 5 6 (PRODUCT LEVEL)	SEE PAGE
	1	1	**140-2349**	1	GASKET	
Y	2	1	*214-6291*	1	MUFFLER GP	106
	3	1	**8T-4121**	6	WASHER-HARD (11X21X2.5MM THK)	
M	4	1	**8T-4133**	3	NUT (M10X1.5 THD)	
M	5	1	**8T-4195**	3	BOLT (M10X1.5X30MM)	

M-METRIC PART
Y-SEPARATE ILLUSTRATION

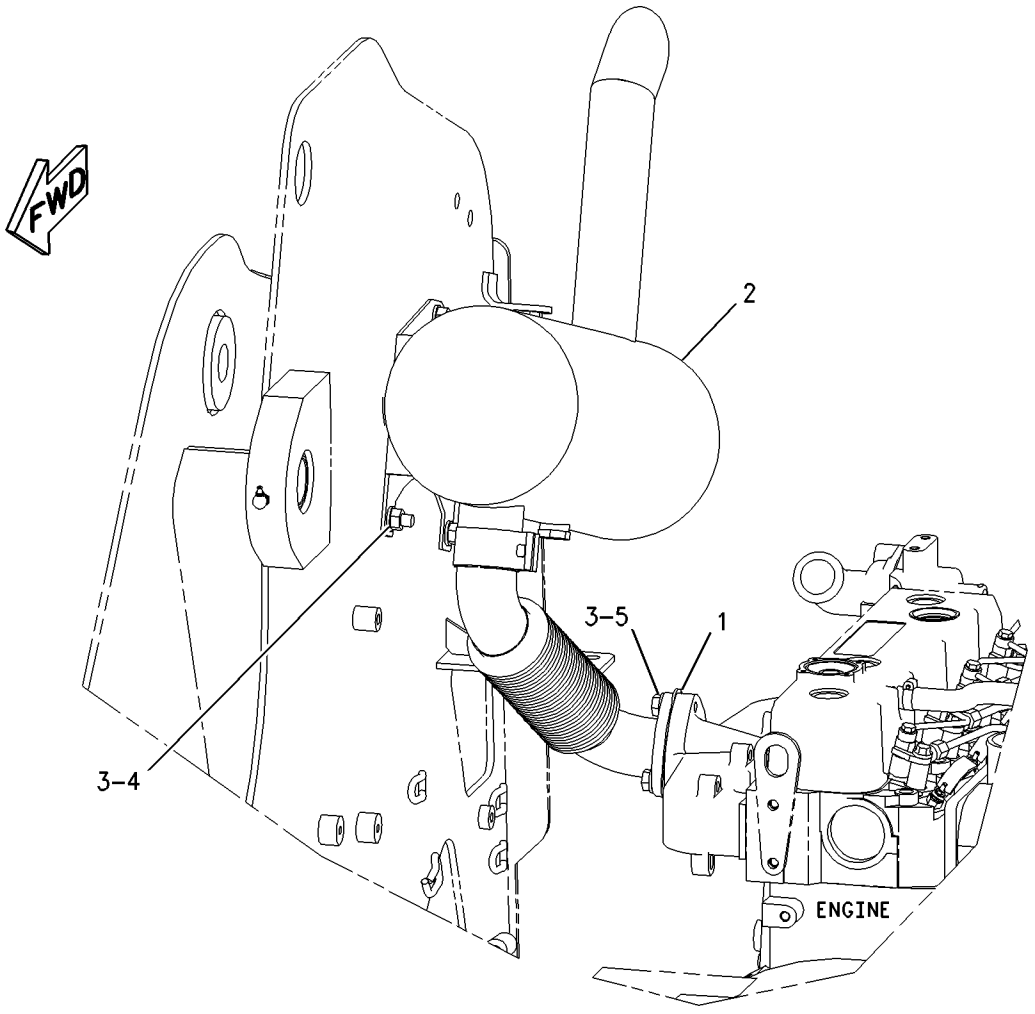

GRAPHIC #1 g00888668

AIR INLET AND EXHAUST SYSTEM

217-0571 MOUNTING GP-MUFFLER

S/N: CAB1-UP; 4NZ3410-UP

PART OF 200-0805, 219-4385 INSTALLATION AR-ENGINE

SMCS-1062 **i01708575**

NOTE	REF NO	GRAPHIC REF	PART NUMBER	QTY	PART NAME 1 2 3 4 5 6 (PRODUCT LEVEL)	SEE PAGE
	1	1	**153-7920**	1	GASKET	
	2	1	*217-0572*	1	MUFFLER GP	
	2A	1	**142-8818**	1	CLAMP-BENT BOLT	
	2B	1	**205-1625**	1	ELBOW AS-EXHAUST	
	2C	1	**214-3232**	1	MUFFLER AS	
	3	1	**5P-4116**	4	WASHER-HARD (8.8X20.5X2MM THK)	
	4	1	**8T-4121**	3	WASHER-HARD (11X21X2.5MM THK)	
M	5	1	**8T-4133**	3	NUT (M10X1.5 THD)	
M	6	1	**8T-4908**	4	BOLT (M8X1.25X25MM)	

M-METRIC PART

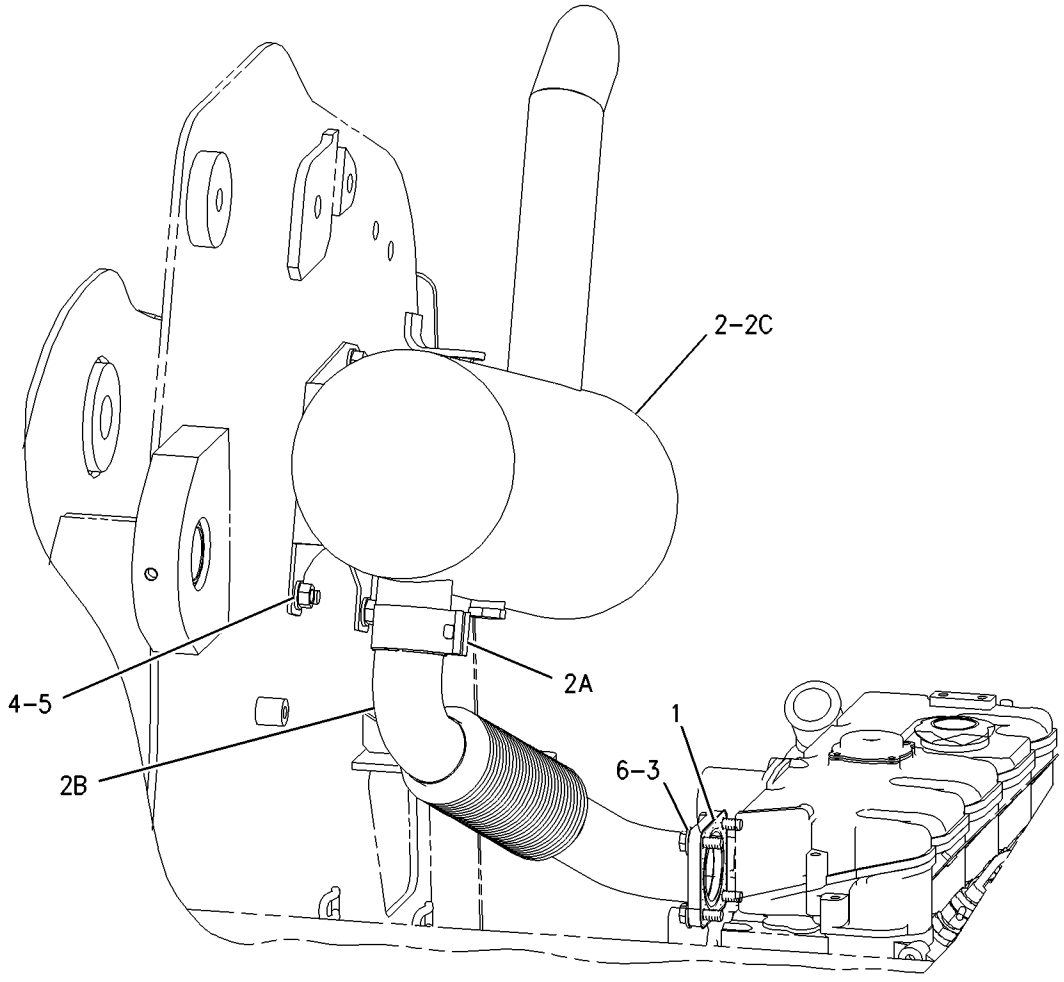

GRAPHIC #1 g00899592

AIR INLET AND EXHAUST SYSTEM

201-7794 MUFFLER GP

S/N: 4NZ3400-UP

PART OF 201-7793 MOUNTING GP-MUFFLER

SMCS-1062 **i01565112**

NOTE	REF NO	GRAPHIC REF	PART NUMBER	QTY	PART NAME 1 2 3 4 5 6 (PRODUCT LEVEL)	SEE PAGE
	1	1	**142-8818**	1	CLAMP-BENT BOLT	
	2	1	**202-9716**	1	MUFFLER AS	
	3	1	**205-1625**	1	ELBOW AS-EXHAUST	

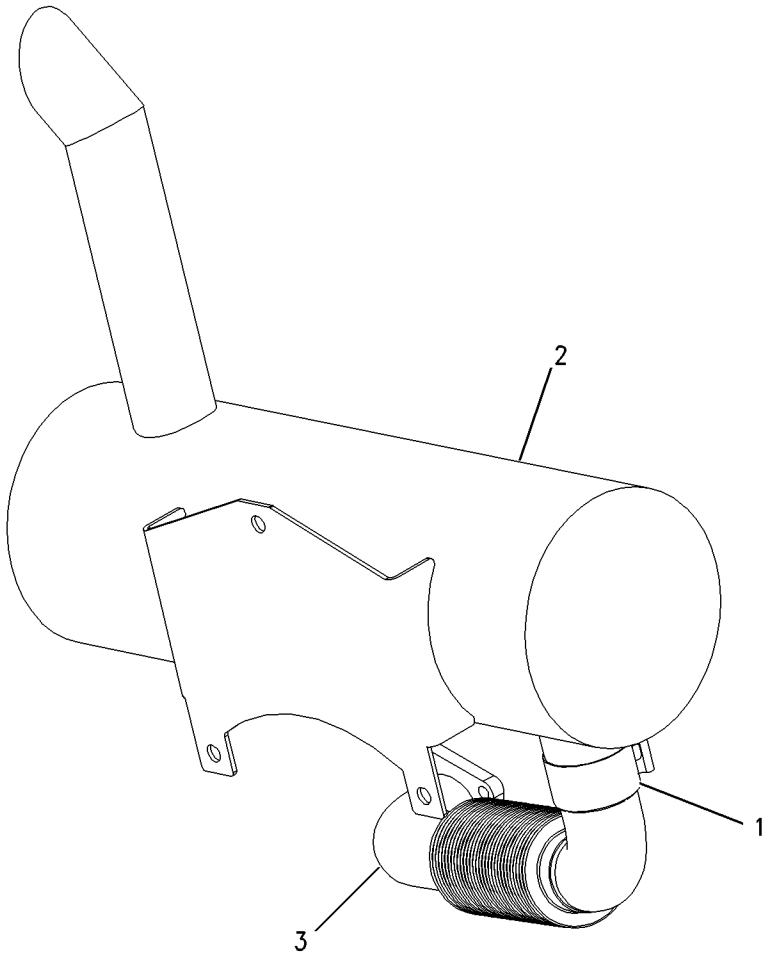

GRAPHIC #1 g00823798

AIR INLET AND EXHAUST SYSTEM

214-6291 MUFFLER GP

S/N: CMB1-UP; 5FZ7170-UP

PART OF 214-6292 MOUNTING GP-MUFFLER

SMCS-1062 **i01727355**

NOTE	REF NO	GRAPHIC REF	PART NUMBER	QTY	PART NAME 1 2 3 4 5 6 (PRODUCT LEVEL)	SEE PAGE
	1	1	**142-8816**	1	ELBOW AS-EXHAUST	
	2	1	**142-8818**	1	CLAMP-BENT BOLT	
	3	1	**214-3232**	1	MUFFLER AS	

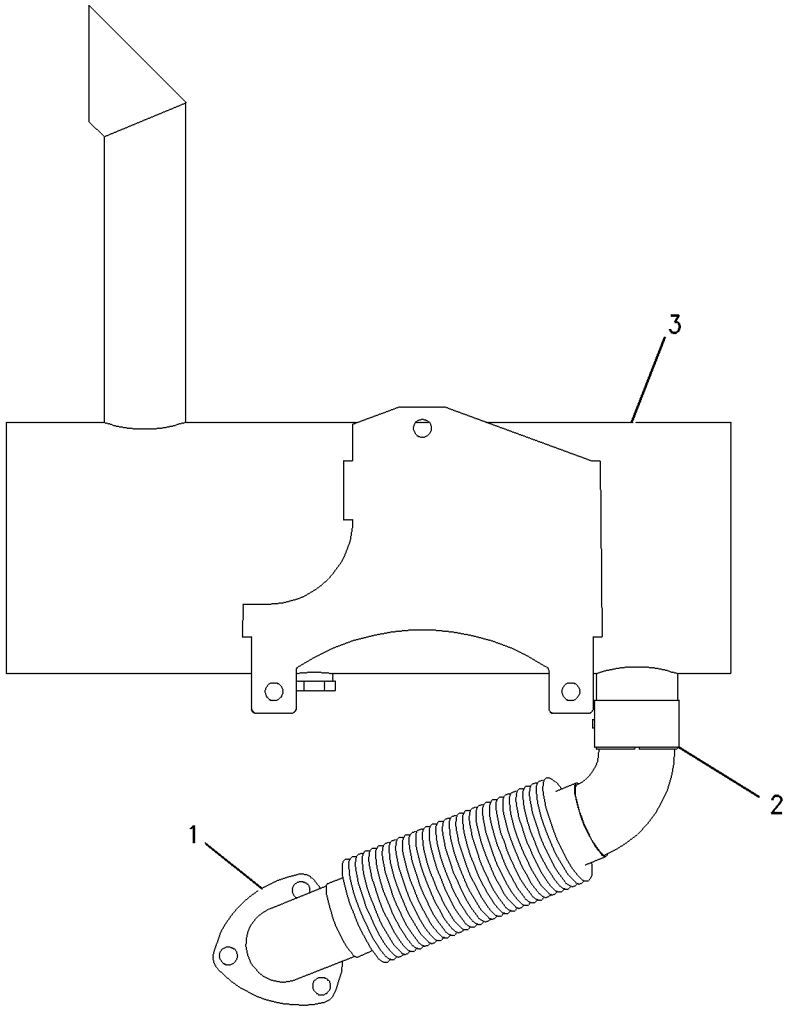

GRAPHIC #1 g00888651

MEMORANDA

192-2657 CONTROL GP-GOVERNOR

S/N: 5FZ6700

PART OF 200-1002 CHASSIS AR

SMCS-1265, 1276 **i01761871**

NOTE	REF NO	GRAPHIC REF	PART NUMBER	QTY	PART NAME 1 2 3 4 5 6 (PRODUCT LEVEL)	SEE PAGE
	1	1	**192-2660**	1	BRACKET AS	
Y	2	1	**192-2664**	1	PEDAL GP-GOVERNOR	557
M	3	1	**5C-2890**	4	NUT (M6X1 THD)	
M	4	1	**5C-7261**	2	NUT (M8X1.25 THD)	
	5	1	**5P-4116**	4	WASHER-HARD (8.8X20.5X2MM THK)	
M	6	1	**8C-6802**	4	SCREW-FLAT HEAD	
M	7	1	**8T-4138**	3	BOLT (M6X1X20MM)	
	8	1	**8T-4205**	7	WASHER-HARD (7.2X14.5X2MM THK)	
M	9	1	**8T-4908**	2	BOLT (M8X1.25X25MM)	
	10	1	**8T-3984**	1	KNOB	

M-METRIC PART
Y-SEPARATE ILLUSTRATION

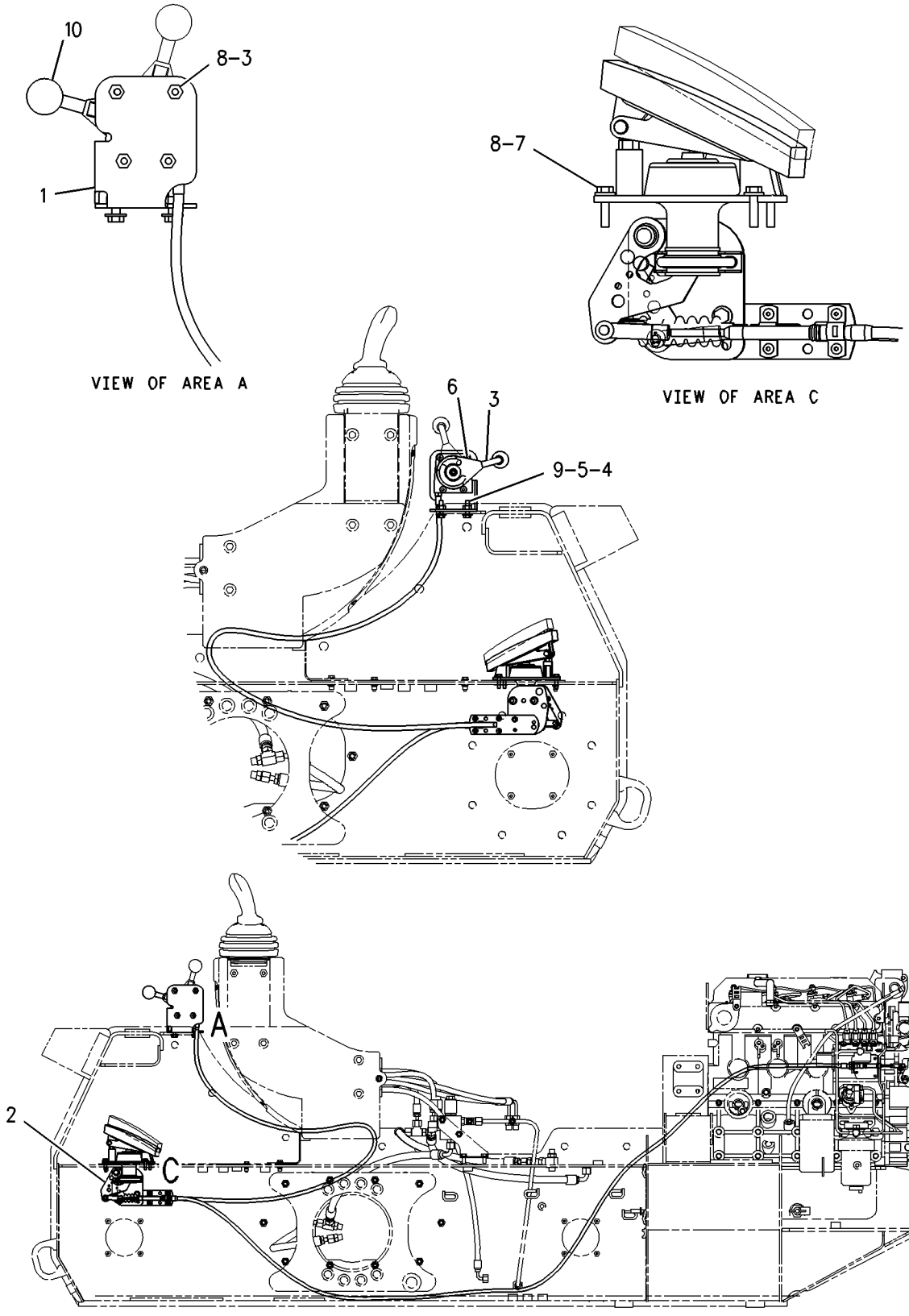

GRAPHIC #1

g00775833

215-3980 CONTROL GP-GOVERNOR

S/N: CAB1-UP; CMB1-UP; 4NZ3400-UP

PART OF 191-2902, 191-9602, 200-0802 CHASSIS AR

SMCS-1265, 1276 **i01653322**

NOTE	REF NO	GRAPHIC REF	PART NUMBER	QTY	PART NAME 1 2 3 4 5 6 (PRODUCT LEVEL)	SEE PAGE
	1	1	**192-2660**	1	BRACKET AS	
Y	2	1	**215-3981**	1	PEDAL GP-GOVERNOR	558
M	3	1	**5C-2890**	4	NUT (M6X1 THD)	
M	4	1	**5C-7261**	2	NUT (M8X1.25 THD)	
	5	1	**5P-4116**	4	WASHER-HARD (8.8X20.5X2MM THK)	
M	6	1	**8C-6802**	4	SCREW-FLAT HEAD	
M	7	1	**8T-4138**	3	BOLT (M6X1X20MM)	
	8	1	**8T-4205**	7	WASHER-HARD (7.2X14.5X2MM THK)	
M	9	1	**8T-4908**	2	BOLT (M8X1.25X25MM)	
	10	1	**8T-3984**	1	KNOB	

M-METRIC PART
Y-SEPARATE ILLUSTRATION

215-3980 **CONTROL GP-GOVERNOR** ***(contd.)*** **i01653322**

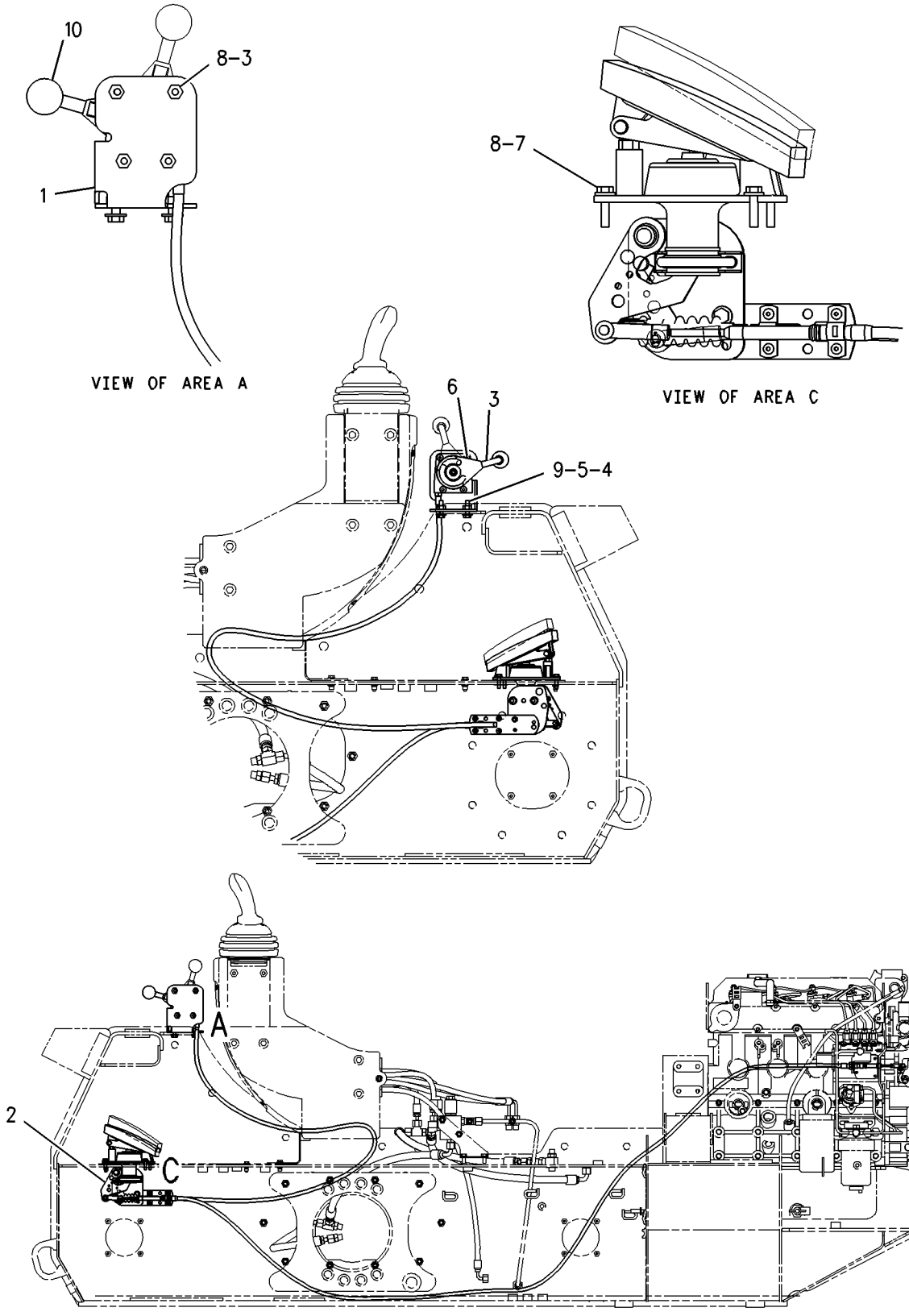

GRAPHIC #1 g00775833

FUEL SYSTEM

164-7629 FILTER & LINES GP-FUEL

S/N: 3NW21000-UP

PART OF 144-6194 ENGINE AR-PRIMARY

SMCS-1261, 1274 **i01375532**

NOTE	REF NO	GRAPHIC REF	PART NUMBER	QTY	PART NAME 1 2 3 4 5 6 (PRODUCT LEVEL)	SEE PAGE
	1	1	**2W-8076**	1	CONNECTOR	
	2	1	**6I-0654**	2	BOLT (M10X1.5X25MM)	
	3	1	**032-8100**	2	WASHER (.064MM THK)	
	4	1	**033-7849**	2	PLUG	
	5	1	**101-3906**	1	BOLT	
	6	1	**101-3907**	2	WASHER	
	7	1	**067-6998**	3	NUT	
	8	1	**032-8047**	2	FERRULE	
	9	1	**105-2423**	1	CONNECTOR	
	10	1	**111-8222**	4	BOLT	
	11	1	**171-1845**	1	BRACKET	
	12	1	**127-8167**	2	CLIP	
Y	13	1	**138-3096**	1	FILTER GP-FUEL	114
	15	1	**153-0488**	1	PUMP AS-FUEL TRANSFER	
	16	1	**121-3221**	1	GASKET	
	17	1	**153-0507**	1	CONNECTION	
	18	1	**153-0508**	1	WASHER	
	19	1	**067-6999**	3	FERRULE	
	20	1	**164-7630**	3	BOLT	
	21	1	**171-1840**	1	TUBE AS	
	22	1	**171-1841**	1	TUBE AS	
	23	1	**171-1842**	1	TUBE AS	
	24	1	**195-3758**	1	TUBE AS	
	26	1	**035-8014**	2	NUT	
					AVAILABLE REPAIR KIT(S):	
			121-7034	1	KIT-FUEL PUMP	

Y-SEPARATE ILLUSTRATION

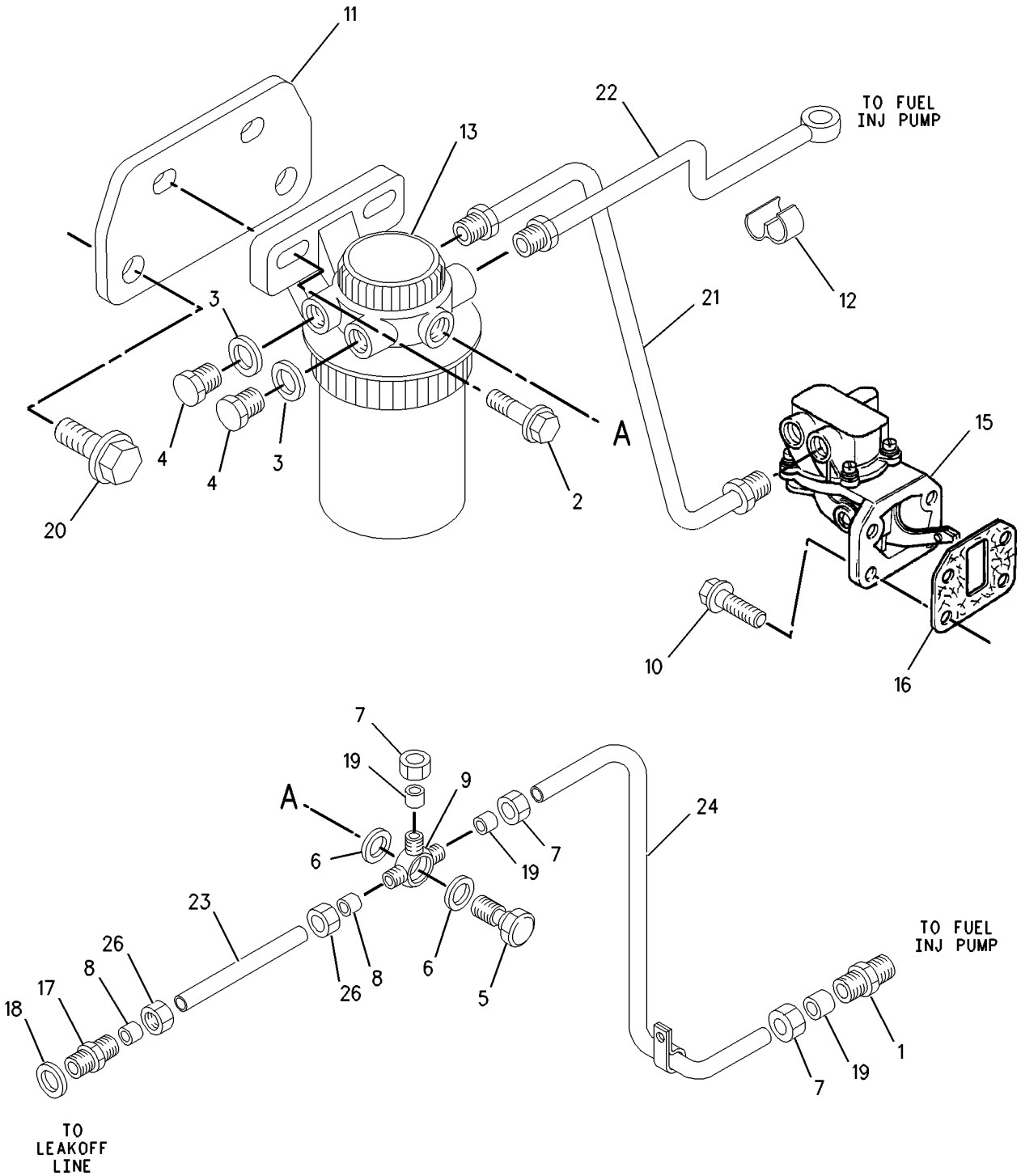

GRAPHIC #1 g00731717

138-3096 FILTER GP-FUEL

S/N: 3NW21000-UP

PART OF 164-7629 FILTER & LINES GP-FUEL

SMCS-1261, 1262 **i01611160**

NOTE	REF NO	GRAPHIC REF	PART NUMBER	QTY	PART NAME 1 2 3 4 5 6 (PRODUCT LEVEL)	SEE PAGE
	1	1	**101-3739**	1	NUT	
	2	1	**101-3740**	1	CAP	
	3	1	**101-3741**	1	SEAL (PLUNGER)	
	4	1	**101-3742**	1	PLUG	
	5	1	**101-3743**	1	SEAL (FUEL FILTER)	
	6	1	**118-8118**	1	RING-RETAINING	
	7	1	**159-6102**	1	FILTER ELEMENT AS-FUEL	

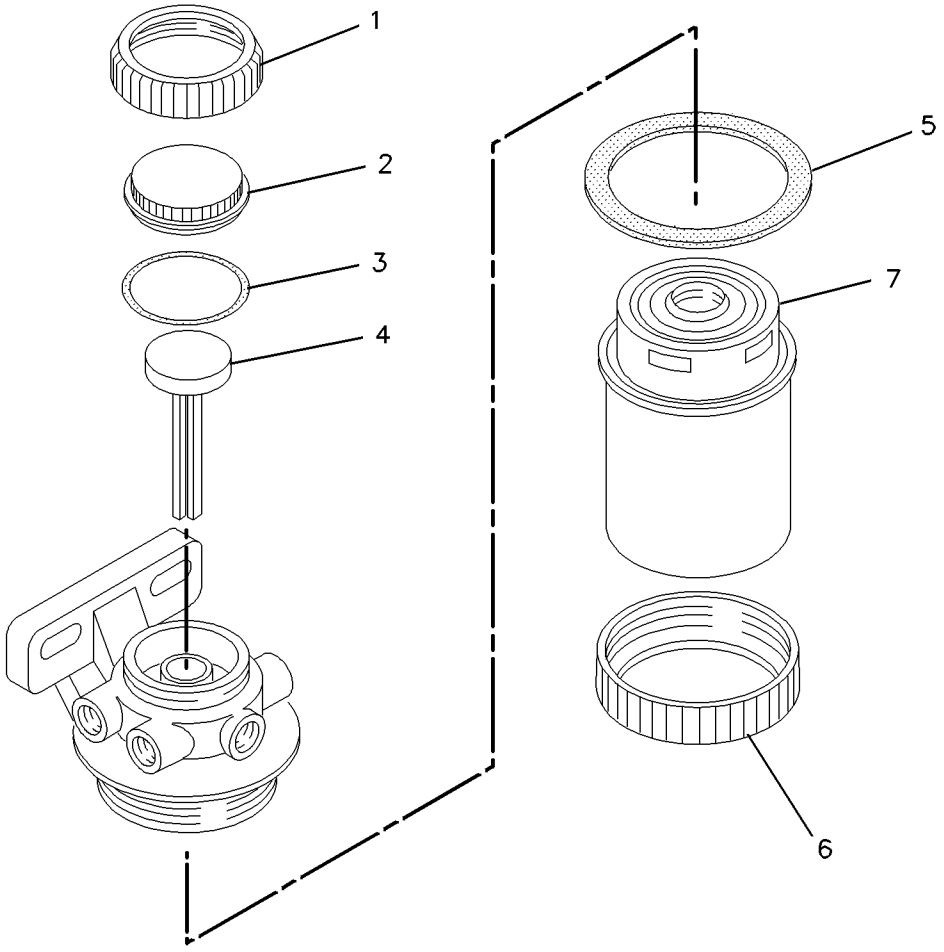

GRAPHIC #1 g00693633

FUEL SYSTEM

176-9954 FILTER GP-FUEL

S/N: CAB1-UP; 4NZ3400-UP

PART OF 201-7779, 202-9022 LINES GP-FUEL

SMCS-1261, 1262 **i01757278**

NOTE	PART NUMBER	QTY	PART NAME 1 2 3 4 5 6 (PRODUCT LEVEL)	SEE PAGE
Y	**144-9962**	1	FILTER GP-WATER SEP & FUEL	116
	129-6259	1	PUMP GP-FUEL PRIMING	
	129-6262	1	BLADDER	

Y-SEPARATE ILLUSTRATION

<END>

144-9962 FILTER GP-WATER SEP & FUEL

S/N: CAB1-UP; 4NZ3400-UP

PART OF 176-9954 FILTER GP-FUEL

SMCS-1261, 1263 **i01757299**

NOTE	REF NO	GRAPHIC REF	PART NUMBER	QTY	PART NAME 1 2 3 4 5 6 (PRODUCT LEVEL)	SEE PAGE
	1	1	**156-1200**	1	FILTER ELEMENT-FUEL	
	2	1	**149-3516**	1	BASE AS	
	3	1	**118-8118**	1	RING-RETAINING	
	4	1	**112-9401**	1	BOWL AS-WATER COLLECTION	
		1	**128-8614**	1	KIT-BOWL SEAL	
	5	1	**118-8119**	1	NUT	
					AVAILABLE REPAIR KIT(S):	
			121-4480	1	KIT-WATER BASE	

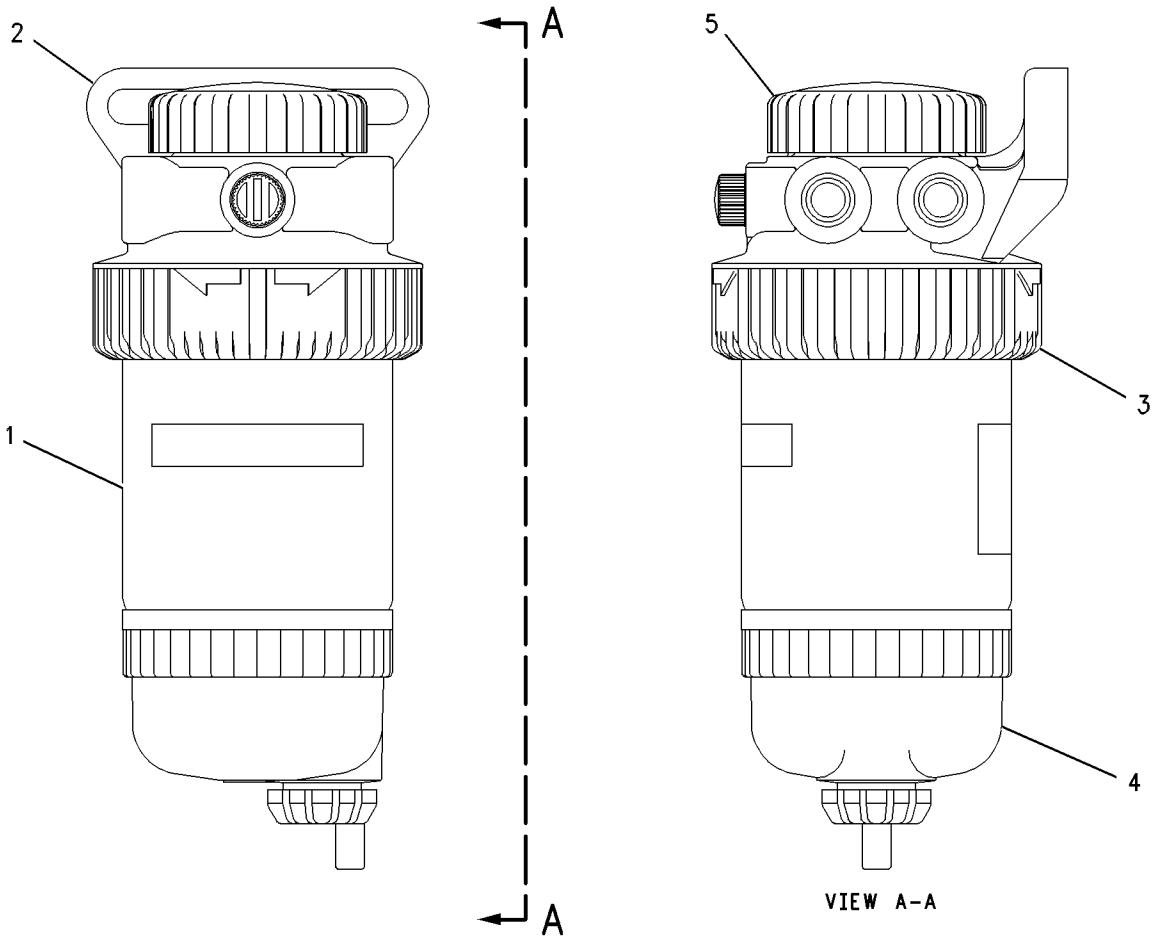

GRAPHIC #1 g00430959

153-1006 FITTING GP-FUEL LINES

S/N: 3NW21000-UP

PART OF 144-6194 ENGINE AR-PRIMARY

SMCS-1256 **i01068141**

NOTE	REF NO	GRAPHIC REF	PART NUMBER	QTY	PART NAME 1 2 3 4 5 6 (PRODUCT LEVEL)	SEE PAGE
	1	1	**067-6268**	1	NUT-FUEL LINE	
	2	1	**067-6269**	1	FITTING	

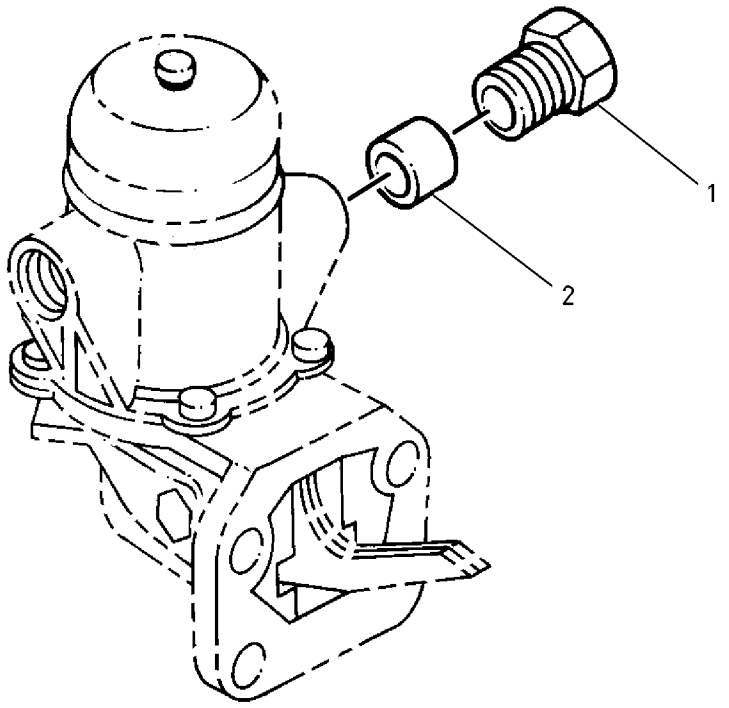

GRAPHIC #1 g00432718

FUEL SYSTEM

171-2929 GOVERNOR GP

S/N: 3NW21000-UP

PART OF 144-6194 ENGINE AR-PRIMARY

SMCS-1264, 1287 **i01515557**

NOTE	REF NO	GRAPHIC REF	PART NUMBER	QTY	PART NAME 1 2 3 4 5 6 (PRODUCT LEVEL)	SEE PAGE
	1	1	**6I-0631**	1	BOLT (M6X1.0X12MM)	
	2	1	**100-4845**	4	BOLT (M5X0.8X10MM)	
	3	1	**130-1841**	1	WASHER	
	4	1	**133-5512**	3	NUT	
	5	1	**158-7896**	1	CLIP	
	6	1	**158-7897**	1	ARM	
	7	1	**158-7898**	1	PIN	
	8	1	**158-7899**	2	PIN	
	9	1	**158-7900**	1	PIN	
	10	1	**205-7644**	1	WASHER-SEAL	
	11	1	**158-7902**	1	BOLT (11/16X1-12X3/4IN)	
	12	1	**158-7903**	1	ARM	
	13	1	**158-7905**	1	PLATE	
	14	1	**158-7906**	1	WEIGHT	
	15	1	**158-7909**	1	SLIDER	
	16	1	**158-7911**	1	BEARING	
	17	1	**158-7916**	3	WASHER	
	18	1	**158-7912**	1	BALL BEARING	
	20	1	**158-7921**	1	NUT	
	21	1	**158-7922**	1	SPRING	
	22	1	**158-7923**	1	ARM	
	23	1	**158-7924**	1	SHAFT	
	24	1	**158-7926**	1	SEAL-O-RING	
	25	1	**158-7933**	1	WASHER	
	26	1	**158-7934**	1	BOLT	
	27	1	**162-2213**	1	CAP	
	28	1	**158-7936**	1	BOLT	
	29	1	**158-7940**	1	SPRING	
	30	1	**158-7946**	1	LINK	
	31	1	**158-7947**	1	SPRING	
	32	1	**137-6390**	1	PROTECTION GP-FUEL SYSTEM	
	33	1	**158-7950**	2	PIN	
	34	1	**158-7951**	2	SPRING	
	35	1	**201-8964**	1	CAMSHAFT	
	37	1	**162-2210**	1	BOLT	
	38	1	**162-2215**	1	RING	

171-2929 **GOVERNOR GP** *(contd.)* **i01515557**

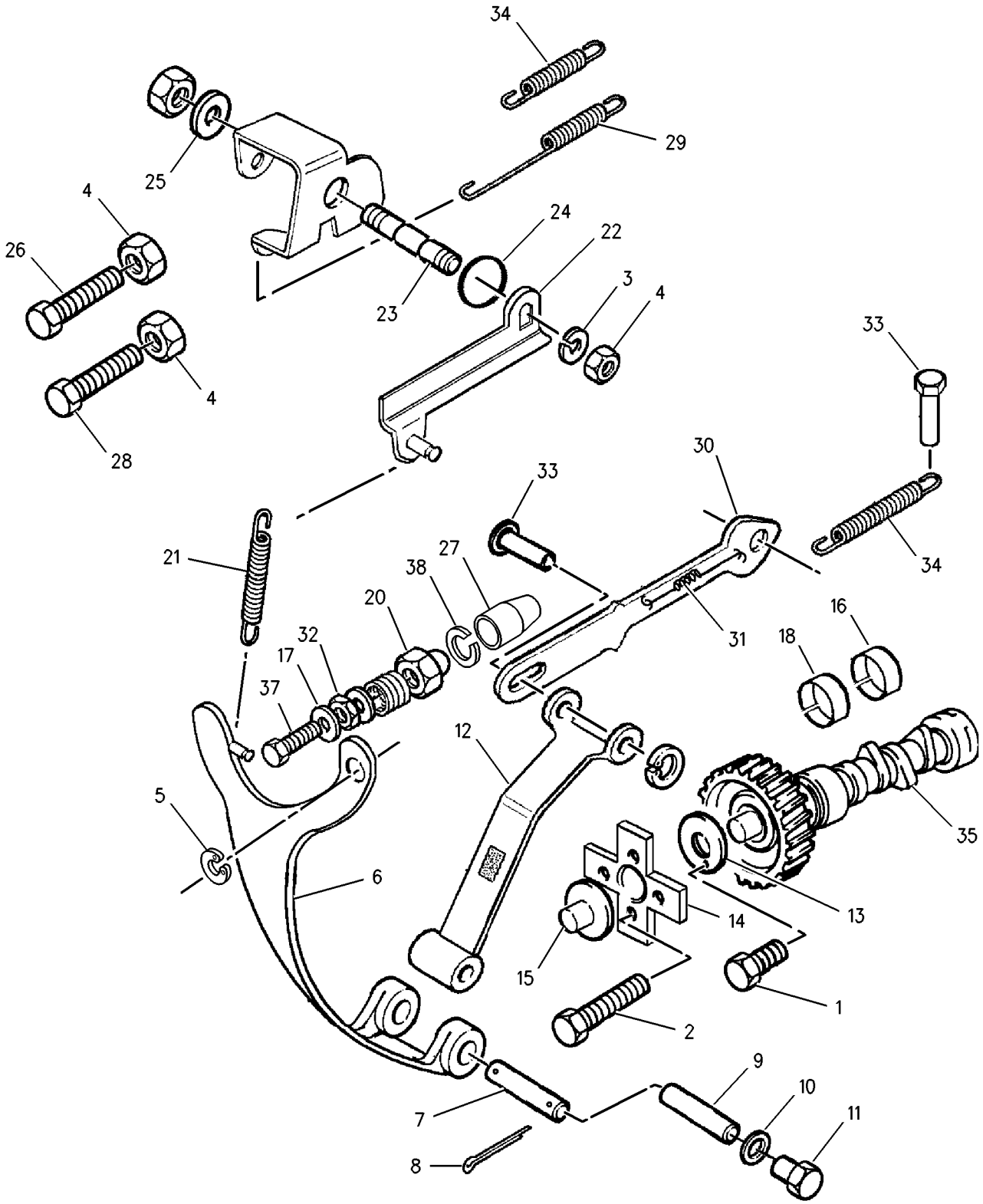

GRAPHIC #1 g00762047

FUEL SYSTEM

142-8821 LINES GP-FUEL

S/N: 5FZ6700-UP

PART OF 200-1002 CHASSIS AR

SMCS-1261, 1274 **i01762561**

NOTE	REF NO	GRAPHIC REF	PART NUMBER	QTY	PART NAME 1 2 3 4 5 6 (PRODUCT LEVEL)	SEE PAGE
	1	1	**3E-7404**	1	CLAMP-HOSE	
	2	1	**4H-2494**	3	SLEEVE-FITTING	
	3	1	**5P-4961**	2	CLAMP-HOSE	
	4	1	**9X-2038**	2	WASHER (7X19X2MM THK)	
	5	1	**033-7849**	2	PLUG	
	6	1	**116-4808**	1	TUBE	
CY	7	1	**130-7092**	1	SEPARATOR GP-WATER	135
	8	1	**142-8817**	1	HOSE	
	9	1	**142-8827**	1	GUARD AS	
M		1	**6V-9632**	2	NUT-WELD (M6X1 THD)	
	10	1	**142-8828**	1	CAP AS-FUEL	
	11	1	**159-5786**	3	TUBE AS	
	12	1	**032-8100**	2	WASHER (.064MM THK)	
	13	1	**1P-4278**	6	CLAMP-HOSE	
	14	1	**5P-0597**	1	CLAMP-HOSE	
	15	1	**8F-8513**	1	CLIP	
	16	1	**8T-4121**	2	WASHER-HARD (11X21X2.5MM THK)	
M	17	1	**8T-4133**	2	NUT (M10X1.5 THD)	
M	18	1	**8T-4138**	2	BOLT (M6X1X20MM)	
M	19	1	**8T-4196**	2	BOLT (M10X1.5X35MM)	
BCE	20	1	**5P-1442**		HOSE (125CM)	
BCE	21	1	**5P-6442**		HOSE (107CM)	

B-USE AS REQUIRED
C-CHANGE FROM PREVIOUS TYPE
E-ORDER BY THE CENTIMETER
M-METRIC PART
Y-SEPARATE ILLUSTRATION

142-8821 **LINES GP-FUEL** *(contd.)* **i01762561**

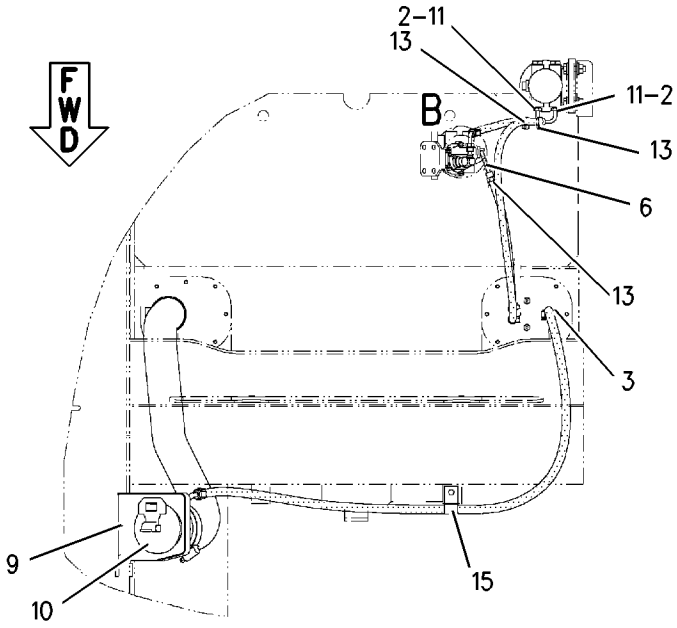

TOP VIEW

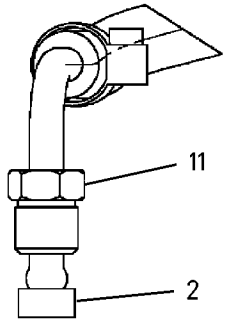

VIEW OF AREA B

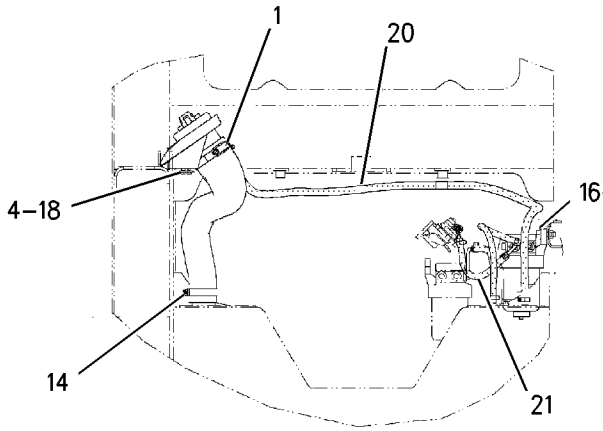

FRONT VIEW

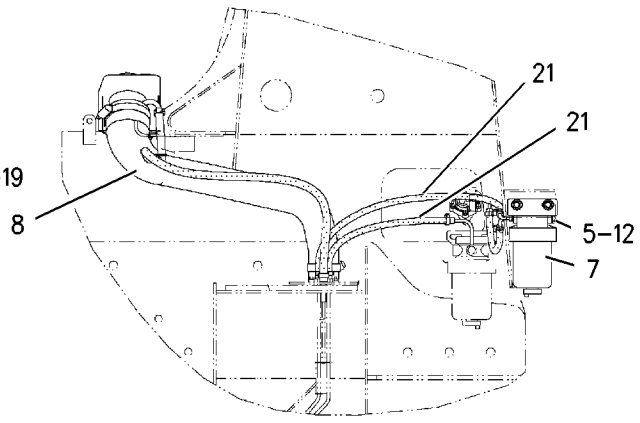

LEFT SIDE VIEW

GRAPHIC #1 g00901696

FUEL SYSTEM

201-7779 LINES GP-FUEL

S/N: 4NZ3400-UP

PART OF 200-0802 CHASSIS AR

SMCS-1261, 1274 **i01762568**

NOTE	REF NO	GRAPHIC REF	PART NUMBER	QTY	PART NAME 1 2 3 4 5 6 (PRODUCT LEVEL)	SEE PAGE
	1	1	**3E-7404**	1	CLAMP-HOSE	
	2	1	**4D-6988**	1	CLIP	
	3	1	**130-3156**	1	CONNECTOR	
	4	1	**5P-4961**	2	CLAMP-HOSE	
	5	1	**9X-2038**	2	WASHER (7X19X2MM THK)	
	6	1	**033-7849**	2	PLUG	
	7	1	**142-8817**	1	HOSE	
	8	1	**142-8827**	1	GUARD AS	
	9	1	**142-8828**	1	CAP AS-FUEL	
	10	1	**151-1975**	2	CONNECTOR	
Y	11	1	*176-9954*	1	FILTER GP-FUEL	115
	12	1	**032-8100**	2	WASHER (.064MM THK)	
M	13	1	**174-3877**	1	BOLT-HEX HEAD (M14X1.5X25MM)	
	14	1	**1P-4278**	10	CLAMP-HOSE	
	15	1	**5P-0597**	1	CLAMP-HOSE	
	16	1	**5P-7814**	2	SEAL-O-RING	
	17	1	**8F-8513**	1	CLIP	
	18	1	**8T-4121**	4	WASHER-HARD (11X21X2.5MM THK)	
	19	1	**8T-4122**	1	WASHER-HARD (17X32X3.5MM THK)	
M	20	1	**8T-4133**	2	NUT (M10X1.5 THD)	
M	21	1	**8T-4138**	2	BOLT (M6X1X20MM)	
M	22	1	**8T-4196**	2	BOLT (M10X1.5X35MM)	
BE	23	1	**5P-1420**		HOSE (118CM)	
BE	24	1	**5P-6442**		HOSE (9CM)	
BE	25	1	**5P-1442**		HOSE (125CM)	
BE	26	1	**5P-9770**		HOSE (42CM)	
BE	27	1	**217-7853**		HOSE (102CM)	

B-USE AS REQUIRED
E-ORDER BY THE CENTIMETER
M-METRIC PART
Y-SEPARATE ILLUSTRATION

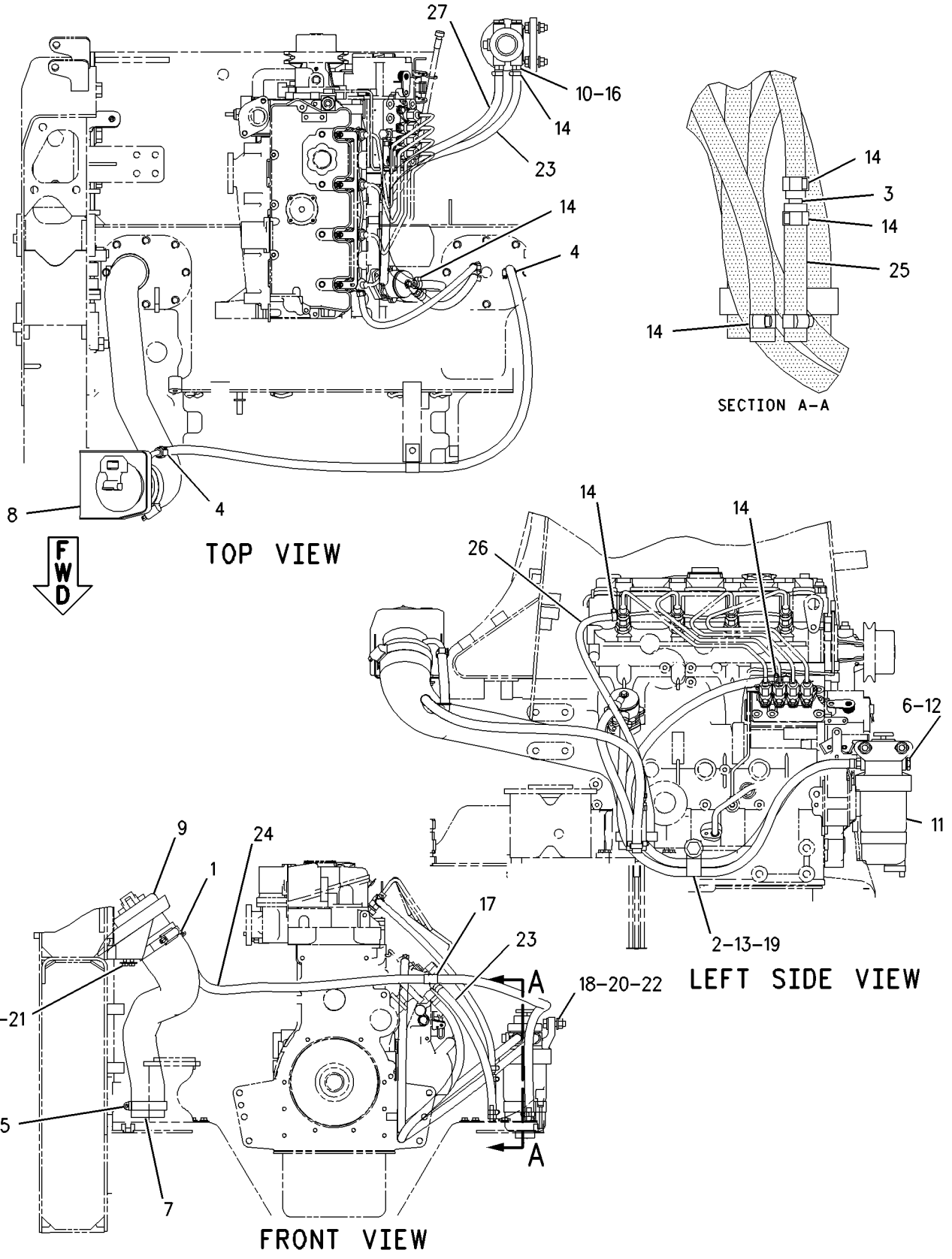

GRAPHIC #1 g00901708

FUEL SYSTEM

202-9022 LINES GP-FUEL

S/N: CAB1-UP

PART OF 191-9602 CHASSIS AR

SMCS-1261, 1274 **i01754127**

NOTE	REF NO	GRAPHIC REF	PART NUMBER	QTY	PART NAME 1 2 3 4 5 6 (PRODUCT LEVEL)	SEE PAGE
	1	1	**3E-7404**	1	CLAMP-HOSE	
	2	1	**4D-6988**	1	CLIP	
	3	1	**5P-4961**	2	CLAMP-HOSE	
	4	1	**9X-2038**	2	WASHER (7X19X2MM THK)	
	5	1	**033-7849**	2	PLUG	
	6	1	**130-3156**	1	CONNECTOR	
	7	1	**142-8827**	1	GUARD AS	
	8	1	**142-8828**	1	CAP AS-FUEL	
	9	1	**151-1975**	2	CONNECTOR	
Y	10	1	*176-9954*	1	FILTER GP-FUEL	115
	11	1	**212-6627**	1	HOSE	
	12	1	**032-8100**	2	WASHER (.064MM THK)	
M	13	1	**174-3877**	1	BOLT-HEX HEAD (M14X1.5X25MM)	
	14	1	**1P-4278**	10	CLAMP-HOSE	
	15	1	**5P-0597**	1	CLAMP-HOSE	
	16	1	**5P-7814**	2	SEAL-O-RING	
	17	1	**8F-8513**	1	CLIP	
	18	1	**8T-4121**	4	WASHER-HARD (11X21X2.5MM THK)	
	19	1	**8T-4122**	1	WASHER-HARD (17X32X3.5MM THK)	
M	20	1	**8T-4133**	2	NUT (M10X1.5 THD)	
M	21	1	**8T-4138**	2	BOLT (M6X1X20MM)	
M	22	1	**8T-4196**	2	BOLT (M10X1.5X35MM)	
BE	23	1	**217-7853**		HOSE (102CM)	
BE	24	1	**5P-1420**		HOSE (118CM)	
BE	25	1	**5P-1442**		HOSE (135CM)	
BE	26	1	**5P-6442**		HOSE (9CM)	
BE	27	1	**5P-9770**		HOSE (42CM)	

B-USE AS REQUIRED
E-ORDER BY THE CENTIMETER
M-METRIC PART
Y-SEPARATE ILLUSTRATION

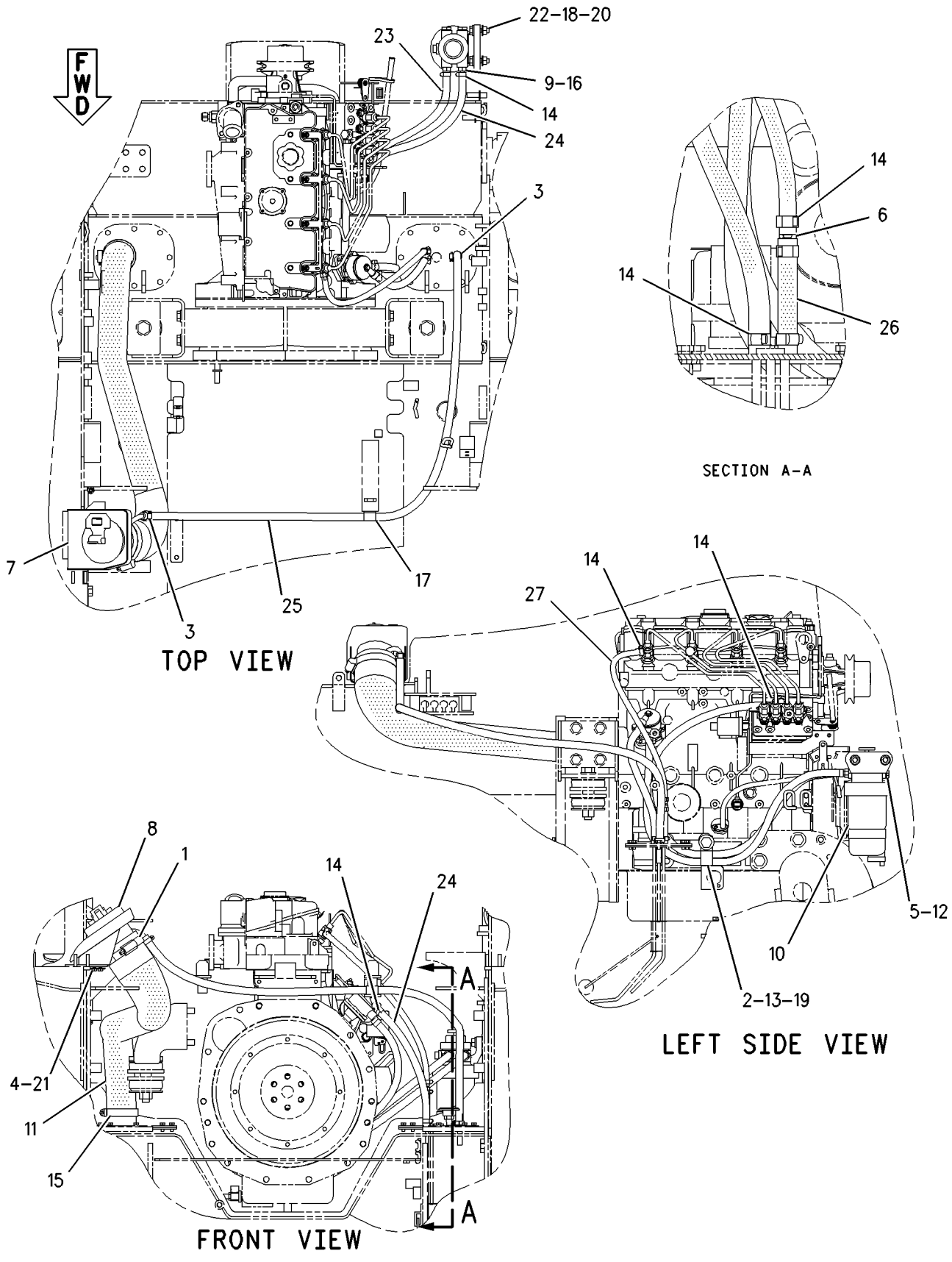

GRAPHIC #1

g00897483

FUEL SYSTEM

212-6626 LINES GP-FUEL

S/N: CMB1-UP

PART OF 191-2902 CHASSIS AR

SMCS-1261, 1274 **i01757379**

NOTE	REF NO	GRAPHIC REF	PART NUMBER	QTY	PART NAME 1 2 3 4 5 6 (PRODUCT LEVEL)	SEE PAGE
	1	1	**3E-7404**	1	CLAMP-HOSE	
	2	1	**4H-2494**	3	SLEEVE-FITTING	
	3	1	**5P-4961**	2	CLAMP-HOSE	
	4	1	**9X-2038**	2	WASHER (7X19X2MM THK)	
	5	1	**033-7849**	2	PLUG	
	6	1	**116-4808**	1	TUBE	
Y	7	1	**130-7092**	1	SEPARATOR GP-WATER	135
	8	1	**142-8827**	1	GUARD AS	
	9	1	**142-8828**	1	CAP AS-FUEL	
	10	1	**159-5786**	3	TUBE AS	
	11	1	**212-6627**	1	HOSE	
	12	1	**032-8100**	2	WASHER (.064MM THK)	
	13	1	**1P-4278**	6	CLAMP-HOSE	
	14	1	**5P-0597**	1	CLAMP-HOSE	
	15	1	**8F-8513**	1	CLIP	
	16	1	**8T-4121**	4	WASHER-HARD (11X21X2.5MM THK)	
M	17	1	**8T-4133**	2	NUT (M10X1.5 THD)	
M	18	1	**8T-4138**	2	BOLT (M6X1X20MM)	
M	19	1	**8T-4196**	2	BOLT (M10X1.5X35MM)	
BE	20	1	**5P-1442**		HOSE (135CM)	
BE	21	1	**5P-6442**		HOSE (53CM)	
BE	22	1	**5P-6442**		HOSE (35CM)	
BE	23	1	**5P-6442**		HOSE (19CM)	

B-USE AS REQUIRED
E-ORDER BY THE CENTIMETER
M-METRIC PART
Y-SEPARATE ILLUSTRATION

212-6626 **LINES GP-FUEL** ***(contd.)*** **i01757379**

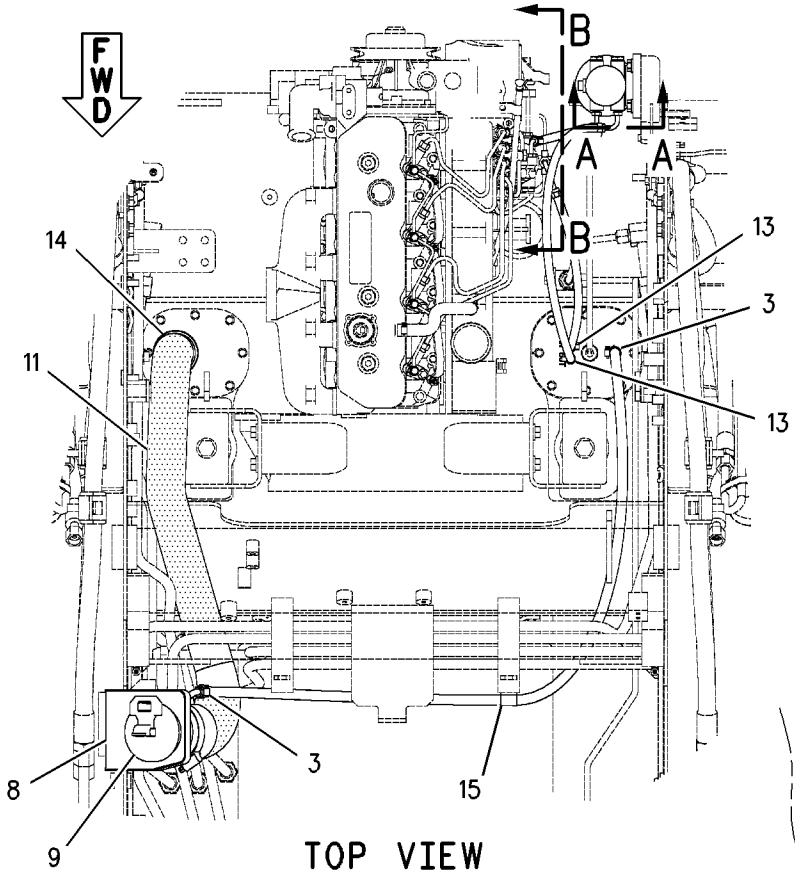

TOP VIEW

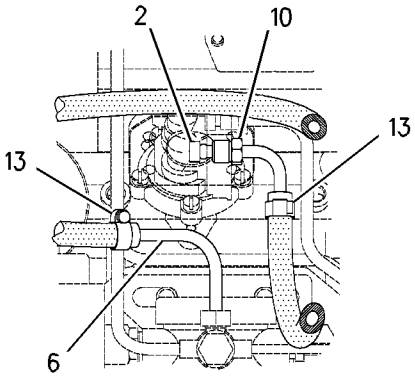

SECTION B-B

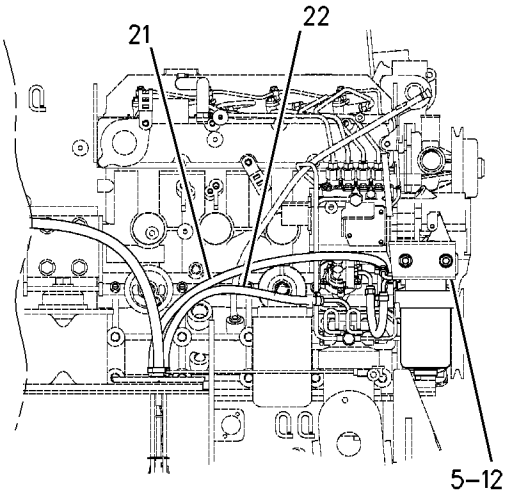

LEFT SIDE VIEW

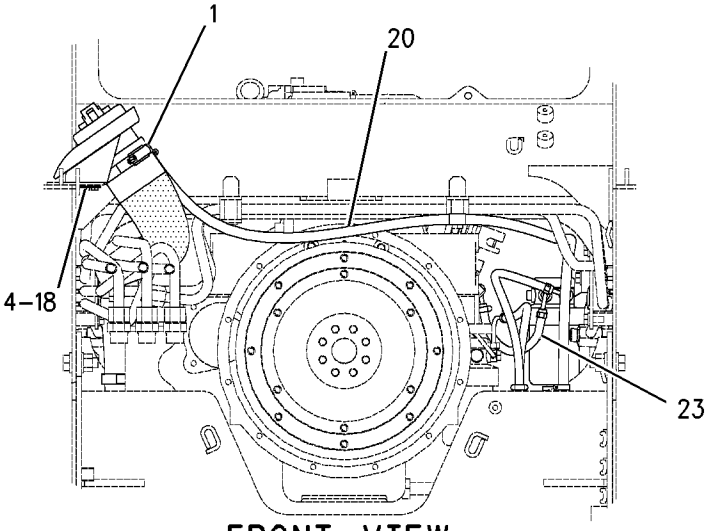

FRONT VIEW

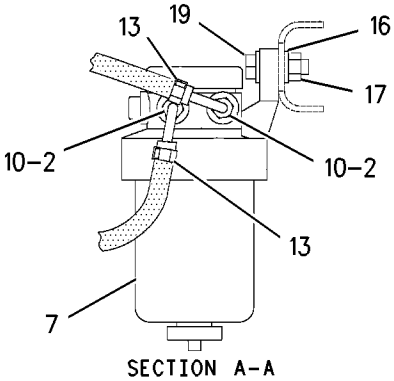

SECTION A-A

GRAPHIC #1 g00898907

176-7711 PUMP & MTG GP-FUEL TRANSFER

S/N: CSD1-UP
PART OF 179-1808 ENGINE AR-PRIMARY
AN ATTACHMENT

SMCS-1256 **i01472676**

NOTE	REF NO	GRAPHIC REF	PART NUMBER	QTY	PART NAME 1 2 3 4 5 6 (PRODUCT LEVEL)	SEE PAGE
	1	1	**153-6873**	2	BOLT	
	2	1	**176-7712**	1	PUMP AS-FUEL PRIMING	
	3	1	**176-7719**	1	SEAL-O-RING	

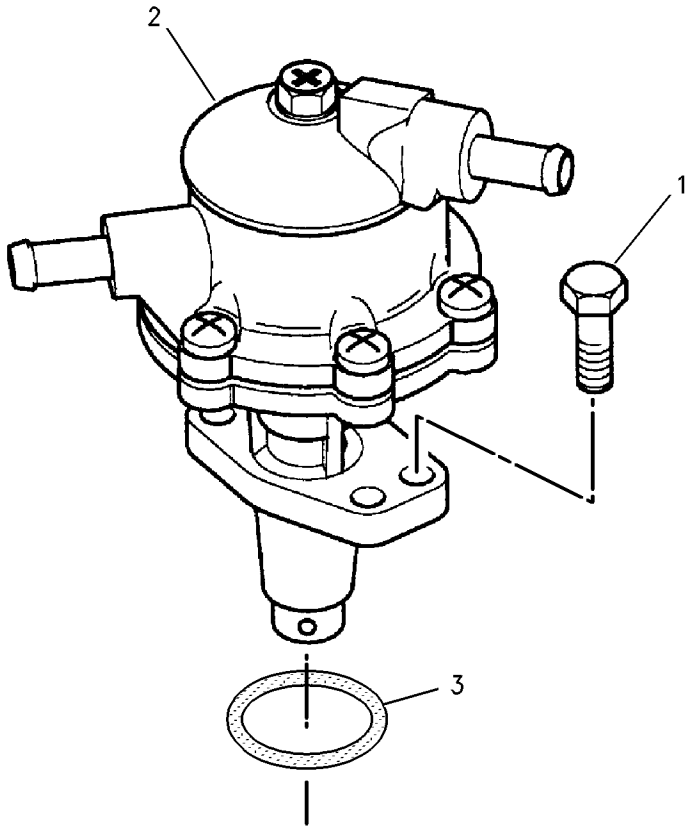

GRAPHIC #1 g00758159

MEMORANDA

165-4958 PUMP GP-FUEL INJECTION

S/N: 3NW21000-UP

PART OF 144-6194 ENGINE AR-PRIMARY

SMCS-1251 **i01670306**

NOTE	REF NO	GRAPHIC REF	PART NUMBER	QTY	PART NAME 1 2 3 4 5 6 (PRODUCT LEVEL)	SEE PAGE
	1	1	**6I-0291**	2	NUT (M8X1.25)	
	2	1	**6I-0572**	4	BOLT (M8X1.25.20MM)	
	3	1	**6I-0631**	4	BOLT (M6X1.0X12MM)	
	4	1	**6I-0840**	2	STUD (M8X20MM)	
	5	1	**067-6998**	1	NUT	
	6	1	**067-6999**	1	FERRULE	
	7	1	**124-3533**	2	DOWEL	
	8	1	**140-8713**	2	CLIP	
	9	1	**140-8714**	1	CLIP	
	10	1	**140-8718**	4	WASHER-SEATING	
	11	1	**147-2991**	4	INJECTOR AS-FUEL	
					(EACH INCLUDES)	
	11A	1	**147-2994**	1	BOLT	
	11B	1	**147-2995**	1	WASHER	
	12	1	**147-3043**	1	GASKET	
	13	1	**147-3046**	4	SEAL-O-RING	
	14	1	**153-1022**	4	SPACER	
	15	1	**153-1153**	1	TUBE AS-FUEL INJECTION (CYL. NO.1)	
	16	1	**153-1154**	1	TUBE AS-FUEL INJECTION (CYL. NO.2)	
	17	1	**153-1155**	1	TUBE AS-FUEL INJECTION (CYL. NO.3)	
	18	1	**153-1156**	1	TUBE AS-FUEL INJECTION (CYL. NO.4)	
	19	1	**192-5845**	1	KIT-SHIM	
	20	1	**160-8657**	1	LINE-FUEL (LEAK OFF)	
	21	1	**164-7610**	1	PUMP GP-FUEL INJECTION	
	21A	1	**146-0006**	1	SCREW-PURGE	
	21B	1	**146-0018**	1	GASKET	
	21C	1	**196-0975**	1	BOLT-BANJO	
	21D	1	**196-0982**	2	GASKET	
	22	1	**146-9303**	1	COVER	
	23	1	**153-1023**	1	NUT	
	24	1	**158-7931**	1	LEVER	
	25	1	**158-7920**	1	SPRING	
	26	1	**171-2930**	1	ADJUSTER AS	

165-4958 **PUMP GP-FUEL INJECTION** *(contd.)* **i01670306**

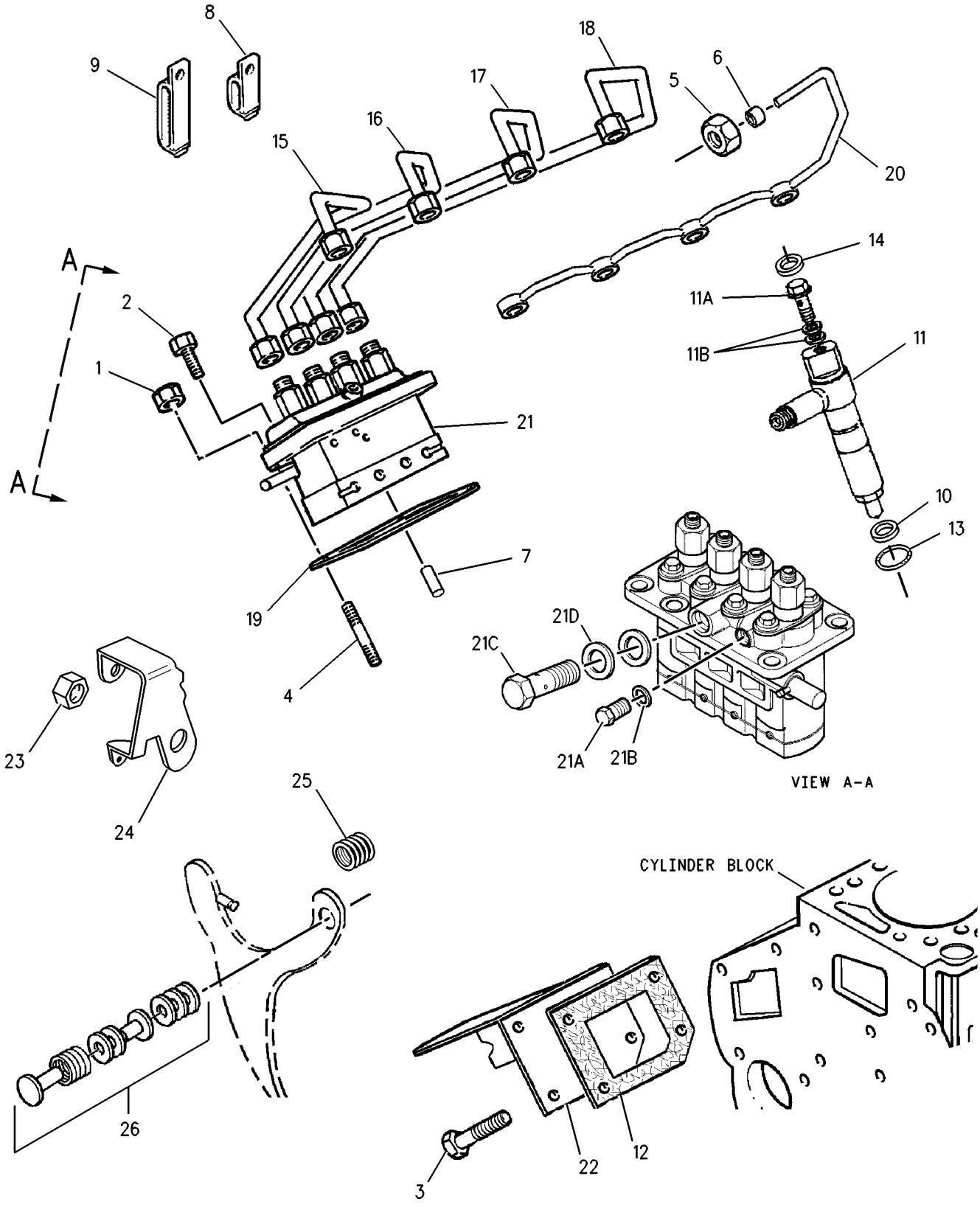

GRAPHIC #1 g00863202

217-2764 PUMP GP-FUEL INJECTION

S/N: CSD1-UP
PART OF 179-1808 ENGINE AR-PRIMARY
AN ATTACHMENT

SMCS-1251 **i01649307**

NOTE	REF NO	GRAPHIC REF	PART NUMBER	QTY	PART NAME 1 2 3 4 5 6 (PRODUCT LEVEL)	SEE PAGE
	1	1	**153-5592**	3	NUT	
	2	1	**153-5960**	3	NUT	
	3	1	**153-6393**	6	DAMPER	
	4	2	**153-6412**	1	WASHER	
	5	1	**154-2713**	3	BOLT	
	6	2	**154-2715**	2	WASHER	
	7	2	**154-2716**	4	SEAL	
B	8	1	**154-3017**	1	SHIM	
B		1	**160-3555**	1	SHIM (0.3MM THK)	
B		1	**160-3556**	1	SHIM (0.4MM THK)	
B		1	**160-3557**	1	SHIM (0.5MM THK)	
B		1	**160-3558**	1	SHIM (0.5MM THK)	
	9	2	**154-3018**	4	INJECTOR AS-FUEL	
					(EACH INCLUDES)	
	10	2	**202-1196**	1	WASHER-SPECIAL	
	11	2	**205-4731**	1	NUT	
	12	2	**205-4732**	1	WASHER	
	13	1	**183-3353**	3	BOLT	
	14	2	**190-3803**	1	BOLT	
	15	1	**217-2754**	1	PUMP GP-FUEL INJECTION	
	16	1	**205-4726**	1	BOLT-BANJO	
	17	1	**205-4727**	1	WASHER	
	18	1	**205-4728**	1	CONNECTOR	
	19	1	**217-2760**	1	TUBE AS (CYL NO. 1)	
	20	1	**217-2761**	1	TUBE AS (CYL NO. 2)	
	21	1	**217-2762**	1	TUBE AS (CYL NO. 3)	
	22	1	**217-2763**	1	TUBE AS (CYL NO. 4)	
	23	2	**217-5204**	1	SOLENOID	

B-USE AS REQUIRED

217-2764 **PUMP GP-FUEL INJECTION** *(contd.)* **i01649307**

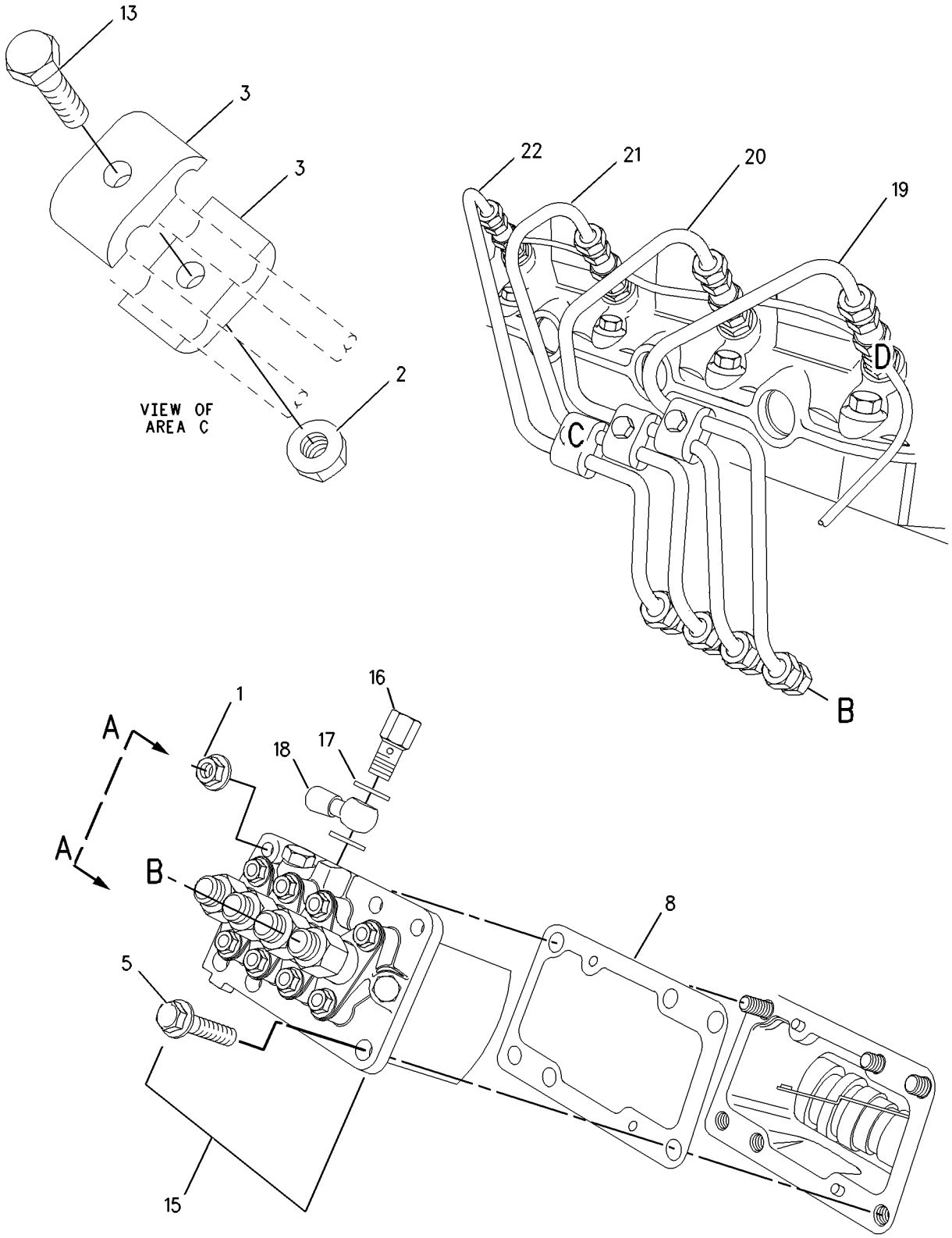

GRAPHIC #1 g00852824

217-2764 **PUMP GP-FUEL INJECTION** *(contd.)* **i01649307**

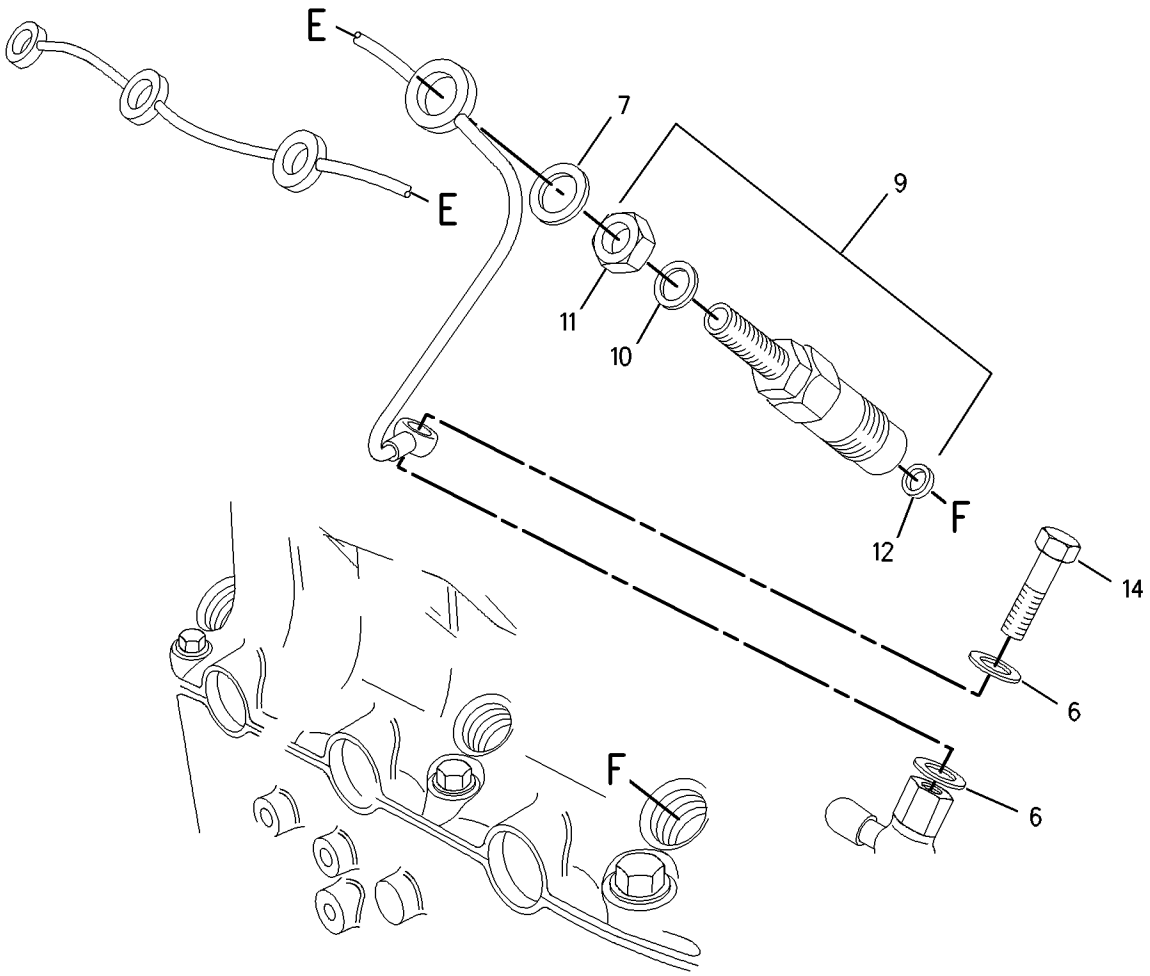

VIEW OF
AREA D

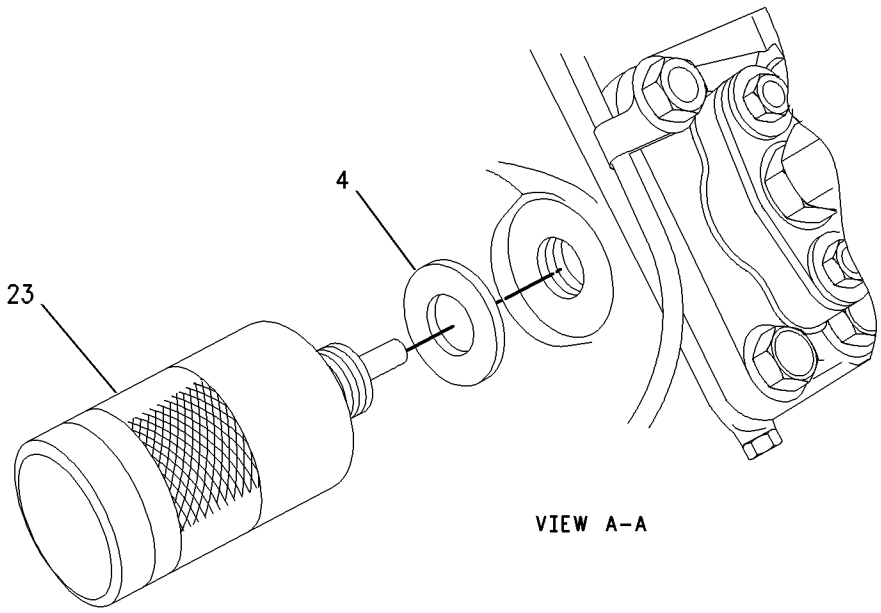

VIEW A-A

GRAPHIC #2 g00852825

FUEL SYSTEM

130-7092 SEPARATOR GP-WATER

S/N: CMB1-UP; 5FZ6700-UP

PART OF 142-8821, 212-6626 LINES GP-FUEL

SMCS-1263 **i01450195**

NOTE	REF NO	GRAPHIC REF	PART NUMBER	QTY	PART NAME 1 2 3 4 5 6 (PRODUCT LEVEL)	SEE PAGE
	1	1	**118-8118**	1	RING-RETAINING	
	2	1	**118-8119**	1	NUT	
	3	1	**131-1812**	1	FILTER ELEMENT-WATER	
					AVAILABLE REPAIR KIT(S):	
			121-4480	1	KIT-WATER BASE	

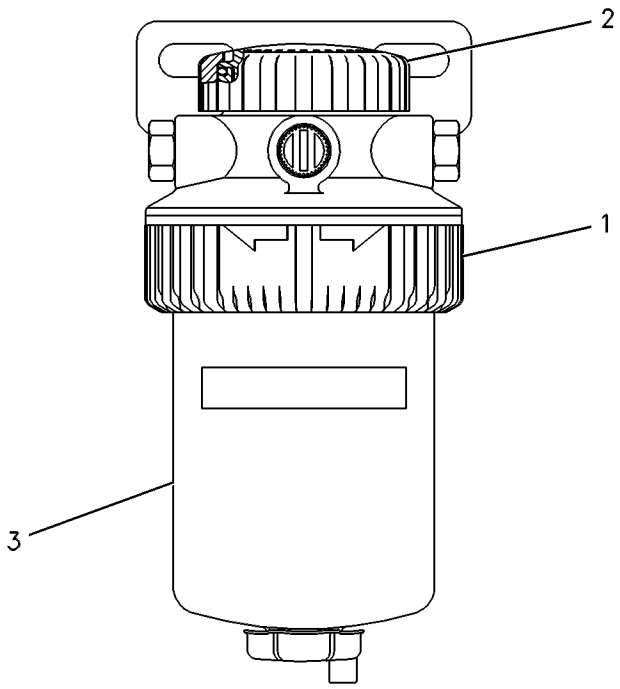

GRAPHIC #1 g00259641

142-9108 ALTERNATOR GP-CHARGING

S/N: CAB1-UP; CMB1-UP; 5FZ6700-UP
PART OF 200-1005, 219-4375, 219-4385 INSTALLATION AR-ENGINE, 220-8098
INSTALLATION AR-HEATER
ALSO AN ATTACHMENT

SMCS-1405, 1410, 1425 **i01588986**

NOTE	REF NO	GRAPHIC REF	PART NUMBER	QTY	PART NAME 1 2 3 4 5 6 (PRODUCT LEVEL)	SEE PAGE
	1	1	**5L-3834**	1	V-BELT	
	2	1	**7X-0579**	2	WASHER-HARD (8.8X25.5X2MM THK)	
M	3	1	**101-7399**	1	BOLT-HEX SOCKET (M10X1.5X120MM)	
M	4	1	**105-3479**	1	BOLT-HEX SOCKET (M10X1.5X90MM)	
	5	1	**106-4159**	1	SPACER (13.5MM THK)	
	6	1	**142-9109**	1	GUARD-BELT	
R	7	1	**144-9954**	1	ALTERNATOR GP-CHARGING	
	8	1	**144-9960**	1	STRAP	
	9	1	**159-5796**	1	BRACKET AS	
	10	1	**101-2867**	3	WASHER-HARD (7.2X25X2MM THK)	
	11	1	**5P-4116**	1	WASHER-HARD (8.8X20.5X2MM THK)	
B	12	1	**7C-6921**	1	SPACER (11X20X22.8MM THK) (22.8 THIK)	
	13	1	**8T-4121**	3	WASHER-HARD (11X21X2.5MM THK)	
M	14	1	**8T-4133**	1	NUT (M10X1.5 THD)	
M	15	1	**8T-4189**	1	BOLT (M8X1.25X20MM)	
M	16	1	**8T-4200**	4	BOLT (M8X1.25X16MM)	
	17	1	**8T-4224**	2	WASHER-HARD (8.8X16X2MM THK)	
M	18	1	**9X-2045**	3	SCREW-TRUSS HEAD (M6X1X20MM)	
	19	1	**4P-8134**	1	CLIP	

B-USE AS REQUIRED
M-METRIC PART
R-REMFG PART MAY BE AVAILABLE

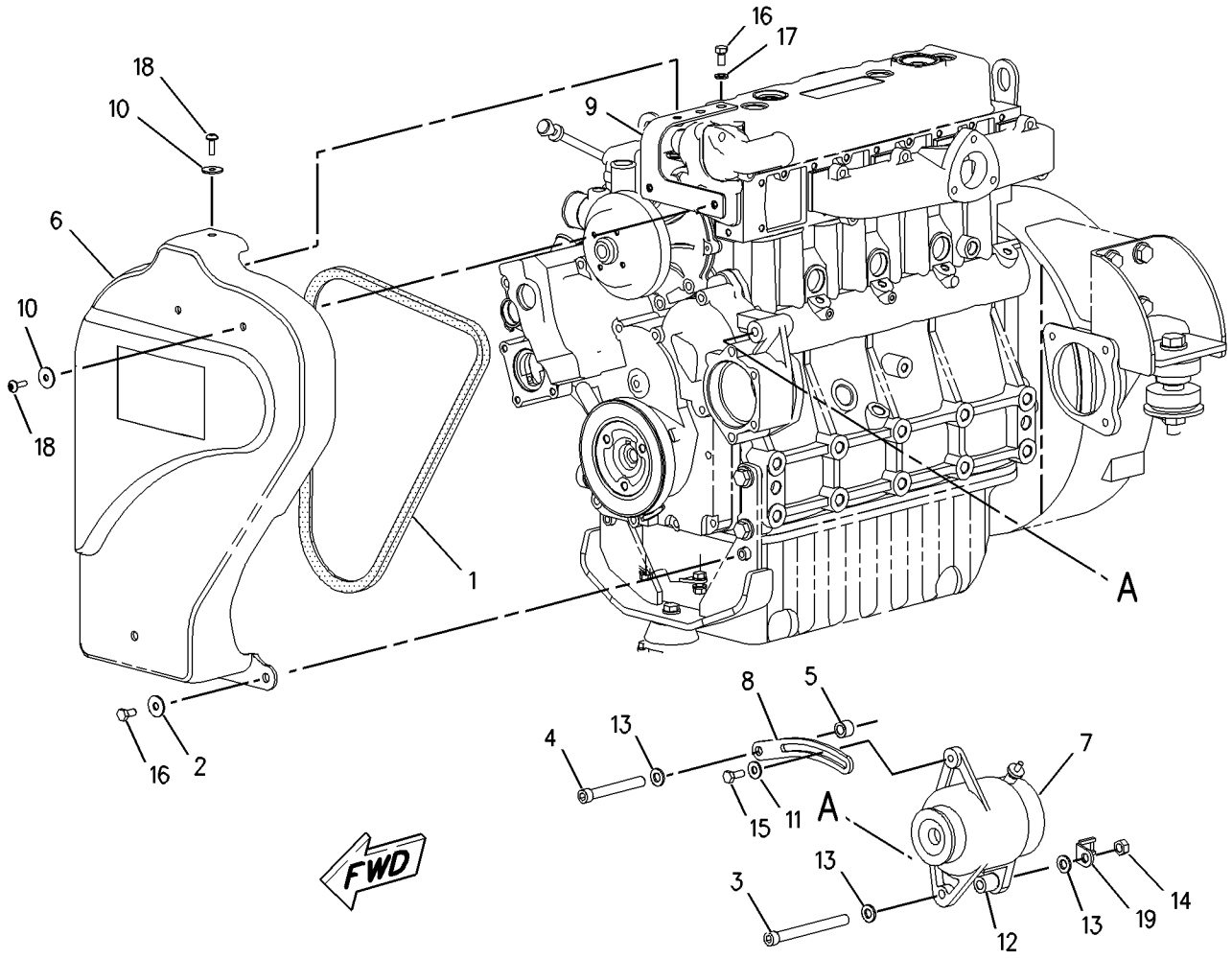

GRAPHIC #1 g00823943

202-9017 ALTERNATOR GP-CHARGING

S/N: 4NZ3400-UP

PART OF 200-0805 INSTALLATION AR-ENGINE

SMCS-1405, 1410, 1425 **i01762578**

NOTE	REF NO	GRAPHIC REF	PART NUMBER	QTY	PART NAME 1 2 3 4 5 6 (PRODUCT LEVEL)	SEE PAGE
	1	1	**7C-9465**	1	SPACER (20MM THK)	
	2	1	**8N-3504**	1	V-BELT	
R	3	1	**144-9952**	1	ALTERNATOR GP-CHARGING	
	4	1	**144-9957**	1	BRACKET AS	
	5	1	**144-9960**	1	STRAP	
	6	1	**149-7694**	1	BRACKET AS	
M		1	**8T-3612**	4	NUT-WELD (M8X1.25 THD)	
	7	1	**170-7058**	1	SPACER	
	8	1	**204-2626**	1	BRACKET AS	
M		1	**8T-3490**	1	NUT-WELD (M10X1.5 THD)	
M		1	**8T-3612**	2	NUT-WELD (M8X1.25 THD)	
	9	1	**208-0044**	1	GUARD-BELT	
	10	1	**1P-7009**	1	CLIP	
	11	1	**5P-4116**	13	WASHER-HARD (8.8X20.5X2MM THK)	
M	12	1	**7X-2537**	1	BOLT (M8X1.25X35MM)	
	13	1	**8T-4121**	3	WASHER-HARD (11X21X2.5MM THK)	
M	14	1	**8T-4133**	1	NUT (M10X1.5 THD)	
M	15	1	**8T-4189**	4	BOLT (M8X1.25X20MM)	
M	16	1	**8T-4200**	5	BOLT (M8X1.25X16MM)	
M	17	1	**8T-4908**	2	BOLT (M8X1.25X25MM)	
M	18	1	**8T-6685**	1	BOLT (M10X1.50X110MM)	
M	19	1	**8T-7547**	1	BOLT (M8X1.25X30MM)	

M-METRIC PART
R-REMFG PART MAY BE AVAILABLE

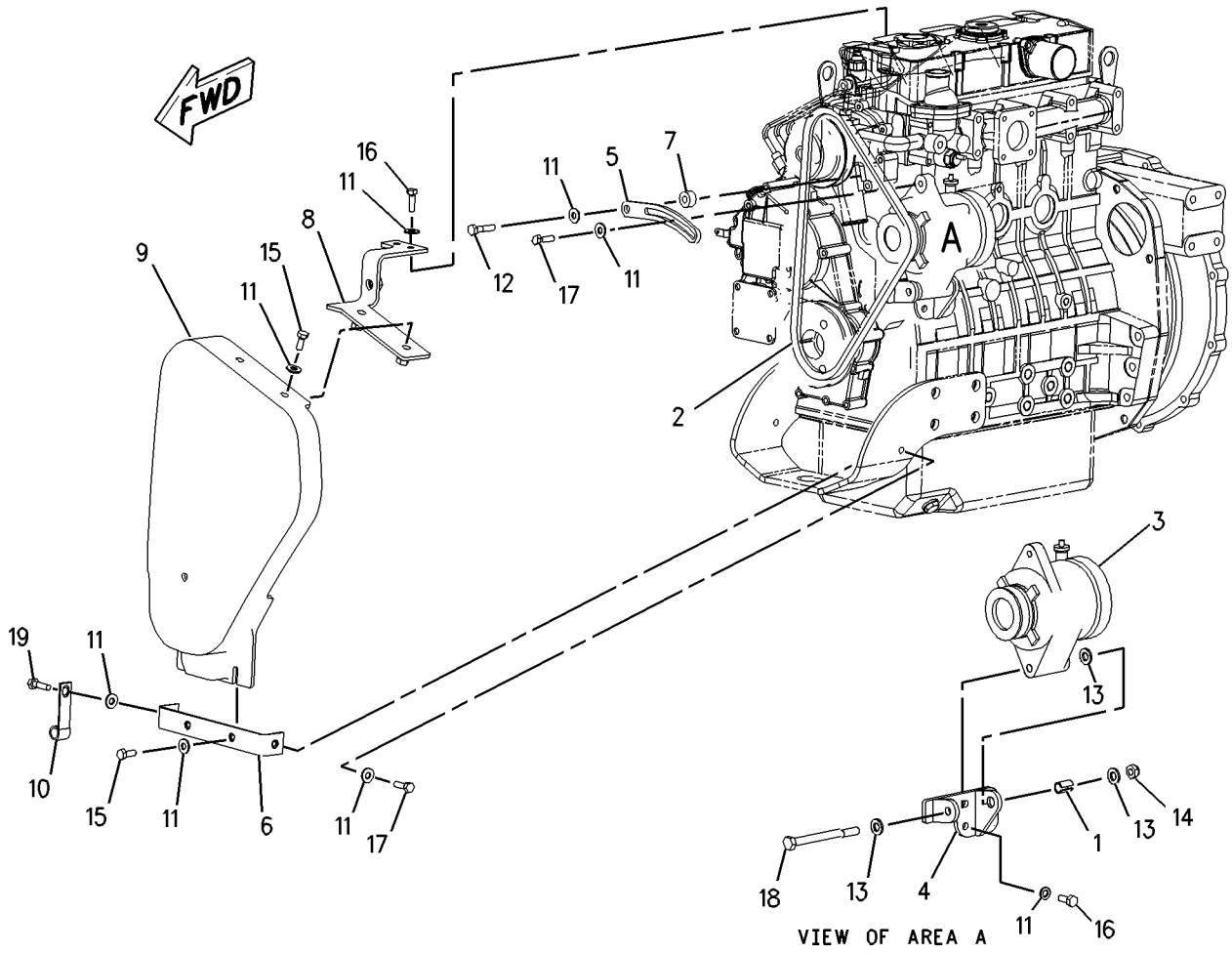

GRAPHIC #1 g00901714

142-7496 BATTERY GP

S/N: CMB1-UP; 4NZ3400-UP; 5FZ6700-UP
STANDARD
CANNOT BE USED WITH 193-8352—PAGE 141
AN ATTACHMENT

SMCS-1401 **i01755323**

NOTE	REF NO	GRAPHIC REF	PART NUMBER	QTY	PART NAME 1 2 3 4 5 6 (PRODUCT LEVEL)	SEE PAGE
	1	1	**153-5656**	1	BATTERY (12 VOLT)	
	2	1	**193-8329**	1	CLAMP	
	3	1	**5P-4116**	2	WASHER-HARD (8.8X20.5X2MM THK)	
M	4	1	**8T-4189**	1	BOLT (M8X1.25X20MM)	
M	5	1	**8T-6912**	1	BOLT (M8X1.25X50MM)	

M-METRIC PART

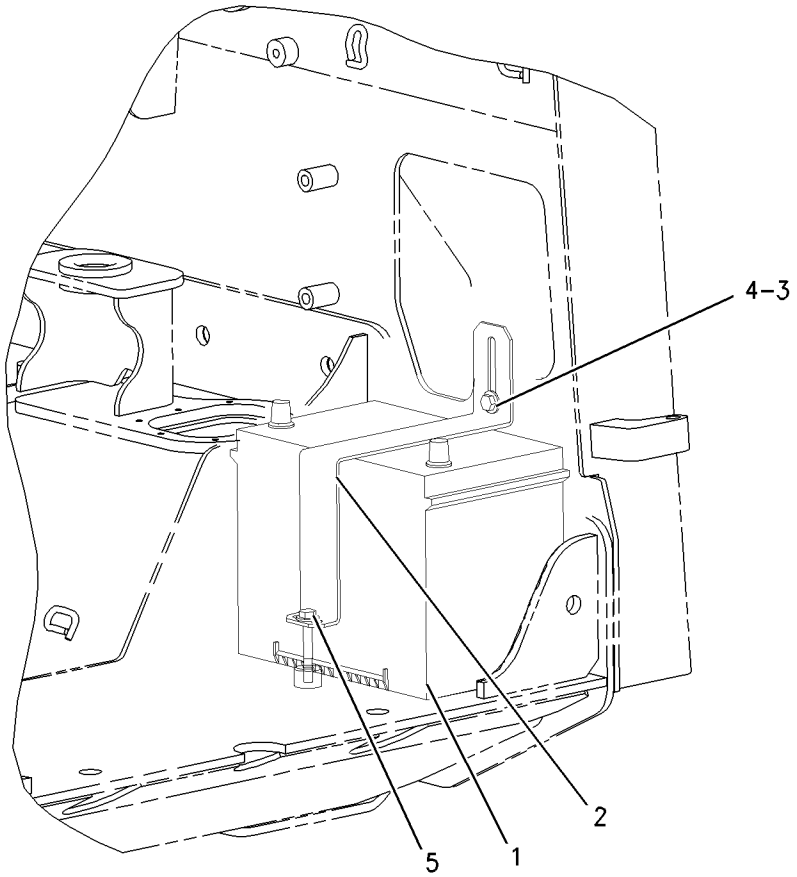

GRAPHIC #1 g00898058

193-8352 BATTERY GP

S/N: CAB1-UP; CMB1-UP; 4NZ3400-UP; 5FZ6700-UP
HEAVY DUTY
CANNOT BE USED WITH 142-7496—PAGE 140
AN ATTACHMENT

SMCS-1401 **i01430896**

NOTE	REF NO	GRAPHIC REF	PART NUMBER	QTY	PART NAME 1 2 3 4 5 6 (PRODUCT LEVEL)	SEE PAGE
	1	1	**9X-5408**	1	BATTERY (12 VOLT)	
	2	1	**193-8329**	1	CLAMP-BATTERY	
	3	1	**5P-4116**	2	WASHER-HARD (8.8X20.5X2MM THK)	
M	4	1	**8T-4189**	2	BOLT (M8X1.25X20MM)	

M-METRIC PART

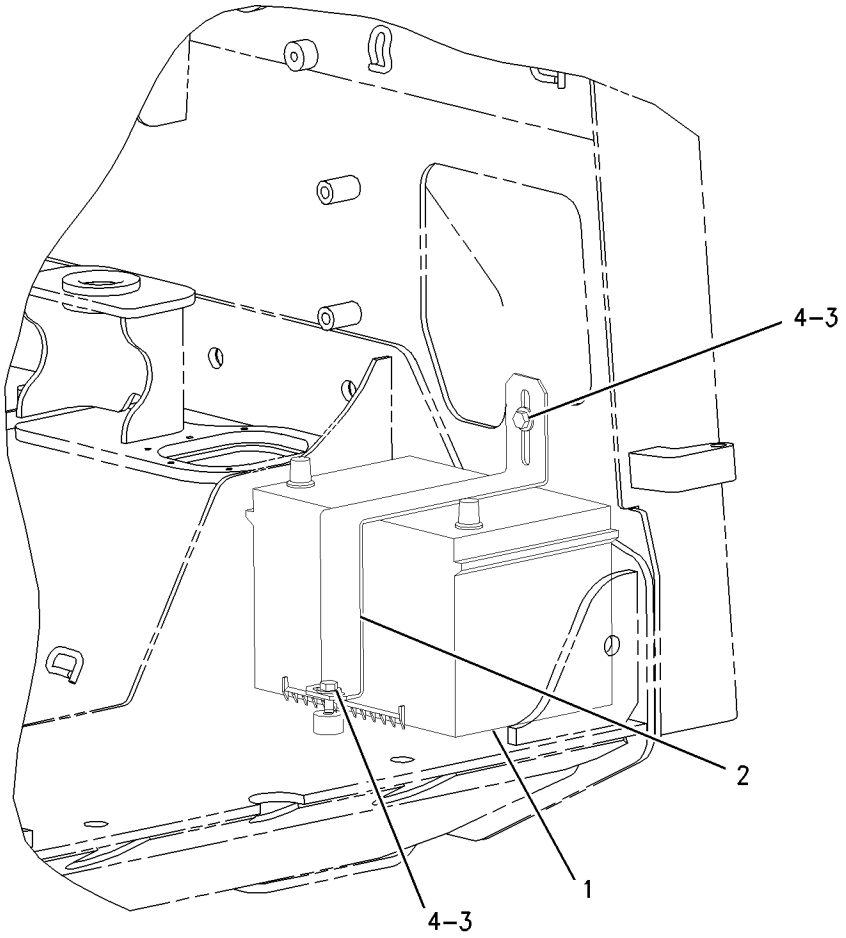

GRAPHIC #1 g00749953

217-2778 CONNECTION GP-ELECTRICAL

S/N: CSD1-UP
PART OF 179-1808 ENGINE AR-PRIMARY
AN ATTACHMENT

SMCS-1408, 4459 **i01649071**

NOTE	REF NO	GRAPHIC REF	PART NUMBER	QTY	PART NAME 1 2 3 4 5 6 (PRODUCT LEVEL)	SEE PAGE
	1	1	**183-4037**	1	CONNECTOR AS	
	2	1	**200-5976**	1	CONNECTION	

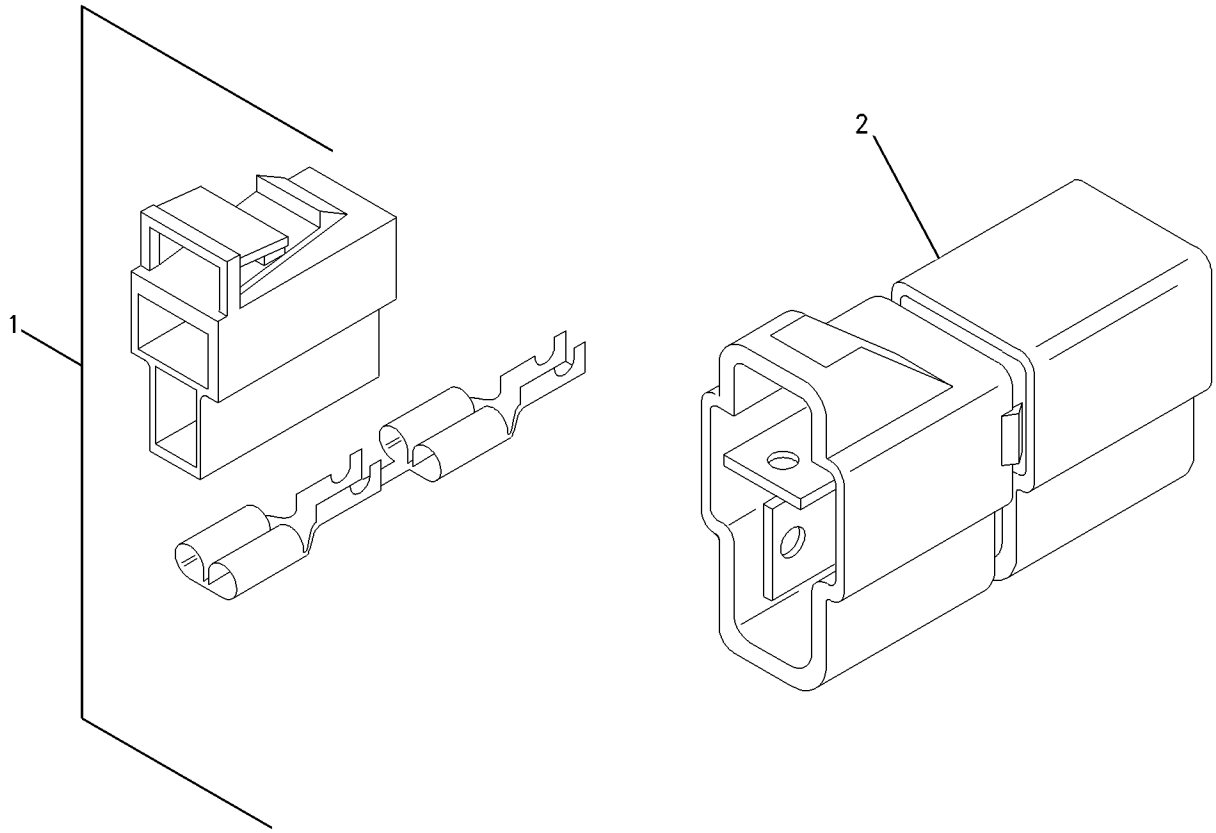

GRAPHIC #1 g00852746

ELECTRICAL AND STARTING SYSTEM

217-5884 CONNECTION GP-ELECTRICAL

S/N: CSD1-UP
PART OF 179-1808 ENGINE AR-PRIMARY
AN ATTACHMENT

SMCS-1408, 4459 **i01649079**

NOTE	REF NO	GRAPHIC REF	PART NUMBER	QTY	PART NAME 1 2 3 4 5 6 (PRODUCT LEVEL)	SEE PAGE
	1	1	**193-0161**	3	KIT-CONNECTOR	

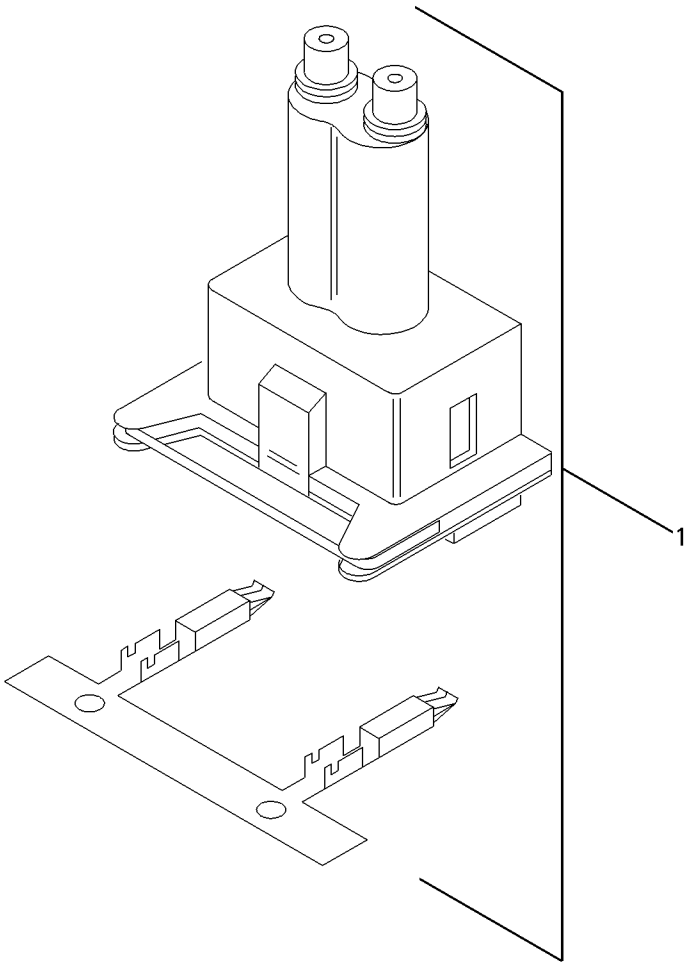

GRAPHIC #1 g00852753

154-4233 CONTROL GP-INTERLOCK

S/N: CAB1-UP; CMB1-UP; 4NZ3400-UP; 5FZ6700-UP
PART OF 193-8375 WIRING GP-CAB

SMCS-7630 **i01698898**

NOTE	REF NO	GRAPHIC REF	PART NUMBER	QTY	PART NAME 1 2 3 4 5 6 (PRODUCT LEVEL)	SEE PAGE
	1	1	**7X-6315**	1	STRAP AS	
	2	1	**184-2472**	1	SCREW-PAN HEAD (LUBRICATED)	
	3	1	**134-4126**	1	WASHER (4.52X8.28X.76MM THK)	

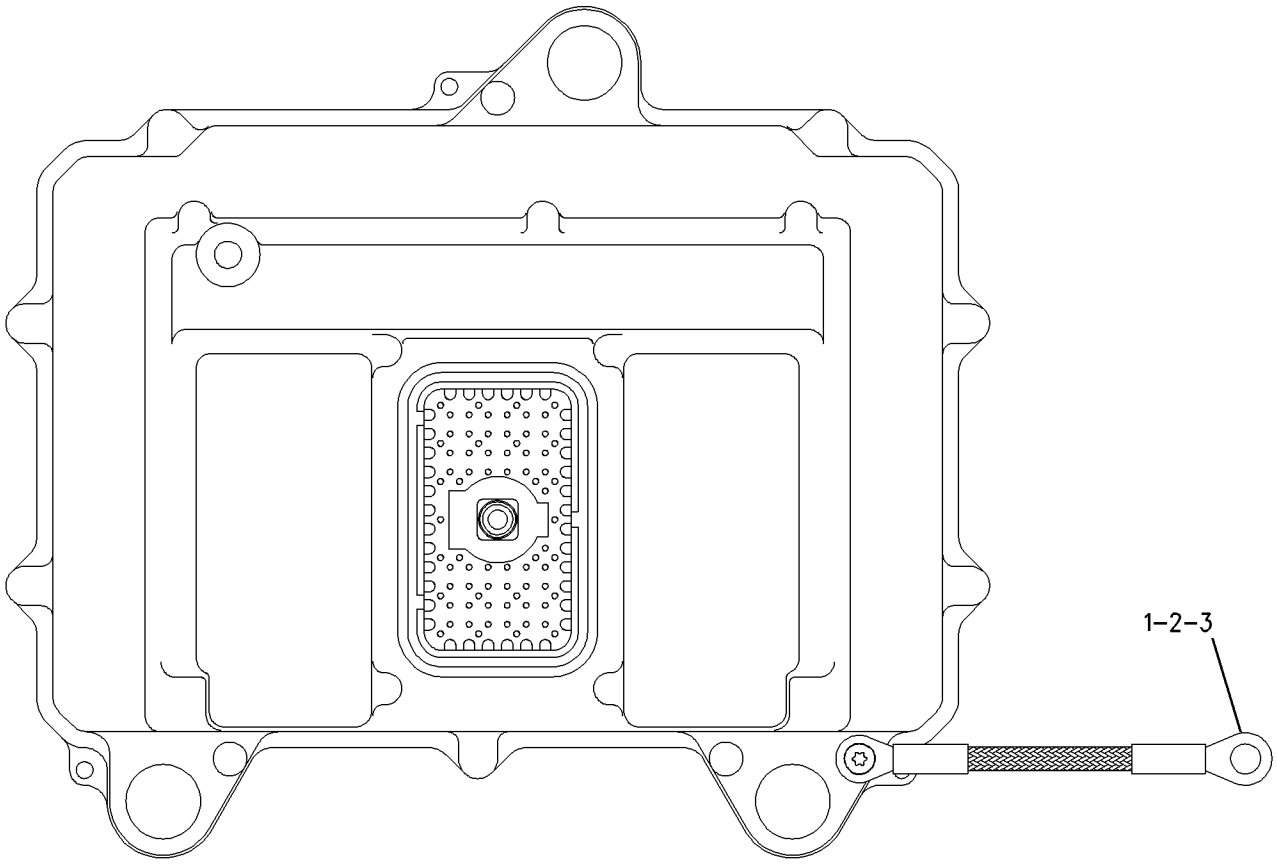

GRAPHIC #1 g00843169

193-8374 COVER GP-FUSE PANEL

S/N: CAB1-UP; CMB1-UP; 4NZ3400-UP; 5FZ6700-UP

PART OF 193-8375 WIRING GP-CAB

SMCS-1417 **i01519206**

NOTE	REF NO	GRAPHIC REF	PART NUMBER	QTY	PART NAME 1 2 3 4 5 6 (PRODUCT LEVEL)	SEE PAGE
	1	1	**116-7471**	1	PULLER-MINIFUSE	
	2	1	**117-3789**	4	RETAINER-STUD	
	3	1	**142-9113**	1	COVER	
	4	1	**160-1737**	4	STUD-SLOTTED	
	5	1	**197-6893**	1	FILM (FUSE AND RELAY)	
E	6	1	**103-2543**		SEAL (3CM)	

E-ORDER BY THE CENTIMETER

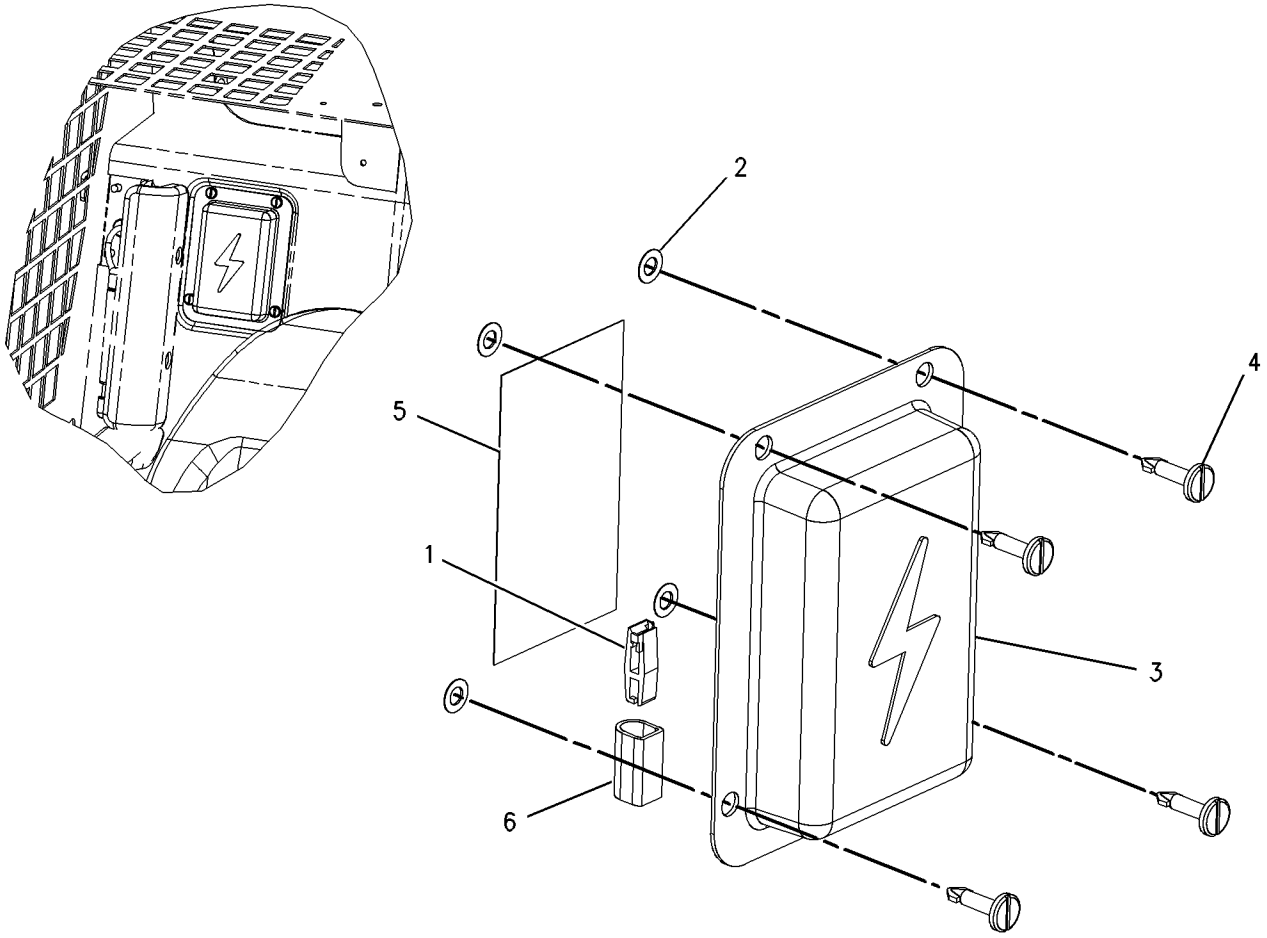

GRAPHIC #1 g00755842

178-2254 ELECTRONICS GP-WORK TOOL

S/N: CAB1-UP; CMB1-UP; 4NZ3400-UP; 5FZ6700-UP

PART OF 190-8001 WIRING GP-CHASSIS

SMCS-7610 **i01746688**

NOTE	PART NUMBER	QTY	PART NAME 1 2 3 4 5 6 (PRODUCT LEVEL)	SEE PAGE
	218-8327	1	SOFTWARE GP-IMPLEMENT	
			—OR—	
	216-0658	1	CONTROL GP-IMPLEMENT	
	7X-6315	1	STRAP AS	
	120-4897	1	SCREW-PAN HEAD (NO.8-32X9.52)	
	134-4126	1	WASHER (4.52X8.28X.76MM THK)	

<END>

153-0524 GLOW PLUG GP

S/N: 3NW21000-UP

PART OF 144-6194 ENGINE AR-PRIMARY

SMCS-1412 **i01349346**

NOTE	REF NO	GRAPHIC REF	PART NUMBER	QTY	PART NAME 1 2 3 4 5 6 (PRODUCT LEVEL)	SEE PAGE
	1	1	**177-7559**	4	PLUG-GLOW	
	2	1	**166-3758**	3	CABLE	

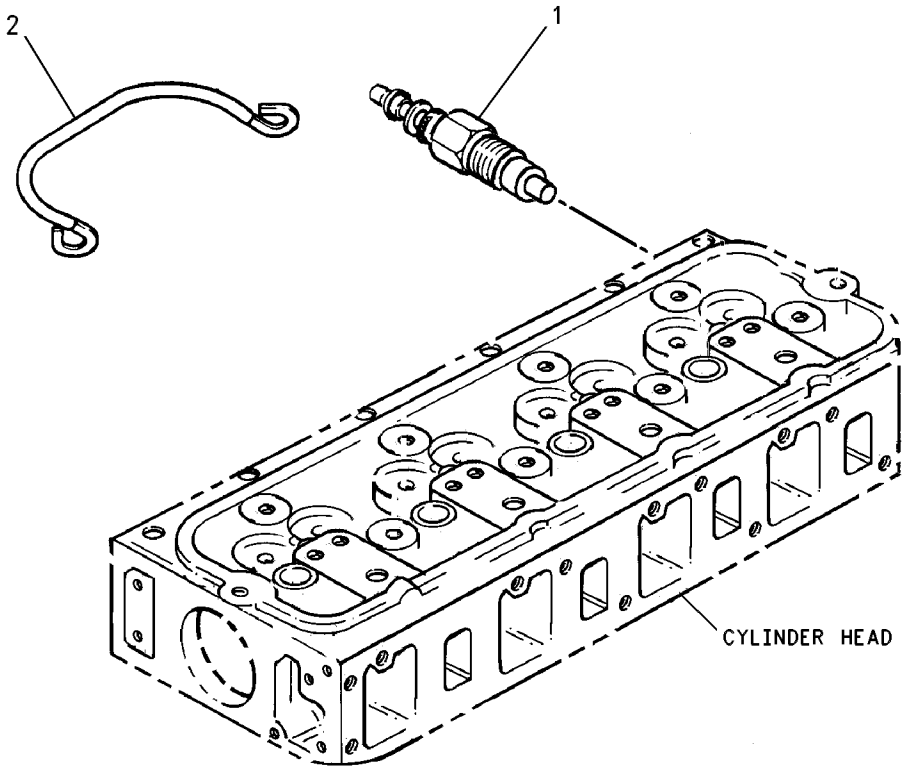

GRAPHIC #1 g00596526

154-1933 GLOW PLUG GP

S/N: CSD1-UP
PART OF 179-1808 ENGINE AR-PRIMARY
AN ATTACHMENT

SMCS-1412 **i01483238**

NOTE	REF NO	GRAPHIC REF	PART NUMBER	QTY	PART NAME 1 2 3 4 5 6 (PRODUCT LEVEL)	SEE PAGE
	1	1	**154-1935**	1	SUPPORT-PLUG	
	2	1	**172-4585**	4	PLUG-GLOW	

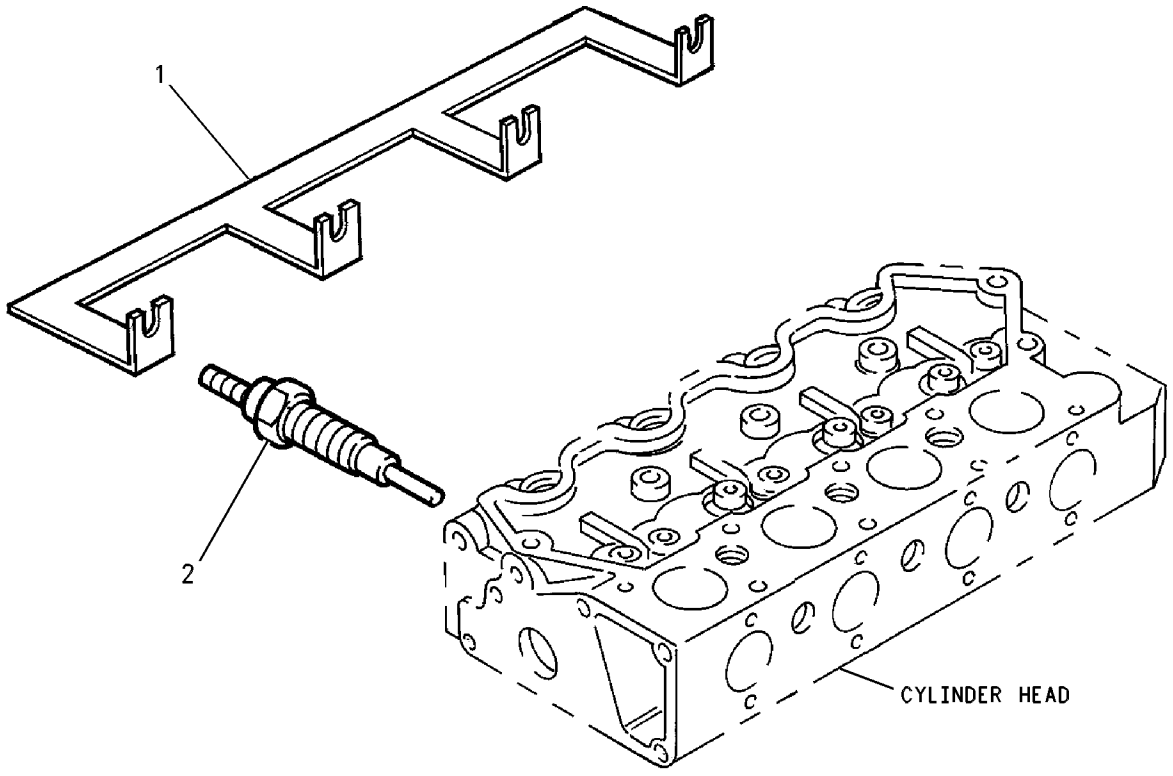

GRAPHIC #1 g00613503

168-7575 HEATER GP-JACKET WATER

S/N: 4NZ3400-3409; 5FZ6700-UP

AN ATTACHMENT

SMCS-1383 **i01355396**

NOTE	REF NO	GRAPHIC REF	PART NUMBER	QTY	PART NAME 1 2 3 4 5 6 (PRODUCT LEVEL)	SEE PAGE
	1	1	**3S-2093**	1	STRAP-CABLE	
	2	1	**159-6108**	1	CORD AS-HEATER	
	3	1	**168-7574**	1	ELEMENT AS	
		1	**6F-0711**	1	SEAL-O-RING (40.87MM ID)	

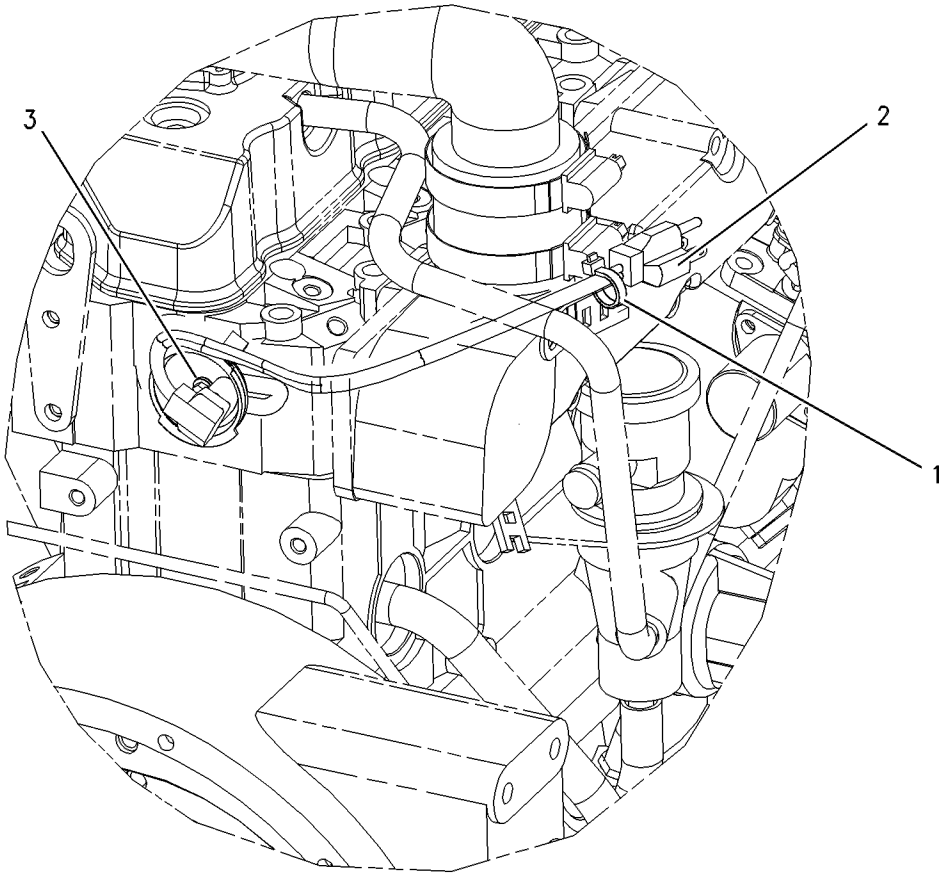

GRAPHIC #1 g00559646

172-4445 HEATER GP-JACKET WATER

S/N: 4NZ3400-UP
(120 VOLTS/530 WATTS)
AN ATTACHMENT

SMCS-1383 **i01554105**

NOTE	REF NO	GRAPHIC REF	PART NUMBER	QTY	PART NAME 1 2 3 4 5 6 (PRODUCT LEVEL)	SEE PAGE
	1	1	*154-3927*	1	HEATER GP-JACKET WATER	
		1	**7X-6312**	1	CORD AS	
		1	**149-3499**	1	ELEMENT AS-JACKET WATER HEATER	
		1	**133-6517**	1	CAP AS-DUST	
	2	1	**9X-6772**	1	STRAP-CABLE	

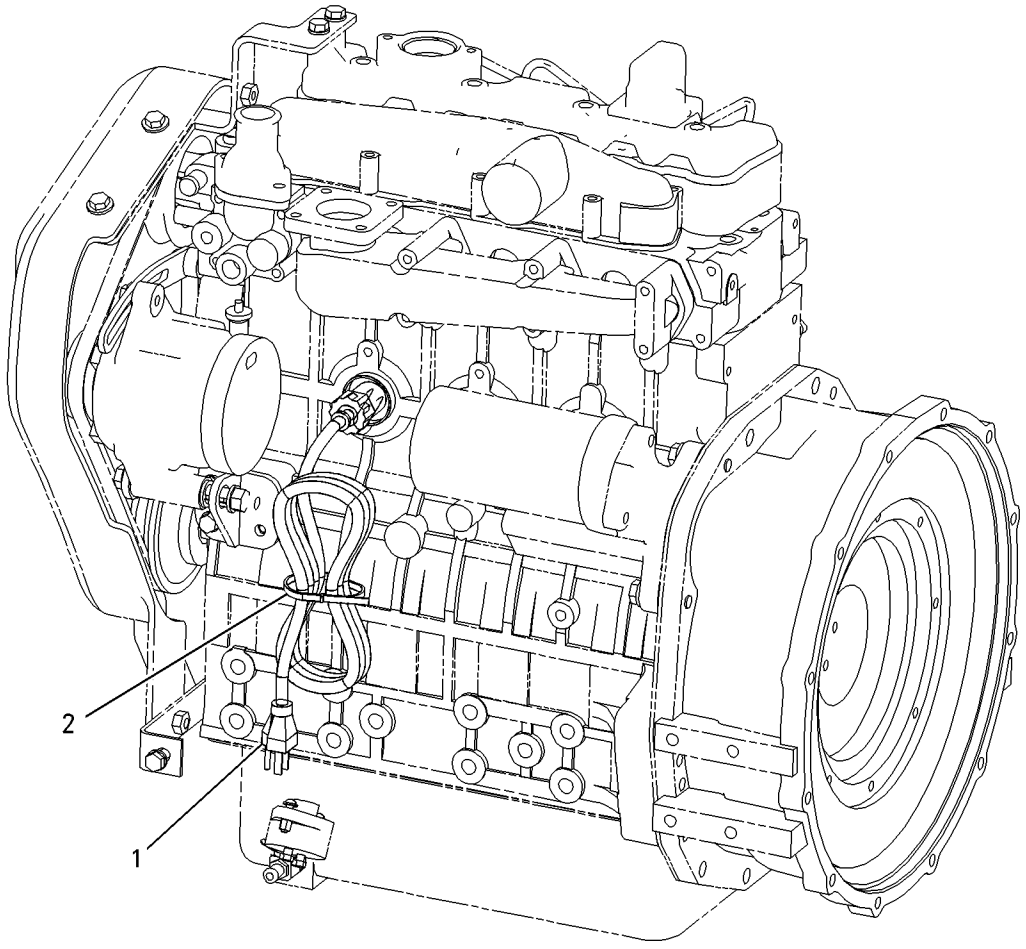

GRAPHIC #1 g00808146

172-4446 HEATER GP-JACKET WATER

S/N: 4NZ3400-UP
(240 VOLTS/530 WATTS)
AN ATTACHMENT

SMCS-1383 **i01554095**

NOTE	REF NO	GRAPHIC REF	PART NUMBER	QTY	PART NAME 1 2 3 4 5 6 (PRODUCT LEVEL)	SEE PAGE
	1	1	*154-3928*	1	HEATER GP-JACKET WATER	
		1	**127-8609**	1	CORD AS-JACKET WATER HEATER	
		1	**151-1394**	11	ELEMENT AS-JACKET WATER HEATER	
		1	**133-6517**	1	CAP AS-DUST	
	2	1	**9X-6772**	1	STRAP-CABLE	

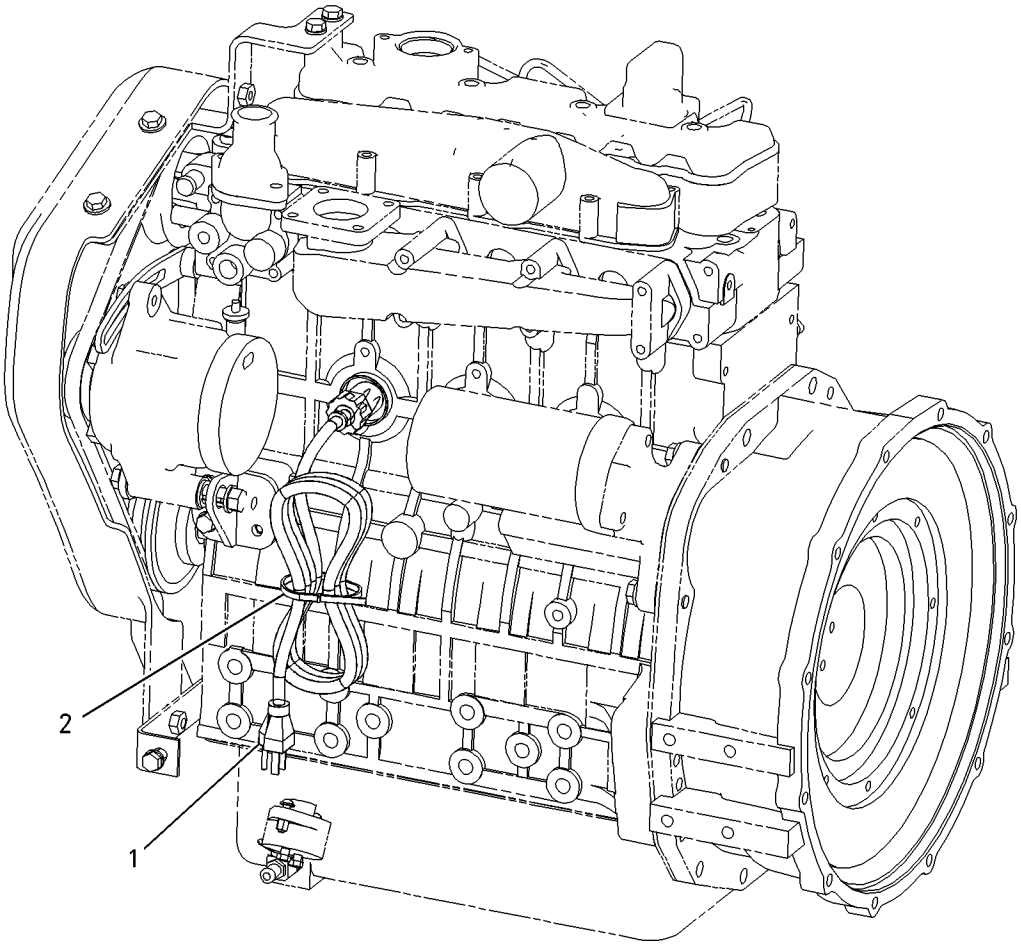

GRAPHIC #1 g00808142

142-8637 LAMP GP-FL00D

S/N: CAB1-UP; CMB1-UP; 4NZ3400-UP; 5FZ6700-UP
12 VOLT. SUSPENDED
PART OF 142-8650 LIGHTING GP-FRONT
AN ATTACHMENT

SMCS-1434 **i01410357**

NOTE	REF NO	GRAPHIC REF	PART NUMBER	QTY	PART NAME 1 2 3 4 5 6 (PRODUCT LEVEL)	SEE PAGE
	1	1	**9W-0607**	1	LAMP (12 VOLT)(55 WATT)	
M	2	1	**6V-9189**	2	LOCKNUT (M8X1.25 THD)	
M	3	1	**8C-5748**	1	BOLT (M8X1.25X55MM)	
M	4	1	**3E-9854**	1	BOLT (M8X1.25X20MM)	
	5	1	**8T-4224**	1	WASHER-HARD (8.8X16X2MM THK)	

M-METRIC PART

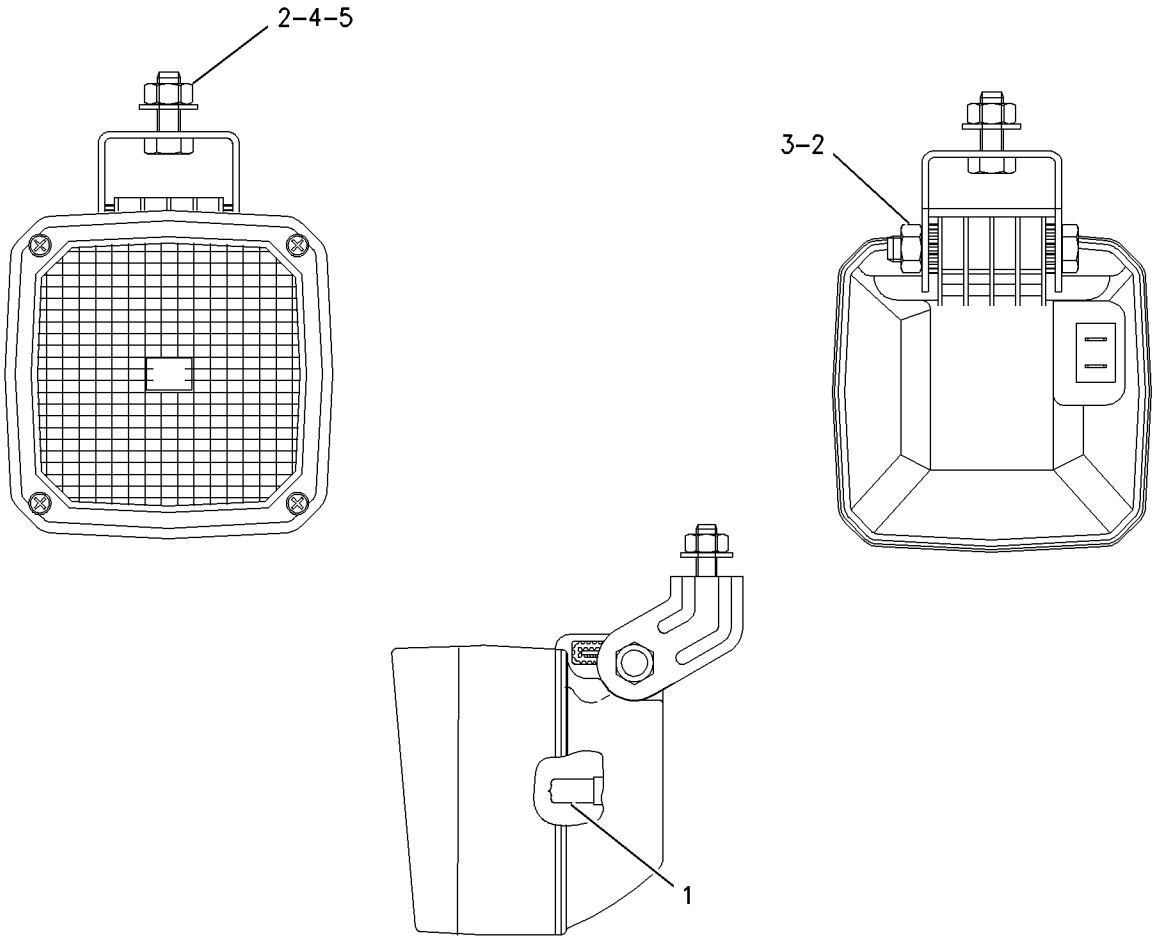

GRAPHIC #1 g00742958

168-6410 LAMP GP-FLOOD

S/N: CAB1-UP; CMB1-UP; 4NZ3400-UP; 5FZ6700-UP
12 VOLT. VERTICAL
PART OF 195-6722 LIGHTING GP-REAR
AN ATTACHMENT

SMCS-1434 **i01416886**

NOTE	REF NO	GRAPHIC REF	PART NUMBER	QTY	PART NAME 1 2 3 4 5 6 (PRODUCT LEVEL)	SEE PAGE
	1	1	**9W-0607**	1	LAMP (12 VOLT)(55 WATT)	
M	2	1	**6V-9189**	2	LOCKNUT (M8X1.25 THD)	
M	3	1	**8C-5748**	1	BOLT (M8X1.25X55MM)	
M	4	1	**3E-9854**	1	BOLT (M8X1.25X20MM)	
	5	1	**8T-4224**	1	WASHER-HARD (8.8X16X2MM THK)	

M-METRIC PART

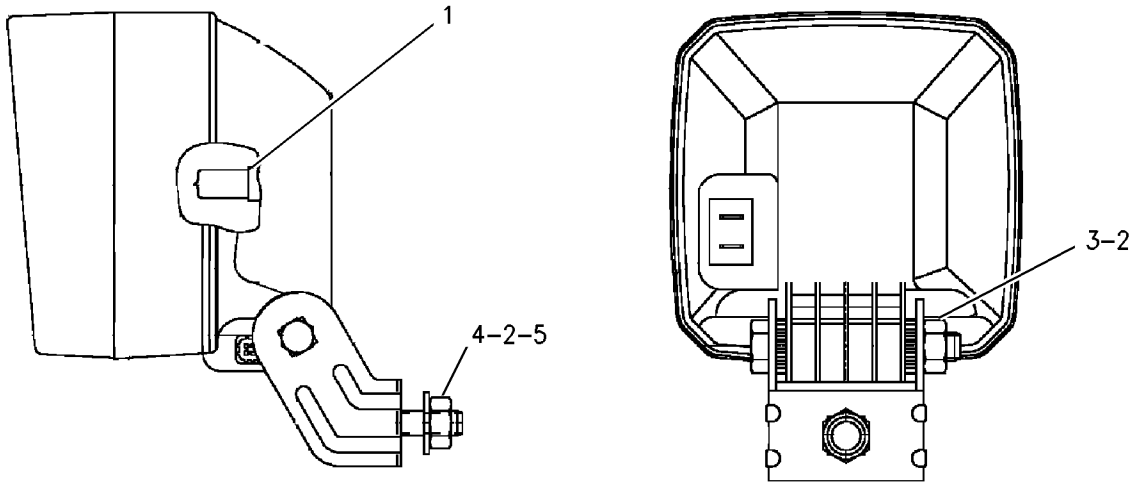

GRAPHIC #1 g00744532

3E-7584 LAMP GP-HEAD & SIGNAL

S/N: 4NZ3400-UP; 5FZ6700-UP
12 VOLT. RH DIP, HIGH/LOW, TURN
PART OF 203-4331, 203-4332 LIGHTING GP-ROADING
AN ATTACHMENT

SMCS-1429, 1430 **i01556039**

NOTE	REF NO	GRAPHIC REF	PART NUMBER	QTY	PART NAME 1 2 3 4 5 6 (PRODUCT LEVEL)	SEE PAGE
	1	1	**9X-4244**	4	SCREW	
	2	1	**100-3251**	2	SCREW-LENS	
	3	1	**9X-9865**	1	SEAL	
	4	1	**100-3248**	1	LENS AS	
	5	1	**9W-3324**	1	LAMP-HEAD (12 VOLT)	
	6	1	**100-3247**	1	BODY AS-LAMP	
M	7	1	**8T-5005**	1	BOLT (M10X1.50X70MM)	
M	8	1	**8T-0389**	1	LOCKNUT (M10X1.5 THD)	
	9	1	**100-3253**	1	SPACER-SPHERICAL	
	10	1	**100-3254**	1	SPACER-SPHERICAL	
	11	1	**100-3255**	1	WASHER-SPHERICAL	
J	12	1	**102-8805**	1	KIT-RECEPTACLE (6 PIN)	
	13	1	**8T-8729**	5	PIN-CONNECTOR	
J	14	1	**3E-3383**	1	WEDGE-RECEPTACLE LOCK	
	15	1	**8T-8737**	1	PLUG-SEAL	
	16	1	**100-3246**	1	LAMP (12V)	
	17	1	**5G-3244**	1	LAMP (12V) (SIGNAL)	
	18	1	**100-3250**	1	LENS-AMBER	

J-KIT MARKED J INCLUDES PART(S) MARKED J
M-METRIC PART

3E-7584 LAMP GP-HEAD & SIGNAL *(contd.)* **i01556039**

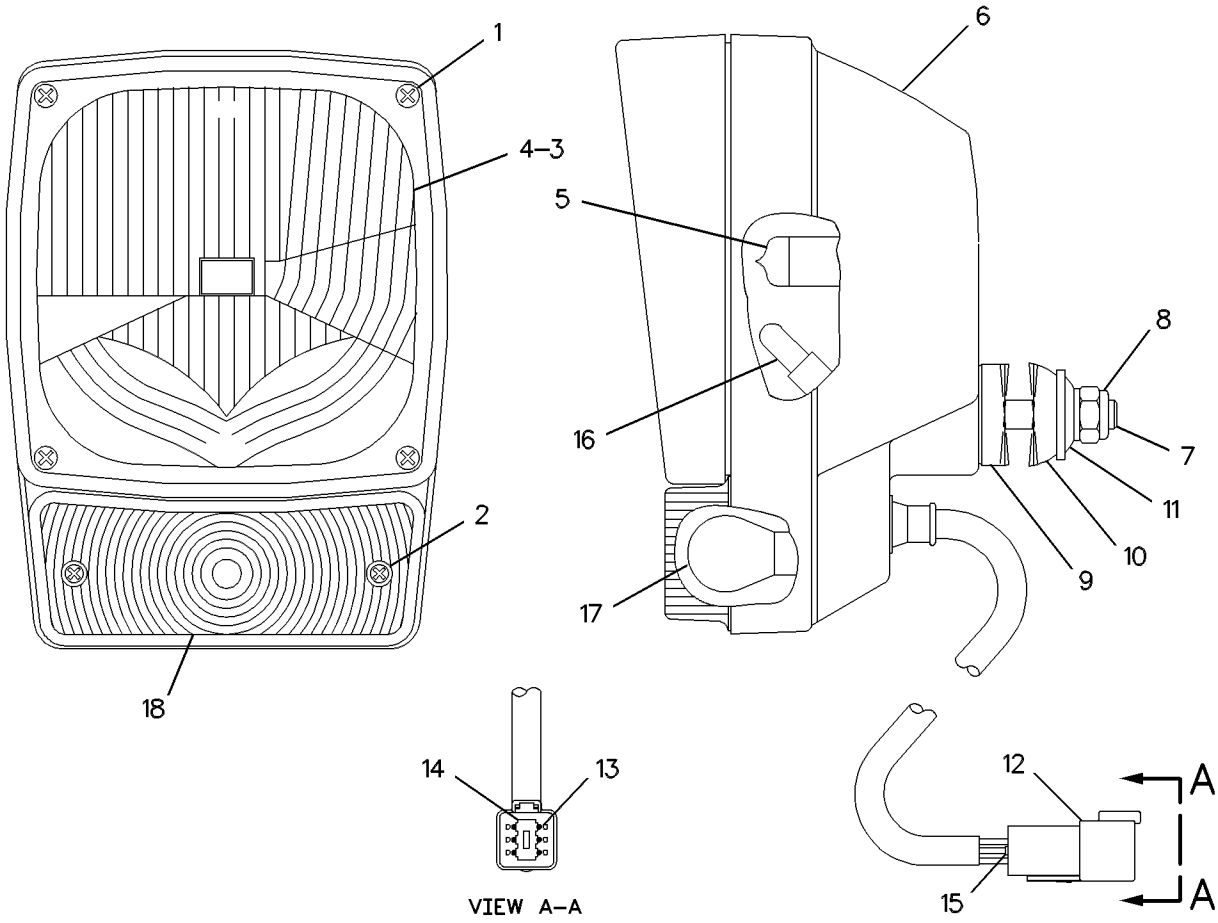

GRAPHIC #1 g00460921

144-9933 LAMP GP-PANEL ILLUMINATION

S/N: CAB1-UP; CMB1-UP; 4NZ3400-UP; 5FZ6700-UP
12 VOLT. BACKLIGHT
PART OF 197-6898 GAUGE & WARNING GP
AN ATTACHMENT

SMCS-1429, 7451 **i01755322**

NOTE	REF NO	GRAPHIC REF	PART NUMBER	QTY	PART NAME 1 2 3 4 5 6 (PRODUCT LEVEL)	SEE PAGE
	1	1	**102-8804**	1	KIT-RECEPTACLE (4 PIN)	
	2	1	**189-3610**	2	LAMP (12 VOLT)	

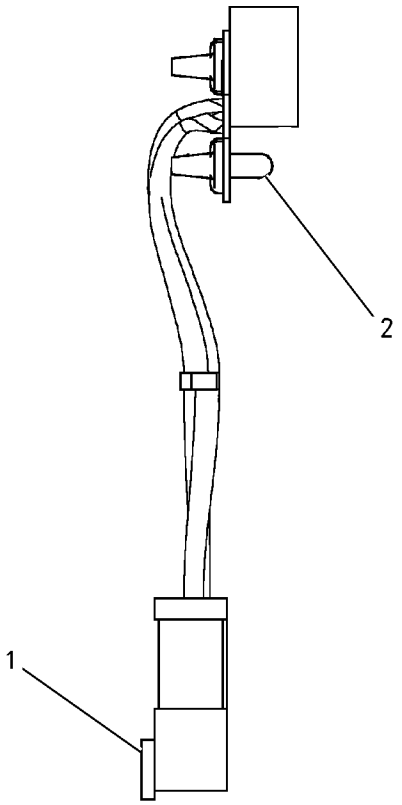

GRAPHIC #1 g00771348

142-8634 LAMP GP-SIGNAL

S/N: 4NZ3400-UP; 5FZ6700-UP
STOP, TAIL, TURN
PART OF 203-4331, 203-4332 LIGHTING GP-ROADING
AN ATTACHMENT

SMCS-1429, 1430, 1432 **i01514702**

NOTE	REF NO	GRAPHIC REF	PART NUMBER	QTY	PART NAME 1 2 3 4 5 6 (PRODUCT LEVEL)	SEE PAGE
	1	1	**9W-3326**	1	LAMP (12 V) (TURN)	
	2	1	**084-4348**	1	LAMP (12V) (STOP AND TAIL)	
	3	1	**102-8804**	1	KIT-RECEPTACLE (4 PIN)	
					(INCLUDES RECEPTACLE AS AND WEDGE)	
	4	1	**146-2438**	1	LENS	
M	5	1	**5C-2890**	2	NUT (M6X1 THD)	
	6	1	**1H-3244**	2	LOCKWASHER	
	7	1	**186-3735**	4	PIN-CONNECTOR	
	8	1	**3E-3377**	1	WEDGE-RECEPTACLE LOCK	

M-METRIC PART

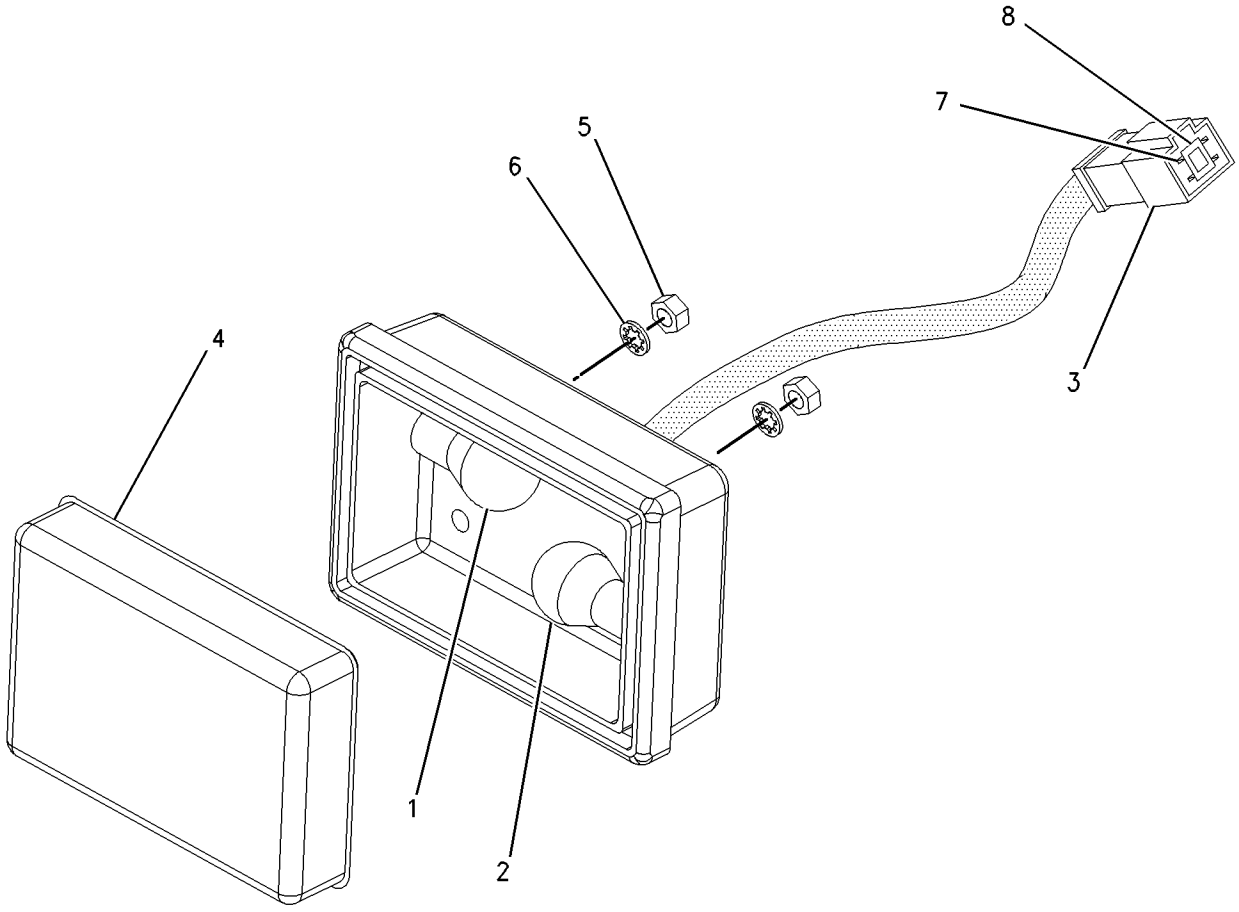

GRAPHIC #1 g00762038

142-7503 LAMP GP-STOP & TAIL

S/N: CAB1-UP; CMB1-UP; 4NZ3400-UP; 5FZ6700-UP
PART OF 142-8652 LIGHTING GP-REAR
AN ATTACHMENT

SMCS-1432 **i01755310**

NOTE	REF NO	GRAPHIC REF	PART NUMBER	QTY	PART NAME 1 2 3 4 5 6 (PRODUCT LEVEL)	SEE PAGE
	1	1	**084-4348**	1	LAMP (12 VOLT)	
	2	1	**102-8804**	1	KIT-RECEPTACLE (4 PIN)	
	3	1	**165-4895**	1	LENS	
M	4	1	**5C-2890**	2	NUT (M6X1 THD)	
	5	1	**8T-0087**	2	LOCKWASHER	

M-METRIC PART

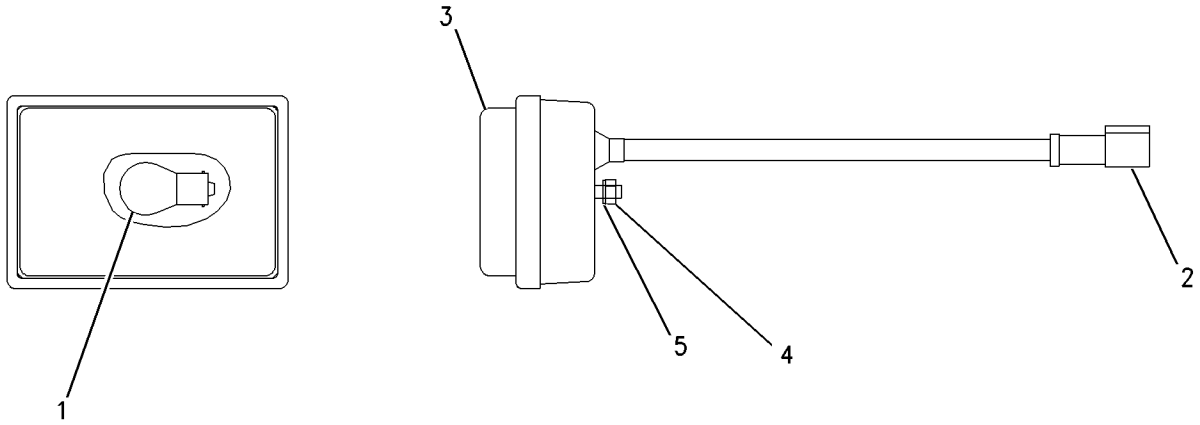

GRAPHIC #1 g00669668

ELECTRICAL AND STARTING SYSTEM

108-2953 LAMP GP-WARNING BEACON

S/N: 4NZ3400-UP; 5FZ6700-UP
PART OF 175-4232 CONVERSION GP-ROADING
AN ATTACHMENT

SMCS-1431 **i01184320**

NOTE	PART NUMBER	QTY	PART NAME 1 2 3 4 5 6 (PRODUCT LEVEL)	SEE PAGE
			(NO SERVICED PARTS)	

<END>

128-6985 LAMP GP-WARNING BEACON

S/N: CAB1-UP; CMB1-UP; 4NZ3400-UP; 5FZ6700-UP
12 VOLT. MAGNETICALLY MOUNTED
PART OF 173-3017 CONVERSION GP-ROADING, 142-8653 LIGHTING GP-WARNING BEACON
AN ATTACHMENT

SMCS-1431 **i01249884**

NOTE	REF NO	GRAPHIC REF	PART NUMBER	QTY	PART NAME 1 2 3 4 5 6 (PRODUCT LEVEL)	SEE PAGE
	1	1	**9X-8121**	1	LENS-AMBER	
	2	1	**9X-8118**	1	LAMP (12 VOLT)	
	3	1	**9X-8139**	1	BELT-DRIVE	
	4	1	**9R-7958**	1	CORD AS	
	5	1	**9R-7942**	1	PLUG AS	

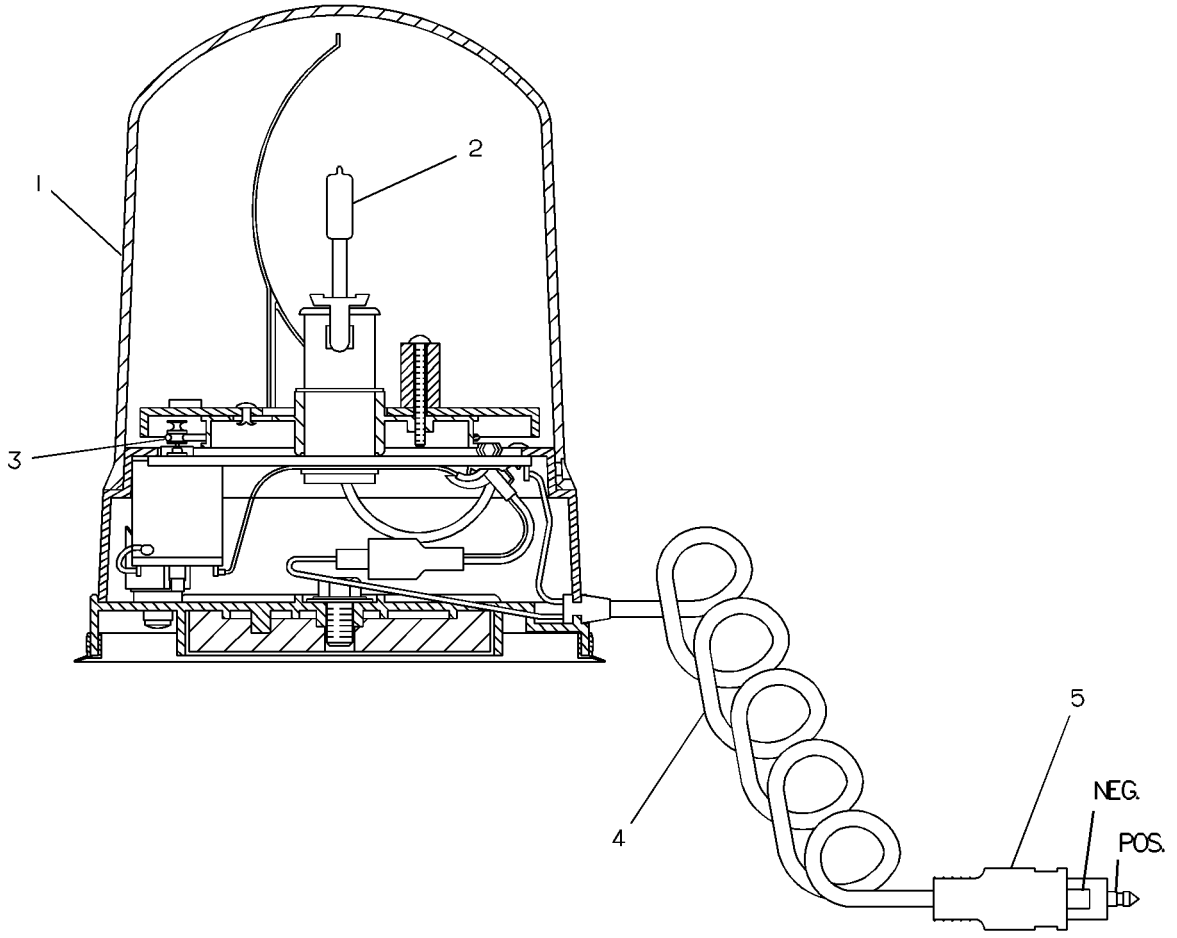

GRAPHIC #1 g00130921

169-6689 LIGHTING AR-STOP & FLOOD

S/N: CAB1-UP; CMB1-UP; 4NZ3400-UP; 5FZ6700-UP
CANNOT BE USED WITH 142-8652–PAGE 163
AN ATTACHMENT

SMCS-1432, 1434 **i01580129**

NOTE	PART NUMBER	QTY	PART NAME 1 2 3 4 5 6 (PRODUCT LEVEL)	SEE PAGE
Y	*142-8650*	1	LIGHTING GP-FRONT	162
Y	*142-8652*	1	LIGHTING GP-REAR	163

Y-SEPARATE ILLUSTRATION

<END>

142-8650 LIGHTING GP-FRONT

S/N: CAB1-UP; CMB1-UP; 4NZ3400-UP; 5FZ6700-UP
FRONT WORKING
PART OF 169-6689 LIGHTING AR-STOP & FLOOD
AN ATTACHMENT

SMCS-1429, 1434 **i01301764**

NOTE	REF NO	GRAPHIC REF	PART NUMBER	QTY	PART NAME 1 2 3 4 5 6 (PRODUCT LEVEL)	SEE PAGE
Y	1	1	**142-8637**	2	LAMP GP-FLOOD	152
	2	1	**9D-8508**	2	GROMMET	

Y-SEPARATE ILLUSTRATION

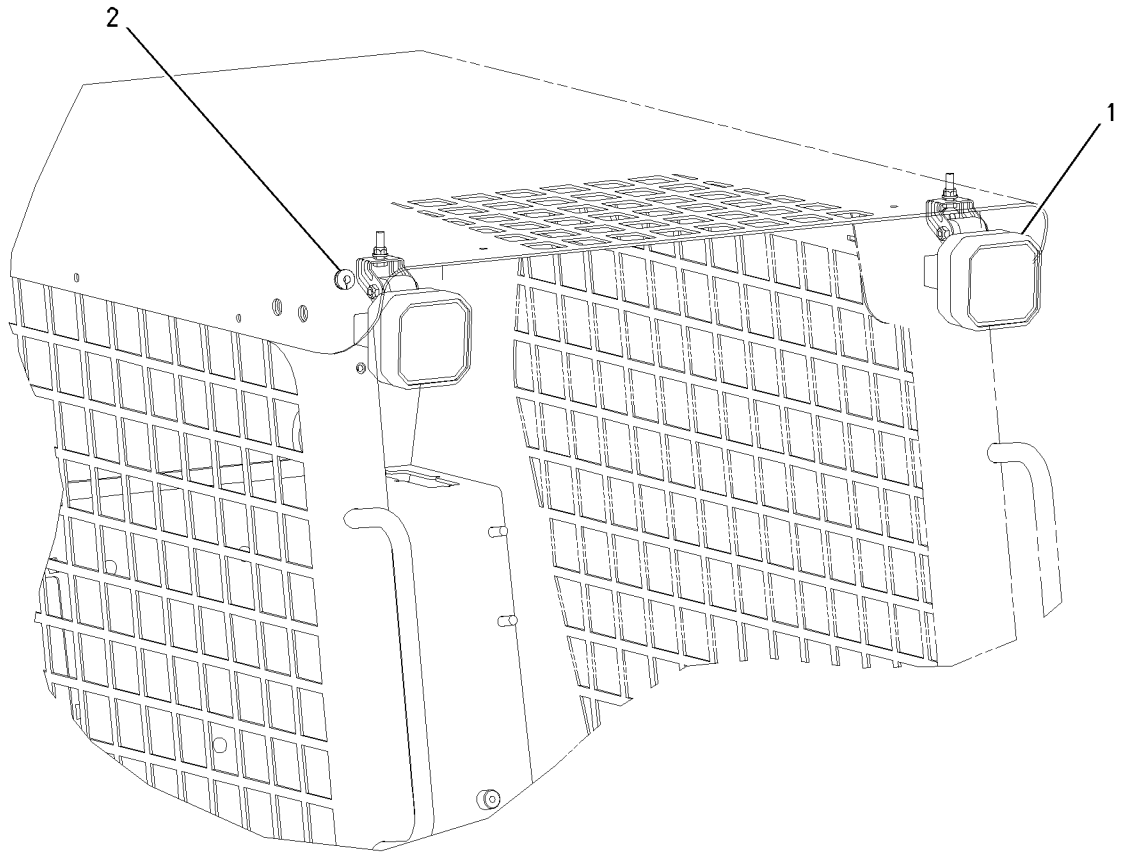

GRAPHIC #1 g00694974

142-8652 LIGHTING GP-REAR

S/N: CAB1-UP; CMB1-UP; 4NZ3400-UP; 5FZ6700-UP
PART OF 169-6689 LIGHTING AR-STOP & FLOOD
CANNOT BE USED WITH 169-6689—PAGE 161
AN ATTACHMENT

SMCS-1429, 1434 **i01580076**

NOTE	REF NO	GRAPHIC REF	PART NUMBER	QTY	PART NAME 1 2 3 4 5 6 (PRODUCT LEVEL)	SEE PAGE
	1	1	**3S-2093**	2	STRAP-CABLE	
	2	1	**9R-1499**	2	REFLECTOR	
Y	3	1	**142-7503**	2	LAMP GP-STOP & TAIL	158
	4	1	**4P-7581**	2	CLIP	
	5	1	**8T-4205**	4	WASHER-HARD (7.2X14.5X2MM THK)	

Y-SEPARATE ILLUSTRATION

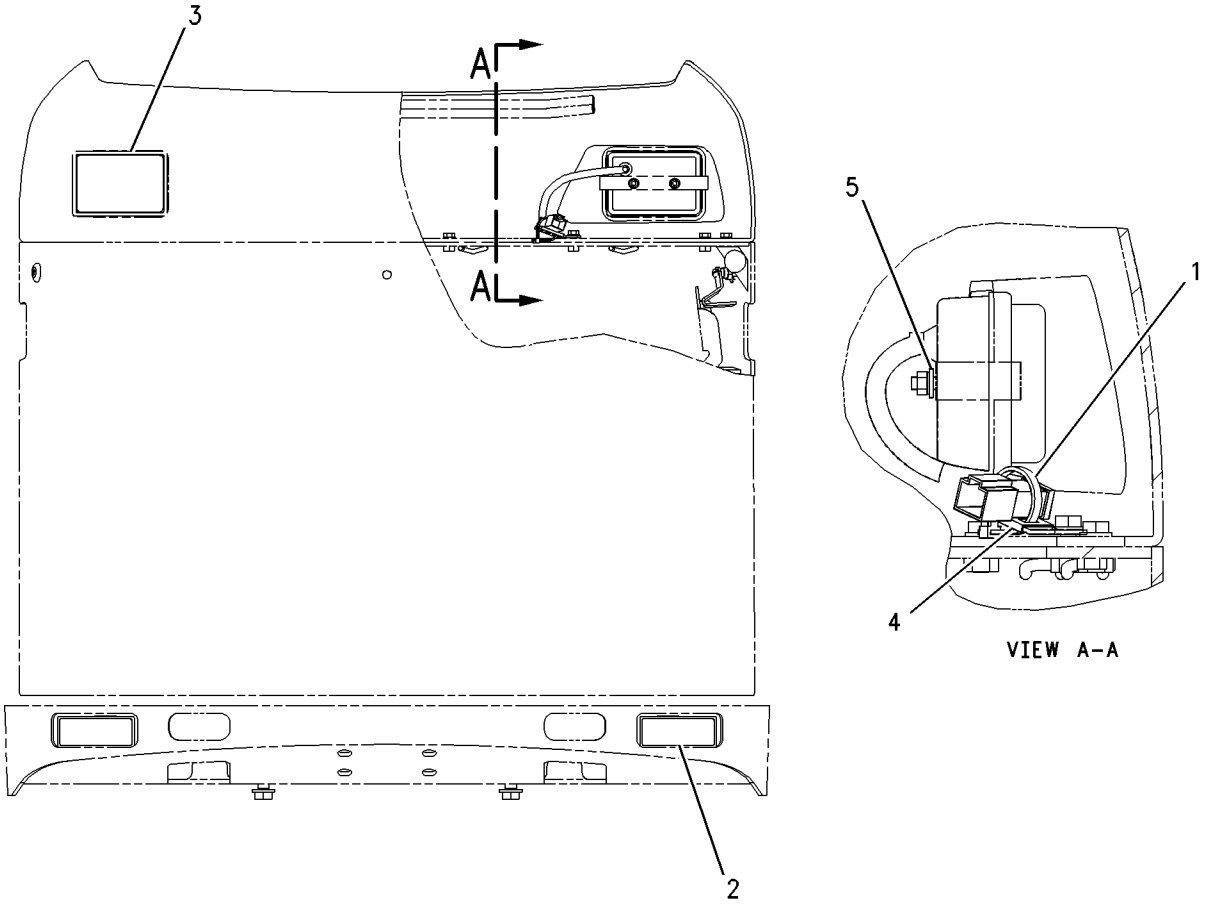

GRAPHIC #1 g00771277

195-6722 LIGHTING GP-REAR

S/N: CAB1-UP; CMB1-UP; 4NZ3400-UP; 5FZ6700-UP
REAR WORKING
AN ATTACHMENT

SMCS-1429, 1434 **i01682917**

NOTE	REF NO	GRAPHIC REF	PART NUMBER	QTY	PART NAME 1 2 3 4 5 6 (PRODUCT LEVEL)	SEE PAGE
	1	1	**142-9326**	1	SWITCH AS (REAR WORKING LAMP)	
Y	2	1	**168-6410**	2	LAMP GP-FLOOD	153
	3	1	**195-0937**	2	INSERT-THREADED	
	4	1	**9D-8508**	2	GROMMET	

Y-SEPARATE ILLUSTRATION

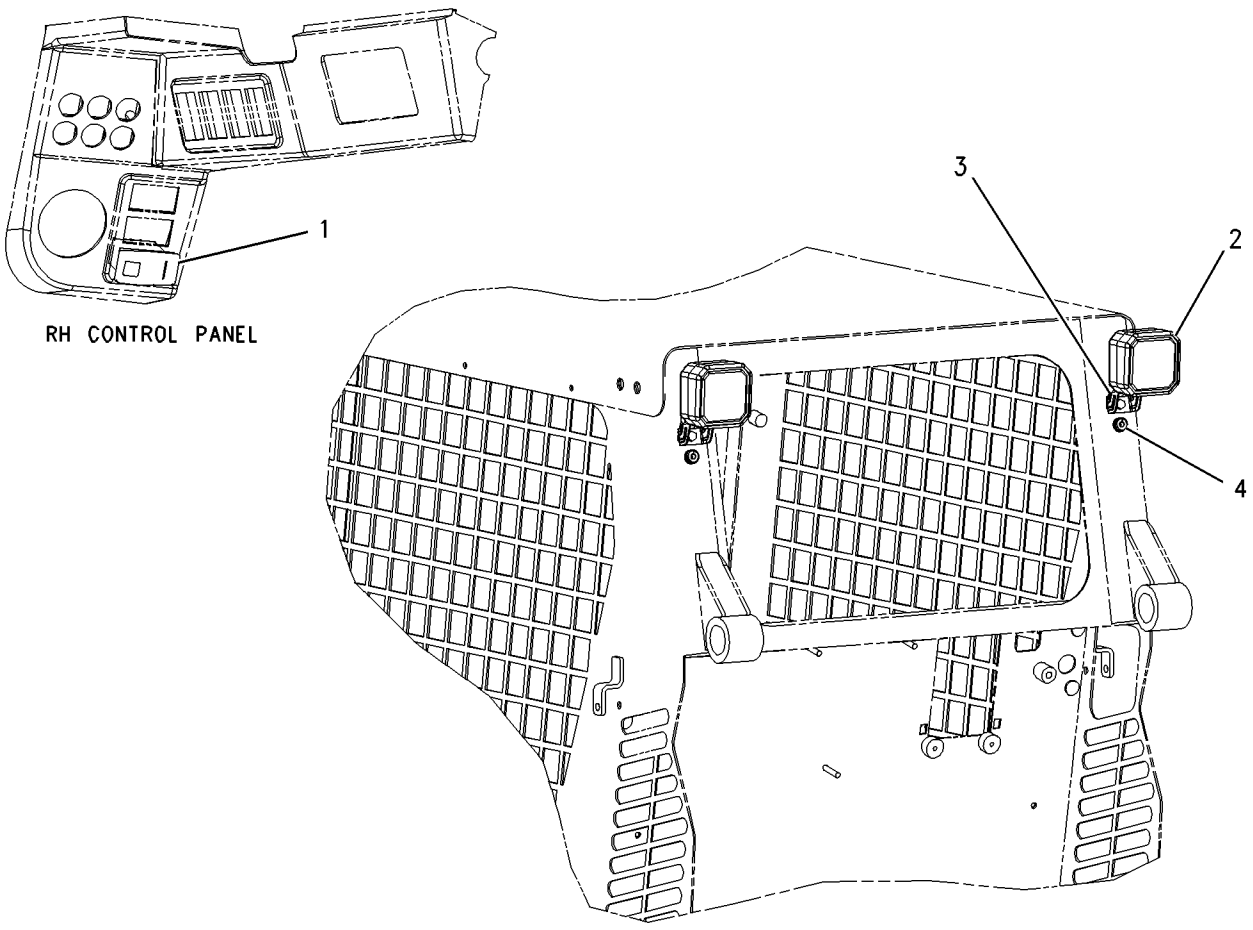

GRAPHIC #1 g00867631

MEMORANDA

203-4331 LIGHTING GP-ROADING

S/N: 4NZ3400-UP; 5FZ6700-UP
NON REGISTRATION
PART OF 206-3777 CONVERSION AR-ROADING
AN ATTACHMENT

SMCS-1429 **i01762612**

NOTE	REF NO	GRAPHIC REF	PART NUMBER	QTY	PART NAME 1 2 3 4 5 6 (PRODUCT LEVEL)	SEE PAGE
Y	1	1	**3E-7584**	2	LAMP GP-HEAD & SIGNAL	154
	2	1,2	**3S-2093**	17	STRAP-CABLE	
	3	2	**7T-4848**	1	FLASHER AS-SIGNAL	
	4	1	**8W-8909**	2	SLEEVE	
Y	5	2	**142-8634**	2	LAMP GP-SIGNAL	157
	6	1	**173-7798**	1	HARNESS AS-LIGHTING	
		1	**102-8802**	1	KIT-RECEPTACLE (2 PIN)	
		1	**102-8804**	1	KIT-RECEPTACLE (4 PIN)	
		1	**102-8805**	1	KIT-RECEPTACLE (6 PIN)	
		1	**155-2260**	1	KIT-CONNECTING PLUG (3 PIN)	
		1	**155-2274**	1	KIT-CONNECTING PLUG (6 PIN)	
	7	2	**183-7117**	2	HARNESS AS-REAR LIGHTING	
		1	**102-8804**	1	KIT-RECEPTACLE (4 PIN)	
		1	**155-2271**	1	KIT-CONNECTING PLUG (4 PIN)	
Y	8	2	*203-4330*	1	PANEL GP-INSTRUMENT	555
	9	2	**102-8803**	1	KIT-RECEPTACLE (3 PIN)	
	10	1	**8T-1887**	2	CLIP (SLOT)	
	11	1	**8T-1888**	2	CLIP (TAB)	
	12	2	**8T-8737**	3	PLUG-SEAL	

Y-SEPARATE ILLUSTRATION

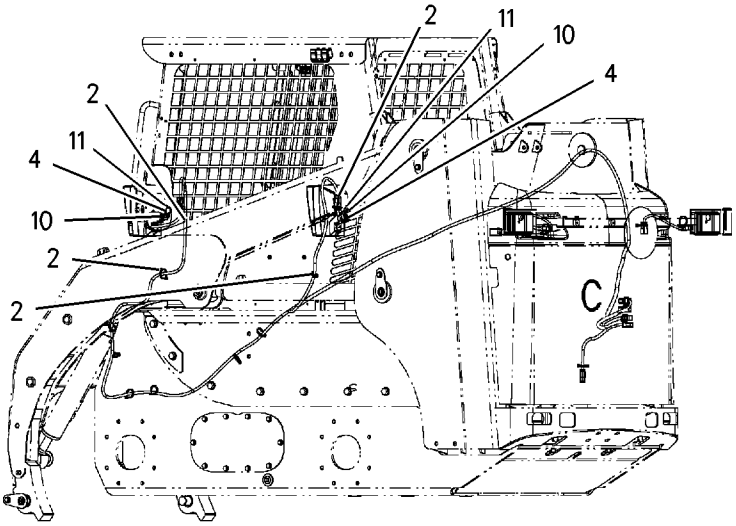

LEFT SIDE VIEW

REFER TO ALL ILLUSTRATIONS OF THIS GROUP FOR AUXILIARY VIEWS

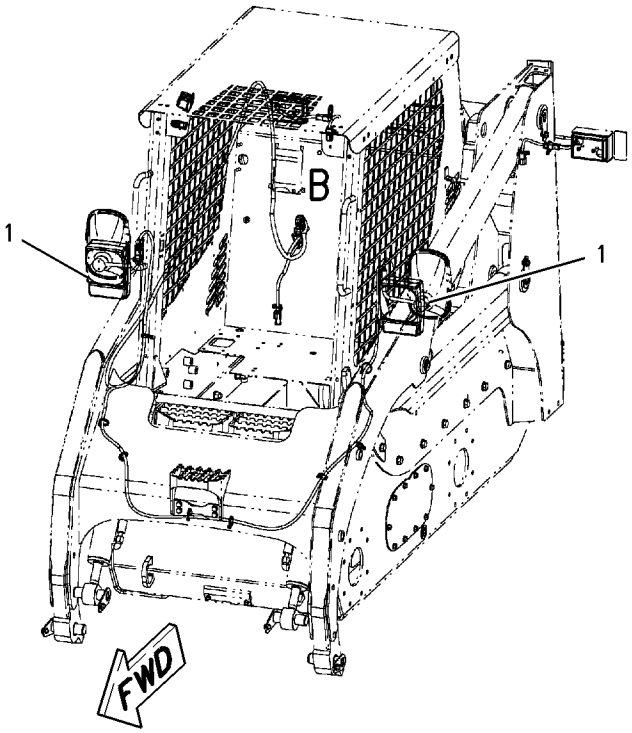

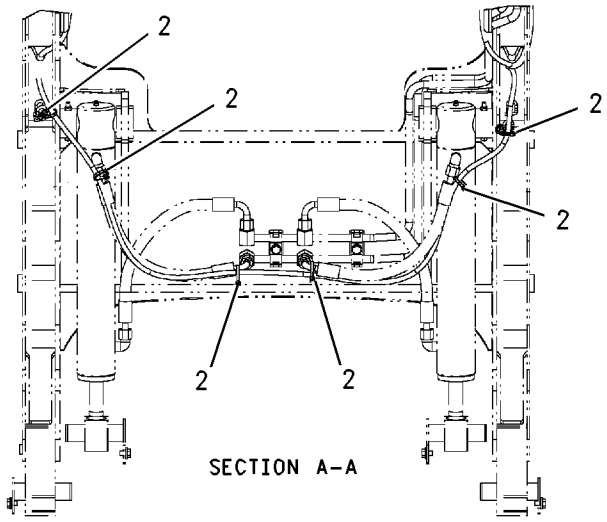

SECTION A-A

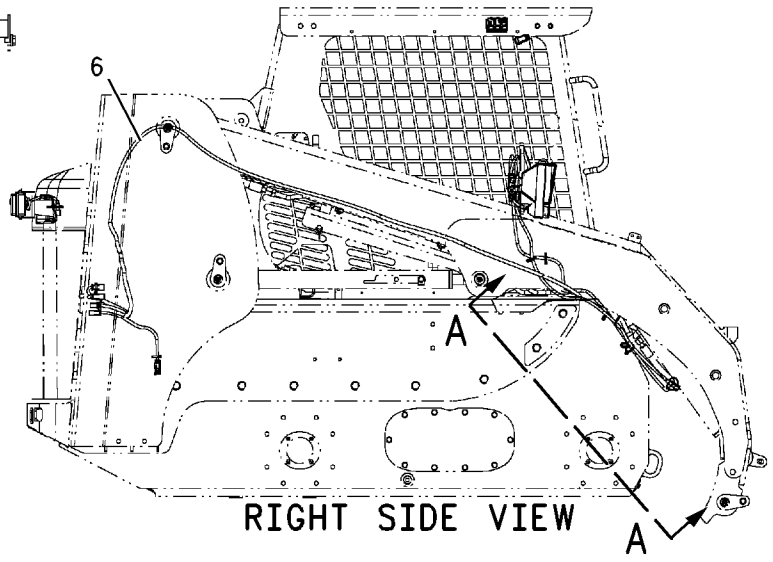

RIGHT SIDE VIEW

GRAPHIC #1

g00901757

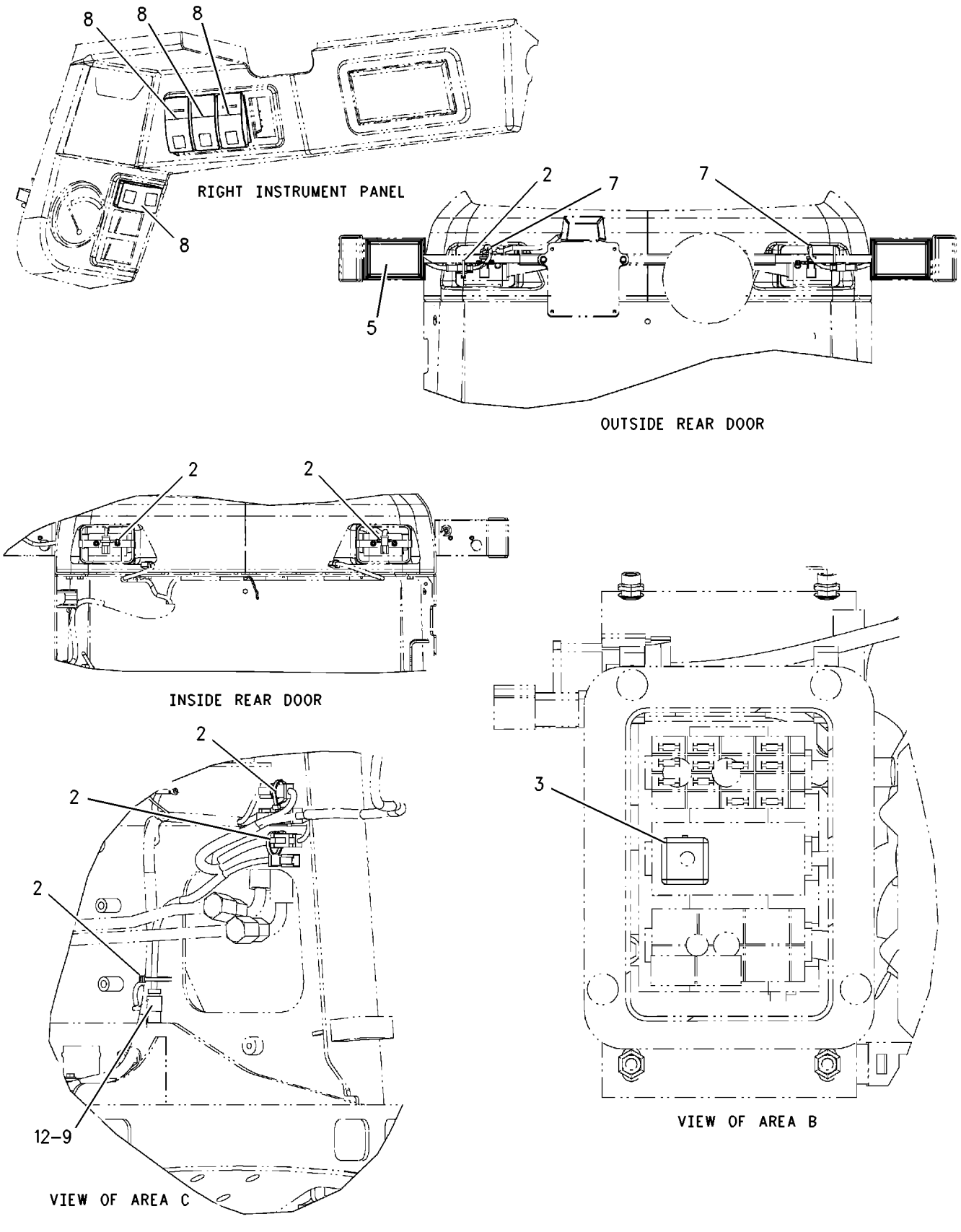

GRAPHIC #2

g00901767

MEMORANDA

203-4332 LIGHTING GP-ROADING

S/N: 4NZ3400-UP; 5FZ6700-UP
REGISTRATION
PART OF 206-3778 CONVERSION AR-ROADING
AN ATTACHMENT

SMCS-1429 **i01762649**

NOTE	REF NO	GRAPHIC REF	PART NUMBER	QTY	PART NAME 1 2 3 4 5 6 (PRODUCT LEVEL)	SEE PAGE
Y	1	1	**3E-7584**	2	LAMP GP-HEAD & SIGNAL	154
	2	1,2	**3S-2093**	19	STRAP-CABLE	
	3	2	**7T-4848**	1	FLASHER AS-SIGNAL	
	4	1	**8W-8909**	2	SLEEVE	
Y	5	2	**142-8634**	2	LAMP GP-SIGNAL	157
Y	6	1	*173-3021*	1	MOUNTING GP-REGISTRATION	594
	7	1	**173-7798**	1	HARNESS AS-LIGHTING	
		1	**102-8802**	1	KIT-RECEPTACLE (2 PIN)	
		1	**102-8804**	1	KIT-RECEPTACLE (4 PIN)	
		1	**102-8805**	1	KIT-RECEPTACLE (6 PIN)	
		1	**155-2260**	1	KIT-CONNECTING PLUG (3 PIN)	
		1	**155-2274**	1	KIT-CONNECTING PLUG (6 PIN)	
	8	2	**183-7117**	1	HARNESS AS-REAR LIGHTING	
		2	**102-8804**	1	KIT-RECEPTACLE (4 PIN)	
		2	**155-2271**	1	KIT-CONNECTING PLUG (4 PIN)	
	9	2	**186-0239**	1	HARNESS AS-REAR LIGHTING	
		2	**102-8804**	1	KIT-RECEPTACLE (4 PIN)	
		2	**155-2271**	1	KIT-CONNECTING PLUG (4 PIN)	
Y	10	2	*203-4330*	1	PANEL GP-INSTRUMENT	555
	11	1	**8T-1887**	2	CLIP (SLOT)	
	12	1	**8T-1888**	2	CLIP (TAB)	

Y-SEPARATE ILLUSTRATION

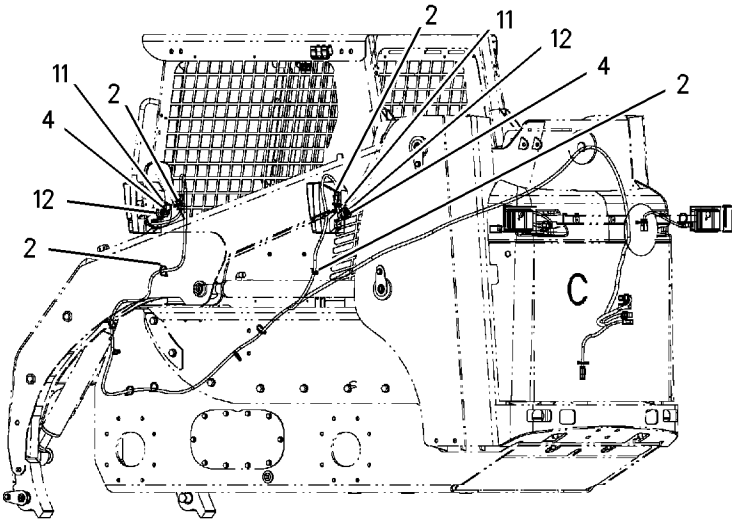

LEFT SIDE VIEW

REFER TO ALL ILLUSTRATIONS OF THIS GROUP FOR AUXILIARY VIEWS

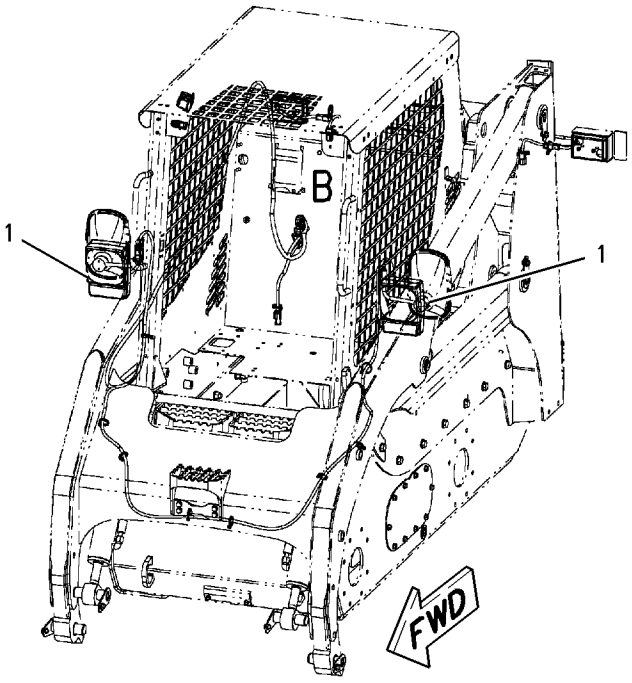

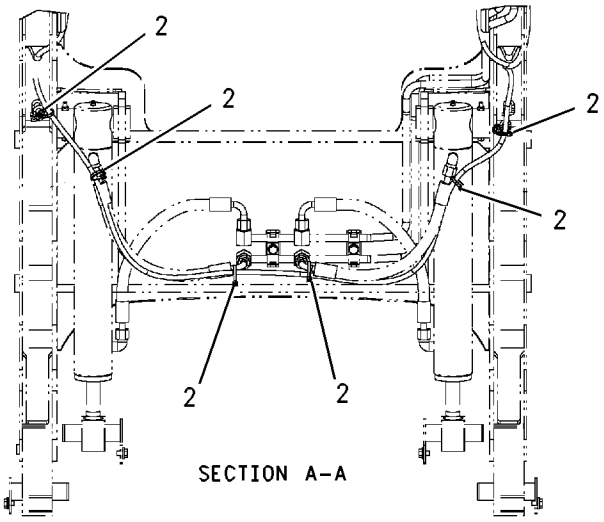

SECTION A-A

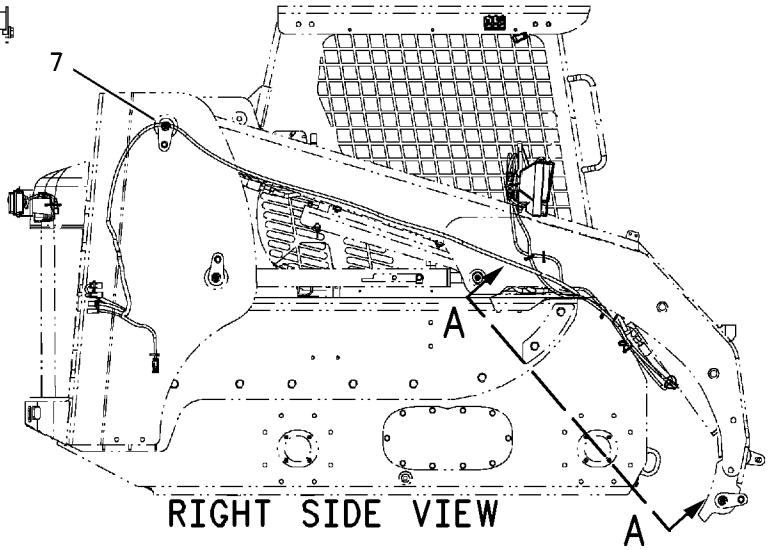

RIGHT SIDE VIEW

GRAPHIC #1

g00901774

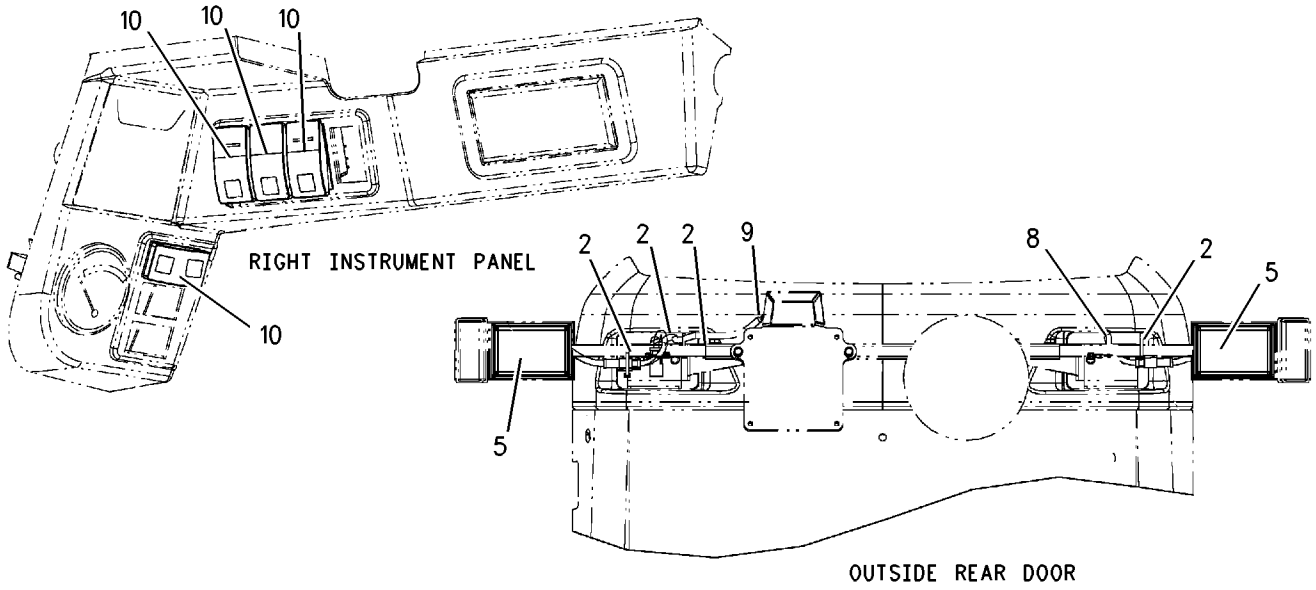

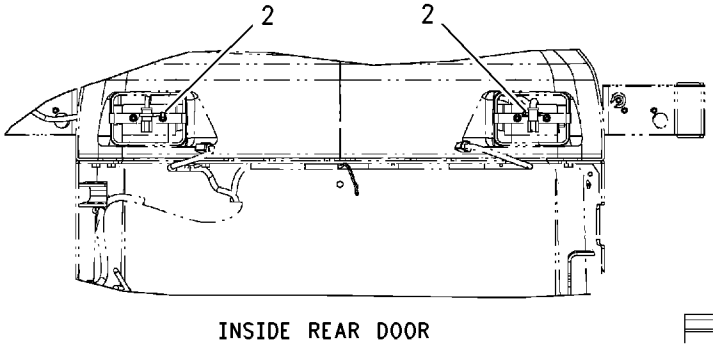

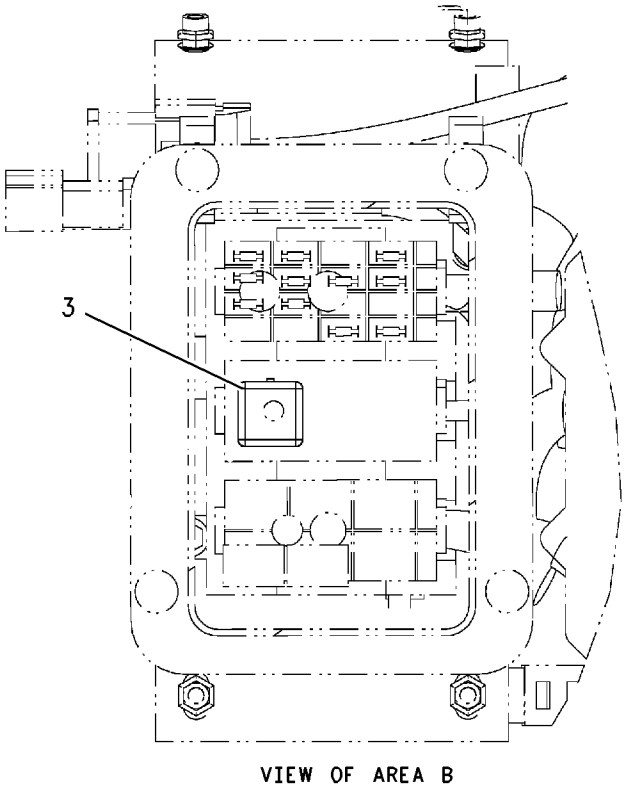

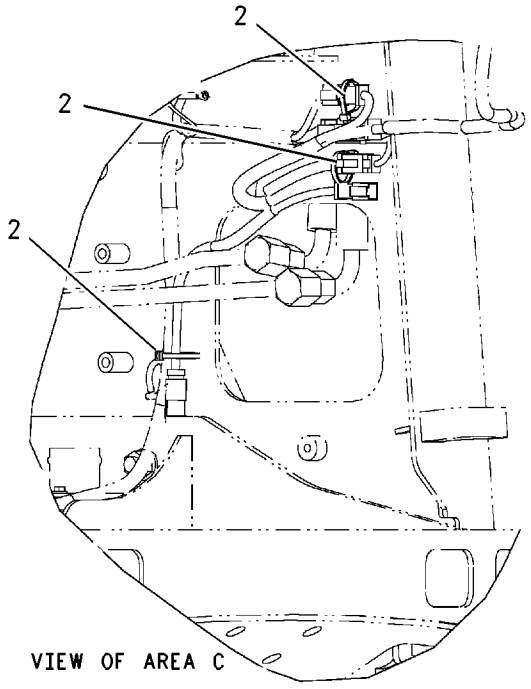

GRAPHIC #2 g00901788

142-8653 LIGHTING GP-WARNING BEACON

S/N: CAB1-UP; CMB1-UP; 4NZ3400-UP; 5FZ6700-UP

AN ATTACHMENT

SMCS-1431 **i01682774**

NOTE	REF NO	GRAPHIC REF	PART NUMBER	QTY	PART NAME 1 2 3 4 5 6 (PRODUCT LEVEL)	SEE PAGE
Y	1	1	**128-6985**	1	LAMP GP-WARNING BEACON	160
	2	1	**142-9327**	1	SWITCH AS (BEACON)	

Y-SEPARATE ILLUSTRATION

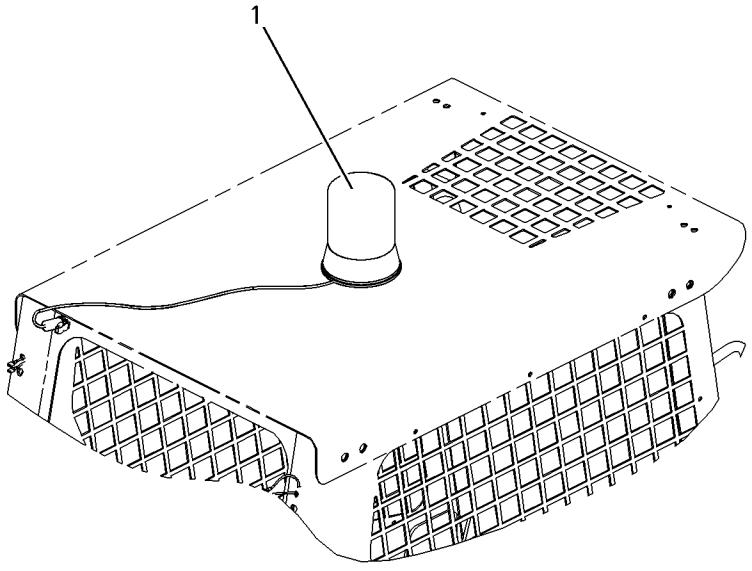

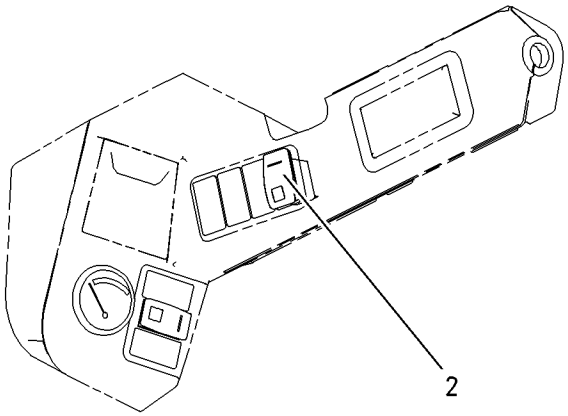

RH CONTROL PANEL

GRAPHIC #1 g00867567

144-9930 MODULE GP-WARNING INDICATOR

S/N: CAB1-UP; CMB1-UP; 4NZ3400-UP; 5FZ6700-UP
12 VOLT. WITH ALARM
PART OF 197-6898 GAUGE & WARNING GP
AN ATTACHMENT

SMCS-7407, 7431 **i01755302**

NOTE	REF NO	GRAPHIC REF	PART NUMBER	QTY	PART NAME 1 2 3 4 5 6 (PRODUCT LEVEL)	SEE PAGE
	1	1	**144-9934**	1	GASKET	
	2	1	**102-8801**	1	KIT-RECEPTACLE (12 PIN)	

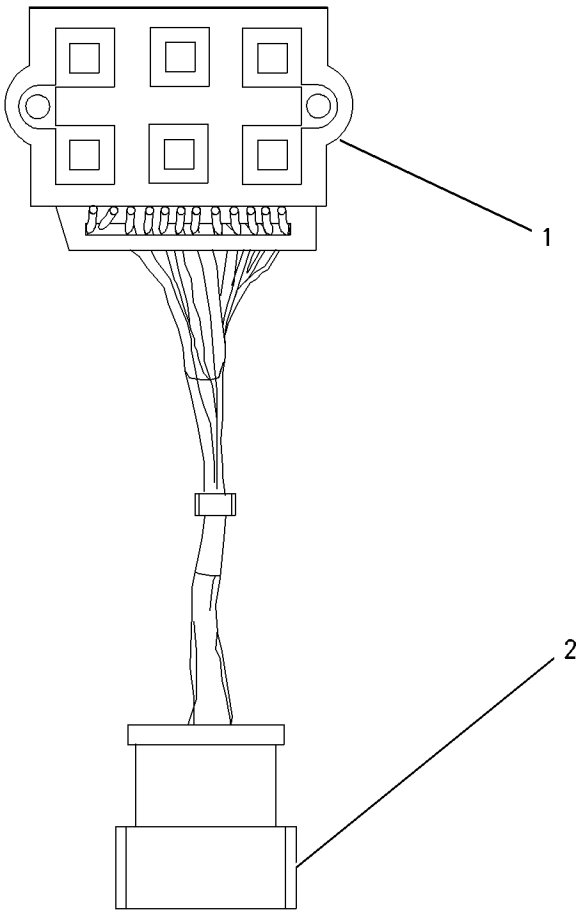

GRAPHIC #1 g00881824

217-5795 SENSOR GP-TEMP & PRESS

S/N: CSD1-UP
PART OF 179-1808 ENGINE AR-PRIMARY
AN ATTACHMENT

SMCS-1435, 7400 **i01649074**

NOTE	REF NO	GRAPHIC REF	PART NUMBER	QTY	PART NAME 1 2 3 4 5 6 (PRODUCT LEVEL)	SEE PAGE
	1	1	**153-5936**	2	WASHER	
	2	1	**183-1165**	1	PLUG-SEALING	
	3	1	**217-5791**	1	SWITCH-OIL PRESSURE	
	4	1	**217-5792**	1	ADAPTER	
	5	1	**217-5793**	1	SWITCH-WATER TEMPERATURE	

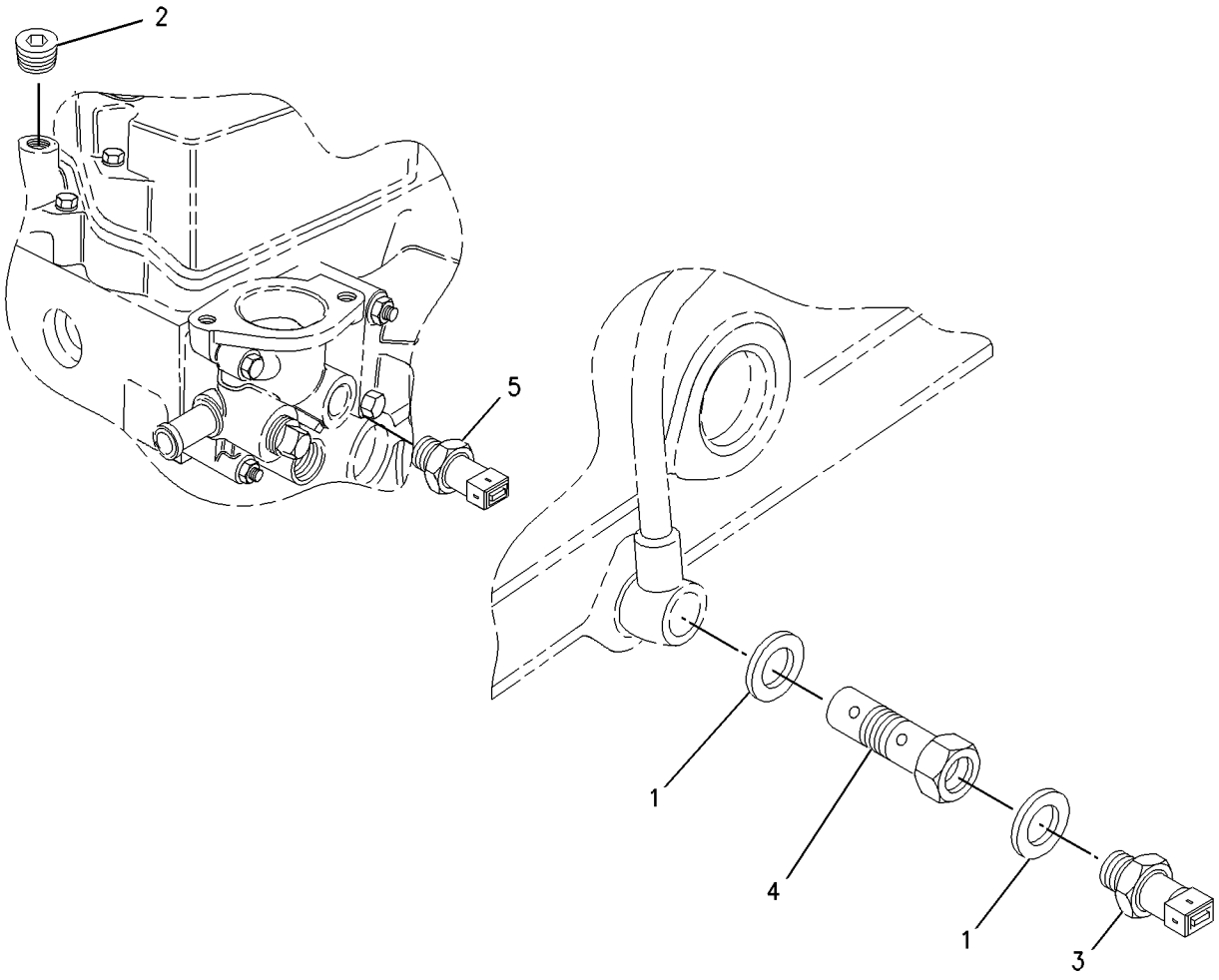

GRAPHIC #1 g00852742

207-1612 SERVICE GP-WORK TOOL

S/N: 4NZ3400-UP; 5FZ6700-UP

AN ATTACHMENT

SMCS-7610 **i01537096**

NOTE	REF NO	GRAPHIC REF	PART NUMBER	QTY	PART NAME 1 2 3 4 5 6 (PRODUCT LEVEL)	SEE PAGE
	1	1	**192-1590**	1	CONTROL GP-UNPROGRAMMED	
	1A	1	**7X-6315**	1	STRAP-GROUNDING	
	1B	1	**120-4897**	1	SCREW-PAN HEAD (NO.8-32X9.52)	
	1C	1	**134-4126**	1	WASHER (4.52X8.28X.76MM THK)	
	2	1	**207-1611**	1	SOFTWARE GP-WORK TOOL (AUXILIARY HYDRAULIC)	

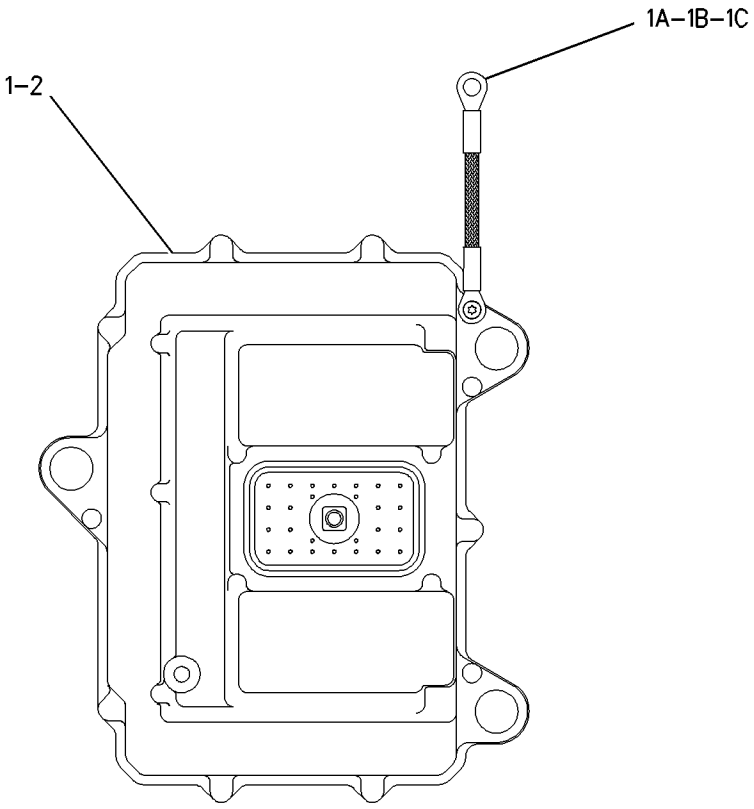

GRAPHIC #1 g00798447

153-0564 SOLENOID GP-SHUTOFF

S/N: 3NW21000-UP

PART OF 144-6194 ENGINE AR-PRIMARY

SMCS-1259 **i01710567**

NOTE	REF NO	GRAPHIC REF	PART NUMBER	QTY	PART NAME 1 2 3 4 5 6 (PRODUCT LEVEL)	SEE PAGE
	1	1	**6I-0846**	2	BOLT (M6X1.0X14MM)	
	2	1	**172-7209**	1	SOLENOID AS	
	3	1	**153-0566**	1	GASKET	

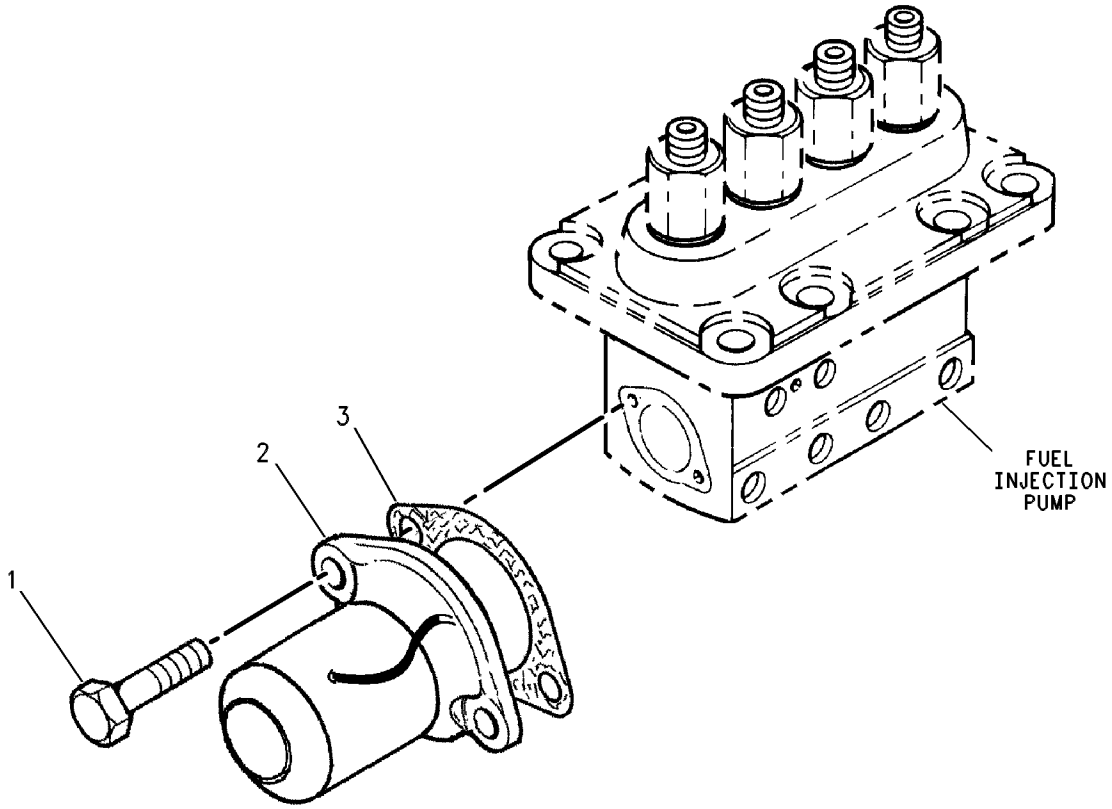

GRAPHIC #1 g00557819

ELECTRICAL AND STARTING SYSTEM

138-2219 STARTING MOTOR GP-ELECTRIC

S/N: 4NZ3400-3409

PART OF 200-0805 INSTALLATION AR-ENGINE

SMCS-1453, 1454, 1465, 1467 **i01631483**

NOTE	REF NO	GRAPHIC REF	PART NUMBER	QTY	PART NAME 1 2 3 4 5 6 (PRODUCT LEVEL)	SEE PAGE
R	1	1	**155-9849**	1	STARTING MOTOR GP-ELECTRIC	
	2	1	**8T-4121**	2	WASHER-HARD (11X21X2.5MM THK)	
M	3	1	**8T-4186**	2	BOLT (M10X1.5X40MM)	

M-METRIC PART
R-REMFG PART MAY BE AVAILABLE

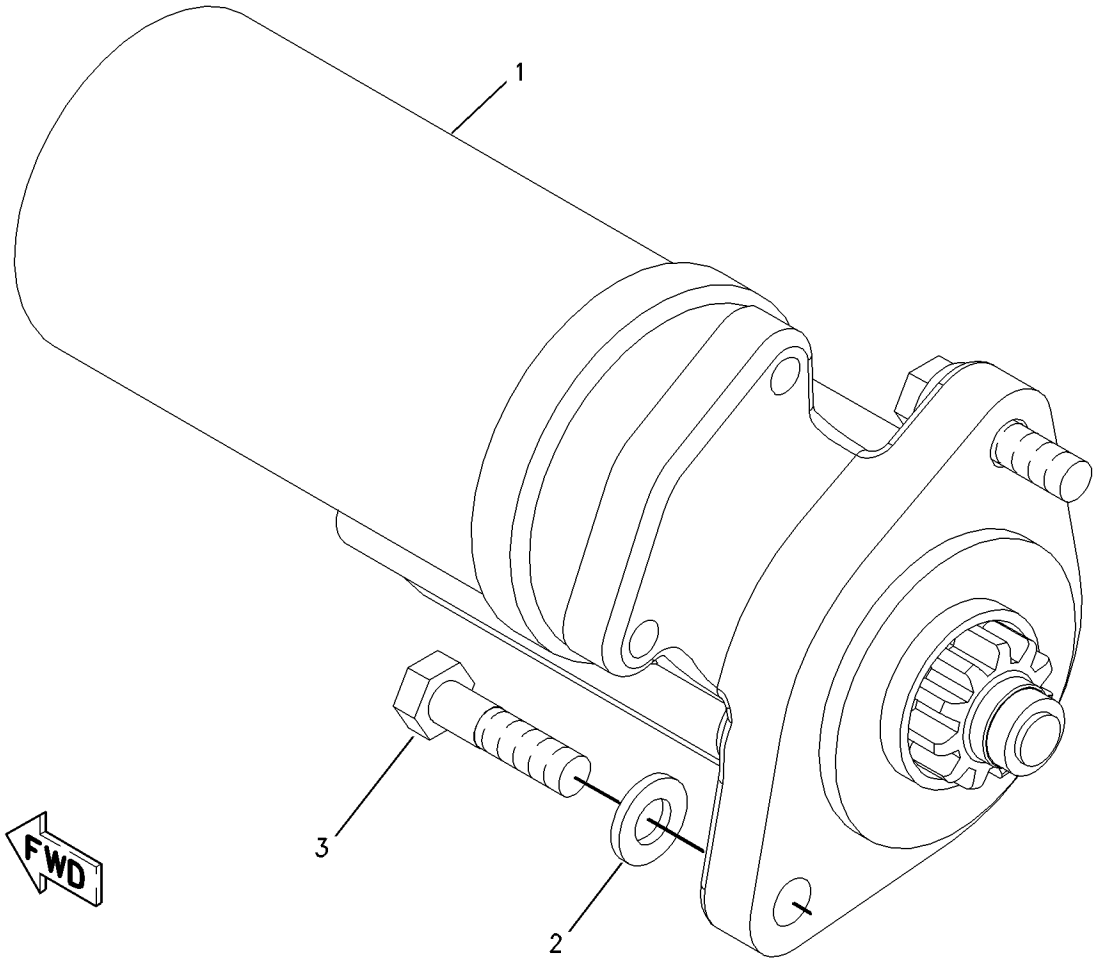

GRAPHIC #1 g00848253

ELECTRICAL AND STARTING SYSTEM

154-3995 STARTING MOTOR GP-ELECTRIC

S/N: CAB1-UP; CMB1-UP; 5FZ6700-UP

PART OF 200-1005, 219-4375, 219-4385 INSTALLATION AR-ENGINE

SMCS-1453, 1454, 1465, 1467 **i01067947**

NOTE	REF NO	GRAPHIC REF	PART NUMBER	QTY	PART NAME 1 2 3 4 5 6 (PRODUCT LEVEL)	SEE PAGE
	1	1	**144-9955**	1	STARTING MOTOR GP-ELECTRIC	
	2	1	**4P-8134**	1	CLIP (10.5MM ID)	
	3	1	**8T-4121**	2	WASHER (2.5MM THK)	
M	4	1	**8T-4133**	3	NUT (M10X1.50 THD)	

M-METRIC PART

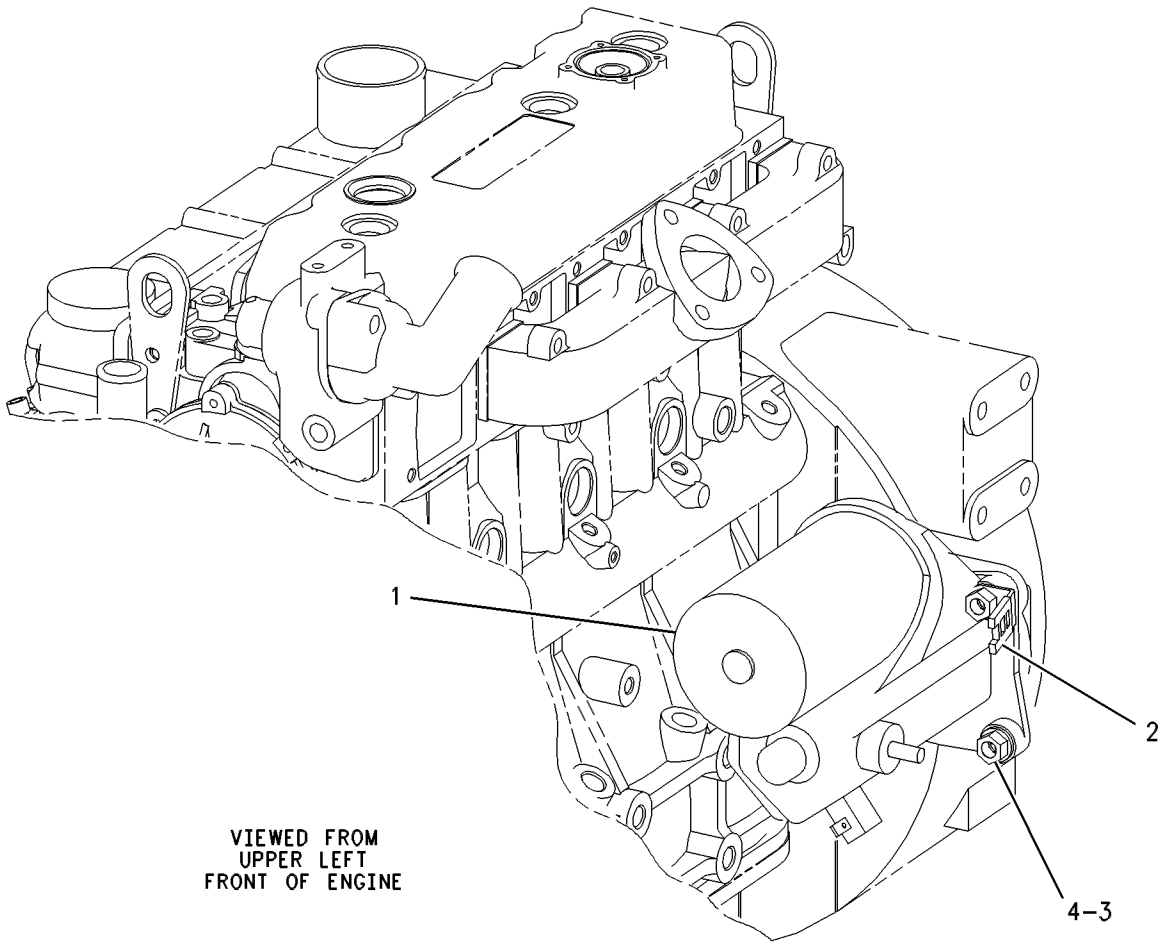

GRAPHIC #1 g00558796

213-6381 STARTING MOTOR GP-ELECTRIC

S/N: 4NZ3410-UP

PART OF 200-0805 INSTALLATION AR-ENGINE

SMCS-1453, 1454, 1465, 1467 **i01632076**

NOTE	REF NO	GRAPHIC REF	PART NUMBER	QTY	PART NAME 1 2 3 4 5 6 (PRODUCT LEVEL)	SEE PAGE
R	1	1	**155-9849**	1	STARTING MOTOR GP-ELECTRIC	
	2	1	**8T-4121**	2	WASHER-HARD (11X21X2.5MM THK)	
M	3	1	**8T-4133**	2	NUT (M10X1.5 THD)	

M-METRIC PART
R-REMFG PART MAY BE AVAILABLE

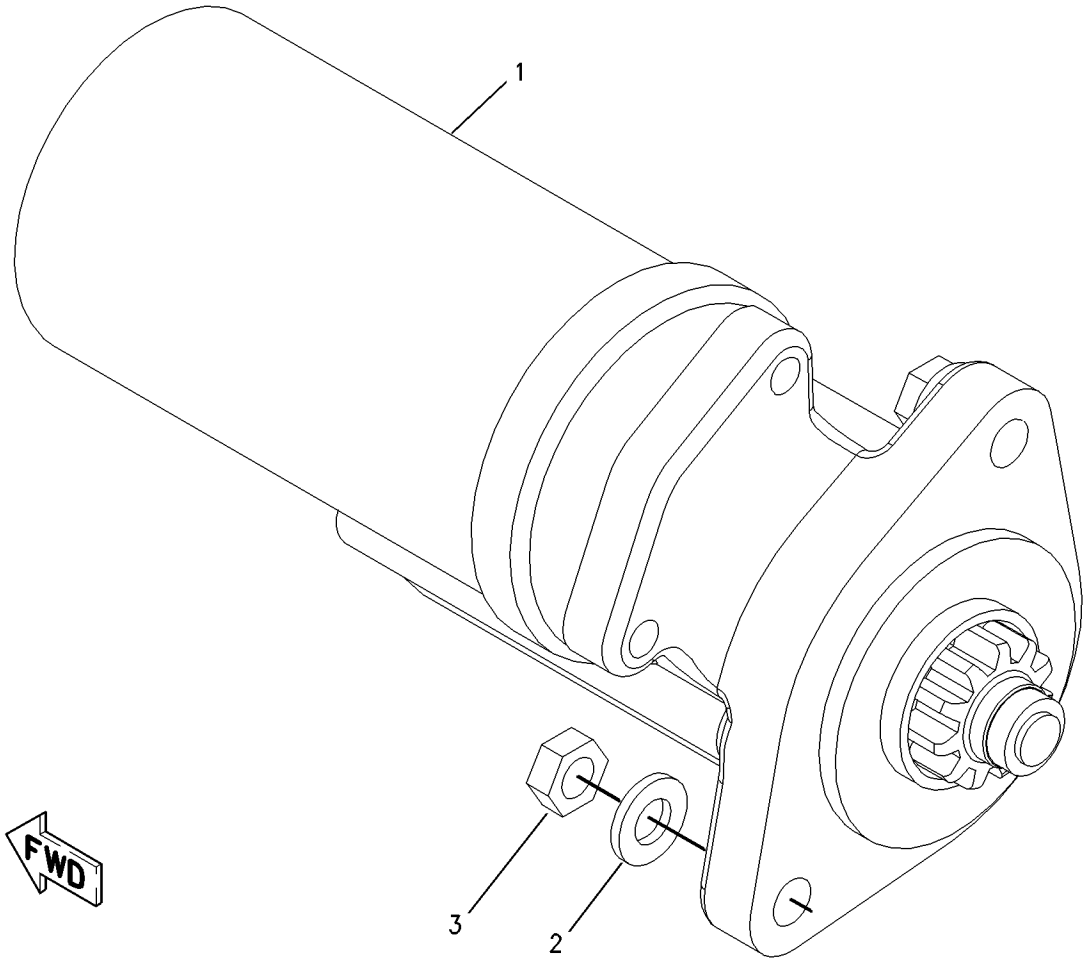

GRAPHIC #1 g00848261

171-4613 SWITCH GP-PRESSURE–OIL

S/N: 3NW21000-UP

PART OF 144-6194 ENGINE AR-PRIMARY

SMCS-1435, 7400 **i01148698**

NOTE	REF NO	GRAPHIC REF	PART NUMBER	QTY	PART NAME 1 2 3 4 5 6 (PRODUCT LEVEL)	SEE PAGE
	1	1	**1W-8438**	1	WASHER	
	2	1	**7W-1238**	1	SWITCH-PRESSURE (OIL)	
	3	1	**067-6007**	1	PLUG	
	4	1	**153-0562**	1	ADAPTER	

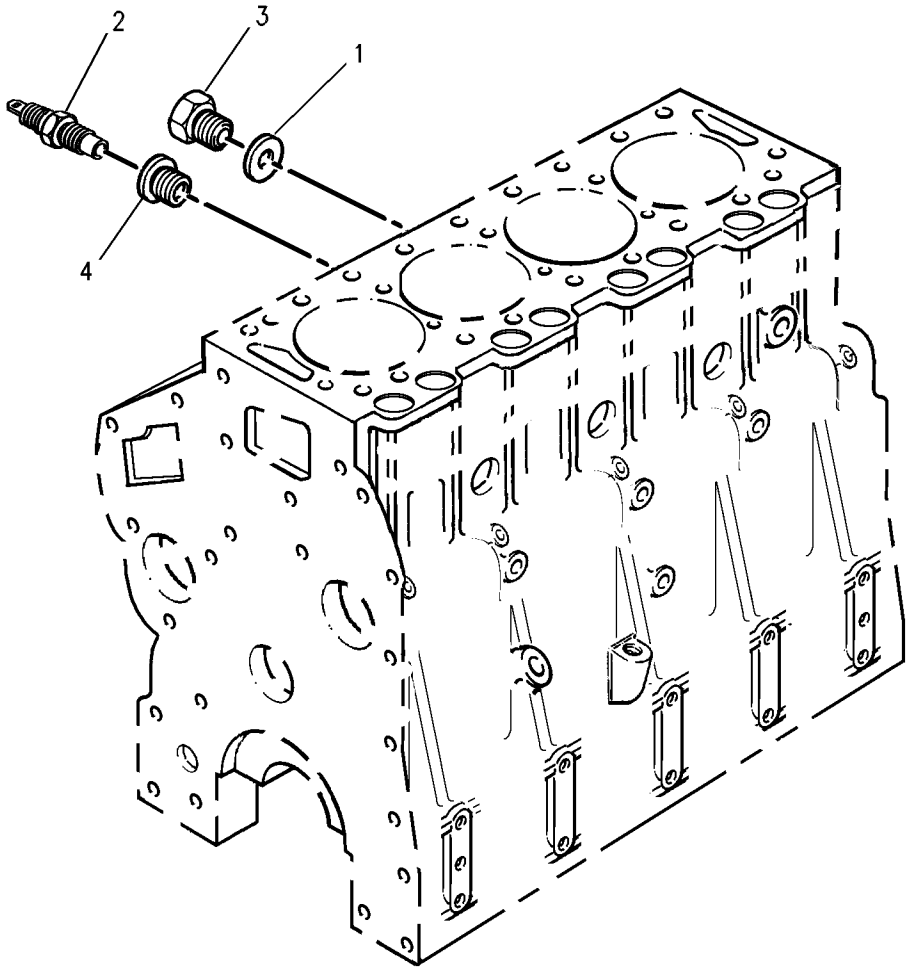

GRAPHIC #1 g00588848

184-1564 SWITCH GP-PRESSURE

S/N: 4NZ3400-UP; 5FZ6700-UP
BRAKE LIGHT
PART OF 192-2694 WIRING GP-REAR LIGHTING
AN ATTACHMENT

SMCS-1435, 7400 **i01627605**

NOTE	REF NO	GRAPHIC REF	PART NUMBER	QTY	PART NAME 1 2 3 4 5 6 (PRODUCT LEVEL)	SEE PAGE
	1	1	**9X-1813**		SLEEVE (19CM)	
	2	1	**102-8802**	1	KIT-RECEPTACLE (2 PIN)	
		1	**3E-3365**	1	WEDGE-RECEPTACLE LOCK (2 PIN)	
	3	1	**8T-8729**	2	PIN-CONNECTOR	
	4	1	**3E-3365**	1	WEDGE-RECEPTACLE LOCK (2 PIN)	
	5	1	**3J-1907**	1	SEAL-O-RING	

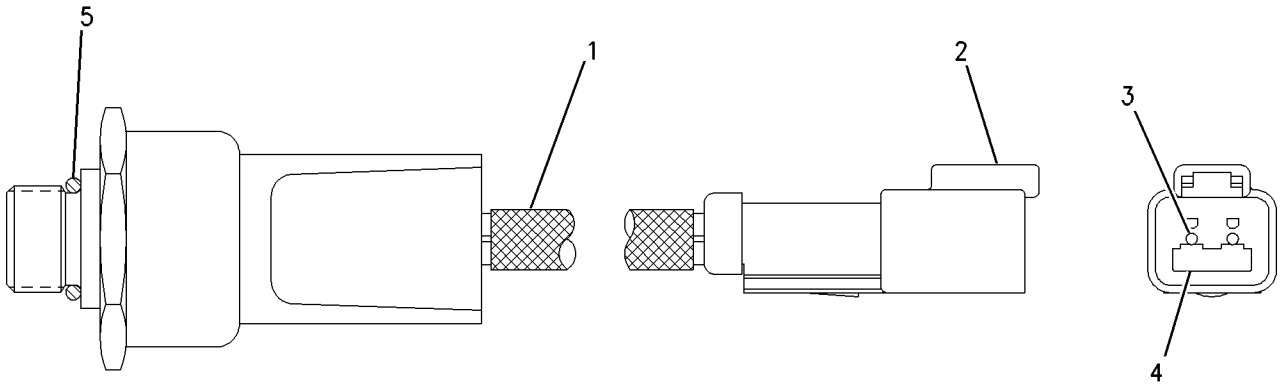

GRAPHIC #1 g00788762

164-8388 SWITCH GP-TEMPERATURE–WATER

S/N: 3NW21000-UP

PART OF 144-6194 ENGINE AR-PRIMARY

SMCS-7400, 7417 **i01585574**

NOTE	REF NO	GRAPHIC REF	PART NUMBER	QTY	PART NAME 1 2 3 4 5 6 (PRODUCT LEVEL)	SEE PAGE
	1	1	**159-1752**	1	SWITCH-WATER TEMPERATURE	
	2	1	**067-6045**	1	WASHER (5/8)	

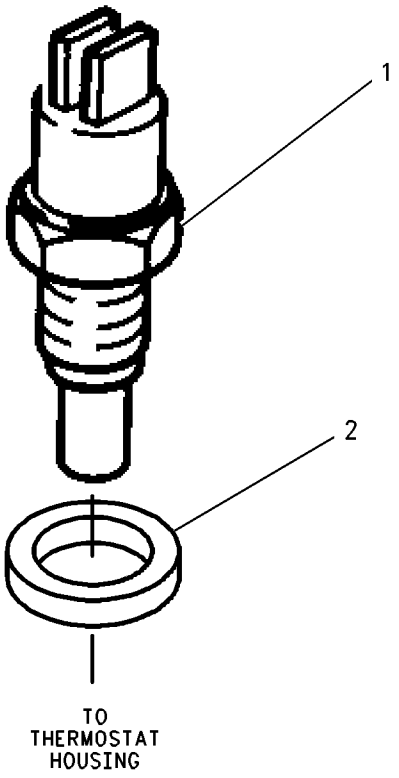

GRAPHIC #1 g00824381

142-8656 WARNING GP-BACKUP

S/N: CAB1-UP; CMB1-UP; 4NZ3400-UP; 5FZ6700-UP
CANNOT BE USED WITH 142-8714—PAGE 372
AN ATTACHMENT

SMCS-7406 **i01762665**

NOTE	REF NO	GRAPHIC REF	PART NUMBER	QTY	PART NAME 1 2 3 4 5 6 (PRODUCT LEVEL)	SEE PAGE
	1	1	**113-8490**	1	FUSE (10 AMP)	
C	2	1	**192-0836**	1	SWITCH GP-PRESSURE (BACKUP ALARM)	
		1	**102-8802**	1	KIT-RECEPTACLE (2 PIN)	
		1	**3E-3365**	1	WEDGE-RECEPTACLE LOCK (2 PIN)	
		1	**3J-1907**	1	SEAL-O-RING	
		1	**8T-8729**	1	PIN-CONNECTOR	
	3	1	**161-2539**	1	ALARM (BACKUP)	
M	4	1	**6V-7357**	2	BOLT (M6X1.0X25MM)	
	5	1	**8T-4205**	2	WASHER-HARD (7.2X14.5X2MM THK)	

C-CHANGE FROM PREVIOUS TYPE
M-METRIC PART

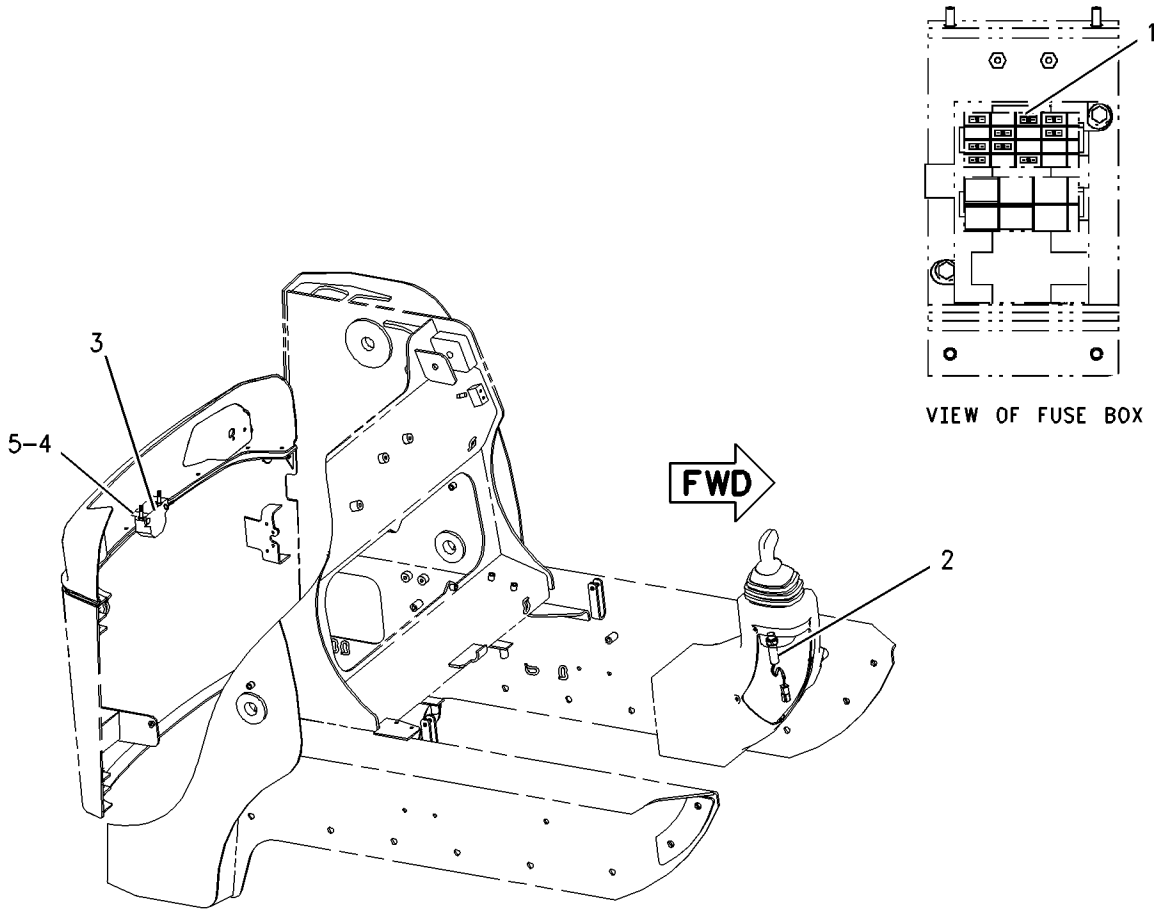

GRAPHIC #1 g00901796

MEMORANDA

193-8375 WIRING GP-CAB

S/N: CAB1-UP; CMB1-UP; 4NZ3400-UP; 5FZ6700-UP

PART OF 191-2902, 191-9602, 200-0802, 200-1002 CHASSIS AR

SMCS-1408, 7301 **i01755479**

NOTE	REF NO	GRAPHIC REF	PART NUMBER	QTY	PART NAME 1 2 3 4 5 6 (PRODUCT LEVEL)	SEE PAGE
	1	1,2	**3S-2093**	16	STRAP-CABLE	
	2	1	**4B-4863**	2	WASHER (4.7X11X1.2MM THK)	
	3	2	**6I-1418**	3	SPACER (8.2X12.7X28.7MM THK)	
	4	1	**7G-1060**	1	STRAP AS-GROUND	
	5	1,2	**8T-8737**	13	PLUG-SEAL	
	6	2	**8T-9655**	6	MOUNT (ISOLATION)	
	7	2	**9R-7941**	1	RECEPTACLE AS-POWER (24 VOLTS)	
	8	2	**113-8490**	9	FUSE (10 AMP)	
	9	2	**113-8491**	2	FUSE (15 AMP)	
	10	1	**128-4249**	1	LOCKWASHER	
	11	2	**143-1974**	4	RECEPTACLE	
	12	2	**146-4323**	2	RELAY AS	
Y	13	2	**154-4233**	1	CONTROL GP-INTERLOCK	144
	14	2	**188-0131**	1	BRACKET AS	
	15	2	**190-8002**	1	HARNESS AS-CAB (INTERLOCK)	
		2	**102-8804**	1	KIT-RECEPTACLE (4 PIN)	
		2	**155-2255**	2	KIT-CONNECTING PLUG (12 PIN)	
		2	**155-2265**	1	KIT-CONNECTING PLUG (8 PIN)	
		2	**155-2260**	2	KIT-CONNECTING PLUG (3 PIN)	
		2	**155-2270**	1	KIT-CONNECTING PLUG (2 PIN)	
		2	**155-2271**	1	KIT-CONNECTING PLUG (4 PIN)	
Y	16	2	*193-8374*	1	COVER GP-FUSE PANEL	145
	17	1	**211-0052**	1	NUT	
M	18	2	**111-4627**	4	SCREW-MACHINE (M6X1.0X30MM)	
	19	1,2	**195-0936**	8	INSERT-THREADED (M6X1)	
	20	2	**102-8803**	1	KIT-RECEPTACLE (3 PIN)	
	21	1	**102-8804**	1	KIT-RECEPTACLE (4 PIN)	
	22	1	**102-8805**	1	KIT-RECEPTACLE (6 PIN)	
	23	1	**102-8806**	1	KIT-RECEPTACLE (8 PIN)	
	24	2	**4P-7581**	1	CLIP	
	25	1	**4P-8134**	2	CLIP	
M	26	2	**5C-7261**	3	NUT (M8X1.25 THD)	
M	27	1	**5C-8312**	2	NUT (M4X0.7 THD)	
M	28	2	**5C-9553**	6	BOLT (M6X1X16MM)	
	29	2	**7G-7053**	1	GROMMET	
	30	2	**7X-0579**	1	WASHER-HARD (8.8X25.5X2MM THK)	
	31	1	**8T-4121**	2	WASHER-HARD (11X21X2.5MM THK)	
M	32	1	**8T-4133**	1	NUT (M10X1.5 THD)	
	33	2	**8T-4205**	2	WASHER-HARD (7.2X14.5X2MM THK)	
M	34	1	**9X-1046**	2	SCREW (M4X0.7X18MM)	
M	35	2	**9X-2042**	6	SCREW-TRUSS HEAD (M6X1X12MM)	
	36	2	**9X-6165**	4	WASHER (6.5X22X2.5MM THK)	
E	37	2	**9X-2092**		STRIP-EDGE (21CM)	

E-ORDER BY THE CENTIMETER
M-METRIC PART
Y-SEPARATE ILLUSTRATION

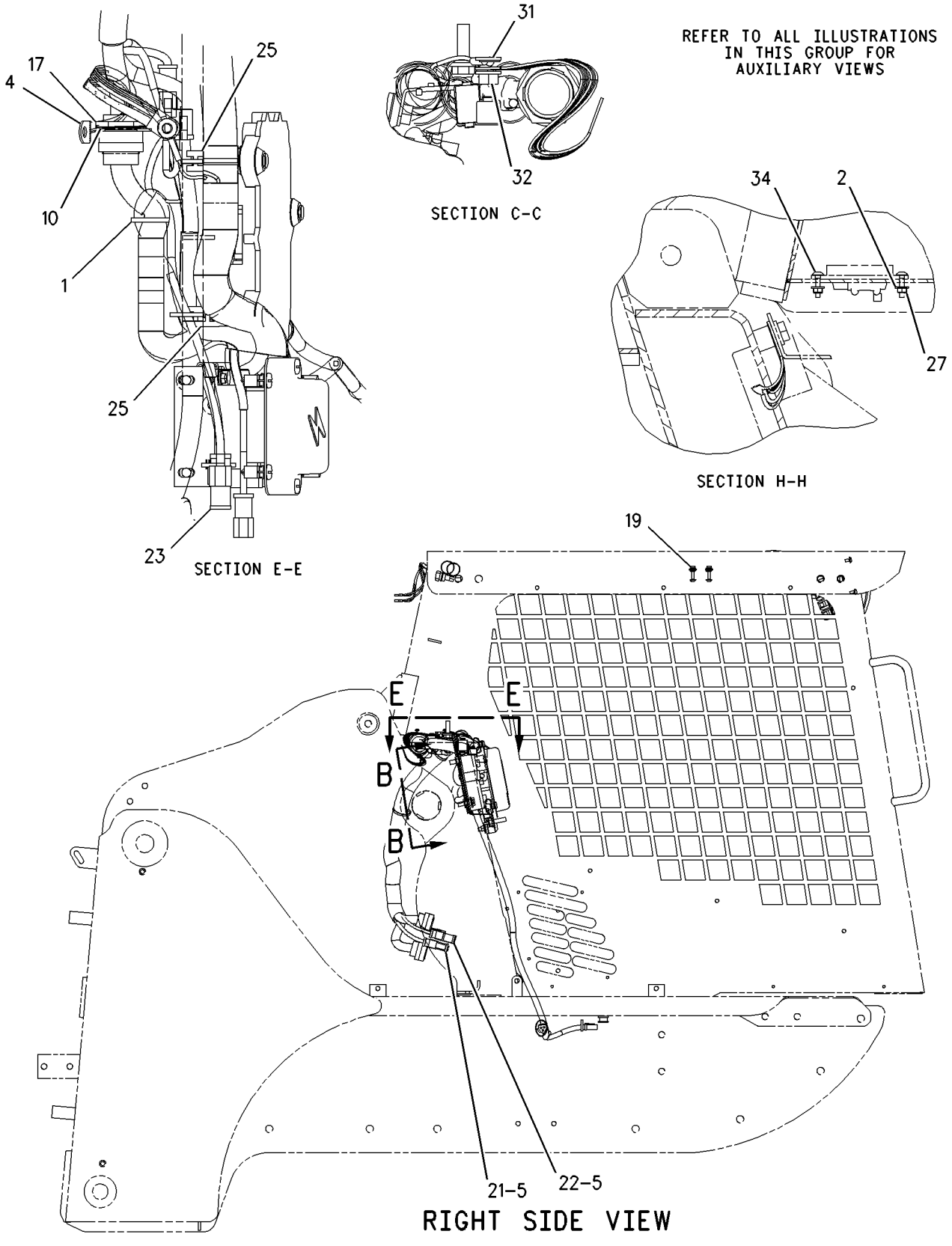

GRAPHIC #1

g00844141

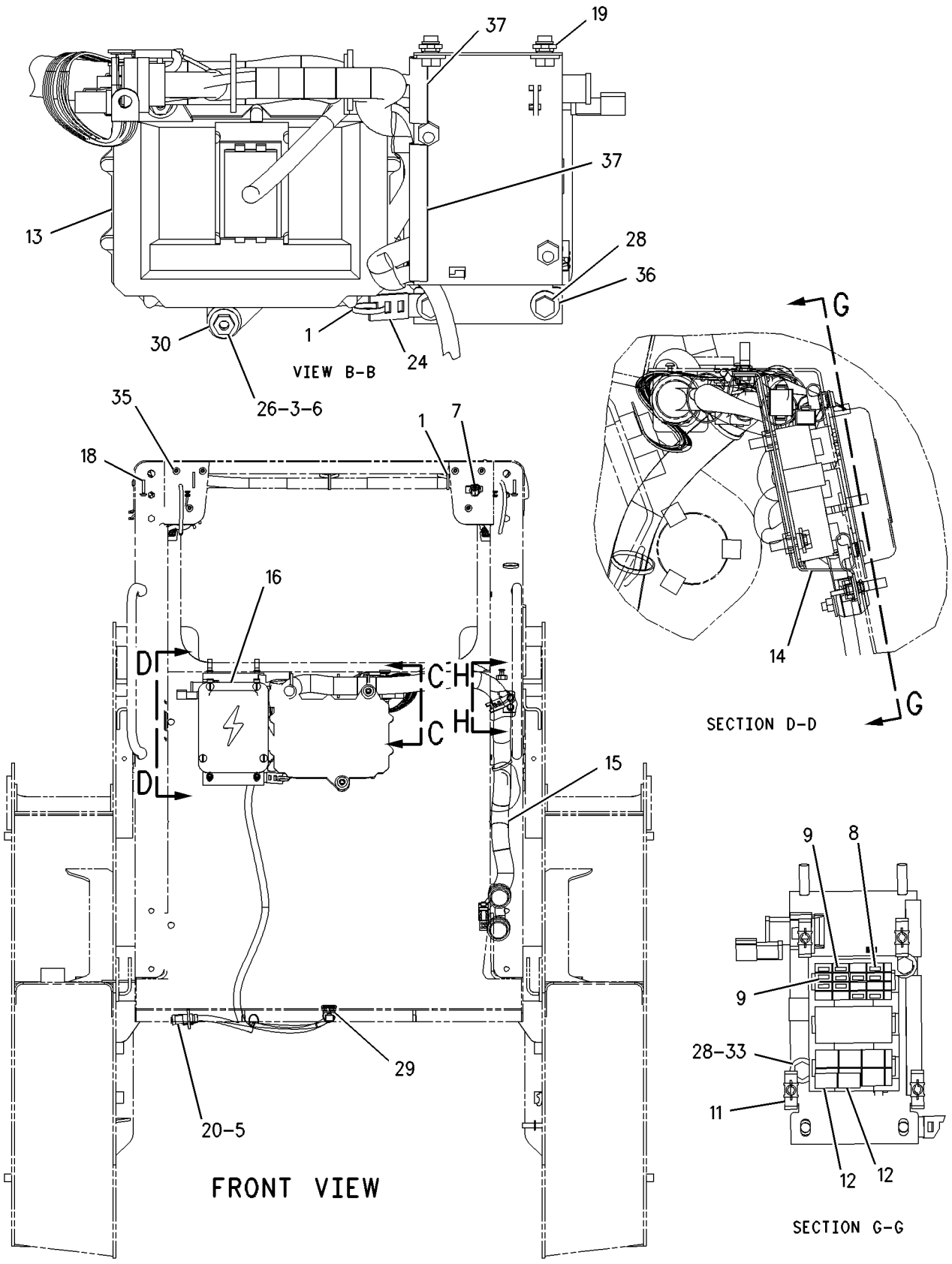

GRAPHIC #2

g00844142

MEMORANDA

ELECTRICAL AND STARTING SYSTEM

190-8001 WIRING GP-CHASSIS

S/N: CAB1-UP; CMB1-UP; 4NZ3400-UP; 5FZ6700-UP

PART OF 191-2902, 191-9602, 200-0802, 200-1002 CHASSIS AR

SMCS-1408, 7051 **i01746323**

NOTE	REF NO	GRAPHIC REF	PART NUMBER	QTY	PART NAME 1 2 3 4 5 6 (PRODUCT LEVEL)	SEE PAGE
	1	1	**6I-1418**	3	SPACER (8.2X12.7X28.7MM THK)	
	2	2	**7D-5473**	2	BOLT-SOCKET HEAD (8-32X.75 IN)	
	3	2	**8C-6354**	1	CAP-RECEPTACLE	
	4	1	**8M-4963**	1	STRAP AS-GROUND	
	5	1	**8T-9655**	6	MOUNT (ISOLATION)	
	6	2	**115-1615**	6	RELAY AS (12 VOLT)	
	7	2	**128-4249**	2	LOCKWASHER	
	8	1	**142-7513**	1	CABLE AS-POWER	
		1	**1S-7251**	1	TERMINAL-RING (FOR 1/2 IN BOLT)	
		1	**3S-6050**	1	TERMINAL AS-BATTERY (NEGATIVE)	
		1	**1M-6119**	1	BOLT-BATTERY TERMINAL (5/16-18X1.375 IN)	
		1	**1M-6120**	1	NUT-BATTERY TERMINAL (5/16-18 THD)	
		1	**5P-0761**		CABLE (00GA)(RED) (30CM)	
		1	**8N-0869**	1	COVER-TERMINAL (RED)	
		1	**8N-1725**	1	COVER-TERMINAL (RED)	
		1	**8L-8413**	1	STRAP-CABLE	
	9	2	**142-8640**	1	HARNESS AS-REAR LIGHTING	
		2	**155-2270**	1	KIT-CONNECTING PLUG (2 PIN)	
		2	**102-8809**	1	KIT-CONNECTING PLUG (4 PIN)	
		2	**102-8805**	1	KIT-RECEPTACLE (6 PIN)	
	10	2	**147-1773**	1	CIRCUIT BREAKER AS (30 AMP)	
		2	**6V-8378**	2	NUT (10-32 THD)	
		2	**8F-1434**	2	LOCKWASHER	
		2	**8T-0328**	2	WASHER-HARD (5.5X10X1MM THK)	
	11	1	**167-7801**	2	RESISTOR AS	
		1	**102-8802**	1	KIT-RECEPTACLE (2 PIN)	
Y	12	1	**178-2254**	1	ELECTRONICS GP-WORK TOOL (AUXILIARY HYDRAULIC)	146
	13	1	**190-8006**	1	HARNESS AS-PLATFORM	
		1	**102-8801**	1	KIT-RECEPTACLE (12 PIN)	
		1	**155-2255**	1	KIT-CONNECTING PLUG (12 PIN)	
		1	**155-2265**	1	KIT-CONNECTING PLUG (8 PIN)	
		1	**155-2260**	1	KIT-CONNECTING PLUG (3 PIN)	
		1	**155-2270**	1	KIT-CONNECTING PLUG (2 PIN)	
		1	**155-2271**	1	KIT-CONNECTING PLUG (4 PIN)	
		1	**155-2274**	1	KIT-CONNECTING PLUG (6 PIN)	
		1	**177-9648**	1	KIT-CONNECTING PLUG (2 PIN)	
	14	2	**190-8008**	1	HARNESS AS-OPERATOR CONTROLS (LH JOYSTICK)	
		2	**102-8801**	1	KIT-RECEPTACLE (12 PIN)	
		2	**155-2265**	1	KIT-CONNECTING PLUG (8 PIN)	
		2	**155-2270**	1	KIT-CONNECTING PLUG (2 PIN)	
	15	2	**190-8009**	1	HARNESS AS-OPERATOR CONTROLS (RH JOYSTICK)	
		2	**102-8805**	1	KIT-RECEPTACLE (6 PIN)	
		2	**155-2270**	1	KIT-CONNECTING PLUG (2 PIN)	
		2	**155-2274**	1	KIT-CONNECTING PLUG (6 PIN)	
	16	2	**193-8378**	1	BRACKET AS	
	17	2	**197-6897**	1	WIRE AS	
		2	**2L-8067**	1	TERMINAL-INSULATED (10-12 GA) (6.35MM)	
	18	2	**202-0602**	1	PLATE	
	19	2	**211-0052**	2	NUT	
B	20	1,2	**102-8802**	6	KIT-RECEPTACLE (2 PIN)	
B	21	1	**102-8804**	2	KIT-RECEPTACLE (4 PIN)	
B	22	1	**102-8806**	1	KIT-RECEPTACLE (8 PIN)	
	23	1,2	**3S-2093**	31	STRAP-CABLE	
	24	2	**4B-4863**	2	WASHER (4.7X11X1.2MM THK)	
	25	1,2	**4P-8134**	2	CLIP	
M	26	2	**5C-9553**	7	BOLT (M6X1X16MM)	

190-8001 **WIRING GP-CHASSIS** ***(contd.)*** **i01746323**

NOTE	REF NO	GRAPHIC REF	PART NUMBER	QTY	PART NAME 1 2 3 4 5 6 (PRODUCT LEVEL)	SEE PAGE
	27	1	**7X-0579**	3	WASHER-HARD (8.8X25.5X2MM THK)	
M	28	1	**7X-0818**	3	BOLT (M8X1.25X45MM)	
	29	2	**8C-8558**	4	SCREW-LOCK	
	30	1	**8T-4121**	3	WASHER-HARD (11X21X2.5MM THK)	
M	31	1	**8T-4133**	3	NUT (M10X1.5 THD)	
M	32	2	**8T-4200**	2	BOLT (M8X1.25X16MM)	
	33	2	**8T-4205**	7	WASHER-HARD (7.2X14.5X2MM THK)	
	34	2	**8T-4224**	2	WASHER-HARD (8.8X16X2MM THK)	
F			**8T-8737**	28	PLUG-SEAL	

B-USE AS REQUIRED
F-NOT SHOWN
M-METRIC PART
Y-SEPARATE ILLUSTRATION

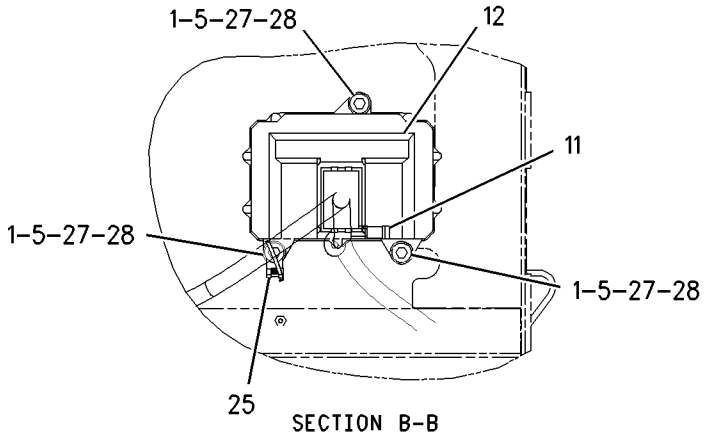

SECTION B-B

REFER TO ALL ILLUSTRATIONS
IN THIS GROUP FOR
AUXILIARY VIEWS

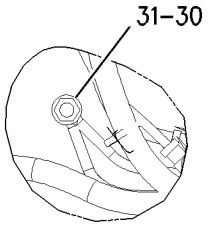

VIEW OF AREA A

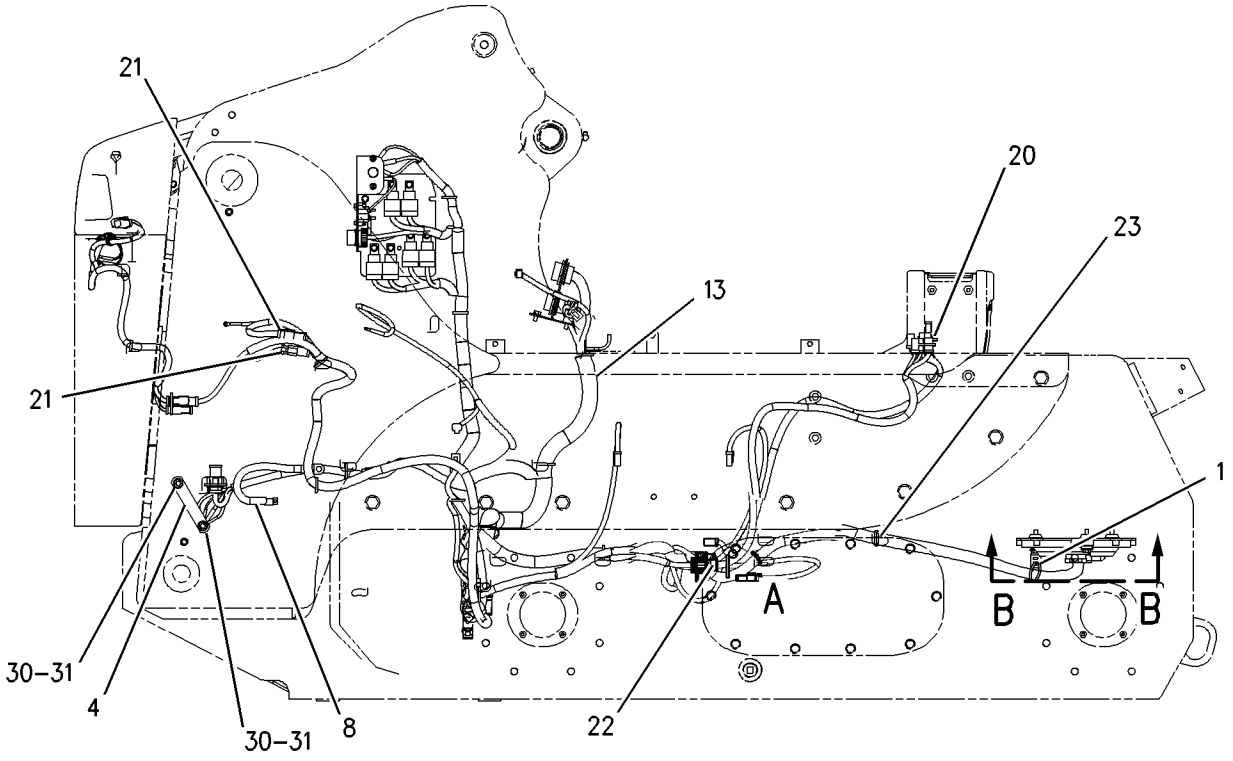

RIGHT SIDE VIEW

GRAPHIC #1 g00894919

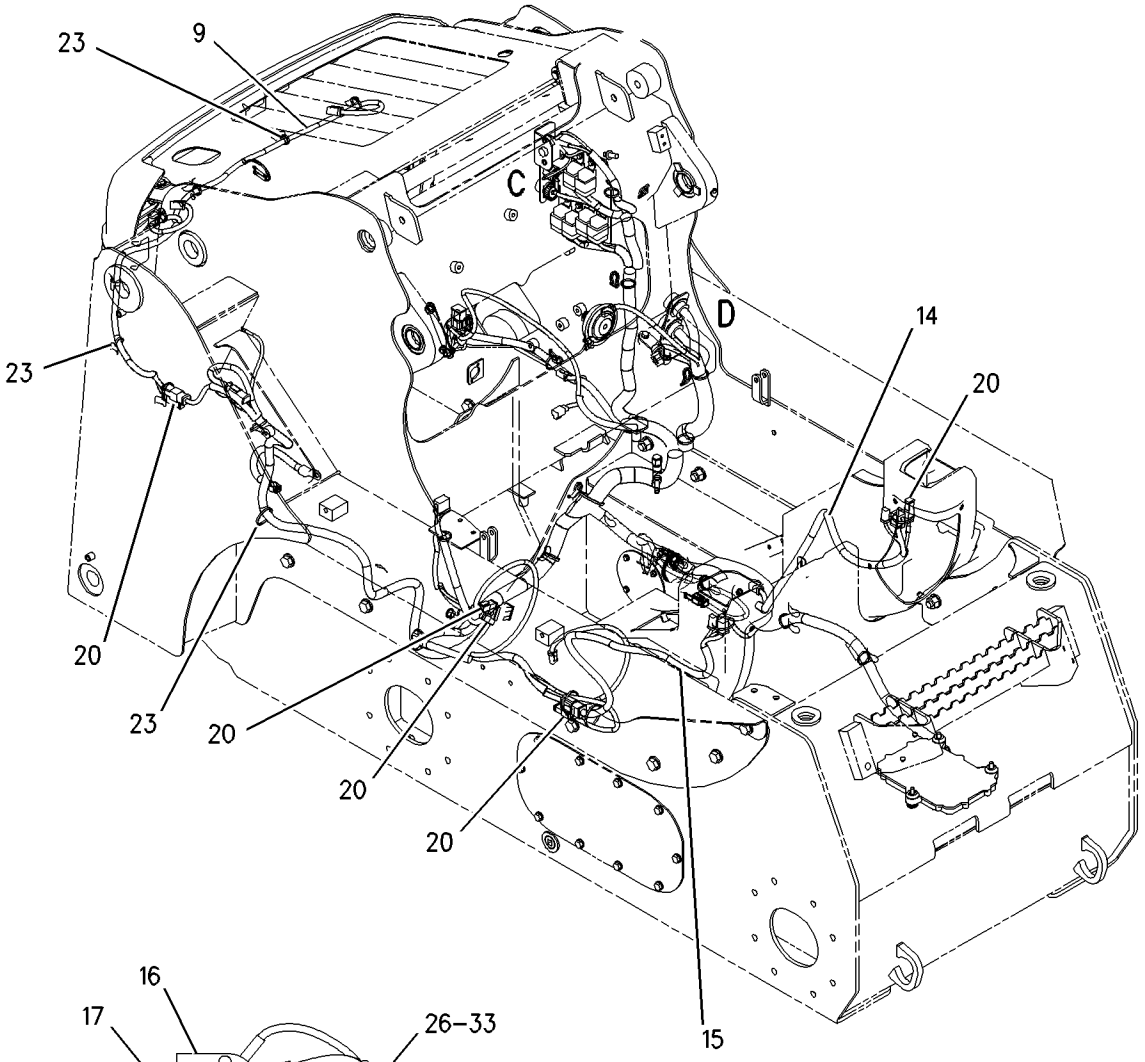

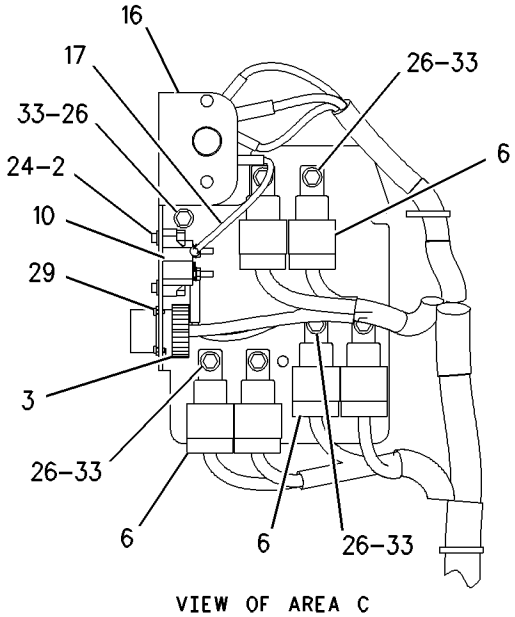

VIEW OF AREA C

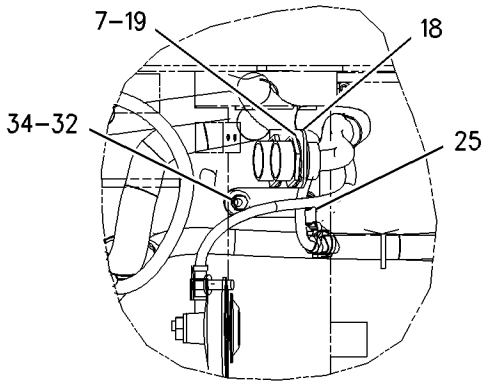

VIEW OF AREA D

GRAPHIC #2

g00894920

197-6900 WIRING GP-ENGINE

S/N: CMB1-UP; 5FZ6700-UP

PART OF 191-2902, 200-1002 CHASSIS AR

SMCS-1000, 1408, 1420 **i01762669**

NOTE	REF NO	GRAPHIC REF	PART NUMBER	QTY	PART NAME 1 2 3 4 5 6 (PRODUCT LEVEL)	SEE PAGE
B	1	1	**3S-2093**	7	STRAP-CABLE	
	2	1	**4P-8134**	2	CLIP	
	3	1	**7G-1060**	1	STRAP AS-GROUND	
	4	1	**142-7517**	1	CABLE AS-GROUND	
	5	1	**142-8833**	2	SPACER	
	6	1	**197-6901**	1	HARNESS AS-ENGINE	
	7	1	**115-3073**	1	CLIP AS-CONNECTING	
	8	1	**4P-7581**	1	CLIP	
M	9	1	**7X-2621**	1	BOLT (M10X1.50X12MM)	
	10	1	**8T-4121**	1	WASHER-HARD (11X21X2.5MM THK)	
M	11	1	**8T-4133**	1	NUT (M10X1.5 THD)	
	12	1	**8T-4224**	2	WASHER-HARD (8.8X16X2MM THK)	
M	13	1	**8T-4908**	2	BOLT (M8X1.25X25MM)	

B-USE AS REQUIRED
M-METRIC PART

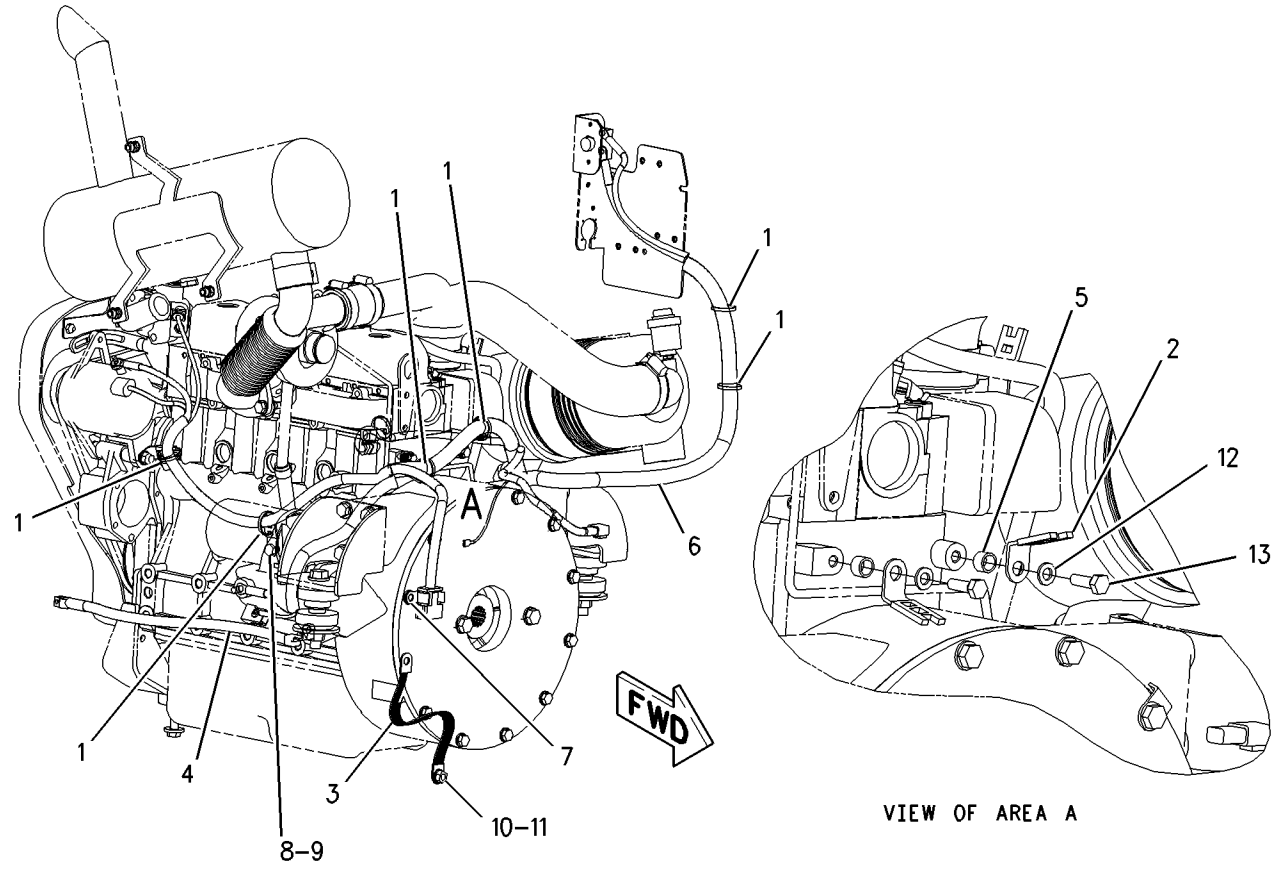

GRAPHIC #1 g00901799

197-8466 WIRING GP-ENGINE

S/N: CAB1-UP; 4NZ3400-UP
PART OF 191-9602, 200-0802 CHASSIS AR
FOR USE WITH 179-1808—PAGE 6

SMCS-1000, 1408, 1420 **i01762676**

NOTE	REF NO	GRAPHIC REF	PART NUMBER	QTY	PART NAME 1 2 3 4 5 6 (PRODUCT LEVEL)	SEE PAGE
	1	1	**3S-2093**	10	STRAP-CABLE	
	2	1	**7G-1060**	1	STRAP AS-GROUND	
	3	1	**8T-8737**	5	PLUG-SEAL	
	4	1	**142-7517**	1	CABLE AS-GROUND	
		1	**3S-6050**	1	TERMINAL AS-BATTERY (NEGATIVE)	
		1	**5P-0747**		CABLE (00GA)(BLACK) (48CM)	
		1	**7N-5274**	1	COVER-TERMINAL (BLACK)	
		1	**8S-3020**	1	TERMINAL-CABLE	
	5	1	**202-2171**	1	HARNESS AS	
	6	1	**115-3073**	1	CLIP AS-CONNECTING	
		1	**8C-3334**	1	RIVET-TUBULAR	
	7	1	**172-9200**	1	SUPPRESSOR-ARC	

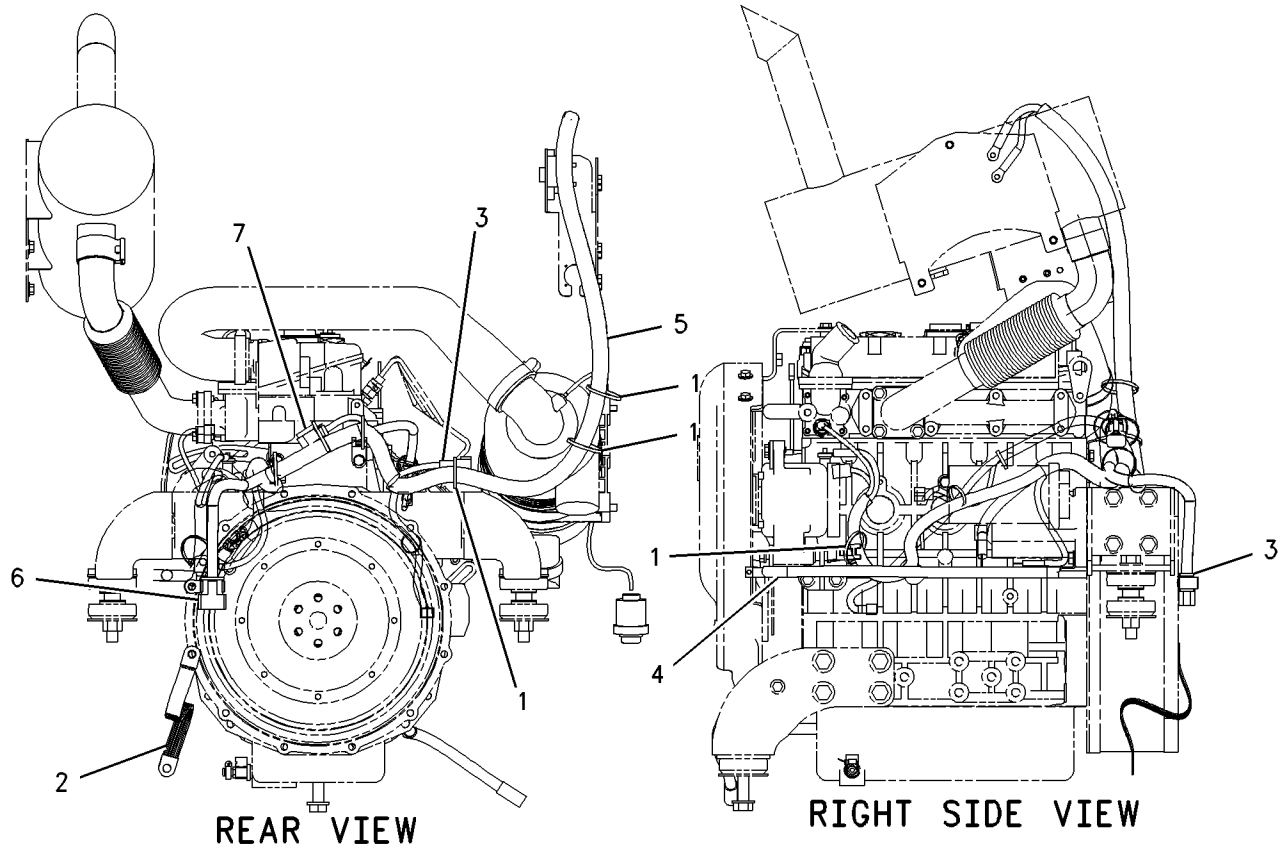

GRAPHIC #1 g00901808

192-2694 WIRING GP-REAR LIGHTING

S/N: 4NZ3400-UP; 5FZ6700-UP
PART OF 206-3778 CONVERSION AR-ROADING
AN ATTACHMENT

SMCS-1408, 1429 **i01762717**

NOTE	REF NO	GRAPHIC REF	PART NUMBER	QTY	PART NAME 1 2 3 4 5 6 (PRODUCT LEVEL)	SEE PAGE
	1	1	**3S-2093**	7	STRAP-CABLE	
	2	1	**115-1615**	1	RELAY AS (12 VOLT)	
	3	1	*166-2033*	2	TEE GP	
		1	**4J-5477**	1	SEAL-O-RING	
		1	**7X-2444**	1	TEE-SWIVEL	
	4	1	**180-3008**	1	HARNESS AS-REAR LIGHTING	
		1	**102-8803**	1	KIT-RECEPTACLE (3 PIN)	
		1	**155-2270**	1	KIT-CONNECTING PLUG (2 PIN)	
Y	5	1	**184-1564**	2	SWITCH GP-PRESSURE	182

Y-SEPARATE ILLUSTRATION

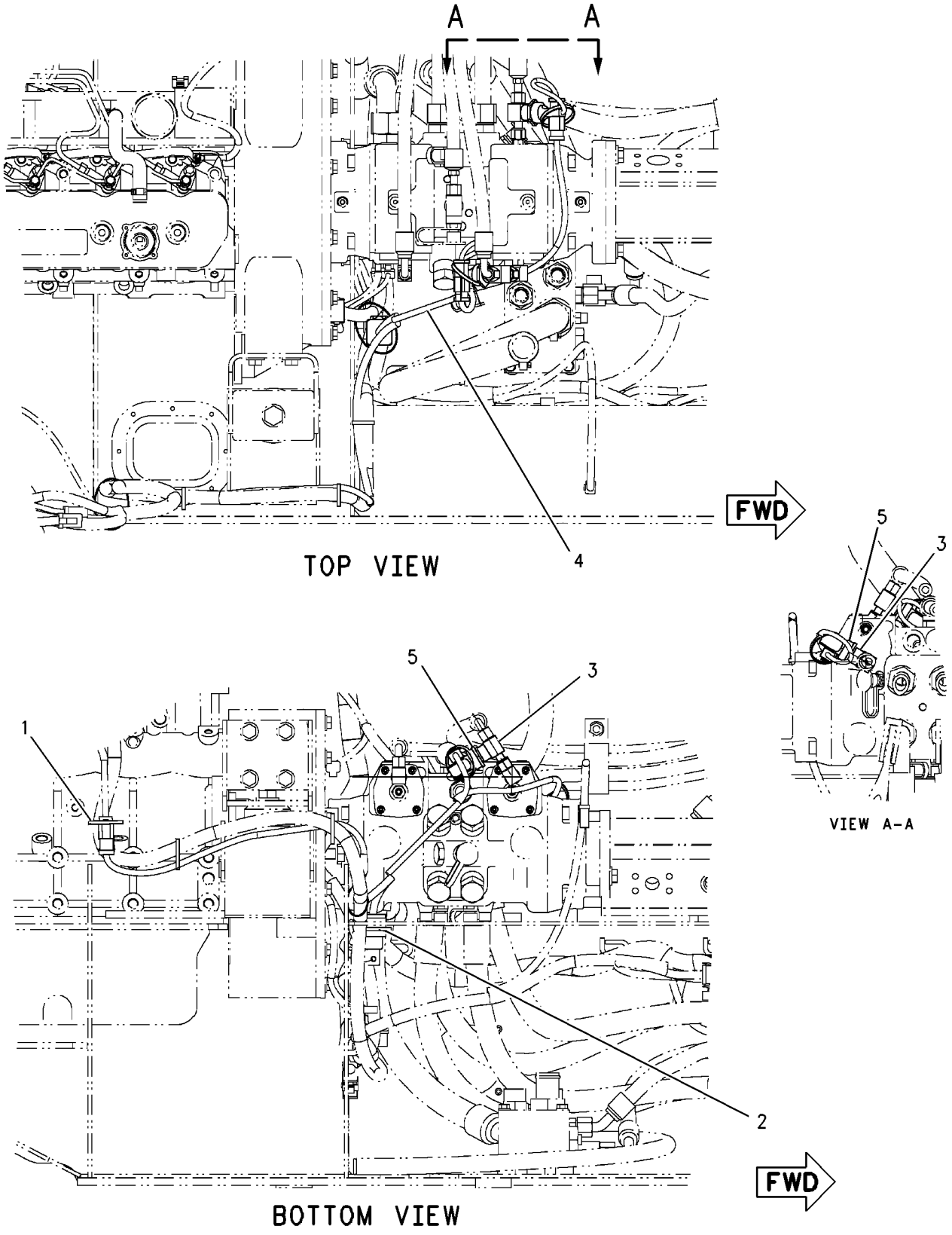

GRAPHIC #1 g00901822

187-1258 WIRING GP-WORK TOOL

S/N: 4NZ3400-UP; 5FZ6700-UP

KIT-WORK TOOL WIRING

FIELD INSTALLATION

SMCS-1408 **i01755441**

NOTE	REF NO	GRAPHIC REF	PART NUMBER	QTY	PART NAME 1 2 3 4 5 6 (PRODUCT LEVEL)	SEE PAGE
	1	1	**3S-2093**	4	STRAP-CABLE	
	2	1	**8T-8737**	3	PLUG-SEAL	
	3	1	**102-8806**	1	KIT-RECEPTACLE (8 PIN)	
	4	1	**105-3542**	1	DIODE GP	
		1	**102-8806**	1	KIT-RECEPTACLE (8 PIN)	
		1	**3E-3389**	1	WEDGE-RECEPTACLE LOCK	
		1	**7X-8831**	1	DIODE	
		1	**9G-3695**	1	PLUG (GROMMET SEALING)	
	5	1	**110-8760**	1	STRAP	
	6	1	**113-8491**	2	FUSE (15 AMP)	
	7	1	**142-8633**	1	SWITCH GP-ROCKER (WORK TOOL)	
		1	**111-7899**	1	GASKET	
	8	1	**142-9184**	1	BRACKET	
	9	1	**142-9333**	1	HARNESS AS-WORK TOOL	
	10	1	**146-4323**	2	RELAY AS	
	11	1	**159-9495**	1	NUT (1/2X18 THD)	
	12	1	**159-9496**	1	LOCKWASHER	
	13	1	**193-8339**	1	PLATE	
Y	14	1	**204-1396**	1	CONTROL GP-HANDLE	288
M	15	1	**5C-7261**	2	NUT (M8X1.25 THD)	
	16	1	**8T-0255**	1	PIN-SPRING	
	17	1	**8T-4121**	2	WASHER-HARD (11X21X2.5MM THK)	
M	18	1	**8T-4191**	2	BOLT (M10X1.5X16MM)	
	19	1	**8T-4224**	4	WASHER-HARD (8.8X16X2MM THK)	
M	20	1	**8T-4908**	2	BOLT (M8X1.25X25MM)	

M-METRIC PART
Y-SEPARATE ILLUSTRATION

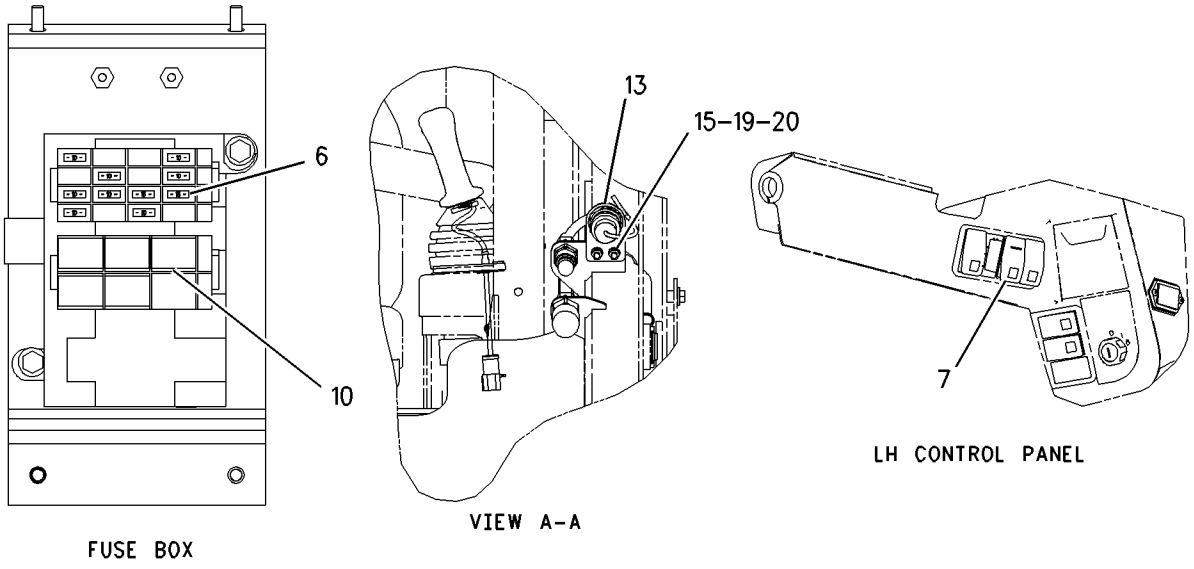

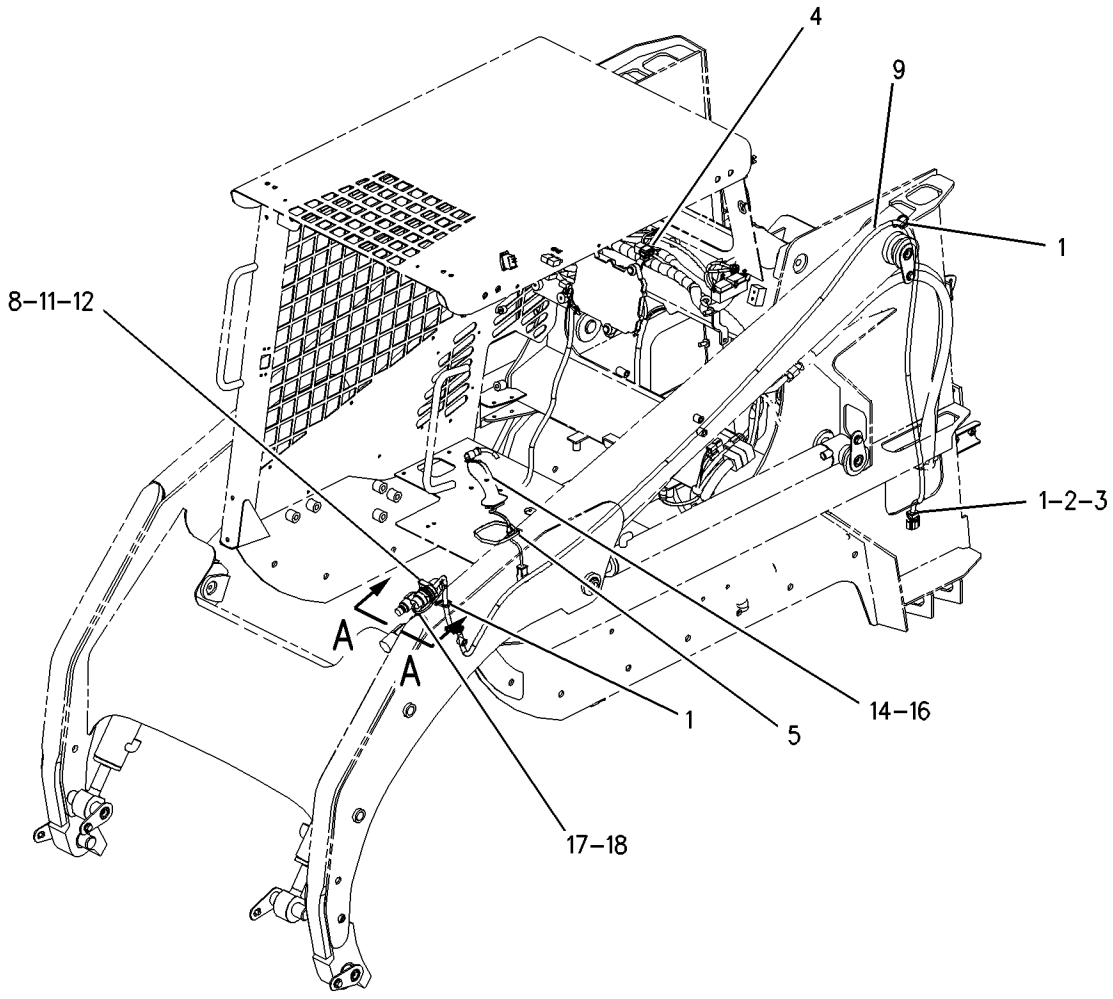

GRAPHIC #1 g00867595

193-8353 WIRING GP-WORK TOOL

S/N: CAB1-UP; CMB1-UP; 4NZ3400-UP; 5FZ6700-UP
PART OF 191-2909, 216-6133 CONTROL GP-PILOT OPERATED HYD
AN ATTACHMENT

SMCS-1408 **i01762725**

NOTE	REF NO	GRAPHIC REF	PART NUMBER	QTY	PART NAME 1 2 3 4 5 6 (PRODUCT LEVEL)	SEE PAGE
	1	1	**3E-3389**	1	WEDGE-RECEPTACLE LOCK	
	2	1	**3S-2093**	5	STRAP-CABLE	
	3	1	**8T-8737**	3	PLUG-SEAL	
	4	1	**105-3542**	1	DIODE GP	
J		1	**102-8806**	1	KIT-RECEPTACLE (8 PIN)	
J		1	**3E-3389**	1	WEDGE-RECEPTACLE LOCK	
		1	**7X-8831**	1	DIODE	
		1	**9G-3695**	1	PLUG (GROMMET SEALING)	
	5	1	**113-8491**	2	FUSE (15 AMP)	
	6	1	**142-8633**	1	SWITCH GP-ROCKER (WORK TOOL)	
		1	**111-7899**	1	GASKET	
	7	1	**142-9333**	1	HARNESS AS-WORK TOOL	
	8	1	**146-4323**	2	RELAY AS	
	9	1	**159-9495**	1	NUT (1/2X18 THD)	
	10	1	**159-9496**	1	LOCKWASHER	
	11	1	**193-8339**	1	PLATE	
	12	1	**102-8806**	1	KIT-RECEPTACLE (8 PIN)	
M	13	1	**5C-7261**	2	NUT (M8X1.25 THD)	
	14	1	**8T-4224**	4	WASHER-HARD (8.8X16X2MM THK)	
M	15	1	**8T-4908**	2	BOLT (M8X1.25X25MM)	

J-KIT MARKED J INLCUDES PART(S) MARKED J
M-METRIC PART

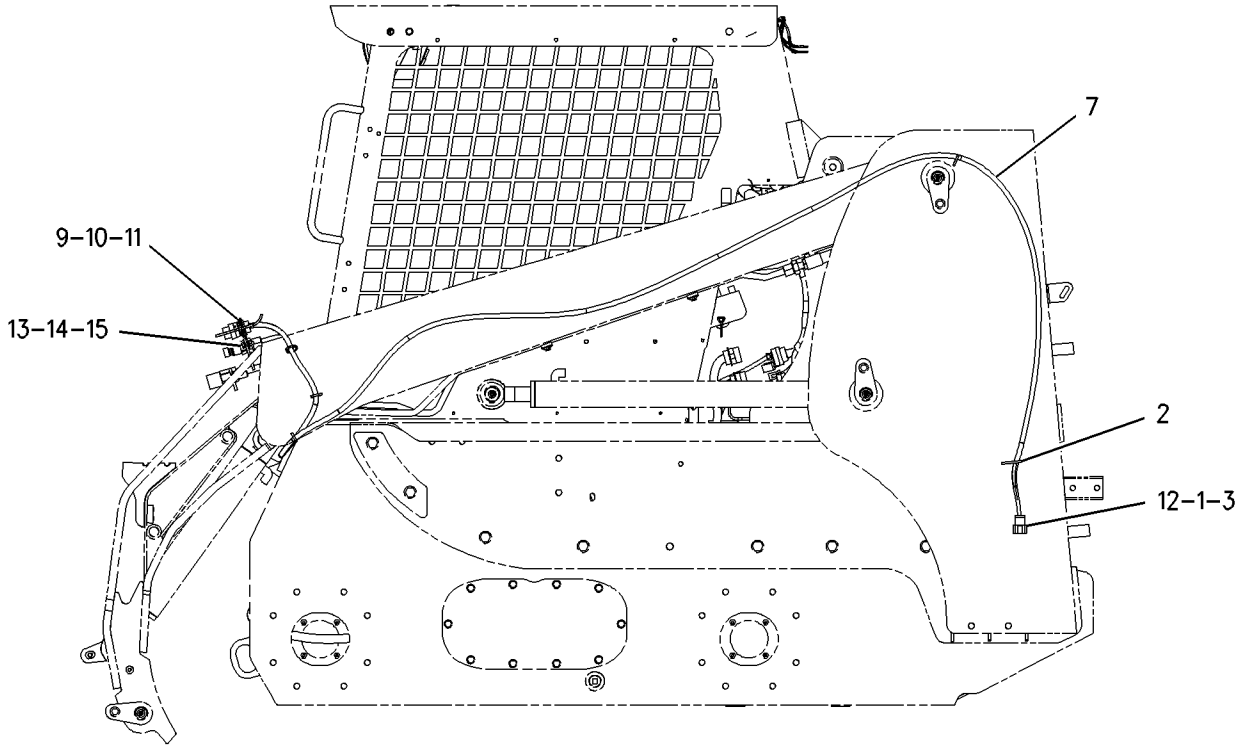

LEFT SIDE VIEW

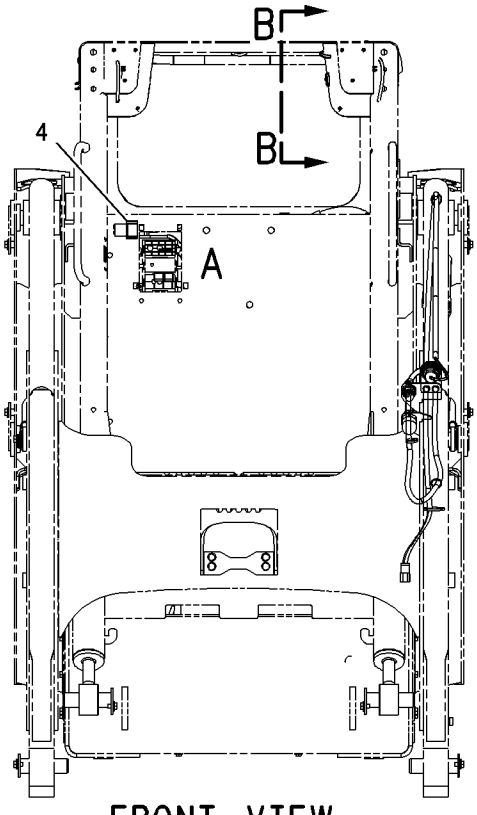

FRONT VIEW

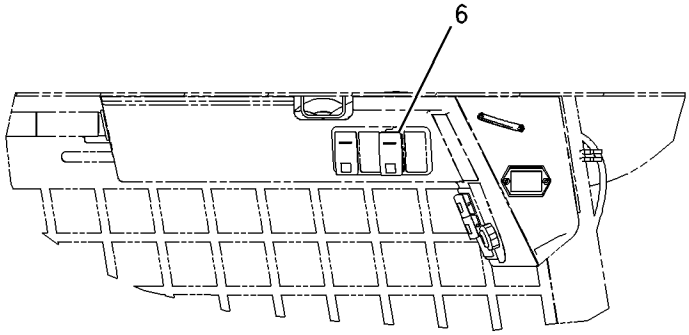

SECTION B–B

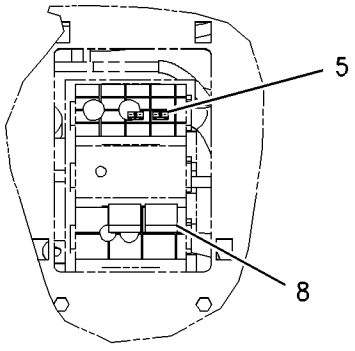

VIEW OF AREA A

GRAPHIC #1 g00901826

197-8467 WIRING GP-WORK TOOL

S/N: CAB1-UP; CMB1-UP
FIELD INSTALLED
FIELD INSTALLATION

SMCS-1408 **i01762731**

NOTE	REF NO	GRAPHIC REF	PART NUMBER	QTY	PART NAME 1 2 3 4 5 6 (PRODUCT LEVEL)	SEE PAGE
	1	1	**3S-2093**	4	STRAP-CABLE	
	2	1	**8T-8737**	3	PLUG-SEAL	
	3	1	**102-8806**	1	KIT-RECEPTACLE (8 PIN)	
		1	**3E-3389**	1	WEDGE-RECEPTACLE LOCK	
	4	1	**105-3542**	1	DIODE GP	
		1	**3E-3389**	1	WEDGE-RECEPTACLE LOCK	
		1	**7X-8831**	2	DIODE	
		1	**9G-3695**	4	PLUG (GROMMET SEALING)	
	5	1	**113-8491**	2	FUSE (15 AMP)	
	6	1	**142-8633**	1	SWITCH GP-ROCKER (WORK TOOL)	
		1	**111-7899**	1	GASKET	
	7	1	**146-4323**	2	RELAY AS	
	8	1	**159-9495**	1	NUT (1/2X18 THD)	
	9	1	**159-9496**	1	LOCKWASHER	
	10	1	**193-8339**	1	PLATE	
	11	1	**197-7639**	1	HARNESS AS-WORK TOOL	
Y	12	1	**204-1396**	1	CONTROL GP-HANDLE	288
M	13	1	**5C-7261**	2	NUT (M8X1.25 THD)	
	14	1	**8T-4224**	4	WASHER-HARD (8.8X16X2MM THK)	
M	15	1	**8T-4908**	2	BOLT (M8X1.25X25MM)	
	16	1	**8T-0255**	1	PIN-SPRING	
	17	1	**110-8760**	1	STRAP	

M-METRIC PART
Y-SEPARATE ILLUSTRATION

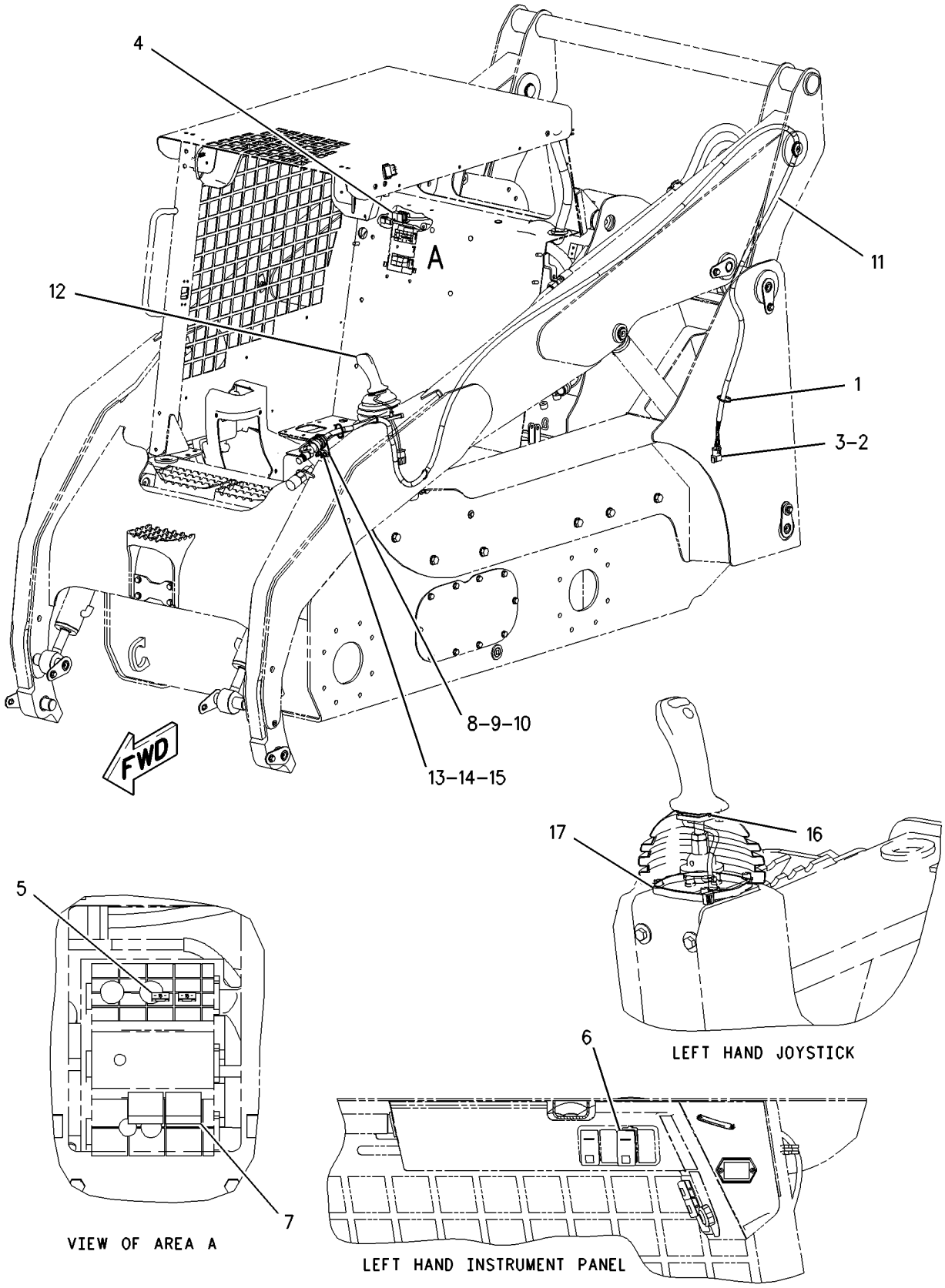

GRAPHIC #1

g00901835

142-8758 AXLE GP

S/N: CAB1-UP; CMB1-UP; 4NZ3400-UP; 5FZ6700-UP
PART OF 142-8760, 212-6692 DRIVE GP-TANDEM

SMCS-3278 **i01265214**

NOTE	REF NO	GRAPHIC REF	PART NUMBER	QTY	PART NAME 1 2 3 4 5 6 (PRODUCT LEVEL)	SEE PAGE
	1	1	**142-8723**	1	HOUSING-AXLE	
	2	1	**142-8724**	1	SPINDLE-WHEEL	
	3	1	**142-8729**	1	SPACER (32.045 MM THK)	
	4	1	**150-4385**	2	CONE	
	5	1	**150-4386**	2	CUP	
	6	1	**150-5472**	1	SEAL-LIP TYPE	
	7	1	**159-5772**	8	STUD (9/16-18-2A THD)	
	8	1	**166-3678**	1	SEAL-LIP TYPE	

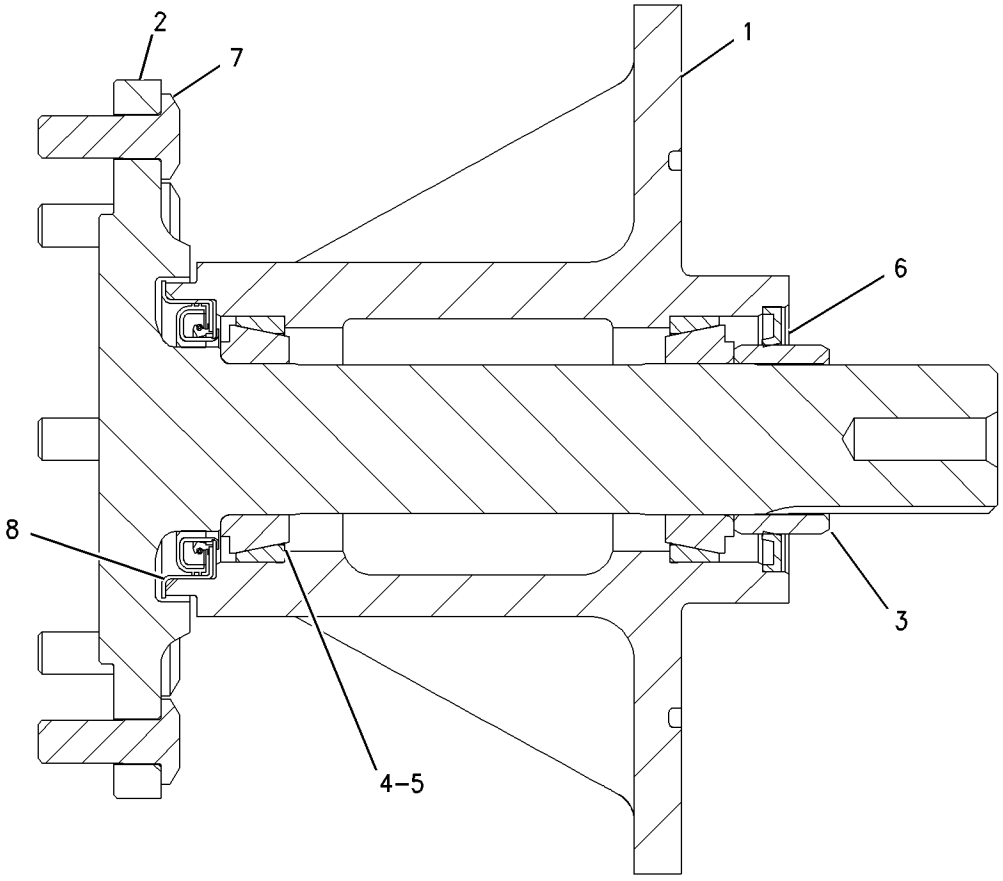

GRAPHIC #1 g00672499

MEMORANDA

193-8370 CONTROL GP-PARKING BRAKE

S/N: 4NZ3400-UP; 5FZ6700-UP

PART OF 200-0801, 200-1001 POWER TRAIN AR

SMCS-4284 **i01762757**

NOTE	REF NO	GRAPHIC REF	PART NUMBER	QTY	PART NAME 1 2 3 4 5 6 (PRODUCT LEVEL)	SEE PAGE
I	1	1	**100-7530**	1	HOSE AS	
I	2	1	**141-7763**	1	HOSE AS	
	3	1	**193-0448**	1	TUBE AS	
	4	1	**193-8309**	1	BRACKET	
	5	1	*197-9462*	1	FITTING GP	
		1	**3J-1907**	1	SEAL-O-RING	
		1	**6V-8397**	1	SEAL-O-RING	
		1	**6V-8398**	2	SEAL-O-RING	
		1	**197-9460**	1	FITTING-CROSS	
Y	6	1	**208-1237**	1	VALVE & MTG GP-CONTROL	384
	7	1	*148-8336*	1	CONNECTOR GP	
		1	**3J-1907**	1	SEAL-O-RING	
		1	**6V-8397**	1	SEAL-O-RING	
		1	**6V-8636**	1	CONNECTOR	
	8	1	*148-8378*	1	ELBOW GP	
		1	**3J-1907**	1	SEAL-O-RING	
		1	**6V-8397**	1	SEAL-O-RING	
		1	**6V-8724**	1	ELBOW	
	9	1	*148-8435*	1	TEE GP	
		1	**3J-1907**	1	SEAL-O-RING	
		1	**6V-8397**	2	SEAL-O-RING	
		1	**6V-8781**	1	TEE-FACE SEAL	
I	10	1	**207-9746**	1	HOSE AS	
M	11	1	**5C-7261**	2	NUT (M8X1.25 THD)	
M	12	1	**8T-3647**	2	BOLT (M8X1.25X80MM)	
M	13	1	**8T-4189**	2	BOLT (M8X1.25X20MM)	
	14	1	**8T-4224**	6	WASHER-HARD (8.8X16X2MM THK)	

I-SEE HOSE FABRICATION GUIDE
M-METRIC PART
Y-SEPARATE ILLUSTRATION

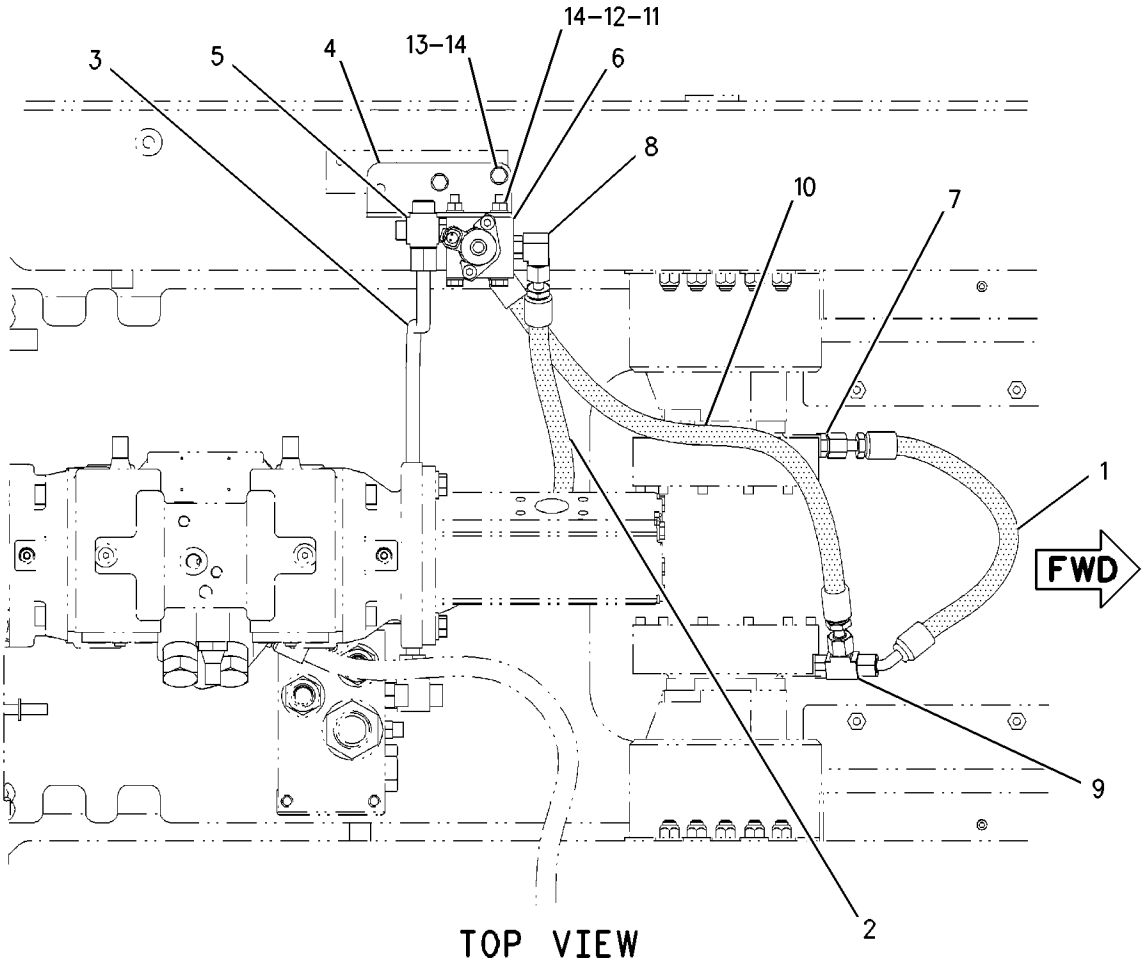

GRAPHIC #1 g00901843

216-6112 CONTROL GP-PARKING BRAKE

S/N: CAB1-UP; CMB1-UP

PART OF 191-2901, 191-9601 POWER TRAIN AR

SMCS-4284 **i01762765**

NOTE	REF NO	GRAPHIC REF	PART NUMBER	QTY	PART NAME 1 2 3 4 5 6 (PRODUCT LEVEL)	SEE PAGE
I	1	1	**100-7530**	1	HOSE AS	
I	2	1	**141-7763**	1	HOSE AS	
I	3	1	**157-1478**	1	HOSE AS	
	4	1	**193-8324**	1	TUBE AS	
	5	1	*197-9462*	1	FITTING GP	
		1	**3J-1907**	1	SEAL-O-RING	
		1	**6V-8397**	1	SEAL-O-RING	
		1	**6V-8398**	2	SEAL-O-RING	
		1	**197-9460**	1	FITTING-CROSS	
Y	6	1	**208-1237**	1	VALVE & MTG GP-CONTROL	384
	7	1	*148-8336*	1	CONNECTOR GP	
		1	**3J-1907**	1	SEAL-O-RING	
		1	**6V-8397**	1	SEAL-O-RING	
		1	**6V-8636**	1	CONNECTOR	
	8	1	*148-8378*	1	ELBOW GP	
		1	**3J-1907**	1	SEAL-O-RING	
		1	**6V-8397**	1	SEAL-O-RING	
		1	**6V-8724**	1	ELBOW	
	9	1	*148-8435*	1	TEE GP	
		1	**3J-1907**	1	SEAL-O-RING	
		1	**6V-8397**	2	SEAL-O-RING	
		1	**6V-8781**	1	TEE-FACE SEAL	
M	10	1	**5C-7261**	2	NUT (M8X1.25 THD)	
M	11	1	**8T-3647**	2	BOLT (M8X1.25X80MM)	
	12	1	**8T-4224**	4	WASHER-HARD (8.8X16X2MM THK)	

I-SEE HOSE FABRICATION GUIDE
M-METRIC PART
Y-SEPARATE ILLUSTRATION

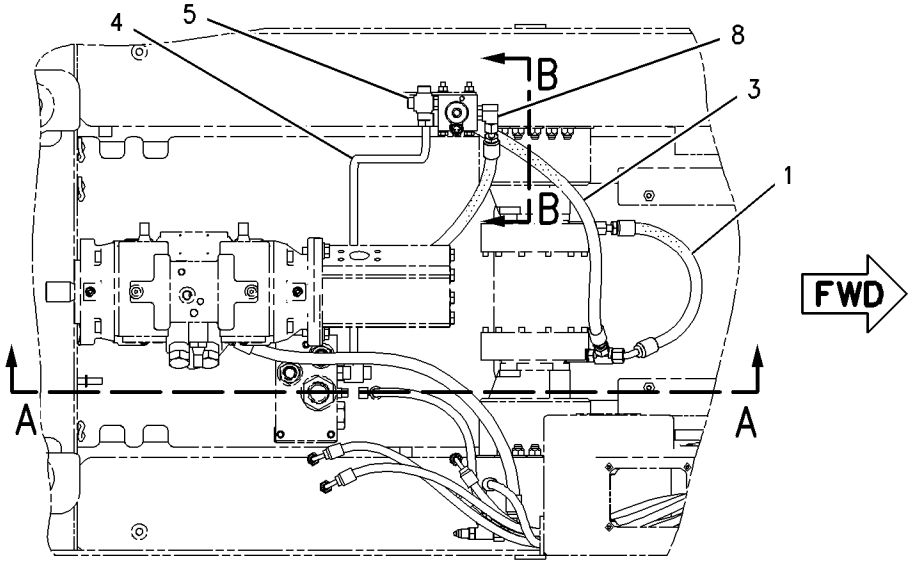

TOP VIEW

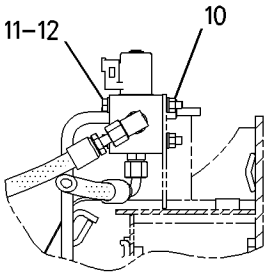

SECTION B-B

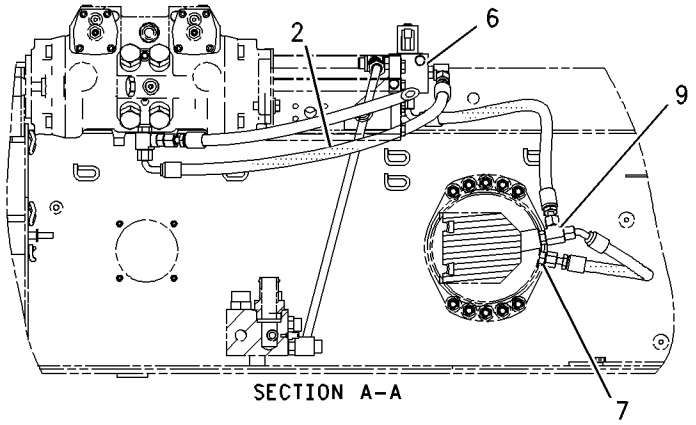

SECTION A-A

GRAPHIC #1 g00901847

142-8760 DRIVE GP-TANDEM

S/N: 4NZ3400-UP; 5FZ6700-UP

PART OF 200-0801, 200-1001 POWER TRAIN AR

SMCS-4062 **i01762773**

NOTE	REF NO	GRAPHIC REF	PART NUMBER	QTY	PART NAME 1 2 3 4 5 6 (PRODUCT LEVEL)	SEE PAGE
	1	1	**5K-1787**	4	SEAL-O-RING	
	2	1	**7G-8839**	2	SPACER (13.5X57X6MM THK)	
	3	1	**7X-0610**	4	WASHER-HARD (20X75X6MM THK)	
	4	1	**142-8725**	32	STUD (9/16-18-2A THDX50.8MM)	
	5	1	**142-8732**	4	SPROCKET-MOTOR (12 TEETH)	
	6	1	**142-8734**	4	SPROCKET-AXLE (35 TEETH)	
	7	1	**142-8757**	2	CHAIN AS	
Y	8	1	**142-8758**	4	AXLE GP	204
	9	1	**142-9036**	32	NUT (9/16 X 18 THD)	
	10	1	**152-1157**	32	WASHER (8MM THK)	
	11	1	**159-5793**	2	SPACER (14.3MM THK)	
	12	1	**168-7572**	2	CHAIN AS	
M	13	1	**099-4691**	2	BOLT-LOCKING (M12X1.75X25MM)	
M	14	1	**100-3866**	4	BOLT-SELF LOCKING (M16X2X40MM)	
	15	1	**8T-4122**	4	WASHER-HARD (17X32X3.5MM THK)	

M-METRIC PART
Y-SEPARATE ILLUSTRATION

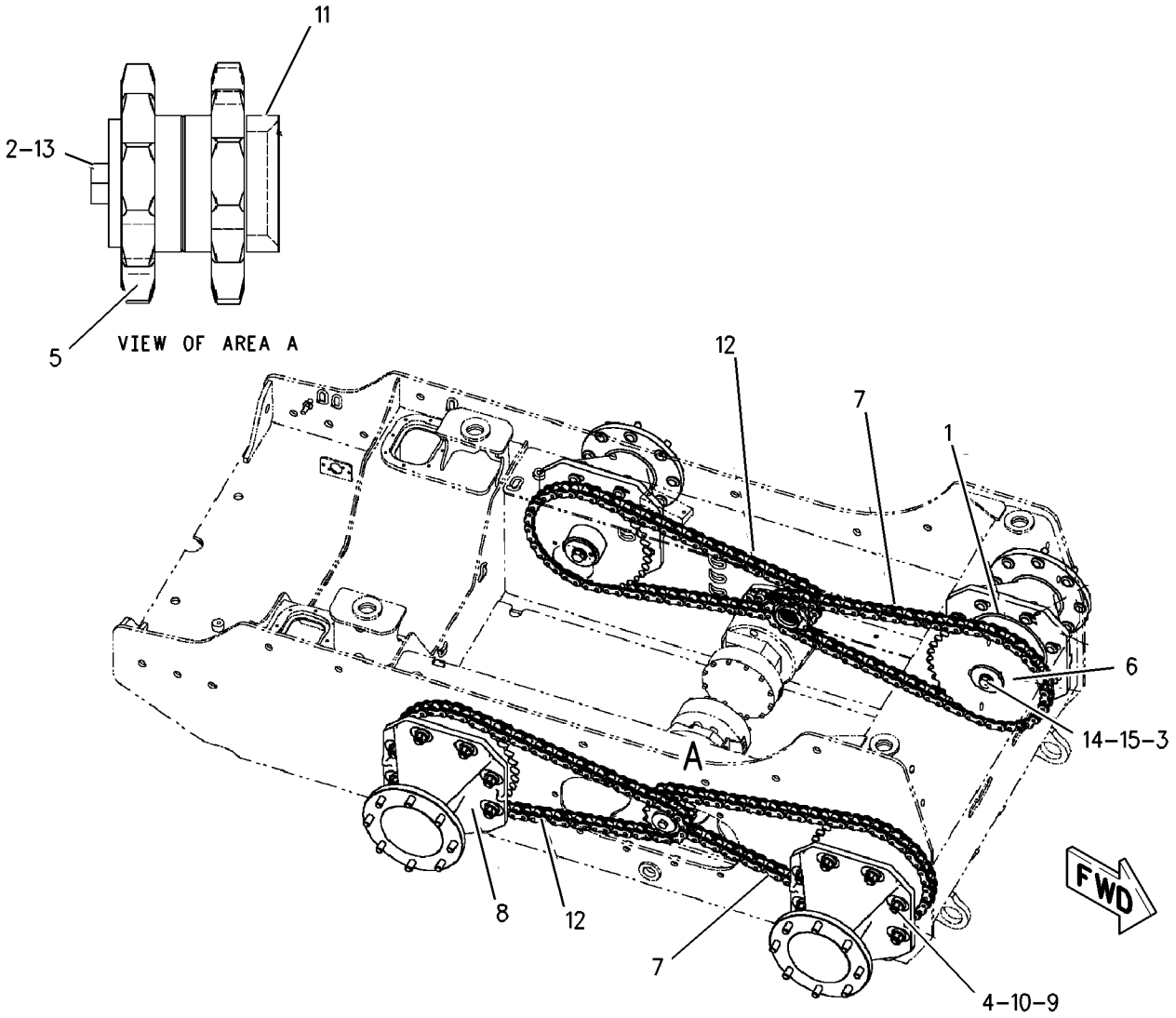

GRAPHIC #1 g00901854

POWER TRAIN

212-6692 DRIVE GP-TANDEM

S/N: CAB1-UP; CMB1-UP

PART OF 191-2901, 191-9601 POWER TRAIN AR

SMCS-4062 **i01754276**

NOTE	REF NO	GRAPHIC REF	PART NUMBER	QTY	PART NAME 1 2 3 4 5 6 (PRODUCT LEVEL)	SEE PAGE
	1	1	**142-8725**	32	STUD (9/16-18-2A THDX50.8MM)	
	2	1	**142-8732**	4	SPROCKET-MOTOR (12 TEETH)	
Y	3	1	**142-8758**	4	AXLE GP	204
	4	1	**152-1157**	32	WASHER (8MM THK)	
	5	1	**159-5793**	2	SPACER (14.3MM THK)	
	6	1	**191-9659**	4	CHAIN AS	
	7	1	**191-9661**	4	SPROCKET	
M	8	1	**099-4691**	2	BOLT-LOCKING (M12X1.75X25MM)	
M	9	1	**100-3866**	4	BOLT-SELF LOCKING (M16X2X40MM)	
	10	1	**142-9036**	32	NUT (9/16 X 18 THD)	
	11	1	**5K-1787**	4	SEAL-O-RING	
	12	1	**7G-8839**	2	SPACER (13.5X57X6MM THK)	
	13	1	**7X-0610**	4	WASHER-HARD (20X75X6MM THK)	
	14	1	**8T-4122**	4	WASHER-HARD (17X32X3.5MM THK)	

M-METRIC PART
Y-SEPARATE ILLUSTRATION

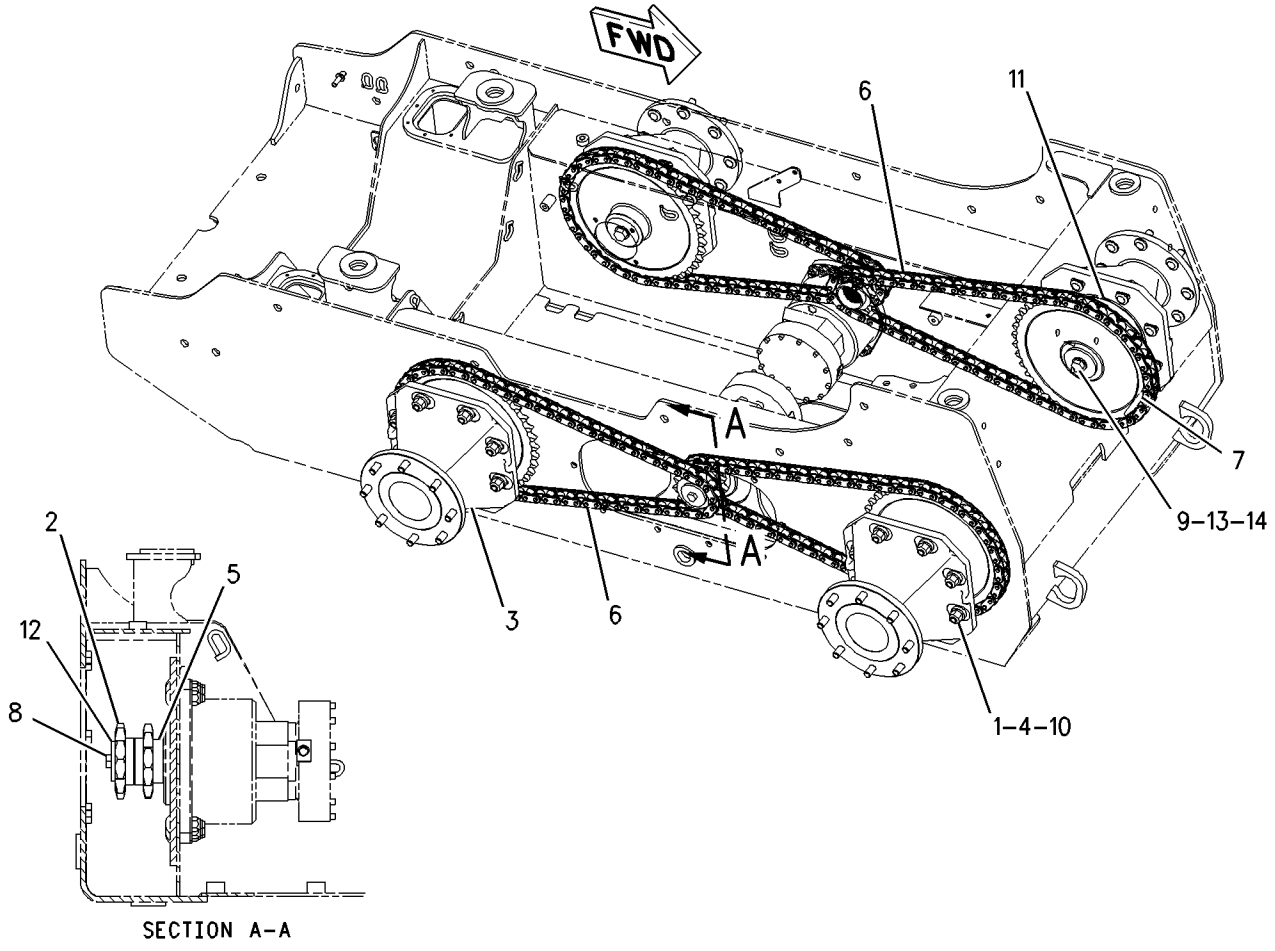

GRAPHIC #1 g00897546

142-8980 FILTER & MTG GP-HYDRAULIC

S/N: CAB1-UP; CMB1-UP; 4NZ3400-UP; 5FZ6700-UP

PART OF 191-9606, 200-0806, 200-1006, 216-6136 HYDRAULIC AR

SMCS-5068 **i01531753**

NOTE	REF NO	GRAPHIC REF	PART NUMBER	QTY	PART NAME 1 2 3 4 5 6 (PRODUCT LEVEL)	SEE PAGE
Y	1	1	**191-9784**	1	FILTER GP-OIL	214
	2	1	**8T-4121**	4	WASHER-HARD (11X21X2.5MM THK)	
M	3	1	**8T-4137**	4	BOLT (M10X1.5X20MM)	

M-METRIC PART
Y-SEPARATE ILLUSTRATION

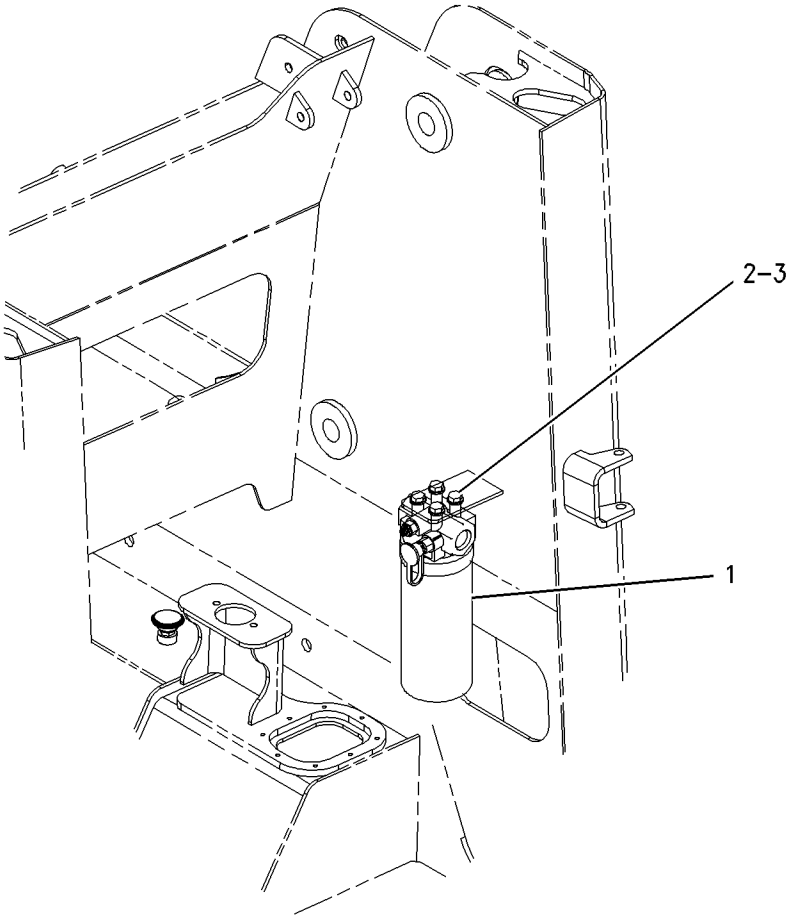

GRAPHIC #1 g00755376

191-9784 FILTER GP-OIL

S/N: CAB1-UP; CMB1-UP; 4NZ3400-UP; 5FZ6700-UP
PART OF 142-8980 FILTER & MTG GP-HYDRAULIC

SMCS-5068 **i01762946**

NOTE	REF NO	GRAPHIC REF	PART NUMBER	QTY	PART NAME 1 2 3 4 5 6 (PRODUCT LEVEL)	SEE PAGE
	1	1	**1G-8878**	1	FILTER AS-OIL	
	2	1	**7X-8549**	1	SWITCH AS-PRESSURE	
	3	1	**8C-3451**	1	CAP-DUST	
	4	1	**183-7264**	1	VALVE AS-FLUID SAMPLING	
	5	1	**3J-1907**	1	SEAL-O-RING	

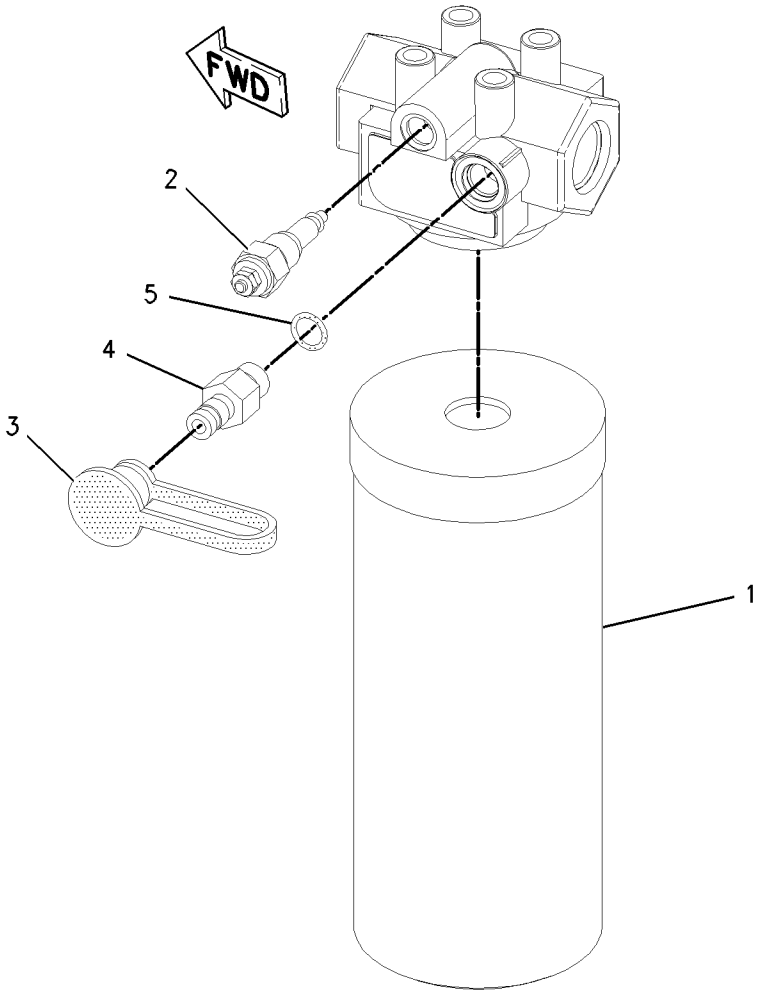

GRAPHIC #1 g00901914

MEMORANDA

191-9711 LINES GP-HYDRAULIC FILTER

S/N: CAB1-UP; CMB1-UP

PART OF 191-9606, 216-6136 HYDRAULIC AR

SMCS-5068 **i01762983**

NOTE	REF NO	GRAPHIC REF	PART NUMBER	QTY	PART NAME 1 2 3 4 5 6 (PRODUCT LEVEL)	SEE PAGE
	1	1	**212-6622**	1	TUBE AS	
	2	1	**212-6623**	1	TUBE AS	
I	3	1	**212-6624**	1	HOSE AS	
	4	1	*148-8340*	1	CONNECTOR GP	
		1	**3K-0360**	1	SEAL-O-RING	
		1	**6V-8398**	1	SEAL-O-RING	
		1	**6V-8639**	1	CONNECTOR	
	5	1	*148-8341*	2	CONNECTOR GP	
					(EACH INCLUDES)	
		1	**3D-2824**	1	SEAL-O-RING	
		1	**6V-8713**	1	CONNECTOR	
		1	**7J-9108**	1	SEAL-O-RING	
	6	1	**6V-8398**	1	SEAL-O-RING	
	7	1	**7J-9108**	1	SEAL-O-RING	
	8	1	**8T-4121**	1	WASHER-HARD (11X21X2.5MM THK)	
M	9	1	**8T-4137**	1	BOLT (M10X1.5X20MM)	
M	10	1	**8T-4189**	1	BOLT (M8X1.25X20MM)	
	11	1	**8T-4224**	1	WASHER-HARD (8.8X16X2MM THK)	
	12	1	**9R-1004**	2	CLIP (TAB)	
	13	1	**9R-1005**	2	CLIP (SLOT)	

I-SEE HOSE FABRICATION GUIDE
M-METRIC PART

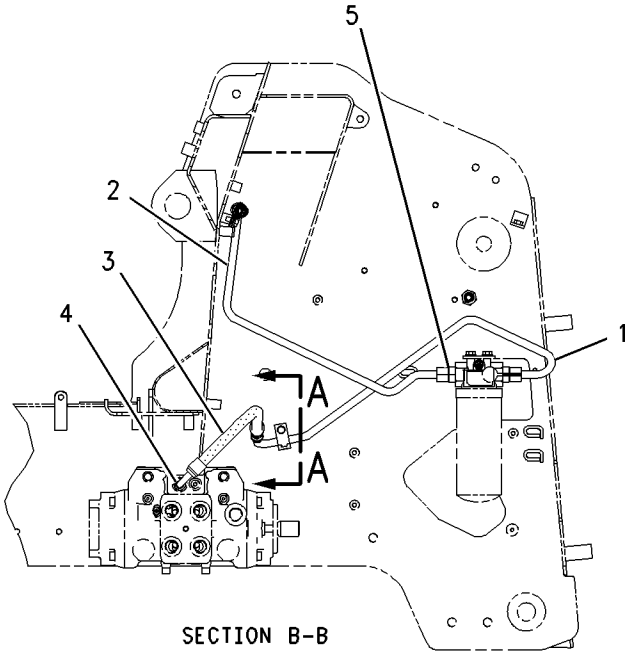

SECTION B-B

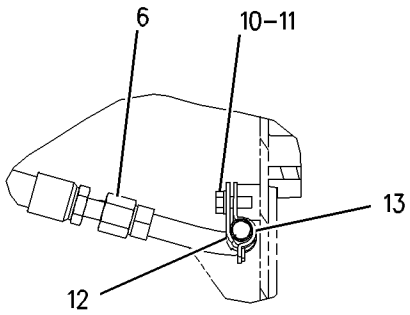

SECTION A-A

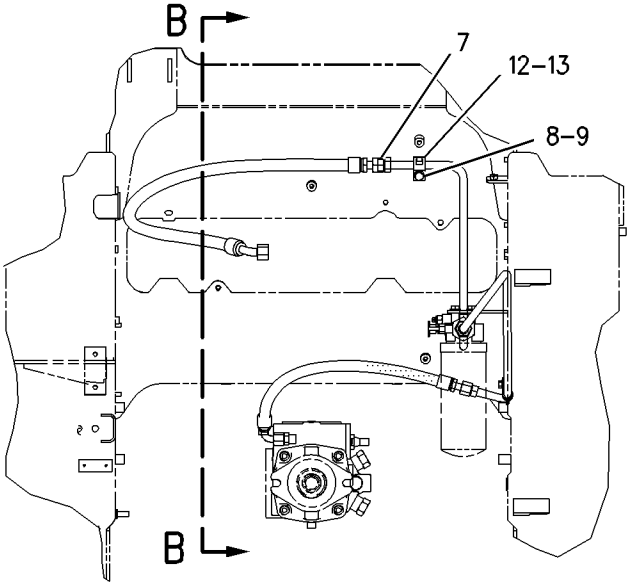

REAR VIEW

GRAPHIC #1 g00901892

195-6785 LINES GP-HYDRAULIC FILTER

S/N: 4NZ3400-UP; 5FZ6700-UP

PART OF 200-0806, 200-1006 HYDRAULIC AR

SMCS-5068 **i01763012**

NOTE	REF NO	GRAPHIC REF	PART NUMBER	QTY	PART NAME 1 2 3 4 5 6 (PRODUCT LEVEL)	SEE PAGE
M	1	1	**101-3129**	1	STUD (M10X1.5 THD)	
	2	1	**142-8973**	1	TUBE AS	
I	3	1	**193-8317**	1	HOSE AS	
	4	1	**193-8363**	1	TUBE AS	
	5	1	*148-8340*	1	CONNECTOR GP	
		1	**3K-0360**	1	SEAL-O-RING	
		1	**6V-8398**	1	SEAL-O-RING	
		1	**6V-8639**	1	CONNECTOR	
	6	1	*148-8341*	1	CONNECTOR GP	
		1	**3D-2824**	1	SEAL-O-RING	
		1	**6V-8713**	1	CONNECTOR	
		1	**7J-9108**	1	SEAL-O-RING	
	7	1	*148-8382*	1	ELBOW GP	
		1	**3D-2824**	1	SEAL-O-RING	
		1	**7J-9108**	1	SEAL-O-RING	
		1	**8T-0404**	1	ELBOW	
	8	1	**6V-8398**	1	SEAL-O-RING	
	9	1	**7J-9108**	1	SEAL-O-RING	
	10	1	**9R-1004**	1	CLIP (TAB)	
	11	1	**9R-1005**	1	CLIP (SLOT)	

I-SEE HOSE FABRICATION GUIDE
M-METRIC PART

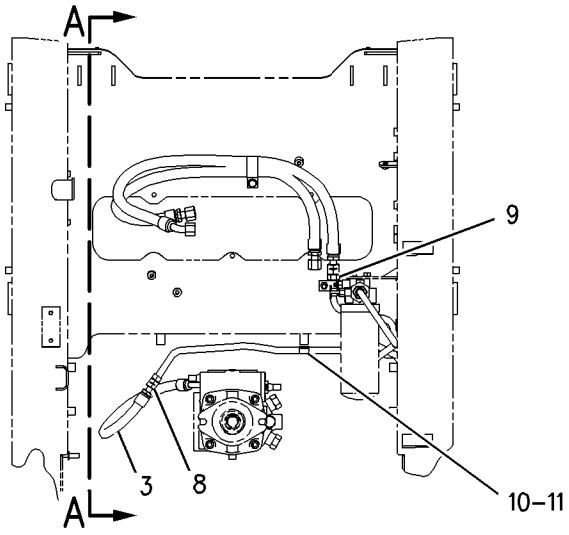

REAR VIEW

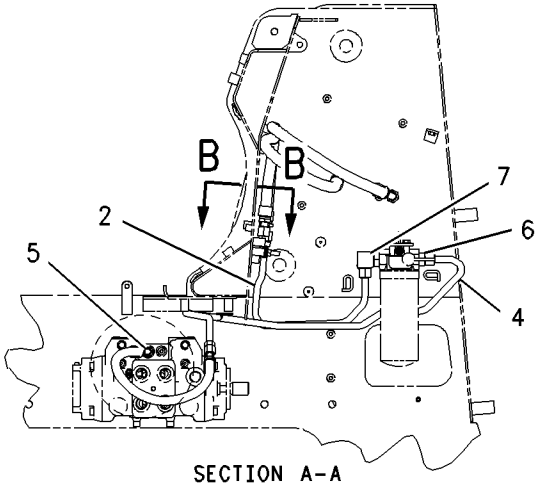

SECTION A-A

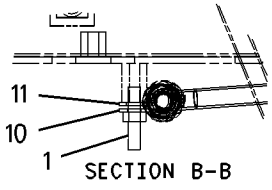

SECTION B-B

GRAPHIC #1 g00901924

191-9712 LINES GP-HYDROSTATIC

S/N: CAB1-UP; CMB1-UP

PART OF 191-2901, 191-9601 POWER TRAIN AR

SMCS-3218 **i01753310**

NOTE	REF NO	GRAPHIC REF	PART NUMBER	QTY	PART NAME 1 2 3 4 5 6 (PRODUCT LEVEL)	SEE PAGE
	1	1	**5D-1026**	1	CLAMP-HOSE	
	2	1	**5P-2230**	4	CLAMP-HOSE	
	3	1	**6N-2944**	1	PLUG	
	4	1	**6V-0852**	5	CAP-DUST	
	5	1	**9U-6993**	1	ADAPTER	
	6	1	**9U-6994**	1	ADAPTER	
I	7	1	**142-8746**	1	HOSE AS	
	8	1	**192-2681**	1	HOSE	
	9	1	*164-5567*	5	FITTING GP	
					(EACH INCLUDES)	
		1	**3J-1907**	1	SEAL-O-RING	
		1	**6V-3965**	1	FITTING AS	
I	10	1	**183-7118**	2	HOSE AS	
I	11	1	**191-9562**	2	HOSE AS	
I	12	1	**191-9563**	1	HOSE AS	
	13	1	**191-9667**	1	HOSE	
Y	14	1	*210-4708*	1	MANIFOLD GP-RETURN	226
	15	1	*148-8322*	4	CONNECTOR GP	
					(EACH INCLUDES)	
		1	**2M-9780**	1	SEAL-O-RING	
		1	**6V-8640**	1	CONNECTOR-SEAL	
		1	**6V-9746**	1	SEAL-O-RING	
	16	1	*148-8327*	4	CONNECTOR GP	
					(EACH INCLUDES)	
		1	**3D-2824**	1	SEAL-O-RING	
		1	**6V-8637**	1	CONNECTOR-SEAL	
		1	**6V-9746**	1	SEAL-O-RING	
	17	1	*148-8338*	2	CONNECTOR GP	
					(EACH INCLUDES)	
		1	**3J-1907**	1	SEAL-O-RING	
		1	**6V-8397**	1	SEAL-O-RING	
		1	**8T-0075**	1	CONNECTOR	
M	18	1	**8T-4177**	3	BOLT (M8X1.25X90MM)	
	19	1	**8T-4224**	3	WASHER-HARD (8.8X16X2MM THK)	
	20	1	**5P-0743**		HOSE (73CM)	

I-SEE HOSE FABRICATION GUIDE
M-METRIC PART
Y-SEPARATE ILLUSTRATION

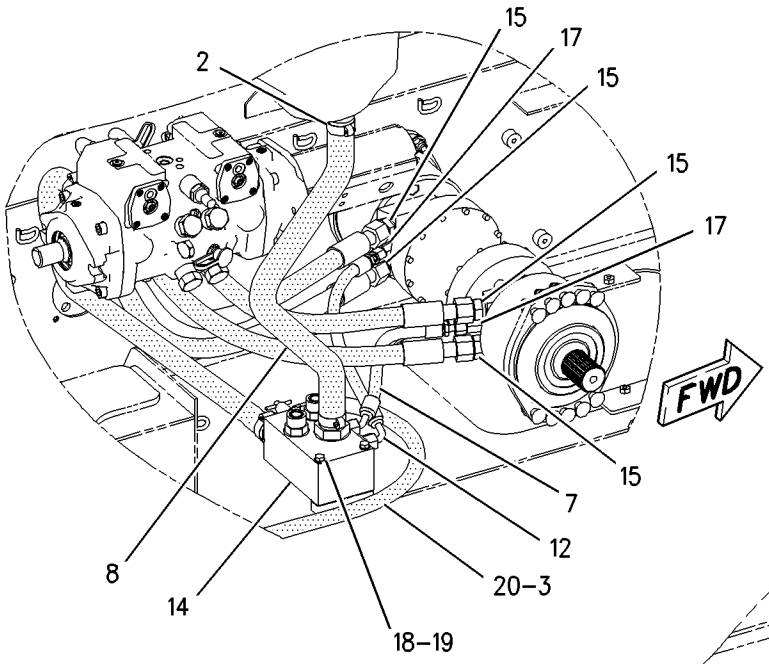

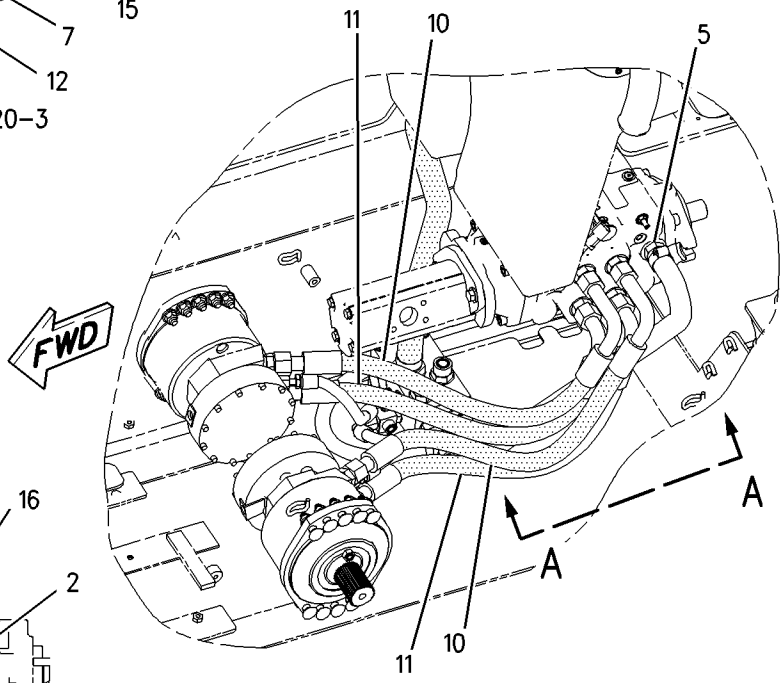

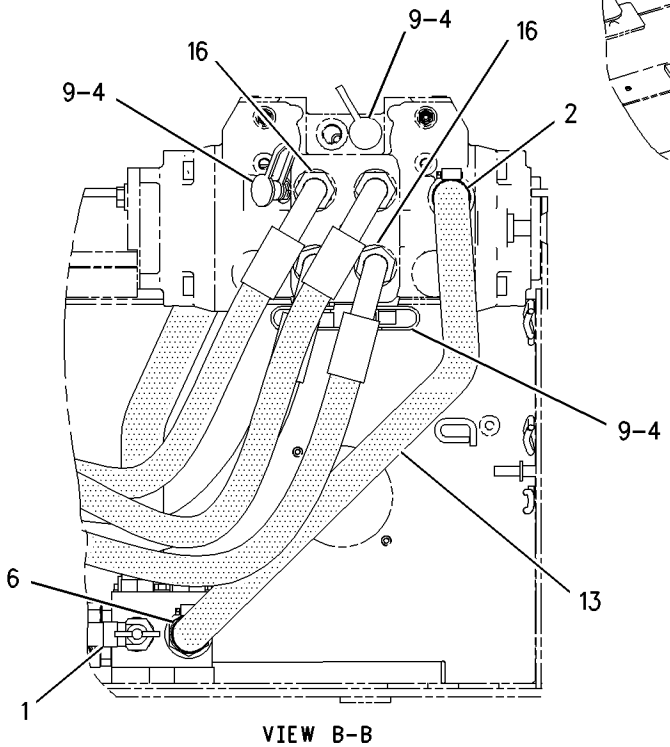

VIEW B-B

GRAPHIC #1

g00896828

POWER TRAIN

192-2610 LINES GP-HYDROSTATIC

S/N: 4NZ3400-UP; 5FZ6700-UP

PART OF 200-0801, 200-1001 POWER TRAIN AR

SMCS-3218 **i01762254**

NOTE	REF NO	GRAPHIC REF	PART NUMBER	QTY	PART NAME 1 2 3 4 5 6 (PRODUCT LEVEL)	SEE PAGE
	1	1	**5D-1026**	1	CLAMP-HOSE	
	2	1	**5P-2230**	2	CLAMP-HOSE	
	3	1	**6N-2944**	1	PLUG	
	4	1	**6V-0852**	5	CAP-DUST	
I	5	1	**142-8746**	1	HOSE AS	
	6	1	*164-5567*	5	FITTING GP	
					(EACH INCLUDES)	
		1	**3J-1907**	1	SEAL-O-RING	
		1	**6V-3965**	1	FITTING AS	
I	7	1	**183-7118**	2	HOSE AS	
I	8	1	**191-9562**	2	HOSE AS	
I	9	1	**191-9563**	1	HOSE AS	
	10	1	**192-2681**	1	HOSE	
Y	11	1	*193-8327*	1	MANIFOLD GP-RETURN	224
I	12	1	**193-8328**	1	HOSE AS	
	13	1	*148-8317*	1	CONNECTOR GP	
		1	**3D-2824**	1	SEAL-O-RING	
		1	**5K-9090**	1	SEAL-O-RING	
		1	**6V-8714**	1	CONNECTOR	
	14	1	*148-8322*	4	CONNECTOR GP	
					(EACH INCLUDES)	
		1	**2M-9780**	1	SEAL-O-RING	
		1	**6V-8640**	1	CONNECTOR-SEAL	
		1	**6V-9746**	1	SEAL-O-RING	
	15	1	*148-8327*	4	CONNECTOR GP	
					(EACH INCLUDES)	
		1	**3D-2824**	1	SEAL-O-RING	
		1	**6V-8637**	1	CONNECTOR-SEAL	
		1	**6V-9746**	1	SEAL-O-RING	
	16	1	*148-8338*	2	CONNECTOR GP	
					(EACH INCLUDES)	
		1	**3J-1907**	1	SEAL-O-RING	
		1	**6V-8397**	1	SEAL-O-RING	
		1	**8T-0075**	1	CONNECTOR	
M	17	1	**8T-4177**	3	BOLT (M8X1.25X90MM)	
	18	1	**8T-4224**	3	WASHER-HARD (8.8X16X2MM THK)	
	19	1	**5P-0743**	73	HOSE (73CM)	

I-SEE HOSE FABRICATION GUIDE
M-METRIC PART
Y-SEPARATE ILLUSTRATION

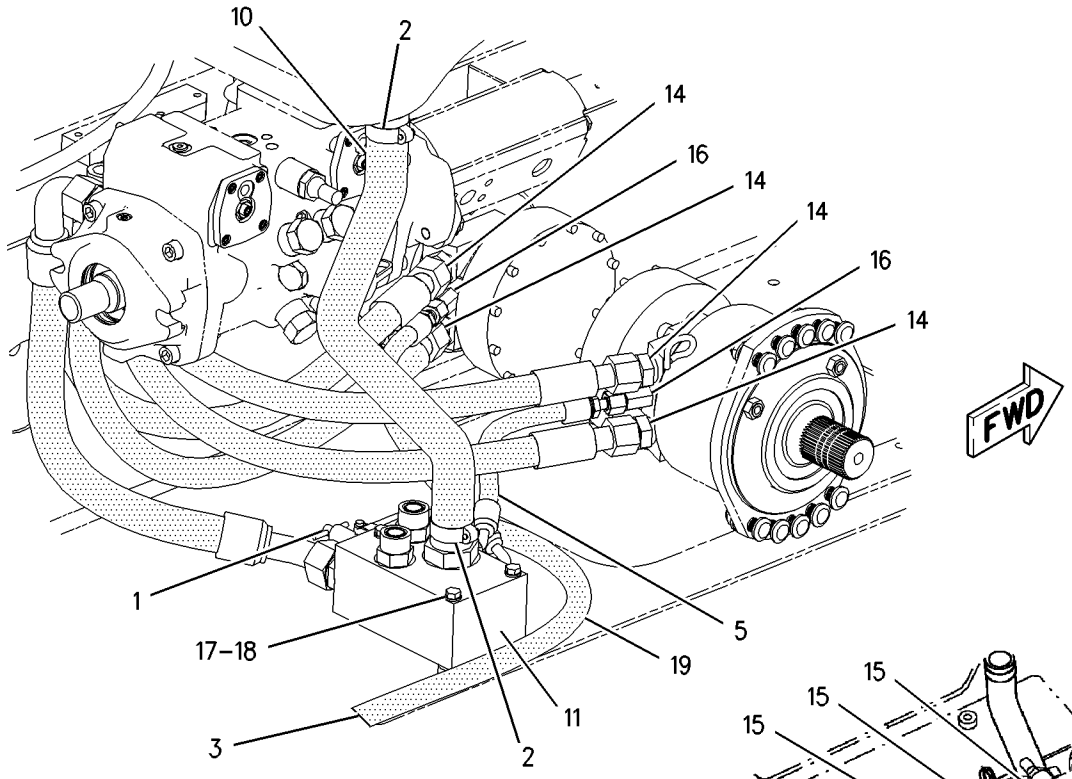

RIGHT SIDE VIEW

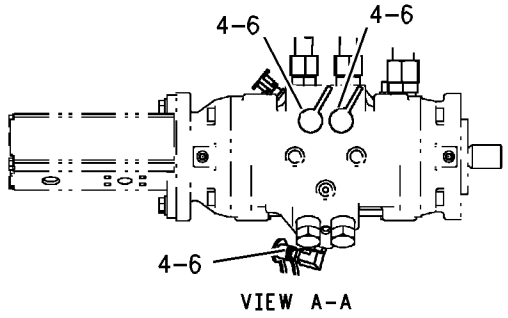

VIEW A-A

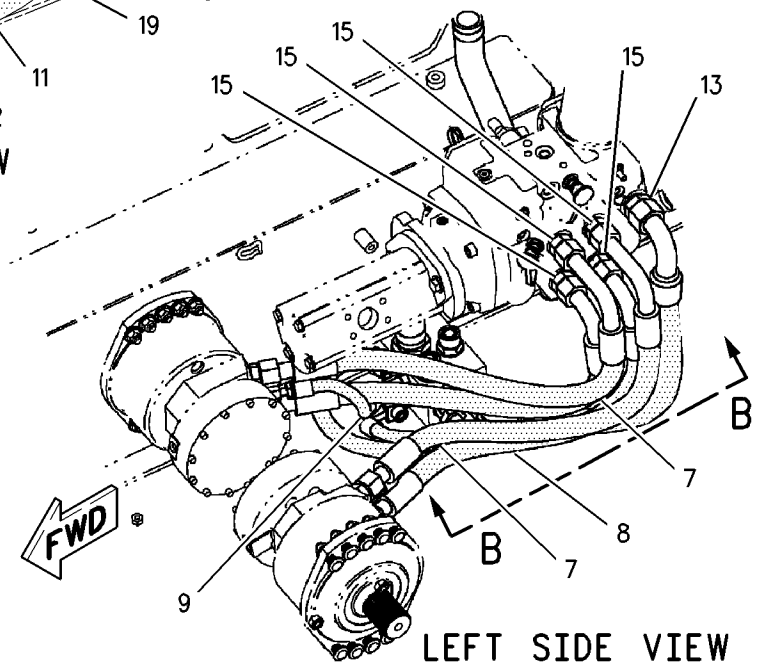

LEFT SIDE VIEW

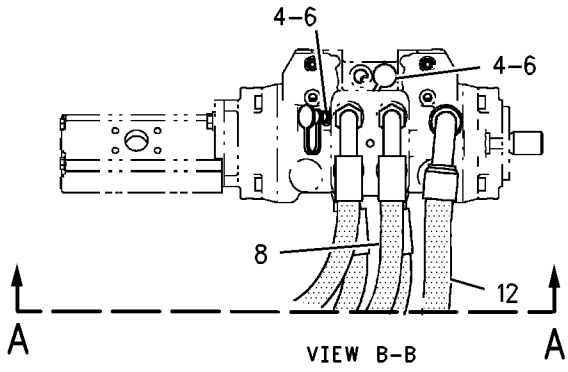

VIEW B-B

GRAPHIC #1

g00901540

193-8327 MANIFOLD GP-RETURN

S/N: 4NZ3400-UP; 5FZ6700-UP

PART OF 192-2610 LINES GP-HYDROSTATIC

SMCS-3154, 5264 **i01628280**

NOTE	REF NO	GRAPHIC REF	PART NUMBER	QTY	PART NAME 1 2 3 4 5 6 (PRODUCT LEVEL)	SEE PAGE
	1	1	**9U-6995**	1	ADAPTER	
	2	1	*165-2273*	1	VALVE GP-SHUTOFF	
		1	**3K-0360**	1	SEAL-O-RING	
		1	**6V-7238**	1	VALVE-SHUTOFF	
	3	1	**193-8326**	1	MANIFOLD GP-RETURN	
		1	**142-8977**	1	VALVE GP-CHECK	
	4	1	*148-8316*	1	CONNECTOR GP	
		1	**3J-7354**	1	SEAL-O-RING	
		1	**4J-5477**	1	SEAL-O-RING	
		1	**6V-8647**	1	CONNECTOR	
	5	1	*148-8327*	2	CONNECTOR GP	
					(EACH INCLUDES)	
		1	**3D-2824**	1	SEAL-O-RING	
		1	**6V-8637**	1	CONNECTOR-SEAL	
		1	**6V-9746**	1	SEAL-O-RING	
	6	1	*148-8335*	1	CONNECTOR GP	
		1	**5K-9090**	1	SEAL-O-RING	
		1	**6V-8635**	1	CONNECTOR	
		1	**7M-8485**	1	SEAL-O-RING	
	7	1	*148-8340*	1	CONNECTOR GP	
		1	**3K-0360**	1	SEAL-O-RING	
		1	**6V-8398**	1	SEAL-O-RING	
		1	**6V-8639**	1	CONNECTOR	
	8	1	*148-8428*	1	TEE GP	
		1	**3K-0360**	1	SEAL-O-RING	
		1	**6V-8398**	2	SEAL-O-RING	
		1	**6V-8782**	1	TEE-FACE SEAL	
	9	1	**2M-9780**	1	SEAL-O-RING	
	10	1	**6V-7420**	1	ADAPTER-STRAIGHT THREAD	

193-8327 **MANIFOLD GP-RETURN** ***(contd.)*** **i01628280**

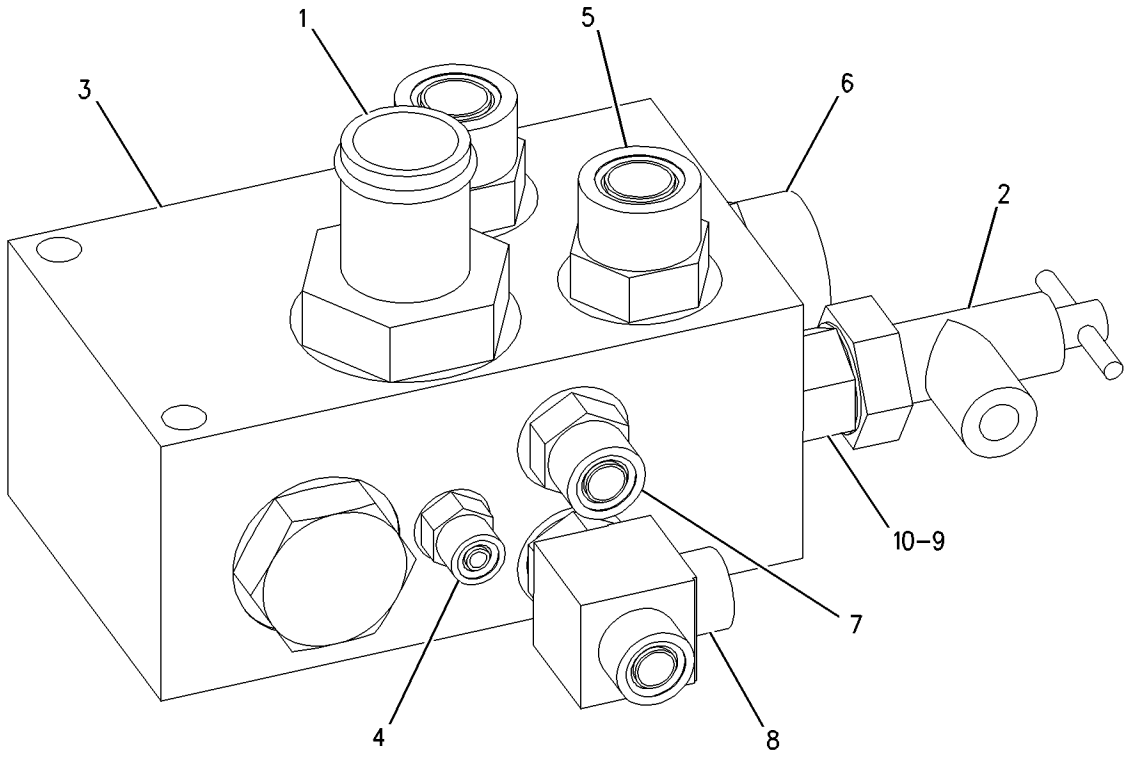

GRAPHIC #1 g00773371

210-4708 MANIFOLD GP-RETURN

S/N: CAB1-UP; CMB1-UP

PART OF 191-9712 LINES GP-HYDROSTATIC

SMCS-3154, 5264 **i01685015**

NOTE	REF NO	GRAPHIC REF	PART NUMBER	QTY	PART NAME 1 2 3 4 5 6 (PRODUCT LEVEL)	SEE PAGE
	1	1	**9U-6995**	1	ADAPTER	
	2	1	*165-2273*	1	VALVE GP-SHUTOFF	
		1	**3K-0360**	1	SEAL-O-RING	
		1	**6V-7238**	1	VALVE-SHUTOFF	
	3	1	**193-8326**	1	MANIFOLD GP-RETURN	
		1	**142-8977**	1	VALVE GP-CHECK	
	4	1	*148-8316*	1	CONNECTOR GP	
		1	**3J-7354**	1	SEAL-O-RING	
		1	**4J-5477**	1	SEAL-O-RING	
		1	**6V-8647**	1	CONNECTOR	
	5	1	*148-8327*	2	CONNECTOR GP	
					(EACH INCLUDES)	
		1	**3D-2824**	1	SEAL-O-RING	
		1	**6V-8637**	1	CONNECTOR-SEAL	
		1	**6V-9746**	1	SEAL-O-RING	
	6	1	*148-8340*	1	CONNECTOR GP	
		1	**3K-0360**	1	SEAL-O-RING	
		1	**6V-8398**	1	SEAL-O-RING	
		1	**6V-8639**	1	CONNECTOR	
	7	1	*148-8428*	1	TEE GP	
		1	**3K-0360**	1	SEAL-O-RING	
		1	**6V-8398**	2	SEAL-O-RING	
		1	**6V-8782**	1	TEE-FACE SEAL	
	8	1	**2M-9780**	1	SEAL-O-RING	
	9	1	**6V-7420**	1	ADAPTER-STRAIGHT THREAD	

210-4708 **MANIFOLD GP-RETURN** *(contd.)* **i01685015**

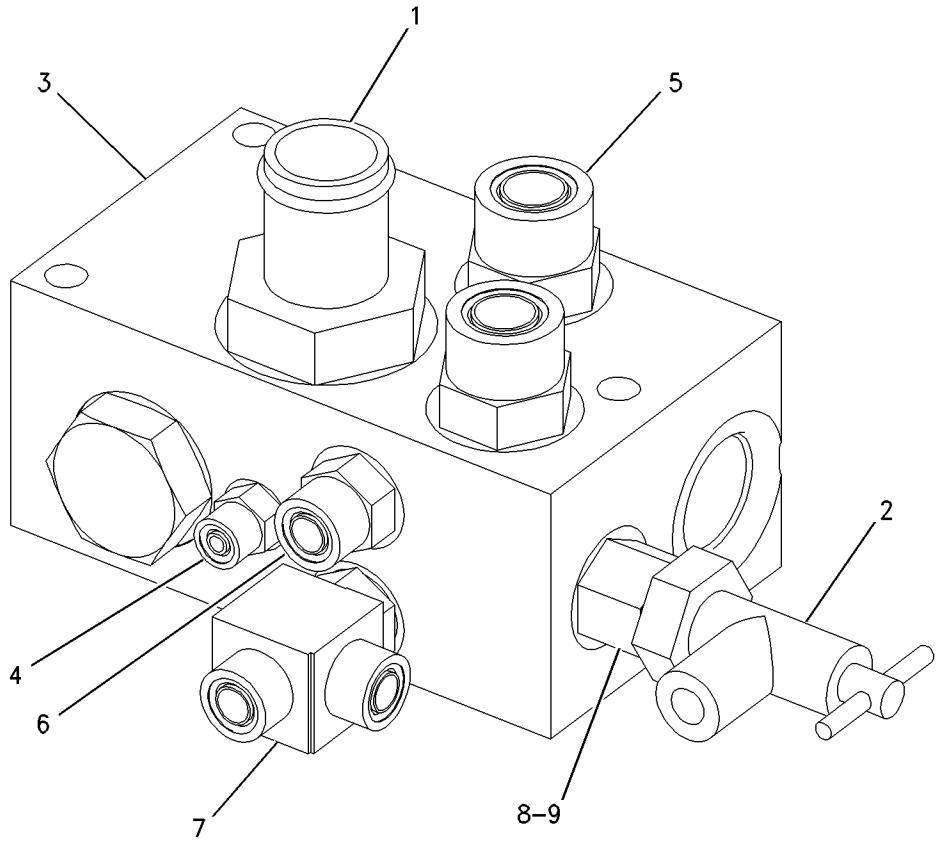

GRAPHIC #1 g00841922

142-8741 MOTOR & MTG GP-HYDROSTATIC

S/N: 4NZ3400-UP; 5FZ6700-UP

PART OF 200-0801, 200-1001 POWER TRAIN AR

SMCS-4351 **i01300061**

NOTE	REF NO	GRAPHIC REF	PART NUMBER	QTY	PART NAME 1 2 3 4 5 6 (PRODUCT LEVEL)	SEE PAGE
	1	1	**142-8720**	2	MOTOR GP-PISTON	
	2	1	**142-8721**	20	STUD	
	3	1	**8T-4223**	20	WASHER-HARD (3MM THK)	
M	4	1	**6V-7687**	20	LOCKNUT (M12X1.75 THD)	

M-METRIC PART

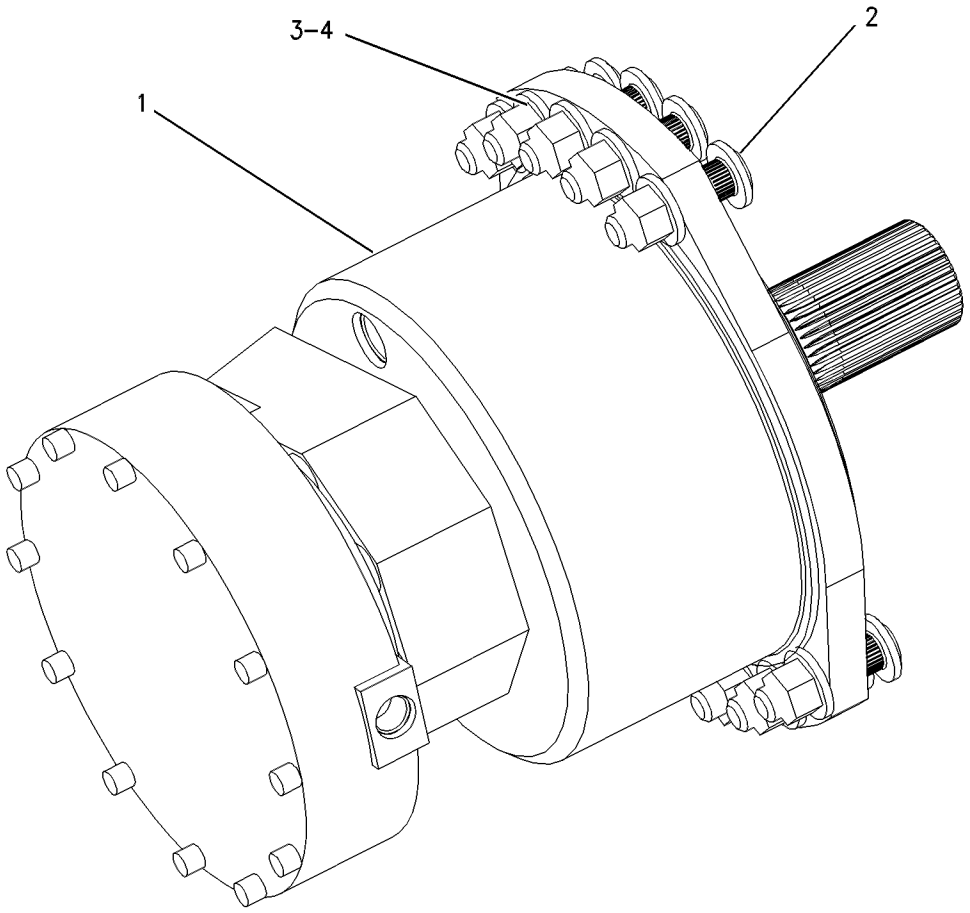

GRAPHIC #1 g00548375

191-9650 MOTOR & MTG GP-HYDROSTATIC

S/N: CAB1-UP; CMB1-UP

PART OF 191-2901, 191-9601 POWER TRAIN AR

SMCS-4351 **i01748778**

NOTE	REF NO	GRAPHIC REF	PART NUMBER	QTY	PART NAME 1 2 3 4 5 6 (PRODUCT LEVEL)	SEE PAGE
Y	1	1	**142-8720**	2	MOTOR GP-PISTON	230
	2	1	**206-5143**	20	BOLT (M12X1.75 THD)	
M	3	1	**6V-7687**	20	LOCKNUT (M12X1.75 THD)	
	4	1	**8T-4223**	20	WASHER-HARD (13.5X25.5X3MM THK)	

M-METRIC PART
Y-SEPARATE ILLUSTRATION

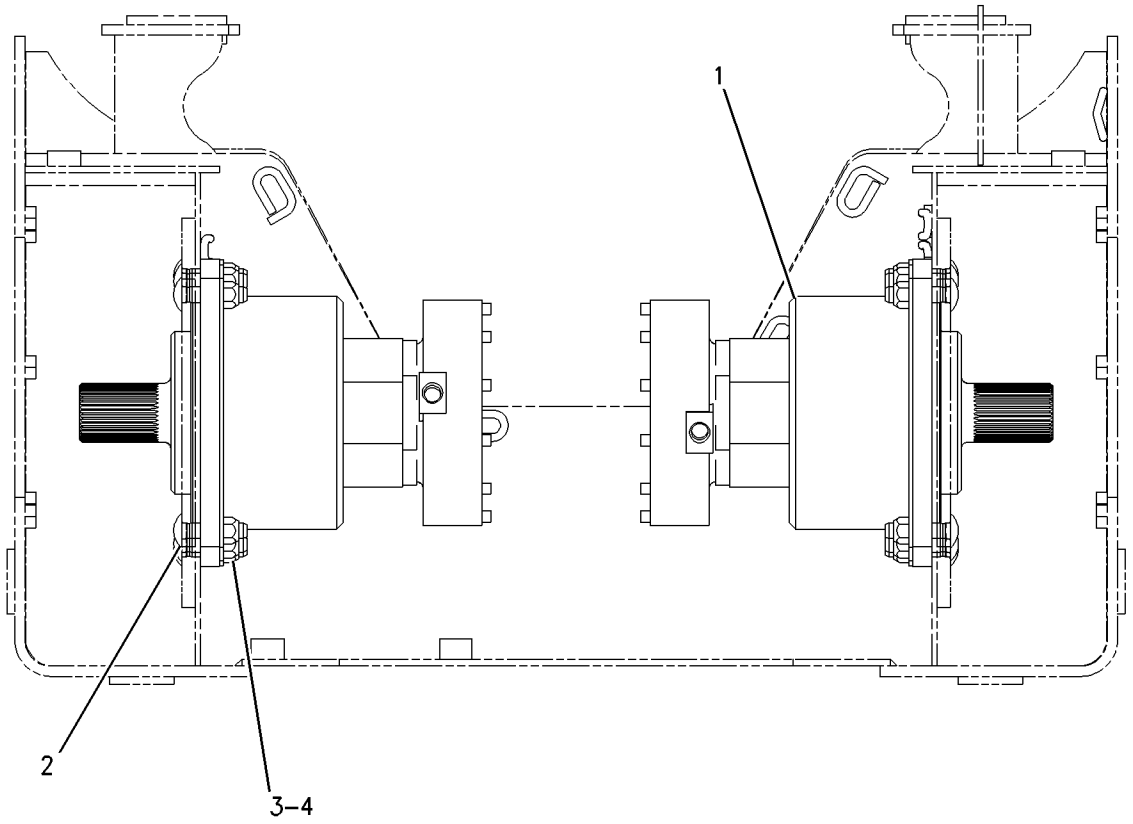

GRAPHIC #1 g00895821

142-8720 MOTOR GP-PISTON

S/N: CAB1-UP; CMB1-UP

PART OF 191-9650 MOTOR & MTG GP-HYDROSTATIC

SMCS-5058 **i01625933**

NOTE	REF NO	GRAPHIC REF	PART NUMBER	QTY	PART NAME 1 2 3 4 5 6 (PRODUCT LEVEL)	SEE PAGE
	1	1	**207-9717**	1	SEAL	
	2	1	**207-9718**	1	GASKET	
	3	1	**207-9719**	1	SEAL	
	4	1	**9S-8002**	3	PLUG-O-RING	
	5	1	**3J-7354**	2	SEAL-O-RING	
	6	1	**033-5853**	1	SEAL-O-RING	
	7	1	**210-4649**	1	SEAL	
	8	1	**1N-5999**	1	PLUG	
	9	1	**7J-0204**	1	SEAL-O-RING	
M	10	1	**5C-7883**	12	BOLT-SOCKET HEAD (M6X1.0X16MM)	

M-METRIC PART

142-8720 MOTOR GP-PISTON *(contd.)* i01625933

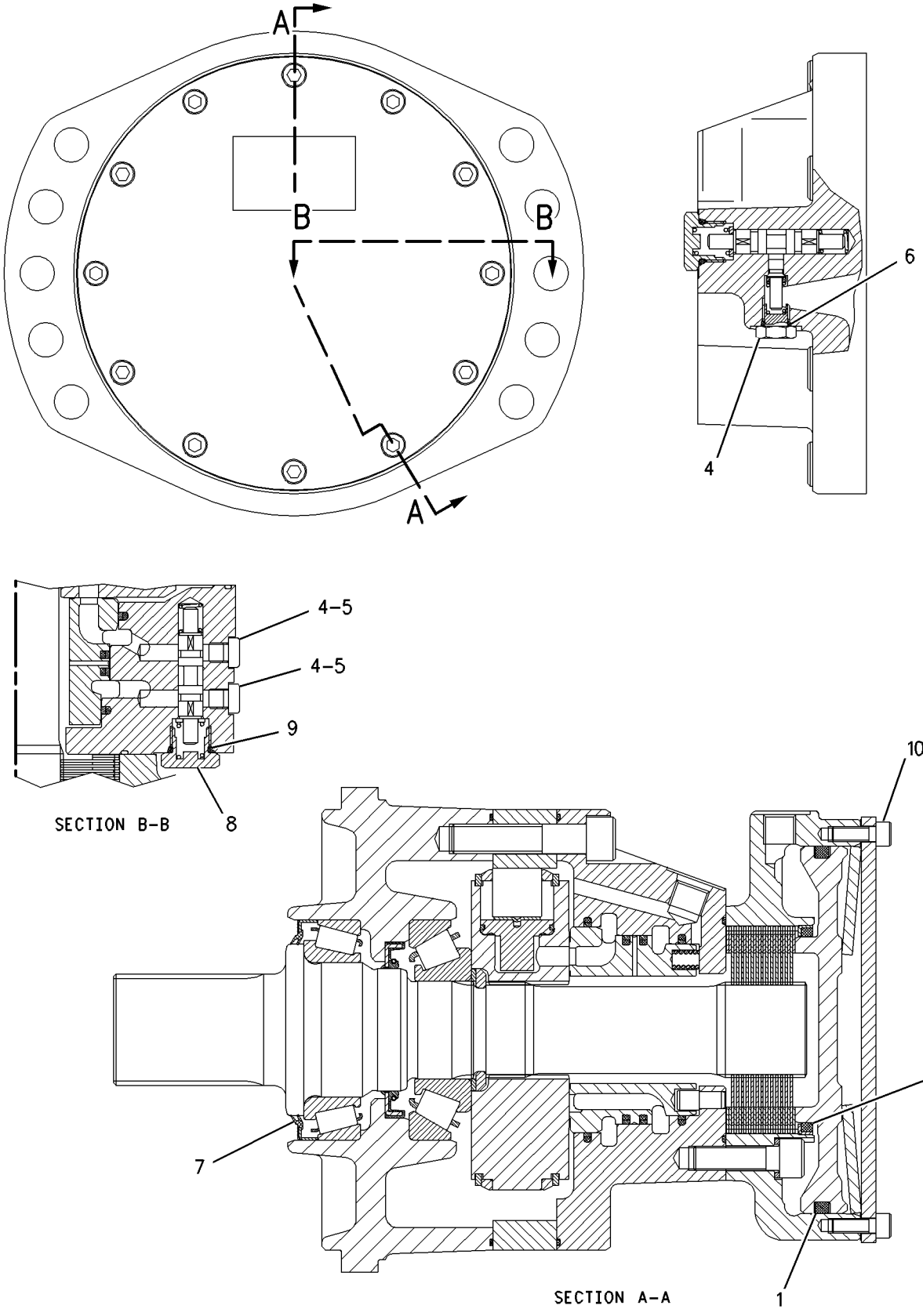

GRAPHIC #1 g00843390

142-8750 MOUNTING GP-PUMP

S/N: 5FZ6700-UP

PART OF 200-1001 POWER TRAIN AR

SMCS-3203 **i01762346**

NOTE	REF NO	GRAPHIC REF	PART NUMBER	QTY	PART NAME 1 2 3 4 5 6 (PRODUCT LEVEL)	SEE PAGE
	1	1	**117-7756**	1	FLANGE	
	2	1	**142-8719**	1	PLATE-ADAPTER	
	3	1	**165-0142**	2	WASHER-HARD (3MM THK)	
M	4	1	**167-4339**	2	BOLT-HEX HEAD (M14X2X40)	
	5	1	**193-8342**	1	HUB-COUPLING	
	6	1	**8T-4121**	12	WASHER-HARD (11X21X2.5MM THK)	
M	7	1	**8T-4195**	8	BOLT (M10X1.5X30MM)	
M	8	1	**8T-4196**	12	BOLT (M10X1.5X35MM)	

M-METRIC PART

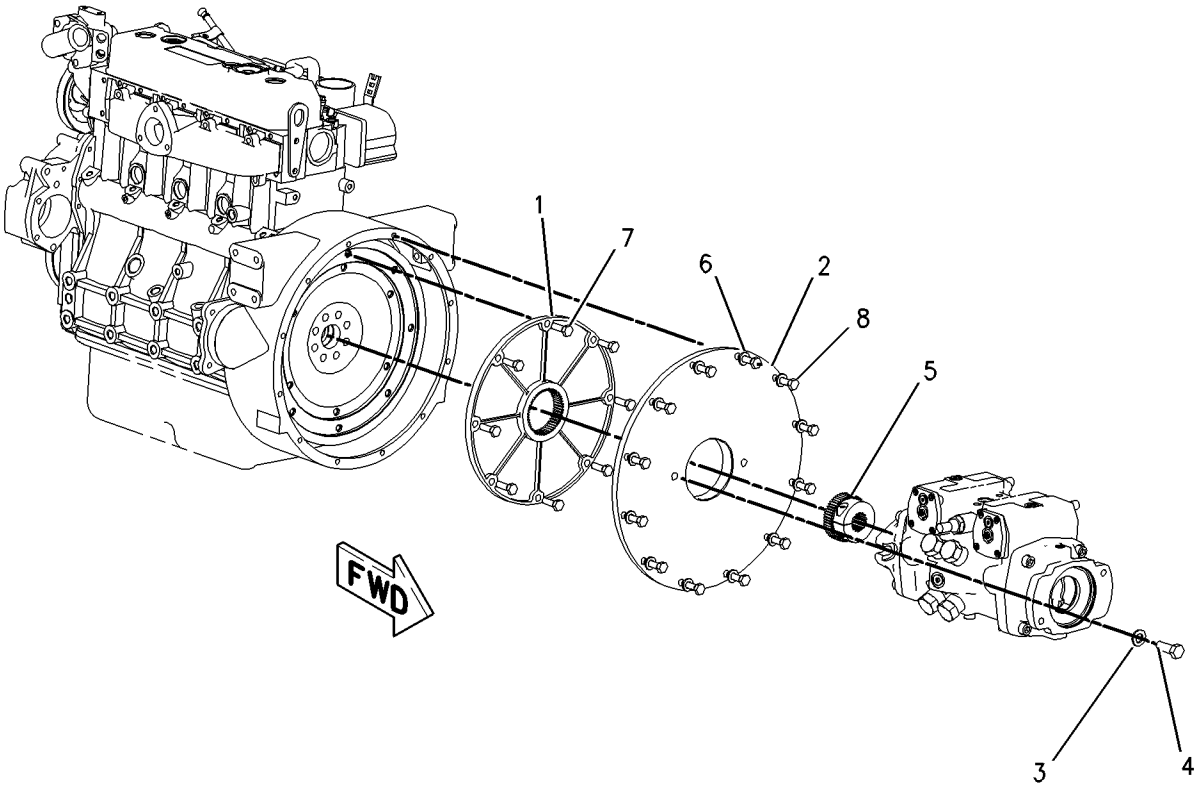

GRAPHIC #1 g00901572

205-3182 MOUNTING GP-PUMP

S/N: 4NZ3400-UP

PART OF 200-0801 POWER TRAIN AR

SMCS-3203 **i01762378**

NOTE	REF NO	GRAPHIC REF	PART NUMBER	QTY	PART NAME 1 2 3 4 5 6 (PRODUCT LEVEL)	SEE PAGE
	1	1	**141-7562**	1	FLANGE-NYLON	
	2	1	**142-8719**	1	PLATE-ADAPTER	
	3	1	**165-0142**	2	WASHER-HARD	
M	4	1	**167-4339**	2	BOLT-HEX HEAD (M14X2X40)	
	5	1	**205-4597**	1	HUB-COUPLING	
	6	1	**6V-8918**	8	BOLT (5/16-18X1.25 IN)	
	7	1	**8T-4121**	12	WASHER-HARD (11X21X2.5MM THK)	
M	8	1	**8T-4196**	12	BOLT (M10X1.5X35MM)	

M-METRIC PART

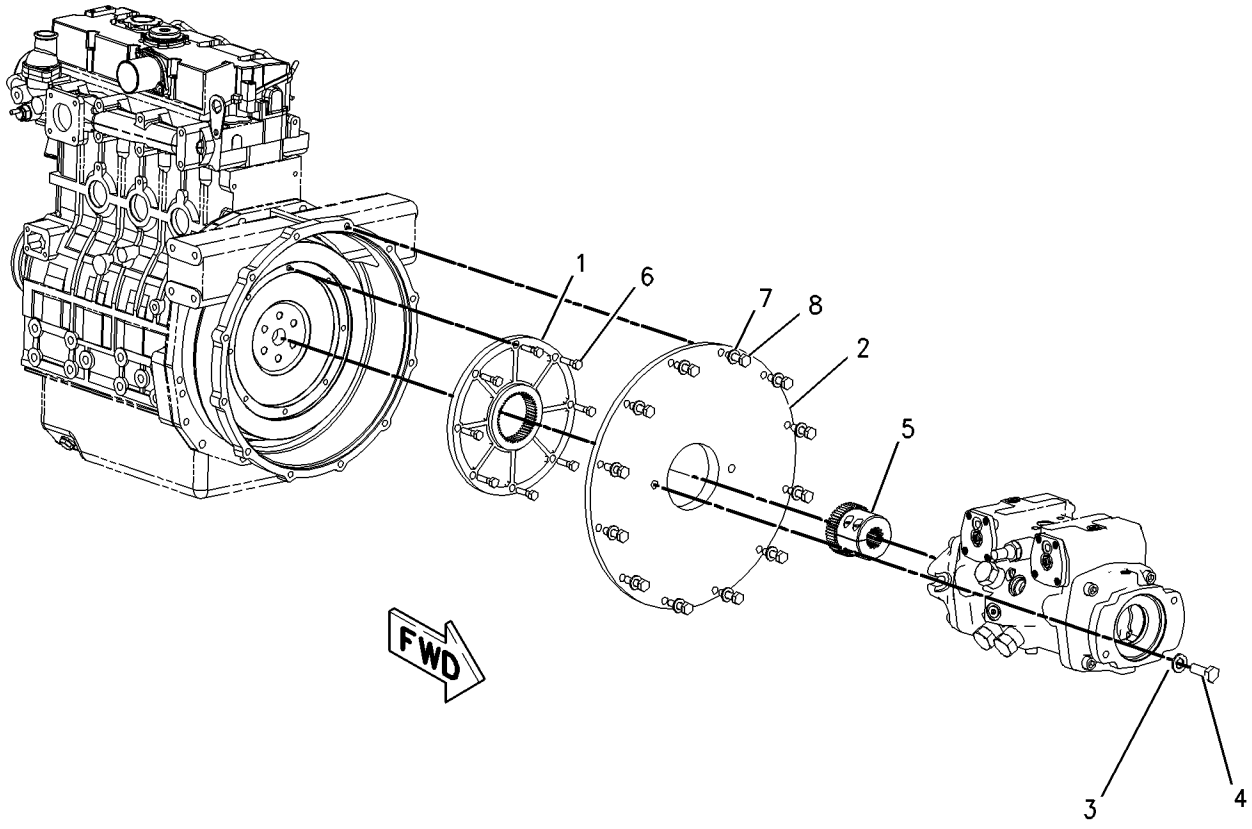

GRAPHIC #1 g00901579

POWER TRAIN

191-2901 POWER TRAIN AR

S/N: CMB1-UP

PART OF 191-2900 COMMON AR

SMCS-4000 **i01751994**

NOTE	PART NUMBER	QTY	PART NAME 1 2 3 4 5 6 (PRODUCT LEVEL)	SEE PAGE
Y	*216-6112*	1	CONTROL GP-PARKING BRAKE	208
Y	*212-6692*	1	DRIVE GP-TANDEM	212
Y	*191-9712*	1	LINES GP-HYDROSTATIC	220
Y	*191-9650*	1	MOTOR & MTG GP-HYDROSTATIC	229
Y	*216-6117*	1	PUMP & MTG GP-HYDROSTATIC	237

Y-SEPARATE ILLUSTRATION

<END>

191-9601 POWER TRAIN AR

S/N: CAB1-UP

PART OF 191-9600 COMMON AR

SMCS-4000 **i01753236**

NOTE	PART NUMBER	QTY	PART NAME 1 2 3 4 5 6 (PRODUCT LEVEL)	SEE PAGE
Y	*191-9650*	1	MOTOR & MTG GP-HYDROSTATIC	229
Y	*191-9712*	1	LINES GP-HYDROSTATIC	220
Y	*212-6692*	1	DRIVE GP-TANDEM	212
Y	*216-6112*	1	CONTROL GP-PARKING BRAKE	208
Y	*216-6116*	1	PUMP & MTG GP-HYDROSTATIC	236

Y-SEPARATE ILLUSTRATION

<END>

200-0801 POWER TRAIN AR

S/N: 4NZ3400-UP

PART OF 200-0800 COMMON AR

SMCS-4000 **i01570782**

NOTE	PART NUMBER	QTY	PART NAME 1 2 3 4 5 6 (PRODUCT LEVEL)	SEE PAGE
Y	*193-8370*	1	CONTROL GP-PARKING BRAKE	206
Y	*142-8760*	1	DRIVE GP-TANDEM	210
Y	*192-2610*	1	LINES GP-HYDROSTATIC	222
Y	*142-8741*	1	MOTOR & MTG GP-HYDROSTATIC	228
Y	*205-3182*	1	MOUNTING GP-PUMP	233
Y	**191-9744**	1	PUMP GP-PISTON	240

Y-SEPARATE ILLUSTRATION

<END>

200-1001 POWER TRAIN AR

S/N: 5FZ6700-UP

PART OF 200-1000 COMMON AR

SMCS-4000 **i01763063**

NOTE	REF NO	GRAPHIC REF	PART NUMBER	QTY	PART NAME 1 2 3 4 5 6 (PRODUCT LEVEL)	SEE PAGE
Y	1	1	*193-8370*	1	CONTROL GP-PARKING BRAKE	206
Y	2	1	*142-8760*	1	DRIVE GP-TANDEM	210
Y	3	1	*192-2610*	1	LINES GP-HYDROSTATIC	222
Y	4	1	*142-8741*	1	MOTOR & MTG GP-HYDROSTATIC	228
Y	5	1	*142-8750*	1	MOUNTING GP-PUMP	232
Y	6	1	**191-9700**	1	PUMP GP-PISTON	238

Y-SEPARATE ILLUSTRATION

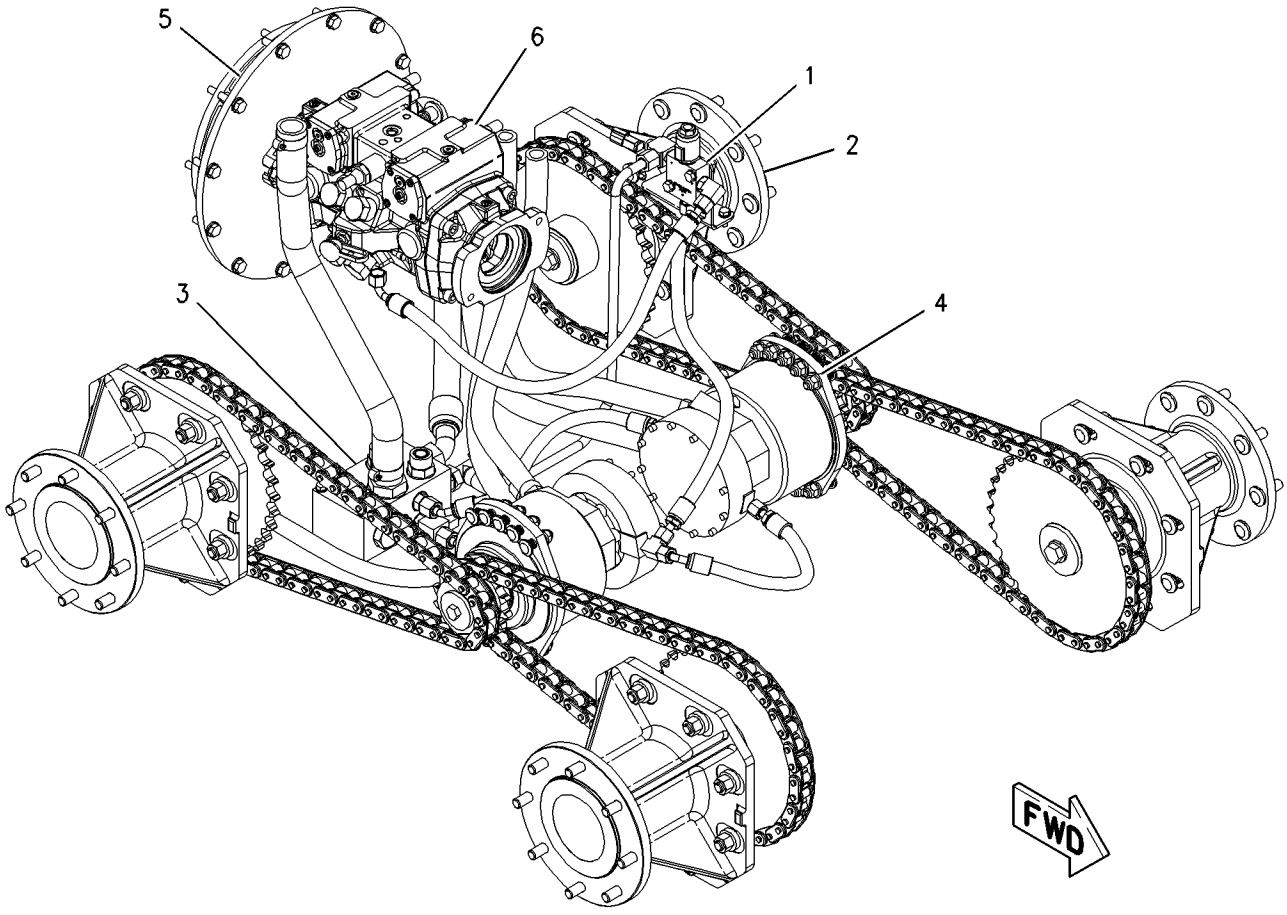

GRAPHIC #1 g00901946

216-6116 PUMP & MTG GP-HYDROSTATIC

S/N: CAB1-UP

PART OF 191-9601 POWER TRAIN AR

SMCS-5070 **i01763074**

NOTE	REF NO	GRAPHIC REF	PART NUMBER	QTY	PART NAME 1 2 3 4 5 6 (PRODUCT LEVEL)	SEE PAGE
	1	1	**141-7562**	1	FLANGE-NYLON	
	2	1	**142-8719**	1	PLATE-ADAPTER	
	3	1	**165-0142**	2	WASHER-HARD	
M	4	1	**167-4339**	2	BOLT-HEX HEAD (M14X2X40)	
Y	5	1	**191-9744**	1	PUMP GP-PISTON	240
	6	1	**205-4597**	1	HUB-COUPLING	
M		1	**6V-5192**	2	BOLT-SOCKET HEAD (M8X1.25X30MM)	
		1	**096-0194**	1	RING-RETAINING	
	7	1	**6V-8918**	8	BOLT (5/16-18X1.25 IN)	
	8	1	**8T-4121**	12	WASHER-HARD (11X21X2.5MM THK)	
M	9	1	**8T-4196**	12	BOLT (M10X1.5X35MM)	

M-METRIC PART
Y-SEPARATE ILLUSTRATION

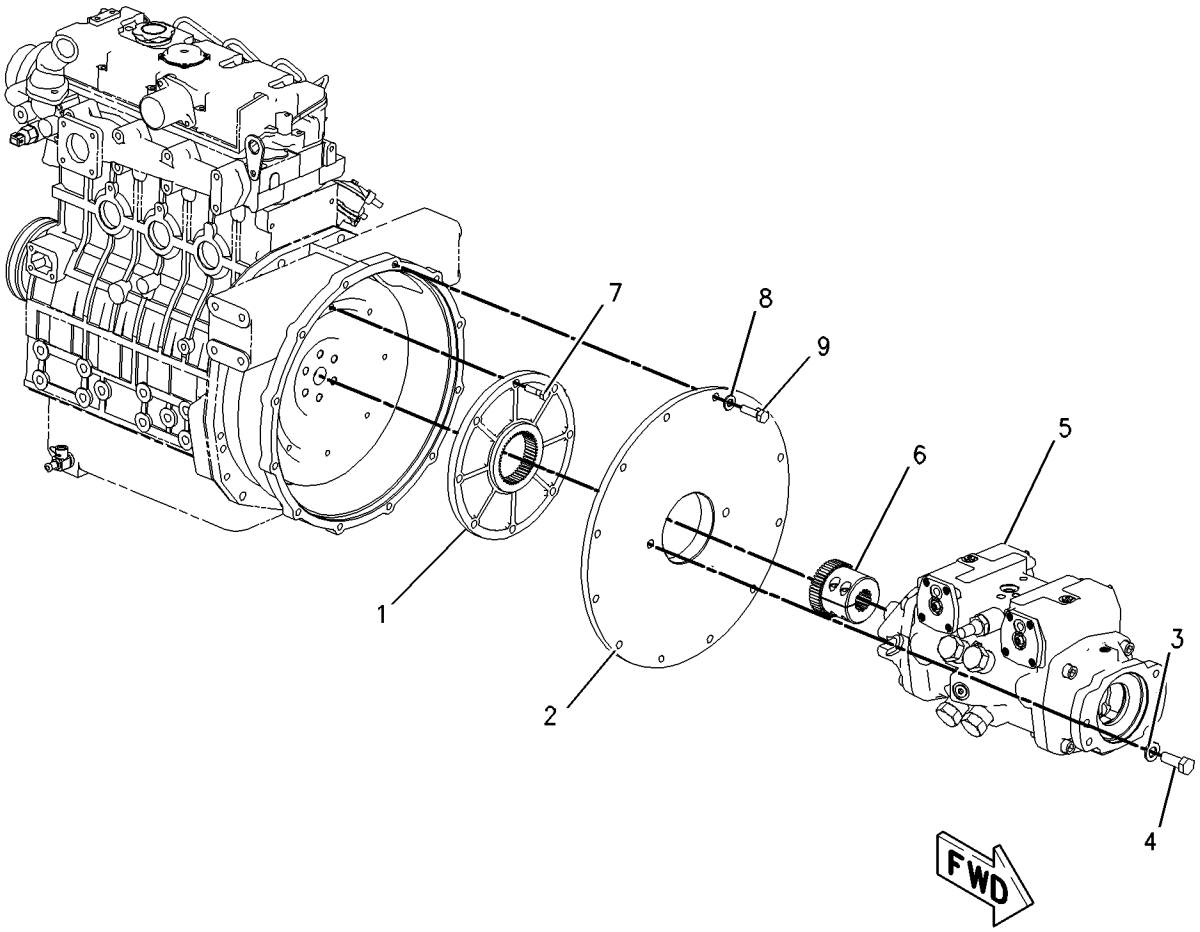

GRAPHIC #1 g00901956

216-6117 PUMP & MTG GP-HYDROSTATIC

S/N: CMB1-UP

PART OF 191-2901 POWER TRAIN AR

SMCS-5070 **i01763092**

NOTE	REF NO	GRAPHIC REF	PART NUMBER	QTY	PART NAME 1 2 3 4 5 6 (PRODUCT LEVEL)	SEE PAGE
	1	1	**117-7756**	1	FLANGE	
	2	1	**142-8719**	1	PLATE-ADAPTER	
	3	1	**165-0142**	2	WASHER-HARD	
M	4	1	**167-4339**	2	BOLT-HEX HEAD (M14X2X40)	
Y	5	1	**191-9700**	1	PUMP GP-PISTON	238
	6	1	**193-8342**	1	HUB-COUPLING	
	7	1	**8T-4121**	12	WASHER-HARD (11X21X2.5MM THK)	
M	8	1	**8T-4195**	8	BOLT (M10X1.5X30MM)	
M	9	1	**8T-4196**	12	BOLT (M10X1.5X35MM)	

M-METRIC PART
Y-SEPARATE ILLUSTRATION

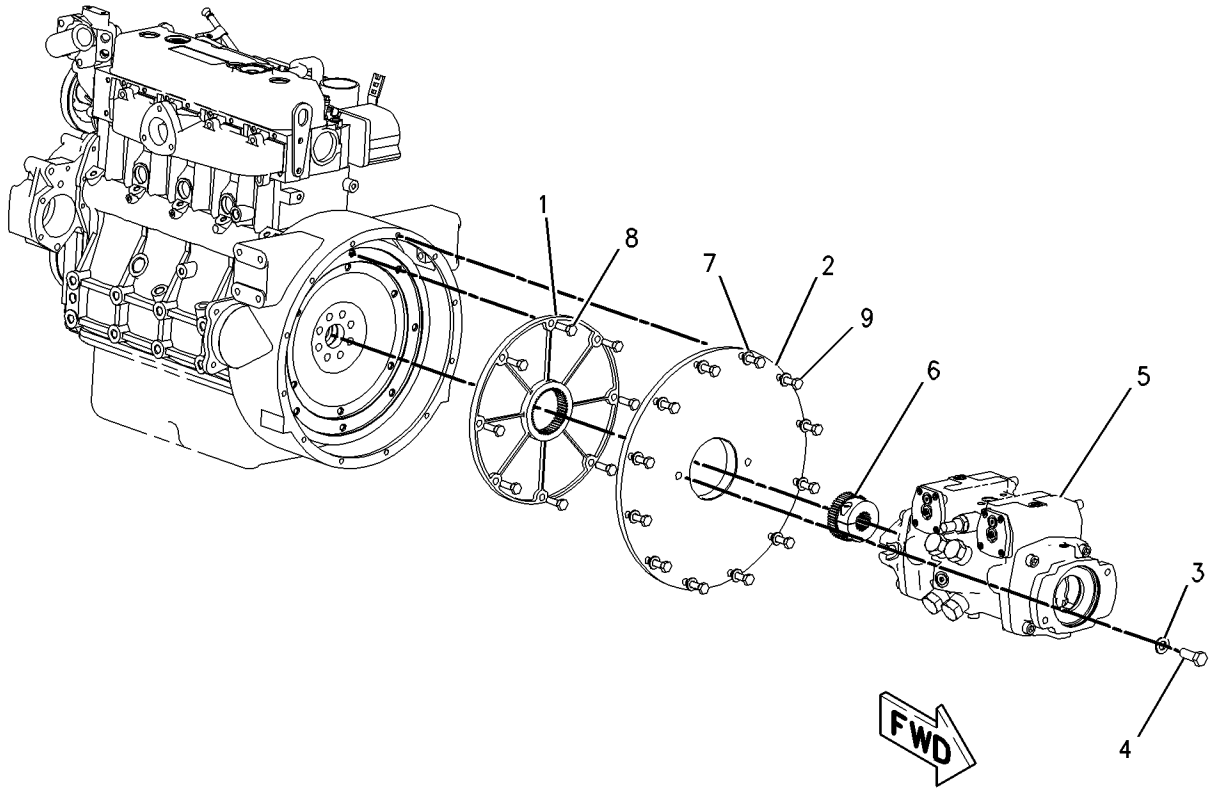

GRAPHIC #1 g00901971

191-9700 PUMP GP-PISTON

S/N: CMB1-UP; 5FZ6700-UP

PART OF 200-1001 POWER TRAIN AR, 216-6117 PUMP & MTG GP-HYDROSTATIC

SMCS-5070 **i01763114**

NOTE	REF NO	GRAPHIC REF	PART NUMBER	QTY	PART NAME 1 2 3 4 5 6 (PRODUCT LEVEL)	SEE PAGE
	1	1	**6E-5060**	3	CAP AS	
	2	1	**167-7713**	4	RING-BACKUP	
	3	1	**204-1452**	2	V-RING SEAL	
	4	1	**204-1453**	1	RING	
	5	1	**204-1454**	1	PIN	
	6	1	**204-1455**	1	LOCK	
	7	1	**204-1456**	1	SHIM	
	8	1	**204-1457**	1	VALVE GP-SPEED SENSING	
	9	1	**204-1458**	4	VALVE GP-RELIEF	
	10	1	**204-1459**	1	VALVE GP-RELIEF	
	11	1	**135-2655**	2	SEAL-O-RING	
	12	1	**3J-7354**	2	SEAL-O-RING	
	13	1	**3K-0715**	1	SEAL-O-RING	
	14	1	**6V-5326**	4	SEAL-O-RING	
	15	1	**6V-5586**	2	SEAL-O-RING	
	16	1	**6V-8352**	1	SEAL-O-RING	
M	17	1	**8T-0267**	8	BOLT-SOCKET HEAD (M6X1X12MM)	
	18	1	**9S-8002**	2	PLUG	
M	19	1	**9X-6606**	2	NUT-HEX (M10X1)	

M-METRIC PART

191-9700 PUMP GP-PISTON ***(contd.)*** **i01763114**

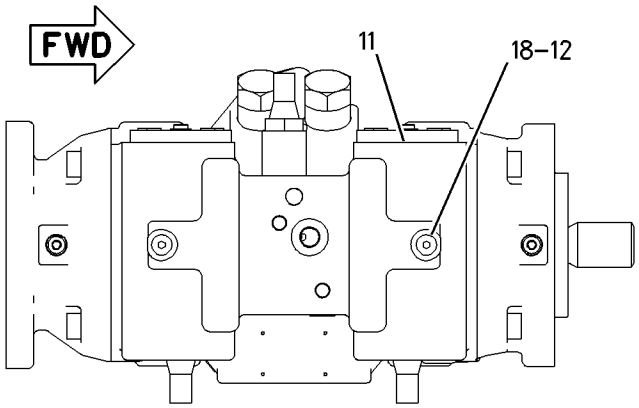

TOP VIEW

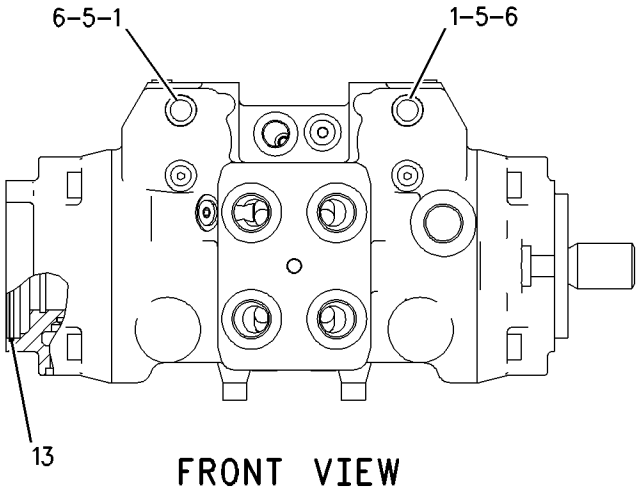

FRONT VIEW

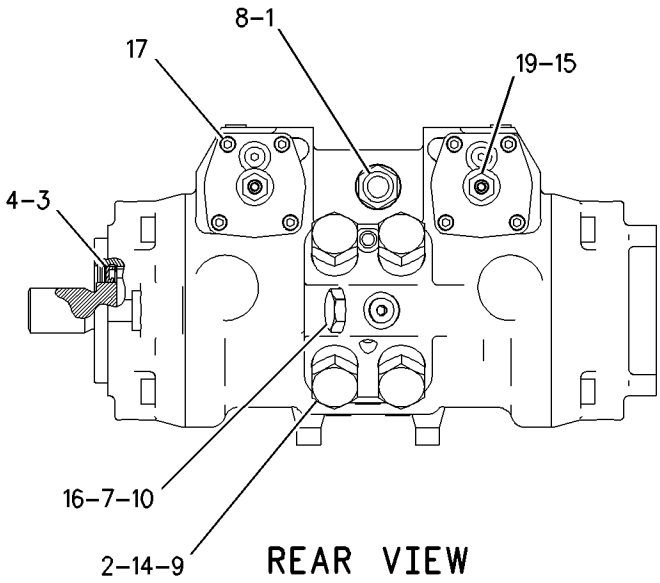

REAR VIEW

GRAPHIC #1 g00901982

191-9744 PUMP GP-PISTON

S/N: CAB1-UP; 4NZ3400-UP

PART OF 200-0801 POWER TRAIN AR, 216-6116 PUMP & MTG GP-HYDROSTATIC

SMCS-5070 **i01763143**

NOTE	REF NO	GRAPHIC REF	PART NUMBER	QTY	PART NAME 1 2 3 4 5 6 (PRODUCT LEVEL)	SEE PAGE
	1	1	**6E-5060**	3	CAP AS	
	2	1	**167-7713**	4	RING-BACKUP	
	3	1	**204-1452**	2	V-RING SEAL	
	4	1	**204-1453**	1	RING	
	5	1	**204-1454**	2	PIN	
	6	1	**204-1455**	2	LOCK	
	7	1	**204-1456**	1	SHIM	
	8	1	**204-1457**	1	VALVE GP-SPEED SENSING	
	9	1	**204-1458**	4	VALVE GP-RELIEF	
	10	1	**204-1459**	1	VALVE GP-RELIEF	
	11	1	**135-2655**	2	SEAL-O-RING	
	12	1	**3J-7354**	2	SEAL-O-RING	
	13	1	**3K-0715**	1	SEAL-O-RING	
	14	1	**6V-5326**	4	SEAL-O-RING	
	15	1	**6V-5586**	2	SEAL-O-RING	
	16	1	**6V-8352**	1	SEAL-O-RING	
M	17	1	**8T-0267**	8	BOLT-SOCKET HEAD (M6X1X12MM)	
	18	1	**9S-8002**	2	PLUG	
M	19	1	**9X-6606**	2	NUT-HEX (M10X1)	

M-METRIC PART

191-9744 PUMP GP-PISTON ***(contd.)*** **i01763143**

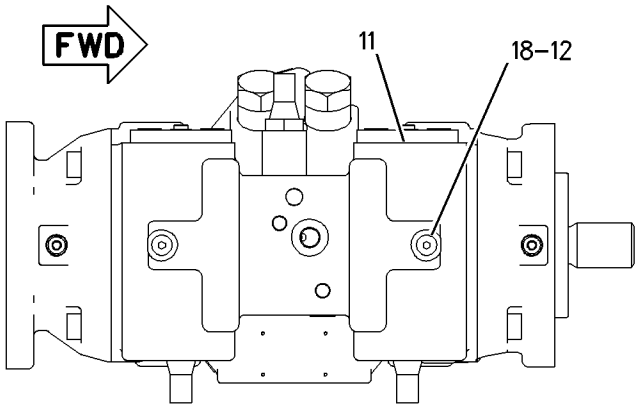

TOP VIEW

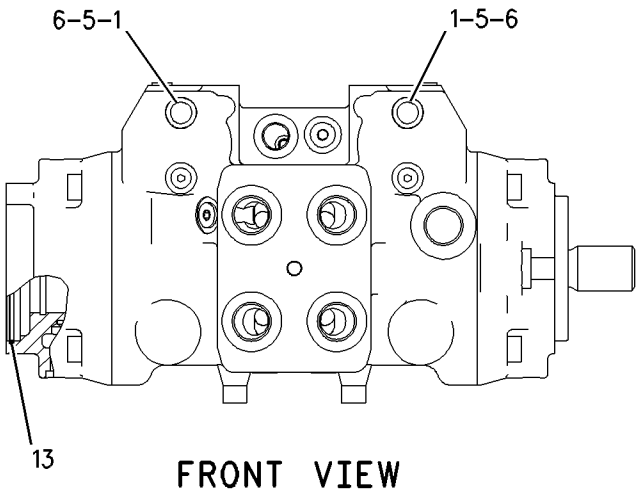

FRONT VIEW

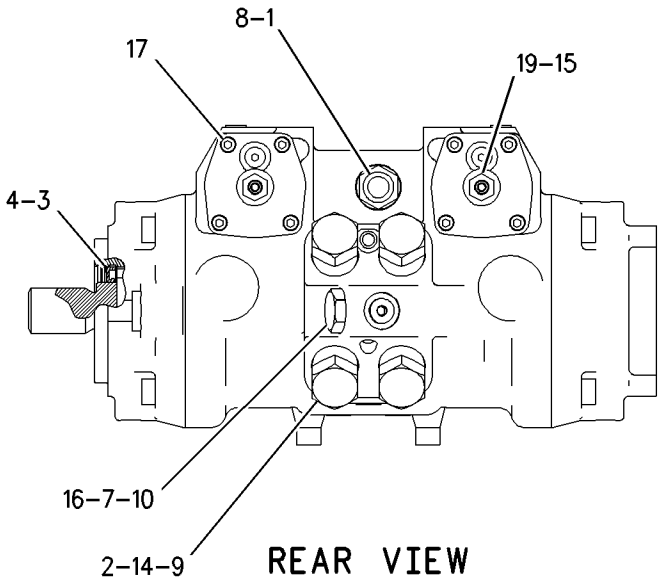

REAR VIEW

GRAPHIC #1 g00901989

142-7495 WHEEL & TIRE AR

S/N: CMB1-UP
(16.5 X 9.75). DIRECTIONAL TIRE
AN ATTACHMENT

SMCS-4200, 4201, 4203 **i01760229**

NOTE	PART NUMBER	QTY	PART NAME 1 2 3 4 5 6 (PRODUCT LEVEL)	SEE PAGE
	142-7493	32	NUT-LUG (9/16-18-2B THD)	
	142-8738	2	TIRE & RIM GP (LH)	
	142-9025	1	TIRE & RIM GP (RH)	
			(EACH TIRE AND RIM GP INCLUDES)	
	142-8759	1	WHEEL AS	
	150-8599	1	VALVE AS-TIRE	
J	*142-8726*	1	TIRE (12-16.5 10 PLY)	

J-CONTACT LOCAL CATERPILLAR DEALER FOR PROPER TIRE REPLACEMENT

<END>

142-8646 WHEEL & TIRE AR

S/N: CMB1-UP
(15 X 6). DIRECTIONAL TIRE
AN ATTACHMENT

SMCS-4200, 4201, 4203 **i01760243**

NOTE	PART NUMBER	QTY	PART NAME 1 2 3 4 5 6 (PRODUCT LEVEL)	SEE PAGE
	142-7493	32	NUT-LUG (9/16-18-2B THD)	
	142-9027	2	TIRE & RIM GP (LH)	
	142-9031	2	TIRE & RIM GP (RH)	
			(EACH TIRE AND RIM GP INCLUDES)	
	142-7481	1	WHEEL AS	
	150-8599	1	VALVE AS-TIRE	
J	*142-8727*	1	TIRE (8.25-15 6 PLY)	

J-CONTACT LOCAL CATERPILLAR DEALER FOR PROPER TIRE REPLACEMENT

<END>

142-8648 WHEEL & TIRE AR

S/N: CAB1-UP; 4NZ3400-UP; 5FZ6700-UP
(16.5 X 8.25). DIRECTIONAL TIRE, HEAVY DUTY
AN ATTACHMENT

SMCS-4200, 4201, 4203 **i01757273**

NOTE	PART NUMBER	QTY	PART NAME 1 2 3 4 5 6 (PRODUCT LEVEL)	SEE PAGE
	142-7493	32	NUT-LUG (9/16-18-2B THD)	
	142-7491	2	TIRE & RIM GP (LH)	
	150-8591	2	TIRE & RIM GP (RH)	
			(EACH TIRE AND RIM GP INCLUDES)	
	142-7490	1	WHEEL AS	
	150-8599	1	VALVE AS-TIRE	
J	*142-7488*	1	TIRE (10-16.5 8 PLY)	

J-CONTACT LOCAL CATERPILLAR DEALER FOR PROPER TIRE REPLACEMENT

<END>

142-8649 WHEEL & TIRE AR

S/N: CAB1-UP; 4NZ3400-UP; 5FZ6700-UP
(16.5 X 8.25). DIRECTIONAL TIRE
AN ATTACHMENT

SMCS-4200, 4201, 4203 **i01757289**

NOTE	PART NUMBER	QTY	PART NAME 1 2 3 4 5 6 (PRODUCT LEVEL)	SEE PAGE
	142-7493	32	NUT-LUG (9/16-18-2B THD)	
	142-7489	2	TIRE & RIM GP (LH)	
	150-8590	2	TIRE & RIM GP (RH)	
			(EACH TIRE AND RIM GP INCLUDES)	
	142-7490	1	WHEEL AS	
	150-8599	1	VALVE AS-TIRE	
J	*142-7486*	1	TIRE (10-16.5 6 PLY)	

J-CONTACT LOCAL CATERPILLAR DEALER FOR PROPER TIRE REPLACEMENT

<END>

142-8665 WHEEL & TIRE AR

S/N: CAB1-UP; 4NZ3400-UP; 5FZ6700-UP
(15 X 6). DIRECTIONAL TIRE
CANNOT BE USED WITH ANY OTHER WHEEL AND TIRE ARRANGEMENT
AN ATTACHMENT

SMCS-4200, 4201, 4203 **i01757291**

NOTE	PART NUMBER	QTY	PART NAME 1 2 3 4 5 6 (PRODUCT LEVEL)	SEE PAGE
	142-7493	32	NUT-LUG (9/16-18-2B THD)	
	142-7480	2	TIRE & RIM GP (LH)	
	150-8594	2	TIRE & RIM GP (RH)	
			(EACH TIRE AND RIM GP INCLUDES)	
	142-7481	1	WHEEL AS	
	150-8599	1	VALVE AS-TIRE	
J	*142-7483*	1	TIRE (7.00-15 6 PLY)	

J-CONTACT LOCAL CATERPILLAR DEALER FOR PROPER TIRE REPLACEMENT

<END>

142-8666 WHEEL & TIRE AR

S/N: CAB1-UP; 4NZ3400-UP; 5FZ6700-UP
(16.5 X 8.25). DIRECTIONAL TIRE
CANNOT BE USED WITH ANY OTHER WHEEL AND TIRE ARRANGEMENT
AN ATTACHMENT

SMCS-4200, 4201, 4203 **i01757399**

NOTE	PART NUMBER	QTY	PART NAME 1 2 3 4 5 6 (PRODUCT LEVEL)	SEE PAGE
	142-7493	32	NUT-LUG (9/16-18-2B THD)	
	142-7484	2	TIRE & RIM GP (LH)	
	150-8592	2	TIRE & RIM GP (RH)	
			(EACH TIRE AND RIM GP INCLUDES)	
	142-7485	1	WHEEL AS	
	150-8599	1	VALVE AS-TIRE	
J	*142-7486*	1	TIRE (10-16.5 6 PLY)	

J-CONTACT LOCAL CATERPILLAR DEALER FOR PROPER TIRE REPLACEMENT

<END>

142-8667 WHEEL & TIRE AR

S/N: CAB1-UP; 4NZ3400-UP; 5FZ6700-UP
(16.5 X 8.25). DIRECTIONAL TIRE, HEAVY DUTY
AN ATTACHMENT

SMCS-4200, 4201, 4203 **i01757402**

NOTE	PART NUMBER	QTY	PART NAME 1 2 3 4 5 6 (PRODUCT LEVEL)	SEE PAGE
	142-7493	32	NUT-LUG (9/16-18-2B THD)	
	142-7487	2	TIRE & RIM GP (LH)	
	150-8593	2	TIRE & RIM GP (RH)	
			(EACH TIRE AND RIM GP INCLUDES)	
	142-7485	1	WHEEL AS	
	150-8599	1	VALVE AS-TIRE	
J	*142-7488*	1	TIRE (10-16.5 8 PLY)	

J-CONTACT LOCAL CATERPILLAR DEALER FOR PROPER TIRE REPLACEMENT

<END>

142-9121 WHEEL & TIRE AR

S/N: CAB1-UP; 4NZ3400-UP; 5FZ6700-UP
(15 X 13LB). DIRECTIONAL TIRE, HIGH FLOTATION
AN ATTACHMENT

SMCS-4200, 4201, 4203 **i01757563**

NOTE	PART NUMBER	QTY	PART NAME 1 2 3 4 5 6 (PRODUCT LEVEL)	SEE PAGE
	142-7493	32	NUT-LUG (9/16-18-2B THD)	
	142-9122	2	TIRE & RIM GP (LH)	
	142-9123	2	TIRE & RIM GP (RH)	
			(EACH TIRE AND RIM GP INCLUDES)	
	152-4901	1	WHEEL AS	
	150-8599	1	VALVE AS-TIRE	
J	**152-4900**	1	TIRE (31 X 15.50-15 8 PLY) (CATERPILLAR)	

J-CONTACT LOCAL CATERPILLAR DEALER FOR PROPER TIRE REPLACEMENT

<END>

152-4862 WHEEL & TIRE AR

S/N: 4NZ3400-UP; 5FZ6700-UP
(10-16.5). DIRECTIONAL TIRE, SEGMENTED TIRE
AN ATTACHMENT

SMCS-4200, 4201, 4203 **i01763157**

NOTE	PART NUMBER	QTY	PART NAME 1 2 3 4 5 6 (PRODUCT LEVEL)	SEE PAGE
	142-7493	32	NUT-LUG (9/16-18-2B THD)	
	152-4864	2	WHEEL & TIRE GP (LH)	
			(EACH WHEEL AND TIRE GP INCLUDES)	
	152-4866	1	WHEEL AS-LH	
	152-4867	20	SEGMENT AS-TIRE	
	152-4863	2	WHEEL & TIRE GP (RH)	
			(EACH WHEEL AND TIRE GP INCLUDES)	
	152-4865	1	WHEEL AS-RH	
J	**152-4867**	20	SEGMENT AS-TIRE	

J-CONTACT LOCAL CATERPILLAR DEALERSHIP FOR PROPER TIRE REPLACEMENT

<END>

154-3973 WHEEL & TIRE AR

S/N: CMB1-UP
(16.5 X 9.75). DIRECTIONAL TIRE, HEAVY DUTY
AN ATTACHMENT

SMCS-4200, 4201, 4203 **i01760251**

NOTE	PART NUMBER	QTY	PART NAME 1 2 3 4 5 6 (PRODUCT LEVEL)	SEE PAGE
	142-7493	32	NUT-LUG (9/16-18-2B THD)	
	154-3980	2	TIRE & RIM GP (LH)	
	154-3981	2	TIRE & RIM GP (RH)	
			(EACH TIRE AND RIM GP INCLUDES)	
	142-8759	1	WHEEL AS	
	150-8599	1	VALVE AS-TIRE	
J	*154-3982*	1	TIRE (12-16.5 10 PLY)	

J-CONTACT LOCAL CATERPILLAR DEALER FOR PROPER TIRE REPLACEMENT

<END>

154-3983 WHEEL & TIRE AR

S/N: CSD1-UP; 4NZ3400-UP; 5FZ6700-UP
(7.50 X 16). SOLID TIRE
AN ATTACHMENT

SMCS-4200, 4201, 4203 **i01757576**

NOTE	PART NUMBER	QTY	PART NAME 1 2 3 4 5 6 (PRODUCT LEVEL)	SEE PAGE
	142-7493	32	NUT-LUG (9/16-18-2B THD)	
J	**154-3984**	4	WHEEL AS (7.50-16 SOLID TIRE) (CATERPILLAR)	

J-CONTACT LOCAL CATERPILLAR DEALER FOR PROPER TIRE REPLACEMENT

<END>

159-5761 WHEEL & TIRE AR

S/N: CMB1-UP
(8.00 X 16). SOLID TIRE
AN ATTACHMENT

SMCS-4200, 4201, 4203 **i01760252**

NOTE	PART NUMBER	QTY	PART NAME 1 2 3 4 5 6 (PRODUCT LEVEL)	SEE PAGE
	142-7493	32	NUT-LUG (9/16-18-2B THD)	
J	**159-5762**	4	WHEEL AS (8.00-16 SOLID TIRE) (CAERPILLAR)	

J-CONTACT LOCAL CATERPILLAR DEALER FOR PROPER TIRE REPLACEMENT

<END>

159-5763 WHEEL & TIRE AR

S/N: CMB1-UP
(12 X 16.5). SEGMENTED TIRE
AN ATTACHMENT

SMCS-4200, 4201, 4203 **i01760256**

NOTE	PART NUMBER	QTY	PART NAME 1 2 3 4 5 6 (PRODUCT LEVEL)	SEE PAGE
	142-7493	32	NUT-LUG (9/16-18-2B THD)	
	159-5764	2	WHEEL & TIRE GP (LH)	
			(EACH INCLUDES)	
	159-5765	1	WHEEL AS-LH	
	159-5769	22	SEGMENT AS-TIRE	
	159-5767	2	WHEEL & TIRE GP (RH)	
			(EACH INCLUDES)	
	159-5768	1	WHEEL AS-RH	
J	**159-5769**	22	SEGMENT AS-TIRE	

J-CONTACT LOCAL CATERPILLAR DEALER FOR PROPER TIRE REPLACEMENT

<END>

165-2602 WHEEL & TIRE AR

S/N: CMB1-UP; CSD1-UP; 4NZ3400-UP; 5FZ6700-UP
(16.5 X 8.25). DIRECTIONAL TIRE, HEAVY DUTY
AN ATTACHMENT

SMCS-4200, 4201, 4203 **i01757418**

NOTE	PART NUMBER	QTY	PART NAME 1 2 3 4 5 6 (PRODUCT LEVEL)	SEE PAGE
	142-7493	32	NUT-LUG (9/16-18-2B THD)	
	165-2605	2	TIRE & RIM GP (LH)	
	165-2606	2	TIRE & RIM GP (RH)	
			(EACH TIRE AND RIM GP INCLUDES)	
	142-7490	1	WHEEL AS	
	150-8599	1	VALVE AS-TIRE	
J	*165-4908*	1	TIRE (10 16.5 8PLY)	

J-CONTACT LOCAL CATERPILLAR DEALER FOR PROPER TIRE REPLACEMENT

<END>

165-4891 WHEEL & TIRE AR

S/N: CAB1-UP; 4NZ3400-UP; 5FZ6700-UP
(16.5 X 8.25). DIRECTIONAL TIRE, HEAVY DUTY
AN ATTACHMENT

SMCS-4200, 4201, 4203 **i01757569**

NOTE	PART NUMBER	QTY	PART NAME 1 2 3 4 5 6 (PRODUCT LEVEL)	SEE PAGE
	142-7493	32	NUT-LUG (9/16-18-2B THD)	
	165-2609	2	TIRE & RIM GP (LH)	
	165-2610	2	TIRE & RIM GP (RH)	
			(EACH TIRE AND RIM GP INCLUDES)	
	142-7485	1	WHEEL AS	
	150-8599	1	VALVE AS-TIRE	
J	*165-4908*	1	TIRE (10 16.5 8PLY)	

J-CONTACT LOCAL CATERPILLAR DEALER FOR PROPER TIRE REPLACEMENT

<END>

165-4903 WHEEL & TIRE AR

S/N: CMB1-UP
(16.5 X 9.75). DIRECTIONAL TIRE, HEAVY DUTY
AN ATTACHMENT

SMCS-4200, 4201, 4203 **i01760266**

NOTE	PART NUMBER	QTY	PART NAME 1 2 3 4 5 6 (PRODUCT LEVEL)	SEE PAGE
	142-7493	32	NUT-LUG (9/16-18-2B THD)	
	165-4906	2	TIRE & RIM GP (LH)	
	165-4907	2	TIRE & RIM GP (RH)	
			(EACH TIRE AND RIM GP INCLUDES)	
	142-8759	1	WHEEL AS	
	150-8599	1	VALVE AS-TIRE	
J	*165-4909*	1	TIRE (12-16.5 10 PLY)	

J-CONTACT LOCAL CATERPILLAR DEALER FOR PROPER TIRE REPLACEMENT

<END>

185-8660 WHEEL & TIRE AR

S/N: CAB1-UP; 4NZ3400-UP; 5FZ6700-UP
(265 X 521). DIRECTIONAL TIRE, LOW SIDE WALL
AN ATTACHMENT

SMCS-4200, 4201, 4203 **i01757570**

NOTE	PART NUMBER	QTY	PART NAME 1 2 3 4 5 6 (PRODUCT LEVEL)	SEE PAGE
	142-7493	32	NUT-LUG (9/16-18-2B THD)	
	185-8670	2	TIRE & RIM GP (LH)	
	185-8671	2	TIRE & RIM GP (RH)	
			(EACH TIRE AND RIM GP INCLUDES)	
	185-8668	1	WHEEL AS	
	150-8599	1	VALVE AS-TIRE	
J	**185-9934**	1	TIRE (265-521 8 PLY) (CATERPILLAR)	

J-CONTACT LOCAL CATERPILLAR DEALER FOR PROPER TIRE REPLACEMENT

<END>

185-8661 WHEEL & TIRE AR

S/N: CAB1-UP; 4NZ3400-UP; 5FZ6700-UP
(521 X 210). DIRECTIONAL TIRE, LOW SIDE WALL
AN ATTACHMENT

SMCS-4200, 4201, 4203 **i01757416**

NOTE	PART NUMBER	QTY	PART NAME 1 2 3 4 5 6 (PRODUCT LEVEL)	SEE PAGE
	142-7493	32	NUT-LUG (9/16-18-2B THD)	
	185-8672	2	TIRE & RIM GP (LH)	
	185-8673	2	TIRE & RIM GP (RH)	
			(EACH TIRE AND RIM GP INCLUDES)	
	150-8599	1	VALVE AS-TIRE	
	185-8669	1	WHEEL AS	
J	**185-9934**	1	TIRE (265-521 8 PLY) (CATERPILLAR)	

J-CONTACT LOCAL CATERPILLAR DEALER FOR PROPER TIRE REPLACEMENT

<END>

185-8664 WHEEL & TIRE AR

S/N: CSD1-UP; 4NZ3400-UP; 5FZ6700-UP
(10 X 16.5). DIRECTIONAL TIRE, HEAVY DUTY
AN ATTACHMENT

SMCS-4200, 4201, 4203 **i01757415**

NOTE	PART NUMBER	QTY	PART NAME 1 2 3 4 5 6 (PRODUCT LEVEL)	SEE PAGE
	142-7493	32	NUT-LUG (9/16-18-2B THD)	
	185-8678	2	TIRE & RIM GP (LH)	
	185-8679	2	TIRE & RIM GP (RH)	
	142-7485	1	WHEEL AS	
	150-8599	1	VALVE AS-TIRE	
J	**185-9932**	1	TIRE (10-16.5 8 PLY) (CATERPILLAR)	

J-CONTACT LOCAL CATERPILLAR DEALER FOR PROPER TIRE REPLACEMENT

<END>

185-8665 WHEEL & TIRE AR

S/N: CAB1-UP; 4NZ3400-UP; 5FZ6700-UP
(10 X 16.5). DIRECTIONAL TIRE, HEAVY DUTY
AN ATTACHMENT

SMCS-4200, 4201, 4203 **i01757413**

NOTE	PART NUMBER	QTY	PART NAME 1 2 3 4 5 6 (PRODUCT LEVEL)	SEE PAGE
	142-7493	32	NUT-LUG (9/16-18-2B THD)	
	185-9926	2	TIRE & RIM GP (LH)	
	185-9927	2	TIRE & RIM GP (RH)	
			(EACH TIRE AND RIM GP INCLUDES)	
	142-7490	1	WHEEL AS	
	150-8599	1	VALVE AS-TIRE	
J	**185-9932**	1	TIRE (10-16.5 8 PLY) (CATERPILLAR)	

J-CONTACT LOCAL CATERPILLAR DEALER FOR PROPER TIRE REPLACEMENT

<END>

POWER TRAIN

185-8666 WHEEL & TIRE AR

S/N: CMB1-UP
(12 X 16.5). DIRECTIONAL TIRE, HEAVY DUTY
AN ATTACHMENT

SMCS-4200, 4201, 4203 **i01763158**

NOTE	PART NUMBER	QTY	PART NAME 1 2 3 4 5 6 (PRODUCT LEVEL)	SEE PAGE
	142-7493	32	NUT-LUG (9/16-18-2B THD)	
	185-9928	2	TIRE & RIM GP (LH)	
	185-9929	2	TIRE & RIM GP (RH)	
			(EACH TIRE AND RIM GP INCLUDES)	
	142-8759	1	WHEEL AS	
	150-8599	1	VALVE AS-TIRE	
J	**185-9933**	1	TIRE (12 X 16.5 10PLY) (CATERPILLAR)	

J-CONTACT LOCAL CATERPILLAR DEALER FOR PROPER TIRE REPLACEMENT

<END>

187-3233 WHEEL & TIRE AR

S/N: CAB1-UP; 4NZ3400-UP; 5FZ6700-UP
(521 X 210). DIRECTIONAL TIRE, LOW SIDE WALL, POLYFILL
AN ATTACHMENT

SMCS-4200, 4201, 4203 **i01757404**

NOTE	PART NUMBER	QTY	PART NAME 1 2 3 4 5 6 (PRODUCT LEVEL)	SEE PAGE
	142-7493	32	NUT-LUG (9/16-18-2B THD)	
	188-0112	2	TIRE & RIM GP (LH)	
	188-0113	2	TIRE & RIM GP (RH)	
			(EACH TIRE AND RIM GP INCLUDES)	
	185-8669	1	WHEEL AS	
	150-8599	1	VALVE AS-TIRE	
J	**185-9934**	1	TIRE (265-521 8 PLY) (CATERPILLAR)	

J-CONTACT LOCAL CATERPILLAR DEALER FOR PROPER TIRE REPLACEMENT

<END>

187-3234 WHEEL & TIRE AR

S/N: CAB1-UP; 4NZ3400-UP; 5FZ6700-UP
(521 X 210). DIRECTIONAL TIRE, LOW SIDE WALL, POLYFILL
AN ATTACHMENT

SMCS-4200, 4201, 4203 **i01757294**

NOTE	PART NUMBER	QTY	PART NAME 1 2 3 4 5 6 (PRODUCT LEVEL)	SEE PAGE
	142-7493	32	NUT-LUG (9/16-18-2B THD)	
	188-0114	2	TIRE & RIM GP (LH)	
	188-0115	2	TIRE & RIM GP (RH)	
			(EACH TIRE AND RIM GP INCLUDES)	
	185-8668	1	WHEEL AS	
	150-8599	1	VALVE AS-TIRE	
J	**185-9934**	1	TIRE (265-521 8 PLY) (CATERPILLAR)	

J-CONTACT LOCAL CATERPILLAR DEALER FOR PROPER TIRE REPLACEMENT

<END>

187-3235 WHEEL & TIRE AR

S/N: CAB1-UP; 4NZ3400-UP; 5FZ6700-UP
(16.5 X 8.25). DIRECTIONAL TIRE, POLYFILL
AN ATTACHMENT

SMCS-4200, 4201, 4203 **i01757284**

NOTE	PART NUMBER	QTY	PART NAME 1 2 3 4 5 6 (PRODUCT LEVEL)	SEE PAGE
	142-7493	1	NUT-LUG (9/16-18-2B THD)	
	188-0120	2	TIRE & RIM GP (LH)	
	188-0121	2	TIRE & RIM GP (RH)	
			(EACH TIRE AND RIM GP INCLUDES)	
	142-7490	1	WHEEL AS	
	150-8599	1	VALVE AS-TIRE	
J	**185-9932**	1	TIRE (10-16.5 8 PLY) (CATERPILLAR)	

J-CONTACT LOCAL CATERPILLAR DEALER FOR PROPER TIRE REPLACEMENT

<END>

187-3236 WHEEL & TIRE AR

S/N: CSD1-UP; 4NZ3400-UP; 5FZ6700-UP
(16.5 X 8.25). DIRECTIONAL TIRE, POLYFILL
AN ATTACHMENT

SMCS-4200, 4201, 4203 **i01757277**

NOTE	PART NUMBER	QTY	PART NAME 1 2 3 4 5 6 (PRODUCT LEVEL)	SEE PAGE
	142-7493	32	NUT-LUG (9/16-18-2B THD)	
	188-0122	2	TIRE & RIM GP (LH)	
	188-0123	2	TIRE & RIM GP (RH)	
			(EACH TIRE AND RIM GP INCLUDES)	
	142-7485	1	WHEEL AS	
	150-8599	1	VALVE AS-TIRE	
J	**185-9932**	1	TIRE (10-16.5 8 PLY) (CATERPILLAR)	

J-CONTACT LOCAL CATERPILLAR DEALER FOR PROPER TIRE REPLACEMENT

<END>

187-3238 WHEEL & TIRE AR

S/N: CMB1-UP
(546 X 248). DIRECTIONAL TIRE, LOW SIDE WALL, POLYFILL
AN ATTACHMENT

SMCS-4200, 4201, 4203 **i01763159**

NOTE	PART NUMBER	QTY	PART NAME 1 2 3 4 5 6 (PRODUCT LEVEL)	SEE PAGE
	142-7493	32	NUT-LUG (9/16-18-2B THD)	
	188-0118	2	TIRE & RIM GP (LH)	
	188-0119	2	TIRE & RIM GP (RH)	
			(EACH TIRE AND RIM GP INCLUDES)	
	185-9936	1	WHEEL AS	
	150-8599	1	VALVE AS-TIRE	
J	**185-9935**	1	TIRE (305 X 546 10PLY) (CATERPILLAR)	

J-CONTACT LOCAL CATERPILLAR DEALER FOR PROPER TIRE REPLACEMENT

<END>

188-0111 WHEEL & TIRE AR

S/N: CMB1-UP
(16.5 X 9.75). DIRECTIONAL TIRE, POLYFILL
AN ATTACHMENT

SMCS-4200, 4201, 4203 **i01760299**

NOTE	PART NUMBER	QTY	PART NAME 1 2 3 4 5 6 (PRODUCT LEVEL)	SEE PAGE
	142-7493	32	NUT-LUG (9/16-18-2B THD)	
	188-0126	2	TIRE & RIM GP (LH)	
	188-0127	2	TIRE & RIM GP (RH)	
			(EACH TIRE AND RIM GP INCLUDES)	
	142-8759	1	WHEEL AS	
	150-8599	1	VALVE AS-TIRE	
J	**185-9933**	1	TIRE (12 X 16.5 10PLY) (CATERPILLAR)	

J-CONTACT LOCAL CATERPILLAR DEALER FOR PROPER TIRE REPLACEMENT

<END>

185-9938 WHEEL & TIRE GP

S/N: CAB1-UP; 4NZ3400-UP; 5FZ6700-UP
KIT - WHEEL & TIRE, 7.50-16 SOLID TIRE
AN ATTACHMENT

SMCS-4200, 4201, 4202, 4203, 4208, 4209 **i01757410**

NOTE	PART NUMBER	QTY	PART NAME 1 2 3 4 5 6 (PRODUCT LEVEL)	SEE PAGE
	154-3984	4	WHEEL AS (7.50-16 SOLID TIRE) (CATERPILLAR)	

<END>

142-9400 BUMPER GP-REAR

S/N: CAB1-UP; CMB1-UP; 4NZ3400-UP; 5FZ6700-UP
PART OF 191-2902, 191-9602, 200-0802, 200-1002 CHASSIS AR

SMCS-7156 **i01519428**

NOTE	REF NO	GRAPHIC REF	PART NUMBER	QTY	PART NAME 1 2 3 4 5 6 (PRODUCT LEVEL)	SEE PAGE
	1	1	**142-9021**	2	STUD	
	2	1	**154-4006**	2	BOSS	
C	3	1	**192-2699**	1	BUMPER AS	
	4	1	**8T-4122**	6	WASHER-HARD (17X32X3.5MM THK)	
M	5	1	**8T-4132**	4	NUT (M16X2 THD)	
M	6	1	**8T-7338**	2	BOLT (M16X2.0X45MM)	

C-CHANGE FROM PREVIOUS TYPE
M-METRIC PART

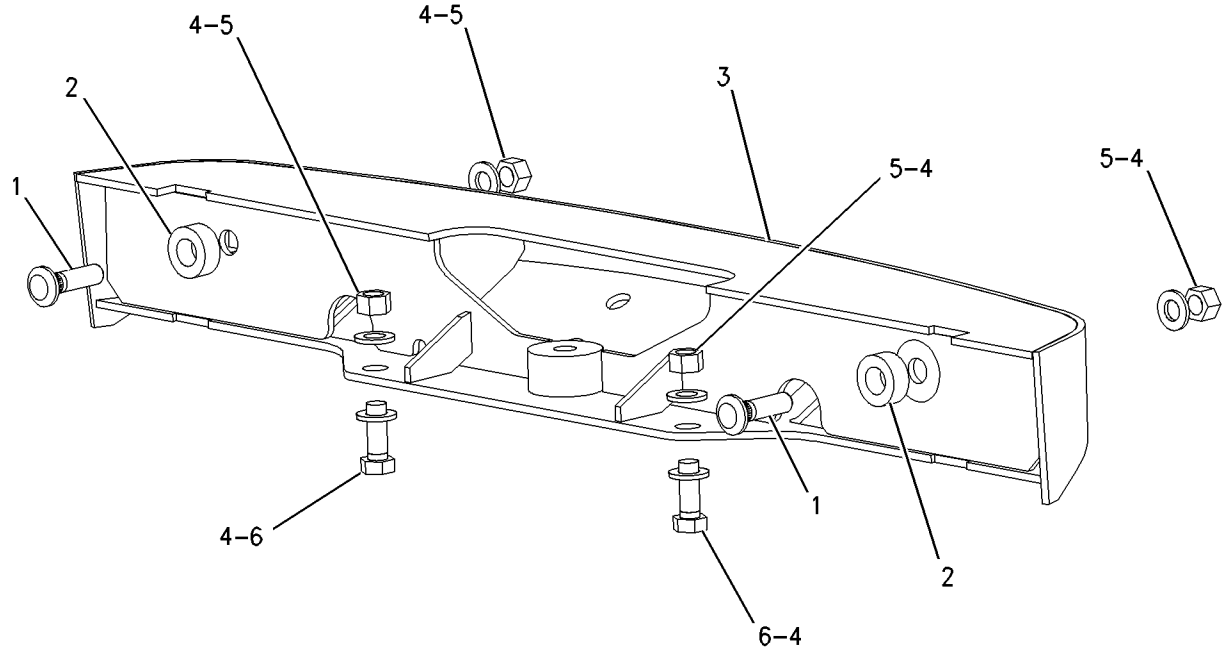

GRAPHIC #1 g00742347

206-3776 CONVERSION AR-ROADING

S/N: 4NZ3400-UP; 5FZ6700-UP
EUROPE
AN ATTACHMENT

SMCS-7000 **i01708594**

NOTE	PART NUMBER	QTY	PART NAME 1 2 3 4 5 6 (PRODUCT LEVEL)	SEE PAGE
Y	*166-2570*	1	BOX GP-STORAGE	500
Y	*142-8780*	1	COUPLER GP-QUICK	452
Y	*203-4326*	1	HORN GP-ELECTRIC	538
Y	*142-9110*	1	LIFTING GP-MACHINE	274
Y	*177-7929*	1	PLATE & FILM GP	597
Y	*206-3773*	1	SUPPRESSION GP-SOUND	282

Y-SEPARATE ILLUSTRATION

<END>

206-3777 CONVERSION AR-ROADING

S/N: 4NZ3400-UP; 5FZ6700-UP
GERMANY
AN ATTACHMENT

SMCS-7000 **i01708615**

NOTE	PART NUMBER	QTY	PART NAME 1 2 3 4 5 6 (PRODUCT LEVEL)	SEE PAGE
Y	*166-2570*	1	BOX GP-STORAGE	500
Y	*175-4232*	1	CONVERSION GP-ROADING	256
Y	*187-3223*	1	COUPLER GP-QUICK	
Y	*203-4326*	1	HORN GP-ELECTRIC	538
Y	**177-9152**	1	KIT-ROADING PLATE & MOUNTING (HOMOLOGATION)	482
Y	*188-0147*	1	LIFTING GP-MACHINE	276
Y	*203-4331*	1	LIGHTING GP-ROADING	166
Y	*175-4238*	1	LOCK GP-QUICK COUPLER	484
Y	*175-4225*	1	MIRROR & MTG GP-REAR VIEW	548
Y	*175-4228*	1	MOUNTING GP-ROADING LIGHTS	278
Y	*177-7929*	1	PLATE & FILM GP	597
Y	*206-3773*	1	SUPPRESSION GP-SOUND	282
Y	*173-3022*	1	VISOR GP-CAB	574

Y-SEPARATE ILLUSTRATION

<END>

206-3778 CONVERSION AR-ROADING

S/N: 4NZ3400-UP; 5FZ6700-UP
ITALY
AN ATTACHMENT

SMCS-7000 **i01708624**

NOTE	PART NUMBER	QTY	PART NAME 1 2 3 4 5 6 (PRODUCT LEVEL)	SEE PAGE
Y	*166-2570*	1	BOX GP-STORAGE	500
Y	*173-3017*	1	CONVERSION GP-ROADING	255
Y	*187-3223*	1	COUPLER GP-QUICK	
Y	*203-4326*	1	HORN GP-ELECTRIC	538
Y	**177-9152**	1	KIT-ROADING PLATE & MOUNTING (HOMOLOGATION)	482
Y	*188-0147*	1	LIFTING GP-MACHINE	276
Y	*203-4332*	1	LIGHTING GP-ROADING	170
Y	*175-4238*	1	LOCK GP-QUICK COUPLER	484
Y	*175-4225*	1	MIRROR & MTG GP-REAR VIEW	548
Y	*175-4228*	1	MOUNTING GP-ROADING LIGHTS	278
Y	*177-7929*	1	PLATE & FILM GP	597
Y	*206-3773*	1	SUPPRESSION GP-SOUND	282
Y	*192-2694*	1	WIRING GP-REAR LIGHTING	196

Y-SEPARATE ILLUSTRATION

<END>

206-3779 CONVERSION AR-ROADING

S/N: 4NZ3400-UP; 5FZ6700-UP
UNITED KINGDOM
AN ATTACHMENT

SMCS-7000 **i01758874**

NOTE	PART NUMBER	QTY	PART NAME 1 2 3 4 5 6 (PRODUCT LEVEL)	SEE PAGE
Y	*166-2570*	1	BOX GP-STORAGE	500
Y	*142-8780*	1	COUPLER GP-QUICK	452
	191-9684	1	FILM GP	
	160-1600	1	FILM-WARNING (CLEARANCE)	
			(ON INSIDE RH FRONT ROPS POST 15MM BELOW LOWER LATCH STRIKER MOUNTING HOLES ALIGN WITH REAR SURFACE OF ROPS POST)	
Y	*203-4326*	1	HORN GP-ELECTRIC	538
Y	*142-9110*	1	LIFTING GP-MACHINE	274
Y	*177-7929*	1	PLATE & FILM GP	597
Y	*206-3773*	1	SUPPRESSION GP-SOUND	282

Y-SEPARATE ILLUSTRATION

<END>

FRAME AND BODY

173-3017 CONVERSION GP-ROADING

S/N: 4NZ3400-UP; 5FZ6700-UP
ITALY
PART OF 206-3778 CONVERSION AR-ROADING
AN ATTACHMENT

SMCS-7000 **i01408815**

NOTE	REF NO	GRAPHIC REF	PART NUMBER	QTY	PART NAME 1 2 3 4 5 6 (PRODUCT LEVEL)	SEE PAGE
Y	1	1	**128-6985**	1	LAMP GP-WARNING BEACON	160
	2	1	**186-2360**	4	COVER AS	
		1	**129-1854**		FASTENER-LOOP (10CM)	
		1	**129-1855**		FASTENER-HOOK (10CM)	

Y-SEPARATE ILLUSTRATION

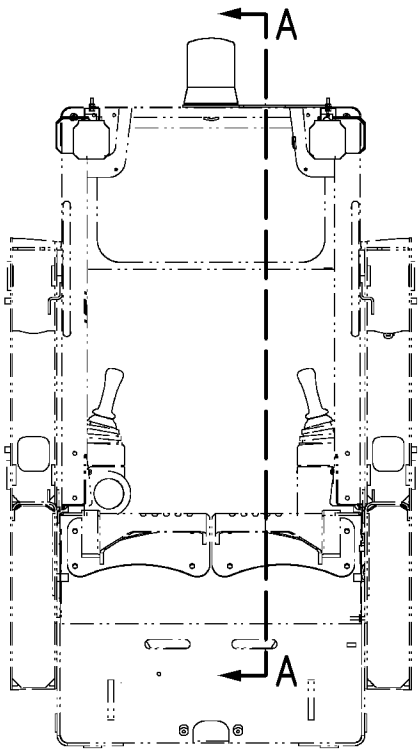

FRONT VIEW

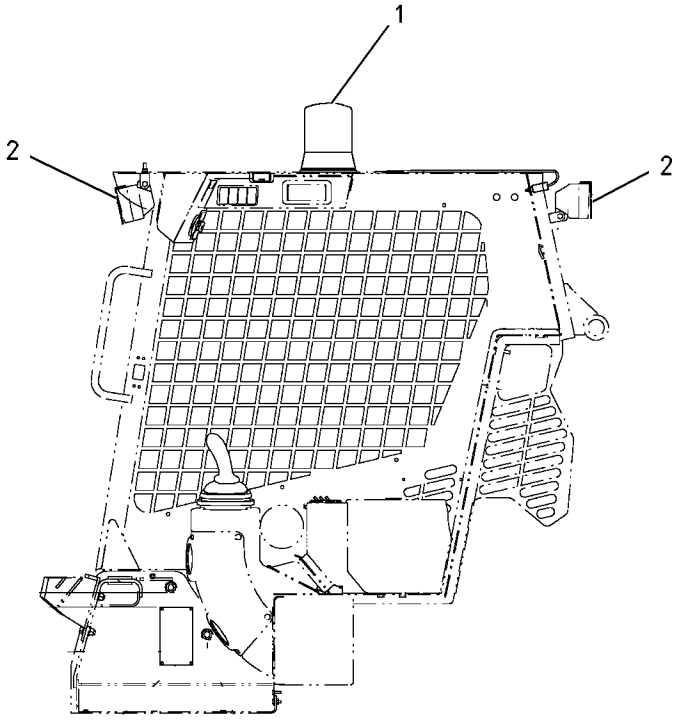

SECTION A-A

GRAPHIC #1 g00701754

175-4232 CONVERSION GP-ROADING

S/N: 4NZ3400-UP; 5FZ6700-UP
GERMANY
PART OF 206-3777 CONVERSION AR-ROADING
AN ATTACHMENT

SMCS-7000 **i01659564**

NOTE	REF NO	GRAPHIC REF	PART NUMBER	QTY	PART NAME 1 2 3 4 5 6 (PRODUCT LEVEL)	SEE PAGE
	1	1	**101-4486**	1	KIT-FIRST AID	
	2	1	**101-4744**	1	OPTION AR-WARNING	
Y	3	1	**108-2953**	1	LAMP GP-WARNING BEACON	159
	4	1	**113-7634**	1	FILM-NOTICE	
	5	1	**173-3015**	1	BRACKET AS	
	6	1	**173-3016**	1	CHOCK	
	7	1	**173-3018**	1	BRACKET	
M	8	1	**8T-4171**	5	BOLT (M6X1X12MM)	
	9	1	**8T-4205**	5	WASHER-HARD (7.2X14.5X2MM THK)	
J	10	1	**129-1854**		FASTENER-LOOP (54CM)	
J	11	1	**129-1855**		FASTENER-HOOK (145CM)	

J-LOOP SIDE ON FIRST AID KIT HOOK SIDE ON MACHINE
M-METRIC PART
Y-SEPARATE ILLUSTRATION

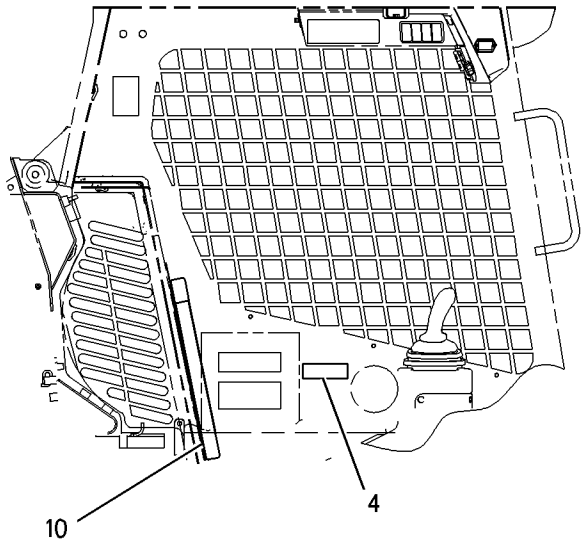

SECTION B-B

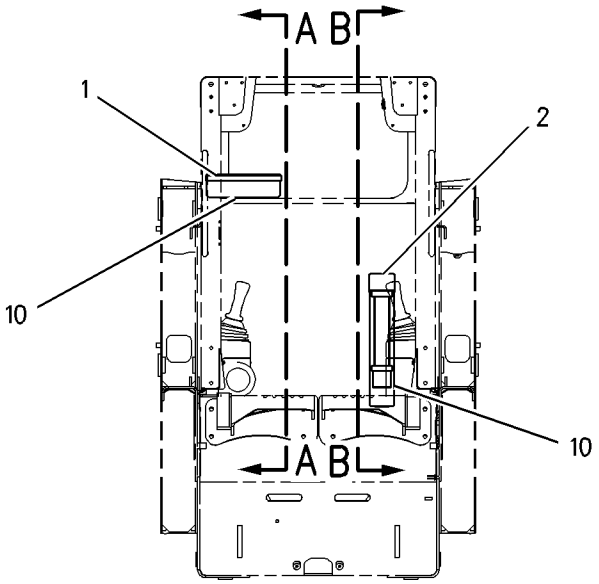

FRONT VIEW

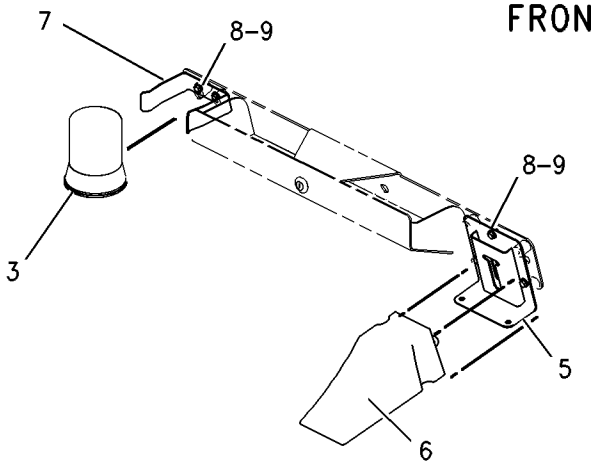

VIEW OF AREA C

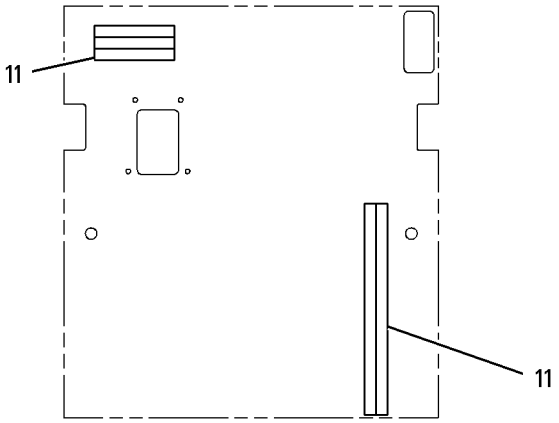

CAB LINER-REAR WALL

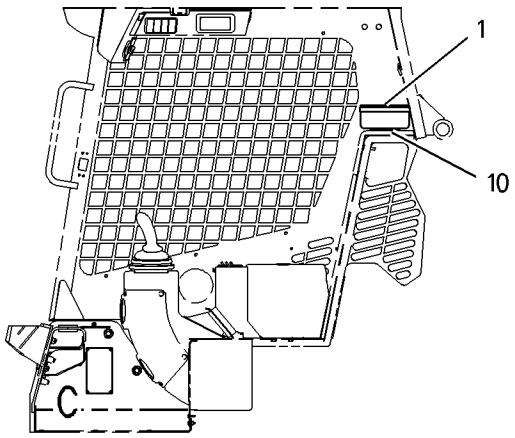

SECTION A-A

GRAPHIC #1 g00856340

142-8830 COUNTERWEIGHT GP

S/N: 5FZ6700-UP
41.14KG (90.50 LBS)
PART OF 200-1000 COMMON AR

SMCS-7056 **i01763179**

NOTE	REF NO	GRAPHIC REF	PART NUMBER	QTY	PART NAME 1 2 3 4 5 6 (PRODUCT LEVEL)	SEE PAGE
	1	1	**177-9580**	10	BLOCK (4.01KG)	
	2	1	**7X-0590**	2	WASHER-HARD (13.5X44.5X6MM THK)	
M	3	1	**8T-7930**	2	BOLT (M12X1.75X160MM)	

M-METRIC PART

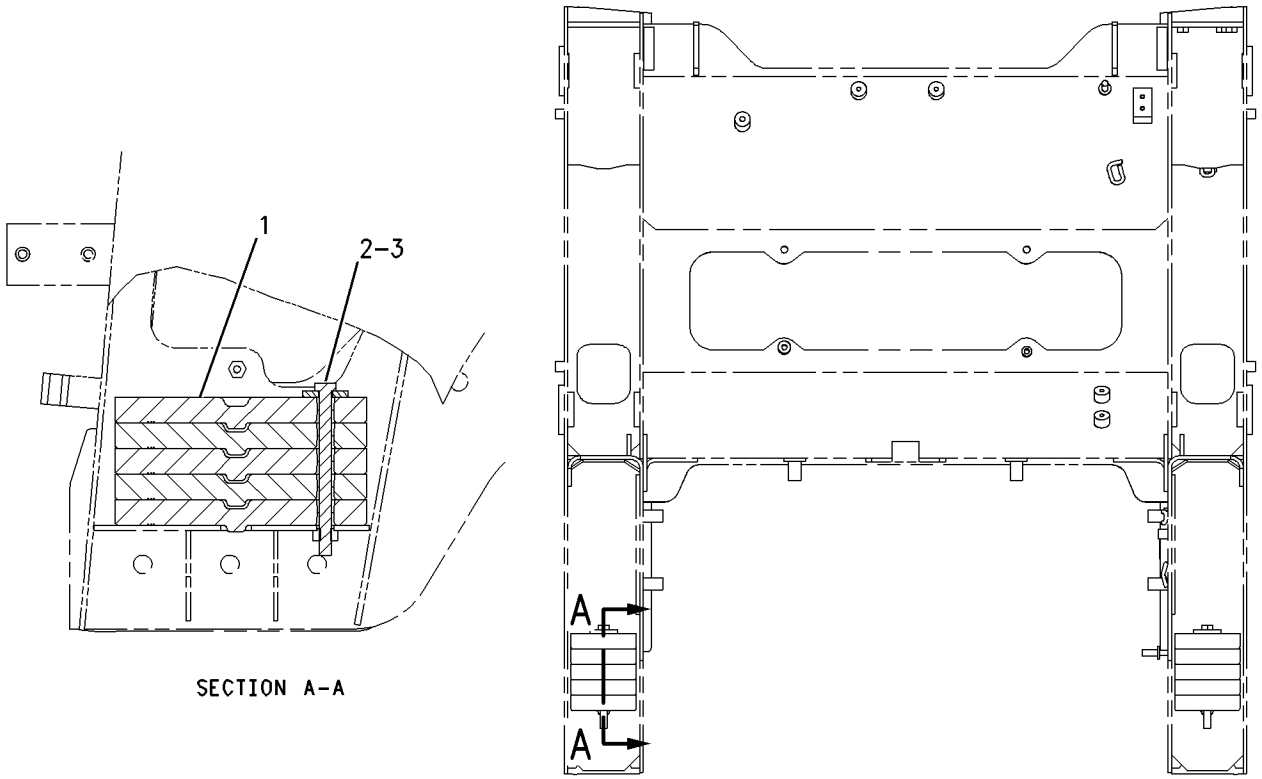

SECTION A-A

FRONT VIEW

GRAPHIC #1 g00902013

FRAME AND BODY

183-7122 COUNTERWEIGHT GP

S/N: 4NZ3400-UP; 5FZ6700-UP
84.3KG (185.46 LBS)
AN ATTACHMENT

SMCS-7056 **i01763195**

NOTE	REF NO	GRAPHIC REF	PART NUMBER	QTY	PART NAME 1 2 3 4 5 6 (PRODUCT LEVEL)	SEE PAGE
	1	1	**183-7123**	1	BLOCK-LH (33.70 KG)	
	2	1	**183-7124**	1	BLOCK-RH (33.70 KG)	
	3	1	**183-7131**	2	BLOCK (16.90 KG)	
M	4	1	**8T-4189**	4	BOLT (M8X1.25X20MM)	
	5	1	**8T-4223**	4	WASHER-HARD (13.5X25.5X3MM THK)	
	6	1	**8T-4224**	4	WASHER-HARD (8.8X16X2MM THK)	
M	7	1	**8T-4648**	4	BOLT (M12X1.75X70MM)	

M-METRIC PART

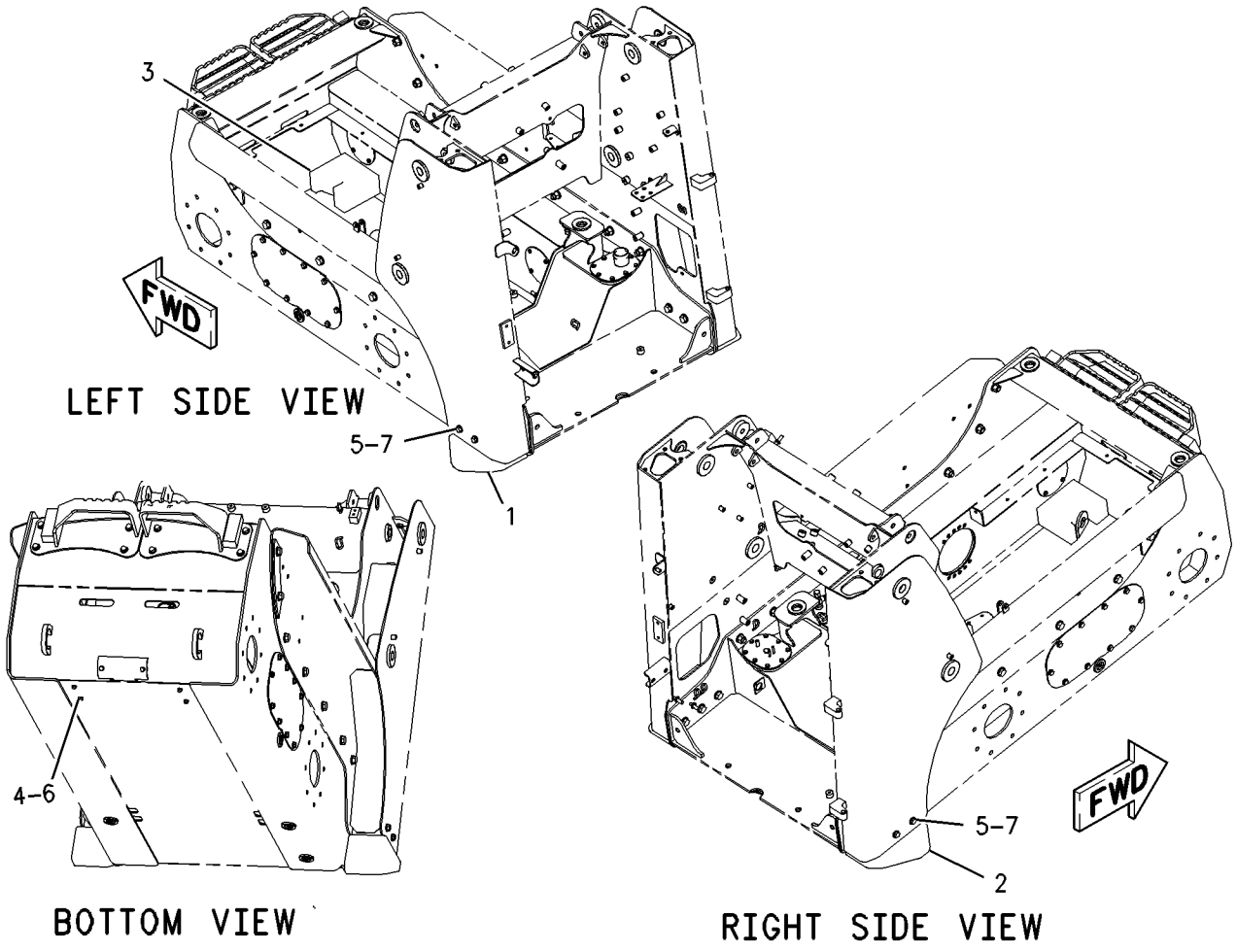

GRAPHIC #1 g00902035

185-9940 COUNTERWEIGHT GP

S/N: 4NZ3400-UP; 5FZ6700-UP
84.3KG (185.46 LBS). KIT-COUNTERWEIGHT
FIELD INSTALLATION

SMCS-7056 **i01763216**

NOTE	REF NO	GRAPHIC REF	PART NUMBER	QTY	PART NAME 1 2 3 4 5 6 (PRODUCT LEVEL)	SEE PAGE
	1	1	**183-7123**	1	BLOCK-LH (33.70 KG)	
	2	1	**183-7124**	1	BLOCK-RH (33.70 KG)	
	3	1	**183-7131**	2	BLOCK (16.9 KG)	
M	4	1	**8T-4189**	4	BOLT (M8X1.25X20MM)	
	5	1	**8T-4223**	4	WASHER-HARD (13.5X25.5X3MM THK)	
	6	1	**8T-4224**	4	WASHER-HARD (8.8X16X2MM THK)	
M	7	1	**8T-4648**	4	BOLT (M12X1.75X70MM)	

M-METRIC PART

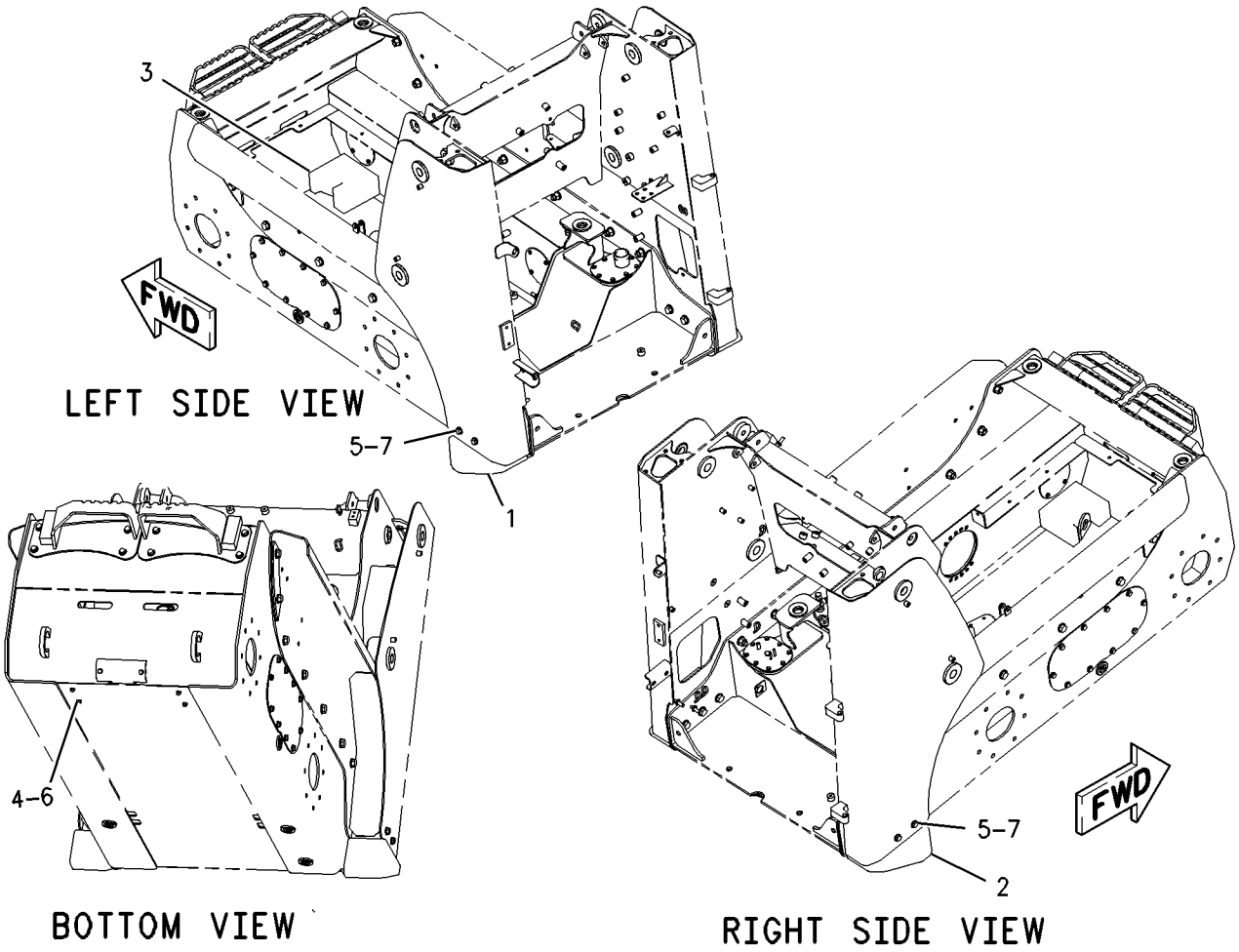

GRAPHIC #1 g00902035

FRAME AND BODY

191-9566 COUNTERWEIGHT GP

S/N: CAB1-UP; CMB1-UP
KIT-COUNTERWEIGHT
FIELD INSTALLATION

SMCS-7056 **i01729775**

NOTE	REF NO	GRAPHIC REF	PART NUMBER	QTY	PART NAME 1 2 3 4 5 6 (PRODUCT LEVEL)	SEE PAGE
J	1	1	**215-3927**	4	PLATE	
J	2	1	**5P-1076**	12	WASHER-HARD (13.5X30X4MM THK)	
JM	3	1	**8T-4244**	6	NUT (M12X1.75 THD)	
JM	4	1	**8T-4910**	6	BOLT (M12X1.75X60MM)	

J-QUANTITIES SHOWN ARE THOSE REQUIRED FOR BOTH LH & RH SIDES
M-METRIC PART

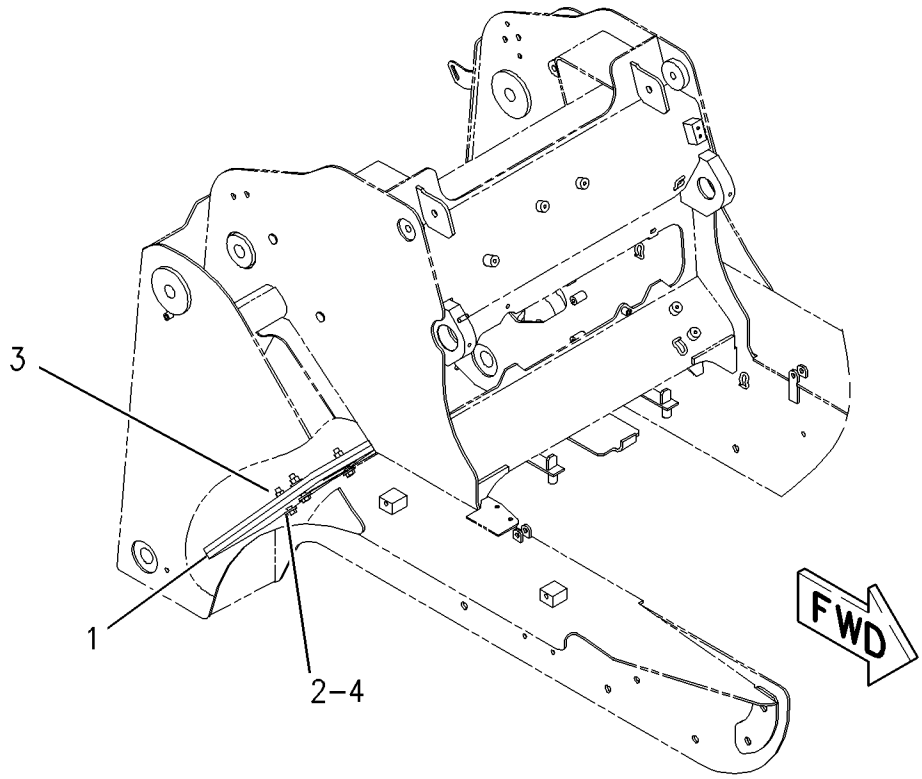

GRAPHIC #1 g00888360

215-3926 COUNTERWEIGHT GP

S/N: CAB1-UP; CMB1-UP
37.05KG (81.51 LBS)
AN ATTACHMENT

SMCS-7056 **i01749135**

NOTE	REF NO	GRAPHIC REF	PART NUMBER	QTY	PART NAME 1 2 3 4 5 6 (PRODUCT LEVEL)	SEE PAGE
	1	1	**215-3927**	4	PLATE	
	2	1	**5P-1076**	12	WASHER-HARD (13.5X30X4MM THK)	
M	3	1	**8T-4244**	6	NUT (M12X1.75 THD)	
M	4	1	**8T-4910**	6	BOLT (M12X1.75X60MM)	

M-METRIC PART

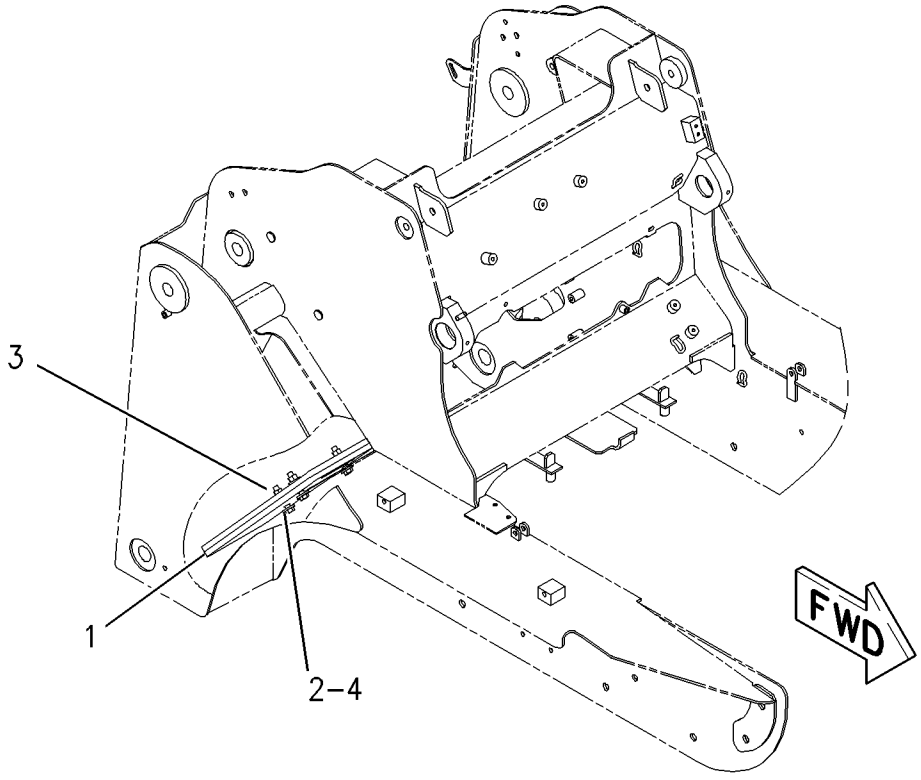

GRAPHIC #1 g00888360

MEMORANDA

142-8803 ENCLOSURE GP-ENGINE

S/N: 4NZ3400-3549; 5FZ6700-7309
PART OF 200-0802, 200-1002 CHASSIS AR

SMCS-7263 **i01763305**

NOTE	REF NO	GRAPHIC REF	PART NUMBER	QTY	PART NAME 1 2 3 4 5 6 (PRODUCT LEVEL)	SEE PAGE
	1	1	**5V-8309**	1	STRIKER AS	
	2	1	**8T-0318**	1	SHIM (0.8MM THK)	
	3	1	**8T-2444**	3	STUD-BALL	
	4	1	**8T-4159**	1	BUMPER	
	5	1	**110-0885**	2	BUMPER	
	6	1	**142-8801**	1	HOOD AS	
	7	1	**142-8802**	1	DOOR AS	
	8	1	**142-8804**	1	GRILL AS	
	9	1	**142-8812**	1	SUPPORT AS	
	10	1	**142-8813**	1	SUPPORT AS	
	11	1	**142-8814**	1	DAMPER AS	
	12	1	**142-8831**	1	STRIKER AS	
	13	1	**142-8832**	2	PIN AS	
	14	1	**178-2255**	2	PIN	
	15	1	**152-1041**	1	LATCH AS	
J	16	1	**152-1042**	1	LOCK AS	
		1	**7F-9223**	1	LOCKWASHER	
		1	**8T-5004**	1	SCREW-MACHINE (1/4-28X0.375 IN)	
	17	1	**159-8405**	2	BOLT-SHOULDER	
	18	1	**159-9790**	1	SPRING AS-GAS	
	19	1	**161-2347**	1	LATCH AS	
	20	1	**2K-4973**	3	LOCKNUT (3/8-16 THD)	
M	21	1	**5C-7261**	3	NUT (M8X1.25 THD)	
	22	1	**7X-7729**	3	WASHER (11X25X3MM THK)	
	23	1	**8T-4121**	8	WASHER-HARD (11X21X2.5MM THK)	
M	24	1	**8T-4133**	4	NUT (M10X1.5 THD)	
M	25	1	**8T-4137**	2	BOLT (M10X1.5X20MM)	
M	26	1	**8T-4181**	7	BOLT (M6X1X20MM)	
M	27	1	**8T-4908**	8	BOLT (M8X1.25X25MM)	
	28	1	**8T-4205**	7	WASHER-HARD (7.2X14.5X2MM THK)	
	29	1	**8T-4224**	3	WASHER-HARD (8.8X16X2MM THK)	
M	30	1	**8T-5005**	4	BOLT (M10X1.50X70MM)	
D	31	1	*5P-8309*		SEAL (1M)	
	32	1	**5P-0372**	2	LOCK PIN	
	33	1	**208-6176**	1	STUD-BALL	
	34	1	**5P-4116**	8	WASHER-HARD (8.8X20.5X2MM THK)	

D-ORDER BY THE METER
J-REQUIRES 5P5800 KEY
M-METRIC PART

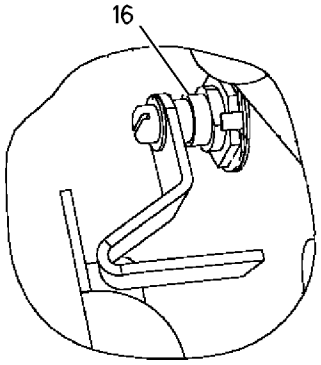

VIEW OF AREA E

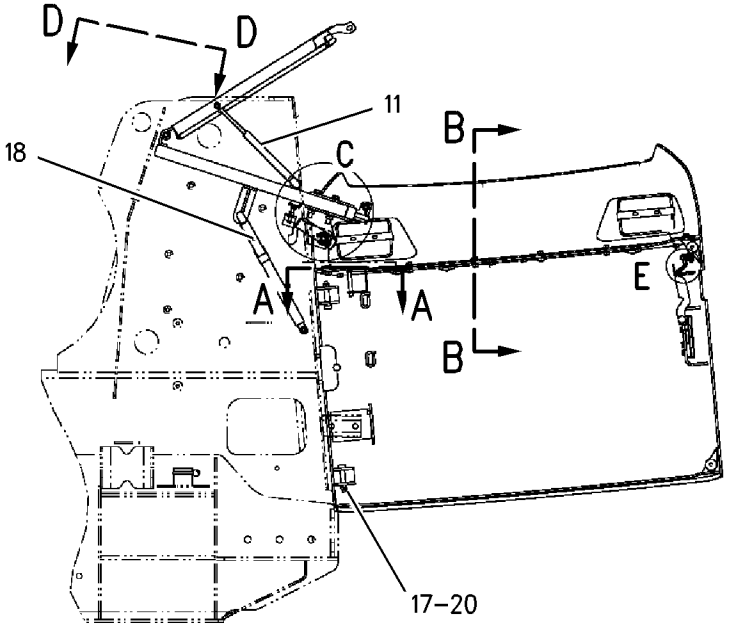

LEFT SIDE VIEW

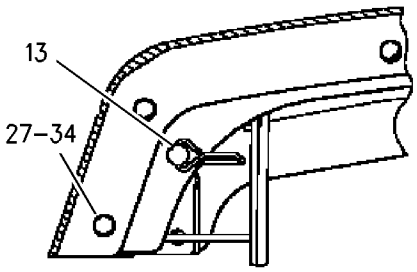

SECTION A-A

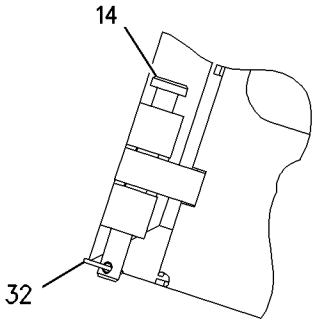

VIEW D-D

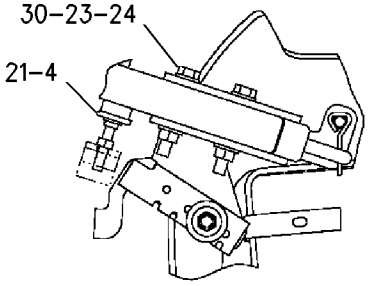

VIEW OF AREA C

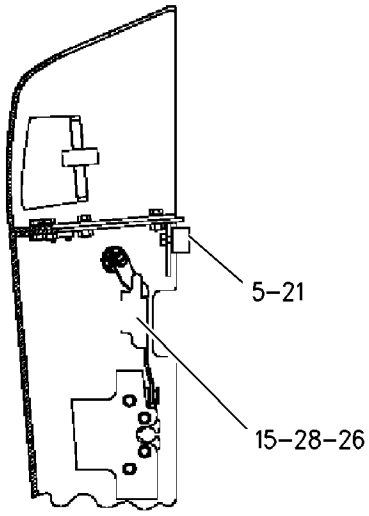

SECTION B-B

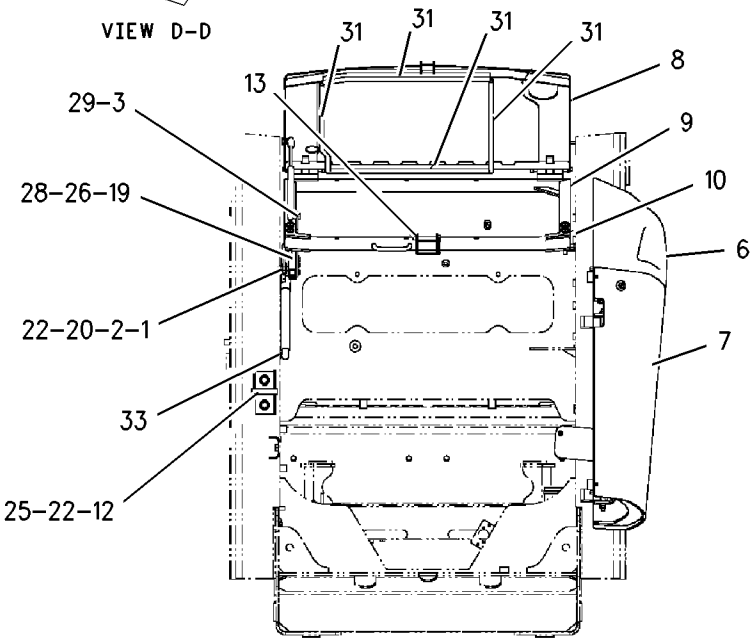

REAR VIEW

GRAPHIC #1

g00902122

142-8803 ENCLOSURE GP-ENGINE

S/N: CAB1-UP; CMB1-UP; 4NZ3550-UP; 5FZ7310-UP
PART OF 191-2902, 191-9602, 200-0802, 200-1002 CHASSIS AR

SMCS-7263 **i01763311**

NOTE	REF NO	GRAPHIC REF	PART NUMBER	QTY	PART NAME 1 2 3 4 5 6 (PRODUCT LEVEL)	SEE PAGE
	1	1	**5P-0372**	2	LOCK PIN	
	2	1	**5V-8309**	1	STRIKER AS	
	3	1	**8T-0318**	1	SHIM (0.8MM THK)	
	4	1	**8T-4159**	1	BUMPER	
	5	1	**110-0885**	2	BUMPER	
	6	1	**142-8801**	1	HOOD AS	
	7	1	**142-8802**	1	DOOR AS	
M		1	**6V-9632**	2	NUT-WELD (M6X1 THD)	
		1	**7T-1099**	6	LINK	
M		1	**8T-3612**	10	NUT-WELD (M8X1.25 THD)	
	8	1	**142-8804**	1	GRILL AS	
M		1	**8T-3612**	1	NUT-WELD (M8X1.25 THD)	
	9	1	**142-8812**	1	SUPPORT AS	
	10	1	**142-8813**	1	SUPPORT AS	
	11	1	**142-8831**	1	STRIKER AS	
	12	1	**142-8832**	2	PIN AS	
	13	1	**152-1041**	1	LATCH AS	
	14	1	**152-1042**	1	LOCK AS	
		1	**7F-9223**	1	LOCKWASHER	
		1	**8T-5004**	1	SCREW-MACHINE (1/4-28X0.375 IN)	
	15	1	**159-8405**	2	BOLT-SHOULDER	
	16	1	**159-9790**	1	SPRING AS-GAS	
	17	1	**161-2347**	1	LATCH AS	
C	18	1	**193-8345**	1	SPRING AS-GAS	
C	19	1	**208-6176**	4	STUD-BALL	
	20	1	**178-2255**	2	PIN	
	21	1	**2K-4973**	3	LOCKNUT (3/8-16 THD)	
M	22	1	**5C-7261**	3	NUT (M8X1.25 THD)	
	23	1	**5P-4116**	8	WASHER-HARD (8.8X20.5X2MM THK)	
	24	1	**7X-7729**	3	WASHER (11X25X3MM THK)	
	25	1	**8T-4121**	8	WASHER-HARD (11X21X2.5MM THK)	
M	26	1	**8T-4133**	4	NUT (M10X1.5 THD)	
M	27	1	**8T-4137**	2	BOLT (M10X1.5X20MM)	
M	28	1	**8T-4181**	7	BOLT (M6X1X20MM)	
	29	1	**8T-4205**	7	WASHER-HARD (7.2X14.5X2MM THK)	
M	30	1	**8T-4908**	8	BOLT (M8X1.25X25MM)	
M	31	1	**8T-5005**	4	BOLT (M10X1.50X70MM)	
	32	1	**3E-8082**		SEAL (184CM)	

C-CHANGE FROM PREVIOUS TYPE
M-METRIC PART

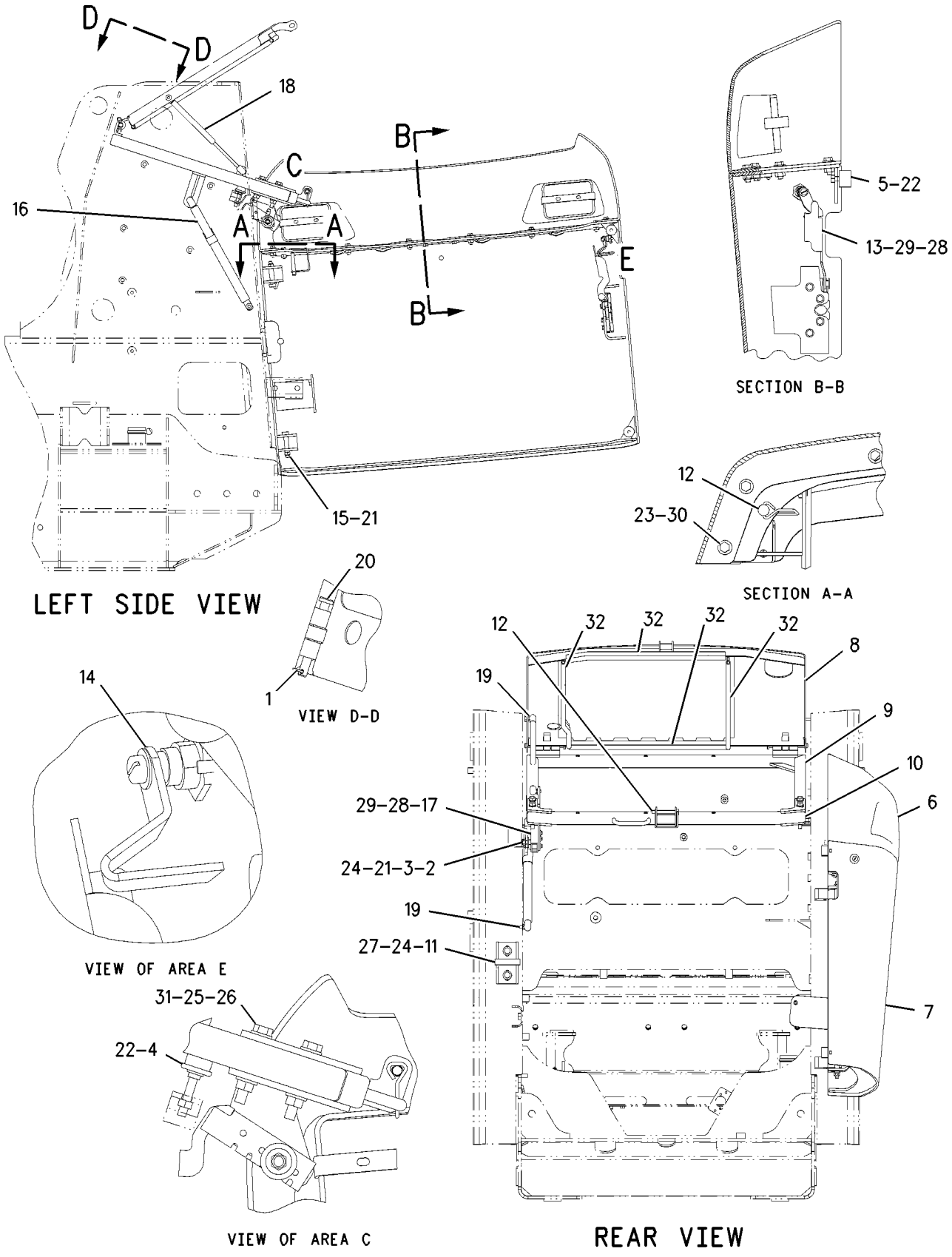

GRAPHIC #1

g00902124

FRAME AND BODY

177-1980 FRAME GP-BLADE

S/N: 4NZ3400-UP; 5FZ6700-UP
PART OF 177-1989 BLADE AR
AN ATTACHMENT

SMCS-6060, 7050 **i01763330**

NOTE	REF NO	GRAPHIC REF	PART NUMBER	QTY	PART NAME 1 2 3 4 5 6 (PRODUCT LEVEL)	SEE PAGE
	1	1	**177-1914**	1	PIN AS	
B	2	1	**177-1955**	1	SHIM (1MM)	
B	3	1	**177-1956**	1	SHIM (2MM)	
B	4	1	**177-1957**	1	SHIM (3MM)	
	5	1	**177-1971**	1	FRAME AS	
	6	1	**177-1974**	1	FRAME AS	
	7	1	**177-1975**	1	FRAME AS	
	8	1	**3B-8489**	1	FITTING-GREASE (1/8-27 THD)	
	9	1	**5B-0935**	1	FITTING	
M	10	1	**7X-2553**	8	BOLT (M16X2X40MM)	
	11	1	**7X-7729**	1	WASHER (11X25X3MM THK)	
	12	1	**8T-4122**	8	WASHER-HARD (17X32X3.5MM THK)	
M	13	1	**8T-4137**	1	BOLT (M10X1.5X20MM)	

B-USE AS REQUIRED
M-METRIC PART

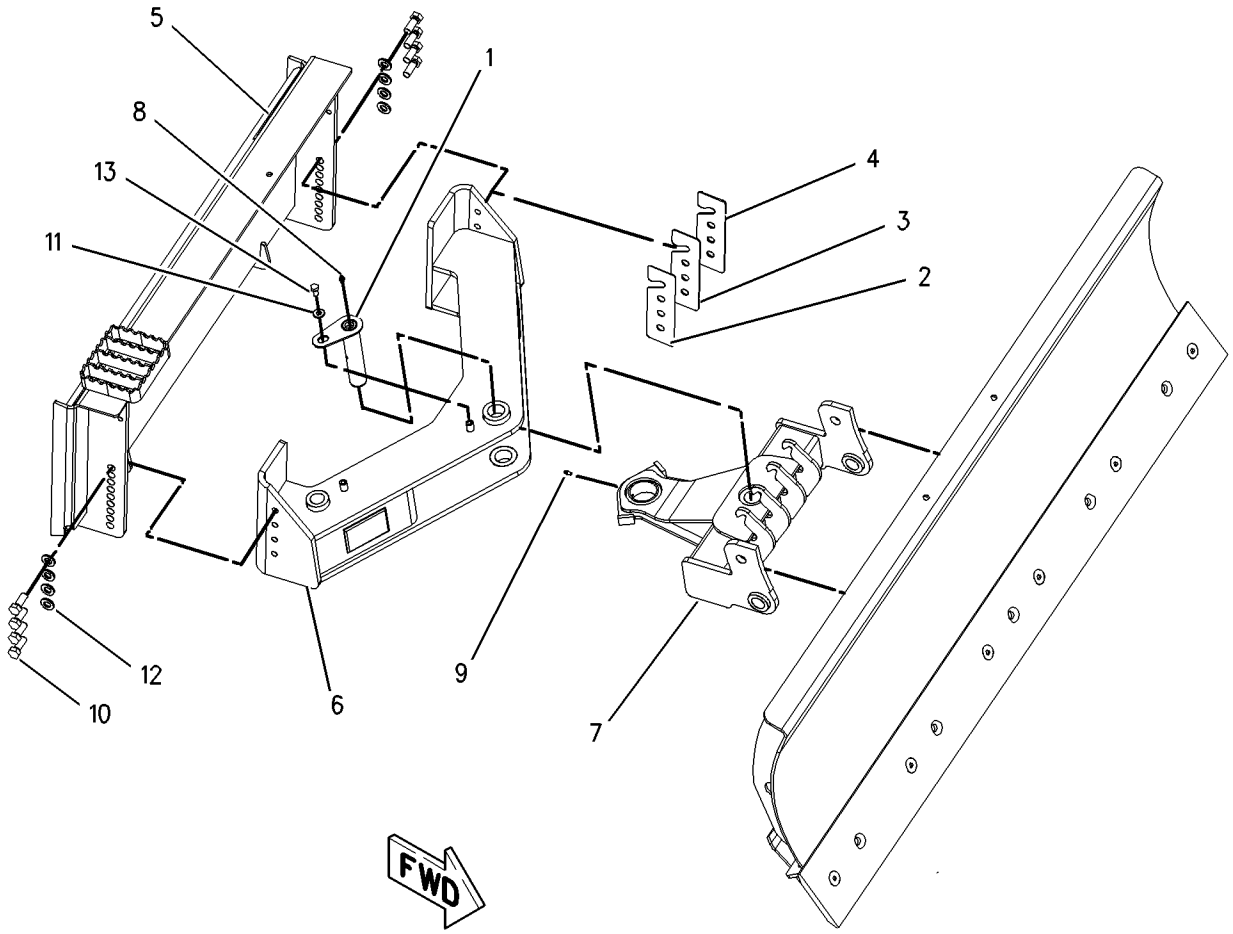

GRAPHIC #1 g00902138

MEMORANDA

FRAME AND BODY

191-9575 FRAME GP-LOADER

S/N: CAB1-UP; CMB1-UP

PART OF 191-2902, 191-9602 CHASSIS AR

SMCS-7054 **i01763354**

NOTE	REF NO	GRAPHIC REF	PART NUMBER	QTY	PART NAME 1 2 3 4 5 6 (PRODUCT LEVEL)	SEE PAGE
	1	1	**3B-8488**	2	FITTING-GREASE (1/8-27 THD)	
	2	1	**3S-9182**	5	PLUG-MAGNETIC	
	3	1	**4D-0298**	2	BEARING	
	4	1	**9G-5127**	2	BREATHER	
	5	1	**142-8810**	1	PLATE AS	
	6	1	**142-8823**	2	GASKET	
	7	1	**142-8824**	1	SENDER AS-FUEL	
		1	**102-8802**	1	KIT-RECEPTACLE (2 PIN)	
	8	1	**142-8896**	4	COVER	
	9	1	**191-2894**	2	PLATE	
	10	1	**191-9573**	1	FRAME AS-LOWER	
		1	**2Y-5974**	2	BOSS	
M		1	**6V-9632**	22	NUT-WELD (M6X1 THD)	
		1	**7T-1099**	14	LINK	
M		1	**8T-3490**	20	NUT-WELD (M10X1.5 THD)	
M		1	**8T-3612**	4	NUT-WELD (M8X1.25 THD)	
M		1	**110-2023**	2	STUD-WELD (M10X1.5X25 MM)	
	11	1	**191-9574**	1	FRAME AS-UPPER	
		1	**7T-1099**	9	LINK	
M		1	**8T-3612**	1	NUT-WELD (M8X1.25 THD)	
M		1	**8T-5413**	3	STUD-WELD (M10X1.5X25MM OAL)	
		1	**9R-2672**	3	BOSS (M10X20MM)	
		1	**9R-5271**	1	BOSS (M10X1.5X25MM)	
M		1	**110-2023**	1	STUD-WELD (M10X1.5X25 MM)	
		1	**111-0483**	3	BOSS (M10X1.5MM)	
M		1	**192-7979**	2	STUD-WELD	
	12	1	**191-9576**	1	COVER AS	
	13	1	**207-9731**	1	STEP AS (LH)	
	14	1	**207-9732**	1	STEP AS (RH)	
M	15	1	**5C-9553**	16	BOLT (M6X1X16MM)	
	16	1	**5P-1076**	16	WASHER-HARD (13.5X30X4MM THK)	
	17	1	**5P-4116**	4	WASHER-HARD (8.8X20.5X2MM THK)	
	18	1	**8T-4121**	20	WASHER-HARD (11X21X2.5MM THK)	
	19	1	**8T-4122**	32	WASHER-HARD (17X32X3.5MM THK)	
M	20	1	**8T-4132**	16	NUT (M16X2 THD)	
M	21	1	**8T-4136**	20	BOLT (M10X1.5X25MM)	
	22	1	**8T-4205**	32	WASHER-HARD (7.2X14.5X2MM THK)	
M	23	1	**8T-4244**	8	NUT (M12X1.75 THD)	
M	24	1	**8T-4908**	4	BOLT (M8X1.25X25MM)	
M	25	1	**8T-4956**	8	BOLT (M12X1.75X35MM)	
M	26	1	**8T-4970**	16	BOLT (M6X1X14MM)	
M	27	1	**8T-7338**	16	BOLT (M16X2.0X45MM)	

M-METRIC PART

191-9575 **FRAME GP-LOADER** *(contd.)* **i01763354**

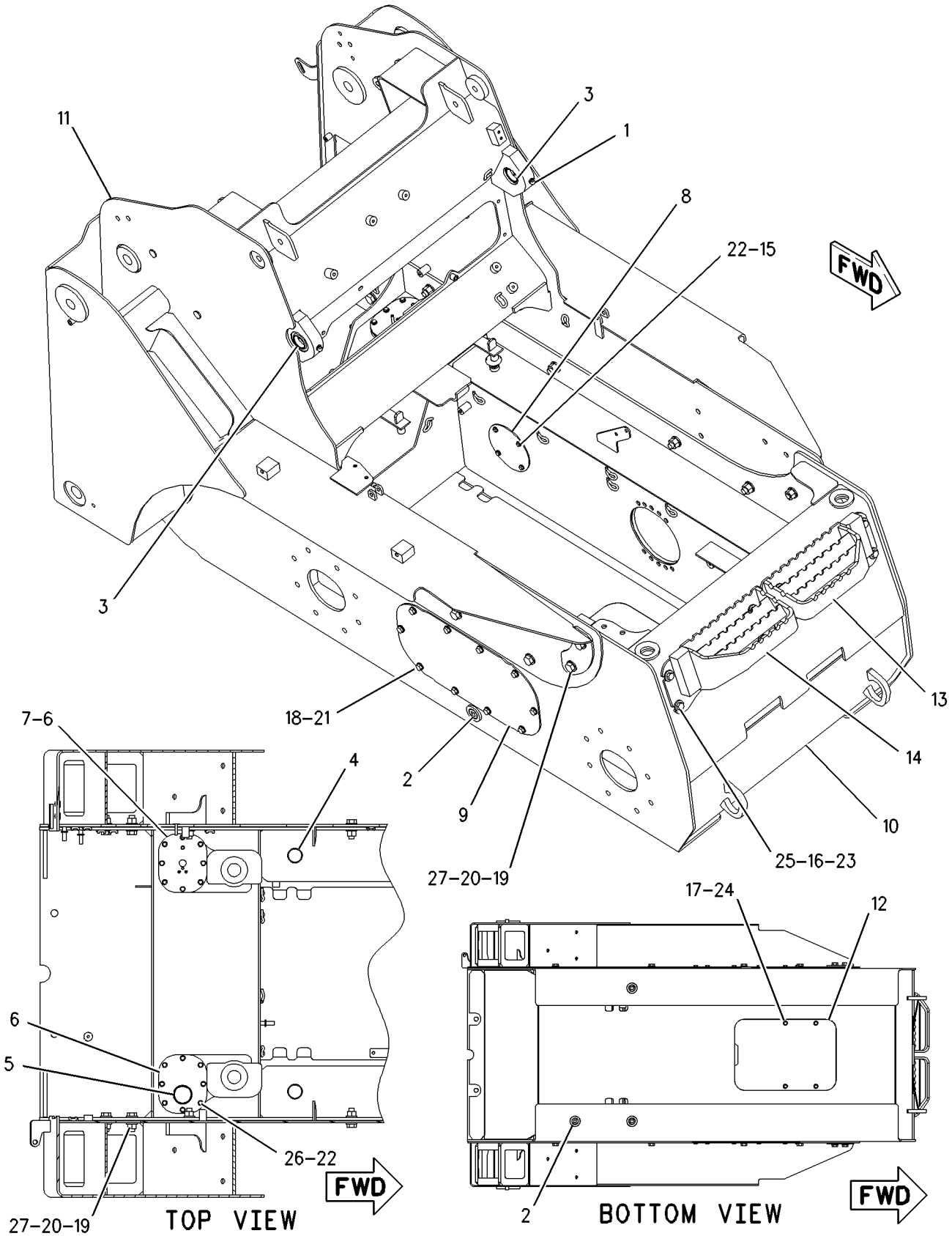

GRAPHIC #1

g00902542

FRAME AND BODY

199-5375 FRAME GP-LOADER

S/N: 4NZ3400-UP; 5FZ6700-UP

PART OF 200-0802, 200-1002 CHASSIS AR

SMCS-7054 **i01763376**

NOTE	REF NO	GRAPHIC REF	PART NUMBER	QTY	PART NAME 1 2 3 4 5 6 (PRODUCT LEVEL)	SEE PAGE
	1	1	**3S-9182**	5	PLUG-MAGNETIC	
	2	1	**124-2831**	2	BREATHER	
	3	1	**142-8810**	1	PLATE AS	
	4	1	**142-8823**	2	GASKET	
	5	1	**142-8824**	1	SENDER AS-FUEL	
		1	**102-8804**	1	KIT-RECEPTACLE (4 PIN)	
	6	1	**142-8896**	4	COVER	
	7	1	**142-8897**	2	COVER	
	8	1	**191-9576**	1	COVER AS	
	9	1	**199-5373**	1	FRAME AS (LOWER)	
		1	**2Y-5974**	2	BOSS	
		1	**7T-1099**	13	LINK	
M		1	**8T-9087**	2	STUD-WELD (M10X1.5X25.1 MM)	
	10	1	**199-5374**	1	FRAME AS (UPPER)	
		1	**7T-1099**	8	LINK	
M		1	**8C-8778**	3	STUD-WELD (M8X1.25X25MM OAL)	
M		1	**8T-9087**	1	STUD-WELD (M10X1.5X25.1 MM)	
		1	**9R-2672**	5	BOSS (M10X20MM)	
		1	**9R-5271**	1	BOSS (M10X1.5X25MM)	
	11	1	**207-9731**	1	STEP AS (LH) (LH)	
	12	1	**207-9732**	1	STEP AS (RH) (RH)	
M	13	1	**5C-9553**	16	BOLT (M6X1X16MM)	
	14	1	**5P-1076**	16	WASHER-HARD (13.5X30X4MM THK)	
	15	1	**8T-4121**	20	WASHER-HARD (11X21X2.5MM THK)	
	16	1	**8T-4122**	36	WASHER-HARD (17X32X3.5MM THK)	
M	17	1	**8T-4132**	18	NUT (M16X2 THD)	
M	18	1	**8T-4136**	20	BOLT (M10X1.5X25MM)	
	19	1	**8T-4205**	32	WASHER-HARD (7.2X14.5X2MM THK)	
	20	1	**8T-4224**	4	WASHER-HARD (8.8X16X2MM THK)	
M	21	1	**8T-4244**	8	NUT (M12X1.75 THD)	
M	22	1	**8T-4908**	4	BOLT (M8X1.25X25MM)	
M	23	1	**8T-4956**	8	BOLT (M12X1.75X35MM)	
M	24	1	**8T-7338**	18	BOLT (M16X2.0X45MM)	
M	25	1	**8T-4171**	16	BOLT (M6X1X12MM)	

M-METRIC PART

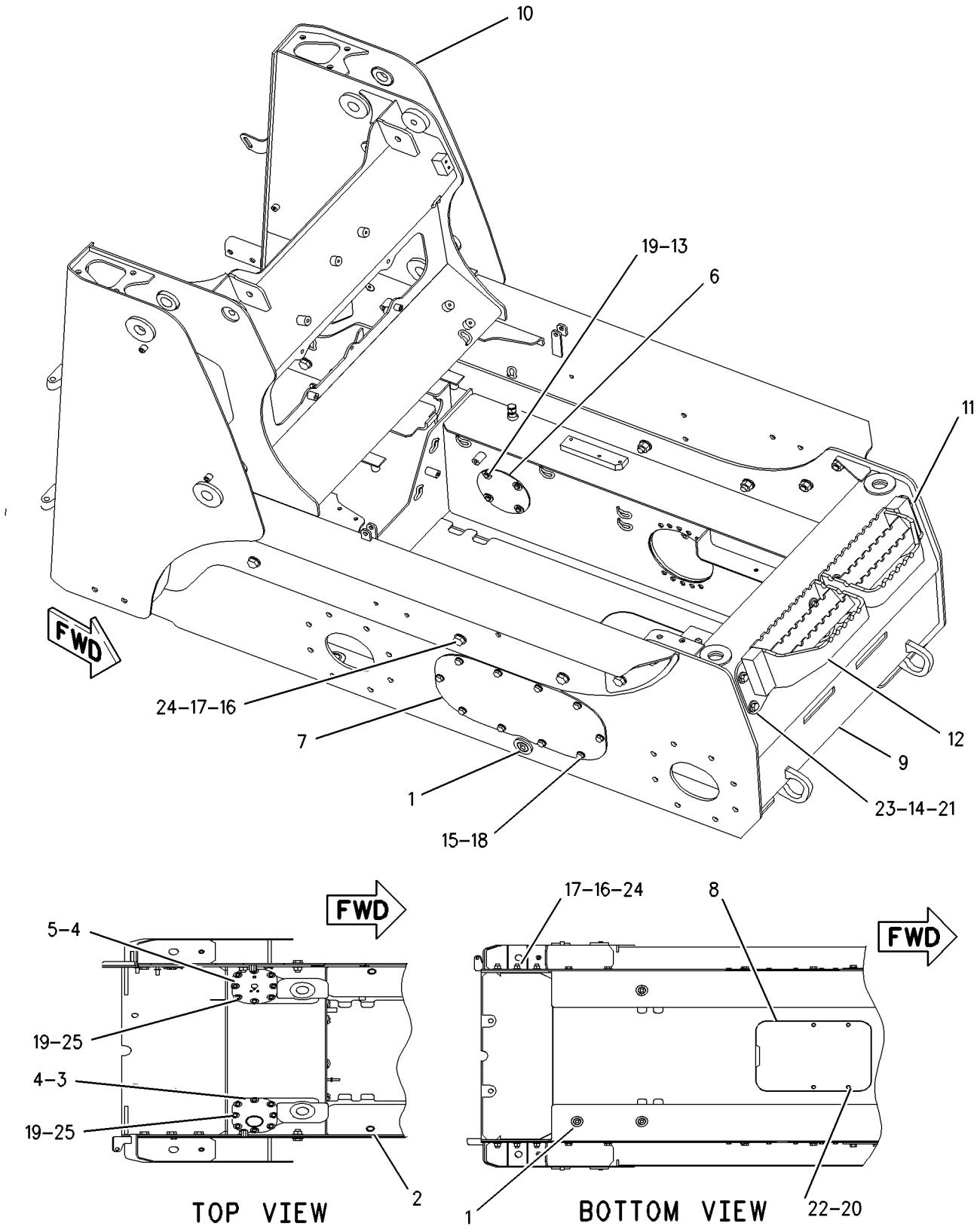

GRAPHIC #1 g00902160

142-9110 LIFTING GP-MACHINE

S/N: 4NZ3400-UP; 5FZ6700-UP
PART OF 206-3776, 206-3779 CONVERSION AR-ROADING
CANNOT BE USED WITH 152-1155—PAGE 275
AN ATTACHMENT

SMCS-7165 **i01763391**

NOTE	REF NO	GRAPHIC REF	PART NUMBER	QTY	PART NAME 1 2 3 4 5 6 (PRODUCT LEVEL)	SEE PAGE
	1	1	**7E-2700**	4	FILM-SYMBOL (LIFT)	
	2	1	**142-7505**	2	PLATE AS	
	3	1	**142-8826**	4	PLATE-LIFT	
M	4	1	**159-2953**	8	SCREW-FLAT HEAD (M16X2.00 THD)	
	5	1	**8T-4121**	4	WASHER-HARD (11X21X2.5MM THK)	
	6	1	**8T-4122**	4	WASHER-HARD (17X32X3.5MM THK)	
M	7	1	**8T-4132**	4	NUT (M16X2 THD)	
M	8	1	**8T-4137**	4	BOLT (M10X1.5X20MM)	

M-METRIC PART

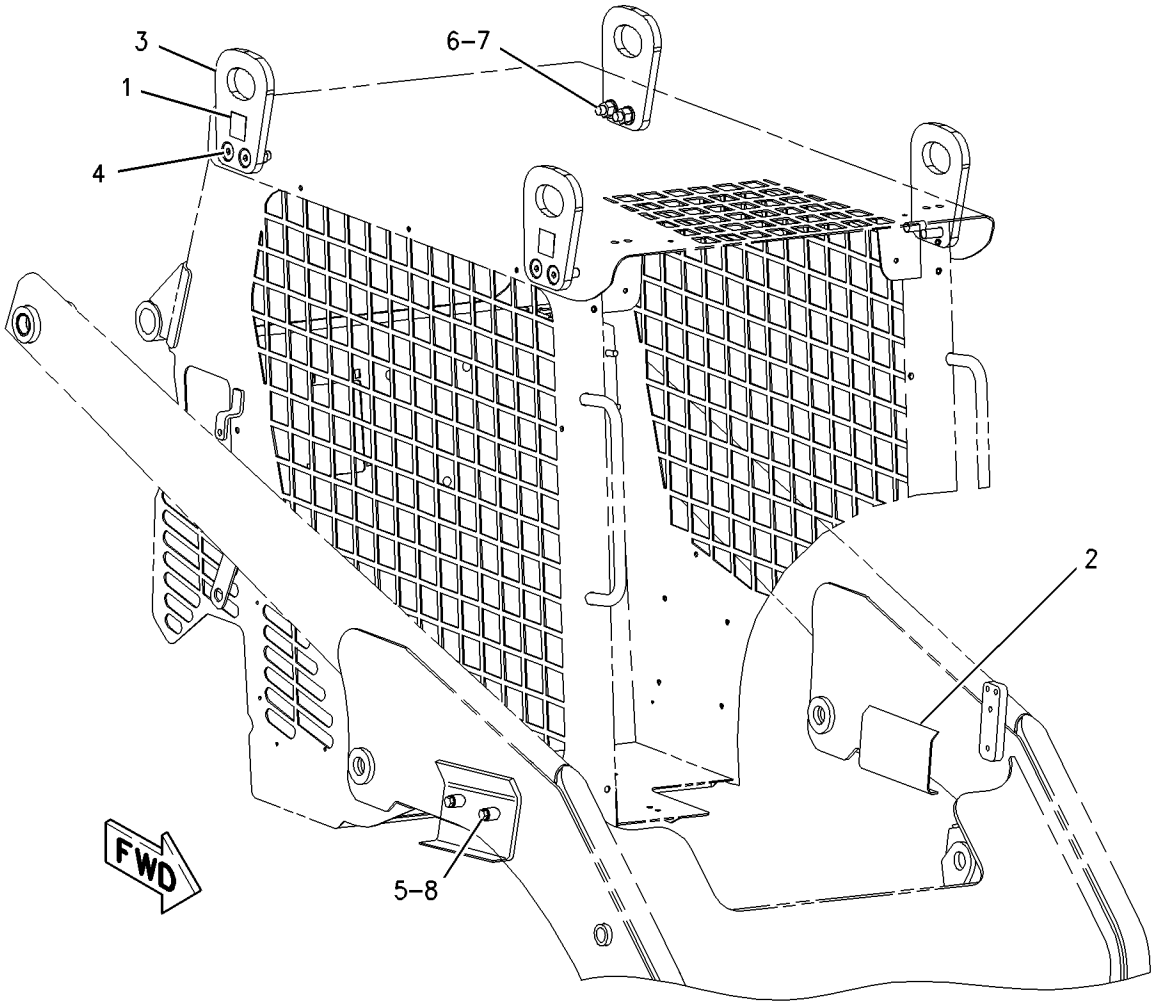

GRAPHIC #1 g00902171

152-1155 LIFTING GP-MACHINE

S/N: 4NZ3400-UP; 5FZ6700-UP
CANNOT BE USED WITH 142-9110—PAGE 274
AN ATTACHMENT

SMCS-7165 **i01763396**

NOTE	REF NO	GRAPHIC REF	PART NUMBER	QTY	PART NAME 1 2 3 4 5 6 (PRODUCT LEVEL)	SEE PAGE
	1	1	**7E-2700**	2	FILM-SYMBOL (LIFT)	
	2	1	**142-7505**	2	PLATE AS	
	3	1	**152-1154**	1	PLATE AS	
	4	1	**152-1156**	4	PLATE	
M	5	1	**159-2953**	8	SCREW-FLAT HEAD (M16X2.00 THD)	
	6	1	**8T-4121**	4	WASHER-HARD (11X21X2.5MM THK)	
	7	1	**8T-4122**	4	WASHER-HARD (17X32X3.5MM THK)	
M	8	1	**8T-4132**	4	NUT (M16X2 THD)	
M	9	1	**8T-4137**	4	BOLT (M10X1.5X20MM)	

M-METRIC PART

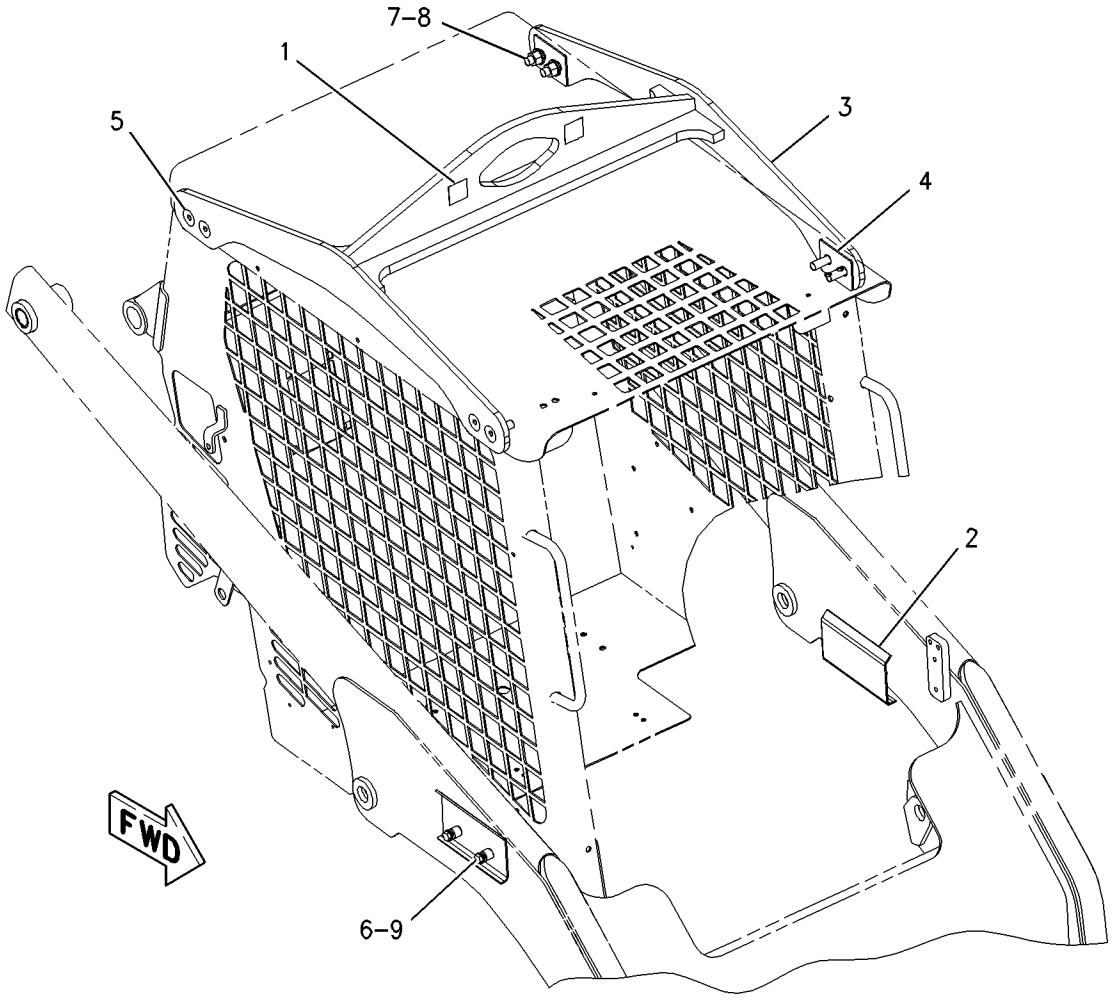

GRAPHIC #1 g00902177

188-0147 LIFTING GP-MACHINE

S/N: CAB1-UP; CMB1-UP; 4NZ3400-UP; 5FZ6700-UP
GERMANY, ITALY
PART OF 206-3777, 206-3778 CONVERSION AR-ROADING
CANNOT BE USED WITH 152-1155—PAGE 275, 190-8090—PAGE 277
AN ATTACHMENT

SMCS-7165 **i01763398**

NOTE	REF NO	GRAPHIC REF	PART NUMBER	QTY	PART NAME 1 2 3 4 5 6 (PRODUCT LEVEL)	SEE PAGE
	1	1	**7E-2700**	4	FILM-SYMBOL (LIFT)	
	2	1	**142-8826**	4	PLATE-LIFT	
M	3	1	**159-2953**	8	SCREW-FLAT HEAD (M16X2.00 THD)	
	4	1	**8T-4122**	4	WASHER-HARD (17X32X3.5MM THK)	
M	5	1	**8T-4132**	4	NUT (M16X2 THD)	

M-METRIC PART

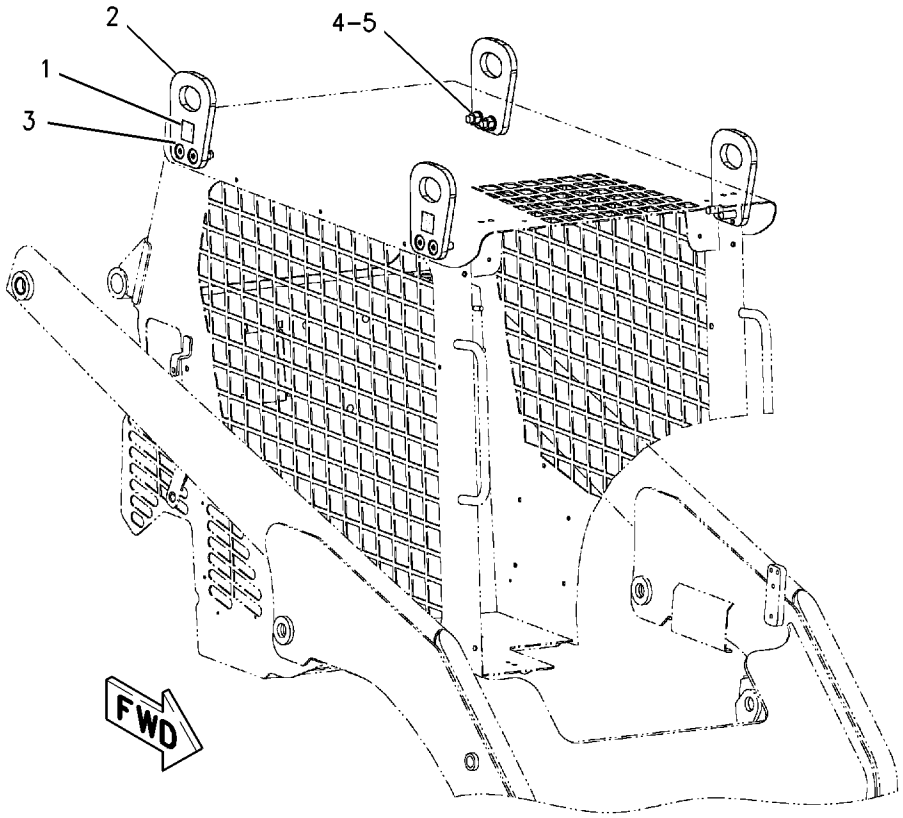

GRAPHIC #1 g00902178

FRAME AND BODY

190-8090 LIFTING GP-MACHINE

S/N: CAB1-UP; CMB1-UP
CANNOT BE USED WITH 4 POINT LIFTING GROUP
AN ATTACHMENT

SMCS-7165 **i01763401**

NOTE	REF NO	GRAPHIC REF	PART NUMBER	QTY	PART NAME 1 2 3 4 5 6 (PRODUCT LEVEL)	SEE PAGE
	1	1	**7E-2700**	2	FILM-SYMBOL (LIFT)	
	2	1	**152-1154**	1	PLATE AS	
	3	1	**152-1156**	4	PLATE	
M	4	1	**159-2953**	8	SCREW-FLAT HEAD (M16X2.00 THD)	
	5	1	**8T-4122**	4	WASHER-HARD (17X32X3.5MM THK)	
M	6	1	**8T-4132**	4	NUT (M16X2 THD)	

M-METRIC PART

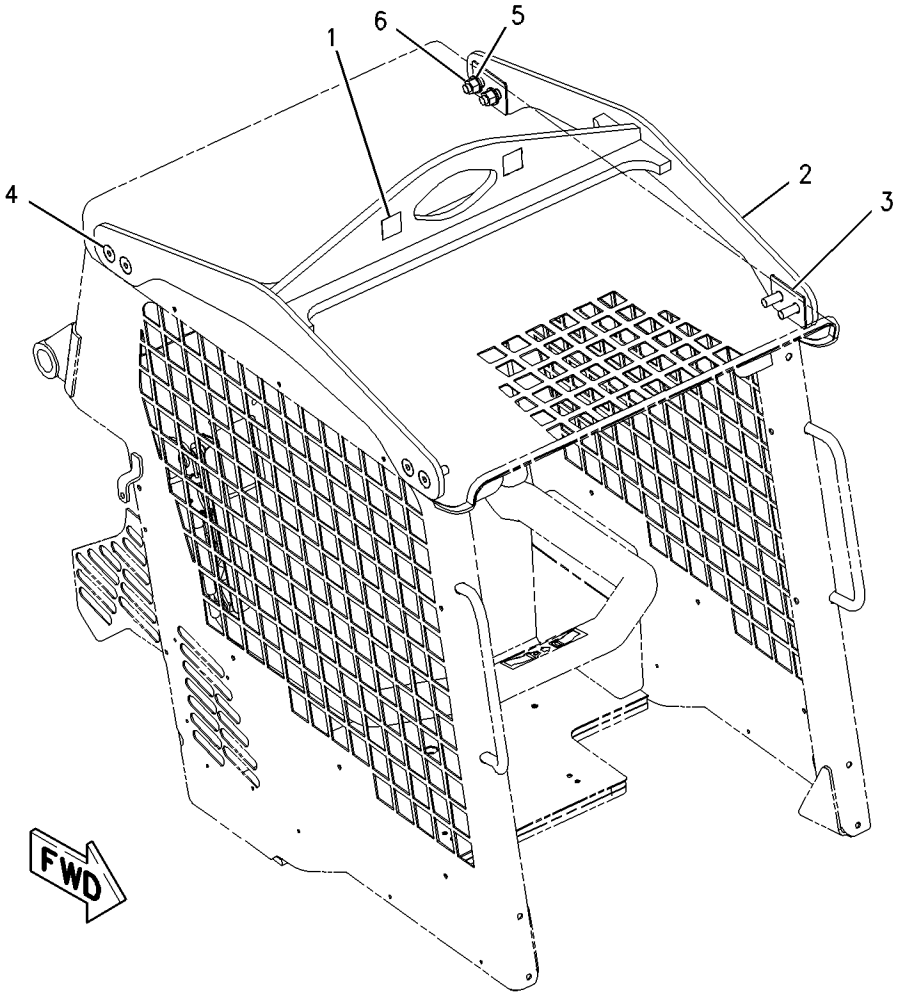

GRAPHIC #1 g00902179

175-4228 MOUNTING GP-ROADING LIGHTS

S/N: 4NZ3400-UP; 5FZ6700-UP
KIT-ROADING LIGHTS-MOUNTING
FIELD INSTALLATION

SMCS-1429 **i01763412**

NOTE	REF NO	GRAPHIC REF	PART NUMBER	QTY	PART NAME 1 2 3 4 5 6 (PRODUCT LEVEL)	SEE PAGE
	1	1	**3S-2093**	6	STRAP-CABLE	
	2	1	**9R-1499**	2	REFLECTOR	
	3	1	**165-7098**	2	SUPPORT AS	
	4	1	**166-2561**	1	BRACKET AS	
	5	1	**183-7117**	2	HARNESS AS-REAR LIGHTING	
		1	**102-8804**	1	KIT-RECEPTACLE (4 PIN)	
M	6	1	**5C-2890**	4	NUT (M6X1 THD)	
M	7	1	**6V-7357**	4	BOLT (M6X1.0X25MM)	
M	8	1	**8T-4138**	4	BOLT (M6X1X20MM)	
	9	1	**8T-4205**	12	WASHER-HARD (7.2X14.5X2MM THK)	

M-METRIC PART

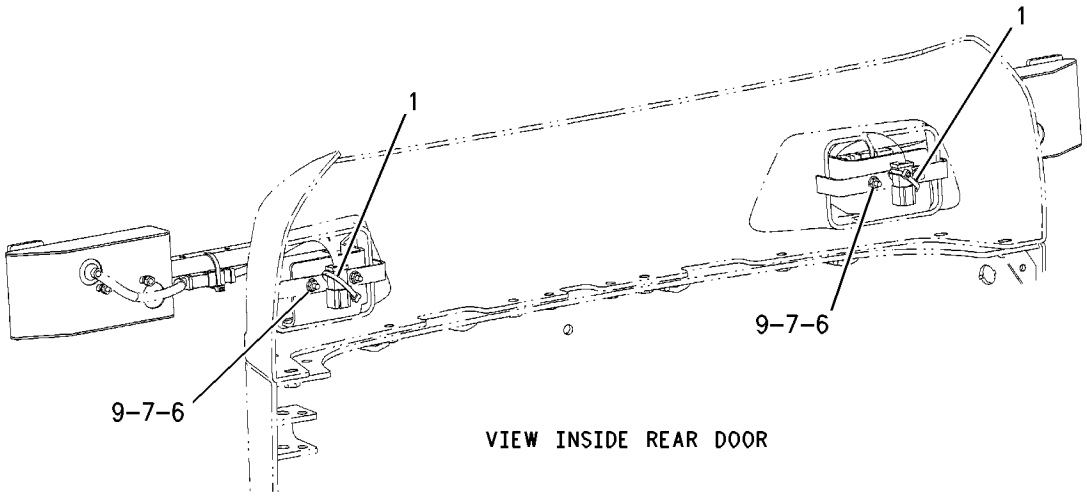

VIEW INSIDE REAR DOOR

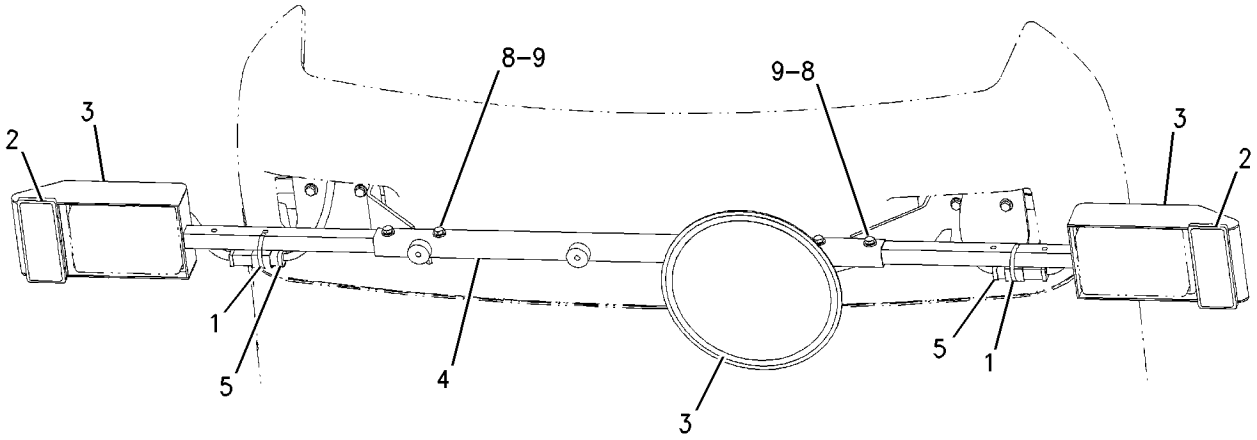

REAR VIEW
GERMAN MACHINE

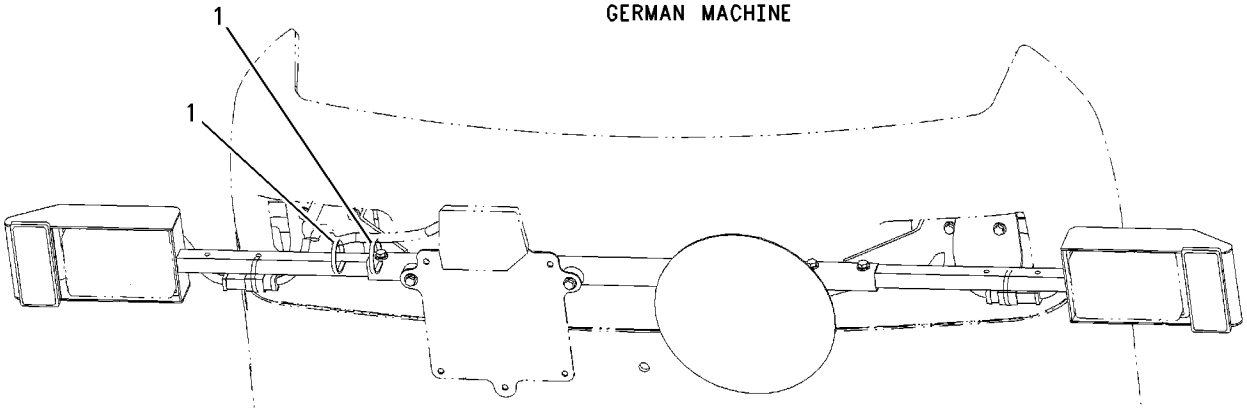

REAR VIEW
ITALIAN MACHINE

GRAPHIC #1 g00902191

199-5272 PANEL GP-SIDE

S/N: 4NZ3400-UP; 5FZ6700-UP

PART OF 191-9799 OPERATOR AR-CANOPY

SMCS-7267 **i01763424**

NOTE	REF NO	GRAPHIC REF	PART NUMBER	QTY	PART NAME 1 2 3 4 5 6 (PRODUCT LEVEL)	SEE PAGE
	1	1	**193-8380**	1	PLATE (LH)	
	2	1	**193-8385**	1	PLATE (RH)	
M	3	1	**131-3543**	5	BOLT-ROUND HEAD (M6X1-6G THD)	
M	4	1	**5C-2890**	5	NUT (M6X1 THD)	
	5	1	**8T-4205**	5	WASHER-HARD (7.2X14.5X2MM THK)	

M-METRIC PART

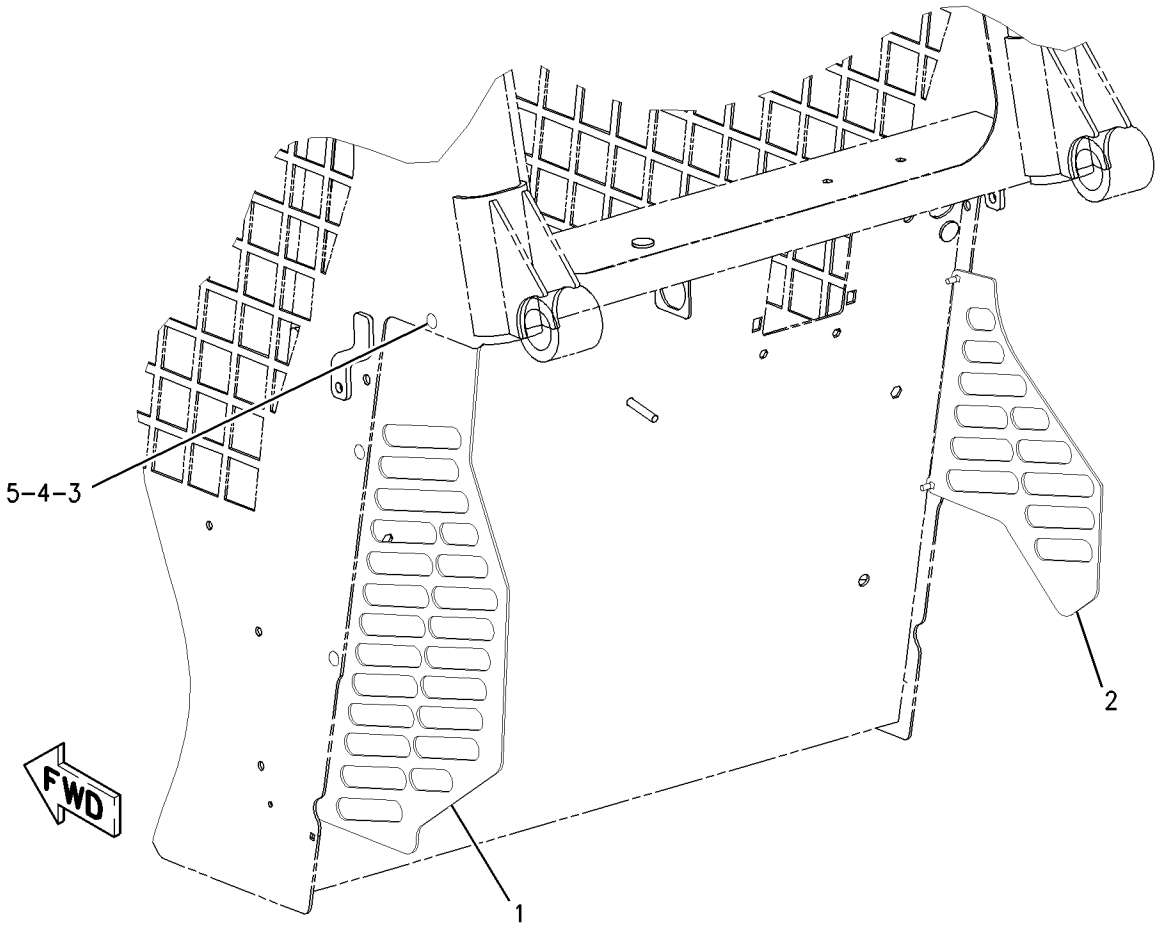

GRAPHIC #1 g00902202

FRAME AND BODY

207-9784 PANEL GP-SIDE

S/N: CAB1-UP; CMB1-UP

PART OF 210-4699 OPERATOR AR-CANOPY

SMCS-7267 **i01763428**

NOTE	REF NO	GRAPHIC REF	PART NUMBER	QTY	PART NAME 1 2 3 4 5 6 (PRODUCT LEVEL)	SEE PAGE
	1	1	**193-8385**	1	PLATE (RH)	
	2	1	**207-9786**	1	PLATE (LH)	
M	3	1	**131-3543**	6	BOLT-ROUND HEAD (M6X1-6G THD)	
M	4	1	**5C-2890**	6	NUT (M6X1 THD)	
	5	1	**8T-4205**	6	WASHER-HARD (7.2X14.5X2MM THK)	

M-METRIC PART

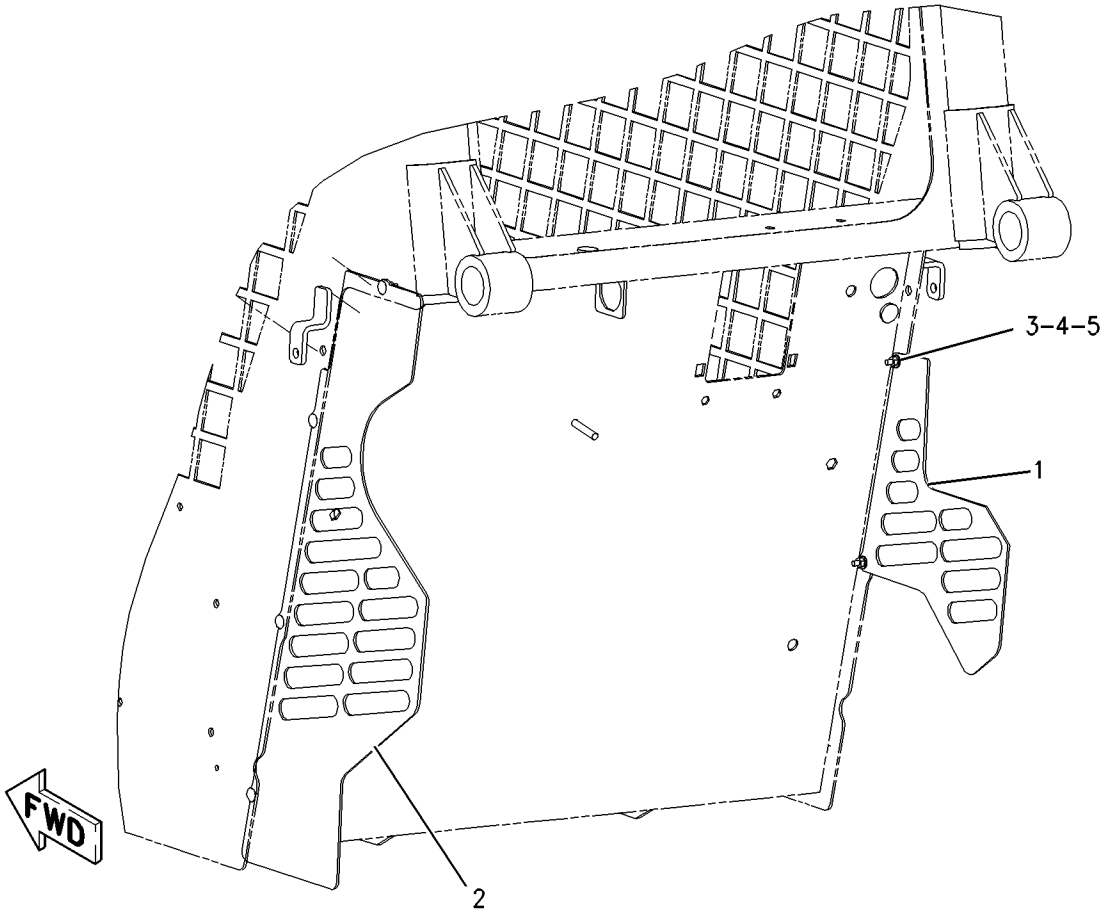

GRAPHIC #1 g00902212

206-3773 SUPPRESSION GP-SOUND

S/N: 4NZ3400-UP; 5FZ6700-UP
DO NOT INSTALL IF MACHINE HAS PLATE OR HEATER INSTALLED
PART OF 206-3776, 206-3777, 206-3778, 206-3779 CONVERSION AR-ROADING
CANNOT BE USED WITH 197-4917—PAGE 313
AN ATTACHMENT

SMCS-1801, 7076 **i01763446**

NOTE	REF NO	GRAPHIC REF	PART NUMBER	QTY	PART NAME 1 2 3 4 5 6 (PRODUCT LEVEL)	SEE PAGE
	1	1	**165-7099**	1	INSULATION	
	2	1	**178-2249**	1	INSULATION	
Y	3	1	**208-4558**	1	FLOOR MAT	524
	4	1	**206-3774**	1	INSULATION	
	5	1	**128-7037**		SEAL (200CM)	

Y-SEPARATE ILLUSTRATION

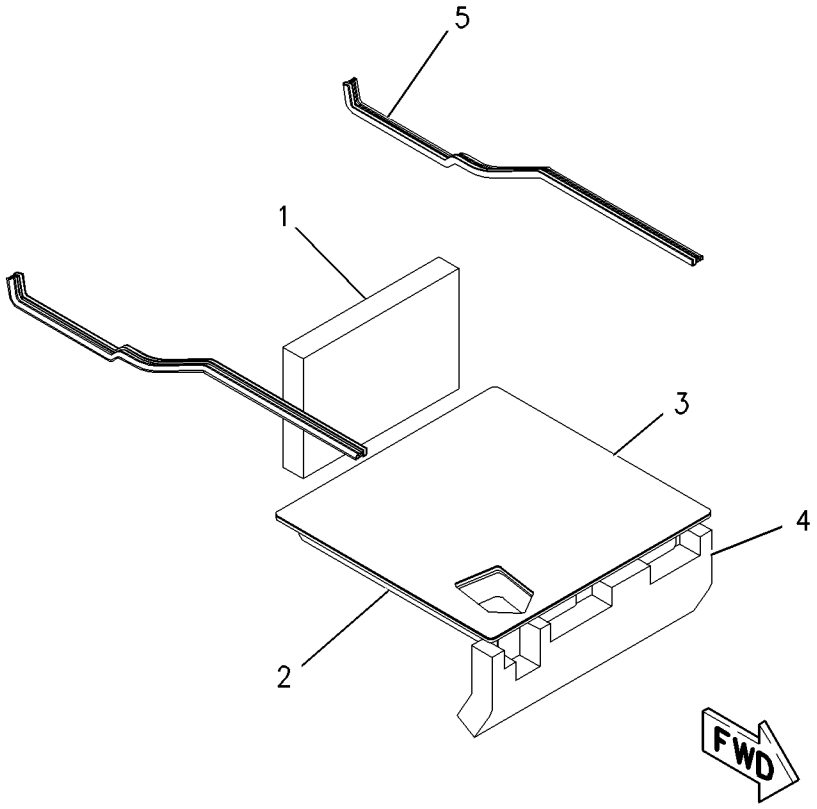

GRAPHIC #1 g00902218

FRAME AND BODY

212-6625 SUPPRESSION GP-SOUND

S/N: 5FZ6700-UP

AN ATTACHMENT

SMCS-1801, 7076 **i01763459**

NOTE	REF NO	GRAPHIC REF	PART NUMBER	QTY	PART NAME 1 2 3 4 5 6 (PRODUCT LEVEL)	SEE PAGE
	1	1	**165-7092**	1	INSULATION	
	2	1	**165-7099**	1	INSULATION	
	3	1	**176-4076**	1	INSULATION	
	4	1	**176-4077**	1	INSULATION	
	5	1	**176-4078**	1	INSULATION	
	6	1	**176-4079**	2	INSULATION	
	7	1	**176-4089**	1	INSULATION	
	8	1	**176-4090**	1	INSULATION	
	9	1	**177-9578**	1	INSULATION	
	10	1	**178-2249**	1	INSULATION	
	11	1	**206-3774**	1	INSULATION	
E	12	1	**128-7037**	2	SEAL (100CM)	

E-ORDER BY THE CENTIMETER

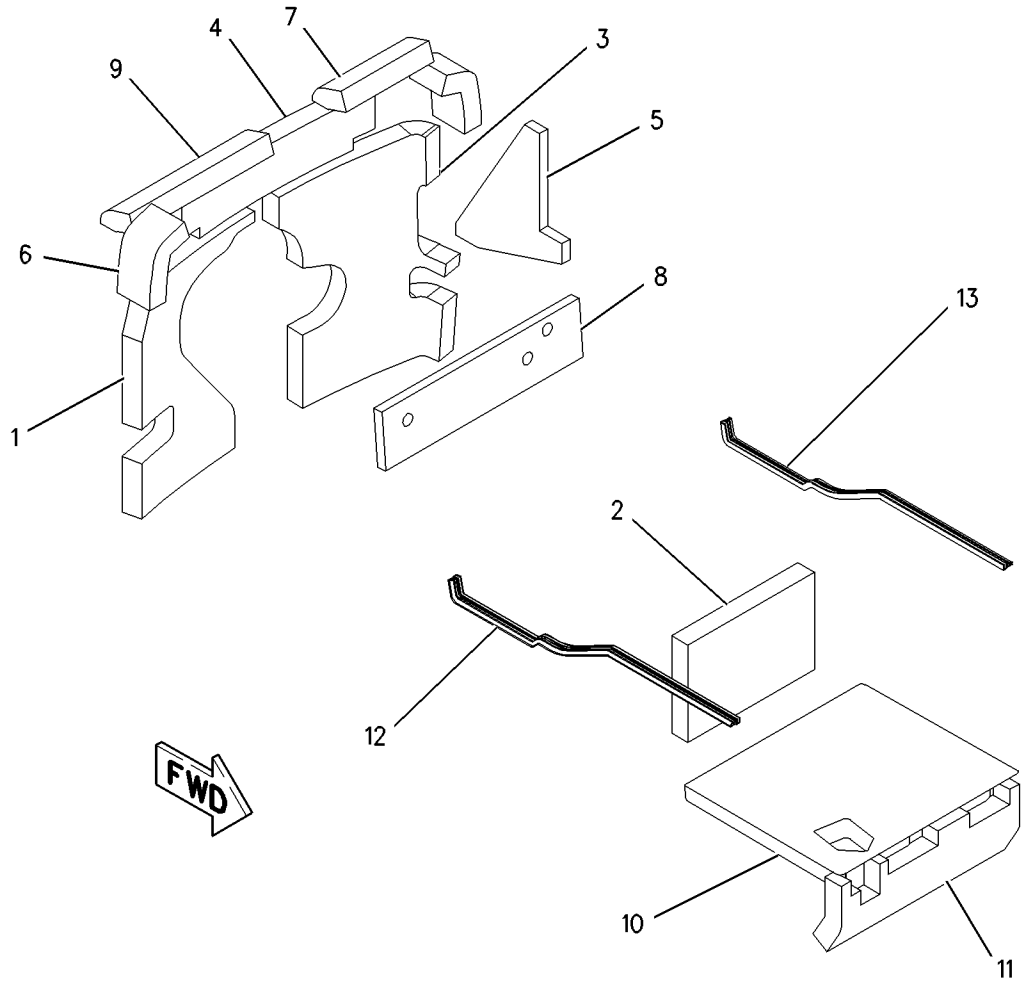

GRAPHIC #1 g00902227

HYDRAULIC SYSTEM

193-0447 ACCUMULATOR & MTG GP-HYDRAULIC

S/N: CAB1-UP; CMB1-UP; 4NZ3400-UP; 5FZ6700-UP

PART OF 191-9606, 200-0806, 200-1006, 216-6136 HYDRAULIC AR

SMCS-5077 **i01763478**

NOTE	REF NO	GRAPHIC REF	PART NUMBER	QTY	PART NAME 1 2 3 4 5 6 (PRODUCT LEVEL)	SEE PAGE
	1	1	**149-0686**	1	ACCUMULATOR	
	2	1	*194-7632*	1	ELBOW AS	
		1	**3K-0360**	1	SEAL-O-RING	
		1	**194-7631**	1	ELBOW	
	3	1	**3K-0360**	1	SEAL-O-RING	

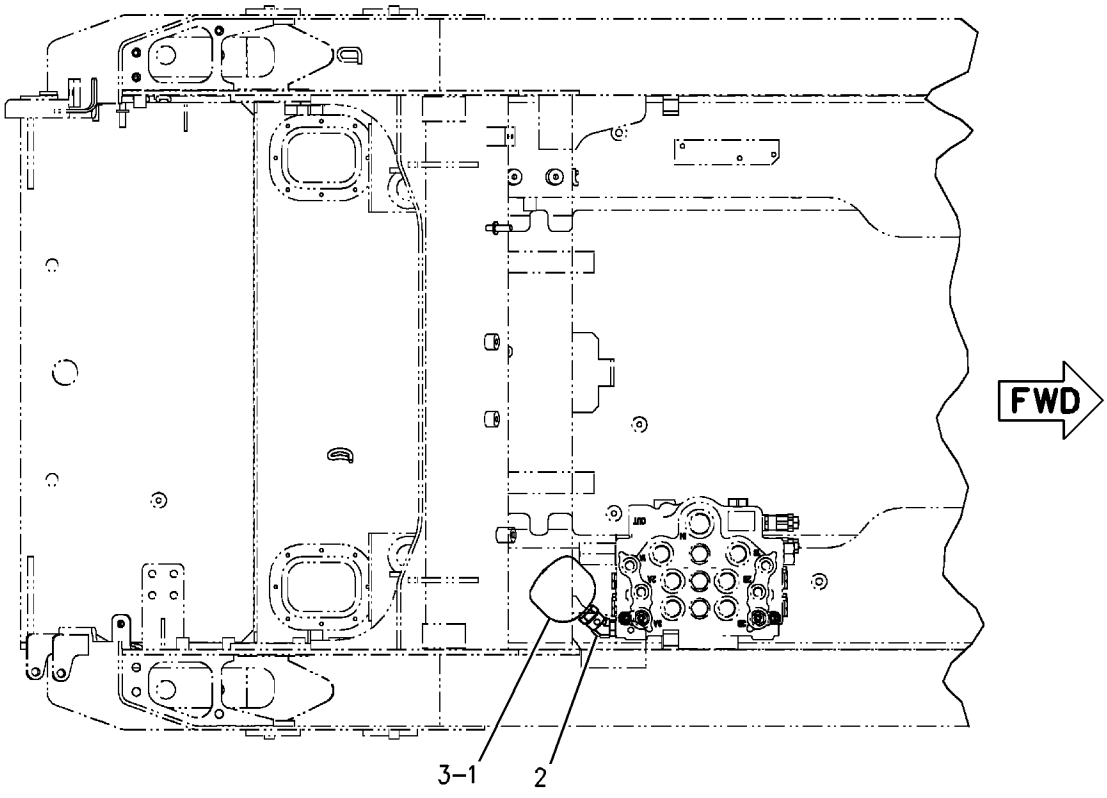

TOP VIEW

GRAPHIC #1 g00902240

159-5751 CONTROL GP-HANDLE

S/N: CAB1-UP; CMB1-UP; 4NZ3400-UP; 5FZ6700-UP
FOURTH FUNCTION
PART OF 190-8095, 216-6129 CONTROL GP-PILOT OPERATED HYD
AN ATTACHMENT

SMCS-5705 **i01573719**

NOTE	REF NO	GRAPHIC REF	PART NUMBER	QTY	PART NAME 1 2 3 4 5 6 (PRODUCT LEVEL)	SEE PAGE
	1	1	**8L-8413**	1	STRAP-CABLE	
	2	1	**159-9853**	1	GROMMET	
	3	1	**102-8805**	1	KIT-RECEPTACLE (6 PIN)	
					(KIT INCLUDES WEDGE)	
	4	1	**8T-8729**	4	PIN-CONNECTOR	
	5	1	**9G-3695**	2	PLUG (GROMMET SEALING)	

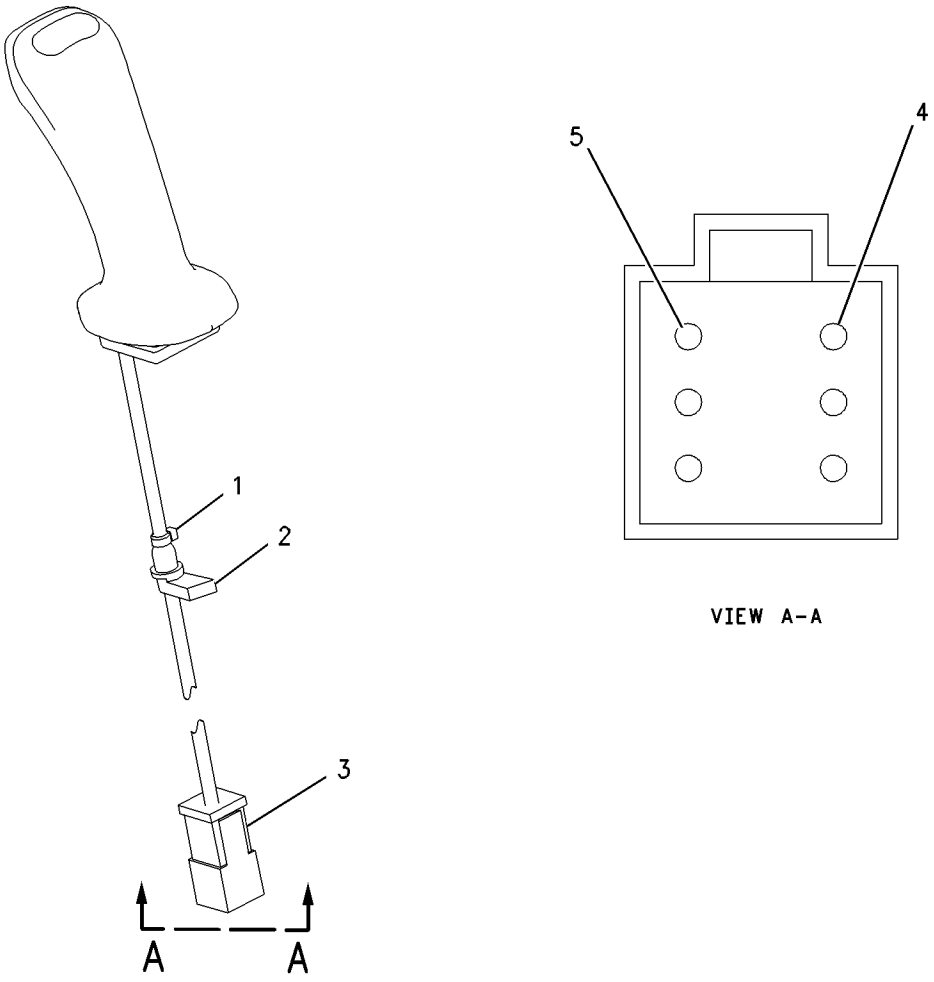

GRAPHIC #1 g00817967

160-4320 CONTROL GP-HANDLE

S/N: 4NZ3400-UP; 5FZ6700-UP
PORPORTIONAL CONTROL
PART OF 190-8080, 216-6130 CONTROL GP-PILOT OPERATED HYD
AN ATTACHMENT

SMCS-5705 **i01636564**

NOTE	REF NO	GRAPHIC REF	PART NUMBER	QTY	PART NAME 1 2 3 4 5 6 (PRODUCT LEVEL)	SEE PAGE
	1	1	**102-8805**	1	KIT-RECEPTACLE (6 PIN)	
					(KIT INCLUDES WEDGE)	
	2	1	**9G-3695**	3	PLUG (GROMMET SEALING)	
	3	1	**3E-3383**	1	WEDGE-RECEPTACLE LOCK	
	4	1	**186-3735**	3	PIN-CONNECTOR	
	5	1	**159-9853**	1	GROMMET	

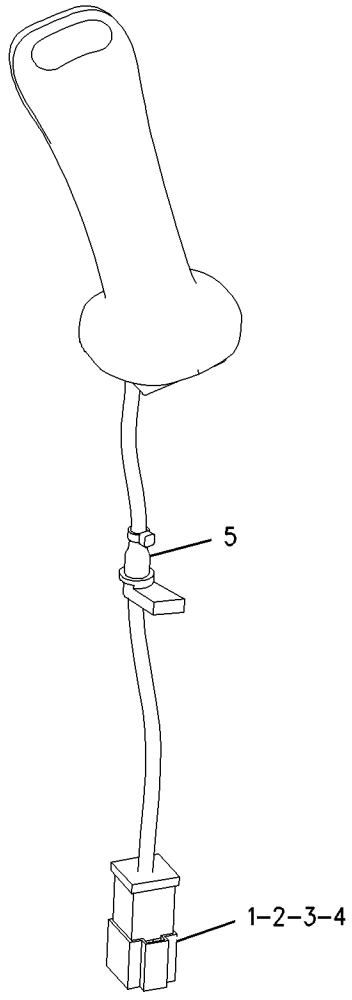

GRAPHIC #1 g00847182

204-1395 CONTROL GP-HANDLE

S/N: CAB1-UP; CMB1-UP; 4NZ3400-UP; 5FZ6700-UP
HORN
PART OF 191-2908 CONTROL GP-PILOT OPERATED HYD
AN ATTACHMENT

SMCS-5705 **i01628478**

NOTE	REF NO	GRAPHIC REF	PART NUMBER	QTY	PART NAME 1 2 3 4 5 6 (PRODUCT LEVEL)	SEE PAGE
	1	1	**8L-8413**	1	STRAP-CABLE	
	2	1	**159-9853**	1	GROMMET	
J	3	1	**102-8806**	1	KIT-RECEPTACLE (8 PIN)	
					(KIT INCLUDES WEDGE)	
	4	1	**8T-8737**	6	PLUG-SEAL	
J	5	1	**3E-3389**	6	WEDGE-RECEPTACLE LOCK	

J-KIT MARKED J SERVICES PARTS MARKED J

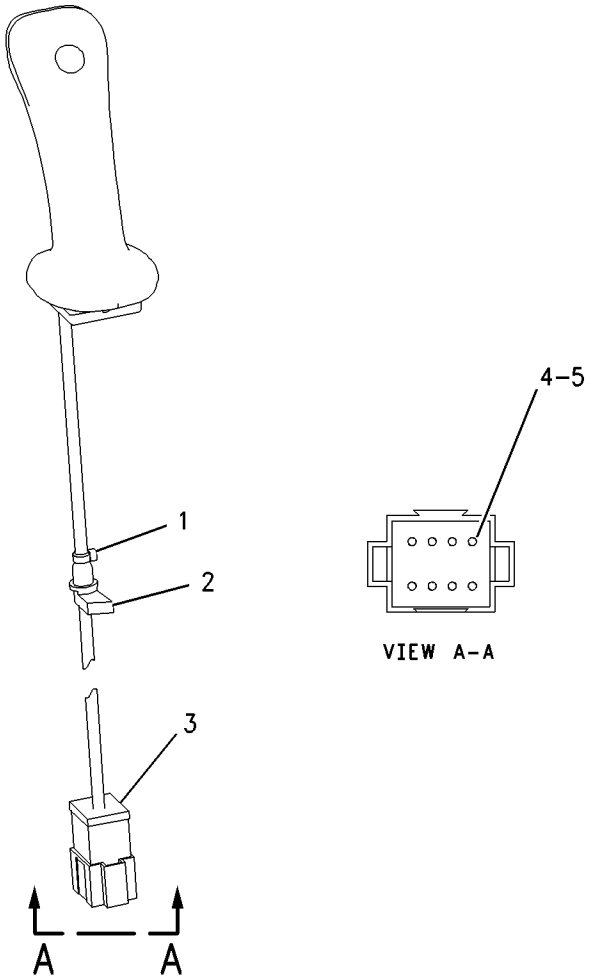

GRAPHIC #1 g00817991

204-1396 CONTROL GP-HANDLE

S/N: CAB1-UP; CMB1-UP; 4NZ3400-UP; 5FZ6700-UP
HORN, FOURTH FUNCTION
PART OF 191-2909, 216-6133 CONTROL GP-PILOT OPERATED HYD, 187-1258, 197-8467
WIRING GP-WORK TOOL
AN ATTACHMENT

SMCS-5705 **i01628482**

NOTE	REF NO	GRAPHIC REF	PART NUMBER	QTY	PART NAME 1 2 3 4 5 6 (PRODUCT LEVEL)	SEE PAGE
	1	1	**8L-8413**	1	STRAP-CABLE	
	2	1	**159-9853**	1	GROMMET	
	3	1	**102-8806**	1	KIT-RECEPTACLE (8 PIN)	
					(KIT INCLUDES WEDGE)	
	4	1	**3E-3389**	1	WEDGE-RECEPTACLE LOCK	
	5	1	**8T-8737**	2	PLUG-SEAL	

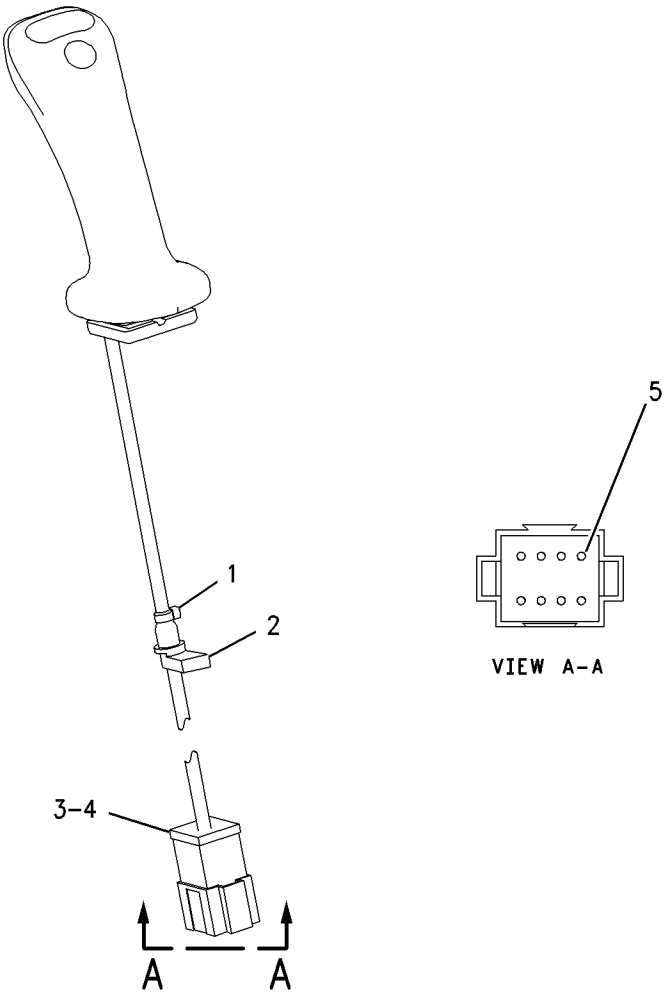

GRAPHIC #1 g00817980

190-8080 CONTROL GP-PILOT OPERATED HYD

S/N: 4NZ3400-UP; 5FZ6700-UP
CANNOT BE USED WITH 190-8095—PAGE 290
AN ATTACHMENT

SMCS-5059, 5705 **i01763513**

NOTE	REF NO	GRAPHIC REF	PART NUMBER	QTY	PART NAME 1 2 3 4 5 6 (PRODUCT LEVEL)	SEE PAGE
	1	1	**110-8760**	1	STRAP	
Y	2	1	**160-4320**	1	CONTROL GP-HANDLE	286
	3	1	**190-8092**	1	BRACKET AS	
M		1	**6V-9632**	3	NUT-WELD (M6X1 THD)	
Y	4	1	**193-8387**	1	VALVE GP-PILOT	403
	5	1	**117-8683**	1	PIN-SPRING	
	6	1	**7X-0579**	2	WASHER-HARD (8.8X25.5X2MM THK)	
M	7	1	**8T-0269**	3	BOLT-SOCKET HEAD (M6X1X20MM)	
	8	1	**8T-4205**	3	WASHER-HARD (7.2X14.5X2MM THK)	
M	9	1	**8T-4908**	2	BOLT (M8X1.25X25MM)	

M-METRIC PART
Y-SEPARATE ILLUSTRATION

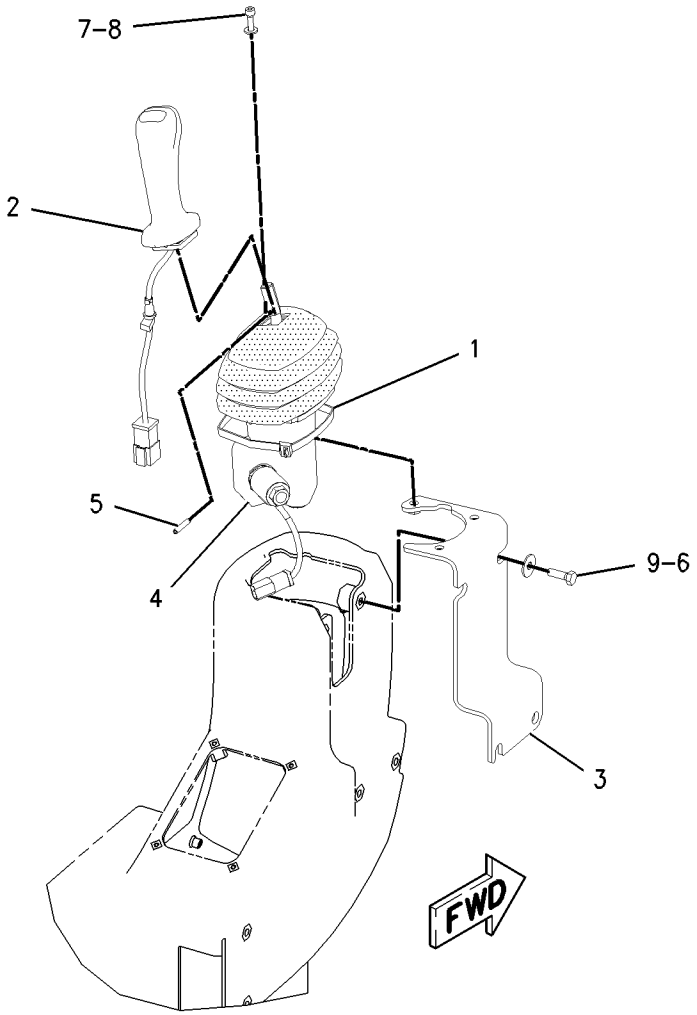

GRAPHIC #1 g00902257

190-8095 CONTROL GP-PILOT OPERATED HYD

S/N: 4NZ3400-UP; 5FZ6700-UP
CANNOT BE USED WITH 190-8080—PAGE 289
AN ATTACHMENT

SMCS-5059, 5705 **i01763533**

NOTE	REF NO	GRAPHIC REF	PART NUMBER	QTY	PART NAME 1 2 3 4 5 6 (PRODUCT LEVEL)	SEE PAGE
	1	1	**110-8760**	1	STRAP	
Y	2	1	**159-5751**	1	CONTROL GP-HANDLE	285
	3	1	**190-8092**	1	BRACKET AS	
CY	4	1	**193-8387**	1	VALVE GP-PILOT	403
	5	1	**117-8683**	1	PIN-SPRING	
	6	1	**7X-0579**	2	WASHER-HARD (8.8X25.5X2MM THK)	
M	7	1	**8T-0269**	3	BOLT-SOCKET HEAD (M6X1X20MM)	
	8	1	**8T-4205**	3	WASHER-HARD (7.2X14.5X2MM THK)	
M	9	1	**8T-4908**	2	BOLT (M8X1.25X25MM)	

C-CHANGE FROM PREVIOUS TYPE
M-METRIC PART
Y-SEPARATE ILLUSTRATION

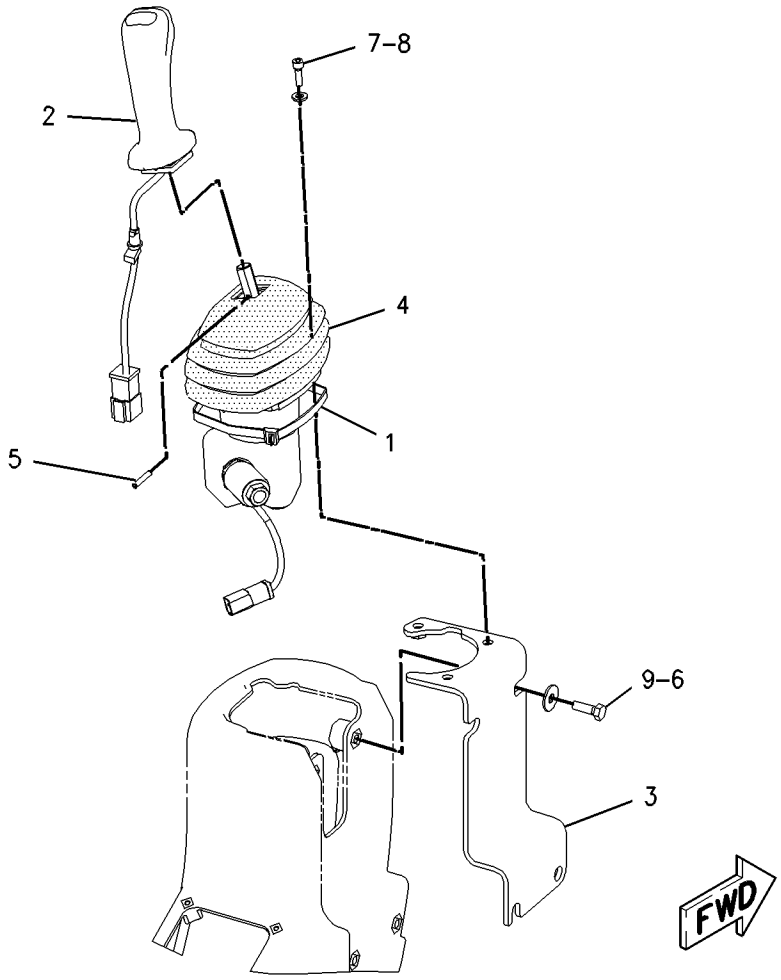

GRAPHIC #1 g00902262

190-8095 CONTROL GP-PILOT OPERATED HYD

S/N: CAB1-UP; CMB1-UP; 4NZ3400-UP; 5FZ6700-UP
CANNOT BE USED WITH 190-8080—PAGE 289
AN ATTACHMENT

SMCS-5059, 5705 **i01755604**

NOTE	REF NO	GRAPHIC REF	PART NUMBER	QTY	PART NAME 1 2 3 4 5 6 (PRODUCT LEVEL)	SEE PAGE
	1	1	**110-8760**	1	STRAP	
Y	2	1	**159-5751**	1	CONTROL GP-HANDLE	285
	3	1	**190-8092**	1	BRACKET AS	
M		1	**6V-9632**	3	NUT-WELD (M6X1 THD)	
CY	4	1	**204-1399**	1	VALVE GP-CONTROL	398
	5	1	**117-8683**	1	PIN-SPRING	
	6	1	**7X-0579**	2	WASHER-HARD (8.8X25.5X2MM THK)	
M	7	1	**8T-0269**	3	BOLT-SOCKET HEAD (M6X1X20MM)	
	8	1	**8T-4205**	3	WASHER-HARD (7.2X14.5X2MM THK)	
M	9	1	**8T-4908**	2	BOLT (M8X1.25X25MM)	

C-CHANGE FROM PREVIOUS TYPE
M-METRIC PART
Y-SEPARATE ILLUSTRATION

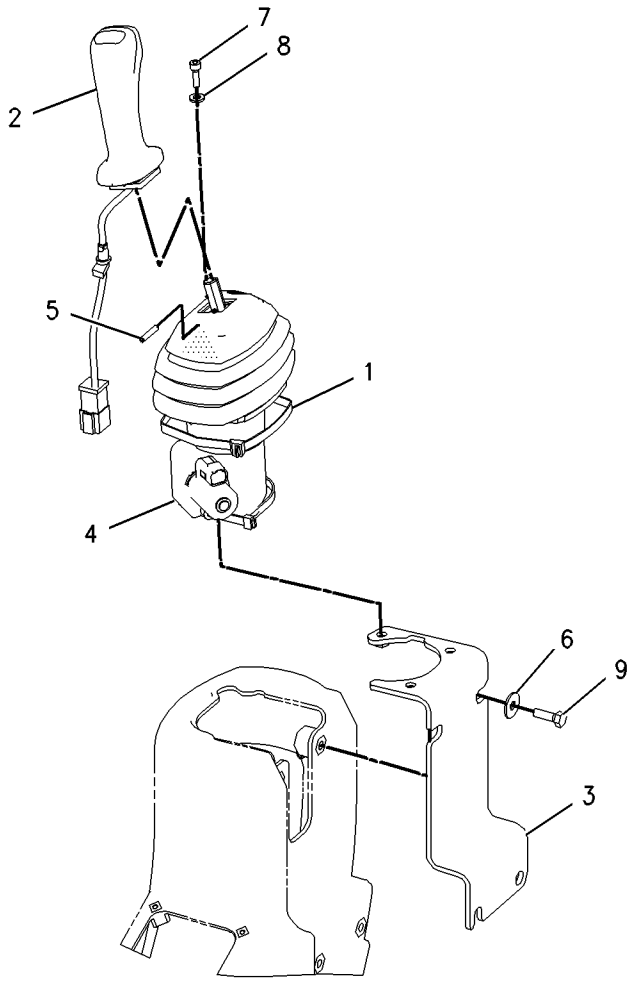

GRAPHIC #1 g00898354

191-2907 CONTROL GP-PILOT OPERATED HYD

S/N: CAB1-UP; CMB1-UP; 4NZ3400-UP; 5FZ6700-UP
WITHOUT HORN OR ELECTRICAL WORK TOOL CONTROL
CANNOT BE USED WITH 191-2908—PAGE 293, 191-2909—PAGE 295
AN ATTACHMENT

SMCS-5059, 5705 **i01755607**

NOTE	REF NO	GRAPHIC REF	PART NUMBER	QTY	PART NAME 1 2 3 4 5 6 (PRODUCT LEVEL)	SEE PAGE
	1	1	**110-8760**	1	STRAP	
	2	1	**142-7508**	1	GROMMET	
	3	1	**191-9788**	1	BRACKET AS	
M		1	**6V-9632**	3	NUT-WELD (M6X1 THD)	
Y	4	1	**204-1400**	1	VALVE GP-PILOT	405
	5	1	**117-8683**	1	PIN-SPRING	
	6	1	**195-3510**	1	HANDLE	
	7	1	**7X-0579**	2	WASHER-HARD (8.8X25.5X2MM THK)	
M	8	1	**8T-0269**	3	BOLT-SOCKET HEAD (M6X1X20MM)	
	9	1	**8T-4205**	3	WASHER-HARD (7.2X14.5X2MM THK)	
M	10	1	**8T-4908**	1	BOLT (M8X1.25X25MM)	

M-METRIC PART
Y-SEPARATE ILLUSTRATION

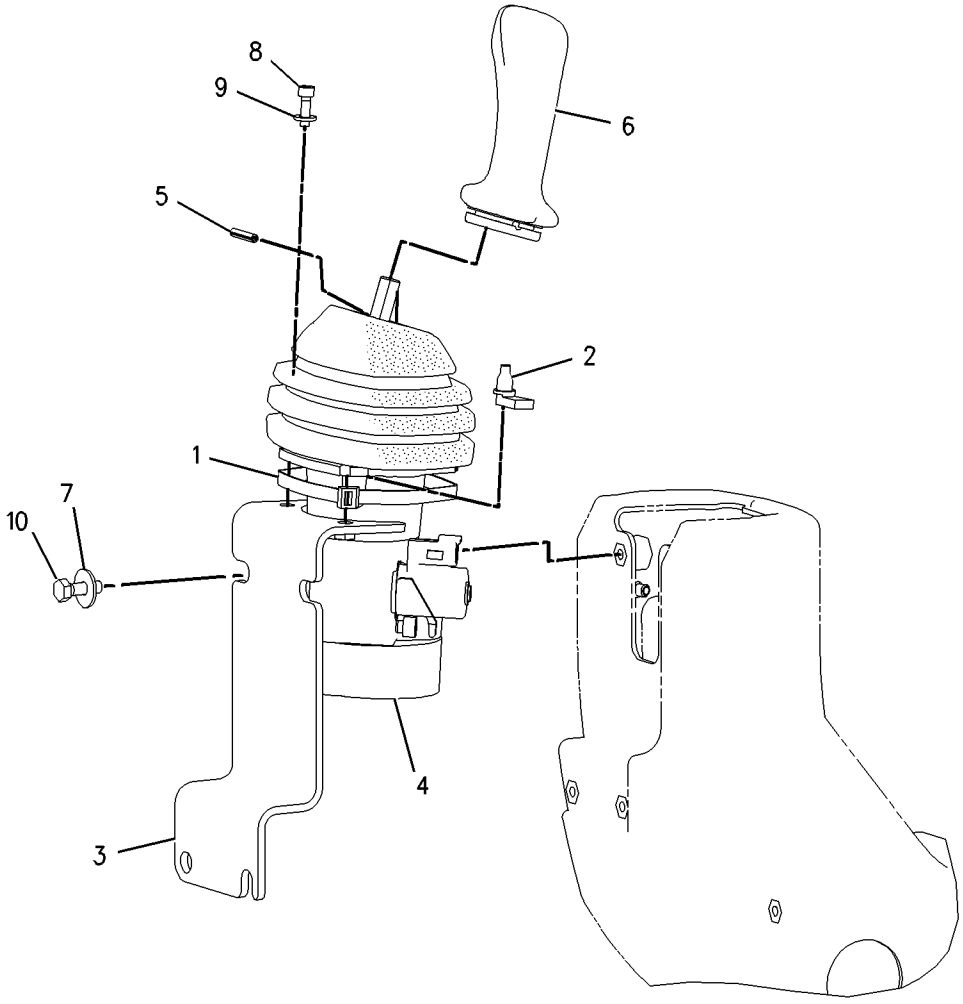

GRAPHIC #1 g00898363

HYDRAULIC SYSTEM

191-2908 CONTROL GP-PILOT OPERATED HYD

S/N: 4NZ3400-UP; 5FZ6700-UP

CANNOT BE USED WITH 191-2907—PAGE 292, 191-2909—PAGE 295

AN ATTACHMENT

SMCS-5059, 5705 **i01763546**

NOTE	REF NO	GRAPHIC REF	PART NUMBER	QTY	PART NAME 1 2 3 4 5 6 (PRODUCT LEVEL)	SEE PAGE
	1	1	**110-8760**	1	STRAP	
Y	2	1	*190-8004*	1	HORN GP-ELECTRIC	537
	3	1	**191-9788**	1	BRACKET AS	
M		1	**6V-9632**	3	NUT-WELD (M6X1 THD)	
Y	4	1	**204-1397**	1	VALVE GP-PILOT	404
	5	1	**117-8683**	1	PIN-SPRING	
Y	6	1	**204-1395**	1	CONTROL GP-HANDLE	287
	7	1	**7X-0579**	2	WASHER-HARD (8.8X25.5X2MM THK)	
M	8	1	**8T-0269**	3	BOLT-SOCKET HEAD (M6X1X20MM)	
	9	1	**8T-4205**	3	WASHER-HARD (7.2X14.5X2MM THK)	
M	10	1	**8T-4908**	2	BOLT (M8X1.25X25MM)	

M-METRIC PART
Y-SEPARATE ILLUSTRATION

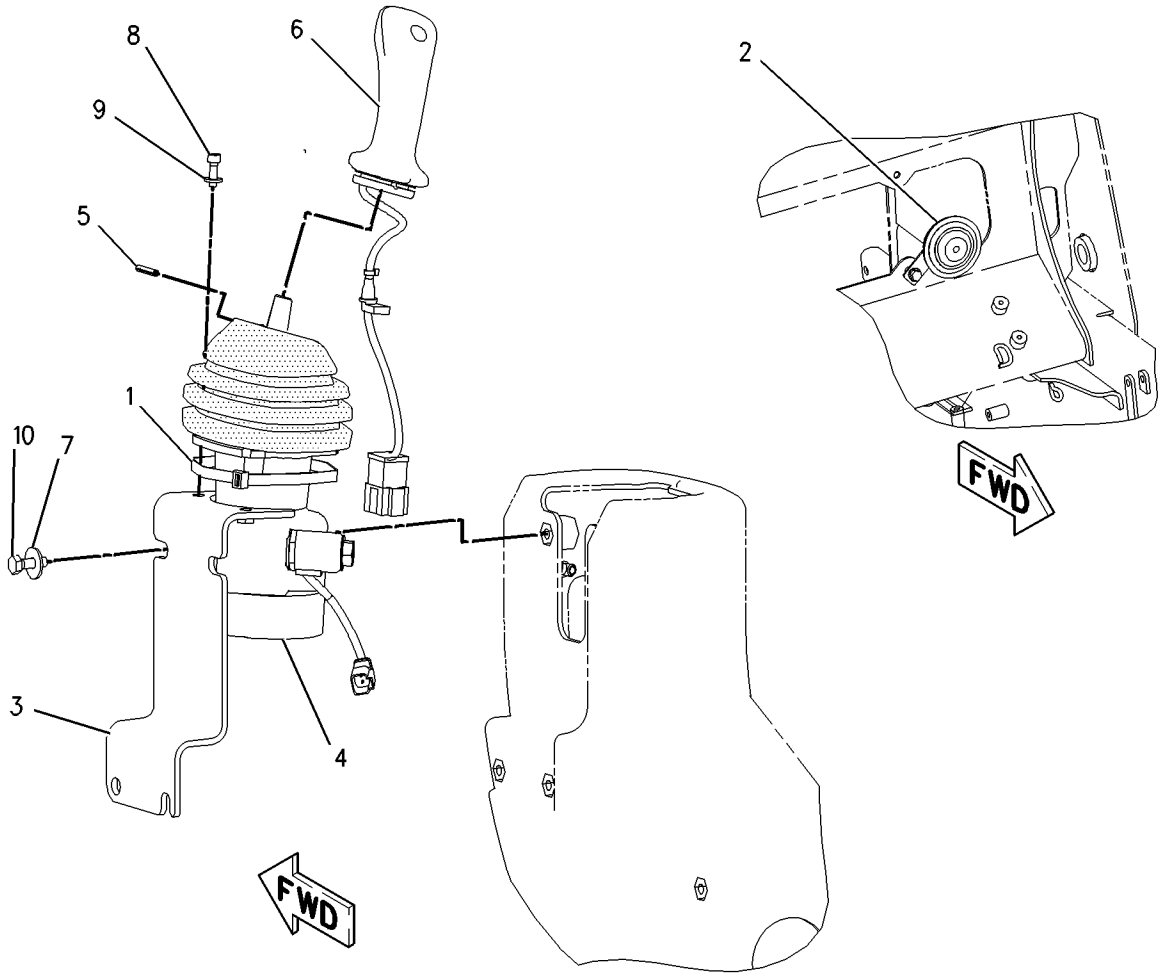

GRAPHIC #1 g00902269

191-2908 CONTROL GP-PILOT OPERATED HYD

S/N: CAB1-UP; CMB1-UP; 4NZ3400-UP; 5FZ6700-UP
CANNOT BE USED WITH 191-2907—PAGE 292, 191-2909—PAGE 295
AN ATTACHMENT

SMCS-5059, 5705 **i01763555**

NOTE	REF NO	GRAPHIC REF	PART NUMBER	QTY	PART NAME 1 2 3 4 5 6 (PRODUCT LEVEL)	SEE PAGE
	1	1	**110-8760**	1	STRAP	
Y	2	1	*190-8004*	1	HORN GP-ELECTRIC	537
	3	1	**191-9788**	1	BRACKET AS	
M		1	**6V-9632**	3	NUT-WELD (M6X1 THD)	
Y	4	1	**204-1400**	1	VALVE GP-PILOT	405
	5	1	**117-8683**	1	PIN-SPRING	
Y	6	1	**204-1395**	1	CONTROL GP-HANDLE	287
	7	1	**7X-0579**	2	WASHER-HARD (8.8X25.5X2MM THK)	
M	8	1	**8T-0269**	3	BOLT-SOCKET HEAD (M6X1X20MM)	
	9	1	**8T-4205**	3	WASHER-HARD (7.2X14.5X2MM THK)	
M	10	1	**8T-4908**	2	BOLT (M8X1.25X25MM)	

M-METRIC PART
Y-SEPARATE ILLUSTRATION

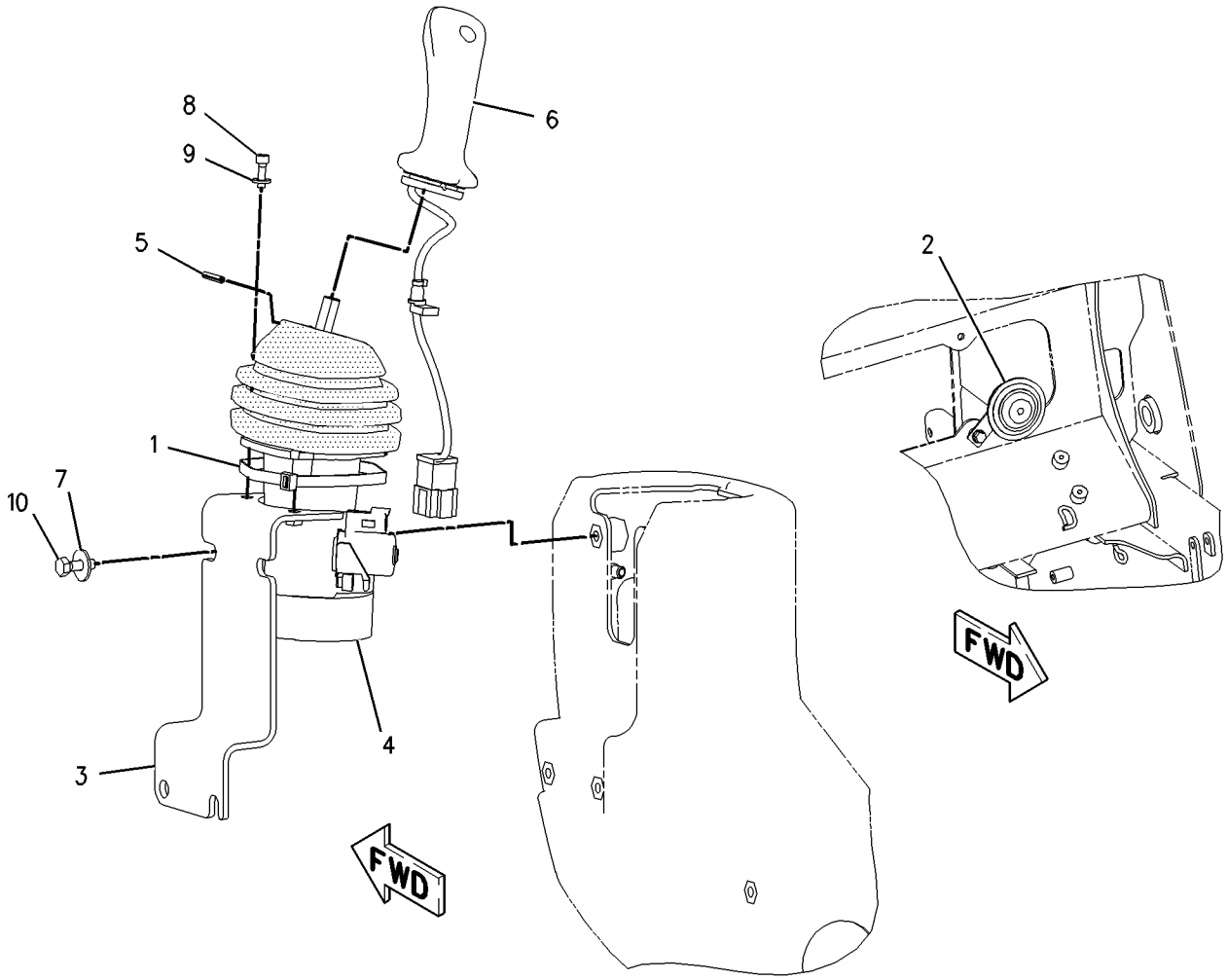

GRAPHIC #1 g00902276

191-2909 CONTROL GP-PILOT OPERATED HYD

S/N: 4NZ3400-UP; 5FZ6700-UP

CANNOT BE USED WITH 191-2907—PAGE 292, 191-2908—PAGE 293

AN ATTACHMENT

SMCS-5059, 5705 **i01763570**

NOTE	REF NO	GRAPHIC REF	PART NUMBER	QTY	PART NAME 1 2 3 4 5 6 (PRODUCT LEVEL)	SEE PAGE
	1	1	**110-8760**	1	STRAP	
Y	2	1	*190-8004*	1	HORN GP-ELECTRIC	537
	3	1	**191-9788**	1	BRACKET AS	
M		1	**6V-9632**	3	NUT-WELD (M6X1 THD)	
Y	4	1	*193-8353*	1	WIRING GP-WORK TOOL	200
Y	5	1	**204-1397**	1	VALVE GP-PILOT	404
	6	1	**117-8683**	1	PIN-SPRING	
Y	7	1	**204-1396**	1	CONTROL GP-HANDLE	288
	8	1	**7X-0579**	2	WASHER-HARD (8.8X25.5X2MM THK)	
M	9	1	**8T-0269**	3	BOLT-SOCKET HEAD (M6X1X20MM)	
	10	1	**8T-4205**	3	WASHER-HARD (7.2X14.5X2MM THK)	
M	11	1	**8T-4908**	2	BOLT (M8X1.25X25MM)	

M-METRIC PART
Y-SEPARATE ILLUSTRATION

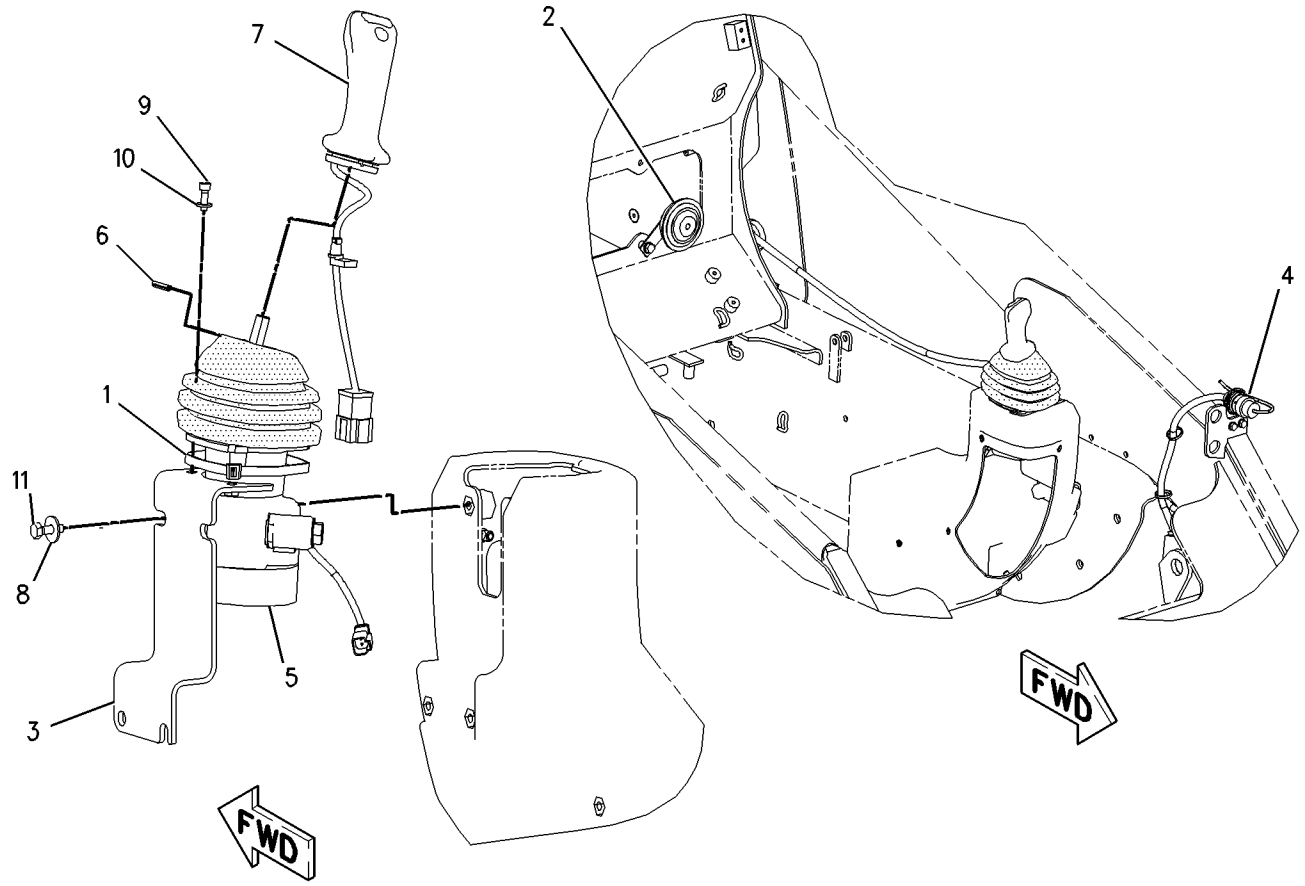

GRAPHIC #1 g00902286

191-2909 CONTROL GP-PILOT OPERATED HYD

S/N: CAB1-UP; CMB1-UP; 4NZ3400-UP; 5FZ6700-UP
CANNOT BE USED WITH 191-2907—PAGE 292, 191-2908—PAGE 293
AN ATTACHMENT

SMCS-5059, 5705 **i01763592**

NOTE	REF NO	GRAPHIC REF	PART NUMBER	QTY	PART NAME 1 2 3 4 5 6 (PRODUCT LEVEL)	SEE PAGE
	1	1	**110-8760**	1	STRAP	
Y	2	1	*190-8004*	1	HORN GP-ELECTRIC	537
	3	1	**191-9788**	1	BRACKET AS	
M		1	**6V-9632**	3	NUT-WELD (M6X1 THD)	
Y	4	1	*193-8353*	1	WIRING GP-WORK TOOL	200
Y	5	1	**204-1400**	1	VALVE GP-PILOT	405
	6	1	**117-8683**	1	PIN-SPRING	
Y	7	1	**204-1396**	1	CONTROL GP-HANDLE	288
	8	1	**7X-0579**	2	WASHER-HARD (8.8X25.5X2MM THK)	
M	9	1	**8T-0269**	3	BOLT-SOCKET HEAD (M6X1X20MM)	
	10	1	**8T-4205**	3	WASHER-HARD (7.2X14.5X2MM THK)	
M	11	1	**8T-4908**	2	BOLT (M8X1.25X25MM)	

M-METRIC PART
Y-SEPARATE ILLUSTRATION

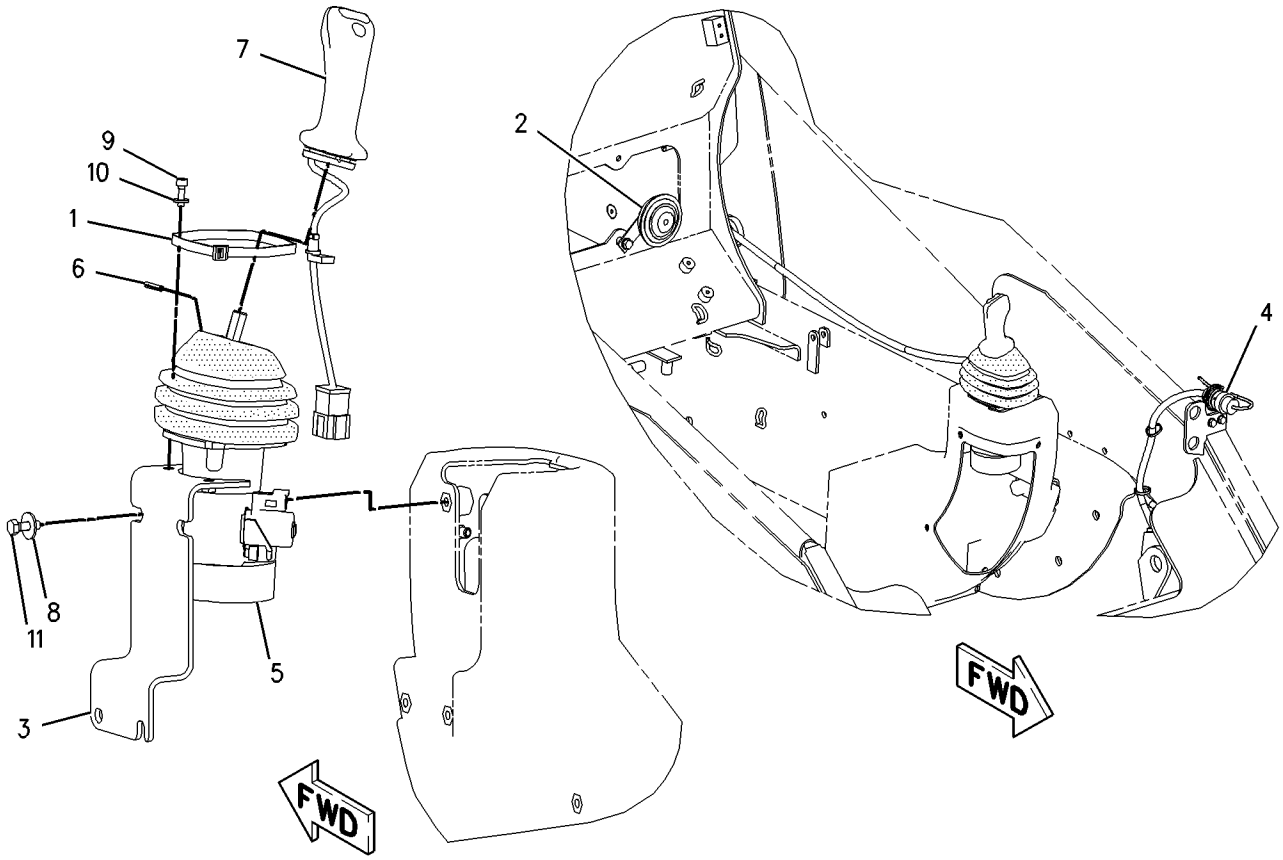

GRAPHIC #1 g00902288

216-6129 CONTROL GP-PILOT OPERATED HYD

S/N: 4NZ3400-UP; 5FZ6700-UP
ON/OFF AUXILIARY CONTROL
AN ATTACHMENT

SMCS-5059, 5705 **i01755266**

NOTE	REF NO	GRAPHIC REF	PART NUMBER	QTY	PART NAME 1 2 3 4 5 6 (PRODUCT LEVEL)	SEE PAGE
	1	1	**110-8760**	1	STRAP	
Y	2	1	**159-5751**	1	CONTROL GP-HANDLE	285
	3	1	**190-8092**	1	BRACKET AS	
M		1	**6V-9632**	3	NUT-WELD (M6X1 THD)	
Y	4	1	**204-1399**	1	VALVE GP-CONTROL	398
	5	1	**117-8683**	1	PIN-SPRING	
	6	1	**7X-0579**	2	WASHER-HARD (8.8X25.5X2MM THK)	
M	7	1	**8T-0269**	3	BOLT-SOCKET HEAD (M6X1X20MM)	
	8	1	**8T-4205**	3	WASHER-HARD (7.2X14.5X2MM THK)	
M	9	1	**8T-4908**	2	BOLT (M8X1.25X25MM)	

M-METRIC PART
Y-SEPARATE ILLUSTRATION

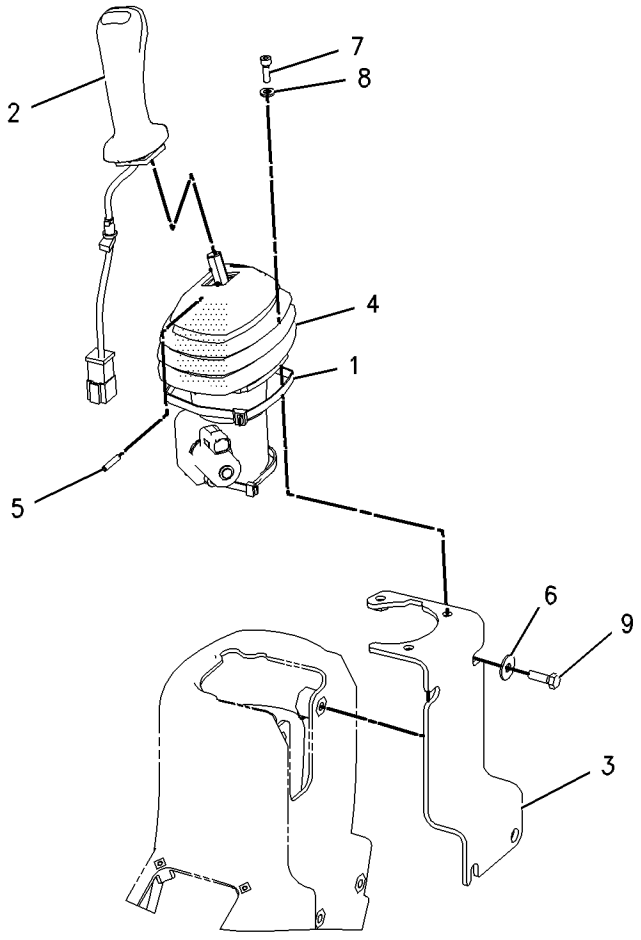

GRAPHIC #1 g00898156

216-6130 CONTROL GP-PILOT OPERATED HYD

S/N: 4NZ3400-UP; 5FZ6700-UP
PROPORTIONAL CONTROL
CANNOT BE USED WITH 216-6129—PAGE 297
AN ATTACHMENT

SMCS-5059, 5705 **i01763617**

NOTE	REF NO	GRAPHIC REF	PART NUMBER	QTY	PART NAME 1 2 3 4 5 6 (PRODUCT LEVEL)	SEE PAGE
	1	1	**110-8760**	1	STRAP	
Y	2	1	**160-4320**	1	CONTROL GP-HANDLE	286
	3	1	**190-8092**	1	BRACKET AS	
M		1	**6V-9632**	3	NUT-WELD (M6X1 THD)	
Y	4	1	**204-1399**	1	VALVE GP-CONTROL	398
	5	1	**117-8683**	1	PIN-SPRING	
	6	1	**7X-0579**	2	WASHER-HARD (8.8X25.5X2MM THK)	
M	7	1	**8T-0269**	3	BOLT-SOCKET HEAD (M6X1X20MM)	
	8	1	**8T-4205**	3	WASHER-HARD (7.2X14.5X2MM THK)	
M	9	1	**8T-4908**	2	BOLT (M8X1.25X25MM)	

M-METRIC PART
Y-SEPARATE ILLUSTRATION

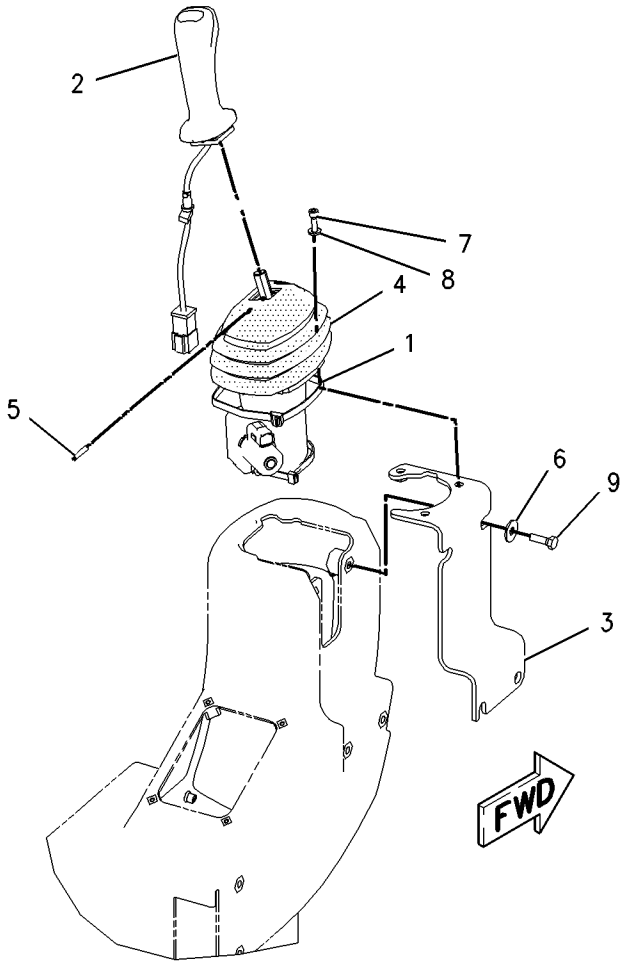

GRAPHIC #1 g00902303

216-6133 CONTROL GP-PILOT OPERATED HYD

S/N: 4NZ3400-UP; 5FZ6700-UP
AN ATTACHMENT

SMCS-5059, 5705 **i01763631**

NOTE	REF NO	GRAPHIC REF	PART NUMBER	QTY	PART NAME 1 2 3 4 5 6 (PRODUCT LEVEL)	SEE PAGE
	1	1	**110-8760**	1	STRAP	
Y	2	1	*190-8004*	1	HORN GP-ELECTRIC	537
	3	1	**191-9788**	1	BRACKET AS	
M		1	**6V-9632**	3	NUT-WELD (M6X1 THD)	
Y	4	1	*193-8353*	1	WIRING GP-WORK TOOL	200
Y	5	1	**204-1400**	1	VALVE GP-PILOT	405
	6	1	**117-8683**	1	PIN-SPRING	
Y	7	1	**204-1396**	1	CONTROL GP-HANDLE	288
	8	1	**7X-0579**	2	WASHER-HARD (8.8X25.5X2MM THK)	
M	9	1	**8T-0269**	3	BOLT-SOCKET HEAD (M6X1X20MM)	
	10	1	**8T-4205**	3	WASHER-HARD (7.2X14.5X2MM THK)	
M	11	1	**8T-4908**	2	BOLT (M8X1.25X25MM)	

M-METRIC PART
Y-SEPARATE ILLUSTRATION

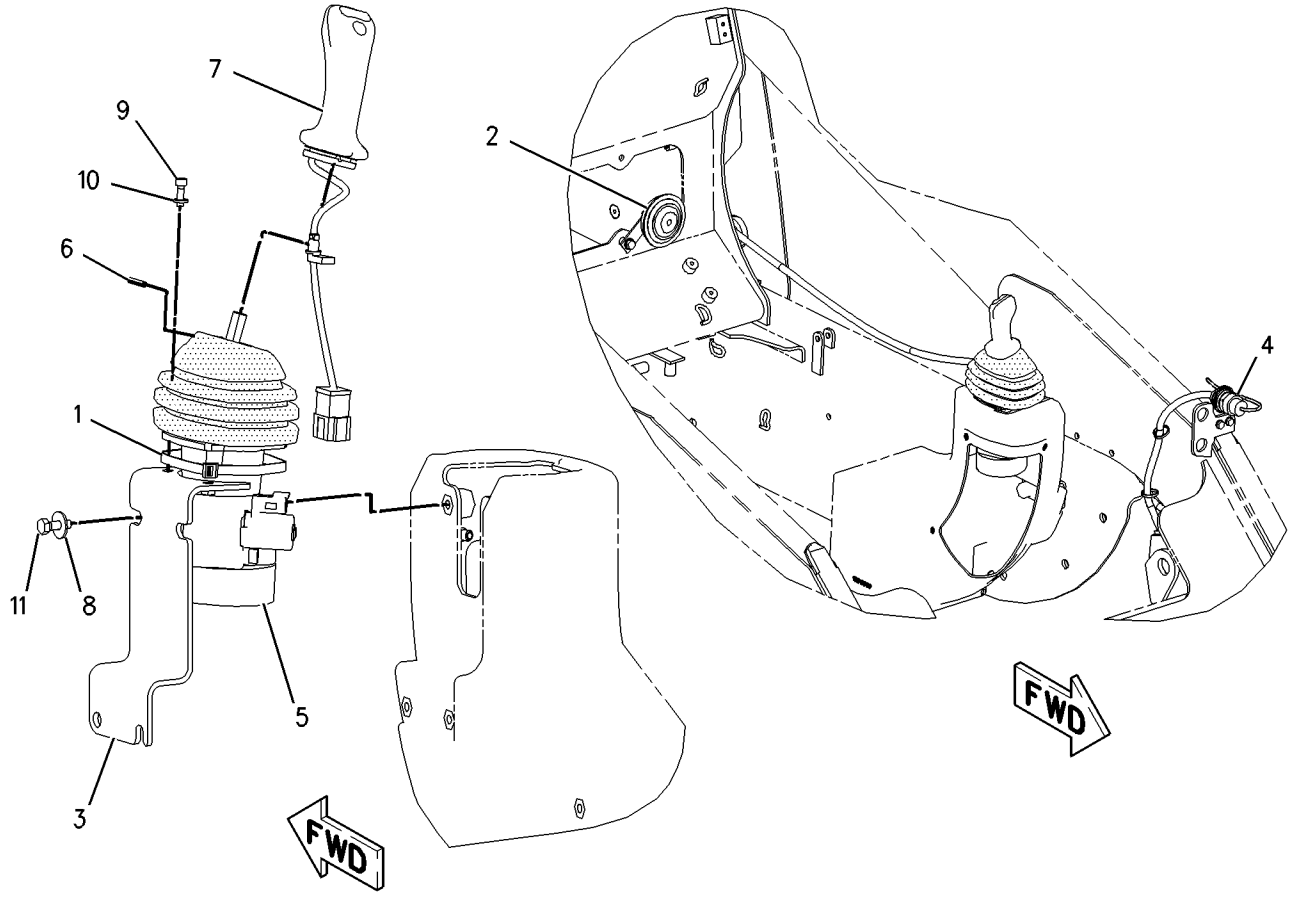

GRAPHIC #1 g00902312

HYDRAULIC SYSTEM

177-1984 CYLINDER & MTG GP-BLADE

S/N: 4NZ3400-UP; 5FZ6700-UP
PART OF 177-1989 BLADE AR
AN ATTACHMENT

SMCS-6701 **i01498570**

NOTE	REF NO	GRAPHIC REF	PART NUMBER	QTY	PART NAME 1 2 3 4 5 6 (PRODUCT LEVEL)	SEE PAGE
	1	1	**064-3843**	1	RING-SNAP	
	2	1	**177-1913**	1	PIN AS	
JY	3	1	**177-1985**	1	CYLINDER GP-BLADE	303
	4	1	**3B-8489**	1	FITTING-GREASE	
	5	1	**7X-7729**	1	WASHER (11X25X3MM THK)	
M	6	1	**8T-4137**	1	BOLT (M10X1.5X20MM)	
					AVAILABLE REPAIR KIT(S):	
J			**177-1958**	1	KIT-SEAL	

J-REPAIR KIT MARKED J AVAILABLE FOR PART MARKED J
M-METRIC PART
Y-SEPARATE ILLUSTRATION

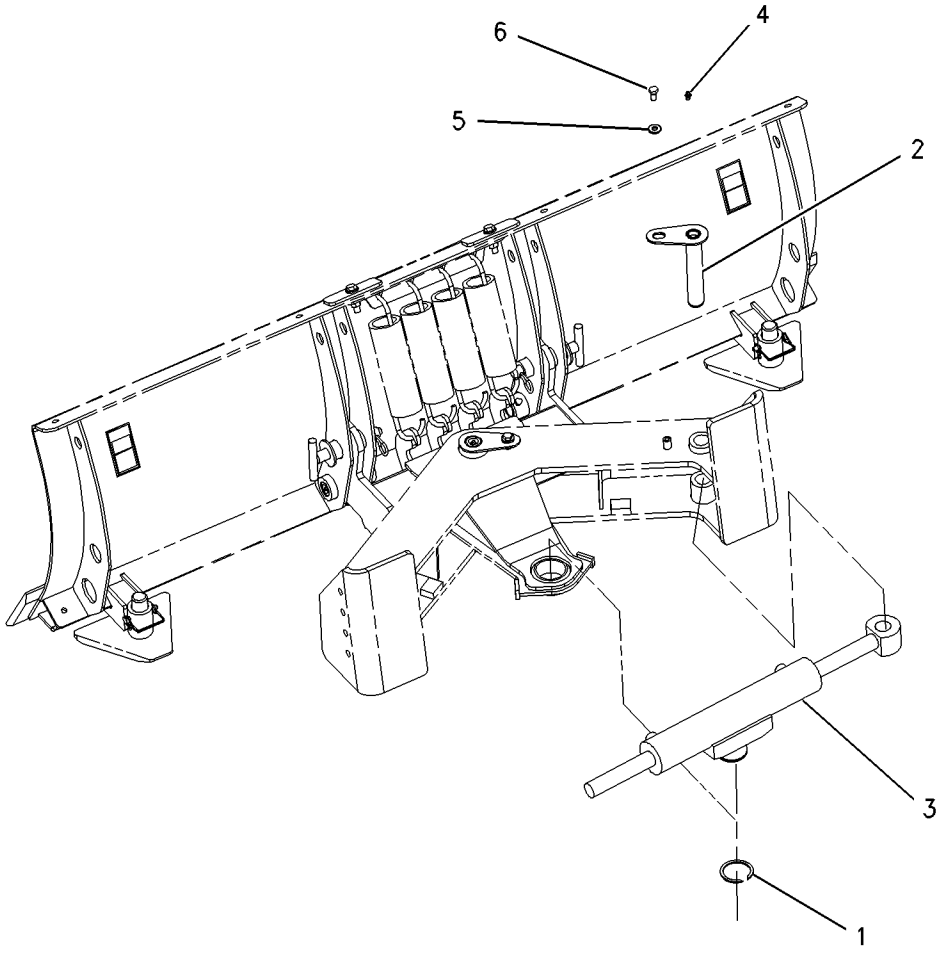

GRAPHIC #1 g00777642

HYDRAULIC SYSTEM

156-0891 CYLINDER & MTG GP-GRAPPLE

S/N: 4NZ3400-UP; 5FZ6700-UP
INDUSTRIAL
PART OF 157-7223, 157-7224 BUCKET AR-GRAPPLE, 162-8139, 163-4812 FORK AR-GRAPPLE
AN ATTACHMENT

SMCS-5457 **i01498639**

NOTE	REF NO	GRAPHIC REF	PART NUMBER	QTY	PART NAME 1 2 3 4 5 6 (PRODUCT LEVEL)	SEE PAGE
	1	1	**156-0892**	2	PLATE	
	2	1	**156-0913**	1	PLATE	
	3	1	**157-0941**	2	PIN	
	4	1	**157-0942**	2	PIN	
	5	1	**159-8035**	2	FILM-WARNING (CRUSH POINT)	
	6	1	**3B-8489**	2	FITTING-GREASE	
	7	1	**4M-5285**	4	RING-RETAINING (EXTERNAL)	
M	8	1	**6V-9189**	2	LOCKNUT (M8X1.25 THD)	
M	9	1	**8T-4138**	3	BOLT (M6X1X20MM)	
M	10	1	**8T-6869**	2	BOLT (M8X1.25X60MM)	
	11	1	**9X-2026**	3	WASHER (6.5X17X1MM THK)	
	12	1	**9X-6274**	4	WASHER (32.5X50X1.6MM THK)	

M-METRIC PART

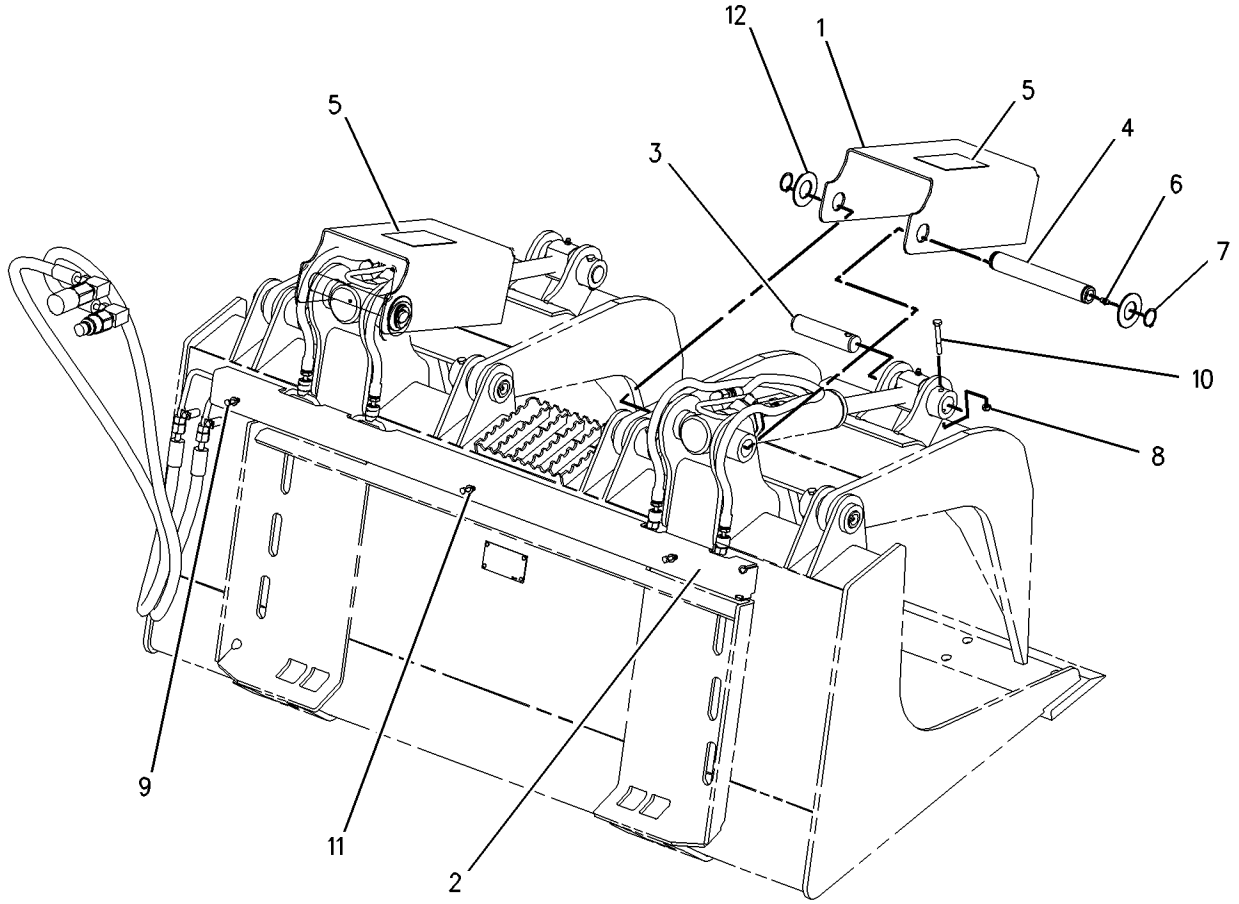

GRAPHIC #1 g00777681

HYDRAULIC SYSTEM

165-8731 CYLINDER & MTG GP-GRAPPLE

S/N: 4NZ3400-UP; 5FZ6700-UP
UTILITY
PART OF 165-8734 GRAPPLE GP-UTILITY
AN ATTACHMENT

SMCS-5457 **i01293213**

NOTE	REF NO	GRAPHIC REF	PART NUMBER	QTY	PART NAME 1 2 3 4 5 6 (PRODUCT LEVEL)	SEE PAGE
	1	1	**154-5013**	2	PIN	
M	2	1	**6V-9189**	2	LOCKNUT (M8X1.25 THD)	
M	3	1	**8T-6869**	2	BOLT (M8X1.25X60MM)	

M-METRIC PART

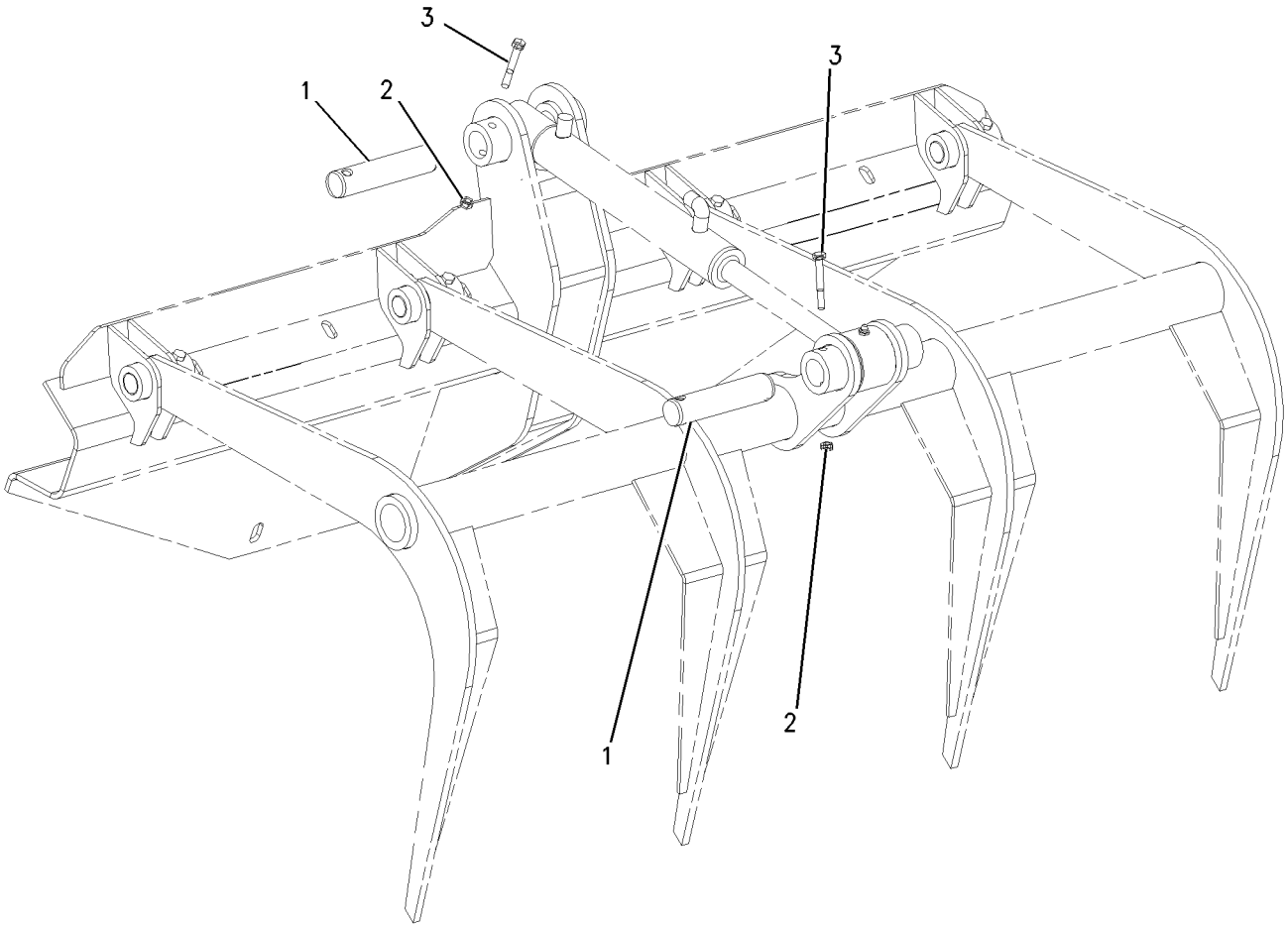

GRAPHIC #1 g00652937

177-1985 CYLINDER GP-BLADE

S/N: 4NZ3400-UP; 5FZ6700-UP
63MM(2.48 IN)BORE X 300MM(11.82 IN)STROKE
PART OF 177-1984 CYLINDER & MTG GP-BLADE
AN ATTACHMENT

SMCS-5101 **i01412039**

NOTE	REF NO	GRAPHIC REF	PART NUMBER	QTY	PART NAME 1 2 3 4 5 6 (PRODUCT LEVEL)	SEE PAGE
					AVAILABLE REPAIR KIT(S):	
			177-1958	1	KIT-SEAL	

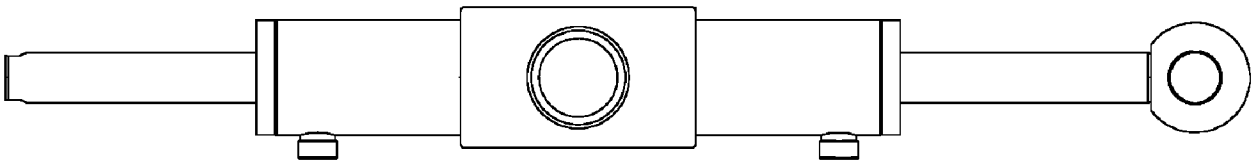

GRAPHIC #1 g00743237

154-5018 CYLINDER GP-BUCKET

S/N: 4NZ3400-UP; 5FZ6700-UP
60MM(2.3 IN)BORE X 200MM(7.7 IN)STROKE
PART OF 154-5004, 154-5008 BUCKET AR-MULTIPURPOSE
AN ATTACHMENT

SMCS-5498 **i01220865**

NOTE	REF NO	GRAPHIC REF	PART NUMBER	QTY	PART NAME 1 2 3 4 5 6 (PRODUCT LEVEL)	SEE PAGE
	1	1	**3B-8489**	1	FITTING-GREASE (1/8-27 THD)	
					AVAILABLE REPAIR KIT(S):	
			164-3213	1	KIT-SEAL	
					(INCLUDES O-RINGS, SEALS, BACK RINGS, PISTON GUIDE RING, SET SCREW AND WIPER RING)	

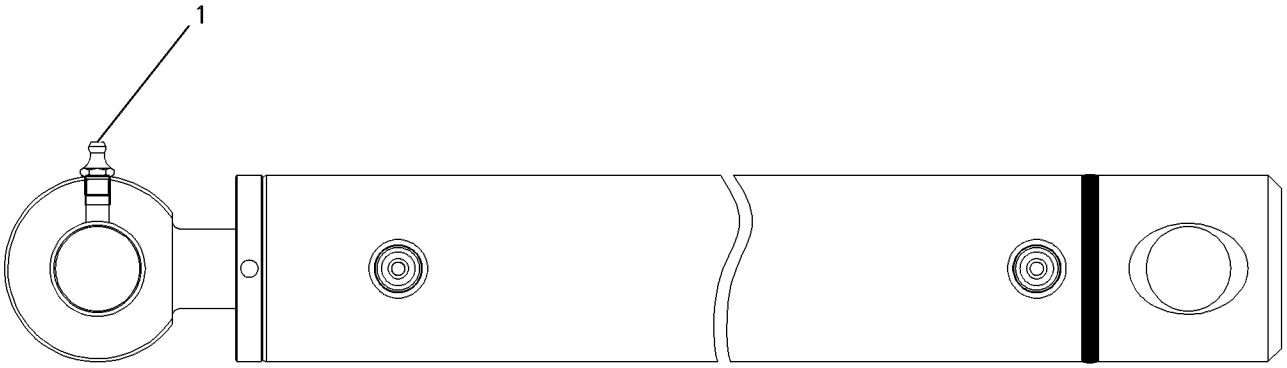

GRAPHIC #1 g00564347

156-5512 CYLINDER GP-GRAPPLE

S/N: 4NZ3400-UP; 5FZ6700-UP
60MM (2.3 IN) BORE X 200MM (7.7 IN) STROKE. INDUSTRIAL
PART OF 157-7223, 157-7224 BUCKET AR-GRAPPLE, 162-8139, 163-4812 FORK AR-GRAPPLE
AN ATTACHMENT

SMCS-5457 **i01292602**

NOTE	REF NO	GRAPHIC REF	PART NUMBER	QTY	PART NAME 1 2 3 4 5 6 (PRODUCT LEVEL)	SEE PAGE
	1	1	**3B-8489**	1	FITTING-GREASE (1/8-27 THD)	
					AVAILABLE REPAIR KIT(S):	
			164-3213	1	KIT-SEAL	
					(INCLUDES O-RINGS, SEALS, BACKRING, PISTON GUIDE RING, SET SCREW, AND WIPER RING)	

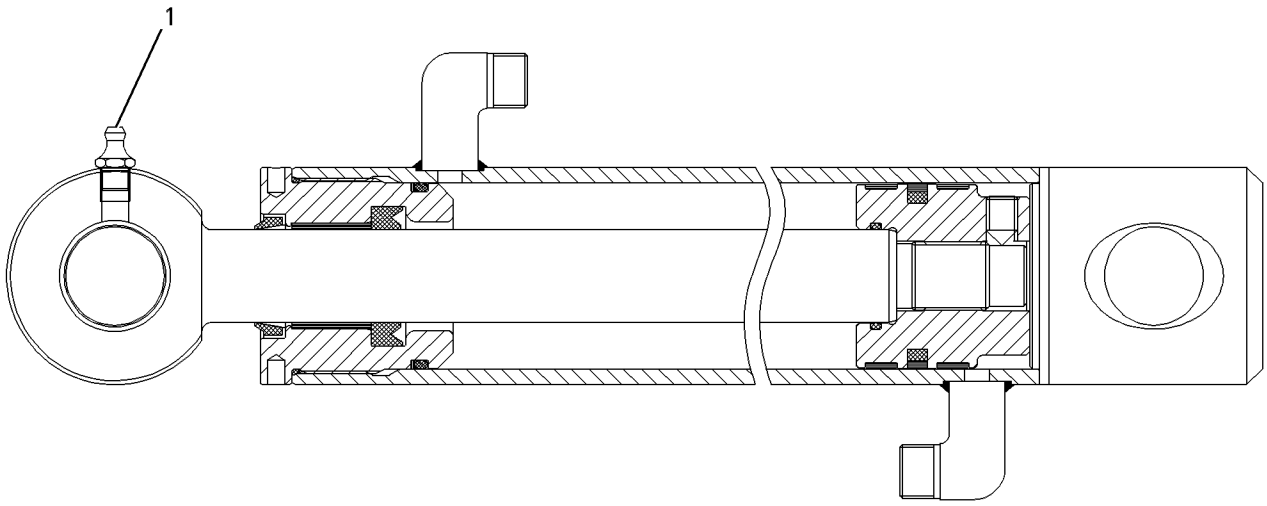

GRAPHIC #1 g00564366

HYDRAULIC SYSTEM

164-9295 CYLINDER GP-GRAPPLE

S/N: 4NZ3400-UP; 5FZ6700-UP
40MM (1.58 IN) BORE X 200MM (7.7 IN) STROKE
PART OF 165-8734 GRAPPLE GP-UTILITY
AN ATTACHMENT

SMCS-5457 **i01217084**

NOTE	REF NO	GRAPHIC REF	PART NUMBER	QTY	PART NAME 1 2 3 4 5 6 (PRODUCT LEVEL)	SEE PAGE
	1	1	**3B-8489**	1	FITTING-GREASE (1/8-27 THD)	
					AVAILABLE REPAIR KIT(S):	
			172-5285	1	KIT-SEAL	
					(INCLUDES WIPER RING, PISTON GUIDE RING, PISTON SEAL AND O-RINGS)	

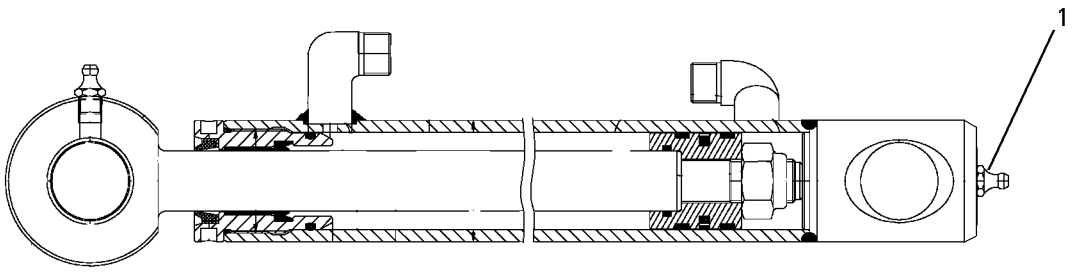

GRAPHIC #1 g00604934

142-8960 CYLINDER GP-LIFT

S/N: 4NZ3400-UP; 5FZ6700-UP
50MM (1.97 IN) BORE X 653MM (25.7 IN) STROKE. RIGHT HAND
PART OF 142-8799 CONTROL GP-WORK TOOL

SMCS-5102 **i01220875**

NOTE	REF NO	GRAPHIC REF	PART NUMBER	QTY	PART NAME 1 2 3 4 5 6 (PRODUCT LEVEL)	SEE PAGE
					AVAILABLE REPAIR KIT(S):	
			142-8962	1	KIT-SEAL	
					(INCLUDES O-RINGS, DOUBLE WIPER RING, SEAL AND BACK RING)	

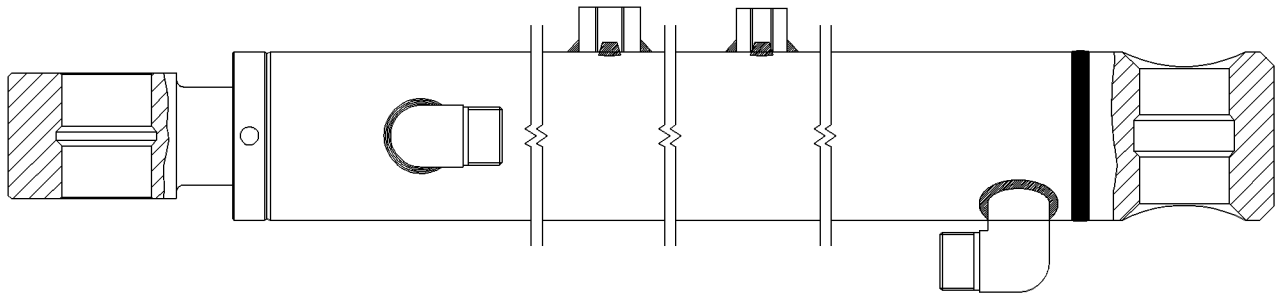

GRAPHIC #1 g00564394

HYDRAULIC SYSTEM

142-8961 CYLINDER GP-LIFT

S/N: 4NZ3400-UP; 5FZ6700-UP
50MM (1.97 IN) BORE X 653MM (25.7 IN) STROKE. LEFT HAND
PART OF 142-8799 CONTROL GP-WORK TOOL

SMCS-5102 **i01220877**

NOTE	REF NO	GRAPHIC REF	PART NUMBER	QTY	PART NAME 1 2 3 4 5 6 (PRODUCT LEVEL)	SEE PAGE
					AVAILABLE REPAIR KIT(S):	
			142-8962	1	KIT-SEAL	
					(INCLUDES O-RINGS, DOUBLE WIPER RING, SEAL, AND BACK RING)	

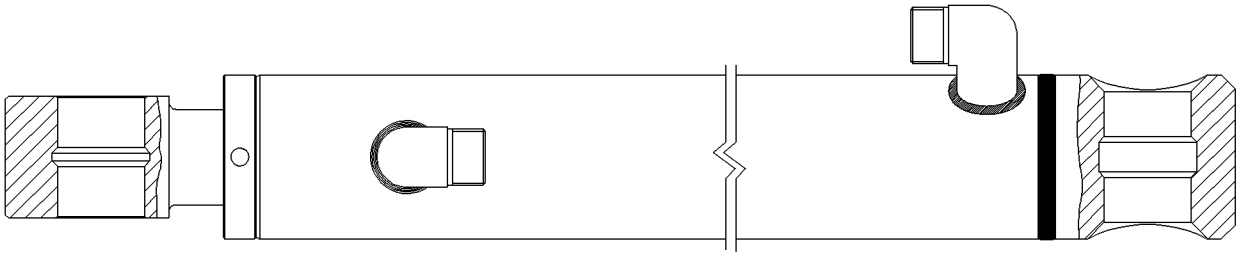

GRAPHIC #1 g00564369

191-9641 CYLINDER GP-LIFT

S/N: CAB1-UP; CMB1-UP
60MM (2.3 IN) BORE X 797MM (31.88 IN) STROKE
PART OF 191-9599 CONTROL GP-WORK TOOL

SMCS-5102 **i01755173**

NOTE	REF NO	GRAPHIC REF	PART NUMBER	QTY	PART NAME 1 2 3 4 5 6 (PRODUCT LEVEL)	SEE PAGE
	1	1	**6V-8398**	2	SEAL-O-RING	
					AVAILABLE REPAIR KIT(S):	
			191-9605	1	KIT-SEAL	
					(INCLUDES RINGS,SEALS,O-RINGS AND SET SCREW)	

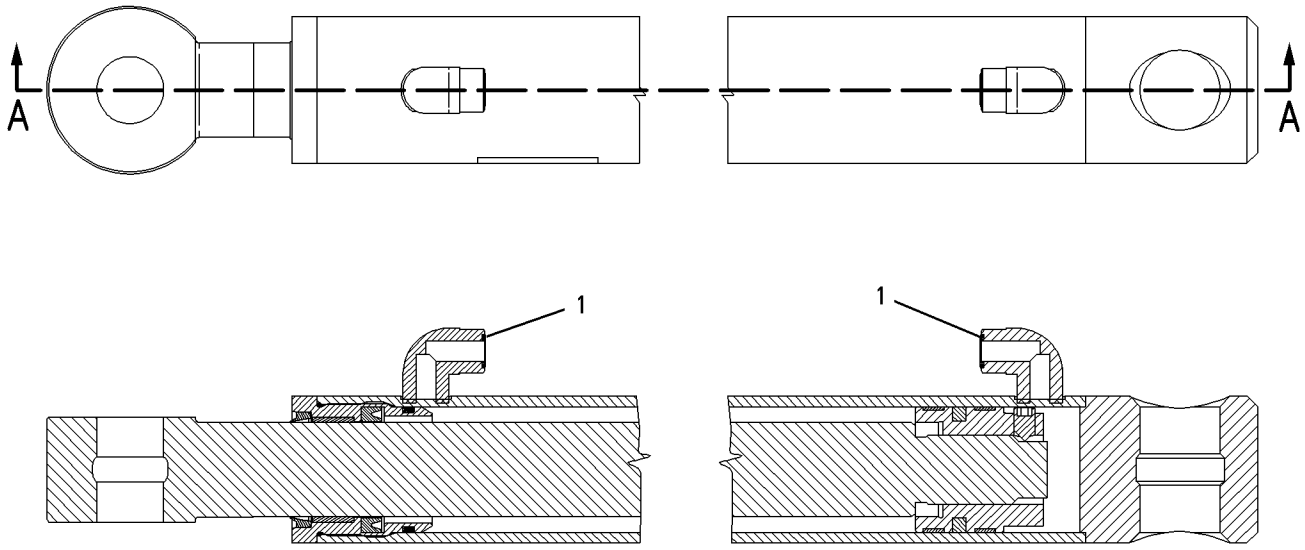

SECTION A-A

GRAPHIC #1 g00874738

177-9568 CYLINDER GP-TILT

S/N: CAB1-UP; CMB1-UP; 4NZ3400-UP; 5FZ6700-UP
65MM (2.6 IN) BORE X 295MM (11.6 IN) STROKE. RIGHT HAND
PART OF 142-8799, 191-9599 CONTROL GP-WORK TOOL

SMCS-5104 **i01755159**

NOTE	REF NO	GRAPHIC REF	PART NUMBER	QTY	PART NAME 1 2 3 4 5 6 (PRODUCT LEVEL)	SEE PAGE
	1	1	**3B-8489**	1	FITTING-GREASE (1/8-27 THD)	
					AVAILABLE REPAIR KIT(S):	
			142-8963	1	KIT-SEAL	
					(INCLUDES RINGS,SEALS,O-RINGS AND SET SCREW)	

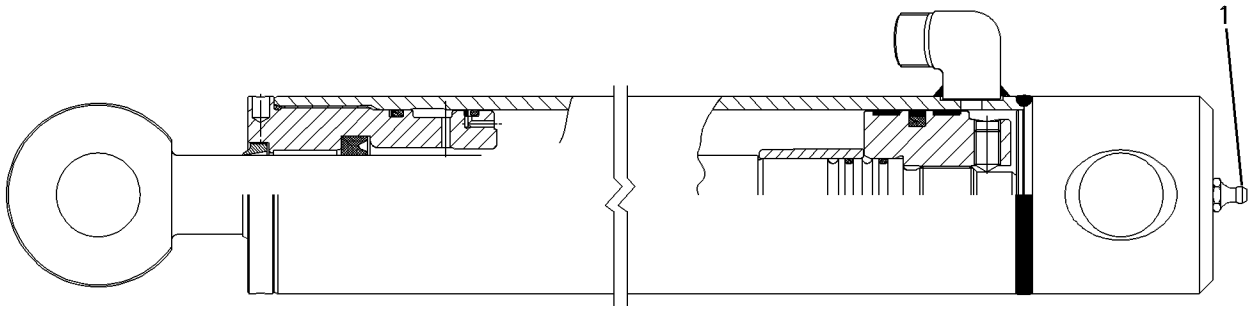

GRAPHIC #1 g00564362

HYDRAULIC SYSTEM

177-9569 CYLINDER GP-TILT

S/N: CAB1-UP; CMB1-UP; 4NZ3400-UP; 5FZ6700-UP
65MM (2.6 IN) BORE X 295MM (11.6 IN) STROKE. LEFT HAND
PART OF 142-8799, 191-9599 CONTROL GP-WORK TOOL

SMCS-5104 **i01755150**

NOTE	REF NO	GRAPHIC REF	PART NUMBER	QTY	PART NAME 1 2 3 4 5 6 (PRODUCT LEVEL)	SEE PAGE
	1	1	**3B-8489**	1	FITTING-GREASE (1/8-27 THD)	
					AVAILABLE REPAIR KIT(S):	
			142-8963	1	KIT-SEAL	
					(INCLUDES RINGS,SEALS,O-RINGS AND SET SCREW)	

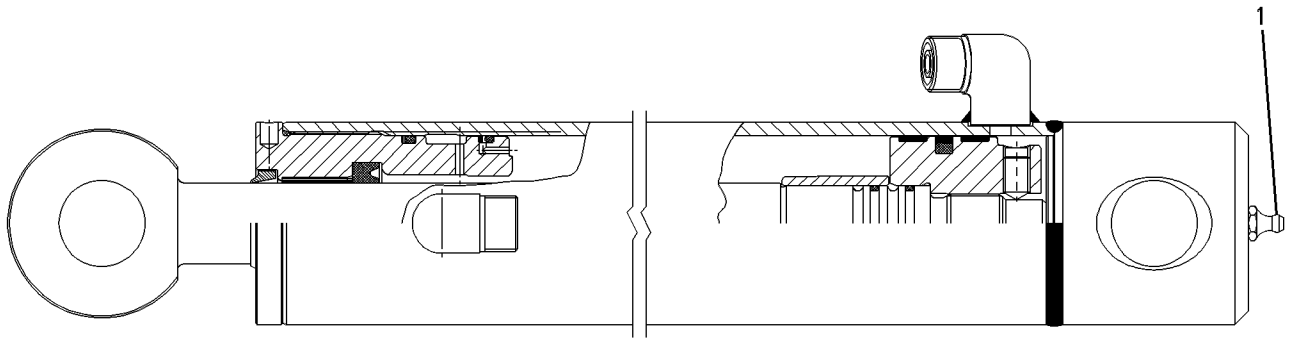

GRAPHIC #1 g00564358

HYDRAULIC SYSTEM

142-8716 HYDRAULIC AR

S/N: 4NZ3400-UP
WITH OUT TOOL POSITIONER
AN ATTACHMENT

SMCS-5050 **i01064033**

NOTE	PART NUMBER	QTY	PART NAME 1 2 3 4 5 6 (PRODUCT LEVEL)	SEE PAGE
Y	*142-8672*	1	LINES GP-LIFT CYLINDER	334
Y	*142-8673*	1	LINES GP-TILT CYLINDER	354

Y-SEPARATE ILLUSTRATION

<END>

142-8717 HYDRAULIC AR

S/N: 4NZ3400-UP
WITH TOOL POSITIONER
AN ATTACHMENT

SMCS-5050 **i01064974**

NOTE	PART NUMBER	QTY	PART NAME 1 2 3 4 5 6 (PRODUCT LEVEL)	SEE PAGE
Y	*142-8674*	1	LINES GP-LIFT CYLINDER	336
Y	*142-8675*	1	LINES GP-TILT CYLINDER	356
	142-9116	1	SWITCH AS	
	111-7899	1	GASKET	
Y	*159-5753*	1	VALVE & MTG GP-CONTROL	387

Y-SEPARATE ILLUSTRATION

<END>

191-9606 HYDRAULIC AR

S/N: CAB1-UP
PART OF 191-9600 COMMON AR

SMCS-5050 **i01753288**

NOTE	PART NUMBER	QTY	PART NAME 1 2 3 4 5 6 (PRODUCT LEVEL)	SEE PAGE
Y	*142-8980*	1	FILTER & MTG GP-HYDRAULIC	213
Y	*191-9672*	1	MOTOR & MTG GP-HYDRAULIC FAN	366
Y	*191-9711*	1	LINES GP-HYDRAULIC FILTER	216
Y	*193-0447*	1	ACCUMULATOR & MTG GP-HYDRAULIC	284
Y	*193-8307*	1	LINES GP-PILOT	344
Y	*195-6795*	1	PUMP & MTG GP-WORK TOOL	374
Y	*199-5320*	1	LINES GP-HYDRAULIC FAN	327
Y	*204-1490*	1	TANK & MTG GP-HYDRAULIC	376
Y	*207-9775*	1	LINES GP-HYDRAULIC OIL COOLER	332
Y	*212-4067*	1	LINES GP-PUMP	352
Y	*212-4090*	1	LINES GP-WORK TOOL	364
Y	*216-6113*	1	LINES GP-HYDRAULIC FAN	329
Y	*216-6128*	1	VALVE & MTG GP-CONTROL	385
Y	*216-6135*	1	LINES GP-PILOT	348

Y-SEPARATE ILLUSTRATION

<END>

HYDRAULIC SYSTEM

197-4916 HYDRAULIC AR

S/N: 4NZ3400-UP; 5FZ6700-UP
WITHOUT TOOL POSITIONER
AN ATTACHMENT

SMCS-5050 **i01538402**

NOTE	PART NUMBER	QTY	PART NAME 1 2 3 4 5 6 (PRODUCT LEVEL)	SEE PAGE
Y	*199-5282*	1	LINES GP-LIFT CYLINDER	338
Y	*199-5283*	1	LINES GP-TILT CYLINDER	358
Y-SEPARATE ILLUSTRATION				

<END>

197-4917 HYDRAULIC AR

S/N: 4NZ3400-UP; 5FZ6700-UP
WITH TOOL POSITIONER
CANNOT BE USED WITH 197-4916—PAGE 313
AN ATTACHMENT

SMCS-5050 **i01538414**

NOTE	PART NUMBER	QTY	PART NAME 1 2 3 4 5 6 (PRODUCT LEVEL)	SEE PAGE
Y	*199-5284*	1	LINES GP-LIFT CYLINDER	340
Y	*199-5285*	1	LINES GP-TILT CYLINDER	360
	142-9116	1	SWITCH AS (AUTO LEVELER)	
	111-7899	1	GASKET	
Y	*159-5753*	1	VALVE & MTG GP-DIVERTER	387
Y-SEPARATE ILLUSTRATION				

<END>

HYDRAULIC SYSTEM

200-0806 HYDRAULIC AR

S/N: 4NZ3400-UP

PART OF 200-0800 COMMON AR

SMCS-5050 **i01649753**

NOTE	PART NUMBER	QTY	PART NAME 1 2 3 4 5 6 (PRODUCT LEVEL)	SEE PAGE
Y	*193-0447*	1	ACCUMULATOR & MTG GP-HYDRAULIC	284
Y	*142-8980*	1	FILTER & MTG GP-HYDRAULIC	213
Y	*207-9715*	1	LINES GP-HYDRAULIC FAN	328
Y	*195-6785*	1	LINES GP-HYDRAULIC FILTER	218
Y	*195-6749*	1	LINES GP-HYDRAULIC OIL COOLER	330
Y	*193-0453*	1	LINES GP-PILOT	342
Y	*206-3793*	1	LINES GP-PILOT	346
Y	*195-6730*	1	LINES GP-PUMP	350
Y	*195-6790*	1	LINES GP-HYDRAULIC FAN	326
Y	*195-6780*	1	LINES GP-WORK TOOL	362
Y	*191-9672*	1	MOTOR & MTG GP-HYDRAULIC FAN	366
Y	*195-6795*	1	PUMP & MTG GP-WORK TOOL	374
Y	*204-1490*	1	TANK & MTG GP-HYDRAULIC	376
			—OR—	
Y	*207-9740*	1	TANK & MTG GP-HYDRAULIC	377
Y	*191-9731*	1	VALVE & MTG GP-CONTROL	380

Y-SEPARATE ILLUSTRATION

<END>

200-1006 HYDRAULIC AR

S/N: 5FZ6700-UP

PART OF 200-1000 COMMON AR

SMCS-5050 **i01618327**

NOTE	PART NUMBER	QTY	PART NAME 1 2 3 4 5 6 (PRODUCT LEVEL)	SEE PAGE
Y	*193-0447*	1	ACCUMULATOR & MTG GP-HYDRAULIC	284
Y	*142-8980*	1	FILTER & MTG GP-HYDRAULIC	213
Y	*207-9715*	1	LINES GP-HYDRAULIC FAN	328
	195-6785	1	LINES GP-HYDRAULIC FILTER	
Y	*206-3775*	1	LINES GP-HYDRAULIC OIL COOLER	331
Y	*193-0453*	1	LINES GP-PILOT	342
Y	*206-3793*	1	LINES GP-PILOT	346
Y	*195-6730*	1	LINES GP-PUMP	350
Y	*195-6790*	1	LINES GP-HYDRAULIC FAN	326
Y	*195-6780*	1	LINES GP-WORK TOOL	362
Y	*192-2695*	1	PUMP & MTG GP-WORK TOOL	373
Y	*207-9740*	1	TANK & MTG GP-HYDRAULIC	377
Y	*191-9757*	1	VALVE & MTG GP-CONTROL	382

Y-SEPARATE ILLUSTRATION

<END>

HYDRAULIC SYSTEM

216-6136 HYDRAULIC AR

S/N: CMB1-UP

PART OF 191-2900 COMMON AR

SMCS-5050 **i01754954**

NOTE	PART NUMBER	QTY	PART NAME 1 2 3 4 5 6 (PRODUCT LEVEL)	SEE PAGE
Y	*142-8980*	1	FILTER & MTG GP-HYDRAULIC	213
Y	*191-9673*	1	MOTOR & MTG GP-HYDRAULIC FAN	367
Y	*191-9711*	1	LINES GP-HYDRAULIC FILTER	216
Y	*192-2695*	1	PUMP & MTG GP-WORK TOOL	373
Y	*193-0447*	1	ACCUMULATOR & MTG GP-HYDRAULIC	284
Y	*193-8307*	1	LINES GP-PILOT	344
Y	*199-5320*	1	LINES GP-HYDRAULIC FAN	327
Y	*204-1490*	1	TANK & MTG GP-HYDRAULIC	376
Y	*207-9775*	1	LINES GP-HYDRAULIC OIL COOLER	332
Y	*212-4067*	1	LINES GP-PUMP	352
Y	*212-4090*	1	LINES GP-WORK TOOL	364
Y	*216-6113*	1	LINES GP-HYDRAULIC FAN	329
Y	*216-6135*	1	LINES GP-PILOT	348
Y	*216-6137*	1	VALVE & MTG GP-CONTROL	386

Y-SEPARATE ILLUSTRATION

<END>

HYDRAULIC SYSTEM

154-5019 LINES GP-BUCKET

S/N: 4NZ3400-UP; 5FZ6700-UP
PART OF 154-5004 BUCKET AR-MULTIPURPOSE
AN ATTACHMENT

SMCS-5057, 5498, 6104 **i01511898**

NOTE	REF NO	GRAPHIC REF	PART NUMBER	QTY	PART NAME 1 2 3 4 5 6 (PRODUCT LEVEL)	SEE PAGE
	1	1	**153-2994**	1	COUPLING (INTERNAL)	
	2	1	**153-2995**	1	COUPLING (EXTERNAL)	
I	3	1	**154-5020**	2	HOSE AS	
I	4	1	**154-5021**	1	HOSE AS	
I	5	1	**154-5022**	1	HOSE AS	
I	6	1	**154-5024**	1	HOSE AS	
I	7	1	**154-5025**	1	HOSE AS	
	8	1	**163-1386**	1	TEE-UNION	
	9	1	*148-8319*	2	CONNECTOR GP	
					(EACH INCLUDES)	
		1	**2M-9780**	1	SEAL-O-RING	
		1	**6V-8397**	1	SEAL-O-RING	
		1	**6V-8715**	1	CONNECTOR	
	10	1	*150-3056*	1	FITTING GP	
		1	**6V-8397**	3	SEAL-O-RING	
		1	**6V-8788**	1	TEE	
	11	1	**1S-0994**	1	CLIP (SLOT)	
M	12	1	**5C-7261**	4	NUT (M8X1.25 THD)	
	13	1	**6D-4247**	3	CLIP	
	14	1	**6V-8397**	7	SEAL-O-RING	
	15	1	**9X-6273**	2	WASHER (32.5X50X0.8MM THK)	
	16	1	**9X-6274**	2	WASHER (32.5X50X1.6MM THK)	

I-SEE HOSE FABRICATION GUIDE
M-METRIC PART

154-5019 **LINES GP-BUCKET** ***(contd.)*** **i01511898**

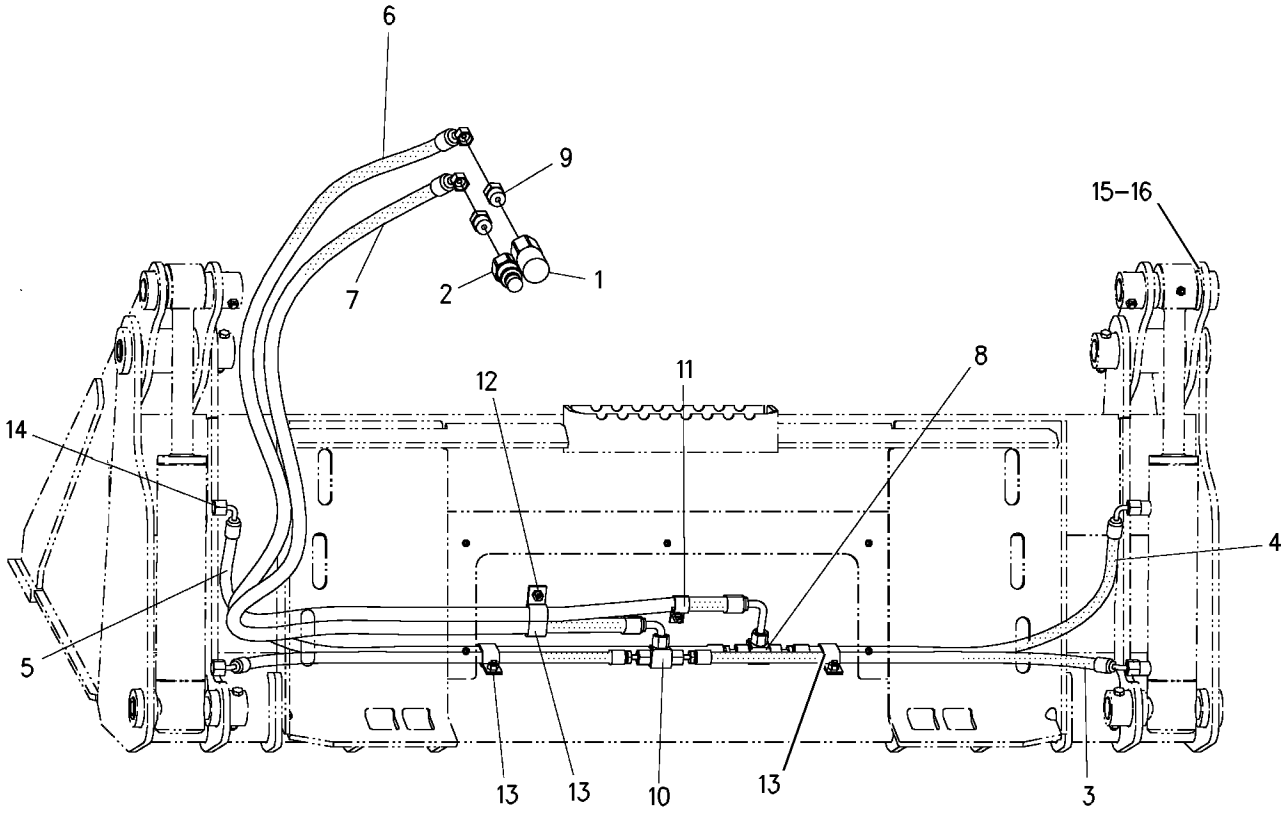

GRAPHIC #1 g00709984

HYDRAULIC SYSTEM

154-5051 LINES GP-BUCKET

S/N: 4NZ3400-UP; 5FZ6700-UP
PART OF 154-5008 BUCKET AR-MULTIPURPOSE
AN ATTACHMENT

SMCS-5057, 5498, 6104 **i01519548**

NOTE	REF NO	GRAPHIC REF	PART NUMBER	QTY	PART NAME 1 2 3 4 5 6 (PRODUCT LEVEL)	SEE PAGE
	1	1	**153-2994**	1	COUPLING (INTERNAL)	
	2	1	**153-2995**	1	COUPLING (EXTERNAL)	
I	3	1	**154-5024**	1	HOSE AS	
I	4	1	**154-5025**	1	HOSE AS	
I	5	1	**156-5508**	1	HOSE AS	
I	6	1	**156-5509**	2	HOSE AS	
I	7	1	**156-5510**	1	HOSE AS	
	8	1	**163-1386**	1	TEE-UNION	
	9	1	*148-8319*	2	CONNECTOR GP	
					(EACH INCLUDES)	
		1	**2M-9780**	1	SEAL-O-RING	
		1	**6V-8397**	1	SEAL-O-RING	
		1	**6V-8715**	1	CONNECTOR	
	10	1	*150-3056*	1	FITTING GP	
		1	**6V-8397**	3	SEAL-O-RING	
		1	**6V-8788**	1	TEE	
	11	1	**1S-0994**	1	CLIP (SLOT)	
M	12	1	**5C-7261**	4	NUT (M8X1.25 THD)	
	13	1	**6D-4247**	3	CLIP	
	14	1	**6V-8397**	7	SEAL-O-RING	
	15	1	**9X-6273**	2	WASHER (32.5X50X0.8MM THK)	
	16	1	**9X-6274**	2	WASHER (32.5X50X1.6MM THK)	

I-SEE HOSE FABRICATION GUIDE
M-METRIC PART

154-5051 **LINES GP-BUCKET** ***(contd.)*** **i01519548**

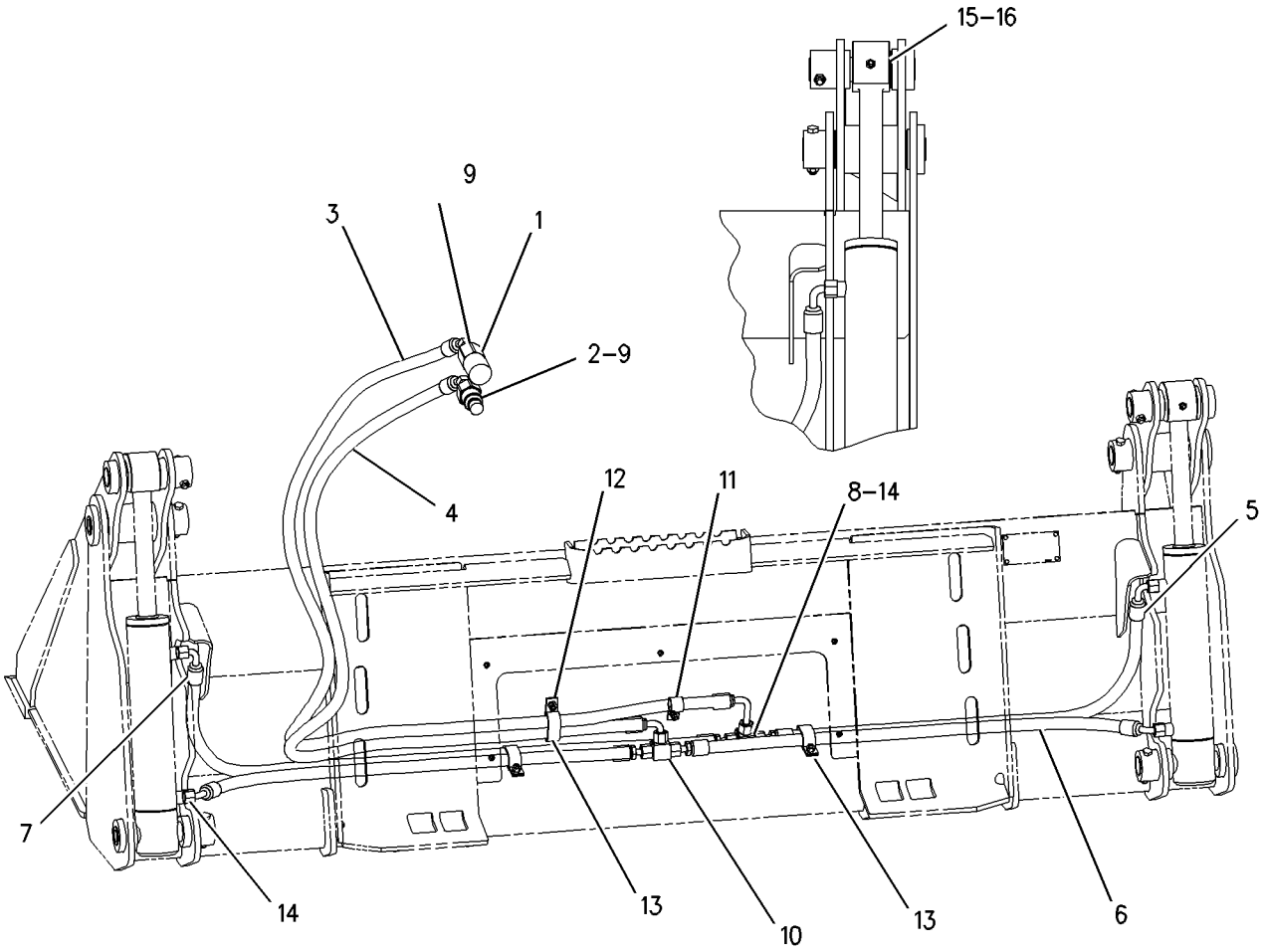

GRAPHIC #1 g00789002

HYDRAULIC SYSTEM

177-1986 LINES GP-CONNECTING

S/N: 4NZ3400-UP; 5FZ6700-UP
PART OF 177-1989 BLADE AR
AN ATTACHMENT

SMCS-5057 **i01519488**

NOTE	REF NO	GRAPHIC REF	PART NUMBER	QTY	PART NAME 1 2 3 4 5 6 (PRODUCT LEVEL)	SEE PAGE
	1	1	**153-2994**	1	COUPLING	
	2	1	**153-2995**	1	COUPLING	
	3	1	**163-1385**	2	ELBOW	
I	4	1	**177-1910**	2	HOSE AS	
I	5	1	**177-1911**	1	HOSE AS	
I	6	1	**177-1912**	1	HOSE AS	
	7	1	**2M-9780**	2	SEAL-O-RING	
	8	1	**3J-1907**	2	SEAL-O-RING	
	9	1	**6V-8397**	8	SEAL-O-RING	
	10	1	**6V-8715**	2	CONNECTOR	
	11	1	**6V-8724**	2	ELBOW	
	12	1	**8T-4121**	4	WASHER-HARD (11X21X2.5MM THK)	
M	13	1	**8T-4133**	2	NUT (M10X1.5 THD)	
M	14	1	**8T-4185**	1	BOLT (M10X1.5X50MM)	
M	15	1	**8T-4195**	1	BOLT (M10X1.5X30MM)	
	16	1	**8T-8192**	2	CLIP (SLOT)	
	17	1	**8T-8193**	2	CLIP (TAB)	

I-SEE HOSE FABRICATION GUIDE
M-METRIC PART

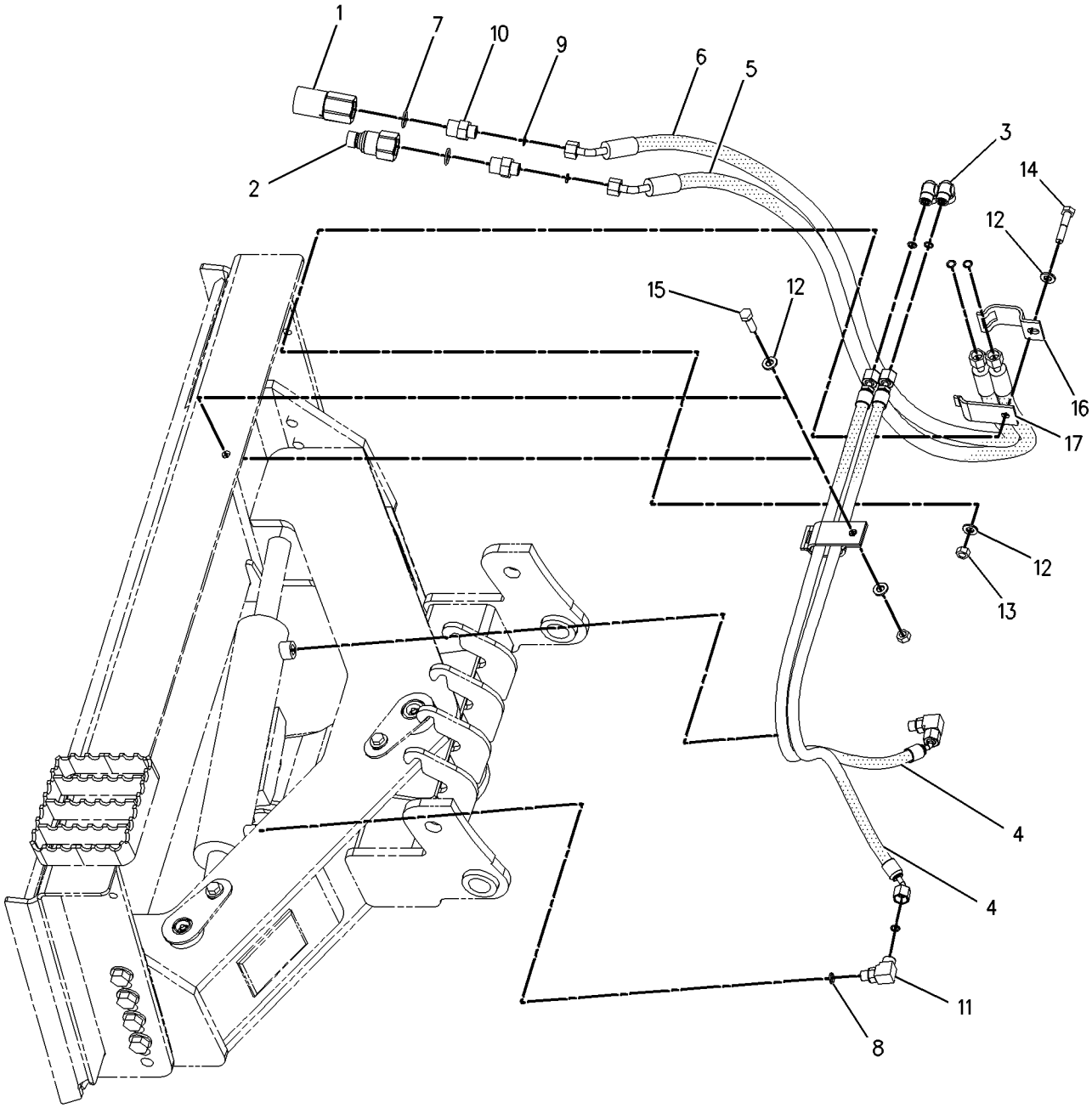

GRAPHIC #1 g00788956

HYDRAULIC SYSTEM

161-0187 LINES GP-GRAPPLE

S/N: 4NZ3400-UP; 5FZ6700-UP
INDUSTRIAL
PART OF 157-7223, 157-7224 BUCKET AR-GRAPPLE, 162-8139, 163-4812 FORK AR-GRAPPLE
AN ATTACHMENT

SMCS-5057 **i01391572**

NOTE	REF NO	GRAPHIC REF	PART NUMBER	QTY	PART NAME 1 2 3 4 5 6 (PRODUCT LEVEL)	SEE PAGE
	1	1	**3E-7404**	2	CLAMP-HOSE	
	2	1	**153-2994**	1	COUPLING	
	3	1	**153-2995**	1	COUPLING	
	4	1	**161-0185**	1	TUBE AS	
	5	1	**161-0186**	1	TUBE AS	
	6	1	**161-0188**	2	TUBE AS	
I	7	1	**161-0189**	2	HOSE AS	
I	8	1	**161-0190**	2	HOSE AS	
	9	1	**163-1385**	1	ELBOW	
I	10	1	**163-9320**	1	HOSE AS	
I	11	1	**166-9312**	1	HOSE AS	
	12	1	*148-8319*	2	CONNECTOR GP	
					(EACH INCLUDES)	
		1	**2M-9780**	1	SEAL-O-RING (19.18MM ID)	
		1	**6V-8397**	1	SEAL-O-RING (9.27MM ID)	
		1	**6V-8715**	1	CONNECTOR	
	13	1	**2V-3216**	6	CLIP	
	14	1	**6V-8397**	13	SEAL-O-RING (9.27MM ID)	
	15	1	**7S-3916**	2	CLIP (TAB)	
	16	1	**7S-3919**	2	CLIP (SLOT)	
	17	1	**8T-4121**	2	WASHER-HARD (11X21X2.5MM THK)	
M	18	1	**8T-4136**	2	BOLT (M10X1.5X25MM)	
M	19	1	**8T-4171**	4	BOLT (M6X1.0X12MM)	
	20	1	**9R-2004**	2	BLOCK	

I-SEE HOSE FABRICATION GUIDE
M-METRIC PART

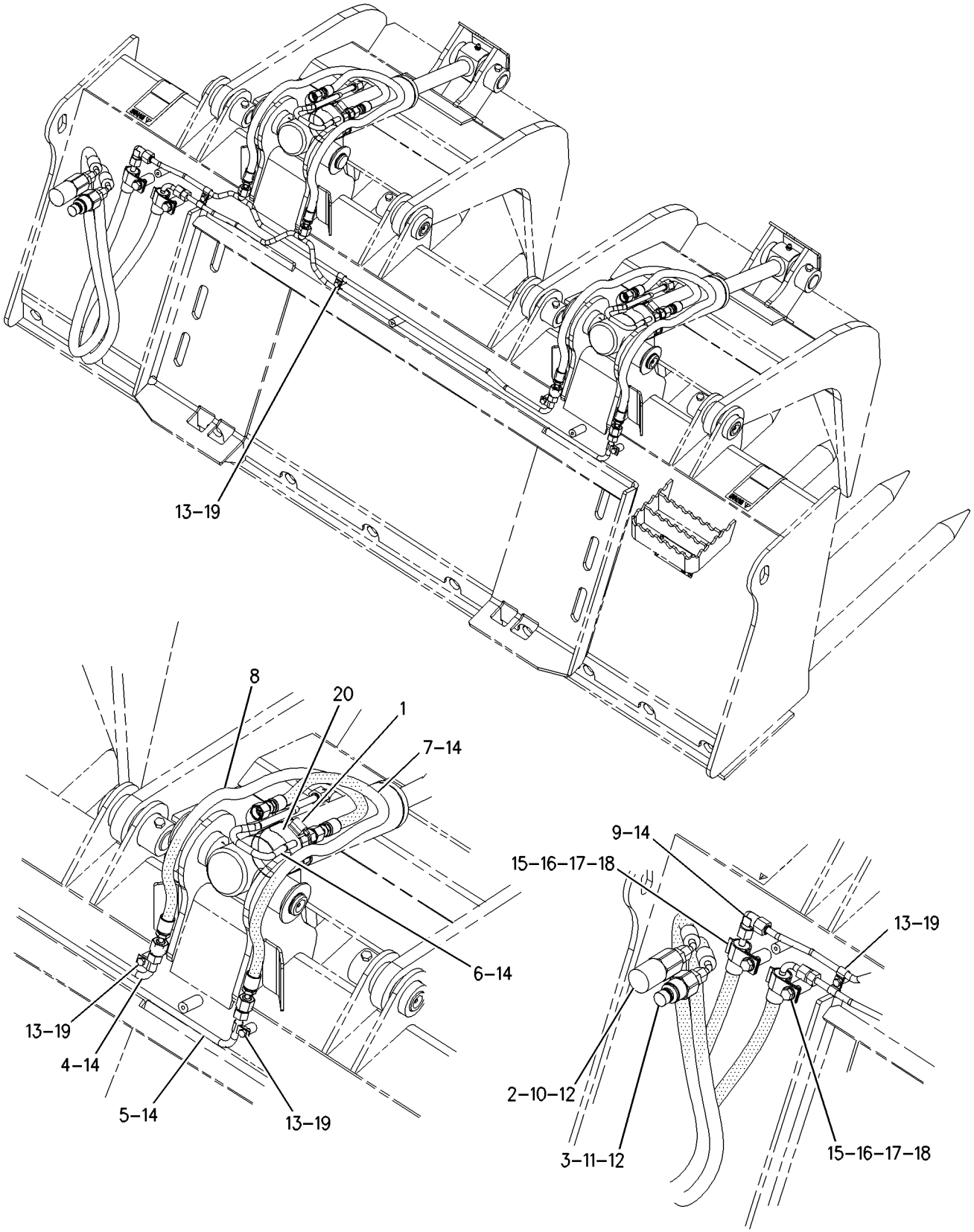

GRAPHIC #1

g00733464

HYDRAULIC SYSTEM

165-8733 LINES GP-GRAPPLE

S/N: 4NZ3400-UP; 5FZ6700-UP
UTILITY
PART OF 165-8734 GRAPPLE GP-UTILITY
AN ATTACHMENT

SMCS-5057 **i01519512**

NOTE	REF NO	GRAPHIC REF	PART NUMBER	QTY	PART NAME 1 2 3 4 5 6 (PRODUCT LEVEL)	SEE PAGE
	1	1	**2J-6540**	1	CLAMP	
	2	1	**153-2994**	1	COUPLING	
	3	1	**153-2995**	1	COUPLING	
	4	1	**183-4085**	1	ELBOW AS	
I	5	1	**174-2384**	1	HOSE AS	
I	6	1	**174-2385**	1	HOSE AS	
	7	1	**174-2388**	1	TUBE AS	
	8	1	**174-2389**	1	TUBE AS	
I	9	1	**174-2393**	2	HOSE AS	
	10	1	**9R-2004**	1	BLOCK	
	11	1	**174-3097**	1	TUBE AS	
	12	1	*148-8319*	2	CONNECTOR GP	
					(EACH INCLUDES)	
		1	**2M-9780**	1	SEAL-O-RING	
		1	**6V-8397**	1	SEAL-O-RING	
		1	**6V-8715**	1	CONNECTOR	
	13	1	**6V-8397**	8	SEAL-O-RING	
	14	1	**7S-3912**	2	CLIP (TAB)	
	15	1	**7S-3913**	2	CLIP (SLOT)	
	16	1	**8T-1893**	2	CLIP (SLOT)	
	17	1	**8T-1894**	2	CLIP (TAB)	
	18	1	**8T-4121**	6	WASHER-HARD (11X21X2.5MM THK)	
M	19	1	**8T-4137**	4	BOLT (M10X1.5X20MM)	

I-SEE HOSE FABRICATION GUIDE
M-METRIC PART

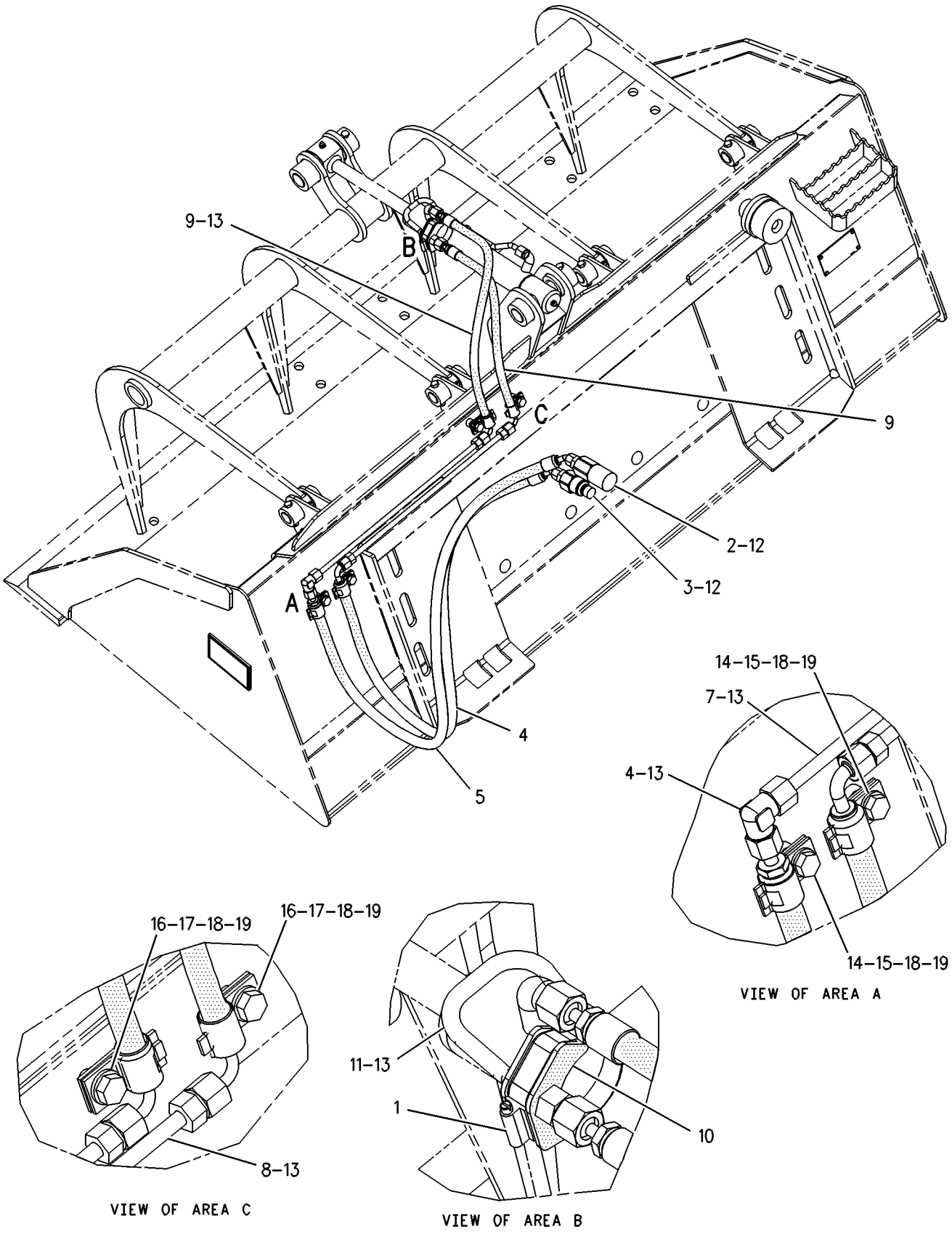

GRAPHIC #1

g00788978

HYDRAULIC SYSTEM

195-6790 LINES GP-HYDRAULIC FAN

S/N: 4NZ3400-UP; 5FZ6700-UP

PART OF 200-0806, 200-1006 HYDRAULIC AR

SMCS-5057 **i01538306**

NOTE	REF NO	GRAPHIC REF	PART NUMBER	QTY	PART NAME 1 2 3 4 5 6 (PRODUCT LEVEL)	SEE PAGE
I	1	1	**193-8311**	1	HOSE AS	
	2	1	*148-8315*	1	CONNECTOR GP	
		1	**2M-9780**	1	SEAL-O-RING	
		1	**6V-8642**	1	CONNECTOR	
		1	**7J-9108**	1	SEAL-O-RING	
	3	1	**4S-1962**	1	CLIP	
	4	1	**7X-7729**	2	WASHER (11X25X3MM THK)	
M	5	1	**8T-4133**	1	NUT (M10X1.5 THD)	

I-SEE HOSE FABRICATION GUIDE
M-METRIC PART

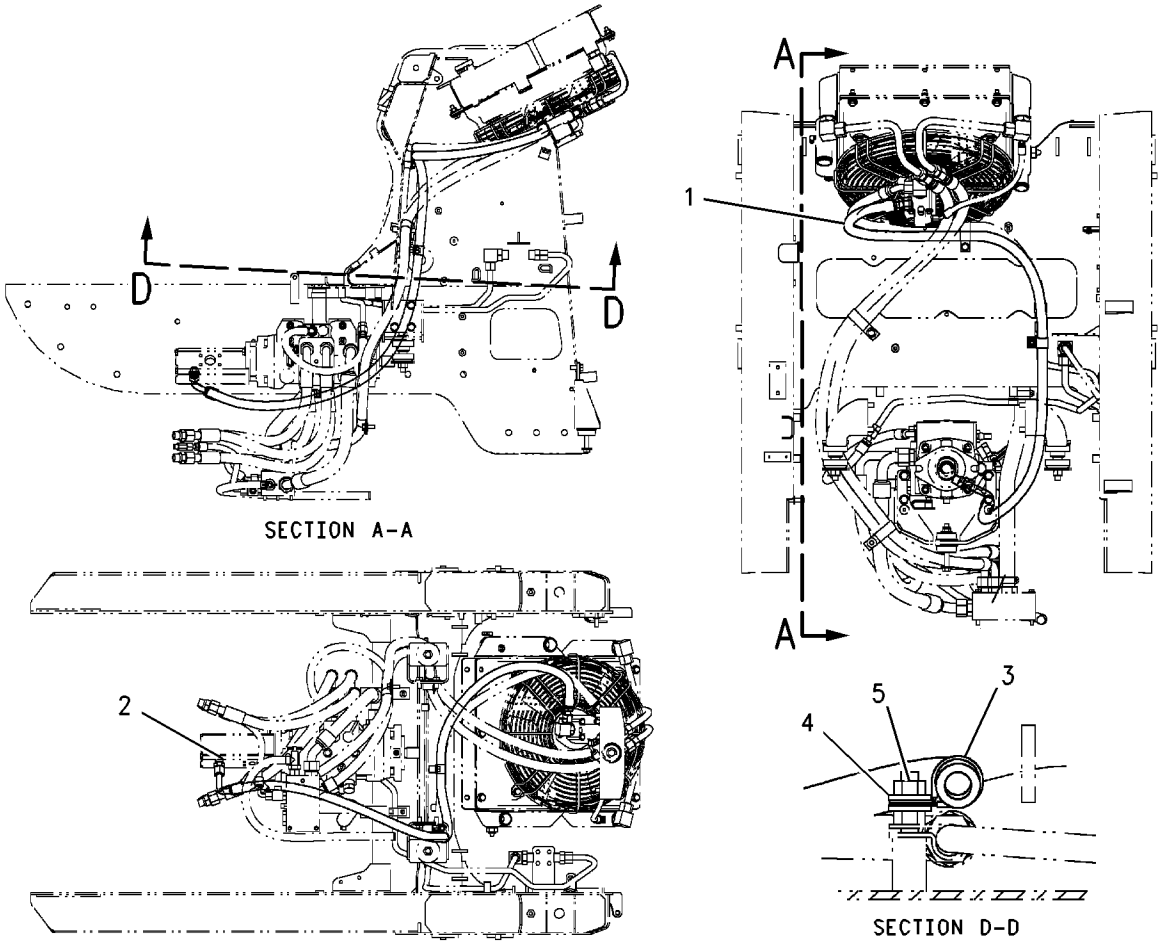

GRAPHIC #1 g00805997

HYDRAULIC SYSTEM

199-5320 LINES GP-HYDRAULIC FAN

S/N: CAB1-UP; CMB1-UP

PART OF 191-9606, 216-6136 HYDRAULIC AR

SMCS-5057 **i01678835**

NOTE	REF NO	GRAPHIC REF	PART NUMBER	QTY	PART NAME 1 2 3 4 5 6 (PRODUCT LEVEL)	SEE PAGE
	1	1	**6V-0394**	1	CONNECTOR-PORT	
I	2	1	**199-5321**	1	HOSE AS	
I	3	1	**204-1410**	1	HOSE AS	
	4	1	*148-8316*	1	CONNECTOR GP	
		1	**3J-7354**	1	SEAL-O-RING	
		1	**4J-5477**	1	SEAL-O-RING	
		1	**6V-8647**	1	CONNECTOR	
	5	1	*148-8390*	2	ELBOW GP	
					(EACH INCLUDES)	
		1	**2M-9780**	1	SEAL-O-RING	
		1	**6V-8626**	1	ELBOW	
		1	**7J-9108**	1	SEAL-O-RING	
	6	1	**4J-7533**	1	SEAL-O-RING	
	7	1	**4K-8864**	1	CLIP	

I-SEE HOSE FABRICATION GUIDE

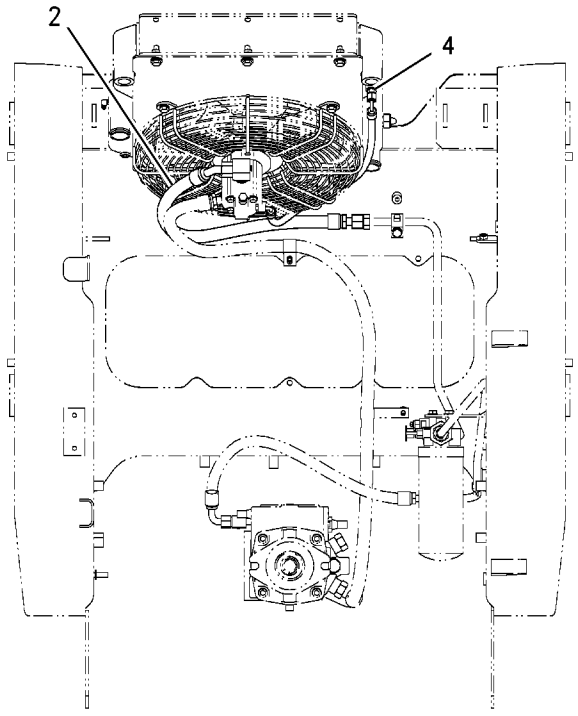

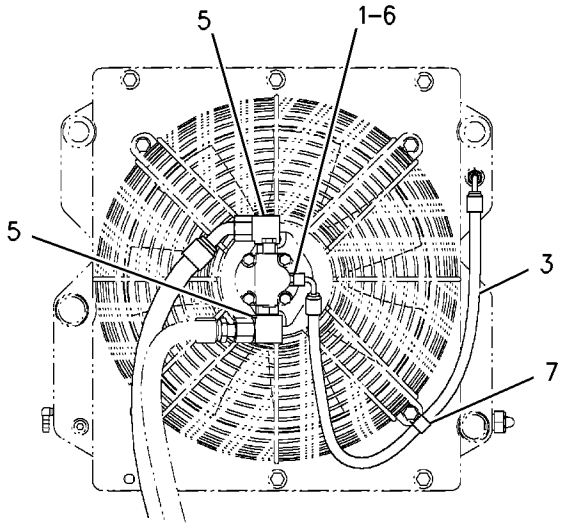

BOTTOM VIEW OF RADIATOR

GRAPHIC #1 g00866805

HYDRAULIC SYSTEM

207-9715 LINES GP-HYDRAULIC FAN

S/N: 4NZ3400-UP; 5FZ6700-UP

PART OF 200-0806, 200-1006 HYDRAULIC AR

SMCS-5057 **i01626086**

NOTE	REF NO	GRAPHIC REF	PART NUMBER	QTY	PART NAME 1 2 3 4 5 6 (PRODUCT LEVEL)	SEE PAGE
	1	1	**6V-0394**	1	CONNECTOR-PORT	
I	2	1	**142-8971**	1	HOSE AS	
I	3	1	**204-1410**	1	HOSE AS	
	4	1	*148-8316*	1	CONNECTOR GP	
		1	**3J-7354**	1	SEAL-O-RING	
		1	**4J-5477**	1	SEAL-O-RING	
		1	**6V-8647**	1	CONNECTOR	
	5	1	*148-8390*	2	ELBOW GP	
					(EACH INCLUDES)	
		1	**2M-9780**	1	SEAL-O-RING	
		1	**6V-8626**	1	ELBOW	
		1	**7J-9108**	1	SEAL-O-RING	
	6	1	**4J-7533**	1	SEAL-O-RING	
	7	1	**4K-8864**	1	CLIP	
	8	1	**6D-1641**	1	CLIP	
	9	1	**8T-4121**	1	WASHER-HARD (11X21X2.5MM THK)	
M	10	1	**8T-4136**	1	BOLT (M10X1.5X25MM)	

I-SEE HOSE FABRICATION GUIDE
M-METRIC PART

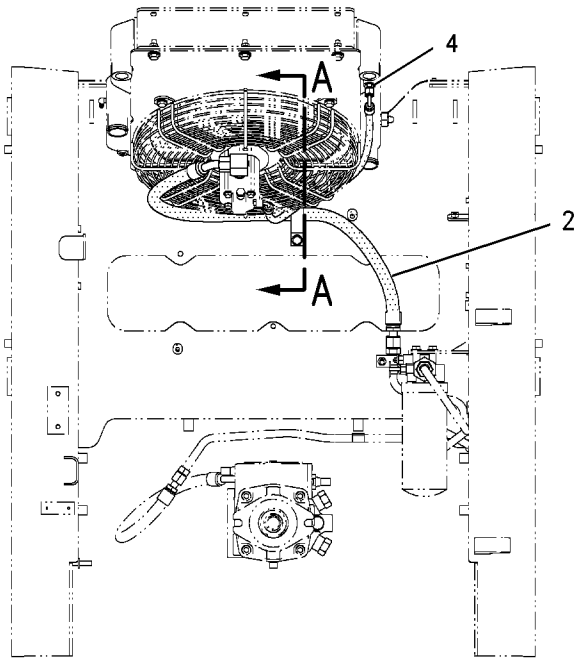

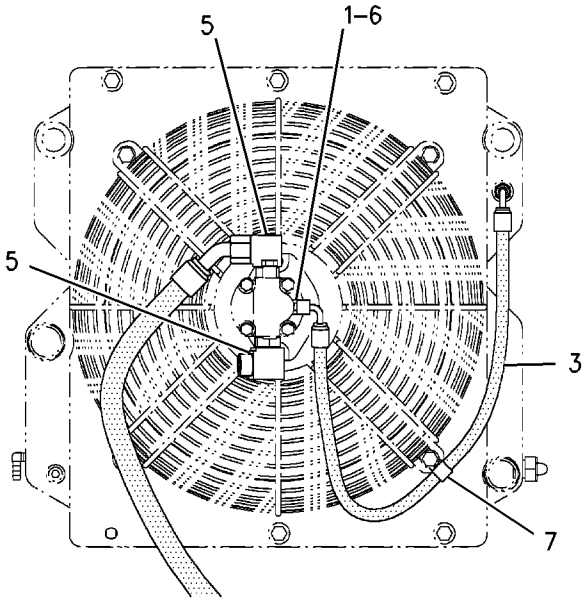

RADIATER BOTTOM VIEW

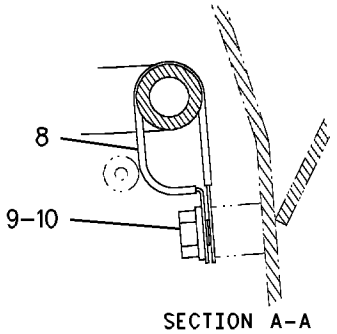

SECTION A-A

GRAPHIC #1 g00842346

HYDRAULIC SYSTEM

216-6113 LINES GP-HYDRAULIC FAN

S/N: CAB1-UP; CMB1-UP

PART OF 191-9606, 216-6136 HYDRAULIC AR

SMCS-5057 **i01692557**

NOTE	REF NO	GRAPHIC REF	PART NUMBER	QTY	PART NAME 1 2 3 4 5 6 (PRODUCT LEVEL)	SEE PAGE
I	1	1	**193-8311**	1	HOSE AS	
	2	1	*148-8315*	1	CONNECTOR GP	
		1	**2M-9780**	1	SEAL-O-RING	
		1	**6V-8642**	1	CONNECTOR	
		1	**7J-9108**	1	SEAL-O-RING	
	3	1	**4S-1962**	2	CLIP	
	4	1	**7X-7729**	1	WASHER (11X25X3MM THK)	
M	5	1	**8T-4195**	1	BOLT (M10X1.5X30MM)	

I-SEE HOSE FABRICATION GUIDE
M-METRIC PART

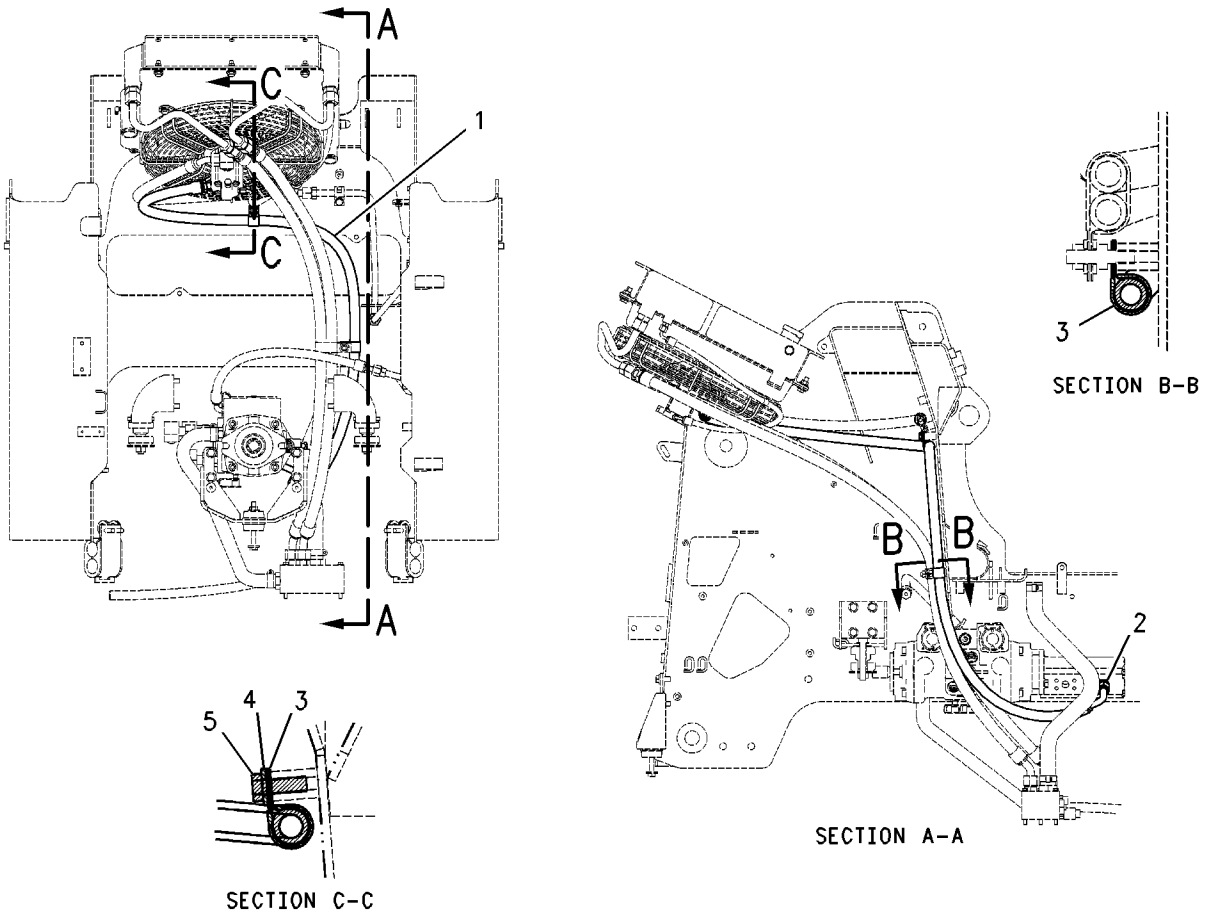

GRAPHIC #1 g00871467

HYDRAULIC SYSTEM

195-6749 LINES GP-HYDRAULIC OIL COOLER

S/N: 4NZ3400-UP; 5FZ6700-UP

PART OF 200-0806, 200-1006 HYDRAULIC AR

SMCS-5057 **i01755131**

NOTE	REF NO	GRAPHIC REF	PART NUMBER	QTY	PART NAME 1 2 3 4 5 6 (PRODUCT LEVEL)	SEE PAGE
I	1	1	**142-8976**	2	HOSE AS	
	2	1	**204-1380**	1	TUBE AS	
	3	1	**204-1381**	1	TUBE AS	
	4	1	**5D-0718**	2	CLIP	
	5	1	**6V-9746**	2	SEAL-O-RING	
	6	1	**7X-7729**	3	WASHER (11X25X3MM THK)	
M	7	1	**8T-4195**	2	BOLT (M10X1.5X30MM)	
	8	1	**148-8327**	2	CONNECTOR GP	
					(EACH INCLUDES)	
		1	**3D-2824**	1	SEAL-O-RING	
		1	**6V-8637**	1	CONNECTOR-SEAL	
		1	**6V-9746**	1	SEAL-O-RING	

I-SEE HOSE FABRICATION GUIDE
M-METRIC PART

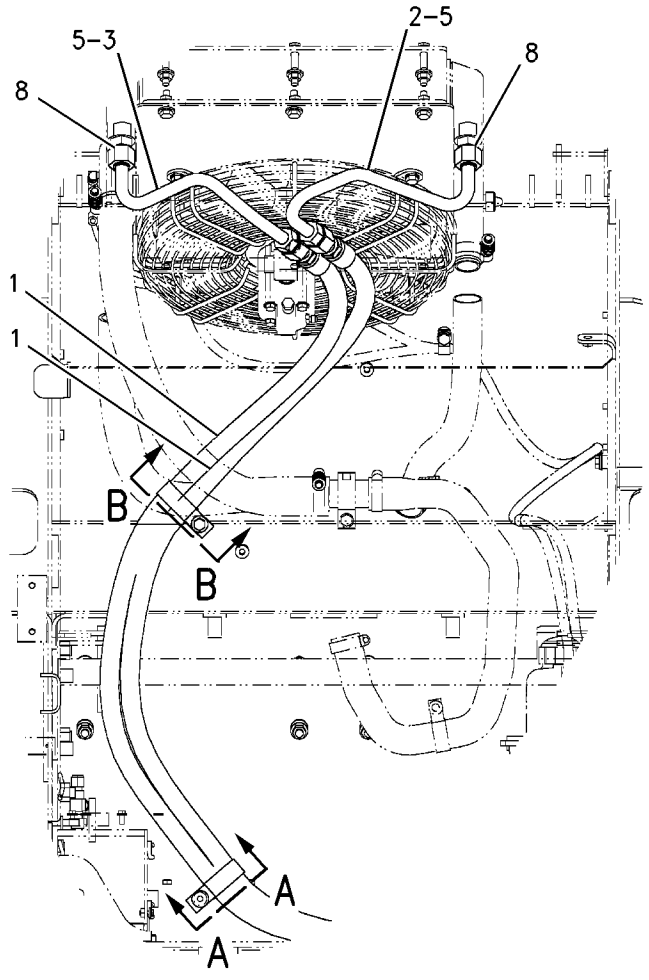

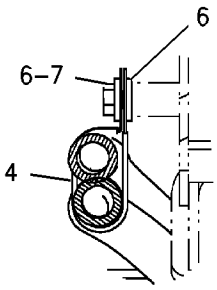

SECTION A-A

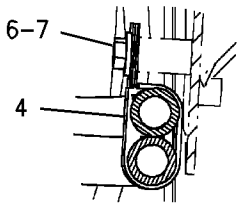

SECTION B-B

GRAPHIC #1 g00898021

HYDRAULIC SYSTEM

206-3775 LINES GP-HYDRAULIC OIL COOLER

S/N: 5FZ6700-UP

PART OF 200-1006 HYDRAULIC AR

SMCS-5057 **i01529941**

NOTE	REF NO	GRAPHIC REF	PART NUMBER	QTY	PART NAME 1 2 3 4 5 6 (PRODUCT LEVEL)	SEE PAGE
I	1	1	**142-8976**	2	HOSE AS	
	2	1	**142-8978**	1	TUBE AS	
	3	1	**142-8979**	1	TUBE AS	
	4	1	**5D-0718**	2	CLIP	
	5	1	**6V-9746**	2	SEAL-O-RING	
	6	1	**7X-7729**	3	WASHER (11X25X3MM THK)	
M	7	1	**8T-4195**	2	BOLT (M10X1.5X30MM)	

I-SEE HOSE FABRICATION GUIDE
M-METRIC PART

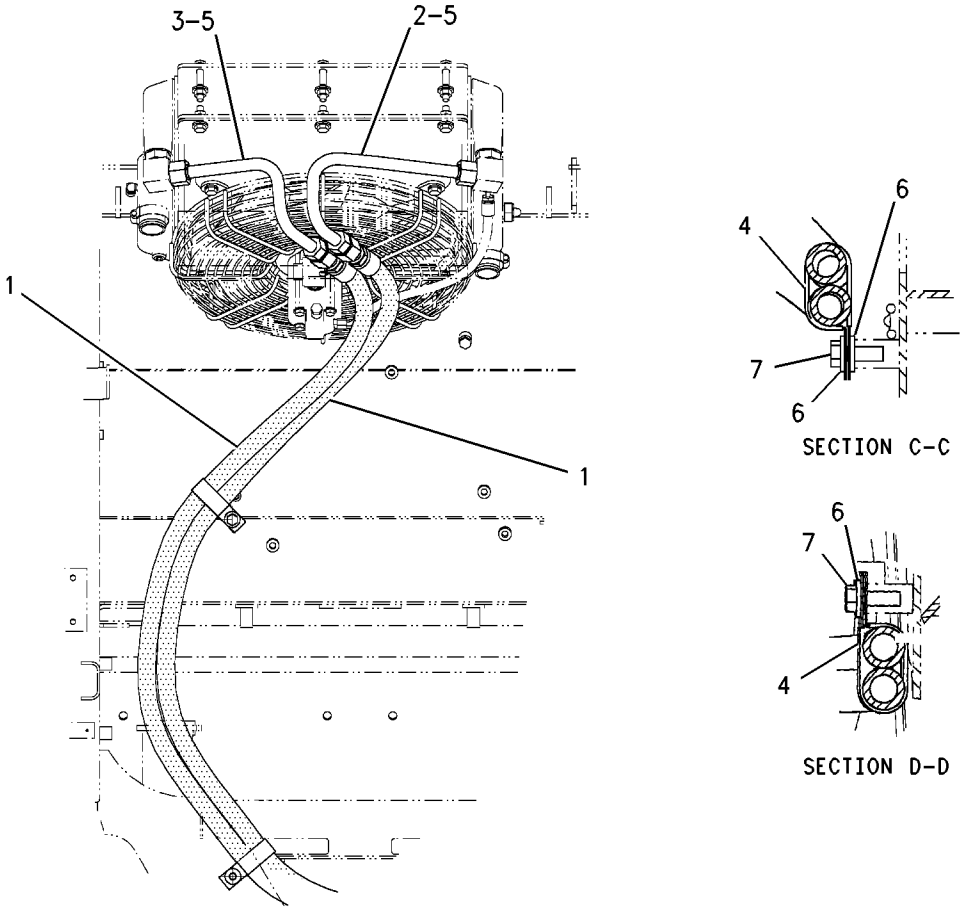

GRAPHIC #1 g00794580

HYDRAULIC SYSTEM

207-9775 LINES GP-HYDRAULIC OIL COOLER

S/N: CAB1-UP; CMB1-UP

PART OF 191-9606, 216-6136 HYDRAULIC AR

SMCS-5057 **i01750071**

NOTE	REF NO	GRAPHIC REF	PART NUMBER	QTY	PART NAME 1 2 3 4 5 6 (PRODUCT LEVEL)	SEE PAGE
M	1	1	**101-3129**	1	STUD (M10X1.5 THD)	
	2	1	**204-1380**	1	TUBE AS	
	3	1	**204-1381**	1	TUBE AS	
I	4	1	**210-4698**	2	HOSE AS	
	5	1	*148-8327*	2	CONNECTOR GP	
					(EACH INCLUDES)	
		1	**3D-2824**	1	SEAL-O-RING	
		1	**6V-8637**	1	CONNECTOR-SEAL	
		1	**6V-9746**	1	SEAL-O-RING	
	6	1	**5D-0718**	1	CLIP	
	7	1	**6V-9746**	2	SEAL-O-RING	
	8	1	**7X-7729**	3	WASHER (11X25X3MM THK)	
M	9	1	**8T-4133**	1	NUT (M10X1.5 THD)	

I-SEE HOSE FABRICATION GUIDE
M-METRIC PART

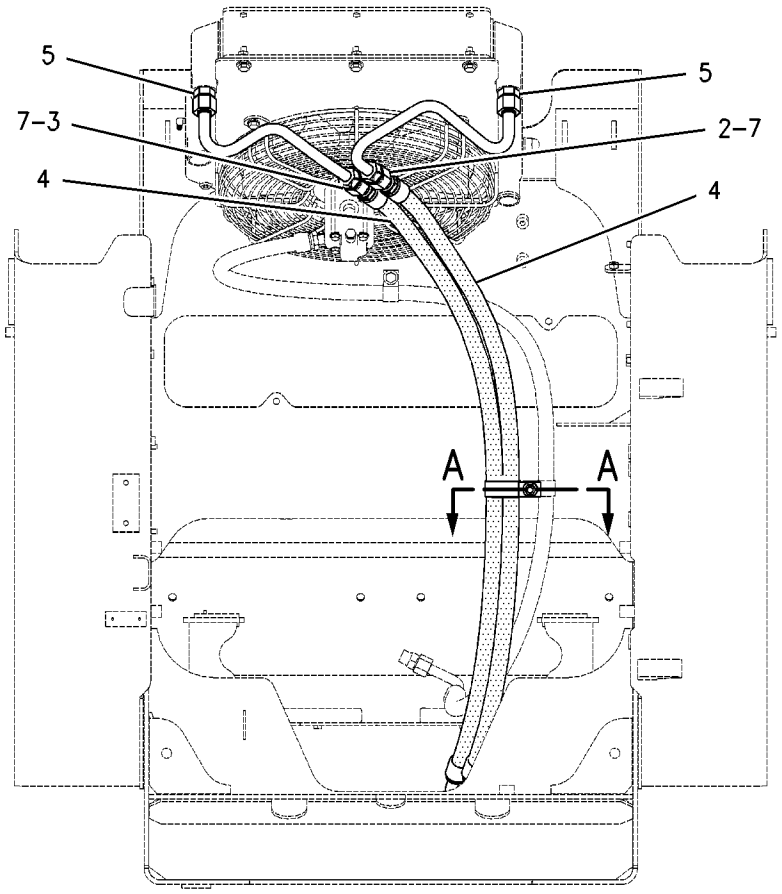

REAR VIEW

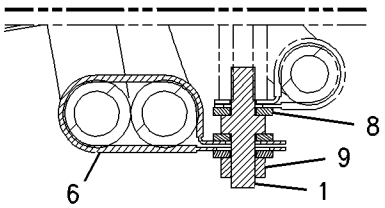

SECTION A-A

GRAPHIC #1 g00895929

MEMORANDA

HYDRAULIC SYSTEM

142-8672 LINES GP-LIFT CYLINDER

S/N: 4NZ3400-UP
PART OF 142-8716 HYDRAULIC AR
AN ATTACHMENT

SMCS-5057, 5102 **i01628502**

NOTE	REF NO	GRAPHIC REF	PART NUMBER	QTY	PART NAME 1 2 3 4 5 6 (PRODUCT LEVEL)	SEE PAGE
	1	1	**3E-7404**	2	CLAMP-HOSE	
	2	1	**191-9783**	1	VALVE GP-BALL	
C	3	1	**142-7509**	1	TUBE AS	
	4	1	**142-8837**	4	BLOCK	
	5	1	**142-8838**	4	PLATE	
	6	1	**142-8901**	1	TUBE AS	
	7	1	**142-8902**	1	TUBE AS	
	8	1	**142-8912**	1	TUBE AS	
	9	1	**142-8997**	2	BLOCK	
	10	1	**142-9222**	1	TUBE AS	
I	11	1	**187-1269**	4	HOSE AS	
	12	1	**187-3231**	2	TUBE AS	
	13	1	**187-3232**	1	TUBE AS	
C	14	1	**173-3321**	1	TUBE AS	
C	15	1	**173-3322**	1	TUBE AS	
	16	1	*148-8315*	2	CONNECTOR GP	
					(EACH AS INCLUDES)	
		1	**2M-9780**	1	SEAL-O-RING	
		1	**6V-8642**	1	CONNECTOR	
		1	**7J-9108**	1	SEAL-O-RING	
C	17	1	*148-8336*	1	CONNECTOR GP	
		1	**3J-1907**	1	SEAL-O-RING	
		1	**6V-8397**	1	SEAL-O-RING	
		1	**6V-8636**	1	CONNECTOR	
	18	1	*148-8378*	1	ELBOW GP	
		1	**3J-1907**	1	SEAL-O-RING	
		1	**6V-8397**	1	SEAL-O-RING	
		1	**6V-8724**	1	ELBOW	
	19	1	**4B-4863**	2	WASHER (4.7X11X1.2MM THK)	
M	20	1	**6V-5698**	2	SCREW-BUTTON HEAD (M4X0.7X10MM)	
C	21	1	**6V-8398**	13	SEAL-O-RING	
	22	1	**7J-9108**	2	SEAL-O-RING	
	23	1	**8T-4121**	8	WASHER-HARD (11X21X2.5MM THK)	
M	24	1	**8T-4136**	8	BOLT (M10X1.5X25MM)	

C-CHANGE FROM PREVIOUS TYPE
I-SEE HOSE FABRICATION GUIDE
M-METRIC PART

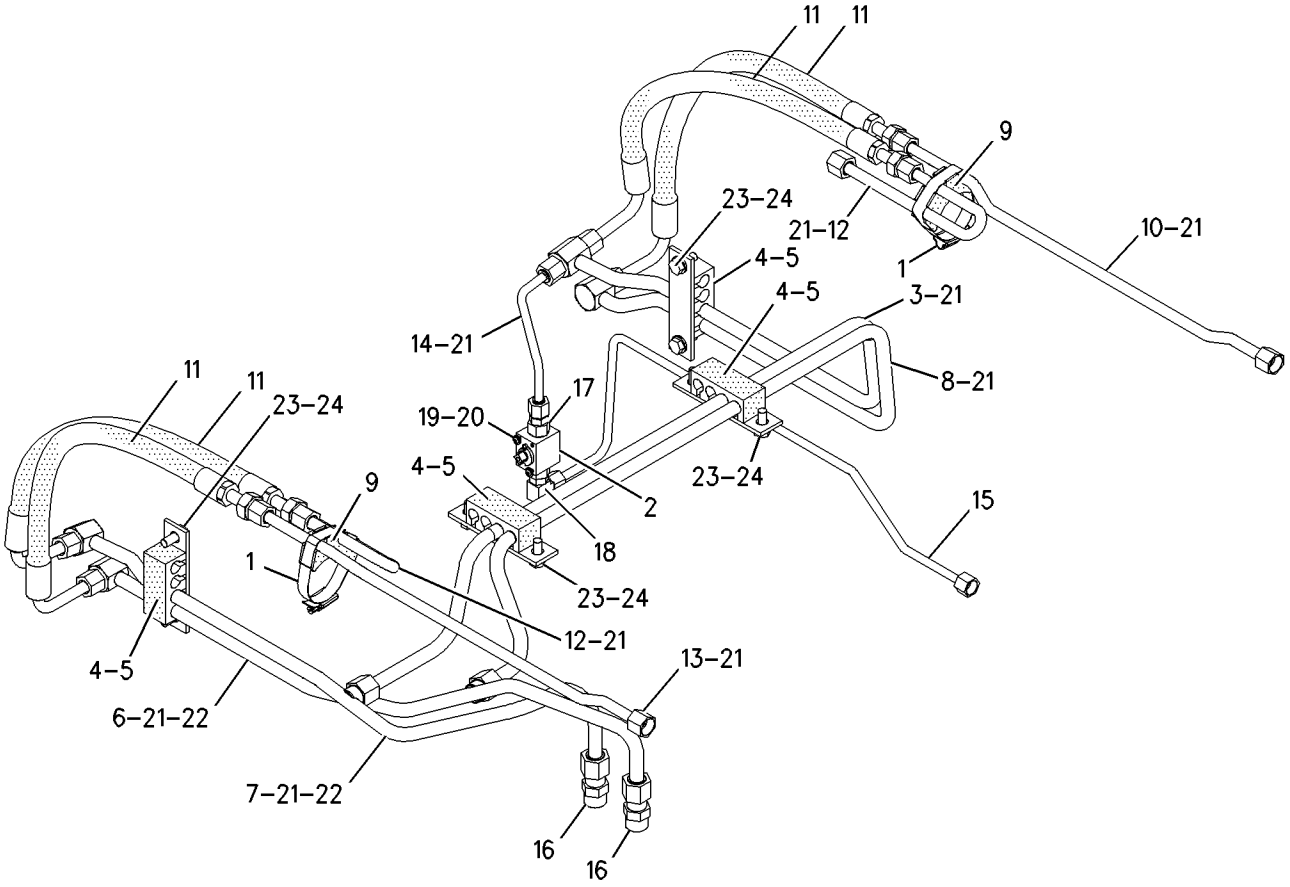

GRAPHIC #1 g00776481

HYDRAULIC SYSTEM

142-8674 LINES GP-LIFT CYLINDER

S/N: 4NZ3400-UP
PART OF 142-8717 HYDRAULIC AR
AN ATTACHMENT

SMCS-5057, 5102 **i01500439**

NOTE	REF NO	GRAPHIC REF	PART NUMBER	QTY	PART NAME 1 2 3 4 5 6 (PRODUCT LEVEL)	SEE PAGE
	1	1	**3E-7404**	2	CLAMP-HOSE	
	2	1	**191-9783**	1	VALVE GP-BALL	
C	3	1	**142-7509**	1	TUBE AS	
	4	1	**142-8747**	1	TUBE AS	
	5	1	**142-8837**	4	BLOCK	
	6	1	**142-8838**	4	PLATE	
	7	1	**142-8902**	1	TUBE AS	
	8	1	**142-8912**	1	TUBE AS	
	9	1	**142-8997**	2	BLOCK	
	10	1	**158-6667**	1	TUBE AS	
	11	1	**158-6668**	1	TUBE AS	
C	12	1	**173-3321**	1	TUBE AS	
C	13	1	**173-3322**	1	TUBE AS	
	14	1	**187-1269**	4	HOSE AS	
	15	1	**187-1273**	2	TUBE AS	
	16	1	**187-3231**	1	TUBE AS	
	17	1	**187-3232**	1	TUBE AS	
	18	1	*148-8315*	3	CONNECTOR GP	
					(EACH AS INCLUDES)	
		1	**2M-9780**	1	SEAL-O-RING	
		1	**6V-8642**	1	CONNECTOR	
		1	**7J-9108**	1	SEAL-O-RING	
C	19	1	*148-8336*	1	CONNECTOR GP	
		1	**3J-1907**	1	SEAL-O-RING	
		1	**6V-8397**	1	SEAL-O-RING	
		1	**6V-8636**	1	CONNECTOR	
	20	1	*148-8378*	1	ELBOW GP	
		1	**3J-1907**	1	SEAL-O-RING	
		1	**6V-8397**	1	SEAL-O-RING	
		1	**6V-8724**	1	ELBOW	
	21	1	*148-8390*	1	ELBOW GP	
		1	**2M-9780**	1	SEAL-O-RING	
		1	**6V-8626**	1	ELBOW	
		1	**7J-9108**	1	SEAL-O-RING	
	22	1	**4B-4863**	2	WASHER (4.7X11X1.2MM THK)	
M	23	1	**6V-5698**	2	SCREW-BUTTON HEAD (M4X0.7X10MM)	
C	24	1	**6V-8398**	13	SEAL-O-RING	
	25	1	**7J-9108**	3	SEAL-O-RING	
	26	1	**8T-4121**	8	WASHER-HARD (11X21X2.5MM THK)	
M	27	1	**8T-4136**	8	BOLT (M10X1.5X25MM)	

C-CHANGE FROM PREVIOUS TYPE
M-METRIC PART

142-8674 **LINES GP-LIFT CYLINDER** ***(contd.)*** **i01500439**

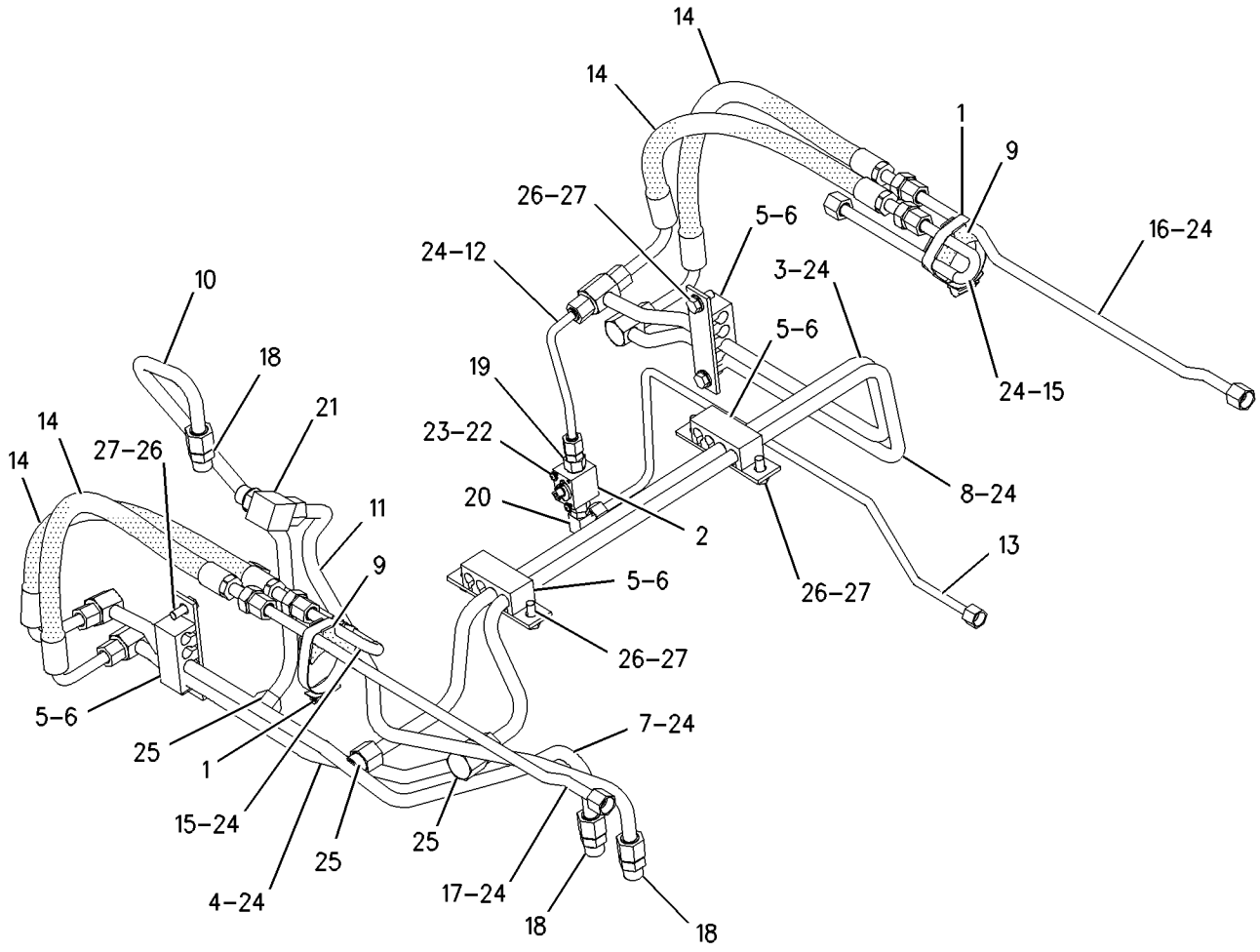

GRAPHIC #1

g00751116

HYDRAULIC SYSTEM

199-5282 LINES GP-LIFT CYLINDER

S/N: 4NZ3400-UP; 5FZ6700-UP
PART OF 197-4916 HYDRAULIC AR
AN ATTACHMENT

SMCS-5057, 5102 **i01686093**

NOTE	REF NO	GRAPHIC REF	PART NUMBER	QTY	PART NAME 1 2 3 4 5 6 (PRODUCT LEVEL)	SEE PAGE
	1	1	**3E-7404**	2	CLAMP-HOSE	
	2	1	**142-7509**	1	TUBE AS	
	3	1	**142-8837**	4	BLOCK	
	4	1	**142-8838**	4	PLATE	
	5	1	**207-9803**	1	TUBE AS	
	6	1	**142-8997**	2	BLOCK	
	7	1	**173-3321**	1	TUBE AS	
I	8	1	**187-1269**	4	HOSE AS	
	9	1	**187-1273**	2	TUBE AS	
	10	1	**187-3231**	1	TUBE AS	
	11	1	**187-3232**	1	TUBE AS	
	12	1	**191-9783**	1	VALVE GP-BALL	
	13	1	**192-2689**	1	TUBE AS	
	14	1	**192-2690**	1	TUBE AS	
	15	1	**193-0452**	1	TUBE AS	
	16	1	*148-8336*	2	CONNECTOR GP	
					(EACH INCLUDES)	
		1	**3J-1907**	1	SEAL-O-RING	
		1	**6V-8397**	1	SEAL-O-RING	
		1	**6V-8636**	1	CONNECTOR	
	17	1	*148-8341*	2	CONNECTOR GP	
					(EACH INCLUDES)	
		1	**3D-2824**	1	SEAL-O-RING	
		1	**6V-8713**	1	CONNECTOR	
		1	**7J-9108**	1	SEAL-O-RING	
	18	1	**4B-4863**	2	WASHER (4.7X11X1.2MM THK)	
M	19	1	**6V-5698**	2	SCREW-BUTTON HEAD (M4X0.7X10MM)	
	20	1	**6V-8398**	13	SEAL-O-RING	
	21	1	**7J-9108**	2	SEAL-O-RING	
	22	1	**8T-4121**	8	WASHER-HARD (11X21X2.5MM THK)	
M	23	1	**8T-4136**	8	BOLT (M10X1.5X25MM)	

I-SEE HOSE FABRICATION GUIDE
M-METRIC PART

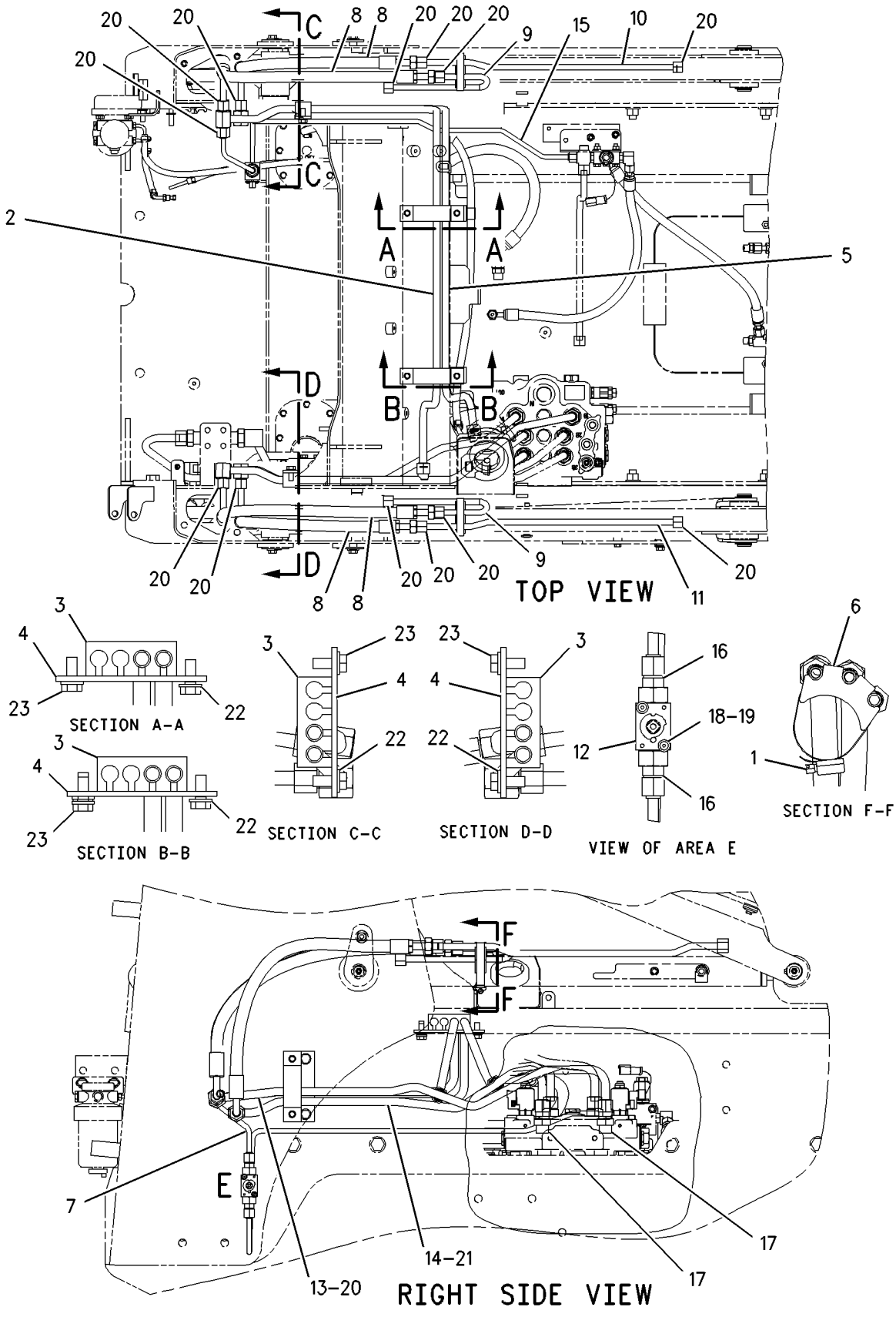

GRAPHIC #1

g00800531

HYDRAULIC SYSTEM

199-5284 LINES GP-LIFT CYLINDER

S/N: 4NZ3400-UP; 5FZ6700-UP
WITH TOOL POSITIONING
PART OF 197-4917 HYDRAULIC AR
AN ATTACHMENT

SMCS-5057, 5102 **i01570849**

NOTE	REF NO	GRAPHIC REF	PART NUMBER	QTY	PART NAME 1 2 3 4 5 6 (PRODUCT LEVEL)	SEE PAGE
	1	1	**3E-7404**	2	CLAMP-HOSE	
	2	1	**142-7509**	1	TUBE AS	
	3	1	**210-4634**	1	TUBE AS	
	4	1	**142-8837**	4	BLOCK	
	5	1	**142-8838**	4	PLATE	
	6	1	**207-9803**	1	TUBE AS	
	7	1	**142-8997**	2	BLOCK	
	8	1	**158-6667**	1	TUBE AS	
	9	1	**173-3321**	1	TUBE AS	
I	10	1	**187-1269**	4	HOSE AS	
	11	1	**187-1273**	2	TUBE AS	
	12	1	**187-3231**	1	TUBE AS	
	13	1	**187-3232**	1	TUBE AS	
	14	1	**191-9783**	1	VALVE GP-BALL	
	15	1	**192-2689**	1	TUBE AS	
	16	1	**193-0452**	1	TUBE AS	
	17	1	**195-6772**	1	TUBE AS	
	18	1	*148-8315*	1	CONNECTOR GP	
		1	**2M-9780**	1	SEAL-O-RING	
		1	**6V-8642**	1	CONNECTOR	
		1	**7J-9108**	1	SEAL-O-RING	
	19	1	*148-8336*	2	CONNECTOR GP	
					(EACH INCLUDES)	
		1	**3J-1907**	1	SEAL-O-RING	
		1	**6V-8397**	1	SEAL-O-RING	
		1	**6V-8636**	1	CONNECTOR	
	20	1	*148-8341*	2	CONNECTOR GP	
					(EACH INCLUDES)	
		1	**3D-2824**	1	SEAL-O-RING	
		1	**6V-8713**	1	CONNECTOR	
		1	**7J-9108**	1	SEAL-O-RING	
	21	1	*148-8390*	1	ELBOW GP	
		1	**2M-9780**	1	SEAL-O-RING	
		1	**6V-8626**	1	ELBOW	
		1	**7J-9108**	1	SEAL-O-RING	
	22	1	**4B-4863**	2	WASHER (4.7X11X1.2MM THK)	
M	23	1	**6V-5698**	2	SCREW-BUTTON HEAD (M4X0.7X10MM)	
	24	1	**6V-8398**	13	SEAL-O-RING	
	25	1	**7J-9108**	3	SEAL-O-RING	
	26	1	**8T-4121**	8	WASHER-HARD (11X21X2.5MM THK)	
M	27	1	**8T-4136**	8	BOLT (M10X1.5X25MM)	

I-SEE HOSE FABRICATION GUIDE
M-METRIC PART

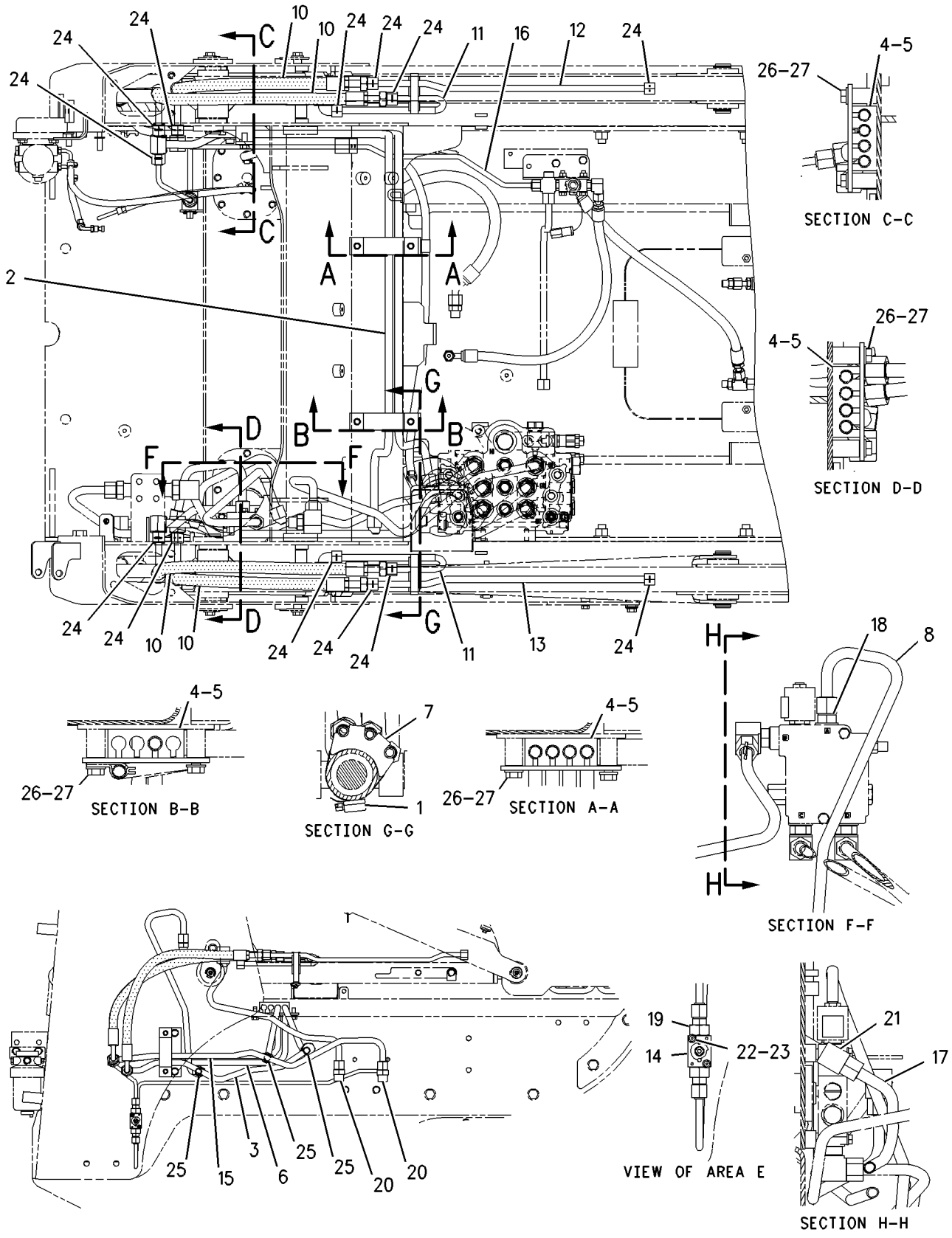

GRAPHIC #1 g00800428

HYDRAULIC SYSTEM

193-0453 LINES GP-PILOT

S/N: 4NZ3400-UP; 5FZ6700-UP

PART OF 200-0806, 200-1006 HYDRAULIC AR

SMCS-5057, 5059 **i01597988**

NOTE	REF NO	GRAPHIC REF	PART NUMBER	QTY	PART NAME 1 2 3 4 5 6 (PRODUCT LEVEL)	SEE PAGE
	1	1	**123-4750**	1	VALVE-CHECK	
I	2	1	**142-9216**	1	HOSE AS	
	3	1	**142-9220**	1	BLOCK	
I	4	1	**157-1478**	1	HOSE AS	
I	5	1	**193-0449**	2	HOSE AS	
I	6	1	**193-8312**	2	HOSE AS	
	7	1	**195-6768**	1	SCREEN	
	8	1	**195-6769**	1	WASHER	
	9	1	**206-3780**	1	HOSE AS	
	10	1	*148-8325*	10	CONNECTOR GP	
					(EACH INCLUDES)	
		1	**3J-1907**	1	SEAL-O-RING	
		1	**4J-5477**	1	SEAL-O-RING	
		1	**6V-8641**	1	CONNECTOR	
	11	1	*148-8435*	1	TEE GP	
		1	**3J-1907**	1	SEAL-O-RING	
		1	**6V-8397**	2	SEAL-O-RING	
		1	**6V-8781**	1	TEE-FACE SEAL	
	12	1	*150-4027*	1	FITTING GP	
		1	**3E-2310**	1	TEE	
		1	**3J-1907**	1	SEAL-O-RING	
		1	**6V-8397**	1	SEAL-O-RING	

I-SEE HOSE FABRICATION GUIDE

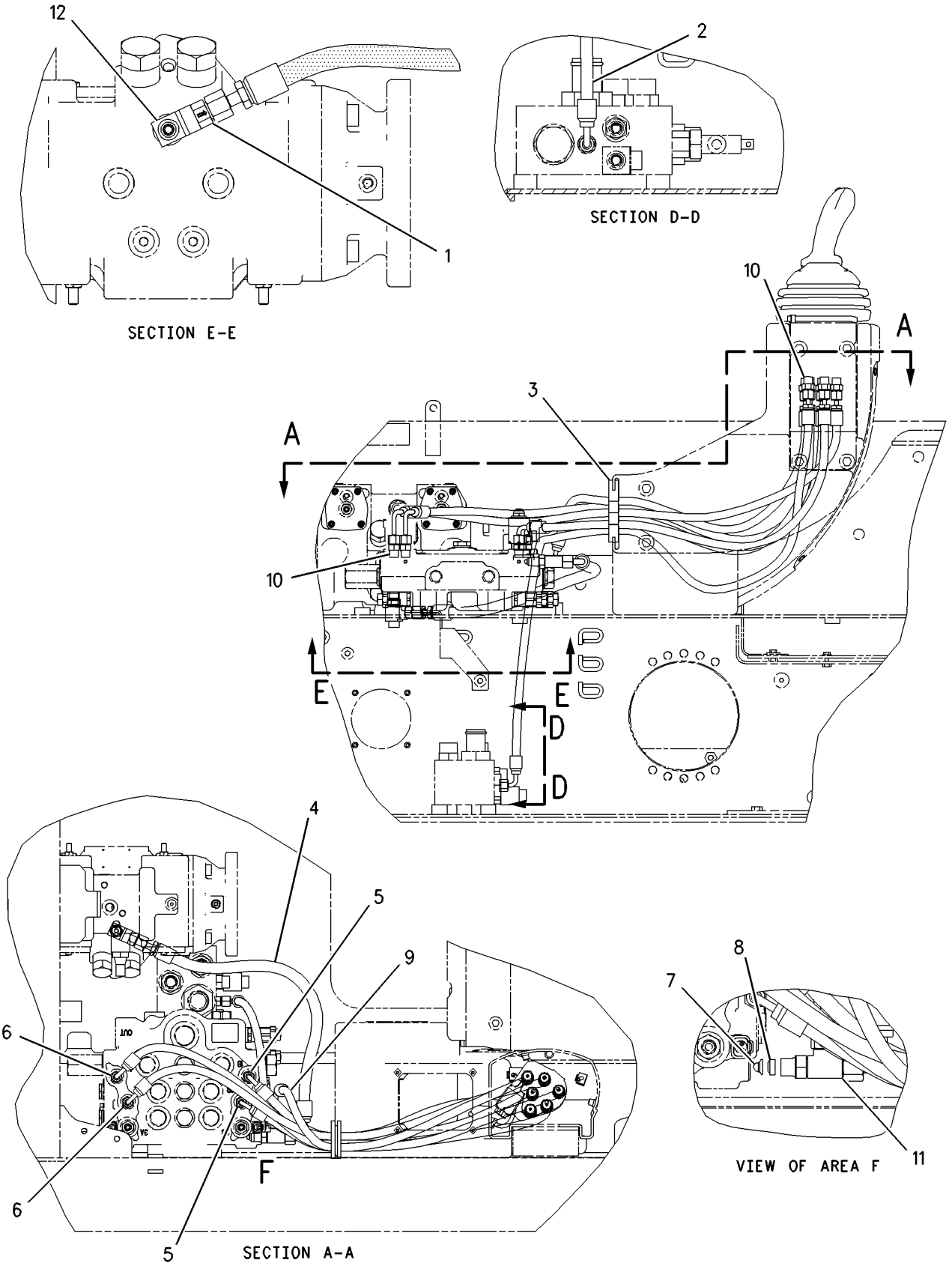

GRAPHIC #1 g00828245

HYDRAULIC SYSTEM

193-8307 LINES GP-PILOT

S/N: CAB1-UP; CMB1-UP

PART OF 191-9606, 216-6136 HYDRAULIC AR

SMCS-5057, 5059 **i01755128**

NOTE	REF NO	GRAPHIC REF	PART NUMBER	QTY	PART NAME 1 2 3 4 5 6 (PRODUCT LEVEL)	SEE PAGE
	1	1	**6V-0852**	1	CAP-DUST	
	2	1	*148-8423*	1	FITTING GP	
		1	**3J-1907**	1	SEAL-O-RING	
		1	**4J-5477**	1	SEAL-O-RING	
		1	**8T-3311**	1	TEE	
	3	1	*164-5567*	1	FITTING GP	
		1	**3J-1907**	1	SEAL-O-RING	
		1	**6V-3965**	1	FITTING AS	
	4	1	**190-8087**	1	HOSE AS	
I	5	1	**190-8119**	1	HOSE AS	
	6	1	**193-8392**	2	HOSE AS	
	7	1	**193-8393**	3	HOSE AS	
	8	1	*148-8316*	2	CONNECTOR GP	
					(EACH INCLUDES)	
		1	**3J-7354**	1	SEAL-O-RING	
		1	**4J-5477**	1	SEAL-O-RING	
		1	**6V-8647**	1	CONNECTOR	
	9	1	*148-8325*	5	CONNECTOR GP	
					(EACH INCLUDES)	
		1	**3J-1907**	1	SEAL-O-RING	
		1	**4J-5477**	1	SEAL-O-RING	
		1	**6V-8641**	1	CONNECTOR	
	10	1	*148-8369*	2	ELBOW GP	
					(EACH INCLUDES)	
		1	**3J-7354**	1	SEAL-O-RING	
		1	**4J-5477**	1	SEAL-O-RING	
		1	**6V-8628**	1	ELBOW	
	11	1	*150-4043*	1	CONNECTOR GP	
		1	**3J-1907**	1	SEAL-O-RING	
		1	**6V-8398**	1	SEAL-O-RING	
		1	**6V-9873**	1	CONNECTOR-SEAL	
	12	1	**8T-4121**	2	WASHER-HARD (11X21X2.5MM THK)	
M	13	1	**8T-4133**	1	NUT (M10X1.5 THD)	
M	14	1	**8T-4195**	1	BOLT (M10X1.5X30MM)	
	15	1	**9D-1829**	1	CLIP	

I-SEE HOSE FABRICATION GUIDE
M-METRIC PART

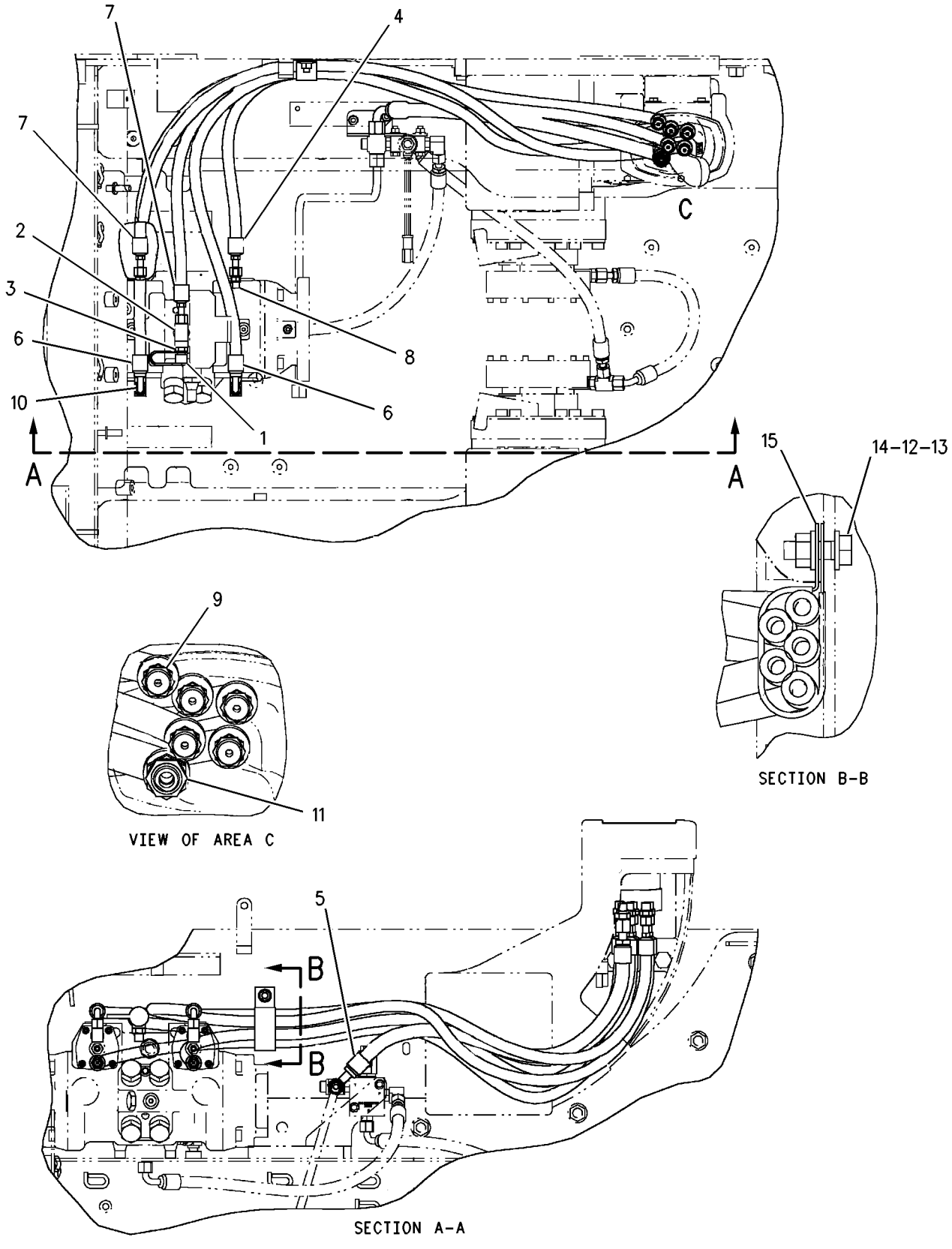

GRAPHIC #1 g00789616

HYDRAULIC SYSTEM

206-3793 LINES GP-PILOT

S/N: 4NZ3700-UP; 5FZ6700-UP

PART OF 200-0806, 200-1006 HYDRAULIC AR

SMCS-5057, 5059 **i01537156**

NOTE	REF NO	GRAPHIC REF	PART NUMBER	QTY	PART NAME 1 2 3 4 5 6 (PRODUCT LEVEL)	SEE PAGE
	1	1	**6V-0852**	1	CAP-DUST	
	2	1	*148-8423*	1	FITTING GP	
		1	**3J-1907**	1	SEAL-O-RING	
		1	**4J-5477**	1	SEAL-O-RING	
		1	**8T-3311**	1	TEE	
	3	1	*164-5567*	1	FITTING GP	
		1	**3J-1907**	1	SEAL-O-RING	
		1	**6V-3965**	1	FITTING	
	4	1	**190-8087**	2	HOSE AS	
I	5	1	**190-8119**	1	HOSE AS	
	6	1	**206-3794**	2	HOSE AS	
	7	1	**206-3796**	1	HOSE AS	
	8	1	*148-8316*	2	CONNECTOR GP	
					(EACH INCLUDES)	
		1	**3J-7354**	1	SEAL-O-RING	
		1	**4J-5477**	1	SEAL-O-RING	
		1	**6V-8647**	1	CONNECTOR	
	9	1	*148-8325*	5	CONNECTOR GP	
					(EACH INCLUDES)	
		1	**3J-1907**	1	SEAL-O-RING	
		1	**4J-5477**	1	SEAL-O-RING	
		1	**6V-8641**	1	CONNECTOR	
	10	1	*148-8369*	2	ELBOW GP	
					(EACH INCLUDES)	
		1	**3J-7354**	1	SEAL-O-RING	
		1	**4J-5477**	1	SEAL-O-RING	
		1	**6V-8628**	1	ELBOW	
	11	1	*150-4043*	1	CONNECTOR GP	
		1	**3J-1907**	1	SEAL-O-RING	
		1	**6V-8398**	1	SEAL-O-RING	
		1	**6V-9873**	1	CONNECTOR-SEAL	
	12	1	**8T-4121**	2	WASHER-HARD (11X21X2.5MM THK)	
M	13	1	**8T-4133**	1	NUT (M10X1.5 THD)	
M	14	1	**8T-4195**	1	BOLT (M10X1.5X30MM)	
	15	1	**9D-1829**	1	CLIP	

I-SEE HOSE FABRICATION GUIDE
M-METRIC PART

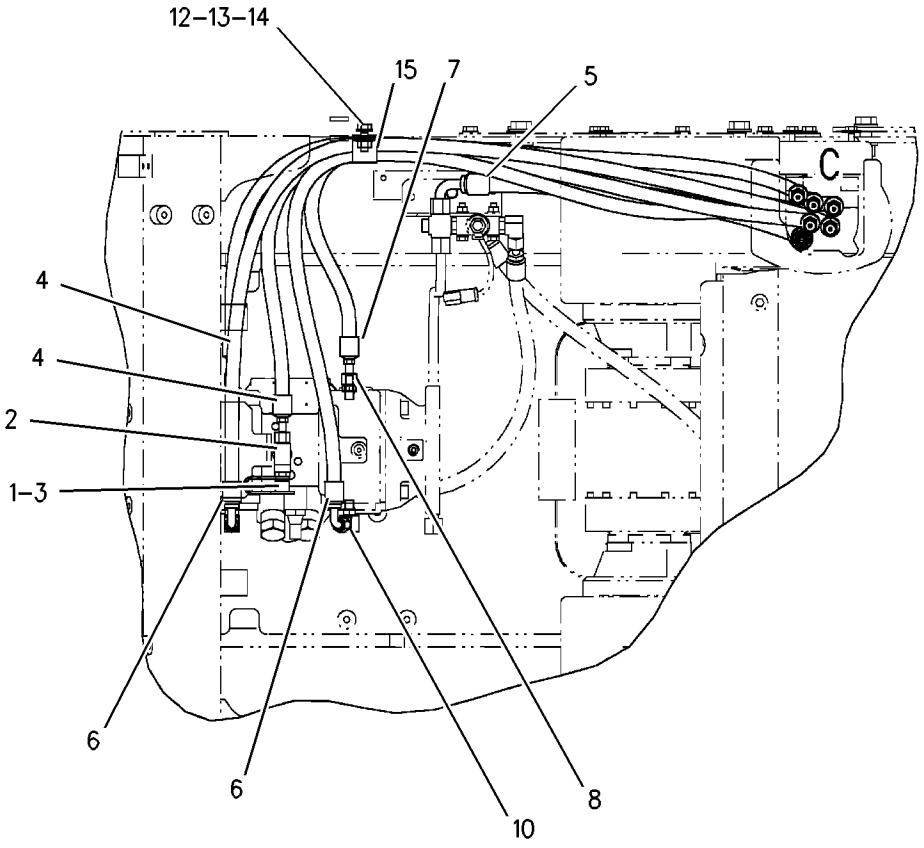

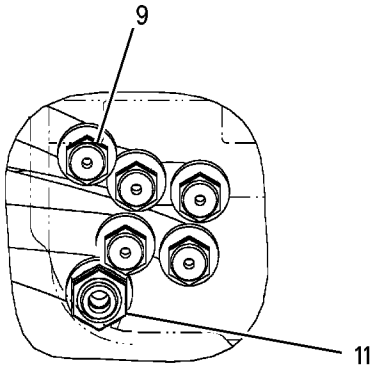

VIEW OF AREA C

GRAPHIC #1

g00800389

HYDRAULIC SYSTEM

216-6135 LINES GP-PILOT

S/N: CAB1-UP; CMB1-UP

PART OF 191-9606, 216-6136 HYDRAULIC AR

SMCS-5057, 5059 **i01750073**

NOTE	REF NO	GRAPHIC REF	PART NUMBER	QTY	PART NAME 1 2 3 4 5 6 (PRODUCT LEVEL)	SEE PAGE
	1	1	**123-4750**	1	VALVE-CHECK	
I	2	1	**142-9216**	1	HOSE AS	
	3	1	**142-9220**	1	BLOCK	
I	4	1	**190-7453**	1	HOSE AS	
I	5	1	**193-0449**	2	HOSE AS	
I	6	1	**193-8312**	2	HOSE AS	
	7	1	**195-6768**	1	SCREEN	
	8	1	**195-6769**	1	WASHER	
	9	1	**206-3780**	1	HOSE AS	
	10	1	*148-8325*	10	CONNECTOR GP	
					(EACH INCLUDES)	
		1	**3J-1907**	1	SEAL-O-RING	
		1	**4J-5477**	1	SEAL-O-RING	
		1	**6V-8641**	1	CONNECTOR	
	11	1	*148-8435*	1	TEE GP	
		1	**3J-1907**	1	SEAL-O-RING	
		1	**6V-8397**	2	SEAL-O-RING	
		1	**6V-8781**	1	TEE-FACE SEAL	
	12	1	*150-4027*	1	FITTING GP	
		1	**3E-2310**	1	TEE	
		1	**3J-1907**	1	SEAL-O-RING	
		1	**6V-8397**	1	SEAL-O-RING	

I-SEE HOSE FABRICATION GUIDE

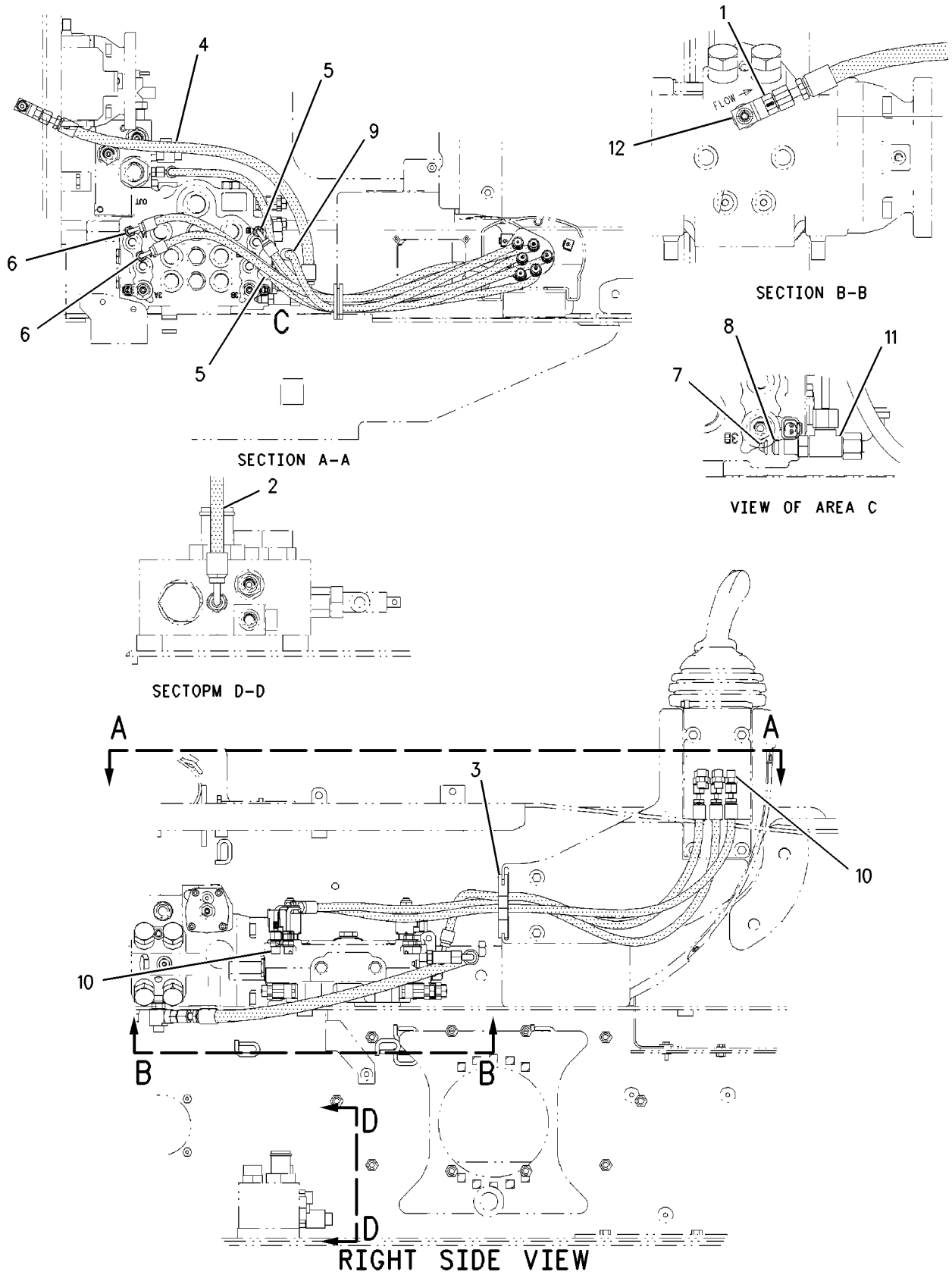

GRAPHIC #1 g00872611

HYDRAULIC SYSTEM

195-6730 LINES GP-PUMP

S/N: 4NZ3400-UP; 5FZ6700-UP

PART OF 200-0806, 200-1006 HYDRAULIC AR

SMCS-5057 **i01763511**

NOTE	REF NO	GRAPHIC REF	PART NUMBER	QTY	PART NAME 1 2 3 4 5 6 (PRODUCT LEVEL)	SEE PAGE
	1	1	**2S-3440**	2	CLAMP-HOSE	
	2	1	**5P-2230**	1	CLAMP-HOSE	
	3	1	**6V-0852**	1	CAP-DUST	
	4	1	**9U-6994**	1	ADAPTER	
	5	1	**142-8992**	1	TUBE	
	6	1	**159-5740**	1	HOSE	
	7	1	*164-5567*	1	FITTING GP	
		1	**3J-1907**	1	SEAL-O-RING	
		1	**6V-3965**	1	FITTING AS	
	8	1	**180-3007**	2	CLAMP-HOSE	
	9	1	**191-9670**	1	HOSE	
	10	1	**193-8308**	1	ADAPTER	
I	11	1	**193-8321**	1	HOSE AS	
	12	1	**204-1409**	1	HOSE	
	13	1	*148-8360*	1	ELBOW GP	
		1	**6V-9182**	1	ELBOW	
		1	**6V-9746**	1	SEAL-O-RING	
		1	**7M-8485**	1	SEAL-O-RING	
	14	1	**1P-4578**	2	FLANGE-HALF	
	15	1	**4J-0522**	1	SEAL-O-RING	
	16	1	**4J-5267**	1	SEAL-O-RING	
	17	1	**5P-0597**	1	CLAMP-HOSE	
	18	1	**8C-3205**	2	FLANGE-HALF	
	19	1	**8T-4121**	8	WASHER-HARD (11X21X2.5MM THK)	
M	20	1	**8T-4195**	4	BOLT (M10X1.5X30MM)	
M	21	1	**8T-4196**	4	BOLT (M10X1.5X35MM)	

I-SEE HOSE FABRICATION GUIDE
M-METRIC PART

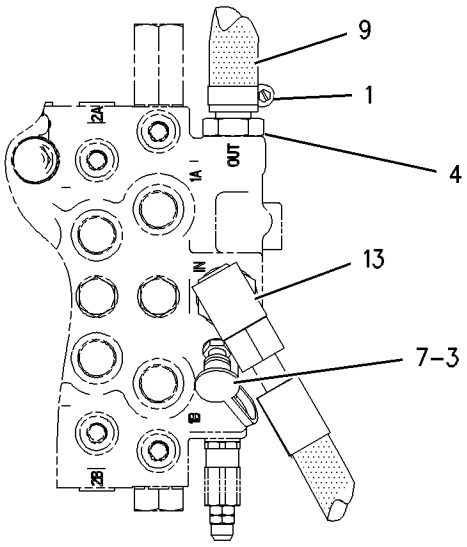

VALVE TOP VIEW

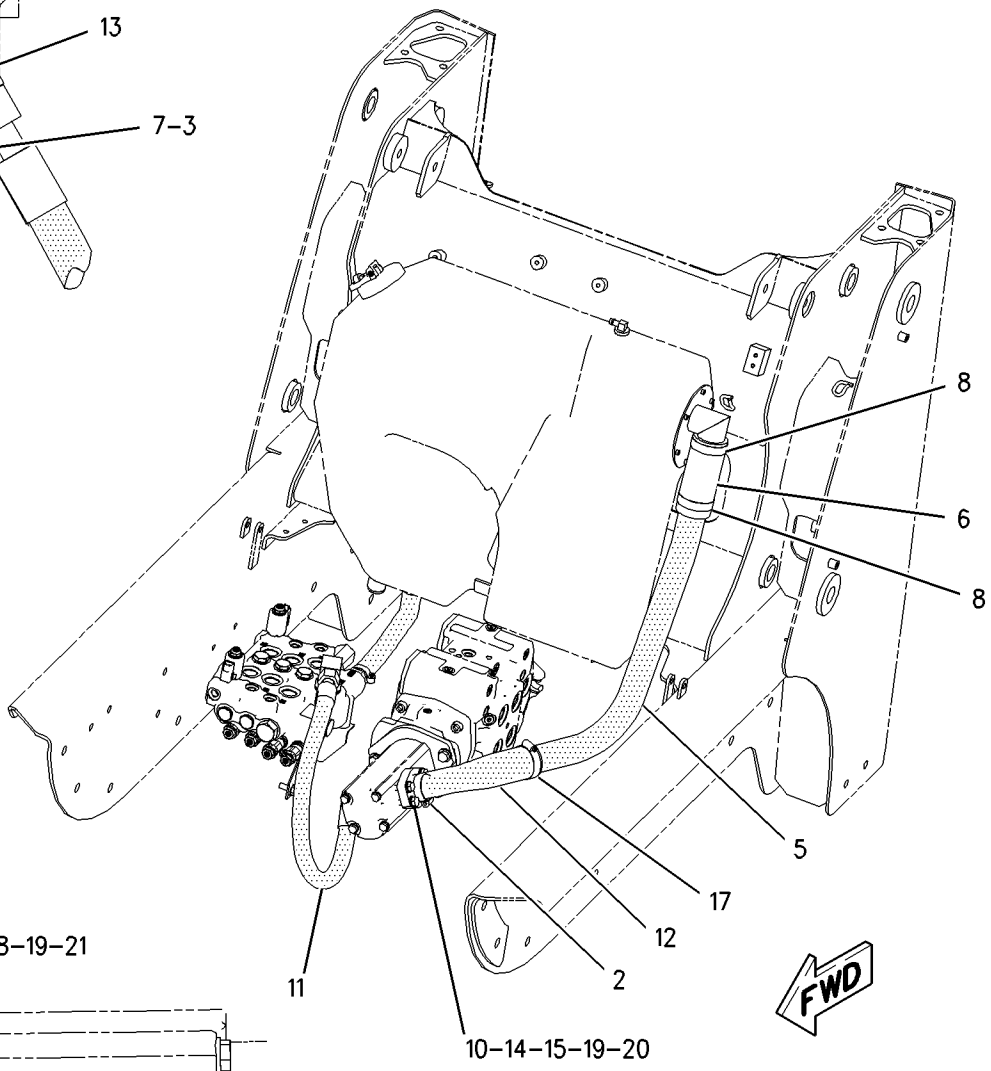

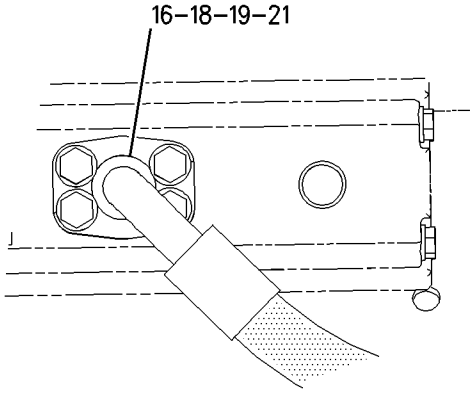

WORK TOOL PUMP CONNECTION

GRAPHIC #1 g00902256

HYDRAULIC SYSTEM

212-4067 LINES GP-PUMP

S/N: CAB1-UP; CMB1-UP
WORK TOOL
PART OF 191-9606, 216-6136 HYDRAULIC AR

SMCS-5057 **i01741619**

NOTE	REF NO	GRAPHIC REF	PART NUMBER	QTY	PART NAME 1 2 3 4 5 6 (PRODUCT LEVEL)	SEE PAGE
	1	1	**2S-3440**	2	CLAMP-HOSE	
	2	1	**5P-2230**	1	CLAMP-HOSE	
	3	1	**6V-0852**	1	CAP-DUST	
	4	1	**9U-6994**	1	ADAPTER	
	5	1	**159-5740**	1	HOSE	
	6	1	*164-5567*	1	FITTING GP	
		1	**3J-1907**	1	SEAL-O-RING	
		1	**6V-3965**	1	FITTING AS	
	7	1	**180-3007**	2	CLAMP-HOSE	
	8	1	**191-9670**	1	HOSE	
	9	1	**193-8308**	1	ADAPTER	
I	10	1	**193-8321**	1	HOSE AS	
	11	1	**212-4068**	1	TUBE	
	12	1	**212-4069**	1	HOSE	
	13	1	*148-8360*	1	ELBOW GP	
		1	**6V-9182**	1	ELBOW	
		1	**6V-9746**	1	SEAL-O-RING	
		1	**7M-8485**	1	SEAL-O-RING	
	14	1	**1P-4578**	2	FLANGE-HALF	
	15	1	**4J-0522**	1	SEAL-O-RING	
	16	1	**4J-5267**	1	SEAL-O-RING	
	17	1	**5P-0597**	1	CLAMP-HOSE	
	18	1	**8C-3205**	2	FLANGE-HALF	
	19	1	**8T-4121**	8	WASHER-HARD (11X21X2.5MM THK)	
M	20	1	**8T-4196**	8	BOLT (M10X1.5X35MM)	

I-SEE HOSE FABRICATION GUIDE
M-METRIC PART

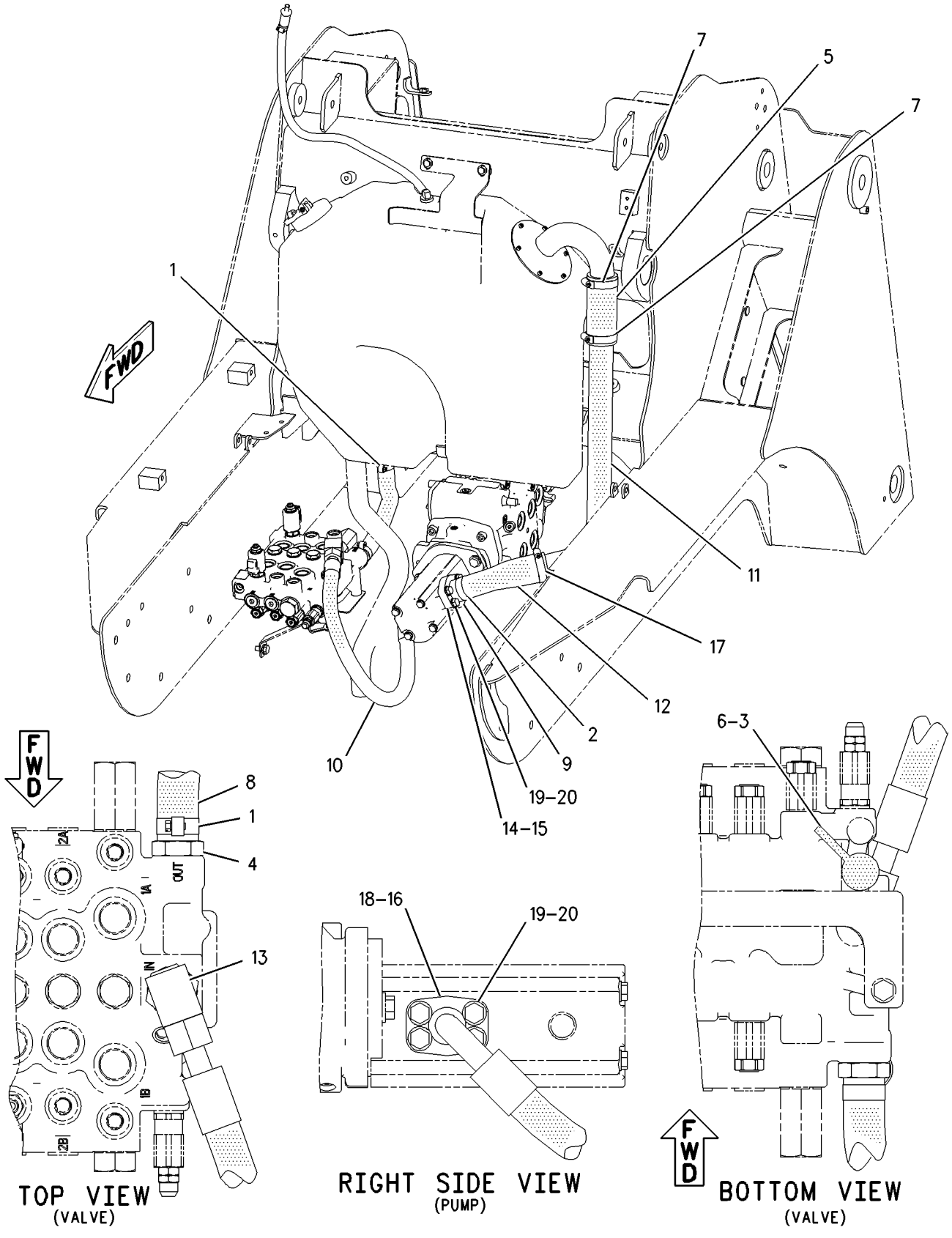

GRAPHIC #1

g00891996

HYDRAULIC SYSTEM

142-8673 LINES GP-TILT CYLINDER

S/N: 4NZ3400-UP
PART OF 142-8716 HYDRAULIC AR
AN ATTACHMENT

SMCS-5057, 5104 **i01506944**

NOTE	REF NO	GRAPHIC REF	PART NUMBER	QTY	PART NAME 1 2 3 4 5 6 (PRODUCT LEVEL)	SEE PAGE
	1	1	**116-4415**	2	PLATE	
	2	1	**142-8903**	1	TUBE AS	
	3	1	**142-8904**	1	TUBE AS	
	4	1	**142-8998**	2	CLIP	
I	5	1	**142-9234**	4	HOSE AS	
CI	6	1	**187-1270**	2	HOSE AS	
C	7	1	**187-3227**	1	TUBE AS	
C	8	1	**187-3228**	1	TUBE AS	
	9	1	*148-8315*	2	CONNECTOR GP	
					(EACH INCLUDES)	
		1	**2M-9780**	1	SEAL-O-RING	
		1	**6V-8642**	1	CONNECTOR	
		1	**7J-9108**	1	SEAL-O-RING	
	10	1	**6V-8398**	8	SEAL-O-RING	
	11	1	**7J-9108**	4	SEAL-O-RING	
M	12	1	**7X-2534**	2	BOLT (M6X1X50MM)	
	13	1	**8T-4121**	2	WASHER-HARD (11X21X2.5MM THK)	
M	14	1	**8T-4136**	2	BOLT (M10X1.5X25MM)	
	15	1	**9R-1005**	2	CLIP (SLOT)	
	16	1	**9R-7802**	2	CLIP (SLOT)	
	17	1	**9R-7803**	2	CLIP (DOUBLE TAB)	

C-CHANGE FROM PREVIOUS TYPE
I-SEE HOSE FABRICATION GUIDE
M-METRIC PART

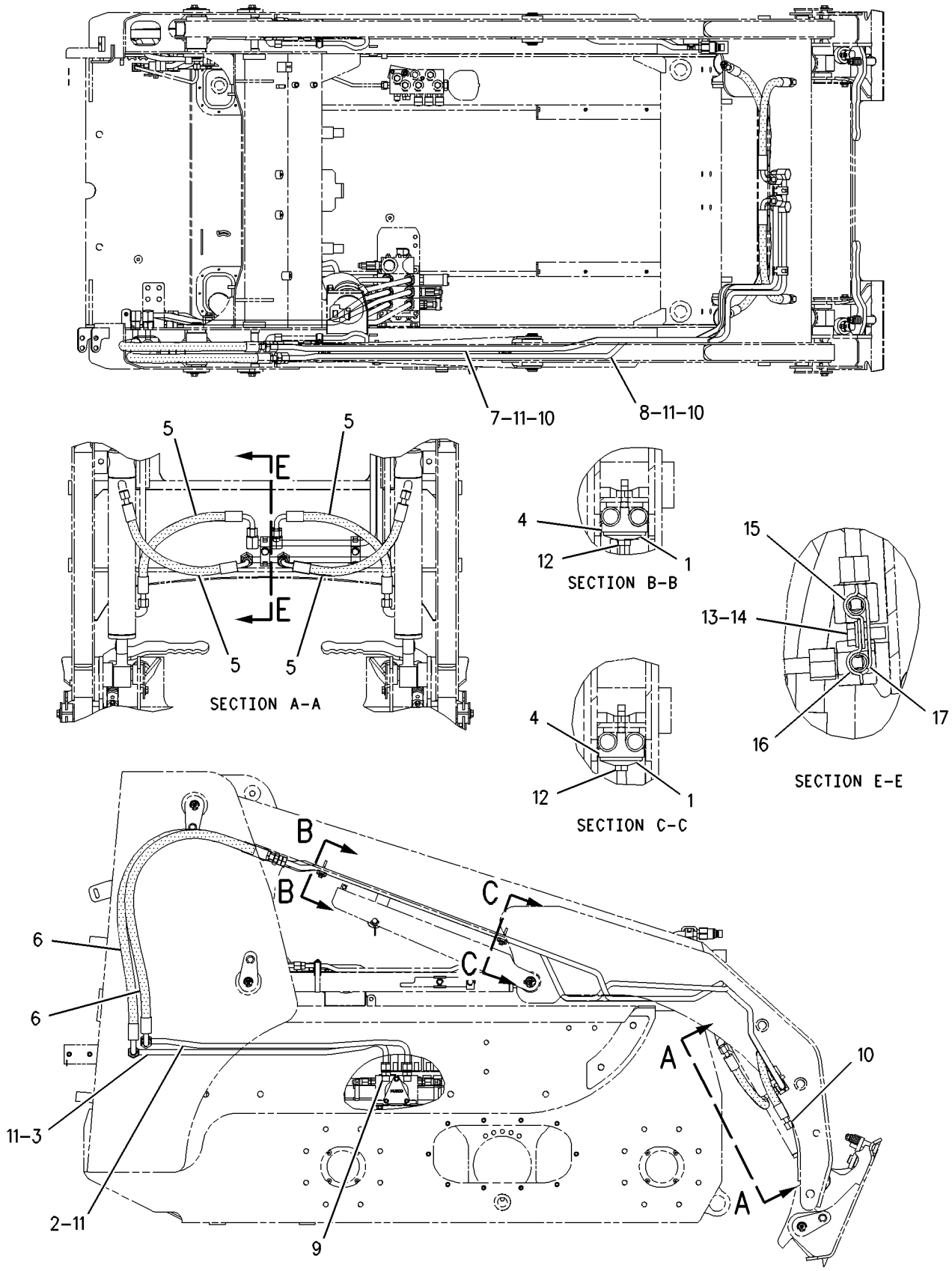

GRAPHIC #1

g00782659

HYDRAULIC SYSTEM

142-8675 LINES GP-TILT CYLINDER

S/N: 4NZ3400-UP
PART OF 142-8717 HYDRAULIC AR
AN ATTACHMENT

SMCS-5057, 5104 **i01508734**

NOTE	REF NO	GRAPHIC REF	PART NUMBER	QTY	PART NAME 1 2 3 4 5 6 (PRODUCT LEVEL)	SEE PAGE
	1	1	**116-4415**	2	PLATE	
	2	1	**142-8998**	2	CLIP	
	3	1	**142-9054**	1	TUBE AS	
	4	1	**142-9055**	1	TUBE AS	
I	5	1	**142-9234**	4	HOSE AS	
	6	1	**158-6669**	1	TUBE AS	
	7	1	**158-6684**	1	TUBE AS	
CI	8	1	**187-1270**	2	HOSE AS	
C	9	1	**187-3227**	1	TUBE AS	
C	10	1	**187-3228**	1	TUBE AS	
	11	1	*148-8315*	2	CONNECTOR GP	
					(EACH INCLUDES)	
		1	**2M-9780**	1	SEAL-O-RING	
		1	**6V-8642**	1	CONNECTOR	
		1	**7J-9108**	1	SEAL-O-RING	
	12	1	*148-8390*	2	ELBOW GP	
					(EACH INCLUDES)	
		1	**2M-9780**	1	SEAL-O-RING	
		1	**6V-8626**	1	ELBOW	
		1	**7J-9108**	1	SEAL-O-RING	
	13	1	**6V-8398**	8	SEAL-O-RING	
	14	1	**7J-9108**	6	SEAL-O-RING	
M	15	1	**7X-2534**	2	BOLT (M6X1X50MM)	
	16	1	**8T-4121**	2	WASHER-HARD (11X21X2.5MM THK)	
M	17	1	**8T-4136**	2	BOLT (M10X1.5X25MM)	
	18	1	**9R-1005**	2	CLIP (SLOT)	
	19	1	**9R-7802**	2	CLIP (SLOT)	
	20	1	**9R-7803**	2	CLIP (DOUBLE TAB)	

C-CHANGE FROM PREVIOUS TYPE
I-SEE HOSE FABRICATION GUIDE
M-METRIC PART

142-8675 **LINES GP-TILT CYLINDER** *(contd.)* **i01508734**

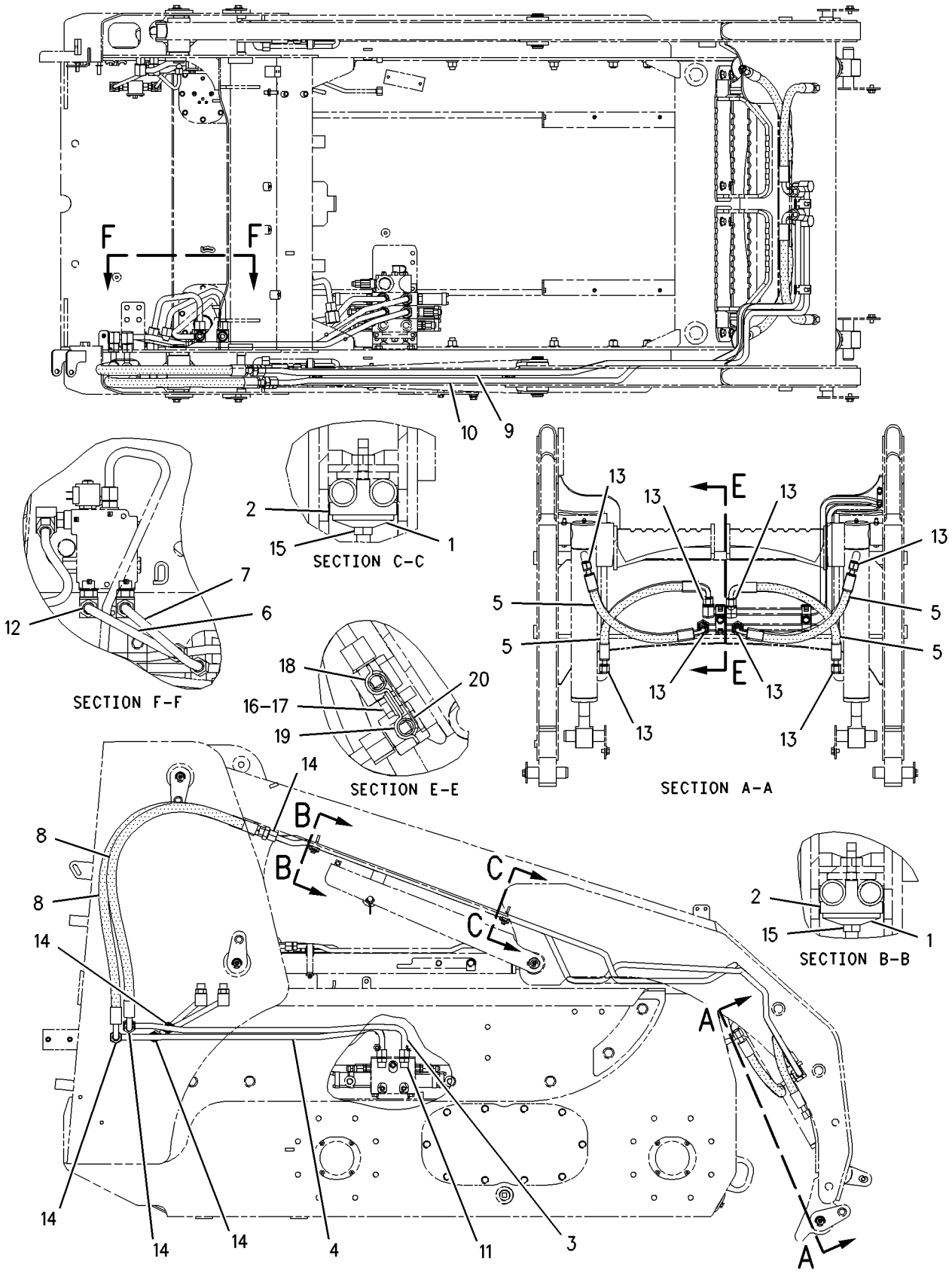

GRAPHIC #1

g00782475

HYDRAULIC SYSTEM

199-5283 LINES GP-TILT CYLINDER

S/N: 4NZ3400-UP; 5FZ6700-UP
PART OF 197-4916 HYDRAULIC AR
AN ATTACHMENT

SMCS-5057, 5104 **i01534867**

NOTE	REF NO	GRAPHIC REF	PART NUMBER	QTY	PART NAME 1 2 3 4 5 6 (PRODUCT LEVEL)	SEE PAGE
	1	1	**116-4415**	2	PLATE	
	2	1	**142-8998**	2	CLIP	
I	3	1	**142-9234**	4	HOSE AS	
I	4	1	**187-1270**	2	HOSE AS	
	5	1	**187-3227**	1	TUBE AS	
	6	1	**187-3228**	1	TUBE AS	
	7	1	**192-2686**	1	TUBE AS	
	8	1	**192-2687**	1	TUBE AS	
	9	1	*148-8341*	2	CONNECTOR GP	
					(EACH INCLUDES)	
		1	**3D-2824**	1	SEAL-O-RING	
		1	**6V-8713**	1	CONNECTOR	
		1	**7J-9108**	1	SEAL-O-RING	
	10	1	**6V-8398**	8	SEAL-O-RING	
	11	1	**7J-9108**	4	SEAL-O-RING	
M	12	1	**7X-2534**	2	BOLT (M6X1X50MM)	
	13	1	**8T-4121**	2	WASHER-HARD (11X21X2.5MM THK)	
M	14	1	**8T-4136**	2	BOLT (M10X1.5X25MM)	
	15	1	**9R-1005**	2	CLIP (SLOT)	
	16	1	**9R-7802**	2	CLIP (SLOT)	
	17	1	**9R-7803**	2	CLIP	

I-SEE HOSE FABRICATION GUIDE
M-METRIC PART

199-5283 **LINES GP-TILT CYLINDER** *(contd.)* **i01534867**

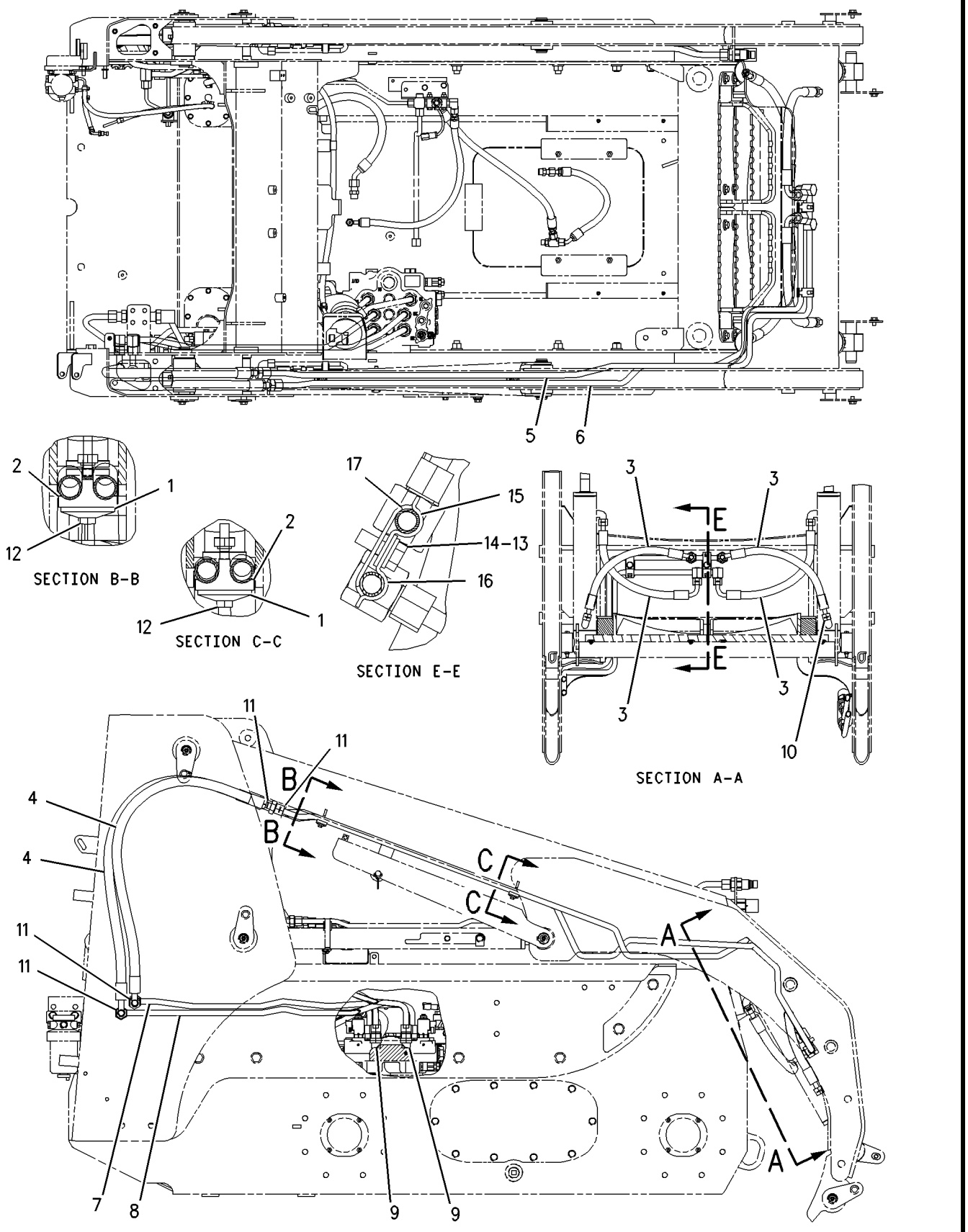

GRAPHIC #1 g00800174

HYDRAULIC SYSTEM

199-5285 LINES GP-TILT CYLINDER

S/N: 4NZ3400-UP; 5FZ6700-UP
WITH TOOL POSITIONING
PART OF 197-4917 HYDRAULIC AR
AN ATTACHMENT

SMCS-5057, 5104 **i01536040**

NOTE	REF NO	GRAPHIC REF	PART NUMBER	QTY	PART NAME 1 2 3 4 5 6 (PRODUCT LEVEL)	SEE PAGE
	1	1	**116-4415**	2	PLATE	
	2	1	**142-8998**	2	CLIP	
I	3	1	**142-9234**	4	HOSE AS	
	4	1	**158-6669**	1	TUBE AS	
	5	1	**158-6684**	1	TUBE AS	
I	6	1	**187-1270**	2	HOSE AS	
	7	1	**187-3227**	1	TUBE AS	
	8	1	**187-3228**	1	TUBE AS	
	9	1	**193-0485**	1	TUBE AS	
	10	1	**193-0486**	1	TUBE AS	
	11	1	*148-8341*	2	CONNECTOR GP	
					(EACH INCLUDES)	
		1	**3D-2824**	1	SEAL-O-RING	
		1	**6V-8713**	1	CONNECTOR	
		1	**7J-9108**	1	SEAL-O-RING	
	12	1	*148-8390*	2	ELBOW GP	
					(EACH INCLUDES)	
		1	**2M-9780**	1	SEAL-O-RING	
		1	**6V-8626**	1	ELBOW	
		1	**7J-9108**	1	SEAL-O-RING	
	13	1	**6V-8398**	8	SEAL-O-RING	
	14	1	**7J-9108**	6	SEAL-O-RING	
M	15	1	**7X-2534**	2	BOLT (M6X1X50MM)	
	16	1	**8T-4121**	2	WASHER-HARD (11X21X2.5MM THK)	
M	17	1	**8T-4136**	2	BOLT (M10X1.5X25MM)	
	18	1	**9R-1005**	2	CLIP (SLOT)	
	19	1	**9R-7802**	2	CLIP (SLOT)	
	20	1	**9R-7803**	2	CLIP	

I-SEE HOSE FABRICATION GUIDE
M-METRIC PART

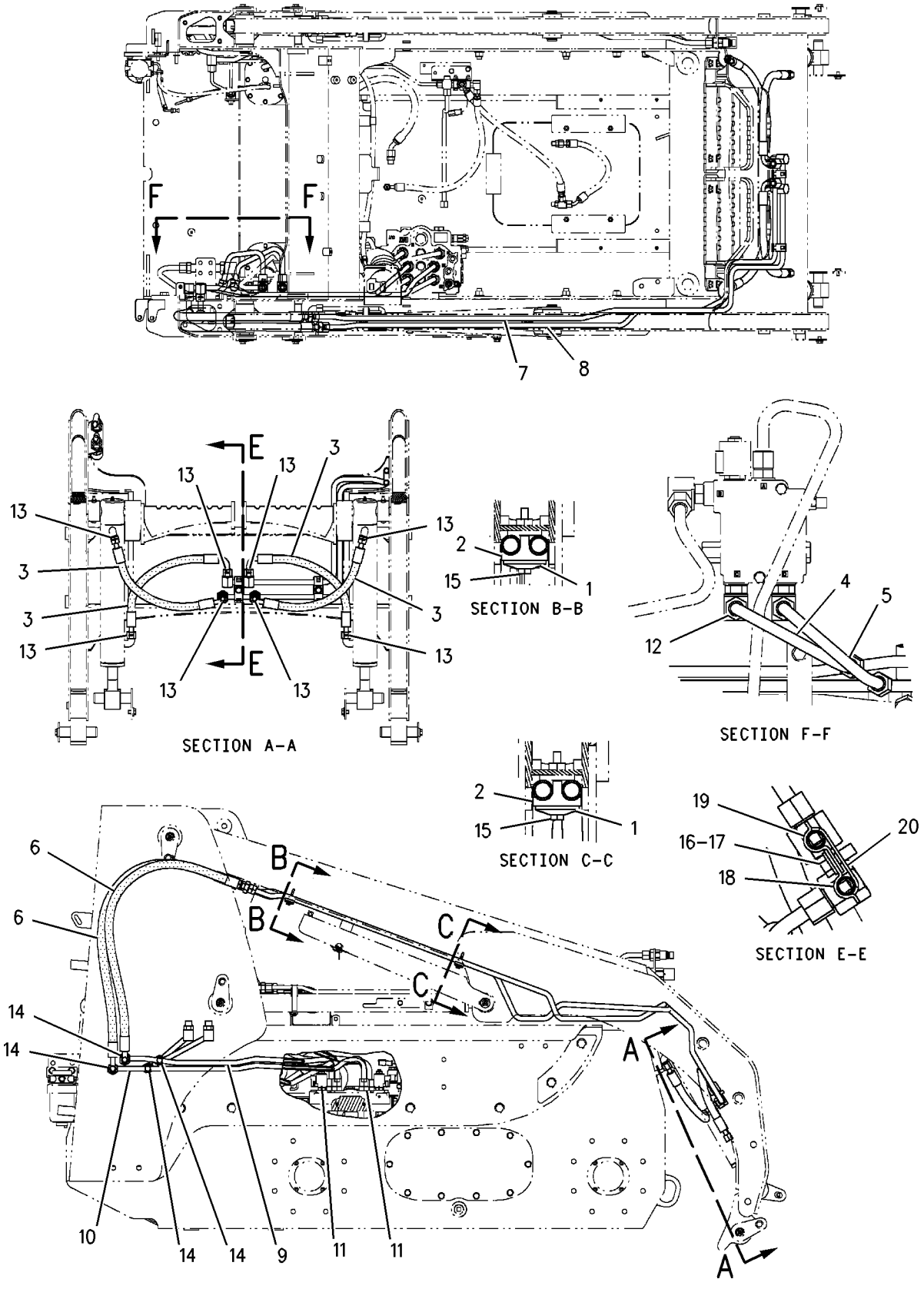

GRAPHIC #1

g00800390

HYDRAULIC SYSTEM

195-6780 LINES GP-WORK TOOL

S/N: 4NZ3400-UP; 5FZ6700-UP

PART OF 200-0806, 200-1006 HYDRAULIC AR

SMCS-5057 **i01528994**

NOTE	REF NO	GRAPHIC REF	PART NUMBER	QTY	PART NAME 1 2 3 4 5 6 (PRODUCT LEVEL)	SEE PAGE
	1	1	**116-4415**	2	PLATE	
	2	1	**142-8998**	2	CLIP	
I	3	1	**187-1271**	2	HOSE AS	
	4	1	**192-2692**	1	TUBE AS	
	5	1	**192-2693**	1	TUBE AS	
	6	1	**193-8330**	1	TUBE AS	
	7	1	**193-8331**	1	TUBE AS	
	8	1	**193-8334**	1	COUPLING	
	9	1	**193-8335**	1	COUPLING	
	10	1	*148-8341*	2	CONNECTOR GP	
					(EACH INCLUDES)	
		1	**3D-2824**	1	SEAL-O-RING	
		1	**6V-8713**	1	CONNECTOR	
		1	**7J-9108**	1	SEAL-O-RING	
	11	1	**6V-9170**	2	NUT-BULKHEAD (1-14 THD)	
	12	1	**7J-9108**	6	SEAL-O-RING	
M	13	1	**7X-2534**	2	BOLT (M6X1X50MM)	

I-SEE HOSE FABRICATION GUIDE
M-METRIC PART

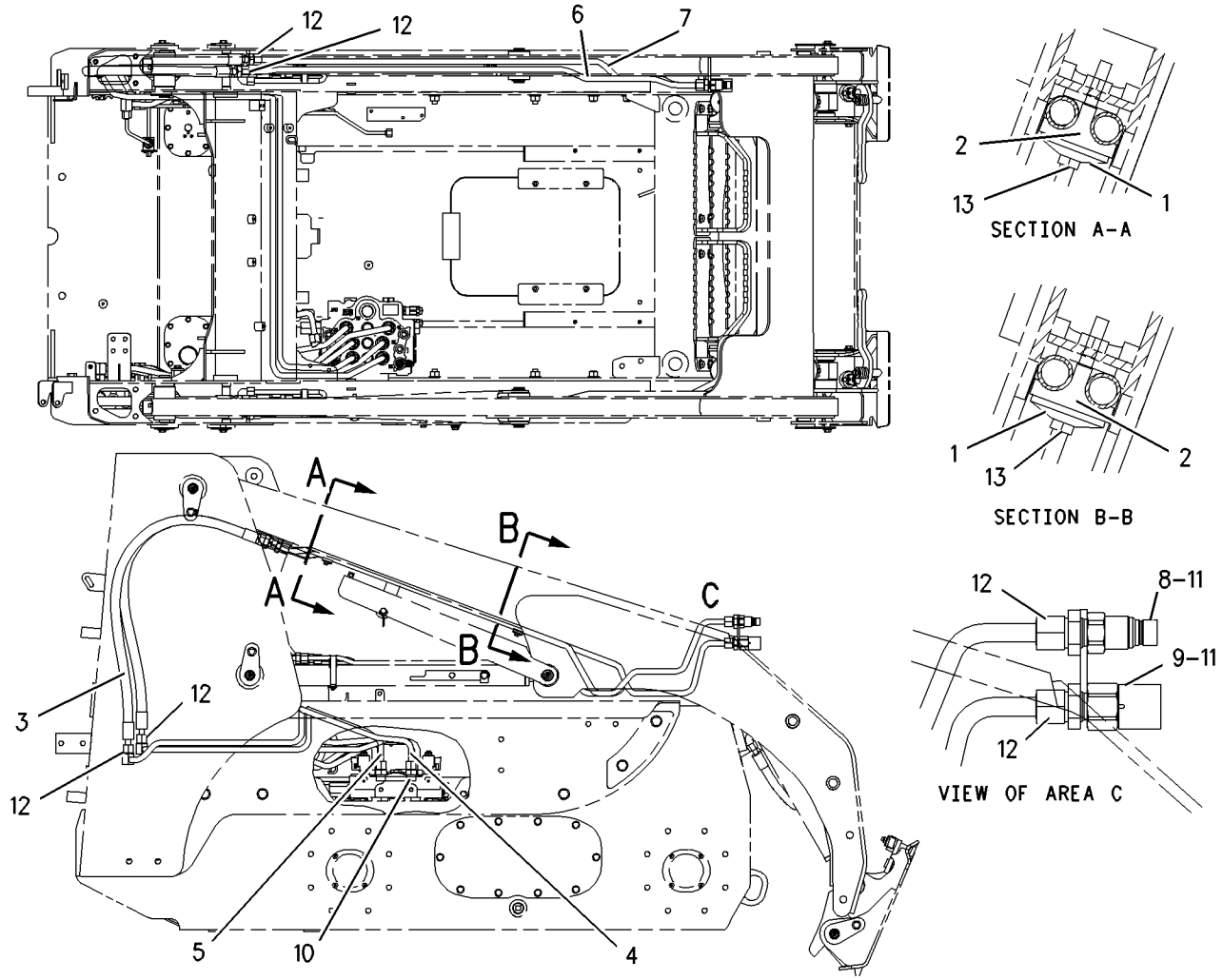

GRAPHIC #1 g00795093

MEMORANDA

HYDRAULIC SYSTEM

212-4090 LINES GP-WORK TOOL

S/N: CAB1-UP; CMB1-UP

PART OF 191-9606, 216-6136 HYDRAULIC AR

SMCS-5057 **i01742823**

NOTE	REF NO	GRAPHIC REF	PART NUMBER	QTY	PART NAME 1 2 3 4 5 6 (PRODUCT LEVEL)	SEE PAGE
	1	1	**193-0474**	1	PLATE	
	2	1	**193-8334**	1	COUPLING	
	3	1	**193-8335**	1	COUPLING	
I	4	1	**212-4091**	2	HOSE AS	
	5	1	**212-4092**	1	TUBE AS	
	6	1	**212-4093**	1	TUBE AS	
	7	1	**212-4094**	1	TUBE AS	
	8	1	**212-4095**	1	TUBE AS	
	9	1	**215-3935**	3	CLIP	
	10	1	**219-4377**	1	PLATE	
	11	1	*148-8341*	2	CONNECTOR GP	
					(EACH INCLUDES)	
		1	**3D-2824**	1	SEAL-O-RING	
		1	**6V-8713**	1	CONNECTOR	
		1	**7J-9108**	1	SEAL-O-RING	
	12	1	**5P-7464**	4	CLIP (SLOT)	
	13	1	**5P-7465**	4	CLIP (TAB)	
	14	1	**6V-7359**	4	GROMMET	
	15	1	**6V-9170**	2	NUT-BULKHEAD (1-14 THD)	
	16	1	**7J-9108**	6	SEAL-O-RING	
M	17	1	**7X-0818**	1	BOLT (M8X1.25X45MM)	
M	18	1	**8T-4139**	2	BOLT (M12X1.75X30MM)	
M	19	1	**8T-4189**	1	BOLT (M8X1.25X20MM)	
M	20	1	**8T-4194**	2	BOLT (M12X1.75X50MM)	
	21	1	**8T-4223**	6	WASHER-HARD (13.5X25.5X3MM THK)	
	22	1	**8T-4224**	4	WASHER-HARD (8.8X16X2MM THK)	
M	23	1	**8T-4244**	2	NUT (M12X1.75 THD)	
M	24	1	**8T-6870**	2	BOLT (M8X1.25X70MM)	
	25	1	**9R-1005**	1	CLIP (SLOT)	
	26	1	**9R-7802**	1	CLIP (SLOT)	
	27	1	**9R-7803**	1	CLIP	

I-SEE HOSE FABRICATION GUIDE
M-METRIC PART

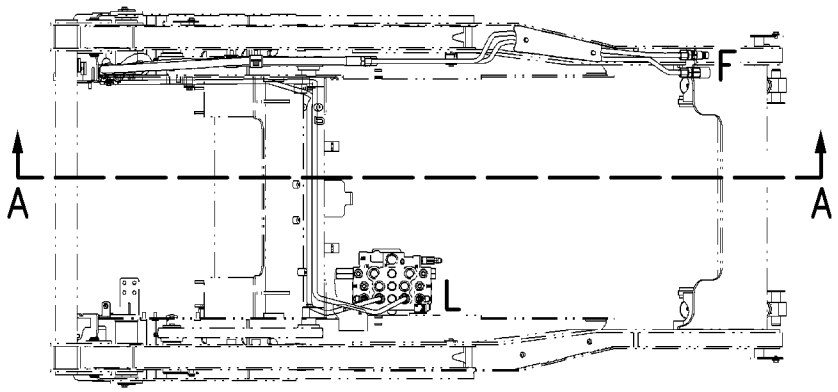

TOP VIEW

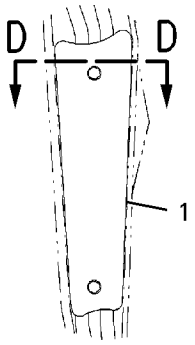

SECTION C-C

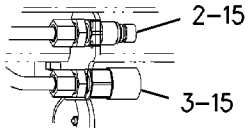

VIEW OF AREA F

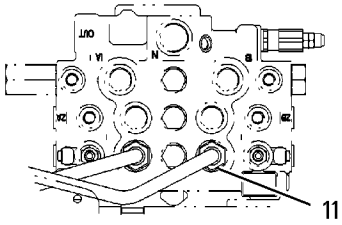

VIEW OF AREA L

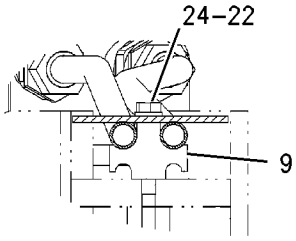

SECTION D-D

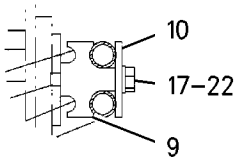

SECTION B-B

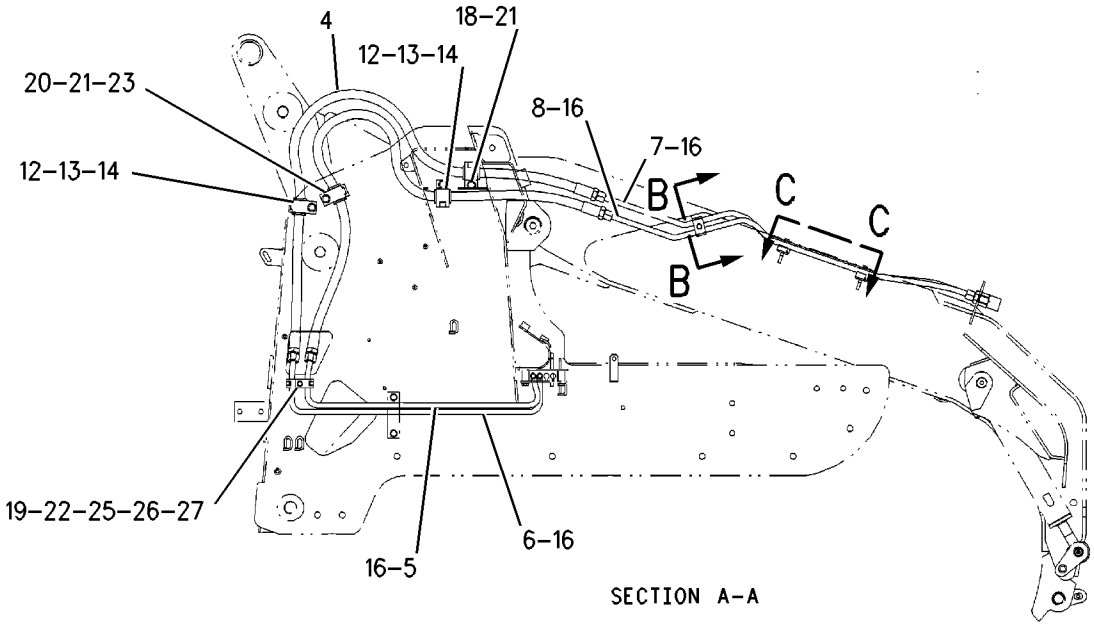

SECTION A-A

GRAPHIC #1

g00893142

191-9672 MOTOR & MTG GP-HYDRAULIC FAN

S/N: CAB1-UP; 4NZ3400-UP

PART OF 191-9606, 200-0806 HYDRAULIC AR

SMCS-1386 **i01685902**

NOTE	REF NO	GRAPHIC REF	PART NUMBER	QTY	PART NAME 1 2 3 4 5 6 (PRODUCT LEVEL)	SEE PAGE
Y	1	1	**191-9662**	1	MOTOR GP-GEAR	369
	2	1	**8T-4121**	2	WASHER-HARD (11X21X2.5MM THK)	
M	3	1	**8T-4196**	2	BOLT (M10X1.5X35MM)	
	4	1	**8T-4224**	1	WASHER-HARD (8.8X16X2MM THK)	
M	5	1	**8T-7547**	1	BOLT (M8X1.25X30MM)	

M-METRIC PART
Y-SEPARATE ILLUSTRATION

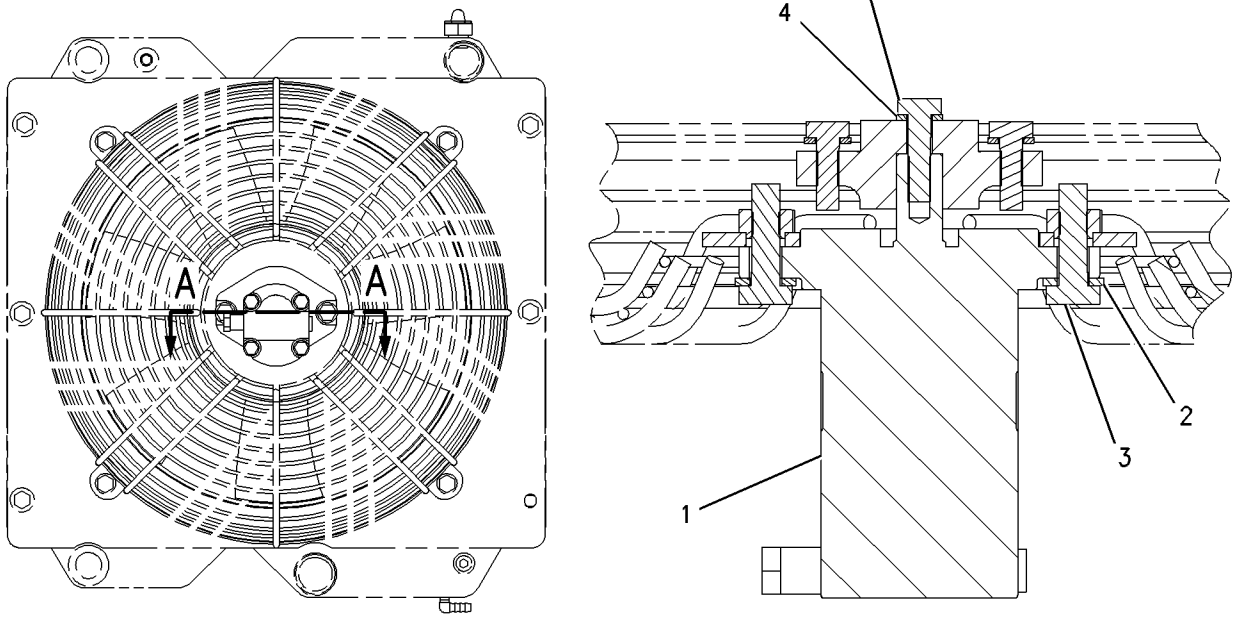

SECTION A-A

GRAPHIC #1 g00847787

HYDRAULIC SYSTEM

191-9673 MOTOR & MTG GP-HYDRAULIC FAN

S/N: CMB1-UP; 5FZ6700-UP

PART OF 200-1006, 216-6136 HYDRAULIC AR

SMCS-1386 **i01639546**

NOTE	REF NO	GRAPHIC REF	PART NUMBER	QTY	PART NAME 1 2 3 4 5 6 (PRODUCT LEVEL)	SEE PAGE
Y	1	1	**191-9663**	1	MOTOR GP-GEAR	370
	2	1	**8T-4121**	2	WASHER-HARD (11X21X2.5MM THK)	
M	3	1	**8T-4196**	2	BOLT (M10X1.5X35MM)	
	4	1	**8T-4224**	1	WASHER-HARD (8.8X16X2MM THK)	
M	5	1	**8T-7547**	1	BOLT (M8X1.25X30MM)	

M-METRIC PART
Y-SEPARATE ILLUSTRATION

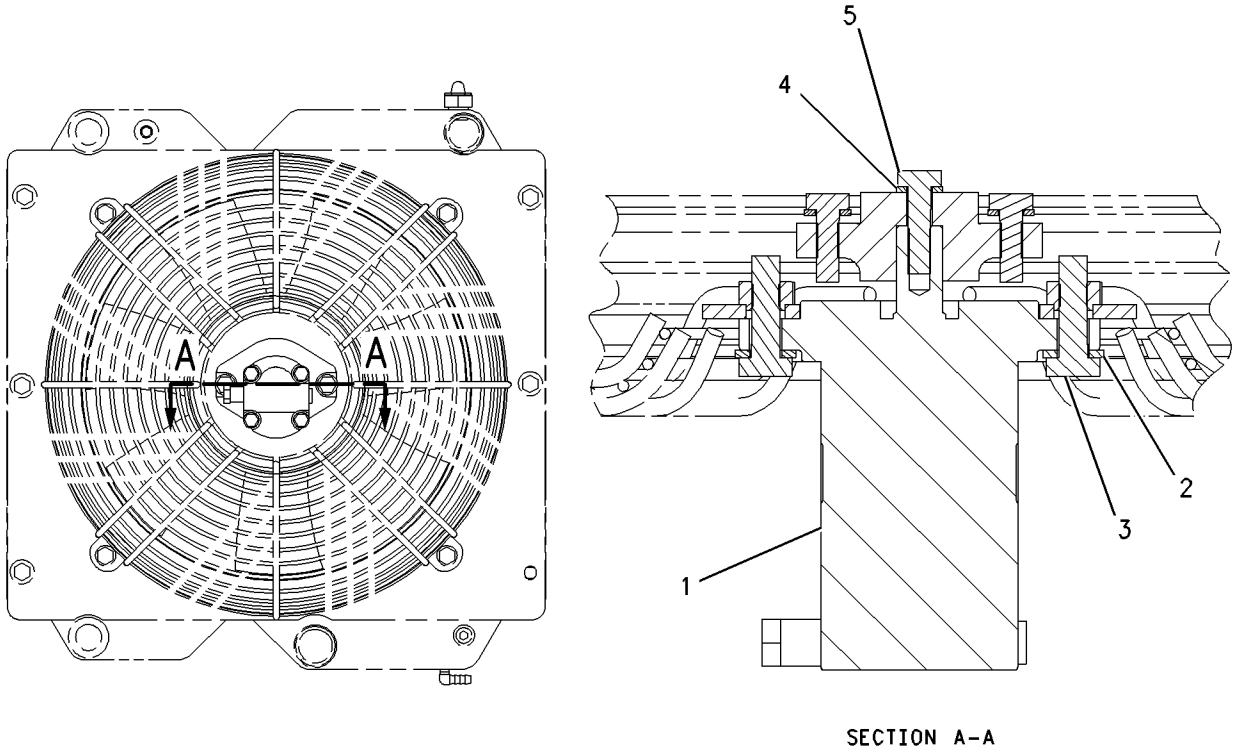

GRAPHIC #1 g00847792

HYDRAULIC SYSTEM

188-0128 MOTOR GP-GEAR

S/N: 5FZ6700-UP

PART OF 142-8860 RADIATOR & HYD OIL COOLER GP

SMCS-1386, 5061 **i01350142**

NOTE	REF NO	GRAPHIC REF	PART NUMBER	QTY	PART NAME 1 2 3 4 5 6 (PRODUCT LEVEL)	SEE PAGE
	1	1	**087-1031**	1	SEAL-O-RING	
	2	1	**187-1261**	1	GASKET	
	3	1	**187-1262**	1	KIT-VALVE	
	4	1	**187-1263**	1	KIT-VALVE	
	5	1	**187-1264**	1	RING-RETAINING	
	6	1	**187-1265**	1	SEAL-SHAFT	

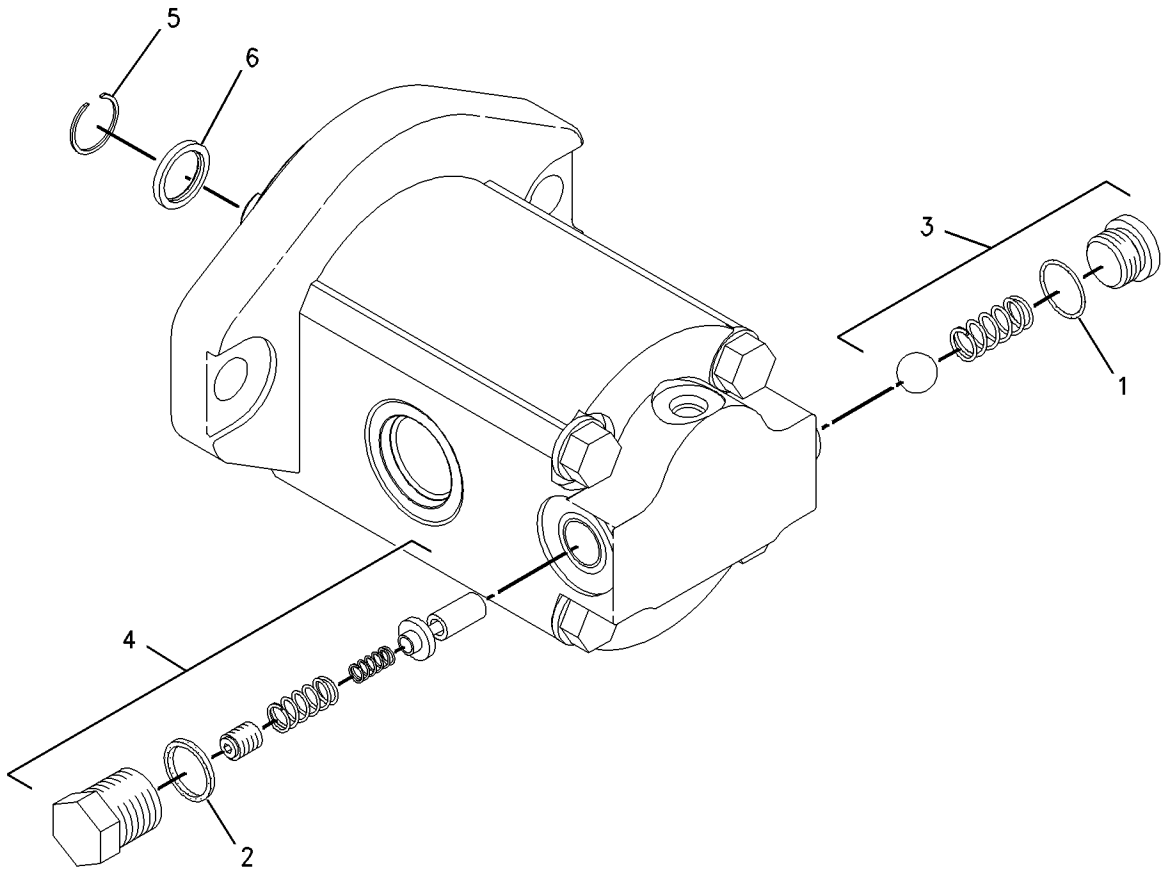

GRAPHIC #1 g00712784

HYDRAULIC SYSTEM

191-9662 MOTOR GP-GEAR

S/N: CAB1-UP; 4NZ3400-UP

PART OF 191-9672 MOTOR & MTG GP-HYDRAULIC FAN

SMCS-1386, 5061 **i01679110**

NOTE	REF NO	GRAPHIC REF	PART NUMBER	QTY	PART NAME 1 2 3 4 5 6 (PRODUCT LEVEL)	SEE PAGE
	1	1	**187-1264**	1	RING-RETAINING	
	2	1	**187-1265**	1	SEAL-SHAFT	
	3	1	**187-1261**	1	GASKET	
	4	1	**187-1263**	1	KIT-VALVE	
	5	1	**087-1031**	1	SEAL-O-RING	
	6	1	**187-1262**	1	KIT-VALVE	

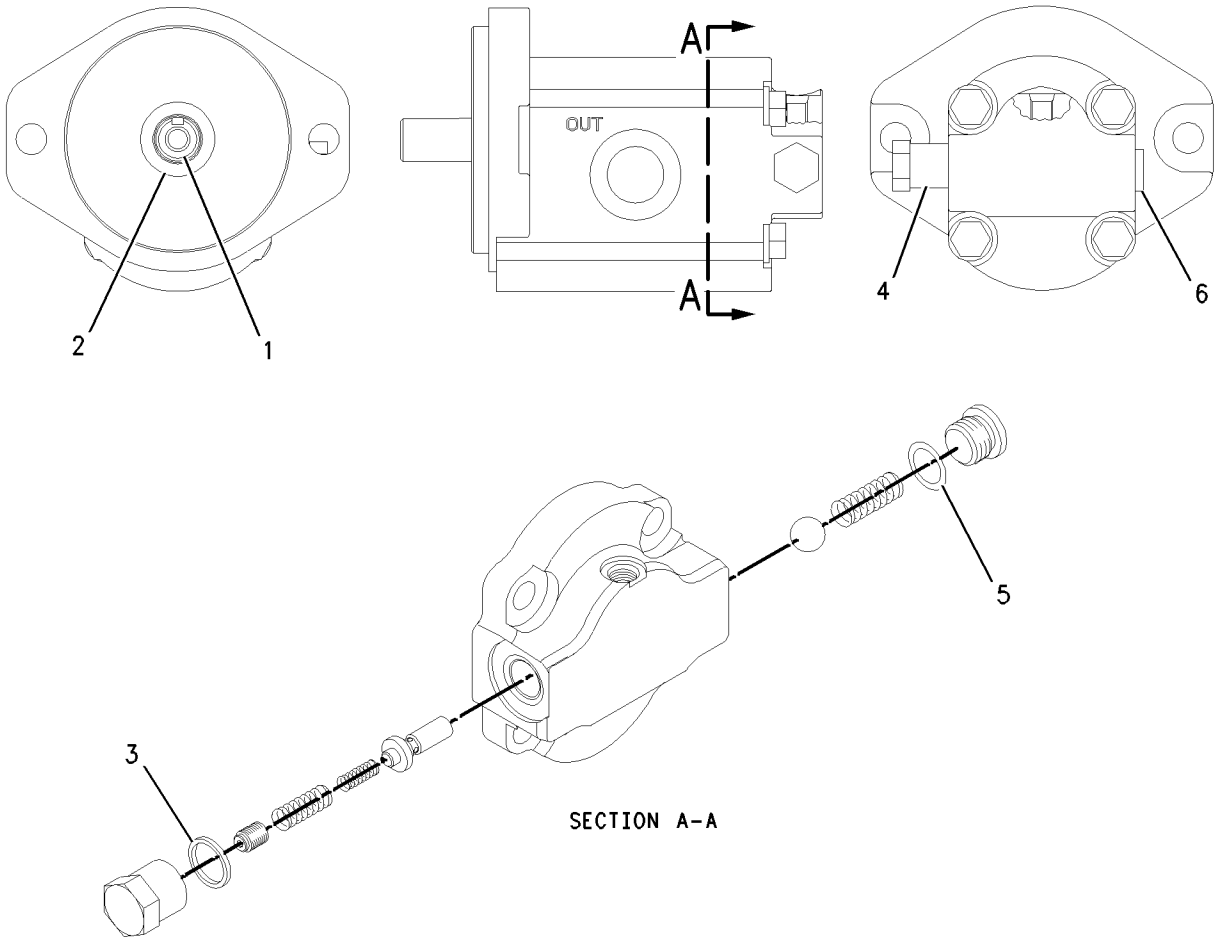

GRAPHIC #1 g00866619

HYDRAULIC SYSTEM

191-9663 MOTOR GP-GEAR

S/N: CMB1-UP; 5FZ6700-UP

PART OF 191-9673 MOTOR & MTG GP-HYDRAULIC FAN

SMCS-1386, 5061 **i01639795**

NOTE	REF NO	GRAPHIC REF	PART NUMBER	QTY	PART NAME 1 2 3 4 5 6 (PRODUCT LEVEL)	SEE PAGE
	1	1	**187-1264**	1	RING-RETAINING	
	2	1	**187-1265**	1	SEAL-SHAFT	
	3	1	**187-1261**	1	GASKET	
	4	1	**187-1263**	1	KIT-VALVE (RELIEF)	
	5	1	**087-1031**	1	SEAL-O-RING	
	6	1	**187-1262**	1	KIT-VALVE (CHECK)	

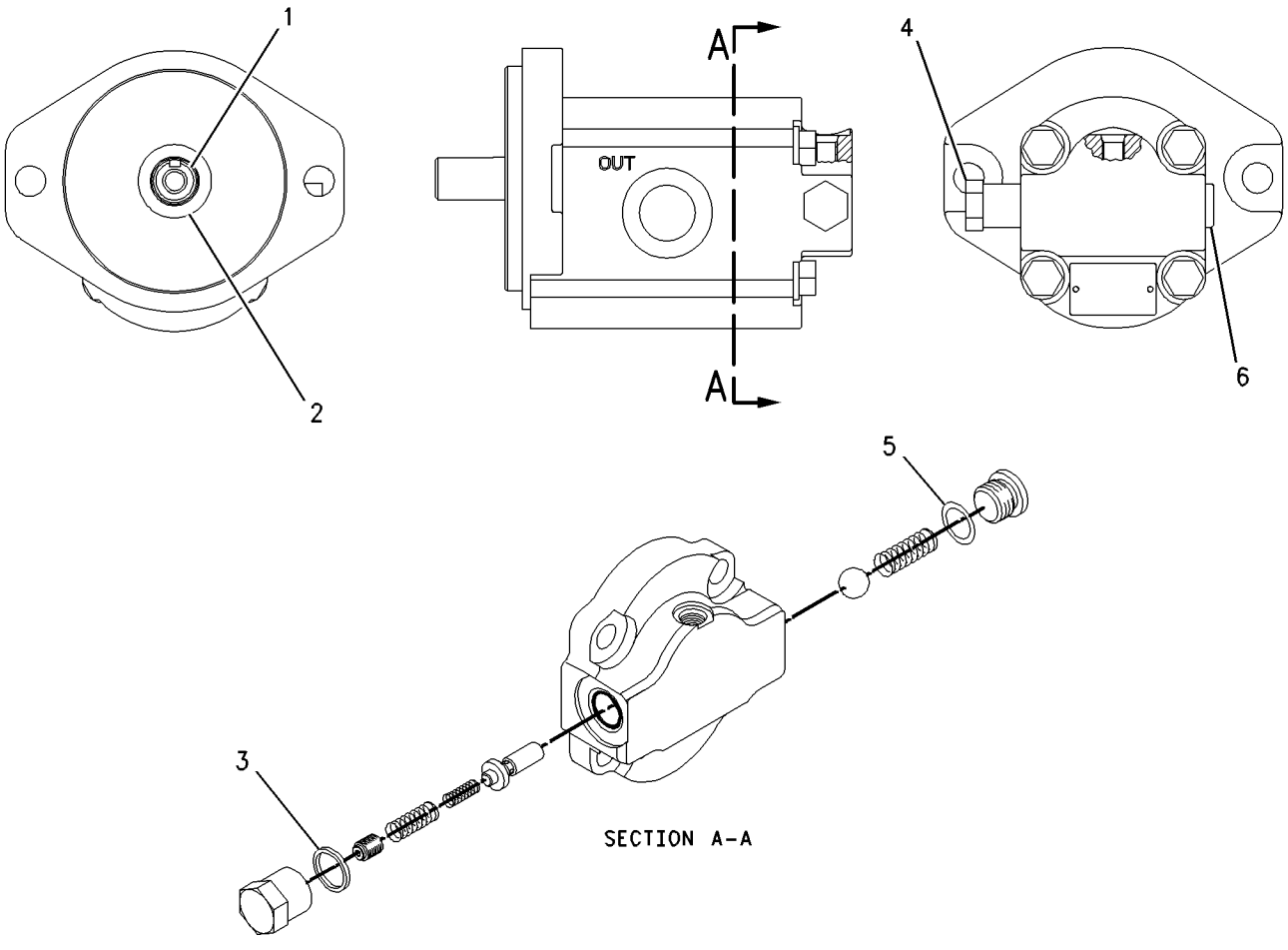

GRAPHIC #1 g00848387

HYDRAULIC SYSTEM

154-5011 MOUNTING GP-CYLINDER

S/N: 4NZ3400-UP; 5FZ6700-UP
PART OF 154-5004, 154-5008 BUCKET AR-MULTIPURPOSE
AN ATTACHMENT

SMCS-5498 **i01066088**

NOTE	REF NO	GRAPHIC REF	PART NUMBER	QTY	PART NAME 1 2 3 4 5 6 (PRODUCT LEVEL)	SEE PAGE
	1	1	**154-5012**	2	PIN	
	2	1	**154-5013**	2	PIN	
	3	1	**3B-8489**	2	FITTING-GREASE (1/8-27 THD)	
M	4	1	**6V-9189**	4	LOCKNUT (M8X1.25 THD)	
M	5	1	**8T-6869**	4	BOLT (M8X1.25X60MM)	

M-METRIC PART

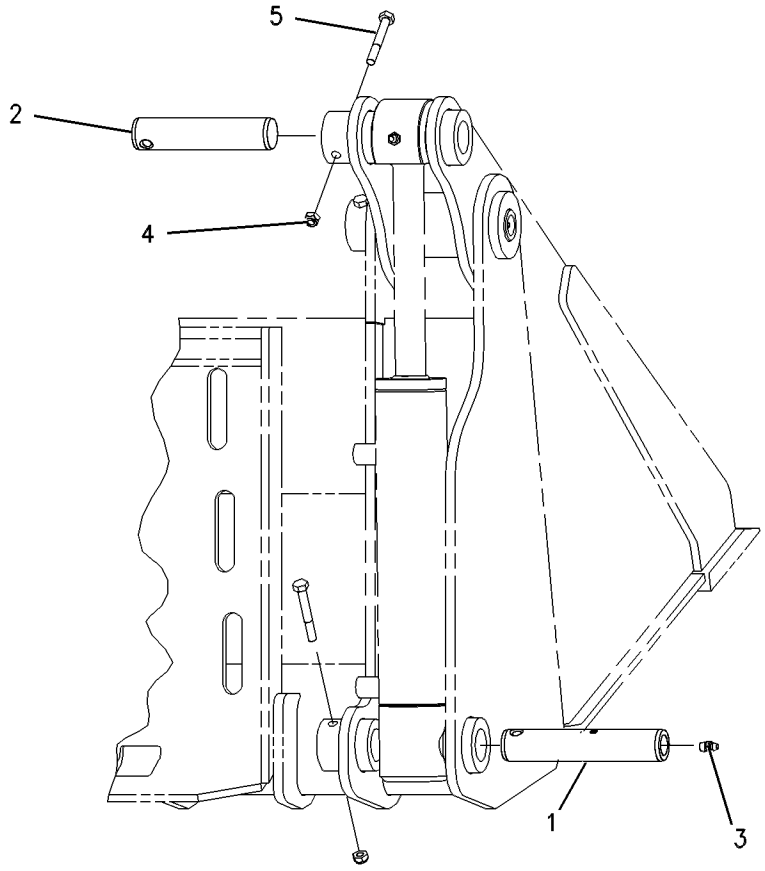

GRAPHIC #1 g00560356

142-8714 PLUG GP-PILOT VALVE

S/N: CAB1-UP; CMB1-UP; 4NZ3400-UP; 5FZ6700-UP
CANNOT BE USED WITH 142-8656—PAGE 184
AN ATTACHMENT

SMCS-5059 **i01344470**

NOTE	REF NO	GRAPHIC REF	PART NUMBER	QTY	PART NAME 1 2 3 4 5 6 (PRODUCT LEVEL)	SEE PAGE
	1	1	*148-8407*	1	PLUG AS	
		1	**3J-1907**	1	SEAL-O-RING (11.89MM ID)	
		1	**9S-4191**	1	PLUG-O-RING (9/16-18 THD)	

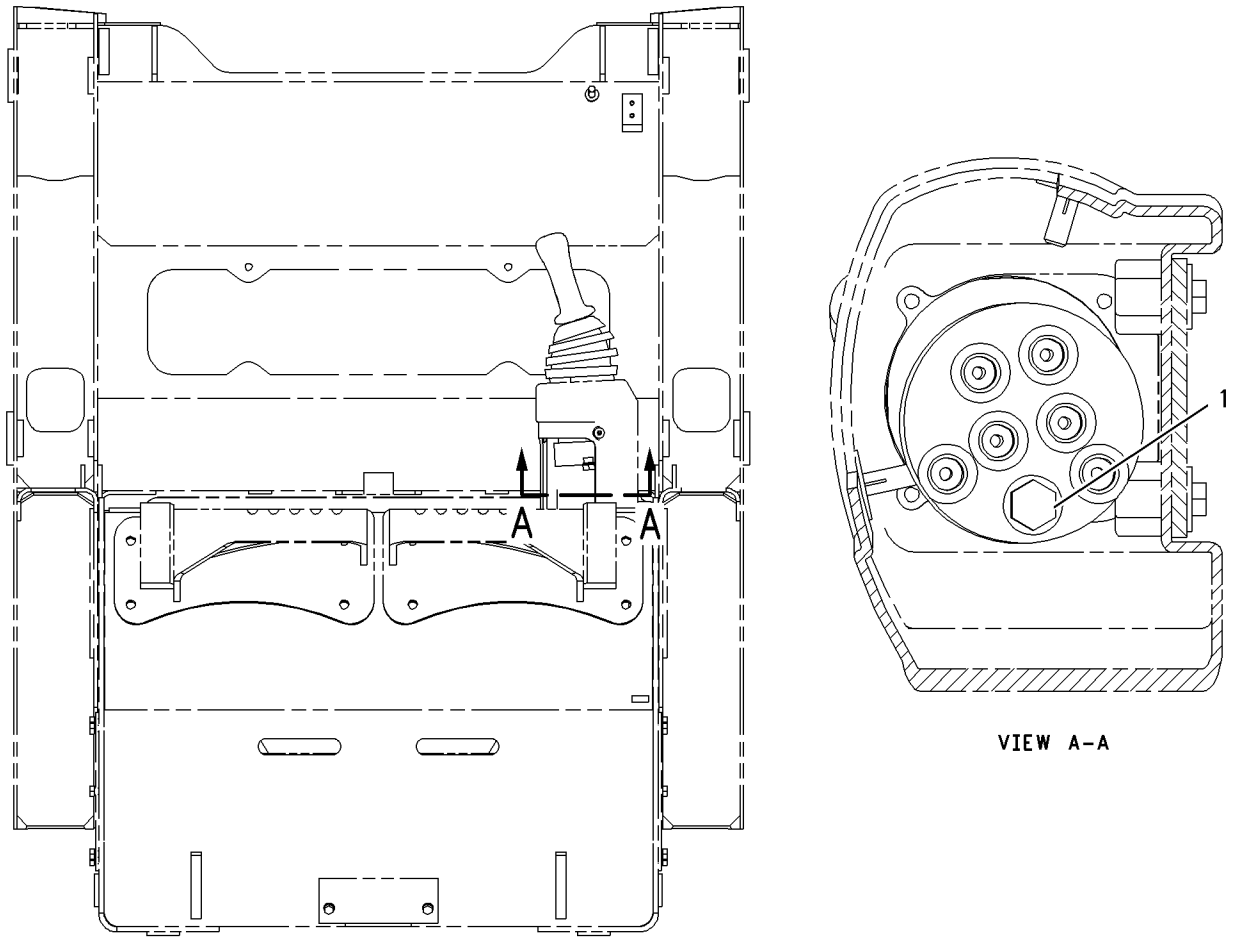

GRAPHIC #1 g00710146

192-2695 PUMP & MTG GP-WORK TOOL

S/N: CMB1-UP; 5FZ6700-UP

PART OF 200-1006, 216-6136 HYDRAULIC AR

SMCS-6700 **i01534315**

NOTE	REF NO	GRAPHIC REF	PART NUMBER	QTY	PART NAME 1 2 3 4 5 6 (PRODUCT LEVEL)	SEE PAGE
Y	1	1	**191-2904**	1	PUMP GP-GEAR	375
	2	1	**8T-4223**	2	WASHER-HARD (13.5X25.5X3MM THK)	
M	3	1	**8T-4956**	2	BOLT (M12X1.75X35MM)	
	4	1	**8T-5049**	1	SEAL-O-RING	

M-METRIC PART
Y-SEPARATE ILLUSTRATION

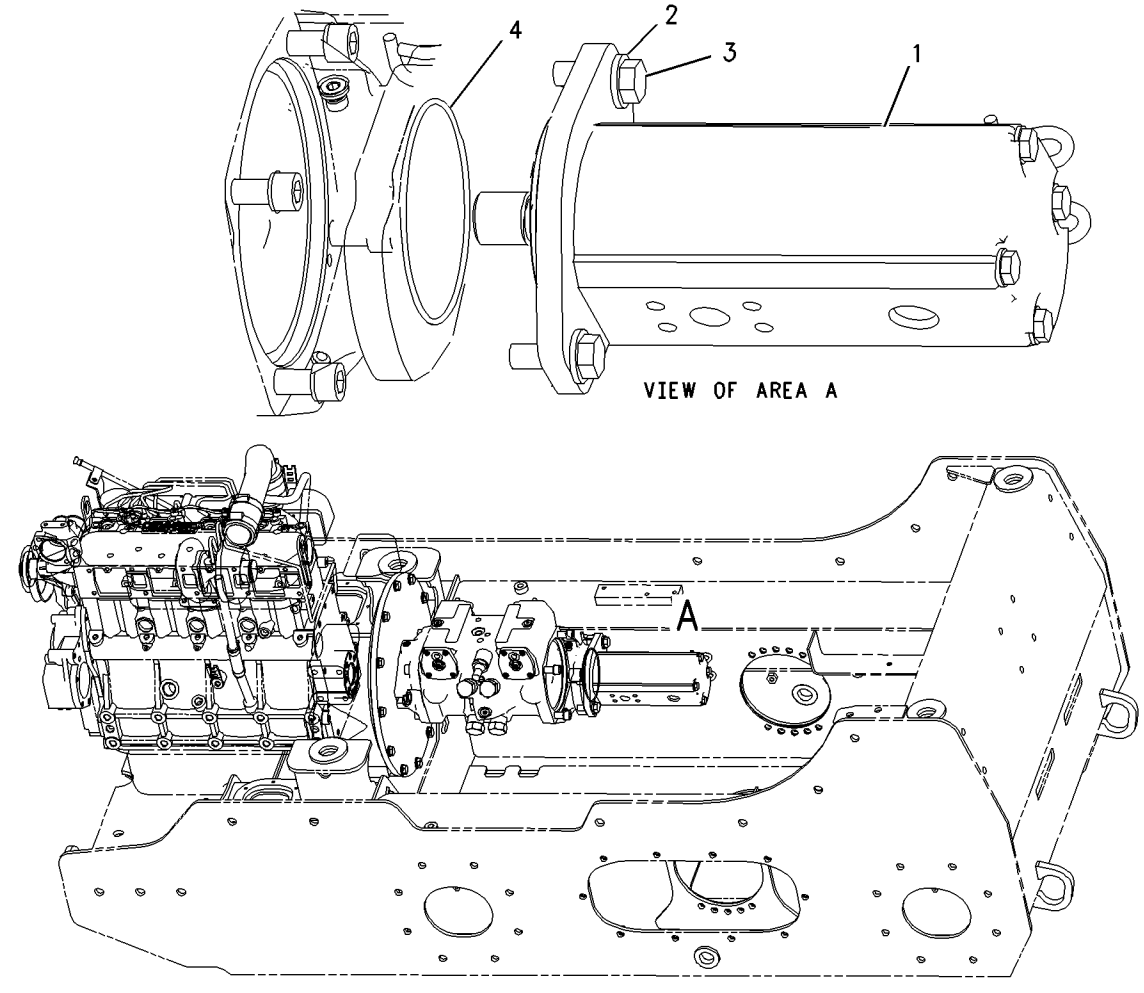

GRAPHIC #1 g00797387

HYDRAULIC SYSTEM

195-6795 PUMP & MTG GP-WORK TOOL

S/N: CAB1-UP; 4NZ3400-UP

PART OF 191-9606, 200-0806 HYDRAULIC AR

SMCS-6700 **i01536962**

NOTE	REF NO	GRAPHIC REF	PART NUMBER	QTY	PART NAME 1 2 3 4 5 6 (PRODUCT LEVEL)	SEE PAGE
Y	1	1	**191-9747**	1	PUMP GP-GEAR	375
	2	1	**8T-4223**	2	WASHER-HARD (13.5X25.5X3MM THK)	
M	3	1	**8T-4956**	2	BOLT (M12X1.75X35MM)	
	4	1	**8T-5049**	1	SEAL-O-RING	

M-METRIC PART
Y-SEPARATE ILLUSTRATION

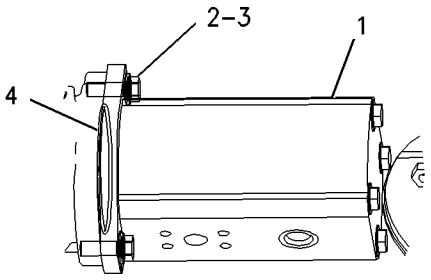

VIEW OF AREA A

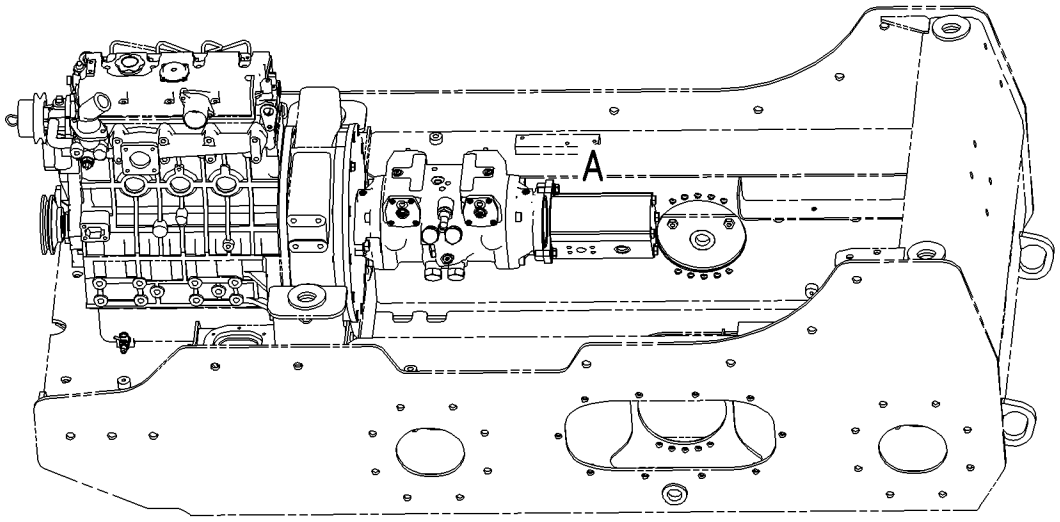

GRAPHIC #1 g00799950

HYDRAULIC SYSTEM

191-2904 PUMP GP-GEAR

S/N: CMB1-UP; 5FZ6700-UP

PART OF 192-2695 PUMP & MTG GP-WORK TOOL

SMCS-5073 **i01532607**

NOTE	PART NUMBER	QTY	PART NAME 1 2 3 4 5 6 (PRODUCT LEVEL)	SEE PAGE
			(NO SERVICED PARTS)	

<END>

191-9747 PUMP GP-GEAR

S/N: CAB1-UP; 4NZ3400-UP

PART OF 195-6795 PUMP & MTG GP-WORK TOOL

SMCS-5073 **i01535919**

NOTE	PART NUMBER	QTY	PART NAME 1 2 3 4 5 6 (PRODUCT LEVEL)	SEE PAGE
			(NO SERVICED PARTS)	

<END>

HYDRAULIC SYSTEM

204-1490 TANK & MTG GP-HYDRAULIC

S/N: CAB1-UP; CMB1-UP; 5FZ6700-UP

PART OF 191-9606, 200-1006, 216-6136 HYDRAULIC AR

SMCS-5056 **i01618340**

NOTE	REF NO	GRAPHIC REF	PART NUMBER	QTY	PART NAME 1 2 3 4 5 6 (PRODUCT LEVEL)	SEE PAGE
	1	1	**5P-4961**	1	CLAMP-HOSE	
	2	1	**154-4014**	1	BRACKET	
Y	3	1	*204-1491*	1	TANK GP-HYDRAULIC	379
	4	1	**207-9729**	1	FILTER AS-FUEL	
	5	1	**5P-4116**	3	WASHER-HARD (8.8X20.5X2MM THK)	
M	6	1	**8T-4200**	3	BOLT (M8X1.25X16MM)	
	7	1	**5P-1442**		HOSE (65CM)	

M-METRIC PART
Y-SEPARATE ILLUSTRATION

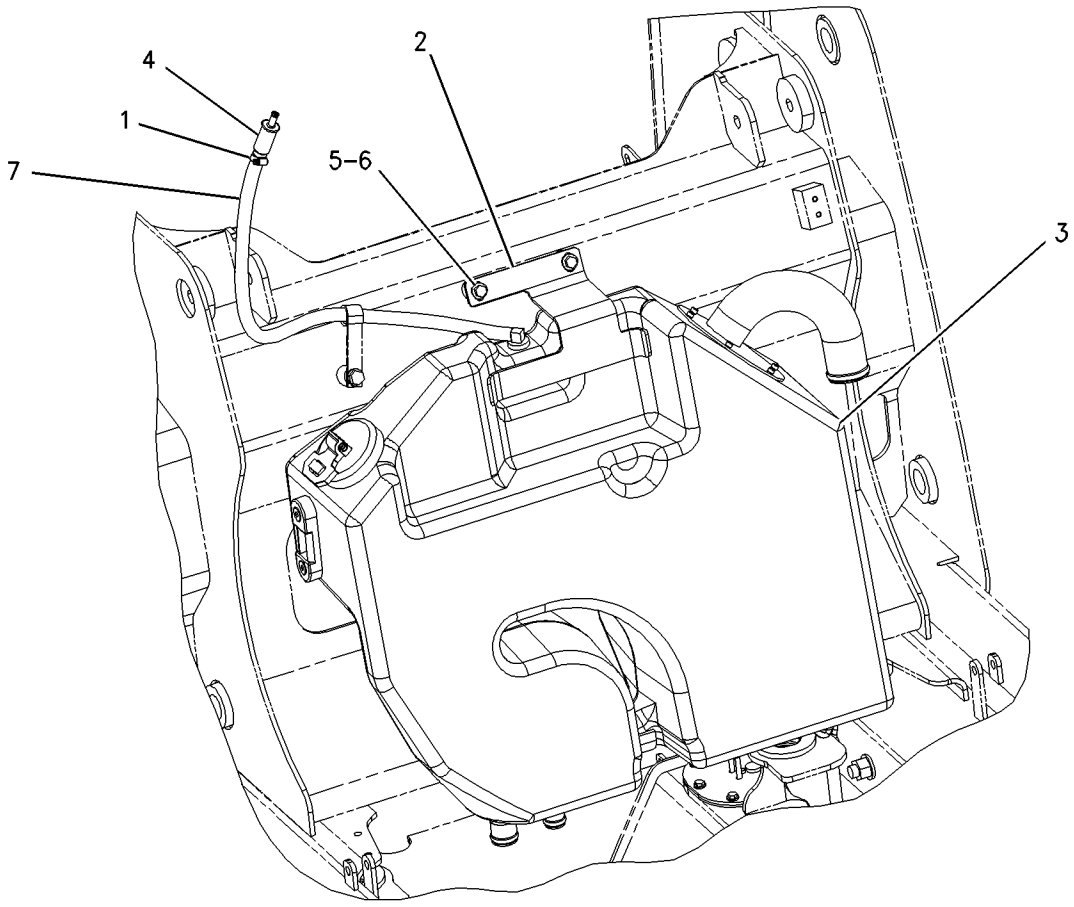

GRAPHIC #1 g00839902

HYDRAULIC SYSTEM

207-9740 TANK & MTG GP-HYDRAULIC

S/N: 4NZ3400-UP; 5FZ6700-UP

PART OF 200-0806, 200-1006 HYDRAULIC AR

SMCS-5056 **i01618524**

NOTE	REF NO	GRAPHIC REF	PART NUMBER	QTY	PART NAME 1 2 3 4 5 6 (PRODUCT LEVEL)	SEE PAGE
	1	1	**5P-4961**	1	CLAMP-HOSE	
Y	2	1	**142-8939**	1	TANK GP-HYDRAULIC	378
	3	1	**154-4014**	1	BRACKET	
	4	1	**207-9729**	1	FILTER AS-FUEL	
	5	1	**5P-4116**	1	WASHER-HARD (8.8X20.5X2MM THK)	
M	6	1	**8T-4200**	1	BOLT (M8X1.25X16MM)	
	7	1	**5P-1442**		HOSE (90CM)	

M-METRIC PART
Y-SEPARATE ILLUSTRATION

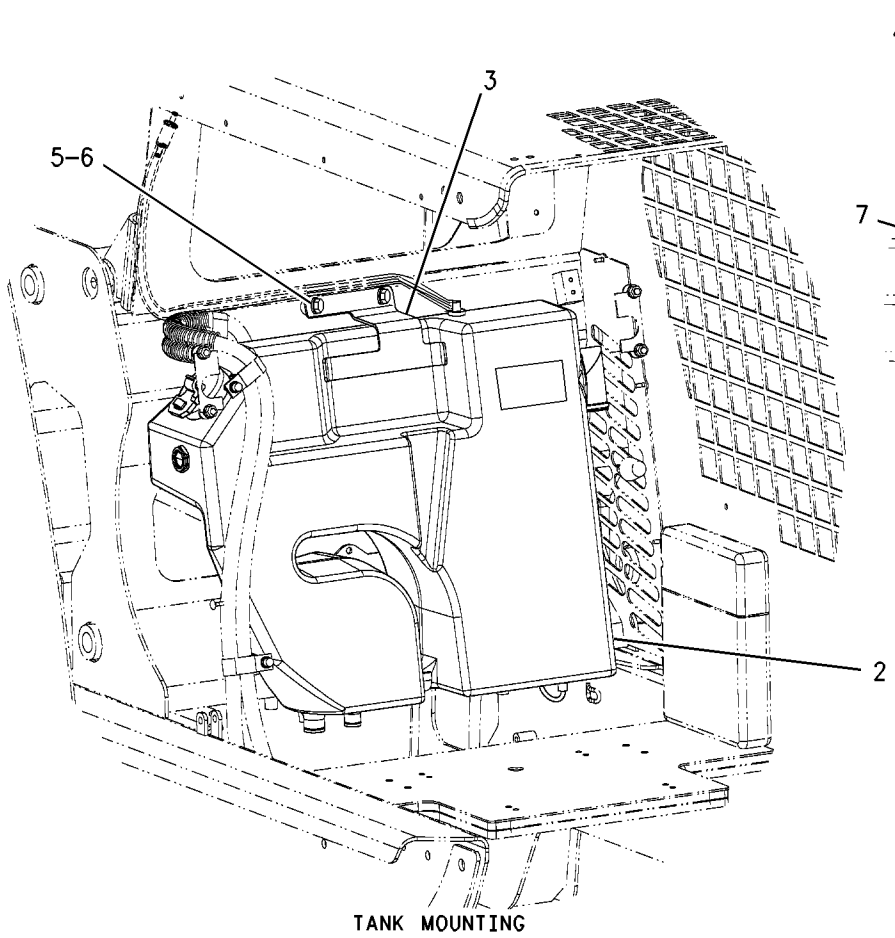

TANK MOUNTING

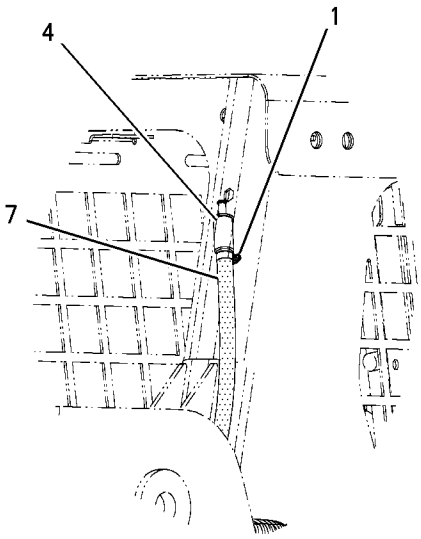

HOSE AND FILTER ROUTING

GRAPHIC #1 g00837852

HYDRAULIC SYSTEM

142-8939 TANK GP-HYDRAULIC

S/N: 4NZ3400-UP; 5FZ6700-UP

PART OF 207-9740 TANK & MTG GP-HYDRAULIC

SMCS-5056 **i01628515**

NOTE	REF NO	GRAPHIC REF	PART NUMBER	QTY	PART NAME 1 2 3 4 5 6 (PRODUCT LEVEL)	SEE PAGE
	1	1	**3K-0360**	1	SEAL-O-RING	
	2	1	**6W-5698**	1	GROMMET	
M	3	1	**099-2374**	6	BOLT-SOCKET HEAD	
	4	1	**132-3056**	1	SEAL-O-RING	
	5	1	**142-8927**	1	BODY AS-GAUGE	
		1	**7M-8485**	1	SEAL-O-RING	
	6	1	**142-8928**	1	ELBOW	
	7	1	**142-8929**	1	SCREEN-SUCTION	
	8	1	**142-8937**	1	CAP AS-HYDRAULIC	
	10	1	**142-8942**	1	TUBE AS	
	11	1	**142-9804**	1	SENDER AS-TEMPERATURE	
		1	**102-8803**	1	KIT-RECEPTACLE (3 PIN)	
					(KIT INCLUDES WEDGE)	
		1	**3E-3371**	1	WEDGE-RECEPTACLE LOCK (3 PIN)	
		1	**186-3735**	3	PIN-CONNECTOR	

M-METRIC PART

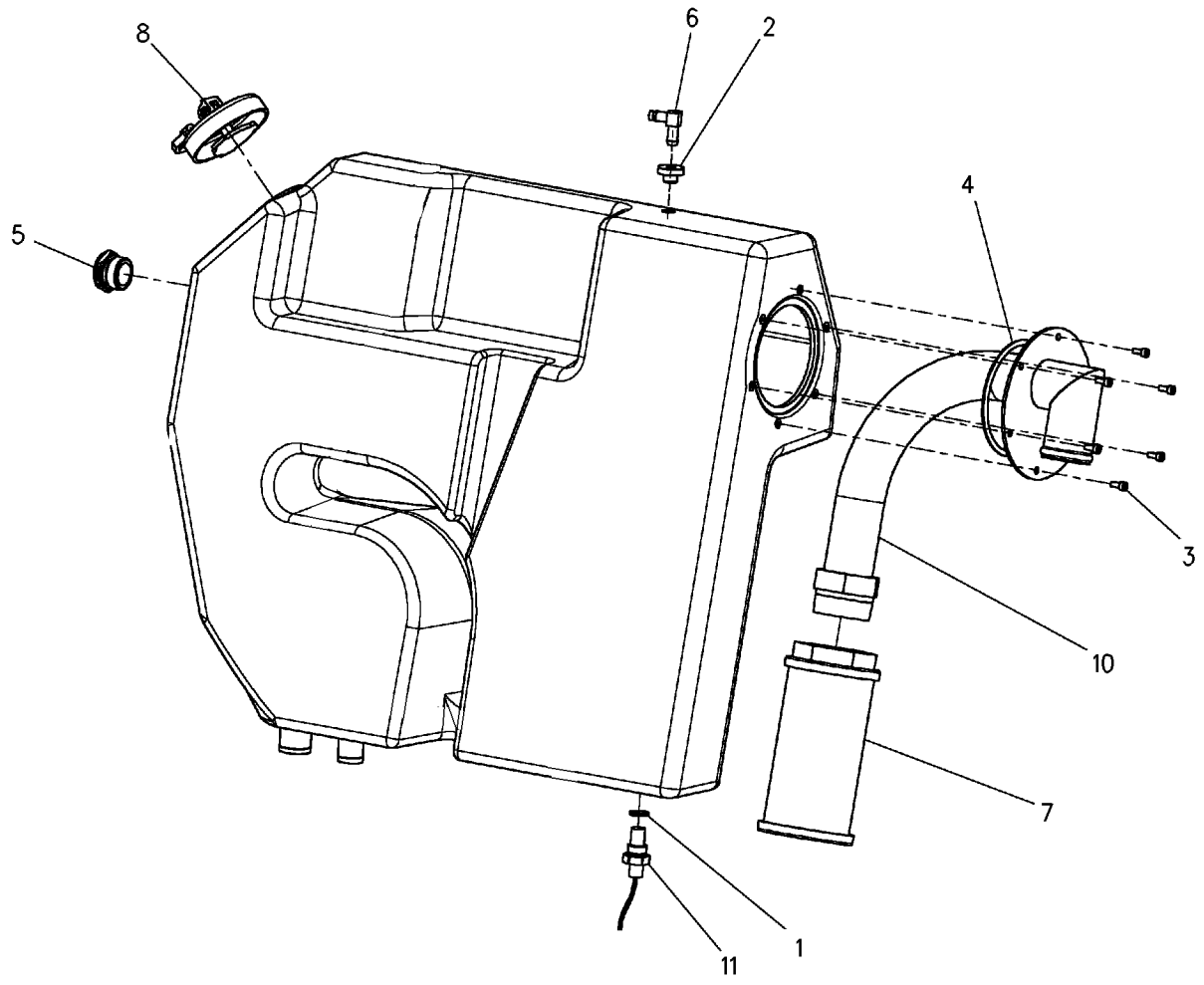

GRAPHIC #1 g00647152

HYDRAULIC SYSTEM

204-1491 TANK GP-HYDRAULIC

S/N: CAB1-UP; CMB1-UP; 5FZ6700-UP

PART OF 204-1490 TANK & MTG GP-HYDRAULIC

SMCS-5056 **i01618373**

NOTE	REF NO	GRAPHIC REF	PART NUMBER	QTY	PART NAME 1 2 3 4 5 6 (PRODUCT LEVEL)	SEE PAGE
	1	1	**6W-5698**	1	GROMMET	
M	2	1	**099-2374**	6	BOLT-SOCKET HEAD	
	3	1	**132-3056**	1	SEAL-O-RING	
	4	1	**142-8928**	1	ELBOW	
	5	1	**142-8929**	1	SCREEN-SUCTION	
	6	1	**142-8937**	1	CAP AS-HYDRAULIC	
	7	1	**142-9804**	1	SENDER AS-TEMPERATURE	
		1	**102-8803**	1	KIT-RECEPTACLE (3 PIN)	
	8	1	*204-1492*	1	TANK GP-HYDRAULIC	
		1	**192-2668**	1	GAUGE-SIGHT	
	9	1	**204-1499**	1	TUBE AS	
	10	1	**3K-0360**	1	SEAL-O-RING	

M-METRIC PART

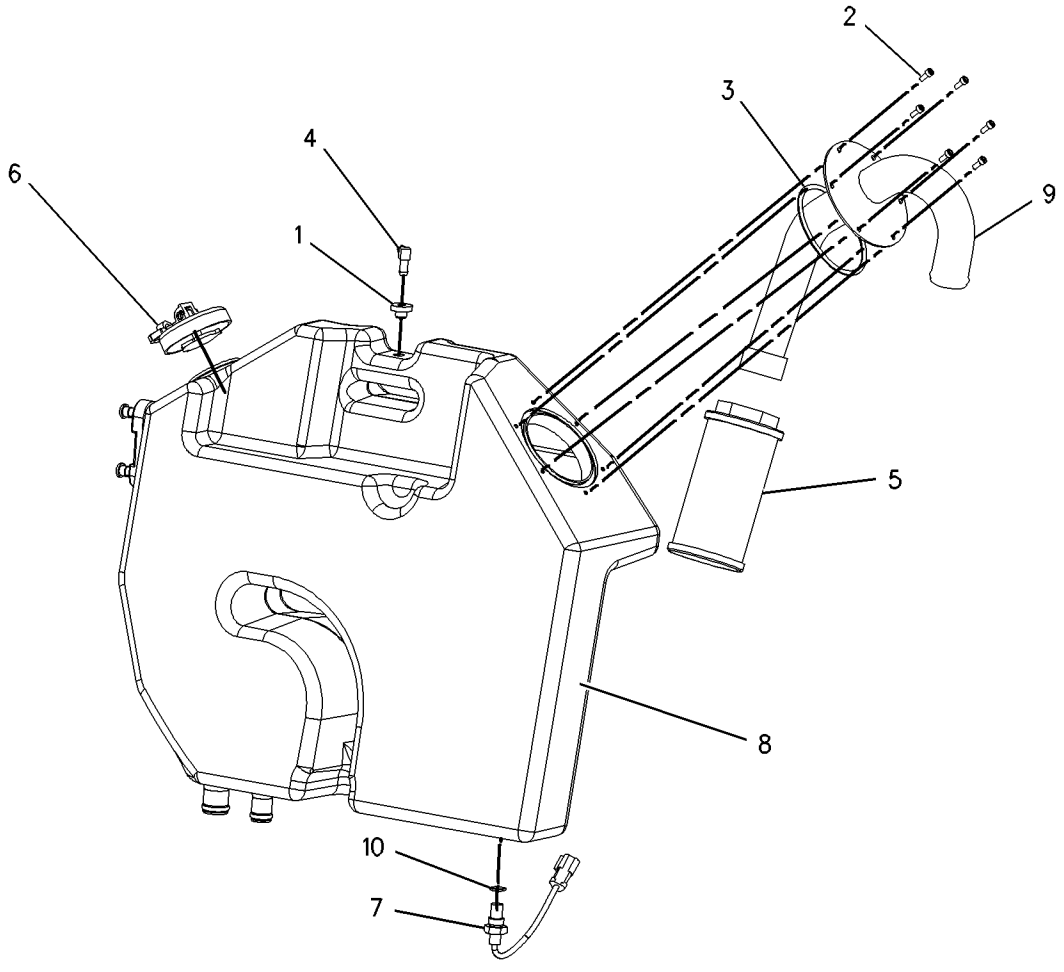

GRAPHIC #1 g00840189

HYDRAULIC SYSTEM

191-9731 VALVE & MTG GP-CONTROL

S/N: 4NZ3400-UP
PART OF 200-0806 HYDRAULIC AR
TYPE 1

SMCS-5051 **i01628547**

NOTE	REF NO	GRAPHIC REF	PART NUMBER	QTY	PART NAME 1 2 3 4 5 6 (PRODUCT LEVEL)	SEE PAGE
Y	1	1	**192-2608**	1	VALVE GP-CONTROL	396
	2	1	**193-8364**	1	BRACKET	
	3	1	**8T-4121**	4	WASHER-HARD (11X21X2.5MM THK)	
M	4	1	**8T-4136**	4	BOLT (M10X1.5X25MM)	

M-METRIC PART
Y-SEPARATE ILLUSTRATION

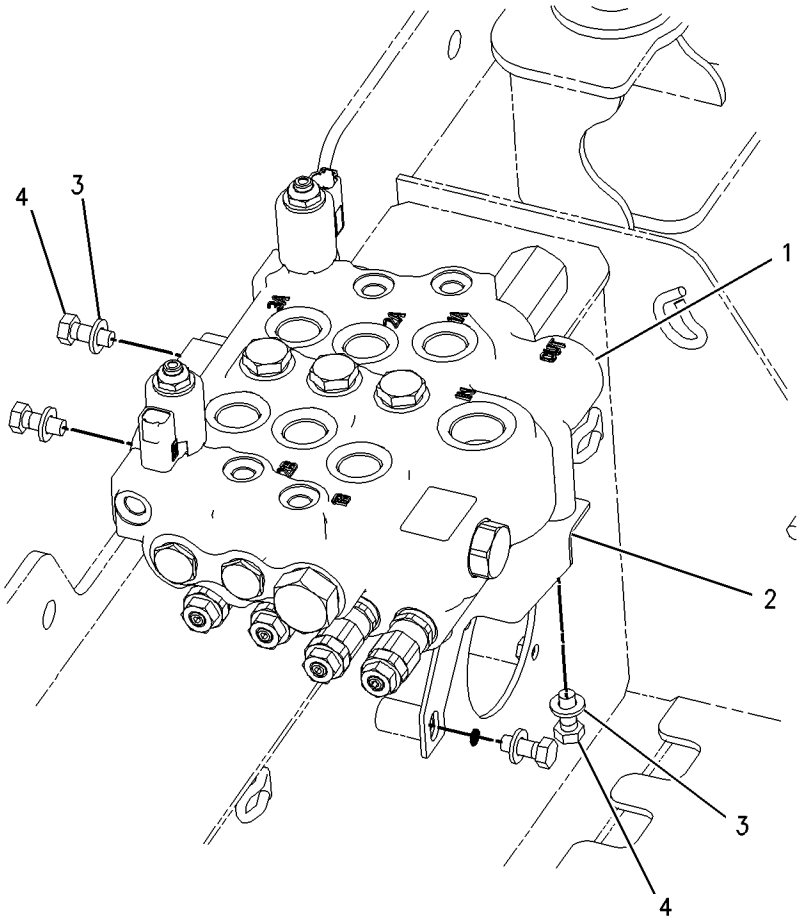

GRAPHIC #1 g00798184

HYDRAULIC SYSTEM

191-9731 VALVE & MTG GP-CONTROL

S/N: 4NZ3400-UP
PART OF 200-0806 HYDRAULIC AR
TYPE 2

SMCS-5051 **i01693881**

NOTE	REF NO	GRAPHIC REF	PART NUMBER	QTY	PART NAME 1 2 3 4 5 6 (PRODUCT LEVEL)	SEE PAGE
	1	1	**193-8364**	1	BRACKET	
C	2	1	**216-6166**	1	VALVE GP-CONTROL	
	3	1	**8T-4121**	4	WASHER-HARD (11X21X2.5MM THK)	
M	4	1	**8T-4136**	2	BOLT (M10X1.5X25MM)	
CM	5	1	**8T-4137**	2	BOLT (M10X1.5X20MM)	

C-CHANGE FROM PREVIOUS TYPE
M-METRIC PART

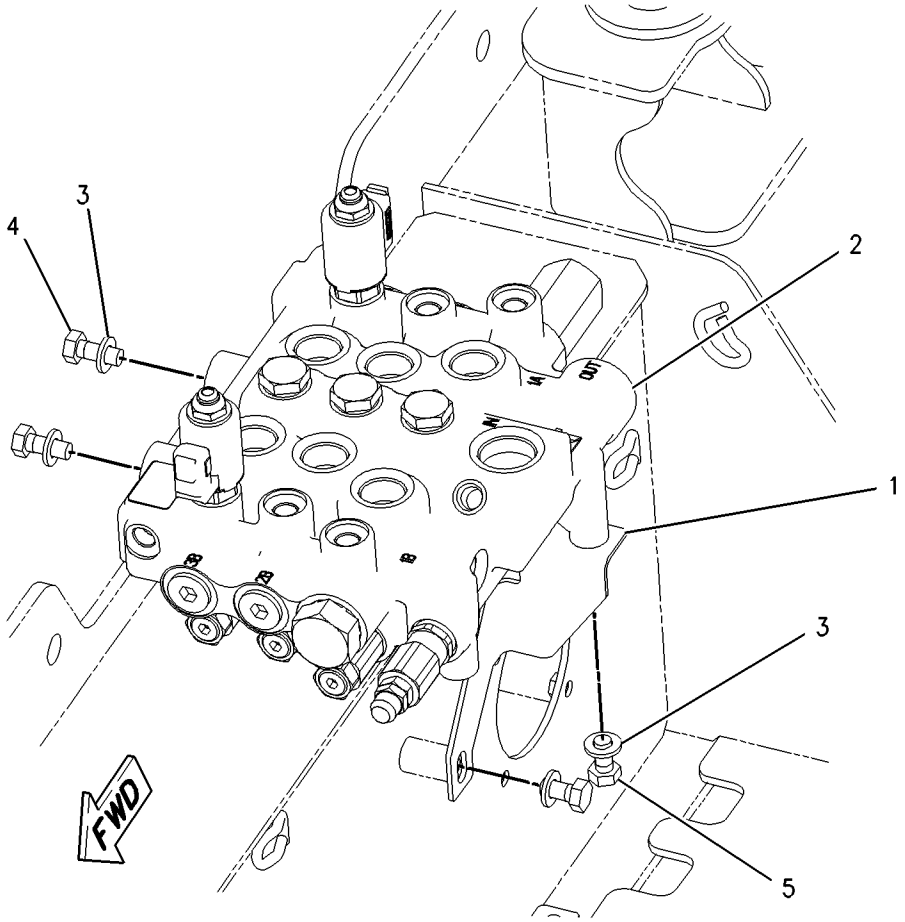

GRAPHIC #1 g00872806

191-9757 VALVE & MTG GP-CONTROL

S/N: 5FZ6700-7521

PART OF 200-1006 HYDRAULIC AR

SMCS-5051 **i01628549**

NOTE	REF NO	GRAPHIC REF	PART NUMBER	QTY	PART NAME 1 2 3 4 5 6 (PRODUCT LEVEL)	SEE PAGE
Y	1	1	**191-9786**	1	VALVE GP-CONTROL	394
	2	1	**193-8364**	1	BRACKET	
	3	1	**8T-4121**	4	WASHER-HARD (11X21X2.5MM THK)	
M	4	1	**8T-4136**	4	BOLT (M10X1.5X25MM)	

M-METRIC PART
Y-SEPARATE ILLUSTRATION

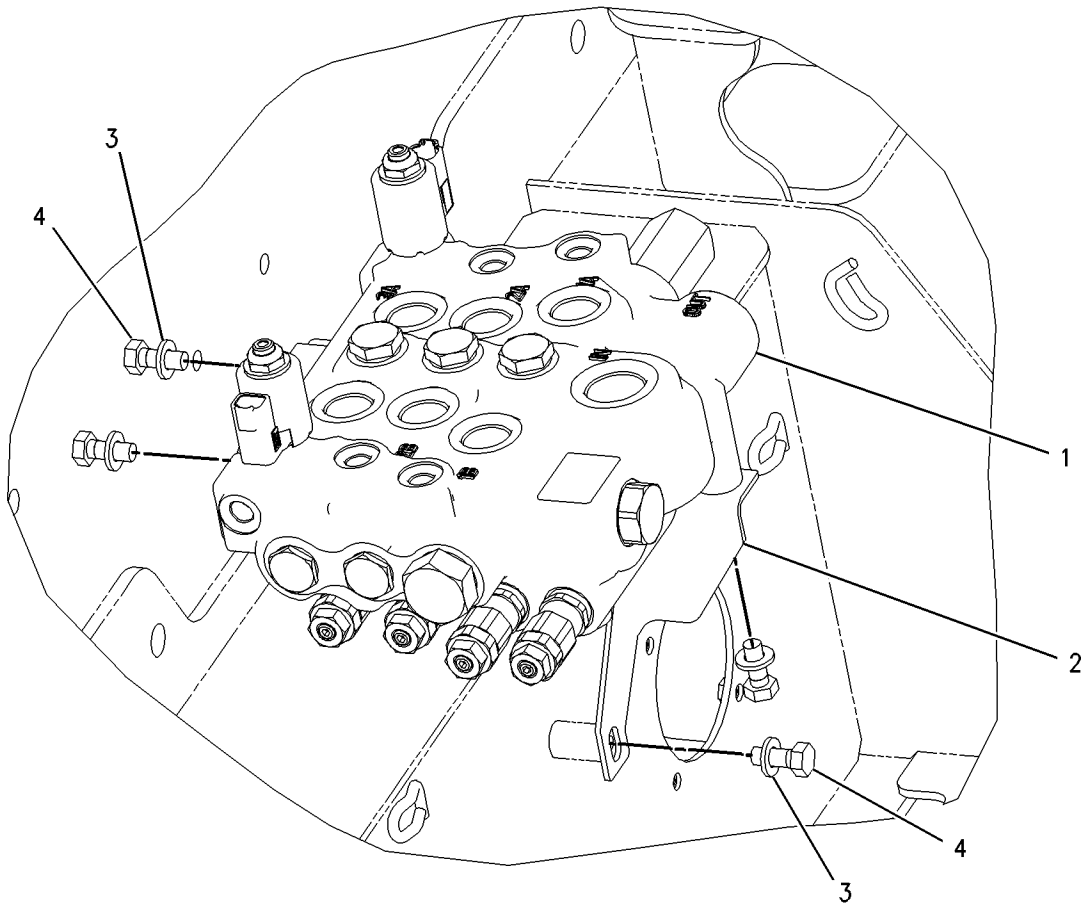

GRAPHIC #1 g00797404

HYDRAULIC SYSTEM

191-9757 VALVE & MTG GP-CONTROL

S/N: 5FZ7522-UP

PART OF 200-1006 HYDRAULIC AR

SMCS-5051 **i01708543**

NOTE	REF NO	GRAPHIC REF	PART NUMBER	QTY	PART NAME 1 2 3 4 5 6 (PRODUCT LEVEL)	SEE PAGE
	1	1	**193-8364**	1	BRACKET	
Y	2	1	**216-6167**	1	VALVE GP-CONTROL	400
	3	1	**8T-4121**	4	WASHER-HARD (11X21X2.5MM THK)	
M	4	1	**8T-4136**	2	BOLT (M10X1.5X25MM)	
M	5	1	**8T-4137**	2	BOLT (M10X1.5X20MM)	

M-METRIC PART
Y-SEPARATE ILLUSTRATION

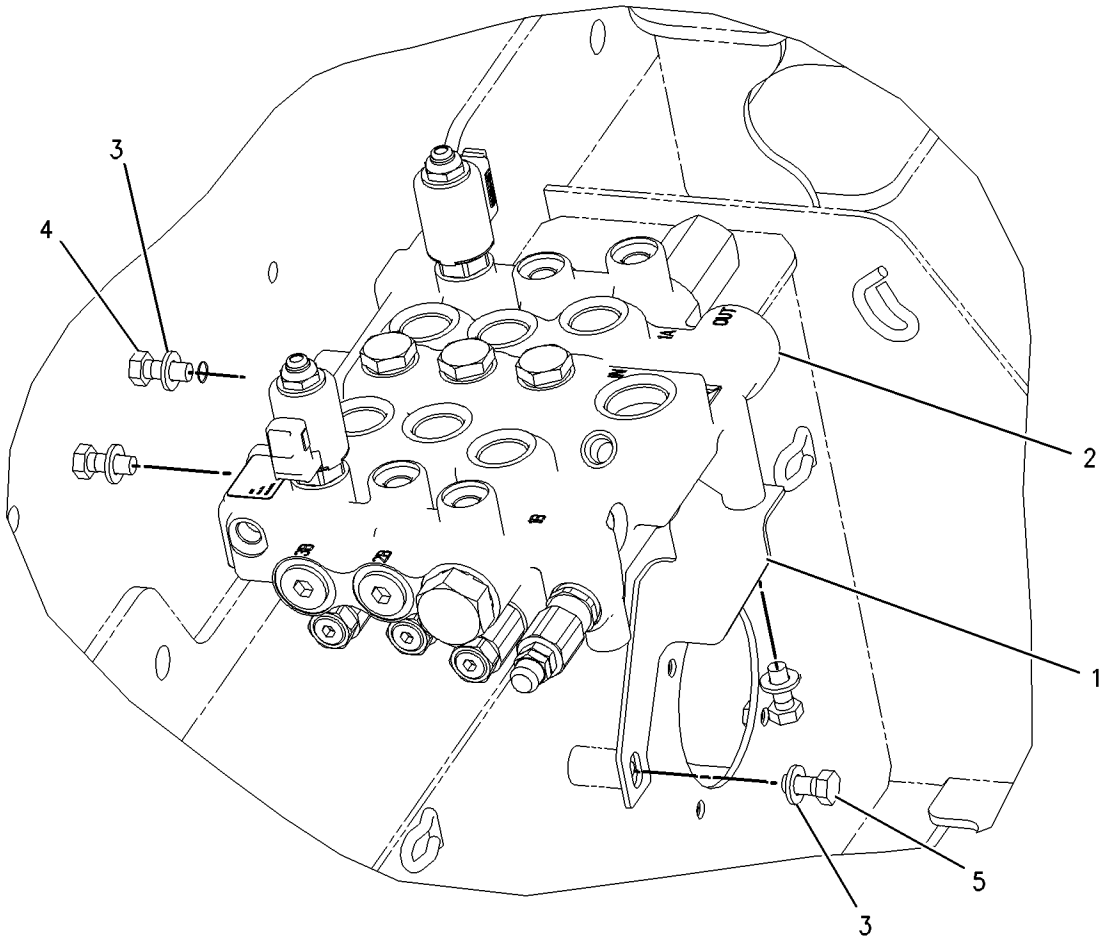

GRAPHIC #1 g00880430

208-1237 VALVE & MTG GP-CONTROL

S/N: CAB1-UP; CMB1-UP; 4NZ3400-UP; 5FZ6700-UP
PART OF 193-8370, 216-6112 CONTROL GP-PARKING BRAKE

SMCS-5051 **i01755095**

NOTE	REF NO	GRAPHIC REF	PART NUMBER	QTY	PART NAME 1 2 3 4 5 6 (PRODUCT LEVEL)	SEE PAGE
	1	1	**195-9700**	1	VALVE GP-SOLENOID	
M		1	**8T-1158**	1	BOLT-SOCKET HEAD (M8X1.25X20MM)	
		1	**212-0061**	1	FLANGE	
		1	**200-2371**	1	KIT-SEAL	
					(INCLUDES SEALS)	
	2	1	**208-0973**	1	MANIFOLD AS	
	3	1	**212-0061**	1	FLANGE	
	4	1	*148-8336*	1	CONNECTOR GP	
		1	**3J-1907**	1	SEAL-O-RING	
		1	**6V-8397**	1	SEAL-O-RING	
		1	**6V-8636**	1	CONNECTOR	
M	5	1	**6V-8202**	2	BOLT-HEX SOCKET (M8X1.25X16MM)	

M-METRIC PART

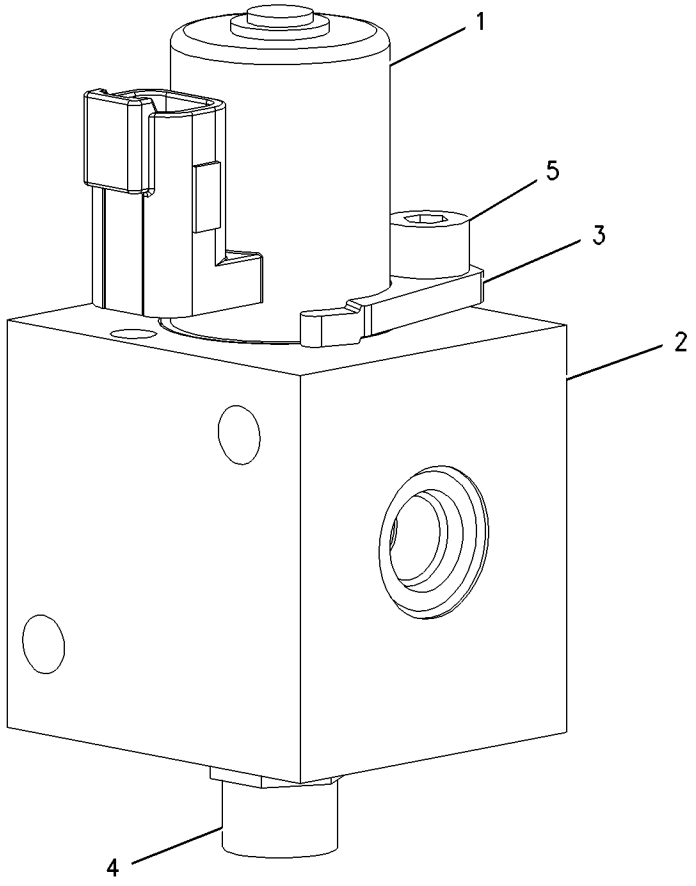

GRAPHIC #1 g00880077

HYDRAULIC SYSTEM

216-6128 VALVE & MTG GP-CONTROL

S/N: CAB1-UP

PART OF 191-9606 HYDRAULIC AR

SMCS-5051 **i01749498**

NOTE	REF NO	GRAPHIC REF	PART NUMBER	QTY	PART NAME 1 2 3 4 5 6 (PRODUCT LEVEL)	SEE PAGE
	1	1	**193-8364**	1	BRACKET	
	2	1	**216-6168**	1	VALVE GP-CONTROL	
	3	1	**8T-4121**	4	WASHER-HARD (11X21X2.5MM THK)	
M	4	1	**8T-4136**	4	BOLT (M10X1.5X25MM)	

M-METRIC PART

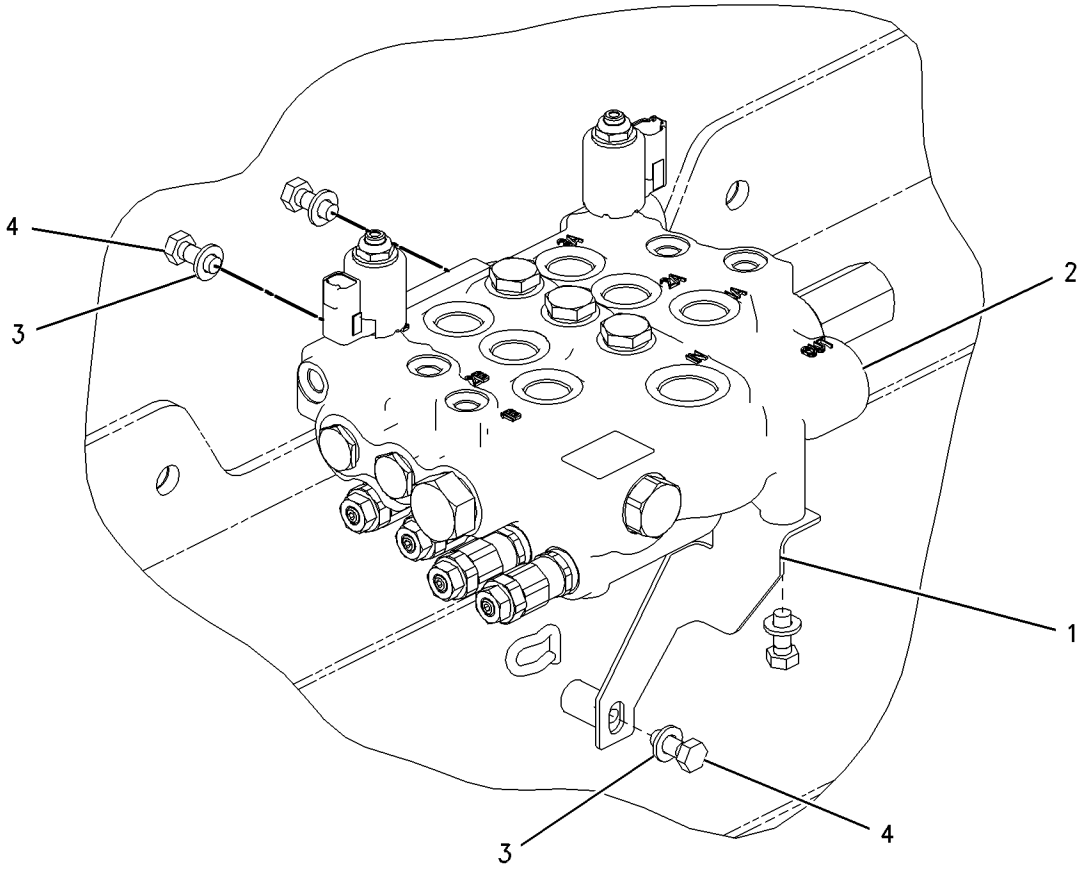

GRAPHIC #1 g00896069

HYDRAULIC SYSTEM

216-6137 VALVE & MTG GP-CONTROL

S/N: CMB1-UP

PART OF 216-6136 HYDRAULIC AR

SMCS-5051 **i01751840**

NOTE	REF NO	GRAPHIC REF	PART NUMBER	QTY	PART NAME 1 2 3 4 5 6 (PRODUCT LEVEL)	SEE PAGE
Y	1	1	**191-9686**	1	VALVE GP-CONTROL	392
	2	1	**193-8364**	1	BRACKET	
	3	1	**8T-4121**	4	WASHER-HARD (11X21X2.5MM THK)	
M	4	1	**8T-4136**	4	BOLT (M10X1.5X25MM)	

M-METRIC PART
Y-SEPARATE ILLUSTRATION

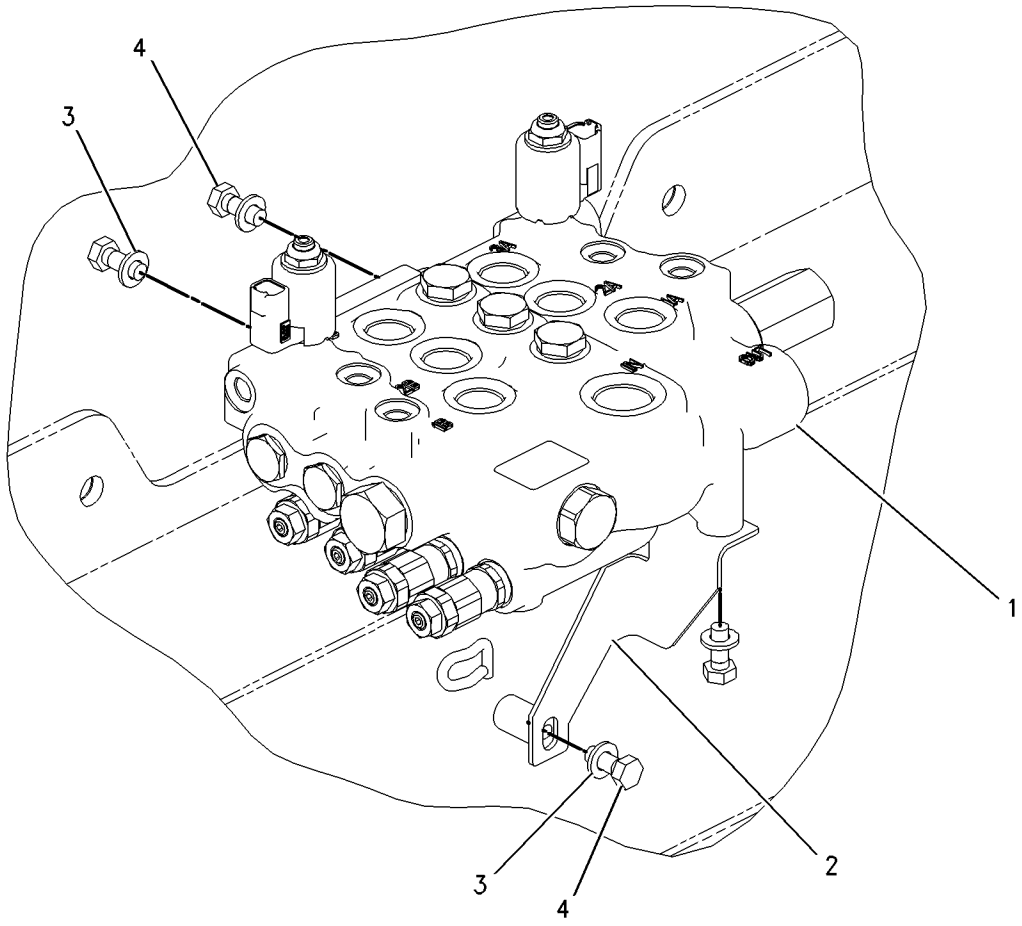

GRAPHIC #1 g00896559

HYDRAULIC SYSTEM

159-5753 VALVE & MTG GP-DIVERTER

S/N: 4NZ3400-3549; 5FZ6700-7309
PART OF 197-4917 HYDRAULIC AR
AN ATTACHMENT

SMCS-5066 **i01487833**

NOTE	REF NO	GRAPHIC REF	PART NUMBER	QTY	PART NAME 1 2 3 4 5 6 (PRODUCT LEVEL)	SEE PAGE
	1	1	**176-4070**	1	VALVE GP-DIVERTER	
		1	**3E-3377**	1	WEDGE-RECEPTACLE LOCK	
		1	**8T-8729**	2	PIN-CONNECTOR	
		1	**9G-3695**	2	PLUG (GROMMET SEALING)	
		1	**102-8804**	1	KIT-RECEPTACLE (4 PIN)	
					(KIT INCLUDES RECEPTACLE AS AND WEDGE)	
	2	1	**8T-4224**	2	WASHER-HARD (8.8X16X2MM THK)	
M	3	1	**8T-6869**	2	BOLT (M8X1.25X60MM)	

M-METRIC PART

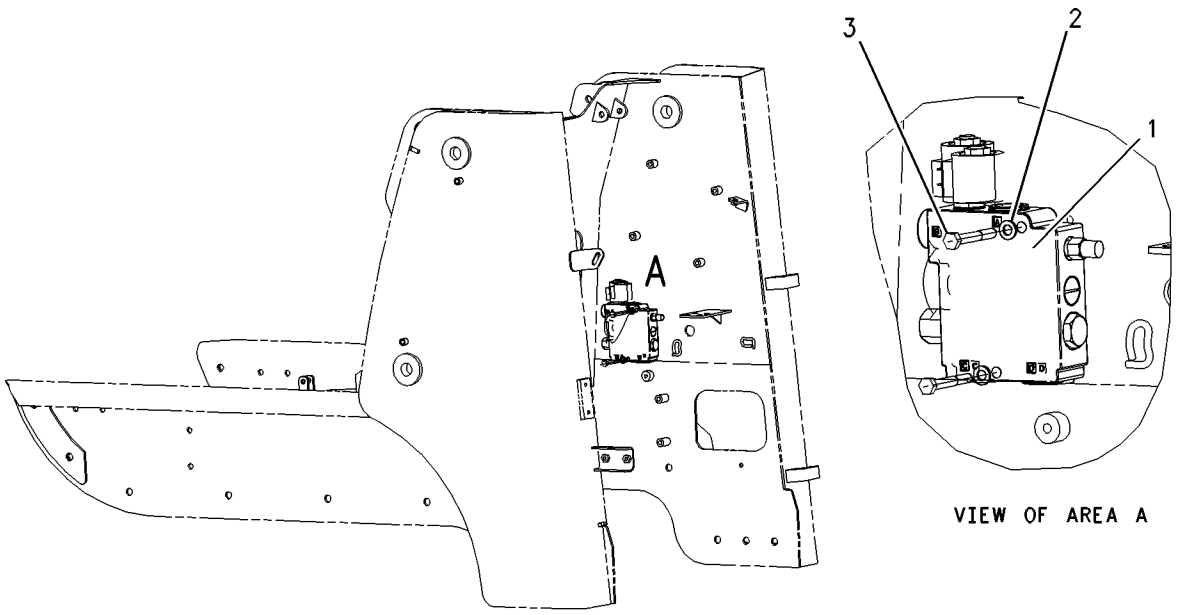

GRAPHIC #1 g00559717

159-5753 VALVE & MTG GP-DIVERTER

S/N: 4NZ3550-UP; 5FZ7310-UP
PART OF 142-8717, 197-4917 HYDRAULIC AR
AN ATTACHMENT

SMCS-5066 **i01678822**

NOTE	REF NO	GRAPHIC REF	PART NUMBER	QTY	PART NAME 1 2 3 4 5 6 (PRODUCT LEVEL)	SEE PAGE
	1	1	**176-4070**	1	VALVE GP-DIVERTER	
		1	**3E-3377**	1	WEDGE-RECEPTACLE LOCK	
		1	**8T-8729**	2	PIN-CONNECTOR	
		1	**9G-3695**	2	PLUG (GROMMET SEALING)	
		1	**102-8804**	1	KIT-RECEPTACLE (4 PIN)	
					(KIT INCLUDES RECEPTACLE AS AND WEDGE)	
C	2	1	**8T-4205**	2	WASHER-HARD (7.2X14.5X2MM THK)	
CM	3	1	**7X-2535**	2	BOLT (M6X1X60MM)	

C-CHANGE FROM PREVIOUS TYPE
M-METRIC PART

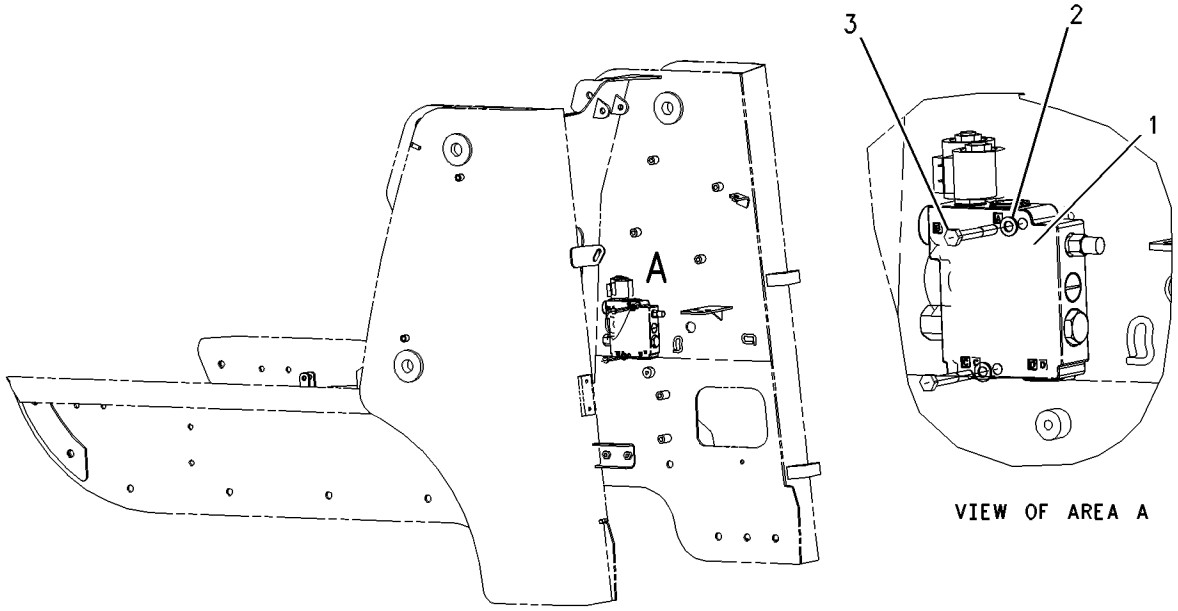

GRAPHIC #1 g00559717

HYDRAULIC SYSTEM

173-3326 VALVE GP-BANK 2

S/N: 4NZ3400-UP; 5FZ6700-UP
AN ATTACHMENT

SMCS-5051 **i01519802**

NOTE	REF NO	GRAPHIC REF	PART NUMBER	QTY	PART NAME 1 2 3 4 5 6 (PRODUCT LEVEL)	SEE PAGE
	1	1	**1B-2714**	4	BOLT (1/4-20X2.5 IN)	
	2	1	**5L-4759**	2	SEAL-O-RING	
	3	1	**6V-9178**	4	SEAL-O-RING	
	4	1	**8F-6302**	2	BOLT (1/4-20X3.75IN)	
	5	1	**8S-4711**	2	BOLT (1/4-20X4.5IN)	
Y	6	1	**9T-7634**	1	VALVE GP-CHECK	390
	7	1	**156-2850**	2	RING-BACKUP	
	8	1	**176-4081**	1	VALVE GP-RELIEF	
		1	**033-6027**	1	SEAL-O-RING	
	9	1	**176-4082**	1	VALVE GP-RELIEF	
		1	**033-6027**	1	SEAL-O-RING	
	10	1	**176-4085**	1	VALVE GP-RELIEF	
		1	**033-6027**	1	SEAL-O-RING	
	11	1	**176-4086**	1	VALVE GP-RELIEF	
		1	**033-6027**	1	SEAL-O-RING	

Y-SEPARATE ILLUSTRATION

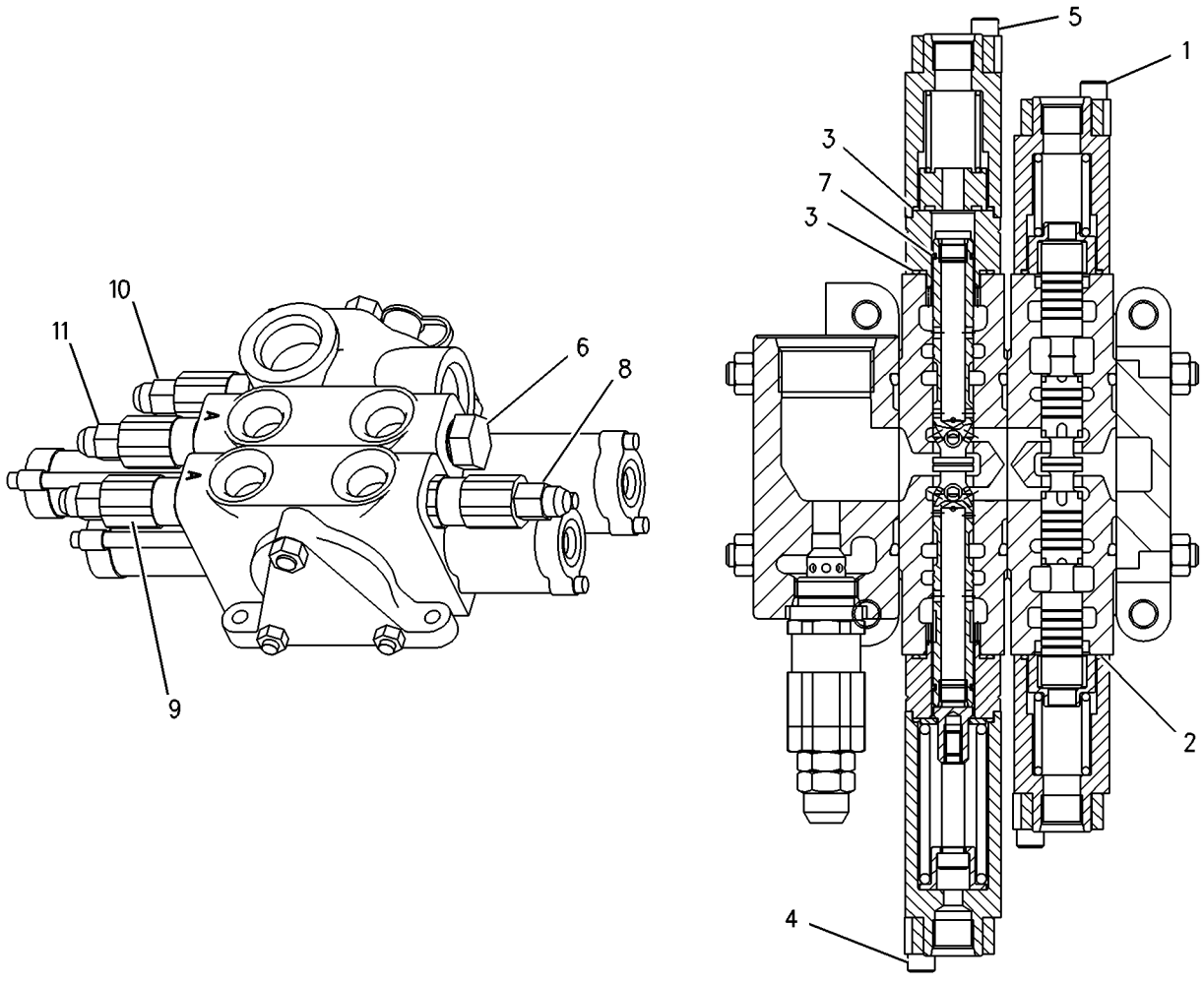

GRAPHIC #1 g00703512

9T-7634 VALVE GP-CHECK

S/N: 4NZ3400-UP; 5FZ6700-UP
PART OF 173-3326 VALVE GP-BANK 2
AN ATTACHMENT

SMCS-5067 **i01505970**

NOTE	REF NO	GRAPHIC REF	PART NUMBER	QTY	PART NAME 1 2 3 4 5 6 (PRODUCT LEVEL)	SEE PAGE
J	1	1	**033-6027**	1	SEAL-O-RING	
					AVAILABLE REPAIR KIT(S):	
J			**107-7491**	1	KIT-SEAL	

J-KIT MARKED J INCLUDES PART MARKED J

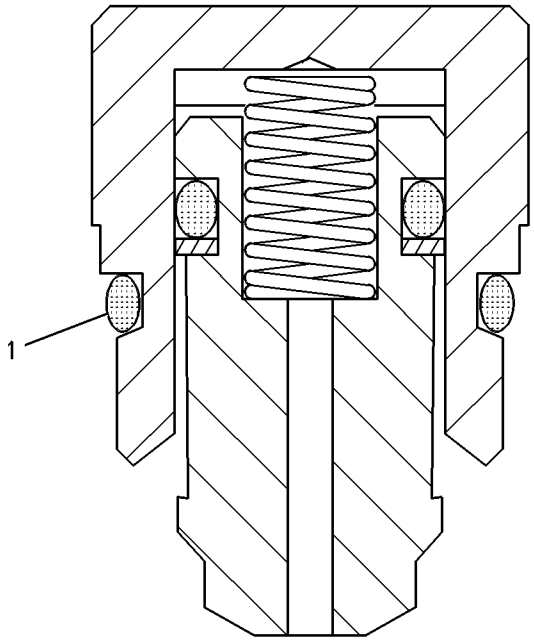

GRAPHIC #1 g00120239

MEMORANDA

HYDRAULIC SYSTEM

191-9686 VALVE GP-CONTROL

S/N: CMB1-UP

PART OF 216-6137 VALVE & MTG GP-CONTROL

SMCS-5051 **i01701863**

NOTE	REF NO	GRAPHIC REF	PART NUMBER	QTY	PART NAME 1 2 3 4 5 6 (PRODUCT LEVEL)	SEE PAGE
Y	1	1	**188-0878**	1	VALVE GP-RELIEF	408
	2	1	**216-6160**	2	VALVE GP-RELIEF	
	3	1	**216-6161**	2	VALVE GP-RELIEF	
Y	4	1	**185-4254**	2	VALVE GP-MODULATING	402
	5	1	**204-1470**	2	SEAL-O-RING	
	6	1	**204-1485**	6	WASHER	
	7	1	**204-1482**	1	SPRING	
	8	1	**204-1488**	1	SPRING	
	9	1	**204-1489**	4	SPRING	
	10	1	**204-1486**	1	WASHER	
	11	1	**127-6316**	1	BOLT-SHOULDER	
	12	1	**204-1476**	4	PLUG	
	13	1	**204-1472**	2	SEAL-O-RING	
	14	1	**204-1471**	2	CAP	
	15	1	**204-1481**	1	CAP	
	16	1	**144-4531**	3	VALVE	
	17	1	**003-3082**	3	SPRING	
	18	1	**8I-5078**	3	SEAL-O-RING	
	19	1	**144-4532**	3	PLUG	
	20	1	**216-6156**	1	VALVE-CHECK	
	21	1	**216-6157**	1	SPRING	
	22	1	**216-6158**	1	SEAL-O-RING	
	23	1	**216-6159**	1	PLUG	

Y-SEPARATE ILLUSTRATION

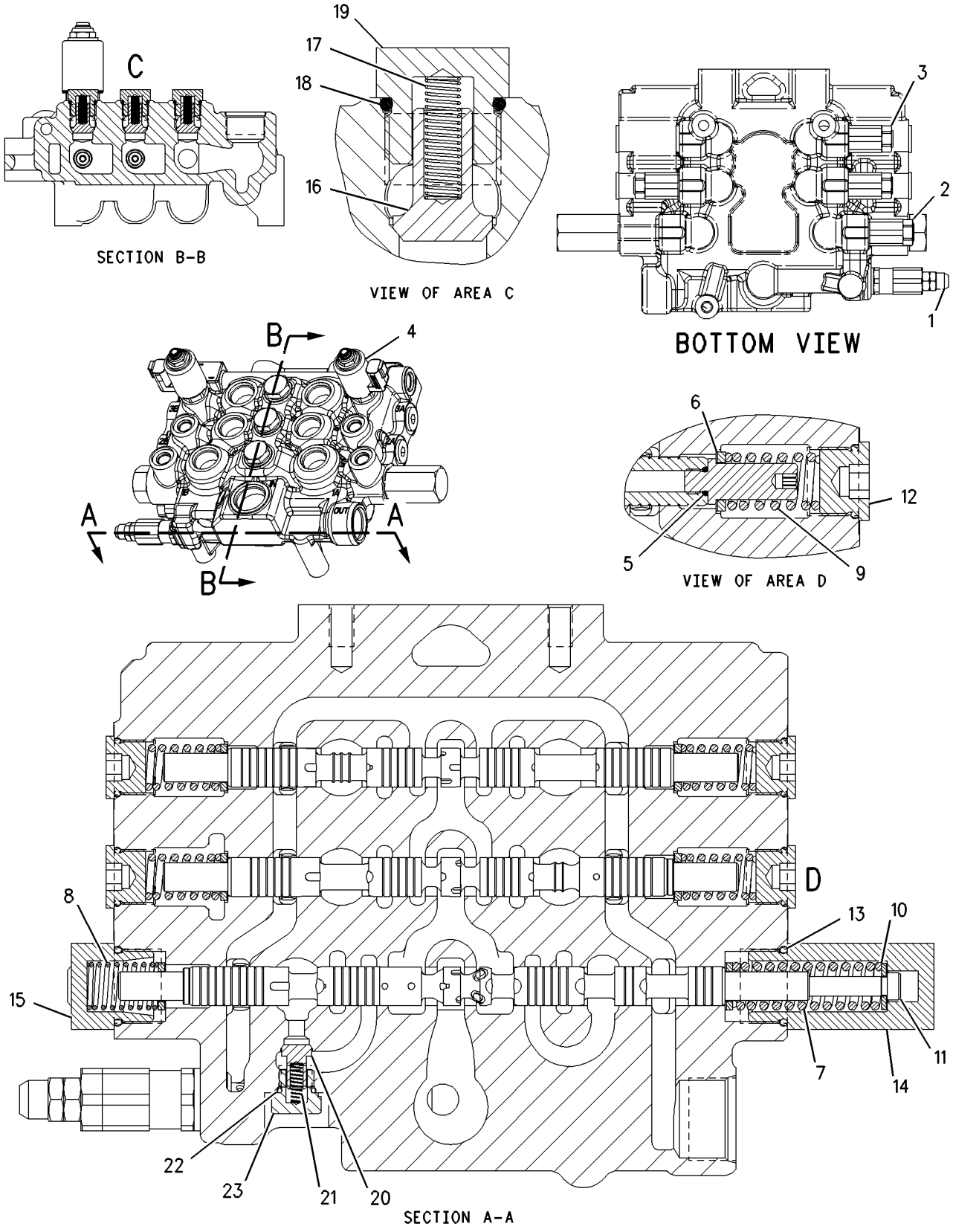

GRAPHIC #1 g00866800

HYDRAULIC SYSTEM

191-9786 VALVE GP-CONTROL

S/N: 5FZ6700-UP

WORK TOOL

PART OF 191-9757 VALVE & MTG GP-CONTROL

SMCS-5051 **i01534300**

NOTE	REF NO	GRAPHIC REF	PART NUMBER	QTY	PART NAME 1 2 3 4 5 6 (PRODUCT LEVEL)	SEE PAGE
Y	1	1	**188-0878**	1	VALVE GP-RELIEF	408
Y	2	1	**185-7709**	1	VALVE GP-RELIEF	407
Y	3	1	**185-4254**	2	VALVE GP-MODULATING	402
Y	4	1	**204-1480**	1	VALVE GP-RELIEF	409
Y	5	1	**185-7708**	2	VALVE GP-RELIEF	406
	6	1	**144-4532**	3	PLUG	
	7	1	**144-4531**	3	VALVE	
	8	1	**204-1481**	1	CAP	
	9	1	**204-1485**	6	WASHER	
	10	1	**204-1482**	1	SPRING	
	11	1	**204-1486**	1	WASHER	
	12	1	**127-6316**	1	BOLT-SHOULDER	
	13	1	**204-1488**	1	SPRING	
	14	1	**204-1489**	4	SPRING	
	15	1	**8I-5078**	3	SEAL-O-RING	
	16	1	**204-1476**	4	PLUG	
	17	1	**9T-0546**	1	SPRING	
	18	1	**9T-0553**	1	VALVE	
	19	1	**204-1472**	2	SEAL-O-RING	
	20	1	**204-1471**	1	CAP	
	21	1	**6E-4816**	1	PLUG GP-CONTROL VALVE	
		1	**6E-2746**	1	PLUG GP-CONTROL VALVE	
					—OR—	
		1	**6E-4793**	1	PLUG GP-CONTROL VALVE	
					—OR—	
		1	**106-6248**	1	PLUG GP-CONTROL VALVE	
	22	1	**003-3082**	3	SPRING	
	23	1	**204-1470**	1	SEAL-O-RING	

Y-SEPARATE ILLUSTRATION

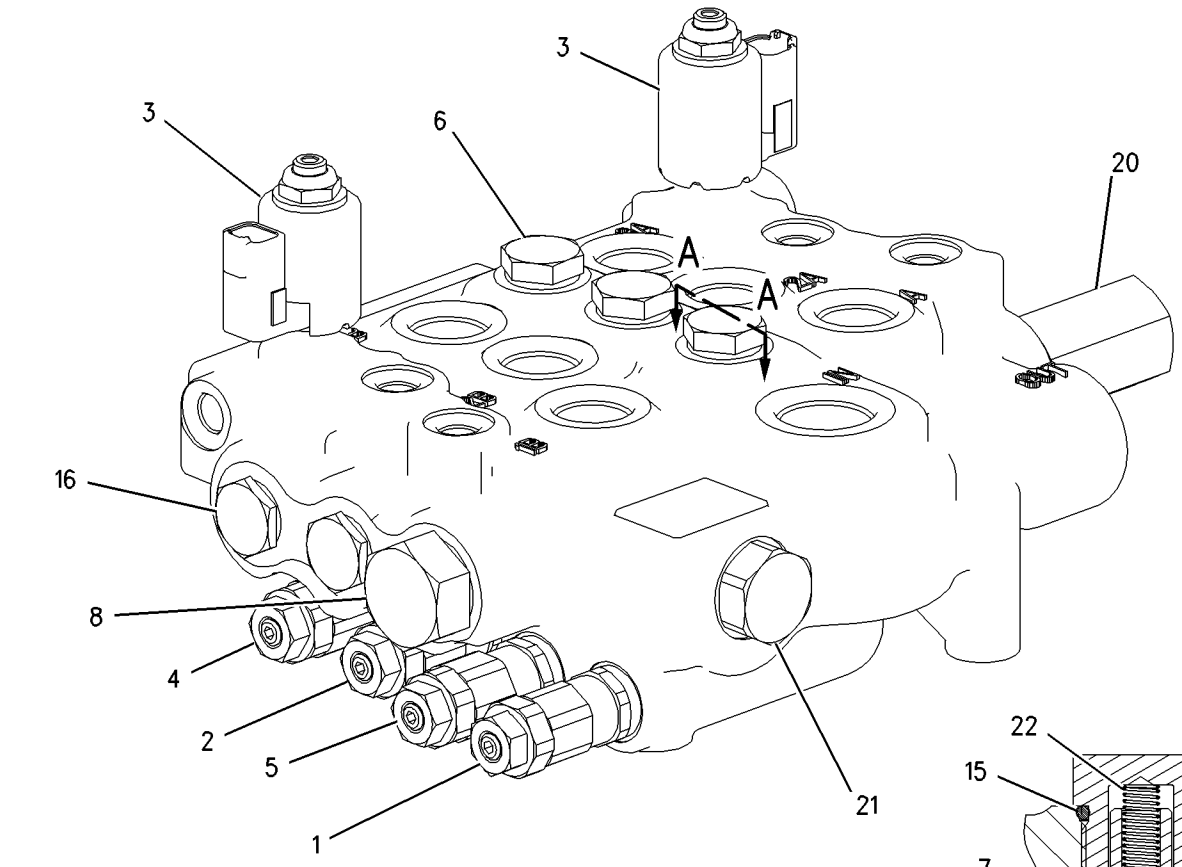

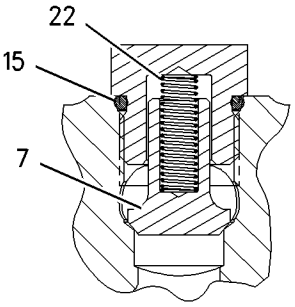

SECTION A-A

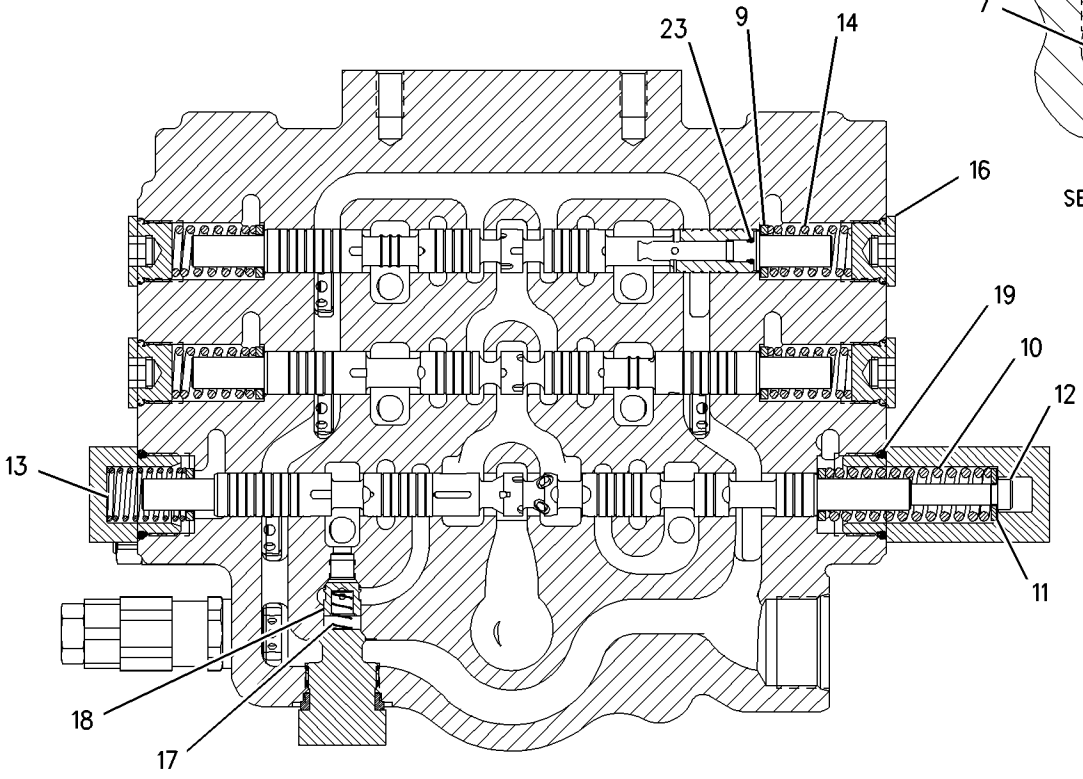

CUTAWAY OF VALVE

GRAPHIC #1 g00801032

HYDRAULIC SYSTEM

192-2608 VALVE GP-CONTROL

S/N: 4NZ3400-UP
WORK TOOL, THREE FUNCTION
PART OF 191-9731 VALVE & MTG GP-CONTROL

SMCS-5051 **i01543849**

NOTE	REF NO	GRAPHIC REF	PART NUMBER	QTY	PART NAME 1 2 3 4 5 6 (PRODUCT LEVEL)	SEE PAGE
	1	1	**186-0907**	1	VALVE GP-RELIEF	
Y	2	1	**185-7709**	1	VALVE GP-RELIEF	407
Y	3	1	**185-4254**	2	VALVE GP-MODULATING	402
Y	4	1	**204-1480**	1	VALVE GP-RELIEF	409
Y	5	1	**185-7708**	2	VALVE GP-RELIEF	406
	6	1	**144-4532**	3	PLUG	
	7	1	**144-4531**	3	VALVE	
	8	1	**204-1481**	1	CAP	
	9	1	**204-1485**	6	WASHER	
	10	1	**204-1482**	1	SPRING	
	11	1	**204-1486**	1	WASHER	
	12	1	**127-6316**	1	BOLT-SHOULDER	
	13	1	**204-1488**	1	SPRING	
	14	1	**204-1489**	4	SPRING	
	15	1	**8I-5078**	3	SEAL-O-RING	
	16	1	**204-1476**	4	PLUG	
	17	1	**9T-0546**	1	SPRING	
	18	1	**9T-0553**	1	VALVE	
	19	1	**204-1472**	2	SEAL-O-RING	
	20	1	**204-1471**	1	CAP	
	21	1	**6E-4816**	1	PLUG GP-CONTROL VALVE	
	22	1	**003-3082**	3	SPRING	
	23	1	**204-1470**	1	SEAL-O-RING	

Y-SEPARATE ILLUSTRATION

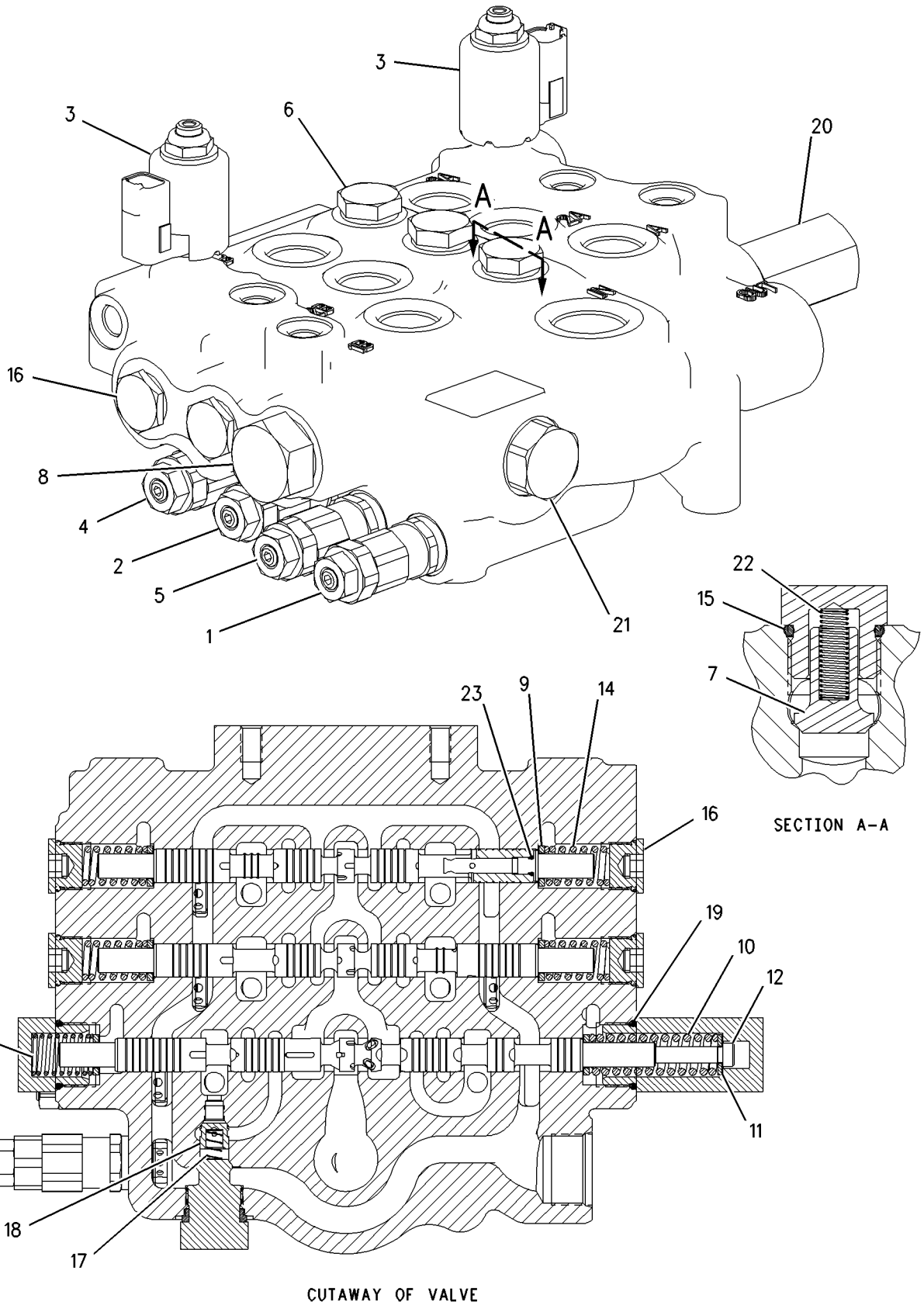

GRAPHIC #1 g00803255

HYDRAULIC SYSTEM

204-1399 VALVE GP-CONTROL

S/N: CAB1-UP; CMB1-UP; 4NZ3400-UP; 5FZ6700-UP
PART OF 190-8095, 216-6129, 216-6130 CONTROL GP-PILOT OPERATED HYD
AN ATTACHMENT

SMCS-5051 **i01755092**

NOTE	REF NO	GRAPHIC REF	PART NUMBER	QTY	PART NAME 1 2 3 4 5 6 (PRODUCT LEVEL)	SEE PAGE
	1	1	**7K-1181**	1	STRAP-CABLE	
	2	1	**158-3770**	1	KIT-LEVER	
					(INCLUDES NUT)	
	3	1	**172-0970**	1	COIL AS	
		1	**186-3735**	1	PIN-CONNECTOR	
		1	**102-8802**	1	KIT-RECEPTACLE (2 PIN)	
	4	1	**173-0703**	1	BOOT	
	5	1	**195-9700**	1	VALVE GP-SOLENOID	
M	6	1	**8T-1158**	1	BOLT-SOCKET HEAD (M8X1.25X20MM)	
M	7	1	**8T-9405**	1	BOLT-SOCKET HEAD (M4X0.7X16MM)	
	8	1	**102-8802**	1	KIT-RECEPTACLE (2 PIN)	

M-METRIC PART

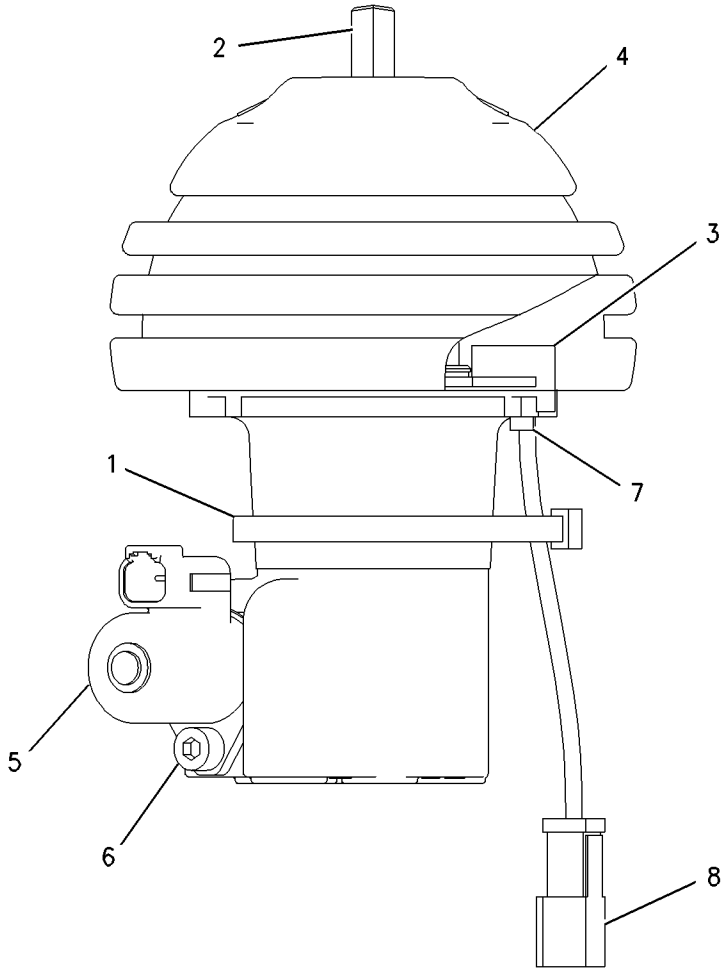

GRAPHIC #1 g00874590

MEMORANDA

HYDRAULIC SYSTEM

216-6167 VALVE GP-CONTROL

S/N: 5FZ7522-UP

PART OF 191-9757 VALVE & MTG GP-CONTROL

SMCS-5051 **i01679125**

NOTE	REF NO	GRAPHIC REF	PART NUMBER	QTY	PART NAME 1 2 3 4 5 6 (PRODUCT LEVEL)	SEE PAGE
Y	1	1	**188-0878**	1	VALVE GP-RELIEF	408
	2	1	**216-6160**	2	VALVE GP-RELIEF	
	3	1	**216-6161**	2	VALVE GP-RELIEF	
Y	4	1	**185-4254**	2	VALVE GP-MODULATING	402
	5	1	**204-1470**	2	SEAL-O-RING	
	6	1	**204-1485**	6	WASHER	
	7	1	**204-1482**	1	SPRING	
	8	1	**204-1488**	1	SPRING	
	9	1	**204-1489**	4	SPRING	
	10	1	**204-1486**	1	WASHER	
	11	1	**127-6316**	1	BOLT-SHOULDER	
	12	1	**204-1476**	4	PLUG	
	13	1	**204-1472**	2	SEAL-O-RING	
	14	1	**204-1471**	1	CAP	
	15	1	**204-1481**	1	CAP	
	16	1	**144-4531**	3	VALVE	
	17	1	**003-3082**	3	SPRING	
	18	1	**8I-5078**	3	SEAL-O-RING	
	19	1	**144-4532**	3	PLUG	
	20	1	**216-6156**	1	VALVE-CHECK	
	21	1	**216-6157**	1	SPRING	
	22	1	**216-6158**	1	SEAL-O-RING	
	23	1	**216-6159**	1	PLUG	

Y-SEPARATE ILLUSTRATION

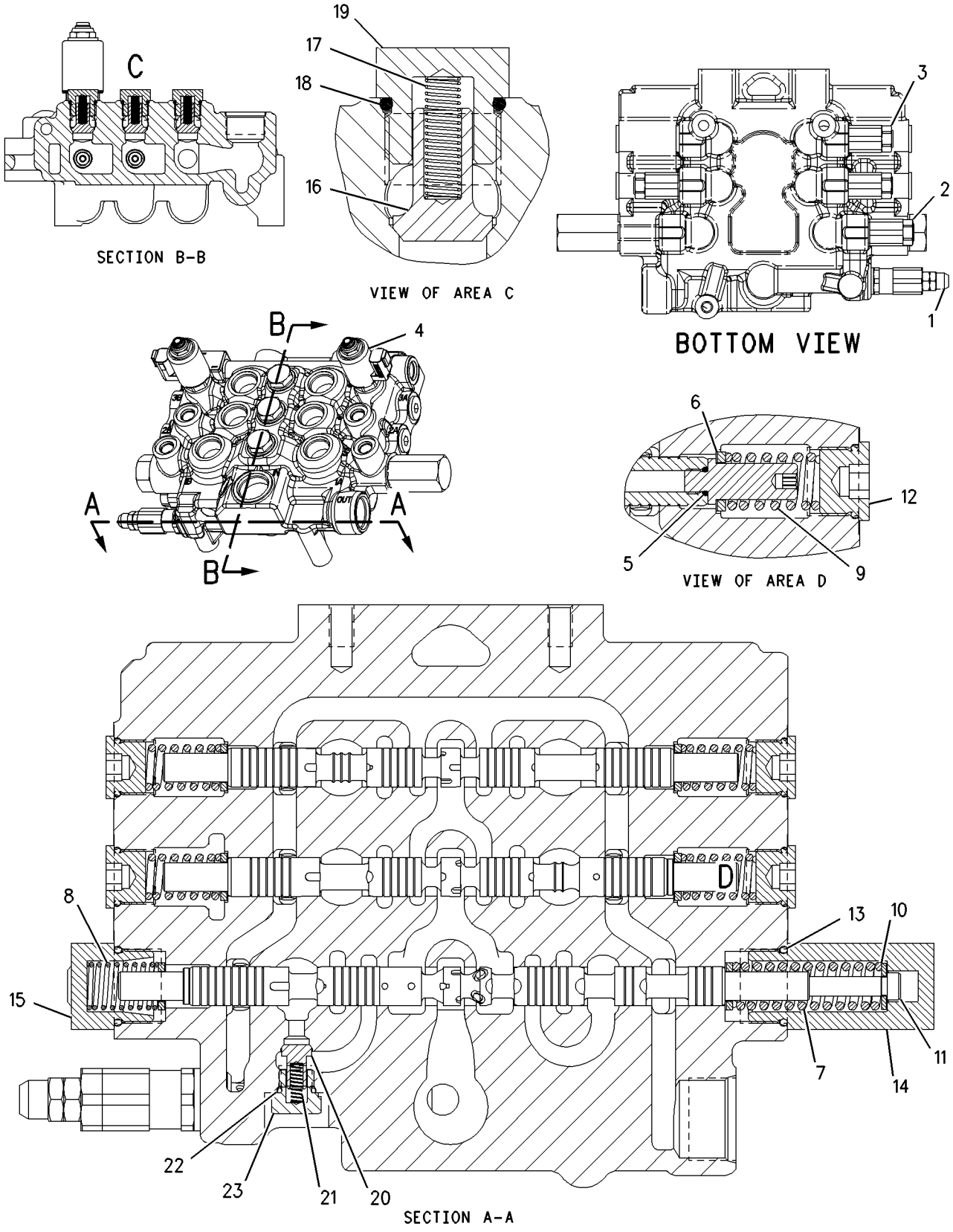

GRAPHIC #1 g00866879

HYDRAULIC SYSTEM

185-4254 VALVE GP-MODULATING

S/N: CMB1-UP; 4NZ3400-UP; 5FZ6700-UP

PART OF 191-9686, 191-9786, 192-2608, 216-6167 VALVE GP-CONTROL

SMCS-3139 **i01755088**

NOTE	REF NO	GRAPHIC REF	PART NUMBER	QTY	PART NAME 1 2 3 4 5 6 (PRODUCT LEVEL)	SEE PAGE
	1	1	**155-4426**	1	COIL AS	
	2	1	**164-2108**	1	WASHER (13.03X25.4X2.38MM THK)	
	3	1	**167-9524**	1	NUT-SELF LOCKING (1/2-28 THD)	
	4	1	*185-4253*	1	VALVE AS	
		1	**3E-6749**	1	SEAL-O-RING	
		1	**033-5879**	1	SEAL-O-RING	
		1	**123-2341**	1	SEAL-O-RING	
		1	**9N-1756**	1	SEAL-O-RING	

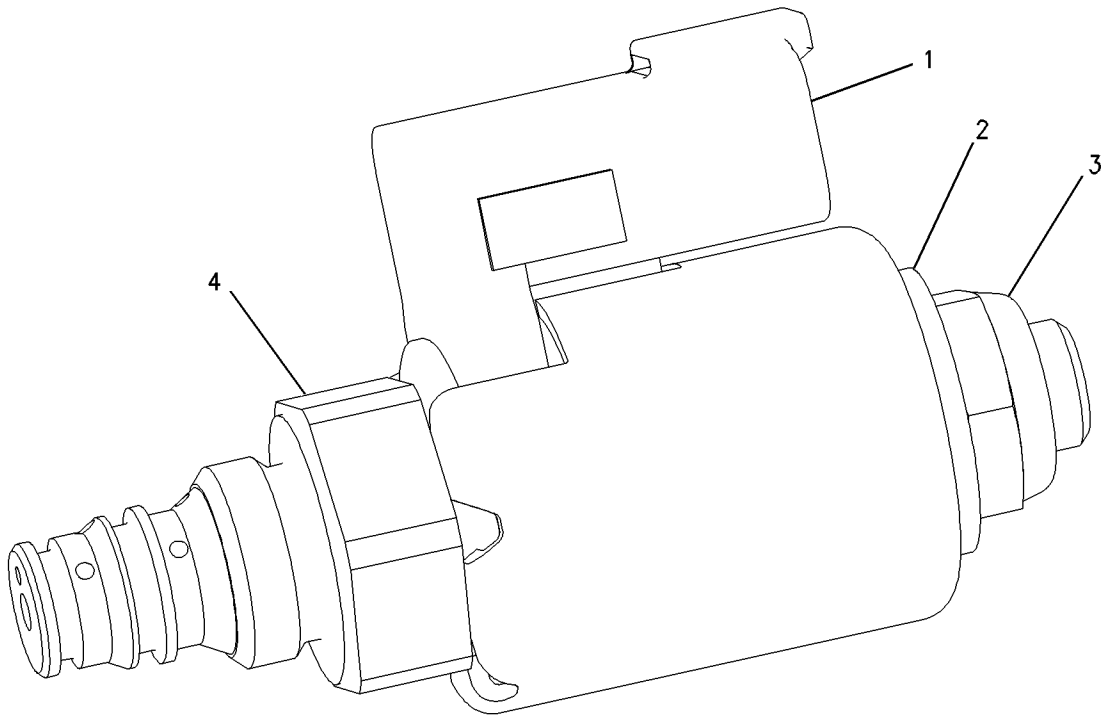

GRAPHIC #1 g00750628

193-8387 VALVE GP-PILOT

S/N: 4NZ3400-UP; 5FZ6700-UP
PART OF 190-8080, 190-8095 CONTROL GP-PILOT OPERATED HYD
AN ATTACHMENT

SMCS-5059, 5705 **i01755084**

NOTE	REF NO	GRAPHIC REF	PART NUMBER	QTY	PART NAME 1 2 3 4 5 6 (PRODUCT LEVEL)	SEE PAGE
	1	1	**158-3770**	1	KIT-LEVER	
	2	1	**172-0970**	1	COIL AS	
		1	**8T-8729**	2	PIN-CONNECTOR	
		1	**102-8802**	1	KIT-RECEPTACLE (2 PIN)	
	3	1	**173-0703**	1	BOOT	
Y	4	1	**191-0916**	1	VALVE GP-SOLENOID	410
M	5	1	**8T-9405**	1	BOLT-SOCKET HEAD (M4X0.7X16MM)	
	6	1	**102-8802**	1	KIT-RECEPTACLE (2 PIN)	

M-METRIC PART
Y-SEPARATE ILLUSTRATION

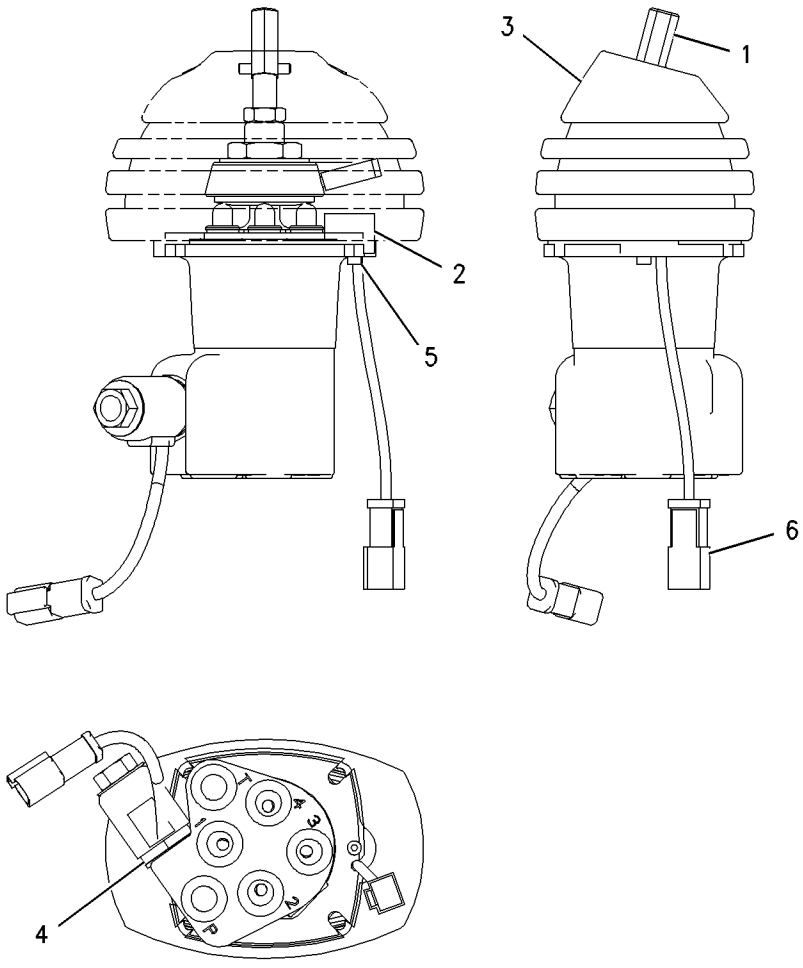

GRAPHIC #1 g00824468

204-1397 VALVE GP-PILOT

S/N: 4NZ3400-UP; 5FZ6700-UP
PART OF 191-2908, 191-2909 CONTROL GP-PILOT OPERATED HYD
AN ATTACHMENT

SMCS-5059, 5705 **i01536981**

NOTE	REF NO	GRAPHIC REF	PART NUMBER	QTY	PART NAME 1 2 3 4 5 6 (PRODUCT LEVEL)	SEE PAGE
	1	1	**158-3770**	1	KIT-LEVER	
M		1	**095-1207**	1	NUT (M12X1.75 THD)	
Y	2	1	**191-0916**	1	VALVE GP-SOLENOID	410
	3	1	**173-0702**	1	BOOT	

M-METRIC PART
Y-SEPARATE ILLUSTRATION

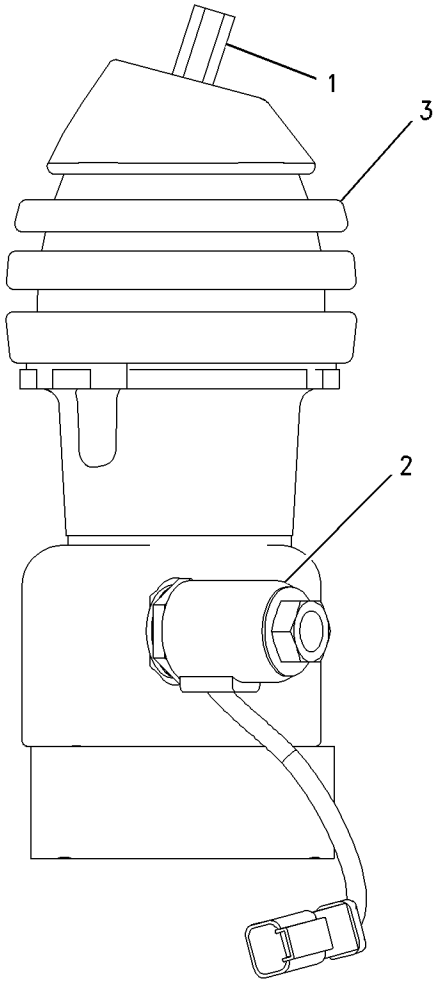

GRAPHIC #1 g00799048

HYDRAULIC SYSTEM

204-1400 VALVE GP-PILOT

S/N: CAB1-UP; CMB1-UP; 4NZ3400-UP; 5FZ6700-UP

PART OF 191-2907, 191-2908, 191-2909, 216-6133 CONTROL GP-PILOT OPERATED HYD AN ATTACHMENT

SMCS-5059, 5705 **i01755070**

NOTE	REF NO	GRAPHIC REF	PART NUMBER	QTY	PART NAME 1 2 3 4 5 6 (PRODUCT LEVEL)	SEE PAGE
	1	1	**158-3770**	1	KIT-LEVER	
					(INCLUDES NUT,LEVER AND PIN-SPRING)	
	2	1	**195-9700**	1	VALVE GP-SOLENOID	
M	3	1	**8T-1158**	1	BOLT-SOCKET HEAD (M8X1.25X20MM)	
	4	1	**173-0702**	1	BOOT	

M-METRIC PART

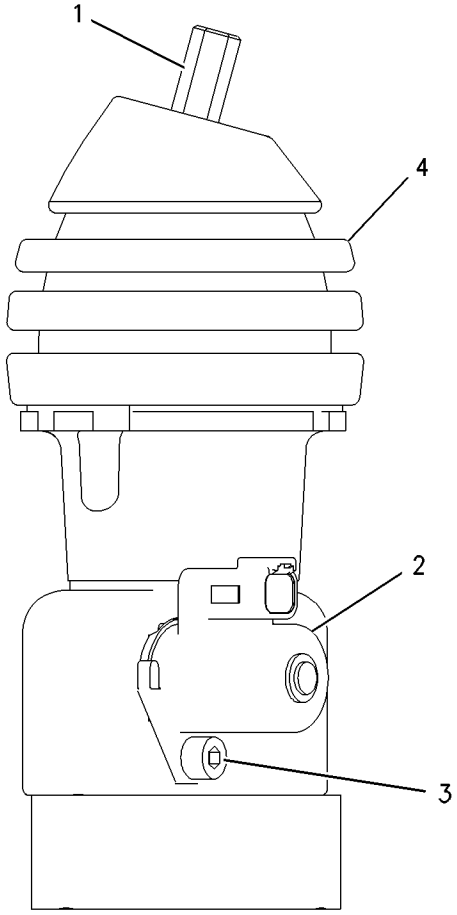

GRAPHIC #1 g00874544

HYDRAULIC SYSTEM

185-7708 VALVE GP-RELIEF

S/N: 4NZ3400-UP; 5FZ6700-UP

PART OF 191-9786, 192-2608 VALVE GP-CONTROL

SMCS-5069, 5117 **i01481595**

NOTE	REF NO	GRAPHIC REF	PART NUMBER	QTY	PART NAME 1 2 3 4 5 6 (PRODUCT LEVEL)	SEE PAGE
	1	1	**9T-7266**	1	NUT (3/4-16 THD)	
	2	1	**033-6028**	1	SEAL-O-RING	
	3	1	**6E-3008**	1	SPRING	
	4	1	**130-1676**	1	SEAL-O-RING	
	5	1	**8L-2779**	1	SEAL-O-RING	

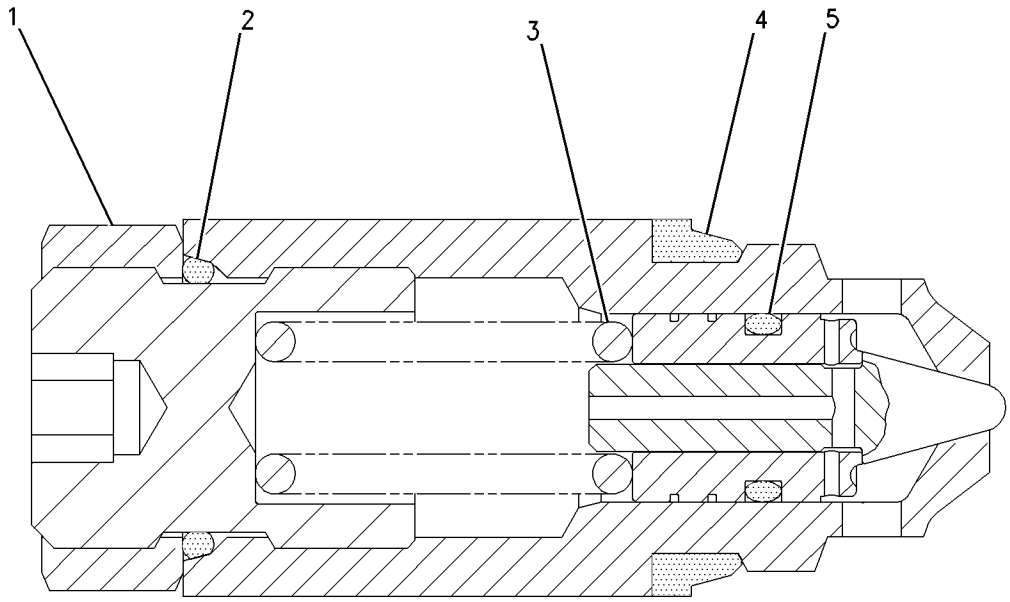

GRAPHIC #1 g00759080

HYDRAULIC SYSTEM

185-7709 VALVE GP-RELIEF

S/N: 4NZ3400-UP; 5FZ6700-UP

PART OF 191-9786, 192-2608 VALVE GP-CONTROL

SMCS-5069, 5117 **i01481612**

NOTE	REF NO	GRAPHIC REF	PART NUMBER	QTY	PART NAME 1 2 3 4 5 6 (PRODUCT LEVEL)	SEE PAGE
	1	1	**9T-7266**	1	NUT (3/4-16 THD)	
	2	1	**033-6028**	1	SEAL-O-RING	
	3	1	**6E-3008**	1	SPRING	
	4	1	**130-1676**	1	SEAL-O-RING	
	5	1	**8L-2779**	1	SEAL-O-RING	

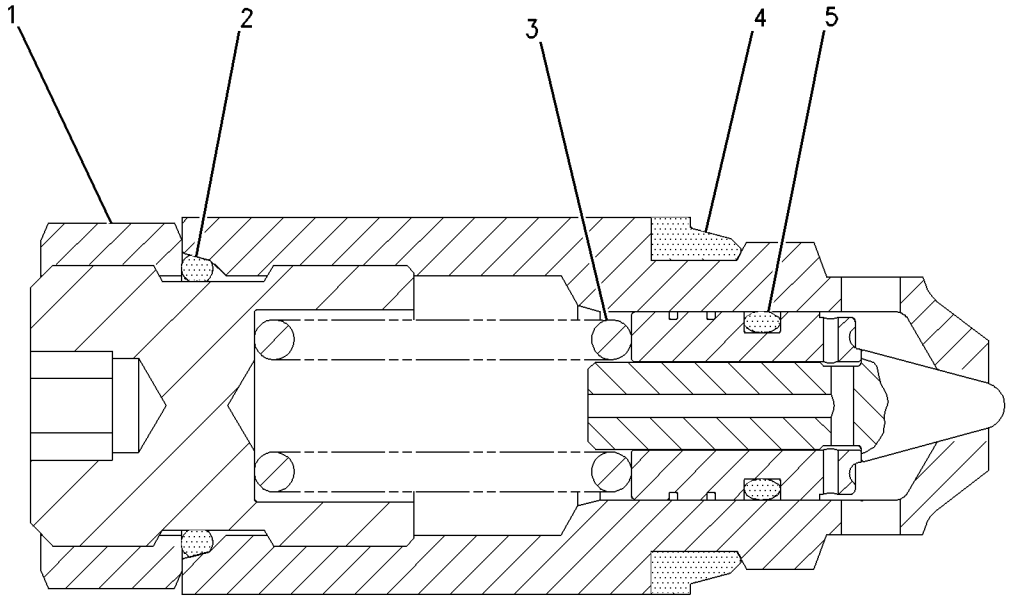

GRAPHIC #1 g00760627

188-0878 VALVE GP-RELIEF

S/N: CMB1-UP; 5FZ6700-UP

PART OF 191-9686, 191-9786, 216-6167 VALVE GP-CONTROL

SMCS-5069, 5117 **i01755687**

NOTE	REF NO	GRAPHIC REF	PART NUMBER	QTY	PART NAME 1 2 3 4 5 6 (PRODUCT LEVEL)	SEE PAGE
	1	1	**039-5069**	1	NUT (3/8-24 THD)	
	2	1	**033-5879**	3	SEAL-O-RING	
	3	1	**039-5070**	1	NUT (3/8-24 THD)	
	4	1	**186-2487**	1	RING-BACKUP	
	5	1	**033-6027**	2	SEAL-O-RING	
	6	1	**9N-1756**	1	SEAL-O-RING	
	7	1	**186-2488**	1	RING-BACKUP	
					AVAILABLE REPAIR KIT(S):	
			151-4003	1	KIT-SERVICE	
					(INCLUDES SEALS, RINGS, SPRINGS)	

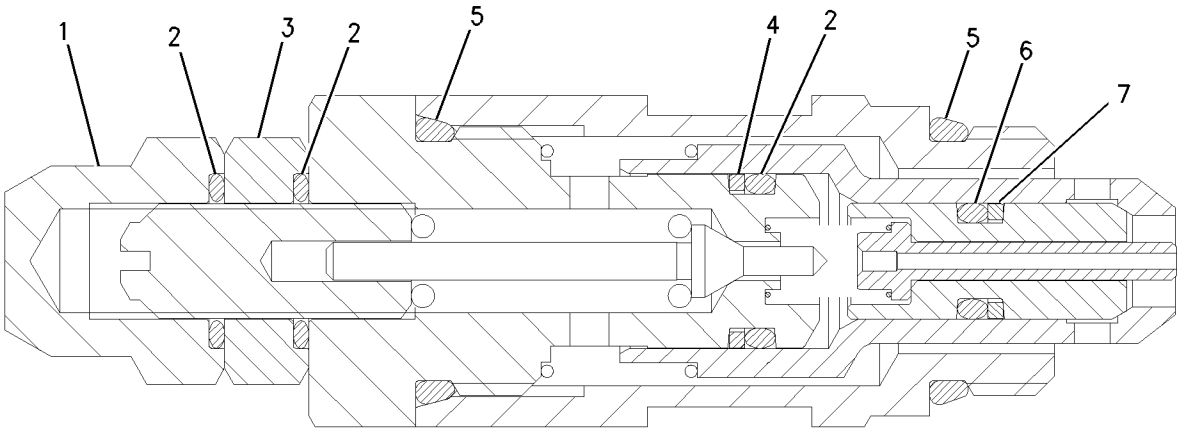

GRAPHIC #1 g00702880

204-1480 VALVE GP-RELIEF

S/N: 4NZ3400-UP; 5FZ6700-UP

PART OF 191-9786, 192-2608 VALVE GP-CONTROL

SMCS-5069, 5117 **i01530753**

NOTE	REF NO	GRAPHIC REF	PART NUMBER	QTY	PART NAME 1 2 3 4 5 6 (PRODUCT LEVEL)	SEE PAGE
	1	1	**9T-7266**	1	NUT (3/4-16 THD)	
	2	1	**033-6028**	1	SEAL-O-RING	
	3	1	**6E-3008**	1	SPRING	
	4	1	**130-1676**	1	SEAL-O-RING	
	5	1	**8L-2779**	1	SEAL-O-RING	

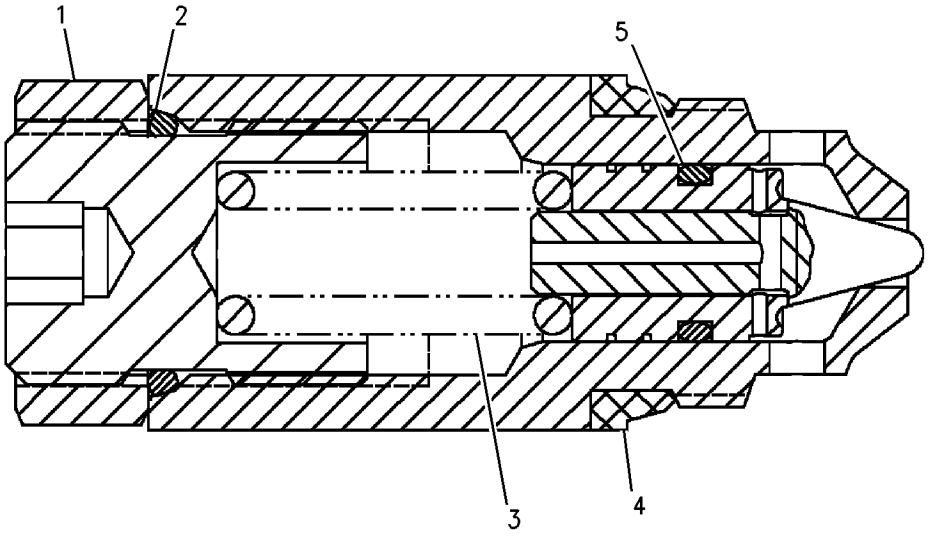

GRAPHIC #1 g00795003

191-0916 VALVE GP-SOLENOID

S/N: 4NZ3400-UP; 5FZ6700-UP
PART OF 193-8387, 204-1397 VALVE GP-PILOT
AN ATTACHMENT

SMCS-5479 **i01755503**

NOTE	REF NO	GRAPHIC REF	PART NUMBER	QTY	PART NAME 1 2 3 4 5 6 (PRODUCT LEVEL)	SEE PAGE
	1	1	**3E-8621**	1	COIL AS	
		1	**1S-9593**	1	STRAP-CABLE	
		1	**102-8802**	1	KIT-RECEPTACLE (2 PIN)	
	2	1	**156-5970**	1	NUT (1/2-20-2B THD)	
	3	1	**191-0915**	1	CARTRIDGE AS-VALVE	
		1	**156-5970**	1	NUT (1/2-20-2B THD)	
		1	**122-1135**	1	KIT-SEAL	
					(INCLUDES SEALS AND RINGS)	

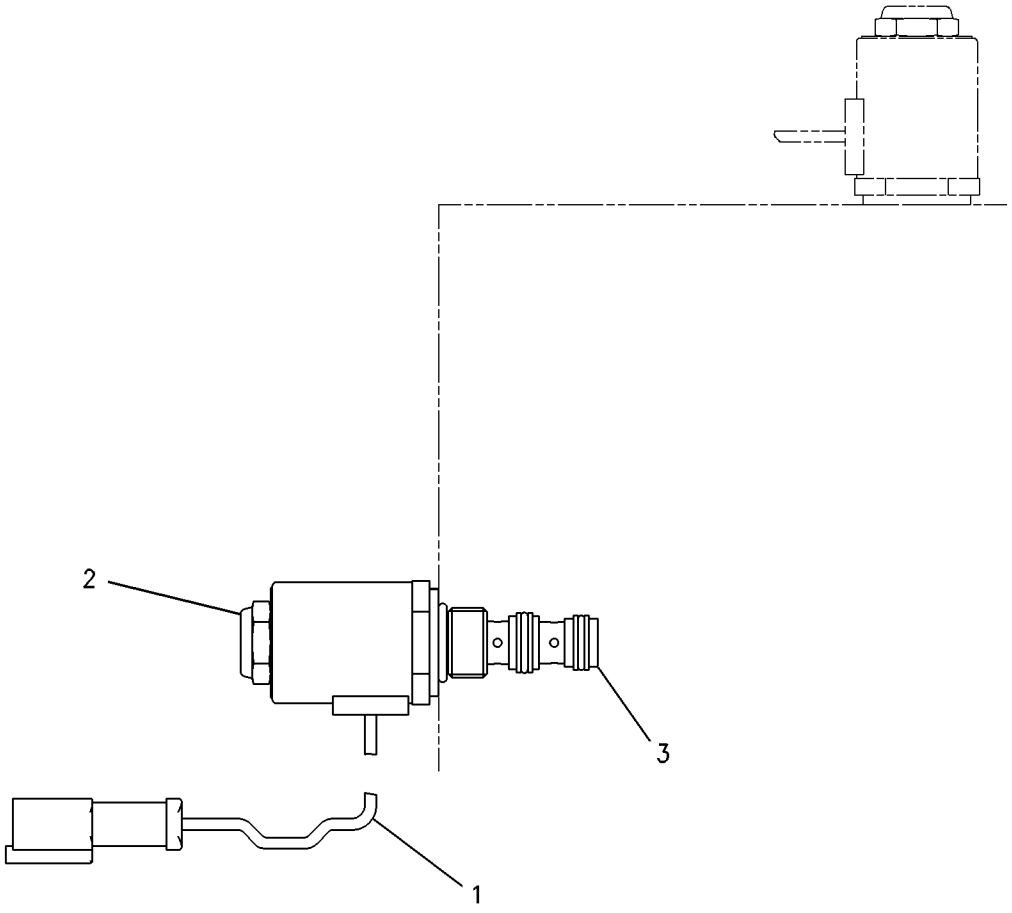

GRAPHIC #1 g00752232

MEMORANDA

IMPLEMENTS

142-8799 CONTROL GP-WORK TOOL

S/N: 4NZ3400-UP; 5FZ6700-UP

PART OF 200-0802, 200-1002 CHASSIS AR

SMCS-5102, 5104, 6119, 6700 **i01755683**

NOTE	REF NO	GRAPHIC REF	PART NUMBER	QTY	PART NAME 1 2 3 4 5 6 (PRODUCT LEVEL)	SEE PAGE
	1	1	**3S-8536**	1	SPACER (.406X.656X.38IN THK)	
	2	1	**142-8789**	1	SUPPORT-LOADER	
	3	1	**142-8790**	4	PIN AS	
	4	1	**142-8791**	4	PIN AS	
	5	1	**142-8792**	1	PIN	
	6	1	**142-8793**	2	PIN	
	7	1	**142-8794**	1	PIN	
C	8	1	**200-0998**	1	ARM AS-LIFT	
		1	**142-8805**	4	BEARING-SLEEVE	
		1	**159-5756**	2	BEARING-SLEEVE	
	9	1	**142-8808**	2	SPACER (32.5X50.5X28MM THK)	
	10	1	**142-8832**	1	PIN AS	
	11	1	**142-8880**	1	LEVER	
	12	1	**142-8881**	1	BRACKET	
Y	13	1	**177-9568**	1	CYLINDER GP-TILT (RH)	310
Y	14	1	**177-9569**	1	CYLINDER GP-TILT (LH)	311
Y	15	1	**142-8960**	1	CYLINDER GP-LIFT (RH)	307
Y	16	1	**142-8961**	1	CYLINDER GP-LIFT (LH)	308
	17	1	**3B-8489**	10	FITTING-GREASE (1/8-27 THD)	
	18	1	**4M-5285**	4	RING-RETAINING (EXTERNAL)	
	19	1	**5H-9743**	1	GROMMET	
M	20	1	**6V-9189**	2	LOCKNUT	
	21	1	**7X-7729**	8	WASHER (11X25X3MM THK)	
M	22	1	**8T-3647**	2	BOLT (M8X1.25X80MM)	
	23	1	**8T-4121**	1	WASHER-HARD (11X21X2.5MM THK)	
M	24	1	**8T-4136**	1	BOLT (M10X1.5X25MM)	
M	25	1	**8T-4189**	1	BOLT (M8X1.25X20MM)	
M	26	1	**8T-4191**	8	BOLT (M10X1.5X16MM)	
	27	1	**8T-4224**	1	WASHER-HARD (8.8X16X2MM THK)	

C-CHANGE FROM PREVIOUS TYPE
M-METRIC PART
Y-SEPARATE ILLUSTRATION

142-8799 **CONTROL GP-WORK TOOL** *(contd.)* **i01755683**

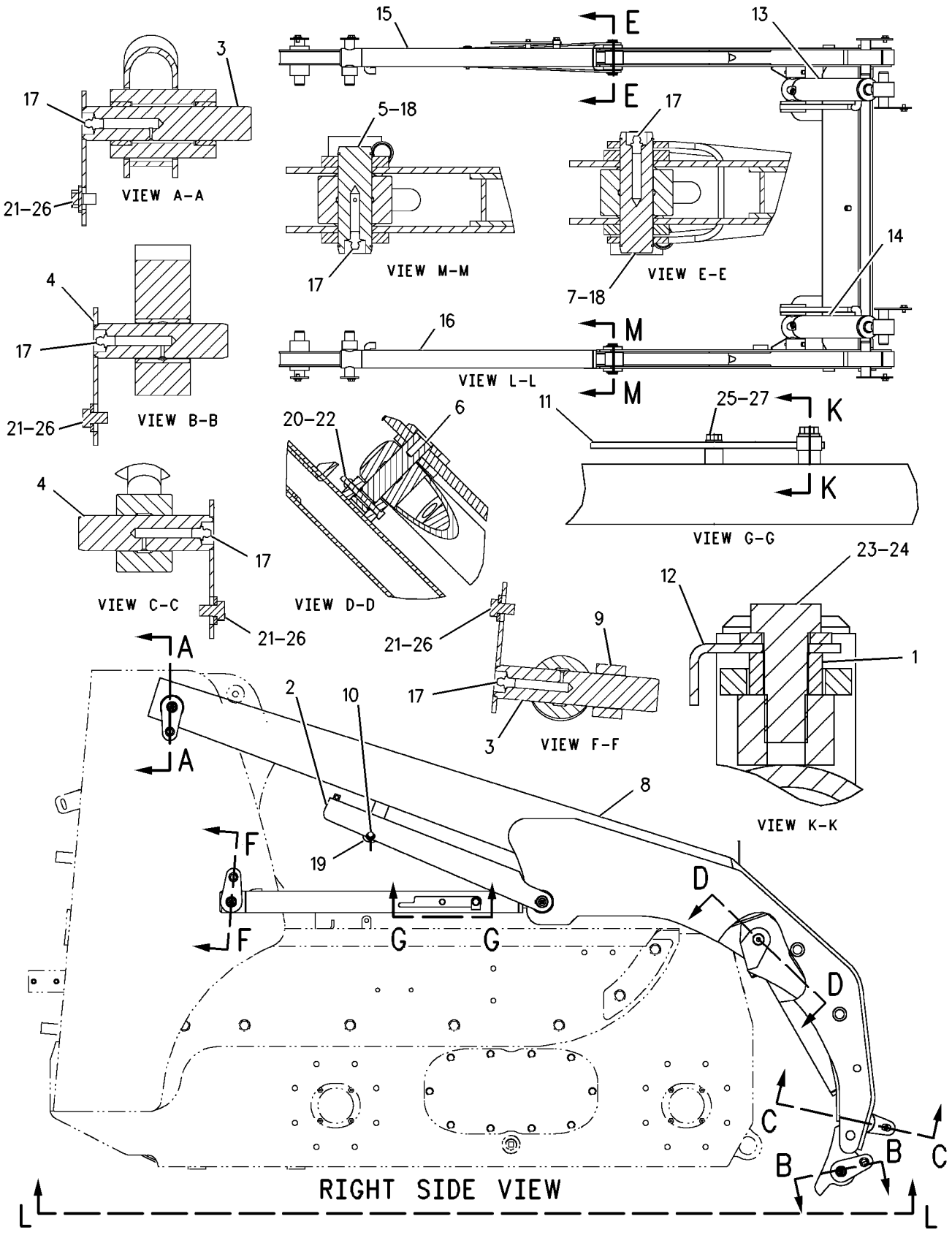

GRAPHIC #1 g00782960

191-9599 CONTROL GP-WORK TOOL

S/N: CAB1-UP; CMB1-UP

PART OF 191-2902, 191-9602 CHASSIS AR

SMCS-5102, 5104, 6119, 6700 **i01744306**

NOTE	REF NO	GRAPHIC REF	PART NUMBER	QTY	PART NAME 1 2 3 4 5 6 (PRODUCT LEVEL)	SEE PAGE
	1	2	**119-4594**	110	WASHER (1MM THK)	
	2	2	**142-8791**	2	PIN AS	
	3	2	**142-8793**	2	PIN	
	4	2	**142-8832**	2	PIN AS	
Y	5	2	**177-9568**	1	CYLINDER GP-TILT (RH)	310
Y	6	2	**177-9569**	1	CYLINDER GP-TILT (LH)	311
	7	2	**190-7967**	2	SPACER	
	8	2	**190-7971**	2	WASHER-HARD	
	9	2	**190-7979**	2	BOLT	
	10	1	**190-8038**	2	PIN AS	
	11	2	**191-9588**	2	PIN AS	
	12	1	**191-9589**	1	SUPPORT AS	
	13	1	**191-9594**	1	LINK AS	
		1	**142-8805**	4	BEARING-SLEEVE	
	14	1	**191-9595**	2	LINK AS	
		1	**191-9633**	2	BEARING-SLEEVE	
		1	**191-9634**	1	PIN	
	15	1	**191-9598**	1	ARM AS-LIFT	
		1	**142-8805**	4	BEARING-SLEEVE	
		1	**159-5756**	2	BEARING-SLEEVE	
	16	1	**191-9635**	2	PIN	
	17	2	**191-9636**	2	PIN	
	18	2	**191-9637**	2	PIN AS	
	19	2	**191-9638**	2	PIN AS	
Y	20	1	**191-9641**	2	CYLINDER GP-LIFT	309
	21	2	**3B-8488**	2	FITTING-GREASE (1/8-27 THD)	
	22	1,2	**3B-8489**	10	FITTING-GREASE	
	23	1,2	**4M-5285**	8	RING-RETAINING (EXTERNAL)	
	24	1	**5B-0651**	2	FITTING-STRAIGHT (1/8-27X1.27IN)	
	25	2	**7X-0590**	2	WASHER-HARD (13.5X44.5X6MM THK)	
	26	2	**7X-7729**	8	WASHER (11X25X3MM THK)	
	27	1	**8T-4121**	2	WASHER-HARD (11X21X2.5MM THK)	
M	28	1	**8T-4133**	2	NUT (M10X1.5 THD)	
M	29	2	**8T-4186**	2	BOLT (M10X1.5X40MM)	
M	30	2	**8T-4191**	8	BOLT (M10X1.5X16MM)	
M	31	2	**8T-4194**	2	BOLT (M12X1.75X50MM)	
M	32	1	**8T-4195**	2	BOLT (M10X1.5X30MM)	
	33	2	**8T-4224**	2	WASHER-HARD (8.8X16X2MM THK)	
	34	1	**8T-4226**	2	WASHER-PLATED (10.5X45X3MM THK)	

M-METRIC PART
Y-SEPARATE ILLUSTRATION

191-9599 **CONTROL GP-WORK TOOL** *(contd.)* **i01744306**

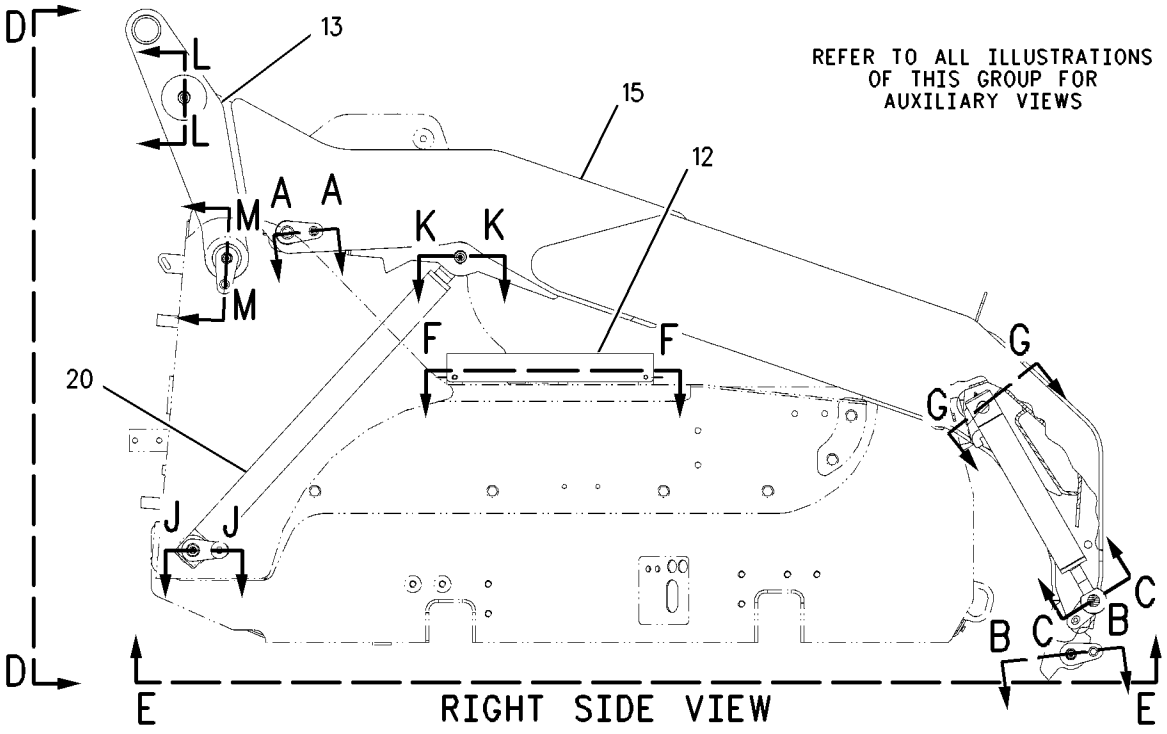

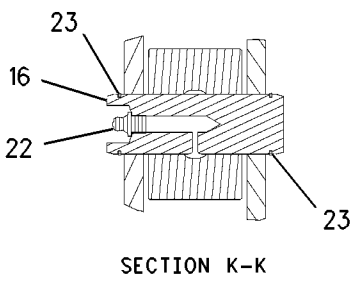

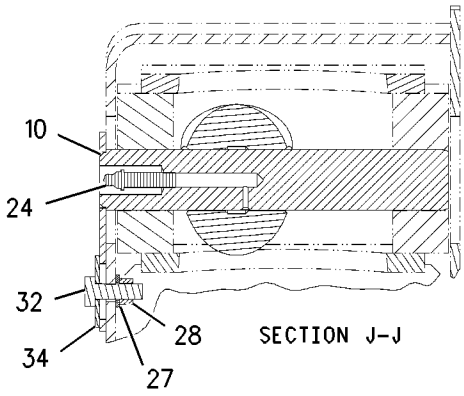

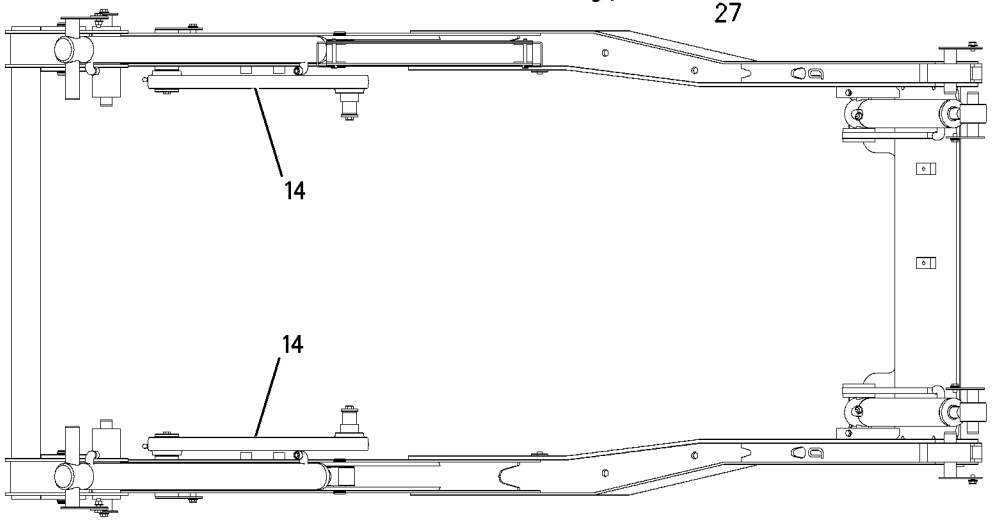

GRAPHIC #1 g00888849

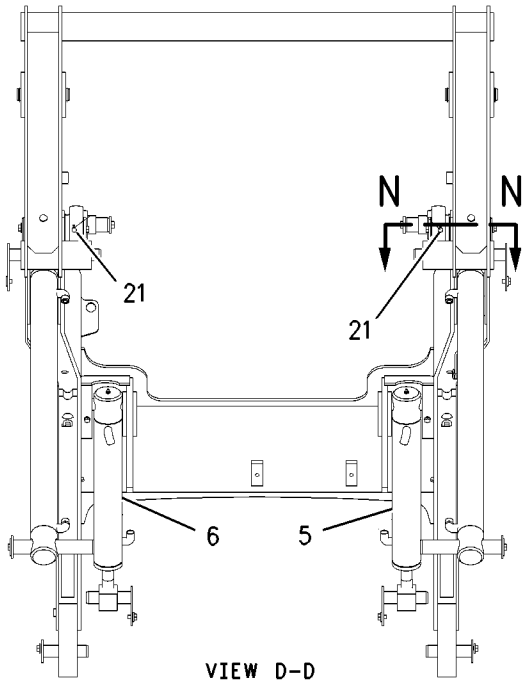

VIEW D-D

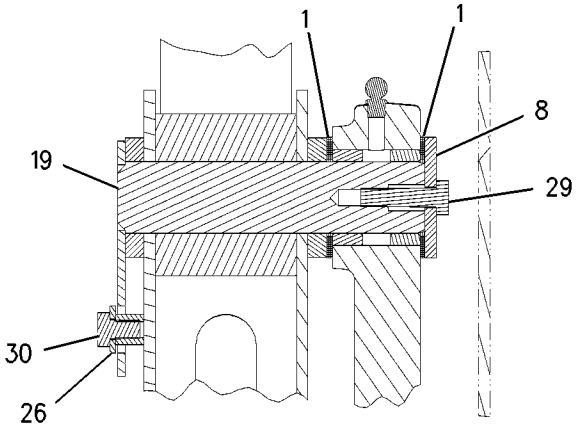

SECTION A-A

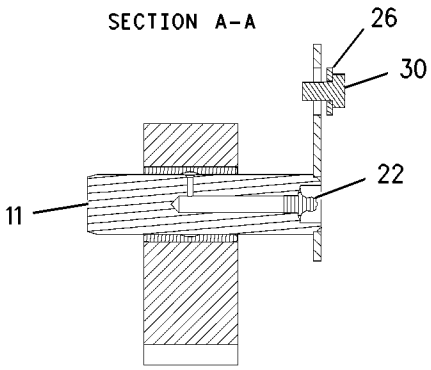

SECTION B-B

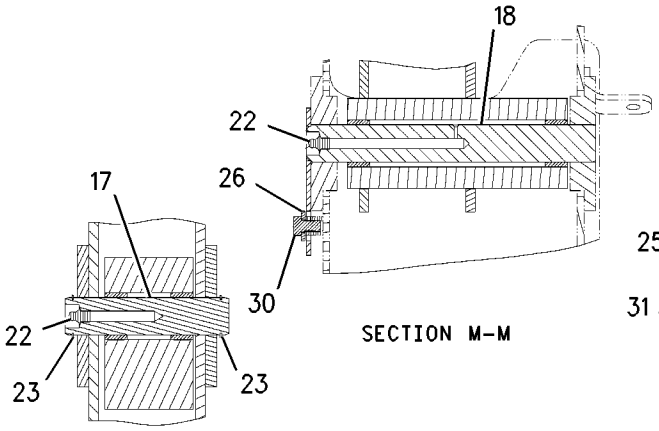

SECTION M-M

SECTION L-L

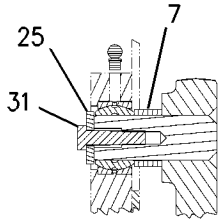

SECTION N-N

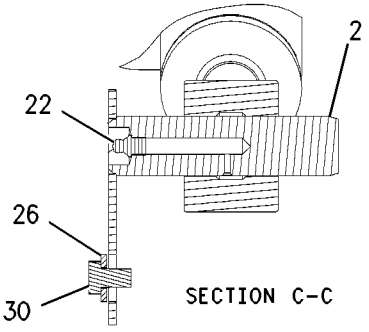

SECTION C-C

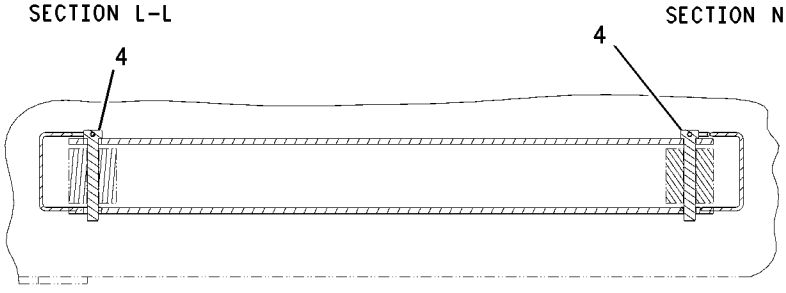

SECTION F-F

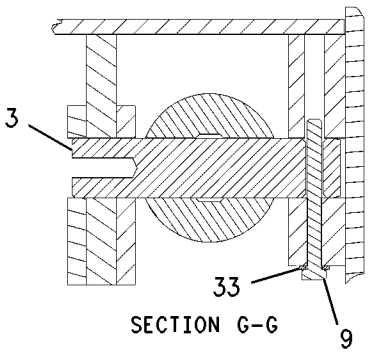

SECTION G-G

GRAPHIC #2

g00888853

156-9809 GUIDE GP-LINES

S/N: CAB1-UP; CMB1-UP; 4NZ3400-UP; 5FZ6700-UP

PART OF 191-2902, 191-9602, 200-0802, 200-1002 CHASSIS AR

SMCS-5057 **i01286006**

NOTE	REF NO	GRAPHIC REF	PART NUMBER	QTY	PART NAME 1 2 3 4 5 6 (PRODUCT LEVEL)	SEE PAGE
M	1	1	**8T-4177**	1	BOLT (M8X1.25X90MM)	
M	2	1	**8T-4199**	1	BOLT (M8X1.25X12MM)	
	3	1	**156-9808**	1	PLATE AS	
M	4	1	**6V-9189**	1	LOCKNUT (M8X1.25 THD)	
	5	1	**7X-0603**	2	WASHER-HARD (2.5MM THK)	
	6	1	**8T-4224**	1	WASHER-HARD (8.8X16X2MM THK)	

M-METRIC PART

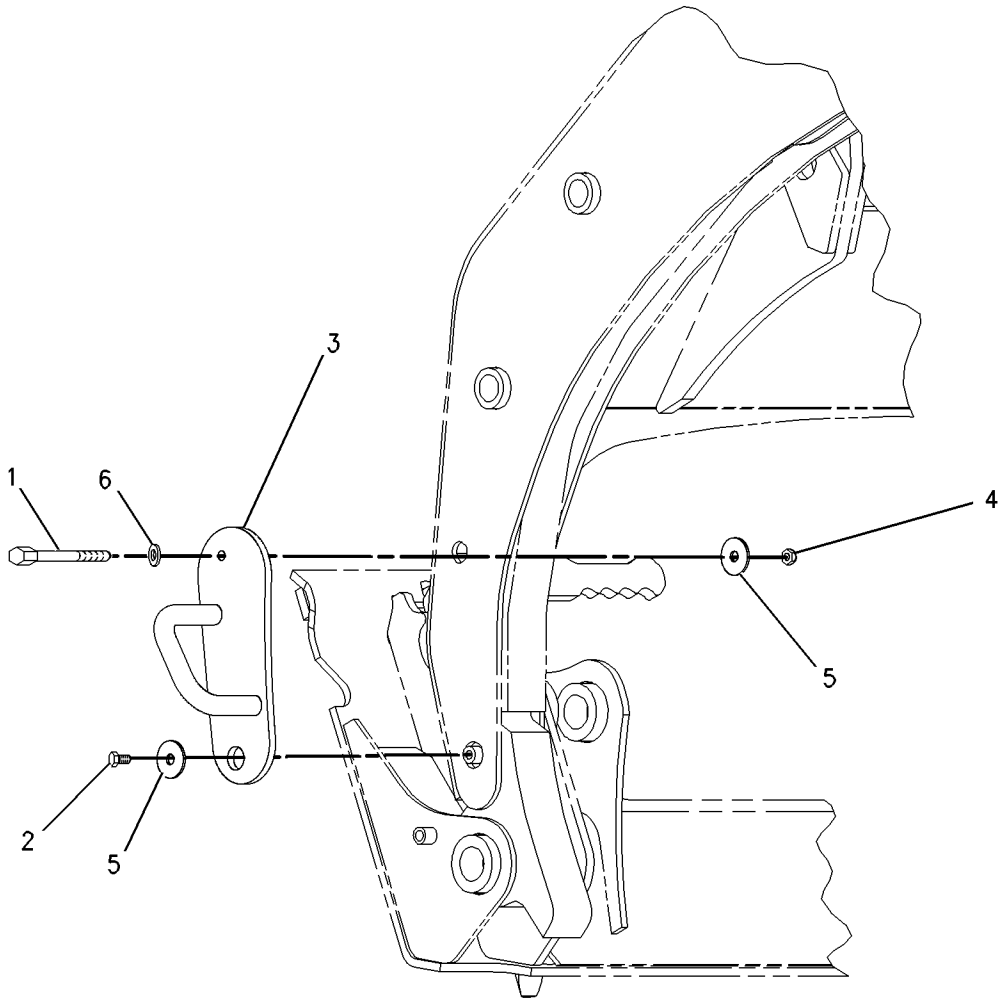

GRAPHIC #1 g00681453

179-7201 ARM GP-MATERIAL HANDLING

S/N: 4NZ3400-UP; 5FZ6700-UP

AN ATTACHMENT

SMCS-6542 **i01512155**

NOTE	REF NO	GRAPHIC REF	PART NUMBER	QTY	PART NAME 1 2 3 4 5 6 (PRODUCT LEVEL)	SEE PAGE
	1	1	**9V-2714**	1	HOOK	
	2	1	**9V-2715**	1	SHACKLE AS	
	3	1	**156-5762**	2	FILM (TIE DOWN)	
	4	1	**178-3377**	1	ARM AS	
Y	5	1	*188-7733*	1	STEP GP-MATERIAL HANDLING ARM	488
M	6	1	**7X-2475**	1	BOLT (M16X2X130MM)	
	7	1	**8T-4122**	2	WASHER-HARD (17X32X3.5MM THK)	
M	8	1	**8T-4132**	2	NUT (M16X2 THD)	

M-METRIC PART
Y-SEPARATE ILLUSTRATION

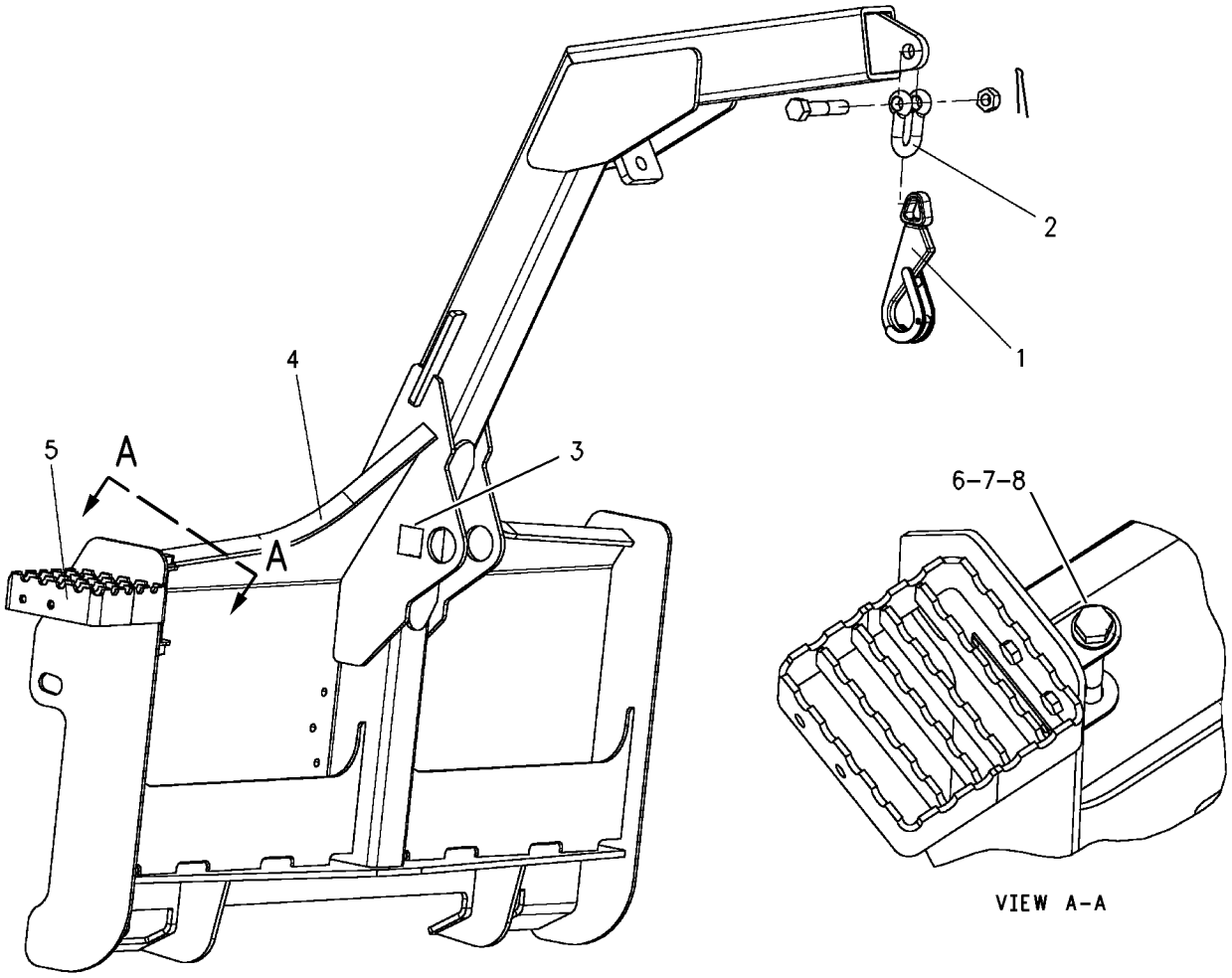

GRAPHIC #1 g00784781

136-8727 BAR GP-TOOTH

S/N: 4NZ3400-UP; 5FZ6700-UP
HALF ARROW
FOR USE WITH 152.40CM (60 IN) BUCKET WITH OUT BOLT ON CUTTING EDGE
FIELD INSTALLATION

SMCS-6822 **i01376595**

NOTE	REF NO	GRAPHIC REF	PART NUMBER	QTY	PART NAME 1 2 3 4 5 6 (PRODUCT LEVEL)	SEE PAGE
	1	1	**136-8734**	1	BAR AS-TOOTH	
	2	1	**8S-9093**	2	BOLT (1-8X2.25IN)	
	3	1	**5P-8250**	2	WASHER (28X49X5MM THK)	
	4	1	**3B-4516**	2	LOCKWASHER	
	5	1	**2J-3507**	2	NUT-FULL (1-8 THD)	

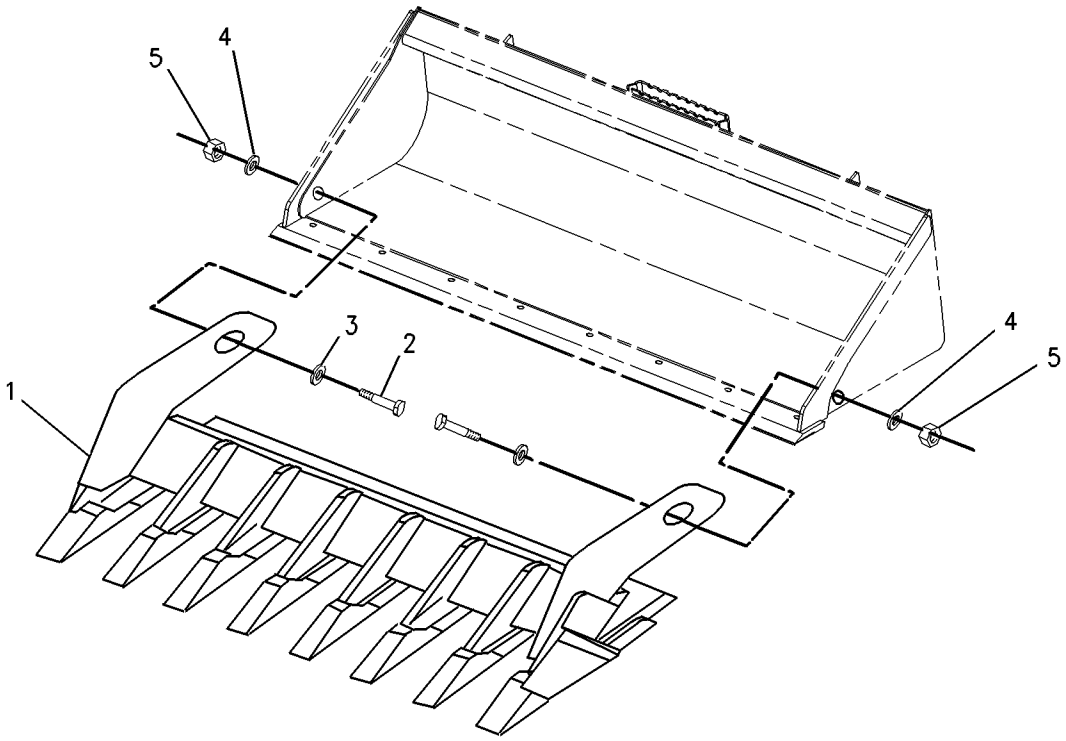

GRAPHIC #1 g00729047

WORK TOOLS

136-8728 BAR GP-TOOTH

S/N: 4NZ3400-UP; 5FZ6700-UP
HALF ARROW
FOR USE WITH 167.64CM (66 IN) BUCKET WITH OUT BOLT ON CUTTING EDGE
FIELD INSTALLATION

SMCS-6822 **i01376602**

NOTE	REF NO	GRAPHIC REF	PART NUMBER	QTY	PART NAME 1 2 3 4 5 6 (PRODUCT LEVEL)	SEE PAGE
	1	1	**136-8735**	1	BAR AS-TOOTH	
	2	1	**8S-9093**	2	BOLT (1-8X2.25IN)	
	3	1	**5P-8250**	2	WASHER (28X49X5MM THK)	
	4	1	**3B-4516**	2	LOCKWASHER	
	5	1	**2J-3507**	2	NUT-FULL (1-8 THD)	

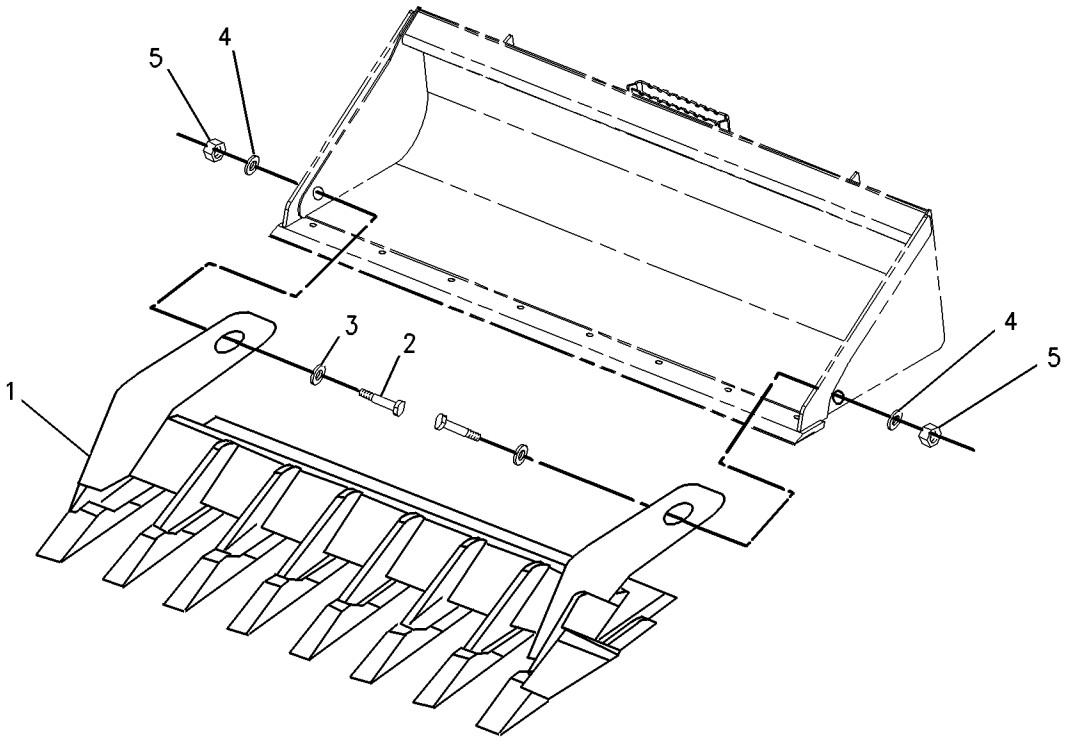

GRAPHIC #1 g00726904

136-8729 BAR GP-TOOTH

S/N: 4NZ3400-UP; 5FZ6700-UP
HALF ARROW
FOR USE WITH 182.88CM (72 IN) BUCKET WITH OUT BOLT ON CUTTING EDGE
FIELD INSTALLATION

SMCS-6822 **i01376614**

NOTE	REF NO	GRAPHIC REF	PART NUMBER	QTY	PART NAME 1 2 3 4 5 6 (PRODUCT LEVEL)	SEE PAGE
	1	1	**136-8736**	1	BAR AS-TOOTH	
	2	1	**8S-9093**	2	BOLT (1-8X2.25IN)	
	3	1	**5P-8250**	2	WASHER (28X49X5MM THK)	
	4	1	**3B-4516**	2	LOCKWASHER	
	5	1	**2J-3507**	2	NUT-FULL (1-8 THD)	

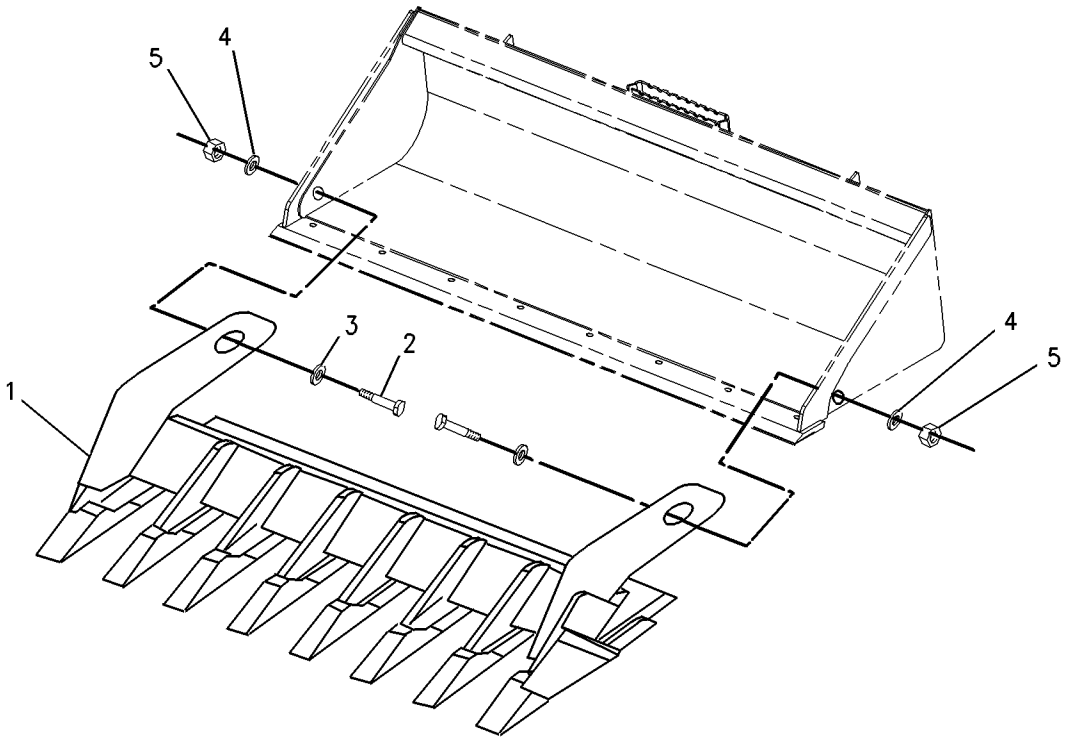

GRAPHIC #1 g00729056

WORK TOOLS

159-0331 BAR GP-TOOTH

S/N: 4NZ3400-UP; 5FZ6700-UP
HALF ARROW
FOR USE WITH 152.40CM (60 IN) BUCKET WITH CUTTING EDGE ATTACHED
FIELD INSTALLATION

SMCS-6822 **i01374582**

NOTE	REF NO	GRAPHIC REF	PART NUMBER	QTY	PART NAME 1 2 3 4 5 6 (PRODUCT LEVEL)	SEE PAGE
	1	1	**159-0330**	1	BAR AS-TOOTH	
	2	1	**8S-9093**	2	BOLT (1-8X2.25IN)	
	3	1	**5P-8250**	2	WASHER (5.0MM THK)	
	4	1	**3B-4516**	2	LOCKWASHER	
	5	1	**2J-3507**	2	NUT-FULL (1-8 THD)	

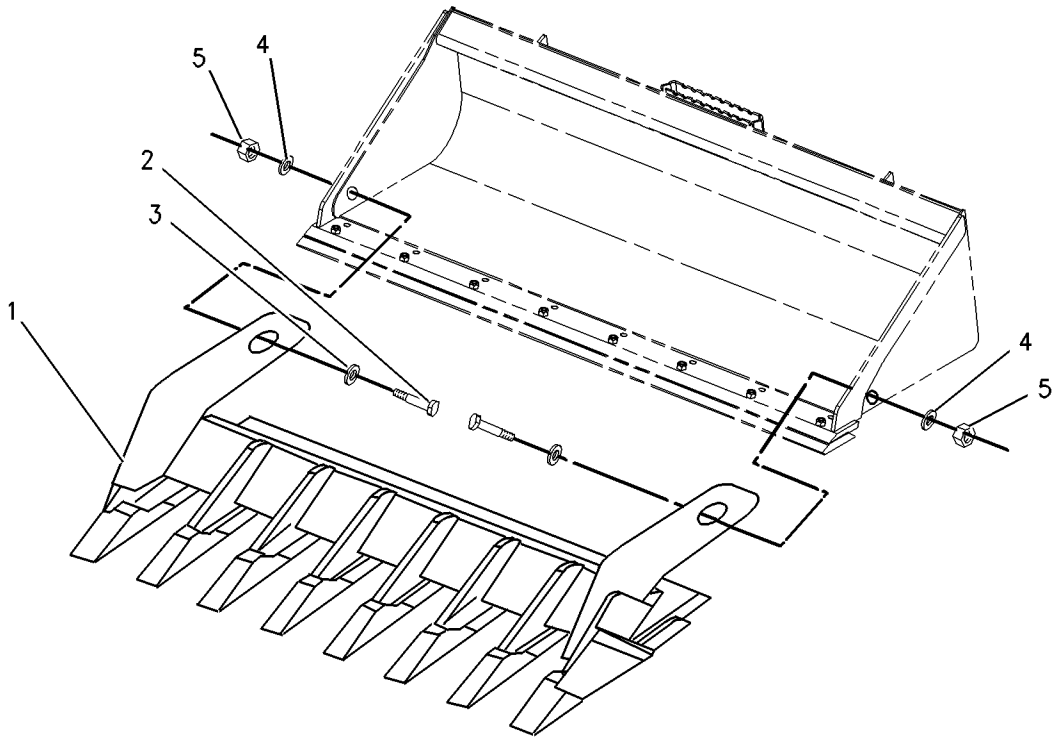

GRAPHIC #1 g00726006

WORK TOOLS

159-0341 BAR GP-TOOTH

S/N: 4NZ3400-UP; 5FZ6700-UP
HALF ARROW
FOR USE WITH 167.64CM (66 IN) BUCKET WITH CUTTING EDGE ATTACHED
FIELD INSTALLATION

SMCS-6822 **i01376583**

NOTE	REF NO	GRAPHIC REF	PART NUMBER	QTY	PART NAME 1 2 3 4 5 6 (PRODUCT LEVEL)	SEE PAGE
	1	1	**159-0340**	1	BAR AS	
	2	1	**8S-9093**	2	BOLT (1-8X2.25IN)	
	3	1	**5P-8250**	2	WASHER (28X49X5MM THK)	
	4	1	**3B-4516**	2	LOCKWASHER	
	5	1	**2J-3507**	2	NUT-FULL (1-8 THD)	

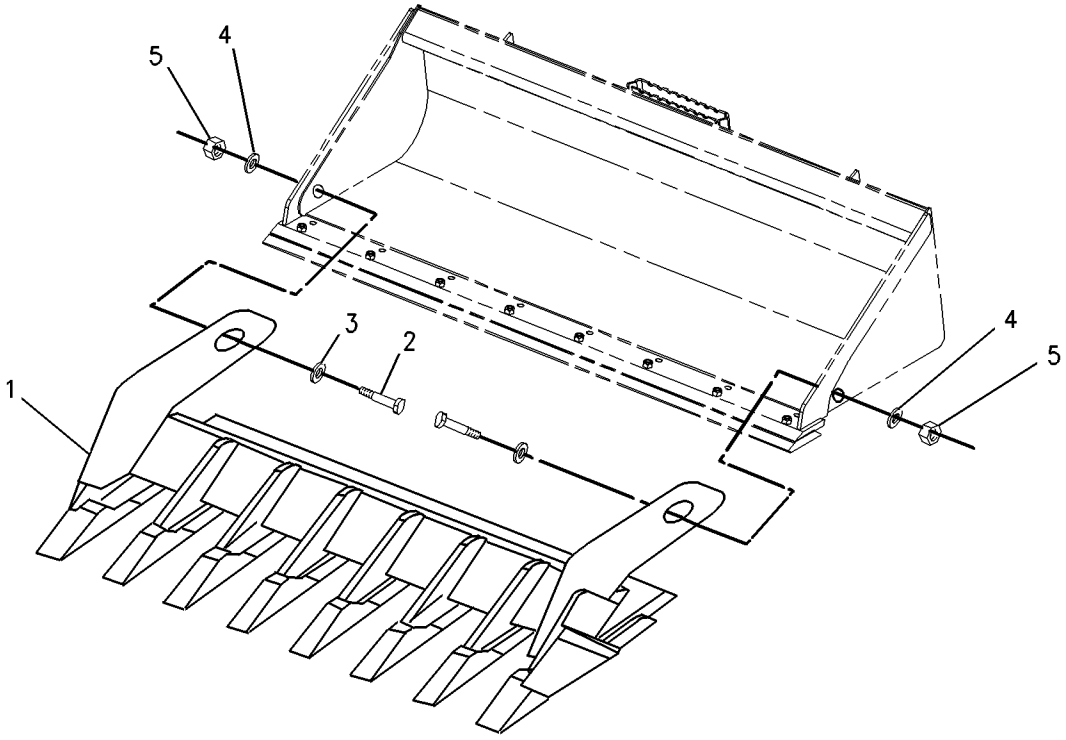

GRAPHIC #1 g00729120

159-0351 BAR GP-TOOTH

S/N: 4NZ3400-UP; 5FZ6700-UP
HALF ARROW
FOR USE WITH 182.88CM (72 IN) BUCKET WITH CUTTING EDGE
FIELD INSTALLATION

SMCS-6822 **i01374643**

NOTE	REF NO	GRAPHIC REF	PART NUMBER	QTY	PART NAME 1 2 3 4 5 6 (PRODUCT LEVEL)	SEE PAGE
	1	1	**159-0350**	1	BAR AS-TOOTH	
	2	1	**8S-9093**	2	BOLT (1-8X2.25IN)	
	3	1	**5P-8250**	2	WASHER (5.0MM THK)	
	4	1	**3B-4516**	2	LOCKWASHER	
	5	1	**2J-3507**	2	NUT-FULL (1-8 THD)	

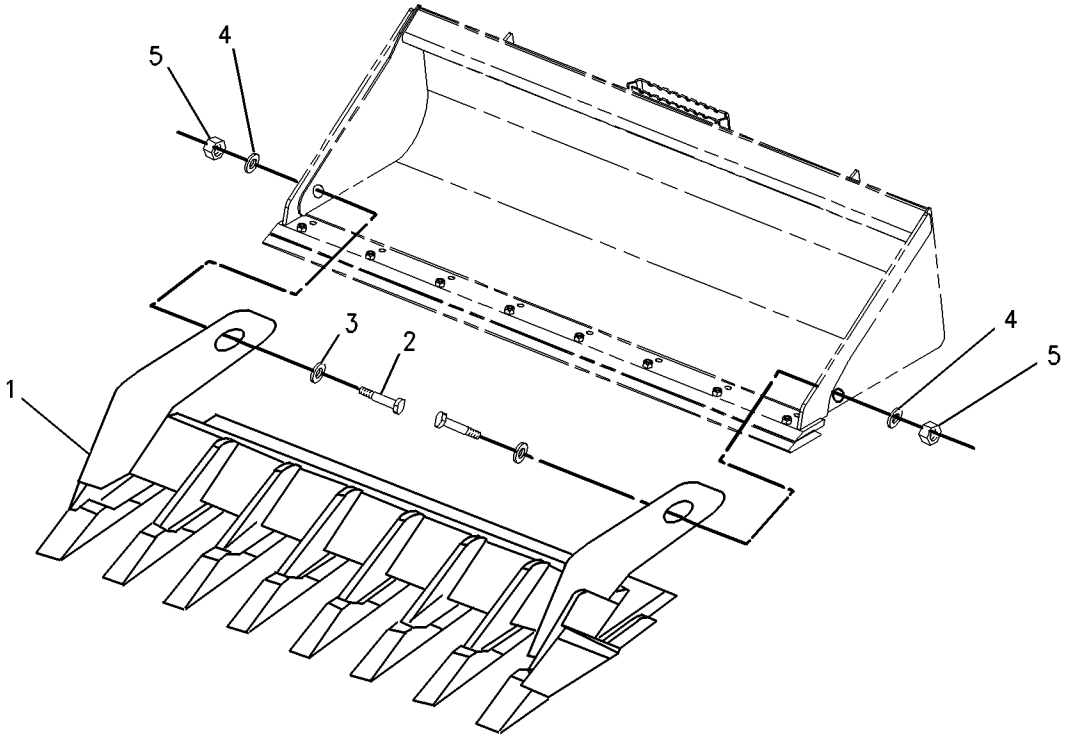

GRAPHIC #1 g00726104

WORK TOOLS

195-9161 BAR GP-TOOTH

S/N: 4NZ3400-UP; 5FZ6700-UP
HALF ARROW
FOR USE WITH 198.12CM (78 IN) BUCKET WITH CUTTING EDGE ATTACHED
FIELD INSTALLATION

SMCS-6822 **i01626134**

NOTE	PART NUMBER	QTY	PART NAME 1 2 3 4 5 6 (PRODUCT LEVEL)	SEE PAGE
	8S-9093	2	BOLT (1-8X2.25IN)	
	3B-4516	2	LOCKWASHER	
	2J-3507	2	NUT-FULL (1-8 THD)	
	195-9160	1	TOOTHBAR AS	
	174-7997	6	PLATE-SUPPORT	
	5P-8250	2	WASHER (28X49X5MM THK)	

<END>

177-1989 BLADE AR

S/N: 4NZ3400-UP; 5FZ6700-UP
AN ATTACHMENT

SMCS-6060, 6701 **i01214886**

NOTE	PART NUMBER	QTY	PART NAME 1 2 3 4 5 6 (PRODUCT LEVEL)	SEE PAGE
Y	*177-1981*	1	BLADE GP	426
Y	*177-1984*	1	CYLINDER & MTG GP-BLADE	300
Y	*135-9386*	1	EDGE GP-CUTTING	457
Y	*177-1980*	1	FRAME GP-BLADE	268
Y	*177-1986*	1	LINES GP-CONNECTING	320
Y	*177-1983*	1	SPRING GP-BLADE	486

Y-SEPARATE ILLUSTRATION

<END>

177-1981 BLADE GP

S/N: 4NZ3400-UP; 5FZ6700-UP
182.88CM (72 IN) BLADE
PART OF 177-1989 BLADE AR
AN ATTACHMENT

SMCS-6060, 6701 **i01498658**

NOTE	REF NO	GRAPHIC REF	PART NUMBER	QTY	PART NAME 1 2 3 4 5 6 (PRODUCT LEVEL)	SEE PAGE
	1	1	**157-0940**	2	PIN	
	2	1	**166-0319**	2	PIN AS	
	3	1	**169-4868**	2	FILM-WARNING (CLEARANCE/DISTANCE)	
	4	1	**177-1921**	2	PIN AS	
	5	1	**177-1972**	2	SKID AS	
	6	1	**177-1987**	1	BLADE AS	
	7	1	**3B-8489**	2	FITTING-GREASE	
M	8	1	**6V-9189**	2	LOCKNUT (M8X1.25 THD)	
M	9	1	**8T-6869**	2	BOLT (M8X1.25X60MM)	
	10	1	**9R-2959**	2	CLIP	

M-METRIC PART

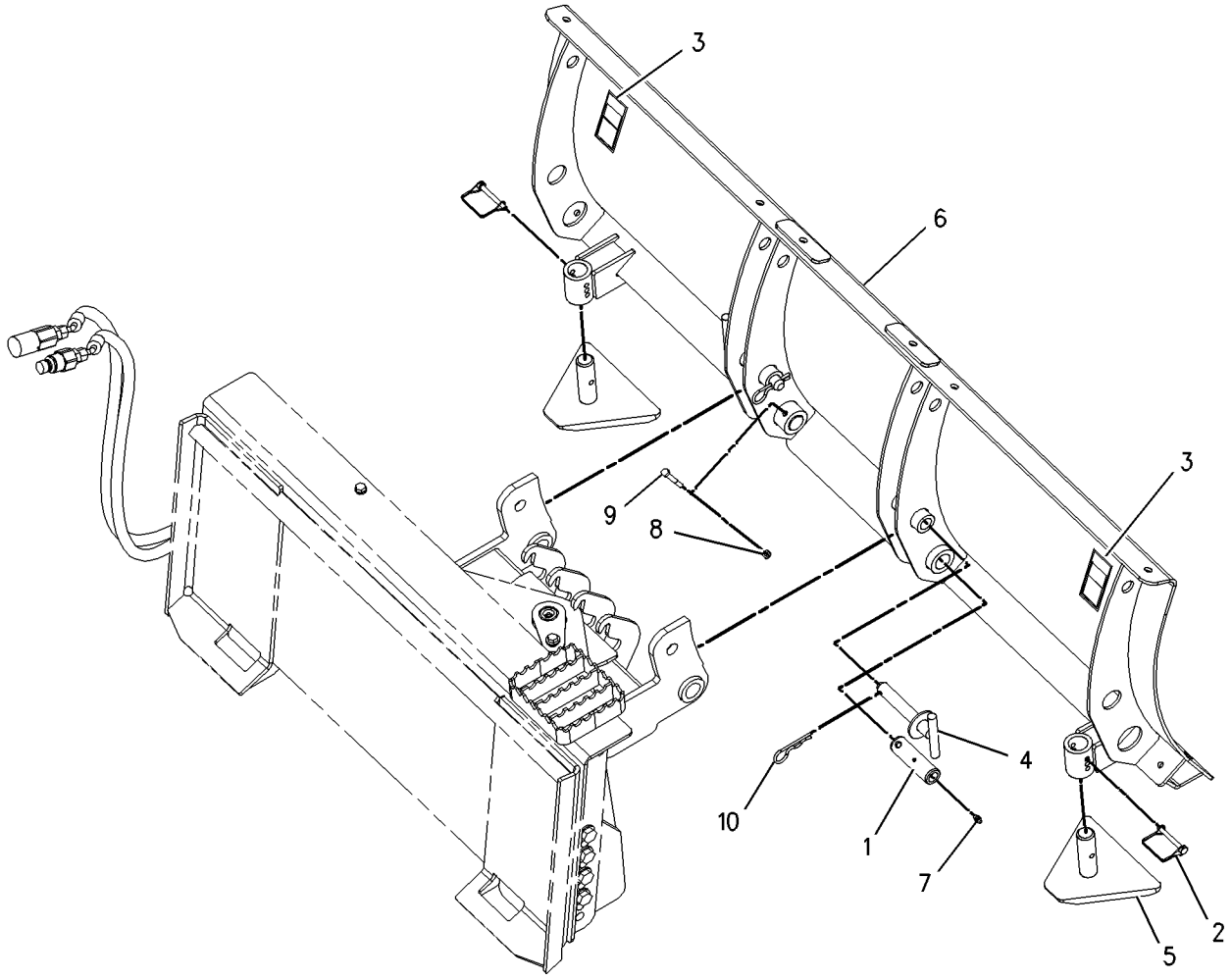

GRAPHIC #1 g00777694

152-0230 BUCKET AR-DIRT

S/N: 4NZ3400-UP; 5FZ6700-UP
137.16CM (54 IN), 0.30CU M (0.39 CU YD)
FIELD REPLACEMENT FOR 165-6155—PAGE 440
AN ATTACHMENT

SMCS-6001 **i01353252**

NOTE	REF NO	GRAPHIC REF	PART NUMBER	QTY	PART NAME 1 2 3 4 5 6 (PRODUCT LEVEL)	SEE PAGE
	1	1	**165-6155**	1	BUCKET AS-DIRT	
	2	1	**149-5434**	1	EDGE	
	3	1	*135-9383*	1	EDGE GP-CUTTING	
	4	1	**135-9393**		EDGE-CUTTING	
M	5	1	**8T-4778**	6	LOCKNUT (M16X2.00 THD)	
M	6	1	**159-2953**	6	SCREW-FLAT HEAD (M16X2.00 THD)	

M-METRIC PART

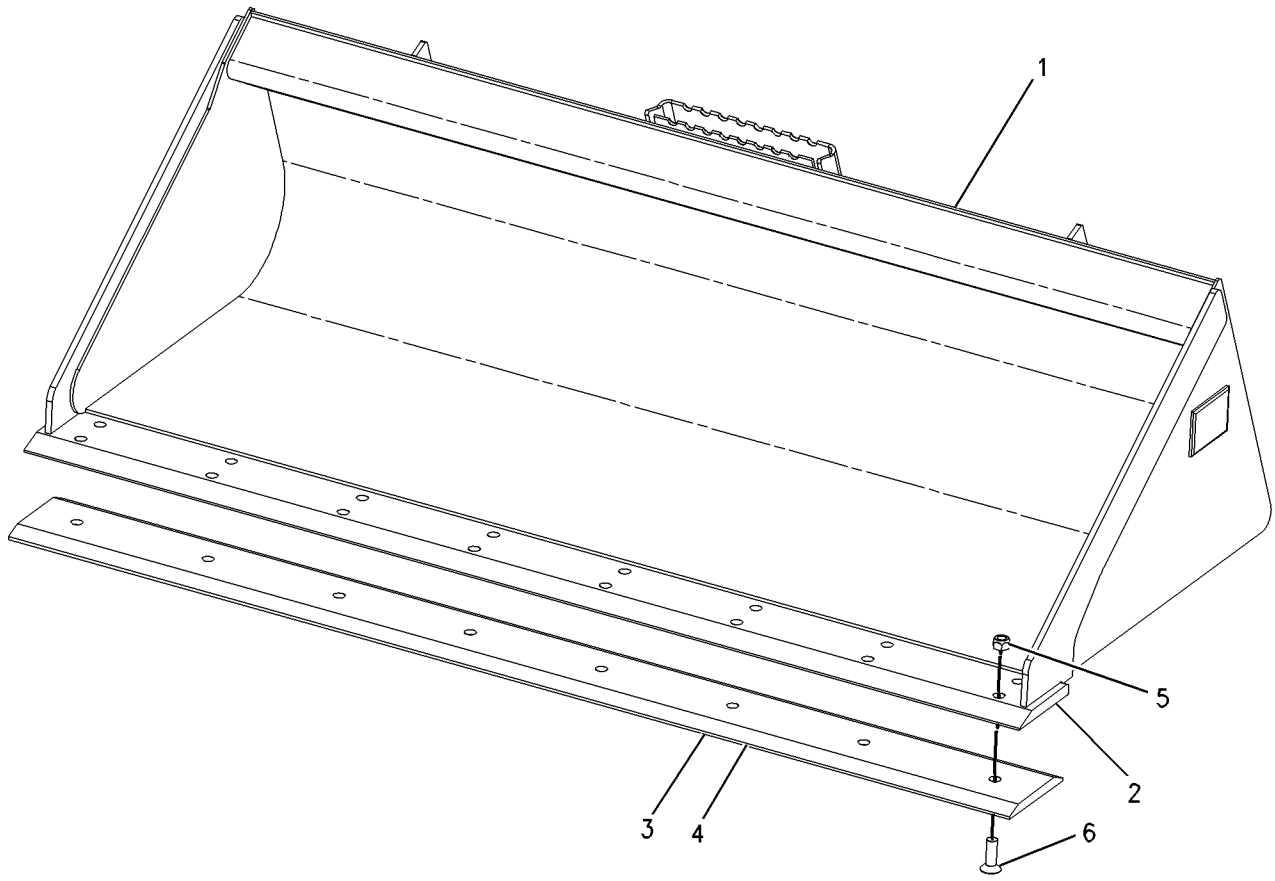

GRAPHIC #1 g00714123

152-0231 BUCKET AR-DIRT

S/N: 4NZ3400-UP; 5FZ6700-UP
152.40CM (60 IN), 0.34CU M (0.44 CU YD)
FIELD REPLACEMENT FOR 165-6156 BUCKET AS-DIRT
AN ATTACHMENT

SMCS-6001 **i01519818**

NOTE	REF NO	GRAPHIC REF	PART NUMBER	QTY	PART NAME 1 2 3 4 5 6 (PRODUCT LEVEL)	SEE PAGE
Y	1	1	**165-6156**	1	BUCKET AS-DIRT	441
Y	2	1	*135-9384*	1	EDGE GP-CUTTING	455

Y-SEPARATE ILLUSTRATION

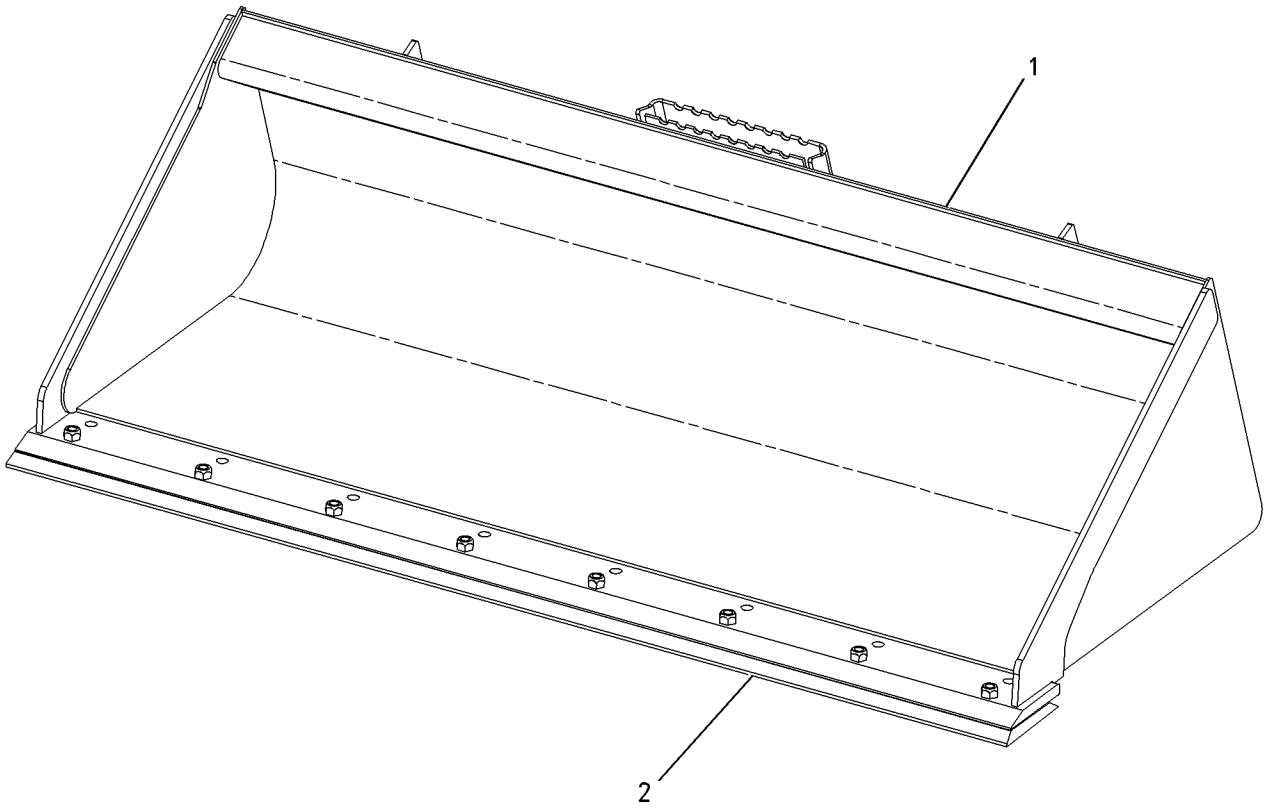

GRAPHIC #1 g00724152

WORK TOOLS

152-0223 BUCKET AR-GENERAL PURPOSE

S/N: 4NZ3400-UP; 5FZ6700-UP
152.40CM (60 IN), 0.36CU M (0.47 CU YD)
AN ATTACHMENT

SMCS-6101 **i01353246**

NOTE	REF NO	GRAPHIC REF	PART NUMBER	QTY	PART NAME 1 2 3 4 5 6 (PRODUCT LEVEL)	SEE PAGE
	1	1	**165-6152**	1	BUCKET AS-GENERAL PURPOSE	
	2	1	**149-5435**	1	EDGE	
	3	1	*141-4999*	8	TOOTH GP-UNI	
	4	1	**132-4720**	1	TOOTH-UNI-SINGLE STRAP	
M	5	1	**159-2953**	2	SCREW-FLAT HEAD (M16X2.00 THD)	
M	6	1	**8T-4778**	2	LOCKNUT (M16X2.00 THD)	

M-METRIC PART

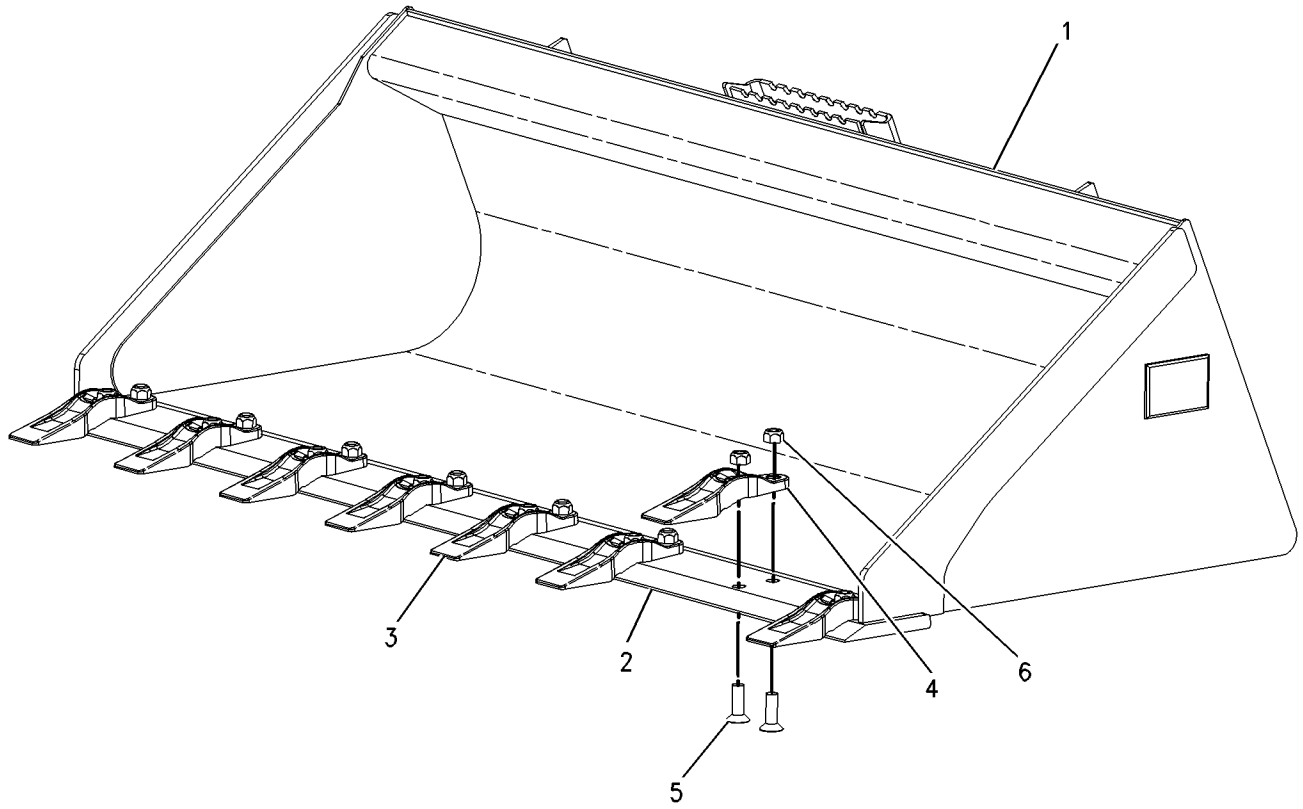

GRAPHIC #1 g00714118

152-0224 BUCKET AR-GENERAL PURPOSE

S/N: 4NZ3400-UP; 5FZ6700-UP
152.40CM (60 IN), 0.36CU M (0.47 CU YD)
AN ATTACHMENT

SMCS-6101 **i01353240**

NOTE	REF NO	GRAPHIC REF	PART NUMBER	QTY	PART NAME 1 2 3 4 5 6 (PRODUCT LEVEL)	SEE PAGE
	1	1	**165-6152**	1	BUCKET AS-GENERAL PURPOSE	
	2	1	**149-5435**	1	EDGE	
	3	1	*135-9384*	1	EDGE GP-CUTTING	
	4	1	**135-9394**	1	EDGE-CUTTING	
M	5	1	**8T-4778**	8	LOCKNUT (M16X2.00 THD)	
M	6	1	**159-2953**	8	SCREW-FLAT HEAD (M16X2.00 THD)	

M-METRIC PART

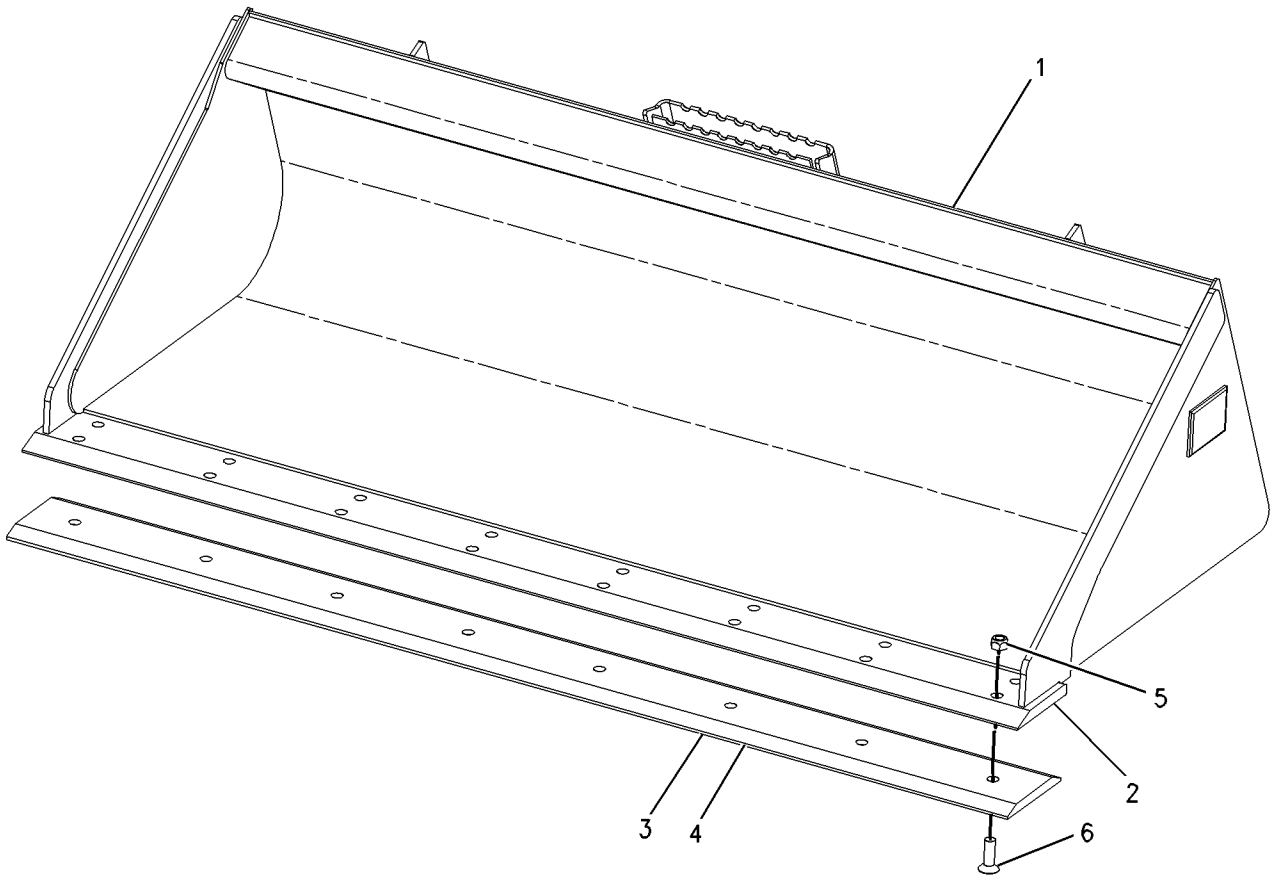

GRAPHIC #1 g00714114

WORK TOOLS

152-0225 BUCKET AR-GENERAL PURPOSE

S/N: 4NZ3400-UP; 5FZ6700-UP
AN ATTACHMENT

SMCS-6101 **i01755592**

NOTE	PART NUMBER	QTY	PART NAME 1 2 3 4 5 6 (PRODUCT LEVEL)	SEE PAGE
Y	**165-6153**	1	BUCKET AS-GENERAL PURPOSE	443
Y	*141-4999*	8	TOOTH GP-UNI	496
Y-SEPARATE ILLUSTRATION				

<END>

152-0226 BUCKET AR-GENERAL PURPOSE

S/N: 4NZ3400-UP; 5FZ6700-UP
AN ATTACHMENT

SMCS-6101 **i01755595**

NOTE	PART NUMBER	QTY	PART NAME 1 2 3 4 5 6 (PRODUCT LEVEL)	SEE PAGE
Y	**165-6153**	1	BUCKET AS-GENERAL PURPOSE	443
Y	*135-9385*	1	EDGE GP-CUTTING	456
Y-SEPARATE ILLUSTRATION				

<END>

157-7223 BUCKET AR-GRAPPLE

S/N: 4NZ3400-UP; 5FZ6700-UP
INDUSTRIAL
PART OF 157-7226 BUCKET AR-GRAPPLE
AN ATTACHMENT

SMCS-6704 **i01628731**

NOTE	PART NUMBER	QTY	PART NAME 1 2 3 4 5 6 (PRODUCT LEVEL)	SEE PAGE
Y	*156-0884*	1	BUCKET GP-GRAPPLE	445
Y	*156-0891*	1	CYLINDER & MTG GP-GRAPPLE	301
Y	**156-5512**	2	CYLINDER GP-GRAPPLE	305
Y	*161-0187*	1	LINES GP-GRAPPLE	322
Y-SEPARATE ILLUSTRATION				

<END>

157-7224 BUCKET AR-GRAPPLE

S/N: 4NZ3400-UP; 5FZ6700-UP
INDUSTRIAL
PART OF 157-7227 BUCKET AR-GRAPPLE
AN ATTACHMENT

SMCS-6704 **i01529477**

NOTE	PART NUMBER	QTY	PART NAME 1 2 3 4 5 6 (PRODUCT LEVEL)	SEE PAGE
Y	*156-0885*	1	BUCKET GP-GRAPPLE	446
Y	*156-0891*	1	CYLINDER & MTG GP-GRAPPLE	301
Y	**156-5512**	2	CYLINDER GP-GRAPPLE	305
Y	*161-0187*	1	LINES GP-GRAPPLE	322

Y-SEPARATE ILLUSTRATION

<END>

157-7226 BUCKET AR-GRAPPLE

S/N: 4NZ3400-UP; 5FZ6700-UP
INDUSTRIAL
AN ATTACHMENT

SMCS-6704 **i01529482**

NOTE	PART NUMBER	QTY	PART NAME 1 2 3 4 5 6 (PRODUCT LEVEL)	SEE PAGE
Y	**157-7223**	1	BUCKET AR-GRAPPLE	431
Y	*135-9384*	1	EDGE GP-CUTTING	455

Y-SEPARATE ILLUSTRATION

<END>

157-7227 BUCKET AR-GRAPPLE

S/N: 4NZ3400-UP; 5FZ6700-UP
INDUSTRIAL
AN ATTACHMENT

SMCS-6704 **i01529483**

NOTE	PART NUMBER	QTY	PART NAME 1 2 3 4 5 6 (PRODUCT LEVEL)	SEE PAGE
Y	**157-7224**	1	BUCKET AR-GRAPPLE	432
Y	*135-9385*	1	EDGE GP-CUTTING	456

Y-SEPARATE ILLUSTRATION

<END>

WORK TOOLS

165-8729 BUCKET AR-GRAPPLE

S/N: 4NZ3400-UP; 5FZ6700-UP
167.64CM (66 IN), 0.47CU M (0.61 CU YD). UTILITY
AN ATTACHMENT

SMCS-6704 **i01345426**

NOTE	REF NO	GRAPHIC REF	PART NUMBER	QTY	PART NAME 1 2 3 4 5 6 (PRODUCT LEVEL)	SEE PAGE
	1	1	**165-8746**	1	BUCKET AS-UTILITY	
	2	1	**149-5436**	1	EDGE	
	3	1	**111-0483**	4	BOSS (M10X1.5MM)	
Y	4	1	**165-8734**	1	GRAPPLE GP-UTILITY	474

Y-SEPARATE ILLUSTRATION

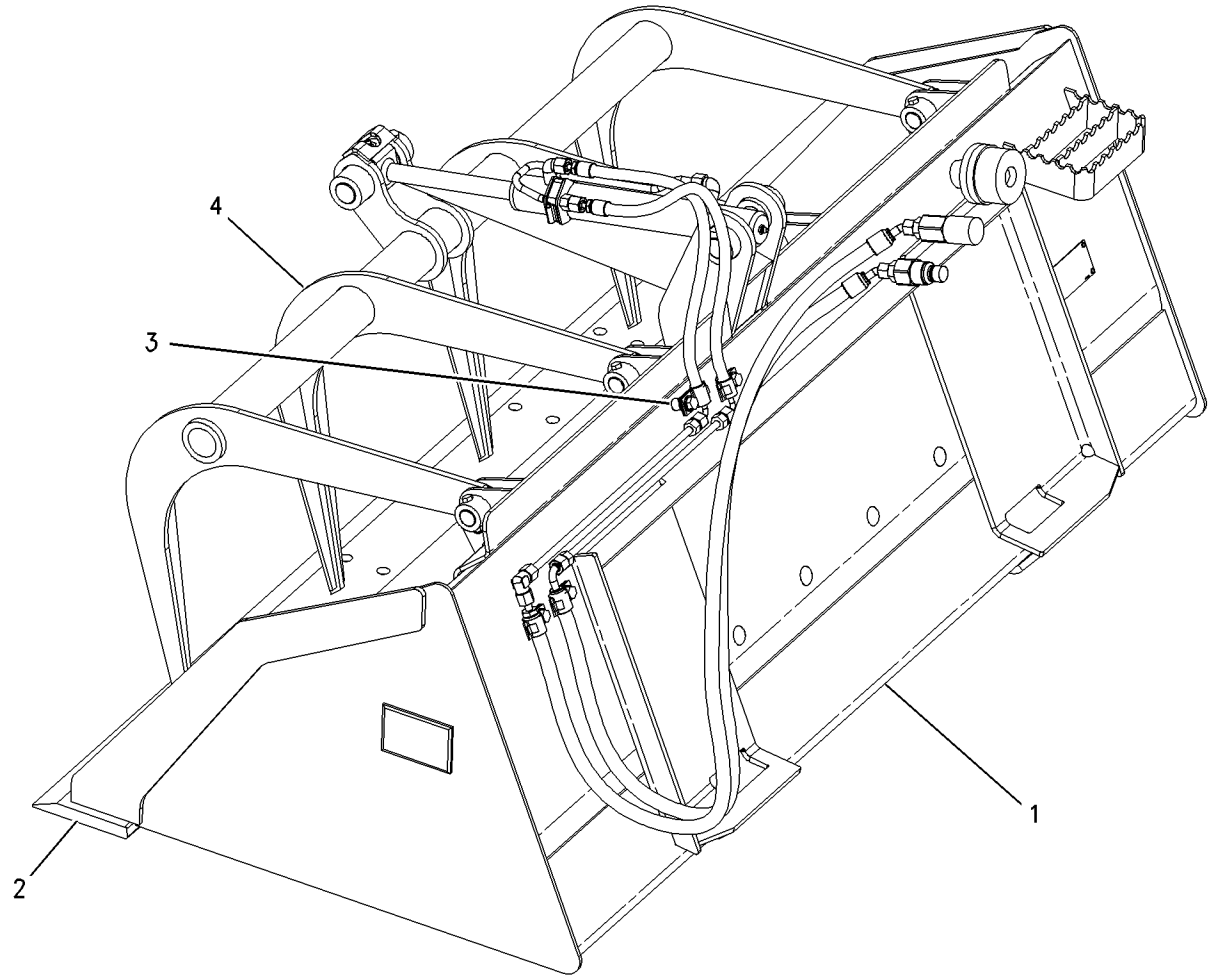

GRAPHIC #1 g00710560

WORK TOOLS

165-8730 BUCKET AR-GRAPPLE

S/N: 4NZ3400-UP; 5FZ6700-UP
182.88CM (72 IN), 0.51CU M (0.66 CU YD). UTILITY
AN ATTACHMENT

SMCS-6704 **i01345450**

NOTE	REF NO	GRAPHIC REF	PART NUMBER	QTY	PART NAME 1 2 3 4 5 6 (PRODUCT LEVEL)	SEE PAGE
	1	1	**165-8747**	1	BUCKET AS-UTILITY	
	2	1	**149-5437**	1	EDGE	
	3	1	**111-0483**	4	BOSS (M10X1.5MM)	
Y	4	1	**165-8734**	1	GRAPPLE GP-UTILITY	474

Y-SEPARATE ILLUSTRATION

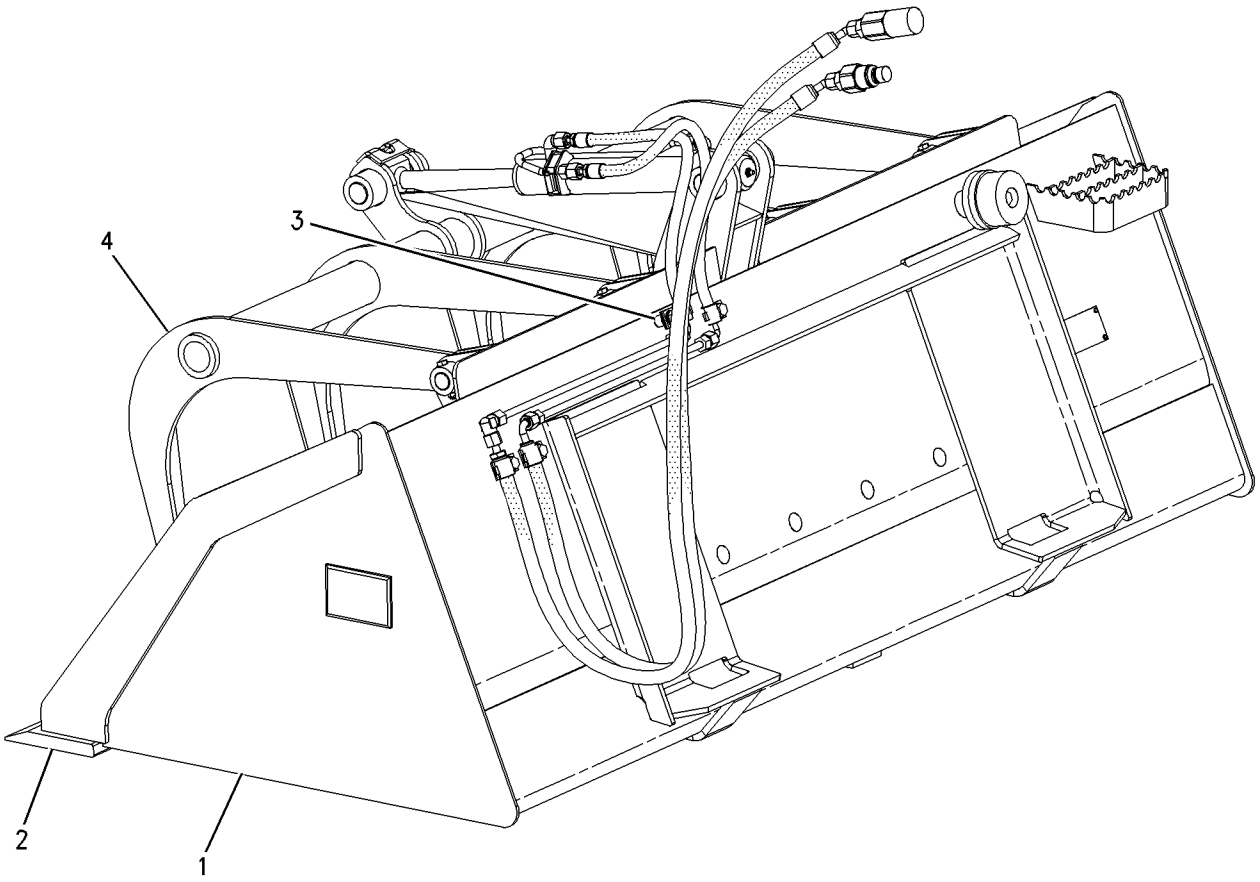

GRAPHIC #1 g00710565

WORK TOOLS

165-8779 BUCKET AR-GRAPPLE

S/N: 4NZ3400-UP; 5FZ6700-UP
167.64CM (66 IN), 0.47CU M (0.61 CU YD). UTILITY
AN ATTACHMENT

SMCS-6704 **i01345476**

NOTE	REF NO	GRAPHIC REF	PART NUMBER	QTY	PART NAME 1 2 3 4 5 6 (PRODUCT LEVEL)	SEE PAGE
	1	1	**165-8777**	1	BUCKET GP-UTILITY	
	2	1	**165-8746**	1	BUCKET AS-UTILITY	
	3	1	**149-5436**	1	EDGE	
	4	1	**111-0483**	4	BOSS (M10X1.5MM)	
	5	1	*135-9385*	1	EDGE GP-CUTTING	
	6	1	**135-9395**	1	EDGE-CUTTING	
M	7	1	**8T-4778**	8	LOCKNUT (M16X2.00 THD)	
M	8	1	**159-2953**	8	SCREW-FLAT HEAD (M16X2.00 THD)	
Y	9	1	**165-8734**	1	GRAPPLE GP-UTILITY	474

M-METRIC PART
Y-SEPARATE ILLUSTRATION

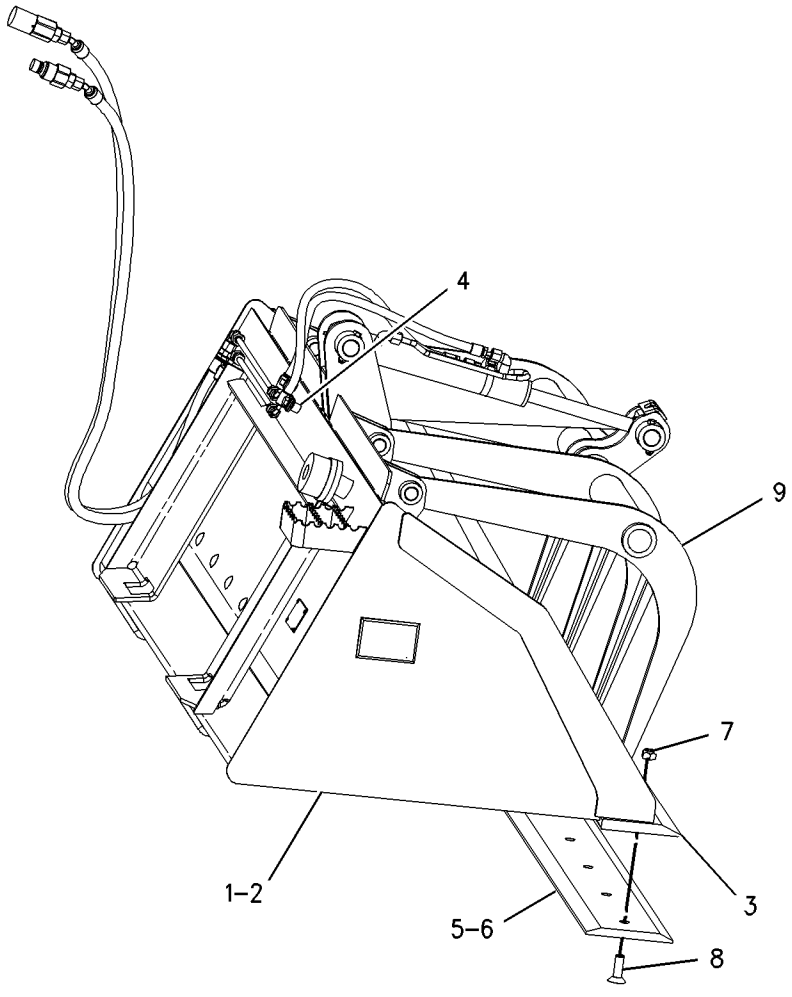

GRAPHIC #1 g00710579

WORK TOOLS

165-8780 BUCKET AR-GRAPPLE

S/N: 4NZ3400-UP; 5FZ6700-UP
UTILITY
AN ATTACHMENT

SMCS-6704 **i01227905**

NOTE	PART NUMBER	QTY	PART NAME 1 2 3 4 5 6 (PRODUCT LEVEL)	SEE PAGE
Y	**165-8778**	1	BUCKET GP-UTILITY	449
Y	**165-8734**	1	GRAPPLE GP-UTILITY	474

Y-SEPARATE ILLUSTRATION

<END>

WORK TOOLS

164-7412 BUCKET AR-LIGHT MATERIAL

S/N: 4NZ3400-UP; 5FZ6700-UP
182.88CM (72 IN), 0.69CU M (0.90 CU YD)
AN ATTACHMENT

SMCS-6103 **i01446891**

NOTE	REF NO	GRAPHIC REF	PART NUMBER	QTY	PART NAME 1 2 3 4 5 6 (PRODUCT LEVEL)	SEE PAGE
	1	1	**164-7414**	1	BUCKET AS-LIGHT MATERIAL	
	2	1	**149-5437**	1	EDGE	
	3	1	*135-9386*	1	EDGE GP-CUTTING	
	4	1	**135-9396**	1	EDGE-CUTTING	
M	5	1	**8T-4778**	11	LOCKNUT	
M	6	1	**159-2953**	11	SCREW-FLAT HEAD (M16X2.00 THD)	

M-METRIC PART

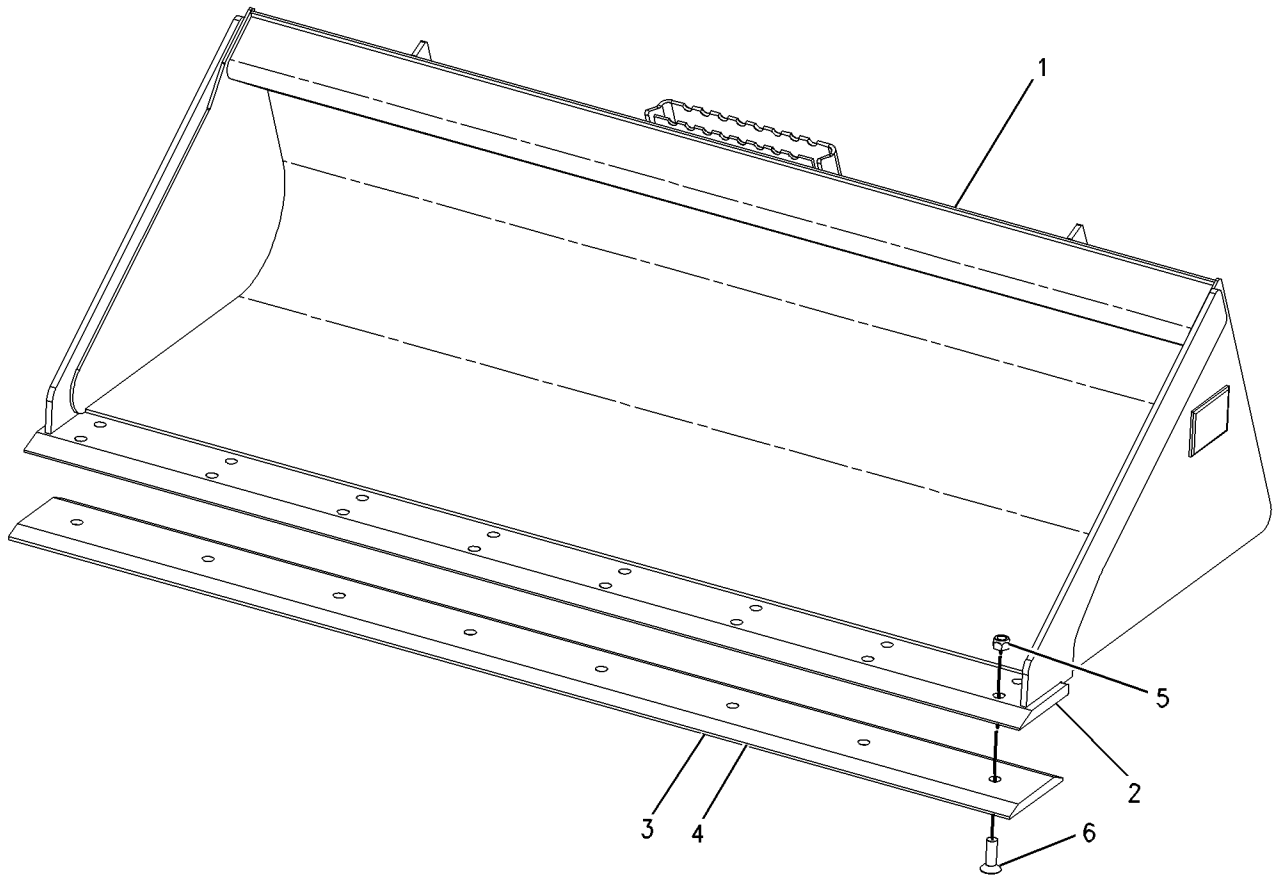

GRAPHIC #1 g00714113

154-5004 BUCKET AR-MULTIPURPOSE

S/N: 4NZ3400-UP; 5FZ6700-UP
PART OF 154-5045, 154-5046 BUCKET AR-MULTIPURPOSE
AN ATTACHMENT

SMCS-6104 **i01519821**

NOTE	PART NUMBER	QTY	PART NAME 1 2 3 4 5 6 (PRODUCT LEVEL)	SEE PAGE
Y	**154-5005**	1	BUCKET GP-MULTIPURPOSE	447
Y	*162-5236*	1	COVER GP-LINES	454
Y	**154-5018**	2	CYLINDER GP-BUCKET	304
Y	*154-5019*	1	LINES GP-BUCKET	316
Y	*154-5011*	1	MOUNTING GP-CYLINDER	371
Y-SEPARATE ILLUSTRATION				

<END>

154-5008 BUCKET AR-MULTIPURPOSE

S/N: 4NZ3400-UP; 5FZ6700-UP
PART OF 154-5047, 154-5048 BUCKET AR-MULTIPURPOSE
AN ATTACHMENT

SMCS-6104 **i01218109**

NOTE	PART NUMBER	QTY	PART NAME 1 2 3 4 5 6 (PRODUCT LEVEL)	SEE PAGE
Y	**154-5007**	1	BUCKET GP-MULTIPURPOSE	448
Y	**154-5018**	2	CYLINDER GP-BUCKET	304
Y	*162-5236*	1	COVER GP-LINES	454
Y	*154-5051*	1	LINES GP-BUCKET	318
Y	*154-5011*	1	MOUNTING GP-CYLINDER	371
Y-SEPARATE ILLUSTRATION				

<END>

154-5045 BUCKET AR-MULTIPURPOSE

S/N: 4NZ3400-UP; 5FZ6700-UP
AN ATTACHMENT

SMCS-6104 **i01218111**

NOTE	PART NUMBER	QTY	PART NAME 1 2 3 4 5 6 (PRODUCT LEVEL)	SEE PAGE
Y	**154-5004**	1	BUCKET AR-MULTIPURPOSE	438
Y	*135-9384*	1	EDGE GP-CUTTING	455
Y-SEPARATE ILLUSTRATION				

<END>

154-5046 BUCKET AR-MULTIPURPOSE

S/N: 4NZ3400-UP; 5FZ6700-UP

AN ATTACHMENT

SMCS-6104 **i01218112**

NOTE	PART NUMBER	QTY	PART NAME 1 2 3 4 5 6 (PRODUCT LEVEL)	SEE PAGE
Y	**154-5004**	1	BUCKET AR-MULTIPURPOSE	438
Y	*141-4999*	8	TOOTH GP-UNI	496

Y-SEPARATE ILLUSTRATION

<END>

154-5047 BUCKET AR-MULTIPURPOSE

S/N: 4NZ3400-UP; 5FZ6700-UP

AN ATTACHMENT

SMCS-6104 **i01218113**

NOTE	PART NUMBER	QTY	PART NAME 1 2 3 4 5 6 (PRODUCT LEVEL)	SEE PAGE
Y	**154-5008**	1	BUCKET AR-MULTIPURPOSE	438
Y	*135-9385*	1	EDGE GP-CUTTING	456

Y-SEPARATE ILLUSTRATION

<END>

154-5048 BUCKET AR-MULTIPURPOSE

S/N: 4NZ3400-UP; 5FZ6700-UP

AN ATTACHMENT

SMCS-6104 **i01218115**

NOTE	PART NUMBER	QTY	PART NAME 1 2 3 4 5 6 (PRODUCT LEVEL)	SEE PAGE
Y	**154-5008**	1	BUCKET AR-MULTIPURPOSE	438
Y	*141-4999*	8	TOOTH GP-UNI	496

Y-SEPARATE ILLUSTRATION

<END>

WORK TOOLS

165-6155 BUCKET AS-DIRT

S/N: 4NZ3400-UP; 5FZ6700-UP
137.16CM (54 IN), 0.30CU M (0.39 CU YD)
AN ATTACHMENT

SMCS-6001 **i01722952**

NOTE	REF NO	GRAPHIC REF	PART NUMBER	QTY	PART NAME 1 2 3 4 5 6 (PRODUCT LEVEL)	SEE PAGE
	1	1	**149-5434**	1	EDGE	

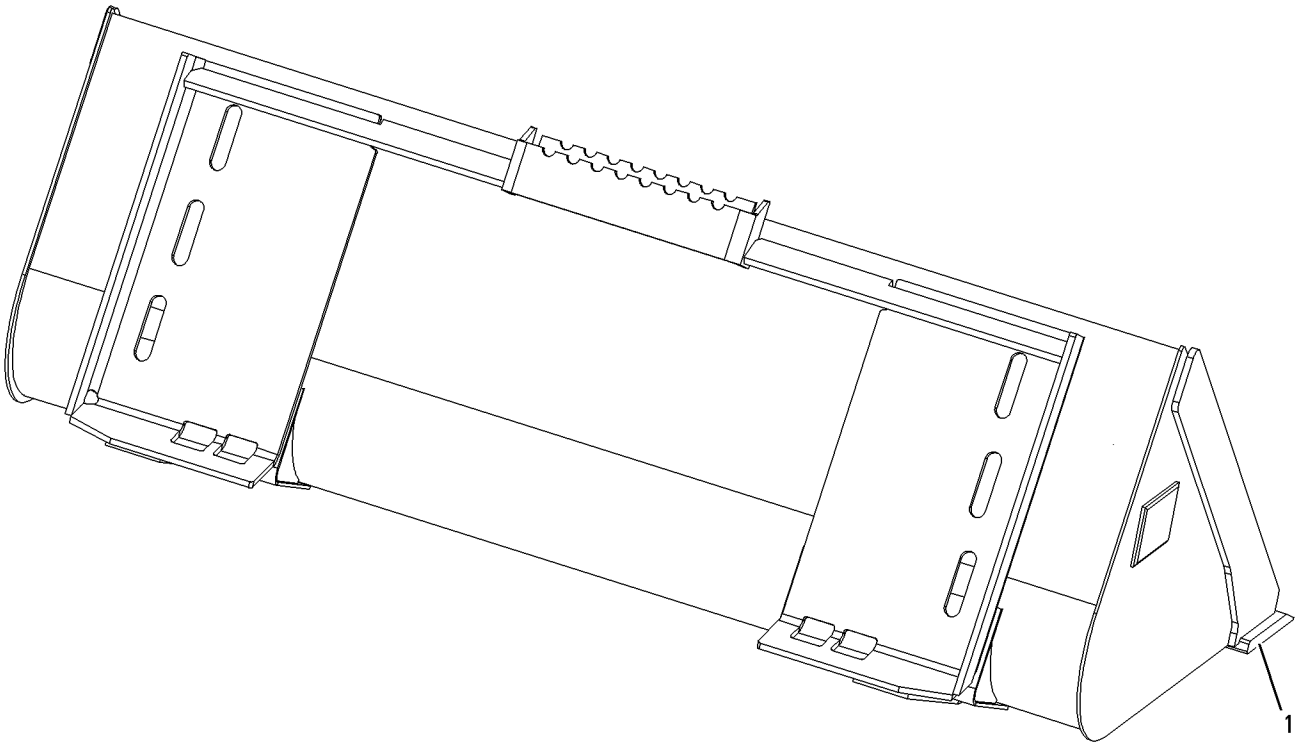

GRAPHIC #1 g00651070

WORK TOOLS

165-6156 BUCKET AS-DIRT

S/N: 4NZ3400-UP; 5FZ6700-UP
152.40CM (60 IN), 0.34CU M (0.44 CU YD)
PART OF 152-0231 BUCKET AR-DIRT
AN ATTACHMENT

SMCS-6001 **i01218130**

NOTE	REF NO	GRAPHIC REF	PART NUMBER	QTY	PART NAME 1 2 3 4 5 6 (PRODUCT LEVEL)	SEE PAGE
	1	1	**149-5435**	1	EDGE	

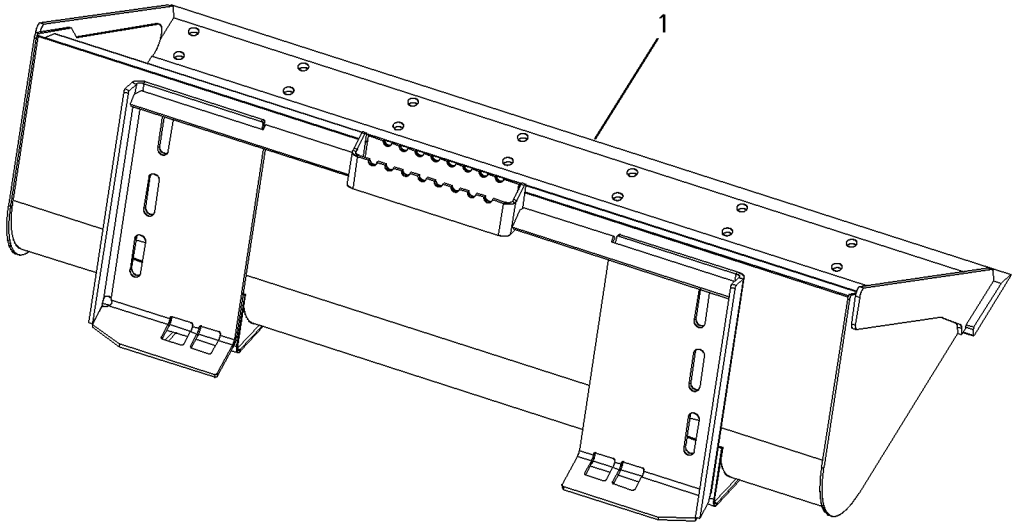

GRAPHIC #1 g00651083

WORK TOOLS

165-6152 BUCKET AS-GENERAL PURPOSE

S/N: 4NZ3400-UP; 5FZ6700-UP
152.40CM (60 IN), 0.36CU M (0.47 CU YD)
AN ATTACHMENT

SMCS-6101 **i01218144**

NOTE	REF NO	GRAPHIC REF	PART NUMBER	QTY	PART NAME 1 2 3 4 5 6 (PRODUCT LEVEL)	SEE PAGE
	1	1	**149-5435**	1	EDGE	

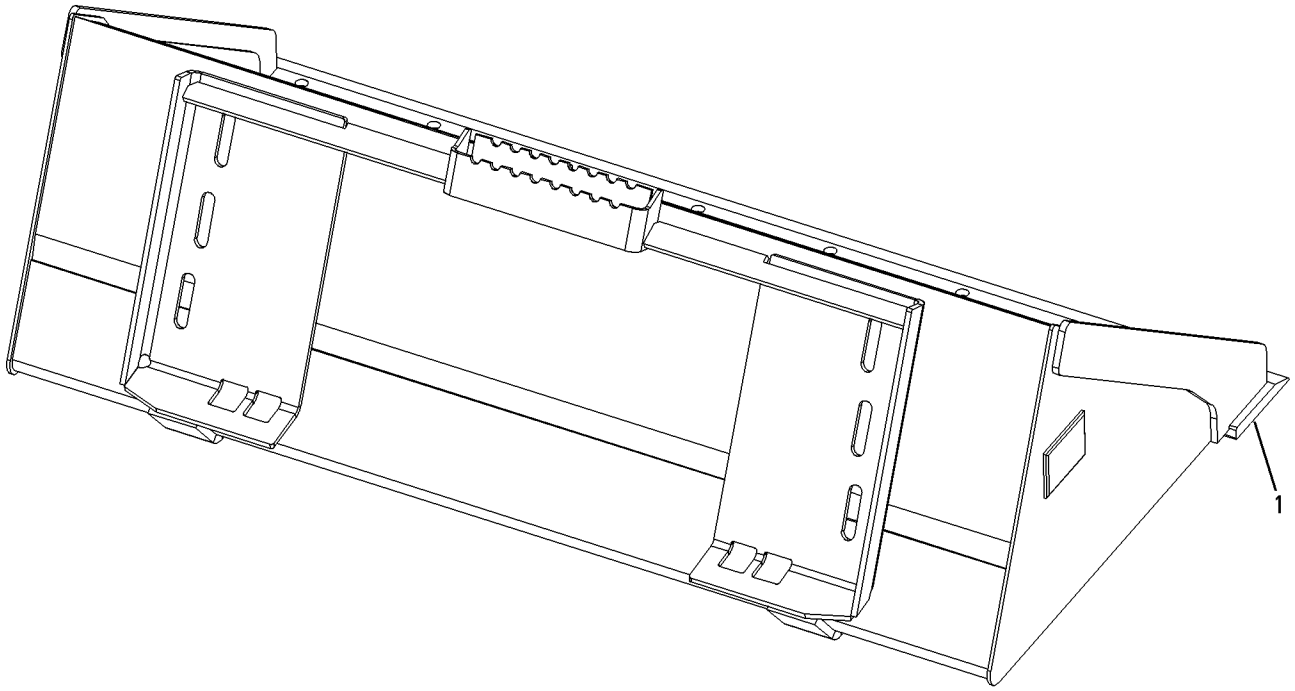

GRAPHIC #1 g00651101

WORK TOOLS

165-6153 BUCKET AS-GENERAL PURPOSE

S/N: 4NZ3400-UP; 5FZ6700-UP
167.64CM (66 IN), 0.40CU M (0.52 CU YD)
PART OF 152-0225, 152-0226 BUCKET AR-GENERAL PURPOSE
AN ATTACHMENT

SMCS-6101 **i01218153**

NOTE	REF NO	GRAPHIC REF	PART NUMBER	QTY	PART NAME 1 2 3 4 5 6 (PRODUCT LEVEL)	SEE PAGE
	1	1	**149-5436**	1	EDGE	

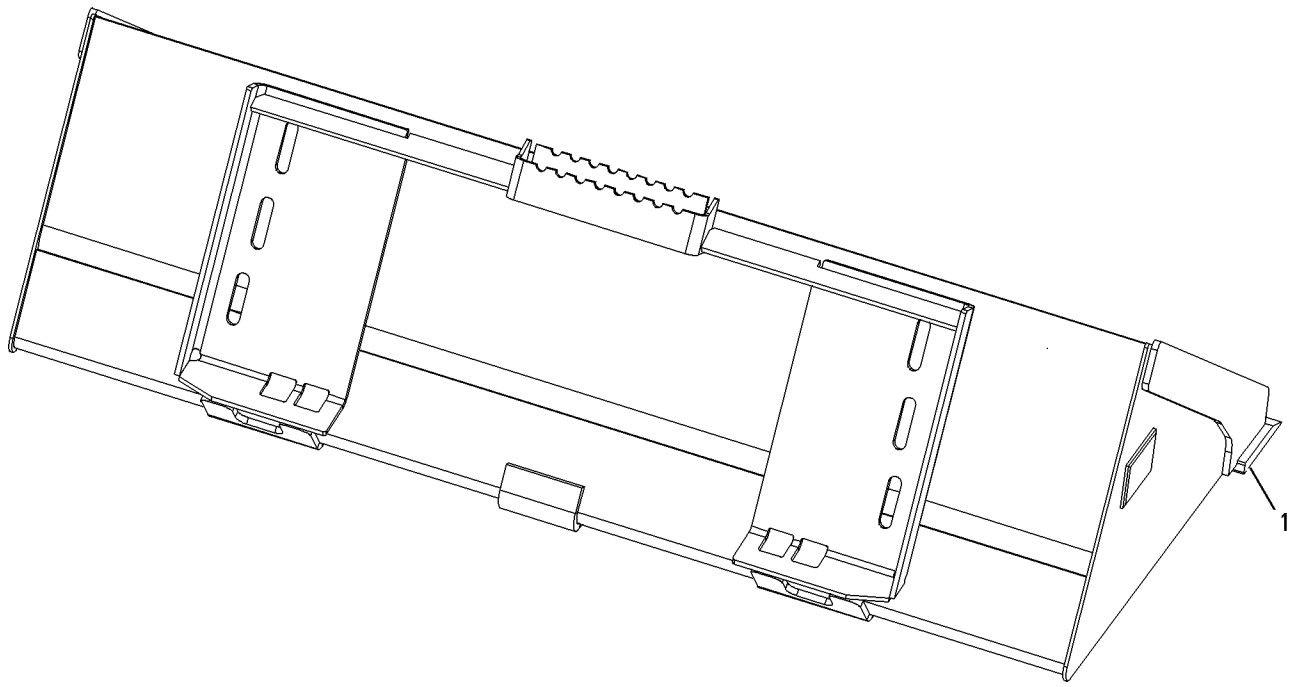

GRAPHIC #1 g00651107

164-7414 BUCKET AS-LIGHT MATERIAL

S/N: 4NZ3400-UP; 5FZ6700-UP
182.88CM (72 IN), 0.69CU M (0.90 CU YD)
AN ATTACHMENT

SMCS-6103 **i01376596**

NOTE	REF NO	GRAPHIC REF	PART NUMBER	QTY	PART NAME 1 2 3 4 5 6 (PRODUCT LEVEL)	SEE PAGE
	1	1	**149-5437**	1	EDGE	

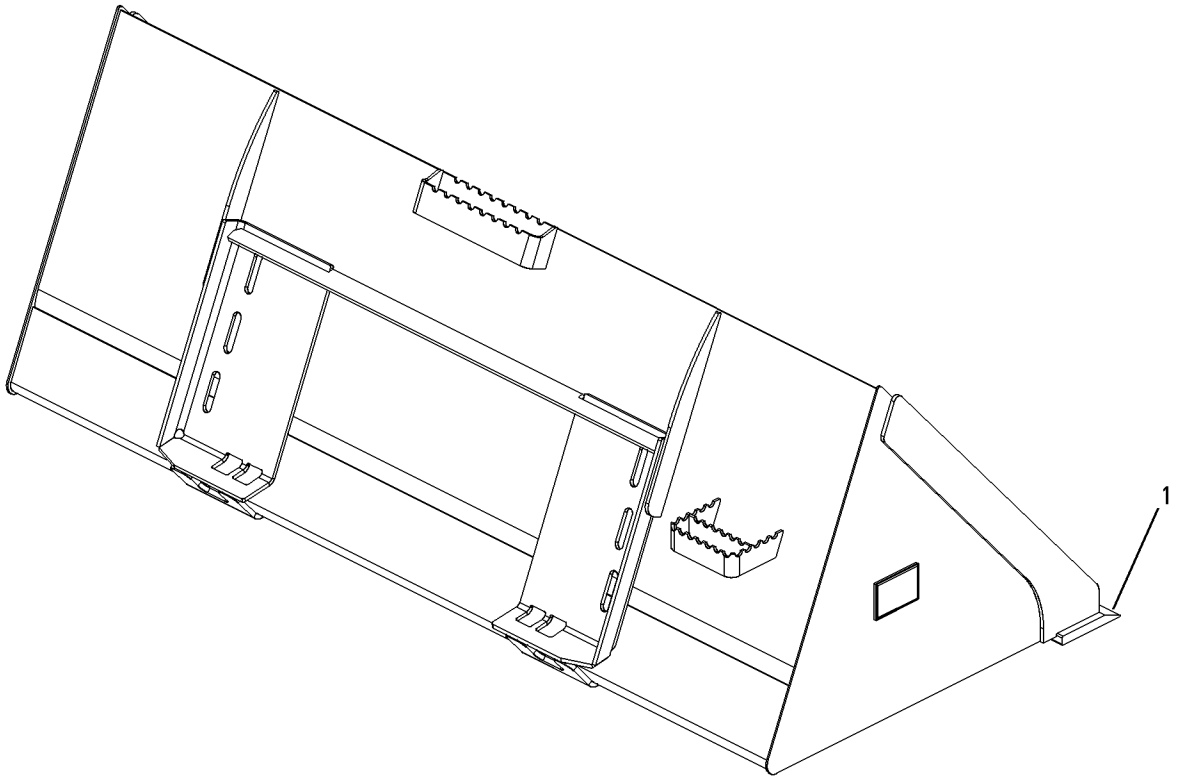

GRAPHIC #1 g00651119

WORK TOOLS

156-0884 BUCKET GP-GRAPPLE

S/N: 4NZ3400-UP; 5FZ6700-UP
152.4CM (60 IN). INDUSTRIAL
PART OF 157-7223 BUCKET AR-GRAPPLE
AN ATTACHMENT

SMCS-6704 **i01628741**

NOTE	REF NO	GRAPHIC REF	PART NUMBER	QTY	PART NAME 1 2 3 4 5 6 (PRODUCT LEVEL)	SEE PAGE
	1	1	**156-0890**	2	FORK AS (GRAPPLE)	
					(EACH INCLUDES)	
		1	**158-5648**	2	BEARING-SLEEVE	
	2	1	**157-0940**	4	PIN	
	3	1	**169-8941**	1	BUCKET AS-GRAPPLE	
		1	**8Y-4489**	2	BOSS	
		1	**149-5435**	1	EDGE	
	4	1	**3B-8489**	4	FITTING-GREASE (1/8-27 THD)	
M	5	1	**6V-9189**	4	LOCKNUT (M8X1.25 THD)	
M	6	1	**8T-6869**	4	BOLT (M8X1.25X60MM)	

M-METRIC PART

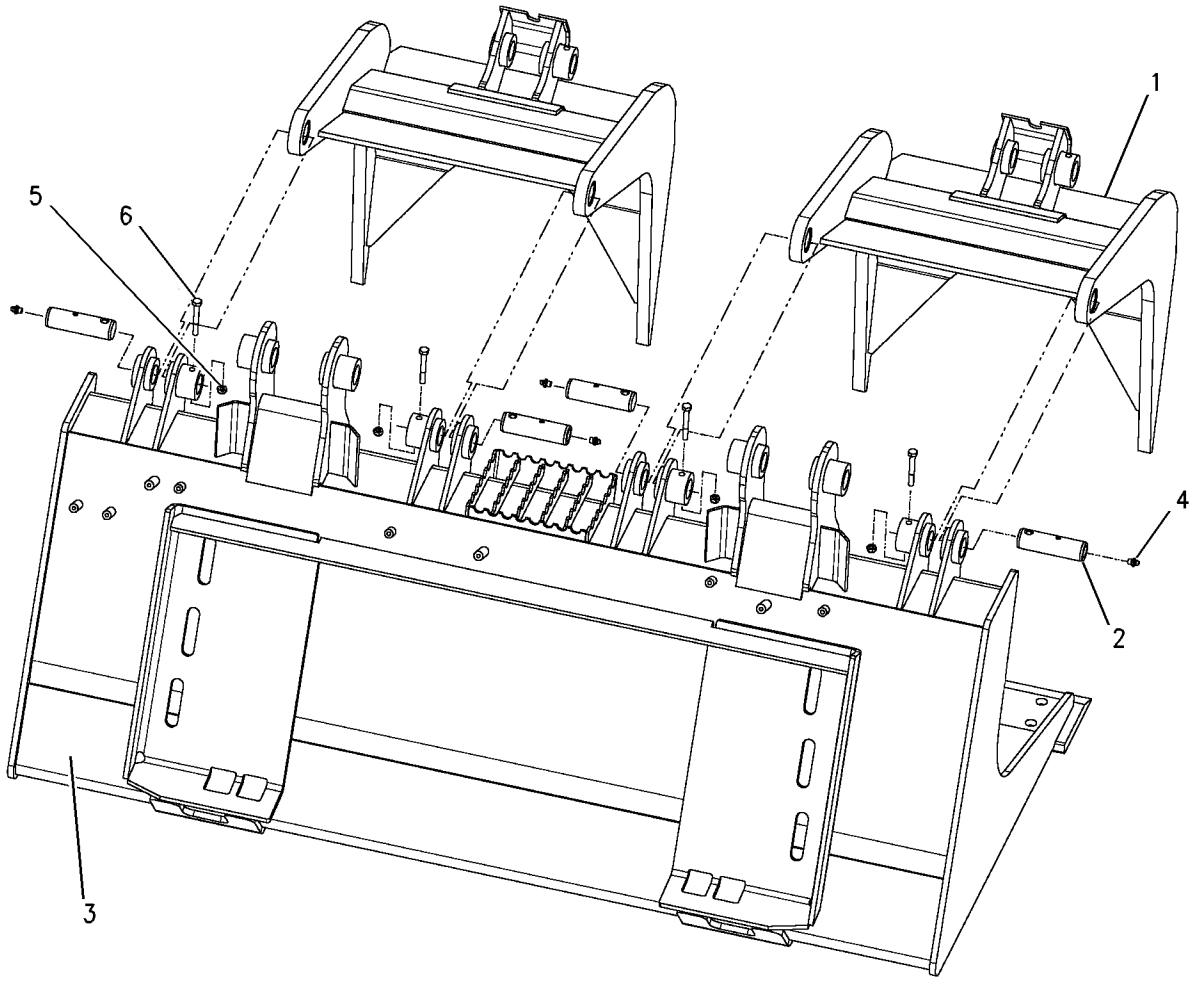

GRAPHIC #1 g00651138

156-0885 BUCKET GP-GRAPPLE

S/N: 4NZ3400-UP; 5FZ6700-UP
167.64CM (66 IN). INDUSTRIAL
PART OF 157-7224 BUCKET AR-GRAPPLE
AN ATTACHMENT

SMCS-6704 **i01628742**

NOTE	REF NO	GRAPHIC REF	PART NUMBER	QTY	PART NAME 1 2 3 4 5 6 (PRODUCT LEVEL)	SEE PAGE
	1	1	**156-0890**	2	FORK AS (GRAPPLE)	
					(EACH INCLUDES)	
		1	**158-5648**	2	BEARING-SLEEVE	
	2	1	**157-0940**	4	PIN	
	3	1	**169-8942**	1	BUCKET AS-GRAPPLE	
		1	**8Y-4489**	2	BOSS	
		1	**149-5436**	1	EDGE	
	4	1	**3B-8489**	4	FITTING-GREASE (1/8-27 THD)	
M	5	1	**6V-9189**	4	LOCKNUT (M8X1.25 THD)	
M	6	1	**8T-6869**	4	BOLT (M8X1.25X60MM)	

M-METRIC PART

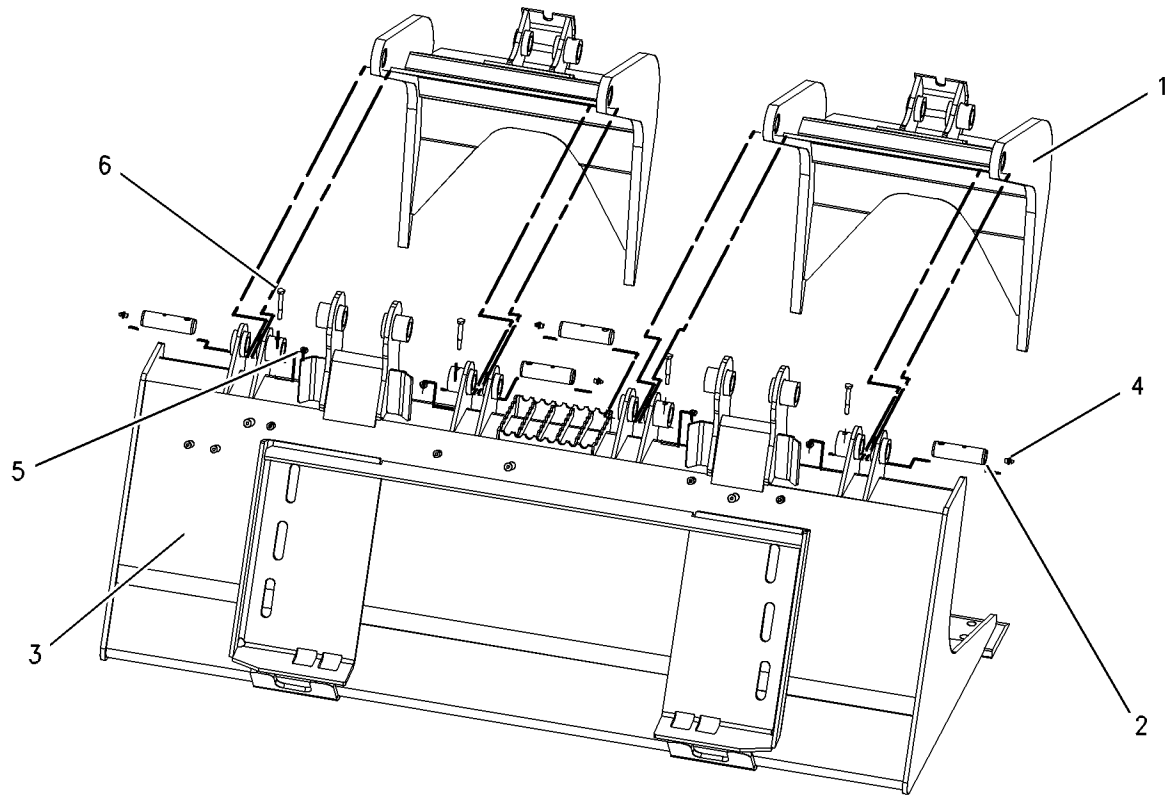

GRAPHIC #1 g00710591

154-5005 BUCKET GP-MULTIPURPOSE

S/N: 4NZ3400-UP; 5FZ6700-UP
152.40CM (60 IN), 0.30CU M (0.39 CU YD)
PART OF 154-5004 BUCKET AR-MULTIPURPOSE
AN ATTACHMENT

SMCS-6104 **i01628762**

NOTE	REF NO	GRAPHIC REF	PART NUMBER	QTY	PART NAME 1 2 3 4 5 6 (PRODUCT LEVEL)	SEE PAGE
	1	1	**149-4232**	1	CLAM AS	
	2	1	**142-8805**	4	BEARING-SLEEVE	
	3	1	**149-5435**	1	EDGE	
	4	1	**154-5012**	2	PIN	
	5	1	**159-5345**	1	BLADE GP	
	5A	1	**154-5037**	1	EDGE	
M	6	1	**6V-9189**	2	LOCKNUT (M8X1.25 THD)	
M	7	1	**8T-6869**	2	BOLT (M8X1.25X60MM)	
	8	1	**159-8038**	2	FILM-WARNING	
	9	1	**3B-8489**	2	FITTING-GREASE (1/8-27 THD)	

M-METRIC PART

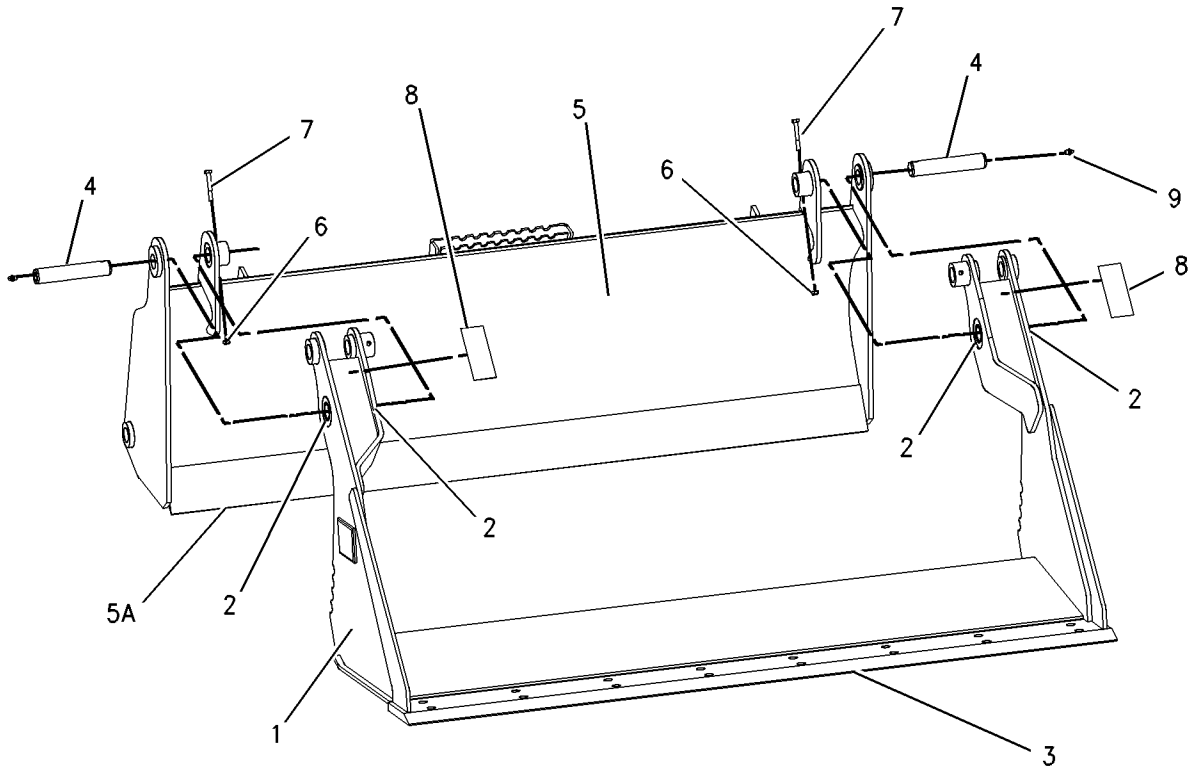

GRAPHIC #1 g00780644

154-5007 BUCKET GP-MULTIPURPOSE

S/N: 4NZ3400-UP; 5FZ6700-UP
167.64CM (66 IN), 0.34CU M (0.44 CU YD)
PART OF 154-5008 BUCKET AR-MULTIPURPOSE
AN ATTACHMENT

SMCS-6104 **i01628771**

NOTE	REF NO	GRAPHIC REF	PART NUMBER	QTY	PART NAME 1 2 3 4 5 6 (PRODUCT LEVEL)	SEE PAGE
	1	1	**154-5012**	1	PIN	
	2	1	**154-5053**	1	CLAM AS	
	3	1	**142-8805**	4	BEARING-SLEEVE	
	4	1	**149-5436**	1	EDGE	
	5	1	**159-5346**	1	BLADE GP	
	5A	1	**154-5059**	1	EDGE	
M	6	1	**6V-9189**	2	LOCKNUT (M8X1.25 THD)	
M	7	1	**8T-6869**	2	BOLT (M8X1.25X60MM)	
	8	1	**159-8038**	2	FILM-WARNING	
	9	1	**3B-8489**	2	FITTING-GREASE (1/8-27 THD)	

M-METRIC PART

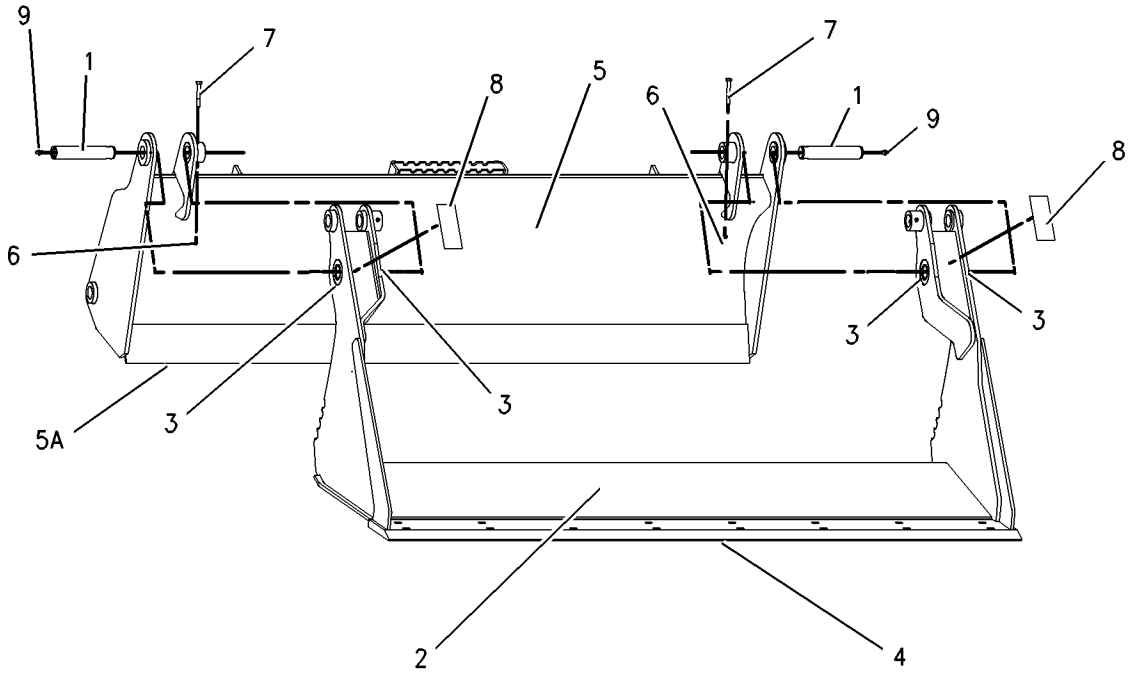

GRAPHIC #1 g00780675

165-8778 BUCKET GP-UTILITY

S/N: 4NZ3400-UP; 5FZ6700-UP
182.88CM (72 IN), 0.51CU M (0.66 CU YD)
PART OF 165-8780 BUCKET AR-GRAPPLE
AN ATTACHMENT

SMCS-6101 **i01345562**

NOTE	REF NO	GRAPHIC REF	PART NUMBER	QTY	PART NAME 1 2 3 4 5 6 (PRODUCT LEVEL)	SEE PAGE
	1	1	**165-8747**	1	BUCKET AS-UTILITY	
	2	1	**149-5437**	1	EDGE	
	3	1	**111-0483**	4	BOSS (M10X1.5MM)	
	4	1	*135-9386*	1	EDGE GP-CUTTING	
	5	1	**135-9396**	1	EDGE-CUTTING	
M	6	1	**8T-4778**	11	LOCKNUT (M16X2.00 THD)	
M	7	1	**159-2953**	11	SCREW-FLAT HEAD (M16X2.00 THD)	

M-METRIC PART

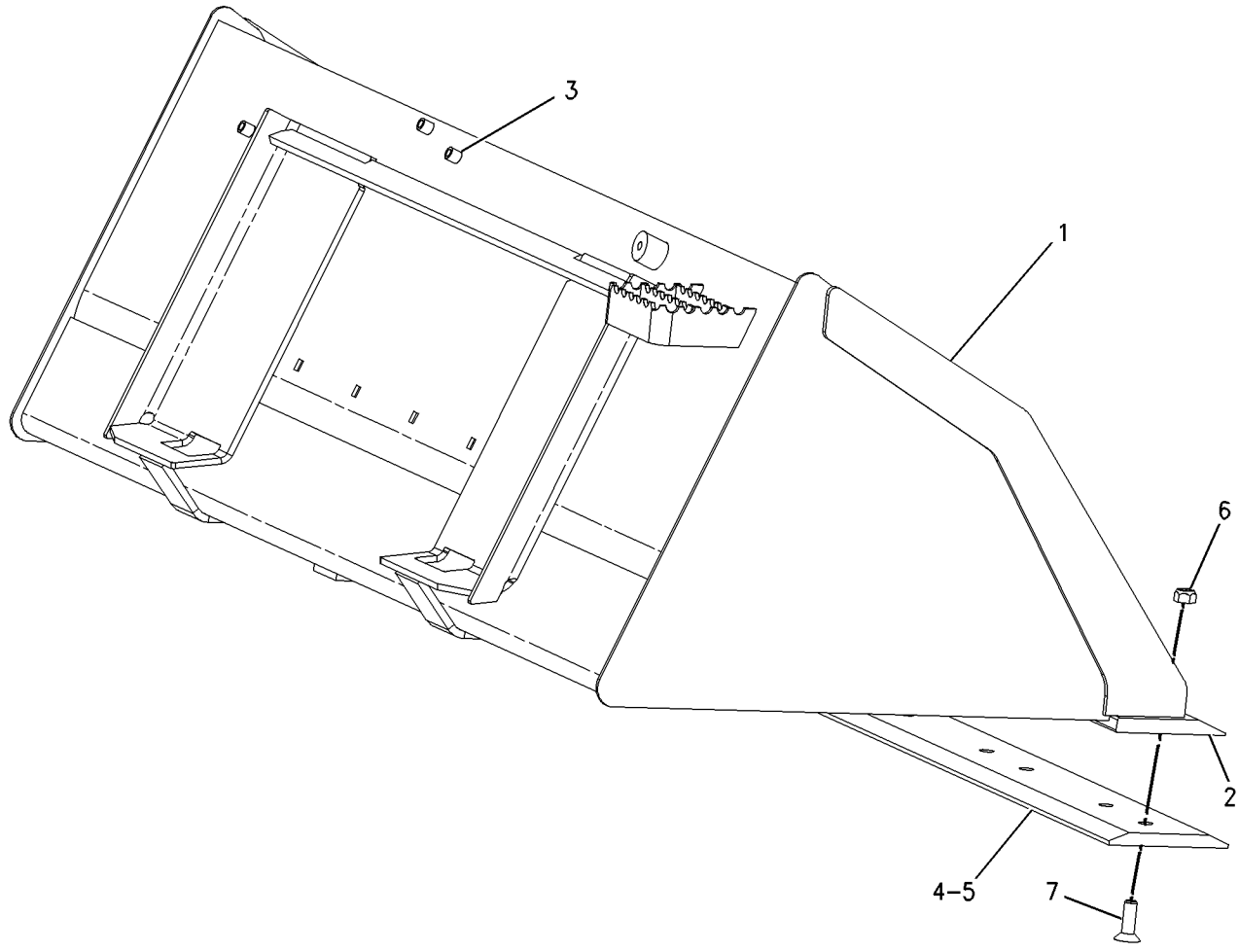

GRAPHIC #1 g00710617

165-8836 BUCKET GP-UTILITY

S/N: 4NZ3400-UP; 5FZ6700-UP
152.40CM (60 IN), 0.42CU M (0.55 CU YD)
AN ATTACHMENT

SMCS-6101 **i01345577**

NOTE	REF NO	GRAPHIC REF	PART NUMBER	QTY	PART NAME 1 2 3 4 5 6 (PRODUCT LEVEL)	SEE PAGE
	1	1	**165-8835**	1	BUCKET AS-UTILITY	
	2	1	**149-5435**	1	EDGE	
	3	1	**111-0483**	1	BOSS (M10X1.5MM)	
	4	1	*135-9384*	1	EDGE GP-CUTTING	
	5	1	**135-9394**	1	EDGE-CUTTING	
M	6	1	**8T-4778**	8	LOCKNUT (M16X2.00 THD)	
M	7	1	**159-2953**	8	SCREW-FLAT HEAD (M16X2.00 THD)	

M-METRIC PART

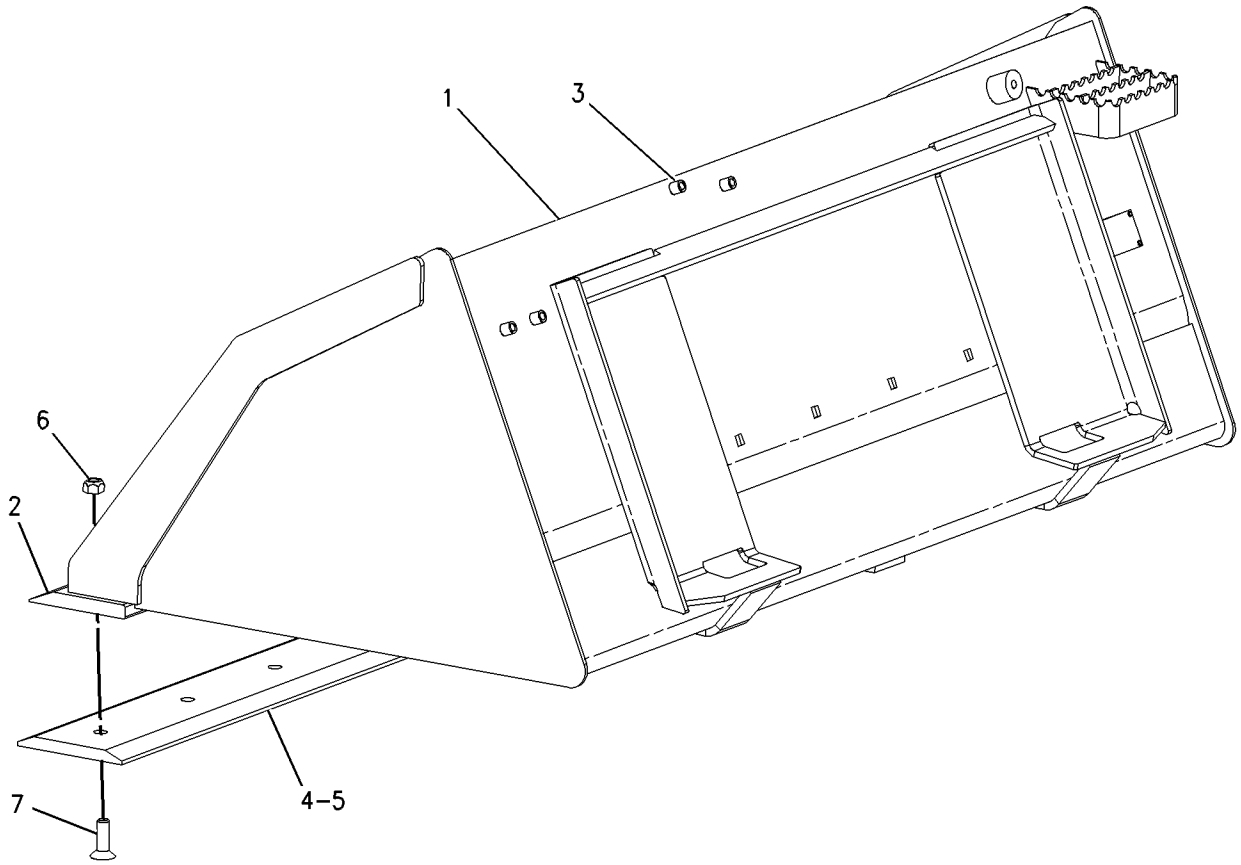

GRAPHIC #1 g00710625

WORK TOOLS

149-1411 CARRIAGE AS-FORK

S/N: 4NZ3400-UP; 5FZ6700-UP

AN ATTACHMENT

SMCS-6402 **i01492473**

NOTE	REF NO	GRAPHIC REF	PART NUMBER	QTY	PART NAME 1 2 3 4 5 6 (PRODUCT LEVEL)	SEE PAGE
					(NO SERVICED PARTS)	

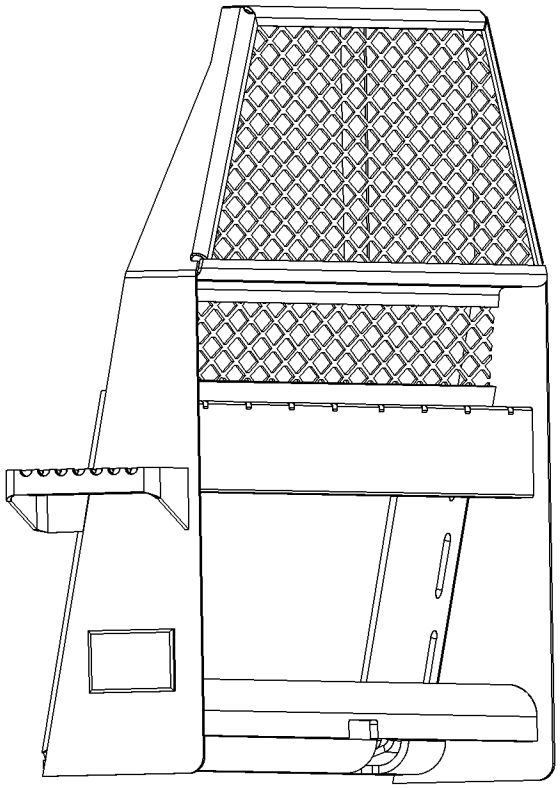

GRAPHIC #1 g00774902

WORK TOOLS

142-8780 COUPLER GP-QUICK

S/N: 4NZ3400-UP; 5FZ6700-UP

AN ATTACHMENT

SMCS-6129 **i01396858**

NOTE	REF NO	GRAPHIC REF	PART NUMBER	QTY	PART NAME 1 2 3 4 5 6 (PRODUCT LEVEL)	SEE PAGE
	1	1	**5B-0651**	2	FITTING-STRAIGHT (1/8-27X1.27IN)	
	2	1	**142-8776**	2	PIN	
	3	1	**142-8779**	1	COUPLER AS	
		1	**111-0483**	4	BOSS (M10X1.5MM)	
		1	**142-9081**	2	BOSS	
	4	1	**142-8783**	2	BLOCK	
	5	1	**142-8784**	2	BLOCK	
	6	1	**142-8786**	1	PLATE	
	7	1	**142-8787**	1	PLATE	
	8	1	**152-1164**	2	SPRING	
	9	1	**159-5797**	2	SPRING	
	10	1	**166-2560**	2	PIN-SPRING	
M	11	1	**095-0707**	2	BOLT (M16X2X120MM)	
	12	1	**131-5879**	2	WASHER (3MM THK)	
	13	1	**132-7551**	2	SPACER (6MM THK)	
M	14	1	**6V-7744**	2	LOCKNUT (M10X1.50 THD)	
M	15	1	**8T-4178**	2	BOLT (M10X1.5X90MM)	

M-METRIC PART

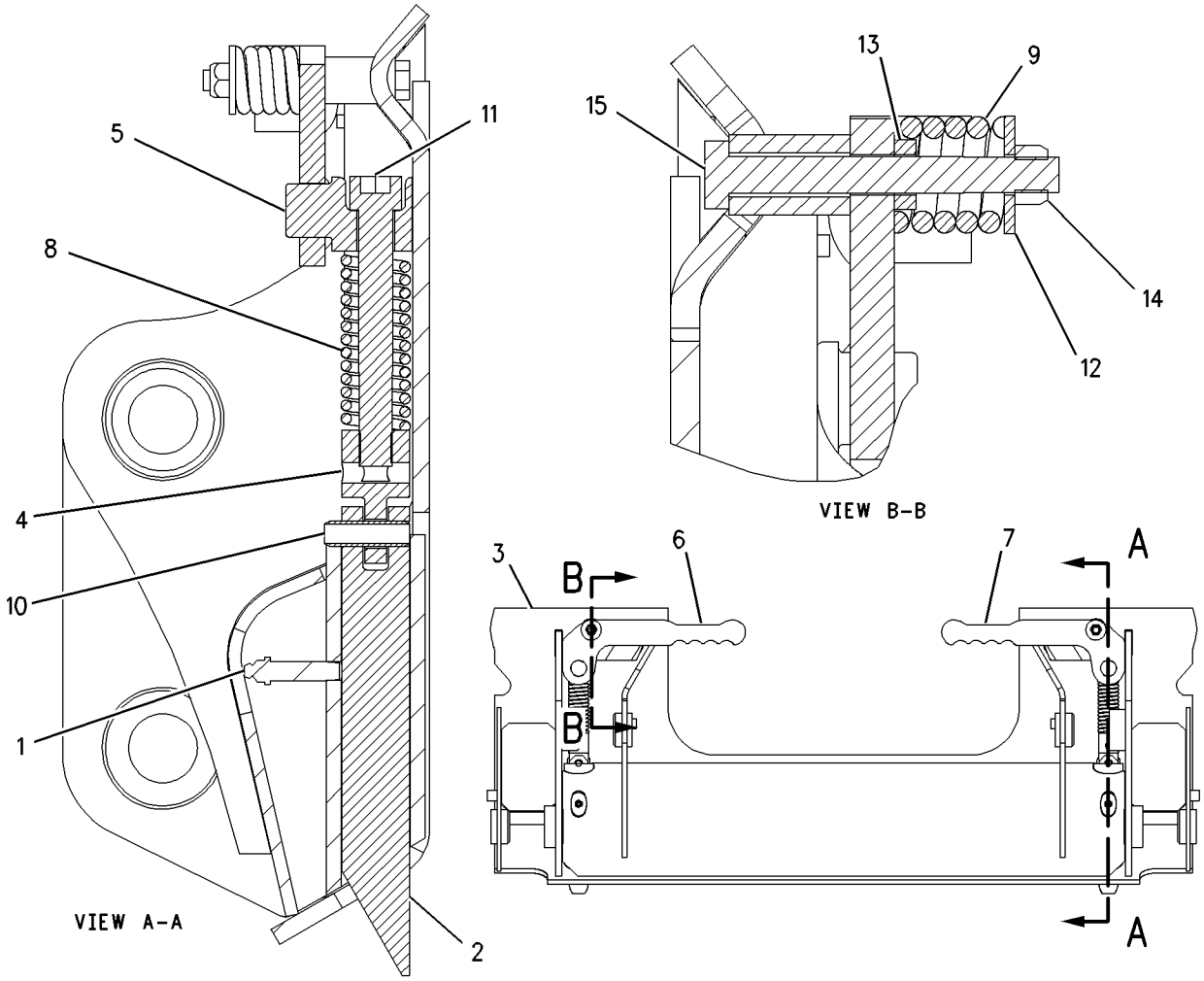

GRAPHIC #1 g00735750

206-3820 COUPLER GP-QUICK

S/N: CAB1-UP; CMB1-UP; 4NZ3400-UP; 5FZ6700-UP

AN ATTACHMENT

SMCS-6129 **i01709920**

NOTE	REF NO	GRAPHIC REF	PART NUMBER	QTY	PART NAME 1 2 3 4 5 6 (PRODUCT LEVEL)	SEE PAGE
	1	1	**159-5797**	2	SPRING	
	2	1	**206-3822**	1	COUPLER AS	
Y	3	1	**215-3960**	1	HANDLE & PIN GP-COUPLER	477
Y	4	1	**215-3961**	1	HANDLE & PIN GP-COUPLER	478
	5	1	**131-5879**	2	WASHER (3MM THK)	
	6	1	**132-7551**	2	SPACER (11X19X6MM THK)	
	7	1	**5B-0651**	2	FITTING-STRAIGHT (1/8-27X1.27IN)	
M	8	1	**6V-7744**	2	LOCKNUT (M10X1.5 THD)	
M	9	1	**7X-2621**	2	BOLT (M10X1.50X12MM)	
	10	1	**7X-7729**	4	WASHER (11X25X3MM THK)	
	11	1	**8T-4121**	6	WASHER-HARD (11X21X2.5MM THK)	
M	12	1	**8T-4172**	2	BOLT (M10X1.50X80MM)	
M	13	1	**8T-4196**	4	BOLT (M10X1.5X35MM)	

M-METRIC PART
Y-SEPARATE ILLUSTRATION

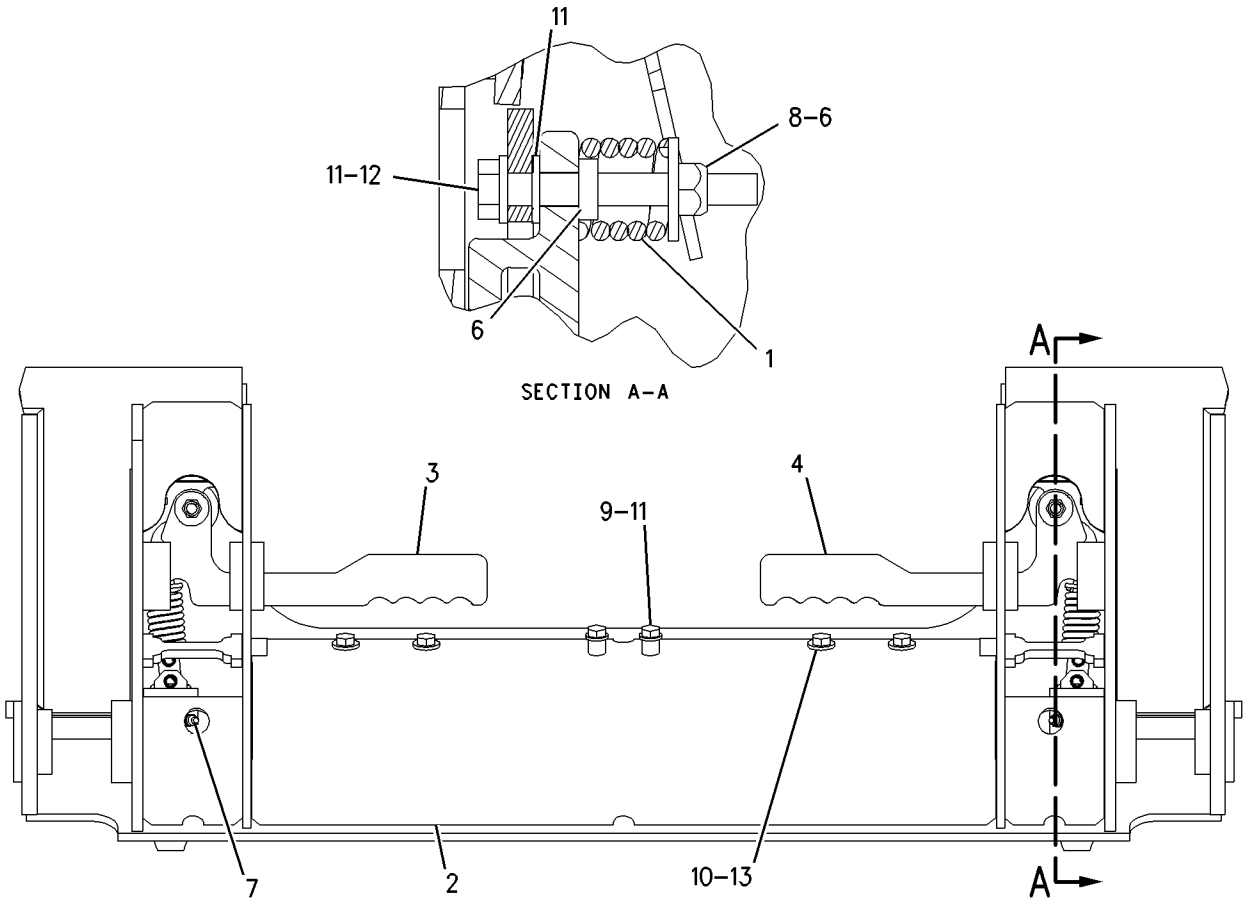

GRAPHIC #1 g00880113

162-5236 COVER GP-LINES

S/N: 4NZ3400-UP; 5FZ6700-UP
PART OF 154-5004, 154-5008 BUCKET AR-MULTIPURPOSE
AN ATTACHMENT

SMCS-5057 **i01227894**

NOTE	REF NO	GRAPHIC REF	PART NUMBER	QTY	PART NAME 1 2 3 4 5 6 (PRODUCT LEVEL)	SEE PAGE
	1	1	**161-4128**	1	PLATE	
M	2	1	**5C-9553**	5	BOLT (M6X1.0X16MM)	
	3	1	**9X-2026**	5	WASHER (1MM THK)	

M-METRIC PART

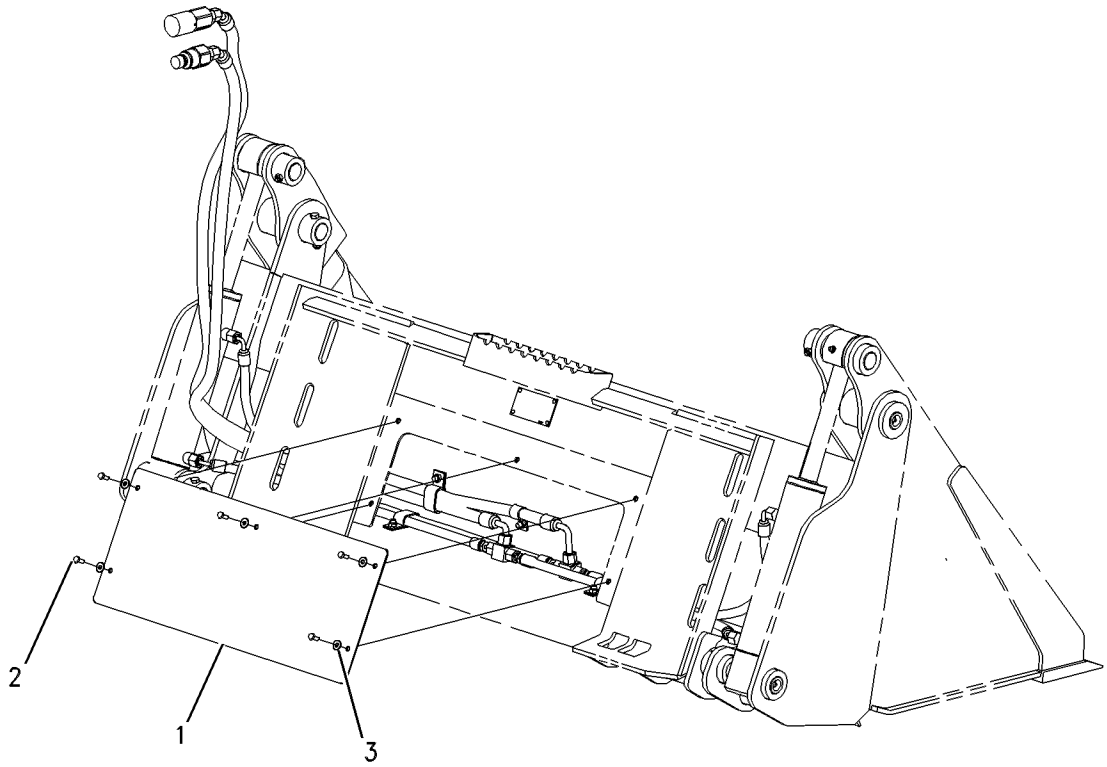

GRAPHIC #1 g00560360

WORK TOOLS

135-9384 EDGE GP-CUTTING

S/N: 4NZ3400-UP; 5FZ6700-UP
PART OF 152-0231 BUCKET AR-DIRT, 157-7226 BUCKET AR-GRAPPLE, 154-5045 BUCKET AR-MULTIPURPOSE
FOR USE WITH 152.40CM (60 IN) BUCKET
AN ATTACHMENT

SMCS-6801 **i01372033**

NOTE	REF NO	GRAPHIC REF	PART NUMBER	QTY	PART NAME 1 2 3 4 5 6 (PRODUCT LEVEL)	SEE PAGE
	1	1	**135-9394**	1	EDGE-CUTTING	
M	2	1	**8T-4778**	8	LOCKNUT (M16X2.00 THD)	
M	3	1	**159-2953**	8	SCREW-FLAT HEAD (M16X2.00 THD)	

M-METRIC PART

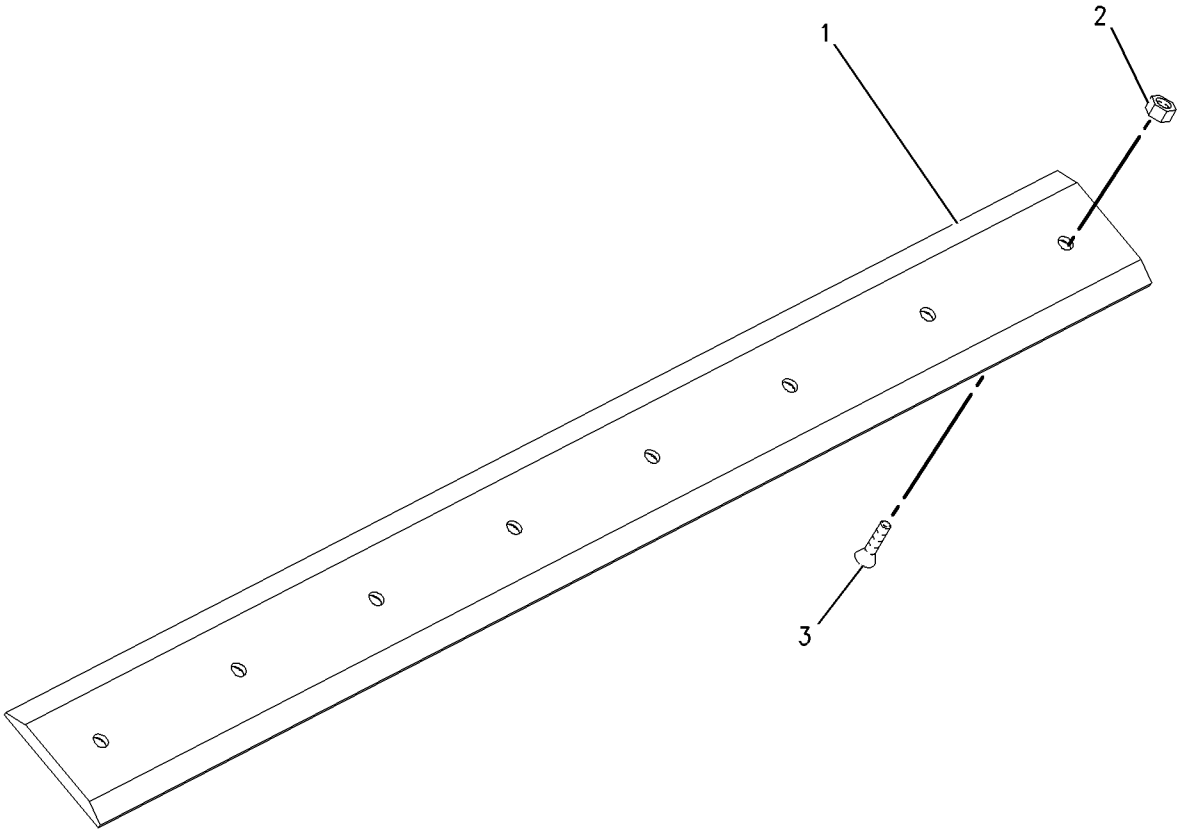

GRAPHIC #1 g00724087

135-9385 EDGE GP-CUTTING

S/N: 4NZ3400-UP; 5FZ6700-UP
PART OF 152-0226 BUCKET AR-GENERAL PURPOSE, 157-7227 BUCKET AR-GRAPPLE, 154-5047 BUCKET AR-MULTIPURPOSE
FOR USE WITH 167.64CM (66 IN) BUCKET
AN ATTACHMENT

SMCS-6801 **i01228508**

NOTE	REF NO	GRAPHIC REF	PART NUMBER	QTY	PART NAME 1 2 3 4 5 6 (PRODUCT LEVEL)	SEE PAGE
	1	1	**135-9395**	1	EDGE-CUTTING	
M	2	1	**8T-4778**	8	LOCKNUT (M16X2.00 THD)	
M	3	1	**159-2953**	8	SCREW-FLAT HEAD (M16X2.00 THD)	

M-METRIC PART

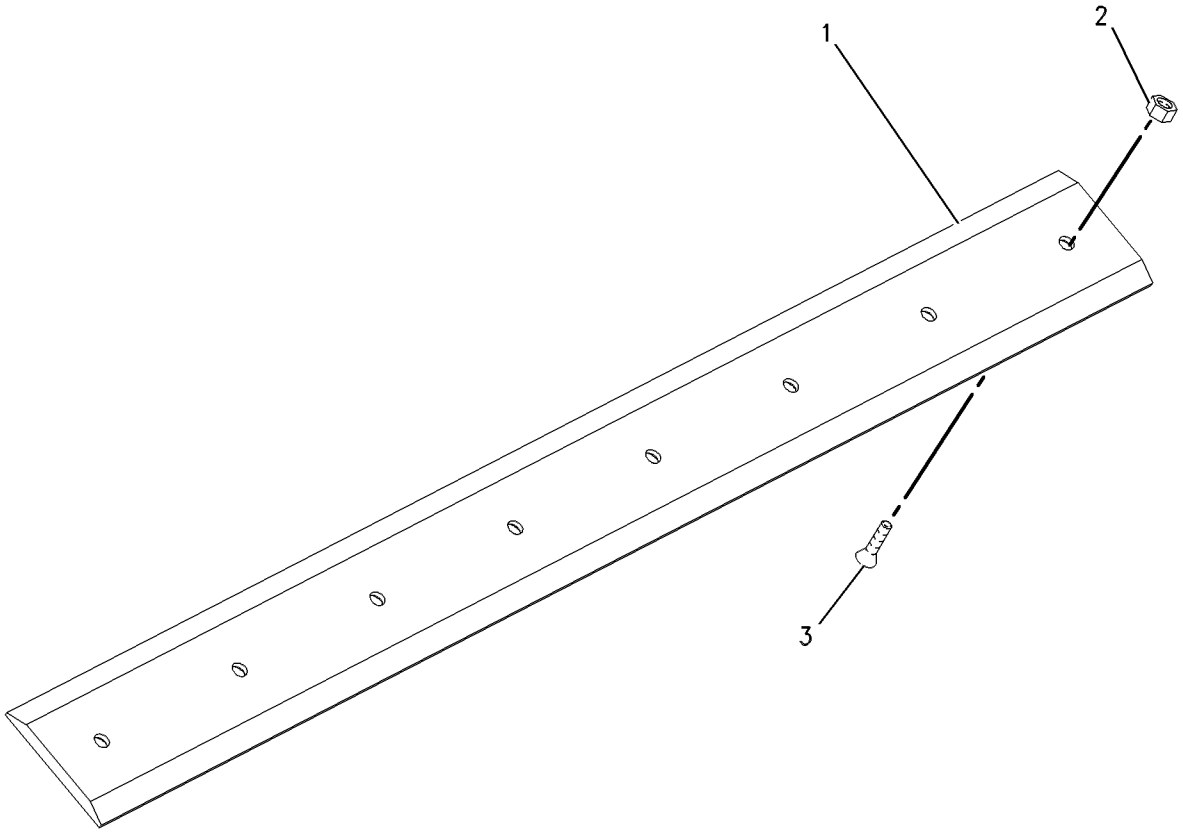

GRAPHIC #1 g00657004

WORK TOOLS

135-9386 EDGE GP-CUTTING

S/N: 4NZ3400-UP; 5FZ6700-UP
PART OF 177-1989 BLADE AR
FOR USE WITH 182.88CM (72 IN) BUCKET
AN ATTACHMENT

SMCS-6801 **i01372498**

NOTE	REF NO	GRAPHIC REF	PART NUMBER	QTY	PART NAME 1 2 3 4 5 6 (PRODUCT LEVEL)	SEE PAGE
	1	1	**135-9396**	1	EDGE-CUTTING	
M	2	1	**8T-4778**	11	LOCKNUT (M16X2.00 THD)	
M	3	1	**159-2953**	11	SCREW-FLAT HEAD (M16X2.00 THD)	

M-METRIC PART

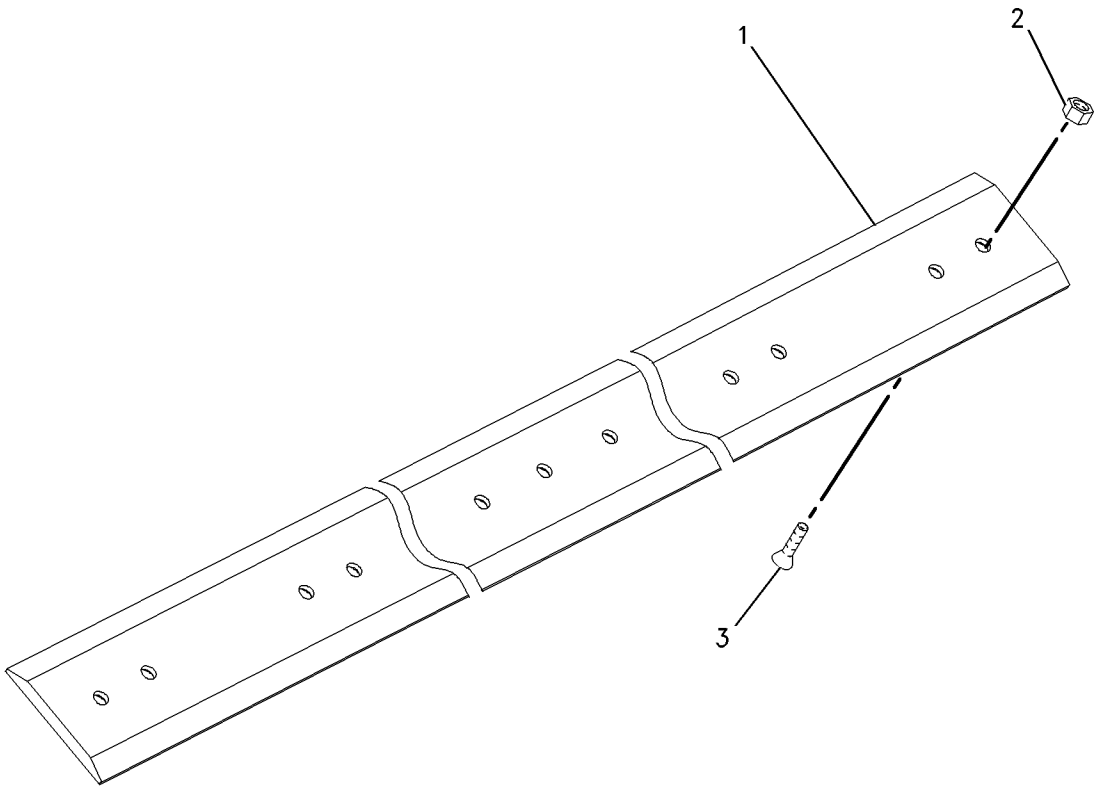

GRAPHIC #1 g00724435

164-7424 EDGE GP-CUTTING

S/N: 4NZ3400-UP; 5FZ6700-UP
182.88CM (72 IN). POLYETHYLENE
FOR USE WITH 177-1989—PAGE 425
AN ATTACHMENT

SMCS-6801 **i01423187**

NOTE	REF NO	GRAPHIC REF	PART NUMBER	QTY	PART NAME 1 2 3 4 5 6 (PRODUCT LEVEL)	SEE PAGE
	1	1	**165-7095**	6	WASHER	
	2	1	**165-8477**	1	EDGE AS (POLYETHYLENE)	
M	3	1	**8T-4140**	6	BOLT (M16X2X60MM)	
M	4	1	**8T-4778**	6	LOCKNUT (M16X2.00 THD)	

M-METRIC PART

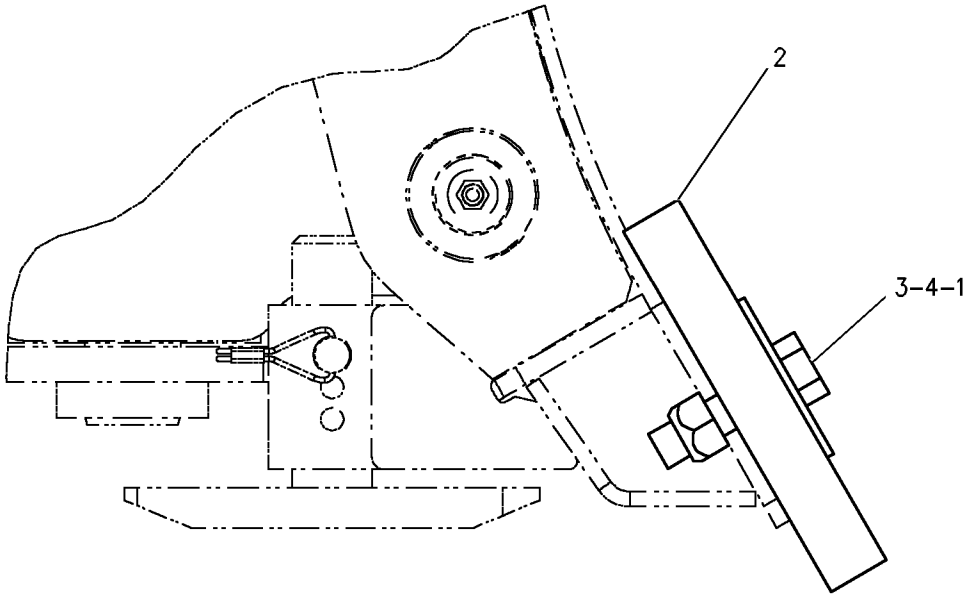

GRAPHIC #1 g00745708

WORK TOOLS

174-7985 EDGE GP-CUTTING

S/N: 4NZ3400-UP; 5FZ6700-UP
16MM CUTTING EDGE
FOR USE WITH 137.2CM (54 IN) BUCKET
FIELD INSTALLATION

SMCS-6801 **i01624372**

NOTE	PART NUMBER	QTY	PART NAME 1 2 3 4 5 6 (PRODUCT LEVEL)	SEE PAGE
	4F-3654	6	BOLT-PLOW	
	174-7965	1	EDGE-CUTTING	
	4K-0367	6	NUT-FULL (5/8-11 THD)	

<END>

174-7986 EDGE GP-CUTTING

S/N: 4NZ3400-UP; 5FZ6700-UP
16MM CUTTING EDGE
FOR USE WITH 152.40CM (60 IN) BUCKET
FIELD INSTALLATION

SMCS-6801 **i01624382**

NOTE	PART NUMBER	QTY	PART NAME 1 2 3 4 5 6 (PRODUCT LEVEL)	SEE PAGE
	4F-3654	8	BOLT-PLOW	
	174-7966	1	EDGE-CUTTING	
	4K-0367	8	NUT-FULL (5/8-11 THD)	

<END>

174-7987 EDGE GP-CUTTING

S/N: 4NZ3400-UP; 5FZ6700-UP
16MM CUTTING EDGE
FOR USE WITH 152.40CM (60 IN) BUCKET
FIELD INSTALLATION

SMCS-6801 **i01624722**

NOTE	PART NUMBER	QTY	PART NAME 1 2 3 4 5 6 (PRODUCT LEVEL)	SEE PAGE
	4F-3654	8	BOLT-PLOW	
	174-7967	1	EDGE-CUTTING	
	4K-0367	8	NUT-FULL (5/8-11 THD)	

<END>

174-7988 EDGE GP-CUTTING

S/N: 4NZ3400-UP; 5FZ6700-UP
16MM CUTTING EDGE
FOR USE WITH 182.88CM (72 IN) BUCKET
FIELD INSTALLATION

SMCS-6801 **i01624725**

NOTE	PART NUMBER	QTY	PART NAME 1 2 3 4 5 6 (PRODUCT LEVEL)	SEE PAGE
	4F-3654	11	BOLT-PLOW	
	174-7968	1	EDGE-CUTTING	
	4K-0367	11	NUT-FULL (5/8-11 THD)	

<END>

174-7989 EDGE GP-CUTTING

S/N: 4NZ3400-UP; 5FZ6700-UP
16MM CUTTING EDGE
FOR USE WITH 198.12CM (78 IN) BUCKET
FIELD INSTALLATION

SMCS-6801 **i01624728**

NOTE	PART NUMBER	QTY	PART NAME 1 2 3 4 5 6 (PRODUCT LEVEL)	SEE PAGE
	4F-3654	11	BOLT-PLOW	
	174-7969	1	EDGE-CUTTING	
	4K-0367	11	NUT-FULL (5/8-11 THD)	

<END>

174-7990 EDGE GP-CUTTING

S/N: 4NZ3400-UP; 5FZ6700-UP
16MM CUTTING EDGE
FOR USE WITH 215.90CM (85 IN) BUCKET
FIELD INSTALLATION

SMCS-6801 **i01624818**

NOTE	PART NUMBER	QTY	PART NAME 1 2 3 4 5 6 (PRODUCT LEVEL)	SEE PAGE
	4F-3654	7	BOLT-PLOW	
	174-7970	1	EDGE-CUTTING	
	4K-0367	7	NUT-FULL (5/8-11 THD)	

<END>

WORK TOOLS

174-7991 EDGE GP-CUTTING

S/N: 4NZ3400-UP; 5FZ6700-UP
19MM CUTTING EDGE
FOR USE WITH 137.2CM (54 IN) BUCKET
FIELD INSTALLATION

SMCS-6801 **i01624832**

NOTE	PART NUMBER	QTY	PART NAME 1 2 3 4 5 6 (PRODUCT LEVEL)	SEE PAGE
	4F-3654	6	BOLT-PLOW	
	174-7971	1	EDGE-CUTTING	
	4K-0367	6	NUT-FULL (5/8-11 THD)	

<END>

174-7992 EDGE GP-CUTTING

S/N: 4NZ3400-UP; 5FZ6700-UP
19MM CUTTING EDGE
FOR USE WITH 152.40CM (60 IN) BUCKET
FIELD INSTALLATION

SMCS-6801 **i01624838**

NOTE	PART NUMBER	QTY	PART NAME 1 2 3 4 5 6 (PRODUCT LEVEL)	SEE PAGE
	4F-3654	8	BOLT-PLOW	
	174-7972	1	EDGE-CUTTING	
	4K-0367	8	NUT-FULL (5/8-11 THD)	

<END>

174-7993 EDGE GP-CUTTING

S/N: 4NZ3400-UP; 5FZ6700-UP
19MM CUTTING EDGE
FOR USE WITH 167.64CM (66 IN) BUCKET
FIELD INSTALLATION

SMCS-6801 **i01624841**

NOTE	PART NUMBER	QTY	PART NAME 1 2 3 4 5 6 (PRODUCT LEVEL)	SEE PAGE
	4F-3654	8	BOLT-PLOW	
	174-7973	1	EDGE-CUTTING	
	4K-0367	8	NUT-FULL (5/8-11 THD)	

<END>

174-7994 EDGE GP-CUTTING

S/N: 4NZ3400-UP; 5FZ6700-UP
19MM CUTTING EDGE
FOR USE WITH 182.88CM (72 IN) BUCKET
FIELD INSTALLATION

SMCS-6801 **i01624935**

NOTE	PART NUMBER	QTY	PART NAME 1 2 3 4 5 6 (PRODUCT LEVEL)	SEE PAGE
	4F-3654	11	BOLT-PLOW	
	174-7974	1	EDGE-CUTTING	
	4K-0367	11	NUT-FULL (5/8-11 THD)	

<END>

174-7995 EDGE GP-CUTTING

S/N: 4NZ3400-UP; 5FZ6700-UP
19MM CUTTING EDGE
FOR USE WITH 198.12CM (78 IN) BUCKET
FIELD INSTALLATION

SMCS-6801 **i01624945**

NOTE	PART NUMBER	QTY	PART NAME 1 2 3 4 5 6 (PRODUCT LEVEL)	SEE PAGE
	4F-3654	11	BOLT-PLOW	
	174-7975	1	EDGE-CUTTING	
	4K-0367	11	NUT-FULL (5/8-11 THD)	

<END>

174-7996 EDGE GP-CUTTING

S/N: 4NZ3400-UP; 5FZ6700-UP
19MM CUTTING EDGE
FOR USE WITH 215.90CM (85 IN) BUCKET
FIELD INSTALLATION

SMCS-6801 **i01624976**

NOTE	PART NUMBER	QTY	PART NAME 1 2 3 4 5 6 (PRODUCT LEVEL)	SEE PAGE
	4F-3654	7	BOLT-PLOW	
	174-7976	1	EDGE-CUTTING	
	4K-0367	7	NUT-FULL (5/8-11 THD)	

<END>

162-8139 FORK AR-GRAPPLE

S/N: 4NZ3400-UP; 5FZ6700-UP
INDUSTRIAL
AN ATTACHMENT

SMCS-6705 **i01520325**

NOTE	PART NUMBER	QTY	PART NAME 1 2 3 4 5 6 (PRODUCT LEVEL)	SEE PAGE
Y	*156-0891*	1	CYLINDER & MTG GP-GRAPPLE	301
Y	**156-5512**	2	CYLINDER GP-GRAPPLE	305
Y	*162-8140*	1	FORK GP-GRAPPLE	465
Y	*164-9614*	9	FORK GP-GRAPPLE	467
Y	*161-0187*	1	LINES GP-GRAPPLE	322

Y-SEPARATE ILLUSTRATION

<END>

163-4812 FORK AR-GRAPPLE

S/N: 4NZ3400-UP; 5FZ6700-UP
INDUSTRIAL
AN ATTACHMENT

SMCS-6705 **i01520322**

NOTE	PART NUMBER	QTY	PART NAME 1 2 3 4 5 6 (PRODUCT LEVEL)	SEE PAGE
Y	*156-0891*	1	CYLINDER & MTG GP-GRAPPLE	301
Y	**156-5512**	2	CYLINDER GP-GRAPPLE	305
Y	*163-4811*	1	FORK GP-GRAPPLE	466
Y	*164-9614*	11	FORK GP-GRAPPLE	467
Y	*161-0187*	1	LINES GP-GRAPPLE	322

Y-SEPARATE ILLUSTRATION

<END>

165-8727 FORK AR-GRAPPLE

S/N: 4NZ3400-UP; 5FZ6700-UP
167.64CM (66 IN). UTILITY
AN ATTACHMENT

SMCS-6705 **i01629852**

NOTE	PART NUMBER	QTY	PART NAME 1 2 3 4 5 6 (PRODUCT LEVEL)	SEE PAGE
Y	**165-8736**	1	FORK GP-UTILITY	472
Y	**165-8734**	1	GRAPPLE GP-UTILITY	474

Y-SEPARATE ILLUSTRATION

<END>

WORK TOOLS

165-8728 FORK AR-GRAPPLE

S/N: 4NZ3400-UP; 5FZ6700-UP
85.0CM (33.49 IN). UTILITY
AN ATTACHMENT

SMCS-6705 **i01629996**

NOTE	PART NUMBER	QTY	PART NAME 1 2 3 4 5 6 (PRODUCT LEVEL)	SEE PAGE
Y	**165-8737**	1	FORK GP-UTILITY	473
Y	**165-8734**	1	GRAPPLE GP-UTILITY	474

Y-SEPARATE ILLUSTRATION

<END>

WORK TOOLS

162-8140 FORK GP-GRAPPLE

S/N: 4NZ3400-UP; 5FZ6700-UP
INDUSTRIAL
PART OF 162-8139 FORK AR-GRAPPLE
AN ATTACHMENT

SMCS-6705 **i01218738**

NOTE	REF NO	GRAPHIC REF	PART NUMBER	QTY	PART NAME 1 2 3 4 5 6 (PRODUCT LEVEL)	SEE PAGE
	1	1	**156-0890**	2	FORK AS (GRAPPLE)	
					(EACH AS INCLUDES)	
		1	**158-5648**	2	BEARING-SLEEVE	
	2	1	**157-0940**	4	PIN	
	3	1	**164-9989**	2	FILM-WARNING (IMPALED POINT)	
	4	1	**169-3567**	1	FORK AS	
	5	1	**3B-8489**	4	FITTING-GREASE (1/8-27 THD)	
M	6	1	**6V-9189**	4	LOCKNUT (M8X1.25 THD)	
M	7	1	**8T-6869**	4	BOLT (M8X1.25X60MM)	

M-METRIC PART

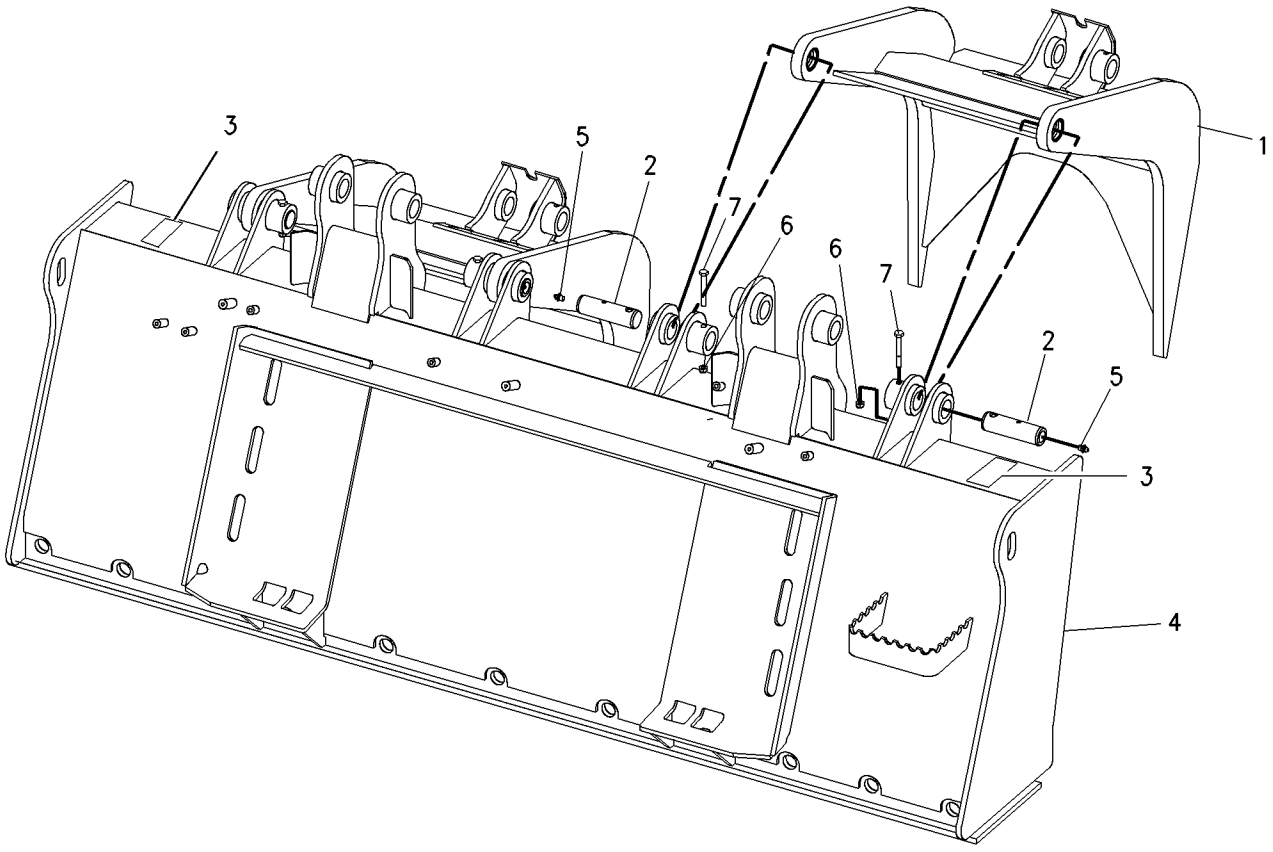

GRAPHIC #1 g00651449

163-4811 FORK GP-GRAPPLE

S/N: 4NZ3400-UP; 5FZ6700-UP
INDUSTRIAL
PART OF 163-4812 FORK AR-GRAPPLE
AN ATTACHMENT

SMCS-6705 **i01630026**

NOTE	REF NO	GRAPHIC REF	PART NUMBER	QTY	PART NAME 1 2 3 4 5 6 (PRODUCT LEVEL)	SEE PAGE
	1	1	**156-0890**	2	FORK AS (GRAPPLE)	
					(EACH AS INCLUDES)	
		1	**158-5648**	2	BEARING-SLEEVE	
	2	1	**157-0940**	4	PIN	
	3	1	**164-9989**	2	FILM-WARNING (IMPALED POINT)	
	4	1	**169-3568**	1	FORK AS	
		1	**8Y-4489**	2	BOSS	
	5	1	**3B-8489**	4	FITTING-GREASE (1/8-27 THD)	
M	6	1	**6V-9189**	4	LOCKNUT (M8X1.25 THD)	
M	7	1	**8T-6869**	4	BOLT (M8X1.25X60MM)	

M-METRIC PART

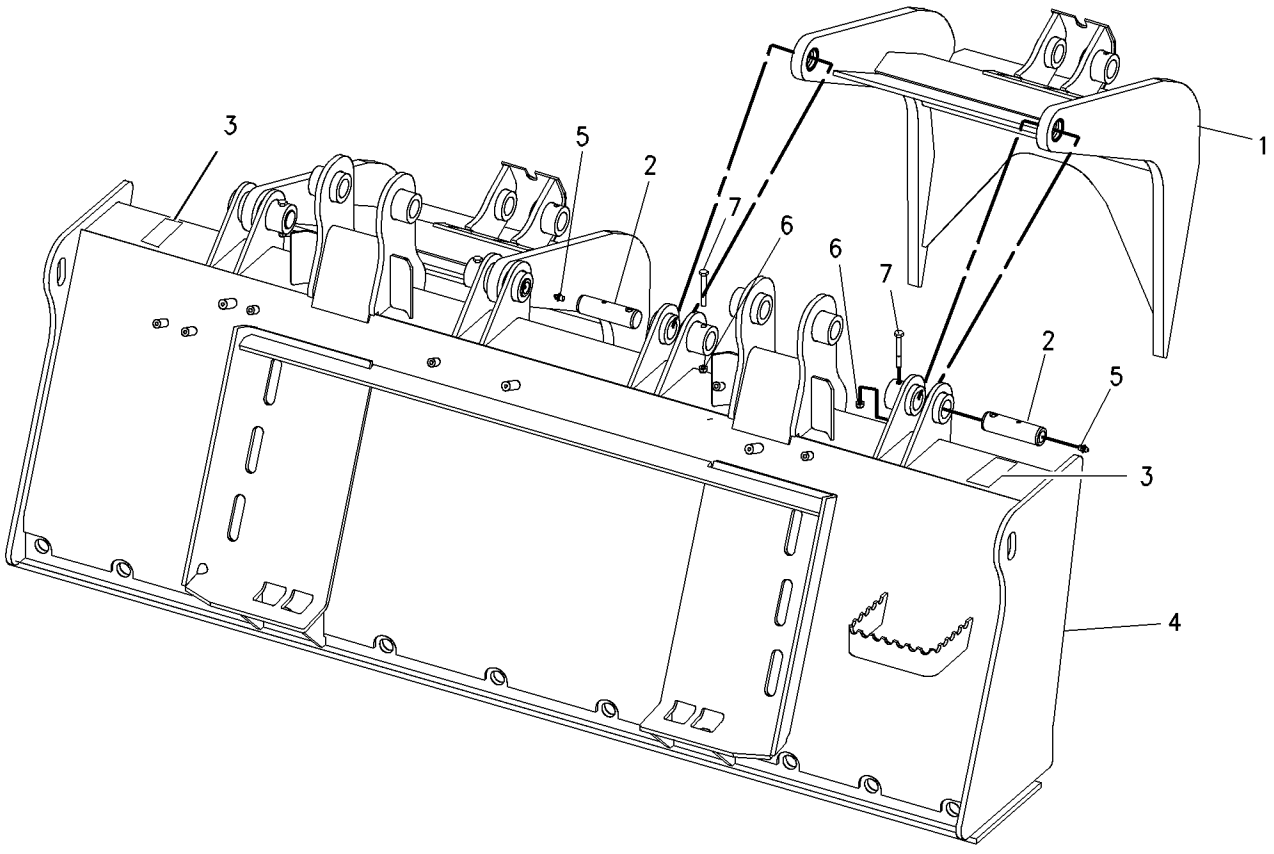

GRAPHIC #1 g00651449

WORK TOOLS

164-9614 FORK GP-GRAPPLE

S/N: 4NZ3400-UP; 5FZ6700-UP
INDUSTRIAL
PART OF 162-8139, 163-4812 FORK AR-GRAPPLE
AN ATTACHMENT

SMCS-6705 **i01075196**

NOTE	REF NO	GRAPHIC REF	PART NUMBER	QTY	PART NAME 1 2 3 4 5 6 (PRODUCT LEVEL)	SEE PAGE
	1	1	**3E-4370**	1	PIN-SPRING	
	2	1	**162-8154**	1	TINE	

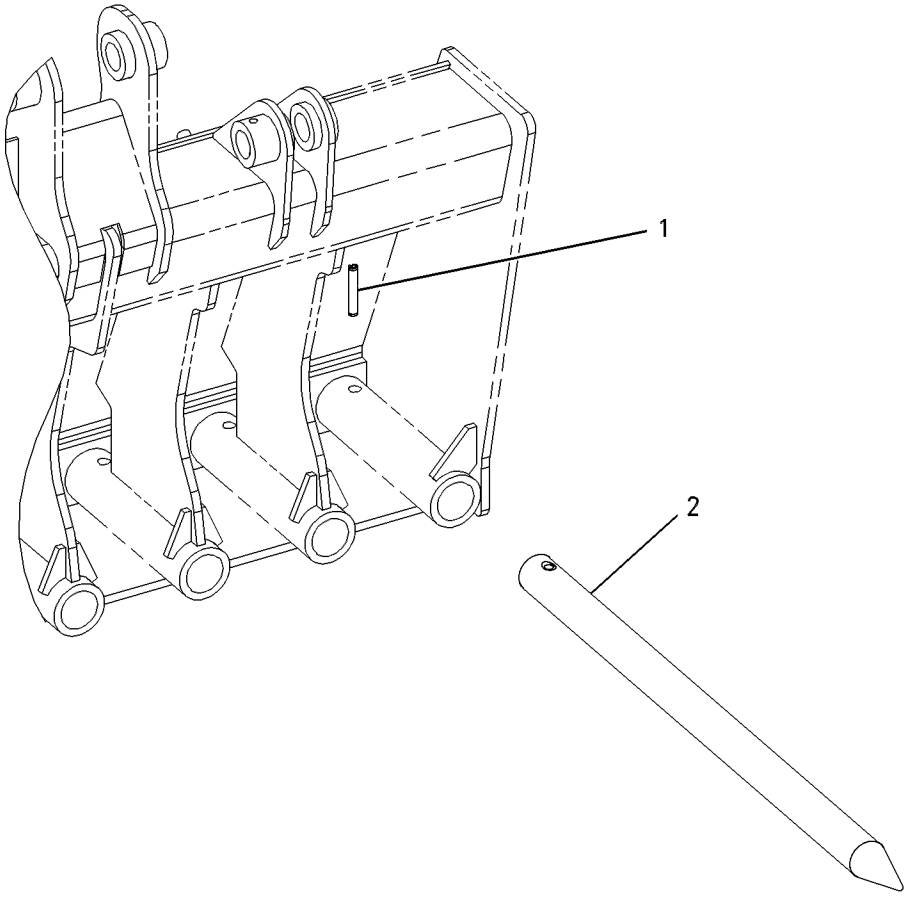

GRAPHIC #1 g00559648

WORK TOOLS

195-6942 FORK GP-PALLET

S/N: 4NZ3400-UP; 5FZ6700-UP
106.68CM (42 IN)
AN ATTACHMENT

SMCS-6136 **i01404679**

NOTE	REF NO	GRAPHIC REF	PART NUMBER	QTY	PART NAME 1 2 3 4 5 6 (PRODUCT LEVEL)	SEE PAGE
	1	1	**196-1338**	1	POSITIONER GP-FORK	

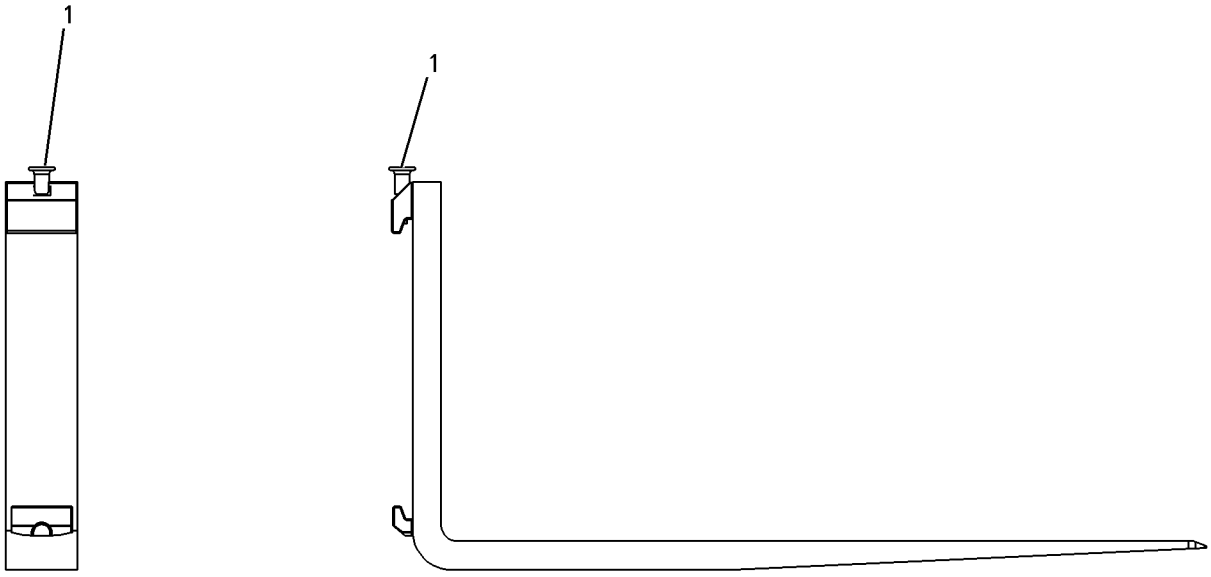

GRAPHIC #1 g00739964

WORK TOOLS

195-6943 FORK GP-PALLET

S/N: 4NZ3400-UP; 5FZ6700-UP
91.44CM (36 IN)
AN ATTACHMENT

SMCS-6136 **i01404720**

NOTE	REF NO	GRAPHIC REF	PART NUMBER	QTY	PART NAME 1 2 3 4 5 6 (PRODUCT LEVEL)	SEE PAGE
	1	1	**196-1338**	1	POSITIONER GP-FORK	

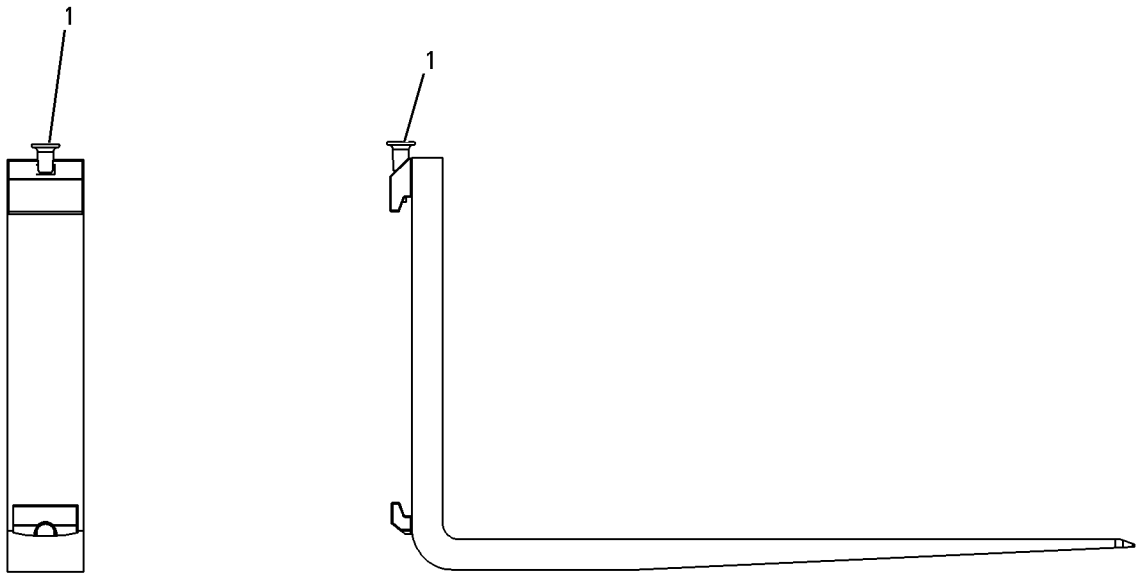

GRAPHIC #1 g00739955

WORK TOOLS

195-8545 FORK GP-PALLET

S/N: 4NZ3400-UP; 5FZ6700-UP
121.92CM (48 IN)
AN ATTACHMENT

SMCS-6136 **i01404721**

NOTE	REF NO	GRAPHIC REF	PART NUMBER	QTY	PART NAME 1 2 3 4 5 6 (PRODUCT LEVEL)	SEE PAGE
	1	1	**196-1338**	1	POSITIONER GP-FORK	

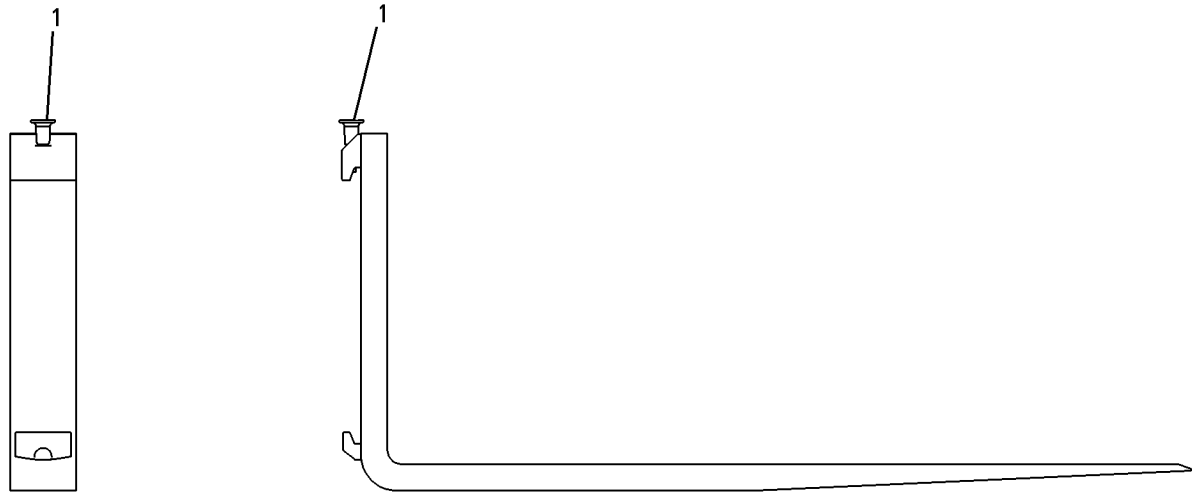

GRAPHIC #1 g00739969

WORK TOOLS

165-8732 FORK GP-UTILITY

S/N: 4NZ3400-UP; 5FZ6700-UP
85.0CM (33.49 IN)
PART OF 165-8736, 165-8737 FORK GP-UTILITY
AN ATTACHMENT

SMCS-6458 **i01204324**

NOTE	REF NO	GRAPHIC REF	PART NUMBER	QTY	PART NAME 1 2 3 4 5 6 (PRODUCT LEVEL)	SEE PAGE
	1	1	**9R-2959**	1	CLIP	
	2	1	**166-4041**	1	TINE	

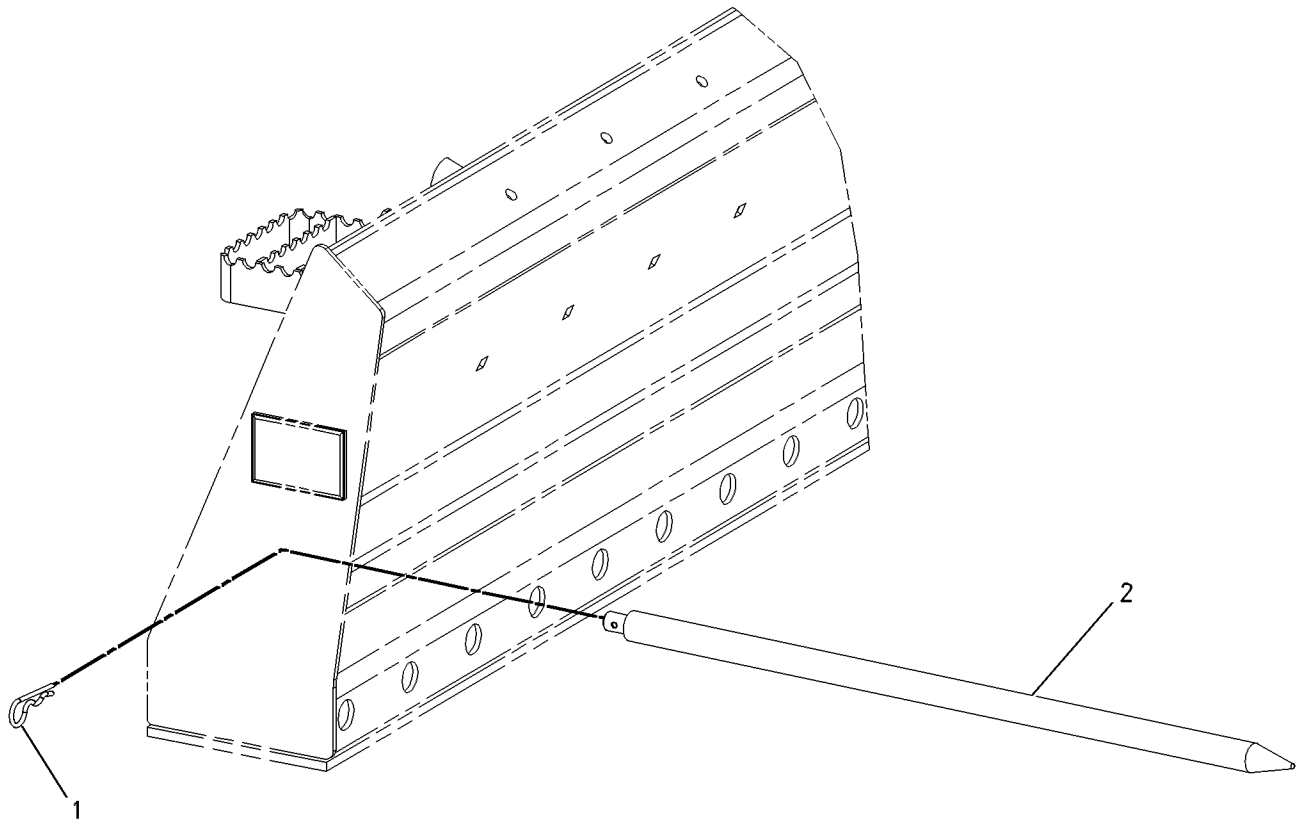

GRAPHIC #1 g00639778

165-8736 FORK GP-UTILITY

S/N: 4NZ3400-UP; 5FZ6700-UP
167.64CM (66 IN)
PART OF 165-8727 FORK AR-GRAPPLE
AN ATTACHMENT

SMCS-6458 **i01629909**

NOTE	REF NO	GRAPHIC REF	PART NUMBER	QTY	PART NAME 1 2 3 4 5 6 (PRODUCT LEVEL)	SEE PAGE
	1	1	**164-9989**	2	FILM-WARNING (IMPALED POINT)	
Y	2	1	*165-8732*	7	FORK GP-UTILITY	471

Y-SEPARATE ILLUSTRATION

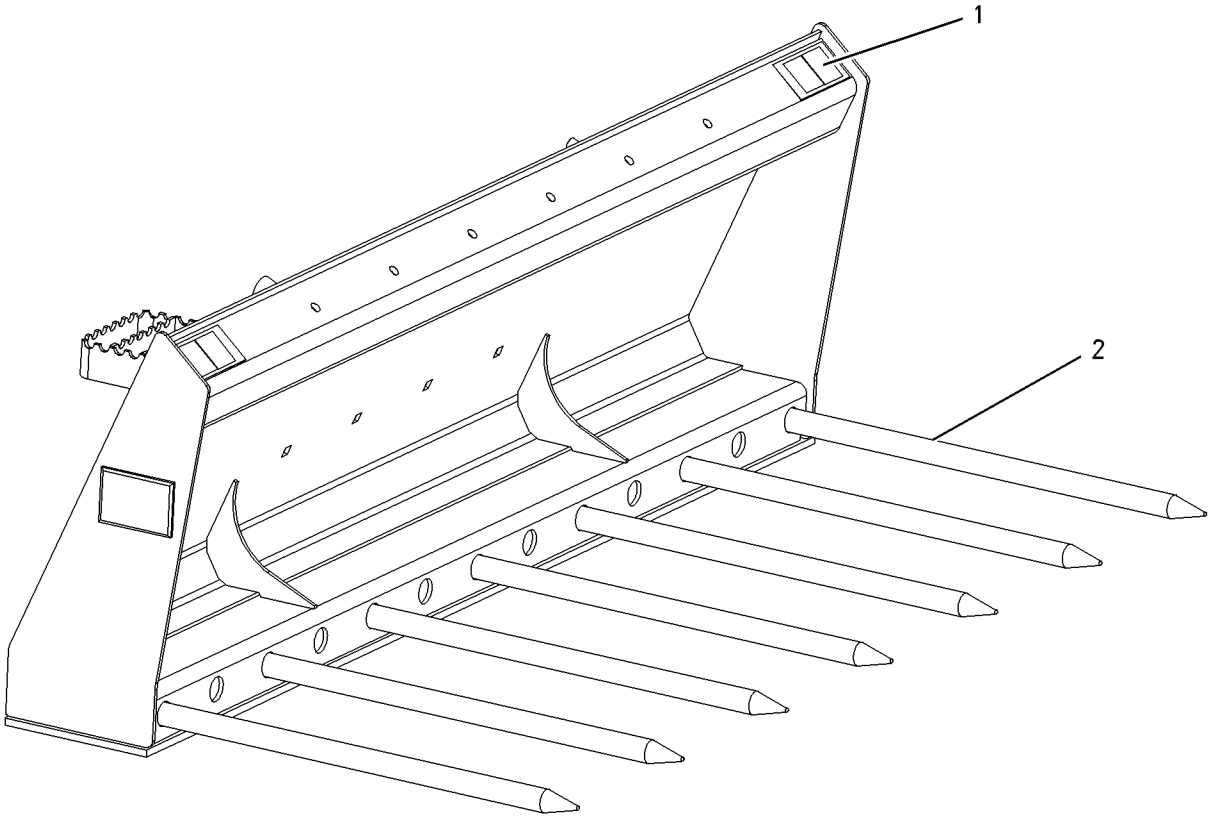

GRAPHIC #1 g00844429

165-8737 FORK GP-UTILITY

S/N: 4NZ3400-UP; 5FZ6700-UP
182.88CM (72 IN)
PART OF 165-8728 FORK AR-GRAPPLE
AN ATTACHMENT

SMCS-6458 **i01629999**

NOTE	REF NO	GRAPHIC REF	PART NUMBER	QTY	PART NAME 1 2 3 4 5 6 (PRODUCT LEVEL)	SEE PAGE
	1	1	**164-9989**	2	FILM-WARNING (IMPALED POINT)	
Y	2	1	*165-8732*	9	FORK GP-UTILITY	471

Y-SEPARATE ILLUSTRATION

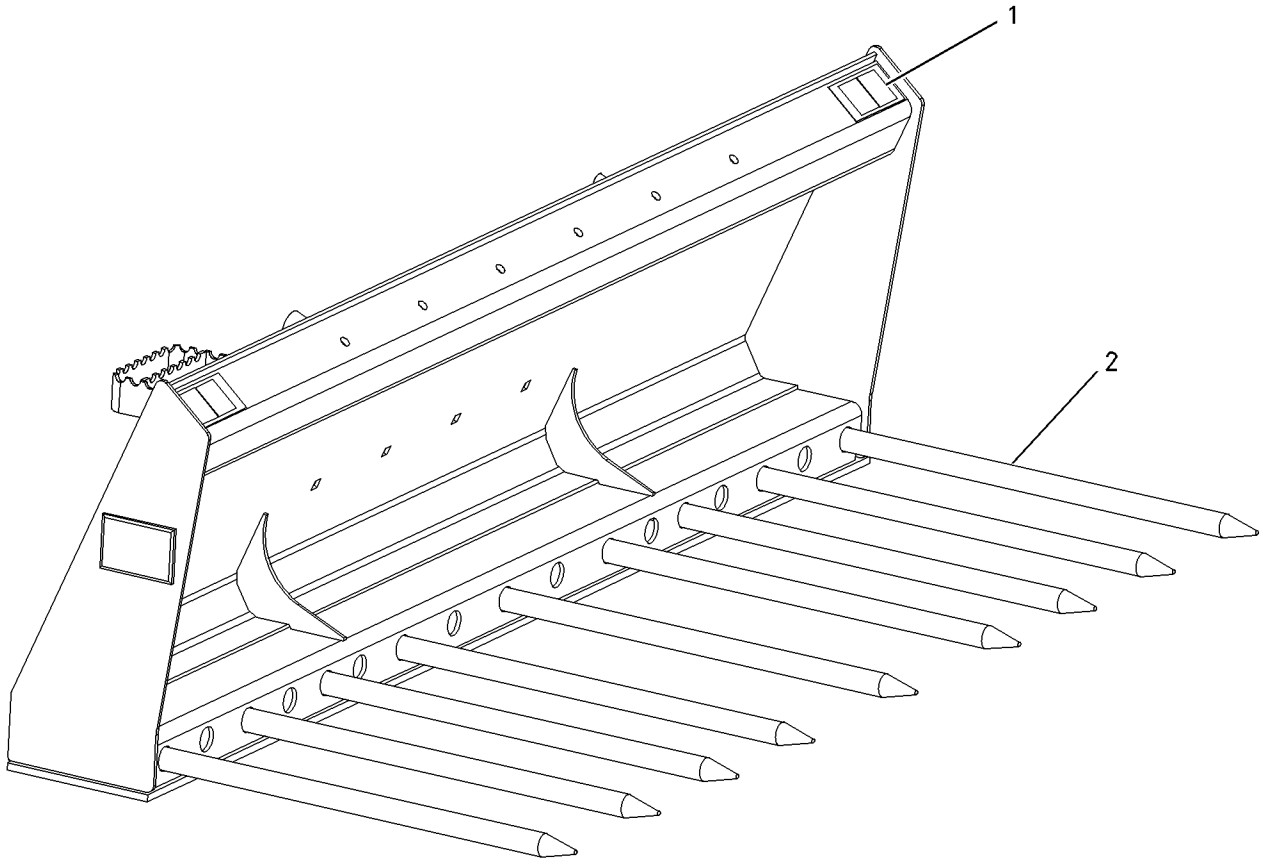

GRAPHIC #1 g00844486

165-8734 GRAPPLE GP-UTILITY

S/N: 4NZ3400-UP; 5FZ6700-UP
PART OF 165-8729, 165-8730, 165-8779, 165-8780 BUCKET AR-GRAPPLE, 165-8727, 165-8728 FORK AR-GRAPPLE
FOR USE WITH 165-8778—PAGE 449, 165-8836—PAGE 450 AN ATTACHMENT

SMCS-6307 **i01629847**

NOTE	REF NO	GRAPHIC REF	PART NUMBER	QTY	PART NAME 1 2 3 4 5 6 (PRODUCT LEVEL)	SEE PAGE
Y	1	1	**164-9295**	1	CYLINDER GP-GRAPPLE	306
Y	2	1	**165-8731**	1	CYLINDER & MTG GP-GRAPPLE	302
Y	3	1	**165-8733**	1	LINES GP-GRAPPLE	324
Y	4	1	**165-8740**	1	GRAPPLE GP-UTILITY	476
M	5	1	**170-5836**	4	BOLT (M12X1.75X35MM)	
	6	1	**173-7407**	1	STOP GP-GRAPPLE	
B	7	1	**8Y-7386**	1	SPACER (12.5X17.1X16.5MM THK)	
	8	1	**2S-6408**	2	WASHER-RETAINING (.531X3.25X.4 IN THK)	
	9	1	**8T-4223**	1	WASHER-HARD (13.5X25.5X3MM THK)	
M	10	1	**8T-4910**	1	BOLT (M12X1.75X60MM)	
	11	1	**8Y-7385**	1	STOP	
	12	1	**5P-1076**	4	WASHER-HARD (13.5X30X4MM THK)	
M	13	1	**8T-4139**	6	BOLT (M12X1.75X30MM)	
	14	1	**8T-4223**	6	WASHER-HARD (13.5X25.5X3MM THK)	
M	15	1	**8T-4244**	10	NUT (M12X1.75 THD)	

B-USE AS REQUIRED
M-METRIC PART
Y-SEPARATE ILLUSTRATION

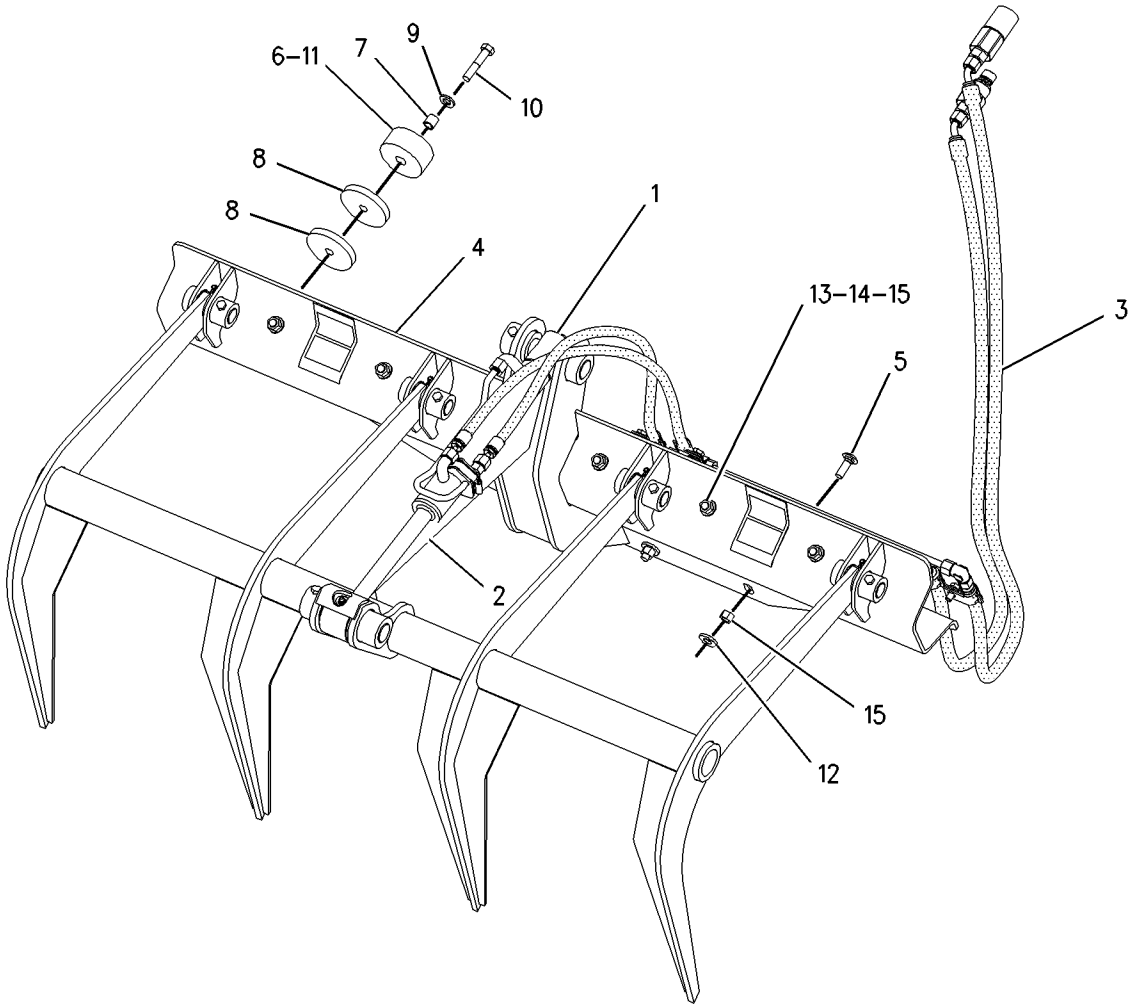

GRAPHIC #1 g00844464

WORK TOOLS

165-8740 GRAPPLE GP-UTILITY

S/N: 4NZ3400-UP; 5FZ6700-UP
PART OF 165-8734 GRAPPLE GP-UTILITY
AN ATTACHMENT

SMCS-6307 **i01497963**

NOTE	REF NO	GRAPHIC REF	PART NUMBER	QTY	PART NAME 1 2 3 4 5 6 (PRODUCT LEVEL)	SEE PAGE
	1	1	**3B-8488**	4	FITTING-HYDRAULIC	
	2	1	**159-5411**	4	PIN	
	3	1	**165-8743**	1	ARM AS	
	4	1	**169-3569**	1	BRACKET AS	
		1	**159-8035**	2	FILM-WARNING (CRUSH POINT)	
M	5	1	**6V-9189**	4	LOCKNUT (M8X1.25 THD)	
M	6	1	**8T-6912**	4	BOLT (M8X1.25X50MM)	

M-METRIC PART

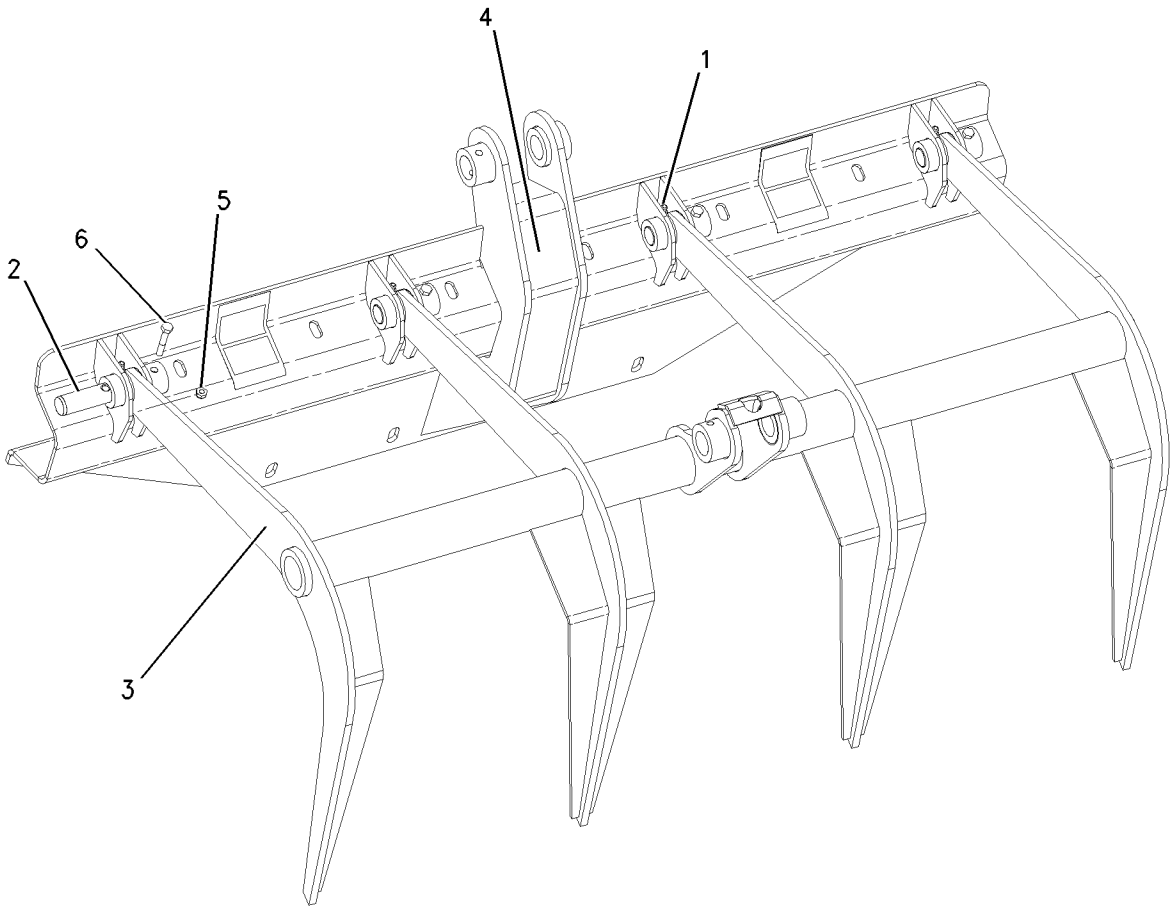

GRAPHIC #1 g00777325

215-3960 HANDLE & PIN GP-COUPLER–LH

S/N: CAB1-UP; CMB1-UP; 4NZ3400-UP; 5FZ6700-UP
PART OF 206-3820 COUPLER GP-QUICK
AN ATTACHMENT

i01668560

NOTE	REF NO	GRAPHIC REF	PART NUMBER	QTY	PART NAME 1 2 3 4 5 6 (PRODUCT LEVEL)	SEE PAGE
	1	1	**166-2560**	1	PIN-SPRING	
	2	1	**192-2642**	1	PIN	
Y	3	1	**215-3958**	1	HANDLE GP-COUPLER	479

Y-SEPARATE ILLUSTRATION

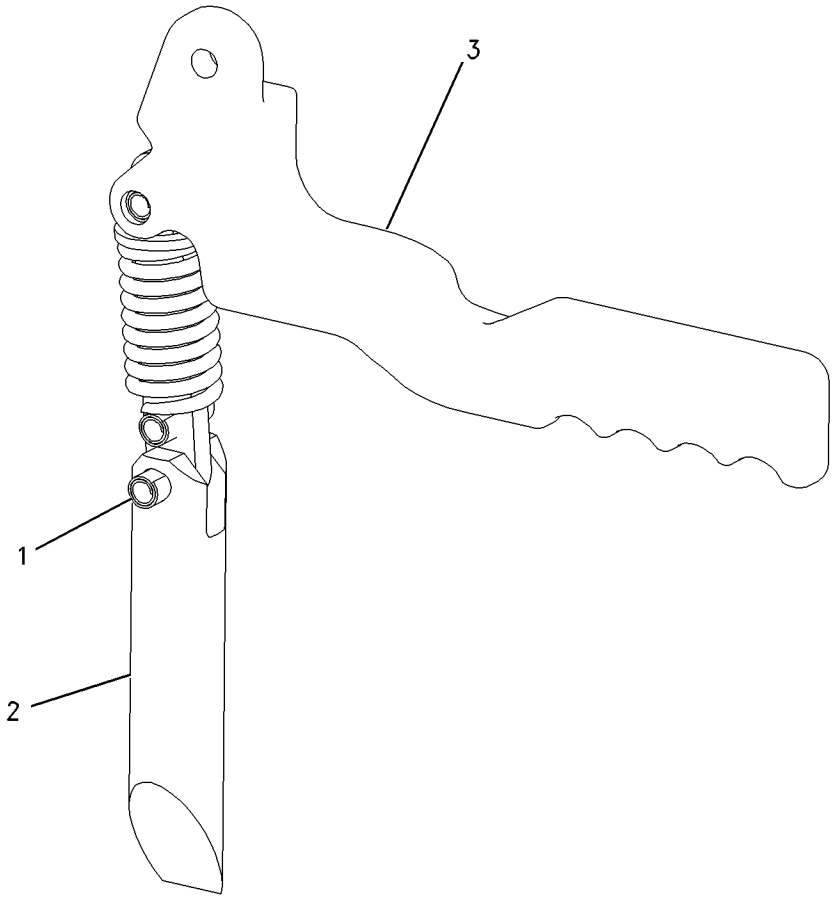

GRAPHIC #1

g00861964

215-3961 HANDLE & PIN GP-COUPLER–RH

S/N: CAB1-UP; CMB1-UP; 4NZ3400-UP; 5FZ6700-UP
PART OF 206-3820 COUPLER GP-QUICK
AN ATTACHMENT

i01668567

NOTE	REF NO	GRAPHIC REF	PART NUMBER	QTY	PART NAME 1 2 3 4 5 6 (PRODUCT LEVEL)	SEE PAGE
	1	1	**166-2560**	1	PIN-SPRING	
	2	1	**192-2642**	1	PIN	
Y	3	1	**215-3959**	1	HANDLE GP-COUPLER	480

Y-SEPARATE ILLUSTRATION

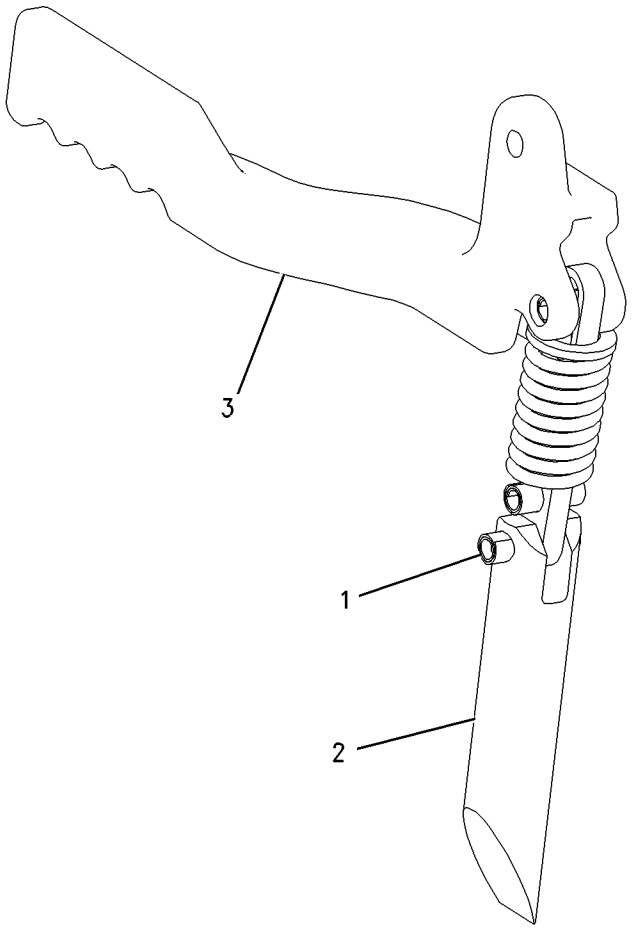

GRAPHIC #1 g00861970

215-3958 HANDLE GP-COUPLER–LH

S/N: CAB1-UP; CMB1-UP; 4NZ3400-UP; 5FZ6700-UP
PART OF 215-3960 HANDLE & PIN GP-COUPLER
AN ATTACHMENT

i01668573

NOTE	REF NO	GRAPHIC REF	PART NUMBER	QTY	PART NAME 1 2 3 4 5 6 (PRODUCT LEVEL)	SEE PAGE
	1	1	**192-2637**	1	PLATE	
	2	1	**192-2645**	1	SPRING	
	3	1	**192-2648**	1	HANDLE	
	4	1	**195-6754**	2	PIN-SPRING	
	5	1	**8T-4123**	1	WASHER-PLATED (22X35X3.5MM THK)	

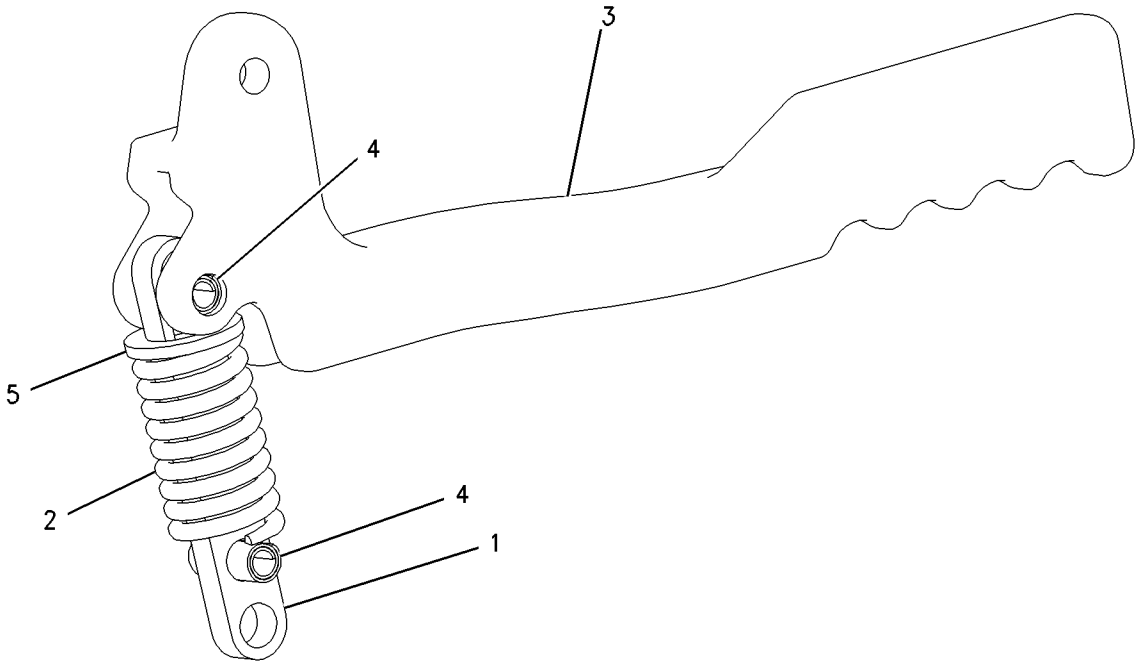

GRAPHIC #1

g00861957

215-3959 HANDLE GP-COUPLER–RH

S/N: CAB1-UP; CMB1-UP; 4NZ3400-UP; 5FZ6700-UP
PART OF 215-3961 HANDLE & PIN GP-COUPLER
AN ATTACHMENT

i01668578

NOTE	REF NO	GRAPHIC REF	PART NUMBER	QTY	PART NAME 1 2 3 4 5 6 (PRODUCT LEVEL)	SEE PAGE
	1	1	**192-2637**	1	PLATE	
	2	1	**192-2645**	1	SPRING	
	3	1	**192-2653**	1	HANDLE	
	4	1	**195-6754**	2	PIN-SPRING	
	5	1	**8T-4123**	1	WASHER-PLATED (22X35X3.5MM THK)	

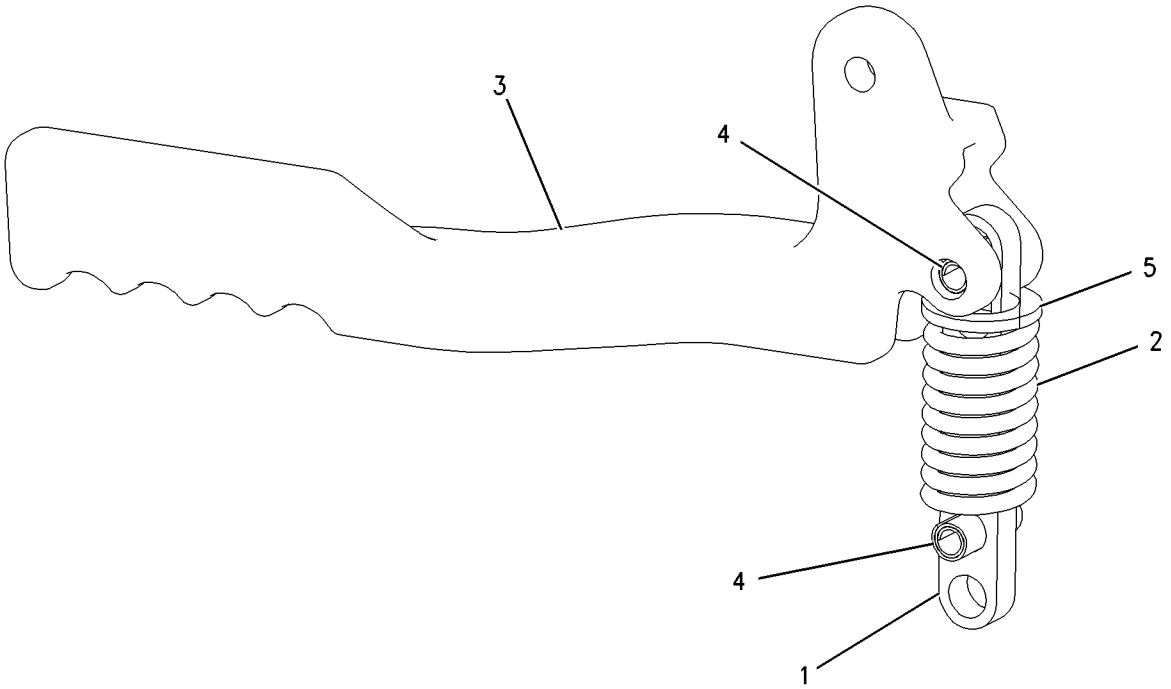

GRAPHIC #1

g00861959

WORK TOOLS

165-8488 KIT-ROADING PLATE & MOUNTING

S/N: 4NZ3400-UP; 5FZ6700-UP
ANGLE BLADE
FIELD INSTALLATION

SMCS-6001, 6101, 6103, 6104, 6704, 7405, 7557 **i01746508**

NOTE	REF NO	GRAPHIC REF	PART NUMBER	QTY	PART NAME 1 2 3 4 5 6 (PRODUCT LEVEL)	SEE PAGE
	1	1	**165-8486**	1	LOCK AS	
	2	1	**165-8487**	2	PLATE GP-ROADING	
	3	1	**177-7415**	4	FILM	
M	4	1	**6V-8949**	2	NUT (M10X1.5-6H THD)	
	5	1	**8T-4121**	4	WASHER-HARD (11X21X2.5MM THK)	
M	6	1	**8T-4186**	2	BOLT (M10X1.5X40MM)	
	7	1	**9R-2959**	1	CLIP	

M-METRIC PART

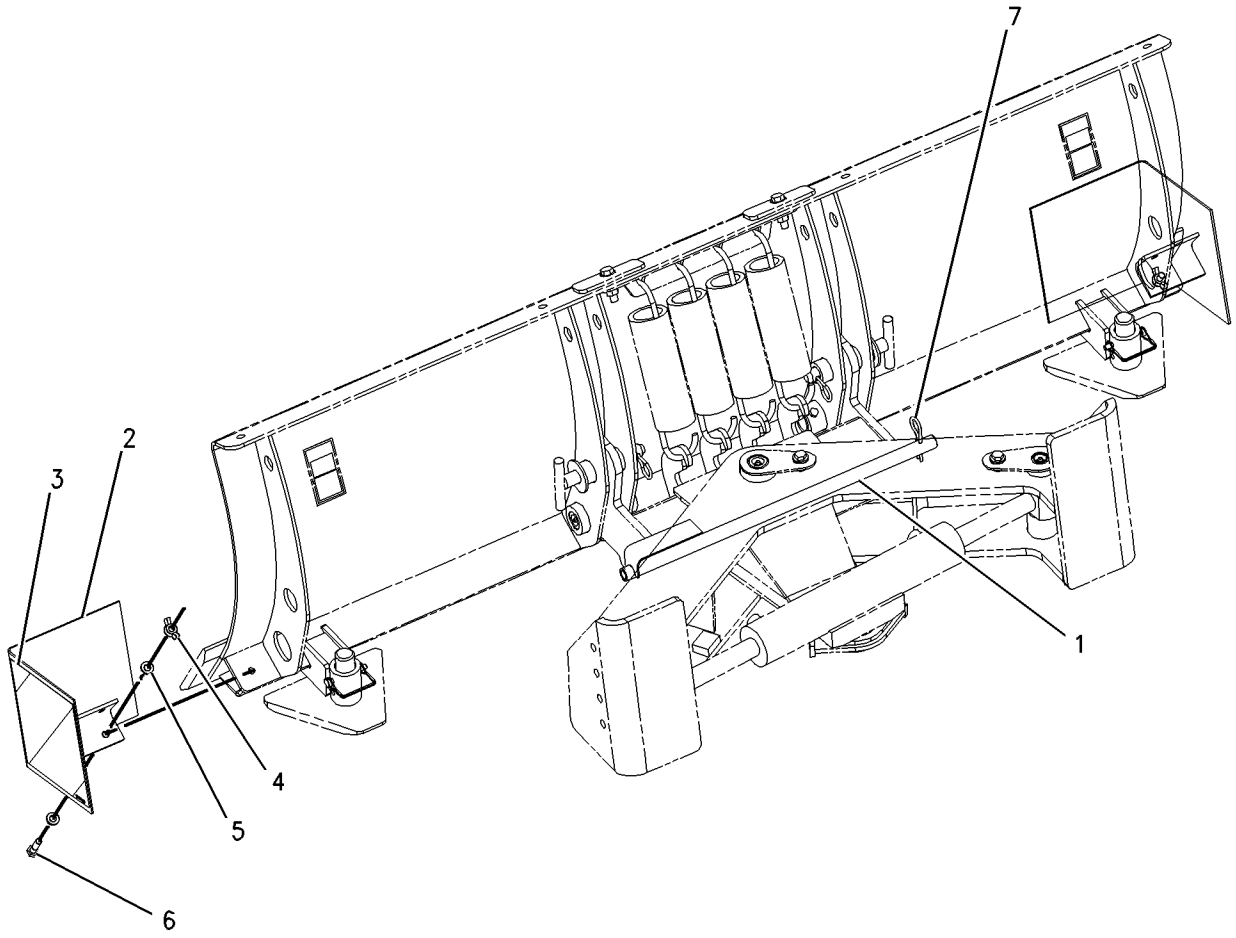

GRAPHIC #1 g00777737

177-9152 KIT-ROADING PLATE & MOUNTING

S/N: 4NZ3400-UP; 5FZ6700-UP
BUCKET
PART OF 206-3777, 206-3778 CONVERSION AR-ROADING
AN ATTACHMENT AND FIELD INSTALLATION

SMCS-6001, 6101, 6103, 6104, 6704, 7405, 7557 **i01746506**

NOTE	REF NO	GRAPHIC REF	PART NUMBER	QTY	PART NAME 1 2 3 4 5 6 (PRODUCT LEVEL)	SEE PAGE
	1	1	**177-9153**	2	PLATE	
	2	1	*184-6097*	1	PLATE GP-ROADING (LH)	
		1	**177-7414**	1	FILM	
		1	**177-7415**	1	FILM	
		1	**177-9150**	1	PLATE AS	
	3	1	*184-6098*	1	PLATE GP-ROADING (RH)	
		1	**177-7414**	1	FILM	
		1	**177-7415**	1	FILM	
		1	**177-9151**	1	PLATE AS	
	4	1	**039-8557**	2	WASHER (13X26X6MM THK)	
M	5	1	**6V-8949**	4	NUT (M10X1.5-6H THD)	
	6	1	**8T-4121**	8	WASHER-HARD (11X21X2.5MM THK)	
M	7	1	**8T-4137**	2	BOLT (M10X1.5X20MM)	
M	8	1	**8T-4186**	2	BOLT (M10X1.5X40MM)	

M-METRIC PART

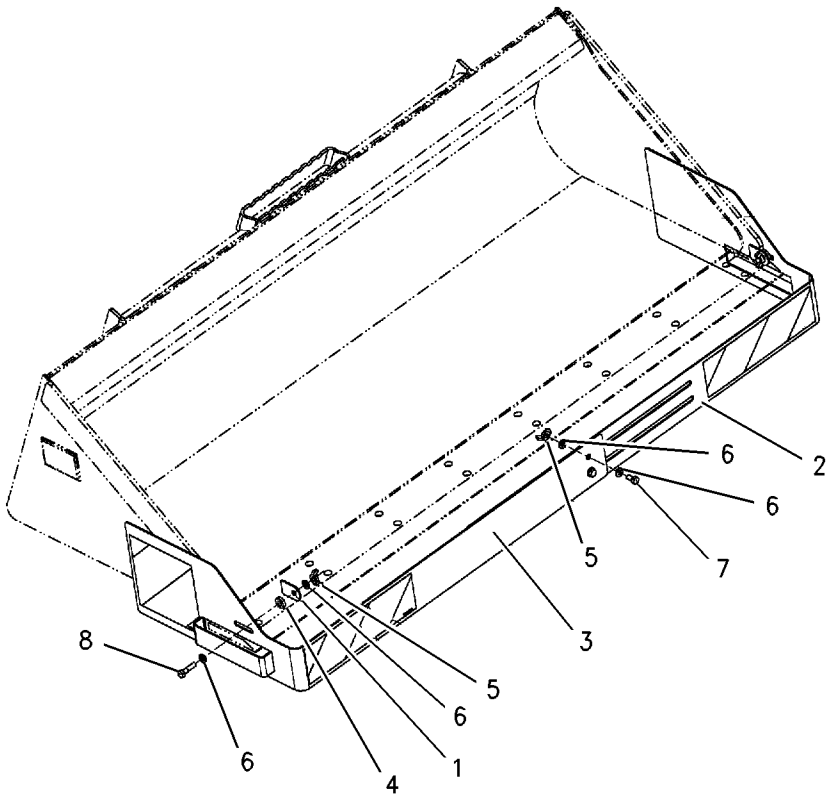

GRAPHIC #1 g00778934

WORK TOOLS

197-0926 KIT-SNOW REMOVAL CONVERSION

S/N: 4NZ3400-UP; 5FZ6700-UP
182.88CM (72IN)ANGLE BLADE
FOR USE WITH 177-1989—PAGE 425
FIELD INSTALLATION

SMCS-6701 **i01630039**

NOTE	REF NO	GRAPHIC REF	PART NUMBER	QTY	PART NAME 1 2 3 4 5 6 (PRODUCT LEVEL)	SEE PAGE
	1	1	**197-0882**	2	MARKER AS	
	2	1	**197-0883**	1	GUARD AS	
M	3	1	**5C-7261**	4	NUT (M8X1.25 THD)	
M	4	1	**8T-4908**	4	BOLT (M8X1.25X25MM)	
M	5	1	**8T-4139**	4	BOLT (M12X1.75X30MM)	
	6	1	**8T-4223**	8	WASHER-HARD (13.5X25.5X3MM THK)	
	7	1	**8T-4224**	8	WASHER-HARD (8.8X16X2MM THK)	
M	8	1	**8T-4244**	4	NUT (M12X1.75 THD)	

M-METRIC PART

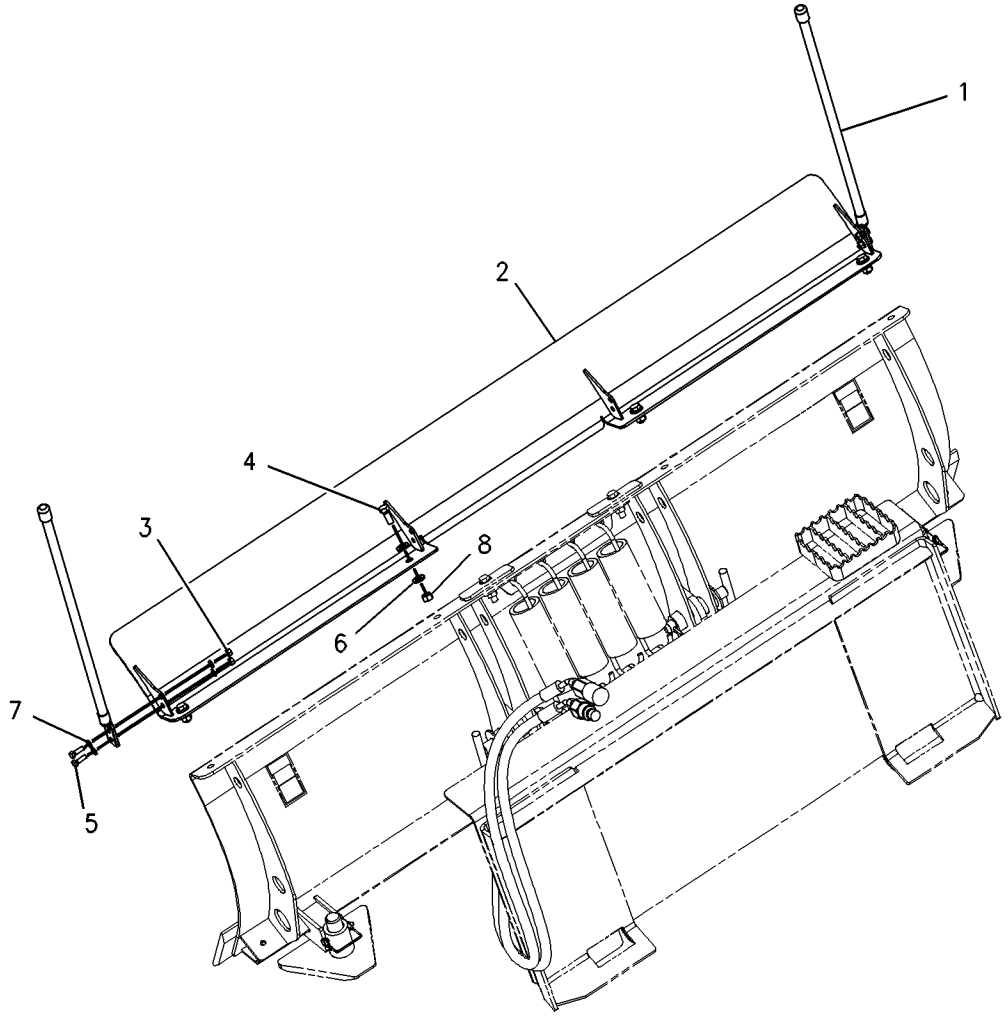

GRAPHIC #1 g00777279

175-4238 LOCK GP-QUICK COUPLER

S/N: 4NZ3400-UP; 5FZ6700-UP
PART OF 206-3777, 206-3778 CONVERSION AR-ROADING
AN ATTACHMENT

SMCS-6129 **i01408856**

NOTE	REF NO	GRAPHIC REF	PART NUMBER	QTY	PART NAME 1 2 3 4 5 6 (PRODUCT LEVEL)	SEE PAGE
	1	1	**9R-5301**	1	PIN-COTTER	
	2	1	**178-2247**	1	PIN	
	3	1	**9X-8257**	1	WASHER (17.5X30X3.5MM THK)	

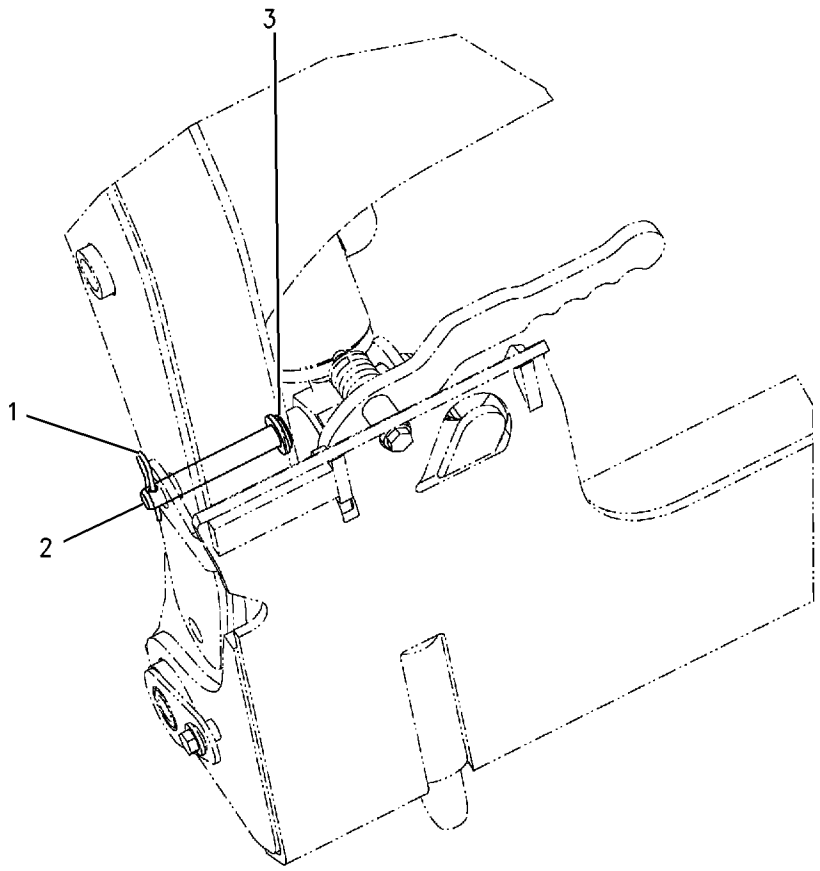

GRAPHIC #1 g00741828

161-7290 PUMP GP-DIAPHRAGM

S/N: CAB1-UP; CMB1-UP; 4NZ3400-UP; 5FZ6700-UP
PART OF 166-2550 TANK & MTG GP-WATER, 193-0451 TANK GP-WATER
AN ATTACHMENT

SMCS-5612 **i01237066**

NOTE	REF NO	GRAPHIC REF	PART NUMBER	QTY	PART NAME 1 2 3 4 5 6 (PRODUCT LEVEL)	SEE PAGE
	1	1	**174-6633**	1	HEAD-PUMP	
	2	1	**160-0663**	1	MOTOR-ELECTRIC	

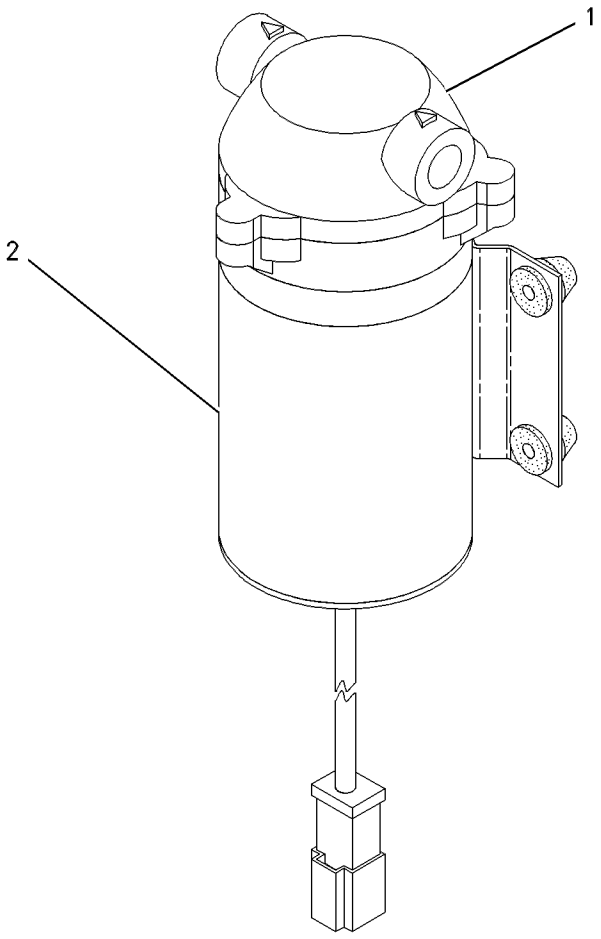

GRAPHIC #1 g00652915

WORK TOOLS

177-1983 SPRING GP-BLADE

S/N: 4NZ3400-UP; 5FZ6700-UP
PART OF 177-1989 BLADE AR
AN ATTACHMENT

SMCS-6060 **i01497986**

NOTE	REF NO	GRAPHIC REF	PART NUMBER	QTY	PART NAME 1 2 3 4 5 6 (PRODUCT LEVEL)	SEE PAGE
	1	1	**177-1941**	4	SPRING	
	2	1	**177-1973**	1	PLATE AS	
M	3	1	**8T-4194**	2	BOLT (M12X1.75X50MM)	
	4	1	**8T-4223**	4	WASHER-HARD (13.5X25.5X3MM THK)	
M	5	1	**8T-4244**	2	NUT (M12X1.75 THD)	

M-METRIC PART

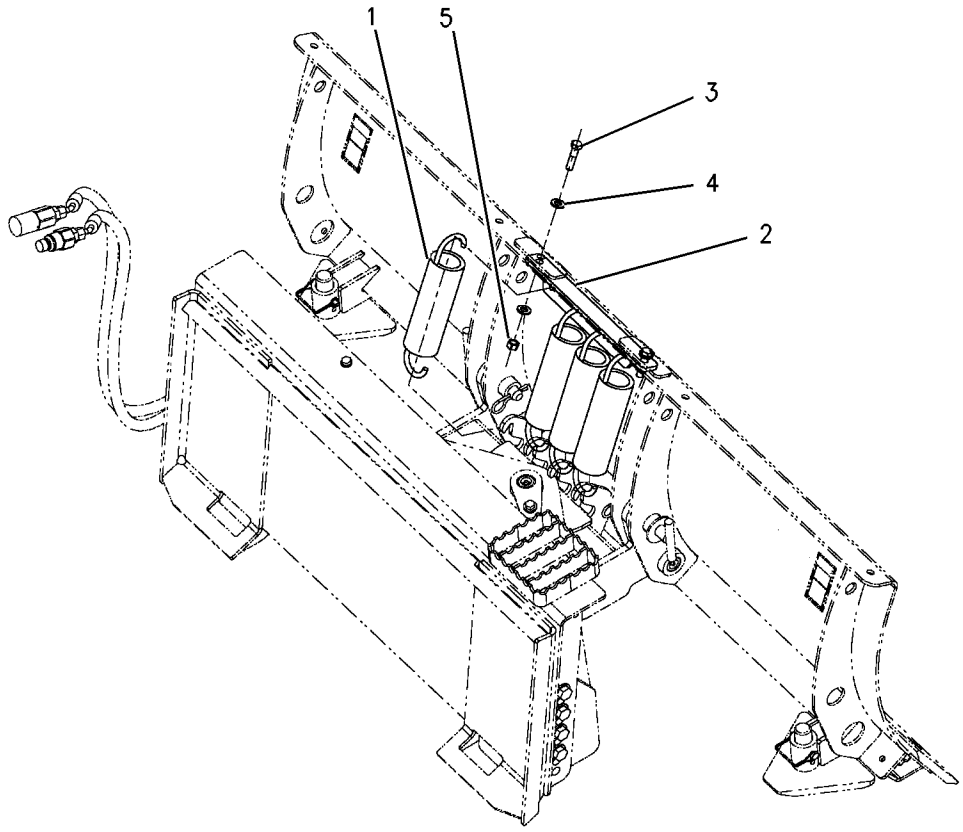

GRAPHIC #1 g00777337

WORK TOOLS

186-3562 STEP GP-MATERIAL HANDLING ARM

S/N: 4NZ3400-UP; 5FZ6700-UP
FOR USE WITH 179-7201—PAGE 418
AN ATTACHMENT

SMCS-6542 **i01498004**

NOTE	REF NO	GRAPHIC REF	PART NUMBER	QTY	PART NAME 1 2 3 4 5 6 (PRODUCT LEVEL)	SEE PAGE
	1	1	**188-7176**	1	STEP AS	
	2	1	**8T-4121**	6	WASHER-HARD (11X21X2.5MM THK)	
M	3	1	**8T-4133**	6	NUT (M10X1.5 THD)	
M	4	1	**8T-4195**	6	BOLT (M10X1.5X30MM)	

M-METRIC PART

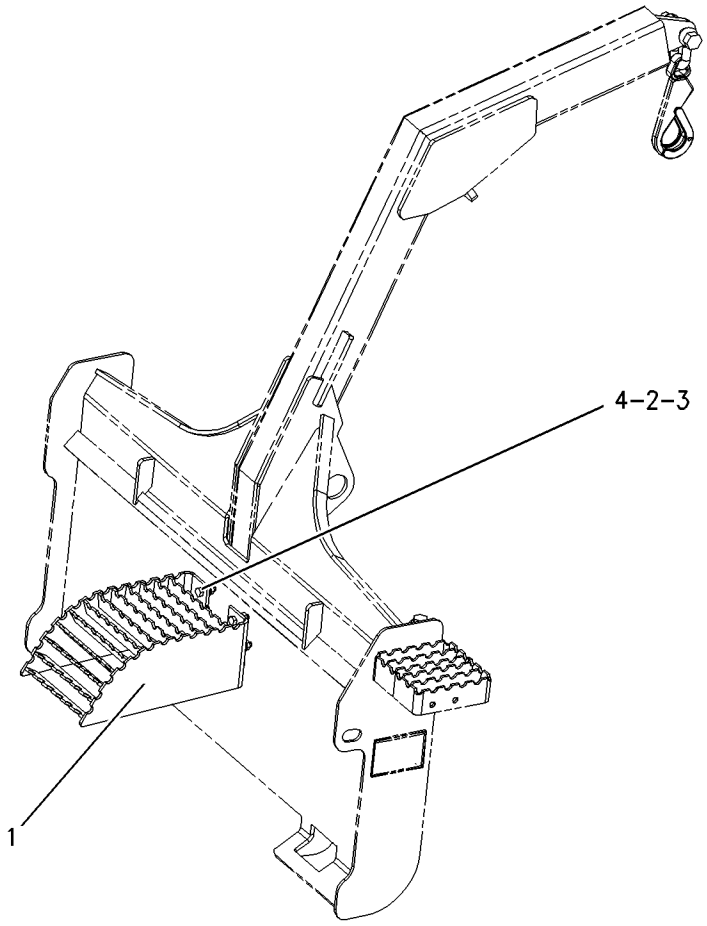

GRAPHIC #1 g00777344

188-7733 STEP GP-MATERIAL HANDLING ARM

S/N: 4NZ3400-UP; 5FZ6700-UP
PART OF 179-7201 ARM GP-MATERIAL HANDLING
AN ATTACHMENT

SMCS-6542 **i01498007**

NOTE	REF NO	GRAPHIC REF	PART NUMBER	QTY	PART NAME 1 2 3 4 5 6 (PRODUCT LEVEL)	SEE PAGE
	1	1	**186-5186**	1	STEP AS	
	2	1	**8T-4121**	2	WASHER-HARD (11X21X2.5MM THK)	
M	3	1	**8T-4133**	2	NUT (M10X1.5 THD)	
M	4	1	**8T-4136**	2	BOLT (M10X1.5X25MM)	

M-METRIC PART

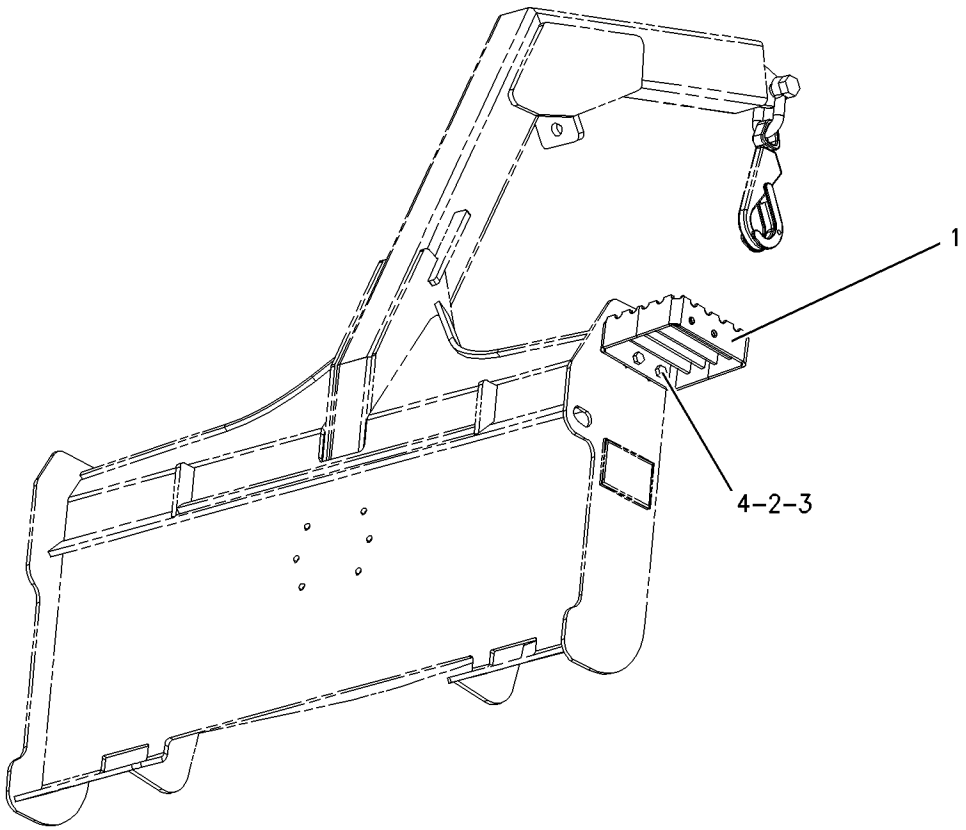

GRAPHIC #1 g00777345

116-2001 STRAINER GP-WATER

S/N: CAB1-UP; CMB1-UP; 4NZ3400-UP; 5FZ6700-UP
PART OF 166-2550 TANK & MTG GP-WATER, 193-0451 TANK GP-WATER
AN ATTACHMENT

SMCS-5612 **i01385622**

NOTE	REF NO	GRAPHIC REF	PART NUMBER	QTY	PART NAME 1 2 3 4 5 6 (PRODUCT LEVEL)	SEE PAGE
	1	1	**119-1415**	1	GASKET	
	2	1	**119-1414**	1	SCREEN	

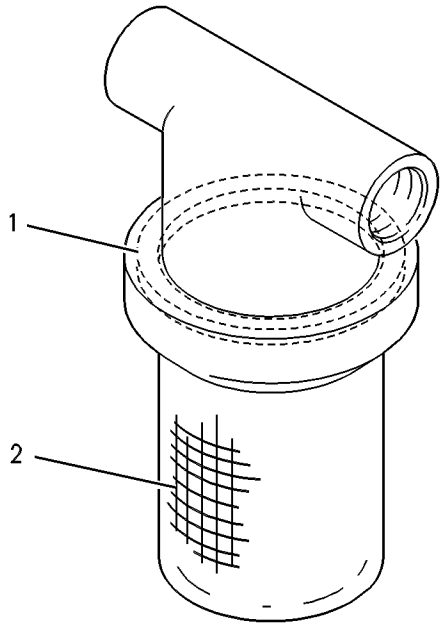

GRAPHIC #1 g00293866

166-2550 TANK & MTG GP-WATER

S/N: 4NZ3400-UP; 5FZ6700-UP

AN ATTACHMENT

SMCS-5613 **i01636594**

NOTE	REF NO	GRAPHIC REF	PART NUMBER	QTY	PART NAME 1 2 3 4 5 6 (PRODUCT LEVEL)	SEE PAGE
	1	1	**3B-7255**	1	BUSHING-REDUCING	
	2	1	**3S-2093**	4	STRAP-CABLE	
	3	1	**7X-0495**	1	ADAPTER	
	4	1	**8T-0737**	1	VALVE-SHUTOFF	
Y	5	1	**116-2001**	1	STRAINER GP-WATER	489
	6	2	**142-7505**	2	PLATE AS	
Y	7	1	**161-7290**	1	PUMP GP-DIAPHRAGM	485
	8	1	**165-4894**	1	HARNESS AS	
Y	9	1	**166-2551**	1	TANK GP-WATER	493
I	10	1	**166-2552**	1	HOSE AS	
	11	1	**166-2553**	1	BRACKET AS	
I	12	2	**166-2554**	1	HOSE AS	
	13	2	**166-2556**	1	BRACKET	
	14	2	**166-2557**	1	PLATE	
	15	2	**166-2558**	1	COUPLING	
	16	1	**166-2559**	2	BRACKET	
	17	2	**191-9665**	1	BRACKET AS	
	18	2	**195-6696**	1	PLATE	
	19	1	**003-2143**	1	ELBOW	
	20	1	**067-2551**	2	CLIP	
	21	1	**095-0912**	2	CLIP	
M	22	1	**111-4627**	4	SCREW-MACHINE (M6X1.0X30MM)	
	23	2	**119-3859**	6	SCREW-PAN HEAD (10-16X0.75 IN)	
M	24	1	**129-3178**	4	LOCKNUT (M6X1 THD)	
	25	1	**1L-2279**	1	ELBOW	
M	26	2	**5C-7261**	2	NUT (M8X1.25 THD)	
	27	2	**5P-8246**	2	WASHER-HARD (15.5X29X3MM THK)	
	28	1,2	**8T-4121**	7	WASHER-HARD (11X21X2.5MM THK)	
	29	1	**8T-4122**	16	WASHER-HARD (17X32X3.5MM THK)	
M	30	1	**8T-4132**	4	NUT (M16X2 THD)	
M	31	1,2	**8T-4137**	5	BOLT (M10X1.5X20MM)	
M	32	2	**8T-4191**	2	BOLT (M10X1.5X16MM)	
	33	1	**8T-4205**	6	WASHER-HARD (7.2X14.5X2MM THK)	
	34	2	**8T-4224**	4	WASHER-HARD (8.8X16X2MM THK)	
M	35	1	**8T-4779**	12	BOLT (M16X2X35MM)	
M	36	2	**8T-4908**	2	BOLT (M8X1.25X25MM)	
	37	1	**167-0608**		SEAL (82CM)	

I-SEE HOSE FABRICATION GUIDE
M-METRIC PART
Y-SEPARATE ILLUSTRATION

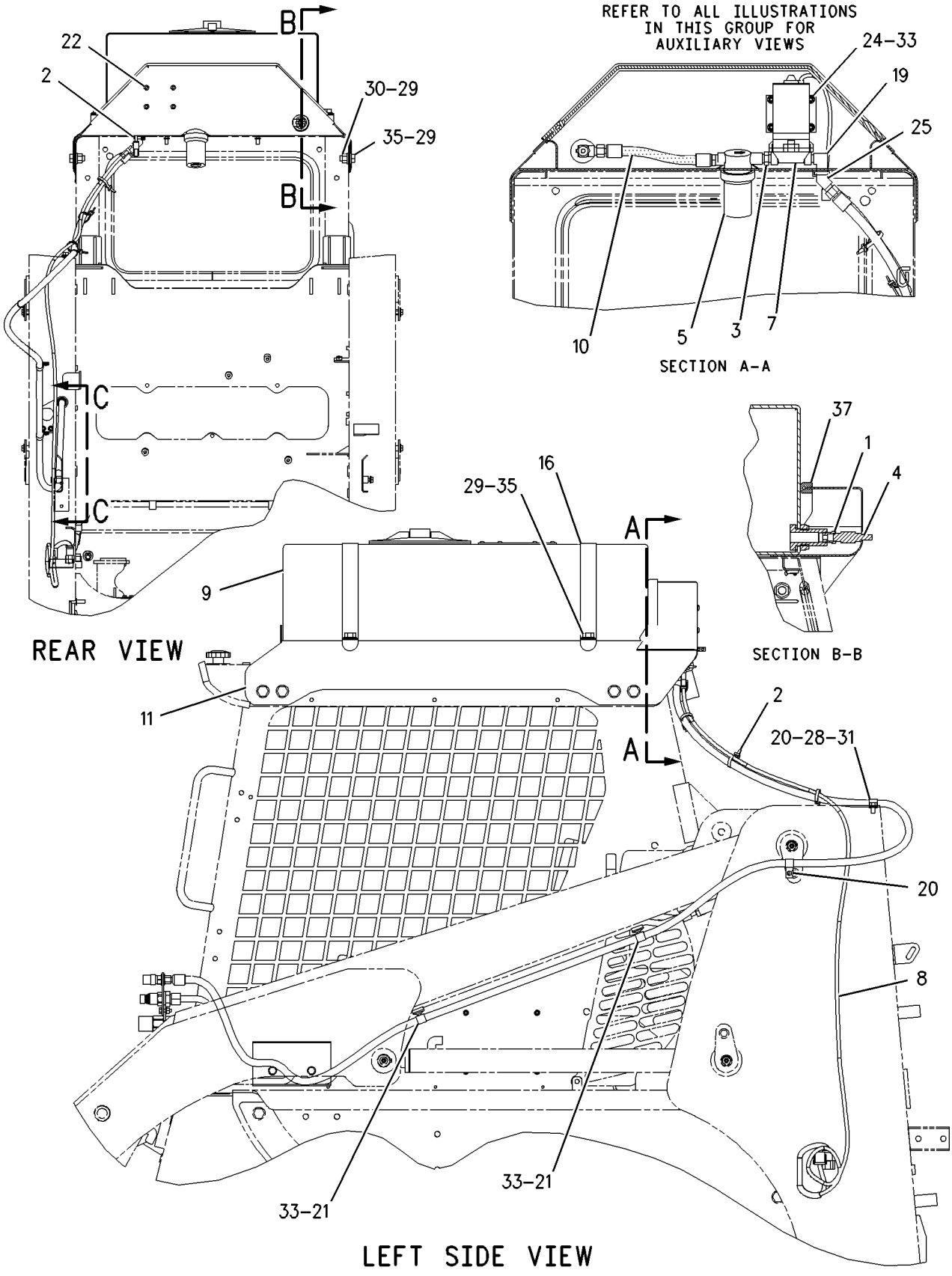

GRAPHIC #1

g00847797

166-2550 TANK & MTG GP-WATER *(contd.)* i01636594

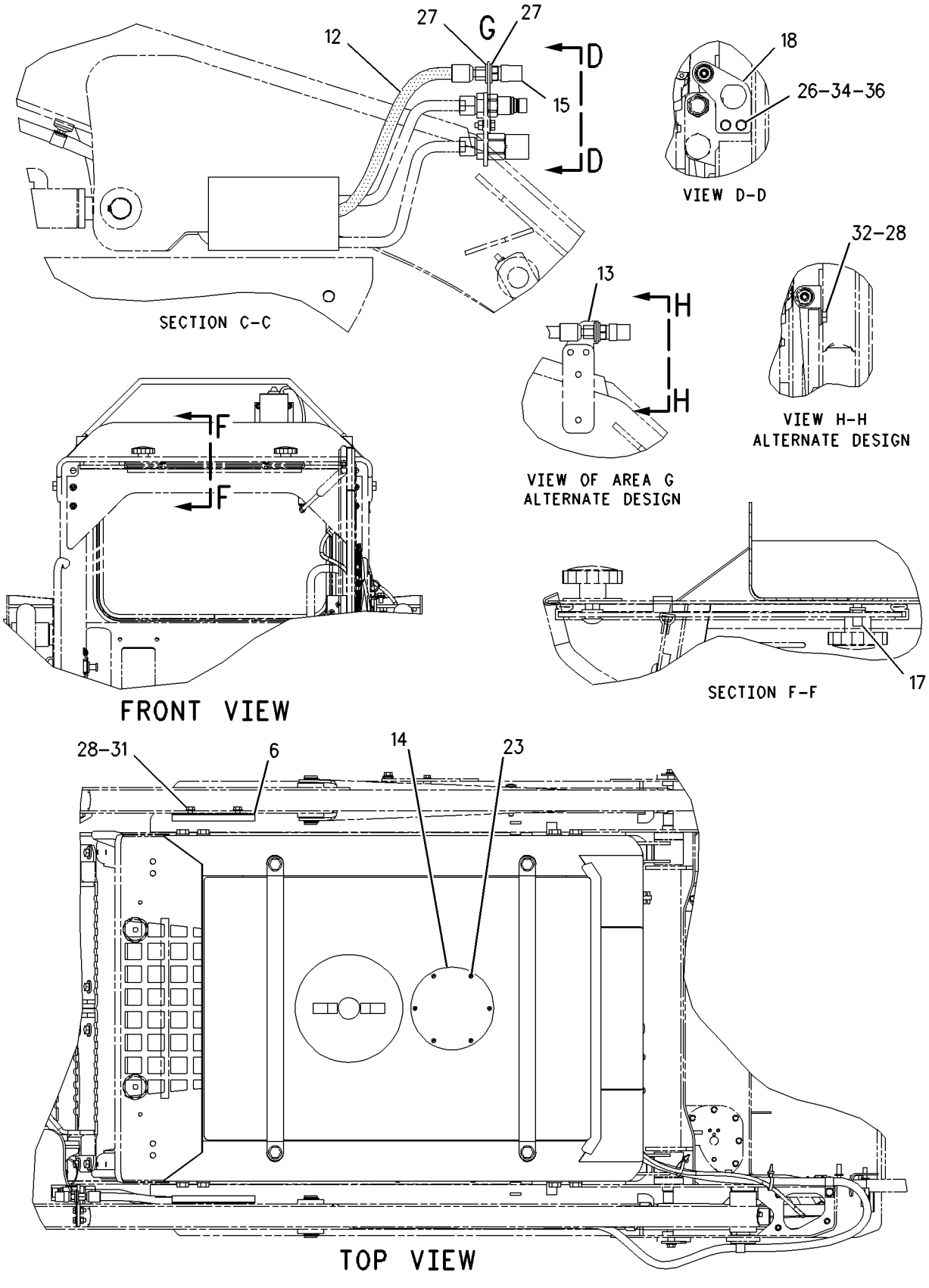

GRAPHIC #2 g00848070

166-2551 TANK GP-WATER

S/N: CAB1-UP; CMB1-UP; 4NZ3400-UP; 5FZ6700-UP
PART OF 166-2550 TANK & MTG GP-WATER, 193-0451 TANK GP-WATER
AN ATTACHMENT

SMCS-5613 **i01411266**

NOTE	REF NO	GRAPHIC REF	PART NUMBER	QTY	PART NAME 1 2 3 4 5 6 (PRODUCT LEVEL)	SEE PAGE
	1	1	**192-2606**	1	CAP AS	
	2	1	**192-2607**	1	OUTLET	

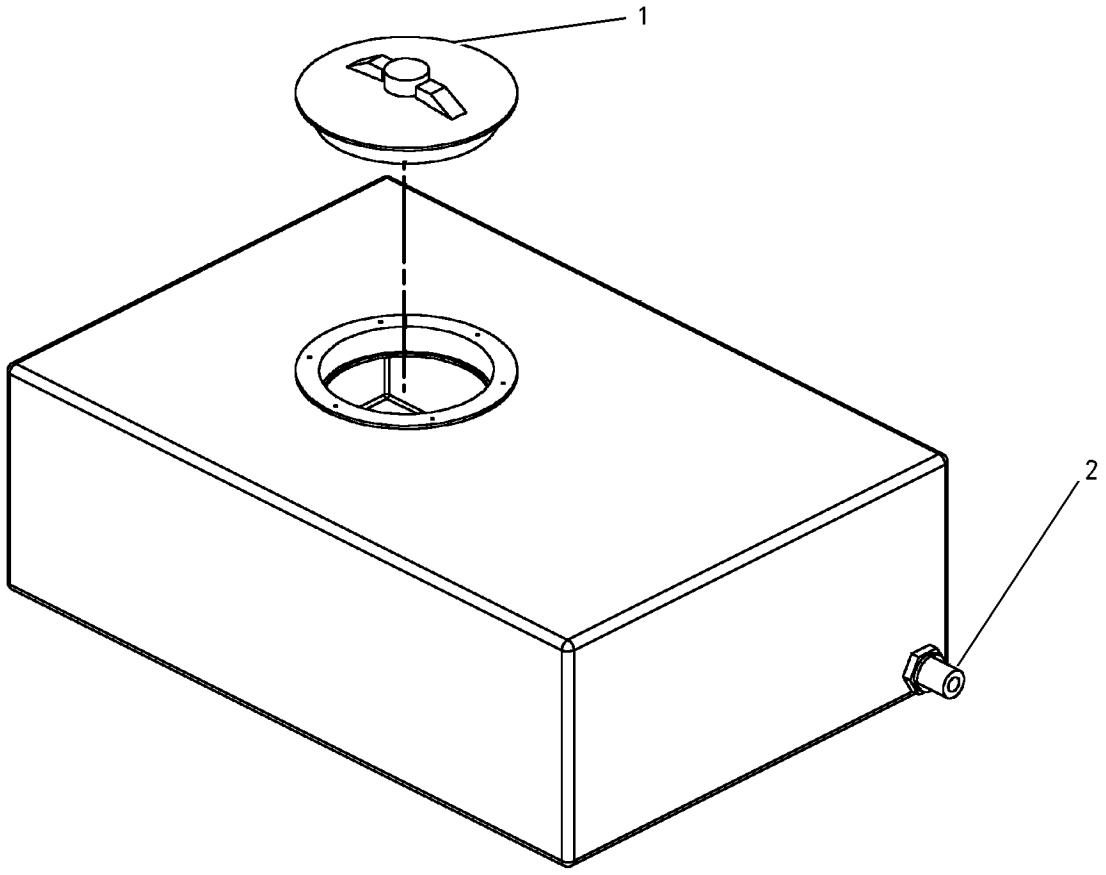

GRAPHIC #1 g00742953

WORK TOOLS

193-0451 TANK GP-WATER

S/N: CAB1-UP; CMB1-UP
AN ATTACHMENT

SMCS-5613 **i01708523**

NOTE	REF NO	GRAPHIC REF	PART NUMBER	QTY	PART NAME 1 2 3 4 5 6 (PRODUCT LEVEL)	SEE PAGE
	1	1	**3B-7255**	1	BUSHING-REDUCING	
	2	1	**3S-2093**	4	STRAP-CABLE	
	3	1	**7K-1181**	2	STRAP-CABLE	
	4	1	**7X-0495**	1	ADAPTER	
	5	1	**8T-0737**	1	VALVE-SHUTOFF	
Y	6	1	**116-2001**	1	STRAINER GP-WATER	489
Y	7	1	**161-7290**	1	PUMP GP-DIAPHRAGM	485
	8	1	**165-4894**	1	HARNESS AS	
		1	**102-8806**	1	KIT-RECEPTACLE (8 PIN)	
		1	**155-2265**	1	KIT-CONNECTING PLUG (8 PIN)	
		1	**155-2270**	1	KIT-CONNECTING PLUG (2 PIN)	
Y	9	1	**166-2551**	1	TANK GP-WATER	493
I	10	1	**166-2552**	1	HOSE AS	
	11	1	**166-2553**	1	BRACKET AS	
	12	1	**166-2557**	1	PLATE	
	13	1	**166-2558**	1	COUPLING	
	14	1	**166-2559**	2	BRACKET	
	15	1	**195-6696**	1	PLATE	
	16	1	**003-2143**	1	ELBOW	
	17	1	**095-0912**	2	CLIP	
M	18	1	**111-4627**	4	SCREW-MACHINE (M6X1.0X30MM)	
	19	1	**119-3859**	6	SCREW-PAN HEAD (10-16X0.75 IN)	
M	20	1	**129-3178**	4	LOCKNUT (M6X1 THD)	
	21	1	**5P-8246**	2	WASHER-HARD (15.5X29X3MM THK)	
	22	1	**8T-4121**	4	WASHER-HARD (11X21X2.5MM THK)	
	23	1	**8T-4122**	16	WASHER-HARD (17X32X3.5MM THK)	
M	24	1	**8T-4132**	4	NUT (M16X2 THD)	
M	25	1	**8T-4133**	2	NUT (M10X1.5 THD)	
M	26	1	**8T-4136**	2	BOLT (M10X1.5X25MM)	
	27	1	**8T-4205**	6	WASHER-HARD (7.2X14.5X2MM THK)	
M	28	1	**8T-4779**	12	BOLT (M16X2X35MM)	
	29	1	**167-0608**		SEAL (82CM)	
	30	1	**206-3802**	1	HOSE AS	

I-SEE HOSE FABRICATION GUIDE
M-METRIC PART
Y-SEPARATE ILLUSTRATION

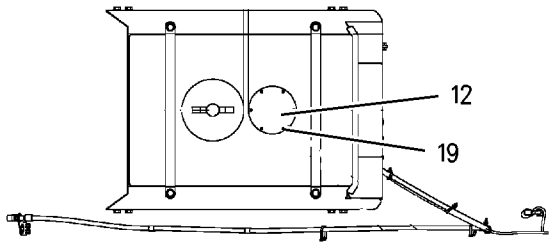

TOP VIEW

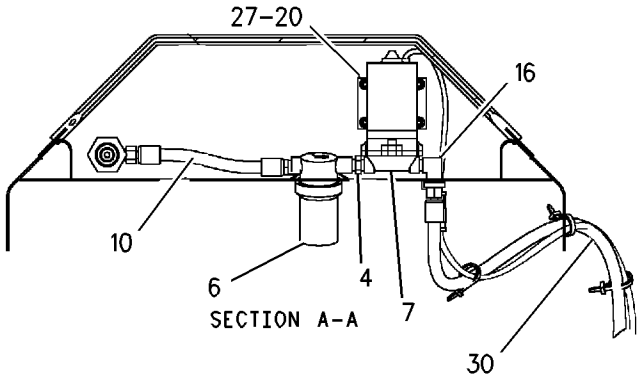

SECTION A-A

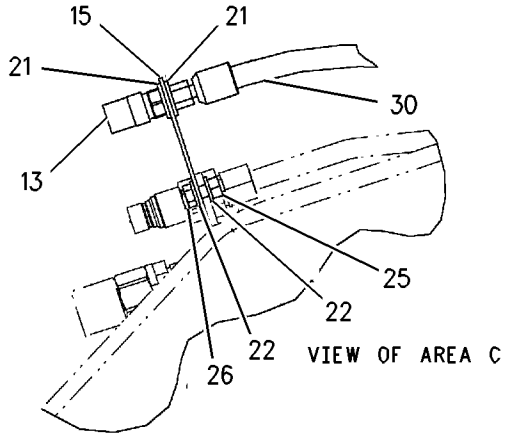

VIEW OF AREA C

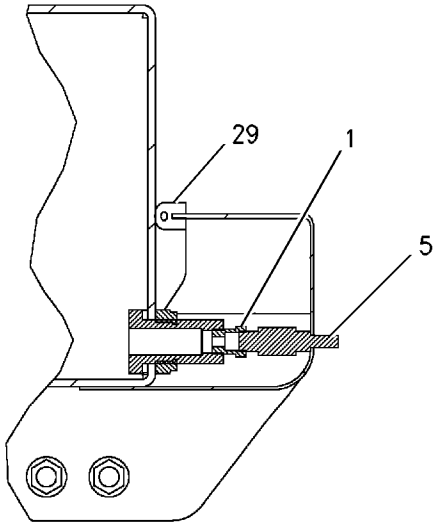

SECTION B-B

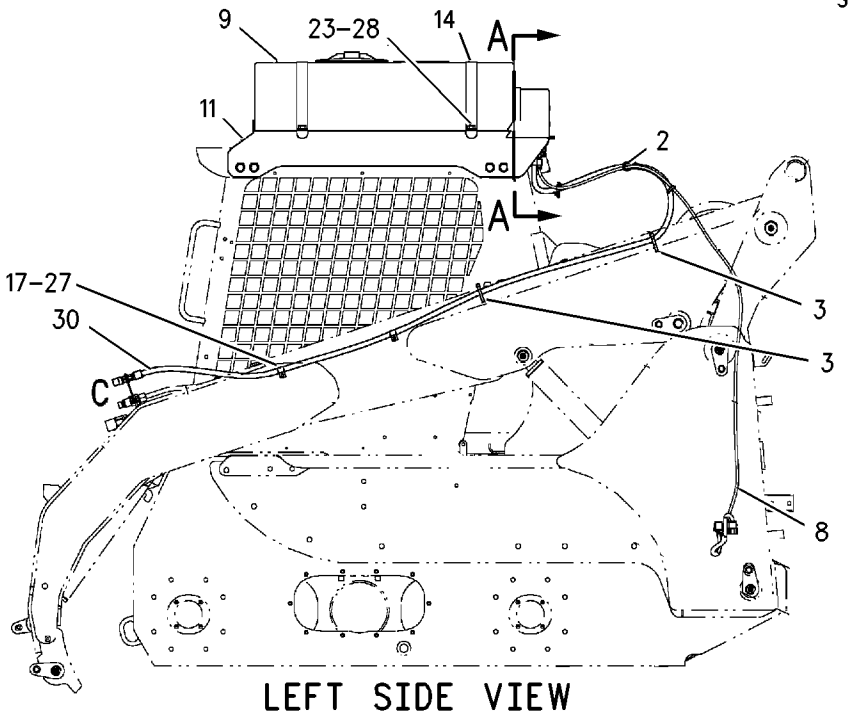

LEFT SIDE VIEW

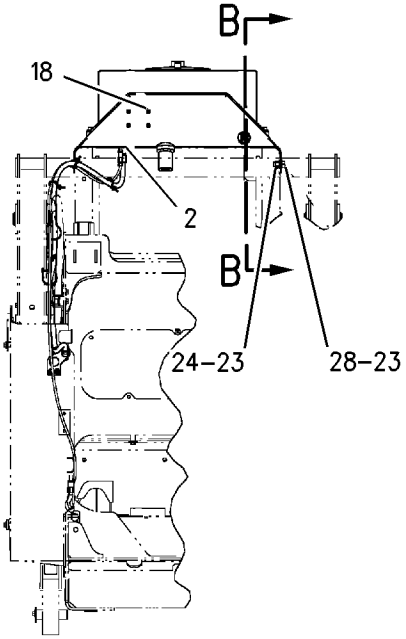

REAR VIEW

GRAPHIC #1

g00879388

141-4999 TOOTH GP-UNI

S/N: 4NZ3400-UP; 5FZ6700-UP
PART OF 152-0225 BUCKET AR-GENERAL PURPOSE, 154-5046, 154-5048 BUCKET AR-MULTIPURPOSE
AN ATTACHMENT

SMCS-6822 **i01755719**

NOTE	REF NO	GRAPHIC REF	PART NUMBER	QTY	PART NAME 1 2 3 4 5 6 (PRODUCT LEVEL)	SEE PAGE
	1	1	**132-4720**	1	TOOTH-UNI-SINGLE STRAP	
M	2	1	**159-2953**	2	SCREW-FLAT HEAD (M16X2.00 THD)	
M	3	1	**8T-4778**	2	LOCKNUT (M16X2 THD)	

M-METRIC PART

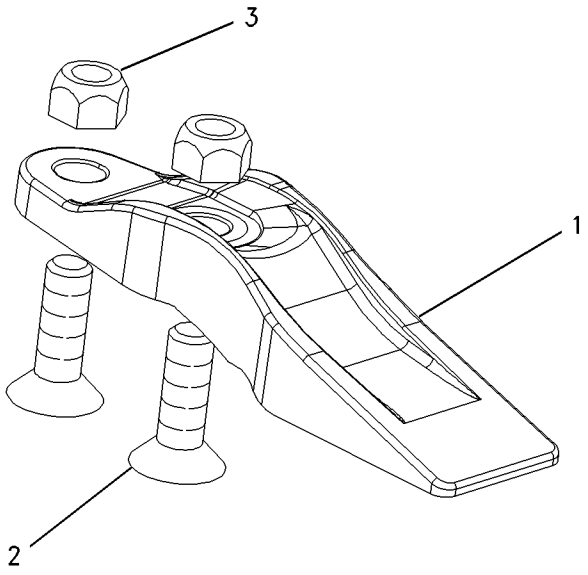

GRAPHIC #1 g00898307

OPERATOR STATION

195-6721 ARMREST & MOUNTING GP

S/N: CAB1-UP; CMB1-UP; 4NZ3400-UP; 5FZ6700-UP
PART OF 191-9799, 210-4699 OPERATOR AR-CANOPY

SMCS-7307, 7312 **i01519843**

NOTE	REF NO	GRAPHIC REF	PART NUMBER	QTY	PART NAME 1 2 3 4 5 6 (PRODUCT LEVEL)	SEE PAGE
	1	1	**4E-1384**	2	BUMPER-CONICAL	
Y	2	1	**142-9276**	1	ARMREST GP	498
	3	1	**142-9288**	2	PLATE	
	4	1	**195-0937**	2	INSERT-THREADED	
M	5	1	**5C-7261**	2	NUT (M8X1.25 THD)	
	6	1	**8T-4121**	4	WASHER-HARD (11X21X2.5MM THK)	
M	7	1	**8T-4133**	4	NUT (M10X1.5 THD)	

M-METRIC PART
Y-SEPARATE ILLUSTRATION

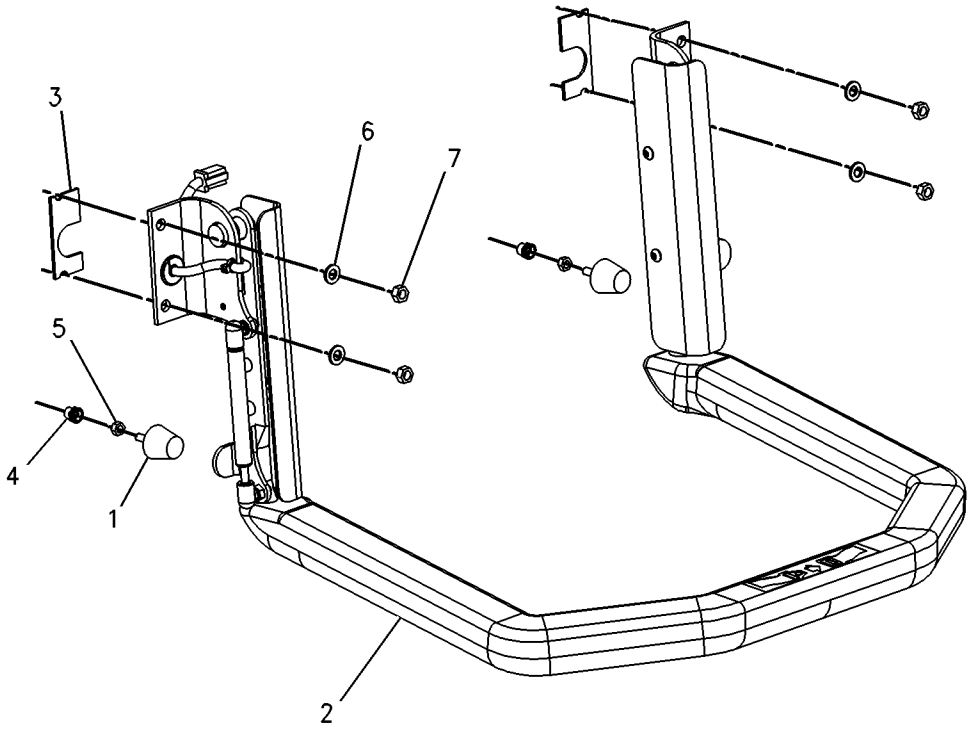

GRAPHIC #1 g00789233

OPERATOR STATION

142-9276 ARMREST GP

S/N: CAB1-UP; CMB1-UP; 4NZ3400-UP; 5FZ6700-UP
PART OF 195-6721 ARMREST & MOUNTING GP

SMCS-7307, 7312 **i01544065**

NOTE	REF NO	GRAPHIC REF	PART NUMBER	QTY	PART NAME 1 2 3 4 5 6 (PRODUCT LEVEL)	SEE PAGE
	1	1	**3S-2093**	1	STRAP-CABLE	
	2	1	**7D-8431**	2	RING-RETAINING	
	3	1	**7G-7053**	1	GROMMET	
	4	1	**9P-4609**	1	ACTUATOR-MAGNETIC	
	5	1	**9S-0285**	2	BEARING-SLEEVE	
	7	1	**142-9278**	1	BRACKET AS-RH	
	8	1	**142-9279**	1	BRACKET AS-LH	
	9	1	**142-9287**	1	SPRING AS-GAS	
	10	1	**142-9386**	1	BRACKET AS	
	11	1	**152-4875**	2	COVER AS	
	12	1	**152-4884**	1	BRACKET AS	
	13	1	**162-0223**	1	SWITCH AS (INTERLOCK)	
E		1	**9X-1813**		SLEEVE (24CM)	
		1	**176-2947**	1	PLUG KIT-CONN	
					(INCLUDES PLUG AS AND WEDGE)	
	14	1	**103-6262**	4	SCREW-MACHINE (4-40X.63 IN)	
	15	1	**130-1916**	2	STUD-BALL	
	16	1	**142-2928**	4	LOCKNUT	
M	17	1	**5C-9553**	4	BOLT (M6X1X16MM)	
	18	1	**8T-4205**	4	WASHER-HARD (7.2X14.5X2MM THK)	
	19	1	**8T-4224**	1	WASHER-HARD (8.8X16X2MM THK)	
M	20	1	**9X-2042**	4	SCREW-TRUSS HEAD (M6X1X12MM)	

E-ORDER BY THE CENTIMETER
M-METRIC PART

142-9276 ARMREST GP *(contd.)*

i01544065

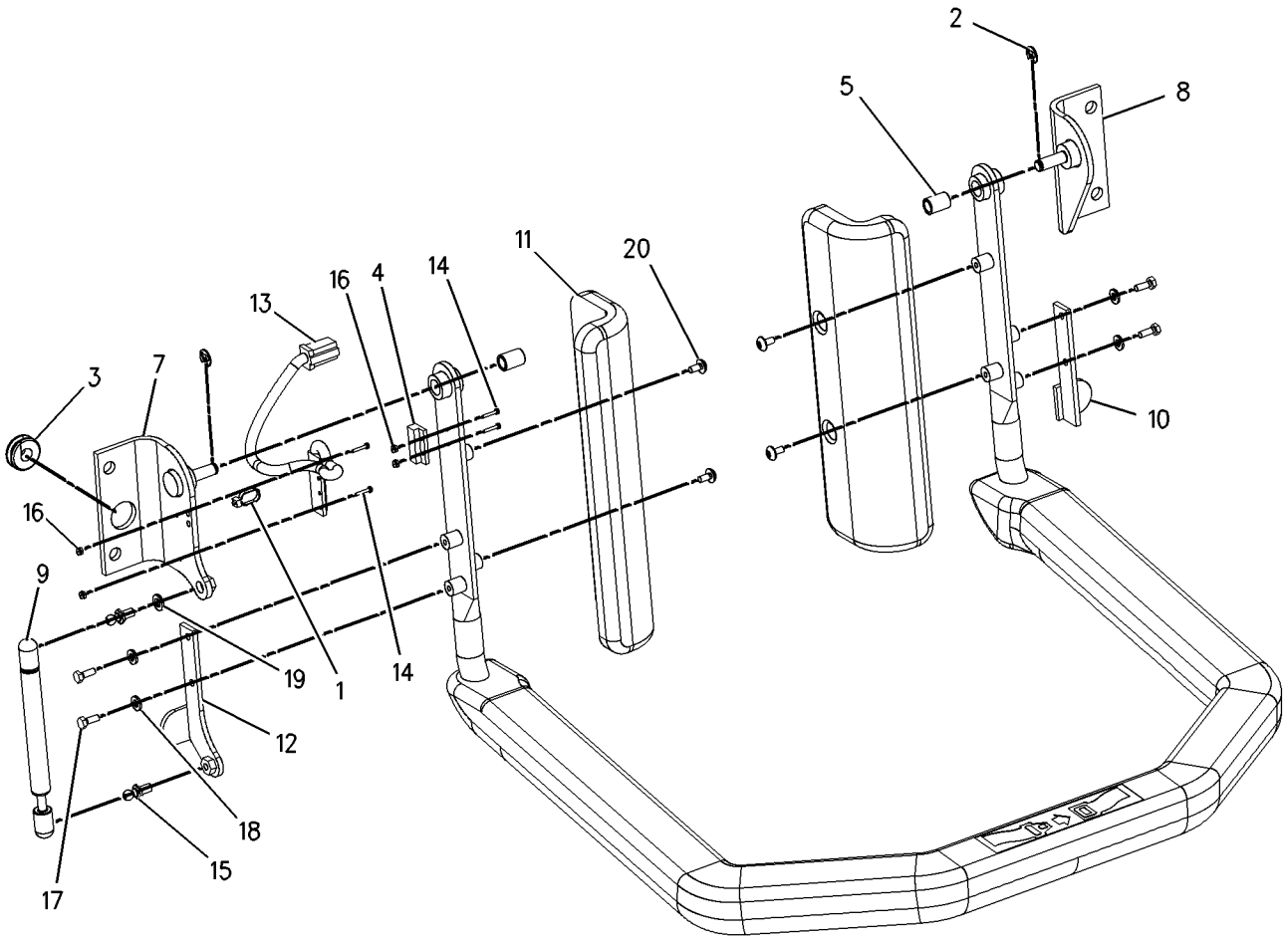

GRAPHIC #1

g00789235

OPERATOR STATION

166-2570 BOX GP-STORAGE

S/N: 4NZ3400-UP; 5FZ6700-UP
PART OF 206-3776, 206-3777, 206-3778, 206-3779 CONVERSION AR-ROADING AN ATTACHMENT

SMCS-7268 **i01299245**

NOTE	REF NO	GRAPHIC REF	PART NUMBER	QTY	PART NAME 1 2 3 4 5 6 (PRODUCT LEVEL)	SEE PAGE
	1	1	**8T-2895**	1	LOCK AS-CYLINDER	
	2	1	**166-2571**	1	TOOL BOX AS	
		1	**5G-8871**	5	BOSS	
	3	1	**6V-1391**		SEAL (0.5M)	

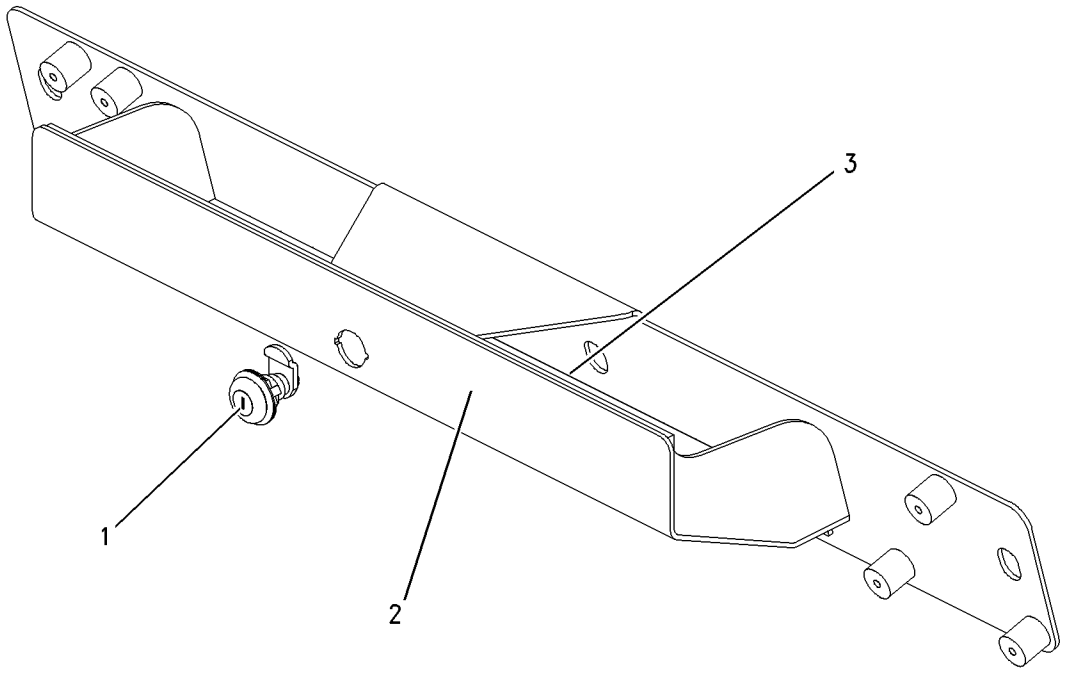

GRAPHIC #1 g00694802

OPERATOR STATION

206-3819 CANOPY GP-ROPS

S/N: CAB1-UP; CMB1-UP; 4NZ3400-UP; 5FZ6700-UP
FIELD REPLACEMENT FOR 191-9781 CANOPY GP-ROPS
FIELD INSTALLATION

SMCS-7323 **i01761407**

NOTE	REF NO	GRAPHIC REF	PART NUMBER	QTY	PART NAME 1 2 3 4 5 6 (PRODUCT LEVEL)	SEE PAGE
	1	1	**191-9781**	1	CANOPY GP-ROPS	
	2	1	**195-0939**	2	STUD-THREADED	
	3	1	**195-0935**	4	INSERT-THREADED	
	4	1	**195-0936**	12	INSERT-THREADED (M6X1)	
	5	1	**195-0937**	8	INSERT-THREADED	

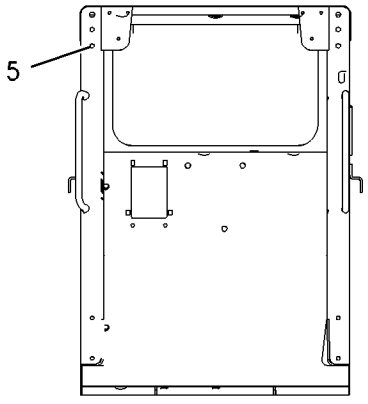

FRONT VIEW

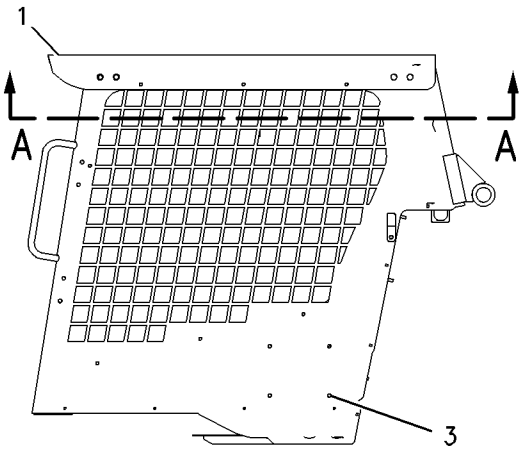

LEFT SIDE VIEW

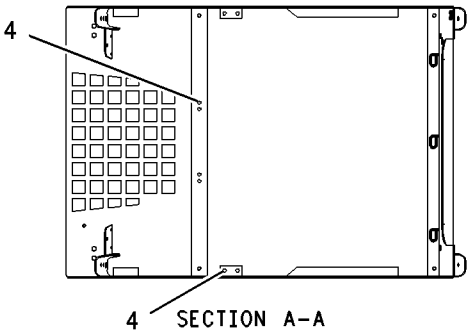

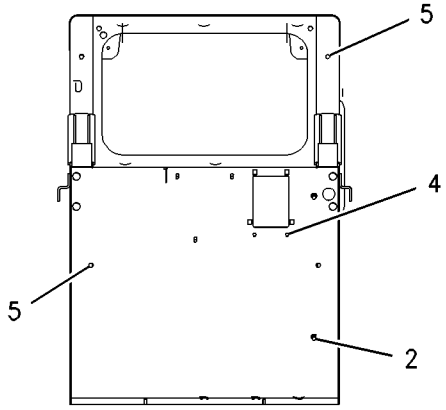

REAR VIEW

GRAPHIC #1 g00901100

OPERATOR STATION

142-9118 COVER GP-CAB

S/N: CAB1-UP; CMB1-UP; 4NZ3400-UP; 5FZ6700-UP
PART OF 193-8371 PANEL GP-INSTRUMENT
AN ATTACHMENT

SMCS-7301, 7478 **i01755054**

NOTE	REF NO	GRAPHIC REF	PART NUMBER	QTY	PART NAME 1 2 3 4 5 6 (PRODUCT LEVEL)	SEE PAGE
	1	1	**158-6695**	1	COVER	
	2	1	**214-2465**	1	KIT-SERVICE METER	
					(INCLUDES METER, FILM, BOLT, AND LOCKNUT)	
	3	1	**215-3207**	1	HARNESS AS	
		1	**102-8803**	1	KIT-RECEPTACLE (3 PIN)	
	4	1	**103-2006**	2	SCREW-PAN HEAD	

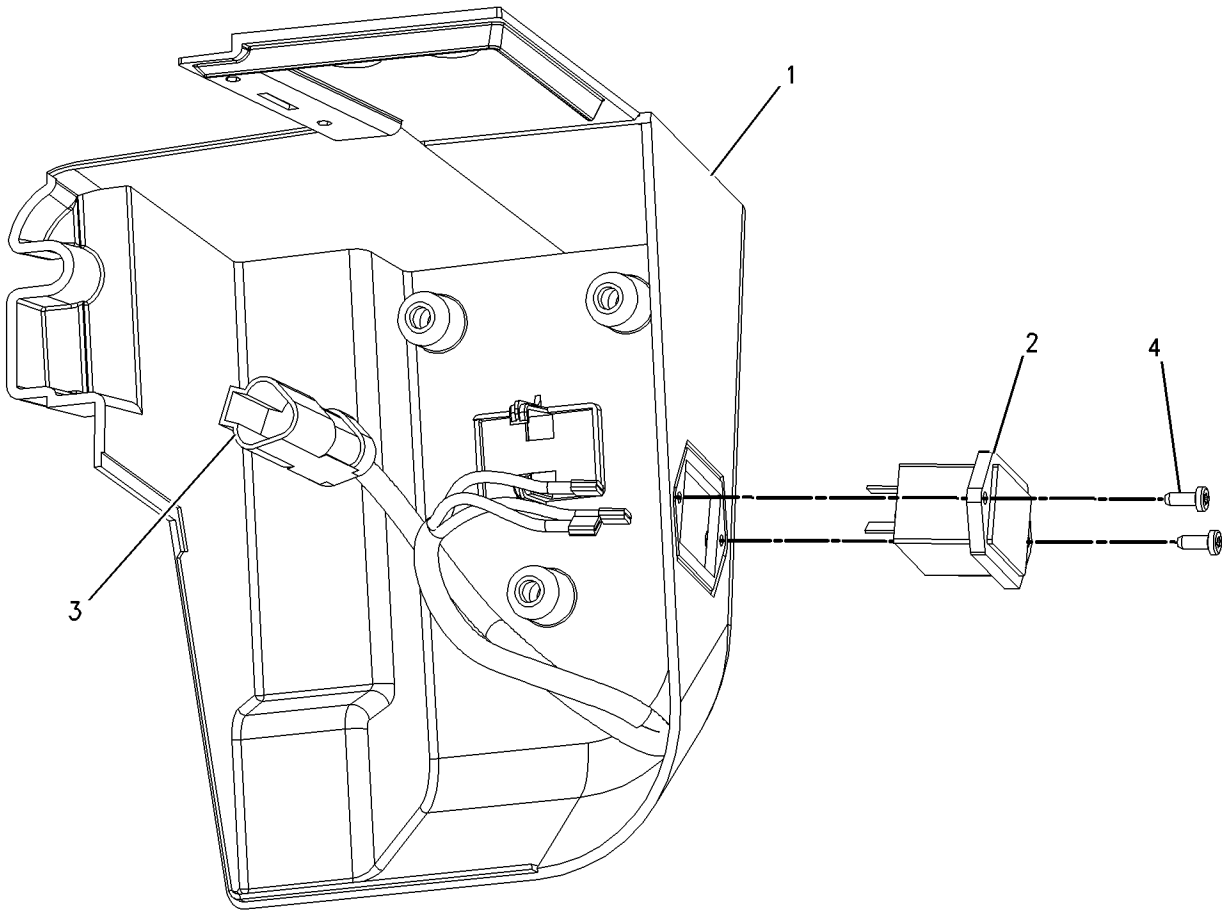

GRAPHIC #1 g00865346

OPERATOR STATION

142-9269 COVER GP-CONSOLE

S/N: CAB1-UP; 4NZ3400-UP; 5FZ6700-UP
PART OF 142-9330, 206-3790 HEATER & MTG GP-CAB
FOR USE WITH HEATER
AN ATTACHMENT

SMCS-5258 **i01075191**

NOTE	REF NO	GRAPHIC REF	PART NUMBER	QTY	PART NAME 1 2 3 4 5 6 (PRODUCT LEVEL)	SEE PAGE
	1	1	**142-9270**	1	COVER-LH	
	2	1	**142-9271**	1	COVER-RH	
M	3	1	**9X-2045**	8	SCREW-TRUSS HEAD (M6X1X20MM)	

M-METRIC PART

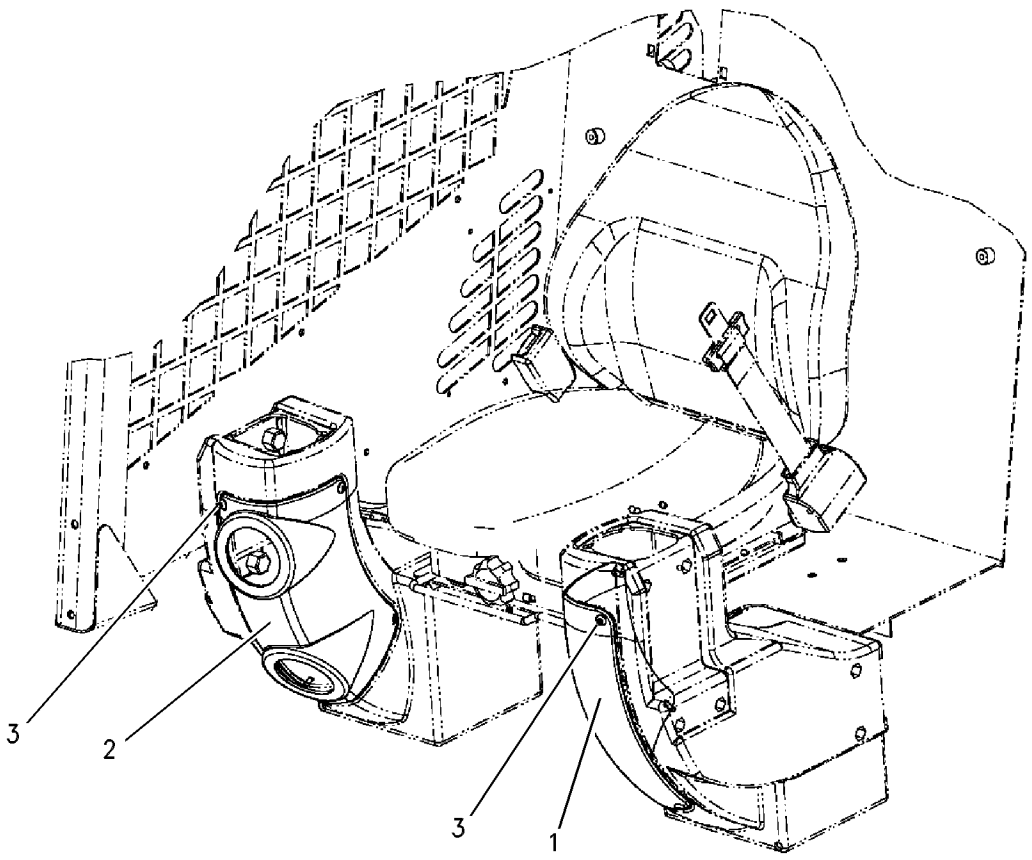

GRAPHIC #1 g00561010

142-9274 COVER GP-CONSOLE

S/N: CAB1-UP; CMB1-UP; 4NZ3400-UP; 5FZ6700-UP
PART OF 220-8098 INSTALLATION AR-HEATER
CANNOT BE USED WITH 142-9330—PAGE 529
AN ATTACHMENT

SMCS-5258 **i01620115**

NOTE	REF NO	GRAPHIC REF	PART NUMBER	QTY	PART NAME 1 2 3 4 5 6 (PRODUCT LEVEL)	SEE PAGE
	1	1	**142-9268**	1	PLATE	
	2	1	**142-9270**	1	COVER-LH	
	3	1	**142-9272**	1	PLATE	
	4	1	**142-9275**	1	COVER-RH	
M	5	1	**5C-2890**	4	NUT (M6X1 THD)	
	6	1	**8D-9671**	1	CLIP	
	7	1	**8T-4121**	1	WASHER-HARD (11X21X2.5MM THK)	
M	8	1	**8T-4136**	1	BOLT (M10X1.5X25MM)	
	9	1	**8T-4205**	4	WASHER-HARD (7.2X14.5X2MM THK)	
M	10	1	**9X-1046**	4	SCREW (M4X0.7X18MM)	
M	11	1	**9X-2044**	4	SCREW-TRUSS HEAD (M6X1X16MM)	
M	12	1	**9X-2045**	8	SCREW-TRUSS HEAD (M6X1X20MM)	

M-METRIC PART

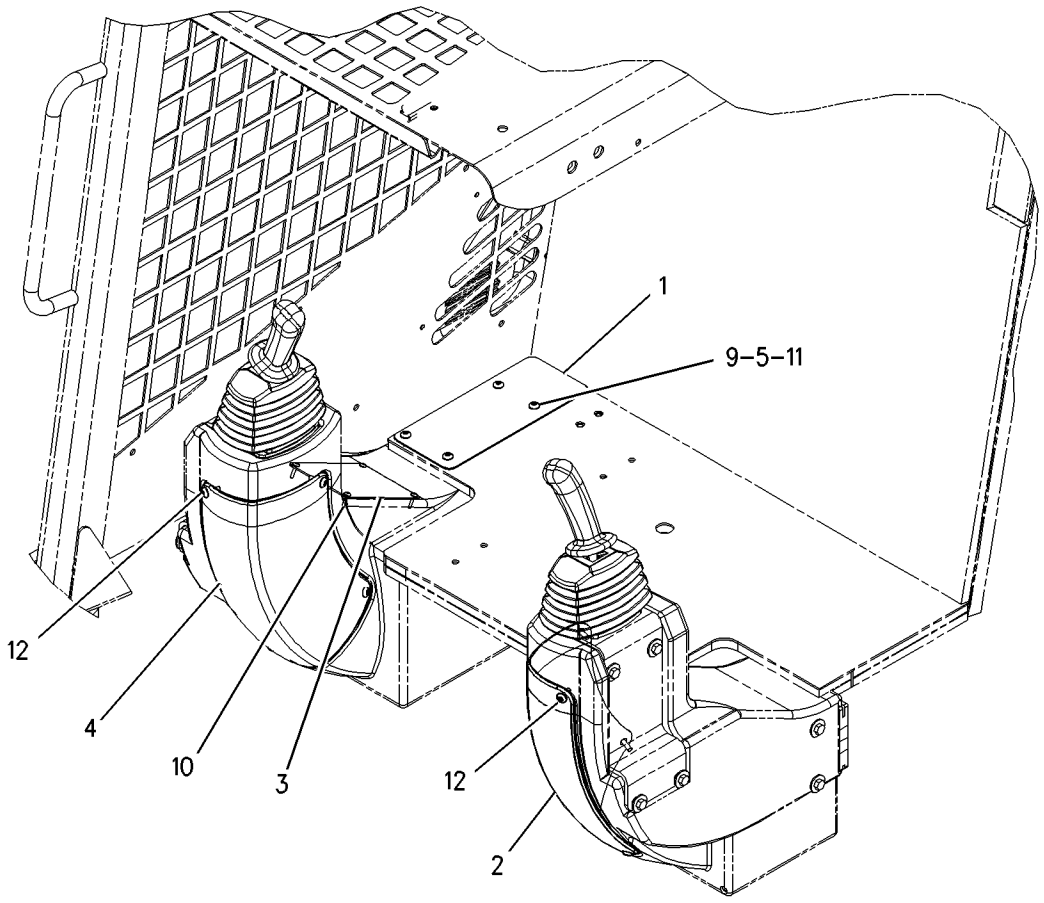

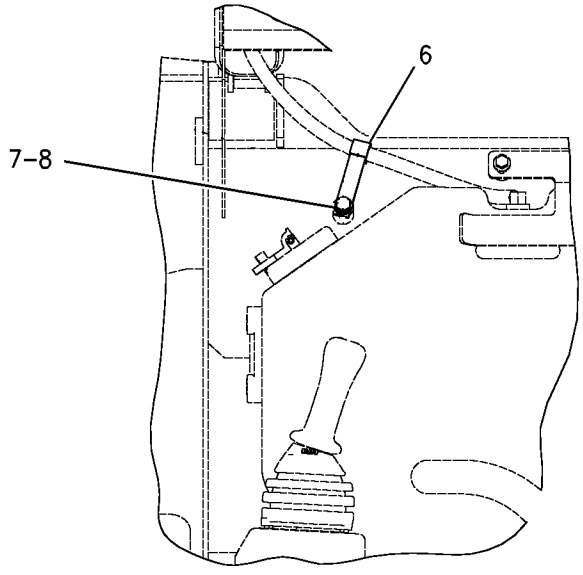

VIEW OF HYDRAULIC TANK

GRAPHIC #1 g00839740

OPERATOR STATION

195-6724 DOOR & MTG GP-CAB

S/N: 4NZ3400-UP; 5FZ6700-UP
CANNOT BE USED WITH 195-6726—PAGE 512
AN ATTACHMENT

SMCS-7308 **i01575548**

NOTE	REF NO	GRAPHIC REF	PART NUMBER	QTY	PART NAME 1 2 3 4 5 6 (PRODUCT LEVEL)	SEE PAGE
	1	2	**3S-2093**	1	STRAP-CABLE	
	2	1	**8T-2444**	1	STUD-BALL	
	3	1	**8T-3848**	1	STRIKER AS-LATCH	
		1	**6V-4270**	1	LOCKWASHER	
	4	2	**142-9127**	1	HARNESS AS-WINDOW WIPER	
		2	**155-2260**	1	KIT-CONNECTING PLUG (3 PIN)	
		2	**102-8803**	1	KIT-RECEPTACLE (3 PIN)	
	5	1	**142-9285**	1	SPRING AS-GAS	
	6	1	**142-9318**	1	STEP AS	
Y	7	1	**142-9340**	1	DOOR GP-CAB (GLASS)	518
	8	1	**142-9348**	1	PLATE AS	
	9	1	**142-9355**	1	MOUNT	
	10	1	**142-9356**	1	BLOCK	
	11	2	**150-8622**	2	HINGE AS	
		2	**5P-0372**	1	LOCKPIN	
	12	2	**159-5799**	1	HANDLE	
M	13	1,2	**127-2170**	8	SCREW-TRUSS HEAD (M8X1.25X20MM)	
	14	1	**195-0937**	4	INSERT-THREADED	
M	15	1	**5C-2890**	4	NUT (M6X1 THD)	
M	16	1,2	**5C-7261**	4	NUT (M8X1.25 THD)	
	17	2	**8T-4121**	6	WASHER-HARD (11X21X2.5MM THK)	
M	18	2	**8T-4133**	6	NUT (M10X1.5 THD)	
	19	1	**8T-4205**	4	WASHER-HARD (7.2X14.5X2MM THK)	
	20	1,2	**8T-4224**	5	WASHER-HARD (8.8X16X2MM THK)	
M	21	2	**9X-2041**	10	SCREW-TRUSS HEAD (M10X1.5X20MM)	
M	22	1	**9X-2045**	4	SCREW-TRUSS HEAD (M6X1X20MM)	
BE	23	2	**124-3243**		SEAL (45CM)	
BE	24	2	**125-3518**		SEAL (65CM)	

B-USE AS REQUIRED
E-ORDER BY THE CENTIMETER
M-METRIC PART
Y-SEPARATE ILLUSTRATION

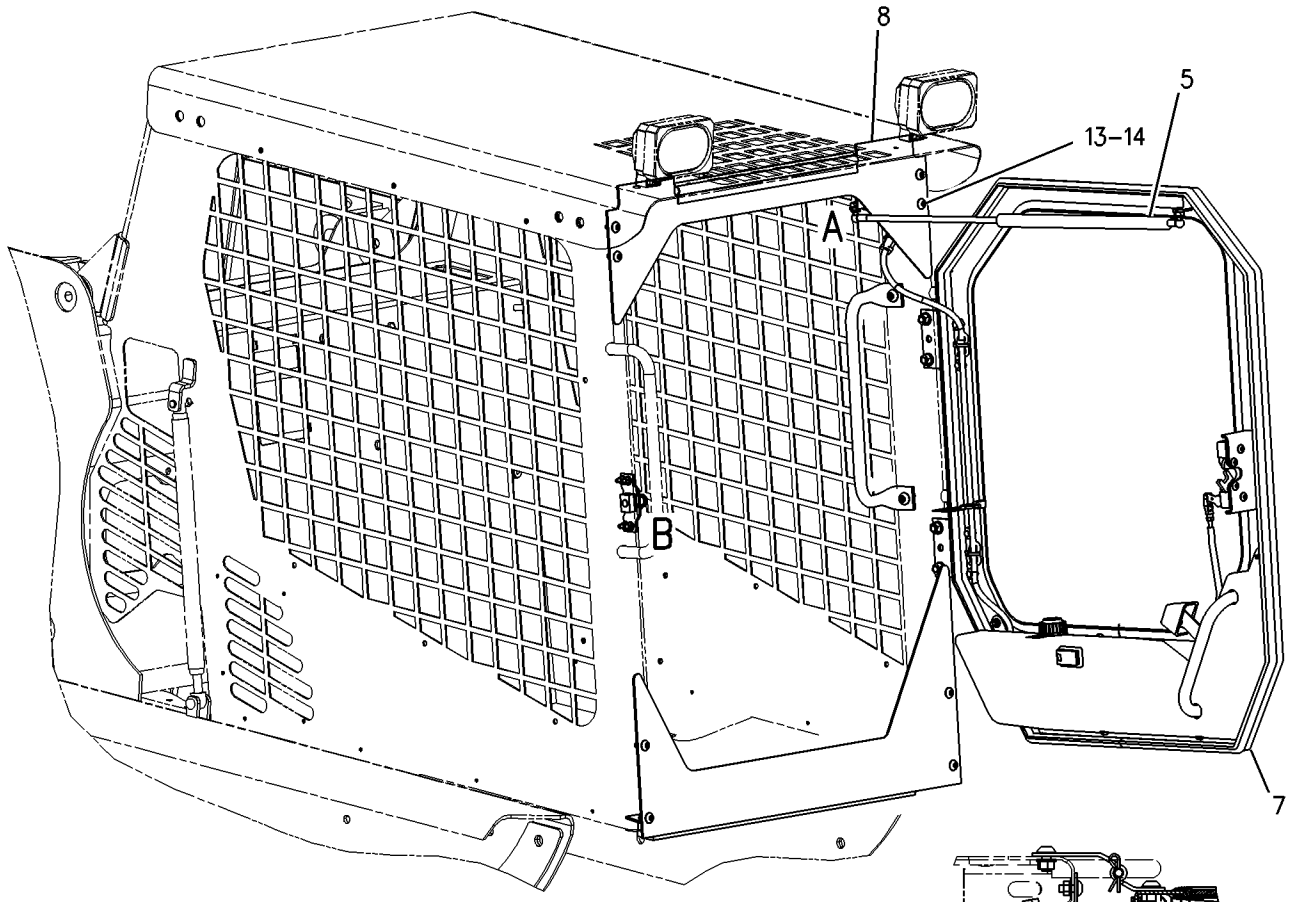

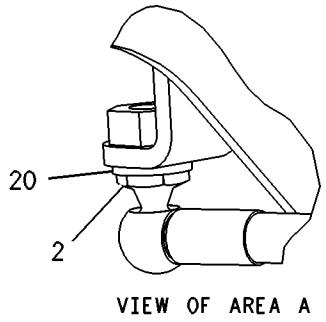

VIEW OF AREA A

REFER TO ALL ILLUSTRATIONS
IN THIS GROUP FOR
AUXILIARY VIEWS

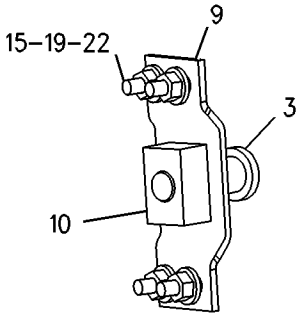

VIEW OF AREA B

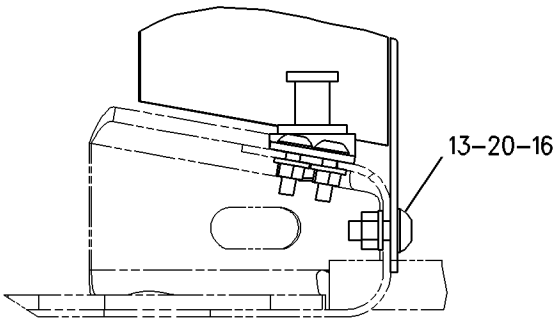

VIEW OF AREA G

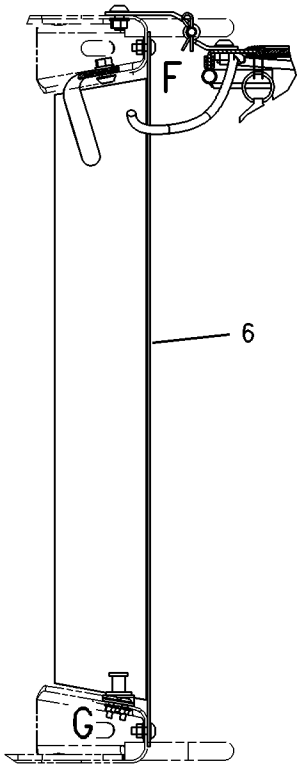

SECTION D-D

GRAPHIC #1 g00768046

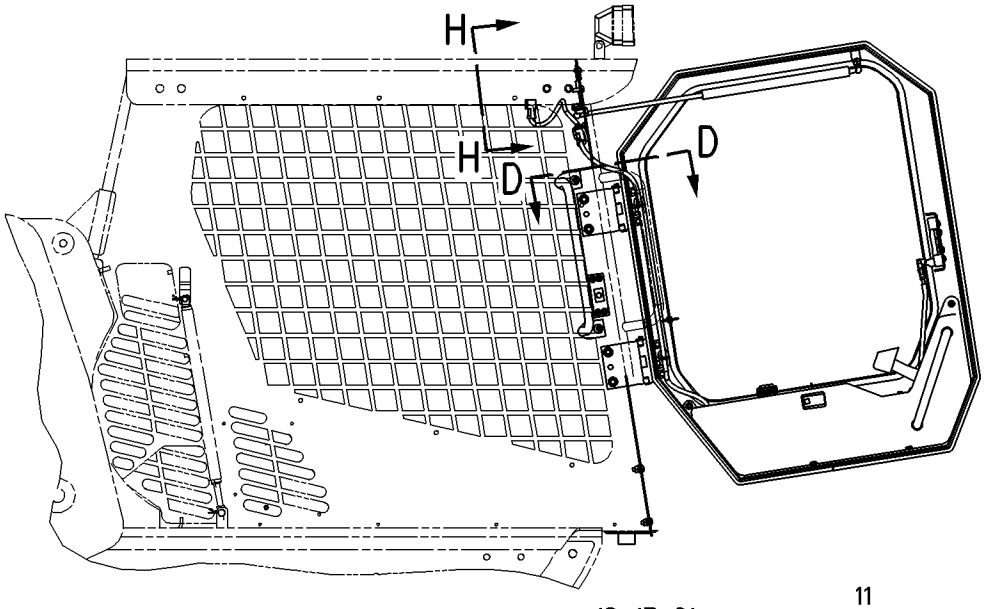

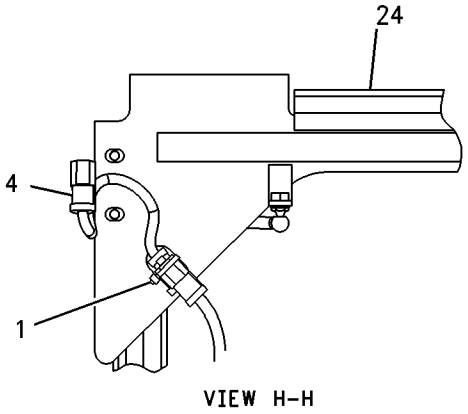

VIEW H-H

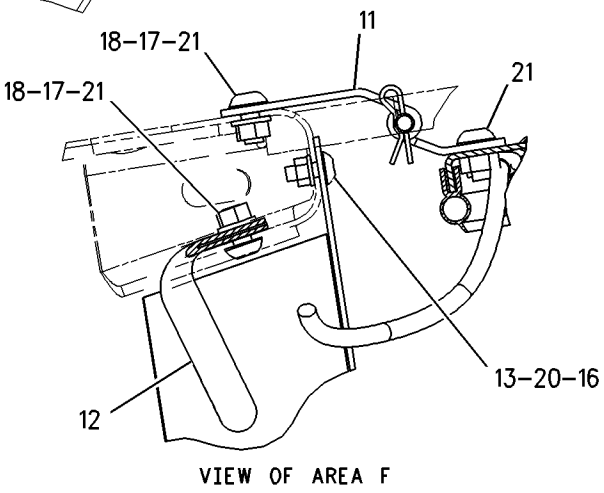

VIEW OF AREA F

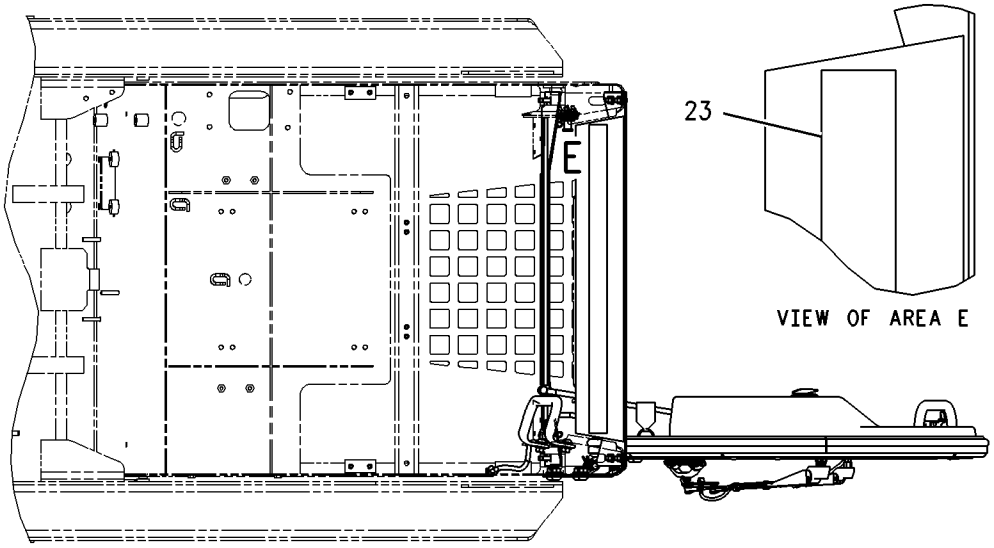

VIEW OF AREA E

GRAPHIC #2 g00768047

MEMORANDA

OPERATOR STATION

195-6724 DOOR & MTG GP-CAB

S/N: CAB1-UP; CMB1-UP; 4NZ5200-UP; 5FZ6700-UP
CANNOT BE USED WITH 195-6726—PAGE 512
AN ATTACHMENT

SMCS-7308 **i01755059**

NOTE	REF NO	GRAPHIC REF	PART NUMBER	QTY	PART NAME 1 2 3 4 5 6 (PRODUCT LEVEL)	SEE PAGE
	1	1	**3S-2093**	1	STRAP-CABLE	
	2	1	**8T-2444**	1	STUD-BALL	
	3	1	**8T-3848**	1	STRIKER AS-LATCH	
		1	**6V-4270**	1	LOCKWASHER	
	4	1	**142-9127**	1	HARNESS AS-WINDOW WIPER	
		1	**102-8803**	1	KIT-RECEPTACLE (3 PIN)	
	5	1	**142-9285**	1	SPRING AS-GAS	
	6	1	**142-9318**	1	STEP AS	
Y	7	1	**142-9340**	1	DOOR GP-CAB (GLASS)	518
	8	1	**142-9355**	1	MOUNT	
	9	1	**142-9356**	1	BLOCK	
	10	1	**150-8622**	2	HINGE AS	
		1	**5P-0372**	1	LOCK PIN	
	11	1	**159-5799**	1	HANDLE	
	12	1	**206-3817**	1	PLATE AS	
		1	**7T-1099**	1	LINK	
M		1	**8T-3612**	1	NUT-WELD (M8X1.25 THD)	
M	13	1	**127-2170**	8	SCREW-TRUSS HEAD (M8X1.25X20MM)	
	14	1	**195-0937**	4	INSERT-THREADED	
M	15	1	**5C-2890**	4	NUT (M6X1 THD)	
M	16	1	**5C-7261**	4	NUT (M8X1.25 THD)	
	17	1	**8T-4121**	6	WASHER-HARD (11X21X2.5MM THK)	
M	18	1	**8T-4133**	6	NUT (M10X1.5 THD)	
	19	1	**8T-4205**	4	WASHER-HARD (7.2X14.5X2MM THK)	
	20	1	**8T-4224**	5	WASHER-HARD (8.8X16X2MM THK)	
M	21	1	**9X-2041**	10	SCREW-TRUSS HEAD (M10X1.5X20MM)	
M	22	1	**9X-2045**	4	SCREW-TRUSS HEAD (M6X1X20MM)	
E	23	1	**3E-8082**		SEAL (72CM)	
E	24	1	**125-3518**		SEAL (65CM)	

E-ORDER BY THE CENTIMETER
M-METRIC PART
Y-SEPARATE ILLUSTRATION

195-6724 **DOOR & MTG GP-CAB** ***(contd.)*** **i01755059**

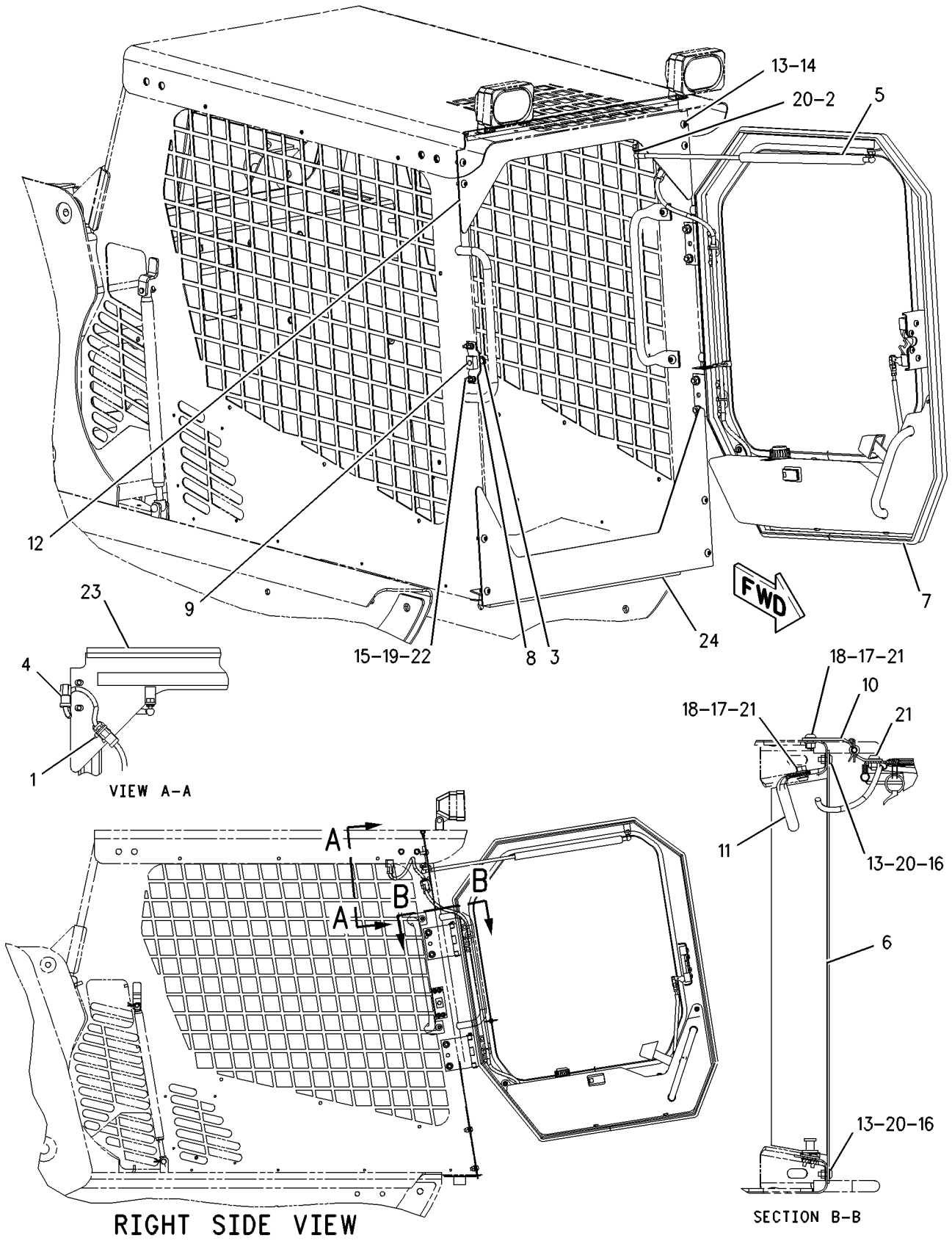

GRAPHIC #1 g00866078

OPERATOR STATION

195-6726 DOOR & MTG GP-CAB

S/N: 4NZ3400-UP; 5FZ6700-UP
POLYCARBONATE
CANNOT BE USED WITH 195-6724—PAGE 506
AN ATTACHMENT

SMCS-7308 **i01755067**

NOTE	REF NO	GRAPHIC REF	PART NUMBER	QTY	PART NAME 1 2 3 4 5 6 (PRODUCT LEVEL)	SEE PAGE
	1	2	**3S-2093**	1	STRAP-CABLE	
	2	1	**8T-2444**	1	STUD-BALL	
	3	1	**8T-3848**	1	STRIKER AS-LATCH	
		1	**6V-4270**	1	LOCKWASHER	
	4	2	**142-9127**	1	HARNESS AS-WINDOW WIPER	
		2	**155-2260**	1	KIT-CONNECTING PLUG (3 PIN)	
		2	**102-8803**	1	KIT-RECEPTACLE (3 PIN)	
	5	1	**142-9285**	1	SPRING AS-GAS	
	6	1	**142-9318**	1	STEP AS	
	7	1	**142-9348**	1	PLATE AS	
	8	1	**142-9355**	1	MOUNT	
	9	1	**142-9356**	1	BLOCK	
	10	2	**150-8622**	2	HINGE AS	
		2	**5P-0372**	1	LOCK PIN	
	11	2	**159-5799**	1	HANDLE	
Y	12	1	**159-5801**	1	DOOR GP-CAB (POLYCARBONATE)	520
M	13	1,2	**127-2170**	8	SCREW-TRUSS HEAD (M8X1.25X20MM)	
	14	1	**195-0937**	4	INSERT-THREADED	
M	15	1	**5C-2890**	4	NUT (M6X1 THD)	
M	16	1,2	**5C-7261**	4	NUT (M8X1.25 THD)	
	17	2	**8T-4121**	6	WASHER-HARD (11X21X2.5MM THK)	
M	18	2	**8T-4133**	6	NUT (M10X1.5 THD)	
	19	1	**8T-4205**	4	WASHER-HARD (7.2X14.5X2MM THK)	
	20	1,2	**8T-4224**	5	WASHER-HARD (8.8X16X2MM THK)	
M	21	2	**9X-2041**	10	SCREW-TRUSS HEAD (M10X1.5X20MM)	
M	22	1	**9X-2045**	4	SCREW-TRUSS HEAD (M6X1X20MM)	
BE	23	2	**124-3243**		SEAL (45CM)	
BE	24	2	**125-3518**		SEAL (65CM)	

B-USE AS REQUIRED
E-ORDER BY THE CENTIMETER
M-METRIC PART
Y-SEPARATE ILLUSTRATION

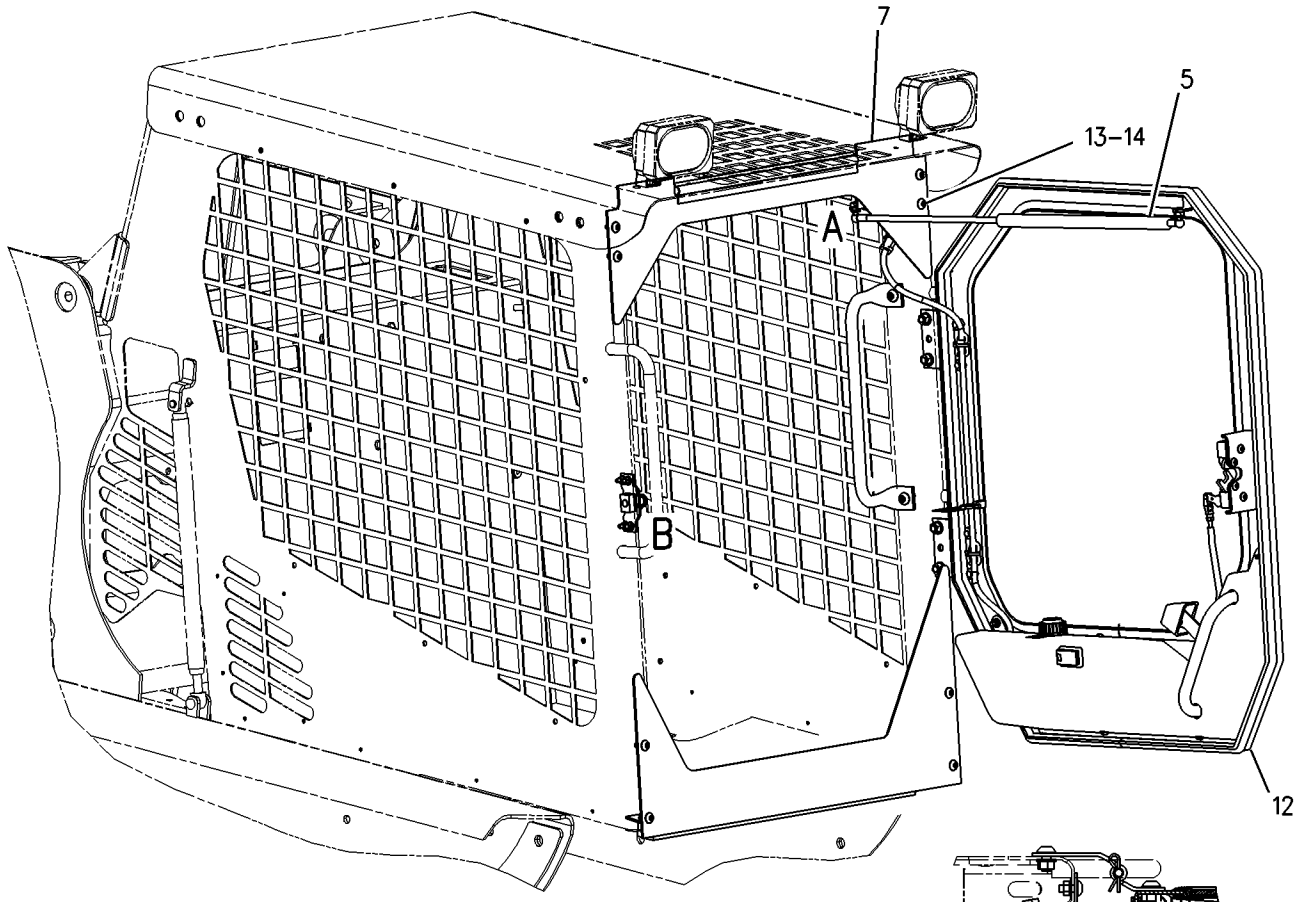

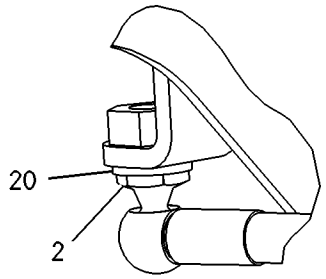

VIEW OF AREA A

REFER TO ALL ILLUSTRATIONS
IN THIS GROUP FOR
AUXILIARY VIEWS

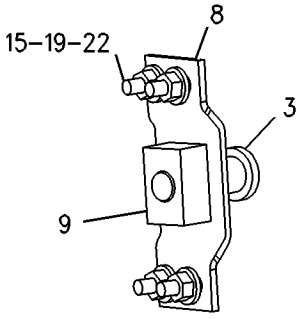

VIEW OF AREA B

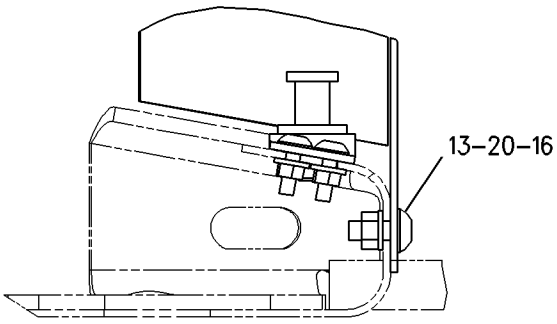

VIEW OF AREA G

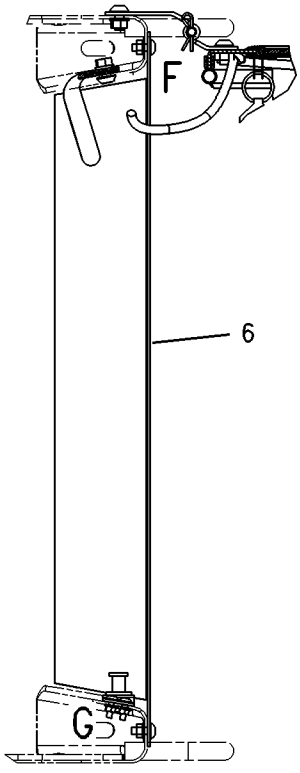

SECTION D-D

GRAPHIC #1 g00768025

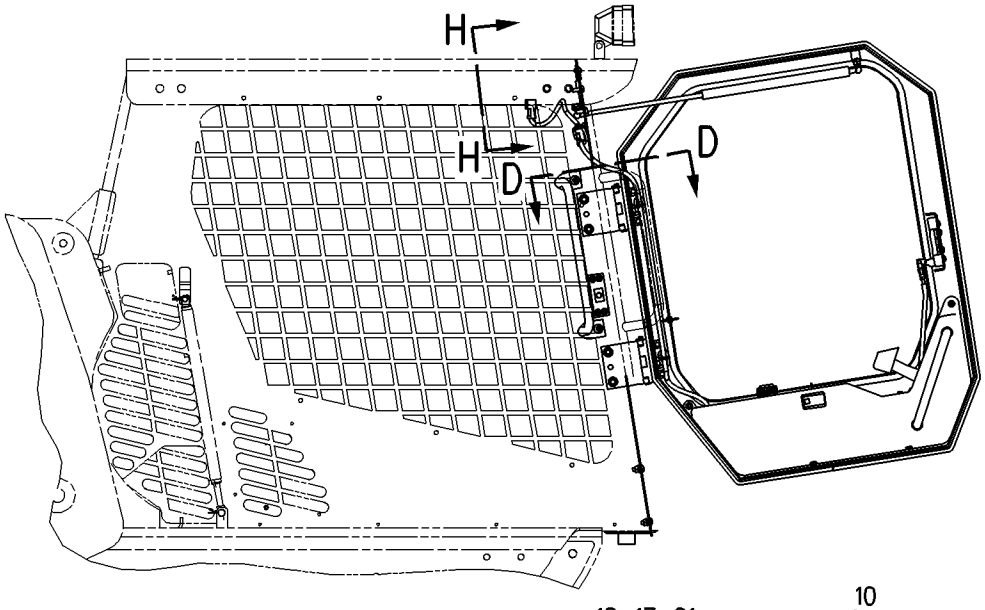

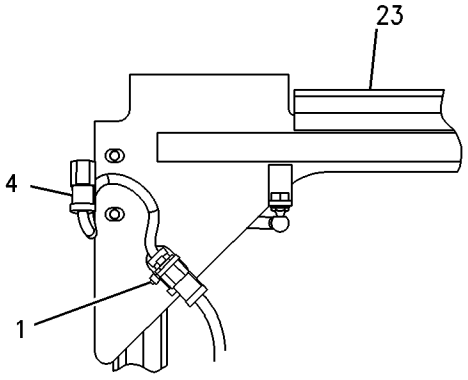

VIEW H-H

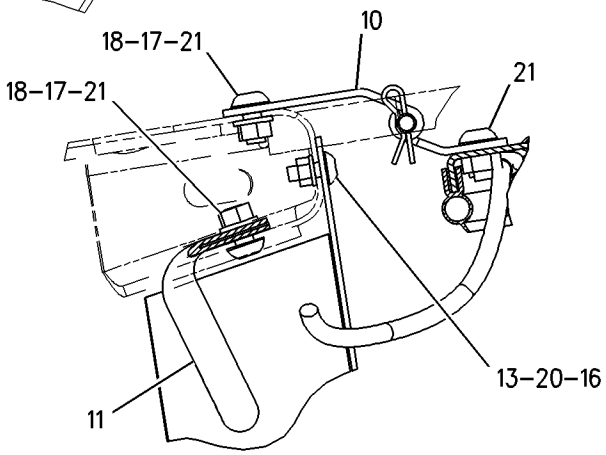

VIEW OF AREA F

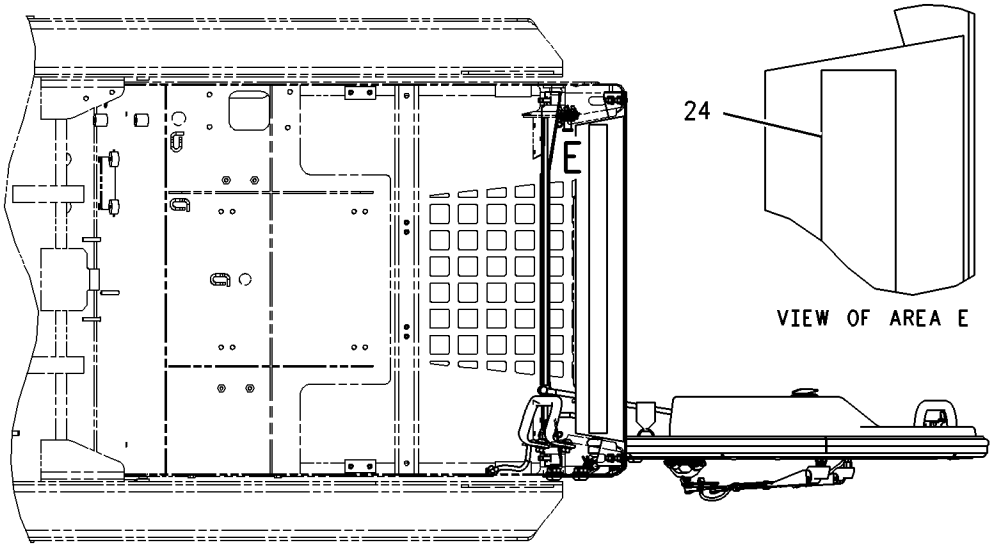

VIEW OF AREA E

GRAPHIC #2

g00768026

MEMORANDA

OPERATOR STATION

195-6726 DOOR & MTG GP-CAB

S/N: CAB1-UP; CMB1-UP; 4NZ3400-UP; 5FZ6700-UP
POLYCARBONATE
CANNOT BE USED WITH 195-6724—PAGE 506
AN ATTACHMENT

SMCS-7308 **i01674433**

NOTE	REF NO	GRAPHIC REF	PART NUMBER	QTY	PART NAME 1 2 3 4 5 6 (PRODUCT LEVEL)	SEE PAGE
	1	1	**3S-2093**	1	STRAP-CABLE	
	2	1	**8T-2444**	1	STUD-BALL	
	3	1	**8T-3848**	1	STRIKER AS-LATCH	
		1	**6V-4270**	1	LOCKWASHER	
	4	1	**142-9127**	1	HARNESS AS-WINDOW WIPER	
		1	**102-8803**		KIT-RECEPTACLE (3 PIN)	
		1	**3E-3371**	1	WEDGE-RECEPTACLE LOCK (3 PIN)	
		1	**144-1636**	3	PIN-CONNECTOR	
		1	**155-2276**	1	WEDGE-PLUG LOCK (3 PIN)	
	5	1	**142-9285**	1	SPRING AS-GAS	
	6	1	**142-9318**	1	STEP AS	
	7	1	**142-9355**	1	MOUNT	
	8	1	**142-9356**	1	BLOCK	
	9	1	**150-8622**	2	HINGE AS	
		1	**5P-0372**	1	LOCK PIN	
	10	1	**159-5799**	1	HANDLE	
Y	11	1	**159-5801**	1	DOOR GP-CAB (POLYCARBONATE)	520
	12	1	**206-3817**	1	PLATE AS	
		1	**7T-1099**	1	LINK	
M		1	**8T-3612**	1	NUT-WELD (M8X1.25 THD)	
M	13	1	**127-2170**	8	SCREW-TRUSS HEAD (M8X1.25X20MM)	
	14	1	**195-0937**	4	INSERT-THREADED	
M	15	1	**5C-2890**	4	NUT (M6X1 THD)	
M	16	1	**5C-7261**	4	NUT (M8X1.25 THD)	
	17	1	**8T-4121**	6	WASHER-HARD (11X21X2.5MM THK)	
M	18	1	**8T-4133**	6	NUT (M10X1.5 THD)	
	19	1	**8T-4205**	4	WASHER-HARD (7.2X14.5X2MM THK)	
	20	1	**8T-4224**	5	WASHER-HARD (8.8X16X2MM THK)	
M	21	1	**9X-2041**	10	SCREW-TRUSS HEAD (M10X1.5X20MM)	
M	22	1	**9X-2045**	4	SCREW-TRUSS HEAD (M6X1X20MM)	
	23	1	**3E-8082**		SEAL (72CM)	
	24	1	**125-3518**		SEAL (65CM)	

M-METRIC PART
Y-SEPARATE ILLUSTRATION

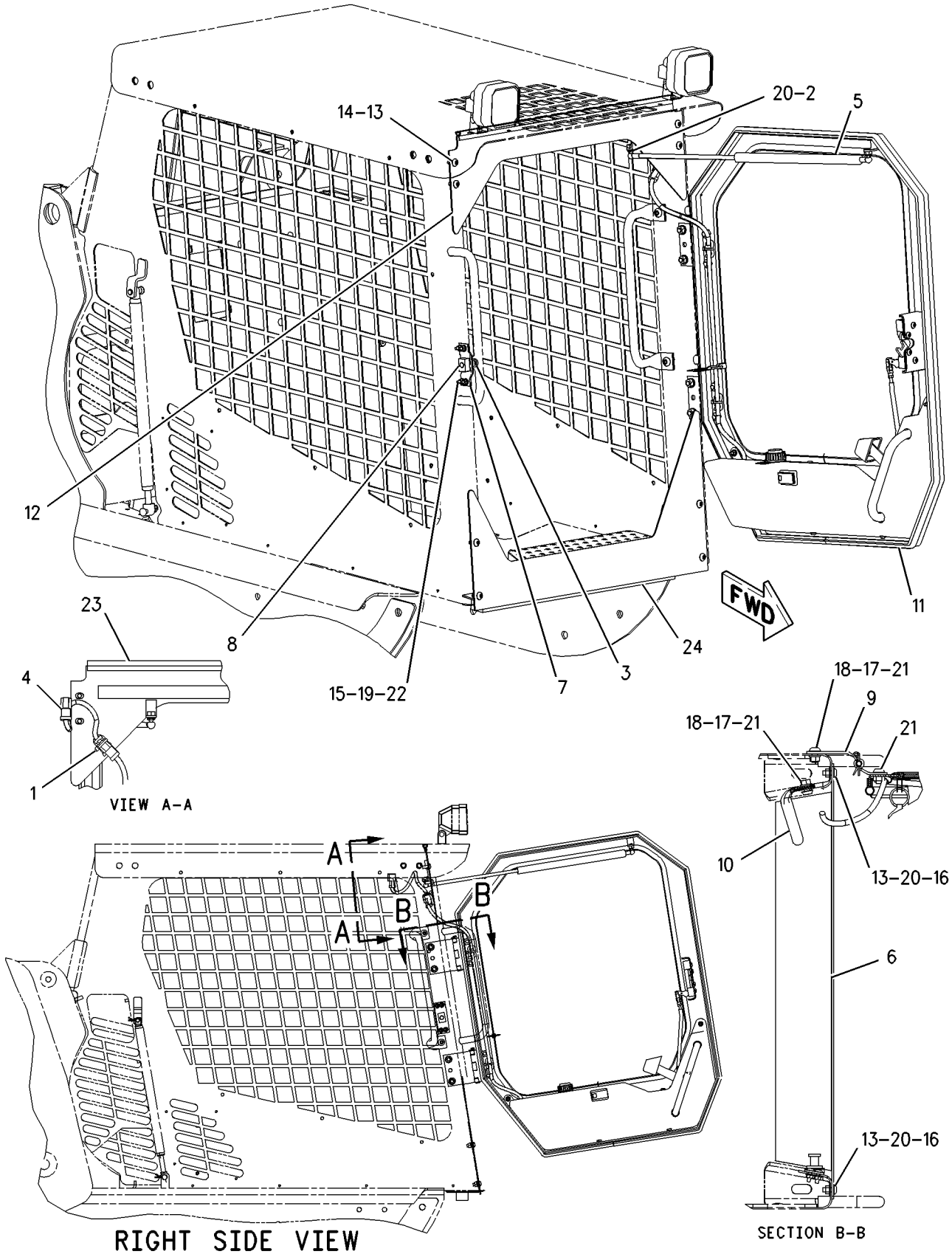

GRAPHIC #1 g00866094

OPERATOR STATION

142-9340 DOOR GP-CAB

S/N: CAB1-UP; CMB1-UP; 4NZ3400-UP; 5FZ6700-UP
GLASS WINDOW
PART OF 195-6724 DOOR & MTG GP-CAB, 178-2252 KIT-CAB DOOR & MOUNTING
AN ATTACHMENT

SMCS-7308 **i01755071**

NOTE	REF NO	GRAPHIC REF	PART NUMBER	QTY	PART NAME 1 2 3 4 5 6 (PRODUCT LEVEL)	SEE PAGE
	1	1	**3S-2093**	2	STRAP-CABLE	
	2	1	**5C-8310**	1	BRACKET-RING	
	3	1	**5C-8311**	1	RING	
	4	1	**6V-7636**	2	PIN AS-SPRING	
	5	1	**8T-2444**	1	STUD-BALL	
M	6	1	**8T-4180**	4	SCREW-MACHINE (M5X0.8X20MM)	
	7	1	**8T-5461**	1	HANDLE-LATCH	
	8	1	**8T-6842**	1	FILM-INSTRUCTION (ALTERNATE EXIT)	
	9	1	**109-2355**	1	HOUSING-SWITCH	
	10	1	**109-9828**	1	LATCH AS-ROTARY	
	11	1	**138-4883**	1	SWITCH AS (WIPER/WASHER)	
		1	**111-7899**	1	GASKET	
	12	1	**141-7633**	1	LINKAGE GP-DOOR	
		1	**6V-8185**	1	NUT (1/4-20 THD)	
		1	**108-5471**	1	CLEVIS	
	13	1	**141-7634**	1	HANDLE AS	
	14	1	**142-9128**	1	HARNESS AS-CAB	
	15	1	**142-9339**	1	BOTTLE AS-WASHER	
		1	**144-0195**		HOSE (12CM)	
	16	1	**142-9341**	1	DOOR AS	
	17	1	**142-9342**	1	GLASS	
	18	1	**142-9372**	1	HANDLE	
	19	1	**147-3019**	2	BRACKET	
	20	1	**159-5798**	1	COVER	
Y	21	1	**161-7522**	1	MOTOR GP-WINDOW WIPER	549
	22	1	**161-7523**	1	ARM AS-WIPER	
	23	1	**161-7524**	1	BLADE AS-WIPER	
M	24	1	**127-2170**	2	SCREW-TRUSS HEAD (M8X1.25X20MM)	
M	25	1	**131-3540**	2	LOCKNUT	
	26	1	**4V-5091**	1	GROMMET	
M	27	1	**5C-2890**	2	NUT (M6X1 THD)	
	28	1	**5Y-0974**	1	SCREW	
	29	1	**8T-4205**	2	WASHER-HARD (7.2X14.5X2MM THK)	
	30	1	**8T-4224**	2	WASHER-HARD (8.8X16X2MM THK)	
M	31	1	**9X-2042**	4	SCREW-TRUSS HEAD (M6X1X12MM)	
M	32	1	**9X-2045**	8	SCREW-TRUSS HEAD (M6X1X20MM)	
	33	1	**9X-8372**	1	FILM-INSTRUCTION (WASHER FILL)	
E	34	1	**124-3243**		SEAL (303CM)	
E	35	1	**104-5957**		STRIP-LOCKING (236CM)	
E	36	1	**108-0656**		SEAL (246CM)	

E-ORDER BY THE CENTIMETER
M-METRIC PART
Y-SEPARATE ILLUSTRATION

142-9340 **DOOR GP-CAB** ***(contd.)*** **i01755071**

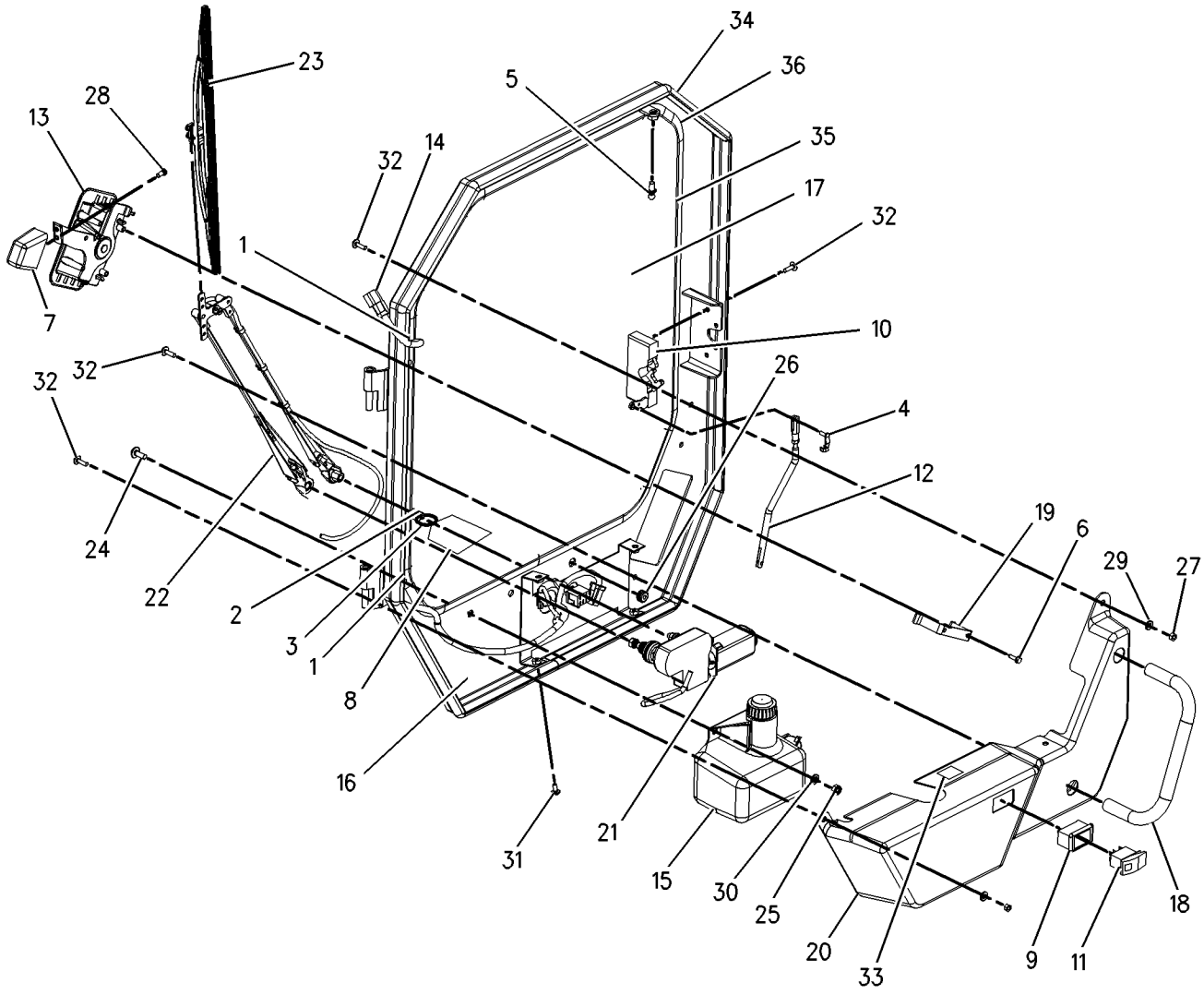

GRAPHIC #1 g00898031

OPERATOR STATION

159-5801 DOOR GP-CAB

S/N: CAB1-UP; CMB1-UP; 4NZ3400-UP; 5FZ6700-UP
POLYCARBONATE WINDOW
PART OF 195-6726 DOOR & MTG GP-CAB, 178-2253 KIT-CAB DOOR & MOUNTING
AN ATTACHMENT

SMCS-7308 **i01755102**

NOTE	REF NO	GRAPHIC REF	PART NUMBER	QTY	PART NAME 1 2 3 4 5 6 (PRODUCT LEVEL)	SEE PAGE
	1	1	**3S-2093**	2	STRAP-CABLE	
	2	1	**5C-8310**	1	BRACKET-RING	
	3	1	**5C-8311**	1	RING	
	4	1	**6V-7636**	2	PIN AS-SPRING	
	5	1	**8T-2444**	1	STUD-BALL	
M	6	1	**8T-4180**	4	SCREW-MACHINE (M5X0.8X20MM)	
	7	1	**8T-5461**	1	HANDLE-LATCH	
	8	1	**8T-6842**	1	FILM-INSTRUCTION (ALTERNATE EXIT)	
	9	1	**9X-8372**	1	FILM-INSTRUCTION (WASHER FILL)	
	10	1	**109-2355**	1	HOUSING-SWITCH	
	11	1	**109-9828**	1	LATCH AS-ROTARY	
	12	1	**138-4883**	1	SWITCH AS (WIPER/WASHER)	
		1	**111-7899**	1	GASKET	
	13	1	**141-7633**	1	LINKAGE GP-DOOR	
		1	**6V-8185**	1	NUT (1/4-20 THD)	
		1	**108-5471**	1	CLEVIS	
	14	1	**141-7634**	1	HANDLE AS	
	15	1	**142-9128**	1	HARNESS AS-CAB	
	16	1	**142-9339**	1	BOTTLE AS-WASHER	
E		1	**144-0195**		HOSE (12CM)	
	17	1	**142-9341**	1	DOOR AS	
	18	1	**142-9372**	1	HANDLE	
	19	1	**147-3019**	2	BRACKET	
	20	1	**159-5798**	1	COVER	
Y	21	1	**161-7522**	1	MOTOR GP-WINDOW WIPER	549
	22	1	**161-7523**	1	ARM AS-WIPER	
	23	1	**161-7524**	1	BLADE AS-WIPER	
	24	1	**165-7089**	1	GLASS	
M	25	1	**127-2170**	2	SCREW-TRUSS HEAD (M8X1.25X20MM)	
M	26	1	**131-3540**	2	LOCKNUT	
	27	1	**4V-5091**	1	GROMMET	
M	28	1	**5C-2890**	2	NUT (M6X1 THD)	
	29	1	**5Y-0974**	1	SCREW	
	30	1	**8T-4205**	2	WASHER-HARD (7.2X14.5X2MM THK)	
	31	1	**8T-4224**	2	WASHER-HARD (8.8X16X2MM THK)	
M	32	1	**9X-2042**	4	SCREW-TRUSS HEAD (M6X1X12MM)	
M	33	1	**9X-2045**	8	SCREW-TRUSS HEAD (M6X1X20MM)	
E	34	1	**124-3243**		SEAL (303CM)	
E	35	1	**104-5957**		STRIP-LOCKING (236CM)	
E	36	1	**108-0656**		SEAL (246CM)	

E-ORDER BY THE CENTIMETER
M-METRIC PART
Y-SEPARATE ILLUSTRATION

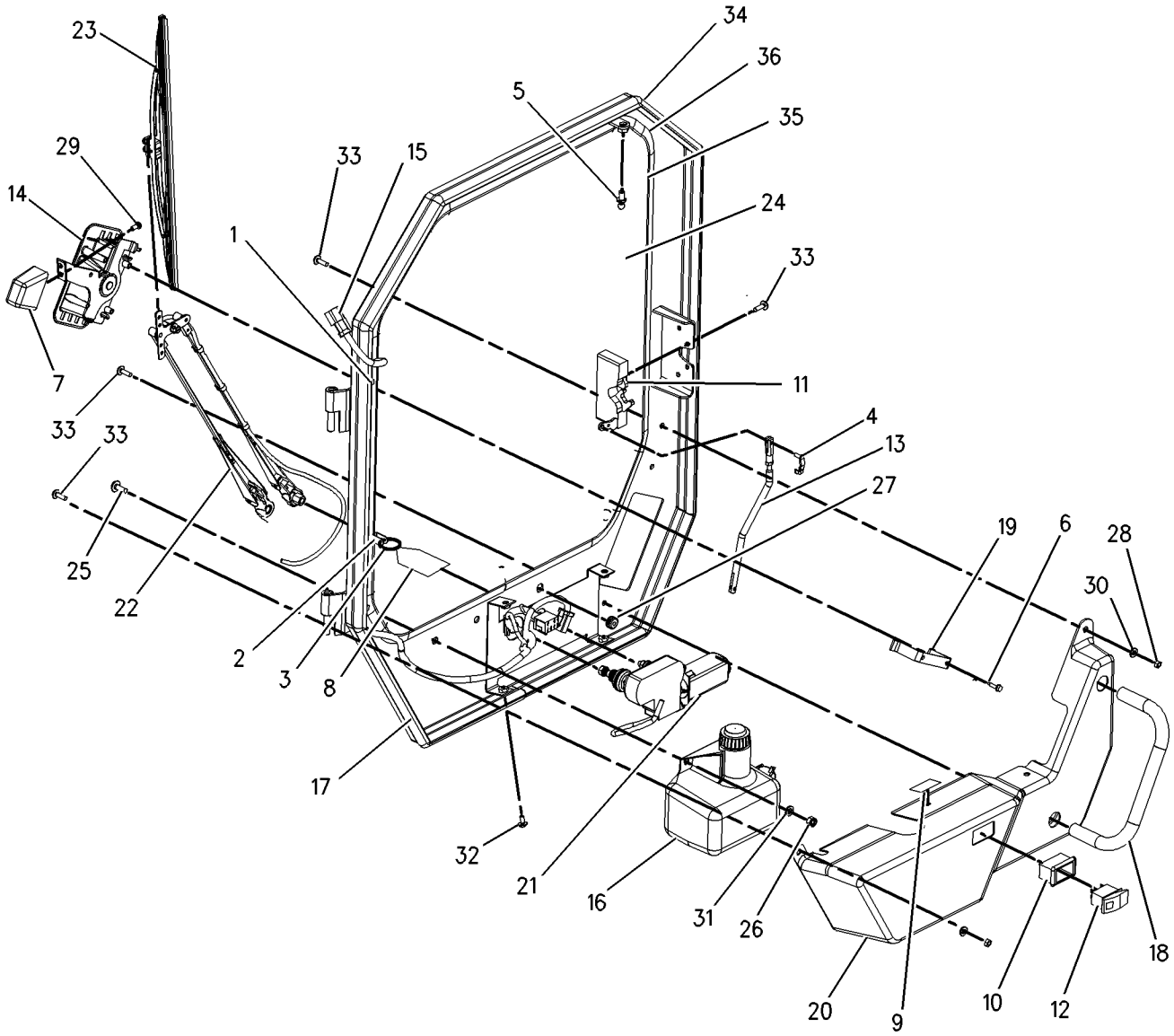

GRAPHIC #1 g00898035

OPERATOR STATION

152-4881 DUCT GP-DEFROST

S/N: CAB1-UP; CMB1-UP; 4NZ3400-UP; 5FZ6700-UP
PART OF 142-9330, 183-7130, 206-3790 HEATER & MTG GP-CAB
AN ATTACHMENT

SMCS-7316, 734D **i01065585**

NOTE	REF NO	GRAPHIC REF	PART NUMBER	QTY	PART NAME 1 2 3 4 5 6 (PRODUCT LEVEL)	SEE PAGE
	1	1	**142-9273**	1	DUCT	
	2	1	**152-4879**	1	SEAL	
M	3	1	**9X-1046**	4	SCREW (M4X0.7X18MM)	

M-METRIC PART

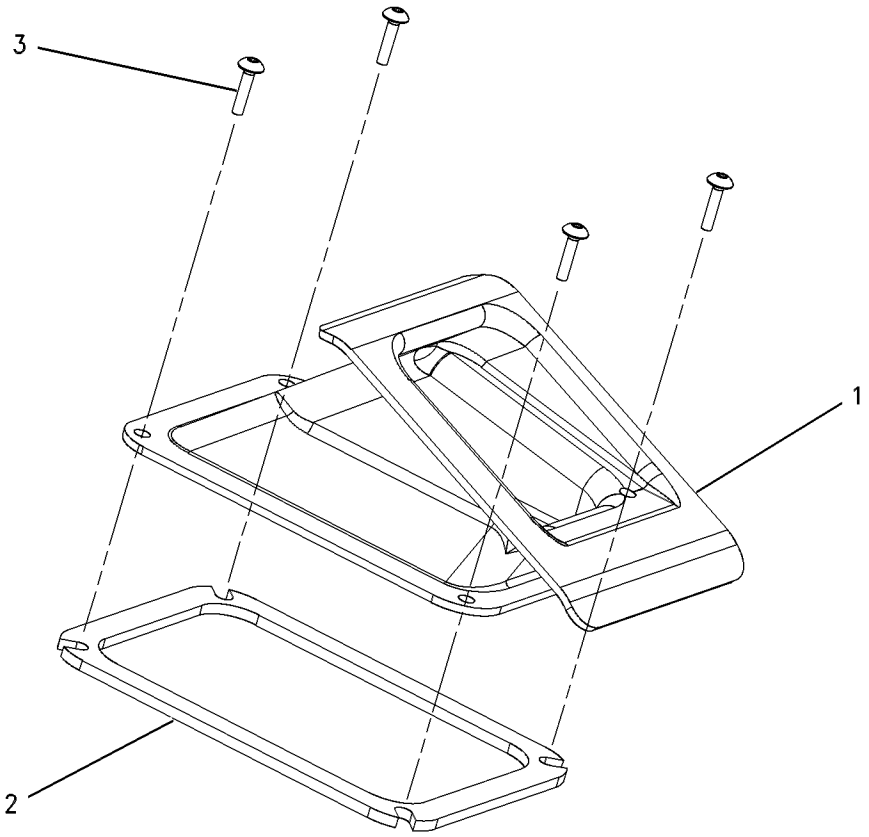

GRAPHIC #1 g00560657

OPERATOR STATION

152-4880 FILTER GP-CAB AIR

S/N: CAB1-UP; CMB1-UP; 4NZ3400-UP; 5FZ6700-UP
PART OF 142-9330, 183-7130, 206-3790 HEATER & MTG GP-CAB
AN ATTACHMENT

SMCS-7342 **i01148378**

NOTE	REF NO	GRAPHIC REF	PART NUMBER	QTY	PART NAME 1 2 3 4 5 6 (PRODUCT LEVEL)	SEE PAGE
	1	1	**142-9290**	1	COVER AS-FILTER	
	2	1	**142-9291**	1	FILTER	
	3	1	**152-4876**	1	SEAL	

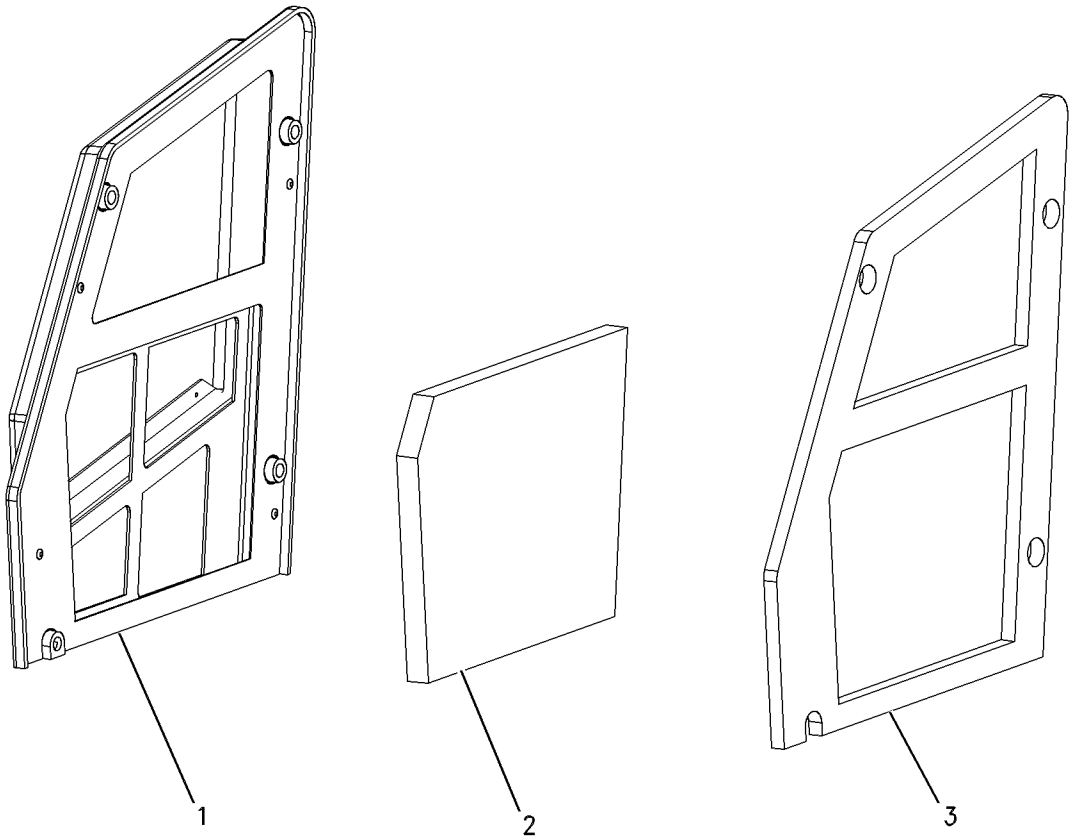

GRAPHIC #1 g00560354

OPERATOR STATION

208-4558 FLOOR MAT

S/N: CAB1-UP; CMB1-UP; 4NZ3400-UP; 5FZ6700-UP
PART OF 206-3773 SUPPRESSION GP-SOUND
AN ATTACHMENT

SMCS-726M **i01642108**

NOTE	REF NO	GRAPHIC REF	PART NUMBER	QTY	PART NAME 1 2 3 4 5 6 (PRODUCT LEVEL)	SEE PAGE
					(NO SERVICED PARTS)	

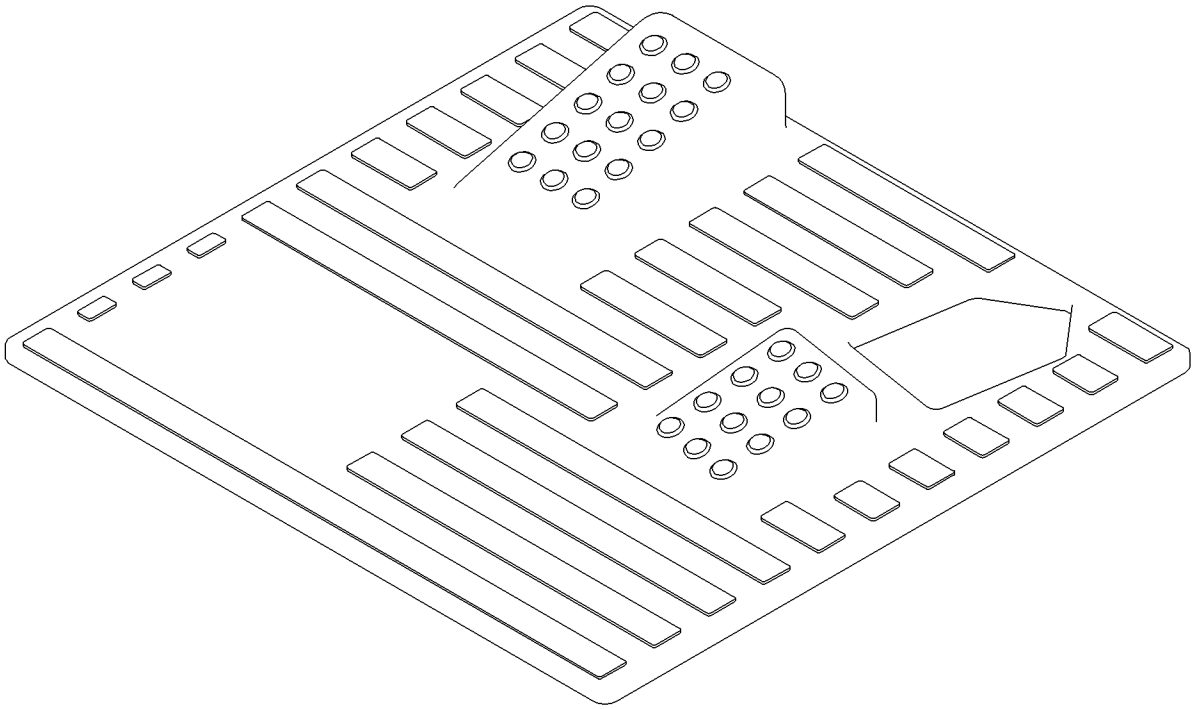

GRAPHIC #1 g00848914

OPERATOR STATION

197-6898 GAUGE & WARNING GP

S/N: CAB1-UP; CMB1-UP; 4NZ3400-UP; 5FZ6700-UP
LEFT HAND
PART OF 193-8371 PANEL GP-INSTRUMENT
AN ATTACHMENT

SMCS-7450, 7451 **i01434018**

NOTE	REF NO	GRAPHIC REF	PART NUMBER	QTY	PART NAME 1 2 3 4 5 6 (PRODUCT LEVEL)	SEE PAGE
J	1	1	**142-8858**	1	SWITCH AS-KEY START	
	1A	1	**167-1530**	1	NUT	
Y	2	1	**144-9930**	1	MODULE GP-WARNING INDICATOR	174
Y	3	1	**144-9933**	1	LAMP GP-PANEL ILLUMINATION	156
	4	1	**158-6694**	1	PANEL	
	5	1	**197-6894**	1	FILM-PANEL (INSTRUCTION)	
	6	1	**197-6895**	1	FILM-PANEL (INSTRUCTION)	
	7	1	**103-2006**	4	SCREW-PAN HEAD (6-19)	

J-REQUIRES 5P8500 KEY
Y-SEPARATE ILLUSTRATION

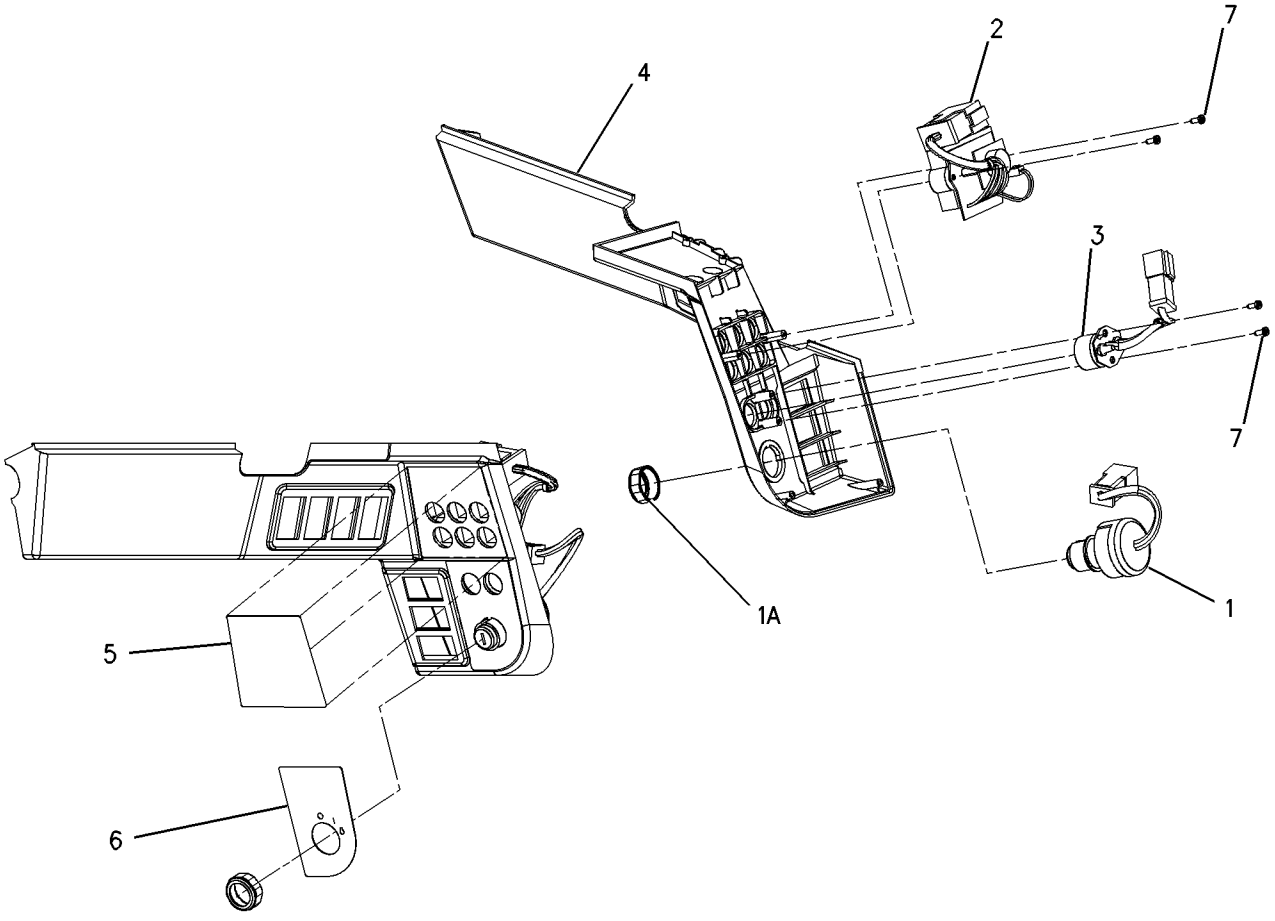

GRAPHIC #1 g00754466

197-6899 GAUGE & WARNING GP–RH

S/N: CAB1-UP; CMB1-UP; 4NZ3400-UP; 5FZ6700-UP
PART OF 193-8371 PANEL GP-INSTRUMENT
AN ATTACHMENT

SMCS-7450, 7451 **i01433996**

NOTE	REF NO	GRAPHIC REF	PART NUMBER	QTY	PART NAME 1 2 3 4 5 6 (PRODUCT LEVEL)	SEE PAGE
	1	1	**084-4277**	1	LAMP GP-DOME	
		1	**6R-7490**	1	LAMP (12V)	
	2	1	**153-0455**	1	INDICATOR GP-LIQUID LEVEL (FUEL)	
	3	1	**4B-2043**	3	NUT (8-32 THD)	
	4	1	**7X-9065**	1	LAMP (12V)	
	5	1	**9B-7233**	3	LOCKWASHER	
	6	1	**158-6697**	1	PANEL	
	7	1	**197-6896**	1	FILM-PANEL	

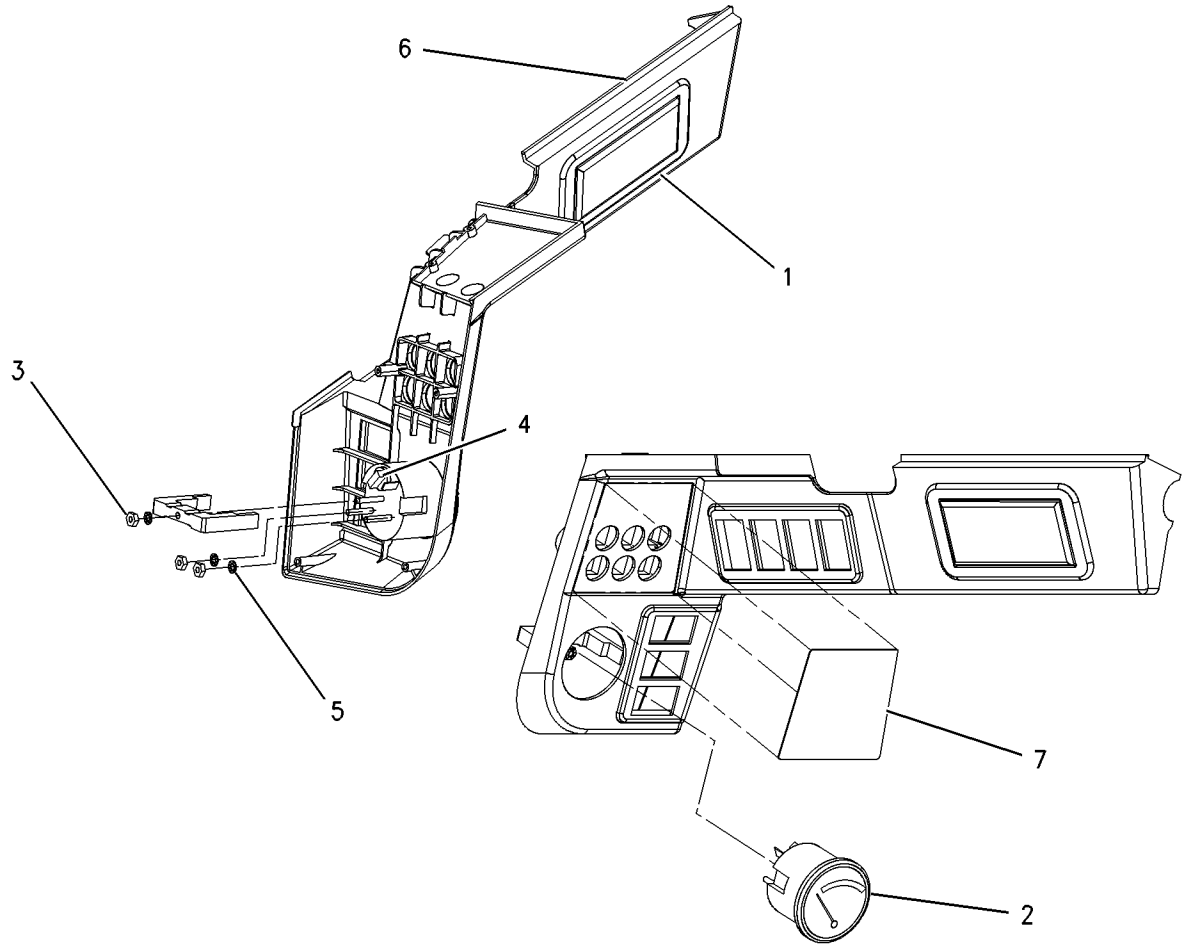

GRAPHIC #1 g00754435

OPERATOR STATION

152-1160 GUARD GP-ROPS/FOPS

S/N: CAB1-UP; CMB1-UP; 4NZ3400-UP; 5FZ6700-UP

AN ATTACHMENT

SMCS-7323 **i01661680**

NOTE	REF NO	GRAPHIC REF	PART NUMBER	QTY	PART NAME 1 2 3 4 5 6 (PRODUCT LEVEL)	SEE PAGE
	1	1	**152-1161**	1	PLATE AS-FOPS	
	2	1	**152-4883**	1	PLATE-ROPS/FOPS	
	3	1	**168-8389**	4	TACK-FASTENER	
M	4	1	**7X-2553**	8	BOLT (M16X2X40MM)	
	5	1	**8T-4122**	12	WASHER-HARD (17X32X3.5MM THK)	
M	6	1	**8T-4132**	4	NUT (M16X2 THD)	
	7	1	**5P-5927**		SEAL (1M)	

M-METRIC PART

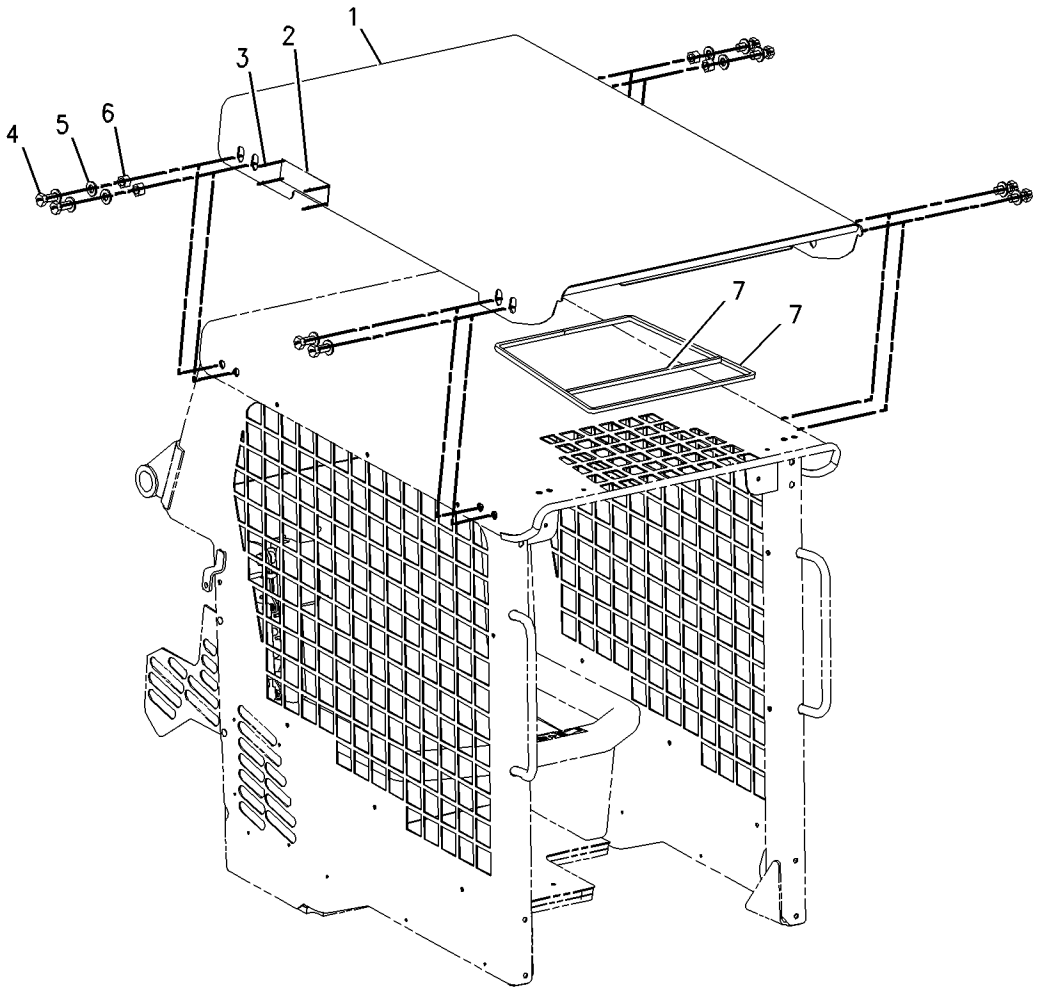

GRAPHIC #1 g00857965

OPERATOR STATION

142-9311 HEADLINER-CAB

S/N: 4NZ3400-UP; 5FZ6700-UP

AN ATTACHMENT

SMCS-7329 **i01507747**

NOTE	REF NO	GRAPHIC REF	PART NUMBER	QTY	PART NAME 1 2 3 4 5 6 (PRODUCT LEVEL)	SEE PAGE
					(NO SERVICED PARTS)	

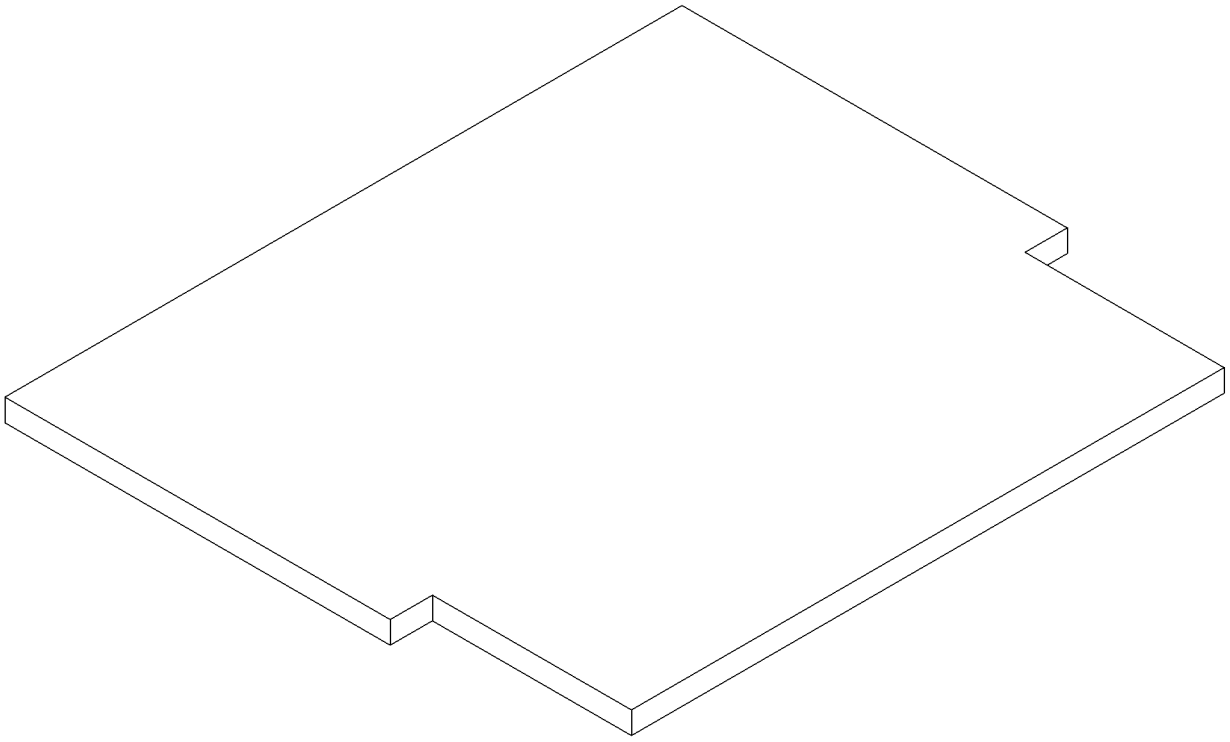

GRAPHIC #1 g00782727

OPERATOR STATION

142-9330 HEATER & MTG GP-CAB

S/N: 5FZ6700-UP
CANNOT BE USED WITH 142-9274—PAGE 504
AN ATTACHMENT

SMCS-7304 **i01676151**

NOTE	REF NO	GRAPHIC REF	PART NUMBER	QTY	PART NAME 1 2 3 4 5 6 (PRODUCT LEVEL)	SEE PAGE
	1	1	**7G-7053**	1	GROMMET	
	2	1	**113-8492**	1	FUSE (20 AMP)	
Y	3	1	*142-9269*	1	COVER GP-CONSOLE (WITH HEATER)	503
Y	4	1	**142-9289**	1	HEATER GP-CAB	534
	5	1	**146-6371**	2	LOUVER AS	
Y	6	1	*152-4874*	1	LINES GP-HEATER	546
Y	7	1	*152-4880*	1	FILTER GP-CAB AIR	523
Y	8	1	*152-4881*	1	DUCT GP-DEFROST	522
	9	1	**199-6619**	4	STUD-CLINCH (M6X1 THD)	
M	10	1	**5C-2890**	4	NUT (M6X1 THD)	
M	11	1	**5C-9553**	4	BOLT (M6X1X16MM)	
	12	1	**8T-4205**	8	WASHER-HARD (7.2X14.5X2MM THK)	

M-METRIC PART
Y-SEPARATE ILLUSTRATION

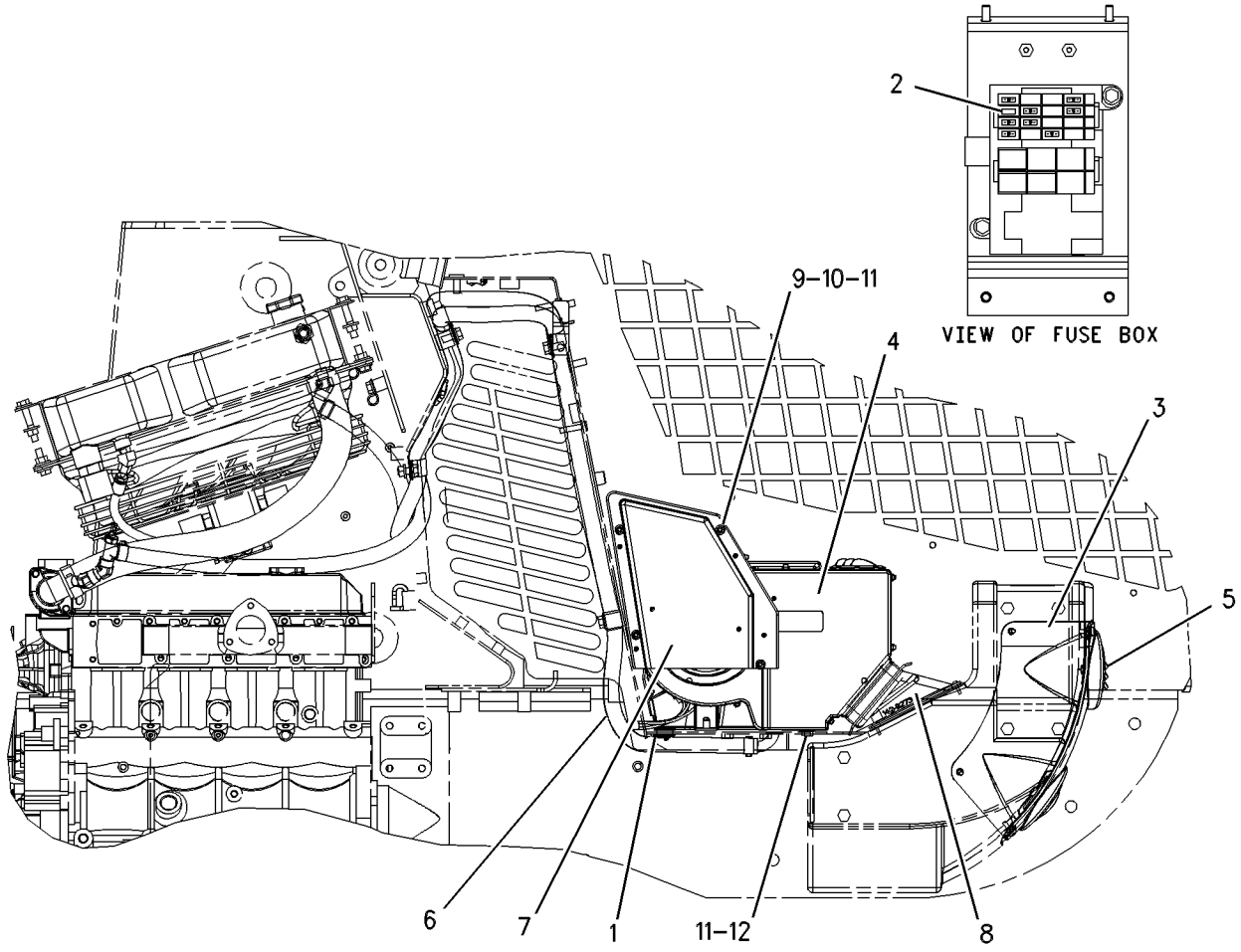

GRAPHIC #1 g00560361

OPERATOR STATION

183-7130 HEATER & MTG GP-CAB

S/N: CAB1-UP; CMB1-UP; 4NZ3400-UP; 5FZ6700-UP
KIT-CAB HEATER AND MOUNTING
AN ATTACHMENT AND FIELD INSTALLATION

SMCS-7304 **i01755208**

NOTE	REF NO	GRAPHIC REF	PART NUMBER	QTY	PART NAME 1 2 3 4 5 6 (PRODUCT LEVEL)	SEE PAGE
C	1	1	**1L-2279**	2	ELBOW	
	2	1	**7G-7053**	1	GROMMET	
	3	1	**8F-8151**	1	VALVE-SHUTOFF	
	4	1	**8T-0154**	4	CLAMP-HOSE	
	5	1	**004-6810**	1	ELBOW	
	6	1	**113-8492**	1	FUSE (20 AMP)	
	7	1	**142-9271**	1	COVER-RH	
Y	8	1	**142-9289**	1	HEATER GP-CAB	534
	9	1	**146-6371**	2	LOUVER AS	
Y	10	1	*152-4880*	1	FILTER GP-CAB AIR	523
Y	11	1	*152-4881*	1	DUCT GP-DEFROST	522
	12	1	**161-6560**	4	STUD	
	13	1	**183-7120**	2	GUARD-HOSE	
	14	1	**205-9883**	1	ELBOW	
C	15	1	**4S-1962**	2	CLIP	
M	16	1	**5C-2890**	4	NUT (M6X1 THD)	
M	17	1	**5C-9553**	4	BOLT (M6X1X16MM)	
	18	1	**6D-1641**	3	CLIP	
	19	1	**8T-4121**	5	WASHER-HARD (11X21X2.5MM THK)	
M	20	1	**8T-4133**	3	NUT (M10X1.5 THD)	
M	21	1	**8T-4136**	4	BOLT (M10X1.5X25MM)	
	22	1	**8T-4205**	8	WASHER-HARD (7.2X14.5X2MM THK)	
M	23	1	**9X-2045**	4	SCREW-TRUSS HEAD (M6X1X20MM)	
C	24	1	**205-9883**	1	ELBOW	
	25	1	**150-7568**	1	ADAPTER	
	26	1	**9X-2092**		STRIP-EDGE (10CM)	
BC	27	1	**136-1953**		HOSE (216CM)(216,226,228)	
BC	28	1	**136-1953**		HOSE (226CM)(236,246,248)	
BC	29	1	**136-1953**		HOSE (241CM)(252,262,267,277)	
BC	30	1	**136-1953**		HOSE (226CM)(216 SN 4ZN 3400 AND UP)	
BC	31	1	**136-1953**		HOSE (216CM)(226,228,236,246,248)	
BC	32	1	**136-1953**		HOSE (226CM)(252,262,267,277)	

B-USE AS REQUIRED
C-CHANGE FROM PREVIOUS TYPE
M-METRIC PART
Y-SEPARATE ILLUSTRATION

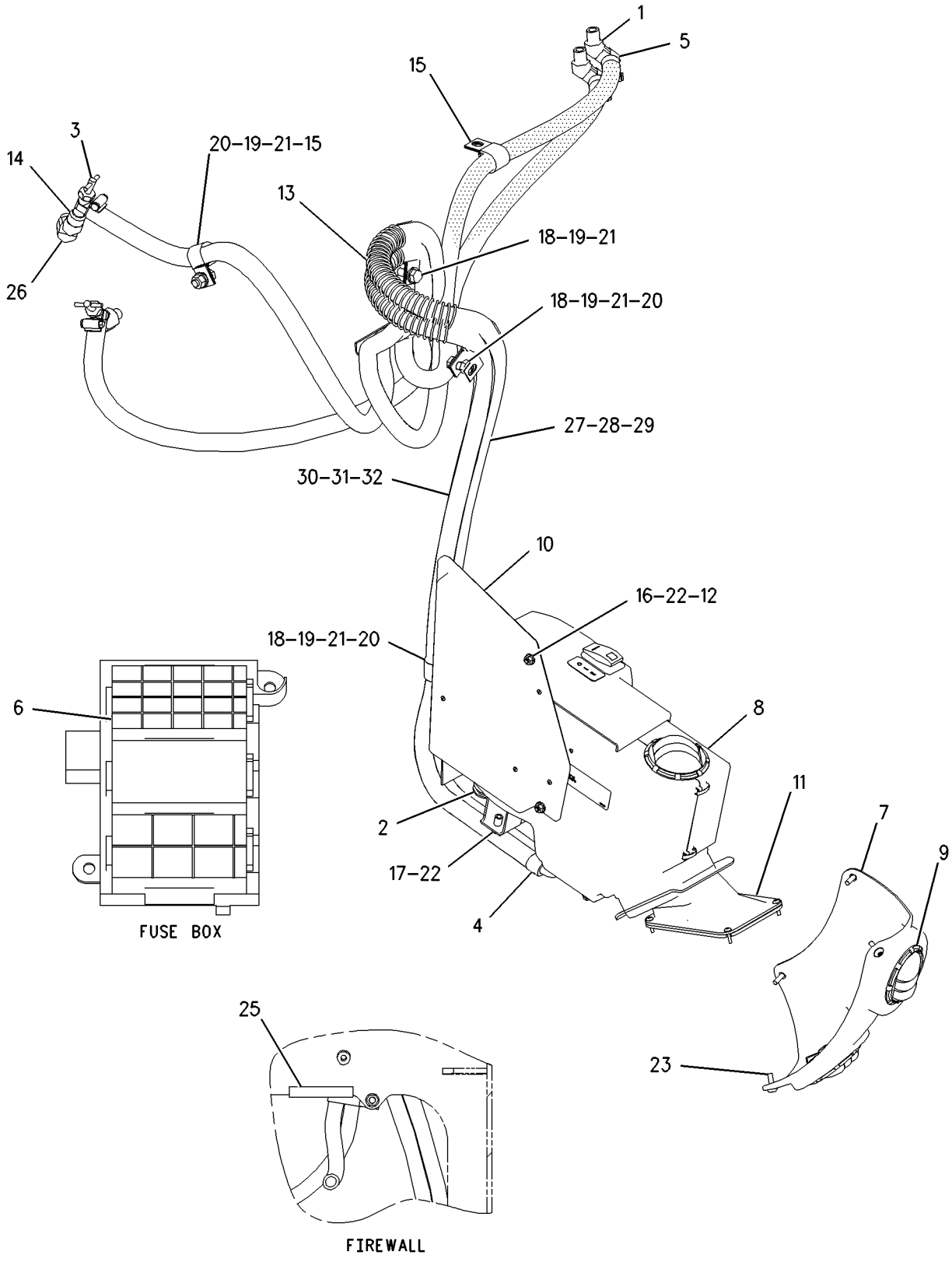

GRAPHIC #1

g00898040

OPERATOR STATION

206-3790 HEATER & MTG GP-CAB

S/N: CAB1-UP; 4NZ3400-UP
CANNOT BE USED WITH 142-9274—PAGE 504
AN ATTACHMENT

SMCS-7304 **i01676164**

NOTE	REF NO	GRAPHIC REF	PART NUMBER	QTY	PART NAME 1 2 3 4 5 6 (PRODUCT LEVEL)	SEE PAGE
	1	1	**7G-7053**	1	GROMMET	
	2	1	**113-8492**	1	FUSE (20 AMP)	
Y	3	1	*142-9269*	1	COVER GP-CONSOLE (WITH HEATER)	503
Y	4	1	**142-9289**	1	HEATER GP-CAB	534
	5	1	**146-6371**	2	LOUVER AS	
Y	6	1	*152-4880*	1	FILTER GP-CAB AIR	523
Y	7	1	*152-4881*	1	DUCT GP-DEFROST	522
	8	1	**199-6619**	4	STUD-CLINCH	
Y	9	1	*206-3791*	1	LINES GP-HEATER	547
M	10	1	**5C-2890**	4	NUT (M6X1 THD)	
M	11	1	**5C-9553**	4	BOLT (M6X1X16MM)	
	12	1	**8T-4205**	8	WASHER-HARD (7.2X14.5X2MM THK)	

M-METRIC PART
Y-SEPARATE ILLUSTRATION

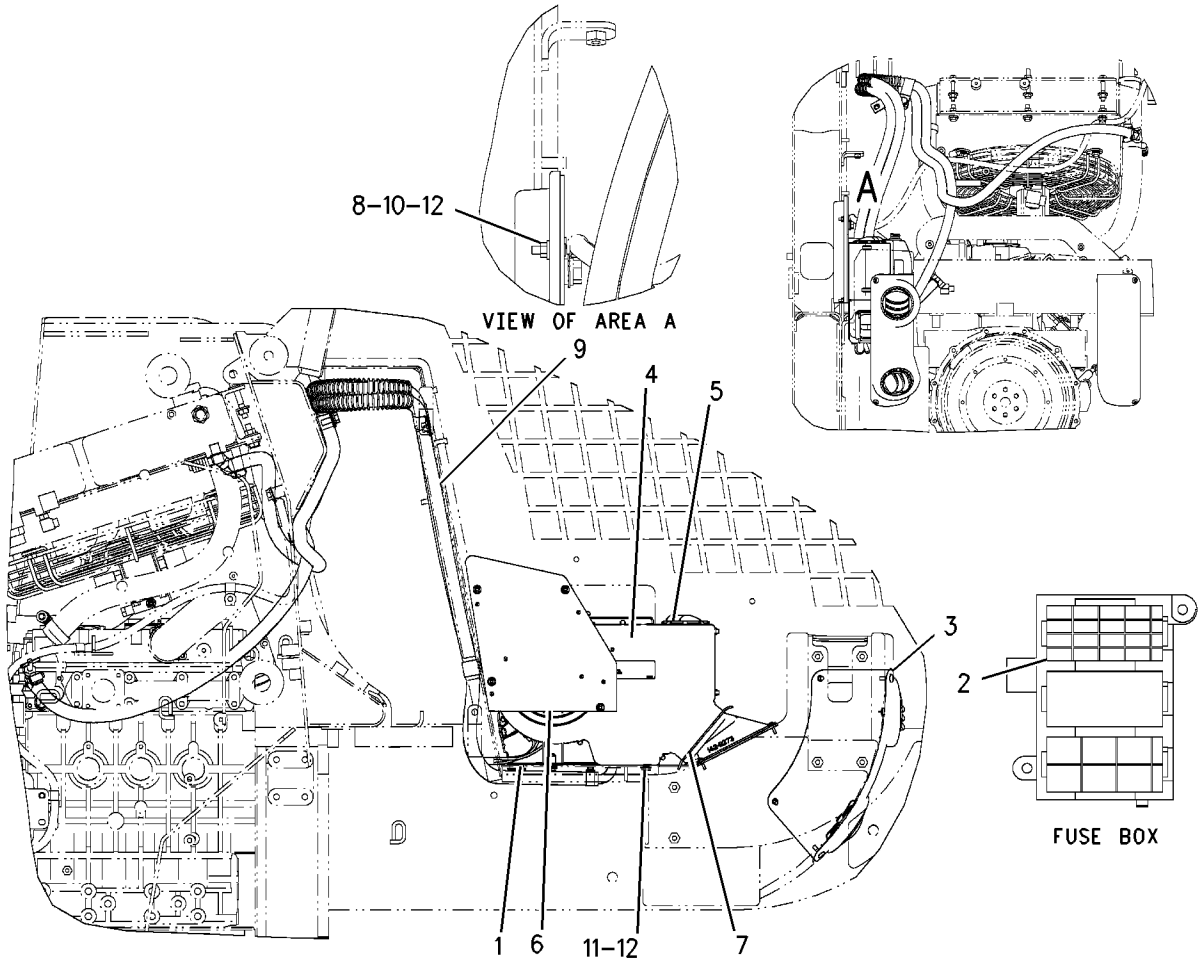

GRAPHIC #1 g00806128

MEMORANDA

OPERATOR STATION

142-9289 HEATER GP-CAB

S/N: CAB1-UP; CMB1-UP; 4NZ3400-UP; 5FZ6700-UP
PART OF 142-9330, 183-7130, 206-3790 HEATER & MTG GP-CAB
AN ATTACHMENT

SMCS-7304 **i01261476**

NOTE	REF NO	GRAPHIC REF	PART NUMBER	QTY	PART NAME 1 2 3 4 5 6 (PRODUCT LEVEL)	SEE PAGE
	1	1	**109-2355**	1	HOUSING-SWITCH	
	2	1	**114-4519**	1	SWITCH AS-3 POSITION (HEATER FAN)	
		1	**111-7899**	1	GASKET	
	3	1	**115-1615**	1	RELAY AS	
	4	1	**146-6371**	1	LOUVER AS	
	5	1	**146-6372**	1	BLOWER AS	
	6	1	**146-6376**	1	FILM (FAN SPEED)	
	7	1	**146-6377**	1	GROMMET	
	8	1	**146-6380**	1	HARNESS AS	
	9	1	**146-6381**	2	NUT-SPEED	
	10	1	**146-6382**	1	RESISTOR	
	11	1	**146-6383**	1	COVER	
	12	1	**146-6385**	1	FILM (TEMPERATURE)	
	13	1	**146-6386**	1	KNOB-CONTROL	
Y	14	1	**150-8624**	1	HEATER GP-CAB	536
	15	1	**177-4563**	5	SCREW (8-16 THD 7/16)	
	16	1	**166-6825**	1	SEAL	
M	17	1	**5C-9553**	1	BOLT (M6X1.0X16MM)	
	18	1	**8T-4205**	1	WASHER-HARD (2MM THK)	
E	19	1	**9X-8699**		SEAL (37.5CM)	

E-ORDER BY THE CENTIMETER
M-METRIC PART
Y-SEPARATE ILLUSTRATION

142-9289 HEATER GP-CAB *(contd.)* **i01261476**

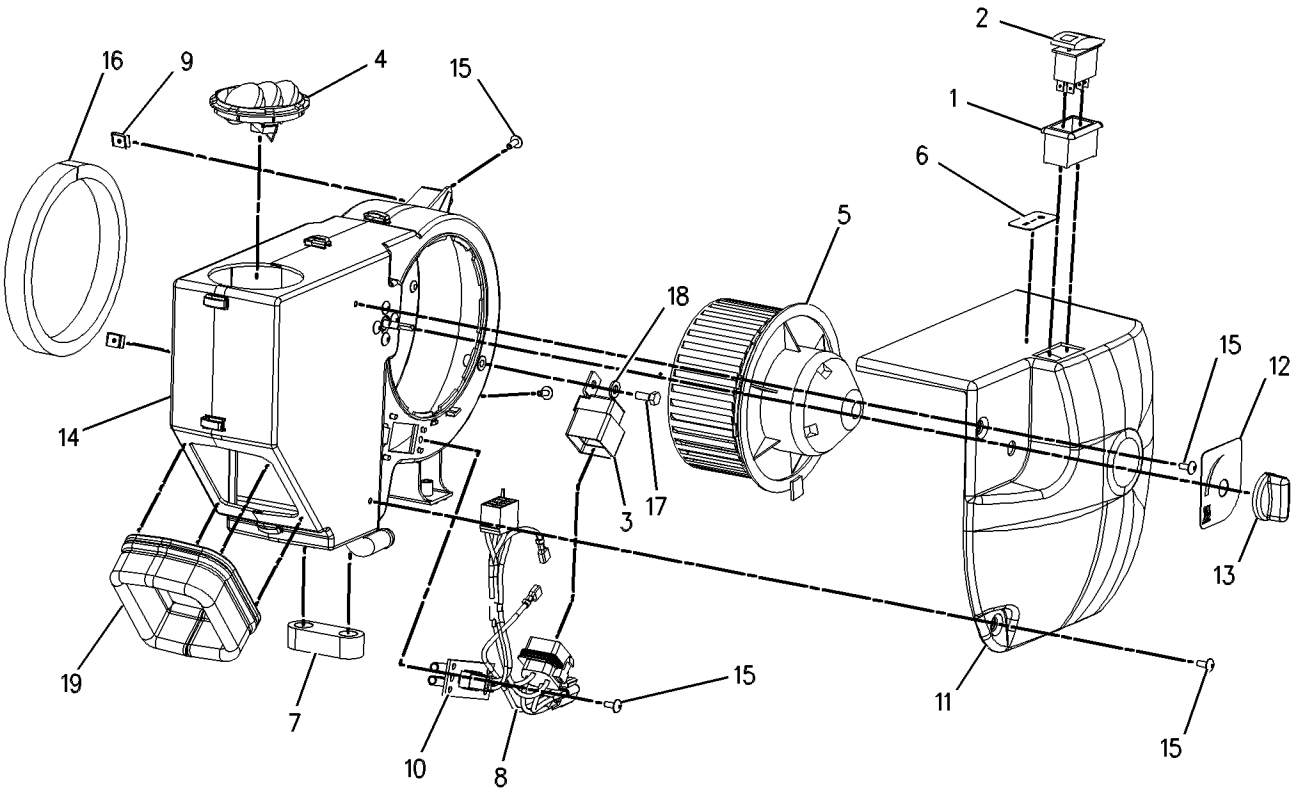

GRAPHIC #1 g00560676

150-8624 HEATER GP-CAB

S/N: CAB1-UP; CMB1-UP; 4NZ3400-UP; 5FZ6700-UP
PART OF 142-9289 HEATER GP-CAB
AN ATTACHMENT

SMCS-7304 **i01591287**

NOTE	REF NO	GRAPHIC REF	PART NUMBER	QTY	PART NAME 1 2 3 4 5 6 (PRODUCT LEVEL)	SEE PAGE
	1	1	**4M-6582**	2	SEAL-O-RING	
	2	1	**8C-3756**	1	FILM-IDENTIFICATION (GROUP & SEQUENCE NO.)	
	3	1	**177-4563**	4	SCREW (8-16 THD 7/16)	
	4	1	**146-6370**	8	CLIP	
	5	1	**146-6374**	1	VALVE AS	
	6	1	**146-6390**	8	SCREW-TRUSS HEAD	

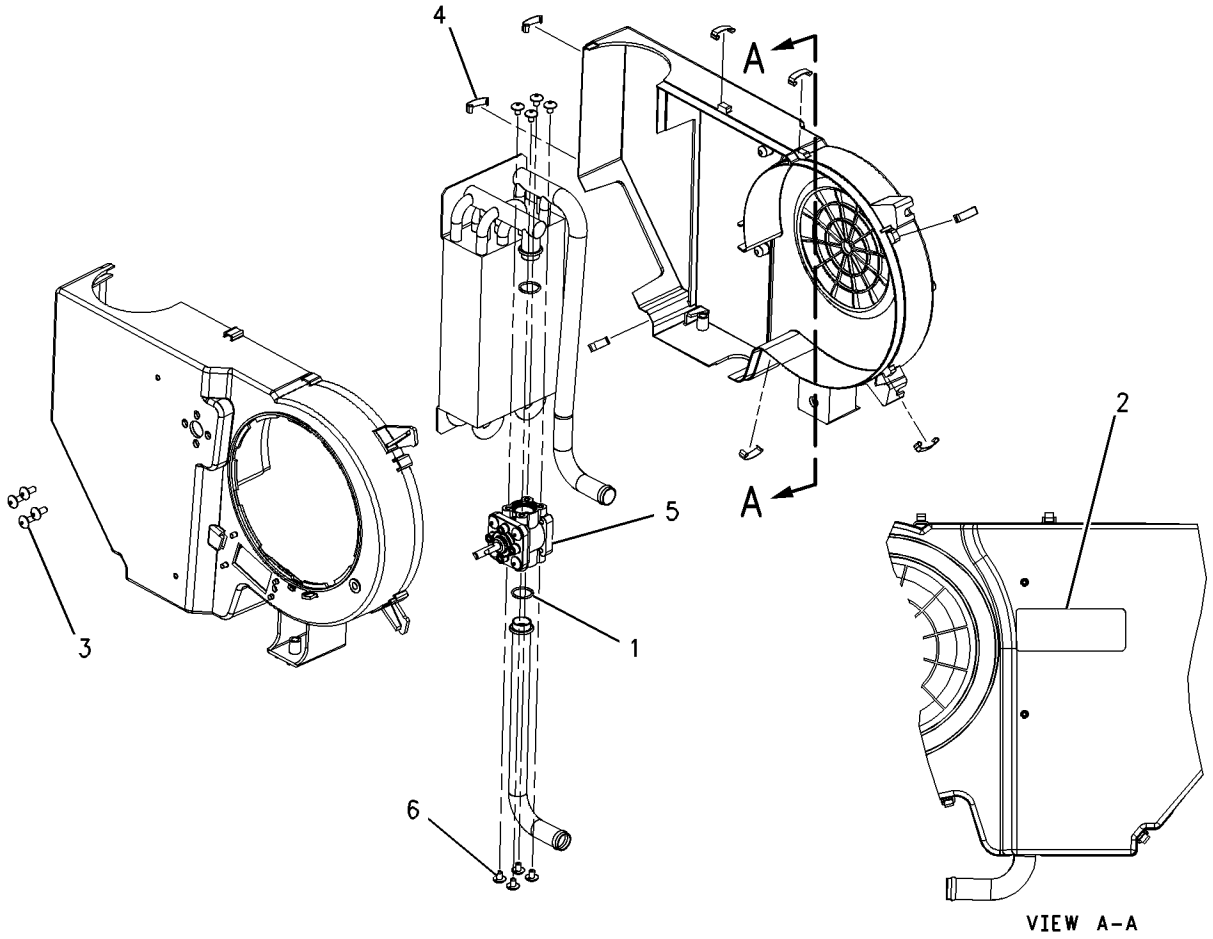

GRAPHIC #1 g00825246

OPERATOR STATION

190-8004 HORN GP-ELECTRIC

S/N: CAB1-UP; CMB1-UP; 4NZ3400-UP; 5FZ6700-UP
PART OF 191-2908, 191-2909, 216-6133 CONTROL GP-PILOT OPERATED HYD
AN ATTACHMENT

SMCS-7402 **i01630146**

NOTE	REF NO	GRAPHIC REF	PART NUMBER	QTY	PART NAME 1 2 3 4 5 6 (PRODUCT LEVEL)	SEE PAGE
	1	1	**164-9425**	1	HORN AS	
	2	1	**8T-4121**	1	WASHER-HARD (11X21X2.5MM THK)	
M	3	1	**8T-4137**	1	BOLT (M10X1.5X20MM)	
	4	1	**113-8490**	1	FUSE (10 AMP)	

M-METRIC PART

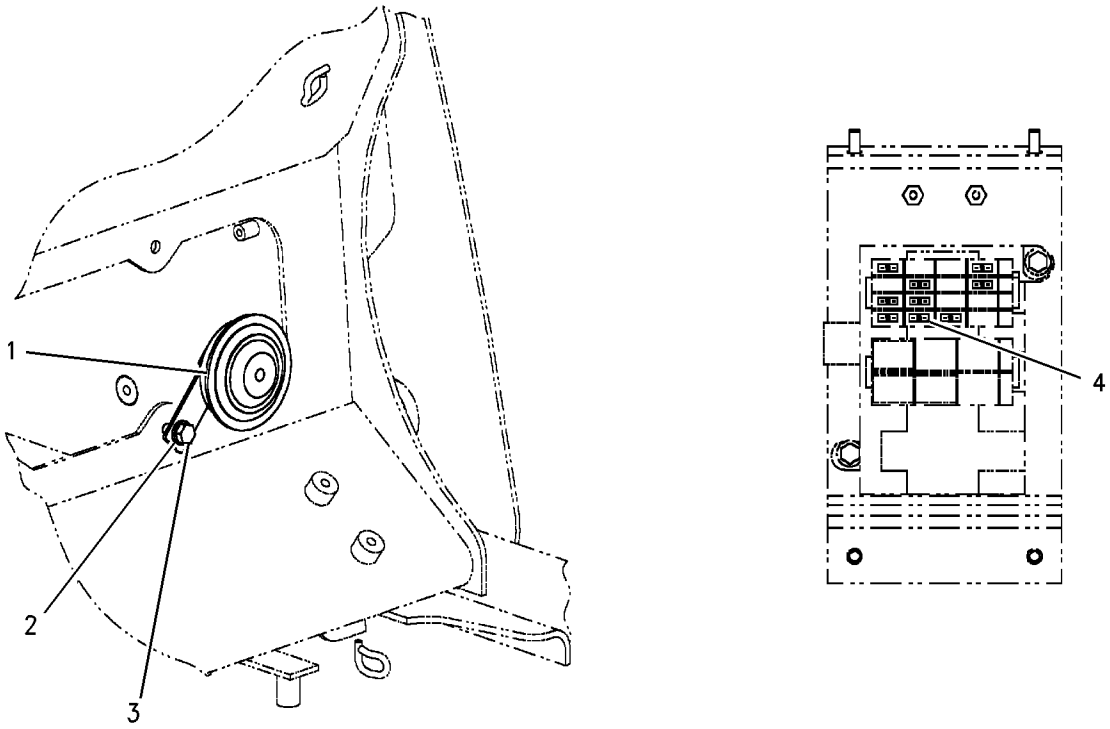

GRAPHIC #1 g00844551

OPERATOR STATION

203-4326 HORN GP-ELECTRIC

S/N: 4NZ3400-UP; 5FZ6700-UP
EUROPEAN UNION
PART OF 206-3776, 206-3777, 206-3778, 206-3779 CONVERSION AR-ROADING
AN ATTACHMENT

SMCS-7402 **i01512539**

NOTE	PART NUMBER	QTY	PART NAME 1 2 3 4 5 6 (PRODUCT LEVEL)	SEE PAGE
M	**8T-4186**	1	BOLT (M10X1.5X40MM)	
	186-3362	1	HARNESS AS	
	102-8802	1	KIT-RECEPTACLE (2 PIN)	
	155-2270	1	KIT-CONNECTING PLUG (2 PIN)	
M	**8T-4133**	1	NUT (M10X1.5 THD)	
	142-8833	1	SPACER (11X14.3X9MM THK)	
	3S-2093	10	STRAP-CABLE	
	8T-4121	3	WASHER-HARD (11X21X2.5MM THK)	

M-METRIC PART

<END>

220-8098 INSTALLATION AR-HEATER

S/N: CMB1-UP; 5FZ6700-UP
WITHOUT HEATER, INCLUDES ALTERNATOR AND BELT GUARD
CANNOT BE USED WITH ANY OTHER HEATER OR AIR CONDITIONER SELECTION
AN ATTACHMENT

SMCS-1405, 7174, 7304, 734D **i01760790**

NOTE	PART NUMBER	QTY	PART NAME 1 2 3 4 5 6 (PRODUCT LEVEL)	SEE PAGE
Y	*142-9108*	1	ALTERNATOR GP-CHARGING	136
Y	*142-9274*	1	COVER GP-CONSOLE (WITHOUT HEATER)	504
	220-8107	1	SUPPORT GP-PLATFORM	
	192-2667	1	SUPPORT AS (LH)	
	192-2669	1	SUPPORT AS (RH)	

Y-SEPARATE ILLUSTRATION

<END>

MEMORANDA

OPERATOR STATION

178-2252 KIT-CAB DOOR & MOUNTING

S/N: CAB1-UP; CMB1-UP; 4NZ3400-UP; 5FZ6700-UP
KIT-CAB DOOR, GLASS WINDOW
CANNOT BE USED WITH 178-2253—PAGE 542
FIELD INSTALLATION

SMCS-7308 **i01755226**

NOTE	REF NO	GRAPHIC REF	PART NUMBER	QTY	PART NAME 1 2 3 4 5 6 (PRODUCT LEVEL)	SEE PAGE
	1	1	**3S-2093**	1	STRAP-CABLE	
	2	1	**5P-0372**	2	LOCK PIN	
	3	1	**8T-2444**	1	STUD-BALL	
	4	1	**8T-3848**	1	STRIKER AS-LATCH	
	5	1	**9C-5344**	1	SPACER (10.5X20X18MM THK)	
	6	1	**095-1325**	1	PIN-CLEVIS	
	7	1	**142-9127**	1	HARNESS AS-WINDOW WIPER	
	8	1	**142-9285**	1	SPRING AS-GAS	
	9	1	**142-9318**	1	STEP AS	
Y	10	1	*142-9340*	1	DOOR GP-CAB (GLASS)	518
	11	1	**142-9348**	1	PLATE AS	
	12	1	**142-9355**	1	MOUNT	
	13	1	**150-8622**	2	HINGE AS	
	14	1	**153-2682**	1	SPRING AS-GAS	
	15	1	**153-2683**	1	SPRING AS-GAS	
	16	1	**159-5799**	1	HANDLE	
	17	1	**177-3405**	1	PIN	
	18	1	**191-9664**	1	PLATE AS	
M	19	1	**127-2170**	8	SCREW-TRUSS HEAD (M8X1.25X20MM)	
	20	1	**142-9356**	1	BLOCK	
	21	1	**195-0937**	4	INSERT-THREADED	
M	22	1	**5C-2890**	4	NUT (M6X1 THD)	
M	23	1	**5C-7261**	4	NUT (M8X1.25 THD)	
	24	1	**8T-4121**	6	WASHER-HARD (11X21X2.5MM THK)	
M	25	1	**8T-4133**	6	NUT (M10X1.5 THD)	
	26	1	**8T-4205**	4	WASHER-HARD (7.2X14.5X2MM THK)	
	27	1	**8T-4224**	5	WASHER-HARD (8.8X16X2MM THK)	
M	28	1	**9X-2041**	10	SCREW-TRUSS HEAD (M10X1.5X20MM)	
M	29	1	**9X-2045**	4	SCREW-TRUSS HEAD (M6X1X20MM)	
E	30	1	**124-3243**		SEAL (45CM)	
E	31	1	**125-3518**		SEAL (65CM)	

E-ORDER BY THE CENTIMETER
M-METRIC PART
Y-SEPARATE ILLUSTRATION

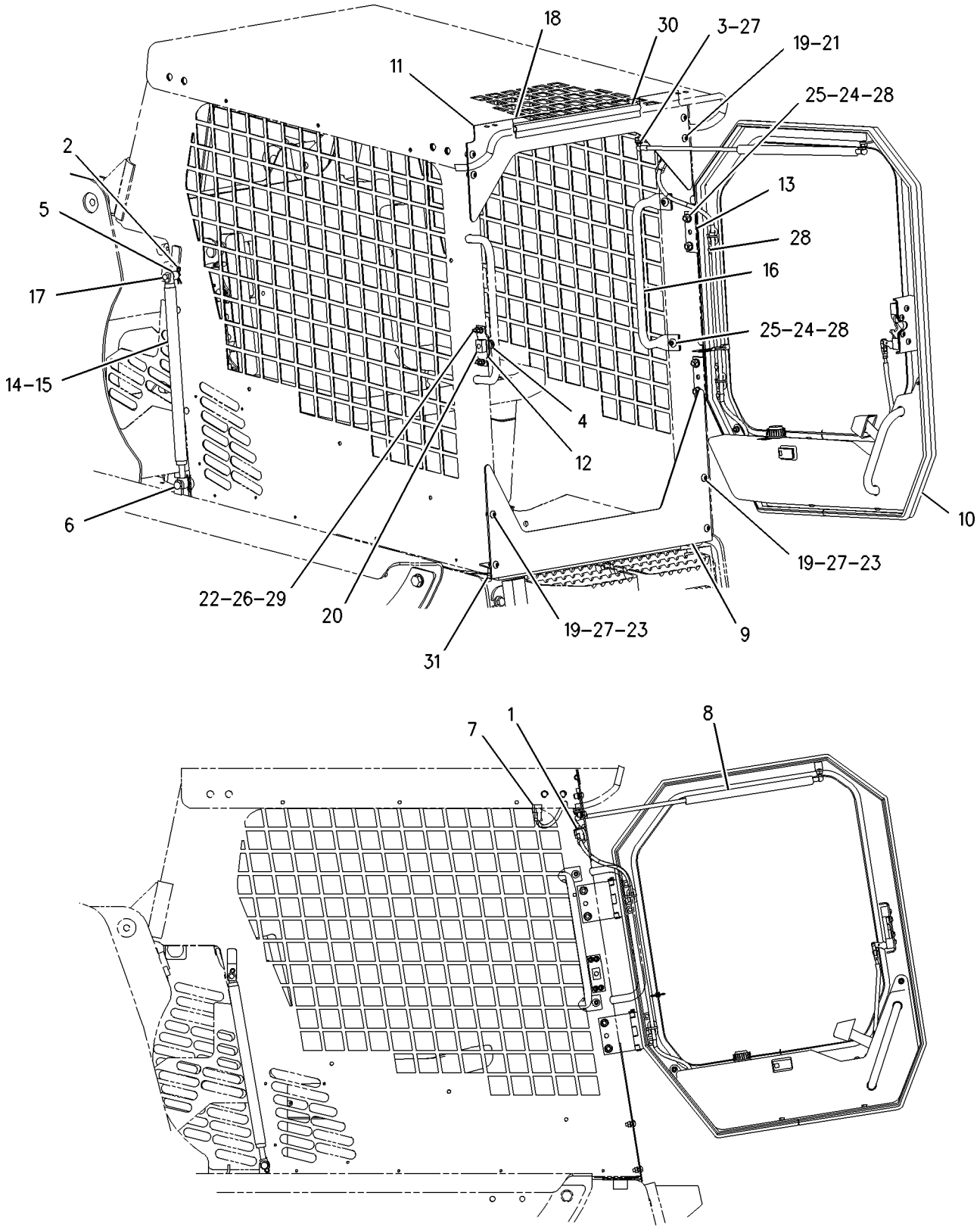

RIGHT SIDE VIEW

GRAPHIC #1 g00859228

OPERATOR STATION

178-2253 KIT-CAB DOOR & MOUNTING

S/N: 4NZ3400-UP; 5FZ6700-UP
KIT-CAB DOOR, POLYCARBONATE WINDOW
CANNOT BE USED WITH 178-2252—PAGE 540
FIELD INSTALLATION

SMCS-7308 **i01755233**

NOTE	REF NO	GRAPHIC REF	PART NUMBER	QTY	PART NAME 1 2 3 4 5 6 (PRODUCT LEVEL)	SEE PAGE
	1	1	**3S-2093**	1	STRAP-CABLE	
	2	1	**5P-0372**	2	LOCK PIN	
	3	1	**8T-2444**	1	STUD-BALL	
	4	1	**8T-3848**	1	STRIKER AS-LATCH	
	5	1	**9C-5344**	1	SPACER (10.5X20X18MM THK)	
	6	1	**095-1325**	1	PIN-CLEVIS	
	7	1	**142-9127**	1	HARNESS AS-WINDOW WIPER	
	8	1	**142-9285**	1	SPRING AS-GAS	
	9	1	**142-9318**	1	STEP AS	
	10	1	**142-9348**	1	PLATE AS	
	11	1	**142-9355**	1	MOUNT	
	12	1	**150-8622**	2	HINGE AS	
	13	1	**153-2682**	1	SPRING AS-GAS	
	14	1	**153-2683**	1	SPRING AS-GAS	
	15	1	**159-5799**	1	HANDLE	
Y	16	1	*159-5801*	1	DOOR GP-CAB (POLYCARBONATE)	520
	17	1	**177-3405**	1	PIN	
	18	1	**191-9664**	1	PLATE AS	
M	19	1	**127-2170**	8	SCREW-TRUSS HEAD (M8X1.25X20MM)	
	20	1	**142-9356**	1	BLOCK	
	21	1	**195-0937**	4	INSERT-THREADED	
M	22	1	**5C-2890**	4	NUT (M6X1 THD)	
M	23	1	**5C-7261**	4	NUT (M8X1.25 THD)	
	24	1	**8T-4121**	6	WASHER-HARD (11X21X2.5MM THK)	
M	25	1	**8T-4133**	6	NUT (M10X1.5 THD)	
	26	1	**8T-4205**	4	WASHER-HARD (7.2X14.5X2MM THK)	
	27	1	**8T-4224**	5	WASHER-HARD (8.8X16X2MM THK)	
M	28	1	**9X-2041**	10	SCREW-TRUSS HEAD (M10X1.5X20MM)	
M	29	1	**9X-2045**	4	SCREW-TRUSS HEAD (M6X1X20MM)	
E	30	1	**124-3243**		SEAL (45CM)	
E	31	1	**125-3518**		SEAL (65CM)	

E-ORDER BY THE CENTIMETER
M-METRIC PART
Y-SEPARATE ILLUSTRATION

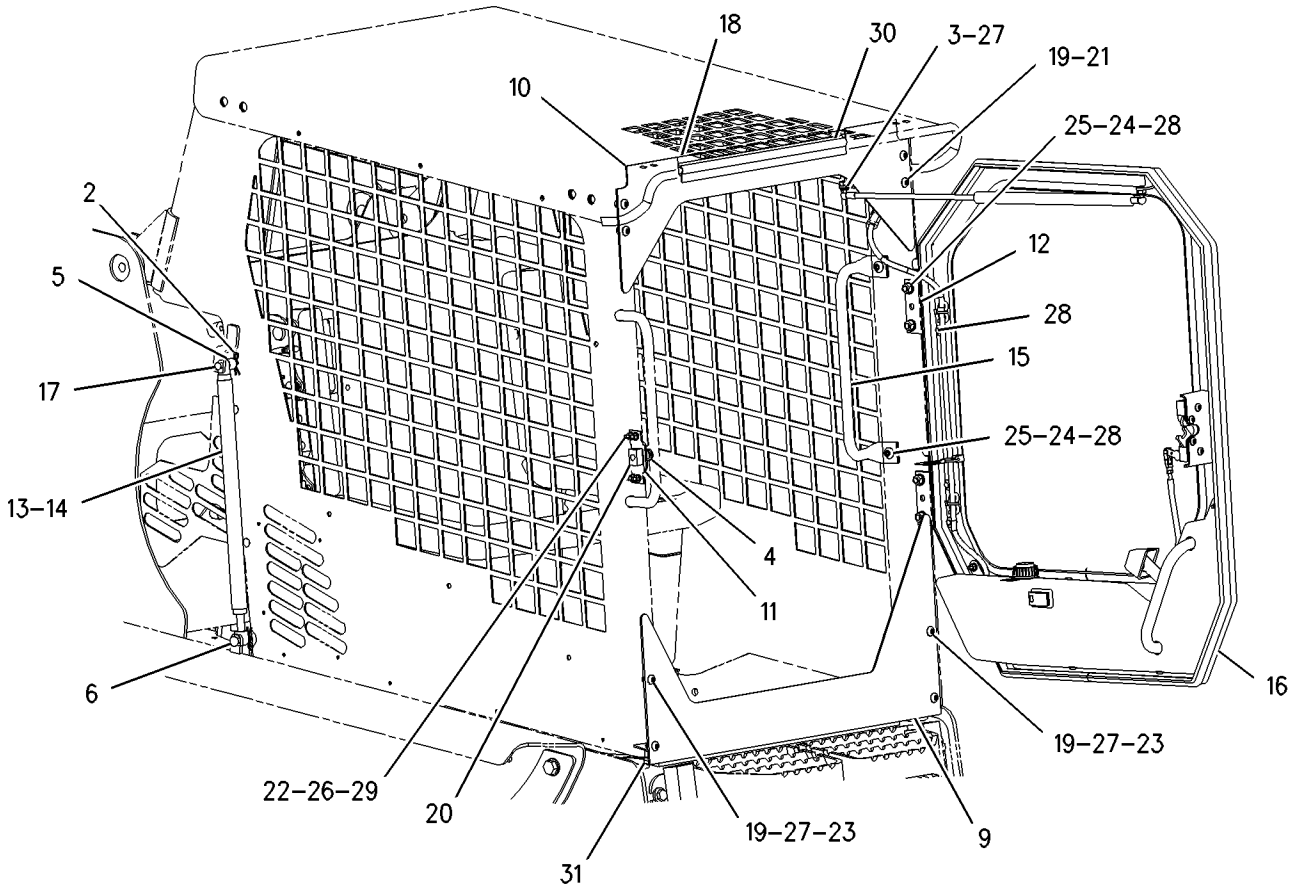

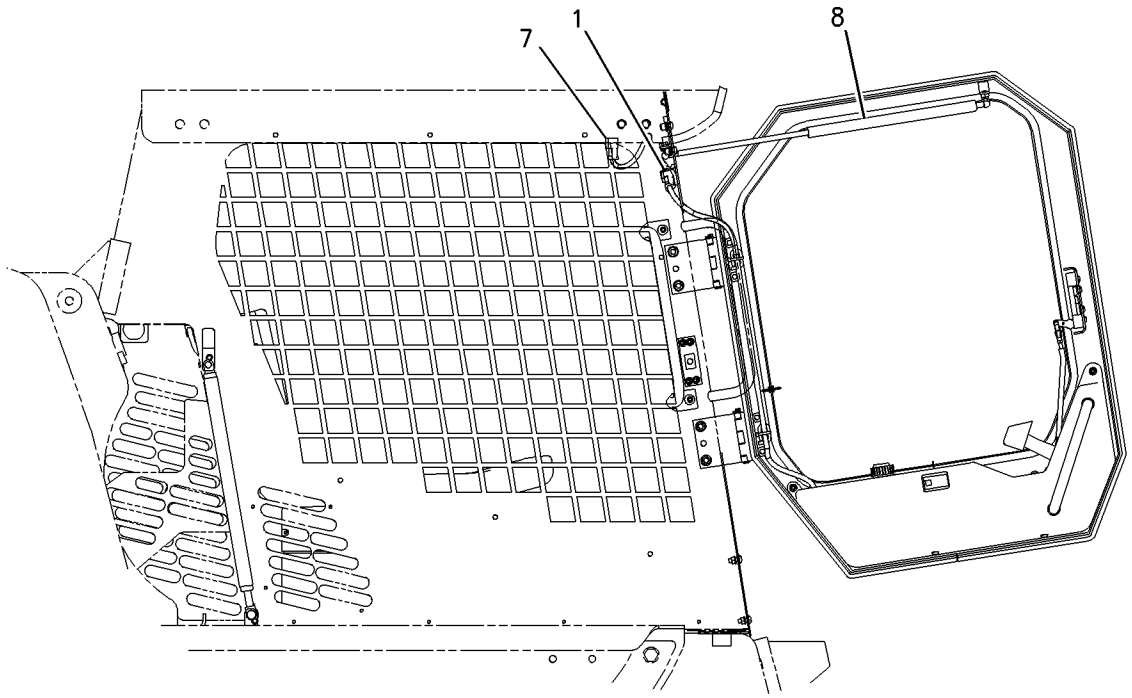

RIGHT SIDE VIEW

GRAPHIC #1 g00859185

OPERATOR STATION

195-6725 LINER GP-CAB

S/N: CAB1-UP; CMB1-UP; 4NZ3400-UP; 5FZ6700-UP
PART OF 191-9799, 210-4699 OPERATOR AR-CANOPY

SMCS-7329 **i01474473**

NOTE	REF NO	GRAPHIC REF	PART NUMBER	QTY	PART NAME 1 2 3 4 5 6 (PRODUCT LEVEL)	SEE PAGE
	1	1	**5P-7957**	1	LANYARD	
	2	1	**142-9353**	1	INSULATION	
	3	1	**152-4871**	1	BOX-STORAGE	
	4	1	**195-0939**	2	STUD-THREADED	
	5	1	**195-6727**	1	LINER	
	6	1	**195-6728**	1	INSULATION	
	7	1	**195-0935**	4	INSERT-THREADED	
M	8	1	**9X-2042**	4	SCREW-TRUSS HEAD (M6X1X12MM)	
BE	9	1	**9X-2092**		STRIP-EDGE (113CM)	

B-USE AS REQUIRED
E-ORDER BY THE CENTIMETER
M-METRIC PART

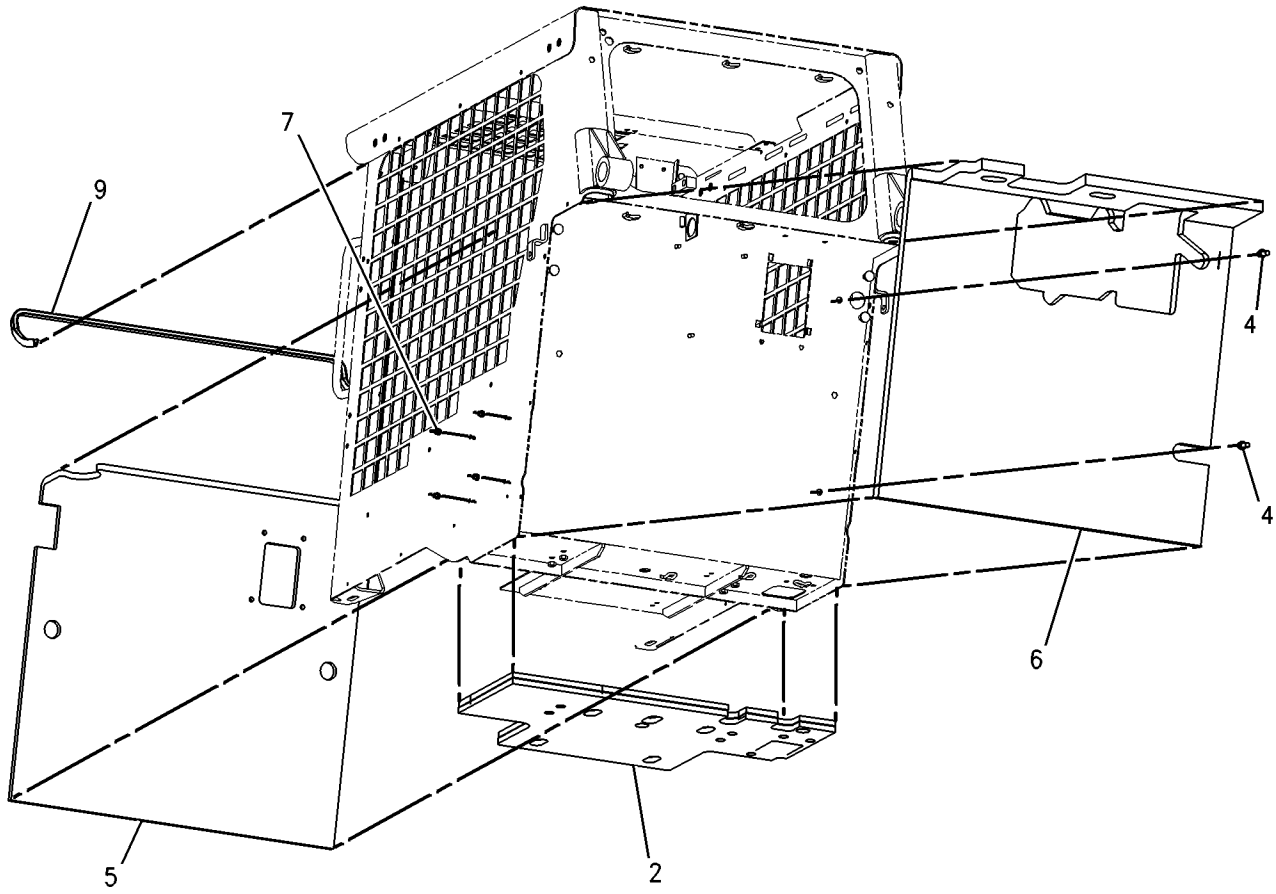

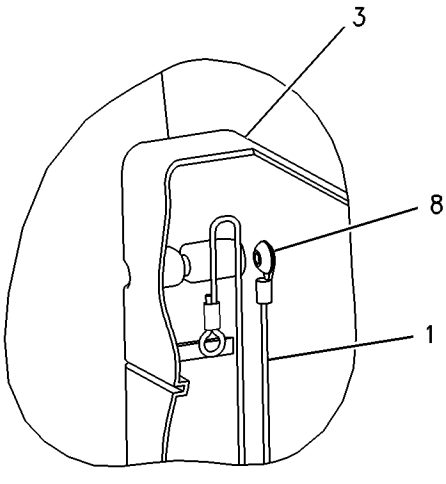

VIEW OF AREA A

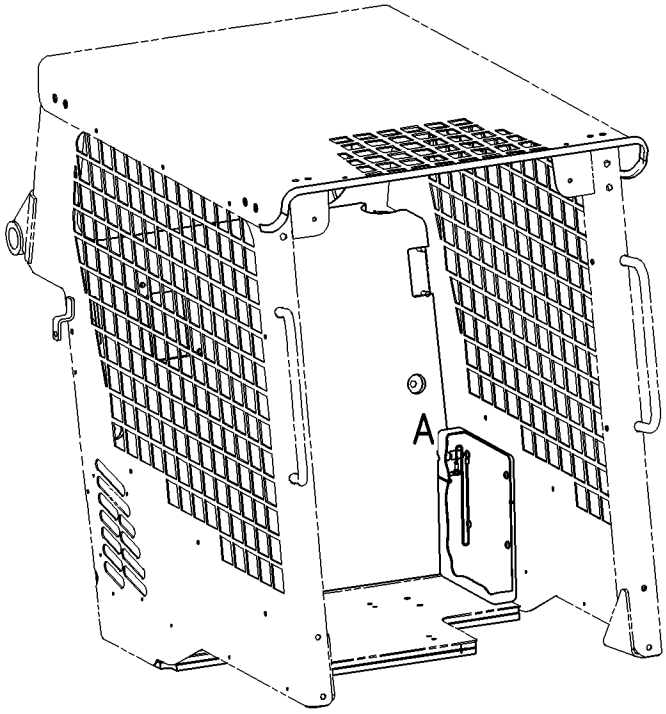

GRAPHIC #1 g00769710

OPERATOR STATION

152-4874 LINES GP-HEATER

S/N: 5FZ6700-UP
PART OF 142-9330 HEATER & MTG GP-CAB
AN ATTACHMENT

SMCS-1812, 7304 **i01679201**

NOTE	REF NO	GRAPHIC REF	PART NUMBER	QTY	PART NAME 1 2 3 4 5 6 (PRODUCT LEVEL)	SEE PAGE
	1	1	**1L-2279**	2	ELBOW	
	2	1	**8F-8151**	1	VALVE-SHUTOFF	
	3	1	**8T-0154**	4	CLAMP-HOSE	
	4	1	**004-6810**	1	ELBOW	
	5	1	**183-7120**	2	GUARD-HOSE	
	6	1	**205-9883**	1	ELBOW	
	7	1	**6D-1641**	3	CLIP	
	8	1	**8T-4121**	3	WASHER-HARD (11X21X2.5MM THK)	
M	9	1	**8T-4133**	2	NUT (M10X1.5 THD)	
M	10	1	**8T-4136**	1	BOLT (M10X1.5X25MM)	
	11	1	**136-1953**		HOSE (432CM)	
	12	1	**9X-2092**		STRIP-EDGE (10CM)	

M-METRIC PART

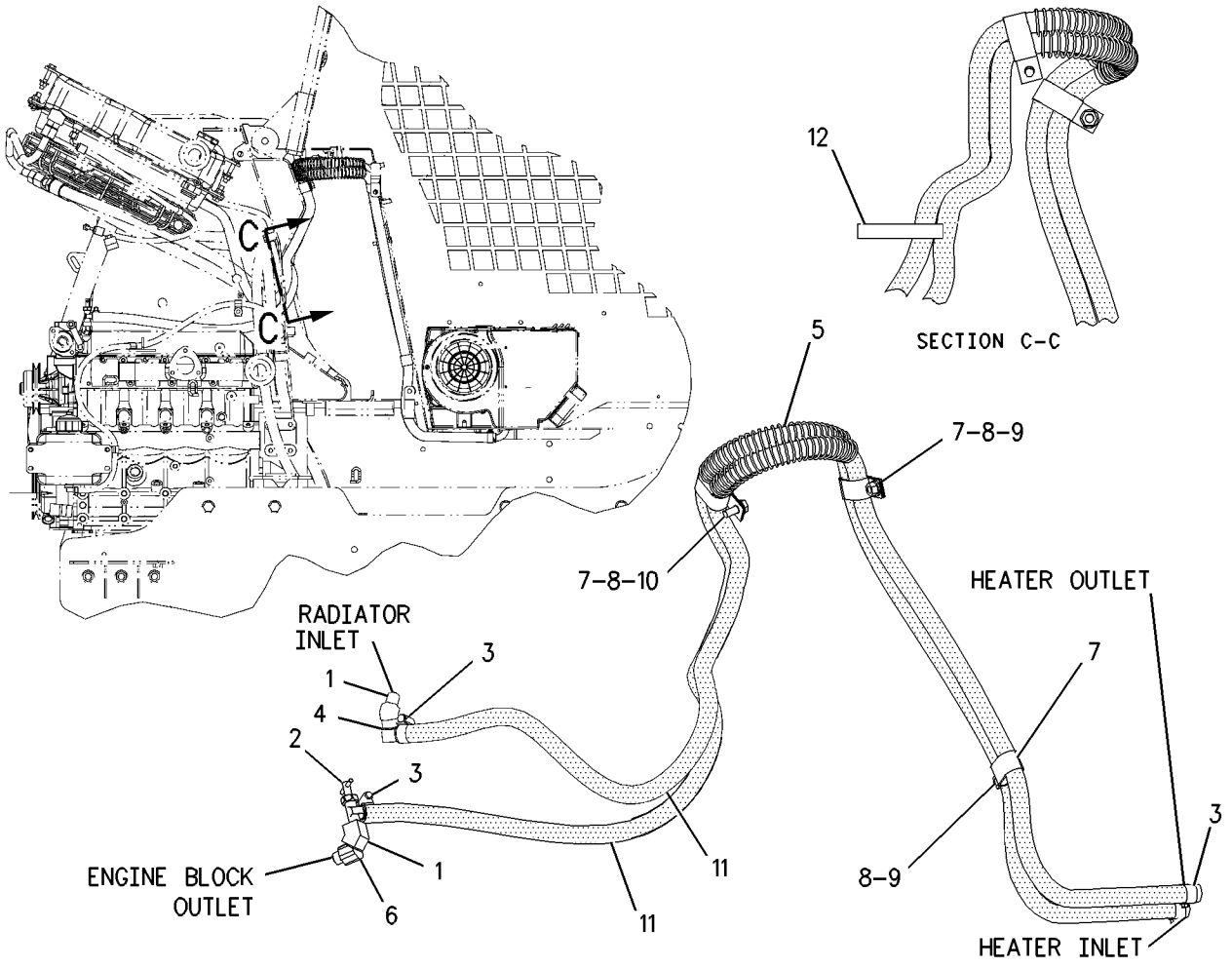

GRAPHIC #1 g00866986

OPERATOR STATION

206-3791 LINES GP-HEATER

S/N: CAB1-UP; 4NZ3400-UP
PART OF 206-3790 HEATER & MTG GP-CAB
AN ATTACHMENT

SMCS-1812, 7304 **i01755684**

NOTE	REF NO	GRAPHIC REF	PART NUMBER	QTY	PART NAME 1 2 3 4 5 6 (PRODUCT LEVEL)	SEE PAGE
	1	1	**1L-2279**	1	ELBOW	
	2	1	**8F-8151**	1	VALVE-SHUTOFF	
	3	1	**8T-0154**	4	CLAMP-HOSE	
	4	1	**004-6810**	1	ELBOW	
	5	1	**150-7568**	1	ADAPTER	
	6	1	**183-7120**	2	GUARD-HOSE	
	7	1	**6D-1641**	3	CLIP	
	8	1	**8T-4121**	3	WASHER-HARD (11X21X2.5MM THK)	
M	9	1	**8T-4133**	2	NUT (M10X1.5 THD)	
M	10	1	**8T-4136**	1	BOLT (M10X1.5X25MM)	
E	11	1	**9X-2092**		STRIP-EDGE (10CM)	
BE	12	1	**136-1953**		HOSE (216CM)(216)	
BE	13	1	**136-1953**		HOSE (226CM)(232)	
BE	14	1	**136-1953**		HOSE (226CM)(216)	
BE	15	1	**136-1953**		HOSE (244CM)(232)	

B-USE AS REQUIRED
E-ORDER BY THE CENTIMETER
M-METRIC PART

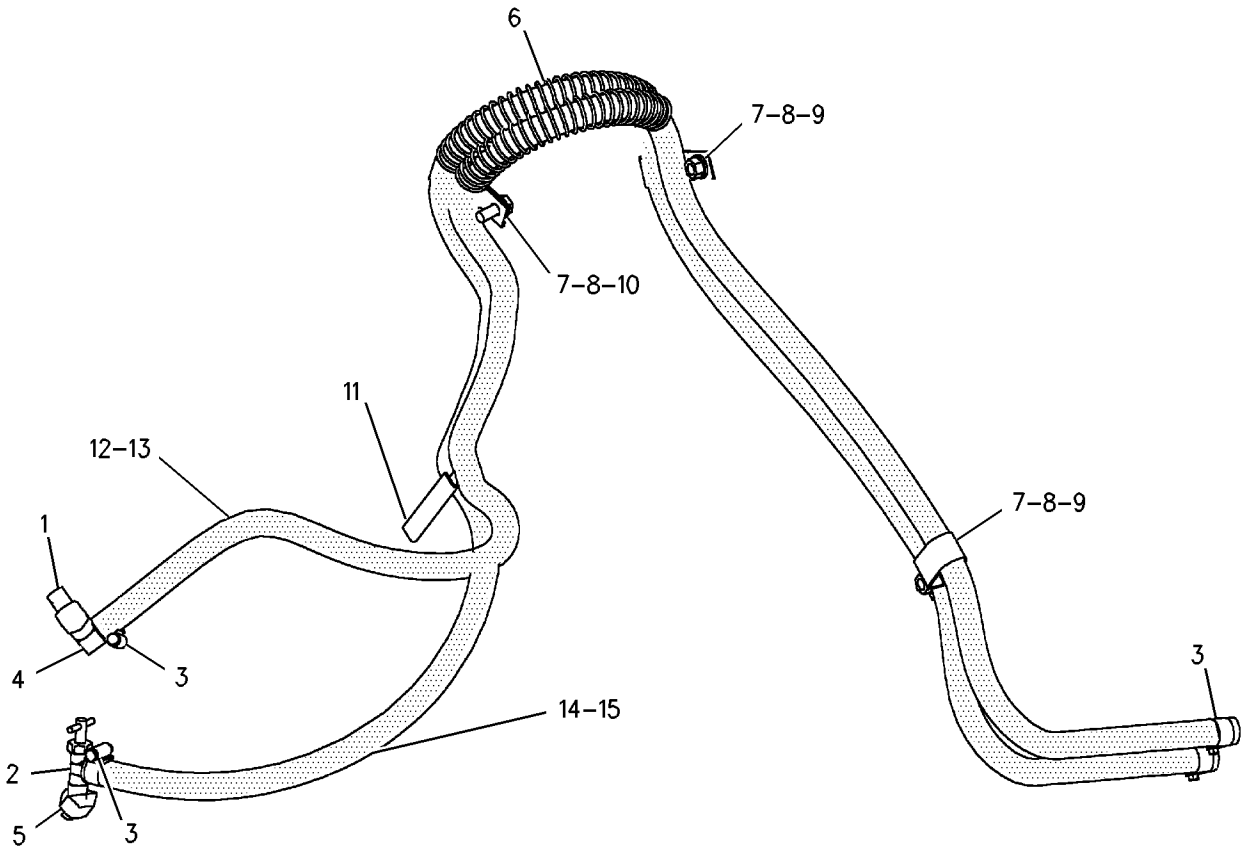

GRAPHIC #1 g00898787

OPERATOR STATION

175-4225 MIRROR & MTG GP-REAR VIEW

S/N: 4NZ3400-UP; 5FZ6700-UP
PART OF 206-3777, 206-3778 CONVERSION AR-ROADING AN ATTACHMENT

SMCS-7319 **i01509160**

NOTE	REF NO	GRAPHIC REF	PART NUMBER	QTY	PART NAME 1 2 3 4 5 6 (PRODUCT LEVEL)	SEE PAGE
	1	1	**132-5166**	2	HEAD-MIRROR	
	2	1	**175-4226**	2	BASE AS	
		1	**7T-1099**	2	LINK	
	3	1	**175-4237**	1	BLOCK AS	
	4	1	**175-4239**	2	BRACKET AS	
M	5	1	**5C-9553**	4	BOLT (M6X1X16MM)	
	6	1	**8T-4121**	4	WASHER-HARD (11X21X2.5MM THK)	
M	7	1	**8T-4136**	4	BOLT (M10X1.5X25MM)	
	8	1	**8T-4205**	4	WASHER-HARD (7.2X14.5X2MM THK)	
	9	1	**6V-1391**		SEAL (0.2M)	

M-METRIC PART

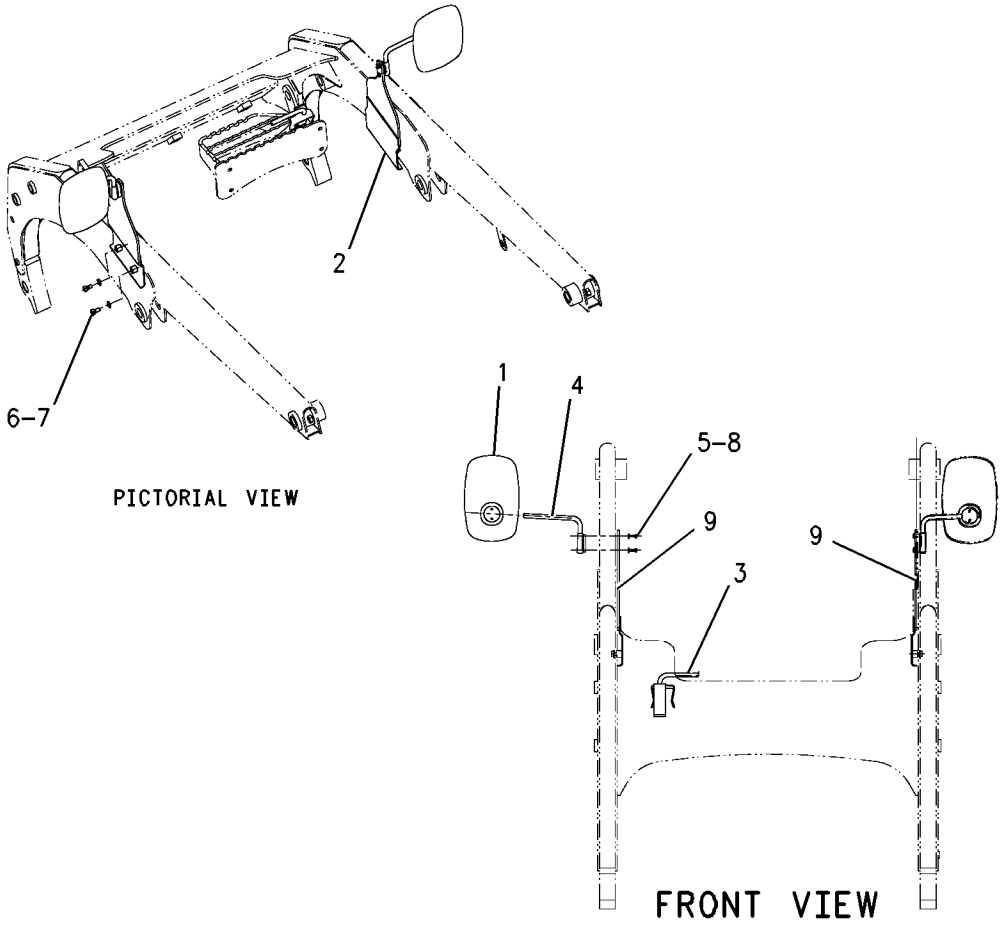

GRAPHIC #1 g00783458

161-7522 MOTOR GP-WINDOW WIPER

S/N: CAB1-UP; CMB1-UP; 4NZ3400-UP; 5FZ6700-UP
PART OF 142-9340, 159-5801 DOOR GP-CAB
AN ATTACHMENT

SMCS-7305 **i01755241**

NOTE	REF NO	GRAPHIC REF	PART NUMBER	QTY	PART NAME 1 2 3 4 5 6 (PRODUCT LEVEL)	SEE PAGE
	1	1	**102-8804**	1	KIT-RECEPTACLE (4 PIN)	
	2	1	**186-3735**	4	PIN-CONNECTOR	

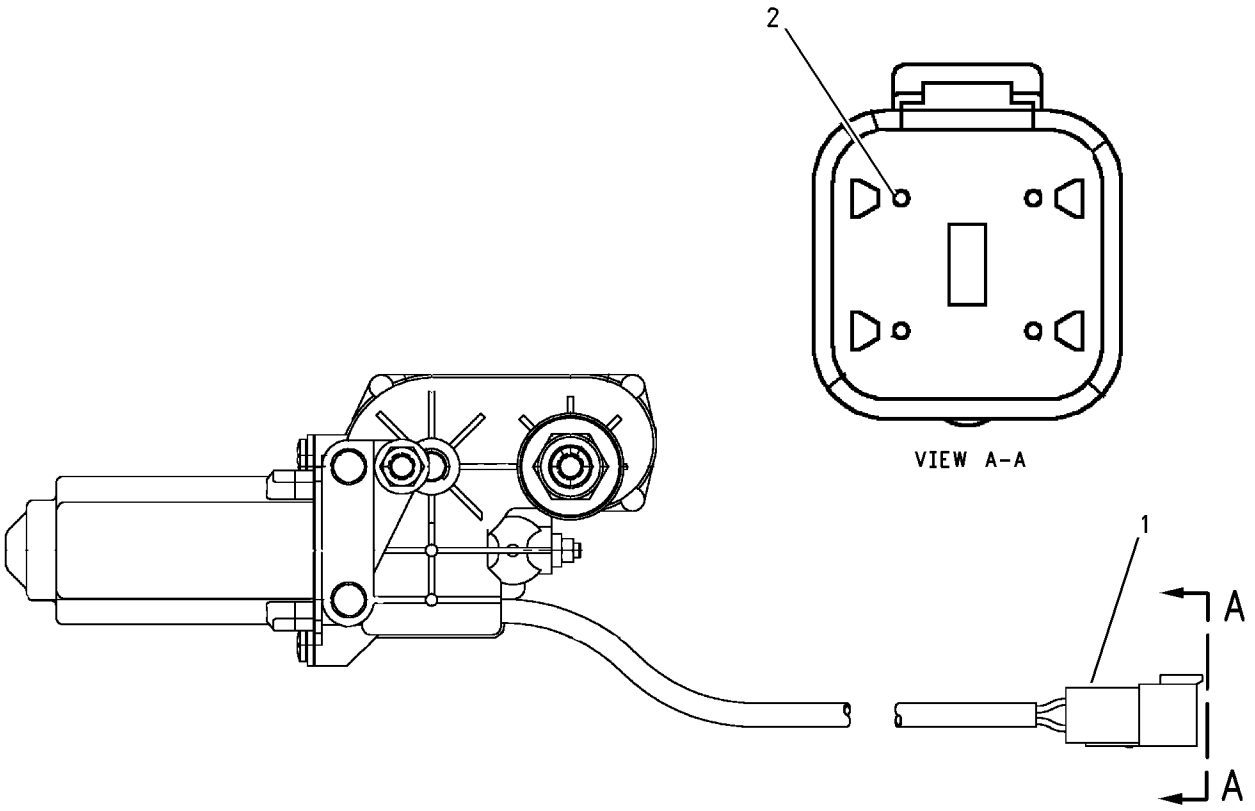

GRAPHIC #1 g00647191

OPERATOR STATION

142-9334 MOUNTING GP-ROPS

S/N: CAB1-UP; CMB1-UP; 4NZ3400-UP; 5FZ6700-UP

PART OF 191-2902, 191-9602, 200-0802, 200-1002 CHASSIS AR

SMCS-7266, 7323, 7325 **i01694084**

NOTE	REF NO	GRAPHIC REF	PART NUMBER	QTY	PART NAME 1 2 3 4 5 6 (PRODUCT LEVEL)	SEE PAGE
	1	1	**152-5878**	2	MOUNT AS	
	2	1	**153-6981**	2	MOUNT	
	3	1	**159-5790**	1	BRACKET	
	4	1	**159-5792**	1	BAR AS	
	5	1	**159-5794**	1	SPRING	
	6	1	**165-7095**	4	WASHER (16.5X71.5X3MM THK)	
	7	1	**4P-7581**	1	CLIP (LADDER) (LADDER)	
M	8	1	**6V-9805**	2	BOLT (M6X1X20MM)	
M	9	1	**7X-2475**	2	BOLT (M16X2X130MM)	
M	10	1	**7X-2556**	2	BOLT (M16X2X100MM)	
	11	1	**8T-4122**	6	WASHER-HARD (17X32X3.5MM THK)	
	12	1	**8T-4205**	2	WASHER-HARD (7.2X14.5X2MM THK)	
M	13	1	**8T-4778**	4	LOCKNUT (M16X2 THD)	

M-METRIC PART

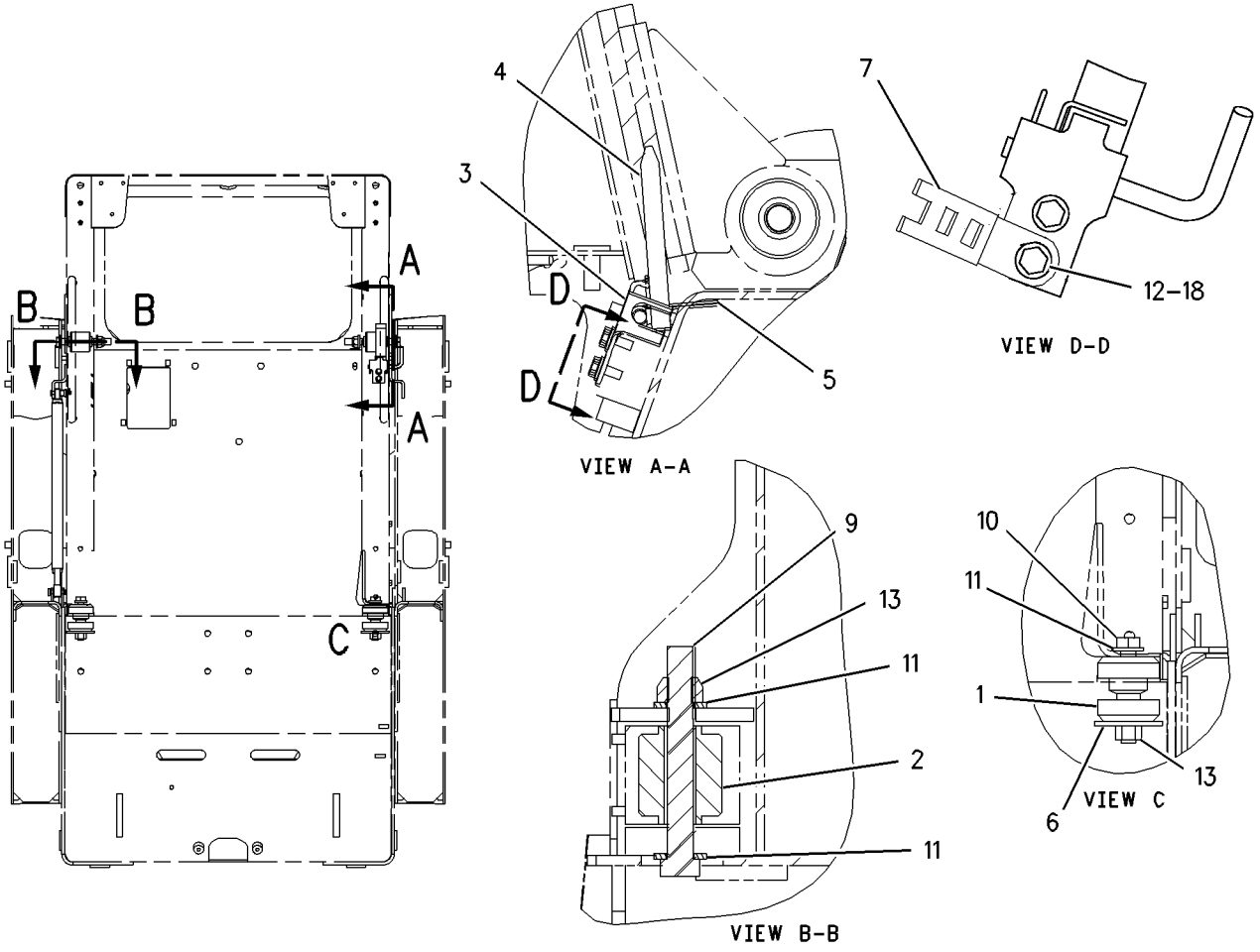

GRAPHIC #1 g00872072

OPERATOR STATION

191-9799 OPERATOR AR-CANOPY

S/N: 4NZ3500-UP; 5FZ6700-UP
PART OF 200-0802, 200-1002 CHASSIS AR

SMCS-7302 **i01630158**

NOTE	PART NUMBER	QTY	PART NAME 1 2 3 4 5 6 (PRODUCT LEVEL)	SEE PAGE
Y	*195-6721*	1	ARMREST & MOUNTING GP	497
	191-9781	1	CANOPY AS-ROPS	
M	**8T-3612**	4	NUT-WELD (M8X1.25 THD)	
	7T-1099	7	LINK	
Y	*195-6725*	1	LINER GP-CAB	544
Y	**199-5272**	1	PANEL GP-SIDE	280

M-METRIC PART
Y-SEPARATE ILLUSTRATION

<END>

210-4699 OPERATOR AR-CANOPY

S/N: CAB1-UP; CMB1-UP
PART OF 191-2902, 191-9602 CHASSIS AR

SMCS-7302 **i01760800**

NOTE	PART NUMBER	QTY	PART NAME 1 2 3 4 5 6 (PRODUCT LEVEL)	SEE PAGE
Y	*195-6721*	1	ARMREST & MOUNTING GP	497
	191-9781	1	CANOPY GP-ROPS	
Y	*195-6725*	1	LINER GP-CAB	544
Y	*207-9784*	1	PANEL GP-SIDE	281

Y-SEPARATE ILLUSTRATION

<END>

195-6791 PANEL AR-INSTRUMENT

S/N: CAB1-UP; CMB1-UP; 4NZ3400-UP; 5FZ6700-UP
AN ATTACHMENT

SMCS-7451 **i01489845**

NOTE	PART NUMBER	QTY	PART NAME 1 2 3 4 5 6 (PRODUCT LEVEL)	SEE PAGE
Y	*193-8371*	1	PANEL GP-INSTRUMENT	552

Y-SEPARATE ILLUSTRATION

<END>

OPERATOR STATION

193-8371 PANEL GP-INSTRUMENT

S/N: CAB1-UP; CMB1-UP; 4NZ3400-UP; 5FZ6700-UP
PART OF 195-6791 PANEL AR-INSTRUMENT
AN ATTACHMENT

SMCS-7451 **i01755279**

NOTE	REF NO	GRAPHIC REF	PART NUMBER	QTY	PART NAME 1 2 3 4 5 6 (PRODUCT LEVEL)	SEE PAGE
	1	2	**109-2356**	2	PLUG	
Y	2	1	**142-9118**	1	COVER GP-CAB	502
	3	2	**142-9320**	1	SWITCH AS (PARKING BRAKE)	
		2	**111-7899**	1	GASKET	
	4	2	**142-9325**	1	SWITCH AS (GLOW PLUG)	
	5	2	**142-9328**	1	SWITCH AS (FRONT WORKING LAMP)	
		2	**111-7899**	1	GASKET	
	6	1	**158-6696**	1	COVER	
	7	1	**158-6698**	1	COVER	
	8	1	**158-6699**	1	COVER	
	9	2	**165-0311**	7	PLUG	
	10	1	**165-0312**	2	WIRE AS	
	11	1	**193-8373**	1	HARNESS AS-INSTRUMENT PANEL	
		1	**102-8805**	1	KIT-RECEPTACLE (6 PIN)	
	12	2	**194-8168**	1	SWITCH AS (CONTINOUS FLOW CONTROL)	
		2	**111-7899**	1	GASKET	
Y	13	1	*197-6898*	1	GAUGE & WARNING GP (LH)	525
Y	14	1	*197-6899*	1	GAUGE & WARNING GP (RH)	526
	15	1	**103-2006**	16	SCREW-PAN HEAD	
	16	1	**9P-0719**	2	GROMMET	

Y-SEPARATE ILLUSTRATION

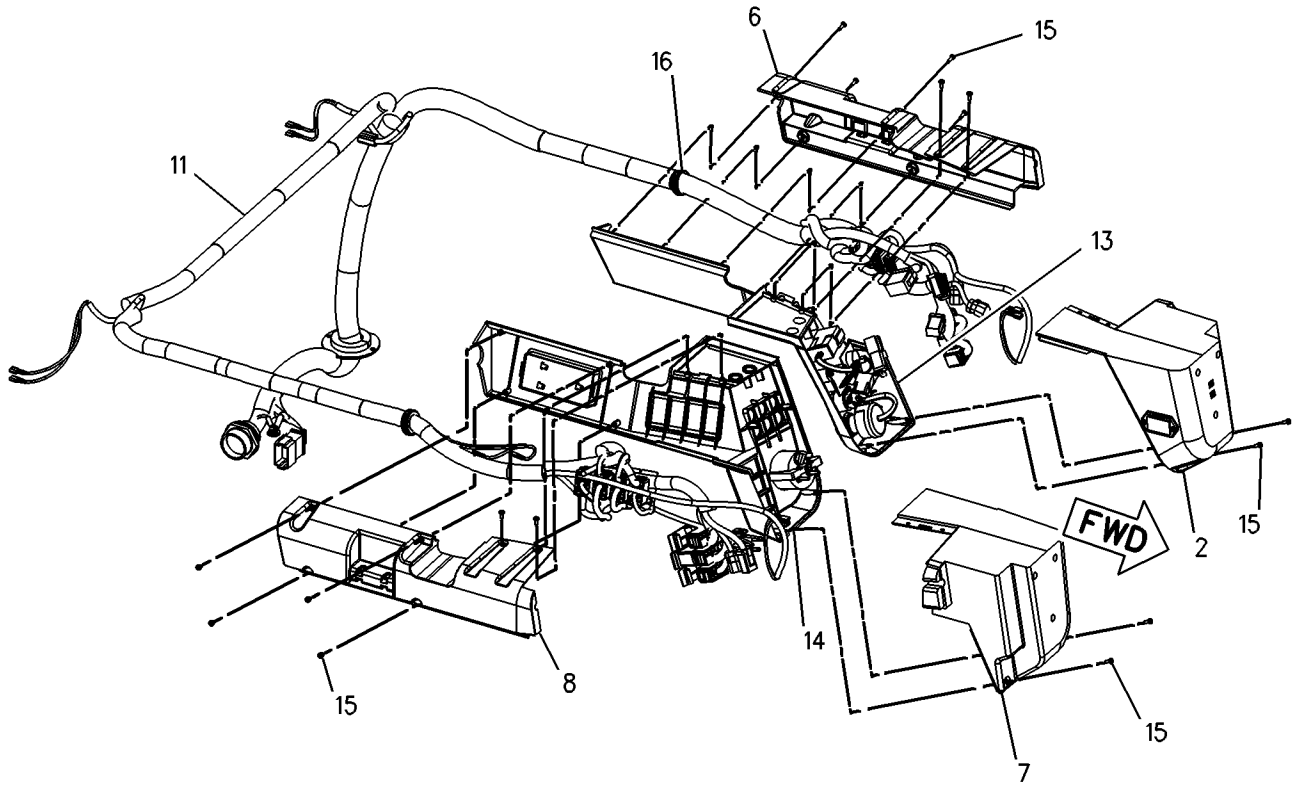

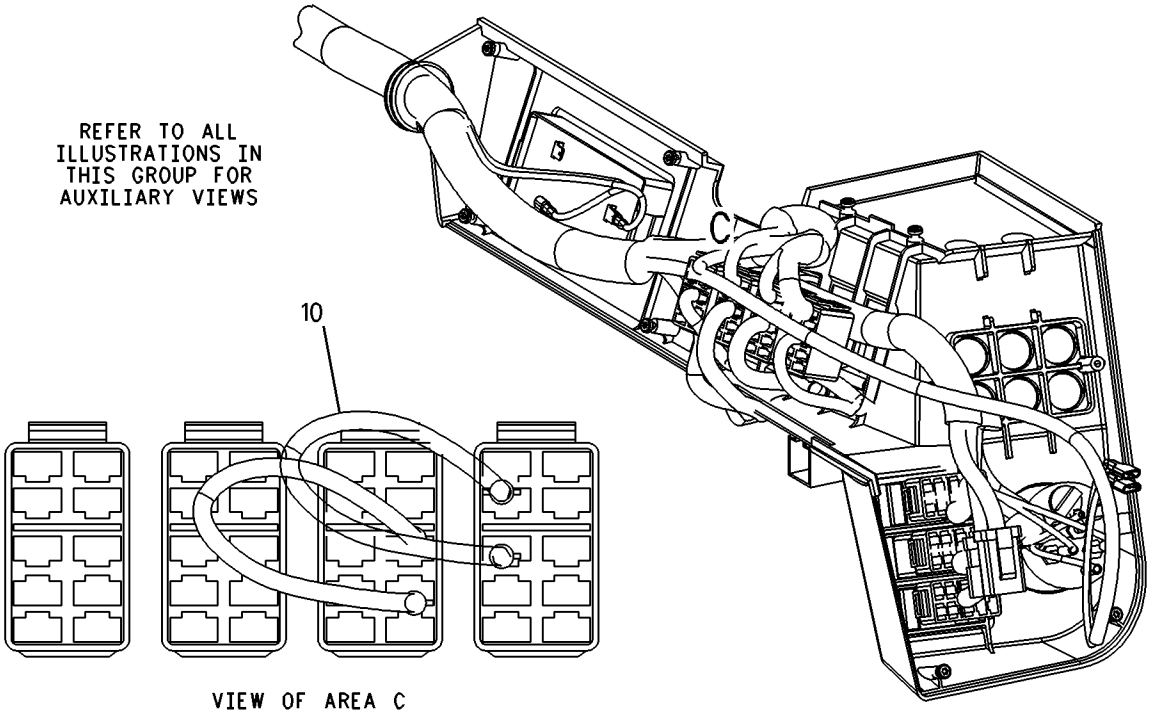

GRAPHIC #1 g00867616

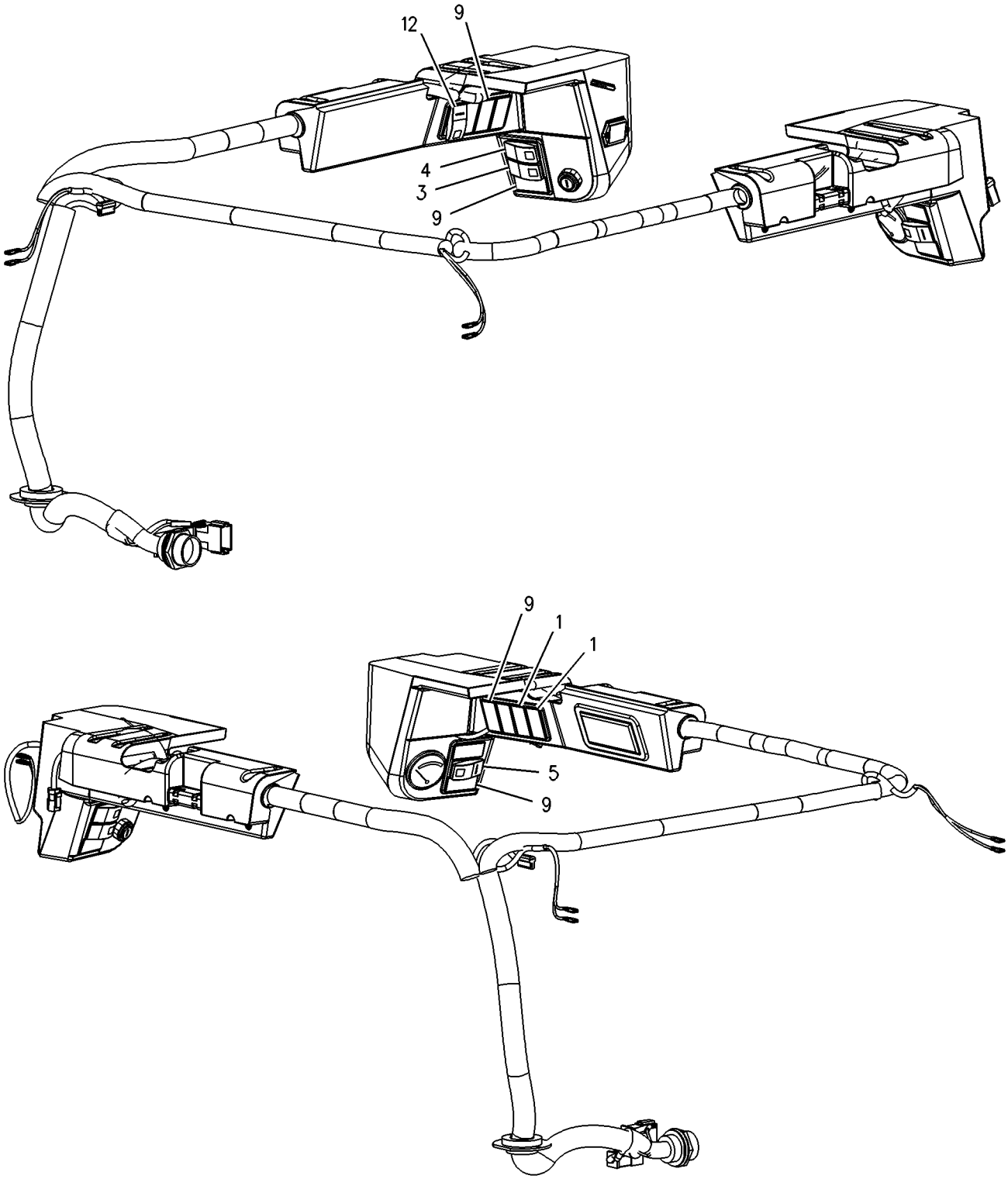

GRAPHIC #2 g00769716

203-4330 PANEL GP-INSTRUMENT

S/N: 4NZ3400-UP; 5FZ6700-UP
ROADING
PART OF 203-4331, 203-4332 LIGHTING GP-ROADING
AN ATTACHMENT

SMCS-7451 **i01517364**

NOTE	PART NUMBER	QTY	PART NAME 1 2 3 4 5 6 (PRODUCT LEVEL)	SEE PAGE
	142-8632	1	SWITCH GP-ROCKER (HYDRAULIC SHUT OFF CONTROL)	
	111-7899	1	GASKET	
	142-9329	1	SWITCH GP-ROCKER (ROADING LIGHTS)	
	111-7899	1	GASKET	
	142-9331	1	SWITCH GP-ROCKER (HAZARD FLASHER CONTROL)	
	111-7899	1	GASKET	
	202-9700	1	SWITCH GP-ROCKER (DIRECTIONAL TURN SIGNAL)	
	111-7899	1	GASKET	

<END>

OPERATOR STATION

192-2661 PEDAL GP-GOVERNOR

S/N: CAB1-UP; CMB1-UP; 4NZ3400-UP; 5FZ6700-UP
PART OF 192-2664, 215-3981 PEDAL GP-GOVERNOR

SMCS-1265, 1276 **i01760857**

NOTE	REF NO	GRAPHIC REF	PART NUMBER	QTY	PART NAME 1 2 3 4 5 6 (PRODUCT LEVEL)	SEE PAGE
M	1	1	**129-3178**	1	LOCKNUT (M6X1 THD)	
	2	1	**3F-9556**	2	LOCKWASHER	
M	3	1	**5C-7261**	1	NUT (M8X1.25 THD)	
M	4	1	**5C-9553**	1	BOLT (M6X1X16MM)	
M	5	1	**6V-5698**	4	SCREW-BUTTON HEAD (M4X0.7X10MM)	
	6	1	**6V-8186**	2	NUT-FULL (5/16-24 THD)	
M	7	1	**8T-4197**	1	BOLT (M8X1.25X40MM)	
	8	1	**8T-4205**	1	WASHER-HARD (7.2X14.5X2MM THK)	
	9	1	**8T-6902**	1	CLIP	
					AVAILABLE REPAIR KIT(S):	
			164-1154	1	KIT-SERVICE	
					(INCLUDES CABLE CLAMPS AND SCREWS)	

M-METRIC PART

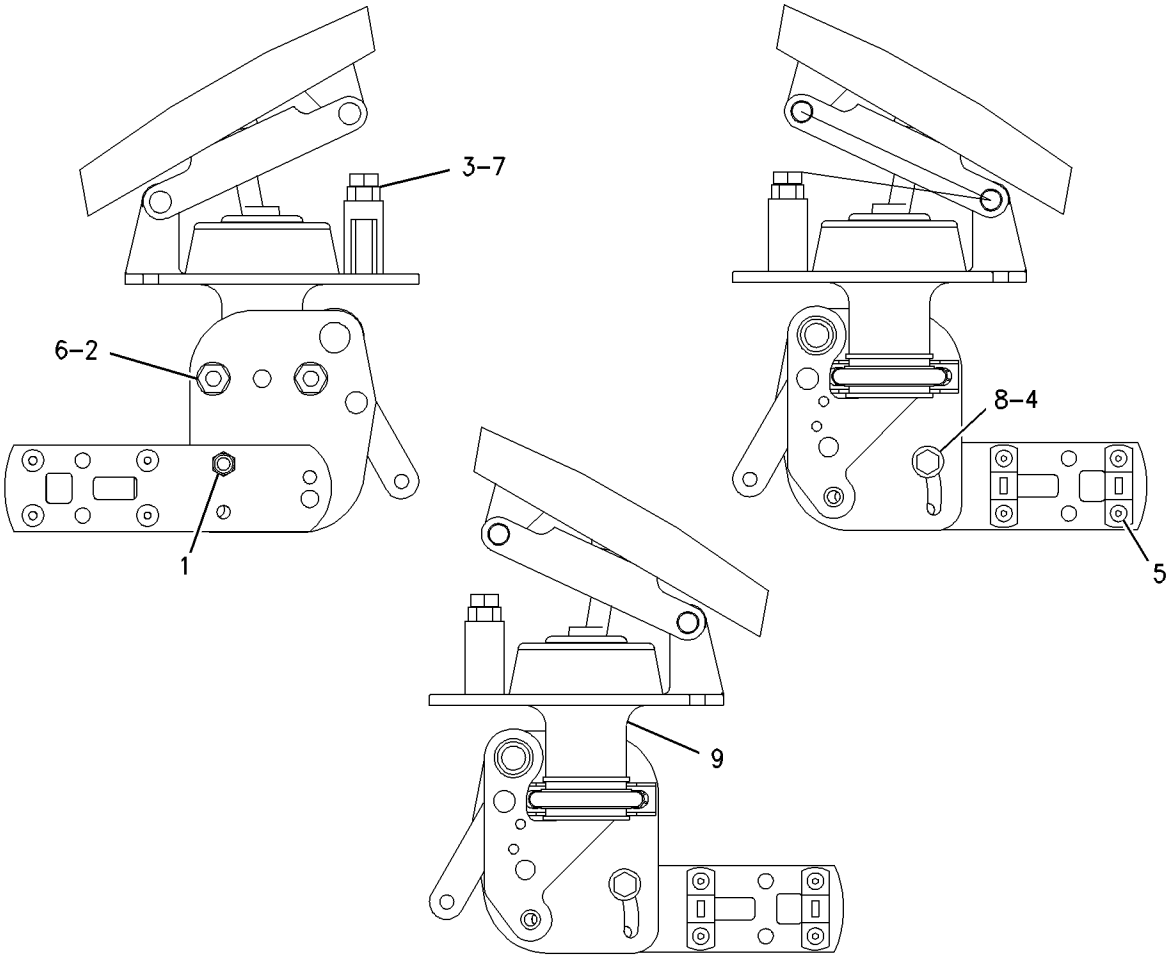

GRAPHIC #1 g00762694

OPERATOR STATION

192-2664 PEDAL GP-GOVERNOR

S/N: 5FZ6700-6709

PART OF 192-2657 CONTROL GP-GOVERNOR

SMCS-1265, 1276 **i01620349**

NOTE	REF NO	GRAPHIC REF	PART NUMBER	QTY	PART NAME 1 2 3 4 5 6 (PRODUCT LEVEL)	SEE PAGE
Y	1	1	**192-2661**	1	PEDAL GP-GOVERNOR	556
	2	1	**192-2662**	1	CABLE AS	
	3	1	**192-2663**	1	LEVER GP-GOVERNOR	
	4	1	**207-9735**	1	CABLE AS	
	5	1	**8T-4742**	1	END-YOKE ROD	
	6	1	**8T-4744**	1	PIN AS-SPRING	

Y-SEPARATE ILLUSTRATION

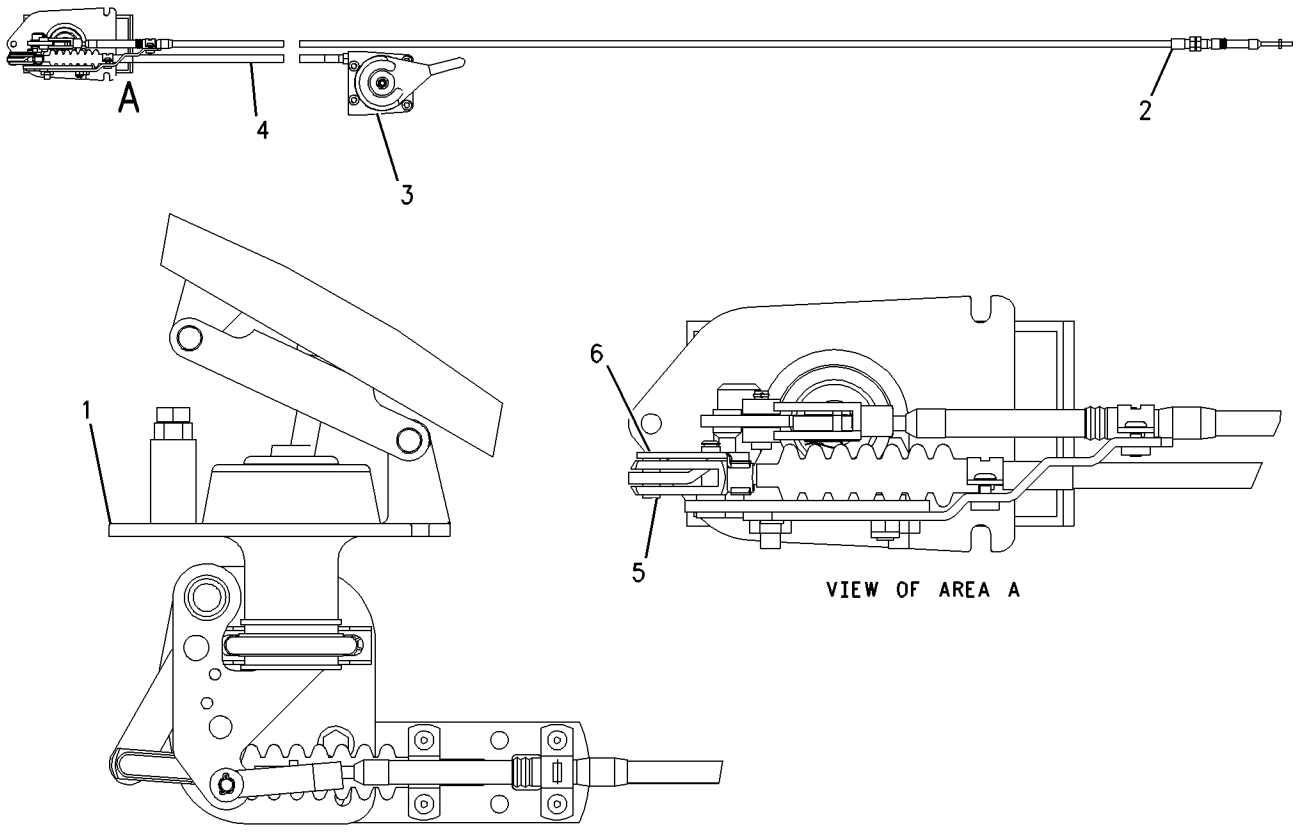

GRAPHIC #1 g00775920

OPERATOR STATION

215-3981 PEDAL GP-GOVERNOR

S/N: CAB1-UP; CMB1-UP; 4NZ3400-UP
PART OF 215-3980 CONTROL GP-GOVERNOR

SMCS-1265, 1276 **i01746292**

NOTE	REF NO	GRAPHIC REF	PART NUMBER	QTY	PART NAME 1 2 3 4 5 6 (PRODUCT LEVEL)	SEE PAGE
	1	1	**8T-4742**	2	END-YOKE ROD	
	2	1	**8T-4744**	2	PIN AS-SPRING	
Y	3	1	**192-2661**	1	PEDAL GP-GOVERNOR	556
	4	1	**192-2663**	1	LEVER GP-GOVERNOR	
M		1	**8T-4971**	1	BOLT (M6X1X30MM)	
M		1	**129-3178**	1	LOCKNUT (M6X1 THD)	
	5	1	**207-9735**	1	CABLE AS	
	6	1	**215-3928**	1	CABLE AS	

M-METRIC PART
Y-SEPARATE ILLUSTRATION

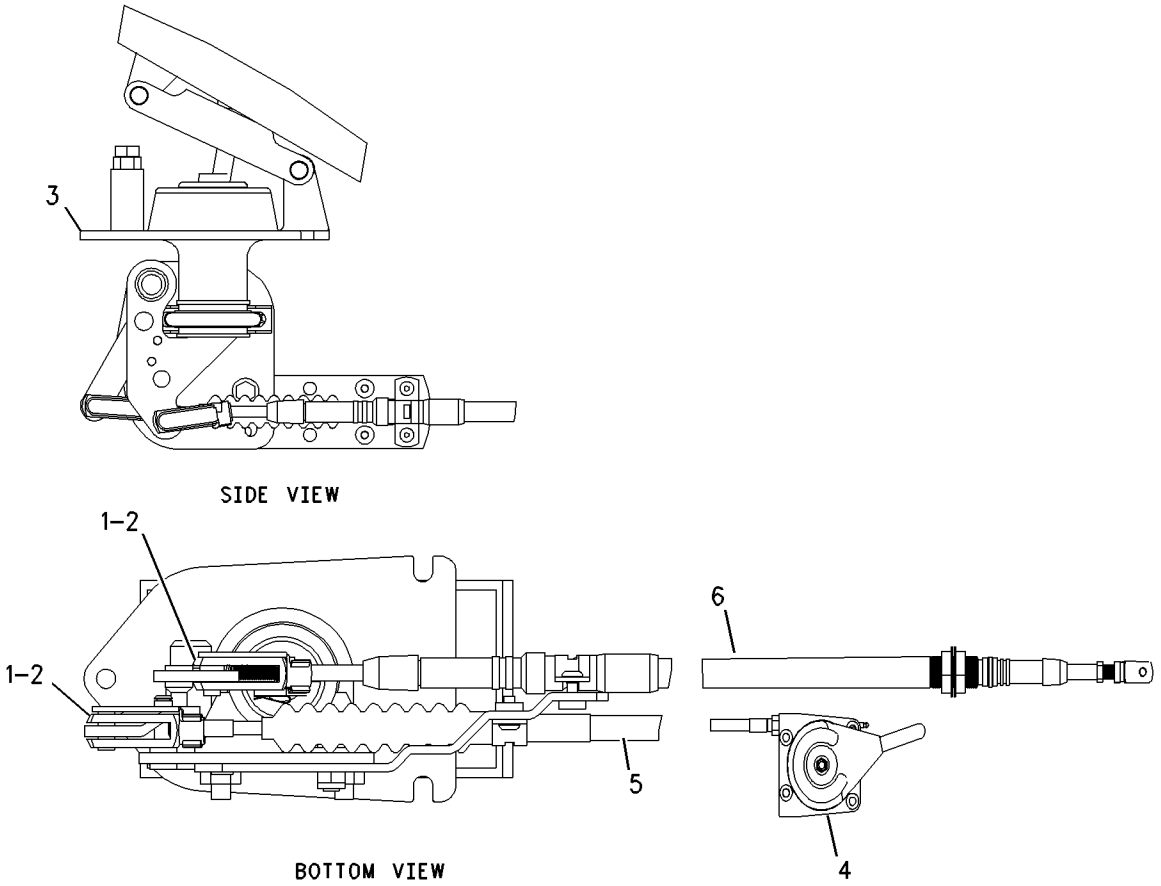

GRAPHIC #1 g00894914

OPERATOR STATION

192-2672 PLATFORM GP-OPERATOR

S/N: 5FZ6700-UP

PART OF 200-1002 CHASSIS AR

SMCS-7253 **i01486711**

NOTE	REF NO	GRAPHIC REF	PART NUMBER	QTY	PART NAME 1 2 3 4 5 6 (PRODUCT LEVEL)	SEE PAGE
	1	1	**154-3968**	2	STRIP	
	2	1	**192-2658**	1	FLOORPLATE AS	
M		1	**6V-9632**	5	NUT-WELD (M6X1 THD)	
	3	1	**192-2667**	1	SUPPORT AS-RH	
	4	1	**192-2669**	1	SUPPORT AS-LH	
	5	1	**192-2673**	1	FLOORPLATE	
M	6	1	**5C-9553**	8	BOLT (M6X1X16MM)	
	7	1	**7X-0579**	8	WASHER-HARD (8.8X25.5X2MM THK)	
	8	1	**8T-4205**	6	WASHER-HARD (7.2X14.5X2MM THK)	
M	9	1	**8T-4908**	8	BOLT (M8X1.25X25MM)	
	10	1	**9X-6165**	2	WASHER (6.5X22X2.5MM THK)	

M-METRIC PART

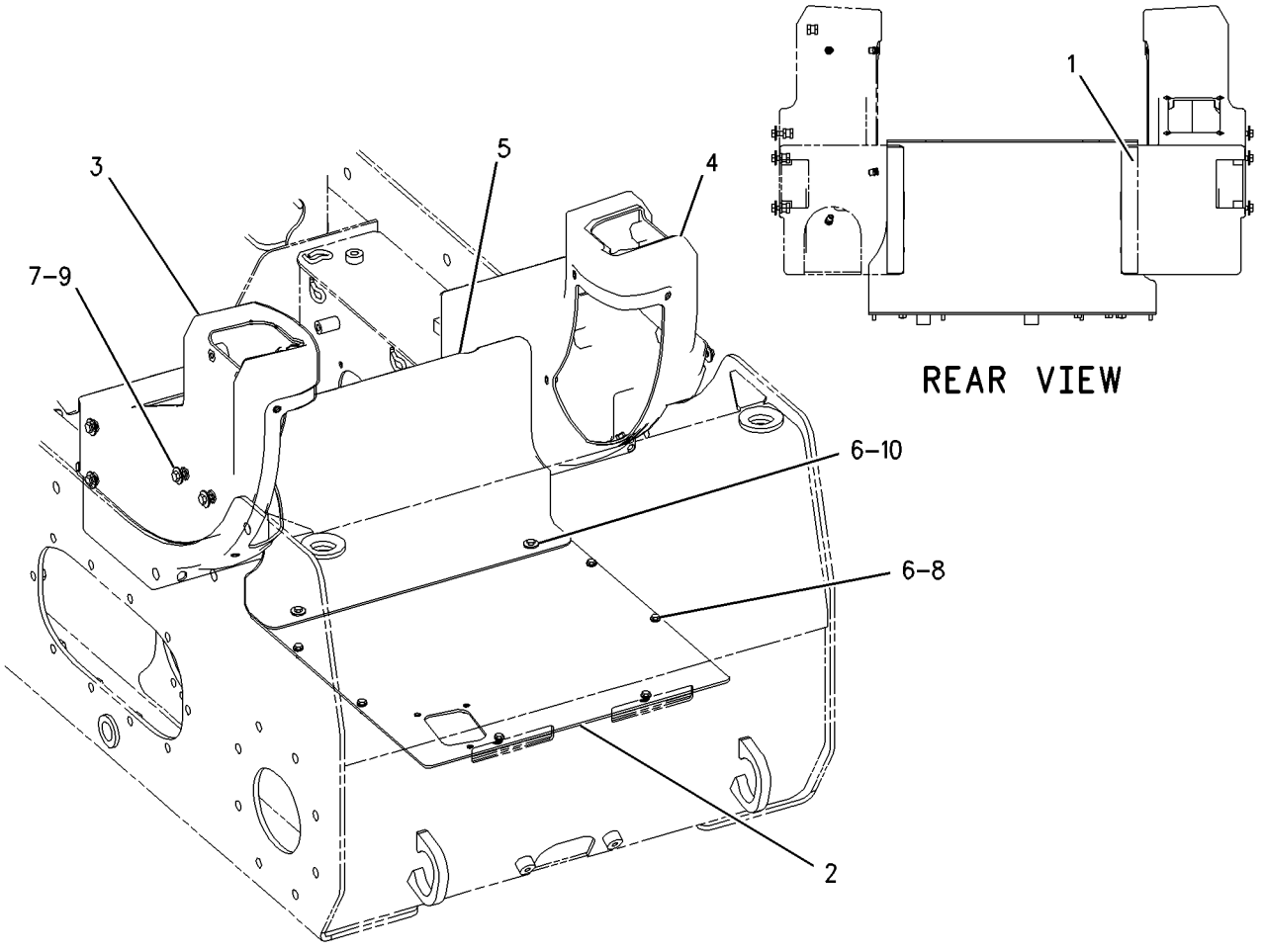

GRAPHIC #1 g00773206

OPERATOR STATION

207-9789 PLATFORM GP-OPERATOR

S/N: CAB1-UP; CMB1-UP; 4NZ3400-UP; 5FZ6700-UP

PART OF 191-2902, 191-9602, 200-0802, 200-1002 CHASSIS AR

SMCS-7253 **i01742518**

NOTE	REF NO	GRAPHIC REF	PART NUMBER	QTY	PART NAME 1 2 3 4 5 6 (PRODUCT LEVEL)	SEE PAGE
	1	1	**154-3968**	2	STRIP	
	2	1	**192-2658**	1	FLOORPLATE AS	
M		1	**6V-9632**	5	NUT-WELD (M6X1 THD)	
	3	1	**207-9788**	1	PLATE	
M	4	1	**5C-9553**	6	BOLT (M6X1X16MM)	
M	5	1	**6V-7357**	2	BOLT (M6X1.0X25MM)	
	6	1	**7X-0579**	8	WASHER-HARD (8.8X25.5X2MM THK)	
	7	1	**8T-4205**	6	WASHER-HARD (7.2X14.5X2MM THK)	
M	8	1	**8T-4908**	8	BOLT (M8X1.25X25MM)	
	9	1	**9X-6165**	2	WASHER (6.5X22X2.5MM THK)	

M-METRIC PART

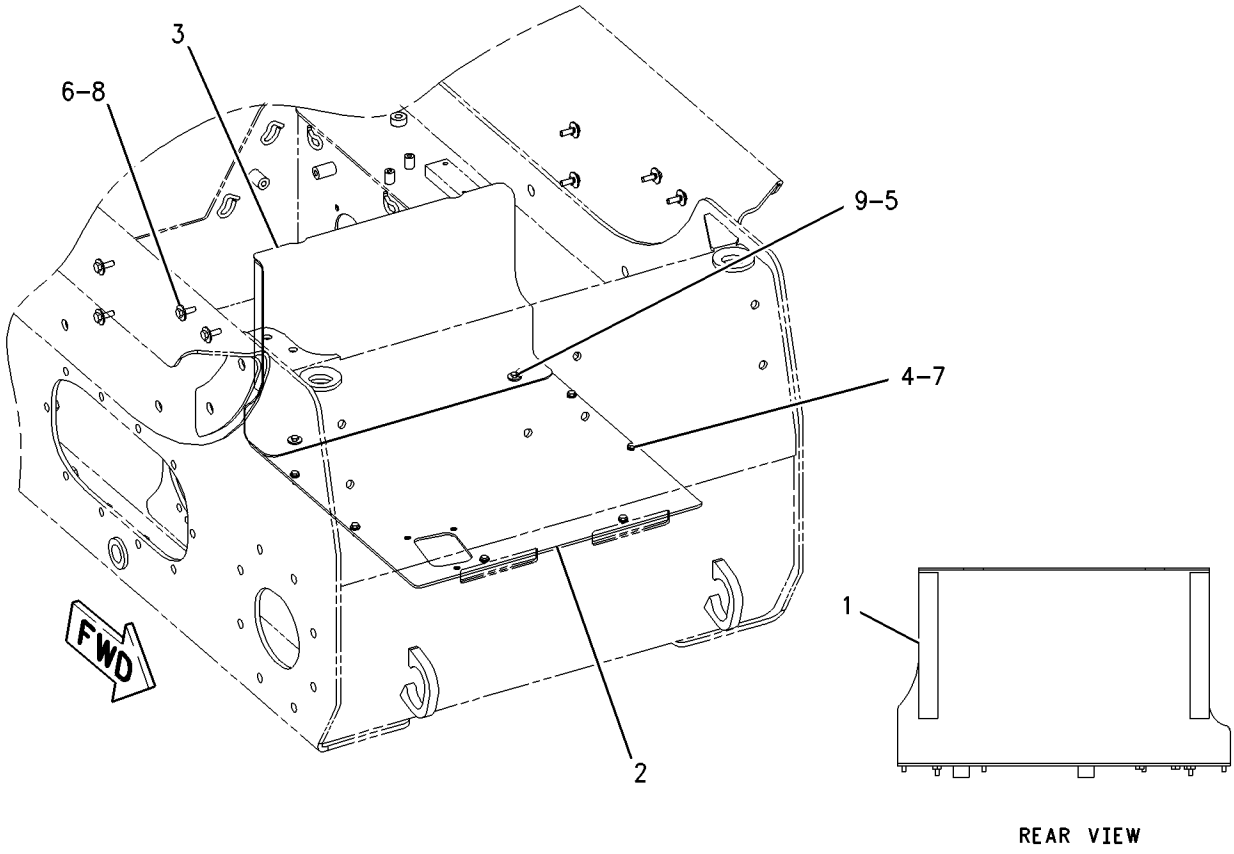

GRAPHIC #1 g00892072

OPERATOR STATION

187-3215 SEAL GP-CAB

S/N: CAB1-UP; CMB1-UP; 4NZ3400-UP; 5FZ6700-UP
PART OF 187-3220 SEAL GP-CAB
CANNOT BE USED WITH 206-3776–PAGE 253, 206-3777–PAGE 253, 206-3778–PAGE 254, 206-3779–PAGE 254, 206-3773–PAGE 282, 210-4701–PAGE 563
AN ATTACHMENT

SMCS-7301 **i01663540**

NOTE	REF NO	GRAPHIC REF	PART NUMBER	QTY	PART NAME 1 2 3 4 5 6 (PRODUCT LEVEL)	SEE PAGE
	1	1	**6V-1178**	2	PLUG-BUTTON	
	2	1	**187-3211**	1	PLATE AS	
	3	1	**187-3212**	1	PLATE	
	4	1	**187-3217**	2	BLOCK AS	
M	5	1	**7X-2552**	8	BOLT (M16X2X30MM)	
	6	1	**8T-4122**	12	WASHER-HARD (17X32X3.5MM THK)	
M	7	1	**8T-4132**	4	NUT (M16X2 THD)	
	8	1	**8T-4224**	8	WASHER-HARD (8.8X16X2MM THK)	
M	9	1	**8T-4908**	2	BOLT (M8X1.25X25MM)	
	10	1	**128-7037**		SEAL (118CM)	

M-METRIC PART

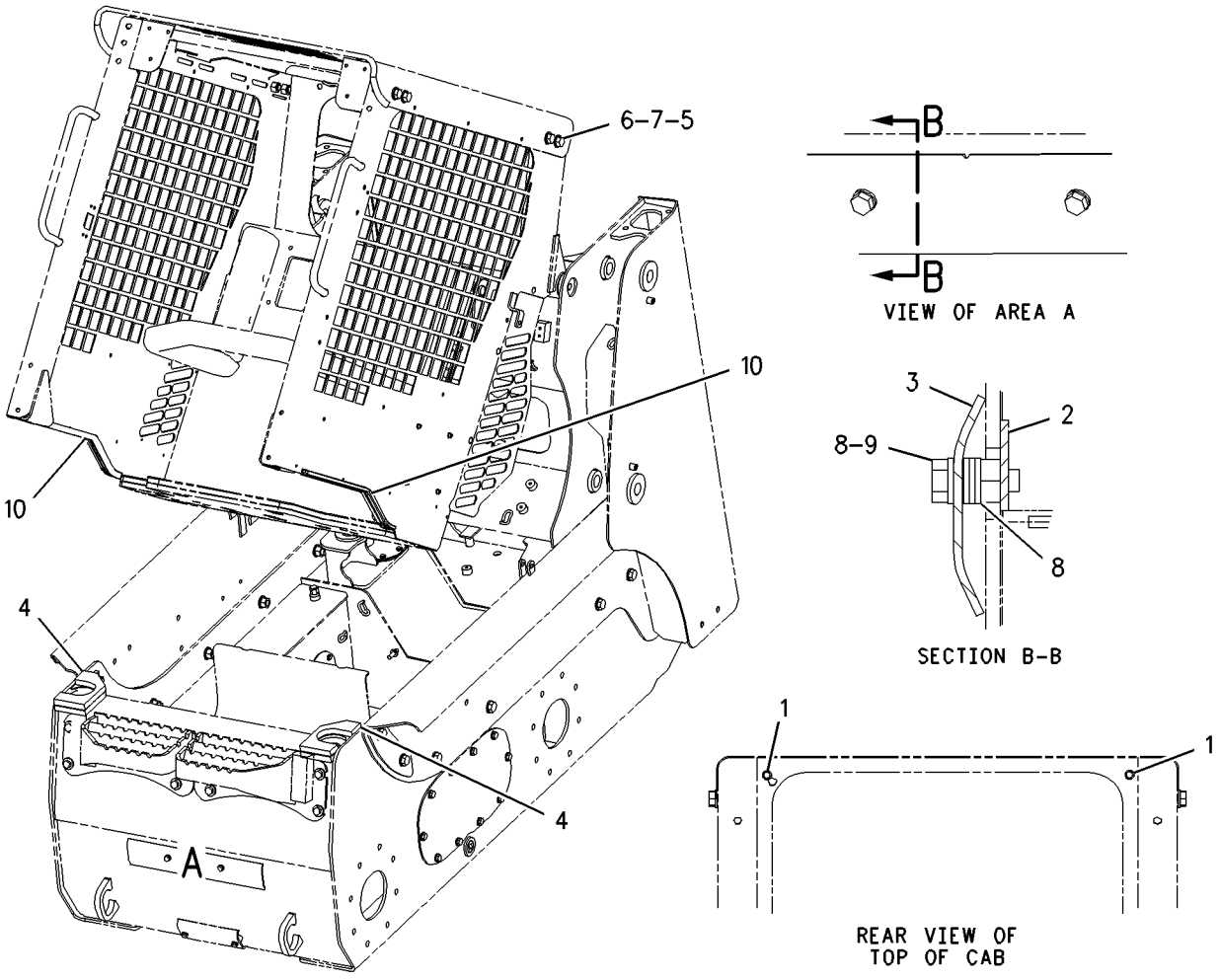

GRAPHIC #1 g00838992

OPERATOR STATION

187-3220 SEAL GP-CAB

S/N: CAB1-UP; CMB1-UP; 4NZ3400-UP; 5FZ6700-UP
KIT-CAB SEAL, DEBRIS BARRIER
AN ATTACHMENT AND FIELD INSTALLATION

SMCS-7301 **i01400527**

NOTE	PART NUMBER	QTY	PART NAME 1 2 3 4 5 6 (PRODUCT LEVEL)	SEE PAGE
Y	*187-3215*	1	SEAL GP-CAB	561

Y-SEPARATE ILLUSTRATION

<END>

OPERATOR STATION

210-4701 SEAL GP-CAB

S/N: CAB1-UP; CMB1-UP; 4NZ3400-UP; 5FZ6700-UP
CANNOT BE USED WITH 187-3215–PAGE 561
AN ATTACHMENT

SMCS-7301 **i01640511**

NOTE	REF NO	GRAPHIC REF	PART NUMBER	QTY	PART NAME 1 2 3 4 5 6 (PRODUCT LEVEL)	SEE PAGE
	1	1	**6V-1178**	2	PLUG-BUTTON	
	2	1	**187-3211**	1	PLATE AS	
M		1	**8T-3612**	2	NUT-WELD (M8X1.25 THD)	
	3	1	**187-3212**	1	PLATE	
	4	1	**187-3217**	2	BLOCK AS	
M	5	1	**7X-2552**	8	BOLT (M16X2X30MM)	
	6	1	**8T-4122**	12	WASHER-HARD (17X32X3.5MM THK)	
M	7	1	**8T-4132**	4	NUT (M16X2 THD)	
	8	1	**8T-4224**	8	WASHER-HARD (8.8X16X2MM THK)	
M	9	1	**8T-4908**	2	BOLT (M8X1.25X25MM)	

M-METRIC PART

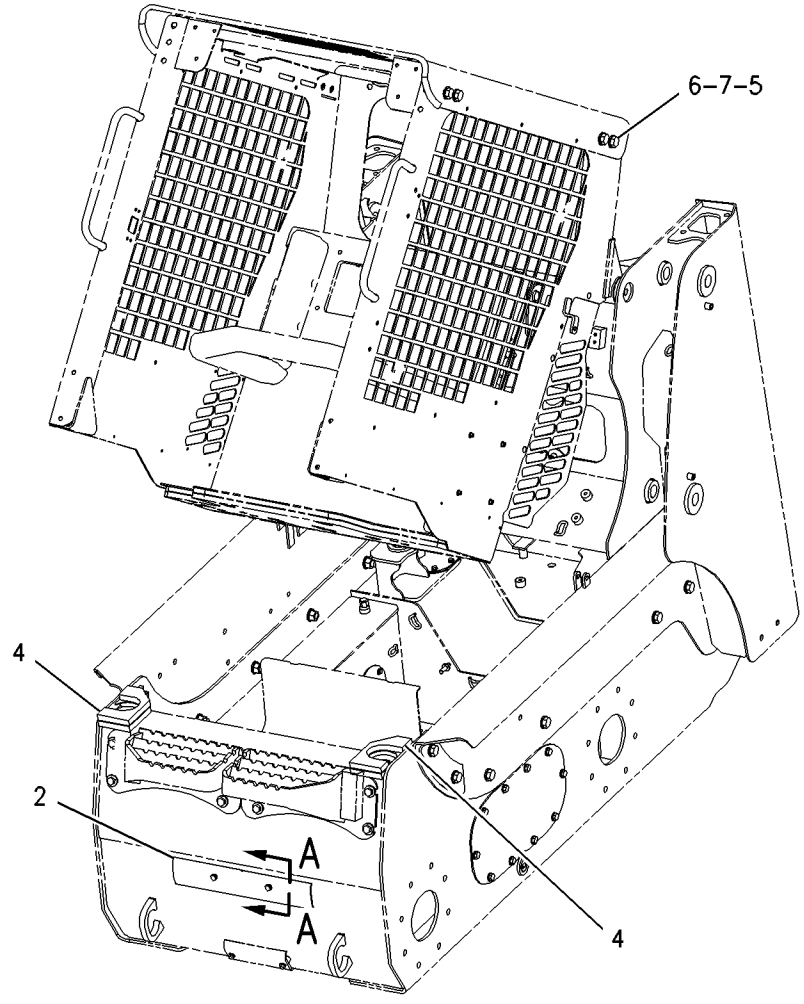

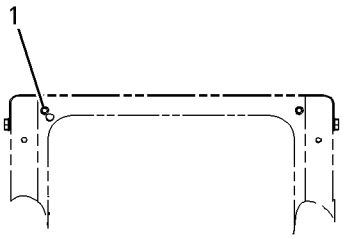

REAR VIEW

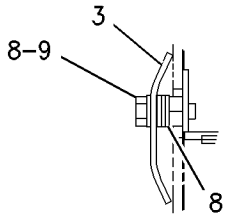

SECTION A–A

GRAPHIC #1 g00848629

OPERATOR STATION

142-9305 SEAT & MOUNTING GP

S/N: CAB1-UP; CMB1-UP; 4NZ3400-UP; 5FZ6700-UP
SUSPENSION
CANNOT BE USED WITH 142-9310—PAGE 565
AN ATTACHMENT

SMCS-7312 **i01280506**

NOTE	REF NO	GRAPHIC REF	PART NUMBER	QTY	PART NAME 1 2 3 4 5 6 (PRODUCT LEVEL)	SEE PAGE
Y	1	1	**142-9304**	1	SEAT GP-SUSPENSION	571
M	2	1	**5C-7261**	4	NUT (M8X1.25 THD)	
	3	1	**8T-4224**	4	WASHER-HARD (8.8X16X2MM THK)	

M-METRIC PART
Y-SEPARATE ILLUSTRATION

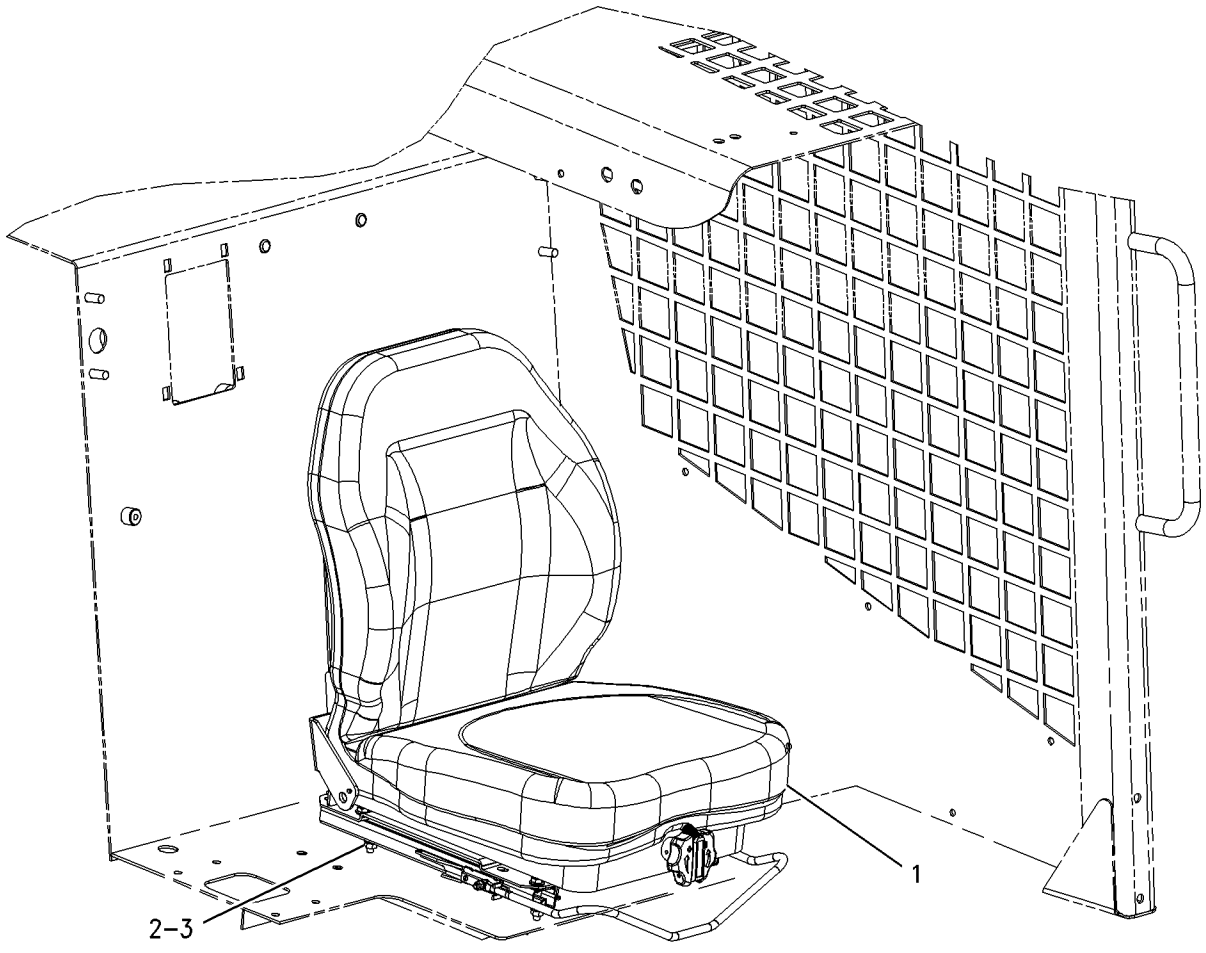

GRAPHIC #1 g00670943

OPERATOR STATION

142-9310 SEAT & MOUNTING GP

S/N: CAB1-UP; CMB1-UP; 4NZ3400-UP; 5FZ6700-UP
STATIC
CANNOT BE USED WITH 142-9305—PAGE 564
AN ATTACHMENT

SMCS-7312 **i01746426**

NOTE	REF NO	GRAPHIC REF	PART NUMBER	QTY	PART NAME 1 2 3 4 5 6 (PRODUCT LEVEL)	SEE PAGE
	1	1	**142-9309**	1	SEAT GP	
		1	**154-3985**	1	WIRE AS	
		1	**153-1260**	1	SWITCH (SEAT)	
		1	**219-4379**	1	HANDLE	
	2	1	**142-9346**	1	BRACKET	
	3	1	**220-8079**	1	BRACKET	
M	4	1	**5C-7261**	4	NUT (M8X1.25 THD)	
	5	1	**8T-4224**	8	WASHER-HARD (8.8X16X2MM THK)	
M	6	1	**8T-4908**	4	BOLT (M8X1.25X25MM)	

M-METRIC PART

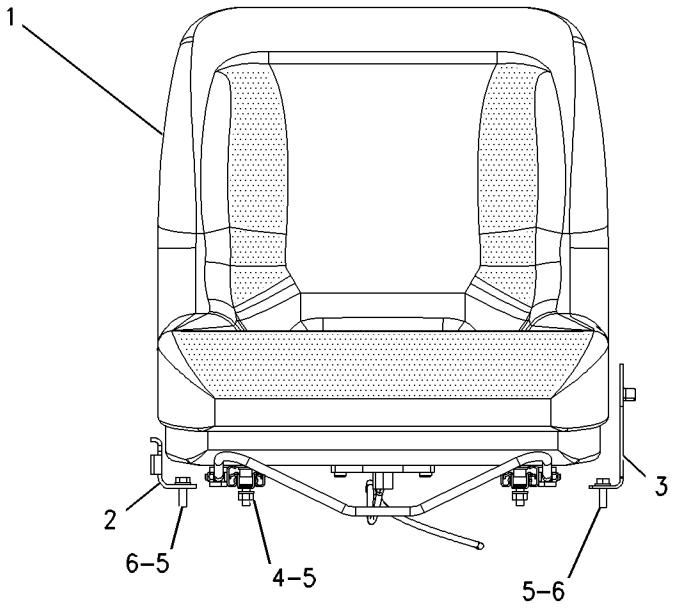

GRAPHIC #1 g00894912

142-9303 SEAT BELT GP

S/N: CAB1-UP; CMB1-UP; 4NZ3400-UP; 5FZ6700-UP
2 INCH, RETRACTABLE, SUSPENSION
FOR USE WITH 142-9305–PAGE 564. CANNOT BE USED WITH 142-9306–PAGE 567, 142-9307–PAGE 568, 142-9308–PAGE 569, 142-9310–PAGE 565
AN ATTACHMENT

SMCS-7327 **i01261504**

NOTE	REF NO	GRAPHIC REF	PART NUMBER	QTY	PART NAME 1 2 3 4 5 6 (PRODUCT LEVEL)	SEE PAGE
	1	1	**8T-4223**	2	WASHER-HARD (3MM THK)	
C	2	1	**0T-0244**	2	BOLT (7/16-20)	
	3	1	**8S-0934**	2	LOCKNUT-FLANGE (7/16-20 THD)	
	4	1	**6E-6549**	2	PLATE	

C-CHANGE FROM PREVIOUS TYPE

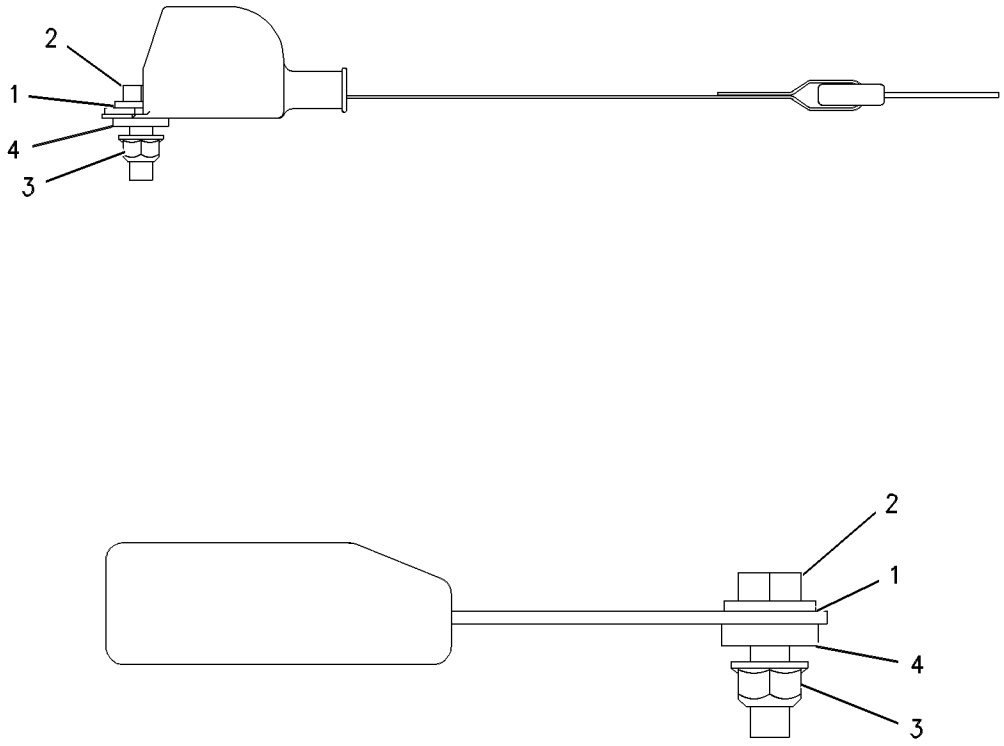

GRAPHIC #1 g00559147

OPERATOR STATION

142-9306 SEAT BELT GP

S/N: 4NZ3400-UP; 5FZ6700-UP
2 INCH, RETRACTABLE, STATIC
FOR USE WITH STATIC SEAT, 142-9310–PAGE 565. CANNOT BE USED WITH 142-9303–PAGE 566, 142-9307–PAGE 568, 142-9308–PAGE 569, 142-9305–PAGE 564 AN ATTACHMENT

SMCS-7327 **i01261752**

NOTE	REF NO	GRAPHIC REF	PART NUMBER	QTY	PART NAME 1 2 3 4 5 6 (PRODUCT LEVEL)	SEE PAGE
	1	1	**8T-4223**	2	WASHER-HARD (3MM THK)	
	2	1	**8T-9381**	2	BOLT (7/16-20X1IN)	
	3	1	**8S-0934**	2	LOCKNUT-FLANGE (7/16-20 THD)	

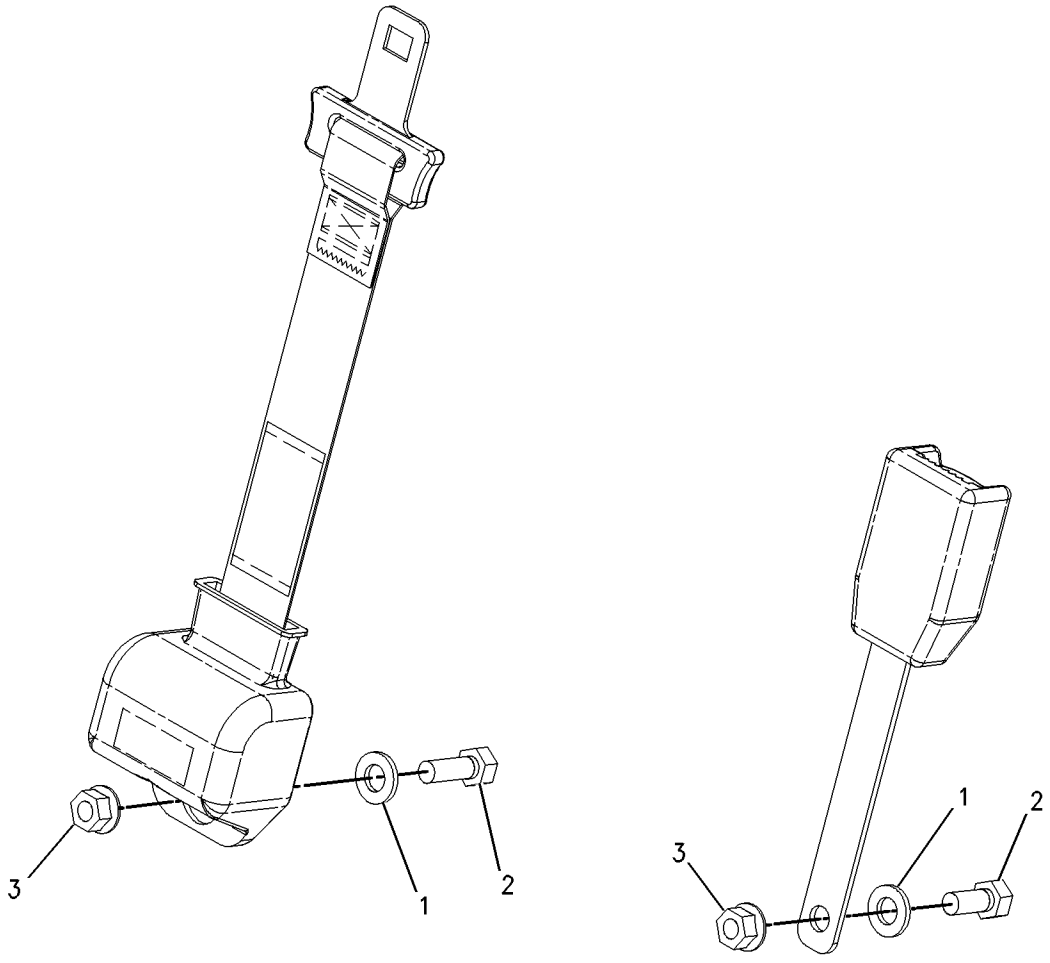

GRAPHIC #1 g00671235

142-9307 SEAT BELT GP

S/N: CAB1-UP; CMB1-UP; 4NZ3400-UP; 5FZ6700-UP
3 INCH, RETRACTABLE, STATIC
FOR USE WITH 142-9310–PAGE 565. CANNOT BE USED WITH 142-9306–PAGE 567, 142-9303–PAGE 566, 142-9308–PAGE 569, 142-9305–PAGE 564
AN ATTACHMENT

SMCS-7327 **i01261781**

NOTE	REF NO	GRAPHIC REF	PART NUMBER	QTY	PART NAME 1 2 3 4 5 6 (PRODUCT LEVEL)	SEE PAGE
	1	1	**8T-4223**	2	WASHER-HARD (3MM THK)	
	2	1	**8T-9381**	2	BOLT (7/16-20X1IN)	
	3	1	**8S-0934**	2	LOCKNUT-FLANGE (7/16-20 THD)	

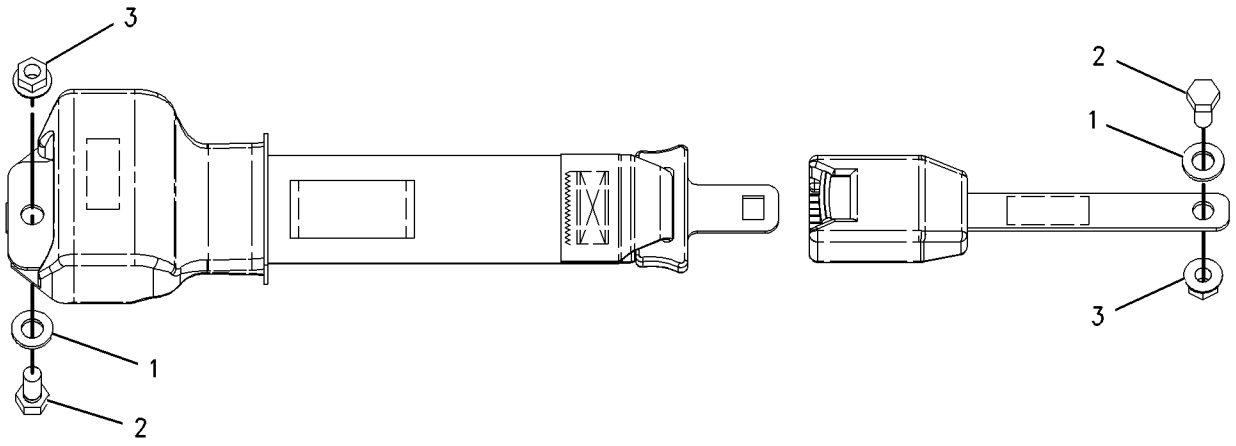

GRAPHIC #1 g00696240

OPERATOR STATION

142-9308 SEAT BELT GP

S/N: 4NZ3400-UP; 5FZ6700-UP
3 INCH, RETRACTABLE, SUSPENSION
FIELD REPLACEMENT FOR 142-9303—PAGE 566. FOR USE WITH 142-9305—PAGE 564.
CANNOT BE USED WITH 142-9306—PAGE 567, 142-9303—PAGE 566, 142-9307—PAGE 568, 142-9310—PAGE 565
AN ATTACHMENT

SMCS-7327 **i01261803**

NOTE	REF NO	GRAPHIC REF	PART NUMBER	QTY	PART NAME 1 2 3 4 5 6 (PRODUCT LEVEL)	SEE PAGE
	1	1	**8T-4223**	2	WASHER-HARD (3MM THK)	
	2	1	**0T-0244**	2	BOLT (7/16-20) (7/16X20X11/4)	
	3	1	**8S-0934**	2	LOCKNUT-FLANGE (7/16-20 THD)	
	4	1	**6E-6549**	2	PLATE	

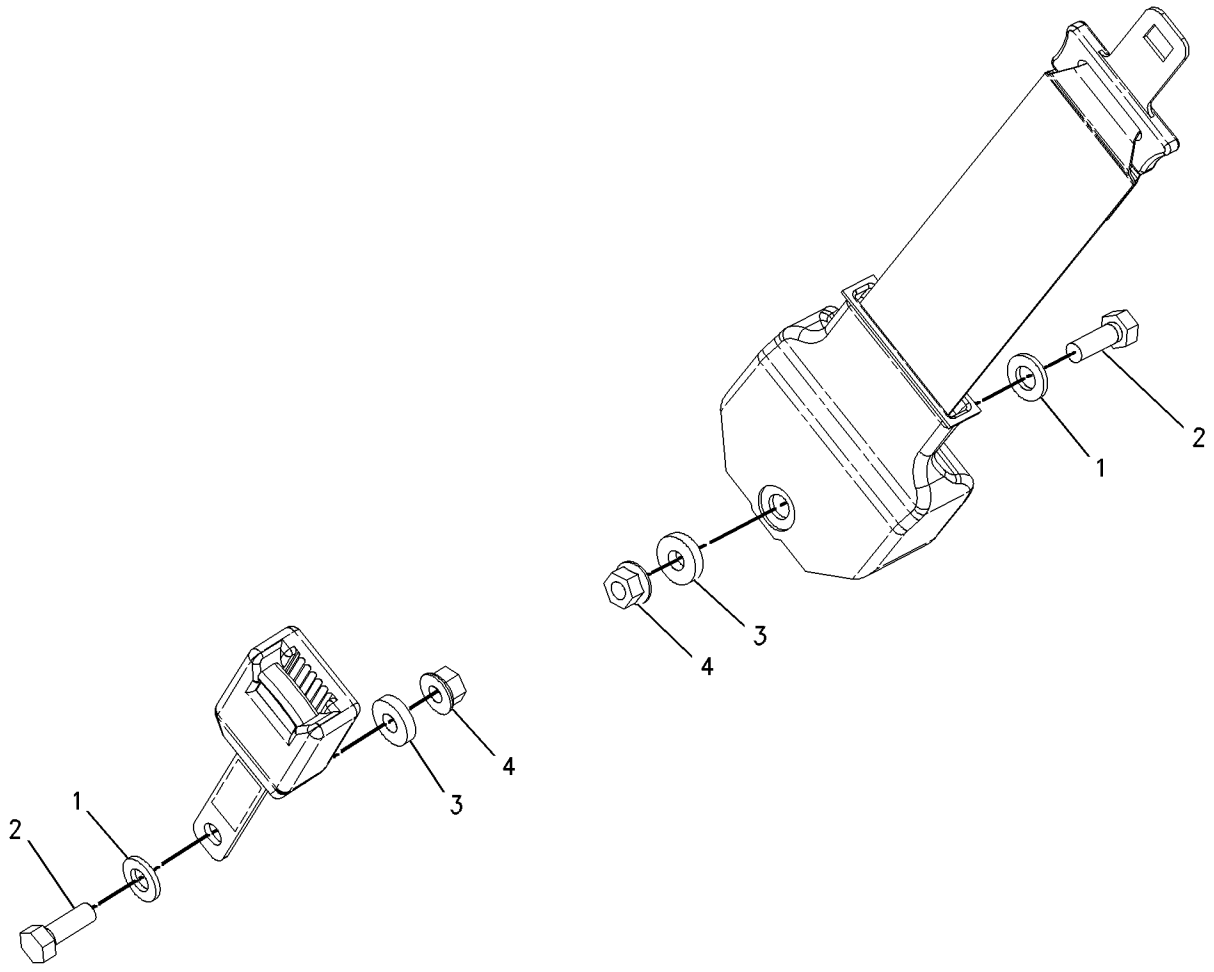

GRAPHIC #1 g00671091

OPERATOR STATION

220-8083 SEAT BELT GP

S/N: CAB1-UP; CMB1-UP; 4NZ3400-UP; 5FZ6700-UP
3 INCH, RETRACTABLE
FOR USE WITH SUSPENSION SEATS AND AIR CONDITIONING
AN ATTACHMENT

SMCS-7327 **i01730943**

NOTE	REF NO	GRAPHIC REF	PART NUMBER	QTY	PART NAME 1 2 3 4 5 6 (PRODUCT LEVEL)	SEE PAGE
	1	1	**6E-6549**	2	PLATE	
	2	1	**0T-0244**	2	BOLT (7/16-20X1.25 IN)	
	3	1	**8S-0934**	2	LOCKNUT-FLANGE (7/16-20 THD)	
	4	1	**8T-4223**	2	WASHER-HARD (13.5X25.5X3MM THK)	

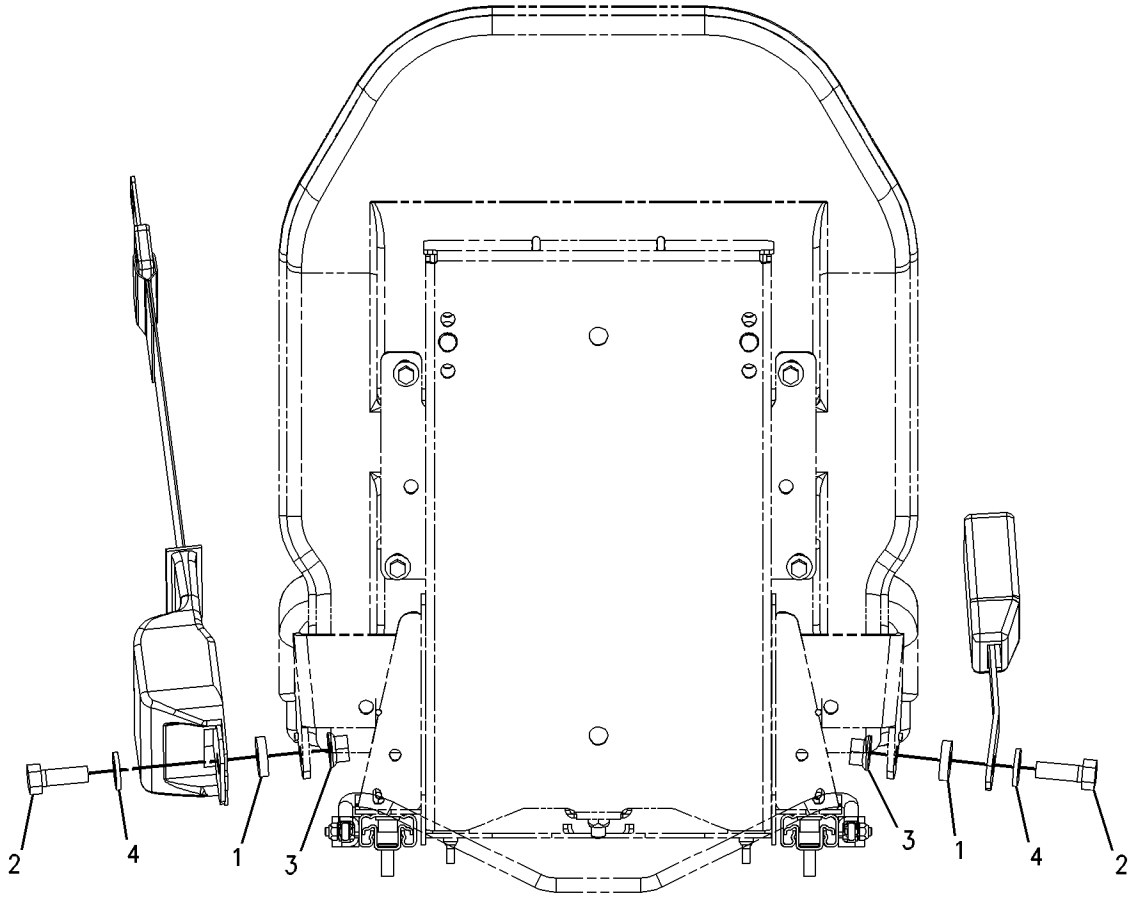

GRAPHIC #1 g00888703

OPERATOR STATION

142-9304 SEAT GP-SUSPENSION

S/N: CAB1-UP; CMB1-UP; 4NZ3400-UP; 5FZ6700-UP
PART OF 142-9305 SEAT & MOUNTING GP
AN ATTACHMENT

SMCS-7324 **i01718241**

NOTE	REF NO	GRAPHIC REF	PART NUMBER	QTY	PART NAME 1 2 3 4 5 6 (PRODUCT LEVEL)	SEE PAGE
	1	1	**154-3985**	1	WIRE AS	
	2	1	**154-3986**	1	SWITCH AS (SEAT)	
	3	1	**154-8711**	1	KIT-SPRING	
	4	1	**154-8715**	1	KIT-DAMPER	
	5	1	**154-8717**	1	KIT-KNOB	
	6	1	**154-8719**	1	KIT-INDICATOR	
	7	1	**173-2543**	1	KIT-CUSHION	
	8	1	**219-4379**	1	HANDLE (ADJUSTER)	

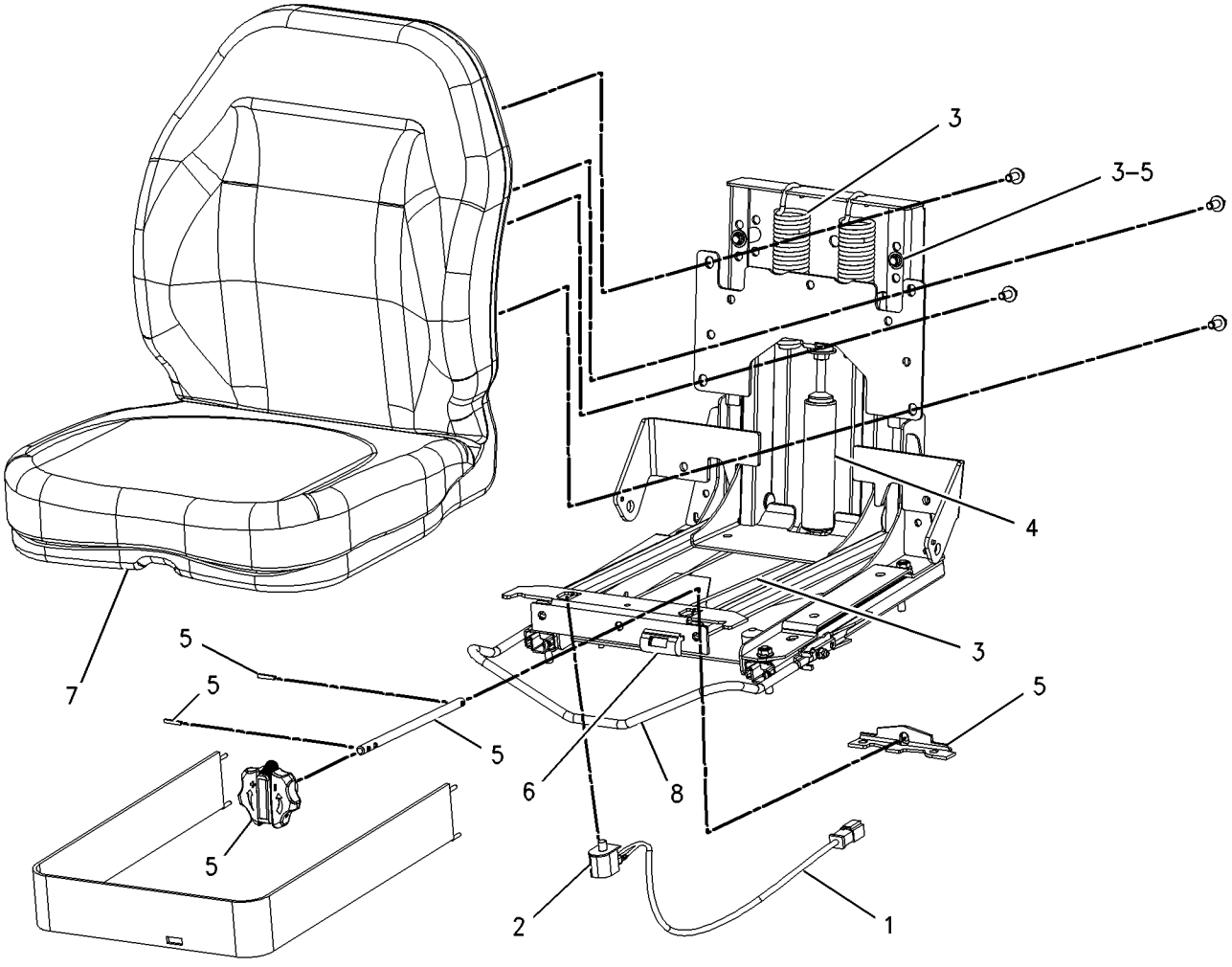

GRAPHIC #1 g00883377

OPERATOR STATION

177-3403 SPRING GP-GAS

S/N: CAB1-UP; CMB1-UP; 4NZ3400-UP; 5FZ6700-UP
PART OF 191-2902, 191-9602, 200-0802, 200-1002 CHASSIS AR

SMCS-7301 **i01663127**

NOTE	REF NO	GRAPHIC REF	PART NUMBER	QTY	PART NAME 1 2 3 4 5 6 (PRODUCT LEVEL)	SEE PAGE
	1	1	**5P-0372**	4	LOCK PIN	
	2	1	**9C-5344**	2	SPACER (10.5X20X18MM THK)	
	3	1	**095-1325**	2	PIN-CLEVIS	
BJ	4	1	**153-2682**	2	SPRING AS-GAS	
BJ	5	1	**153-2683**	2	SPRING AS-GAS	
	6	1	**177-3405**	2	PIN	

B-USE AS REQUIRED
J-CONTACT LOCAL CATERPILLAR DEALER FOR PROPER SPRING CONFIGURATION

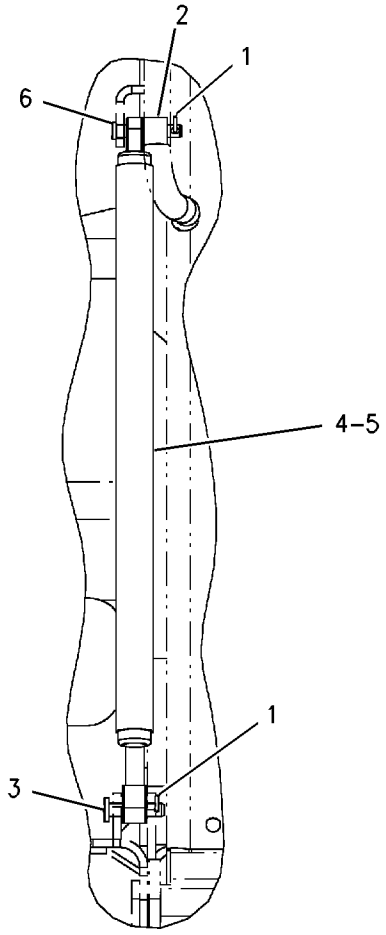

GRAPHIC #1 g00741774

OPERATOR STATION

166-2569 VISOR GP-CAB

S/N: 4NZ3400-UP; 5FZ6700-UP
PART OF 173-3022 VISOR GP-CAB
AN ATTACHMENT

SMCS-7301 **i01297216**

NOTE	REF NO	GRAPHIC REF	PART NUMBER	QTY	PART NAME 1 2 3 4 5 6 (PRODUCT LEVEL)	SEE PAGE
	1	1	**2S-5717**	1	LOCKNUT	
	2	1	**5T-7869**	2	CLAMP	
	3	1	**5T-7870**	1	KNOB	
	4	1	**1D-4677**	2	BOLT-ROUND HEAD (3/8-16X1 IN)	
M	5	1	**9X-2042**	4	SCREW-TRUSS HEAD (M6X1.0X12MM)	

M-METRIC PART

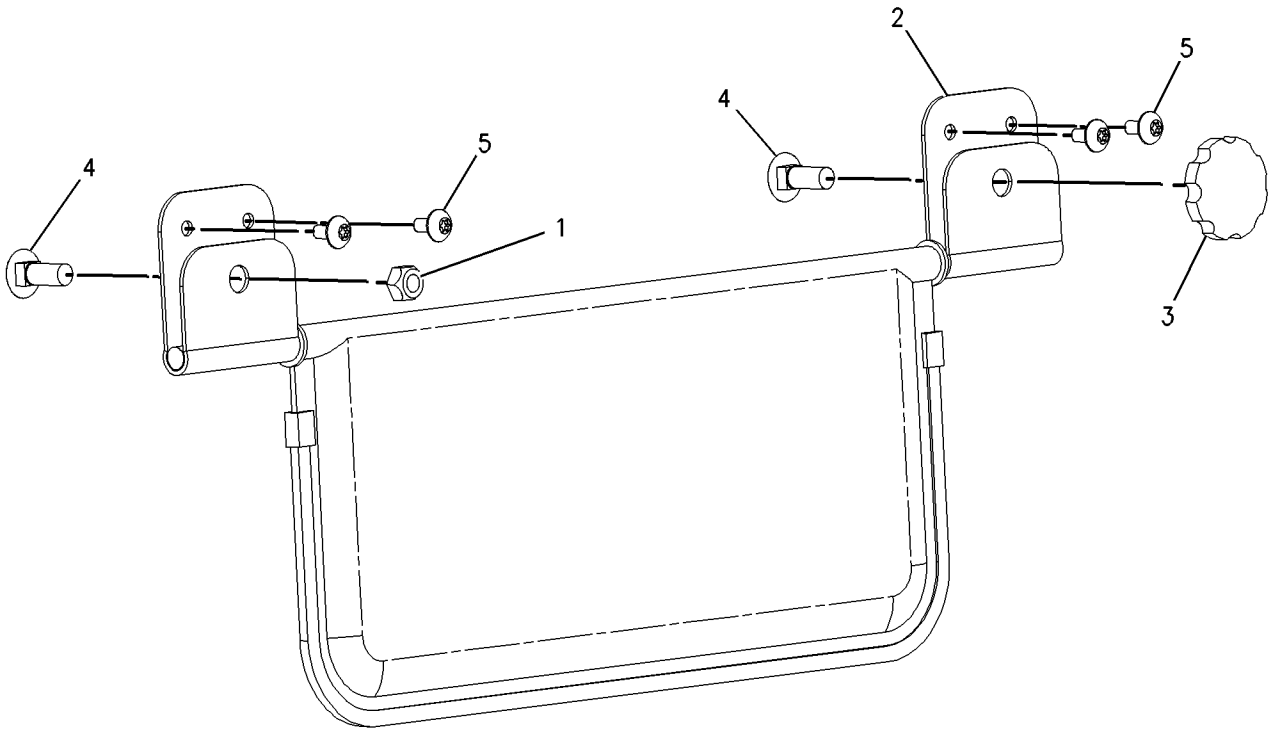

GRAPHIC #1 g00695703

OPERATOR STATION

173-3022 VISOR GP-CAB

S/N: 4NZ3400-UP; 5FZ6700-UP
PART OF 206-3777 CONVERSION AR-ROADING
AN ATTACHMENT

SMCS-7301 **i01486233**

NOTE	REF NO	GRAPHIC REF	PART NUMBER	QTY	PART NAME 1 2 3 4 5 6 (PRODUCT LEVEL)	SEE PAGE
	1	1	**166-2562**	1	PLATE AS	
Y	2	1	**166-2569**	1	VISOR GP-CAB	573
	3	1	**195-0936**	4	INSERT-THREADED	
M	4	1	**9X-2045**	4	SCREW-TRUSS HEAD (M6X1X20MM)	

M-METRIC PART
Y-SEPARATE ILLUSTRATION

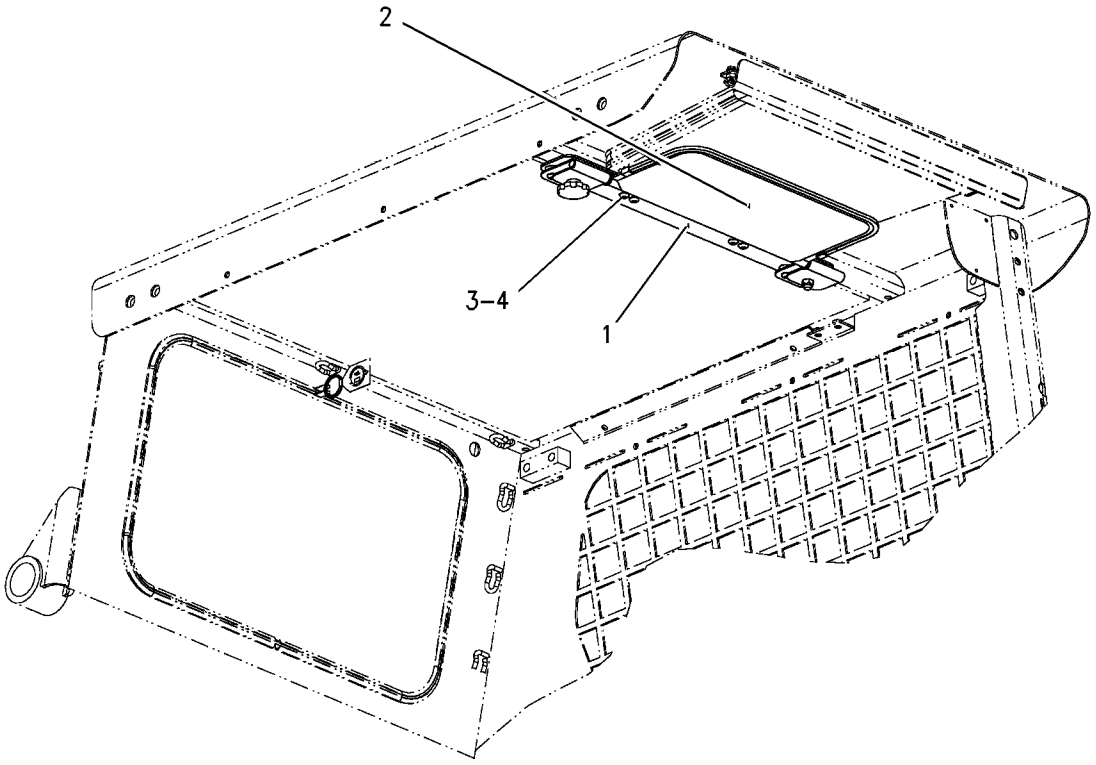

GRAPHIC #1 g00772669

OPERATOR STATION

142-9363 WINDOW GP-CAB

S/N: CAB1-UP; CMB1-UP; 4NZ3400-UP; 5FZ6700-UP
SIDE, NO HEATER USED
PART OF 183-7138 WINDOW GP-CAB
CANNOT BE USED WITH 187-3213—PAGE 583
AN ATTACHMENT

SMCS-7310 **i01684433**

NOTE	REF NO	GRAPHIC REF	PART NUMBER	QTY	PART NAME 1 2 3 4 5 6 (PRODUCT LEVEL)	SEE PAGE
	1	1	**150-8625**	1	PLATE	
Y	2	1	**154-7988**	1	WINDOW GP-CAB (RH)	576
Y	3	1	**154-7989**	1	WINDOW GP-CAB (LH)	578
	4	1	**161-6560**	4	STUD (M6X1 THD)	
M	5	1	**5C-2890**	4	NUT (M6X1 THD)	
	6	1	**8T-4205**	4	WASHER-HARD (7.2X14.5X2MM THK)	
M	7	1	**9X-2045**	14	SCREW-TRUSS HEAD (M6X1X20MM)	

M-METRIC PART
Y-SEPARATE ILLUSTRATION

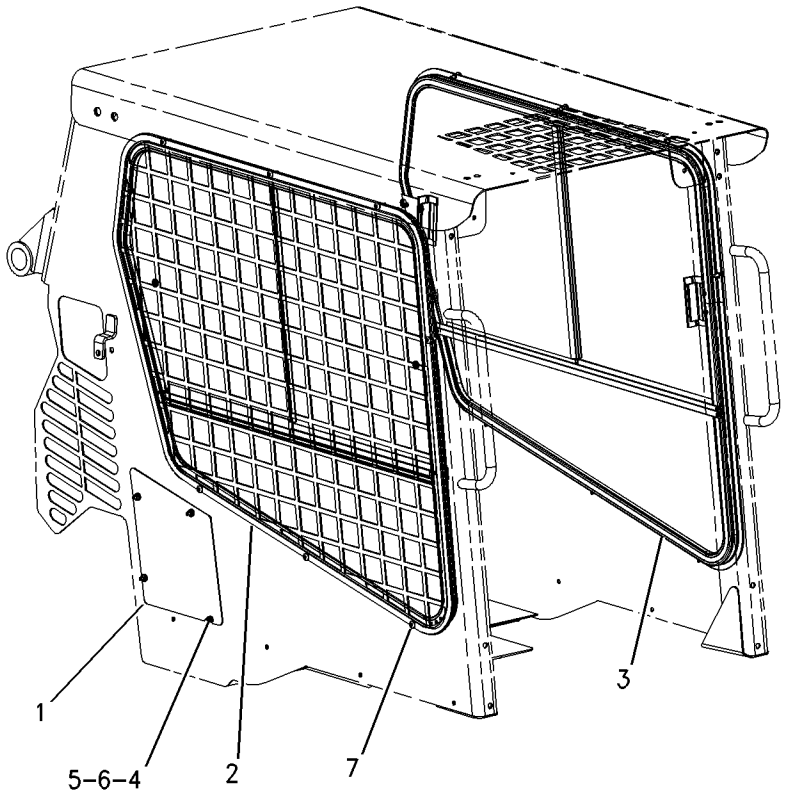

GRAPHIC #1 g00686531

OPERATOR STATION

154-7988 WINDOW GP-CAB—RH

S/N: CAB1-UP; CMB1-UP; 4NZ3400-UP; 5FZ6700-UP
PART OF 142-9363, 187-3213 WINDOW GP-CAB
AN ATTACHMENT

SMCS-7310 **i01755297**

NOTE	REF NO	GRAPHIC REF	PART NUMBER	QTY	PART NAME 1 2 3 4 5 6 (PRODUCT LEVEL)	SEE PAGE
	1	1	**6D-5797**	2	SCREW-SOCKET	
	2	1	**207-0530**	1	GLASS (SLIDER)	
	3	1	**207-0531**	1	GLASS (SLIDER)	
	4	1	**207-0532**	1	GLASS (BOTTOM)	
	5	1	**207-0546**	2	LATCH AS	
	6	1	**207-0548**	1	CATCH	
	7	1	**207-0549**	1	CATCH	
	8	1	**207-0550**	1	RAIL-SLIDE	
	9	1	**207-0551**	1	RAIL	
	10	1	**207-0552**	1	RAIL	
	11	1	**207-0554**	1	RAIL-SLIDE	
	12	1	**207-0561**	1	RAIL (CROSS)	
	13	1	**9X-6016**	6	SCREW-HEX SOCKET (8-32)	
E	14	1	**207-0538**		SEAL (52CM)	
E	15	1	**207-0539**		SEAL (79CM)	
	16	1	**207-0541**		TAPE (BUTYL)	
E	17	1	**207-0573**		SEAL (220CM)	
E	18	1	**3E-3892**		SEAL (314CM)	
E	19	1	**207-0572**		SEAL (354CM)	

E-ORDER BY THE CENTIMETER

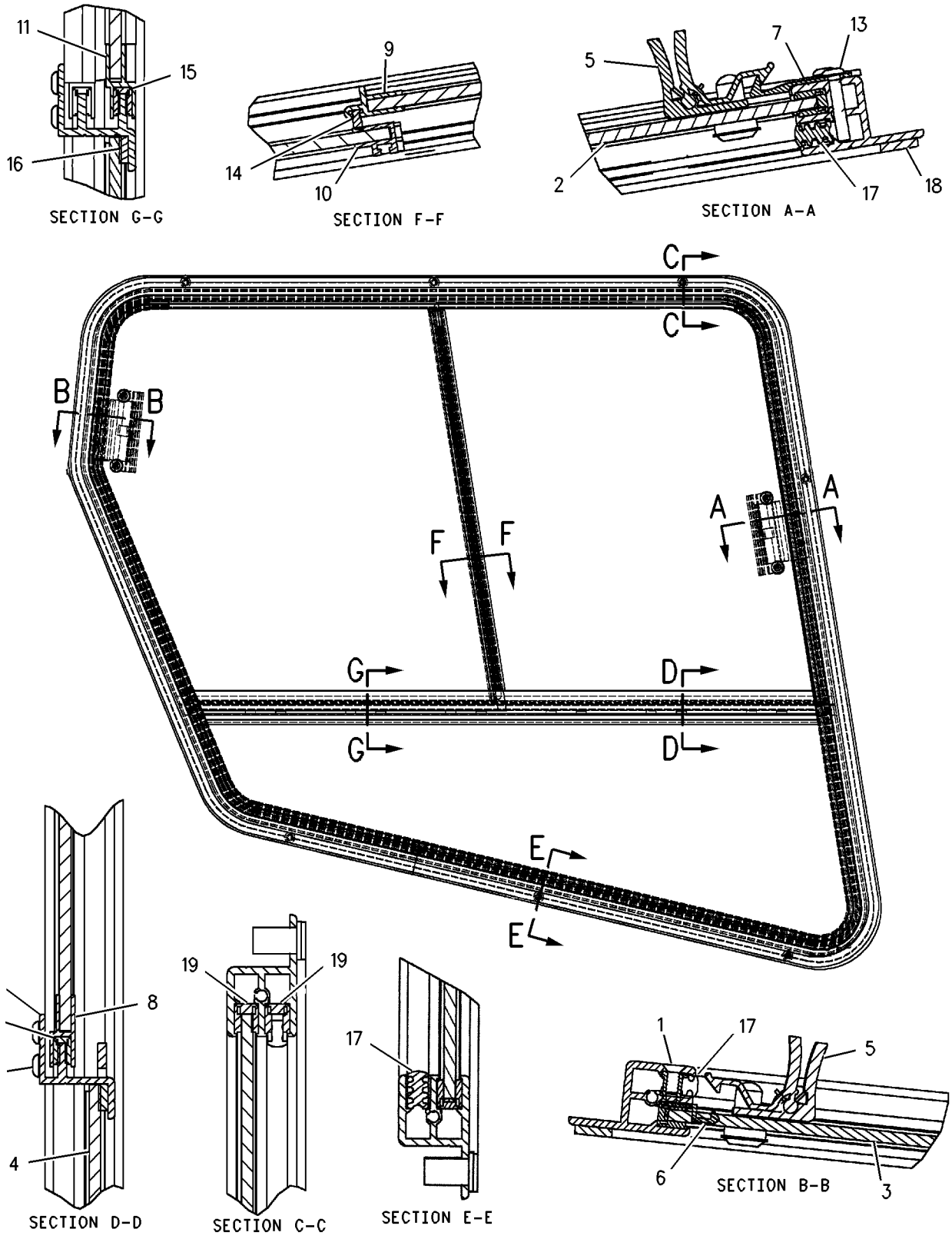

GRAPHIC #1

g00839920

OPERATOR STATION

154-7989 WINDOW GP-CAB—LH

S/N: CAB1-UP; CMB1-UP; 4NZ3400-UP; 5FZ6700-UP
PART OF 142-9363, 187-3213 WINDOW GP-CAB
AN ATTACHMENT

SMCS-7310 **i01615402**

NOTE	REF NO	GRAPHIC REF	PART NUMBER	QTY	PART NAME 1 2 3 4 5 6 (PRODUCT LEVEL)	SEE PAGE
	1	1	**6D-5797**	2	SCREW-SOCKET	
	2	1	**207-0530**	1	GLASS (SLIDER)	
	3	1	**207-0531**	1	GLASS (SLIDER)	
	4	1	**207-0532**	1	GLASS (BOTTOM)	
	5	1	**207-0546**	2	LATCH AS	
	6	1	**207-0548**	1	CATCH	
	7	1	**207-0549**		CATCH	
	8	1	**207-0574**	1	RAIL-SLIDE	
	9	1	**207-0575**	1	RAIL	
	10	1	**207-0576**	1	RAIL	
	11	1	**207-0577**	1	RAIL-SLIDE	
	12	1	**207-0578**	1	RAIL (CROSS)	
	13	1	**9X-6016**	6	SCREW-HEX SOCKET (8-32)	
	14	1	**207-0538**		SEAL (52CM)	
	15	1	**207-0539**		SEAL (79CM)	
	16	1	**207-0541**		TAPE (BUTYL)(80CM)	
	17	1	**207-0573**		SEAL (220CM)	
	18	1	**3E-3892**		SEAL (314CM)	
	19	1	**207-0572**		SEAL (354CM)	

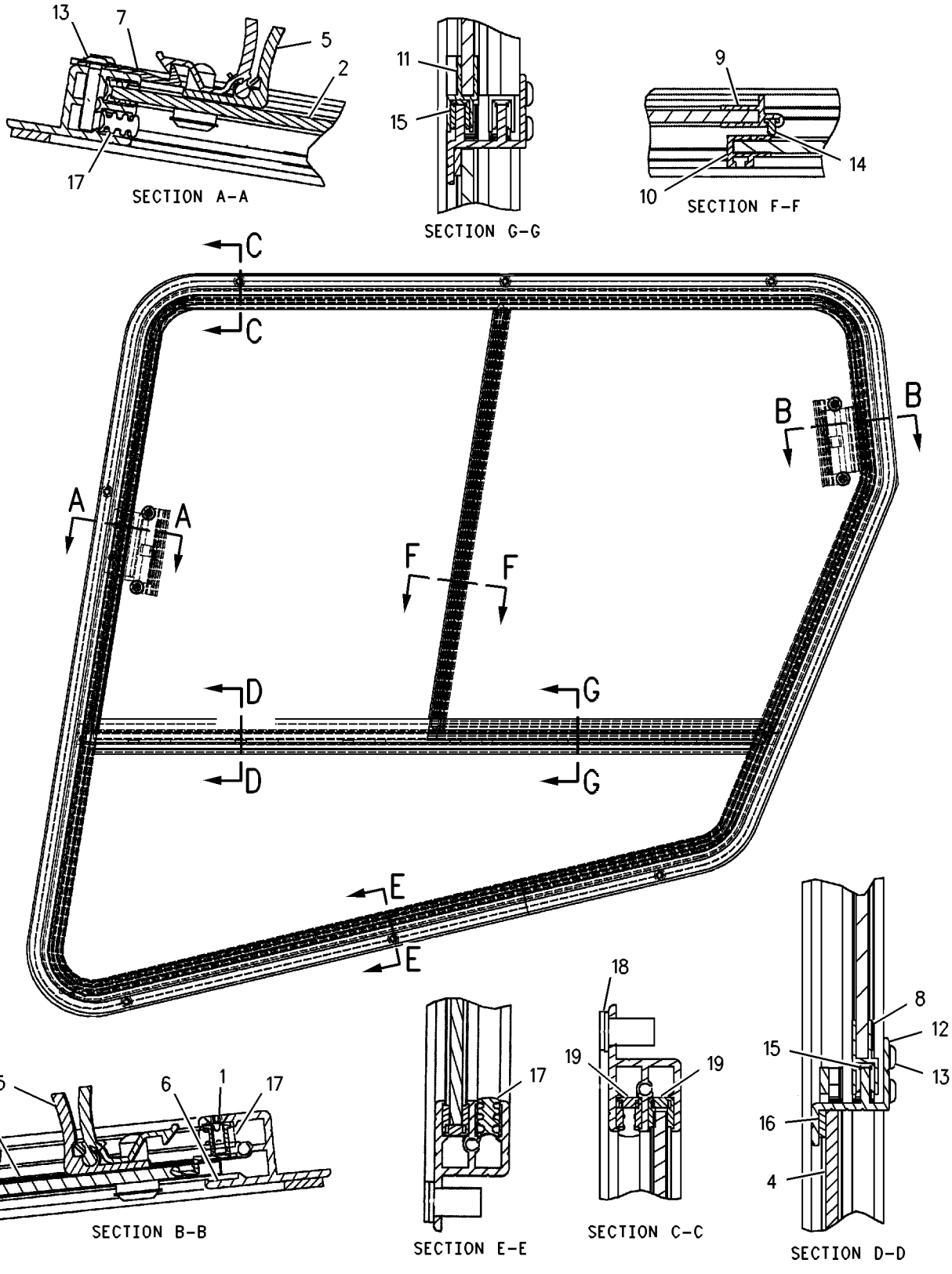

GRAPHIC #1 g00839918

OPERATOR STATION

183-7137 WINDOW GP-CAB

S/N: 4NZ3400-UP; 5FZ6700-UP
KIT-CAB WINDOW, TOP & REAR
FIELD INSTALLATION

SMCS-7310 **i01670231**

NOTE	REF NO	GRAPHIC REF	PART NUMBER	QTY	PART NAME 1 2 3 4 5 6 (PRODUCT LEVEL)	SEE PAGE
	1	1	**2G-8767**	4	WASHER (10.5X60X3MM THK)	
	2	1	**5C-8310**	1	BRACKET-RING	
	3	1	**5C-8311**	1	RING	
	4	1	**6D-6812**	4	KNOB AS	
	5	1	**8T-6842**	1	FILM-INSTRUCTION (ALTERNATE EXIT)	
	6	1	**142-9319**	1	GLASS-REAR	
	7	1	**191-9668**	1	INSULATION	
	8	1	**206-3818**	1	WINDOW	
	9	1	**212-6693**	1	PLATE	
	10	1	**3J-1907**	4	SEAL-O-RING	
M	11	1	**5C-2890**	2	NUT (M6X1 THD)	
M	12	1	**5C-9553**	2	BOLT (M6X1X16MM)	
	13	1	**6V-8801**	4	NUT (3/8-16 THD)	
	14	1	**8T-4121**	4	WASHER-HARD (11X21X2.5MM THK)	
	15	1	**8T-4205**	4	WASHER-HARD (7.2X14.5X2MM THK)	
	16	1	**8T-9407**	4	BOLT-CARRIAGE (3/8-16X1.25 IN)	
	17	1	**206-7951**		SEAL (191CM)	
	18	1	**206-7952**		STRIP (185CM)	
	19	1	**5P-7483**		SEAL (1.5M)	

M-METRIC PART

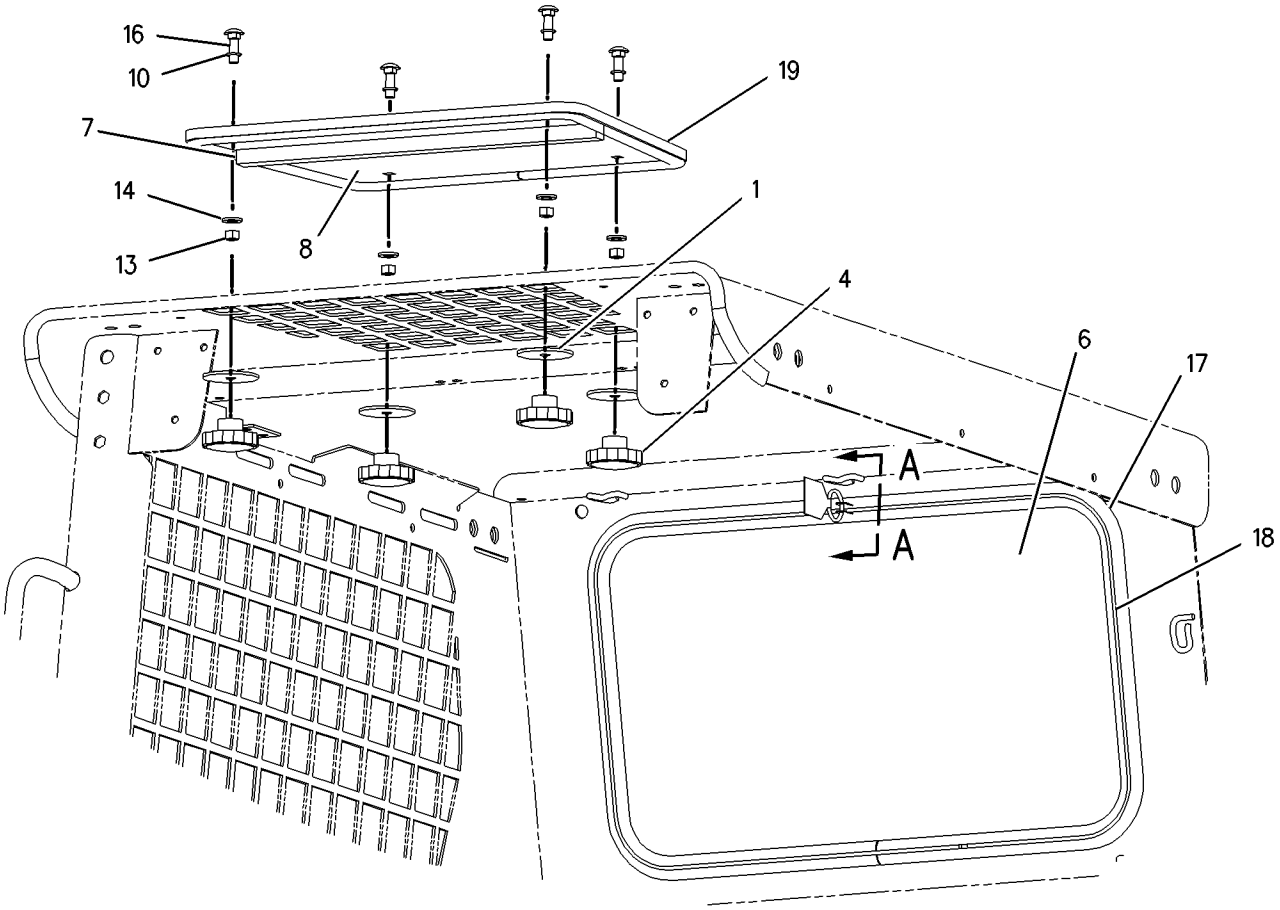

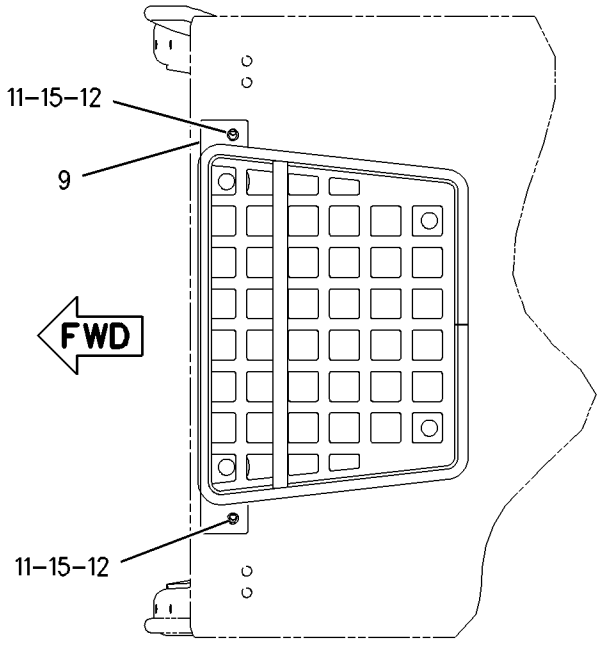

TOP VIEW

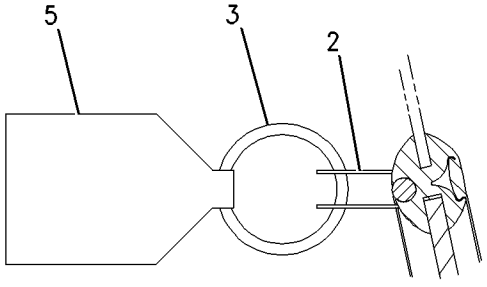

SECTION A-A

GRAPHIC #1

g00863229

OPERATOR STATION

183-7138 WINDOW GP-CAB

S/N: CAB1-UP; CMB1-UP; 4NZ3400-UP; 5FZ6700-UP
KIT-CAB WINDOW, SIDE
AN ATTACHMENT AND FIELD INSTALLATION

SMCS-7310 **i01251766**

NOTE	PART NUMBER	QTY	PART NAME 1 2 3 4 5 6 (PRODUCT LEVEL)	SEE PAGE
Y	*142-9363*	1	WINDOW GP-CAB (SIDE)	575

Y-SEPARATE ILLUSTRATION

<END>

OPERATOR STATION

187-3213 WINDOW GP-CAB

S/N: CAB1-UP; CMB1-UP; 4NZ3400-UP; 5FZ6700-UP
SIDE, HEATER USED
CANNOT BE USED WITH 142-9363—PAGE 575
AN ATTACHMENT

SMCS-7310 **i01684498**

NOTE	REF NO	GRAPHIC REF	PART NUMBER	QTY	PART NAME 1 2 3 4 5 6 (PRODUCT LEVEL)	SEE PAGE
Y	1	1	**154-7988**	1	WINDOW GP-CAB (RH)	576
Y	2	1	**154-7989**	1	WINDOW GP-CAB (LH)	578
M	3	1	**9X-2045**	14	SCREW-TRUSS HEAD (M6X1X20MM)	

M-METRIC PART
Y-SEPARATE ILLUSTRATION

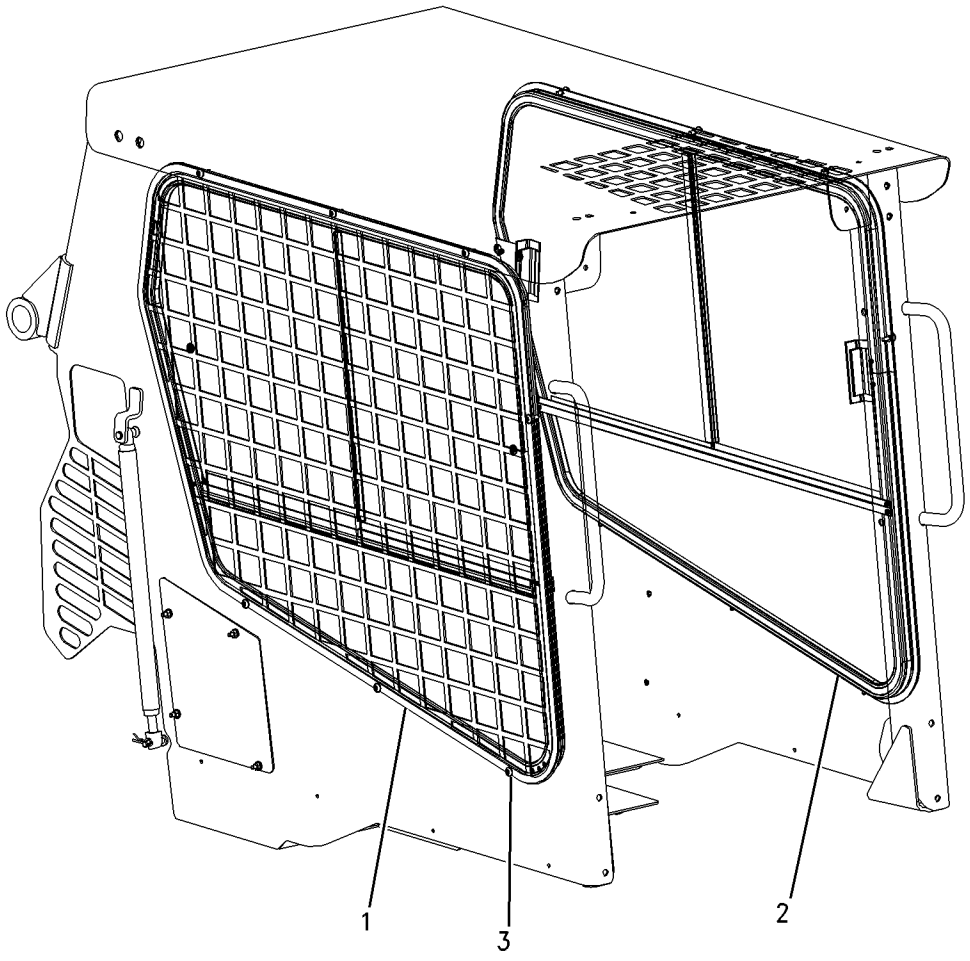

GRAPHIC #1 g00748059

OPERATOR STATION

195-6723 WINDOW GP-CAB

S/N: 4NZ3400-UP; 5FZ6700-UP
AN ATTACHMENT

SMCS-7310 **i01498009**

NOTE	REF NO	GRAPHIC REF	PART NUMBER	QTY	PART NAME 1 2 3 4 5 6 (PRODUCT LEVEL)	SEE PAGE
	1	1	**5C-8310**	1	BRACKET-RING	
	2	1	**5C-8311**	1	RING (29.0MM ID)	
	3	1	**8T-6842**	1	FILM-INSTRUCTION (ALTERNATE EXIT)	
	4	1	**142-9314**	1	GLASS-TOP	
	5	1	**142-9316**	1	BRACKET AS	
	6	1	**142-9317**	2	PLATE	
	7	1	**142-9319**	1	GLASS-REAR	
	8	1	**195-0936**	4	INSERT-THREADED	
M	9	1	**8T-4138**	2	BOLT (M6X1X20MM)	
	10	1	**8T-4205**	2	WASHER-HARD (7.2X14.5X2MM THK)	
M	11	1	**9X-2045**	4	SCREW-TRUSS HEAD (M6X1X20MM)	
BE	12	1	**108-0656**		SEAL (190CM)	
BE	13	1	**104-5957**		STRIP-LOCKING (190CM)	
BE	14	1	**128-7037**		SEAL (104CM)	
BE	15	1	**6V-1392**		SEAL (6CM)	

B-USE AS REQUIRED
E-ORDER BY THE CENTIMETER
M-METRIC PART

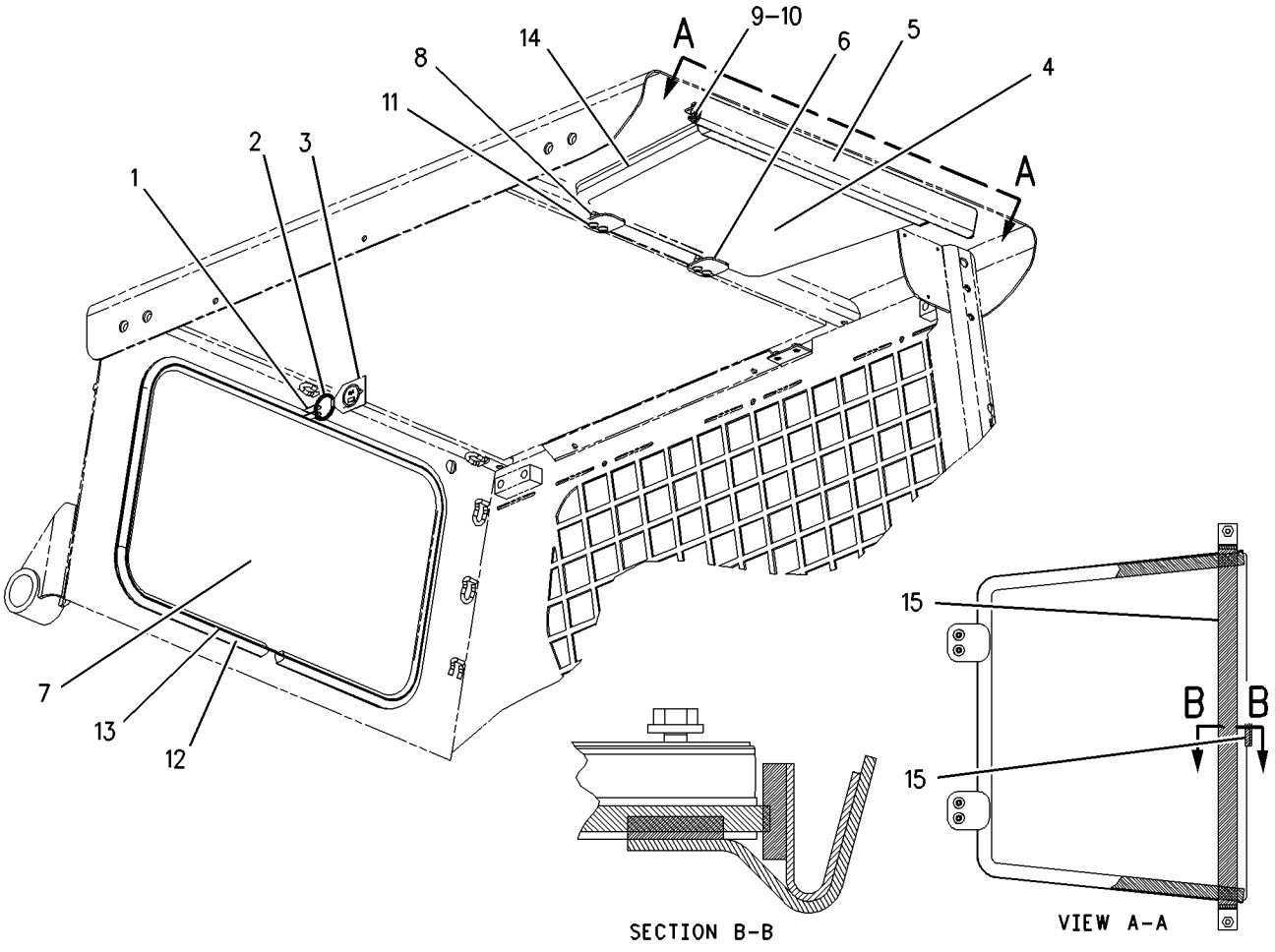

GRAPHIC #1 g00767778

MEMORANDA

OPERATOR STATION

195-6723 WINDOW GP-CAB

S/N: CAB1-UP; CMB1-UP; 4NZ3400-UP; 5FZ6700-UP
PART OF 191-2902, 191-9602 CHASSIS AR
ALSO AN ATTACHMENT

SMCS-7310 **i01681368**

NOTE	REF NO	GRAPHIC REF	PART NUMBER	QTY	PART NAME 1 2 3 4 5 6 (PRODUCT LEVEL)	SEE PAGE
C	1	1	**2G-8767**	4	WASHER (10.5X60X3MM THK)	
	2	1	**5C-8310**	1	BRACKET-RING	
	3	1	**5C-8311**	1	RING	
C	4	1	**6D-6812**	4	KNOB AS	
	5	1	**8T-6842**	1	FILM-INSTRUCTION (ALTERNATE EXIT)	
	6	1	**142-9319**	1	WINDOW	
C	7	1	**191-9668**	1	INSULATION	
C	8	1	**206-3818**	1	WINDOW	
C	9	1	**3J-1907**	4	SEAL-O-RING	
C	10	1	**6V-8801**	4	NUT (3/8-16 THD)	
C	11	1	**8T-4121**	4	WASHER-HARD (11X21X2.5MM THK)	
C	12	1	**8T-9407**	4	BOLT-CARRIAGE (3/8-16X1.25 IN)	
C	13	1	**206-7951**	191	SEAL	
C	14	1	**206-7952**	191	STRIP	
D	15	1	**5P-7483**	1	SEAL	

C-CHANGE FROM PREVIOUS TYPE
D-ORDER BY THE METER

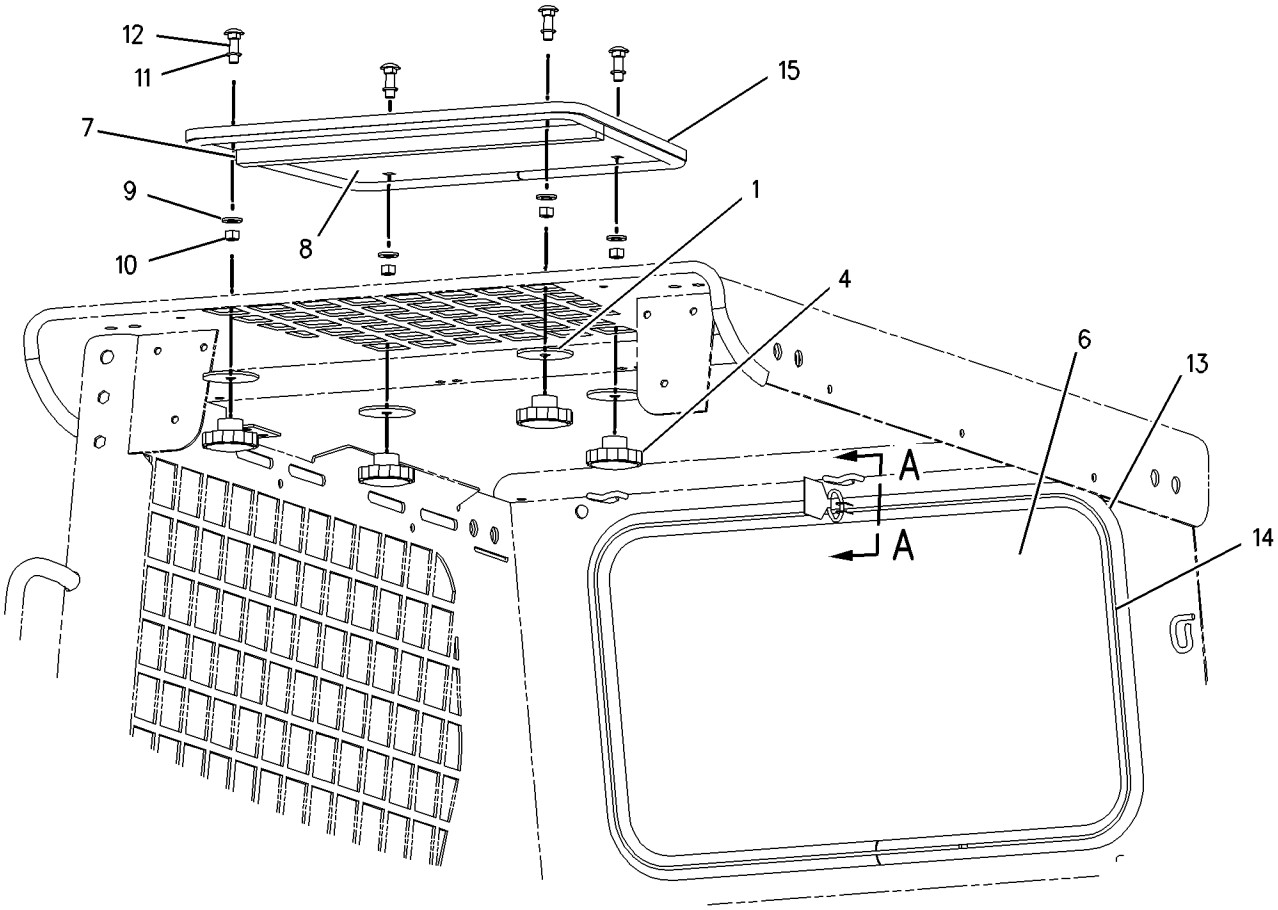

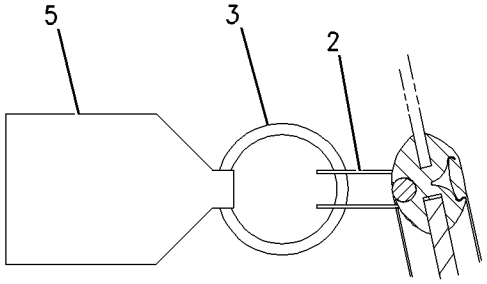

SECTION A-A

GRAPHIC #1

g00867195

SERVICE EQUIPMENT AND SUPPLIES

158-7499 FILM GP

S/N: 4NZ3400-UP

PART OF 200-0800 COMMON AR

SMCS-7557 **i01512161**

NOTE	REF NO	GRAPHIC REF	PART NUMBER	QTY	PART NAME 1 2 3 4 5 6 (PRODUCT LEVEL)	SEE PAGE
	1	1	**162-6887**	1	FILM-STRIPE (LH)	
	2	1	**162-6886**	1	FILM-STRIPE (RH)	
	3	1	**162-6891**	1	FILM-STRIPE (LH)	
	4	1	**162-6890**	1	FILM-STRIPE (RH)	
	5	1	**9X-2754**	1	FILM-CAT	
	6	1	**162-6889**	1	FILM-STRIPE	
E	7	1	**120-0210**		FILM (60CM)	

E-ORDER BY THE CENTIMETER

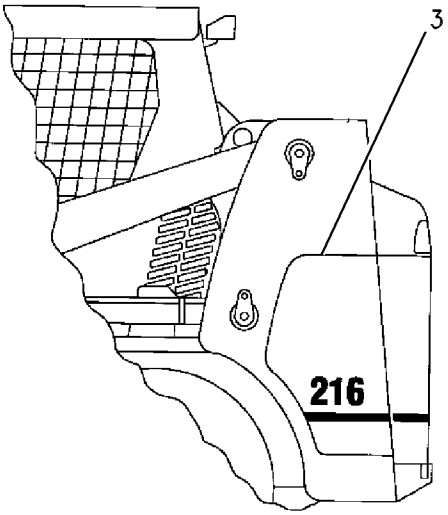

LEFT SIDE VIEW

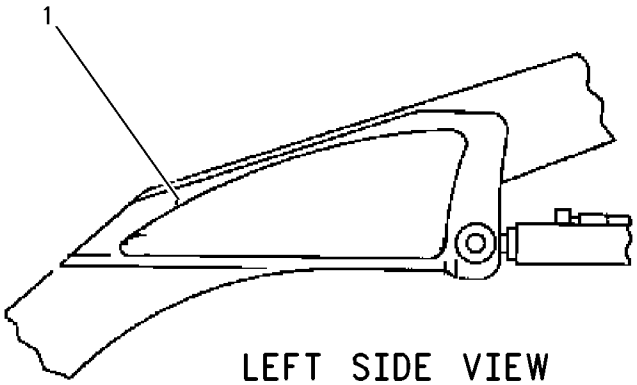

LEFT SIDE VIEW

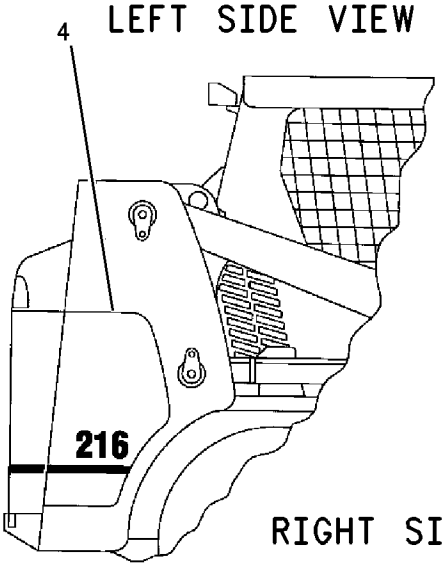

RIGHT SIDE VIEW

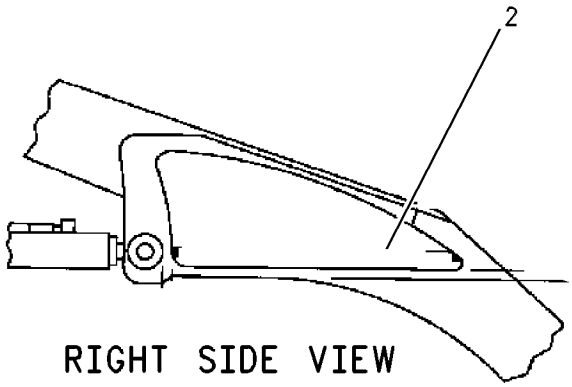

RIGHT SIDE VIEW

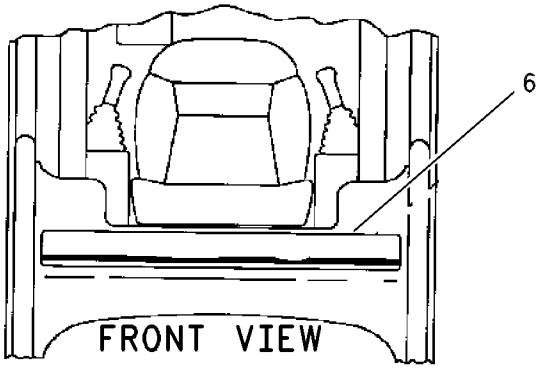

FRONT VIEW

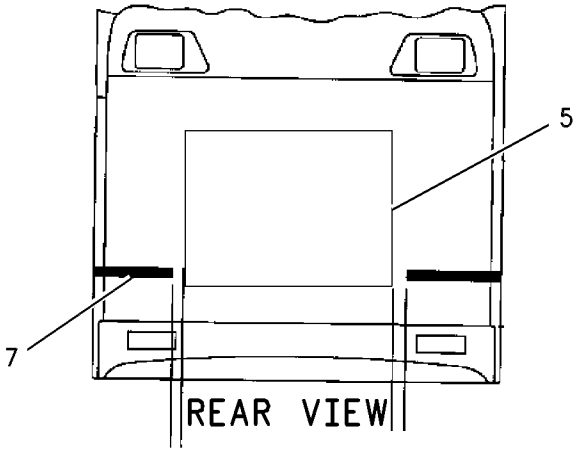

REAR VIEW

GRAPHIC #1 g00559021

SERVICE EQUIPMENT AND SUPPLIES

166-8833 FILM GP

S/N: 5FZ6700-UP

PART OF 200-1000 COMMON AR

SMCS-7557 **i01512848**

NOTE	REF NO	GRAPHIC REF	PART NUMBER	QTY	PART NAME 1 2 3 4 5 6 (PRODUCT LEVEL)	SEE PAGE
	1	1	**162-6887**	1	FILM-STRIPE (LH)	
	2	1	**162-6886**	1	FILM-STRIPE (RH)	
	3	1	**166-2768**	1	FILM-STRIPE (LH)	
	4	1	**166-2769**	1	FILM-STRIPE (RH)	
	5	1	**9X-2754**	1	FILM-CAT	
	6	1	**162-6889**	1	FILM-STRIPE	
E	7	1	**120-0210**		FILM (60CM)	

E-ORDER BY THE CENTIMETER

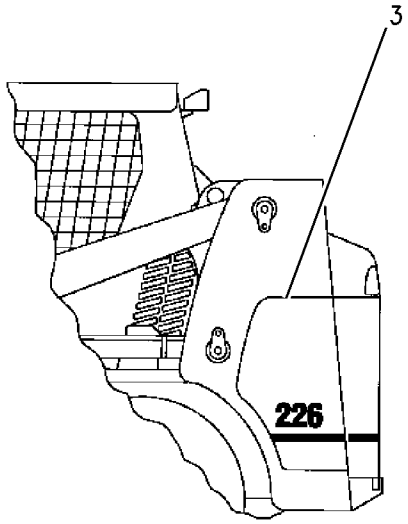

LEFT SIDE

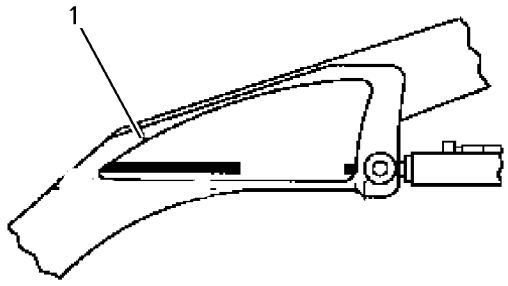

LEFT SIDE

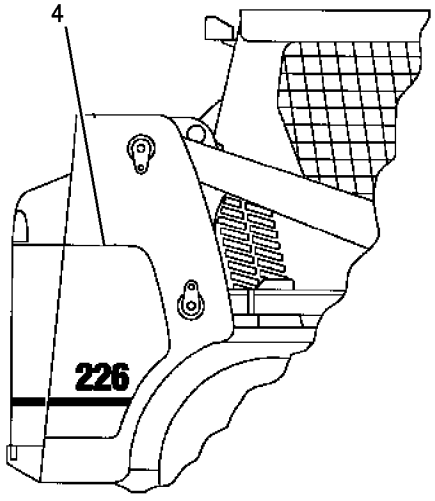

RIGHT SIDE

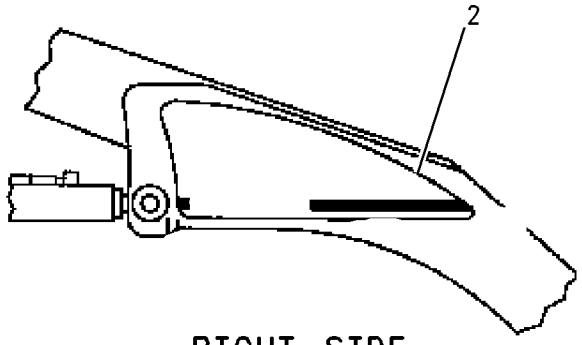

RIGHT SIDE

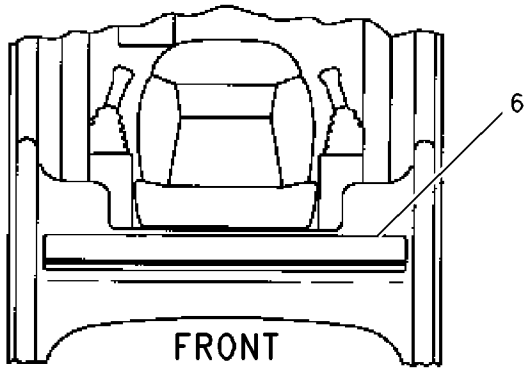

FRONT

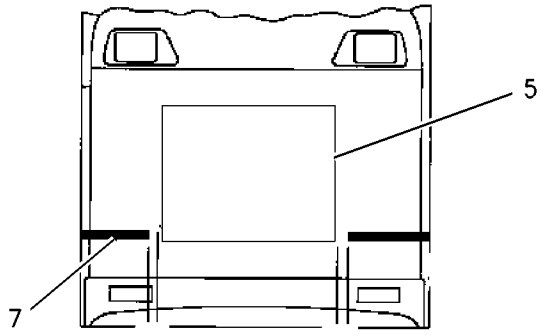

REAR

GRAPHIC #1 g00785116

SERVICE EQUIPMENT AND SUPPLIES

191-9565 FILM GP

S/N: CMB1-UP

PART OF 191-2900 COMMON AR

SMCS-7557 **i01760215**

NOTE	REF NO	GRAPHIC REF	PART NUMBER	QTY	PART NAME 1 2 3 4 5 6 (PRODUCT LEVEL)	SEE PAGE
	1	1	**9X-2754**	1	FILM-CAT	
	2	1	**162-6889**	1	FILM-STRIPE	
	3	1	**212-4083**	1	FILM-STRIPE (RH)	
	4	1	**212-4084**	1	FILM-STRIPE (LH)	
	5	1	**215-3940**	1	FILM-STRIPE (RH)	
	6	1	**215-3941**	1	FILM-STRIPE (LH)	
	7	1	**120-0210**		FILM-STRIPE (RED) (60CM)	

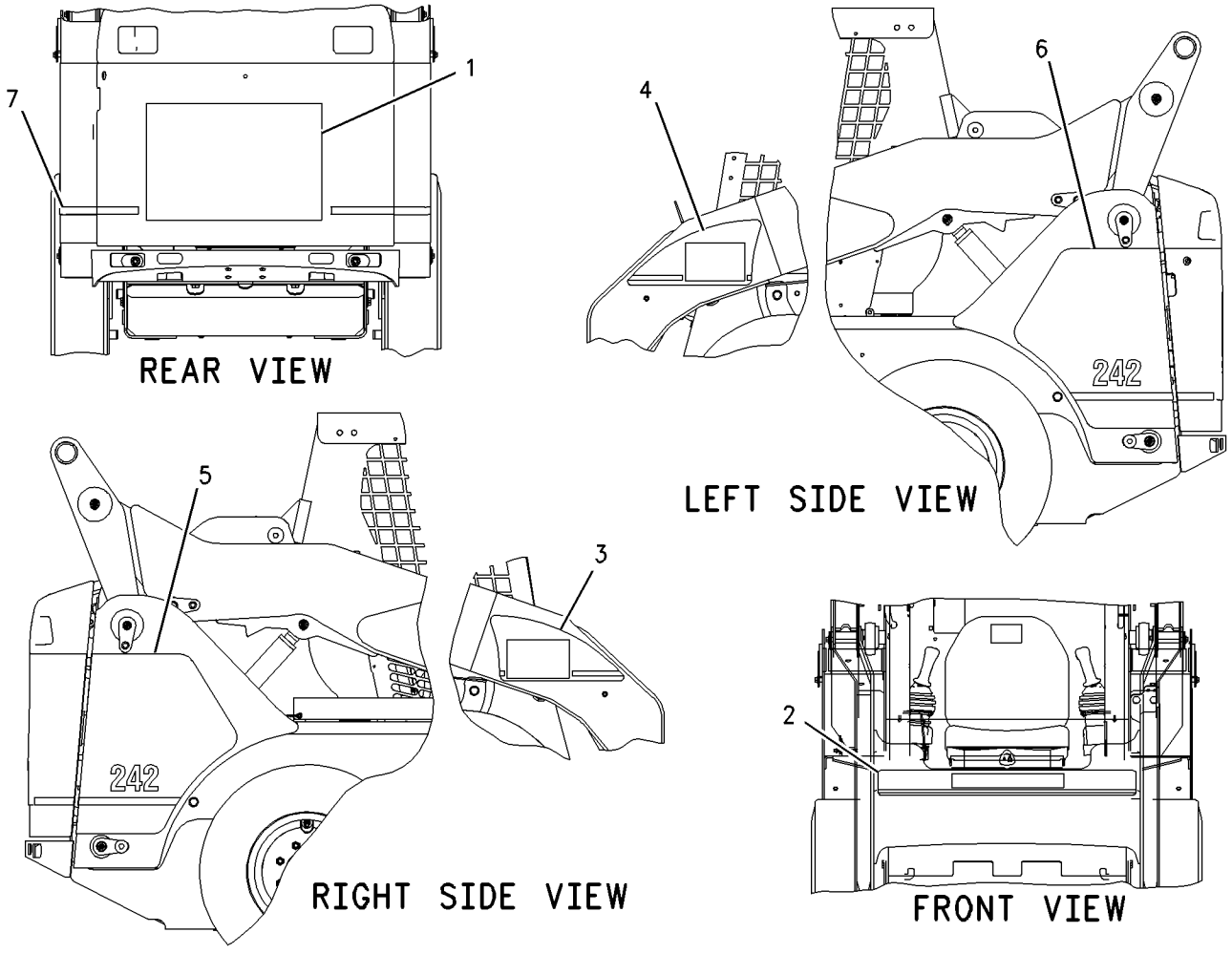

GRAPHIC #1 g00900463

SERVICE EQUIPMENT AND SUPPLIES

191-9685 FILM GP

S/N: CAB1-UP

PART OF 191-9600 COMMON AR

SMCS-7557 **i01760224**

NOTE	REF NO	GRAPHIC REF	PART NUMBER	QTY	PART NAME 1 2 3 4 5 6 (PRODUCT LEVEL)	SEE PAGE
	1	1	**9X-2754**	1	FILM-CAT	
	2	1	**162-6889**	1	FILM-STRIPE	
	3	1	**212-4083**	1	FILM-STRIPE (RH)	
	4	1	**212-4084**	1	FILM-STRIPE (LH)	
	5	1	**215-3938**	1	FILM-STRIPE (RH)	
	6	1	**215-3939**	1	FILM-STRIPE (LH)	
	7	1	**120-0210**		FILM-STRIPE (RED) (60CM)	

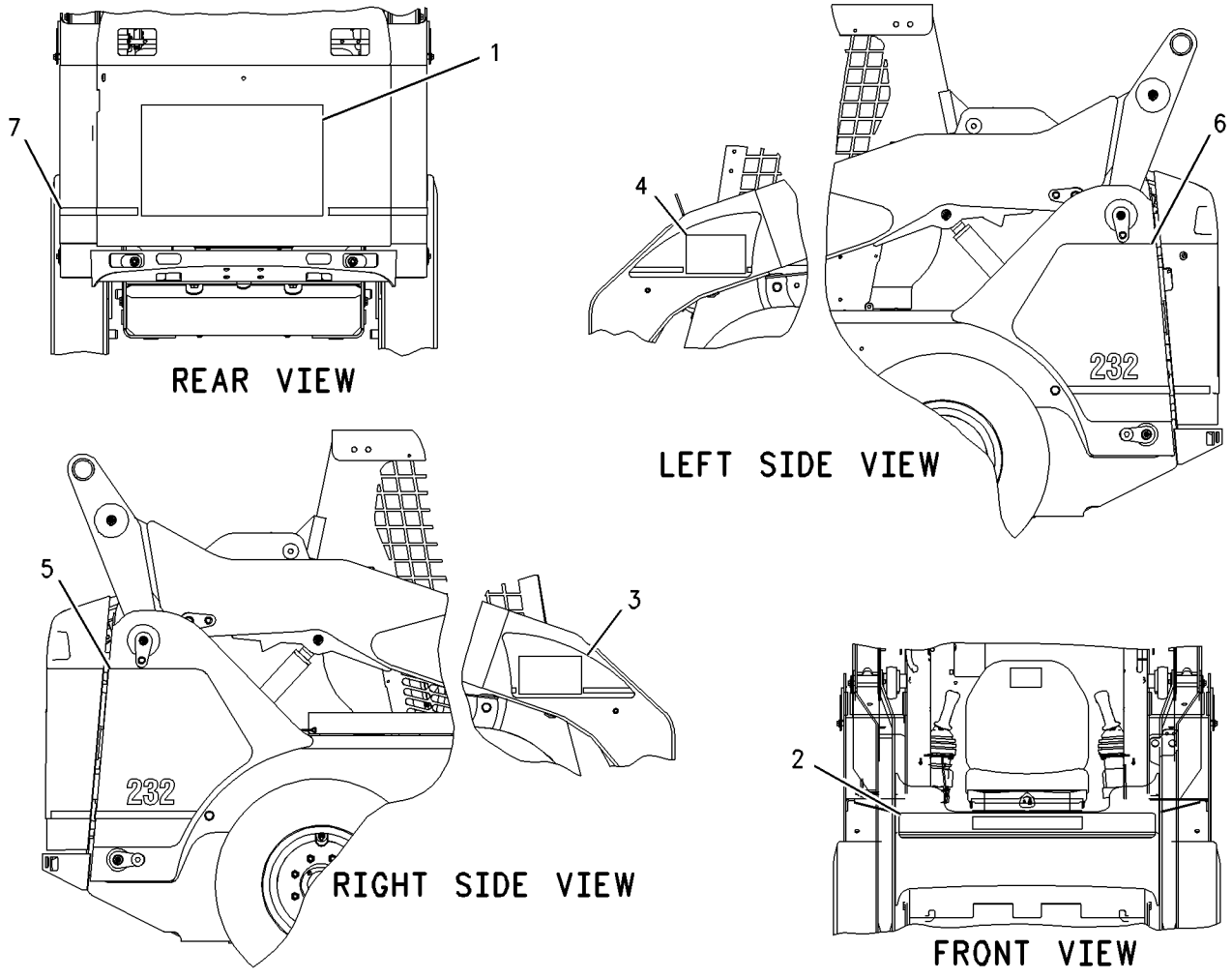

GRAPHIC #1 g00900469

SERVICE EQUIPMENT AND SUPPLIES

173-3021 MOUNTING GP-REGISTRATION

S/N: 4NZ3400-UP; 5FZ6700-UP
PART OF 203-4332 LIGHTING GP-ROADING
AN ATTACHMENT

SMCS-1429, 7000, 7557 **i01697273**

NOTE	REF NO	GRAPHIC REF	PART NUMBER	QTY	PART NAME 1 2 3 4 5 6 (PRODUCT LEVEL)	SEE PAGE
	1	1	**175-4236**	1	PLATE	
	2	1	**190-8962**	1	LAMP GP-FLOOD	
		1	**7M-9957**	1	LAMP (12 VOLTS)	
	3	1	**204-1365**	1	PLATE	
	4	1	**207-9780**	1	BRACKET AS	
	5	1	**215-4001**	1	PLATE	
	6	1	**4B-4863**	2	WASHER (4.7X11X1.2MM THK)	
M	7	1	**5C-8312**	2	NUT (M4X0.7 THD)	
M	8	1	**6V-9672**	2	SCREW-MACHINE (M4X.7X16MM)	
M	9	1	**8T-4171**	3	BOLT (M6X1X12MM)	
	10	1	**8T-4205**	3	WASHER-HARD (7.2X14.5X2MM THK)	

M-METRIC PART

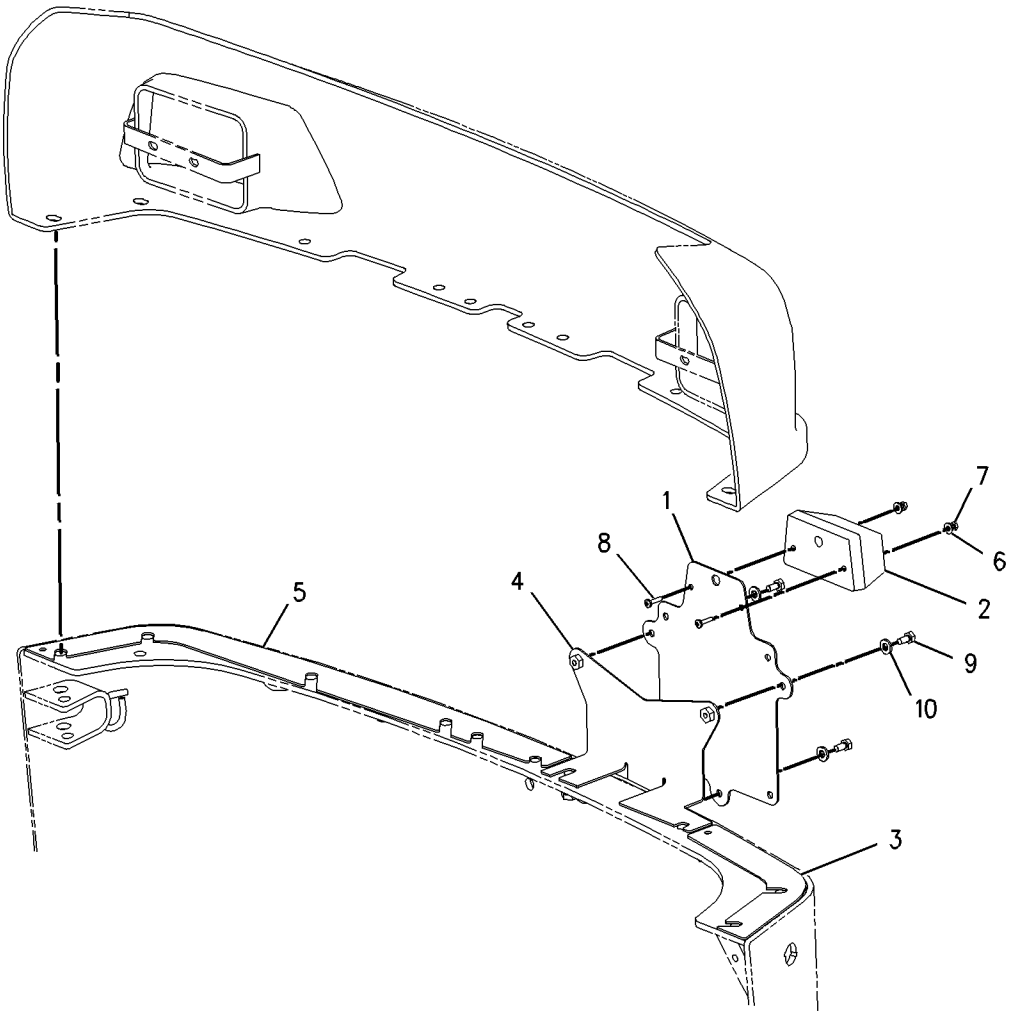

GRAPHIC #1 g00874745

SERVICE EQUIPMENT AND SUPPLIES

163-5016 PLATE & FILM GP–ENGLISH

S/N: 4NZ3400-UP; 5FZ6700-UP

AN ATTACHMENT

SMCS-7405, 7557 **i01759696**

NOTE	REF NO	GRAPHIC REF	PART NUMBER	QTY	PART NAME 1 2 3 4 5 6 (PRODUCT LEVEL)	SEE PAGE
	1	1	**164-9741**	1	FILM-INSTRUCTION (OMM)	
	2	1	**162-5235**	1	FILM-WARNING (LIFT ARM BRACE)	
B	3	1	**156-3843**	2	FILM-WARNING (CAB TILT SUPPORT LEVER)	
	4	1	**164-9740**	1	FILM-INSTRUCTION (ENGINE START PROCEDURE)	
	5	1	**175-7413**	1	FILM-WARNING (WARNING/DANGER COMBINTION)	
	6	1	**8C-7588**	1	FILM-WARNING (BATTERY)	
	7	1	**215-3901**	1	FILM-WARNING (QUICK COUPLER)	
	8	1	**156-3834**	1	FILM-WARNING (UNIVERSAL)	

B-USE AS REQUIRED

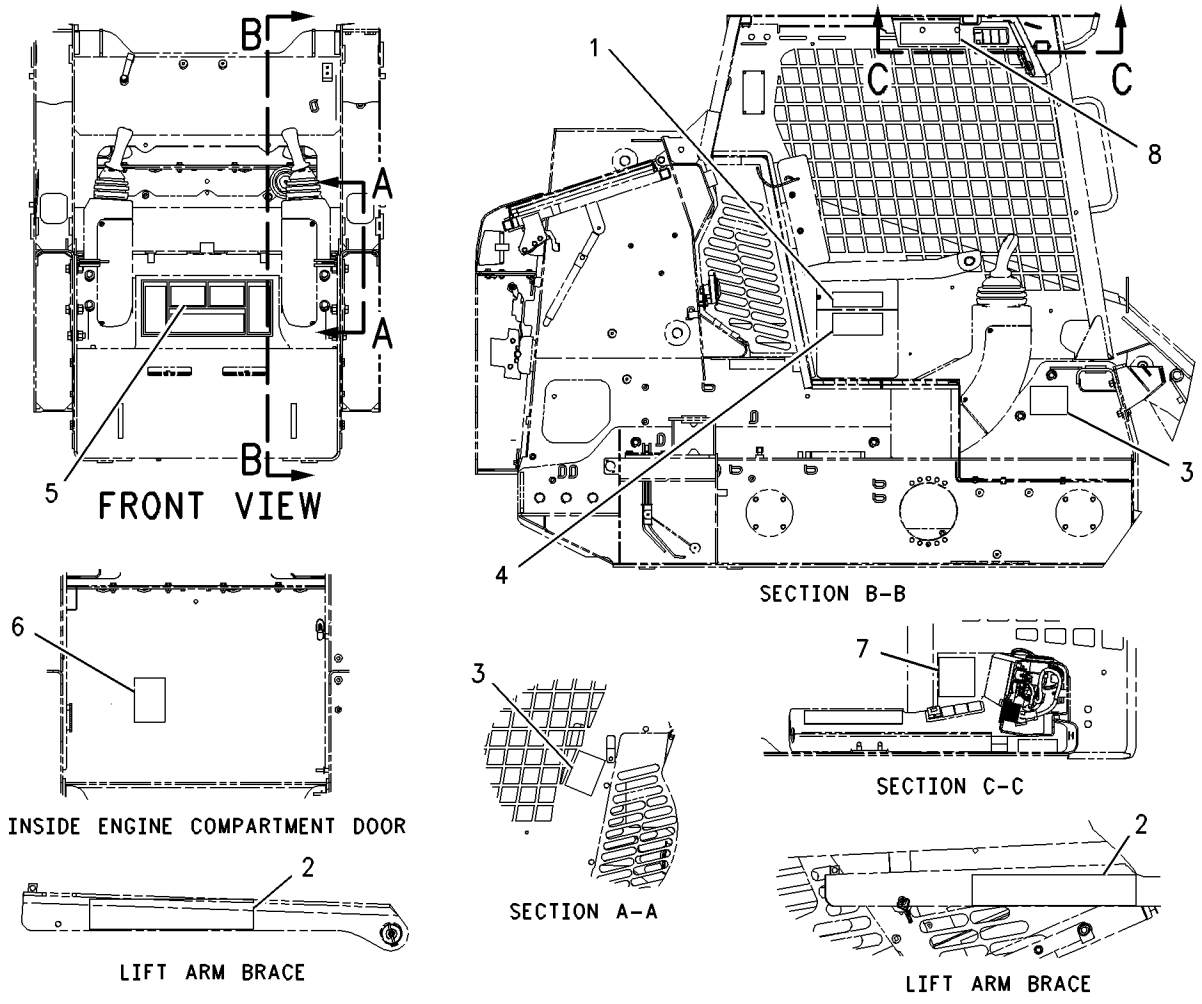

GRAPHIC #1 g00900345

SERVICE EQUIPMENT AND SUPPLIES

176-0614 PLATE & FILM GP–SPANISH

S/N: 4NZ3400-UP; 5FZ6700-UP
SEE 163-5016 FOR FILM LOCATION
AN ATTACHMENT

SMCS-7405, 7557 **i01759686**

NOTE	PART NUMBER	QTY	PART NAME 1 2 3 4 5 6 (PRODUCT LEVEL)	SEE PAGE
	176-1226	1	FILM-INSTRUCTION (OMM)	
	176-1335	1	FILM-WARNING (LIFT ARM BRACE)	
	163-9112	2	FILM-WARNING (CAB TILT SUPPORT LEVER)	
	176-1336	1	FILM-NOTICE (ENGINE START PROCEDURE)	
	176-1337	1	FILM-WARNING (WARNING/DANGER COMBINATION)	
	101-0569	1	FILM-WARNING (BATTERY)	
	215-3920	1	FILM-WARNING (QUICK COUPLER)	
	164-2346	1	FILM-WARNING (UNIVERSAL)	

<END>

SERVICE EQUIPMENT AND SUPPLIES

177-7929 PLATE & FILM GP

S/N: 4NZ3400-UP; 5FZ6700-UP
EUROPEAN SOURCE ONLY
PART OF 206-3776, 206-3777, 206-3778, 206-3779 CONVERSION AR-ROADING AN ATTACHMENT

SMCS-7405, 7557 **i01759427**

NOTE	REF NO	GRAPHIC REF	PART NUMBER	QTY	PART NAME 1 2 3 4 5 6 (PRODUCT LEVEL)	SEE PAGE
	1	1	**172-1241**	1	FILM-CAUTION (LIFTING/TIEDOWN)	

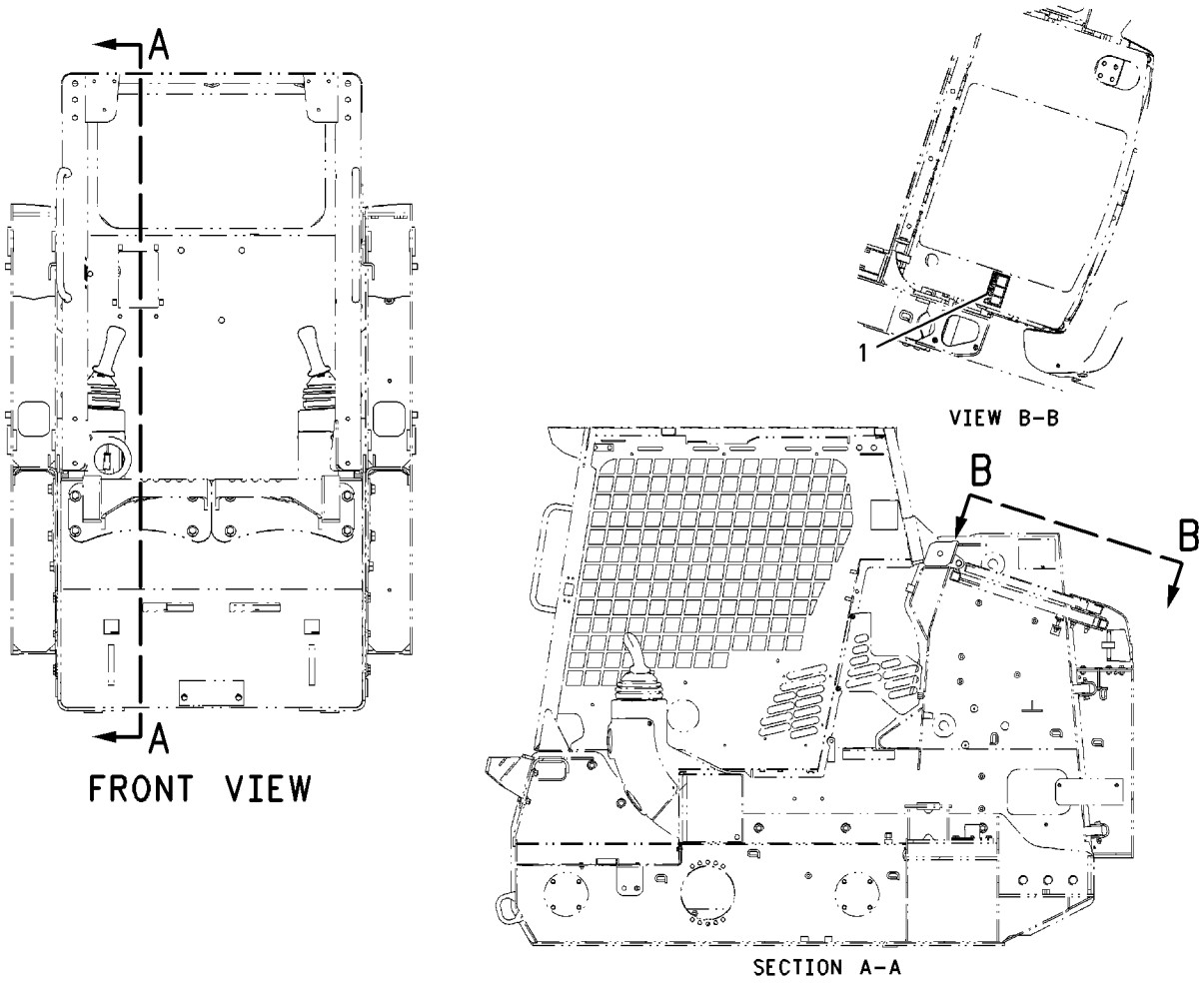

GRAPHIC #1 g00900306

179-1980 PLATE & FILM GP—ARABIC

S/N: 4NZ3400-UP; 5FZ6700-UP
SEE 163-5016 FOR FILM LOCATION
AN ATTACHMENT

SMCS-7405, 7557 **i01759777**

NOTE	PART NUMBER	QTY	PART NAME 1 2 3 4 5 6 (PRODUCT LEVEL)	SEE PAGE
	179-5866	1	FILM-INSTRUCTION (OMM)	
	179-5884	1	FILM-WARNING (LIFT ARM BRACE)	
B	**163-9119**	2	FILM-WARNING (CAB TILT SUPPORT LEVER)	
	179-5640	1	FILM-NOTICE (ENGINE START PROCEDURE)	
	179-5661	1	FILM-WARNING (WARNING/DANGER COMBINATION)	
	101-0576	1	FILM-WARNING (BATTERY)	
	215-3902	1	FILM-WARNING (QUICK COUPLER)	
	164-2354	1	FILM-WARNING (UNIVERSAL)	

B-USE AS REQUIRED

<END>

179-1981 PLATE & FILM GP—CHINESE

S/N: 4NZ3400-UP; 5FZ6700-UP
SEE 163-5016 FOR FILM LOCATION
AN ATTACHMENT

SMCS-7405, 7557 **i01756515**

NOTE	PART NUMBER	QTY	PART NAME 1 2 3 4 5 6 (PRODUCT LEVEL)	SEE PAGE
	179-5869	1	FILM-INSTRUCTION (OMM)	
B	**179-5887**	1	FILM-WARNING (LIFT ARM BRACE)	
	179-5916	2	FILM-WARNING (CAB TILT SUPPORT LEVER)	
	179-5643	1	FILM-WARNING (ENGINE START PROCEDURE)	
	179-5664	1	FILM-WARNING (WARNING/DANGER COMBINATION)	
	192-3519	1	FILM-WARNING (BATTERY)	
	215-3903	1	FILM-WARNING (QUICK COUPLER)	
	179-6575	1	FILM-WARNING (UNIVERSAL)	

B-USE AS REQUIRED

<END>

179-1982 PLATE & FILM GP—CZECHOSLOVAKIAN

S/N: 4NZ3400-UP; 5FZ6700-UP
SEE 163-5016 FOR FILM LOCATION
AN ATTACHMENT

SMCS-7405, 7557 **i01759689**

NOTE	PART NUMBER	QTY	PART NAME 1 2 3 4 5 6 (PRODUCT LEVEL)	SEE PAGE
	179-5865	1	FILM-INSTRUCTION (OMM)	
	179-5883	1	FILM-WARNING (LIFT ARM BRACE)	
	163-9120	2	FILM-WARNING (CAB TILT SUPPORT LEVER)	
	179-5639	1	FILM-NOTICE (ENGINE START PROCEDURE)	
	179-5660	1	FILM-WARNING (WARNING/DANGER COMBINATION)	
	140-8760	1	FILM-WARNING (BATTERY)	
	215-3904	1	FILM-WARNING (QUICK COUPLER)	
	164-2353	1	FILM-WARNING (UNIVERSAL)	

<END>

179-1983 PLATE & FILM GP—DANISH

S/N: 4NZ3400-UP; 5FZ6700-UP
SEE 163-5016 FOR FILM LOCATION
AN ATTACHMENT

SMCS-7405, 7557 **i01759692**

NOTE	PART NUMBER	QTY	PART NAME 1 2 3 4 5 6 (PRODUCT LEVEL)	SEE PAGE
	179-5861	1	FILM-INSTRUCTION (OMM)	
	179-5879	1	FILM-WARNING (LIFT ARM BRACE)	
	163-9116	2	FILM-WARNING (CAB TILT SUPPORT LEVER)	
	179-5635	1	FILM-NOTICE (ENGINE START PROCEURE)	
	179-5656	1	FILM-WARNING (WARNING/DANGER COMBINATION)	
	101-0573	1	FILM-WARNING (BATTERY)	
	215-3905	1	FILM-WARNING (QUICK COUPLER)	
	164-2350	1	FILM-WARNING (UNIVERSAL)	

<END>

179-1984 PLATE & FILM GP—DUTCH

S/N: 4NZ3400-UP; 5FZ6700-UP
SEE 163-5016 FOR FILM LOCATION
AN ATTACHMENT

SMCS-7405, 7557 **i01759724**

NOTE	PART NUMBER	QTY	PART NAME 1 2 3 4 5 6 (PRODUCT LEVEL)	SEE PAGE
	179-5863	1	FILM-INSTRUCTION (OMM)	
	179-5881	1	FILM-WARNING (LIFT ARM BRACE)	
B	**163-9118**	2	FILM-WARNING (CAB TILT SUPPORT LEVER)	
	179-5637	1	FILM-NOTICE (ENGINE START PROCEDURE)	
	179-5658	1	FILM-WARNING (WARNING/DANGER COMBINATION)	
	101-0575	1	FILM-WARNING (BATTERY)	
	163-9455	1	FILM-WARNING (QUICK COUPLER)	
	164-2352	1	FILM-WARNING (UNIVERSAL)	

B-USE AS REQUIRED

<END>

SERVICE EQUIPMENT AND SUPPLIES

179-1985 PLATE & FILM GP—FINNISH

S/N: 4NZ3400-UP; 5FZ6700-UP
SEE 163-5016 FOR FILM LOCATION
AN ATTACHMENT

SMCS-7405, 7557 **i01759730**

NOTE	PART NUMBER	QTY	PART NAME 1 2 3 4 5 6 (PRODUCT LEVEL)	SEE PAGE
	179-5873	1	FILM-INSTRUCTION (OMM)	
	179-5891	1	FILM-WARNING (LIFT ARM BRACE)	
B	**163-9125**	2	FILM-WARNING (CAB TILT SUPPORT LEVER)	
	179-5647	1	FILM-NOTICE (ENGINE START PROCEDURE)	
	179-5668	1	FILM-WARNING (WARNING/DANGER COMBINATION)	
	128-8583	1	FILM-WARNING (BATTERY)	
	215-3907	1	FILM-WARNING (QUICK COUPLER)	
	164-2360	1	FILM-WARNING (UNIVERSAL)	

B-USE AS REQUIRED

<END>

179-1986 PLATE & FILM GP—FRENCH

S/N: 4NZ3400-UP; 5FZ6700-UP
SEE 163-5016 FOR FILM LOCATION
AN ATTACHMENT

SMCS-7405, 7557 **i01759734**

NOTE	PART NUMBER	QTY	PART NAME 1 2 3 4 5 6 (PRODUCT LEVEL)	SEE PAGE
	176-1225	1	FILM-INSTRUCTION (OMM)	
	163-5015	1	FILM-WARNING (LIFT ARM BRACE)	
B	**163-5050**	2	FILM-WARNING (CAB TILT SUPPORT LEVER)	
	179-5631	1	FILM-NOTICE (ENGINE START PROCEDURE)	
	179-5651	1	FILM-WARNING (WARNING/DANGER COMBINATION)	
	101-0568	1	FILM-WARNING (BATTERY)	
	215-3908	1	FILM-WARNING (QUICK COUPLER)	
	163-5020	1	FILM-WARNING (UNIVERSAL)	

B-USE AS REQUIRED

<END>

179-1987 PLATE & FILM GP–GERMAN

S/N: 4NZ3400-UP; 5FZ6700-UP
SEE 163-5016 FOR FILM LOCATION
AN ATTACHMENT

SMCS-7405, 7557 **i01759737**

NOTE	PART NUMBER	QTY	PART NAME 1 2 3 4 5 6 (PRODUCT LEVEL)	SEE PAGE
	176-1229	1	FILM-INSTRUCTION (OMM)	
	179-5877	1	FILM-WARNING (LIFT ARM BRACE)	
B	**163-9114**	2	FILM-WARNING (CAB TILT SUPPORT LEVER)	
	179-5633	1	FILM-NOTICE (ENGINE START PROCEDURE)	
	179-5654	1	FILM-WARNING (WARNING/DANGER COMBINATION)	
	101-0571	1	FILM-WARNING (BATTERY)	
	215-3909	1	FILM-WARNING (QUICK COUPLER)	
	164-2348	1	FILM-WARNING (UNIVERSAL)	

B-USE AS REQUIRED

<END>

179-1988 PLATE & FILM GP–GREEK

S/N: 4NZ3400-UP; 5FZ6700-UP
SEE 163-5016 FOR FILM LOCATION
AN ATTACHMENT

SMCS-7405, 7557 **i01759738**

NOTE	PART NUMBER	QTY	PART NAME 1 2 3 4 5 6 (PRODUCT LEVEL)	SEE PAGE
	179-5862	1	FILM-INSTRUCTION (OMM)	
	179-5880	1	FILM-WARNING (LIFT ARM BRACE)	
B	**163-9117**	2	FILM-WARNING (CAB TILT SUPPORT LEVER)	
	179-5636	1	FILM-NOTICE (ENGINE START PROCEDURE)	
	179-5657	1	FILM (WARNING/DANGER COMBINATOIN)	
	101-0574	1	FILM-WARNING (BATTERY)	
	215-3910	1	FILM-WARNING (QUICK COUPLER)	
	164-2351	1	FILM-WARNING (UNIVERSAL)	

B-USE AS REQUIRED

<END>

179-1989 PLATE & FILM GP—HEBREW

S/N: 5FZ6700
SEE 163-5016 FOR FILM LOCATION
AN ATTACHMENT

SMCS-7405, 7557 **i01759745**

NOTE	PART NUMBER	QTY	PART NAME 1 2 3 4 5 6 (PRODUCT LEVEL)	SEE PAGE
	179-5874	1	FILM-INSTRUCTION (OMM)	
	179-5892	1	FILM-WARNING (LIFT ARM BRACE)	
B	**179-5918**	2	FILM-WARNING (CAB TILT SUPPORT LEVER)	
	179-5649	1	FILM-NOTICE (ENGINE SART PROCEDURE)	
	179-5669	1	FILM (WARNING/DANGER COMBINATION)	
	141-4797	1	FILM-WARNING (BATTERY)	
	215-3911	1	FILM-WARNING (QUICK COUPLER)	
	179-6576	1	FILM-WARNING (UNIVERSAL)	

B-USE AS REQUIRED

<END>

179-1990 PLATE & FILM GP—ICELANDIC

S/N: 4NZ3400-UP; 5FZ6700-UP
SEE 163-5016 FOR FILM LOCATION
AN ATTACHMENT

SMCS-7405, 7557 **i01759748**

NOTE	PART NUMBER	QTY	PART NAME 1 2 3 4 5 6 (PRODUCT LEVEL)	SEE PAGE
	179-5871	1	FILM-INSTRUCTION (OMM)	
	179-5889	1	FILM-WARNING (LIFT ARM BRACE)	
B	**179-5917**	2	FILM-WARNING (CAB TILT SUPPORT LEVER)	
	179-5645	1	FILM-WARNING (ENGINE START PROCEDURE)	
	179-5666	1	FILM-WARNING (WARNING/DANGER COMBINATION)	
	192-3520	1	FILM-WARNING (BATTERY)	
	215-3912	1	FILM-WARNING (QUICK COUPLER)	
	179-6577	1	FILM-WARNING (UNIVERSAL)	

B-USE AS REQUIRED

<END>

179-1991 PLATE & FILM GP—INDONESIAN

S/N: 4NZ3400-UP; 5FZ6700-UP
SEE 163-5016 FOR FILM LOCATION
AN ATTACHMENT

SMCS-7405, 7557 **i01759754**

NOTE	PART NUMBER	QTY	PART NAME 1 2 3 4 5 6 (PRODUCT LEVEL)	SEE PAGE
	179-5864	1	FILM-INSTRUCTION (OMM)	
	179-5882	1	FILM-WARNING (LIFT ARM BRACE)	
B	**179-5915**	2	FILM-WARNING (CAB TILT SUPPORT LEVER)	
	179-5638	1	FILM-WARNING (ENGINE START PROCEDURE)	
	179-5659	1	FILM-WARNING (WARNING/DANGER COMBINATION)	
	192-3517	1	FILM-WARNING (BATTERY)	
	215-3913	1	FILM-WARNING (QUICK COUPLER)	
	179-6578	1	FILM-WARNING (UNIVERSAL)	

B-USE AS REQUIRED

<END>

179-1992 PLATE & FILM GP—ITALIAN

S/N: 4NZ3400-UP; 5FZ6700-UP
SEE 163-5016 FOR FILM LOCATION
AN ATTACHMENT

SMCS-7405, 7557 **i01759757**

NOTE	PART NUMBER	QTY	PART NAME 1 2 3 4 5 6 (PRODUCT LEVEL)	SEE PAGE
	179-5860	1	FILM-INSTRUCTION (OMM)	
	179-5878	1	FILM-WARNING (LIFT ARM BRACE)	
B	**163-9115**	2	FILM-WARNING (CAB TILT SUPPORT LEVER)	
	179-5634	1	FILM-NOTICE (ENGINE START PROCEDURE)	
	179-5655	1	FILM-WARNING (WARNING/DANGER COMBINATION)	
	101-0572	1	FILM-WARNING (BATTERY)	
	215-3914	1	FILM-WARNING (QUICK COUPLER)	
	164-2349	1	FILM-WARNING (UNIVERSAL)	

B-USE AS REQUIRED

<END>

179-1993 PLATE & FILM GP—JAPANESE

S/N: 4NZ3400-UP; 5FZ6700-UP
SEE 163-5016 FOR FILM LOCATION
AN ATTACHMENT

SMCS-7405, 7557 **i01759772**

NOTE	PART NUMBER	QTY	PART NAME 1 2 3 4 5 6 (PRODUCT LEVEL)	SEE PAGE
	179-5865	1	FILM-INSTRUCTION (OMM)	
	179-5885	1	FILM-WARNING (LIFT ARM BRACE)	
B	**163-9121**	2	FILM-WARNING (CAB TILT SUPPORT LEVER)	
	179-5641	1	FILM-WARNING (ENGINE START PROCEDURE)	
	179-5662	1	FILM-WARNING (WARNING/DANGER COMBINATION)	
	136-2151	1	FILM-WARNING (BATTERY)	
	163-9458	1	FILM-WARNING (QUICK COUPLER)	
	164-2356	1	FILM-WARNING (UNIVERSAL)	

B-USE AS REQUIRED

<END>

179-1994 PLATE & FILM GP—NORWEGIAN

S/N: 4NZ3400-UP; 5FZ6700-UP
SEE 163-5016 FOR FILM LOCATION
AN ATTACHMENT

SMCS-7405, 7557 **i01759779**

NOTE	PART NUMBER	QTY	PART NAME 1 2 3 4 5 6 (PRODUCT LEVEL)	SEE PAGE
	179-5872	1	FILM-INSTRUCTION (OMM)	
	179-5890	1	FILM-WARNING (LIFT ARM BRACE)	
B	**163-9124**	2	FILM-WARNING (CAB TILT SUPPORT LEVER)	
	179-5646	1	FILM-NOTICE (ENGINE START PROCEDURE)	
	179-5667	1	FILM-WARNING (WARNING/DANGER COMBINATION)	
	192-3518	1	FILM-WARNING (BATTERY)	
	215-3916	1	FILM-WARNING (QUICK COUPLER)	
	164-2359	1	FILM-WARNING (UNIVERSAL)	

B-USE AS REQUIRED

<END>

179-1995 PLATE & FILM GP—POLISH

S/N: 4NZ4000-UP; 5FZ6700-UP
SEE 163-5016 FOR FILM LOCATION
AN ATTACHMENT

SMCS-7405, 7557 **i01759785**

NOTE	PART NUMBER	QTY	PART NAME 1 2 3 4 5 6 (PRODUCT LEVEL)	SEE PAGE
	179-5858	1	FILM-INSTRUCTION (OMM)	
	179-5893	1	FILM-WARNING (LIFT ARM BRACE)	
B	**179-5919**	2	FILM-WARNING (CAB TILT SUPPORT LEVER)	
	179-5650	1	FILM-NOTICE (ENGINE START PROCEDURE)	
	179-5670	1	FILM-WARNING (WARNING/DANGER COMBINATION)	
	152-9784	1	FILM-WARNING (BATTERY)	
	215-3917	1	FILM-WARNING (QUICK COUPLER)	
	179-6579	1	FILM-WARNING (UNIVERAL)	

B-USE AS REQUIRED

<END>

179-1996 PLATE & FILM GP—PORTUGUESE

S/N: 4NZ3400-4000; 5FZ6700
SEE 163-5016 FOR FILM LOCATION
AN ATTACHMENT

SMCS-7405, 7557 **i01759788**

NOTE	PART NUMBER	QTY	PART NAME 1 2 3 4 5 6 (PRODUCT LEVEL)	SEE PAGE
	176-1228	1	FILM-INSTRUCTION (OMM)	
	179-5876	1	FILM-WARNING (LIFT ARM BRACE)	
B	**163-9113**	2	FILM-WARNING (CAB TILT SUPPORT LEVER)	
	179-5632	1	FILM-NOTICE (ENGINE START PROCEDURE)	
	179-5653	1	FILM-WARNING (WARNING/DANGER COMBINAITON)	
	101-0570	1	FILM-WARNING (BATTERY)	
	215-3918	1	FILM-WARNING (QUICK COUPLER)	
	164-2347	1	FILM-WARNING (UNIVERSAL)	

B-USE AS REQUIRED

<END>

SERVICE EQUIPMENT AND SUPPLIES

179-1997 PLATE & FILM GP

S/N: 4NZ4000-UP; 5FZ6700-UP
RUSSIAN
AN ATTACHMENT

SMCS-7405, 7557 **i01693541**

NOTE	REF NO	GRAPHIC REF	PART NUMBER	QTY	PART NAME 1 2 3 4 5 6 (PRODUCT LEVEL)	SEE PAGE
	1	1	**179-5868**	1	FILM-INSTRUCTION	
	2	1	**179-5886**	1	FILM-WARNING (LIFT ARM BRACE)	
	3	1	**163-9122**	2	FILM-WARNING (CAB TILT SUPPORT LEVER)	
	4	1	**179-5642**	1	FILM-NOTICE (ENGINE START PROCEDURE)	
	5	1	**179-5663**	1	FILM-WARNING (WARNING/DANGER COMBINATION)	
	6	1	**117-9667**	1	FILM-WARNING (BATTERY)	
	7	1	**215-3919**	1	FILM-WARNING (QUICK COUPLER)	
	8	1	**164-2357**	1	FILM-WARNING (UNIVERSAL)	

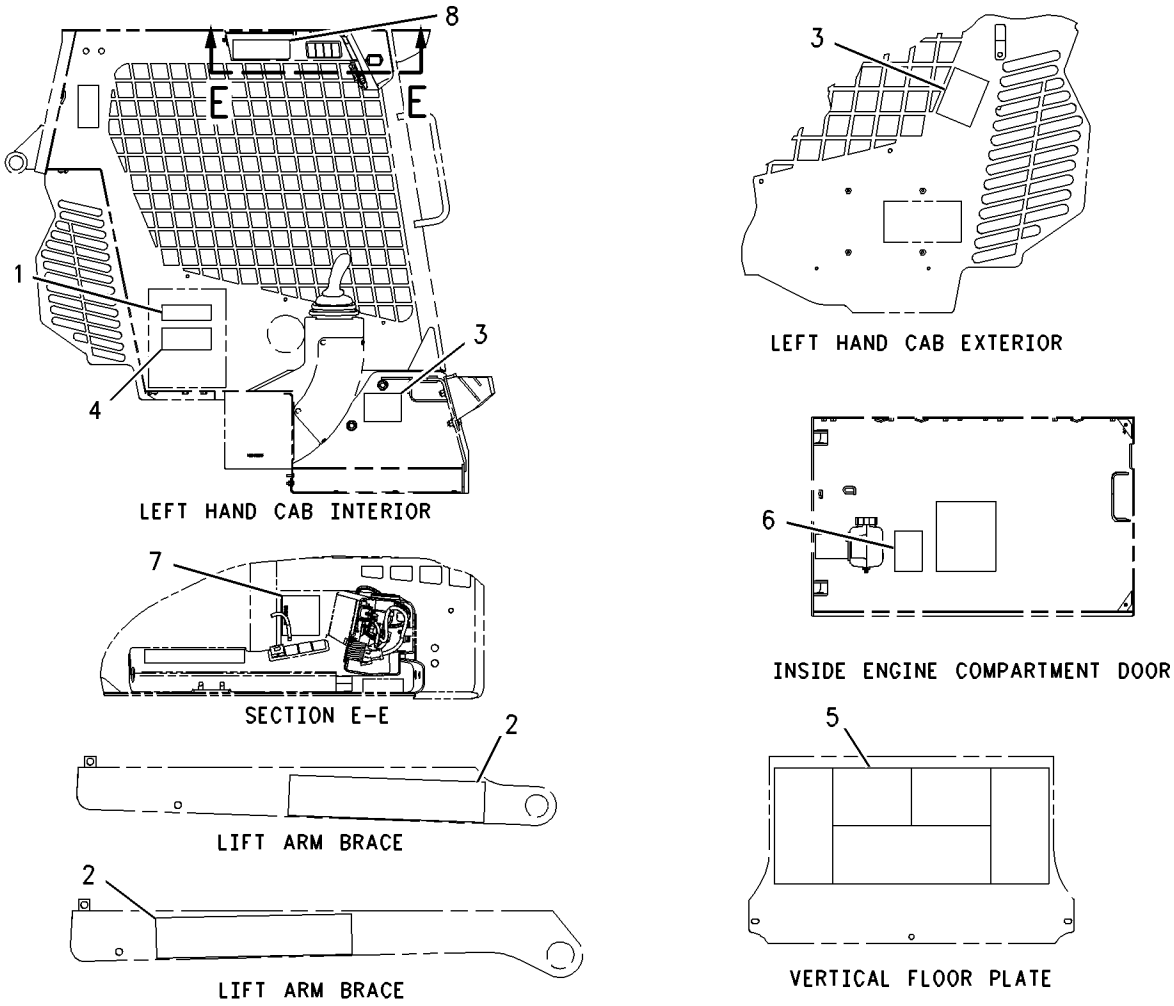

GRAPHIC #1 g00850594

179-1998 PLATE & FILM GP—SWEDISH

S/N: 4NZ3400-UP; 5FZ6700-UP
SEE 163-5016 FOR FILM LOCATION
AN ATTACHMENT

SMCS-7405, 7557 **i01759792**

NOTE	PART NUMBER	QTY	PART NAME 1 2 3 4 5 6 (PRODUCT LEVEL)	SEE PAGE
	179-5870	1	FILM-INSTRUCTION (OMM)	
	179-5888	1	FILM-WARNING (LIFT ARM BRACE)	
B	**163-9123**	2	FILM-WARNING (CAB TILT SUPPORT LEVER)	
	179-5644	1	FILM-WARNING (ENGINE START PROCEDURE)	
	179-5665	1	FILM-WARNING (WARNING/DANGER COMBINATION)	
	101-0577	1	FILM-WARNING (BATTERY)	
	163-9460	1	FILM-WARNING (QUICK COUPLER)	
	164-2358	1	FILM-WARNING (UNIVERSAL)	

B-USE AS REQUIRED

<END>

179-1999 PLATE & FILM GP—TURKISH

S/N: 4NZ3400-UP; 5FZ6700-UP
SEE 163-5016 FOR FILM LOCATION
AN ATTACHMENT

SMCS-7405, 7557 **i01759793**

NOTE	PART NUMBER	QTY	PART NAME 1 2 3 4 5 6 (PRODUCT LEVEL)	SEE PAGE
	192-8955	1	FILM-INSTRUCTION (OMM)	
	193-1053	1	FILM-WARNING (LIFT ARM BRACE)	
B	**192-9027**	2	FILM-WARNING (CAB TILT SUPPORT LEVER)	
	179-5648	1	FILM-NOTICE (ENGINE START PROCEDURE)	
	179-5652	1	FILM-WARNING (WARNING/DANGER COMBINATION)	
	192-3521	1	FILM-WARNING (BATTERY)	
	179-6883	1	FILM-WARNING (QUIK COUPLER)	
	179-6580	1	FILM-WARNING (UNIVERSAL)	

B-USE AS REQUIRED

<END>

190-7954 PLATE & FILM GP

S/N: CAB1-UP; CMB1-UP
ENGLISH
PART OF 191-2900, 191-9600 COMMON AR

SMCS-7405, 7557 **i01697826**

NOTE	REF NO	GRAPHIC REF	PART NUMBER	QTY	PART NAME 1 2 3 4 5 6 (PRODUCT LEVEL)	SEE PAGE
	1	1	**105-3330**	1	FILM-WARNING (ACCUMULATOR PRESSURE)	
	2	1	**190-8118**	1	FILM (SERVICE CHART)	
	3	1	**162-5233**	1	FILM-INSTRUCTION (WORK TOOL CONTROL RH)	
	4	1	**162-5234**	1	FILM-INSTRUCTION (MACHINE CONTROL LH)	
	5	1	**156-5762**	4	FILM (TIE DOWN)	
	7	1	**190-8108**	1	FILM (THROTTLE)	
	8	1	**190-8109**	1	FILM (RELAY)	
	9	1	**194-7790**	1	FILM-WARNING (COLD WEATHER OPERATION)	
	10	1	**159-8035**	2	FILM-WARNING (CRUSH POINT)	
	26	1	**156-3849**	1	FILM-WARNING (RADIATOR)	

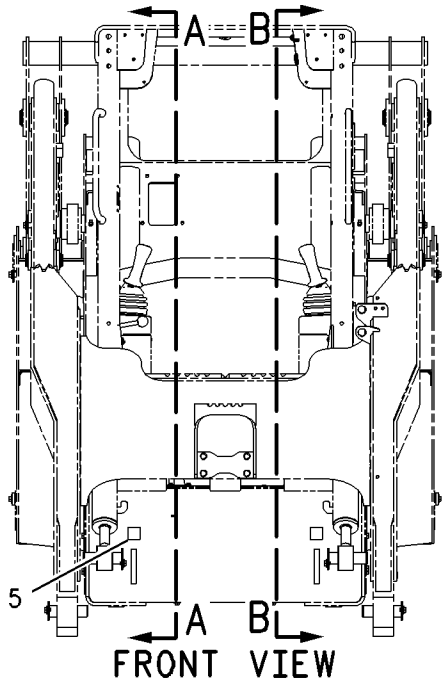

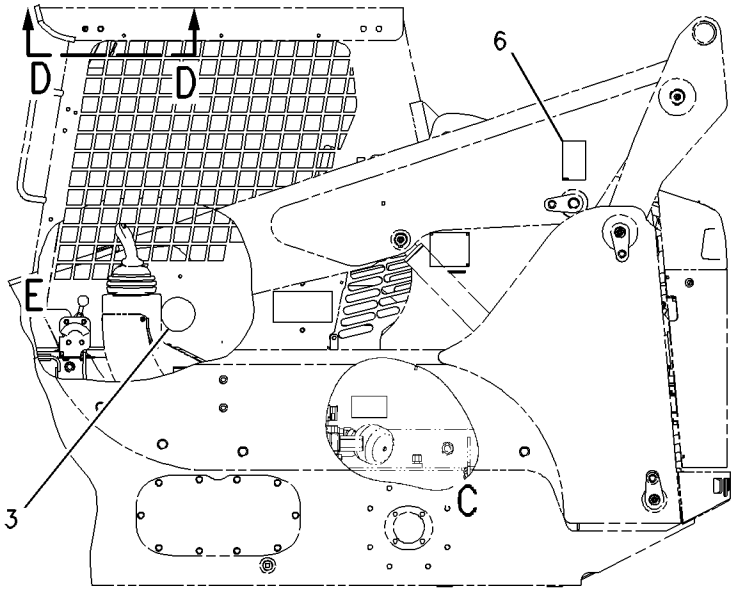

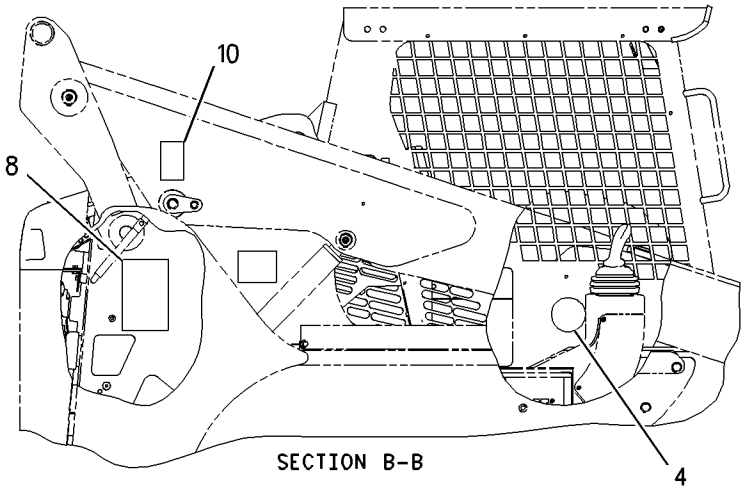

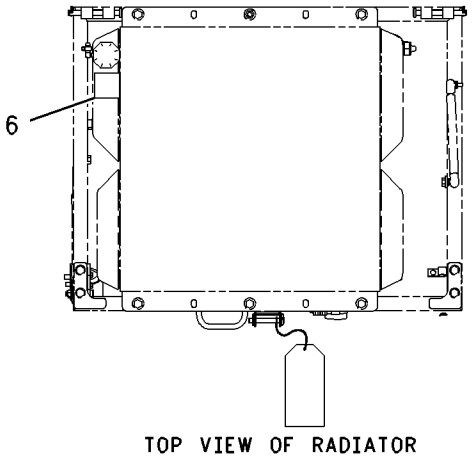

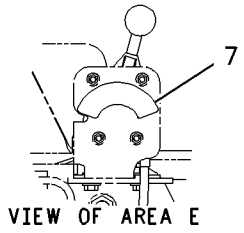

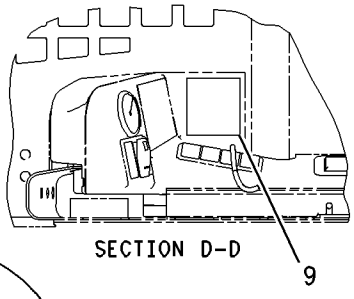

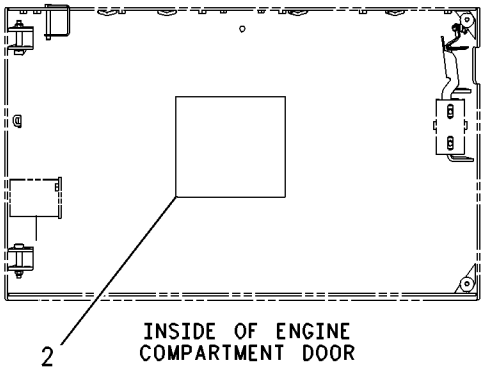

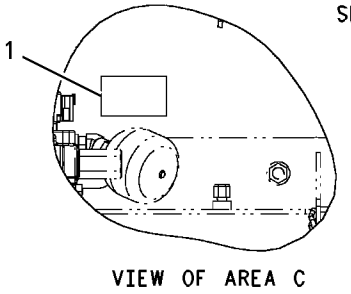

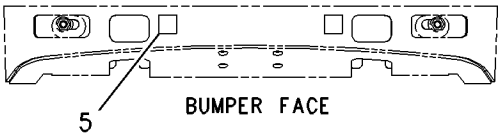

GRAPHIC #1 g00874122

SERVICE EQUIPMENT AND SUPPLIES

191-9564 PLATE & FILM GP

S/N: CAB1-UP; CMB1-UP
ENGLISH
CANNOT BE USED WITH 193-8365—PAGE 614, 204-1359—PAGE 618, 204-1373—PAGE 619
AN ATTACHMENT

SMCS-7405, 7557 **i01666501**

NOTE	REF NO	GRAPHIC REF	PART NUMBER	QTY	PART NAME 1 2 3 4 5 6 (PRODUCT LEVEL)	SEE PAGE
	1	1	**164-9741**	1	FILM-INSTRUCTION (OMM)	
	2	1	**190-7456**	1	FILM-WARNING (LIFT ARM BRACE)	
	3	1	**156-3843**	2	FILM-WARNING (CAB TILT SUPPORT LEVER)	
	4	1	**164-9740**	1	FILM-INSTRUCTION (ENGINE START PROCEDURE)	
	5	1	**175-7413**	1	FILM-WARNING (WARNING/DANGER COMBINTION)	
	6	1	**8C-7588**	1	FILM-WARNING (BATTERY)	
	7	1	**215-3901**	1	FILM-WARNING (QUICK COUPLER)	
	8	1	**156-3834**	1	FILM-WARNING (UNIVERSAL)	

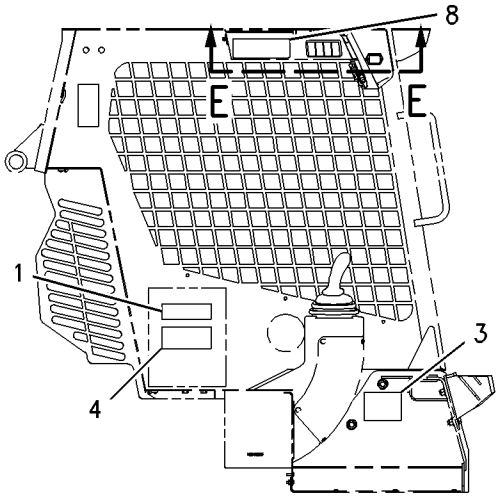

LEFT HAND CAB INTERIOR

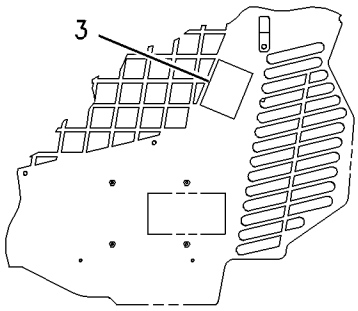

LEFT HAND CAB EXTERIOR

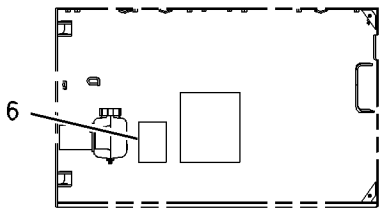

INSIDE ENGINE COMPARTMENT DOOR

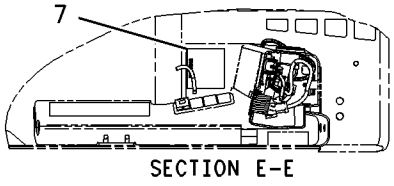

SECTION E-E

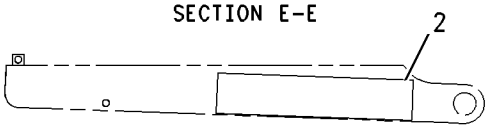

LIFT ARM BRACE

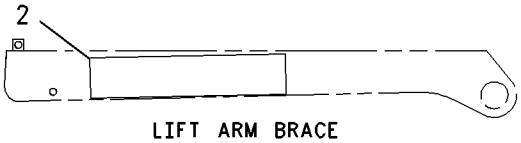

LIFT ARM BRACE

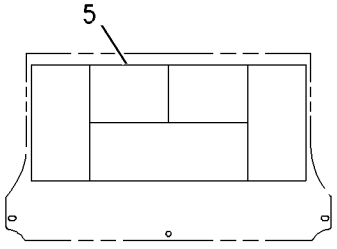

VERTICAL FLOOR PLATE

GRAPHIC #1 g00850594

SERVICE EQUIPMENT AND SUPPLIES

192-2697 PLATE & FILM GP

S/N: 5FZ6700-UP
HUNGARIAN
AN ATTACHMENT

SMCS-7405, 7557 **i01615027**

NOTE	REF NO	GRAPHIC REF	PART NUMBER	QTY	PART NAME 1 2 3 4 5 6 (PRODUCT LEVEL)	SEE PAGE
	1	1	**192-8953**	1	FILM-INSTRUCTION (OMM)	
	2	1	**197-3720**	1	FILM-WARNING (LIFT ARM BRACE)	
	3	1	**197-3723**	1	FILM-WARNING (CAB TILT SUPPPORT LEVER)	
	4	1	**192-9003**	1	FILM-WARNING (ENGINE START PROCEDURE)	
	5	1	**197-3724**	1	FILM-WARNING (WARNNG/DANGER COMBINATION)	
	6	1	**197-3727**	1	FILM-WARNING (BATTERY)	
	7	1	**193-2449**	1	FILM-WARNING (QUICK COUPLER)	
	8	1	**197-3726**	1	FILM-WARNING (UNIVERSAL)	

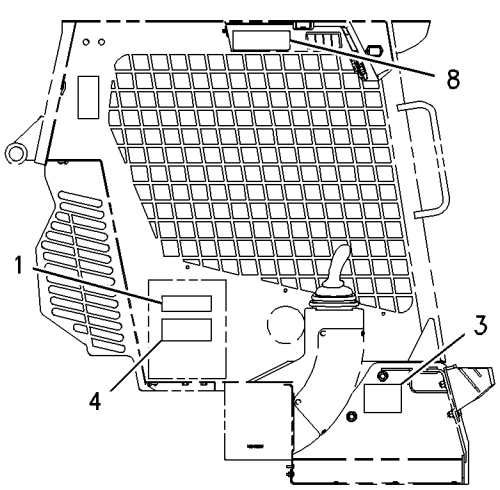

LEFT HAND CAB INTERIOR

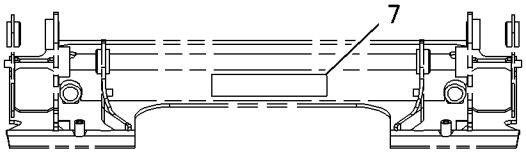

TOP OF QUICK COUPLER

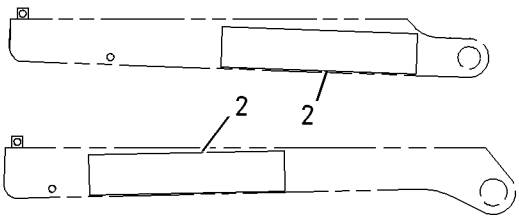

LIFT ARM BRACE

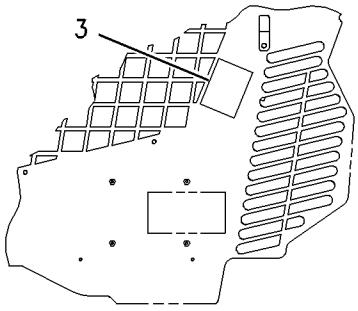

LEFT HAND CAB EXTERIOR

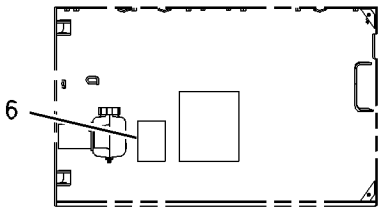

INSIDE ENGINE COMPARTMENT DOOR

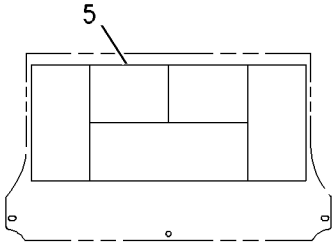

VERTICAL FLOOR PLATE

GRAPHIC #1 g00745869

SERVICE EQUIPMENT AND SUPPLIES

192-2697 PLATE & FILM GP

S/N: 4NZ3400-UP; 5FZ6700-UP
HUNGARIAN
AN ATTACHMENT

SMCS-7405, 7557 **i01693557**

NOTE	REF NO	GRAPHIC REF	PART NUMBER	QTY	PART NAME 1 2 3 4 5 6 (PRODUCT LEVEL)	SEE PAGE
	1	1	**192-8953**	1	FILM-INSTRUCTION (OMM)	
	2	1	**197-3720**	1	FILM-WARNING (LIFT ARM BRACE)	
	3	1	**197-3723**	1	FILM-WARNING (CAB TILT SUPPPORT LEVER)	
	4	1	**192-9003**	1	FILM-WARNING (ENGINE START PROCEDURE)	
	5	1	**197-3724**	1	FILM-WARNING (WARNNG/DANGER COMBINATION)	
	6	1	**197-3727**	1	FILM-WARNING (BATTERY)	
	7	1	**215-3924**	1	FILM-WARNING (QUICK COUPLER)	
	8	1	**197-3726**	1	FILM-WARNING (UNIVERSAL)	

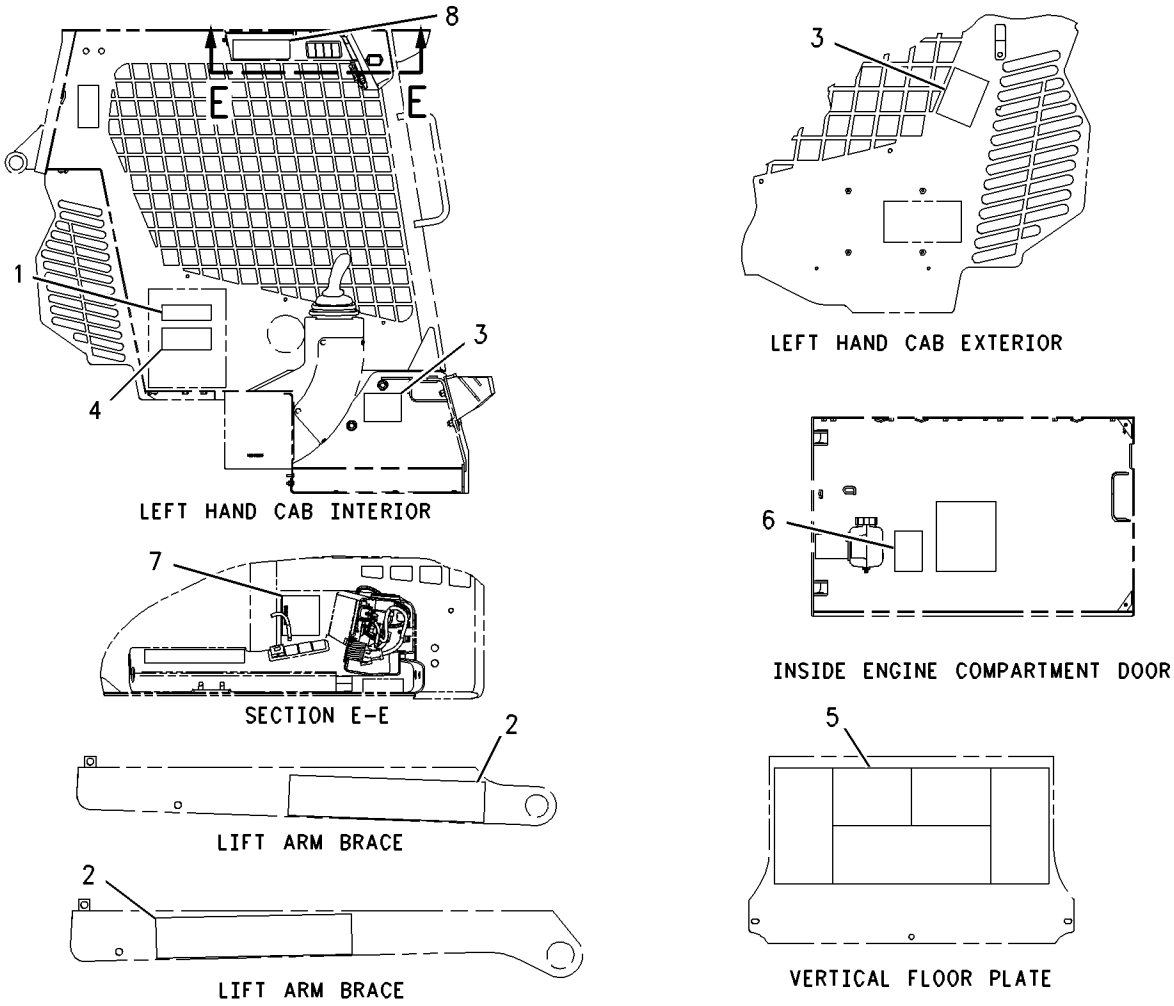

GRAPHIC #1 g00850594

SERVICE EQUIPMENT AND SUPPLIES

192-2698 PLATE & FILM GP

S/N: 4NZ4000; 5FZ6700
KOREAN
AN ATTACHMENT

SMCS-7405, 7557 **i01693573**

NOTE	REF NO	GRAPHIC REF	PART NUMBER	QTY	PART NAME 1 2 3 4 5 6 (PRODUCT LEVEL)	SEE PAGE
	1	1	**193-8927**	1	FILM-INSTRUCTION (OMM)	
	2	1	**193-8939**	1	FILM-WARNING (LIFT ARM BRACE)	
	3	1	**193-8915**	2	FILM-WARNING (CAB TILT SUPPORT LEVER)	
	4	1	**193-8942**	1	FILM-NOTICE (ENGINE START PROCEDURE)	
	5	1	**193-8930**	1	FILM-WARNING (WARNING/DANGER COMBINATION)	
	6	1	**193-8921**	1	FILM-WARNING (BATTERY)	
	7	1	**215-3923**	1	FILM-WARNING (QUICK COUPLER)	
	8	1	**193-8918**	1	FILM-WARNING (UNIVERSAL)	

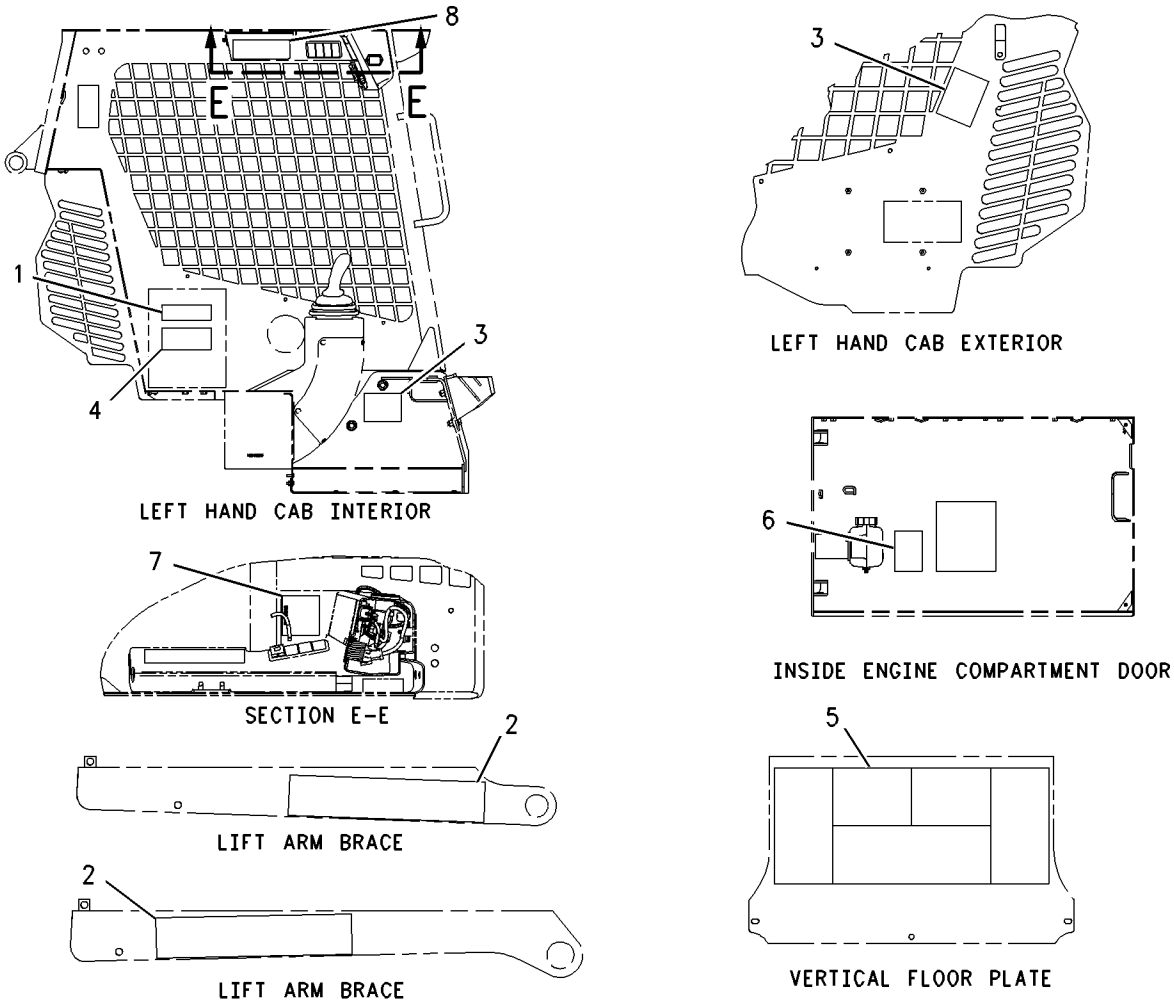

GRAPHIC #1 g00850594

SERVICE EQUIPMENT AND SUPPLIES

193-8365 PLATE & FILM GP

S/N: CAB1-UP; CMB1-UP
SPANISH
CANNOT BE USED WITH 191-9564—PAGE 610, 204-1359—PAGE 618, 204-1373—PAGE 619
AN ATTACHMENT

SMCS-7405, 7557 **i01666511**

NOTE	REF NO	GRAPHIC REF	PART NUMBER	QTY	PART NAME 1 2 3 4 5 6 (PRODUCT LEVEL)	SEE PAGE
	1	1	**176-1226**	1	FILM-INSTRUCTION (OMM)	
	2	1	**190-8107**	1	FILM-WARNING (LIFT ARM BRACE)	
	3	1	**163-9112**	2	FILM-WARNING (CAB TILT SUPPORT LEVER)	
	4	1	**176-1336**	1	FILM-NOTICE (ENGINE START PROCEDURE)	
	5	1	**176-1337**	1	FILM-WARNING (WARNING/DANGER COMBINATION)	
	6	1	**101-0569**	1	FILM-WARNING (BATTERY)	
	7	1	**215-3920**	1	FILM-WARNING (QUICK COUPLER)	
	8	1	**164-2346**	1	FILM-WARNING (UNIVERSAL)	

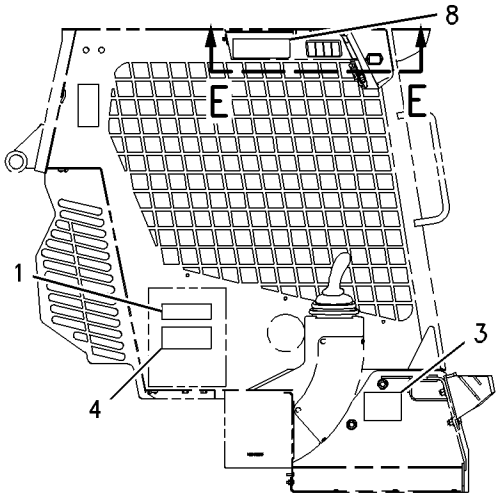

LEFT HAND CAB INTERIOR

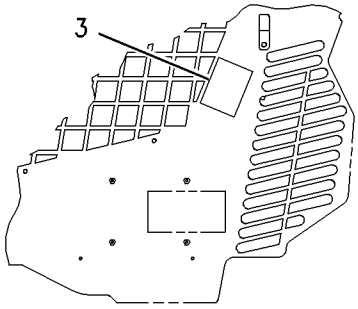

LEFT HAND CAB EXTERIOR

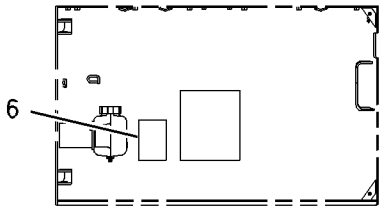

INSIDE ENGINE COMPARTMENT DOOR

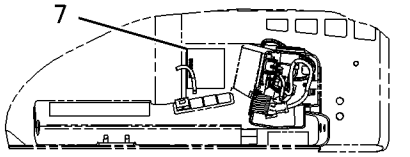

SECTION E-E

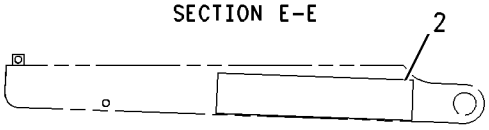

LIFT ARM BRACE

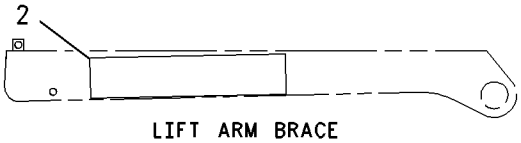

LIFT ARM BRACE

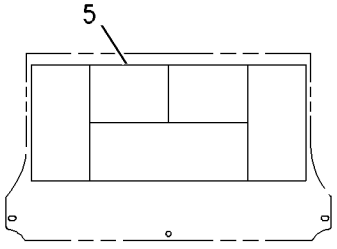

VERTICAL FLOOR PLATE

GRAPHIC #1 g00850594

MEMORANDA

SERVICE EQUIPMENT AND SUPPLIES

195-6765 PLATE & FILM GP

S/N: 4NZ3400-UP; 5FZ6700-UP
ENGLISH
PART OF 200-0800, 200-1000 COMMON AR

SMCS-7405, 7557 **i01492583**

NOTE	REF NO	GRAPHIC REF	PART NUMBER	QTY	PART NAME 1 2 3 4 5 6 (PRODUCT LEVEL)	SEE PAGE
	1	1	**105-3330**	1	FILM-WARNING (ACCUMULATOR PRESSURE)	
	2	1	**142-9126**	1	FILM-INSTRUCTION (SERVICE CHART)	
	3	1	**162-5233**	1	FILM-INSTRUCTION (WORK TOOL CONTROL RH)	
	4	1	**162-5234**	1	FILM-INSTRUCTION (MACHINE CONTROL LH)	
	5	1	**156-5762**	4	FILM (TIE DOWN)	
	6	1	**156-3849**	1	FILM-WARNING (RADIATOR)	
	7	1	**190-8108**	1	FILM (THROTTLE)	
	8	1	**190-8109**	1	FILM (RELAY)	
	9	1	**194-7790**	1	FILM-WARNING (COLD TEMPERATURE OPERATION)	

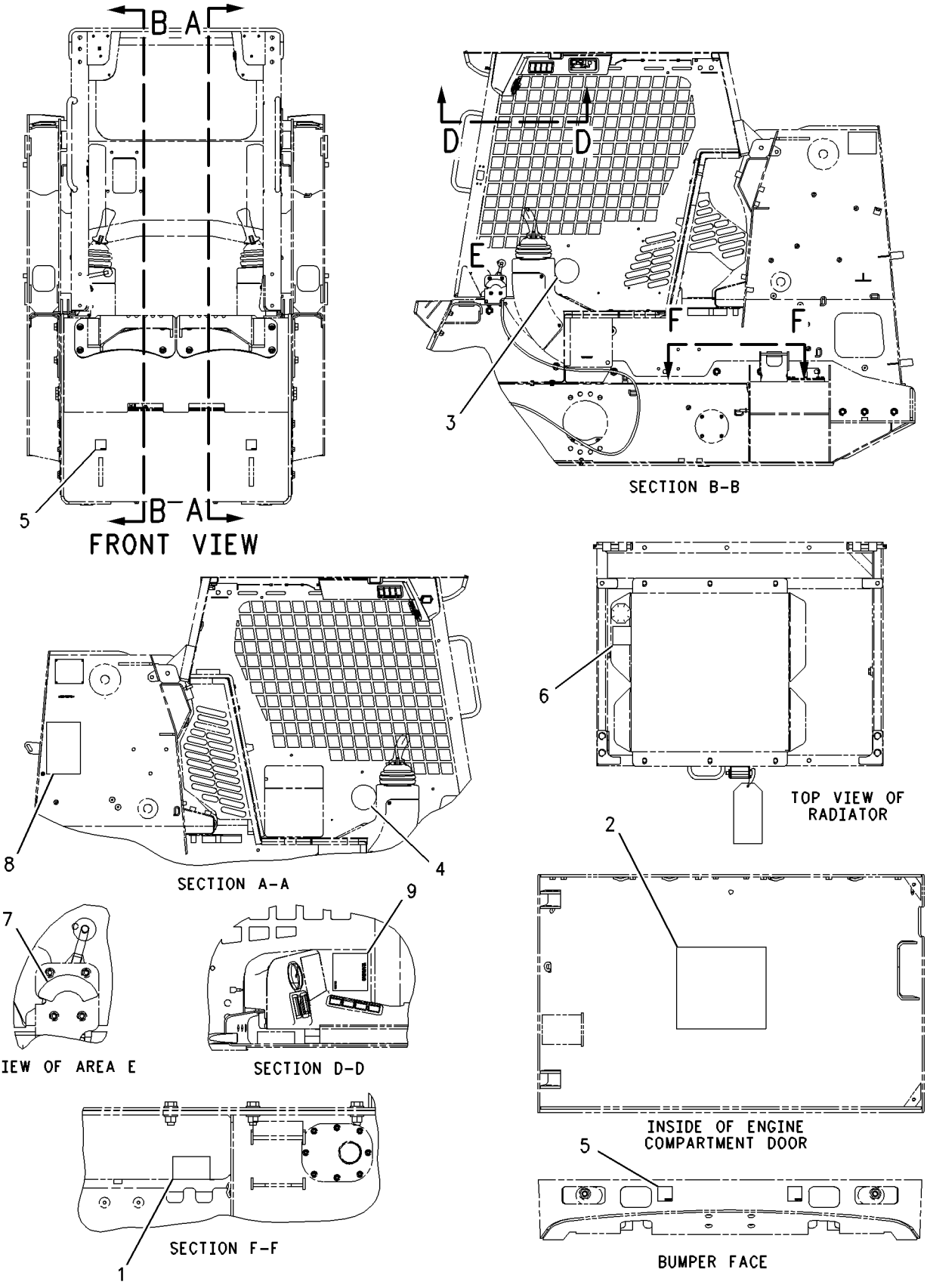

GRAPHIC #1

g00775163

204-1359 PLATE & FILM GP

S/N: CAB1-UP; CMB1-UP
FRENCH
CANNOT BE USED WITH 191-9564—PAGE 610, 193-8365—PAGE 614, 204-1373—PAGE 619
AN ATTACHMENT

SMCS-7405, 7557 **i01666528**

NOTE	REF NO	GRAPHIC REF	PART NUMBER	QTY	PART NAME 1 2 3 4 5 6 (PRODUCT LEVEL)	SEE PAGE
	1	1	**176-1225**	1	FILM-INSTRUCTION (OMM)	
	2	1	**204-1361**	1	FILM-WARNING (LIFT ARM BRACE)	
	3	1	**163-5050**	2	FILM-WARNING (CAB TILT SUPPORT LEVER)	
	4	1	**179-5631**	1	FILM-NOTICE (ENGINE START PROCEDURE)	
	5	1	**179-5651**	1	FILM-WARNING (WARNING/DANGER COMBINATION)	
	6	1	**101-0568**	1	FILM-WARNING (BATTERY)	
	7	1	**163-5051**	1	FILM-WARNING (QUICK COUPLER)	
	8	1	**163-5020**	1	FILM-WARNING (UNIVERSAL)	

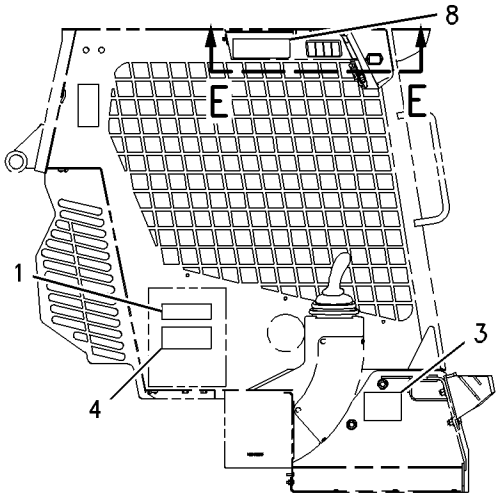

LEFT HAND CAB INTERIOR

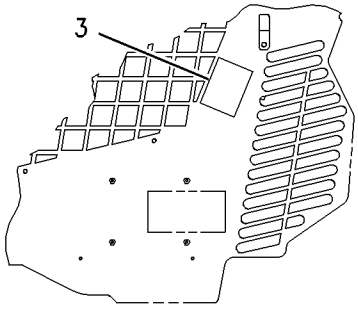

LEFT HAND CAB EXTERIOR

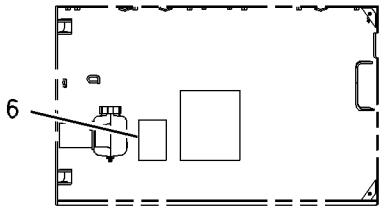

INSIDE ENGINE COMPARTMENT DOOR

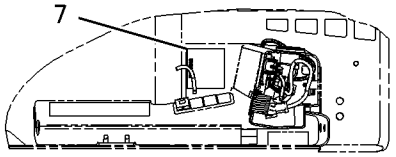

SECTION E-E

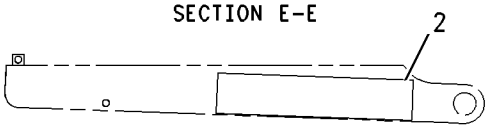

LIFT ARM BRACE

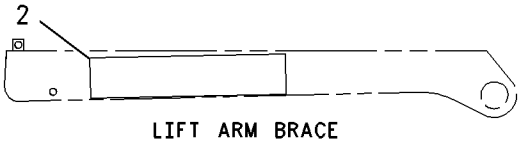

LIFT ARM BRACE

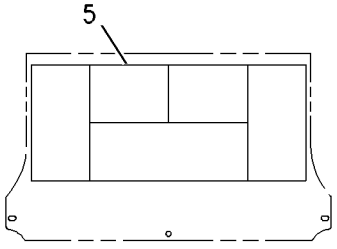

VERTICAL FLOOR PLATE

GRAPHIC #1 g00850594

SERVICE EQUIPMENT AND SUPPLIES

204-1373 PLATE & FILM GP

S/N: CMB1-UP; CSD1-UP
PORTUGUESE
CANNOT BE USED WITH 191-9564—PAGE 610, 193-8365—PAGE 614, 204-1359—PAGE 618
AN ATTACHMENT

SMCS-7405, 7557 **i01693608**

NOTE	REF NO	GRAPHIC REF	PART NUMBER	QTY	PART NAME 1 2 3 4 5 6 (PRODUCT LEVEL)	SEE PAGE
	1	1	**176-1228**	1	FILM-INSTRUCTION (OMM)	
	2	1	**204-1374**	1	FILM-WARNING (LIFT ARM BRACE)	
	3	1	**163-9113**	2	FILM-WARNING (CAB TILT SUPPORT LEVER)	
	4	1	**179-5632**	1	FILM-NOTICE (ENGINE START PROCEDURE)	
	5	1	**179-5653**	1	FILM-WARNING (WARNING/DANGER COMBINAITON)	
	6	1	**101-0570**	1	FILM-WARNING (BATTERY)	
	7	1	**215-3918**	1	FILM-WARNING (QUICK COUPLER)	
	8	1	**164-2347**	1	FILM-WARNING (UNIVERSAL)	

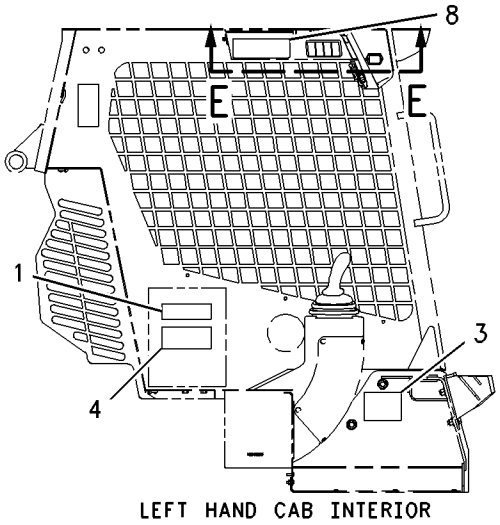

LEFT HAND CAB INTERIOR

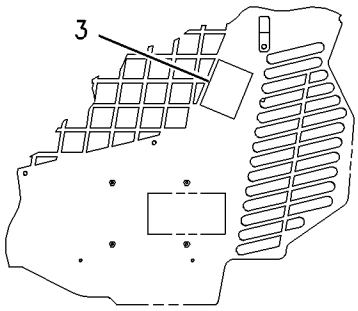

LEFT HAND CAB EXTERIOR

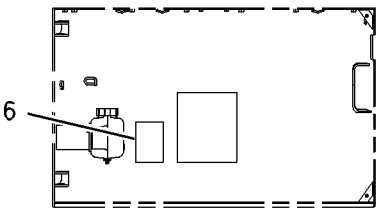

INSIDE ENGINE COMPARTMENT DOOR

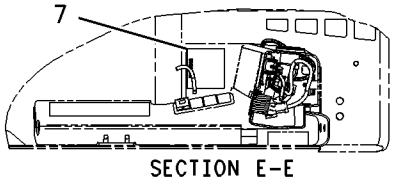

SECTION E-E

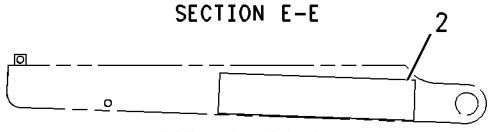

LIFT ARM BRACE

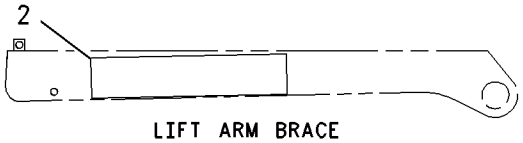

LIFT ARM BRACE

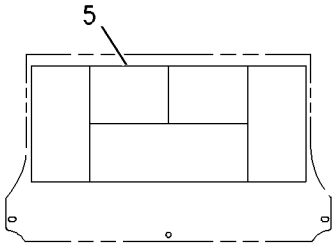

VERTICAL FLOOR PLATE

GRAPHIC #1 g00850594

222-5707 PLATE & FILM GP—GERMAN

S/N: CAB1-UP; CMB1-UP
SEE 163-5016 FOR FILM LOCATION
AN ATTACHMENT

SMCS-7405, 7557 **i01756800**

NOTE	PART NUMBER	QTY	PART NAME 1 2 3 4 5 6 (PRODUCT LEVEL)	SEE PAGE
	176-1229	1	FILM-INSTRUCTION (OMM)	
B	**223-4839**	1	FILM-WARNING (LIFT ARM BRACE)	
	163-9114	2	FILM-WARNING (CAB TILT SUPPORT LEVER)	
	179-5633	1	FILM-NOTICE (ENGINE START PROCEDURE)	
	179-5654	1	FILM-WARNING (WARNING/DANGER COMBINATION)	
	101-0571	1	FILM-WARNING (BATTERY)	
	215-3909	1	FILM-WARNING (QUICK COUPLER)	
	164-2348	1	FILM-WARNING (UNIVERSAL)	

B-USE AS REQUIRED

<END>

222-5708 PLATE & FILM GP—GREEK

S/N: CAB1-UP; CMB1-UP
SEE 163-5016 FOR FILM LOCATION
AN ATTACHMENT

SMCS-7405, 7557 **i01756878**

NOTE	PART NUMBER	QTY	PART NAME 1 2 3 4 5 6 (PRODUCT LEVEL)	SEE PAGE
	179-5862	1	FILM-INSTRUCTION (OMM)	
B	**223-4840**	1	FILM-WARNING (LIFT ARM BRACE)	
	163-9117	2	FILM-WARNING (CAB TILT SUPPORT LEVER)	
	179-5636	1	FILM-NOTICE (ENGINE START PROCEDURE)	
	179-5657	1	FILM (WARNING/DANGER COMBINATOIN)	
	101-0574	1	FILM-WARNING (BATTERY)	
	215-3910	1	FILM-WARNING (QUICK COUPLER)	
	164-2351	1	FILM-WARNING (UNIVERSAL)	

B-USE AS REQUIRED

<END>

SERVICE EQUIPMENT AND SUPPLIES

222-5710 PLATE & FILM GP—ICELANDIC

S/N: CAB1-UP; CMB1-UP
SEE 163-5016 FOR FILM LOCATION
AN ATTACHMENT

SMCS-7405, 7557 **i01757805**

NOTE	PART NUMBER	QTY	PART NAME 1 2 3 4 5 6 (PRODUCT LEVEL)	SEE PAGE
	179-5871	1	FILM-INSTRUCTION (OMM)	
B	**223-4843**	1	FILM-WARNING (LIFT ARM BRACE)	
	179-5917	2	FILM-WARNING (CAB TILT SUPPORT LEVER)	
	179-5645	1	FILM-WARNING (ENGINE START PROCEDURE)	
	179-5666	1	FILM-WARNING (WARNING/DANGER COMBINATION)	
	192-3520	1	FILM-WARNING (BATTERY)	
	215-3912	1	FILM-WARNING (QUICK COUPLER)	
	179-6577	1	FILM-WARNING (UNIVERSAL)	

B-USE AS REQUIRED

<END>

222-5711 PLATE & FILM GP—INDONESIAN

S/N: CAB1-UP; CMB1-UP
SEE 163-5016 FOR FILM LOCATON
AN ATTACHMENT

SMCS-7405, 7557 **i01757828**

NOTE	PART NUMBER	QTY	PART NAME 1 2 3 4 5 6 (PRODUCT LEVEL)	SEE PAGE
	179-5864	1	FILM-INSTRUCTION (OMM)	
B	**223-4845**	1	FILM-WARNING (LIFT ARM BRACE)	
	179-5915	2	FILM-WARNING (CAB TILT SUPPORT LEVER)	
	179-5638	1	FILM-WARNING (ENGINE START PROCEDURE)	
	179-5659	1	FILM-WARNING (WARNING/DANGER COMBINATION)	
	192-3517	1	FILM-WARNING (BATTERY)	
	215-3913	1	FILM-WARNING (QUICK COUPLER)	
	179-6578	1	FILM-WARNING (UNIVERSAL)	

B-USE AS REQUIRED

<END>

222-5712 PLATE & FILM GP—ITALIAN

S/N: CAB1-UP; CMB1-UP
SEE 163-5016 FOR FILM LOCATION
AN ATTACHMENT

SMCS-7405, 7557 **i01757835**

NOTE	PART NUMBER	QTY	PART NAME 1 2 3 4 5 6 (PRODUCT LEVEL)	SEE PAGE
	179-5860	1	FILM-INSTRUCTION (OMM)	
B	**223-4859**	1	FILM-WARNING (LIFT ARM BRACE)	
	163-9115	2	FILM-WARNING (CAB TILT SUPPORT LEVER)	
	179-5634	1	FILM-NOTICE (ENGINE START PROCEDURE)	
	179-5655	1	FILM-WARNING (WARNING/DANGER COMBINATION)	
	101-0572	1	FILM-WARNING (BATTERY)	
	215-3914	1	FILM-WARNING (QUICK COUPLER)	
	164-2349	1	FILM-WARNING (UNIVERSAL)	

B-USE AS REQUIRED

<END>

222-5714 PLATE & FILM GP—NORWEGIAN

S/N: CAB1-UP; CMB1-UP
SEE 163-5016 FOR FILM LOCATION
AN ATTACHMENT

SMCS-7405, 7557 **i01757842**

NOTE	PART NUMBER	QTY	PART NAME 1 2 3 4 5 6 (PRODUCT LEVEL)	SEE PAGE
	179-5872	1	FILM-INSTRUCTION (OMM)	
B	**223-4861**	1	FILM-WARNING (LIFT ARM BRAE)	
	163-9124	2	FILM-WARNING (CAB TILT SUPPORT LEVER)	
	179-5646	1	FILM-NOTICE (ENGINE START PROCEDURE)	
	179-5667	1	FILM-WARNING (WARNING/DANGER COMBINATION)	
	192-3518	1	FILM-WARNING (BATTERY)	
	215-3916	1	FILM-WARNING (QUICK COUPLER)	
	164-2359	1	FILM-WARNING (UNIVERSAL)	

B-USE AS REQUIRED

<END>

222-5715 PLATE & FILM GP—POLISH

S/N: CAB1-UP; CMB1-UP
SEE 163-5016 FOR FILM LOCATION
AN ATTACHMENT

SMCS-7405, 7557 **i01757861**

NOTE	PART NUMBER	QTY	PART NAME 1 2 3 4 5 6 (PRODUCT LEVEL)	SEE PAGE
	179-5858	1	FILM-INSTRUCTION (OMM)	
B	**223-4862**	1	FILM-WARNING (LIFT ARM BRACE)	
	179-5919	2	FILM-WARNING (CAB TILT SUPPORT LEVER)	
	179-5650	1	FILM-NOTICE (ENGINE START PROCEDURE)	
	179-5670	1	FILM-WARNING (WARNING/DANGER COMBINATION)	
	152-9784	1	FILM-WARNING (BATTERY)	
	215-3917	1	FILM-WARNING (QUICK COUPLER)	
	179-6579	1	FILM-WARNING (UNIVERAL)	

B-USE AS REQUIRED

<END>

222-5716 PLATE & FILM GP—RUSSIAN

S/N: CAB1-UP; CMB1-UP
SEE 163-5016 FOR FILM LOCATION
AN ATTACHMENT

SMCS-7405, 7557 **i01757874**

NOTE	PART NUMBER	QTY	PART NAME 1 2 3 4 5 6 (PRODUCT LEVEL)	SEE PAGE
	179-5868	1	FILM-INSTRUCTION (OMM)	
B	**223-4865**	1	FILM-WARNING (LIFT ARM BRACE)	
	163-9122	2	FILM-WARNING (CAB TILT SUPPORT LEVER)	
	179-5642	1	FILM-NOTICE (ENGINE START PROCEDURE)	
	179-5663	1	FILM-WARNING (WARNING/DANGER COMBINATION)	
	117-9667	1	FILM-WARNING (BATTERY)	
	215-3919	1	FILM-WARNING (QUICK COUPLER)	
	164-2357	1	FILM-WARNING (UNIVERSAL)	

B-USE AS REQUIRED

<END>

222-5719 PLATE & FILM GP–HUNGARIAN

S/N: CAB1-UP; CMB1-UP
SEE 163-5016 FOR FILM LOCATION
AN ATTACHMENT

SMCS-7405, 7557 **i01757953**

NOTE	PART NUMBER	QTY	PART NAME 1 2 3 4 5 6 (PRODUCT LEVEL)	SEE PAGE
	192-8953	1	FILM-INSTRUCTION (OMM)	
B	**223-4842**	1	FILM-WARNING (LIFT ARM BRACE)	
	197-3723	2	FILM-WARNING (CAB TILT SUPPPORT LEVER)	
	192-9003	1	FILM-WARNING (ENGINE START PROCEDURE)	
	197-3724	1	FILM-WARNING (WARNNG/DANGER COMBINATION)	
	197-3727	1	FILM-WARNING (BATTERY)	
	215-3924	1	FILM-WARNING (QUICK COUPLER)	
	197-3726	1	FILM-WARNING (UNIVERSAL)	

B-USE AS REQUIRED

<END>

PART NUMBER INDEX

Part	Page
0	
0T-0244	566
	569
	570
1	
1B-2714	389
1B-8735	18
1B-8736	61
1D-4677	573
1G-8878	214
1H-3244	157
1L-2279	490
	530
	546
	547
1M-6119	190
1M-6120	190
1N-3762	23
	100
1N-5999	230
1P-4278	82
	84
	86
	90
	92
	120
	122
	124
	126
1P-4578	350
	352
1P-7009	138
1Q-6031	78
1S-0994	316
	318
1S-7251	190
1S-9593	410
1W-8438	23
	181
2	
2B-0858	26
2G-8767	580
	586
2J-3507	419
	420
	421
	422
	423
	424
	425
2J-6540	324
2K-4973	264
	266
2L-8067	190
2M-9780	78
	220
	222
	224
	226
	316
	318
	320
	322
	324
	326
	327
	328
	329
	334
	336
	340
	354
	356
	360
2S-3440	350
	352
2S-5717	573
2S-6408	474
2V-3216	322
2W-8076	112
2Y-5974	270
	272
3	
3B-4516	419
	420
	421
	422
	423
	424
	425
3B-7255	490
	494
3B-8488	270
	414
	476
3B-8489	268
	300
	301
	304
	305
	306
	310
	311
	371
	412
	414
	426
	445
	446
	447
	448
	465
	466
3D-2824	78
	216
	218
	220
	222
	224
	226
	330
	332
	338
	340
	358
	360
	362
	364
3E-2310	342
	348
3E-3365	182
	184
3E-3371	378
	516
3E-3377	157
	387
	388
3E-3383	154
	286
3E-3389	198
	200
	202
	287
	288
3E-3892	576
	578
3E-4370	467
3E-6749	402
3E-7404	120
	122
	124
	126
	322
	334
	336
	338
	340
3E-7584	▶154
	166
	170
3E-8082	266
	510
	516
3E-8621	410
3E-9854	152
	153
3F-9556	556
3J-1907	182
	184
	206
	208
	214
	220
	222
	320
	334
	336
	338
	340
	342
	344
	346
	348
	350
	352
	372
	384
	580
	586
3J-7354	78
	224
	226
	230
	238
	240
	327
	328
	344
	346
3K-0360	216
	218
	224
	226
	284
	378
	379
3K-0715	238
	240
3S-2093	149
	163
	166
	170
	186
	190
	194
	195
	196
	198
	200
	202
	278
	490
	494
	498
	506
	510
	512
	516
	518
	520
	538
	540
	542
3S-6050	190
	195
3S-8536	412
3S-9182	270
	272
4	
4B-2043	526
4B-4281	14
4B-4863	186
	190
	334
	336
	338
	340
	594

▶ **PRIMARY REFERENCE**

PART NUMBER INDEX

Part	Page	Part	Page	Part	Page	Part	Page
4D-0298	270		453		454		124
4D-6988	122	5B-0935	268		498		126
	124	5C-2890	108		529		376
4D-8123	96		110		530		377
	97		157		532	5P-1517	30
4E-1384	497		158		534	5P-2230	220
4F-3654	459		278		548		222
	460		280		556		350
	461		281		559		352
	462		504		560	5P-2369	82
4H-2494	120		506		580		92
	126		510	5D-0718	330	5P-3422	30
4J-0522	350		512		331		31
	352		516		332	5P-4116	94
4J-5267	350		518	5D-1026	14		95
	352		520		30		101
4J-5477	78		529		220		104
	196		530		222		108
	224		532	5G-3244	154		110
	226		540	5G-8871	500		136
	327		542	5G-9495	31		138
	328		575	5H-9743	412		140
	342		580	5K-1787	210		141
	344	5C-7261	95		212		264
	346		108	5K-9090	222		266
	348		110		224		270
4J-7533	78		186	5L-3834	136		376
	327		198	5L-4759	389		377
	328		200	5P-0372	264	5P-4868	96
4K-0367	459		202		266		97
	460		206		506	5P-4961	31
	461		208		510		120
	462		264		512		122
4K-8864	82		266		516		124
	84		316		540		126
	86		318		542		376
	90		483		572		377
	92		490	5P-0597	96	5P-5927	527
	327		497		120	5P-6442	120
	328		506		122		122
4M-5285	301		510		124		124
	412		512		126		126
	414		516		350	5P-7464	364
4M-6582	536		540		352	5P-7465	364
4P-7581	163		542	5P-0743	220	5P-7483	580
	186		556		222		586
	194		564	5P-0747	195	5P-7814	122
	550		565	5P-0761	190		124
4P-8134	136	5C-7883	230	5P-1076	47	5P-7957	544
	179	5C-8310	518		261	5P-8246	490
	186		520		262		494
	190		580		270	5P-8250	419
	194		584		272		420
4S-1962	326		586		474		421
	329	5C-8311	518	5P-1420	31		422
	530		520		82		423
4V-5091	518		580		84		424
	520		584		86		425
4W-8063	73		586		90	5P-8309	264
		5C-8312	186		92	5P-9770	122
5			594		122		124
		5C-9553	186		124	5T-7869	573
			190	5P-1442	31	5T-7870	573
5B-0651	414		270		120	5V-8309	264
	452		272		122		266

PART NUMBER INDEX

Part	Page
5Y-0974	518
	520
6	
6D-1641	328
	530
	546
	547
6D-4247	316
	318
6D-5797	576
	578
6D-6812	580
	586
6E-2746	394
6E-3008	406
	407
	409
6E-4793	394
6E-4816	394
	396
6E-5060	238
	240
6E-6549	566
	569
	570
6F-0711	149
6I-0217	38
	52
6I-0254	38
6I-0289	52
6I-0291	13
	38
	64
	73
	130
6I-0293	100
6I-0364	50
6I-0423	35
6I-0454	46
6I-0512	38
6I-0572	130
6I-0594	13
6I-0631	35
	73
	118
	130
6I-0654	112
6I-0839	38
6I-0840	130
6I-0846	177
6I-1064	52
6I-1200	66
6I-1418	186
	190
6I-1497	52
6I-4037	38
6I-4079	52
6I-4374	38
6I-4709	100
6N-2944	30
	220
	222
6R-7490	526
6V-0394	78
	327
	328
6V-0852	220
	222
	344
	346
	350
	352
6V-1178	561
	563
6V-1363	96
	97
6V-1391	500
	548
6V-1392	584
6V-3965	220
	222
	344
	346
	350
	352
6V-4270	506
	510
	512
	516
6V-5192	236
6V-5326	238
	240
6V-5586	238
	240
6V-5698	334
	336
	338
	340
	556
6V-7238	224
	226
6V-7357	184
	278
	560
6V-7359	364
6V-7420	224
	226
6V-7636	518
	520
6V-7687	228
	229
6V-7744	452
	453
6V-8185	518
	520
6V-8186	556
6V-8202	384
6V-8352	238
	240
6V-8378	190
6V-8397	206
	208
	220
	222
	316
	318
	320
	322
	324
	334
	336
	338
	340
	342
	348
	384
6V-8398	206
	208
	216
	218
	224
	226
	309
	334
	336
	338
	340
	344
	346
	354
	356
	358
	360
6V-8626	78
	327
	328
	336
	340
	356
	360
6V-8628	344
	346
6V-8635	224
6V-8636	206
	208
	334
	336
	338
	340
	384
6V-8637	220
	222
	224
	226
	330
	332
6V-8639	216
	218
	224
	226
6V-8640	220
	222
6V-8641	342
	344
	346
	348
6V-8642	326
	329
	334
	336
	340
	354
	356
6V-8647	224
	226
	327
	328
	338
	340
	342
6V-8713	216
	218
	338
	340
	358
	360
	362
	364
6V-8714	222
6V-8715	316
	318
	320
	322
	324
6V-8724	206
	208
	320
	334
	336
6V-8781	206
	208
	342
	348
6V-8782	224
	226
6V-8788	316
	318
6V-8801	580
	586
6V-8918	233
	236
6V-8949	481
	482
6V-9000	78
6V-9007	78
6V-9170	362
	364
6V-9178	389
6V-9182	350
	352
6V-9189	152
	153
	301
	302
	371
	412
	417
	426
	445
	446
	447
	448
	465
	466
	476
6V-9632	120
	266
	270

► **PRIMARY REFERENCE**

PART NUMBER INDEX

Part	Page
	289
	291
	292
	293
	294
	295
	296
	297
	298
	299
	559
	560
6V-9672	594
6V-9746	78
	220
	222
	224
	226
	330
	331
	332
	350
	352
6V-9805	550
6V-9873	344
	346
6W-5698	378
	379
7	
7C-6921	136
7C-9465	138
7D-5473	190
7D-8431	498
7E-2700	274
	275
	276
	277
7F-9223	264
	266
7G-1060	186
	194
	195
7G-7053	186
	498
	529
	530
	532
7G-8839	210
	212
7J-0204	230
7J-9108	78
	216
	218
	326
	327
	328
	329
	334
	336
	338
	340
	354
	356
	358
	360
	362
	364
7K-1181	398
	494
7M-7410	72
	78
	80
7M-8485	224
	350
	352
	378
7M-9957	594
7N-5274	195
7S-3912	324
7S-3913	324
7S-3916	322
7S-3919	322
7T-1099	266
	270
	272
	510
	516
	548
	551
7T-4848	166
	170
7W-1238	181
7W-2327	66
7W-2501	26
7W-2632	52
7W-4724	38
7X-0495	490
	494
7X-0579	136
	186
	191
	289
	290
	291
	292
	293
	294
	295
	296
	297
	298
	299
	559
	560
7X-0590	258
	414
7X-0603	417
7X-0610	210
	212
7X-0818	191
	364
7X-2444	196
7X-2475	48
	418
	550
7X-2534	354
	356
	358
	360
	362
7X-2535	388
7X-2537	138
7X-2552	561
	563
7X-2553	268
	527
7X-2556	47
	48
	550
7X-2621	194
	453
7X-6312	150
7X-6315	144
	146
	176
7X-7729	78
	80
	82
	84
	86
	90
	92
	264
	266
	268
	300
	326
	329
	330
	331
	332
	412
	414
	453
7X-8549	214
7X-8831	198
	200
	202
7X-9065	526
8	
8C-3205	350
	352
8C-3334	195
8C-3445	30
	31
8C-3451	214
8C-3756	536
8C-5748	152
	153
8C-6354	190
8C-6802	108
	110
8C-7588	595
	610
8C-8558	191
8C-8778	272
8D-9671	504
8F-1434	190
8F-6302	389
8F-8151	530
	546
	547
8F-8513	120
	122
	124
	126
8I-5078	392
	394
	396
	400
8L-2779	406
	407
	409
8L-8413	190
	285
	287
	288
8M-4963	190
8N-0869	190
8N-1725	190
8N-3504	138
8S-0934	566
	567
	568
	569
	570
8S-3020	195
8S-4711	389
8S-9093	419
	420
	421
	422
	423
	424
	425
8T-0075	220
	222
8T-0087	158
8T-0154	530
	546
	547
8T-0255	198
	202
8T-0267	238
	240
8T-0269	289
	290
	291
	292
	293
	294
	295
	296
	297
	298
	299
8T-0318	264
	266
8T-0328	190
8T-0389	154
8T-0404	218
8T-0737	490
	494
8T-1158	384

► **PRIMARY REFERENCE**

PART NUMBER INDEX

Part	Page
	398
	405
8T-1887	166
	170
8T-1888	166
	170
8T-1893	324
8T-1894	324
8T-2444	264
	506
	510
	512
	516
	518
	520
	540
	542
8T-2895	500
8T-3311	344
	346
8T-3490	138
	270
8T-3612	138
	266
	270
	510
	516
	551
	563
8T-3647	206
	208
	412
8T-3848	506
	510
	512
	516
	540
	542
8T-3984	108
	110
8T-4121	78
	80
	82
	84
	86
	90
	92
	101
	102
	103
	104
	120
	122
	124
	126
	136
	138
	178
	179
	180
	186
	191
	194
	198
	213
	216
	232
	233
	236
	237
	264
	266
	270
	272
	274
	275
	320
	322
	324
	328
	334
	336
	338
	340
	344
	346
	350
	352
	354
	356
	358
	360
	366
	367
	380
	381
	382
	383
	385
	386
	412
	414
	453
	481
	482
	487
	488
	490
	494
	497
	504
	506
	510
	512
	516
	530
	537
	538
	540
	542
	546
	547
	548
	580
	586
8T-4122	47
	48
	122
	124
	210
	212
	252
	268
	270
	272
	274
	275
	276
	277
	418
	490
	494
	527
	550
	561
	563
8T-4123	479
	480
8T-4132	47
	48
	252
	270
	272
	274
	275
	276
	277
	418
	490
	494
	527
	561
	563
8T-4133	78
	80
	82
	84
	86
	90
	92
	101
	102
	103
	104
	120
	122
	124
	126
	136
	138
	179
	180
	186
	191
	194
	264
	266
	320
	326
	332
	344
	346
	414
	487
	488
	494
8T-4136	82
	92
	270
	272
	322
	328
	334
	336
	338
	340
	354
	356
	358
	360
	380
	381
	382
	383
	385
	386
	412
	488
	494
	504
	530
	546
	547
	548
8T-4137	82
	84
	86
	90
	92
	213
	216
	264
	266
	268
	274
	275
	300
	324
	381
	383
	482
	490
	537
8T-4138	108
	110
	120
	122
	124
	126

► **PRIMARY REFERENCE**

PART NUMBER INDEX

Part	Page
	278
	301
	584
8T-4139	47
	364
	474
	483
8T-4140	458
8T-4159	264
	266
8T-4171	256
	272
	322
	594
8T-4172	453
8T-4177	220
	222
	417
8T-4178	452
8T-4180	518
	520
8T-4181	264
	266
8T-4185	320
8T-4186	178
	414
	481
	482
	538
8T-4189	136
	138
	140
	141
	206
	216
	259
	260
	364
	412
8T-4191	198
	412
	414
	490
8T-4192	47
	48
8T-4194	364
	414
	486
8T-4195	102
	103
	232
	237
	320
	329
	330
	331
	344
	346
	350
	414
	487
8T-4196	78
	80
	82
	84
	86
	90
	92
	120
	122
	124
	126
	232
	233
	236
	237
	350
	352
	366
	367
	453
8T-4197	556
8T-4199	417
8T-4200	136
	138
	191
	376
	377
8T-4205	108
	110
	163
	184
	186
	191
	256
	264
	266
	270
	272
	278
	280
	281
	289
	290
	291
	292
	293
	294
	295
	296
	297
	298
	299
	388
	490
	494
	498
	504
	506
	510
	512
	516
	518
	520
	529
	530
	532
	534
	540
	542
	548
	550
	556
	559
	560
	575
	580
	584
	594
8T-4223	47
	48
	228
	229
	259
	260
	364
	373
	374
	474
	483
	486
	566
	567
	568
	569
	570
8T-4224	70
	71
	78
	82
	84
	86
	90
	92
	136
	152
	153
	191
	194
	198
	200
	202
	206
	208
	216
	220
	222
	259
	260
	264
	272
	364
	366
	367
	387
	412
	414
	417
	483
	490
	498
	506
	510
	512
	516
	518
	520
	540
	542
	561
	563
	564
	565
8T-4226	414
8T-4244	261
	262
	270
	272
	364
	474
	483
	486
8T-4648	259
	260
8T-4742	557
	558
8T-4744	557
	558
8T-4778	427
	429
	430
	435
	437
	449
	450
	455
	456
	457
	458
	496
	550
8T-4779	490
	494
8T-4908	70
	71
	94
	101
	104
	108
	110
	138
	194
	198
	200
	202
	264
	266
	270
	272
	289
	290
	291
	292
	293
	294
	295
	296
	297
	298
	299

► **PRIMARY REFERENCE**

PART NUMBER INDEX

Part	Page	Part	Page	Part	Page	Part	Page
	483	8T-6902	556		286		153
	490	8T-6912	140		387	9W-3324	154
	559		476		388	9W-3326	157
	560	8T-7338	252	9G-5127	270	9W-6226	47
	561		270	9N-1756	402	9W-8096	47
	563		272		408	9X-1046	186
	565	8T-7547	78	9P-0719	552		504
8T-4910	261		138	9P-4609	498		522
	262		366	9R-1004	216	9X-1813	182
	474		367		218		498
8T-4956	270	8T-7852	96	9R-1005	216	9X-2026	301
	272		97		218		454
	373	8T-7930	258		354	9X-2038	120
	374	8T-8192	320		356		122
8T-4970	270	8T-8193	320		358		124
8T-4971	558	8T-8729	154		360		126
8T-4983	82		182		364	9X-2041	506
	84		184	9R-1499	163		510
	86		285		278		512
	92		387	9R-2004	322		516
8T-4986	90		388		324		540
8T-5004	264		403	9R-2672	270		542
	266	8T-8737	154		272	9X-2042	186
8T-5005	82		166	9R-2959	426		498
	84		186		471		518
	86		191		481		520
	90		195	9R-5271	270		544
	92		198		272		573
	154		200	9R-5301	484	9X-2044	504
	264		202	9R-7802	354	9X-2045	136
	266		287		356		503
8T-5041	47		288		358		504
8T-5049	373	8T-9087	272		360		506
	374	8T-9381	567		364		510
8T-5091	82		568	9R-7803	354		512
	84	8T-9405	398		356		516
	86		403		358		518
	90	8T-9407	580		360		520
	92		586		364		530
8T-5413	270	8T-9655	186	9R-7941	186		540
8T-5461	518		190	9R-7942	160		542
	520	8W-8909	166	9R-7958	160		574
8T-6466	82		170	9S-0285	498		575
	84	8Y-4489	445	9S-4191	372		583
	86		446	9S-8002	230		584
	90		466		238	9X-2092	186
	92	8Y-7385	474		240		530
8T-6685	138	8Y-7386	474	9T-0546	394		544
8T-6842	518				396		546
	520			9T-0553	394		547
	580	**9**			396	9X-2754	588
	584			9T-7266	406		590
	586	9B-7233	526		407		592
8T-6869	301	9C-5344	540		409		593
	302		542	9T-7634	389	9X-4244	154
	371		572		▶390	9X-5408	141
	387	9D-1829	344	9U-6993	220	9X-6016	576
	426		346	9U-6994	220		578
	445	9D-8508	162		350	9X-6165	186
	446		164		352		559
	447	9F-2247	23	9U-6995	224		560
	448	9G-3695	198		226	9X-6273	316
	465		200	9V-2714	418		318
	466		202	9V-2715	418	9X-6274	301
8T-6870	364		285	9W-0607	152		316

▶ **PRIMARY REFERENCE**

PART NUMBER INDEX

Part	Page
	318
9X-6606	238
	240
9X-6772	150
	151
9X-8118	160
9X-8121	160
9X-8139	160
9X-8257	484
9X-8372	518
	520
9X-8699	534
9X-9865	154
9Y-5015	23
	26
0	
003-2143	490
	494
003-3082	392
	394
	396
	400
004-6810	530
	546
	547
032-8047	112
032-8062	64
032-8100	112
	120
	122
	124
	126
032-8139	33
033-5853	230
033-5879	402
	408
033-6027	389
	390
	408
033-6028	406
	407
	409
033-7849	112
	120
	122
	124
	126
035-8014	112
036-1865	80
039-5069	408
039-5070	408
039-8557	482
064-3843	300
067-2551	490
067-6006	14
	23
067-6007	23
	181
067-6045	183
067-6268	117
067-6269	117
067-6366	51
067-6998	112
	130
067-6999	112
	130
067-9509	23
069-1124	23
	60
069-4080	78
	80
084-4277	526
084-4348	157
	158
087-1031	368
	369
	370
095-0707	452
095-0912	490
	494
095-1207	404
095-1325	540
	542
	572
096-0194	236
096-6166	96
	97
099-2374	378
	379
099-4691	210
	212
1	
100-3246	154
100-3247	154
100-3248	154
100-3250	154
100-3251	154
100-3253	154
100-3254	154
100-3255	154
100-3751	38
100-3753	73
100-3866	210
	212
100-4458	44
100-4463	13
100-4841	11
100-4845	118
100-7530	206
	208
101-0568	600
	618
101-0569	596
	614
101-0570	605
	619
101-0571	601
	620
101-0572	603
	622
101-0573	599
101-0574	601
	620
101-0575	599
101-0576	598
101-0577	607
101-2867	136
101-3129	218
	332
101-3675	14
101-3691	38
101-3739	114
101-3740	114
101-3741	114
101-3742	114
101-3743	114
101-3771	52
101-3805	38
101-3906	112
101-3907	112
101-4486	256
101-4744	256
101-7399	136
102-1957	35
102-6496	31
102-8801	174
	190
102-8802	166
	170
	182
	184
	190
	270
	398
	403
	410
	538
102-8803	166
	186
	196
	378
	379
	502
	506
	510
	512
	516
102-8804	156
	157
	158
	166
	170
	186
	190
	272
	278
	387
	388
	549
102-8805	154
	166
	170
	186
	190
	285
	286
	552
102-8806	186
	190
	198
	200
	202
	287
	288
	494
102-8809	190
103-2006	502
	525
	552
103-2543	145
103-5687	13
103-6262	498
104-5957	518
	520
	584
105-2423	112
105-3330	608
	616
105-3479	136
105-3542	198
	200
	202
106-4159	136
106-6248	394
107-7491	390
108-0656	518
	520
	584
108-2953	▶159
	256
108-5471	518
	520
109-2355	518
	520
	534
109-2356	552
109-9828	518
	520
110-0885	264
	266
110-2023	270
110-2570	31
110-8760	198
	202
	289
	290
	291
	292
	293
	294
	295
	296
	297
	298
	299
111-0483	270
	433
	434
	435
	449
	450
	452
111-4627	186
	490

▶ **PRIMARY REFERENCE**

PART NUMBER INDEX

Part	Page
	494
111-7899	198
	200
	202
	312
	313
	518
	520
	534
	552
	555
111-8222	112
112-2370	38
112-9401	116
112-9717	94
	95
113-7634	256
113-8490	184
	186
	537
113-8491	186
	198
	200
	202
113-8492	529
	530
	532
114-4363	52
114-4519	534
115-1615	190
	196
	534
115-3073	194
	195
116-2001	▶489
	490
	494
116-4415	354
	356
	358
	360
	362
116-4808	120
	126
116-7471	145
117-3789	145
117-7756	232
	237
117-8683	289
	290
	291
	292
	293
	294
	295
	296
	297
	298
	299
117-9667	606
	623
118-8118	114
	116
	135
118-8119	116
	135
118-9145	23
	66
119-1414	489
119-1415	489
119-3859	490
	494
119-4594	414
120-0210	588
	590
	592
	593
120-4897	146
	176
121-3221	112
121-4480	116
	135
121-7034	112
122-1135	410
123-0275	96
	97
123-2341	402
123-2899	68
	69
123-4750	342
	348
124-2831	272
124-3243	506
	512
	518
	520
	540
	542
124-3533	130
124-3815	38
	73
124-6264	82
	84
	86
	90
	92
125-3518	506
	510
	512
	516
	540
	542
126-5027	78
127-2170	506
	510
	512
	516
	518
	520
	540
	542
127-2836	73
127-6316	392
	394
	396
	400
127-8167	112
127-8609	151
128-4249	186
	190
128-6985	▶160
	173
	255
128-7037	282
	283
	561
	584
128-8583	600
128-8614	116
129-1854	255
	256
129-1855	255
	256
129-3178	490
	494
	556
	558
129-3180	47
129-6259	115
129-6262	115
130-1676	406
	407
	409
130-1841	118
130-1916	498
130-3156	122
	124
130-7092	120
	126
	▶135
131-1812	135
131-3540	518
	520
131-3543	280
	281
131-5879	452
	453
132-3056	378
	379
132-4720	429
	496
132-5166	548
132-7551	452
	453
133-5512	40
	118
133-6517	150
	151
134-4126	144
	146
	176
134-8726	94
	95
135-2655	238
	240
135-9383	427
135-9384	428
	430
	432
	438
	450
	▶455
135-9385	431
	432
	435
	439
	▶456
135-9386	425
	437
	449
	▶457
135-9393	427
135-9394	430
	450
	455
135-9395	435
	456
135-9396	437
	449
	457
136-1953	530
	546
	547
136-2151	604
136-8727	▶419
136-8728	▶420
136-8729	▶421
136-8734	419
136-8735	420
136-8736	421
136-9164	51
137-6390	118
137-6391	5
	▶58
138-2219	7
	▶178
138-3096	112
	▶114
138-4883	518
	520
138-7162	36
138-7402	36
138-7446	34
139-5511	42
140-2331	94
	95
140-2334	94
	95
140-2349	102
	103
140-8713	130
140-8714	130
140-8718	130
140-8760	599
141-4797	602
141-4999	429
	431
	439
	▶496
141-5453	48
141-7562	233
	236
141-7633	518
	520
141-7634	518
	520
141-7763	206
	208
142-2928	498
142-7480	243

▶ **PRIMARY REFERENCE**

PART NUMBER INDEX

Part	Page
142-7481	242
	243
142-7483	243
142-7484	244
142-7485	244
	247
	248
	250
142-7486	243
	244
142-7487	244
142-7488	242
	244
142-7489	243
142-7490	242
	243
	246
	248
	250
142-7491	242
142-7493	242
	243
	244
	245
	246
	247
	248
	249
	250
	251
142-7495	▶242
142-7496	▶140
142-7503	▶158
	163
142-7505	274
	275
	490
142-7508	292
142-7509	334
	336
	338
	340
142-7513	190
142-7517	194
	195
142-8632	555
142-8633	198
	200
	202
142-8634	▶157
	166
	170
142-8637	▶152
	162
142-8640	190
142-8646	▶242
142-8648	▶242
142-8649	▶243
142-8650	161
	▶162
142-8652	161
	▶163
142-8653	▶173
142-8656	▶184
142-8665	▶243
142-8666	▶244
142-8667	▶244
142-8672	312
	▶334
142-8673	312
	▶354
142-8674	312
	▶336
142-8675	312
	▶356
142-8714	▶372
142-8716	▶312
142-8717	▶312
142-8719	232
	233
	236
	237
142-8720	228
	229
	▶230
142-8721	228
142-8723	204
142-8724	204
142-8725	210
	212
142-8726	242
142-8727	242
142-8729	204
142-8732	210
	212
142-8734	210
142-8738	242
142-8741	▶228
	234
	235
142-8746	220
	222
142-8747	336
142-8750	▶232
	235
142-8757	210
142-8758	▶204
	210
	212
142-8759	242
	245
	247
	249
	251
142-8760	▶210
	234
	235
142-8776	452
142-8779	452
142-8780	253
	254
	▶452
142-8783	452
142-8784	452
142-8786	452
142-8787	452
142-8789	412
142-8790	412
142-8791	412
	414
142-8792	412
142-8793	412
	414
142-8794	412
142-8799	2
	▶412
142-8801	264
	266
142-8802	264
	266
142-8803	1
	2
	▶264
	▶266
142-8804	264
	266
142-8805	412
	414
	447
	448
142-8808	412
142-8810	270
	272
142-8812	264
	266
142-8813	264
	266
142-8814	264
142-8816	102
	106
142-8817	120
	122
142-8818	102
	104
	105
	106
142-8821	2
	▶120
142-8823	270
	272
142-8824	270
	272
142-8826	274
	276
142-8827	120
	122
	124
	126
142-8828	120
	122
	124
	126
142-8830	4
	▶258
142-8831	264
	266
142-8832	264
	266
	412
	414
142-8833	194
	538
142-8837	334
	336
	338
	340
142-8838	334
	336
	338
	340
142-8849	97
142-8850	8
	9
	10
	▶47
142-8853	47
142-8854	47
	48
142-8857	7
	8
	▶94
142-8858	525
142-8859	8
	▶86
142-8860	▶78
	86
142-8861	78
	80
142-8862	78
142-8863	78
142-8864	▶70
	78
142-8865	70
142-8866	82
	84
	86
	90
	92
142-8867	84
	86
	90
142-8868	84
	86
	90
142-8870	70
142-8880	412
142-8881	412
142-8896	270
	272
142-8897	272
142-8901	334
142-8902	334
	336
142-8903	354
142-8904	354
142-8912	334
	336
142-8927	378
142-8928	378
142-8929	378
142-8937	378
142-8939	377
	▶378
142-8942	378
142-8960	▶307
	412
142-8961	▶308

▶ **PRIMARY REFERENCE**

PART NUMBER INDEX

Part	Page
	412
142-8962	307
	308
142-8963	310
	311
142-8969	78
142-8971	328
142-8973	218
142-8976	330
	331
142-8977	224
	226
142-8978	331
142-8979	331
142-8980	▶213
	312
	314
	315
142-8992	350
142-8997	334
	336
	338
	340
142-8998	354
	356
	358
	360
	362
142-9021	252
142-9025	242
142-9027	242
142-9031	242
142-9036	210
	212
142-9054	356
142-9055	356
142-9081	452
142-9108	8
	9
	10
	▶136
	538
142-9109	136
142-9110	253
	254
	▶274
142-9113	145
142-9116	312
	313
142-9118	▶502
	552
142-9121	▶244
142-9122	244
142-9123	244
142-9126	616
142-9127	506
	510
	512
	516
	540
	542
142-9128	518
	520
142-9184	198
142-9216	342
	348
142-9220	342
	348
142-9222	334
142-9234	354
	356
	358
	360
142-9268	504
142-9269	▶503
	529
	532
142-9270	503
	504
142-9271	503
	530
142-9272	504
142-9273	522
142-9274	▶504
	538
142-9275	504
142-9276	497
	▶498
142-9278	498
142-9279	498
142-9285	506
	510
	512
	516
	540
	542
142-9287	498
142-9288	497
142-9289	529
	530
	532
	▶534
142-9290	523
142-9291	523
142-9303	▶566
142-9304	564
	▶571
142-9305	▶564
142-9306	▶567
142-9307	▶568
142-9308	▶569
142-9309	565
142-9310	▶565
142-9311	▶528
142-9314	584
142-9316	584
142-9317	584
142-9318	506
	510
	512
142-9319	580
	584
	586
142-9320	552
142-9325	552
142-9326	164
142-9327	173
142-9328	552
142-9329	555
142-9330	▶529
142-9331	555
142-9333	198
	200
142-9334	1
	2
	▶550
142-9339	518
	520
142-9340	506
	510
	▶518
	540
142-9341	518
	520
142-9342	518
142-9346	565
142-9348	506
	512
	540
	542
142-9353	544
142-9355	506
	510
	512
	516
	540
	542
142-9356	506
	510
	512
	516
	540
	542
142-9363	▶575
	582
142-9372	518
	520
142-9386	498
142-9400	1
	2
	▶252
142-9804	378
	379
143-1974	186
143-4535	82
	92
143-4536	82
	92
144-0195	518
	520
144-1636	516
144-4531	392
	394
	396
	400
144-4532	392
	394
	396
	400
144-6194	3
	4
	▶5
144-9930	▶174
	525
144-9933	▶156
	525
144-9934	174
144-9952	138
144-9954	136
144-9955	179
144-9957	138
144-9960	136
	138
144-9961	54
144-9962	115
	▶116
146-0006	130
146-0018	130
146-2438	157
146-4323	186
	198
	200
	202
146-6370	536
146-6371	529
	530
	532
	534
146-6372	534
146-6374	536
146-6376	534
146-6377	534
146-6380	534
146-6381	534
146-6382	534
146-6383	534
146-6385	534
146-6386	534
146-6390	536
146-7808	59
146-9303	130
147-1773	190
147-2991	130
147-2994	130
147-2995	130
147-3019	518
	520
147-3043	130
147-3046	130
148-8315	326
	329
	334
	336
	340
	354
	356
148-8316	224
	226
	327
	328
	344
	346
148-8317	222
148-8319	316
	318
	322
	324

▶ **PRIMARY REFERENCE**

PART NUMBER INDEX

Part	Page	Part	Page	Part	Page	Part	Page
148-8322	220	149-4232	447	152-0226	▶431	152-6580	64
	222	149-5434	427	152-0230	▶427	152-6581	64
148-8325	342		440	152-0231	▶428	152-6582	64
	344	149-5435	429	152-1041	264	152-6584	64
	346		430		266	152-6605	64
	348		441	152-1042	264	152-6730	38
148-8327	220		442		266	152-6735	38
	222		445	152-1154	275	152-6738	38
	224		447		277	152-6739	38
	226		450	152-1155	▶275	152-6740	38
	330	149-5436	433	152-1156	275	152-6743	38
	332		435		277	152-6790	18
148-8335	224		443	152-1157	210	152-6791	18
148-8336	206		446		212	152-6795	18
	208		448	152-1160	▶527	152-6799	18
	334	149-5437	434	152-1161	527	152-6801	18
	336		437	152-1164	452	152-6862	11
	338		444	152-4858	8	152-6863	11
	340		449		9	152-6864	11
	384	149-7694	138		10	152-6866	11
148-8338	220	150-3056	316		▶30	152-6867	11
	222		318	152-4862	▶245	152-6868	11
148-8340	216	150-4027	342	152-4863	245	152-6869	11
	218		348	152-4864	245	152-9784	605
	224	150-4043	344	152-4865	245		623
	226		346	152-4866	245	152-9857	26
148-8341	216	150-4140	54	152-4867	245	152-9858	26
	218	150-4385	204	152-4871	544	152-9859	26
	338	150-4386	204	152-4874	529	152-9860	26
	340	150-5030	96		▶546	152-9862	27
	358		97	152-4875	498	152-9863	27
	360	150-5472	204	152-4876	523	152-9864	27
	362	150-7568	530	152-4879	522	153-0072	33
	364		547	152-4880	▶523	153-0073	33
148-8347	78	150-8590	243		529	153-0077	5
148-8360	350	150-8591	242		530		▶33
	352	150-8592	244		532	153-0083	52
148-8369	344	150-8593	244	152-4881	▶522	153-0084	52
	346	150-8594	243		529	153-0104	14
148-8378	206	150-8599	242		530	153-0105	14
	208		243		532	153-0106	14
	334		244	152-4883	527	153-0108	14
	336		245	152-4884	498	153-0112	14
148-8382	218		246	152-4891	94	153-0115	5
148-8385	78		247		95		▶14
148-8390	78		248	152-4897	94	153-0117	14
	327		249		95	153-0160	73
	328		250	152-4900	244	153-0162	73
	336		251	152-4901	244	153-0163	73
	340	150-8622	506	152-5878	47	153-0164	73
	356		510		550	153-0165	5
	360		512	152-6555	22		▶73
148-8407	372		516	152-6556	22	153-0176	73
148-8423	344		540	152-6557	23	153-0177	73
	346		542	152-6558	23	153-0178	73
148-8428	224	150-8624	534	152-6559	23	153-0314	61
	226		▶536	152-6560	11	153-0317	61
148-8435	206	150-8625	575	152-6561	23	153-0319	5
	208	151-1394	151	152-6572	64		▶61
	342	151-1975	122	152-6573	64	153-0405	100
	348		124	152-6574	64	153-0455	526
149-0686	284	151-4003	408	152-6576	64	153-0488	112
149-1411	▶451	152-0223	▶429	152-6577	64	153-0507	112
149-3499	150	152-0224	▶430	152-6578	64	153-0508	112
149-3516	116	152-0225	▶431	152-6579	64	153-0524	5

▶ **PRIMARY REFERENCE**

PART NUMBER INDEX

Part	Page
	▶147
153-0561	5
	▶44
153-0562	23
	181
153-0563	44
153-0564	5
	▶177
153-0566	177
153-0693	5
	▶60
153-0983	67
153-0985	67
153-0988	67
153-0989	67
153-0991	67
153-0992	67
153-1006	5
	▶117
153-1013	35
153-1014	5
	▶35
153-1022	130
153-1023	130
153-1029	58
153-1153	130
153-1154	130
153-1155	130
153-1156	130
153-1176	5
	▶46
153-1217	5
153-1260	565
153-2682	540
	542
	572
153-2683	540
	542
	572
153-2994	316
	318
	320
	322
	324
153-2995	316
	318
	320
	322
	324
153-5382	28
153-5386	24
153-5387	24
153-5390	24
153-5391	24
153-5394	24
153-5395	24
153-5396	24
153-5402	20
	24
153-5518	20
153-5552	28
153-5553	28
153-5554	28
153-5556	28
153-5557	28
153-5558	28
153-5559	28
153-5573	29
153-5587	65
153-5590	65
153-5592	62
	98
	132
153-5656	140
153-5933	54
153-5936	54
	175
153-5939	16
153-5960	40
	42
	76
	132
153-5961	16
	65
	76
153-5962	16
	42
153-5967	76
153-6374	45
153-6375	36
	45
	51
153-6393	132
153-6412	132
153-6492	12
	62
153-6494	62
153-6497	62
153-6832	54
153-6833	54
153-6835	54
	65
153-6838	24
	42
	54
153-6841	54
153-6848	54
153-6849	54
153-6850	54
153-6851	54
153-6853	54
153-6856	42
	76
153-6868	36
153-6873	128
153-6879	54
153-6881	54
153-6981	550
153-7640	16
	49
153-7920	101
	104
153-7983	42
153-7985	42
153-7987	42
153-7988	65
154-0175	24
154-0176	24
154-0177	24
154-0178	24
154-0181	20
154-0385	20
154-0386	20
154-0388	20
154-0389	20
154-0391	24
154-0393	24
154-0867	59
154-0869	59
154-0870	59
154-0871	59
154-0873	59
154-0874	59
154-0887	28
154-0888	28
154-0889	28
154-0890	28
154-1201	20
154-1202	20
154-1203	20
154-1230	20
154-1231	20
154-1240	65
154-1241	65
154-1242	65
154-1243	65
154-1246	65
154-1248	65
154-1249	65
154-1347	16
154-1351	16
154-1396	40
154-1401	40
154-1403	40
154-1405	40
154-1408	40
154-1410	40
154-1411	40
154-1412	40
154-1416	40
154-1636	40
154-1637	40
154-1638	40
154-1639	40
154-1641	40
154-1672	40
154-1673	40
154-1675	40
154-1676	42
154-1677	42
154-1678	42
154-1679	42
154-1680	42
154-1816	▶74
	76
154-1818	74
154-1819	74
154-1820	74
154-1822	63
154-1823	76
154-1824	76
154-1826	76
154-1828	76
154-1877	6
	▶45
154-1880	62
154-1882	62
154-1933	6
	▶148
154-1935	148
154-1941	54
154-1942	54
154-1945	54
154-1947	54
154-1948	54
154-2353	54
154-2394	36
154-2395	36
154-2403	36
154-2405	34
154-2406	34
154-2426	98
154-2427	98
154-2428	98
154-2433	49
154-2435	6
	▶49
154-2700	76
154-2713	132
154-2715	132
154-2716	132
154-3017	132
154-3018	132
154-3927	150
154-3928	151
154-3968	559
	560
154-3973	▶245
154-3980	245
154-3981	245
154-3982	245
154-3983	▶245
154-3984	245
	251
154-3985	565
	571
154-3986	571
154-3995	8
	9
	10
	▶179
154-4006	252
154-4014	376
	377
154-4233	▶144
	186
154-4505	12
154-4508	12
154-5004	▶438
	439
154-5005	438
	▶447
154-5007	438
	▶448
154-5008	▶438
	439
154-5011	▶371
	438
154-5012	371
	447

▶ **PRIMARY REFERENCE**

PART NUMBER INDEX

Part	Page
	448
154-5013	302
	371
154-5018	▶304
	438
154-5019	▶316
	438
154-5020	316
154-5021	316
154-5022	316
154-5024	316
	318
154-5025	316
	318
154-5037	447
154-5045	▶438
154-5046	▶439
154-5047	▶439
154-5048	▶439
154-5051	▶318
	438
154-5053	448
154-5059	448
154-7988	575
	▶576
	583
154-7989	575
	▶578
	583
154-8711	571
154-8715	571
154-8717	571
154-8719	571
155-2255	186
	190
155-2260	166
	170
	186
	190
	506
	512
155-2265	186
	190
	494
155-2270	186
	190
	196
	494
	538
155-2271	166
	170
	186
	190
155-2274	166
	170
	190
155-2276	516
155-4426	402
155-8009	40
155-8084	54
155-9849	178
	180
156-0884	431
	▶445
156-0885	432
	▶446
156-0890	445
	446
	465
	466
156-0891	▶301
	431
	432
	463
156-0892	301
156-0913	301
156-1200	116
156-2850	389
156-3834	595
	610
156-3843	595
	610
156-3849	608
	616
156-5508	318
156-5509	318
156-5510	318
156-5512	▶305
	431
	432
	463
156-5762	418
	608
	616
156-5970	410
156-6971	20
156-6988	29
156-6989	29
156-7347	54
156-9808	417
156-9809	1
	2
	▶417
157-0940	426
	445
	446
	465
	466
157-0941	301
157-0942	301
157-1478	208
	342
157-7223	▶431
	432
157-7224	432
157-7226	▶432
157-7227	▶432
158-3770	398
	403
	404
	405
158-5648	445
	446
	465
	466
158-6667	336
	340
158-6668	336
158-6669	356
	360
158-6684	356
	360
158-6694	525
158-6695	502
158-6696	552
158-6697	526
158-6698	552
158-6699	552
158-7499	3
	▶588
158-7896	118
158-7897	118
158-7898	118
158-7899	118
158-7900	118
158-7902	118
158-7903	118
158-7905	118
158-7906	118
158-7909	118
158-7911	118
158-7912	118
158-7916	118
158-7920	130
158-7921	118
158-7922	118
158-7923	118
158-7924	118
158-7926	118
158-7931	130
158-7933	118
158-7934	118
158-7936	40
	42
	118
158-7940	118
158-7946	118
158-7947	118
158-7950	118
158-7951	118
159-0082	14
159-0330	422
159-0331	▶422
159-0340	423
159-0341	▶423
159-0350	424
159-0351	▶424
159-1752	183
159-2953	274
	275
	276
	277
	427
	429
	430
	435
	437
	449
	450
	455
	456
	457
	496
159-5345	447
159-5346	448
159-5411	476
159-5740	350
	352
159-5751	▶285
	290
	291
	297
159-5753	312
	313
	▶387
	▶388
159-5756	412
	414
159-5761	▶246
159-5762	246
159-5763	▶246
159-5764	246
159-5765	246
159-5767	246
159-5768	246
159-5769	246
159-5772	204
159-5786	120
	126
159-5790	550
159-5792	550
159-5793	210
	212
159-5794	550
159-5796	136
159-5797	452
	453
159-5798	518
	520
159-5799	506
	510
	512
	516
	540
	542
159-5801	512
	516
	▶520
	542
159-6102	114
159-6108	149
159-8035	301
	476
	608
159-8038	447
	448
159-8336	30
	31
159-8405	264
	266
159-9495	198
	200
	202
159-9496	198
	200
	202
159-9790	264
	266
159-9853	285
	286

▶ **PRIMARY REFERENCE**

PART NUMBER INDEX

Part	Page
	287
	288
160-0663	485
160-1600	254
160-1737	145
160-3555	132
160-3556	132
160-3557	132
160-3558	132
160-3568	6
	▶98
160-4150	54
160-4151	54
160-4152	54
160-4153	54
160-4320	▶286
	289
	298
160-7626	29
160-8657	130
161-0185	322
161-0186	322
161-0187	▶322
	431
	432
	463
161-0188	322
161-0189	322
161-0190	322
161-2347	264
	266
161-2539	184
161-4128	454
161-6560	530
	575
161-7290	▶485
	490
	494
161-7522	518
	520
	▶549
161-7523	518
	520
161-7524	518
	520
162-0223	498
162-2207	40
	42
162-2210	118
162-2213	118
162-2215	118
162-5233	608
	616
162-5234	608
	616
162-5235	595
162-5236	438
	▶454
162-6886	588
	590
162-6887	588
	590
162-6889	588
	590
	592
162-6890	588
162-6891	588
162-8139	▶463
162-8140	463
	▶465
162-8154	467
163-1385	320
	322
163-1386	316
	318
163-1627	35
163-4811	463
	▶466
163-4812	▶463
163-5015	600
163-5016	▶595
163-5020	600
	618
163-5050	600
	618
163-5051	618
163-9112	596
	614
163-9113	605
	619
163-9114	601
	620
163-9115	603
	622
163-9116	599
163-9117	601
	620
163-9118	599
163-9119	598
163-9120	599
163-9121	604
163-9122	606
	623
163-9123	607
163-9124	604
	622
163-9125	600
163-9320	322
163-9455	599
163-9458	604
163-9460	607
164-1154	556
164-2108	402
164-2346	596
	614
164-2347	605
	619
164-2348	601
	620
164-2349	603
	622
164-2350	599
164-2351	601
	620
164-2352	599
164-2353	599
164-2354	598
164-2356	604
164-2357	606
164-2358	607
164-2359	604
	622
164-2360	600
164-3213	304
	305
164-5567	220
	222
	344
	346
	350
	352
164-7412	▶437
164-7414	437
	▶444
164-7424	▶458
164-7597	▶26
	27
164-7606	11
164-7610	130
164-7613	5
	▶50
164-7616	5
	▶66
164-7619	66
164-7620	66
164-7621	66
164-7622	5
	▶68
	▶69
164-7623	5
	▶13
164-7624	5
	▶100
164-7625	100
164-7627	99
164-7628	99
164-7629	5
	▶112
164-7630	112
164-7633	5
	▶72
164-8388	5
	▶183
164-9295	▶306
	474
164-9425	537
164-9614	463
	▶467
164-9740	595
	610
164-9741	595
	610
164-9989	465
	466
	472
	473
165-0142	232
	233
	236
	237
165-0311	552
165-0312	552
165-2139	42
165-2141	76
165-2142	36
165-2273	224
	226
165-2602	▶246
165-2605	246
165-2606	246
165-2609	247
165-2610	247
165-3605	54
165-4891	▶247
165-4894	490
	494
165-4895	158
165-4903	▶247
165-4906	247
165-4907	247
165-4908	246
	247
165-4909	247
165-4958	5
	▶130
165-4961	5
	▶99
165-6152	429
	430
	▶442
165-6153	431
	▶443
165-6155	427
	▶440
165-6156	428
	▶441
165-7089	520
165-7092	283
165-7095	47
	48
	458
	550
165-7098	278
165-7099	282
	283
165-8477	458
165-8486	481
165-8487	481
165-8488	▶481
165-8727	▶463
165-8728	▶464
165-8729	▶433
165-8730	▶434
165-8731	▶302
	474
165-8732	▶471
	472
	473
165-8733	▶324
	474
165-8734	433
	434
	435
	436
	463
	464
	▶474
165-8736	463

▶ **PRIMARY REFERENCE**

PART NUMBER INDEX

Part	Page
	▶472
165-8737	464
	▶473
165-8740	474
	▶476
165-8743	476
165-8746	433
	435
165-8747	434
	449
165-8777	435
165-8778	436
	▶449
165-8779	▶435
165-8780	▶436
165-8835	450
165-8836	▶450
166-0319	426
166-2033	196
166-2338	36
166-2550	▶490
166-2551	490
	▶493
	494
166-2552	490
	494
166-2553	490
	494
166-2554	490
166-2556	490
166-2557	490
	494
166-2558	490
	494
166-2559	490
	494
166-2560	452
	477
	478
166-2561	278
166-2562	574
166-2569	▶573
	574
166-2570	253
	254
	▶500
166-2571	500
166-2768	590
166-2769	590
166-3678	204
166-3758	147
166-3759	5
	▶32
166-3760	32
166-4041	471
166-5268	40
166-6825	534
166-8833	4
	▶590
166-9312	322
167-0608	490
	494
167-1530	525
167-4339	232
	233
	236
	237
167-7713	238
	240
167-7801	190
167-9524	402
168-6410	▶153
	164
168-7572	210
168-7574	149
168-7575	▶149
168-8389	527
169-3567	465
169-3568	466
169-3569	476
169-4868	426
169-6689	▶161
169-6715	82
	84
	86
	90
169-8941	445
169-8942	446
170-5836	474
170-7058	138
170-7611	52
170-7612	52
170-7614	52
170-7615	52
170-7666	14
171-1187	68
171-1840	112
171-1841	112
171-1842	112
171-1845	112
171-2792	5
	▶22
171-2803	5
	▶27
171-2808	5
	▶64
171-2823	5
	▶38
171-2824	5
	▶11
171-2929	5
	▶118
171-2930	130
171-2948	5
	▶67
171-4613	5
	▶181
171-4663	5
	▶18
172-0970	398
	403
172-1241	597
172-4445	▶150
172-4446	▶151
172-4585	148
172-5285	306
172-7209	177
172-9200	195
173-0427	99
173-0702	404
173-0703	398
	403
173-1284	73
173-1339	5
173-2543	571
173-3015	256
173-3016	256
173-3017	254
	▶255
173-3018	256
173-3021	170
	▶594
173-3022	253
	▶574
173-3321	334
	336
	338
	340
173-3322	334
	336
173-3326	▶389
173-7407	474
173-7798	166
	170
173-9855	11
174-2384	324
174-2385	324
174-2388	324
174-2389	324
174-2393	324
174-3097	324
174-3877	122
	124
174-6633	485
174-7965	459
174-7966	459
174-7967	459
174-7968	460
174-7969	460
174-7970	460
174-7971	461
174-7972	461
174-7973	461
174-7974	462
174-7975	462
174-7976	462
174-7985	▶459
174-7986	▶459
174-7987	▶459
174-7988	▶460
174-7989	▶460
174-7990	▶460
174-7991	▶461
174-7992	▶461
174-7993	▶461
174-7994	▶462
174-7995	▶462
174-7996	▶462
174-7997	425
175-4225	253
	254
	▶548
175-4226	548
175-4228	253
	254
	▶278
175-4232	253
	▶256
175-4236	594
175-4237	548
175-4238	253
	254
	▶484
175-4239	548
175-4921	23
175-7413	595
	610
176-0614	▶596
176-0633	64
176-1225	600
	618
176-1226	596
	614
176-1228	605
	619
176-1229	601
	620
176-1335	596
176-1336	596
	614
176-1337	596
	614
176-2947	498
176-4070	387
	388
176-4076	283
176-4077	283
176-4078	283
176-4079	283
176-4081	389
176-4082	389
176-4085	389
176-4086	389
176-4089	283
176-4090	283
176-7711	6
	▶128
176-7712	128
176-7719	128
176-9954	▶115
	122
	124
177-1910	320
177-1911	320
177-1912	320
177-1913	300
177-1914	268
177-1921	426
177-1941	486
177-1955	268
177-1956	268
177-1957	268
177-1958	300
	303
177-1971	268
177-1972	426
177-1973	486
177-1974	268
177-1975	268

▶ **PRIMARY REFERENCE**

PART NUMBER INDEX

Part	Page
177-1980	▶268
	425
177-1981	425
	▶426
177-1983	425
	▶486
177-1984	▶300
	425
177-1985	300
	▶303
177-1986	▶320
	425
177-1987	426
177-1989	▶425
177-3403	1
	2
	▶572
177-3405	540
	542
	572
177-4563	534
	536
177-7414	482
177-7415	481
	482
177-7559	147
177-7929	253
	254
	▶597
177-9150	482
177-9151	482
177-9152	253
	254
	▶482
177-9153	482
177-9568	▶310
	412
	414
177-9569	▶311
	412
	414
177-9578	283
177-9580	258
177-9648	190
178-2247	484
178-2249	282
	283
178-2252	▶540
178-2253	▶542
178-2254	▶146
	190
178-2255	264
	266
178-2452	73
178-3377	418
178-5019	38
179-1808	▶6
179-1980	▶598
179-1981	▶598
179-1982	▶599
179-1983	▶599
179-1984	▶599
179-1985	▶600
179-1986	▶600
179-1987	▶601
179-1988	▶601
179-1989	▶602
179-1990	▶602
179-1991	▶603
179-1992	▶603
179-1993	▶604
179-1994	▶604
179-1995	▶605
179-1996	▶605
179-1997	▶606
179-1998	▶607
179-1999	▶607
179-5631	600
	618
179-5632	605
	619
179-5633	601
	620
179-5634	603
	622
179-5635	599
179-5636	601
	620
179-5637	599
179-5638	603
	621
179-5639	599
179-5640	598
179-5641	604
179-5642	606
	623
179-5643	598
179-5644	607
179-5645	602
	621
179-5646	604
	622
179-5647	600
179-5648	607
179-5649	602
179-5650	605
	623
179-5651	600
	618
179-5652	607
179-5653	605
	619
179-5654	601
	620
179-5655	603
	622
179-5656	599
179-5657	601
	620
179-5658	599
179-5659	603
	621
179-5660	599
179-5661	598
179-5662	604
179-5663	606
	623
179-5664	598
179-5665	607
179-5666	602
	621
179-5667	604
	622
179-5668	600
179-5669	602
179-5670	605
	623
179-5858	605
	623
179-5860	603
	622
179-5861	599
179-5862	601
	620
179-5863	599
179-5864	603
	621
179-5865	599
	604
179-5866	598
179-5868	606
	623
179-5869	598
179-5870	607
179-5871	602
	621
179-5872	604
	622
179-5873	600
179-5874	602
179-5876	605
179-5877	601
179-5878	603
179-5879	599
179-5880	601
179-5881	599
179-5882	603
179-5883	599
179-5884	598
179-5885	604
179-5886	606
179-5887	598
179-5888	607
179-5889	602
179-5890	604
179-5891	600
179-5892	602
179-5893	605
179-5915	603
	621
179-5916	598
179-5917	602
	621
179-5918	602
179-5919	605
	623
179-6575	598
179-6576	602
179-6577	602
	621
179-6578	603
	621
179-6579	605
	623
179-6580	607
179-6883	607
179-7201	▶418
180-2428	14
180-3007	350
	352
180-3008	196
180-6115	62
183-1163	24
183-1164	24
183-1165	24
	175
183-1168	24
183-1336	20
183-3213	29
183-3353	132
183-3572	40
183-3606	12
183-4037	142
183-4085	324
183-7117	166
	170
	278
183-7118	220
	222
183-7120	530
	546
	547
183-7122	▶259
183-7123	259
	260
183-7124	259
	260
183-7130	▶530
183-7131	259
	260
183-7137	▶580
183-7138	▶582
183-7264	214
184-1564	▶182
	196
184-2472	144
184-6097	482
184-6098	482
185-4253	402
185-4254	392
	394
	396
	400
	▶402
185-7708	394
	396
	▶406
185-7709	394
	396
	▶407
185-8660	▶247
185-8661	▶248
185-8664	▶248
185-8665	▶248
185-8666	▶249
185-8668	247
	249
185-8669	248
	249
185-8670	247

▶ **PRIMARY REFERENCE**

PART NUMBER INDEX

Part	Page
185-8671	247
185-8672	248
185-8673	248
185-8678	248
185-8679	248
185-9926	248
185-9927	248
185-9928	249
185-9929	249
185-9932	248
	250
185-9933	249
	251
185-9934	247
	248
	249
185-9935	250
185-9936	250
185-9938	▶251
185-9940	▶260
185-9949	8
	▶90
186-0239	170
186-0907	396
186-2360	255
186-2487	408
186-2488	408
186-3362	538
186-3562	▶487
186-3735	157
	286
	378
	398
	549
186-5186	488
187-1258	▶198
187-1261	368
	369
	370
187-1262	368
	369
	370
187-1263	368
	369
	370
187-1264	368
	369
	370
187-1265	368
	369
	370
187-1269	334
	336
	338
	340
187-1270	354
	356
	358
	360
187-1271	362
187-1273	336
	338
	340
187-3211	561
	563
187-3212	561
	563
187-3213	▶583
187-3215	▶561
	562
187-3217	561
	563
187-3220	▶562
187-3223	253
	254
187-3227	354
	356
	358
	360
187-3228	354
	356
	358
	360
187-3231	334
	336
	338
	340
187-3232	334
	336
	338
	340
187-3233	▶249
187-3234	▶249
187-3235	▶250
187-3236	▶250
187-3238	▶250
188-0111	▶251
188-0112	249
188-0113	249
188-0114	249
188-0115	249
188-0118	250
188-0119	250
188-0120	250
188-0121	250
188-0122	250
188-0123	250
188-0126	251
188-0127	251
188-0128	78
	▶368
188-0131	186
188-0147	253
	254
	▶276
188-0878	392
	394
	400
	▶408
188-1052	61
188-5102	23
188-7176	487
188-7733	418
	▶488
188-8543	58
188-8633	26
188-8636	26
188-8637	26
188-9044	26
188-9071	67
189-3610	156
190-3803	132
190-7453	348
190-7456	610
190-7954	3
	▶608
190-7967	414
190-7971	414
190-7979	414
190-8001	1
	2
	▶190
190-8002	186
190-8004	293
	294
	295
	296
	299
	▶537
190-8006	190
190-8008	190
190-8009	190
190-8038	414
190-8080	▶289
190-8087	344
	346
190-8090	▶277
190-8092	289
	290
	291
190-8095	▶290
	▶291
190-8107	614
190-8108	608
	616
190-8109	608
	616
190-8118	608
190-8119	344
	346
190-8377	58
190-8962	594
191-0542	40
191-0915	410
191-0916	403
	404
	▶410
191-2894	270
191-2900	▶3
191-2901	3
	▶234
191-2902	▶1
	3
191-2904	373
	▶375
191-2907	▶292
191-2908	▶293
	▶294
191-2909	▶295
	▶296
191-9288	64
191-9289	64
191-9296	42
191-9297	42
191-9562	220
	222
191-9563	220
	222
191-9564	▶610
191-9565	3
	▶592
191-9566	▶261
191-9573	270
191-9574	270
191-9575	1
	▶270
191-9576	270
	272
191-9588	414
191-9589	414
191-9594	414
191-9595	414
191-9598	414
191-9599	1
	▶414
191-9600	▶3
191-9601	3
	▶234
191-9602	▶1
	3
191-9605	309
191-9606	3
	▶312
191-9633	414
191-9634	414
191-9635	414
191-9636	414
191-9637	414
191-9638	414
191-9641	▶309
	414
191-9650	▶229
	234
191-9659	212
191-9661	212
191-9662	366
	▶369
191-9663	367
	▶370
191-9664	540
	542
191-9665	490
191-9667	220
191-9668	580
	586
191-9670	350
	352
191-9672	312
	314
	▶366
191-9673	315
	▶367
191-9684	254
191-9685	3
	▶593
191-9686	386
	▶392
191-9700	235

▶ **PRIMARY REFERENCE**

PART NUMBER INDEX

Part	Page
	237
	▶238
191-9711	▶216
	312
	315
191-9712	▶220
	234
191-9731	314
	▶380
	▶381
191-9744	234
	236
	▶240
191-9747	374
	▶375
191-9757	314
	▶382
	▶383
191-9781	501
	551
191-9783	334
	336
	338
	340
191-9784	213
	▶214
191-9786	382
	▶394
191-9788	292
	293
	294
	295
	296
	299
191-9799	2
	▶551
192-0836	184
192-1590	176
192-2606	493
192-2607	493
192-2608	380
	▶396
192-2610	▶222
	234
	235
192-2637	479
	480
192-2642	477
	478
192-2645	479
	480
192-2648	479
192-2653	480
192-2657	2
	▶108
192-2658	559
	560
192-2660	108
	110
192-2661	▶556
	557
	558
192-2662	557
192-2663	557
	558
192-2664	108
	▶557
192-2667	538
	559
192-2668	379
192-2669	538
	559
192-2672	2
	▶559
192-2673	559
192-2681	220
	222
192-2686	358
192-2687	358
192-2689	338
	340
192-2690	338
192-2692	362
192-2693	362
192-2694	▶196
	254
192-2695	314
	315
	▶373
192-2697	▶611
	▶612
192-2698	▶613
192-2699	252
192-3517	603
	621
192-3518	604
	622
192-3519	598
192-3520	602
	621
192-3521	607
192-5845	130
192-6335	26
192-7979	270
192-8953	611
	612
	624
192-8955	607
192-9003	611
	612
	624
192-9027	607
193-0161	143
193-0447	▶284
	312
	314
	315
193-0448	206
193-0449	342
	348
193-0451	▶494
193-0452	338
	340
193-0453	314
	▶342
193-0474	364
193-0485	360
193-0486	360
193-1053	607
193-2449	611
193-8307	312
	315
	▶344
193-8308	350
	352
193-8309	206
193-8311	326
	329
193-8312	342
	348
193-8317	218
193-8321	350
	352
193-8324	208
193-8326	224
	226
193-8327	222
	▶224
193-8328	222
193-8329	140
	141
193-8330	362
193-8331	362
193-8334	362
	364
193-8335	362
	364
193-8339	198
	200
	202
193-8342	232
	237
193-8345	266
193-8352	▶141
193-8353	▶200
	295
	296
	299
193-8363	218
193-8364	380
	381
	382
	383
	385
	386
193-8365	▶614
193-8370	▶206
	234
	235
193-8371	551
	▶552
193-8373	552
193-8374	▶145
	186
193-8375	1
	2
	▶186
193-8378	190
193-8380	280
193-8385	280
	281
193-8387	289
	290
	▶403
193-8392	344
193-8393	344
193-8915	613
193-8918	613
193-8921	613
193-8927	613
193-8930	613
193-8939	613
193-8942	613
194-7631	284
194-7632	284
194-7790	608
	616
194-8168	552
195-0935	501
	544
195-0936	186
	501
	574
	584
195-0937	164
	497
	501
	506
	510
	512
	516
	540
	542
195-0939	501
	544
195-3510	292
195-3709	38
195-3710	38
195-3758	112
195-3786	38
195-6696	490
	494
195-6721	▶497
	551
195-6722	▶164
195-6723	1
	▶584
	▶586
195-6724	▶506
	▶510
195-6725	▶544
	551
195-6726	▶512
	▶516
195-6727	544
195-6728	544
195-6730	314
	▶350
195-6749	314
	▶330
195-6754	479
	480
195-6765	3
	4
	▶616
195-6768	342
	348
195-6769	342
	348
195-6772	340

▶ **PRIMARY REFERENCE**

PART NUMBER INDEX

Part	Page
195-6780	314
	▶362
195-6785	▶218
	314
195-6790	314
	▶326
195-6791	▶551
195-6795	312
	314
	▶374
195-6942	▶468
195-6943	▶469
195-8545	▶470
195-9160	425
195-9161	▶425
195-9244	14
195-9700	384
	398
	405
196-0975	130
196-0982	130
196-1338	468
	469
	470
197-0882	483
197-0883	483
197-0926	▶483
197-3720	611
	612
197-3723	611
	612
	624
197-3724	611
	612
	624
197-3726	611
	612
	624
197-3727	611
	612
	624
197-4916	▶313
197-4917	▶313
197-6893	145
197-6894	525
197-6895	525
197-6896	526
197-6897	190
197-6898	▶525
	552
197-6899	▶526
	552
197-6900	1
	2
	▶194
197-6901	194
197-7639	202
197-8466	1
	2
	▶195
197-8467	▶202
197-9460	206
	208
197-9462	206
	208
198-8555	68
199-5272	▶280
	551
199-5282	313
	▶338
199-5283	313
	▶358
199-5284	313
	▶340
199-5285	313
	▶360
199-5320	312
	315
	▶327
199-5321	327
199-5373	272
199-5374	272
199-5375	2
	▶272
199-6619	529
	532

2

Part	Page
200-0800	▶3
200-0801	3
	▶234
200-0802	▶2
	3
200-0805	3
	▶7
200-0806	3
	▶314
200-0807	42
200-0998	412
200-1000	▶4
200-1001	4
	▶235
200-1002	▶2
	4
200-1005	4
	▶8
200-1006	4
	▶314
200-2371	384
200-5976	142
201-7779	2
	▶122
201-7793	▶101
201-7794	101
	▶105
201-7796	96
201-7798	7
	▶96
201-7800	7
	▶92
201-7803	▶80
	82
	84
	90
	92
201-8964	118
201-9884	58
201-9885	58
201-9886	58
201-9887	58
202-0602	190
202-0919	52
202-0920	52
202-0921	52
202-1196	132
202-2171	195
202-3185	5
	▶52
202-9013	80
202-9014	▶71
	80
202-9017	7
	▶138
202-9022	1
	▶124
202-9700	555
202-9716	102
	105
203-4326	253
	254
	▶538
203-4330	166
	170
	▶555
203-4331	▶166
	253
203-4332	▶170
	254
203-4740	69
203-4743	69
204-1359	▶618
204-1361	618
204-1365	594
204-1373	▶619
204-1374	619
204-1380	330
	332
204-1381	330
	332
204-1395	▶287
	293
	294
204-1396	198
	202
	▶288
	295
	296
	299
204-1397	293
	295
	▶404
204-1399	291
	297
	298
	▶398
204-1400	292
	294
	296
	299
	▶405
204-1409	350
204-1410	327
	328
204-1452	238
	240
204-1453	238
	240
204-1454	238
	240
204-1455	238
	240
204-1456	238
	240
204-1457	238
	240
204-1458	238
	240
204-1459	238
	240
204-1470	392
	394
	396
	400
204-1471	392
	394
	396
	400
204-1472	392
	394
	396
	400
204-1476	392
	394
	396
	400
204-1480	394
	396
	▶409
204-1481	392
	394
	396
	400
204-1482	392
	394
	396
	400
204-1485	392
	394
	396
	400
204-1486	392
	394
	396
	400
204-1488	392
	394
	396
	400
204-1489	392
	394
	396
	400
204-1490	312
	314
	315
	▶376
204-1491	376
	▶379

▶ **PRIMARY REFERENCE**

PART NUMBER INDEX

Part	Page
204-1492	379
204-1499	379
204-2097	66
204-2626	138
205-1625	104
	105
205-1627	96
	97
205-2325	71
205-3182	▶233
	234
205-3184	7
	▶48
205-3185	48
205-3727	71
205-4585	82
	92
205-4597	233
	236
205-4726	132
205-4727	132
205-4728	132
205-4731	132
205-4732	132
205-5490	22
	▶23
205-6383	82
	92
205-7644	118
205-8779	8
	▶102
205-8780	102
205-9883	530
	546
205-9934	8
	9
	10
	▶97
206-0034	7
	▶31
206-3499	65
206-3773	253
	254
	▶282
206-3774	282
	283
206-3775	314
	▶331
206-3776	▶253
206-3777	▶253
206-3778	▶254
206-3779	▶254
206-3780	342
	348
206-3790	▶532
206-3791	532
	▶547
206-3793	314
	▶346
206-3794	346
206-3796	346
206-3802	494
206-3817	510
	516
206-3818	580
206-3819	▶501
206-3820	▶453
206-3822	453
206-5143	229
206-7951	580
	586
206-7952	580
	586
207-0530	576
	578
207-0531	576
	578
207-0532	576
	578
207-0538	576
	578
207-0539	576
	578
207-0541	576
	578
207-0546	576
	578
207-0548	576
	578
207-0549	576
	578
207-0550	576
207-0551	576
207-0552	576
207-0554	576
207-0561	576
207-0572	576
	578
207-0573	576
	578
207-0574	578
207-0575	578
207-0576	578
207-0577	578
207-0578	578
207-1611	176
207-1612	▶176
207-6154	80
207-9715	314
	▶328
207-9717	230
207-9718	230
207-9719	230
207-9729	376
	377
207-9731	270
	272
207-9732	270
	272
207-9735	557
	558
207-9740	314
	▶377
207-9746	206
207-9775	312
	315
	▶332
207-9780	594
207-9784	▶281
207-9786	281
207-9788	560
207-9789	1
	2
	▶560
207-9803	338
	340
208-0044	138
208-0973	384
208-1237	206
	208
	▶384
208-4558	282
	▶524
208-4704	80
208-6176	264
	266
210-4634	340
210-4649	230
210-4698	332
210-4699	1
	▶551
210-4701	▶563
210-4708	220
	▶226
211-0052	186
	190
211-3443	82
	92
211-7739	42
211-9061	48
212-0061	384
212-0743	42
212-0744	42
212-0745	42
212-0747	42
212-4067	312
	315
	▶352
212-4068	352
212-4069	352
212-4083	592
	593
212-4084	592
	593
212-4090	312
	315
	▶364
212-4091	364
212-4092	364
212-4093	364
212-4094	364
212-4095	364
212-6622	216
212-6623	216
212-6624	216
212-6625	▶283
212-6626	1
	▶126
212-6627	124
	126
212-6692	▶212
	234
212-6693	580
213-6381	7
	▶180
214-2465	502
214-3232	104
	106
214-6291	103
	▶106
214-6292	8
	9
	▶103
215-2605	54
215-2616	76
215-2617	76
215-2620	24
215-2621	42
215-3207	502
215-3901	595
	610
215-3902	598
215-3903	598
215-3904	599
215-3905	599
215-3907	600
215-3908	600
215-3909	601
	620
215-3910	601
	620
215-3911	602
215-3912	602
	621
215-3913	603
	621
215-3914	603
	622
215-3916	604
	622
215-3917	605
	623
215-3918	605
	619
215-3919	606
	623
215-3920	596
	614
215-3923	613
215-3924	612
	624
215-3926	▶262
215-3927	261
	262
215-3928	558
215-3935	364
215-3938	593
215-3939	593
215-3940	592
215-3941	592
215-3958	477
	▶479
215-3959	478
	▶480
215-3960	453
	▶477
215-3961	453
	▶478

▶ **PRIMARY REFERENCE**

PART NUMBER INDEX

Part	Page
215-3980	1
	2
	▶110
215-3981	110
	▶558
215-4001	594
216-0658	146
216-6112	▶208
	234
216-6113	312
	315
	▶329
216-6116	234
	▶236
216-6117	234
	▶237
216-6128	312
	▶385
216-6129	▶297
216-6130	▶298
216-6133	▶299
216-6135	312
	315
	▶348
216-6136	3
	▶315
216-6137	315
	▶386
216-6156	392
	400
216-6157	392
	400
216-6158	392
	400
216-6159	392
	400
216-6160	392
	400
216-6161	392
	400
216-6166	381
216-6167	383
	▶400
216-6168	385
217-0571	7
	10
	▶104
217-0572	104
217-1447	6
	▶20
217-1451	59
217-1456	59
217-1480	6
	▶59
217-1481	▶28
	29
217-2743	29
217-2744	29
217-2746	6
	▶29
217-2749	65
217-2752	65
217-2753	6
	▶65
217-2754	132
217-2760	132
217-2761	132
217-2762	132
217-2763	132
217-2764	6
	▶132
217-2776	62
217-2777	6
	▶62
217-2778	6
	▶142
217-5204	132
217-5770	24
217-5771	24
217-5791	175
217-5792	175
217-5793	175
217-5794	40
217-5795	6
	▶175
217-5858	16
217-5859	16
217-5860	16
217-5861	16
217-5862	16
217-5863	16
217-5864	16
217-5866	16
217-5867	6
	▶16
217-5884	6
	▶143
217-7102	42
217-7103	40
217-7104	40
217-7108	40
217-7110	▶40
	42
217-7111	42
217-7115	42
217-7118	6
	▶42
217-7139	12
217-7143	6
	▶12
217-7174	12
217-7221	6
	▶34
217-7225	36
217-7238	6
	▶36
217-7317	51
217-7352	54
217-7357	54
217-7358	54
217-7360	6
	▶54
217-7379	76
217-7381	74
	76
217-7384	6
	▶76
217-7395	6
	▶24
217-7748	6
	▶51
217-7832	6
	▶63
217-7853	122
	124
218-8327	146
219-4375	3
	▶9
219-4377	364
219-4379	565
	571
219-4385	3
	▶10
219-4386	9
	10
	▶95
219-4387	10
	▶82
220-8079	565
220-8083	▶570
220-8098	▶538
220-8107	538
220-8123	9
	▶84
222-5707	▶620
222-5708	▶620
222-5710	▶621
222-5711	▶621
222-5712	▶622
222-5714	▶622
222-5715	▶623
222-5716	▶623
222-5719	▶624
222-5723	82
	92
223-4839	620
223-4840	620
223-4842	624
223-4843	621
223-4845	621
223-4859	622
223-4861	622
223-4862	623
223-4865	623

▶ **PRIMARY REFERENCE**



© 2002 Caterpillar
All Rights Reserved

Printed in U.S.A.