CATERPILLAR®

SEBP3770-14
January 2006

RUTHZIL TRATOR COMERCIAL DE PEÇAS LTDA 11 97083-6812 ROLANDO

Parts Manual

SIS

See “General Information” for New Parts Manual Features.

216B, 226B, 232B, 242B Skid Steer Loader

BXM1-Up (Machine)
MJH1-Up (Machine)
RLL1-Up (Machine)
SCH1-Up (Machine)
CSD1-Up (Engine)
GGA1-Up (Engine)

Powered By 3024C Engine
This Parts Manual is also available in .pdf Format on Compact Disc (CD-ROM) - Caterpillar Form SERP3770.

Product and Dealer Information

Note: For product identification plate locations, see the section “Product Identification Information” in the Operation and Maintenance Manual.

Delivery Date: _____

Product Information

Model: _____

Product Identification Number: _____

Engine Serial Number: _____

Transmission Serial Number: _____

Generator Serial Number: _____

Attachment Serial Numbers: _____

Attachment Information: _____

Customer Equipment Number: _____

Dealer Equipment Number: _____

Dealer Information

Name: _____ Branch: _____

Address: _____

_____

_____

	Dealer Contact	Phone Number	Hours
Sales:	_____	_____	_____
Parts:	_____	_____	_____
Service:	_____	_____	_____

Informations produit et concessionnaire

Nota: Voir l'emplacement de la plaque signalétique du produit au chapitre "Informations produit" du guide d'utilisation et d'entretien.

Date de livraison: _____

Informations produit

Modèle: _____

Numéro d'identification produit: _____

Numéro de série du moteur: _____

Numéro de série de la boîte de vitesses: _____

Numéro de série de l'alternateur: _____

Numéros de série d'équipement: _____

Informations sur l'équipement: _____

Numéro matériel client: _____

Numéro matériel concessionnaire: _____

Informations concessionnaire

Nom: _____ Agence: _____

Adresse: _____

_____

_____

	Contact concessionnaire	Numéro de téléphone	Heures
Ventes:			
Pièces:			
Service:			

Información del Producto/Distribuidor

Nota: Para saber la ubicación de las placas de identificación del producto, ver la sección “Información sobre identificación del producto” en el Manual de Operación y Mantenimiento.

Fecha de entrega: _____

Información del producto

Modelo: _____

Número de identificación del producto: _____

Número de serie del motor: _____

Número de serie de la transmisión: _____

Número de serie del generador: _____

Números de serie de los accesorios: _____

Información sobre los accesorios: _____

Número del equipo del cliente: _____

Número del equipo del distribuidor: _____

Información del distribuidor

Nombre: _____ Sucursal: _____

Dirección: _____

_____

_____

Comunicación con el distribuidor	Número de teléfono	Horas
Ventas: _____	_____	_____
Piezas: _____	_____	_____
Servicio: _____	_____	_____

Informações Sobre Produto e Revendedor

Nota: Para localizações da placa de identificação do produto, consulte a seção, “Informações Sobre Identificação do Produto” no Manual de Operação e Manutenção.

Data de Entrega: _____

Informações Sobre o Produto

Modelo: _____

Número de Identificação do Produto: _____

Número de Série do Motor: _____

Número de Série da Transmissão: _____

Número de Série do Gerador: _____

Números de Série de Acessórios: _____

Informações Sobre Acessórios: _____

Número do Equipamento do Cliente: _____

Número do Equipamento do Revendedor: _____

Informações Sobre o Revendedor

Nome: _____ Filial: _____

Endereço: _____

_____

_____

	Contato do Revendedor	Telefone	Horas
Vendas:	_____	_____	_____
Peças:	_____	_____	_____
Serviço:	_____	_____	_____

Produkt- und Händlerinformation

Anmerkung: Für die Lage der Produkt-Identnummer und Seriennummern siehe Abschnitt “Produkt-Identinformation” im Betriebs- und Wartungshandbuch.

Lieferdatum: _____

Produkt-Identinformation

Modell: _____

Produkt-Identnummer: _____

Seriennummer des Motors: _____

Seriennummer des Getriebes: _____

Seriennummer des Generators: _____

Seriennummern der Arbeitsgeräte: _____

Arbeitsgeräteinformation: _____

Kundennummer: _____

Händlernummer: _____

Händlerinformation

Name: _____ Niederlassung: _____

Adresse: _____

_____

_____

	Kontaktperson beim Händler	Telefon	Dienststunden
Verkauf:	_____	_____	_____
Ersatzteile:	_____	_____	_____
Service:	_____	_____	_____

MEMORANDA

TABLE OF CONTENTS

Name	Page
GENERAL INFORMATION	A20
REPAIR ALTERNATIVES	A39
SUPPLEMENTAL COOLANT ADDITIVES	A44
MAINTENANCE PARTS	A49
INDEX	A71
MACHINE ARRANGEMENT	1
CHASSIS AR	1
COMMON AR	1
CONVERSION AR-MACHINE	4
ENGINE ARRANGEMENT	19
ENGINE AR	19
ENGINE AR-PRIMARY	21
INSTALLATION AR-ENGINE	23
BASIC ENGINE	27
CAMSHAFT GP	27
COVER GP-VALVE MECHANISM	29
CRANKSHAFT GP	35
CYLINDER BLOCK GP	42
CYLINDER HEAD GP	49
DRAIN GP-ENGINE OIL	53
FLYWHEEL GP	54
GUARD GP-BELT	55
HOUSING GP-FLYWHEEL	56
HOUSING GP-FRONT	57
LIFTING GP-ENGINE	61
MOUNTING GP-ENGINE	63
MOUNTING GP-FAN	65
PAN GP-OIL	66
PISTON & ROD GP	74
PULLEY GP-CRANKSHAFT	77
PULLEY GP-WATER PUMP	78
VALVE MECHANISM GP	80
LUBRICATION SYSTEM	83
FILTER GP-ENGINE OIL	83
COOLING SYSTEM	84
COOLER GP-FLTR BASE & ENG OIL	84
MOUNTING GP-RAD & OIL COOLER	85
PUMP GP-WATER	89
RADIATOR & HYD OIL COOLER GP	98
RADIATOR & OIL COOLER MTG GP	102
AIR INLET AND EXHAUST SYSTEM	108
AIR CLEANER GP	108
LINES GP-AIR	110
MANIFOLD GP-EXHAUST	112
MUFFLER & MOUNTING GP	114
MUFFLER GP	116
TURBOCHARGER GP	119
FUEL SYSTEM	123
CABLE GP-GOVERNOR CONTROL	123
CONTROL GP-GOVERNOR	124
FILTER GP-WATER SEP & FUEL	125
GOVERNOR GP	126
LINES GP-FUEL PRM & FILTER	132
PUMP & MTG GP-FUEL TRANSFER	136
PUMP GP-FUEL INJECTION	137
PUMP GP-FUEL PRM & PRIM FILTER	142
ELECTRICAL AND STARTING SYSTEM	143
ALTERNATOR GP-CHARGING	143
BATTERY GP	145
CONNECTION GP-ELECTRICAL	147
CONTROL GP-INTERLOCK	150
CONVERSION AR-NON-ROADING	151
COVER GP-FUSE PANEL	152
ELECTRONICS GP-IMPLEMENT	153
FASTENER GP-WIRING HARNESS	154
GLOW PLUG GP	155
HEATER GP-JACKET WATER	156
INSTALLATION GP-SECURITY	158
KIT-WORK TOOL CONTROL & WIRING	160
KIT-WORK TOOL WIRING	162
LAMP GP-FLOOD	164
LAMP GP-HEAD & SIGNAL	166
LAMP GP-STOP & TAIL	168
LAMP GP-WARNING BEACON	170
LIGHTING GP-FLOOD	171
LIGHTING GP-ROADING	173
LIGHTING GP-STOP & TAIL	177
LIGHTING GP-WARNING BEACON	178
SENSOR GP-TEMP & PRESS	179
SERVICE GP-MACHINE	182
STARTING MOTOR GP-ELECTRIC	183
SWITCH GP-PRESSURE	186
WARNING GP-BACKUP	187
WIRING GP-AIR CONDITIONER	188
WIRING GP-CHASSIS	189
WIRING GP-ENGINE	192
WIRING GP-HORN	196
WIRING GP-MACHINE	197
WIRING GP-REAR LIGHTING	199
WIRING GP-WORK TOOL	200
POWER TRAIN	204
AXLE GP	204
CONTROL GP-PARKING BRAKE	207
DRIVE GP-TANDEM	223
FILTER & LINES GP-HYDRAULIC	225

TABLE OF CONTENTS

Name	Page
FILTER GP-OIL	229
LINES GP-HYDROSTATIC	230
MANIFOLD GP-RETURN	234
MOTOR & MTG GP-HYDROSTATIC	238
MOTOR GP-PISTON	239
MOUNTING GP-PUMP	241
POWER TRAIN AR	242
PUMP & MTG GP-HYDROSTATIC	243
PUMP GP-PISTON	247
TIRE & RIM GP	251
VALVE & MTG GP-SOLENOID	267
VALVE GP-SOLENOID	270
WHEEL & TIRE AR	271
FRAME AND BODY	279
BUMPER GP	279
CONVERSION AR-ROADING	281
CONVERSION GP-ROADING	292
COUNTERWEIGHT GP	296
ENCLOSURE GP-ENGINE	301
FRAME & MTG GP-MACHINE	303
FRAME GP-BLADE	308
GUIDE GP-LINES	309
KIT-ROADING CONVERSION	310
LIFTING GP-MACHINE	311
MIRROR & MTG GP-REAR VIEW	315
MOUNTING GP-REGISTRATION	317
MOUNTING GP-ROADING LIGHTS	319
SUPPRESSION GP-SOUND	321
HYDRAULIC SYSTEM	322
ACCUMULATOR & MTG GP-HYDRAULIC	322
ADAPTER GP-OIL LINE	323
CONTROL GP-HANDLE	324
CONTROL GP-PILOT OPERATED HYD	332
CYLINDER & MTG GP-ANGLE BLADE	352
CYLINDER & MTG GP-LIFT ARM	354
CYLINDER GP-BUCKET	359
CYLINDER GP-COUPLER	360
CYLINDER GP-GRAPPLE	361
CYLINDER GP-HYDRAULIC	363
CYLINDER GP-LIFT	364
CYLINDER GP-TILT	367
FITTING GP-HYDRAULIC	369
HANDLE GP-MODULAR	372
HYDRAULIC AR	374
KIT-HIGH FLOW CONVERSION	382
KIT-QUICK COUPLER CONVERSION	388
LINES GP-BUCKET	391
LINES GP-CONNECTING	396
LINES GP-GRAPPLE	400
LINES GP-HYDRAULIC FAN	404
LINES GP-HYDRAULIC OIL COOLER	416
LINES GP-LIFT CYLINDER	418
LINES GP-LOAD CONTROL VALVE	430
LINES GP-PILOT	434
LINES GP-PUMP	442
LINES GP-TILT CYLINDER	450
LINES GP-WORK TOOL	480
MANIFOLD & MTG GP-CONTROL	495
MANIFOLD GP-CONTROL	498
MOTOR & MTG GP-HYDRAULIC FAN	501
MOTOR GP-GEAR	505
MOUNTING GP-CYLINDER	509
PLUG GP-PILOT VALVE	512
PUMP & MTG GP-WORK TOOL	513
PUMP GP-GEAR	517
TANK & MTG GP-HYDRAULIC	519
TANK GP-HYDRAULIC	520
VALVE & LINES GP-COUPLER	521
VALVE & MTG GP-CONTROL	536
VALVE & MTG GP-DIVERTER	540
VALVE & MTG GP-SOLENOID	543
VALVE GP-CONTROL	545
VALVE GP-DIVERTER	553
VALVE GP-PILOT	555
VALVE GP-RELIEF	557
VALVE GP-SOLENOID	558
WORK TOOLS	562
ARM GP-MATERIAL HANDLING	562
BLADE AR	563
BLADE GP-ANGLING	566
BUCKET AR-GRAPPLE	570
BUCKET AR-MULTIPURPOSE	572
BUCKET GP-DIRT	575
BUCKET GP-GENERAL PURPOSE	579
BUCKET GP-GRAPPLE	585
BUCKET GP-LIGHT MATERIAL	588
BUCKET GP-MULTIPURPOSE	590
BUCKET GP-UTILITY	593
CARRIAGE & FORK AR	596
CONVERSION AR-QUICK COUPLER	597
CONVERSION GP-WORK TOOL	603
COUPLER AR-QUICK	604
COUPLER GP-QUICK	606
COVER GP-LINES	609
CYLINDER & LINK GP-COUPLER	610
EDGE GP-BIT & CUTTING	612
EDGE GP-CUTTING	613
FORK AR-GRAPPLE	617
FORK GP-GRAPPLE	619
FORK GP-PALLET	622
FORK GP-UTILITY	623
GRAPPLE & CYLINDER GP-UTILITY	628
GRAPPLE GP-UTILITY	630
HANDLE & PIN GP-COUPLER	631
HANDLE GP-COUPLER	633

TABLE OF CONTENTS

Name	Page
KIT-ROADING PLATE & MOUNTING	635
LINK GP-COUPLER	636
LOCK GP-QUICK COUPLER	638
PLATE GP-ROADING	639
PUMP GP-DIAPHRAGM	641
SPRING GP-BLADE	643
STEP GP-MATERIAL HANDLING ARM	644
STRAINER GP-WATER	645
TANK & MTG GP-WATER	646
TANK GP-WATER	653
TOOTH GP-UNI	654
OPERATOR STATION	655
ACCUMULATOR GP-REFRIGERANT	655
AIR CONDITIONER & MOUNTING GP	657
AIR CONDITIONER AR	658
AIR CONDITIONER GP	659
ARMREST & MOUNTING GP	661
ARMREST GP	662
BOX GP-STORAGE	664
CAB AR-ENCLOSED ROPS	665
CAB GP-ENCLOSED ROPS	666
COMPRESSOR & MOTOR GP-REFRIG	667
COMPRESSOR & MTG GP-REFRIG	668
CONDENSER & MTG GP-REFRIGERANT	669
COUPLING GP-DRIVE	671
COVER GP-CONSOLE	673
COVER GP-INSTRUMENT PANEL	675
DOOR & MTG GP-CAB	676
DOOR GP-CAB	682
DUCT & CONTROL GP	687
FRAME GP-WINDOW	688
GAUGE & WARNING GP	690
GUARD GP-ROPS/FOPS	693
HANDHOLD GP	694
HEATER & MTG GP-CAB	695
HEATER AR-CAB	696
HEATER GP-CAB	697
HOUSING AS-SIDE	700
INSTALLATION AR	701
INSTALLATION GP	704
KIT-CAB DOOR & MOUNTING	706
KIT-CAB SEAL	708
LEVER GP-GOVERNOR	709
LINER GP-CAB	710
LINER-CAB	711
LINES GP-AIR CONDITIONER	712
LINES GP-HEATER	720
LITERATURE GP	721
MIRROR GP-REAR VIEW	722
MODULE GP-WARNING INDICATOR	723
MOUNTING GP-ROPS	726
PANEL AR-INSTRUMENT	727
PANEL GP-INSTRUMENT	728
PANEL GP-SIDE	732
PEDAL GP-GOVERNOR	734
PLATFORM GP-OPERATOR	736
SEAL GP-CAB	738
SEAT BELT GP	739
SEAT GP	747
SPRING GP-GAS	749
SUSPENSION GP-SEAT	750
VISOR GP-CAB	751
WINDOW GP-CAB	753
SERVICE EQUIPMENT AND SUPPLIES	760
FILM GP	760
PLATE & FILM GP	773
PART NUMBER INDEX	B1

TABLE DES MATIÈRES

Désignation	Page
GÉNÉRALITÉS	A23
OPTIONS DE RÉPARATION	A40
ADDITIFS POUR LIQUIDE DE REFROIDISSEMENT	A45
PIÈCES DE RECHANGE	A53
INDEX	A82
MACHINE COMPLÈTE	1
VERSION DE CHASSIS	1
VERSION NORMALE	1
VERSION DE TRANSFORMATION MACHINE	4
MOTEUR COMPLET	19
MOTEUR (VERSION)	19
MOTEUR (VERSION PRINCIPALE)	21
MONTAGE DE MOTEUR (VERSION)	23
MOTEUR DE BASE	27
ARBRE A CAMES (ASS)	27
CACHE-SOUPAPES (ASS)	29
VILEBREQUIN (ASS)	35
BLOC-CYLINDRES (ASS)	42
CULASSE (ASS)	49
VIDANGE-HUILE DE MOTEUR (ASS)	53
VOLANT MOTEUR (ASS)	54
PROTEGE-COURROIE (ASS)	55
CARTER DE VOLANT (ASS)	56
CARTER AV (ASS)	57
OEILLETONS DE LEVAGE MOTEUR (ASS)	61
MONTAGE DE MOTEUR (ASS)	63
MONTAGE DE VENTILATEUR (ASS)	65
HUILE MOTEUR - CARTER (ASS)	66
PISTON ET BIELLE (ASS)	74
VILEBREQUIN - POULIE (ASS)	77
POULIE DE POMPE À EAU (ASS)	78
CULBUTERIE (ASS)	80
CIRCUIT DE GRAISSAGE	83
FILTRE À HUILE MOTEUR (ASS)	83
CIRCUIT DE REFROIDISSEMENT	84
SUPPORT DE FILTRE ET REFROIDISSEUR D'HUILE MOTEUR	84
MONTAGE DE RADIATEUR ET REFROIDISSEUR D'HUILE (ASS)	85
POMPE A EAU (ASS)	89
RADIATEUR ET REFROIDISSEUR D'HUILE HYDRAULIQUE (ASS)	98
RADIATEUR ET REFROIDISSEUR D'HUILE-MONTAGE (ASS)	102
CIRCUIT D'ADMISSION D'AIR ET D'ÉCHAPPEMENT	108
FILTRE A AIR (ASS)	108
CANALISATIONS D'AIR (ASS)	110
COLLECTEUR D'ÉCHAPPEMENT (ASS)	112
SILENCIEUX ET MONTAGE (ASS)	114
SILENCIEUX (ASS)	116
TURBOCOMPRESSEUR (ASS)	119
CIRCUIT DE CARBURANT	123
CÂBLE DE COMMANDE DU RÉGULATEUR (ASS)	123
COMMANDE DE RÉGULATEUR (ASS)	124
FILTRE DE SÉPARATEUR D'EAU ET DE CARBURANT (ASS)	125
REGULATEUR (ASS)	126
CANALISATIONS DE FILTRE ET D'AMORÇAGE DE CARBURANT (ASS)	132
POMPE D'ALIMENTATION ET MONTAGE (ASS)	136
POMPE D'INJECTION DE CARBURANT (ASS)	137
*PUMP GP-FUEL PRM & PRIM FILTER	142
CIRCUIT ÉLECTRIQUE ET DE DÉMARRAGE	143
ALTERNATEUR DE CHARGE (ASS)	143
BATTERIE (ASS)	145
BRANCHEMENT ÉLECTRIQUE (ASS)	147
COMMANDE D'INTERVERROUILLAGE (ASS)	150
VERSION DE TRANSFORMATION - DÉPLACEMENT NON ROUTIER	151
COUVERCLE - PANNEAU DE FUSIBLES (ASS)	152
COMMANDE ÉLECTRONIQUE D'ÉQUIPEMENT (ASS)	153
BOULONNERIE DE FAISCEAU DE CABLES	154
BOUGIE DE PRÉCHAUFFAGE (ASS)	155
EAU DES CHEMISES - RECHAUFFEUR (ASS)	156
MONTAGE-SÉCURITÉ (ASS)	158
*KIT-WORK TOOL CONTROL & WIRING	160
*KIT-WORK TOOL WIRING	162

* TRADUCTION NON DISPONIBLE AU MOMENT DE LA PUBLICATION

TABLE DES MATIÈRES

Désignation	Page
LAMPE - PHARE (ASS)	164
LAMPE - PHARE ET CLIGNOTANT	166
FEUX ARRIÈRE ET FEUX D'ARRÊT	168
LAMPE - GYROPHARE (ASS)	170
ÉCLAIRAGE - PROJECTEURS (ASS)	171
ÉCLAIRAGE - FEUX DE ROUTE (ASS)	173
ÉCLAIRAGE-FEUX DE STOP ET ARRIÈRE (ASS)	177
ÉCLAIRAGE - GYROPHARE (ASS)	178
CAPTEUR - TEMP. ET PRESSION (ASS)	179
ENTRETIEN DE LA MACHINE (ASS)	182
DÉMARREUR ÉLECTRIQUE (ASS)	183
MANOCONTACT	186
AVERTISSEUR DE RECUL (ASS)	187
CABLAGE - CLIMATISEUR (ASS)	188
CABLAGE DE CHASSIS (ASS)	189
CABLAGE DE MOTEUR (ASS)	192
CÂBLAGE DE KLAXON (ASS)	196
CABLAGE DE LA MACHINE (ASS)	197
CABLAGE D'ECLAIRAGE ARRIERE (ASS)	199
CÂBLAGE - OUTIL DE TRAVAIL (ASS)	200
TRANSMISSION	204
ESSIEU (ASS)	204
COMMANDE DE FREIN DE STATIONNEMENT (ASS)	207
ENTRAINEMENT EN TANDEM (ASS)	223
FILTRE ET CANALISATIONS HYRAULIQUES (ASS)	225
FILTRE A HUILE (ASS)	229
CANALISATIONS HYDROSTATIQUES (ASS)	230
COLLECTEUR-RETOUR (ASS)	234
MOTEUR ET MONTAGE - HYDROSTATIQUE (ASS)	238
GROUPE DE MOTEUR A PISTONS	239
MONTAGE DE POMPE (ASS)	241
TRANSMISSION (VERSION)	242
POMPE HYDROSTATIQUE ET MONTAGE (ASS)	243
POMPE A PISTONS (ASS)	247
PNEU ET JANTE (ASS)	251
SOUPAPE ET MONTAGE - SOLÉNOÏDE	267
SOUPAPE - SOLÉNOÏDE (ASS)	270
ROUE ET PNEU (VERSION)	271
CHÂSSIS ET BENNE	279
PARE-CHOCS (ASS)	279
VERSION DE TRANSFORMATION POUR DÉPLACEMENT ROUTIER	281
GROUPE DE TRANSFORMATION - DÉPLACEMENT ROUTIER	292
CONTREPOIDS (ASS)	296
CARENAGE DE MOTEUR (ASS)	301
BÂTI DE MACHINE ET MONTAGE (ASS)	303
BÂTI DE LAME (ASS)	308
GUIDE - CANALISATIONS (ASS)	309
*KIT-ROADING CONVERSION	310
MACHINE DE LEVAGE	311
RÉTROVISEUR ET MONTAGE (ASS)	315
MONTAGE - IMMATRICULATION (ASS)	317
MONTAGE DE FEUX DE DÉPLACEMENT SUR ROUTE (ASS)	319
INSONORISATION (ASS)	321
CIRCUIT HYDRAULIQUE	322
ACCUMULATEUR ET MONTAGE - HYDRAULIQUE (ASS)	322
RACCORD DE CANALISATION D'HUILE (ASS)	323
COMMANDE DE POIGNÉE (ASS)	324
COMMANDE HYDRAULIQUE PILOTE (ASS)	332
VÉRIN DE LAME D'ORIENTATION ET MONTAGE (ASS)	352
VÉRIN DE BRAS DE LEVAGE ET MONTAGE (ASS)	354
VERIN DE GODET (ASS)	359
VÉRIN DE COUPLEUR (ASS)	360
PINCE - VÉRIN (ASS)	361
VÉRIN HYDRAULIQUE (ASS)	363
VÉRIN DE LEVAGE (ASS)	364
VÉRIN D'INCLINAISON (ASS)	367
GRAISSEUR HYDRAULIQUE (ASS)	369
POIGNÉE MODULAIRE (ASS)	372
VERSION HYDRAULIQUE	374
*KIT-HIGH FLOW CONVERSION	382
*KIT-QUICK COUPLER CONVERSION	388
ECLAIRAGE DE GODET (ASS)	391
CANALISATIONS - BRANCHEMENT (ASS)	396
PINCE - CANALISATIONS (ASS)	400
CANALISATIONS HYDRAULIQUES DE VENTILATEUR (ASS)	404
CANALISATIONS DE REFROIDISSEUR D'HUILE HYDR. (ASS)	416
CANALISATIONS DE VÉRIN DE LEVAGE (ASS)	418
CANALISATIONS-VALVE DE CONTROLE DE CHARGE	430

* TRADUCTION NON DISPONIBLE AU MOMENT DE LA PUBLICATION

TABLE DES MATIÈRES

Désignation	Page
CANALISATIONS A COMMANDE PILOTE (ASS)	434
CANALISATIONS DE POMPE (ASS)	442
CANALISATIONS DU VÉRIN D'INCLINAISON (ASS)	450
CANALISATIONS - OUTIL DE TRAVAIL (ASS)	480
COMMANDE DE COLLECTEUR ET MONTAGE (ASS)	495
COLLECTEUR - COMMANDE (ASS)	498
MOTEUR ET MONTAGE DE VENTILATEUR HYDRAULIQUE (ASS)	501
MOTEUR À ENGRENAGES (ASS)	505
MONTAGE DE VÉRIN (ASS)	509
BOUCHON DE SOUPAPE PILOTE (ASS)	512
POMPE ET MONTAGE - OUTIL DE TRAVAIL (ASS)	513
POMPE A ENGRENAGES (ASS)	517
RÉSERVOIR HYDRAULIQUE ET MONTAGE (ASS)	519
RÉSERVOIR HYDRAULIQUE (ASS)	520
SOUPAPE ET CANALISATIONS DE COUPLEUR (ASS)	521
DISTRIBUTEUR ET MONTAGE (ASS)	536
SOUPAPE DE DÉRIVATION ET MONTAGE	540
SOUPAPE ET MONTAGE - SOLÉNOÏDE	543
DISTRIBUTEUR (ASS)	545
SOUPAPE DE DERIVATION (ASS)	553
SOUPAPE PILOTE (ASS)	555
CLAPET DE DECHARGE (ASS)	557
SOUPAPE - SOLÉNOÏDE (ASS)	558
OUTILS DE TRAVAIL	562
BRAS DE MANUTENTION (ASS)	562
LAME (VERSION)	563
*BLADE GP-ANGLING	566
LAME À ORIENTATION (ASS)	567
GODET - PINCE (VERSION)	570
GODET TOUS-TRAVAUX (VERSION)	572
GODET POUR TERRASSEMENT (ASS)	575
GODET NORMAL (ASS)	579
GODET - PINCE (ASS)	585
GODET POUR MATERIAUX LEGERS (ASS)	588
GODET TOUS-TRAVAUX (ASS)	590
GODET POUR TRAVAUX DE SERVITUDE (ASS)	593
VERSION DE TABLIER ET DE FOURCHE	596
VERSION DE TRANSFORMATION - COUPLEUR EXPRESS	597
*CONVERSION GP-WORK TOOL	603
COUPLEUR EXPRESS (VERSION)	604
COUPLEUR EXPRESS (ASS)	606
COUVERCLE-CANALISATIONS (ASS)	609
VÉRIN ET BIELLE DE COUPLEUR (ASS)	610
EMBOUT ET LAME DE COUPE (ASS)	612
LAME DE COUPE (ASS)	613
FOURCHE - PINCE (VERSION)	617
FOURCHE - PINCE (ASS)	619
FOURCHE PALLETTE (ASS)	622
FOURCHE-RÉSEAU PUBLIC (ASS)	623
GRAPPIN ET VÉRIN POUR TRAVAUX DE SERVITUDE (ASS)	628
PINCE-RÉSEAU PUBLIC (ASS)	630
POIGNÉE ET AXE DE COUPLEUR (ASS)	631
POIGNÉE DE COUPLEUR (ASS)	633
KIT DE PLAQUE DE DÉPLACEMENT ROUTIER ET MONTAGE	635
BIELLE DE COUPLEUR (ASS)	636
VERROUILLAGE DE COUPLEUR EXPRESS (ASS)	638
PLAQUE-DÉPLACEMENT ROUTIER (ASS)	639
POMPE - DIAPHRAGME (ASS)	641
RESSORT DE LAME (ASS)	643
MARCHEPIED-BRAS DE MANUTENTION (ASS)	644
TAMIS D'EAU (ASS)	645
RÉSERVOIR D'EAU ET MONTAGE (ASS)	646
RÉSERVOIR D'EAU (ASS)	653
DENT MONOBLOC (ASS)	654
POSTE DE CONDUITE	655
ACCUMULATEUR - CLIMATISEUR (ASS)	655
CLIMATISEUR ET MONTAGE (ASS)	657
CLIMATISEUR (VERSION)	658
CLIMATISEUR (ASS)	659
ACCOUDOIR ET MONTAGE (ASS)	661
ACCOUDOIR (ASS)	662
COFFRE DE RANGEMENT (ASS)	664
CABINE ROPS FERMÉE (VERSION)	665
FILTRE - ELECTRONIQUE (ASS)	666
COMPRESSEUR ET MOTEUR DE RÉFRIGÉRATION (ASS)	667
COMPRESSEUR ET MONTAGE - RÉFRIGÉRANT (ASS)	668

* TRADUCTION NON DISPONIBLE AU MOMENT DE LA PUBLICATION

TABLE DES MATIÈRES

Désignation	Page
CONDENSATEUR ET MONTAGE (RÉFRIGÉRANT)	669
ACCOUPLEMENT D'ENTRAINEMENT (ASS)	671
COUVERCLE DE LA CONSOLE (ASS)	673
COUVERCLE DU TABLEAU DE BORD (ASS)	675
PORTE DE CABINE ET MONTAGE (ASS)	676
PORTIÈRE DE CABINE (ASS)	682
CONDUIT ET COMMANDE (ASS)	687
CADRE DE VITRE (ASS)	688
INDICATEURS ET TÉMOINS LUMINEUX (ASS)	690
PROTECTION DE ROPS/FOPS (ASS)	693
POIGNÉE	694
CHAUFFAGE ET MONTAGE - CABINE (ASS)	695
CHAUFFAGE DE CABINE (VERSION)	696
CHAUFFAGE DE CABINE (ASS)	697
CÔTÉ CARTER (ENS)	700
MONTAGE (VERSION)	701
GROUPE DE MONTAGE	704
KIT DE PORTE DE CABINE ET MONTAGE	706
*KIT-CAB SEAL	708
LEVIER DE RÉGULATEUR (ASS)	709
CABINE - REVÊTEMENT (ASS)	710
CAPITONNAGE	711
CANALISATIONS DE CLIMATISEUR (ASS)	712
CANALISATIONS DE CHAUFFAGE (ASS)	720
LITTÉRATURE (ASS)	721
RÉTROVISEUR (ASS)	722
MODULE - TÉMOIN (ASS)	723
MONTAGE DU TOIT ROPS (ASS)	726
VERSION DE TABLEAU DE BORD	727
TABLEAU DE BORD (ASS)	728
PANNEAU LATERAL (ASS)	732
RÉGULATEUR - PÉDALE (ASS)	734
PLATE-FORME DE CABINE	736
JOINT DE CABINE (ASS)	738
CEINTURE DE SECURITE (ASS)	739
SIÈGE (ASS)	747
RESSORT-GAZ (ASS)	749
SIÈGE AVEC SUSPENSION (ASS)	750
RETROVISEUR - CABINE (ASS)	751
VITRE DE CABINE (ASS)	753
MATÉRIEL ET FOURNITURES D'ENTRETIEN	760
PLAQUE SIGNALÉTIQUE (ASS)	760
PLAQUES SIGNALETIQUES ET AUTOCOLLANTS (ASS)	773
INDEX DE NUMÉROS DE PIÈCES	B1

* TRADUCTION NON DISPONIBLE AU MOMENT DE LA PUBLICATION

CONTENIDO

Nombre	Página
INFORMACIÓN GENERAL	A27
ALTERNATIVAS DE REPARACIÓN	A41
ADITIVOS DE REFRIGERANTE SUPLEMENTARIOS	A46
PIEZAS DE MANTENIMIENTO	A58
INDICE	A94
CONFIGURACION DE LA MAQUINA	1
CHASIS (CONFIG)	1
CONFIGURACIÓN COMÚN	1
*CONVERSION AR-MACHINE	4
CONFIGURACION DE MOTOR	19
CONFIGURACIÓN DE MOTORES	19
MOTOR PRIMARIO (CONFIG)	21
CONFIGURACIÓN DE INSTALACIÓN DEL MOTOR	23
MOTOR BASICO	27
ÁRBOL DE LEVAS (GR)	27
TAPA DEL MECANISMO DE VÁLVULAS (GR)	29
CIGÜEÑAL (GR)	35
BLOQUE MOTOR (GR)	42
CULATA DE CILINDROS (GR)	49
DRENAJE DEL ACEITE DE MOTOR	53
VOLANTE (GR)	54
PROTECTOR DE CORREA (GR)	55
VOLANTE - CAJA DE (GR)	56
CAJA DELANTERA (GR)	57
CÁNCAMOS DE LEVANTAMIENTO DEL MOTOR (GR)	61
MONTAJE DEL MOTOR (GR)	63
MONTAJE DEL VENTILADOR (GR)	65
CÁRTER - COLECTOR DEL (GR)	66
PISTÓN Y BIELA (GR)	74
CIGÜEÑAL - POLEA DE (GR)	77
GRUPO, MANIJA, BOMBA DE AGUA	78
MECANISMO DE VÁLVULAS (GR)	80
SISTEMA DE LUBRICACION	83
FILTRO DE ACEITE DEL MOTOR (GR)	83
SISTEMA DE ENFRIAMIENTO	84
ENFRIADOR DE ACEITE DEL MOTOR Y BASE DEL FILTRO	84
GRUPO DEMONTAJE DE RADIADOR Y ENFRIAMIENTO DE ACEITE	85
BOMBA DE AGUA (GR)	89
RADIADOR Y ENFRIADOR DE ACEITE HIDRÁULICO (GR)	98
MONTAJE DE RADIADOR Y ENFRIAMIENTO DE ACEITE (GR)	102
SISTEMA DE ESCAPE Y ADMISION DE AIRE	108
FILTRO DE AIRE (GR)	108
AIRE - TUBERÍAS DE (GR)	110
MÚLTIPLE DE ESCAPE (GR)	112
SILENCIADOR Y MONTAJE GR	114
SILENCIADOR (GR)	116
TURBOCOMPRESOR (GR)	119
SISTEMA DE COMBUSTIBLE	123
CABLE GR-CONTROL DE MANDO	123
CONTROL DE REGULADOR (GR)	124
FILTRO DE COMBUSTIBLE Y SEPARADOR DE AGUA (GR)	125
REGULADOR (GR)	126
TUBERIAS (GR) -COMBUSTIBLE PRIMARIO Y FILTRO	132
BOMBA DE TRANSFERENCIA DE COMBUSTIBLE Y MONTAJE (GR)	136
BOMBA DE INYECCIÓN DE COMBUSTIBLE (GR)	137
*PUMP GP-FUEL PRM & PRIM FILTER	142
SISTEMA DE ARRANQUE ELECTRICO	143
CARGA - ALTERNADOR DE (GR)	143
BATERÍA (GR)	145
CONEXIÓN ELÉCTRICA (GR)	147
CONTROL DE TRABA (GR)	150
CONFIGURACIÓN DE TRANSFORMACIÓN PARA OBRAS	151
CUBIERTO DEL PANEL DE FUSIBLES (GR)	152
IMPLEMENTOS (GR ELECTRÓNICO)	153
TORNILLERIA DE MAZO DE CABLES (GR)	154
BUJÍA INCANDESCENTE (GR)	155
AGUA DE LAS CAMISAS - CALENTADOR DEL (GR)	156
INSTALACION DE SEGURIDAD (GR)	158
*KIT-WORK TOOL CONTROL & WIRING	160
*KIT-WORK TOOL WIRING	162
REFLECTOR (GR)	164
LÁMPARA DE LUZ DELANTERA Y DE SEÑAL (GR)	166
LUCES DE PARADA Y COLA (GR)	168
LÁMPARA DE BALIZA DE ADVERTENCIA (GR)	170

* NO HAY TRADUCCION DISPONIBLE EN EL MOMENTO DE LA IMPRESION

CONTENIDO

Nombre	Página
LUCES DE REFLECTOR (GR)	171
LUCES DE DESPLAZAMIENTO (GR)	173
LUCES DE PARADA Y DE COLA (GR)	177
LUZ DE BALIZA (GR)	178
GRUPO DE SENSORES DE TEMPERATURA Y PRESIÓN	179
SERVICIO DE MAQUINA (GR)	182
MOTOR DE ARRANQUE ELÉCTRICO (GR)	183
INTERRUPTOR DE PRESIÓN (GR)	186
RETROCESO - ALARMA DE (GR)	187
CABLES DEL ACONDICIONADOR DE AIRE (GR)	188
CABLES DEL CHASIS (GR)	189
CABLES DEL MOTOR (GR)	192
CABLE GR-BOCINA	196
CABLES DE LA MÁQUINA (GR)	197
ALAMBRADO DE LUCES TRASERAS (GR)	199
CABLES DE LA HERRAMIENTA DE TRABAJO (GR)	200
TREN DE FUERZA	204
EJE (GR)	204
CONTROL DEL FRENO DE ESTACIONAMIENTO	207
MANDO TANDEM (GR)	223
FILTROS Y TUBERÍAS HIDRÁULICAS (GR)	225
FILTRO DE ACEITE (GR)	229
TUBERÍAS HIDROSTÁTICAS (GR)	230
RETORNO EN EL MULTIPLE(GR)	234
MOTOR HIDROSTATICO Y MONTAJE (GR)	238
PISTONES DEL MOTOR (GR)	239
MONTAJE DE LA BOMBA (GR)	241
TREN DE FUERZA (CONFIG)	242
HIDROSTATICO, BOMBA Y GRUPO DE MONTAJE	243
BOMBA DE PISTONES (GR)	247
ARO Y LLANTA (GR)	251
VALVULA DE SOLENOIDE Y MONTAJE (GR	267
VÁLVULA DE SOLENOIDE (GR)	270
RUEDA Y LLANTA (CONFIG)	271
BASTIDOR Y CAJA	279
PARACHOQUES (GR)	279
CONFIGURACIÓN DE TRANSFORMACIÓN PARA CARRETERA	281
CONVERSION PARA DESPLAZAMIENTO POR CARRETERA (GR)	292
CONTRAPESO (GR)	296
COMPARTIMIENTO DEL MOTOR (GR)	301
BASTIDOR Y MONTAJE (GR)-MAQUINA	303
BASTIDOR DE HOJA (GR)	308
TUBERIAS DE LA GUIA (GR)	309
*KIT-ROADING CONVERSION	310
LEVANTAMIENTO DE LA MÁQUINA (GR)	311
RETROVISOR Y MONTAJE (GR)	315
MONTAJE-REGISTRO (GR)	317
MONTAJE DE LUCES DE DESPLAZAMIENTO POR CARRETERA (GR)	319
INSONORIZADOR (GR)	321
SISTEMA HIDRAULICO	322
ACUMULADOR HIDRAULICO Y MONTAJE (GR)	322
GRUPO ADAPTADOR-TUBERIA DE ACEITE	323
CONTROL DE MANIJA (GR)	324
CONTROL HIDRÁULICO DE OPERACIÓN PILOTO (GR)	332
CILINDRO Y MONTAJE (GR)- INCLINACIÓN DE LA HOJA	352
GRUPO DE MONTAJE Y CILINDRO, LEVANTAMIENTO DEL BRAZO	354
CILINDRO DE CUCHARÓN (GR)	359
CILINDRO DEL ACOPLADOR (GR)	360
CILINDRO DE GARFIO (GR)	361
CILINDRO HIDRÁULICO (GRUPO)	363
CILINDRO DE LEVANTAMIENTO (GR)	364
INCLINACIÓN HORIZONTAL - CILINDRO DE (GR)	367
CONEXION HIDRAULICA (GR)	369
MANIJA MODULAR (GR)	372
HIDRÁULICA (CONFIG)	374
*KIT-HIGH FLOW CONVERSION	382
*KIT-QUICK COUPLER CONVERSION	388
TUBERÍAS DEL CUCHARÓN (GR)	391
TUBERIAS DE CONEXION (GR)	396
TUBERÍAS DEL GARFIO (GR)	400
TUBERÍAS HIDRÁULICAS DEL VENTILADOR (GR)	404
TUBERÍAS DEL ENFRIADOR DE ACEITE HIDRÁULICO (GR)	416
CILINDRO DE LEVANTAMIENTO - TUBERÍAS DEL (GR)	418
TUBERIAS DE VALVULA DE CONTROL DE CARGA (GR)	430
TUBERÍAS CON SERVOMANDO (GR)	434
BOMBA - TUBERÍAS DE (GR)	442

* NO HAY TRADUCCION DISPONIBLE EN EL MOMENTO DE LA IMPRESION

CONTENIDO

Nombre	Página
TUBERÍAS DEL CILINDRO DE INCLINACIÓN (GR)	450
TUBERIAS DE LA HERRAMIENTA DE TRABAJO	480
MULTIPLE Y MONTAJE (GR) - CONTROL	495
CONTROL DEL MULTIPLE (GR)	498
MOTOR Y MONTAJE DE VENTILADOR HIDRAULICO (GR)	501
MOTOR DE ENGRANAJES (GR)	505
MONTAJE DE CILINDRO (GR)	509
TAPON DE LA VALVULA PILOTO (GR)	512
BOMBA Y MONTAJE DE LA HERRAMIENTA DE TRABAJO (GR)	513
BOMBA DE ENGRANAJES (GR)	517
TANQUE HIDRÁULICO Y MONTAJE (GR)	519
TANQUE HIDRÁULICO (GR)	520
GR. VÁLVULA Y TUBERIAS-ACOPLADOR	521
VÁLVULA DE CONTROL Y MONTAJE (GR)	536
VÁLVULA DE DERIVACIÓN Y MONTAJE (GR)	540
VALVULA DE SOLENOIDE Y MONTAJE (GR	543
VÁLVULA DE CONTROL (GR)	545
VÁLVULA DE DERIVACIÓN (GR)	553
VÁLVULA PILOTO (GR)	555
VÁLVULA DE ALIVIO (GR)	557
VÁLVULA DE SOLENOIDE (GR)	558
HERRAMIENTAS	562
AGUILÓN TELESCÓPICO (GR)	562
HOJA (CONFIG)	563
*BLADE GP-ANGLING	566
HOJA ORIENTABLE (GR)	567
CUCHARON DE GARFIO (CONF)	570
CUCHARÓN DE USO MÚLTIPLE (CONFIG)	572
CUCHARÓN PARA TIERRA (GR)	575
CUCHARÓN DE USO GENERAL (GR)	579
CUCHARON DE GARFIO (GR)	585
CUCHARÓN PARA MATERIAL LIVIANO (GR)	588
CUCHARÓN DE USO MÚLTIPLE (GR)	590
CUCHARÓN UTILITARIO (GR)	593
CARGADOR Y HORQUILLA (CONF)	596
CONFIG. DE CONVERSIÓN DEL ACOPLAMIENTO RÁPIDO	597
*CONVERSION GP-WORK TOOL	603
ACOPLADOR RÁPIDO (CONFIG)	604
ACOPLADOR RÁPIDO (GR)	606
TAPA DE TUBERIAS (GR)	609
GRUPO DE CILINDRO Y ESLABON, ACOPLADOR	610
GRUPO DE CANTONERA Y CUCHILLA	612
CUCHILLA (GR)	613
HORQUILLA DE GARFIO (CONF)	617
HORQUILLA DE GARFIO (GR)	619
HORQUILLA PARA TARIMAS (GR)	622
HORQUILLA DE UTILIDAD (GR)	623
GRUPO DE CILINDRO Y GARFIO, UTILITARIO	628
GARFIO DE UTILIDAD (GR)	630
GRUPO DE MANIJA Y PIN-ACOPLADOR	631
ACOPLADOR DE MANIJA	633
JUEGO-PLACA DE DESPLAZAMIENTO Y MONTAJE	635
GRUPO DE ESLABON, ACOPLADOR	636
TRABA-ACOPLADOR RAPIDO (GR)	638
PLACA DE DESPLAZAMIENTO POR CARRETERA (GR)	639
BOMBA DEL DIAFRAGMA (GR)	641
RESORTE DE HOJA (GR)	643
ESCALON DE BRAZO DE MANEJO DE MATERIALES (GR)	644
COLADOR DEL AGUA (GR)	645
MONTAJE DEL TANQUE DE AGUA (GR)	646
TANQUE DEL AGUA (GR)	653
DIENTE DE UNA PIEZA (UNI-TOOTH) (GR)	654
ESTACION DEL OPERADOR	655
ACUMULADOR DEL ACONDICIONADOR DE AIRE (GR)	655
ACONDICIONADOR DE AIRE Y MONTAJE (GR)	657
ACONDICIONADOR DE AIRE (CONFIG)	658
ACONDICIONADOR DE AIRE (GR)	659
POSABRAZOS Y MONTAJE (GR)	661
POSABRAZOS (GR)	662
CAJA DE ALMACENAMIENTO	664
SISTEMA ROPS DE CABINA CERRADA (CONFIG)	665
CABINA INCLUYE ROPS (GR)	666
COMPRESOR Y MOTOR GR-REFRIGERANTE	667
COMPRESOR DE REFRIGERANTE Y GRUPO DE MONTAJE	668
CONDENSADOR DEL REFRIGERANTE Y MONTAJE (GR)	669

* NO HAY TRADUCCION DISPONIBLE EN EL MOMENTO DE LA IMPRESION

CONTENIDO

Nombre	Página
*COUPLING GP-DRIVE	671
TAPA DE LA CONSOLA (GR)	673
TAPA DEL TABLERO DE INSTRUMENTOS (GR)	675
PUERTA Y MONTAJE DE CABINA (GR)	676
PUERTA DE CABINA	682
CONDUCTO Y CONTROL (GR)	687
BASTIDOR DE LA VENTANA (GR)	688
INDICADORES Y ADVERTENCIA (GR)	690
PROTECTOR DE ROPS/FOPS	693
PASAMANOS (GR)	694
CALEFACCIÓN Y MONTAJE DE LA CABINA (GR)	695
CALEFACCIÓN DE LA CABINA (CONFIG)	696
CALEFACCIÓN DE LA CABINA (GR)	697
COMPARTIMENTO CONJ-LATERAL	700
INSTALACIÓN (CONFIG)	701
GRUPO DE INSTALACIÓN	704
JUEGO, PUERTA DE CABINA Y MONTAJE	706
*KIT-CAB SEAL	708
GRUPO DE PALANCA-REGULADOR	709
REVESTIMIENTO DE LA CABINA (GR)	710
REVESTIMIENTO-TECHO	711
TUBERÍAS DE ACONDICIONADOR DE AIRE (GR)	712
TUBERÍAS DE LA CALEFACCIÓN (GR)	720
PUBLICACIONES (GR)	721
RETROVISOR (GR)	722
MÓDULO INDICADOR DE ADVERTENCIA (GR)	723
MONTAJE DE LA ESTRUCTURA ROPS (GR)	726
TABLERO DE INSTRUMENTOS (CONFIG)	727
TABLERO DE INSTRUMENTOS (GR)	728
PANEL LATERAL (GR)	732
REGULADOR - PEDAL DEL (GR)	734
PLATAFORMA DE LA CABINA	736
SELLO DE CABINA (GR)	738
CINTURÓN DE SEGURIDAD (GR)	739
ASIENTO (GR)	747
RESORTE DE GAS (GR)	749
ASIENTO CON SUSPENSIÓN (GR)	750
VISERA (GR)	751
VENTANA DE LA CABINA (GR)	753
EQUIPO DE SERVICIO Y SUMINISTROS	760
ETIQUETA DE ADVERTENCIA (GR)	760
CALCOMANÍAS Y PLACAS DE IDENTIFICACIÓN (GR)	773
INDICE DE NUMEROS DE PIEZA	B1

* NO HAY TRADUCCION DISPONIBLE EN EL MOMENTO DE LA IMPRESION

ÍNDICE

Designação	Página
INFORMAÇÃO GERAL	A31
ALTERNATIVAS DE REPARO	A42
ADITIVOS SUPLEMENTARES DO LÍQUIDO ARREFECEDOR	A47
PEÇAS DE MANUTENÇÃO	A63
ÍNDICE	A106
ARRANJO DA MÁQUINA	1
CHASSI	1
ARRANJO BÁSICO	1
MÁQUINA - CONVERSÃO	4
ARRANJO DO MOTOR	19
MOTOR	19
MOTOR PRIMÁRIO	21
GRUPO DE INSTALAÇÃO - MOTOR	23
MOTOR BÁSICO	27
EIXO-COMANDO DE VÁLVULA	27
TAMPA - MECANISMO DAS VÁLVULAS	29
VIRABREQUIM	35
BLOCO DO MOTOR	42
CABEÇOTE DO MOTOR	49
DRENO - ÓLEO DO MOTOR	53
VOLANTE DO MOTOR	54
PROTETOR - CORREIAS	55
CAIXA DO VOLANTE DO MOTOR	56
CAIXA DIANTEIRA	57
LEVANTAMENTO DO MOTOR	61
MONTAGEM - MOTOR	63
MONTAGEM - VENTILADOR	65
CÁRTER DO ÓLEO DO MOTOR	66
PISTÃO E BIELA	74
POLIA DO VIRABREQUIM	77
GRUPO DE POLIA - BOMBA DE ÁGUA	78
MECANISMO DAS VÁLVULAS	80
SISTEMA DE LUBRIFICAÇÃO	83
FILTRO - ÓLEO DO MOTOR	83
SISTEMA DE ARREFECIMENTO	84
ARREFECEDOR DE ÓLEO DO MOTOR E BASE DO FILTRO	84
SUPORTE - ARREFECEDR DE ÓLEO E RADIADOR	85
BOMBA DE ÁGUA	89
RADIADOR E ARREFECEDOR DO ÓLEO HIDRÁULICO	98
RADIADOR E ARREFECEDOR DE ÓLEO - MONTAGEM	102
SISTEMA DE ADMISSÃO DE AR E DE ESCAPE	108
PURIFICADOR DE AR	108
TUBOS - AR	110
COLETOR DE ESCAPE	112
AMORTECEDOR E MONTAGEM	114
SILENCIADOR	116
TURBOALIMENTADOR	119
SISTEMA DE COMBUSTÍVEL	123
CABO - CONTROLE DO GOVERNADOR	123
CONTROLE DO GOVERNADOR	124
FILTRO DE COMBUSTÍVEL E SEPARADOR DE ÁGUA	125
GOVERNADOR	126
TUBULAÇÕES - FILTRO E ESCORVA DO COMBUSTÍVEL	132
BOMBA E MONTAGEM - TRANSFERÊNCIA DE COMBUSTÍVEL	136
BOMBA DE INJEÇÃO DO COMBUSTÍVEL	137
*PUMP GP-FUEL PRM & PRIM FILTER	142
SISTEMA ELÉTRICO E DE PARTIDA	143
ALTERNADOR DE CORRENTE	143
BATERIA	145
CONEXÃO - ELÉTRICA	147
CONTROLE DE TRAVAMENTO	150
GR. DE CONVERSÃO - ARRANJO NÃO RODOVIÁRIO	151
TAMPA DO PAINEL DO FUSÍVEL	152
SIST. ELETRÔNICO - ACESSÓRIO	153
FIXADORES - CHICOTE	154
VELA DE AQUECIMENTO; VELA INCANDESCENTE	155
AQUECEDOR DA ÁGUA DO MOTOR	156
INSTALAÇÃO-SEGURANÇA	158
KIT-CONTROLE E FIAÇÃO DA FERRAMENTA DE TRABALHO	160
KIT-FIAÇÃO DA FERRAMENTA DE TRABALHO	162
LÂMPADA - FAROL	164
LÂMPADA DIANTEIRA E DE SINAL	166
LUZ TRASEIRA E DE FREIO	168
LUZ GIRATÓRIA DE ALARME	170
SISTEMA DE ILUMINAÇÃO - FARÓIS	171
ILUMINAÇÃO - RODOVIÁRIA	173
ILUMINAÇÃO - FREIO E MARCHA À RÉ	177

* TRADUÇÃO NÃO DISPONÍVEL NO MOMENTO DA IMPRESSÃO

ÍNDICE

Designação	Página
SIST. DE ILUMINAÇÃO - PISCA-PISCA GIRATÓRIO DE ADVERTÊNCIA	178
SENSOR DE PRESSÃO E TEMPERATURA	179
GR. DE SERVIÇO - MÁQUINA	182
MOTOR ELÉTRICO DE PARTIDA	183
INTERRUPTOR - PRESSÃO	186
ALARME DE MARCHA À RÉ	187
CABOS/FIOS ELÉTRICOS - AR CONDICIONADO	188
CABOS/FIOS ELÉTRICOS - CHASSI	189
CABOS/FIOS ELÉTRICOS - MOTOR	192
FIAÇÃO - BUZINA	196
CABOS/FIOS ELÉTRICOS - MÁQUINA	197
CABOS E FIOS ELÉTRICOS-LUZES TRASEIRAS	199
CABOS/FIOS ELÉTRICOS - FERRAMENTAS DE TRABALHO	200
TREM DE FORÇA	204
EIXO	204
CONTROLE DO FREIO DE ESTACIONAMENTO	207
COMANDO DO TANDEM	223
FILTRO HIDRÁULICO E TUBOS	225
FILTRO - ÓLEO	229
TUBOS - SISTEMA HIDROSTÁTICO	230
COLETOR - RETORNO	234
MOTOR HIDROSTÁTICO E MONTAGEM	238
MOTOR - PISTÃO	239
MONTAGEM - BOMBA	241
TREM DE FORÇA	242
BOMBA E MONTAGEM - HIDROSTÁTICA	243
BOMBA DE PISTÃO	247
PNEU E ARO	251
VALVULA DO SOLENOIDE E MONTAGEM	267
VÁLVULA SOLENÓIDE	270
RODA E PNEU	271
CHASSI E CARROCERIA	279
PÁRA-CHOQUE	279
GRUPO DE CONVERSÃO - ARRANJO RODOVIÁRIO	281
GR. DE CONVERSÃO - OPERAÇÃO RODOVIÁRIA	292
CONTRAPESO	296
COBERTURA DO MOTOR	301
ARMAÇÃO E MONTAGEM - MÁQUINA	303
ARMAÇÃO - LÂMINA	308
GUIA - TUBOS	309
KIT-CONVERSÃO DE RODAGEM	310
LEVANTAMENTO DA MÁQUINA	311
ESPELHO RETROVISOR E MONTAGEM	315
MONTAGEM DA PLACA DE REGISTRO	317
MONTAGEM - LUZES PARA ILUMINAÇÃO RODOVIÁRIA	319
REDUÇÃO DE RUÍDO	321
SISTEMA HIDRÁULICO	322
ACUMULADOR HIDRÁULICO E MONTAGEM	322
ADAPTADOR-TUBULAÇÃO DE ÓLEO	323
CONTROLE-CABO	324
CONTROLE HIDRÁULICO DE OPERAÇÃO PILOTO	332
CILINDRO E MONTAGEM - LÂMINA ANGULÁVEL	352
CILINDRO E MONTAGEM - BRAÇO DE LEVANTAMENTO	354
CILINDRO DA CAÇAMBA	359
CILINDRO - ACOPLADOR	360
CILINDRO DA GARRA	361
CILINDRO HIDRÁULICO	363
CILINDRO DE LEVANTAMENTO	364
CILINDRO DE INCLINAÇÃO	367
CONEXÃO - HIDRÁULICA	369
ALAVANCA DE CONTROLE - MODULAR	372
COMANDO HIDRÁULICO	374
KIT-CONVERSÃO DE FLUXO ALTO	382
KIT-CONVERSÃO DO ACOPLADOR RÁPIDO	388
TUBOS - CAÇAMBA	391
TUBOS DE CONEXÃO	396
TUBOS - GARRA	400
TUBOS - VENTILADOR HIDRÁULICOS	404
TUBOS - ARREFECEDOR DE ÓLEO HIDRÁULICO	416
TUBOS - CILINDRO DE LEVANTAMENTO	418
TUBOS - VÁLVULA DE CONTROLE DE CARGA	430
TUBOS - CIRCUITO PILOTO	434
TUBOS - BOMBA	442
TUBOS - CILINDRO DE INCLINAÇÃO	450
TUBOS - FERRAMENTA DE TRABALHO	480
COLETOR E MONTAGEM - CONTROLE	495
COLETOR - CONTROLE	498

* TRADUÇÃO NÃO DISPONÍVEL NO MOMENTO DA IMPRESSÃO

ÍNDICE

Designação	Página
MOTOR E MONTAGEM - VENTILADOR HIDRÁULICO	501
MOTOR - ENGRENAGENS	505
MONTAGEM - CILINDRO	509
BUJÃO DA VÁLVULA PILOTO	512
BOMBA DA FERRAMENTA DE TRABALHO E MONTAGEM	513
BOMBA DE ENGRENAGENS	517
TANQUE DE ÓLEO HIDRÁULICO E MONTAGEM	519
TANQUE HIDRÁULICO	520
VÁLVULA E TUBULAÇÕES - ACOPLADOR	521
VÁLVULA DE CONTROLE E MONTAGEM	536
VÁLVULA DESVIADORA E MONTAGEM	540
VALVULA DO SOLENOIDE E MONTAGEM	543
VÁLVULA DE CONTROLE	545
VÁLVULA DESVIADORA	553
VÁLVULA DE CONTROLE PILOTO	555
VÁLVULA DE ALÍVIO	557
VÁLVULA SOLENÓIDE	558
FERRAMENTAS DE TRABALHO	562
BRAÇO - MANIPULADOR DE MATERIAIS	562
LÂMINA	563
*BLADE GP-ANGLING	566
LÂMINA ANGULÁVEL	567
CAÇAMBA - GARRA	570
CAÇAMBA DE MÚLTIPLAS APLICAÇÕES	572
CACAMBA - TERRA	575
CAÇAMBA PARA APLICAÇÃO GERAL	579
CAÇAMBA - GARRA	585
CAÇAMBA PARA MATERIAL LEVE	588
CAÇAMBA DE MÚLTIPLAS APLICAÇÕES	590
CAÇAMBA PARA SERVIÇOS GERAIS	593
CACAMBA E GARFO	596
GRUPO DE CONVERSÃO - ACOPLADOR RÁPIDO	597
CONVERSÃO-FERRAMENTA DE TRABALHO	603
ACOPLADOR RÁPIDO	604
TAMPA - TUBULAÇÕES	609
CILINDRO E ARTICULAÇÃO - ACOPLADOR	610
BEIRA - PONTA CORTANTE	612
BORDA CORTANTE	613
GARFO DA GARRA	617
GARFO DE PALETAS	622
GARFO - SERVIÇOS PÚBLICOS	623
GARRA E CILINDRO - SERVIÇOS PÚBLICOS	628
GARRA - SERVIÇOS PÚBLICOS	630
ALÇA E PINO - ACOPLADOR	631
ALÇA - ACOPLADOR	633
JOGO-PLACA DE RODAGEM E MONTAGEM	635
ARTICULAÇÃO - ACOPLADOR	636
TRAVA - ACOPLADOR RÁPIDO	638
PLACA-RODOVIÁRIO	639
BOMBA DE DIAFRAGMA	641
MOLA - LÂMINA	643
DEGRAU - BRAÇO DE MANIPULAÇÃO DE MATERIAIS	644
TELA FILTRANTE - ÁGUA	645
TANQUE DE ÁGUA E MONTAGEM	646
TANQUE DE ÁGUA	653
UNI-DENTE	654
POSTO DO OPERADOR	655
ACUMULADOR - AR CONDICIONADO	655
CONDICIONADOR DE AR E MONTAGEM	657
CONDICIONADOR DE AR	658
ENCOSTO DO BRAÇO E MONTAGEM	661
BRAÇO DO ASSENTO	662
CAIXA DE ARMAZENAMENTO	664
CABINE - ESTRUTURA ROPS COBERTA	665
CABINE - ESTRUTURA DE PROTEÇÃO CONTRA CAPOTAMENTO	666
COMPRESSOR E MOTOR - REFRIGERADO	667
COMPRESSOR DE REFRIGERANTE E MONTAGEM	668
CONDENSADOR DO REFRIGERANTE E MONTAGEM	669
ACOPLAMENTO DE COMANDO	671
TAMPA - CONSOLO	673
TAMPA - PAINEL DE INSTRUMENTOS	675
PORTA E MONTAGEM-CABINA	676
PORTA DA CABINE	682
DUCTO E CONTROLE	687
ARMAÇÃO DO VIDRO	688
INDICADOR E ALARME	690
PROTETOR - ROPS/FOPS	693
PEGA-MÃO	694
AQUECEDOR DA CABINE E MONTAGEM	695
AQUECEDOR DA CABINE	696
ALOJAMENTO - LATERAL	700

* TRADUÇÃO NÃO DISPONÍVEL NO MOMENTO DA IMPRESSÃO

ÍNDICE

Designação	Página
INSTALAÇÃO - ARRANJO	701
INSTALAÇÃO	704
JOGO - PORTA DA CABINE E MONTAGEM	706
KIT-RETENTOR DA CABINE	708
ALAVANCA - GOVERNADOR	709
REVESTIMENTO DA CABINE	710
REVESTIMENTO - CABINE	711
TUBOS - AR CONDICIONADO	712
TUBOS - AQUECEDOR	720
PUBLICAÇÃO	721
ESPELHO RETROVISOR	722
MÓDULO - INDICADOR DE ALARME	723
MONTAGEM - ESTRUTURA ROPS	726
PAINEL DE INSTRUMENTOS	727
PAINEL LATERAL	732
PEDAL DO GOVERNADOR	734
PLATAFORMA DO OPERADOR	736
RETENTOR-CABINE	738
CINTO DE SEGURANÇA	739
ASSENTO	747
MOLA A GÁS	749
SUSPENSÃO - ASSENTO	750
PÁRA-SOL DA CABINE	751
JANELA DA CABINE	753
EQUIPAMENTO DE SERVIÇO E SUPRIMENTOS	760
DECALQUE	760
PLACA E DECALQUE	773
ÍNDICE DE NÚMERO DE PEÇA	B1

* TRADUÇÃO NÃO DISPONÍVEL NO MOMENTO DA IMPRESSÃO

INHALTSVERZEICHNIS

Bezeichnung	Seite
ALLGEMEINE HINWEISE	A35
REPARATURALTERNATIVEN	A43
KÜHLMITTELZUSATZ	A48
WARTUNGSTEILE	A67
STICHWORTVERZEICHNIS	A118
MASCHINE	1
FAHRWERK	1
GRUNDAUSFÜHRUNG	1
MASCHINEN-UMBAUSATZ	4
MOTOR	19
MOTORAUSFÜHRUNG	19
MOTOR-EINBAUSATZ	23
MOTOR - GRUNDAUSFÜHRUNG	27
NOCKENWELLE	27
VENTILDECKEL	29
KURBELWELLE	35
MOTORBLOCK	42
ZYLINDERKOPF	49
MOTORÖLABLASS	53
SCHWUNGRAD	54
RIEMENSCHUTZ	55
SCHWUNGRADGEHÄUSE	56
STIRNRADGEHÄUSE	57
MOTORHUBÖSE	61
MOTORAUFLAGER	63
LÜFTERBEFESTIGUNG	65
ÖLWANNE	66
PLEUELSTANGE UND KOLBEN	74
KURBELWELLEN-RIEMENSCHEIBE	77
WASSERPUMPE - RIEMENSCHEIBE	78
VENTILSTEUERUNG	80
SCHMIERSYSTEM	83
ÖLFILTER	83
KÜHLSYSTEM	84
MOTORÖLKÜHLER UND FILTER-SOCKEL	84
KÜHLER U. ÖLKÜHLER - BEFESTIGUNG	85
KÜHLWASSERPUMPE	89
KÜHLER UND HYDRAULIKÖLKÜHLER	98
KÜHLER U. ÖLKÜHLERBEFESTIGUNG	102
LUFTANSAUG- UND ABGASSYSTEM	108
LUFTREINIGER	108
DRUCKLUFTLEITUNGEN	110
AUSPUFFKRÜMMER	112
SCHALLDÄMPFER U. BEFESTIGUNG	114
SCHALLDÄMPFER	116
TURBOLADER	119
KRAFTSTOFFSYSTEM	123
DREHZAHLREGLERKABEL	123
REGLERSTEUERUNG	124
WASSERABSCHEIDER- U. KRAFTSTOFFILTER	125
REGLER	126
KRAFTSTOFFENTLÜFTUNGS- U. FILTERLEITUNGEN	132
KRAFTSTOFFÖRDERPUMPE UND BEFESTIGUNGSTEILE	136
KRAFTSTOFFEINSPRITZPUMPE	137
*PUMP GP-FUEL PRM & PRIM FILTER	142
ELEKTRISCHE ANLAGE UND STARTSYSTEM	143
DREHSTROMGENERATOR	143
BATTERIE	145
ANSCHLUSS, ELEKTR.	147
VERRIEGELUNGSSTEUERUNG	150
UMBAUSATZ - NICHT FÜR STRASSENVERKEHR	151
SICHERUNGSTAFEL - ABDECKUNG	152
ARBEITSGERÄTEELEKTRONIK	153
VERDRAHTUNGSKABELBAUMHALTETEILE	154
GLÜHKERZE	155
UMLAUFKÜHLWASSERHEIZUNG	156
SICHERHEITSEINBAUSATZ	158
*KIT-WORK TOOL CONTROL & WIRING	160
*KIT-WORK TOOL WIRING	162
ARBEITSLEUCHTEN	164
SCHEINWERFER U. RICHTUNGSLEUCHTE	166
BREMS- UND RÜCKLEUCHTE	168
RUNDUM-KENNLEUCHTE	170
ARBEITSLEUCHTEN	171
BELEUCHTUNGSANLAGE (STRASSENAUSRÜSTUNG)	173
BREMS- UND RÜCKLEUCHTEN	177
RUNDUM-KENNLEUCHTE	178
TEMPERATUR- U. DRUCKSENSOR	179
SERVICE MASCHINE	182
STARTERMOTOR	183
DRUCKSCHALTER	186

* ÜBERSETZUNG ZUM ZEITPUNKT DER DRUCKLEGUNG NICHT VORHANDEN

INHALTSVERZEICHNIS

Bezeichnung	Seite
RÜCKFAHRWARNHORN	187
KLIMAANLAGENVERDRAHTUNG	188
FAHRGESTELLVERDRAHTUNG	189
MOTORVERDRAHTUNG	192
WARNHORNVERDRAHTUNG	196
MASCHINENVERDRAHTUNG	197
HECKBELEUCHTUNGSVERDRAHTUNG	199
ARBEITSGERÄT - VERDRAHTUNG	200
KRAFTSÜBERTRAGUNG	204
ACHSE	204
FESTSTELLBREMSGESTÄNGE	207
TANDEMANTRIEB	223
HYDRAULIKFILTER U. LEITUNGEN	225
ÖLFILTER	229
HYDROSTATIKLEITUNGEN	230
RÜCKLAUFVENTIL - VERTEILER	234
HYDROSTATIKMOTOR U. BEFESTIGUNG	238
KOLBENMOTOR	239
PUMPENAUFHÄNGUNG	241
KRAFTÜBERTRAGUNG	242
HYDROSTATIKPUMPE U. BEFESTIGUNG	243
KOLBENPUMPE	247
REIFEN UND FELGE	251
SOLENOIDVENTIL U. BEFESTIGUNGSTEILE	267
MAGNETVENTIL	270
RAD UND REIFEN	271
RAHMEN UND FAHRGESTELL	279
STOSSSTANGE	279
UMBAUSATZ - FÜR STRASSENVERKEHR	281
STRASSENFAHRT - UMRÜSTSATZ	292
GEGENGEWICHT	296
MOTORVERKLEIDUNG	301
MASCHINENRAHMEN U. BEFESTIGUNG	303
SCHILDRAHMEN	308
LEITUNGSFÜHRUNG	309
*KIT-ROADING CONVERSION	310
MASCHINENHUBÖSE	311
RÜCKSPIEGEL U. BEFESTIGUNG	315
TYPENSCHILDBEFESTIGUNG	317
BELEUCHTUNG FÜR STRASSENFAHRT - BEFESTIGUNG	319
SCHALLDÄMPFUNG	321
HYDRAULIKSYSTEM	322
HYDRAULIKDRUCKSPEICHER U. BEFESTIGUNG	322
ADAPTER - ÖLLEITUNG	323
STEUERHEBEL	324
HYDRAULIKBEDIENUNG (MIT VORSTEUERUNG)	332
ZYLINDER U. BEFESTIGUNG - WINKELSCHLID	352
HUBARMZYLINDER U. BEFESTIGUNGSSATZ	354
SCHAUFELZYLINDER	359
SCHNELLWECHSELANSCHLUSSZYLINDER	360
GREIFERZYLINDER	361
HYDRAULIKZYLINDER	363
HUBZYLINDER	364
KIPPZYLINDER	367
HYDRAULIKFITTING	369
MODULARHEBEL	372
HYDRAULIKSYSTEM	374
*KIT-HIGH FLOW CONVERSION	382
*KIT-QUICK COUPLER CONVERSION	388
SCHAUFELLEITUNGEN	391
ANSCHLUSSLEITUNGEN	396
GREIFERLEITUNGEN	400
HYDRAULIKLÜFTERLEITUNGEN	404
HYDRAULIKÖLKÜHLERLEITUNGEN	416
HUBZYLINDERLEITUNGEN	418
LASTSTEUERVENTILLEITUNGEN	430
VORSTEUERLEITUNGEN	434
HYDRAULIKPUMPE UND LEITUNGEN	442
NEIGEZYLINDERLEITUNGEN	450
ARBEITSGERÄT - LEITUNGEN	480
KRÜMMERSTEUERUNG U. BEFESTIGUNG	495
STEUERKRÜMMER	498
HYDRAULIKKÜHLERMOTOR U. BEFESTIGUNG	501
MOTORANTRIEB	505
ZYLINDERAUFHÄNGUNG	509
VORSTEUERVENTILSTOPFEN	512
ARBEITSGERÄTEPUMPE U. BEFESTIGUNG	513
ZAHNRADPUMPE	517
HYDRAULIKTANK UND BEFESTIGUNGSTEILE	519
HYDRAULIKTANK	520
KUPPLUNGSVENTIL U. LEITUNGEN	521
STEUERVENTIL UND BEFESTIGUNGSTEILE	536

* ÜBERSETZUNG ZUM ZEITPUNKT DER DRUCKLEGUNG NICHT VORHANDEN

INHALTSVERZEICHNIS

Bezeichnung	Seite
VERTEILERVENTIL U. BEFESTIGUNGSTEILE	540
SOLENOIDVENTIL U. BEFESTIGUNGSTEILE	543
STEUERVENTIL	545
UMLEITVENTIL	553
VORSTEUERVENTIL	555
ÜBERDRUCKVENTIL	557
MAGNETVENTIL	558
ARBEITSGERÄTE	562
TRAGARM	562
SCHILD	563
*BLADE GP-ANGLING	566
SCHWENKSCHILD	567
GREIFERSCHAUFEL	570
KOMBISCHAUFEL	572
ERDSCHAUFEL	575
*BUCKET GP-GENERAL PURPOSE	579
GREIEFERSCHAUFEL	585
LEICHTGUTSCHAUFEL	588
KOMBISCHAUFEL	590
MEHRZWECKSCHAUFEL	593
TRÄGER U. GABEL	596
SCHNELLWECHSELEINRICHTUNGS-UMBAUSATZ	597
*CONVERSION GP-WORK TOOL	603
SCHNELLWECHSELVORRICHTUNG	604
SCHNELLWECHSELEINRICHTUNG	606
LEITUNGSABDECKUNG	609
SCHNELLWECHSELEINRICHTUNG - ZYLINDER U. VERBINDUNG	610
SCHNEIDMESSER UND EINSATZ-STÜCK	612
SCHNEIDMESSER	613
GREIFERGABEL	617
PALETTENGABEL	622
MEHRZWECKGABEL	623
MEHRZWECKGREIFER U. ZYLINDER	628
MEHRZWECKGREIFER	630
GRIFF U. BOLZEN - ANSCHLUSS	631
ANSCHLUSSGRIFF	633
STRASSENFAHRTSCHILD UND BEFESTIGUNG	635
VERBINDUNG - SCHNELLWECHSELEINRICHTUNG	636
SCHNELLWECHSELEINRICHTUNGSSPERRE	638
SCHILD - STRASSENFAHRT	639
MEMBRANPUMPE	641
SCHILDFEDER	643
TRAGARMSTUFE	644
WASSERSIEBEINSATZ	645
WASSERTANK U. BEFESTIGUNGSTEILE	646
WASSERTANK	653
UNIVERSAL-ZAHNSPITZE	654
FAHRERHAUS	655
KLIMAANLAGENDRUCKSPEICHER	655
KLIMAANLAGE UND AUFHÄNGUNG	657
KLIMAANLAGE	658
ARNLEHNE U. BEFESTIGUNG	661
ARMLEHNE	662
VERSTAUKASTEN	664
FAHRERHAUS MIT ÜBERROLL-SCHUTZ	665
KÜHLKOMPRESSOR U. MOTOR	667
KÄLTEMITTELKOMPRESSOR U. BEFESTIGUNG	668
KÄLTEMITTELKONDENSATOR U. BEFESTIGUNGSTEILE	669
ANTRIEBSKUPPLUNG	671
STEUERKONSOLENABDECKUNG	673
INSTRUMENTENTAFELABDECKUNG	675
FAHRERHAUSTÜR U. BEFESTIGUNG	676
FAHRERHAUSTÜR	682
LUFTKANAL UND REGULIERUNG	687
FENSTERRAHMEN	688
WARNANZEIGENSATZ	690
VERKLEIDUNG - ÜBERROLLSCHUTZ/ STEINSCHLAGSCHUTZ	693
HALTEGRIFF	694
FAHRERHAUSHEIZUNG U. BEFESTIGUNGSTEILE	695
FAHRERHAUSHEIZUNG	696
SEITENGEHÄUSE	700
EINBAUSATZ	701
FAHRERHAUSTÜR U. BEFESTIGUNG	706
*KIT-CAB SEAL	708
REGELERHEBEL	709
FAHRERHAUSAUSKLEIDUNG	710
FAHRERHAUS - LINER	711
KLIMAANLAGENLEITUNGEN	712
HEIZUNGSLEITUNGEN	720
DOKUMENTATION	721
RÜCKSPIEGEL	722
WARNANZEIGEMODUL	723
ÜBERROLLSCHUTZAUFLAGER	726
INSTRUMENTENTAFEL	727
SEITENVERKLEIDUNG	732
GASPEDAL	734
FAHRERPLATTFORM	736
FAHERHAUSDICHTUNG	738
SICHERHEITSGURT	739
FAHRERSITZ	747

* ÜBERSETZUNG ZUM ZEITPUNKT DER DRUCKLEGUNG NICHT VORHANDEN

INHALTSVERZEICHNIS

Bezeichnung	Seite	Bezeichnung	Seite
GASFEDERGRUPPE	749		
FAHRERSITZFEDERUNG	750		
FAHRERHAUS, SONNENBLENDE	751		
FAHRERHAUSFENSTER	753		
WARTUNGSAUSRÜSTUNG UND -ZUBEHÖR	760		
AUFKLEBER	760		
SCHILD UND AUFKLEBER	773		
ERSATZTEILNUMMERNINDEX	B1		

* ÜBERSETZUNG ZUM ZEITPUNKT DER DRUCKLEGUNG NICHT VORHANDEN

GENERAL INFORMATION

1. MACHINE IDENTIFICATION

Caterpillar machines are identified by Product Identification Numbers (PIN). Some components included in a machine may be identified by Serial Numbers (S/N). Typical components that will be serialized include engines, transmissions, bulldozers, and rippers. The machine and engine are further identified by arrangement numbers and in some cases modification numbers. These numbers are shown on the product identification plate(s) and on the master plate in the operator's compartment.

Caterpillar dealers need all of these numbers to determine accurate parts identification.

SIS ***New Feature***

Effective First Quarter 2001 the Caterpillar Product Identification Number (PIN) changed from 8 to 17 characters. In an effort to provide uniform equipment identification, Caterpillar and other construction equipment manufacturers are moving to comply with the latest version of the product identification numbering standard. Non-road machine PINs are defined by ISO 10261. The new PIN format will apply to all Caterpillar machines and generator sets. The PIN plates and frame marking will display the 17 character PIN. The new format will look like the following:

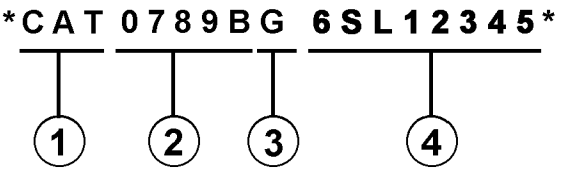

Where:

1. Caterpillar's World Manufacturing Code (characters 1-3)

2. Machine Descriptor (characters 4-8)

3. Check Character (character 9)

4. Machine Indicator Section (MIS) or Product Sequence Number (characters 10-17). These were previously referred to as the Serial Number.

Machines and generator sets produced before First Quarter 2001 will maintain their 8 character PIN format.

Components such as engines, transmissions, axles, etc. and work tools will continue to use an 8 character Serial Number (S/N).

2. ORDERING PARTS

⚠ WARNING

When replacement parts are required for this product Caterpillar recommends using Caterpillar replacement parts or parts with equivalent specifications including, but not limited to, physical dimensions, type, strength and material.

Failure to heed this warning can lead to premature failures, product damage, personal injury or death.

Quality Caterpillar replacement parts are available from Caterpillar dealers throughout the world. Their parts inventories are up to date and include all parts normally required to protect your investment in Caterpillar machines. Dealers may offer repair kits or remanufactured parts to allow selection of the most effective repair alternative for a particular situation. When ordering parts, your order should specify the quantity, part number, part name, and the serial number/product identification number of the machine for which the parts are needed.

3. PARTS MANUAL ORGANIZATION

Product information in this manual is presented as "information elements" that represent all of the components for the specific model. Engine Arrangement and Seat Group are examples of information elements. The information elements are organized alphabetically by part name and secondarily by part number within each major section of the manual.

4. TABLE OF CONTENTS

A table of contents (TOC) is found at the beginning of the manual. The TOC lists each section of the manual with a complete list of all information elements organized as they appear in the manual. Page numbers are provided for quick reference to detailed parts identification illustrations and serviceable consist lists.

5. MAINTENANCE PARTS INDEX

The Maintenance Parts Index, located near the beginning of the manual, references most frequently used maintenance part numbers, providing description, quantity, usage and page number. This information is organized alphabetically by part description.

6. INDEX

The index located near the front of the manual is an alphabetical listing of all information elements included in the manual. Page numbers are provided for quick reference to detailed parts identification illustrations and serviceable consist lists.

7. PART NUMBER INDEX

A numerical index listing all part numbers and the corresponding page number(s) appears at the back of the manual.

8. CAPTIONS

Captions located at the beginning of each information element identify the part number and part name along with additional descriptive information. PIN and S/N information found in each caption should be used to select correct information for a specific machine. Field replacement options, identification of optional attachment components, and where used ("part of") information is also provided.

The first line of a caption is shown in larger type font to indicate the beginning of an information element. Captions for additional pages that may be required to illustrate an information element will be shown in standard type font and will include the term *(contd.)* .

9. NON-SERVICED PARTS

In some instances it is necessary to display non-serviced parts that are a link to a lower level serviceable consist lists. These non-serviced part numbers are shown in *italic* type indicating that they are not available.

10. PARTS LIST REFERENCE NUMBERS

Numbers shown in the Ref No column correspond to numbers used in the associated graphic(s). An alphabetic suffix may be added to a reference number to identify lower level consist items. Numbers shown in the Graphic Ref column refer to the graphic number identifier displayed in the lower left corner of each illustration. The Graphic Ref number may be used in combination with the item Ref No to determine the correct part number. There may be intentional omission of a Ref No in a consist list as information is updated to reflect the latest serviceable part numbers.

11. INDENTED PART NAMES

When a part name is indented in a parts list, it is part of (included in) the group or assembly under which it is indented.

12. ILLUSTRATION REFERENCE LETTERS

When necessary, illustrations contain reference letters (A, B, C etc.) that are intended to track lines and harnesses from one point to another. They are also used to show where to reconnect illustrations that have been separated.

13. ABBREVIATIONS AND SYMBOLS

O.D. – Outside Diameter
I.D. – Inside Diameter
A – Not Part Of This Group
B – Use As Required
C – Change From Previous Type
D – Order By The Meter
E – Order By The Centimeter
F – Not Shown
G – Order By The Inch
I – Refer To Hydraulic Information System
M – Metric Part
R – Remfg Part May Be Available
Y – Separate Illustration
Z – Not Serviced Separately

SIS *New Feature*

14.<END>

This symbol indicates the end of an information element.

NOTE:

Continuing improvement and advancement of product design may cause changes to your machine which may not be included in this publication. Whenever a question arises regarding your caterpillar product or this publication, please consult your caterpillar dealer for the latest available information.

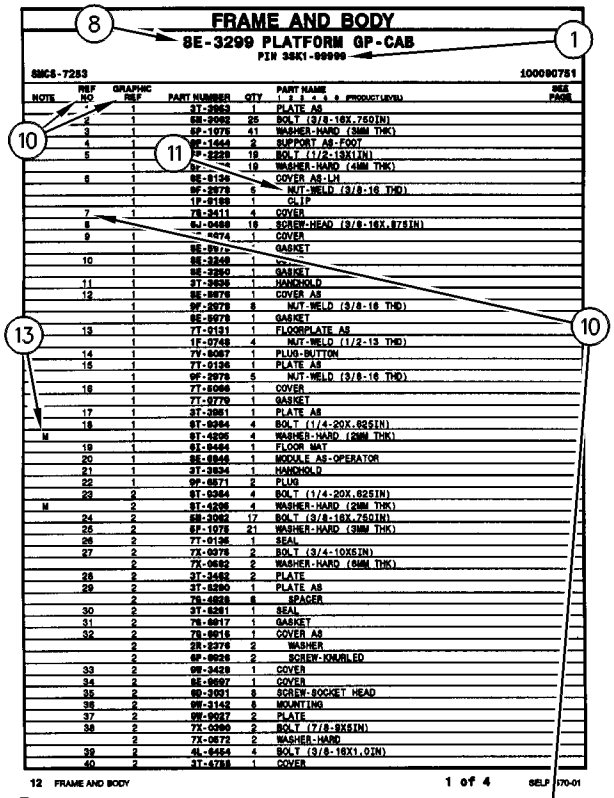

FRAME AND BODY

8E-3299 PLATFORM GP-CAB

PIN 3SK1-99999

SMCS-7283 100090751

NOTE	REF NO	GRAPHIC REF	PART NUMBER	QTY	PART NAME 1 2 3 4 5 6 (PRODUCT LEVEL)	SEE PAGE
	*	1	3T-3963	1	PLATE AS	
	2	1	5M-2062	25	BOLT (3/8-16X.750IN)	
	3	1	6P-1075	41	WASHER-HARD (3MM THK)	
	4	1	8E-1444	2	SUPPORT AS-FOOT	
	5	1	9P-2229	19	BOLT (1/2-13X1IN)	
		1	6P-[illegible]	19	WASHER-HARD (4MM THK)	
	6	1	8E-9136	*	COVER AS-LH	
		1	9F-2979	6	NUT-WELD (3/8-16 THD)	
		1	1P-0189	1	CLIP	
	7	1	7X-3411	4	COVER	
	8	1	9J-0468	18	SCREW-HEAD (3/8-16X.87SIN)	
	9	1	[illegible]-8274	1	COVER	
		1	8E-9[illegible]	*	GASKET	
	10	1	8E-3248	1	[illegible]	
		1	8E-3250	1	GASKET	
	11	1	3T-3636	1	HANDHOLD	
	12	1	8E-9078	1	COVER AS	
		1	9F-2979	8	NUT-WELD (3/8-16 THD)	
		1	8E-9079	1	GASKET	
	13	1	7T-9131	1	FLOORPLATE AS	
		1	1F-0748	4	NUT-WELD (1/2-13 THD)	
	14	1	7V-8067	1	PLUG-BUTTON	
	15	1	7T-9136	1	PLATE AS	
		1	9F-2979	5	NUT-WELD (3/8-16 THD)	
	16	1	7T-8066	1	COVER	
		1	7T-9779	1	GASKET	
	17	1	3T-3951	1	PLATE AS	
	18	1	9T-0264	4	BOLT (1/4-20X.62SIN)	
M		1	9T-4295	4	WASHER-HARD (2MM THK)	
	19	1	9I-9454	1	FLOOR MAT	
	20	1	8E-8848	1	MODULE AS-OPERATOR	
	21	1	3T-3934	1	HANDHOLD	
	22	1	9P-0871	2	PLUG	
	23	2	9T-0264	4	BOLT (1/4-20X.62SIN)	
M		2	9T-4295	4	WASHER-HARD (2MM THK)	
	24	2	5M-2062	17	BOLT (3/8-16X.75QIN)	
	25	2	6P-1075	21	WASHER-HARD (3MM THK)	
	26	2	7T-9136	1	SEAL	
	27	2	7X-0075	2	BOLT (3/4-10X5IN)	
		2	7X-0682	2	WASHER-HARD (6MM THK)	
	28	2	3T-3482	2	PLATE	
	29	2	3T-8290	1	PLATE AS	
		2	7S-4828	6	SPACER	
	30	2	3T-8281	1	SEAL	
	31	2	7S-8817	1	GASKET	
	32	2	7S-8816	1	COVER AS	
		2	5R-2276	2	WASHER	
		2	9F-0026	2	SCREW-KNURLED	
	33	2	9W-3429	1	COVER	
	34	2	8E-9697	1	COVER	
	35	2	9D-3031	8	SCREW-SOCKET HEAD	
	36	2	9W-3143	8	MOUNTING	
	37	2	9W-9037	2	PLATE	
	38	2	7X-0360	2	BOLT (7/8-9X5IN)	
		2	7X-0672	2	WASHER-HARD	
	39	2	4L-9454	4	BOLT (3/8-16X1.0IN)	
	40	2	3T-4788	1	COVER	

12 FRAME AND BODY 1 of 4 SELP4570-01

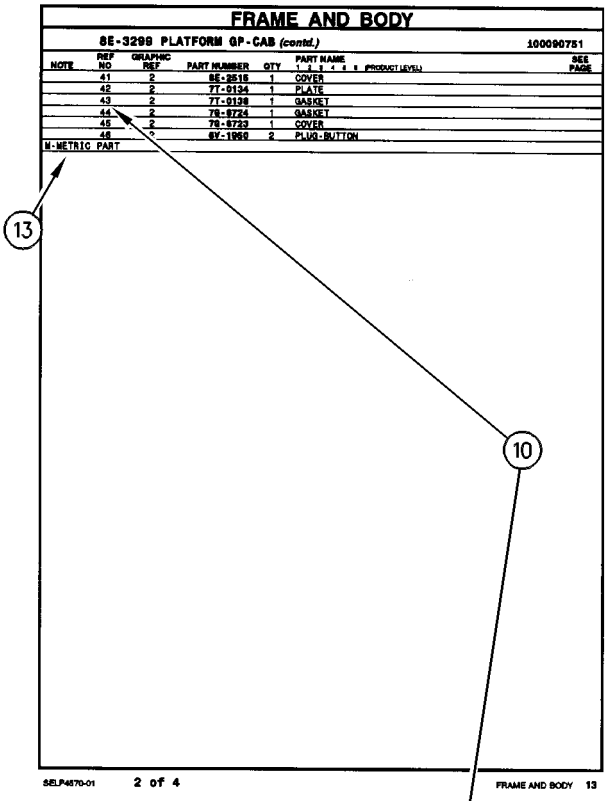

FRAME AND BODY

8E-3299 PLATFORM GP-CAB (contd.) 100090751

NOTE	REF NO	GRAPHIC REF	PART NUMBER	QTY	PART NAME 1 2 3 4 5 6 (PRODUCT LEVEL)	SEE PAGE
	41	2	8E-2515	1	COVER	
	42	2	7T-9134	1	PLATE	
	43	2	7T-9138	1	GASKET	
	44	2	7S-8724	1	GASKET	
	45	2	7S-8723	1	COVER	
	46	*	8Y-1950	2	PLUG-BUTTON	

M-METRIC PART

SELP4570-01 2 of 4 FRAME AND BODY 13

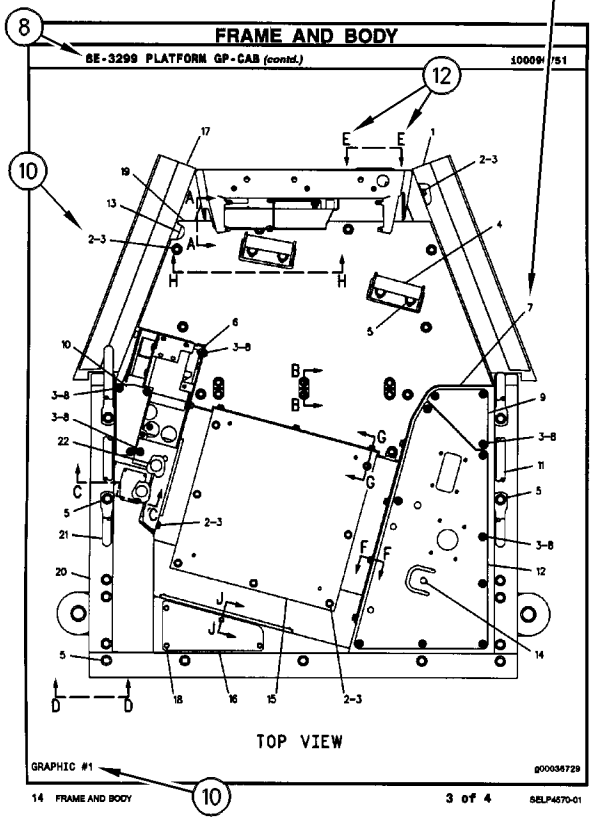

FRAME AND BODY

8E-3299 PLATFORM GP-CAB (contd.) 100090751

TOP VIEW

GRAPHIC #1 g00036729

14 FRAME AND BODY 3 of 4 SELP4570-01

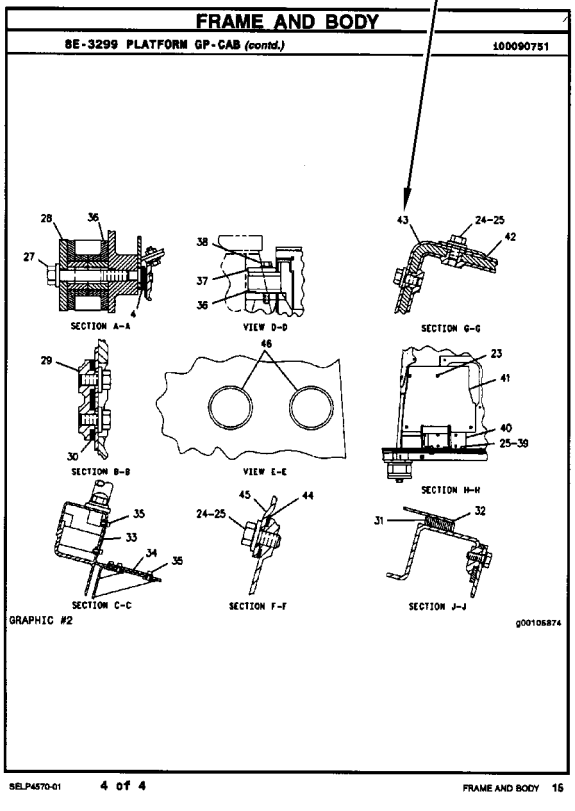

FRAME AND BODY

8E-3299 PLATFORM GP-CAB (contd.) 100090751

SECTION A-A VIEW D-D SECTION G-G

SECTION B-B VIEW E-E SECTION H-H

SECTION C-C SECTION F-F SECTION J-J

GRAPHIC #2 g00105874

SELP4570-01 4 of 4 FRAME AND BODY 15

GÉNÉRALITÉS

1. IDENTIFICATION DE LA MACHINE

Toutes les machines Caterpillar portent un numéro d'identification (PIN). Certains composants des machines peuvent porter des numéros de série (S/N). En général, parmi les composants qui portent des numéros de série il y a les moteurs, les transmissions, les bulldozers et les rippers. En plus, la machine et le moteur peuvent recevoir des numéros de version, et dans certains cas, de modification. Ces numéros figurent sur les plaques de numéro de série et sur la plaque signalétique principale qui se trouve dans le poste de conduite.

Les concessionnaires Caterpillar doivent connaître tous ces numéros pour identifier correctement les pièces.

SIS *Nouvelle Caractéristique*

À partir du premier trimestre 2001, le numéro d'identification produit (PIN) Caterpillar passe de 8 à 17 caractères. Afin de permettre une identification uniforme des matériels, Caterpillar et d'autres constructeurs de machines de travaux publics s'efforcent de se conformer à la norme la plus récente portant sur les numéros d'identification des produits. Les numéros d'identification (PIN) de machines de chantier sont définis par la norme ISO 10261. Le nouveau format du numéro d'identification est valable pour toutes les machines et tous les groupes électrogènes Caterpillar. Le numéro d'identification produit (PIN) figurant sur la plaque et sur le châssis se composera de 17 caractères. Le nouveau format ressemblera à ceci:

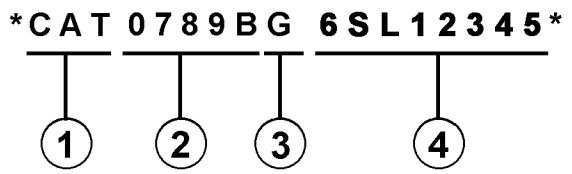

Il se décomposera de la façon suivante:

1. Code international de fabrication de Caterpillar (caractères 1 à 3)

2. Descriptif de la machine (caractères 4 à 8)

3. Contrôle (caractère 9)

4. Indicateur machine (MIS) ou numéro de séquence produit (caractères 10 à 17). Ceux-ci étaient auparavant désignés sous le terme de numéro de série.

Les machines et les groupes électrogènes construits avant le premier trimestre 2001 garderont le format à 8 caractères du numéro d'identification produit (PIN).

Les organes tels que les moteurs, les boîtes de vitesses, les essieux, etc., continueront d'être désignés par un numéro de série (S/N) à 8 caractères.

2. COMMANDE DE PIÈCES

⚠ DANGER

Lorsqu'il faut remplacer des pièces de rechange pour ce produit Caterpillar recommande d'utiliser les pièces de rechange Caterpillar ou les pièces qui ont des spécifications équivalentes dont les dimensions physiques, le type, la force et le matériau. Ces équivalences ne se limitent pas à l'énoncé précédent.

L'inobservation de cette mise en garde peut entraîner des défaillances prématurées, des dommages au produit, des blessures ou même la mort.

Les concessionnaires Caterpillar fournissent dans le monde entier des pièces de rechange de qualité Caterpillar. Leurs stocks de pièces sont constamment réapprovisionnés et comptent toutes les pièces nécessaires pour assurer la bonne marche de vos machines Caterpillar. Certains concessionnaires proposent également des kits de réparation ou des pièces rénovées, ce qui permet de choisir la solution la plus économique dans une situation donnée. Lors des commandes de pièces, mentionner la quantité, le numéro et la désignation des pièces ainsi que le numéro de série ou le numéro d'identification (PIN) de la machine pour laquelle ces pièces sont requises.

3. ORGANISATION DU CATALOGUE DE PIÈCES

Les renseignements sur les produits sont présentés sous forme de "Information element" (élément d'information) représentant tous les composants d'un modèle donné. "Engine Arrangement" (version de moteur) et "Seat Group" (assemblage de siège)" sont des exemples d'éléments d'information. Les éléments d'information sont classés par ordre alphabétique par la désignation standard des pièces et par numéros de pièces dans chaque partie importante du manuel.

4. TABLE DES MATIÈRES

SIS *Nouvelle Caractéristique*

La table des matières se trouve au début du manuel. La table des matières fournit la liste de tous les chapitres du manuel avec une liste complète de tous les éléments d'information classés par ordre d'apparition dans le manuel. Les numéros de page sont fournis afin que l'utilisateur puisse trouver rapidement les illustrations détaillées concernant l'identification des pièces et les listes des pièces d'entretien.

5. INDEX DES PIÈCES D'ENTRETIEN

La rubrique "Index des pièces d'entretien" qui se trouve au début du manuel renvoie aux pièces d'entretien les plus fréquemment utilisées en précisant la désignation, la quantité, là où la pièce est utilisée et le numéro de page. Ces pièces sont classés par ordre alphabétique.

6. INDEX

L'index qui se trouve vers le début du manuel est une liste alphabétique de tous les éléments d'information du manuel. Les numéros de page sont fournis afin que l'utilisateur puisse trouver rapidement les illustrations détaillées concernant l'identification des pièces et les listes des pièces d'entretien.

7. INDEX DES NUMÉROS DE PIÈCES

Une liste numérique de tous les numéros de pièces et des pages correspondantes se trouve à la fin du manuel.

8. LÉGENDES

Les légendes qui se trouvent en haut de chaque page de chaque élément d'information fournissent le numéro de pièce, la désignation ainsi que des renseignements supplémentaires sur les pièces. Les renseignements concernant les numéros de série (S/N) qui se trouvent dans chaque légende doivent être utilisés pour sélectionner les informations correctes pour un moteur donné. Les informations concernant les options de remplacement sur le chantier, l'identification des composants des équipements offerts en option et les lieux d'application sont aussi fournies.

SIS *Nouvelle Caractéristique*

Les lettres de la première ligne d'une légende sont présentées en police plus grande afin d'indiquer le début d'une unité d'information. Les légendes qui pourraient être requises pour des pages supplémentaires afin d'illustrer une unité d'information seront présentées en police standard et comprendront le terme (à suivre).

9. PIÈCES NON FOURNIES

SIS *Nouvelle Caractéristique*

Dans certains cas, il est nécessaire d'indiquer les pièces non fournies qui sont en aval de la liste des pièces d'entretien. Les numéros des pièces non fournies dans la liste des pièces et les légendes seront en italique pour signaler qu'ils ne sont pas disponibles.

10. NUMÉROS DE RÉFÉRENCE DE LA LISTE DES PIÈCES

SIS *Nouvelle Caractéristique*

Les numéros indiqués dans la colonne des numéros de références correspondent aux numéros utilisés dans les illustrations auxquelles ils sont associés. Un suffixe alphabétique peut être ajouté à un numéro de référence pour identifier la liste des articles en aval. Les numéros indiqués dans la colonne de référence de l'illustration renvoient à l'identification du numéro affiché dans le coin inférieur gauche de chaque illustration. Le numéro de référence de l'illustration pourrait être utilisé avec le numéro de référence de l'article pour déterminer le numéro de pièce correct. Il peut y avoir une omission intentionnelle d'un numéro de référence dans une liste de pièces suite à la mise à jour des informations en vue de refléter les numéros de pièces les plus récentes.

11. DÉSIGNATIONS DE PIÈCES EN RETRAIT

Lorsqu'une désignation de pièce est en retrait, cela veut dire que l'article en regard fait partie de l'ensemble sous lequel il figure.

12. LETTRES DE RÉFÉRENCE DES ILLUSTRATIONS

Quand cela est nécessaire, les illustrations comportent des lettres de référence (A, B, C, etc.) pour montrer le trajet des canalisations et faisceaux de câbles d'un point à l'autre. Elles sont utilisées également pour indiquer où relier les illustrations séparées auparavant.

13. ABRÉVIATIONS ET SYMBOLES

O.D. – Diamètre extérieur
I.D. – Diamètre intérieur
A – Ne fait pas partie de ce groupe
B – Utiliser selon besoin
C – Modification
D – Commander par mètre
E – Commander par centimètre
F – Non représenté
G – Commander par pouce
I – Voir "Hydraulic Information System"
M – Pièce métrique
R – Pièce rénovée éventuellement disponible
Y – Illustration séparée
Z – Non fourni séparément

NOTA:

En raison du progrès technique et des améliorations continuelles apportées au matériel, votre machine comporte peut-être des modifications qui n'apparaissent pas dans la présente publication. En cas de doute sur un détail de votre machine Caterpillar ou sur le texte de la présente publication, adressez-vous à votre concessionnaire Caterpillar.

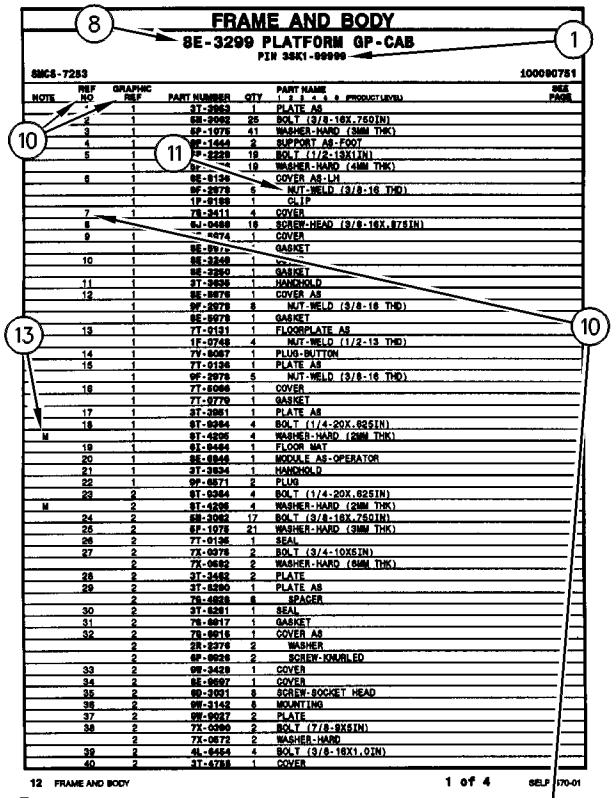

FRAME AND BODY
8E-3299 PLATFORM GP-CAB
PIN 3SK1-99999
SMCS-7283 100090751

NOTE	REF NO	GRAPHIC REF	PART NUMBER	QTY	PART NAME 1 2 3 4 5 6 (PRODUCT LEVEL)	SEE PAGE
	*	1	3T-3963	1	PLATE AS	
	2	1	5M-3062	25	BOLT (3/8-16X.750IN)	
	3	1	6P-1075	41	WASHER-HARD (3MM THK)	
	4	1	9E-1443	2	SUPPORT AS-FOOT	
	5	1	9P-2229	19	BOLT (1/2-13X1IN)	
		1	9P-[illegible]	19	WASHER-HARD (4MM THK)	
	6	1	9E-9136	*	COVER AS-LH	
		1	9F-2979	6	NUT-WELD (3/8-16 THD)	
		1	1P-0189	1	CLIP	
	7	1	7X-3411	4	COVER	
	8	1	6J-0468	18	SCREW-HEAD (3/8-16X.87SIN)	
	9	1	[illegible]-0274	1	COVER	
		1	9E-9[illegible]	*	GASKET	
	10	1	9E-3248	1	[illegible]	
		1	9E-3250	1	GASKET	
	11	1	3T-3636	1	HANDHOLD	
	12	1	9E-9076	1	COVER AS	
		1	9F-2979	8	NUT-WELD (3/8-16 THD)	
		1	9E-9078	1	GASKET	
	13	1	7T-9131	1	FLOORPLATE AS	
		1	1F-0748	4	NUT-WELD (1/2-13 THD)	
	14	1	7V-5057	1	PLUG-BUTTON	
	15	1	7T-9136	1	PLATE AS	
		1	9F-2979	5	NUT-WELD (3/8-16 THD)	
	16	1	7T-5066	1	COVER	
		1	7T-9779	1	GASKET	
	17	1	3T-3951	1	PLATE AS	
	18	1	9T-0264	4	BOLT (1/4-20X.62SIN)	
M		1	9T-4295	4	WASHER-HARD (2MM THK)	
	19	1	9I-9454	1	FLOOR MAT	
	20	1	9E-6946	1	MODULE AS-OPERATOR	
	21	1	3T-3934	1	HANDHOLD	
	22	1	9P-0571	2	PLUG	
	23	2	9T-0264	4	BOLT (1/4-20X.62SIN)	
M		2	9T-4295	4	WASHER-HARD (2MM THK)	
	24	2	5M-3062	17	BOLT (3/8-16X.750IN)	
	25	2	6P-1075	21	WASHER-HARD (3MM THK)	
	26	2	7T-9136	1	SEAL	
	27	2	7X-0075	2	BOLT (3/4-10X5IN)	
		2	7X-0682	2	WASHER-HARD (6MM THK)	
	28	2	3T-3482	2	PLATE	
	29	2	3T-5290	1	PLATE AS	
		2	7E-4828	6	SPACER	
	30	2	3T-5291	1	SEAL	
	31	2	7E-9817	1	GASKET	
	32	2	7E-9816	1	COVER AS	
		2	5R-2276	2	WASHER	
		2	9F-9026	2	SCREW-KNURLED	
	33	2	9W-3429	1	COVER	
	34	2	8E-9697	1	COVER	
	35	2	9D-3031	8	SCREW-SOCKET HEAD	
	36	2	9W-3143	8	MOUNTING	
	37	2	9W-9027	2	PLATE	
	38	2	7X-0360	2	BOLT (7/8-9X5IN)	
		2	7X-0672	2	WASHER-HARD	
	39	2	4L-9454	4	BOLT (3/8-16X1.0IN)	
	40	2	3T-4788	1	COVER	

12 FRAME AND BODY 1 of 4 SELP4570-01

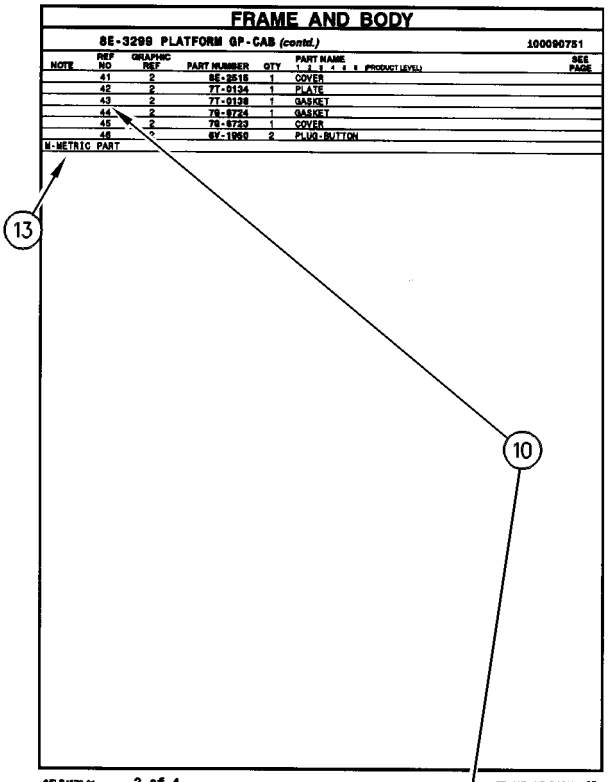

FRAME AND BODY
8E-3299 PLATFORM GP-CAB (contd.)
100090751

NOTE	REF NO	GRAPHIC REF	PART NUMBER	QTY	PART NAME 1 2 3 4 5 6 (PRODUCT LEVEL)	SEE PAGE
	41	2	8E-2515	1	COVER	
	42	2	7T-9134	1	PLATE	
	43	2	7T-9138	1	GASKET	
	44	2	7E-9724	1	GASKET	
	45	2	7E-9723	1	COVER	
	46	*	8Y-1950	2	PLUG-BUTTON	

M-METRIC PART

SELP4570-01 2 of 4 FRAME AND BODY 13

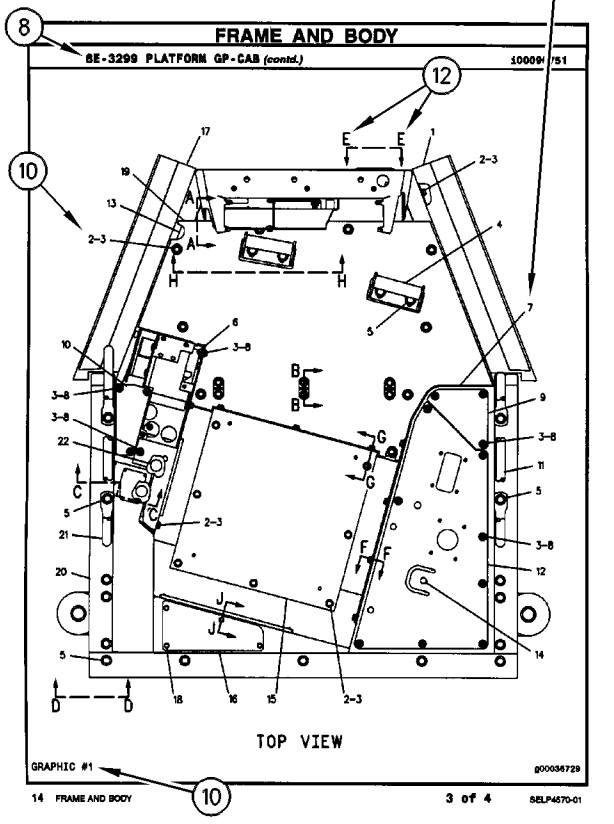

FRAME AND BODY
8E-3299 PLATFORM GP-CAB (contd.)
100090751

14 FRAME AND BODY 3 of 4 SELP4570-01

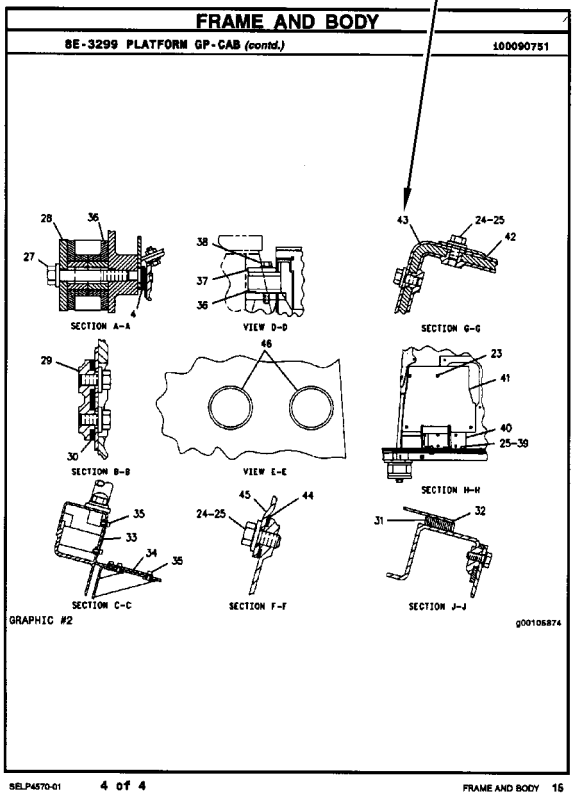

FRAME AND BODY
8E-3299 PLATFORM GP-CAB (contd.)
100090751

SELP4570-01 4 of 4 FRAME AND BODY 15

INFORMACIÓN GENERAL

1. MÁQUINAS

Las máquinas Caterpillar se identifican con Números de Identificación del Producto (PIN). Algunos componentes incluídos en la máquina pueden estar identificados con Números de Serie (N/S). Los componentes que tienen típicamente esta identificación incluyen motores, transmisiones, hojas topadoras y desgarradores. La máquina y el motor se identifican además con Números de Configuración y en algunos casos, Números de Modificación. Estos números están en las placas de identificación del producto o en la placa principal en la cabina del operador.

Los distribuidores Caterpillar necesitan estos números para identificar con exactitud los números de piezas de repuesto.

SIS *Nueva Característica*

A partir del primer trimestre del 2001, el Número de Identificación de Producto (PIN) de Caterpillar cambió de 8 a 17 caracteres. Para hacer más uniforme el método de identificación de equipos, Caterpillar y otros fabricantes de equipo de construcción han tomado medidas para cumplir con la versión más reciente de la norma de numeración de identificación de productos. Los Números de Identificación de Producto para máquinas que no se operan en carreteras son definidos por la norma ISO 10261. El nuevo formato PIN corresponderá a todas las máquinas y grupos electrógenos Caterpillar. Las placas y los caracteres PIN estampados en el bastidor mostrarán el PIN de 17 caracteres. El nuevo formato tendrá la apariencia siguiente:

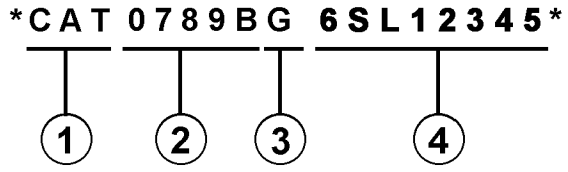

Significado de los caracteres:

1. Código de Fabricación Mundial de Caterpillar (caracteres 1-3)

2. Sección Descriptor de la Máquina (caracteres 4-8)

3. Carácter de Verificación (carácter 9)

4. Sección Indicador de la Máquina (MIS) o Número de Secuencia de Producto (caracteres 10-17). Anteriormente, estos caracteres constituían el Número de Serie.

Las máquinas y grupos electrógenos producidos antes del primer semestre del 2001 mantendrán su formato PIN de 8 caracteres.

Los componentes como motores, transmisiones, ejes, herramientas de trabajo, etc., continuarán usando un Número de Serie (S/N) de 8 caracteres.

2. COMO PEDIR REPUESTOS

⚠ ADVERTENCIA

Cuando se necesiten piezas de repuesto para este producto, Caterpillar recomienda usar piezas de repuesto Caterpillar o piezas que tengan especificaciones equivalentes incluyendo, pero sin estar limitadas a, dimensiones físicas, tipo, fortaleza y material.

El no hacer caso de esta advertencia puede llevar a fallas prematuras, daños al producto y lesiones graves o mortales.

Las piezas de repuesto Caterpillar de calidad están a la disposición de los distribuidores Caterpillar en todo el mundo. Sus existencias actualizadas incluyen todas las piezas normalmente requeridas para proteger su inversión en máquinas Caterpillar. Los distribuidores pueden tener juegos de reparación o piezas remanufacturadas para permitir la selección de la mejor alternativa de reparación en un caso en particular. Al pedir piezas de repuesto, especifique en su pedido la cantidad, el número de pieza, el nombre de la pieza y el número de serie/número de identificación del producto, de la máquina para la cual se necesitan estas piezas.

3. ORGANIZACION DEL MANUAL DE PIEZAS

La información sobre el producto, se presenta en este manual, como "elementos de información" que representan todos los componentes de un modelo específico. Las configuraciones de motores y los grupos de asientos son ejemplos de elementos de información. Los elementos de información están organizados primeramente por nombres de piezas en orden alfabético y en segundo lugar, por el número de pieza dentro de cada sección principal del manual.

4. CONTENIDO

La página de Contenido se encuentra al principio del manual. El Contenido indica cada sección del manual con una lista completa de todos los elementos de información organizados en el orden que aparecen en el manual. Los números de página proporcionan una referencia rápida a las ilustraciones detalladas de identificación de piezas y a las listas de componentes de repuesto de dichas piezas.

5. ÍNDICE DE PIEZAS DE MANTENIMIENTO

Al principio de este catálogo se encuentra un índice de los números de piezas utilizadas más frecuentemente para el mantenimiento, que incluye descripción, cantidad necesaria, lugar de utilización y número de página. Esta información está organizada alfabéticamente, por descripción de la pieza.

6. ÍNDICE

El Índice, ubicado cerca del principio del manual, es una lista en orden alfabético de todos los elementos de información incluídos en el manual. Los números de página proporcionan una referencia rápida a las ilustraciones detalladas de identificación de piezas y a las listas de componentes de repuesto de dichas piezas.

7. INDICE NUMÉRICO DE PIEZAS

Un índice numérico de piezas con el correspondiente número de página aparece al final de este catálogo.

8. TÍTULOS

Los títulos ubicados al principio de cada elemento de información identifican el número y el nombre de la pieza junto con información descriptiva. Se debe usar información sobre los Números de Identificación de Pieza (PIN) y los números de serie (S/N) para seleccionar la información que corresponda a una máquina en particular. También se suministra información sobre las opciones de reparación en el campo, la identificación de componentes de accesorios optativos y el lugar de ubicación de la pieza ("es parte de").

La primera línea del título se muestra con un tipo de letra más grande para indicar el comienzo de un elemento de información. Si se requieren páginas adicionales para ilustrar un elemento de información, los títulos se muestran con un tipo de letra normal y la continuación se indica entre paréntesis.

9. PIEZAS QUE NO SE SUMINISTRAN COMO REPUESTO

En algunos casos es necesario indicar piezas que no se suministran como repuesto pero que pueden estar conectadas a listas de componentes de otras piezas de repuesto. En tal caso, dichas piezas se muestran en cursiva para indicar que no son piezas disponibles.

10. NÚMEROS DE REFERENCIA

Los números en la columna de No. de Referencia corresponden a los números indicados en la ilustración que pertenece a ese número de pieza. Los números que tienen un sufijo alfabético identifican artículos de las listas de componentes de piezas. Los números en la columna de Referencia de la ilustración se identifican en la esquina inferior izquierda de cada ilustración. Para determinar el número de pieza correcto se puede utilizar tanto el No. de Referencia de la ilustración como el No. de Referencia del artículo. A medida que se actualiza la información para indicar los más recientes números de piezas de repuesto, puede omitirse intencionalmente un No. de Referencia en una lista de componentes de piezas.

11. NOMBRES DE PIEZA SANGRADOS

Cuando el nombre de una pieza está sangrado en una lista, significa que esta pieza forma parte del grupo o conjunto del renglón inmediatamente superior.

12. LETRAS DE REFERENCIA DE ILUSTRACIONES

Las ilustraciones contienen algunas veces letras de referencia (A, B, C etc.) cuyo propósito es seguir el trayecto de líneas y mazos de cables de un punto a otro. También se utilizan para mostrar dónde volver a unir ilustraciones que se habían separado.

13. ABREVIATURAS Y SIMBOLOS

O.D. – Diámetro exterior
I.D. – Diámetro interior
A – No es pieza de este grupo
B – Utilizado según la demanda
C – Indica cambio
D – Se pide por metro
E – Se pide por centímetro
F – No se muestra
G – Se pide por pulgada
I – Consulte el sistema de información hidráulica
M – Pieza métrica
R – Puede estar disponible como pieza remanufacturada
Y – Ilustración separada
Z – No se suministra por separado

SIS *Nueva Característica*

14.<END>

Este símbolo indica el final de un elemento de información.

NOTA:

Las contínuas mejoras y adelantos en diseño podrían originar cambios a su máquina que no se incluyen en esta publicación. Cuando tenga alguna pregunta acerca de su producto Caterpillar o de esta publicación, consulte al distribuidor Caterpillar para obtener la información más reciente.

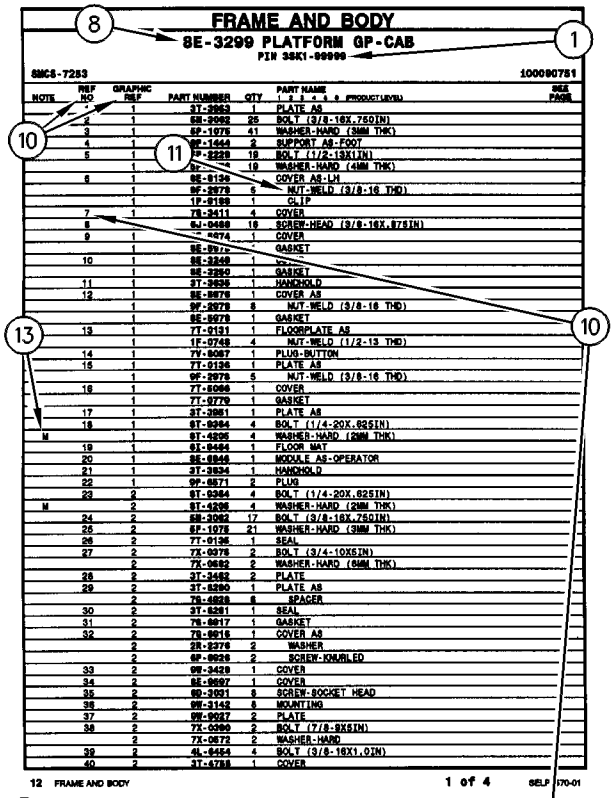

FRAME AND BODY

8E-3299 PLATFORM GP-CAB

PIN 3SK1-99999

SMCS-7283 100090751

NOTE	REF NO	GRAPHIC REF	PART NUMBER	QTY	PART NAME 1 2 3 4 5 6 (PRODUCT LEVEL)	SEE PAGE
	*	1	3T-3963	1	PLATE AS	
	2	1	5M-3062	25	BOLT (3/8-16X.750IN)	
	3	1	6P-1075	41	WASHER-HARD (3MM THK)	
	4	1	9E-1443	2	SUPPORT AS-FOOT	
	5	1	9P-2229	19	BOLT (1/2-13X1IN)	
		1	9P-[illegible]	19	WASHER-HARD (4MM THK)	
	6	1	9E-9136	*	COVER AS-LH	
		1	9F-2979	6	NUT-WELD (3/8-16 THD)	
		1	1P-0189	1	CLIP	
	7	1	7S-3411	4	COVER	
	8	1	6J-0468	18	SCREW-HEAD (3/8-16X.87SIN)	
	9	1	[illegible]-0274	1	COVER	
		1	9E-9976	*	GASKET	
	10	1	9E-3248	1	[illegible]	
		1	9E-3250	1	GASKET	
	11	1	3T-3636	1	HANDHOLD	
	12	1	9E-9976	1	COVER AS	
		1	9F-2979	8	NUT-WELD (3/8-16 THD)	
		1	9E-9978	1	GASKET	
	13	1	7T-9131	1	FLOORPLATE AS	
		1	1F-0748	4	NUT-WELD (1/2-13 THD)	
	14	1	7V-8067	1	PLUG-BUTTON	
	15	1	7T-9136	1	PLATE AS	
		1	9F-2979	5	NUT-WELD (3/8-16 THD)	
	16	1	7T-5066	1	COVER	
		1	7T-9779	1	GASKET	
	17	1	3T-3951	1	PLATE AS	
	18	1	9T-0264	4	BOLT (1/4-20X.62SIN)	
M		1	9T-4295	4	WASHER-HARD (2MM THK)	
	19	1	9I-9454	1	FLOOR MAT	
	20	1	9E-6946	1	MODULE AS-OPERATOR	
	21	1	3T-3934	1	HANDHOLD	
	22	1	9P-0571	2	PLUG	
	23	2	9T-0264	4	BOLT (1/4-20X.62SIN)	
M		2	9T-4295	4	WASHER-HARD (2MM THK)	
	24	2	5M-3062	17	BOLT (3/8-16X.75QIN)	
	25	2	6P-1075	21	WASHER-HARD (3MM THK)	
	26	2	7T-9136	1	SEAL	
	27	2	7X-0075	2	BOLT (3/4-10X5IN)	
		2	7X-0682	2	WASHER-HARD (6MM THK)	
	28	2	3T-3482	2	PLATE	
	29	2	3T-5290	1	PLATE AS	
		2	7S-4828	6	SPACER	
	30	2	3T-5291	1	SEAL	
	31	2	7S-8817	1	GASKET	
	32	2	7S-8816	1	COVER AS	
		2	5R-2276	2	WASHER	
		2	9F-9026	2	SCREW-KNURLED	
	33	2	9W-3429	1	COVER	
	34	2	8E-9697	1	COVER	
	35	2	9D-3031	8	SCREW-SOCKET HEAD	
	36	2	9W-3143	8	MOUNTING	
	37	2	9W-9037	2	PLATE	
	38	2	7X-0360	2	BOLT (7/8-9X5IN)	
		2	7X-0672	2	WASHER-HARD	
	39	2	4L-9454	4	BOLT (3/8-16X1.0IN)	
	40	2	3T-4788	1	COVER	

12 FRAME AND BODY 1 of 4 SELP4570-01

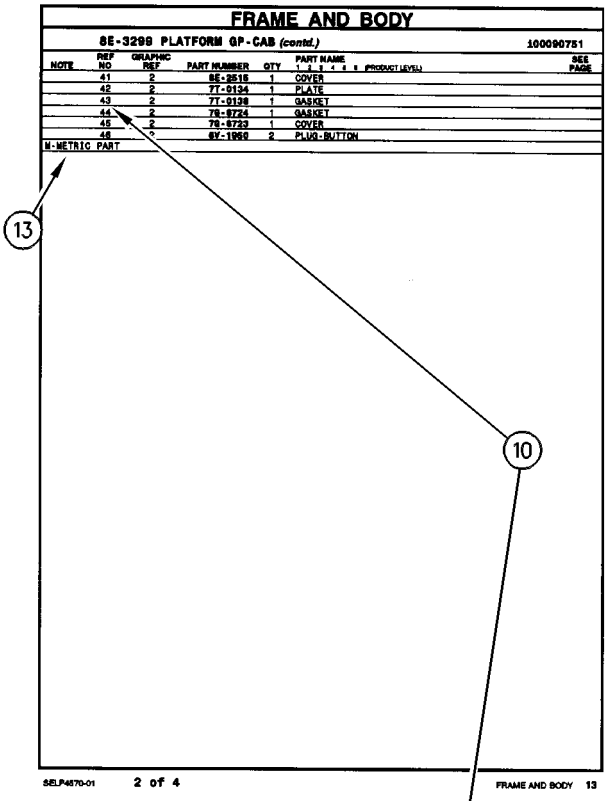

FRAME AND BODY

8E-3299 PLATFORM GP-CAB *(contd.)* 100090751

NOTE	REF NO	GRAPHIC REF	PART NUMBER	QTY	PART NAME 1 2 3 4 5 6 (PRODUCT LEVEL)	SEE PAGE
	41	2	8E-2515	1	COVER	
	42	2	7T-9134	1	PLATE	
	43	2	7T-9138	1	GASKET	
	44	2	7S-8724	1	GASKET	
	45	2	7S-8723	1	COVER	
	46	*	8Y-1950	2	PLUG-BUTTON	

M-METRIC PART

SELP4570-01 2 of 4 FRAME AND BODY 13

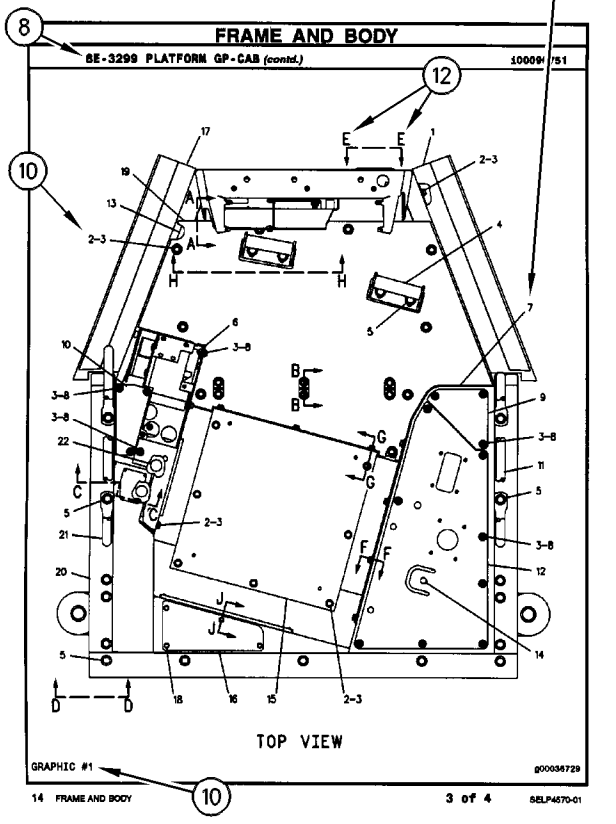

FRAME AND BODY

8E-3299 PLATFORM GP-CAB *(contd.)* 100090751

TOP VIEW

GRAPHIC #1 g00036729

14 FRAME AND BODY 3 of 4 SELP4570-01

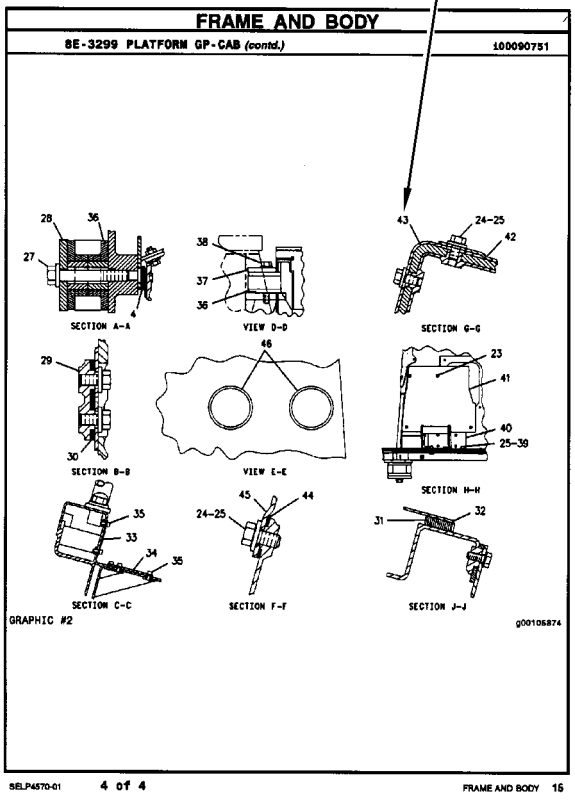

FRAME AND BODY

8E-3299 PLATFORM GP-CAB *(contd.)* 100090751

SECTION A-A VIEW D-D SECTION G-G

SECTION B-B VIEW E-E SECTION H-H

SECTION C-C SECTION F-F SECTION J-J

GRAPHIC #2 g00105874

SELP4570-01 4 of 4 FRAME AND BODY 15

INFORMAÇÃO GERAL

1. IDENTIFICAÇÃO DA MÁQUINA

As máquinas Caterpillar são identificadas pelos Números de Informação do Produto (PIN). Alguns componentes incluídos numa máquina podem ser identificados por Números de Série (S/N). Componentes típicos que serão enumerados com números de série incluem motores, transmissões, lâminas e ríperes. Além do número de série, a máquina e o motor são ainda identificados por números de arranjo e, em alguns casos, números de modificações. Tais números encontram-se na(s) placa(s) de identificação do produto e na placa mestre no compartimento do operador.

SIS *Novidades*

A partir do primeiro trimestre de 2001 o Número de Identificação de Produto da Caterpillar (PIN) precisa ser mudado de 8 para 17 caracteres. Esforçando-se para fornecer uma identificação uniforme de equipamentos, a Caterpillar e outros fabricantes de equipamento de construção estão mudando para atender a versão mais atualizada do padrão de identificação de produtos. Os números de PIN para produtos de aplicações não rodoviárias são definidos pela ISO 10261. O novo formato de número PIN será adotado em todas as máquinas e grupos geradores Caterpillar. As placas e as marcações do chassi mostrarão os 17 dígitos de PIN. O novo formato terá a seguinte disposição:

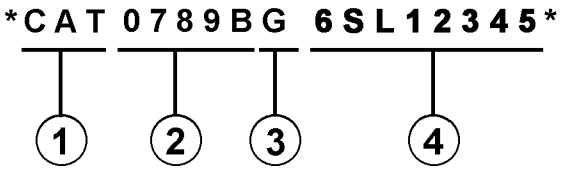

Onde:

1. Código de Fabricação Mundial da Caterpillar (dígitos 1-3)

2. Descrição da Máquina (dígitos 4-8)

3. Dígito de Verificação (dígito 9)

4. Seção de Indicador da Máquina (MIS) ou Número de Seqüência de Produto (dígitos 10-17). Estes eram anteriormente chamados de Número de Série.

Máquinas e grupos geradores produzidos antes do primeiro trimestre de 2001 manterão o formato de 8 caracteres de PIN.

Componentes como motores, transmissões, eixos, ferramentas de trabalho, etc. continuarão a usar Número de Série (S/N) com oito caracteres.

2. COMO OBTER PEÇAS

⚠ CUIDADO

Quando peças de substituição são exigidas para este produto, a Caterpillar recomenda a utilização de peças de substituição Caterpillar ou peças com as especificações equivalentes incluindo, mas não limitadas, à dimensões físicas, tipos, resistência e materiais.

A inobservância desta advertência poderá resultar em falhas prematuras, danos ao produto, ferimentos ou morte.

As Peças de Reposição de Qualidade Caterpillar encontram-se disponíveis nos revendedores Caterpillar no mundo inteiro. Seus estoques de peças são atualizados e incluem todas as peças normalmente necessárias para proteger seu investimento em máquinas Caterpillar. Alguns revendedores podem oferecer jogos de reparo ou peças de troca/remanufaturadas disponíveis como uma opção da alternativa de reparo mais eficaz para uma situação específica. Ao encomendar peças, seu pedido deve especificar a quantidade, o número e o nome da peça e o número de série/número de identificação do produto referentes à máquina para a qual as peças se destinam.

3. ORGANIZAÇÃO DO MANUAL DE PEÇAS

A informação do produto neste manual é apresentada em forma de "elementos de informação" que representam todos os componentes para o modelo específico. Arranjo de Motor e Grupo de Assento são exemplos de elementos de informação. Os elementos de informação são organizados em ordem alfabética por nome de peça ou secundariamente, por número de peça incluído em cada seção principal do manual.

4. LISTA DE CONTEÚDOS

A Lista de Conteúdos (TOC) se encontra no princípio do manual. A Lista de Conteúdos (TOC) relaciona em cada seção do manual uma lista completa com todos os elementos de informação organizados conforme aparecem no manual. Números de página são fornecidos para que se tenha referência rápida de ilustrações de peças detalhadas e listas de conteúdos que podem receber serviço de manutenção.

INFORMAÇÃO GERAL

5. ÍNDICE DE PEÇAS DE MANUTENÇÃO

O Índice de Peças de Manutenção, localizado perto do princípio do manual, faz referência aos números de peça de manutenção usados com maior frequência, fornecendo uma descrição, a quantidade, o uso e o número de página. Esta informação é organizada com a descrição da peça em ordem alfabética.

6. ÍNDICE

O Índice localizado perto do princípio do manual, consiste de uma lista em ordem alfabética de todos os elementos de informação incluídos no manual. Números de página são fornecidos para que se tenha referência rápida de ilustrações de peças detalhadas e listas de conteúdos que podem receber serviço de manutenção.

7. ÍNDICE DE NÚMERO DE PEÇA

Um índice numérico relacionando todos os números de peça e a(s) página(s) correspondentes, aparece no final do manual.

8. LEGENDAS

As legendas localizadas no início de cada elemento de informação identificam o número e o nome de peça, juntamente com informação descritiva adicional. Informações sobre o Número de Informação do Produto (PIN) e o Número de Série (S/N) encontradas em cada legenda devem ser usadas para selecionar a informação correta sobre uma máquina específica. Opções de substituição no campo, identificação de componentes de acessórios opcionais e informações sobre onde são utilizados ("parte de") são também fornecidas.

A primeira linha de uma legenda é indicada em tipo maior para indicar o princípio de um elemento de informação. Legendas para páginas adicionais que podem ser necessárias para ilustrar um elemento de informação serão apresentadas em tipo padrão e incluirão o termo *(continua)* .

9. NÃO DISPONÍVEL SEPARADAMENTE

Em alguns casos, é necessário mostrar peças não disponíveis separadamente que têm uma ligação com listas de conteúdos de nível inferior que podem receber serviço de manutenção. Os números de peça destes componentes não disponíveis aparecerão em *itálico* , a fim de indicar que não estão disponíveis.

10. NÙMEROS DE REFERÊNCIA À LISTA DE PEÇAS

Os números indicados na coluna Ref No (No. de Referência) correspondem-se aos números usados no(s) gráfico(s) correspondente(s). Um sufixo com letras pode ser acrescentado a um número de referência para identificar itens de conteúdo de nível inferior. Os números indicados na coluna Graphic Ref (Referência de Gráfico) referem-se ao identificador de número de gráfico presente no canto esquerdo inferior de cada ilustração. O número de Referência de Gráfico pode ser usado em combinação com o item Ref No para determinar-se o número de peça correto. Poderá haver omissão intencional de um número de referência (Ref No) de uma lista de conteúdos uma vez que as informações são atualizadas para refletir os números de peça mais recentes que podem receber serviço de manutenção.

11. NOMES DE PEÇAS DESALINHADOS

Quando um nome de peça encontra-se desalinhado numa lista de peças, significa que tal item faz parte do (está incluído no) grupo ou conjunto sob o qual está relacionado.

12. LETRAS DE REFERÊNCIA NAS ILUSTRAÇÕES

Quando necessário, as ilustrações contêm letras de referência (A, B, C, etc.) que são utilizadas para seguir tubulações e cabos elétricos de um ponto a outro. Também foram utilizadas para indicar onde se pode reconectar as ilustrações que foram separadas.

13. ABREVIAÇÕES E SÍMBOLOS

O.D. – "Outside Diameter" (Diâmetro Externo)
I.D. – "Inside Diameter" (Diâmetro Interno)
A – Não faz parte deste grupo
B – Use conforme necessário
C – Indica modificação
D – Vendido por metro
E – Vendido por centímetro
F – Não ilustrado
G – Vendido por polegada
I – Consultar o Sistema de Informações Hidráulicas
M – Peça métrica
R – Peça remanufaturada pode estar disponível; consulte o seu revendedor Cat
Y – Ilustração separada
Z – Não disponível separadamente

SIS *Novidades*

14. <END>

Este símbolo indica o final de um elemento de informação.

NOTA:

Os contínuos aperfeiçoamentos e avanços no projeto do produto podem ocasionar modificações em sua máquina que talvez ainda não estejam incluídas nesta publicação. Sempre que surgirem dúvidas quanto a um produto Caterpillar ou quanto à presente publicação, consulte o seu revendedor Caterpillar para obter as informações mais recentes disponíveis.

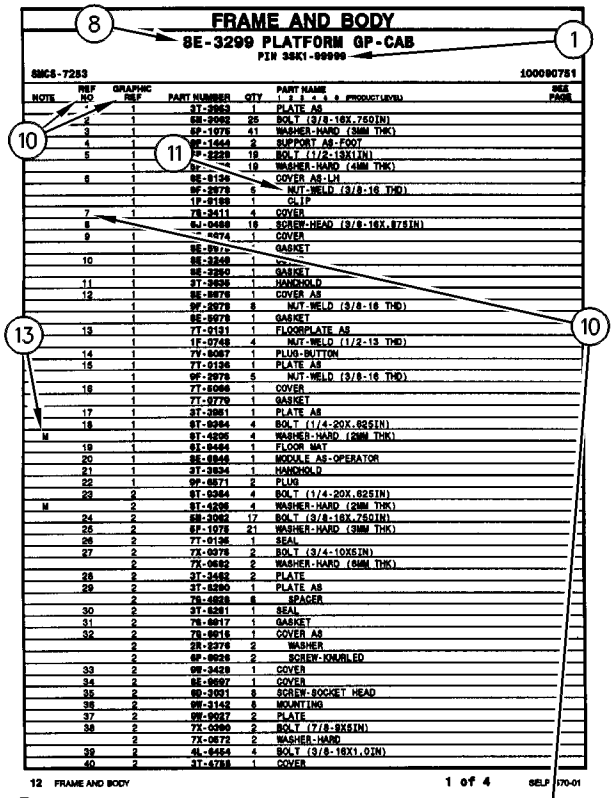

FRAME AND BODY

8E-3299 PLATFORM GP-CAB

PIN 3SK1-99999

SMCS-7283 100090751

NOTE	REF NO	GRAPHIC REF	PART NUMBER	QTY	PART NAME 1 2 3 4 5 6 (PRODUCT LEVEL)	SEE PAGE
	*	1	3T-3963	1	PLATE AS	
	2	1	5B-2062	25	BOLT (3/8-16X.750IN)	
	3	1	6P-1075	41	WASHER-HARD (3MM THK)	
	4	1	8E-1443	2	SUPPORT AS-FOOT	
	5	1	5P-2229	19	BOLT (1/2-13X1IN)	
		1	6P-[illegible]	19	WASHER-HARD (4MM THK)	
	6	1	8E-9136	*	COVER AS-LH	
		1	9F-2979	6	NUT-WELD (3/8-16 THD)	
		1	1P-0189	1	CLIP	
	7	1	7X-3411	4	COVER	
	8	1	6J-0468	18	SCREW-HEAD (3/8-16X.87SIN)	
	9	1	[illegible]-0274	1	COVER	
		1	8E-9[illegible]	*	GASKET	
	10	1	8E-3248	1	[illegible]	
		1	8E-3250	1	GASKET	
	11	1	3T-3636	1	HANDHOLD	
	12	1	8E-9078	1	COVER AS	
		1	9F-2979	8	NUT-WELD (3/8-16 THD)	
		1	8E-9079	1	GASKET	
	13	1	7T-9131	1	FLOORPLATE AS	
		1	1F-0748	4	NUT-WELD (1/2-13 THD)	
	14	1	7V-8067	1	PLUG-BUTTON	
	15	1	7T-9136	1	PLATE AS	
		1	9F-2979	5	NUT-WELD (3/8-16 THD)	
	16	1	7T-5066	1	COVER	
		1	7T-9779	1	GASKET	
	17	1	3T-3951	1	PLATE AS	
	18	1	9T-0264	4	BOLT (1/4-20X.62SIN)	
M		1	9T-4296	4	WASHER-HARD (2MM THK)	
	19	1	9I-9464	1	FLOOR MAT	
	20	1	8E-6848	1	MODULE AS-OPERATOR	
	21	1	3T-3934	1	HANDHOLD	
	22	1	9P-0671	2	PLUG	
	23	2	9T-0264	4	BOLT (1/4-20X.62SIN)	
M		2	9T-4296	4	WASHER-HARD (2MM THK)	
	24	2	5B-2062	17	BOLT (3/8-16X.750IN)	
	25	2	6P-1075	21	WASHER-HARD (3MM THK)	
	26	2	7T-9136	1	SEAL	
	27	2	7X-0078	2	BOLT (3/4-10X5IN)	
		2	7X-0682	2	WASHER-HARD (6MM THK)	
	28	2	3T-3482	2	PLATE	
	29	2	3T-5290	1	PLATE AS	
		2	7S-4828	6	SPACER	
	30	2	3T-5291	1	SEAL	
	31	2	7S-8817	1	GASKET	
	32	2	7S-8818	1	COVER AS	
		2	5R-2276	2	WASHER	
		2	9F-9026	2	SCREW-KNURLED	
	33	2	9W-3429	1	COVER	
	34	2	8E-9697	1	COVER	
	35	2	9D-3031	8	SCREW-SOCKET HEAD	
	36	2	9W-3143	8	MOUNTING	
	37	2	9W-9037	2	PLATE	
	38	2	7X-0360	2	BOLT (7/8-9X5IN)	
		2	7X-0672	2	WASHER-HARD	
	39	2	4L-6454	4	BOLT (3/8-16X1.0IN)	
	40	2	3T-4788	1	COVER	

12 FRAME AND BODY 1 of 4 SELP4570-01

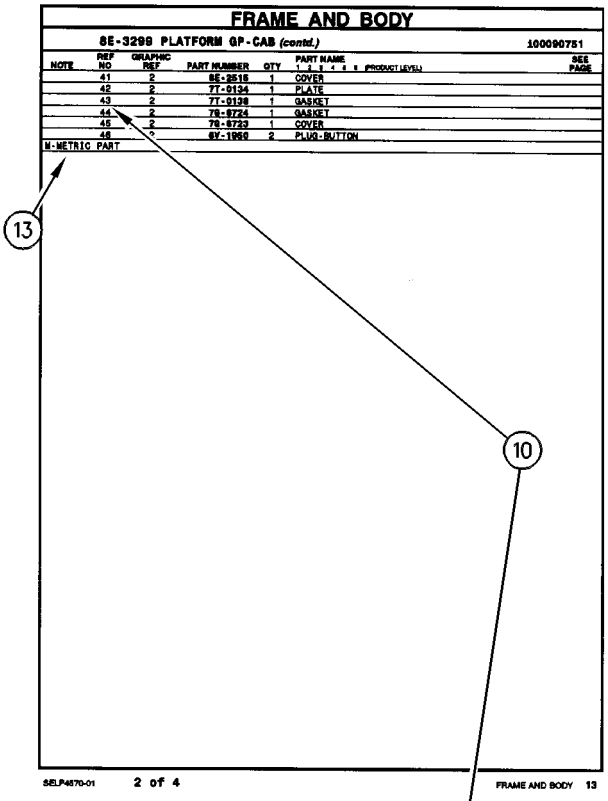

FRAME AND BODY

8E-3299 PLATFORM GP-CAB (contd.) 100090751

NOTE	REF NO	GRAPHIC REF	PART NUMBER	QTY	PART NAME 1 2 3 4 5 6 (PRODUCT LEVEL)	SEE PAGE
	41	2	8E-2515	1	COVER	
	42	2	7T-9134	1	PLATE	
	43	2	7T-9138	1	GASKET	
	44	2	7S-8724	1	GASKET	
	45	2	7S-8723	1	COVER	
	46	*	8Y-1950	2	PLUG-BUTTON	

M-METRIC PART

SELP4570-01 2 of 4 FRAME AND BODY 13

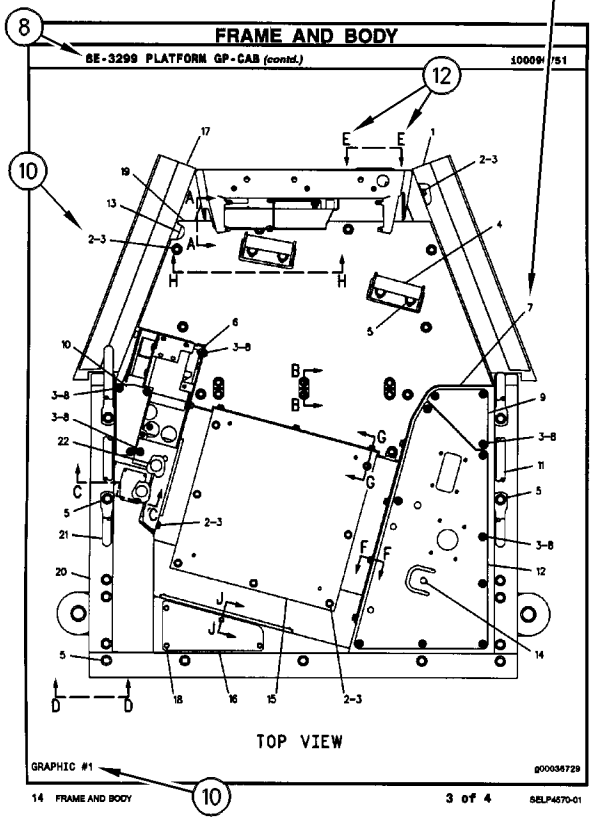

FRAME AND BODY

8E-3299 PLATFORM GP-CAB (contd.) 100090751

GRAPHIC #1 g00036729

TOP VIEW

14 FRAME AND BODY 3 of 4 SELP4570-01

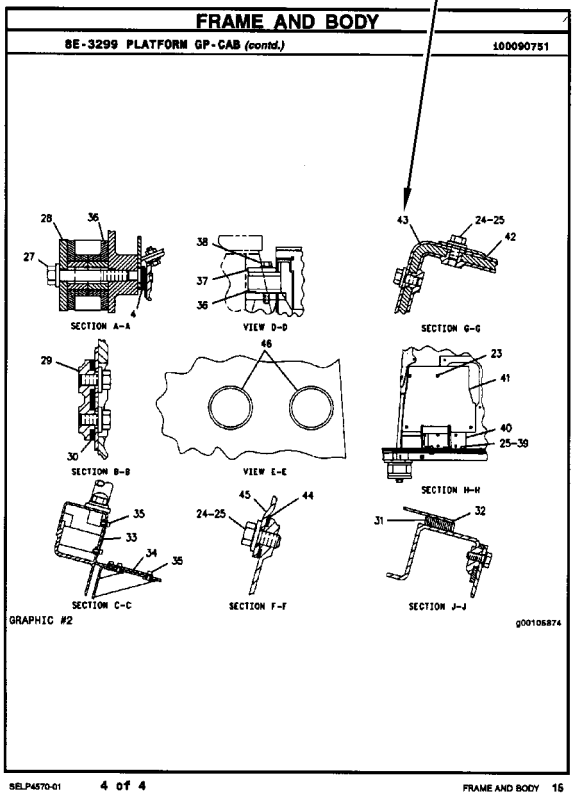

FRAME AND BODY

8E-3299 PLATFORM GP-CAB (contd.) 100090751

SECTION A-A

VIEW D-D

SECTION G-G

SECTION B-B

VIEW E-E

SECTION H-H

SECTION C-C

SECTION F-F

SECTION J-J

GRAPHIC #2 g00105874

SELP4570-01 4 of 4 FRAME AND BODY 15

ALLGEMEINE HINWEISE

1. MASCHINENKENNZEICHNUNG

Caterpillar-Maschinen sind mit PRODUCT IDENTIFICATION NUMBERS (PIN) (Produkt-Identnummern) gekennzeichnet. Einige Baugruppen, z.B. Motoren, Getriebe, Planierschilde und Aufreißer, sind mit SERIAL NUMBERS (S/N) (Seriennummern) gekennzeichnet. An der Maschine und am Motor befinden sich außerdem ARRANGEMENT NUMBERS (Ausrüstungsnummern) sowie in einigen Fällen MODIFICATION NUMBERS (Änderungsnummern). Sie befinden sich auf den PIN-Schildern und auf dem Typenschild im Fahrerhaus.

Bei Ersatzteilbestellungen müssen dem Händler alle diese Nummern zur Verfügung gestellt werden.

SIS *Neu im Parts Manual*

Vom ersten Quartal 2001 ab wurde die Caterpillar Produkt-Identnummer (PIN) von 8 auf 17 Zeichen geändert. Um zur Standardisierung der Produkt-Identnummer beizutragen, sind Caterpillar und andere Baumaschinenhersteller bestrebt, die aktuellste Norm zur Produkt-Identnummerierung einzuführen. Produkt-Identnummern für Baumaschinen sind durch ISO 10261 definiert. Das neue Format der Produkt-Identnummern gilt für alle Caterpillar-Maschinen und -Stromaggregate. Die Produkt-Identschilder und -Identrahmenmarkierung enthalten die aus 17 Zeichen bestehende Identnummer. Das neue Format hat folgende Abschnitte:

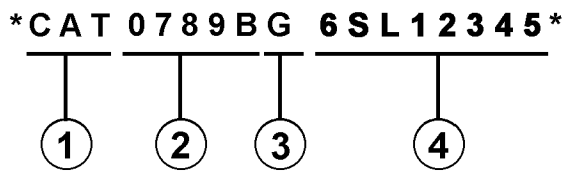

Abschnitte:

1. Caterpillars weltweiter Herstellungscode (Zeichen 1-3)

2. Modell (Zeichen 4-8)

3. Kontrollzeichen (Zeichen 9)

4. Maschinenspezifische Kennung (MIS) oder Produktsequenznummer (Zeichen 10-17). Diese wurde früher als Seriennummer bezeichnet.

Für vor dem ersten Quartal 2001 hergestellte Maschinen und Stromaggregate wird das aus 8 Zeichen bestehende PIN-Format beibehalten.

Bauteile wie z.B. Motoren, Getriebe, Achsen sowie Arbeitsgeräte werden weiterhin eine aus 8 Zeichen bestehende Seriennummer (S/N) aufweisen.

2. BESTELLEN VON ERSATZTEILEN

⚠ WARNUNG

Wenn für diese Maschine Ersatzteile benötigt werden, empfiehlt Caterpillar, ausschließlich Caterpillar-Ersatzteile oder solche zu verwenden, die die gleichen technischen Merkmale hinsichtlich Typ, Festigkeit, Werkzeugeigenschaften und die gleichen Maße aufweisen.

Bei Nichtbeachtung dieser Warnung besteht Verletzungs- oder sogar Lebensgefahr! Ferner kann Nichtbeachtung vorzeitige Ausfälle der Teile und Beschädigung der Maschine zur Folge haben.

Original Caterpillar-Ersatzteile können weltweit bei jedem Caterpillar-Händlern bestellt werden. Die umfangreichen Händlerlager enthalten normalerweise alle Teile, die Sie für Ihre Caterpillar-Maschine benötigen. Einige Händler bieten Reparatursätze, Austausch- oder werküberholte Teile an, so daß Sie eine Auswahl unter verschiedenen Reparaturmöglichkeiten treffen können. Ihre Bestellung muß folgende Angaben enthalten: Anzahl der benötigten Teile, Bestellnummer, Bezeichnung des Teils, Serien-Nr./Produkt-Ident-Nr., Ausrüstungs-Nr. und Änderungs-Nr. der Maschine, für die diese Teile benötigt werden.

3. AUFBAU DES PARTS MANUAL

Die Produktinformationen für alle Komponenten eines bestimmten Modells sind in INFORMATION ELEMENTS (Informationseinheiten) gegliedert. ENGINE ARRANGEMENT (Motorausführung) und SEAT GROUP (Fahrersitz) sind Beispiele für solche Informationseinheiten. Sie sind innerhalb jeder Gruppe alphabetisch, entsprechend der Ersatzteilbezeichnung, und zusätzlich numerisch, entsprechend der Ersatzteilnummer, geordnet.

4. INHALTSVERZEICHNIS

Das Inhaltsverzeichnis befindet sich am Anfang des Buches. Im Inhaltsverzeichnis werden die einzelnen Abschnitte des Buches aufgeführt. Die Abschnitte enthalten eine vollständige Aufstellung aller Informationseinheiten. Diese sind entsprechend ihrem Erscheinen im Buch geordnet. Das Inhaltsverzeichnis enthält Seitenangaben für Schnellverweise auf detaillierte Abbildungen und Teillisten.

ALLGEMEINE HINWEISE

5. INDEX FÜR WARTUNGSTEILE

Der Index für Wartungsteile vorn im Buch enthält die Bestellnummern, Seitenangaben, Mengenangaben und Informationen über den Einsatzbereich für die am häufigsten benötigten Ersatzteile. Die Angaben sind alphabetisch entsprechend der Teilebezeichnung geordnet.

6. INDEX

Der Index vorn im Buch enthält eine alphabetische Liste aller Informationseinheiten. Er enthält Seitenangaben für Schnellverweise auf detaillierte Abbildungen und Teillisten.

7. INDEX FÜR BESTELLNUMMERN

Hinten im Buch befindet sich ein numerischer Index, mit allen Bestellnummern und dem Hinweis auf die Seite, auf der sich die betreffende Abbildung befindet.

8. ÜBERSCHRIFTEN

Die Überschriften, die sich am Anfang jeder der Informationseinheiten befinden, enthalten Bestellnummern, Ersatzteilbezeichnungen und zusätzliche beschreibende Informationen. Produkt-Ident- und Seriennummern in den Überschriften sollten zur Auswahl der richtigen Informationen für die betreffende Maschine verwendet werden. Die Überschriften enthalten außerdem Informationen über möglichen Außendienstersatz, mögliche Baugerätekomponenten und die Baugruppe, zu der das Teil gehört.

Die erste Zeile einer Überschrift erscheint in einer größeren Schriftart, um den Anfang einer Informationseinheit zu kennzeichnen. Überschriften für zusätzliche Seiten, die zur Erläuterung einer Informationseinheit notwendig sind, erscheinen in normaler Schriftart und enthalten den Begriff "(contd.)".

9. NICHT EINZELN LIEFERBARE TEILE

In einigen Fällen ist es notwendig nicht lieferbare Teile, die selbst mit einer eigenen Teilliste im Buch vertreten sind, aufzuführen. Die Bestellnummern dieser nicht einzeln lieferbaren Teile erscheinen kursiv, wodurch angezeigt wird, daß sie nur in Verbindung mit anderen Teilen lieferbar sind.

10. REFERENZNUMMER FÜR ERSATZTEILE

Die Zahlen, die in der Spalte "Ref No" aufgeführt sind, stimmen mit den Zahlen in den beigefügten Abbildungen überein. Ein Buchstaben-Suffix kann zu einer Referenznummer hinzugefügt werden, um zu kennzeichnen, daß das Teil mit einer eigenen Teilliste im Buch aufgeführt ist. Die in der Spalte "Graphic Ref" angeführten Zahlen verweisen auf die Identifikationsnummer der Abbildung, die sich in der linken unteren Ecke der Abbildung befindet. Diese Nummer kann zusammen mit der Referenznummer des Teils angegeben werden, um die richtige Ersatzteilnummer zu ermitteln. Referenznummern können absichtlich weggelassen werden, da die Nummern der lieferbaren Ersatzteile ständig aktualisiert werden.

11. EINGERÜCKTE BEZEICHNUNGEN

Wenn eine Bezeichnung eingerückt ist, wird dadurch angezeigt, daß das Teil zu einer Baugruppe gehört, unter deren Bezeichnung es eingerückt ist.

12. REFERENZBUCHSTABEN

Falls erforderlich sind in den Abbildungen Referenzbuchstaben enthalten (z.B. A, B, C, usw.), die Leitungen und Kabelbäume von einem Punkt zum anderen verfolgen. Außerdem geben sie die Stelle an, an der getrennte Abbildungen fortgesetzt werden.

13. ABKÜRZUNGEN UND SYMBOLE

O.D. – Außendurchmesser
I.D. – Innendurchmesser
A – kein Teil dieser Gruppe
B – nach Bedarf verwenden
C – Hinweis auf eine Änderung
D – in Meter-Länge bestellen
E – in Zentimeter-Länge bestellen
F – nicht gezeigt
G – in Zoll-Länge bestellen
I – siehe Hydraulikinformationssystem
M – metrisches Teil
R – werküberholtes Teil unter Umständen lieferbar
Y – separate Abbildung
Z – nicht einzeln lieferbar

SIS *Neu im Parts Manual*

14. <END>

Dieses Symbol zeigt das Ende eines Informationselements an.

ANMERKUNG:

Ständig vorgenommene Verbesserungen und Weiterentwicklungen an Ihrer Maschine können Änderungen verursachen, die in der vorliegenden Ausgabe noch nicht berücksichtigt sind. Fragen zu Ihrer Caterpillar-Maschine oder diesem Ersatzteilbuch beantwortet Ihr Caterpillar-Händler.

ALLGEMEINE HINWEISE

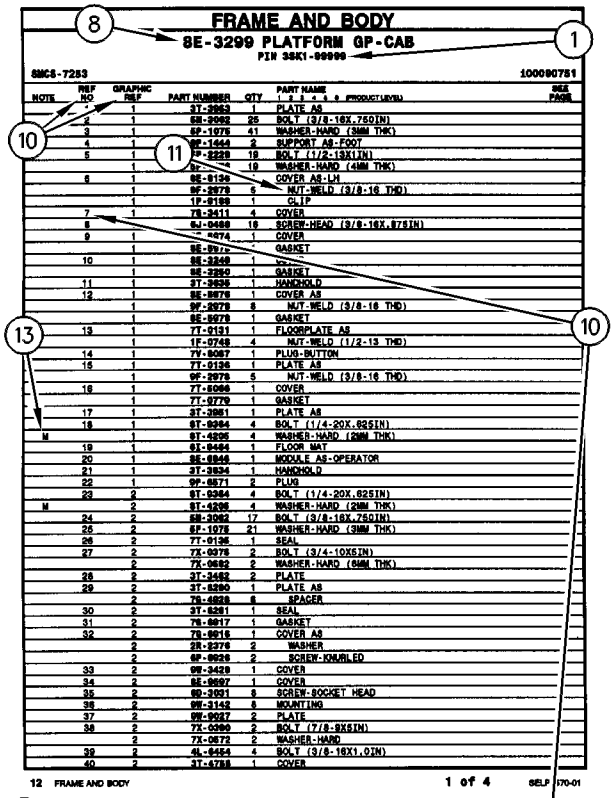

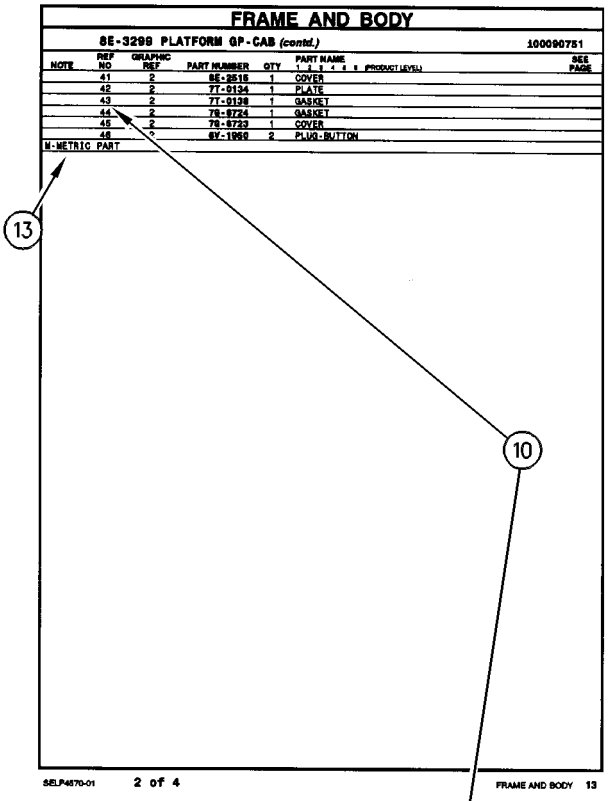

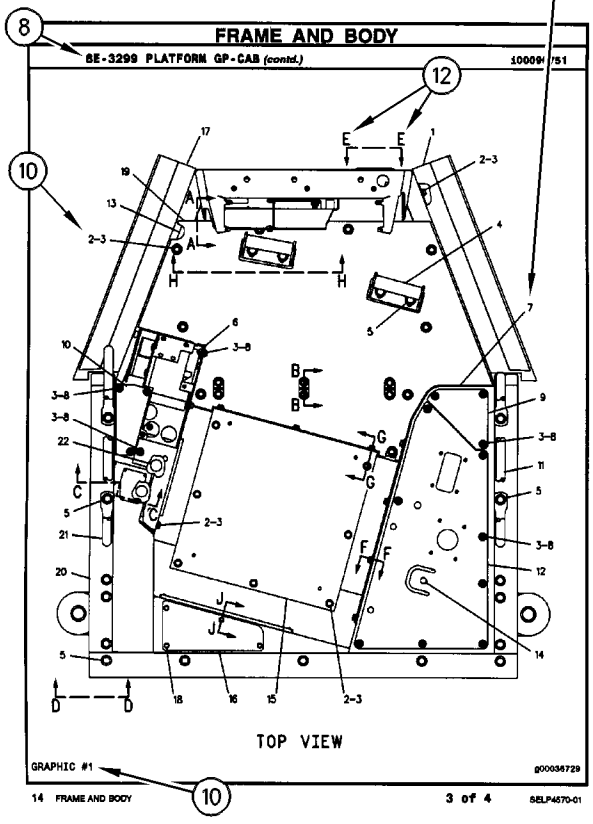

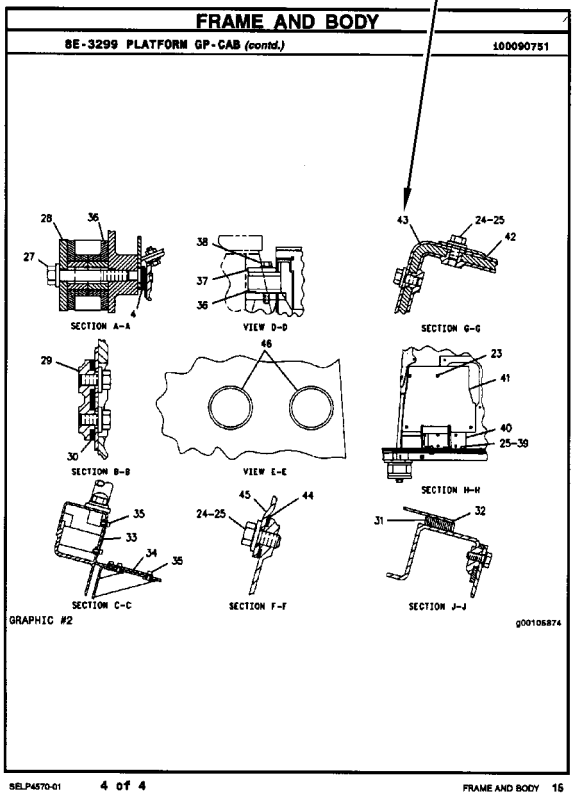

REMANUFACTURED COMPONENTS

As an option when making repairs consider Caterpillar Remanufactured Components. Components that are available through the Caterpillar Remanufactured Program are identified three ways in the parts book:

- with the letter R in the note field of the parts list
- with an R* at the beginning of the first line of the caption
- with an *R at the end of the first line of the caption

Typical components included in the Remanufacturing Program include:

ALTERNATORS
CONNECTING RODS
CRANKSHAFTS - UNDERSIZE
CRANKSHAFTS - UPGRADE TO NEW
CYLINDER HEADS
ELECTRONIC CONTROL MODULES (ECM)
ELECTRONIC SENSORS
FUEL INJECTORS
FUEL NOZZLES
FUEL PUMPS
GOVERNORS
OIL PUMPS
PISTONS
SHORT BLOCKS
STARTERS
TURBOCHARGERS - COMPLETE
TURBOCHARGER CARTRIDGES
WATER PUMPS

Caterpillar Remanufactured engines for many engine arrangements are also available.

OPTIONS DE RÉPARATION

COMPOSANTS RÉNOVÉS

Comme option de réparation, considérer les composants rénovés Caterpillar. Les composants disponibles dans le cadre du programme Caterpillar de composants rénovés sont identifiés de trois façons dans le catalogue de pièces:

- avec la lettre "R" dans l'espace note de la liste des pièces
- avec R* au début de la première ligne des légendes
- avec *R à la fin de la première ligne des légendes

Les composants suivants figurent parmi les composants typiques du programme de rénovation:

ALTERNATEURS
BIELLES
VILEBREQUINS - SOUS-DIMENSIONNÉS
VILEBREQUINS - REMIS À NEUF
CULASSES
MODULES DE COMMANDE ÉLECTRONIQUE (ECM)
CAPTEURS ÉLECTRONIQUES
INJECTEURS
TÊTES D'INJECTEURS
POMPES À CARBURANT
RÉGULATEURS
POMPES À HUILE
PISTONS
BLOCS EMBIELLÉS
DÉMARREURS
TURBOCOMPRESSEURS - COMPLETS
CARTOUCHES DE TURBOCOMPRESSEUR
POMPES À EAU

Des moteurs rénovés sont aussi disponibles pour plusieurs versions de moteur.

ALTERNATIVAS DE REPARACIÓN

COMPONENTES REMANUFACTURADOS

Al hacer reparaciones, tenga en cuenta la opción de Componentes Remanufacturados Caterpillar. Los componentes que están disponibles por medio del programa de Productos Remanufacturados Caterpillar se identifican de tres maneras en el manual de piezas:

- con la letra R en el espacio de Nota de la lista de piezas
- con una R* al comienzo de la primera línea de la leyenda
- con una *R al final de la primera línea de la leyenda

Los componentes que se incluyen típicamente en el Programa de Productos Remanufacturados son:

ALTERNADORES
BIELAS
CIGÜEÑALES - BAJOMEDIDA
CIGÜEÑALES - REMANUFACTURADOS A NUEVO
CULATAS
MÓDULOS DE CONTROL ELECTRÓNICO (ECM)
SENSORES ELECTRONICOS
INYECTORES
BOQUILLAS
BOMBAS DE COMBUSTIBLE
REGULADORES
BOMBAS DE ACEITE
PISTONES
MONOBLOQUES
MOTORES DE ARRANQUE
TURBOCOMPRESORES - COMPLETOS
NÚCLEOS DE TURBOCOMPRESOR
BOMBAS DE AGUA

También hay disponibles motores Remanufacturados Caterpillar para muchas de las configuraciones de motores.

ALTERNATIVAS DE REPARO

COMPONENTES REMANUFATURADOS

Considere o uso de Componentes Remanufaturados Caterpillar ao efetuar reparos. Os componentes disponíveis através do Programa de Remanufatura Caterpillar são identificados de três formas no manual de peças:

- com um R na área da nota da lista de peças
- com um R* no princípio da primeira linha da legenda
- com um *R no final da primeira linha da legenda

Os componentes típicos que constam no Programa de Remanufatura incluem:

ALTERNADORES
BIELAS
VIRABREQUINS - SUBMEDIDAS
VIRABREQUINS - ATUALIZAÇÃO
CABEÇOTES
MÓDULOS DE CONTROLE ELETRÔNICO (ECM)
SENSORES ELETRÔNICOS
INJETORES DE COMBUSTÍVEL
BICOS DE ABASTECIMENTO DE COMBUSTÍVEL
BOMBAS DE COMBUSTÍVEL
GOVERNADORES
BOMBAS DE ÓLEO
PISTÕES
BLOCOS BÁSICOS DO MOTOR
MOTORES DE PARTIDA
TURBOALIMENTADORES - COMPLETOS
CARTUCHOS DE TURBOALIMENTADORES
BOMBAS D'ÁGUA

Motores Remanufaturados Caterpillar também encontram-se disponíveis para diversos arranjos de motor.

REPARATURALTERNATIVEN

WERKÜBERHOLTE AT-PRODUKTE

Bei Reparaturen sollten werküberholte AT-Produkte von Caterpillar in Betracht gezogen werden. Die durch das AT-Programm von Caterpillar erhältlichen Teile sind im Parts Book auf drei verschiedene Arten gekennzeichnet:

- mit dem Buchstaben R in der Spalte NOTE der Ersatzteilliste
- mit einem R* am Anfang der ersten Zeile der Überschrift
- mit einem *R am Ende der ersten Zeile der Überschrift

Das AT-Programm umfaßt u.a. folgende Produkte:

DREHSTROMGENERATOREN
PLEUELSTANGEN
KURBELWELLEN - MIT UNTERMASS
KURBELWELLEN - MIT ORIGINALMASS
ZYLINDERKÖPFE
ELEKTRONISCHE STEUEREINHEITEN (EMC)
ELEKTRONISCHE SENSOREN
PUMPENDÜSEN
EINSPRITZDÜSEN
KRAFTSTOFFPUMPEN
DREHZAHLREGLER
ÖLPUMPEN
KOLBEN
TEILMOTOREN
ANLASSER
TURBOLADER - KOMPLETT
TURBOLADERLAUFZEUGE
KÜHLWASSERPUMPEN

Viele Motoren können durch werküberholte AT-Motoren von Caterpillar ersetzt werden.

SUPPLEMENTAL COOLANT ADDITIVES

CUSTOMER BENEFITS:

Protects against cavitation, foam, erosion, corrosion, and scale buildup in cooling systems.

- Provides measured coolant conditioner.

DESCRIPTION:

Additives deplete from the coolant with normal operation. For this reason, Supplemental Coolant Additives (SCA) must be added to all heavy duty coolants at regular intervals. In addition, when not using a fully formulated, pre-charged antifreeze, like Caterpillar's DEAC, an initial charge of SCA must be added to the cooling system. The amount of SCA added to the system is dependent on the capacity of the system.

The SCA for initial fill is provided as a liquid. SCA's for maintenance intervals are available in liquid form and as a spin-on element. (No Spin-on available for 3600 Family of Engines)

NOTE:

The amount of SCA added at initial fill is not the same as the amount added at maintenance intervals.

The coolant additive elements can be used with any ethylene or propylene glycol type antifreeze which meets ASTM D4985 or ASTM D5345 Specifications.

NOTE:

For use with standard heavy duty coolant only, not for use with Extended Life Coolant.

PARTS NEEDED:

Cooling System Capacity		Liquid SCA at Initial Fill	Liquid SCA at Maintenance*	Spin-on SCA Maintenance Element*
Liters	Gallons			
22-30	(6-8)	3P-2044 (1)	6V-3542 (1)	111-2370 (1)
30-38	(8-10)	3P-2044 (1) 6V-3542 (1)	111-2372 (1)	111-2369 (1)
38-49	(10-13)	3P-2044 (1) 8T-1589 (1)	111-2372 (1)	111-2369 (1)
49-64	(13-17)	3P-2044 (2)	8T-1589 (1)	9N-3368 (1)
64-83	(17-22)	3P-2044 (2) 8T-1589 (1)	111-2372 (1) 6V-3542 (1)	111-2371 (1)
83-114	(22-30)	3P-2044 (3) 8T-1589 (1)	3P-2044 (1)	9N-3718 (1)
114-163	(30-43)	3P-2044 (5)	3P-2044 (1) 6V-3542 (1)	111-2371 (2)
163-242	(43-64)	3P-2044 (8)	3P-2044 (2)	9N-3718 (2)

** Normal maintenance period is 250 hrs. See your Operation and Maintenance Manual for complete coolant maintenance instructions.*

( ) Indicates quantity required.

ADDITIFS POUR LIQUIDE DE REFROIDISSEMENT

AVANTAGES POUR LE CLIENT

L'additif protège contre la cavitation, la mousse, l'érosion, la corrosion et l'accumulation de dépôts dans le circuit de refroidissement.

- L'additif complémentaire fournit une quantité mesurée d'additif.

DESCRIPTION:

Les additifs s'épuisent pendant l'utilisation du moteur. C'est pourquoi l'on doit ajouter de l'additif au liquide de refroidissement/antigel pour moteurs diesel à intervalles réguliers. En plus, si l'on n'utilise pas de l'antigel entièrement formulé et pré-chargé comme le liquide de refroidissement/antigel Caterpillar pour moteurs diesel, une quantité initiale d'additif doit être ajoutée au circuit de refroidissement. La quantité d'additif à ajouter au circuit dépend de la contenance du circuit.

L'additif pour le remplissage initial est fourni sous forme liquide. L'additif pour l'entretien ultérieur est disponible sous forme liquide et sous forme d'élément à visser. (Il n'y a pas d'élément à visser pour les moteurs de la famille 3600).

NOTA:

La quantité d'additif à ajouter au remplissage initial diffère de la quantité à ajouter aux intervalles d'entretien.

Les éléments d'additif peuvent être utilisés avec tout antigel de type éthylène ou propylène-glycol conforme à la norme ASTM D4985 ou ASTM D5345.

NOTA:

A utiliser uniquement avec du liquide de refroidissement pour moteurs diesel et non avec le liquide de refroidissement longue durée.

PIÈCES NÉCESSAIRES:

Contenance du circuit de refroidissement		Additif liquide au remplissage initial	Additif liquide aux intervalles d'entretien*	Elément d'additif à visser aux intervalles d'entretien*
Litres	Gallons U.S.			
22-30	(6-8)	3P-2044 (1)	6V-3542 (1)	111-2370 (1)
30-38	(8-10)	3P-2044 (1) 6V-3542 (1)	111-2372 (1)	111-2369 (1)
38-49	(10-13)	3P-2044 (1) 8T-1589 (1)	111-2372 (1)	111-2369 (1)
49-64	(13-17)	3P-2044 (2)	8T-1589 (1)	9N-3368 (1)
64-83	(17-22)	3P-2044 (2) 8T-1589 (1)	111-2372 (1) 6V-3542 (1)	111-2371 (1)
83-114	(22-30)	3P-2044 (3) 8T-1589 (1)	3P-2044 (1)	9N-3718 (1)
114-163	(30-43)	3P-2044 (5)	3P-2044 (1) 6V-3542 (1)	111-2371 (2)
163-242	(43-64)	3P-2044 (8)	3P-2044 (2)	9N-3718 (2)

** L'intervalle d'entretien normal est de 250 heures-service. Voir le Guide d'utilisation et d'entretien pour de plus amples renseignements concernant l'entretien du circuit de refroidissement.*

( ) Indique la quantité exigée.

ADITIVOS DE REFRIGERANTE SUPLEMENTARIOS

VENTAJAS PARA EL USUARIO:

Protegen contra la cavitación, la formación de espuma, la corrosión y la acumulación de escamas en los sistemas de enfriamiento.

- Suministra un acondicionador dosificado de refrigerante.

DESCRIPCIÓN:

Los aditivos en el refrigerante se agotan con la operación normal. Por esta razón, se debe agregar Aditivo de refrigerante suplementario (SCA) a todos los refrigerantes para servicio pesado, a intervalos regulares. Además, cuando no se usa un anticongelante de precarga completo, tal como el DEAC de Caterpillar, es necesario agregar una cantidad de aditivo de refrigerante suplementario inicial al sistema de enfriamiento. La cantidad de aditivo que se debe agregar depende de la capacidad del sistema.

El SCA de llenado inicial es líquido. El que se usa para el mantenimiento está disponible tanto en líquido como en un elemento enroscable. (No hay elemento enroscable disponible para la Familia de Motores 3600).

NOTA:

La cantidad de aditivo de llenado inicial no es la misma que se agrega en los intervalos de mantenimiento.

Los elementos de aditivo de refrigerante se pueden usar con cualquier anticongelante de tipo glicol etilénico o propílico que esté de acuerdo con las especificaciones de las normas ASTM D4985 o ASTM D5345.

NOTA:

Se debe utilizar únicamente con refrigerante estándar para servicio pesado; no se debe usar con Refrigerante de Larga Duración.

PIEZAS NECESARIAS:

Capacidad del Sistema de Enfriamiento		SCA líquido de llenado inicial	SCA líquido de mantenimiento*	Elemento de mantenimiento enroscable*
litros	gal EE.UU.			
22-30	6-8	3P-2044 (1)	6V-3542 (1)	111-2370 (1)
30-38	8-10	3P-2044 (1) 6V-3542 (1)	111-2372 (1)	111-2369 (1)
38-49	10-13	3P-2044 (1) 8T-1589 (1)	111-2372 (1)	111-2369 (1)
49-64	13-17	3P-2044 (2)	8T-1589 (1)	9N-3368 (1)
64-83	17-22	3P-2044 (2) 8T-1589 (1)	111-2372 (1) 6V-3542 (1)	111-2371 (1)
83-114	22-30	3P-2044 (3) 8T-1589 (1)	3P-2044 (1)	9N-3718 (1)
114-163	30-43	3P-2044 (5)	3P-2044 (1) 6V-3542 (1)	111-2371 (2)
163-242	43-64	3P-2044 (8)	3P-2044 (2)	9N-3718 (2)

** El período normal de mantenimiento es de 250 horas. Para ver las instrucciones completas sobre el mantenimiento del refrigerante, consulte el Manual de Operación y Mantenimiento.*

( ) Indica la cantidad necesaria.

ADITIVOS SUPLEMENTARES DO LÍQUIDO ARREFECEDOR

BENEFÍCIOS PARA O CLIENTE:

Protege contra cavitação, espuma, erosão, corrosão e acúmulo de crostas nos sistemas de arrefecimento.

- Fornece uma quantidade pré-determinada de condicionador de arrefecimento.

DESCRIÇÃO:

Com a operação normal, os aditivos se esgotam do líquido arrefecedor. Por isso, Aditivos Suplementares do Líquido Arrefecedor (SCA) devem ser acrescentados a todos os líquidos arrefecedores para serviço pesado em intervalos regulares. Além disso, quando um anticongelante pré-carregado, totalmente formulado não for usado, como o DEAC Caterpillar, uma carga inicial de SCA deve ser acrescentada ao sistema de arrefecimento. A quantidade de SCA acrescentada ao sistema depende da capacidade do sistema.

O SCA para abastecimento inicial é fornecido em forma de líquido. Os aditivos suplementares (SCA) para intervalos de manutenção estão à disposição em forma líquida e como um elemento com roscas. (Exceto os Motores da Família 3600)

NOTA:

A quantidade de SCA adicionada no abastecimento inicial não é a mesma que a acrescentada nos intervalos de manutenção.

Os elementos do aditivo do líquido arrefecedor podem ser usados com qualquer tipo de anticongelante etileno ou propileno que satisfaz as Especificações ASTM D4985 ou ASTM D5345.

NOTA:

Para uso apenas com líquido arrefecedor para serviço pesado padrão, não deve ser usado com Líquido Arrefecedor de Vida Longa.

PEÇAS NECESSÁRIAS:

Capacidade do Sistema de Arrefecimento		Líquido SCA Durante Abastecimento Inicial	Líquido SCA Durante Manutenção*	Elemento de Manutenção de SCA com Roscas*
Litros	Galões			
22-30	6-8	3P-2044 (1)	6V-3542 (1)	111-2370 (1)
30-38	8-10	3P-2044 (1) 6V-3542 (1)	111-2372 (1)	111-2369 (1)
38-49	10-13	3P-2044 (1) 8T-1589 (1)	111-2372 (1)	111-2369 (1)
49-64	13-17	3P-2044 (2)	8T-1589 (1)	9N-3368 (1)
64-83	17-22	3P-2044 (2) 8T-1589 (1)	111-2372 (1) 6V-3542 (1)	111-2371 (1)
83-114	22-30	3P-2044 (3) 8T-1589 (1)	3P-2044 (1)	9N-3718 (1)
114-163	30-43	3P-2044 (5)	3P-2044 (1) 6V-3542 (1)	111-2371 (2)
163-242	43-64	3P-2044 (8)	3P-2044 (2)	9N-3718 (2)

** O período normal de manutenção é de 250 horas. Consulte o Manual de Operação e Manutenção para obter instruções completas quanto à manutenção do líquido arrefecedor.*

( ) Indica a quantidade exigida.

KÜHLMITTELZUSATZ

VORTEILE FÜR DEN KUNDEN:

Schutz gegen Kavitation, Schaumbildung, Erosion, Korrosion und Kesselsteinbildung in Kühlsystemen.

- Richtig dosierter Kühlmittelzusatz

BESCHREIBUNG:

Additive erschöpfen sich während des Motorbetriebs. Deshalb muß allen HD-Kühlmitteln regelmäßig Kühlmittelzusatz beigefügt werden. Wenn bei Erstfüllung kein vollwertiges Fertigkühlmittel, wie das Frostschutz- und Kühlmittel für Dieselmotoren von Caterpiller (DEAC), verwendet wird, muß bei Erstfüllung Kühlmittelzusatz beigefügt werden. Wieviel Kühlmittelzusatz beigefügt werden muß, hängt vom Inhalt des Kühlsystems ab.

Für Erstfüllung ist Kühlmittelzusatz nur in flüssiger Form erhältlich. Für Wartungsintervalle ist Kühlmittelzusatz in flüssiger Form und als Zusatzelement erhältlich. (Für die Motorbaureihe 3600 sind keine Zusatzelemente erhältlich.)

ANMERKUNG:

Die Kühlmittelmenge bei Erstfüllung ist nicht die gleiche Menge, die bei Wartungsintervallen beigefügt werden muß.

Die Kühlmittelzusatzelemente können mit allen Frostschutzmitteln auf Ethylen- oder Propylenglykolbasis verwendet werden, die den Standards nach ASTM D4985 oder ASTM D5345 entsprechen.

ANMERKUNG:

Den Kühlmittelzusatz nicht mit Langzeitkühlmittel (ELC) von Caterpillar verwenden. Der Kühlmittelzusatz ist nur für HD-Kühlmittel bestimmt.

TEILEBEZEICHNUNG:

Kühlsysteminhalt		Kühlmittelzusatz bei Erstfüllung	Flüssiger Kühlmittelzusatz bei Wartung*	Kühlmittelzusatzelement bei Wartung*
Liter	US-Gall.			
22-30	(6-8)	3P-2044 (1)	6V-3542 (1)	111-2370 (1)
30-38	(8-10)	3P-2044 (1) 6V-3542 (1)	111-2372 (1)	111-2369 (1)
38-49	(10-13)	3P-2044 (1) 8T-1589 (1)	111-2372 (1)	111-2369 (1)
49-64	(13-17)	3P-2044 (2)	8T-1589 (1)	9N-3368 (1)
64-83	(17-22)	3P-2044 (2) 8T-1589 (1)	111-2372 (1) 6V-3542 (1)	111-2371 (1)
83-114	(22-30)	3P-2044 (3) 8T-1589 (1)	3P-2044 (1)	9N-3718 (1)
114-163	(30-43)	3P-2044 (5)	3P-2044 (1) 6V-3542 (1)	111-2371 (2)
163-242	(43-64)	3P-2044 (8)	3P-2044 (2)	9N-3718 (2)

** Der normale Wartungsintervall beträgt 250 Betriebsstunden. Für vollständige Anweisungen zur Wartung des Kühlsystems, siehe Betriebs- und Wartungshandbuch.*

( ) Erforderliche Anzahl

MAINTENANCE PARTS

DESCRIPTION	PART NUMBER	QTY	WHERE USED	PAGE
AIR INLET AND EXHAUST SYSTEM				
FILTER ELEMENT AS-AIR (PRIMARY)	231-0167	1	AIR CLEANER GP	109
FILTER ELEMENT AS-AIR (SECONDARY)	231-0168	1	AIR CLEANER GP	109
BASIC ENGINE				
CAP (ENGINE OIL FILLER)	217-7358	1	PAN GP-OIL	66
		1	PAN GP-OIL	70
FILTER AS-ENGINE OIL	220-1523	1	PAN GP-OIL	66
GAUZE (CRANKCASE BREATHER)	153-5939	1	COVER GP-VALVE MECHANISM	31
		1	COVER GP-VALVE MECHANISM	33
GAUZE (CRANKCASE BREATHER) (CRANKCASE BREATHER)	153-5939	1	COVER GP-VALVE MECHANISM	29
PLUG GP-OIL PAN (DRAIN)	165-3605	1	PAN GP-OIL	66
		1	PAN GP-OIL	70
SEAL-VALVE COVER	233-0695	1	COVER GP-VALVE MECHANISM	29
		1	COVER GP-VALVE MECHANISM	31
		1	COVER GP-VALVE MECHANISM	33
V-BELT (WATER PUMP)	251-6789	1	PULLEY GP-WATER PUMP	79
COOLING SYSTEM				
CAP AS-RADIATOR	036-1865	1	RADIATOR & HYD OIL COOLER GP	98
		1	RADIATOR & HYD OIL COOLER GP	99
		1	RADIATOR & HYD OIL COOLER GP	100
CAP-VENTED	169-6715	1	RADIATOR & OIL COOLER MTG GP	102
		1	RADIATOR & OIL COOLER MTG GP	104
		1	RADIATOR & OIL COOLER MTG GP	106
COCK	153-5967	1	PUMP GP-WATER	90
		1	PUMP GP-WATER	94
GASKET-COVER	154-1828	1	PUMP GP-WATER	90
		1	PUMP GP-WATER	92
		1	PUMP GP-WATER	94
		1	PUMP GP-WATER	96

MAINTENANCE PARTS

DESCRIPTION	PART NUMBER	QTY	WHERE USED	PAGE
ELECTRICAL AND STARTING SYSTEM				
BATTERY (12-VOLT, MAINTENANCE FREE)	230-6368	1	BATTERY GP	146
BATTERY (12 VOLT, STANDARD)	153-5656	1	BATTERY GP	145
BELT-DRIVE (WARNING BEACON)	9X-8139	1	LAMP GP-WARNING BEACON	170
CIRCUIT BREAKER AS (105-AMPERE)	171-2212	1	WIRING GP-ENGINE	192
		1	WIRING GP-ENGINE	194
CIRCUIT BREAKER AS (30-AMPERE)	147-1773	1	LIGHTING GP-ROADING	175
CIRCUIT BREAKER AS (30-AMPERE) (LIGHTING)	147-1773	1	LIGHTING GP-ROADING	173
ELEMENT AS-JACKET WATER HEATER	149-3499	1	HEATER GP-JACKET WATER	156
	151-1394	11	HEATER GP-JACKET WATER	157
FUSE (10-AMPERE)	113-8490	4	KIT-WORK TOOL CONTROL & WIRING	160
		4	KIT-WORK TOOL CONTROL & WIRING	161
		4	KIT-WORK TOOL WIRING	162
		4	KIT-WORK TOOL WIRING	163
		1	WARNING GP-BACKUP	187
		8	WIRING GP-CHASSIS	189
		4	WIRING GP-WORK TOOL	200
		4	WIRING GP-WORK TOOL	202
FUSE (15-AMPERE)	113-8491	2	KIT-WORK TOOL CONTROL & WIRING	160
		2	KIT-WORK TOOL CONTROL & WIRING	161
		2	KIT-WORK TOOL WIRING	163
		1	WIRING GP-AIR CONDITIONER	188
		3	WIRING GP-CHASSIS	189
		2	WIRING GP-WORK TOOL	200
		2	WIRING GP-WORK TOOL	202
FUSE (20-AMPERE)	113-8492	1	WIRING GP-CHASSIS	189
FUSE (30-AMPERE)	124-3548	1	WIRING GP-AIR CONDITIONER	188
GLOW PLUG	172-4585	4	GLOW PLUG GP	155
KEY AS-ELECTRONIC (SECURITY)	206-5162	2	INSTALLATION GP-SECURITY	158
	206-5165	1	INSTALLATION GP-SECURITY	158
	206-5162	2	SERVICE GP-MACHINE	182
	206-5165	2	SERVICE GP-MACHINE	182
LAMP AS (RED, GREEN, LED, 12-VOLT)	165-5655	1	INSTALLATION GP-SECURITY	159
LAMP-HEAD (12-VOLT, 60-WATT)	9W-3324	1	LAMP GP-HEAD & SIGNAL	166
LAMP (12-VOLT, 21-WATT)	5G-3244	1	LAMP GP-HEAD & SIGNAL	166
	9W-3326	1	LAMP GP-STOP & TAIL	169
LAMP (12-VOLT, 4-WATT)	100-3246	1	LAMP GP-HEAD & SIGNAL	166
LAMP (12-VOLT, 5-WATT)	084-4348	1	LAMP GP-STOP & TAIL	168
		1	LAMP GP-STOP & TAIL	169
LAMP (12-VOLT, 55-WATT)	9W-0607	1	LAMP GP-FLOOD	164
		1	LAMP GP-FLOOD	165
	9X-8118	1	LAMP GP-WARNING BEACON	170
LENS	165-4895	1	LAMP GP-STOP & TAIL	168
LENS (AMBER) (FRONT TURN)	100-3250	1	LAMP GP-HEAD & SIGNAL	166
LENS (AMBER, WARNING BEACON)	9X-8121	1	LAMP GP-WARNING BEACON	170
LENS AS (HEADLIGHT)	100-3248	1	LAMP GP-HEAD & SIGNAL	166
LENS-LAMP (REAR, LH)	146-2438	1	LAMP GP-STOP & TAIL	169

MAINTENANCE PARTS

DESCRIPTION	PART NUMBER	QTY	WHERE USED	PAGE
FRAME AND BODY				
BREATHER AS (TANDEM HOUSING)	9G-5127	2	FRAME & MTG GP-MACHINE	303
		2	FRAME & MTG GP-MACHINE	305
LAMP (12-VOLT)	7M-9957	1	CONVERSION AR-ROADING	291
LAMP (12-VOLT) (REGISTRATION PLATE)	7M-9957	1	MOUNTING GP-REGISTRATION	317
LAMP (12-VOLT, 10-WATT)	195-9712	1	CONVERSION AR-ROADING	291
PADLOCK GP	246-2641	1	CONVERSION AR-ROADING	290
		1	CONVERSION GP-ROADING	292
		1	CONVERSION GP-ROADING	294
PLUG-MAGNETIC (TANDEM)	3S-9182	5	FRAME & MTG GP-MACHINE	305
		5	FRAME & MTG GP-MACHINE	303
FUEL SYSTEM				
CAP AS-FILLER (FUEL)	142-8828	1	LINES GP-FUEL PRM & FILTER	132
		1	LINES GP-FUEL PRM & FILTER	134
FILTER ELEMENT-FUEL (WATER SEPARATOR)	156-1200	1	FILTER GP-WATER SEP & FUEL	125
HYDRAULIC SYSTEM				
CAP AS-FILLER (HYDRAULIC TANK)	142-8937	1	TANK GP-HYDRAULIC	520
FILTER AS (BREATHER)(HYDRAULIC OIL)	207-9729	1	TANK & MTG GP-HYDRAULIC	519
FUSE (10-AMPERE)	113-8490	1	CONTROL GP-PILOT OPERATED HYD	343
		1	CONTROL GP-PILOT OPERATED HYD	346
		1	KIT-QUICK COUPLER CONVERSION	388
SCREEN	195-6768	1	LINES GP-PILOT	436
		1	LINES GP-PILOT	438
SCREEN-SUCTION (HYDRAULIC TANK)	142-8929	1	TANK GP-HYDRAULIC	520
LUBRICATION SYSTEM				
FILTER AS-ENGINE OIL	220-1523	1	FILTER GP-ENGINE OIL	83
OPERATOR STATION				
BLADE AS-WIPER	101-0745	1	DOOR GP-CAB	685
BLADE AS-WIPER (WIPER)	101-0745	1	DOOR GP-CAB	683
BREATHER AS	9G-5127	1	INSTALLATION AR	701
		1	INSTALLATION AR	703
BREATHER AS (AIR CONDITIONER)	9G-5127	1	COMPRESSOR & MOTOR GP-REFRIG	667
FILTER-CAB AIR	231-8130	1	AIR CONDITIONER GP	659
		1	HEATER GP-CAB	697
	231-8132	1	AIR CONDITIONER GP	659
		1	HEATER GP-CAB	697
FUSE (30-AMPERE)	124-3548	1	INSTALLATION AR	701
		1	INSTALLATION AR	703
LAMP (12-VOLT)	7X-9065	1	GAUGE & WARNING GP	691
		1	GAUGE & WARNING GP	692
LAMP (12-VOLT, 10-WATT)	6R-7490	1	GAUGE & WARNING GP	691
		1	GAUGE & WARNING GP	692
POWER TRAIN				
FILTER ELEMENT (HYDRAULIC)	1G-8878	1	FILTER GP-OIL	229

MAINTENANCE PARTS

DESCRIPTION	PART NUMBER	QTY	WHERE USED	PAGE
WORK TOOLS				
FITTING-GREASE (1/8-27 THD)	3B-8488	4	GRAPPLE GP-UTILITY	630
FUSE (10-AMPERE)	113-8490	1	CONVERSION AR-QUICK COUPLER	597
		1	CONVERSION AR-QUICK COUPLER	600
			COUPLER AR-QUICK	604
		1	COUPLER AR-QUICK	605
SCREEN (WATER)	119-1414	1	STRAINER GP-WATER	645

PIÈCES DE RECHANGE

DESCRIPTION	NUMÉRO DE PIECÈS	QTÉ	DOMAINE D'APPLICATION	PAGE
CHÂSSIS ET BENNE				
AMPOULE (12 VOLTS)	7M-9957	1	VERSION DE TRANSFORMATION POUR DÉPLACEMENT ROUTIER	291
AMPOULE (12 VOLTS) (PLAQUE D'IMMATRICULATION)	7M-9957	1	MONTAGE - IMMATRICULATION (ASS)	317
AMPOULE (12V, 10W)	195-9712	1	VERSION DE TRANSFORMATION POUR DÉPLACEMENT ROUTIER	291
BOUCHON AIMANTÉ (TANDEM)	3S-9182	5	BÂTI DE MACHINE ET MONTAGE (ASS)	303
		5	BÂTI DE MACHINE ET MONTAGE (ASS)	305
CADENAS (ASS)	246-2641	1	GROUPE DE TRANSFORMATION - DÉPLACEMENT ROUTIER	292
		1	GROUPE DE TRANSFORMATION - DÉPLACEMENT ROUTIER	294
		1	VERSION DE TRANSFORMATION POUR DÉPLACEMENT ROUTIER	290
RENIFLARD (ENS) (CARTER DE TANDEM)	9G-5127	2	BÂTI DE MACHINE ET MONTAGE (ASS)	303
		2	BÂTI DE MACHINE ET MONTAGE (ASS)	305
CIRCUIT D'ADMISSION D'AIR ET D'ÉCHAPPEMENT				
ÉLÉMENT DE FILTRE À AIR (ENS) (PRINCIPAL)	231-0167	1	FILTRE A AIR (ASS)	109
ÉLÉMENT DE FILTRE À AIR (ENS) (SECONDAIRE)	231-0168	1	FILTRE A AIR (ASS)	109
CIRCUIT DE CARBURANT				
BOUCHON DE GOULOTTE DE REMPLISSAGE (ENS) (CARBURANT)	142-8828	1	CANALISATIONS DE FILTRE ET D'AMORÇAGE DE CARBURANT (ASS)	132
		1	CANALISATIONS DE FILTRE ET D'AMORÇAGE DE CARBURANT (ASS)	134
ÉLÉMENT DE FILTRE À CARBURANT (SÉPARATEUR D'EAU)	156-1200	1	FILTRE DE SÉPARATEUR D'EAU ET DE CARBURANT (ASS)	125
CIRCUIT DE GRAISSAGE				
FILTRE A HUILE MOTEUR (ENS)	220-1523	1	FILTRE À HUILE MOTEUR (ASS)	83

PIÈCES DE RECHANGE

DESCRIPTION	NUMÉRO DE PIECÈS	QTÉ	DOMAINE D'APPLICATION	PAGE
CIRCUIT DE REFROIDISSEMENT				
BOUCHON À ÉVENT	169-6715	1	RADIATEUR ET REFROIDISSEUR D'HUILE-MONTAGE (ASS)	102
		1	RADIATEUR ET REFROIDISSEUR D'HUILE-MONTAGE (ASS)	104
		1	RADIATEUR ET REFROIDISSEUR D'HUILE-MONTAGE (ASS)	106
BOUCHON DE RADIATEUR (ENS)	036-1865	1	RADIATEUR ET REFROIDISSEUR D'HUILE HYDRAULIQUE (ASS)	98
		1	RADIATEUR ET REFROIDISSEUR D'HUILE HYDRAULIQUE (ASS)	99
		1	RADIATEUR ET REFROIDISSEUR D'HUILE HYDRAULIQUE (ASS)	100
JOINT DE COUVERCLE	154-1828	1	POMPE A EAU (ASS)	90
		1	POMPE A EAU (ASS)	92
		1	POMPE A EAU (ASS)	94
		1	POMPE A EAU (ASS)	96
ROBINET	153-5967	1	POMPE A EAU (ASS)	90
		1	POMPE A EAU (ASS)	94
CIRCUIT ÉLECTRIQUE ET DE DÉMARRAGE				
AMPOULE (12-V, 5-W)	084-4348	1	FEUX ARRIÈRE ET FEUX D'ARRÊT	168
		1	FEUX ARRIÈRE ET FEUX D'ARRÊT	169
AMPOULE (12V, 21W)	5G-3244	1	LAMPE - PHARE ET CLIGNOTANT	166
	9W-3326	1	FEUX ARRIÈRE ET FEUX D'ARRÊT	169
AMPOULE (12V, 4W)	100-3246	1	LAMPE - PHARE ET CLIGNOTANT	166
AMPOULE (12V, 55W)	9W-0607	1	LAMPE - PHARE (ASS)	164
		1	LAMPE - PHARE (ASS)	165
	9X-8118	1	LAMPE - GYROPHARE (ASS)	170
BATTERIE (12V, SANS ENTRETIEN)	230-6368	1	BATTERIE (ASS)	146
BATTERIE (12V, STANDARD)	153-5656	1	BATTERIE (ASS)	145
BOUGIE DE PRECHAUFFAGE	172-4585	4	BOUGIE DE PRÉCHAUFFAGE (ASS)	155
CLÉ ÉLECTRONIQUE (ENS) (SÉCURITÉ)	206-5162	2	ENTRETIEN DE LA MACHINE (ASS)	182
		2	MONTAGE-SÉCURITÉ (ASS)	158
	206-5165	2	ENTRETIEN DE LA MACHINE (ASS)	182
		1	MONTAGE-SÉCURITÉ (ASS)	158
DISJONCTEUR (ENS) (105A)	171-2212	1	CABLAGE DE MOTEUR (ASS)	192
		1	CABLAGE DE MOTEUR (ASS)	194
DISJONCTEUR (ENS) (30A)	147-1773	1	ÉCLAIRAGE - FEUX DE ROUTE (ASS)	175
DISJONCTEUR (ENS) (30A) (ÉCLAIRAGE)	147-1773	1	ÉCLAIRAGE - FEUX DE ROUTE (ASS)	173
ÉLÉMENT DU RÉCHAUFFEUR D'EAU DES CHEMISES (ENS)	149-3499	1	EAU DES CHEMISES - RECHAUFFEUR (ASS)	156
	151-1394	11	EAU DES CHEMISES - RECHAUFFEUR (ASS)	157
ENTRAÎNEMENT POUR COURROIE (GYROPHARE)	9X-8139	1	LAMPE - GYROPHARE (ASS)	170
FUSIBLE (10A)	113-8490	1	AVERTISSEUR DE RECUL (ASS)	187
		4	CÂBLAGE - OUTIL DE TRAVAIL (ASS)	200
		4	CÂBLAGE - OUTIL DE TRAVAIL (ASS)	202
		8	CABLAGE DE CHASSIS (ASS)	189
		4	*KIT-WORK TOOL CONTROL & WIRING	160

PIÈCES DE RECHANGE

DESCRIPTION	NUMÉRO DE PIECÈS	QTÉ	DOMAINE D'APPLICATION	PAGE
		4	*KIT-WORK TOOL CONTROL & WIRING	161
		4	*KIT-WORK TOOL WIRING	162
		4	*KIT-WORK TOOL WIRING	163
FUSIBLE (15A)	113-8491	1	CABLAGE - CLIMATISEUR (ASS)	188
		2	CÂBLAGE - OUTIL DE TRAVAIL (ASS)	200
		2	CÂBLAGE - OUTIL DE TRAVAIL (ASS)	202
		3	CABLAGE DE CHASSIS (ASS)	189
		2	*KIT-WORK TOOL CONTROL & WIRING	160
		2	*KIT-WORK TOOL CONTROL & WIRING	161
		2	*KIT-WORK TOOL WIRING	163
FUSIBLE (20A)	113-8492	1	CABLAGE DE CHASSIS (ASS)	189
FUSIBLE (30A)	124-3548	1	CABLAGE - CLIMATISEUR (ASS)	188
LAMPE - FEUX AV (12V, 60W)	9W-3324	1	LAMPE - PHARE ET CLIGNOTANT	166
LAMPE (ENS) (ROUGE, VERT, TÉMOIN LUMINEUX, 12V)	165-5655	1	MONTAGE-SÉCURITÉ (ASS)	159
LENTILLE	165-4895	1	FEUX ARRIÈRE ET FEUX D'ARRÊT	168
LENTILLE DE LAMPE (ARRIÈRE GAUCHE)	146-2438	1	FEUX ARRIÈRE ET FEUX D'ARRÊT	169
LENTILLE (ENS) (PHARE AVANT)	100-3248	1	LAMPE - PHARE ET CLIGNOTANT	166
LENTILLE (GYROPHARE JAUNE)	9X-8121	1	LAMPE - GYROPHARE (ASS)	170
LENTILLE (JAUNE) (CLIGNOTANT AVANT)	100-3250	1	LAMPE - PHARE ET CLIGNOTANT	166
CIRCUIT HYDRAULIQUE				
BOUCHON DE GOULOTTE DE REMPLISSAGE (ENS) (RÉSERVOIR HYDRAULIQUE)	142-8937	1	RÉSERVOIR HYDRAULIQUE (ASS)	520
ÉCRAN	195-6768	1	CANALISATIONS A COMMANDE PILOTE (ASS)	436
		1	CANALISATIONS A COMMANDE PILOTE (ASS)	438
FILTRE (ENS) (RENIFLARD)(HUILE HYDRAULIQUE)	207-9729	1	RÉSERVOIR HYDRAULIQUE ET MONTAGE (ASS)	519
FUSIBLE (10A)	113-8490	1	COMMANDE HYDRAULIQUE PILOTE (ASS)	343
		1	COMMANDE HYDRAULIQUE PILOTE (ASS)	346
		1	*KIT-QUICK COUPLER CONVERSION	388
TAMIS D'ASPIRATION (RÉSERVOIR HYDRAULIQUE)	142-8929	1	RÉSERVOIR HYDRAULIQUE (ASS)	520

PIÈCES DE RECHANGE

DESCRIPTION	NUMÉRO DE PIECÈS	QTÉ	DOMAINE D'APPLICATION	PAGE
MOTEUR DE BASE				
BOUGIE (ASS)-CARTER D'HUILE (VIDANGE)	165-3605	1	HUILE MOTEUR - CARTER (ASS)	66
		1	HUILE MOTEUR - CARTER (ASS)	70
CHAPEAU (GOULOTTE D'HUILE MOTEUR)	217-7358	1	HUILE MOTEUR - CARTER (ASS)	66
		1	HUILE MOTEUR - CARTER (ASS)	70
COURROIE TRAPEZOIDALE (POMPE À EAU)	251-6789	1	POULIE DE POMPE À EAU (ASS)	79
FILTRE A HUILE MOTEUR (ENS)	220-1523	1	HUILE MOTEUR - CARTER (ASS)	66
JOINT DE CACHE-SOUPAPES	233-0695	1	CACHE-SOUPAPES (ASS)	29
		1	CACHE-SOUPAPES (ASS)	31
		1	CACHE-SOUPAPES (ASS)	33
TOILE (RENIFLARD DE CARTER MOTEUR)	153-5939	1	CACHE-SOUPAPES (ASS)	31
		1	CACHE-SOUPAPES (ASS)	33
TOILE (RENIFLARD DE CARTER MOTEUR) (RENIFLARD DE CARTER)	153-5939	1	CACHE-SOUPAPES (ASS)	29
OUTILS DE TRAVAIL				
ÉCRAN (EAU)	119-1414	1	TAMIS D'EAU (ASS)	645
FUSIBLE (10A)	113-8490		COUPLEUR EXPRESS (VERSION)	604
		1	COUPLEUR EXPRESS (VERSION)	605
		1	VERSION DE TRANSFORMATION - COUPLEUR EXPRESS	597
		1	VERSION DE TRANSFORMATION - COUPLEUR EXPRESS	600
GRAISSEUR (FILET 1/8-27)	3B-8488	4	PINCE-RÉSEAU PUBLIC (ASS)	630
POSTE DE CONDUITE				
AMPOULE (12 VOLTS)	7X-9065	1	INDICATEURS ET TÉMOINS LUMINEUX (ASS)	691
		1	INDICATEURS ET TÉMOINS LUMINEUX (ASS)	692
AMPOULE (12V, 10W)	6R-7490	1	INDICATEURS ET TÉMOINS LUMINEUX (ASS)	691
		1	INDICATEURS ET TÉMOINS LUMINEUX (ASS)	692
BALAI D'ESSUIE-GLACE (ENS)	101-0745	1	PORTIÈRE DE CABINE (ASS)	685
BALAI D'ESSUIE-GLACE (ENS) (ESSUIE-GLACE)	101-0745	1	PORTIÈRE DE CABINE (ASS)	683
FILTRE À AIR DE CABINE	231-8130	1	CHAUFFAGE DE CABINE (ASS)	697
		1	CLIMATISEUR (ASS)	659
	231-8132	1	CHAUFFAGE DE CABINE (ASS)	697
		1	CLIMATISEUR (ASS)	659
FUSIBLE (30A)	124-3548	1	MONTAGE (VERSION)	701
		1	MONTAGE (VERSION)	703
RENIFLARD (ENS)	9G-5127	1	MONTAGE (VERSION)	701
		1	MONTAGE (VERSION)	703
RENIFLARD (ENS) (CLIMATISEUR)	9G-5127	1	COMPRESSEUR ET MOTEUR DE RÉFRIGÉRATION (ASS)	667

PIÈCES DE RECHANGE

DESCRIPTION	NUMÉRO DE PIECÈS	QTÉ	DOMAINE D'APPLICATION	PAGE
TRANSMISSION				
ÉLÉMENT DE FILTRE (HYDRAULIQUE)	1G-8878	1	FILTRE A HUILE (ASS)	229

PIEZAS DE MANTENIMIENTO

DESCRIPCION	NUMERO DE PIEZA	CANT	SE UTILIZA EN	PAGINA
BASTIDOR Y CAJA				
CANDADO (GR)	246-2641	1	CONFIGURACIÓN DE TRANSFORMACIÓN PARA CARRETERA	290
		1	CONVERSION PARA DESPLAZAMIENTO POR CARRETERA (GR)	292
		1	CONVERSION PARA DESPLAZAMIENTO POR CARRETERA (GR)	294
LÁMPARA (12 VOLTIOS)	7M-9957	1	CONFIGURACIÓN DE TRANSFORMACIÓN PARA CARRETERA	291
LÁMPARA (12 VOLTIOS) (PLACA DE REGISTRACIÓN)	7M-9957	1	MONTAJE-REGISTRO (GR)	317
LÁMPARA (12 VOLTIOS, 10 VATIOS)	195-9712	1	CONFIGURACIÓN DE TRANSFORMACIÓN PARA CARRETERA	291
RESPIRADERO (CONJ) (COMPARTIMENTO DE TANDEM)	9G-5127	2	BASTIDOR Y MONTAJE (GR)-MAQUINA	303
		2	BASTIDOR Y MONTAJE (GR)-MAQUINA	305
TAPÓN MAGNÉTICO (TANDEM)	3S-9182	5	BASTIDOR Y MONTAJE (GR)-MAQUINA	303
		5	BASTIDOR Y MONTAJE (GR)-MAQUINA	305
ESTACION DEL OPERADOR				
FILTRO DE AIRE DE CABINA	231-8130	1	ACONDICIONADOR DE AIRE (GR)	659
		1	CALEFACCIÓN DE LA CABINA (GR)	697
	231-8132	1	ACONDICIONADOR DE AIRE (GR)	659
		1	CALEFACCIÓN DE LA CABINA (GR)	697
FUSIBLE (30-AMPERIOS)	124-3548	1	INSTALACIÓN (CONFIG)	701
		1	INSTALACIÓN (CONFIG)	703
HOJA DE LIMPIAPARABRISAS (CONJ)	101-0745	1	PUERTA DE CABINA	685
HOJA DE LIMPIAPARABRISAS (CONJ) (LIMPIADOR)	101-0745	1	PUERTA DE CABINA	683
LÁMPARA (12 VOLTIOS)	7X-9065	1	INDICADORES Y ADVERTENCIA (GR)	691
		1	INDICADORES Y ADVERTENCIA (GR)	692
LÁMPARA (12 VOLTIOS, 10 VATIOS)	6R-7490	1	INDICADORES Y ADVERTENCIA (GR)	691
		1	INDICADORES Y ADVERTENCIA (GR)	692
RESPIRADERO (CONJ)	9G-5127	1	INSTALACIÓN (CONFIG)	701
		1	INSTALACIÓN (CONFIG)	703
RESPIRADERO (CONJ) (AIRE ACONDICIONADO)	9G-5127	1	COMPRESOR Y MOTOR GR-REFRIGERANTE	667

PIEZAS DE MANTENIMIENTO

DESCRIPCION	NUMERO DE PIEZA	CANT	SE UTILIZA EN	PAGINA
HERRAMIENTAS				
CONEXIÓN DE ENGRASE (ROSCA DE 1/8-27)	3B-8488	4	GARFIO DE UTILIDAD (GR)	630
FUSIBLE (10-AMPERIOS)	113-8490		ACOPLADOR RÁPIDO (CONFIG)	604
		1	ACOPLADOR RÁPIDO (CONFIG)	605
		1	CONFIG. DE CONVERSIÓN DEL ACOPLAMIENTO RÁPIDO	597
		1	CONFIG. DE CONVERSIÓN DEL ACOPLAMIENTO RÁPIDO	600
REJILLA (AGUA)	119-1414	1	COLADOR DEL AGUA (GR)	645
MOTOR BASICO				
CORREA TRAPEZOIDAL (BOMBA DE AGUA)	251-6789	1	GRUPO, MANIJA, BOMBA DE AGUA	79
FILTRO DE ACEITE DEL MOTOR (CONJ)	220-1523	1	CÁRTER - COLECTOR DEL (GR)	66
GASA (RESPIRADERO DE CARTER)	153-5939	1	TAPA DEL MECANISMO DE VÁLVULAS (GR)	31
		1	TAPA DEL MECANISMO DE VÁLVULAS (GR)	33
GASA (RESPIRADERO DE CARTER) (RESPIRADERO DEL CARTER)	153-5939	1	TAPA DEL MECANISMO DE VÁLVULAS (GR)	29
SELLO - TAPA DE VÁLVULA	233-0695	1	TAPA DEL MECANISMO DE VÁLVULAS (GR)	29
		1	TAPA DEL MECANISMO DE VÁLVULAS (GR)	31
		1	TAPA DEL MECANISMO DE VÁLVULAS (GR)	33
TAPA (LLENADO DE ACEITE DEL MOTOR)	217-7358	1	CÁRTER - COLECTOR DEL (GR)	66
		1	CÁRTER - COLECTOR DEL (GR)	70
TAPON DEL COLECTOR DEL CARTER (GR) (DRENAJE)	165-3605	1	CÁRTER - COLECTOR DEL (GR)	66
		1	CÁRTER - COLECTOR DEL (GR)	70
SISTEMA DE ARRANQUE ELECTRICO				
BATERÍA (12 VOLTIOS, ESTANDAR)	153-5656	1	BATERÍA (GR)	145
BATERÍA (12-VOLTIOS, LIBRE DE MANTENIMIENTO)	230-6368	1	BATERÍA (GR)	146
BUJÍA INCANDESCENTE	172-4585	4	BUJÍA INCANDESCENTE (GR)	155
CONJUNTO DE LLAVE, ELECTRONICA (SEGURIDAD)	206-5162	2	INSTALACION DE SEGURIDAD (GR)	158
		2	SERVICIO DE MAQUINA (GR)	182
	206-5165	1	INSTALACION DE SEGURIDAD (GR)	158
		2	SERVICIO DE MAQUINA (GR)	182
CRISTAL	165-4895	1	LUCES DE PARADA Y COLA (GR)	168
CRISTAL (AMBAR, BALIZA DE ADVERTENCIA)	9X-8121	1	LÁMPARA DE BALIZA DE ADVERTENCIA (GR)	170
CRISTAL (AMBAR) (DELANTERA, DE GIRO)	100-3250	1	LÁMPARA DE LUZ DELANTERA Y DE SEÑAL (GR)	166
DISYUNTOR (CONJ) (105 AMPERIOS)	171-2212	1	CABLES DEL MOTOR (GR)	192
		1	CABLES DEL MOTOR (GR)	194
DISYUNTOR (CONJ) (30-AMPERIOS)	147-1773	1	LUCES DE DESPLAZAMIENTO (GR)	175
DISYUNTOR (CONJ) (30-AMPERIOS) (LUCES)	147-1773	1	LUCES DE DESPLAZAMIENTO (GR)	173

PIEZAS DE MANTENIMIENTO

DESCRIPCION	NUMERO DE PIEZA	CANT	SE UTILIZA EN	PAGINA
ELEMENTO DEL CALENTADOR DEL AGUA DE LAS CAMISAS	149-3499	1	AGUA DE LAS CAMISAS - CALENTADOR DEL (GR)	156
	151-1394	11	AGUA DE LAS CAMISAS - CALENTADOR DEL (GR)	157
FUSIBLE (10-AMPERIOS)	113-8490	4	CABLES DE LA HERRAMIENTA DE TRABAJO (GR)	200
		4	CABLES DE LA HERRAMIENTA DE TRABAJO (GR)	202
		8	CABLES DEL CHASIS (GR)	189
		4	*KIT-WORK TOOL CONTROL & WIRING	160
		4	*KIT-WORK TOOL CONTROL & WIRING	161
		4	*KIT-WORK TOOL WIRING	162
		4	*KIT-WORK TOOL WIRING	163
		1	RETROCESO - ALARMA DE (GR)	187
FUSIBLE (15 AMPERIOS)	113-8491	2	CABLES DE LA HERRAMIENTA DE TRABAJO (GR)	200
		2	CABLES DE LA HERRAMIENTA DE TRABAJO (GR)	202
		1	CABLES DEL ACONDICIONADOR DE AIRE (GR)	188
		3	CABLES DEL CHASIS (GR)	189
		2	*KIT-WORK TOOL CONTROL & WIRING	160
		2	*KIT-WORK TOOL CONTROL & WIRING	161
		2	*KIT-WORK TOOL WIRING	163
FUSIBLE (20-AMPERIOS)	113-8492	1	CABLES DEL CHASIS (GR)	189
FUSIBLE (30-AMPERIOS)	124-3548	1	CABLES DEL ACONDICIONADOR DE AIRE (GR)	188
LÁMPARA (CONJ) (ROJO, VERDE, DIODO, 12 VOLTIOS)	165-5655	1	INSTALACION DE SEGURIDAD (GR)	159
LÁMPARA DE FARO DELANTERO (12-VOLTIOS, 60-VATIOS)	9W-3324	1	LÁMPARA DE LUZ DELANTERA Y DE SEÑAL (GR)	166
LÁMPARA (12 VLOTIOS, 5 VATIOS)	084-4348	1	LUCES DE PARADA Y COLA (GR)	168
		1	LUCES DE PARADA Y COLA (GR)	169
LÁMPARA (12 VOLTIOS, 21 VATIOS)	5G-3244	1	LÁMPARA DE LUZ DELANTERA Y DE SEÑAL (GR)	166
	9W-3326	1	LUCES DE PARADA Y COLA (GR)	169
LÁMPARA (12 VOLTIOS, 4 VATIOS)	100-3246	1	LÁMPARA DE LUZ DELANTERA Y DE SEÑAL (GR)	166
LÁMPARA (12 VOLTIOS, 55 VATIOS)	9X-8118	1	LÁMPARA DE BALIZA DE ADVERTENCIA (GR)	170
	9W-0607	1	REFLECTOR (GR)	164
		1	REFLECTOR (GR)	165
MANDO DE CORREA (BALIZA DE ADVERTENCIA)	9X-8139	1	LÁMPARA DE BALIZA DE ADVERTENCIA (GR)	170
VIDRIO (CONJ) (FARO DELANTERO)	100-3248	1	LÁMPARA DE LUZ DELANTERA Y DE SEÑAL (GR)	166
VIDRIO DE LA LÁMPARA (TRASERO MANO IZQUIERDA)	146-2438	1	LUCES DE PARADA Y COLA (GR)	169

PIEZAS DE MANTENIMIENTO

DESCRIPCION	NUMERO DE PIEZA	CANT	SE UTILIZA EN	PAGINA
SISTEMA DE COMBUSTIBLE				
ELEMENTO DE FILTRO DE COMBUSTIBLE (SEPARADOR DE AGUA)	156-1200	1	FILTRO DE COMBUSTIBLE Y SEPARADOR DE AGUA (GR)	125
TAPA DE LLENADO (CONJ) (COMBUSTIBLE)	142-8828	1	TUBERIAS (GR) -COMBUSTIBLE PRIMARIO Y FILTRO	132
		1	TUBERIAS (GR) -COMBUSTIBLE PRIMARIO Y FILTRO	134
SISTEMA DE ENFRIAMIENTO				
GRIFO	153-5967	1	BOMBA DE AGUA (GR)	90
		1	BOMBA DE AGUA (GR)	94
JUNTA DE LA TAPA DE VÁLVULAS	154-1828	1	BOMBA DE AGUA (GR)	90
		1	BOMBA DE AGUA (GR)	92
		1	BOMBA DE AGUA (GR)	94
		1	BOMBA DE AGUA (GR)	96
TAPA CON RESPIRADERO	169-6715	1	MONTAJE DE RADIADOR Y ENFRIAMIENTO DE ACEITE (GR)	102
		1	MONTAJE DE RADIADOR Y ENFRIAMIENTO DE ACEITE (GR)	104
		1	MONTAJE DE RADIADOR Y ENFRIAMIENTO DE ACEITE (GR)	106
TAPA DE RADIADOR (CONJ)	036-1865	1	RADIADOR Y ENFRIADOR DE ACEITE HIDRÁULICO (GR)	98
		1	RADIADOR Y ENFRIADOR DE ACEITE HIDRÁULICO (GR)	99
		1	RADIADOR Y ENFRIADOR DE ACEITE HIDRÁULICO (GR)	100
SISTEMA DE ESCAPE Y ADMISION DE AIRE				
ELEMENTO DEL FILTRO DE AIRE (CONJ) (PRIMARIO)	231-0167	1	FILTRO DE AIRE (GR)	109
ELEMENTO DEL FILTRO DE AIRE (CONJ) (SECUNDARIO)	231-0168	1	FILTRO DE AIRE (GR)	109
SISTEMA DE LUBRICACION				
FILTRO DE ACEITE DEL MOTOR (CONJ)	220-1523	1	FILTRO DE ACEITE DEL MOTOR (GR)	83
SISTEMA HIDRAULICO				
FILTRO (CONJ) (RESPIRADERO)(ACEITE HIDRAULLICO)	207-9729	1	TANQUE HIDRÁULICO Y MONTAJE (GR)	519
FUSIBLE (10-AMPERIOS)	113-8490	1	CONTROL HIDRÁULICO DE OPERACIÓN PILOTO (GR)	343
		1	CONTROL HIDRÁULICO DE OPERACIÓN PILOTO (GR)	346
		1	*KIT-QUICK COUPLER CONVERSION	388
REJILLA	195-6768	1	TUBERÍAS CON SERVOMANDO (GR)	436
		1	TUBERÍAS CON SERVOMANDO (GR)	438
REJILLA DE SUCCIÓN (TANQUE HIDRÁULICO)	142-8929	1	TANQUE HIDRÁULICO (GR)	520
TAPA DE LLENADO (CONJ) (TANQUE HIDRAULICO)	142-8937	1	TANQUE HIDRÁULICO (GR)	520

PIEZAS DE MANTENIMIENTO

DESCRIPCION	NUMERO DE PIEZA	CANT	SE UTILIZA EN	PAGINA
TREN DE FUERZA				
ELEMENTO DE FILTRO (HIDRÁULICO)	1G-8878	1	FILTRO DE ACEITE (GR)	229

PEÇAS DE MANUTENÇÃO

DESCRIÇÃO	NÚMERO DE PEÇA	QUANT	UTILIZADA EM	PÁGINA
CHASSI E CARROCERIA				
BUJÃO MAGNÉTICO (TANDEM)	3S-9182	5	ARMAÇÃO E MONTAGEM - MÁQUINA	303
		5	ARMAÇÃO E MONTAGEM - MÁQUINA	305
CADEADO	246-2641	1	GR. DE CONVERSÃO - OPERAÇÃO RODOVIÁRIA	292
		1	GR. DE CONVERSÃO - OPERAÇÃO RODOVIÁRIA	294
		1	GRUPO DE CONVERSÃO - ARRANJO RODOVIÁRIO	290
LÂMPADA (12-VOLTS)	7M-9957	1	GRUPO DE CONVERSÃO - ARRANJO RODOVIÁRIO	291
LÂMPADA (12-VOLTS) (PLACA DE REGISTRO)	7M-9957	1	MONTAGEM DA PLACA DE REGISTRO	317
LÂMPADA (12-VOLTS, 10-WATTS)	195-9712	1	GRUPO DE CONVERSÃO - ARRANJO RODOVIÁRIO	291
RESPIRO (ALOJAMENTO DO TANDEM)	9G-5127	2	ARMAÇÃO E MONTAGEM - MÁQUINA	303
		2	ARMAÇÃO E MONTAGEM - MÁQUINA	305
FERRAMENTAS DE TRABALHO				
FUSÍVEL (10 AMPERES)	113-8490		ACOPLADOR RÁPIDO	604
		1	ACOPLADOR RÁPIDO	605
		1	GRUPO DE CONVERSÃO - ACOPLADOR RÁPIDO	597
		1	GRUPO DE CONVERSÃO - ACOPLADOR RÁPIDO	600
GRAXEIRA (ROSCA 1/8-27 POL)	3B-8488	4	GARRA - SERVIÇOS PÚBLICOS	630
TELA FILTRANTE (ÁGUA)	119-1414	1	TELA FILTRANTE - ÁGUA	645
MOTOR BÁSICO				
BUJÃO - CÁRTER DO ÓLEO (DRENAGEM)	165-3605	1	CÁRTER DO ÓLEO DO MOTOR	66
		1	CÁRTER DO ÓLEO DO MOTOR	70
CORREIA EM V (BOMBA D'ÁGUA)	251-6789	1	GRUPO DE POLIA - BOMBA DE ÁGUA	79
FILTRO - ÓLEO DO MOTOR	220-1523	1	CÁRTER DO ÓLEO DO MOTOR	66
FILTRO (RESPIRO DO CÁRTER)	153-5939	1	TAMPA - MECANISMO DAS VÁLVULAS	31
		1	TAMPA - MECANISMO DAS VÁLVULAS	33
FILTRO (RESPIRO DO CÁRTER) (RESPIRO DO CÁRTER DO ÓLEO DO MOTOR)	153-5939	1	TAMPA - MECANISMO DAS VÁLVULAS	29
RETENTOR - TAMPA DA VÁLVULA	233-0695	1	TAMPA - MECANISMO DAS VÁLVULAS	29
		1	TAMPA - MECANISMO DAS VÁLVULAS	31
		1	TAMPA - MECANISMO DAS VÁLVULAS	33
TAMPA (BOCAL DE ENCHIMENTO DO ÓLEO DO MOTOR)	217-7358	1	CÁRTER DO ÓLEO DO MOTOR	66
		1	CÁRTER DO ÓLEO DO MOTOR	70

PEÇAS DE MANUTENÇÃO

DESCRIÇÃO	NÚMERO DE PEÇA	QUANT	UTILIZADA EM	PÁGINA
POSTO DO OPERADOR				
FILTRO DE AR DE CABINA	231-8130	1	AQUECEDOR DA CABINE	697
		1	CONDICIONADOR DE AR	659
	231-8132	1	AQUECEDOR DA CABINE	697
		1	CONDICIONADOR DE AR	659
FUSÍVEL (30 AMPERES)	124-3548	1	INSTALAÇÃO - ARRANJO	701
		1	INSTALAÇÃO - ARRANJO	703
LÂMINA DO LIMPADOR DE PÁRA-BRISA	101-0745	1	PORTA DA CABINE	685
LÂMINA DO LIMPADOR DE PÁRA-BRISA (LIMPADOR)	101-0745	1	PORTA DA CABINE	683
LÂMPADA (12-VOLTS)	7X-9065	1	INDICADOR E ALARME	691
		1	INDICADOR E ALARME	692
LÂMPADA (12-VOLTS, 10-WATTS)	6R-7490	1	INDICADOR E ALARME	691
		1	INDICADOR E ALARME	692
RESPIRO	9G-5127	1	INSTALAÇÃO - ARRANJO	701
		1	INSTALAÇÃO - ARRANJO	703
RESPIRO (AR CONDICIONADO)	9G-5127	1	COMPRESSOR E MOTOR - REFRIGERADO	667
SISTEMA DE ADMISSÃO DE AR E DE ESCAPE				
ELEMENTO DO FILTRO DE AR (PRIMÁRIO)	231-0167	1	PURIFICADOR DE AR	109
ELEMENTO DO FILTRO DE AR (SECUNDÁRIO)	231-0168	1	PURIFICADOR DE AR	109
SISTEMA DE ARREFECIMENTO				
JUNTA - TAMPA	154-1828	1	BOMBA DE ÁGUA	90
		1	BOMBA DE ÁGUA	92
		1	BOMBA DE ÁGUA	94
		1	BOMBA DE ÁGUA	96
TAMPA - RADIADOR	036-1865	1	RADIADOR E ARREFECEDOR DO ÓLEO HIDRÁULICO	98
		1	RADIADOR E ARREFECEDOR DO ÓLEO HIDRÁULICO	99
		1	RADIADOR E ARREFECEDOR DO ÓLEO HIDRÁULICO	100
TAMPA COM RESPIRO	169-6715	1	RADIADOR E ARREFECEDOR DE ÓLEO - MONTAGEM	102
		1	RADIADOR E ARREFECEDOR DE ÓLEO - MONTAGEM	104
		1	RADIADOR E ARREFECEDOR DE ÓLEO - MONTAGEM	106
TORNEIRA	153-5967	1	BOMBA DE ÁGUA	90
		1	BOMBA DE ÁGUA	94
SISTEMA DE COMBUSTÍVEL				
ELEMENTO DO FILTRO DE COMBUSTÍVEL (SEPARADOR DE ÁGUA)	156-1200	1	FILTRO DE COMBUSTÍVEL E SEPARADOR DE ÁGUA	125
TAMPA - BOCAL DE ENCHIMENTO (COMBUSTÍVEL)	142-8828	1	TUBULAÇÕES - FILTRO E ESCORVA DO COMBUSTÍVEL	132
		1	TUBULAÇÕES - FILTRO E ESCORVA DO COMBUSTÍVEL	134

PEÇAS DE MANUTENÇÃO

DESCRIÇÃO	NÚMERO DE PEÇA	QUANT	UTILIZADA EM	PÁGINA
SISTEMA DE LUBRIFICAÇÃO				
FILTRO - ÓLEO DO MOTOR	220-1523	1	FILTRO - ÓLEO DO MOTOR	83
SISTEMA ELÉTRICO E DE PARTIDA				
BATERIA (12 VOLTS, ISENTO DE MANUTENÇÃO)	230-6368	1	BATERIA	146
BATERIA (12 VOLTS, PADRÃO)	153-5656	1	BATERIA	145
CHAVE - ELETRÔNICO (SEGURANÇA)	206-5162	2	GR. DE SERVIÇO - MÁQUINA	182
		2	INSTALAÇÃO-SEGURANÇA	158
	206-5165	2	GR. DE SERVIÇO - MÁQUINA	182
		1	INSTALAÇÃO-SEGURANÇA	158
CORREIA DE COMANDO (PISCA-ALERTA)	9X-8139	1	LUZ GIRATÓRIA DE ALARME	170
DISJUNTOR AUTOMÁTICO DE CIRCUITO (105 AMPERES)	171-2212	1	CABOS/FIOS ELÉTRICOS - MOTOR	192
		1	CABOS/FIOS ELÉTRICOS - MOTOR	194
DISJUNTOR AUTOMÁTICO DE CIRCUITO (30 AMPERES)	147-1773	1	ILUMINAÇÃO - RODOVIÁRIA	175
DISJUNTOR AUTOMÁTICO DE CIRCUITO (30 AMPERES) (ILUMINAÇÃO)	147-1773	1	ILUMINAÇÃO - RODOVIÁRIA	173
ELEMENTO - AQUECEDOR DE ÁGUA DA CAMISA	149-3499	1	AQUECEDOR DA ÁGUA DO MOTOR	156
	151-1394	11	AQUECEDOR DA ÁGUA DO MOTOR	157
FAROL DIANTEIRO (12 VOLTS, 60 WATTS)	9W-3324	1	LÂMPADA DIANTEIRA E DE SINAL	166
FUSÍVEL (10 AMPERES)	113-8490	1	ALARME DE MARCHA À RÉ	187
		8	CABOS/FIOS ELÉTRICOS - CHASSI	189
		4	CABOS/FIOS ELÉTRICOS - FERRAMENTAS DE TRABALHO	200
		4	CABOS/FIOS ELÉTRICOS - FERRAMENTAS DE TRABALHO	202
		4	KIT-CONTROLE E FIAÇÃO DA FERRAMENTA DE TRABALHO	160
		4	KIT-CONTROLE E FIAÇÃO DA FERRAMENTA DE TRABALHO	161
		4	KIT-FIAÇÃO DA FERRAMENTA DE TRABALHO	162
		4	KIT-FIAÇÃO DA FERRAMENTA DE TRABALHO	163
FUSÍVEL (15 AMPERES)	113-8491	1	CABOS/FIOS ELÉTRICOS - AR CONDICIONADO	188
		3	CABOS/FIOS ELÉTRICOS - CHASSI	189
		2	CABOS/FIOS ELÉTRICOS - FERRAMENTAS DE TRABALHO	200
		2	CABOS/FIOS ELÉTRICOS - FERRAMENTAS DE TRABALHO	202
		2	KIT-CONTROLE E FIAÇÃO DA FERRAMENTA DE TRABALHO	160
		2	KIT-CONTROLE E FIAÇÃO DA FERRAMENTA DE TRABALHO	161
		2	KIT-FIAÇÃO DA FERRAMENTA DE TRABALHO	163
FUSÍVEL (20-AMPERES)	113-8492	1	CABOS/FIOS ELÉTRICOS - CHASSI	189

PEÇAS DE MANUTENÇÃO

DESCRIÇÃO	NÚMERO DE PEÇA	QUANT	UTILIZADA EM	PÁGINA
FUSÍVEL (30 AMPERES)	124-3548	1	CABOS/FIOS ELÉTRICOS - AR CONDICIONADO	188
LÂMPADA (VERMELHA, VERDE, LED, 12 VOLTS)	165-5655	1	INSTALAÇÃO-SEGURANÇA	159
LÂMPADA (12-VOLTS, 21-WATTS)	5G-3244	1	LÂMPADA DIANTEIRA E DE SINAL	166
	9W-3326	1	LUZ TRASEIRA E DE FREIO	169
LÂMPADA (12-VOLTS, 4-WATTS)	100-3246	1	LÂMPADA DIANTEIRA E DE SINAL	166
LÂMPADA (12 VOLTS, 5 WATTS)	084-4348	1	LUZ TRASEIRA E DE FREIO	168
		1	LUZ TRASEIRA E DE FREIO	169
LÂMPADA (12-VOLTS, 55-WATTS)	9W-0607	1	LÂMPADA - FAROL	164
		1	LÂMPADA - FAROL	165
	9X-8118	1	LUZ GIRATÓRIA DE ALARME	170
LENTE	165-4895	1	LUZ TRASEIRA E DE FREIO	168
LENTE - LÂMPADA (TRASEIRO, ESQUERDO)	146-2438	1	LUZ TRASEIRA E DE FREIO	169
LENTE (ÂMBAR, PISCA-ALERTA)	9X-8121	1	LUZ GIRATÓRIA DE ALARME	170
LENTE (ÂMBER) (DIANTEIRA, DE CURVA)	100-3250	1	LÂMPADA DIANTEIRA E DE SINAL	166
LENTE (LUZES DIANTEIRAS)	100-3248	1	LÂMPADA DIANTEIRA E DE SINAL	166
VELA DE AQUECIMENTO; VELA INCANDESCENTE	172-4585	4	VELA DE AQUECIMENTO; VELA INCANDESCENTE	155
SISTEMA HIDRÁULICO				
FILTRO (RESPIRO)(ÓLEO HIDRÁULICO)	207-9729	1	TANQUE DE ÓLEO HIDRÁULICO E MONTAGEM	519
FUSÍVEL (10 AMPERES)	113-8490	1	CONTROLE HIDRÁULICO DE OPERAÇÃO PILOTO	343
		1	CONTROLE HIDRÁULICO DE OPERAÇÃO PILOTO	346
		1	KIT-CONVERSÃO DO ACOPLADOR RÁPIDO	388
TAMPA - BOCAL DE ENCHIMENTO (TANQUE HIDRÁULICO)	142-8937	1	TANQUE HIDRÁULICO	520
TELA DE SUCÇÃO (TANQUE HIDRÁULICO)	142-8929	1	TANQUE HIDRÁULICO	520
TELA FILTRANTE	195-6768	1	TUBOS - CIRCUITO PILOTO	436
		1	TUBOS - CIRCUITO PILOTO	438
TREM DE FORÇA				
ELEMENTO FILTRANTE (HIDRÁULICO)	1G-8878	1	FILTRO - ÓLEO	229

WARTUNGSTEILE

BESCHREIBUNG	ERSATZTEIL-NUMMER	MENGE	VERWENDET IN	SEITE
ARBEITSGERÄTE				
SCHMIERNIPPEL (1/8-27-GEWINDE)	3B-8488	4	MEHRZWECKGREIFER	630
SCREEN (WASSER)	119-1414	1	WASSERSIEBEINSATZ	645
SICHERUNG (10 A)	113-8490	1	SCHNELLWECHSELEINRICHTUNGS-UMBAUSATZ	597
		1	SCHNELLWECHSELEINRICHTUNGS-UMBAUSATZ	600
			SCHNELLWECHSELVORRICHTUNG	604
		1	SCHNELLWECHSELVORRICHTUNG	605
ELEKTRISCHE ANLAGE UND STARTSYSTEM				
ABDECKGLAS	165-4895	1	BREMS- UND RÜCKLEUCHTE	168
ABDECKGLAS (FRONTSCHEINWERFER)	100-3248	1	SCHEINWERFER U. RICHTUNGSLEUCHTE	166
ABDECKGLAS (GELB, RUNDUM-KENNLEUCHTE)	9X-8121	1	RUNDUM-KENNLEUCHTE	170
ABDECKGLAS (GELB) (WENDUNG, VORN)	100-3250	1	SCHEINWERFER U. RICHTUNGSLEUCHTE	166
BATTERIE (12 V, STANDARD)	153-5656	1	BATTERIE	145
BATTERIE (12 V, WARTUNGSFREI)	230-6368	1	BATTERIE	146
BELEUCHTUNGSANLAGE (ROT, GRÜN, LED, 12 V)	165-5655	1	SICHERHEITSEINBAUSATZ	159
ELEKTRONISCHER SCHLÜSSEL (SICHERHEIT)	206-5162	2	SERVICE MASCHINE	182
		2	SICHERHEITSEINBAUSATZ	158
	206-5165	2	SERVICE MASCHINE	182
		1	SICHERHEITSEINBAUSATZ	158
GLÜHKERZE	172-4585	4	GLÜHKERZE	155
LAUFBAND UND ANTRIEB (RUNDUM-KENNLEUCHTE)	9X-8139	1	RUNDUM-KENNLEUCHTE	170
LEUCHTE (12 V, 21 W)	5G-3244	1	SCHEINWERFER U. RICHTUNGSLEUCHTE	166
	9W-3326	1	BREMS- UND RÜCKLEUCHTE	169
LEUCHTE (12 V, 4 W)	100-3246	1	SCHEINWERFER U. RICHTUNGSLEUCHTE	166
LEUCHTE (12 V, 5 W)	084-4348	1	BREMS- UND RÜCKLEUCHTE	168
		1	BREMS- UND RÜCKLEUCHTE	169
LEUCHTE (12 V, 55 W)	9W-0607	1	ARBEITSLEUCHTEN	164
		1	ARBEITSLEUCHTEN	165
	9X-8118	1	RUNDUM-KENNLEUCHTE	170
LEUCHTENLINSE (HINTEN, LINKS)	146-2438	1	BREMS- UND RÜCKLEUCHTE	169
SCHEINWERFER (12 V, 60 W)	9W-3324	1	SCHEINWERFER U. RICHTUNGSLEUCHTE	166
SICHERUNG (10 A)	113-8490	4	ARBEITSGERÄT - VERDRAHTUNG	200
		4	ARBEITSGERÄT - VERDRAHTUNG	202
		8	FAHRGESTELLVERDRAHTUNG	189
		4	*KIT-WORK TOOL CONTROL & WIRING	160
		4	*KIT-WORK TOOL CONTROL & WIRING	161
		4	*KIT-WORK TOOL WIRING	162
		4	*KIT-WORK TOOL WIRING	163
		1	RÜCKFAHRWARNHORN	187
SICHERUNG (15 A)	113-8491	2	ARBEITSGERÄT - VERDRAHTUNG	200

WARTUNGSTEILE

BESCHREIBUNG	ERSATZTEIL-NUMMER	MENGE	VERWENDET IN	SEITE
		2	ARBEITSGERÄT - VERDRAHTUNG	202
		3	FAHRGESTELLVERDRAHTUNG	189
		2	*KIT-WORK TOOL CONTROL & WIRING	160
		2	*KIT-WORK TOOL CONTROL & WIRING	161
		2	*KIT-WORK TOOL WIRING	163
		1	KLIMAANLAGENVERDRAHTUNG	188
SICHERUNG (20 A)	113-8492	1	FAHRGESTELLVERDRAHTUNG	189
SICHERUNG (30 A)	124-3548	1	KLIMAANLAGENVERDRAHTUNG	188
UMLAUFKÜHLWASSERHEIZUNGS-ELEMENT	149-3499	1	UMLAUFKÜHLWASSERHEIZUNG	156
	151-1394	11	UMLAUFKÜHLWASSERHEIZUNG	157
UNTERBRECHER (105 A)	171-2212	1	MOTORVERDRAHTUNG	192
		1	MOTORVERDRAHTUNG	194
UNTERBRECHER (30 A)	147-1773	1	BELEUCHTUNGSANLAGE (STRASSENAUSRÜSTUNG)	175
UNTERBRECHER (30 A) (BELEUCHTUNG)	147-1773	1	BELEUCHTUNGSANLAGE (STRASSENAUSRÜSTUNG)	173
FAHRERHAUS				
ENTLÜFTER	9G-5127	1	EINBAUSATZ	701
		1	EINBAUSATZ	703
ENTLÜFTER (KLIMAANLAGE)	9G-5127	1	KÜHLKOMPRESSOR U. MOTOR	667
FAHRERHAUSLUFTFILTER	231-8130	1	FAHRERHAUSHEIZUNG	697
		1	KLIMAANLAGE	659
	231-8132	1	FAHRERHAUSHEIZUNG	697
		1	KLIMAANLAGE	659
LEUCHTE (12 V)	7X-9065	1	WARNANZEIGENSATZ	691
		1	WARNANZEIGENSATZ	692
LEUCHTE (12 V, 10 W)	6R-7490	1	WARNANZEIGENSATZ	691
		1	WARNANZEIGENSATZ	692
SCHEIBENWISCHERBLATT	101-0745	1	FAHRERHAUSTÜR	685
SCHEIBENWISCHERBLATT (SCHEIBENWISCHER)	101-0745	1	FAHRERHAUSTÜR	683
SICHERUNG (30 A)	124-3548	1	EINBAUSATZ	701
		1	EINBAUSATZ	703
HYDRAULIKSYSTEM				
ANSAUGSIEB (HYDRAULIKTANK)	142-8929	1	HYDRAULIKTANK	520
EINFÜLLKAPPE (HYDRAULIKTANK)	142-8937	1	HYDRAULIKTANK	520
FILTERSATZ (ENTLÜFTER) (HYDRAULIKÖL)	207-9729	1	HYDRAULIKTANK UND BEFESTIGUNGSTEILE	519
SCREEN	195-6768	1	VORSTEUERLEITUNGEN	436
		1	VORSTEUERLEITUNGEN	438
SICHERUNG (10 A)	113-8490	1	HYDRAULIKBEDIENUNG (MIT VORSTEUERUNG)	343
		1	HYDRAULIKBEDIENUNG (MIT VORSTEUERUNG)	346
		1	*KIT-QUICK COUPLER CONVERSION	388

WARTUNGSTEILE

BESCHREIBUNG	ERSATZTEIL-NUMMER	MENGE	VERWENDET IN	SEITE
KRAFTSTOFFSYSTEM				
EINFÜLLKAPPE (KRAFTSTOFF)	142-8828	1	KRAFTSTOFFENTLÜFTUNGS- U. FILTERLEITUNGEN	132
		1	KRAFTSTOFFENTLÜFTUNGS- U. FILTERLEITUNGEN	134
KRAFTSTOFFILTERELEMENT (WASSERABSCHEIDER)	156-1200	1	WASSERABSCHEIDER- U. KRAFTSTOFFILTER	125
KRAFTSÜBERTRAGUNG				
FILTER (HYDRAULIK)	1G-8878	1	ÖLFILTER	229
KÜHLSYSTEM				
HAHN	153-5967	1	KÜHLWASSERPUMPE	90
		1	KÜHLWASSERPUMPE	94
KAPPE MIT ENTLÜFTER	169-6715	1	KÜHLER U. ÖLKÜHLERBEFESTIGUNG	102
		1	KÜHLER U. ÖLKÜHLERBEFESTIGUNG	104
		1	KÜHLER U. ÖLKÜHLERBEFESTIGUNG	106
KÜHLERKAPPE	036-1865	1	KÜHLER UND HYDRAULIKÖLKÜHLER	98
		1	KÜHLER UND HYDRAULIKÖLKÜHLER	99
		1	KÜHLER UND HYDRAULIKÖLKÜHLER	100
VENTILDECKELDICHTUNG	154-1828	1	KÜHLWASSERPUMPE	90
		1	KÜHLWASSERPUMPE	92
		1	KÜHLWASSERPUMPE	94
		1	KÜHLWASSERPUMPE	96
LUFTANSAUG- UND ABGASSYSTEM				
LUFTFILTER (HAUPTELEMENT)	231-0167	1	LUFTREINIGER	109
LUFTFILTER (HILFSELEMENT)	231-0168	1	LUFTREINIGER	109
MOTOR - GRUNDAUSFÜHRUNG				
GAZE (KURBELGEHÄUSEENTLÜFTER)	153-5939	1	VENTILDECKEL	31
		1	VENTILDECKEL	33
GAZE (KURBELGEHÄUSEENTLÜFTER) (KURBELGEHÄUSEENTLÜFTER)	153-5939	1	VENTILDECKEL	29
KAPPE (MOTORÖLFÜLLUNG)	217-7358	1	ÖLWANNE	66
		1	ÖLWANNE	70
KEILRIEMEN (WASSERPUMPE)	251-6789	1	WASSERPUMPE - RIEMENSCHEIBE	79
ÖLFILTER	220-1523	1	ÖLWANNE	66
ÖLWANNENSCHRAUBE (ABLASS)	165-3605	1	ÖLWANNE	66
		1	ÖLWANNE	70
VENTILDECKELDICHTUNG	233-0695	1	VENTILDECKEL	29
		1	VENTILDECKEL	31
		1	VENTILDECKEL	33

WARTUNGSTEILE

BESCHREIBUNG	ERSATZTEIL-NUMMER	MENGE	VERWENDET IN	SEITE
RAHMEN UND FAHRGESTELL				
ENTLÜFTER (TANDEMGEHÄUSE)	9G-5127	2	MASCHINENRAHMEN U. BEFESTIGUNG	303
		2	MASCHINENRAHMEN U. BEFESTIGUNG	305
LEUCHTE (12 V)	7M-9957	1	UMBAUSATZ - FÜR STRASSENVERKEHR	291
LEUCHTE (12 V) (KENNZEICHEN)	7M-9957	1	TYPENSCHILDBEFESTIGUNG	317
LEUCHTE (12 V, 10 W)	195-9712	1	UMBAUSATZ - FÜR STRASSENVERKEHR	291
MAGNETSTOPFEN (TANDEM)	3S-9182	5	MASCHINENRAHMEN U. BEFESTIGUNG	303
		5	MASCHINENRAHMEN U. BEFESTIGUNG	305
VORHÄNGESCHLOSS	246-2641	1	STRASSENFAHRT - UMRÜSTSATZ	292
		1	STRASSENFAHRT - UMRÜSTSATZ	294
		1	UMBAUSATZ - FÜR STRASSENVERKEHR	290
SCHMIERSYSTEM				
ÖLFILTER	220-1523	1	ÖLFILTER	83

INDEX

Name	Page
A	
ACCUMULATOR & MTG GP-HYDRAULIC	322
ACCUMULATOR GP-HYDRAULIC (UNCHARGED) (WORK TOOL)	322
ACCUMULATOR GP-REFRIGERANT–WITH DESICCANT	655 656
ADAPTER GP-OIL LINE	323
AIR CLEANER GP	108 109
AIR CONDITIONER & MOUNTING GP	657
AIR CONDITIONER AR	658
AIR CONDITIONER GP	659
ALTERNATOR GP-CHARGING	143 144
ARM GP-MATERIAL HANDLING	562
ARM GP-WINDOW WIPER	683 685
ARMREST & MOUNTING GP	661
ARMREST GP	662
AXLE GP	204 205 206
B	
BATTERY GP–HEAVY DUTY	146
BATTERY GP–STANDARD	145
BATTERY (12-VOLT, MAINTENANCE FREE)	146
BATTERY (12 VOLT, STANDARD)	145
BELT-DRIVE (WARNING BEACON)	170
BLADE AR–ANGLING	563 564 565
BLADE AS-WIPER	685
BLADE AS-WIPER (WIPER)	683
BLADE GP-ANGLING	566 567 568 569
BLOWER GP-CAB	659 697
BOX GP-STORAGE	664
BREATHER AS	701 703
BREATHER AS (AIR CONDITIONER)	667
BREATHER AS (TANDEM HOUSING)	303 305
BUCKET AR-GRAPPLE	570 571 572
BUCKET AR-MULTIPURPOSE	572 573 574
BUCKET GP-DIRT	575 576 577 578
BUCKET GP-GENERAL PURPOSE	579 580 581 582 583 584
BUCKET GP-GRAPPLE	585 586 587
BUCKET GP-LIGHT MATERIAL	588 589
BUCKET GP-MULTIPURPOSE	590 591 592
BUCKET GP-UTILITY	593 594 595
BUMPER GP–REAR	279 280
C	
CAB AR-ENCLOSED ROPS	665
CAB GP-ENCLOSED ROPS	666
CABLE GP-GOVERNOR CONTROL	123
CAMSHAFT GP	27 28
CAP AS-FILLER (FUEL)	132 134
CAP AS-FILLER (HYDRAULIC TANK)	520
CAP AS-RADIATOR	98 99 100
CAP (ENGINE OIL FILLER)	66 70
CAP-VENTED	102 104 106
CARRIAGE & FORK AR	596
CHASSIS AR	1
CIRCUIT BREAKER AS (105-AMPERE)	192 194
CIRCUIT BREAKER AS (30-AMPERE)	175
CIRCUIT BREAKER AS (30-AMPERE) (LIGHTING)	173
COCK	90 94
COMMON AR	1 2 3 4

INDEX

Name	Page
COMPRESSOR & MOTOR GP-REFRIG	667
COMPRESSOR & MTG GP-REFRIG	668
COMPRESSOR GP-REFRIGERANT	667
	701
	702
CONDENSER & MTG GP-REFRIGERANT	669
CONNECTION GP-ELECTRICAL	147
	148
	149
CONTROL GP-FAN	197
CONTROL GP-GOVERNOR	124
CONTROL GP-HANDLE	331
CONTROL GP-HANDLE–DIRECTION, SPEED	324
	325
CONTROL GP-HANDLE–LH	327
	329
CONTROL GP-HANDLE–RH	328
	331
CONTROL GP-HANDLE–WORK TOOL	326
	330
CONTROL GP-INTERLOCK	150
CONTROL GP-PARKING BRAKE	207
	209
	211
	213
	215
	217
	219
	221
CONTROL GP-PILOT OPERATED HYD	332
	334
	336
	338
	340
	341
	343
	346
	349
CONTROL GP-UNPROGRAMMED	153
CONTROL GP-UNPROGRAMMED (SECURITY)	182
CONVERSION AR-MACHINE	4
	6
	13
CONVERSION AR-MACHINE–EUROPE	4
	5
	6
CONVERSION AR-MACHINE–EUROPEAN, UNITED KINGDOM	7
CONVERSION AR-MACHINE–GERMANY	10
	11
	15
	16
CONVERSION AR-MACHINE–GERMANY, HIGH FLOW	17
	18
CONVERSION AR-MACHINE–GERMANY, ITALY	7
CONVERSION AR-MACHINE–ITALY	8
	13
CONVERSION AR-MACHINE–ITALY, HIGH FLOW	14
CONVERSION AR-MACHINE–UNITED KINGDOM	9
	12
CONVERSION AR-NON-ROADING	151
CONVERSION AR-QUICK COUPLER–KIT	597
	600
CONVERSION AR-ROADING–EUROPE	281
	284
CONVERSION AR-ROADING–EUROPEAN	289
CONVERSION AR-ROADING–GERMANY	281
	283
	284
	286
	290
CONVERSION AR-ROADING–GERMANY, ITALY	287
	288
	289
CONVERSION AR-ROADING–ITALY	282
	283
	285
	286
	291
CONVERSION AR-ROADING–UNITED KINGDOM	282
	285
CONVERSION AR-ROADING–UNITED KINGDOM, COSA	288
CONVERSION GP-ROADING–GERMANY	292
	294
CONVERSION GP-ROADING–ITALY	293
	295
CONVERSION GP-WORK TOOL–KIT, HIGH FLOW	603
COOLANT HEATER LINES	720
COOLER GP-FLTR BASE & ENG OIL	84
COUNTERWEIGHT GP	296
	297
	300
COUNTERWEIGHT GP–KIT	298
	299
COUPLER AR-QUICK	604
	605
COUPLER GP-QUICK	606
	607
COUPLING GP-DRIVE	671

INDEX

Name	Page
COVER GP-CONSOLE	673
	674
COVER GP-FUSE PANEL	152
COVER GP-INSTRUMENT PANEL	675
COVER GP-LINES	609
COVER GP-VALVE MECHANISM	29
	31
	33
CRANKSHAFT GP	35
	36
	38
	40
CYLINDER & LINK GP-COUPLER–LH	610
CYLINDER & LINK GP-COUPLER–RH	611
CYLINDER & MTG GP-ANGLE BLADE	352
	353
CYLINDER & MTG GP-LIFT ARM	354
	357
CYLINDER BLOCK GP	42
	44
	46
	47
CYLINDER GP-BUCKET	359
CYLINDER GP-COUPLER	360
CYLINDER GP-GRAPPLE	361
	362
CYLINDER GP-HYDRAULIC–ANGLE BLADE	363
CYLINDER GP-HYDRAULIC (ANGLE)	353
CYLINDER GP-HYDRAULIC (TILT)	353
CYLINDER GP-LIFT	366
CYLINDER GP-LIFT–LH	364
CYLINDER GP-LIFT–RH	365
CYLINDER GP-TILT–BUCKET EJECTOR, LH	367
CYLINDER GP-TILT–BUCKET EJECTOR, RH	368
CYLINDER HEAD GP	49
	50
	51
	52

D

DOOR & MTG GP-CAB	676
	679
DOOR GP-CAB	683
DOOR GP-CAB–GLASS	682
	685
DOOR GP-CAB (POLYCARBONATE)	683
DRAIN GP-ENGINE OIL	53
DRIVE GP-TANDEM	223
	224
DUCT & CONTROL GP	687

E

EDGE GP-BIT & CUTTING	612
EDGE GP-CUTTING	613
	614
	615
	616
ELBOW GP	416
	417
ELECTRONICS GP-IMPLEMENT	153
ELEMENT AS-JACKET WATER HEATER	156
	157
ENCLOSURE GP-ENGINE	301
ENGINE AR	19
	20
ENGINE AR-PRIMARY	21
	22

F

FAN GP-BLOWER	98
	99
	100
FASTENER GP-WIRING HARNESS	154
FILM-FUSE/RELAY	152
FILM GP	375
	377
	379
	380
	760
	761
	762
	763
	764
FILM GP–KIT	765
	767
	769
	771
FILM (HIGH FLOW)	379
	380
	384
	385
FILM (HIGH FLOW)	375
	377
FILM-IDENTIFICATION (IGNITION SWITCH)	159
FILM-IDENTIFICATION (IGNITION SWITCH)	158
FILM-IDENTIFICATION (13-KM/H)	10
	11
	15
	16
	281
	284
	290
FILM-IDENTIFICATION (13-KM/H)	17
	18
FILM-INFORMATION (TIE-DOWN LOCATION)	562
	765

INDEX

Name	Page
	767
	769
	771
	774
	777
	780
	783
FILM-INSTRUCTION	692
FILM-INSTRUCTION (DASH)	691
FILM-INSTRUCTION (INSTRUMENT PANEL)	690
FILM-INSTRUCTION (MACHINE CONTROL, READ OMM)	334
	338
	341
	343
	346
FILM-INSTRUCTION (MACHINE CONTROL, READ OMM)	340
FILM-INSTRUCTION (MACHINE CONTROLS)	332
	336
	385
FILM-INSTRUCTION (MACHINE CONTROLS)	349
	384
FILM-INSTRUCTION (MACHINE SECURITY, READ OMM)	158
	159
FILM-INSTRUCTION (NO STEP)	786
FILM (REFLECTIVE)	639
	640
FILM-STRIPE (REFLECTIVE, RED, WHITE)	639
	640
FILM (TEMPERATURE CONTROL)	697
FILM-WARNING (CLEARANCE)	310
	760
FILM-WARNING (CRUSH HAZARD, STAY BACK)	774
	783
FILM-WARNING (CRUSH POINT)	630
FILM-WARNING (CRUSH POINT)	590
	591
	592
FILM-WARNING (HIGH PRESSURE, READ OMM, ISO)	774
	777
FILM-WARNING (IMPALED POINT)	619
	620
	624
	625
	626
	627
FILM-WARNING (NO CLEARANCE, STAY BACK)	566
	567
FILM-WARNING (NO HANDS, STAY BACK)	510
FILM-WARNING (STEERING)	290
	292
	294
FILTER & LINES GP-HYDRAULIC	225
	227
FILTER AS (BREATHER)(HYDRAULIC OIL)	519
FILTER AS-ENGINE OIL	66
	83
FILTER BASE & ENG OIL COOLER	84
FILTER-CAB AIR	659
	697
FILTER ELEMENT AS-AIR (PRIMARY)	109
FILTER ELEMENT AS-AIR (SECONDARY)	109
FILTER ELEMENT-FUEL (WATER SEPARATOR)	125
FILTER ELEMENT (HYDRAULIC)	229
FILTER GP-ENGINE OIL	83
FILTER GP-OIL–HYDRAULIC	229
FILTER GP-WATER SEP & FUEL	125
FITTING GP-HYDRAULIC	369
	370
	371
	382
	384
	434
	440
	442
	448
FITTING-GREASE (1/8-27 THD)	630
FLASHER AS	173
	175
FLOOR MAT	4
	5
	6
	7
	8
	9
	10
	11
	12
	13
	14
	15
	16
	17
	18
	281
	282
	283
	284
	285
	286
	287
	288

INDEX

Name	Page
	289
FLYWHEEL GP	54
FORK AR-GRAPPLE	617
	618
FORK GP-GRAPPLE	619
	620
	621
FORK GP-PALLET–KIT	622
FORK GP-UTILITY	623
	624
	625
	626
	627
FRAME & MTG GP-MACHINE	303
	305
FRAME GP-BLADE	308
FRAME GP-MACHINE	303
	305
FRAME GP-WINDOW–LH	689
FRAME GP-WINDOW–RH	688
FUSE (10-AMPERE)	160
	161
	162
	163
	187
	189
	200
	202
	388
	597
	600
	604
FUSE (10-AMPERE)	343
	346
	605
FUSE (15-AMPERE)	160
	161
	163
	188
	189
	200
	202
FUSE (20-AMPERE)	189
FUSE (30-AMPERE)	188
	701
	703

G

GASKET-COVER	90
	92
	94
	96
GAUGE & WARNING GP–LH	690
GAUGE & WARNING GP–RH	691
	692
GAUGE GP-FUEL LEVEL	691
	692
GAUGE-OIL (DIPSTICK)	66
GAUGE-SIGHT	100
GAUGE-SIGHT (HYDRAULIC TANK)	520
GAUGE-SIGHT (RADIATOR)	98
	99
GAUZE (CRANKCASE BREATHER)	31
	33
GAUZE (CRANKCASE BREATHER) (CRANKCASE BREATHER)	29
GLOW PLUG	155
GLOW PLUG GP	155
GOVERNOR GP	126
	129
GRAPPLE & CYLINDER GP-UTILITY	628
GRAPPLE GP-UTILITY	630
GUARD GP-BELT	55
GUARD GP-ROPS/FOPS	693
GUIDE GP-LINES	309

H

HANDHOLD GP	694
HANDLE & PIN GP-COUPLER–LH	631
HANDLE & PIN GP-COUPLER–RH	632
HANDLE GP-COUPLER–LH	633
HANDLE GP-COUPLER–RH	634
HANDLE GP-MODULAR	327
	328
	329
	373
HANDLE GP-MODULAR–DIRECTION, SPEED	372
HEATER & MTG GP-CAB	695
HEATER AR-CAB	696
HEATER GP-CAB	697
HEATER GP-CAB–KIT	699
HEATER GP-JACKET WATER	156
	157
HORN AS (LOW TONE)	340
	341
	343
	346
HOUSING AS-SIDE–A/C, HEATER	700
HOUSING GP-FLYWHEEL	56
HOUSING GP-FRONT	57
	59
HYDRAULIC AR	374
	375
	376
	377
	378
	380

INDEX

Name	Page
	381
	382
HYDRAULIC AR– HIGH FLOW, SOUND SUPPRESSION	379
	380
HYDRAULIC AR–SOUND SUPPRESSION	379

I

INSTALLATION AR–A/C, HEATER	702
INSTALLATION AR–KIT	701
INSTALLATION AR-ENGINE	23
	24
	25
	26
INSTALLATION GP	704
	705
INSTALLATION GP-SECURITY	158
INSTALLATION GP-SECURITY–KIT	159

K

KEY AS-ELECTRONIC (SECURITY)	158
	182
KIT-BEARING (ROD)	74
	75
	76
KIT-CAB DOOR & MOUNTING–GLASS	707
KIT-CAB DOOR & MOUNTING– POLYCARBONATE	706
KIT-CAB SEAL–DEBRIS BARRIER	708
KIT-CONNECTING PLUG (2-PIN)	160
	161
	163
KIT-CONNECTING PLUG (2-PIN)	189
	200
KIT-CRANKSHAFT BEARING (MAIN)	36
	38
	40
KIT-CUSHION	750
KIT-DAMPER	750
KIT-HANDLE (KNOB)	750
KIT-HIGH FLOW CONVERSION–KIT	382
	384
KIT-LEVER	324
	325
	326
KIT-PUMP REPAIR	247
KIT-QUICK COUPLER CONVERSION–KIT	388
KIT-ROADING CONVERSION– UNITED KINGDOM	310
KIT-ROADING PLATE & MOUNTING– BUCKET	635
KIT-SEAL	269
	353
	359
	361
	363
	498
	499
	544
	553
	554
	558
	560
KIT-SEAL (WATER SEPARATOR)	125
KIT-SERVICE	557
	735
KIT-SERVICE METER	675
KIT-SPRING	750
KIT-STARTING MOTOR	183
KIT-WATER BASE (WATER SEPARATOR)	125
KIT-WORK TOOL CONTROL & WIRING– RADIAL LIFT	161
KIT-WORK TOOL CONTROL & WIRING– VERTICAL LIFT	160
KIT-WORK TOOL WIRING–RADIAL LIFT	162
KIT-WORK TOOL WIRING–VERTICAL LIFT	163

L

LAMP AS (RED, GREEN, LED, 12-VOLT)	159
LAMP GP-DOME	691
	692
LAMP GP-FLOOD–12 VOLT	164
LAMP GP-FLOOD– 12-VOLT, VERTICAL MOUNT	165
LAMP GP-HEAD & SIGNAL	166
LAMP GP-REGISTRATION PLATE	291
	317
LAMP GP-STOP & TAIL	168
LAMP GP-STOP & TAIL–STOP, TAIL	169
LAMP GP-WARNING BEACON– AMBER, MAGNETIC MOUNT, ROTATING	170
LAMP-HEAD (12-VOLT, 60-WATT)	166
LAMP (12-VOLT)	291
	691
	692
LAMP (12-VOLT) (REGISTRATION PLATE)	317
LAMP (12-VOLT, 10-WATT)	291
	691
	692
LAMP (12-VOLT, 21-WATT)	166
	169
LAMP (12-VOLT, 4-WATT)	166
LAMP (12-VOLT, 5-WATT)	168
LAMP (12-VOLT, 5-WATT)	169
LAMP (12-VOLT, 55-WATT)	164
	165
	170

INDEX

Name	Page
LENS	168
LENS (AMBER) (FRONT TURN)	166
LENS (AMBER, WARNING BEACON)	170
LENS AS (HEADLIGHT)	166
LENS-LAMP (REAR, LH)	169
LEVER GP-GOVERNOR	709
LIFTING GP-ENGINE	61
	62
LIFTING GP-MACHINE–SINGLE POINT	312
	314
LIFTING GP-MACHINE–4-POINT	311
	313
LIGHTING GP-FLOOD	172
LIGHTING GP-FLOOD–REAR	171
LIGHTING GP-ROADING	173
	175
LIGHTING GP-STOP & TAIL	177
LIGHTING GP-WARNING BEACON–12-VOLT	178
LINER-CAB	711
LINER GP-CAB	710
LINES GP-AIR	110
	111
LINES GP-AIR CONDITIONER	712
	714
	716
	718
LINES GP-BUCKET	391
	393
	394
LINES GP-CONNECTING	396
	398
LINES GP-FUEL PRM & FILTER	132
	134
LINES GP-GRAPPLE	400
	402
LINES GP-HEATER	720
LINES GP-HYDRAULIC FAN	404
	406
	408
	410
	412
	414
LINES GP-HYDRAULIC OIL COOLER	416
	417
LINES GP-HYDROSTATIC	230
	232
LINES GP-LIFT CYLINDER	418
	420
	422
	424
	426
	428
LINES GP-LOAD CONTROL VALVE	430
	432
LINES GP-PILOT–DIRECTION, SPEED	434
	440
LINES GP-PILOT–WORK TOOL	436
	438
LINES GP-PUMP	442
	444
	446
LINES GP-PUMP–HIGH FLOW	448
LINES GP-TILT CYLINDER	450
	452
	454
	456
	459
	462
	464
	466
	468
	470
	472
	474
	476
	478
LINES GP-WORK TOOL	480
	483
	486
	488
	490
	492
LINK GP-COUPLER	636
	637
LITERATURE GP	3
	721
LOCK GP-QUICK COUPLER	638

M

MANIFOLD & MTG GP-CONTROL	495
	496
MANIFOLD & MTG GP-CONTROL–ANGLING BLADE	497
MANIFOLD GP-CONTROL	498
	499
MANIFOLD GP-CONTROL–ANGLING BLADE	500
MANIFOLD GP-EXHAUST	112
	113
MANIFOLD GP-RETURN	234
	236
MIRROR & MTG GP-REAR VIEW	315
	316
MIRROR GP	315
	316
MIRROR GP-REAR VIEW	722
MODULE GP-WARNING INDICATOR	723
	725
MODULE GP-WARNING INDICATOR–12-VOLT	724

INDEX

Name	Page
MOTOR & MTG GP-HYDRAULIC FAN	501
	502
	503
MOTOR & MTG GP-HYDROSTATIC	238
MOTOR GP-GEAR	508
MOTOR GP-GEAR–A/C COMPRESSOR	506
MOTOR GP-GEAR–HYDRAULIC FAN	505
	507
MOTOR GP-PISTON	239
MOTOR GP-WINDOW WIPER	683
	685
MOUNTING GP-CYLINDER	509
	510
	511
MOUNTING GP-ENGINE	63
	64
MOUNTING GP-FAN	65
MOUNTING GP-PUMP	241
MOUNTING GP-RAD & OIL COOLER	85
	87
MOUNTING GP-REGISTRATION	317
	318
MOUNTING GP-ROADING LIGHTS–KIT	319
MOUNTING GP-ROPS	726
MUFFLER & MOUNTING GP	114
	115
MUFFLER GP	116
	117
	118

P

Name	Page
PADLOCK GP	290
	292
	294
PAN GP-OIL	66
	70
PANEL AR-INSTRUMENT	727
PANEL GP-FUSE	160
	161
	162
	163
	189
	200
	202
PANEL GP-INSTRUMENT	728
	730
PANEL GP-SIDE	732
	733
PEDAL GP-GOVERNOR	734
	735
PISTON & ROD GP	74
	75
	76
PLATE & FILM GP	773
	774
	777
	780
	783
	786
PLATE GP-ROADING–LH	639
PLATE GP-ROADING–RH	640
PLATE-IDENTIFICATION (MAXIMUM WEIGHT)	290
	291
	292
	293
	294
PLATFORM GP-OPERATOR	736
PLUG GP-OIL PAN (DRAIN)	66
	70
PLUG GP-PILOT VALVE	512
PLUG-MAGNETIC (TANDEM)	303
	305
POWER TRAIN AR	242
PULLER-MINIFUSE	152
PULLEY GP-CRANKSHAFT	77
PULLEY GP-WATER PUMP	78
	79
PUMP & MTG GP-FUEL TRANSFER	136
PUMP & MTG GP-HYDROSTATIC	243
	244
	245
	246
PUMP & MTG GP-WORK TOOL	513
	514
	515
	516
PUMP GP-DIAPHRAGM	641
	642
	650
PUMP GP-FUEL INJECTION	137
	140
PUMP GP-FUEL PRIMING	142
PUMP GP-FUEL PRM & PRIM FILTER	142
PUMP GP-FUEL TRANSFER	136
PUMP GP-GEAR	515
	516
PUMP GP-GEAR–WORK TOOL	517
	518
PUMP GP-PISTON	247
PUMP GP-PISTON–HYDROSTATIC	249
PUMP GP-WATER	89
	90
	92
	94
	96

INDEX

Name	Page
R	
RADIATOR & HYD OIL COOLER GP	98, 99, 100
RADIATOR & OIL COOLER MTG GP	102, 104, 106
RECOVERY GP-COOLANT	102, 104, 106
RELAY AS (SHELL) (SHELL)	190
RELAY AS (12-VOLT)	160, 161, 162, 163, 200, 202, 291, 349, 383, 386, 659
RELAY AS (12-VOLT) (BRAKE LIGHT)	199
RELAY AS (12-VOLT) (COLD START)	192, 194
RELAY AS (12-VOLT) (HEATER)	697
RELAY AS (12-VOLT) (MAIN POWER)	189, 200, 202
RELAY AS (12-VOLT) (WORK TOOL)	200, 202
S	
SCREEN	436, 438
SCREEN-SUCTION (HYDRAULIC TANK)	520
SCREEN (WATER)	645
SEAL GP-CAB	738
SEAL-VALVE COVER	29, 31, 33
SEAT BELT GP	739, 740, 741, 742, 743, 744, 745, 746
SEAT GP	748
SEAT GP–SUSPENSION	747
SENSOR GP-TEMP & PRESS	179, 180, 181
SENSOR GP-TEMPERATURE (ENGINE COOLANT)	100
SENSOR GP-TEMPERATURE (HYDRAULIC OIL)	503
SENSOR-SPEED	508
SERVICE GP-MACHINE–SECURITY	182
SOFTWARE GP-MACHINE	182
SOFTWARE GP-MACHINE (SECURITY)	158
SOLENOID AS	558
SOLENOID (FUEL SHUTOFF)	137, 140
SOLENOID (STARTING MOTOR)	183
SPRING GP-BLADE	643
SPRING GP-GAS	749
STARTING MOTOR GP-ELECTRIC	183, 185
STEP GP-MATERIAL HANDLING ARM	644
STRAINER GP-WATER	645
SUN VISOR	751, 752
SUPPORT GP-STORAGE BOX	10, 11, 15, 16, 17, 18, 281, 283, 284, 286
SUPPRESSION GP-SOUND	321
SUSPENSION GP-SEAT	750
SWITCH AS-KEY START	690
SWITCH AS-LIMIT	683, 685
SWITCH AS-PRESSURE (AIR CONDITIONER)	712, 714, 716, 718
SWITCH AS-PRESSURE (HYDRAULIC OIL)	229
SWITCH AS-PRESSURE (REFRIGERANT)	702, 704
SWITCH AS-ROCKER (AIR CONDITIONER)	659
SWITCH AS-ROCKER (COLD START)	728, 730
SWITCH AS-ROCKER (ELECTRIC POWER, WORK TOOL)	160, 161, 162, 163
SWITCH AS-ROCKER (ELECTRIC POWER, WORK TOOL)	200, 202

INDEX

Name	Page
SWITCH AS-ROCKER (FRONT WORK LIGHT)	728, 730
SWITCH AS-ROCKER (HAZARD WARNING LIGHTS)	173, 175
SWITCH AS-ROCKER (HEATER)	659
SWITCH AS-ROCKER (HEATER)	697
SWITCH AS-ROCKER (PARKING BRAKE)	728, 730
SWITCH AS-ROCKER (QUICK COUPLER)	388, 597, 600, 604, 605
SWITCH AS-ROCKER (REAR WIPER)	683, 685
SWITCH AS-ROCKER (REAR WORK LAMPS)	171
SWITCH AS-ROCKER (ROADING LIGHTS)	175
SWITCH AS-ROCKER (ROADING LIGHTS)	173
SWITCH AS-ROCKER (TURN SIGNAL)	173, 175
SWITCH AS-ROCKER (WARNING BEACON)	178
SWITCH AS (SEAT)	750
SWITCH AS-TEMPERATURE (HYDRAULIC OIL)	520
SWITCH GP-PRESSURE–BRAKE LIGHT	186
SWITCH GP-PRESSURE (BACKUP ALARM)	187
SWITCH GP-ROCKER (HIGH FLOW)	382
SWITCH GP-ROCKER (HIGH FLOW)	349, 386
SWITCH GP-ROCKER (WORK TOOL POSITIONER)	374, 376, 377
SWITCH-PRESSURE (ENGINE OIL) (ENGINE)	180
SWITCH-PRESSURE (ENGINE OIL) (ENGINE OIL PRESSURE)	179, 181
SWITCH (SEAT) (SEAT)	748
SWITCH-TEMPERATURE (AIR CONDITIONER)	659
SWITCH-TEMPERATURE (ENGINE COOLANT)	179, 180, 181

T

Name	Page
TANK & MTG GP-HYDRAULIC	519
TANK & MTG GP-WATER	646, 648, 650
TANK GP-HYDRAULIC	520
TANK GP-WATER	653
TIRE & RIM GP	255, 256, 261, 262, 263, 264
TIRE & RIM GP–LH	251, 252, 254, 256, 257, 258, 259, 260, 261, 262, 264, 265
TIRE & RIM GP–RH	252, 253, 254, 256, 257, 258, 259, 260, 261, 262, 264, 265, 266
TOOTH GP-UNI	654
TURBOCHARGER GP	119, 121

V

Name	Page
V-BELT (WATER PUMP)	79
VALVE & LINES GP-COUPLER	521, 524, 527, 530, 533
VALVE & MTG GP-CONTROL	536, 537, 538, 539
VALVE & MTG GP-DIVERTER	540, 541, 542
VALVE & MTG GP-SOLENOID	269, 543, 544

INDEX

Name	Page
VALVE & MTG GP-SOLENOID–PARKING BRAKE	267, 268
VALVE-BREATHER (CRANKCASE)	29, 31, 33
VALVE-DRAIN (ENGINE OIL SUMP)	66
VALVE-DRAIN (ENGINE OIL SUMP) (OIL)	70
VALVE GP-CHECK	499
VALVE GP-CONTROL	545, 547, 549, 551
VALVE GP-DIVERTER	553, 554
VALVE GP-MANUAL (LOWERING CONTROL)	430
VALVE GP-MANUAL (MANUAL LOWERING CONTROL)	432, 521, 524, 527, 530, 533
VALVE GP-PILOT	555
VALVE GP-PILOT–WORK TOOL	556
VALVE GP-RELIEF	498, 499
VALVE GP-RELIEF–MAIN	557
VALVE GP-RELIEF (CHARGE)	247, 249
VALVE GP-RELIEF (CROSS OVER)	247
VALVE GP-RELIEF (CROSSOVER)	249
VALVE GP-SHUTOFF (HYDRAULIC TANK DRAIN)	234
VALVE GP-SOLENOID	269, 503, 555, 556, 559, 560
VALVE GP-SOLENOID–A/C COMPRESSOR	561
VALVE GP-SOLENOID–INTERLOCK	558
VALVE GP-SOLENOID–PARKING BRAKE	270
VALVE GP-SOLENOID (AUXILIARY FLOW)	498
VALVE GP-SOLENOID (AUXILIARY FLOW CONTROL)	270
VALVE GP-SOLENOID (HIGH FLOW)	498, 499
VALVE GP-SOLENOID (HIGH FLOW BOOST)	498, 499
VALVE GP-SOLENOID (PARKING BRAKE)	267
VALVE GP-SOLENOID (QUICK COUPLER)	544
VALVE GP-SPEED SENSING	247
VALVE MECHANISM GP	80
VALVE-RELIEF	70
VISOR GP-CAB	751, 752

W

Name	Page
WARNING GP-BACKUP	187
WHEEL & TIRE AR	271, 272, 276, 277, 278
WHEEL & TIRE AR–HEAVY DUTY	271, 272, 273, 274, 275, 276
WHEEL & TIRE AR–HIGH FLOTATION	272
WHEEL & TIRE AR–LOW SIDE WALL	274, 275
WHEEL & TIRE AR–PNEUMATIC	271
WHEEL & TIRE AR–SOLID	273, 278
WINDOW GP-CAB	753, 754
WINDOW GP-CAB–KIT	755
WINDOW GP-CAB–RH,UPPER	758
WINDOW GP-CAB–UPPER,LH	756
WIRING GP-AIR CONDITIONER	188
WIRING GP-CHASSIS	189
WIRING GP-ENGINE	192, 194
WIRING GP-HORN	196
WIRING GP-MACHINE–DEMAND FAN	197
WIRING GP-REAR LIGHTING	199
WIRING GP-WORK TOOL	200, 202

INDEX

Désignation	Page

A

ACCOUDOIR (ASS)	662
ACCOUDOIR ET MONTAGE (ASS)	661
ACCOUPLEMENT D'ENTRAINEMENT (ASS)	671
ACCUMULATEUR - CLIMATISEUR (ASS)	655
	656
ACCUMULATEUR ET MONTAGE - HYDRAULIQUE (ASS)	322
ACCUMULATEUR HYDRAULIQUE (ASS) (NON CHARGÉ) (OUTIL DE TRAVAIL)	322
ALTERNATEUR DE CHARGE (ASS)	143
	144
AMPOULE (12-V, 5-W)	168
	169
AMPOULE (12 VOLTS)	291
	691
	692
AMPOULE (12 VOLTS) (PLAQUE D'IMMATRICULATION)	317
AMPOULE (12V, 10W)	291
	691
	692
AMPOULE (12V, 21W)	166
	169
AMPOULE (12V, 4W)	166
AMPOULE (12V, 55W)	164
	165
AMPOULE (12V, 55W)	170
ARBRE A CAMES (ASS)	27
	28
AUTOCOLLANT (COMMANDE DE TEMPÉRATURE)	697
AUTOCOLLANT DE FUSIBLE/ RELAIS	152
AUTOCOLLANT DE MISE EN GARDE (ATTENTION AUX MAINS, RESTER À L'ÉCART)	510
AUTOCOLLANT DE MISE EN GARDE (DÉGAGEMENT)	310
	760
AUTOCOLLANT DE MISE EN GARDE (DIRECTION)	292
	294
AUTOCOLLANT DE MISE EN GARDE (DIRECTION)	290
AUTOCOLLANT DE MISE EN GARDE (HAUTE PRESSION, LIRE LE GUIDE D'UTILISATION ET D'ENTRETIEN, ISO)	774
	777
AUTOCOLLANT DE MISE EN GARDE (*NO CLEARANCE, STAY BACK)	566
	567
AUTOCOLLANT DE MISE EN GARDE (POINT D'ÉCRASEMENT)	590
	591
	592
	630
AUTOCOLLANT DE MISE EN GARDE (POINT PERCÉ)	619
	620
	624
	625
	626
	627
AUTOCOLLANT DE MISE EN GARDE (RISQUE D'ÉCRASEMENT, RESTER À L'ÉCART)	774
	783
AUTOCOLLANT (DÉBIT ÉLEVÉ)	375
	377
	379
	380
	384
	385
AUTOCOLLANT D'IDENTIFICATION (CONTACTEUR D'ALLUMAGE)	158
AUTOCOLLANT D'IDENTIFICATION (CONTACTEUR D'ALLUMAGE)	159
AUTOCOLLANT D'IDENTIFICATION (*13-KM/H)	10
	11
	15
	16
	17
	18
	281
	284
	290
AUTOCOLLANT-INFORMATION (*TIE-DOWN LOCATION)	774
	777
	780
	783
AUTOCOLLANT-INFORMATION (*TIE-DOWN LOCATION)	562
	765
	767
	769
	771
AUTOCOLLANT (RÉFLECTEUR)	639
	640
AVERTISSEUR DE RECUL (ASS)	187

B

BAÏONNETTE- NIVEAU DE CARBURANT (ASS)	691
	692

* TRADUCTION NON DISPONIBLE AU MOMENT DE LA PUBLICATION

INDEX

Désignation	Page
BALAI D'ESSUIE-GLACE (ENS)	685
BALAI D'ESSUIE-GLACE (ENS) (ESSUIE-GLACE)	683
BANDE AUTOCOLLANTE (RÉFLECTEUR, ROUGE, BLANC)	639
	640
BÂTI DE LAME (ASS)	308
BÂTI DE MACHINE (ASS)	303
	305
BÂTI DE MACHINE ET MONTAGE (ASS)	303
	305
BATTERIE (ASS)	145
	146
BATTERIE (12V, SANS ENTRETIEN)	146
BATTERIE (12V, STANDARD)	145
BIELLE DE COUPLEUR (ASS)	636
	637
*BLADE GP-ANGLING	566
BLOC-CYLINDRES (ASS)	42
	44
	46
	47
BOUCHON À ÉVENT	102
	104
	106
BOUCHON AIMANTÉ (TANDEM)	303
	305
BOUCHON DE GOULOTTE DE REMPLISSAGE (ENS) (CARBURANT)	132
	134
BOUCHON DE GOULOTTE DE REMPLISSAGE (ENS) (RÉSERVOIR HYDRAULIQUE)	520
BOUCHON DE RADIATEUR (ENS)	98
	99
	100
BOUCHON DE SOUPAPE PILOTE (ASS)	512
BOUGIE (ASS)-CARTER D'HUILE (VIDANGE)	66
	70
BOUGIE DE PRECHAUFFAGE	155
BOUGIE DE PRÉCHAUFFAGE (ASS)	155
BOULONNERIE DE FAISCEAU DE CABLES	154
BRANCHEMENT ÉLECTRIQUE (ASS)	147
	148
	149
BRAS DE MANUTENTION (ASS)	562
BRAS D'ESSUIE-GLACE (ASS)	685
BRAS D'ESSUIE-GLACE (ASS)	683

C

Désignation	Page
CABINE - REVÊTEMENT (ASS)	710
CABINE ROPS FERMÉE (VERSION)	665
CABLAGE - CLIMATISEUR (ASS)	188
CÂBLAGE - OUTIL DE TRAVAIL (ASS)	200
	202
CABLAGE DE CHASSIS (ASS)	189
CÂBLAGE DE KLAXON (ASS)	196
CABLAGE DE LA MACHINE (ASS)	197
CABLAGE DE MOTEUR (ASS)	192
	194
CABLAGE D'ECLAIRAGE ARRIERE (ASS)	199
CÂBLE DE COMMANDE DU RÉGULATEUR (ASS)	123
CACHE-SOUPAPES (ASS)	29
	31
	33
CADENAS (ASS)	290
	292
	294
CADRE DE VITRE (ASS)	688
	689
CANALISATIONS - BRANCHEMENT (ASS)	396
	398
CANALISATIONS - OUTIL DE TRAVAIL (ASS)	480
	483
	486
	488
	490
	492
CANALISATIONS A COMMANDE PILOTE (ASS)	434
	436
	438
	440
CANALISATIONS D'AIR (ASS)	110
	111
CANALISATIONS DE CHAUFFAGE (ASS)	720
CANALISATIONS DE CLIMATISEUR (ASS)	712
	714
	716
	718
CANALISATIONS DE FILTRE ET D'AMORÇAGE DE CARBURANT (ASS)	134
CANALISATIONS DE FILTRE ET D'AMORÇAGE DE CARBURANT (ASS)	132
CANALISATIONS DE POMPE (ASS)	442
	444
	446
	448
CANALISATIONS DE RÉCHAUFFEUR DE LIQUIDE DE REFROIDISSEMENT	720
CANALISATIONS DE REFROIDISSEUR D'HUILE HYDR. (ASS)	416
	417

* TRADUCTION NON DISPONIBLE AU MOMENT DE LA PUBLICATION

INDEX

Désignation	Page
CANALISATIONS DE VÉRIN DE LEVAGE (ASS)	418
	420
	422
	424
	426
	428
CANALISATIONS DU VÉRIN D'INCLINAISON (ASS)	450
	452
	454
	456
	459
	462
	464
	466
	468
	470
	472
	474
	476
	478
CANALISATIONS HYDRAULIQUES DE VENTILATEUR (ASS)	404
	406
	408
	410
	412
	414
CANALISATIONS HYDROSTATIQUES (ASS)	230
	232
CANALISATIONS-VALVE DE CONTROLE DE CHARGE	430
	432
CAPITONNAGE	711
CAPTEUR - TEMP. ET PRESSION (ASS)	179
	180
	181
CAPTEUR DE TEMPERATURE (ASS) (HUILE HYDRAULIQUE)	503
CAPTEUR DE TEMPERATURE (ASS) (LIQUIDE DE REFROIDISSEMENT DU MOTEUR)	100
CAPTEUR DE VITESSE	508
CARENAGE DE MOTEUR (ASS)	301
CARTER AV (ASS)	57
	59
CARTER DE VOLANT (ASS)	56
CEINTURE DE SECURITE (ASS)	739
	740
	741
	742
	743
	744
	745
	746
CHAPEAU (GOULOTTE D'HUILE MOTEUR)	66
	70
CHAUFFAGE DE CABINE (ASS)	697
	699
CHAUFFAGE DE CABINE (VERSION)	696
CHAUFFAGE ET MONTAGE - CABINE (ASS)	695
CLAPET DE DECHARGE	70
CLAPET DE DECHARGE (ASS)	498
	499
	557
CLAPET DE DECHARGE (ASS) (CHARGE)	247
	249
CLAPET DE DECHARGE (ASS) (COURT-CIRCUITER)	247
CLAPET DE DECHARGE (ASS) (LIMITEUR SECONDAIRE)	249
CLAPET DE RETENUE (ENS)	499
CLÉ ÉLECTRONIQUE (ENS) (SÉCURITÉ)	158
	182
CLIGNOTANT (ENS)	173
	175
CLIMATISEUR (ASS)	659
CLIMATISEUR ET MONTAGE (ASS)	657
CLIMATISEUR (VERSION)	658
COFFRE DE RANGEMENT (ASS)	664
COLLECTEUR - COMMANDE (ASS)	498
COLLECTEUR - COMMANDE (ASS)	499
COLLECTEUR - COMMANDE (ASS)	500
COLLECTEUR D'ÉCHAPPEMENT (ASS)	112
	113
COLLECTEUR-RETOUR (ASS)	234
	236
COMMANDE DE COLLECTEUR ET MONTAGE (ASS)	495
	496
	497
COMMANDE DE FREIN DE STATIONNEMENT (ASS)	207
	209
	211
	213
	215
	217
	219
	221
COMMANDE DE POIGNÉE (ASS)	324
	325
	326
	327
	328
	329

* TRADUCTION NON DISPONIBLE AU MOMENT DE LA PUBLICATION

INDEX

Désignation	Page
	330
	331
COMMANDE DE RÉGULATEUR (ASS)	124
COMMANDE DE VENTILATEUR (ASS)	197
COMMANDE D'INTERVERROUILLAGE (ASS)	150
COMMANDE ÉLECTRONIQUE D'ÉQUIPEMENT (ASS)	153
COMMANDE HYDRAULIQUE PILOTE (ASS)	332
	334
	336
	338
	340
	341
	343
	346
	349
COMMANDE NON PROGRAMMEE (ASS)	153
COMMANDE NON PROGRAMMEE (ASS) (SÉCURITÉ)	182
COMPRESSEUR DE REFRIGERANT (ASS)	667
COMPRESSEUR DE REFRIGERANT (ASS)	702
COMPRESSEUR DE REFRIGERANT (ASS)	701
COMPRESSEUR ET MONTAGE - RÉFRIGÉRANT (ASS)	668
COMPRESSEUR ET MOTEUR DE RÉFRIGÉRATION (ASS)	667
CONDENSATEUR ET MONTAGE (RÉFRIGÉRANT)	669
CONDUIT ET COMMANDE (ASS)	687
CONTACTEUR DE DÉMARRAGE À CLÉ (ENS)	690
CONTACTEUR (ENS) (SIÈGE)	750
CONTREPOIDS (ASS)	296
	297
	298
	299
	300
*CONVERSION GP-WORK TOOL	603
CÔTÉ CARTER (ENS)	700
COUDE (ASS)	416
	417
COUPLEUR EXPRESS (ASS)	606
	607
COUPLEUR EXPRESS (VERSION)	604
	605
COURROIE TRAPEZOIDALE (POMPE À EAU)	79
COUVERCLE - PANNEAU DE FUSIBLES (ASS)	152
COUVERCLE-CANALISATIONS (ASS)	609
COUVERCLE DE LA CONSOLE (ASS)	673
	674
COUVERCLE DU TABLEAU DE BORD (ASS)	675
CULASSE (ASS)	49
	50
	51
	52
CULBUTERIE (ASS)	80
	81

D

DÉMARREUR ÉLECTRIQUE (ASS)	183
	185
DENT MONOBLOC (ASS)	654
DISJONCTEUR DE SECURITE (ENS)	683
	685
DISJONCTEUR (ENS) (105A)	192
	194
DISJONCTEUR (ENS) (30A)	175
DISJONCTEUR (ENS) (30A) (ÉCLAIRAGE)	173
DISTRIBUTEUR (ASS)	545
	547
	549
	551
DISTRIBUTEUR ET MONTAGE (ASS)	536
	537
	538
	539

E

EAU DES CHEMISES - RECHAUFFEUR (ASS)	157
EAU DES CHEMISES - RECHAUFFEUR (ASS)	156
ÉCLAIRAGE - FEUX DE ROUTE (ASS)	173
	175
ÉCLAIRAGE - GYROPHARE (ASS)	178
ÉCLAIRAGE - PROJECTEURS (ASS)	171
	172
ECLAIRAGE DE GODET (ASS)	391
	393
	394
ÉCLAIRAGE-FEUX DE STOP ET ARRIÈRE (ASS)	177
ÉCRAN	436
	438
ÉCRAN (EAU)	645
ÉLÉMENT DE FILTRE À AIR (ENS) (PRINCIPAL)	109
ÉLÉMENT DE FILTRE À AIR (ENS) (SECONDAIRE)	109
ÉLÉMENT DE FILTRE À CARBURANT (SÉPARATEUR D'EAU)	125

* TRADUCTION NON DISPONIBLE AU MOMENT DE LA PUBLICATION

INDEX

Désignation	Page
ÉLÉMENT DE FILTRE (HYDRAULIQUE)	229
ÉLÉMENT DU RÉCHAUFFEUR D'EAU DES CHEMISES (ENS)	156
	157
EMBOUT ET LAME DE COUPE (ASS)	612
ENTRAINEMENT EN TANDEM (ASS)	223
	224
ENTRAÎNEMENT POUR COURROIE (GYROPHARE)	170
ENTRETIEN DE LA MACHINE (ASS)	182
ESSIEU (ASS)	204
	205
	206
EXTRACTEUR DE MINI-FUSIBLE	152

F

FEUX ARRIÈRE ET FEUX D'ARRÊT	168
	169
FILTRE - ELECTRONIQUE (ASS)	666
FILTRE A AIR (ASS)	108
	109
FILTRE À AIR DE CABINE	659
	697
FILTRE A HUILE (ASS)	229
FILTRE À HUILE MOTEUR (ASS)	83
FILTRE A HUILE MOTEUR (ENS)	66
	83
FILTRE DE SÉPARATEUR D'EAU ET DE CARBURANT (ASS)	125
FILTRE (ENS) (RENIFLARD)(HUILE HYDRAULIQUE)	519
FILTRE ET CANALISATIONS HYRAULIQUES (ASS)	225
	227
FOURCHE - PINCE (ASS)	619
	620
	621
FOURCHE - PINCE (VERSION)	617
	618
FOURCHE PALLETTE (ASS)	622
FOURCHE-RÉSEAU PUBLIC (ASS)	623
	624
	625
	626
	627
FUSIBLE (10A)	160
	161
	162
	163
	187
	189
	200
	202
	343
	346
	388
	597
	600
	604
	605
FUSIBLE (15A)	160
	161
	163
	188
	189
	200
	202
FUSIBLE (20A)	189
FUSIBLE (30A)	188
	701
	703

G

GODET - PINCE (ASS)	585
	586
	587
GODET - PINCE (VERSION)	570
	571
	572
GODET NORMAL (ASS)	579
	580
	581
	582
	583
	584
GODET POUR MATERIAUX LEGERS (ASS)	588
	589
GODET POUR TERRASSEMENT (ASS)	575
	576
	577
	578
GODET POUR TRAVAUX DE SERVITUDE (ASS)	593
	594
	595
GODET TOUS-TRAVAUX (ASS)	590
	591
	592
GODET TOUS-TRAVAUX (VERSION)	572
	573
	574
GRAISSEUR (FILET 1/8-27)	630
GRAISSEUR HYDRAULIQUE (ASS)	369
	370

* TRADUCTION NON DISPONIBLE AU MOMENT DE LA PUBLICATION

INDEX

Désignation	Page
	371
	384
	434
	440
GRAISSEUR HYDRAULIQUE (ASS)	382
GRAISSEUR HYDRAULIQUE (ASS)	442
	448
GRAPPIN ET VÉRIN POUR TRAVAUX DE SERVITUDE (ASS)	628
GROUPE DE MONTAGE	704
	705
GROUPE DE MOTEUR A PISTONS	239
GROUPE DE TRANSFORMATION - DÉPLACEMENT ROUTIER	292
	293
	294
	295
GUIDE - CANALISATIONS (ASS)	309

H

HUILE MOTEUR - CARTER (ASS)	70
HUILE MOTEUR - CARTER (ASS)	66

I

INDICATEURS ET TÉMOINS LUMINEUX (ASS)	690
	691
	692
INSONORISATION (ASS)	321
INTERRUPTEUR - CONTACTEUR (SIÈGE) (SIÈGE)	748
INTERRUPTEUR À BASCULE (ASS) (DÉBIT ÉLEVÉ)	382
INTERRUPTEUR À BASCULE (ASS) (DÉBIT ÉLEVÉ)	349
	386
INTERRUPTEUR À BASCULE (ASS) (POSITIONNEUR D'OUTIL DE TRAVAIL)	374
	376
	377
INTERRUPTEUR BALANCIER (ENS) (ALIMENTATION ÉLECTRIQUE, OUTIL DE TRAVAIL)	160
	161
	162
	163
	200
	202
INTERRUPTEUR BALANCIER (ENS) (CLIGNOTANT)	173
	175
INTERRUPTEUR BALANCIER (ENS) (CLIMATISEUR)	659
INTERRUPTEUR BALANCIER (ENS) (COUPLEUR EXPRESS)	388
INTERRUPTEUR BALANCIER (ENS) (COUPLEUR EXPRESS)	597
	600
	604
	605
INTERRUPTEUR BALANCIER (ENS) (DÉMARRAGE À FROID)	728
	730
INTERRUPTEUR BALANCIER (ENS) (ESSUIE-GLACE ARRIÈRE)	683
INTERRUPTEUR BALANCIER (ENS) (ESSUIE-GLACE ARRIÈRE)	685
INTERRUPTEUR BALANCIER (ENS) (FEUX DE DÉPLACEMENT SUR ROUTE)	173
	175
INTERRUPTEUR BALANCIER (ENS) (FEUX DE DÉTRESSE)	173
	175
INTERRUPTEUR BALANCIER (ENS) (FREIN DE STATIONNEMENT)	728
	730
INTERRUPTEUR BALANCIER (ENS) (GYROPHARE)	178
INTERRUPTEUR BALANCIER (ENS) (PROJECTEUR AVANT)	728
	730
INTERRUPTEUR BALANCIER (ENS) (PROJECTEURS ARRIÈRE)	171
INTERRUPTEUR BALANCIER (ENS) (RÉCHAUFFEUR)	697
INTERRUPTEUR BALANCIER (ENS) (RÉCHAUFFEUR)	659

J

JAUGE D'HUILE (JAUGE BAÏONNETTE)	66
JOINT DE CABINE (ASS)	738
JOINT DE CACHE-SOUPAPES	29
	31
	33
JOINT DE COUVERCLE	90
	92
	94
	96

K

KIT - COUSSIN	750
*KIT-CAB SEAL	708

* TRADUCTION NON DISPONIBLE AU MOMENT DE LA PUBLICATION

INDEX

Désignation	Page
KIT D'AMORTISSEUR DE VIBRATIONS	750
KIT DE BOUGIE (2 BROCHES)	189
KIT DE BOUGIE (2 BROCHES)	160
	161
	163
	200
KIT DE COMPTEUR D'ENTRETIEN	675
KIT DE COUSSINET DE VILEBREQUIN (PRINCIPAL)	36
	38
	40
KIT DE COUSSINET (TIGE)	74
	75
	76
KIT DE DÉMARREUR	183
KIT DE JOINTS	269
	353
	359
	361
	363
	498
	499
	544
	553
	554
	558
	560
KIT DE JOINTS (SÉPARATEUR D'EAU)	125
KIT DE LEVIER	324
	325
	326
KIT DE PLAQUE DE DÉPLACEMENT ROUTIER ET MONTAGE	635
KIT DE POIGNÉE (BOUTON)	750
KIT DE PORTE DE CABINE ET MONTAGE	706
	707
KIT DE RÉPARATION DE POMPE	247
KIT DE RESSORTS	750
KIT D'ENTRETIEN	557
	735
*KIT-HIGH FLOW CONVERSION	382
	384
*KIT-QUICK COUPLER CONVERSION	388
*KIT-ROADING CONVERSION	310
*KIT-WORK TOOL CONTROL & WIRING	160
	161
*KIT-WORK TOOL WIRING	162
	163
KLAXON (ENS) (BAS)	340
	341
KLAXON (ENS) (BAS)	343
	346

L

Désignation	Page
LAME À ORIENTATION (ASS)	567
	568
	569
LAME DE COUPE (ASS)	613
	614
	615
	616
LAME (VERSION)	563
	564
	565
LAMPE - FEUX AV (12V, 60W)	166
LAMPE - GYROPHARE (ASS)	170
LAMPE - PHARE (ASS)	164
	165
LAMPE - PHARE ET CLIGNOTANT	166
LAMPE (ENS) (ROUGE, VERT, TÉMOIN LUMINEUX, 12V)	159
LAMPE-PLAQUE D'IMMATRICULATION (ASS)	291
	317
LENTILLE	168
LENTILLE DE LAMPE (ARRIÈRE GAUCHE)	169
LENTILLE (ENS) (PHARE AVANT)	166
LENTILLE (GYROPHARE JAUNE)	170
LENTILLE (JAUNE) (CLIGNOTANT AVANT)	166
LEVIER DE RÉGULATEUR (ASS)	709
LITTÉRATURE (ASS)	3
	721
LOGICIEL - MACHINE (ENS)	182
LOGICIEL - MACHINE (ENS) (SÉCURITÉ)	158

M

Désignation	Page
MACHINE DE LEVAGE	311
	312
	313
	314
MANOCONTACT	186
MANOCONTACT (AVERTISSEUR DE RECUL)	187
MANOCONTACT (ENS) (CLIMATISEUR)	712
	714
	716
	718
MANOCONTACT (ENS) (HUILE HYDRAULIQUE)	229
MANOCONTACT (ENS) (RÉFRIGÉRANT)	702
	704
MANOCONTACT (HUILE MOTEUR) (MOTEUR)	180
MANOCONTACT (HUILE MOTEUR) (PRESSION D'HUILE MOTEUR)	181

* TRADUCTION NON DISPONIBLE AU MOMENT DE LA PUBLICATION

INDEX

Désignation	Page
MANOCONTACT (HUILE MOTEUR) (PRESSION D'HUILE MOTEUR)	179
MARCHEPIED-BRAS DE MANUTENTION (ASS)	644
MODULE - TÉMOIN (ASS)	723
	724
	725
MONTAGE - IMMATRICULATION (ASS)	317
MONTAGE - IMMATRICULATION (ASS)	318
MONTAGE DE FEUX DE DÉPLACEMENT SUR ROUTE (ASS)	319
MONTAGE DE MOTEUR (ASS)	63
	64
MONTAGE DE MOTEUR (VERSION)	23
	24
	25
	26
MONTAGE DE POMPE (ASS)	241
MONTAGE DE RADIATEUR ET REFROIDISSEUR D'HUILE (ASS)	85
	87
MONTAGE DE VENTILATEUR (ASS)	65
MONTAGE DE VÉRIN (ASS)	509
	510
	511
MONTAGE DU TOIT ROPS (ASS)	726
MONTAGE-SÉCURITÉ (ASS)	158
	159
MONTAGE (VERSION)	701
	702
MOTEUR À ENGRENAGES (ASS)	505
	506
	507
	508
MOTEUR D'ESSUIE-GLACE (ASS)	683
MOTEUR D'ESSUIE-GLACE (ASS)	685
MOTEUR ET MONTAGE - HYDROSTATIQUE (ASS)	238
MOTEUR ET MONTAGE DE VENTILATEUR HYDRAULIQUE (ASS)	501
	502
	503
MOTEUR (VERSION)	19
	20
MOTEUR (VERSION PRINCIPALE)	21
	22

O

OEILLETONS DE LEVAGE MOTEUR (ASS)	61
	62

P

PANNEAU - FUSIBLES (ASS)	160
	161
	162
	163
PANNEAU - FUSIBLES (ASS)	189
	200
	202
PANNEAU LATERAL (ASS)	732
	733
PARE-CHOCS (ASS)	279
	280
PARE-SOLEIL	751
	752
PINCE - CANALISATIONS (ASS)	400
	402
PINCE - VÉRIN (ASS)	361
	362
PINCE-RÉSEAU PUBLIC (ASS)	630
PISTON ET BIELLE (ASS)	74
PISTON ET BIELLE (ASS)	75
	76
PLAFONNIER (ASS)	691
	692
PLAQUE-DÉPLACEMENT ROUTIER (ASS)	640
PLAQUE-DÉPLACEMENT ROUTIER (ASS)	639
PLAQUE (IDENTIFICATION) (POIDS MAXIMUM)	292
	293
	294
PLAQUE (IDENTIFICATION) (POIDS MAXIMUM)	290
	291
PLAQUE SIGNALÉTIQUE (ASS)	375
	377
	379
	380
	761
	762
	763
	764
	765
	767
	769
	771
PLAQUE SIGNALÉTIQUE (ASS)	760
PLAQUES SIGNALETIQUES ET AUTOCOLLANTS (ASS)	773
	774
	777
	780
	783

* TRADUCTION NON DISPONIBLE AU MOMENT DE LA PUBLICATION

INDEX

Désignation	Page
PLAQUES SIGNALETIQUES ET AUTOCOLLANTS (ASS)	786
PLATE-FORME DE CABINE	736
PNEU ET JANTE (ASS)	251
	252
	253
	254
	255
	256
	257
	258
	259
	260
	261
	262
	263
	264
	265
	266
POIGNÉE	694
POIGNÉE DE COUPLEUR (ASS)	633
	634
POIGNÉE ET AXE DE COUPLEUR (ASS)	631
	632
POIGNÉE MODULAIRE (ASS)	327
	328
	329
	372
	373
POMPE - DIAPHRAGME (ASS)	641
	642
	650
POMPE A EAU (ASS)	89
	90
	92
	94
	96
POMPE A ENGRENAGES (ASS)	515
	516
	517
	518
POMPE A PISTONS (ASS)	247
	249
POMPE D'ALIMENTATION EN CARBURANT (ASS)	136
POMPE D'ALIMENTATION ET MONTAGE (ASS)	136
POMPE D'AMORÇAGE DE CARBURANT (ASS)	142
POMPE D'INJECTION DE CARBURANT (ASS)	137
	140
POMPE ET MONTAGE - OUTIL DE TRAVAIL (ASS)	513
	514
	515
	516
POMPE HYDROSTATIQUE ET MONTAGE (ASS)	243
	244
	245
	246
PORTE DE CABINE ET MONTAGE (ASS)	676
	679
PORTIÈRE DE CABINE (ASS)	682
	683
	685
PORTIÈRE DE CABINE (ASS) (POLYCARBONE)	683
POULIE DE POMPE À EAU (ASS)	78
	79
PROTECTION DE ROPS/FOPS (ASS)	693
PROTEGE-COURROIE (ASS)	55
*PUMP GP-FUEL PRM & PRIM FILTER	142

R

Désignation	Page
RACCORD DE CANALISATION D'HUILE (ASS)	323
RADIATEUR ET REFROIDISSEUR D'HUILE HYDRAULIQUE (ASS)	98
	99
	100
RADIATEUR ET REFROIDISSEUR D'HUILE-MONTAGE (ASS)	102
	104
	106
REFROIDISSEUR HUILE MOTEUR ET SUPPORT DE FILTRE	84
REGARD DE NIVEAU	100
REGARD DE NIVEAU (RADIATEUR)	98
	99
REGARD DE NIVEAU (RÉSERVOIR HYDRAULIQUE)	520
RÉGULATEUR - PÉDALE (ASS)	734
	735
REGULATEUR (ASS)	126
	129
RELAIS (ENS) (COQUILLE) (*SHELL)	190
RELAIS (ENS) (12 VOLTS)	160
	161
	163
	349
	383
	386

* TRADUCTION NON DISPONIBLE AU MOMENT DE LA PUBLICATION

INDEX

Désignation	Page
	659
RELAIS (ENS) (12 VOLTS)	291
RELAIS (ENS) (12 VOLTS)	160
	161
	162
	163
	200
	202
RELAIS (ENS) (12 VOLTS) (DÉMARRAGE À FROID)	192
RELAIS (ENS) (12 VOLTS) (DÉMARRAGE À FROID)	194
RELAIS (ENS) (12 VOLTS) (ÉCLAIRAGE DE FREIN)	199
RELAIS (ENS) (12 VOLTS) (OUTIL DE TRAVAIL)	200
	202
RELAIS (ENS) (12 VOLTS) (PUISSANCE PRINCIPALE)	189
	200
	202
RELAIS (ENS) (12 VOLTS) (RÉCHAUFFEUR)	697
RENIFLARD (ENS)	701
	703
RENIFLARD (ENS) (CARTER DE TANDEM)	303
	305
RENIFLARD (ENS) (CLIMATISEUR)	667
RÉSERVOIR D'EAU (ASS)	653
RÉSERVOIR D'EAU ET MONTAGE (ASS)	646
	648
	650
RÉSERVOIR HYDRAULIQUE (ASS)	520
RÉSERVOIR HYDRAULIQUE ET MONTAGE (ASS)	519
RESSORT DE LAME (ASS)	643
RESSORT-GAZ (ASS)	749
RETROVISEUR - CABINE (ASS)	751
	752
RÉTROVISEUR (ASS)	315
	316
	722
RÉTROVISEUR ET MONTAGE (ASS)	315
	316
ROBINET	90
	94
ROTATION DE LA ROUE DU VENTILATEUR SOUFFLANT	692
ROTATION DE LA ROUE DU VENTILATEUR SOUFFLANT (COMMANDES DE MACHINE)	384
	385
ROTATION DE LA ROUE DU VENTILATEUR SOUFFLANT (COMMANDES DE MACHINE)	332
	336
	349
ROTATION DE LA ROUE DU VENTILATEUR SOUFFLANT (*MACHINE CONTROL, READ OMM)	334
	338
	340
	341
	343
	346
ROTATION DE LA ROUE DU VENTILATEUR SOUFFLANT (*MACHINE SECURITY, READ OMM)	158
	159
ROTATION DE LA ROUE DU VENTILATEUR SOUFFLANT (N. D'ÉTAPE)	786
ROTATION DE LA ROUE DU VENTILATEUR SOUFFLANT (TABLEAU DE BORD)	690
	691
ROUE ET PNEU (VERSION)	271
	272
	273
	274
	275
	276
	277
	278

S

Désignation	Page
SIÈGE (ASS)	747
	748
SIÈGE AVEC SUSPENSION (ASS)	750
SILENCIEUX (ASS)	116
	117
	118
SILENCIEUX ET MONTAGE (ASS)	114
	115
SOLÉNOÏDE (ARRÊT DE CARBURANT)	140
SOLÉNOÏDE (COUPURE D'ALIMENTATION)	137
SOLÉNOÏDE (DÉMARREUR)	183
SOLÉNOÏDE (ENS)	558
SOUPAPE - RENIFLARD (VILEBREQUIN)	29
	31
	33
SOUPAPE - SOLÉNOÏDE (ASS)	269
	270
	503
	555
	556

* TRADUCTION NON DISPONIBLE AU MOMENT DE LA PUBLICATION

INDEX

Désignation	Page
	558
	559
	560
	561
SOUPAPE - SOLÉNOÏDE (ASS) (*AUXILIARY FLOW)	498
SOUPAPE - SOLÉNOÏDE (ASS) (COMMANDE DE DÉBIT AUXILIAIRE)	270
SOUPAPE - SOLÉNOÏDE (ASS) (COUPLEUR EXPRESS)	544
SOUPAPE - SOLÉNOÏDE (ASS) (FREIN DE STATIONNEMENT)	267
SOUPAPE - SOLÉNOÏDE (ASS) (*HIGH FLOW)	498
	499
SOUPAPE - SOLÉNOÏDE (ASS) (*HIGH FLOW BOOST)	498
	499
SOUPAPE A COMMANDE MANUELLE (ASS) (COMMANDE D'ABAISSEMENT)	430
SOUPAPE A COMMANDE MANUELLE (ASS) (COMMANDE D'ABAISSEMENT MANUELLE)	432
SOUPAPE A COMMANDE MANUELLE (ASS) (COMMANDE D'ABAISSEMENT MANUELLE)	521
	524
	527
	530
	533
SOUPAPE D'ARRÊT (ASS) (VIDANGE DU RÉSERVOIR HYDRAULIQUE)	234
SOUPAPE DE CAPTEUR DE VITESSE (ASS)	247
SOUPAPE DE DERIVATION (ASS)	553
	554
SOUPAPE DE DÉRIVATION ET MONTAGE	540
	541
	542
SOUPAPE DE VIDANGE (*ENGINE OIL SUMP)	66
SOUPAPE DE VIDANGE (*ENGINE OIL SUMP) (HUILE)	70
SOUPAPE ET CANALISATIONS DE COUPLEUR (ASS)	524
	527
	530
	533
SOUPAPE ET CANALISATIONS DE COUPLEUR (ASS)	521
SOUPAPE ET MONTAGE - SOLÉNOÏDE	267
	268
	269
	543
	544
SOUPAPE PILOTE (ASS)	555
	556
SUPPORT DE BOÎTE DE RANGEMENT (ASS)	10
	11
	15
	16
	17
	18
	281
	283
	284
	286
SUPPORT DE FILTRE ET REFROIDISSEUR D'HUILE MOTEUR	84
SUPPORT DE SÉPARATEUR D'EAU (SÉPARATEUR D'EAU)	125

T

Désignation	Page
TABLEAU DE BORD (ASS)	728
	730
TAMIS D'ASPIRATION (RÉSERVOIR HYDRAULIQUE)	520
TAMIS D'EAU (ASS)	645
TAPIS DE PLANCHER	4
	5
	6
	7
	8
	9
	10
	11
	12
	13
	14
	15
	16
	17
	18
	281
	282
	283
	284
	285
	286
	287
	288
	289
THERMOCONTACT (CLIMATISEUR)	659
THERMOCONTACT (ENS) (HUILE HYDRAULIQUE)	520

* TRADUCTION NON DISPONIBLE AU MOMENT DE LA PUBLICATION

INDEX

Désignation	Page
THERMOCONTACT (LIQUIDE DE REFROIDISSEMENT DU MOTEUR)	179
	180
	181
TOILE (RENIFLARD DE CARTER MOTEUR)	31
	33
TOILE (RENIFLARD DE CARTER MOTEUR) (RENIFLARD DE CARTER)	29
TRANSMISSION (VERSION)	242
TURBOCOMPRESSEUR (ASS)	119
	121

V

VASE D'EXPANSION POUR LIQUIDE RÉFRIGERANT	102
	104
	106
VENTILATEUR SOUFFLANT (ASS)	100
VENTILATEUR SOUFFLANT (ASS)	98
	99
VENTILATEUR SOUFFLANT DE CABINE (ASS)	659
	697
VÉRIN DE BRAS DE LEVAGE ET MONTAGE (ASS)	354
	357
VÉRIN DE COUPLEUR (ASS)	360
VERIN DE GODET (ASS)	359
VÉRIN DE LAME D'ORIENTATION ET MONTAGE (ASS)	352
	353
VÉRIN DE LEVAGE (ASS)	364
	365
	366
VÉRIN D'INCLINAISON (ASS)	367
	368
VÉRIN ET BIELLE DE COUPLEUR (ASS)	610
	611
VÉRIN HYDRAULIQUE (ASS)	363
VÉRIN HYDRAULIQUE (ASS) (ANGLE)	353
VÉRIN HYDRAULIQUE (ASS) (INCLINAISON)	353
VERROUILLAGE DE COUPLEUR EXPRESS (ASS)	638
VERSION DE CHASSIS	1
VERSION DE TABLEAU DE BORD	727
VERSION DE TABLIER ET DE FOURCHE	596
VERSION DE TRANSFORMATION - COUPLEUR EXPRESS	597
	600
VERSION DE TRANSFORMATION - DÉPLACEMENT NON ROUTIER	151
VERSION DE TRANSFORMATION MACHINE	4
	5
	6
	7
	8
	9
	10
	11
	12
	13
	14
	15
	16
	17
	18
VERSION DE TRANSFORMATION POUR DÉPLACEMENT ROUTIER	281
	282
	283
	284
	285
	286
	287
	288
	289
	290
	291
VERSION HYDRAULIQUE	374
	375
	376
	377
	378
	379
	380
	381
	382
VERSION NORMALE	1
	2
	3
	4
VIDANGE-HUILE DE MOTEUR (ASS)	53
VILEBREQUIN - POULIE (ASS)	77
VILEBREQUIN (ASS)	35
	36
	38
	40
VITRE DE CABINE (ASS)	753
	754
	755
	756
	758
VOLANT MOTEUR (ASS)	54

* TRADUCTION NON DISPONIBLE AU MOMENT DE LA PUBLICATION

INDICE

Nombre	Página
A	
ACONDICIONADOR DE AIRE (CONFIG)	658
ACONDICIONADOR DE AIRE (GR)	659
ACONDICIONADOR DE AIRE Y MONTAJE (GR)	657
ACOPLADOR DE MANIJA	633
	634
ACOPLADOR RÁPIDO (CONFIG)	604
	605
ACOPLADOR RÁPIDO (GR)	606
	607
ACUMULADOR DEL ACONDICIONADOR DE AIRE (GR)	655
	656
ACUMULADOR HIDRAULICO (GR) (DESCARGADO) (HERRAMIENTA)	322
ACUMULADOR HIDRAULICO Y MONTAJE (GR)	322
AGUA DE LAS CAMISAS - CALENTADOR DEL (GR)	156
	157
AGUILÓN TELESCÓPICO (GR)	562
AIRE - TUBERÍAS DE (GR)	110
	111
ALAMBRADO DE LUCES TRASERAS (GR)	199
ALFOMBRILLA DEL PISO	4
	5
	6
	7
	8
	9
	10
	11
	12
	13
	14
	15
	16
	17
	18
	281
	282
	283
	284
	285
	286
	287
	288
	289
ÁRBOL DE LEVAS (GR)	27
	28
*ARM GP-WINDOW WIPER	683
	685
ARO Y LLANTA (GR)	251
	252
	253
	254
	255
	256
	257
	258
	259
	260
	261
	262
	263
	264
	265
	266
ASIENTO CON SUSPENSIÓN (GR)	750
ASIENTO (GR)	747
	748
B	
BASE DEL FILTRO Y ACEITE REFRIGERANTE DE MOTOR	84
BASTIDOR DE HOJA (GR)	308
BASTIDOR DE LA VENTANA (GR)	688
	689
BASTIDOR Y MONTAJE (GR)-MAQUINA	303
	305
BATERÍA (GR)	145
	146
BATERÍA (12 VOLTIOS, ESTANDAR)	145
BATERÍA (12-VOLTIOS, LIBRE DE MANTENIMIENTO)	146
*BLADE GP-ANGLING	566
BLOQUE MOTOR (GR)	42
	44
	46
	47
BOCINA (CONJ) (TONO BAJO)	340
	341
BOCINA (CONJ) (TONO BAJO)	343
	346
BOMBA - TUBERÍAS DE (GR)	442
	444
	446
	448
BOMBA DE AGUA (GR)	89
	90
	92
	94
	96

* NO HAY TRADUCCION DISPONIBLE EN EL MOMENTO DE LA IMPRESION

INDICE

Nombre	Página
BOMBA DE CEBADO DE COMBUSTIBLE (GR)	142
BOMBA DE ENGRANAJES (GR)	515
	516
	517
	518
BOMBA DE INYECCIÓN DE COMBUSTIBLE (GR)	137
	140
BOMBA DE PISTONES (GR)	247
	249
BOMBA DE TRANSFERENCIA DE COMBUSTIBLE (GR)	136
BOMBA DE TRANSFERENCIA DE COMBUSTIBLE Y MONTAJE (GR)	136
BOMBA DEL DIAFRAGMA (GR)	641
	642
	650
BOMBA Y MONTAJE DE LA HERRAMIENTA DE TRABAJO (GR)	513
	514
	515
	516
BUJÍA INCANDESCENTE	155
BUJÍA INCANDESCENTE (GR)	155

C

CABINA INCLUYE ROPS (GR)	666
CABLE GR-BOCINA	196
CABLE GR-CONTROL DE MANDO	123
CABLES DE LA HERRAMIENTA DE TRABAJO (GR)	200
	202
CABLES DE LA MÁQUINA (GR)	197
CABLES DEL ACONDICIONADOR DE AIRE (GR)	188
CABLES DEL CHASIS (GR)	189
CABLES DEL MOTOR (GR)	192
	194
CAJA DE ALMACENAMIENTO	664
CAJA DELANTERA (GR)	57
	59
CALCOMANÍA (CONTROL DE TEMPERATURA)	697
CALCOMANÍA DE ADVERTENCIA	692
CALCOMANÍA DE ADVERTENCIA (CONTROLES DE LA MAQUINA)	332
	336
	349
	384
	385
CALCOMANÍA DE ADVERTENCIA (DIRECCIÓN)	290
	292
	294
CALCOMANÍA DE ADVERTENCIA (ESPACIO)	310
	760
CALCOMANÍA DE ADVERTENCIA (*HIGH PRESSURE, READ OMM, ISO)	774
	777
CALCOMANÍA DE ADVERTENCIA (*MACHINE CONTROL, READ OMM)	334
	338
	341
	343
	346
CALCOMANÍA DE ADVERTENCIA (*MACHINE CONTROL, READ OMM)	340
CALCOMANÍA DE ADVERTENCIA (*MACHINE SECURITY, READ OMM)	158
	159
CALCOMANÍA DE ADVERTENCIA (*NO CLEARANCE, STAY BACK)	566
	567
CALCOMANÍA DE ADVERTENCIA (NO PISAR)	786
CALCOMANÍA DE ADVERTENCIA (NO TOCAR, MANTENGASE ALEJADO)	510
CALCOMANÍA DE ADVERTENCIA (PELIGRO DE APLASTAMIENTO, MANTENGASE DETRAS DE ESTE LUGAR)	774
	783
CALCOMANÍA DE ADVERTENCIA (PELIGRO DE EMPALAMIENTO)	619
	620
CALCOMANÍA DE ADVERTENCIA (PELIGRO DE EMPALAMIENTO)	624
	625
	626
	627
CALCOMANÍA DE ADVERTENCIA (PUNTO DE APLASTAMIENTO)	590
	591
	592
CALCOMANÍA DE ADVERTENCIA (PUNTO DE APLASTAMIENTO)	630
CALCOMANÍA DE ADVERTENCIA (TABLERO)	691
CALCOMANÍA DE ADVERTENCIA (TABLERO DE INSTRUMENTOS)	690
CALCOMANÍA DE IDENTIFICACIÓN (INTERRUPTOR DE ENCENDIDO)	158
	159

* NO HAY TRADUCCION DISPONIBLE EN EL MOMENTO DE LA IMPRESION

INDICE

Nombre	Página
CALCOMANÍA DE IDENTIFICACIÓN (*13-KM/H)	10
	11
	15
	16
	17
	18
	281
	284
	290
CALCOMANÍA DE RAYAS (*REFLECTIVE, RED, WHITE)	639
	640
CALCOMANÍA (FLUJO ALTO)	384
CALCOMANÍA (FLUJO ALTO)	375
	377
	379
	380
CALCOMANÍA (FLUJO ALTO)	385
CALCOMANIA-FUSIBLE/RELÉ	152
CALCOMANÍA (*REFLECTIVE)	639
	640
CALCOMANÍAS Y PLACAS DE IDENTIFICACIÓN (GR)	777
	786
CALCOMANÍAS Y PLACAS DE IDENTIFICACIÓN (GR)	773
	774
	780
	783
CALEFACCIÓN DE LA CABINA (CONFIG)	696
CALEFACCIÓN DE LA CABINA (GR)	697
CALEFACCIÓN DE LA CABINA (GR)	699
CALEFACCIÓN Y MONTAJE DE LA CABINA (GR)	695
CÁNCAMOS DE LEVANTAMIENTO DEL MOTOR (GR)	61
	62
CANDADO (GR)	290
	292
	294
CARGA - ALTERNADOR DE (GR)	143
	144
CARGADOR Y HORQUILLA (CONF)	596
CÁRTER - COLECTOR DEL (GR)	70
CÁRTER - COLECTOR DEL (GR)	66
CHASIS (CONFIG)	1
CIGÜEÑAL - POLEA DE (GR)	77
CIGÜEÑAL (GR)	35
	36
	38
	40
CILINDRO DE CUCHARÓN (GR)	359
CILINDRO DE GARFIO (GR)	361
	362
CILINDRO DE LEVANTAMIENTO - TUBERÍAS DEL (GR)	418
	420
	422
	424
	426
	428
CILINDRO DE LEVANTAMIENTO (GR)	364
	365
	366
CILINDRO DEL ACOPLADOR (GR)	360
CILINDRO HIDRÁULICO (GRUPO)	363
CILINDRO HIDRÁULICO (GRUPO) (*ANGLE)	353
CILINDRO HIDRÁULICO (GRUPO) (*TILT)	353
CILINDRO Y MONTAJE (GR)- INCLINACIÓN DE LA HOJA	352
	353
CINTURÓN DE SEGURIDAD (GR)	739
	740
	741
	742
	743
	744
	745
	746
COLADOR DEL AGUA (GR)	645
COMPARTIMENTO CONJ-LATERAL	700
COMPARTIMIENTO DEL MOTOR (GR)	301
COMPRESOR DE REFRIGERANTE (GR)	667
	701
	702
COMPRESOR DE REFRIGERANTE Y GRUPO DE MONTAJE	668
COMPRESOR Y MOTOR GR-REFRIGERANTE	667
CONDENSADOR DEL REFRIGERANTE Y MONTAJE (GR)	669
CONDUCTO Y CONTROL (GR)	687
CONEXIÓN DE ENGRASE (ROSCA DE 1/8-27)	630
CONEXIÓN ELÉCTRICA (GR)	147
	148
	149
CONEXION HIDRAULICA (GR)	369
	370
	371
	382
	384
	434
	440
	442

* NO HAY TRADUCCION DISPONIBLE EN EL MOMENTO DE LA IMPRESION

INDICE

Nombre	Página
	448
CONFIG. DE CONVERSIÓN DEL ACOPLAMIENTO RÁPIDO	597
	600
CONFIGURACIÓN COMÚN	1
	2
	3
	4
CONFIGURACIÓN DE INSTALACIÓN DEL MOTOR	23
	24
	25
	26
CONFIGURACIÓN DE MOTORES	19
	20
CONFIGURACIÓN DE TRANSFORMACIÓN PARA CARRETERA	281
	282
	283
	284
	285
	286
	287
	288
	289
	290
	291
CONFIGURACIÓN DE TRANSFORMACIÓN PARA OBRAS	151
CONJUNTO DE DESTELLADOR	173
	175
CONJUNTO DE LLAVE, ELECTRONICA (SEGURIDAD)	182
CONJUNTO DE LLAVE, ELECTRONICA (SEGURIDAD)	158
CONTRAPESO (GR)	296
	297
	298
	299
	300
CONTROL DE MANIJA (GR)	324
	325
	326
	327
CONTROL DE MANIJA (GR)	328
	329
	330
	331
CONTROL DE REGULADOR (GR)	124
CONTROL DE TRABA (GR)	150
CONTROL DEL FRENO DE ESTACIONAMIENTO	207
	209
	211
	213
	215
	217
	219
	221
CONTROL DEL MULTIPLE (GR)	498
CONTROL DEL MULTIPLE (GR)	499
	500
CONTROL DEL VENTILADOR (GR)	197
CONTROL HIDRÁULICO DE OPERACIÓN PILOTO (GR)	334
	336
	338
	340
	341
	343
	346
	349
CONTROL HIDRÁULICO DE OPERACIÓN PILOTO (GR)	332
CONTROL NO PROGRAMADO (GR)	153
CONTROL NO PROGRAMADO (GR) (SEGURIDAD)	182
*CONVERSION AR-MACHINE	4
	5
	6
	7
	8
	9
	10
	11
	12
	13
	14
	15
	16
	17
	18
*CONVERSION GP-WORK TOOL	603
CONVERSION PARA DESPLAZAMIENTO POR CARRETERA (GR)	292
	293
	294
	295
CORREA TRAPEZOIDAL (BOMBA DE AGUA)	79
*COUPLING GP-DRIVE	671
CRISTAL	168
CRISTAL (AMBAR, BALIZA DE ADVERTENCIA)	170
CRISTAL (AMBAR) (DELANTERA, DE GIRO)	166
CUBIERTO DEL PANEL DE FUSIBLES (GR)	152
CUCHARON DE GARFIO (CONF)	570

* NO HAY TRADUCCION DISPONIBLE EN EL MOMENTO DE LA IMPRESION

INDICE

Nombre	Página
	571
	572
CUCHARON DE GARFIO (GR)	585
	586
	587
CUCHARÓN DE USO GENERAL (GR)	579
	580
	581
	582
	583
	584
CUCHARÓN DE USO MÚLTIPLE (CONFIG)	572
	573
	574
CUCHARÓN DE USO MÚLTIPLE (GR)	590
CUCHARÓN DE USO MÚLTIPLE (GR)	591
	592
CUCHARÓN PARA MATERIAL LIVIANO (GR)	588
	589
CUCHARÓN PARA TIERRA (GR)	575
	576
	577
	578
CUCHARÓN UTILITARIO (GR)	593
	594
	595
CUCHILLA (GR)	613
	614
	615
	616
CULATA DE CILINDROS (GR)	49
	50
	51
	52

D

DIENTE DE UNA PIEZA (UNI-TOOTH) (GR)	654
DISYUNTOR (CONJ) (105 AMPERIOS)	192
	194
DISYUNTOR (CONJ) (30-AMPERIOS)	175
DISYUNTOR (CONJ) (30-AMPERIOS) (LUCES)	173
DRENAJE DEL ACEITE DE MOTOR	53

E

EJE (GR)	204
	205
	206
ELEMENTO DE FILTRO DE COMBUSTIBLE (SEPARADOR DE AGUA)	125
ELEMENTO DE FILTRO (HIDRÁULICO)	229
ELEMENTO DEL CALENTADOR DEL AGUA DE LAS CAMISAS	156
	157
ELEMENTO DEL FILTRO DE AIRE (CONJ) (PRIMARIO)	109
ELEMENTO DEL FILTRO DE AIRE (CONJ) (SECUNDARIO)	109
ENFRIADOR DE ACEITE DEL MOTOR Y BASE DEL FILTRO	84
ESCALON DE BRAZO DE MANEJO DE MATERIALES (GR)	644
ESPEJO (GR)	315
	316
ETIQUETA DE ADVERTENCIA (GR)	375
	377
	379
	380
	761
	762
	763
	764
	765
	767
	769
	771
ETIQUETA DE ADVERTENCIA (GR)	760
EXTRACTOR DE MINIFUSIBLES	152

F

FILTRO (CONJ) (RESPIRADERO)(ACEITE HIDRAULLICO)	519
FILTRO DE ACEITE DEL MOTOR (CONJ)	66
FILTRO DE ACEITE DEL MOTOR (CONJ)	83
FILTRO DE ACEITE DEL MOTOR (GR)	83
FILTRO DE ACEITE (GR)	229
FILTRO DE AIRE DE CABINA	659
	697
FILTRO DE AIRE (GR)	108
	109
FILTRO DE COMBUSTIBLE Y SEPARADOR DE AGUA (GR)	125
FILTROS Y TUBERÍAS HIDRÁULICAS (GR)	225
	227
FUSIBLE (10-AMPERIOS)	187
	343
	346
	388
	597
	600
	604
	605
FUSIBLE (10-AMPERIOS)	160

* NO HAY TRADUCCION DISPONIBLE EN EL MOMENTO DE LA IMPRESION

INDICE

Nombre	Página
	161
	162
	163
	189
	200
	202
FUSIBLE (15 AMPERIOS)	188
FUSIBLE (15 AMPERIOS)	160
	161
	163
	189
	200
	202
FUSIBLE (20-AMPERIOS)	189
FUSIBLE (30-AMPERIOS)	188
	701
	703

G

GARFIO DE UTILIDAD (GR)	630
GASA (RESPIRADERO DE CARTER)	31
	33
GASA (RESPIRADERO DE CARTER) (RESPIRADERO DEL CARTER)	29
GR. VÁLVULA Y TUBERIAS-ACOPLADOR	521
	524
	527
	530
	533
GRIFO	90
	94
GRUPO ADAPTADOR-TUBERIA DE ACEITE	323
GRUPO DE BASTIDOR, MAQUINARIA	303
	305
GRUPO DE CANTONERA Y CUCHILLA	612
GRUPO DE CILINDRO Y ESLABON, ACOPLADOR	610
	611
GRUPO DE CILINDRO Y GARFIO, UTILITARIO	628
GRUPO DE CODO	416
	417
GRUPO DE ESLABON, ACOPLADOR	636
	637
GRUPO DE INSTALACIÓN	704
	705
GRUPO DE MANIJA Y PIN-ACOPLADOR	631
	632
GRUPO DE MONTAJE Y CILINDRO, LEVANTAMIENTO DEL BRAZO	354
	357
GRUPO DE PALANCA-REGULADOR	709
GRUPO DE SENSORES DE TEMPERATURA Y PRESIÓN	179
	180
	181
GRUPO DEMONTAJE DE RADIADOR Y ENFRIAMIENTO DE ACEITE	85
	87
GRUPO, MANIJA, BOMBA DE AGUA	78
	79

H

HIDRÁULICA (CONFIG)	375
	376
	377
	378
	379
	380
	381
	382
HIDRÁULICA (CONFIG)	374
HIDROSTATICO, BOMBA Y GRUPO DE MONTAJE	243
	244
	245
	246
HOJA (CONFIG)	563
	564
	565
HOJA DE LIMPIAPARABRISAS (CONJ)	685
HOJA DE LIMPIAPARABRISAS (CONJ) (LIMPIADOR)	683
HOJA ORIENTABLE (GR)	567
	568
	569
HORQUILLA DE GARFIO (CONF)	617
	618
HORQUILLA DE GARFIO (GR)	619
	620
	621
HORQUILLA DE UTILIDAD (GR)	625
	626
	627
HORQUILLA DE UTILIDAD (GR)	623
	624
HORQUILLA PARA TARIMAS (GR)	622

I

IMPLEMENTOS (GR ELECTRÓNICO)	153
INCLINACIÓN HORIZONTAL - CILINDRO DE (GR)	367
	368

* NO HAY TRADUCCION DISPONIBLE EN EL MOMENTO DE LA IMPRESION

INDICE

Nombre	Página
INDICADOR DEL NIVEL DE ACEITE (GR)	691, 692
INDICADORES Y ADVERTENCIA (GR)	691, 692
INDICADORES Y ADVERTENCIA (GR)	690
INSONORIZADOR (GR)	321
INSTALACIÓN (CONFIG)	701, 702
INSTALACION DE SEGURIDAD (GR)	158, 159
INTERRUPTOR (ASIENTO) (ASIENTO)	748
INTERRUPTOR (CONJ) (ASIENTO)	750
INTERRUPTOR DE ARRANQUE CON LLAVE (CONJ)	690
INTERRUPTOR DE LÍMITE (CONJ)	683
INTERRUPTOR DE LÍMITE (CONJ)	685
INTERRUPTOR DE PRESIÓN (ACEITE DE MOTOR) (MOTOR)	180
INTERRUPTOR DE PRESIÓN (ACEITE DE MOTOR) (PRESIÓN DEL ACEITE DE MOTOR)	179, 181
INTERRUPTOR DE PRESIÓN (CONJ) (ACEITE HIDRÁULICO)	229
INTERRUPTOR DE PRESIÓN (CONJ) (AIRE ACONDICIONADO)	712, 714, 716, 718
INTERRUPTOR DE PRESIÓN (CONJ) (REFRIGERANTE)	702, 704
INTERRUPTOR DE PRESIÓN (GR)	186
INTERRUPTOR DE PRESIÓN (GR) (ALARMA DE RETROCESO)	187
INTERRUPTOR DE TEMPERATURA (AIRE ACONDICIONADO)	659
INTERRUPTOR DE TEMPERATURA (CONJ) (ACEITE HIDRÁULICO)	520
INTERRUPTOR DE TEMPERATURA (REFRIGERANTE DEL MOTOR)	179, 180, 181
INTERRUPTOR DE VOLQUETE (CONJ) (ACONDICIONADOR DE AIRE)	659
INTERRUPTOR DE VOLQUETE (CONJ) (ACOPLADOR RAPIDO)	597, 600
INTERRUPTOR DE VOLQUETE (CONJ) (ACOPLADOR RAPIDO)	388
INTERRUPTOR DE VOLQUETE (CONJ) (ACOPLADOR RAPIDO)	604, 605
INTERRUPTOR DE VOLQUETE (CONJ) (ARRANQUE EN FRIO)	728, 730
INTERRUPTOR DE VOLQUETE (CONJ) (BALIZA DE ADVERTENCIA)	178
INTERRUPTOR DE VOLQUETE (CONJ) (CALEFACTOR)	659, 697
INTERRUPTOR DE VOLQUETE (CONJ) (FRENO DE ESTACIONAMIENTO)	728, 730
INTERRUPTOR DE VOLQUETE (CONJ) (LIMPIAPARABRISAS TRASERO)	683, 685
INTERRUPTOR DE VOLQUETE (CONJ) (LUCES DE ADVERTENCIA DE PELIGRO)	173, 175
INTERRUPTOR DE VOLQUETE (CONJ) (LUCES DE DESPLAZAMIENTO)	173, 175
INTERRUPTOR DE VOLQUETE (CONJ) (LUCES DE TRABAJO TRASERAS)	171
INTERRUPTOR DE VOLQUETE (CONJ) (LUZ DE TRABAJO DELANTERA)	728, 730
INTERRUPTOR DE VOLQUETE (CONJ) (POTENCIA ELECTRICA, HERRAMIENTA DE TRABAJO)	200, 202
INTERRUPTOR DE VOLQUETE (CONJ) (POTENCIA ELECTRICA, HERRAMIENTA DE TRABAJO)	160, 161, 162, 163
INTERRUPTOR DE VOLQUETE (CONJ) (SEÑAL DE GIRO)	173, 175
INTERRUPTOR DE VOLQUETE (GR) (FLUJO ALTO)	349, 382, 386
INTERRUPTOR DE VOLQUETE (GR) (UBICADOR DE HERRAMIENTA DE TRABAJO)	374, 376, 377

J

JUEGO-ARRANQUE DEL MOTOR	183
JUEGO DE AMORTIGUADOR	750

* NO HAY TRADUCCION DISPONIBLE EN EL MOMENTO DE LA IMPRESION

INDICE

Nombre	Página
JUEGO DE BASE DEL SEPARADOR DE AGUA (SEPARADOR DE AGUA)	125
JUEGO DE COJINETES (BIELA)	74 75 76
JUEGO DE COJINETES DE BANCADA (PRINCIPAL)	36 38 40
JUEGO DE ENCHUFE (2 CLAVIJAS)	160 189
JUEGO DE ENCHUFE (2 CLAVIJAS)	161 163 200
JUEGO DE MANIJA (PERILLA)	750
JUEGO DE MEDIDOR DE SERVICIO	675
JUEGO DE PALANCA	324 325 326
JUEGO DE REPARACIÓN DE LA BOMBA	247
JUEGO DE RESORTES	750
JUEGO DE SELLOS	269 353 359 361 363 498 499 544 553 554 558 560
JUEGO DE SELLOS (SEPARADOR DE AGUA)	125
JUEGO DE SERVICIO	557 735
JUEGO-PLACA DE DESPLAZAMIENTO Y MONTAJE	635
JUEGO, PUERTA DE CABINA Y MONTAJE	706 707
JUNTA DE LA TAPA DE VÁLVULAS	90 92 94 96

K

*KIT-CAB SEAL	708
*KIT-HIGH FLOW CONVERSION	382 384
*KIT-QUICK COUPLER CONVERSION	388
*KIT-ROADING CONVERSION	310
*KIT-WORK TOOL CONTROL & WIRING	160 161
*KIT-WORK TOOL WIRING	162 163

L

LÁMPARA (CONJ) (ROJO, VERDE, DIODO, 12 VOLTIOS)	159
LÁMPARA DE BALIZA DE ADVERTENCIA (GR)	170
LÁMPARA DE FARO DELANTERO (12-VOLTIOS, 60-VATIOS)	166
LÁMPARA DE LUZ DELANTERA Y DE SEÑAL (GR)	166
LAMPARA DE PLACA DE REGISTRO (GR)	291 317
LÁMPARA DEL TECHO (GR)	691 692
LÁMPARA (12 VLOTIOS, 5 VATIOS)	168
LÁMPARA (12 VLOTIOS, 5 VATIOS)	169
LÁMPARA (12 VOLTIOS)	291 691 692
LÁMPARA (12 VOLTIOS) (PLACA DE REGISTRACIÓN)	317
LÁMPARA (12 VOLTIOS, 10 VATIOS)	691 692
LÁMPARA (12 VOLTIOS, 10 VATIOS)	291
LÁMPARA (12 VOLTIOS, 21 VATIOS)	166 169
LÁMPARA (12 VOLTIOS, 4 VATIOS)	166
LÁMPARA (12 VOLTIOS, 55 VATIOS)	170
LÁMPARA (12 VOLTIOS, 55 VATIOS)	164 165
LEVANTAMIENTO DE LA MÁQUINA (GR)	311 312 313 314
LUCES DE DESPLAZAMIENTO (GR)	173 175
LUCES DE PARADA Y COLA (GR)	168 169
LUCES DE PARADA Y DE COLA (GR)	177
LUCES DE REFLECTOR (GR)	171
LUCES DE REFLECTOR (GR)	172
LUZ DE BALIZA (GR)	178

M

MANDO DE CORREA (BALIZA DE ADVERTENCIA)	170
MANDO TANDEM (GR)	223

* NO HAY TRADUCCION DISPONIBLE EN EL MOMENTO DE LA IMPRESION

INDICE

Nombre	Página
	224
MANIJA MODULAR (GR)	327
	328
	329
MANIJA MODULAR (GR)	372
	373
MECANISMO DE VÁLVULAS (GR)	80
	81
MEDIDOR DE ACEITE (VARILLA)	66
MIRILLA	100
MIRILLA (RADIADOR)	98
	99
MIRILLA (TANQUE HIDRÁULICO)	520
MÓDULO INDICADOR DE ADVERTENCIA (GR)	723
	724
	725
MONTAJE DE CILINDRO (GR)	509
	510
	511
MONTAJE DE LA BOMBA (GR)	241
MONTAJE DE LA ESTRUCTURA ROPS (GR)	726
MONTAJE DE LUCES DE DESPLAZAMIENTO POR CARRETERA (GR)	319
MONTAJE DE RADIADOR Y ENFRIAMIENTO DE ACEITE (GR)	102
	104
	106
MONTAJE DEL MOTOR (GR)	63
	64
MONTAJE DEL TANQUE DE AGUA (GR)	646
	648
	650
MONTAJE DEL VENTILADOR (GR)	65
MONTAJE-REGISTRO (GR)	317
	318
MOTOR DE ARRANQUE ELÉCTRICO (GR)	183
MOTOR DE ARRANQUE ELÉCTRICO (GR)	185
MOTOR DE ENGRANAJES (GR)	505
	506
	507
	508
MOTOR HIDROSTATICO Y MONTAJE (GR)	238
MOTOR-LIMPIAPARABRISAS (GR)	683
	685
MOTOR PRIMARIO (CONFIG)	21
	22
MOTOR Y MONTAJE DE VENTILADOR HIDRAULICO (GR)	501
	502
	503
MÚLTIPLE DE ESCAPE (GR)	112
	113
MULTIPLE Y MONTAJE (GR) - CONTROL	495
	496
	497

P

Nombre	Página
PANEL DE FUSIBLES (GR)	160
	161
	162
	163
	189
	200
	202
PANEL LATERAL (GR)	732
	733
PARACHOQUES (GR)	279
	280
PASAMANOS (GR)	694
PISTÓN Y BIELA (GR)	74
	75
	76
PISTONES DEL MOTOR (GR)	239
PLACA DE DESPLAZAMIENTO POR CARRETERA (GR)	639
	640
PLACA DE IDENTIFICACION (PESO MAXIMO)	290
	291
	292
	293
	294
PLACA DE INFORMACION (*TIE-DOWN LOCATION)	562
	765
	767
	769
	771
	774
	780
	783
PLACA DE INFORMACION (*TIE-DOWN LOCATION)	777
PLATAFORMA DE LA CABINA	736
POSABRAZOS (GR)	662
POSABRAZOS Y MONTAJE (GR)	661
PROTECTOR DE CORREA (GR)	55
PROTECTOR DE ROPS/FOPS	693
PUBLICACIONES (GR)	3
	721
PUERTA DE CABINA	682
	683
	685
PUERTA DE CABINA (*POLYCARBONATE)	683

* NO HAY TRADUCCION DISPONIBLE EN EL MOMENTO DE LA IMPRESION

INDICE

Nombre	Página
PUERTA Y MONTAJE DE CABINA (GR)	676, 679
*PUMP GP-FUEL PRM & PRIM FILTER	142

R

Nombre	Página
RADIADOR Y ENFRIADOR DE ACEITE HIDRÁULICO (GR)	98, 99, 100
RECUPERACIÓN DEL REFRIGERANTE (GR)	102, 104, 106
REFLECTOR (GR)	164, 165
REGULADOR - PEDAL DEL (GR)	734, 735
REGULADOR (GR)	126, 129
REJILLA	436, 438
REJILLA (AGUA)	645
REJILLA DE SUCCIÓN (TANQUE HIDRÁULICO)	520
RELÉ (CONJ) (*SHELL) (*SHELL)	190
RELÉ (CONJ) (12 VOLTIOS)	160, 161, 162, 163, 200, 202, 291, 349, 383, 386, 659
RELÉ (CONJ) (12 VOLTIOS) (ARRANQUE EN FRIO)	192, 194
RELÉ (CONJ) (12 VOLTIOS) (CALEFACTOR)	697
RELÉ (CONJ) (12 VOLTIOS) (CORRIENTE PRINCIPAL)	202
RELÉ (CONJ) (12 VOLTIOS) (CORRIENTE PRINCIPAL)	189, 200
RELÉ (CONJ) (12 VOLTIOS) (HERRAMIENTA)	200, 202
RELÉ (CONJ) (12 VOLTIOS) (LUZ DEL FRENO)	199
RESORTE DE GAS (GR)	749
RESORTE DE HOJA (GR)	643
RESPIRADERO (CONJ)	701, 703
RESPIRADERO (CONJ) (AIRE ACONDICIONADO)	667
RESPIRADERO (CONJ) (COMPARTIMENTO DE TANDEM)	303, 305
RETORNO EN EL MULTIPLE(GR)	236
RETORNO EN EL MULTIPLE(GR)	234
RETROCESO - ALARMA DE (GR)	187
RETROVISOR (GR)	722
RETROVISOR Y MONTAJE (GR)	315, 316
REVESTIMIENTO DE LA CABINA (GR)	710
REVESTIMIENTO-TECHO	711
RUEDA Y LLANTA (CONFIG)	271, 272, 273, 274, 275, 276, 277, 278

S

Nombre	Página
SELLO - TAPA DE VÁLVULA	29, 31, 33
SELLO DE CABINA (GR)	738
SENSOR DE TEMPERATURA (GR) (ACEITE HIDRÁULICO)	503
SENSOR DE TEMPERATURA (GR) (REFRIGERANTE DEL MOTOR)	100
SENSOR DE VELOCIDAD	508
SERVICIO DE MAQUINA (GR)	182
SILENCIADOR (GR)	116, 117, 118
SILENCIADOR Y MONTAJE GR	114, 115
SISTEMA ROPS DE CABINA CERRADA (CONFIG)	665
SOFTWARE PARA LA MAQUINA (GR)	182
SOFTWARE PARA LA MAQUINA (GR) (SEGURIDAD)	158
SOLENOIDE (CONJ)	558
SOLENOIDE (CORTE DE COMBUSTIBLE)	140
SOLENOIDE (DESCONEXIÓN DE COMBUSTIBLE)	137
SOLENOIDE (MOTOR DE ARRANQUE)	183
SOPLADOR - VENTILADOR (GR)	98, 99

* NO HAY TRADUCCION DISPONIBLE EN EL MOMENTO DE LA IMPRESION

INDICE

Nombre	Página
	100
*SUPPORT GP-STORAGE BOX	10
	11
	15
	16
	17
	18
	281
	283
	284
	286
T	
TABLERO DE INSTRUMENTOS (CONFIG)	727
TABLERO DE INSTRUMENTOS (GR)	728
	730
TANQUE DEL AGUA (GR)	653
TANQUE HIDRÁULICO (GR)	520
TANQUE HIDRÁULICO Y MONTAJE (GR)	519
TAPA CON RESPIRADERO	102
	104
	106
TAPA DE LA CONSOLA (GR)	673
	674
TAPA DE LLENADO (CONJ) (COMBUSTIBLE)	132
	134
TAPA DE LLENADO (CONJ) (TANQUE HIDRAULICO)	520
TAPA DE RADIADOR (CONJ)	98
	99
	100
TAPA DE TUBERIAS (GR)	609
TAPA DEL MECANISMO DE VÁLVULAS (GR)	29
	31
	33
TAPA DEL TABLERO DE INSTRUMENTOS (GR)	675
TAPA (LLENADO DE ACEITE DEL MOTOR)	66
	70
TAPON DE LA VALVULA PILOTO (GR)	512
TAPON DEL COLECTOR DEL CARTER (GR) (DRENAJE)	66
TAPON DEL COLECTOR DEL CARTER (GR) (DRENAJE)	70
TAPÓN MAGNÉTICO (TANDEM)	303
	305
TORNILLERIA DE MAZO DE CABLES (GR)	154
TRABA-ACOPLADOR RAPIDO (GR)	638
TREN DE FUERZA (CONFIG)	242
TUBERÍAS CON SERVOMANDO (GR)	434
	436
	438
	440
TUBERÍAS DE ACONDICIONADOR DE AIRE (GR)	712
	714
	716
	718
TUBERIAS DE CALEFACCION	720
TUBERIAS DE CONEXION (GR)	396
	398
TUBERÍAS DE LA CALEFACCIÓN (GR)	720
TUBERIAS DE LA GUIA (GR)	309
TUBERIAS DE LA HERRAMIENTA DE TRABAJO	480
	483
	486
	488
	490
	492
TUBERIAS DE VALVULA DE CONTROL DE CARGA (GR)	432
TUBERIAS DE VALVULA DE CONTROL DE CARGA (GR)	430
TUBERÍAS DEL CILINDRO DE INCLINACIÓN (GR)	450
	452
	454
	456
	459
	462
	464
	466
	468
	470
	472
	474
	476
	478
TUBERÍAS DEL CUCHARÓN (GR)	391
	393
	394
TUBERÍAS DEL ENFRIADOR DE ACEITE HIDRÁULICO (GR)	416
	417
TUBERÍAS DEL GARFIO (GR)	400
	402
TUBERIAS (GR) -COMBUSTIBLE PRIMARIO Y FILTRO	134
TUBERIAS (GR) -COMBUSTIBLE PRIMARIO Y FILTRO	132
TUBERÍAS HIDRÁULICAS DEL VENTILADOR (GR)	404
	406
	408

* NO HAY TRADUCCION DISPONIBLE EN EL MOMENTO DE LA IMPRESION

INDICE

Nombre	Página
	410
	412
	414
TUBERÍAS HIDROSTÁTICAS (GR)	230
	232
TURBOCOMPRESOR (GR)	119
	121

V

VALVULA DE ALIVIO	70
VÁLVULA DE ALIVIO (GR)	498
	499
	557
VÁLVULA DE ALIVIO (GR) (ACEITE DEL MOTOR)	247
	249
VÁLVULA DE ALIVIO (GR) (CRUCE)	247
	249
VÁLVULA DE CONTROL (GR)	545
	547
	549
	551
VÁLVULA DE CONTROL MANUAL (GR) (CONTROL DE BAJADA)	430
VÁLVULA DE CONTROL MANUAL (GR) (CONTROL MANUAL DE BAJADA)	432
	521
	524
	527
	530
	533
VÁLVULA DE CONTROL Y MONTAJE (GR)	536
	537
	538
	539
VÁLVULA DE CORTE (GR) (DRENAJE DE TANQUE HIDRÁULICO)	234
VÁLVULA DE DERIVACIÓN (GR)	553
	554
VÁLVULA DE DERIVACIÓN Y MONTAJE (GR)	540
	541
	542
VÁLVULA DE DETECCIÓN DE VELOCIDAD (GR)	247
VÁLVULA DE DRENAJE (*ENGINE OIL SUMP)	66
VÁLVULA DE DRENAJE (*ENGINE OIL SUMP) (ACEITE)	70
VÁLVULA DE RETENCIÓN (GR)	499
VÁLVULA DE SOLENOIDE (GR)	269
	270
	503
VÁLVULA DE SOLENOIDE (GR)	555
	556
VÁLVULA DE SOLENOIDE (GR)	558
	559
	560
	561
VÁLVULA DE SOLENOIDE (GR) (ACOPLADOR RAPIDO)	544
VÁLVULA DE SOLENOIDE (GR) (*AUXILIARY FLOW)	498
VÁLVULA DE SOLENOIDE (GR) (*AUXILIARY FLOW CONTROL)	270
VÁLVULA DE SOLENOIDE (GR) (FRENO DE ESTACIONAMIENTO)	267
VÁLVULA DE SOLENOIDE (GR) (*HIGH FLOW)	498
VÁLVULA DE SOLENOIDE (GR) (*HIGH FLOW)	499
VÁLVULA DE SOLENOIDE (GR) (*HIGH FLOW BOOST)	498
	499
VALVULA DE SOLENOIDE Y MONTAJE (GR	267
	268
	269
VALVULA DE SOLENOIDE Y MONTAJE (GR	543
	544
VÁLVULA PILOTO (GR)	555
	556
VÁLVULA-RESPIRADERO (CÁRTER DEL MOTOR)	29
	31
	33
VENTANA DE LA CABINA (GR)	753
	754
	755
	756
	758
VENTILADOR SOPLADOR DE LA CABINA (GR)	659
	697
VIDRIO (CONJ) (FARO DELANTERO)	166
VIDRIO DE LA LÁMPARA (TRASERO MANO IZQUIERDA)	169
VISERA	751
	752
VISERA (GR)	751
	752
VOLANTE - CAJA DE (GR)	56
VOLANTE (GR)	54

* NO HAY TRADUCCION DISPONIBLE EN EL MOMENTO DE LA IMPRESION

ÍNDICE

Designação	Página

A

ACOPLADOR RÁPIDO	604
	605
	606
	607
ACOPLAMENTO DE COMANDO	671
ACUMULADOR - AR CONDICIONADO	655
	656
ACUMULADOR HIDRÁULICO (DESCARREGADO) (FERRAMENTA DE TRABALHO)	322
ACUMULADOR HIDRÁULICO E MONTAGEM	322
ADAPTADOR-TUBULAÇÃO DE ÓLEO	323
ADESIVO - FUSÍVEL/RELÉ	152
ALARME DE MARCHA À RÉ	187
ALAVANCA - GOVERNADOR	709
ALAVANCA DE CONTROLE - MODULAR	327
	328
	329
	372
	373
ALÇA - ACOPLADOR	633
	634
ALÇA E PINO - ACOPLADOR	631
	632
ALOJAMENTO - LATERAL	700
ALTERNADOR DE CORRENTE	143
	144
AMORTECEDOR E MONTAGEM	114
	115
AQUECEDOR DA ÁGUA DO MOTOR	156
	157
AQUECEDOR DA CABINE	696
	697
	699
AQUECEDOR DA CABINE E MONTAGEM	695
ARMAÇÃO - LÂMINA	308
ARMAÇÃO DO VIDRO	688
	689
ARMAÇÃO E MONTAGEM - MÁQUINA	303
	305
ARRANJO BÁSICO	1
	2
	3
	4
ARREFECEDOR DE ÓLEO DO MOTOR E BASE DO FILTRO	84
ARTICULAÇÃO - ACOPLADOR	636
	637
ASSENTO	747
	748

B

BATERIA	145
	146
BATERIA (12 VOLTS, ISENTO DE MANUTENÇÃO)	146
BATERIA (12 VOLTS, PADRÃO)	145
BEIRA - PONTA CORTANTE	612
*BLADE GP-ANGLING	566
BLOCO DO MOTOR	42
	44
	46
	47
BOMBA DA FERRAMENTA DE TRABALHO E MONTAGEM	513
	514
	515
	516
BOMBA DE ÁGUA	89
	90
	92
	94
	96
BOMBA DE DIAFRAGMA	641
	642
	650
BOMBA DE ENGRENAGENS	515
	516
	517
	518
BOMBA DE ESCORVA DO COMBUSTÍVEL	142
BOMBA DE INJEÇÃO DO COMBUSTÍVEL	137
	140
BOMBA DE PISTÃO	247
	249
BOMBA DE TRANSFERÊNCIA DO COMBUSTÍVEL	136
BOMBA E MONTAGEM - HIDROSTÁTICA	243
	244
	245
	246
BOMBA E MONTAGEM - TRANSFERÊNCIA DE COMBUSTÍVEL	136
BORDA CORTANTE	613
	614
	615
	616
BRAÇO - MANIPULADOR DE MATERIAIS	562
BRAÇO DO ASSENTO	662
BRAÇO DO LIMPADOR	683
	685
BUJÃO - CÁRTER DO ÓLEO (DRENAGEM)	66
	70
BUJÃO DA VÁLVULA PILOTO	512

* TRADUÇÃO NÃO DISPONÍVEL NO MOMENTO DA IMPRESSÃO

ÍNDICE

Designação	Página
BUJÃO MAGNÉTICO (TANDEM)	303, 305
BUZINA (TOM BAIXO)	340, 341
BUZINA (TOM BAIXO)	343, 346

C

CABEÇOTE DO MOTOR	49, 50, 51, 52
CABINE - ESTRUTURA DE PROTEÇÃO CONTRA CAPOTAMENTO	666
CABINE - ESTRUTURA ROPS COBERTA	665
CABO - CONTROLE DO GOVERNADOR	123
CABOS E FIOS ELÉTRICOS-LUZES TRASEIRAS	199
CABOS/FIOS ELÉTRICOS - AR CONDICIONADO	188
CABOS/FIOS ELÉTRICOS - CHASSI	189
CABOS/FIOS ELÉTRICOS - FERRAMENTAS DE TRABALHO	200, 202
CABOS/FIOS ELÉTRICOS - MÁQUINA	197
CABOS/FIOS ELÉTRICOS - MOTOR	192, 194
CAÇAMBA - GARRA	570, 571, 572, 585, 586, 587
CACAMBA - TERRA	575, 576, 577, 578
CAÇAMBA DE MÚLTIPLAS APLICAÇÕES	572, 573, 574, 590, 591, 592
CACAMBA E GARFO	596
CAÇAMBA PARA APLICAÇÃO GERAL	579, 580, 581, 582, 583, 584
CAÇAMBA PARA MATERIAL LEVE	588, 589
CAÇAMBA PARA SERVIÇOS GERAIS	593, 594, 595
CADEADO	290, 292, 294
CAIXA DE ARMAZENAMENTO	664
CAIXA DIANTEIRA	57, 59
CAIXA DO VOLANTE DO MOTOR	56
CÁRTER DO ÓLEO DO MOTOR	66, 70
CHASSI	1
CHASSI - MÁQUINA	303, 305
CHAVE - ELETRÔNICO (SEGURANÇA)	158, 182
CHAVE INTERRUPTORA DE PARTIDA	690
CILINDRO - ACOPLADOR	360
CILINDRO DA CAÇAMBA	359
CILINDRO DA GARRA	361, 362
CILINDRO DE INCLINAÇÃO	367, 368
CILINDRO DE LEVANTAMENTO	364, 365, 366
CILINDRO E ARTICULAÇÃO - ACOPLADOR	610, 611
CILINDRO E MONTAGEM - BRAÇO DE LEVANTAMENTO	354, 357
CILINDRO E MONTAGEM - LÂMINA ANGULÁVEL	352, 353
CILINDRO HIDRÁULICO	363
CILINDRO HIDRÁULICO (ÂNGULO)	353
CILINDRO HIDRÁULICO (INCLINAÇÃO)	353
CINTO DE SEGURANÇA	739, 740, 741, 742, 743, 744, 745, 746
COBERTURA DO MOTOR	301
COLETOR - CONTROLE	498, 499, 500
COLETOR - RETORNO	234, 236
COLETOR DE ESCAPE	112

* TRADUÇÃO NÃO DISPONÍVEL NO MOMENTO DA IMPRESSÃO

ÍNDICE

Designação	Página
	113
COLETOR E MONTAGEM - CONTROLE	495
	496
	497
COMANDO DO TANDEM	223
	224
COMANDO HIDRÁULICO	374
	375
	376
	377
	378
	379
	380
	381
	382
COMPRESSOR DE REFRIGERANTE	667
	701
	702
COMPRESSOR DE REFRIGERANTE E MONTAGEM	668
COMPRESSOR E MOTOR - REFRIGERADO	667
CONDENSADOR DO REFRIGERANTE E MONTAGEM	669
CONDICIONADOR DE AR	658
	659
CONDICIONADOR DE AR E MONTAGEM	657
CONEXÃO - ELÉTRICA	147
	148
	149
CONEXÃO - HIDRÁULICA	369
	370
	371
	382
	384
	434
	440
	442
	448
CONTRAPESO	296
	297
	298
	299
	300
CONTROLE - NÃO PROGRAMADO	153
CONTROLE - NÃO PROGRAMADO (SEGURANÇA)	182
CONTROLE-CABO	324
	325
	326
	327
	328
	329
	330
	331
CONTROLE DE TRAVAMENTO	150
CONTROLE DO FREIO DE ESTACIONAMENTO	207
	209
	211
	213
	215
	217
	219
	221
CONTROLE DO GOVERNADOR	124
CONTROLE DO VENTILADOR	197
CONTROLE HIDRÁULICO DE OPERAÇÃO PILOTO	332
	334
	336
	338
	340
	341
	343
	346
	349
CONVERSÃO-FERRAMENTA DE TRABALHO	603
CORREIA DE COMANDO (PISCA-ALERTA)	170
CORREIA EM V (BOMBA D'ÁGUA)	79
COTOVELO	416
	417

D

DECALQUE	375
	377
	379
	380
	760
	761
	762
	763
	764
	765
	767
	769
	771
DECALQUE - ADVERTÊNCIA (ALTA PRESSÃO, LER OMM, ISO)	774
	777
DECALQUE - ADVERTÊNCIA (DIREÇÃO)	290
	292
	294
DECALQUE - ADVERTÊNCIA (FOLGA)	310
DECALQUE - ADVERTÊNCIA (FOLGA)	760

* TRADUÇÃO NÃO DISPONÍVEL NO MOMENTO DA IMPRESSÃO

ÍNDICE

Designação	Página
DECALQUE - ADVERTÊNCIA (NÃO TOQUE COM AS MÃOS, MANTENHA-SE AFASTADO)	510
DECALQUE - ADVERTÊNCIA (*NO CLEARANCE, STAY BACK)	566
	567
DECALQUE - ADVERTÊNCIA (PERIGO DE ESMAGAMENTO, MANTENHA DISTÂNCIA)	774
DECALQUE - ADVERTÊNCIA (PERIGO DE ESMAGAMENTO, MANTENHA DISTÂNCIA)	783
DECALQUE - ADVERTÊNCIA (PONTO DE ESMAGAMENTO)	590
	591
	592
	630
DECALQUE - ADVERTÊNCIA (PONTO DE UNIÃO)	619
	620
	624
	625
	626
	627
DECALQUE - IDENTIFICAÇÃO (IGNIÇÃO)	158
	159
DECALQUE - IDENTIFICAÇÃO (13 KM/H)	281
	284
	290
DECALQUE - IDENTIFICAÇÃO (13 KM/H)	10
	11
	15
	16
	17
	18
DECALQUE - INFORMAÇÕES (LOCAL DE AMARRAÇÃO)	562
DECALQUE - INFORMAÇÕES (LOCAL DE AMARRAÇÃO)	765
	767
	769
	771
	774
	777
	780
	783
DECALQUE - INSTRUÇÃO	692
DECALQUE - INSTRUÇÃO (CONTROLE DA MÁQUINA, LER OMM)	334
	338
	340
	341
	343
	346
DECALQUE - INSTRUÇÃO (CONTROLES DA MÁQUINA)	332
	336
	349
	384
	385
DECALQUE - INSTRUÇÃO (*MACHINE SECURITY, READ OMM)	158
	159
DECALQUE - INSTRUÇÃO (PAINEL)	691
DECALQUE - INSTRUÇÃO (PAINEL DE INSTRUMENTOS)	690
DECALQUE - INSTRUÇÃO (SEM DEGRAUS)	786
DECALQUE - TIRA (*REFLECTIVE, RED, WHITE)	639
	640
DECALQUE (CONTROLE DE TEMPERATURA)	697
DECALQUE (FLUXO ALTO)	375
	377
	379
	380
	384
	385
DECALQUE (REFLETOR)	639
	640
DEGRAU - BRAÇO DE MANIPULAÇÃO DE MATERIAIS	644
DISJUNTOR AUTOMÁTICO DE CIRCUITO (105 AMPERES)	192
	194
DISJUNTOR AUTOMÁTICO DE CIRCUITO (30 AMPERES)	175
DISJUNTOR AUTOMÁTICO DE CIRCUITO (30 AMPERES) (ILUMINAÇÃO)	173
DRENO - ÓLEO DO MOTOR	53
DUCTO E CONTROLE	687

E

EIXO	204
	205
	206
EIXO-COMANDO DE VÁLVULA	27
	28
ELEMENTO - AQUECEDOR DE ÁGUA DA CAMISA	156
	157
ELEMENTO DO FILTRO DE AR (PRIMÁRIO)	109
ELEMENTO DO FILTRO DE AR (SECUNDÁRIO)	109

* TRADUÇÃO NÃO DISPONÍVEL NO MOMENTO DA IMPRESSÃO

ÍNDICE

Designação	Página
ELEMENTO DO FILTRO DE COMBUSTÍVEL (SEPARADOR DE ÁGUA)	125
ELEMENTO FILTRANTE (HIDRÁULICO)	229
ENCOSTO DO BRAÇO E MONTAGEM	661
ESPELHO	315
	316
ESPELHO RETROVISOR	722
ESPELHO RETROVISOR E MONTAGEM	315
	316

F

FAROL DIANTEIRO (12 VOLTS, 60 WATTS)	166
FIAÇÃO - BUZINA	196
FILTRO - ÓLEO	229
FILTRO - ÓLEO DO MOTOR	66
	83
FILTRO DE AR DE CABINA	659
	697
FILTRO DE COMBUSTÍVEL E SEPARADOR DE ÁGUA	125
FILTRO HIDRÁULICO E TUBOS	225
	227
FILTRO (RESPIRO DO CÁRTER)	31
	33
FILTRO (RESPIRO DO CÁRTER) (RESPIRO DO CÁRTER DO ÓLEO DO MOTOR)	29
FILTRO (RESPIRO)(ÓLEO HIDRÁULICO)	519
FIXADORES - CHICOTE	154
FUSÍVEL (10 AMPERES)	160
	161
	162
	163
	187
	189
	200
	202
	388
	597
	600
	604
	605
FUSÍVEL (10 AMPERES)	343
	346
FUSÍVEL (15 AMPERES)	160
	161
	163
	188
	189
	200
	202
FUSÍVEL (20-AMPERES)	189
FUSÍVEL (30 AMPERES)	188
	701
	703

G

GARFO - SERVIÇOS PÚBLICOS	623
	624
	625
	626
	627
GARFO DA GARRA	617
	618
	619
	620
	621
GARFO DE PALETAS	622
GARRA - SERVIÇOS PÚBLICOS	630
GARRA E CILINDRO - SERVIÇOS PÚBLICOS	628
GOVERNADOR	126
	129
GR. DE CONVERSÃO - ARRANJO NÃO RODOVIÁRIO	151
GR. DE CONVERSÃO - OPERAÇÃO RODOVIÁRIA	292
	293
	294
	295
GR. DE SERVIÇO - MÁQUINA	182
GRAXEIRA (ROSCA 1/8-27 POL)	630
GRUPO DE CONVERSÃO - ACOPLADOR RÁPIDO	597
	600
GRUPO DE CONVERSÃO - ARRANJO RODOVIÁRIO	281
	282
	283
	284
	285
	286
	287
	288
	289
	290
	291
GRUPO DE INSTALAÇÃO - MOTOR	23
	24
	25
	26
GRUPO DE POLIA - BOMBA DE ÁGUA	78
	79
GUIA - TUBOS	309

* TRADUÇÃO NÃO DISPONÍVEL NO MOMENTO DA IMPRESSÃO

ÍNDICE

Designação	Página
I	
ILUMINAÇÃO - FREIO E MARCHA À RÉ	177
ILUMINAÇÃO - RODOVIÁRIA	173 175
INDICADOR E ALARME	690 691 692
INSTALAÇÃO	704 705
INSTALAÇÃO - ARRANJO	701 702
INSTALAÇÃO-SEGURANÇA	158 159
INTERRUPTOR - BALANCIM (ACOPLADOR RAPIDO)	388 597 600 604 605
INTERRUPTOR - BALANCIM (AQUECEDOR)	659 697
INTERRUPTOR - BALANCIM (CONDICIONADOR DE AR)	659
INTERRUPTOR - BALANCIM (ENERGIA ELÉTRICA, FERRAMENTA DE TRABALHO)	160 161 162 163 200 202
INTERRUPTOR - BALANCIM (FARÓIS DE ESTRADA)	173 175
INTERRUPTOR - BALANCIM (FAROL DIANTEIRO)	728 730
INTERRUPTOR - BALANCIM (FLUXO ALTO)	382
INTERRUPTOR - BALANCIM (FLUXO ALTO)	349 386
INTERRUPTOR - BALANCIM (FREIO DE ESTACIONAMENTO)	728 730
INTERRUPTOR - BALANCIM (LIMPADOR TRASEIRO)	683 685
INTERRUPTOR - BALANCIM (LUZES DE ADVERTÊNCIA CONTRA PERIGO)	173 175
INTERRUPTOR - BALANCIM (LUZES DE TRABALHO TRASEIRAS)	171
INTERRUPTOR - BALANCIM (PARTIDA A FRIO)	728 730
INTERRUPTOR - BALANCIM (PISCA-ALERTA)	178
INTERRUPTOR - BALANCIM (POSICIONADOR DA FERRAMENTA DE TRABALHO)	374 376 377
INTERRUPTOR - BALANCIM (SETA DE DIREÇÃO)	173 175
INTERRUPTOR - LIMITADOR	683 685
INTERRUPTOR - PRESSÃO	186
INTERRUPTOR - PRESSÃO (ALARME DE MARCHA-À-RÉ)	187
INTERRUPTOR - PRESSÃO (AR CONDICIONADO)	712 714 716 718
INTERRUPTOR - PRESSÃO (ÓLEO DO MOTOR) (MOTOR)	180
INTERRUPTOR - PRESSÃO (ÓLEO DO MOTOR) (PRESSÃO DO ÓLEO DO MOTOR)	179 181
INTERRUPTOR - PRESSÃO (ÓLEO HIDRÁULICO)	229
INTERRUPTOR - PRESSÃO (REFRIGERANTE)	702 704
INTERRUPTOR - TEMPERATURA (AR CONDICIONADO)	659
INTERRUPTOR - TEMPERATURA (LÍQUIDO ARREFECEDOR DO MOTOR)	179 180 181
INTERRUPTOR - TEMPERATURA (ÓLEO HIDRÁULICO)	520
INTERRUPTOR (ASSENTO)	750
INTERRUPTOR (ASSENTO) (ASSENTO)	748
J	
JANELA DA CABINE	753 754 755 756 758
JOGO - PORTA DA CABINE E MONTAGEM	706 707
JOGO DE ALAVANCA	324 325 326

* TRADUÇÃO NÃO DISPONÍVEL NO MOMENTO DA IMPRESSÃO

ÍNDICE

Designação	Página
JOGO DE ALAVANCA (BOTÃO)	750
JOGO DE ALMOFADA	750
JOGO DE AMORTECEDOR	750
JOGO DE BASE DO SEPARADOR DE ÁGUA (SEPARADOR DE ÁGUA)	125
JOGO DE MANCAL (HASTE)	74
	75
	76
JOGO DE MANCAL PRINCIPAL DO MOTOR (PRINCIPAL)	36
	38
	40
JOGO DE MANUTENÇÃO	557
	735
JOGO DE MARCADOR DE HORAS DE SERVIÇO	675
JOGO DE MOLA	750
JOGO DE REPARO DA BOMBA	247
JOGO DE RETENTOR	269
	353
	359
	361
	363
	498
	499
	544
	553
	554
	558
	560
JOGO DE RETENTOR (SEPARADOR DE ÁGUA)	125
JOGO DE TOMADA DE CONEXÃO (2 PINOS)	160
	161
	163
JOGO DE TOMADA DE CONEXÃO (2 PINOS)	189
	200
JOGO-MOTOR DE PARTIDA	183
JOGO-PLACA DE RODAGEM E MONTAGEM	635
JUNTA - TAMPA	90
	92
	94
	96

K

KIT-CONTROLE E FIAÇÃO DA FERRAMENTA DE TRABALHO	160
	161
KIT-CONVERSÃO DE FLUXO ALTO	382
	384
KIT-CONVERSÃO DE RODAGEM	310
KIT-CONVERSÃO DO ACOPLADOR RÁPIDO	388
KIT-FIAÇÃO DA FERRAMENTA DE TRABALHO	162
	163
KIT-RETENTOR DA CABINE	708

L

LÂMINA	563
	564
	565
LÂMINA ANGULÁVEL	567
	568
	569
LÂMINA DO LIMPADOR DE PÁRA-BRISA	685
LÂMINA DO LIMPADOR DE PÁRA-BRISA (LIMPADOR)	683
LÂMPADA - FAROL	164
	165
LÂMPADA - TETO	691
	692
LÂMPADA DIANTEIRA E DE SINAL	166
LAMPADA-PLACA DE REGISTRO	291
	317
LÂMPADA (VERMELHA, VERDE, LED, 12 VOLTS)	159
LÂMPADA (12-VOLTS)	291
	691
	692
LÂMPADA (12-VOLTS) (PLACA DE REGISTRO)	317
LÂMPADA (12-VOLTS, 10-WATTS)	291
	691
	692
LÂMPADA (12-VOLTS, 21-WATTS)	166
	169
LÂMPADA (12-VOLTS, 4-WATTS)	166
LÂMPADA (12 VOLTS, 5 WATTS)	168
LÂMPADA (12 VOLTS, 5 WATTS)	169
LÂMPADA (12-VOLTS, 55-WATTS)	164
	165
	170
LENTE	168
LENTE - LÂMPADA (TRASEIRO, ESQUERDO)	169
LENTE (ÂMBAR, PISCA-ALERTA)	170
LENTE (ÂMBER) (DIANTEIRA, DE CURVA)	166
LENTE (LUZES DIANTEIRAS)	166
LEVANTAMENTO DA MÁQUINA	311
	312
	313
	314
LEVANTAMENTO DO MOTOR	61
	62

* TRADUÇÃO NÃO DISPONÍVEL NO MOMENTO DA IMPRESSÃO

ÍNDICE

Designação	Página
LUZ GIRATÓRIA DE ALARME	170
LUZ INTERMITENTE	173
	175
LUZ TRASEIRA E DE FREIO	168
	169

M

MÁQUINA - CONVERSÃO	4
	5
	6
	7
	8
	9
	10
	11
	12
	13
	14
	15
	16
	17
	18
MECANISMO DAS VÁLVULAS	80
	81
MEDIDOR - NÍVEL DE COMBUSTÍVEL	691
	692
MEDIDOR - ÓLEO (VARETA DE NÍVEL)	66
MÓDULO - INDICADOR DE ALARME	723
	724
	725
MOLA - LÂMINA	643
MOLA A GÁS	749
MONTAGEM - BOMBA	241
MONTAGEM - CILINDRO	509
	510
	511
MONTAGEM - ESTRUTURA ROPS	726
MONTAGEM - LUZES PARA ILUMINAÇÃO RODOVIÁRIA	319
MONTAGEM - MOTOR	63
	64
MONTAGEM - VENTILADOR	65
MONTAGEM DA PLACA DE REGISTRO	317
	318
MOTOR	19
	20
MOTOR - ENGRENAGENS	505
	506
	507
	508
MOTOR - LIMPADOR DO VIDRO	683
	685
MOTOR - PISTÃO	239
MOTOR E MONTAGEM - VENTILADOR HIDRÁULICO	501
	502
	503
MOTOR ELÉTRICO DE PARTIDA	183
	185
MOTOR HIDROSTÁTICO E MONTAGEM	238
MOTOR PRIMÁRIO	21
	22

P

PAINEL DE FUSÍVEIS	160
	161
	162
	163
	189
	200
	202
PAINEL DE INSTRUMENTOS	727
	728
	730
PAINEL LATERAL	732
	733
PÁRA-CHOQUE	279
	280
PÁRA-SOL	751
	752
PÁRA-SOL DA CABINE	751
	752
PEDAL DO GOVERNADOR	734
	735
PEGA-MÃO	694
PISTÃO E BIELA	74
	75
	76
PLACA DE IDENTIFICAÇÃO (PESO MÁXIMO)	290
	291
	292
	293
	294
PLACA E DECALQUE	773
	774
	777
	780
	783
	786
PLACA-RODOVIÁRIO	639
	640
PLATAFORMA DO OPERADOR	736
PNEU E ARO	251

* TRADUÇÃO NÃO DISPONÍVEL NO MOMENTO DA IMPRESSÃO

ÍNDICE

Designação	Página
	252
	253
	254
	255
	256
	257
	258
	259
	260
	261
	262
	263
	264
	265
	266
POLIA DO VIRABREQUIM	77
PORTA DA CABINE	682
	683
	685
PORTA DA CABINE (POLICARBONATO)	683
PORTA E MONTAGEM-CABINA	676
	679
PROTETOR - CORREIAS	55
PROTETOR - ROPS/FOPS	693
PUBLICAÇÃO	3
	721
*PUMP GP-FUEL PRM & PRIM FILTER	142
PURIFICADOR DE AR	108
	109

R

RADIADOR E ARREFECEDOR DE ÓLEO - MONTAGEM	102
	104
	106
RADIADOR E ARREFECEDOR DO ÓLEO HIDRÁULICO	98
	99
	100
RECUPERAÇÃO DE LÍQUIDO ARREFECEDOR	102
	104
	106
REDUÇÃO DE RUÍDO	321
RELÉ (CONJ) (CASQUILHO) (*SHELL)	190
RELÉ (CONJ) (12-VOLTS)	160
	161
	162
	163
	200
	202
	291
	349
	383
	386
	659
RELÉ (CONJ) (12-VOLTS) (AQUECEDOR)	697
RELÉ (CONJ) (12-VOLTS) (FERRAMENTA DE TRABALHO)	200
	202
RELÉ (CONJ) (12-VOLTS) (LUZ DE FREIO)	199
RELÉ (CONJ) (12-VOLTS) (PARTIDA A FRIO)	192
	194
RELÉ (CONJ) (12-VOLTS) (POTÊNCIA PRINCIPAL)	189
	200
	202
RESPIRO	701
	703
RESPIRO (ALOJAMENTO DO TANDEM)	303
	305
RESPIRO (AR CONDICIONADO)	667
RETENTOR - TAMPA DA VÁLVULA	29
	31
	33
RETENTOR-CABINE	738
REVESTIMENTO - CABINE	711
REVESTIMENTO DA CABINE	710
RODA E PNEU	271
	272
	273
	274
	275
	276
	277
	278

S

SACADOR - MINIFUSÍVEL	152
SENSOR - TEMPERATURA (LÍQUIDO ARREFECEDOR DO MOTOR)	100
SENSOR - TEMPERATURA (ÓLEO HIDRÁULICO)	503
SENSOR DE PRESSÃO E TEMPERATURA	179
	180
	181
SENSOR DE VELOCIDADE	508
SILENCIADOR	116
	117
	118
SIST. DE ILUMINAÇÃO - PISCA-PISCA GIRATÓRIO DE ADVERTÊNCIA	178
SIST. ELETRÔNICO - ACESSÓRIO	153
SISTEMA DE ILUMINAÇÃO - FARÓIS	171

* TRADUÇÃO NÃO DISPONÍVEL NO MOMENTO DA IMPRESSÃO

ÍNDICE

Designação	Página
	172
SOFTWARE - MÁQUINA	182
SOFTWARE - MÁQUINA (SEGURANÇA)	158
SOLENÓIDE	558
SOLENÓIDE (CORTE DO COMBUSTÍVEL)	137
SOLENÓIDE (DESLIGAMENTO - COMBUSTÍVEL)	140
SOLENÓIDE (MOTOR DE PARTIDA)	183
SUPORTE - ARREFECEDR DE ÓLEO E RADIADOR	85
	87
SUPORTE - CAIXA DE ARMAZENAGEM	10
	11
	15
	16
	17
	18
	281
	283
	284
	286
SUSPENSÃO - ASSENTO	750

T

TAMPA - BOCAL DE ENCHIMENTO (COMBUSTÍVEL)	132
	134
TAMPA - BOCAL DE ENCHIMENTO (TANQUE HIDRÁULICO)	520
TAMPA - CONSOLO	673
	674
TAMPA - MECANISMO DAS VÁLVULAS	29
	31
	33
TAMPA - PAINEL DE INSTRUMENTOS	675
TAMPA - RADIADOR	98
	99
	100
TAMPA - TUBULAÇÕES	609
TAMPA (BOCAL DE ENCHIMENTO DO ÓLEO DO MOTOR)	66
	70
TAMPA COM RESPIRO	102
	104
	106
TAMPA DO PAINEL DO FUSÍVEL	152
TANQUE DE ÁGUA	653
TANQUE DE ÁGUA E MONTAGEM	646
	648
	650
TANQUE DE ÓLEO HIDRÁULICO E MONTAGEM	519
TANQUE HIDRÁULICO	520
TAPETE	4
	5
	6
	7
	8
	9
	10
	11
	12
	13
	14
	15
	16
	17
	18
	281
	282
	283
	284
	285
	286
	287
	288
	289
TELA DE SUCÇÃO (TANQUE HIDRÁULICO)	520
TELA FILTRANTE	436
	438
TELA FILTRANTE - ÁGUA	645
TELA FILTRANTE (ÁGUA)	645
TORNEIRA	90
	94
TRAVA - ACOPLADOR RÁPIDO	638
TREM DE FORÇA	242
TUBOS - AQUECEDOR	720
TUBOS - AR	110
	111
TUBOS - AR CONDICIONADO	712
	714
	716
	718
TUBOS - ARREFECEDOR DE ÓLEO HIDRÁULICO	416
	417
TUBOS - BOMBA	442
	444
	446
	448
TUBOS - CAÇAMBA	391
	393
	394
TUBOS - CILINDRO DE INCLINAÇÃO	450
	452

* TRADUÇÃO NÃO DISPONÍVEL NO MOMENTO DA IMPRESSÃO

ÍNDICE

Designação	Página
	454
	456
	459
	462
	464
	466
	468
	470
	472
	474
	476
	478
TUBOS - CILINDRO DE LEVANTAMENTO	418
	420
	422
	424
	426
	428
TUBOS - CIRCUITO PILOTO	434
	436
	438
	440
TUBOS - FERRAMENTA DE TRABALHO	480
	483
	486
	488
	490
	492
TUBOS - GARRA	400
	402
TUBOS - SISTEMA HIDROSTÁTICO	230
	232
TUBOS - VÁLVULA DE CONTROLE DE CARGA	430
	432
TUBOS - VENTILADOR HIDRÁULICOS	404
	406
	408
	410
	412
	414
TUBOS DE CONEXÃO	396
	398
TUBOS DO AQUECEDOR	720
TUBULAÇÕES - FILTRO E ESCORVA DO COMBUSTÍVEL	132
	134
TURBOALIMENTADOR	119
	121

U

UNI-DENTE	654

V

VÁLVULA - SENSOR DE VELOCIDADE	247
VÁLVULA DE ALÍVIO	70
	498
	499
	557
VÁLVULA DE ALÍVIO (CARGA)	247
	249
VÁLVULA DE ALÍVIO (DE DUAS DIREÇÕES)	249
VÁLVULA DE ALÍVIO (SOPREPOSIÇÃO)	247
VÁLVULA DE CONTROLE	545
	547
	549
	551
VÁLVULA DE CONTROLE E MONTAGEM	536
	537
	538
	539
VÁLVULA DE CONTROLE PILOTO	555
	556
VÁLVULA DE DRENAGEM (TANQUE DO ÓLEO DO MOTOR)	66
VÁLVULA DE DRENAGEM (TANQUE DO ÓLEO DO MOTOR) (ÓLEO)	70
VÁLVULA DE PARADA (DRENO DO TANQUE HIDRÁULICO)	234
VÁLVULA DE RETENÇÃO	499
VÁLVULA DESVIADORA	553
	554
VÁLVULA DESVIADORA E MONTAGEM	540
	541
	542
VÁLVULA DO RESPIRO (CÁRTER)	29
	31
	33
VALVULA DO SOLENOIDE E MONTAGEM	267
	268
	269
	543
	544
VÁLVULA E TUBULAÇÔES - ACOPLADOR	521
	524
	527
	530
	533
VÁLVULA MANUAL (CONTROLD MANUAL DE ABAIXAMENTO)	432
	521
	524
	527
	530
	533

* TRADUÇÃO NÃO DISPONÍVEL NO MOMENTO DA IMPRESSÃO

ÍNDICE

Designação	Página
VÁLVULA MANUAL (CONTROLE DE ABAIXAMENTO)	430
VÁLVULA SOLENÓIDE	269
	270
	503
	555
	556
	558
	559
	560
	561
VÁLVULA SOLENÓIDE (ACOPLADOR RÁPIDO)	544
VÁLVULA SOLENÓIDE (CONTROLE DE FLUXO AUXILIAR)	270
VÁLVULA SOLENÓIDE (FLUXO ALTO)	498
	499
VÁLVULA SOLENÓIDE (FLUXO AUXILIAR)	498
VÁLVULA SOLENÓIDE (FREIO DE ESTACIONAMENTO)	267
VÁLVULA SOLENÓIDE (REFORÇO DO FLUXO ALTO)	498
	499
VELA DE AQUECIMENTO; VELA INCANDESCENTE	155
VENTILADOR DA CABINE	659
	697
VENTILADOR DE SOPRO	98
	99
	100
VIGIA	100
VIGIA (RADIADOR)	98
	99
VIGIA (TANQUE HIDRÁULICO)	520
VIRABREQUIM	35
	36
	38
	40
VOLANTE DO MOTOR	54

* TRADUÇÃO NÃO DISPONÍVEL NO MOMENTO DA IMPRESSÃO

STICHWORTVERZEICHNIS

Bezeichnung	Seite
A	
ABDECKGLAS	168
ABDECKGLAS (FRONTSCHEINWERFER)	166
ABDECKGLAS (GELB, RUNDUM-KENNLEUCHTE)	170
ABDECKGLAS (GELB) (WENDUNG, VORN)	166
ABLASSVENTIL (*ENGINE OIL SUMP)	66
ABLASSVENTIL (*ENGINE OIL SUMP) (ÖL)	70
ABSPERRVENTIL (HYDRAULIKTANKAB-LASS)	234
ACHSE	204
	205
	206
ADAPTER - ÖLLEITUNG	323
ANSAUGSIEB (HYDRAULIKTANK)	520
ANSCHLUSS, ELEKTR.	147
	148
	149
ANSCHLUSSGRIFF	633
	634
ANSCHLUSSLEITUNGEN	396
	398
ANTRIEBSKUPPLUNG	671
ARBEITSGERÄT - LEITUNGEN	480
	483
	486
	488
	490
	492
ARBEITSGERÄT - VERDRAHTUNG	200
	202
ARBEITSGERÄTEELEKTRONIK	153
ARBEITSGERÄTEPUMPE U. BEFESTIGUNG	513
	514
	515
	516
ARBEITSLEUCHTEN	164
	165
	171
	172
ARMLEHNE	662
ARNLEHNE U. BEFESTIGUNG	661
AUFKLEBER	375
	377
	379
	380
	760
	761
	762
	763
	764
	765
	767
	769
	771
AUFKLEBER - INFORMATION (*TIE-DOWN LOCATION)	562
	765
	767
	769
	771
	774
AUFKLEBER - INFORMATION (*TIE-DOWN LOCATION)	777
	780
	783
AUFKLEBER - SOICHERUNG/RELAIS	152
AUFKLEBER (HOHER FLUSS)	375
	377
	379
	380
	384
	385
AUFKLEBER (REFLEKTIEREND, ROT, WEISS)	639
	640
AUFKLEBER (REFLEKTIV)	639
	640
AUFKLEBER (TEMPERATURREGELUNG)	697
AUSPUFFKRÜMMER	112
	113
B	
BATTERIE	145
	146
BATTERIE (12 V, STANDARD)	145
BATTERIE (12 V, WARTUNGSFREI)	146
BELEUCHTUNG FÜR STRASSENFAHRT - BEFESTIGUNG	319
BELEUCHTUNGSANLAGE (ROT, GRÜN, LED, 12 V)	159
BELEUCHTUNGSANLAGE (STRASSENAUSRÜ-STUNG)	173
	175
*BLADE GP-ANGLING	566
BLINKER	173
	175
BREMS- UND RÜCKLEUCHTE	168
	169
BREMS- UND RÜCKLEUCHTEN	177
*BUCKET GP-GENERAL PURPOSE	579
	580
	581
	582
	583

* ÜBERSETZUNG ZUM ZEITPUNKT DER DRUCKLEGUNG NICHT VORHANDEN

STICHWORTVERZEICHNIS

Bezeichnung	Seite
	584
C	
*CONVERSION GP-WORK TOOL	603
D	
DÄMPFER-EINBAUSATZ	750
DICHTUNGSSATZ	269
	353
	359
	361
	363
	498
	499
	544
	553
	554
	558
	560
DICHTUNGSSATZ (WASSERABSCHEIDER)	125
DOKUMENTATION	3
	721
DREHSTROMGENERATOR	143
	144
DREHZAHLGEBERVENTIL	247
DREHZAHLREGLERKABEL	123
DREHZAHLSENSOR	508
DRUCKBEGRENZUNGSVENTIL	70
DRUCKLÜFTER	98
	99
	100
DRUCKLUFTLEITUNGEN	110
	111
DRUCKSCHALTER	186
DRUCKSCHALTER (HYDRAULIKÖL)	229
DRUCKSCHALTER (KLIMAANLAGE)	712
	714
	716
	718
DRUCKSCHALTER (KÜHLMITTEL)	702
	704
DRUCKSCHALTER (MOTORÖL) (MOTOR)	180
DRUCKSCHALTER (MOTORÖL) (MOTORÖLDRUCK)	179
	181
DRUCKSCHALTER (RÜCKFAHRALARM)	187
E	
EINBAUSATZ	701
	702
	704
	705
EINFÜLLKAPPE (HYDRAULIKTANK)	520
EINFÜLLKAPPE (KRAFTSTOFF)	132
	134
ELEKTRONISCHER SCHLÜSSEL (SICHERHEIT)	158
	182
ENDSCHALTER	683
	685
ENTLÜFTER	701
	703
ENTLÜFTER (KLIMAANLAGE)	667
ENTLÜFTER (TANDEMGEHÄUSE)	303
	305
ENTLÜFTERVENTIL (KURBELGEHÄUSE)	29
	31
	33
ERDSCHAUFEL	575
	576
	577
	578
F	
FAHERHAUSDICHTUNG	738
FAHRERHAUS - LINER	711
FAHRERHAUS-DRUCKLÜFTER	659
	697
FAHRERHAUS MIT ÜBERROLLSCHUTZ	665
	666
FAHRERHAUS, SONNENBLENDE	751
	752
FAHRERHAUSAUSKLEIDUNG	710
FAHRERHAUSBELEUCHTUNG	691
	692
FAHRERHAUSFENSTER	753
	754
	755
	756
	758
FAHRERHAUSHEIZUNG	696
	697
	699
FAHRERHAUSHEIZUNG U. BEFESTIGUNGS-TEILE	695
FAHRERHAUSLUFTFILTER	659
	697
FAHRERHAUSTÜR	682
	683
	685
FAHRERHAUSTÜR (POLYCARBONAT)	683
FAHRERHAUSTÜR U. BEFESTIGUNG	676

* ÜBERSETZUNG ZUM ZEITPUNKT DER DRUCKLEGUNG NICHT VORHANDEN

STICHWORTVERZEICHNIS

Bezeichnung	Seite
	679
	706
	707
FAHRERPLATTFORM	736
FAHRERSITZ	747
	748
FAHRERSITZFEDERUNG	750
FAHRGESTELLVERDRAHTUNG	189
FAHRWERK	1
FEDER-EINBAUSATZ	750
FENSTERRAHMEN	688
	689
FESTSTELLBREMSGESTÄNGE	207
	209
	211
	213
	215
	217
	219
	221
FILTER (HYDRAULIK)	229
FILTERSATZ (ENTLÜFTER)(HYDRAULIKÖL)	519
FILTERSOCKEL U. MOTORÖLKÜHLER	84
FUSSMATTE	4
	5
	6
	7
	8
	9
	10
	11
	12
	13
	14
	15
	16
	17
	18
	281
	282
	283
	284
	285
	286
	287
	288
	289

G

GASFEDERGRUPPE	749
GASPEDAL	734
	735
GAZE (KURBELGEHÄUSEENTLÜFTER)	31
	33
GAZE (KURBELGEHÄUSEENTLÜFTER) (KURBELGEHÄUSEENTLÜFTER)	29
GEGENGEWICHT	296
	297
	298
	299
	300
GLÜHKERZE	155
GREIEFERSCHAUFEL	585
	586
	587
GREIFERGABEL	617
	618
	619
	620
	621
GREIFERLEITUNGEN	400
	402
GREIFERSCHAUFEL	570
	571
	572
GREIFERZYLINDER	361
	362
GRIFF U. BOLZEN - ANSCHLUSS	631
	632
GRUNDAUSFÜHRUNG	1
	2
	3
	4

H

HAHN	90
	94
HALTEGRIFF	694
HANDGRIFF-EINBAUSATZ (KNOPF)	750
HEBEL-EINBAUSATZ	324
	325
	326
HECKBELEUCHTUNGSVERDRAHTUNG	199
HEIZUNGSLEITUNGEN	720
HUBARMZYLINDER U. BEFESTIGUNGS-SATZ	354
	357
HUBZYLINDER	364
	365
	366
HUBZYLINDERLEITUNGEN	418
	420
	422
	424

* ÜBERSETZUNG ZUM ZEITPUNKT DER DRUCKLEGUNG NICHT VORHANDEN

STICHWORTVERZEICHNIS

Bezeichnung	Seite
	426
	428
HYDRAULIKBEDIENUNG (MIT VORSTEUERUNG)	334
	336
	338
	340
	341
	343
	346
	349
HYDRAULIKBEDIENUNG (MIT VORSTEUERUNG)	332
HYDRAULIKDRUCKSPEICHER (NICHT GELADEN) (ARBEITSGERÄT)	322
HYDRAULIKDRUCKSPEICHER U. BEFESTIGUNG	322
HYDRAULIKFILTER U. LEITUNGEN	225
	227
HYDRAULIKFITTING	369
	370
	371
	382
	384
	434
	440
	442
	448
HYDRAULIKKÜHLERMOTOR U. BEFESTIGUNG	501
	502
	503
HYDRAULIKLÜFTERLEITUNGEN	404
	406
	408
	410
	412
	414
HYDRAULIKÖLKÜHLERLEITUNGEN	416
	417
HYDRAULIKPUMPE UND LEITUNGEN	442
	444
	446
	448
HYDRAULIKSYSTEM	374
	375
	376
	377
	378
	379
	380
	381
	382
HYDRAULIKTANK	520
HYDRAULIKTANK UND BEFESTIGUNGSTEILE	519
HYDRAULIKZYLINDER	363
HYDRAULIKZYLINDER (KIPPEN)	353
HYDRAULIKZYLINDER (WINKEL)	353
HYDROSTATIKLEITUNGEN	230
	232
HYDROSTATIKMOTOR U. BEFESTIGUNG	238
HYDROSTATIKPUMPE U. BEFESTIGUNG	243
	244
	245
	246

I

IDENTIFIKATIONSSCHILD (MAX. GEWICHT)	291
	293
IDENTIFIKATIONSSCHILD (MAX. GEWICHT)	290
	292
	294
IDENTIFIZIERUNGS-AUFKLEBER (STARTSCHLÜSSELSCHALTER)	158
IDENTIFIZIERUNGS-AUFKLEBER (STARTSCHLÜSSELSCHALTER)	159
IDENTIFIZIERUNGS-AUFKLEBER (*13-KM/H)	10
	11
	15
	16
	17
	18
	281
	284
	290
INSTRUKTIONS-AUFKLEBER	692
INSTRUKTIONS-AUFKLEBER (INSTRUMENTENBRETT)	691
INSTRUKTIONS-AUFKLEBER (INSTRUMENTENTAFEL)	690
INSTRUKTIONS-AUFKLEBER (*MACHINE CONTROL, READ OMM)	334
	338
	341
	343
	346
INSTRUKTIONS-AUFKLEBER (*MACHINE CONTROL, READ OMM)	340
INSTRUKTIONS-AUFKLEBER (*MACHINE SECURITY, READ OMM)	158
	159
INSTRUKTIONS-AUFKLEBER (MASCHINENSTEUERUNGEN)	332

* ÜBERSETZUNG ZUM ZEITPUNKT DER DRUCKLEGUNG NICHT VORHANDEN

STICHWORTVERZEICHNIS

Bezeichnung	Seite
	336
	349
	384
	385
INSTRUKTIONS-AUFKLEBER (NICHT BETRETEN)	786
INSTRUMENTENTAFEL	727
	728
	730
INSTRUMENTENTAFEL-SICHERUNG	160
	161
	162
	163
	189
	200
	202
INSTRUMENTENTAFELABDECKUNG	675

K

Bezeichnung	Seite
KÄLTEMITTELKOMPRESSOR	667
	701
	702
KÄLTEMITTELKOMPRESSOR U. BEFESTIGUNG	668
KÄLTEMITTELKONDENSATOR U. BEFESTIGUNGSTEILE	669
KAPPE MIT ENTLÜFTER	102
	104
	106
KAPPE (MOTORÖLFÜLLUNG)	66
	70
KEILRIEMEN (WASSERPUMPE)	79
KIPPSCHALTER (ARBEITSGERÄTEANORDNUNG)	374
	376
	377
KIPPSCHALTER (ELEKTRISCHER STROM, ARBEITSGERÄT)	160
	161
	162
	163
	200
	202
KIPPSCHALTER (FAHRTRICHTUNGSBLINKER)	173
	175
KIPPSCHALTER (FESTSTELLBREMSE)	728
	730
KIPPSCHALTER (HEIZUNG)	659
	697
KIPPSCHALTER (HINTERE ARBEITSSCHEINWERFER)	171
KIPPSCHALTER (HINTERER SCHEIBENWISCHER)	683
	685
KIPPSCHALTER (HOHER FLUSS)	349
	382
	386
KIPPSCHALTER (KALTSTART)	728
	730
KIPPSCHALTER (KLIMAANLAGE)	659
KIPPSCHALTER (RUNDUM-KENNLEUCHTE)	178
KIPPSCHALTER (SCHNELLWECHSELEINRICHTUNG)	388
	597
	600
	604
	605
KIPPSCHALTER (STRASSENBELEUCHTUNG)	173
	175
KIPPSCHALTER (VORDERER ARBIETSSCHEINWERFER)	728
	730
KIPPSCHALTER (WARNLEUCHTEN)	173
	175
KIPPZYLINDER	367
	368
*KIT-CAB SEAL	708
*KIT-HIGH FLOW CONVERSION	382
	384
*KIT-QUICK COUPLER CONVERSION	388
*KIT-ROADING CONVERSION	310
*KIT-WORK TOOL CONTROL & WIRING	160
	161
*KIT-WORK TOOL WIRING	162
	163
KLIMAANLAGE	658
	659
KLIMAANLAGE UND AUFHÄNGUNG	657
KLIMAANLAGENDRUCKSPEICHER	655
	656
KLIMAANLAGENLEITUNGEN	712
	714
	716
	718
KLIMAANLAGENVERDRAHTUNG	188
KNIESTÜCK	416
	417
KOLBENMOTOR	239
KOLBENPUMPE	247
	249
KOMBISCHAUFEL	572
	573

* ÜBERSETZUNG ZUM ZEITPUNKT DER DRUCKLEGUNG NICHT VORHANDEN

STICHWORTVERZEICHNIS

Bezeichnung	Seite
	574
	590
	591
	592
KRAFTSTOFF-ENTLÜFTUNGSPUMPE	142
KRAFTSTOFFEINSPRITZPUMPE	137
	140
KRAFTSTOFFENTLÜFTUNGS- U. FILTERLEITUNGEN	132
KRAFTSTOFFENTLÜFTUNGS- U. FILTERLEITUNGEN	134
KRAFTSTOFFILTERELEMENT (WASSERABSCHEIDER)	125
KRAFTSTOFFÖRDERPUMPE	136
KRAFTSTOFFÖRDERPUMPE UND BEFESTIGUNGSTEILE	136
KRAFTSTOFFSTANDANZEIGE	691
	692
KRAFTÜBERTRAGUNG	242
KRÜMMERSTEUERUNG U. BEFESTIGUNG	495
	496
	497
KÜHLER U. ÖLKÜHLER - BEFESTIGUNG	85
	87
KÜHLER U. ÖLKÜHLERBEFESTIGUNG	102
	104
	106
KÜHLER UND HYDRAULIKÖLKÜHLER	98
	99
	100
KÜHLERKAPPE	98
	99
	100
KÜHLKOMPRESSOR U. MOTOR	667
KÜHLMITTELÜBERLAUFBEHÄLTER	102
	104
	106
KÜHLWASSERPUMPE	89
	90
	92
	94
	96
KUPPLUNGSVENTIL U. LEITUNGEN	521
	524
	527
	530
	533
KURBELLAGER-EINBAUSATZ (HAUPT)	36
	38
	40
KURBELWELLE	35
	36
	38
	40
KURBELWELLEN-RIEMENSCHEIBE	77

L

LAGERSATZ (STANGE)	74
	75
	76
LASTSTEUERVENTILLEITUNGEN	430
	432
LAUFBAND UND ANTRIEB (RUNDUM-KENNLEUCHTE)	170
LEICHTGUTSCHAUFEL	588
	589
LEITUNGSABDECKUNG	609
LEITUNGSFÜHRUNG	309
LEUCHTE (12 V)	291
	691
	692
LEUCHTE (12 V) (KENNZEICHEN)	317
LEUCHTE (12 V, 10 W)	291
	691
	692
LEUCHTE (12 V, 21 W)	166
	169
LEUCHTE (12 V, 4 W)	166
LEUCHTE (12 V, 5 W)	168
LEUCHTE (12 V, 5 W)	169
LEUCHTE (12 V, 55 W)	164
	165
	170
LEUCHTENLINSE (HINTEN, LINKS)	169
LÜFTERBEFESTIGUNG	65
LÜFTERSTEUERUNG	197
LUFTFILTER (HAUPTELEMENT)	109
LUFTFILTER (HILFSELEMENT)	109
LUFTKANAL UND REGULIERUNG	687
LUFTREINIGER	108
	109

M

MAGNETSPULE	558
MAGNETSTOPFEN (TANDEM)	303
	305
MAGNETVENTIL	269
	270
	503
	555
	556
	558
	559
	560

* ÜBERSETZUNG ZUM ZEITPUNKT DER DRUCKLEGUNG NICHT VORHANDEN

STICHWORTVERZEICHNIS

Bezeichnung	Seite
	561
MAGNETVENTIL (*AUXILIARY FLOW)	498
MAGNETVENTIL (FESTSTELLBREMSE)	267
MAGNETVENTIL (*HIGH FLOW)	498
	499
MAGNETVENTIL (*HIGH FLOW BOOST)	498
	499
MAGNETVENTIL (HILFSHYDRAULIK - FLUSSSTEUERUNG)	270
MAGNETVENTIL (SCHNELLWECHSELEIN-RICHTUNG)	544
MASCHINEN-UMBAUSATZ	4
	5
	6
	7
	8
	9
	10
	11
	12
	13
	14
	15
	16
	17
	18
MASCHINENHUBÖSE	311
	312
	313
	314
MASCHINENRAHMEN	303
	305
MASCHINENRAHMEN U. BEFESTIGUNG	303
	305
MASCHINENVERDRAHTUNG	197
MEHRZWECKGABEL	623
	624
	625
	626
	627
MEHRZWECKGREIFER	630
MEHRZWECKGREIFER U. ZYLINDER	628
MEHRZWECKSCHAUFEL	593
	594
	595
MEMBRANPUMPE	641
	642
	650
MINISICHERUNGSZIEHER	152
MODULARHEBEL	327
	328
	329
	372
	373
MOTOR-EINBAUSATZ	23
	24
	25
	26
MOTORANTRIEB	505
	506
	507
	508
MOTORAUFLAGER	63
	64
MOTORAUSFÜHRUNG	19
	20
	21
	22
MOTORBLOCK	42
	44
	46
	47
MOTORHUBÖSE	61
	62
MOTORÖLABLASS	53
MOTORÖLKÜHLER UND FILTERSOCKEL	84
MOTORVERDRAHTUNG	192
	194
MOTORVERKLEIDUNG	301

N

Bezeichnung	Seite
NEIGEZYLINDERLEITUNGEN	450
	452
	454
	456
	459
	462
	464
	466
	468
	470
	472
	474
	476
	478
NOCKENWELLE	27
	28

O

Bezeichnung	Seite
ÖLANZEIGE (ÖLMESSSTAB)	66
ÖLFILTER	66
	83
	229
ÖLWANNE	66

* ÜBERSETZUNG ZUM ZEITPUNKT DER DRUCKLEGUNG NICHT VORHANDEN

STICHWORTVERZEICHNIS

Bezeichnung	Seite
	70
ÖLWANNENSCHRAUBE (ABLASS)	66
	70

P

PALETTENGABEL	622
PLEUELSTANGE UND KOLBEN	74
	75
	76
POLSTEREINBAUSATZ	750
*PUMP GP-FUEL PRM & PRIM FILTER	142
PUMPENAUFHÄNGUNG	241
PUMPENREPARATURSATZ	247

R

RAD UND REIFEN	271
	272
	273
	274
	275
	276
	277
	278
REGELERHEBEL	709
REGLER	126
	129
REGLERSTEUERUNG	124
REIFEN UND FELGE	251
	252
	253
	254
	255
	256
	257
	258
	259
	260
	261
	262
	263
	264
	265
	266
RELAIS (SCHALE) (*SHELL)	190
RELAIS (12 V)	160
	161
	162
	163
	200
	202
	291
	349
	383
	386
	659
RELAIS (12 V) (ARBEITSGERÄT)	200
	202
RELAIS (12 V) (BREMSLEUCHTE)	199
RELAIS (12 V) (HAUPTSTROM)	200
	202
RELAIS (12 V) (HAUPTSTROM)	189
RELAIS (12 V) (HEIZUNG)	697
RELAIS (12 V) (KALTSTART)	192
	194
RIEMENSCHUTZ	55
RÜCKFAHRWARNHORN	187
RÜCKLAUFVENTIL - VERTEILER	234
	236
RÜCKSPIEGEL	722
RÜCKSPIEGEL U. BEFESTIGUNG	315
	316
RUNDUM-KENNLEUCHTE	170
	178

S

SCHALLDÄMPFER	116
	117
	118
SCHALLDÄMPFER U. BEFESTIGUNG	114
	115
SCHALLDÄMPFUNG	321
SCHALTER (SITZ)	750
SCHALTER (SITZ) (SITZ)	748
SCHAUFELLEITUNGEN	391
	393
	394
SCHAUFELZYLINDER	359
SCHAUGLAS	100
SCHAUGLAS (HYDRAULIKTANK)	520
SCHAUGLAS (KÜHLER)	98
	99
SCHEIBENWISCHERARM	683
	685
SCHEIBENWISCHERBLATT	685
SCHEIBENWISCHERBLATT (SCHEIBENWISCHER)	683
SCHEIBENWISCHERMOTOR	683
	685
SCHEINWERFER U. RICHTUNGSLEUCHTE	166
SCHEINWERFER (12 V, 60 W)	166
SCHILD	563
	564
	565

* ÜBERSETZUNG ZUM ZEITPUNKT DER DRUCKLEGUNG NICHT VORHANDEN

STICHWORTVERZEICHNIS

Bezeichnung	Seite
SCHILD - STRASSENFAHRT	639
	640
SCHILD UND AUFKLEBER	773
	774
	777
	780
	783
	786
SCHILDFEDER	643
SCHILDRAHMEN	308
SCHMIERNIPPEL (1/8-27-GEWINDE)	630
SCHNEIDMESSER	613
	614
	615
	616
SCHNEIDMESSER UND EINSATZSTÜCK	612
SCHNELLWECHSELANSCHLUSSZYLINDER	360
SCHNELLWECHSELEINRICHTUNG	606
	607
SCHNELLWECHSELEINRICHTUNG - ZYLINDER U. VERBINDUNG	610
	611
SCHNELLWECHSELEINRICHTUNGS-UMBAUSATZ	597
	600
SCHNELLWECHSELEINRICHTUNGSSPERRE	638
SCHNELLWECHSELVORRICHTUNG	604
	605
SCHWENKSCHILD	567
	568
	569
SCHWUNGRAD	54
SCHWUNGRADGEHÄUSE	56
SCREEN	436
	438
SCREEN (WASSER)	645
SEITENGEHÄUSE	700
SEITENVERKLEIDUNG	732
	733
SENSORANSCHLUSSSATZ (2POLIG)	160
	161
	163
	200
SENSORANSCHLUSSSATZ (2POLIG)	189
SERVICE MASCHINE	182
SICHERHEITSEINBAUSATZ	158
	159
SICHERHEITSGURT	739
	740
	741
	742
	743
	744
	745
	746
SICHERUNG (10 A)	160
	161
	162
	163
	187
	189
	200
	202
	343
	346
	388
	597
	600
	604
	605
SICHERUNG (15 A)	160
	161
	163
	188
	189
	200
	202
SICHERUNG (20 A)	189
SICHERUNG (30 A)	188
	701
	703
SICHERUNGSTAFEL - ABDECKUNG	152
SOFTWARE - MASCHINE	182
SOFTWARE - MASCHINE (SICHERHEIT)	158
SOLENOID (KRAFTSTOFFABSPERRUNG)	137
SOLENOID (KRAFTSTOFFABSTELLUNG)	140
SOLENOID (STARTERMOTOR)	183
SOLENOIDVENTIL U. BEFESTIGUNGSTEILE	267
	268
	269
SOLENOIDVENTIL U. BEFESTIGUNGSTEILE	543
	544
SONNENBLENDE	751
	752
SPERRVENTIL	499
SPIEGEL	315
	316
STARTERMOTOR	183
	185
STARTSCHLÜSSELSCHALTER	690
STEUERHEBEL	324
	325
	326

* ÜBERSETZUNG ZUM ZEITPUNKT DER DRUCKLEGUNG NICHT VORHANDEN

STICHWORTVERZEICHNIS

Bezeichnung	Seite
	327
	328
	329
	330
	331
STEUERKONSOLENABDECKUNG	673
	674
STEUERKRÜMMER	498
	499
	500
STEUERUNG - NICHT PROGRAMMIERT	153
STEUERUNG - NICHT PROGRAMMIERT (SICHERHEIT)	182
STEUERVENTIL	545
	547
	549
	551
STEUERVENTIL UND BEFESTIGUNGSTEILE	536
	537
	538
	539
STIRNRADGEHÄUSE	57
	59
STOSSSTANGE	279
	280
STRASSENFAHRT - UMRÜSTSATZ	292
	293
	294
	295
STRASSENFAHRTSCHILD UND BEFESTIGUNG	635

T

TANDEMANTRIEB	223
	224
TEMPERATUR- U. DRUCKSENSOR	179
	180
	181
TEMPERATURSCHALTER (HYDRAULIKÖL)	520
TEMPERATURSCHALTER (KLIMAANLAGE)	659
TEMPERATURSCHALTER (MOTORKÜHLMITTEL)	179
	180
	181
TEMPERATURSENSOR (HYDRAULIKÖL)	503
TEMPERATURSENSOR (MOTORKÜHLMITTEL)	100
TRAGARM	562
TRAGARMSTUFE	644
TRÄGER - STAUKASTEN	10
	11
	15
	16
	17
	18
	281
	283
	284
	286
TRÄGER U. GABEL	596
TURBOLADER	119
	121
TYPENSCHILDBEFESTIGUNG	317
	318

U

ÜBERDRUCKVENTIL	498
	499
	557
ÜBERDRUCKVENTIL (LADUNG)	247
	249
ÜBERDRUCKVENTIL (ÜBERKREUZ)	247
ÜBERDRUCKVENTIL (UMSCHALTVENTIL)	249
ÜBERROLLSCHUTZAUFLAGER	726
UMBAUSATZ - FÜR STRASSENVERKEHR	281
	282
	283
	284
	285
	286
	287
	288
	289
	290
	291
UMBAUSATZ - NICHT FÜR STRASSENVERKEHR	151
UMLAUFKÜHLWASSERHEIZUNG	156
	157
UMLAUFKÜHLWASSERHEIZUNGS-ELEMENT	156
	157
UMLEITVENTIL	553
	554
UNIVERSAL-ZAHNSPITZE	654
UNTERBRECHER (105 A)	192
	194
UNTERBRECHER (30 A)	175
UNTERBRECHER (30 A) (BELEUCHTUNG)	173

V

VENTIL, MECH. (ABSENKSTEUERUNG)	430

* ÜBERSETZUNG ZUM ZEITPUNKT DER DRUCKLEGUNG NICHT VORHANDEN

STICHWORTVERZEICHNIS

Bezeichnung	Seite
VENTIL, MECH. (STEUERUNG FÜR MANUELLES ABSENKEN)	432
VENTIL, MECH. (STEUERUNG FÜR MANUELLES ABSENKEN)	521
	524
	527
	530
	533
VENTILDECKEL	29
	31
	33
VENTILDECKELDICHTUNG	29
	31
	33
	90
	92
	94
	96
VENTILSTEUERUNG	80
	81
VERBINDUNG - SCHNELLWECHSELEINRICHTUNG	636
	637
VERDRAHTUNGSKABELBAUMHALTETEILE	154
VERKLEIDUNG - ÜBERROLLSCHUTZ/ STEINSCHLAGSCHUTZ	693
VERRIEGELUNGSSTEUERUNG	150
VERSTAUKASTEN	664
VERTEILERVENTIL U. BEFESTIGUNGSTEILE	540
	541
	542
VORHÄNGESCHLOSS	290
	292
	294
VORSTEUERLEITUNGEN	434
	436
	438
	440
VORSTEUERVENTIL	555
	556
VORSTEUERVENTILSTOPFEN	512

W

WARNANZEIGEMODUL	723
	724
	725
WARNANZEIGENSATZ	690
	691
	692
WARNAUFKLEBER (AUFGESPIESSTER PUNKT)	619
	620
	624
	625
	626
	627
WARNAUFKLEBER (DRUCKPUNKT)	590
	591
	592
	630
WARNAUFKLEBER (FREIRAUM)	760
WARNAUFKLEBER (FREIRAUM)	310
WARNAUFKLEBER (HÄNDE FERNHALTEN, BEREICH NICHT BETRETEN)	510
WARNAUFKLEBER (HOCHDRUCK, HANDBUCH LESEN, ISO)	774
	777
WARNAUFKLEBER (LENKUNG)	290
	292
	294
WARNAUFKLEBER (*NO CLEARANCE, STAY BACK)	566
	567
WARNAUFKLEBER (QUETSCHGEFAHR, NICHT BETRETEN)	774
	783
WARNHORN (NIEDRIGER TON)	340
	341
WARNHORN (NIEDRIGER TON)	343
	346
WARNHORNVERDRAHTUNG	196
WARTUNGSMESSER	675
WARTUNGSSATZ	557
	735
WASSERABSCHEIDER - EINBAUSATZ (WASSERABSCHEIDER)	125
WASSERABSCHEIDER- U. KRAFTSTOFFILTER	125
WASSERPUMPE - RIEMENSCHEIBE	78
	79
WASSERSIEBEINSATZ	645
WASSERTANK	653
WASSERTANK U. BEFESTIGUNGSTEILE	646
	648
	650

Z

ZAHNRADPUMPE	515
	516
	517
	518

* ÜBERSETZUNG ZUM ZEITPUNKT DER DRUCKLEGUNG NICHT VORHANDEN

STICHWORTVERZEICHNIS

Bezeichnung	Seite	Bezeichnung	Seite
ZULASSUNGSSCHILDLEUCHTE	291		
	317		
ZYLINDER U. BEFESTIGUNG - WINKELSCHLID	352		
	353		
ZYLINDERAUFHÄNGUNG	509		
	510		
	511		
ZYLINDERKOPF	49		
	50		
	51		
	52		

* ÜBERSETZUNG ZUM ZEITPUNKT DER DRUCKLEGUNG NICHT VORHANDEN

MEMORANDA

MACHINE ARRANGEMENT

218-5910 CHASSIS AR

S/N: MJH1-UP; RLL1-UP

PART OF 218-6216, 218-6226, 278-1216, 278-1226 COMMON AR

SMCS-7000 **i01950568**

NOTE	PART NUMBER	QTY	PART NAME 1 2 3 4 5 6 (PRODUCT LEVEL)	SEE PAGE
Y	*218-5650*	1	BUMPER GP (REAR)	279
Y	*218-5602*	1	CONTROL GP-GOVERNOR	124
Y	*218-6799*	1	CYLINDER & MTG GP-LIFT ARM	354
Y	*218-5803*	1	ENCLOSURE GP-ENGINE	301
Y	*218-6975*	1	FRAME & MTG GP-MACHINE	305
Y	*156-9809*	1	GUIDE GP-LINES	309
Y	*228-1781*	1	LINES GP-FUEL PRM & FILTER	134
Y	*218-6430*	1	PANEL GP-SIDE	733
Y	*218-6360*	1	PLATFORM GP-OPERATOR	736
Y	*225-8001*	1	WIRING GP-CHASSIS	189

Y-SEPARATE ILLUSTRATION

<END>

218-6610 CHASSIS AR

S/N: SCH1-UP; BXM1-UP

PART OF 218-6232, 218-6242, 278-1232, 278-1242 COMMON AR

SMCS-7000 **i01966744**

NOTE	PART NUMBER	QTY	PART NAME 1 2 3 4 5 6 (PRODUCT LEVEL)	SEE PAGE
Y	*218-5772*	1	BUMPER GP (REAR)	280
Y	*218-5602*	1	CONTROL GP-GOVERNOR	124
Y	*218-6899*	1	CYLINDER & MTG GP-LIFT ARM	357
Y	*218-5803*	1	ENCLOSURE GP-ENGINE	301
Y	*218-6875*	1	FRAME & MTG GP-MACHINE	303
Y	*156-9809*	1	GUIDE GP-LINES	309
Y	*218-0933*	1	LINES GP-FUEL PRM & FILTER	132
Y	*218-6428*	1	PANEL GP-SIDE	732
Y	*218-6360*	1	PLATFORM GP-OPERATOR	736
Y	*225-8001*	1	WIRING GP-CHASSIS	189

Y-SEPARATE ILLUSTRATION

<END>

218-6216 COMMON AR

S/N: RLL1-3199

SMCS-7000 **i01943571**

NOTE	PART NUMBER	QTY	PART NAME 1 2 3 4 5 6 (PRODUCT LEVEL)	SEE PAGE
Y	*218-6350*	1	CAB AR-ENCLOSED ROPS	665
Y	*218-5910*	1	CHASSIS AR	1
Y	*218-6177*	1	FILM GP	761
Y	*218-5620*	1	HYDRAULIC AR	374
Y	*228-1767*	1	INSTALLATION AR-ENGINE	24
Y	*218-6500*	1	POWER TRAIN AR	242

Y-SEPARATE ILLUSTRATION

<END>

MACHINE ARRANGEMENT

218-6226 COMMON AR

S/N: MJH1-5599

SMCS-7000 **i02289149**

NOTE	PART NUMBER	QTY	PART NAME 1 2 3 4 5 6 (PRODUCT LEVEL)	SEE PAGE
Y	*218-6350*	1	CAB AR-ENCLOSED ROPS	665
Y	*218-5910*	1	CHASSIS AR	1
Y	*142-8830*	1	COUNTERWEIGHT GP	296
Y	*218-6178*	1	FILM GP	762
Y	*218-5820*	1	HYDRAULIC AR	375
Y	*218-0911*	1	INSTALLATION AR-ENGINE	23
Y	*218-6500*	1	POWER TRAIN AR	242
			S/N: MJH1-2524	
Y	*261-5750*	1	POWER TRAIN AR	242
			S/N: MJH2525-5599	

Y-SEPARATE ILLUSTRATION

<END>

218-6232 COMMON AR

S/N: SCH1-1599

SMCS-7000 **i01943574**

NOTE	PART NUMBER	QTY	PART NAME 1 2 3 4 5 6 (PRODUCT LEVEL)	SEE PAGE
Y	*218-6350*	1	CAB AR-ENCLOSED ROPS	665
Y	*218-6610*	1	CHASSIS AR	1
Y	*218-6217*	1	FILM GP	763
Y	*218-6820*	1	HYDRAULIC AR	378
Y	*228-1767*	1	INSTALLATION AR-ENGINE	24
Y	*218-6200*	1	POWER TRAIN AR	242

Y-SEPARATE ILLUSTRATION

<END>

218-6242 COMMON AR

S/N: BXM1-2399

SMCS-7000 **i02357504**

NOTE	PART NUMBER	QTY	PART NAME 1 2 3 4 5 6 (PRODUCT LEVEL)	SEE PAGE
Y	*218-6350*	1	CAB AR-ENCLOSED ROPS	665
Y	*218-6610*	1	CHASSIS AR	1
Y	*218-6218*	1	FILM GP	764
Y	*218-6920*	1	HYDRAULIC AR	378
Y	*218-0911*	1	INSTALLATION AR-ENGINE	23
Y	*218-6200*	1	POWER TRAIN AR	242
			S/N: BXM1-1016	
Y	*261-5751*	1	POWER TRAIN AR	242
			S/N: BXM1017-2399	

Y-SEPARATE ILLUSTRATION

<END>

MACHINE ARRANGEMENT

278-1216 COMMON AR

S/N: RLL3200-UP

SMCS-7000 **i02437714**

NOTE	PART NUMBER	QTY	PART NAME 1 2 3 4 5 6 (PRODUCT LEVEL)	SEE PAGE
Y	*218-6350*	1	CAB AR-ENCLOSED ROPS	665
Y	*218-5910*	1	CHASSIS AR	1
Y	*218-6177*	1	FILM GP	761
Y	*278-1217*	1	HYDRAULIC AR	380
Y	*278-1218*	1	INSTALLATION AR-ENGINE	25
Y	*6V-1970*	1	LITERATURE GP	721
Y	*218-6500*	1	POWER TRAIN AR	242

Y-SEPARATE ILLUSTRATION

<END>

278-1226 COMMON AR

S/N: MJH5600-UP

SMCS-7000 **i02440216**

NOTE	PART NUMBER	QTY	PART NAME 1 2 3 4 5 6 (PRODUCT LEVEL)	SEE PAGE
Y	*218-6350*	1	CAB AR-ENCLOSED ROPS	665
Y	*218-5910*	1	CHASSIS AR	1
Y	*142-8830*	1	COUNTERWEIGHT GP	296
Y	*218-6178*	1	FILM GP	762
Y	*278-1227*	1	HYDRAULIC AR	381
Y	*278-1228*	1	INSTALLATION AR-ENGINE	26
Y	*6V-1970*	1	LITERATURE GP	721
Y	*261-5750*	1	POWER TRAIN AR	242

Y-SEPARATE ILLUSTRATION

<END>

278-1232 COMMON AR

S/N: SCH1600-UP

SMCS-7000 **i02426166**

NOTE	PART NUMBER	QTY	PART NAME 1 2 3 4 5 6 (PRODUCT LEVEL)	SEE PAGE
Y	*218-6350*	1	CAB AR-ENCLOSED ROPS	665
Y	*218-6610*	1	CHASSIS AR	1
Y	*218-6217*	1	FILM GP	763
Y	*278-1233*	1	HYDRAULIC AR	381
Y	*278-1218*	1	INSTALLATION AR-ENGINE	25
Y	*218-6200*	1	POWER TRAIN AR	242

Y-SEPARATE ILLUSTRATION

<END>

MACHINE ARRANGEMENT

278-1242 COMMON AR

S/N: BXM2400-UP

SMCS-7000 **i02426133**

NOTE	PART NUMBER	QTY	PART NAME 1 2 3 4 5 6 (PRODUCT LEVEL)	SEE PAGE
Y	*218-6350*	1	CAB AR-ENCLOSED ROPS	665
Y	*218-6610*	1	CHASSIS AR	1
Y	*218-6218*	1	FILM GP	764
Y	*278-1243*	1	HYDRAULIC AR	382
Y	*278-1228*	1	INSTALLATION AR-ENGINE	26
Y	*261-5751*	1	POWER TRAIN AR	242

Y-SEPARATE ILLUSTRATION

<END>

252-0449 CONVERSION AR-MACHINE

S/N: SCH1600-UP; RLL3200-UP

AN ATTACHMENT

SMCS-7000 **i02450995**

NOTE	PART NUMBER	QTY	PART NAME 1 2 3 4 5 6 (PRODUCT LEVEL)	SEE PAGE
Y	*142-8652*	1	LIGHTING GP-STOP & TAIL	177
Y	*272-3049*	1	MUFFLER GP	118
Y	*218-5790*	1	PANEL AR-INSTRUMENT	727
Y	*218-6175*	1	PUMP & MTG GP-WORK TOOL	514

Y-SEPARATE ILLUSTRATION

<END>

261-6155 CONVERSION AR-MACHINE–EUROPE

S/N: RLL3200-UP

AN ATTACHMENT

SMCS-7000 **i02428117**

NOTE	PART NUMBER	QTY	PART NAME 1 2 3 4 5 6 (PRODUCT LEVEL)	SEE PAGE
Y	*216-6146*	1	BOX GP-STORAGE	664
Y	*218-6708*	1	LIFTING GP-MACHINE	313
Y	*142-8652*	1	LIGHTING GP-STOP & TAIL	177
Y	*272-3049*	1	MUFFLER GP	118
Y	*218-5791*	1	PANEL AR-INSTRUMENT	727
Y	*261-6094*	1	PUMP & MTG GP-WORK TOOL	515
Y	*233-5616*	1	SUPPRESSION GP-SOUND	321
Y	*230-3743*	1	WIRING GP-HORN	196
	218-5601	1	FLOOR MAT	

Y-SEPARATE ILLUSTRATION

<END>

MACHINE ARRANGEMENT

261-6156 CONVERSION AR-MACHINE—EUROPE

S/N: SCH1600-UP

AN ATTACHMENT

SMCS-7000 **i02428135**

NOTE	PART NUMBER	QTY	PART NAME 1 2 3 4 5 6 (PRODUCT LEVEL)	SEE PAGE
Y	*216-6146*	1	BOX GP-STORAGE	664
Y	*188-0147*	1	LIFTING GP-MACHINE	311
Y	*142-8652*	1	LIGHTING GP-STOP & TAIL	177
Y	*272-3049*	1	MUFFLER GP	118
Y	*218-5791*	1	PANEL AR-INSTRUMENT	727
Y	*261-6094*	1	PUMP & MTG GP-WORK TOOL	515
Y	*233-5616*	1	SUPPRESSION GP-SOUND	321
Y	*230-3743*	1	WIRING GP-HORN	196
	218-5601	1	FLOOR MAT	

Y-SEPARATE ILLUSTRATION

<END>

261-6157 CONVERSION AR-MACHINE—EUROPE

S/N: MJH5600-UP

AN ATTACHMENT

SMCS-7000 **i02432695**

NOTE	PART NUMBER	QTY	PART NAME 1 2 3 4 5 6 (PRODUCT LEVEL)	SEE PAGE
Y	*216-6146*	1	BOX GP-STORAGE	664
Y	*218-6708*	1	LIFTING GP-MACHINE	313
Y	*142-8652*	1	LIGHTING GP-STOP & TAIL	177
Y	*261-6121*	1	MOTOR & MTG GP-HYDRAULIC FAN	503
Y	*272-3047*	1	MUFFLER GP	117
Y	*218-5791*	1	PANEL AR-INSTRUMENT	727
Y	*261-6118*	1	RADIATOR & OIL COOLER MTG GP	106
Y	*233-5616*	1	SUPPRESSION GP-SOUND	321
Y	*230-3743*	1	WIRING GP-HORN	196
Y	*272-1625*	1	WIRING GP-MACHINE	197
	218-5601	1	FLOOR MAT	

Y-SEPARATE ILLUSTRATION

<END>

MACHINE ARRANGEMENT

261-6158 CONVERSION AR-MACHINE—EUROPE

S/N: BXM2400-UP
AN ATTACHMENT

SMCS-7000 **i02441115**

NOTE	PART NUMBER	QTY	PART NAME 1 2 3 4 5 6 (PRODUCT LEVEL)	SEE PAGE
Y	*218-5791*	1	PANEL AR-INSTRUMENT	727
Y	*216-6146*	1	BOX GP-STORAGE	664
Y	*188-0147*	1	LIFTING GP-MACHINE	311
Y	*142-8652*	1	LIGHTING GP-STOP & TAIL	177
Y	*261-6121*	1	MOTOR & MTG GP-HYDRAULIC FAN	503
Y	*272-3047*	1	MUFFLER GP	117
Y	*261-6118*	1	RADIATOR & OIL COOLER MTG GP	106
Y	*233-5616*	1	SUPPRESSION GP-SOUND	321
Y	*230-3743*	1	WIRING GP-HORN	196
Y	*272-1625*	1	WIRING GP-MACHINE	197
	218-5601	1	FLOOR MAT	

Y-SEPARATE ILLUSTRATION

<END>

261-6160 CONVERSION AR-MACHINE

S/N: MJH5600-UP; BXM2400-UP
AN ATTACHMENT

SMCS-7000 **i02454485**

NOTE	PART NUMBER	QTY	PART NAME 1 2 3 4 5 6 (PRODUCT LEVEL)	SEE PAGE
Y	*142-8652*	1	LIGHTING GP-STOP & TAIL	177
Y	*218-6058*	1	MOTOR & MTG GP-HYDRAULIC FAN	501
Y	*272-3047*	1	MUFFLER GP	117
Y	*218-5790*	1	PANEL AR-INSTRUMENT	727
Y	*228-1783*	1	RADIATOR & OIL COOLER MTG GP	104

Y-SEPARATE ILLUSTRATION

<END>

MACHINE ARRANGEMENT

261-6187 CONVERSION AR-MACHINE–GERMANY, ITALY

S/N: MJH5600-UP

AN ATTACHMENT

SMCS-7000 **i02456105**

NOTE	PART NUMBER	QTY	PART NAME 1 2 3 4 5 6 (PRODUCT LEVEL)	SEE PAGE
Y	*216-6146*	1	BOX GP-STORAGE	664
Y	**177-9152**	1	KIT-ROADING PLATE & MOUNTING (BUCKET)	635
Y	*218-6708*	1	LIFTING GP-MACHINE	313
Y	*216-4715*	1	LIGHTING GP-ROADING	173
Y	*175-4238*	1	LOCK GP-QUICK COUPLER (MECHANICAL)	638
Y	*238-7671*	1	MIRROR & MTG GP-REAR VIEW	315
Y	*261-6121*	1	MOTOR & MTG GP-HYDRAULIC FAN	503
Y	*272-3047*	1	MUFFLER GP	117
Y	*218-5791*	1	PANEL AR-INSTRUMENT	727
Y	*261-6118*	1	RADIATOR & OIL COOLER MTG GP	106
Y	*233-5616*	1	SUPPRESSION GP-SOUND	321
Y	*230-3743*	1	WIRING GP-HORN	196
Y	*272-1625*	1	WIRING GP-MACHINE	197
	218-5601	1	FLOOR MAT	

Y-SEPARATE ILLUSTRATION

<END>

261-6197 CONVERSION AR-MACHINE–

EUROPEAN, UNITED KINGDOM

S/N: MJH5600-UP

AN ATTACHMENT

SMCS-7000 **i02456104**

NOTE	PART NUMBER	QTY	PART NAME 1 2 3 4 5 6 (PRODUCT LEVEL)	SEE PAGE
Y	*216-6146*	1	BOX GP-STORAGE	664
Y	*218-6708*	1	LIFTING GP-MACHINE	313
Y	*142-8652*	1	LIGHTING GP-STOP & TAIL	177
Y	*261-6121*	1	MOTOR & MTG GP-HYDRAULIC FAN	503
Y	*272-3047*	1	MUFFLER GP	117
Y	*218-5791*	1	PANEL AR-INSTRUMENT	727
Y	*261-6118*	1	RADIATOR & OIL COOLER MTG GP	106
Y	*233-5616*	1	SUPPRESSION GP-SOUND	321
Y	*230-3743*	1	WIRING GP-HORN	196
Y	*272-1625*	1	WIRING GP-MACHINE	197
	218-5601	1	FLOOR MAT	

Y-SEPARATE ILLUSTRATION

<END>

MACHINE ARRANGEMENT

278-1212 CONVERSION AR-MACHINE–ITALY

S/N: MJH5600-UP

AN ATTACHMENT

SMCS-7000 **i02445031**

NOTE	PART NUMBER	QTY	PART NAME 1 2 3 4 5 6 (PRODUCT LEVEL)	SEE PAGE
Y	*216-6146*	1	BOX GP-STORAGE	664
Y	*278-1293*	1	CONVERSION GP-ROADING	295
Y	**177-9152**	1	KIT-ROADING PLATE & MOUNTING (BUCKET)	635
Y	*218-6708*	1	LIFTING GP-MACHINE	313
Y	*216-4715*	1	LIGHTING GP-ROADING	173
Y	*175-4238*	1	LOCK GP-QUICK COUPLER (MECHANICAL)	638
Y	*238-7671*	1	MIRROR & MTG GP-REAR VIEW	315
Y	*261-6121*	1	MOTOR & MTG GP-HYDRAULIC FAN	503
Y	*225-7963*	1	MOUNTING GP-REGISTRATION	318
Y	*272-3047*	1	MUFFLER GP	117
Y	*218-5791*	1	PANEL AR-INSTRUMENT	727
Y	*261-6118*	1	RADIATOR & OIL COOLER MTG GP	106
Y	*233-5616*	1	SUPPRESSION GP-SOUND	321
Y	*230-3743*	1	WIRING GP-HORN	196
Y	*272-1625*	1	WIRING GP-MACHINE	197
Y	*225-7964*	1	WIRING GP-REAR LIGHTING	199
	218-5601	1	FLOOR MAT	

Y-SEPARATE ILLUSTRATION

<END>

278-1213 CONVERSION AR-MACHINE–ITALY

S/N: BXM2400-UP

AN ATTACHMENT

SMCS-7000 **i02445032**

NOTE	PART NUMBER	QTY	PART NAME 1 2 3 4 5 6 (PRODUCT LEVEL)	SEE PAGE
Y	*216-6146*	1	BOX GP-STORAGE	664
Y	*278-1293*	1	CONVERSION GP-ROADING	295
Y	**177-9152**	1	KIT-ROADING PLATE & MOUNTING (BUCKET)	635
Y	*188-0147*	1	LIFTING GP-MACHINE	311
Y	*216-4716*	1	LIGHTING GP-ROADING	175
Y	*175-4238*	1	LOCK GP-QUICK COUPLER (MECHANICAL)	638
Y	*238-7671*	1	MIRROR & MTG GP-REAR VIEW	315
Y	*261-6121*	1	MOTOR & MTG GP-HYDRAULIC FAN	503
Y	*225-7963*	1	MOUNTING GP-REGISTRATION	318
Y	*272-3047*	1	MUFFLER GP	117
Y	*218-5791*	1	PANEL AR-INSTRUMENT	727
Y	*261-6118*	1	RADIATOR & OIL COOLER MTG GP	106
Y	*233-5616*	1	SUPPRESSION GP-SOUND	321
Y	*230-3743*	1	WIRING GP-HORN	196
Y	*272-1625*	1	WIRING GP-MACHINE	197
Y	*225-7964*	1	WIRING GP-REAR LIGHTING	199
	218-5601	1	FLOOR MAT	

Y-SEPARATE ILLUSTRATION

<END>

MACHINE ARRANGEMENT

278-1220 CONVERSION AR-MACHINE—UNITED KINGDOM

S/N: MJH5600-UP

AN ATTACHMENT

SMCS-7000 **i02444343**

NOTE	PART NUMBER	QTY	PART NAME 1 2 3 4 5 6 (PRODUCT LEVEL)	SEE PAGE
Y	*216-6146*	1	BOX GP-STORAGE	664
Y	**191-9684**	1	FILM GP	760
Y	*218-6708*	1	LIFTING GP-MACHINE	313
Y	*142-8652*	1	LIGHTING GP-STOP & TAIL	177
Y	*261-6121*	1	MOTOR & MTG GP-HYDRAULIC FAN	503
Y	*272-3047*	1	MUFFLER GP	117
Y	*218-5791*	1	PANEL AR-INSTRUMENT	727
Y	*261-6118*	1	RADIATOR & OIL COOLER MTG GP	106
Y	*233-5616*	1	SUPPRESSION GP-SOUND	321
Y	*230-3743*	1	WIRING GP-HORN	196
Y	*272-1625*	1	WIRING GP-MACHINE	197
	218-5601	1	FLOOR MAT	

Y-SEPARATE ILLUSTRATION

<END>

278-1221 CONVERSION AR-MACHINE—UNITED KINGDOM

S/N: BXM2400-UP

AN ATTACHMENT

SMCS-7000 **i02444336**

NOTE	PART NUMBER	QTY	PART NAME 1 2 3 4 5 6 (PRODUCT LEVEL)	SEE PAGE
Y	*216-6146*	1	BOX GP-STORAGE	664
Y	**191-9684**	1	FILM GP	760
Y	*188-0147*	1	LIFTING GP-MACHINE	311
Y	*142-8652*	1	LIGHTING GP-STOP & TAIL	177
Y	*261-6121*	1	MOTOR & MTG GP-HYDRAULIC FAN	503
Y	*272-3047*	1	MUFFLER GP	117
Y	*218-5791*	1	PANEL AR-INSTRUMENT	727
Y	*261-6118*	1	RADIATOR & OIL COOLER MTG GP	106
Y	*233-5616*	1	SUPPRESSION GP-SOUND	321
Y	*230-3743*	1	WIRING GP-HORN	196
Y	*272-1625*	1	WIRING GP-MACHINE	197
	218-5601	1	FLOOR MAT	

Y-SEPARATE ILLUSTRATION

<END>

MACHINE ARRANGEMENT

278-1224 CONVERSION AR-MACHINE—GERMANY

S/N: MJH5600-UP

AN ATTACHMENT

SMCS-7000 **i02454481**

NOTE	PART NUMBER	QTY	PART NAME 1 2 3 4 5 6 (PRODUCT LEVEL)	SEE PAGE
Y	*216-6146*	1	BOX GP-STORAGE	664
Y	**278-1292**	1	CONVERSION GP-ROADING	294
Y	**177-9152**	1	KIT-ROADING PLATE & MOUNTING (BUCKET)	635
Y	*218-6708*	1	LIFTING GP-MACHINE	313
Y	*216-4715*	1	LIGHTING GP-ROADING	173
Y	*175-4238*	1	LOCK GP-QUICK COUPLER (MECHANICAL)	638
Y	*238-7672*	1	MIRROR & MTG GP-REAR VIEW	316
Y	**261-6121**	1	MOTOR & MTG GP-HYDRAULIC FAN	503
Y	**272-3047**	1	MUFFLER GP	117
Y	*218-5791*	1	PANEL AR-INSTRUMENT	727
Y	**261-6118**	1	RADIATOR & OIL COOLER MTG GP	106
Y	*233-5616*	1	SUPPRESSION GP-SOUND	321
Y	*173-3022*	1	VISOR GP-CAB	752
Y	*230-3743*	1	WIRING GP-HORN	196
Y	*272-1625*	1	WIRING GP-MACHINE	197
	222-5695	1	SUPPORT GP-STORAGE BOX	
	216-6144	1	BRACKET AS	
	233-5680	3	FILM-IDENTIFICATION (13-KM/H)	
			(1-FACING THE REAR OF THE MACHINE, ON THE ENGINE ENCLOSURE, THE LEFT EDGE OF THE FILM TO BE LOCATED 17-MM FROM THE	
			VERTICAL CENTERLINE OF THE MACHINE. THE BOTTOM EDGE OF THE FILM IS 5-MM ABOVE THE SEAM BETWEEN THE HOOD & DOOR ASSEMBLY)	
			(1-FACING THE RIGHT SIDE OF THE MACHINE, LOCATED ON THE LOWER FRAME ASSEMBLY, THE RIGHT EDGE OF THE FILM IS TO BE 661-MM	
			FROM THE FRONT EDGE OF THE LOWER FRAME ASSEMBLY. THE BOTTOM EDGE OF THE FILM IS 425-MM FROM THE BOTTOM EDGE OF THE LOWER	
			FRAME ASSEMBLY)	
			(1-FACING THE LEFT SIDE OF THE MACHINE, LOCATED ON THE LOWER FRAME ASSEMBLY, THE RIGHT EDGE OF THE FILM IS TO BE 661-MM	
			FROM THE FRONT EDGE OF THE LOWER FRAME ASSEMBLY. THE BOTTOM EDGE OF THE FILM IS 425-MM FROM THE BOTTOM EDGE OF THE LOWER	
			FRAME ASSEMBLY)	
	218-5601	1	FLOOR MAT	

Y-SEPARATE ILLUSTRATION

<END>

MACHINE ARRANGEMENT

278-1225 CONVERSION AR-MACHINE–GERMANY

S/N: BXM2400-UP

AN ATTACHMENT

SMCS-7000 **i02473430**

NOTE	PART NUMBER	QTY	PART NAME 1 2 3 4 5 6 (PRODUCT LEVEL)	SEE PAGE
Y	*216-6146*	1	BOX GP-STORAGE	664
Y	*278-1292*	1	CONVERSION GP-ROADING	294
Y	**177-9152**	1	KIT-ROADING PLATE & MOUNTING (BUCKET)	635
Y	*188-0147*	1	LIFTING GP-MACHINE	311
Y	*216-4716*	1	LIGHTING GP-ROADING	175
Y	*175-4238*	1	LOCK GP-QUICK COUPLER (MECHANICAL)	638
Y	*238-7672*	1	MIRROR & MTG GP-REAR VIEW	316
Y	*261-6121*	1	MOTOR & MTG GP-HYDRAULIC FAN	503
Y	*272-3047*	1	MUFFLER GP	117
Y	*218-5791*	1	PANEL AR-INSTRUMENT	727
Y	*261-6118*	1	RADIATOR & OIL COOLER MTG GP	106
Y	*233-5616*	1	SUPPRESSION GP-SOUND	321
Y	*173-3022*	1	VISOR GP-CAB	752
Y	*230-3743*	1	WIRING GP-HORN	196
Y	*272-1625*	1	WIRING GP-MACHINE	197
	222-5695	1	SUPPORT GP-STORAGE BOX	
	216-6144	1	BRACKET AS	
	233-5680	3	FILM-IDENTIFICATION (13-KM/H)	
			(1-FACING THE REAR OF THE MACHINE, ON THE ENGINE ENCLOSURE, THE LEFT EDGE OF THE FILM TO BE LOCATED 17-MM FROM THE	
			VERTICAL CENTERLINE OF THE MACHINE. THE BOTTOM EDGE OF THE FILM IS 5-MM ABOVE THE SEAM BETWEEN THE HOOD & DOOR	
			ASSEMBLY)	
			(1-FACING THE RIGHT SIDE OF THE MACHINE, LOCATED ON THE LOWER FRAME ASSEMBLY, THE RIGHT EDGE OF THE FILM IS TO BE	
			661-MM FROM THE FRONT EDGE OF THE LOWER FRAME ASSEMBY. THE BOTTOM EDGE OF THEOF THE FILM IS 425-MM FROM THE BOTTOM	
			EDGE OF THE LOWER FRAME ASSEMBLY)	
			(1-FACING THE LEFT SIDE OF THE MACHINE, LOCATED ON THE LOWER FRAME ASSEMBLY, THE RIGHT EDGE OF THE FILM IS TO BE 661-MM	
			FROM THE FRONT EDGE OF THE LOWER FRAME ASSEMBLY. THE BOTTOM EDGE OF THE FILM IS 425-MM FROM THE BOTTOM EDGE OF THE	
			LOWER FRAME ASSEMBLY)	
	218-5601	1	FLOOR MAT	

Y-SEPARATE ILLUSTRATION

<END>

MACHINE ARRANGEMENT

278-5347 CONVERSION AR-MACHINE—UNITED KINGDOM

S/N: RLL3200-UP

AN ATTACHMENT

SMCS-7000 **i02473273**

NOTE	PART NUMBER	QTY	PART NAME 1 2 3 4 5 6 (PRODUCT LEVEL)	SEE PAGE
Y	*216-6146*	1	BOX GP-STORAGE	664
Y	**191-9684**	1	FILM GP	760
Y	*218-6708*	1	LIFTING GP-MACHINE	313
Y	*142-8652*	1	LIGHTING GP-STOP & TAIL	177
Y	*272-3049*	1	MUFFLER GP	118
Y	*218-5791*	1	PANEL AR-INSTRUMENT	727
Y	*261-6094*	1	PUMP & MTG GP-WORK TOOL	515
Y	*233-5616*	1	SUPPRESSION GP-SOUND	321
Y	*230-3743*	1	WIRING GP-HORN	196
	218-5601	1	FLOOR MAT	

Y-SEPARATE ILLUSTRATION

<END>

278-5348 CONVERSION AR-MACHINE—UNITED KINGDOM

S/N: SCH1600-UP

AN ATTACHMENT

SMCS-7000 **i02473274**

NOTE	PART NUMBER	QTY	PART NAME 1 2 3 4 5 6 (PRODUCT LEVEL)	SEE PAGE
Y	*216-6146*	1	BOX GP-STORAGE	664
Y	**191-9684**	1	FILM GP	760
Y	*188-0147*	1	LIFTING GP-MACHINE	311
Y	*142-8652*	1	LIGHTING GP-STOP & TAIL	177
Y	*272-3049*	1	MUFFLER GP	118
Y	*218-5791*	1	PANEL AR-INSTRUMENT	727
Y	*261-6094*	1	PUMP & MTG GP-WORK TOOL	515
Y	*233-5616*	1	SUPPRESSION GP-SOUND	321
Y	*230-3743*	1	WIRING GP-HORN	196
	218-5601	1	FLOOR MAT	

Y-SEPARATE ILLUSTRATION

<END>

MACHINE ARRANGEMENT

278-5369 CONVERSION AR-MACHINE—ITALY

S/N: RLL3200-UP

AN ATTACHMENT

SMCS-7000 **i02473275**

NOTE	PART NUMBER	QTY	PART NAME 1 2 3 4 5 6 (PRODUCT LEVEL)	SEE PAGE
Y	*216-6146*	1	BOX GP-STORAGE	664
Y	*278-1293*	1	CONVERSION GP-ROADING	295
Y	**177-9152**	1	KIT-ROADING PLATE & MOUNTING (BUCKET)	635
Y	*218-6708*	1	LIFTING GP-MACHINE	313
Y	*216-4715*	1	LIGHTING GP-ROADING	173
Y	*175-4238*	1	LOCK GP-QUICK COUPLER (MECHANICAL)	638
Y	*238-7671*	1	MIRROR & MTG GP-REAR VIEW	315
Y	*225-7963*	1	MOUNTING GP-REGISTRATION	318
Y	*272-3049*	1	MUFFLER GP	118
Y	*218-5791*	1	PANEL AR-INSTRUMENT	727
Y	*261-6094*	1	PUMP & MTG GP-WORK TOOL	515
Y	*233-5616*	1	SUPPRESSION GP-SOUND	321
Y	*230-3743*	1	WIRING GP-HORN	196
Y	*225-7964*	1	WIRING GP-REAR LIGHTING	199
	218-5601	1	FLOOR MAT	

Y-SEPARATE ILLUSTRATION

<END>

278-5370 CONVERSION AR-MACHINE

S/N: SCH1600-UP

AN ATTACHMENT

SMCS-7000 **i02445036**

NOTE	PART NUMBER	QTY	PART NAME 1 2 3 4 5 6 (PRODUCT LEVEL)	SEE PAGE
Y	*216-6146*	1	BOX GP-STORAGE	664
Y	*278-1293*	1	CONVERSION GP-ROADING	295
Y	**177-9152**	1	KIT-ROADING PLATE & MOUNTING (BUCKET)	635
Y	*188-0147*	1	LIFTING GP-MACHINE	311
Y	*216-4716*	1	LIGHTING GP-ROADING	175
Y	*175-4238*	1	LOCK GP-QUICK COUPLER (MECHANICAL)	638
Y	*238-7671*	1	MIRROR & MTG GP-REAR VIEW	315
Y	*225-7963*	1	MOUNTING GP-REGISTRATION	318
Y	*272-3049*	1	MUFFLER GP	118
Y	*218-5791*	1	PANEL AR-INSTRUMENT	727
Y	*261-6094*	1	PUMP & MTG GP-WORK TOOL	515
Y	*233-5616*	1	SUPPRESSION GP-SOUND	321
Y	*230-3743*	1	WIRING GP-HORN	196
Y	*225-7964*	1	WIRING GP-REAR LIGHTING	199
	218-5601	1	FLOOR MAT	

Y-SEPARATE ILLUSTRATION

<END>

MACHINE ARRANGEMENT

278-5408 CONVERSION AR-MACHINE—ITALY, HIGH FLOW

S/N: MJH5600-UP

AN ATTACHMENT

SMCS-7000 **i02471459**

NOTE	PART NUMBER	QTY	PART NAME 1 2 3 4 5 6 (PRODUCT LEVEL)	SEE PAGE
Y	*216-6146*	1	BOX GP-STORAGE	664
Y	*278-1293*	1	CONVERSION GP-ROADING	295
Y	**177-9152**	1	KIT-ROADING PLATE & MOUNTING (BUCKET)	635
Y	*218-6708*	1	LIFTING GP-MACHINE	313
Y	*216-4715*	1	LIGHTING GP-ROADING	173
Y	*175-4238*	1	LOCK GP-QUICK COUPLER (MECHANICAL)	638
Y	*238-7672*	1	MIRROR & MTG GP-REAR VIEW	316
Y	*261-6121*	1	MOTOR & MTG GP-HYDRAULIC FAN	503
Y	*225-7963*	1	MOUNTING GP-REGISTRATION	318
Y	*272-3047*	1	MUFFLER GP	117
Y	*218-5791*	1	PANEL AR-INSTRUMENT	727
Y	*261-6118*	1	RADIATOR & OIL COOLER MTG GP	106
Y	*233-5616*	1	SUPPRESSION GP-SOUND	321
Y	*230-3743*	1	WIRING GP-HORN	196
Y	*272-1625*	1	WIRING GP-MACHINE	197
Y	*225-7964*	1	WIRING GP-REAR LIGHTING	199
	218-5601	1	FLOOR MAT	

Y-SEPARATE ILLUSTRATION

<END>

278-5409 CONVERSION AR-MACHINE—ITALY, HIGH FLOW

S/N: BXM2400-UP

AN ATTACHMENT

SMCS-7000 **i02446347**

NOTE	PART NUMBER	QTY	PART NAME 1 2 3 4 5 6 (PRODUCT LEVEL)	SEE PAGE
Y	*216-6146*	1	BOX GP-STORAGE	664
Y	*234-0793*	1	CONVERSION GP-ROADING	293
Y	**177-9152**	1	KIT-ROADING PLATE & MOUNTING (BUCKET)	635
Y	*188-0147*	1	LIFTING GP-MACHINE	311
Y	*216-4716*	1	LIGHTING GP-ROADING	175
Y	*175-4238*	1	LOCK GP-QUICK COUPLER (MECHANICAL)	638
Y	*238-7672*	1	MIRROR & MTG GP-REAR VIEW	316
Y	*261-6121*	1	MOTOR & MTG GP-HYDRAULIC FAN	503
Y	*225-7963*	1	MOUNTING GP-REGISTRATION	318
Y	*272-3047*	1	MUFFLER GP	117
Y	*218-5791*	1	PANEL AR-INSTRUMENT	727
Y	*261-6118*	1	RADIATOR & OIL COOLER MTG GP	106
Y	*233-5616*	1	SUPPRESSION GP-SOUND	321
Y	*230-3743*	1	WIRING GP-HORN	196
Y	*272-1625*	1	WIRING GP-MACHINE	197
Y	*225-7964*	1	WIRING GP-REAR LIGHTING	199
	218-5601	1	FLOOR MAT	

Y-SEPARATE ILLUSTRATION

<END>

MACHINE ARRANGEMENT

278-5413 CONVERSION AR-MACHINE—GERMANY

S/N: RLL3200-UP

AN ATTACHMENT

SMCS-7000 **i02449500**

NOTE	PART NUMBER	QTY	PART NAME 1 2 3 4 5 6 (PRODUCT LEVEL)	SEE PAGE
Y	*216-6146*	1	BOX GP-STORAGE	664
Y	*278-1292*	1	CONVERSION GP-ROADING	294
Y	**177-9152**	1	KIT-ROADING PLATE & MOUNTING (BUCKET)	635
Y	*218-6708*	1	LIFTING GP-MACHINE	313
Y	*216-4715*	1	LIGHTING GP-ROADING	173
Y	*175-4238*	1	LOCK GP-QUICK COUPLER (MECHANICAL)	638
Y	*238-7671*	1	MIRROR & MTG GP-REAR VIEW	315
Y	*272-3049*	1	MUFFLER GP	118
Y	*218-5791*	1	PANEL AR-INSTRUMENT	727
Y	*261-6094*	1	PUMP & MTG GP-WORK TOOL	515
Y	*233-5616*	1	SUPPRESSION GP-SOUND	321
Y	*173-3022*	1	VISOR GP-CAB	752
Y	*230-3743*	1	WIRING GP-HORN	196
	222-5695	1	SUPPORT GP-STORAGE BOX	
	216-6144	1	BRACKET AS	
	233-5680	3	FILM-IDENTIFICATION (13-KM/H)	
			(1 - FACING THE REAR OF THE MACHINE, ON THE ENGINE ENCLOSURE, THE LEFT EDGE OF THE FILM 17-MM FROM THE VERTICAL	
			CENTERLINE OF THE MACHINE. THE BOTTOM EDGE OF THE FILM 5-MM ABOVE THE SEAM BETWEEN THE HOOD & DOOR ASSEMBLY)	
			(2 - ON RIGHT & LEFT SIDE OF MACHINE, ON THE LOWER FRAME ASSEMBLY, THE RIGHT EDGE OF THE FILM 661-MM FROM THE FRONT	
			EDGE OF THE LOWER FRAME ASSEMBLY. THE BOTTOM EDGE OF THE FILM 425-MM FROM THE BOTTOM EDGE OF THE LOWER FRAME ASSEMBLY)	
	218-5601	1	FLOOR MAT	

Y-SEPARATE ILLUSTRATION

<END>

MACHINE ARRANGEMENT

278-5414 CONVERSION AR-MACHINE—GERMANY

S/N: SCH1600-UP

AN ATTACHMENT

SMCS-7000 **i02449502**

NOTE	PART NUMBER	QTY	PART NAME 1 2 3 4 5 6 (PRODUCT LEVEL)	SEE PAGE
Y	*216-6146*	1	BOX GP-STORAGE	664
Y	*278-1292*	1	CONVERSION GP-ROADING	294
Y	**177-9152**	1	KIT-ROADING PLATE & MOUNTING (BUCKET)	635
Y	*188-0147*	1	LIFTING GP-MACHINE	311
Y	*216-4716*	1	LIGHTING GP-ROADING	175
Y	*175-4238*	1	LOCK GP-QUICK COUPLER (MECHANICAL)	638
Y	*238-7671*	1	MIRROR & MTG GP-REAR VIEW	315
Y	*272-3049*	1	MUFFLER GP	118
Y	*218-5791*	1	PANEL AR-INSTRUMENT	727
Y	*261-6094*	1	PUMP & MTG GP-WORK TOOL	515
Y	*233-5616*	1	SUPPRESSION GP-SOUND	321
Y	*173-3022*	1	VISOR GP-CAB	752
Y	*230-3743*	1	WIRING GP-HORN	196
	222-5695	1	SUPPORT GP-STORAGE BOX	
	216-6144	1	BRACKET AS	
	233-5680	3	FILM-IDENTIFICATION (13-KM/H)	
			(1 - FACING THE REAR OF THE MACHINE, ON THE ENGINE ENCLOSURE, THE LEFT EDGE OF THE FILM 17-MM FROM THE VERTICAL	
			CENTERLINE OF THE MACHINE. THE BOTTOM EDGE OF THE FILM 5-MM ABOVE THE SEAM BETWEEN THE HOOD & DOOR ASSEMBLY)	
			(2 - ON RIGHT & LEFT SIDE OF MACHINE, ON THE LOWER FRAME ASSEMBLY, THE RIGHT EDGE OF THE FILM 661-MM FROM THE FRONT	
			EDGE OF THE LOWER FRAME ASSEMBLY. THE BOTTOM EDGE OF THE FILM 425-MM FROM THE BOTTOM EDGE OF THE LOWER FRAME ASSEMBLY)	
	218-5601	1	FLOOR MAT	

Y-SEPARATE ILLUSTRATION

<END>

MACHINE ARRANGEMENT

278-5441 CONVERSION AR-MACHINE—GERMANY, HIGH FLOW

S/N: MJH5600-UP

AN ATTACHMENT

SMCS-7000 **i02450010**

NOTE	PART NUMBER	QTY	PART NAME 1 2 3 4 5 6 (PRODUCT LEVEL)	SEE PAGE
Y	*216-6146*	1	BOX GP-STORAGE	664
Y	*278-1292*	1	CONVERSION GP-ROADING	294
Y	**177-9152**	1	KIT-ROADING PLATE & MOUNTING (BUCKET)	635
Y	*218-6708*	1	LIFTING GP-MACHINE	313
Y	*216-4715*	1	LIGHTING GP-ROADING	173
Y	*175-4238*	1	LOCK GP-QUICK COUPLER (MECHANICAL)	638
Y	*238-7672*	1	MIRROR & MTG GP-REAR VIEW	316
Y	*261-6121*	1	MOTOR & MTG GP-HYDRAULIC FAN	503
Y	*272-3047*	1	MUFFLER GP	117
Y	*218-5791*	1	PANEL AR-INSTRUMENT	727
Y	*261-6118*	1	RADIATOR & OIL COOLER MTG GP	106
Y	*233-5616*	1	SUPPRESSION GP-SOUND	321
Y	*173-3022*	1	VISOR GP-CAB	752
Y	*230-3743*	1	WIRING GP-HORN	196
Y	*272-1625*	1	WIRING GP-MACHINE	197
	261-6362	1	PLATE & FILM GP	
	225-4148	1	PLATE	
	222-5695	1	SUPPORT GP-STORAGE BOX	
	216-6144	1	BRACKET AS	
	233-5680	3	FILM-IDENTIFICATION (13-KM/H)	
			(1 - FACING THE REAR OF THE MACHINE, ON THE ENGINE ENCLOSURE, THE LEFT EDGE OF THE FILM 17-MM FROM THE VERTICAL	
			CENTERLINE OF THE MACHINE. THE BOTTOM EDGE OF THE FILM 5-MM ABOVE THE SEAM BETWEEN THE HOOD & DOOR ASSEMBLY)	
			(2 - ON RIGHT & LEFT SIDE OF MACHINE, ON THE LOWER FRAME ASSEMBLY, THE RIGHT EDGE OF THE FILM 661-MM FROM THE FRONT	
			EDGE OF THE LOWER FRAME ASSEMBLY. THE BOTTOM EDGE OF THE FILM 425-MM FROM THE BOTTOM EDGE OF THE LOWER FRAME ASSEMBLY)	
	218-5601	1	FLOOR MAT	

Y-SEPARATE ILLUSTRATION

<END>

MACHINE ARRANGEMENT

278-5442 CONVERSION AR-MACHINE—GERMANY, HIGH FLOW

S/N: BXM2400-UP

AN ATTACHMENT

SMCS-7000 **i02473415**

NOTE	PART NUMBER	QTY	PART NAME 1 2 3 4 5 6 (PRODUCT LEVEL)	SEE PAGE
Y	*216-6146*	1	BOX GP-STORAGE	664
Y	*278-1292*	1	CONVERSION GP-ROADING	294
Y	**177-9152**	1	KIT-ROADING PLATE & MOUNTING (BUCKET)	635
Y	*188-0147*	1	LIFTING GP-MACHINE	311
Y	*216-4716*	1	LIGHTING GP-ROADING	175
Y	*175-4238*	1	LOCK GP-QUICK COUPLER (MECHANICAL)	638
Y	*238-7672*	1	MIRROR & MTG GP-REAR VIEW	316
Y	*261-6121*	1	MOTOR & MTG GP-HYDRAULIC FAN	503
Y	*272-3047*	1	MUFFLER GP	117
Y	*218-5791*	1	PANEL AR-INSTRUMENT	727
Y	*261-6118*	1	RADIATOR & OIL COOLER MTG GP	106
Y	*233-5616*	1	SUPPRESSION GP-SOUND	321
Y	*173-3022*	1	VISOR GP-CAB	752
Y	*230-3743*	1	WIRING GP-HORN	196
Y	*272-1625*	1	WIRING GP-MACHINE	197
	222-5695	1	SUPPORT GP-STORAGE BOX	
	216-6144	1	BRACKET AS	
	233-5680	3	FILM-IDENTIFICATION (13-KM/H)	
			(1-FACING THE REAR OF THE MACHINE, ON THE ENGINE ENCLOSURE, THE LEFT EDGE OF THE FILM TO BE LOCATED 17-MM FROM THE	
			VERTICAL CENTERLINE OF THE MACHINE. THE BOTTOM EDGE OF THE FILM IS 5-MM ABOVE THE SEAM BETWEEN THE HOOD & DOOR ASSEMBLY)	
			(1-FACING THE RIGHT SIDE OF THE MACHINE LOCATED ON THE LOWER FRAME ASSEMBLY, THE RIGHT EDGE OF THE FILM IS TO BE 661-MM	
			FROM THE FRONT EDGE OF THE LOWER FRAME ASSEMBLY. THE BOTTOM EDGE OF THE FILM IS 425-MM FROM THE BOTTOM EDGE OF THE LOWER	
			FRAME ASSEMBLY)	
			(1-FACING THE LEFT SIDE OF THE MACHINE, LOCATED ON THE LOWER FRAME ASSEMBLY, THE RIGHT EDGE OF THE FILM IS TO BE 661-MM	
			FROM THE FRONT EDGE OF THE LOWER FRAME ASSEMBLY. THE BOTTOM EDGE OF THE FILM IS 425-MM FROM THE BOTTOM EDGE OF THE LOWER	
			FRAME ASSEMBLY)	
	218-5601	1	FLOOR MAT	

Y-SEPARATE ILLUSTRATION

<END>

ENGINE ARRANGEMENT

218-6550 ENGINE AR

S/N: SCH1-UP; RLL1-UP

SMCS-1000 **i02011626**

NOTE	PART NUMBER	QTY	PART NAME 1 2 3 4 5 6 (PRODUCT LEVEL)	SEE PAGE
Y	**179-1808**	1	ENGINE AR-PRIMARY	21

Y-SEPARATE ILLUSTRATION

ENGINE ARRANGEMENT

218-6750 ENGINE AR

S/N: MJH1-UP; BXM1-UP

AN ATTACHMENT

SMCS-1000 **i01951757**

NOTE	PART NUMBER	QTY	PART NAME 1 2 3 4 5 6 (PRODUCT LEVEL)	SEE PAGE
Y	*233-6648*	1	ENGINE AR-PRIMARY	22

Y-SEPARATE ILLUSTRATION

ENGINE ARRANGEMENT

179-1808 ENGINE AR-PRIMARY

S/N: GGA1-UP; CSD1-UP
38 BRAKE KW (51 BHP) AT 3000 RPM
PART OF 218-6550 ENGINE AR

SMCS-1000 **i02462414**

NOTE	PART NUMBER	QTY	PART NAME 1 2 3 4 5 6 (PRODUCT LEVEL)	SEE PAGE
Y	*247-9912*	1	ALTERNATOR GP-CHARGING	144
Y	*217-7143*	1	CAMSHAFT GP	27
Y	*217-5884*	1	CONNECTION GP-ELECTRICAL (ALTERNATOR, STARTING MOTOR)	148
			S/N: CSD1-9553	
Y	*217-2778*	1	CONNECTION GP-ELECTRICAL	147
			S/N: CSD9554-UP	
Y	*272-9497*	1	CONNECTION GP-ELECTRICAL	149
			S/N: CSD9554-UP	
Y	*217-5867*	1	COVER GP-VALVE MECHANISM	29
Y	*217-1447*	1	CRANKSHAFT GP	36
Y	*217-7395*	1	CYLINDER BLOCK GP	42
Y	**240-0648**	1	CYLINDER BLOCK GP (LONG)	46
Y	*217-2746*	1	CYLINDER HEAD GP	50
Y	*246-3515*	1	FILTER GP-ENGINE OIL	83
Y	*217-7221*	1	FLYWHEEL GP	54
Y	*192-0104*	1	GLOW PLUG GP	155
Y	*231-5129*	1	GOVERNOR GP	126
Y	*217-7238*	1	HOUSING GP-FLYWHEEL	56
Y	*217-7118*	1	HOUSING GP-FRONT	57
	253-8001	1	KIT-GASKET (0.5-MM THK HEAD GASKET)	
	253-8003	1	KIT-GASKET (0.4-MM THK HEAD GASKET)	
Y	*154-1877*	1	LIFTING GP-ENGINE	61
Y	*160-3568*	1	MANIFOLD GP-EXHAUST	112
Y	*154-2435*	1	MOUNTING GP-FAN	65
Y	*217-7748*	1	MOUNTING GP-STARTING MOTOR	
Y	*217-7360*	1	PAN GP-OIL	66
			S/N: CSD1-4402	
Y	*246-3481*	1	PAN GP-OIL	70
			S/N: CSD4403-UP	
Y	*217-1480*	1	PISTON & ROD GP	74
Y	*217-2777*	1	PULLEY GP-CRANKSHAFT	77
Y	*217-7832*	1	PULLEY GP-WATER PUMP	78
			S/N: CSD1-4402	
Y	*251-6791*	1	PULLEY GP-WATER PUMP	79
			S/N: CSD4403-UP	
Y	*176-7711*	1	PUMP & MTG GP-FUEL TRANSFER	136
Y	*217-2764*	1	PUMP GP-FUEL INJECTION	137
			S/N: CSD1-9553	
Y	**271-2120**	1	PUMP GP-FUEL INJECTION	140
			S/N: CSD9554-UP	
Y	*217-7384*	1	PUMP GP-WATER	90
Y	*168-8979*	1	STARTING MOTOR GP-ELECTRIC	185
Y	*263-3256*	1	SENSOR GP-TEMP & PRESS (ENGINE COOLANT, ENGINE OIL)	181
			S/N: CSD1-9553	
Y	*247-0323*	1	SENSOR GP-TEMP & PRESS (ENGINE COOLANT, ENGINE OIL)	180
			S/N: CSD9554-UP	
Y	*217-2753*	1	VALVE MECHANISM GP	80

Y-SEPARATE ILLUSTRATION

ENGINE ARRANGEMENT

233-6648 ENGINE AR-PRIMARY

S/N: GGA1-UP; CSD1-UP
45 BRAKE KW (61 BHP) AT 3000 RPM
PART OF 218-6750 ENGINE AR
AN ATTACHMENT

SMCS-1000 **i02462229**

NOTE	PART NUMBER	QTY	PART NAME 1 2 3 4 5 6 (PRODUCT LEVEL)	SEE PAGE
Y	*246-4319*	1	ALTERNATOR GP-CHARGING	143
Y	*246-3337*	1	CAMSHAFT GP	28
Y	*272-9497*	1	CONNECTION GP-ELECTRICAL	149
			S/N: CSD9634-UP; GGA5204-UP	
Y	*217-2778*	1	CONNECTION GP-ELECTRICAL	147
Y	*217-5884*	1	CONNECTION GP-ELECTRICAL (ALTERNATOR, STARTING MOTOR)	148
Y	*246-3472*	1	COOLER GP-FLTR BASE & ENG OIL	84
Y	*238-9348*	1	COVER GP-VALVE MECHANISM	31
Y	*236-5052*	1	CRANKSHAFT GP	38
			S/N: CSD1-9240; GGA1-525	
Y	*270-6915*	1	CRANKSHAFT GP	40
			S/N: CSD9241-UP; GGA526-UP	
Y	*236-5051*	1	CYLINDER BLOCK GP	44
			S/N: CSD1-9240; GGA1-525	
Y	*270-6932*	1	CYLINDER BLOCK GP	47
			S/N: CSD9241-UP; GGA526-UP	
Y	*236-5129*	1	CYLINDER HEAD GP	52
Y	*246-3515*	1	FILTER GP-ENGINE OIL	83
Y	*217-7221*	1	FLYWHEEL GP	54
Y	*192-0104*	1	GLOW PLUG GP	155
Y	*246-3415*	1	GOVERNOR GP	129
Y	*217-7238*	1	HOUSING GP-FLYWHEEL	56
Y	*246-3338*	1	HOUSING GP-FRONT	59
Y	*251-7618*	1	LIFTING GP-ENGINE	62
Y	*239-0233*	1	MANIFOLD GP-EXHAUST	113
Y	*154-2435*	1	MOUNTING GP-FAN	65
Y	*246-3481*	1	PAN GP-OIL	70
Y	*236-5125*	1	PISTON & ROD GP	75
			S/N: CSD1-9240; GGA1-525	
Y	*270-6930*	1	PISTON & ROD GP	76
			S/N: CSD9241-UP; GGA526-UP	
Y	*217-2777*	1	PULLEY GP-CRANKSHAFT	77
Y	*251-6791*	1	PULLEY GP-WATER PUMP	79
Y	*176-7711*	1	PUMP & MTG GP-FUEL TRANSFER	136
Y	*217-2764*	1	PUMP GP-FUEL INJECTION	137
			S/N: CSD1-9633; GGA1-5203	
Y	*271-2120*	1	PUMP GP-FUEL INJECTION	140
			S/N: CSD9634-UP	
Y	*246-3451*	1	PUMP GP-WATER	94
Y	*168-8979*	1	STARTING MOTOR GP-ELECTRIC	185
Y	*263-3256*	1	SENSOR GP-TEMP & PRESS (ENGINE COOLANT, ENGINE OIL)	181
			S/N: CSD1-9633; GGA1-5203	
Y	*247-0323*	1	SENSOR GP-TEMP & PRESS (ENGINE COOLANT, ENGINE OIL)	180
			S/N: CSD9634-UP; GGA5204-UP	
Y	*239-0230*	1	TURBOCHARGER GP	119
Y	*236-5156*	1	VALVE MECHANISM GP	81

Y-SEPARATE ILLUSTRATION

ENGINE ARRANGEMENT

218-0911 INSTALLATION AR-ENGINE

S/N: MJH1-5599; BXM1-2399

PART OF 218-6226, 218-6242 COMMON AR

SMCS-1000 **i02061860**

NOTE	PART NUMBER	QTY	PART NAME 1 2 3 4 5 6 (PRODUCT LEVEL)	SEE PAGE
Y	*228-1773*	1	AIR CLEANER GP	108
Y	*229-8730*	1	DRAIN GP-ENGINE OIL	53
Y	*246-8723*	1	GUARD GP-BELT	55
Y	*228-1784*	1	LINES GP-AIR	111
Y	*228-1764*	1	MOUNTING GP-ENGINE (SUPPORTS)	63
Y	*241-5789*	1	MOUNTING GP-ENGINE (HARDWARE)	64
Y	*228-1763*	1	MOUNTING GP-PUMP	241
Y	*228-1762*	1	MOUNTING GP-RAD & OIL COOLER	87
Y	*228-1772*	1	MUFFLER & MOUNTING GP	115
Y	*228-1783*	1	RADIATOR & OIL COOLER MTG GP	104
Y	*225-8010*	1	WIRING GP-ENGINE	192

Y-SEPARATE ILLUSTRATION

ENGINE ARRANGEMENT

228-1767 INSTALLATION AR-ENGINE

S/N: SCH1-1599; RLL1-3199

PART OF 218-6216, 218-6232 COMMON AR

SMCS-1000 **i02040010**

NOTE	PART NUMBER	QTY	PART NAME 1 2 3 4 5 6 (PRODUCT LEVEL)	SEE PAGE
Y	*228-1773*	1	AIR CLEANER GP	108
Y	*229-8730*	1	DRAIN GP-ENGINE OIL	53
Y	*246-8723*	1	GUARD GP-BELT	55
Y	*218-0944*	1	LINES GP-AIR	110
Y	*228-1764*	1	MOUNTING GP-ENGINE (SUPPORTS)	63
Y	*241-5789*	1	MOUNTING GP-ENGINE (HARDWARE)	64
Y	*228-1763*	1	MOUNTING GP-PUMP	241
Y	*218-0934*	1	MOUNTING GP-RAD & OIL COOLER	85
Y	*218-0937*	1	MUFFLER & MOUNTING GP	114
Y	*218-0925*	1	RADIATOR & OIL COOLER MTG GP	102
Y	*225-8010*	1	WIRING GP-ENGINE	192

Y-SEPARATE ILLUSTRATION

ENGINE ARRANGEMENT

278-1218 INSTALLATION AR-ENGINE

S/N: SCH1600-UP; RLL3200-UP

PART OF 278-1216, 278-1232 COMMON AR

SMCS-1000 **i02437708**

NOTE	PART NUMBER	QTY	PART NAME 1 2 3 4 5 6 (PRODUCT LEVEL)	SEE PAGE
Y	*228-1773*	1	AIR CLEANER GP	108
Y	*229-8730*	1	DRAIN GP-ENGINE OIL	53
Y	*246-8723*	1	GUARD GP-BELT	55
Y	*218-0944*	1	LINES GP-AIR	110
Y	*228-1764*	1	MOUNTING GP-ENGINE (SUPPORTS)	63
Y	*241-5789*	1	MOUNTING GP-ENGINE (HARDWARE)	64
Y	*228-1763*	1	MOUNTING GP-PUMP	241
Y	*218-0934*	1	MOUNTING GP-RAD & OIL COOLER	85
Y	*218-0925*	1	RADIATOR & OIL COOLER MTG GP	102
Y	*225-8010*	1	WIRING GP-ENGINE	192

Y-SEPARATE ILLUSTRATION

ENGINE ARRANGEMENT

278-1228 INSTALLATION AR-ENGINE

S/N: MJH5600-UP; BXM2400-UP

PART OF 278-1226, 278-1242 COMMON AR

SMCS-1000 **i02437016**

NOTE	PART NUMBER	QTY	PART NAME 1 2 3 4 5 6 (PRODUCT LEVEL)	SEE PAGE
Y	*228-1773*	1	AIR CLEANER GP	108
Y	*229-8730*	1	DRAIN GP-ENGINE OIL	53
Y	*246-8723*	1	GUARD GP-BELT	55
Y	*228-1784*	1	LINES GP-AIR	111
Y	*228-1764*	1	MOUNTING GP-ENGINE (SUPPORTS)	63
Y	*241-5789*	1	MOUNTING GP-ENGINE (HARDWARE)	64
Y	*228-1763*	1	MOUNTING GP-PUMP	241
Y	*228-1762*	1	MOUNTING GP-RAD & OIL COOLER	87
Y	*225-8010*	1	WIRING GP-ENGINE	192

Y-SEPARATE ILLUSTRATION

BASIC ENGINE

217-7143 CAMSHAFT GP

S/N: GGA1-UP; CSD1-UP

PART OF 179-1808 ENGINE AR-PRIMARY

SMCS-1210, 1211, 1212 **i01649084**

NOTE	REF NO	GRAPHIC REF	PART NUMBER	QTY	PART NAME 1 2 3 4 5 6 (PRODUCT LEVEL)	SEE PAGE
	1	1	**217-7174**	1	TAPPET	
	2	1	**217-7139**	1	CAMSHAFT AS	
	3	1	**153-6492**	1	KEY-WOODRUFF	
	4	1	**183-3606**	1	SPACER	
	5	1	**154-4508**	1	GEAR-CAMSHAFT (66 TEETH)	
	6	1	**154-4505**	1	BEARING	

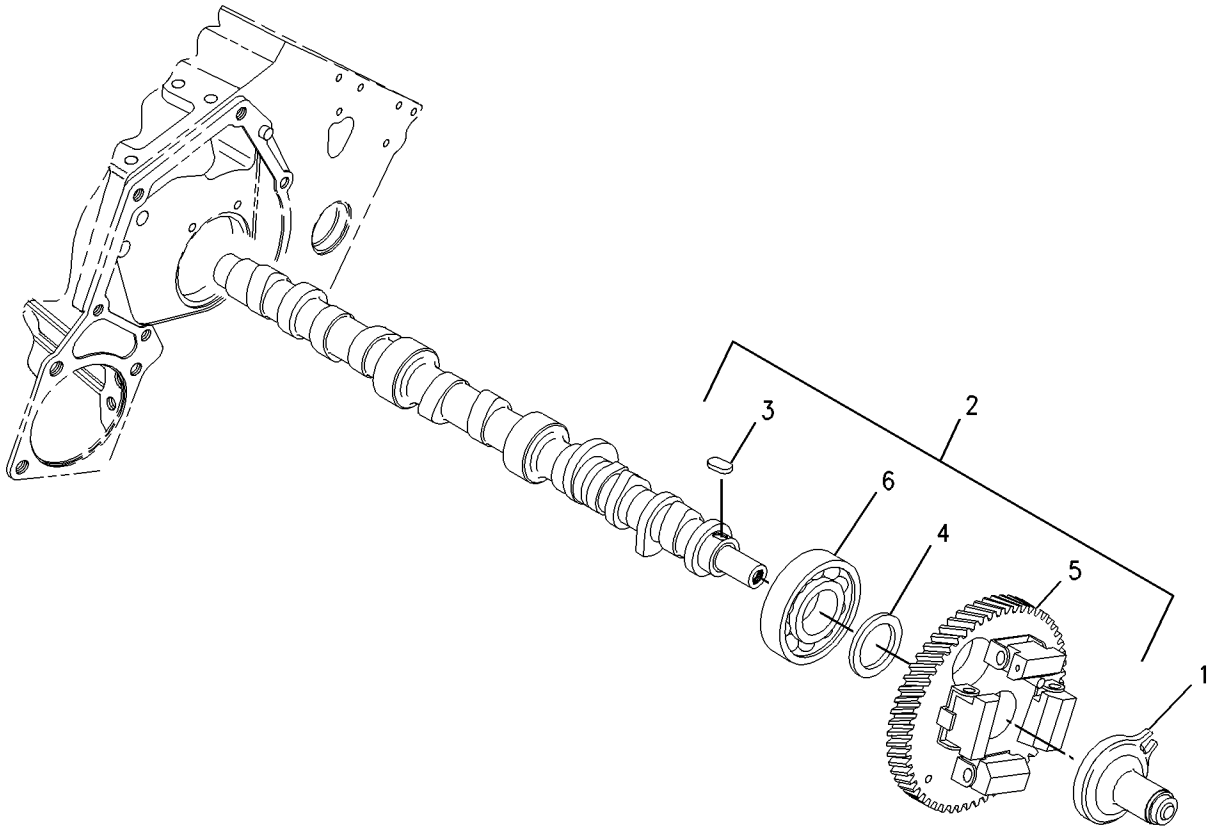

GRAPHIC #1 **<END>** g00852594

246-3337 CAMSHAFT GP

S/N: GGA1-UP; CSD1-UP
PART OF 233-6648 ENGINE AR-PRIMARY
AN ATTACHMENT

SMCS-1210, 1211, 1212 **i01992078**

NOTE	REF NO	GRAPHIC REF	PART NUMBER	QTY	PART NAME 1 2 3 4 5 6 (PRODUCT LEVEL)	SEE PAGE
	1	1	**217-7174**	1	TAPPET	
	2	1	**154-4504**	1	CAMSHAFT AS	
	2A	1	**153-6492**	1	KEY-WOODRUFF	
	2B	1	**154-4506**	3	SPACER	
	2C	1	**154-4507**	1	GEAR-CAMSHAFT (22 TEETH)	
	2D	1	**154-4508**	1	GEAR-CAMSHAFT (66 TEETH)	
	2E	1	**154-4505**	1	BEARING	

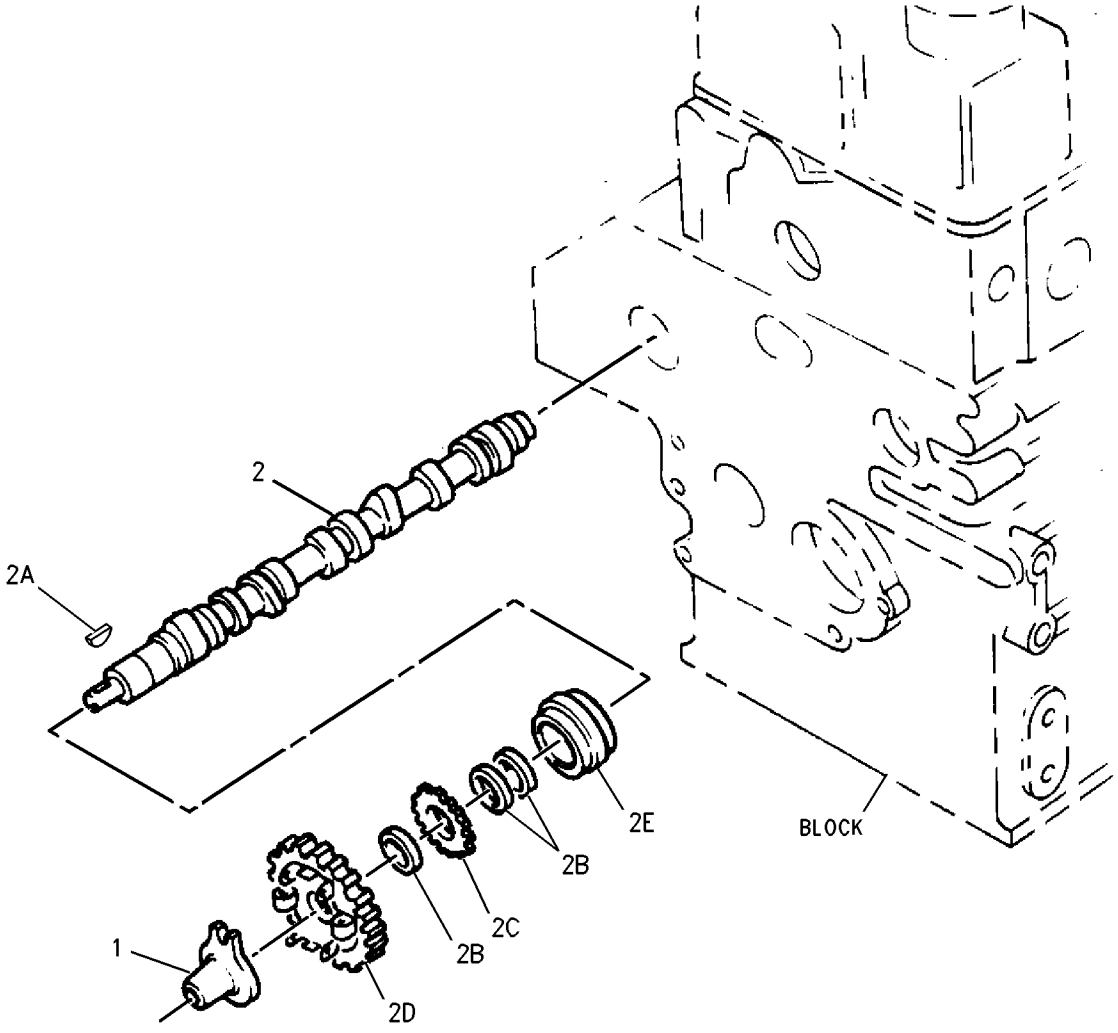

GRAPHIC #1 **<END>** g00715135

217-5867 COVER GP-VALVE MECHANISM

S/N: GGA1-UP; CSD1-UP

PART OF 179-1808 ENGINE AR-PRIMARY

SMCS-1107 **i02460205**

NOTE	REF NO	GRAPHIC REF	PART NUMBER	QTY	PART NAME 1 2 3 4 5 6 (PRODUCT LEVEL)	SEE PAGE
	1	1	**153-5961**	2	BOLT	
	2	1	**153-5962**	3	BOLT	
	3	1	**154-1347**	4	NUT	
	4	1	**190-3762**	4	WASHER	
	5	1	**233-7061**	1	COVER-VALVE	
	6	1	**153-5939**	1	GAUZE (CRANKCASE BREATHER) (CRANKCASE BREATHER)	
	7	1	**153-7640**	2	BOLT	
	8	1	**217-5859**	1	VALVE-BREATHER (CRANKCASE)	
	9	1	**217-5860**	4	BOLT	
	10	1	**217-5861**	1	PLATE-RETAINING	
	11	1	**217-5862**	6	BOLT	
	12	1	**217-5863**	1	CONNECTION-AIR	
	13	1	**217-5864**	1	GASKET	
	14	1	**233-0695**	1	SEAL-VALVE COVER	

217-5867 **COVER GP-VALVE MECHANISM** *(contd.)* **i02460205**

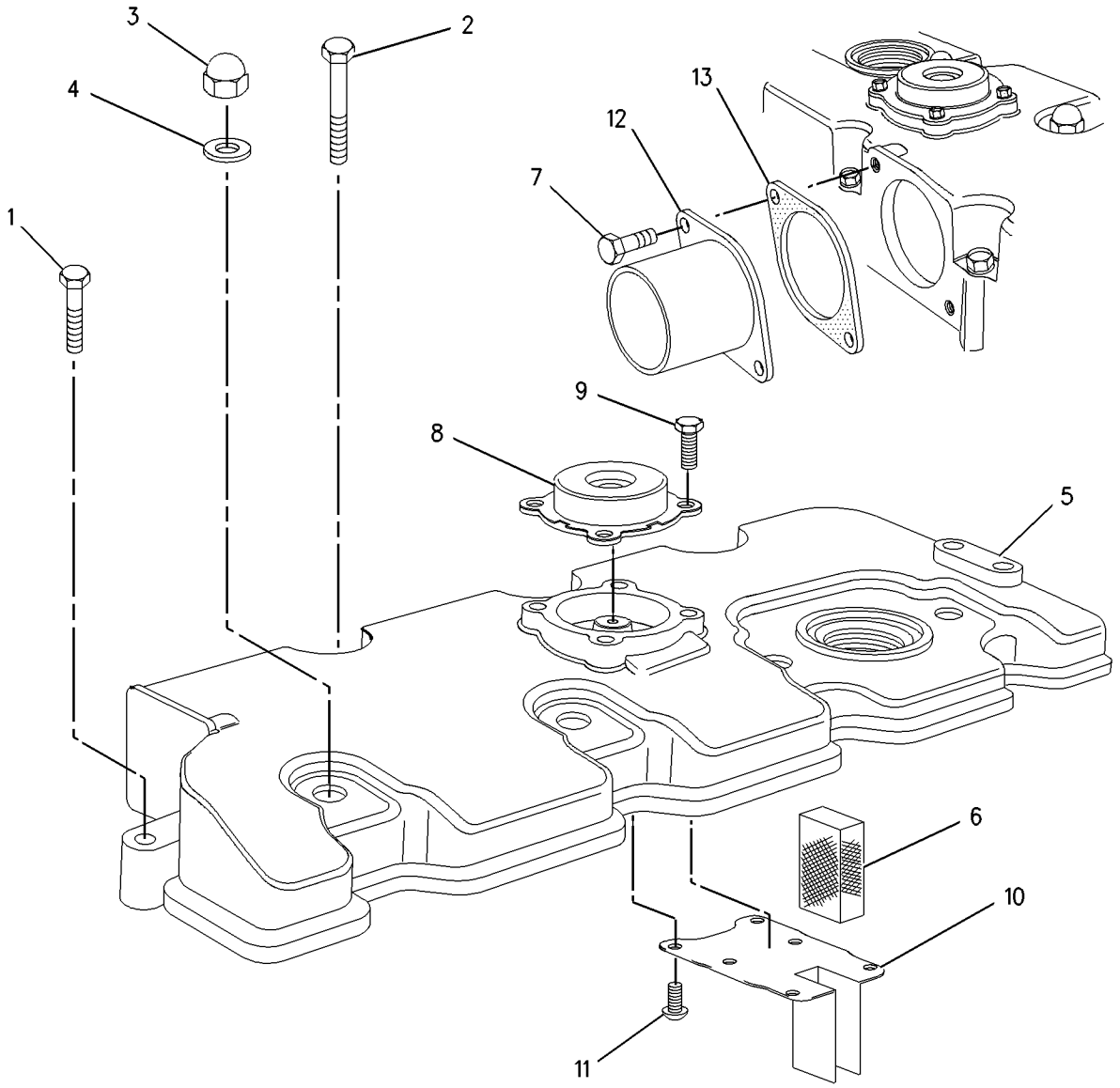

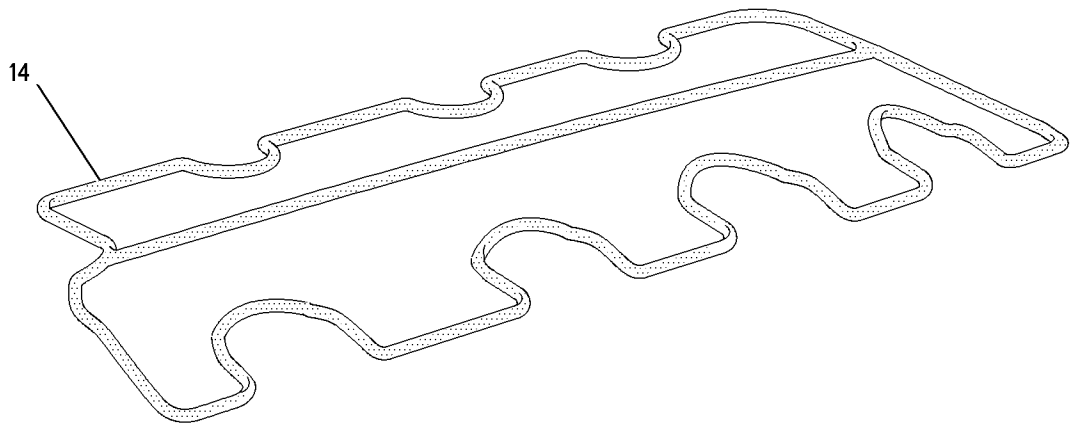

GRAPHIC #1 **<END>** g00852550

238-9348 COVER GP-VALVE MECHANISM

S/N: GGA1-3651; CSD1-3651
PART OF 233-6648 ENGINE AR-PRIMARY
AN ATTACHMENT

SMCS-1107 **i02235151**

NOTE	REF NO	GRAPHIC REF	PART NUMBER	QTY	PART NAME 1 2 3 4 5 6 (PRODUCT LEVEL)	SEE PAGE
	1	1	**153-5939**	1	GAUZE (CRANKCASE BREATHER)	
	2	1	**153-5961**	2	BOLT	
	3	1	**153-5962**	3	BOLT	
	4	1	**153-7640**	2	BOLT	
	5	1	**154-1347**	4	NUT	
	6	1	**154-1351**	4	SEAL-NUT	
	7	1	**183-1165**	1	PLUG-SEALING	
	8	1	**217-5859**	1	VALVE-BREATHER (CRANKCASE)	
	9	1	**217-5861**	1	PLATE-RETAINING	
	10	1	**217-5862**	6	BOLT	
	11	1	**217-5864**	1	GASKET	
	12	1	**233-0695**	1	SEAL-VALVE COVER	
	13	1	**238-8731**	1	ADAPTER-BREATHER	
	14	1	**238-9289**	1	COVER-VALVE	
	15	1	**238-9295**	1	BOLT	
	16	1	**238-9315**	1	GASKET	
	17	1	**238-9332**	1	CONNECTION-AIR	

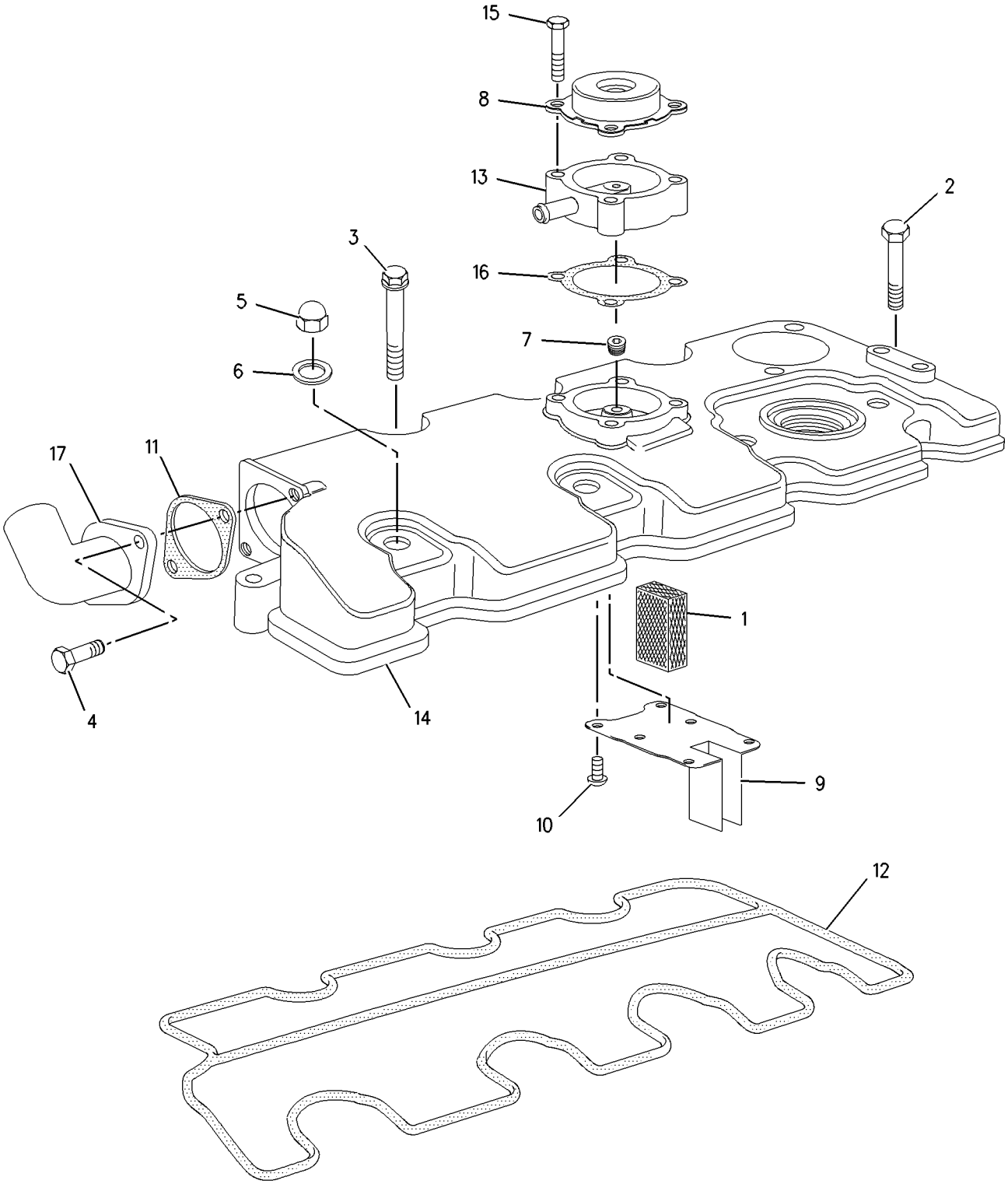

GRAPHIC #1 **<END>** g01007735

238-9348 COVER GP-VALVE MECHANISM

S/N: GGA3652-UP; CSD3652-UP
PART OF 233-6648 ENGINE AR-PRIMARY
AN ATTACHMENT

SMCS-1107 **i02239681**

NOTE	REF NO	GRAPHIC REF	PART NUMBER	QTY	PART NAME 1 2 3 4 5 6 (PRODUCT LEVEL)	SEE PAGE
	1	1	**153-5939**	1	GAUZE (CRANKCASE BREATHER)	
	2	1	**153-5961**	2	BOLT	
	3	1	**153-5962**	3	BOLT	
	4	1	**153-7640**	2	BOLT	
	5	1	**154-1347**	4	NUT	
	6	1	**190-3762**	4	WASHER	
	7	1	**183-1165**	1	PLUG-SEALING	
	8	1	**217-5859**	1	VALVE-BREATHER (CRANKCASE)	
	9	1	**217-5861**	1	PLATE-RETAINING	
	10	1	**217-5862**	6	BOLT	
	11	1	**217-5864**	1	GASKET	
	12	1	**233-0695**	1	SEAL-VALVE COVER	
	13	1	**238-8731**	1	ADAPTER-BREATHER	
	14	1	**238-9289**	1	COVER-VALVE	
	15	1	**238-9295**	1	BOLT	
C	16	1	**262-3975**	1	GASKET	
C	17	1	**249-1486**	1	CONNECTION-AIR	

C-CHANGE FROM PREVIOUS TYPE

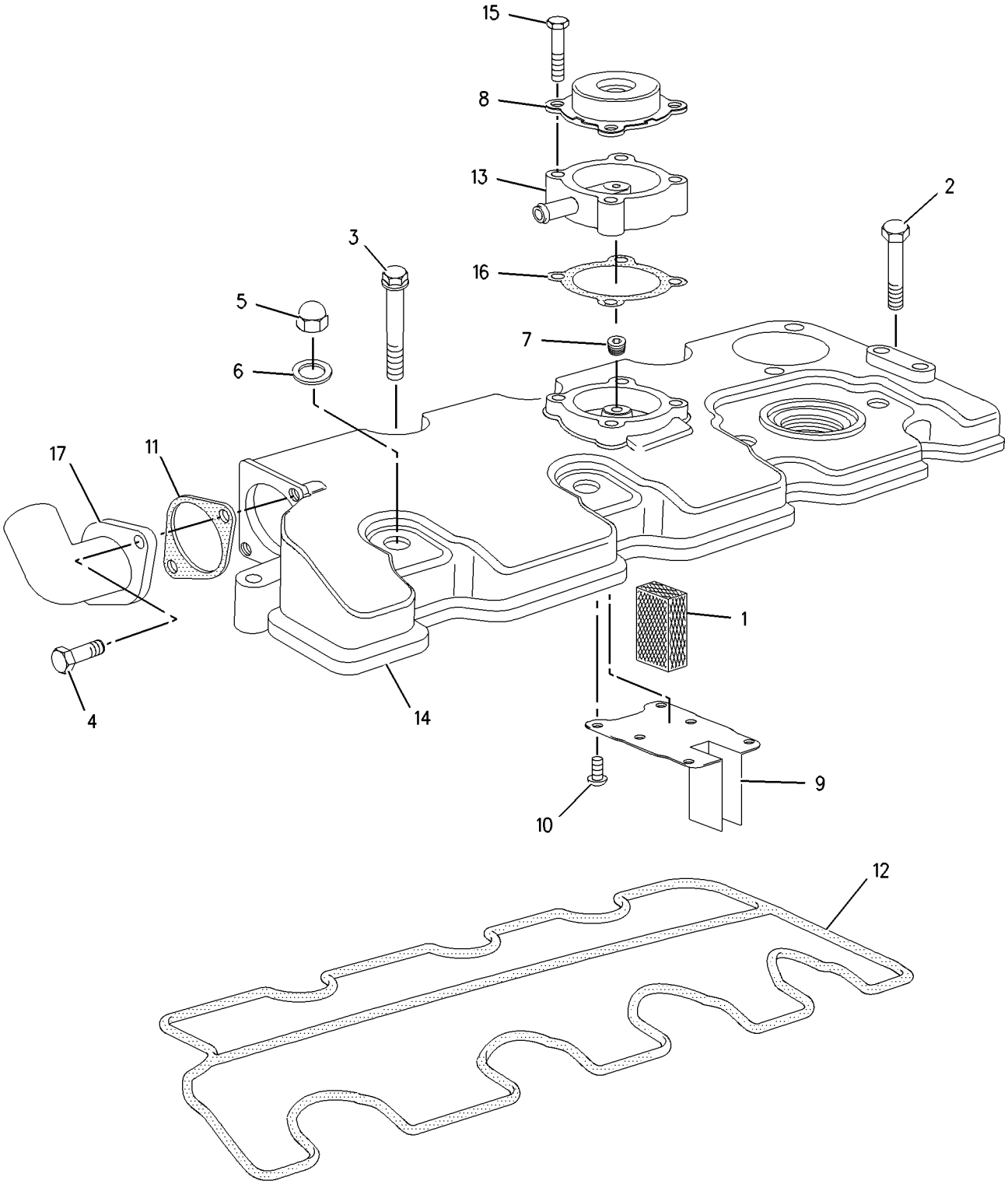

GRAPHIC #1 **<END>** g01007735

154-1201 CRANKSHAFT GP

S/N: GGA526-UP; CSD9241-UP
PART OF 270-6915 CRANKSHAFT GP
AN ATTACHMENT

SMCS-1202 **i01498296**

NOTE	REF NO	GRAPHIC REF	PART NUMBER	QTY	PART NAME 1 2 3 4 5 6 (PRODUCT LEVEL)	SEE PAGE
	1	1	*153-5518*	1	KEY	
	2	1	*154-1202*	1	GEAR-CRANKSHAFT (33 TEETH)	

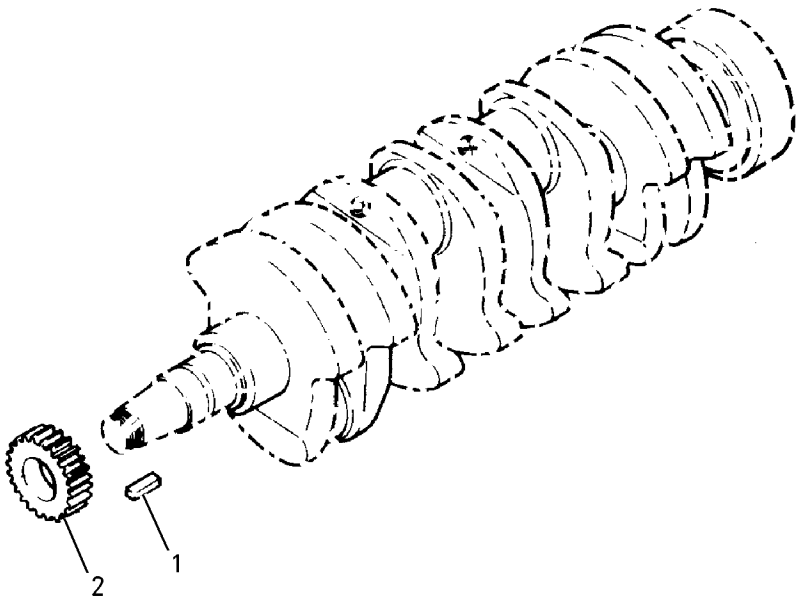

GRAPHIC #1 **<END>** g00777635

BASIC ENGINE

217-1447 CRANKSHAFT GP

S/N: GGA1-UP; CSD1-UP

PART OF 179-1808 ENGINE AR-PRIMARY

SMCS-1202 **i02223447**

NOTE	REF NO	GRAPHIC REF	PART NUMBER	QTY	PART NAME 1 2 3 4 5 6 (PRODUCT LEVEL)	SEE PAGE
	1	1	**154-0181**	1	BEARING AS	
	2	1	**154-0386**	1	BEARING AS	
	3	1	**154-0388**	1	BEARING AS	
	4	1	**154-0389**	1	BEARING AS	
					(EACH BEARING AS INCLUDES)	
	5	1	**153-5402**	2	DOWEL	
	6	1	**154-0385**	2	BOLT	
	7	1	**154-1201**	1	CRANKSHAFT GP	
	7A	1	**154-1202**	1	GEAR-CRANKSHAFT (33-TEETH)	
	7B	1	**153-5518**	1	KEY	
	8	1	**154-1203**	1	KIT-CRANKSHAFT BEARING (MAIN)	
	9	1	**154-1230**	1	WASHER-THRUST	
	10	1	**154-1231**	2	WASHER-THRUST	
	11	1	**156-6971**	3	BOLT	
	12	1	**183-1336**	1	BOLT	

217-1447 **CRANKSHAFT GP** *(contd.)* **i02223447**

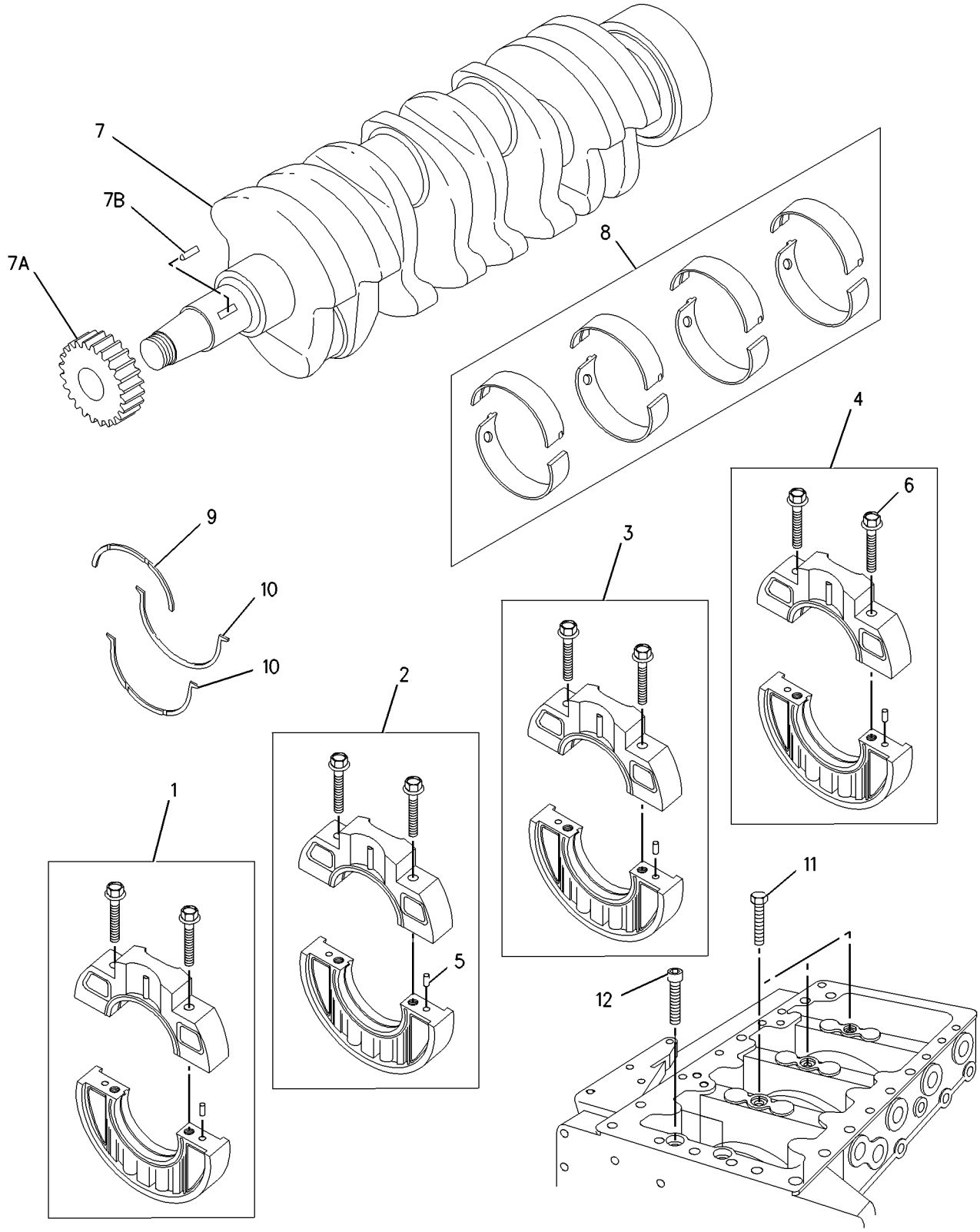

GRAPHIC #1 **<END>** g00852638

BASIC ENGINE

236-5052 CRANKSHAFT GP

S/N: GGA1-525; CSD1-9240
PART OF 233-6648 ENGINE AR-PRIMARY
AN ATTACHMENT

SMCS-1202 **i02361335**

NOTE	REF NO	GRAPHIC REF	PART NUMBER	QTY	PART NAME 1 2 3 4 5 6 (PRODUCT LEVEL)	SEE PAGE
	1	1	**154-0181**	1	BEARING AS	
	1A	1	**153-5402**	2	DOWEL	
	1B	1	**154-0385**	2	BOLT	
	2	1	**154-0386**	1	BEARING AS	
	2A	1	**153-5402**	2	DOWEL	
	2B	1	**154-0385**	2	BOLT	
	3	1	**154-0388**	1	BEARING AS	
	3A	1	**153-5402**	2	DOWEL	
	3B	1	**154-0385**	2	BOLT	
	4	1	**154-0389**	1	BEARING AS	
	4A	1	**153-5402**	2	DOWEL	
	4B	1	**154-0385**	2	BOLT	
	5	1	**154-1201**	1	CRANKSHAFT GP	
	5A	1	**154-1202**	1	GEAR-CRANKSHAFT (33-TEETH)	
	5B	1	**153-5518**	1	KEY	
	6	1	**154-1230**	1	WASHER-THRUST	
	7	1	**154-1231**	2	WASHER-THRUST	
	8	1	**154-1203**	1	KIT-CRANKSHAFT BEARING (MAIN)	

236-5052 **CRANKSHAFT GP** *(contd.)* **i02361335**

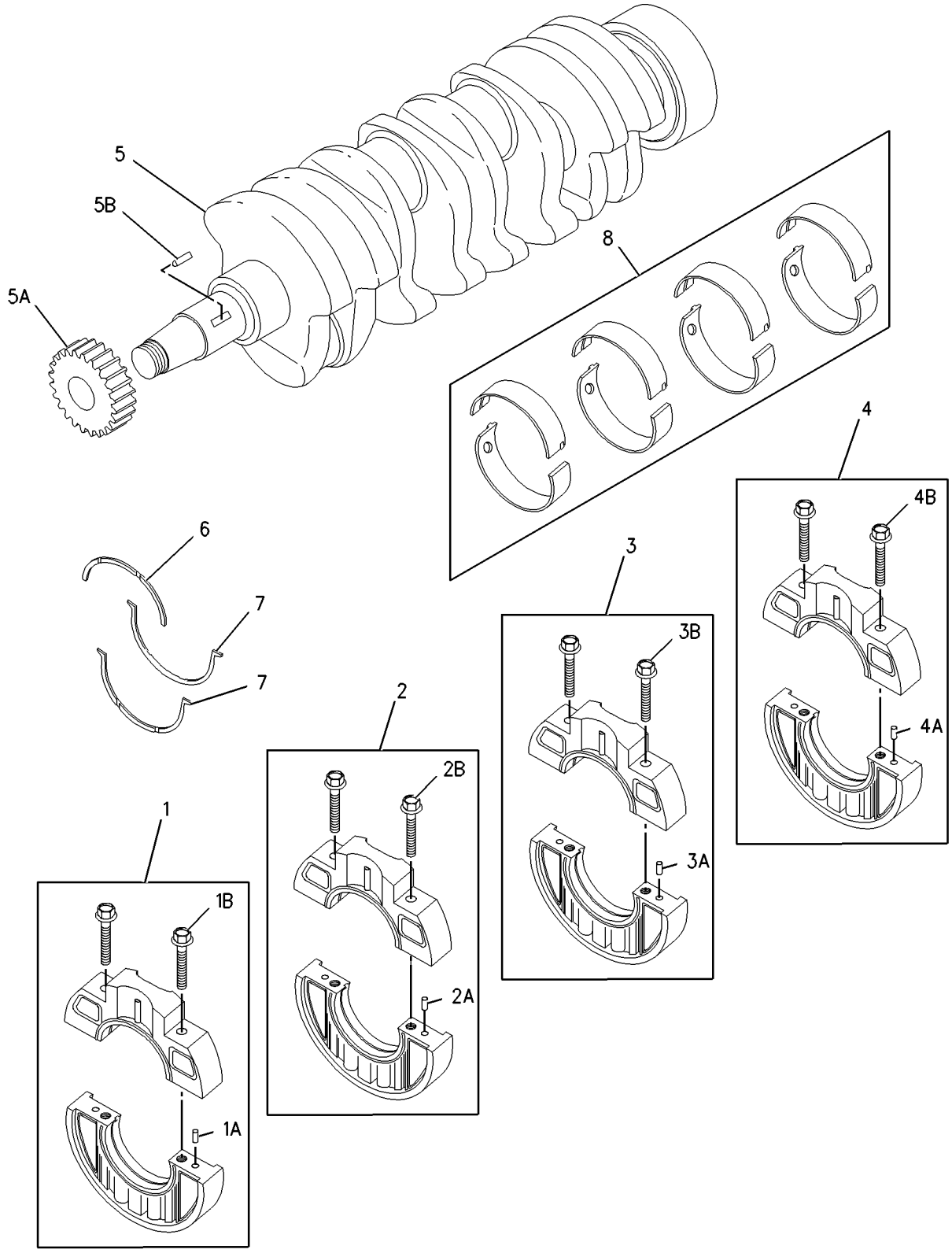

GRAPHIC #1 **<END>** g01006619

BASIC ENGINE

270-6915 CRANKSHAFT GP

S/N: GGA526-UP; CSD9241-UP
PART OF 233-6648 ENGINE AR-PRIMARY
AN ATTACHMENT

SMCS-1202 **i02370705**

NOTE	REF NO	GRAPHIC REF	PART NUMBER	QTY	PART NAME 1 2 3 4 5 6 (PRODUCT LEVEL)	SEE PAGE
	1	1	**154-0181**	1	BEARING AS	
	1A	1	**153-5402**	2	DOWEL	
	1B	1	**154-0385**	2	BOLT	
	2	1	**154-0386**	1	BEARING AS	
	2A	1	**153-5402**	2	DOWEL	
	2B	1	**154-0385**	2	BOLT	
	3	1	**154-0388**	1	BEARING AS	
	3A	1	**153-5402**	2	DOWEL	
	3B	1	**154-0385**	2	BOLT	
	4	1	**154-0389**	1	BEARING AS	
	4A	1	**153-5402**	2	DOWEL	
	4B	1	**154-0385**	2	BOLT	
Y	5	1	**154-1201**	1	CRANKSHAFT GP	35
	6	1	**154-1230**	1	WASHER-THRUST	
	7	1	**154-1231**	2	WASHER-THRUST	
	8	1	**156-6971**	3	BOLT	
	9	1	**154-1203**	1	KIT-CRANKSHAFT BEARING (MAIN)	
	10	1	**183-1336**	2	BOLT	

Y-SEPARATE ILLUSTRATION

270-6915 **CRANKSHAFT GP** *(contd.)* **i02370705**

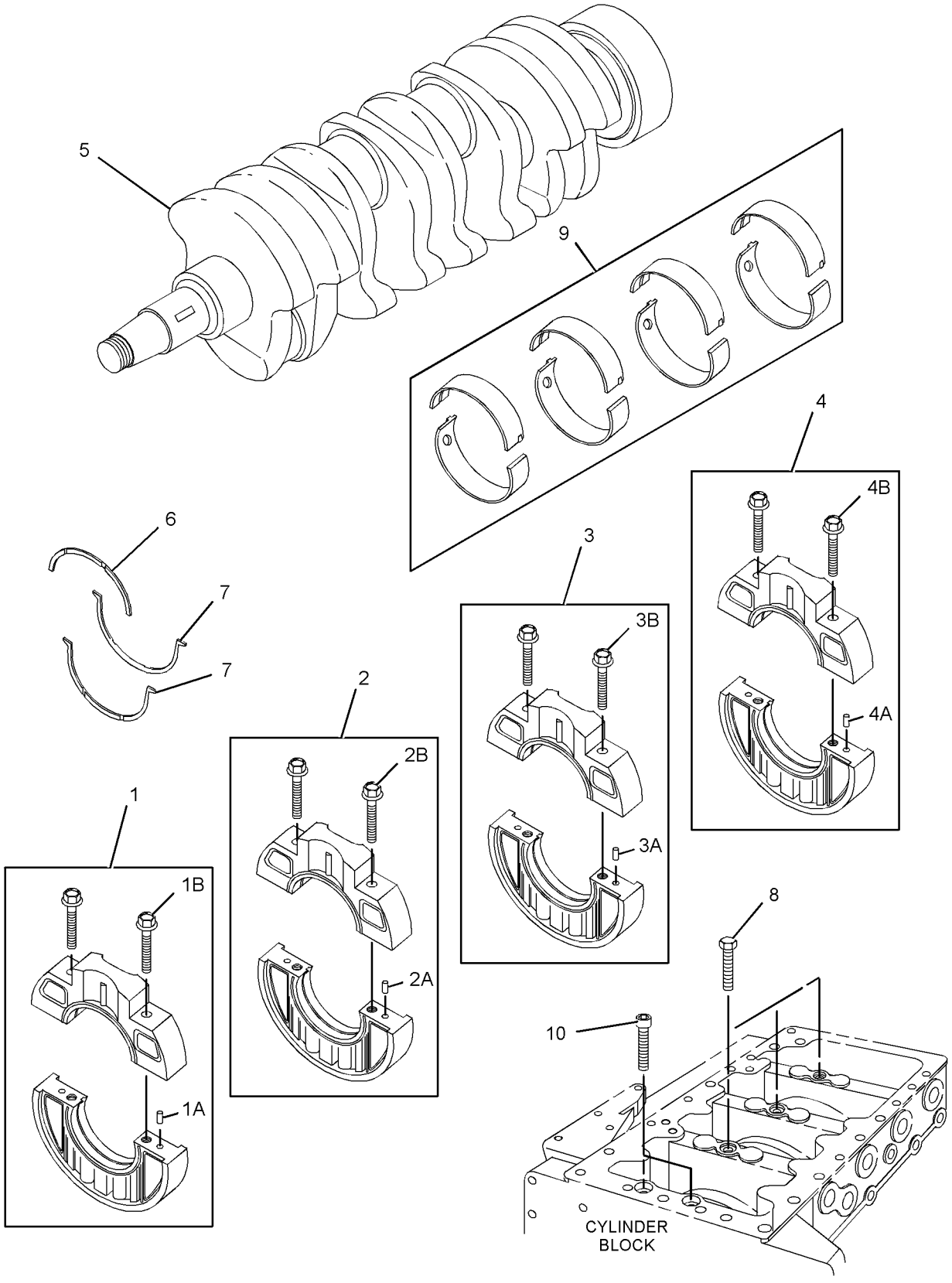

GRAPHIC #1 **<END>** g01193079

BASIC ENGINE

217-7395 CYLINDER BLOCK GP

S/N: GGA1-UP; CSD1-UP

PART OF 179-1808 ENGINE AR-PRIMARY

SMCS-1201 **i02460206**

NOTE	REF NO	GRAPHIC REF	PART NUMBER	QTY	PART NAME 1 2 3 4 5 6 (PRODUCT LEVEL)	SEE PAGE
	1	1	**153-5390**	1	BALL BEARING	
	2	1	**153-5391**	1	PLUG	
	3	1	**153-6838**	2	BOLT	
	4	1	**154-0178**	1	SEAL	
	5	1	**215-2620**	1	GASKET (PLATE)	
	6	1	**154-0391**	1	PLATE	
	7	1	**183-1165**	1	PLUG-SEALING	
	8	1	**153-5394**	2	DOWEL	
	9	1	**153-5395**	2	DOWEL	
	10	1	**153-5396**	2	PIN	
	11	1	**183-1163**	1	STUD	
	12	1	**183-1164**	1	STUD	
	13	1	**154-0176**	1	BUSHING	
	14	1	**154-0177**	1	BUSHING	
	15	1	**217-5771**	1	SHAFT	
	16	1	**183-1168**	1	BUSHING	
	17	1	**217-5770**	2	PLUG (BLANKING)	
	18	1	**153-5402**	2	DOWEL	
	19	1	**154-0175**	2	PLUG	
	20	1	**221-1136**	3	PLUG	
	21	1	**154-0393**	3	STUD	
	22	1	**153-5387**	3	PLUG	
	23	1	**237-9315**	2	PLUG-SEALING	
	24	1	**237-9316**	5	PLUG-SEALING	

217-7395 **CYLINDER BLOCK GP** *(contd.)* **i02460206**

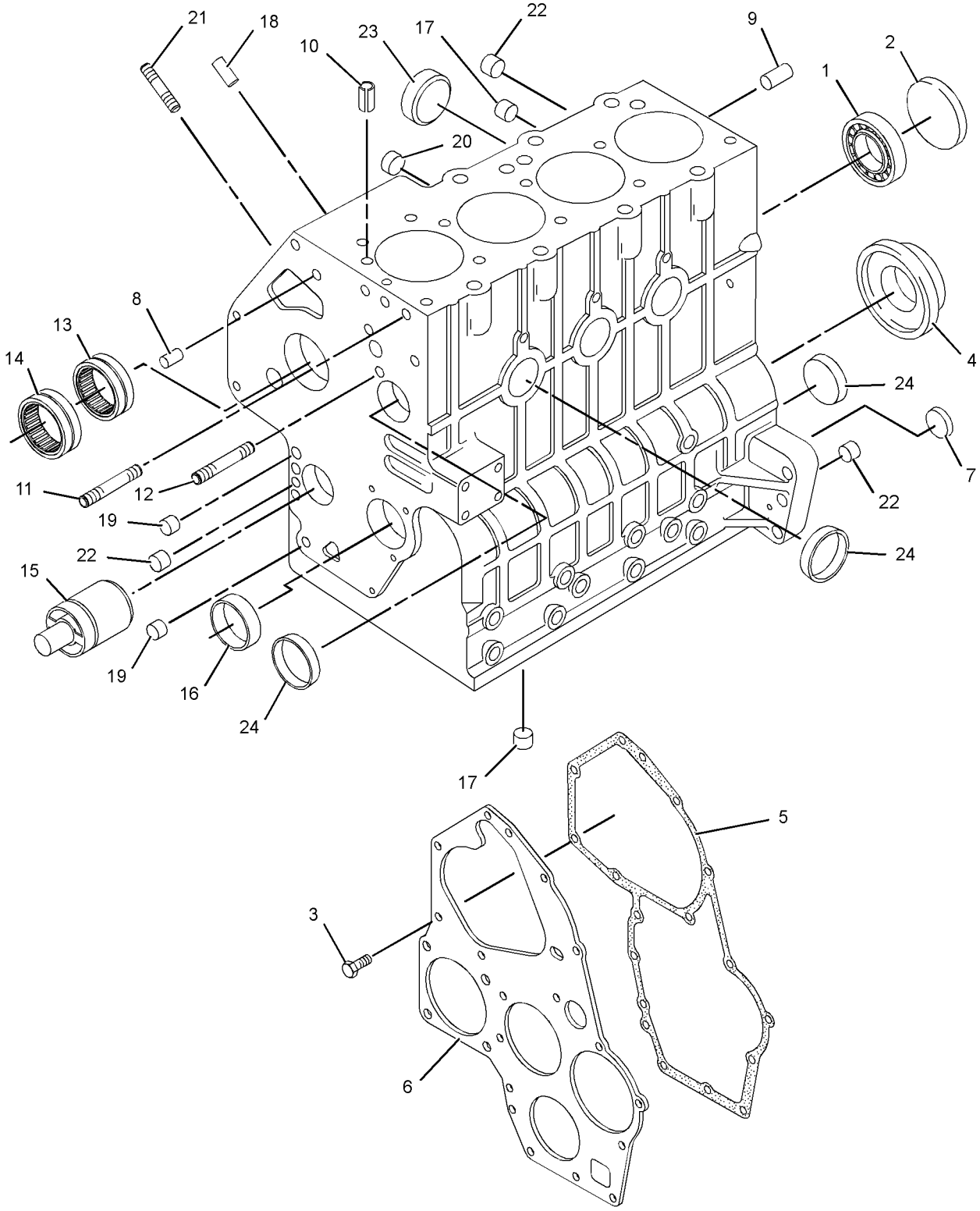

GRAPHIC #1 **<END>** g01228152

BASIC ENGINE

236-5051 CYLINDER BLOCK GP

S/N: GGA1-525; CSD1-9240
PART OF 233-6648 ENGINE AR-PRIMARY
AN ATTACHMENT

SMCS-1201 **i02033803**

NOTE	REF NO	GRAPHIC REF	PART NUMBER	QTY	PART NAME 1 2 3 4 5 6 (PRODUCT LEVEL)	SEE PAGE
	1	1	**6B-0924**	1	BALL BEARING	
	2	1	**153-5387**	5	PLUG	
	3	1	**153-5391**	1	PLUG	
	4	1	**153-5394**	2	DOWEL	
	5	1	**153-5395**	2	DOWEL	
	6	1	**153-5396**	2	PIN	
	7	1	**153-5402**	1	DOWEL	
	8	1	**153-6838**	2	BOLT	
	9	1	**154-0175**	2	PLUG	
	10	1	**154-0176**	1	BUSHING	
	11	1	**154-0177**	1	BUSHING	
	12	1	**154-0178**	1	SEAL	
	13	1	**154-0391**	1	PLATE	
	14	1	**154-0393**	3	STUD	
	16	1	**183-1163**	1	STUD	
	17	1	**183-1164**	1	STUD	
	18	1	**183-1168**	1	BUSHING	
	20	1	**215-2620**	1	GASKET	
	21	1	**217-5770**	2	PLUG	
	22	1	**217-5771**	1	SHAFT	
	23	1	**221-1136**	3	PLUG	
F		1	**156-6971**	3	BOLT	
F		1	**183-1336**	2	BOLT	

F-NOT SHOWN

236-5051 **CYLINDER BLOCK GP** *(contd.)* **i02033803**

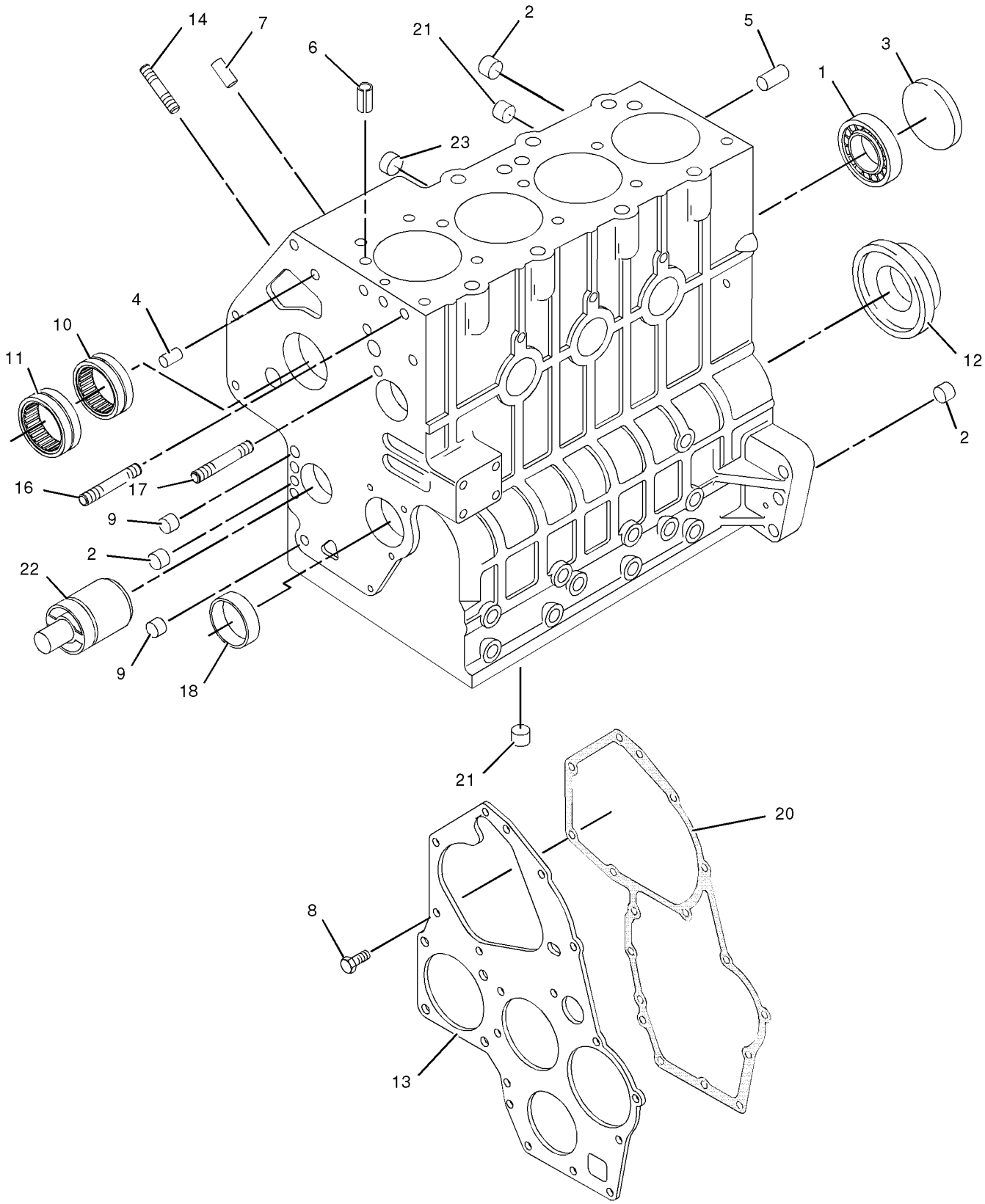

GRAPHIC #1 **<END>** g01047370

BASIC ENGINE

240-0648 CYLINDER BLOCK GP

S/N: GGA1-UP; CSD1-UP

PART OF 179-1808 ENGINE AR-PRIMARY

SMCS-1201 **i02252510**

NOTE	REF NO	GRAPHIC REF	PART NUMBER	QTY	PART NAME 1 2 3 4 5 6 (PRODUCT LEVEL)	SEE PAGE
	1	1	**237-9315**	2	PLUG-SEALING	
	2	1	**237-9316**	5	PLUG-SEALING	

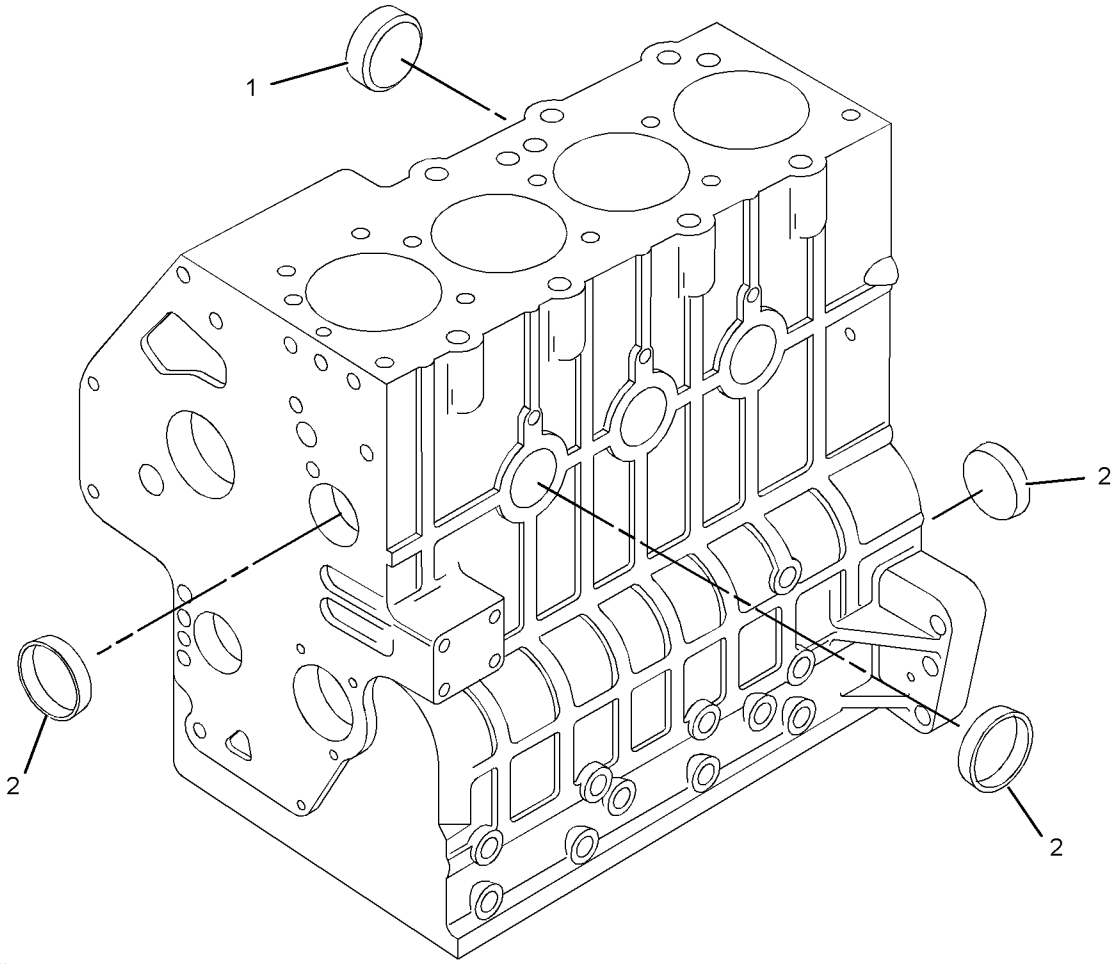

GRAPHIC #1 **<END>** g01058640

BASIC ENGINE

270-6932 CYLINDER BLOCK GP

S/N: GGA526-UP; CSD9241-UP
PART OF 233-6648 ENGINE AR-PRIMARY
AN ATTACHMENT

SMCS-1201 **i02355472**

NOTE	REF NO	GRAPHIC REF	PART NUMBER	QTY	PART NAME 1 2 3 4 5 6 (PRODUCT LEVEL)	SEE PAGE
	1	1	**153-5382**	1	PLUG	
	2	1	**153-5387**	3	PLUG	
	3	1	**6B-0924**	1	BALL BEARING	
	4	1	**153-5394**	2	DOWEL	
	5	1	**153-5395**	2	DOWEL	
	6	1	**153-5396**	2	PIN	
	7	1	**153-5402**	1	DOWEL	
	8	1	**153-6838**	2	BOLT	
	9	1	**154-0175**	2	PLUG	
	10	1	**154-0176**	1	BUSHING	
	11	1	**154-0177**	1	BUSHING	
	12	1	**154-0178**	1	SEAL	
	13	1	**154-0391**	1	PLATE	
	14	1	**154-0393**	3	STUD	
	15	1	**183-1163**	1	STUD	
	16	1	**183-1164**	1	STUD	
	17	1	**183-1168**	1	BUSHING	
	18	1	**215-2620**	1	GASKET	
	19	1	**217-5770**	2	PLUG	
	20	1	**217-5771**	1	SHAFT	
	21	1	**221-1136**	3	PLUG	

270-6932 **CYLINDER BLOCK GP** *(contd.)* **i02355472**

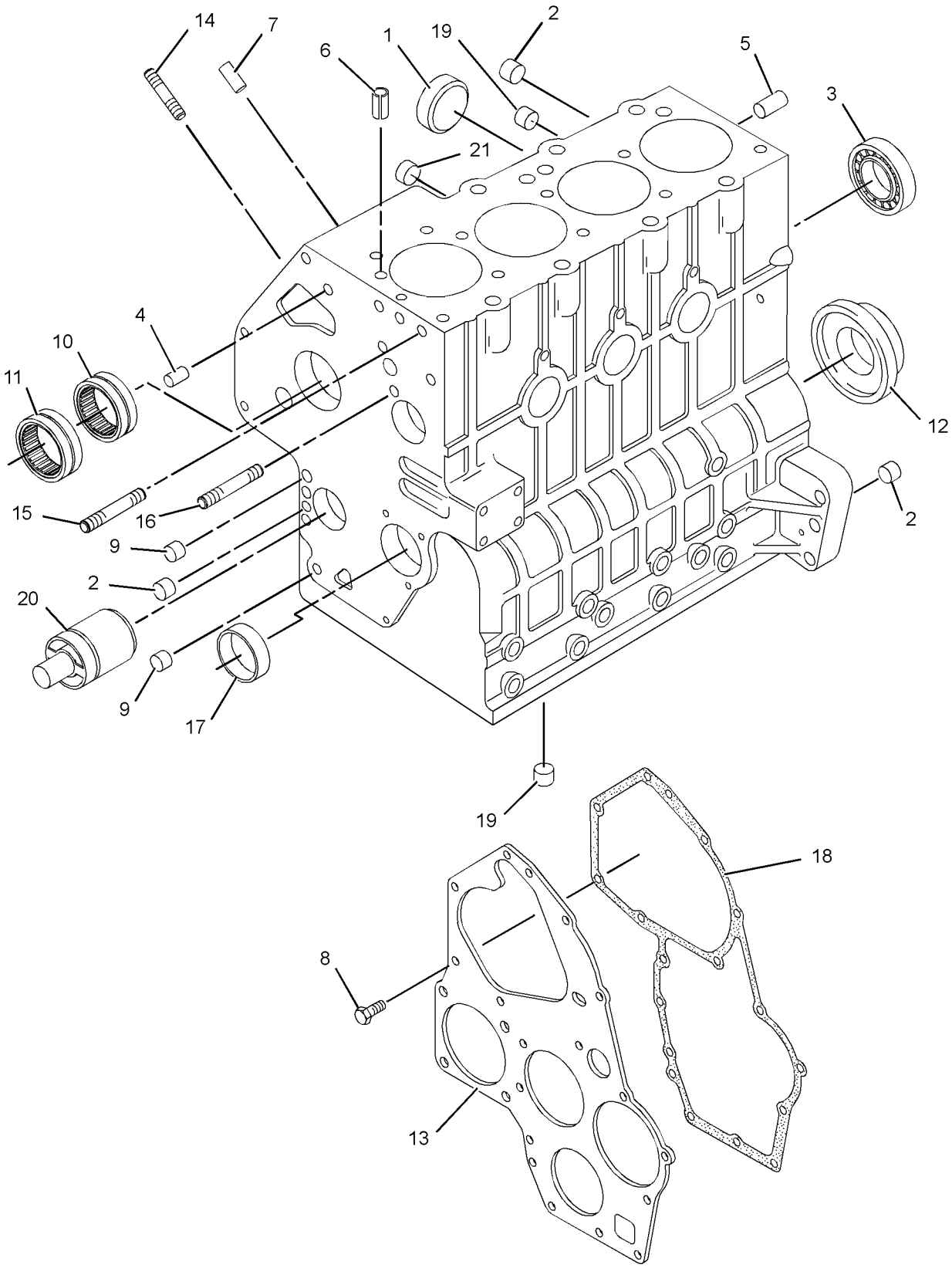

GRAPHIC #1 **<END>** g01192267

217-1481 CYLINDER HEAD GP

S/N: CSD1-UP

PART OF 217-2746 CYLINDER HEAD GP

SMCS-1100, 1101, 1103, 1104, 1105, 1108, 1109, 1115, 1117, 1121, 1124, 1125

i02059772

NOTE	REF NO	GRAPHIC REF	PART NUMBER	QTY	PART NAME 1 2 3 4 5 6 (PRODUCT LEVEL)	SEE PAGE
	1	1	**153-5382**	6	PLUG	
	2	1	**153-5552**	6	PLUG	
	3	1	**153-5553**	7	PLUG	
	4	1	**153-5554**	4	SEAL (EXHAUST)	
	5	1	**153-5556**	16	RETAINER	
	6	1	**153-5557**	8	CAP	
	7	1	**153-5558**	8	SPRING	
	8	1	**153-5559**	4	SEAL (INLET)	
	9	1	**154-0887**	3	PLUG	
	10	1	**154-0888**	4	VALVE-INLET	
	11	1	**154-0889**	4	VALVE-EXHAUST	
	12	1	**247-6398**	4	INSERT	

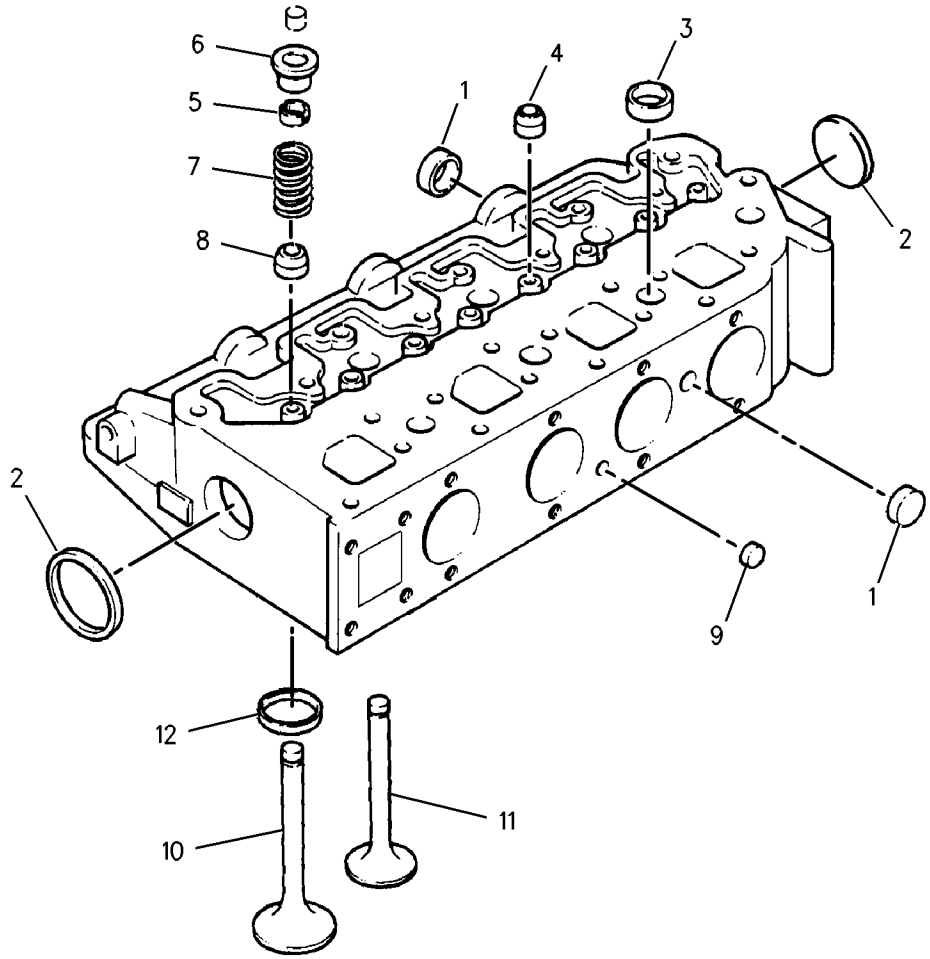

GRAPHIC #1

<END>

g00702747

217-2746 CYLINDER HEAD GP

S/N: GGA1-UP; CSD1-UP

PART OF 179-1808 ENGINE AR-PRIMARY

SMCS-1100, 1101, 1103, 1104, 1105, 1108, 1109, 1115, 1117, 1121, 1124, 1125

i01649064

NOTE	REF NO	GRAPHIC REF	PART NUMBER	QTY	PART NAME 1 2 3 4 5 6 (PRODUCT LEVEL)	SEE PAGE
	1	1	**153-5573**	8	CAP	
	2	1	**156-6988**	14	BOLT	
	3	1	**156-6989**	4	BOLT	
	4	1	**160-7626**	2	STUD	
	5	1	**183-3213**	2	STUD	
Y	6	1	**217-1481**	1	CYLINDER HEAD GP	49
B	7	1	**217-2743**	1	GASKET (0.4MM THK)	
B		1	**217-2744**	1	GASKET (0.5MM THK)	

B-USE AS REQUIRED
Y-SEPARATE ILLUSTRATION

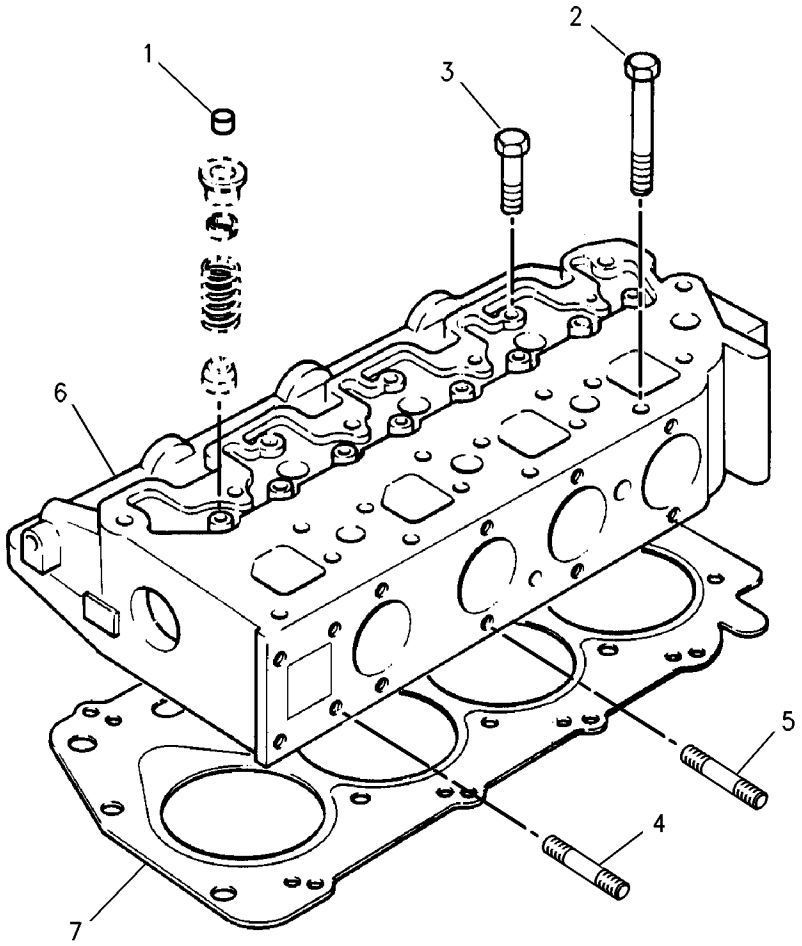

GRAPHIC #1

<END>

g00852319

236-5127 CYLINDER HEAD GP

S/N: GGA1-UP; CSD1-UP
PART OF 236-5129 CYLINDER HEAD GP
AN ATTACHMENT

SMCS-1100, 1101, 1103, 1104, 1105, 1108, 1109, 1115, 1117, 1121, 1124, 1125

i01932114

NOTE	REF NO	GRAPHIC REF	PART NUMBER	QTY	PART NAME 1 2 3 4 5 6 (PRODUCT LEVEL)	SEE PAGE
	1	1	**153-5382**	5	PLUG	
	2	1	**153-5552**	2	PLUG	
	3	1	**153-5553**	7	PLUG	
	4	1	**153-5556**	16	RETAINER	
	5	1	**153-5557**	8	CAP	
	6	1	**153-5558**	8	SPRING	
	7	1	**154-0887**	3	PLUG	
	8	1	**154-0888**	4	VALVE-INLET	
	9	1	**154-0889**	4	VALVE-EXHAUST	
	10	1	**230-9126**	4	INSERT-VALVE (EXHAUST)	
	11	1	**235-6973**	4	INSERT-VALVE (INLET)	
	12	1	**153-5554**	4	SEAL	
	13	1	**153-5559**	4	SEAL	

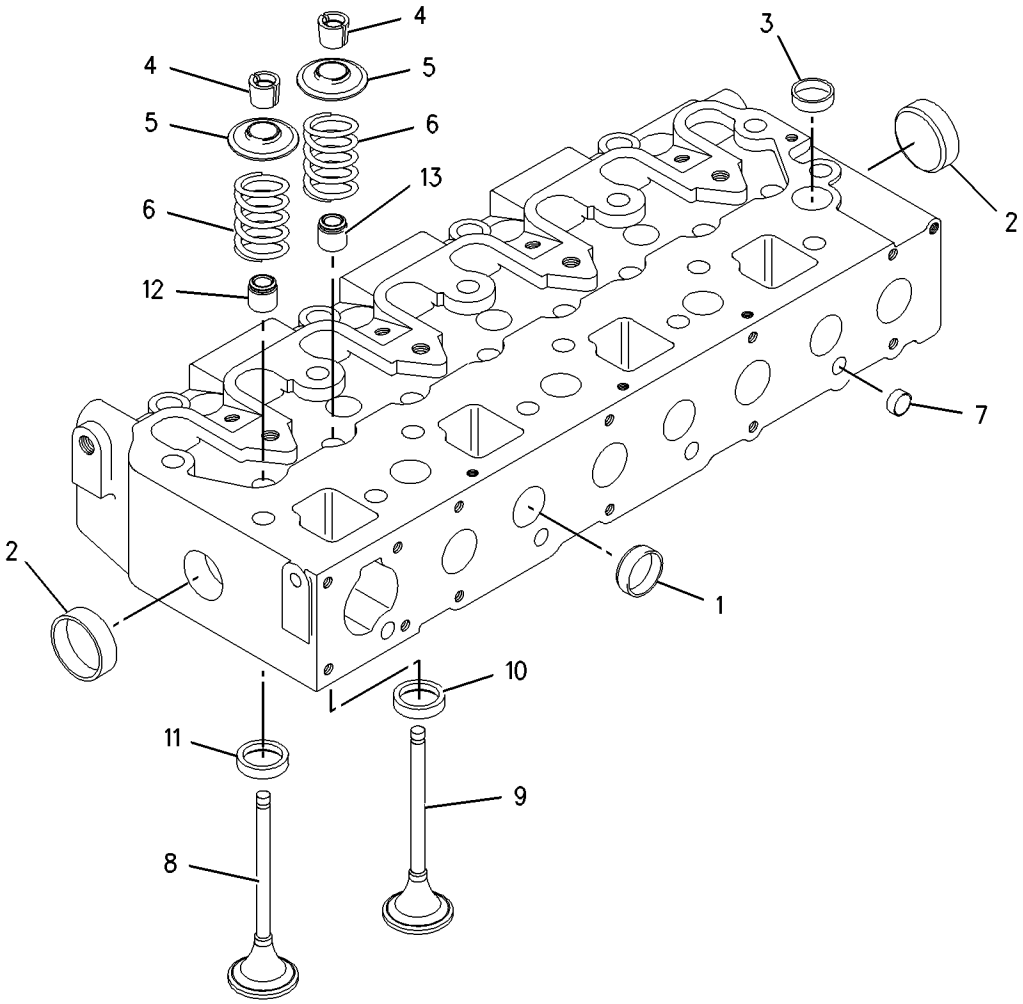

GRAPHIC #1

<END>

g01007374

236-5129 CYLINDER HEAD GP

S/N: GGA1-UP; CSD1-UP
PART OF 233-6648 ENGINE AR-PRIMARY
AN ATTACHMENT

SMCS-1100, 1101, 1103, 1104, 1105, 1108, 1109, 1115, 1117, 1121, 1124, 1125

i01932126

NOTE	REF NO	GRAPHIC REF	PART NUMBER	QTY	PART NAME 1 2 3 4 5 6 (PRODUCT LEVEL)	SEE PAGE
	1	1	**153-5573**	8	CAP	
	2	1	**156-6988**	14	BOLT	
	3	1	**156-6989**	4	BOLT	
	4	1	**183-1164**	1	STUD	
	5	1	**183-3213**	2	STUD	
Y	6	1	**236-5127**	1	CYLINDER HEAD GP	51
	7	1	**217-2743**	1	GASKET (0.4MM THK)	
		1	**217-2744**	1	GASKET (0.5MM THK)	

Y-SEPARATE ILLUSTRATION

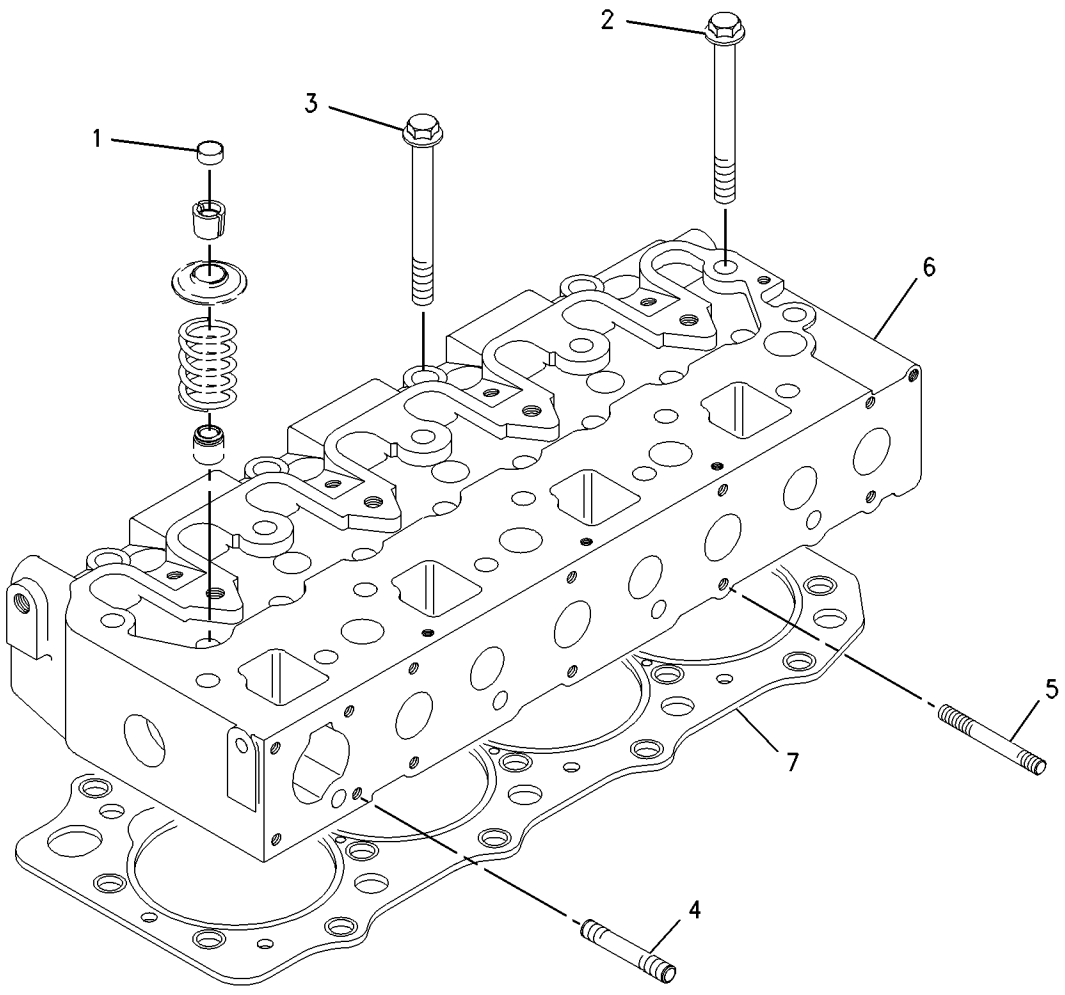

GRAPHIC #1

<END>

g01007349

229-8730 DRAIN GP-ENGINE OIL

S/N: MJH1-UP; SCH1-UP; RLL1-UP; BXM1-UP

PART OF 218-0911, 228-1767, 278-1218, 278-1228 INSTALLATION AR-ENGINE

SMCS-1302 **i02096146**

NOTE	REF NO	GRAPHIC REF	PART NUMBER	QTY	PART NAME 1 2 3 4 5 6 (PRODUCT LEVEL)	SEE PAGE
	1	1	**5P-4961**	1	CLAMP-HOSE	
	2	1	**8C-3445**	1	CAP-DUST	
	3	1	**8C-3446**	1	VALVE-FLUID SAMPLING	
	4	1	**110-2570**	1	CAP	
	5	1	**229-8728**	1	TEE	
	6	1	**229-8729**	1	ADAPTER	
	7	1	**7J-0204**	1	SEAL-O-RING	
	8	1	**8L-2779**	1	SEAL-O-RING	
E	9	1	**5P-1442**		HOSE (35-CM)	

E-ORDER BY THE CENTIMETER

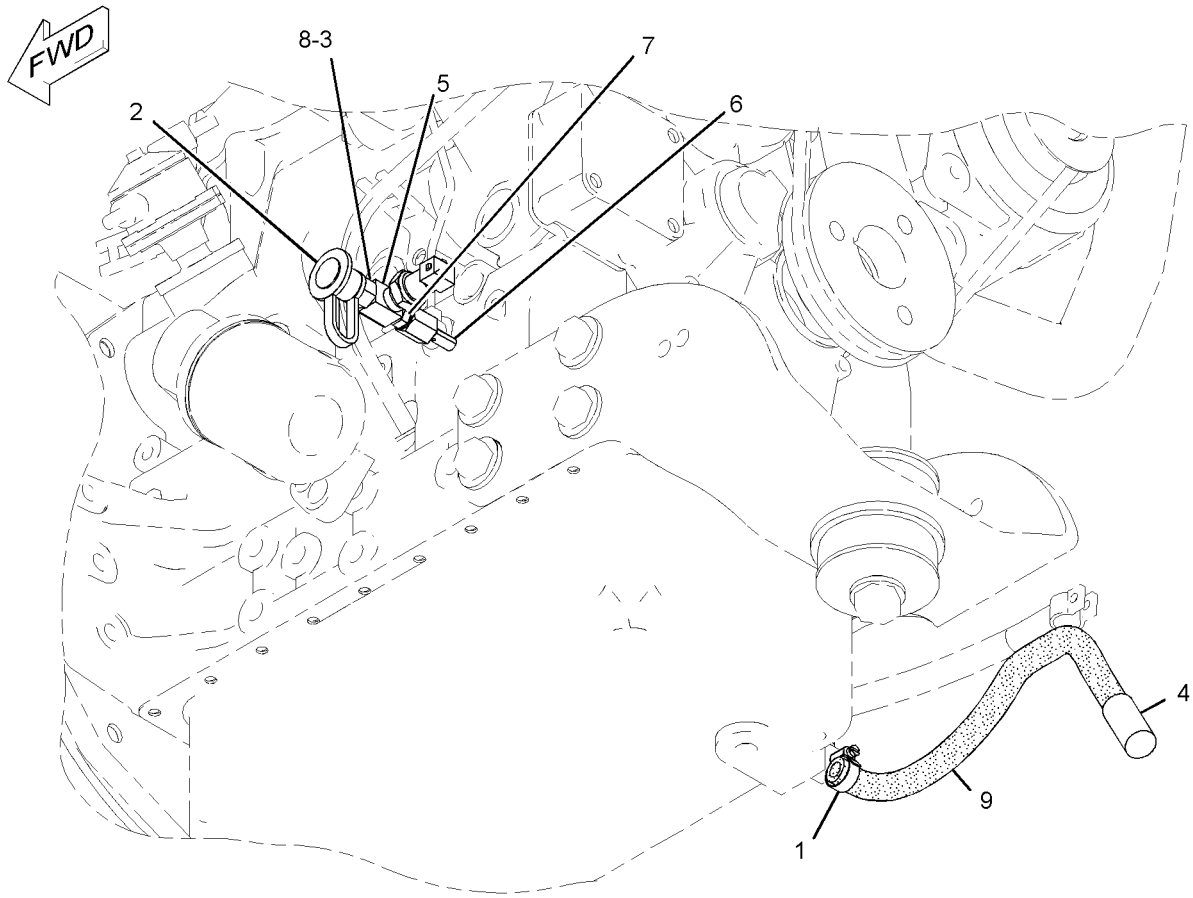

GRAPHIC #1 **<END>** g01068591

BASIC ENGINE

217-7221 FLYWHEEL GP

S/N: GGA1-UP; CSD1-UP
PART OF 179-1808, 233-6648 ENGINE AR-PRIMARY
ALSO AN ATTACHMENT

SMCS-1156, 1158 **i01649085**

NOTE	REF NO	GRAPHIC REF	PART NUMBER	QTY	PART NAME 1 2 3 4 5 6 (PRODUCT LEVEL)	SEE PAGE
	1	1	**138-7446**	1	FLYWHEEL AS	
	1A	1	**154-2405**	1	GEAR-STARTER (126 TEETH)	
	2	1	**154-2406**	6	BOLT	

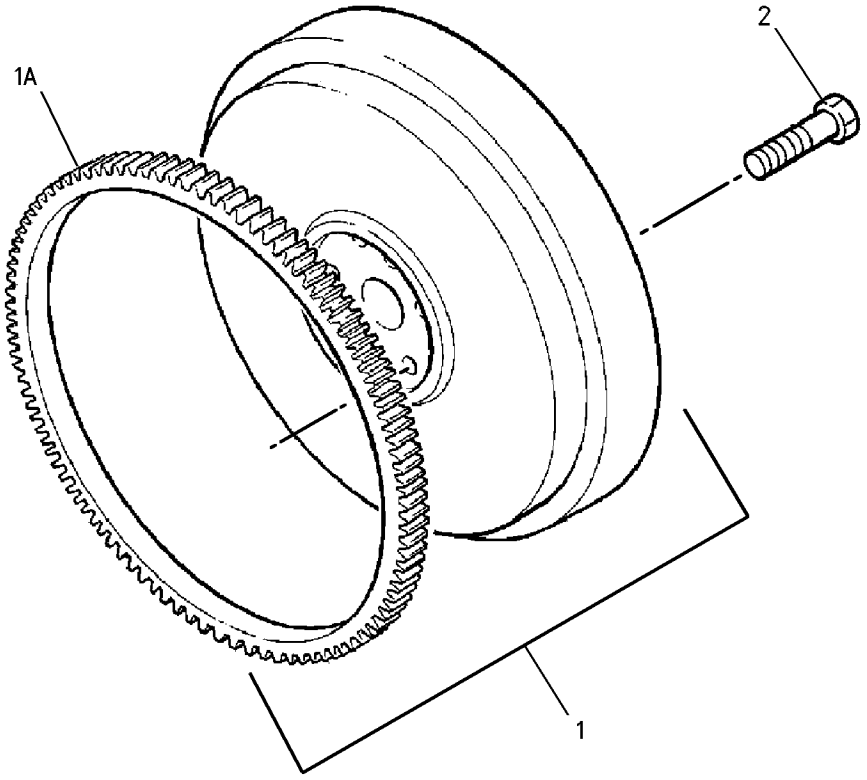

GRAPHIC #1 **<END>** g00640776

246-8723 GUARD GP-BELT

S/N: MJH1-UP; SCH1-UP; RLL1-UP; BXM1-UP

PART OF 218-0911, 228-1767, 278-1218, 278-1228 INSTALLATION AR-ENGINE

SMCS-7174 **i02041355**

NOTE	REF NO	GRAPHIC REF	PART NUMBER	QTY	PART NAME 1 2 3 4 5 6 (PRODUCT LEVEL)	SEE PAGE
	1	1	**149-7694**	1	BRACKET AS	
M		1	**8T-3612**	4	NUT-WELD (M8X1.25-THD)	
	2	1	**208-0044**	1	GUARD-BELT	
	3	1	**228-9953**	1	BRACKET AS	
M		1	**8T-3490**	2	NUT-WELD (M10X1.5-THD)	
M		1	**8T-3612**	2	NUT-WELD (M8X1.25-THD)	
	4	1	**5P-4116**	8	WASHER-HARD (8.8X20.5X2-MM THK)	
M	5	1	**8T-4189**	4	BOLT (M8X1.25X20-MM)	
M	6	1	**8T-4908**	2	BOLT (M8X1.25X25-MM)	
M	7	1	**8T-5093**	2	BOLT-LOCKING (M8X1.25X25-MM)	

M-METRIC PART

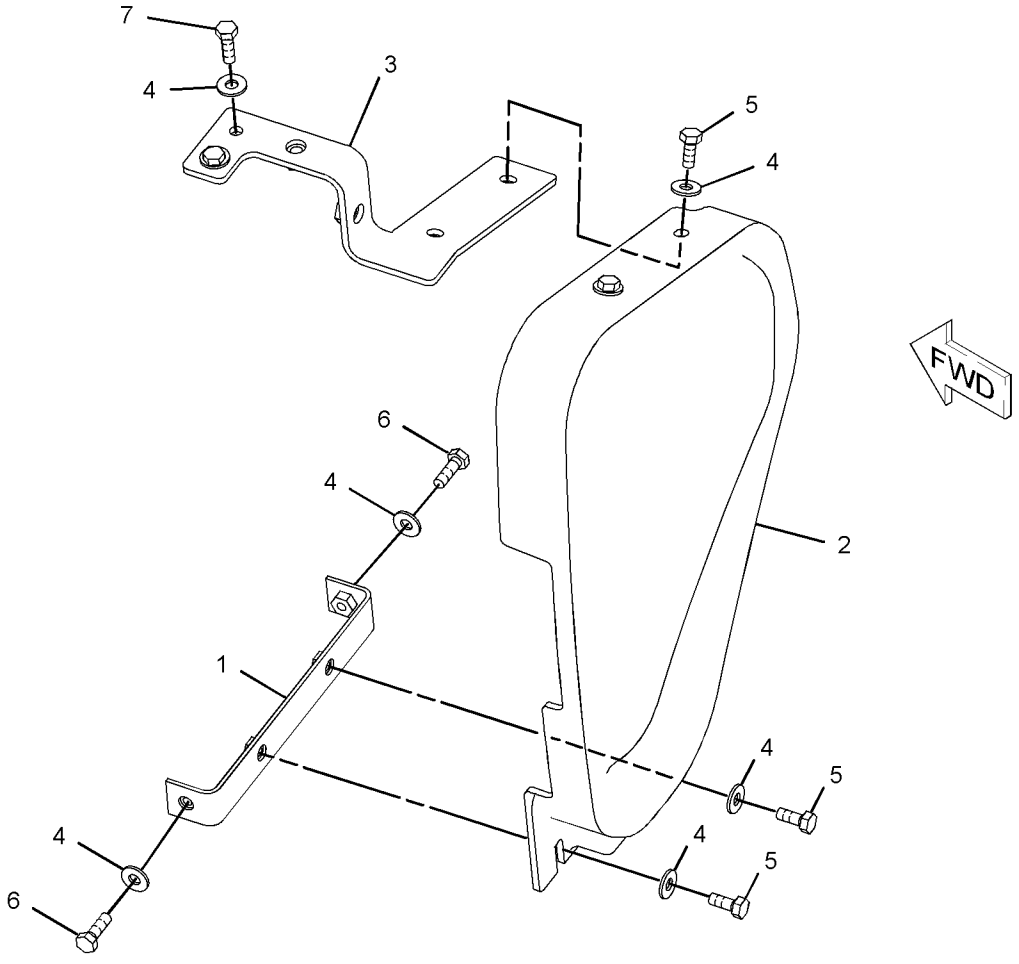

GRAPHIC #1 **<END>** g01071917

BASIC ENGINE

217-7238 HOUSING GP-FLYWHEEL

S/N: GGA1-UP; CSD1-UP
PART OF 179-1808, 233-6648 ENGINE AR-PRIMARY
ALSO AN ATTACHMENT

SMCS-1157 **i01649087**

NOTE	REF NO	GRAPHIC REF	PART NUMBER	QTY	PART NAME 1 2 3 4 5 6 (PRODUCT LEVEL)	SEE PAGE
	1	1	**217-7225**	1	HOUSING-FLYWHEEL	
	2	1	**138-7402**	6	BOLT	
	3	1	**153-6375**	10	BOLT	
	4	1	**153-6868**	3	BOLT	
	5	1	**154-2394**	1	PLATE	
	6	1	**154-2395**	1	PLUG	
	7	1	**154-2403**	4	WASHER	
	8	1	**165-2142**	2	BOLT	
	9	1	**138-7162**	4	BOLT	
	10	1	**166-2338**	4	NUT	

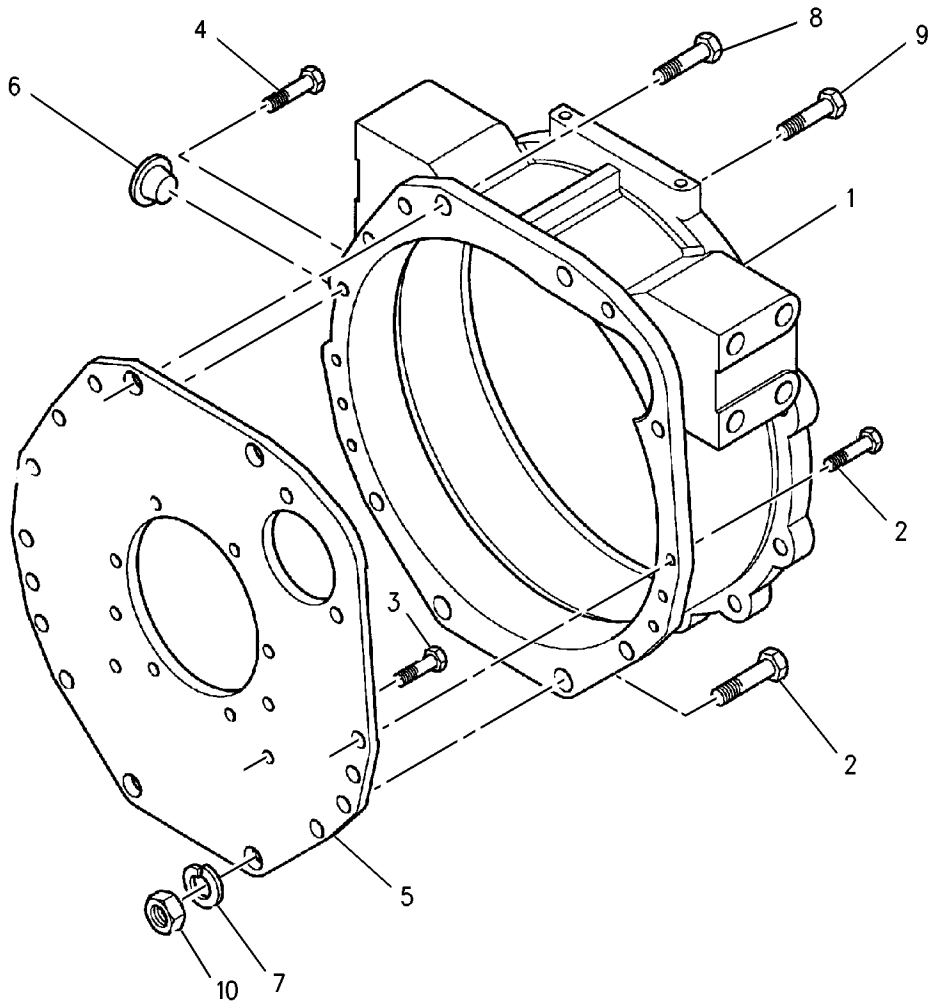

GRAPHIC #1 **<END>** g00852718

217-7118 HOUSING GP-FRONT

S/N: GGA1-UP; CSD1-UP

PART OF 179-1808 ENGINE AR-PRIMARY

SMCS-1151, 1160, 1162, 1166, 3108 **i02266511**

NOTE	REF NO	GRAPHIC REF	PART NUMBER	QTY	PART NAME 1 2 3 4 5 6 (PRODUCT LEVEL)	SEE PAGE
	1	1	**153-5960**	1	NUT	
	2	1	**153-5962**	3	BOLT	
	3	1	**153-6838**	4	BOLT	
	4	1	**153-6856**	7	BOLT	
	5	1	**153-7985**	1	WASHER	
	6	1	**154-1672**	1	HOUSING-FRONT	
	7	1	**154-1673**	1	PIN	
	8	1	**154-1675**	1	SEAL	
	9	1	**154-1676**	1	GEAR AS (62-TEETH)	
	9A	1	**154-1677**	3	BUSHING	
	9B	1	**154-1678**	3	DOWEL	
	9C	1	**154-1679**	1	SPRING	
	10	1	**154-1680**	1	PLATE	
	11	1	**165-2139**	2	BOLT	
	12	1	**200-0807**	1	BRACKET	
	13	1	**215-2621**	1	GASKET	

217-7118 **HOUSING GP-FRONT** *(contd.)* **i02266511**

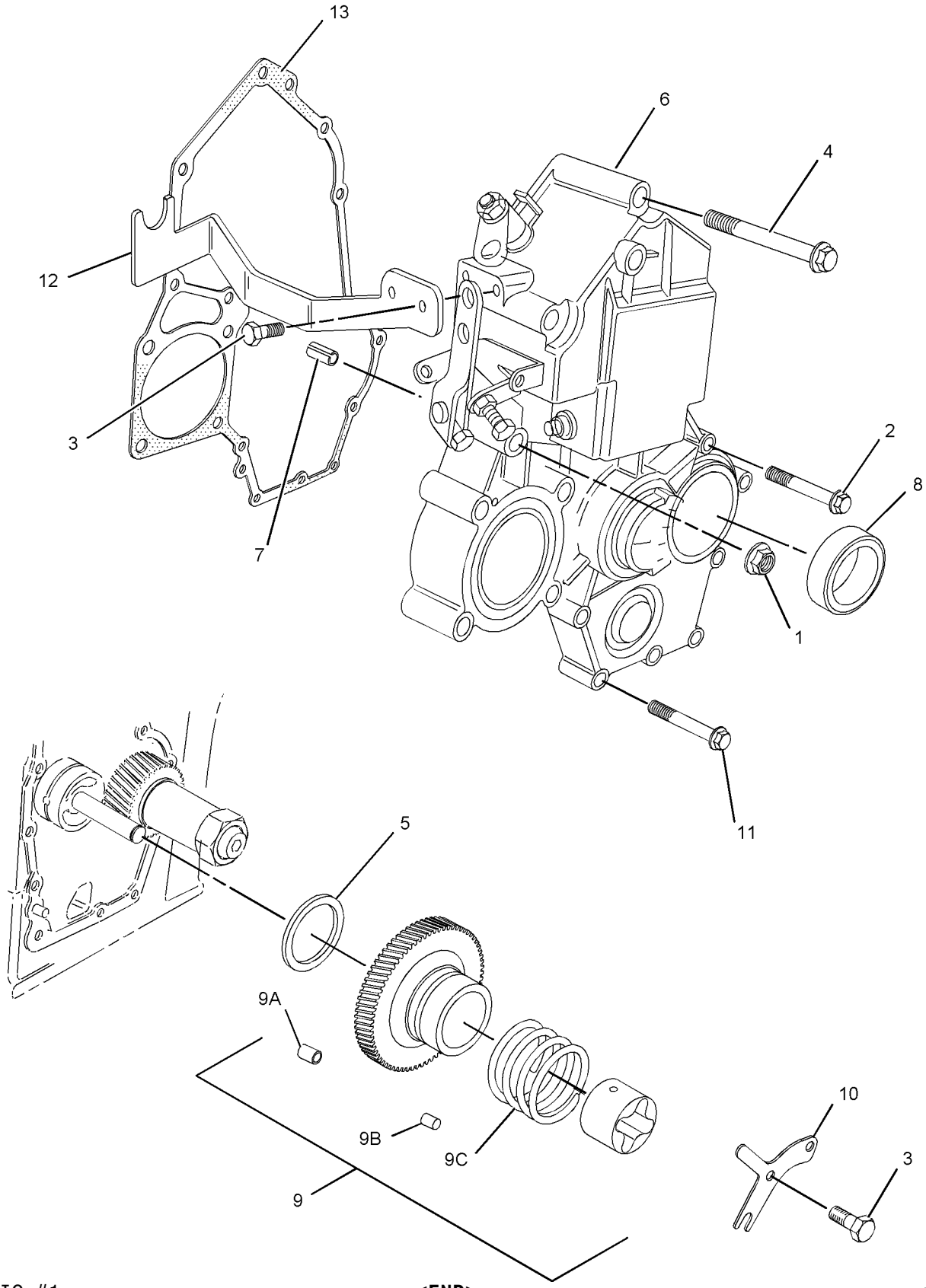

GRAPHIC #1 **<END>** g01137384

246-3338 HOUSING GP-FRONT

S/N: GGA1-UP; CSD1-UP
PART OF 233-6648 ENGINE AR-PRIMARY
AN ATTACHMENT

SMCS-1151, 1160, 1162, 1166, 3108 **i02010675**

NOTE	REF NO	GRAPHIC REF	PART NUMBER	QTY	PART NAME 1 2 3 4 5 6 (PRODUCT LEVEL)	SEE PAGE
	1	1	**153-5960**	2	NUT	
	2	1	**153-5962**	3	BOLT	
	3	1	**153-6838**	4	BOLT	
	4	1	**153-6856**	6	BOLT	
	5	1	**153-7985**	1	WASHER	
	6	1	**154-1680**	1	PLATE	
	7	1	**154-1672**	1	HOUSING-FRONT	
	8	1	**154-1673**	1	PIN	
	9	1	**154-1675**	1	SEAL	
	10	1	**154-1676**	1	GEAR AS (62 TEETH)	
	10A	1	**154-1677**	3	BUSHING	
	10B	1	**154-1678**	3	DOWEL	
	10C	1	**154-1679**	1	SPRING	
	11	1	**165-2139**	2	BOLT	
	12	1	*215-2621*	1	GASKET	
F		1	**160-7626**	1	STUD	

F-NOT SHOWN

246-3338 **HOUSING GP-FRONT** *(contd.)* **i02010675**

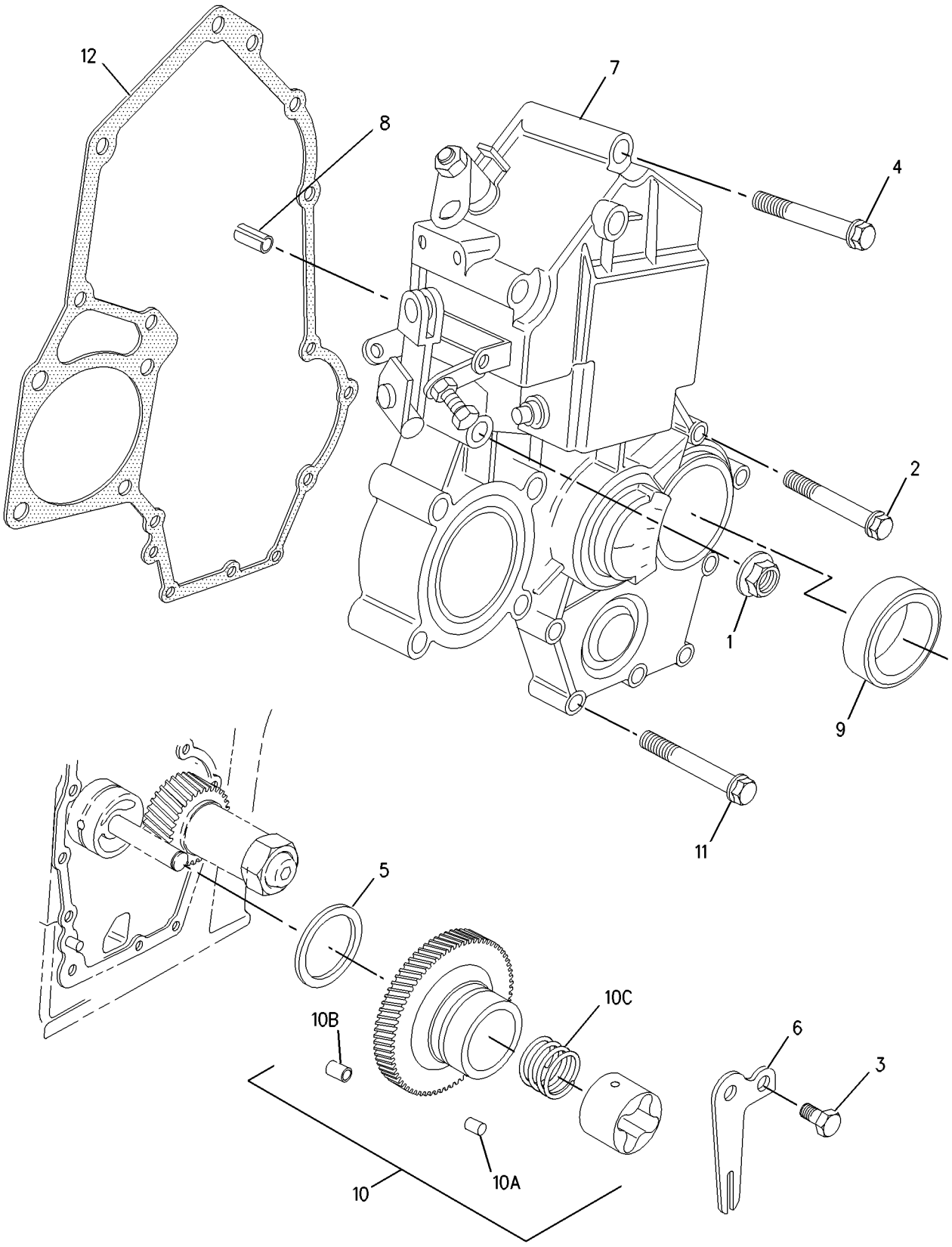

GRAPHIC #1 **<END>** g00995977

154-1877 LIFTING GP-ENGINE

S/N: GGA1-UP; CSD1-UP

PART OF 179-1808 ENGINE AR-PRIMARY

SMCS-1122 **i02304693**

NOTE	REF NO	GRAPHIC REF	PART NUMBER	QTY	PART NAME 1 2 3 4 5 6 (PRODUCT LEVEL)	SEE PAGE
	1	1	**191-0573**	1	PLATE	
	2	1	**191-0574**	1	PLATE	
	3	1	**153-6375**	2	BOLT	

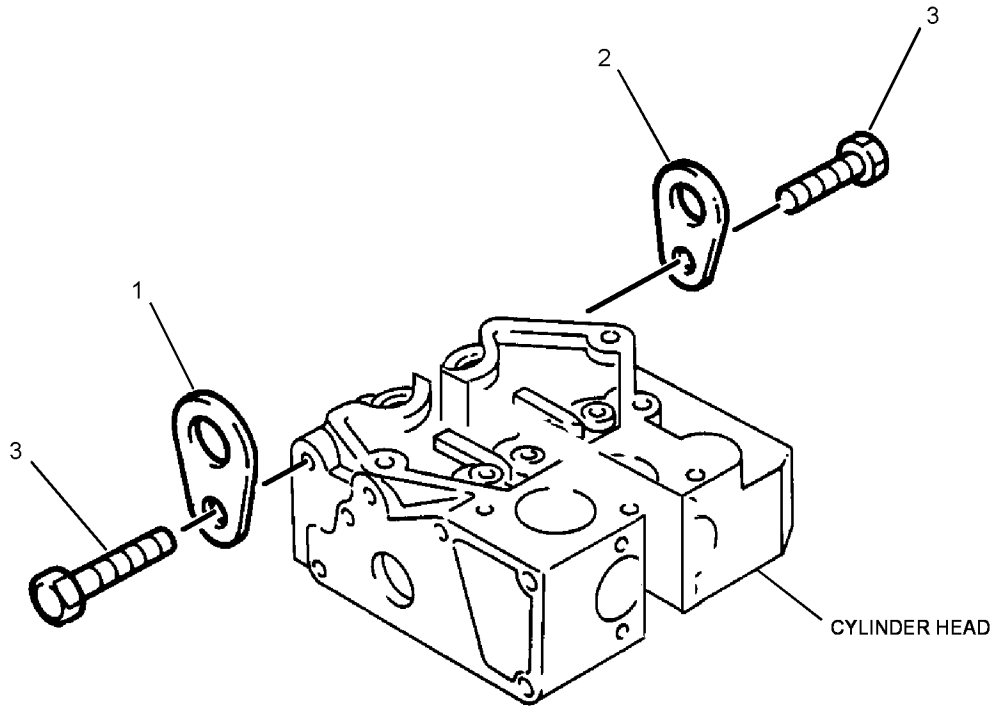

GRAPHIC #1 **<END>** g01154198

BASIC ENGINE

251-7618 LIFTING GP-ENGINE

S/N: GGA1-UP; CSD1-UP
PART OF 233-6648 ENGINE AR-PRIMARY
AN ATTACHMENT

SMCS-1122 **i02089687**

NOTE	REF NO	GRAPHIC REF	PART NUMBER	QTY	PART NAME 1 2 3 4 5 6 (PRODUCT LEVEL)	SEE PAGE
	1	1	**155-7984**	2	WASHER	
	2	1	**165-2141**	2	BOLT	
	3	1	**251-7615**	2	PLATE-LIFTING	

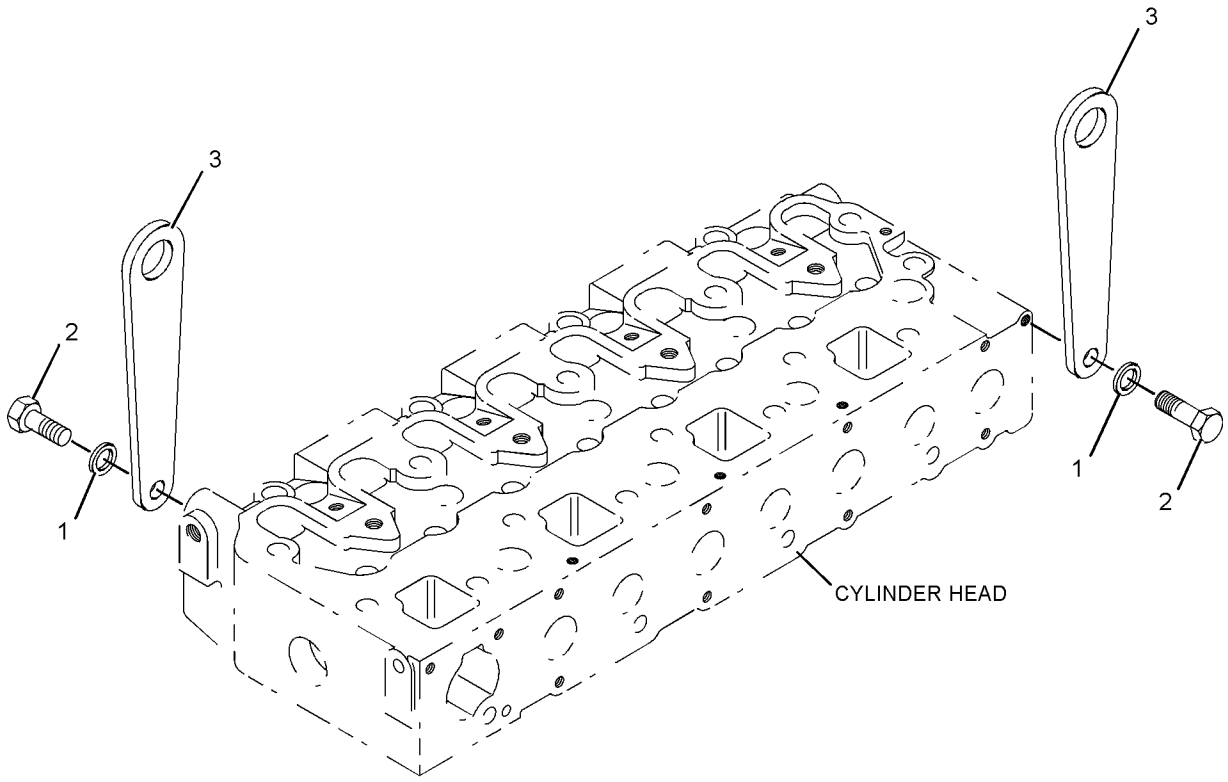

GRAPHIC #1 **<END>** g01091205

228-1764 MOUNTING GP-ENGINE

S/N: MJH1-UP; SCH1-UP; RLL1-UP; BXM1-UP

SUPPORTS

PART OF 218-0911, 228-1767, 278-1218, 278-1228 INSTALLATION AR-ENGINE

SMCS-1152, 1153, 1154 **i02062518**

NOTE	REF NO	GRAPHIC REF	PART NUMBER	QTY	PART NAME 1 2 3 4 5 6 (PRODUCT LEVEL)	SEE PAGE
	1	1	**205-3185**	1	BRACKET AS	
	2	1	**237-0419**	1	BRACKET AS	
	3	1	**237-0420**	1	BRACKET AS	
M	4	1	**141-5453**	8	BOLT (M14X1.5X30-MM)	
M	5	1	**8T-4122**	8	WASHER-HARD (17X32X3.5-MM THK)	
M	6	1	**8T-4192**	8	BOLT (M12X1.75X25-MM)	
	7	1	**8T-4223**	8	WASHER-HARD (13.5X25.5X3-MM THK)	

M-METRIC PART

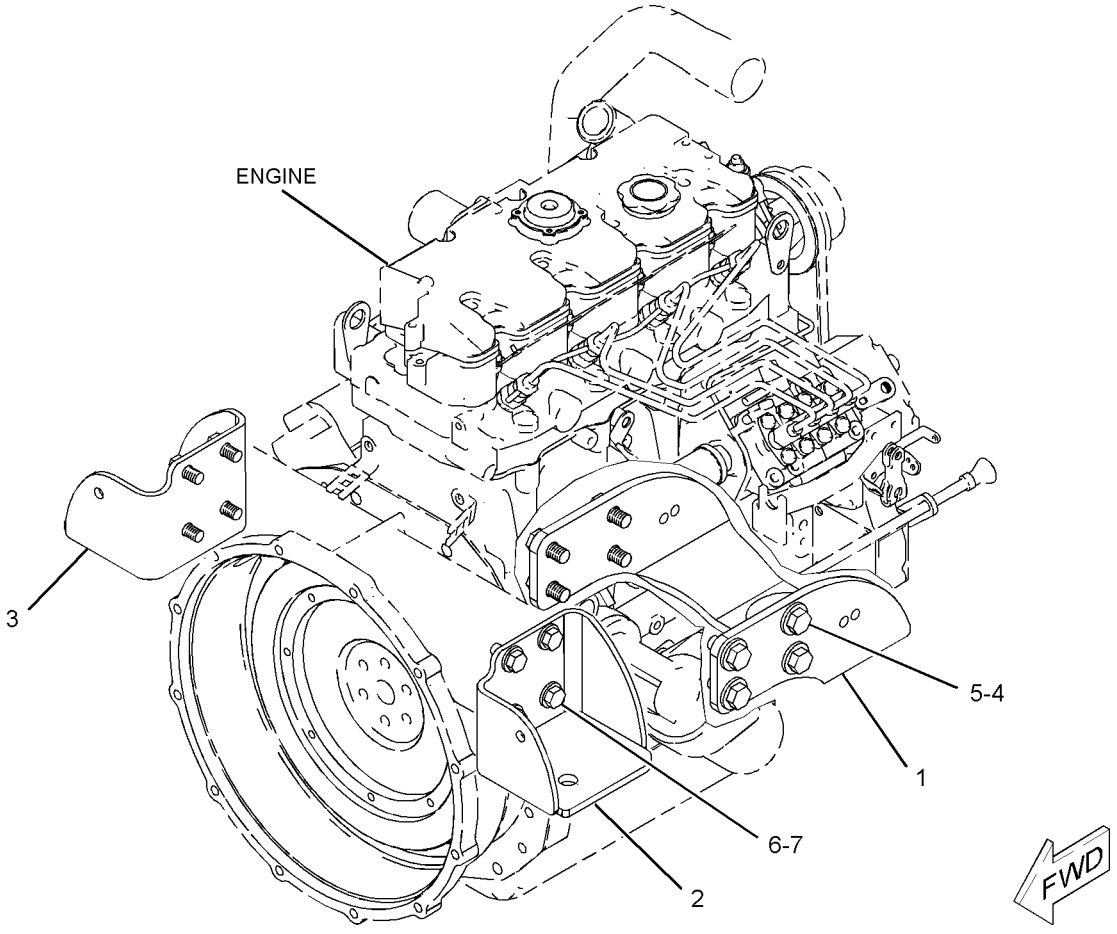

GRAPHIC #1 **<END>** g01072247

241-5789 MOUNTING GP-ENGINE

S/N: MJH1-UP; SCH1-UP; RLL1-UP; BXM1-UP

HARDWARE

PART OF 218-0911, 228-1767, 278-1218, 278-1228 INSTALLATION AR-ENGINE

SMCS-1152, 1153, 1154 **i02003955**

NOTE	REF NO	GRAPHIC REF	PART NUMBER	QTY	PART NAME 1 2 3 4 5 6 (PRODUCT LEVEL)	SEE PAGE
	1	1	**211-9061**	3	MOUNT AS	
	2	1	**165-7095**	6	WASHER (16.5X71.5X3-MM THK)	
M	3	1	**7X-2556**	3	BOLT (M16X2X100-MM)	
M	4	1	**8T-4122**	3	WASHER-HARD (17X32X3.5-MM THK)	
M	5	1	**8T-4132**	3	NUT (M16X2-THD)	

M-METRIC PART

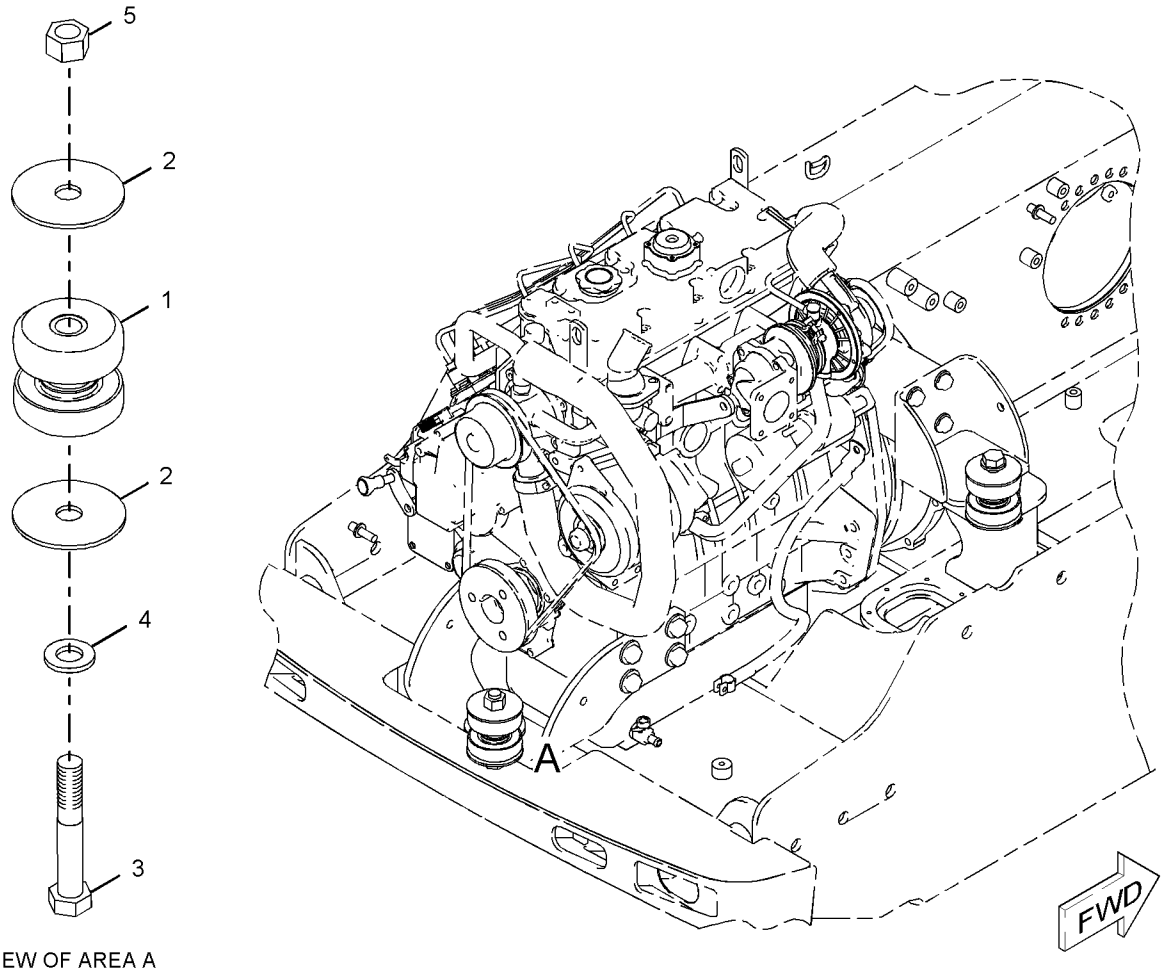

VIEW OF AREA A

GRAPHIC #1 **<END>** g01036490

154-2435 MOUNTING GP-FAN

S/N: GGA1-UP; CSD1-UP
PART OF 179-1808, 233-6648 ENGINE AR-PRIMARY
ALSO AN ATTACHMENT

SMCS-1356 **i00897568**

NOTE	REF NO	GRAPHIC REF	PART NUMBER	QTY	PART NAME 1 2 3 4 5 6 (PRODUCT LEVEL)	SEE PAGE
	1	1	**153-7640**	4	BOLT	
	2	1	**154-2433**	1	PLATE	

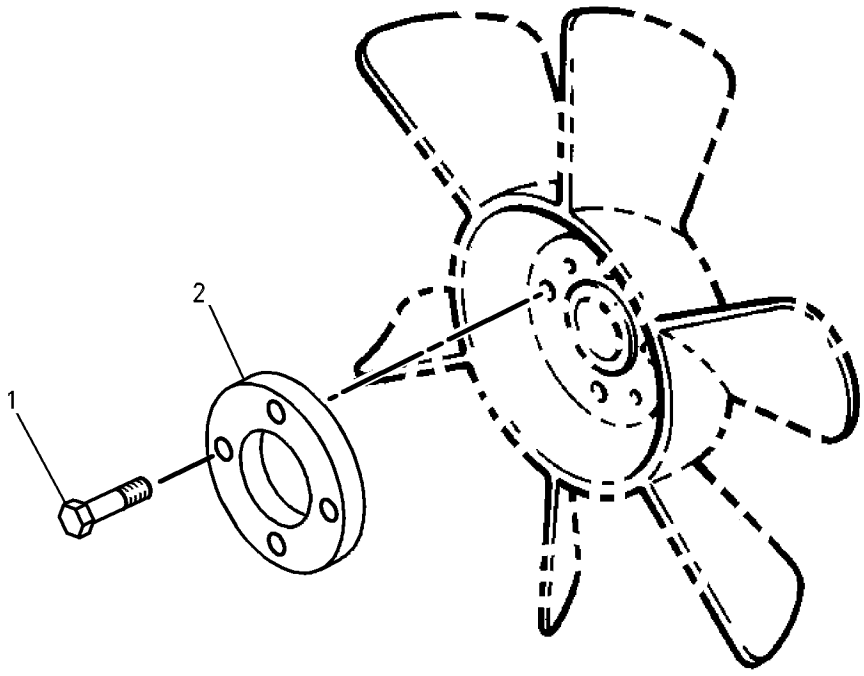

GRAPHIC #1 **<END>** g00485543

BASIC ENGINE

217-7360 PAN GP-OIL

S/N: CSD1-4402

PART OF 179-1808 ENGINE AR-PRIMARY

SMCS-1302 **i02474810**

NOTE	REF NO	GRAPHIC REF	PART NUMBER	QTY	PART NAME 1 2 3 4 5 6 (PRODUCT LEVEL)	SEE PAGE
	1	1	**144-9961**	1	VALVE-DRAIN (ENGINE OIL SUMP)	
	2	2	**220-1523**	1	FILTER AS-ENGINE OIL	
	3	2	**153-5933**	1	SEAL	
	4	3	**153-5936**	2	WASHER	
	5	1	**153-6832**	2	WASHER	
	6	1	**153-6833**	30	BOLT	
	7	1	**153-6835**	1	SEAL-O-RING	
	8	1,2	**153-6838**	3	BOLT	
	9	2	**153-6841**	2	SEAL-O-RING	
	10	3	**153-6848**	1	COVER	
	11	3	**153-6849**	1	SPRING	
	12	3	**153-6850**	1	COLLAR	
	13	3	**153-6851**	1	CLIP	
	14	3	**153-6853**	1	SEAL-O-RING	
	15	2	**153-6879**	1	CONNECTION	
	16	3	**153-6881**	1	BOLT	
	17	3	**154-1941**	1	ROTOR	
	18	3	**154-1942**	1	VALVE-RELIEF	
	19	1	**154-1945**	1	PAN-OIL	
	20	1	**154-1947**	1	PIPE-OIL	
	21	1	**154-1948**	1	STRAINER (OIL PAN)	
	22	3	**154-2353**	1	TUBE AS-OIL	
	23	2	**155-8084**	1	WASHER	
	24	2	**238-2685**	1	TUBE AS	
B	25	3	**160-4150**	1	SHIM (0.1-MM THK)	
B		3	**160-4151**	1	SHIM (0.15-MM THK)	
B		3	**160-4152**	1	SHIM (0.2-MM THK)	
B		3	**160-4153**	1	SHIM (0.5-MM THK)	
	29	1	**165-3605**	1	PLUG GP-OIL PAN (DRAIN)	
	30	1	**215-2605**	1	GASKET	
	31	1	**217-7352**	1	COVER-VALVE	
	32	2	**217-7357**	1	GAUGE-OIL (DIPSTICK)	
	33	2	**217-7358**	1	CAP (ENGINE OIL FILLER)	

B-USE AS REQUIRED

217-7360 **PAN GP-OIL** *(contd.)* **i02474810**

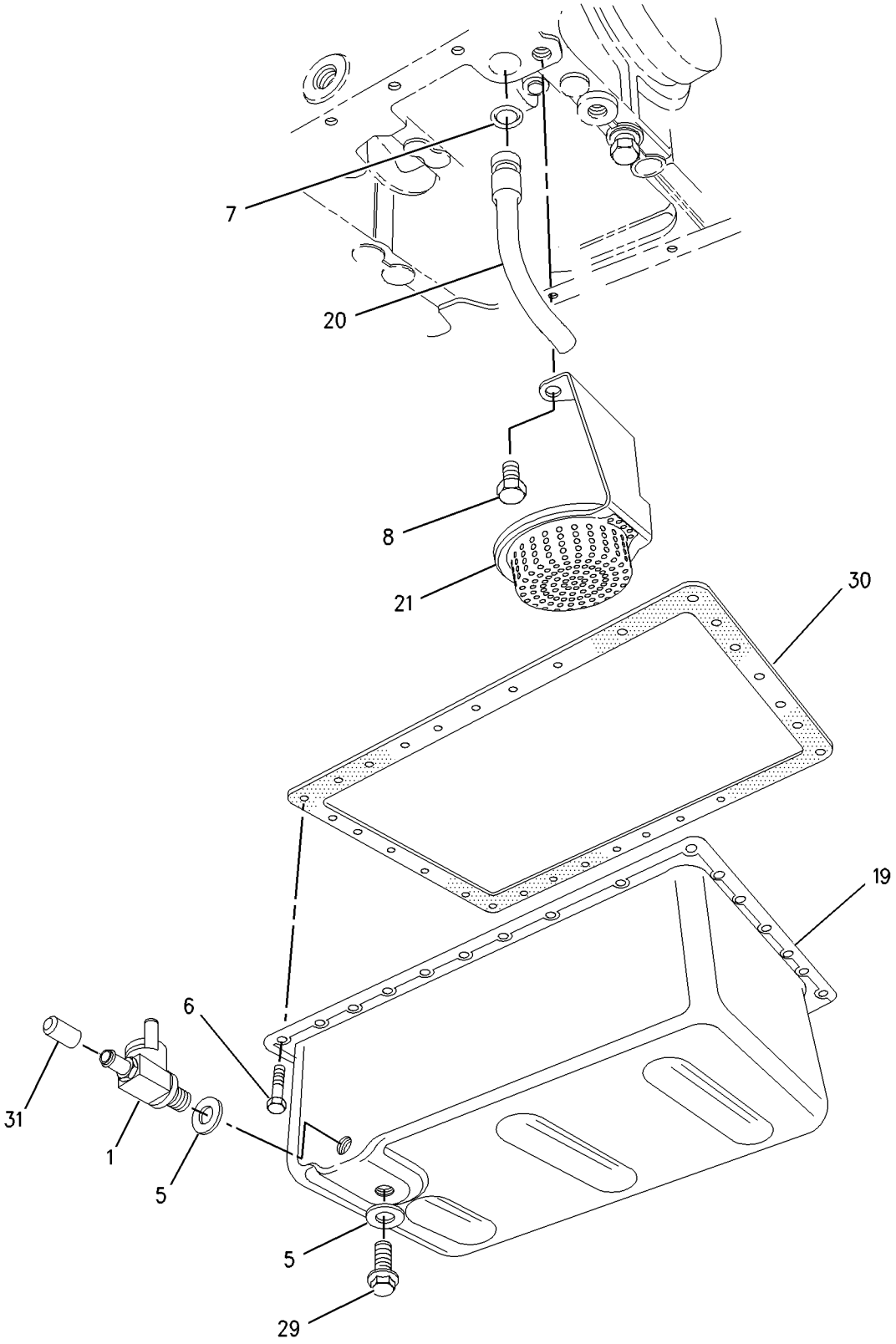

GRAPHIC #1 g00852736

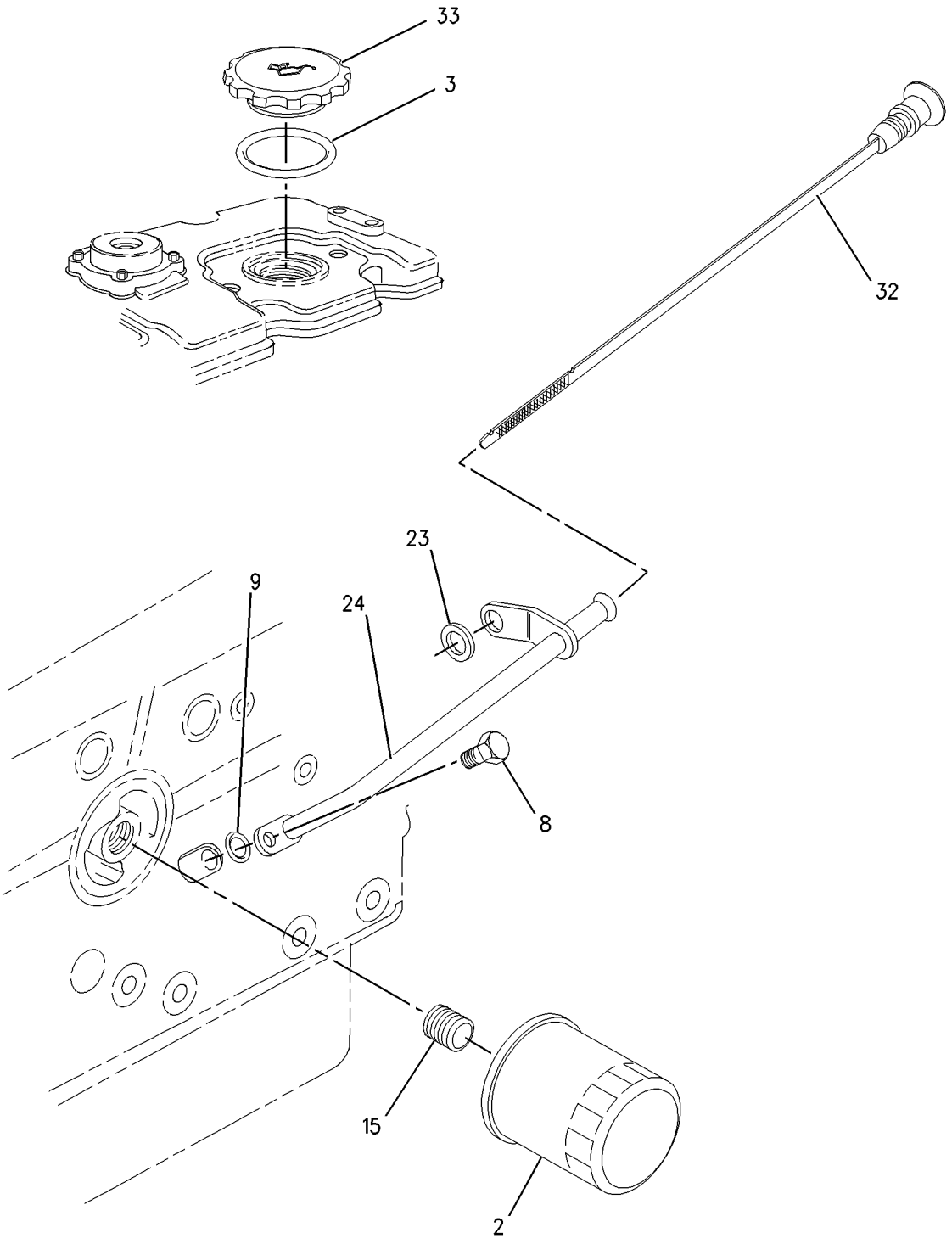

GRAPHIC #2 g00852737

217-7360 **PAN GP-OIL** *(contd.)* **i02474810**

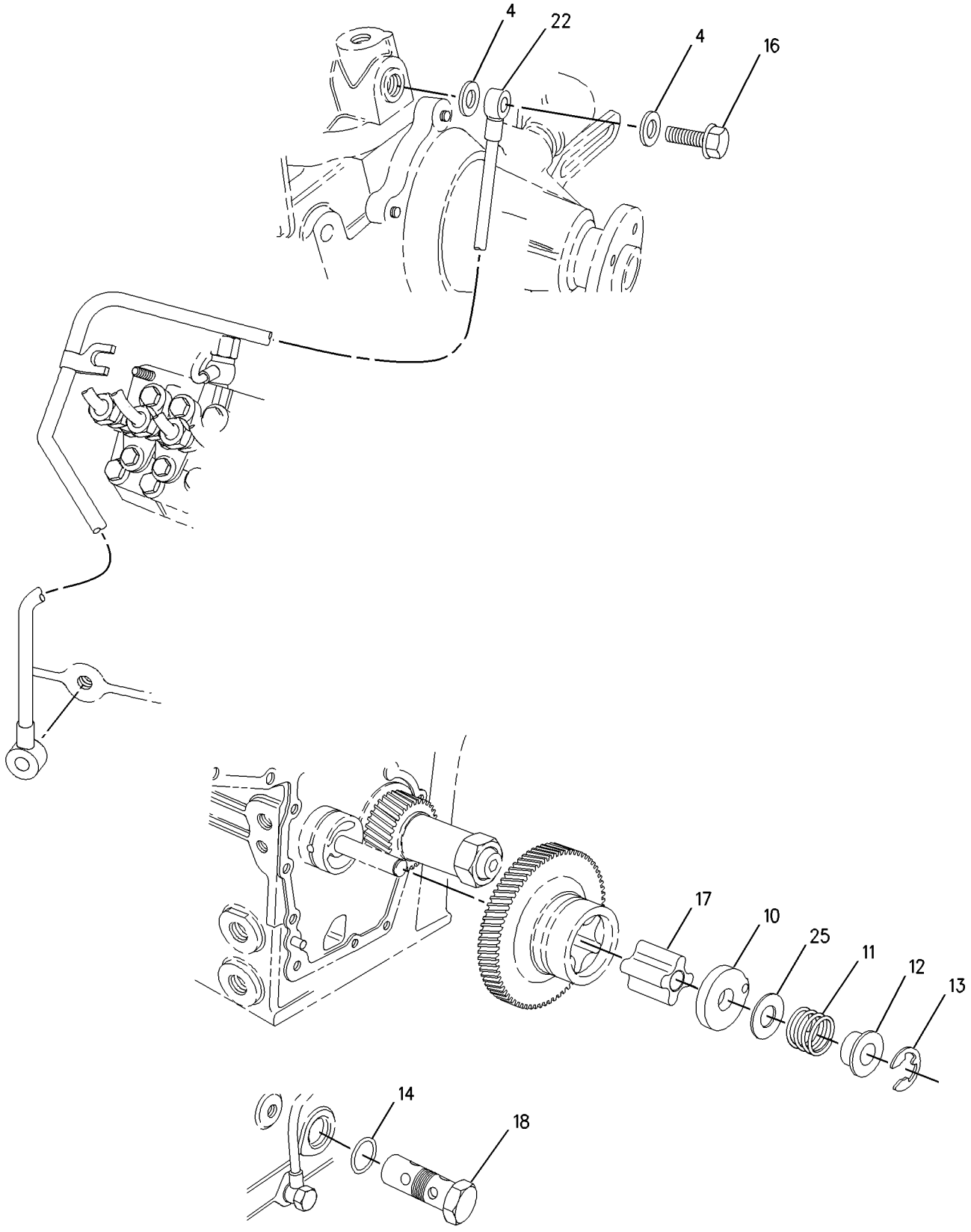

GRAPHIC #3 **<END>** g00852738

BASIC ENGINE

246-3481 PAN GP-OIL

S/N: GGA1-UP; CSD4403-UP
PART OF 179-1808, 233-6648 ENGINE AR-PRIMARY
ALSO AN ATTACHMENT

SMCS-1302 **i02460046**

NOTE	REF NO	GRAPHIC REF	PART NUMBER	QTY	PART NAME 1 2 3 4 5 6 (PRODUCT LEVEL)	SEE PAGE
	2	1	**144-9961**	1	VALVE-DRAIN (ENGINE OIL SUMP) (OIL)	
	3	2	**153-5933**	1	SEAL	
	4	3	**153-5936**	2	WASHER	
	5	1	**153-6832**	2	WASHER	
	6	1	**153-6833**	31	BOLT	
	7	1	**153-6835**	1	SEAL-O-RING	
	8	1,2	**153-6838**	2	BOLT	
	9	2	**153-6841**	2	SEAL-O-RING	
	10	3	**153-6848**	1	COVER	
	11	3	**153-6849**	1	SPRING	
	12	3	**153-6850**	1	COLLAR	
	13	3	**153-6851**	1	CLIP	
	14	3	**153-6853**	1	SEAL-O-RING	
	15	3	**153-6881**	1	BOLT	
	16	3	**154-1941**	1	ROTOR	
	17	3	**154-1942**	1	VALVE-RELIEF	
	18	1	**154-1945**	1	PAN-OIL	
	19	1	**154-1947**	1	PIPE-OIL	
	20	1	**154-1948**	1	STRAINER (OIL PAN)	
	21	3	**154-2353**	1	TUBE AS-OIL	
	22	2	**155-8084**	1	WASHER	
B	23	3	**160-4150**	1	SHIM (0.1-MM THK)	
B		3	**160-4151**	1	SHIM (0.15-MM THK)	
B		3	**160-4152**	1	SHIM (0.2-MM THK)	
B		3	**160-4153**	1	SHIM (0.5-MM THK)	
	25	1	**165-3605**	1	PLUG GP-OIL PAN (DRAIN)	
	27	1	**215-2605**	1	GASKET	
	28	1	**217-7352**	1	COVER-VALVE	
	29	2	**217-7357**	1	GAUGE-OIL (DIPSTICK)	
	30	2	**217-7358**	1	CAP (ENGINE OIL FILLER)	
	31	2	**238-2685**	1	TUBE AS	

B-USE AS REQUIRED

246-3481 **PAN GP-OIL** *(contd.)* **i02460046**

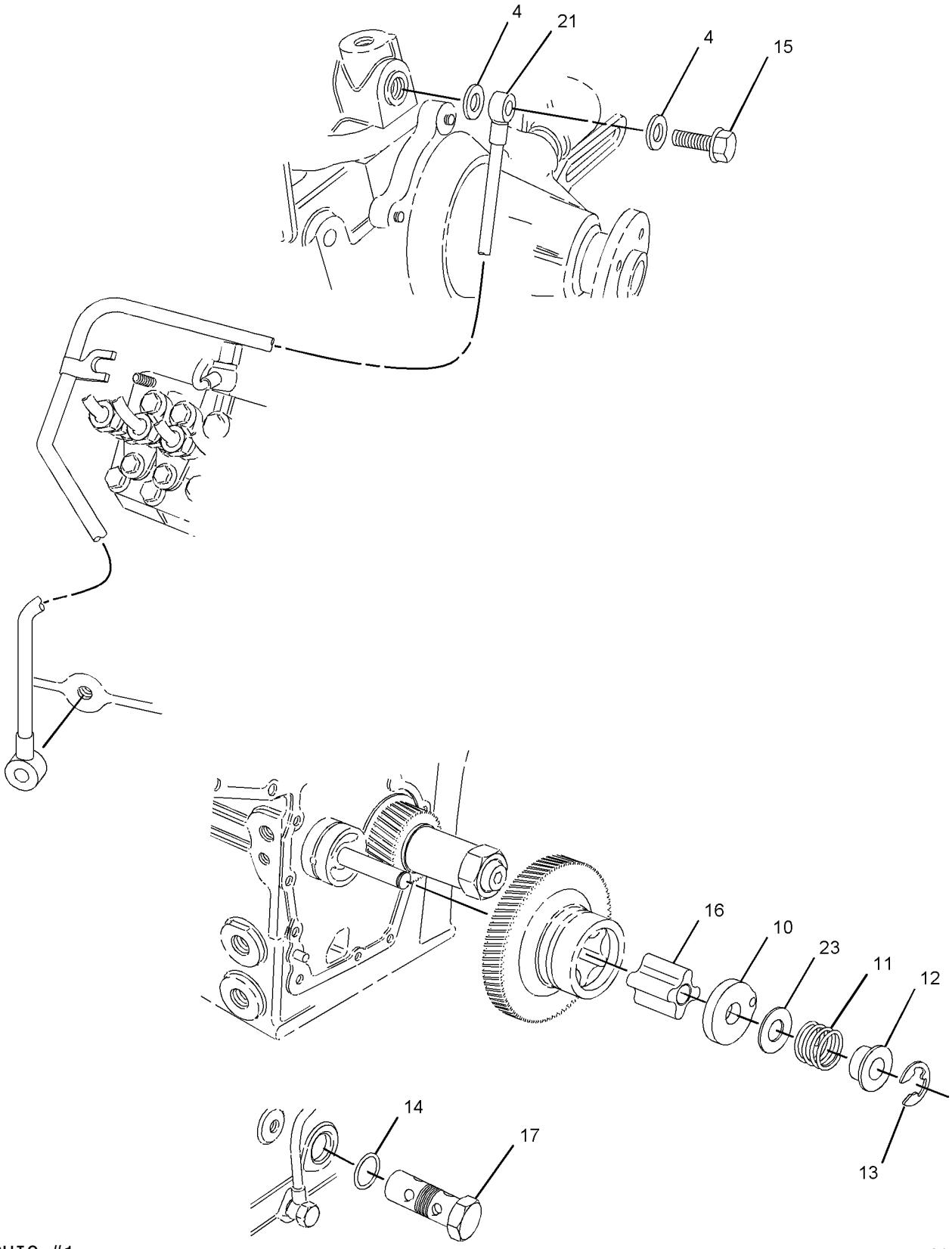

GRAPHIC #1 g01067102

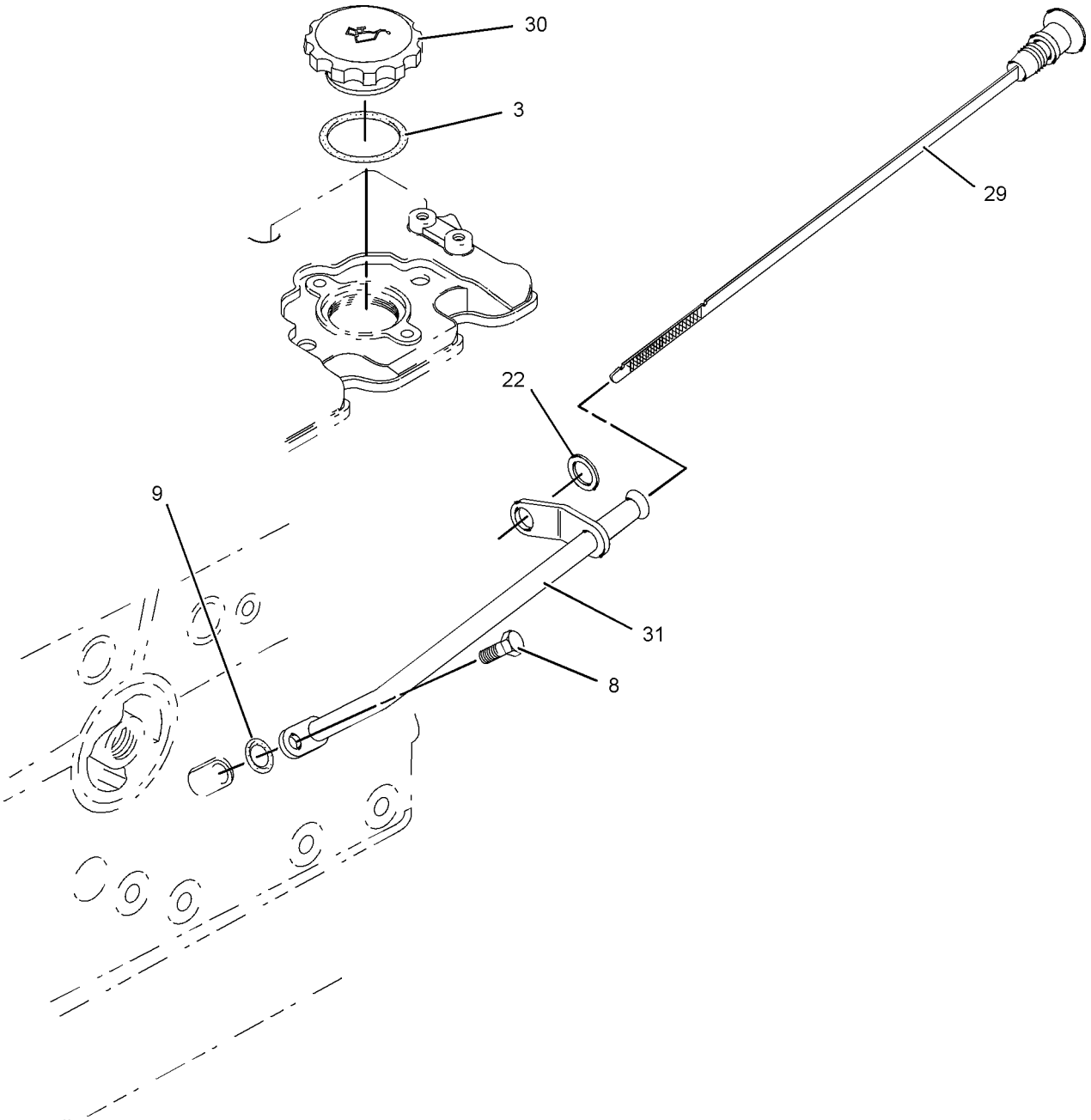

GRAPHIC #2 g01067009

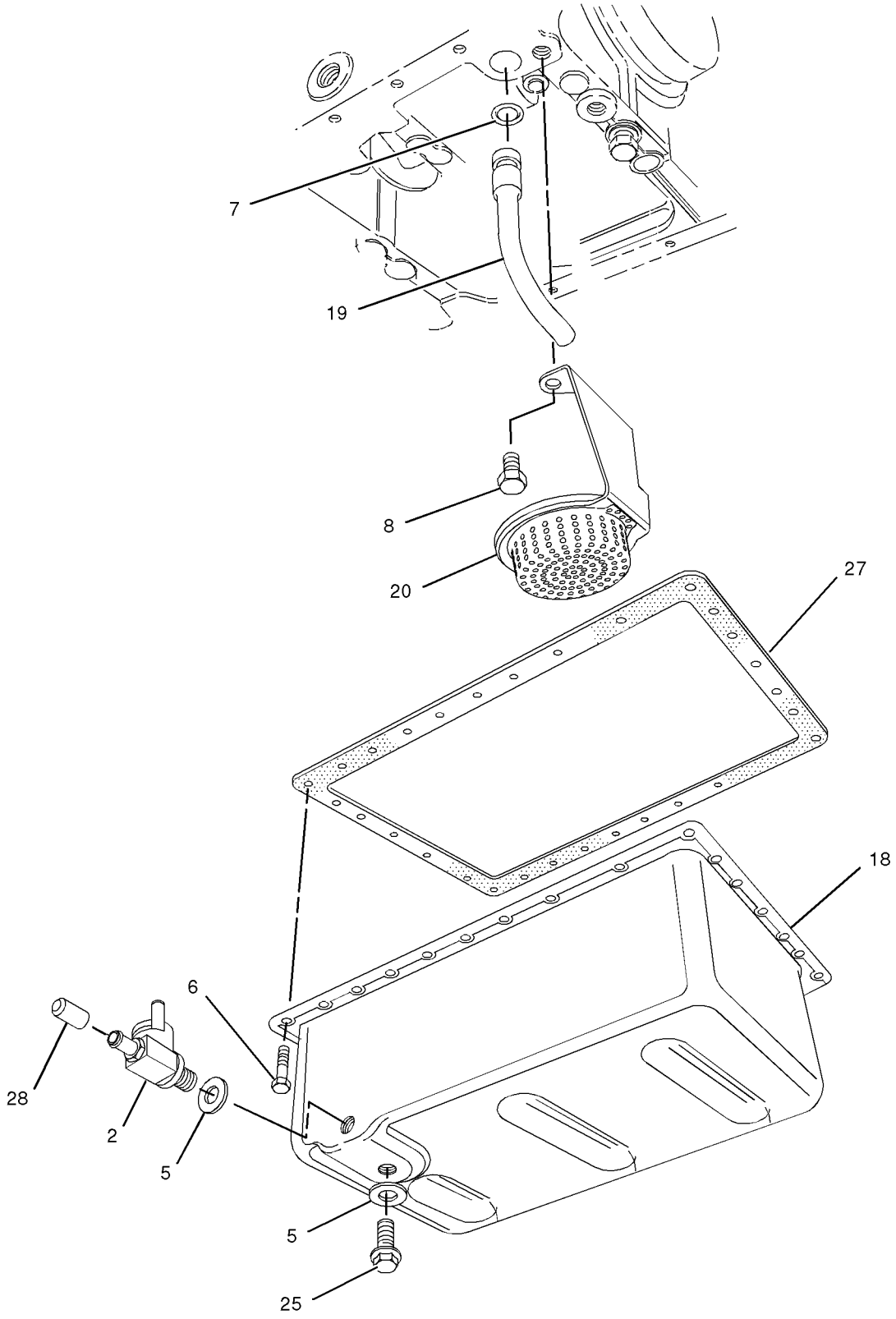

GRAPHIC #3 **<END>** g01040308

217-1480 PISTON & ROD GP

S/N: GGA1-UP; CSD1-UP
PART OF 179-1808 ENGINE AR-PRIMARY

SMCS-1225 **i02223460**

NOTE	REF NO	GRAPHIC REF	PART NUMBER	QTY	PART NAME 1 2 3 4 5 6 (PRODUCT LEVEL)	SEE PAGE
	1	1	**146-7808**	4	KIT-BEARING (ROD)	
	2	1	**154-0867**	4	ROD AS-CONNECTING	
					(EACH INCLUDES)	
	3	1	**154-0869**	1	BUSHING	
	4	1	**154-0870**	2	BOLT	
	5	1	**154-0871**	2	NUT	
	6	1	**154-0873**	4	PIN	
	7	1	**154-0874**	8	CLIP	
	8	1	*217-1451*	4	PISTON AS	
					(EACH INCLUDES)	
	9	1	**217-1456**	1	KIT-PISTON RING	
					(EACH KIT INCLUDES COMPLETE SET OF RINGS FOR ONE PISTON)	

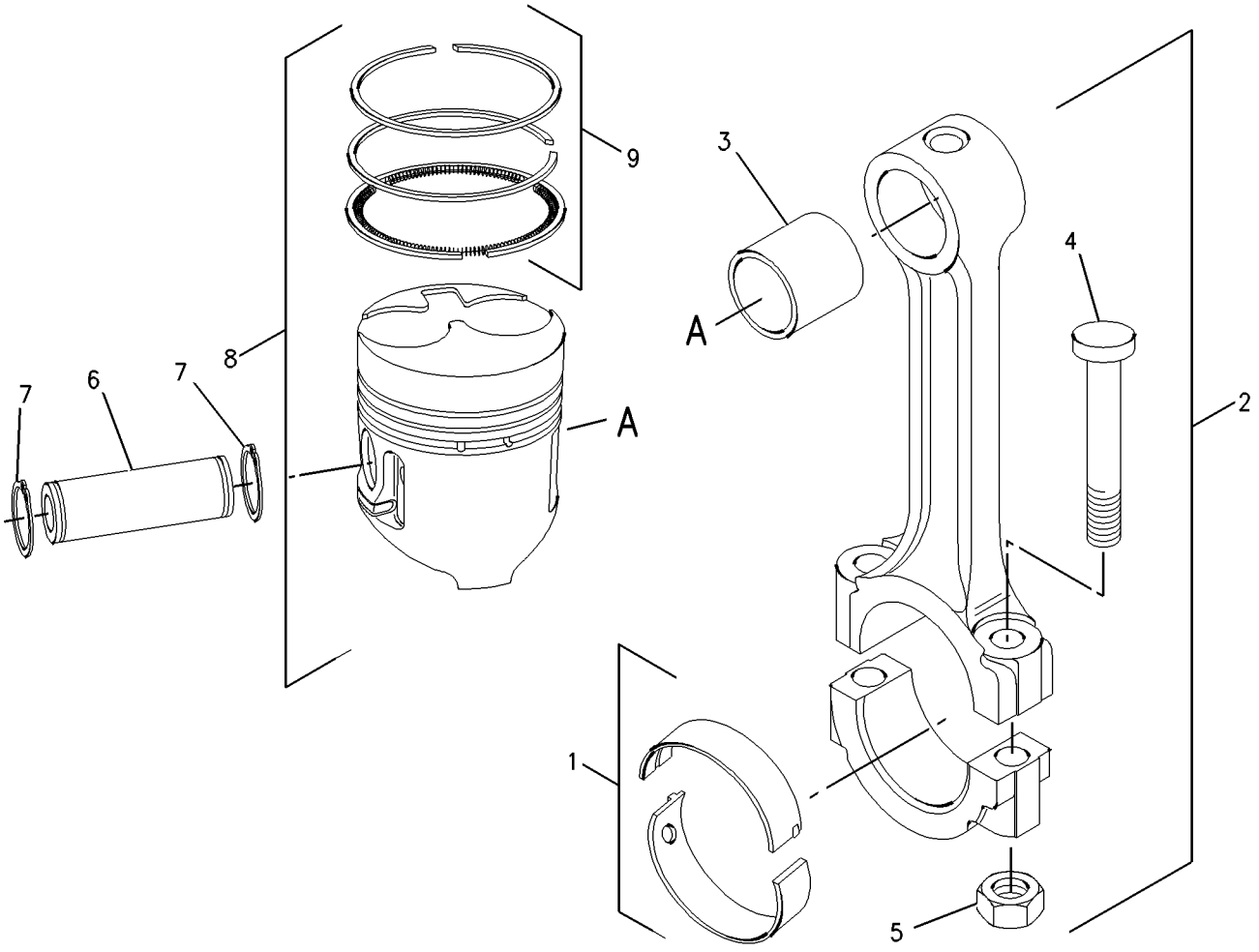

GRAPHIC #1 **<END>** g00852672

BASIC ENGINE

236-5125 PISTON & ROD GP

S/N: GGA1-525; CSD1-9240
PART OF 233-6648 ENGINE AR-PRIMARY
AN ATTACHMENT

SMCS-1225 **i01932125**

NOTE	REF NO	GRAPHIC REF	PART NUMBER	QTY	PART NAME 1 2 3 4 5 6 (PRODUCT LEVEL)	SEE PAGE
	1	1	**146-7808**	4	KIT-BEARING (ROD)	
	2	1	**154-0867**	4	ROD AS-CONNECTING	
					(EACH INCLUDES)	
	2A	1	**154-0869**	1	BUSHING	
	2B	1	**154-0870**	2	BOLT	
	2C	1	**154-0871**	2	NUT	
	3	1	**154-0873**	1	PIN	
	4	1	**154-0874**	2	CLIP	
	5	1	**236-5124**	4	PISTON AS	
					(EACH INCLUDES)	
	5A	1	**236-5123**	1	RING GP-PISTON	

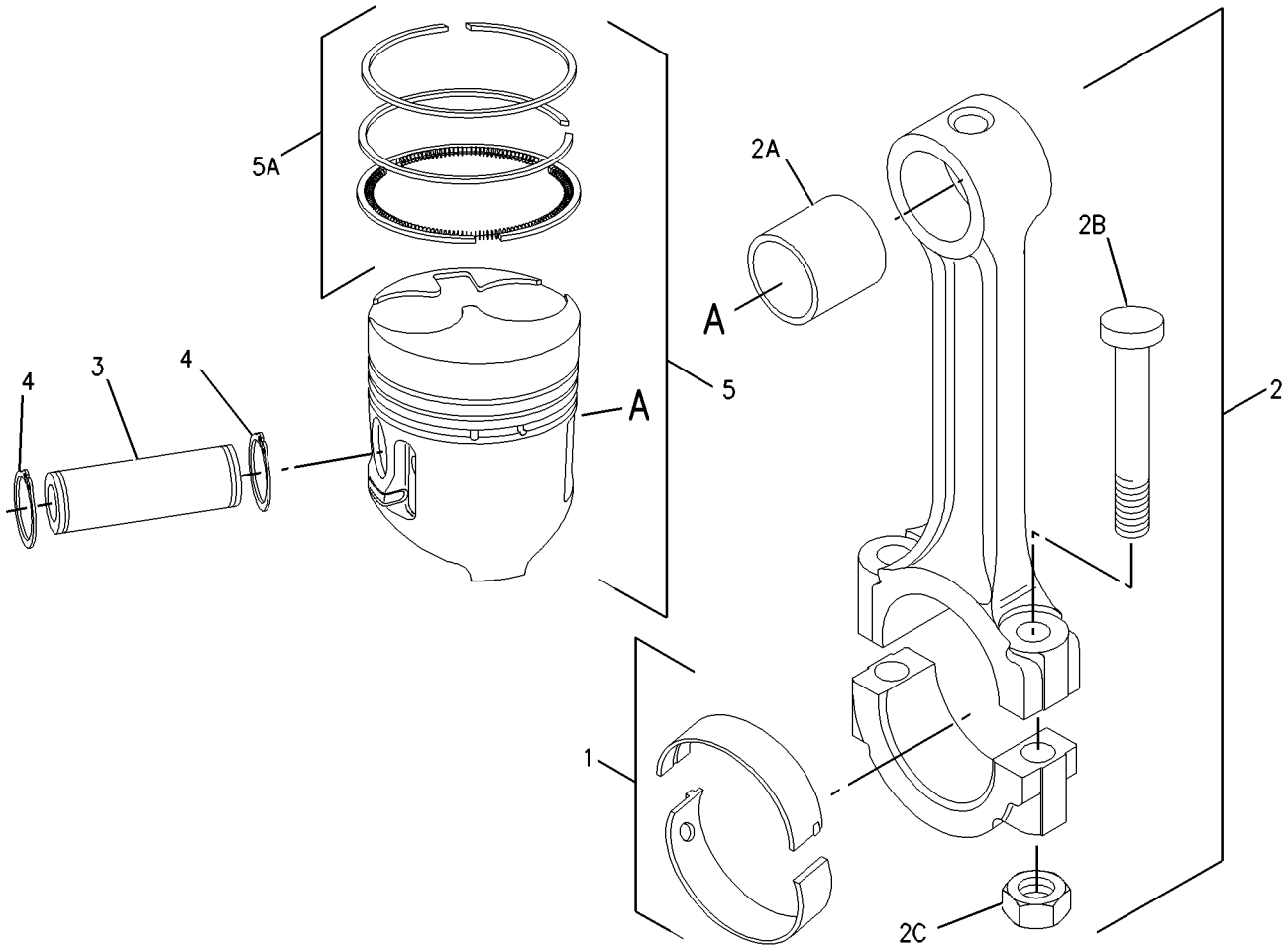

GRAPHIC #1 **<END>** g01006481

270-6930 PISTON & ROD GP

S/N: GGA526-UP; CSD9241-UP
PART OF 233-6648 ENGINE AR-PRIMARY
AN ATTACHMENT

SMCS-1225 **i02449417**

NOTE	REF NO	GRAPHIC REF	PART NUMBER	QTY	PART NAME 1 2 3 4 5 6 (PRODUCT LEVEL)	SEE PAGE
	1	1	**146-7808**	4	KIT-BEARING (ROD)	
	2	1	**154-0867**	4	ROD AS-CONNECTING	
					(EACH INCLUDES)	
	2A	1	**154-0869**	1	BUSHING	
	2B	1	**154-0870**	2	BOLT	
	2C	1	**154-0871**	2	NUT	
	3	1	**154-0873**	1	PIN	
	4	1	**154-0874**	2	CLIP	
	5	1	**270-6968**	4	PISTON AS	
					(EACH INCLUDES)	
	5A	1	**270-6970**	4	KIT-PISTON RING	

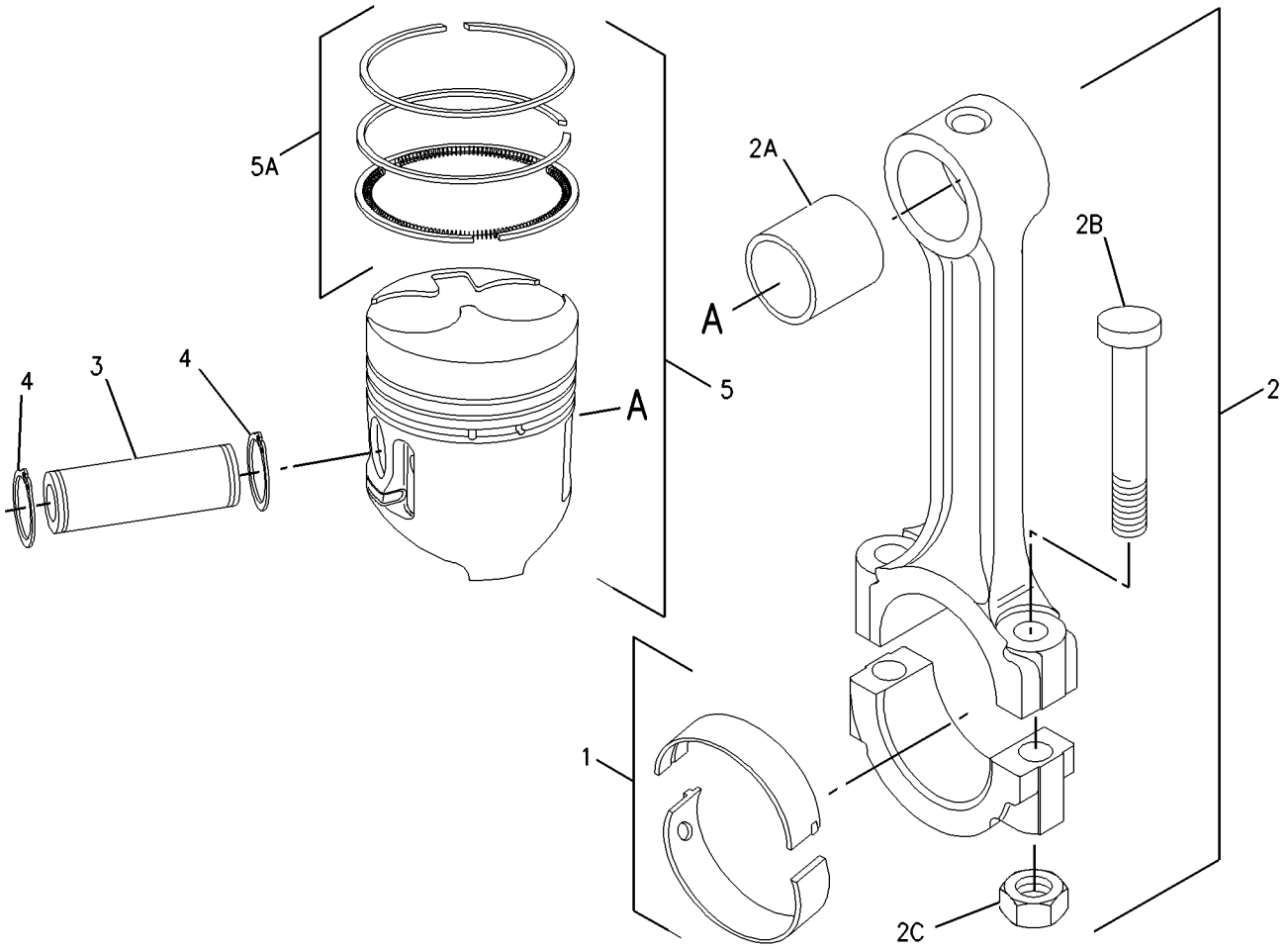

GRAPHIC #1 **<END>** g01006481

217-2777 PULLEY GP-CRANKSHAFT

S/N: GGA1-UP; CSD1-UP
PART OF 179-1808, 233-6648 ENGINE AR-PRIMARY
ALSO AN ATTACHMENT

SMCS-1205 **i01649069**

NOTE	REF NO	GRAPHIC REF	PART NUMBER	QTY	PART NAME 1 2 3 4 5 6 (PRODUCT LEVEL)	SEE PAGE
	1	1	**153-5592**	4	NUT	
	2	1	**153-6492**	1	KEY-WOODRUFF	
	3	1	**153-6494**	1	GASKET	
	4	1	**153-6497**	1	SEAL-O-RING	
	5	1	**154-1880**	1	NUT	
	6	1	**154-1882**	2	PLATE	
	7	1	**180-6115**	4	BOLT	
	8	1	**217-2776**	1	PULLEY-CRANKSHAFT	

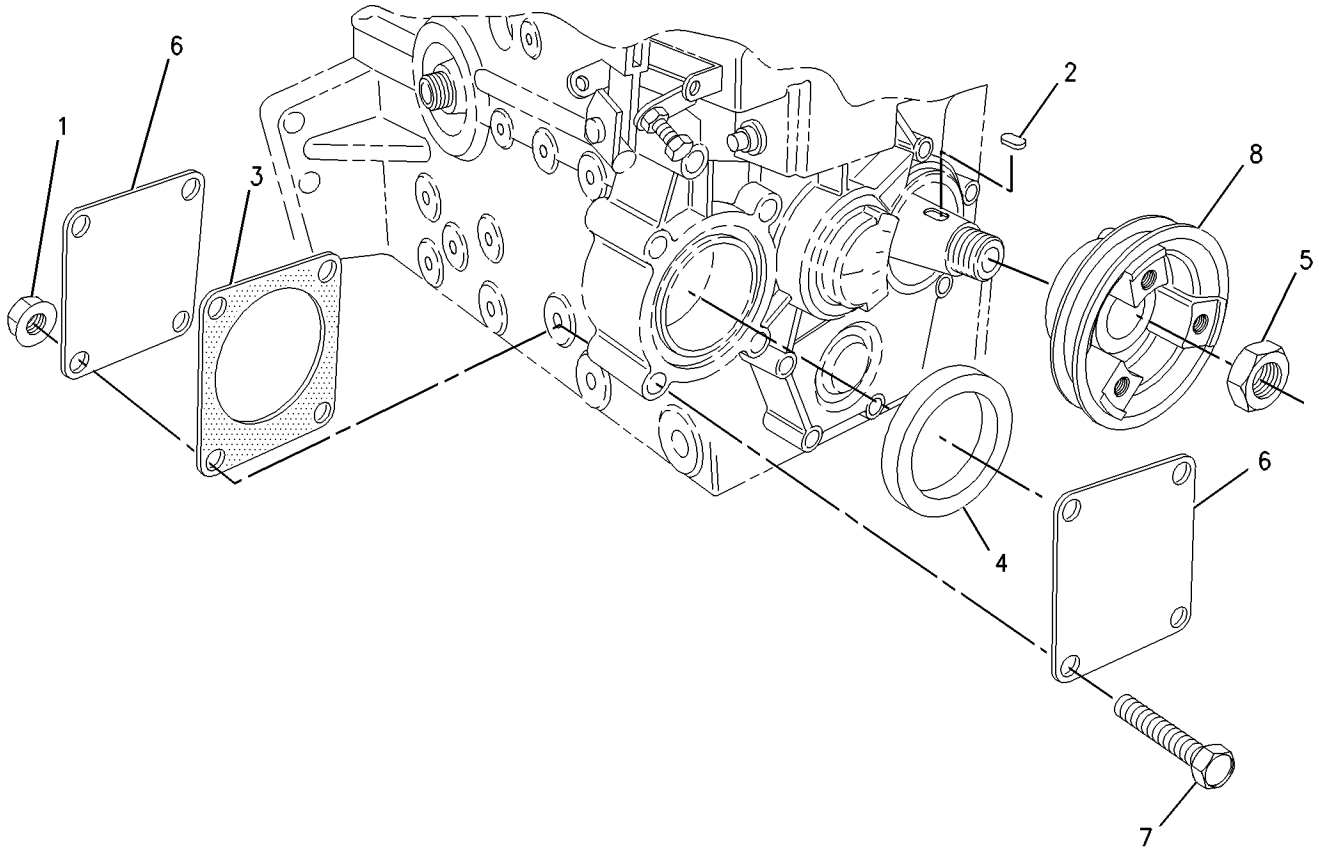

GRAPHIC #1 **<END>** g00852781

217-7832 PULLEY GP-WATER PUMP

S/N: CSD1-4402

PART OF 179-1808 ENGINE AR-PRIMARY

SMCS-1384 **i01649097**

NOTE	REF NO	GRAPHIC REF	PART NUMBER	QTY	PART NAME 1 2 3 4 5 6 (PRODUCT LEVEL)	SEE PAGE
	1	1	**154-1822**	1	PULLEY-WATER PUMP	

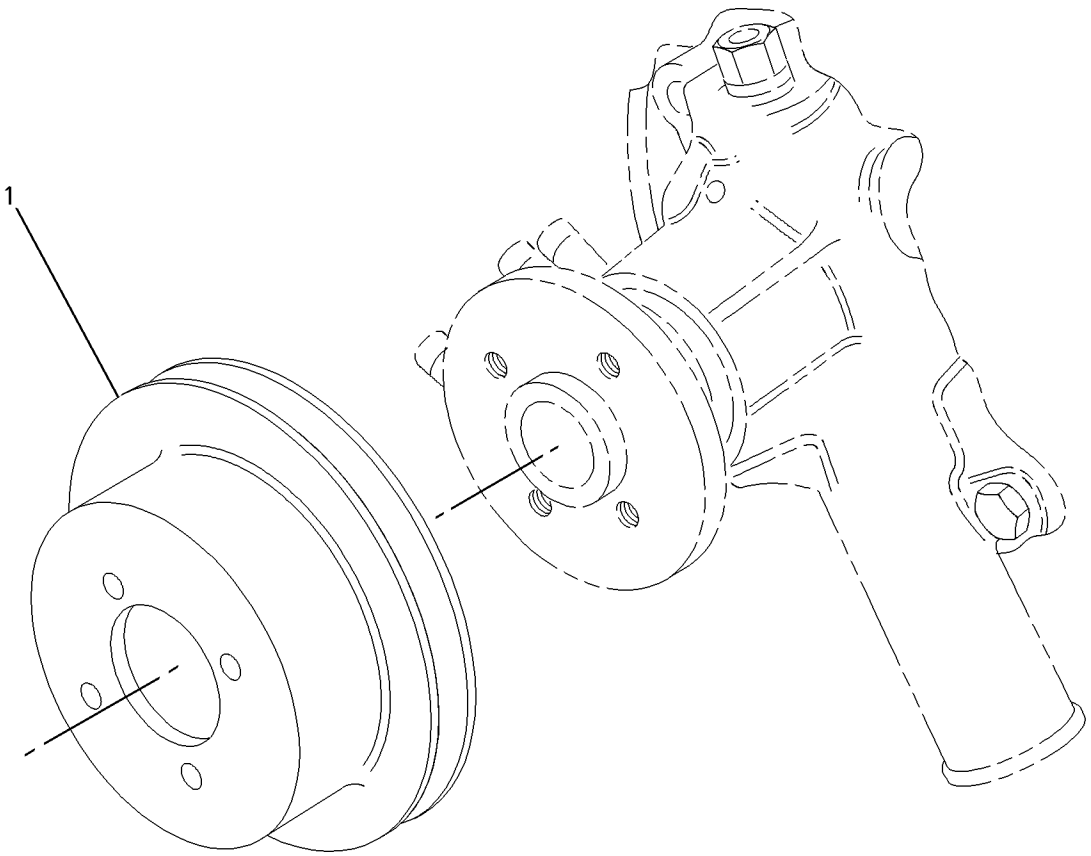

GRAPHIC #1 **<END>** g00852560

251-6791 PULLEY GP-WATER PUMP

S/N: GGA1-UP; CSD4403-UP
PART OF 179-1808, 233-6648 ENGINE AR-PRIMARY
ALSO AN ATTACHMENT

SMCS-1384 **i02089686**

NOTE	REF NO	GRAPHIC REF	PART NUMBER	QTY	PART NAME 1 2 3 4 5 6 (PRODUCT LEVEL)	SEE PAGE
	1	1	**154-1822**	1	PULLEY-WATER PUMP	
	2	1	**251-6789**	1	V-BELT (WATER PUMP)	

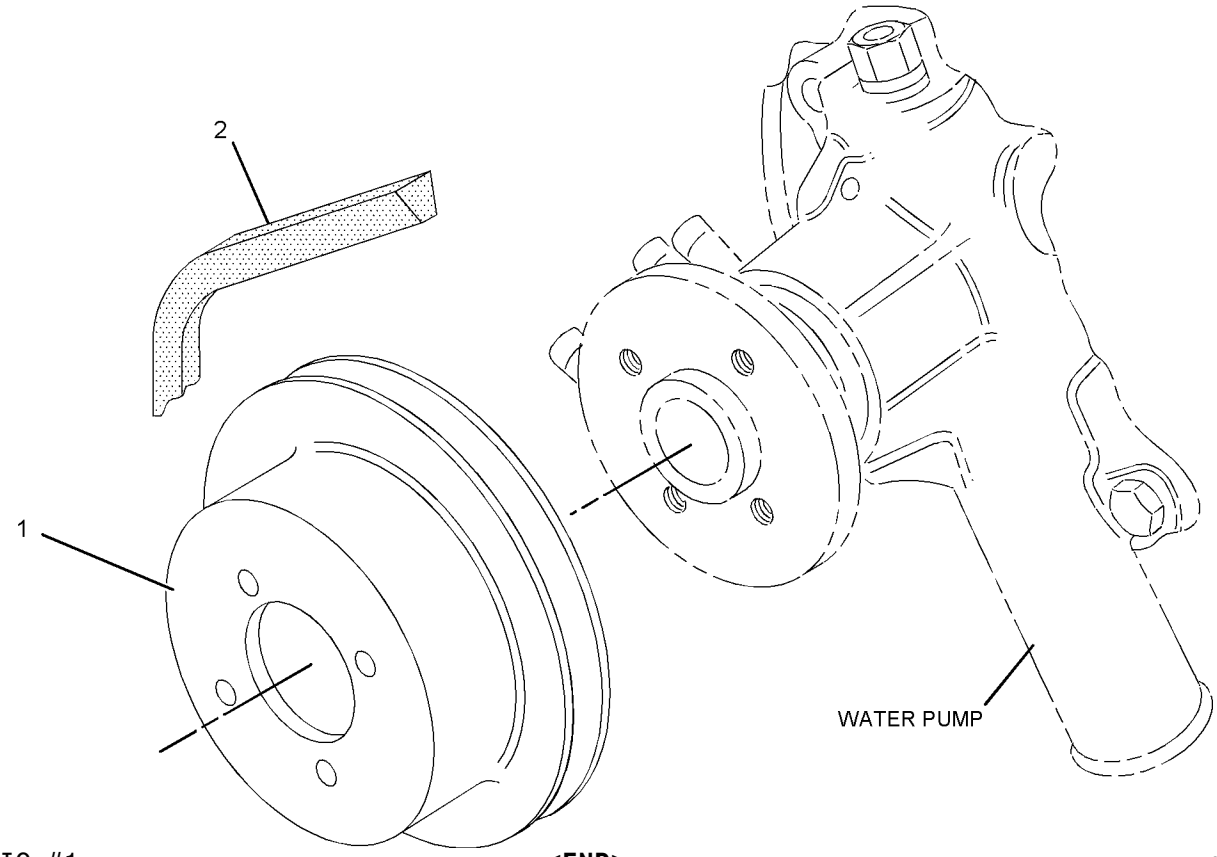

GRAPHIC #1 **<END>** g01048774

217-2753 VALVE MECHANISM GP

S/N: GGA1-UP; CSD1-UP

PART OF 179-1808 ENGINE AR-PRIMARY

SMCS-1102, 1112, 1121, 1123, 1208, 1209 **i01891506**

NOTE	REF NO	GRAPHIC REF	PART NUMBER	QTY	PART NAME 1 2 3 4 5 6 (PRODUCT LEVEL)	SEE PAGE
	1	1	**217-2749**	1	ROCKER ARM AS	
	2	1	**153-5587**	8	SCREW-ADJUSTING	
	3	1	**153-5590**	8	NUT	
	4	1	**153-6835**	1	SEAL-O-RING	
	5	1	**154-1240**	4	LEVER-RH	
	6	1	**154-1241**	4	LEVER-LH	
	7	1	**154-1242**	3	SPRING	
	8	1	**154-1243**	6	WASHER	
	9	1	**206-3499**	1	SHAFT-ROCKER ARM	
	10	1	**153-5961**	2	BOLT	
	11	1	**153-7988**	4	NUT	
	12	1	**154-1246**	4	STUD	
	13	1	**154-1248**	8	ROD	
	14	1	**154-1249**	8	TAPPET	
	15	1	**217-2752**	1	GASKET (VALVE BRACKET)	

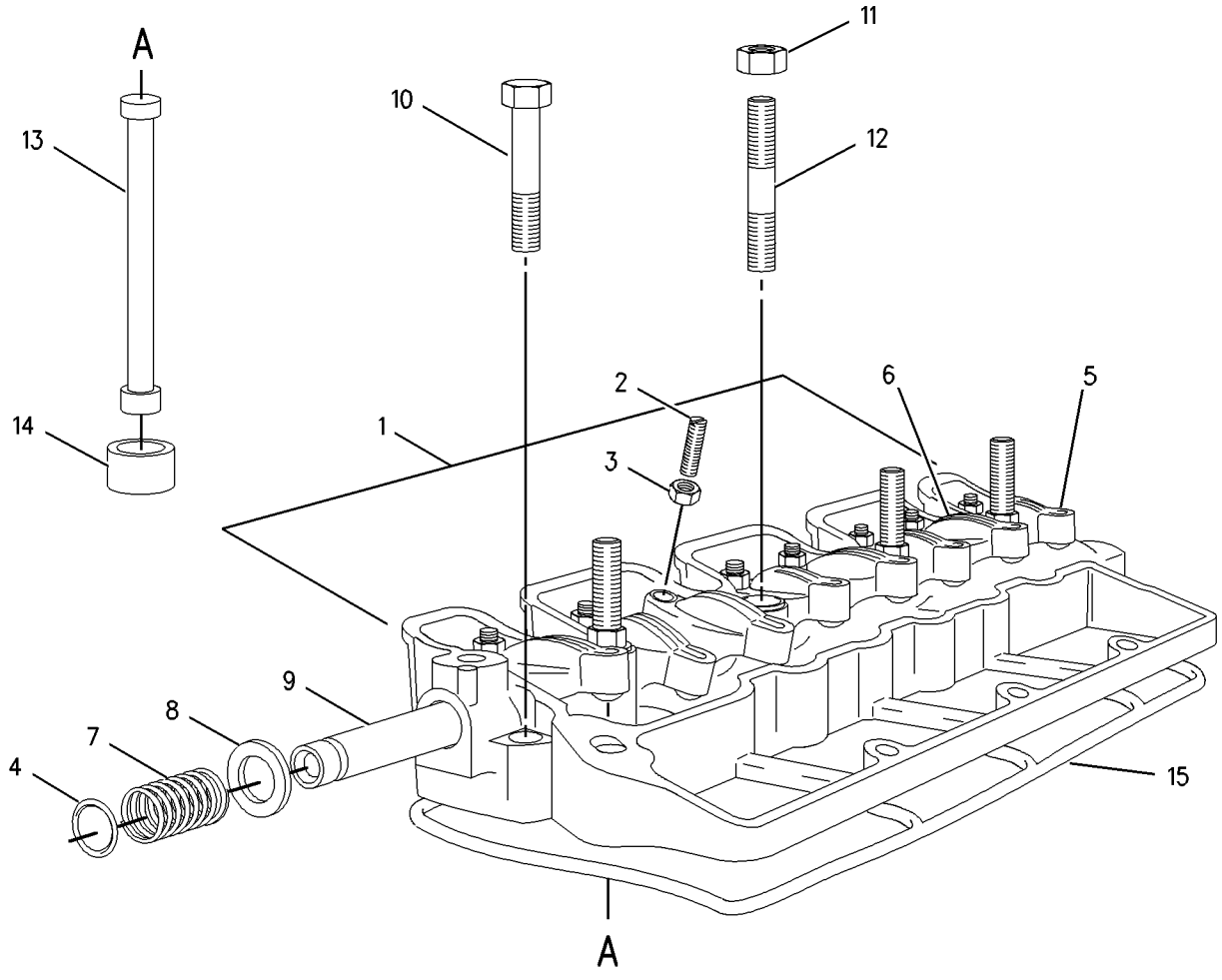

GRAPHIC #1 **<END>** g00984565

236-5156 VALVE MECHANISM GP

S/N: GGA1-UP; CSD1-UP

PART OF 233-6648 ENGINE AR-PRIMARY

AN ATTACHMENT

SMCS-1102, 1112, 1121, 1123, 1208, 1209 **i01932127**

NOTE	REF NO	GRAPHIC REF	PART NUMBER	QTY	PART NAME 1 2 3 4 5 6 (PRODUCT LEVEL)	SEE PAGE
	1	1	**153-7988**	4	NUT	
	2	1	**154-1246**	4	STUD	
	3	1	**154-1248**	8	ROD	
	4	1	**154-1249**	8	TAPPET	
	5	1	**217-2749**	1	ROCKER ARM AS	
	5A	1	**153-5587**	8	SCREW-ADJUSTING	
	5B	1	**153-5590**	8	NUT	
	5C	1	**153-6835**	1	SEAL-O-RING	
	5D	1	**154-1240**	4	LEVER-RH	
	5E	1	**154-1241**	4	LEVER-LH	
	5F	1	**154-1243**	6	WASHER	
	5G	1	**154-1242**	3	SPRING	
	5H	1	**206-3499**	1	SHAFT-ROCKER ARM	
	6	1	**217-2752**	1	GASKET (VALVE BRACKET)	

236-5156 **VALVE MECHANISM GP** *(contd.)* **i01932127**

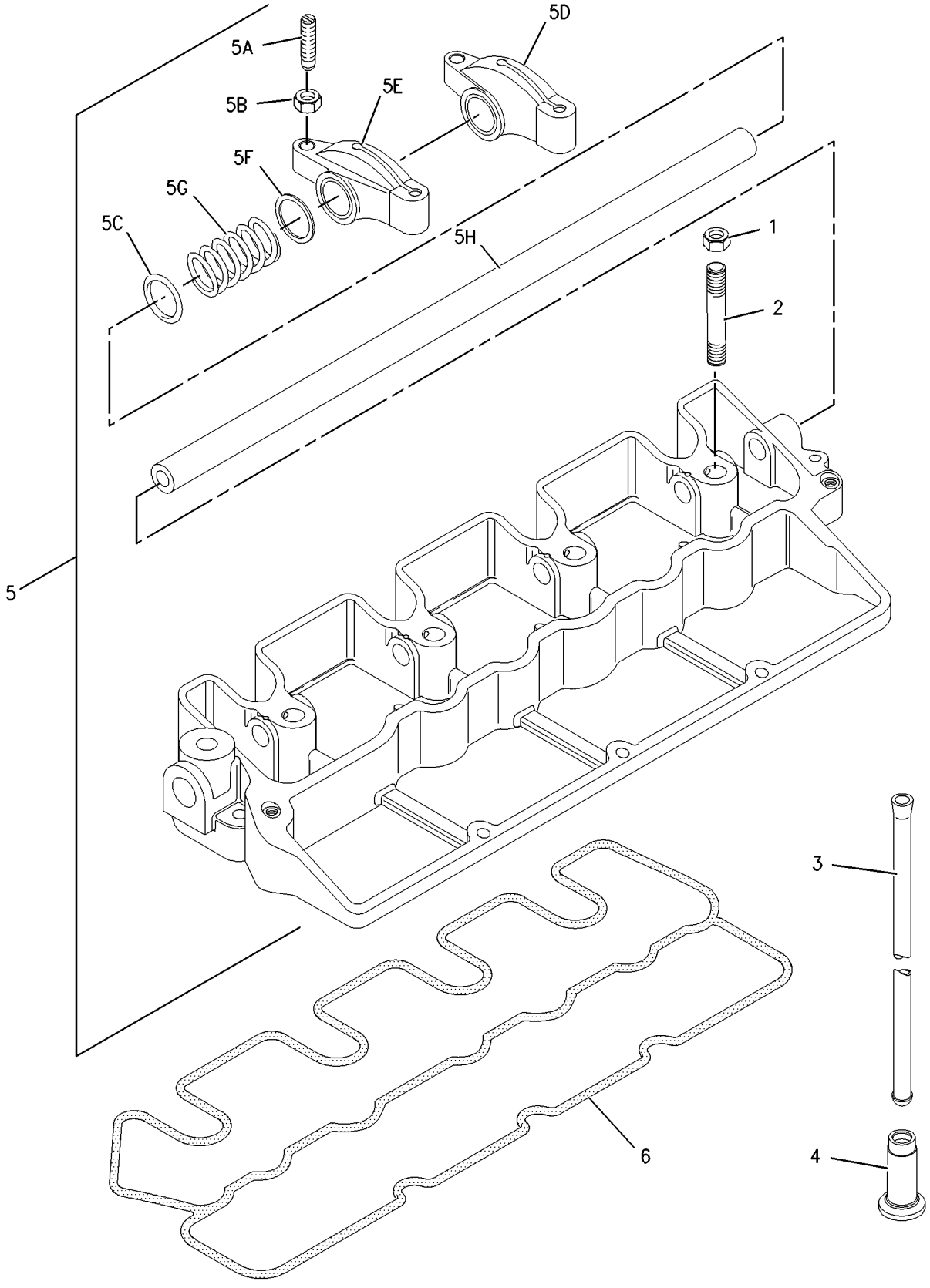

GRAPHIC #1 **<END>** g01007444

246-3515 FILTER GP-ENGINE OIL

S/N: GGA1-UP; CSD4403-UP
PART OF 179-1808, 233-6648 ENGINE AR-PRIMARY
ALSO AN ATTACHMENT

SMCS-1308 **i02186863**

NOTE	REF NO	GRAPHIC REF	PART NUMBER	QTY	PART NAME 1 2 3 4 5 6 (PRODUCT LEVEL)	SEE PAGE
	1	1	**153-6879**	1	CONNECTION	
	2	1	**220-1523**	1	FILTER AS-ENGINE OIL	
	3	1	**6I-1201**	1	SEAL-O-RING	
	4	1	**7X-0510**	1	WASHER-HARD (15.5X29X3-MM THK)	
	5	1	**118-9145**	1	CONNECTOR	
	6	1	**164-7619**	1	SEAL-O-RING	
	7	1	**198-2663**	1	BOLT	
	8	1	**231-8920**	1	BOLT	
	9	1	**252-0787**	1	SEAL-O-RING	
	10	1	**252-0788**	1	HEAD-OIL FILTER	

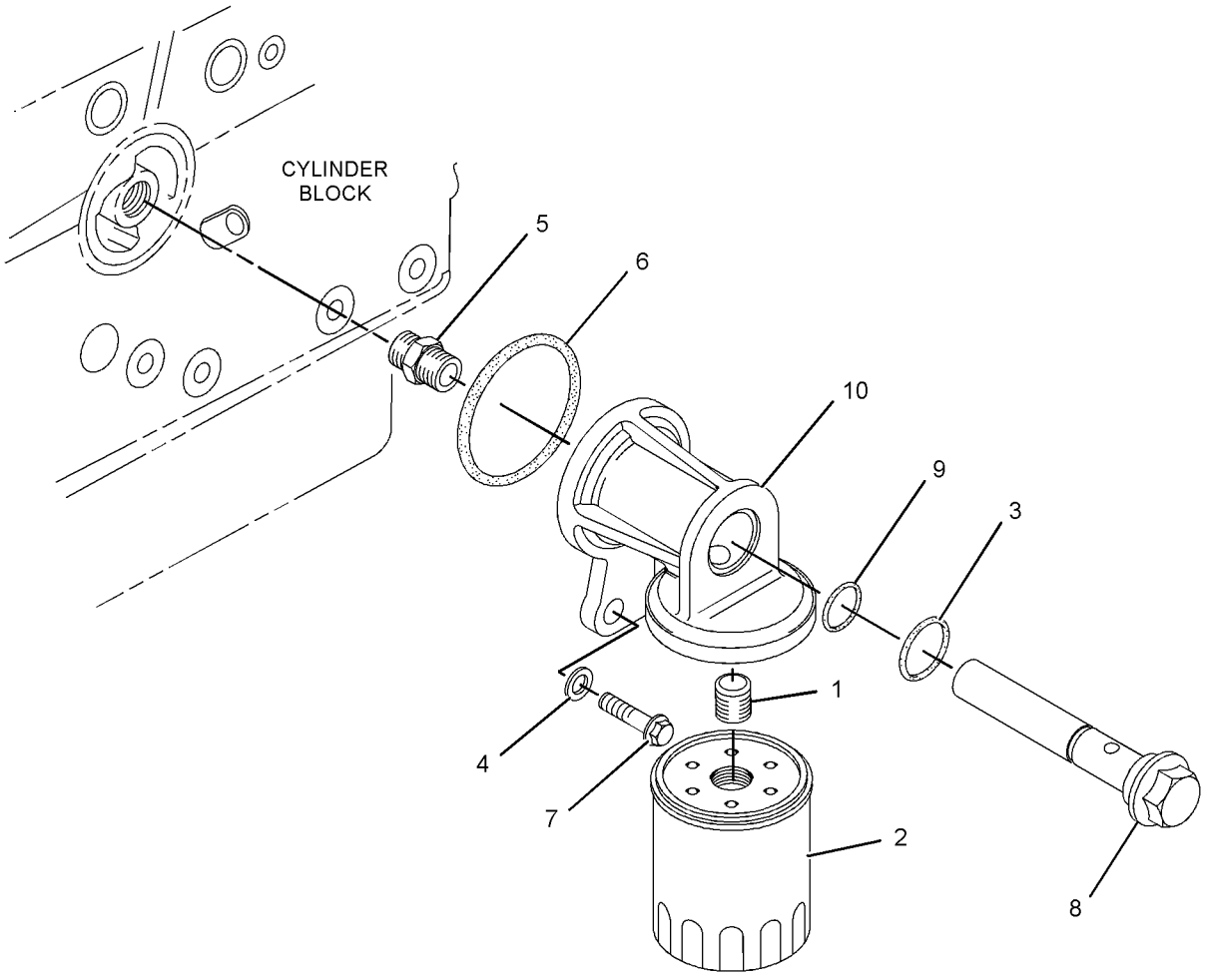

GRAPHIC #1 **<END>** g01109328

246-3472 COOLER GP-FLTR BASE & ENG OIL

S/N: GGA1-UP; CSD1-UP
PART OF 233-6648 ENGINE AR-PRIMARY
AN ATTACHMENT

SMCS-1306, 1378 **i02016184**

NOTE	REF NO	GRAPHIC REF	PART NUMBER	QTY	PART NAME 1 2 3 4 5 6 (PRODUCT LEVEL)	SEE PAGE
	1	1	**127-8281**	1	CLIP	
	2	1	**238-9137**	1	CONNECTION	
	3	1	**238-9143**	1	CONNECTION	
	4	1	**245-1361**	1	COOLER AS-OIL	
	4A	1	**245-1362**	1	CONNECTOR	
	4B	1	**245-1364**	1	SEAL	
	5	1	**246-3470**	1	HOSE	
	6	1	**246-3471**	1	HOSE	
	7	1	**160-4826**	4	CLAMP-HOSE	
	8	1	**180-6118**	1	BOLT	
	9	1	**155-7984**	1	WASHER	

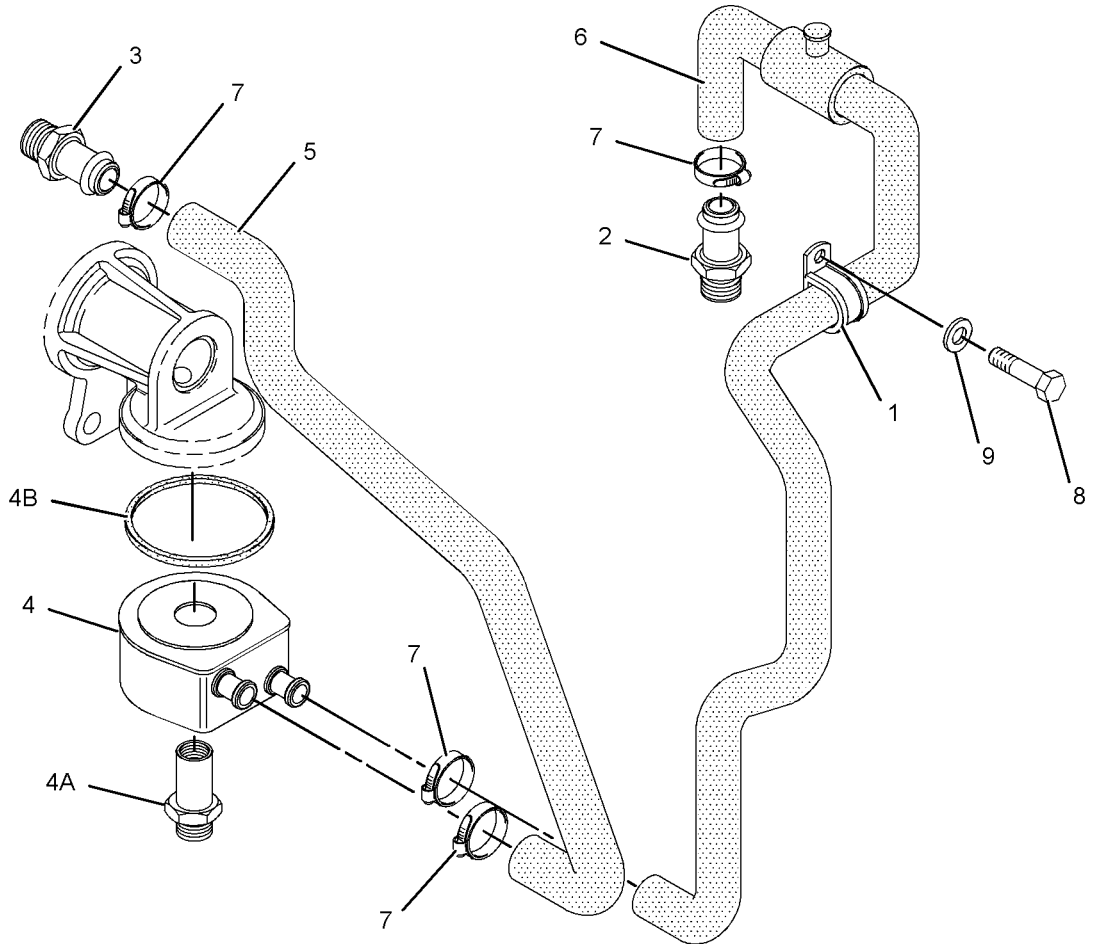

GRAPHIC #1 **<END>** g01042418

218-0934 MOUNTING GP-RAD & OIL COOLER

S/N: SCH1-UP; RLL1-UP

PART OF 228-1767, 278-1218 INSTALLATION AR-ENGINE

SMCS-1353, 1374 **i01988443**

NOTE	REF NO	GRAPHIC REF	PART NUMBER	QTY	PART NAME 1 2 3 4 5 6 (PRODUCT LEVEL)	SEE PAGE
	1	1	**5P-0372**	2	LOCK PIN	
	2	1	**5V-8309**	1	STRIKER AS	
B	3	1	**8T-0318**	1	SHIM (0.8-MM THK)	
	4	1	**8T-4159**	1	BUMPER	
	5	1	**142-8812**	1	SUPPORT AS	
	6	1	**142-8832**	1	PIN AS	
	7	1	**161-2347**	1	LATCH AS	
	8	1	**193-8345**	1	SPRING AS-GAS	
	9	1	**208-6176**	4	STUD-BALL	
	10	1	**218-0913**	1	GRILL AS	
	11	1	**228-3724**	1	SUPPORT AS	
	12	1	**232-1789**	1	SPRING AS-GAS	
	13	1	**178-2255**	2	PIN	
	14	1	**2K-4973**	1	LOCKNUT (3/8-16-THD)	
M	15	1	**5C-7261**	1	NUT (M8X1.25-THD)	
	16	1	**7X-7729**	1	WASHER (11X25X3-MM THK)	
	17	1	**8T-4121**	8	WASHER-HARD (11X21X2.5-MM THK)	
M	18	1	**8T-4133**	4	NUT (M10X1.5-THD)	
M	19	1	**8T-4181**	3	BOLT (M6X1X20-MM)	
	20	1	**8T-4205**	3	WASHER-HARD (7.2X14.5X2-MM THK)	
M	21	1	**8T-5005**	4	BOLT (M10X1.5X70-MM)	
E	22	1	**3E-8082**		SEAL (46CM EACH)	

B-USE AS REQUIRED
E-ORDER BY THE CENTIMETER
M-METRIC PART

218-0934 **MOUNTING GP-RAD & OIL COOLER** *(contd.)* **i01988443**

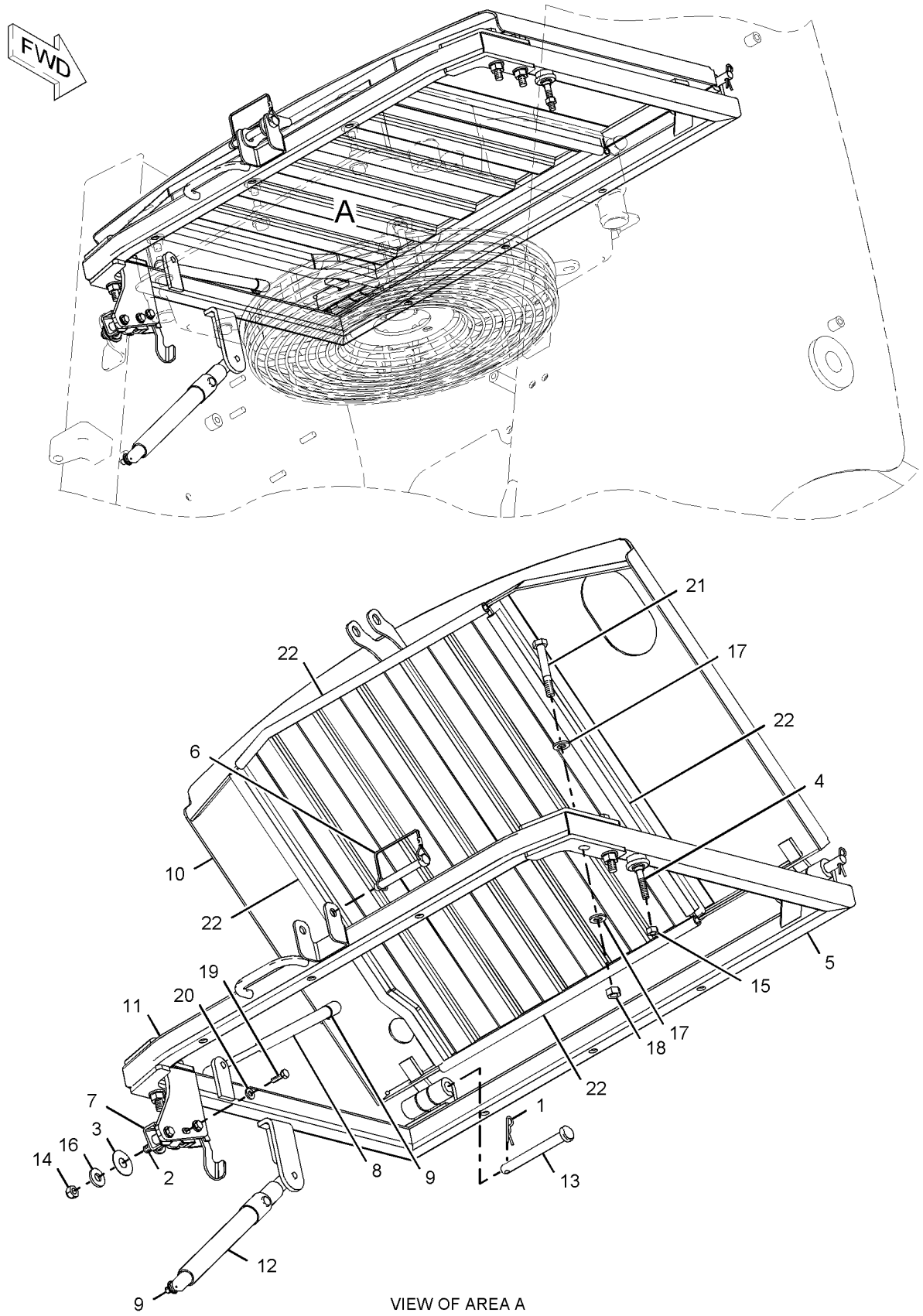

VIEW OF AREA A

GRAPHIC #1 **<END>** g01031537

228-1762 MOUNTING GP-RAD & OIL COOLER

S/N: MJH1-UP; BXM1-UP

PART OF 218-0911, 278-1228 INSTALLATION AR-ENGINE

SMCS-1353, 1374 **i02475638**

NOTE	REF NO	GRAPHIC REF	PART NUMBER	QTY	PART NAME 1 2 3 4 5 6 (PRODUCT LEVEL)	SEE PAGE
	1	1	**5P-0372**	2	LOCK PIN	
	2	1	**5V-8309**	1	STRIKER AS	
B	3	1	**8T-0318**	1	SHIM (0.8-MM THK)	
	4	1	**8T-4159**	1	BUMPER	
	5	1	**142-8812**	1	SUPPORT AS	
	6	1	**142-8832**	1	PIN AS	
	7	1	**161-2347**	1	LATCH AS	
	8	1	**193-8345**	1	SPRING AS-GAS	
	9	1	**208-6176**	4	STUD-BALL	
	10	1	**228-3724**	1	SUPPORT AS	
	11	1	**228-9641**	1	GRILL AS	
	12	1	**232-1789**	1	SPRING AS-GAS	
	13	1	**178-2255**	2	PIN	
	14	1	**2K-4973**	1	LOCKNUT (3/8-16-THD)	
M	15	1	**5C-7261**	1	NUT (M8X1.25-THD)	
	16	1	**7X-7729**	1	WASHER (11X25X3-MM THK)	
	17	1	**8T-4121**	8	WASHER-HARD (11X21X2.5-MM THK)	
M	18	1	**8T-4133**	4	NUT (M10X1.5-THD)	
M	19	1	**8T-4181**	3	BOLT (M6X1X20-MM)	
	20	1	**8T-4205**	3	WASHER-HARD (7.2X14.5X2-MM THK)	
M	21	1	**8T-5005**	4	BOLT (M10X1.5X70-MM)	
E	22	1	**3E-8082**		SEAL (46-CM EACH)	

B-USE AS REQUIRED
E-ORDER BY THE CENTIMETER
M-METRIC PART

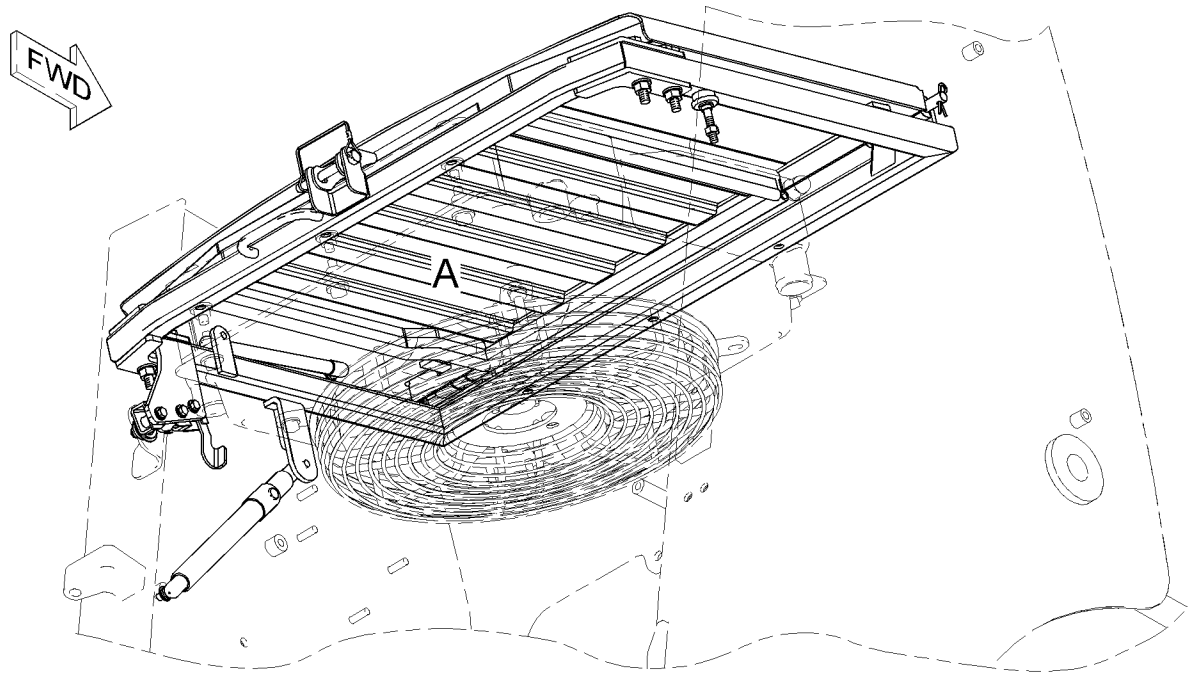

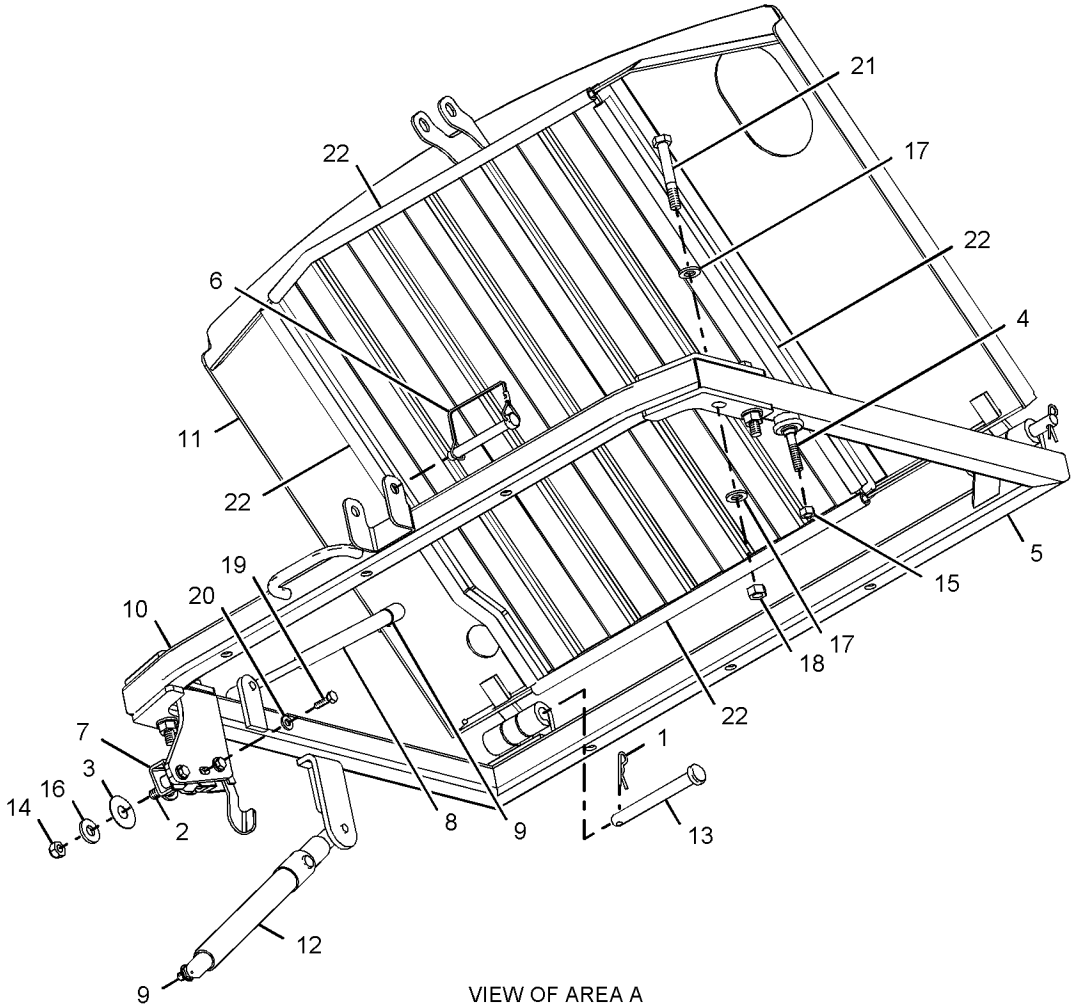

VIEW OF AREA A

GRAPHIC #1 **<END>** g01031828

154-1816 PUMP GP-WATER

S/N: GGA1-UP; CSD1-UP
PART OF 217-7384, 246-3451 PUMP GP-WATER
ALSO AN ATTACHMENT

SMCS-1361 **i01705193**

NOTE	REF NO	GRAPHIC REF	PART NUMBER	QTY	PART NAME 1 2 3 4 5 6 (PRODUCT LEVEL)	SEE PAGE
	1	1	**154-1818**	1	PLATE	
	2	1	**154-1819**	1	GASKET-WATER PUMP	
	3	1	**154-1820**	3	BOLT	
	4	1	**217-7381**	1	PLUG	

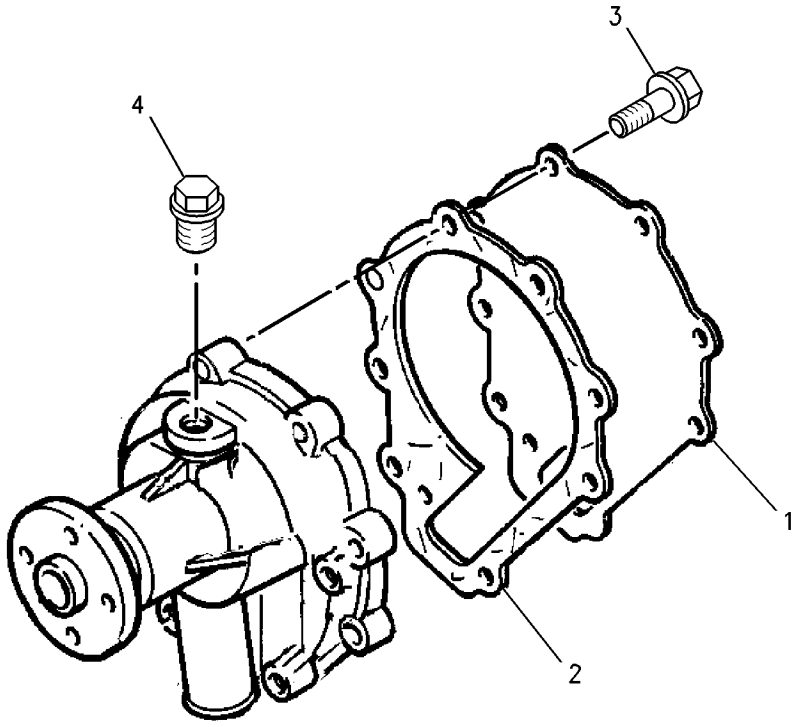

GRAPHIC #1 **<END>** g00702044

COOLING SYSTEM

217-7384 PUMP GP-WATER

S/N: CSD1-UP

PART OF 179-1808 ENGINE AR-PRIMARY

TYPE 1

SMCS-1361 **i01961736**

NOTE	REF NO	GRAPHIC REF	PART NUMBER	QTY	PART NAME 1 2 3 4 5 6 (PRODUCT LEVEL)	SEE PAGE
Y	1	1	**154-1816**	1	PUMP GP-WATER	89
	2	1	**217-7381**	1	PLUG	
	3	1	**154-1823**	1	HOSE	
	4	1	**153-5960**	3	NUT	
	5	1	**154-2700**	1	HOUSING-REGULATOR	
	6	1	**153-5967**	1	COCK	
	7	1	**153-6856**	2	BOLT	
	8	1	**230-6263**	1	REGULATOR-WATER TEMPERATURE	
	9	1	**154-1828**	1	GASKET-COVER	
	10	1	**165-2141**	2	BOLT	
	11	1	**215-2616**	1	GASKET (WATER PUMP)	
	12	1	**215-2617**	1	GASKET	
	13	1	**217-7379**	1	HOUSING	
	14	1	**154-1824**	2	CLAMP-HOSE	
	15	1	**153-5961**	4	BOLT	

Y-SEPARATE ILLUSTRATION

217-7384 **PUMP GP-WATER** *(contd.)* **i01961736**

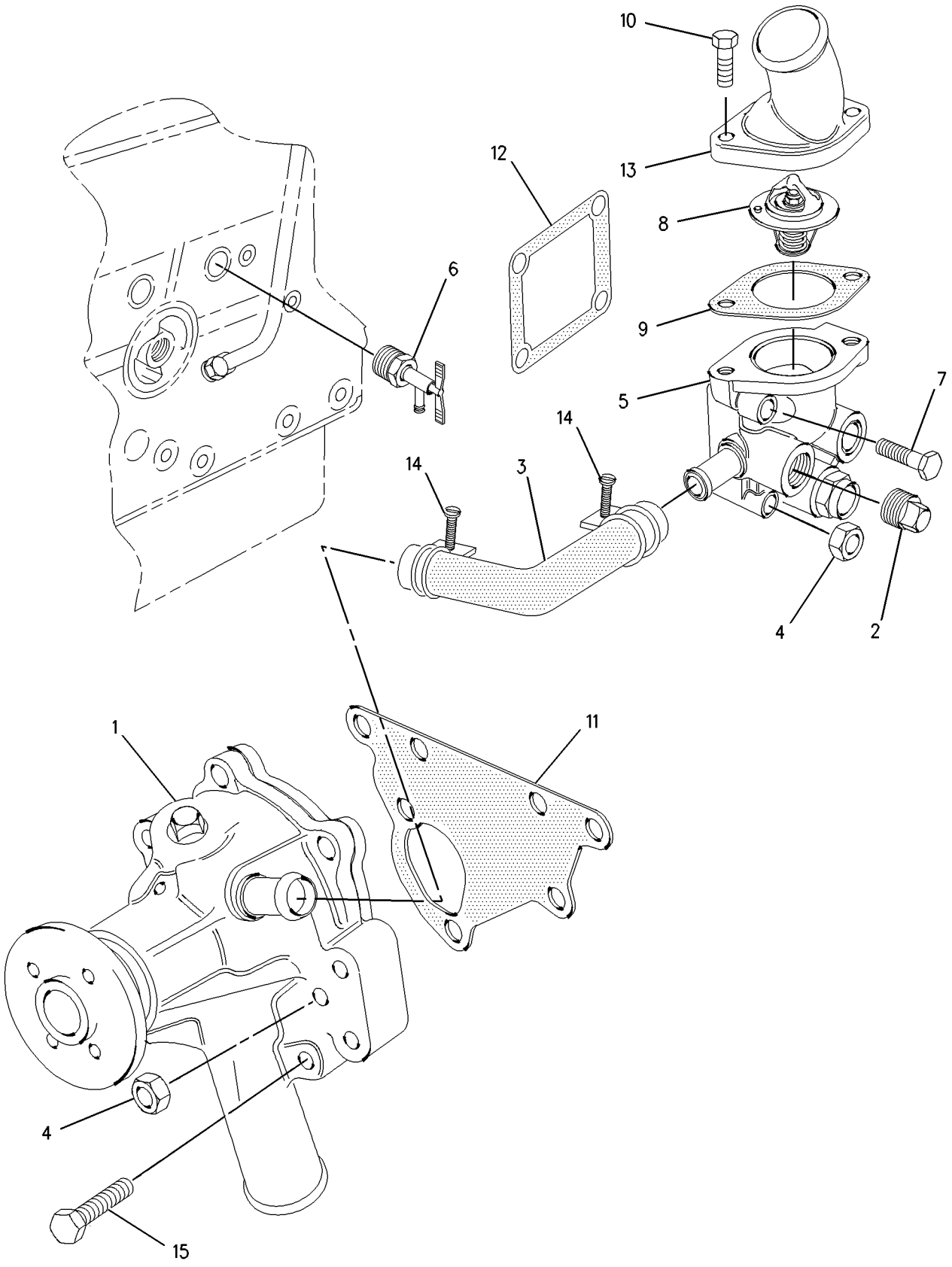

GRAPHIC #1 **<END>** g00852511

COOLING SYSTEM

217-7384 PUMP GP-WATER

S/N: CSD1-UP
PART OF 179-1808 ENGINE AR-PRIMARY
TYPE 2

SMCS-1361 **i02071504**

NOTE	REF NO	GRAPHIC REF	PART NUMBER	QTY	PART NAME 1 2 3 4 5 6 (PRODUCT LEVEL)	SEE PAGE
Y	1	1	**154-1816**	1	PUMP GP-WATER	89
	2	1	**217-7381**	1	PLUG	
	3	1	**154-1823**	1	HOSE	
	4	1	**153-5960**	3	NUT	
	5	1	**154-2700**	1	HOUSING-REGULATOR	
	7	1	**153-6856**	2	BOLT	
	8	1	**230-6263**	1	REGULATOR-WATER TEMPERATURE	
	9	1	**154-1828**	1	GASKET-COVER	
	10	1	**165-2141**	2	BOLT	
	11	1	**215-2616**	1	GASKET (WATER PUMP)	
	12	1	**215-2617**	1	GASKET	
	13	1	**217-7379**	1	HOUSING	
	14	1	**154-1824**	2	CLAMP-HOSE	
	15	1	**153-5961**	4	BOLT	
C	16	1	**5P-2369**	1	CLIP	
C	17	1	**124-6264**	1	CLAMP-HOSE	
C	18	1	**205-4585**	1	HOSE	
C	19	1	**218-2317**	1	PLUG	

C-CHANGE FROM PREVIOUS TYPE
Y-SEPARATE ILLUSTRATION

217-7384 **PUMP GP-WATER** *(contd.)* **i02071504**

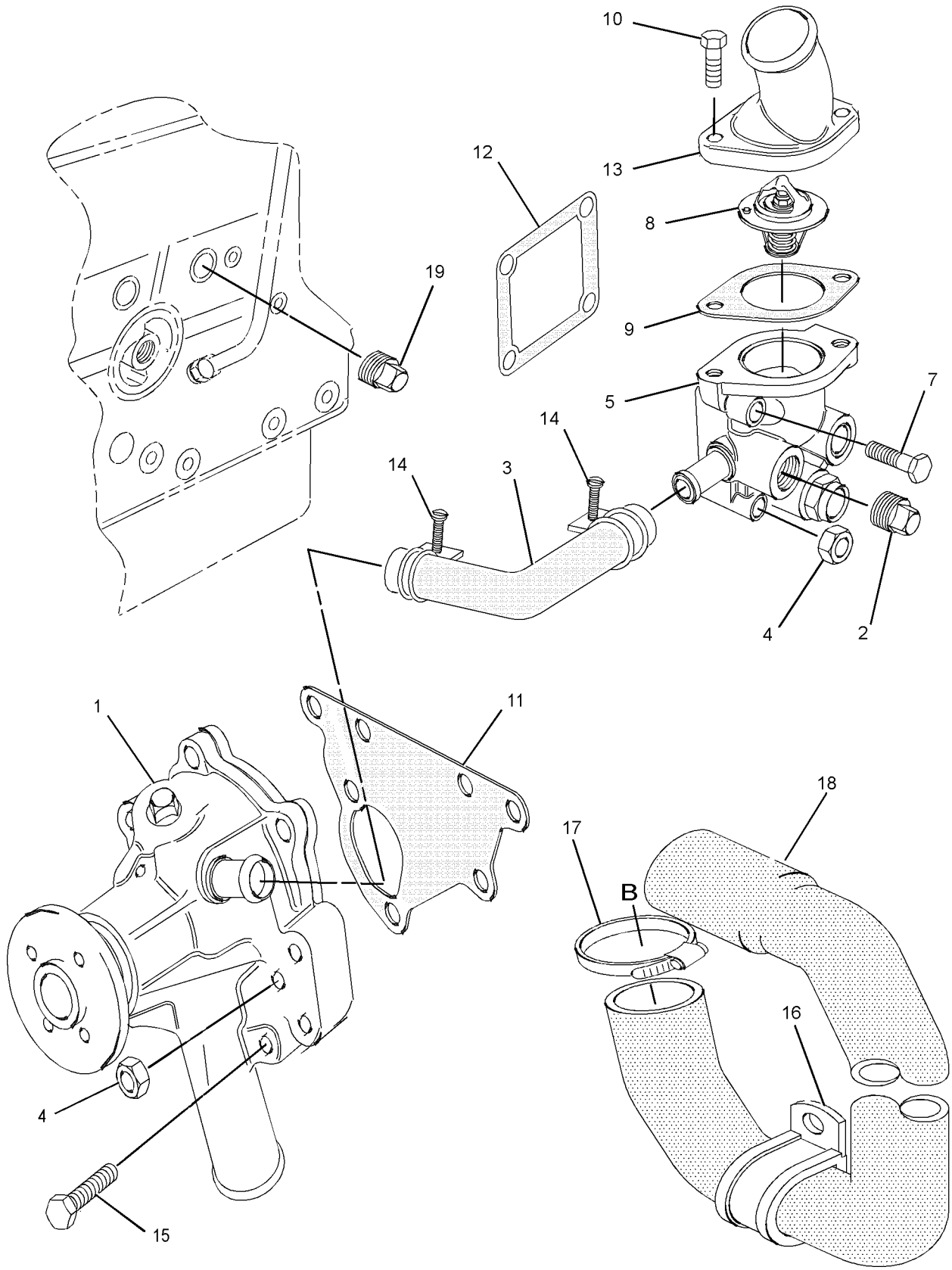

GRAPHIC #1 **<END>** g01067697

COOLING SYSTEM

246-3451 PUMP GP-WATER

S/N: GGA1-4381; CSD1-4381
PART OF 233-6648 ENGINE AR-PRIMARY
AN ATTACHMENT

SMCS-1361 **i02028795**

NOTE	REF NO	GRAPHIC REF	PART NUMBER	QTY	PART NAME 1 2 3 4 5 6 (PRODUCT LEVEL)	SEE PAGE
	1	1	**5P-2369**	1	CLIP	
	2	1	**153-5960**	5	NUT	
	3	1	**153-5961**	4	BOLT	
	4	1	**153-5967**	1	COCK	
Y	5	1	**154-1816**	1	PUMP GP-WATER	89
	6	1	**154-1823**	1	HOSE	
	7	1	**154-1824**	2	CLAMP-HOSE	
	8	1	**154-1828**	1	GASKET-COVER	
	11	1	**165-2141**	2	BOLT	
	13	1	**205-4585**	1	HOSE	
	14	1	**215-2616**	1	GASKET (WATER PUMP)	
	15	1	**215-2617**	1	GASKET (HOUSING)	
	16	1	**217-7379**	1	HOUSING	
	17	1	**217-7381**	4	PLUG	
	18	1	**236-9985**	1	HOUSING-REGULATOR	
	19	1	**5P-2230**	1	CLAMP-HOSE	
	20	1	**153-6856**	2	BOLT	
	21	1	**249-5541**	1	REGULATOR-WATER TEMPERATURE	

Y-SEPARATE ILLUSTRATION

246-3451 **PUMP GP-WATER** *(contd.)* **i02028795**

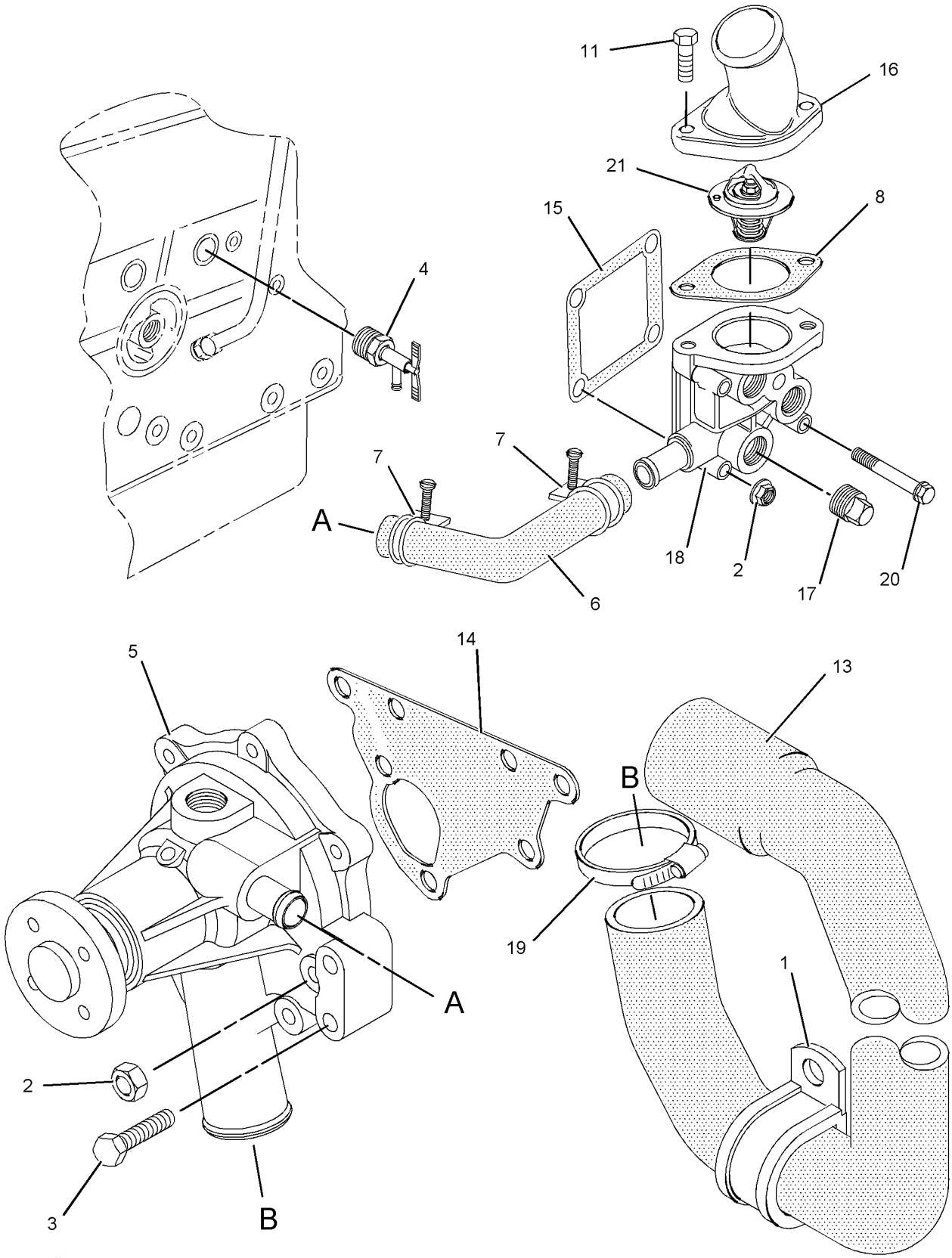

GRAPHIC #1 **<END>** g01046938

COOLING SYSTEM

246-3451 PUMP GP-WATER

S/N: GGA4382-UP; CSD4382-UP
PART OF 233-6648 ENGINE AR-PRIMARY
AN ATTACHMENT

SMCS-1361 **i02159962**

NOTE	REF NO	GRAPHIC REF	PART NUMBER	QTY	PART NAME 1 2 3 4 5 6 (PRODUCT LEVEL)	SEE PAGE
	1	1	**5P-2369**	1	CLIP	
	2	1	**153-5960**	5	NUT	
	3	1	**153-5961**	4	BOLT	
C	4	1	**218-2317**	1	PLUG	
Y	5	1	**154-1816**	1	PUMP GP-WATER	89
	6	1	**154-1823**	1	HOSE	
	7	1	**154-1824**	2	CLAMP-HOSE	
	8	1	**154-1828**	1	GASKET-COVER	
	11	1	**165-2141**	2	BOLT	
	13	1	**205-4585**	1	HOSE	
	14	1	**215-2616**	1	GASKET (WATER PUMP)	
	15	1	**215-2617**	1	GASKET (HOUSING)	
	16	1	**217-7379**	1	HOUSING	
	17	1	**217-7381**	4	PLUG	
	18	1	**236-9985**	1	HOUSING-REGULATOR	
	19	1	**5P-2230**	1	CLAMP-HOSE	
	20	1	**153-6856**	2	BOLT	
	21	1	**249-5541**	1	REGULATOR-TEMPERATURE	

C-CHANGE FROM PREVIOUS TYPE
Y-SEPARATE ILLUSTRATION

246-3451 **PUMP GP-WATER** *(contd.)* **i02159962**

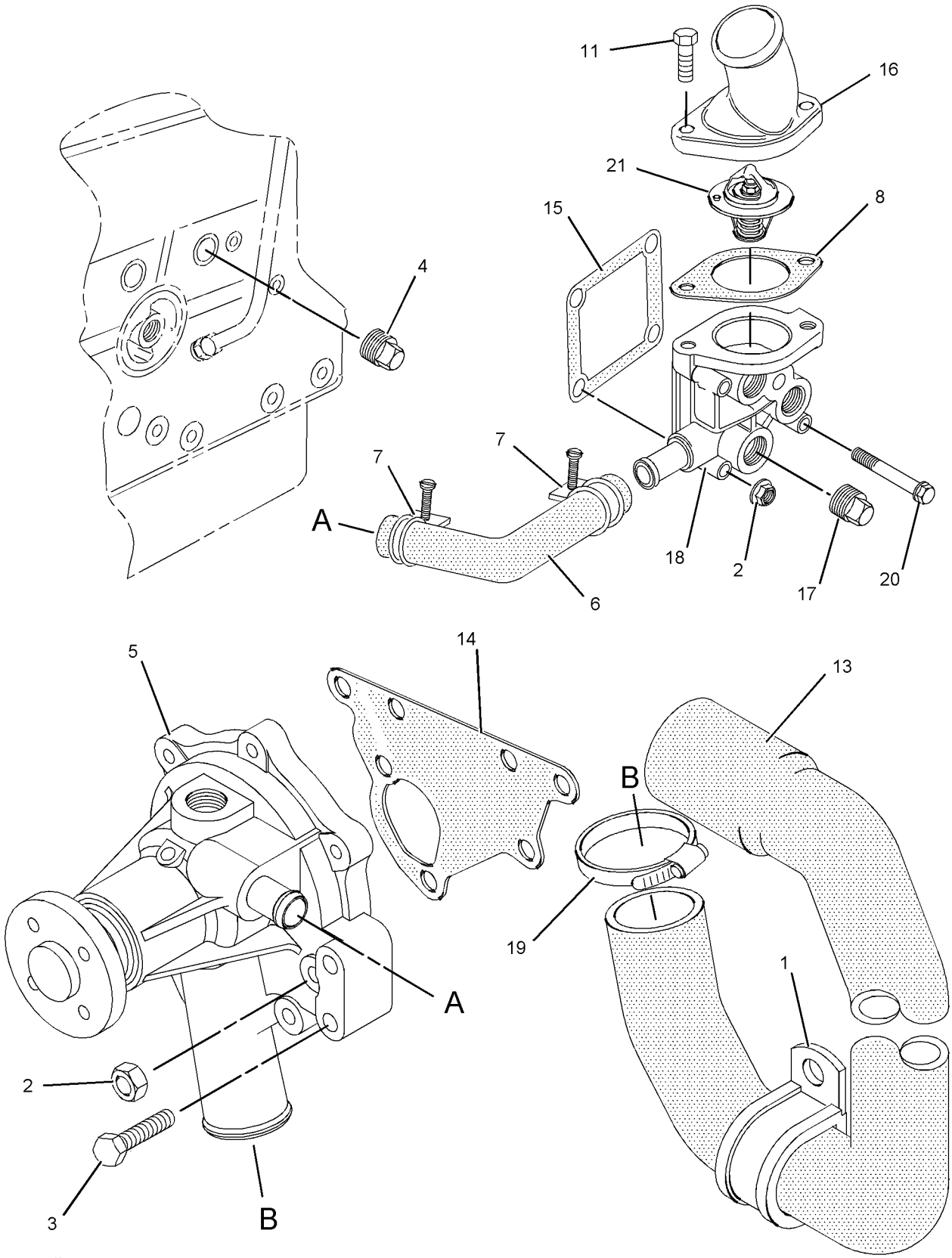

GRAPHIC #1 **<END>** g01099437

COOLING SYSTEM

228-3359 RADIATOR & HYD OIL COOLER GP

S/N: MJH1-5599; BXM1-UP
PART OF 228-1783 RADIATOR & OIL COOLER MTG GP
ALSO AN ATTACHMENT

SMCS-1351, 1356, 1386 **i02475641**

NOTE	REF NO	GRAPHIC REF	PART NUMBER	QTY	PART NAME 1 2 3 4 5 6 (PRODUCT LEVEL)	SEE PAGE
	1	1	**036-1865**	1	CAP AS-RADIATOR	
	2	1	**069-4080**	1	FITTING	
	3	1	**227-6715**	1	STUD (M10X1.15-THD)	
	4	1	**207-6154**	1	GAUGE-SIGHT (RADIATOR)	
	5	1	**228-2723**	1	RADIATOR & HYD OIL COOLER AS	
	6	1	**228-3350**	1	SHROUD AS	
	7	1	**233-6683**	1	GUARD AS (FAN)	
	8	1	*236-5816*	1	FAN GP-BLOWER	
	8A	1	**8T-4224**	4	WASHER-HARD (8.8X16X2-MM THK)	
M	8B	1	**8T-4908**	4	BOLT (M8X1.25X25-MM)	
	8C	1	**205-3727**	1	FAN AS	
	8D	1	**229-8796**	1	ADAPTER	
	9	1	**7M-7410**	1	PLUG-PIPE	
	10	1	**7X-7729**	12	WASHER (11X25X3-MM THK)	
	11	1	**8T-4121**	3	WASHER-HARD (11X21X2.5-MM THK)	
M	12	1	**8T-4133**	6	NUT (M10X1.5-THD)	
M	13	1	**8T-4196**	8	BOLT (M10X1.5X35-MM)	

M-METRIC PART

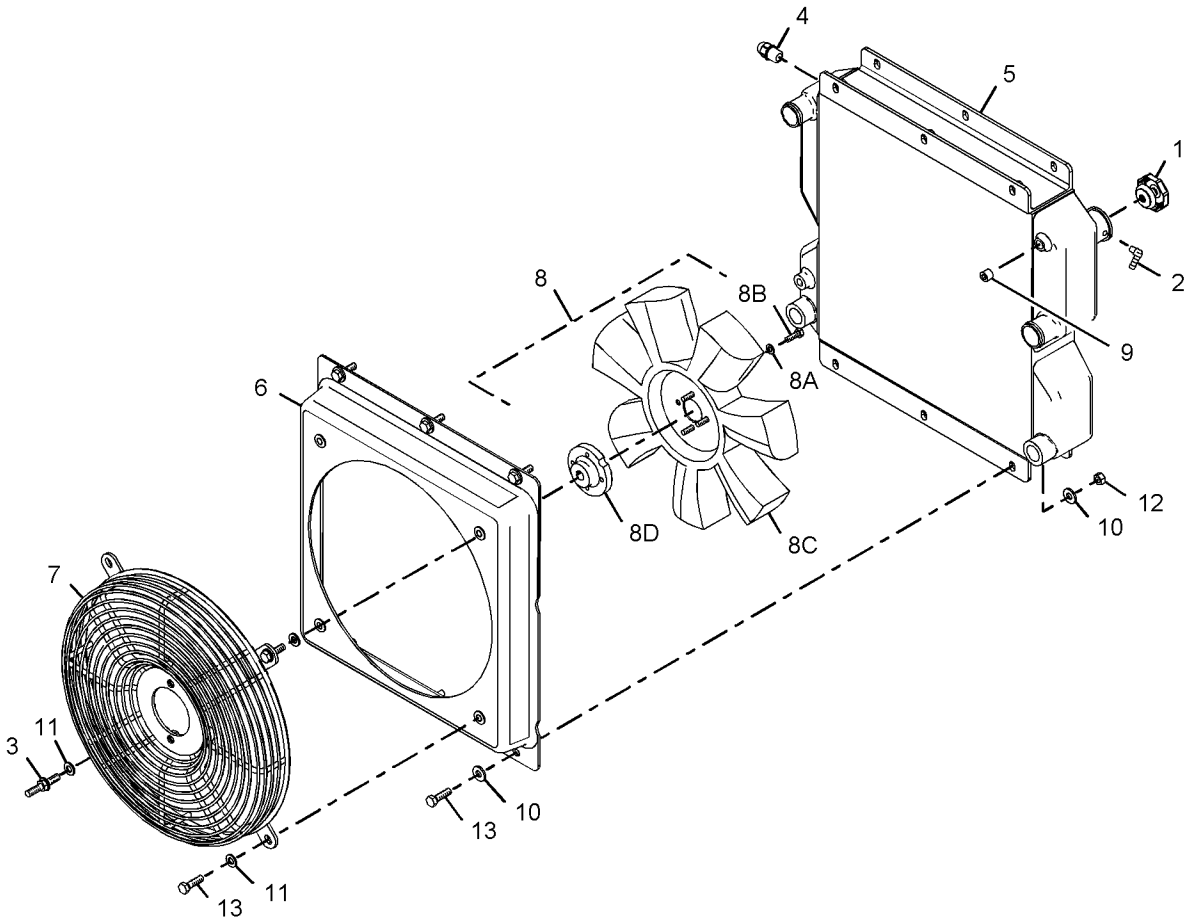

GRAPHIC #1 **<END>** g01041895

236-5375 RADIATOR & HYD OIL COOLER GP

S/N: SCH1-UP; RLL1-UP

PART OF 218-0925 RADIATOR & OIL COOLER MTG GP

SMCS-1351, 1356, 1386 **i02469375**

NOTE	REF NO	GRAPHIC REF	PART NUMBER	QTY	PART NAME 1 2 3 4 5 6 (PRODUCT LEVEL)	SEE PAGE
	1	1	**036-1865**	1	CAP AS-RADIATOR	
	2	1	**069-4080**	1	FITTING	
	3	1	**142-8861**	1	RADIATOR & HYD OIL COOLER AS	
	4	1	**207-6154**	1	GAUGE-SIGHT (RADIATOR)	
	5	1	**227-6715**	1	STUD (M10X1.15-THD)	
	6	1	**233-6683**	1	GUARD AS (FAN)	
	7	1	**236-5816**	1	FAN GP-BLOWER	
	7A	1	**205-3727**	1	FAN AS	
	7B	1	**229-8796**	1	ADAPTER	
	7C	1	**8T-4224**	4	WASHER-HARD (8.8X16X2-MM THK)	
M	7D	1	**8T-4908**	4	BOLT (M8X1.25X25-MM)	
	8	1	**241-3010**	1	SHROUD AS	
	9	1	**7M-7410**	1	PLUG-PIPE	
	10	1	**7X-7729**	12	WASHER (11X25X3-MM THK)	
	11	1	**8T-4121**	3	WASHER-HARD (11X21X2.5-MM THK)	
M	12	1	**8T-4133**	6	NUT (M10X1.5-THD)	
M	13	1	**8T-4196**	8	BOLT (M10X1.5X35-MM)	

M-METRIC PART

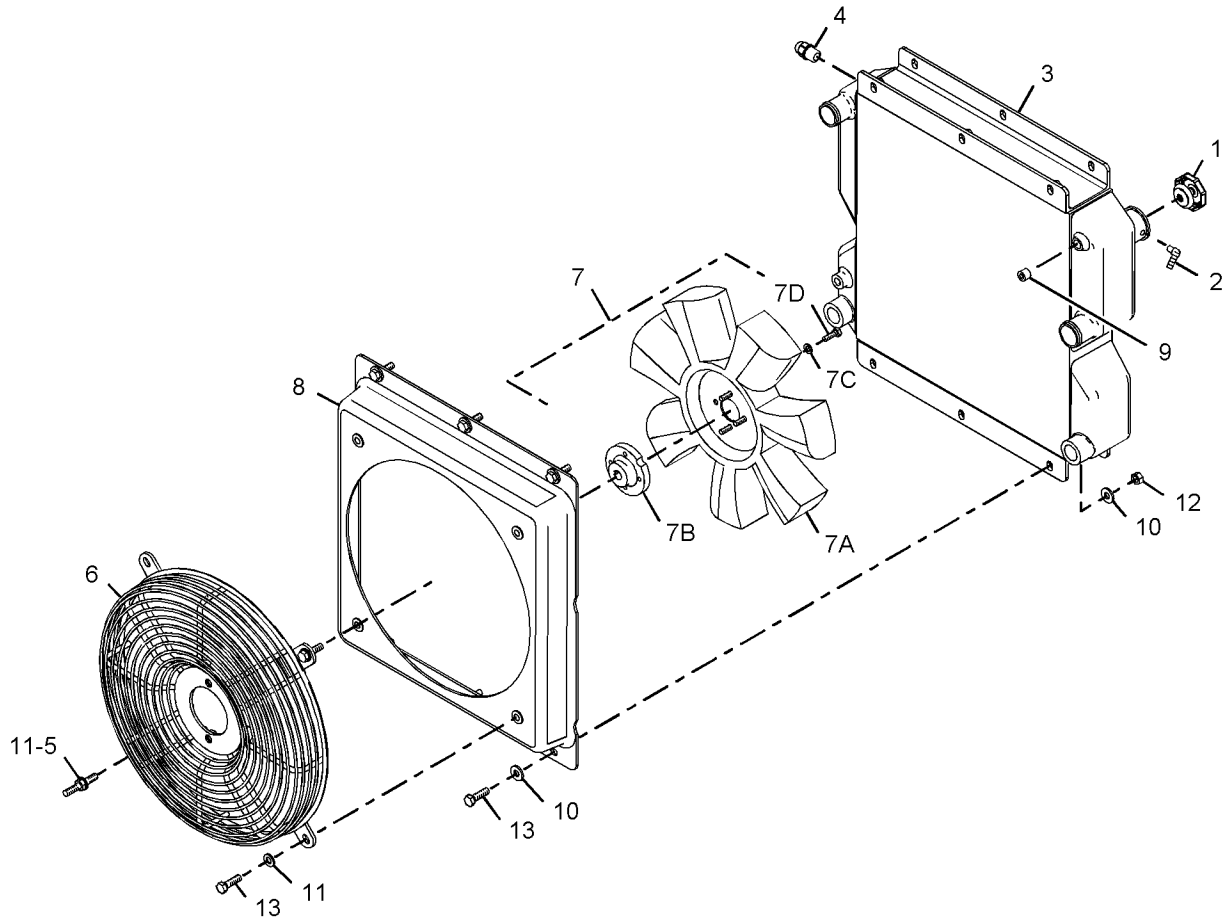

GRAPHIC #1 **<END>** g01033797

COOLING SYSTEM

261-6119 RADIATOR & HYD OIL COOLER GP

S/N: MJH5600-UP; BXM2400-UP

PART OF 261-6118 RADIATOR & OIL COOLER MTG GP

AN ATTACHMENT

SMCS-1351, 1356, 1386 **i02449612**

NOTE	REF NO	GRAPHIC REF	PART NUMBER	QTY	PART NAME 1 2 3 4 5 6 (PRODUCT LEVEL)	SEE PAGE
	1	1	**036-1865**	1	CAP AS-RADIATOR	
	2	1	**069-4080**	1	FITTING	
	3	1	**207-6154**	1	GAUGE-SIGHT	
	4	1	**227-6715**	1	STUD (M10X1.15-THD)	
	5	1	**228-3350**	1	SHROUD AS	
	6	1	**233-6683**	1	GUARD AS	
	7	1	*236-5816*	1	FAN GP-BLOWER	
		1	**8T-4224**	4	WASHER-HARD (8.8X16X2-MM THK)	
M		1	**8T-4908**	4	BOLT (M8X1.25X25-MM)	
		1	**205-3727**	1	FAN AS	
		1	**229-8796**	1	ADAPTER	
	8	1	**276-3076**	1	RADIATOR & HYD OIL COOLER AS	
	9	1	**238-0112**	1	SENSOR GP-TEMPERATURE (ENGINE COOLANT)	
	10	1	**6V-9028**	1	SEAL-O-RING	
	11	1	**7M-7410**	1	PLUG-PIPE	
	12	1	**7X-7729**	12	WASHER (11X25X3-MM THK)	
	13	1	**8T-4121**	3	WASHER-HARD (11X21X2.5-MM THK)	
M	14	1	**8T-4133**	6	NUT (M10X1.5-THD)	
M	15	1	**8T-4196**	8	BOLT (M10X1.5X35-MM)	

M-METRIC PART

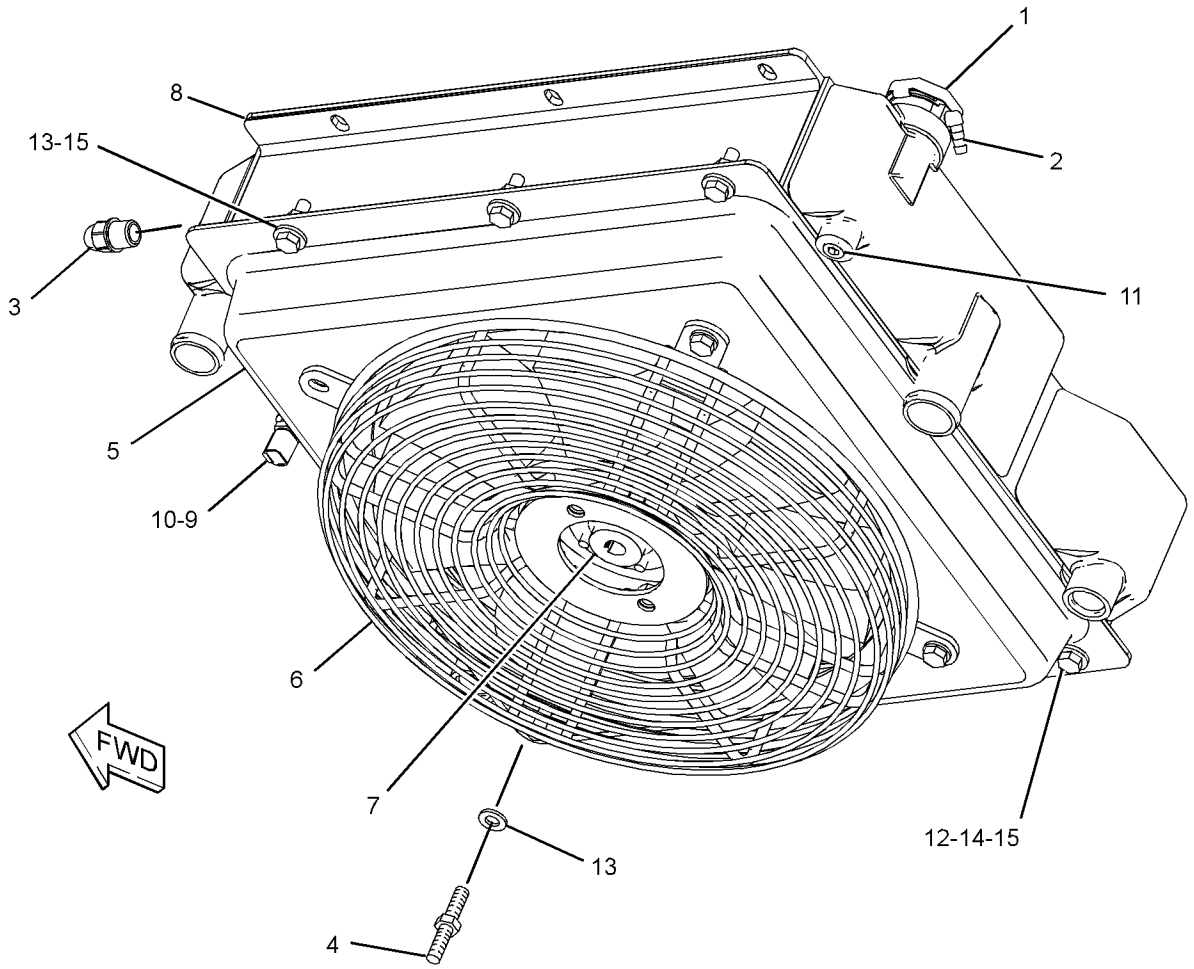

GRAPHIC #1 **<END>** g01229591

COOLING SYSTEM

218-0925 RADIATOR & OIL COOLER MTG GP

S/N: SCH1-UP; RLL1-UP

PART OF 228-1767, 278-1218 INSTALLATION AR-ENGINE

SMCS-1351, 1354 **i02475355**

NOTE	REF NO	GRAPHIC REF	PART NUMBER	QTY	PART NAME 1 2 3 4 5 6 (PRODUCT LEVEL)	SEE PAGE
	1	1	**1P-4278**	2	CLAMP-HOSE	
	2	1	**7X-1443**	4	PROTECTOR	
	3	1	**124-6264**	1	CLAMP-HOSE	
	4	1	**205-6383**	1	TUBE	
	5	1	**222-1178**	2	CLAMP	
	6	1	**230-5088**	1	RECOVERY GP-COOLANT	
		1	**169-6715**	1	CAP-VENTED	
	7	1	**231-3578**	1	HOSE (WATER PUMP)	
	8	1	**231-3579**	1	HOSE (TEMPERATURE REGULATOR)	
	9	1	**231-3925**	1	BRACKET AS	
	10	1	**232-4901**	2	CLAMP	
Y	11	1	*236-5375*	1	RADIATOR & HYD OIL COOLER GP	99
	12	1	**143-4535**	1	CLIP (SLOT)	
	13	1	**143-4536**	1	CLIP (TAB)	
	14	1	**4K-8864**	2	CLIP	
	15	1	**7X-7729**	12	WASHER (11X25X3-MM THK)	
	16	1	**8T-4121**	2	WASHER-HARD (11X21X2.5-MM THK)	
M	17	1	**8T-4133**	6	NUT (M10X1.5-THD)	
M	18	1	**8T-4136**	1	BOLT (M10X1.5X25-MM)	
M	19	1	**8T-4137**	1	BOLT (M10X1.5X20-MM)	
	20	1	**8T-4224**	2	WASHER-HARD (8.8X16X2-MM THK)	
M	21	1	**8T-5005**	1	BOLT (M10X1.5X70-MM)	
M	22	1	**8T-5091**	2	BOLT (M8X1.25X20-MM)	
M	23	1	**8T-6466**	5	BOLT (M10X1.5X60-MM)	
E	24	1	**5P-1420**		HOSE (110CM)	

E-ORDER BY THE CENTIMETER
M-METRIC PART
Y-SEPARATE ILLUSTRATION

218-0925 **RADIATOR & OIL COOLER MTG GP** *(contd.)* **i02475355**

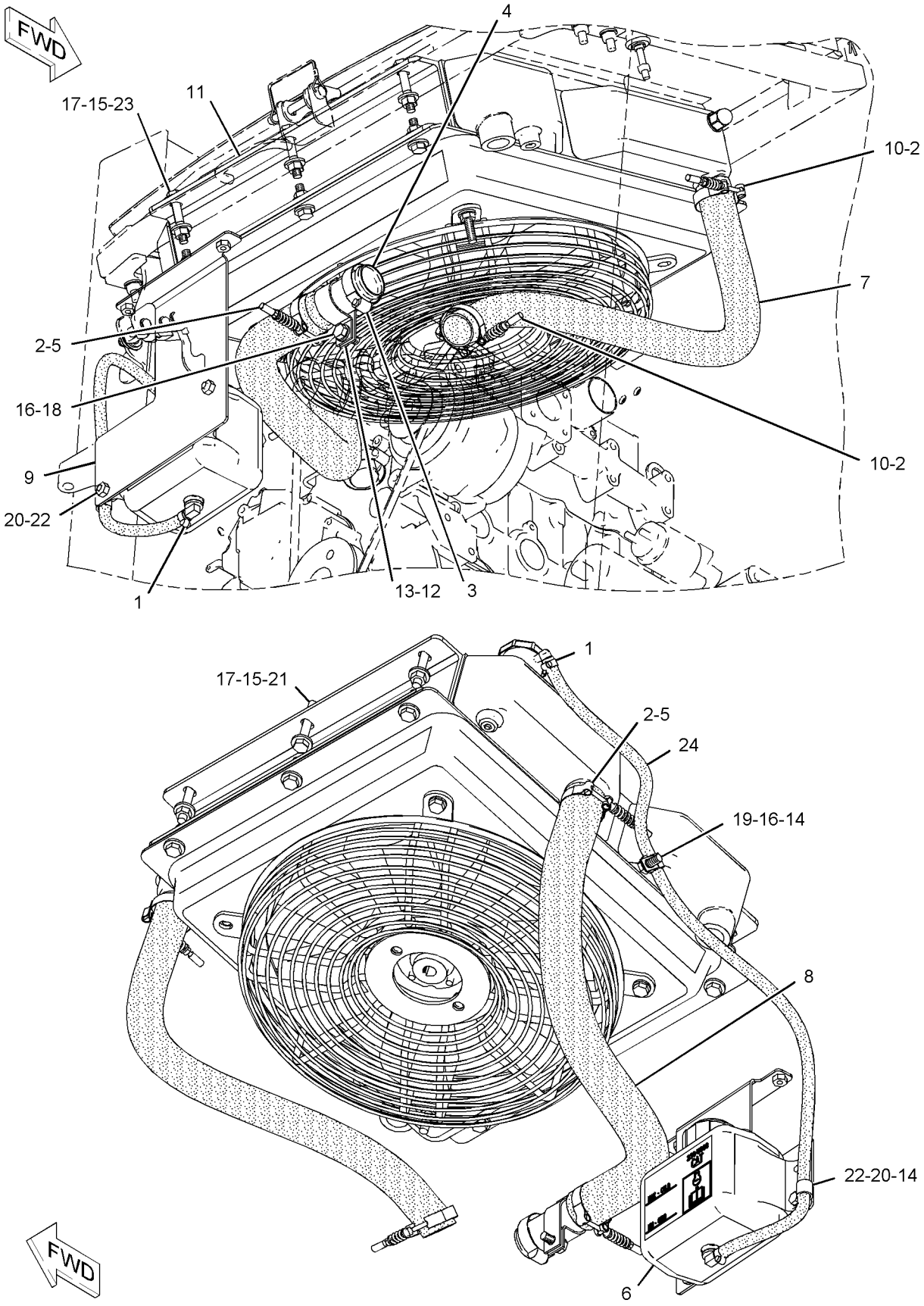

GRAPHIC #1 **<END>** g01040332

COOLING SYSTEM

228-1783 RADIATOR & OIL COOLER MTG GP

S/N: MJH1-5599; BXM1-2399
PART OF 261-6160 CONVERSION AR-MACHINE, 218-0911 INSTALLATION AR-ENGINE
ALSO AN ATTACHMENT

SMCS-1351, 1354 **i02475360**

NOTE	REF NO	GRAPHIC REF	PART NUMBER	QTY	PART NAME 1 2 3 4 5 6 (PRODUCT LEVEL)	SEE PAGE
	1	1	**1P-4278**	2	CLAMP-HOSE	
	2	1	**7X-1443**	4	PROTECTOR	
	3	1	**124-6264**	1	CLAMP-HOSE	
	4	1	**205-6383**	1	TUBE	
	5	1	**222-1178**	2	CLAMP	
Y	6	1	*228-3359*	1	RADIATOR & HYD OIL COOLER GP	98
	7	1	**230-5088**	1	RECOVERY GP-COOLANT	
		1	**169-6715**	1	CAP-VENTED	
	8	1	**231-3578**	1	HOSE (WATER PUMP)	
	9	1	**231-3579**	1	HOSE (TEMPERATURE REGULATOR)	
	10	1	**231-3925**	1	BRACKET AS	
	11	1	**232-4901**	2	CLAMP	
	12	1	**143-4535**	1	CLIP (SLOT)	
	13	1	**143-4536**	1	CLIP (TAB)	
	14	1	**4K-8864**	2	CLIP	
	15	1	**7X-7729**	12	WASHER (11X25X3-MM THK)	
	16	1	**8T-4121**	2	WASHER-HARD (11X21X2.5-MM THK)	
M	17	1	**8T-4133**	6	NUT (M10X1.5-THD)	
M	18	1	**8T-4136**	1	BOLT (M10X1.5X25-MM)	
M	19	1	**8T-4137**	1	BOLT (M10X1.5X20-MM)	
	20	1	**8T-4224**	2	WASHER-HARD (8.8X16X2-MM THK)	
M	21	1	**8T-5005**	1	BOLT (M10X1.5X70-MM)	
M	22	1	**8T-5091**	2	BOLT (M8X1.25X20-MM)	
M	23	1	**8T-6466**	5	BOLT (M10X1.5X60-MM)	
E	24	1	**5P-1420**		HOSE (110CM)	

E-ORDER BY THE CENTIMETER
M-METRIC PART
Y-SEPARATE ILLUSTRATION

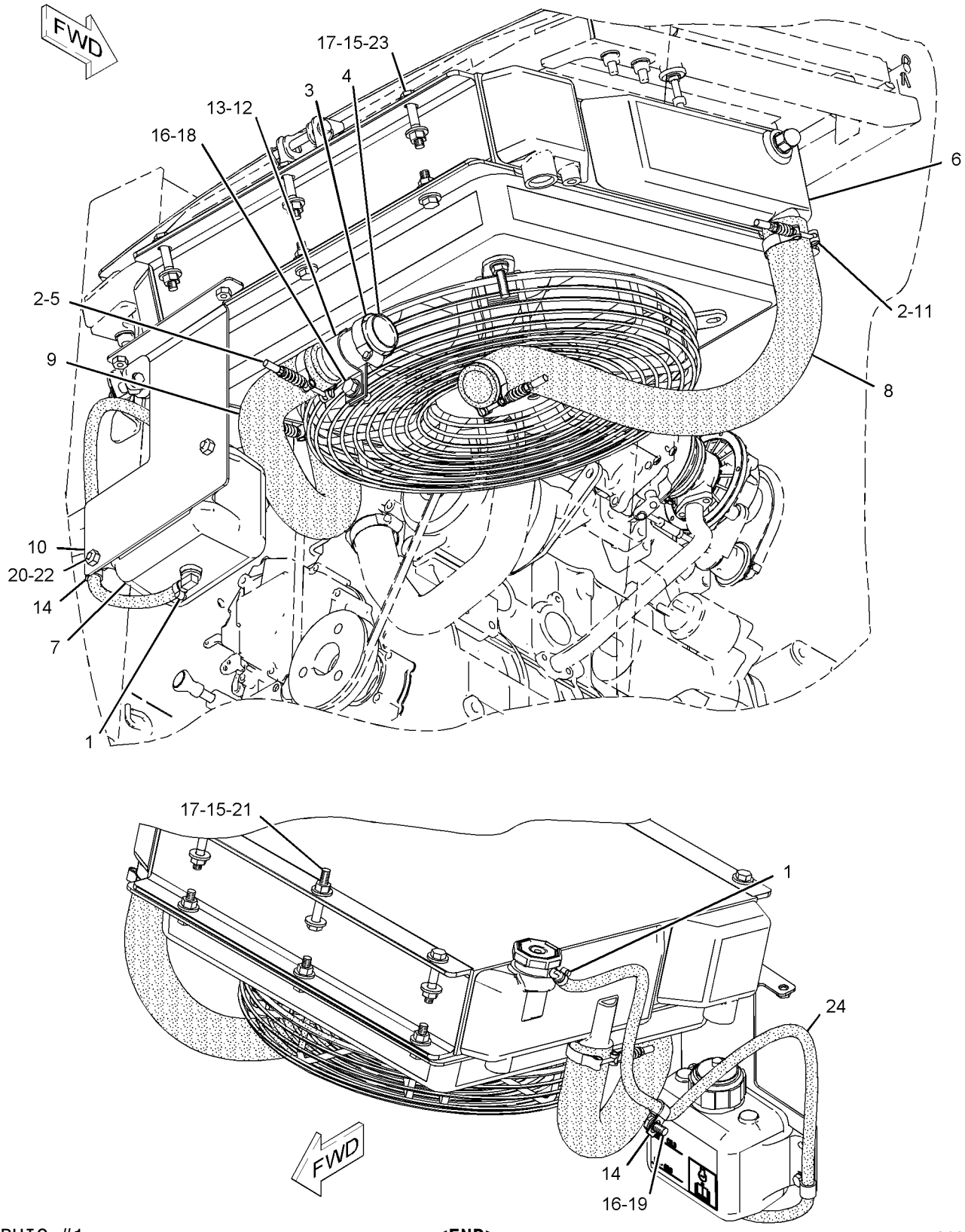

GRAPHIC #1 **<END>** g01051095

COOLING SYSTEM

261-6118 RADIATOR & OIL COOLER MTG GP

S/N: MJH5600-UP; BXM2400-UP
STAGE II SOUND
PART OF 261-6157, 261-6158, 261-6187, 261-6197, 278-1212, 278-1213, 278-1220, 278-1221, 278-1224, 278-1225, 278-5408, 278-5409, 278-5441, 278-5442 CONVERSION AR-MACHINE
AN ATTACHMENT

SMCS-1351, 1354 **i02431656**

NOTE	REF NO	GRAPHIC REF	PART NUMBER	QTY	PART NAME 1 2 3 4 5 6 (PRODUCT LEVEL)	SEE PAGE
	1	1	**1P-4278**	2	CLAMP-HOSE	
	2	1	**7X-1443**	4	PROTECTOR	
	3	1	**124-6264**	1	CLAMP-HOSE	
	4	1	**205-6383**	1	TUBE	
	5	1	**222-1178**	2	CLAMP	
	6	1	**230-5088**	1	RECOVERY GP-COOLANT	
		1	**169-6715**	1	CAP-VENTED	
	7	1	**231-3578**	1	HOSE	
	8	1	**231-3579**	1	HOSE	
	9	1	**231-3925**	1	BRACKET AS	
M		1	**8T-3612**	4	NUT-WELD (M8X1.25-THD)	
	10	1	**232-4901**	2	CLAMP	
Y	11	1	*261-6119*	1	RADIATOR & HYD OIL COOLER GP	100
	12	1	**143-4535**	1	CLIP (SLOT)	
	13	1	**143-4536**	1	CLIP (TAB)	
	14	1	**4K-8864**	2	CLIP	
	15	1	**7X-7729**	12	WASHER (11X25X3-MM THK)	
	16	1	**8T-4121**	2	WASHER-HARD (11X21X2.5-MM THK)	
M	17	1	**8T-4133**	6	NUT (M10X1.5-THD)	
M	18	1	**8T-4136**	1	BOLT (M10X1.5X25-MM)	
M	19	1	**8T-4137**	1	BOLT (M10X1.5X20-MM)	
	20	1	**8T-4224**	2	WASHER-HARD (8.8X16X2-MM THK)	
M	21	1	**8T-5005**	1	BOLT (M10X1.5X70-MM)	
M	22	1	**8T-5091**	2	BOLT (M8X1.25X20-MM)	
M	23	1	**8T-6466**	5	BOLT (M10X1.5X60-MM)	
E	24	1	**5P-1420**		HOSE (110-CM)	

E-ORDER BY THE CENTIMETER
M-METRIC PART
Y-SEPARATE ILLUSTRATION

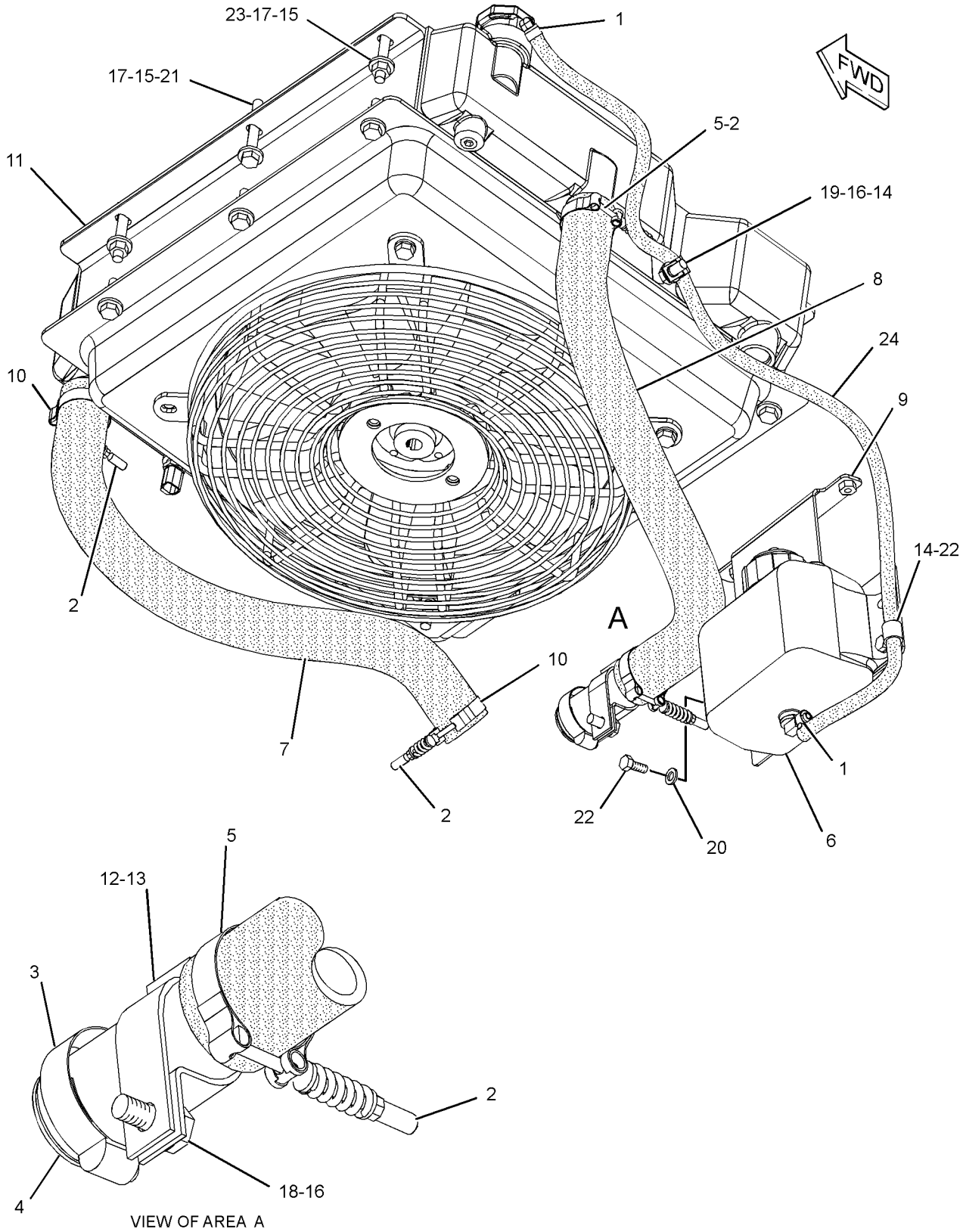

VIEW OF AREA A

GRAPHIC #1 **<END>** g01229599

AIR INLET AND EXHAUST SYSTEM

228-1773 AIR CLEANER GP

S/N: MJH1-UP; SCH1-UP; RLL1-UP; BXM1-UP

PART OF 218-0911, 228-1767, 278-1218, 278-1228 INSTALLATION AR-ENGINE

SMCS-1051, 1054 **i02291138**

NOTE	REF NO	GRAPHIC REF	PART NUMBER	QTY	PART NAME 1 2 3 4 5 6 (PRODUCT LEVEL)	SEE PAGE
Y	1	1	*242-0171*	1	AIR CLEANER GP	109
M	2	1	**9X-2842**	2	BOLT (M8X1.25X45-MM)	
	3	1	**5P-4116**	2	WASHER-HARD (8.8X20.5X2-MM THK)	

M-METRIC PART
Y-SEPARATE ILLUSTRATION

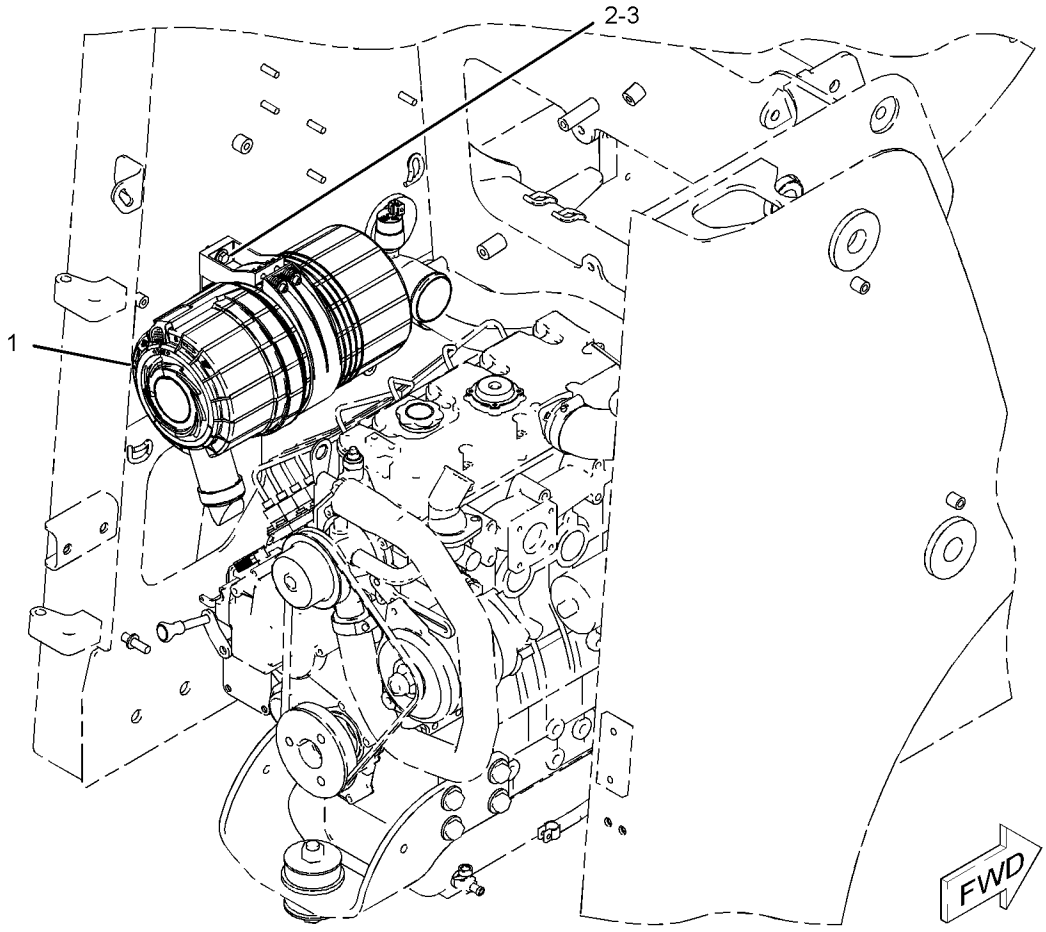

GRAPHIC #1 **<END>** g01150983

AIR INLET AND EXHAUST SYSTEM

242-0171 AIR CLEANER GP

S/N: MJH1-UP; SCH1-UP; RLL1-UP; BXM1-UP
PART OF 228-1773 AIR CLEANER GP

SMCS-1051, 1054 **i02046747**

NOTE	REF NO	GRAPHIC REF	PART NUMBER	QTY	PART NAME 1 2 3 4 5 6 (PRODUCT LEVEL)	SEE PAGE
	1	1	**5L-3233**	1	FITTING	
	2	1	**231-0169**	1	BAND AS	
	3	1	**241-3394**	1	INDICATOR	
	4	1	**242-0172**	1	AIR CLEANER GP	
		1	**112-9717**	1	VALVE-VACUATOR	
		1	**231-0167**	1	FILTER ELEMENT AS-AIR (PRIMARY)	
		1	**231-0168**	1	FILTER ELEMENT AS-AIR (SECONDARY)	
		1	**242-0173**	1	COVER AS	

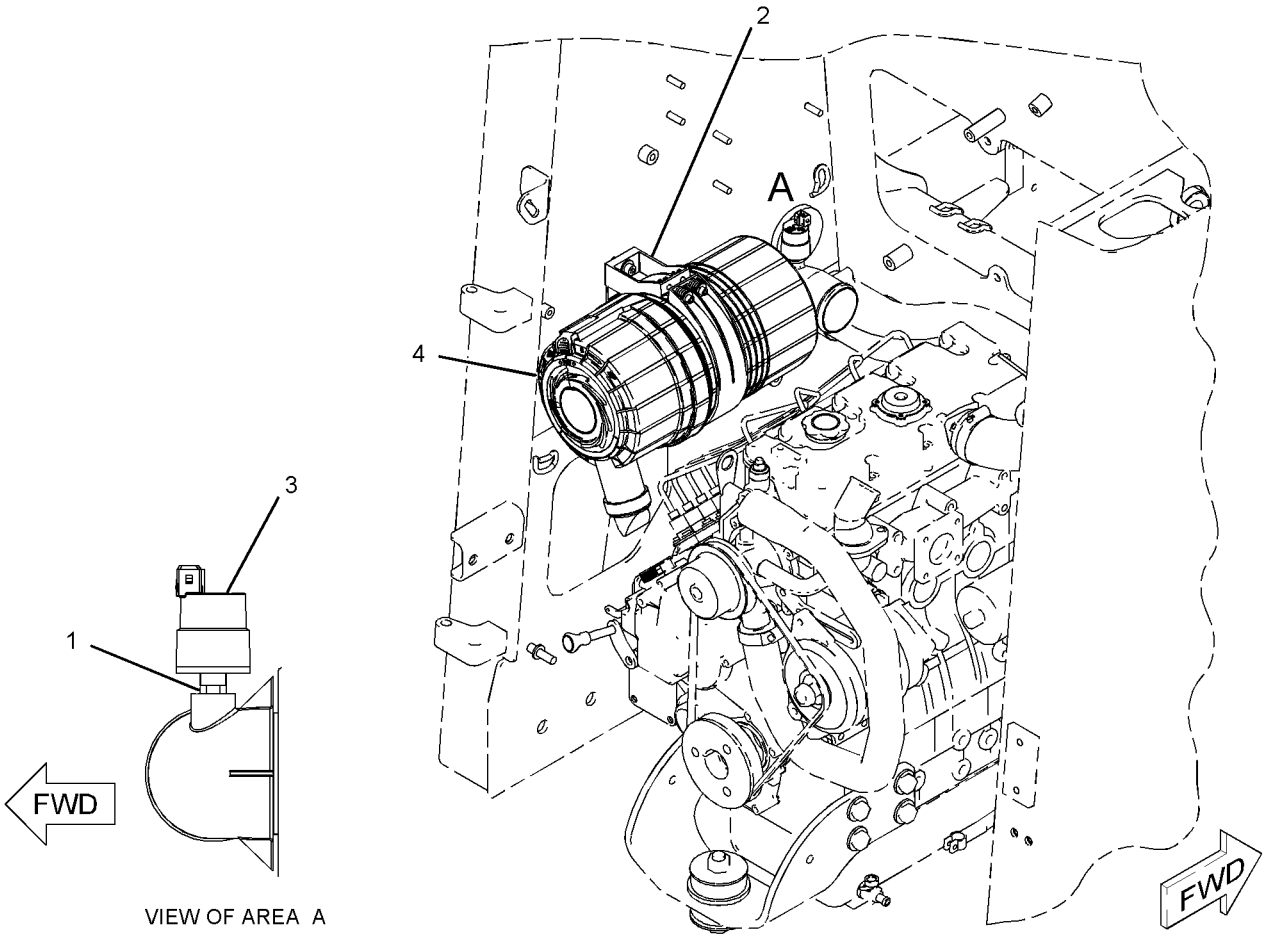

VIEW OF AREA A

GRAPHIC #1 **<END>** g01032140

AIR INLET AND EXHAUST SYSTEM

218-0944 LINES GP-AIR

S/N: SCH1-UP; RLL1-UP

PART OF 228-1767, 278-1218 INSTALLATION AR-ENGINE

SMCS-1071 **i01988376**

NOTE	REF NO	GRAPHIC REF	PART NUMBER	QTY	PART NAME 1 2 3 4 5 6 (PRODUCT LEVEL)	SEE PAGE
	1	1	**5P-4868**	1	CLAMP-HOSE	
	2	1	**228-9935**	1	HOSE-AIR	
	3	1	**5P-0597**	1	CLAMP-HOSE	

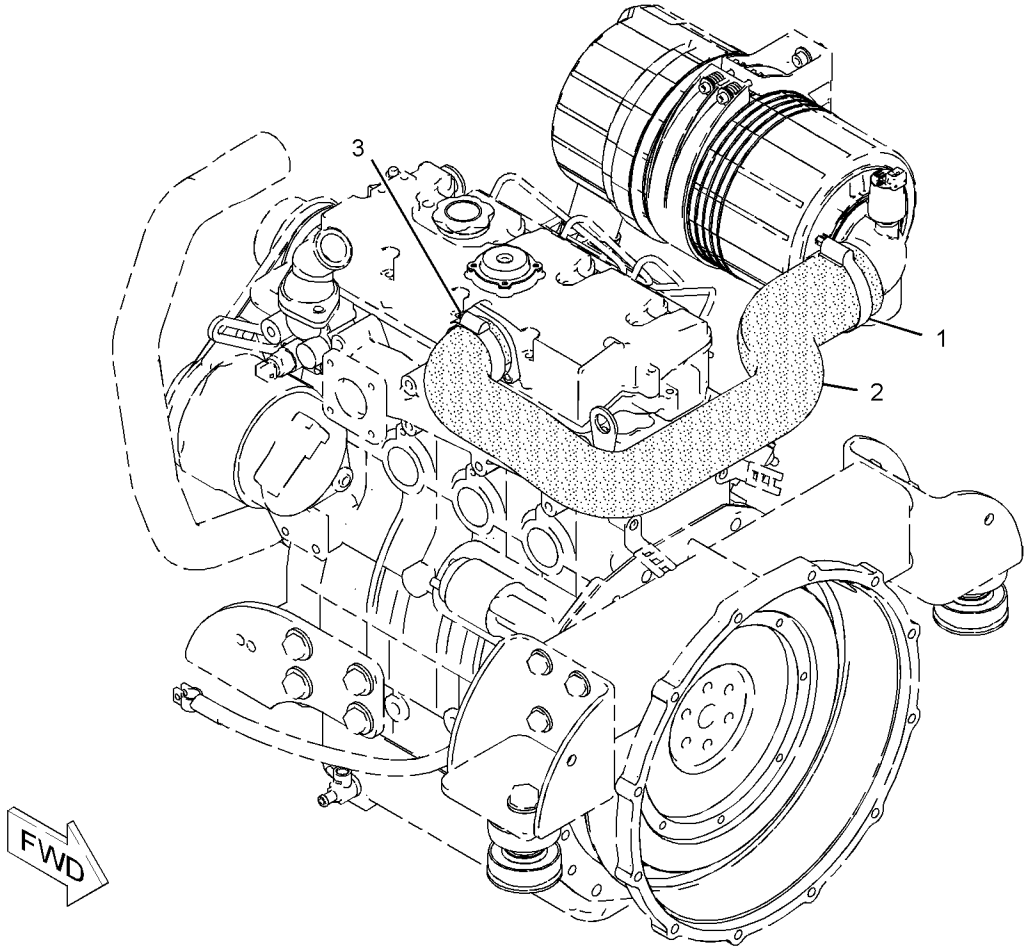

GRAPHIC #1 **<END>** g01031666

AIR INLET AND EXHAUST SYSTEM

228-1784 LINES GP-AIR

S/N: MJH1-UP; BXM1-2300, 2400-UP

PART OF 218-0911, 278-1228 INSTALLATION AR-ENGINE

SMCS-1071 **i02237702**

NOTE	REF NO	GRAPHIC REF	PART NUMBER	QTY	PART NAME 1 2 3 4 5 6 (PRODUCT LEVEL)	SEE PAGE
	1	1	**5P-4961**	2	CLAMP-HOSE	
	2	1	**7X-1443**	2	PROTECTOR	
	3	1	**216-6945**	1	CLAMP	
	4	1	**222-1178**	1	CLAMP	
	5	1	**228-1805**	1	HOSE AS	
E	6	1	**5P-1505**		HOSE (35-CM)	

E-ORDER BY THE CENTIMETER

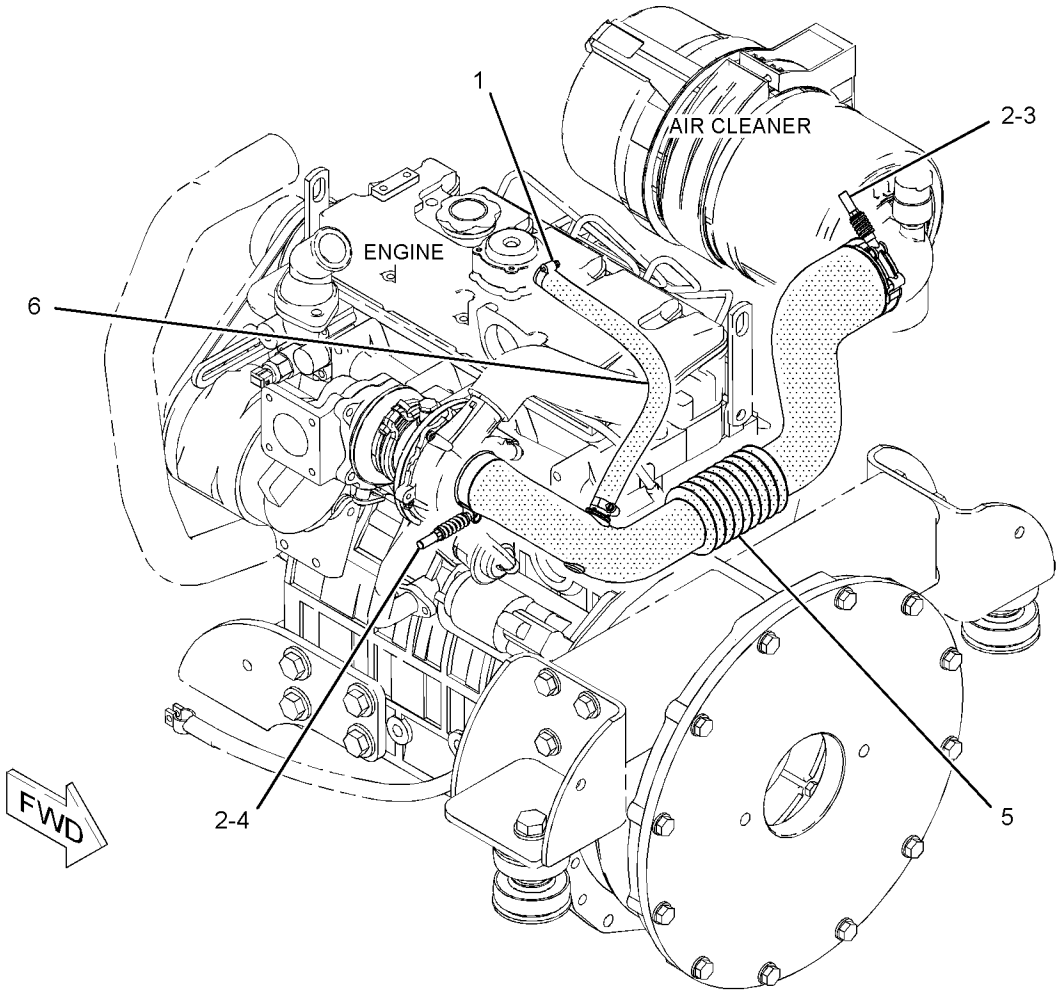

GRAPHIC #1 **<END>** g01128743

AIR INLET AND EXHAUST SYSTEM

160-3568 MANIFOLD GP-EXHAUST

S/N: GGA1-UP; CSD1-UP

PART OF 179-1808 ENGINE AR-PRIMARY

SMCS-1059 **i00898196**

NOTE	REF NO	GRAPHIC REF	PART NUMBER	QTY	PART NAME 1 2 3 4 5 6 (PRODUCT LEVEL)	SEE PAGE
	1	1	**153-5592**	2	NUT	
	2	1	**154-2426**	1	MANIFOLD-EXHAUST	
	3	1	**154-2427**	1	GASKET-EXHAUST	
	4	1	**154-2428**	6	BOLT	

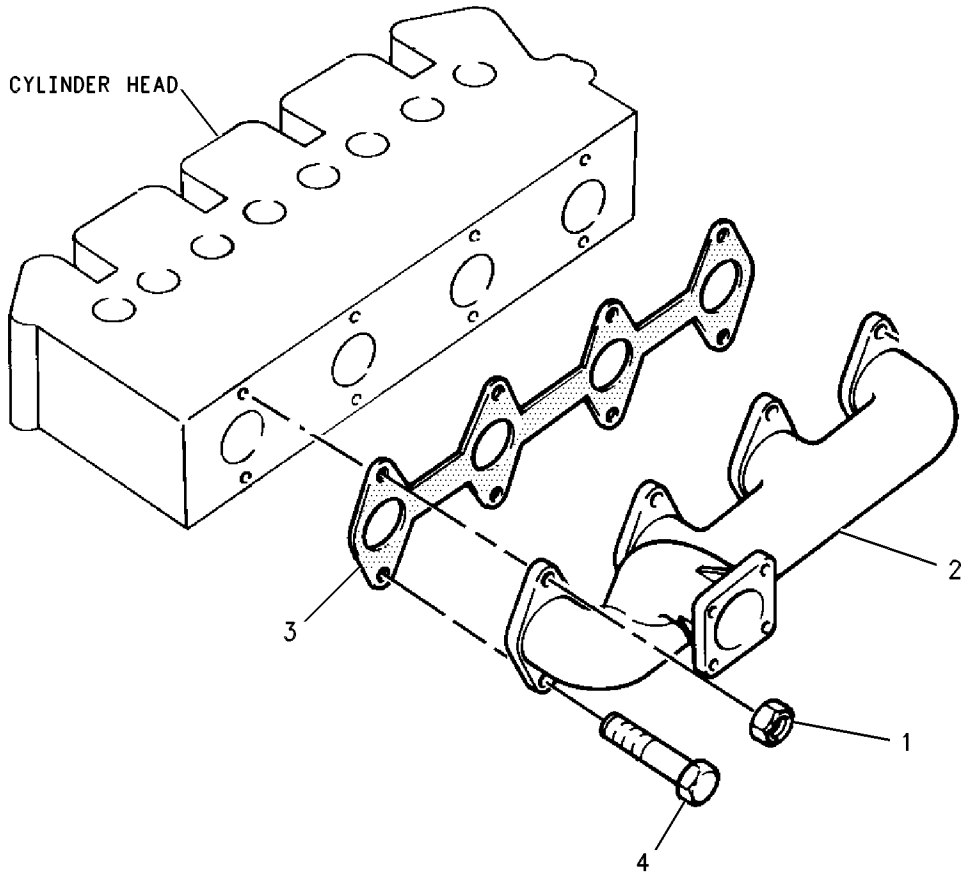

GRAPHIC #1 **<END>** g00483759

239-0233 MANIFOLD GP-EXHAUST

S/N: GGA1-UP; CSD1-UP
PART OF 233-6648 ENGINE AR-PRIMARY
AN ATTACHMENT

SMCS-1059 **i01932143**

NOTE	REF NO	GRAPHIC REF	PART NUMBER	QTY	PART NAME 1 2 3 4 5 6 (PRODUCT LEVEL)	SEE PAGE
	1	1	**153-5592**	8	NUT	
	2	1	**154-2427**	1	GASKET-EXHAUST	
	3	1	**154-2428**	4	BOLT	
	4	1	**163-5372**	5	WASHER	
	5	1	**236-9987**	1	MANIFOLD-EXHAUST	
	6	1	**238-9196**	1	GASKET-TURBOCHARGER	
	7	1	**238-9198**	1	ELBOW-EXHAUST	
	8	1	**238-9199**	1	GASKET-ELBOW	
	9	1	**238-9200**	5	BOLT	
	10	1	**239-0232**	4	STUD	

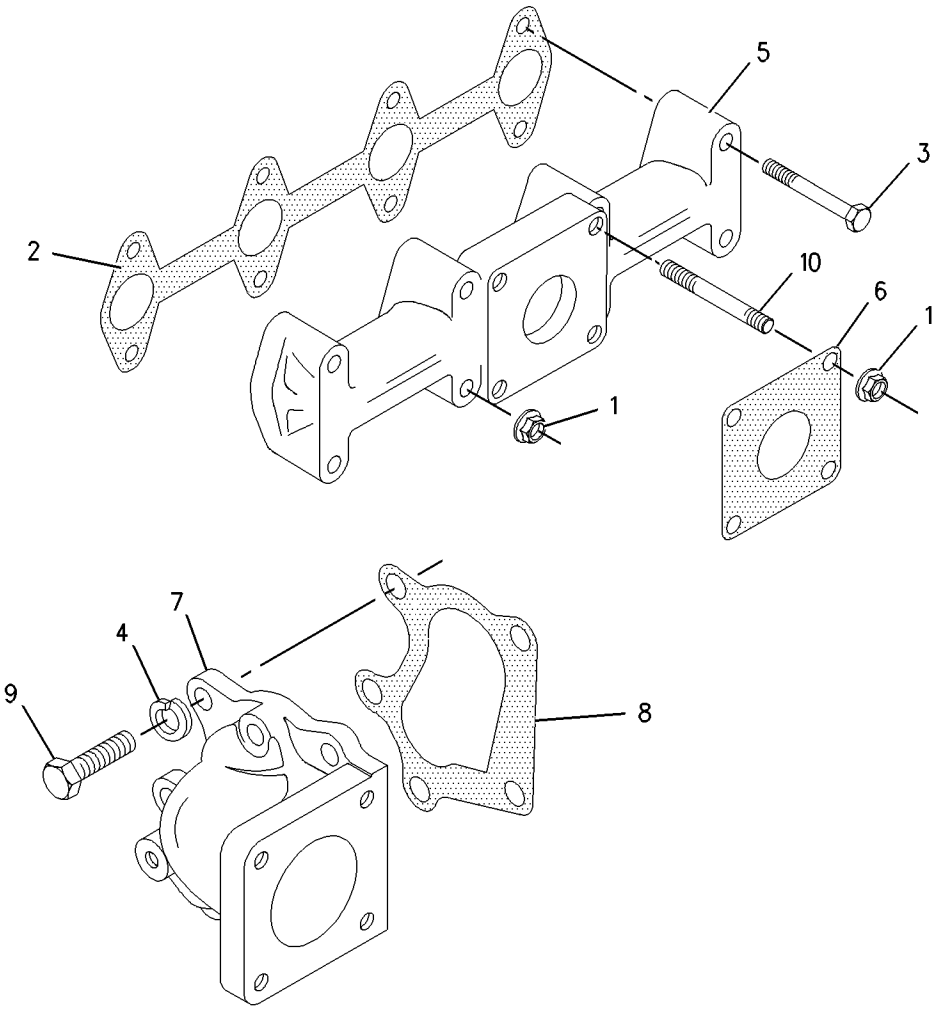

GRAPHIC #1 **<END>** g01007667

AIR INLET AND EXHAUST SYSTEM

218-0937 MUFFLER & MOUNTING GP

S/N: SCH1-1599; RLL1-3199

PART OF 228-1767 INSTALLATION AR-ENGINE

SMCS-1062 **i02062563**

NOTE	REF NO	GRAPHIC REF	PART NUMBER	QTY	PART NAME 1 2 3 4 5 6 (PRODUCT LEVEL)	SEE PAGE
	1	1	**153-7920**	1	GASKET	
	2	1	*229-0294*	1	MUFFLER GP	
		1	**142-8818**	1	CLAMP-BENT BOLT	
		1	**228-9954**	1	ELBOW AS-EXHAUST	
		1	**230-3731**	1	MUFFLER AS	
	3	1	**5P-4116**	4	WASHER-HARD (8.8X20.5X2-MM THK)	
	4	1	**7X-7729**	3	WASHER (11X25X3-MM THK)	
M	5	1	**8T-4133**	3	NUT (M10X1.5-THD)	
M	6	1	**8T-4908**	4	BOLT (M8X1.25X25-MM)	

M-METRIC PART

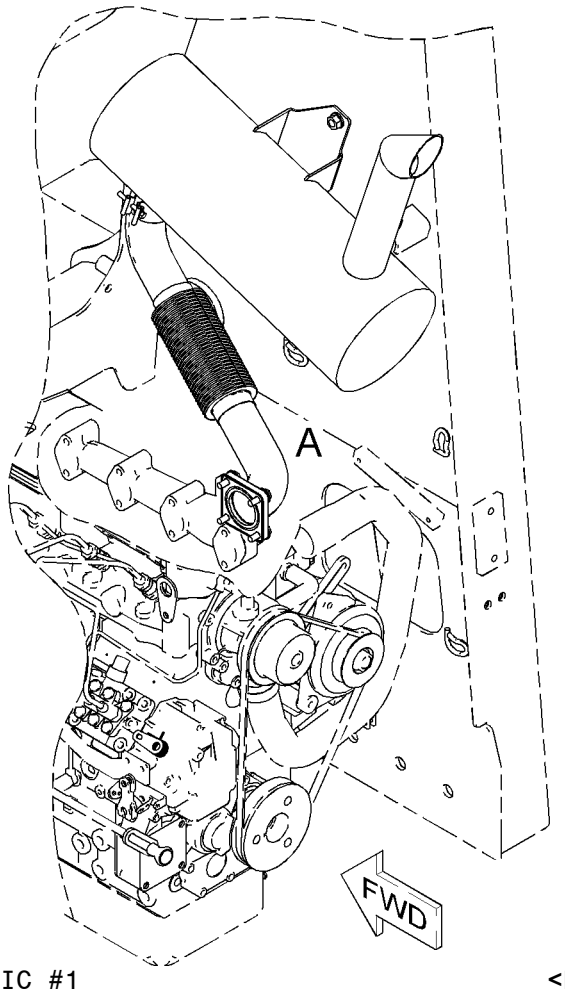

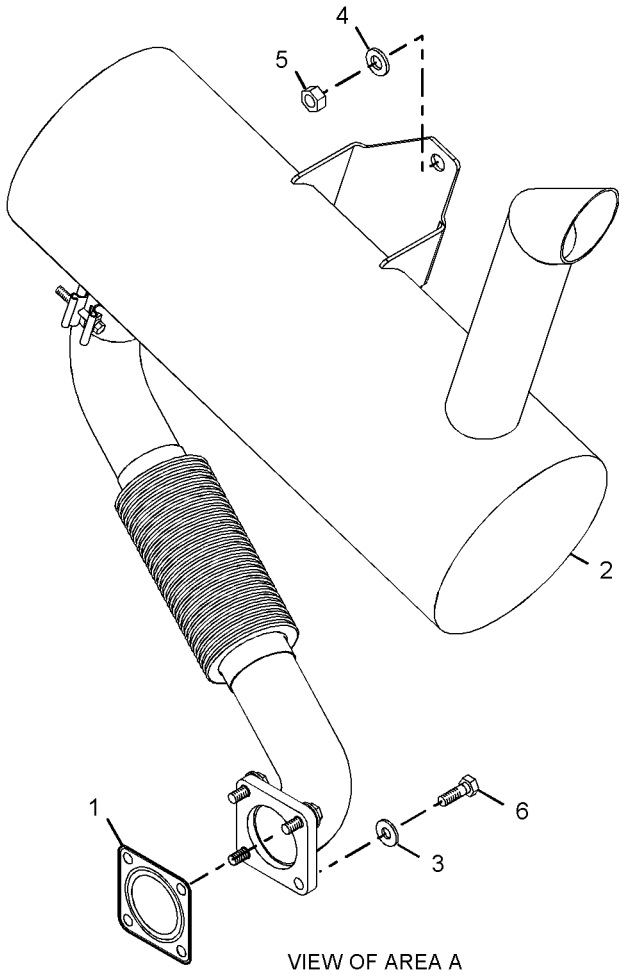

VIEW OF AREA A

GRAPHIC #1 **<END>** g01031723

AIR INLET AND EXHAUST SYSTEM

228-1772 MUFFLER & MOUNTING GP

S/N: MJH1-5599; BXM1-2399

PART OF 218-0911 INSTALLATION AR-ENGINE

SMCS-1062 **i02062584**

NOTE	REF NO	GRAPHIC REF	PART NUMBER	QTY	PART NAME 1 2 3 4 5 6 (PRODUCT LEVEL)	SEE PAGE
	1	1	**153-7920**	1	GASKET	
	2	1	*228-1771*	1	MUFFLER GP	
		1	**142-8818**	1	CLAMP-BENT BOLT	
		1	**228-1770**	1	MUFFLER AS	
		1	**228-2524**	1	ELBOW AS-EXHAUST	
	3	1	**5P-4116**	4	WASHER-HARD (8.8X20.5X2-MM THK)	
	4	1	**7X-7729**	3	WASHER (11X25X3-MM THK)	
M	5	1	**8T-4133**	3	NUT (M10X1.5-THD)	
M	6	1	**8T-4908**	4	BOLT (M8X1.25X25-MM)	

M-METRIC PART

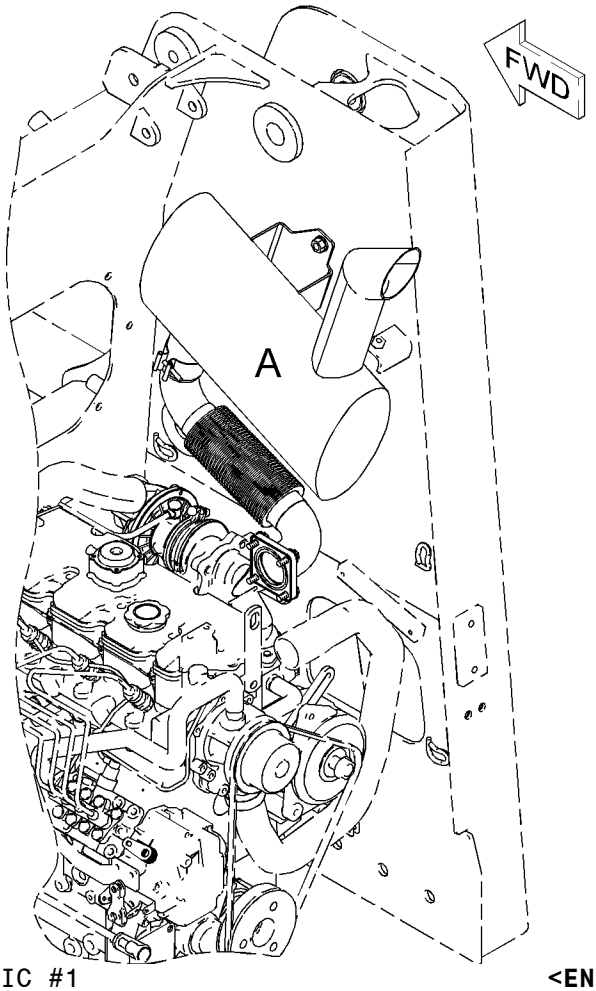

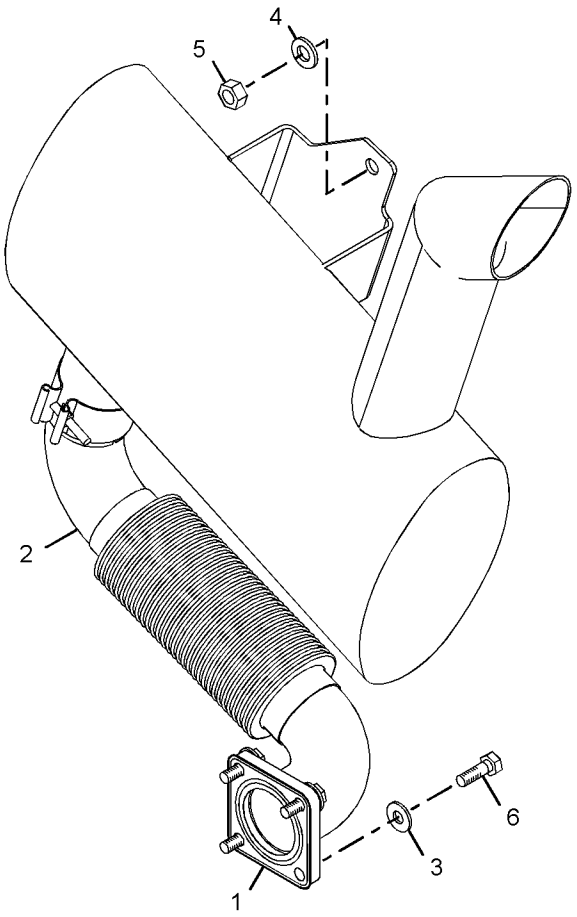

VIEW OF AREA A

GRAPHIC #1 **<END>** g01030341

AIR INLET AND EXHAUST SYSTEM

272-3046 MUFFLER GP

S/N: MJH5600-UP; BXM2400-UP
STAGE II SOUND
PART OF 272-3047 MUFFLER GP
AN ATTACHMENT

SMCS-1062 **i02431658**

NOTE	REF NO	GRAPHIC REF	PART NUMBER	QTY	PART NAME 1 2 3 4 5 6 (PRODUCT LEVEL)	SEE PAGE
	1	1	**142-8818**	1	CLAMP-BENT BOLT	
	2	1	**228-2524**	1	ELBOW AS-EXHAUST	

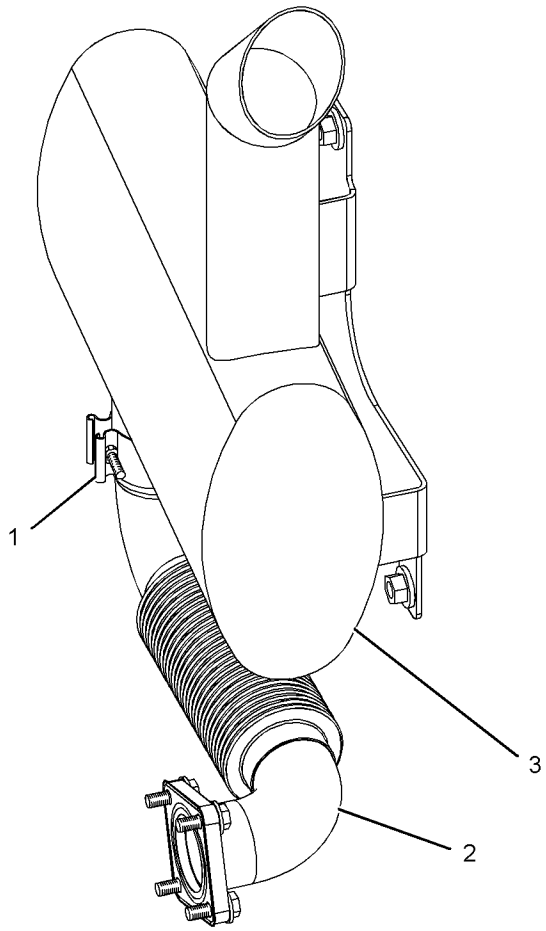

REAR VIEW
(UPPER LEFT)

GRAPHIC #1 **<END>** g01229589

AIR INLET AND EXHAUST SYSTEM

272-3047 MUFFLER GP

S/N: MJH5600-UP; BXM2400-UP
STAGE II SOUND
PART OF 261-6157, 261-6158, 261-6160, 261-6187, 261-6197, 278-1212, 278-1213, 278-1220, 278-1221, 278-1224, 278-1225, 278-5408, 278-5409, 278-5441, 278-5442 CONVERSION AR-MACHINE
AN ATTACHMENT

SMCS-1062 **i02431659**

NOTE	REF NO	GRAPHIC REF	PART NUMBER	QTY	PART NAME 1 2 3 4 5 6 (PRODUCT LEVEL)	SEE PAGE
	1	1	**153-7920**	1	GASKET	
Y	2	1	*272-3046*	1	MUFFLER GP	116
	3	1	**5P-4116**	4	WASHER-HARD (8.8X20.5X2-MM THK)	
	4	1	**7X-7729**	3	WASHER (11X25X3-MM THK)	
M	5	1	**8T-4133**	3	NUT (M10X1.5-THD)	
M	6	1	**8T-4908**	4	BOLT (M8X1.25X25-MM)	

M-METRIC PART
Y-SEPARATE ILLUSTRATION

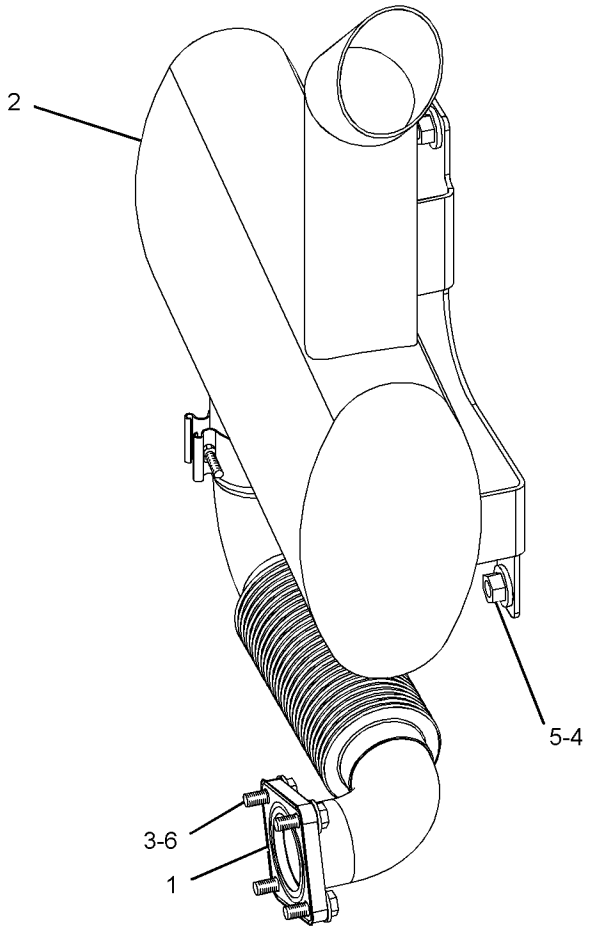

REAR VIEW
(UPPER LEFT)

GRAPHIC #1 **<END>** g01229585

272-3049 MUFFLER GP

S/N: SCH1600-UP; RLL3200-UP
STAGE II SOUND
PART OF 252-0449, 261-6155, 261-6156, 278-5347, 278-5348, 278-5369, 278-5370, 278-5413, 278-5414 CONVERSION AR-MACHINE
AN ATTACHMENT

SMCS-1062 **i02432676**

NOTE	REF NO	GRAPHIC REF	PART NUMBER	QTY	PART NAME 1 2 3 4 5 6 (PRODUCT LEVEL)	SEE PAGE
	1	1	**153-7920**	1	GASKET	
	2	1	*272-3048*	1	MUFFLER GP	
		1	**142-8818**	1	CLAMP-BENT BOLT	
		1	**230-3731**	1	MUFFLER AS	
		1	**272-3058**	1	ELBOW AS-EXHAUST	
	3	1	**5P-4116**	4	WASHER-HARD (8.8X20.5X2-MM THK)	
	4	1	**7X-7729**	3	WASHER (11X25X3-MM THK)	
M	5	1	**8T-4133**	3	NUT (M10X1.5-THD)	
M	6	1	**8T-4908**	4	BOLT (M8X1.25X25-MM)	

M-METRIC PART

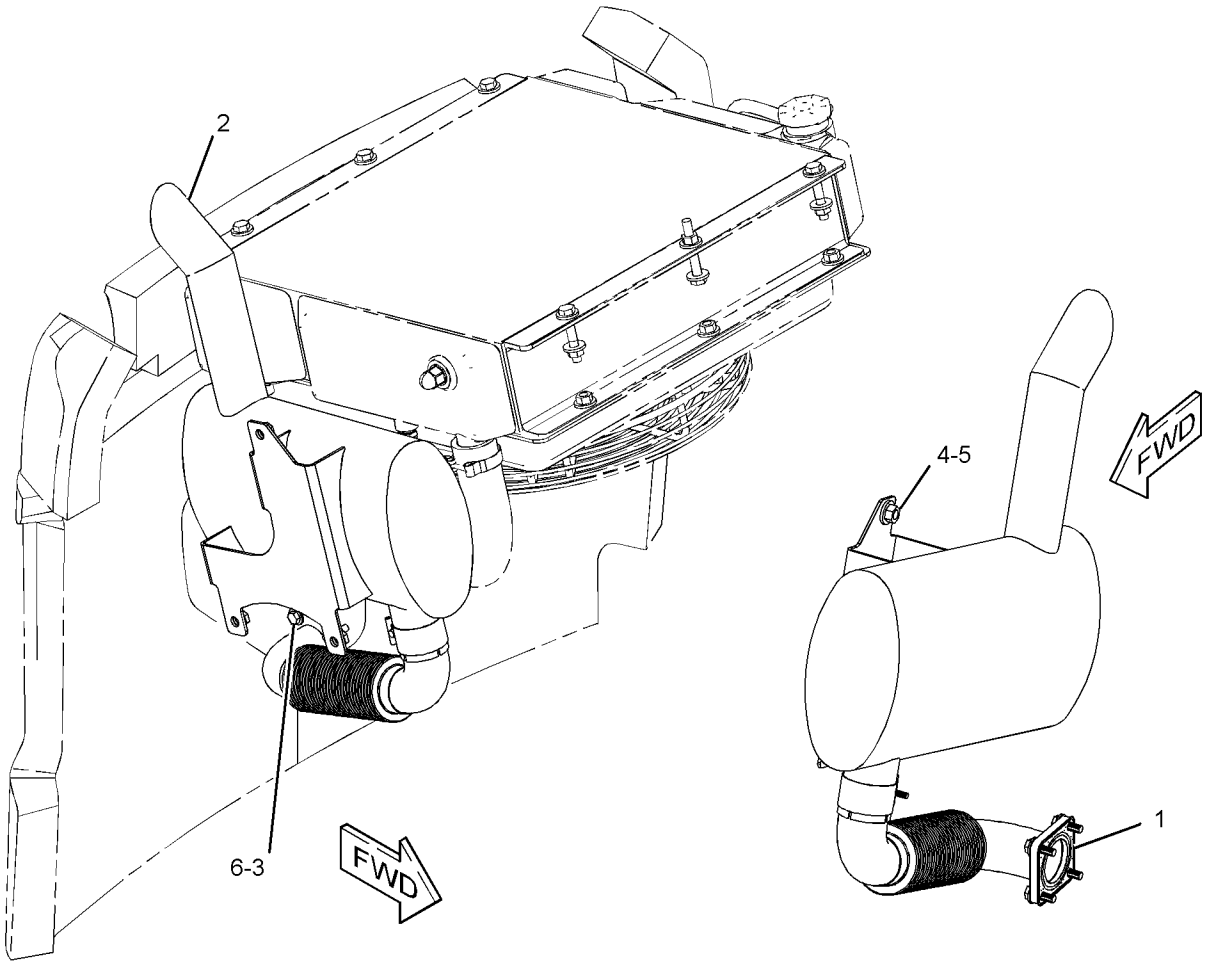

GRAPHIC #1 **<END>** g01229532

AIR INLET AND EXHAUST SYSTEM

239-0230 TURBOCHARGER GP

S/N: GGA1-3651; CSD1-3651
PART OF 233-6648 ENGINE AR-PRIMARY
AN ATTACHMENT

SMCS-1052, 1053 **i01932142**

NOTE	REF NO	GRAPHIC REF	PART NUMBER	QTY	PART NAME 1 2 3 4 5 6 (PRODUCT LEVEL)	SEE PAGE
	1	1	**064-3058**	2	CLAMP-HOSE	
	2	1	**153-6838**	2	BOLT	
	3	1	**153-6853**	1	SEAL-O-RING	
	4	1	**155-7984**	2	WASHER	
	5	1	**165-2141**	2	BOLT	
	6	1	**168-9001**	2	BOLT	
	7	1	**183-3572**	3	BOLT	
	8	1	**225-8533**	2	GASKET	
	9	1	**238-9349**	1	TURBOCHARGER GP	
	10	1	**238-9351**	1	HOSE	
	11	1	**239-0177**	1	TUBE AS-TURBOCHARGER	
	12	1	**239-0187**	1	BRACKET	
	13	1	**239-0228**	1	TUBE AS	
	13A	1	**225-8526**	2	WASHER	
	13B	1	**239-0169**	1	BOLT	
	13C	1	**239-0227**	2	CLIP	
	14	1	**239-0229**	1	SPACER	

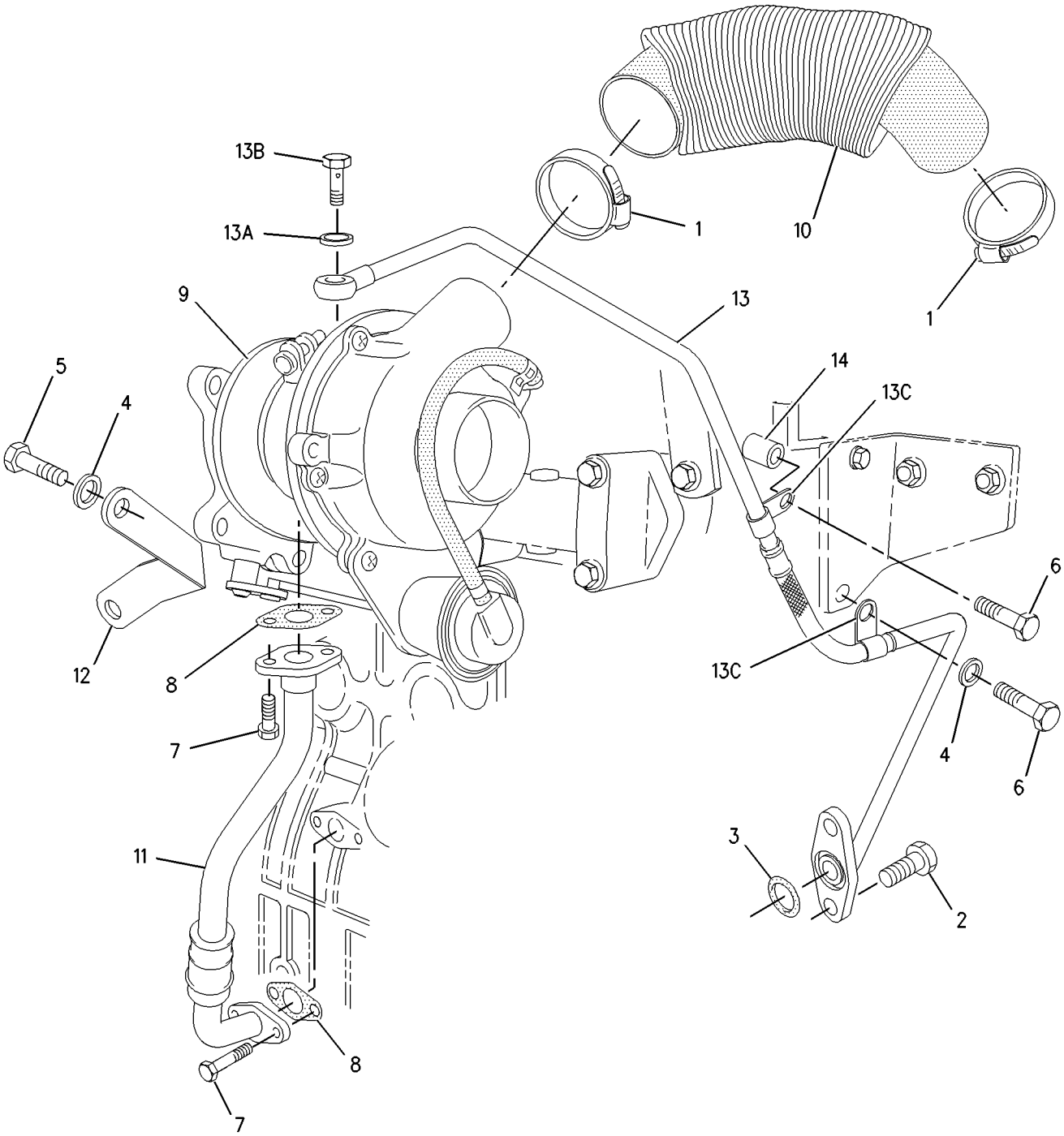

GRAPHIC #1 **<END>** g01007836

AIR INLET AND EXHAUST SYSTEM

239-0230 TURBOCHARGER GP

S/N: GGA3652-UP; CSD3652-UP
PART OF 233-6648 ENGINE AR-PRIMARY
AN ATTACHMENT

SMCS-1052, 1053 **i02249723**

NOTE	REF NO	GRAPHIC REF	PART NUMBER	QTY	PART NAME 1 2 3 4 5 6 (PRODUCT LEVEL)	SEE PAGE
	1	1	**064-3058**	2	CLAMP-HOSE	
	2	1	**153-6838**	2	BOLT	
	3	1	**153-6853**	1	SEAL-O-RING	
	4	1	**155-7984**	2	WASHER	
	5	1	**165-2141**	2	BOLT	
	6	1	**168-9001**	2	BOLT	
	7	1	**183-3572**	3	BOLT	
	8	1	**225-8533**	2	GASKET	
	9	1	**238-9349**	1	TURBOCHARGER GP	
	10	1	**249-1532**	1	HOSE-AIR INLET	
	11	1	**239-0177**	1	TUBE AS-TURBOCHARGER	
	12	1	**239-0187**	1	BRACKET	
	13	1	**239-0228**	1	TUBE AS	
	13A	1	**225-8526**	2	WASHER (10.4X13.75X1.37-MM THK)	
	13B	1	**239-0169**	1	BOLT	
	13C	1	**239-0227**	2	CLIP	
	14	1	**239-0229**	1	SPACER	

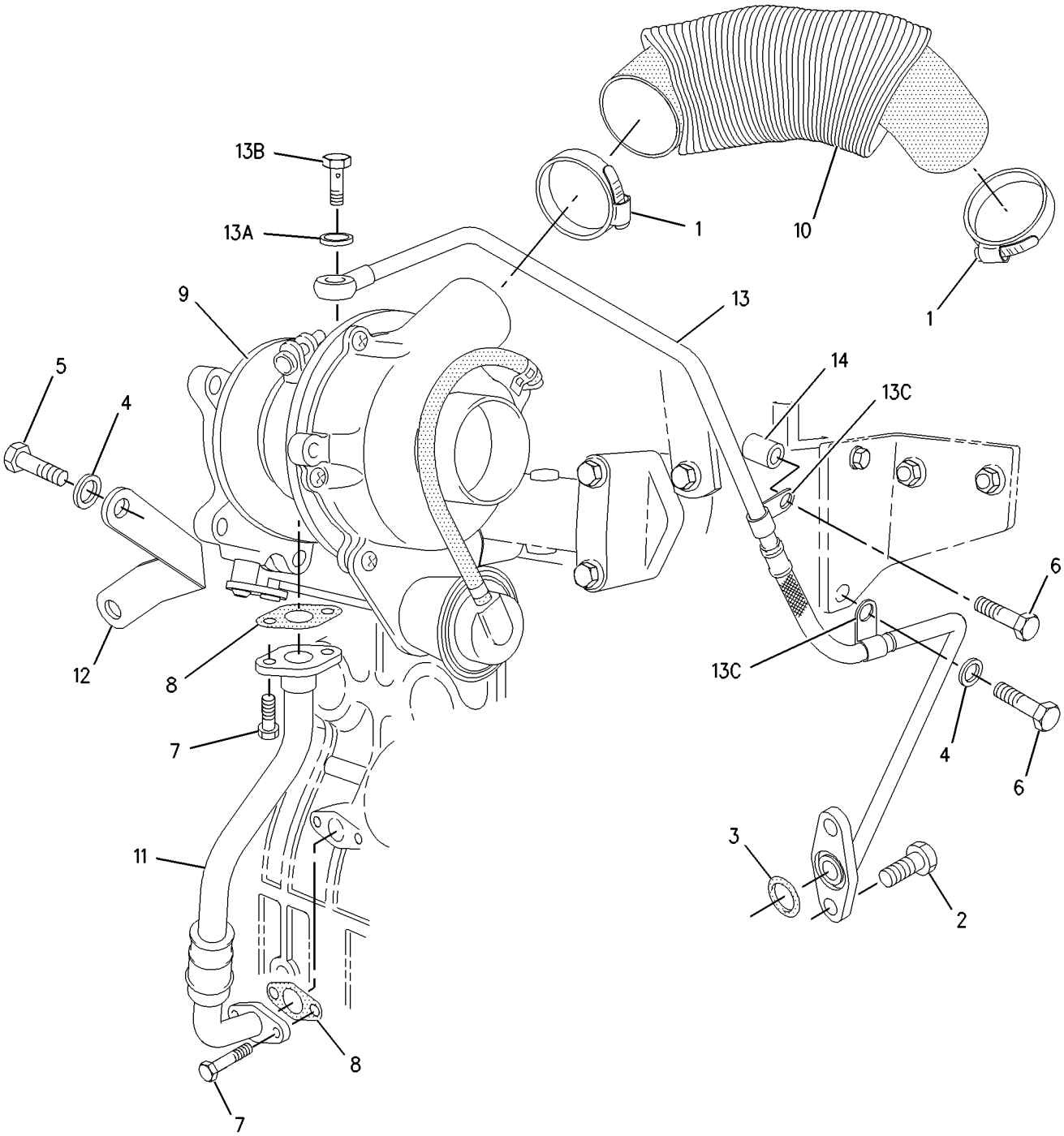

GRAPHIC #1 **<END>** g01007836

218-5566 CABLE GP-GOVERNOR CONTROL

S/N: MJH1-UP; SCH1-UP; RLL1-UP; BXM1-UP
PART OF 218-5565 PEDAL GP-GOVERNOR

SMCS-1265 **i01991439**

NOTE	REF NO	GRAPHIC REF	PART NUMBER	QTY	PART NAME 1 2 3 4 5 6 (PRODUCT LEVEL)	SEE PAGE
	1	1	**8T-4744**	1	PIN AS-SPRING	
	2	1	**125-2458**	1	ROD END	
M	3	1	**5C-2874**	1	NUT (M5X0.8-THD)	
M	4	1	**5C-2890**	1	NUT (M6X1-THD)	
	5	1	**8T-4742**	1	END-YOKE ROD	
	6	1	**8T-6902**	1	CLIP	
	7	1	**8T-6904**	1	PIN-CLEVIS	

M-METRIC PART

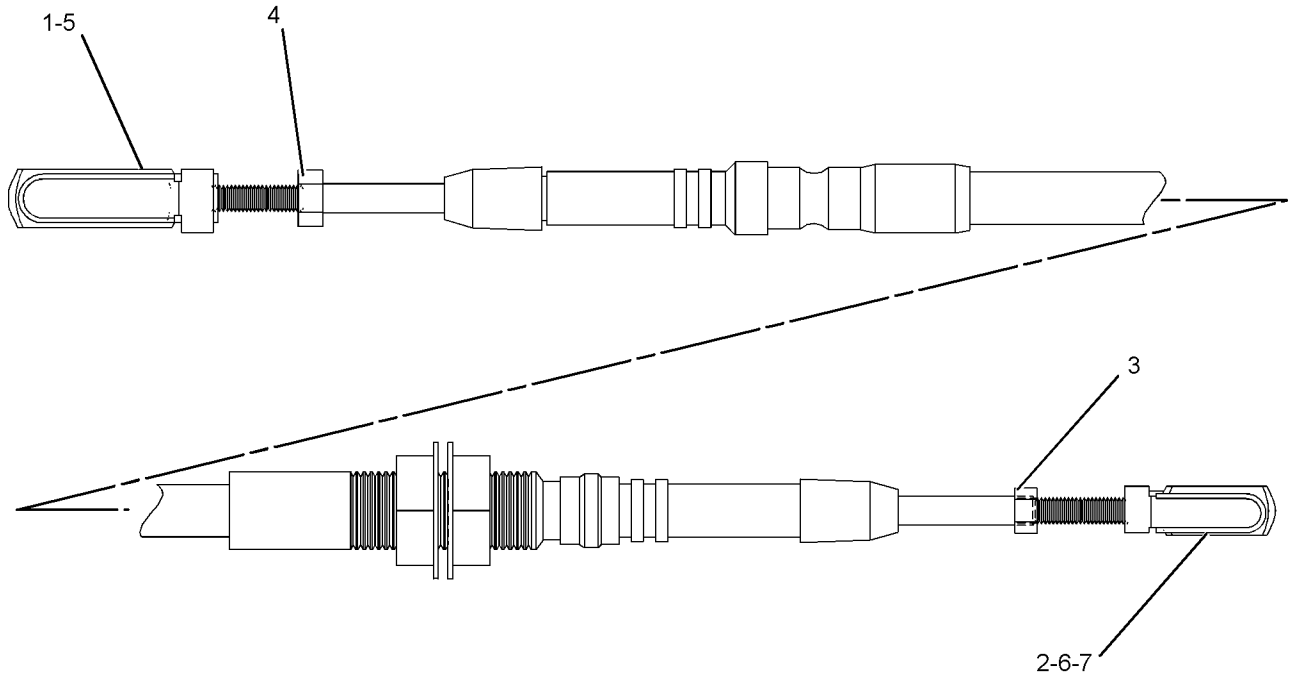

GRAPHIC #1 **<END>** g01031418

218-5602 CONTROL GP-GOVERNOR

S/N: MJH1-UP; SCH1-UP; RLL1-UP; BXM1-UP
PART OF 218-5910, 218-6610 CHASSIS AR

SMCS-1265, 1276 **i01934895**

NOTE	REF NO	GRAPHIC REF	PART NUMBER	QTY	PART NAME 1 2 3 4 5 6 (PRODUCT LEVEL)	SEE PAGE
	1	1	**7K-1181**	1	STRAP-CABLE	
	2	1	**218-6616**	1	BRACKET AS	
	3	1	**218-6617**	1	BRACKET-STOP	
Y	4	1	*218-5565*	1	PEDAL GP-GOVERNOR (INCLUDES LEVER)	734
	5	1	**237-7296**	4	SCREW-FLAT HEAD	
	6	1	**4B-4863**	2	WASHER (4.7X11X1.2-MM THK)	
M	7	1	**5C-2890**	4	NUT (M6X1-THD)	
	8	1	**8T-3984**	1	KNOB	
M	9	1	**8T-3998**	2	BOLT (M4X0.7X12-MM)	
M	10	1	**8T-4138**	3	BOLT (M6X1X20-MM)	
	11	1	**8T-4205**	7	WASHER-HARD (7.2X14.5X2-MM THK)	

M-METRIC PART
Y-SEPARATE ILLUSTRATION

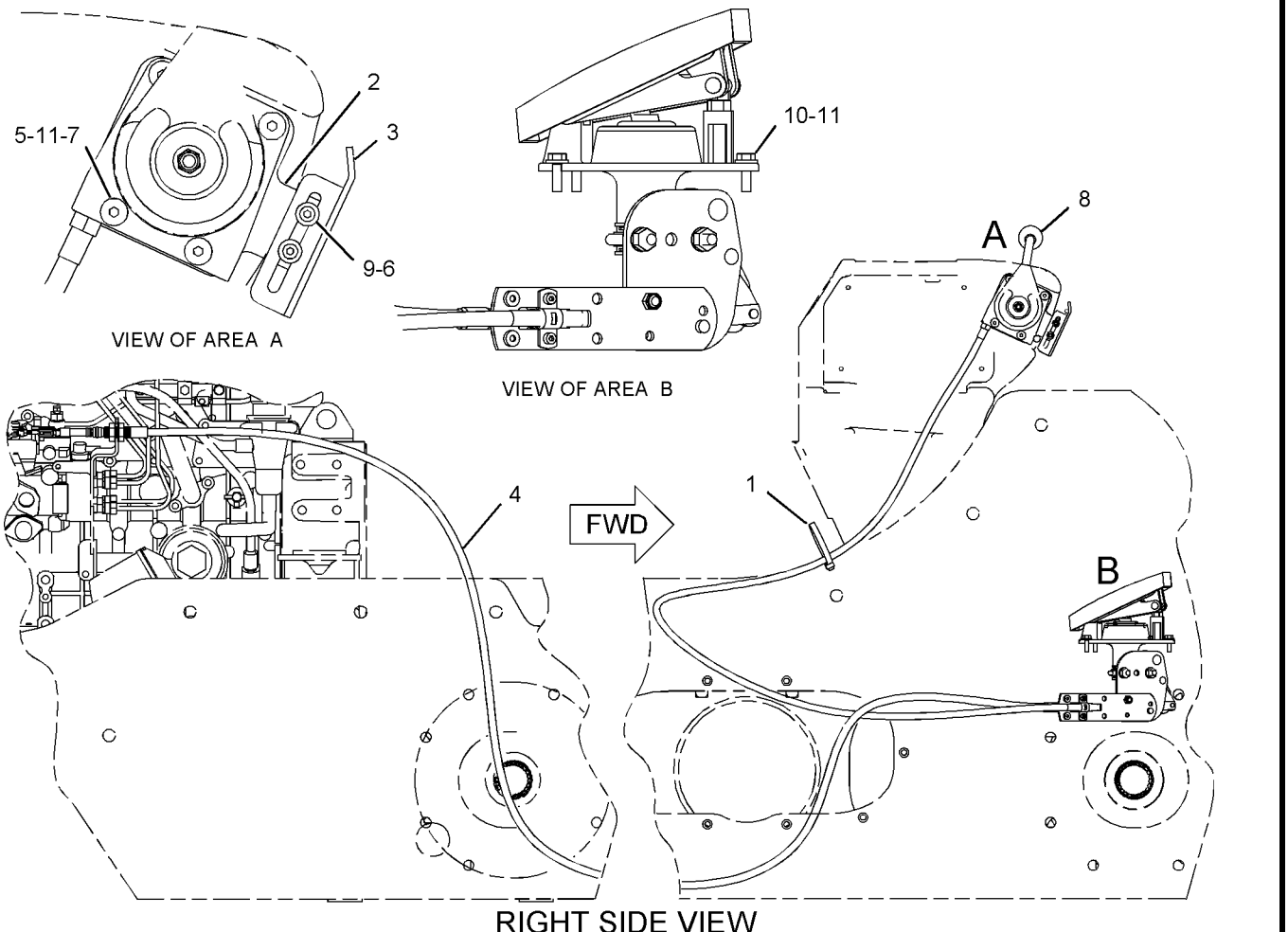

GRAPHIC #1 **<END>** g01029882

144-9962 FILTER GP-WATER SEP & FUEL

S/N: MJH1-UP; SCH1-UP; RLL1-UP; BXM1-UP
PART OF 176-9954 PUMP GP-FUEL PRM & PRIM FILTER

SMCS-1261, 1263 **i02152337**

NOTE	REF NO	GRAPHIC REF	PART NUMBER	QTY	PART NAME 1 2 3 4 5 6 (PRODUCT LEVEL)	SEE PAGE
	1	1	**156-1200**	1	FILTER ELEMENT-FUEL (WATER SEPARATOR)	
	2	1	**149-3516**	1	BASE AS	
	3	1	**118-8118**	1	RING-RETAINING	
	4	1	**112-9401**	1	BOWL AS-WATER COLLECTION	
		1	**128-8614**	1	KIT-SEAL (WATER SEPARATOR)	
	5	1	**118-8119**	1	NUT	
					AVAILABLE REPAIR KIT(S):	
			121-4480	1	KIT-WATER BASE (WATER SEPARATOR)	

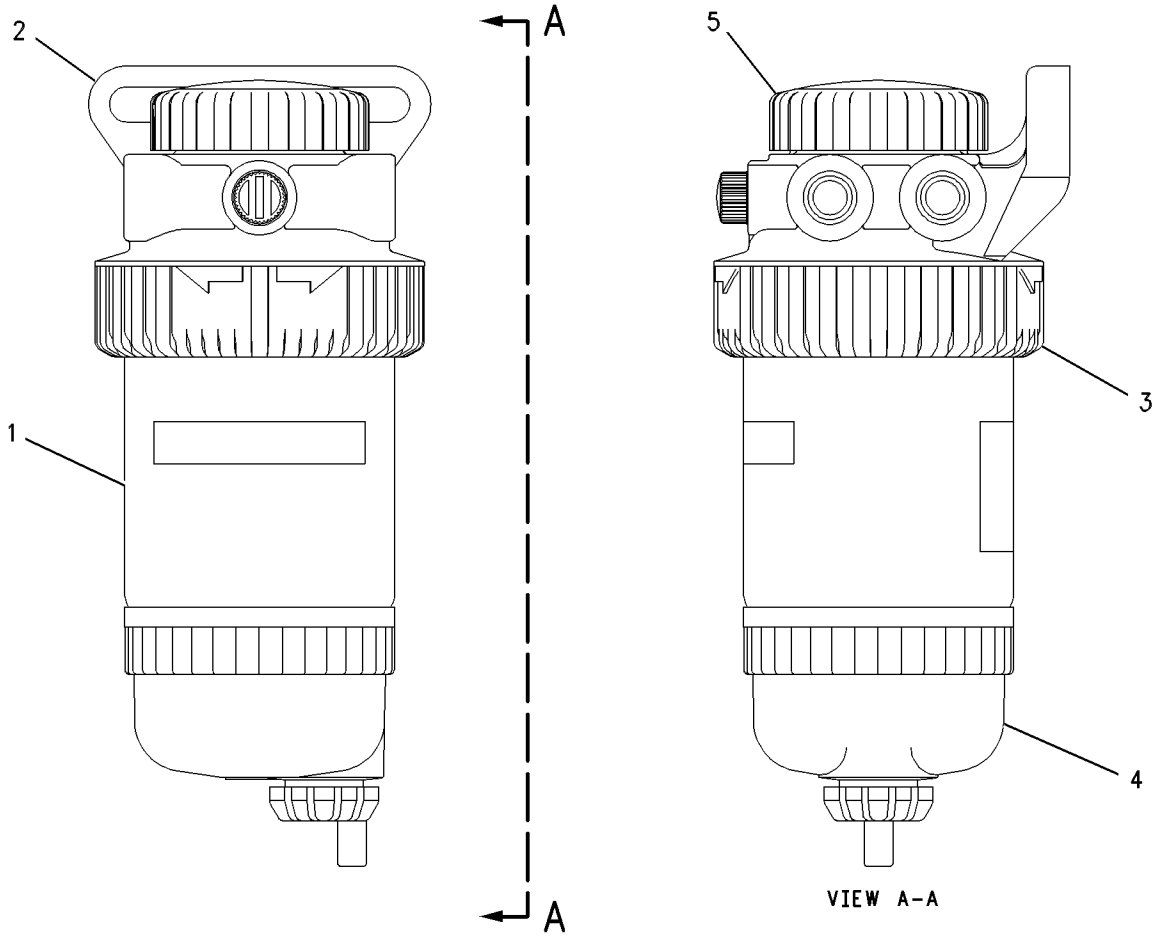

GRAPHIC #1 **<END>** g00430959

FUEL SYSTEM

231-5129 GOVERNOR GP

S/N: GGA1-UP; CSD1-UP

PART OF 179-1808 ENGINE AR-PRIMARY

SMCS-1264, 1908 **i02266512**

NOTE	REF NO	GRAPHIC REF	PART NUMBER	QTY	PART NAME 1 2 3 4 5 6 (PRODUCT LEVEL)	SEE PAGE
	1	1	**133-5512**	1	NUT	
	2	2	**139-5511**	1	CAP	
	3	1	**153-5960**	1	NUT	
	4	1	**153-7983**	1	PIN	
	5	2	**153-7987**	1	WASHER	
	6	1	**154-1396**	1	CLIP	
	7	1	**154-1401**	1	ARM	
	8	1	**154-1403**	1	SEAL-O-RING	
	9	1	**154-1405**	1	LEVER	
	10	1	**154-1408**	1	WASHER	
	11	1	**154-1410**	2	SEAL-O-RING	
	12	1	**154-1411**	1	CLIP	
	13	1	**265-5625**	1	BRACKET-THROTTLE	
	14	1	**154-1416**	1	SPRING	
	15	1	**154-1636**	2	NUT	
	16	1	**154-1637**	1	ARM	
	17	1	**154-1638**	1	SEAL-O-RING	
	18	1	**154-1639**	1	CLIP	
	19	1	**154-1641**	1	SPRING (VIMS, ENGLISH, SWEDISH)	
	20	1	**155-8009**	1	BOLT	
	21	1,2	**158-7936**	3	BOLT	
	22	1,2	**162-2207**	2	NUT	
	23	1	**166-5268**	1	LEVER	
	24	1	**183-3572**	2	BOLT	
	25	1	**191-0542**	1	SHAFT	
	26	2	**191-9296**	1	BOLT	
	27	2	**191-9297**	1	NUT	
	28	1	**217-5794**	1	LEVER	
	29	1	**217-7103**	1	LEVER	
	30	1	**217-7108**	1	SPRING	
	31	2	**217-7111**	1	BOLT AS	
	31A	2	**153-7987**	1	WASHER	
	31B	2	**212-0743**	1	NUT	
	31C	2	**212-0744**	1	SEAL-O-RING	
	31D	2	**212-0745**	1	BOLT	
	31E	2	**212-0747**	1	RING-RETAINING	
	32	2	**217-7115**	1	CAP (TAMPER RESISTANT)	
	33	2	**211-7739**	1	KIT-CAP (TAMPER RESISTANT)	
	34	1	**265-6944**	1	PLUG	
	35	1	**265-5624**	1	SPRING-RETURN	

231-5129 **GOVERNOR GP** *(contd.)* **i02266512**

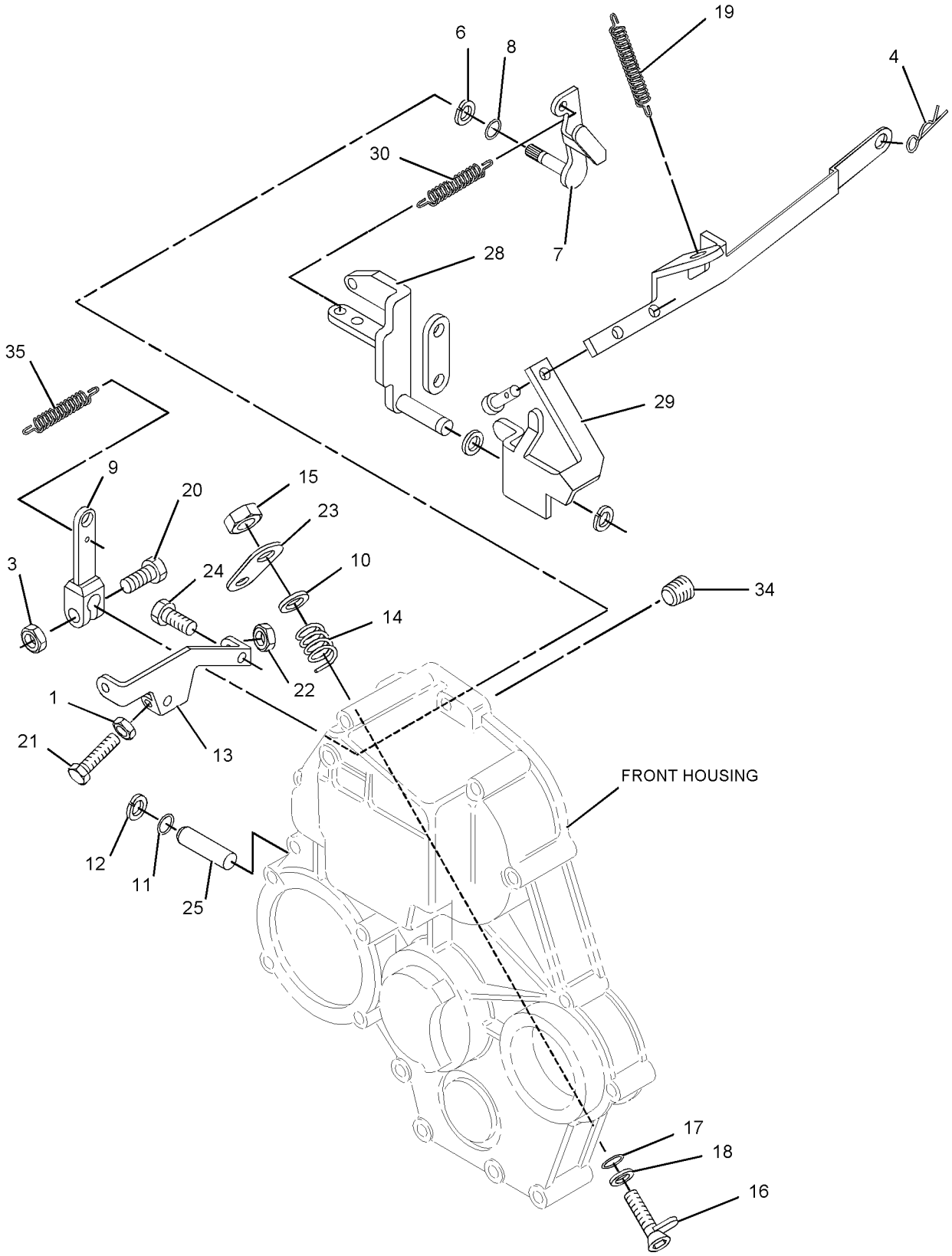

GRAPHIC #1

g01137994

231-5129 **GOVERNOR GP** *(contd.)* **i02266512**

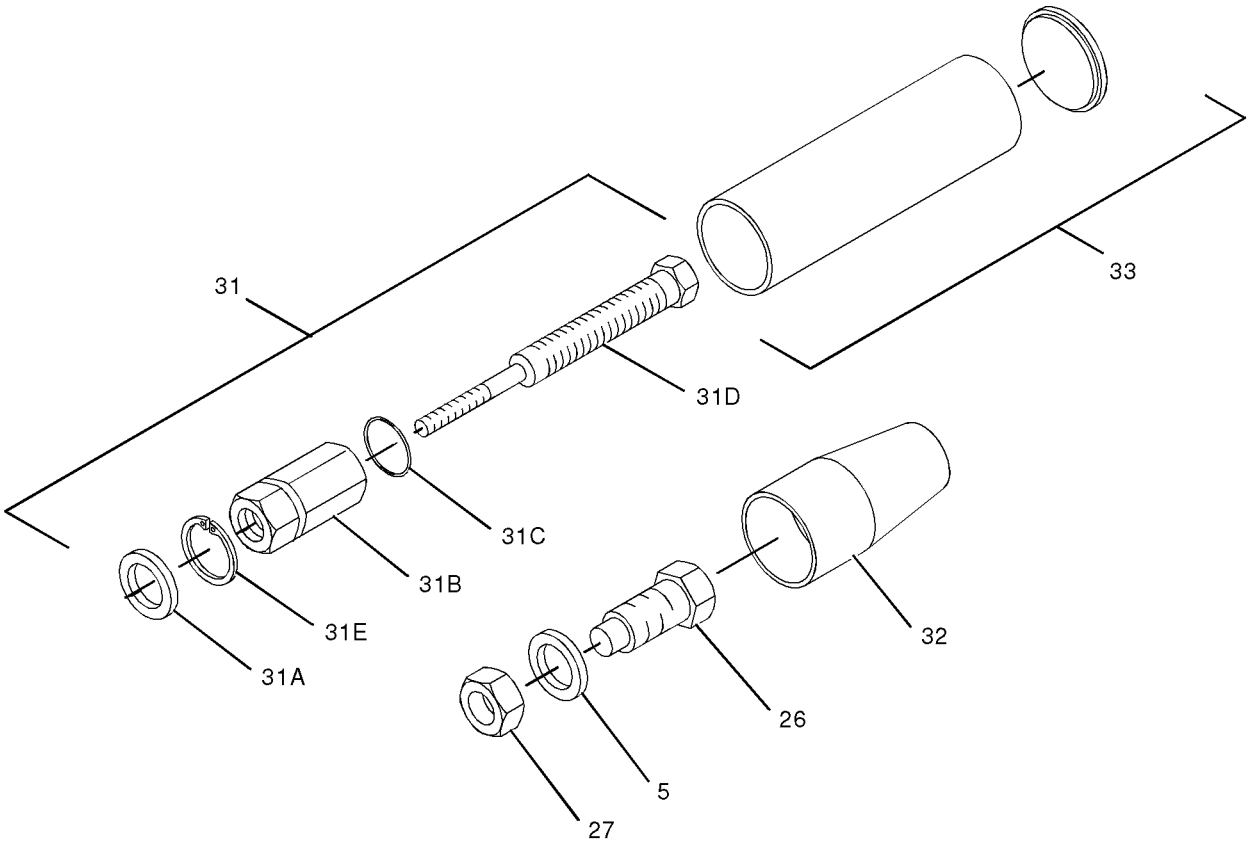

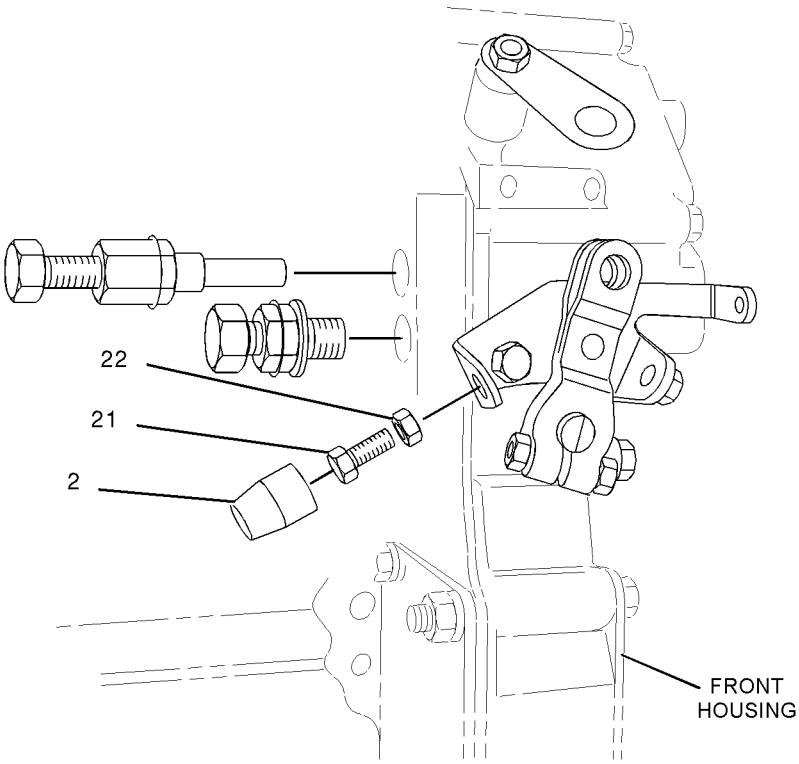

GRAPHIC #2 **<END>** g01031342

246-3415 GOVERNOR GP

S/N: GGA1-UP; CSD1-UP
PART OF 233-6648 ENGINE AR-PRIMARY
AN ATTACHMENT

SMCS-1264, 1908 **i02360161**

NOTE	REF NO	GRAPHIC REF	PART NUMBER	QTY	PART NAME 1 2 3 4 5 6 (PRODUCT LEVEL)	SEE PAGE
M	1	1,2	**5C-2890**	1	NUT (M6X1-THD)	
	2	2	**139-5511**	1	CAP (TAMPERPROOF)	
	3	1	**153-5960**	1	NUT	
	4	1	**153-7983**	1	PIN	
	5	2	**153-7987**	1	WASHER	
	6	1	**154-1396**	1	CLIP	
	7	1	**154-1401**	1	ARM	
	8	1	**154-1403**	1	SEAL-O-RING	
	9	1	**154-1405**	1	LEVER	
	10	1	**154-1408**	1	WASHER	
	11	1	**154-1410**	2	SEAL-O-RING	
	12	1	**154-1411**	1	CLIP	
	13	1	**154-1416**	1	SPRING	
	14	1	**154-1636**	2	NUT	
	15	1	**154-1637**	1	ARM	
	16	1	**154-1638**	1	SEAL-O-RING	
	17	1	**154-1639**	1	CLIP	
	18	1	**154-1641**	1	SPRING (VIMS, ENGLISH, SWEDISH)	
	19	1	**155-8009**	1	BOLT	
	20	1,2	**158-7936**	2	BOLT	
	21	1	**162-2207**	1	NUT	
	22	1	**183-3572**	2	BOLT	
	23	1	**191-0542**	1	SHAFT	
	24	2	**191-9293**	1	CAP-COVER	
	25	2	**191-9296**	1	BOLT	
	26	2	**191-9297**	1	NUT	
	27	1	**217-5794**	1	LEVER	
	28	1	**217-7108**	1	SPRING	
	29	2	**217-7111**	1	BOLT AS	
	29A	2	**153-7987**	1	WASHER	
	29B	2	**212-0743**	1	NUT	
	29C	2	**212-0744**	1	SEAL-O-RING	
	29D	2	**212-0745**	1	BOLT	
	29E	2	**212-0747**	1	RING-RETAINING	
	30	2	**217-7115**	1	CAP (TAMPER RESISTANT)	
	31	1	**236-5170**	1	SENSOR AS (TORQUE)	
	32	1	**238-1266**	1	LEVER	
	33	2	**211-7739**	1	KIT-CAP (TAMPER RESISTANT)	
	34	1	**265-5624**	1	SPRING-RETURN	
	35	1	**265-5625**	1	BRACKET-THROTTLE	
	36	1	**265-6944**	1	PLUG	

M-METRIC PART

246-3415 **GOVERNOR GP** *(contd.)* **i02360161**

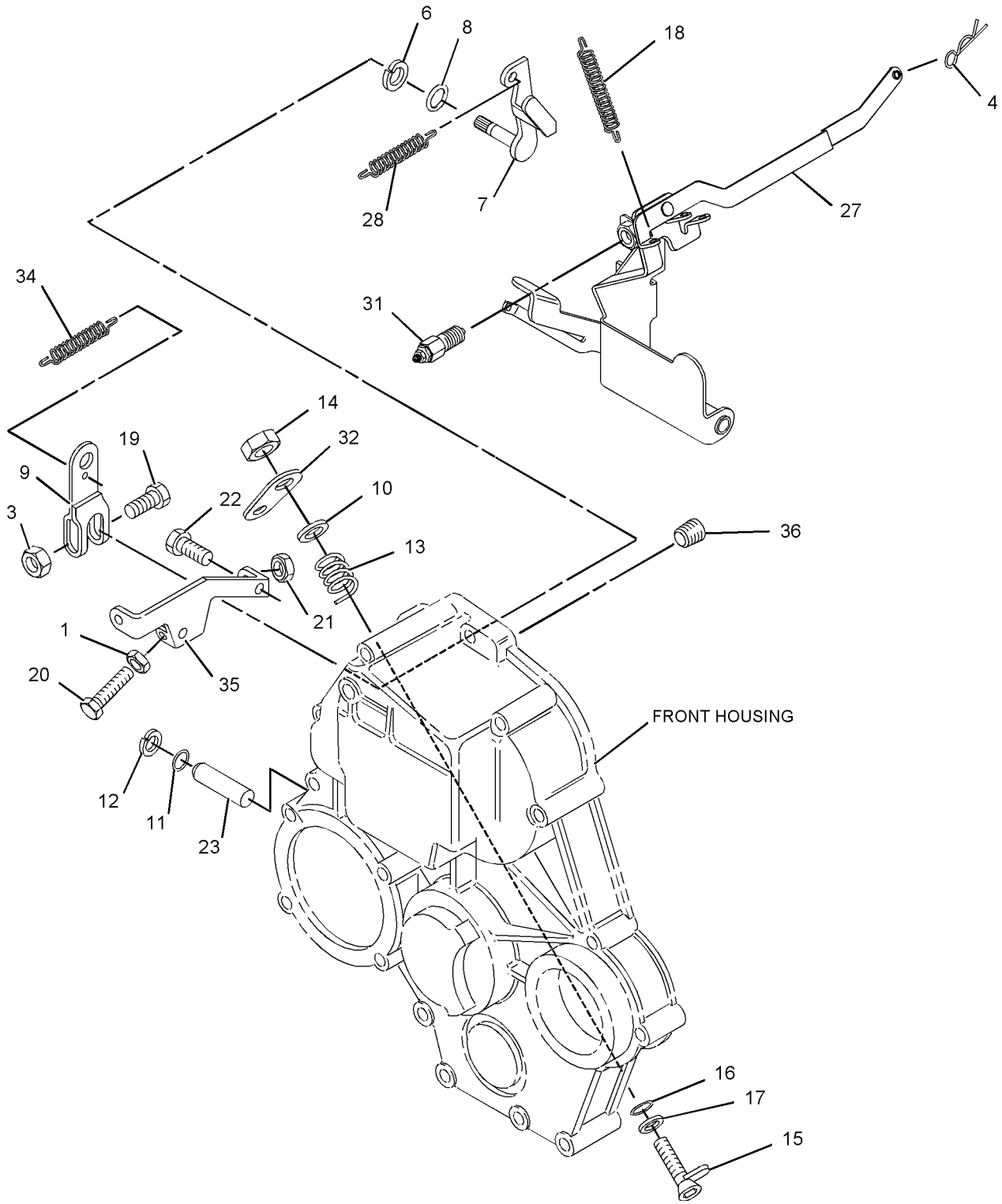

GRAPHIC #1 g01137658

246-3415 **GOVERNOR GP** *(contd.)* **i02360161**

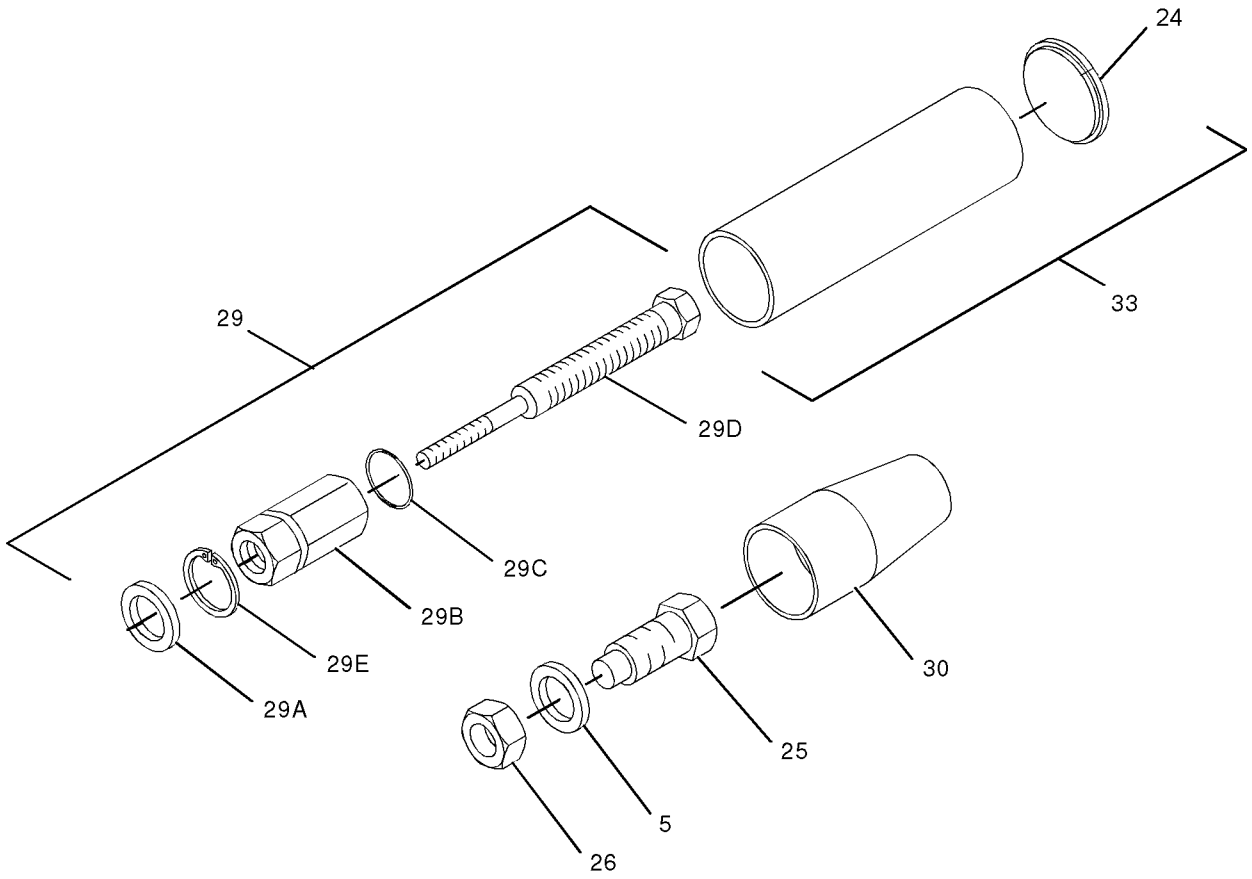

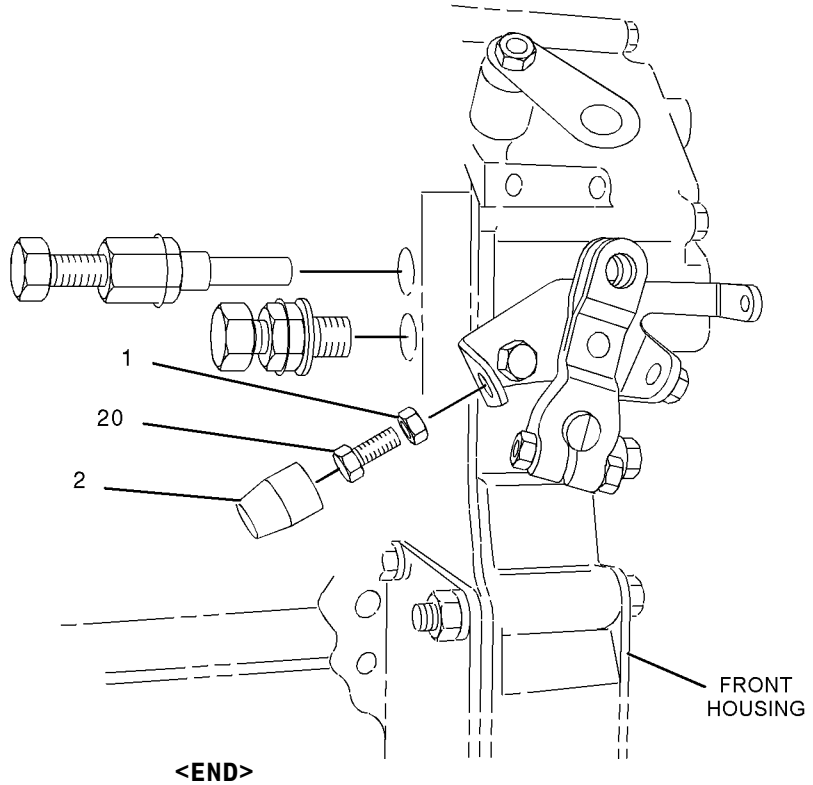

GRAPHIC #2 **<END>** g01040215

FUEL SYSTEM

218-0933 LINES GP-FUEL PRM & FILTER

S/N: SCH1-UP; BXM1-UP
PART OF 218-6610 CHASSIS AR

SMCS-1258, 1263, 1274 **i02280889**

NOTE	REF NO	GRAPHIC REF	PART NUMBER	QTY	PART NAME 1 2 3 4 5 6 (PRODUCT LEVEL)	SEE PAGE
	1	1	**1P-4278**	10	CLAMP-HOSE	
	2	1	**3E-7404**	1	CLAMP-HOSE	
	3	1	**5P-4961**	2	CLAMP-HOSE	
	4	1	**9X-2038**	2	WASHER (7X19X2-MM THK)	
	5	1	**033-7849**	2	PLUG	
	6	1	**252-0368**	1	GUARD AS	
		1	**6W-5698**	1	GROMMET	
		1	**142-8928**	1	ELBOW	
	7	1	**142-8828**	1	CAP AS-FILLER (FUEL)	
Y	8	1	*176-9954*	1	PUMP GP-FUEL PRM & PRIM FILTER	142
	9	1	**180-3007**	1	CLAMP-HOSE	
	10	1	**212-6627**	1	HOSE	
	11	1	**231-3041**	1	CONNECTOR	
	12	1	**246-2622**	2	ELBOW	
	13	1	**246-3336**	1	HOSE	
	14	1	**032-8100**	2	WASHER (0.531X0.718X0.064-IN THK)	
	15	1	**4D-6466**	1	CLIP	
M	16	1	**5C-9553**	2	BOLT (M6X1X16-MM)	
	17	1	**8F-8513**	1	CLIP	
	18	1	**8T-4121**	4	WASHER-HARD (11X21X2.5-MM THK)	
M	19	1	**8T-4133**	2	NUT (M10X1.5-THD)	
M	20	1	**8T-4196**	2	BOLT (M10X1.5X35-MM)	
E	21	1	**158-6067**		HOSE (110-CM)	
E	22	1	**5P-9770**		HOSE (45-CM)	
E	23	1	**5P-1442**		HOSE (134-CM)	
E	24	1	**8C-6959**		HOSE (22-CM)	

E-ORDER BY THE CENTIMETER
M-METRIC PART
Y-SEPARATE ILLUSTRATION

218-0933 **LINES GP-FUEL PRM & FILTER** *(contd.)* **i02280889**

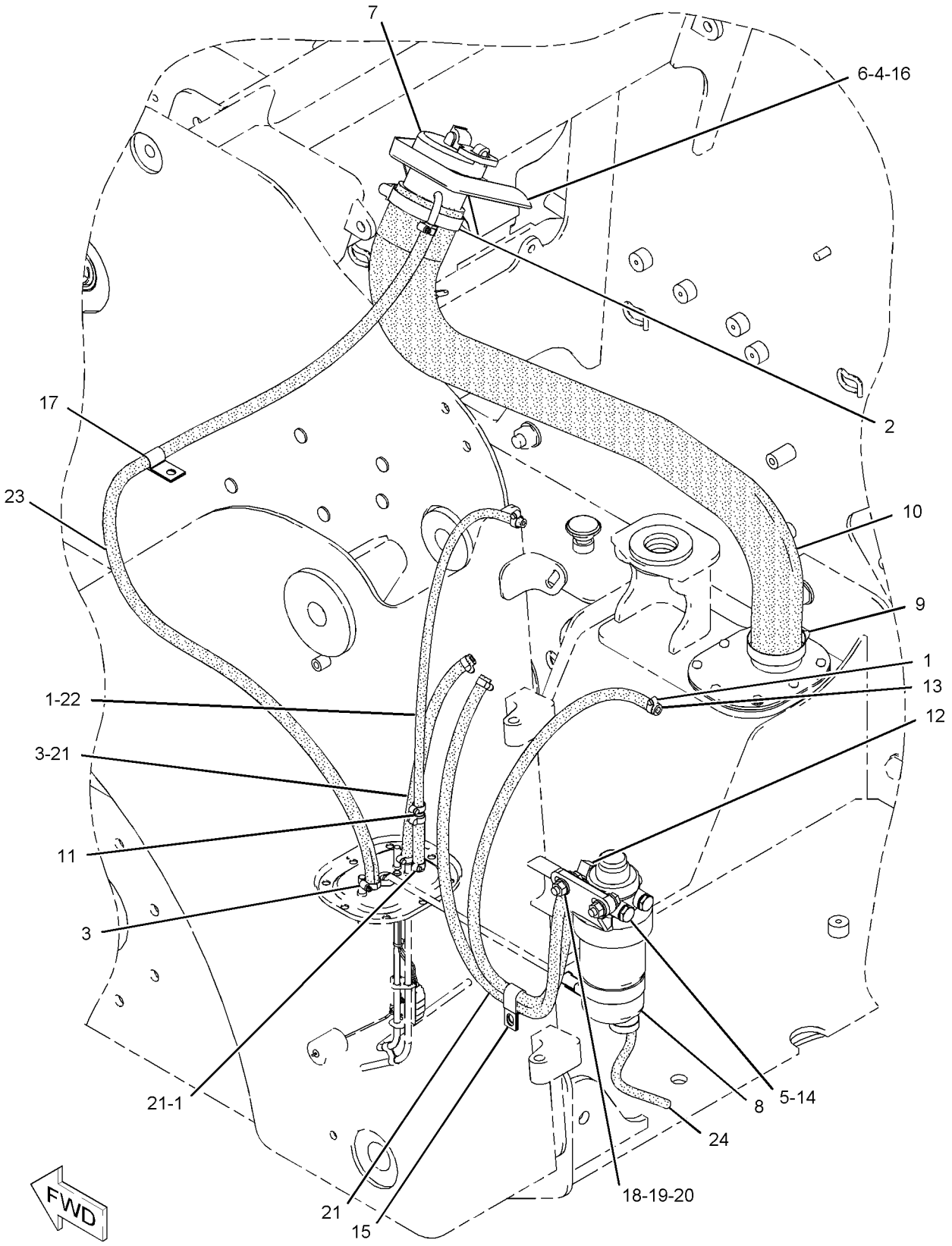

GRAPHIC #1 **<END>** g01037699

228-1781 LINES GP-FUEL PRM & FILTER

S/N: MJH1-UP; RLL1-UP

PART OF 218-5910 CHASSIS AR

SMCS-1258, 1263, 1274 **i02449886**

NOTE	REF NO	GRAPHIC REF	PART NUMBER	QTY	PART NAME 1 2 3 4 5 6 (PRODUCT LEVEL)	SEE PAGE
	1	1	**1P-4278**	9	CLAMP-HOSE	
	2	1	**3E-7404**	1	CLAMP-HOSE	
	3	1	**5P-4961**	2	CLAMP-HOSE	
	4	1	**9X-2038**	2	WASHER (7X19X2-MM THK)	
	5	1	**033-7849**	2	PLUG	
	6	1	**252-0368**	1	GUARD AS	
		1	**6W-5698**	1	GROMMET	
		1	**142-8928**	1	ELBOW	
	7	1	**142-8828**	1	CAP AS-FILLER (FUEL)	
Y	8	1	*176-9954*	1	PUMP GP-FUEL PRM & PRIM FILTER	142
	9	1	**180-3007**	1	CLAMP-HOSE	
	10	1	**218-6661**	1	HOSE	
	11	1	**231-3041**	1	CONNECTOR	
	12	1	**246-2622**	2	ELBOW	
	14	1	**032-8100**	2	WASHER (0.531X0.718X0.064-IN THK)	
	15	1	**4D-6466**	1	CLIP	
M	16	1	**5C-9553**	2	BOLT (M6X1X16-MM)	
	17	1	**8F-8513**	1	CLIP	
	18	1	**8T-4121**	5	WASHER-HARD (11X21X2.5-MM THK)	
M	19	1	**8T-4133**	2	NUT (M10X1.5-THD)	
M	20	1	**8T-4137**	1	BOLT (M10X1.5X20-MM)	
M	21	1	**8T-4196**	2	BOLT (M10X1.5X35-MM)	
E	22	1	**158-6067**		HOSE (8-CM)	
E	23	1	**5P-9770**		HOSE (45-CM)	
E	24	1	**5P-1442**		HOSE (125-CM)	
E	25	1	**8C-6959**		HOSE (22-CM)	
E	26	1	**158-6067**		HOSE (73-CM)	
E	27	1	**158-6067**		HOSE (29-CM)	

E-ORDER BY THE CENTIMETER
M-METRIC PART
Y-SEPARATE ILLUSTRATION

228-1781 **LINES GP-FUEL PRM & FILTER** *(contd.)* **i02449886**

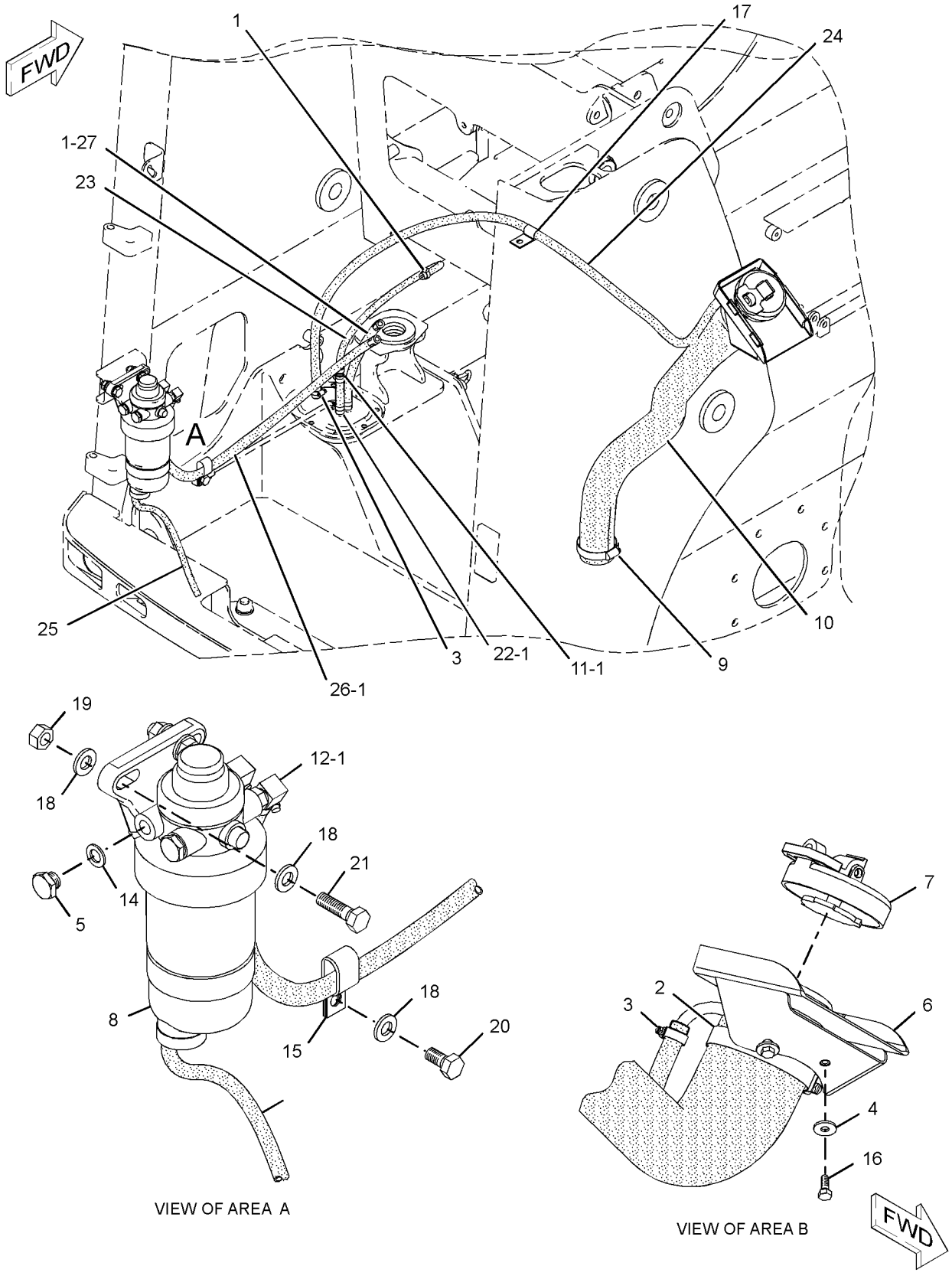

GRAPHIC #1 **<END>** g01229510

176-7711 PUMP & MTG GP-FUEL TRANSFER

S/N: GGA1-UP; CSD1-UP
PART OF 179-1808, 233-6648 ENGINE AR-PRIMARY
ALSO AN ATTACHMENT

SMCS-1256 **i02013850**

NOTE	REF NO	GRAPHIC REF	PART NUMBER	QTY	PART NAME 1 2 3 4 5 6 (PRODUCT LEVEL)	SEE PAGE
	1	1	**153-6873**	2	BOLT	
	2	1	**176-7712**	1	PUMP GP-FUEL TRANSFER	
	3	1	**176-7719**	1	SEAL-O-RING	

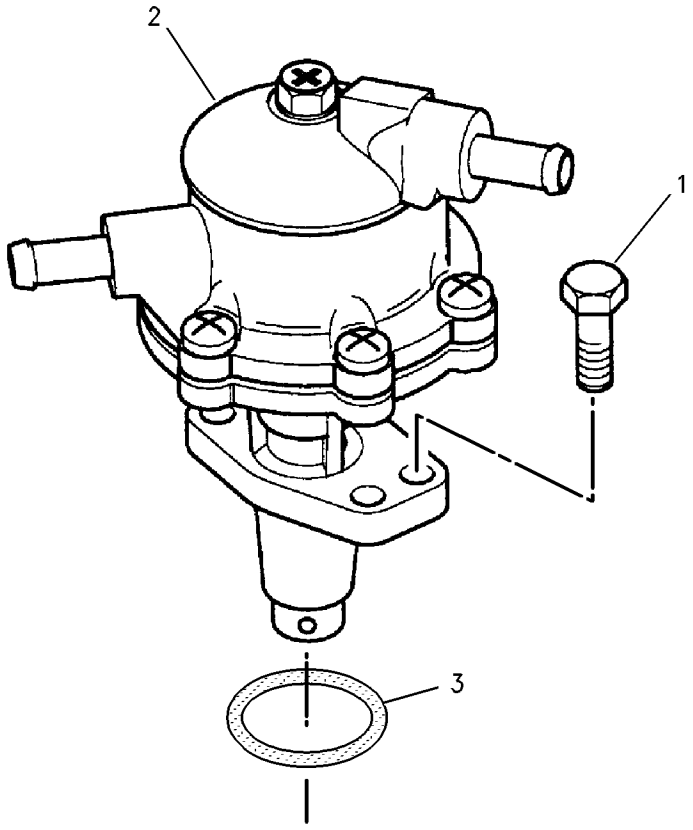

GRAPHIC #1 **<END>** g00758159

FUEL SYSTEM

217-2764 PUMP GP-FUEL INJECTION

S/N: GGA1-UP; CSD1-5203
PART OF 179-1808, 233-6648 ENGINE AR-PRIMARY
ALSO AN ATTACHMENT

SMCS-1251, 1290, 5479 **i02308211**

NOTE	REF NO	GRAPHIC REF	PART NUMBER	QTY	PART NAME 1 2 3 4 5 6 (PRODUCT LEVEL)	SEE PAGE
	1	1	**153-5592**	3	NUT	
	2	1	**153-5960**	3	NUT	
	3	1	**153-6393**	6	DAMPER	
	4	2	**153-6412**	1	WASHER	
	5	1	**154-2713**	3	BOLT	
	6	2	**154-2715**	2	WASHER	
	7	2	**154-2716**	4	SEAL	
B	8	1	**154-3017**	1	SHIM (0.2-MM THK)	
B		1	**160-3555**	1	SHIM (0.3-MM THK)	
B		1	**160-3556**	1	SHIM (0.4-MM THK)	
B		1	**160-3557**	1	SHIM (0.5-MM THK)	
B		1	**160-3558**	1	SHIM (0.5-MM THK)	
	9	2	**154-3018**	4	INJECTOR AS-FUEL	
					(EACH INCLUDES)	
	11	2	**205-4731**	1	NUT	
	12	2	**202-1196**	1	WASHER-SPECIAL	
	13	1	**183-3353**	3	BOLT	
	14	2	**190-3803**	1	BOLT	
	15	1	**217-2754**	1	PUMP GP-FUEL INJECTION	
	16	1	**205-4726**	1	BOLT	
	17	1	**205-4727**	1	WASHER	
	18	1	**205-4728**	1	CONNECTOR	
	19	1	**217-2760**	1	TUBE AS (CYL NO. 1)	
	20	1	**217-2761**	1	TUBE AS (CYL NO. 2)	
	21	1	**217-2762**	1	TUBE AS (CYL NO. 3)	
	22	1	**217-2763**	1	TUBE AS (CYL NO. 4)	
	23	2	**217-5204**	1	SOLENOID (FUEL SHUTOFF)	
	24	2	**225-4123**	1	LINE-LEAK OFF	

B-USE AS REQUIRED

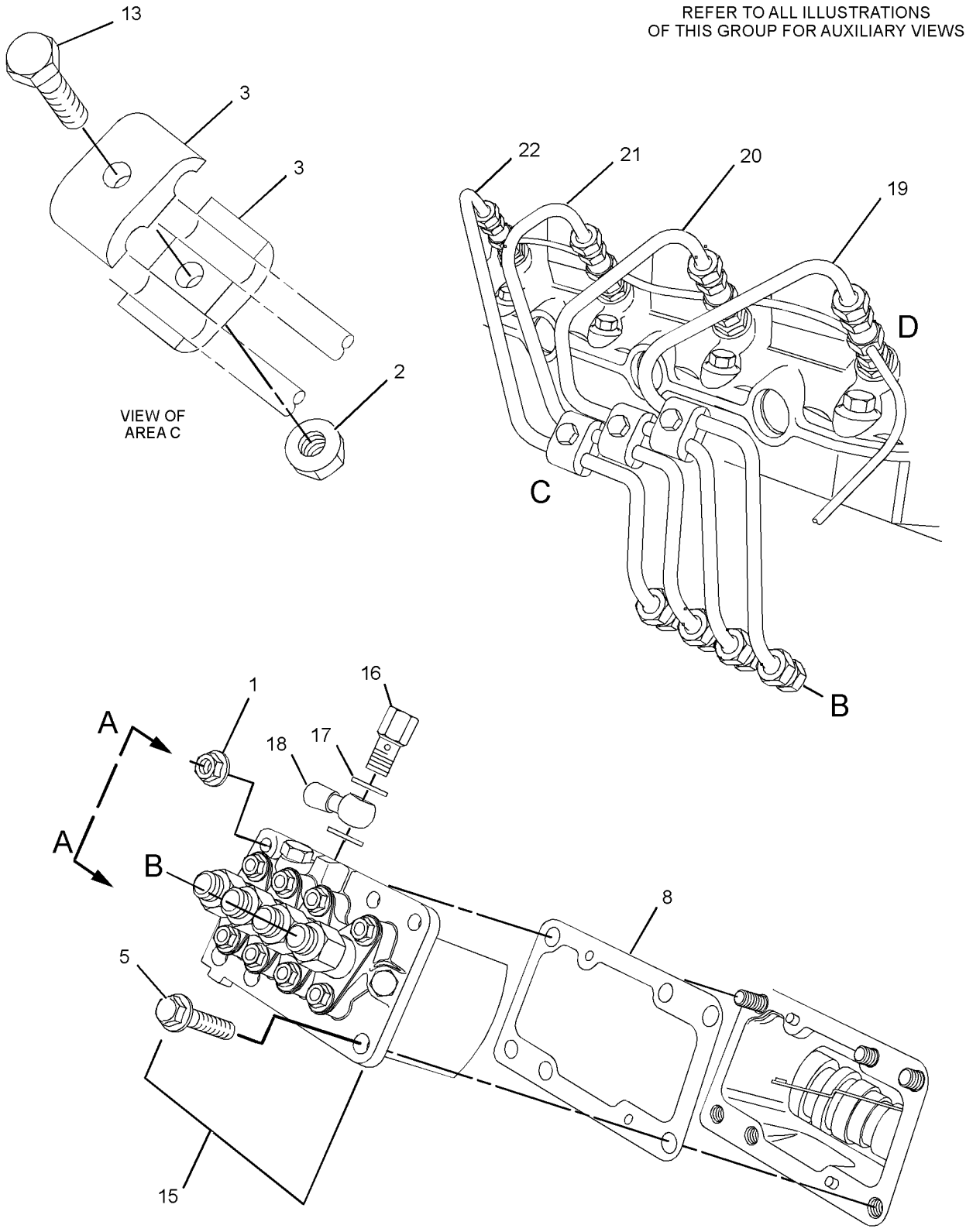

GRAPHIC #1

g01228800

217-2764 **PUMP GP-FUEL INJECTION** *(contd.)* **i02308211**

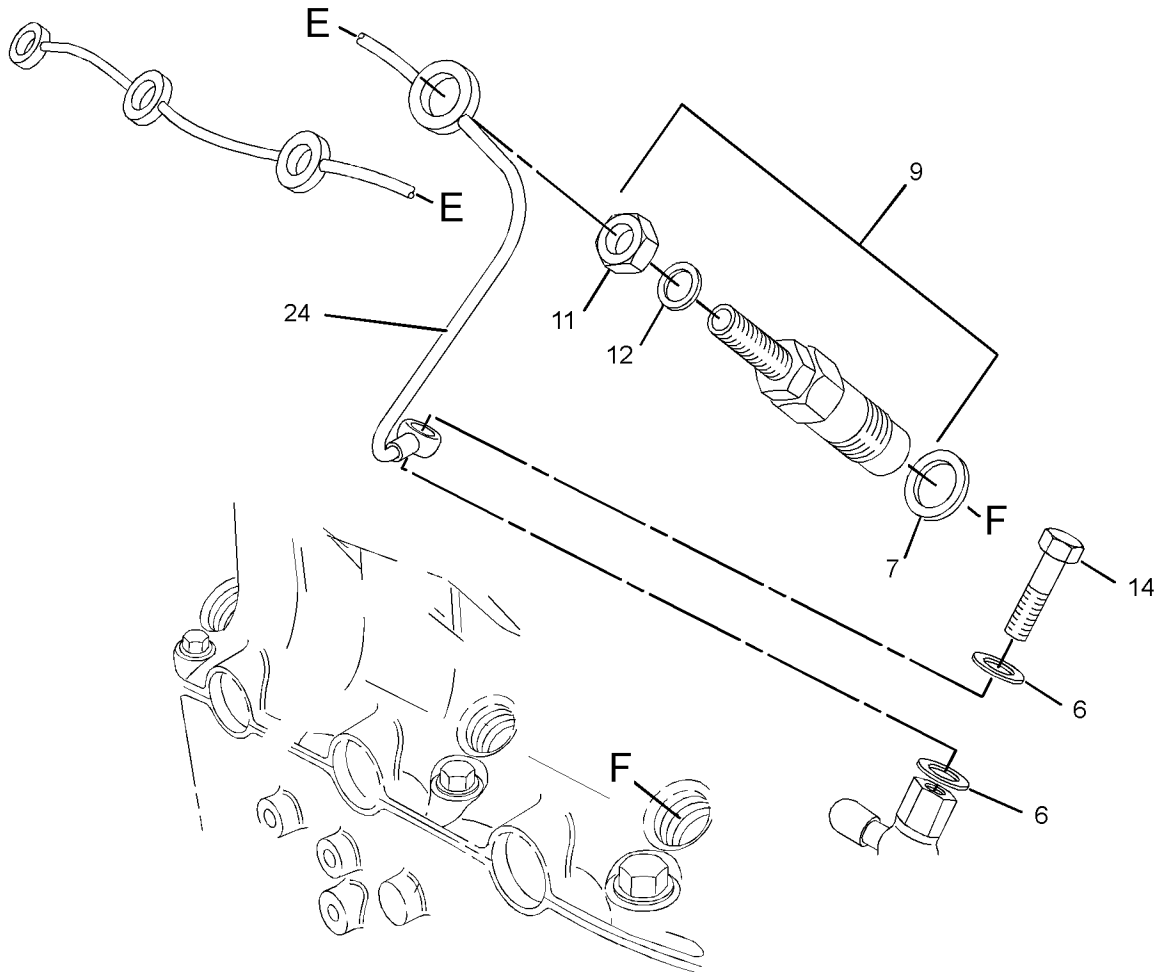

VIEW OF AREA D

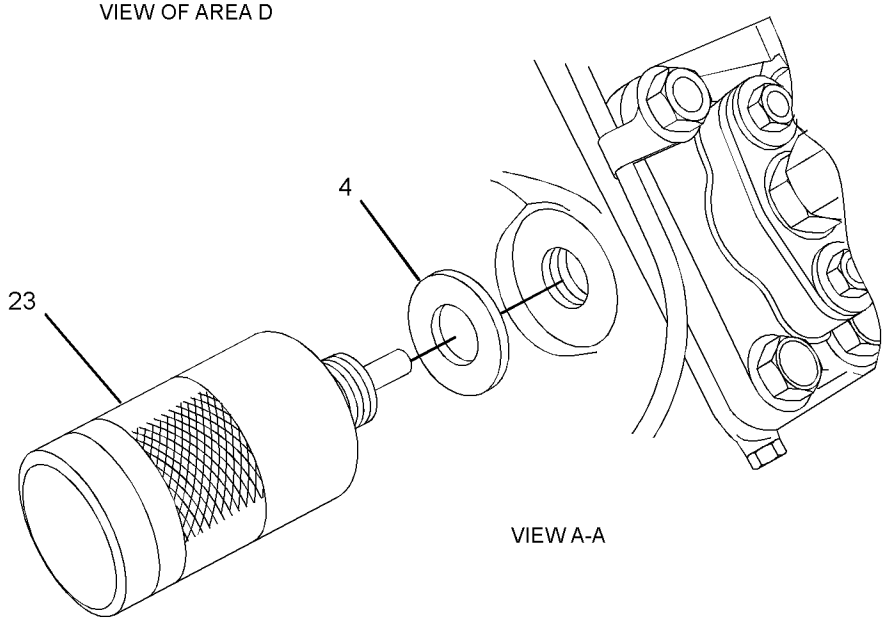

VIEW A-A

GRAPHIC #2 **<END>** g01228798

271-2120 PUMP GP-FUEL INJECTION

S/N: GGA5204-UP; CSD9554-UP
PART OF 179-1808, 233-6648 ENGINE AR-PRIMARY
ALSO AN ATTACHMENT

SMCS-1251, 1290, 5479 **i02409179**

NOTE	REF NO	GRAPHIC REF	PART NUMBER	QTY	PART NAME 1 2 3 4 5 6 (PRODUCT LEVEL)	SEE PAGE
	1	1	**153-5592**	3	NUT	
	2	1	**153-5960**	3	NUT	
	3	1	**153-6393**	6	DAMPER	
	4	1	**153-6412**	1	WASHER	
	5	1	**154-2713**	2	BOLT	
B	6	1	**154-3017**	1	SHIM (0.2-MM THK)	
B		1	**160-3555**	1	SHIM (0.3-MM THK)	
B		1	**160-3556**	1	SHIM (0.4-MM THK)	
B		1	**160-3557**	1	SHIM (0.5-MM THK)	
B		1	**160-3558**	1	SHIM (0.5-MM THK)	
	7	1	**163-5372**	1	WASHER	
	8	1	**183-3353**	3	BOLT	
	9	1	**217-2754**	1	PUMP GP-FUEL INJECTION	
	9A	1	**205-4726**	1	BOLT	
	9B	1	**205-4727**	1	WASHER	
	9C	1	**205-4728**	1	CONNECTOR	
	10	1	**217-2760**	1	TUBE AS (CYL NO. 1)	
	11	1	**217-2761**	1	TUBE AS (CYL NO. 2)	
	12	1	**217-2762**	1	TUBE AS (CYL NO. 3)	
	13	1	**217-2763**	1	TUBE AS (CYL NO. 4)	
	14	1	**238-6914**	1	BOLT (M8X1.25X20-MM)	
	15	1	**271-2117**	1	SOLENOID (FUEL SHUTOFF)	

B-USE AS REQUIRED

271-2120 **PUMP GP-FUEL INJECTION** *(contd.)* **i02409179**

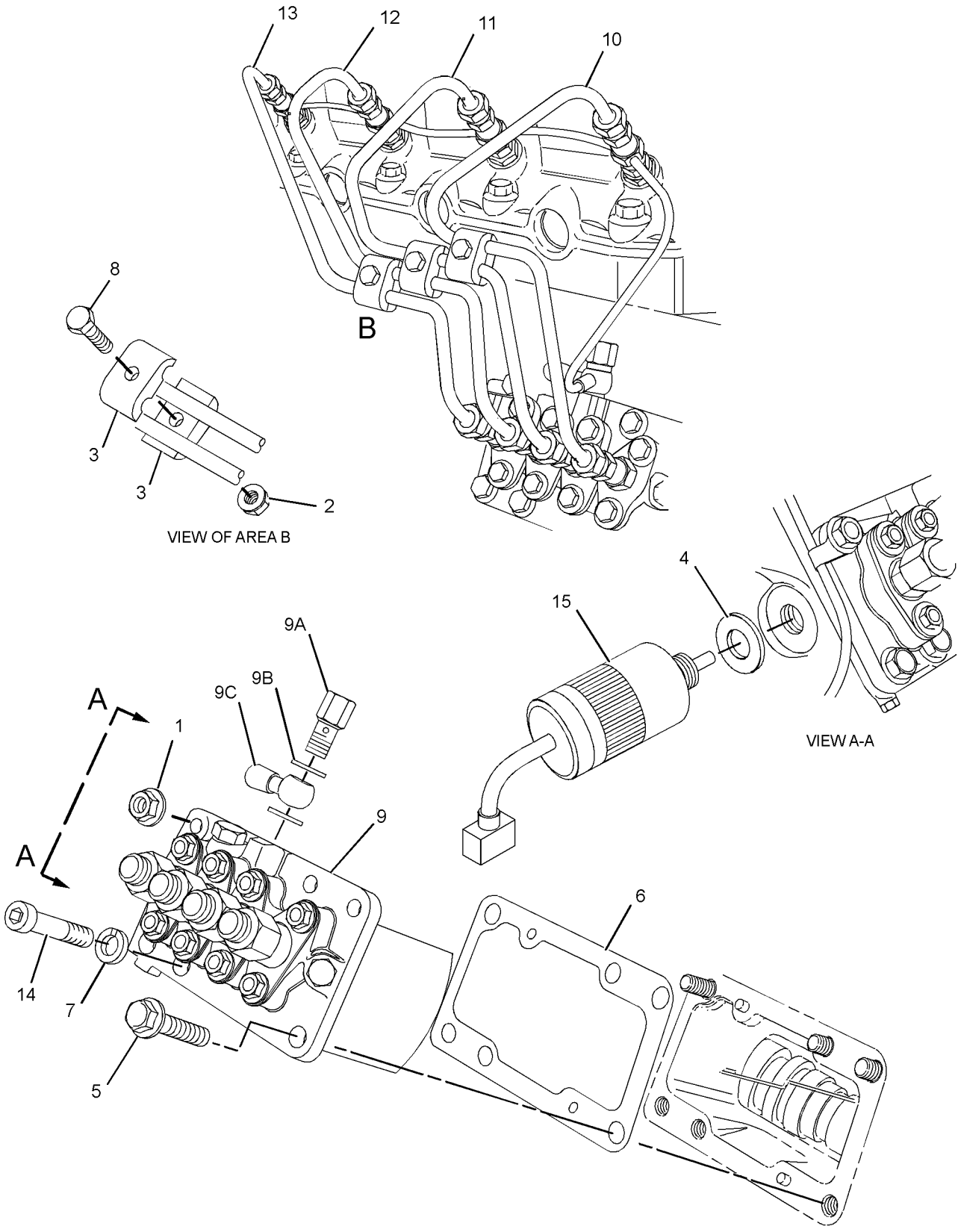

GRAPHIC #1 **<END>** g01198930

176-9954 PUMP GP-FUEL PRM & PRIM FILTER

S/N: MJH1-UP; SCH1-UP; RLL1-UP; BXM1-UP

PART OF 218-0933, 228-1781 LINES GP-FUEL PRM & FILTER

SMCS-1258, 1261, 1263 **i01757278**

NOTE	PART NUMBER	QTY	PART NAME 1 2 3 4 5 6 (PRODUCT LEVEL)	SEE PAGE
Y	**144-9962**	1	FILTER GP-WATER SEP & FUEL	125
	129-6259	1	PUMP GP-FUEL PRIMING	
	129-6262	1	BLADDER	

Y-SEPARATE ILLUSTRATION

<END>

246-4319 ALTERNATOR GP-CHARGING

S/N: GGA1-UP; CSD1-UP
PART OF 233-6648 ENGINE AR-PRIMARY
AN ATTACHMENT

SMCS-1405 **i02208680**

NOTE	REF NO	GRAPHIC REF	PART NUMBER	QTY	PART NAME 1 2 3 4 5 6 (PRODUCT LEVEL)	SEE PAGE
	1	1	**100-8451**	1	BOLT	
	2	1	**180-8579**	1	NUT	
	3	1	**155-7984**	2	WASHER	
	4	1	**165-2141**	3	BOLT	
	5	1	**168-8999**	1	LEVER-ADJUSTING	
	6	1	**168-9001**	2	BOLT	
	7	1	**168-9002**	1	WASHER	
	8	1	**225-3143**	1	ALTERNATOR GP-CHARGING	
	9	1	**225-7955**	1	CABLE AS-BATTERY (NEGATIVE)	
		1	**225-7956**	1	TERMINAL-CABLE	
	9A	1	**3S-6050**	1	TERMINAL AS-BATTERY (NEGATIVE)	
		1	**1M-6119**	1	BOLT (5/16-18X1.375-IN)	
		1	**1M-6120**	1	NUT (5/16-18-THD)	
		1	**7N-5274**	1	COVER-TERMINAL (BLACK)	
		1	**8L-8413**	1	STRAP-CABLE	
	9B	1	**5P-0747**		CABLE (OO-GA, BLACK) (48CM)	
	10	1	**246-3198**	1	PULLEY-ALTERNATOR	
	11	1	**246-4267**	1	BRACKET	
	12	1	**246-4318**	5	CLIP	
	13	1	**163-5372**	1	WASHER	

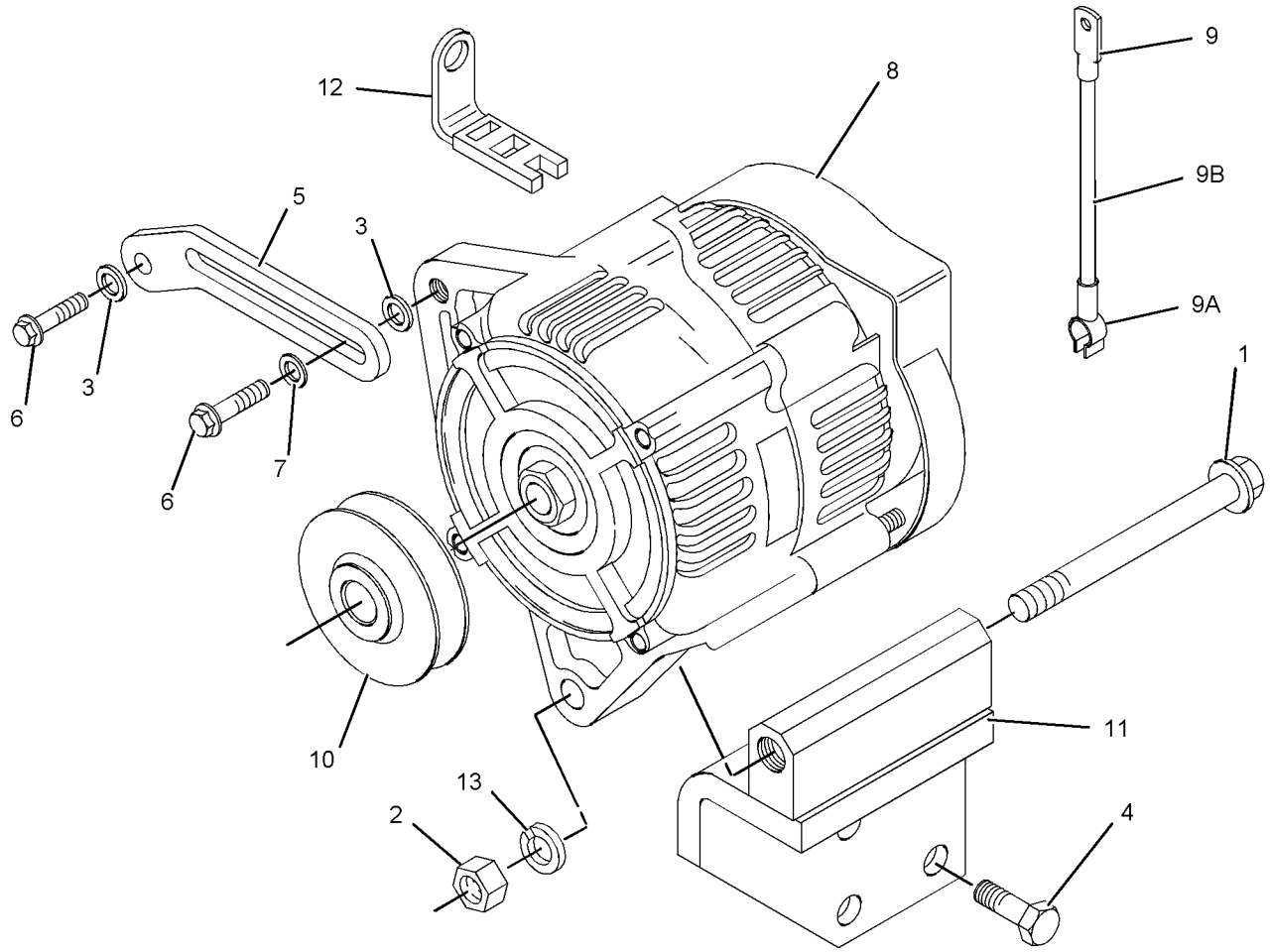

GRAPHIC #1 **<END>** g01116785

ELECTRICAL AND STARTING SYSTEM

247-9912 ALTERNATOR GP-CHARGING

S/N: CSD1-UP

PART OF 179-1808 ENGINE AR-PRIMARY

SMCS-1405 **i02086745**

NOTE	REF NO	GRAPHIC REF	PART NUMBER	QTY	PART NAME 1 2 3 4 5 6 (PRODUCT LEVEL)	SEE PAGE
	1	1	**100-8451**	1	BOLT	
	2	1	**180-8579**	1	NUT	
	3	1	**153-6375**	5	BOLT	
	4	1	**155-7984**	2	WASHER	
	5	1	**165-2141**	3	BOLT	
	6	1	**168-8999**	1	LEVER-ADJUSTING	
	7	1	**168-9001**	2	BOLT	
	8	1	**168-9002**	1	WASHER	
	9	1	**225-3143**	1	ALTERNATOR GP-CHARGING	
	10	1	**225-7955**	1	CABLE AS-BATTERY (NEGATIVE)	
		1	**225-7956**	1	TERMINAL-CABLE	
E	10A	1	**5P-0747**		CABLE (00-GA, BLACK) (48CM)	
	10B	1	**3S-6050**	1	TERMINAL AS-BATTERY (NEGATIVE)	
		1	**1M-6119**	1	BOLT (5/16-18X1.375-IN)	
		1	**1M-6120**	1	NUT (5/16-18-THD)	
		1	**7N-5274**	1	COVER-TERMINAL (BLACK)	
		1	**8L-8413**	1	STRAP-CABLE	
	11	1	**246-3198**	1	PULLEY-ALTERNATOR	
	12	1	**246-4267**	1	BRACKET	
	13	1	**246-4318**	5	CLIP	
	14	1	**163-5372**	1	WASHER	

E-ORDER BY THE CENTIMETER

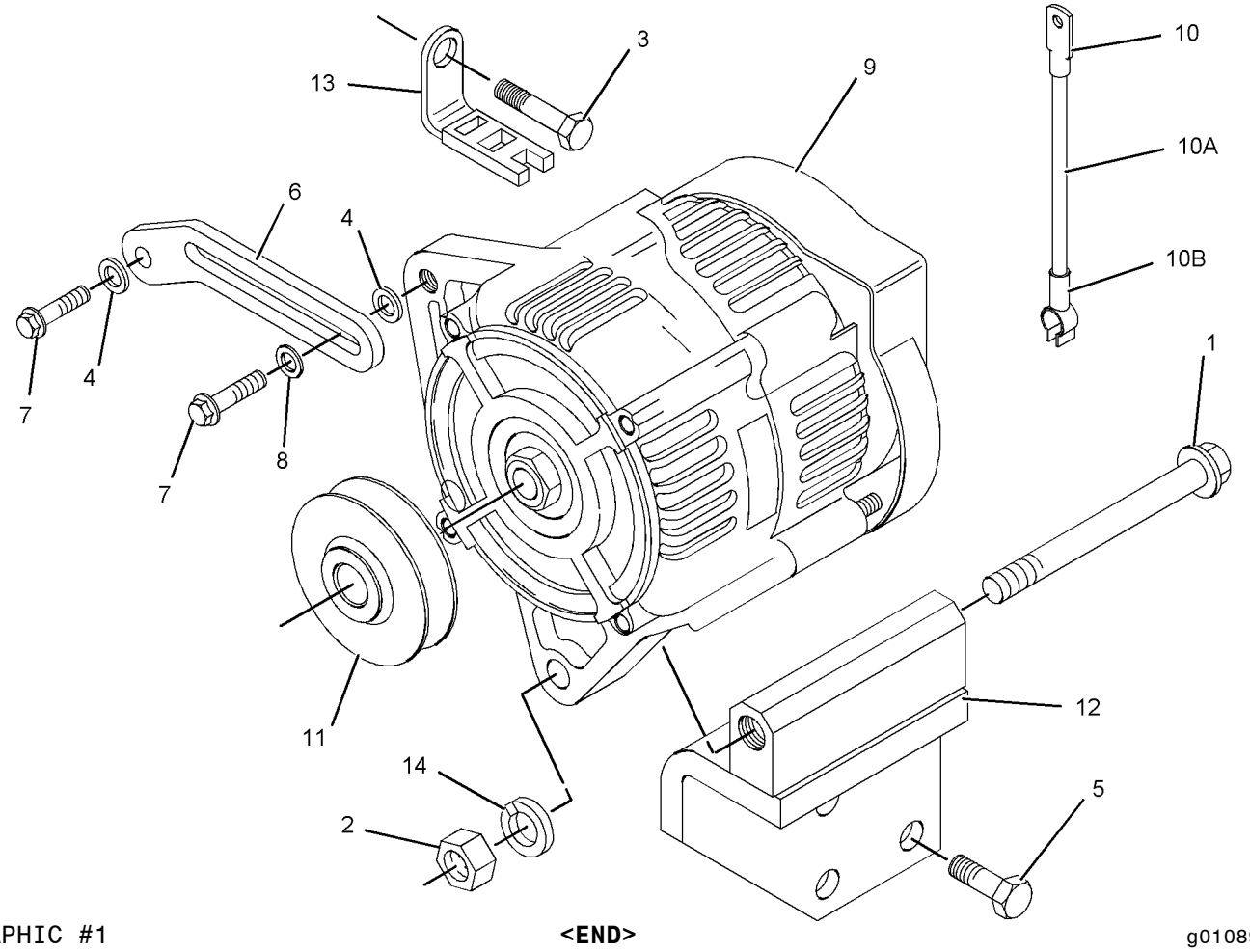

GRAPHIC #1 **<END>** g01089472

225-7950 BATTERY GP–STANDARD

S/N: MJH1-UP; SCH1-UP; RLL1-UP; BXM1-UP
AN ATTACHMENT

SMCS-1401 **i02014204**

NOTE	REF NO	GRAPHIC REF	PART NUMBER	QTY	PART NAME 1 2 3 4 5 6 (PRODUCT LEVEL)	SEE PAGE
	1	1	**153-5656**	1	BATTERY (12 VOLT, STANDARD)	
	2	1	**193-8329**	1	CLAMP	
	3	1	**5P-4116**	2	WASHER-HARD (8.8X20.5X2-MM THK)	
M	4	1	**8T-4189**	1	BOLT (M8X1.25X20-MM)	
M	5	1	**8T-6912**	1	BOLT (M8X1.25X50-MM)	

M-METRIC PART

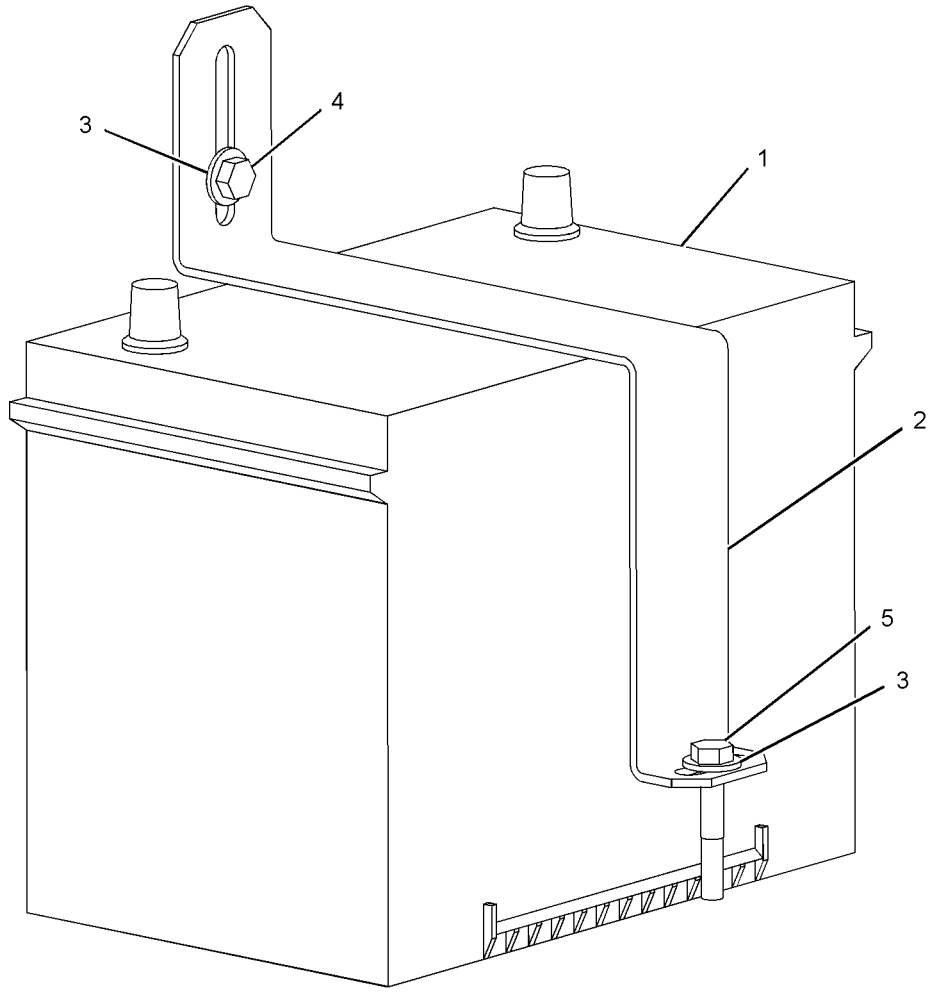

GRAPHIC #1 **<END>** g01010454

225-7952 BATTERY GP–HEAVY DUTY

S/N: MJH1-UP; SCH1-UP; RLL1-UP; BXM1-UP

AN ATTACHMENT

SMCS-1401 **i02014205**

NOTE	REF NO	GRAPHIC REF	PART NUMBER	QTY	PART NAME 1 2 3 4 5 6 (PRODUCT LEVEL)	SEE PAGE
	1	1	**193-8329**	1	CLAMP	
	2	1	**230-6368**	1	BATTERY (12-VOLT, MAINTENANCE FREE)	
	3	1	**5P-4116**	2	WASHER-HARD (8.8X20.5X2-MM THK)	
M	4	1	**8T-4189**	2	BOLT (M8X1.25X20-MM)	

M-METRIC PART

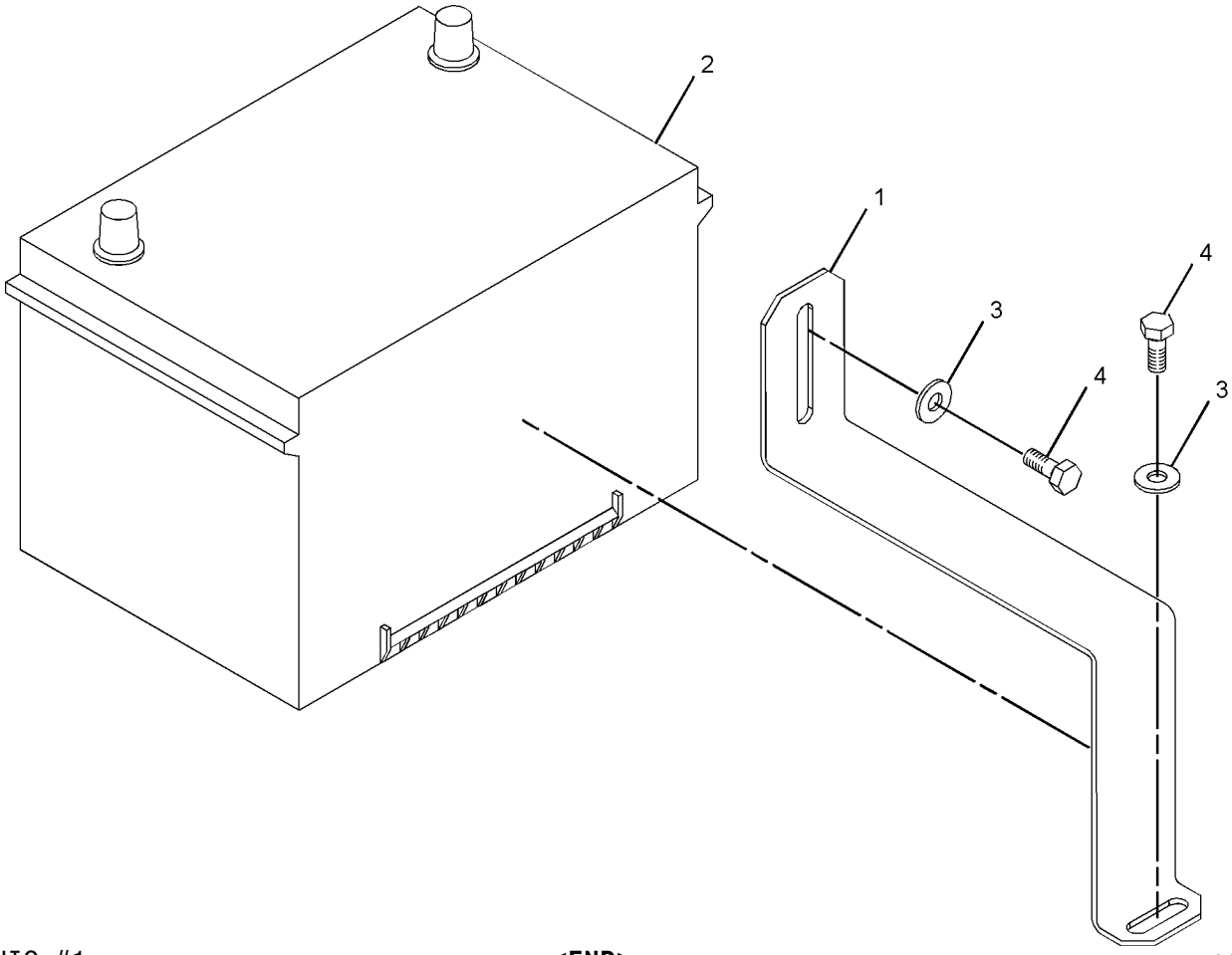

GRAPHIC #1 **<END>** g01015484

217-2778 CONNECTION GP-ELECTRICAL

S/N: GGA1-UP; CSD1-UP
PART OF 179-1808, 233-6648 ENGINE AR-PRIMARY
ALSO AN ATTACHMENT

SMCS-1408, 4459 **i01649071**

NOTE	REF NO	GRAPHIC REF	PART NUMBER	QTY	PART NAME 1 2 3 4 5 6 (PRODUCT LEVEL)	SEE PAGE
	1	1	**183-4037**	1	CONNECTOR AS	
	2	1	**200-5976**	1	CONNECTION	

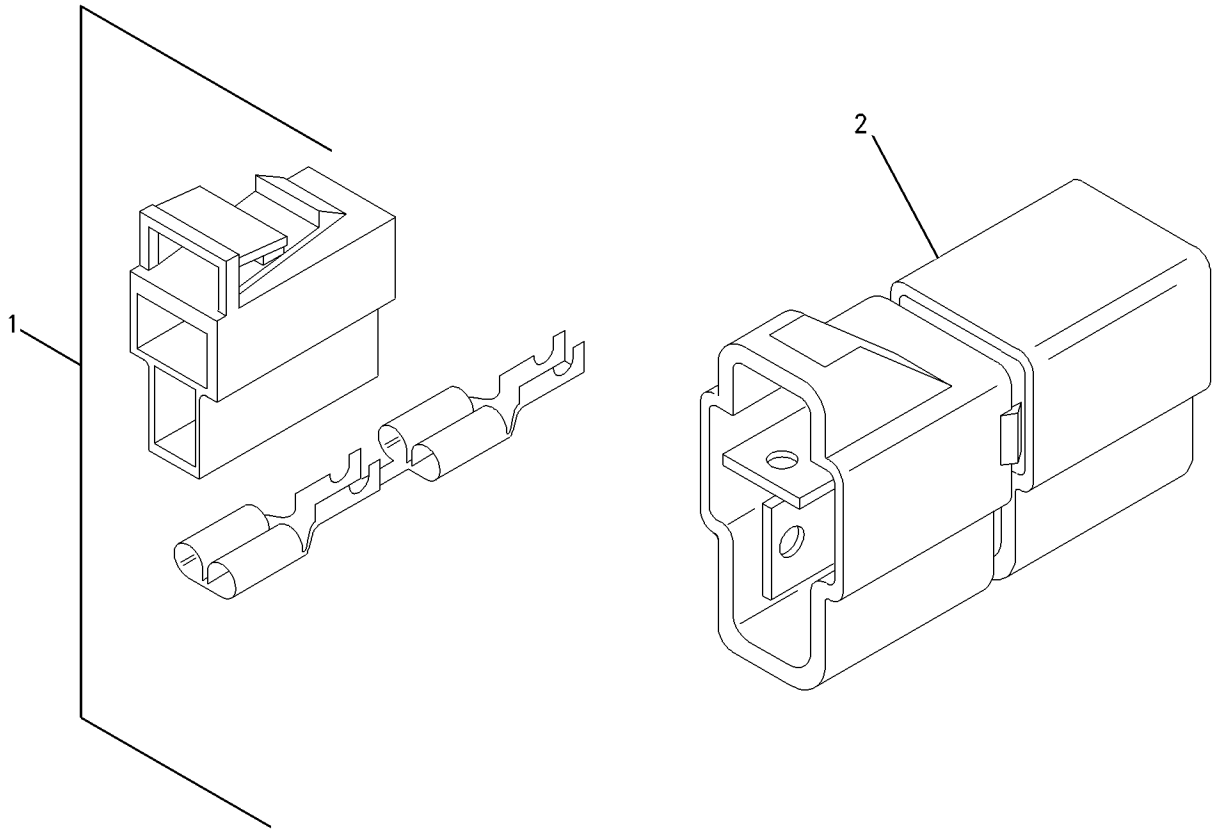

GRAPHIC #1 **<END>** g00852746

217-5884 CONNECTION GP-ELECTRICAL

S/N: GGA1-4056; CSD1-9553
PART OF 179-1808, 233-6648 ENGINE AR-PRIMARY
ALSO AN ATTACHMENT

SMCS-1408, 4459 **i02135600**

NOTE	REF NO	GRAPHIC REF	PART NUMBER	QTY	PART NAME 1 2 3 4 5 6 (PRODUCT LEVEL)	SEE PAGE
	1	1	**193-0161**	3	CABLE AS-ADAPTER	

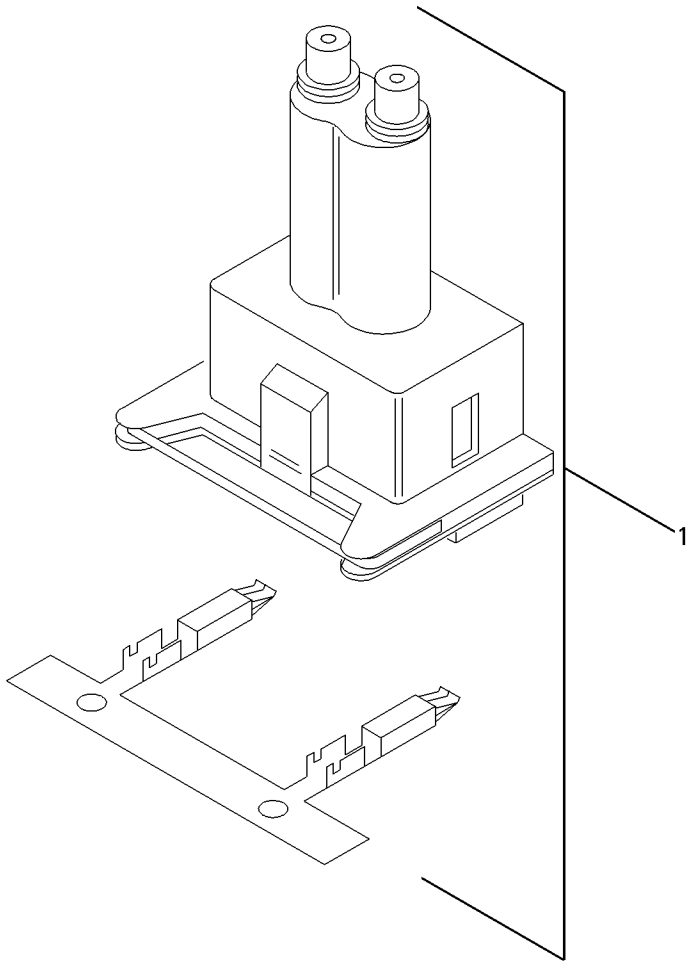

GRAPHIC #1 **<END>** g00852753

ELECTRICAL AND STARTING SYSTEM

272-9497 CONNECTION GP-ELECTRICAL

S/N: GGA5204-UP; CSD9554-UP
PART OF 179-1808, 233-6648 ENGINE AR-PRIMARY
ALSO AN ATTACHMENT

SMCS-1408, 4459 **i02357633**

NOTE	PART NUMBER	QTY	PART NAME 1 2 3 4 5 6 (PRODUCT LEVEL)	SEE PAGE
	272-9496	3	CONNECTOR	

<END>

154-4233 CONTROL GP-INTERLOCK

S/N: MJH1-UP; SCH1-UP; RLL1-UP; BXM1-UP
PART OF 225-8001 WIRING GP-CHASSIS

SMCS-7630 **i01698898**

NOTE	REF NO	GRAPHIC REF	PART NUMBER	QTY	PART NAME 1 2 3 4 5 6 (PRODUCT LEVEL)	SEE PAGE
	1	1	**7X-6315**	1	STRAP AS-GROUND	
	2	1	**184-2472**	1	SCREW-PAN HEAD (NO 8-32X9.52-MM)	
	3	1	**134-4126**	1	WASHER (4.52X8.28X0.76-MM THK)	

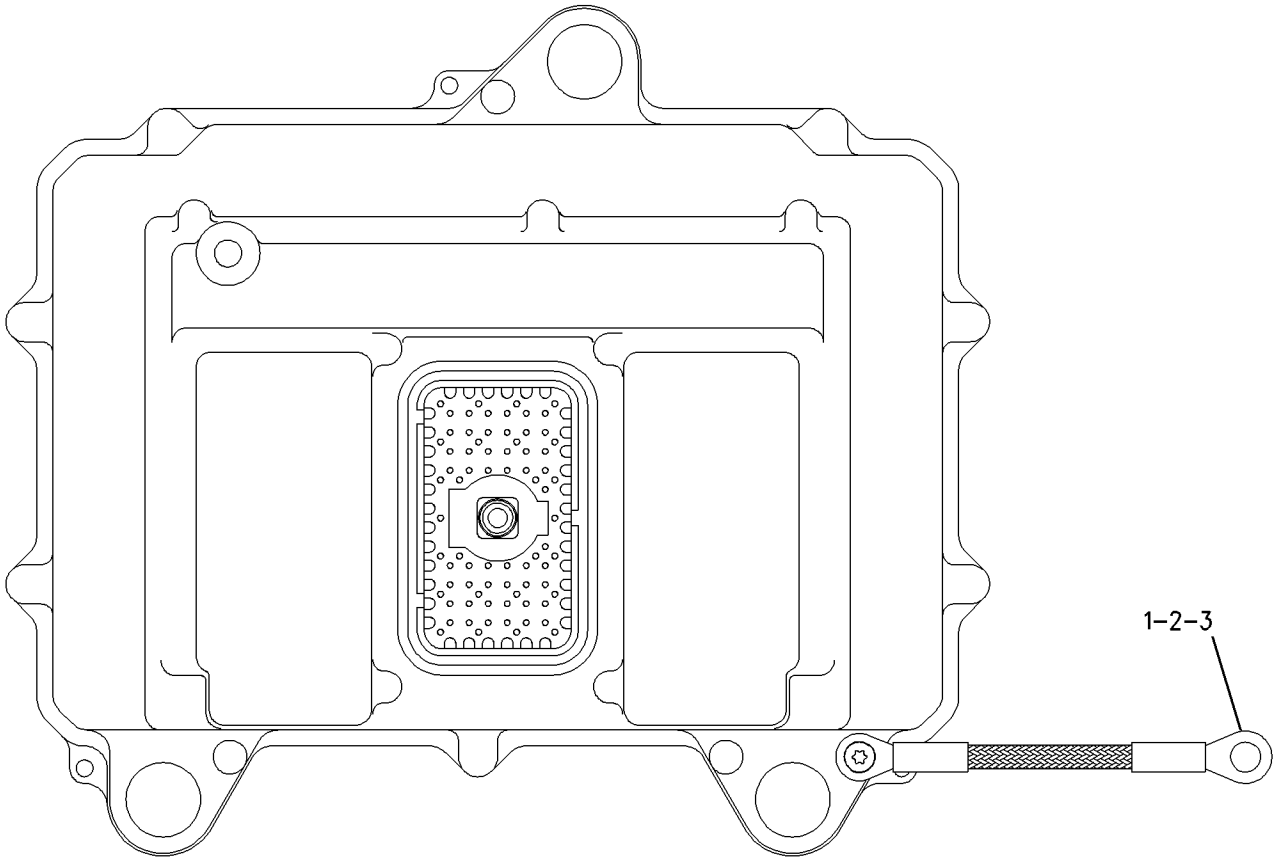

GRAPHIC #1 **<END>** g00843169

233-5670 CONVERSION AR-NON-ROADING

S/N: MJH1-UP; SCH1-UP; RLL1-UP; BXM1-UP

NACD

AN ATTACHMENT

SMCS-7000 **i02009667**

NOTE	PART NUMBER	QTY	PART NAME 1 2 3 4 5 6 (PRODUCT LEVEL)	SEE PAGE
Y	*142-8652*	1	LIGHTING GP-STOP & TAIL	177
Y	*218-5790*	1	PANEL AR-INSTRUMENT	727

Y-SEPARATE ILLUSTRATION

<END>

216-4755 COVER GP-FUSE PANEL

S/N: MJH1-UP; SCH1-UP; RLL1-UP; BXM1-UP
PART OF 225-8001 WIRING GP-CHASSIS

SMCS-1417 **i02262603**

NOTE	REF NO	GRAPHIC REF	PART NUMBER	QTY	PART NAME 1 2 3 4 5 6 (PRODUCT LEVEL)	SEE PAGE
	1	1	**116-7471**	1	PULLER-MINIFUSE	
	2	1	**164-3765**	2	RETAINER	
	3	1	**216-4714**	1	FILM-FUSE/RELAY	
	4	1	**225-5193**	1	COVER AS	
M	5	1	**232-6692**	2	SCREW (M6X1X20-MM)	
E	6	1	**103-2543**		SEAL (3-CM)	
D	7	1	**8T-5372**		SEAL (.9-M)	

D-ORDER BY THE METER
E-ORDER BY THE CENTIMETER
M-METRIC PART

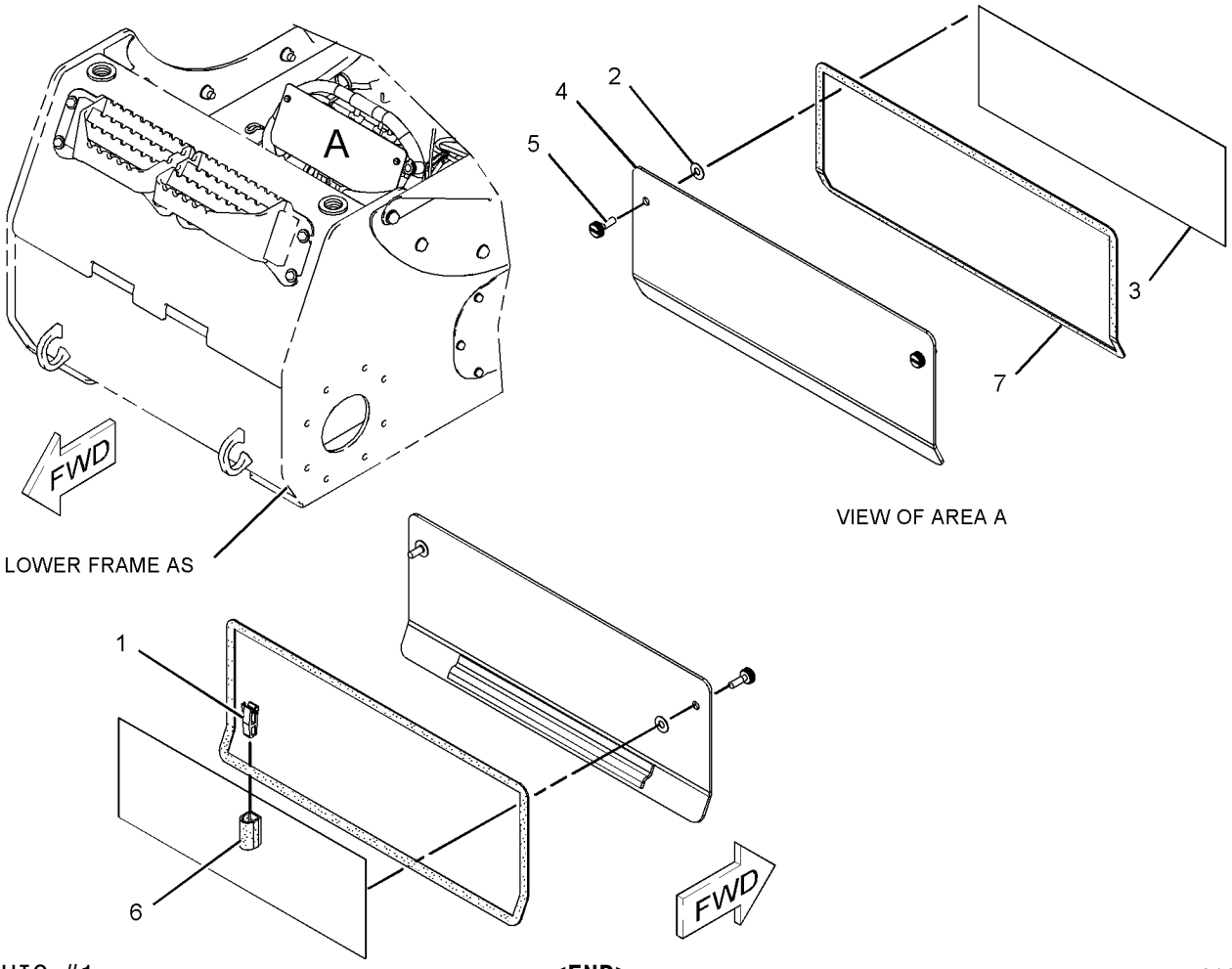

GRAPHIC #1 **<END>** g01056852

225-8000 ELECTRONICS GP-IMPLEMENT

S/N: MJH1-UP; SCH1-UP; RLL1-UP; BXM1-UP
PART OF 225-8001 WIRING GP-CHASSIS

SMCS-7610, 7620 **i02118948**

NOTE	PART NUMBER	QTY	PART NAME 1 2 3 4 5 6 (PRODUCT LEVEL)	SEE PAGE
	216-0658	1	CONTROL GP-UNPROGRAMMED	
	7X-6315	1	STRAP AS-GROUND	
	120-4897	1	SCREW-PAN HEAD (NO 8-32X9.52)	
	134-4126	1	WASHER (4.52X8.28X0.76-MM THK)	
	254-9215	1	SOFTWARE GP-WORK TOOL	
			—OR—	
	254-9216	1	SERVICE GP-IMPLEMENT (WORK TOOL)	
			(OPTIONAL SERVICE REPLACEMENT)	
			(INCLUDES CONTROL GP, SOFTWARE GP)	

<END>

216-4750 FASTENER GP-WIRING HARNESS

S/N: MJH1-UP; SCH1-UP; RLL1-UP; BXM1-UP
PART OF 218-6350 CAB AR-ENCLOSED ROPS

SMCS-1408 **i01938577**

NOTE	REF NO	GRAPHIC REF	PART NUMBER	QTY	PART NAME 1 2 3 4 5 6 (PRODUCT LEVEL)	SEE PAGE
	1	1	**4B-4863**	2	WASHER (4.7X11X1.2-MM THK)	
	2	1	**7G-1060**	1	STRAP AS-GROUND	
	3	1	**9R-7941**	1	SOCKET AS	
		1	**9R-7980**	1	COVER	
M	4	1	**111-4627**	4	SCREW-MACHINE (M6X1X30-MM)	
	5	1	**195-0936**	4	INSERT-THREADED (M6X1)	
	6	1	**3S-2093**	6	STRAP-CABLE	
M	7	1	**5C-8312**	2	NUT (M4X0.7-THD)	
	8	1	**7G-7053**	1	GROMMET	
	9	1	**8T-4121**	2	WASHER-HARD (11X21X2.5-MM THK)	
M	10	1	**8T-4133**	1	NUT (M10X1.5-THD)	
M	11	1	**9X-1046**	2	SCREW (M4X0.7X18-MM)	
M	12	1	**9X-2042**	6	SCREW-TRUSS HEAD (M6X1X12-MM)	

M-METRIC PART

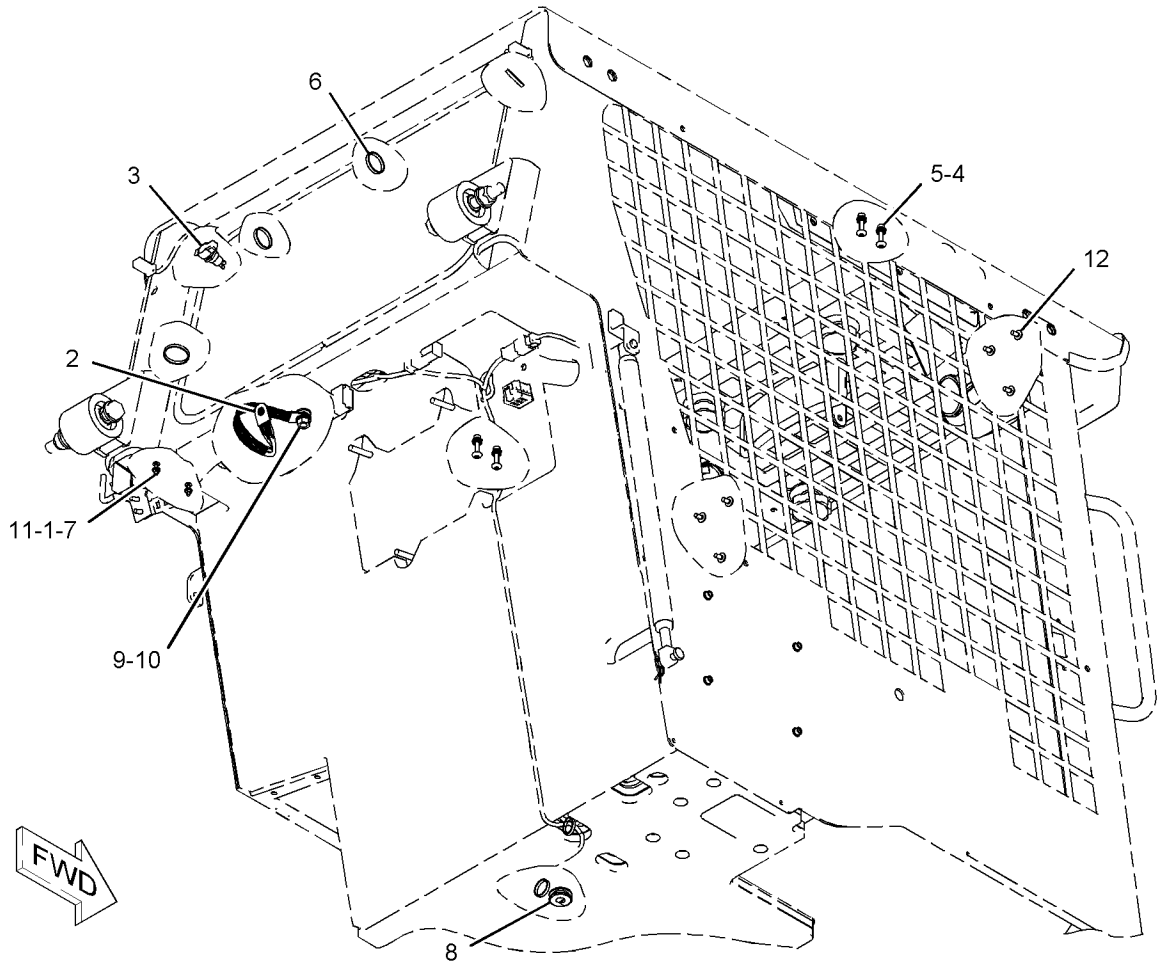

GRAPHIC #1 **<END>** g01026665

192-0104 GLOW PLUG GP

S/N: GGA1-UP; CSD1-UP
PART OF 179-1808, 233-6648 ENGINE AR-PRIMARY
ALSO AN ATTACHMENT

SMCS-1412 **i01992077**

NOTE	REF NO	GRAPHIC REF	PART NUMBER	QTY	PART NAME 1 2 3 4 5 6 (PRODUCT LEVEL)	SEE PAGE
	1	1	**155-8076**	1	NUT	
	2	1	**155-8077**	1	WASHER	
	3	1	**172-4585**	4	GLOW PLUG	
	4	1	**192-0105**	1	SUPPORT-PLUG	

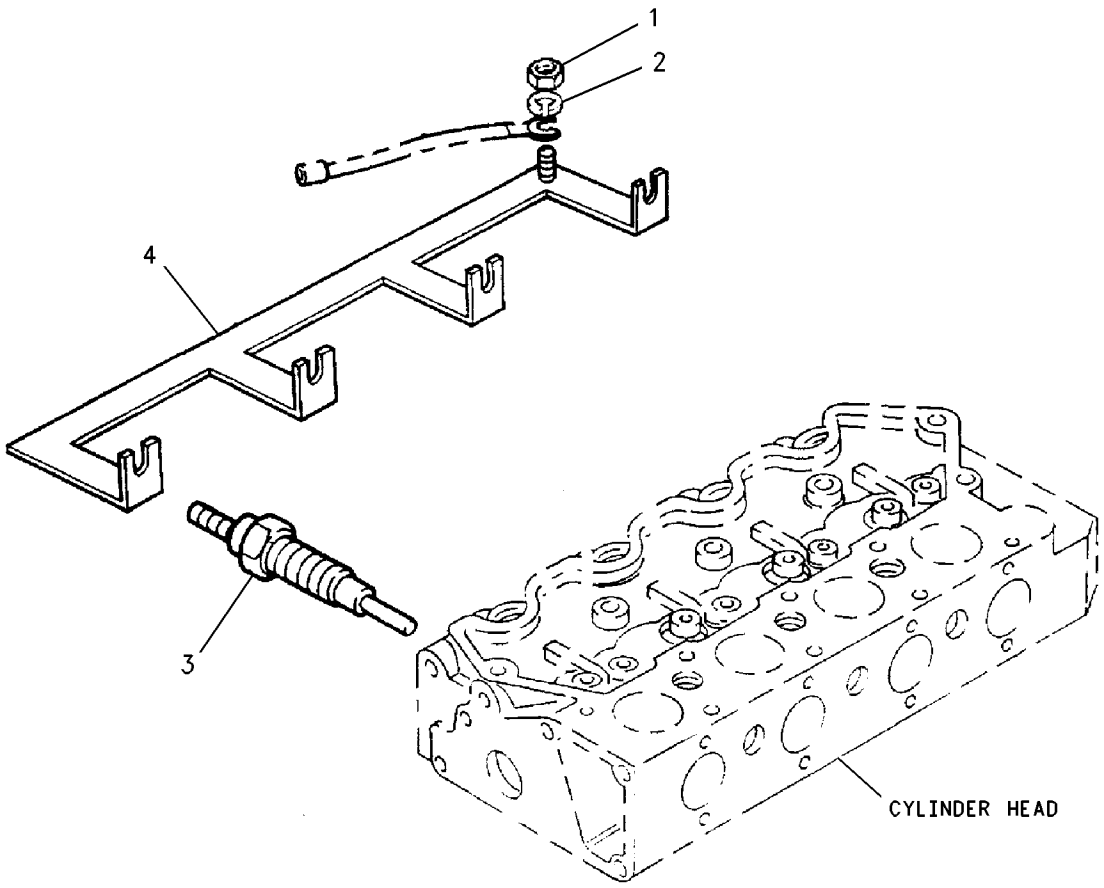

GRAPHIC #1 **<END>** g00708690

172-4445 HEATER GP-JACKET WATER

S/N: MJH1-UP; SCH1-UP; RLL1-UP; BXM1-UP
(120 VOLTS/530 WATTS)
AN ATTACHMENT

SMCS-1383 **i02015246**

NOTE	REF NO	GRAPHIC REF	PART NUMBER	QTY	PART NAME 1 2 3 4 5 6 (PRODUCT LEVEL)	SEE PAGE
	1	1	*154-3927*	1	HEATER GP-JACKET WATER	
		1	**7X-6312**	1	CORD AS-JACKET WATER HEATER	
		1	**149-3499**	1	ELEMENT AS-JACKET WATER HEATER	
		1	**133-6517**	1	CAP AS-DUST	
	2	1	**9X-6772**	1	STRAP-CABLE	

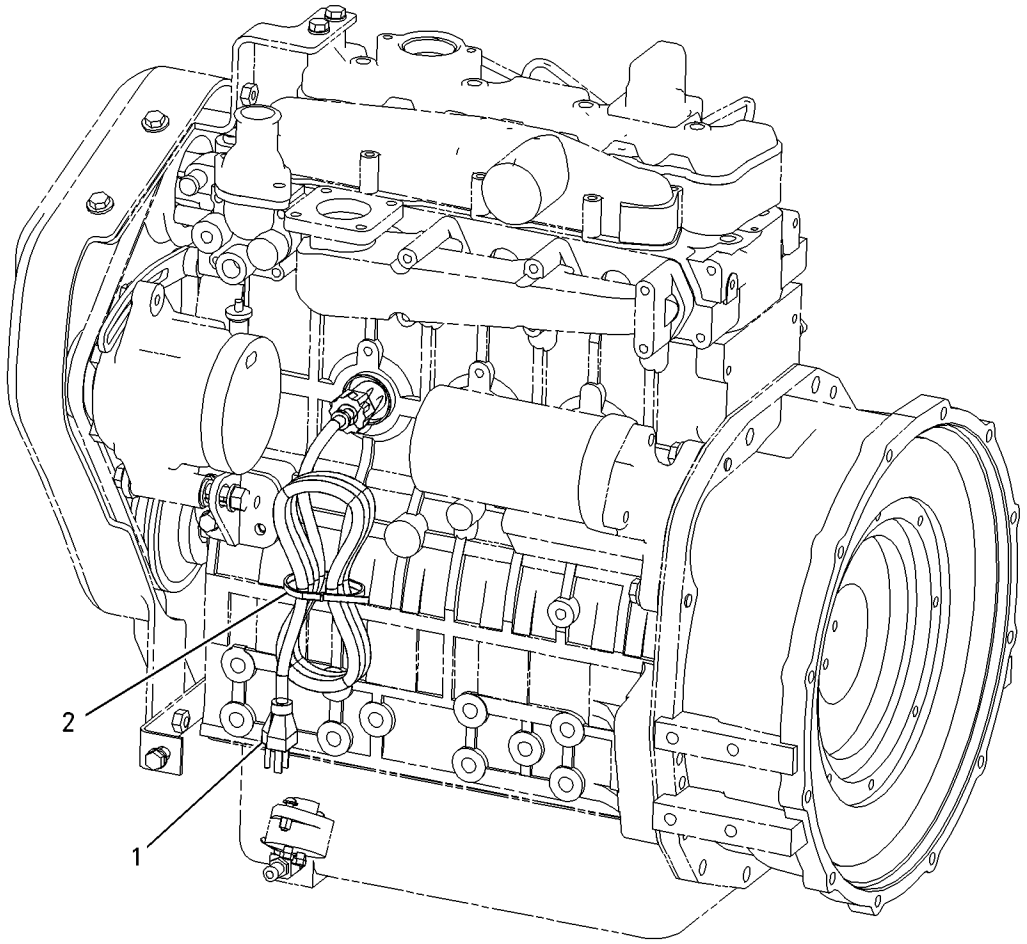

GRAPHIC #1 **<END>** g00808146

172-4446 HEATER GP-JACKET WATER

S/N: MJH1-UP; SCH1-UP; RLL1-UP; BXM1-UP
(240 VOLTS/530 WATTS)
AN ATTACHMENT

SMCS-1383 **i02015245**

NOTE	REF NO	GRAPHIC REF	PART NUMBER	QTY	PART NAME 1 2 3 4 5 6 (PRODUCT LEVEL)	SEE PAGE
	1	1	*154-3928*	1	HEATER GP-JACKET WATER	
		1	**127-8609**	1	CORD AS-JACKET WATER HEATER	
		1	**151-1394**	11	ELEMENT AS-JACKET WATER HEATER	
		1	**133-6517**	1	CAP AS-DUST	
	2	1	**9X-6772**	1	STRAP-CABLE	

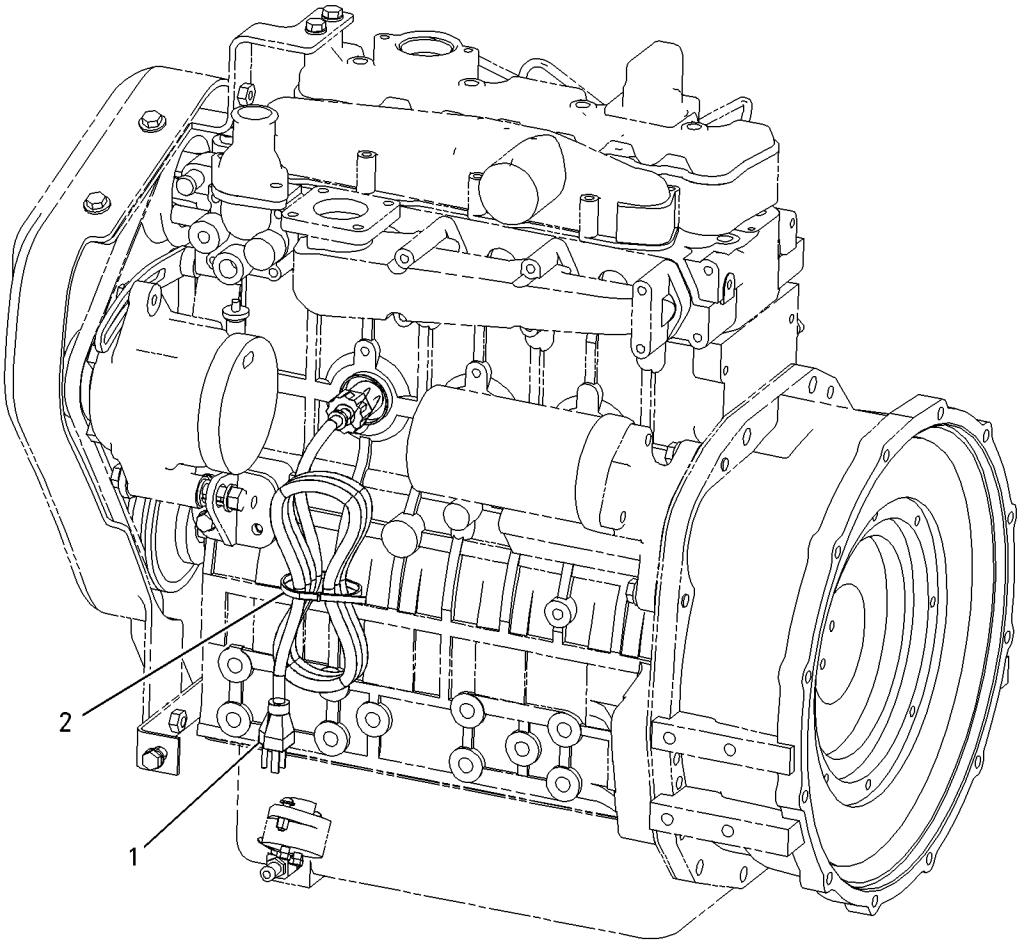

GRAPHIC #1 **<END>** g00808142

ELECTRICAL AND STARTING SYSTEM

225-7991 INSTALLATION GP-SECURITY

S/N: MJH1-UP; SCH1-UP; RLL1-UP; BXM1-UP

AN ATTACHMENT

SMCS-7631 **i02359041**

NOTE	PART NUMBER	QTY	PART NAME 1 2 3 4 5 6 (PRODUCT LEVEL)	SEE PAGE
Y	**207-5262**	1	SERVICE GP-MACHINE (SECURITY)	182
	4P-8134	3	CLIP	
	205-8257	1	COIL AS (EXCITER)	
BD	**5P-5677**		WIRE (18-GA, BLACK)	
	186-3735	2	PIN-CONNECTOR (16-GA TO 18-GA)	
	222-3870	1	COIL AS (FERRITE)	
	102-8802	2	KIT-RECEPTACLE (2-PIN)	
			(INCLUDES RECEPTACLE AS & WEDGE)	
	3E-3365	2	WEDGE-RECEPTACLE LOCK (2-PIN)	
	186-3735	4	PIN-CONNECTOR (16-GA TO 18-GA)	
	5P-5677		WIRE (18-GA, BLACK)	
E	**9X-1813**		SLEEVE (15-CM)	
	198-5389	1	FILM-IDENTIFICATION (IGNITION SWITCH)	
	205-0826	1	FILM-INSTRUCTION (MACHINE SECURITY, READ OMM)	
	216-4709	1	HARNESS AS-CONTROL (SECURITY)	
	102-8804	1	KIT-RECEPTACLE (4-PIN)	
	102-8801	1	KIT-RECEPTACLE (12-PIN)	
			(EACH KIT INCLUDES RECEPTACLE AS & WEDGE)	
	155-2270	1	KIT-CONNECTING PLUG (2-PIN)	
			(INCLUDES PLUG AS, WEDGE & INTERFACE SEAL)	
	206-5162	2	KEY AS-ELECTRONIC (SECURITY)	
			—OR—	
	206-5165	1	KEY AS-ELECTRONIC (SECURITY)	
	102-8802	1	KIT-RECEPTACLE (2-PIN)	
			(INCLUDES RECEPTACLE AS & WEDGE)	
	8T-9655	6	MOUNT-ISOLATION	
M	**5C-7261**	3	NUT (M8X1.25-THD)	
	232-9737	1	SOFTWARE GP-MACHINE (SECURITY)	
	6I-1418	3	SPACER (8.2X12.7X28.7-MM THK)	
	3S-2093	7	STRAP-CABLE	
	7K-1181	5	STRAP-CABLE	
	7X-0579	3	WASHER-HARD (8.8X25.5X2-MM THK)	
	3E-3365	1	WEDGE-RECEPTACLE LOCK (2-PIN)	

B-USE AS REQUIRED
D-ORDER BY THE METER
E-ORDER BY THE CENTIMETER
M-METRIC PART
Y-SEPARATE ILLUSTRATION

<END>

239-5010 INSTALLATION GP-SECURITY–KIT

S/N: MJH1-UP; SCH1-UP; RLL1-UP; BXM1-UP

FIELD INSTALLATION

SMCS-7631 **i02359042**

NOTE	PART NUMBER	QTY	PART NAME 1 2 3 4 5 6 (PRODUCT LEVEL)	SEE PAGE
Y	**207-5262**	1	SERVICE GP-MACHINE (SECURITY)	182
M	**7X-0818**	3	BOLT (M8X1.25X45-MM)	
	4P-7581	3	CLIP	
	205-8257	1	COIL AS (EXCITER)	
	186-3735	2	PIN-CONNECTOR (16-GA TO 18-GA)	
BD	**5P-5677**		WIRE (18-GA, BLACK)	
	222-3870	1	COIL AS (FERRITE)	
	102-8802	2	KIT-RECEPTACLE (2-PIN)	
			(INCLUDES RECEPTACLE AS & WEDGE)	
	186-3735	4	PIN-CONNECTOR (16-GA TO 18-GA)	
BD	**5P-5677**		WIRE (18-GA, BLACK)	
BE	**9X-1813**		SLEEVE (1)	
	198-5389	1	FILM-IDENTIFICATION (IGNITION SWITCH)	
	205-0826	1	FILM-INSTRUCTION (MACHINE SECURITY, READ OMM)	
	216-4709	1	HARNESS AS-CONTROL (SECURITY)	
	102-8804	1	KIT-RECEPTACLE (4-PIN)	
	102-8801	1	KIT-RECEPTACLE (12-PIN)	
			(EACH KIT INCLUDES RECEPTACLE AS & WEDGE)	
	155-2270	2	KIT-CONNECTING PLUG (2-PIN)	
			(INCLUDES PLUG AS, WEDGE & INTERFACE SEAL)	
	195-0937	3	INSERT-THREADED (M8X1.25)	
	155-2260	1	KIT-CONNECTING PLUG (3-PIN)	
			(INCLUDES PLUG AS & WEDGE)	
	102-8802	1	KIT-RECEPTACLE (2-PIN)	
			(INCLUDES RECEPTACLE AS & WEDGE)	
	102-8803	1	KIT-RECEPTACLE (3-PIN)	
			(INCLUDES RECEPTACLE AS & WEDGE)	
	165-5655	1	LAMP AS (RED, GREEN, LED, 12-VOLT)	
	186-3735	3	PIN-CONNECTOR (16-GA TO 18-GA)	
	8T-9655	6	MOUNT-ISOLATION	
M	**5C-7261**	3	NUT (M8X1.25-THD)	
	8T-8737	2	PLUG-SEAL	
	6I-1418	3	SPACER (8.2X12.7X28.7-MM THK)	
	115-8109	1	SPLICE-WIRE	
	7K-1181	12	STRAP-CABLE	
	9N-0869	9	WASHER-HARD (8.8X25.5X2-MM THK)	
	207-3814	1	WIRE AS (PRODUCT LINK, SPLICE)	
	186-3735	1	PIN-CONNECTOR (16-GA TO 18-GA)	
	186-3736	2	SOCKET-CONNECTOR (16-GA TO 18-GA)	
BE	**125-7874**		TUBE-HEAT SHRINK	

B-USE AS REQUIRED
D-ORDER BY THE METER
E-ORDER BY THE CENTIMETER
M-METRIC PART
Y-SEPARATE ILLUSTRATION

<END>

233-5638 KIT-WORK TOOL CONTROL & WIRING–

VERTICAL LIFT

S/N: SCH1-UP; BXM1-UP

AN ATTACHMENT

SMCS-1408, 5705 **i02302989**

NOTE	PART NUMBER	QTY	PART NAME 1 2 3 4 5 6 (PRODUCT LEVEL)	SEE PAGE
Y	**231-4258**	1	CONTROL GP-HANDLE (LH)	329
	221-3881	1	PANEL GP-FUSE	
	113-8490	4	FUSE (10-AMPERE)	
	113-8491	2	FUSE (15-AMPERE)	
	146-9439	5	RELAY AS (12-VOLT)	
	215-5564	2	SUPPRESSOR-ARC	
	216-4725	1	HARNESS AS-WORK TOOL (LIFT ARM)	
	156-1460	1	RECEPTACLE (8-PIN)	
			(INCLUDES RECEPTACLE AS & WEDGE)	
	156-1458	1	COVER	
	1S-9593		STRAP-CABLE	
	225-8012	1	HARNESS AS-WORK TOOL (PLATFORM)	
	155-2255	1	KIT-CONNECTING PLUG (12-PIN)	
	155-2265	1	KIT-CONNECTING PLUG (8-PIN)	
	196-2382	1	KIT-CONNECTING PLUG (2-PIN)	
	196-2383	1	KIT-PLUG (8-PIN)	
	196-2384	1	KIT-PLUG (8-PIN)	
			(EACH PLUG KIT INCLUDES PLUG AS, WEDGE & INTERFACE SEAL)	
	177-9645	1	KIT-RECEPTACLE (2-PIN)	
			(INCLUDES RECEPTACLE AS & WEDGE)	
	102-8806	1	KIT-RECEPTACLE (8-PIN)	
			(INCLUDES RECEPTACLE AS & WEDGE)	
	115-1615	1	RELAY AS (12-VOLT)	
	146-9439	1	RELAY AS (12-VOLT)	
	142-8633	1	SWITCH AS-ROCKER (ELECTRIC POWER, WORK TOOL)	
M	**5C-9553**	1	BOLT (M6X1X16-MM)	
	159-9496	1	LOCKWASHER	
	159-9495	1	NUT (1-1/2-18-THD)	
M	**095-0733**	2	SCREW-MACHINE (M4X0.7X40-MM)	
	3S-2093	8	STRAP-CABLE	
	4B-4863	2	WASHER (4.7X11X1.2-MM THK)	
	8T-4205	1	WASHER-HARD (7.2X14.5X2-MM THK)	
	3E-3389	1	WEDGE-RECEPTACLE LOCK	

M-METRIC PART
Y-SEPARATE ILLUSTRATION

<END>

233-5706 KIT-WORK TOOL CONTROL & WIRING–

RADIAL LIFT

S/N: MJH1-UP; RLL1-UP

AN ATTACHMENT

SMCS-1408, 5705 **i02302986**

NOTE	PART NUMBER	QTY	PART NAME 1 2 3 4 5 6 (PRODUCT LEVEL)	SEE PAGE
Y	**231-4258**	1	CONTROL GP-HANDLE (LH)	329
	221-3881	1	PANEL GP-FUSE	
	113-8490	4	FUSE (10-AMPERE)	
	113-8491	2	FUSE (15-AMPERE)	
	146-9439	5	RELAY AS (12-VOLT)	
	215-5564	2	SUPPRESSOR-ARC	
	225-7961	1	HARNESS AS-WORK TOOL (LIFT ARM)	
	156-1460	1	RECEPTACLE (8-PIN)	
			(INCLUDES RECEPTACLE AS & WEDGE)	
	156-1458	1	COVER	
	1S-9593	1	STRAP-CABLE	
	225-8012	1	HARNESS AS-WORK TOOL (PLATFORM)	
	155-2255	1	KIT-CONNECTING PLUG (12-PIN)	
	155-2265	1	KIT-CONNECTING PLUG (8-PIN)	
	196-2382	1	KIT-CONNECTING PLUG (2-PIN)	
	196-2383	11	KIT-PLUG (8-PIN)	
	196-2384		KIT-PLUG (8-PIN)	
			(EACH PLUG KIT INCLUDES PLUG AS, WEDGE & INTERFACE SEAL)	
	177-9645	1	KIT-RECEPTACLE (2-PIN)	
			(INCLUDES RECEPTACLE AS & WEDGE)	
	102-8806	1	KIT-RECEPTACLE (8-PIN)	
			(INCLUDES RECEPTACLE AS & WEDGE)	
	115-1615	1	RELAY AS (12-VOLT)	
	146-9439	1	RELAY AS (12-VOLT)	
	142-8633	1	SWITCH AS-ROCKER (ELECTRIC POWER, WORK TOOL)	
M	**5C-9553**	1	BOLT (M6X1X16-MM)	
	159-9496	1	LOCKWASHER	
M	**095-0733**	2	SCREW-MACHINE (M4X0.7X40-MM)	
	3S-2093	9	STRAP-CABLE	
	4B-4863	2	WASHER (4.7X11X1.2-MM THK)	
	8T-4205	1	WASHER-HARD (7.2X14.5X2-MM THK)	
	3E-3389	1	WEDGE-RECEPTACLE LOCK	

M-METRIC PART
Y-SEPARATE ILLUSTRATION

<END>

218-6741 KIT-WORK TOOL WIRING—RADIAL LIFT

S/N: MJH1-UP; RLL1-UP

AN ATTACHMENT

SMCS-1408 **i02293279**

NOTE	PART NUMBER	QTY	PART NAME 1 2 3 4 5 6 (PRODUCT LEVEL)	SEE PAGE
M	**5C-9553**	1	BOLT (M6X1X16-MM)	
	225-7961	1	HARNESS AS-WORK TOOL (LIFT ARM)	
	156-1460	1	RECEPTACLE (8-PIN)	
	1S-9593	1	STRAP-CABLE	
	156-1458	1	COVER	
	225-8012	1	HARNESS AS-WORK TOOL (PLATFORM)	
	155-2255	1	KIT-CONNECTING PLUG (12-PIN)	
	155-2265	1	KIT-CONNECTING PLUG (8-PIN)	
			(EACH INCLUDES PLUG AS, WEDGE, & INTERFACE SEAL)	
	196-2381	1	KIT-CONNECTING PLUG (2-PIN)	
			(INCLUDES PLUG AS, LOCK, & TERMINAL AS)	
	177-9645	1	KIT-RECEPTACLE (2-PIN)	
			(INCLUDES RECEPTACLE AS & WEDGE)	
	159-9496	1	LOCKWASHER	
	159-9495	1	NUT (1-1/2-18-THD)	
	221-3881	1	PANEL GP-FUSE	
	113-8490	4	FUSE (10-AMPERE)	
	113-9491	2	MUFFLER	
	146-9439	5	RELAY AS (12-VOLT)	
	215-5564	2	SUPPRESSOR-ARC	
	115-1615	1	RELAY AS (12-VOLT)	
	146-9439	1	RELAY AS (12-VOLT)	
M	**095-0733**	2	SCREW-MACHINE (M4X0.7X40-MM)	
	3S-2093	9	STRAP-CABLE	
	142-8633	1	SWITCH AS-ROCKER (ELECTRIC POWER, WORK TOOL)	
	4B-4863	2	WASHER (4.7X11X1.2-MM THK)	
	8T-4205	1	WASHER-HARD (7.2X14.5X2-MM THK)	
	3E-3389	1	WEDGE-RECEPTACLE LOCK	

M-METRIC PART

<END>

218-6742 KIT-WORK TOOL WIRING—VERTICAL LIFT

S/N: SCH1-UP; BXM1-UP
AN ATTACHMENT

SMCS-1408 **i02360165**

NOTE	PART NUMBER	QTY	PART NAME 1 2 3 4 5 6 (PRODUCT LEVEL)	SEE PAGE
	221-3881	1	PANEL GP-FUSE	
	113-8490	4	FUSE (10-AMPERE)	
	113-8491	2	FUSE (15-AMPERE)	
	146-9439	5	RELAY AS (12-VOLT)	
M	**5C-9553**	1	BOLT (M6X1X16-MM)	
	216-4725	1	HARNESS AS-WORK TOOL (LIFT ARM)	
	1S-9593	1	STRAP-CABLE	
	156-1458	1	COVER	
	156-1460	1	RECEPTACLE (8-PIN)	
	225-8012	1	HARNESS AS-WORK TOOL (PLATFORM)	
	177-9643	1	LOCK	
	177-9644	1	SEAL-RECEPTACLE	
	177-9645	1	KIT-RECEPTACLE (2-PIN)	
			(INCLUDES RECEPTACLE AS & WEDGE)	
	155-2255	1	KIT-CONNECTING PLUG (12-PIN)	
	155-2265	1	KIT-CONNECTING PLUG (8-PIN)	
	196-2382	1	KIT-CONNECTING PLUG (2-PIN)	
	196-2383	1	KIT-PLUG (8-PIN)	
	196-2384	1	KIT-PLUG (8-PIN)	
			(EACH INCLUDES PLUG AS, WEDGE, INTERFACE SEAL)	
	102-8806	1	KIT-RECEPTACLE (8-PIN)	
			(INCLUDES RECEPTACLE AS & WEDGE)	
	159-9496	1	LOCKWASHER	
	159-9495	1	NUT (1-1/2-18-THD)	
	115-1615	1	RELAY AS (12-VOLT)	
	146-9439	1	RELAY AS (12-VOLT)	
M	**095-0733**	2	SCREW-MACHINE (M4X0.7X40-MM)	
	3S-2093	8	STRAP-CABLE	
	142-8633	1	SWITCH AS-ROCKER (ELECTRIC POWER, WORK TOOL)	
	4B-4863	2	WASHER (4.7X11X1.2-MM THK)	
	8T-4205	1	WASHER-HARD (7.2X14.5X2-MM THK)	

M-METRIC PART

<END>

234-4328 LAMP GP-FLOOD–12 VOLT

S/N: MJH1-UP; SCH1-UP; RLL1-UP; BXM1-UP
SUSPENDED
PART OF 218-6425 LIGHTING GP-FLOOD

SMCS-1434 **i02274830**

NOTE	REF NO	GRAPHIC REF	PART NUMBER	QTY	PART NAME 1 2 3 4 5 6 (PRODUCT LEVEL)	SEE PAGE
	1	1	**9W-0607**	1	LAMP (12-VOLT, 55-WATT)	
M	2	1	**8T-4133**	1	NUT (M10X1.5-THD)	
	3	1	**9X-4244**	2	SCREW	
	4	1	**202-6614**	1	LENS AS (FLOODLIGHT)	
	5	1	**234-7730**	1	BODY AS	
	6	1	**164-7556**	1	CLIP (LAMP RETAINING)	
	7	1	**234-7731**	1	BRACKET AS	

M-METRIC PART

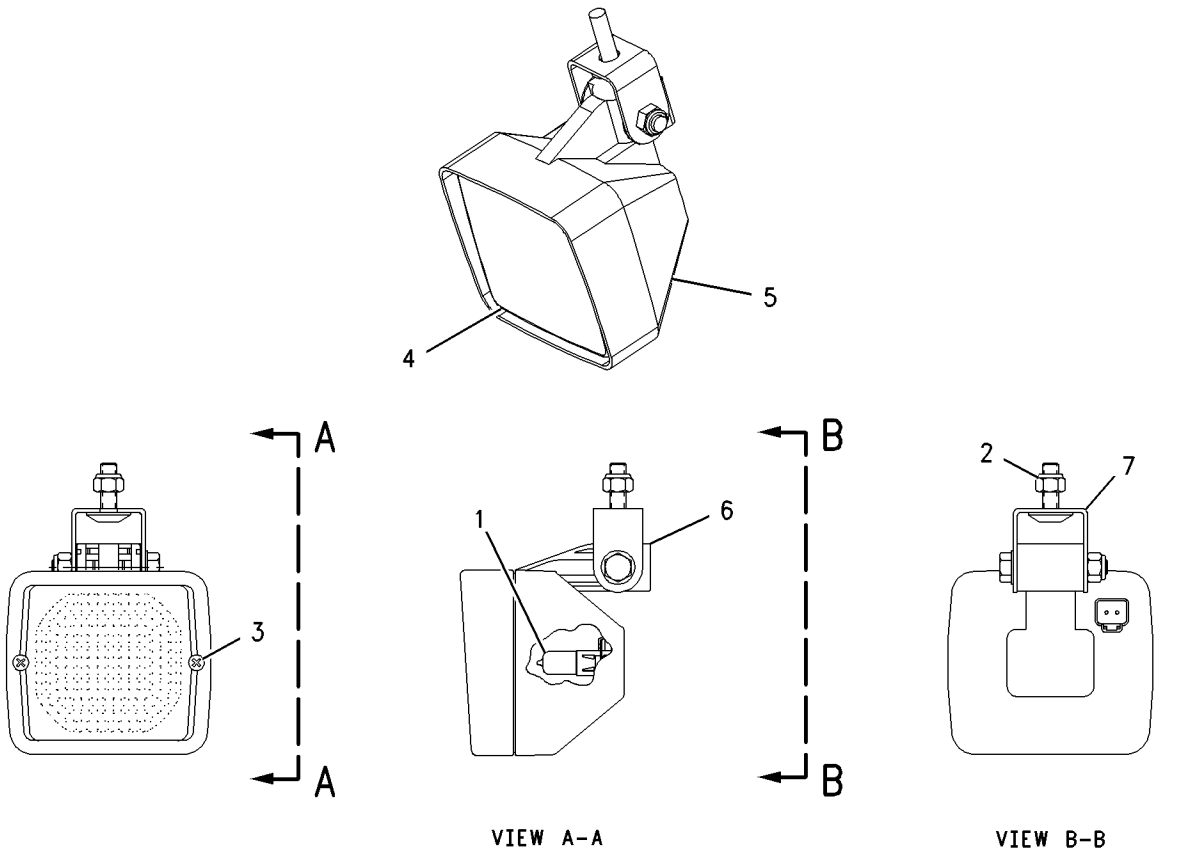

GRAPHIC #1 **<END>** g01004557

234-7727 LAMP GP-FLOOD–12-VOLT, VERTICAL MOUNT

S/N: MJH1-UP; SCH1-UP; RLL1-UP; BXM1-UP
PART OF 216-4746 LIGHTING GP-FLOOD
AN ATTACHMENT

SMCS-1434 **i01957412**

NOTE	REF NO	GRAPHIC REF	PART NUMBER	QTY	PART NAME 1 2 3 4 5 6 (PRODUCT LEVEL)	SEE PAGE
	1	1	**9W-0607**	1	LAMP (12-VOLT, 55-WATT)	
	2	1	**9X-4244**	2	SCREW	
	3	1	**202-6611**	1	LENS AS (FLOODLIGHT)	
	4	1	**234-7758**	1	BODY AS	
	5	1	**164-7556**	1	CLIP (LAMP RETAINING)	
	6	1	**234-7756**	1	BRACKET-MOUNTING	

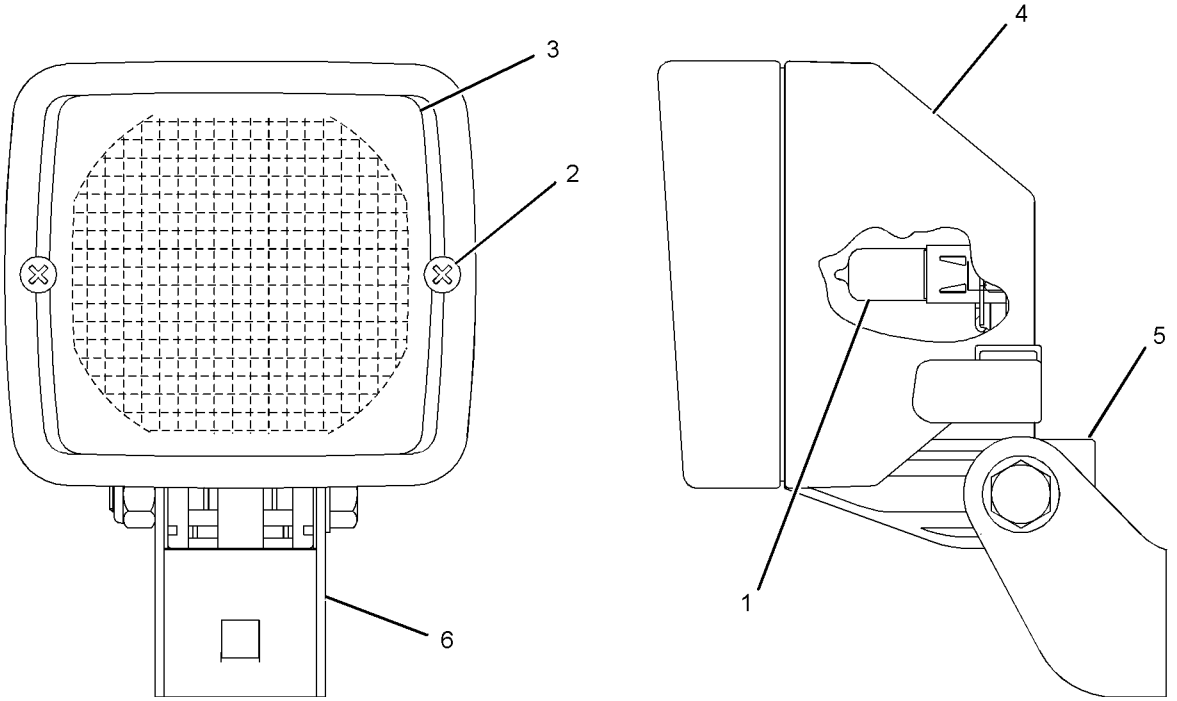

GRAPHIC #1 **<END>** g01017848

3E-7584 LAMP GP-HEAD & SIGNAL

S/N: MJH1-UP; SCH1-UP; RLL1-UP; BXM1-UP
PART OF 216-4715, 216-4716 LIGHTING GP-ROADING
AN ATTACHMENT

SMCS-1429, 1430 **i02474497**

NOTE	REF NO	GRAPHIC REF	PART NUMBER	QTY	PART NAME 1 2 3 4 5 6 (PRODUCT LEVEL)	SEE PAGE
	1	1	**9X-4244**	4	SCREW	
	2	1	**100-3251**	2	SCREW-LENS	
	3	1	**9X-9865**	1	SEAL	
	4	1	**100-3248**	1	LENS AS (HEADLIGHT)	
	5	1	**9W-3324**	1	LAMP-HEAD (12-VOLT, 60-WATT)	
	6	1	**100-3247**	1	BODY AS-LAMP	
M	7	1	**8T-5005**	1	BOLT (M10X1.5X70-MM)	
M	8	1	**8T-0389**	1	LOCKNUT (M10X1.15-THD)	
	9	1	**100-3253**	1	SPACER	
	10	1	**100-3254**	1	SPACER	
	11	1	**100-3255**	1	WASHER	
J	12	1	**102-8805**	1	KIT-RECEPTACLE (6-PIN)	
					(INCLUDES RECEPTACLE AS & WEDGE)	
	13	1	**8T-8729**	5	PIN-CONNECTOR	
J	14	1	**3E-3383**	1	WEDGE-RECEPTACLE LOCK (6-PIN)	
	15	1	**8T-8737**	1	PLUG-SEAL	
	16	1	**100-3246**	1	LAMP (12-VOLT, 4-WATT)	
	17	1	**5G-3244**	1	LAMP (12-VOLT, 21-WATT)	
	18	1	**100-3250**	1	LENS (AMBER) (FRONT TURN)	

J-KIT MARKED J INCLUDES PART MARKED J
M-METRIC PART

3E-7584 LAMP GP-HEAD & SIGNAL *(contd.)* **i02474497**

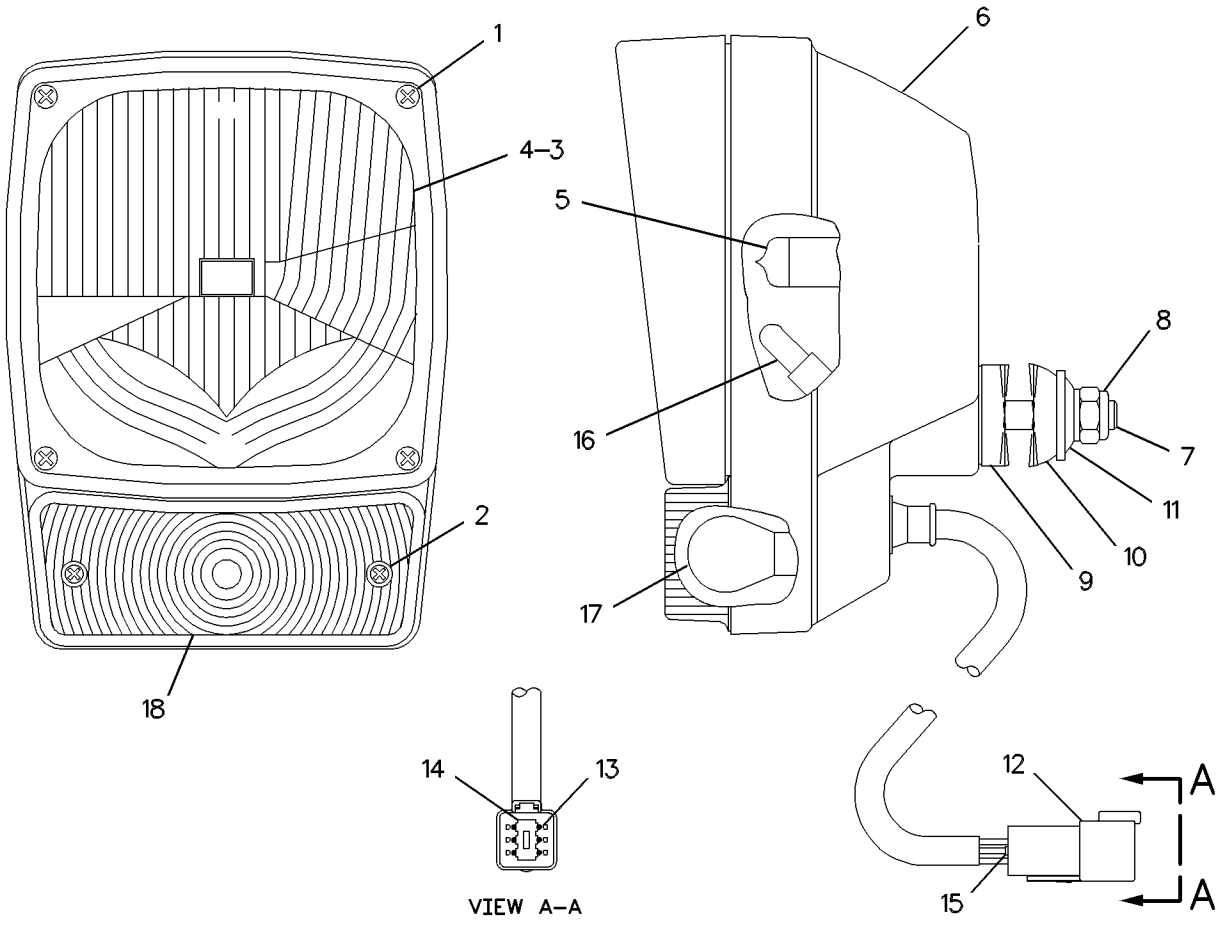

GRAPHIC #1 **<END>** g00460921

142-7503 LAMP GP-STOP & TAIL

S/N: MJH1-UP; SCH1-UP; RLL1-UP; BXM1-UP
PART OF 142-8652 LIGHTING GP-STOP & TAIL
AN ATTACHMENT

SMCS-1432 **i02359075**

NOTE	REF NO	GRAPHIC REF	PART NUMBER	QTY	PART NAME 1 2 3 4 5 6 (PRODUCT LEVEL)	SEE PAGE
	1	1	**084-4348**	1	LAMP (12-VOLT, 5-WATT)	
	2	1	**102-8804**	1	KIT-RECEPTACLE (4-PIN)	
					(INCLUDES RECEPTACLE AS & WEDGE)	
	3	1	**165-4895**	1	LENS	
M	4	1	**5C-2890**	2	NUT (M6X1-THD)	
	5	1	**8T-0087**	2	LOCKWASHER	

M-METRIC PART

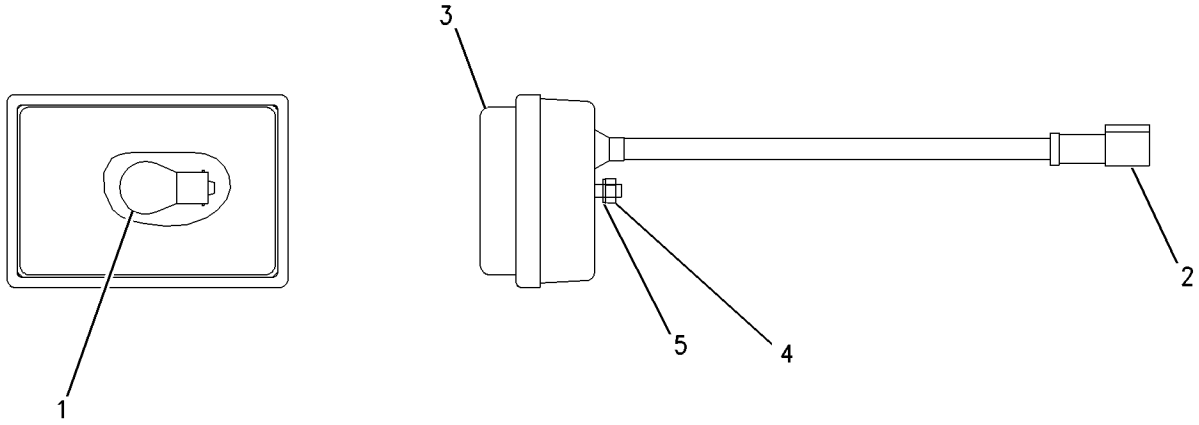

GRAPHIC #1 **<END>** g00669668

142-8634 LAMP GP-STOP & TAIL–STOP, TAIL

S/N: MJH1-UP; SCH1-UP; RLL1-UP; BXM1-UP
PART OF 216-4715, 216-4716 LIGHTING GP-ROADING
AN ATTACHMENT

SMCS-1432 **i02474491**

NOTE	REF NO	GRAPHIC REF	PART NUMBER	QTY	PART NAME 1 2 3 4 5 6 (PRODUCT LEVEL)	SEE PAGE
	1	1	**9W-3326**	1	LAMP (12-VOLT, 21-WATT)	
	2	1	**084-4348**	1	LAMP (12-VOLT, 5-WATT)	
	3	1	**102-8804**	1	KIT-RECEPTACLE (4-PIN)	
					(INCLUDES RECEPTACLE AS & WEDGE)	
	4	1	**146-2438**	1	LENS-LAMP (REAR, LH)	
M	5	1	**5C-2890**	2	NUT (M6X1-THD)	
	6	1	**1H-3244**	2	LOCKWASHER	
	7	1	**186-3735**	4	PIN-CONNECTOR (16-GA TO 18-GA)	

M-METRIC PART

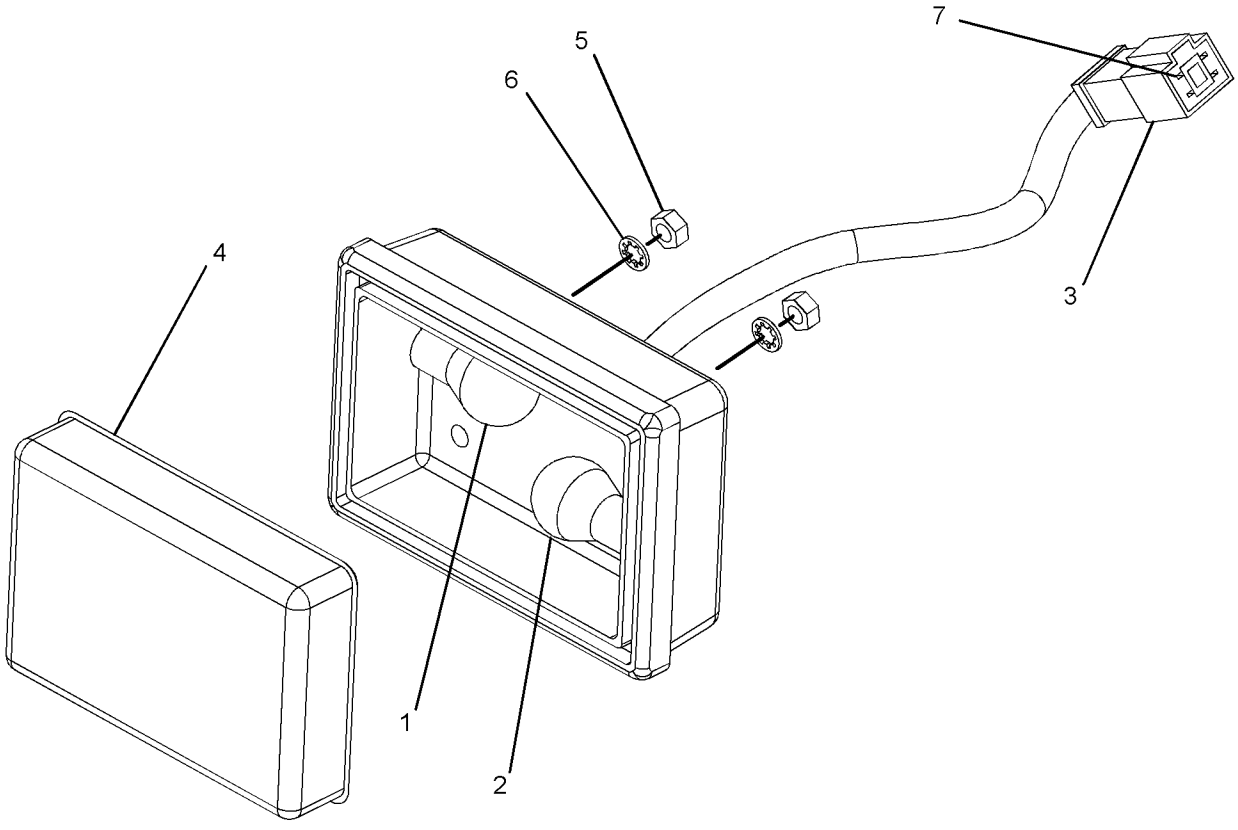

GRAPHIC #1 **<END>** g01212497

128-6985 LAMP GP-WARNING BEACON–

AMBER, MAGNETIC MOUNT, ROTATING

S/N: MJH1-UP; SCH1-UP; RLL1-UP; BXM1-UP

PART OF 257-5727 CONVERSION AR-ROADING, 234-0793, 278-1293 CONVERSION GP-ROADING, 142-8653 LIGHTING GP-WARNING BEACON AN ATTACHMENT

SMCS-1431 **i02237918**

NOTE	REF NO	GRAPHIC REF	PART NUMBER	QTY	PART NAME 1 2 3 4 5 6 (PRODUCT LEVEL)	SEE PAGE
	1	1	**9X-8121**	1	LENS (AMBER, WARNING BEACON)	
	2	1	**9X-8118**	1	LAMP (12-VOLT, 55-WATT)	
	3	1	**9X-8139**	1	BELT-DRIVE (WARNING BEACON)	
	4	1	**9R-7958**	1	CORD AS	
	5	1	**9R-7942**	1	PLUG AS	

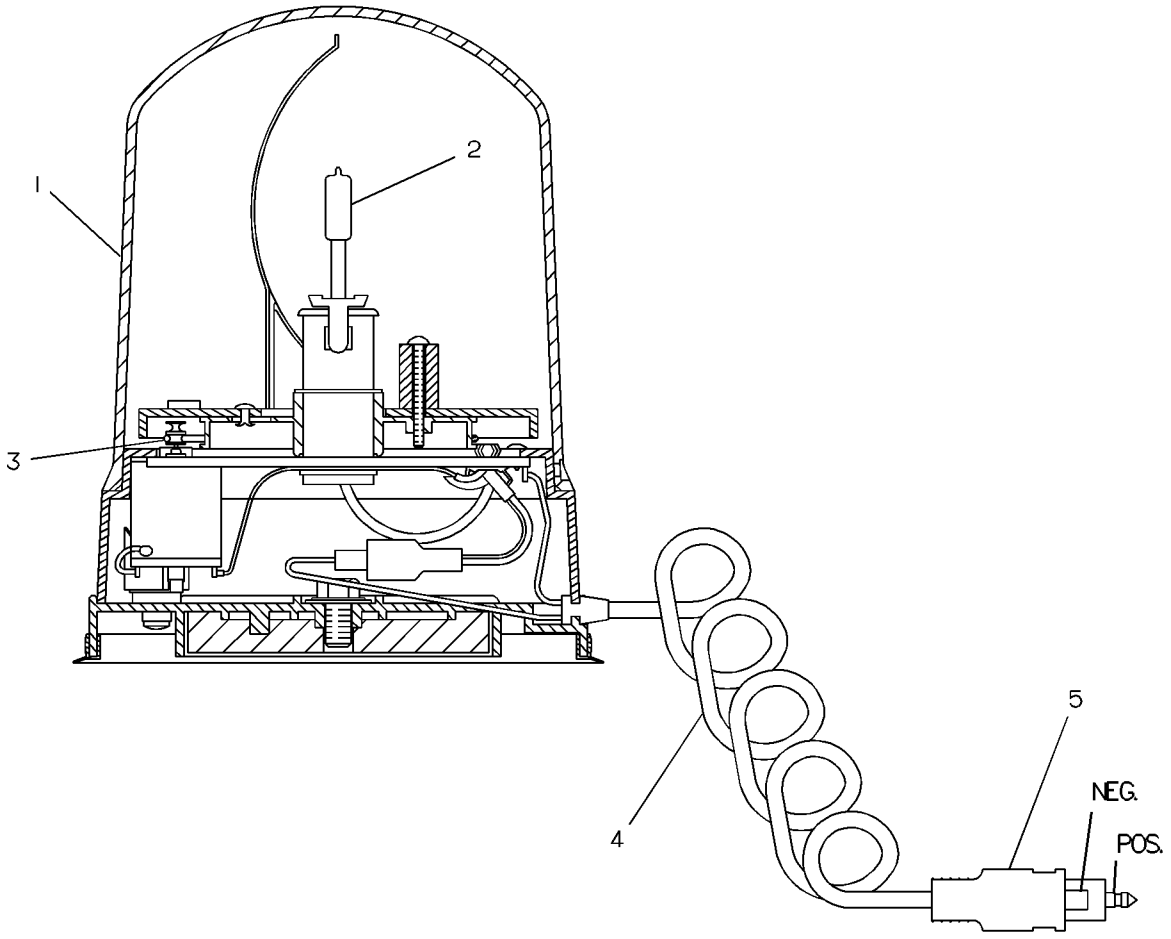

GRAPHIC #1 **<END>** g00130921

216-4746 LIGHTING GP-FLOOD–REAR

S/N: MJH1-UP; SCH1-UP; RLL1-UP; BXM1-UP
AN ATTACHMENT

SMCS-1434 **i02262618**

NOTE	REF NO	GRAPHIC REF	PART NUMBER	QTY	PART NAME 1 2 3 4 5 6 (PRODUCT LEVEL)	SEE PAGE
	1	1	**142-9326**	1	SWITCH AS-ROCKER (REAR WORK LAMPS)	
		1	**111-7899**	1	GASKET	
Y	2	1	**234-7727**	2	LAMP GP-FLOOD (12-VOLT, VERTICAL MOUNT) (REAR)	165
	3	1	**195-0937**	2	INSERT-THREADED (M8X1.25)	
	4	1	**5P-8439**	2	GROMMET	
M	5	1	**6V-2317**	2	BOLT (M8X1.25X30-MM)	
	6	1	**8T-4224**	4	WASHER-HARD (8.8X16X2-MM THK)	

M-METRIC PART
Y-SEPARATE ILLUSTRATION

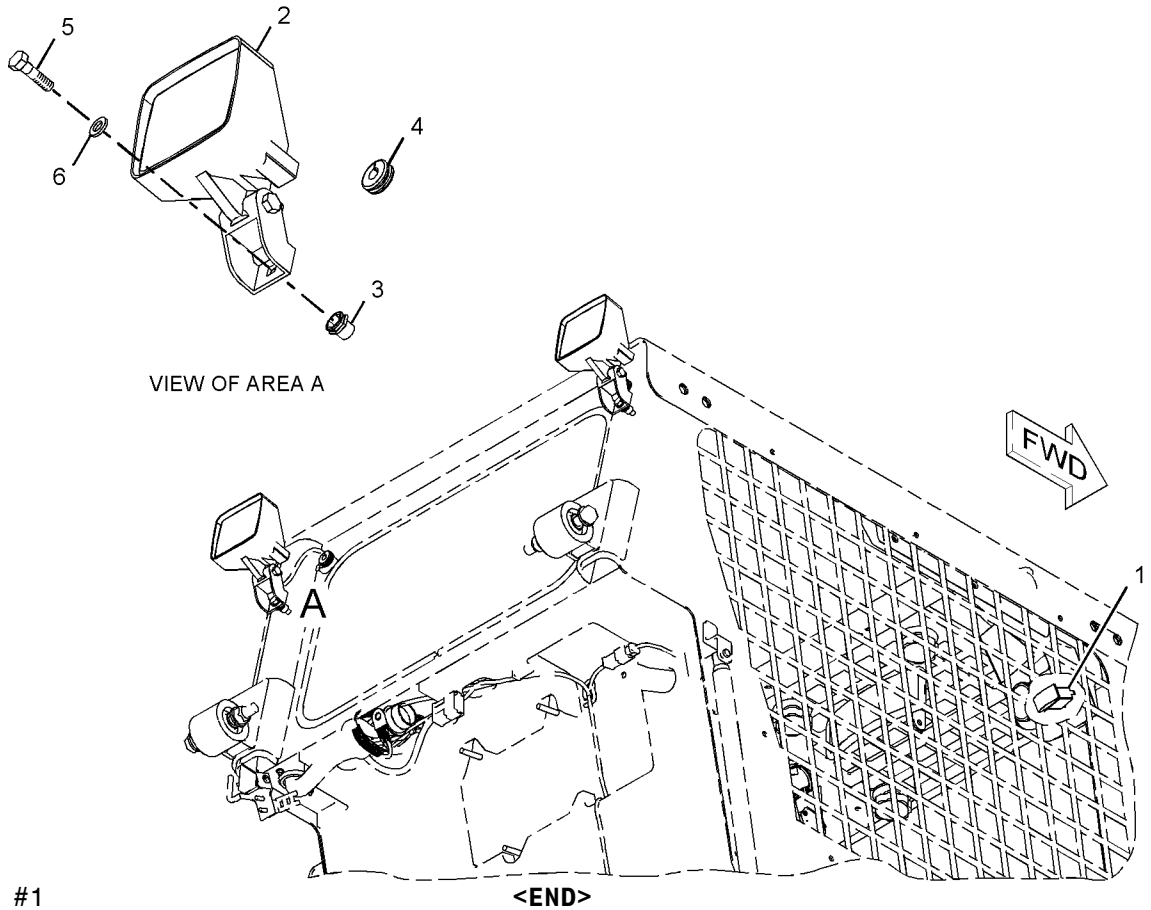

GRAPHIC #1 **<END>** g01136313

218-6425 LIGHTING GP-FLOOD

S/N: MJH1-UP; SCH1-UP; RLL1-UP; BXM1-UP
PART OF 218-6350 CAB AR-ENCLOSED ROPS

SMCS-1434 **i02023293**

NOTE	REF NO	GRAPHIC REF	PART NUMBER	QTY	PART NAME 1 2 3 4 5 6 (PRODUCT LEVEL)	SEE PAGE
Y	1		**234-4328**	2	LAMP GP-FLOOD (12-VOLT, SUSPENDED MOUNT) (FRONT)	164
	2		**5P-8439**	2	GROMMET	
	3		**8T-4121**	4	WASHER-HARD (11X21X2.5-MM THK)	

Y-SEPARATE ILLUSTRATION

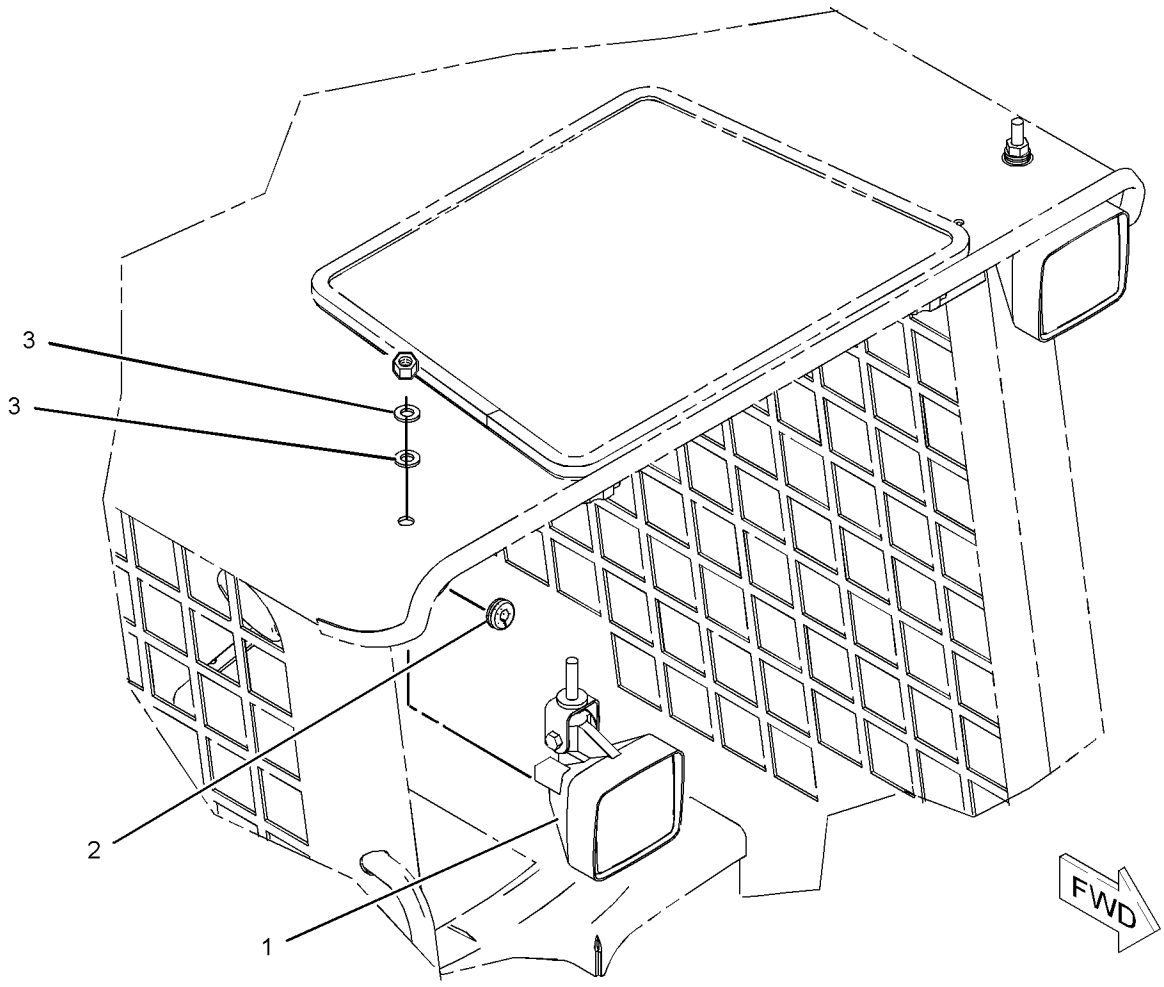

GRAPHIC #1 **<END>** g01040888

216-4715 LIGHTING GP-ROADING

S/N: MJH1-UP; RLL1-UP

PART OF 261-6187, 278-1212, 278-1224, 278-5369, 278-5408, 278-5413, 278-5441 CONVERSION AR-MACHINE, 233-5672, 233-5673, 233-5675, 233-5676, 257-5716, 257-5717 CONVERSION AR-ROADING AN ATTACHMENT

SMCS-1429 **i02359086**

NOTE	REF NO	GRAPHIC REF	PART NUMBER	QTY	PART NAME 1 2 3 4 5 6 (PRODUCT LEVEL)	SEE PAGE
Y	1	1	**3E-7584**	2	LAMP GP-HEAD & SIGNAL	166
	2	1	**7D-5473**	2	BOLT-SOCKET HEAD (8-32X0.75-IN)	
	3	1	**8T-1887**	2	CLIP (SLOT)	
	4	1	**8T-1888**	2	CLIP (TAB)	
	5	1	**8W-8909**	2	SLEEVE	
	6	1	**9R-1499**	2	REFLECTOR	
Y	7	1	**142-8634**	2	LAMP GP-STOP & TAIL	169
	8	1	**147-1773**	1	CIRCUIT BREAKER AS (30-AMPERE) (LIGHTING)	
		1	**6V-8378**	2	NUT (10-32-THD)	
		1	**8F-1434**	2	LOCKWASHER	
		1	**8T-0328**	2	WASHER-HARD (5.5X10X1-MM THK)	
	9	1	**216-4727**	1	HARNESS AS-REAR LIGHTING	
		1	**102-8805**	1	KIT-RECEPTACLE (6-PIN)	
		1	**102-8806**	1	KIT-RECEPTACLE (8-PIN)	
					(EACH KIT INCLUDES RECEPTACLE AS & WEDGE)	
		1	**155-2265**	1	KIT-CONNECTING PLUG (8-PIN)	
					(INCLUDES PLUG AS, WEDGE & INTERFACE SEAL)	
	10	1	**225-7962**	1	SWITCH GP-ROCKER (ROADING)	
		1	**226-5900**	1	SWITCH AS-ROCKER (TURN SIGNAL)	
		1	**142-9329**	1	SWITCH AS-ROCKER (ROADING LIGHTS)	
		1	**142-9331**	1	SWITCH AS-ROCKER (HAZARD WARNING LIGHTS)	
					(EACH SWITCH AS-ROCKER INCLUDES)	
		1	**111-7899**	1	GASKET	
	11	1	**225-7990**	1	HARNESS AS-FRONT LIGHTING	
		1	**155-2274**	1	KIT-CONNECTING PLUG (6-PIN)	
					(INCLUDES PLUG AS, WEDGE & INTERFACE SEAL)	
	12	1	**225-8013**	1	WIRE AS	
	13	1	**242-9000**	1	FLASHER AS	
	14	1	**195-0935**	1	INSERT-THREADED (M6X1)	
	15	1	**206-1346**	2	STRAP-CABLE	
	16	1	**3S-2093**	18	STRAP-CABLE	
	17	1	**4B-4863**	2	WASHER (4.7X11X1.2-MM THK)	
	18	1	**4P-7581**	1	CLIP	
M	19	1	**8T-4201**	1	BOLT-LOCKING (M10X1.5X20-MM)	
M	20	1	**9X-2042**	1	SCREW-TRUSS HEAD (M6X1X12-MM)	

M-METRIC PART
Y-SEPARATE ILLUSTRATION

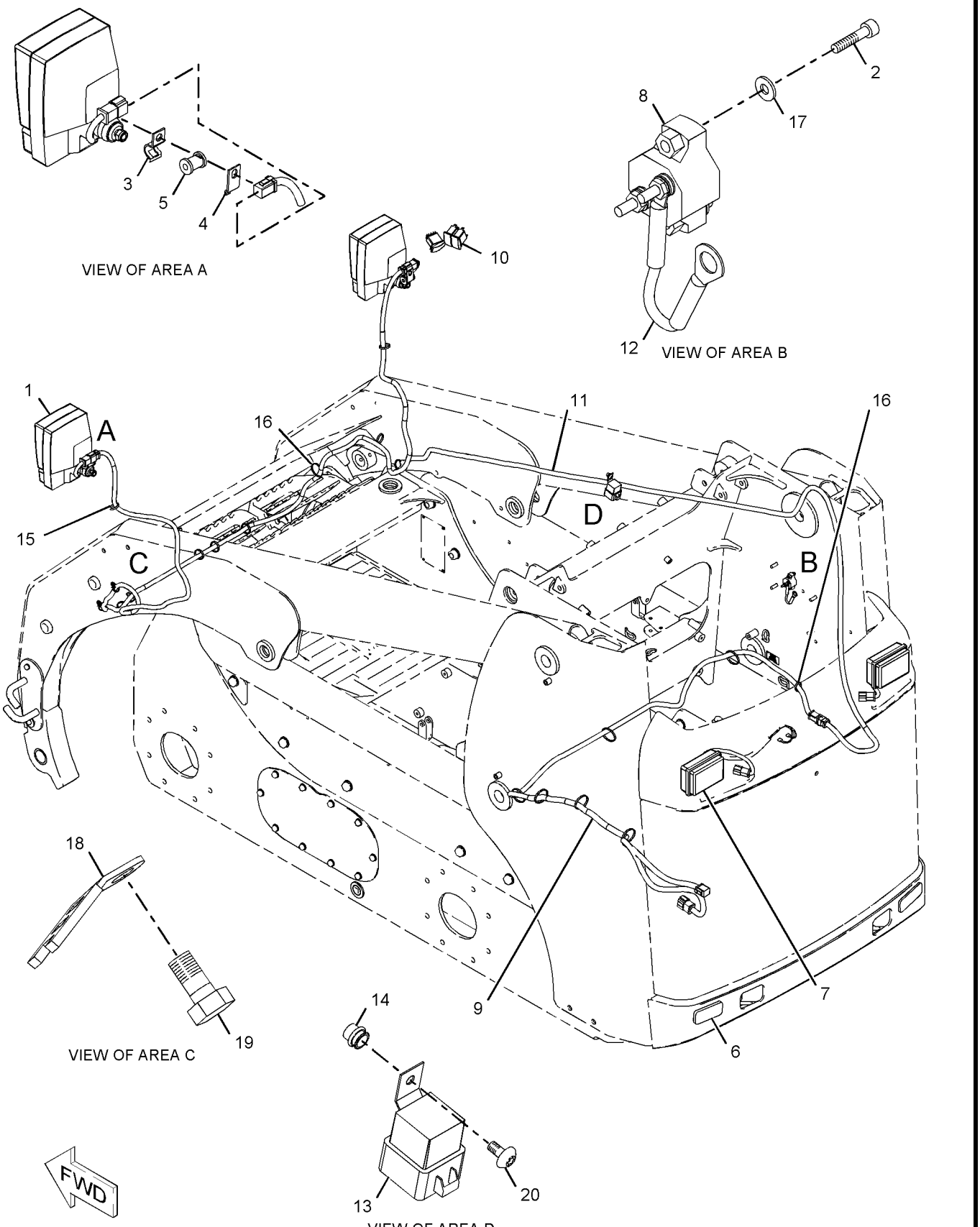

GRAPHIC #1

<END>

g01029883

216-4716 LIGHTING GP-ROADING

S/N: SCH1-UP; BXM1-UP
PART OF 278-1213, 278-1225, 278-5370, 278-5409, 278-5414, 278-5442 CONVERSION AR-MACHINE, 233-5682, 233-5683, 233-5685, 233-5686, 257-5721, 257-5722 CONVERSION AR-ROADING AN ATTACHMENT

SMCS-1429 **i02471493**

NOTE	REF NO	GRAPHIC REF	PART NUMBER	QTY	PART NAME 1 2 3 4 5 6 (PRODUCT LEVEL)	SEE PAGE
Y	1	1	**3E-7584**	2	LAMP GP-HEAD & SIGNAL	166
	2	1	**7D-5473**	2	BOLT-SOCKET HEAD (8-32X0.75-IN)	
	3	1	**8T-1887**	2	CLIP (SLOT)	
	4	1	**8T-1888**	2	CLIP (TAB)	
	5	1	**8W-8909**	2	SLEEVE	
	6	1	**9R-1499**	2	REFLECTOR	
Y	7	1	**142-8634**	2	LAMP GP-STOP & TAIL	169
	8	1	**147-1773**	1	CIRCUIT BREAKER AS (30-AMPERE)	
		1	**6V-8378**	2	NUT (10-32-THD)	
		1	**8F-1434**	2	LOCKWASHER	
		1	**8T-0328**	2	WASHER-HARD (5.5X10X1-MM THK)	
	9	1	**216-4726**	1	HARNESS AS-FRONT LIGHTING	
		1	**155-2274**	1	KIT-CONNECTING PLUG (6-PIN)	
					(INCLUDES PLUG AS, WEDGE & INTERFACE SEAL)	
	10	1	**216-4727**	1	HARNESS AS-REAR LIGHTING	
		1	**102-8805**	1	KIT-RECEPTACLE (6-PIN)	
		1	**102-8806**	1	KIT-RECEPTACLE (8-PIN)	
					(EACH KIT INCLUDES RECEPTACLE AS & WEDGE)	
		1	**155-2265**	1	KIT-CONNECTING PLUG (8-PIN)	
					(INCLUDES PLUG AS, WEDGE & INTERFACE SEAL)	
	11	1	*225-7962*	1	SWITCH GP-ROCKER (ROADING)	
		1	**142-9329**	1	SWITCH AS-ROCKER (ROADING LIGHTS)	
		1	**142-9331**	1	SWITCH AS-ROCKER (HAZARD WARNING LIGHTS)	
		1	**226-5900**	1	SWITCH AS-ROCKER (TURN SIGNAL)	
					(EACH SWITCH AS-ROCKER INCLUDES)	
		1	**111-7899**	1	GASKET	
	12	1	**225-8013**	1	WIRE AS	
	13	1	**242-9000**	1	FLASHER AS	
	14	1	**195-0935**	1	INSERT-THREADED (M6X1)	
	15	1	**206-1346**	2	STRAP-CABLE	
	16	1	**3S-2093**	18	STRAP-CABLE	
	17	1	**4B-4863**	2	WASHER (4.7X11X1.2-MM THK)	
	18	1	**4P-7581**	1	CLIP	
M	19	1	**8T-4201**	1	BOLT-LOCKING (M10X1.5X20-MM)	
M	20	1	**9X-2042**	1	SCREW-TRUSS HEAD (M6X1X12-MM)	

M-METRIC PART
Y-SEPARATE ILLUSTRATION

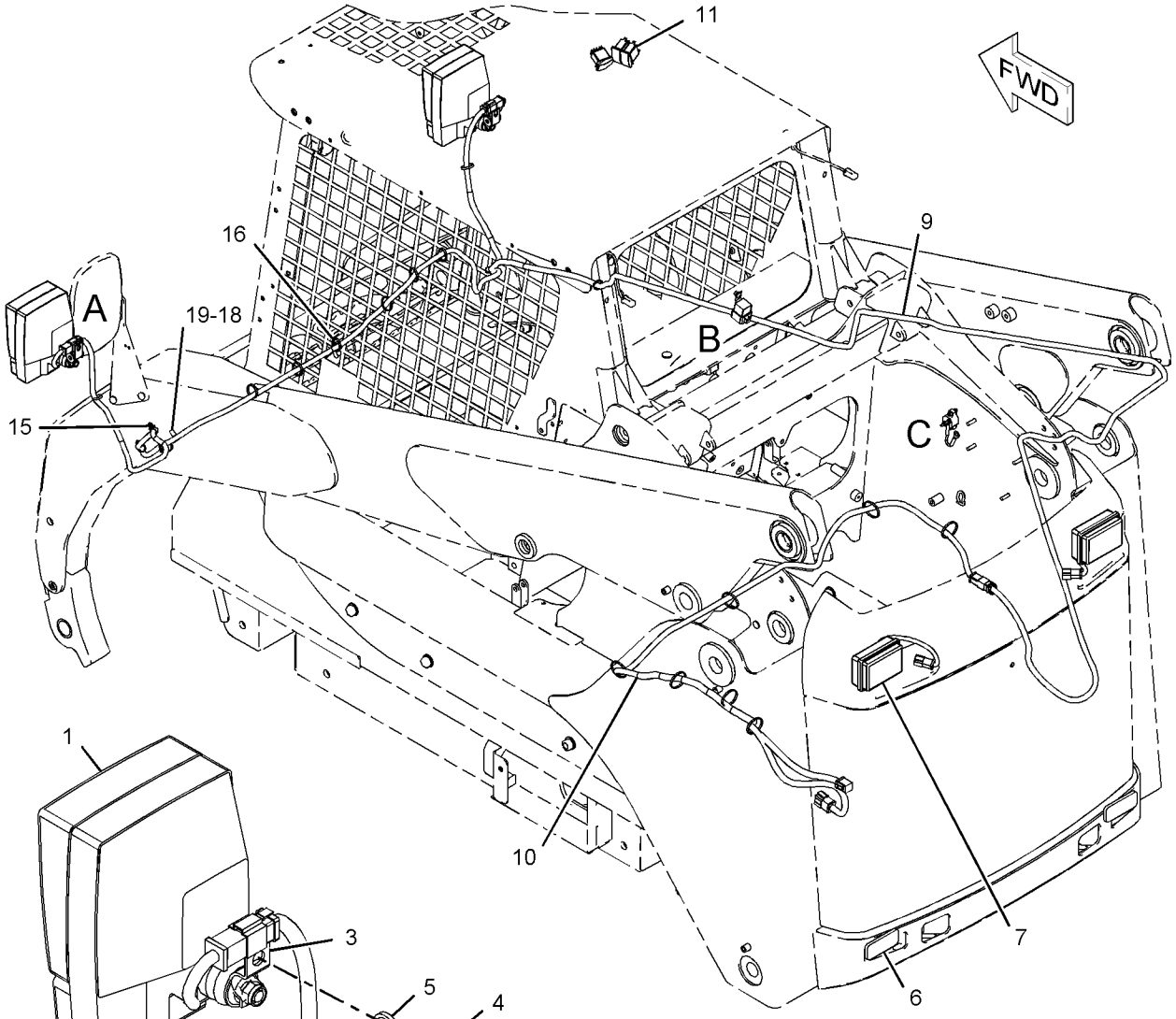

VIEW OF AREA A

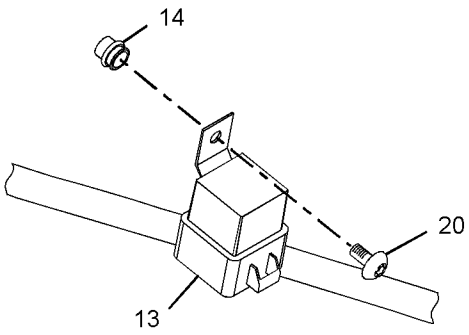

VIEW OF AREA B

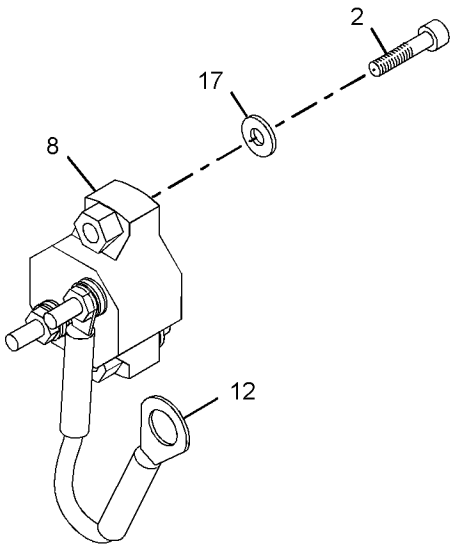

VIEW OF AREA C

GRAPHIC #1 **<END>** g01035544

142-8652 LIGHTING GP-STOP & TAIL

S/N: MJH1-UP; SCH1-UP; RLL1-UP; BXM1-UP
PART OF 252-0449, 261-6155, 261-6156, 261-6157, 261-6158, 261-6160, 261-6197, 278-1220, 278-1221, 278-5347, 278-5348 CONVERSION AR-MACHINE, 233-5670 CONVERSION AR-NON-ROADING, 233-5671, 233-5674, 233-5681, 233-5684, 257-5718, 257-5723 CONVERSION AR-ROADING AN ATTACHMENT

SMCS-1432 **i02005846**

NOTE	REF NO	GRAPHIC REF	PART NUMBER	QTY	PART NAME 1 2 3 4 5 6 (PRODUCT LEVEL)	SEE PAGE
	1	1	**3S-2093**	2	STRAP-CABLE	
	2	1	**9R-1499**	2	REFLECTOR	
Y	3	1	**142-7503**	2	LAMP GP-STOP & TAIL	168
	4	1	**4P-7581**	2	CLIP	
	5	1	**8T-4205**	4	WASHER-HARD (7.2X14.5X2-MM THK)	

Y-SEPARATE ILLUSTRATION

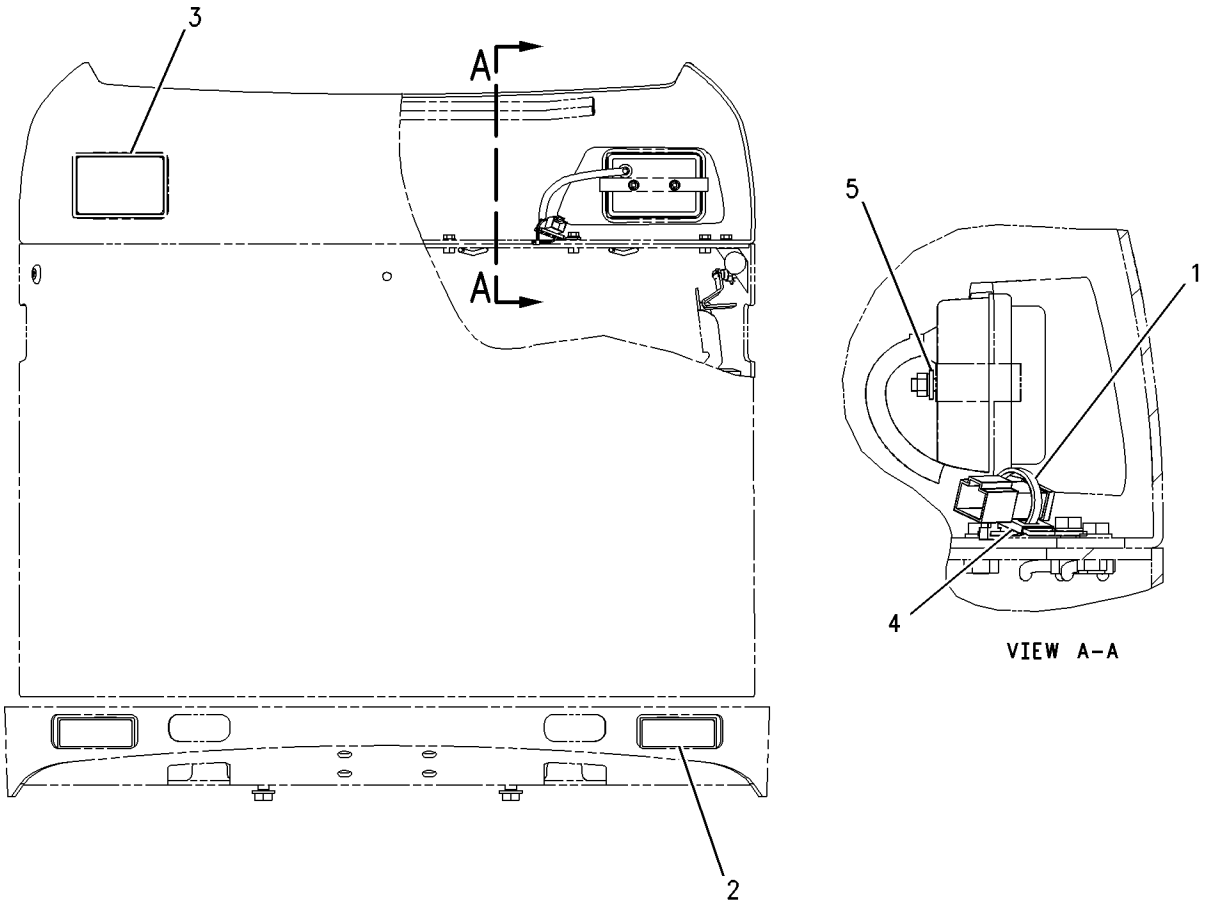

GRAPHIC #1 **<END>** g00771277

142-8653 LIGHTING GP-WARNING BEACON–12-VOLT

S/N: MJH1-UP; SCH1-UP; RLL1-UP; BXM1-UP

AN ATTACHMENT

SMCS-1431 **i02262621**

NOTE	REF NO	GRAPHIC REF	PART NUMBER	QTY	PART NAME 1 2 3 4 5 6 (PRODUCT LEVEL)	SEE PAGE
Y	1	1	**128-6985**	1	LAMP GP-WARNING BEACON (12-VOLT, AMBER)	170
	2	1	**142-9327**	1	SWITCH AS-ROCKER (WARNING BEACON)	
		1	**111-7899**	1	GASKET	

Y-SEPARATE ILLUSTRATION

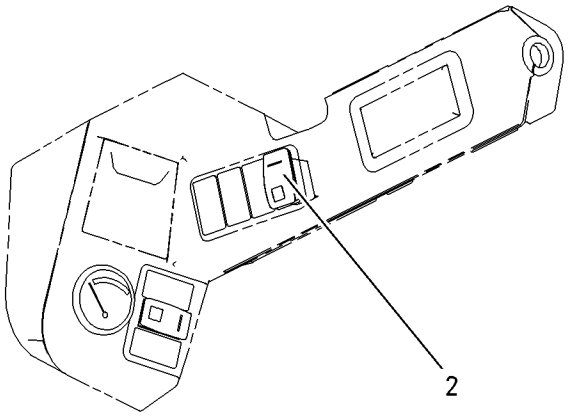

RH CONTROL PANEL

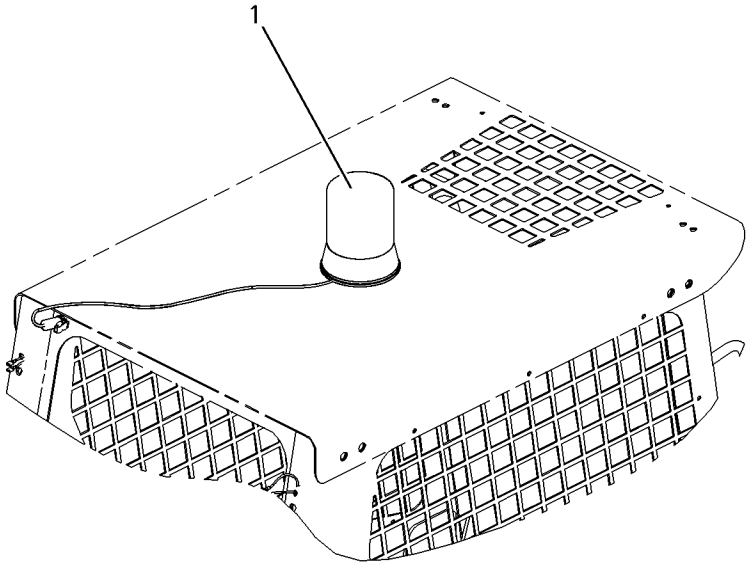

GRAPHIC #1 **<END>** g00867567

217-5795 SENSOR GP-TEMP & PRESS

S/N: CSD1-UP

PART OF 179-1808 ENGINE AR-PRIMARY

SMCS-1906, 1924 **i02312094**

NOTE	REF NO	GRAPHIC REF	PART NUMBER	QTY	PART NAME 1 2 3 4 5 6 (PRODUCT LEVEL)	SEE PAGE
	1	1	**153-5936**	2	WASHER	
	2	1	**183-1165**	1	PLUG-SEALING	
	3	1	**266-0226**	1	SWITCH-PRESSURE (ENGINE OIL) (ENGINE OIL PRESSURE)	
	4	1	**217-5792**	1	ADAPTER	
	5	1	**217-5793**	1	SWITCH-TEMPERATURE (ENGINE COOLANT)	

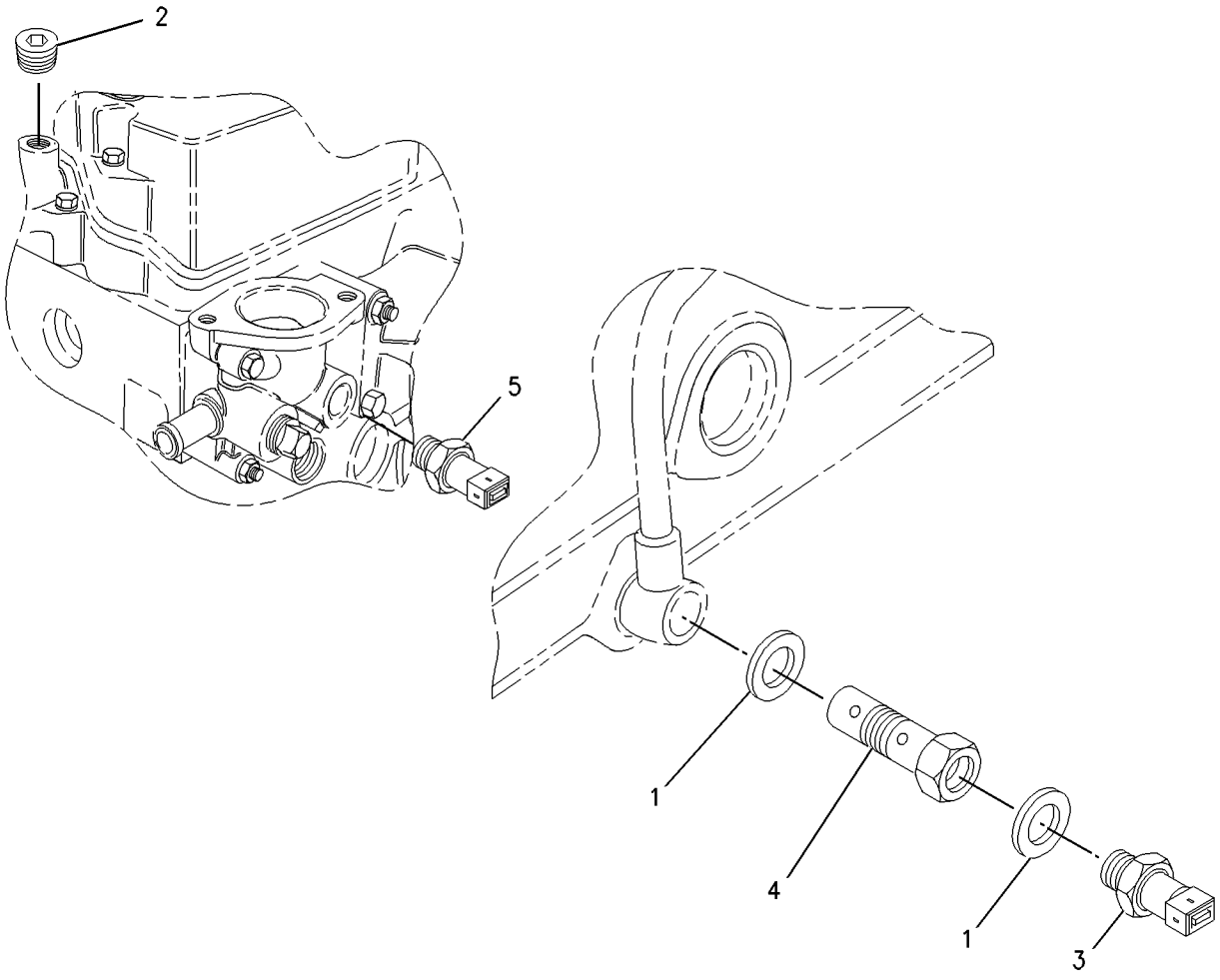

GRAPHIC #1 **<END>** g00852742

247-0323 SENSOR GP-TEMP & PRESS

S/N: GGA5204-UP; CSD9554-UP
PART OF 179-1808, 233-6648 ENGINE AR-PRIMARY
ALSO AN ATTACHMENT

SMCS-1906, 1924 **i02250689**

NOTE	PART NUMBER	QTY	PART NAME 1 2 3 4 5 6 (PRODUCT LEVEL)	SEE PAGE
	217-5792	1	ADAPTER	
	266-0227	1	SWITCH-PRESSURE (ENGINE OIL) (ENGINE)	
	231-2999	1	SWITCH-TEMPERATURE (ENGINE COOLANT)	
	153-5936	2	WASHER	

<END>

263-3256 SENSOR GP-TEMP & PRESS

S/N: GGA1777-5204; CSD4403-9554
PART OF 179-1808, 233-6648 ENGINE AR-PRIMARY
ALSO AN ATTACHMENT

SMCS-1906, 1924 **i02253700**

NOTE	REF NO	GRAPHIC REF	PART NUMBER	QTY	PART NAME 1 2 3 4 5 6 (PRODUCT LEVEL)	SEE PAGE
	1	1	**153-5936**	2	WASHER	
	2	1	**266-0226**	1	SWITCH-PRESSURE (ENGINE OIL) (ENGINE OIL PRESSURE)	
	3	1	**217-5792**	1	ADAPTER	
	4	1	**217-5793**	1	SWITCH-TEMPERATURE (ENGINE COOLANT)	

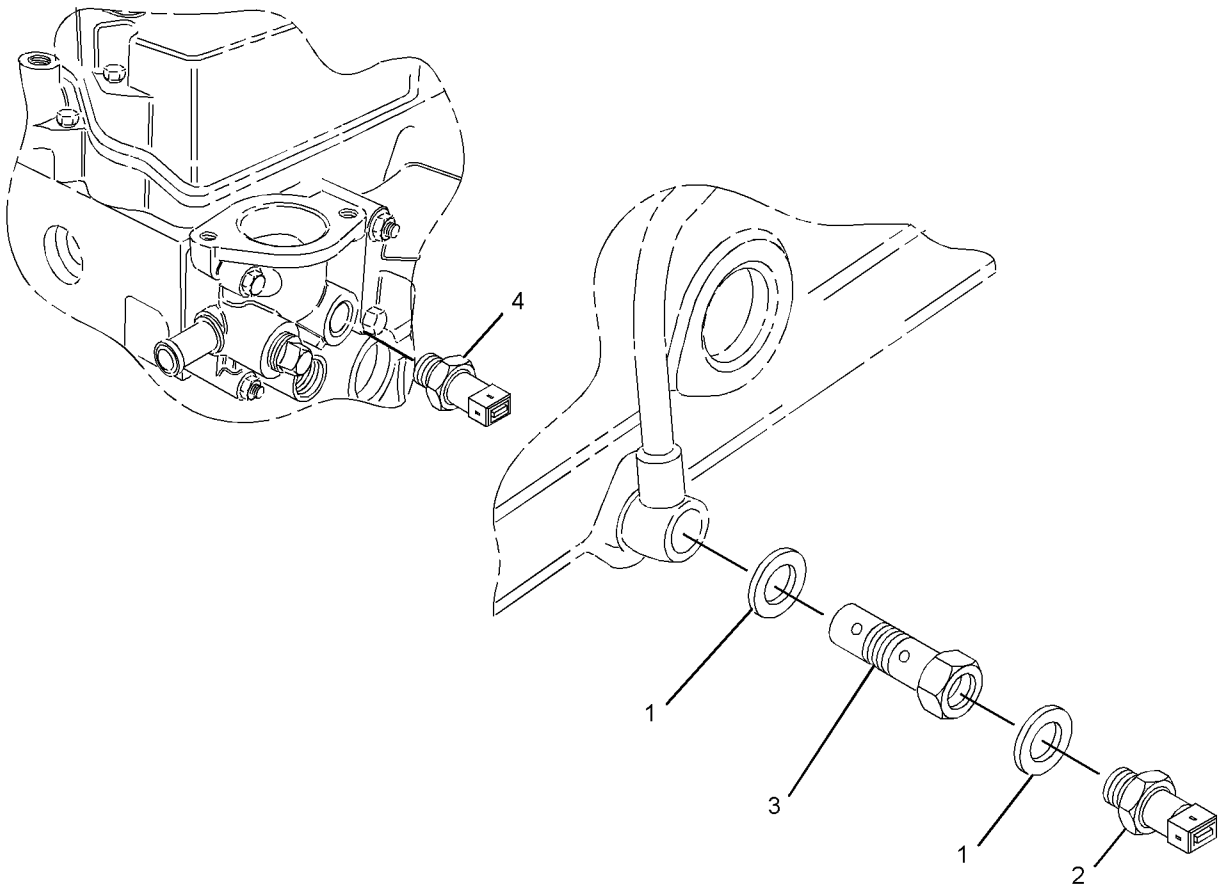

GRAPHIC #1 **<END>** g01117231

207-5262 SERVICE GP-MACHINE–SECURITY

S/N: MJH1-UP; SCH1-UP; RLL1-UP; BXM1-UP
PART OF 225-7991, 239-5010 INSTALLATION GP-SECURITY
AN ATTACHMENT

SMCS-7610, 7631 **i02348756**

NOTE	REF NO	GRAPHIC REF	PART NUMBER	QTY	PART NAME 1 2 3 4 5 6 (PRODUCT LEVEL)	SEE PAGE
	1	1	*156-6155*	1	CONTROL GP-UNPROGRAMMED (SECURITY)	
	1A	1	**7X-6315**	1	STRAP AS-GROUND	
	1B	1	**184-2472**	1	SCREW-PAN HEAD (NO 8-32X9.52-MM)	
	1C	1	**134-4126**	1	WASHER (4.52X8.28X0.76-MM THK)	
	2	1	**243-6464**	1	SOFTWARE GP-MACHINE	
	3	1	**206-5162**	2	KEY AS-ELECTRONIC (SECURITY)	
					–OR–	
		1	**206-5165**	2	KEY AS-ELECTRONIC (SECURITY)	
	4	1	**219-6314**	2	KEY RING (IDENTIFICATION)	

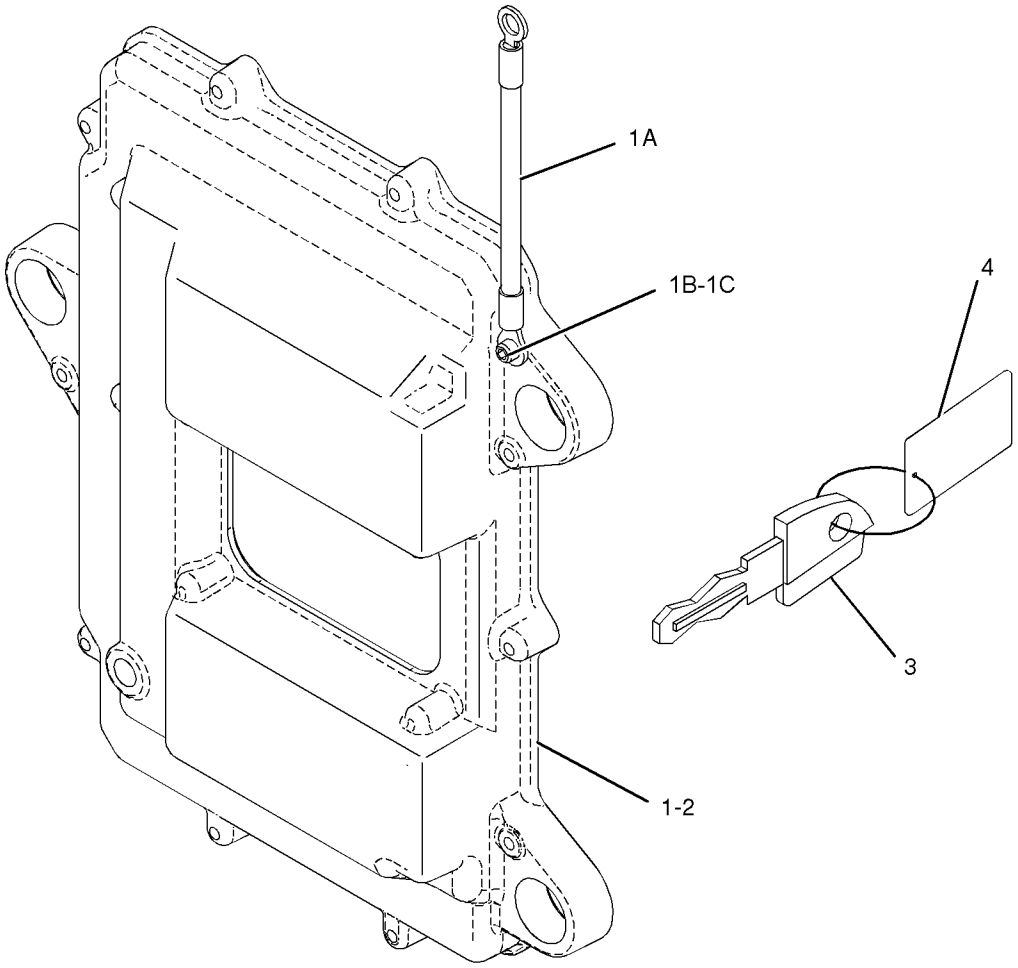

GRAPHIC #1 **<END>** g01026135

163-3361 STARTING MOTOR GP-ELECTRIC

S/N: CSD1-UP

PART OF 168-8979 STARTING MOTOR GP-ELECTRIC

ALSO AN ATTACHMENT

SMCS-1453 **i02385155**

NOTE	REF NO	GRAPHIC REF	PART NUMBER	QTY	PART NAME 1 2 3 4 5 6 (PRODUCT LEVEL)	SEE PAGE
	1	1	**242-7070**	1	BUSHING	
	2	1	**242-7071**	1	SOLENOID (STARTING MOTOR)	
	3	1	**242-7073**	1	BUSHING	
	4	1	**242-7074**	1	DRIVE-MOTOR	
	5	1	**242-7075**	1	HOLDER	
	6	1	**242-7076**	1	BUSHING	
	7	1	**242-7077**	1	KIT-STARTING MOTOR	
	8	1	**242-7078**	1	ARMATURE	

163-3361 **STARTING MOTOR GP-ELECTRIC** *(contd.)* **i02385155**

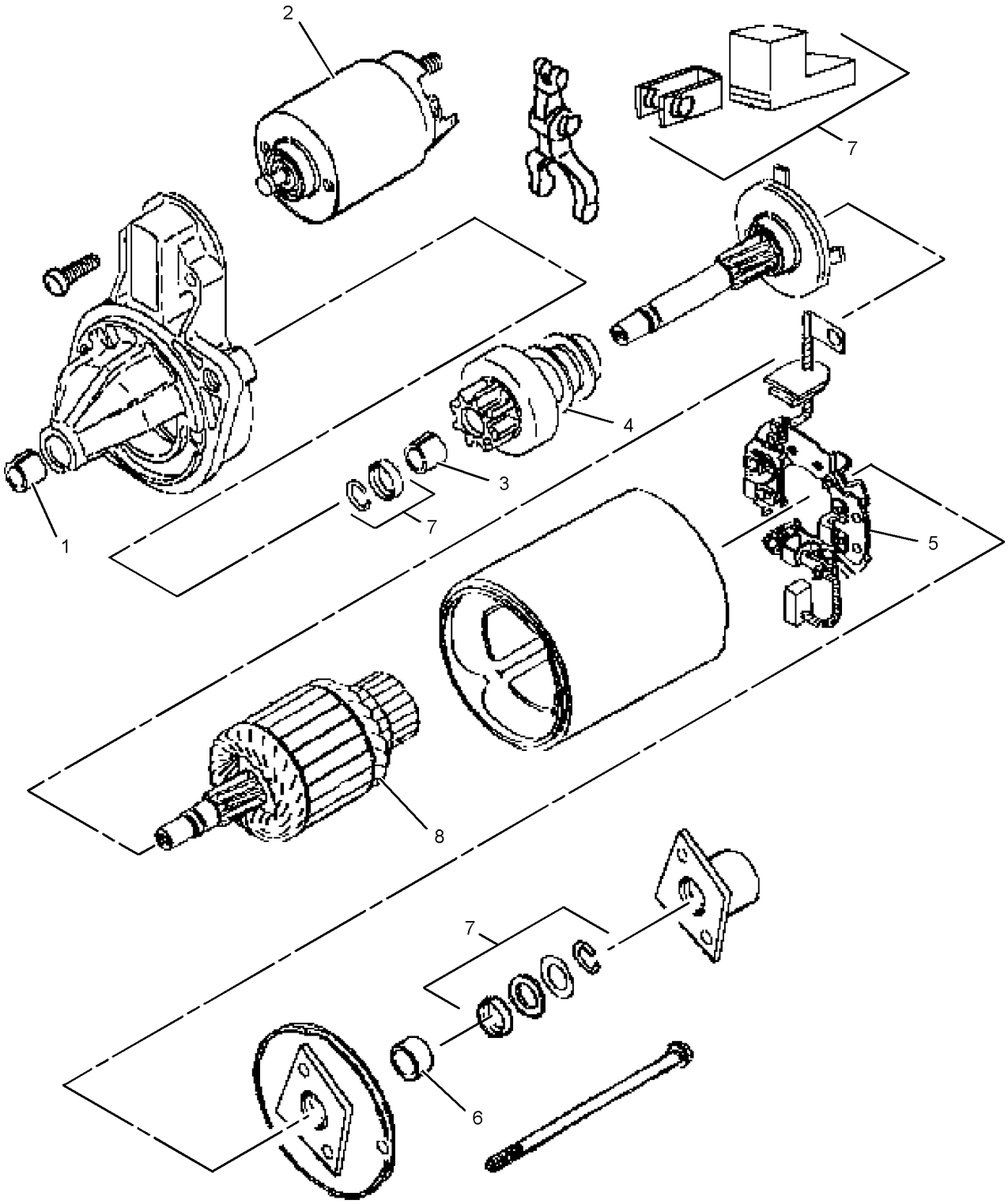

GRAPHIC #1 **<END>** g01158306

168-8979 STARTING MOTOR GP-ELECTRIC

S/N: GGA1-UP; CSD1-UP
PART OF 179-1808, 233-6648 ENGINE AR-PRIMARY
ALSO AN ATTACHMENT

SMCS-1453 **i02208050**

NOTE	REF NO	GRAPHIC REF	PART NUMBER	QTY	PART NAME 1 2 3 4 5 6 (PRODUCT LEVEL)	SEE PAGE
	1	1	**154-1399**	2	WASHER	
	2	1	**154-2401**	2	BOLT	
	3	1	**154-2403**	2	WASHER	
Y	4	1	**163-3361**	1	STARTING MOTOR GP-ELECTRIC	183

Y-SEPARATE ILLUSTRATION

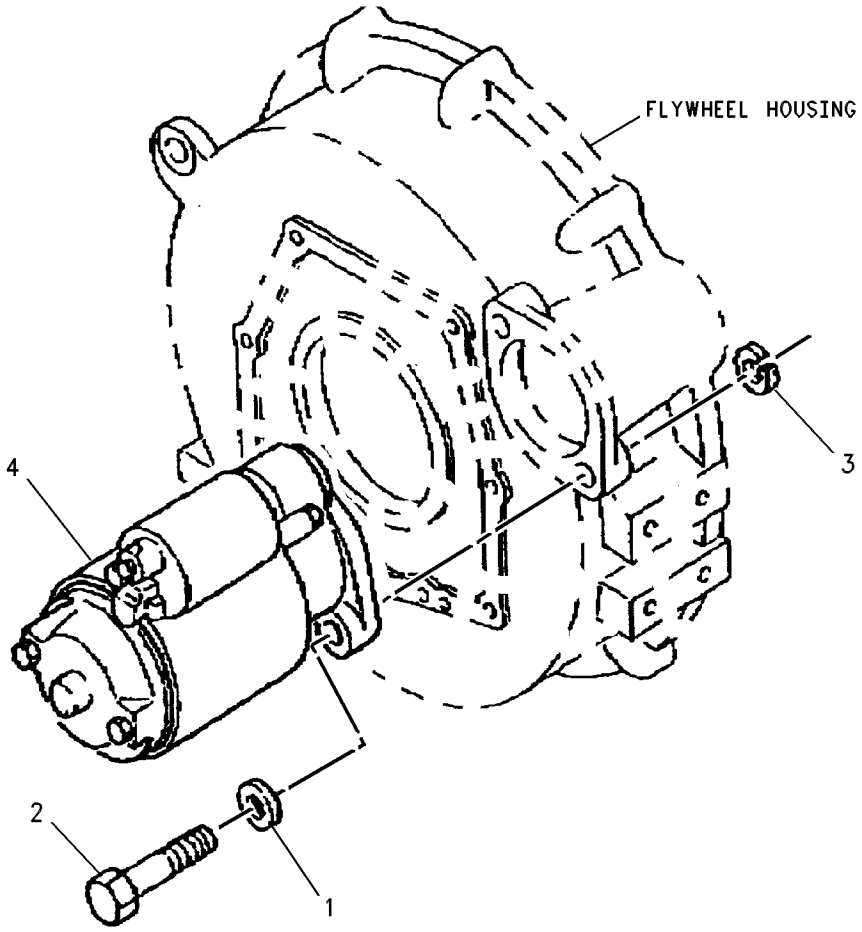

GRAPHIC #1 **<END>** g00582487

184-1564 SWITCH GP-PRESSURE–BRAKE LIGHT

S/N: MJH1-UP; SCH1-UP; RLL1-UP; BXM1-UP
PART OF 257-5727 CONVERSION AR-ROADING, 225-7964 WIRING GP-REAR LIGHTING AN ATTACHMENT

SMCS-1435, 7400 **i02475639**

NOTE	REF NO	GRAPHIC REF	PART NUMBER	QTY	PART NAME 1 2 3 4 5 6 (PRODUCT LEVEL)	SEE PAGE
	1	1	**9X-1813**		SLEEVE (19-CM)	
	2	1	**102-8802**	1	KIT-RECEPTACLE (2-PIN)	
					(INCLUDES RECECPTACLE AS & WEDGE)	
	3	1	**8T-8729**	2	PIN-CONNECTOR	
	4	1	**3E-3365**	1	WEDGE-RECEPTACLE LOCK (2-PIN)	
	5	1	**3J-1907**	1	SEAL-O-RING	

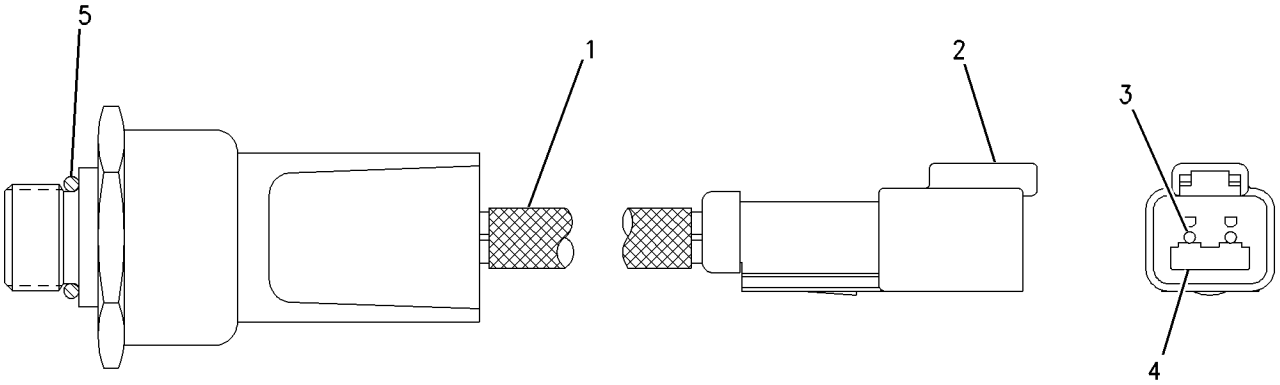

GRAPHIC #1 **<END>** g00788762

225-7969 WARNING GP-BACKUP

S/N: MJH1-UP; SCH1-UP; RLL1-UP; BXM1-UP
AN ATTACHMENT

SMCS-7406 **i02359135**

NOTE	REF NO	GRAPHIC REF	PART NUMBER	QTY	PART NAME 1 2 3 4 5 6 (PRODUCT LEVEL)	SEE PAGE
	1	1	**8T-4205**	2	WASHER-HARD (7.2X14.5X2-MM THK)	
	2	1	**161-2539**	1	ALARM	
	3	1	**192-0836**	1	SWITCH GP-PRESSURE (BACKUP ALARM)	
		1	**102-8802**	2	KIT-RECEPTACLE (2-PIN)	
					(INCLUDES RECEPTACLE AS & WEDGE)	
		1	**3E-3365**	1	WEDGE-RECEPTACLE LOCK (2-PIN)	
		1	**3J-1907**	1	SEAL-O-RING	
		1	**8T-8729**	1	PIN-CONNECTOR	
M	4	1	**6V-7357**	2	BOLT (M6X1X25-MM)	
F		1	**113-8490**	1	FUSE (10-AMPERE)	

F-NOT SHOWN
M-METRIC PART

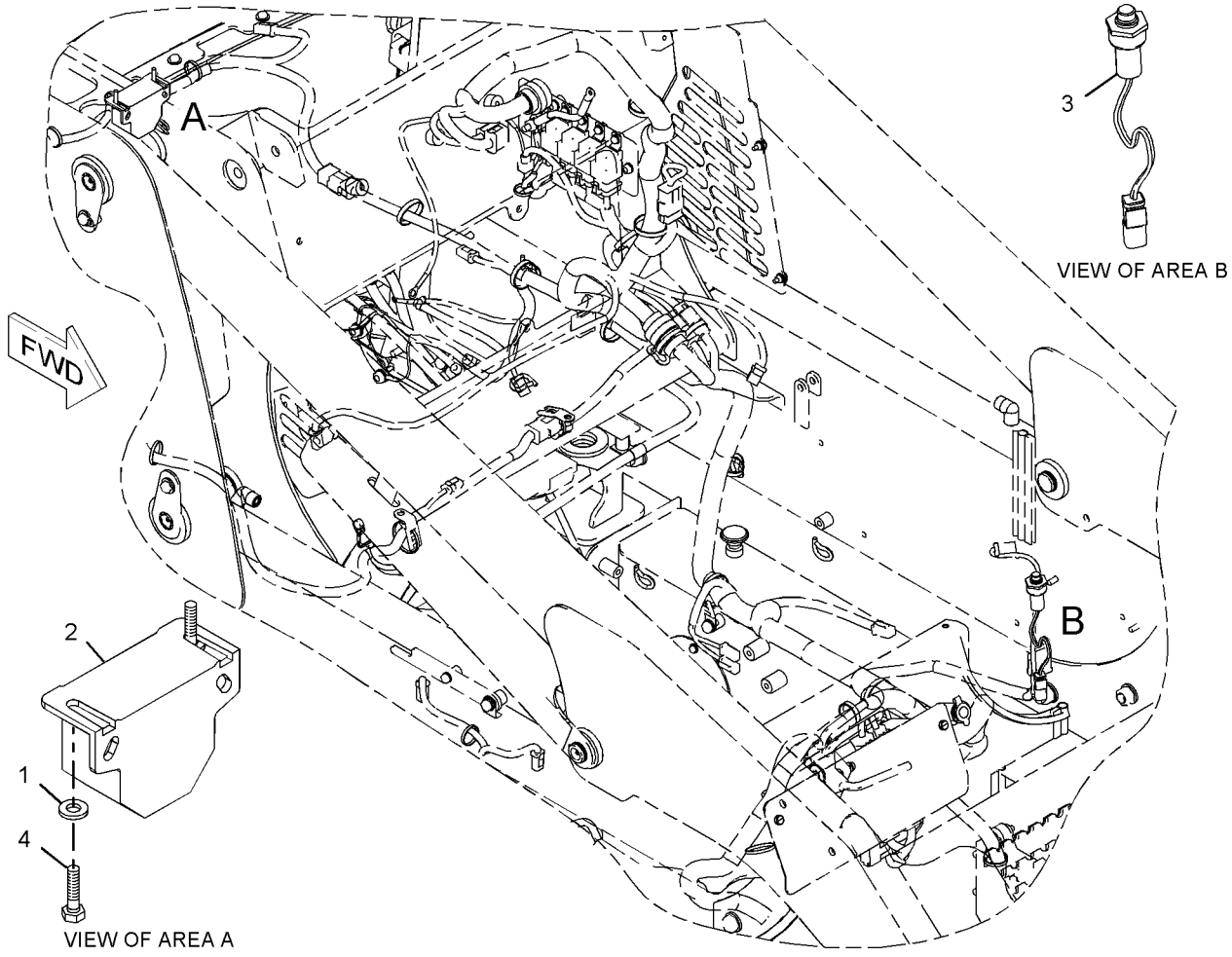

GRAPHIC #1 **<END>** g01030769

225-7948 WIRING GP-AIR CONDITIONER

S/N: MJH1-UP; BXM1-UP
PART OF 218-6273, 218-6302 AIR CONDITIONER AR
AN ATTACHMENT

SMCS-1408, 7320 **i02359133**

NOTE	REF NO	GRAPHIC REF	PART NUMBER	QTY	PART NAME 1 2 3 4 5 6 (PRODUCT LEVEL)	SEE PAGE
	1	1	**3S-2093**	12	STRAP-CABLE	
	2	1	**202-2168**	1	HARNESS AS-FUEL TANK	
		1	**102-8802**	1	KIT-RECEPTACLE (2-PIN)	
					(INCLUDES RECEPTACLE AS & WEDGE)	
		1	**155-2270**	1	KIT-CONNECTING PLUG (2-PIN)	
					(INCLUDES PLUG AS, WEDGE & INTERFACE SEAL)	
	3	1	**221-3879**	1	HARNESS AS-HEATER & AIR COND	
		1	**155-2260**	1	KIT-CONNECTING PLUG (3-PIN)	
		1	**155-2270**	1	KIT-CONNECTING PLUG (2-PIN)	
					(EACH KIT INCLUDES PLUG AS, WEDGE & INTERFACE SEAL)	
BF		1	**124-3548**	1	FUSE (30-AMPERE)	
BF		1	**113-8491**	1	FUSE (15-AMPERE)	

B-USE AS REQUIRED
F-NOT SHOWN

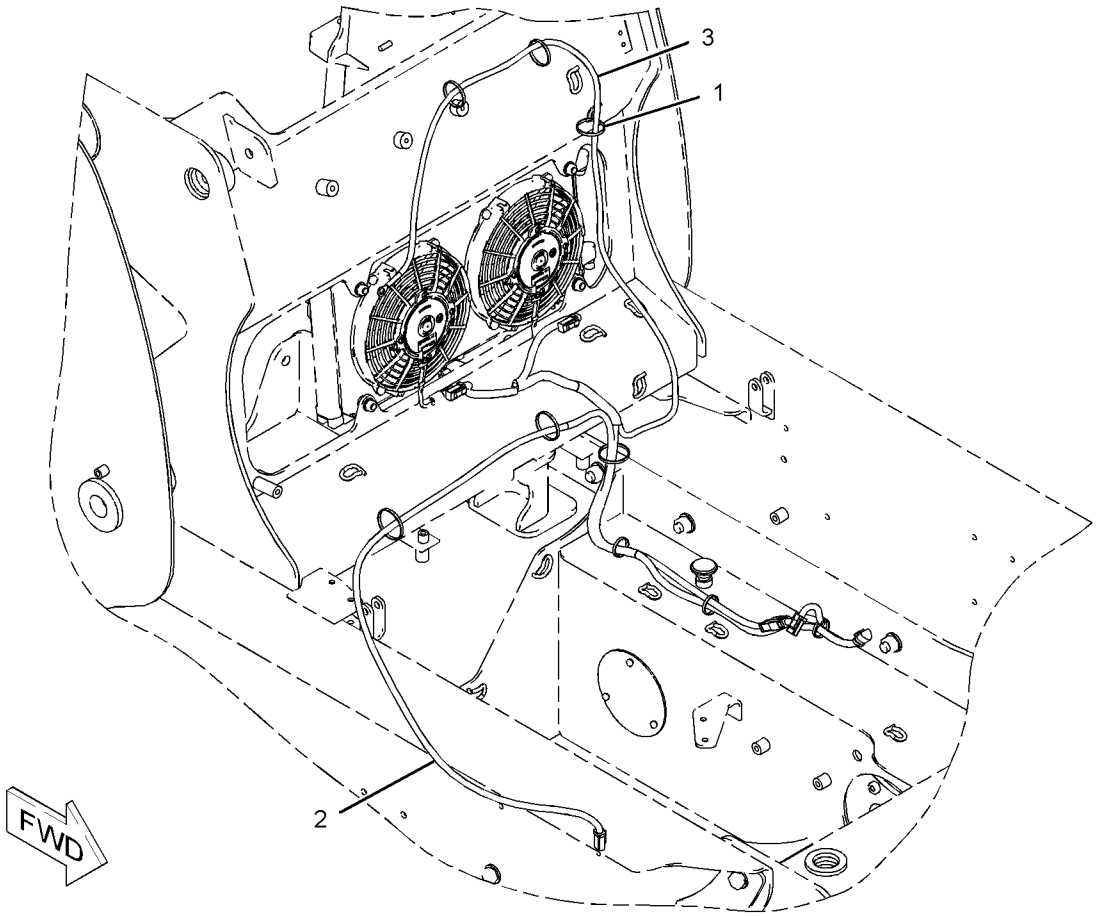

GRAPHIC #1 **<END>** g01029283

ELECTRICAL AND STARTING SYSTEM

225-8001 WIRING GP-CHASSIS

S/N: MJH1-UP; SCH1-UP; RLL1-UP; BXM1-UP
PART OF 218-5910, 218-6610 CHASSIS AR

SMCS-1408, 7051 **i02253667**

NOTE	REF NO	GRAPHIC REF	PART NUMBER	QTY	PART NAME 1 2 3 4 5 6 (PRODUCT LEVEL)	SEE PAGE
	1	1	**4B-4863**	2	WASHER (4.7X11X1.2-MM THK)	
	2	1	**6I-1418**	6	SPACER (8.2X12.7X28.7-MM THK)	
	3	1	**7K-1181**	12	STRAP-CABLE	
	4	1	**8M-4963**	1	STRAP AS-GROUND	
	5	1	**8T-8799**	2	BOOT	
	6	1	**8T-9655**	12	MOUNT-ISOLATION	
E	7	1	**9X-2092**		STRIP-EDGE (10-CM)	
	8	1	**090-9434**	3	SPACER (9X20X10-MM THK)	
	9	1	**114-4516**	1	BLOCK	
	10	1	**115-1615**	3	RELAY AS (12-VOLT) (MAIN POWER)	
Y	11	1	**154-4233**	1	CONTROL GP-INTERLOCK	150
B	12	1	**177-9645**	1	KIT-RECEPTACLE (2-PIN)	
					(INCLUDES RECEPTACLE AS & WEDGE)	
	13	1	**178-7539**	1	RECEPTACLE AS (POWER SUPPLY)	
	14	1	**216-4703**	1	HARNESS AS-REAR LIGHTING	
		1	**155-2272**	2	PLUG AS-CONNECTOR (4-PIN)	
					(EACH INCLUDES PLUG AS, WEDGE & INTERFACE SEAL)	
		1	**102-8806**	1	KIT-RECEPTACLE (8-PIN)	
					(INCLUDES RECEPTACLE AS & WEDGE)	
Y	15	1	*216-4755*	1	COVER GP-FUSE PANEL	152
	16	1	**221-3880**	1	PANEL GP-FUSE	
		1	**113-8490**	8	FUSE (10-AMPERE)	
		1	**113-8491**	3	FUSE (15-AMPERE)	
		1	**113-8492**	1	FUSE (20-AMPERE)	
	17	1	**225-5190**	1	BRACKET AS	
	18	1	**225-7981**	1	BRACKET AS	
	19	1	**225-7982**	1	WIRE AS	
Y	20	1	*225-8000*	1	ELECTRONICS GP-IMPLEMENT (WORK TOOL)	153
	21	1	**225-8002**	1	HARNESS AS-PLATFORM (LOWER)	
		1	**150-6764**	1	PLUG AS-CONNECTOR (26-PIN)	
		1	**159-9322**	1	SEAL-O-RING	
		1	**150-6765**	1	PLUG AS-CONNECTOR (26-PIN)	
		1	**159-9322**	1	SEAL-O-RING	
		1	**155-2272**	1	PLUG AS-CONNECTOR (4-PIN)	
					(INCLUDES PLUG AS & WEDGE)	
		1	**155-2255**	2	KIT-CONNECTING PLUG (12-PIN)	
		1	**155-2265**	1	KIT-CONNECTING PLUG (8-PIN)	
		1	**155-2270**	6	KIT-CONNECTING PLUG (2-PIN)	
					(EACH PLUG KIT INCLUDES PLUG AS, WEDGE & INTERFACE SEAL)	
		1	**102-8805**	1	KIT-RECEPTACLE (6-PIN)	
		1	**102-8801**	1	KIT-RECEPTACLE (12-PIN)	
					(EACH RECEPTACLE KIT INCLUDES RECEPTACLE AS & WEDGE)	
		1	**196-2381**	1	KIT-CONNECTING PLUG (2-PIN)	
		1	**196-2382**	1	KIT-CONNECTING PLUG (2-PIN)	
		1	**196-2383**	1	KIT-PLUG (8-PIN)	
					(EACH PLUG KIT INCLUDES PLUG AS, LOCK & TERMINAL AS)	
		1	**8L-8413**	7	STRAP-CABLE	
		1	**167-3692**	1	RECEPTACLE AS-CONNECTOR (31-PIN)	
	22	1	**225-8003**	1	HARNESS AS-PLATFORM (UPPER)	
		1	**9X-1054**	4	PLUG AS-CONNECTOR (4-PIN)	
		1	**100-3320**	1	PLUG AS-CONNECTOR (2-PIN)	
		1	**126-5011**	1	SEAL-CONNECTOR	

225-8001 **WIRING GP-CHASSIS** *(contd.)* **i02253667**

NOTE	REF NO	GRAPHIC REF	PART NUMBER	QTY	PART NAME 1 2 3 4 5 6 (PRODUCT LEVEL)	SEE PAGE
		1	**155-2272**	2	PLUG AS-CONNECTOR (4-PIN)	
					(EACH INCLUDES PLUG AS, WEDGE & INTERFACE SEAL)	
		1	**167-3693**	2	PLUG AS-CONNECTOR (31-PIN)	
		1	**155-2255**	3	KIT-CONNECTING PLUG (12-PIN)	
		1	**155-2265**	1	KIT-CONNECTING PLUG (8-PIN)	
		1	**155-2260**	2	KIT-CONNECTING PLUG (3-PIN)	
		1	**155-2270**	2	KIT-CONNECTING PLUG (2-PIN)	
		1	**155-2274**	1	KIT-CONNECTING PLUG (6-PIN)	
		1	**177-9648**	1	KIT-CONNECTING PLUG (2-PIN)	
					(EACH PLUG KIT INCLUDES PLUG AS, WEDGE & INTERFACE SEAL)	
		1	**177-9656**	1	KIT-CONNECTING PLUG (4-PIN)	
					(INCLUDES PLUG AS & WEDGE)	
		1	**102-8804**	1	KIT-RECEPTACLE (4-PIN)	
		1	**102-8801**	1	KIT-RECEPTACLE (12-PIN)	
					(EACH RECEPTACLE KIT INCLUDES RECEPTACLE AS & WEDGE)	
		1	**8L-8413**	11	STRAP-CABLE	
		1	**9X-3401**	11	PIN-CONNECTOR (16-GA TO 18-GA) (16-GA TO 18-GA)	
					—OR—	
		1	**126-1767**	11	PIN-CONNECTOR (14-GA) (14-GA)	
M	24	1	**095-0733**	2	SCREW-MACHINE (M4X0.7X40-MM)	
B	25	1	**155-2255**	1	KIT-CONNECTING PLUG (12-PIN)	
B	26	1	**155-2271**	1	KIT-CONNECTING PLUG (4-PIN)	
					(EACH PLUG KIT INCLUDES PLUG AS, WEDGE & INTERFACE SEAL)	
B	27	1	**102-8802**	2	KIT-RECEPTACLE (2-PIN)	
B	28	1	**102-8803**	1	KIT-RECEPTACLE (3-PIN)	
B	29	1	**102-8804**	3	KIT-RECEPTACLE (4-PIN)	
B	30	1	**102-8806**	1	KIT-RECEPTACLE (8-PIN)	
					(EACH RECEPTACLE KIT INCLUDES RECEPTACLE AS & WEDGE)	
	31	1	**3S-2093**	35	STRAP-CABLE	
	32	1	**4P-7581**	3	CLIP	
	33	1	**4P-8134**	3	CLIP	
	34	1	**246-9371**	1	RELAY AS (SHELL) (SHELL)	
M	35	1	**5C-7261**	3	NUT (M8X1.25-THD)	
M	36	1	**5C-9553**	4	BOLT (M6X1X16-MM)	
M	37	1	**6V-5698**	2	SCREW-BUTTON HEAD (M4X0.7X10-MM)	
	38	1	**7X-0579**	6	WASHER-HARD (8.8X25.5X2-MM THK)	
M	39	1	**7X-0818**	6	BOLT (M8X1.25X45-MM)	
	40	1	**8C-8558**	2	SCREW-LOCK	
	41	1	**8T-4121**	5	WASHER-HARD (11X21X2.5-MM THK)	
M	42	1	**8T-4133**	4	NUT (M10X1.5-THD)	
M	43	1	**8T-4191**	2	BOLT (M10X1.5X16-MM)	
	44	1	**8T-4205**	4	WASHER-HARD (7.2X14.5X2-MM THK)	
	45	1	**8T-4224**	3	WASHER-HARD (8.8X16X2-MM THK)	
M	46	1	**9X-2044**	4	SCREW-TRUSS HEAD (M6X1X16-MM)	
B	47	1	**155-2258**	1	WEDGE-PLUG LOCK (12-PIN)	
B	48	1	**155-2262**	1	WEDGE-PLUG LOCK (4-PIN)	
B	49	1	**8T-8737**	45	PLUG-SEAL	

B-USE AS REQUIRED
E-ORDER BY THE CENTIMETER
M-METRIC PART
Y-SEPARATE ILLUSTRATION

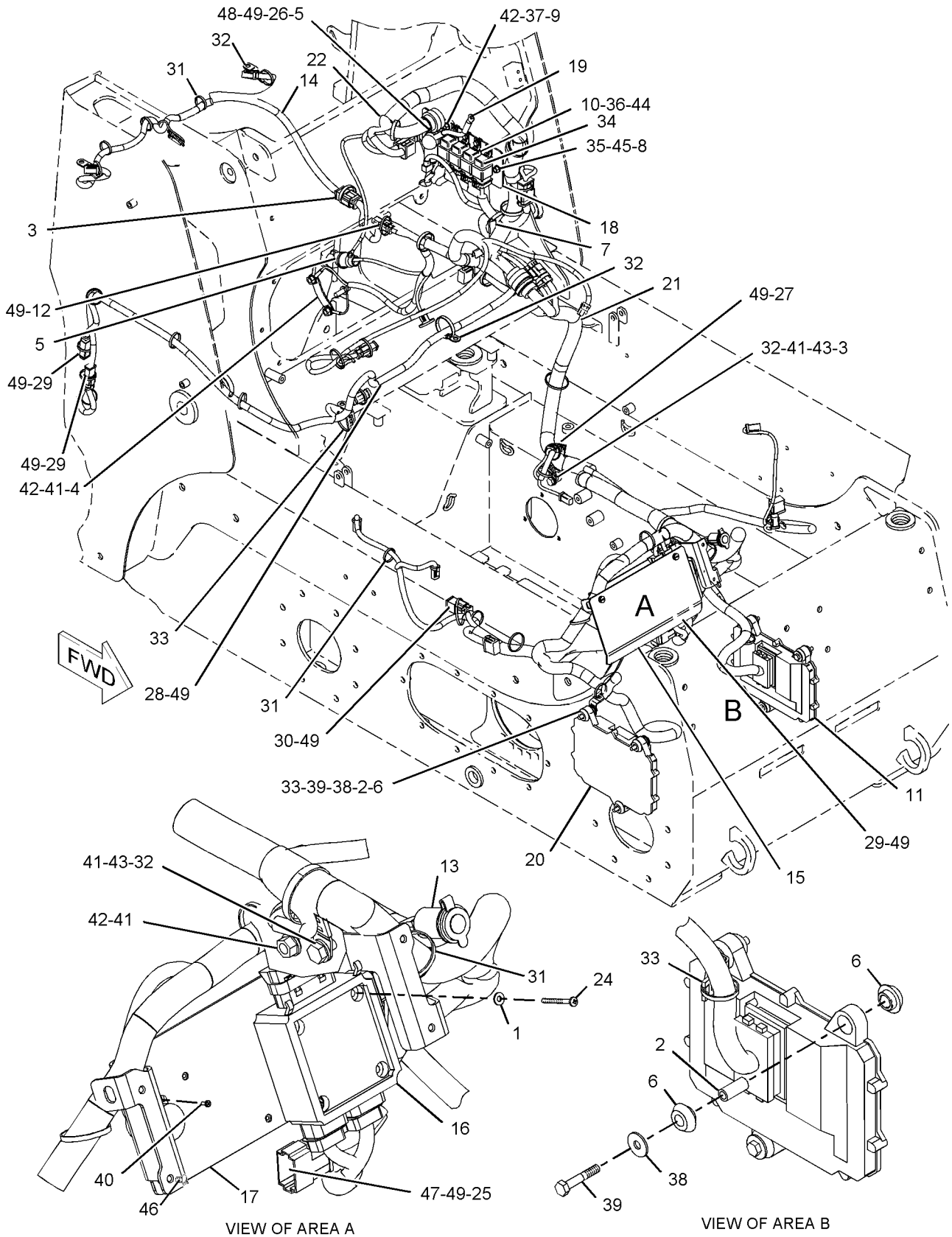

GRAPHIC #1 **<END>** g01149031

225-8010 WIRING GP-ENGINE

S/N: MJH1-3321; SCH1-958; RLL1-1768; BXM1-1353
PART OF 218-0911, 228-1767 INSTALLATION AR-ENGINE

SMCS-1000, 1408, 1420 **i02359183**

NOTE	REF NO	GRAPHIC REF	PART NUMBER	QTY	PART NAME 1 2 3 4 5 6 (PRODUCT LEVEL)	SEE PAGE
	1	1	**4B-4274**	2	WASHER (5.5X13X1.2-MM THK)	
	2	1	**5L-4507**	2	SCREW-MACHINE (10-32X0.875-IN)	
	3	1	**7G-1060**	1	STRAP AS-GROUND	
	4	1	**8F-1434**	2	LOCKWASHER	
	5	1	**090-9434**	3	SPACER (9X20X10-MM THK)	
	6	1	**115-1615**	2	RELAY AS (12-VOLT) (COLD START)	
	8	1	**171-2212**	1	CIRCUIT BREAKER AS (105-AMPERE)	
		1	**1H-3244**	2	LOCKWASHER	
		1	**6V-8187**	2	NUT (1/4-28-THD)	
		1	**8T-4205**	2	WASHER-HARD (7.2X14.5X2-MM THK)	
	9	1	**225-7954**	1	CABLE AS-BATTERY (POSITIVE)	
		1	**1S-7252**	1	TERMINAL-RING (FOR 3/8-IN BOLT)	
		1	**5P-0761**	30	CABLE (00-GA, RED)	
		1	**8N-0869**	1	COVER-TERMINAL (RED)	
		1	**8N-1725**	1	COVER-TERMINAL (RED)	
		1	**3S-6049**	1	TERMINAL AS-BATTERY (POSITIVE)	
		1	**1M-6119**	1	BOLT (5/16-18X1.375-IN)	
		1	**1M-6120**	1	NUT (5/16-18-THD)	
	10	1	**225-7980**	1	BRACKET AS	
	12	1	**225-8011**	1	HARNESS AS-ENGINE	
		1	**102-8801**	1	KIT-RECEPTACLE (12-PIN)	
					(INCLUDES RECEPTACLE AS & WEDGE)	
		1	**155-2271**	1	KIT-CONNECTING PLUG (4-PIN)	
					(INCLUDES PLUG AS, WEDGE & INTERFACE SEAL)	
	13	1	**238-9397**	1	RESISTOR AS	
	14	1	**172-9200**	1	SUPPRESSOR-ARC	
	15	1	**1H-3244**	1	LOCKWASHER	
	16	1	**3S-2093**	8	STRAP-CABLE	
	17	1	**4P-8134**	1	CLIP	
M	18	1	**5C-2874**	1	NUT (M5X0.8-THD)	
M	19	1	**5C-2890**	1	NUT (M6X1-THD)	
M	20	1	**5C-7261**	4	NUT (M8X1.25-THD)	
M	21	1	**5C-9553**	2	BOLT (M6X1X16-MM)	
	22	1	**8T-0328**	2	WASHER-HARD (5.5X10X1-MM THK)	
	23	1	**8T-4121**	2	WASHER-HARD (11X21X2.5-MM THK)	
M	24	1	**8T-4133**	1	NUT (M10X1.5-THD)	
M	25	1	**8T-4200**	1	BOLT (M8X1.25X16-MM)	
	26	1	**8T-4205**	3	WASHER-HARD (7.2X14.5X2-MM THK)	
	27	1	**8T-4224**	4	WASHER-HARD (8.8X16X2-MM THK)	

M-METRIC PART

225-8010 **WIRING GP-ENGINE** *(contd.)* **i02359183**

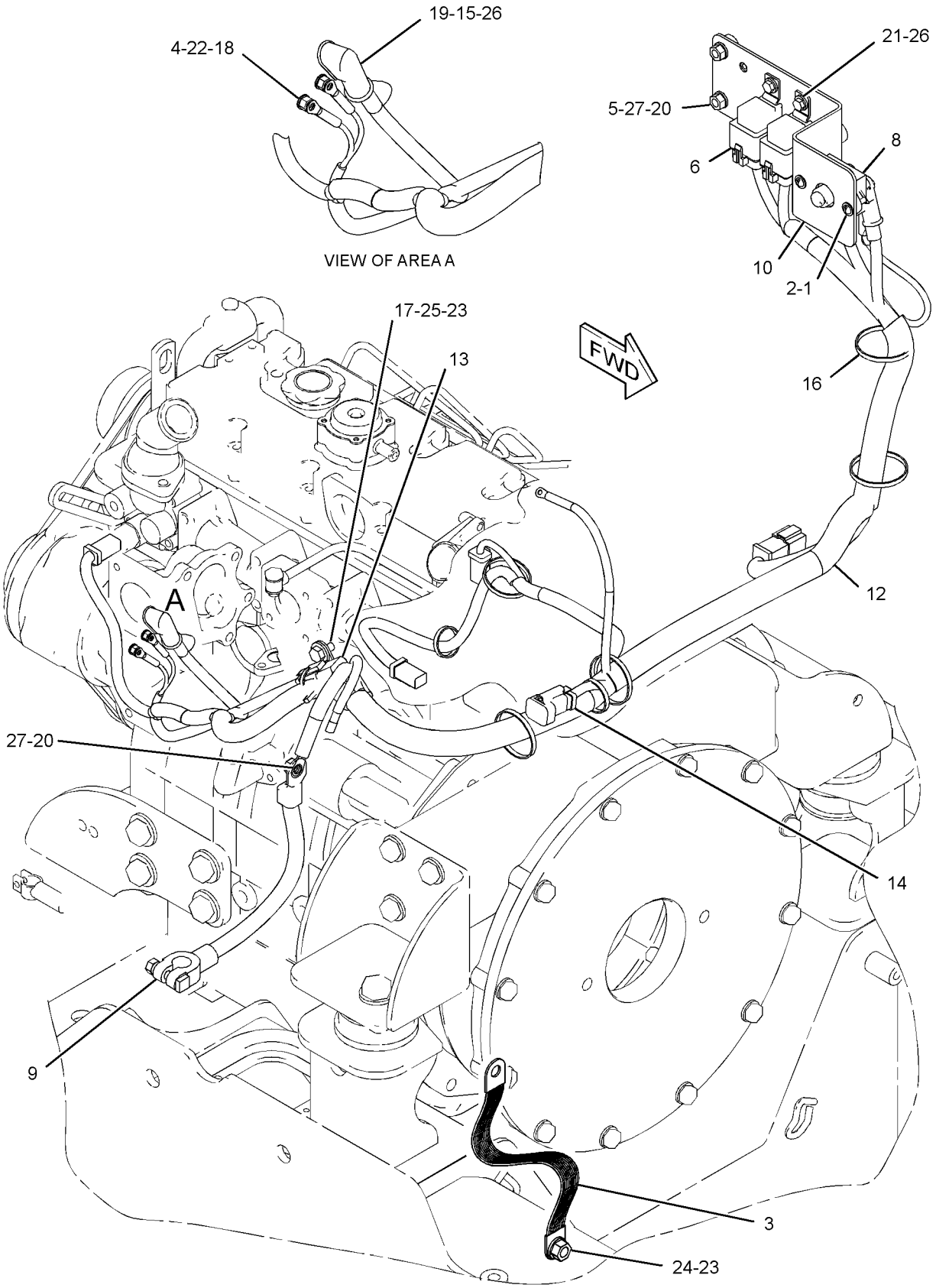

GRAPHIC #1 **<END>** g01154448

225-8010 WIRING GP-ENGINE

S/N: MJH3322-UP; SCH959-UP; RLL1769-UP; BXM1354-UP

PART OF 218-0911, 228-1767, 278-1218, 278-1228 INSTALLATION AR-ENGINE

SMCS-1000, 1408, 1420 **i02337433**

NOTE	REF NO	GRAPHIC REF	PART NUMBER	QTY	PART NAME 1 2 3 4 5 6 (PRODUCT LEVEL)	SEE PAGE
	1	1	**4B-4274**	2	WASHER (5.5X13X1.2-MM THK)	
	2	1	**5L-4507**	2	SCREW-MACHINE (10-32X0.875-IN)	
	3	1	**7G-1060**	1	STRAP AS-GROUND	
	4	1	**8F-1434**	2	LOCKWASHER	
	5	1	**090-9434**	3	SPACER (9X20X10-MM THK)	
	6	1	**115-1615**	2	RELAY AS (12-VOLT) (COLD START)	
C	7	1	**106-8704**	1	SUPPRESSOR AS-ARC	
	8	1	**171-2212**	1	CIRCUIT BREAKER AS (105-AMPERE)	
		1	**1H-3244**	2	LOCKWASHER	
		1	**6V-8187**	2	NUT (1/4-28-THD)	
		1	**8T-4205**	2	WASHER-HARD (7.2X14.5X2-MM THK)	
	9	1	**225-7954**	1	CABLE AS-BATTERY (POSITIVE)	
		1	**1S-7252**	1	TERMINAL-RING (FOR 3/8-IN BOLT)	
		1	**5P-0761**	30	CABLE (00-GA, RED)	
		1	**8N-0869**	1	COVER-TERMINAL (RED)	
		1	**8N-1725**	1	COVER-TERMINAL (RED)	
		1	**3S-6049**	1	TERMINAL AS-BATTERY (POSITIVE)	
		1	**1M-6119**	1	BOLT (5/16-18X1.375-IN)	
		1	**1M-6120**	1	NUT (5/16-18-THD)	
	10	1	**225-7980**	1	BRACKET AS	
C	11	1	**270-2702**	1	HARNESS AS-ENGINE	
		1	**102-8802**	1	KIT-RECEPTACLE (2-PIN)	
					(INCLUDES RECEPTACLE AS & WEDGE)	
		1	**7K-1181**	2	STRAP-CABLE	
		1	**155-2270**	2	KIT-CONNECTING PLUG (2-PIN)	
					(EACH INCLUDES PLUG AS, WEDGE, & INTERFACE SEAL)	
	12	1	**225-8011**	1	HARNESS AS-ENGINE	
		1	**102-8801**	1	KIT-RECEPTACLE (12-PIN)	
					(INCLUDES RECEPTACLE AS & WEDGE)	
		1	**155-2271**	1	KIT-CONNECTING PLUG (4-PIN)	
					(INCLUDES PLUG AS, WEDGE, & INTERFACE SEAL)	
	13	1	**238-9397**	1	RESISTOR AS	
	14	1	**172-9200**	1	SUPPRESSOR-ARC	
	15	1	**1H-3244**	1	LOCKWASHER	
C	16	1	**3S-2093**	10	STRAP-CABLE	
	17	1	**4P-8134**	1	CLIP	
M	18	1	**5C-2874**	1	NUT (M5X0.8-THD)	
M	19	1	**5C-2890**	1	NUT (M6X1-THD)	
M	20	1	**5C-7261**	4	NUT (M8X1.25-THD)	
M	21	1	**5C-9553**	2	BOLT (M6X1X16-MM)	
	22	1	**8T-0328**	2	WASHER-HARD (5.5X10X1-MM THK)	
	23	1	**8T-4121**	2	WASHER-HARD (11X21X2.5-MM THK)	
M	24	1	**8T-4133**	1	NUT (M10X1.5-THD)	
M	25	1	**8T-4200**	1	BOLT (M8X1.25X16-MM)	
	26	1	**8T-4205**	3	WASHER-HARD (7.2X14.5X2-MM THK)	
	27	1	**8T-4224**	4	WASHER-HARD (8.8X16X2-MM THK)	

C-CHANGE FROM PREVIOUS TYPE
M-METRIC PART

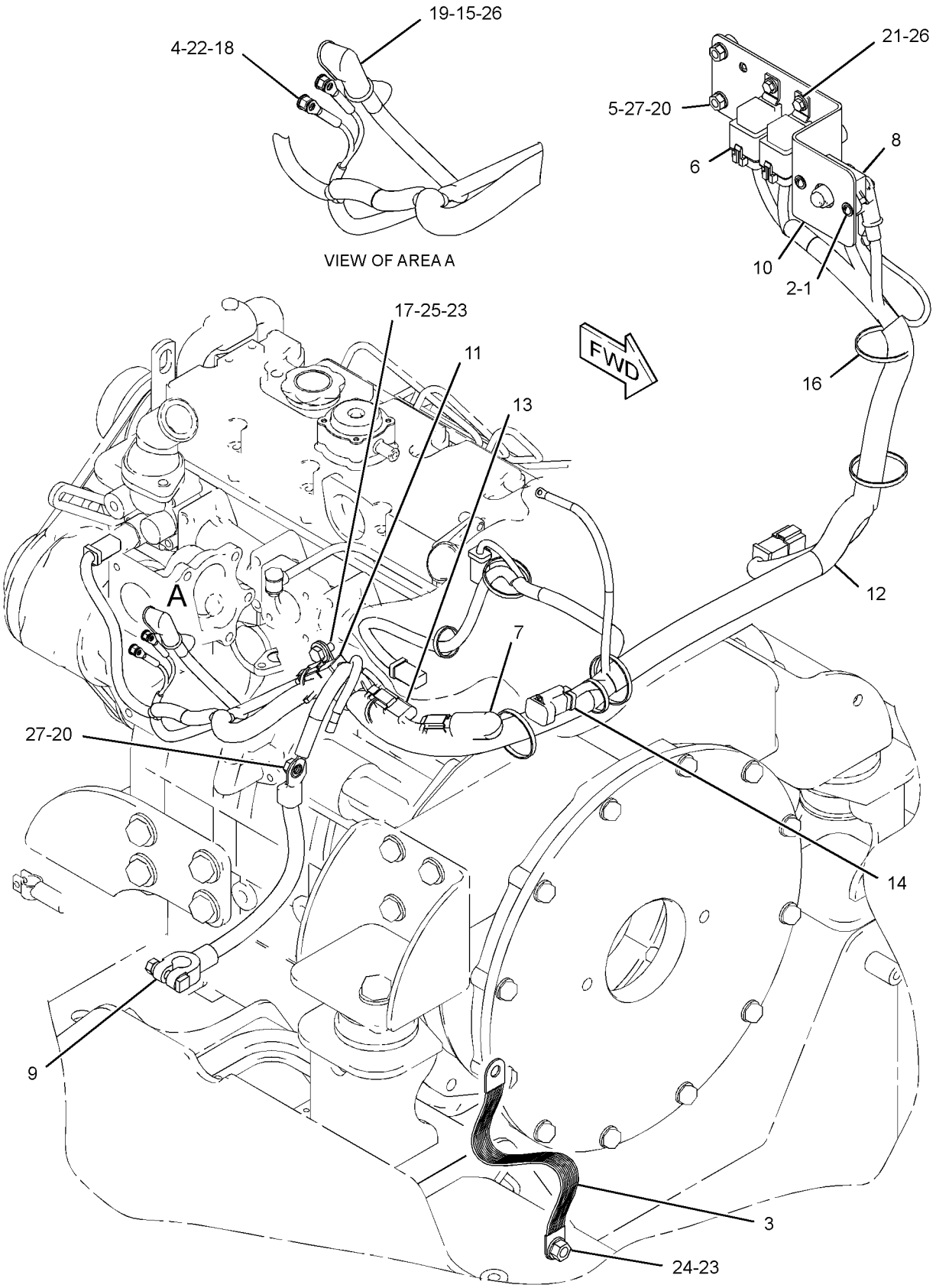

GRAPHIC #1 **<END>** g01178579

230-3743 WIRING GP-HORN

S/N: MJH1-UP; SCH1-UP; RLL1-UP; BXM1-UP

PART OF 261-6155, 261-6156, 261-6157, 261-6158, 261-6187, 261-6197, 278-1212, 278-1213, 278-1220, 278-1221, 278-1224, 278-1225, 278-5347, 278-5348, 278-5369, 278-5370, 278-5408, 278-5409, 278-5413, 278-5414, 278-5441, 278-5442 CONVERSION AR-MACHINE, 233-5671, 233-5672, 233-5673, 233-5674, 233-5675, 233-5676, 233-5681, 233-5682, 233-5683, 233-5684, 233-5685, 233-5686, 257-5716, 257-5717, 257-5718, 257-5721, 257-5722, 257-5723 CONVERSION AR-ROADING

AN ATTACHMENT

SMCS-1408, 7402 **i02359173**

NOTE	REF NO	GRAPHIC REF	PART NUMBER	QTY	PART NAME 1 2 3 4 5 6 (PRODUCT LEVEL)	SEE PAGE
	1	1	**3S-2093**	5	STRAP-CABLE	
M	2	1	**8T-4186**	1	BOLT (M10X1.5X40-MM)	
	3	1	**142-8833**	1	SPACER (11X14.3X9-MM THK)	
M	4	1	**8T-4133**	1	NUT (M10X1.5-THD)	
	5	1	**186-3362**	1	HARNESS AS-CHASSIS (HORN)	
		1	**102-8802**	1	KIT-RECEPTACLE (2-PIN)	
					(INCLUDES RECEPTACLE AS & WEDGE)	
		1	**155-2270**	1	KIT-CONNECTING PLUG (2-PIN)	
					(INCLUDES PLUG AS, WEDGE & INTERFACE SEAL)	
	6	1	**8T-4121**	3	WASHER-HARD (11X21X2.5-MM THK)	

M-METRIC PART

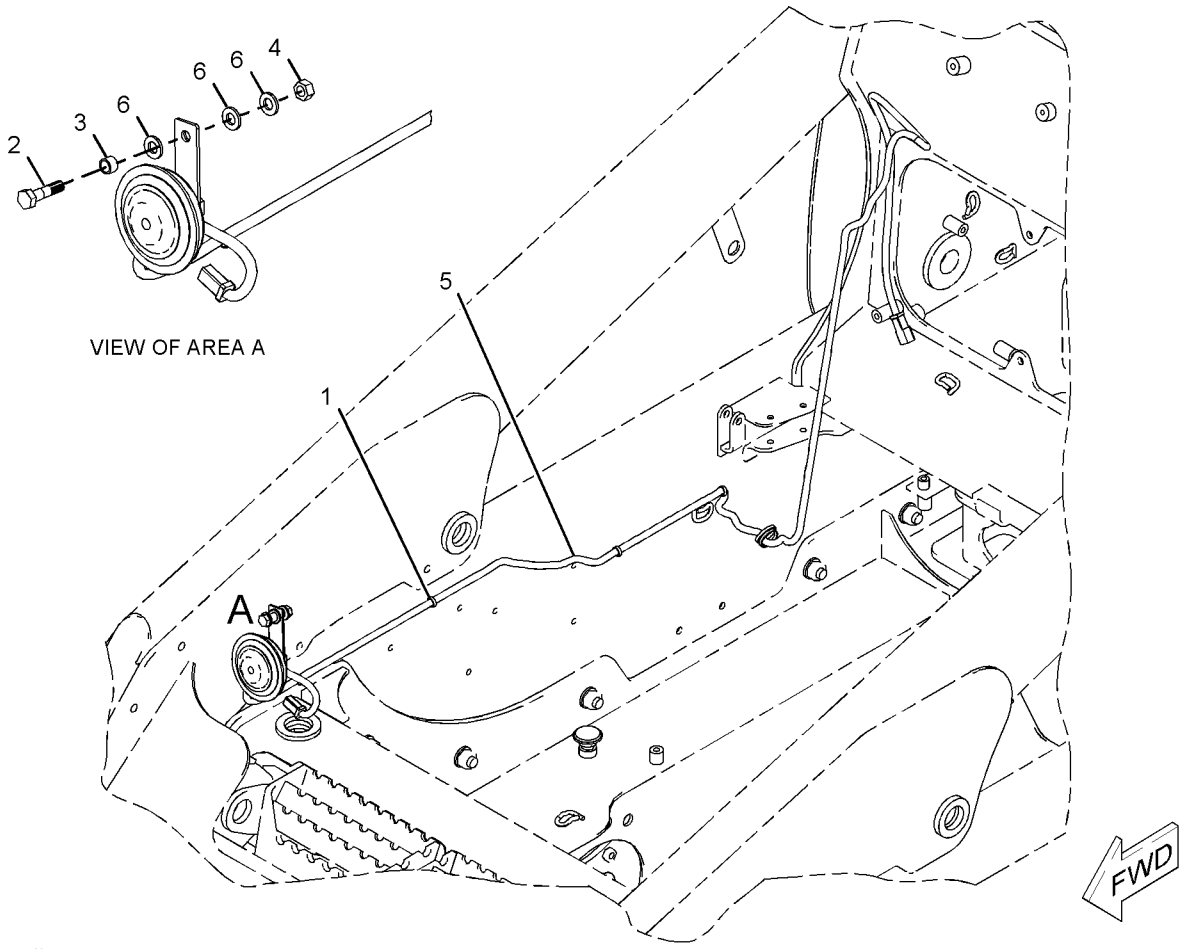

GRAPHIC #1 **<END>** g01037702

272-1625 WIRING GP-MACHINE–DEMAND FAN

S/N: MJH5600-UP; BXM2400-UP
STAGE II SOUND
PART OF 261-6157, 261-6158, 261-6187, 261-6197, 278-1212, 278-1213, 278-1220, 278-1221, 278-1224, 278-1225, 278-5408, 278-5409, 278-5441, 278-5442 CONVERSION AR-MACHINE
AN ATTACHMENT

SMCS-1408 **i02430223**

NOTE	REF NO	GRAPHIC REF	PART NUMBER	QTY	PART NAME 1 2 3 4 5 6 (PRODUCT LEVEL)	SEE PAGE
	1	1	**7K-1181**	10	STRAP-CABLE	
	2	1	**8T-8737**	5	PLUG-SEAL	
	3	1	**206-2423**	8	SADDLE	
	4	1	**270-1629**	1	CONTROL GP-FAN	
	5	1	**272-1626**	1	HARNESS AS-SWITCH	
		1	**102-8803**	1	KIT-RECEPTACLE (3-PIN)	
					(INCLUDES RECEPTACLE AS & WEDGE)	
		1	**8L-8413**	10	STRAP-CABLE	
E		1	**119-3662**		TUBE-HEAT SHRINK (7-CM)	
E		1	**125-7874**		TUBE-HEAT SHRINK (10-CM)	
		1	**155-2260**	3	KIT-CONNECTING PLUG (3-PIN)	
		1	**155-2270**	3	KIT-CONNECTING PLUG (2-PIN)	
		1	**155-2271**	1	KIT-CONNECTING PLUG (4-PIN)	
					(EACH PLUG KIT INCLUDES PLUG AS, WEDGE & INTERFACE SEAL)	
		1	**230-4011**	1	PLUG AS-CONNECTOR (2-PIN)	
		1	**253-8110**	1	PLUG	
	6	1	**278-1061**	1	BRACKET AS	
	7	1	**205-7048**	3	INSERT-THREADED (M6X1-6H-THD)	
	8	1	**102-8802**	1	KIT-RECEPTACLE (2-PIN)	
	9	1	**102-8803**	1	KIT-RECEPTACLE (3-PIN)	
					(EACH RECEPTACLE KIT INCLUDES RECEPTACLE AS & WEDGE)	
	10	1	**3S-2093**	19	STRAP-CABLE	
	11	1	**4P-8134**	1	CLIP (LADDER)	
M	12	1	**8T-4138**	3	BOLT (M6X1X20-MM)	
	13	1	**8T-4205**	5	WASHER-HARD (7.2X14.5X2-MM THK)	
M	14	1	**8T-4971**	2	BOLT (M6X1X30-MM)	

E-ORDER BY THE CENTIMETER
M-METRIC PART

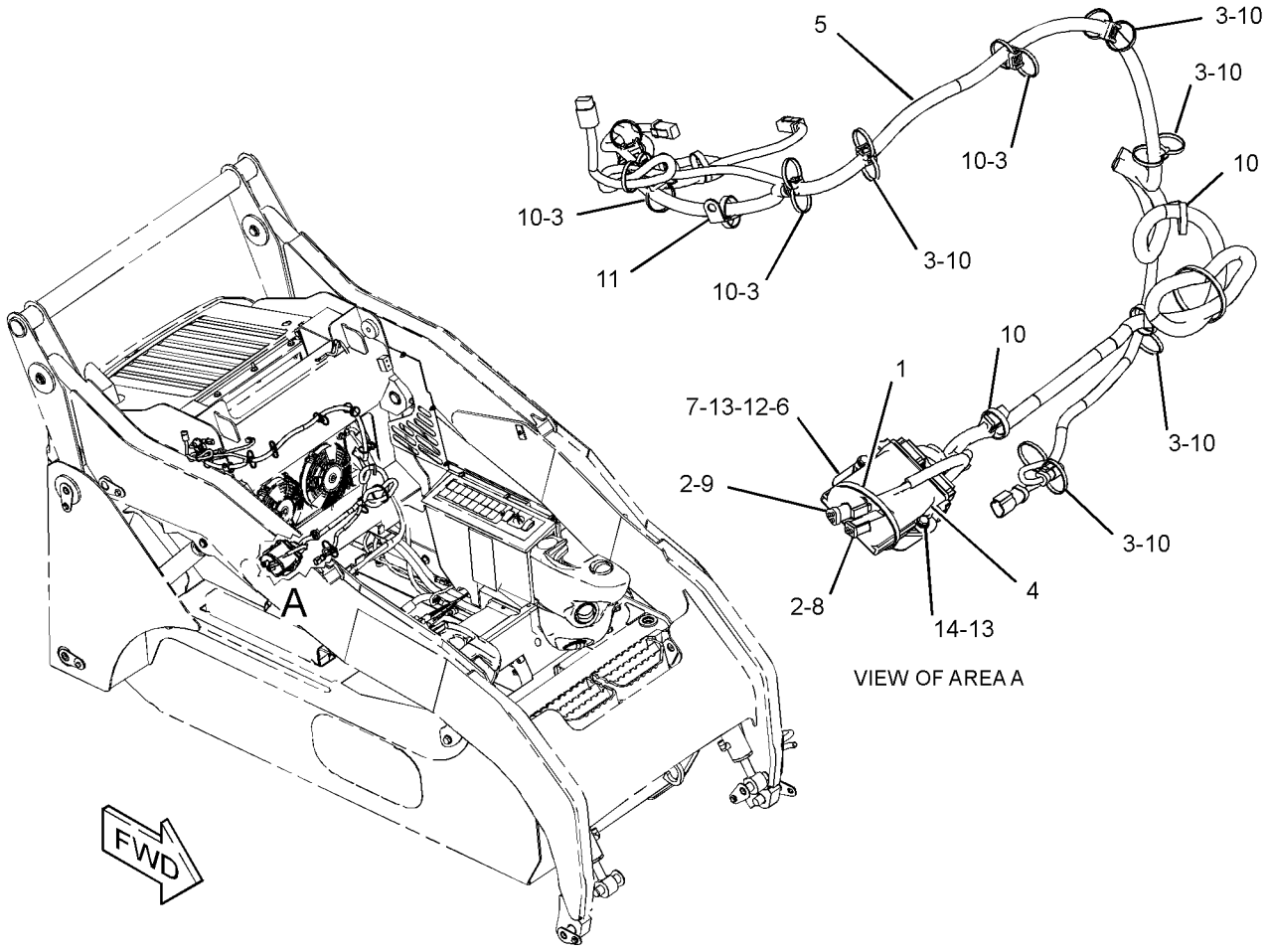

GRAPHIC #1 **<END>** g01229171

225-7964 WIRING GP-REAR LIGHTING

S/N: MJH1-UP; SCH1-UP; RLL1-UP; BXM1-UP
PART OF 278-1212, 278-1213, 278-5369, 278-5370, 278-5408, 278-5409 CONVERSION AR-MACHINE, 233-5673, 233-5676, 233-5683, 233-5686 CONVERSION AR-ROADING AN ATTACHMENT

SMCS-1408, 1429 **i02359264**

NOTE	REF NO	GRAPHIC REF	PART NUMBER	QTY	PART NAME 1 2 3 4 5 6 (PRODUCT LEVEL)	SEE PAGE
	1	1	**115-1615**	1	RELAY AS (12-VOLT) (BRAKE LIGHT)	
	2	1	*166-2033*	2	TEE AS	
					(EACH INCLUDES)	
		1	**4J-5477**	1	SEAL-O-RING	
		1	**7X-2444**	1	TEE-SWIVEL	
Y	3	1	**184-1564**	2	SWITCH GP-PRESSURE (BRAKE LIGHT)	186
	4	1	**216-4711**	1	HARNESS AS-REAR LIGHTING (BRAKE)	
		1	**102-8803**	1	KIT-RECEPTACLE (3-PIN)	
					(INCLUDES RECEPTACLE AS & WEDGE)	
		1	**155-2270**	2	KIT-CONNECTING PLUG (2-PIN)	
					(EACH INCLUDES PLUG AS, WEDGE & INTERFACE SEAL)	
B	5	1	**3S-2093**	4	STRAP-CABLE	

B-USE AS REQUIRED
Y-SEPARATE ILLUSTRATION

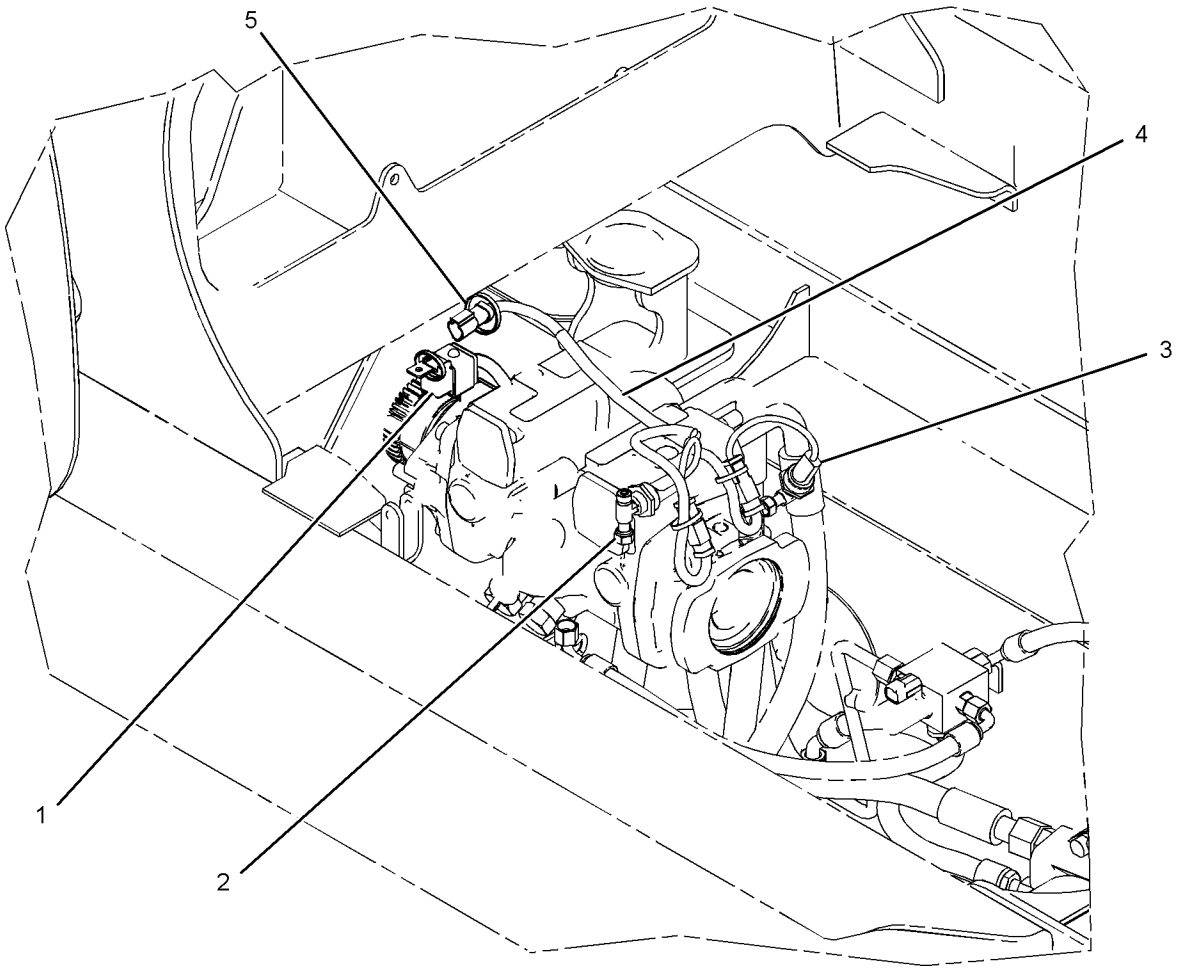

GRAPHIC #1 **<END>** g01030665

ELECTRICAL AND STARTING SYSTEM

216-4724 WIRING GP-WORK TOOL

S/N: SCH1-UP; BXM1-UP
PART OF 218-5947 CONTROL GP-PILOT OPERATED HYD
AN ATTACHMENT

SMCS-1408 **i02253399**

NOTE	REF NO	GRAPHIC REF	PART NUMBER	QTY	PART NAME 1 2 3 4 5 6 (PRODUCT LEVEL)	SEE PAGE
	1	1	**4B-4863**	2	WASHER (4.7X11X1.2-MM THK)	
	2	1	**115-1615**	1	RELAY AS (12-VOLT) (MAIN POWER)	
	3	1	**142-8633**	1	SWITCH AS-ROCKER (ELECTRIC POWER, WORK TOOL)	
		1	**111-7899**	1	GASKET	
	4	1	**146-9439**	1	RELAY AS (12-VOLT) (WORK TOOL)	
	5	1	**159-9495**	1	NUT (1-1/2-18-THD)	
	6	1	**159-9496**	1	LOCKWASHER	
	7	1	**216-4725**	1	HARNESS AS-WORK TOOL (LIFT ARM)	
		1	**156-1460**	1	RECEPTACLE (8-PIN)	
	8	1	**221-3881**	1	PANEL GP-FUSE	
		1	**113-8490**	4	FUSE (10-AMPERE)	
		1	**113-8491**	2	FUSE (15-AMPERE)	
		1	**146-9439**	5	RELAY AS (12-VOLT)	
		1	**215-5564**	2	SUPPRESSOR-ARC	
	9	1	**225-8012**	1	HARNESS AS-WORK TOOL (PLATFORM)	
		1	**177-9645**	1	KIT-RECEPTACLE (2-PIN)	
					(INCLUDES RECEPTACLE AS & WEDGE)	
		1	**155-2255**	1	KIT-CONNECTING PLUG (12-PIN)	
		1	**155-2265**	1	KIT-CONNECTING PLUG (8-PIN)	
					(EACH PLUG KIT INCLUDES PLUG AS, WEDGE & INTERFACE SEAL)	
		1	**196-2382**	1	KIT-CONNECTING PLUG (2-PIN)	
		1	**196-2383**	1	KIT-PLUG (8-PIN)	
		1	**196-2384**	1	KIT-PLUG (8-PIN)	
M	10	1	**095-0733**	2	SCREW-MACHINE (M4X0.7X40-MM)	
	11	1	**3S-2093**	8	STRAP-CABLE	
M	12	1	**5C-9553**	1	BOLT (M6X1X16-MM)	
	13	1	**8T-4205**	1	WASHER-HARD (7.2X14.5X2-MM THK)	
	14	1	**102-8806**	1	KIT-RECEPTACLE (8-PIN)	
					(INCLUDES RECEPTACLE AS & WEDGE)	
	15	1	**3E-3389**	1	WEDGE-RECEPTACLE LOCK	

M-METRIC PART

216-4724 **WIRING GP-WORK TOOL** *(contd.)* **i02253399**

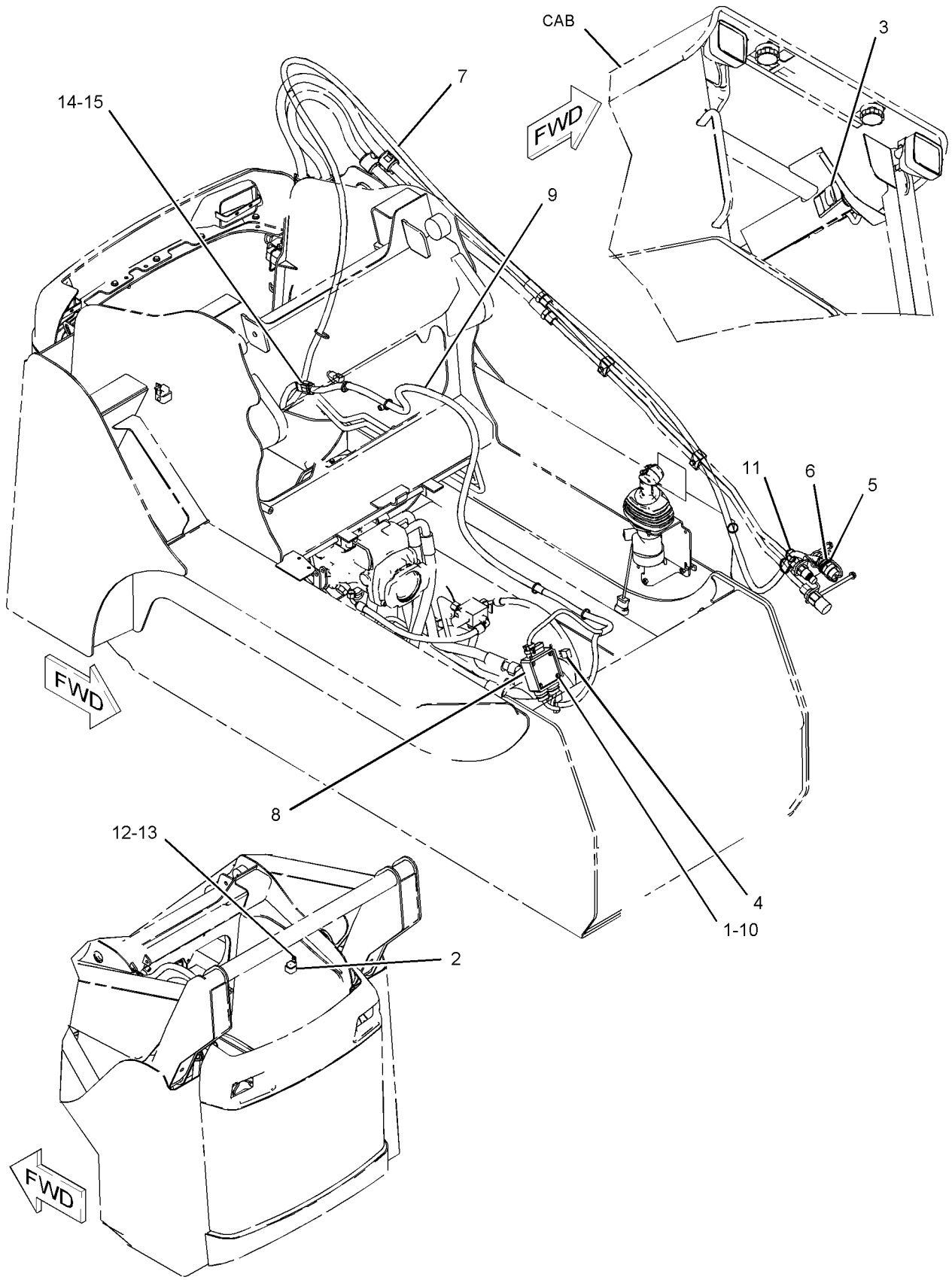

GRAPHIC #1 **<END>** g01104725

ELECTRICAL AND STARTING SYSTEM

225-7960 WIRING GP-WORK TOOL

S/N: MJH1-UP; RLL1-UP
PART OF 218-5933 CONTROL GP-PILOT OPERATED HYD
AN ATTACHMENT

SMCS-1408 **i02359272**

NOTE	REF NO	GRAPHIC REF	PART NUMBER	QTY	PART NAME 1 2 3 4 5 6 (PRODUCT LEVEL)	SEE PAGE
	1	1	**4B-4863**	2	WASHER (4.7X11X1.2-MM THK)	
	2	1	**115-1615**	1	RELAY AS (12-VOLT) (MAIN POWER)	
	3	1	**142-8633**	1	SWITCH AS-ROCKER (ELECTRIC POWER, WORK TOOL)	
		1	**111-7899**	1	GASKET	
	4	1	**146-9439**	1	RELAY AS (12-VOLT) (WORK TOOL)	
	5	1	**159-9495**	1	NUT (1-1/2-18-THD)	
	6	1	**159-9496**	1	LOCKWASHER	
	7	1	**221-3881**	1	PANEL GP-FUSE	
		1	**113-8490**	4	FUSE (10-AMPERE)	
		1	**113-8491**	2	FUSE (15-AMPERE)	
		1	**146-9439**	5	RELAY AS (12-VOLT)	
		1	**215-5564**	2	SUPPRESSOR-ARC	
	8	1	**225-7961**	1	HARNESS AS-WORK TOOL (LIFT ARM)	
		1	**102-8806**	1	KIT-RECEPTACLE (8-PIN)	
					(INCLUDES RECEPTACLE AS & WEDGE)	
	9	1	**225-8012**	1	HARNESS AS-WORK TOOL (PLATFORM)	
		1	**177-9645**	1	KIT-RECEPTACLE (2-PIN)	
					(INCLUDES RECEPTACLE AS & WEDGE)	
		1	**155-2255**	1	KIT-CONNECTING PLUG (12-PIN)	
		1	**155-2265**	1	KIT-CONNECTING PLUG (8-PIN)	
					(EACH KIT INCLUDES PLUG AS, WEDGE & INTERFACE SEAL)	
		1	**196-2383**	1	KIT-PLUG (8-PIN)	
		1	**196-2384**	1	KIT-PLUG (8-PIN)	
M	10	1	**095-0733**	2	SCREW-MACHINE (M4X0.7X40-MM)	
	11	1	**102-8806**	1	KIT-RECEPTACLE (8-PIN)	
					(INCLUDES RECEPTACLE AS & WEDGE)	
	12	1	**3E-3389**	1	WEDGE-RECEPTACLE LOCK	
	13	1	**3S-2093**	9	STRAP-CABLE	
M	14	1	**5C-9553**	1	BOLT (M6X1X16-MM)	
	15	1	**8T-4205**	1	WASHER-HARD (7.2X14.5X2-MM THK)	

M-METRIC PART

225-7960 **WIRING GP-WORK TOOL** *(contd.)* **i02359272**

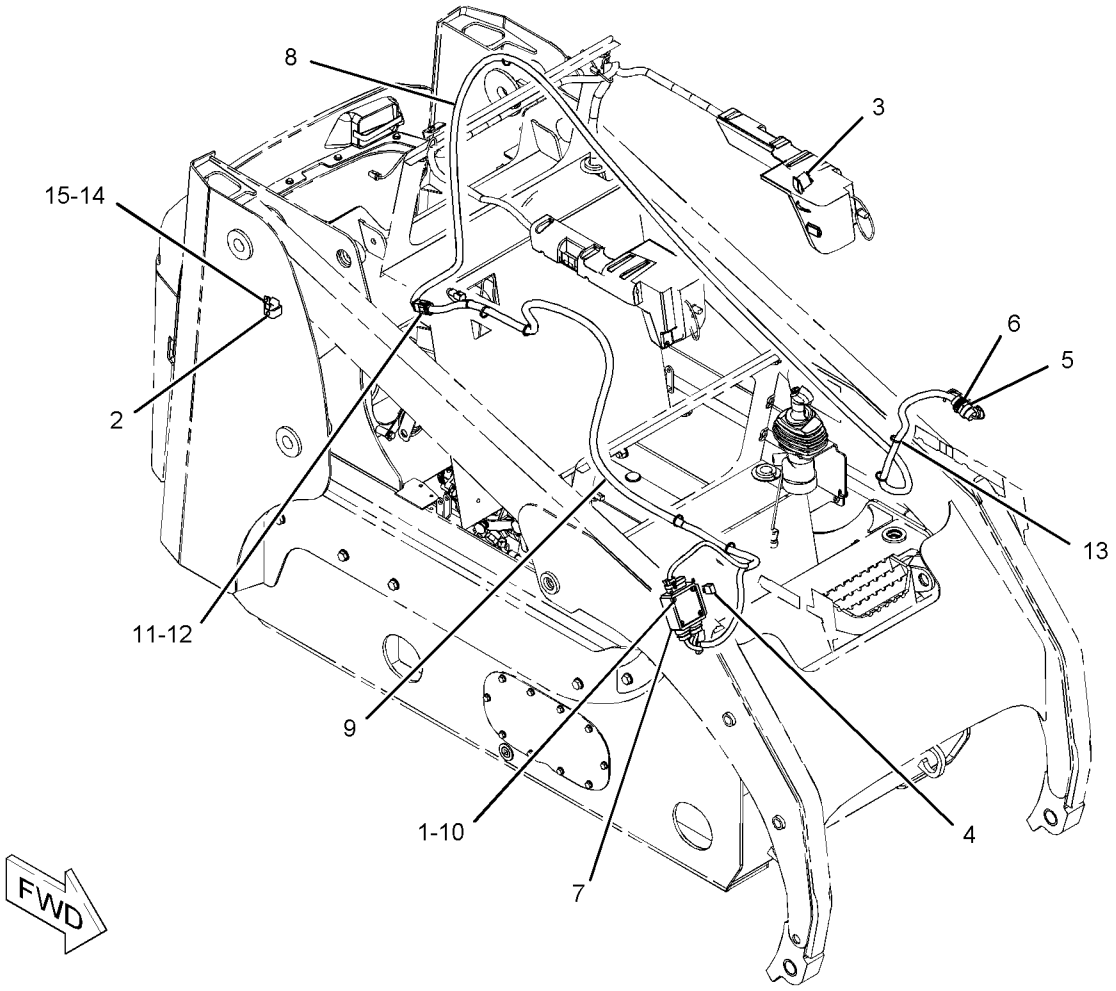

GRAPHIC #1 **<END>** g01123643

142-8758 AXLE GP

S/N: MJH1-UP; SCH1-UP; RLL1-UP; BXM1-UP
PART OF 261-6255 AXLE GP
AN ATTACHMENT

SMCS-3278 **i01790260**

NOTE	REF NO	GRAPHIC REF	PART NUMBER	QTY	PART NAME 1 2 3 4 5 6 (PRODUCT LEVEL)	SEE PAGE
	1	1	**142-8723**	1	HOUSING-AXLE	
	2	1	**142-8724**	1	SPINDLE-WHEEL	
	3	1	**142-8729**	1	SPACER (32.045 MM THK)	
	4	1	**150-4385**	2	CONE	
	5	1	**150-4386**	2	CUP	
	6	1	**150-5472**	1	SEAL-LIP TYPE	
	7	1	**159-5772**	8	STUD (9/16-18-2A THD)	
	8	1	**166-3678**	1	SEAL-LIP TYPE	

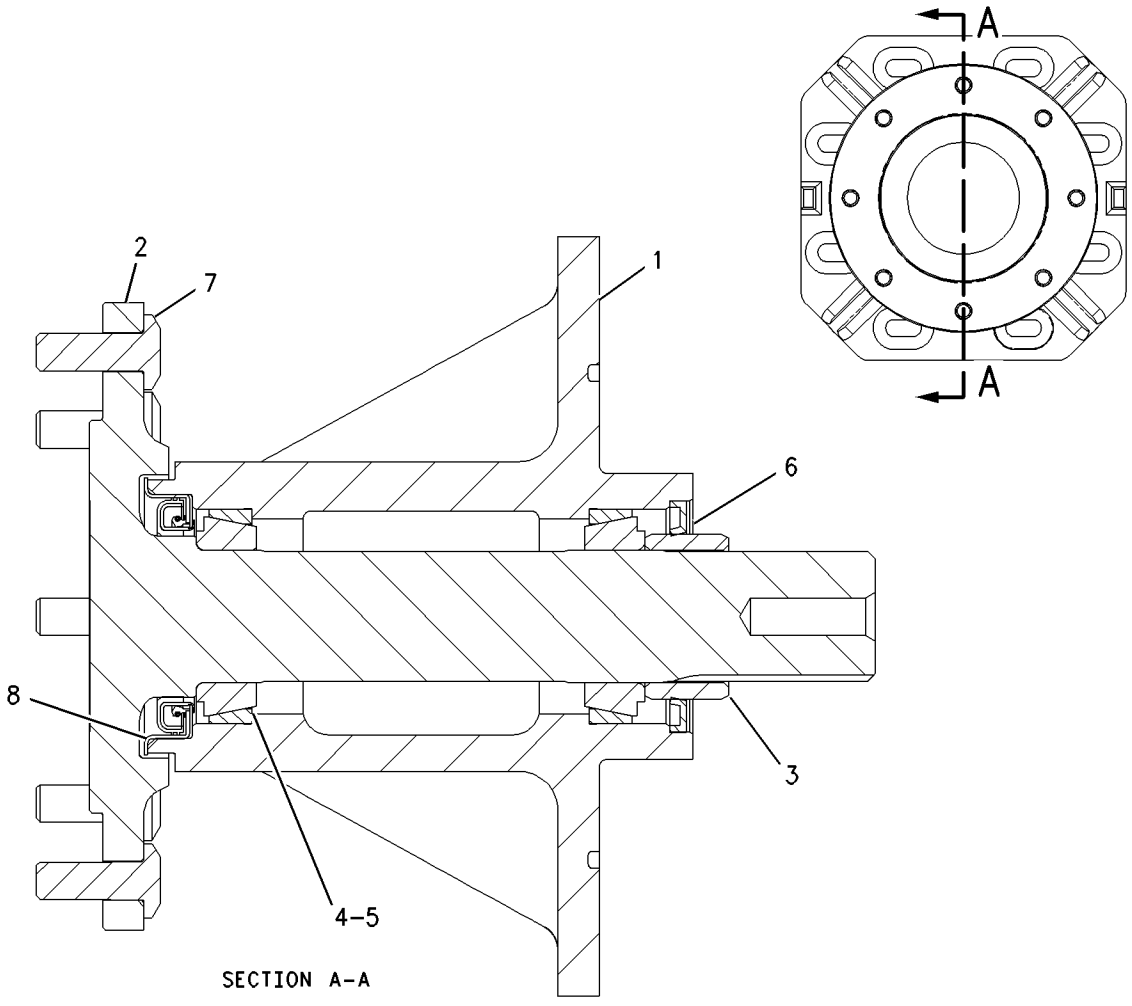

GRAPHIC #1 **<END>** g00916188

258-2759 AXLE GP

S/N: MJH1-UP; SCH1-UP; RLL1-UP; BXM1-UP
PART OF 261-6245 AXLE GP
AN ATTACHMENT

SMCS-3278 **i02476359**

NOTE	REF NO	GRAPHIC REF	PART NUMBER	QTY	PART NAME 1 2 3 4 5 6 (PRODUCT LEVEL)	SEE PAGE
	1	1	**142-8724**	1	SPINDLE-WHEEL	
	2	1	**142-8729**	1	SPACER (50.8X63.5X32-MM THK)	
	3	1	**150-4385**	2	CONE	
	4	1	**150-4386**	2	CUP	
	5	1	**159-5772**	8	STUD	
	6	1	**258-2751**	1	HOUSING-AXLE	
	7	1	**262-2915**	1	SEAL-LIP TYPE	
	8	1	**265-5193**	1	SEAL GP	
	9	1	**264-4319**	1	RETAINER-SEAL	
	10	1	**2B-0858**	1	PLUG-PIPE	

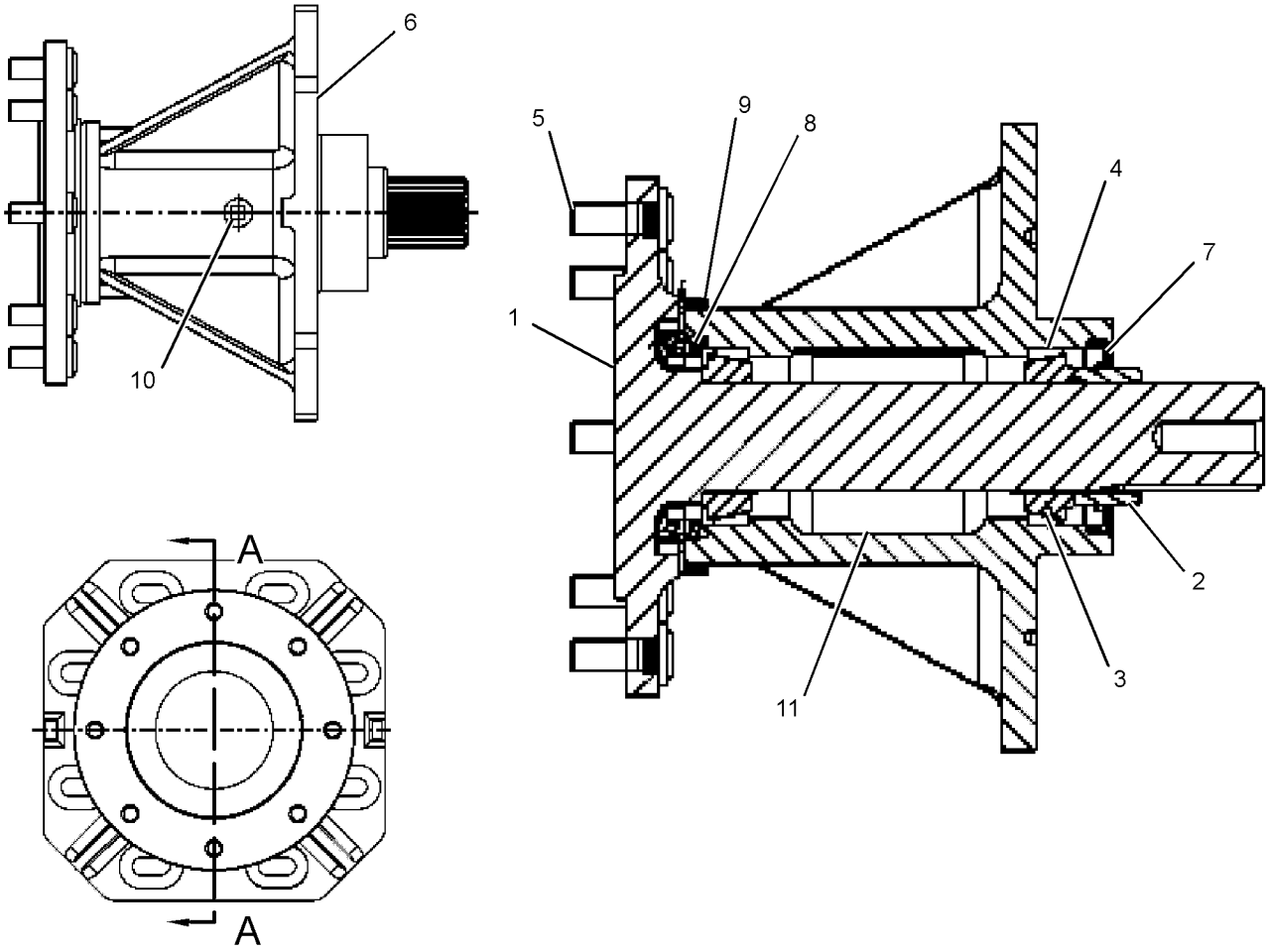

GRAPHIC #1 **<END>** g01236262

261-6245 AXLE GP

S/N: MJH1-UP; SCH1-UP; RLL1-UP; BXM1-UP
AN ATTACHMENT

SMCS-3278 **i02476352**

NOTE	PART NUMBER	QTY	PART NAME 1 2 3 4 5 6 (PRODUCT LEVEL)	SEE PAGE
Y	**258-2759**	4	AXLE GP	205

Y-SEPARATE ILLUSTRATION

<END>

261-6255 AXLE GP

S/N: MJH1-UP; SCH1-UP; RLL1-UP; BXM1-UP
AN ATTACHMENT

SMCS-3278 **i02476310**

NOTE	PART NUMBER	QTY	PART NAME 1 2 3 4 5 6 (PRODUCT LEVEL)	SEE PAGE
Y	**142-8758**	4	AXLE GP	204

Y-SEPARATE ILLUSTRATION

<END>

218-6235 CONTROL GP-PARKING BRAKE

S/N: MJH1-1451; RLL1-796

PART OF 218-5620, 218-5820 HYDRAULIC AR

SMCS-4284 **i02056538**

NOTE	REF NO	GRAPHIC REF	PART NUMBER	QTY	PART NAME 1 2 3 4 5 6 (PRODUCT LEVEL)	SEE PAGE
I	1	1	**100-7530**	1	HOSE AS	
Y	2	1	*208-5681*	1	VALVE & MTG GP-SOLENOID (PARKING BRAKE)	267
I	3	1	**218-5580**	1	HOSE AS	
	4	1	**218-6215**	1	TUBE AS	
I	5	1	**218-6231**	1	HOSE AS	
	6	1	*148-8336*	3	CONNECTOR AS	
					(EACH INCLUDES)	
		1	**3J-1907**	1	SEAL-O-RING	
		1	**6V-8397**	1	SEAL-O-RING	
		1	**6V-8636**	1	CONNECTOR	
	7	1	*148-8435*	1	TEE AS	
		1	**3J-1907**	1	SEAL-O-RING	
		1	**6V-8397**	2	SEAL-O-RING	
		1	**6V-8781**	1	TEE-FACE SEAL	
	8	1	*150-4043*	1	CONNECTOR AS	
		1	**3J-1907**	1	SEAL-O-RING	
		1	**6V-8398**	1	SEAL-O-RING	
		1	**6V-9873**	1	CONNECTOR	
	9	1	**8T-4224**	2	WASHER-HARD (8.8X16X2-MM THK)	
M	10	1	**8T-6869**	2	BOLT (M8X1.25X60-MM)	
	11	1	**6V-8398**	2	SEAL-O-RING	

I-REFER TO HYDRAULIC INFORMATION SYSTEM
M-METRIC PART
Y-SEPARATE ILLUSTRATION

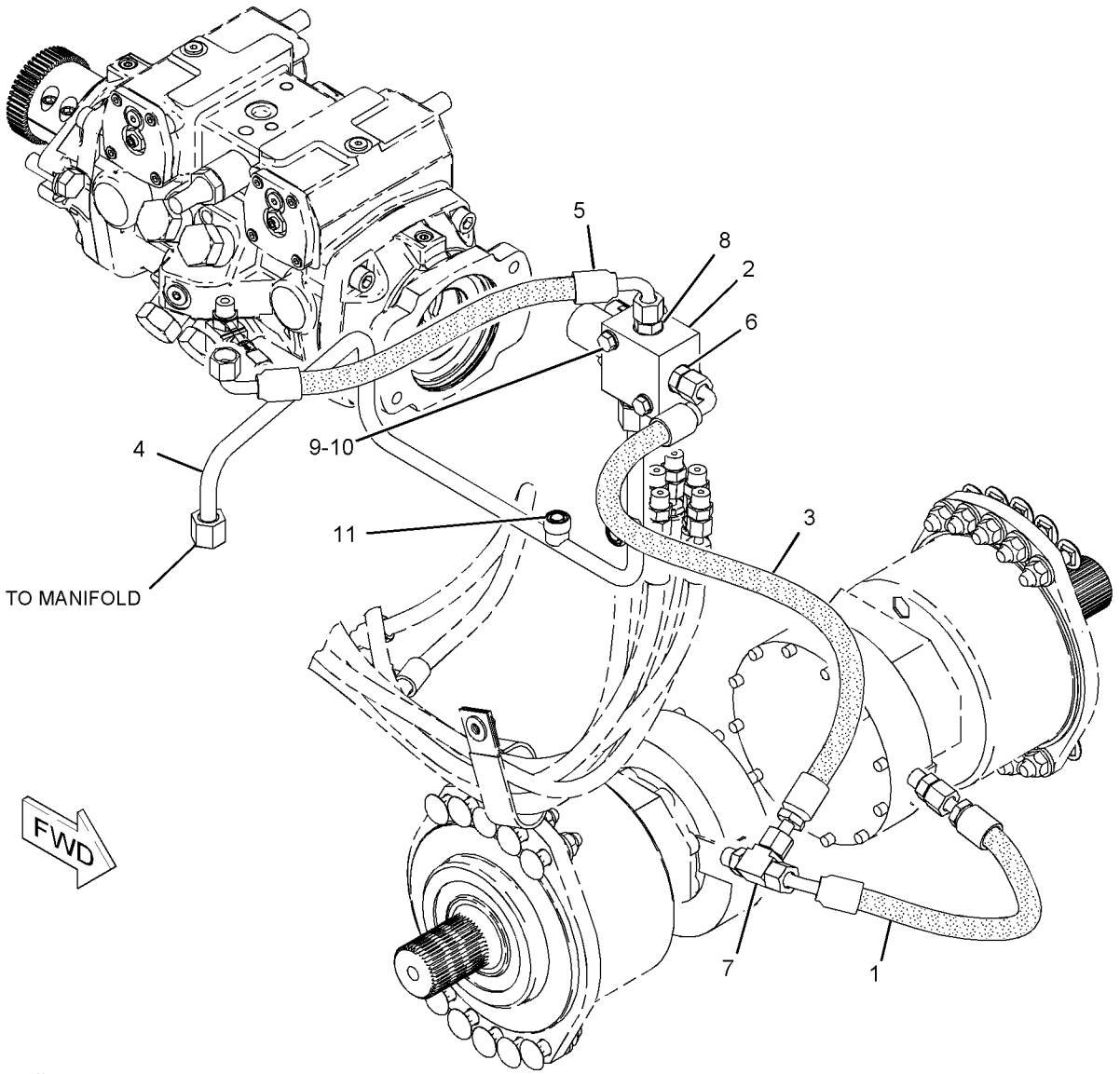

GRAPHIC #1 **<END>** g01055153

218-6235 CONTROL GP-PARKING BRAKE

S/N: MJH1452-1560; RLL797-840

PART OF 218-5620, 218-5820 HYDRAULIC AR

SMCS-4284 **i02227977**

NOTE	REF NO	GRAPHIC REF	PART NUMBER	QTY	PART NAME 1 2 3 4 5 6 (PRODUCT LEVEL)	SEE PAGE
I	1	1	**100-7530**	1	HOSE AS	
Y	2	1	*208-5681*	1	VALVE & MTG GP-SOLENOID (PARKING BRAKE)	267
I	3	1	**218-5580**	1	HOSE AS	
CI	4	1	**218-6231**	1	HOSE AS	
	5	1	**233-5849**	1	TUBE AS	
	6	1	*148-8336*	3	CONNECTOR AS	
					(EACH INCLUDES)	
		1	**3J-1907**	1	SEAL-O-RING	
		1	**6V-8397**	1	SEAL-O-RING	
		1	**6V-8636**	1	CONNECTOR	
	7	1	*148-8435*	1	TEE AS	
		1	**3J-1907**	1	SEAL-O-RING	
		1	**6V-8397**	2	SEAL-O-RING	
		1	**6V-8781**	1	TEE-FACE SEAL	
C	8	1	*161-8560*	1	CONNECTOR AS	
		1	**3J-1907**	1	SEAL-O-RING	
		1	**7J-9108**	1	SEAL-O-RING	
		1	**8C-6758**	1	CONNECTOR	
	9	1	**6V-8398**	2	SEAL-O-RING	
	10	1	**8T-4224**	2	WASHER-HARD (8.8X16X2-MM THK)	
M	11	1	**8T-6869**	2	BOLT (M8X1.25X60-MM)	

C-CHANGE FROM PREVIOUS TYPE
I-REFER TO HYDRAULIC INFORMATION SYSTEM
M-METRIC PART
Y-SEPARATE ILLUSTRATION

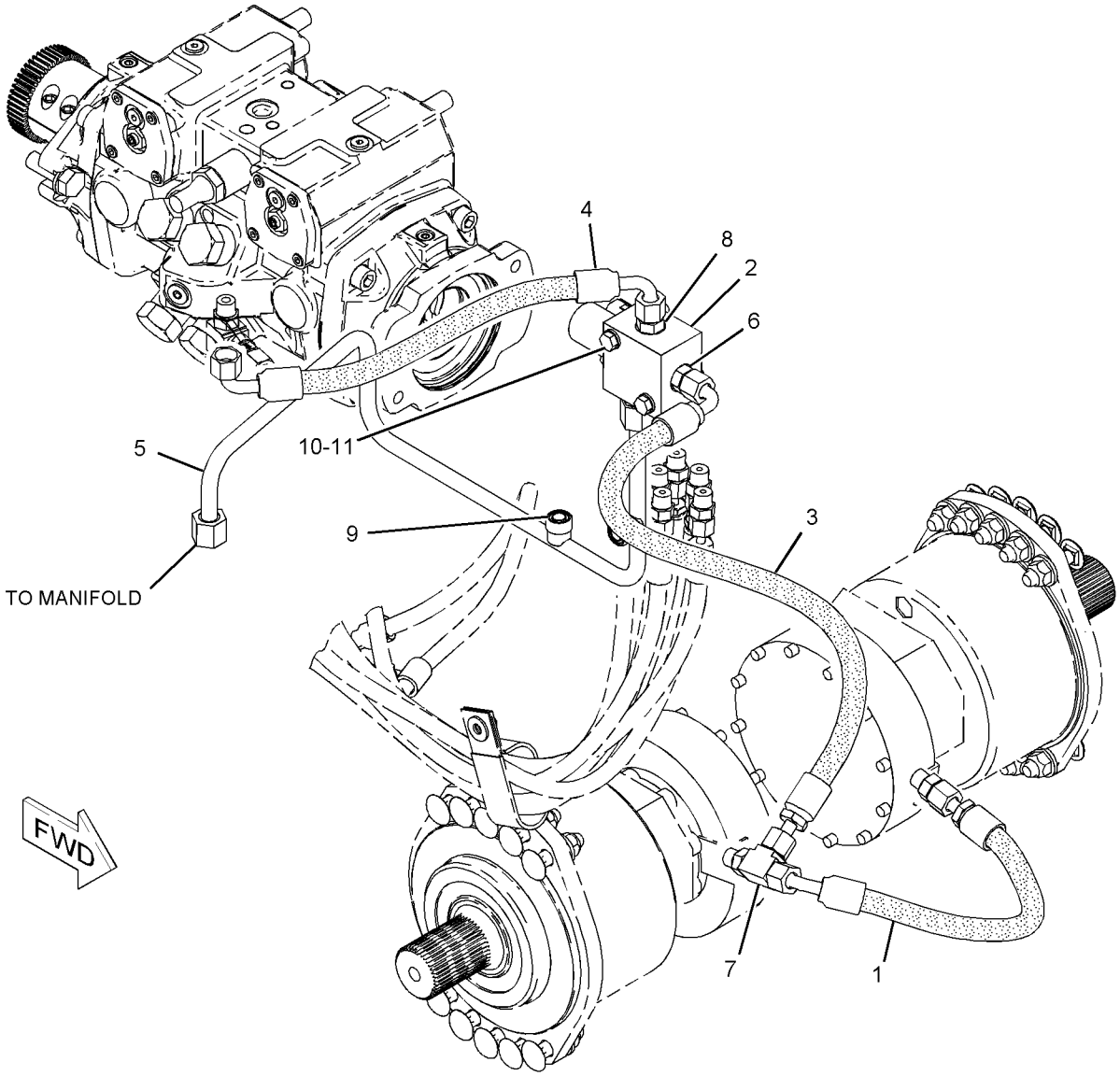

GRAPHIC #1 **<END>** g01126675

218-6235 CONTROL GP-PARKING BRAKE

S/N: MJH1561-2908; RLL841-1574

PART OF 218-5620, 218-5820 HYDRAULIC AR

SMCS-4284 **i02231084**

NOTE	REF NO	GRAPHIC REF	PART NUMBER	QTY	PART NAME 1 2 3 4 5 6 (PRODUCT LEVEL)	SEE PAGE
I	1	1	**100-7530**	1	HOSE AS	
CY	2	1	*233-7131*	1	VALVE & MTG GP-SOLENOID (PARKING BRAKE)	268
I	3	1	**218-5580**	1	HOSE AS	
I	4	1	**218-6231**	1	HOSE AS	
	5	1	**233-5849**	1	TUBE AS	
	6	1	*148-8336*	3	CONNECTOR AS	
					(EACH INCLUDES)	
		1	**3J-1907**	1	SEAL-O-RING	
		1	**6V-8397**	1	SEAL-O-RING	
		1	**6V-8636**	1	CONNECTOR	
	7	1	*148-8435*	1	TEE AS	
		1	**3J-1907**	1	SEAL-O-RING	
		1	**6V-8397**	2	SEAL-O-RING	
		1	**6V-8781**	1	TEE-FACE SEAL	
	8	1	*161-8560*	1	CONNECTOR AS	
		1	**3J-1907**	1	SEAL-O-RING	
		1	**7J-9108**	1	SEAL-O-RING	
		1	**8C-6758**	1	CONNECTOR	
	9	1	**6V-8398**	2	SEAL-O-RING	
	10	1	**8T-4224**	2	WASHER-HARD (8.8X16X2-MM THK)	
M	11	1	**8T-6869**	2	BOLT (M8X1.25X60-MM)	

C-CHANGE FROM PREVIOUS TYPE
I-REFER TO HYDRAULIC INFORMATION SYSTEM
M-METRIC PART
Y-SEPARATE ILLUSTRATION

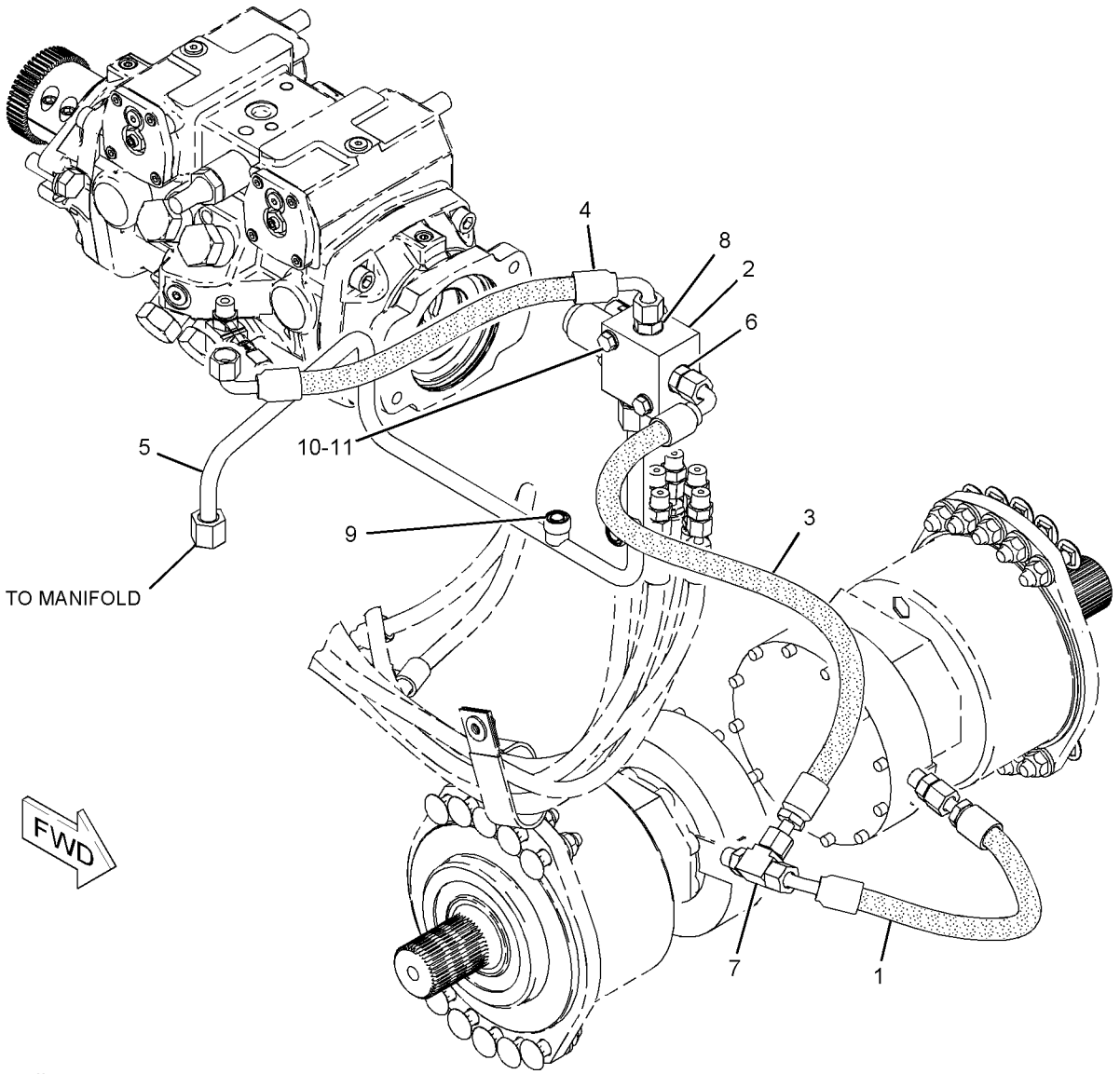

GRAPHIC #1 **<END>** g01126804

218-6235 CONTROL GP-PARKING BRAKE

S/N: MJH2909-UP; RLL1575-UP

PART OF 218-5620, 218-5820, 278-1217, 278-1227 HYDRAULIC AR

SMCS-4284 **i02400960**

NOTE	REF NO	GRAPHIC REF	PART NUMBER	QTY	PART NAME 1 2 3 4 5 6 (PRODUCT LEVEL)	SEE PAGE
I	1	1	**100-7530**	1	HOSE AS	
CY	2	1	*259-8210*	1	VALVE & MTG GP-SOLENOID (PARKING BRAKE)	269
I	3	1	**218-5580**	1	HOSE AS	
I	4	1	**218-6231**	1	HOSE AS	
	5	1	**233-5849**	1	TUBE AS	
	6	1	*148-8336*	3	CONNECTOR AS	
					(EACH INCLUDES)	
		1	**3J-1907**	1	SEAL-O-RING	
		1	**6V-8397**	1	SEAL-O-RING	
		1	**6V-8636**	1	CONNECTOR	
	7	1	*148-8435*	1	TEE AS	
		1	**3J-1907**	1	SEAL-O-RING	
		1	**6V-8397**	2	SEAL-O-RING	
		1	**6V-8781**	1	TEE-FACE SEAL	
	8	1	*161-8560*	1	CONNECTOR AS	
		1	**3J-1907**	1	SEAL-O-RING	
		1	**7J-9108**	1	SEAL-O-RING	
		1	**8C-6758**	1	CONNECTOR	
	9	1	**6V-8398**	2	SEAL-O-RING	
	10	1	**8T-4224**	2	WASHER-HARD (8.8X16X2-MM THK)	
M	11	1	**8T-6869**	2	BOLT (M8X1.25X60-MM)	

C-CHANGE FROM PREVIOUS TYPE
I-REFER TO HYDRAULIC INFORMATION SYSTEM
M-METRIC PART
Y-SEPARATE ILLUSTRATION

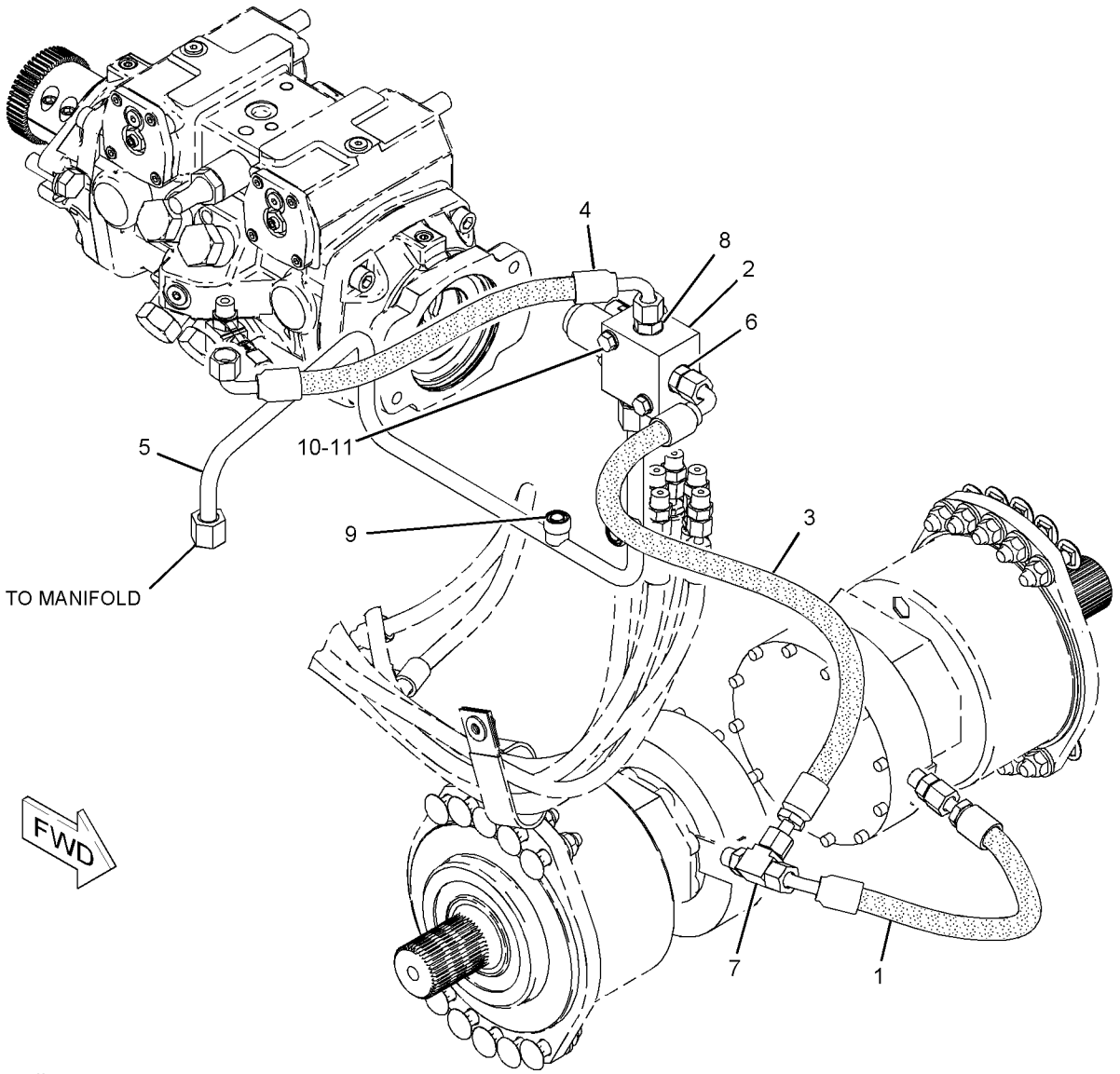

GRAPHIC #1 **<END>** g01126804

218-6536 CONTROL GP-PARKING BRAKE

S/N: SCH1-452; BXM1-680

PART OF 218-6820, 218-6920 HYDRAULIC AR

SMCS-4284 **i02360182**

NOTE	REF NO	GRAPHIC REF	PART NUMBER	QTY	PART NAME 1 2 3 4 5 6 (PRODUCT LEVEL)	SEE PAGE
I	1	1	**100-7530**	1	HOSE AS	
Y	2	1	*208-5681*	1	VALVE & MTG GP-SOLENOID (PARKING BRAKE)	267
I	3	1	**218-5580**	1	HOSE AS	
I	4	1	**218-6231**	1	HOSE AS	
	5	1	**218-6537**	1	TUBE AS	
	6	1	*148-8336*	3	CONNECTOR AS	
					(EACH INCLUDES)	
		1	**3J-1907**	1	SEAL-O-RING	
		1	**6V-8397**	1	SEAL-O-RING	
		1	**6V-8636**	1	CONNECTOR	
	7	1	*148-8435*	1	TEE AS	
		1	**3J-1907**	1	SEAL-O-RING	
		1	**6V-8397**	2	SEAL-O-RING	
		1	**6V-8781**	1	TEE-FACE SEAL	
	8	1	*150-4043*	1	CONNECTOR AS	
		1	**3J-1907**	1	SEAL-O-RING	
		1	**6V-8398**	1	SEAL-O-RING	
		1	**6V-9873**	1	CONNECTOR	
	9	1	**6V-8398**	2	SEAL-O-RING	
	10	1	**8T-4224**	2	WASHER-HARD (8.8X16X2-MM THK)	
M	11	1	**8T-6869**	2	BOLT (M8X1.25X60-MM)	

I-REFER TO HYDRAULIC INFORMATION SYSTEM
M-METRIC PART
Y-SEPARATE ILLUSTRATION

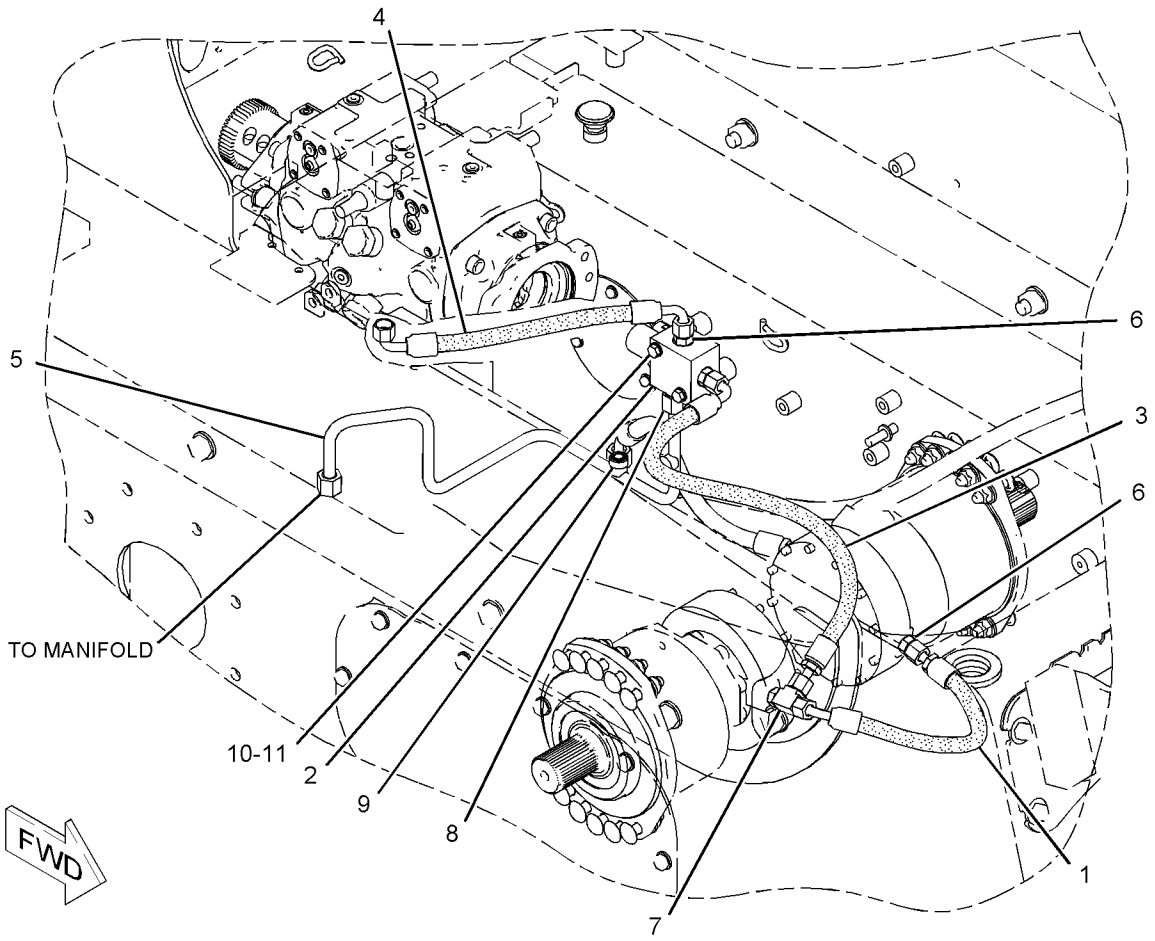

GRAPHIC #1 **<END>** g01028103

218-6536 CONTROL GP-PARKING BRAKE

S/N: SCH453-476; BXM681-714

PART OF 218-6820, 218-6920 HYDRAULIC AR

SMCS-4284 **i02228018**

NOTE	REF NO	GRAPHIC REF	PART NUMBER	QTY	PART NAME 1 2 3 4 5 6 (PRODUCT LEVEL)	SEE PAGE
I	1	1	**100-7530**	1	HOSE AS	
Y	2	1	*208-5681*	1	VALVE & MTG GP-SOLENOID (PARKING BRAKE)	267
I	3	1	**218-5580**	1	HOSE AS	
I	4	1	**218-6231**	1	HOSE AS	
C	5	1	**233-5847**	1	TUBE AS	
	6	1	*148-8336*	3	CONNECTOR AS	
					(EACH INCLUDES)	
		1	**3J-1907**	1	SEAL-O-RING	
		1	**6V-8397**	1	SEAL-O-RING	
		1	**6V-8636**	1	CONNECTOR	
	7	1	*148-8435*	1	TEE AS	
		1	**3J-1907**	1	SEAL-O-RING	
		1	**6V-8397**	2	SEAL-O-RING	
		1	**6V-8781**	1	TEE-FACE SEAL	
C	8	1	*161-8560*	1	CONNECTOR AS	
		1	**3J-1907**	1	SEAL-O-RING	
		1	**7J-9108**	1	SEAL-O-RING	
		1	**8C-6758**	1	CONNECTOR	
	9	1	**6V-8398**	2	SEAL-O-RING	
	10	1	**8T-4224**	2	WASHER-HARD (8.8X16X2-MM THK)	
M	11	1	**8T-6869**	2	BOLT (M8X1.25X60-MM)	

C-CHANGE FROM PREVIOUS TYPE
I-REFER TO HYDRAULIC INFORMATION SYSTEM
M-METRIC PART
Y-SEPARATE ILLUSTRATION

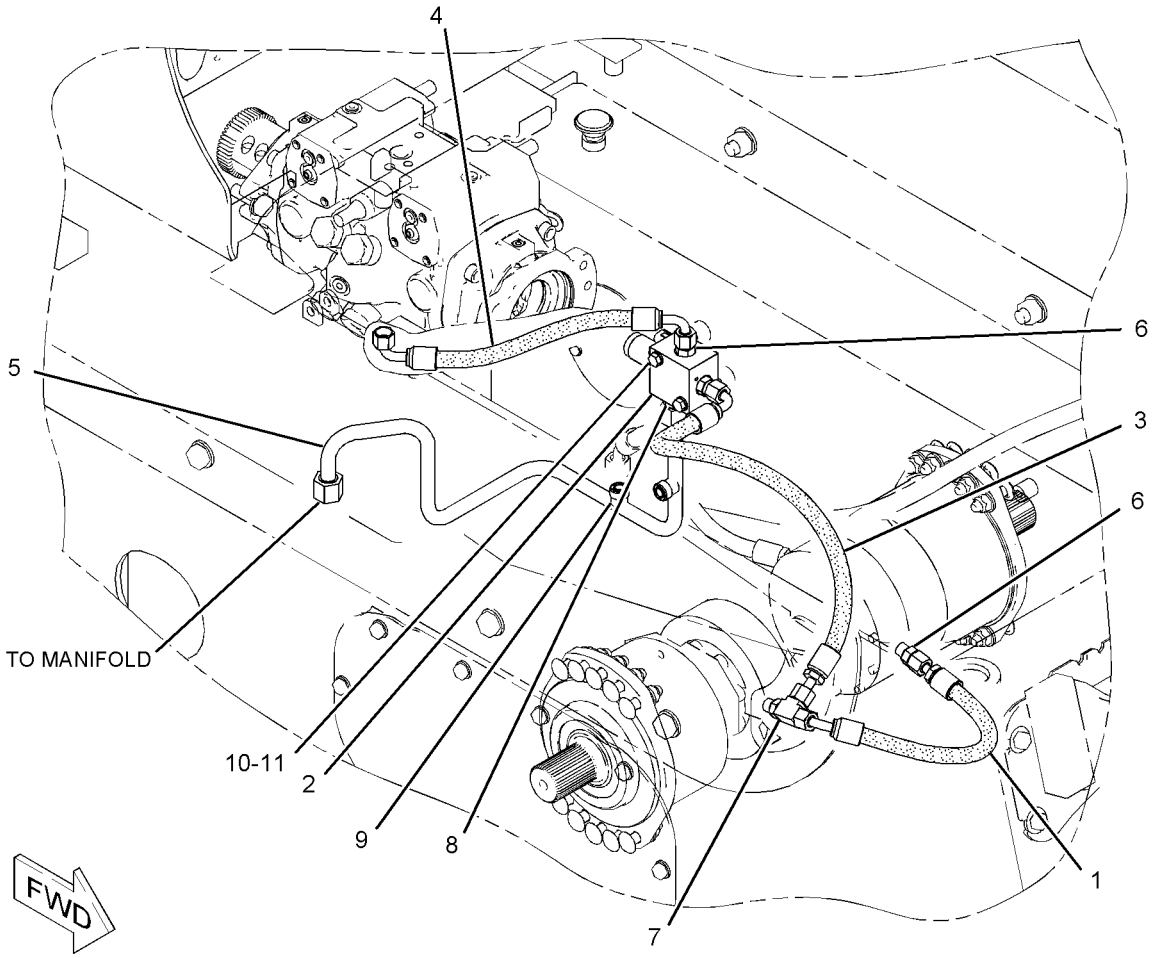

GRAPHIC #1 **<END>** g01131274

218-6536 CONTROL GP-PARKING BRAKE

S/N: SCH477-845; BXM715-1203

PART OF 218-6820, 218-6920 HYDRAULIC AR

SMCS-4284 **i02235303**

NOTE	REF NO	GRAPHIC REF	PART NUMBER	QTY	PART NAME 1 2 3 4 5 6 (PRODUCT LEVEL)	SEE PAGE
I	1	1	**100-7530**	1	HOSE AS	
CY	2	1	**233-7131**	1	VALVE & MTG GP-SOLENOID (PARKING BRAKE)	268
I	3	1	**218-5580**	1	HOSE AS	
I	4	1	**218-6231**	1	HOSE AS	
	5	1	**233-5847**	1	TUBE AS	
	6	1	*148-8336*	3	CONNECTOR AS	
					(EACH INCLUDES)	
		1	**3J-1907**	1	SEAL-O-RING	
		1	**6V-8397**	1	SEAL-O-RING	
		1	**6V-8636**	1	CONNECTOR	
	7	1	*148-8435*	1	TEE AS	
		1	**3J-1907**	1	SEAL-O-RING	
		1	**6V-8397**	2	SEAL-O-RING	
		1	**6V-8781**	1	TEE-FACE SEAL	
	8	1	*161-8560*	1	CONNECTOR AS	
		1	**3J-1907**	1	SEAL-O-RING	
		1	**7J-9108**	1	SEAL-O-RING	
		1	**8C-6758**	1	CONNECTOR	
	9	1	**6V-8398**	2	SEAL-O-RING	
	10	1	**8T-4224**	2	WASHER-HARD (8.8X16X2-MM THK)	
M	11	1	**8T-6869**	2	BOLT (M8X1.25X60-MM)	

C-CHANGE FROM PREVIOUS TYPE
I-REFER TO HYDRAULIC INFORMATION SYSTEM
M-METRIC PART
Y-SEPARATE ILLUSTRATION

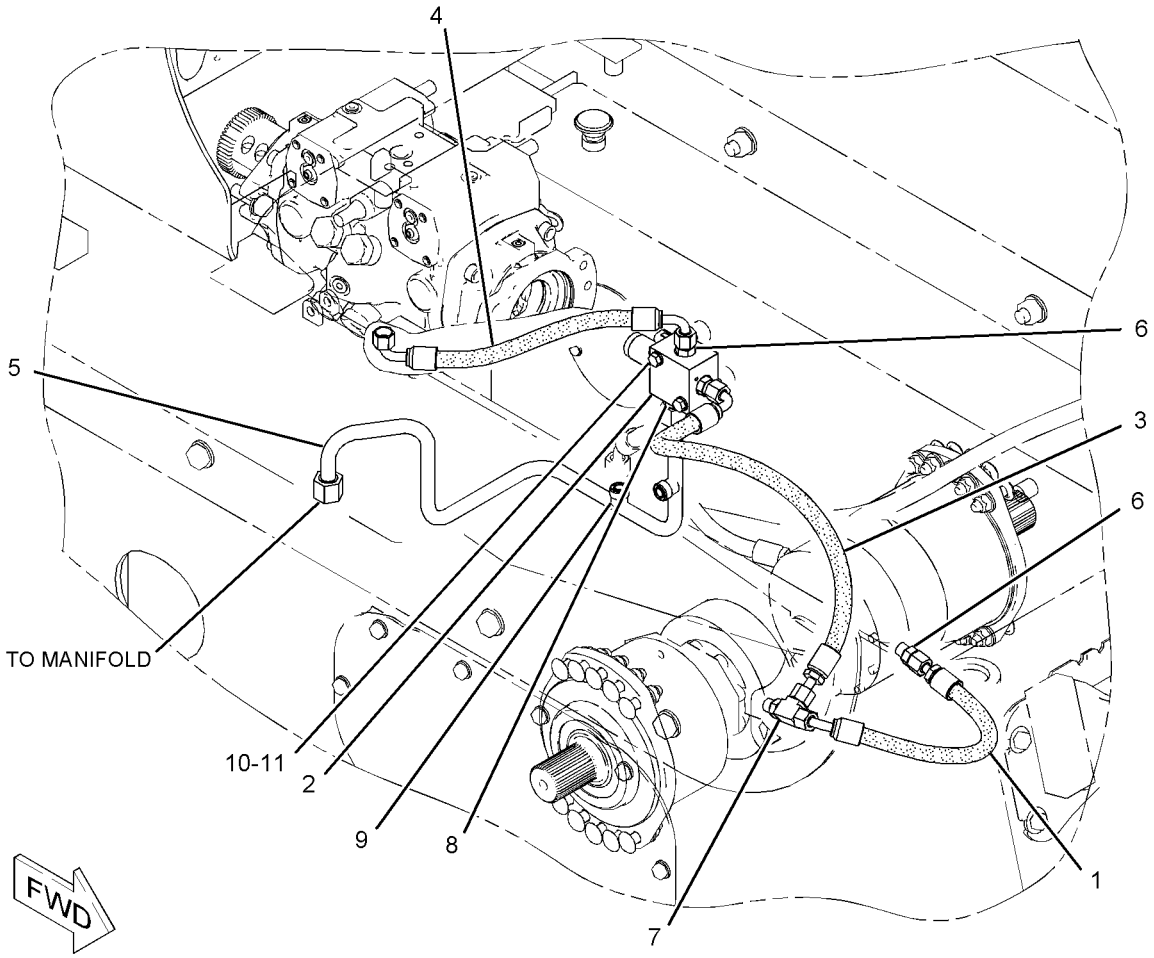

GRAPHIC #1 **<END>** g01131274

218-6536 CONTROL GP-PARKING BRAKE

S/N: SCH846-UP; BXM1204-UP

PART OF 218-6820, 218-6920, 278-1233, 278-1243 HYDRAULIC AR

SMCS-4284 **i02445706**

NOTE	REF NO	GRAPHIC REF	PART NUMBER	QTY	PART NAME 1 2 3 4 5 6 (PRODUCT LEVEL)	SEE PAGE
I	1	1	**100-7530**	1	HOSE AS	
CY	2	1	**259-8210**	1	VALVE & MTG GP-SOLENOID (PARKING BRAKE)	269
I	3	1	**218-5580**	1	HOSE AS	
I	4	1	**218-6231**	1	HOSE AS	
	5	1	**233-5847**	1	TUBE AS	
	6	1	*148-8336*	3	CONNECTOR AS	
					(EACH INCLUDES)	
		1	**3J-1907**	1	SEAL-O-RING	
		1	**6V-8397**	1	SEAL-O-RING	
		1	**6V-8636**	1	CONNECTOR	
	7	1	*148-8435*	1	TEE AS	
		1	**3J-1907**	1	SEAL-O-RING	
		1	**6V-8397**	2	SEAL-O-RING	
		1	**6V-8781**	1	TEE-FACE SEAL	
	8	1	*161-8560*	1	CONNECTOR AS	
		1	**3J-1907**	1	SEAL-O-RING	
		1	**7J-9108**	1	SEAL-O-RING	
		1	**8C-6758**	1	CONNECTOR	
	9	1	**6V-8398**	2	SEAL-O-RING	
	10	1	**8T-4224**	2	WASHER-HARD (8.8X16X2-MM THK)	
M	11	1	**8T-6869**	2	BOLT (M8X1.25X60-MM)	

C-CHANGE FROM PREVIOUS TYPE
I-REFER TO HYDRAULIC INFORMATION SYSTEM
M-METRIC PART
Y-SEPARATE ILLUSTRATION

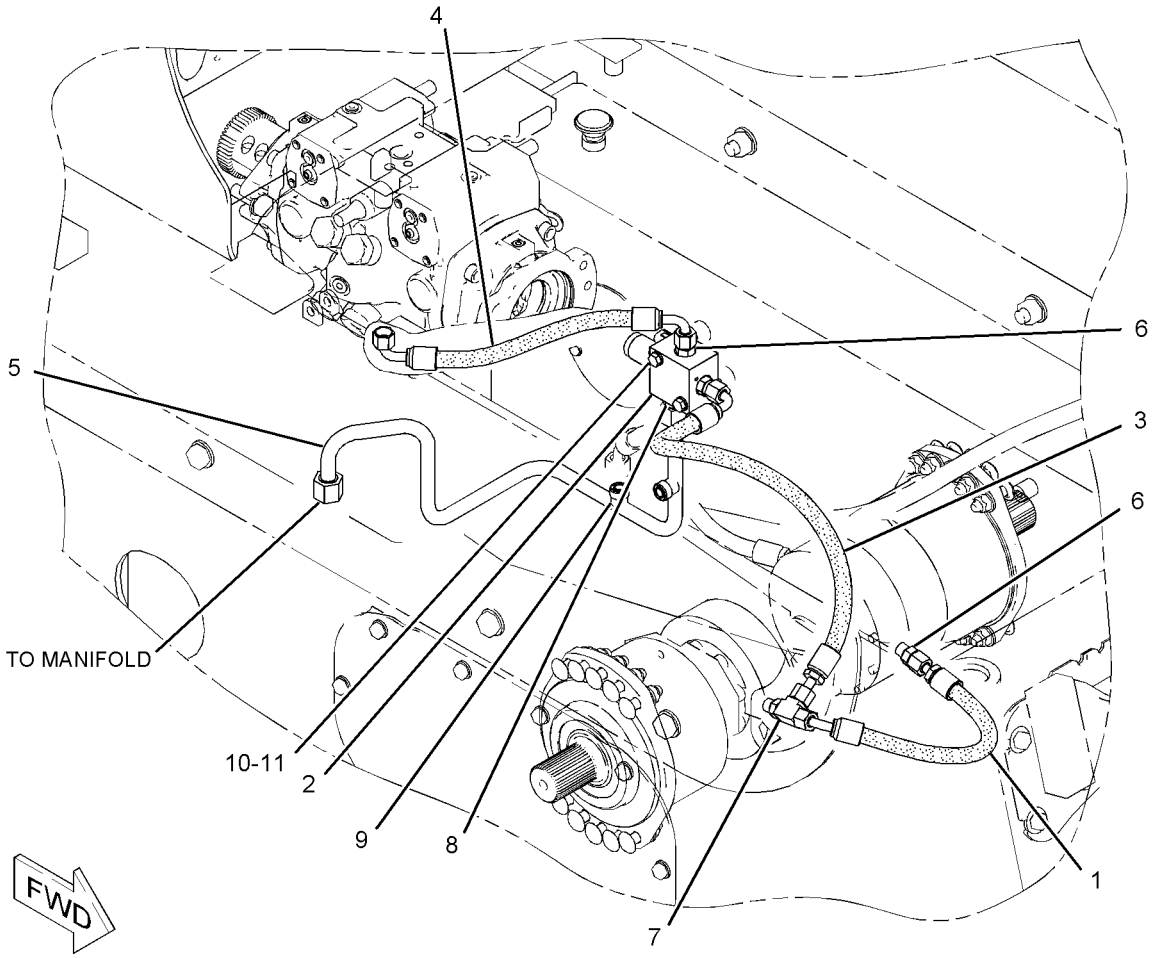

GRAPHIC #1 **<END>** g01131274

142-8760 DRIVE GP-TANDEM

S/N: MJH1-UP; RLL1-UP

PART OF 218-6500, 261-5750 POWER TRAIN AR

SMCS-4062 **i02456005**

NOTE	REF NO	GRAPHIC REF	PART NUMBER	QTY	PART NAME 1 2 3 4 5 6 (PRODUCT LEVEL)	SEE PAGE
	1	1	**142-8732**	4	SPROCKET (12-TEETH) (MOTOR)	
	2	1	**142-8734**	4	SPROCKET (35-TEETH) (AXLE)	
	3	1	**142-8757**	2	CHAIN AS	
	4	1	**152-1157**	32	WASHER (15.5X32X8-MM THK)	
	5	1	**159-5793**	2	SPACER (14.3-MM THK)	
	6	1	**168-7572**	2	CHAIN AS	
	7	1	**200-0999**	32	STUD	
M	8	1	**099-4691**	2	BOLT-LOCKING (M12X1.75X25-MM)	
M	9	1	**100-3866**	4	BOLT-SELF-LOCKING (M16X2X40-MM)	
	10	1	**142-9036**	32	NUT (9/16-18-THD)	
	11	1	**5K-1787**	4	SEAL-O-RING	
	12	1	**7G-8839**	2	SPACER (13.5X57X6-MM THK)	
	13	1	**7X-0610**	4	WASHER-HARD (20X75X6-MM THK)	
M	14	1	**8T-4122**	4	WASHER-HARD (17X32X3.5-MM THK)	

M-METRIC PART

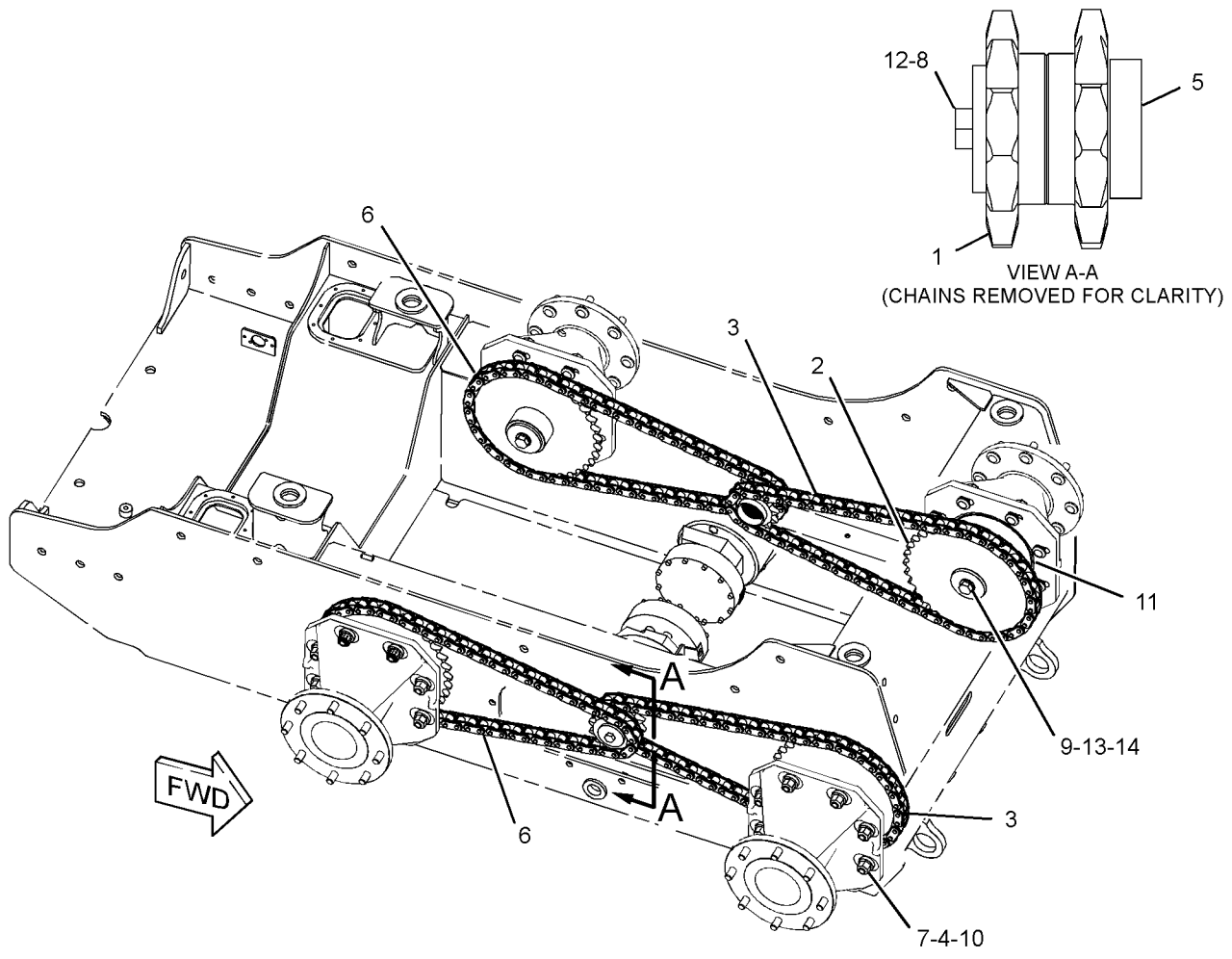

GRAPHIC #1 **<END>** g01229385

212-6692 DRIVE GP-TANDEM

S/N: SCH1-UP; BXM1-UP

PART OF 218-6200, 261-5751 POWER TRAIN AR

SMCS-4062 **i02456003**

NOTE	REF NO	GRAPHIC REF	PART NUMBER	QTY	PART NAME 1 2 3 4 5 6 (PRODUCT LEVEL)	SEE PAGE
	1	1	**142-8732**	4	SPROCKET (12-TEETH) (MOTOR)	
	2	1	**152-1157**	32	WASHER (15.5X32X8-MM THK)	
	3	1	**159-5793**	2	SPACER (14.3-MM THK)	
	4	1	**191-9659**	4	CHAIN AS	
	5	1	**191-9661**	4	SPROCKET (40-TEETH) (AXLE)	
	6	1	**200-0999**	32	STUD	
M	7	1	**099-4691**	2	BOLT-LOCKING (M12X1.75X25-MM)	
M	8	1	**100-3866**	4	BOLT-SELF-LOCKING (M16X2X40-MM)	
	9	1	**142-9036**	32	NUT (9/16-18-THD)	
	10	1	**5K-1787**	4	SEAL-O-RING	
	11	1	**7G-8839**	2	SPACER (13.5X57X6-MM THK)	
	12	1	**7X-0610**	4	WASHER-HARD (20X75X6-MM THK)	
M	13	1	**8T-4122**	4	WASHER-HARD (17X32X3.5-MM THK)	

M-METRIC PART

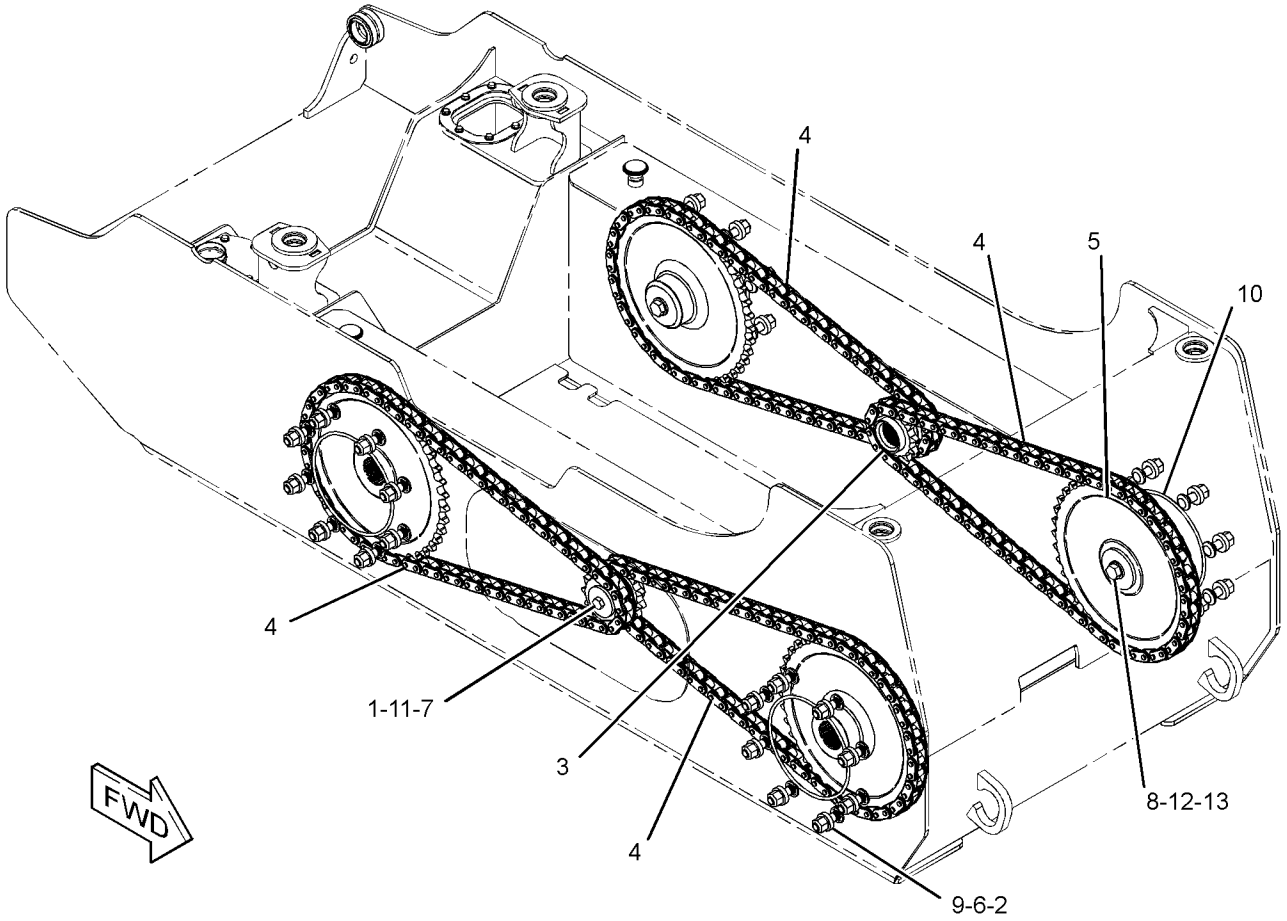

GRAPHIC #1 **<END>** g01229421

218-6545 FILTER & LINES GP-HYDRAULIC

S/N: SCH1-UP; BXM1-UP

PART OF 218-6820, 218-6920, 278-1233, 278-1243 HYDRAULIC AR

SMCS-5057, 5068 **i02270913**

NOTE	REF NO	GRAPHIC REF	PART NUMBER	QTY	PART NAME 1 2 3 4 5 6 (PRODUCT LEVEL)	SEE PAGE
I	1	1	**218-6529**	1	HOSE AS	
	2	1	**218-6548**	1	BRACKET AS	
	3	1	**238-7733**	1	HOSE AS	
Y	4	1	**223-9974**	1	FILTER GP-OIL (HYDRAULIC)	229
	5	1	*148-8315*	1	CONNECTOR AS	
		1	**6V-8642**	1	CONNECTOR	
		1	**2M-9780**	1	SEAL-O-RING	
		1	**7J-9108**	1	SEAL-O-RING	
	6	1	*148-8328*	1	CONNECTOR AS	
		1	**6V-8633**	1	CONNECTOR	
		1	**3D-2824**	1	SEAL-O-RING	
		1	**6V-8398**	1	SEAL-O-RING	
	7	1	*148-8340*	1	CONNECTOR AS	
		1	**6V-8639**	1	CONNECTOR	
		1	**3K-0360**	1	SEAL-O-RING	
		1	**6V-8398**	1	SEAL-O-RING	
	8	1	*148-8382*	1	ELBOW AS	
		1	**8T-0404**	1	ELBOW	
		1	**3D-2824**	1	SEAL-O-RING	
		1	**7J-9108**	1	SEAL-O-RING	
	9	1	**4S-1962**	1	CLIP	
	10	1	**6V-1228**	1	CLIP	
	11	1	**8T-4121**	9	WASHER-HARD (11X21X2.5-MM THK)	
M	12	1	**8T-4133**	1	NUT (M10X1.5-THD)	
M	13	1	**8T-4137**	4	BOLT (M10X1.5X20-MM)	
M	14	1	**8T-4196**	1	BOLT (M10X1.5X35-MM)	
M	15	1	**8T-4136**	2	BOLT (M10X1.5X25-MM)	
M	16	1	**8T-4195**	1	BOLT (M10X1.5X30-MM)	

I-REFER TO HYDRAULIC INFORMATION SYSTEM
M-METRIC PART
Y-SEPARATE ILLUSTRATION

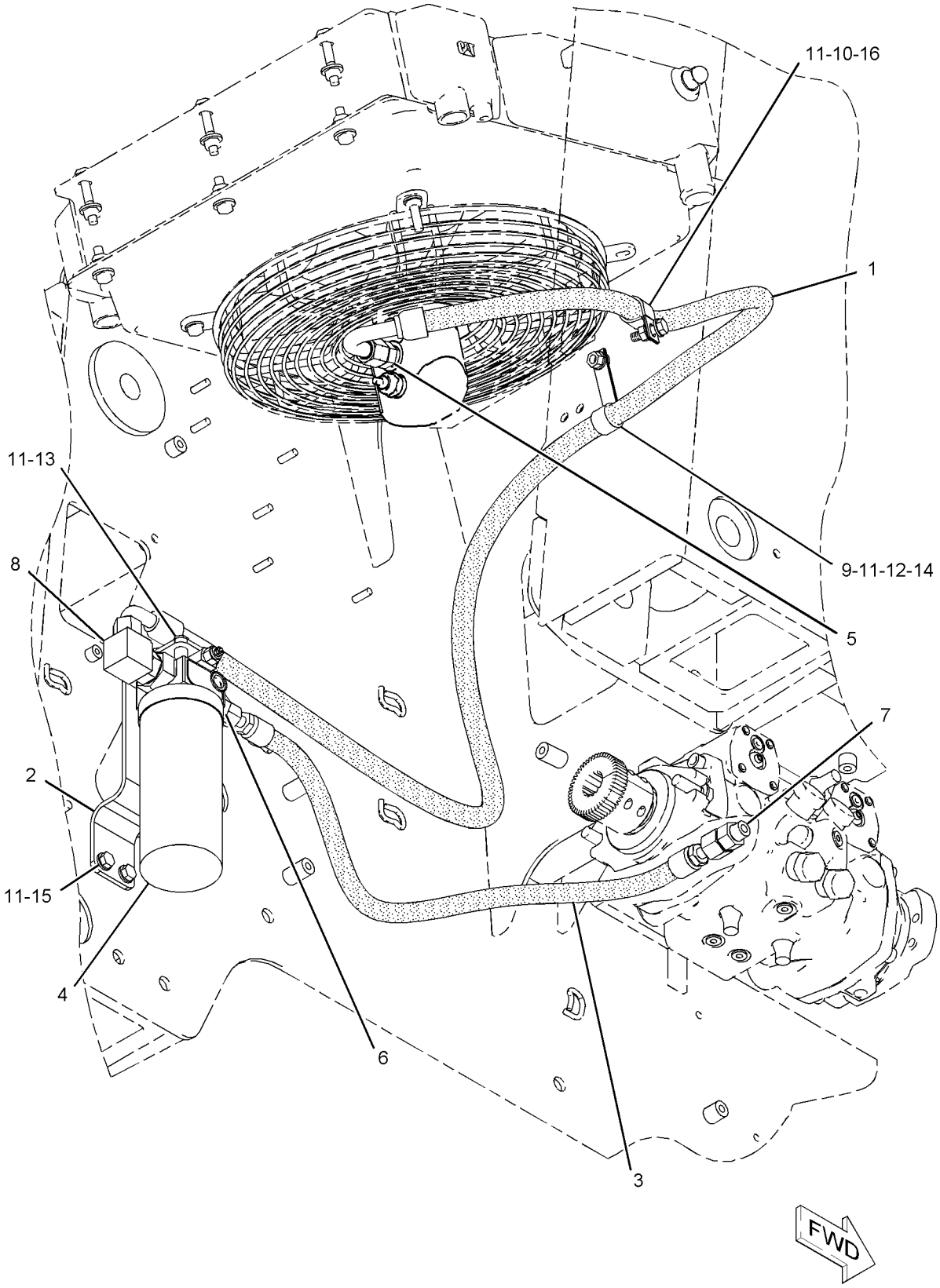

GRAPHIC #1 **<END>** g01137656

218-6624 FILTER & LINES GP-HYDRAULIC

S/N: MJH1-UP; RLL1-UP

PART OF 218-5620, 218-5820, 278-1217, 278-1227 HYDRAULIC AR

SMCS-5057, 5068 **i02008214**

NOTE	REF NO	GRAPHIC REF	PART NUMBER	QTY	PART NAME 1 2 3 4 5 6 (PRODUCT LEVEL)	SEE PAGE
	1	1	**218-5671**	1	PLATE	
I	2	1	**218-6062**	1	HOSE AS	
	3	1	**218-6677**	1	HOSE AS	
Y	4	1	**223-9974**	1	FILTER GP-OIL (HYDRAULIC)	229
	5	1	*148-8315*	1	CONNECTOR AS	
		1	**2M-9780**	1	SEAL-O-RING	
		1	**6V-8642**	1	CONNECTOR	
		1	**7J-9108**	1	SEAL-O-RING	
	6	1	*148-8328*	1	CONNECTOR AS	
		1	**3D-2824**	1	SEAL-O-RING	
		1	**6V-8398**	1	SEAL-O-RING	
		1	**6V-8633**	1	CONNECTOR	
	7	1	*148-8340*	1	CONNECTOR AS	
		1	**3K-0360**	1	SEAL-O-RING	
		1	**6V-8398**	1	SEAL-O-RING	
		1	**6V-8639**	1	CONNECTOR	
	8	1	*148-8382*	1	ELBOW AS	
		1	**3D-2824**	1	SEAL-O-RING	
		1	**7J-9108**	1	SEAL-O-RING	
		1	**8T-0404**	1	ELBOW	
	9	1	**6B-2882**	1	SPACER (0.406X0.75X0.312-IN THK)	
	10	1	**6V-1228**	1	CLIP	
	11	1	**8T-4121**	7	WASHER-HARD (11X21X2.5-MM THK)	
M	12	1	**8T-4133**	2	NUT (M10X1.5-THD)	
M	13	1	**8T-4137**	4	BOLT (M10X1.5X20-MM)	
M	14	1	**8T-4195**	1	BOLT (M10X1.5X30-MM)	

I-REFER TO HYDRAULIC INFORMATION SYSTEM
M-METRIC PART
Y-SEPARATE ILLUSTRATION

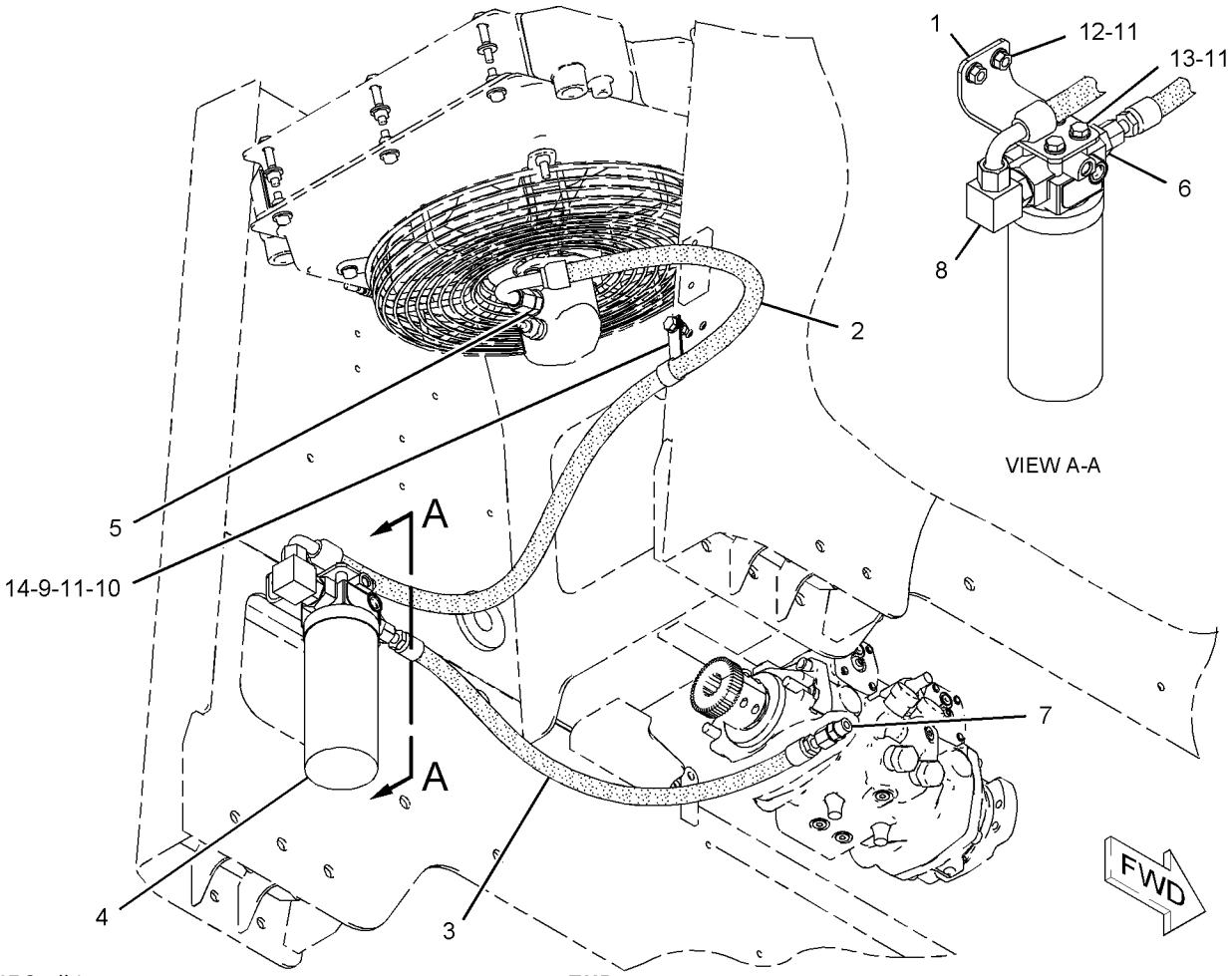

GRAPHIC #1 **<END>** g01038697

223-9974 FILTER GP-OIL–HYDRAULIC

S/N: MJH1-UP; SCH1-UP; RLL1-UP; BXM1-UP

PART OF 218-6545, 218-6624 FILTER & LINES GP-HYDRAULIC

SMCS-5068 **i02469830**

NOTE	REF NO	GRAPHIC REF	PART NUMBER	QTY	PART NAME 1 2 3 4 5 6 (PRODUCT LEVEL)	SEE PAGE
	1	1	**3J-1907**	1	SEAL-O-RING	
	2	1	**134-0404**	1	SWITCH AS-PRESSURE (HYDRAULIC OIL)	
	3	1	**1G-8878**	1	FILTER ELEMENT (HYDRAULIC)	

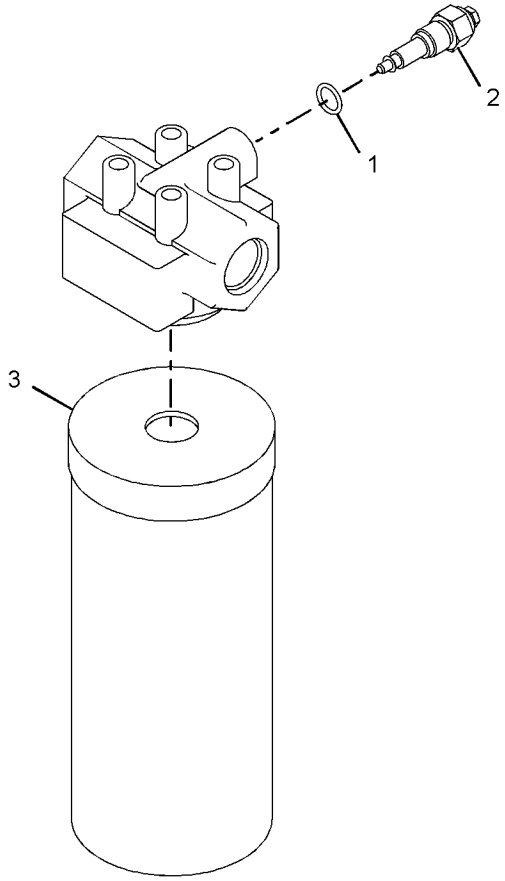

GRAPHIC #1 **<END>** g01035150

218-6089 LINES GP-HYDROSTATIC

S/N: MJH1-UP; RLL1-UP

PART OF 218-5620, 218-5820, 278-1217, 278-1227 HYDRAULIC AR

SMCS-3154 **i02359962**

NOTE	REF NO	GRAPHIC REF	PART NUMBER	QTY	PART NAME 1 2 3 4 5 6 (PRODUCT LEVEL)	SEE PAGE
	1	1	**2S-3440**	1	CLAMP-HOSE	
	2	1	**6V-0852**	5	CAP-DUST	
	3	1	**9U-6993**	1	ADAPTER AS	
		1	**3D-2824**	1	SEAL-O-RING	
	4	1	*164-5567*	5	FITTING AS	
					(EACH INCLUDES)	
		1	**3J-1907**	1	SEAL-O-RING	
		1	**6V-3965**	1	FITTING AS (QUICK DISCONNECT)	
Y	5	1	*218-5560*	1	MANIFOLD GP-RETURN	234
	6	1	**275-0623**	1	HOSE	
I	7	1	**142-9241**	2	HOSE AS	
I	8	1	**218-6095**	2	HOSE AS	
I	9	1	**218-6096**	1	HOSE AS	
I	10	1	**218-6862**	1	HOSE AS	
	11	1	*148-8322*	4	CONNECTOR GP	
					(EACH INCLUDES)	
		1	**2M-9780**	1	SEAL-O-RING	
		1	**6V-8640**	1	CONNECTOR	
		1	**6V-9746**	1	SEAL-O-RING	
	12	1	*148-8327*	4	CONNECTOR GP	
					(EACH INCLUDES)	
		1	**3D-2824**	1	SEAL-O-RING	
		1	**6V-8637**	1	CONNECTOR	
		1	**6V-9746**	1	SEAL-O-RING	
	13	1	*148-8338*	2	CONNECTOR AS	
					(EACH INCLUDES)	
		1	**3J-1907**	1	SEAL-O-RING	
		1	**6V-8397**	1	SEAL-O-RING	
		1	**8T-0075**	1	CONNECTOR	
M	14	1	**5C-7261**	3	NUT (M8X1.25-THD)	
	15	1	**5P-2230**	1	CLAMP-HOSE	
	16	1	**5P-4116**	3	WASHER-HARD (8.8X20.5X2-MM THK)	

I-REFER TO HYDRAULIC INFORMATION SYSTEM
M-METRIC PART
Y-SEPARATE ILLUSTRATION

218-6089 **LINES GP-HYDROSTATIC** *(contd.)* **i02359962**

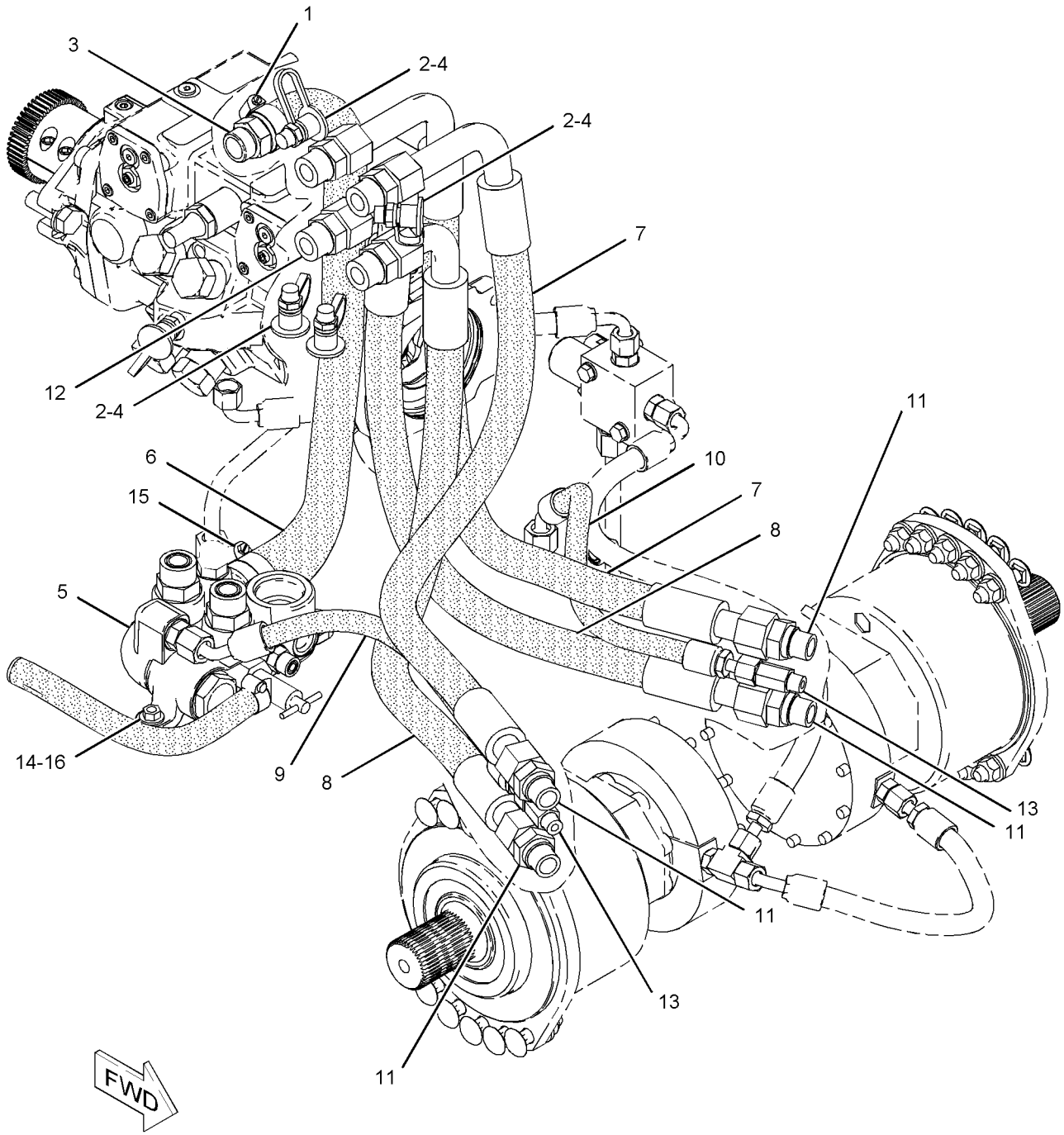

GRAPHIC #1 **<END>** g01037519

218-6506 LINES GP-HYDROSTATIC

S/N: SCH1-UP; BXM1-UP

PART OF 218-6820, 218-6920, 278-1233, 278-1243 HYDRAULIC AR

SMCS-3154 **i02359965**

NOTE	REF NO	GRAPHIC REF	PART NUMBER	QTY	PART NAME 1 2 3 4 5 6 (PRODUCT LEVEL)	SEE PAGE
	1	1	**2S-3440**	1	CLAMP-HOSE	
	2	1,1	**6V-0852**	5	CAP-DUST	
	3	1	**9U-6993**	1	ADAPTER AS	
		1	**3D-2824**	1	SEAL-O-RING	
	4	1	*164-5567*	5	FITTING AS	
					(EACH INCLUDES)	
		1	**3J-1907**	1	SEAL-O-RING	
		1	**6V-3965**	1	FITTING AS (QUICK DISCONNECT)	
Y	5	1	*218-5560*	1	MANIFOLD GP-RETURN	234
I	6	1,1	**142-9241**	2	HOSE AS	
I	7	1	**218-6095**	2	HOSE AS	
	8	1	**275-0625**	1	HOSE	
I	9	1	**218-6508**	1	HOSE AS	
I	10	1	**218-6863**	1	HOSE AS	
	11	1	*148-8322*	4	CONNECTOR GP	
					(EACH INCLUDES)	
		1	**2M-9780**	1	SEAL-O-RING	
		1	**6V-8640**	1	CONNECTOR	
		1	**6V-9746**	1	SEAL-O-RING	
	12	1	*148-8327*	4	CONNECTOR GP	
					(EACH INCLUDES)	
		1	**3D-2824**	1	SEAL-O-RING	
		1	**6V-8637**	1	CONNECTOR	
		1	**6V-9746**	1	SEAL-O-RING	
	13	1	*148-8338*	2	CONNECTOR AS	
					(EACH INCLUDES)	
		1	**3J-1907**	1	SEAL-O-RING	
		1	**6V-8397**	1	SEAL-O-RING	
		1	**8T-0075**	1	CONNECTOR	
M	14	1	**5C-7261**	3	NUT (M8X1.25-THD)	
	15	1	**5P-2230**	1	CLAMP-HOSE	
	16	1	**5P-4116**	3	WASHER-HARD (8.8X20.5X2-MM THK)	

I-REFER TO HYDRAULIC INFORMATION SYSTEM
M-METRIC PART
Y-SEPARATE ILLUSTRATION

218-6506 **LINES GP-HYDROSTATIC** *(contd.)* **i02359965**

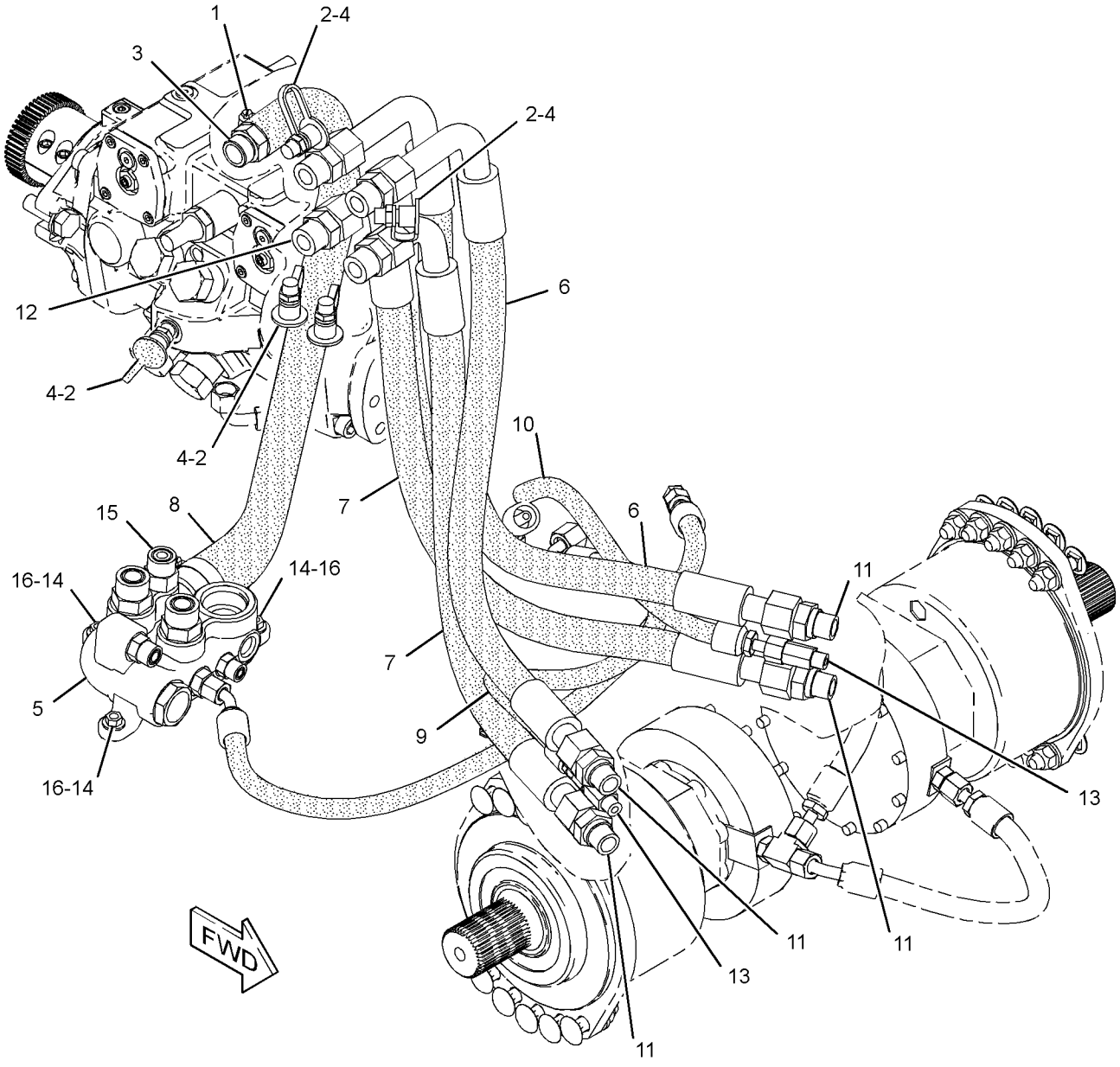

GRAPHIC #1 **<END>** g01229478

218-5560 MANIFOLD GP-RETURN

S/N: MJH1-3175; SCH1-923; RLL1-1700; BXM1-1307
PART OF 218-6089, 218-6506 LINES GP-HYDROSTATIC

SMCS-5264 **i02475645**

NOTE	REF NO	GRAPHIC REF	PART NUMBER	QTY	PART NAME 1 2 3 4 5 6 (PRODUCT LEVEL)	SEE PAGE
E	1	1	**5P-0743**		HOSE (27-CM)	
	2	1	**5D-1026**	1	CLAMP-HOSE	
	3	1	**6N-2944**	1	PLUG	
	4	1	**105-4593**	1	POPPET	
	5	1	*165-2273*	1	VALVE GP-SHUTOFF (HYDRAULIC TANK DRAIN)	
		1	**3K-0360**	1	SEAL-O-RING	
		1	**6V-7238**	1	VALVE-SHUTOFF	
	6	1	**212-6603**	1	PLUG AS	
		1	**6V-8978**	1	SEAL-O-RING	
	7	1	**212-6604**	1	SPRING	
	8	1	**218-5561**	1	BLOCK	
	9	1	*148-8327*	2	CONNECTOR GP	
					(EACH INCLUDES)	
		1	**3D-2824**	1	SEAL-O-RING	
		1	**6V-8637**	1	CONNECTOR	
		1	**6V-9746**	1	SEAL-O-RING	
	10	1	*148-8336*	1	CONNECTOR AS	
		1	**3J-1907**	1	SEAL-O-RING	
		1	**6V-8397**	1	SEAL-O-RING	
		1	**6V-8636**	1	CONNECTOR	
	11	1	*148-8342*	1	CONNECTOR AS	
		1	**3K-0360**	1	SEAL-O-RING	
		1	**6V-8632**	1	CONNECTOR	
		1	**7J-9108**	1	SEAL-O-RING	
	12	1	*148-8340*	1	CONNECTOR AS	
		1	**3K-0360**	1	SEAL-O-RING	
		1	**6V-8398**	1	SEAL-O-RING	
		1	**6V-8639**	1	CONNECTOR	

E-ORDER BY THE CENTIMETER

218-5560 **MANIFOLD GP-RETURN** *(contd.)* **i02475645**

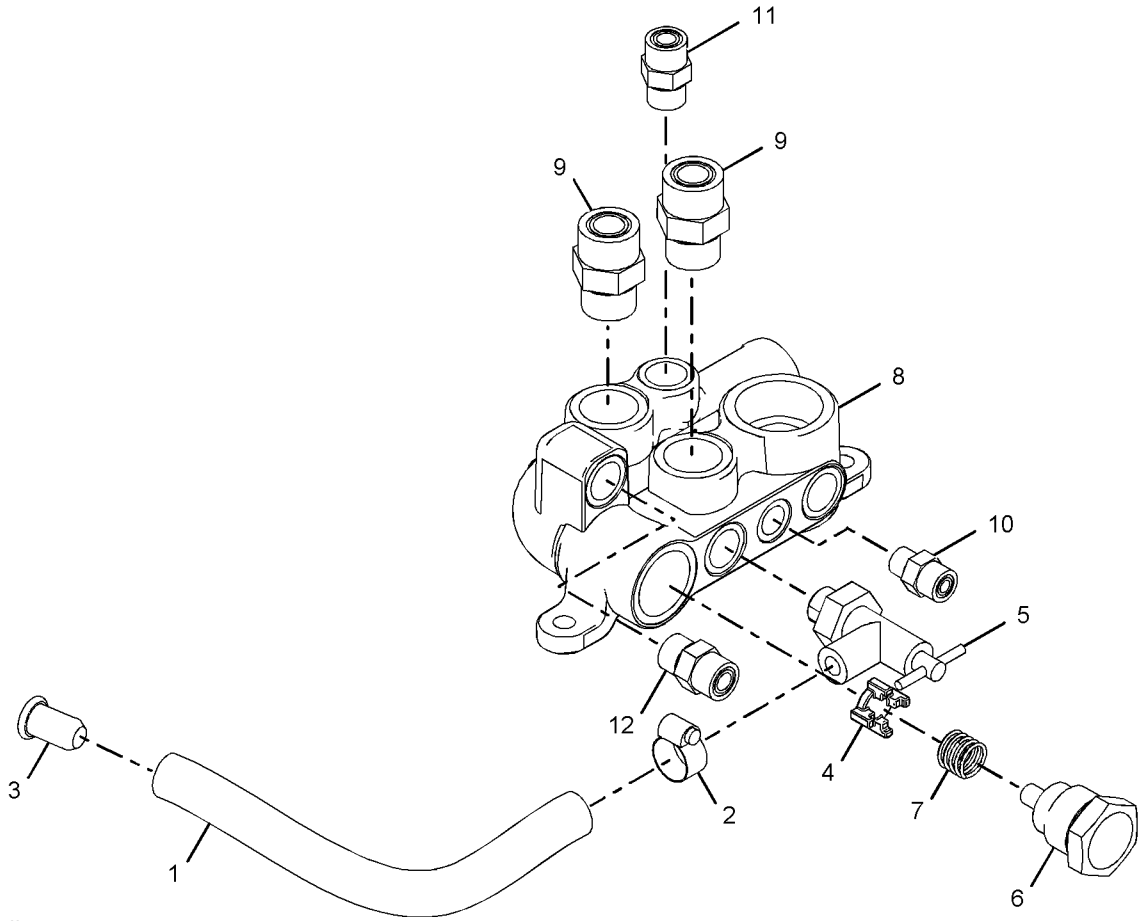

GRAPHIC #1 **<END>** g01065875

218-5560 MANIFOLD GP-RETURN

S/N: MJH3176-UP; SCH924-UP; RLL1701-UP; BXM1308-UP
PART OF 218-6089, 218-6506 LINES GP-HYDROSTATIC

SMCS-5264 **i02475640**

NOTE	REF NO	GRAPHIC REF	PART NUMBER	QTY	PART NAME 1 2 3 4 5 6 (PRODUCT LEVEL)	SEE PAGE
C	1	1	**7K-1181**	1	STRAP-CABLE	
	2	1	**105-4593**	1	POPPET	
	3	1	**212-6603**	1	PLUG AS	
		1	**6V-8978**	1	SEAL-O-RING	
	4	1	**212-6604**	1	SPRING	
	5	1	**218-5561**	1	BLOCK	
CI	6	1	**233-5716**	1	HOSE AS	
C	7	1	*148-8318*	1	CONNECTOR AS (HYDRAULIC TANK DRAIN)	
		1	**3K-0360**	1	SEAL-O-RING	
		1	**6V-8937**	1	REDUCER-O-RING	
		1	**6V-8634**	1	CONNECTOR	
	8	1	*148-8327*	2	CONNECTOR GP	
					(EACH INCLUDES)	
		1	**3D-2824**	1	SEAL-O-RING	
		1	**6V-8637**	1	CONNECTOR	
		1	**6V-9746**	1	SEAL-O-RING	
	9	1	*148-8336*	1	CONNECTOR AS	
		1	**3J-1907**	1	SEAL-O-RING	
		1	**6V-8397**	1	SEAL-O-RING	
		1	**6V-8636**	1	CONNECTOR	
	10	1	*148-8340*	1	CONNECTOR AS	
		1	**3K-0360**	1	SEAL-O-RING	
		1	**6V-8398**	1	SEAL-O-RING	
		1	**6V-8639**	1	CONNECTOR	
	11	1	*148-8342*	1	CONNECTOR AS	
		1	**3K-0360**	1	SEAL-O-RING	
		1	**6V-8632**	1	CONNECTOR	
		1	**7J-9108**	1	SEAL-O-RING	
C	12	1	*165-4934*	1	PLUG AS	
		1	**6V-8397**	1	SEAL-O-RING	
		1	**6V-9508**	1	PLUG	

C-CHANGE FROM PREVIOUS TYPE
I-REFER TO HYDRAULIC INFORMATION SYSTEM

218-5560 **MANIFOLD GP-RETURN** *(contd.)* **i02475640**

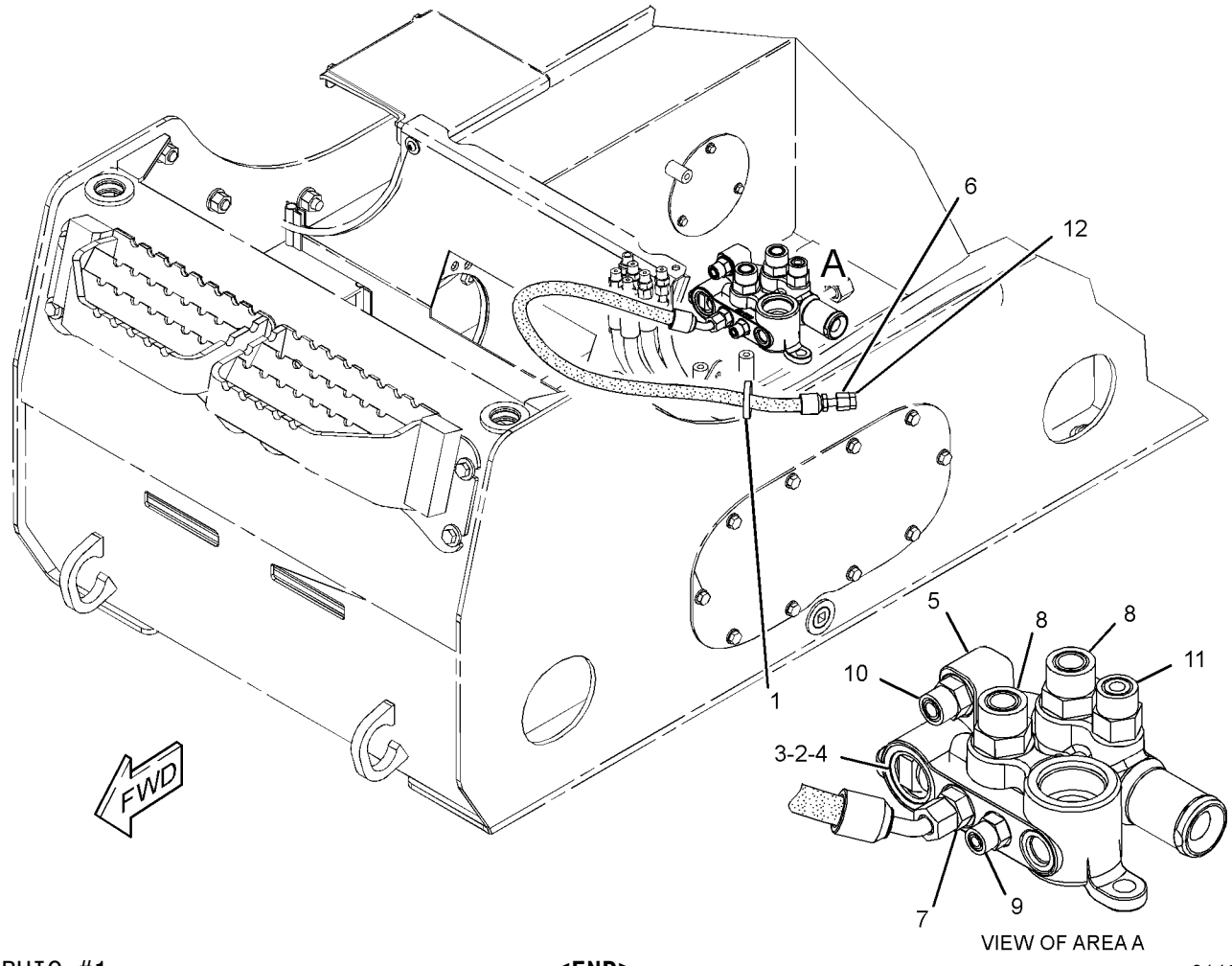

GRAPHIC #1 **<END>** g01151517

191-9650 MOTOR & MTG GP-HYDROSTATIC

S/N: MJH1-UP; SCH1-UP; RLL1-UP; BXM1-UP

PART OF 218-6200, 218-6500, 261-5750, 261-5751 POWER TRAIN AR

SMCS-5058 **i01835299**

NOTE	REF NO	GRAPHIC REF	PART NUMBER	QTY	PART NAME 1 2 3 4 5 6 (PRODUCT LEVEL)	SEE PAGE
	1	1	**206-5143**	20	BOLT (M12X1.75-THD)	
YR	2	1	**220-8152**	2	MOTOR GP-PISTON	239
M	3	1	**6V-7687**	20	LOCKNUT (M12X1.75-THD)	
	4	1	**8T-4223**	20	WASHER-HARD (13.5X25.5X3-MM THK)	

M-METRIC PART
R-REMFG PART MAY BE AVAILABLE
Y-SEPARATE ILLUSTRATION

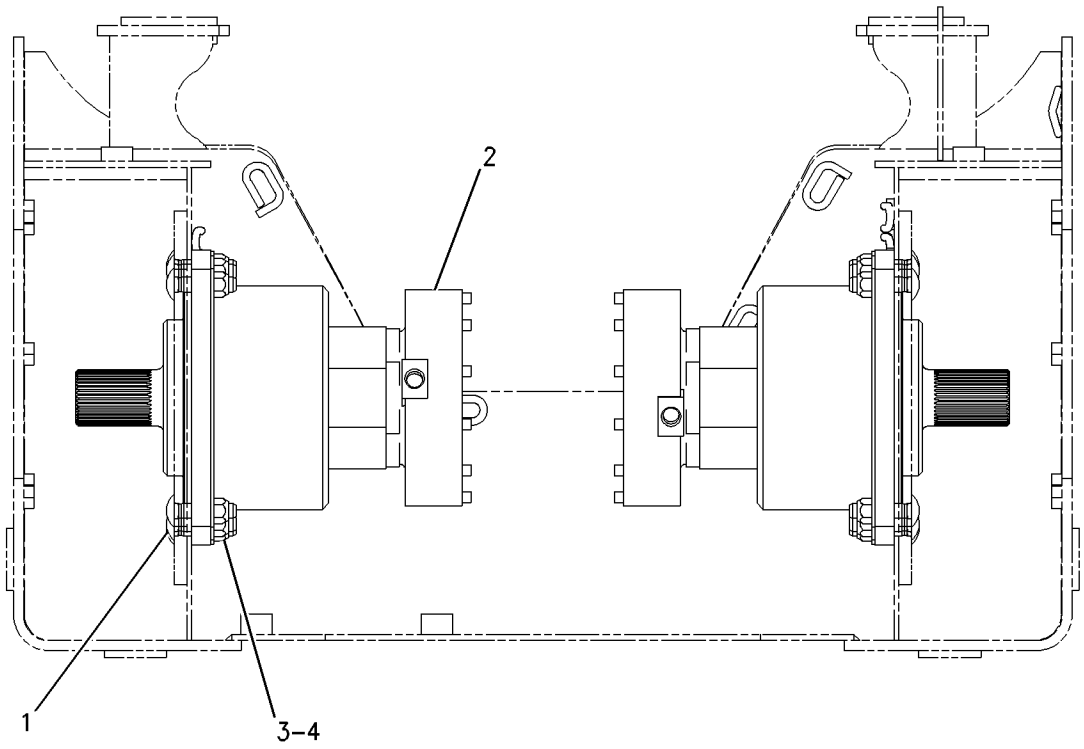

REAR VIEW

GRAPHIC #1 **<END>** g00978901

220-8152 MOTOR GP-PISTON*R

S/N: MJH1-UP; SCH1-UP; RLL1-UP; BXM1-UP
PART OF 191-9650 MOTOR & MTG GP-HYDROSTATIC

SMCS-5058 **i02429961**

NOTE	REF NO	GRAPHIC REF	PART NUMBER	QTY	PART NAME 1 2 3 4 5 6 (PRODUCT LEVEL)	SEE PAGE
J	1	1	**207-9717**	1	SEAL-RING	
	2	1	**207-9718**	1	GASKET	
J	3	1	**207-9719**	1	SEAL-LIP TYPE	
J	4	1	**033-5853**	1	SEAL-O-RING	
J	5	1	**210-4649**	1	SEAL	
	6	1	**216-6124**	1	PLUG	
J	7	1	**3E-6708**	1	SEAL-O-RING	
M	8	1	**5C-7883**	12	BOLT-SOCKET HEAD (M6X1X16-MM)	
	9	1	**222-5693**	1	PLUG-O RING	
J	10	1	**7I-2750**	8	SEAL	
M	11	1	**8T-0271**	8	BOLT-SOCKET HEAD (M10X1.5X35-MM)	
J	12	1	**220-8169**	1	SEAL-RING	
	13	1	**268-1936**	1	BEARING AS-TAPERED ROLLER	
	14	1	**140-2492**	1	BEARING	
	15	1	**172-8173**	15	DISC-BRAKE (OUTER)	
	16	1	**172-8175**	13	DISC-BRAKE (INNER)	
B	17	1	**279-0733**	1	KIT-SHIM	
					(INLCUDES WASHERS)	
	18	1	**140-2490**	1	RING-SPLIT	
B	19	1	**140-2513**	2	SHIM (0.01-MM THK)	
B	20	1	**140-2514**	1	SHIM (0.3-MM THK)	
					AVAILABLE REPAIR KIT(S):	
J			**268-1925**	1	KIT-SEAL	
					(INCLUDES SEALS)	

B-USE AS REQUIRED
J-KITS MARKED J INCLUDE PARTS MARKED J
M-METRIC PART

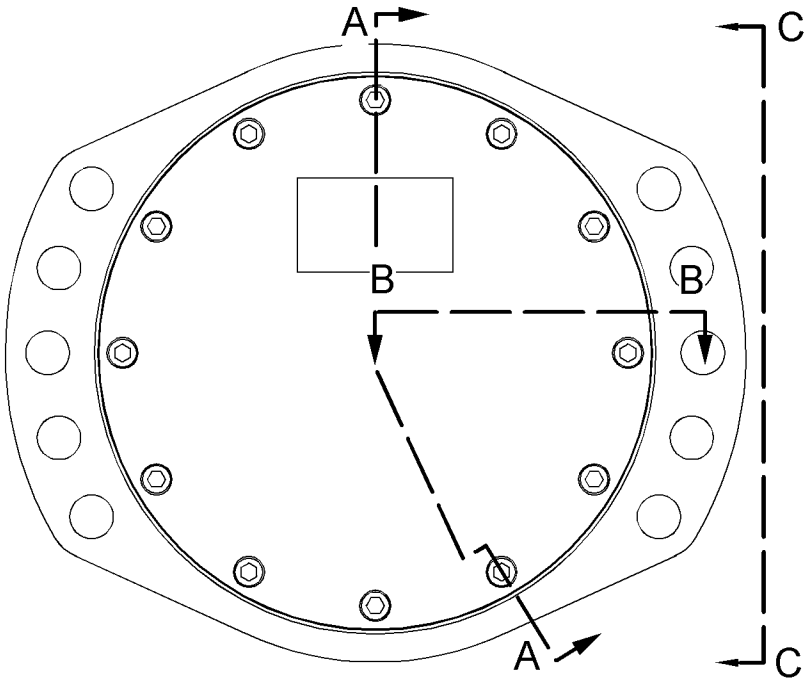

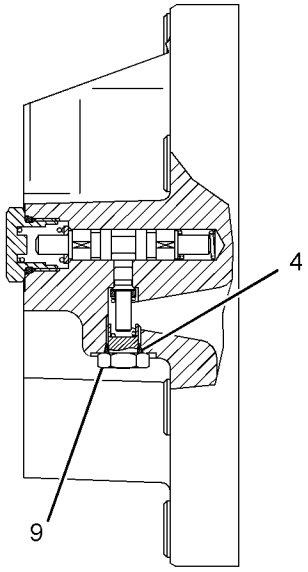

VIEW C-C
(SECTIONED)

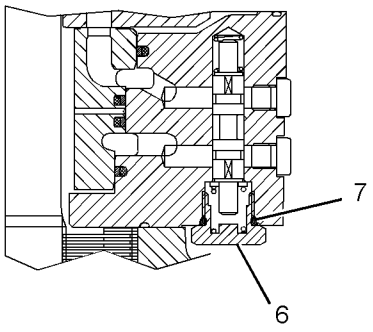

SECTION B-B

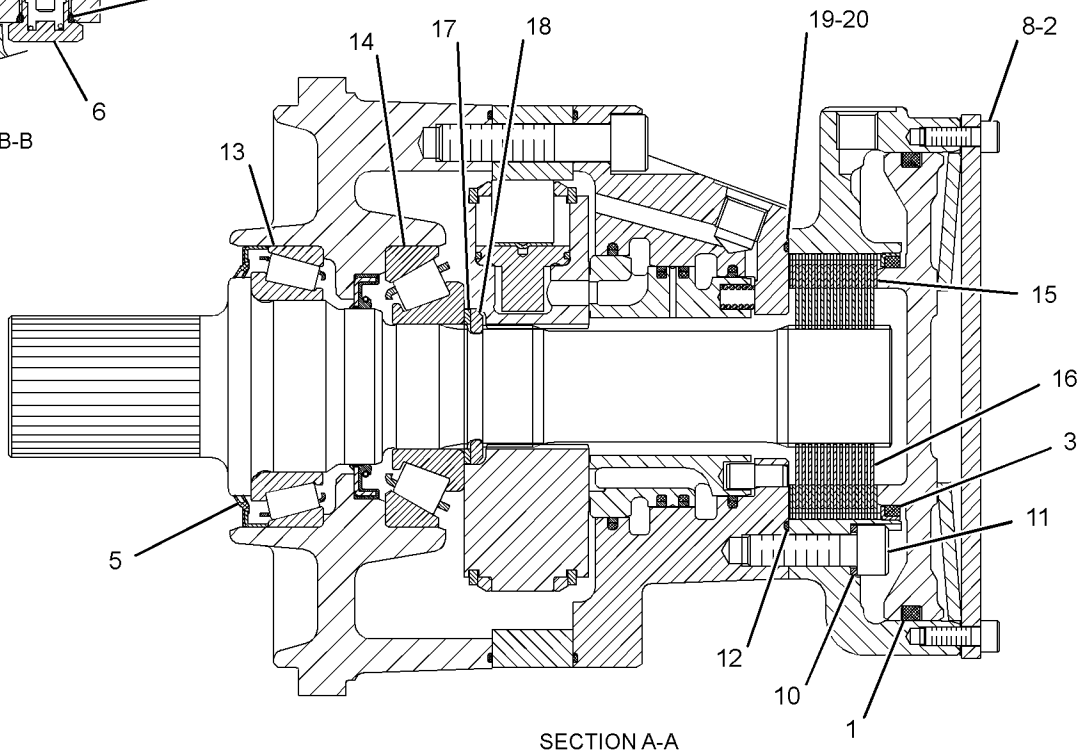

SECTION A-A

GRAPHIC #1 **<END>** g01214647

228-1763 MOUNTING GP-PUMP

S/N: MJH1-UP; SCH1-UP; RLL1-UP; BXM1-UP

PART OF 218-0911, 228-1767, 278-1218, 278-1228 INSTALLATION AR-ENGINE

SMCS-3203, 5070 **i01988423**

NOTE	REF NO	GRAPHIC REF	PART NUMBER	QTY	PART NAME 1 2 3 4 5 6 (PRODUCT LEVEL)	SEE PAGE
	1	1	**141-7562**	1	FLANGE-NYLON	
	2	1	**142-8719**	1	PLATE-ADAPTER	
	3	1	**6V-8918**	8	BOLT (5/16-18X1.25-IN)	
	4	1	**8T-4121**	12	WASHER-HARD (11X21X2.5-MM THK)	
M	5	1	**8T-4196**	12	BOLT (M10X1.5X35-MM)	

M-METRIC PART

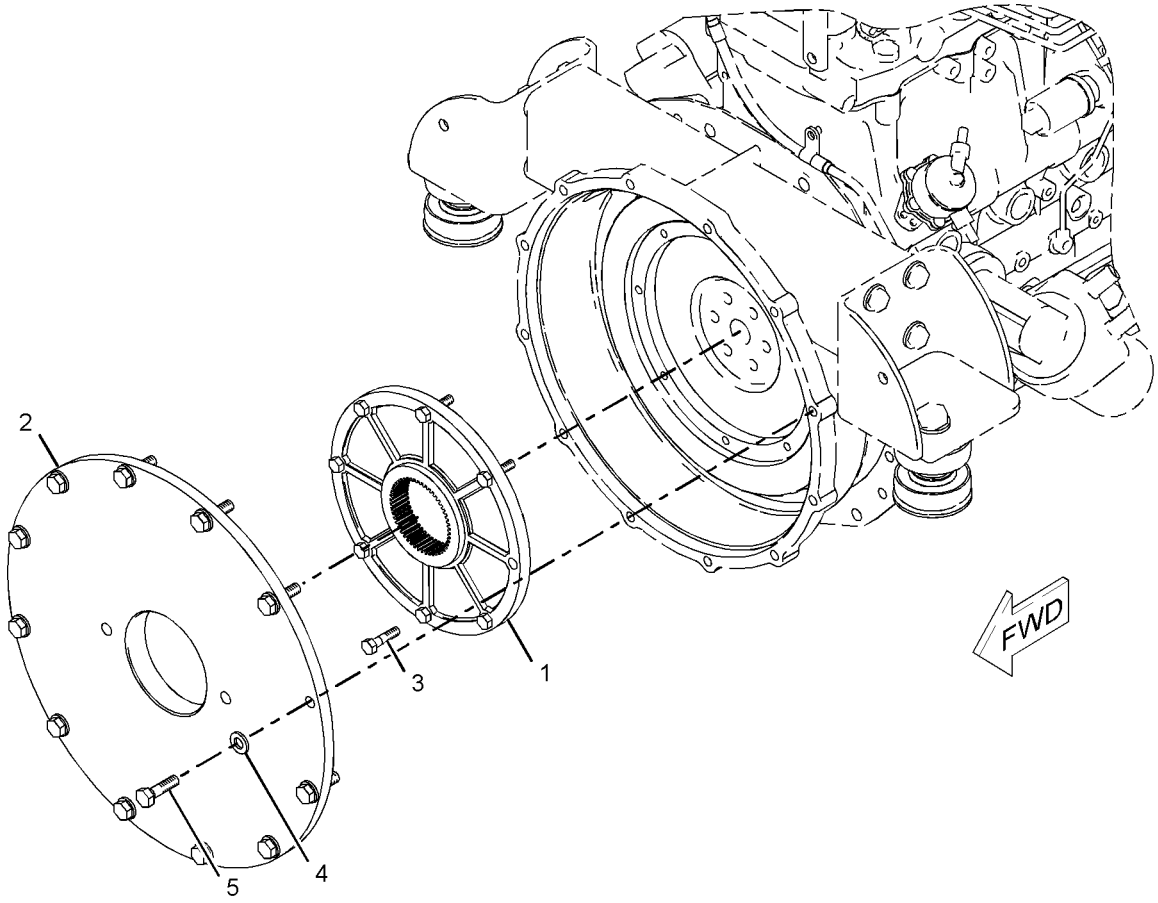

GRAPHIC #1 **<END>** g01030422

POWER TRAIN

218-6200 POWER TRAIN AR

S/N: SCH1-UP; BXM1-1016

PART OF 218-6232, 218-6242, 278-1232 COMMON AR

SMCS-3203, 4062, 5058, 5070 **i01966735**

NOTE	PART NUMBER	QTY	PART NAME 1 2 3 4 5 6 (PRODUCT LEVEL)	SEE PAGE
Y	*212-6692*	1	DRIVE GP-TANDEM	224
Y	*191-9650*	1	MOTOR & MTG GP-HYDROSTATIC	238
Y	*218-5719*	1	PUMP & MTG GP-HYDROSTATIC	243

Y-SEPARATE ILLUSTRATION

<END>

218-6500 POWER TRAIN AR

S/N: MJH1-2524; RLL1-UP

PART OF 218-6216, 218-6226, 278-1216 COMMON AR

SMCS-3203, 4062, 5058, 5070 **i01950561**

NOTE	PART NUMBER	QTY	PART NAME 1 2 3 4 5 6 (PRODUCT LEVEL)	SEE PAGE
Y	*142-8760*	1	DRIVE GP-TANDEM	223
Y	*191-9650*	1	MOTOR & MTG GP-HYDROSTATIC	238
Y	*218-5719*	1	PUMP & MTG GP-HYDROSTATIC	243

Y-SEPARATE ILLUSTRATION

<END>

261-5750 POWER TRAIN AR

S/N: MJH2525-UP

PART OF 218-6226, 278-1226 COMMON AR

SMCS-3203, 4062, 5058, 5070 **i02289158**

NOTE	PART NUMBER	QTY	PART NAME 1 2 3 4 5 6 (PRODUCT LEVEL)	SEE PAGE
Y	*142-8760*	1	DRIVE GP-TANDEM	223
Y	*191-9650*	1	MOTOR & MTG GP-HYDROSTATIC	238
Y	*261-5660*	1	PUMP & MTG GP-HYDROSTATIC	245

Y-SEPARATE ILLUSTRATION

<END>

261-5751 POWER TRAIN AR

S/N: BXM1017-UP

PART OF 218-6242, 278-1242 COMMON AR

SMCS-3203, 4062, 5058, 5070 **i02288840**

NOTE	PART NUMBER	QTY	PART NAME 1 2 3 4 5 6 (PRODUCT LEVEL)	SEE PAGE
Y	*212-6692*	1	DRIVE GP-TANDEM	224
Y	*191-9650*	1	MOTOR & MTG GP-HYDROSTATIC	238
Y	*261-5660*	1	PUMP & MTG GP-HYDROSTATIC	245

Y-SEPARATE ILLUSTRATION

<END>

218-5719 PUMP & MTG GP-HYDROSTATIC

S/N: MJH1-2524; SCH1-707; RLL1-1308; BXM1-1016
PART OF 218-6200, 218-6500 POWER TRAIN AR

SMCS-3203, 5070 **i01948739**

NOTE	REF NO	GRAPHIC REF	PART NUMBER	QTY	PART NAME 1 2 3 4 5 6 (PRODUCT LEVEL)	SEE PAGE
	1	1	**165-0142**	2	WASHER-HARD (14.8X27X3-MM THK)	
	2	1	**205-4597**	1	HUB-COUPLING	
M		1	**6V-5192**	2	BOLT-SOCKET HEAD (M8X1.25X30-MM)	
		1	**096-0194**	1	RING-RETAINING	
Y	3	1	**228-9216**	1	PUMP GP-PISTON	247
M	4	1	**167-4339**	2	BOLT (M14X2X40-MM)	

M-METRIC PART
Y-SEPARATE ILLUSTRATION

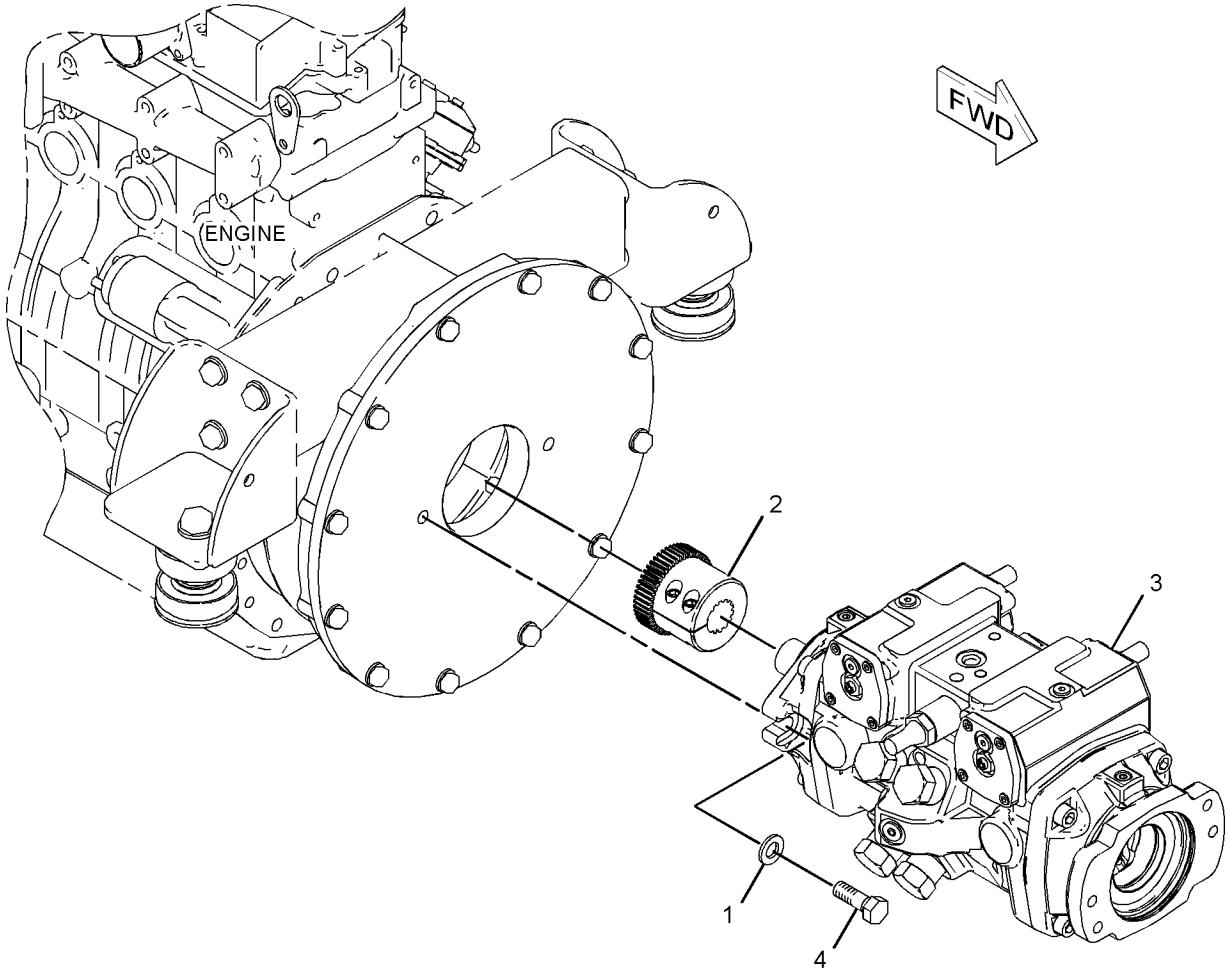

GRAPHIC #1 **<END>** g01017384

218-5719 PUMP & MTG GP-HYDROSTATIC

S/N: SCH708-UP; RLL1309-UP

PART OF 218-6200, 218-6500 POWER TRAIN AR

SMCS-3203, 5070 **i02299150**

NOTE	REF NO	GRAPHIC REF	PART NUMBER	QTY	PART NAME 1 2 3 4 5 6 (PRODUCT LEVEL)	SEE PAGE
	1	1	**165-0142**	2	WASHER-HARD (14.8X27X3-MM THK)	
YR	2	1	**228-9216**	1	PUMP GP-PISTON	247
C	3	1	**252-9167**	2	BOLT-SOCKET HEAD	
C	4	1	**263-4997**	1	HUB AS-COUPLING	
		1	**096-0194**	1	RING-RETAINING	
M	5	1	**167-4339**	2	BOLT (M14X2X40-MM)	

C-CHANGE FROM PREVIOUS TYPE
M-METRIC PART
R-REMFG PART MAY BE AVAILABLE
Y-SEPARATE ILLUSTRATION

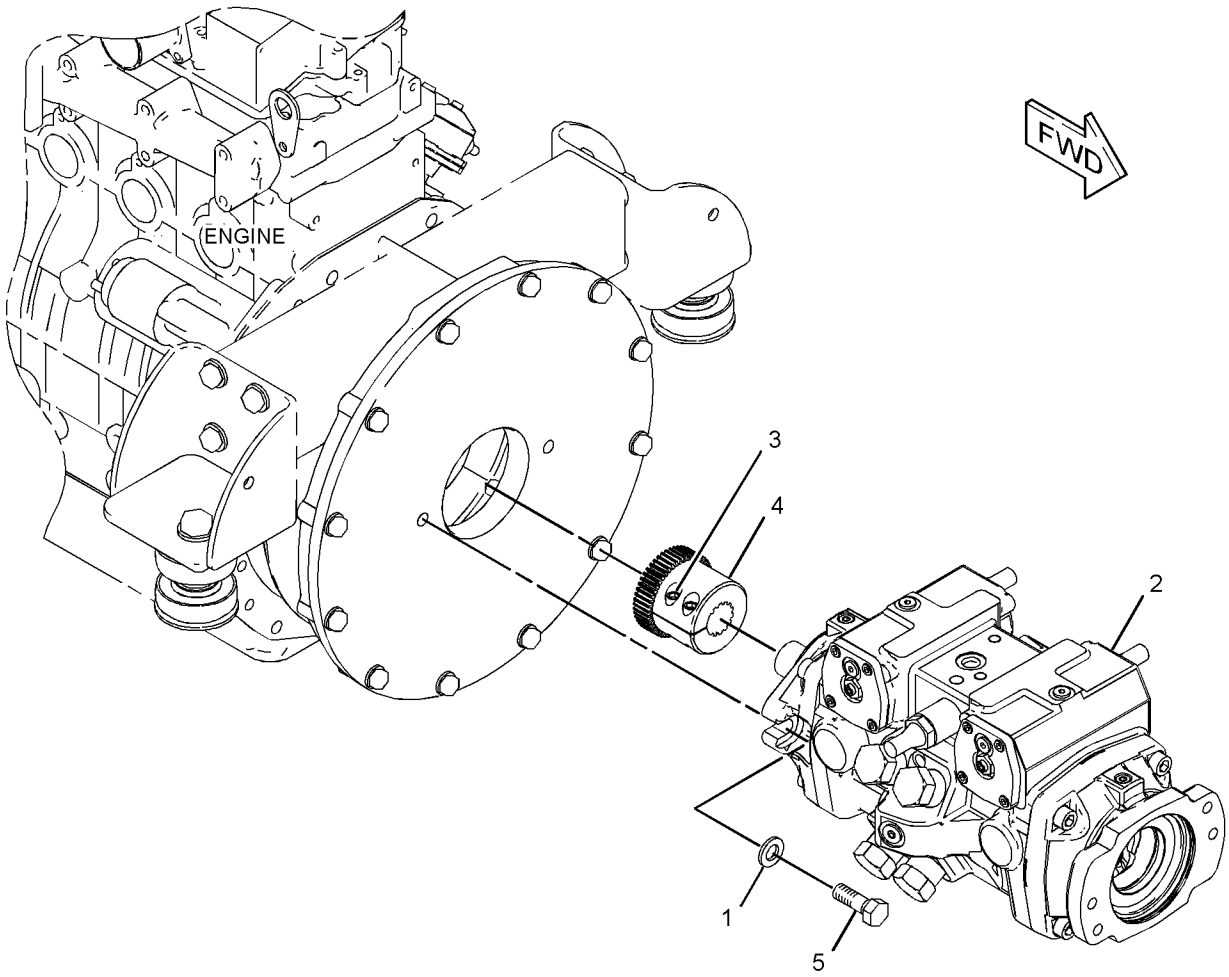

GRAPHIC #1 **<END>** g01178563

261-5660 PUMP & MTG GP-HYDROSTATIC

S/N: MJH2525-2586; BXM1017-1076

PART OF 261-5750, 261-5751 POWER TRAIN AR

SMCS-3203, 5070 **i02288967**

NOTE	REF NO	GRAPHIC REF	PART NUMBER	QTY	PART NAME 1 2 3 4 5 6 (PRODUCT LEVEL)	SEE PAGE
	1	1	**165-0142**	2	WASHER-HARD (14.8X27X3-MM THK)	
	2	1	**205-4597**	1	HUB-COUPLING	
M		1	**6V-5192**	2	BOLT-SOCKET HEAD (M8X1.25X30-MM)	
		1	**096-0194**	1	RING-RETAINING	
Y	3	1	*233-5649*	1	PUMP GP-PISTON	249
M	4	1	**167-4339**	2	BOLT (M14X2X40-MM)	

M-METRIC PART
Y-SEPARATE ILLUSTRATION

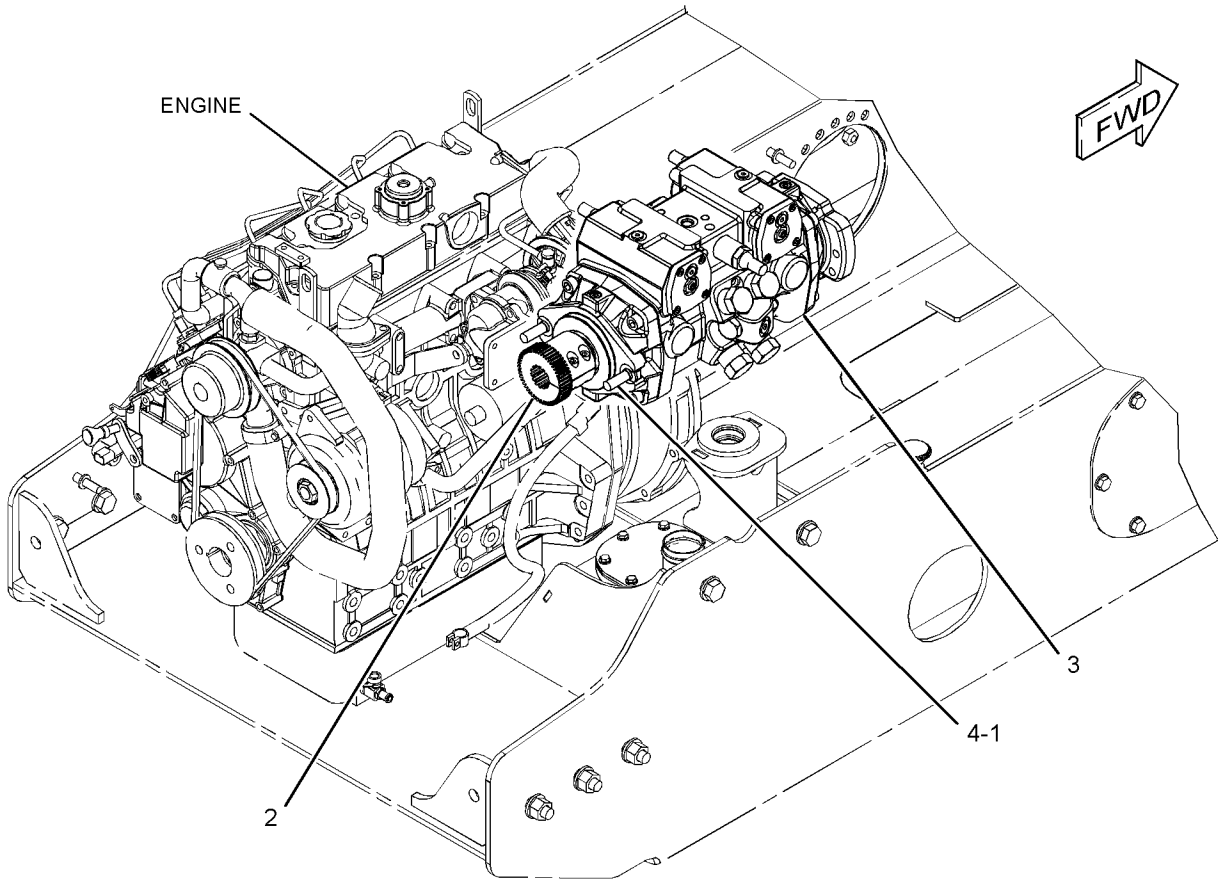

GRAPHIC #1 **<END>** g01167320

261-5660 PUMP & MTG GP-HYDROSTATIC

S/N: MJH2587-UP; BXM1077-UP

PART OF 261-5750, 261-5751 POWER TRAIN AR

SMCS-3203, 5070 **i02302485**

NOTE	REF NO	GRAPHIC REF	PART NUMBER	QTY	PART NAME 1 2 3 4 5 6 (PRODUCT LEVEL)	SEE PAGE
	1	1	**165-0142**	2	WASHER-HARD (14.8X27X3-MM THK)	
Y	2	1	*233-5649*	1	PUMP GP-PISTON	249
C	3	1	**252-9167**	2	BOLT-SOCKET HEAD	
C	4	1	**263-4997**	1	HUB AS-COUPLING	
		1	**096-0194**	1	RING-RETAINING	
M	5	1	**167-4339**	2	BOLT (M14X2X40-MM)	

C-CHANGE FROM PREVIOUS TYPE
M-METRIC PART
Y-SEPARATE ILLUSTRATION

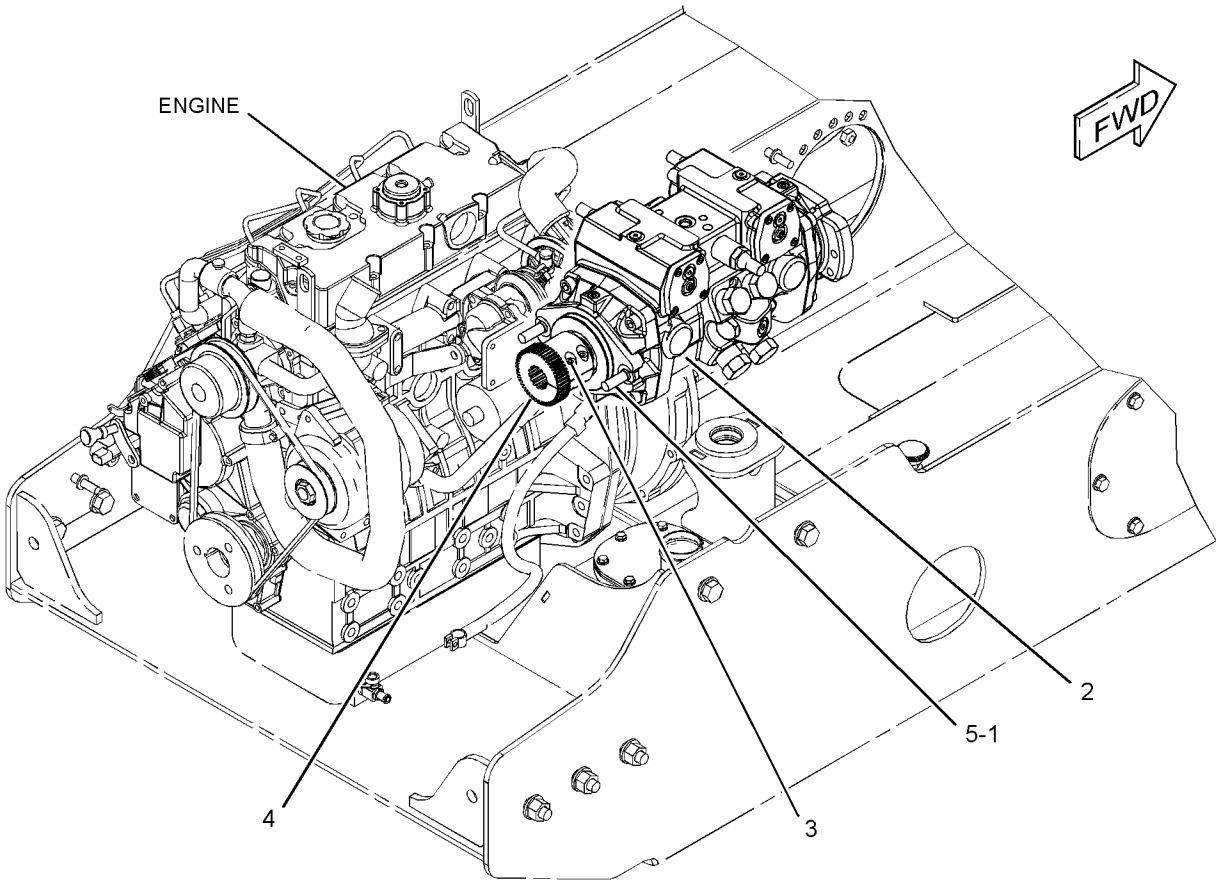

GRAPHIC #1 **<END>** g01174571

228-9216 PUMP GP-PISTON*R

S/N: MJH1-2524; SCH1-UP; RLL1-UP; BXM1-1016
HYDROSTATIC
PART OF 218-5719 PUMP & MTG GP-HYDROSTATIC

SMCS-3203, 5070 **i02429909**

NOTE	REF NO	GRAPHIC REF	PART NUMBER	QTY	PART NAME 1 2 3 4 5 6 (PRODUCT LEVEL)	SEE PAGE
	1	1	**6E-5060**	3	CAP AS	
	2	1	**167-7713**	4	RING-BACKUP	
	3	1	**121-4459**	2	BEARING-ROLLER	
	4	1	**108-3565**	2	CLIP	
	5	1	**204-1454**	2	PIN-THREADED	
	6	1	**204-1455**	2	LOCK	
B	7	1	**204-1456**	1	SHIM	
	8	1	**204-1457**	1	VALVE GP-SPEED SENSING	
	9	1	**121-4870**	4	VALVE GP-RELIEF (CROSS OVER)	
	10	1	**204-1459**	1	VALVE GP-RELIEF (CHARGE)	
	11	1	**135-2655**	2	SEAL-O-RING	
	12	1	**3J-7354**	2	SEAL-O-RING	
	13	1	**3K-0715**	1	SEAL-O-RING	
	14	1	**6V-5326**	4	SEAL-O-RING	
	15	1	**6V-5586**	2	SEAL-O-RING	
	16	1	**6V-8352**	1	SEAL-O-RING	
M	17	1	**8T-0267**	8	BOLT-SOCKET HEAD (M6X1X12-MM)	
	18	1	**9S-8002**	2	PLUG	
M	19	1	**9X-6606**	2	NUT-HEX (M10X1)	
	20	1	**107-0307**	2	CRADLE-BEARING	
	21	1	**107-0309**	2	BEARING	
	22	1	**204-1452**	1	RING-RETAINING	
	23	1	**140-1802**	3	SEAL-RING	
	24	1	**126-5640**	2	BEARING-ROLLER	
	25	1	**1G-3410**	4	WIRE	
	26	1	**177-0337**	2	KIT-PUMP REPAIR	
					(INCLUDES PISTONS, RETAINING PLATE, ROTATING BALL, BARREL, PINS, SPACER, SPRING & RING)	
	27	1	**6E-0725**	4	ROLLER	
	28	1	**268-1930**	1	PLATE-CONTROL (RH)	
	29	1	**268-1931**	1	PLATE-CONTROL (LH)	
	30	1	**268-1929**	2	CRADLE	
					AVAILABLE REPAIR KIT(S):	
			268-9529	1	KIT-SEAL	
					(INCLUDES RINGS, SEALS, SHAFT SEAL, SPACERS & SEAL LOCK NUTS)	

B-USE AS REQUIRED
M-METRIC PART

228-9216 **PUMP GP-PISTON** *(contd.)* **i02429909**

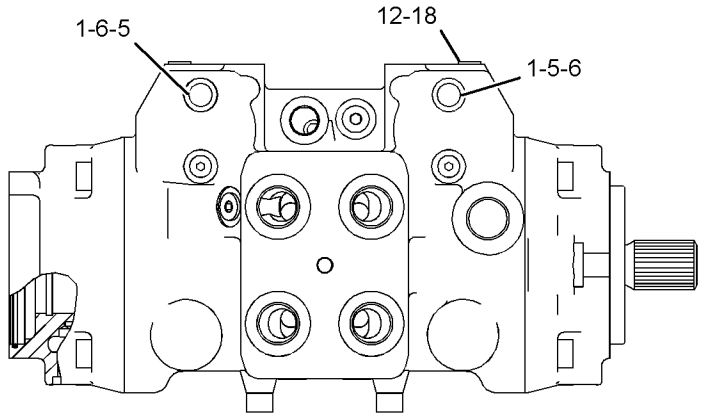

VIEW B-B

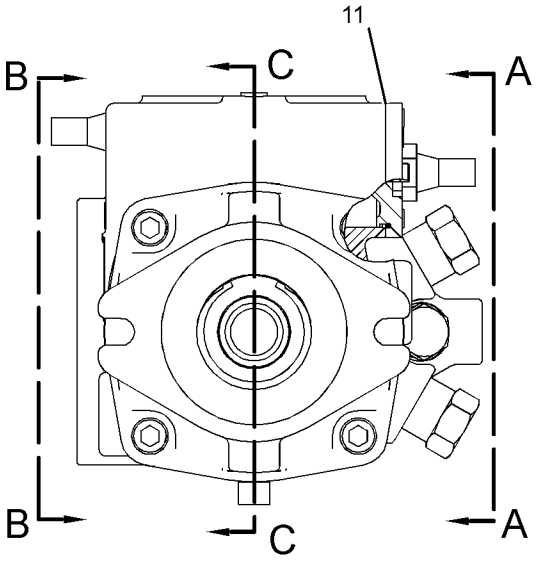

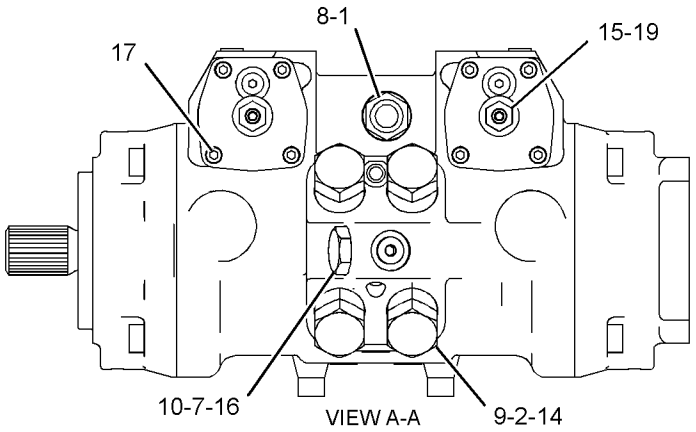

VIEW A-A

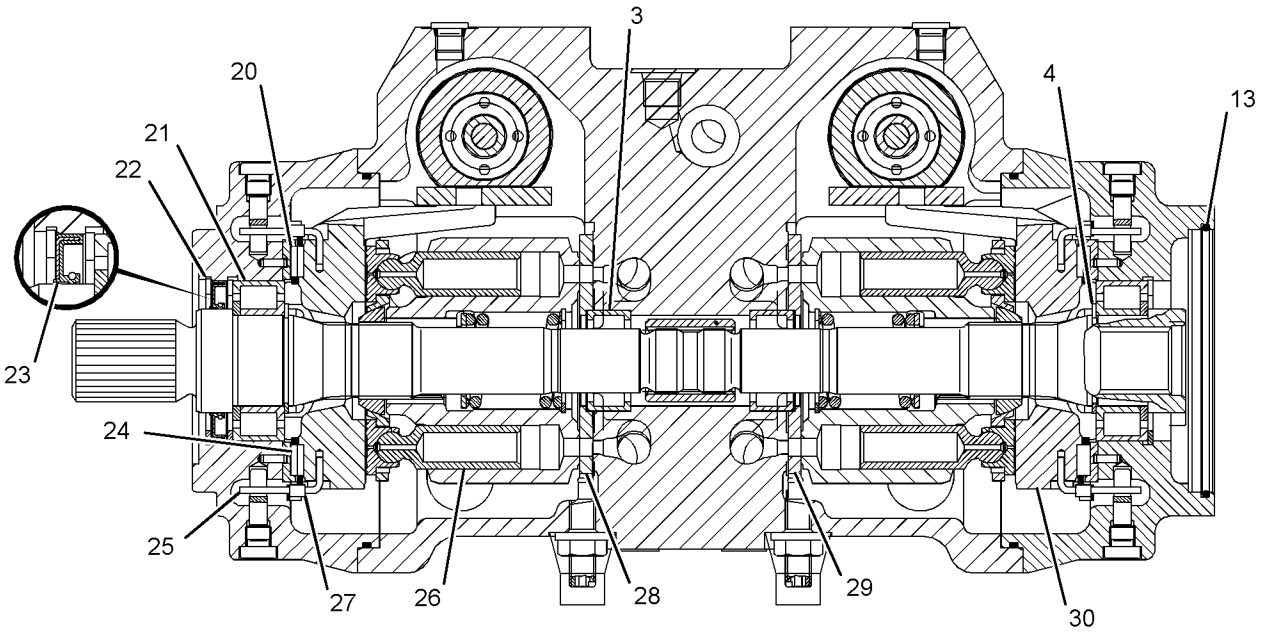

SECTION C-C

GRAPHIC #1 **<END>** g01214597

233-5649 PUMP GP-PISTON—HYDROSTATIC

S/N: MJH2525-UP; BXM1017-UP

PART OF 261-5660 PUMP & MTG GP-HYDROSTATIC

SMCS-3203, 5070 **i02429986**

NOTE	REF NO	GRAPHIC REF	PART NUMBER	QTY	PART NAME 1 2 3 4 5 6 (PRODUCT LEVEL)	SEE PAGE
	1	1	**6E-5060**	3	CAP AS	
	2	1	**167-7713**	4	RING-BACKUP	
	3	1	**121-4459**	2	BEARING-ROLLER	
	4	1	**108-3565**	2	CLIP	
	5	1	**204-1454**	2	PIN-THREADED	
	6	1	**204-1455**	2	LOCK	
	7	1	**204-1456**	1	SHIM	
	8	1	**280-7805**	1	VALVE GP-PUMP CONTROL	
	9	1	**121-4870**	4	VALVE GP-RELIEF (CROSSOVER)	
	10	1	**204-1459**	1	VALVE GP-RELIEF (CHARGE)	
	11	1	**135-2655**	2	SEAL-O-RING	
	12	1	**3J-7354**	2	SEAL-O-RING	
	13	1	**3K-0715**	1	SEAL-O-RING	
	14	1	**6V-5326**	4	SEAL-O-RING	
	15	1	**6V-5586**	2	SEAL-O-RING	
	16	1	**6V-8352**	1	SEAL-O-RING	
M	17	1	**8T-0267**	8	BOLT-SOCKET HEAD (M6X1X12-MM)	
	18	1	**9S-8002**	2	PLUG (STRAIGHT THREAD O-RING)	
M	19	1	**9X-6606**	2	NUT-HEX (M10X1)	
	20	1	**107-0307**	2	CRADLE-BEARING	
	21	1	**107-0309**	2	BEARING	
	22	1	**204-1452**	3	RING-RETAINING	
	23	1	**140-1802**	1	SEAL-RING	
	24	1	**126-5640**	2	BEARING-ROLLER	
	25	1	**1G-3410**	4	WIRE	
	26	1	**268-1934**	2	ROTATING GP-PUMP	
	27	1	**6E-0725**	4	ROLLER	
	28	1	**268-1930**	1	PLATE-CONTROL (RH)	
	29	1	**268-1931**	1	PLATE-CONTROL (LH)	
	30	1	**268-1929**	2	CRADLE	
	31	1	**261-5659**	1	ORIFICE	
					AVAILABLE REPAIR KIT(S):	
			268-9529	1	KIT-SEAL	
					(INCLUDES RINGS, SEALS, SEAL LOCK NUTS, SPACERS & SHAFT SEAL)	

M-METRIC PART

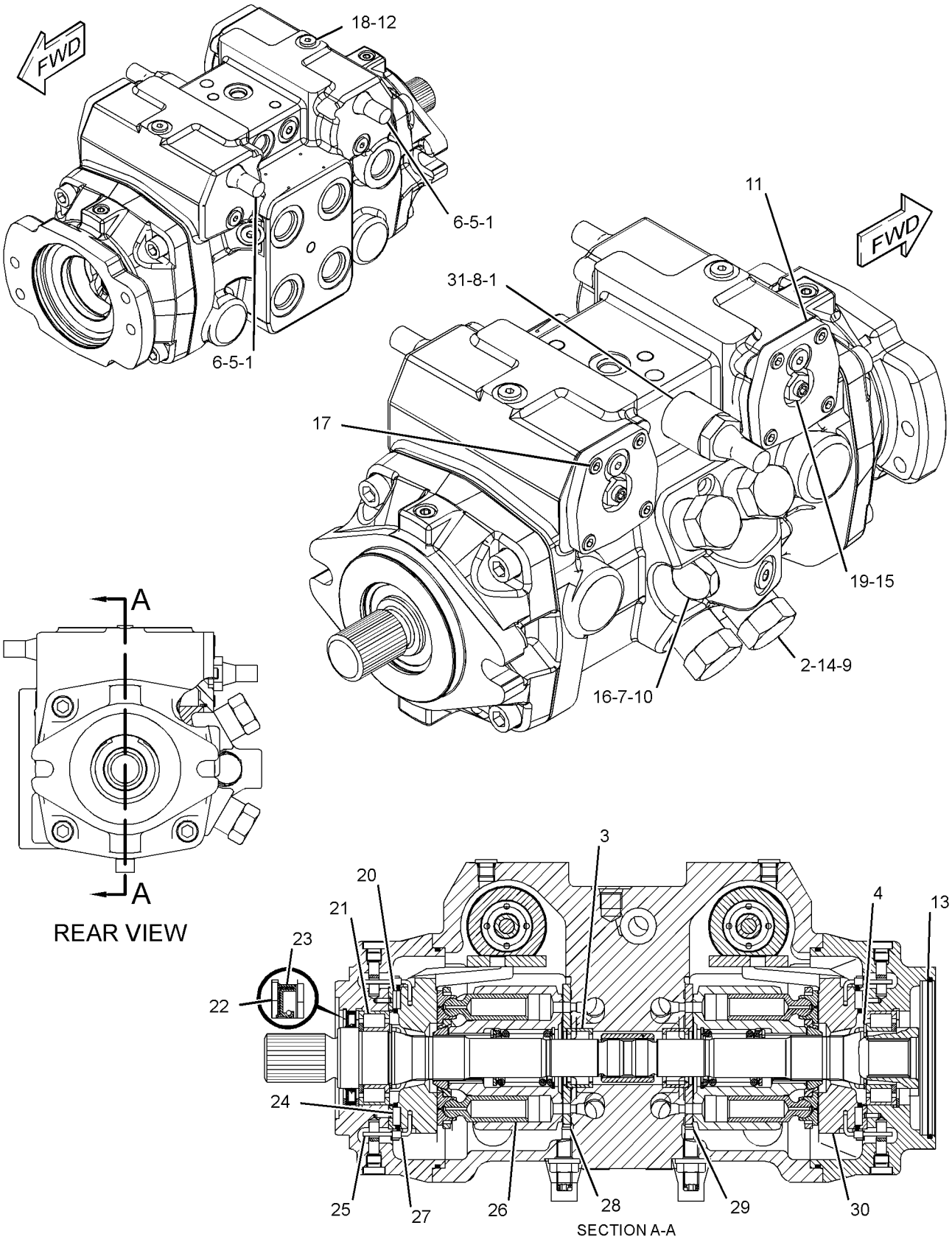

GRAPHIC #1 **<END>** g01214575

142-7484 TIRE & RIM GP–LH

S/N: MJH1-UP; SCH1-UP; RLL1-UP; BXM1-UP
PART OF 142-8666 WHEEL & TIRE AR
AN ATTACHMENT

SMCS-4202 **i02475320**

NOTE	PART NUMBER	QTY	PART NAME 1 2 3 4 5 6 (PRODUCT LEVEL)	SEE PAGE
	150-8599	1	VALVE AS-TIRE	
	142-7485	1	WHEEL AS	
	142-7486	1	TIRE (10-16.5)	

<END>

142-7487 TIRE & RIM GP–LH

S/N: MJH1-UP; SCH1-UP; RLL1-UP; BXM1-UP
PART OF 142-8667 WHEEL & TIRE AR
AN ATTACHMENT

SMCS-4202 **i02475321**

NOTE	PART NUMBER	QTY	PART NAME 1 2 3 4 5 6 (PRODUCT LEVEL)	SEE PAGE
	142-7485	1	WHEEL AS	
	150-8599	1	VALVE AS-TIRE	
	142-7488	1	TIRE (10-16.5)	

<END>

142-7489 TIRE & RIM GP–LH

S/N: MJH1-UP; SCH1-UP; RLL1-UP; BXM1-UP
PART OF 142-8649 WHEEL & TIRE AR
AN ATTACHMENT

SMCS-4202 **i02475322**

NOTE	PART NUMBER	QTY	PART NAME 1 2 3 4 5 6 (PRODUCT LEVEL)	SEE PAGE
	142-7490	1	WHEEL AS	
	150-8599	1	VALVE AS-TIRE	
	142-7486	1	TIRE (10-16.5)	

<END>

142-7491 TIRE & RIM GP–LH

S/N: MJH1-UP; SCH1-UP; RLL1-UP
PART OF 142-8648 WHEEL & TIRE AR
AN ATTACHMENT

SMCS-4202 **i02475323**

NOTE	PART NUMBER	QTY	PART NAME 1 2 3 4 5 6 (PRODUCT LEVEL)	SEE PAGE
	142-7490	1	WHEEL AS	
	150-8599	1	VALVE AS-TIRE	
	142-7488	1	TIRE (10-16.5)	

<END>

142-8728 TIRE & RIM GP–LH

S/N: BXM1-UP
DIRECTIONAL TIRE
PART OF 142-7494 WHEEL & TIRE AR
AN ATTACHMENT

SMCS-4202 **i02474337**

NOTE	PART NUMBER	QTY	PART NAME 1 2 3 4 5 6 (PRODUCT LEVEL)	SEE PAGE
	150-8599	1	VALVE AS-TIRE	
	142-8731	1	WHEEL AS	
	142-8726	1	TIRE	

<END>

142-8737 TIRE & RIM GP–RH

S/N: BXM1-UP
DIRECTIONAL TIRE
PART OF 142-7494 WHEEL & TIRE AR
AN ATTACHMENT

SMCS-4202 **i02474344**

NOTE	PART NUMBER	QTY	PART NAME 1 2 3 4 5 6 (PRODUCT LEVEL)	SEE PAGE
	150-8599	1	VALVE AS-TIRE	
	142-8731	1	WHEEL AS	
	142-8726	1	TIRE	

<END>

150-8590 TIRE & RIM GP–RH

S/N: MJH1-UP; SCH1-UP; RLL1-UP; BXM1-UP
PART OF 142-8649 WHEEL & TIRE AR
AN ATTACHMENT

SMCS-4202 **i02475324**

NOTE	PART NUMBER	QTY	PART NAME 1 2 3 4 5 6 (PRODUCT LEVEL)	SEE PAGE
	142-7490	1	WHEEL AS	
	150-8599	1	VALVE AS-TIRE	
	142-7486	1	TIRE (10-16.5)	

<END>

150-8591 TIRE & RIM GP–RH

S/N: MJH1-UP; SCH1-UP; RLL1-UP
PART OF 142-8648 WHEEL & TIRE AR
AN ATTACHMENT

SMCS-4202 **i02475325**

NOTE	PART NUMBER	QTY	PART NAME 1 2 3 4 5 6 (PRODUCT LEVEL)	SEE PAGE
	142-7490	1	WHEEL AS	
	150-8599	1	VALVE AS-TIRE	
	142-7488	1	TIRE (10-16.5)	

<END>

150-8592 TIRE & RIM GP–RH

S/N: MJH1-UP; SCH1-UP; RLL1-UP; BXM1-UP
PART OF 142-8666 WHEEL & TIRE AR
AN ATTACHMENT

SMCS-4202 **i02475326**

NOTE	PART NUMBER	QTY	PART NAME 1 2 3 4 5 6 (PRODUCT LEVEL)	SEE PAGE
	142-7485	1	WHEEL AS	
	150-8599	1	VALVE AS-TIRE	
	142-7486	1	TIRE (10-16.5)	

<END>

150-8593 TIRE & RIM GP–RH

S/N: MJH1-UP; SCH1-UP; RLL1-UP; BXM1-UP
PART OF 142-8667 WHEEL & TIRE AR
AN ATTACHMENT

SMCS-4202 **i02475327**

NOTE	PART NUMBER	QTY	PART NAME 1 2 3 4 5 6 (PRODUCT LEVEL)	SEE PAGE
	142-7485	1	WHEEL AS	
	150-8599	1	VALVE AS-TIRE	
	142-7488	1	TIRE (10-16.5)	

<END>

154-3978 TIRE & RIM GP–LH

S/N: BXM1-UP
DIRECTIONAL TIRE, HEAVY DUTY
PART OF 154-3972 WHEEL & TIRE AR
AN ATTACHMENT

SMCS-4202 **i02474350**

NOTE	PART NUMBER	QTY	PART NAME 1 2 3 4 5 6 (PRODUCT LEVEL)	SEE PAGE
	150-8599	1	VALVE AS-TIRE	
	142-8731	1	WHEEL AS	
	154-3982	1	TIRE (12-R16.5)	

<END>

154-3979 TIRE & RIM GP–RH

S/N: BXM1-UP
DIRECTIONAL TIRE, HEAVY DUTY
PART OF 154-3972 WHEEL & TIRE AR
AN ATTACHMENT

SMCS-4202 **i02474380**

NOTE	PART NUMBER	QTY	PART NAME 1 2 3 4 5 6 (PRODUCT LEVEL)	SEE PAGE
	150-8599	1	VALVE AS-TIRE	
	142-8731	1	WHEEL AS	
	154-3982	1	TIRE (12-R16.5)	

<END>

165-2605 TIRE & RIM GP

S/N: MJH1-UP; SCH1-UP; RLL1-UP; BXM1-UP
PART OF 165-2602 WHEEL & TIRE AR
AN ATTACHMENT

SMCS-4202 **i02362220**

NOTE	PART NUMBER	QTY	PART NAME 1 2 3 4 5 6 (PRODUCT LEVEL)	SEE PAGE
	150-8599	1	VALVE AS-TIRE	
	142-7490	1	WHEEL AS	
	165-4908	1	TIRE (10-16.5)	

<END>

165-2606 TIRE & RIM GP

S/N: MJH1-UP; SCH1-UP; RLL1-UP; BXM1-UP
PART OF 165-2602 WHEEL & TIRE AR
AN ATTACHMENT

SMCS-4202 **i02362218**

NOTE	PART NUMBER	QTY	PART NAME 1 2 3 4 5 6 (PRODUCT LEVEL)	SEE PAGE
	150-8599	1	VALVE AS-TIRE	
	142-7490	1	WHEEL AS	
	165-4908	1	TIRE (10-16.5)	

<END>

165-2609 TIRE & RIM GP

S/N: MJH1-UP; SCH1-UP; RLL1-UP; BXM1-UP
PART OF 165-4891 WHEEL & TIRE AR
AN ATTACHMENT

SMCS-4202 **i02362238**

NOTE	PART NUMBER	QTY	PART NAME 1 2 3 4 5 6 (PRODUCT LEVEL)	SEE PAGE
	150-8599	1	VALVE AS-TIRE	
	142-7485	1	WHEEL AS	
	165-4908	1	TIRE (10-16.5)	

<END>

165-2610 TIRE & RIM GP

S/N: MJH1-UP; SCH1-UP; RLL1-UP; BXM1-UP
PART OF 165-4891 WHEEL & TIRE AR
AN ATTACHMENT

SMCS-4202 **i02362235**

NOTE	PART NUMBER	QTY	PART NAME 1 2 3 4 5 6 (PRODUCT LEVEL)	SEE PAGE
	150-8599	1	VALVE AS-TIRE	
	142-7485	1	WHEEL AS	
	165-4908	1	TIRE (10-16.5)	

<END>

165-4901 TIRE & RIM GP—LH

S/N: BXM1-UP
(16.5 X 9.75). DIRECTIONAL TIRE, HEAVY DUTY
PART OF 165-4898 WHEEL & TIRE AR
AN ATTACHMENT

SMCS-4202 **i02474449**

NOTE	PART NUMBER	QTY	PART NAME 1 2 3 4 5 6 (PRODUCT LEVEL)	SEE PAGE
	150-8599	1	VALVE AS-TIRE	
	142-8731	1	WHEEL AS	
	165-4909	1	TIRE (12-16.5)	

<END>

165-4902 TIRE & RIM GP—RH

S/N: BXM1-UP
DIRECTIONAL TIRE, HEAVY DUTY
PART OF 165-4898 WHEEL & TIRE AR
AN ATTACHMENT

SMCS-4202 **i02474458**

NOTE	PART NUMBER	QTY	PART NAME 1 2 3 4 5 6 (PRODUCT LEVEL)	SEE PAGE
	150-8599	1	VALVE AS-TIRE	
	142-8731	1	WHEEL AS	
	165-4909	1	TIRE (12-16.5)	

<END>

185-8670 TIRE & RIM GP–LH

S/N: MJH1-UP; SCH1-UP; RLL1-UP; BXM1-UP
265-MMX521-MM
PART OF 185-8660 WHEEL & TIRE AR
AN ATTACHMENT

SMCS-4202 **i02362163**

NOTE	PART NUMBER	QTY	PART NAME 1 2 3 4 5 6 (PRODUCT LEVEL)	SEE PAGE
	150-8599	1	VALVE AS-TIRE	
	185-8668	1	WHEEL AS	
	185-9934	1	TIRE (265-521)	

<END>

185-8671 TIRE & RIM GP–RH

S/N: MJH1-UP; SCH1-UP; RLL1-UP; BXM1-UP
265-MMX521-MM
PART OF 185-8660 WHEEL & TIRE AR
AN ATTACHMENT

SMCS-4202 **i02362161**

NOTE	PART NUMBER	QTY	PART NAME 1 2 3 4 5 6 (PRODUCT LEVEL)	SEE PAGE
	150-8599	1	VALVE AS-TIRE	
	185-8668	1	WHEEL AS	
	185-9934	1	TIRE (265-521)	

<END>

185-8672 TIRE & RIM GP–LH

S/N: MJH1-UP; SCH1-UP; RLL1-UP; BXM1-UP
521-MMX210-MM
PART OF 185-8661 WHEEL & TIRE AR
AN ATTACHMENT

SMCS-4202 **i02362165**

NOTE	PART NUMBER	QTY	PART NAME 1 2 3 4 5 6 (PRODUCT LEVEL)	SEE PAGE
	150-8599	1	VALVE AS-TIRE	
	185-8669	1	WHEEL AS	
	185-9934	1	TIRE (265-521)	

<END>

185-8673 TIRE & RIM GP–RH

S/N: MJH1-UP; SCH1-UP; RLL1-UP; BXM1-UP
521-MMX210-MM
PART OF 185-8661 WHEEL & TIRE AR
AN ATTACHMENT

SMCS-4202 **i02362171**

NOTE	PART NUMBER	QTY	PART NAME 1 2 3 4 5 6 (PRODUCT LEVEL)	SEE PAGE
	150-8599	1	VALVE AS-TIRE	
	185-8669	1	WHEEL AS	
	185-9934	1	TIRE (265-521)	

<END>

185-8676 TIRE & RIM GP–LH

S/N: BXM1-UP
PART OF 185-8663 WHEEL & TIRE AR
AN ATTACHMENT

SMCS-4202 **i02474467**

NOTE	PART NUMBER	QTY	PART NAME 1 2 3 4 5 6 (PRODUCT LEVEL)	SEE PAGE
	150-8599	1	VALVE AS-TIRE	
	185-9937	1	WHEEL AS	
	185-9935	1	TIRE (305-546)	

<END>

185-8677 TIRE & RIM GP–RH

S/N: BXM1-UP
PART OF 185-8663 WHEEL & TIRE AR
AN ATTACHMENT

SMCS-4202 **i02474504**

NOTE	PART NUMBER	QTY	PART NAME 1 2 3 4 5 6 (PRODUCT LEVEL)	SEE PAGE
	150-8599	1	VALVE AS-TIRE	
	185-9937	1	WHEEL AS	
	185-9935	1	TIRE (305-546)	

<END>

185-8678 TIRE & RIM GP–LH

S/N: MJH1-UP; SCH1-UP; RLL1-UP; BXM1-UP
16.5X8.25
PART OF 185-8664 WHEEL & TIRE AR
AN ATTACHMENT

SMCS-4202 **i02361343**

NOTE	PART NUMBER	QTY	PART NAME 1 2 3 4 5 6 (PRODUCT LEVEL)	SEE PAGE
	150-8599	1	VALVE AS-TIRE	
	142-7485	1	WHEEL AS	
	185-9932	1	TIRE (10-16.5)	

<END>

185-8679 TIRE & RIM GP–RH

S/N: MJH1-UP; SCH1-UP; RLL1-UP; BXM1-UP
16.5X8.25
PART OF 185-8664 WHEEL & TIRE AR
AN ATTACHMENT

SMCS-4202 **i02361345**

NOTE	PART NUMBER	QTY	PART NAME 1 2 3 4 5 6 (PRODUCT LEVEL)	SEE PAGE
	150-8599	1	VALVE AS-TIRE	
	142-7485	1	WHEEL AS	
	185-9932	1	TIRE (10-16.5)	

<END>

185-9926 TIRE & RIM GP–LH

S/N: MJH1-UP; SCH1-UP; RLL1-UP; BXM1-UP
16.5X8.25
PART OF 185-8665 WHEEL & TIRE AR
AN ATTACHMENT

SMCS-4202 **i02362228**

NOTE	PART NUMBER	QTY	PART NAME 1 2 3 4 5 6 (PRODUCT LEVEL)	SEE PAGE
	150-8599	1	VALVE AS-TIRE	
	142-7490	1	WHEEL AS	
	185-9932	1	TIRE (10-16.5)	

<END>

185-9927 TIRE & RIM GP–RH

S/N: MJH1-UP; SCH1-UP; RLL1-UP; BXM1-UP
16.5X8.25
PART OF 185-8665 WHEEL & TIRE AR
AN ATTACHMENT

SMCS-4202 **i02362230**

NOTE	PART NUMBER	QTY	PART NAME 1 2 3 4 5 6 (PRODUCT LEVEL)	SEE PAGE
	150-8599	1	VALVE AS-TIRE	
	142-7490	1	WHEEL AS	
	185-9932	1	TIRE (10-16.5)	

<END>

185-9930 TIRE & RIM GP–LH

S/N: BXM1-UP
PART OF 185-8667 WHEEL & TIRE AR
AN ATTACHMENT

SMCS-4202 **i02362232**

NOTE	PART NUMBER	QTY	PART NAME 1 2 3 4 5 6 (PRODUCT LEVEL)	SEE PAGE
	150-8599	1	VALVE AS-TIRE	
	142-8731	1	WHEEL AS	
	185-9933	1	TIRE (12-16.5)	

<END>

185-9931 TIRE & RIM GP–RH

S/N: BXM1-UP
PART OF 185-8667 WHEEL & TIRE AR
AN ATTACHMENT

SMCS-4202 **i02362236**

NOTE	PART NUMBER	QTY	PART NAME 1 2 3 4 5 6 (PRODUCT LEVEL)	SEE PAGE
	150-8599	1	VALVE AS-TIRE	
	142-8731	1	WHEEL AS	
	185-9933	1	TIRE (12-16.5)	

<END>

188-0124 TIRE & RIM GP–LH

S/N: BXM1-UP
PART OF 187-3239 WHEEL & TIRE AR
AN ATTACHMENT

SMCS-4202 **i02474523**

NOTE	PART NUMBER	QTY	PART NAME 1 2 3 4 5 6 (PRODUCT LEVEL)	SEE PAGE
	142-8731	1	WHEEL AS	
	150-8599	1	VALVE AS-TIRE	
	185-9933	1	TIRE (12-16.5)	

<END>

188-0125 TIRE & RIM GP–RH

S/N: BXM1-UP
PART OF 187-3239 WHEEL & TIRE AR
AN ATTACHMENT

SMCS-4202 **i02474537**

NOTE	PART NUMBER	QTY	PART NAME 1 2 3 4 5 6 (PRODUCT LEVEL)	SEE PAGE
	142-8731	1	WHEEL AS	
	150-8599	1	VALVE AS-TIRE	
	185-9933	1	TIRE (12-16.5)	

<END>

199-5434 TIRE & RIM GP

S/N: MJH1-UP; SCH1-UP; RLL1-UP
(16.5X12)
PART OF 142-9121 WHEEL & TIRE AR
AN ATTACHMENT

SMCS-4202 **i02361277**

NOTE	PART NUMBER	QTY	PART NAME 1 2 3 4 5 6 (PRODUCT LEVEL)	SEE PAGE
	150-8599	1	VALVE AS-TIRE	
	178-2270	1	WHEEL AS	
	199-5436	1	TIRE (31-15.5-16.5)	

<END>

199-5435 TIRE & RIM GP

S/N: MJH1-UP; SCH1-UP; RLL1-UP
(16.5X12)
PART OF 142-9121 WHEEL & TIRE AR
AN ATTACHMENT

SMCS-4202 **i02361622**

NOTE	PART NUMBER	QTY	PART NAME 1 2 3 4 5 6 (PRODUCT LEVEL)	SEE PAGE
	150-8599	1	VALVE AS-TIRE	
	178-2270	1	WHEEL AS	
	199-5436	1	TIRE (31-15.5-16.5)	

<END>

199-5438 TIRE & RIM GP—LH

S/N: BXM1-UP
PART OF 178-2256 WHEEL & TIRE AR
AN ATTACHMENT

SMCS-4202 **i02362244**

NOTE	PART NUMBER	QTY	PART NAME 1 2 3 4 5 6 (PRODUCT LEVEL)	SEE PAGE
	150-8599	1	VALVE AS-TIRE	
	178-2270	1	WHEEL AS	
	199-5440	1	TIRE (33-15.5-16.5)	

<END>

199-5439 TIRE & RIM GP—RH

S/N: BXM1-UP
PART OF 178-2256 WHEEL & TIRE AR
AN ATTACHMENT

SMCS-4202 **i02362243**

NOTE	PART NUMBER	QTY	PART NAME 1 2 3 4 5 6 (PRODUCT LEVEL)	SEE PAGE
	150-8599	1	VALVE AS-TIRE	
	178-2270	1	WHEEL AS	
	199-5440	1	TIRE (33-15.5-16.5)	

<END>

225-9270 TIRE & RIM GP

S/N: MJH1-UP; SCH1-UP; RLL1-UP; BXM1-UP
(16.5X8.25)
PART OF 228-9214 WHEEL & TIRE AR
AN ATTACHMENT

SMCS-4202 **i02366917**

NOTE	PART NUMBER	QTY	PART NAME 1 2 3 4 5 6 (PRODUCT LEVEL)	SEE PAGE
	150-8599	1	VALVE AS-TIRE	
	142-7490	1	WHEEL AS	
	225-9267	1	TIRE (10-16.5)	

<END>

225-9271 TIRE & RIM GP

S/N: MJH1-UP; SCH1-UP; RLL1-UP; BXM1-UP
(16.5X8.25)
PART OF 228-9215 WHEEL & TIRE AR
AN ATTACHMENT

SMCS-4202 **i02362162**

NOTE	PART NUMBER	QTY	PART NAME 1 2 3 4 5 6 (PRODUCT LEVEL)	SEE PAGE
	150-8599	1	VALVE AS-TIRE	
	142-7485	1	WHEEL AS	
	225-9267	1	TIRE (10-16.5)	

<END>

238-7738 TIRE & RIM GP

S/N: RLL1-UP
(15X6)
PART OF 238-7737 WHEEL & TIRE AR
AN ATTACHMENT

SMCS-4202 **i02362204**

NOTE	PART NUMBER	QTY	PART NAME 1 2 3 4 5 6 (PRODUCT LEVEL)	SEE PAGE
	150-8599	1	VALVE AS-TIRE	
	142-7481	1	WHEEL AS	
	238-7740	1	TIRE (7-15)	

<END>

238-7739 TIRE & RIM GP

S/N: RLL1-UP
(15X6)
PART OF 238-7737 WHEEL & TIRE AR
AN ATTACHMENT

SMCS-4202 **i02362207**

NOTE	PART NUMBER	QTY	PART NAME 1 2 3 4 5 6 (PRODUCT LEVEL)	SEE PAGE
	150-8599	1	VALVE AS-TIRE	
	142-7481	1	WHEEL AS	
	238-7740	1	TIRE (7-15)	

<END>

265-2894 TIRE & RIM GP—LH

S/N: MJH1-UP; SCH1-UP; RLL1-UP; BXM1-UP
PART OF 252-0344 WHEEL & TIRE AR
AN ATTACHMENT

SMCS-4202 **i02279688**

NOTE	PART NUMBER	QTY	PART NAME 1 2 3 4 5 6 (PRODUCT LEVEL)	SEE PAGE
	150-8599	1	VALVE AS-TIRE	
	142-7490	1	WHEEL AS	
	222-3962	1	TIRE (10-16.5)	

<END>

265-2895 TIRE & RIM GP—RH

S/N: MJH1-UP; SCH1-UP; RLL1-UP; BXM1-UP
PART OF 252-0344 WHEEL & TIRE AR
AN ATTACHMENT

SMCS-4202 **i02279722**

NOTE	PART NUMBER	QTY	PART NAME 1 2 3 4 5 6 (PRODUCT LEVEL)	SEE PAGE
	150-8599	1	VALVE AS-TIRE	
	142-7490	1	WHEEL AS	
	222-3962	1	TIRE (10-16.5)	

<END>

265-2896 TIRE & RIM GP–LH

S/N: MJH1-UP; SCH1-UP; RLL1-UP; BXM1-UP
PART OF 252-0345 WHEEL & TIRE AR
AN ATTACHMENT

SMCS-4202 **i02279732**

NOTE	PART NUMBER	QTY	PART NAME 1 2 3 4 5 6 (PRODUCT LEVEL)	SEE PAGE
	150-8599	1	VALVE AS-TIRE	
	142-7485	1	WHEEL AS	
	222-3962	1	TIRE (10-16.5)	

<END>

265-2897 TIRE & RIM GP–RH

S/N: MJH1-UP; SCH1-UP; RLL1-UP; BXM1-UP
PART OF 252-0345 WHEEL & TIRE AR
AN ATTACHMENT

SMCS-4202 **i02363184**

NOTE	PART NUMBER	QTY	PART NAME 1 2 3 4 5 6 (PRODUCT LEVEL)	SEE PAGE
	150-8599	1	VALVE AS-TIRE	
	142-7485	1	WHEEL AS	
	222-3962	1	TIRE (10-16.5)	

<END>

265-2898 TIRE & RIM GP–LH

S/N: BXM1-UP
PART OF 252-0346 WHEEL & TIRE AR
AN ATTACHMENT

SMCS-4202 **i02361217**

NOTE	PART NUMBER	QTY	PART NAME 1 2 3 4 5 6 (PRODUCT LEVEL)	SEE PAGE
	150-8599	1	VALVE AS-TIRE	
	142-8731	1	WHEEL AS	
	222-3963	1	TIRE (12-16.5)	

<END>

265-2899 TIRE & RIM GP–RH

S/N: BXM1-UP
PART OF 252-0346 WHEEL & TIRE AR
AN ATTACHMENT

SMCS-4202 **i02361220**

NOTE	PART NUMBER	QTY	PART NAME 1 2 3 4 5 6 (PRODUCT LEVEL)	SEE PAGE
	150-8599	1	VALVE AS-TIRE	
	142-8731	1	WHEEL AS	
	222-3963	1	TIRE (12-16.5)	

<END>

208-5681 VALVE & MTG GP-SOLENOID—PARKING BRAKE

S/N: MJH1-1560; SCH1-476; RLL1-840; BXM1-714
PART OF 218-6235, 218-6536 CONTROL GP-PARKING BRAKE
FIELD REPLACEMENT ORDER 233-7131—PAGE 268

SMCS-5479 **i01954482**

NOTE	REF NO	GRAPHIC REF	PART NUMBER	QTY	PART NAME 1 2 3 4 5 6 (PRODUCT LEVEL)	SEE PAGE
M	1	1	**8T-1158**	1	BOLT-SOCKET HEAD (M8X1.25X20-MM)	
Y	2	1	**195-9700**	1	VALVE GP-SOLENOID (PARKING BRAKE)	560
	3	1	**212-0061**	1	FLANGE	
	4	1	**223-6465**	1	MANIFOLD	

M-METRIC PART
Y-SEPARATE ILLUSTRATION

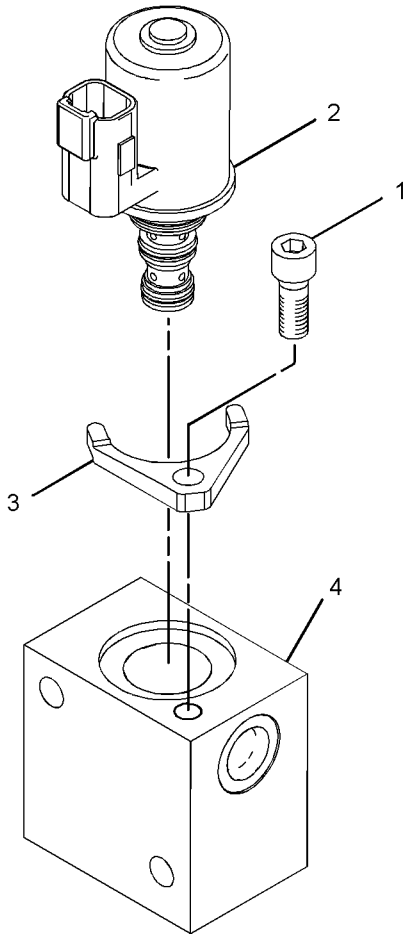

GRAPHIC #1

<END>

g01017615

233-7131 VALVE & MTG GP-SOLENOID—PARKING BRAKE

S/N: MJH1561-2908; SCH477-845; RLL841-1574; BXM715-1203
PART OF 218-6235, 218-6536 CONTROL GP-PARKING BRAKE
FIELD REPLACEMENT FOR 208-5681—PAGE 267

SMCS-5479 **i02180085**

NOTE	REF NO	GRAPHIC REF	PART NUMBER	QTY	PART NAME 1 2 3 4 5 6 (PRODUCT LEVEL)	SEE PAGE
Y	1	1	**259-8194**	1	VALVE GP-SOLENOID	270
	2	1	**259-8195**	1	MANIFOLD	

Y-SEPARATE ILLUSTRATION

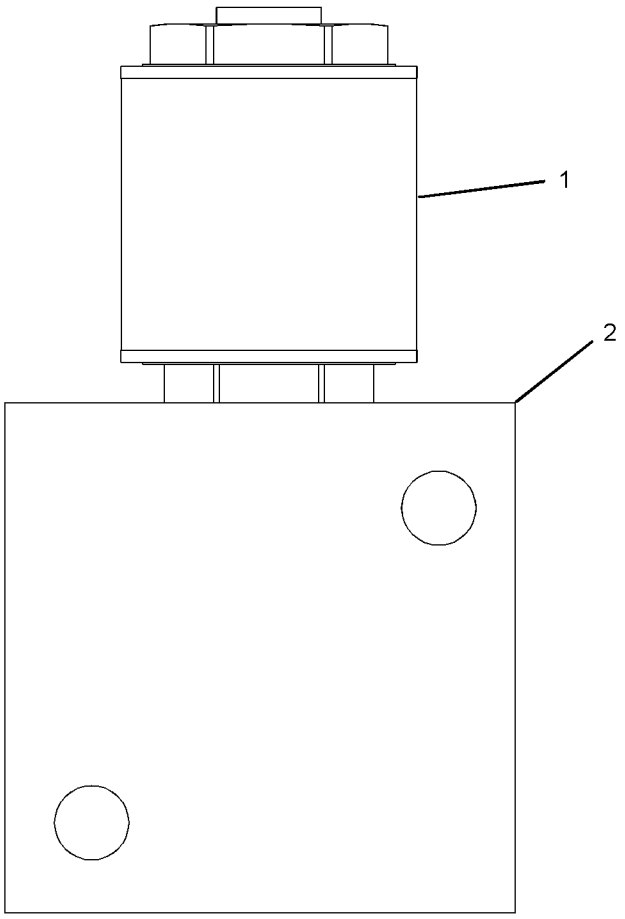

RIGHT SIDE VIEW

GRAPHIC #1 **<END>** g01132346

259-8210 VALVE & MTG GP-SOLENOID

S/N: MJH2909-UP; SCH846-UP; RLL1575-UP; BXM1204-UP
PART OF 218-6235, 218-6536 CONTROL GP-PARKING BRAKE

SMCS-5479 **i02308555**

NOTE	REF NO	GRAPHIC REF	PART NUMBER	QTY	PART NAME 1 2 3 4 5 6 (PRODUCT LEVEL)	SEE PAGE
J	1	1	**247-6462**	1	VALVE GP-SOLENOID	
M	2	1	**096-5968**	2	BOLT-SOCKET HEAD (M5X0.8X8-MM)	
					AVAILABLE REPAIR KIT(S):	
J			**250-8330**	1	KIT-SEAL	
					(INCLUDES O-RINGS)	

J-KIT MARKED J AVAILABLE FOR PART(S) MARKED J
M-METRIC PART

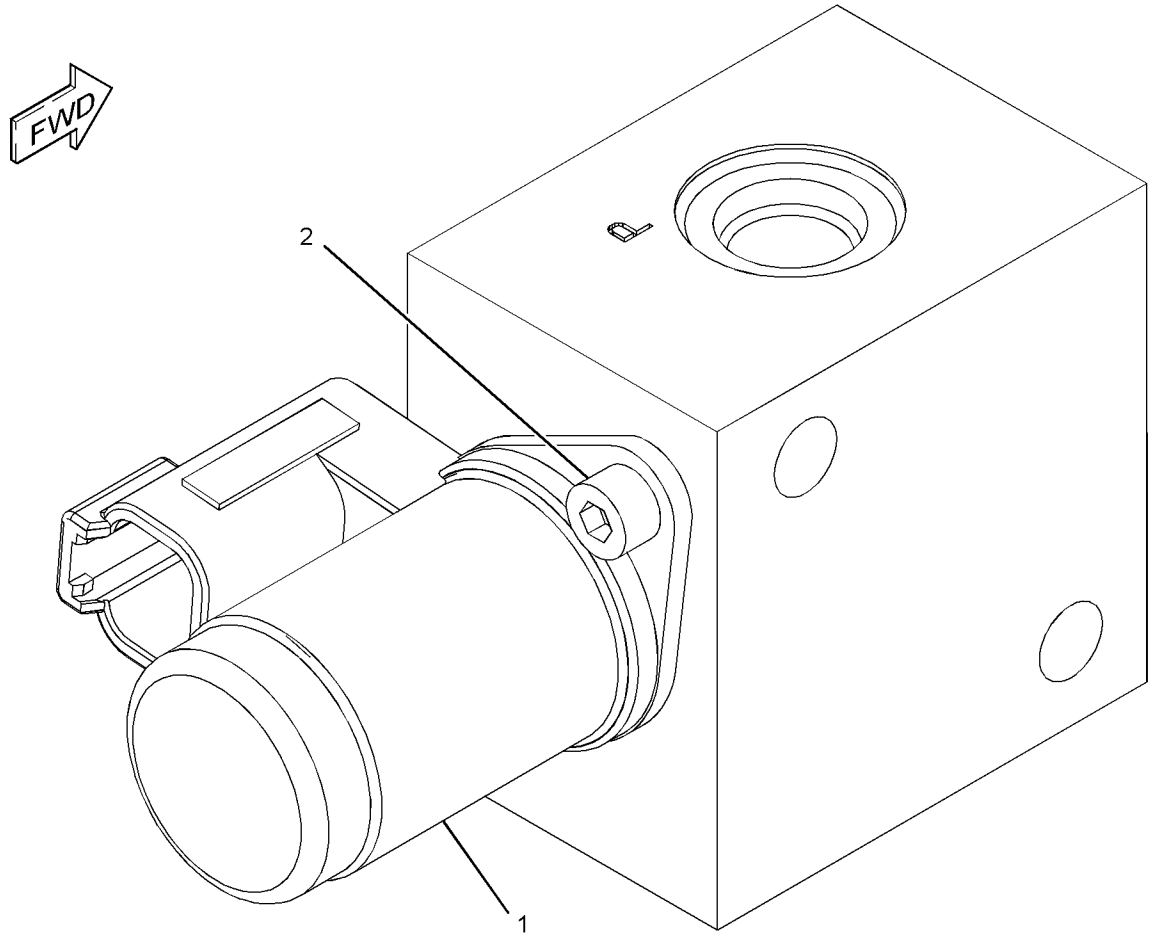

GRAPHIC #1 **<END>** g01151237

259-8194 VALVE GP-SOLENOID—PARKING BRAKE

S/N: MJH1561-2908; SCH477-845; RLL841-1574; BXM715-1203

PART OF 233-7131 VALVE & MTG GP-SOLENOID

SMCS-5479 **i02183723**

NOTE	REF NO	GRAPHIC REF	PART NUMBER	QTY	PART NAME 1 2 3 4 5 6 (PRODUCT LEVEL)	SEE PAGE
J	1	1	**238-4624**	1	VALVE GP-SOLENOID (AUXILIARY FLOW CONTROL)	
		1	**238-4626**	1	COIL AS	
		1	**250-3483**	1	NUT	
					AVAILABLE REPAIR KIT(S):	
J				1	KIT-SEAL	
J-KIT MARKED J AVAILABLE FOR PART MARKED J						

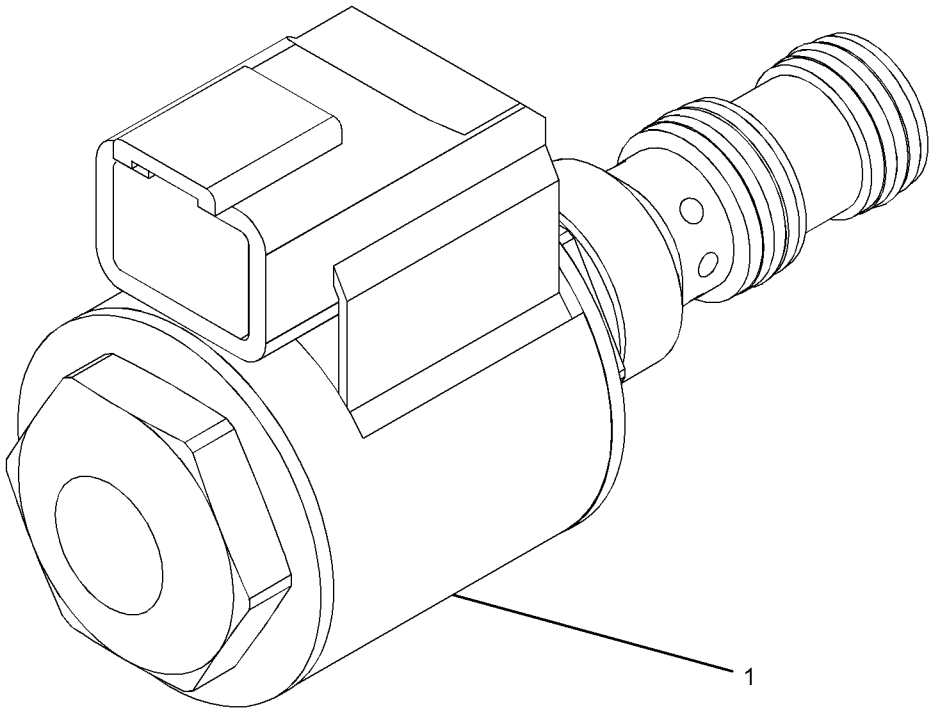

GRAPHIC #1 **<END>** g01121017

142-7494 WHEEL & TIRE AR—PNEUMATIC

S/N: BXM1-UP
AN ATTACHMENT

SMCS-4200, 4201, 4203 **i02361111**

NOTE	PART NUMBER	QTY	PART NAME 1 2 3 4 5 6 (PRODUCT LEVEL)	SEE PAGE
Y	*142-8728*	2	TIRE & RIM GP (LH)	252
Y	*142-8737*	2	TIRE & RIM GP (RH)	252
	142-7493	32	NUT-LUG (9/16-18-2B THD)	

Y-SEPARATE ILLUSTRATION

<END>

142-8648 WHEEL & TIRE AR—HEAVY DUTY

S/N: MJH1-UP; SCH1-UP; RLL1-UP
AN ATTACHMENT

SMCS-4200, 4201, 4203 **i02361112**

NOTE	PART NUMBER	QTY	PART NAME 1 2 3 4 5 6 (PRODUCT LEVEL)	SEE PAGE
Y	*142-7491*	2	TIRE & RIM GP (LH)	252
Y	*150-8591*	2	TIRE & RIM GP (RH)	253
	142-7493	32	NUT-LUG (9/16-18-2B THD)	

Y-SEPARATE ILLUSTRATION

<END>

142-8649 WHEEL & TIRE AR

S/N: MJH1-UP; SCH1-UP; RLL1-UP; BXM1-UP
AN ATTACHMENT

SMCS-4200, 4201, 4203 **i02361113**

NOTE	PART NUMBER	QTY	PART NAME 1 2 3 4 5 6 (PRODUCT LEVEL)	SEE PAGE
Y	*142-7489*	2	TIRE & RIM GP (LH)	251
Y	*150-8590*	2	TIRE & RIM GP (RH)	253
	142-7493	32	NUT-LUG (9/16-18-2B THD)	

Y-SEPARATE ILLUSTRATION

<END>

142-8666 WHEEL & TIRE AR

S/N: MJH1-UP; SCH1-UP; RLL1-UP; BXM1-UP
AN ATTACHMENT

SMCS-4200, 4201, 4203 **i02361114**

NOTE	PART NUMBER	QTY	PART NAME 1 2 3 4 5 6 (PRODUCT LEVEL)	SEE PAGE
Y	*142-7484*	2	TIRE & RIM GP (LH)	251
Y	*150-8592*	2	TIRE & RIM GP (RH)	253
	142-7493	32	NUT-LUG (9/16-18-2B THD)	

Y-SEPARATE ILLUSTRATION

<END>

142-8667 WHEEL & TIRE AR—HEAVY DUTY

S/N: MJH1-UP; SCH1-UP; RLL1-UP; BXM1-UP
AN ATTACHMENT

SMCS-4200, 4201, 4203 **i02361115**

NOTE	PART NUMBER	QTY	PART NAME 1 2 3 4 5 6 (PRODUCT LEVEL)	SEE PAGE
Y	*142-7487*	2	TIRE & RIM GP (LH)	251
Y	*150-8593*	2	TIRE & RIM GP (RH)	254
	142-7493	32	NUT-LUG (9/16-18-2B THD)	

Y-SEPARATE ILLUSTRATION

<END>

142-9121 WHEEL & TIRE AR—HIGH FLOTATION

S/N: MJH1-UP; SCH1-UP; RLL1-UP
AN ATTACHMENT

SMCS-4200, 4201, 4203 **i02361138**

NOTE	PART NUMBER	QTY	PART NAME 1 2 3 4 5 6 (PRODUCT LEVEL)	SEE PAGE
Y	*199-5434*	2	TIRE & RIM GP (LH)	261
Y	*199-5435*	2	TIRE & RIM GP (RH)	262
	142-7493	32	NUT-LUG (9/16-18-2B THD)	

Y-SEPARATE ILLUSTRATION

<END>

154-3972 WHEEL & TIRE AR—HEAVY DUTY

S/N: BXM1-UP

AN ATTACHMENT

SMCS-4200, 4201, 4203 **i02361146**

NOTE	PART NUMBER	QTY	PART NAME 1 2 3 4 5 6 (PRODUCT LEVEL)	SEE PAGE
Y	*154-3978*	2	TIRE & RIM GP (LH)	254
Y	*154-3979*	2	TIRE & RIM GP (RH)	254
	142-7493	32	NUT-LUG (9/16-18-2B THD)	

Y-SEPARATE ILLUSTRATION

<END>

159-5761 WHEEL & TIRE AR—SOLID

S/N: BXM1-UP

AN ATTACHMENT

SMCS-4200, 4201, 4203 **i02361156**

NOTE	PART NUMBER	QTY	PART NAME 1 2 3 4 5 6 (PRODUCT LEVEL)	SEE PAGE
	142-7493	32	NUT-LUG (9/16-18-2B THD)	
	187-3230	4	TIRE-SOLID (33X6X8)	

<END>

165-2602 WHEEL & TIRE AR—HEAVY DUTY

S/N: MJH1-UP; SCH1-UP; RLL1-UP; BXM1-UP

AN ATTACHMENT

SMCS-4200, 4201, 4203 **i02361177**

NOTE	PART NUMBER	QTY	PART NAME 1 2 3 4 5 6 (PRODUCT LEVEL)	SEE PAGE
Y	*165-2605*	2	TIRE & RIM GP (LH)	255
Y	*165-2606*	2	TIRE & RIM GP (RH)	255
	142-7493	32	NUT-LUG (9/16-18-2B THD)	

Y-SEPARATE ILLUSTRATION

<END>

165-4891 WHEEL & TIRE AR—HEAVY DUTY

S/N: MJH1-UP; SCH1-UP; RLL1-UP; BXM1-UP

AN ATTACHMENT

SMCS-4200, 4201, 4203 **i02361179**

NOTE	PART NUMBER	QTY	PART NAME 1 2 3 4 5 6 (PRODUCT LEVEL)	SEE PAGE
Y	*165-2609*	2	TIRE & RIM GP (LH)	255
Y	*165-2610*	2	TIRE & RIM GP (RH)	256
	142-7493	32	NUT-LUG (9/16-18-2B THD)	

Y-SEPARATE ILLUSTRATION

<END>

165-4898 WHEEL & TIRE AR—HEAVY DUTY

S/N: BXM1-UP
AN ATTACHMENT

SMCS-4200, 4201, 4203 **i02361187**

NOTE	PART NUMBER	QTY	PART NAME 1 2 3 4 5 6 (PRODUCT LEVEL)	SEE PAGE
Y	*165-4901*	2	TIRE & RIM GP (LH)	256
Y	*165-4902*	2	TIRE & RIM GP (RH)	256
	142-7493	32	NUT-LUG (9/16-18-2B THD)	

Y-SEPARATE ILLUSTRATION

<END>

178-2256 WHEEL & TIRE AR—HEAVY DUTY

S/N: BXM1-UP
AN ATTACHMENT

SMCS-4200, 4201, 4203 **i02361189**

NOTE	PART NUMBER	QTY	PART NAME 1 2 3 4 5 6 (PRODUCT LEVEL)	SEE PAGE
Y	*199-5438*	2	TIRE & RIM GP (LH)	262
Y	*199-5439*	2	TIRE & RIM GP (RH)	262
	142-7493	32	NUT-LUG (9/16-18-2B THD)	

Y-SEPARATE ILLUSTRATION

<END>

185-8660 WHEEL & TIRE AR—LOW SIDE WALL

S/N: MJH1-UP; SCH1-UP; RLL1-UP; BXM1-UP
AN ATTACHMENT

SMCS-4200, 4201, 4203 **i02361192**

NOTE	PART NUMBER	QTY	PART NAME 1 2 3 4 5 6 (PRODUCT LEVEL)	SEE PAGE
Y	*185-8670*	2	TIRE & RIM GP (LH)	257
Y	*185-8671*	2	TIRE & RIM GP (RH)	257
	142-7493	32	NUT-LUG (9/16-18-2B THD)	

Y-SEPARATE ILLUSTRATION

<END>

185-8661 WHEEL & TIRE AR—LOW SIDE WALL

S/N: MJH1-UP; SCH1-UP; RLL1-UP; BXM1-UP
AN ATTACHMENT

SMCS-4200, 4201, 4203 **i02361196**

NOTE	PART NUMBER	QTY	PART NAME 1 2 3 4 5 6 (PRODUCT LEVEL)	SEE PAGE
Y	*185-8672*	2	TIRE & RIM GP (LH)	257
Y	*185-8673*	2	TIRE & RIM GP (RH)	258
	142-7493	32	NUT-LUG (9/16-18-2B THD)	

Y-SEPARATE ILLUSTRATION

<END>

185-8663 WHEEL & TIRE AR—LOW SIDE WALL

S/N: BXM1-UP
AN ATTACHMENT

SMCS-4200, 4201, 4203 **i02361197**

NOTE	PART NUMBER	QTY	PART NAME 1 2 3 4 5 6 (PRODUCT LEVEL)	SEE PAGE
Y	*185-8676*	2	TIRE & RIM GP (LH)	258
Y	*185-8677*	2	TIRE & RIM GP (RH)	258
	142-7493	32	NUT-LUG (9/16-18-2B THD)	

Y-SEPARATE ILLUSTRATION

<END>

185-8664 WHEEL & TIRE AR—HEAVY DUTY

S/N: MJH1-UP; SCH1-UP; RLL1-UP; BXM1-UP
AN ATTACHMENT

SMCS-4200, 4201, 4203 **i02361199**

NOTE	PART NUMBER	QTY	PART NAME 1 2 3 4 5 6 (PRODUCT LEVEL)	SEE PAGE
Y	*185-8678*	2	TIRE & RIM GP (LH)	259
Y	*185-8679*	2	TIRE & RIM GP (RH)	259
	142-7493	32	NUT-LUG (9/16-18-2B THD)	

Y-SEPARATE ILLUSTRATION

<END>

185-8665 WHEEL & TIRE AR—HEAVY DUTY

S/N: MJH1-UP; SCH1-UP; RLL1-UP; BXM1-UP

AN ATTACHMENT

SMCS-4200, 4201, 4203 **i02361201**

NOTE	PART NUMBER	QTY	PART NAME 1 2 3 4 5 6 (PRODUCT LEVEL)	SEE PAGE
Y	*185-9926*	2	TIRE & RIM GP (LH)	259
Y	*185-9927*	2	TIRE & RIM GP (RH)	260
	142-7493	32	NUT-LUG (9/16-18-2B THD)	

Y-SEPARATE ILLUSTRATION

<END>

185-8667 WHEEL & TIRE AR—HEAVY DUTY

S/N: BXM1-UP

AN ATTACHMENT

SMCS-4200, 4201, 4203 **i02361203**

NOTE	PART NUMBER	QTY	PART NAME 1 2 3 4 5 6 (PRODUCT LEVEL)	SEE PAGE
Y	*185-9930*	2	TIRE & RIM GP (LH)	260
Y	*185-9931*	2	TIRE & RIM GP (RH)	260
	142-7493	32	NUT-LUG (9/16-18-2B THD)	

Y-SEPARATE ILLUSTRATION

<END>

187-3239 WHEEL & TIRE AR

S/N: BXM1-UP

AN ATTACHMENT

SMCS-4200, 4201, 4203 **i02361206**

NOTE	PART NUMBER	QTY	PART NAME 1 2 3 4 5 6 (PRODUCT LEVEL)	SEE PAGE
Y	*188-0124*	2	TIRE & RIM GP (LH)	261
Y	*188-0125*	2	TIRE & RIM GP (RH)	261
	142-7493	32	NUT-LUG (9/16-18-2B THD)	

Y-SEPARATE ILLUSTRATION

<END>

228-9214 WHEEL & TIRE AR

S/N: MJH1-UP; SCH1-UP; RLL1-UP; BXM1-UP
AN ATTACHMENT

SMCS-4200, 4201, 4203 **i02361208**

NOTE	PART NUMBER	QTY	PART NAME 1 2 3 4 5 6 (PRODUCT LEVEL)	SEE PAGE
Y	*225-9270*	4	TIRE & RIM GP	263
	142-7493	32	NUT-LUG (9/16-18-2B THD)	

Y-SEPARATE ILLUSTRATION

<END>

228-9215 WHEEL & TIRE AR

S/N: MJH1-UP; SCH1-UP; RLL1-UP; BXM1-UP
AN ATTACHMENT

SMCS-4200, 4201, 4203 **i02361209**

NOTE	PART NUMBER	QTY	PART NAME 1 2 3 4 5 6 (PRODUCT LEVEL)	SEE PAGE
Y	*225-9271*	4	TIRE & RIM GP	263
	142-7493	32	NUT-LUG (9/16-18-2B THD)	

Y-SEPARATE ILLUSTRATION

<END>

238-7737 WHEEL & TIRE AR

S/N: RLL1-UP
AN ATTACHMENT

SMCS-4200, 4201, 4203 **i02361212**

NOTE	PART NUMBER	QTY	PART NAME 1 2 3 4 5 6 (PRODUCT LEVEL)	SEE PAGE
Y	*238-7738*	2	TIRE & RIM GP (LH)	263
Y	*238-7739*	2	TIRE & RIM GP (RH)	264
	142-7493	32	NUT-LUG (9/16-18-2B THD)	

Y-SEPARATE ILLUSTRATION

<END>

252-0344 WHEEL & TIRE AR

S/N: MJH1-UP; SCH1-UP; RLL1-UP; BXM1-UP
AN ATTACHMENT

SMCS-4200, 4201, 4203 **i02279641**

NOTE	PART NUMBER	QTY	PART NAME 1 2 3 4 5 6 (PRODUCT LEVEL)	SEE PAGE
Y	**265-2895**	2	TIRE & RIM GP (RH)	264
Y	**265-2894**	2	TIRE & RIM GP (LH)	264
	142-7493	32	NUT-LUG (9/16-18-2B THD)	

Y-SEPARATE ILLUSTRATION

<END>

252-0345 WHEEL & TIRE AR

S/N: MJH1-UP; SCH1-UP; RLL1-UP; BXM1-UP
AN ATTACHMENT

SMCS-4200, 4201, 4203 **i02279670**

NOTE	PART NUMBER	QTY	PART NAME 1 2 3 4 5 6 (PRODUCT LEVEL)	SEE PAGE
Y	**265-2896**	2	TIRE & RIM GP (LH)	265
Y	**265-2897**	2	TIRE & RIM GP (RH)	265
	142-7493	32	NUT-LUG (9/16-18-2B THD)	

Y-SEPARATE ILLUSTRATION

<END>

252-0346 WHEEL & TIRE AR

S/N: BXM1-UP
AN ATTACHMENT

SMCS-4200, 4201, 4203 **i02279611**

NOTE	PART NUMBER	QTY	PART NAME 1 2 3 4 5 6 (PRODUCT LEVEL)	SEE PAGE
Y	**265-2899**	2	TIRE & RIM GP (RH)	266
Y	**265-2898**	2	TIRE & RIM GP (LH)	265
	142-7493	32	NUT-LUG (9/16-18-2B THD)	

Y-SEPARATE ILLUSTRATION

<END>

252-0367 WHEEL & TIRE AR—SOLID

S/N: MJH1-UP; SCH1-UP; RLL1-UP; BXM1-UP
AN ATTACHMENT

SMCS-4200, 4201, 4203 **i02279677**

NOTE	PART NUMBER	QTY	PART NAME 1 2 3 4 5 6 (PRODUCT LEVEL)	SEE PAGE
	142-7493	32	NUT-LUG (9/16-18-2B THD)	
	226-3736	2	TIRE-SOLID (31X6X10)	
	226-3737	2	TIRE-SOLID (31X6X10)	

<END>

252-0378 WHEEL & TIRE AR—SOLID

S/N: MJH1-UP; SCH1-UP; RLL1-UP; BXM1-UP
AN ATTACHMENT

SMCS-4200, 4201, 4203 **i02279683**

NOTE	PART NUMBER	QTY	PART NAME 1 2 3 4 5 6 (PRODUCT LEVEL)	SEE PAGE
	142-7493	32	NUT-LUG (9/16-18-2B THD)	
	226-3736	2	TIRE-SOLID (31X6X10)	
	226-3737	2	TIRE-SOLID (31X6X10)	

<END>

218-5650 BUMPER GP–REAR

S/N: MJH1-UP; RLL1-UP

PART OF 218-5910 CHASSIS AR

SMCS-7156 **i01948738**

NOTE	REF NO	GRAPHIC REF	PART NUMBER	QTY	PART NAME 1 2 3 4 5 6 (PRODUCT LEVEL)	SEE PAGE
	1	1	**218-5647**	2	SPACER	
	2	1	**218-5651**	1	BUMPER AS	
	3	1	**218-5773**	1	PLATE	
	4	1	**229-4895**	2	BOLT-WHEEL	
M	5	1	**8T-4122**	6	WASHER-HARD (17X32X3.5-MM THK)	
M	6	1	**8T-4132**	4	NUT (M16X2-THD)	
M	7	1	**8T-7338**	2	BOLT (M16X2X45-MM)	

M-METRIC PART

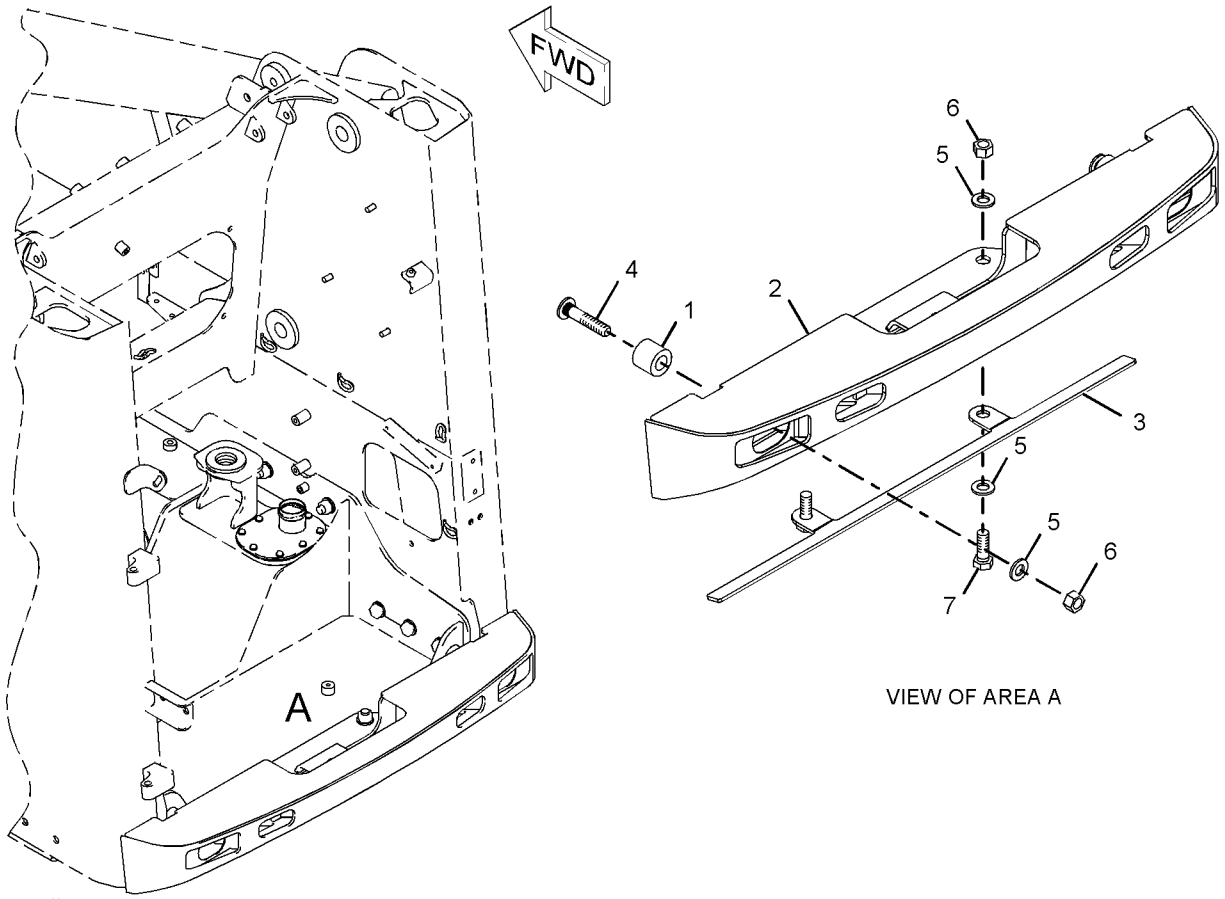

VIEW OF AREA A

GRAPHIC #1 **<END>** g01019651

FRAME AND BODY

218-5772 BUMPER GP–REAR

S/N: SCH1-UP; BXM1-UP

PART OF 218-6610 CHASSIS AR

SMCS-7156 **i01964597**

NOTE	REF NO	GRAPHIC REF	PART NUMBER	QTY	PART NAME 1 2 3 4 5 6 (PRODUCT LEVEL)	SEE PAGE
	1	1	**142-9021**	2	STUD	
	2	1	**154-4006**	2	BOSS	
	3	1	**218-5651**	1	BUMPER AS	
M	4	1	**8T-4122**	6	WASHER-HARD (17X32X3.5-MM THK)	
M	5	1	**8T-4132**	4	NUT (M16X2-THD)	
M	6	1	**8T-7338**	2	BOLT (M16X2X45-MM)	

M-METRIC PART

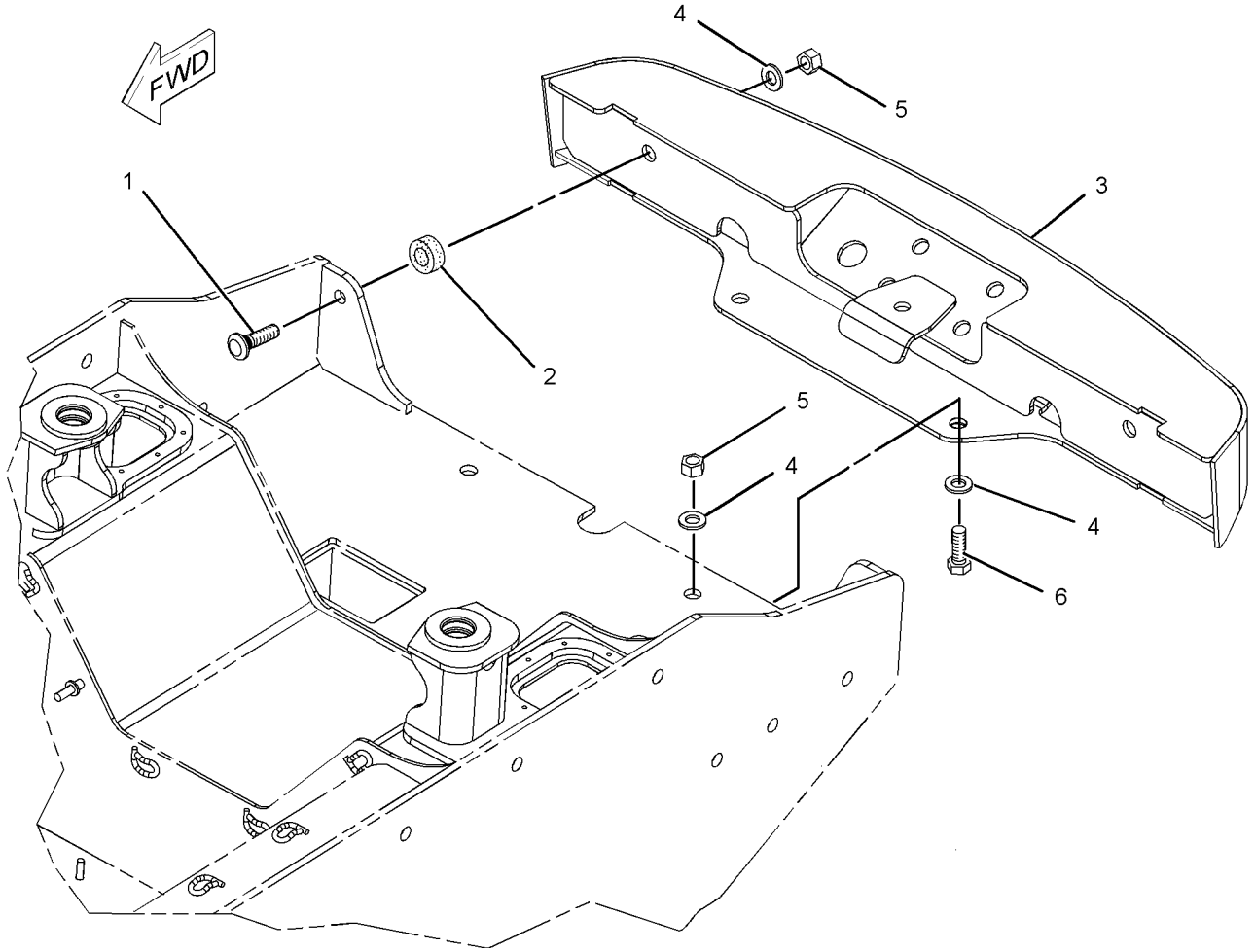

GRAPHIC #1 **<END>** g01021209

233-5671 CONVERSION AR-ROADING—EUROPE

S/N: MJH1-UP; RLL1-UP

AN ATTACHMENT

SMCS-7000 **i02124770**

NOTE	PART NUMBER	QTY	PART NAME 1 2 3 4 5 6 (PRODUCT LEVEL)	SEE PAGE
Y	*216-6146*	1	BOX GP-STORAGE	664
Y	*218-6708*	1	LIFTING GP-MACHINE	313
Y	*142-8652*	1	LIGHTING GP-STOP & TAIL	177
Y	*218-5791*	1	PANEL AR-INSTRUMENT	727
Y	*233-5616*	1	SUPPRESSION GP-SOUND (ENGINE)	321
Y	*230-3743*	1	WIRING GP-HORN	196
	218-5601	1	FLOOR MAT	

Y-SEPARATE ILLUSTRATION

<END>

233-5672 CONVERSION AR-ROADING—GERMANY

S/N: MJH1-UP; RLL1-UP

AN ATTACHMENT

SMCS-7000 **i02338201**

NOTE	PART NUMBER	QTY	PART NAME 1 2 3 4 5 6 (PRODUCT LEVEL)	SEE PAGE
Y	*216-6146*	1	BOX GP-STORAGE	664
Y	*234-0792*	1	CONVERSION GP-ROADING	292
Y	**177-9152**	1	KIT-ROADING PLATE & MOUNTING (BUCKET)	635
Y	*218-6708*	1	LIFTING GP-MACHINE	313
Y	*216-4715*	1	LIGHTING GP-ROADING	173
Y	*175-4238*	1	LOCK GP-QUICK COUPLER (MECHANICAL)	638
Y	*238-7671*	1	MIRROR & MTG GP-REAR VIEW	315
Y	*218-5791*	1	PANEL AR-INSTRUMENT	727
Y	*233-5616*	1	SUPPRESSION GP-SOUND	321
Y	*173-3022*	1	VISOR GP-CAB	752
Y	*230-3743*	1	WIRING GP-HORN	196
	222-5695	1	SUPPORT GP-STORAGE BOX	
	216-6144	1	BRACKET AS	
	233-5680	3	FILM-IDENTIFICATION (13-KM/H)	
	218-5601	1	FLOOR MAT	

Y-SEPARATE ILLUSTRATION

<END>

233-5673 CONVERSION AR-ROADING—ITALY

S/N: MJH1-UP; RLL1-UP

AN ATTACHMENT

SMCS-7000 **i02338200**

NOTE	PART NUMBER	QTY	PART NAME 1 2 3 4 5 6 (PRODUCT LEVEL)	SEE PAGE
Y	*216-6146*	1	BOX GP-STORAGE	664
Y	*234-0793*	1	CONVERSION GP-ROADING	293
Y	**177-9152**	1	KIT-ROADING PLATE & MOUNTING (BUCKET)	635
Y	*218-6708*	1	LIFTING GP-MACHINE	313
Y	*216-4715*	1	LIGHTING GP-ROADING	173
Y	*175-4238*	1	LOCK GP-QUICK COUPLER (MECHANICAL)	638
Y	*238-7671*	1	MIRROR & MTG GP-REAR VIEW	315
Y	*225-7963*	1	MOUNTING GP-REGISTRATION	318
Y	*218-5791*	1	PANEL AR-INSTRUMENT	727
Y	*233-5616*	1	SUPPRESSION GP-SOUND	321
Y	*230-3743*	1	WIRING GP-HORN	196
Y	*225-7964*	1	WIRING GP-REAR LIGHTING	199
	218-5601	1	FLOOR MAT	

Y-SEPARATE ILLUSTRATION

<END>

233-5674 CONVERSION AR-ROADING—UNITED KINGDOM

S/N: MJH1-UP; RLL1-UP

AN ATTACHMENT

SMCS-7000 **i02124773**

NOTE	PART NUMBER	QTY	PART NAME 1 2 3 4 5 6 (PRODUCT LEVEL)	SEE PAGE
Y	*216-6146*	1	BOX GP-STORAGE	664
Y	**191-9684**	1	FILM GP	760
Y	*218-6708*	1	LIFTING GP-MACHINE	313
Y	*142-8652*	1	LIGHTING GP-STOP & TAIL	177
Y	*218-5791*	1	PANEL AR-INSTRUMENT	727
Y	*233-5616*	1	SUPPRESSION GP-SOUND	321
Y	*230-3743*	1	WIRING GP-HORN	196
	218-5601	1	FLOOR MAT	

Y-SEPARATE ILLUSTRATION

<END>

233-5675 CONVERSION AR-ROADING—GERMANY

S/N: MJH1-UP
HIGH FLOW
AN ATTACHMENT

SMCS-7000 **i02360650**

NOTE	PART NUMBER	QTY	PART NAME 1 2 3 4 5 6 (PRODUCT LEVEL)	SEE PAGE
Y	*216-6146*	1	BOX GP-STORAGE	664
Y	*234-0792*	1	CONVERSION GP-ROADING	292
Y	*230-3743*	1	WIRING GP-HORN	196
Y	**177-9152**	1	KIT-ROADING PLATE & MOUNTING (BUCKET)	635
Y	*218-6708*	1	LIFTING GP-MACHINE	313
Y	*216-4715*	1	LIGHTING GP-ROADING	173
Y	*175-4238*	1	LOCK GP-QUICK COUPLER (MECHANICAL)	638
Y	*238-7672*	1	MIRROR & MTG GP-REAR VIEW	316
Y	*218-5791*	1	PANEL AR-INSTRUMENT	727
Y	*233-5616*	1	SUPPRESSION GP-SOUND	321
Y	*173-3022*	1	VISOR GP-CAB	752
	222-5695	1	SUPPORT GP-STORAGE BOX	
	216-6144	1	BRACKET AS	
	218-5601	1	FLOOR MAT	

Y-SEPARATE ILLUSTRATION

<END>

233-5676 CONVERSION AR-ROADING—ITALY

S/N: MJH1-UP
HIGH FLOW
AN ATTACHMENT

SMCS-7000 **i02338198**

NOTE	PART NUMBER	QTY	PART NAME 1 2 3 4 5 6 (PRODUCT LEVEL)	SEE PAGE
Y	*216-6146*	1	BOX GP-STORAGE	664
Y	*234-0793*	1	CONVERSION GP-ROADING	293
Y	**177-9152**	1	KIT-ROADING PLATE & MOUNTING (BUCKET)	635
Y	*218-6708*	1	LIFTING GP-MACHINE	313
Y	*216-4715*	1	LIGHTING GP-ROADING	173
Y	*175-4238*	1	LOCK GP-QUICK COUPLER (MECHANICAL)	638
Y	*238-7672*	1	MIRROR & MTG GP-REAR VIEW	316
Y	*225-7963*	1	MOUNTING GP-REGISTRATION	318
Y	*218-5791*	1	PANEL AR-INSTRUMENT	727
Y	*233-5616*	1	SUPPRESSION GP-SOUND	321
Y	*230-3743*	1	WIRING GP-HORN	196
Y	*225-7964*	1	WIRING GP-REAR LIGHTING	199
	218-5601	1	FLOOR MAT	

Y-SEPARATE ILLUSTRATION

<END>

233-5681 CONVERSION AR-ROADING—EUROPE

S/N: SCH1-UP; BXM1-UP

AN ATTACHMENT

SMCS-7000 **i02124778**

NOTE	PART NUMBER	QTY	PART NAME 1 2 3 4 5 6 (PRODUCT LEVEL)	SEE PAGE
Y	*216-6146*	1	BOX GP-STORAGE	664
Y	*188-0147*	1	LIFTING GP-MACHINE	311
Y	*142-8652*	1	LIGHTING GP-STOP & TAIL	177
Y	*218-5791*	1	PANEL AR-INSTRUMENT	727
Y	*233-5616*	1	SUPPRESSION GP-SOUND	321
Y	*230-3743*	1	WIRING GP-HORN	196
	218-5601	1	FLOOR MAT	

Y-SEPARATE ILLUSTRATION

<END>

233-5682 CONVERSION AR-ROADING—GERMANY

S/N: SCH1-UP; BXM1-UP

AN ATTACHMENT

SMCS-7000 **i02338195**

NOTE	PART NUMBER	QTY	PART NAME 1 2 3 4 5 6 (PRODUCT LEVEL)	SEE PAGE
Y	*216-6146*	1	BOX GP-STORAGE	664
Y	*234-0792*	1	CONVERSION GP-ROADING	292
Y	**177-9152**	1	KIT-ROADING PLATE & MOUNTING (BUCKET)	635
Y	*188-0147*	1	LIFTING GP-MACHINE	311
Y	*216-4716*	1	LIGHTING GP-ROADING	175
Y	*175-4238*	1	LOCK GP-QUICK COUPLER (MECHANICAL)	638
Y	*238-7671*	1	MIRROR & MTG GP-REAR VIEW	315
Y	*218-5791*	1	PANEL AR-INSTRUMENT	727
Y	*233-5616*	1	SUPPRESSION GP-SOUND	321
Y	*173-3022*	1	VISOR GP-CAB	752
Y	*230-3743*	1	WIRING GP-HORN	196
	222-5695	1	SUPPORT GP-STORAGE BOX	
	216-6144	1	BRACKET AS	
	233-5680	3	FILM-IDENTIFICATION (13-KM/H)	
	218-5601	1	FLOOR MAT	

Y-SEPARATE ILLUSTRATION

<END>

233-5683 CONVERSION AR-ROADING—ITALY

S/N: SCH1-UP; BXM1-UP

AN ATTACHMENT

SMCS-7000 **i02338194**

NOTE	PART NUMBER	QTY	PART NAME 1 2 3 4 5 6 (PRODUCT LEVEL)	SEE PAGE
Y	*216-6146*	1	BOX GP-STORAGE	664
Y	*234-0793*	1	CONVERSION GP-ROADING	293
Y	**177-9152**	1	KIT-ROADING PLATE & MOUNTING (BUCKET)	635
Y	*188-0147*	1	LIFTING GP-MACHINE	311
Y	*216-4716*	1	LIGHTING GP-ROADING	175
Y	*175-4238*	1	LOCK GP-QUICK COUPLER (MECHANICAL)	638
Y	*238-7671*	1	MIRROR & MTG GP-REAR VIEW	315
Y	*225-7963*	1	MOUNTING GP-REGISTRATION	318
Y	*218-5791*	1	PANEL AR-INSTRUMENT	727
Y	*233-5616*	1	SUPPRESSION GP-SOUND	321
Y	*230-3743*	1	WIRING GP-HORN	196
Y	*225-7964*	1	WIRING GP-REAR LIGHTING	199
	218-5601	1	FLOOR MAT	

Y-SEPARATE ILLUSTRATION

<END>

233-5684 CONVERSION AR-ROADING—UNITED KINGDOM

S/N: SCH1-UP; BXM1-UP

AN ATTACHMENT

SMCS-7000 **i02124783**

NOTE	PART NUMBER	QTY	PART NAME 1 2 3 4 5 6 (PRODUCT LEVEL)	SEE PAGE
Y	*216-6146*	1	BOX GP-STORAGE	664
Y	**191-9684**	1	FILM GP	760
Y	*188-0147*	1	LIFTING GP-MACHINE	311
Y	*142-8652*	1	LIGHTING GP-STOP & TAIL	177
Y	*218-5791*	1	PANEL AR-INSTRUMENT	727
Y	*233-5616*	1	SUPPRESSION GP-SOUND	321
Y	*230-3743*	1	WIRING GP-HORN	196
	218-5601	1	FLOOR MAT	

Y-SEPARATE ILLUSTRATION

<END>

FRAME AND BODY

233-5685 CONVERSION AR-ROADING—GERMANY

S/N: BXM1-UP
HIGH FLOW
AN ATTACHMENT

SMCS-7000 **i02338193**

NOTE	PART NUMBER	QTY	PART NAME 1 2 3 4 5 6 (PRODUCT LEVEL)	SEE PAGE
Y	*216-6146*	1	BOX GP-STORAGE	664
Y	*234-0792*	1	CONVERSION GP-ROADING	292
Y	**177-9152**	1	KIT-ROADING PLATE & MOUNTING (BUCKET)	635
Y	*188-0147*	1	LIFTING GP-MACHINE	311
Y	*216-4716*	1	LIGHTING GP-ROADING	175
Y	*175-4238*	1	LOCK GP-QUICK COUPLER (MECHANICAL)	638
Y	*238-7672*	1	MIRROR & MTG GP-REAR VIEW	316
Y	*218-5791*	1	PANEL AR-INSTRUMENT	727
Y	*233-5616*	1	SUPPRESSION GP-SOUND	321
Y	*173-3022*	1	VISOR GP-CAB	752
Y	*230-3743*	1	WIRING GP-HORN	196
	222-5695	1	SUPPORT GP-STORAGE BOX	
	216-6144	1	BRACKET AS	
	218-5601	1	FLOOR MAT	

Y-SEPARATE ILLUSTRATION

<END>

233-5686 CONVERSION AR-ROADING—ITALY

S/N: BXM1-UP
HIGH FLOW
AN ATTACHMENT

SMCS-7000 **i02338192**

NOTE	PART NUMBER	QTY	PART NAME 1 2 3 4 5 6 (PRODUCT LEVEL)	SEE PAGE
Y	*216-6146*	1	BOX GP-STORAGE	664
Y	*234-0793*	1	CONVERSION GP-ROADING	293
Y	**177-9152**	1	KIT-ROADING PLATE & MOUNTING (BUCKET)	635
Y	*188-0147*	1	LIFTING GP-MACHINE	311
Y	*216-4716*	1	LIGHTING GP-ROADING	175
Y	*175-4238*	1	LOCK GP-QUICK COUPLER (MECHANICAL)	638
Y	*238-7672*	1	MIRROR & MTG GP-REAR VIEW	316
Y	*225-7963*	1	MOUNTING GP-REGISTRATION	318
Y	*218-5791*	1	PANEL AR-INSTRUMENT	727
Y	*233-5616*	1	SUPPRESSION GP-SOUND	321
Y	*230-3743*	1	WIRING GP-HORN	196
Y	*225-7964*	1	WIRING GP-REAR LIGHTING	199
	218-5601	1	FLOOR MAT	

Y-SEPARATE ILLUSTRATION

<END>

FRAME AND BODY

257-5716 CONVERSION AR-ROADING—GERMANY, ITALY

S/N: MJH1-UP; RLL1-UP

AN ATTACHMENT

SMCS-7000 **i02253856**

NOTE	PART NUMBER	QTY	PART NAME 1 2 3 4 5 6 (PRODUCT LEVEL)	SEE PAGE
Y	*216-6146*	1	BOX GP-STORAGE	664
Y	**177-9152**	1	KIT-ROADING PLATE & MOUNTING (BUCKET)	635
Y	*218-6708*	1	LIFTING GP-MACHINE	313
Y	*216-4715*	1	LIGHTING GP-ROADING	173
Y	*175-4238*	1	LOCK GP-QUICK COUPLER (MECHANICAL)	638
Y	*238-7671*	1	MIRROR & MTG GP-REAR VIEW	315
Y	*218-5791*	1	PANEL AR-INSTRUMENT	727
Y	*233-5616*	1	SUPPRESSION GP-SOUND	321
Y	*230-3743*	1	WIRING GP-HORN	196
	218-5601	1	FLOOR MAT	

Y-SEPARATE ILLUSTRATION

<END>

257-5717 CONVERSION AR-ROADING—GERMANY, ITALY

S/N: MJH1-UP

AN ATTACHMENT

SMCS-7000 **i02337109**

NOTE	PART NUMBER	QTY	PART NAME 1 2 3 4 5 6 (PRODUCT LEVEL)	SEE PAGE
Y	*216-6146*	1	BOX GP-STORAGE	664
Y	**177-9152**	1	KIT-ROADING PLATE & MOUNTING (BUCKET)	635
Y	*218-6708*	1	LIFTING GP-MACHINE	313
Y	*216-4715*	1	LIGHTING GP-ROADING	173
Y	*175-4238*	1	LOCK GP-QUICK COUPLER (MECHANICAL)	638
Y	*238-7672*	1	MIRROR & MTG GP-REAR VIEW	316
Y	*218-5791*	1	PANEL AR-INSTRUMENT	727
Y	*233-5616*	1	SUPPRESSION GP-SOUND	321
Y	*230-3743*	1	WIRING GP-HORN	196
	218-5601	1	FLOOR MAT	

Y-SEPARATE ILLUSTRATION

<END>

257-5718 CONVERSION AR-ROADING—UNITED KINGDOM, COSA

S/N: MJH1-UP; RLL1-UP

AN ATTACHMENT

SMCS-7000 **i02337115**

NOTE	PART NUMBER	QTY	PART NAME 1 2 3 4 5 6 (PRODUCT LEVEL)	SEE PAGE
Y	*216-6146*	1	BOX GP-STORAGE	664
Y	*218-6708*	1	LIFTING GP-MACHINE	313
Y	*142-8652*	1	LIGHTING GP-STOP & TAIL	177
Y	*218-5791*	1	PANEL AR-INSTRUMENT	727
Y	*233-5616*	1	SUPPRESSION GP-SOUND	321
Y	*230-3743*	1	WIRING GP-HORN	196
	218-5601	1	FLOOR MAT	

Y-SEPARATE ILLUSTRATION

<END>

257-5721 CONVERSION AR-ROADING—GERMANY, ITALY

S/N: BXM1-UP

FOR USE WITH 218-6762—PAGE 377

AN ATTACHMENT

SMCS-7000 **i02271507**

NOTE	PART NUMBER	QTY	PART NAME 1 2 3 4 5 6 (PRODUCT LEVEL)	SEE PAGE
Y	*216-6146*	1	BOX GP-STORAGE	664
Y	*188-0147*	1	LIFTING GP-MACHINE	311
Y	*216-4716*	1	LIGHTING GP-ROADING	175
Y	*175-4238*	1	LOCK GP-QUICK COUPLER (MECHANICAL)	638
Y	*238-7671*	1	MIRROR & MTG GP-REAR VIEW	315
Y	*218-5791*	1	PANEL AR-INSTRUMENT	727
Y	*233-5616*	1	SUPPRESSION GP-SOUND	321
Y	*230-3743*	1	WIRING GP-HORN	196
Y	**177-9152**	1	KIT-ROADING PLATE & MOUNTING (BUCKET)	635
	218-5601	1	FLOOR MAT	

Y-SEPARATE ILLUSTRATION

<END>

257-5722 CONVERSION AR-ROADING—GERMANY, ITALY

S/N: BXM1-UP

FOR USE WITH 257-5727—PAGE 291. CANNOT BE USED WITH 218-6760—PAGE 377, 233-5670—PAGE 151

AN ATTACHMENT

SMCS-7000 **i02271512**

NOTE	PART NUMBER	QTY	PART NAME 1 2 3 4 5 6 (PRODUCT LEVEL)	SEE PAGE
Y	*216-6146*	1	BOX GP-STORAGE	664
Y	*188-0147*	1	LIFTING GP-MACHINE	311
Y	*216-4716*	1	LIGHTING GP-ROADING	175
Y	*175-4238*	1	LOCK GP-QUICK COUPLER (MECHANICAL)	638
Y	*238-7672*	1	MIRROR & MTG GP-REAR VIEW	316
Y	*233-5616*	1	SUPPRESSION GP-SOUND	321
Y	*230-3743*	1	WIRING GP-HORN	196
Y	**177-9152**	1	KIT-ROADING PLATE & MOUNTING (BUCKET)	635
	218-5601	1	FLOOR MAT	

Y-SEPARATE ILLUSTRATION

<END>

257-5723 CONVERSION AR-ROADING—EUROPEAN

S/N: BXM1-UP

AN ATTACHMENT

SMCS-7000 **i02271515**

NOTE	PART NUMBER	QTY	PART NAME 1 2 3 4 5 6 (PRODUCT LEVEL)	SEE PAGE
Y	*142-8652*	1	LIGHTING GP-STOP & TAIL	177
Y	*188-0147*	1	LIFTING GP-MACHINE	311
Y	*216-6146*	1	BOX GP-STORAGE	664
Y	*218-5791*	1	PANEL AR-INSTRUMENT	727
Y	*230-3743*	1	WIRING GP-HORN	196
Y	*233-5616*	1	SUPPRESSION GP-SOUND	321
	218-5601	1	FLOOR MAT	

Y-SEPARATE ILLUSTRATION

<END>

257-5726 CONVERSION AR-ROADING—GERMANY

S/N: MJH1-UP; RLL1-UP

FOR USE WITH 257-5716—PAGE 287

AN ATTACHMENT

SMCS-7000 **i02240665**

NOTE	PART NUMBER	QTY	PART NAME 1 2 3 4 5 6 (PRODUCT LEVEL)	SEE PAGE
Y	**166-2569**	1	VISOR GP-CAB	751
	173-3015	1	BRACKET AS	
	216-6144	1	BRACKET AS	
M	**8T-4171**	5	BOLT (M6X1X12-MM)	
	173-3018	1	BRACKET	
	173-3016	1	CHOCK	
	233-5680	3	FILM-IDENTIFICATION (13-KM/H)	
	113-7634	1	FILM-WARNING (STEERING)	
	195-0936	4	INSERT-THREADED (M6X1)	
	246-2641	1	PADLOCK GP	
	5P-8500	1	KEY	
			(WITH PLASTIC OVERMOLD)	
	199-6309	1	KEY	
			(OPTIONAL SERVICE REPLACEMENT) (PLAIN KEY WITHOUT PLASTIC OVERMOLD)	
	166-2562	1	PLATE AS	
	159-7342	1	PLATE-IDENTIFICATION (MAXIMUM WEIGHT)	
M	**9X-2045**	4	SCREW-TRUSS HEAD (M6X1X20-MM)	
	168-8389	4	TACK-FASTENER	
	8T-4205	5	WASHER-HARD (7.2X14.5X2-MM THK)	

M-METRIC PART
Y-SEPARATE ILLUSTRATION

<END>

257-5727 CONVERSION AR-ROADING—ITALY

S/N: MJH1-UP; RLL1-UP; BXM1-UP
FOR USE WITH 257-5716—PAGE 287, 257-5717—PAGE 287
AN ATTACHMENT

SMCS-7000 **i02360651**

NOTE	PART NUMBER	QTY	PART NAME 1 2 3 4 5 6 (PRODUCT LEVEL)	SEE PAGE
Y	**128-6985**	1	LAMP GP-WARNING BEACON (12-VOLT, AMBER)	170
Y	**184-1564**	2	SWITCH GP-PRESSURE	186
M	**8T-4171**	3	BOLT (M6X1X12-MM)	
	207-9780	1	BRACKET AS	
	186-2360	4	COVER AS	
	186-0239	1	HARNESS AS-REAR LIGHTING	
	102-8804	1	KIT-RECEPTACLE (4-PIN)	
			(INCLUDES RECEPTACLE AS & WEDGE)	
	155-2272	1	PLUG AS-CONNECTOR (4-PIN)	
			(INCLUDES PLUG AS, WEDGE & INTERFACE SEAL)	
	216-4711	1	HARNESS AS-REAR LIGHTING (BRAKE)	
	102-8803	1	KIT-RECEPTACLE (3-PIN)	
			(INCLUDES RECEPTACLE AS & WEDGE)	
	9X-1054	1	PLUG AS-CONNECTOR (4-PIN)	
			(INCLUES PLUG AS, WEDGE & INTERFACE SEAL)	
	155-2270	2	KIT-CONNECTING PLUG (2-PIN)	
			(EACH KIT INCLUDES PLUG AS, WEDGE & INTERFACE SEAL)	
	190-8962	1	LAMP GP-REGISTRATION PLATE	
	7M-9957	1	LAMP (12-VOLT)	
	195-9712	1	LAMP (12-VOLT, 10-WATT)	
M	**5C-8312**	2	NUT (M4X0.7-THD)	
	175-4236	1	PLATE	
	204-1365	1	PLATE	
	215-4001	1	PLATE	
	159-7342	1	PLATE-IDENTIFICATION (MAXIMUM WEIGHT)	
	115-1615	1	RELAY AS (12-VOLT)	
M	**6V-9672**	2	SCREW-MACHINE (M4X0.7X16-MM)	
	3S-2093	4	STRAP-CABLE	
	168-8389	4	TACK-FASTENER	
	166-2033	2	TEE AS	
			(EACH INCLUDES)	
	4J-5477	1	SEAL-O-RING	
	7X-2444	1	TEE-SWIVEL	
	4B-4863	2	WASHER (4.7X11X1.2-MM THK)	
	8T-4205	1	WASHER-HARD (7.2X14.5X2-MM THK)	

M-METRIC PART
Y-SEPARATE ILLUSTRATION

<END>

234-0792 CONVERSION GP-ROADING—GERMANY

S/N: MJH1-UP; SCH1-UP; RLL1-UP; BXM1-UP

PART OF 233-5672, 233-5675, 233-5682, 233-5685 CONVERSION AR-ROADING

AN ATTACHMENT

SMCS-7000 **i02474671**

NOTE	REF NO	GRAPHIC REF	PART NUMBER	QTY	PART NAME 1 2 3 4 5 6 (PRODUCT LEVEL)	SEE PAGE
	1	1	**246-2641**	1	PADLOCK GP	
		1	**5P-8500**	1	KEY	
					(WITH PLASTIC OVERMOLD)	
	2	1	**113-7634**	1	FILM-WARNING (STEERING)	
	3	1	**159-7342**	1	PLATE-IDENTIFICATION (MAXIMUM WEIGHT)	
	4	1	**168-8389**	4	TACK-FASTENER	
	5	1	**173-3015**	1	BRACKET AS	
	6	1	**173-3016**	1	CHOCK	
	7	1	**173-3018**	1	BRACKET	
M	8	1	**8T-4171**	5	BOLT (M6X1X12-MM)	
	9	1	**8T-4205**	5	WASHER-HARD (7.2X14.5X2-MM THK)	

M-METRIC PART

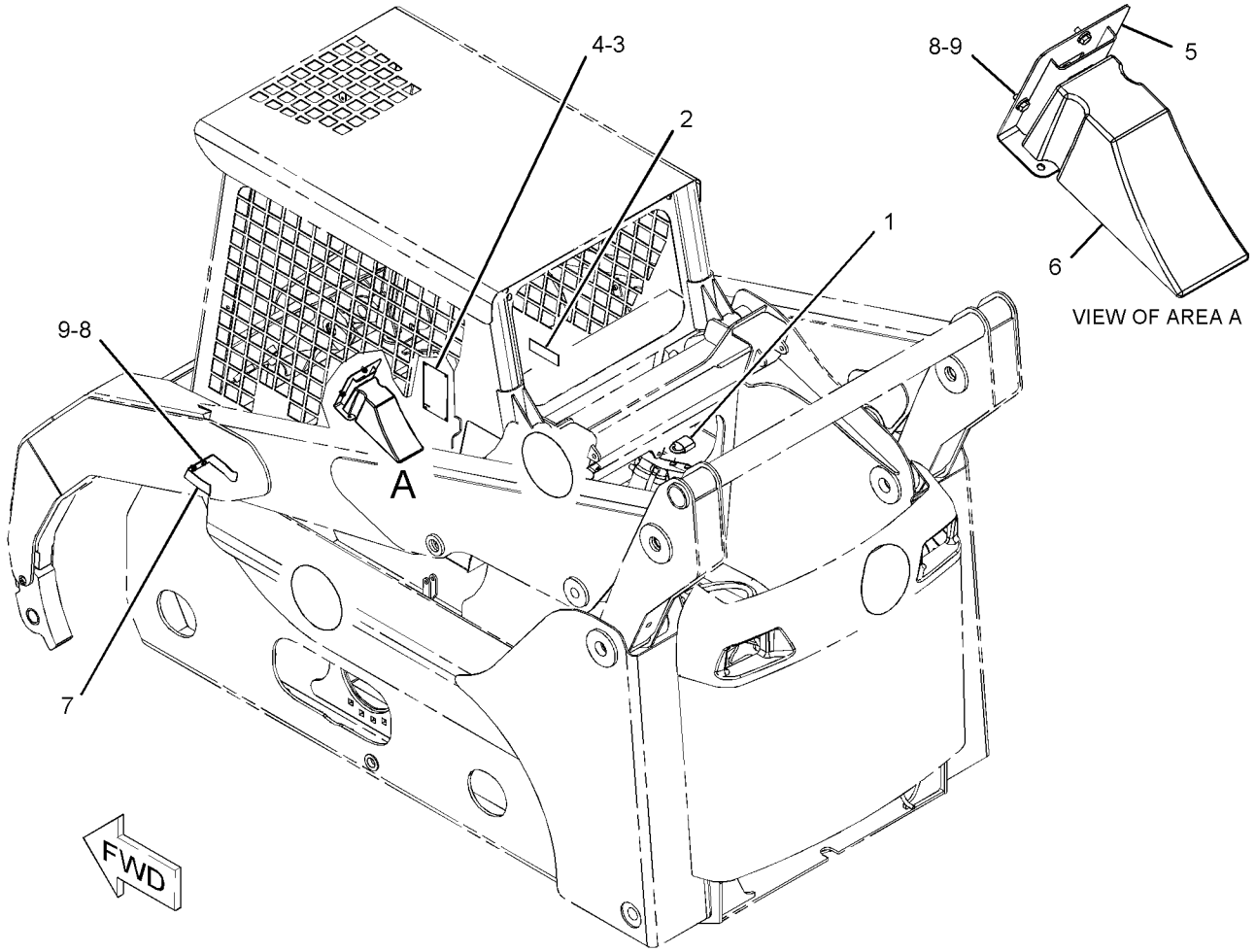

GRAPHIC #1 **<END>** g01131744

234-0793 CONVERSION GP-ROADING–ITALY

S/N: MJH1-UP; SCH1-UP; RLL1-UP; BXM1-UP
PART OF 278-5409 CONVERSION AR-MACHINE, 233-5673, 233-5676, 233-5683, 233-5686 CONVERSION AR-ROADING
AN ATTACHMENT

SMCS-7000 **i02124793**

NOTE	REF NO	GRAPHIC REF	PART NUMBER	QTY	PART NAME 1 2 3 4 5 6 (PRODUCT LEVEL)	SEE PAGE
Y	1	1	**128-6985**	1	LAMP GP-WARNING BEACON (12-VOLT, AMBER)	170
	2	1	**159-7342**	1	PLATE-IDENTIFICATION (MAXIMUM WEIGHT)	
	3	1	**168-8389**	4	TACK-FASTENER	
	4	1	**186-2360**	4	COVER AS	
					(EACH INCLUDES)	
BE		1	**129-1854**		FASTENER-LOOP	
BE		1	**129-1855**		FASTENER-HOOK	

B-USE AS REQUIRED
E-ORDER BY THE CENTIMETER
Y-SEPARATE ILLUSTRATION

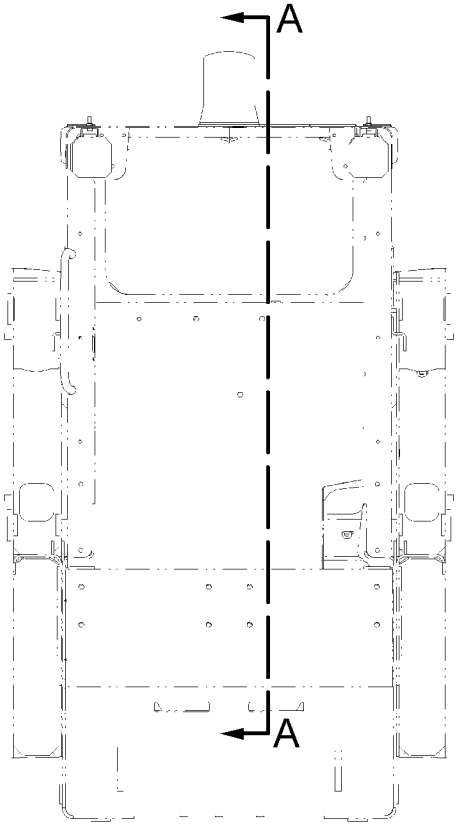

FRONT VIEW

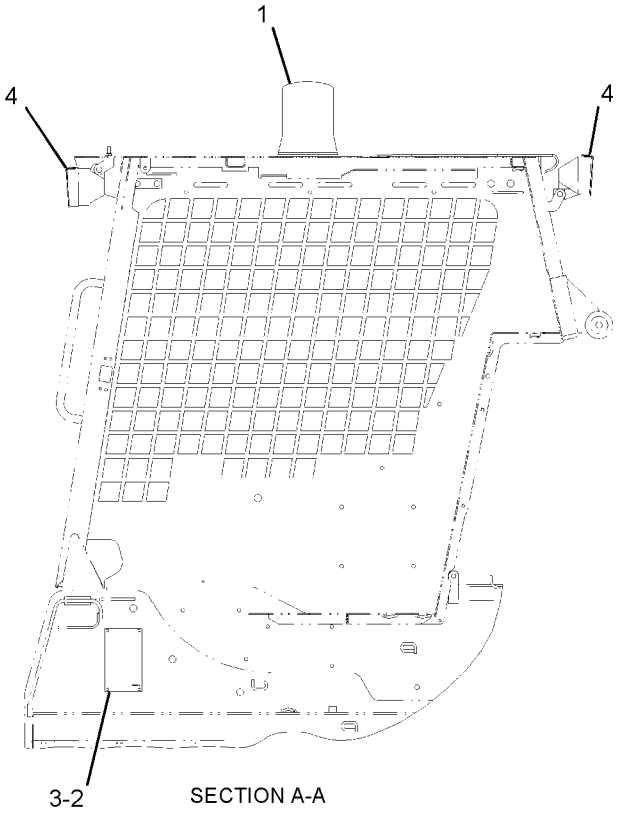

SECTION A-A

GRAPHIC #1 **<END>** g01130743

278-1292 CONVERSION GP-ROADING—GERMANY

S/N: MJH5600-UP; SCH1600-UP; RLL3200-UP; BXM2400-UP
PART OF 278-1224, 278-1225, 278-5413, 278-5414, 278-5441, 278-5442
CONVERSION AR-MACHINE
AN ATTACHMENT

SMCS-7000 **i02449422**

NOTE	REF NO	GRAPHIC REF	PART NUMBER	QTY	PART NAME 1 2 3 4 5 6 (PRODUCT LEVEL)	SEE PAGE
	1	1	**246-2641**	1	PADLOCK GP	
		1	**5P-8500**	1	KEY	
					(WITH PLASTIC OVERMOLD)	
	2	1	**113-7634**	1	FILM-WARNING (STEERING)	
	3	1	**159-7342**	1	PLATE-IDENTIFICATION (MAXIMUM WEIGHT)	
	4	1	**168-8389**	4	TACK-FASTENER	
	5	1	**173-3015**	1	BRACKET AS	
	6	1	**173-3016**	1	CHOCK	
	7	1	**173-3018**	1	BRACKET	
M	8	1	**8T-4171**	5	BOLT (M6X1X12-MM)	
	9	1	**8T-4205**	5	WASHER-HARD (7.2X14.5X2-MM THK)	

M-METRIC PART

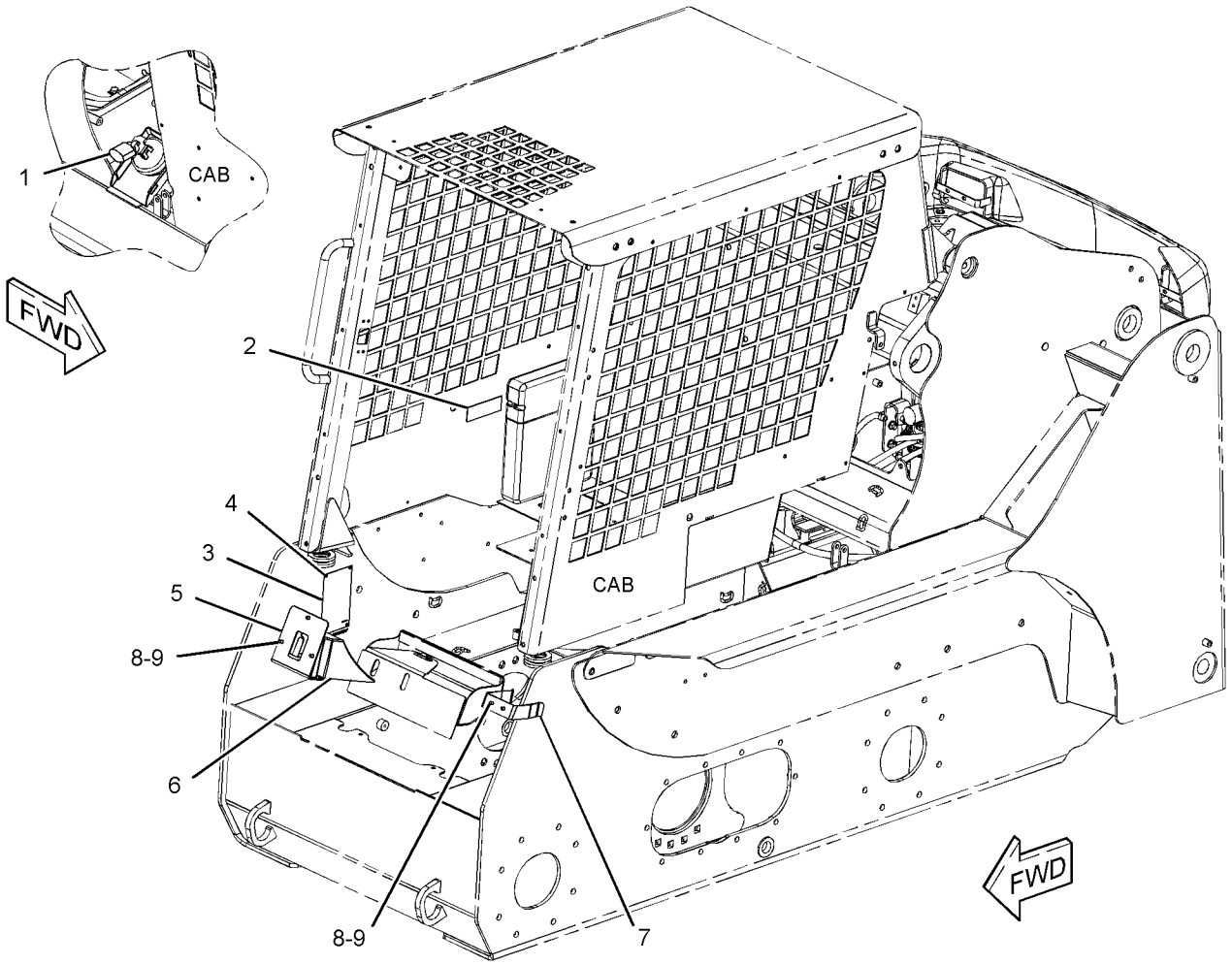

GRAPHIC #1 **<END>** g01230481

278-1293 CONVERSION GP-ROADING–ITALY

S/N: MJH5600-UP; SCH1600-UP; RLL3200-UP; BXM2400-UP
PART OF 278-1212, 278-1213, 278-5369, 278-5370, 278-5408 CONVERSION
AR-MACHINE
AN ATTACHMENT

SMCS-7000 **i02444911**

NOTE	REF NO	GRAPHIC REF	PART NUMBER	QTY	PART NAME 1 2 3 4 5 6 (PRODUCT LEVEL)	SEE PAGE
Y	1	1	**128-6985**	1	LAMP GP-WARNING BEACON (12-VOLT, AMBER)	170
	2	1	**186-2360**	4	COVER AS	
					(EACH INCLUDES)	
E		1	**129-1854**		FASTENER-LOOP (10-CM)	
E		1	**129-1855**		FASTENER-HOOK (10-CM)	

E-ORDER BY THE CENTIMETER
Y-SEPARATE ILLUSTRATION

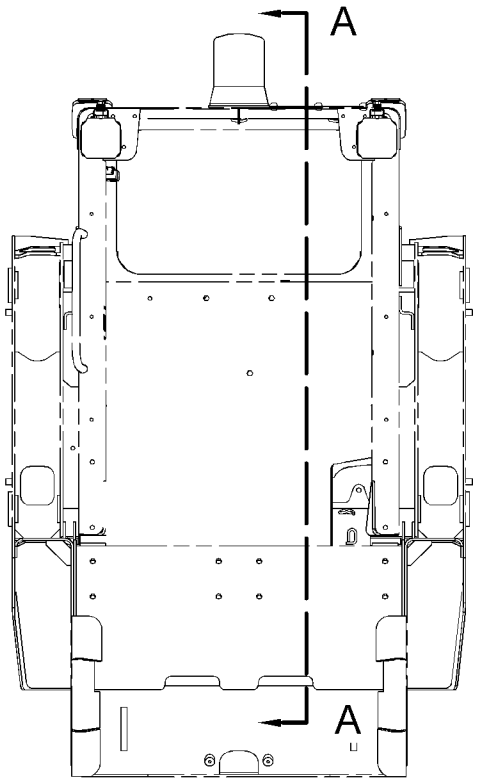

FRONT VIEW

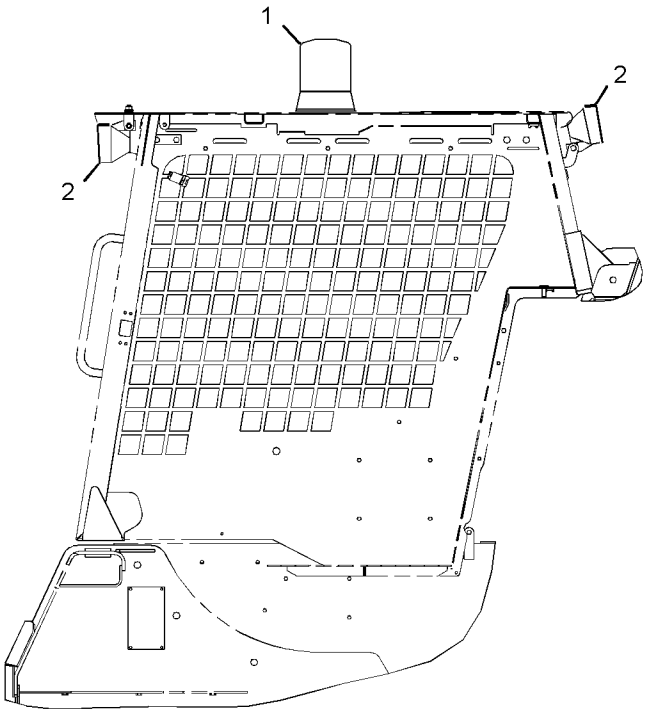

SECTION A-A

GRAPHIC #1 **<END>** g01230326

142-8830 COUNTERWEIGHT GP

S/N: MJH1-UP
41.14KG (90.50 LBS)
PART OF 218-6226, 278-1226 COMMON AR

SMCS-7056 **i01883925**

NOTE	REF NO	GRAPHIC REF	PART NUMBER	QTY	PART NAME 1 2 3 4 5 6 (PRODUCT LEVEL)	SEE PAGE
	1	1	**177-9580**	10	BLOCK	
	2	1	**7X-0590**	2	WASHER-HARD (13.5X44.5X6MM THK)	
M	3	1	**8T-7930**	2	BOLT (M12X1.75X160MM)	

M-METRIC PART

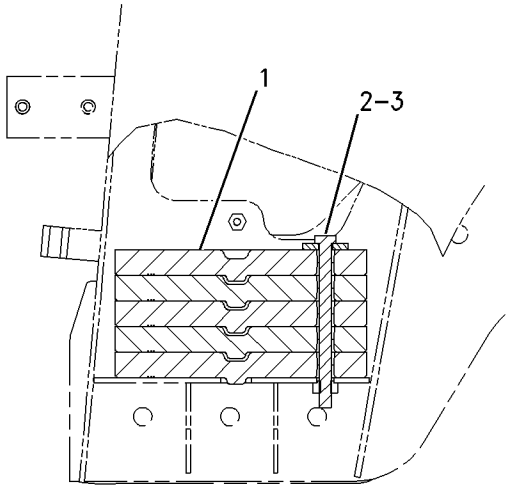

SECTION A-A

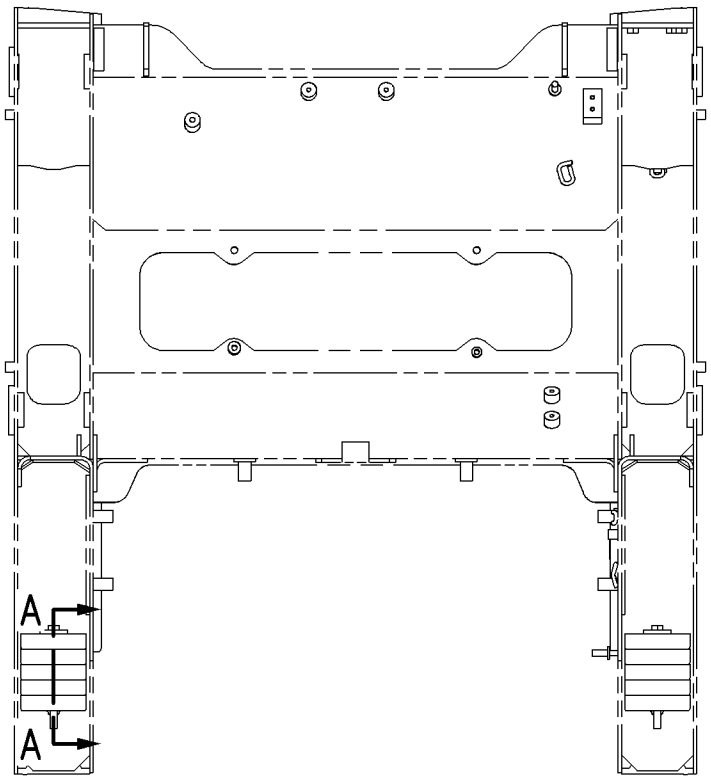

REAR VIEW

GRAPHIC #1 **<END>** g00914383

FRAME AND BODY

183-7122 COUNTERWEIGHT GP

S/N: MJH1-UP; RLL1-UP
84.3KG (185.46 LBS)
AN ATTACHMENT

SMCS-7056 **i01763195**

NOTE	REF NO	GRAPHIC REF	PART NUMBER	QTY	PART NAME 1 2 3 4 5 6 (PRODUCT LEVEL)	SEE PAGE
	1	1	**183-7123**	1	BLOCK-LH (33.70 KG)	
	2	1	**183-7124**	1	BLOCK (RH) (33.70 KG)	
	3	1	**183-7131**	2	BLOCK (16.90 KG)	
M	4	1	**8T-4189**	4	BOLT (M8X1.25X20-MM)	
	5	1	**8T-4223**	4	WASHER-HARD (13.5X25.5X3-MM THK)	
	6	1	**8T-4224**	4	WASHER-HARD (8.8X16X2-MM THK)	
M	7	1	**8T-4648**	4	BOLT (M12X1.75X70-MM)	

M-METRIC PART

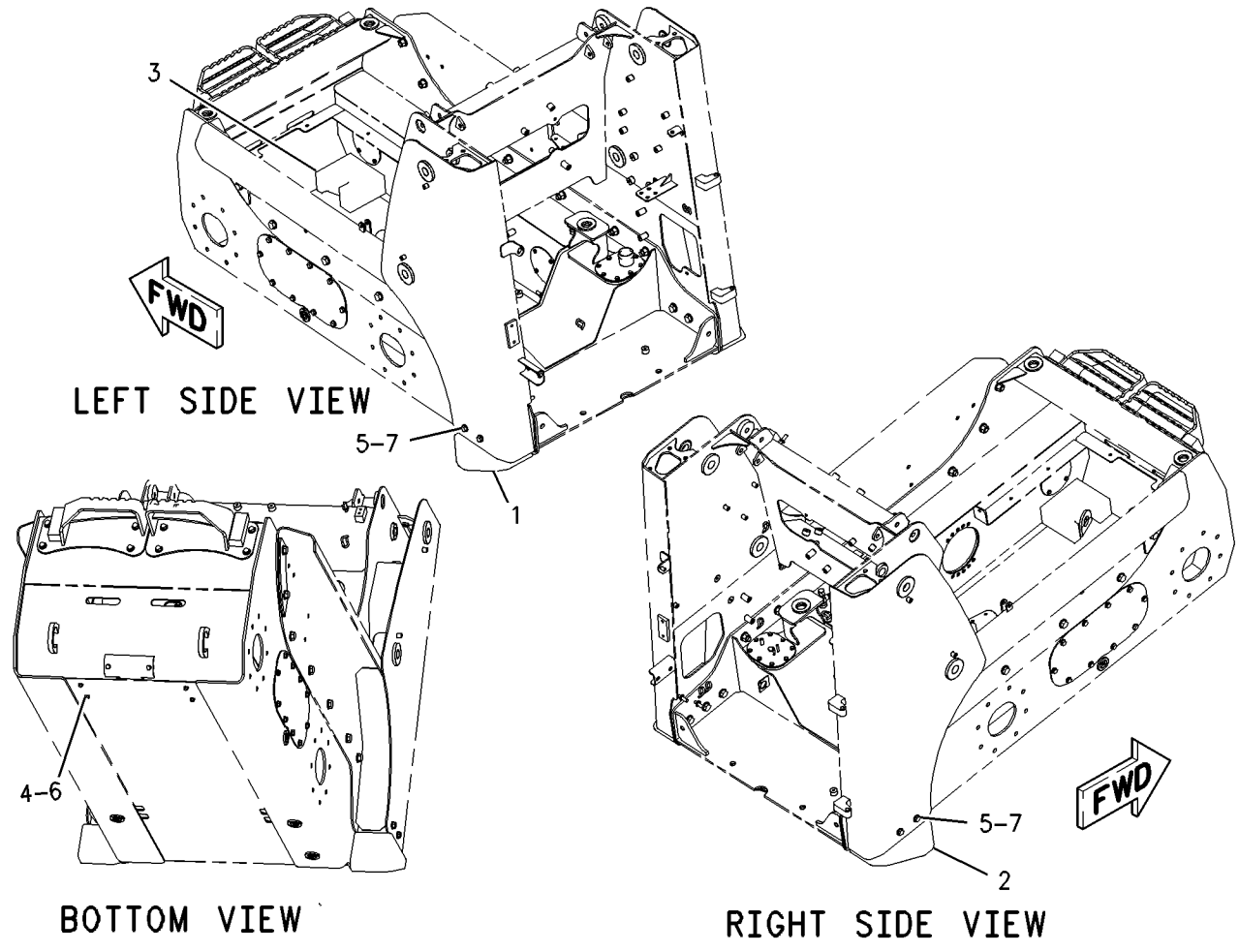

GRAPHIC #1 **<END>** g00902035

FRAME AND BODY

185-9940 COUNTERWEIGHT GP–KIT

S/N: MJH1-UP; RLL1-UP
84.3KG (185.46 LBS)
AN ATTACHMENT

SMCS-7056 **i01787102**

NOTE	REF NO	GRAPHIC REF	PART NUMBER	QTY	PART NAME 1 2 3 4 5 6 (PRODUCT LEVEL)	SEE PAGE
	1	1	**183-7123**	1	BLOCK-LH (33.70 KG)	
	2	1	**183-7124**	1	BLOCK (RH) (33.70 KG)	
	3	1	**183-7131**	2	BLOCK (16.9 KG)	
M	4	1	**8T-4189**	4	BOLT (M8X1.25X20-MM)	
	5	1	**8T-4223**	4	WASHER-HARD (13.5X25.5X3-MM THK)	
	6	1	**8T-4224**	4	WASHER-HARD (8.8X16X2-MM THK)	
M	7	1	**8T-4648**	4	BOLT (M12X1.75X70-MM)	

M-METRIC PART

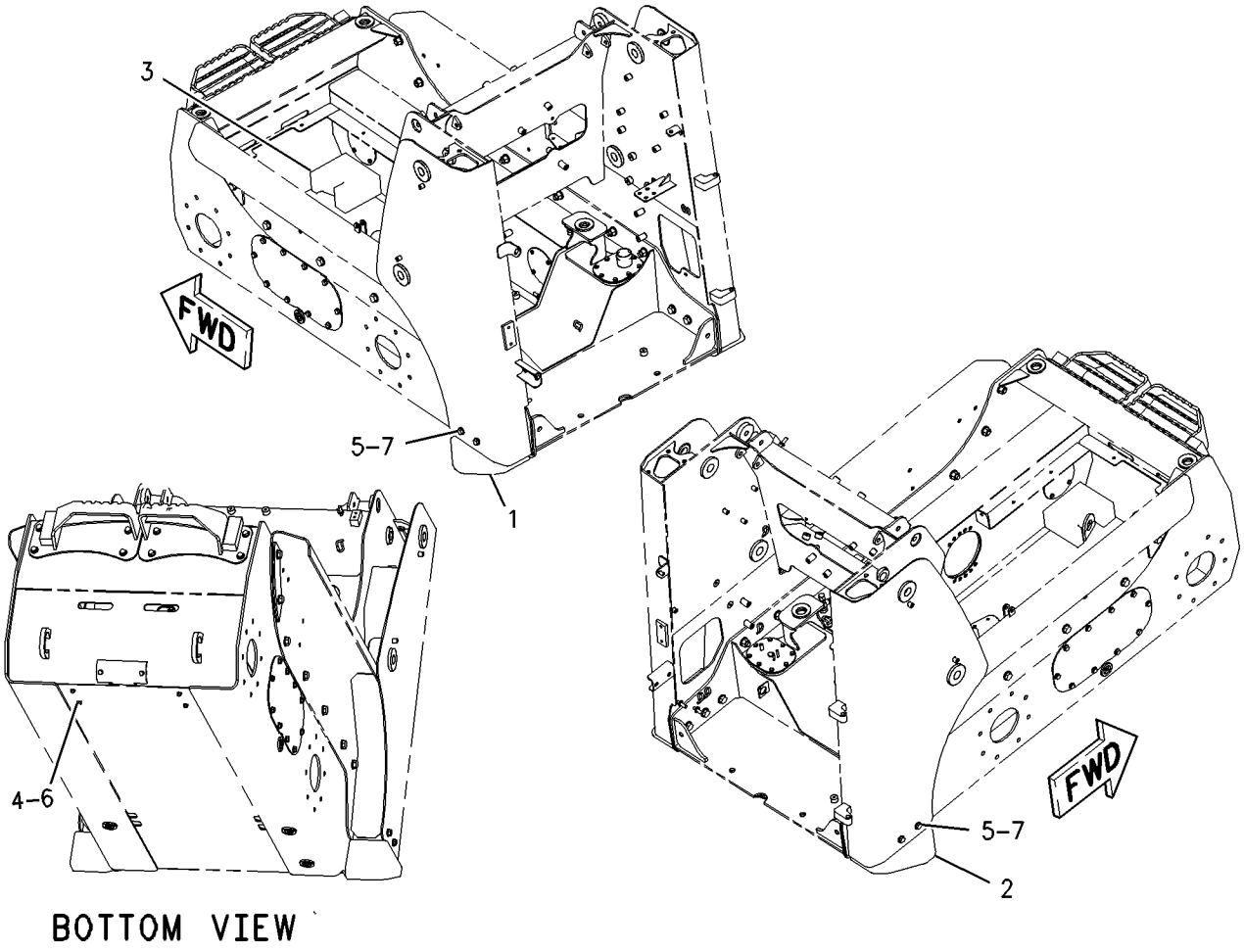

GRAPHIC #1 **<END>** g00914398

191-9566 COUNTERWEIGHT GP–KIT

S/N: SCH1-UP; BXM1-UP
37.05 KG (81.5 LBS)
AN ATTACHMENT

SMCS-7056 **i01986629**

NOTE	REF NO	GRAPHIC REF	PART NUMBER	QTY	PART NAME 1 2 3 4 5 6 (PRODUCT LEVEL)	SEE PAGE
	1	1	**215-3927**	4	PLATE	
	2	1	**5P-1076**	12	WASHER-HARD (13.5X30X4-MM THK)	
M	3	1	**8T-4244**	6	NUT (M12X1.75-THD)	
M	4	1	**8T-4910**	6	BOLT (M12X1.75X60-MM)	

M-METRIC PART

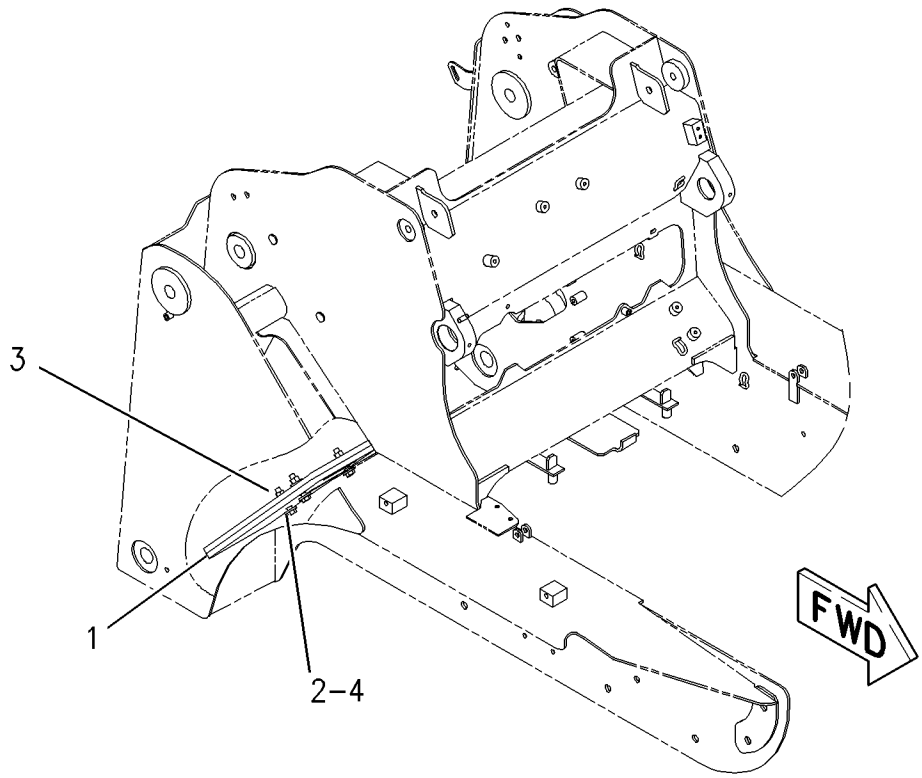

GRAPHIC #1 **<END>** g00888360

215-3926 COUNTERWEIGHT GP

S/N: SCH1-UP; BXM1-UP
37.05KG (81.51 LBS)
AN ATTACHMENT

SMCS-7056 **i01749135**

NOTE	REF NO	GRAPHIC REF	PART NUMBER	QTY	PART NAME 1 2 3 4 5 6 (PRODUCT LEVEL)	SEE PAGE
	1	1	**215-3927**	4	PLATE	
	2	1	**5P-1076**	12	WASHER-HARD (13.5X30X4-MM THK)	
M	3	1	**8T-4244**	6	NUT (M12X1.75-THD)	
M	4	1	**8T-4910**	6	BOLT (M12X1.75X60-MM)	

M-METRIC PART

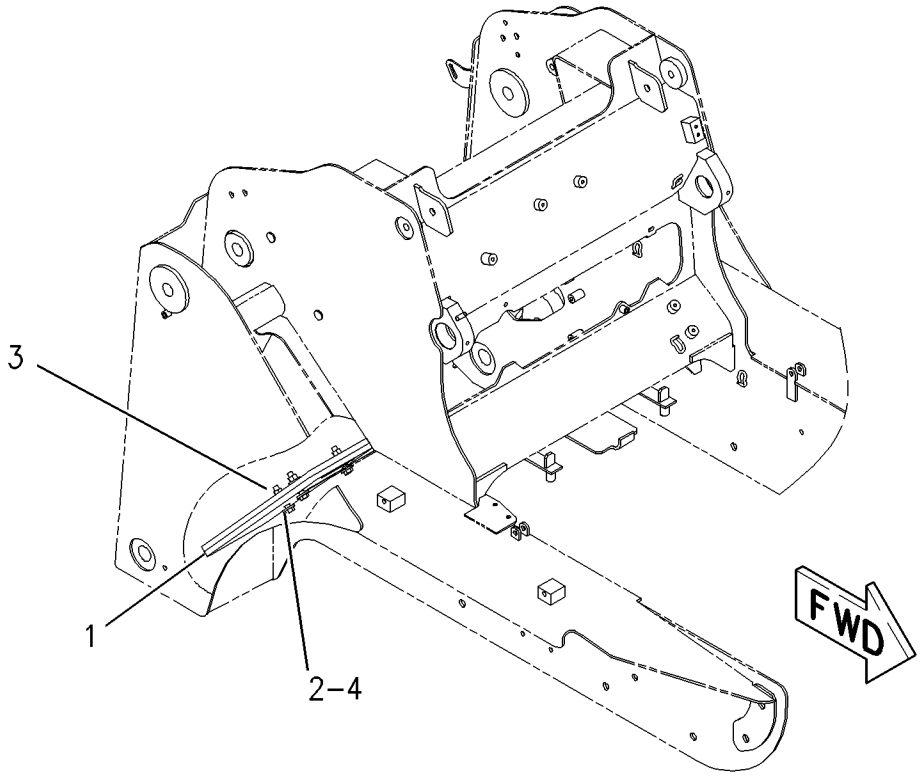

GRAPHIC #1 **<END>** g00888360

218-5803 ENCLOSURE GP-ENGINE

S/N: MJH1-UP; SCH1-UP; RLL1-UP; BXM1-UP
PART OF 218-5910, 218-6610 CHASSIS AR

SMCS-7263 **i02014410**

NOTE	REF NO	GRAPHIC REF	PART NUMBER	QTY	PART NAME 1 2 3 4 5 6 (PRODUCT LEVEL)	SEE PAGE
	1	1	**110-0885**	2	BUMPER	
	2	1	**142-8801**	1	HOOD AS	
	3	1	**142-8831**	1	STRIKER AS	
	4	1	**142-8832**	1	PIN AS	
	5	1	**159-8405**	2	BOLT-SHOULDER	
	6	1	**218-5802**	1	DOOR AS	
	7	1	**223-4240**	1	LATCH AS	
J	8	1	**224-3875**	1	LOCK GP	
		1	**226-0291**	1	LOCK AS	
		1	**233-4872**	1	CAM	
M	9	1	**131-3540**	3	LOCKNUT (M8X1.25 THD)	
	10	1	**2K-4973**	2	LOCKNUT (3/8-16 THD)	
M	11	1	**5C-7261**	2	NUT (M8X1.25-THD)	
	12	1	**5P-4116**	11	WASHER-HARD (8.8X20.5X2-MM THK)	
M	13	1	**7X-2537**	3	BOLT (M8X1.25X35-MM)	
	14	1	**7X-7729**	2	WASHER (11X25X3-MM THK)	
M	15	1	**8T-4137**	2	BOLT (M10X1.5X20-MM)	
M	16	1	**8T-4181**	4	BOLT (M6X1X20-MM)	
	17	1	**8T-4205**	4	WASHER-HARD (7.2X14.5X2-MM THK)	
M	18	1	**8T-4908**	5	BOLT (M8X1.25X25-MM)	

J-REQUIRES 5P-8500 KEY
M-METRIC PART

218-5803 **ENCLOSURE GP-ENGINE** *(contd.)* **i02014410**

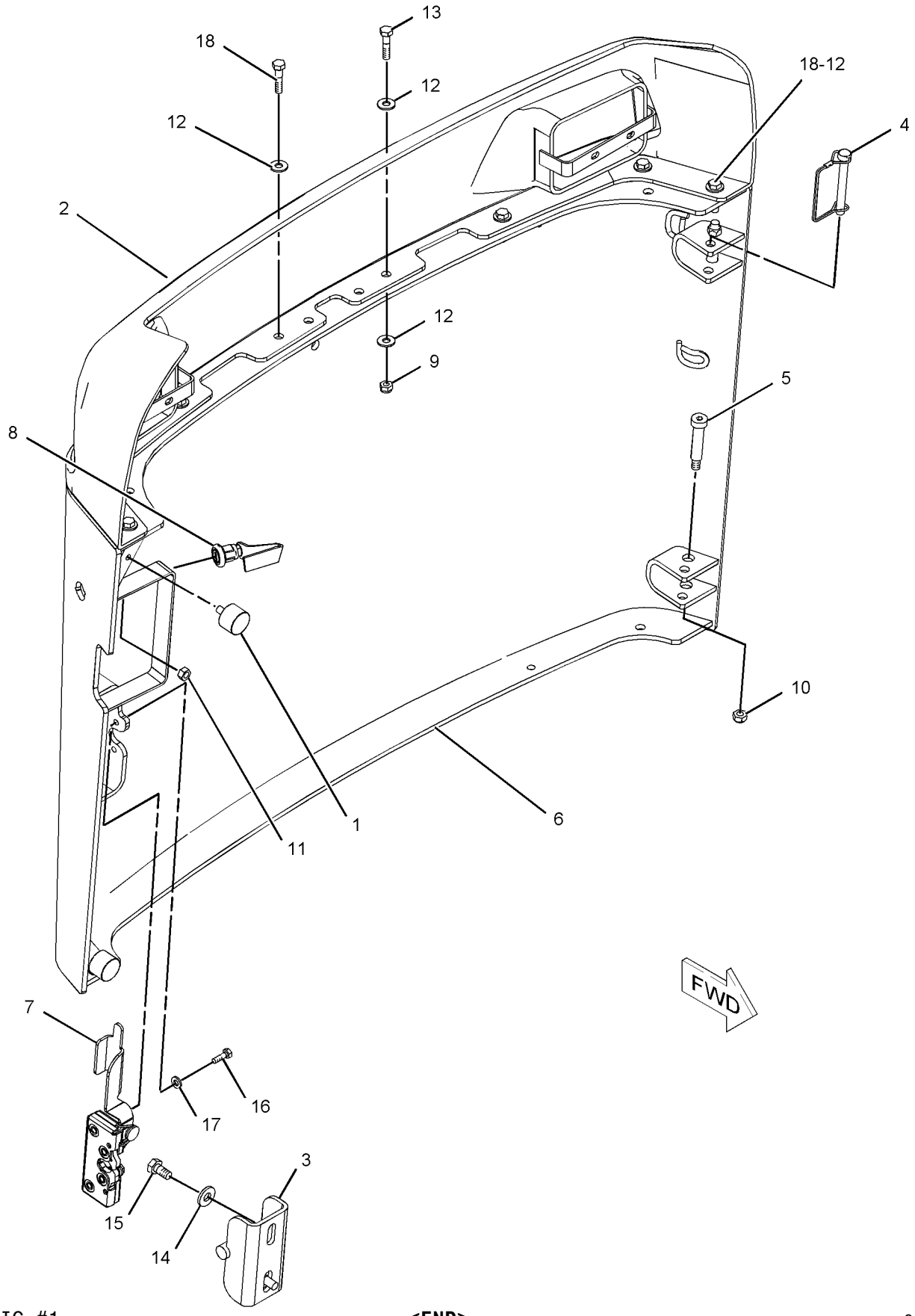

GRAPHIC #1 **<END>** g01030767

218-6875 FRAME & MTG GP-MACHINE

S/N: SCH1-UP; BXM1-UP
PART OF 218-6610 CHASSIS AR

SMCS-6119, 7050, 7481 **i02445741**

NOTE	REF NO	GRAPHIC REF	PART NUMBER	QTY	PART NAME 1 2 3 4 5 6 (PRODUCT LEVEL)	SEE PAGE
	1	1	**3B-8488**	2	FITTING-GREASE	
	2	1	**3S-9182**	5	PLUG-MAGNETIC (TANDEM)	
	3	1	**4D-0298**	2	BEARING	
	4	1	**9G-5127**	2	BREATHER AS (TANDEM HOUSING)	
	5	1	**142-8810**	1	PLATE AS	
	6	1	**142-8823**	2	GASKET	
	7	1	**191-2894**	2	PLATE	
	8	1	**191-9576**	1	COVER AS	
	9	1	**207-9731**	1	STEP AS (LH)	
	10	1	**207-9732**	1	STEP AS (RH)	
	11	1	**218-5551**	4	COVER	
	12	1	*218-6542*	1	FRAME GP-MACHINE	
		1	**191-9594**	1	LINK AS	
		1	**261-6201**	1	FRAME AS-UPPER	
		1	**218-6873**	1	FRAME AS-LOWER	
		1	**218-6898**	1	ARM AS-LIFT	
	13	1	**231-2105**	1	SENDER AS-FUEL LEVEL	
		1	**102-8802**	1	KIT-RECEPTACLE (2-PIN)	
					(INCLUDES PLUG AS & WEDGE)	
M	14	1	**5C-9553**	12	BOLT (M6X1X16-MM)	
	15	1	**5P-1076**	16	WASHER-HARD (13.5X30X4-MM THK)	
	16	1	**5P-4116**	4	WASHER-HARD (8.8X20.5X2-MM THK)	
	17	1	**8T-4121**	20	WASHER-HARD (11X21X2.5-MM THK)	
M	18	1	**8T-4122**	28	WASHER-HARD (17X32X3.5-MM THK)	
M	19	1	**8T-4132**	14	NUT (M16X2-THD)	
M	20	1	**8T-4136**	20	BOLT (M10X1.5X25-MM)	
M	21	1	**8T-4194**	8	BOLT (M12X1.75X50-MM)	
	22	1	**8T-4205**	28	WASHER-HARD (7.2X14.5X2-MM THK)	
M	23	1	**8T-4244**	8	NUT (M12X1.75-THD)	
M	24	1	**8T-4908**	4	BOLT (M8X1.25X25-MM)	
M	25	1	**8T-4970**	16	BOLT (M6X1X14-MM)	
M	26	1	**8T-7338**	14	BOLT (M16X2X45-MM)	
BF			**228-9222**	1	SHIM (3-MM THK)	

B-USE AS REQUIRED
F-NOT SHOWN
M-METRIC PART

218-6875 **FRAME & MTG GP-MACHINE** *(contd.)* **i02445741**

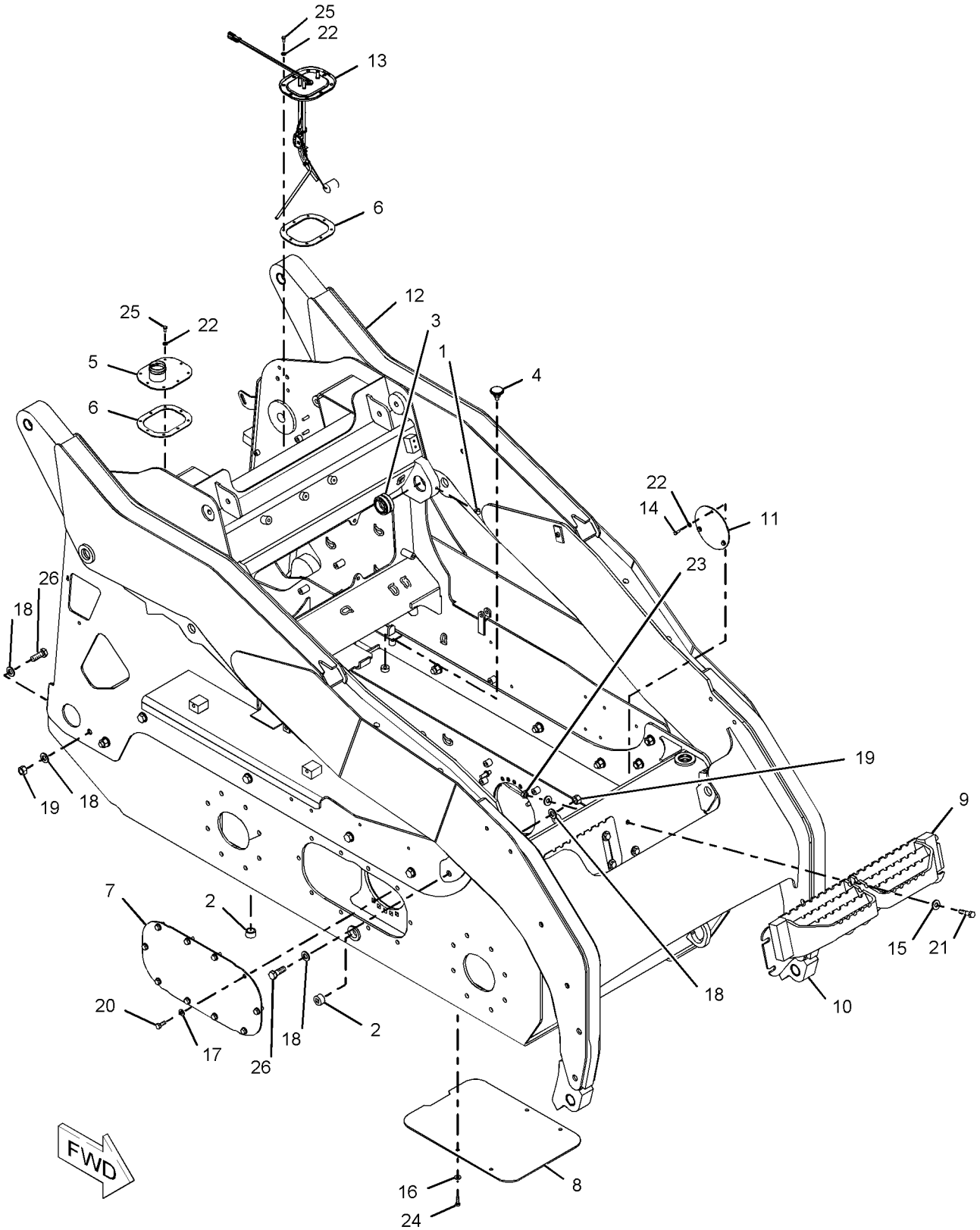

GRAPHIC #1

<END>

g01022018

218-6975 FRAME & MTG GP-MACHINE

S/N: MJH1-UP; RLL1-UP
PART OF 218-5910 CHASSIS AR

SMCS-6119, 7050, 7481 **i02445718**

NOTE	REF NO	GRAPHIC REF	PART NUMBER	QTY	PART NAME 1 2 3 4 5 6 (PRODUCT LEVEL)	SEE PAGE
	1	2	**3S-9182**	5	PLUG-MAGNETIC (TANDEM)	
	2	1	**9G-5127**	2	BREATHER AS (TANDEM HOUSING)	
	3	2	**142-8810**	1	PLATE AS	
	4	1,2	**142-8823**	2	GASKET	
	5	1	**142-8897**	2	COVER	
	6	2	**191-9576**	1	COVER AS	
	7	1	**207-9731**	1	STEP AS (LH)	
	8	1	**207-9732**	1	STEP AS (RH)	
	9	2	**218-5551**	4	COVER	
	10	1	*218-6526*	1	FRAME GP-MACHINE	
		1	**218-6798**	1	ARM AS-LIFT	
		1	**218-6973**	1	FRAME AS-LOWER	
		1	**261-6200**	1	FRAME AS-UPPER	
	11	1	**231-2105**	1	SENDER AS-FUEL LEVEL	
		1	**3E-3365**	1	WEDGE-RECEPTACLE LOCK (2-PIN)	
		1	**102-8802**	1	KIT-RECEPTACLE (2-PIN)	
		1	**186-3735**	2	PIN-CONNECTOR (16-GA TO 18-GA)	
M	12	2	**5C-9553**	12	BOLT (M6X1X16-MM)	
	13	1	**5P-1076**	16	WASHER-HARD (13.5X30X4-MM THK)	
	14	2	**5P-4116**	4	WASHER-HARD (8.8X20.5X2-MM THK)	
	15	2	**8T-4121**	20	WASHER-HARD (11X21X2.5-MM THK)	
M	16	1,2	**8T-4122**	32	WASHER-HARD (17X32X3.5-MM THK)	
M	17	1,2	**8T-4132**	16	NUT (M16X2-THD)	
M	18	2	**8T-4136**	20	BOLT (M10X1.5X25-MM)	
M	19	1	**8T-4194**	8	BOLT (M12X1.75X50-MM)	
	20	1,2	**8T-4205**	28	WASHER-HARD (7.2X14.5X2-MM THK)	
M	21	1	**8T-4244**	8	NUT (M12X1.75-THD)	
M	22	2	**8T-4908**	4	BOLT (M8X1.25X25-MM)	
M	23	1,2	**8T-4970**	16	BOLT (M6X1X14-MM)	
M	24	1,2	**8T-7338**	16	BOLT (M16X2X45-MM)	

M-METRIC PART

218-6975 **FRAME & MTG GP-MACHINE** *(contd.)* **i02445718**

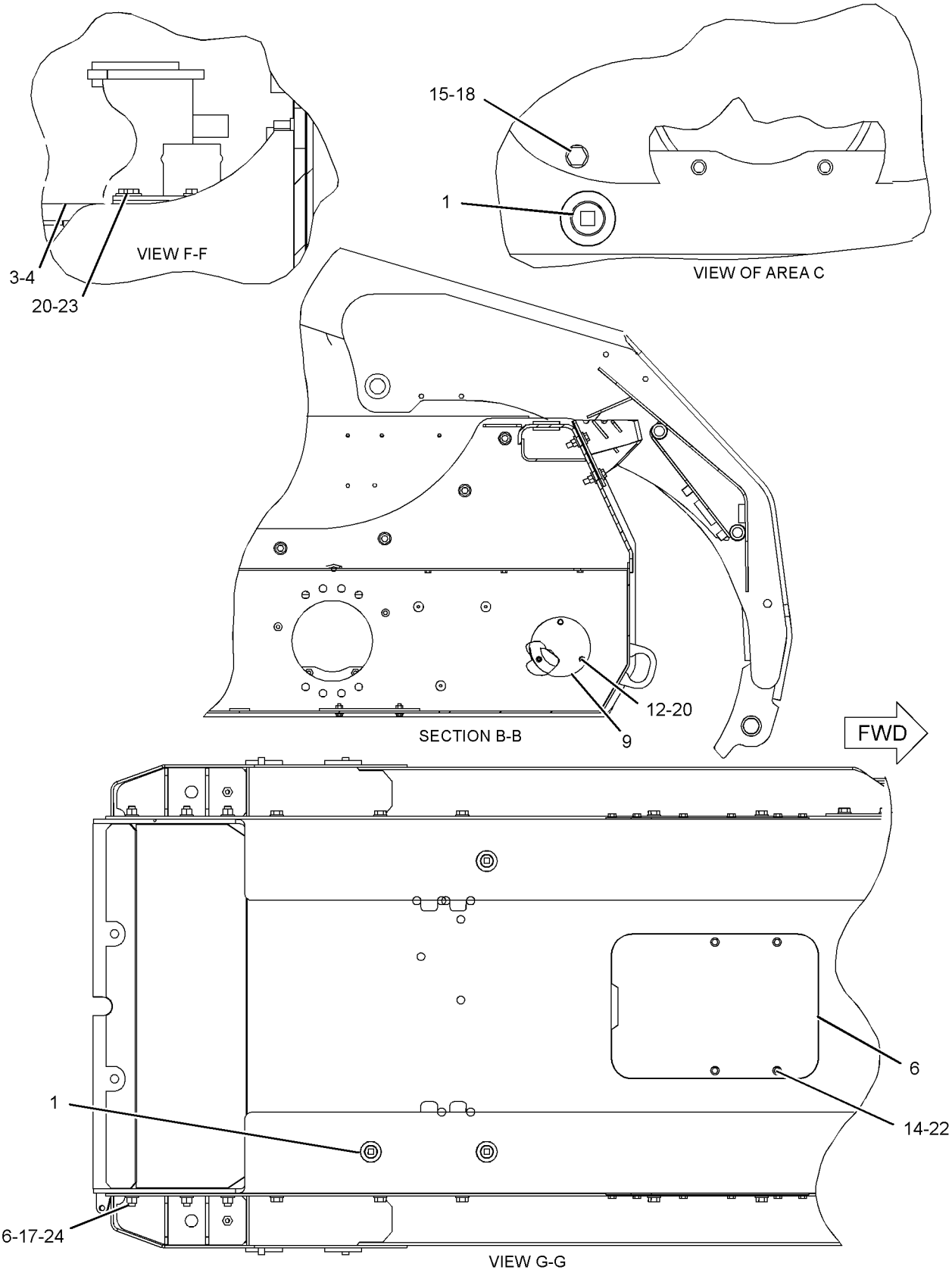

GRAPHIC #1 g01166237

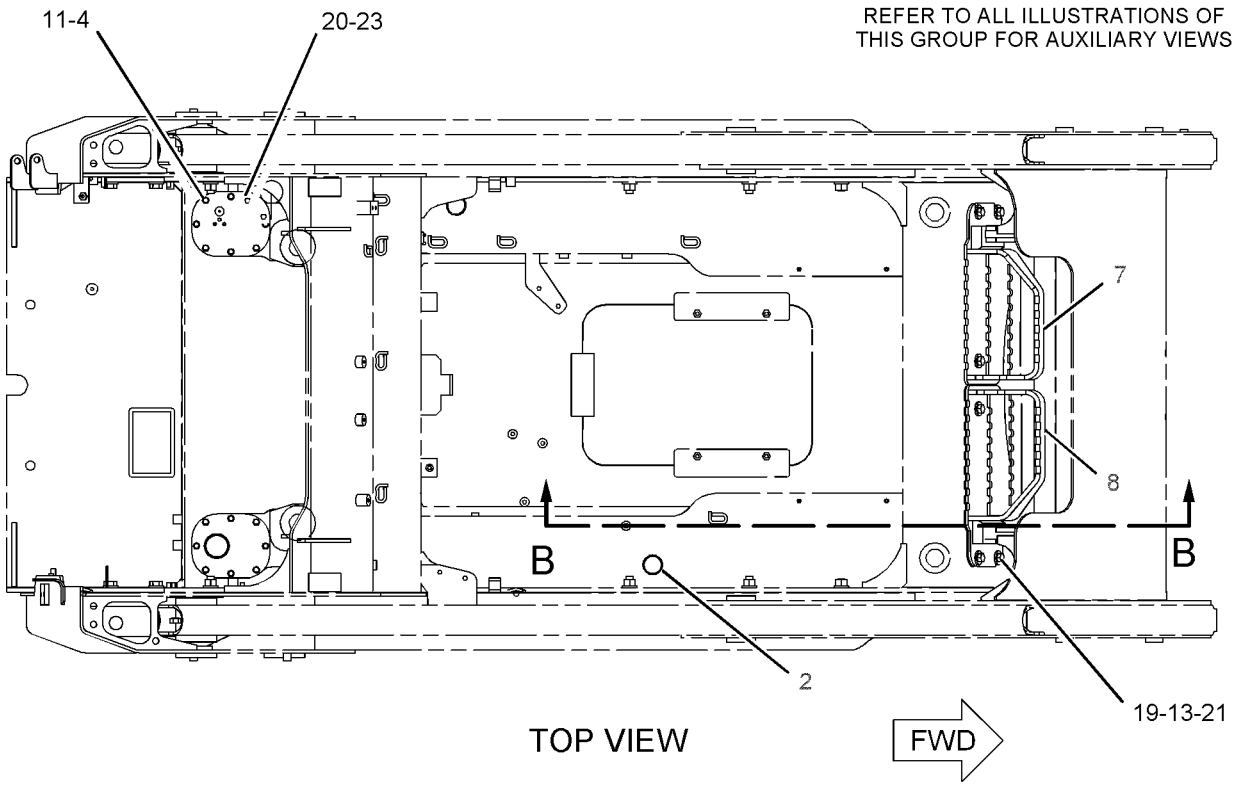

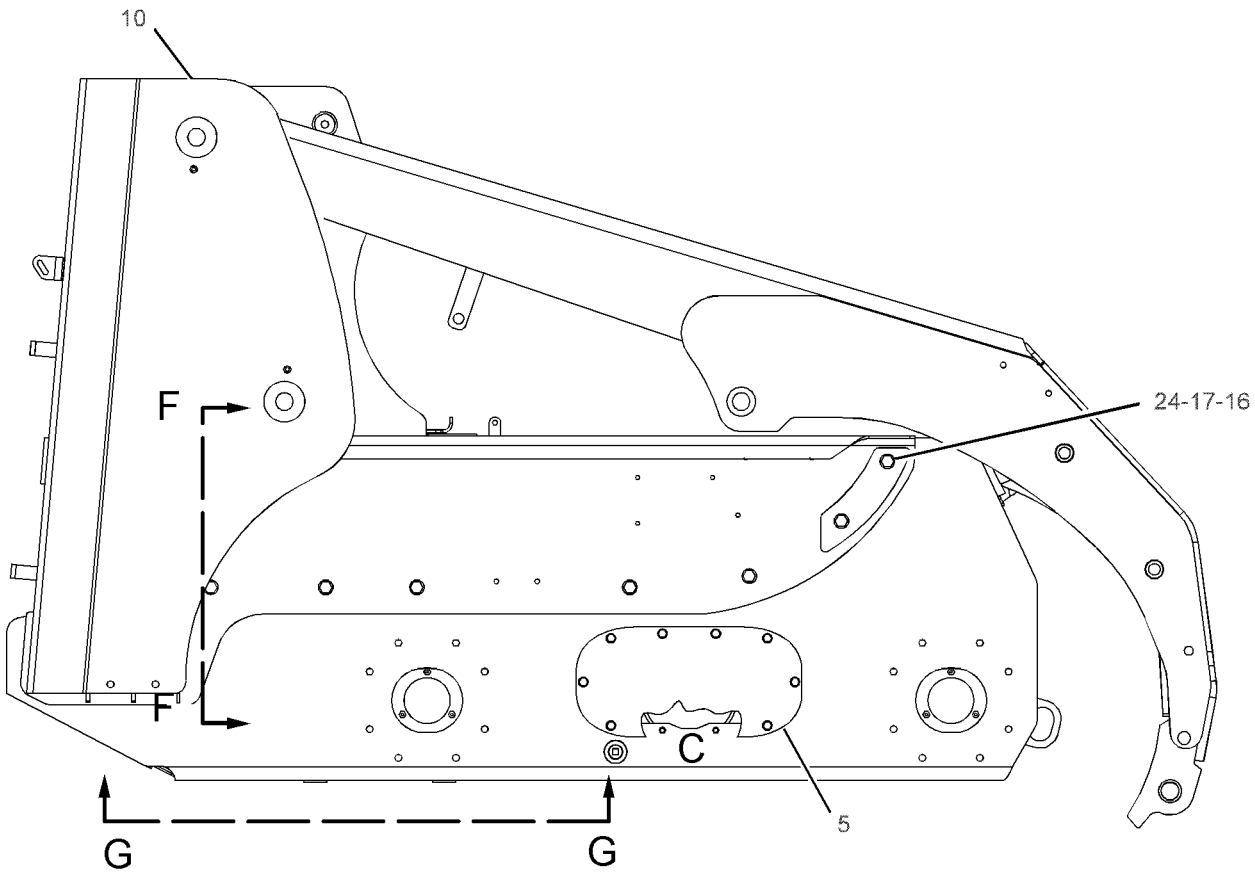

GRAPHIC #2 **<END>** g01029452

FRAME AND BODY

230-5670 FRAME GP-BLADE

S/N: MJH1-UP; SCH1-UP; RLL1-UP; BXM1-UP
PART OF 177-1989, 177-1990 BLADE AR
AN ATTACHMENT

SMCS-6060 **i01860873**

NOTE	REF NO	GRAPHIC REF	PART NUMBER	QTY	PART NAME 1 2 3 4 5 6 (PRODUCT LEVEL)	SEE PAGE
	1	1	**177-1914**	1	PIN AS	
B	2	1	**177-1955**	1	SHIM (1-MM)	
B	3	1	**177-1956**	1	SHIM (2-MM)	
B	4	1	**177-1957**	1	SHIM (3-MM)	
	5	1	**177-1971**	1	FRAME AS	
	6	1	**177-1975**	1	FRAME AS	
	7	1	**230-5407**	1	FRAME AS	
	8	1	**3B-8489**	1	FITTING-GREASE	
	9	1	**5B-0935**	1	FITTING-GREASE	
M	10	1	**7X-2553**	8	BOLT (M16X2X40-MM)	
	11	1	**7X-7729**	1	WASHER (11X25X3-MM THK)	
M	12	1	**8T-4122**	8	WASHER-HARD (17X32X3.5-MM THK)	
M	13	1	**8T-4137**	1	BOLT (M10X1.5X20-MM)	

B-USE AS REQUIRED
M-METRIC PART

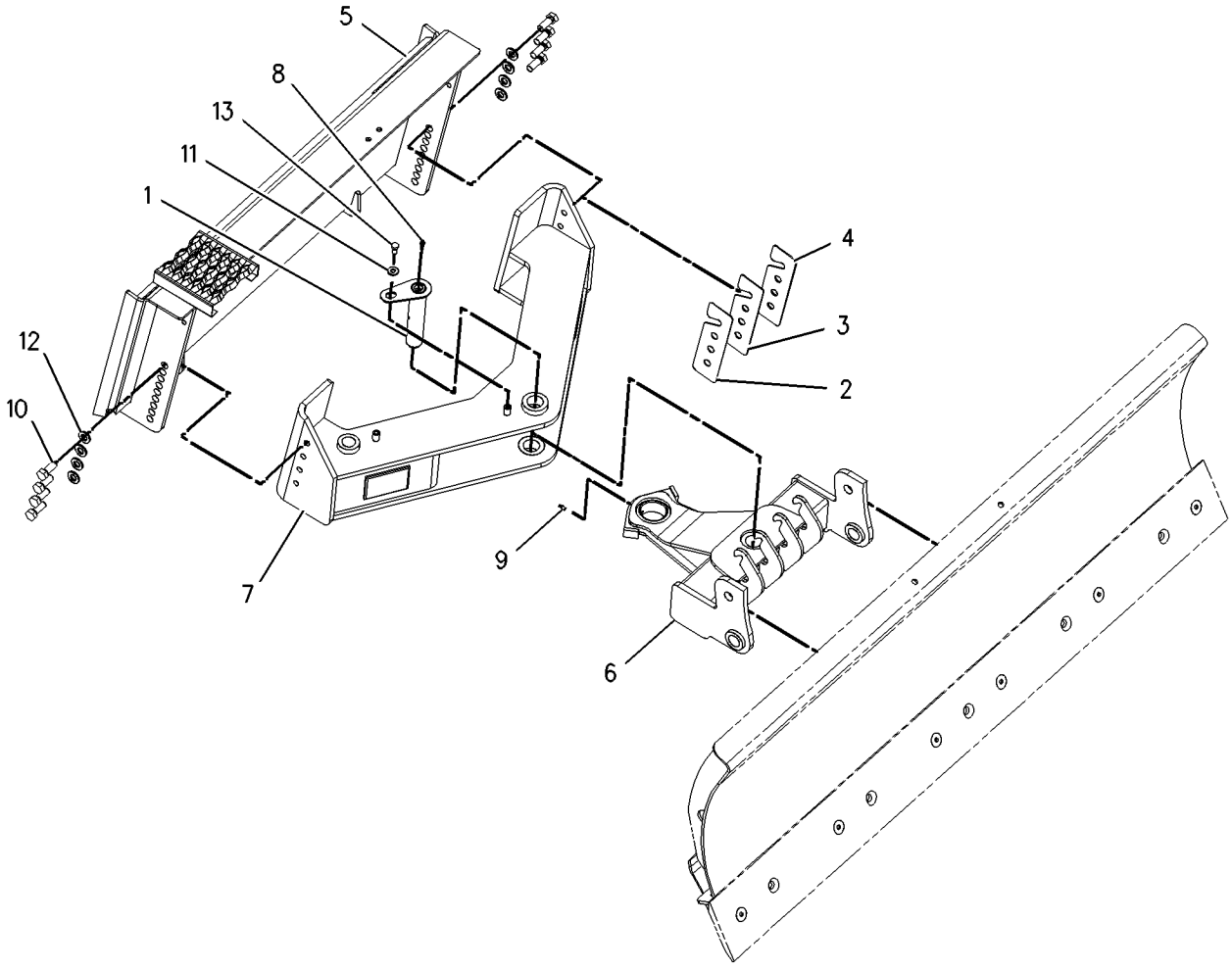

GRAPHIC #1 **<END>** g00978893

156-9809 GUIDE GP-LINES

S/N: MJH1-UP; SCH1-UP; RLL1-UP; BXM1-UP
PART OF 218-5910, 218-6610 CHASSIS AR

SMCS-5057 **i02059887**

NOTE	REF NO	GRAPHIC REF	PART NUMBER	QTY	PART NAME 1 2 3 4 5 6 (PRODUCT LEVEL)	SEE PAGE
	1	1	**227-4315**	1	PLATE AS	
	2	1	**247-4877**	1	BOLT (M8X1.25X12-MM)	
M	3	1	**6V-9189**	1	LOCKNUT (M8X1.25-THD)	
	4	1	**7X-0603**	2	WASHER-HARD (9.9X35X2.5-MM THK)	
M	5	1	**8T-4177**	1	BOLT (M8X1.25X90-MM)	
	6	1	**8T-4224**	1	WASHER-HARD (8.8X16X2-MM THK)	

M-METRIC PART

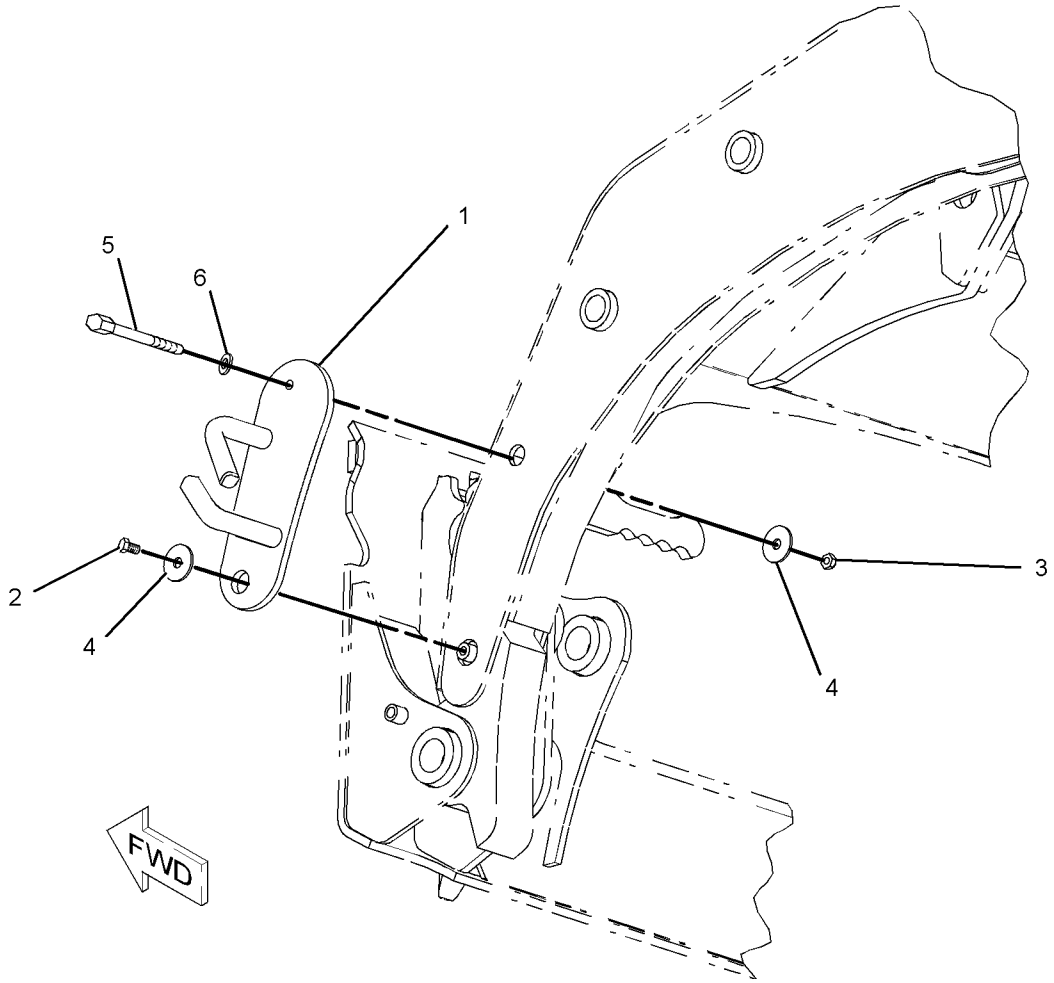

GRAPHIC #1 **<END>** g01056800

257-5730 KIT-ROADING CONVERSION—UNITED KINGDOM

S/N: MJH1-UP; RLL1-UP; BXM1-UP
FOR USE WITH 257-5718—PAGE 288
AN ATTACHMENT

SMCS-7000 **i02330195**

NOTE	PART NUMBER	QTY	PART NAME 1 2 3 4 5 6 (PRODUCT LEVEL)	SEE PAGE
	160-1600	1	FILM-WARNING (CLEARANCE)	

<END>

188-0147 LIFTING GP-MACHINE–4-POINT

S/N: SCH1-UP; BXM1-UP

PART OF 261-6156, 261-6158, 278-1213, 278-1221, 278-1225, 278-5348, 278-5370, 278-5409, 278-5414, 278-5442 CONVERSION AR-MACHINE, 233-5681, 233-5682, 233-5683, 233-5684, 233-5685, 233-5686, 257-5721, 257-5722, 257-5723 CONVERSION AR-ROADING

AN ATTACHMENT

SMCS-7165 **i01900934**

NOTE	REF NO	GRAPHIC REF	PART NUMBER	QTY	PART NAME 1 2 3 4 5 6 (PRODUCT LEVEL)	SEE PAGE
	1	1	**7E-2700**	4	FILM-SYMBOL (LIFT)	
	2	1	**142-8826**	4	PLATE-LIFT	
M	3	1	**159-2953**	8	SCREW-FLAT HEAD (M16X2-THD)	
M	4	1	**8T-4122**	4	WASHER-HARD (17X32X3.5-MM THK)	
M	5	1	**8T-4132**	4	NUT (M16X2-THD)	

M-METRIC PART

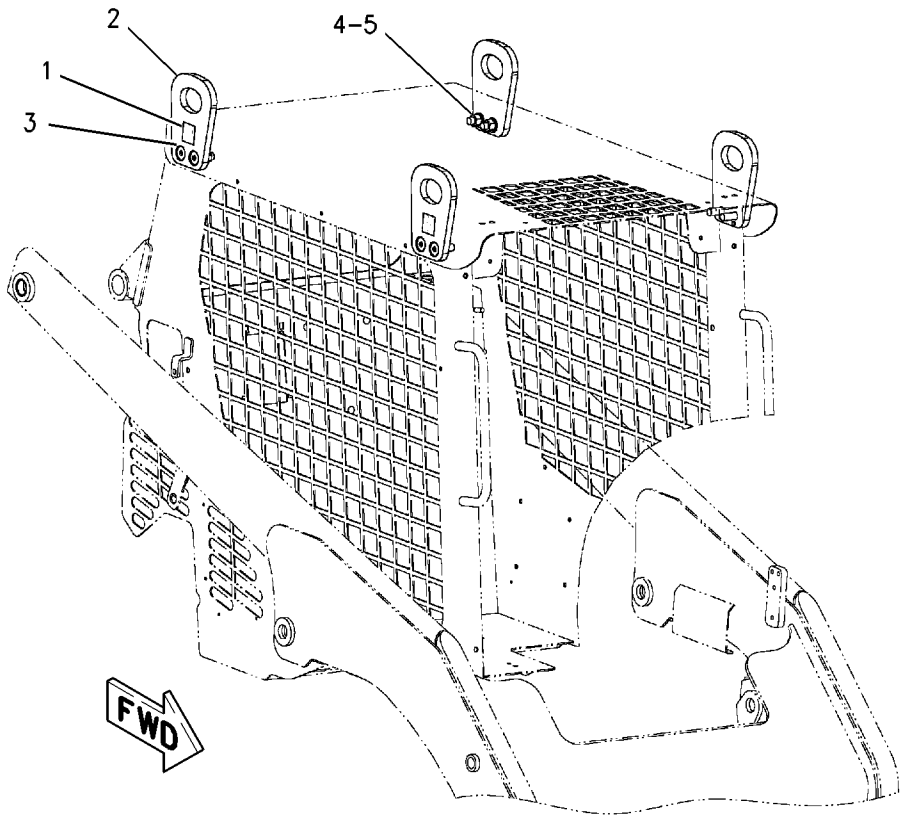

GRAPHIC #1 **<END>** g00902178

218-5969 LIFTING GP-MACHINE—SINGLE POINT

S/N: SCH1-UP; BXM1-UP
AN ATTACHMENT

SMCS-7165 **i01995168**

NOTE	REF NO	GRAPHIC REF	PART NUMBER	QTY	PART NAME 1 2 3 4 5 6 (PRODUCT LEVEL)	SEE PAGE
	1	1	**5P-0372**	2	LOCK PIN	
	2	1	**7E-2700**	2	FILM-SYMBOL (LIFT)	
	3	1	**9C-5344**	1	SPACER (10.5X20X18-MM THK)	
	4	1	**095-1325**	1	PIN-CLEVIS	
	5	1	**152-1154**	1	PLATE AS	
	6	1	**152-1156**	4	PLATE	
	7	1	**153-2683**	1	SPRING AS-GAS	
	8	1	**177-3405**	1	PIN	
M	9	1	**159-2953**	8	SCREW-FLAT HEAD (M16X2-THD)	
M	10	1	**8T-4122**	4	WASHER-HARD (17X32X3.5-MM THK)	
M	11	1	**8T-4132**	4	NUT (M16X2-THD)	

M-METRIC PART

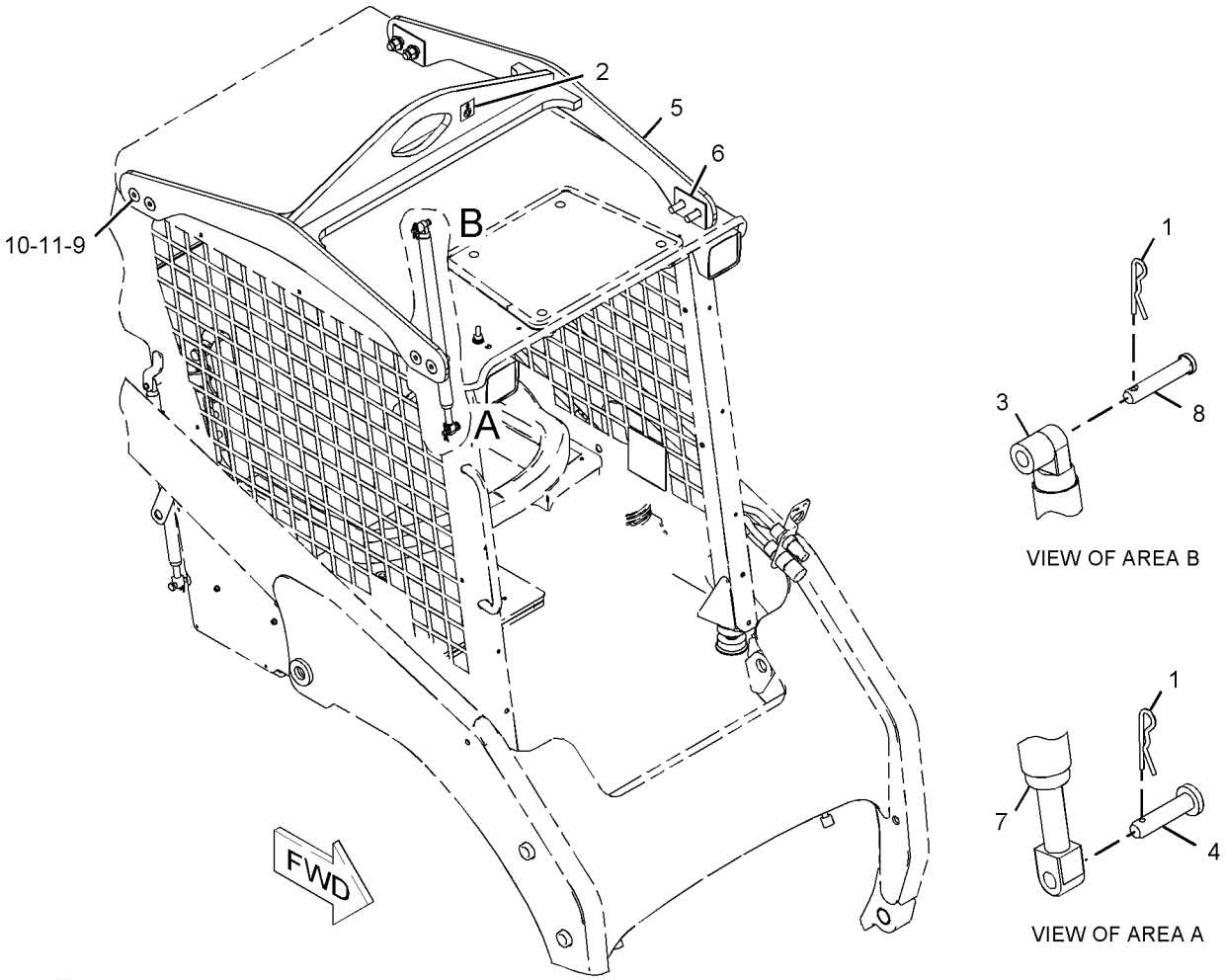

GRAPHIC #1 **<END>** g01033956

218-6708 LIFTING GP-MACHINE—4-POINT

S/N: MJH1-UP; RLL1-UP

PART OF 261-6155, 261-6157, 261-6187, 261-6197, 278-1212, 278-1220, 278-1224, 278-5347, 278-5369, 278-5408, 278-5413, 278-5441 CONVERSION AR-MACHINE, 233-5671, 233-5672, 233-5673, 233-5674, 233-5675, 233-5676, 257-5716, 257-5717, 257-5718 CONVERSION AR-ROADING AN ATTACHMENT

SMCS-7165 **i01951888**

NOTE	REF NO	GRAPHIC REF	PART NUMBER	QTY	PART NAME 1 2 3 4 5 6 (PRODUCT LEVEL)	SEE PAGE
	1	1	**7E-2700**	4	FILM-SYMBOL (LIFT)	
	2	1	**142-8826**	4	PLATE-LIFT	
	3	1	**218-6711**	1	PLATE AS	
	4	1	**218-6726**	1	PLATE AS	
M	5	1	**159-2953**	8	SCREW-FLAT HEAD (M16X2-THD)	
	6	1	**8T-4121**	4	WASHER-HARD (11X21X2.5-MM THK)	
M	7	1	**8T-4122**	4	WASHER-HARD (17X32X3.5-MM THK)	
M	8	1	**8T-4132**	4	NUT (M16X2-THD)	
M	9	1	**8T-4137**	4	BOLT (M10X1.5X20-MM)	

M-METRIC PART

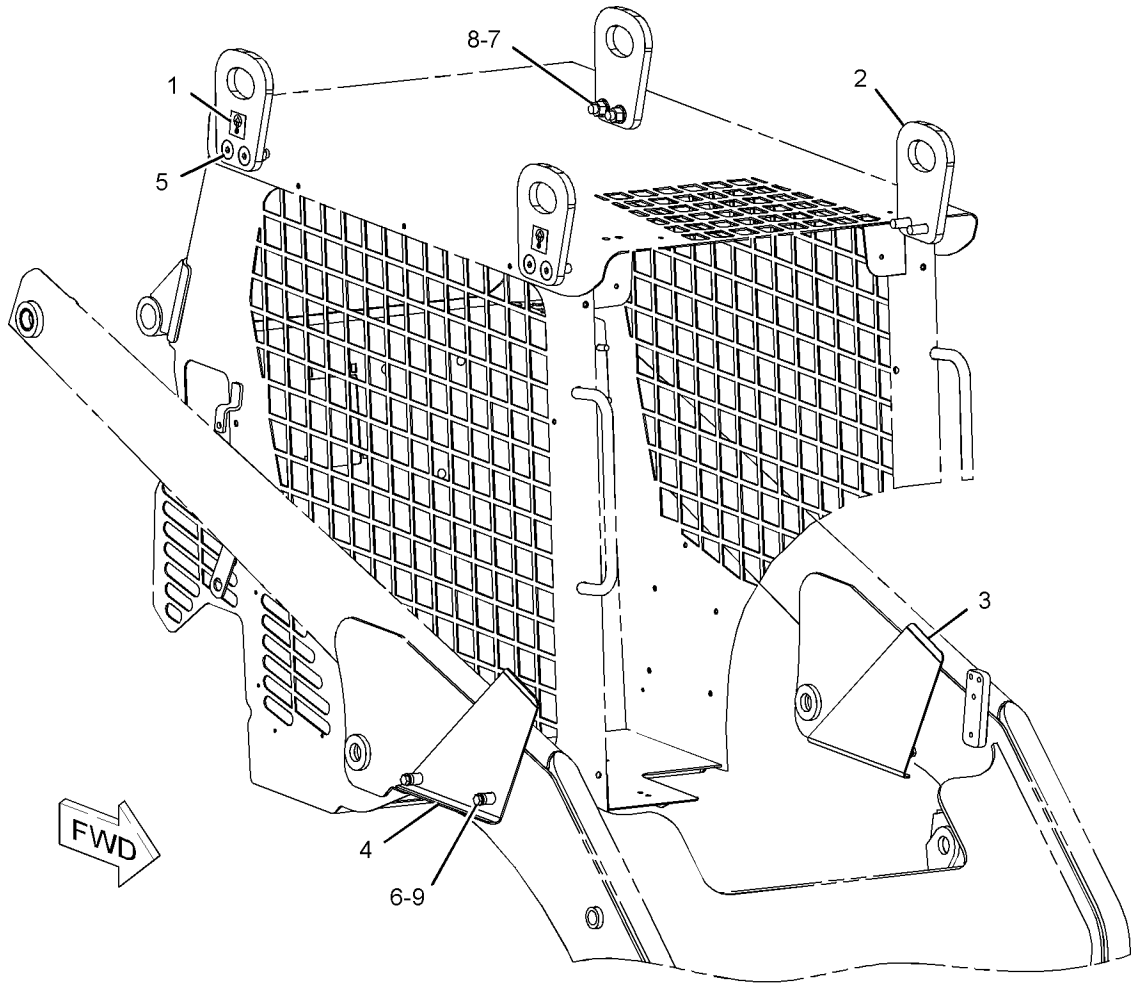

GRAPHIC #1 **<END>** g01015781

FRAME AND BODY

218-6709 LIFTING GP-MACHINE—SINGLE POINT

S/N: MJH1-UP; RLL1-UP
AN ATTACHMENT

SMCS-7165 **i01990566**

NOTE	REF NO	GRAPHIC REF	PART NUMBER	QTY	PART NAME 1 2 3 4 5 6 (PRODUCT LEVEL)	SEE PAGE
	1	1	**5P-0372**	2	LOCK PIN	
	2	1	**7E-2700**	2	FILM-SYMBOL (LIFT)	
	3	1	**9C-5344**	1	SPACER (10.5X20X18-MM THK)	
	4	1	**095-1325**	1	PIN-CLEVIS	
	5	1	**152-1154**	1	PLATE AS	
	6	1	**152-1156**	4	PLATE	
	7	1	**153-2683**	1	SPRING AS-GAS	
	8	1	**177-3405**	1	PIN	
	9	1	**218-6711**	1	PLATE AS	
M		1	**9R-2672**	2	BOSS-THREADED	
	10	1	**218-6726**	1	PLATE AS	
M		1	**9R-2672**	2	BOSS-THREADED	
M	11	1	**159-2953**	8	SCREW-FLAT HEAD (M16X2-THD)	
	12	1	**8T-4121**	4	WASHER-HARD (11X21X2.5-MM THK)	
M	13	1	**8T-4122**	4	WASHER-HARD (17X32X3.5-MM THK)	
M	14	1	**8T-4132**	4	NUT (M16X2-THD)	
M	15	1	**8T-4137**	4	BOLT (M10X1.5X20-MM)	

M-METRIC PART

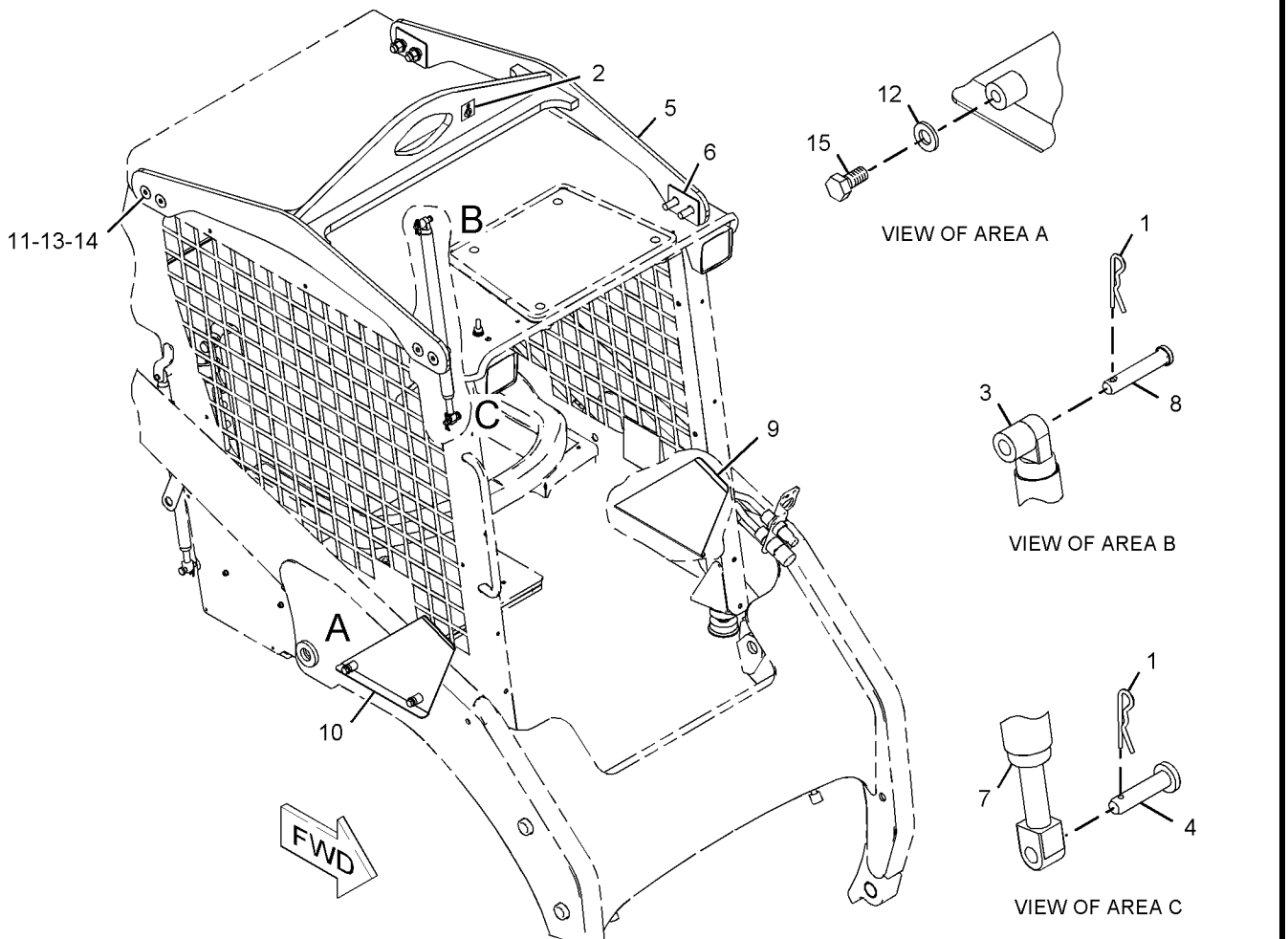

GRAPHIC #1 **<END>** g01030934

238-7671 MIRROR & MTG GP-REAR VIEW

S/N: MJH1-UP; SCH1-UP; RLL1-UP; BXM1-UP
PART OF 261-6187, 278-1212, 278-1213, 278-5369, 278-5370, 278-5413, 278-5414 CONVERSION AR-MACHINE, 233-5672, 233-5673, 233-5682, 233-5683, 257-5716, 257-5721 CONVERSION AR-ROADING AN ATTACHMENT

SMCS-7319 **i01958287**

NOTE	REF NO	GRAPHIC REF	PART NUMBER	QTY	PART NAME 1 2 3 4 5 6 (PRODUCT LEVEL)	SEE PAGE
	1	1	**132-5166**	2	MIRROR GP	
					(EACH INCLUDES)	
		1	**148-2371**	1	CLAMP (TOP)	
		1	**148-2372**	1	CLAMP (BOTTOM)	
	2	1	**175-4237**	1	BLOCK AS	
	3	1	**175-4239**	2	BRACKET AS	
	4	1	**238-7675**	2	PLATE	
M	5	1	**5C-9553**	4	BOLT (M6X1X16-MM)	
	6	1	**8T-4121**	4	WASHER-HARD (11X21X2.5-MM THK)	
M	7	1	**8T-4133**	2	NUT (M10X1.5-THD)	
M	8	1	**8T-4178**	2	BOLT (M10X1.5X90-MM)	
	9	1	**8T-4205**	4	WASHER-HARD (7.2X14.5X2-MM THK)	

M-METRIC PART

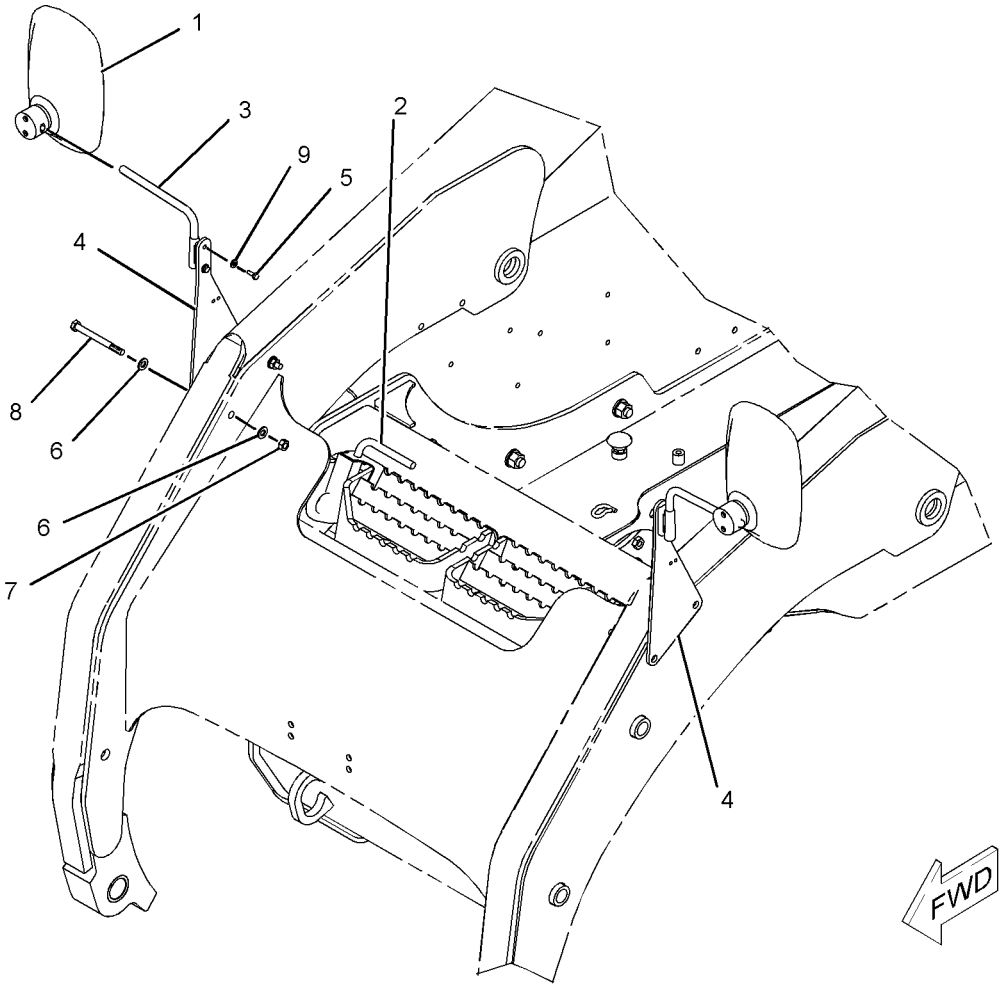

GRAPHIC #1 **<END>** g01017865

238-7672 MIRROR & MTG GP-REAR VIEW

S/N: MJH1-UP; BXM1-UP
HIGH FLOW
PART OF 278-1224, 278-1225, 278-5408, 278-5409, 278-5441, 278-5442 CONVERSION AR-MACHINE, 233-5675, 233-5676, 233-5685, 233-5686, 257-5717, 257-5722 CONVERSION AR-ROADING
AN ATTACHMENT

SMCS-7319 **i01957890**

NOTE	REF NO	GRAPHIC REF	PART NUMBER	QTY	PART NAME 1 2 3 4 5 6 (PRODUCT LEVEL)	SEE PAGE
	1	1	**132-5166**	2	MIRROR GP	
					(EACH INCLUDES)	
		1	**148-2371**	1	CLAMP (TOP)	
		1	**148-2372**	1	CLAMP (BOTTOM)	
	2	1	**175-4237**	1	BLOCK AS	
	3	1	**175-4239**	2	BRACKET AS	
	4	1	**238-7675**	1	PLATE	
	5	1	**238-7676**	1	BRACKET AS	
M	6	1	**5C-9553**	4	BOLT (M6X1X16-MM)	
M	7	1	**7X-0818**	1	BOLT (M8X1.25X45-MM)	
	8	1	**8T-4121**	4	WASHER-HARD (11X21X2.5-MM THK)	
M	9	1	**8T-4133**	2	NUT (M10X1.5-THD)	
M	10	1	**8T-4178**	2	BOLT (M10X1.5X90-MM)	
	11	1	**8T-4205**	4	WASHER-HARD (7.2X14.5X2-MM THK)	
M	12	1	**8T-7547**	1	BOLT (M8X1.25X30-MM)	

M-METRIC PART

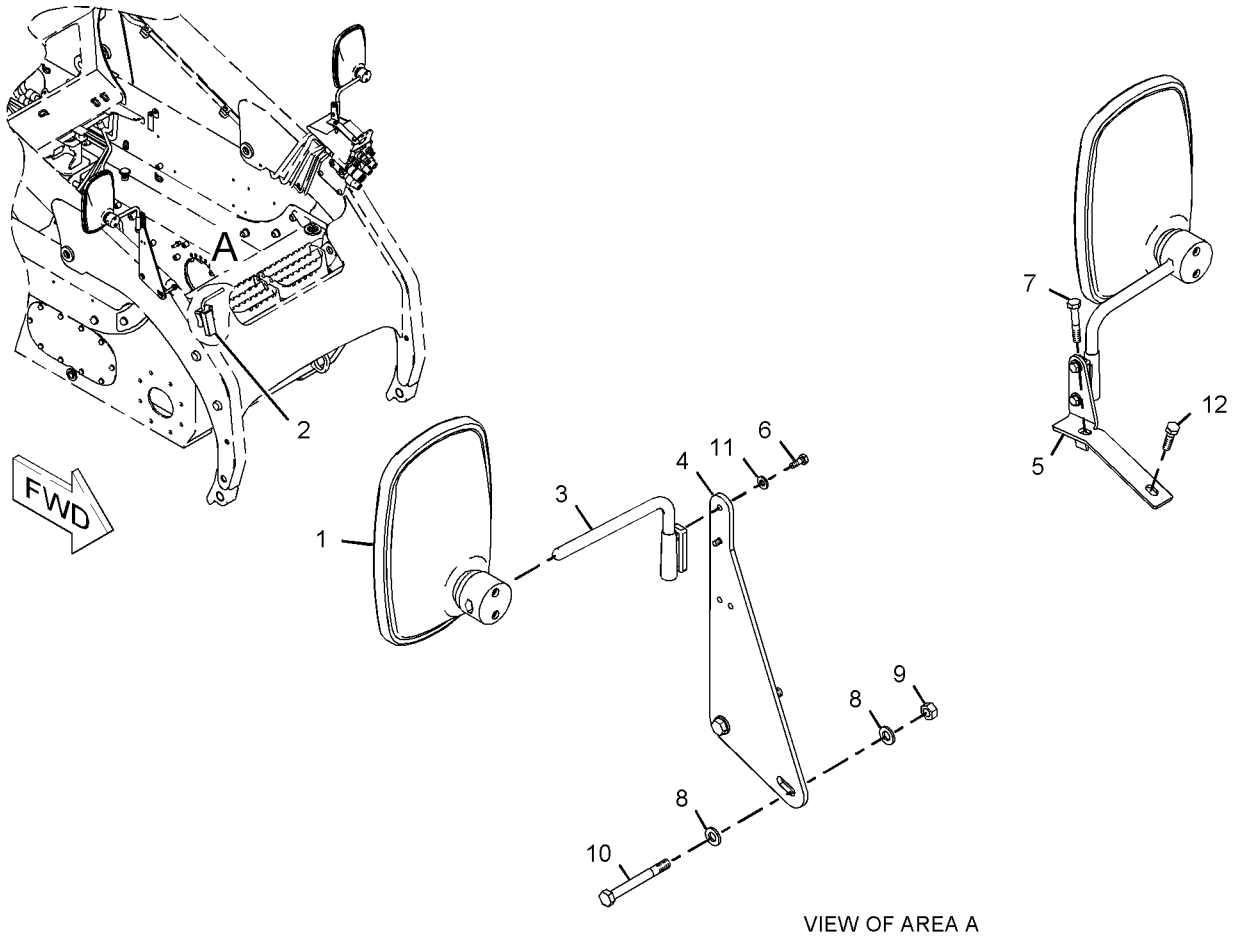

VIEW OF AREA A

GRAPHIC #1 **<END>** g01030330

173-3021 MOUNTING GP-REGISTRATION

S/N: MJH1-UP; SCH1-UP; RLL1-UP; BXM1-UP
PART OF 225-7963 MOUNTING GP-REGISTRATION
AN ATTACHMENT

SMCS-1408, 1429, 7050 **i02005879**

NOTE	REF NO	GRAPHIC REF	PART NUMBER	QTY	PART NAME 1 2 3 4 5 6 (PRODUCT LEVEL)	SEE PAGE
	1	1	**175-4236**	1	PLATE	
	2	1	**190-8962**	1	LAMP GP-REGISTRATION PLATE	
		1	**7M-9957**	1	LAMP (12-VOLT) (REGISTRATION PLATE)	
	3	1	**204-1365**	1	PLATE	
	4	1	**207-9780**	1	BRACKET AS	
	5	1	**215-4001**	1	PLATE	
	6	1	**4B-4863**	2	WASHER (4.7X11X1.2-MM THK)	
M	7	1	**5C-8312**	2	NUT (M4X0.7 THD)	
M	8	1	**6V-9672**	2	SCREW-MACHINE (M4X0.7X16-MM)	
M	9	1	**8T-4171**	3	BOLT (M6X1X12-MM)	
	10	1	**8T-4205**	3	WASHER-HARD (7.2X14.5X2-MM THK)	

M-METRIC PART

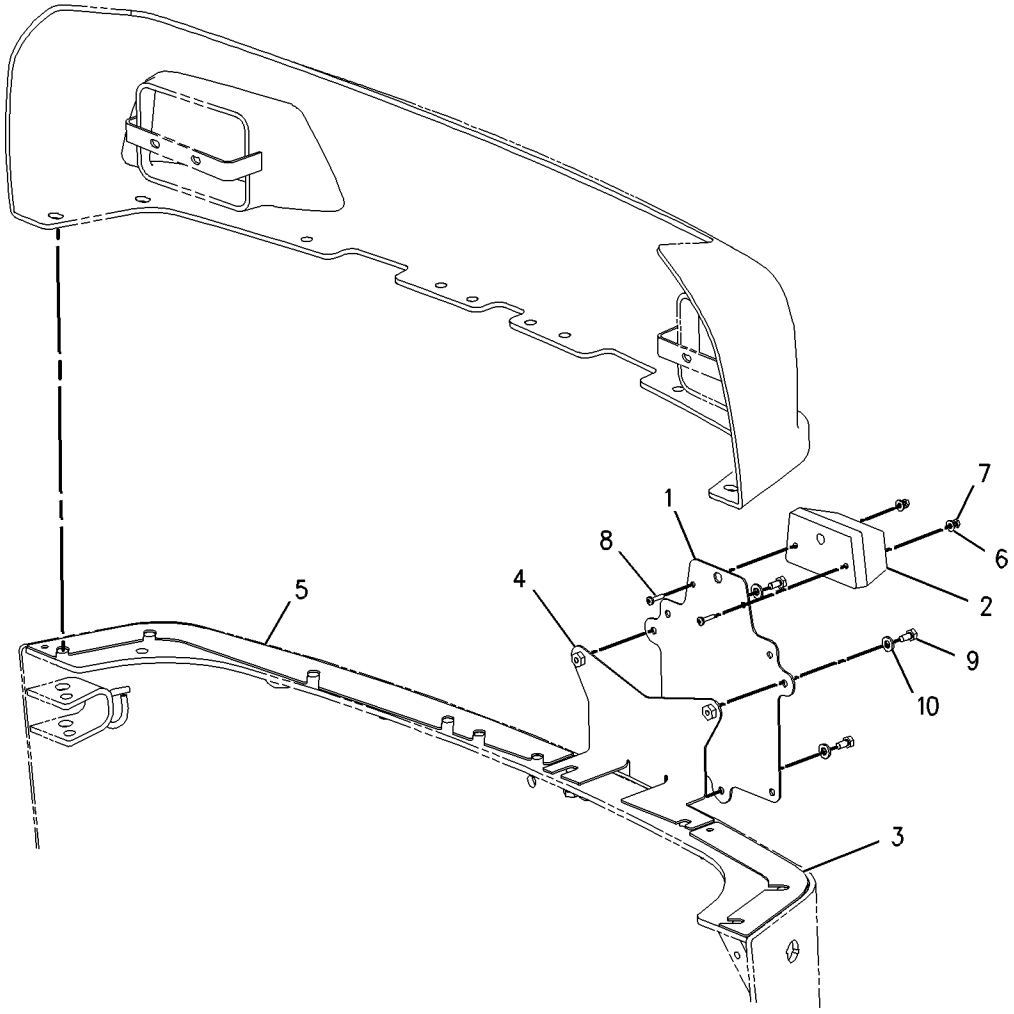

GRAPHIC #1 **<END>** g00874745

225-7963 MOUNTING GP-REGISTRATION

S/N: MJH1-UP; SCH1-UP; RLL1-UP; BXM1-UP
PART OF 278-1212, 278-1213, 278-5369, 278-5370, 278-5408, 278-5409 CONVERSION AR-MACHINE, 233-5673, 233-5676, 233-5683, 233-5686 CONVERSION AR-ROADING
AN ATTACHMENT

SMCS-1408, 1429, 7050 **i01951893**

NOTE	REF NO	GRAPHIC REF	PART NUMBER	QTY	PART NAME 1 2 3 4 5 6 (PRODUCT LEVEL)	SEE PAGE
Y	1	1	*173-3021*	1	MOUNTING GP-REGISTRATION	317
	2	1	**186-0239**	1	HARNESS AS-REAR LIGHTING	
		1	**102-8804**	1	KIT-RECEPTACLE (4-PIN)	
		1	**155-2271**	1	KIT-CONNECTING PLUG (4-PIN)	

Y-SEPARATE ILLUSTRATION

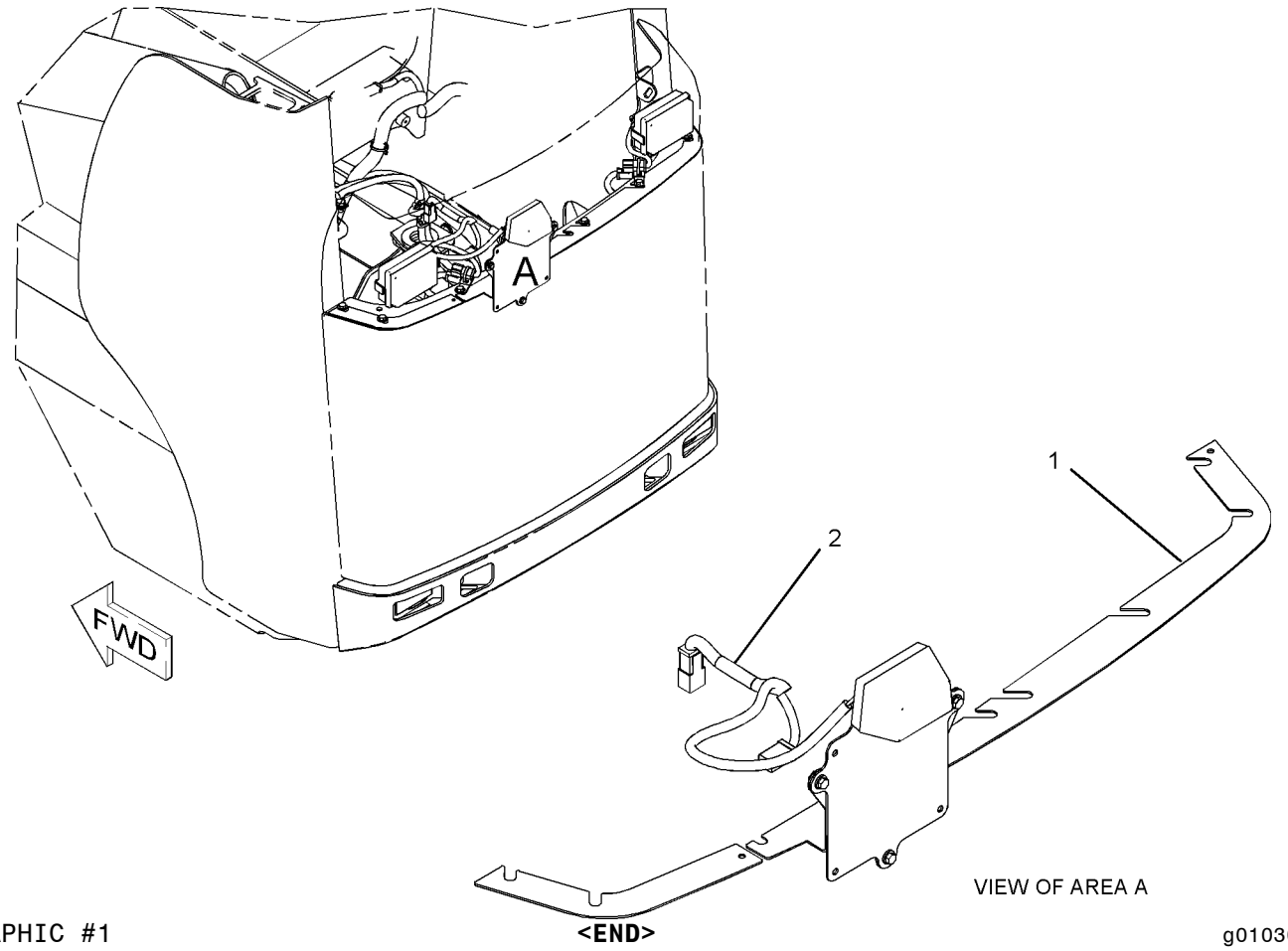

GRAPHIC #1

<END>

g01030726

175-4228 MOUNTING GP-ROADING LIGHTS–KIT

S/N: MJH1-UP; SCH1-UP; RLL1-UP; BXM1-UP

AN ATTACHMENT

SMCS-1429 **i02023872**

NOTE	REF NO	GRAPHIC REF	PART NUMBER	QTY	PART NAME 1 2 3 4 5 6 (PRODUCT LEVEL)	SEE PAGE
	1	1	**3S-2093**	6	STRAP-CABLE	
	2	1	**9R-1499**	2	REFLECTOR	
	3	1	**165-7098**	2	SUPPORT AS	
	4	1	**166-2561**	1	BRACKET AS	
	5	1	**183-7117**	2	HARNESS AS-REAR LIGHTING	
					(EACH INCLUDES)	
		1	**102-8804**	1	KIT-RECEPTACLE (4-PIN)	
M	6	1	**5C-2890**	4	NUT (M6X1-THD)	
M	7	1	**6V-7357**	4	BOLT (M6X1X25-MM)	
M	8	1	**8T-4138**	4	BOLT (M6X1X20-MM)	
	9	1	**8T-4205**	12	WASHER-HARD (7.2X14.5X2-MM THK)	

M-METRIC PART

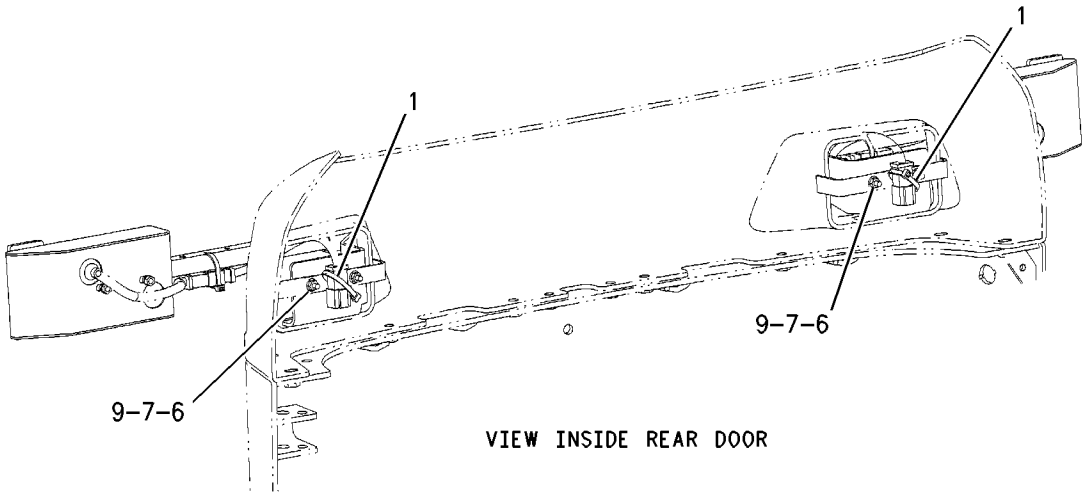

VIEW INSIDE REAR DOOR

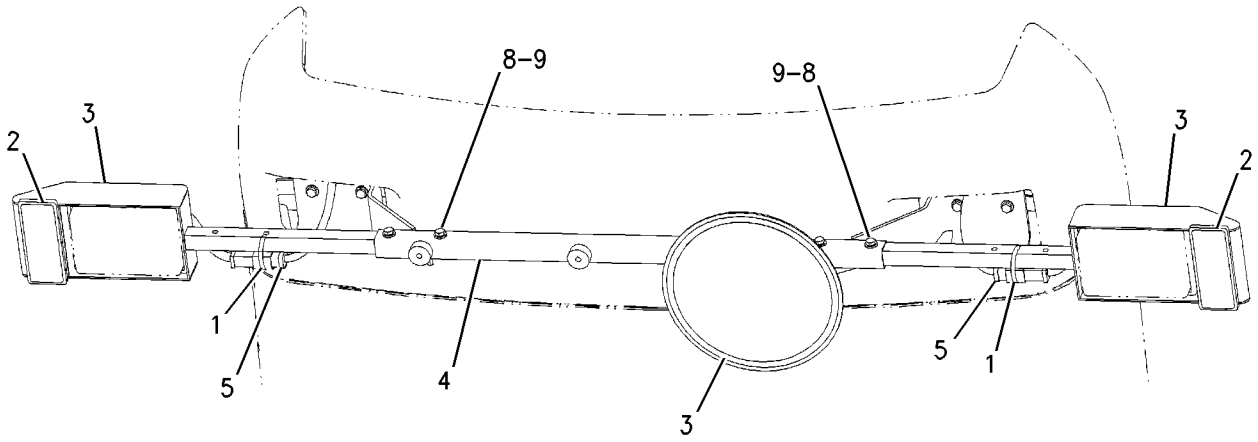

REAR VIEW
GERMAN MACHINE

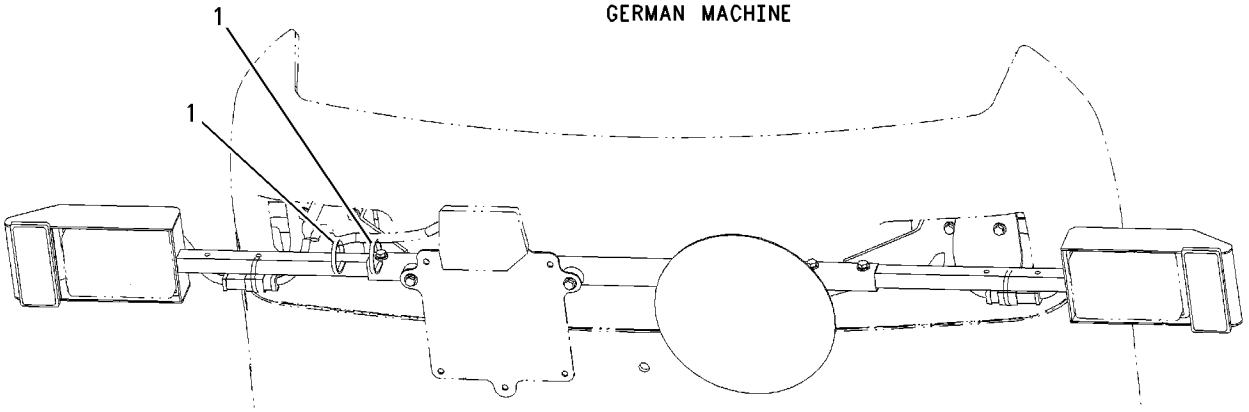

REAR VIEW
ITALIAN MACHINE

GRAPHIC #1 **<END>** g00902191

233-5616 SUPPRESSION GP-SOUND

S/N: MJH1-UP; SCH1-UP; RLL1-UP; BXM1-UP
PART OF 261-6155, 261-6156, 261-6157, 261-6158, 261-6187, 261-6197, 278-1212, 278-1213, 278-1220, 278-1221, 278-1224, 278-1225, 278-5347, 278-5348, 278-5369, 278-5370, 278-5408, 278-5409, 278-5413, 278-5414, 278-5441, 278-5442 CONVERSION AR-MACHINE, 233-5671, 233-5672, 233-5673, 233-5674, 233-5675, 233-5676, 233-5681, 233-5682, 233-5683, 233-5684, 233-5685, 233-5686, 257-5716, 257-5717, 257-5718, 257-5721, 257-5722, 257-5723 CONVERSION AR-ROADING
AN ATTACHMENT

SMCS-1801, 7076 **i01952009**

NOTE	REF NO	GRAPHIC REF	PART NUMBER	QTY	PART NAME 1 2 3 4 5 6 (PRODUCT LEVEL)	SEE PAGE
	1	1	**176-4079**	2	INSULATION	
	2	1	**236-5088**	1	INSULATION	
	3	1	**241-5648**	1	INSULATION	
	4	1	**241-5649**	1	INSULATION	

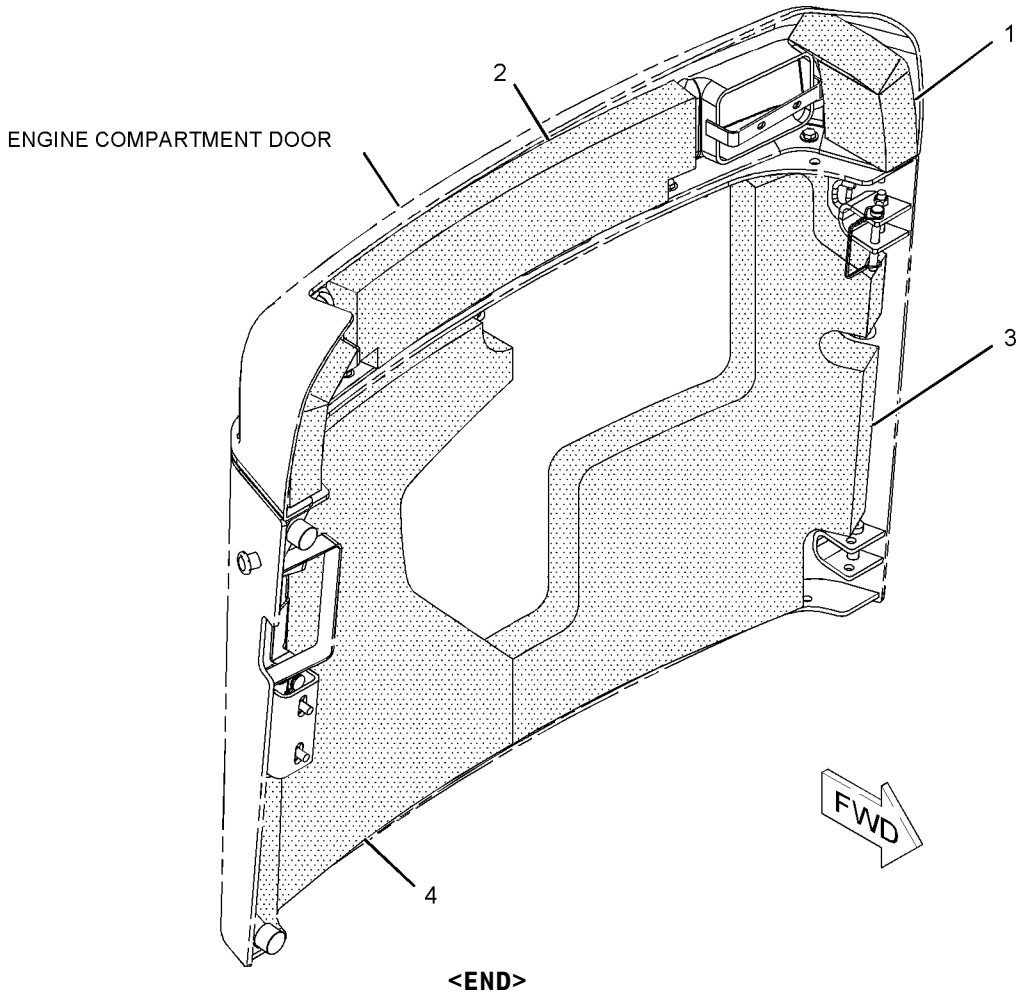

GRAPHIC #1 **<END>** g01018949

193-0447 ACCUMULATOR & MTG GP-HYDRAULIC

S/N: MJH1-UP; SCH1-UP; RLL1-UP; BXM1-UP
WORK TOOL
PART OF 218-5620, 218-5820, 218-6820, 218-6920, 278-1217, 278-1227, 278-1233, 278-1243 HYDRAULIC AR

SMCS-5077 **i01996305**

NOTE	REF NO	GRAPHIC REF	PART NUMBER	QTY	PART NAME 1 2 3 4 5 6 (PRODUCT LEVEL)	SEE PAGE
	1	1	*149-0686*	1	ACCUMULATOR GP-HYDRAULIC (CHARGED) (WORK TOOL)	
		1	**227-8807**	1	ACCUMULATOR GP-HYDRAULIC (UNCHARGED) (WORK TOOL)	
	2	1	*194-7632*	1	ELBOW AS	
		1	**3K-0360**	1	SEAL-O-RING	
		1	**194-7631**	1	ELBOW	
	3	1	**3K-0360**	1	SEAL-O-RING	

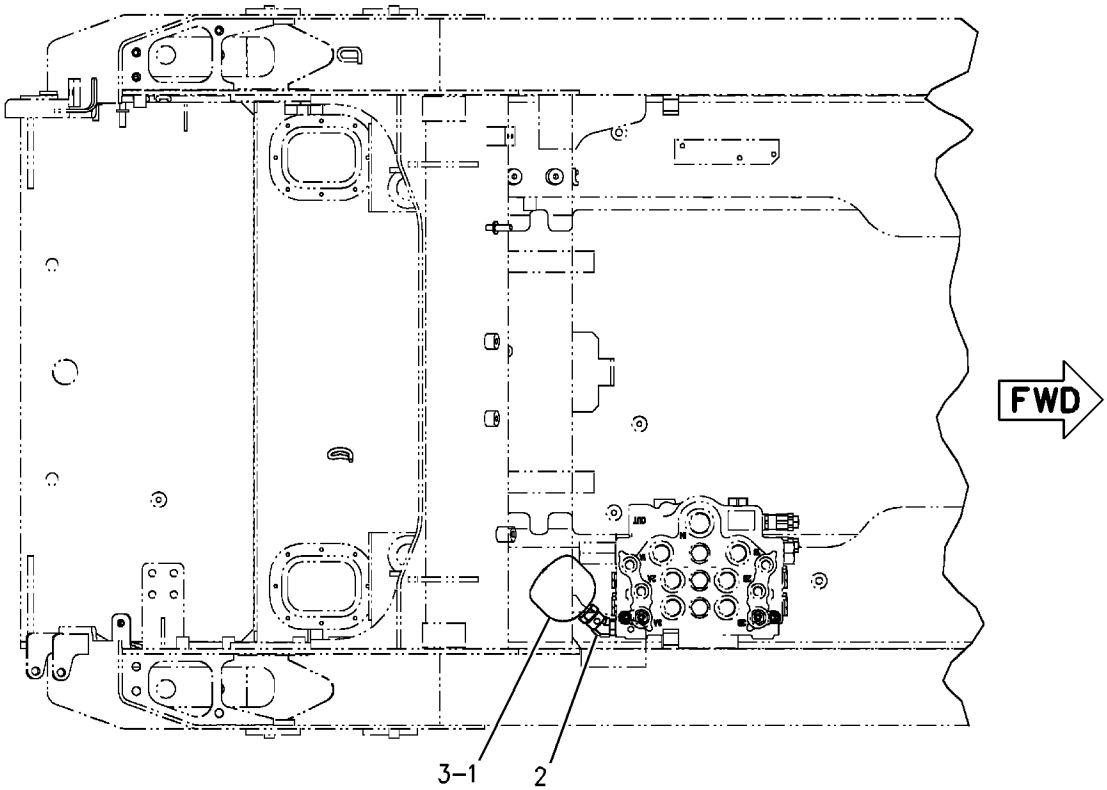

TOP VIEW

GRAPHIC #1 **<END>** g00902240

179-7001 ADAPTER GP-OIL LINE

S/N: MJH1-UP; SCH1-UP; RLL1-UP; BXM1-UP
PART OF 218-6099, 218-6503 LINES GP-PILOT

SMCS-5057 **i01836385**

NOTE	REF NO	GRAPHIC REF	PART NUMBER	QTY	PART NAME 1 2 3 4 5 6 (PRODUCT LEVEL)	SEE PAGE
	1	1	**179-7002**	1	ADAPTER AS	
	2	1	**214-7568**	1	SEAL-O-RING	

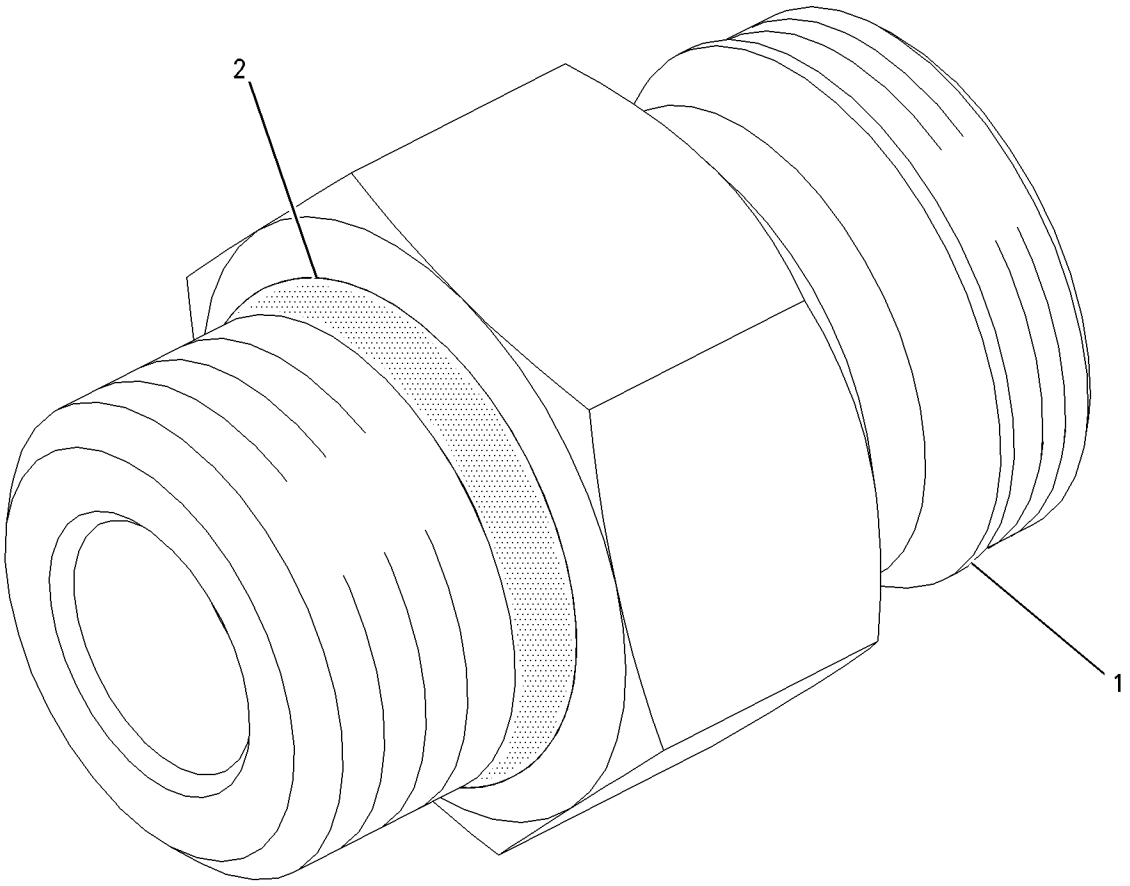

GRAPHIC #1 **<END>** g00938522

218-6480 CONTROL GP-HANDLE–DIRECTION, SPEED

S/N: MJH1-UP; SCH1-UP; RLL1-UP; BXM1-UP
PART OF 218-5930 CONTROL GP-PILOT OPERATED HYD
AN ATTACHMENT

SMCS-5705 **i02197932**

NOTE	REF NO	GRAPHIC REF	PART NUMBER	QTY	PART NAME 1 2 3 4 5 6 (PRODUCT LEVEL)	SEE PAGE
	1	1	**173-0702**	1	BOOT	
Y	2	1	**218-6117**	1	HANDLE GP-MODULAR	372
	3	1	**158-3770**	1	KIT-LEVER	
M		1	**095-1207**	1	NUT (M12X1.75-THD)	

M-METRIC PART
Y-SEPARATE ILLUSTRATION

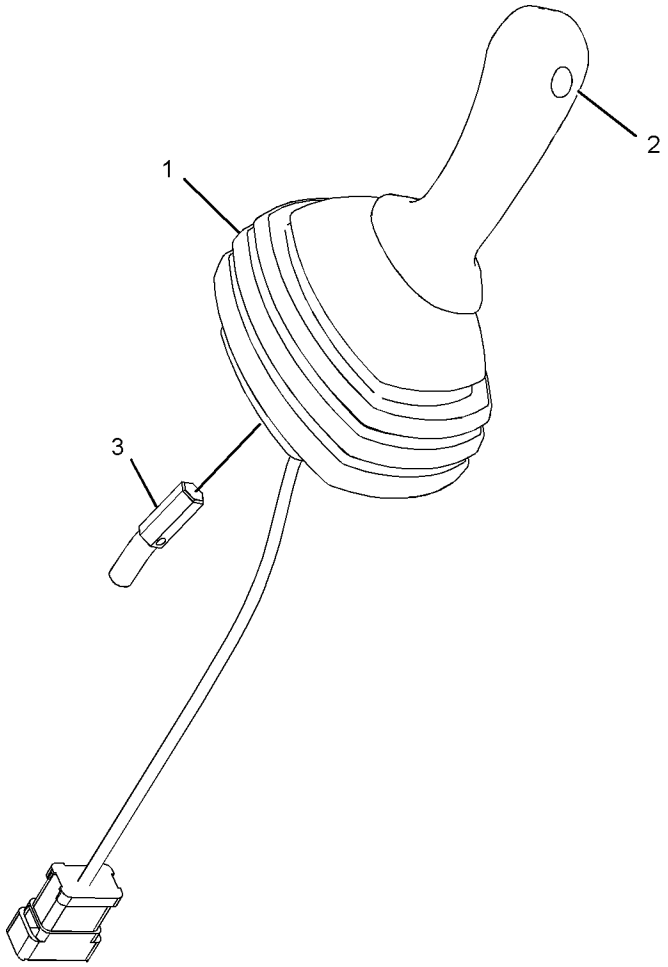

GRAPHIC #1 **<END>** g01111218

218-6485 CONTROL GP-HANDLE–DIRECTION, SPEED

S/N: MJH1-UP; SCH1-UP; RLL1-UP; BXM1-UP
PART OF 218-5931 CONTROL GP-PILOT OPERATED HYD
AN ATTACHMENT

SMCS-5705 **i02197934**

NOTE	REF NO	GRAPHIC REF	PART NUMBER	QTY	PART NAME 1 2 3 4 5 6 (PRODUCT LEVEL)	SEE PAGE
	1	1	**173-0702**	1	BOOT	
Y	2	1	**218-6118**	1	HANDLE GP-MODULAR	373
	3	1	**158-3770**	1	KIT-LEVER	
M		1	**095-1207**	1	NUT (M12X1.75-THD)	

M-METRIC PART
Y-SEPARATE ILLUSTRATION

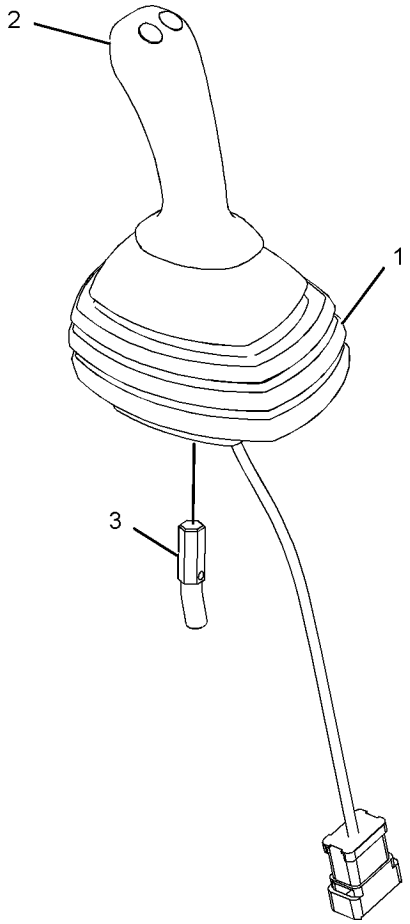

GRAPHIC #1 **<END>** g01111214

218-6490 CONTROL GP-HANDLE–WORK TOOL

S/N: MJH1-UP; SCH1-UP; RLL1-UP; BXM1-UP
PART OF 218-5611 CONTROL GP-PILOT OPERATED HYD
AN ATTACHMENT

SMCS-5705 **i02197935**

NOTE	REF NO	GRAPHIC REF	PART NUMBER	QTY	PART NAME 1 2 3 4 5 6 (PRODUCT LEVEL)	SEE PAGE
	1	1	**173-0703**	1	BOOT	
Y	2	1	**218-6118**	1	HANDLE GP-MODULAR	373
	3	1	**158-3770**	1	KIT-LEVER	
M		1	**095-1207**	1	NUT (M12X1.75-THD)	

M-METRIC PART
Y-SEPARATE ILLUSTRATION

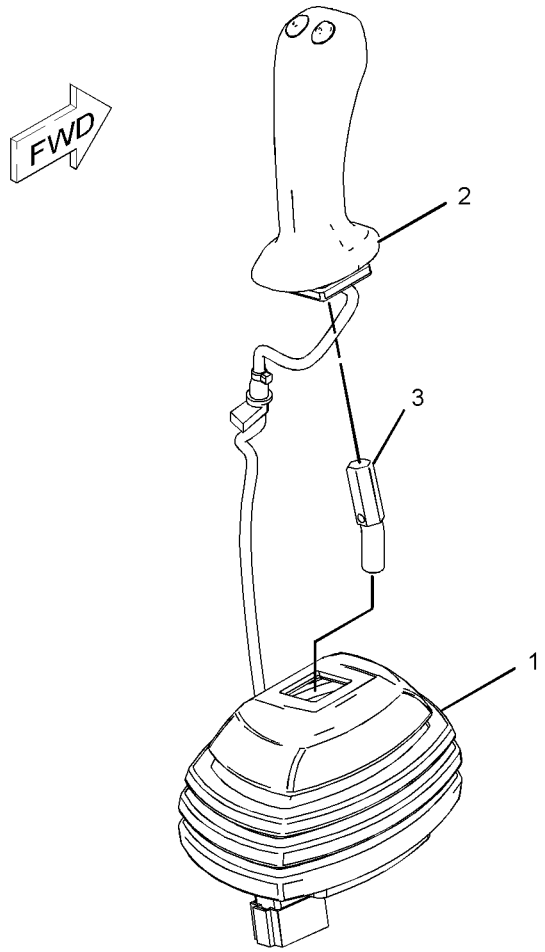

GRAPHIC #1 **<END>** g01111213

231-4256 CONTROL GP-HANDLE–LH

S/N: MJH1-UP; SCH1-UP; RLL1-UP; BXM1-UP
PART OF 218-5932 CONTROL GP-PILOT OPERATED HYD
AN ATTACHMENT

SMCS-5705 **i02189555**

NOTE	REF NO	GRAPHIC REF	PART NUMBER	QTY	PART NAME 1 2 3 4 5 6 (PRODUCT LEVEL)	SEE PAGE
	1	1	**223-3725**	1	HANDLE GP-MODULAR	
	1A	1	**186-3735**	4	PIN-CONNECTOR (16-GA TO 18-GA)	
	1B	1	**174-3091**	1	KIT-RECEPTACLE (12-PIN)	
					(INCLUDES RECEPTACLE AS & WEDGE)	
	2	1	**223-3728**	1	BOOT	
	3	1	**231-4261**	1	ADAPTER (LH)	
	4	1	**213-7489**	3	SCREW (M4X25-MM)	
M	5	1	**178-9983**	3	LOCKNUT (M4X0.7-THD)	
	6	1	**1S-9593**	1	STRAP-CABLE	
	7	1	**8T-8737**	8	PLUG-SEAL	
	8	1	**252-6934**	1	GROMMET	

M-METRIC PART

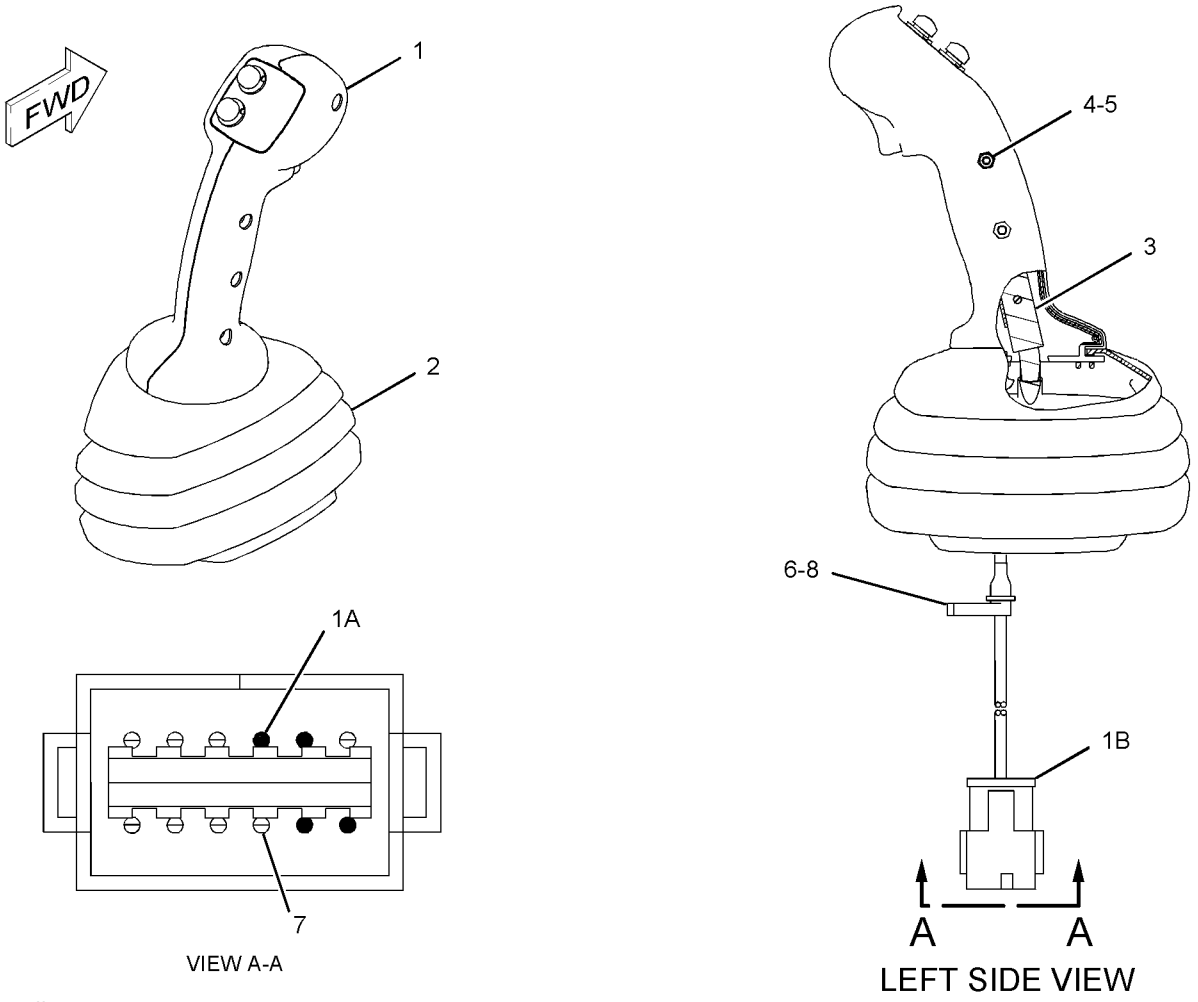

GRAPHIC #1 **<END>** g01132335

231-4257 CONTROL GP-HANDLE–RH

S/N: MJH1-UP; SCH1-UP; RLL1-UP; BXM1-UP
PART OF 218-5612 CONTROL GP-PILOT OPERATED HYD
AN ATTACHMENT

SMCS-5705 **i02250695**

NOTE	REF NO	GRAPHIC REF	PART NUMBER	QTY	PART NAME 1 2 3 4 5 6 (PRODUCT LEVEL)	SEE PAGE
	1	1	**223-3725**	1	HANDLE GP-MODULAR	
	1A	1	**186-3735**	4	PIN-CONNECTOR (16-GA TO 18-GA)	
	1B	1	**174-3091**	1	KIT-RECEPTACLE (12-PIN)	
					(INCLUDES RECEPTACLE AS & WEDGE)	
	2	1	**223-3728**	1	BOOT	
	3	1	**231-4262**	1	ADAPTER (RH)	
	4	1	**213-7489**	3	SCREW (M4X25-MM)	
M	5	1	**178-9983**	3	LOCKNUT (M4X0.7-THD)	
	6	1	**1S-9593**	1	STRAP-CABLE	
	7	1	**8T-8737**	8	PLUG-SEAL	
	8	1	**252-6934**	1	GROMMET	

M-METRIC PART

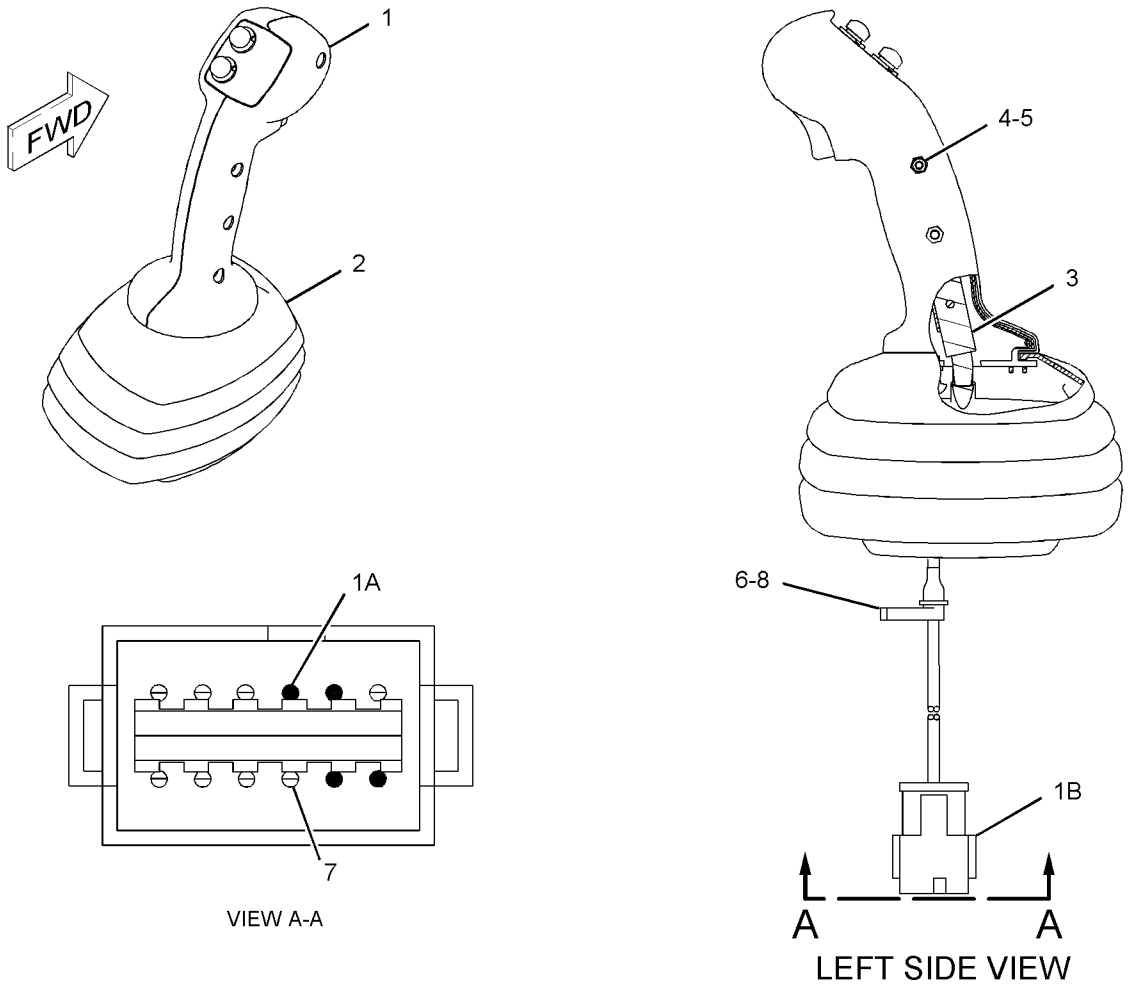

GRAPHIC #1 **<END>** g01133018

231-4258 CONTROL GP-HANDLE–LH

S/N: MJH1-UP; SCH1-UP; RLL1-UP; BXM1-UP
PART OF 218-5933, 218-5947 CONTROL GP-PILOT OPERATED HYD, 233-5638, 233-5706
KIT-WORK TOOL CONTROL & WIRING
AN ATTACHMENT

SMCS-5705 **i02189624**

NOTE	REF NO	GRAPHIC REF	PART NUMBER	QTY	PART NAME 1 2 3 4 5 6 (PRODUCT LEVEL)	SEE PAGE
	1	1	**223-3726**	1	HANDLE GP-MODULAR	
	1A	1	**186-3735**	7	PIN-CONNECTOR (16-GA TO 18-GA)	
	1B	1	**174-3091**	1	KIT-RECEPTACLE (12-PIN)	
					(INCLUDES RECEPTACLE AS & WEDGE)	
	2	1	**223-3728**	1	BOOT	
	3	1	**231-4261**	1	ADAPTER (LH)	
	4	1	**213-7489**	3	SCREW (M4X25-MM)	
M	5	1	**178-9983**	3	LOCKNUT (M4X0.7-THD)	
	6	1	**1S-9593**	1	STRAP-CABLE	
	7	1	**8T-8737**	3	PLUG-SEAL	
	8	1	**252-6934**	1	GROMMET	

M-METRIC PART

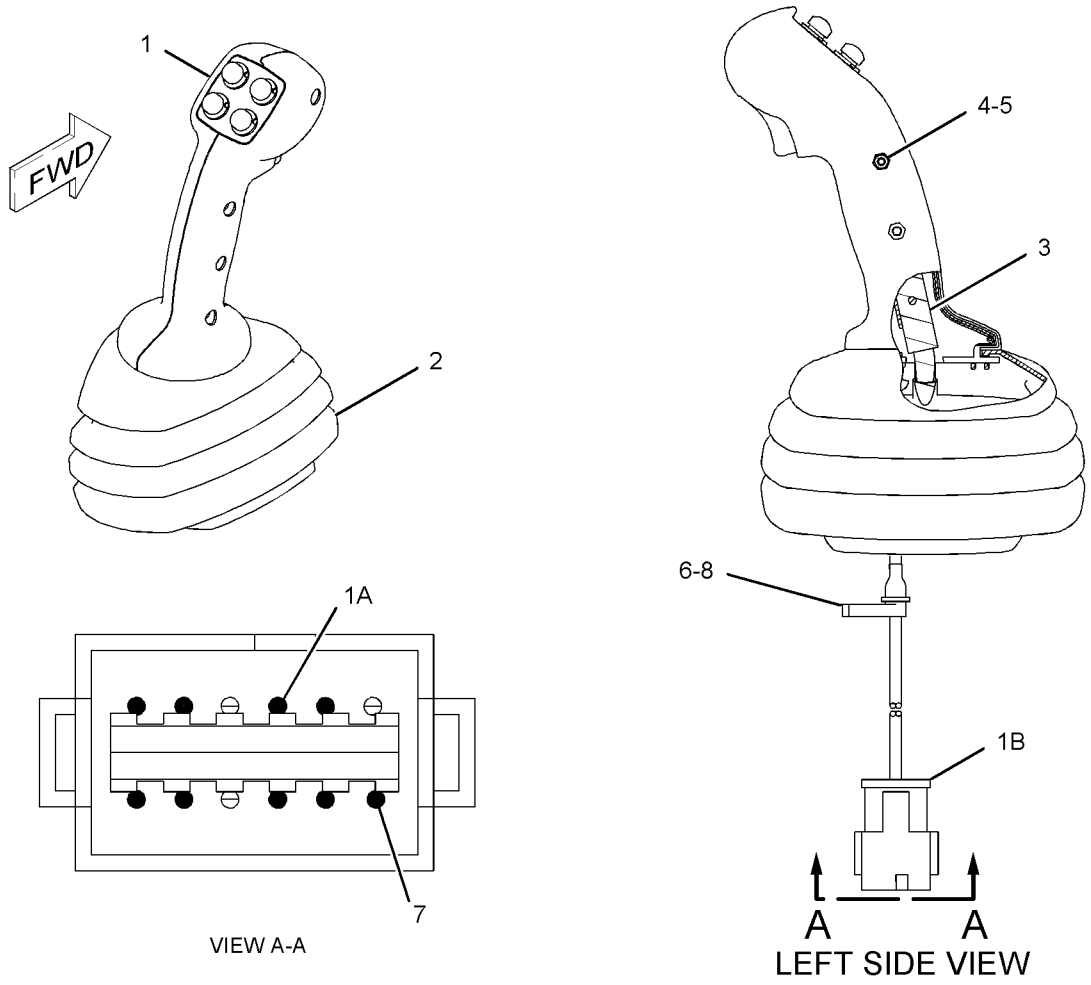

GRAPHIC #1 **<END>** g01132255

231-4259 CONTROL GP-HANDLE—WORK TOOL

S/N: MJH1-UP; BXM1-UP

PART OF 218-6571 CONTROL GP-PILOT OPERATED HYD, 218-6737, 218-6738 KIT-HIGH FLOW CONVERSION

AN ATTACHMENT

SMCS-5705 **i02265596**

NOTE	REF NO	GRAPHIC REF	PART NUMBER	QTY	PART NAME 1 2 3 4 5 6 (PRODUCT LEVEL)	SEE PAGE
	1	1	**215-8308**	1	CONTROL GP-HANDLE	
	1A	1	**174-3091**	1	KIT-RECEPTACLE (12-PIN)	
	1B	1	**3E-5180**	1	WEDGE-RECEPTACLE LOCK (12-PIN)	
	1C	1	**186-3735**	11	PIN-CONNECTOR (16-GA TO 18-GA)	
	2	1	**223-3728**	1	BOOT	
	3	1	**231-4262**	1	ADAPTER (RH)	
	4	1	**213-7489**	3	SCREW (M4X25-MM)	
M	5	1	**178-9983**	3	LOCKNUT (M4X0.7-THD)	
	6	1	**252-6934**	1	GROMMET	
	7	1	**8T-8737**	1	PLUG-SEAL	
	8	1	**1S-9593**	1	STRAP-CABLE	

M-METRIC PART

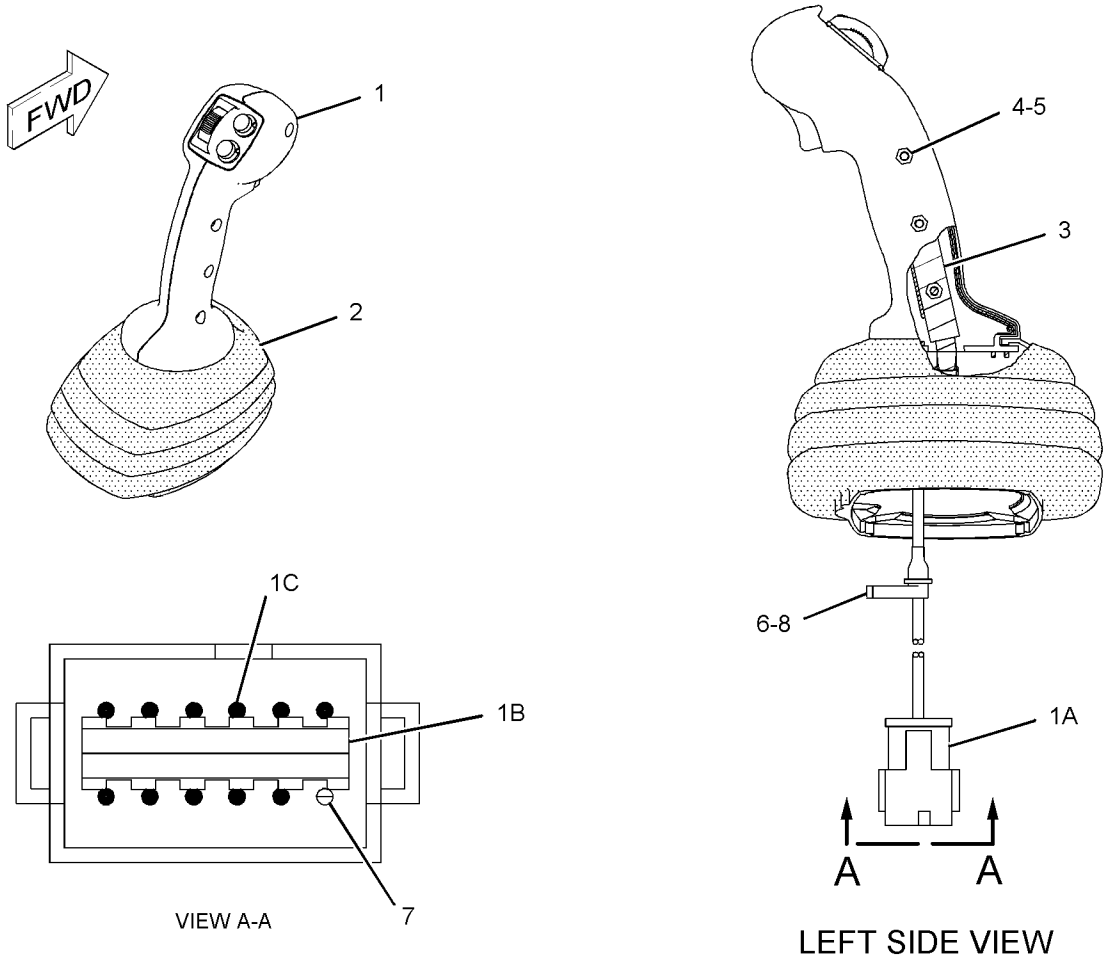

GRAPHIC #1 **<END>** g01132563

231-4260 CONTROL GP-HANDLE–RH

S/N: MJH1-UP; SCH1-UP; RLL1-UP; BXM1-UP
PART OF 218-5618 CONTROL GP-PILOT OPERATED HYD
AN ATTACHMENT

SMCS-5705 **i02189795**

NOTE	REF NO	GRAPHIC REF	PART NUMBER	QTY	PART NAME 1 2 3 4 5 6 (PRODUCT LEVEL)	SEE PAGE
	1	1	**215-8307**	1	CONTROL GP-HANDLE	
	1A	1	**186-3735**	7	PIN-CONNECTOR (16-GA TO 18-GA)	
	1B	1	**174-3091**	1	KIT-RECEPTACLE (12-PIN)	
					(INCLUDES RECEPTACLE AS & WEDGE)	
	2	1	**223-3728**	1	BOOT	
	3	1	**231-4262**	1	ADAPTER (RH)	
	4	1	**213-7489**	3	SCREW (M4X25-MM)	
M	5	1	**178-9983**	3	LOCKNUT (M4X0.7-THD)	
	6	1	**1S-9593**	1	STRAP-CABLE	
	7	1	**8T-8737**	5	PLUG-SEAL	
	8	1	**252-6934**	1	GROMMET	

M-METRIC PART

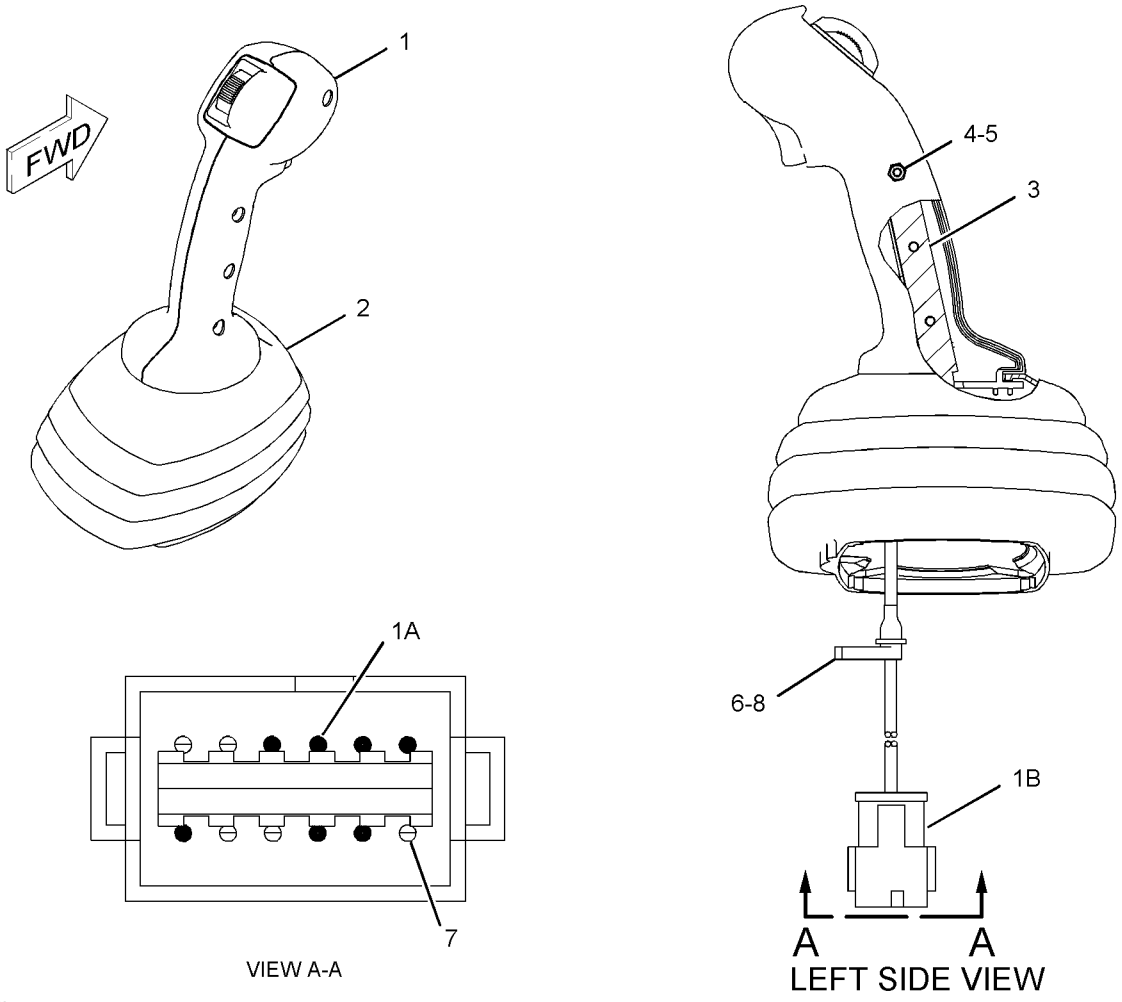

GRAPHIC #1 **<END>** g01132271

HYDRAULIC SYSTEM

218-5611 CONTROL GP-PILOT OPERATED HYD

S/N: MJH1-UP; SCH1-UP; RLL1-UP; BXM1-UP
ON/OFF AUXILIARY SWITCH
AN ATTACHMENT

SMCS-5059, 5705 **i02195836**

NOTE	REF NO	GRAPHIC REF	PART NUMBER	QTY	PART NAME 1 2 3 4 5 6 (PRODUCT LEVEL)	SEE PAGE
	1	2	**8T-4205**	3	WASHER-HARD (7.2X14.5X2-MM THK)	
	2	2	**110-8760**	1	STRAP	
	3	2	**216-4704**	1	HARNESS AS-OPERATOR CONTROLS (JOYSTICK)	
		2	**155-2255**	1	KIT-CONNECTING PLUG (12-PIN)	
		2	**155-2270**	2	KIT-CONNECTING PLUG (2-PIN)	
					(EACH PLUG KIT INCLUDES PLUG AS, WEDGE & INTERFACE SEAL)	
		2	**102-8801**	1	KIT-RECEPTACLE (12-PIN)	
					(INCLUDES RECEPTACLE AS & WEDGE)	
	4	2	**218-6421**	1	BRACKET AS	
M		1	**6V-9632**	3	NUT-WELD (M6X1-THD)	
		1	**7T-1099**	1	LINK	
M		1	**8T-3612**	3	NUT-WELD (M8X1.25-THD)	
Y	5	2	**218-6490**	1	CONTROL GP-HANDLE (WORK TOOL)	326
Y	6	2	**228-9228**	1	VALVE GP-PILOT (WORK TOOL)	556
	7	1	**237-5332**	1	FILM-INSTRUCTION (MACHINE CONTROLS)	
M	8	2	**8T-0269**	3	BOLT-SOCKET HEAD (M6X1X20-MM)	

M-METRIC PART
Y-SEPARATE ILLUSTRATION

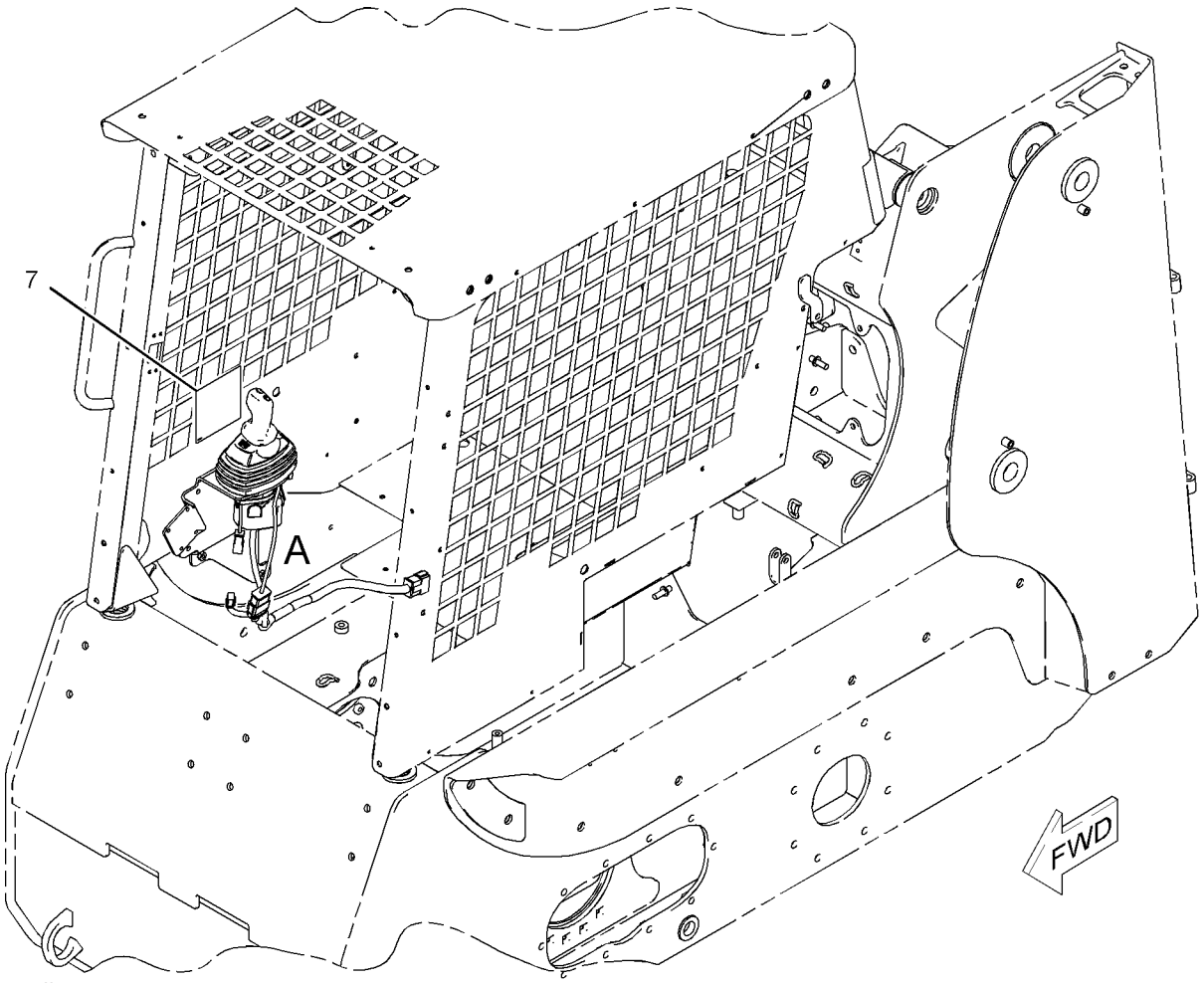

GRAPHIC #1 g01016393

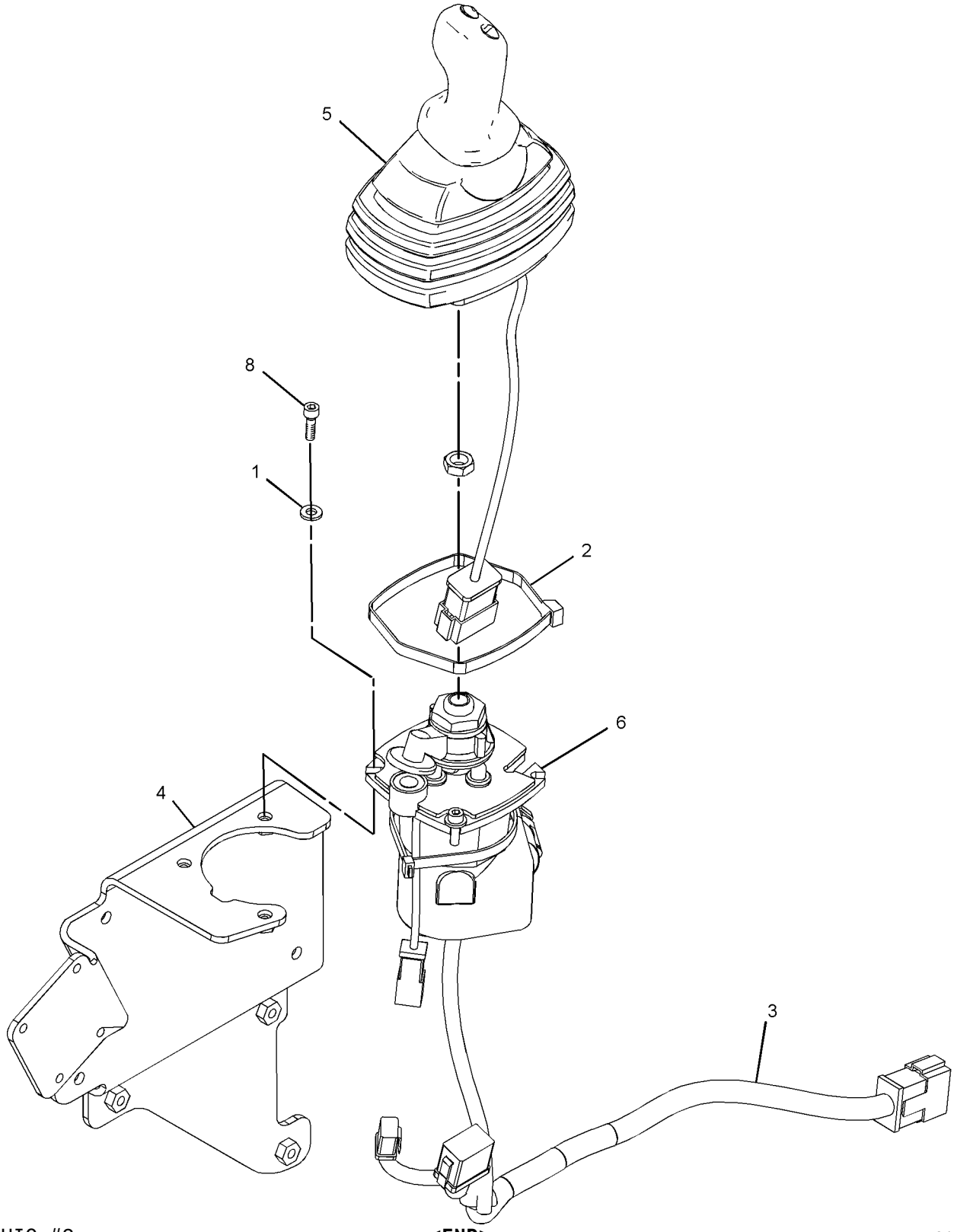

GRAPHIC #2

<END>

g01111318

HYDRAULIC SYSTEM

218-5612 CONTROL GP-PILOT OPERATED HYD

S/N: MJH1-UP; SCH1-UP; RLL1-UP; BXM1-UP
ON/OFF AUXILIARY SWITCH
AN ATTACHMENT

SMCS-5059, 5705 **i02280917**

NOTE	REF NO	GRAPHIC REF	PART NUMBER	QTY	PART NAME 1 2 3 4 5 6 (PRODUCT LEVEL)	SEE PAGE
M	1	2	**095-1207**	1	NUT (M12X1.75-THD)	
	2	2	**110-8760**	1	STRAP	
	3	2	**216-4704**	1	HARNESS AS-OPERATOR CONTROLS (JOYSTICK)	
		2	**155-2255**	1	KIT-CONNECTING PLUG (12-PIN)	
		2	**155-2270**	2	KIT-CONNECTING PLUG (2-PIN)	
					(EACH PLUG KIT INCLUDES PLUG AS, WEDGE & INTERFACE SEAL)	
		2	**102-8801**	1	KIT-RECEPTACLE (12-PIN)	
					(INCLUDES RECEPTACLE AS & WEDGE)	
	4	2	**218-6421**	1	BRACKET AS	
Y	5	2	**228-9228**	1	VALVE GP-PILOT (WORK TOOL)	556
Y	6	2	**231-4257**	1	CONTROL GP-HANDLE (RH) (WORK TOOL)	328
	7	1	**262-7668**	1	FILM-INSTRUCTION (MACHINE CONTROL, READ OMM)	
M	8	2	**8T-0269**	3	BOLT-SOCKET HEAD (M6X1X20-MM)	
	9	2	**8T-4205**	3	WASHER-HARD (7.2X14.5X2-MM THK)	

M-METRIC PART
Y-SEPARATE ILLUSTRATION

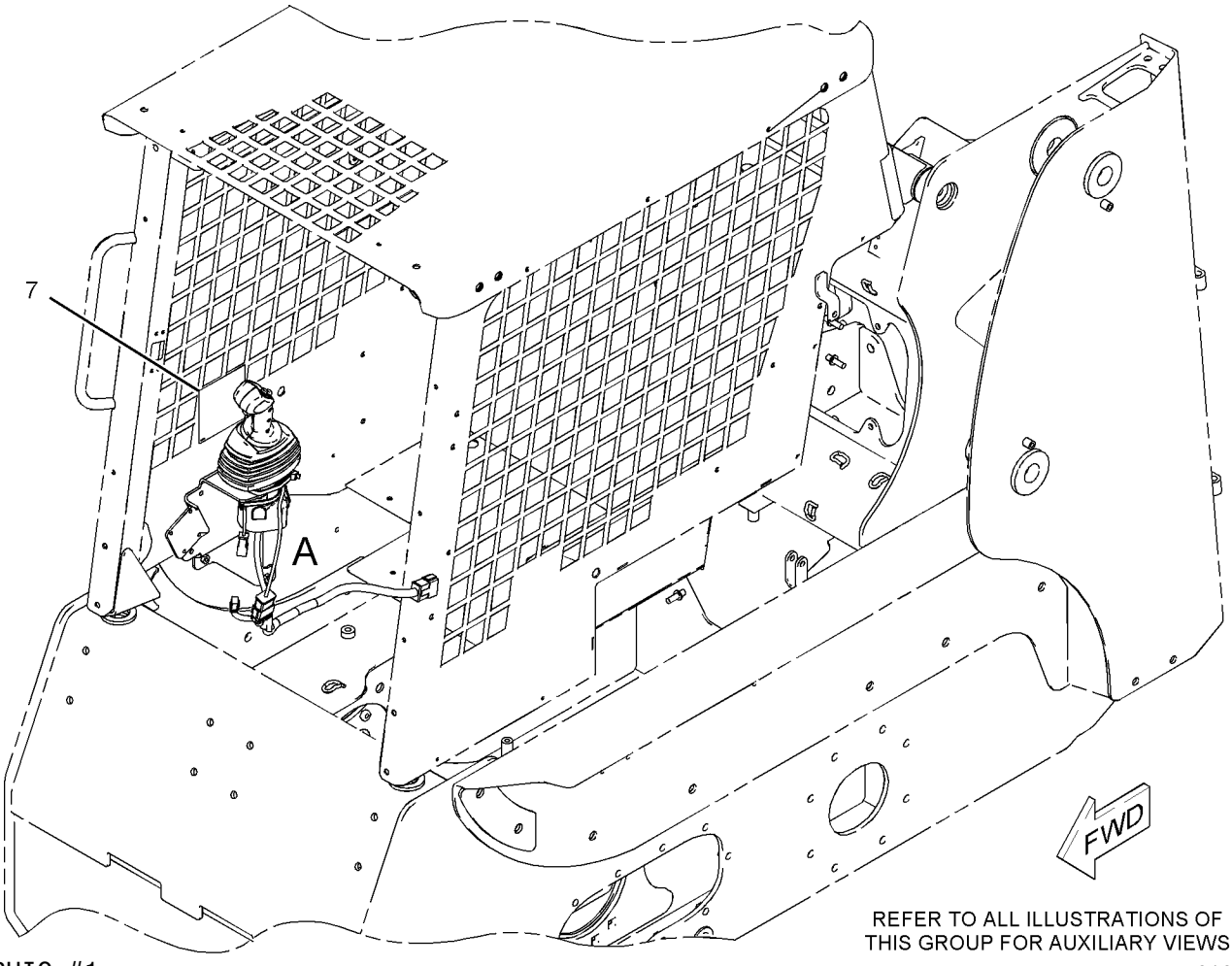

REFER TO ALL ILLUSTRATIONS OF THIS GROUP FOR AUXILIARY VIEWS

GRAPHIC #1 g01017033

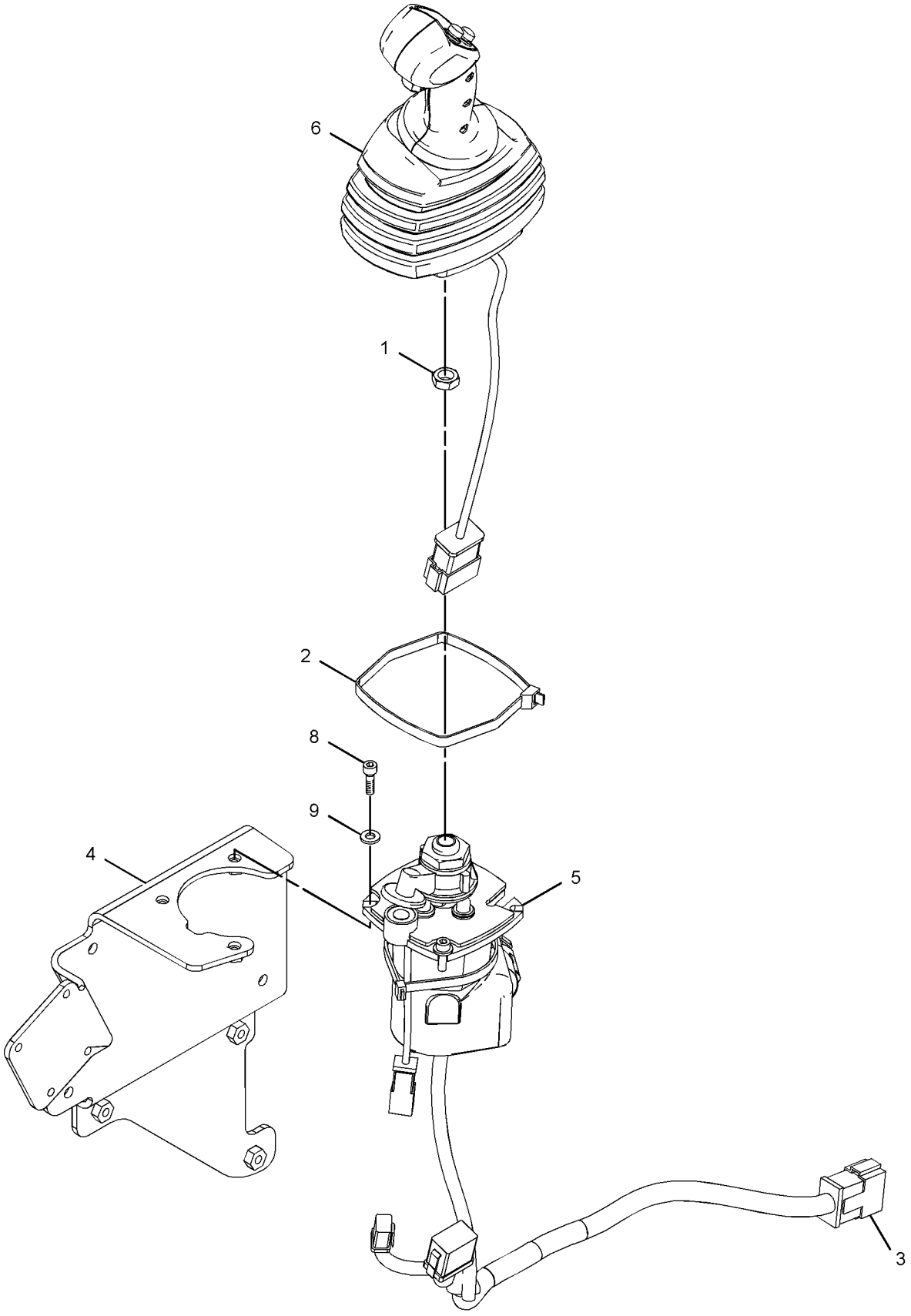

VIEW OF AREA A

GRAPHIC #2

<END>

g01017034

HYDRAULIC SYSTEM

218-5618 CONTROL GP-PILOT OPERATED HYD

S/N: MJH1-UP; SCH1-UP; RLL1-UP; BXM1-UP
PROPORTIONAL AUXILIARY SWITCH
AN ATTACHMENT

SMCS-5059, 5705 **i01954541**

NOTE	REF NO	GRAPHIC REF	PART NUMBER	QTY	PART NAME 1 2 3 4 5 6 (PRODUCT LEVEL)	SEE PAGE
M	1	2	**095-1207**	1	NUT (M12X1.75-THD)	
	2	2	**110-8760**	1	STRAP	
	3	2	**216-4704**	1	HARNESS AS-OPERATOR CONTROLS (JOYSTICK)	
		2	**155-2255**	1	KIT-CONNECTING PLUG (12-PIN)	
		2	**155-2270**	2	KIT-CONNECTING PLUG (2-PIN)	
		2	**102-8801**	1	KIT-RECEPTACLE (12-PIN)	
	4	2	**218-6421**	1	BRACKET AS	
Y	5	2	**228-9228**	1	VALVE GP-PILOT (WORK TOOL)	556
Y	6	2	**231-4260**	1	CONTROL GP-HANDLE (RH) (WORK TOOL)	331
	7	1	**235-5243**	1	FILM-INSTRUCTION (MACHINE CONTROLS)	
M	8	2	**8T-0269**	3	BOLT-SOCKET HEAD (M6X1X20-MM)	
	9	2	**8T-4205**	3	WASHER-HARD (7.2X14.5X2-MM THK)	

M-METRIC PART
Y-SEPARATE ILLUSTRATION

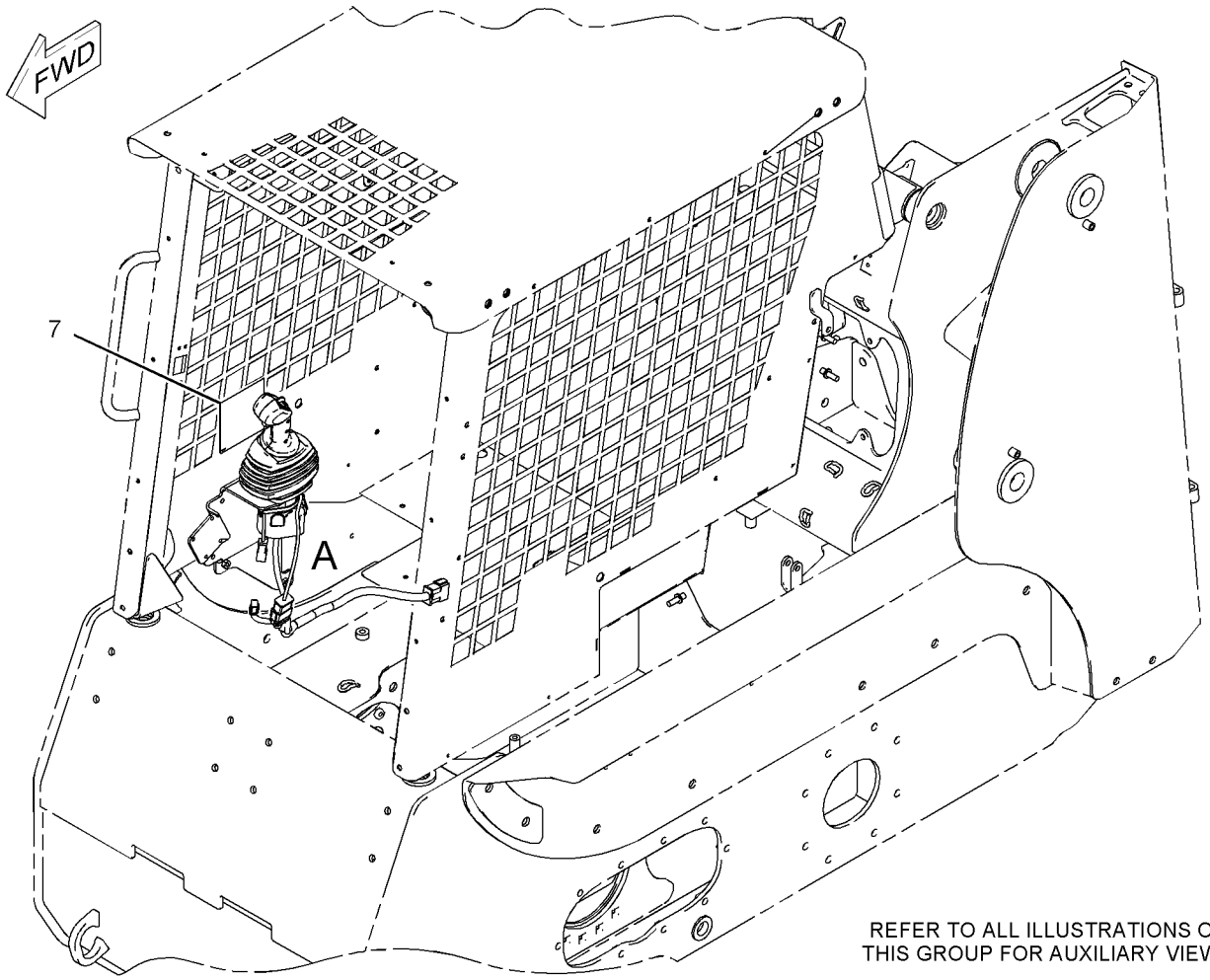

REFER TO ALL ILLUSTRATIONS OF THIS GROUP FOR AUXILIARY VIEWS

GRAPHIC #1 g01016439

218-5618 **CONTROL GP-PILOT OPERATED HYD** *(contd.)* **i01954541**

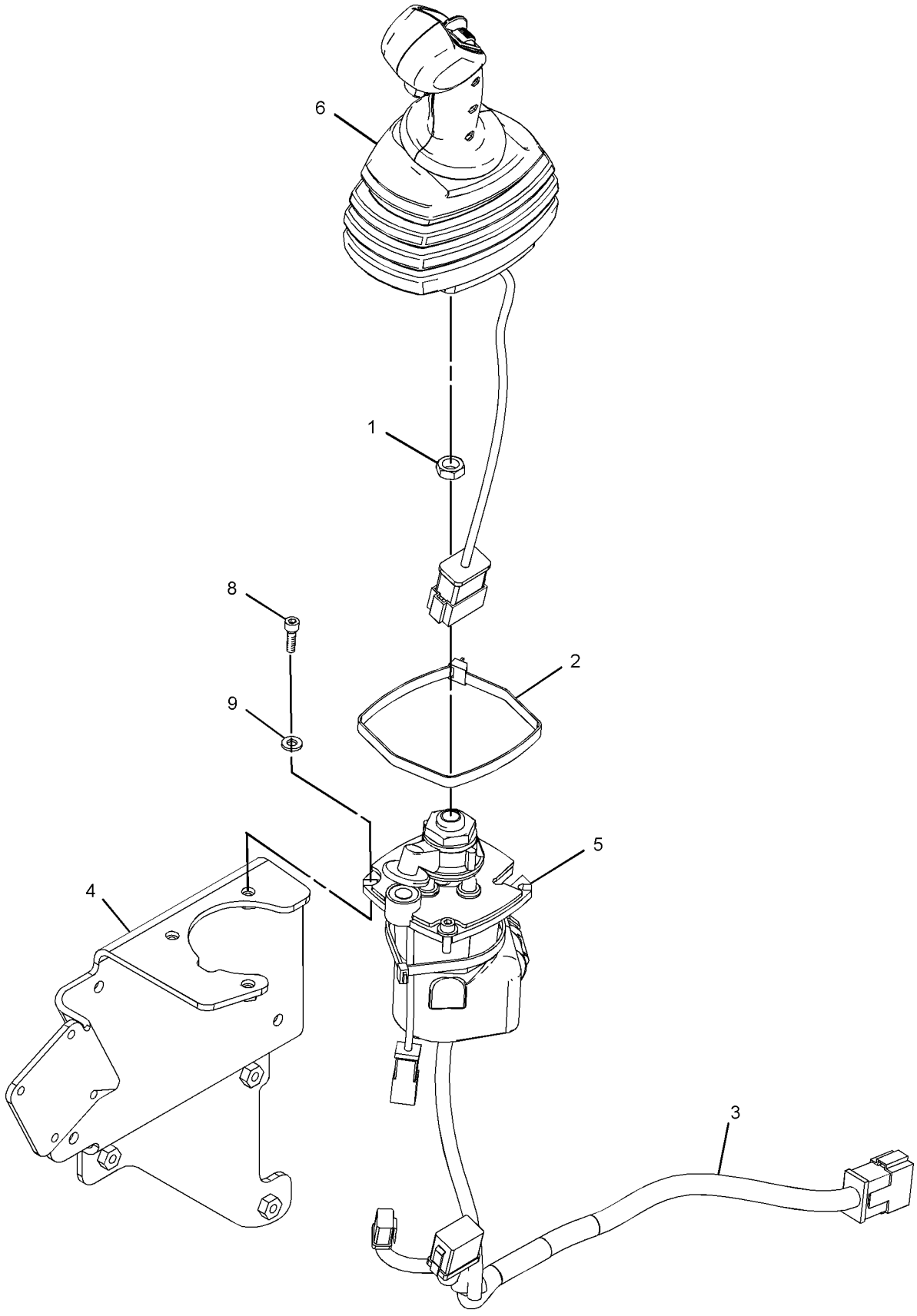

VIEW OF AREA A

GRAPHIC #2

<END>

g01016444

218-5930 CONTROL GP-PILOT OPERATED HYD

S/N: MJH1-UP; SCH1-UP; RLL1-UP; BXM1-UP

AN ATTACHMENT

SMCS-5059, 5705 **i02451276**

NOTE	REF NO	GRAPHIC REF	PART NUMBER	QTY	PART NAME 1 2 3 4 5 6 (PRODUCT LEVEL)	SEE PAGE
	1	2	**110-8760**	1	STRAP	
Y	3	2	**218-6119**	1	VALVE GP-PILOT (DIRECTION, SPEED)	555
	4	2	**218-6422**	1	BRACKET AS	
Y	5	2	**218-6480**	1	CONTROL GP-HANDLE (DIRECTION, SPEED)	324
	6	1	**237-5331**	1	FILM-INSTRUCTION (MACHINE CONTROL, READ OMM)	
M	7	2	**8T-0269**	3	BOLT-SOCKET HEAD (M6X1X20-MM)	
	8	2	**8T-4205**	3	WASHER-HARD (7.2X14.5X2-MM THK)	

M-METRIC PART
Y-SEPARATE ILLUSTRATION

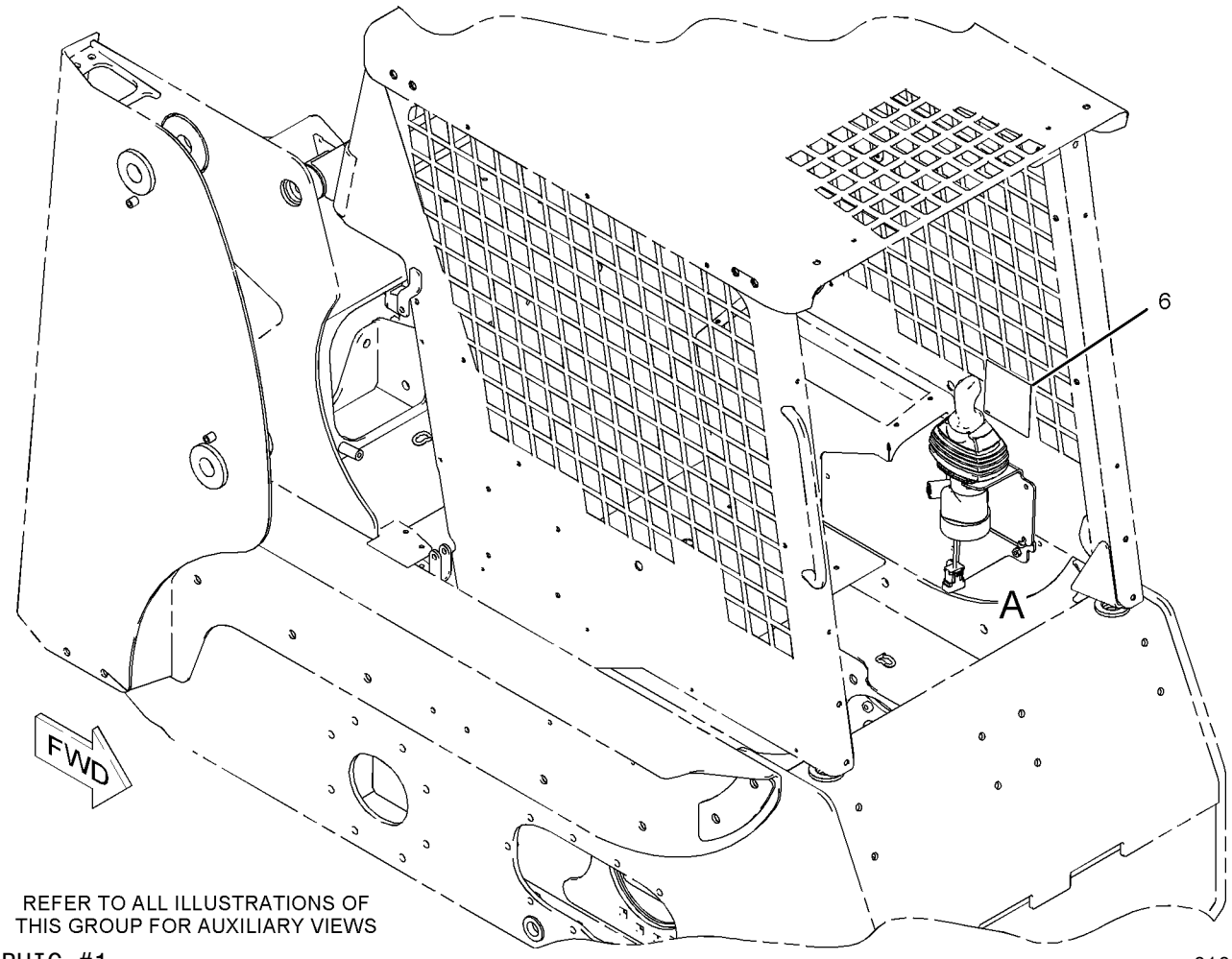

REFER TO ALL ILLUSTRATIONS OF THIS GROUP FOR AUXILIARY VIEWS

GRAPHIC #1 g01017159

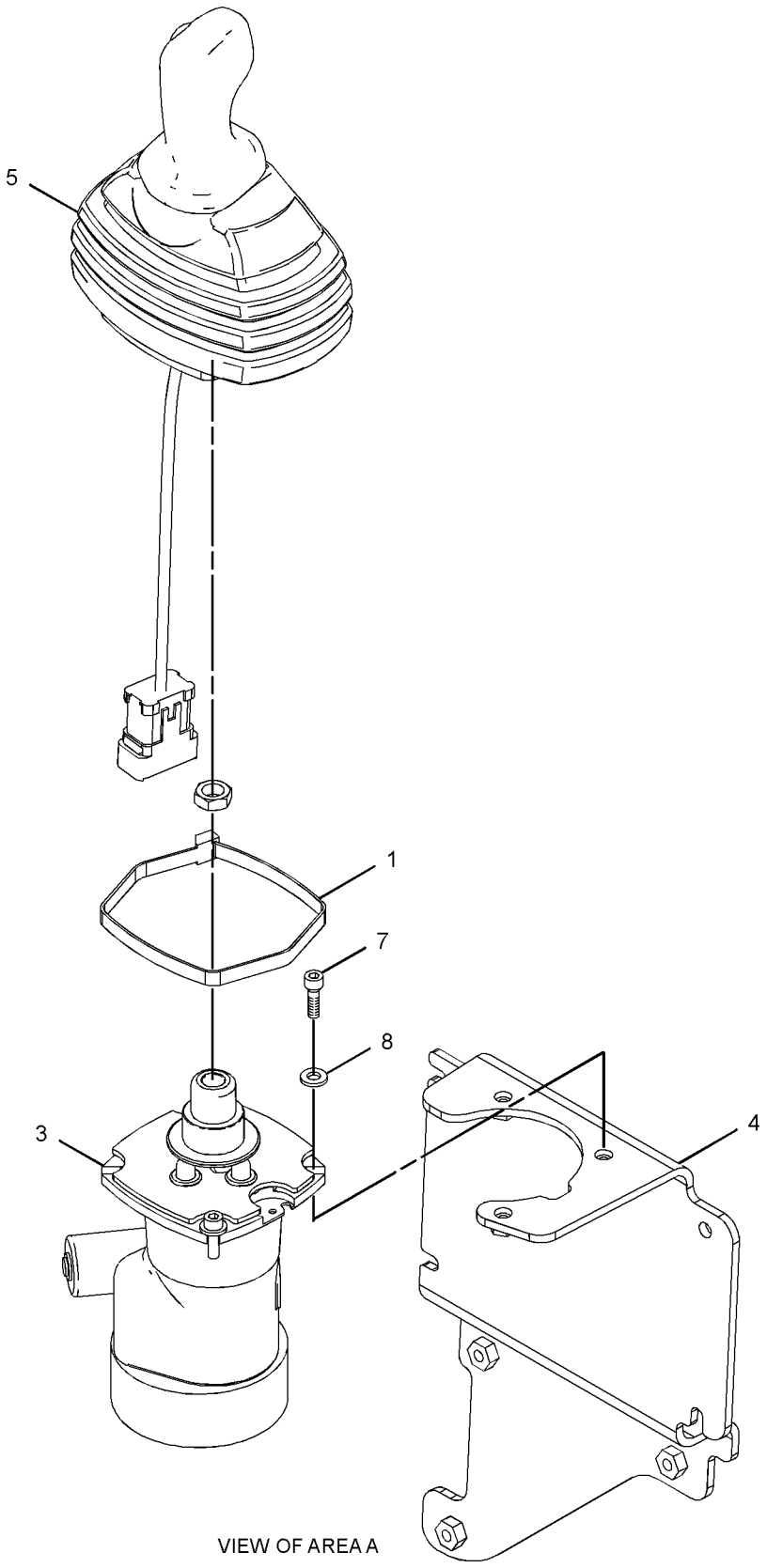

VIEW OF AREA A

GRAPHIC #2 **<END>** g01225787

218-5931 CONTROL GP-PILOT OPERATED HYD

S/N: MJH1-UP; SCH1-UP; RLL1-UP; BXM1-UP

HORN

AN ATTACHMENT

SMCS-5059, 5705 **i02451259**

NOTE	REF NO	GRAPHIC REF	PART NUMBER	QTY	PART NAME 1 2 3 4 5 6 (PRODUCT LEVEL)	SEE PAGE
	1	1	**110-8760**	1	STRAP	
M	2	1	**8T-4137**	1	BOLT (M10X1.5X20-MM)	
	3	1	**164-9425**	1	HORN AS (LOW TONE)	
	4	1	**8T-4205**	3	WASHER-HARD (7.2X14.5X2-MM THK)	
Y	5	1	**218-6119**	1	VALVE GP-PILOT (DIRECTION, SPEED)	555
	6	1	**218-6422**	1	BRACKET AS	
Y	7	1	**218-6485**	1	CONTROL GP-HANDLE (DIRECTION, SPEED)	325
	8	1	**237-5331**	1	FILM-INSTRUCTION (MACHINE CONTROL, READ OMM)	
M	9	1	**8T-0269**	3	BOLT-SOCKET HEAD (M6X1X20-MM)	
	10	1	**8T-4121**	1	WASHER-HARD (11X21X2.5-MM THK)	

M-METRIC PART
Y-SEPARATE ILLUSTRATION

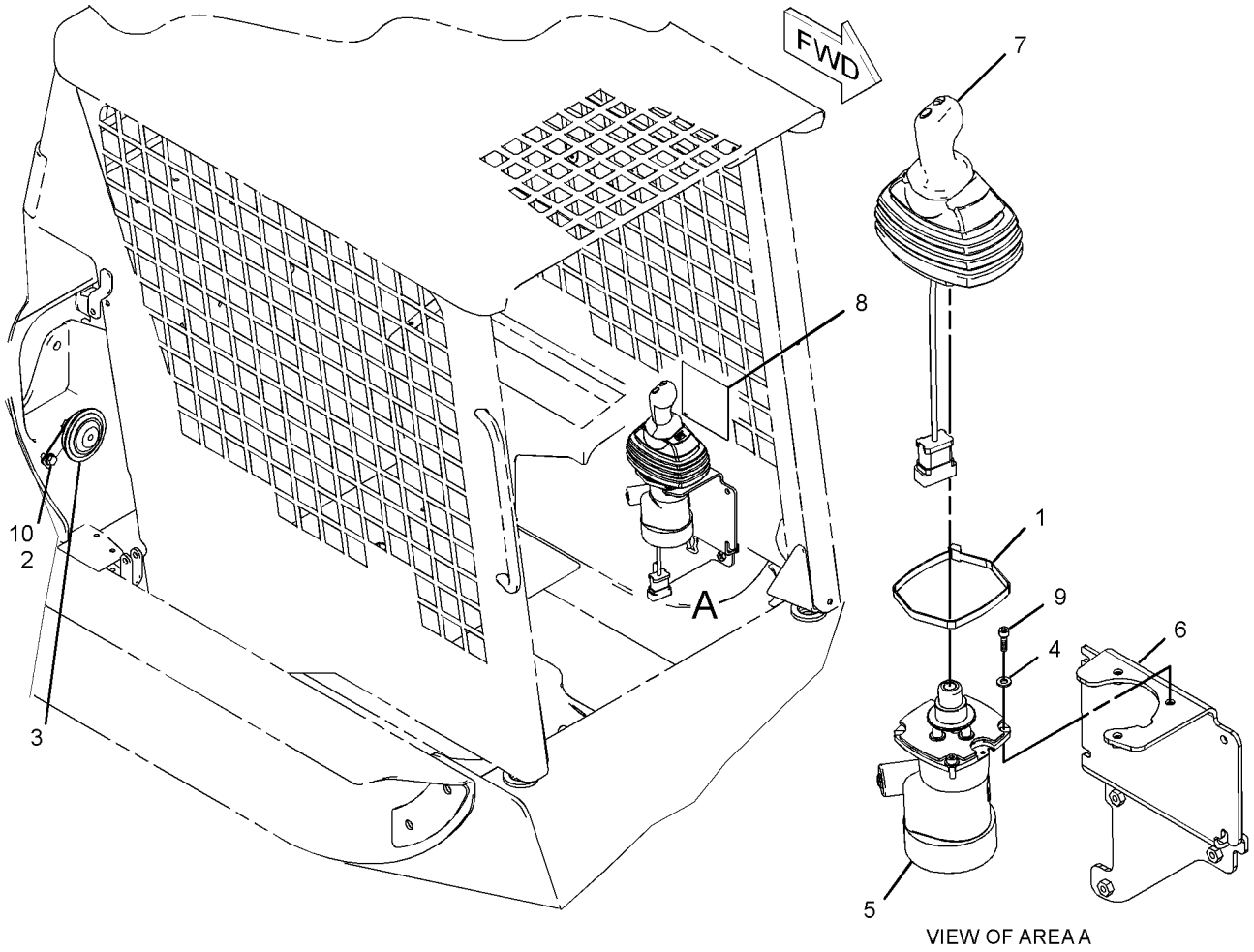

VIEW OF AREA A

GRAPHIC #1 **<END>** g01225060

HYDRAULIC SYSTEM

218-5932 CONTROL GP-PILOT OPERATED HYD

S/N: MJH1-UP; SCH1-UP; RLL1-UP; BXM1-UP

HORN

AN ATTACHMENT

SMCS-5059, 5705 **i02451290**

NOTE	REF NO	GRAPHIC REF	PART NUMBER	QTY	PART NAME 1 2 3 4 5 6 (PRODUCT LEVEL)	SEE PAGE
M	1	2	**095-1207**	1	NUT (M12X1.75-THD)	
	2	2	**110-8760**	1	STRAP	
Y	3	2	**218-6119**	1	VALVE GP-PILOT (DIRECTION, SPEED)	555
	4	2	**218-6422**	1	BRACKET AS	
Y	5	2	**231-4256**	1	CONTROL GP-HANDLE (LH) (DIRECTION, SPEED)	327
	6	1	**235-5246**	1	FILM-INSTRUCTION (MACHINE CONTROL, READ OMM)	
M	7	2	**8T-0269**	3	BOLT-SOCKET HEAD (M6X1X20-MM)	
	8	2	**8T-4205**	3	WASHER-HARD (7.2X14.5X2-MM THK)	
M	9	2	**8T-4137**	1	BOLT (M10X1.5X20-MM)	
	10	2	**164-9425**	1	HORN AS (LOW TONE)	
	11	2	**8T-4121**	1	WASHER-HARD (11X21X2.5-MM THK)	

M-METRIC PART
Y-SEPARATE ILLUSTRATION

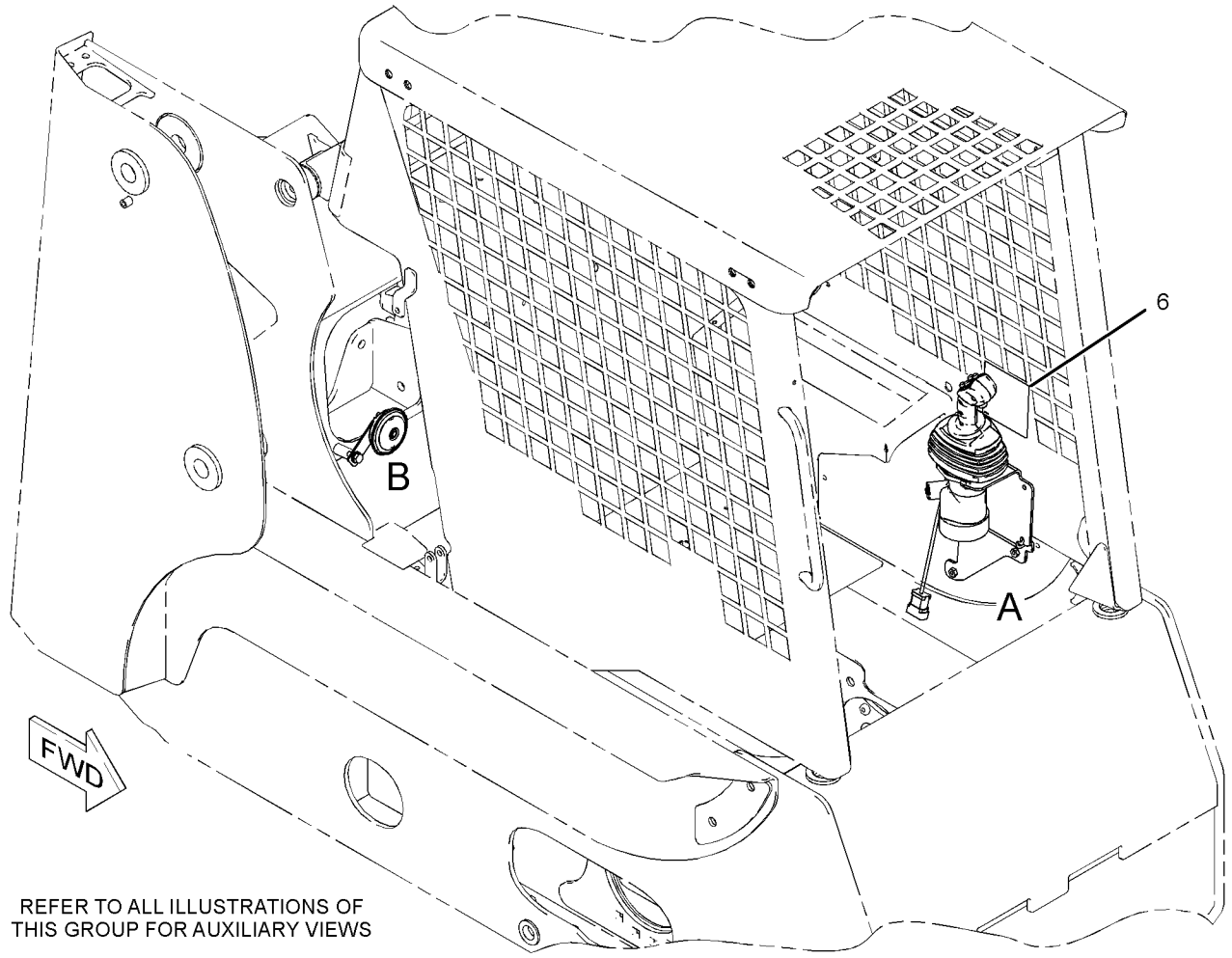

REFER TO ALL ILLUSTRATIONS OF THIS GROUP FOR AUXILIARY VIEWS

GRAPHIC #1 g01229647

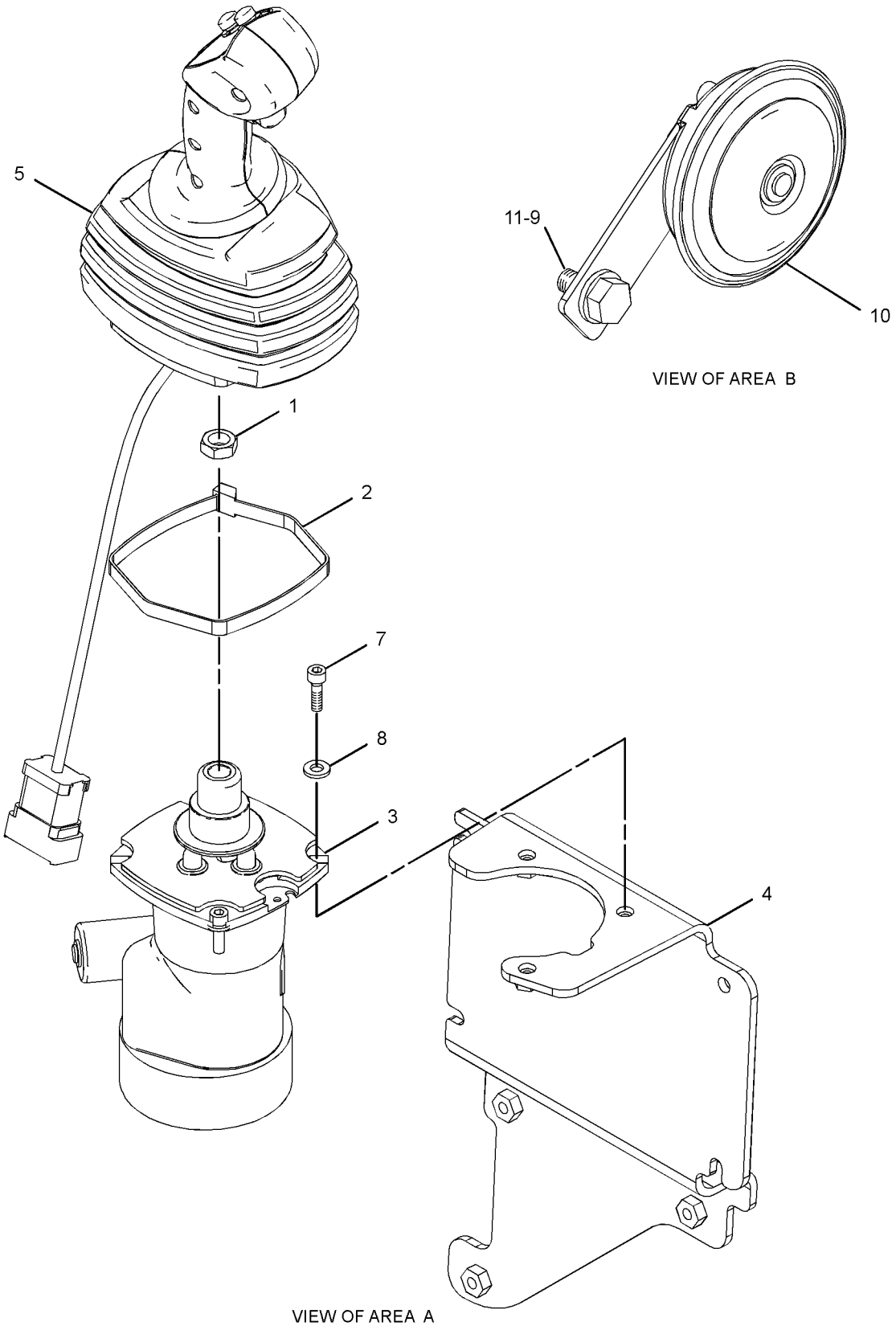

GRAPHIC #2 **<END>** g01229637

HYDRAULIC SYSTEM

218-5933 CONTROL GP-PILOT OPERATED HYD

S/N: MJH1-UP; RLL1-UP
HORN, FOURTH FUNCTION
AN ATTACHMENT

SMCS-5059, 5705 **i02014867**

NOTE	REF NO	GRAPHIC REF	PART NUMBER	QTY	PART NAME 1 2 3 4 5 6 (PRODUCT LEVEL)	SEE PAGE
M	1	2	**095-1207**	1	NUT (M12X1.75-THD)	
	2	2	**110-8760**	1	STRAP	
	3	2	**8T-4205**	3	WASHER-HARD (7.2X14.5X2-MM THK)	
M	4	2	**8T-0269**	3	BOLT-SOCKET HEAD (M6X1X20-MM)	
	5	1	**235-5246**	1	FILM-INSTRUCTION (MACHINE CONTROL, READ OMM)	
Y	6	2	**218-6119**	1	VALVE GP-PILOT (DIRECTION, SPEED)	555
	7	2	**218-6422**	1	BRACKET AS	
Y	8	2	*225-7960*	1	WIRING GP-WORK TOOL (RADIAL LIFT)	202
Y	9	2	**231-4258**	1	CONTROL GP-HANDLE (LH) (DIRECTION, SPEED)	329
BF		1	**113-8490**	1	FUSE (10-AMPERE)	
BF		1	**133-9931**	1	JUMPER AS	
BF		1	**164-9425**	1	HORN AS (LOW TONE)	
BF		1	**177-9853**	1	RECEPTACLE AS	
F		1	**178-3586**	1	LOCK	
BF		1	**8T-4121**	1	WASHER-HARD (11X21X2.5-MM THK)	
BFM		1	**8T-4137**	1	BOLT (M10X1.5X20-MM)	

B-USE AS REQUIRED
F-NOT SHOWN
M-METRIC PART
Y-SEPARATE ILLUSTRATION

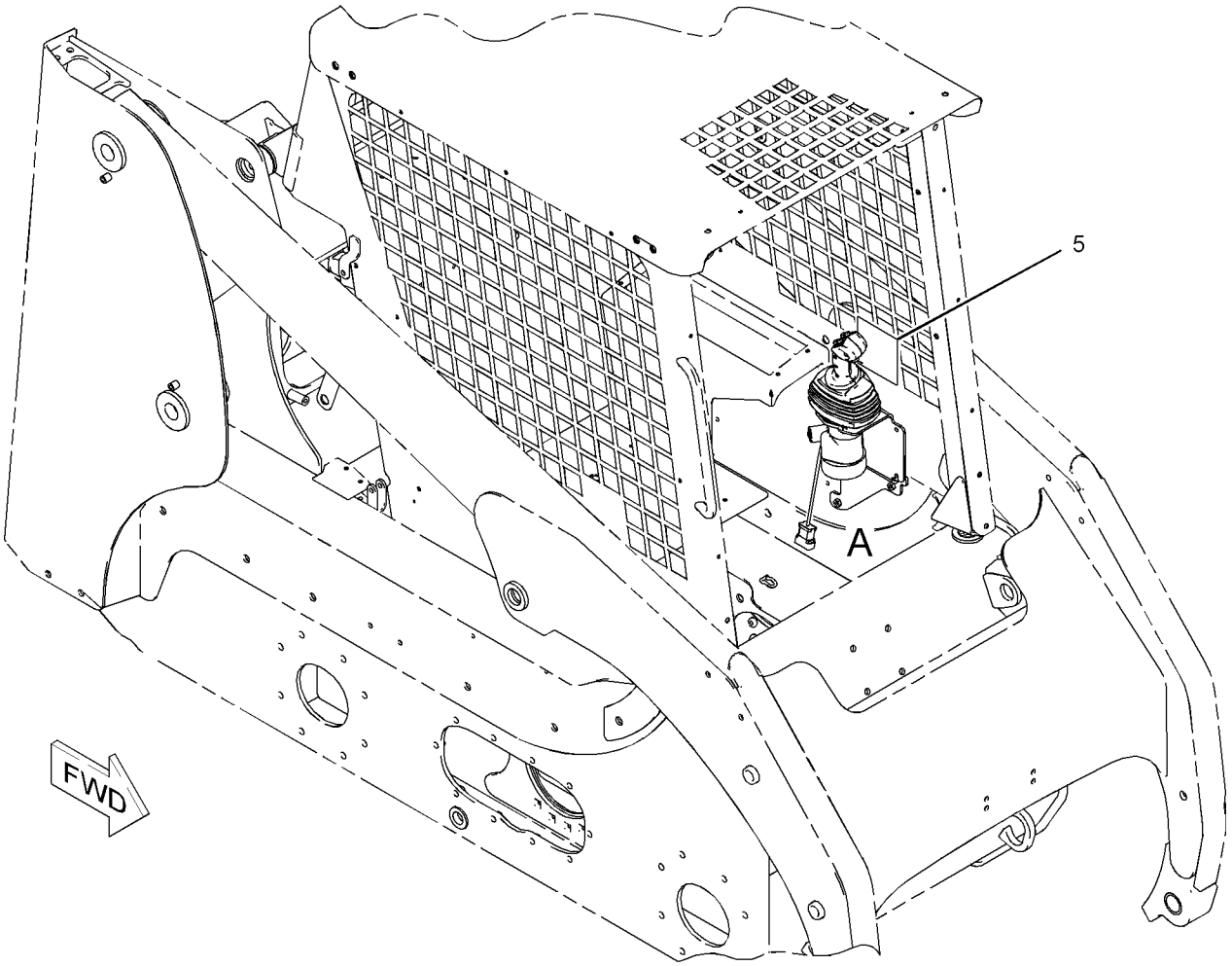

GRAPHIC #1 g01041619

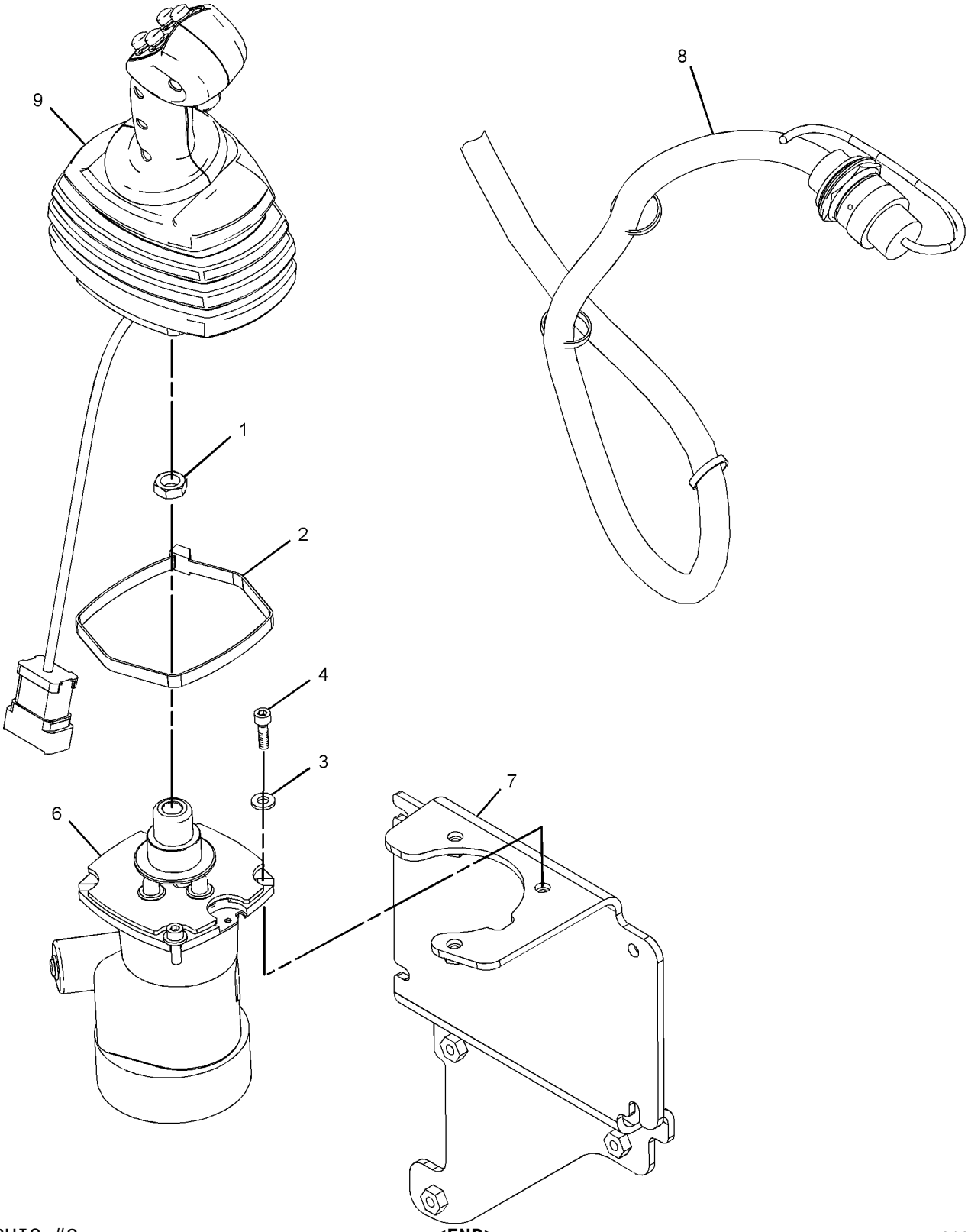

GRAPHIC #2

<END>

g01041620

HYDRAULIC SYSTEM

218-5947 CONTROL GP-PILOT OPERATED HYD

S/N: SCH1-UP; BXM1-UP
HORN, FOURTH FUNCTION
AN ATTACHMENT

SMCS-5059, 5705 **i02014860**

NOTE	REF NO	GRAPHIC REF	PART NUMBER	QTY	PART NAME 1 2 3 4 5 6 (PRODUCT LEVEL)	SEE PAGE
M	1	2	**095-1207**	1	NUT (M12X1.75-THD)	
	2	2	**110-8760**	1	STRAP	
	3	2	**8T-4205**	3	WASHER-HARD (7.2X14.5X2-MM THK)	
M	4	2	**8T-0269**	3	BOLT-SOCKET HEAD (M6X1X20-MM)	
	5	1	**235-5246**	1	FILM-INSTRUCTION (MACHINE CONTROL, READ OMM)	
Y	6	2	*216-4724*	1	WIRING GP-WORK TOOL (VERTICAL LIFT)	200
Y	7	2	**218-6119**	1	VALVE GP-PILOT (DIRECTION, SPEED)	555
	8	2	**218-6422**	1	BRACKET AS	
Y	9	2	**231-4258**	1	CONTROL GP-HANDLE (LH) (DIRECTION, SPEED)	329
BF		1	**113-8490**	1	FUSE (10-AMPERE)	
BF		1	**133-9931**	1	JUMPER AS	
BF		1	**164-9425**	1	HORN AS (LOW TONE)	
F		1	**177-9853**	1	RECEPTACLE AS	
F		1	**178-3586**	1	LOCK	
BF		1	**8T-4121**	1	WASHER-HARD (11X21X2.5-MM THK)	
BFM		1	**8T-4137**	1	BOLT (M10X1.5X20-MM)	

B-USE AS REQUIRED
F-NOT SHOWN
M-METRIC PART
Y-SEPARATE ILLUSTRATION

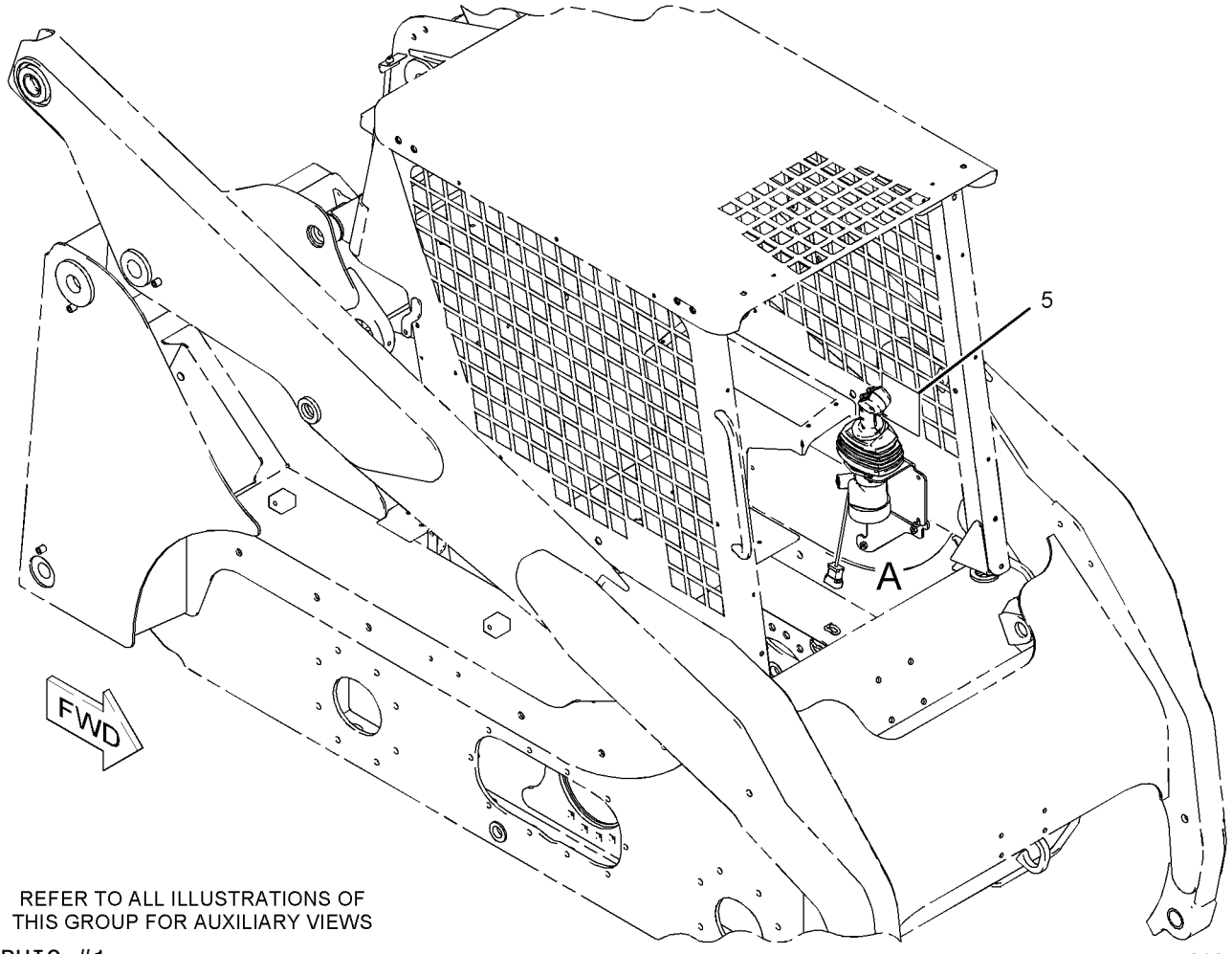

REFER TO ALL ILLUSTRATIONS OF
THIS GROUP FOR AUXILIARY VIEWS

GRAPHIC #1

g01041610

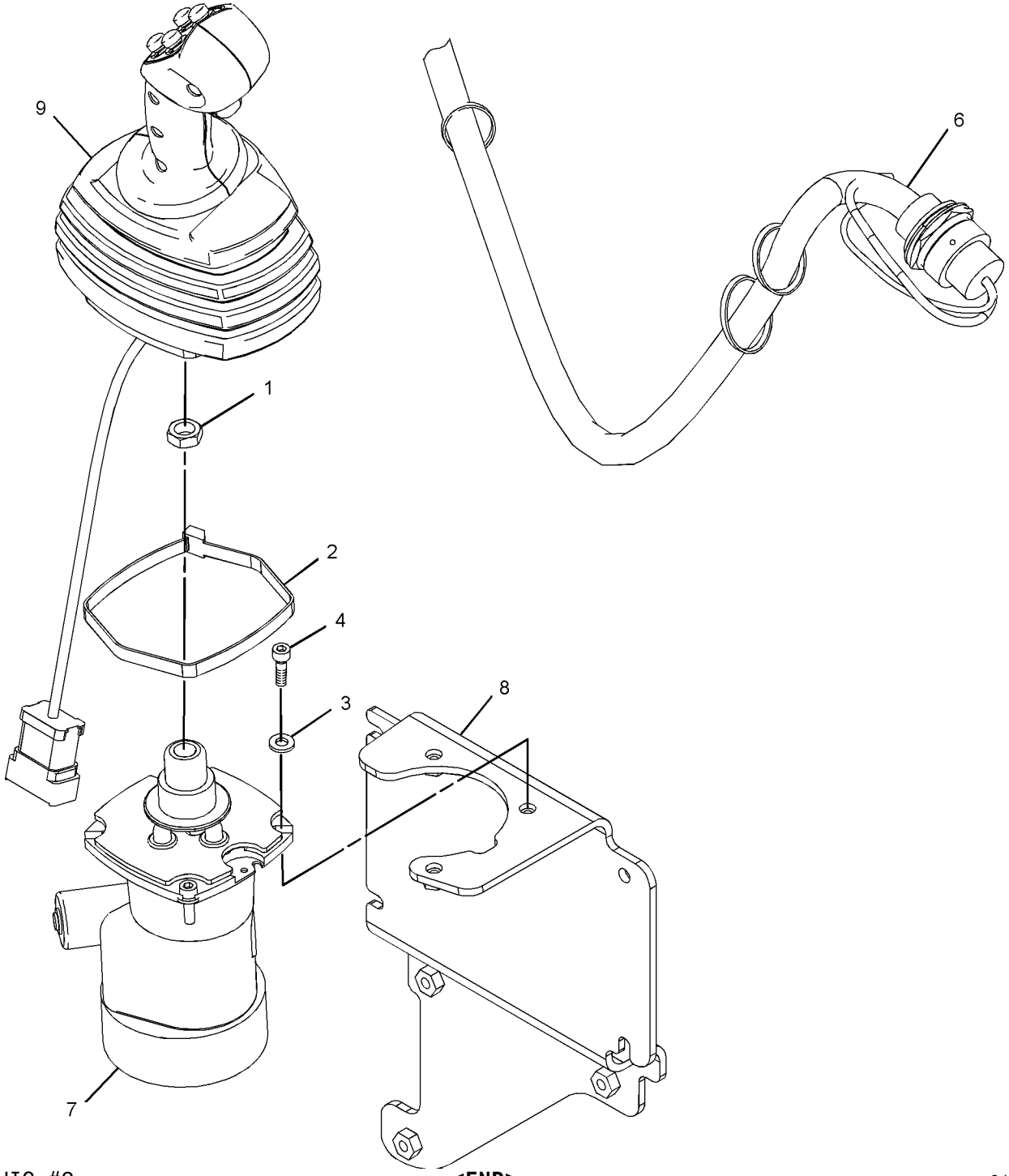

GRAPHIC #2 **<END>** g01041611

218-6571 CONTROL GP-PILOT OPERATED HYD

S/N: MJH1-UP; BXM1-UP
HIGH FLOW, PROPORTIONAL AUXILIARY
AN ATTACHMENT

SMCS-5059, 5705 **i02359323**

NOTE	REF NO	GRAPHIC REF	PART NUMBER	QTY	PART NAME 1 2 3 4 5 6 (PRODUCT LEVEL)	SEE PAGE
M	1	2	**095-1207**	1	NUT (M12X1.75-THD)	
	2	2	**110-8760**	1	STRAP	
	3	1,2	**115-1615**	1	RELAY AS (12-VOLT)	
	4	2	**133-9931**	1	JUMPER AS	
		2	**102-8803**		KIT-RECEPTACLE (3-PIN)	
					(INCLUDES RECEPTACLE AS & WEDGE)	
	5	2	**218-6421**	1	BRACKET AS	
	6	1	**223-5942**	1	SWITCH GP-ROCKER (HIGH FLOW)	
		1	**111-7899**	1	GASKET	
	7	2	**225-8005**	1	HARNESS AS-OPERATOR CONTROLS (HIGH FLOW)	
		2	**102-8802**	1	KIT-RECEPTACLE (2-PIN)	
		2	**102-8806**	1	KIT-RECEPTACLE (8-PIN)	
					(EACH KIT INCLUDES RECEPTACLE AS & WEDGE)	
		2	**155-2270**	5	KIT-CONNECTING PLUG (2-PIN)	
					(EACH KIT INCLUDES PLUG AS, WEDGE & INTERFACE SEAL)	
	8	1	**225-8009**	1	HARNESS AS-OPERATOR CONTROLS (JOYSTICK)	
		1	**155-2255**	1	KIT-CONNECTING PLUG (12-PIN)	
		1	**155-2260**	1	KIT-CONNECTING PLUG (3-PIN)	
		1	**155-2270**	2	KIT-CONNECTING PLUG (2-PIN)	
					(EACH KIT INCLUDES PLUG AS, WEDGE & INTERFACE SEAL)	
		1	**102-8802**	1	KIT-RECEPTACLE (2-PIN)	
		1	**102-8801**	1	KIT-RECEPTACLE (12-PIN)	
					(EACH KIT INCLUDES RECEPTACLE AS & WEDGE)	
Y	9	2	**228-9228**	1	VALVE GP-PILOT (WORK TOOL)	556
Y	10	2	**231-4259**	1	CONTROL GP-HANDLE (RH)	330
	11	1	**235-5243**	1	FILM-INSTRUCTION (MACHINE CONTROLS)	
M	12	2	**8T-0269**	3	BOLT-SOCKET HEAD (M6X1X20-MM)	
	13	2	**8T-4205**	3	WASHER-HARD (7.2X14.5X2-MM THK)	

M-METRIC PART
Y-SEPARATE ILLUSTRATION

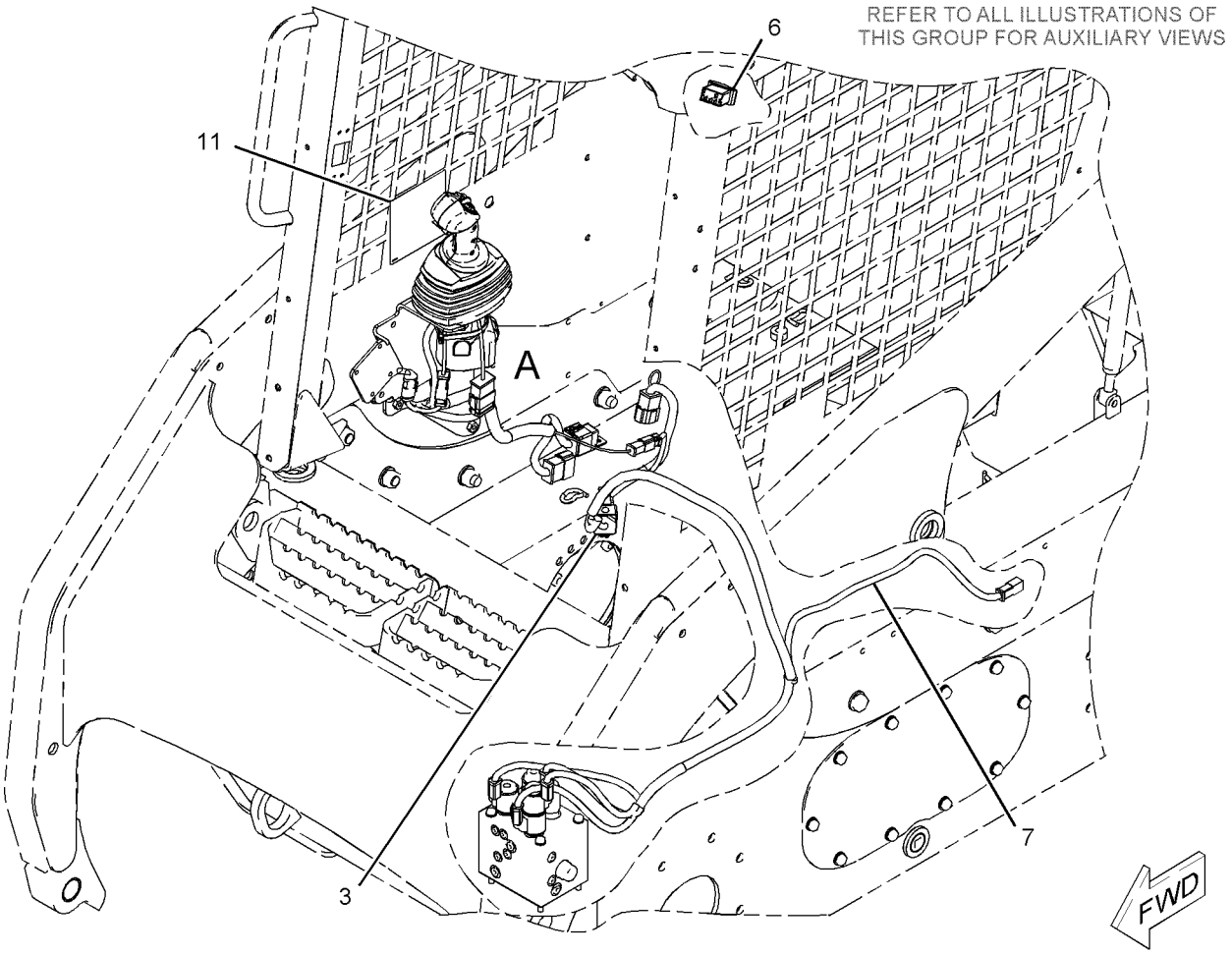

GRAPHIC #1 g01038717

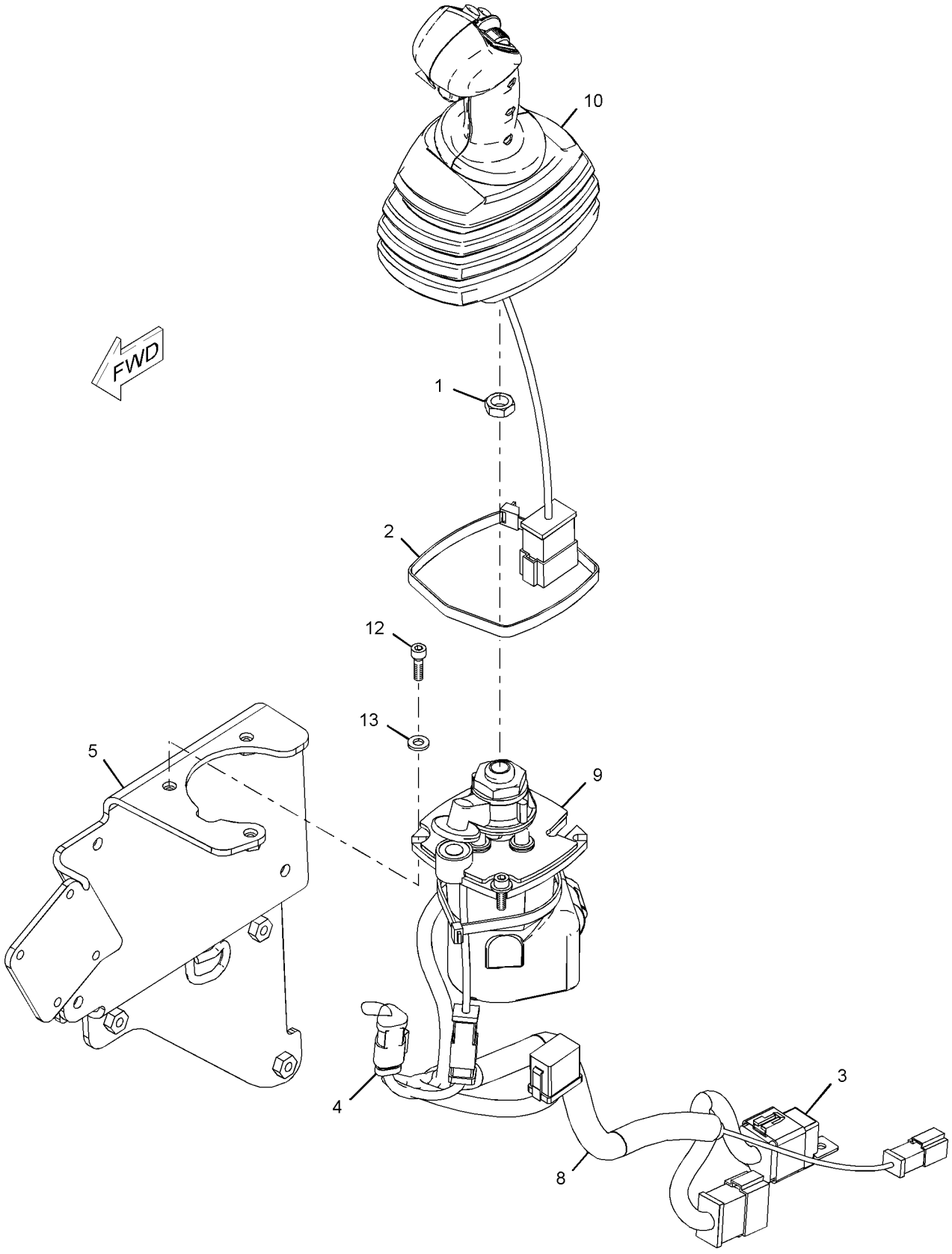

VIEW OF AREA A

GRAPHIC #2

<END>

g01038719

230-5406 CYLINDER & MTG GP-ANGLE BLADE

S/N: MJH1-UP; SCH1-UP; RLL1-UP; BXM1-UP
PART OF 177-1989, 177-1990 BLADE AR
AN ATTACHMENT

SMCS-6701 **i01860855**

NOTE	REF NO	GRAPHIC REF	PART NUMBER	QTY	PART NAME 1 2 3 4 5 6 (PRODUCT LEVEL)	SEE PAGE
	1	1	**064-3843**	1	RING-SNAP	
	2	1	**210-0855**	1	PIN AS	
	3	1	**213-3943**	1	BUSHING	
Y	4	1	**225-9521**	1	CYLINDER GP-HYDRAULIC (ANGLE BLADE)	363
	5	1	**3B-8489**	1	FITTING-GREASE	
	6	1	**7X-7729**	1	WASHER (11X25X3-MM THK)	
M	7	1	**8T-4137**	1	BOLT (M10X1.5X20-MM)	

M-METRIC PART
Y-SEPARATE ILLUSTRATION

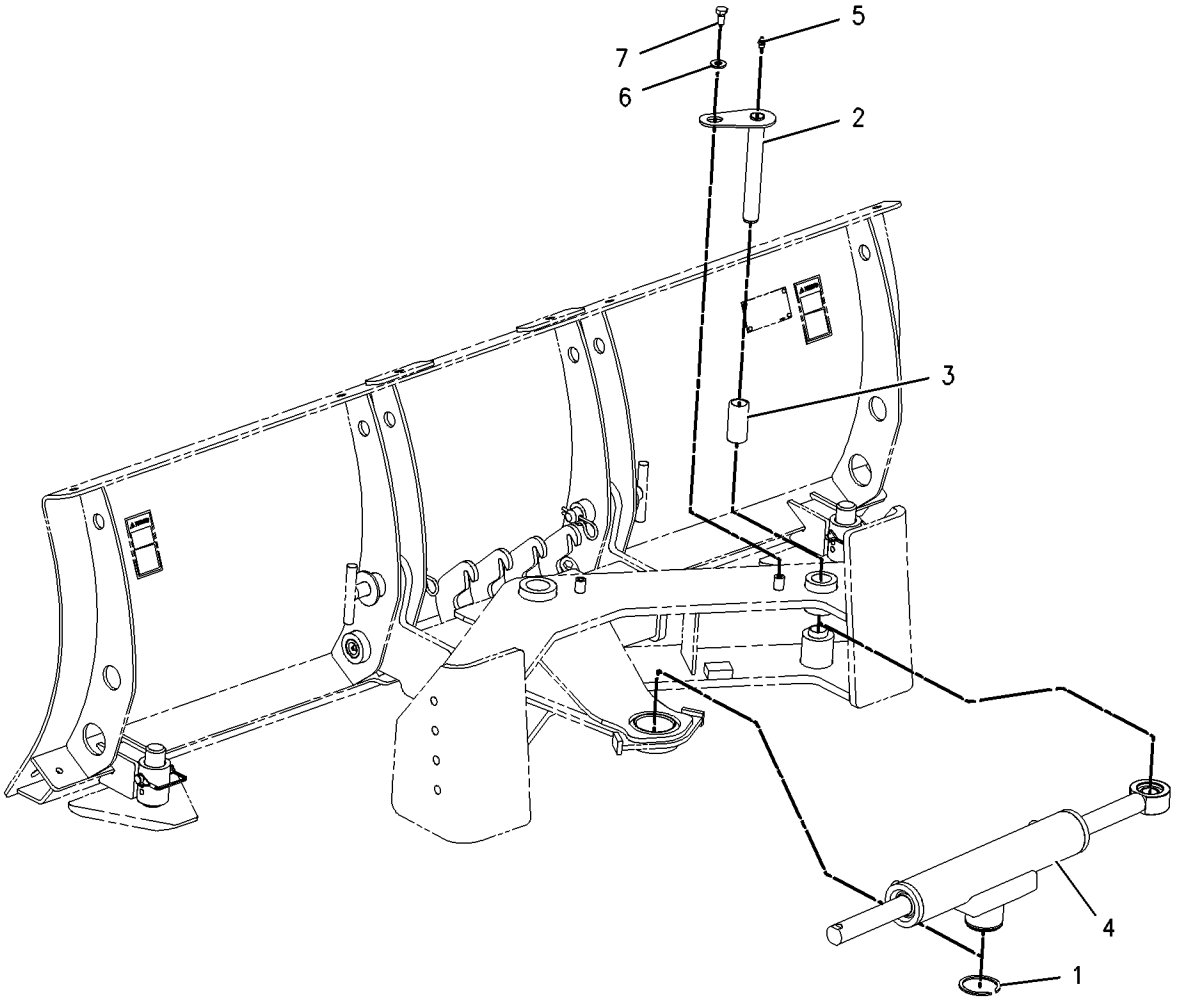

GRAPHIC #1 **<END>** g00978845

231-5274 CYLINDER & MTG GP-ANGLE BLADE

S/N: MJH1-UP; BXM1-UP
PART OF 231-5275, 231-5277 BLADE AR
AN ATTACHMENT

SMCS-6701 **i02301723**

NOTE	REF NO	GRAPHIC REF	PART NUMBER	QTY	PART NAME 1 2 3 4 5 6 (PRODUCT LEVEL)	SEE PAGE
J	1	1	**230-4604**	2	CYLINDER GP-HYDRAULIC (ANGLE)	
					(EACH INCLUDES)	
		1	**3B-8489**	2	FITTING-GREASE	
		1	**244-1368**	1	ROD AS	
J	2	1	**230-4605**	1	CYLINDER GP-HYDRAULIC (TILT)	
		1	**3B-8489**	2	FITTING-GREASE	
		1	**244-1369**	1	ROD AS	
	3	1	**231-5266**	6	PIN AS	
	4	1	**238-0999**	12	SPACER (25.4X28.4X13-MM THK)	
M	5	1	**8T-4200**	6	BOLT (M8X1.25X16-MM)	
	6	1	**6V-8397**	6	SEAL-O-RING	
	7	1	**8T-4224**	6	WASHER-HARD (8.8X16X2-MM THK)	
	8	1	**244-1370**	6	SPACER (8.2X13X6-MM THK)	
					AVAILABLE REPAIR KIT(S):	
J			**234-5130**	1	KIT-SEAL	
					(INCLUDES RINGS, SEALS & WIPER)	

J-KIT MARKED J AVAILABLE FOR PART(S) MARKED J
M-METRIC PART

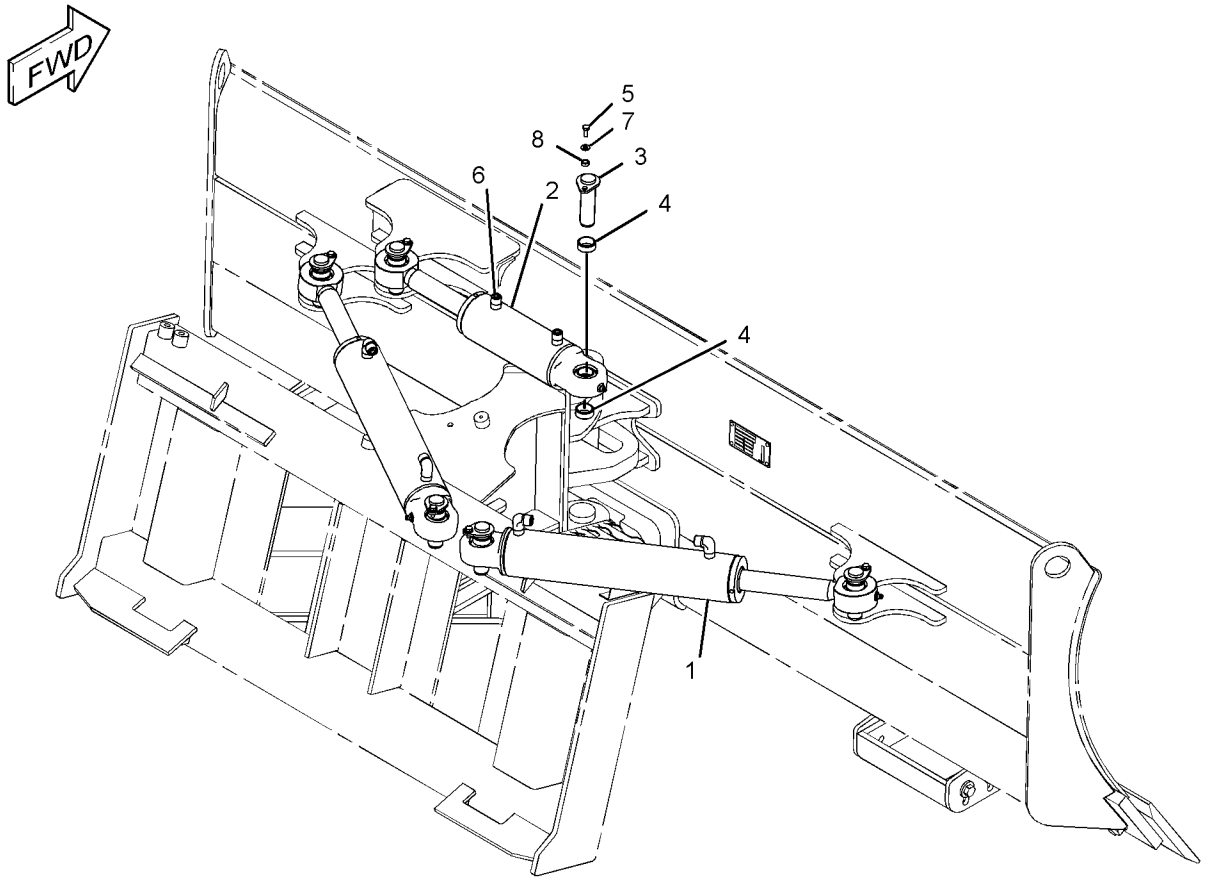

GRAPHIC #1 **<END>** g01164349

HYDRAULIC SYSTEM

218-6799 CYLINDER & MTG GP-LIFT ARM

S/N: MJH1-UP; RLL1-UP
PART OF 218-5910 CHASSIS AR

SMCS-5102, 5104, 6118, 6119 **i02318241**

NOTE	REF NO	GRAPHIC REF	PART NUMBER	QTY	PART NAME 1 2 3 4 5 6 (PRODUCT LEVEL)	SEE PAGE
	1	1	**142-8789**	1	SUPPORT-LOADER	
	2	2	**142-8790**	4	PIN AS	
	3	2	**142-8791**	2	PIN AS	
	4	1	**142-8792**	1	PIN	
	5	2	**142-8793**	2	PIN	
	6	1	**142-8794**	1	PIN	
	7	2	**142-8808**	2	SPACER (32.5X50.5X28-MM THK)	
	8	2	**142-8832**	1	PIN AS	
	9	1	**142-8880**	1	LEVER	
	10	1	**142-8881**	1	BRACKET	
	11	2	**191-9588**	2	PIN AS	
Y	12	1	**230-3683**	1	CYLINDER GP-LIFT (LH)	364
Y	13	2	**230-3684**	1	CYLINDER GP-TILT (LH)	367
Y	14	1	**230-3693**	1	CYLINDER GP-LIFT (RH)	365
Y	15	2	**230-3694**	1	CYLINDER GP-TILT (RH)	368
	16	2	**3B-8489**	10	FITTING-GREASE	
	17	1	**3S-8536**	1	SPACER (0.406X0.656X0.38-IN THK)	
	18	1	**4M-5285**	4	RING-RETAINING (EXTERNAL)	
	19	2	**5H-9743**	1	GROMMET	
M	20	2	**6V-9189**	2	LOCKNUT (M8X1.25-THD)	
	21	2	**7X-7729**	8	WASHER (11X25X3-MM THK)	
M	22	2	**8T-3647**	2	BOLT (M8X1.25X80-MM)	
	23	1	**8T-4121**	1	WASHER-HARD (11X21X2.5-MM THK)	
M	24	1	**8T-4136**	1	BOLT (M10X1.5X25-MM)	
M	25	1	**8T-4189**	1	BOLT (M8X1.25X20-MM)	
M	26	2	**8T-4191**	8	BOLT (M10X1.5X16-MM)	
	27	1	**8T-4224**	1	WASHER-HARD (8.8X16X2-MM THK)	

M-METRIC PART
Y-SEPARATE ILLUSTRATION

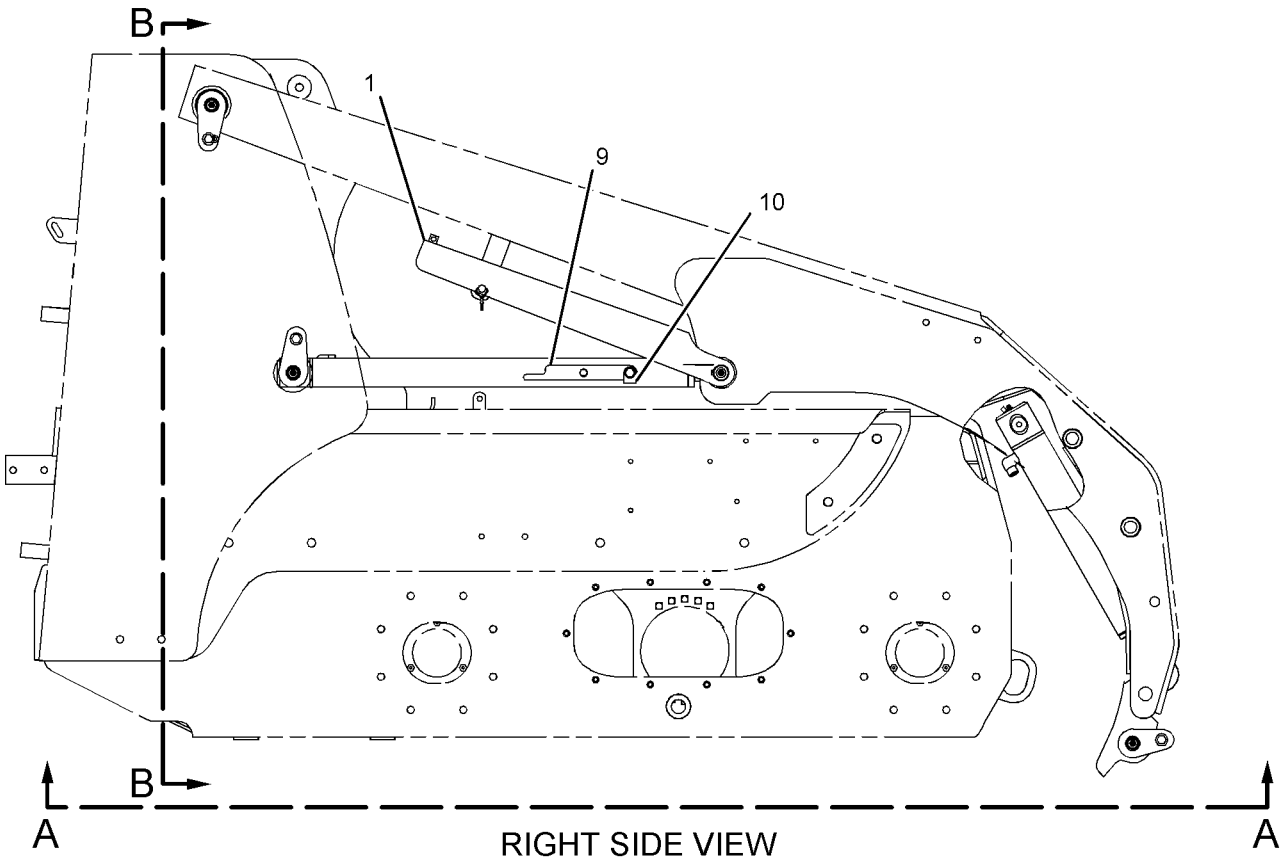

RIGHT SIDE VIEW

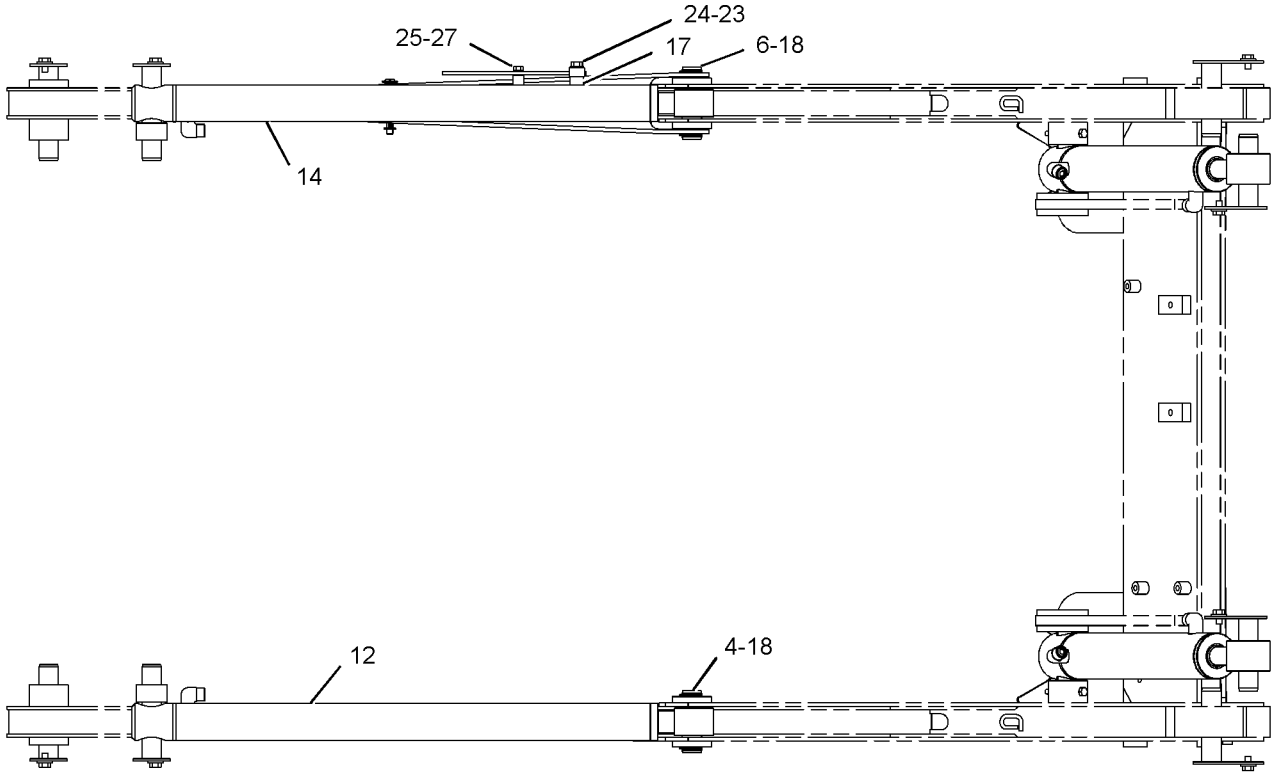

VIEW A-A

GRAPHIC #1

g01026736

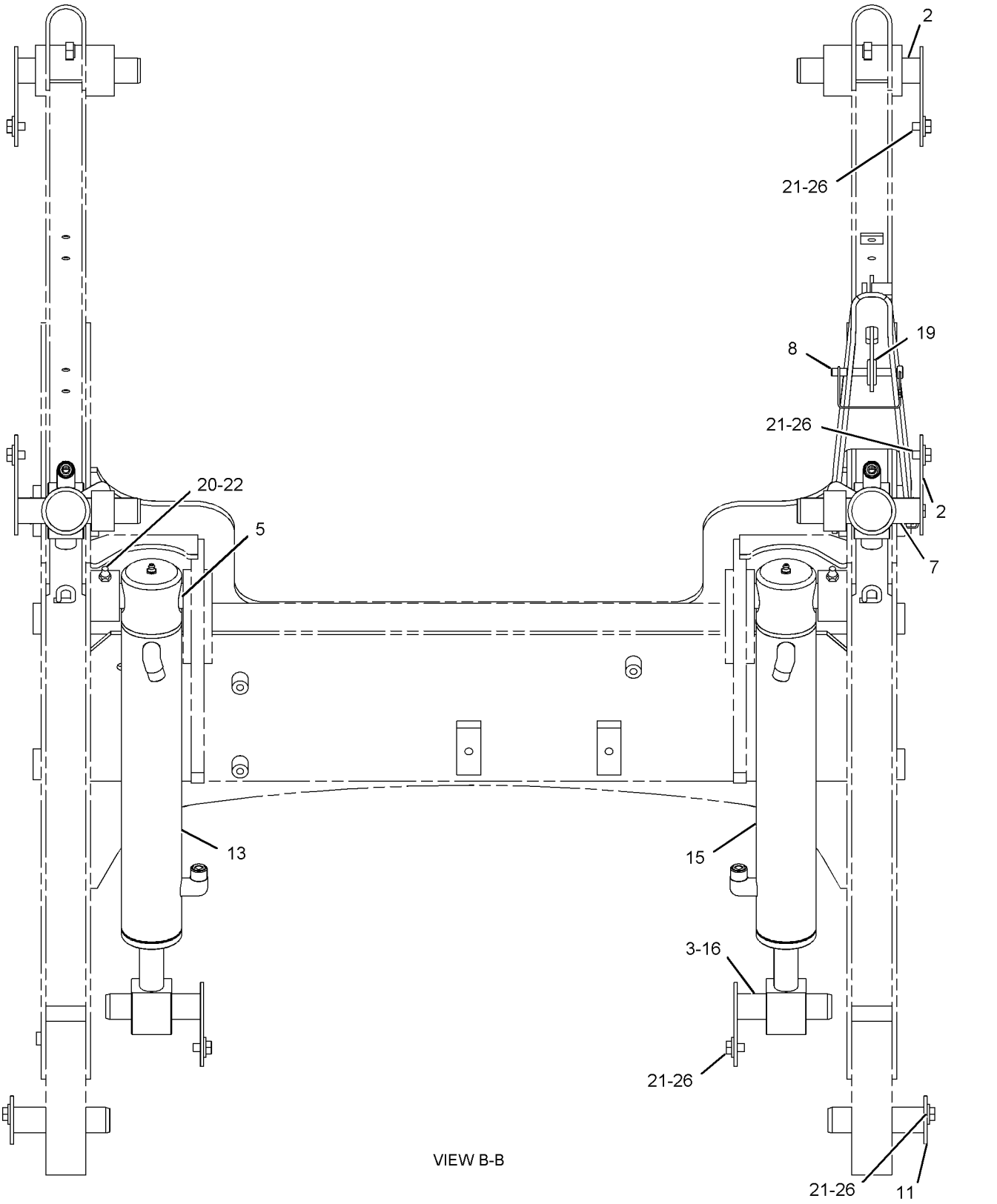

VIEW B-B

GRAPHIC #2 **<END>** g01026737

218-6899 CYLINDER & MTG GP-LIFT ARM

S/N: SCH1-UP; BXM1-UP
PART OF 218-6610 CHASSIS AR

SMCS-5102, 5104, 6118, 6119 **i02323372**

NOTE	REF NO	GRAPHIC REF	PART NUMBER	QTY	PART NAME 1 2 3 4 5 6 (PRODUCT LEVEL)	SEE PAGE
	1	1	**119-4594**	10	WASHER (41X64X1-MM THK)	
	2	1	**142-8791**	2	PIN AS	
	3	1	**142-8793**	2	PIN	
	4	1	**142-8832**	2	PIN AS	
	5	1	**190-7967**	2	SPACER (38.35X48.35X23.5-MM THK)	
	6	1	**190-7979**	2	BOLT (M8X1.25X80-MM)	
	7	1	**190-8038**	2	PIN AS	
	8	1	**191-9588**	2	PIN AS	
	9	1	**191-9589**	1	SUPPORT AS	
	10	1	**191-9635**	2	PIN	
	11	1	**191-9636**	2	PIN	
	12	1	**191-9637**	2	PIN AS	
	13	1	**191-9638**	2	PIN AS	
Y	14	1	**230-3684**	1	CYLINDER GP-TILT (LH)	367
Y	15	1	**230-3694**	1	CYLINDER GP-TILT (RH)	368
Y	16	1	**230-3703**	2	CYLINDER GP-LIFT	366
	17	1	**238-7720**	2	LINK AS	
					(EACH INCLUDES)	
		1	**191-9633**	2	BEARING-SLEEVE	
	18	1	**190-7971**	2	WASHER-HARD (11X64X6-MM THK)	
	19	1	**2K-5964**	2	RING-RETAINING	
	20	1	**3B-8488**	2	FITTING-GREASE	
	21	1	**3B-8489**	10	FITTING-GREASE	
	22	1	**4M-5285**	8	RING-RETAINING (EXTERNAL)	
	23	1	**5B-0651**	2	FITTING-STRAIGHT	
	24	1	**7X-7729**	8	WASHER (11X25X3-MM THK)	
	25	1	**8T-4121**	2	WASHER-HARD (11X21X2.5-MM THK)	
M	26	1	**8T-4133**	2	NUT (M10X1.5-THD)	
M	27	1	**8T-4186**	2	BOLT (M10X1.5X40-MM)	
M	28	1	**8T-4191**	8	BOLT (M10X1.5X16-MM)	
M	29	1	**8T-4195**	2	BOLT (M10X1.5X30-MM)	
	30	1	**8T-4224**	2	WASHER-HARD (8.8X16X2-MM THK)	
	31	1	**8T-4226**	2	WASHER-PLATED (10.5X45X3-MM THK)	

M-METRIC PART
Y-SEPARATE ILLUSTRATION

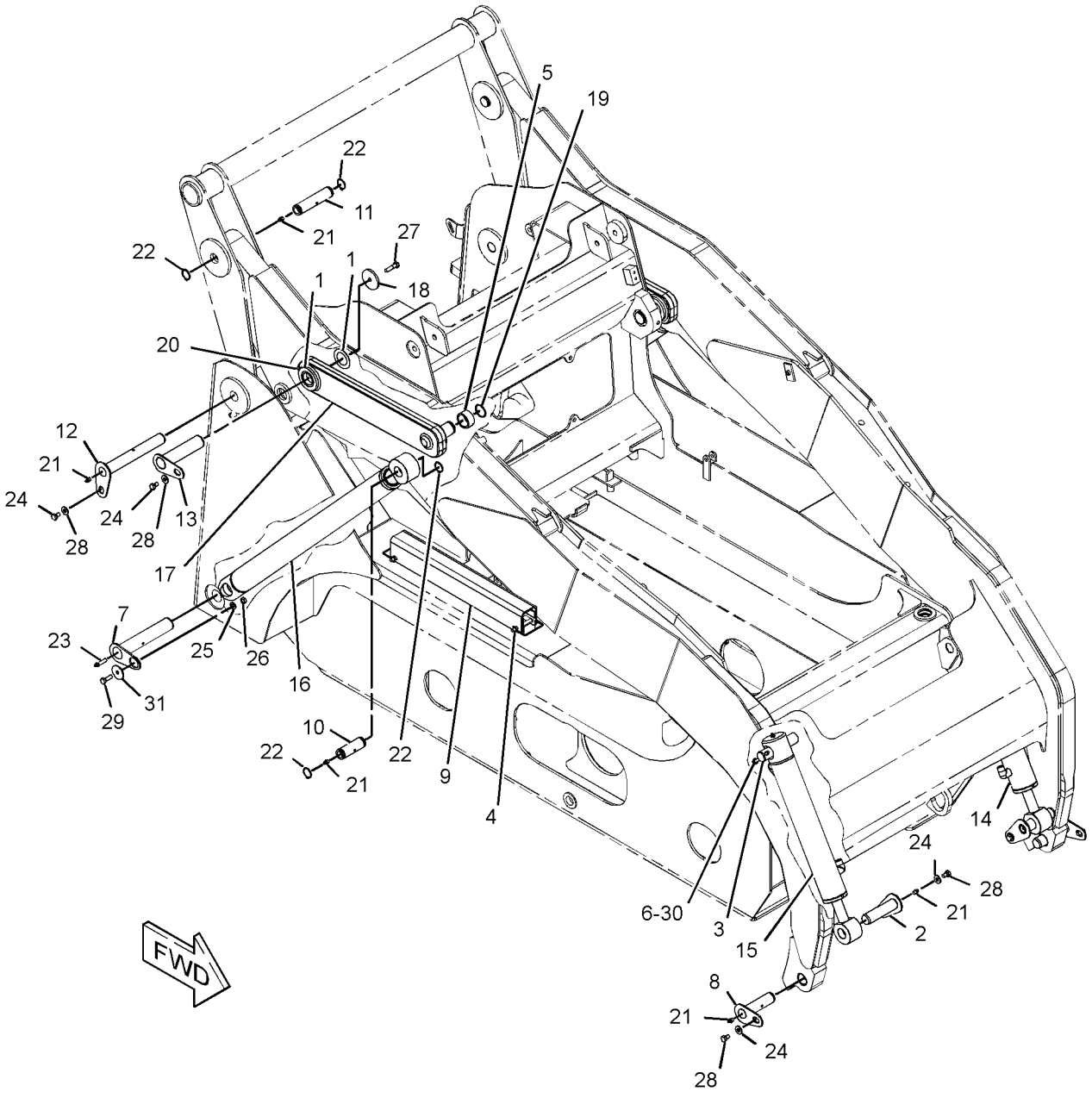

GRAPHIC #1 **<END>** g01176221

154-5018 CYLINDER GP-BUCKET

S/N: MJH1-UP; SCH1-UP; RLL1-UP; BXM1-UP
60-MM(2.3-IN)BORE X 200-MM(7.7-IN)STROKE
PART OF 154-5004, 154-5008, 154-5010 BUCKET AR-MULTIPURPOSE AN ATTACHMENT

SMCS-5498 **i02023880**

NOTE	REF NO	GRAPHIC REF	PART NUMBER	QTY	PART NAME 1 2 3 4 5 6 (PRODUCT LEVEL)	SEE PAGE
	1	1	**3B-8489**	1	FITTING-GREASE	
					AVAILABLE REPAIR KIT(S):	
			164-3213	1	KIT-SEAL	
					(INCLUDES O-RINGS, SEALS, BACK RINGS, PISTON GUIDE RING, SET SCREW, & WIPER RING)	

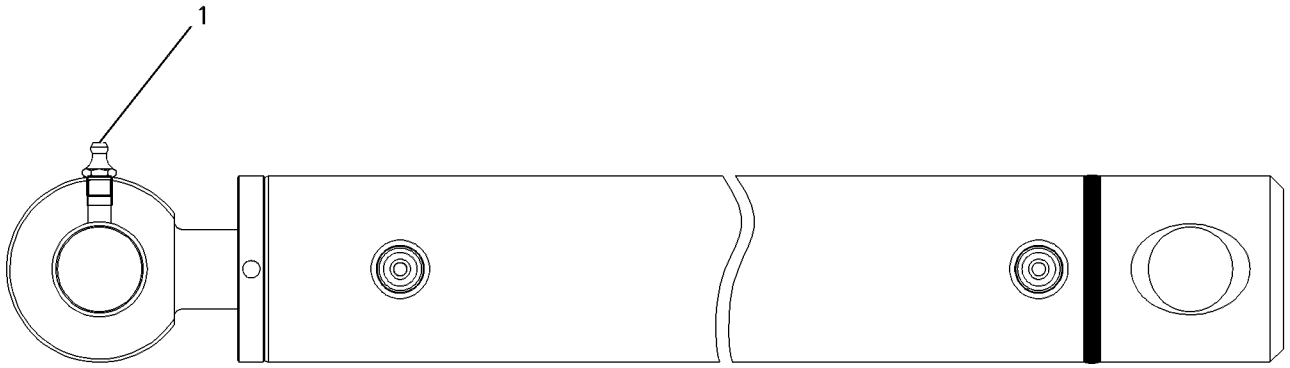

GRAPHIC #1 **<END>** g00564347

HYDRAULIC SYSTEM

192-2640 CYLINDER GP-COUPLER

S/N: MJH1-UP; SCH1-UP; RLL1-UP; BXM1-UP
35MM (1.4 IN) BORE X 103.5MM (4.14 IN) STROKE
PART OF 218-6757 CONVERSION AR-QUICK COUPLER, 218-5957 KIT-QUICK COUPLER CONVERSION
AN ATTACHMENT

SMCS-5133 **i01672784**

NOTE	PART NUMBER	QTY	PART NAME 1 2 3 4 5 6 (PRODUCT LEVEL)	SEE PAGE
			(NO SERVICED PARTS)	

<END>

156-5512 CYLINDER GP-GRAPPLE

S/N: MJH1-UP; SCH1-UP; RLL1-UP; BXM1-UP
60-MM (2.3-IN) BORE X 200-MM (7.7-IN) STROKE. INDUSTRIAL
PART OF 157-7223, 157-7224, 157-7225 BUCKET AR-GRAPPLE, 162-8139, 163-4812 FORK AR-GRAPPLE
AN ATTACHMENT

SMCS-5457 **i02023883**

NOTE	REF NO	GRAPHIC REF	PART NUMBER	QTY	PART NAME 1 2 3 4 5 6 (PRODUCT LEVEL)	SEE PAGE
	1	1	**3B-8489**	1	FITTING-GREASE	
					AVAILABLE REPAIR KIT(S):	
			164-3213	1	KIT-SEAL	
					(INCLUDES O-RINGS, SEALS, BACKRING, PISTON GUIDE RING, SET SCREW, & WIPER RING)	

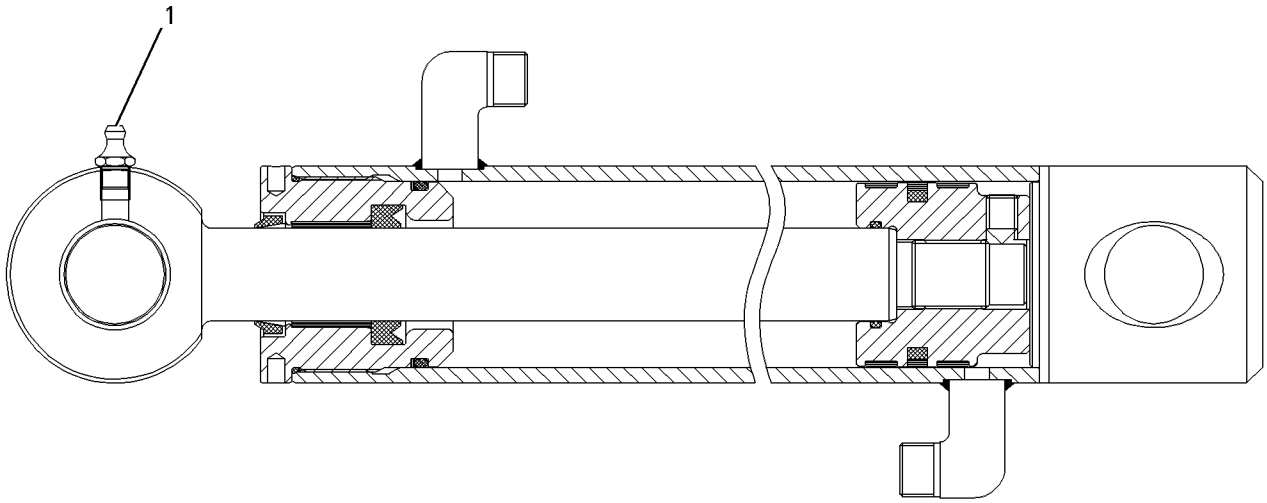

GRAPHIC #1 **<END>** g00564366

164-9295 CYLINDER GP-GRAPPLE

S/N: MJH1-UP; SCH1-UP; RLL1-UP; BXM1-UP
40-MM (1.58-IN) BORE X 200-MM (7.7-IN) STROKE
PART OF 165-8734 GRAPPLE & CYLINDER GP-UTILITY
AN ATTACHMENT

SMCS-5457 **i01217084**

NOTE	REF NO	GRAPHIC REF	PART NUMBER	QTY	PART NAME 1 2 3 4 5 6 (PRODUCT LEVEL)	SEE PAGE
	1	1	**3B-8489**	1	FITTING-GREASE	
					AVAILABLE REPAIR KIT(S):	
			172-5285	1	KIT-SEAL	
					(INCLUDES WIPER RING, PISTON GUIDE RING, PISTON SEAL AND O-RINGS)	

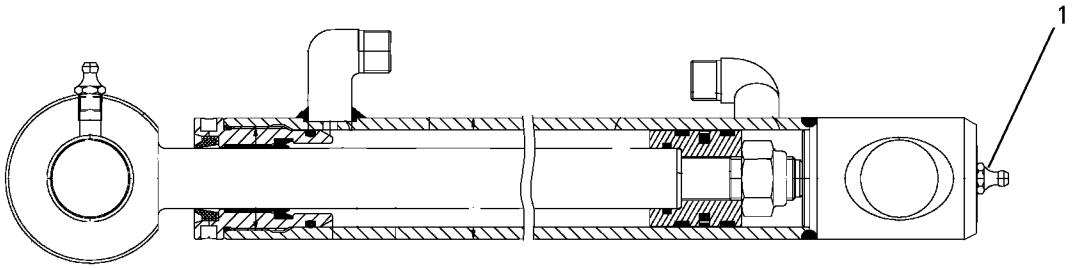

GRAPHIC #1 **<END>** g00604934

225-9521 CYLINDER GP-HYDRAULIC—ANGLE BLADE

S/N: MJH1-UP; SCH1-UP; RLL1-UP; BXM1-UP
63-MM (2.48-IN) BORE X 300-MM (11.81-IN) STROKE
PART OF 230-5406 CYLINDER & MTG GP-ANGLE BLADE
AN ATTACHMENT

SMCS-5362, 7562 **i02006038**

NOTE	REF NO	GRAPHIC REF	PART NUMBER	QTY	PART NAME 1 2 3 4 5 6 (PRODUCT LEVEL)	SEE PAGE
					AVAILABLE REPAIR KIT(S):	
			177-1958	1	KIT-SEAL	
					(INCLUDES O-RINGS,SEALS,BACK RINGS,PISTON GUIDE RING.ROD GUIDE RING AND WIPER RINGS)	

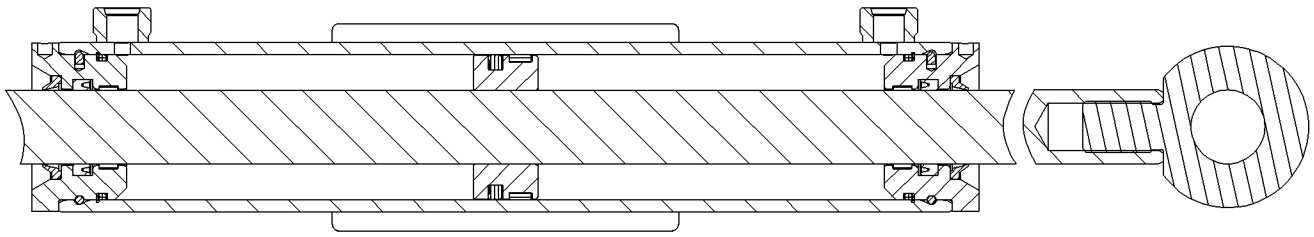

GRAPHIC #1 **<END>** g00937315

230-3683 CYLINDER GP-LIFT–LH

S/N: MJH1-UP; RLL1-UP
50-MM (1.97-IN) BORE X 653-MM (25.71-IN) STROKE
PART OF 218-6799 CYLINDER & MTG GP-LIFT ARM

SMCS-5102 **i01934855**

NOTE	REF NO	GRAPHIC REF	PART NUMBER	QTY	PART NAME 1 2 3 4 5 6 (PRODUCT LEVEL)	SEE PAGE
					AVAILABLE REPAIR KIT(S):	
			218-6826	1	KIT-SEAL	
					(INCLUDES SEALS, PISTON WEAR BAND, O-RINGS, & BACK UP RING)	

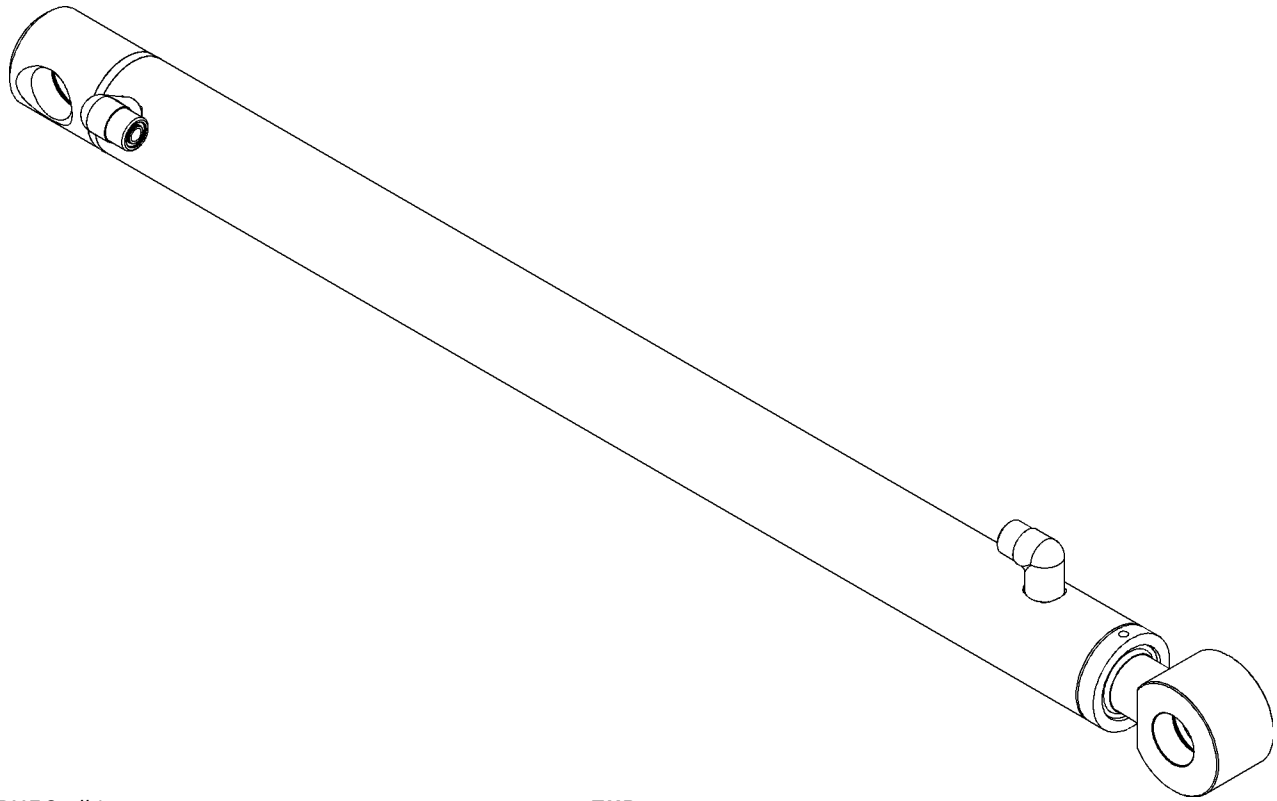

GRAPHIC #1 **<END>** g01010863

HYDRAULIC SYSTEM

230-3693 CYLINDER GP-LIFT–RH

S/N: MJH1-UP; RLL1-UP
50-MM (1.97-IN) BORE X 653-MM (25.71-IN) STROKE
PART OF 218-6799 CYLINDER & MTG GP-LIFT ARM

SMCS-5102 **i01934885**

NOTE	REF NO	GRAPHIC REF	PART NUMBER	QTY	PART NAME 1 2 3 4 5 6 (PRODUCT LEVEL)	SEE PAGE
					AVAILABLE REPAIR KIT(S):	
			218-6826	1	KIT-SEAL	
					(INCLUDES SEALS, PISTON WEAR BAND, O-RINGS & BACK UP RING)	

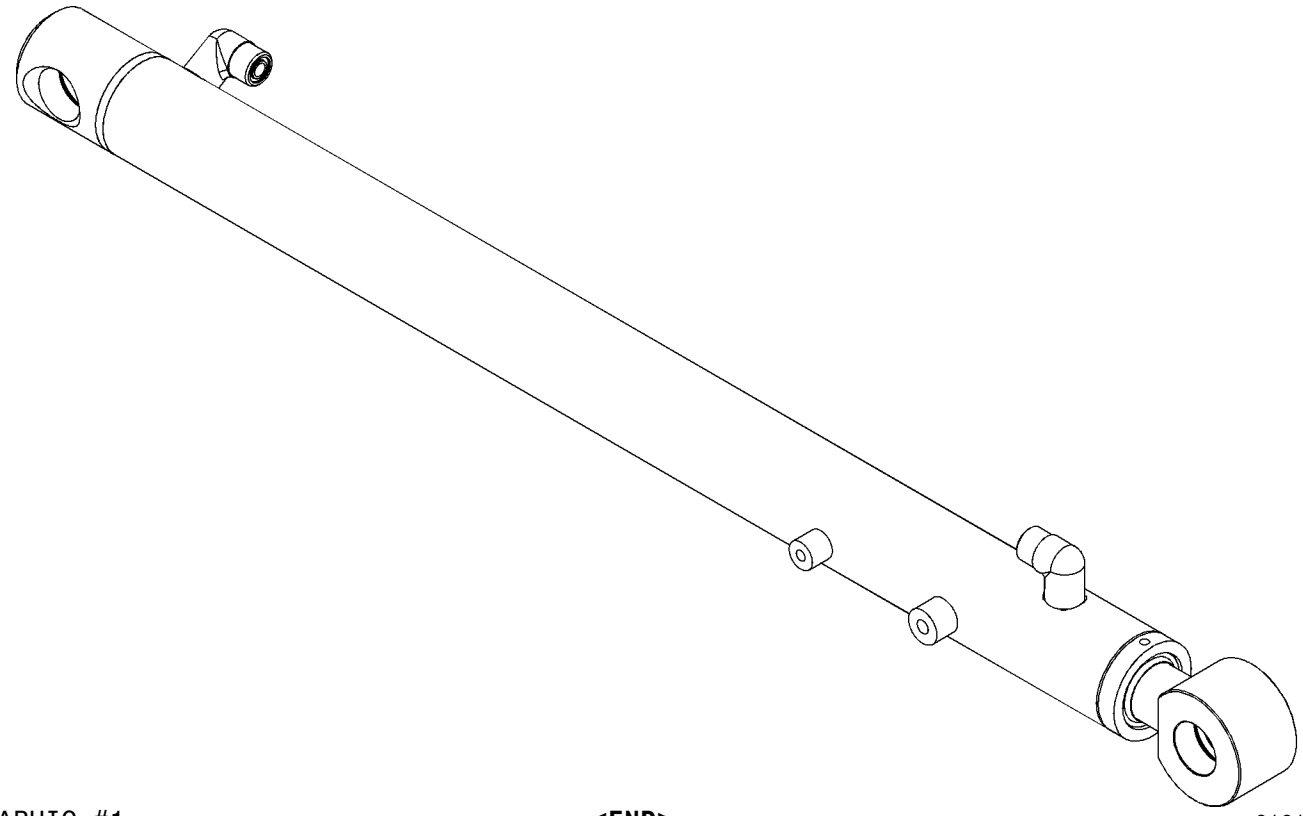

GRAPHIC #1 **<END>** g01010790

HYDRAULIC SYSTEM

230-3703 CYLINDER GP-LIFT

S/N: SCH1-UP; BXM1-UP
60-MM (2.36-IN) BORE X 797-MM (31.38-IN) STROKE
PART OF 218-6899 CYLINDER & MTG GP-LIFT ARM

SMCS-5102 **i01974878**

NOTE	REF NO	GRAPHIC REF	PART NUMBER	QTY	PART NAME 1 2 3 4 5 6 (PRODUCT LEVEL)	SEE PAGE
					AVAILABLE REPAIR KIT(S):	
			218-6827	1	KIT-SEAL	
					(INCLUDES PISTON SEAL, PISTON WEAR BAND, O-RINGS, BACK-UP RING, WIPER SEAL AND ROD SEAL)	

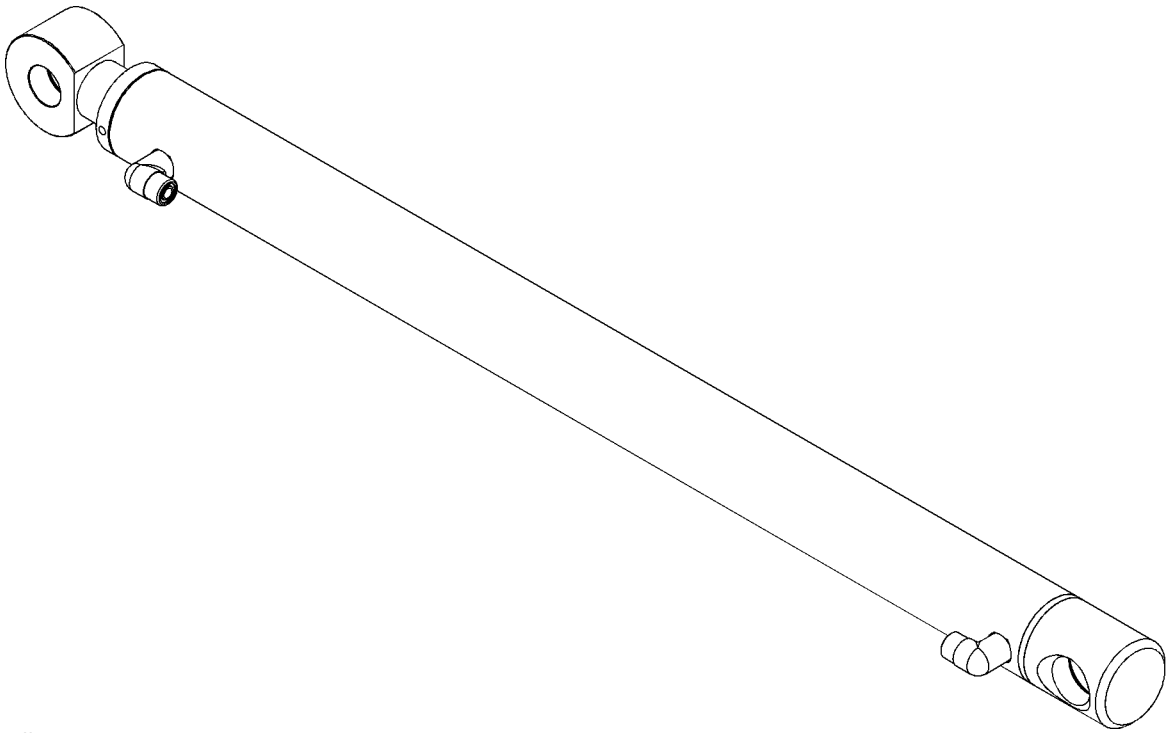

GRAPHIC #1 **<END>** g01027811

230-3684 CYLINDER GP-TILT–BUCKET EJECTOR, LH

S/N: MJH1-UP; SCH1-UP; RLL1-UP; BXM1-UP
65-MM (2.556-IN) BORE X 295-MM (11.61-IN) STROKE
PART OF 218-6799, 218-6899 CYLINDER & MTG GP-LIFT ARM

SMCS-5104 **i01934882**

NOTE	REF NO	GRAPHIC REF	PART NUMBER	QTY	PART NAME 1 2 3 4 5 6 (PRODUCT LEVEL)	SEE PAGE
	1	1	**3B-8489**	1	FITTING-GREASE	
					AVAILABLE REPAIR KIT(S):	
			218-6825	1	KIT-SEAL	
					(INCLUDES PISTON SEAL, PISTON WEAR BAND, O-RINGS, BACK UP RINGS, WIPER SEAL & ROD SEAL)	

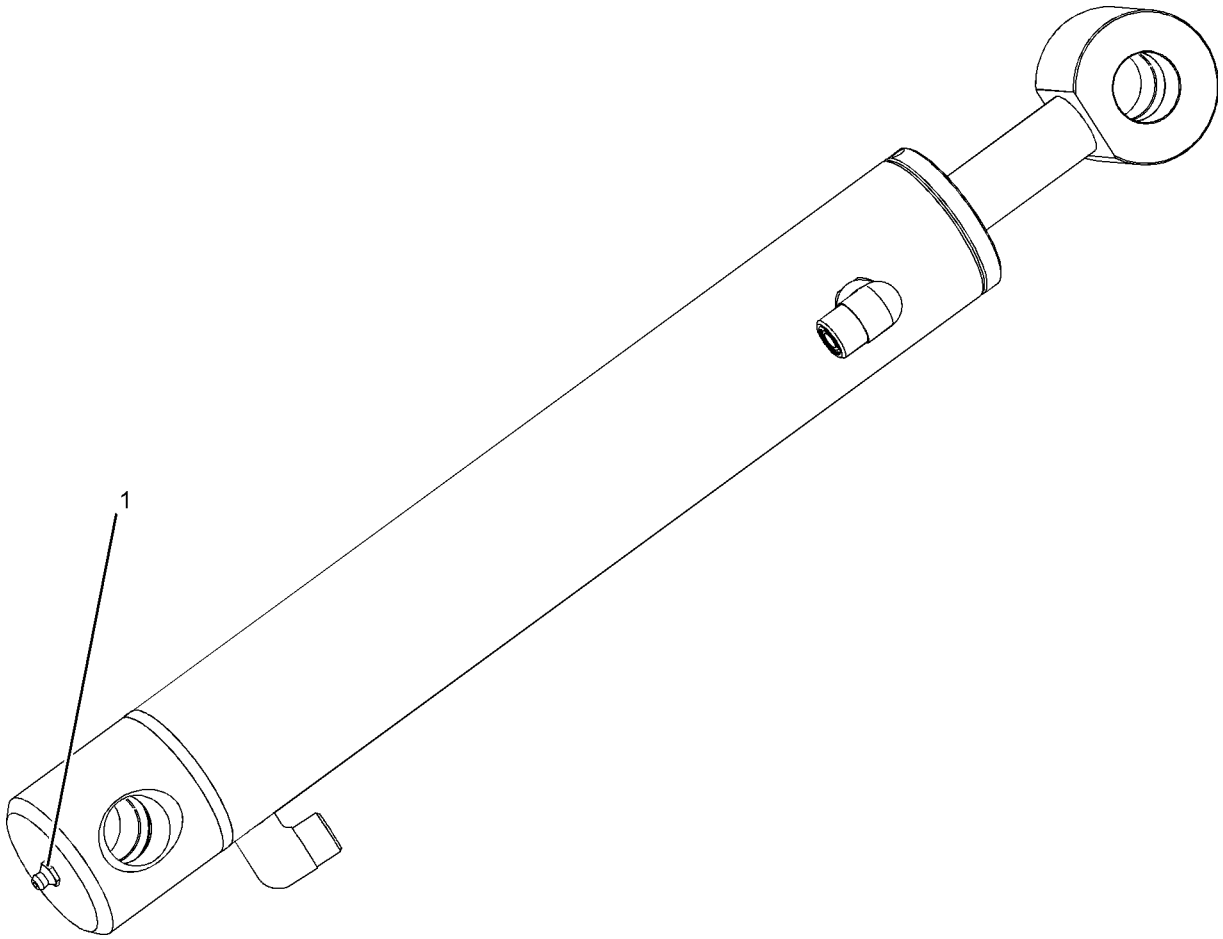

GRAPHIC #1 **<END>** g01012081

HYDRAULIC SYSTEM

230-3694 CYLINDER GP-TILT–BUCKET EJECTOR, RH

S/N: MJH1-UP; SCH1-UP; RLL1-UP; BXM1-UP
65-MM (2.56-IN) BORE X 295-MM (11.61-IN) STROKE
PART OF 218-6799, 218-6899 CYLINDER & MTG GP-LIFT ARM

SMCS-5104 **i01934887**

NOTE	REF NO	GRAPHIC REF	PART NUMBER	QTY	PART NAME 1 2 3 4 5 6 (PRODUCT LEVEL)	SEE PAGE
F		1	**3B-8489**	1	FITTING-GREASE	
					AVAILABLE REPAIR KIT(S):	
			218-6825	1	KIT-SEAL	
					(INCLUDES SEAL, PISTON WEAR BAND, O-RINGS & BACK UP RINGS)	

F-NOT SHOWN

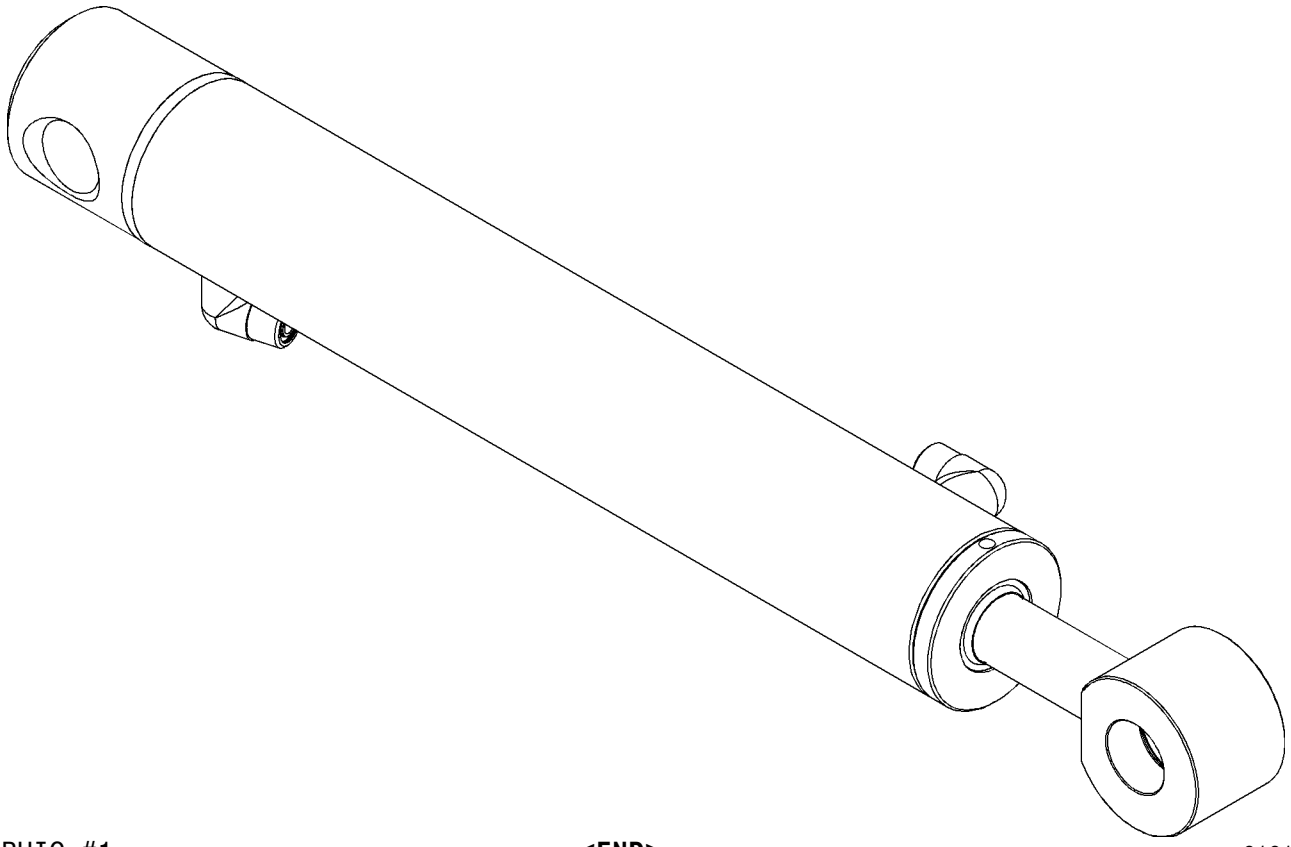

GRAPHIC #1 **<END>** g01010855

9U-6995 FITTING GP-HYDRAULIC

S/N: MJH1-UP; RLL1-UP
PART OF 218-6132 LINES GP-PUMP
ALSO AN ATTACHMENT

SMCS-5057 **i02445230**

NOTE	REF NO	GRAPHIC REF	PART NUMBER	QTY	PART NAME 1 2 3 4 5 6 (PRODUCT LEVEL)	SEE PAGE
	1	1	**2S-4078**	1	SEAL-O-RING	

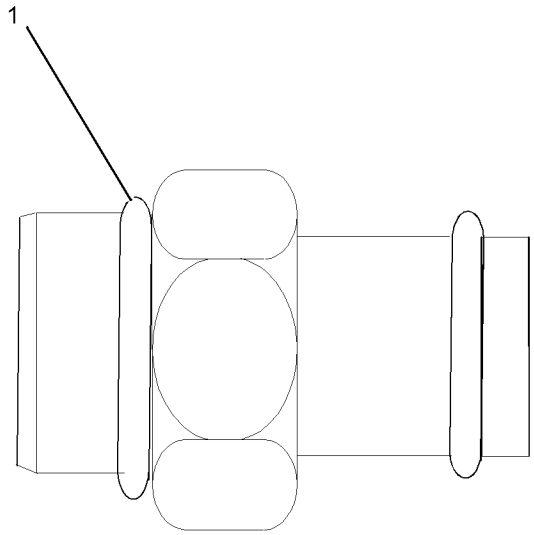

GRAPHIC #1 **<END>** g01221963

218-5840 FITTING GP-HYDRAULIC

S/N: MJH1-UP; BXM1-UP
PART OF 218-6737, 218-6738 KIT-HIGH FLOW CONVERSION, 218-5853, 218-6312 LINES GP-WORK TOOL
AN ATTACHMENT

SMCS-5057 **i01974387**

NOTE	REF NO	GRAPHIC REF	PART NUMBER	QTY	PART NAME 1 2 3 4 5 6 (PRODUCT LEVEL)	SEE PAGE
	1	1	**218-5843**	1	FITTING (QUICK DISCONNECT, MALE)	
	2	1	**218-5844**	1	FITTING (QUICK DISCONNECT, MALE)	
	3	1	**2M-9780**	1	SEAL-O-RING	
	4	1	**6V-8640**	1	CONNECTOR	
	5	1	**6V-9746**	1	SEAL-O-RING	

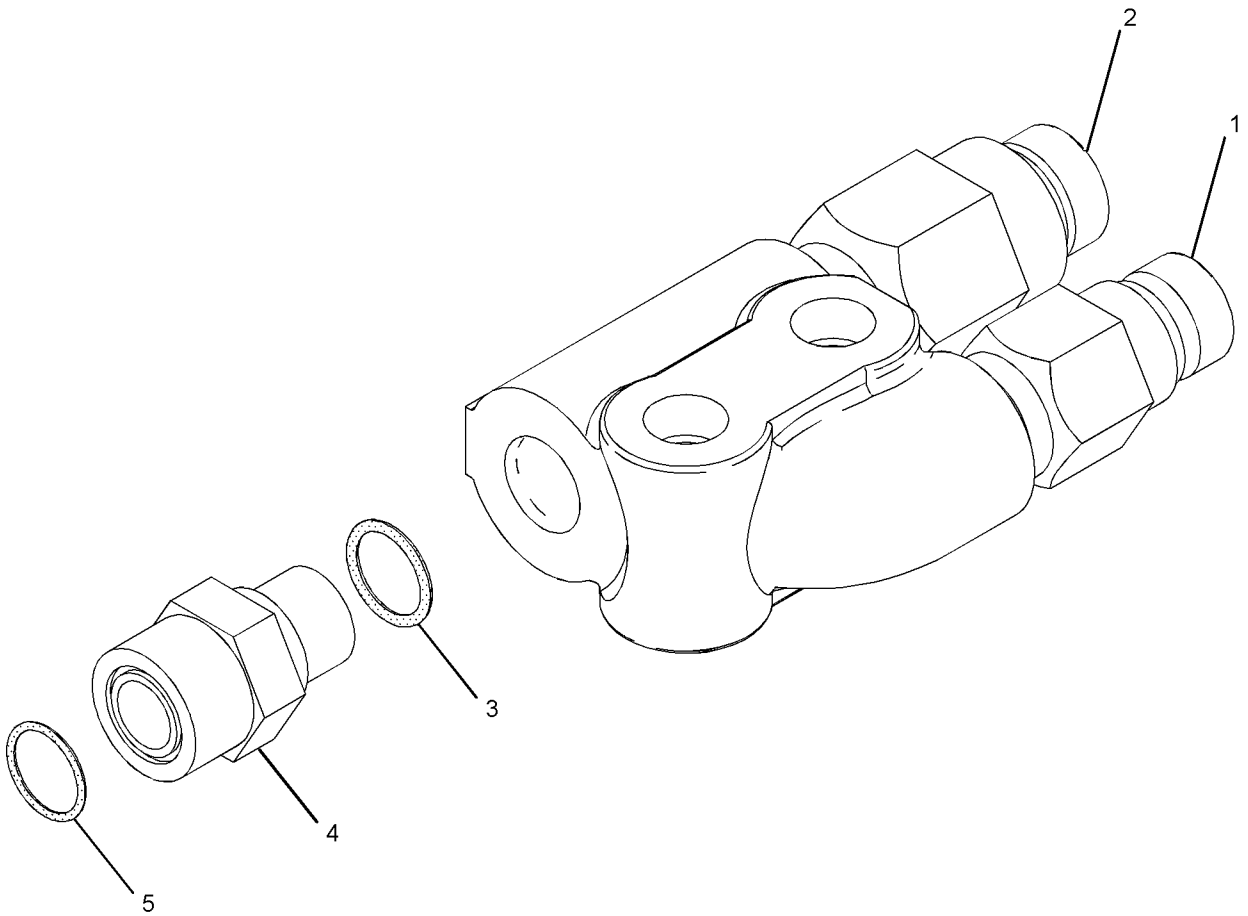

GRAPHIC #1 **<END>** g01026062

218-5841 FITTING GP-HYDRAULIC

S/N: MJH1-UP; BXM1-UP
PART OF 218-6737, 218-6738 KIT-HIGH FLOW CONVERSION, 218-5853, 218-6312 LINES GP-WORK TOOL
AN ATTACHMENT

SMCS-5057 **i02129402**

NOTE	REF NO	GRAPHIC REF	PART NUMBER	QTY	PART NAME 1 2 3 4 5 6 (PRODUCT LEVEL)	SEE PAGE
	1	1	**218-5845**	1	FITTING (QUICK DISCONNECT, FEMALE)	
	2	1	**218-5846**	1	FITTING (QUICK DISCONNECT, FEMALE)	
	3	1	**2M-9780**	1	SEAL-O-RING	
	4	1	**6V-8640**	1	CONNECTOR	
	5	1	**6V-9746**	1	SEAL-O-RING	

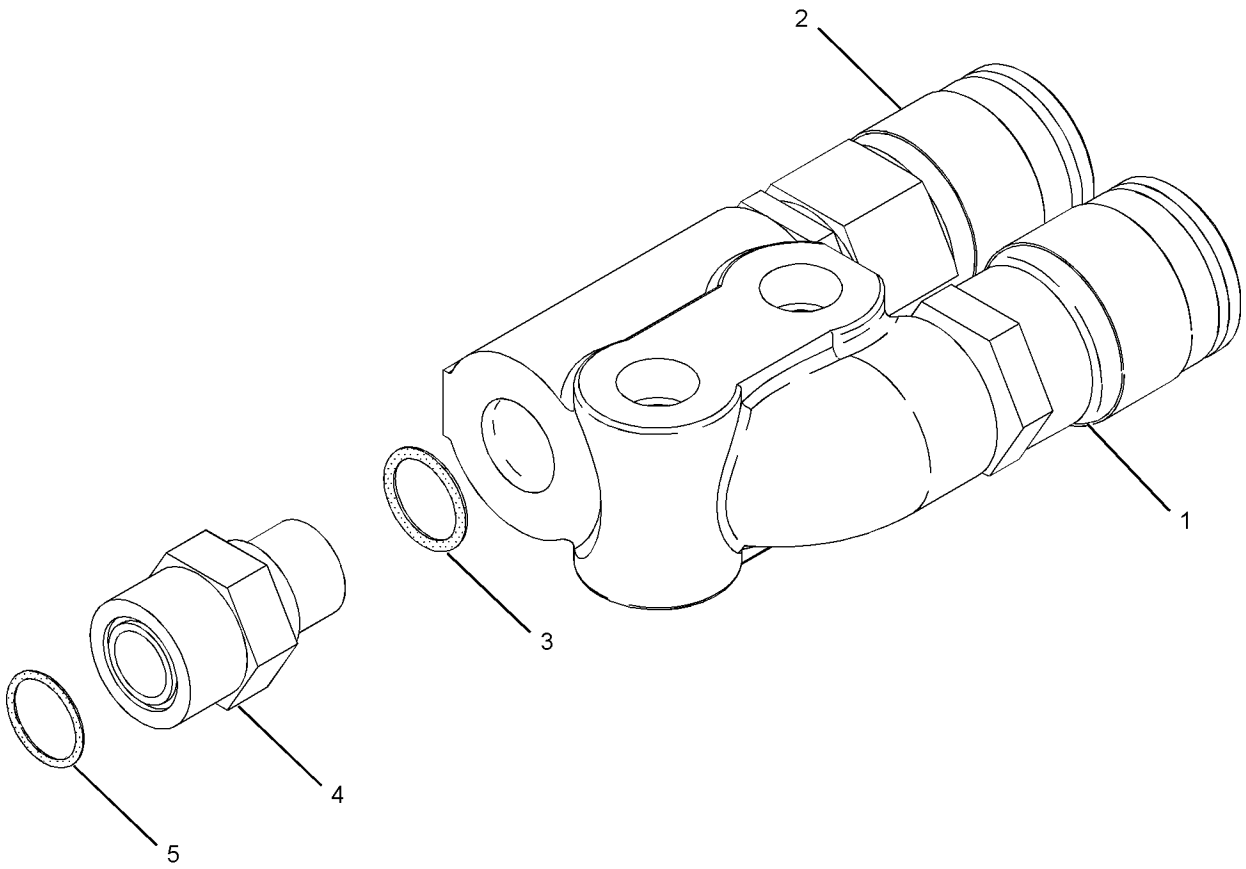

GRAPHIC #1 **<END>** g01084158

218-6117 HANDLE GP-MODULAR–DIRECTION, SPEED

S/N: MJH1-UP; SCH1-UP; RLL1-UP; BXM1-UP
PART OF 218-6480 CONTROL GP-HANDLE
AN ATTACHMENT

SMCS-5705 **i02249635**

NOTE	REF NO	GRAPHIC REF	PART NUMBER	QTY	PART NAME 1 2 3 4 5 6 (PRODUCT LEVEL)	SEE PAGE
	1	1	**8L-8413**	1	STRAP-CABLE	
	2	1	**159-9853**	1	GROMMET	
	3	1	**174-3091**	1	KIT-RECEPTACLE (12-PIN)	
					(INCLUDES RECEPTACLE AS & WEDGE)	
	4	1	**186-3735**	2	PIN-CONNECTOR (16-GA TO 18-GA)	
	5	1	**8T-8737**	10	PLUG-SEAL	

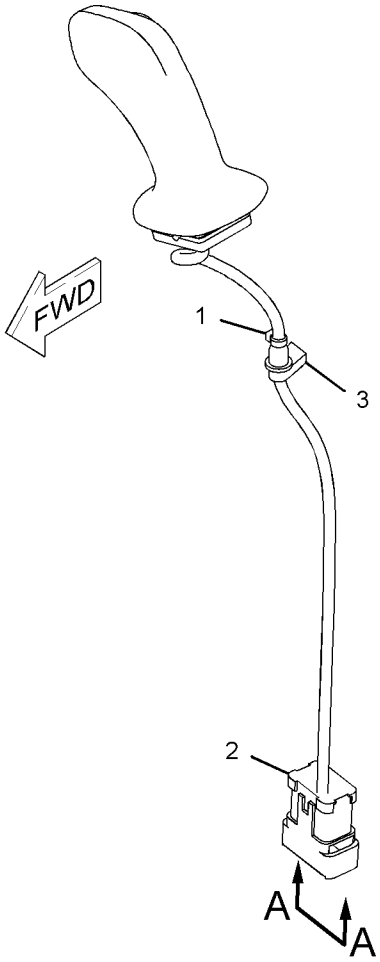

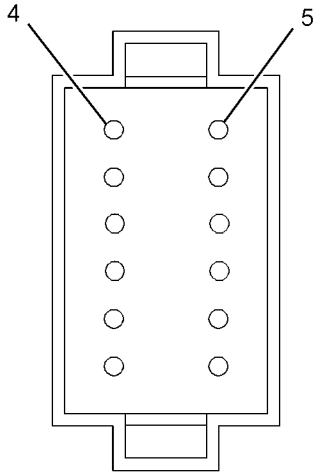

VIEW A-A

GRAPHIC #1 **<END>** g01010901

218-6118 HANDLE GP-MODULAR

S/N: MJH1-UP; SCH1-UP; RLL1-UP; BXM1-UP
PART OF 218-6485, 218-6490 CONTROL GP-HANDLE
AN ATTACHMENT

SMCS-5705 **i02200052**

NOTE	REF NO	GRAPHIC REF	PART NUMBER	QTY	PART NAME 1 2 3 4 5 6 (PRODUCT LEVEL)	SEE PAGE
	1	1	**8L-8413**	1	STRAP-CABLE	
	2	1	**159-9853**	1	GROMMET	
	3	1	**174-3091**	1	KIT-RECEPTACLE (12-PIN)	
					(INCLUDES RECEPTACLE AS & WEDGE)	
	4	1	**186-3735**	4	PIN-CONNECTOR (16-GA TO 18-GA)	
	5	1	**8T-8737**	8	PLUG-SEAL	
F			**242-8277**	1	HARNESS AS-WIRING (HANDLE)	
		1	**102-8805**	1	KIT-RECEPTACLE (6-PIN)	
					(INCLUDES RECEPTACLE AS & WEDGE)	
		1	**155-2255**	1	KIT-CONNECTING PLUG (12-PIN)	
					(INCLUDES PLUG AS, WEDGE & INTERFACE SEAL)	

F-NOT SHOWN

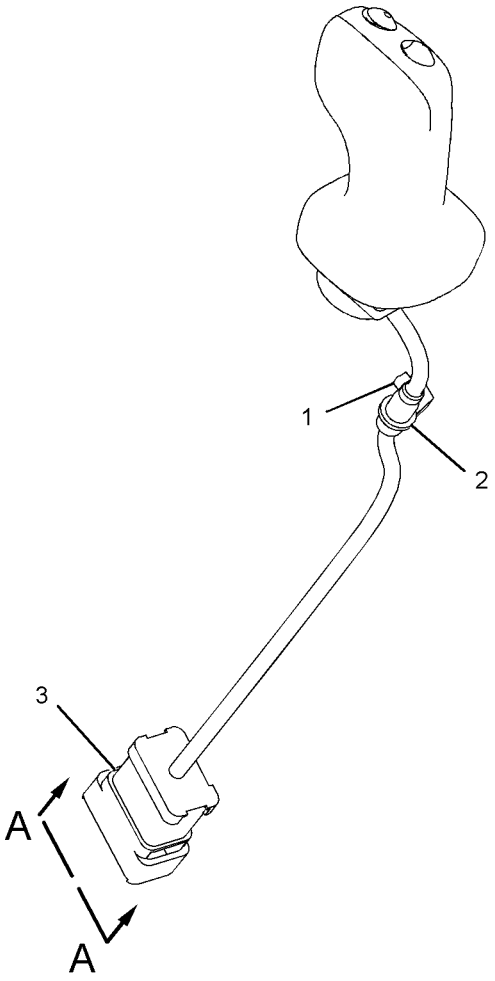

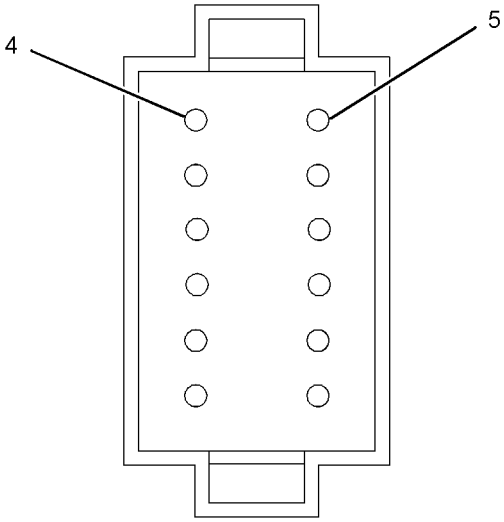

VIEW A-A

GRAPHIC #1 **<END>** g01113888

HYDRAULIC SYSTEM

218-5620 HYDRAULIC AR

S/N: RLL1-3199
PART OF 218-6216 COMMON AR

SMCS-5050 **i02009602**

NOTE	PART NUMBER	QTY	PART NAME 1 2 3 4 5 6 (PRODUCT LEVEL)	SEE PAGE
Y	*193-0447*	1	ACCUMULATOR & MTG GP-HYDRAULIC	322
Y	*218-6235*	1	CONTROL GP-PARKING BRAKE	207
Y	*218-6624*	1	FILTER & LINES GP-HYDRAULIC	227
Y	*218-6143*	1	LINES GP-HYDRAULIC OIL COOLER	416
Y	*218-6089*	1	LINES GP-HYDROSTATIC	230
Y	*218-6099*	1	LINES GP-PILOT (WORK TOOL)	436
Y	*218-5978*	1	LINES GP-PILOT (DIRECTION, SPEED)	434
Y	*218-6132*	1	LINES GP-PUMP	446
Y	*218-6197*	1	LINES GP-WORK TOOL	486
Y	*218-6758*	1	MOTOR & MTG GP-HYDRAULIC FAN	502
Y	*218-6175*	1	PUMP & MTG GP-WORK TOOL	514
Y	*233-5980*	1	TANK & MTG GP-HYDRAULIC	519
Y	*218-6786*	1	VALVE & MTG GP-CONTROL	538

Y-SEPARATE ILLUSTRATION

<END>

218-5709 HYDRAULIC AR

S/N: SCH1-UP; BXM1-UP
WITH WORK TOOL POSITIONER
AN ATTACHMENT

SMCS-5050 **i02360655**

NOTE	PART NUMBER	QTY	PART NAME 1 2 3 4 5 6 (PRODUCT LEVEL)	SEE PAGE
Y	*218-5707*	1	LINES GP-LIFT CYLINDER	418
Y	*218-5708*	1	LINES GP-TILT CYLINDER	450
Y	*191-9652*	1	VALVE & MTG GP-DIVERTER	541
	142-9116	1	SWITCH GP-ROCKER (WORK TOOL POSITIONER)	
	111-7899	1	GASKET	
			(LOCATE IN SECOND SLOT FROM REAR ON LH INSTRUMENT PANEL)	

Y-SEPARATE ILLUSTRATION

<END>

HYDRAULIC SYSTEM

218-5820 HYDRAULIC AR

S/N: MJH1-UP
PART OF 218-6226 COMMON AR

SMCS-5050 **i02009627**

NOTE	PART NUMBER	QTY	PART NAME 1 2 3 4 5 6 (PRODUCT LEVEL)	SEE PAGE
Y	*193-0447*	1	ACCUMULATOR & MTG GP-HYDRAULIC	322
Y	*218-6235*	1	CONTROL GP-PARKING BRAKE	207
Y	*218-6624*	1	FILTER & LINES GP-HYDRAULIC	227
Y	*218-6143*	1	LINES GP-HYDRAULIC OIL COOLER	416
Y	*218-6089*	1	LINES GP-HYDROSTATIC	230
Y	*218-6099*	1	LINES GP-PILOT (WORK TOOL)	436
Y	*218-5978*	1	LINES GP-PILOT (DIRECTION, SPEED)	434
Y	*218-6058*	1	MOTOR & MTG GP-HYDRAULIC FAN	501
Y	*233-5980*	1	TANK & MTG GP-HYDRAULIC	519
Y	*218-6781*	1	VALVE & MTG GP-CONTROL	536

Y-SEPARATE ILLUSTRATION

<END>

218-6130 HYDRAULIC AR

S/N: MJH1-UP
AN ATTACHMENT

SMCS-5050 **i01951401**

NOTE	PART NUMBER	QTY	PART NAME 1 2 3 4 5 6 (PRODUCT LEVEL)	SEE PAGE
Y	*218-6132*	1	LINES GP-PUMP	446
Y	*218-6197*	1	LINES GP-WORK TOOL	486
Y	*218-6175*	1	PUMP & MTG GP-WORK TOOL	514

Y-SEPARATE ILLUSTRATION

<END>

218-6131 HYDRAULIC AR

S/N: MJH1-UP
HIGH FLOW
AN ATTACHMENT

SMCS-5050 **i02469370**

NOTE	PART NUMBER	QTY	PART NAME 1 2 3 4 5 6 (PRODUCT LEVEL)	SEE PAGE
Y	*218-6133*	1	LINES GP-PUMP	448
Y	*218-5853*	1	LINES GP-WORK TOOL	480
Y	*218-5812*	1	MANIFOLD & MTG GP-CONTROL	495
Y	*218-6079*	1	PUMP & MTG GP-WORK TOOL	513
	236-4706	1	FILM GP	
	236-4707	2	FILM (HIGH FLOW)	

Y-SEPARATE ILLUSTRATION

<END>

HYDRAULIC SYSTEM

218-6180 HYDRAULIC AR

S/N: MJH1-UP; RLL1-UP
WITHOUT WORK TOOL POSITIONER
AN ATTACHMENT

SMCS-5050 **i01951403**

NOTE	PART NUMBER	QTY	PART NAME 1 2 3 4 5 6 (PRODUCT LEVEL)	SEE PAGE
Y	*218-6207*	1	LINES GP-LIFT CYLINDER	426
Y	*218-5819*	1	LINES GP-TILT CYLINDER	456

Y-SEPARATE ILLUSTRATION

<END>

218-6181 HYDRAULIC AR

S/N: MJH1-UP; RLL1-UP
WITH WORK TOOL POSITIONER
AN ATTACHMENT

SMCS-5050 **i02360657**

NOTE	PART NUMBER	QTY	PART NAME 1 2 3 4 5 6 (PRODUCT LEVEL)	SEE PAGE
Y	*218-5851*	1	LINES GP-LIFT CYLINDER	422
Y	*218-5852*	1	LINES GP-TILT CYLINDER	464
Y	*159-5753*	1	VALVE & MTG GP-DIVERTER	540
	142-9116	1	SWITCH GP-ROCKER (WORK TOOL POSITIONER)	
	111-7899	1	GASKET	
			(LOCATE SECOND SLOT FROM REAR ON LH INSTRUMENT PANEL)	

Y-SEPARATE ILLUSTRATION

<END>

218-6640 HYDRAULIC AR

S/N: SCH1-UP; BXM1-UP
WITHOUT WORK TOOL POSITIONER
AN ATTACHMENT

SMCS-5050 **i01958533**

NOTE	PART NUMBER	QTY	PART NAME 1 2 3 4 5 6 (PRODUCT LEVEL)	SEE PAGE
Y	*218-6604*	1	LINES GP-LIFT CYLINDER	428
Y	*218-6607*	1	LINES GP-TILT CYLINDER	474

Y-SEPARATE ILLUSTRATION

<END>

HYDRAULIC SYSTEM

218-6641 HYDRAULIC AR

S/N: SCH1-UP; BXM1-UP
WITH WORK TOOL POSITIONER
AN ATTACHMENT

SMCS-5050 **i02360658**

NOTE	PART NUMBER	QTY	PART NAME 1 2 3 4 5 6 (PRODUCT LEVEL)	SEE PAGE
Y	*218-5890*	1	LINES GP-LIFT CYLINDER	424
Y	*218-5891*	1	LINES GP-TILT CYLINDER	470
Y	*218-5892*	1	VALVE & MTG GP-DIVERTER	542
	142-9116	1	SWITCH GP-ROCKER (WORK TOOL POSITIONER)	
	111-7899	1	GASKET	
			(LOCATE SECOND SLOT FROM REAR ON LH INSTRUMENT PANEL)	
Y-SEPARATE ILLUSTRATION				

<END>

218-6760 HYDRAULIC AR

S/N: BXM1-UP
AN ATTACHMENT

SMCS-5050 **i01958549**

NOTE	PART NUMBER	QTY	PART NAME 1 2 3 4 5 6 (PRODUCT LEVEL)	SEE PAGE
Y	*218-6311*	1	LINES GP-WORK TOOL	488
Y	*218-5901*	1	LINES GP-PUMP	442
Y	*218-6175*	1	PUMP & MTG GP-WORK TOOL	514
Y-SEPARATE ILLUSTRATION				

<END>

218-6762 HYDRAULIC AR

S/N: BXM1-UP
HIGH FLOW
AN ATTACHMENT

SMCS-5050 **i02469372**

NOTE	PART NUMBER	QTY	PART NAME 1 2 3 4 5 6 (PRODUCT LEVEL)	SEE PAGE
Y	*218-5903*	1	LINES GP-PUMP	444
Y	*218-6312*	1	LINES GP-WORK TOOL	492
Y	*218-5812*	1	MANIFOLD & MTG GP-CONTROL	495
Y	*218-6079*	1	PUMP & MTG GP-WORK TOOL	513
	236-4706	1	FILM GP	
	236-4707	2	FILM (HIGH FLOW)	
Y-SEPARATE ILLUSTRATION				

<END>

HYDRAULIC SYSTEM

218-6820 HYDRAULIC AR

S/N: SCH1-1599

PART OF 218-6232 COMMON AR

SMCS-5050 **i01987438**

NOTE	PART NUMBER	QTY	PART NAME 1 2 3 4 5 6 (PRODUCT LEVEL)	SEE PAGE
Y	*193-0447*	1	ACCUMULATOR & MTG GP-HYDRAULIC	322
Y	*218-6536*	1	CONTROL GP-PARKING BRAKE	215
Y	*218-6545*	1	FILTER & LINES GP-HYDRAULIC	225
Y	*218-6541*	1	LINES GP-HYDRAULIC OIL COOLER	417
Y	*218-6506*	1	LINES GP-HYDROSTATIC	232
Y	*218-6503*	1	LINES GP-PILOT (WORK TOOL)	438
Y	*234-0788*	1	LINES GP-PILOT (DIRECTION, SPEED)	440
Y	*218-5901*	1	LINES GP-PUMP	442
Y	*218-6311*	1	LINES GP-WORK TOOL	488
Y	*218-6758*	1	MOTOR & MTG GP-HYDRAULIC FAN	502
Y	*218-6175*	1	PUMP & MTG GP-WORK TOOL	514
Y	*233-5980*	1	TANK & MTG GP-HYDRAULIC	519
Y	*218-6787*	1	VALVE & MTG GP-CONTROL	539

Y-SEPARATE ILLUSTRATION

<END>

218-6920 HYDRAULIC AR

S/N: BXM1-2399

PART OF 218-6242 COMMON AR

SMCS-5050 **i01966888**

NOTE	PART NUMBER	QTY	PART NAME 1 2 3 4 5 6 (PRODUCT LEVEL)	SEE PAGE
Y	*193-0447*	1	ACCUMULATOR & MTG GP-HYDRAULIC	322
Y	*218-6536*	1	CONTROL GP-PARKING BRAKE	215
Y	*218-6545*	1	FILTER & LINES GP-HYDRAULIC	225
Y	*218-6541*	1	LINES GP-HYDRAULIC OIL COOLER	417
Y	*218-6506*	1	LINES GP-HYDROSTATIC	232
Y	*218-6503*	1	LINES GP-PILOT (WORK TOOL)	438
Y	*234-0788*	1	LINES GP-PILOT (DIRECTION, SPEED)	440
Y	*218-6058*	1	MOTOR & MTG GP-HYDRAULIC FAN	501
Y	*233-5980*	1	TANK & MTG GP-HYDRAULIC	519
Y	*218-6783*	1	VALVE & MTG GP-CONTROL	537

Y-SEPARATE ILLUSTRATION

<END>

261-6132 HYDRAULIC AR—SOUND SUPPRESSION

S/N: MJH5600-UP

CANNOT BE USED WITH HIGH FLOW, 218-6131 HYDRAULIC AR, 218-6130 HYDRAULIC AR, HIGH FLOW, SOUND SUPPRESSION, 261-6139 HYDRAULIC AR

AN ATTACHMENT

SMCS-5050 **i02449578**

NOTE	PART NUMBER	QTY	PART NAME 1 2 3 4 5 6 (PRODUCT LEVEL)	SEE PAGE
Y	*218-6132*	1	LINES GP-PUMP	446
Y	*218-6197*	1	LINES GP-WORK TOOL	486
Y	*261-6094*	1	PUMP & MTG GP-WORK TOOL	515
Y-SEPARATE ILLUSTRATION				

<END>

261-6139 HYDRAULIC AR—HIGH FLOW, SOUND SUPPRESSION

S/N: MJH5600-UP

CANNOT BE USED WITH 218-6130 HYDRAULIC AR, HIGH FLOW, 218-6131 HYDRAULIC AR, SOUND SUPPRESSION, 261-6132 HYDRAULIC AR

AN ATTACHMENT

SMCS-5050 **i02449586**

NOTE	PART NUMBER	QTY	PART NAME 1 2 3 4 5 6 (PRODUCT LEVEL)	SEE PAGE
Y	*218-6133*	1	LINES GP-PUMP	448
Y	*218-5853*	1	LINES GP-WORK TOOL	480
Y	*218-5812*	1	MANIFOLD & MTG GP-CONTROL	495
Y	*261-6095*	1	PUMP & MTG GP-WORK TOOL	516
	236-4706	1	FILM GP	
	236-4707	2	FILM (HIGH FLOW)	
Y-SEPARATE ILLUSTRATION				

<END>

261-6142 HYDRAULIC AR—SOUND SUPPRESSION

S/N: BXM2400-UP

CANNOT BE USED WITH SOUND SUPPRESSION, 261-6149 HYDRAULIC AR, 218-6760 HYDRAULIC AR, HIGH FLOW, 218-6762 HYDRAULIC AR

AN ATTACHMENT

SMCS-5050 **i02449595**

NOTE	PART NUMBER	QTY	PART NAME 1 2 3 4 5 6 (PRODUCT LEVEL)	SEE PAGE
Y	*218-5901*	1	LINES GP-PUMP	442
Y	*218-6311*	1	LINES GP-WORK TOOL	488
Y	*261-6094*	1	PUMP & MTG GP-WORK TOOL	515
Y-SEPARATE ILLUSTRATION				

<END>

HYDRAULIC SYSTEM

261-6149 HYDRAULIC AR—HIGH FLOW, SOUND SUPPRESSION

S/N: BXM2400-UP

CANNOT BE USED WITH 218-6760 HYDRAULIC AR, HIGH FLOW, 218-6762 HYDRAULIC AR, SOUND SUPPRESSION, 261-6142 HYDRAULIC AR

AN ATTACHMENT

SMCS-5050 **i02453734**

NOTE	PART NUMBER	QTY	PART NAME 1 2 3 4 5 6 (PRODUCT LEVEL)	SEE PAGE
Y	*218-5812*	1	MANIFOLD & MTG GP-CONTROL	495
Y	*218-5903*	1	LINES GP-PUMP	444
Y	*218-6312*	1	LINES GP-WORK TOOL	492
Y	*261-6095*	1	PUMP & MTG GP-WORK TOOL	516
	236-4706	1	FILM GP	
	236-4707	2	FILM (HIGH FLOW)	
			(1- ON BOTH SIDES OF THE MACHINE, BOTTOM EDGE OF THE DECAL IS TO BE 403.34-MM FROM BOTTOM EDGE OF UPPER FRAME, LEFT	
			SIDE OF THE DECAL IS TO BE 47.87-MM FROM BACK EDGE OF UPPER FRAME)	

Y-SEPARATE ILLUSTRATION

<END>

278-1217 HYDRAULIC AR

S/N: RLL3200-UP

PART OF 278-1216 COMMON AR

SMCS-5050 **i02440104**

NOTE	PART NUMBER	QTY	PART NAME 1 2 3 4 5 6 (PRODUCT LEVEL)	SEE PAGE
Y	*193-0447*	1	ACCUMULATOR & MTG GP-HYDRAULIC	322
Y	*218-6235*	1	CONTROL GP-PARKING BRAKE	207
Y	*218-6624*	1	FILTER & LINES GP-HYDRAULIC	227
Y	*218-6143*	1	LINES GP-HYDRAULIC OIL COOLER	416
Y	*218-6089*	1	LINES GP-HYDROSTATIC	230
Y	*218-5978*	1	LINES GP-PILOT (DIRECTION, SPEED)	434
Y	*218-6099*	1	LINES GP-PILOT	436
Y	*218-6132*	1	LINES GP-PUMP	446
Y	*218-6197*	1	LINES GP-WORK TOOL	486
Y	*218-6758*	1	MOTOR & MTG GP-HYDRAULIC FAN	502
Y	*233-5980*	1	TANK & MTG GP-HYDRAULIC	519
Y	*218-6786*	1	VALVE & MTG GP-CONTROL	538

Y-SEPARATE ILLUSTRATION

<END>

HYDRAULIC SYSTEM

278-1227 HYDRAULIC AR

S/N: MJH5600-UP

PART OF 278-1226 COMMON AR

SMCS-5050 **i02440224**

NOTE	PART NUMBER	QTY	PART NAME 1 2 3 4 5 6 (PRODUCT LEVEL)	SEE PAGE
Y	*193-0447*	1	ACCUMULATOR & MTG GP-HYDRAULIC	322
Y	*218-6235*	1	CONTROL GP-PARKING BRAKE	207
Y	*218-6624*	1	FILTER & LINES GP-HYDRAULIC	227
Y	*218-6143*	1	LINES GP-HYDRAULIC OIL COOLER	416
Y	*218-6089*	1	LINES GP-HYDROSTATIC	230
Y	*218-5978*	1	LINES GP-PILOT (DIRECTION, SPEED)	434
Y	*218-6099*	1	LINES GP-PILOT	436
Y	*233-5980*	1	TANK & MTG GP-HYDRAULIC	519
Y	*218-6781*	1	VALVE & MTG GP-CONTROL	536
Y-SEPARATE ILLUSTRATION				

<END>

278-1233 HYDRAULIC AR

S/N: SCH1600-UP

PART OF 278-1232 COMMON AR

SMCS-5050 **i02439986**

NOTE	PART NUMBER	QTY	PART NAME 1 2 3 4 5 6 (PRODUCT LEVEL)	SEE PAGE
Y	*193-0447*	1	ACCUMULATOR & MTG GP-HYDRAULIC	322
Y	*218-6536*	1	CONTROL GP-PARKING BRAKE	215
Y	*218-6545*	1	FILTER & LINES GP-HYDRAULIC	225
Y	*218-6541*	1	LINES GP-HYDRAULIC OIL COOLER	417
Y	*218-6506*	1	LINES GP-HYDROSTATIC	232
Y	*218-6503*	1	LINES GP-PILOT	438
Y	*234-0788*	1	LINES GP-PILOT	440
Y	*218-5901*	1	LINES GP-PUMP	442
Y	*218-6311*	1	LINES GP-WORK TOOL	488
Y	*218-6758*	1	MOTOR & MTG GP-HYDRAULIC FAN	502
Y	*233-5980*	1	TANK & MTG GP-HYDRAULIC	519
Y	*218-6787*	1	VALVE & MTG GP-CONTROL	539
Y-SEPARATE ILLUSTRATION				

<END>

HYDRAULIC SYSTEM

278-1243 HYDRAULIC AR

S/N: BXM2400-UP
PART OF 278-1242 COMMON AR

SMCS-5050 **i02437702**

NOTE	PART NUMBER	QTY	PART NAME 1 2 3 4 5 6 (PRODUCT LEVEL)	SEE PAGE
Y	*193-0447*	1	ACCUMULATOR & MTG GP-HYDRAULIC	322
Y	*218-6536*	1	CONTROL GP-PARKING BRAKE	215
Y	*218-6545*	1	FILTER & LINES GP-HYDRAULIC	225
Y	*218-6541*	1	LINES GP-HYDRAULIC OIL COOLER	417
Y	*218-6506*	1	LINES GP-HYDROSTATIC	232
Y	*218-6503*	1	LINES GP-PILOT	438
Y	*234-0788*	1	LINES GP-PILOT	440
Y	*233-5980*	1	TANK & MTG GP-HYDRAULIC	519
Y	*218-6783*	1	VALVE & MTG GP-CONTROL	537
Y-SEPARATE ILLUSTRATION				

<END>

218-6737 KIT-HIGH FLOW CONVERSION–KIT

S/N: MJH1-UP
HIGH FLOW
AN ATTACHMENT

SMCS-1408, 5057, 5264, 5705 **i02449958**

NOTE	PART NUMBER	QTY	PART NAME 1 2 3 4 5 6 (PRODUCT LEVEL)	SEE PAGE
Y	**231-4259**	1	CONTROL GP-HANDLE (RH)	330
Y	**218-5840**	1	FITTING GP-HYDRAULIC (QUICK DISCONNECT)	370
Y	**218-5841**	1	FITTING GP-HYDRAULIC (QUICK DISCONNECT)	371
Y	**248-7696**	1	MANIFOLD GP-CONTROL (HIGH FLOW)	499
Y	**225-9238**	1	PUMP GP-GEAR (WORK TOOL, HIGH FLOW)	517
	9U-6994	2	FITTING GP-HYDRAULIC	
			(EACH INCLUDES)	
	7M-8485	1	SEAL-O-RING	
	223-5942	1	SWITCH GP-ROCKER (HIGH FLOW)	
	111-7899	1	GASKET	
	176-4074	1	CONNECTOR GP	
	2S-4078	1	SEAL-O-RING	
	177-9567	1	TEE AS	
	218-6727	1	BRACKET AS	
	218-6002	2	BRACKET AS	
	148-8340	3	CONNECTOR AS	
			(EACH INCLUDES)	
	3K-0360	1	SEAL-O-RING	
	6V-8398	1	SEAL-O-RING	
	6V-8639	1	CONNECTOR	
	148-8336	2	CONNECTOR AS	
			(EACH INCLUDES)	
	3J-1907	1	SEAL-O-RING	
	6V-8397	1	SEAL-O-RING	
	6V-8636	1	CONNECTOR	
	148-8327	2	CONNECTOR GP	
			(EACH INCLUDES)	
	3D-2824	1	SEAL-O-RING	
	6V-8637	1	CONNECTOR	
	6V-9746	1	SEAL-O-RING	
	218-6776	1	COVER AS	
	225-8009	1	HARNESS AS-OPERATOR CONTROLS (JOYSTICK)	

218-6737 KIT-HIGH FLOW CONVERSION *(contd.)* i02449958

NOTE	PART NUMBER	QTY	PART NAME 1 2 3 4 5 6 (PRODUCT LEVEL)	SEE PAGE
	100-5041	4	TERMINAL-RECEPTACLE	
	125-7874		TUBE-HEAT SHRINK (20-CM)	
	9X-1054	1	PLUG AS-CONNECTOR (4-PIN)	
	155-2255	1	KIT-CONNECTING PLUG (12-PIN)	
	155-2270	2	KIT-CONNECTING PLUG (2-PIN)	
			(EACH INCLUDES PLUG AS, WEDGE, & INTERFACE SEAL)	
	102-8802	1	KIT-RECEPTACLE (2-PIN)	
	102-8801	1	KIT-RECEPTACLE (12-PIN)	
			(EACH INCLUDES RECEPTACLE AS & WEDGE)	
	8L-8413	10	STRAP-CABLE	
	225-8005	1	HARNESS AS-OPERATOR CONTROLS (HIGH FLOW)	
	102-8802	1	KIT-RECEPTACLE (2-PIN)	
	102-8806	1	KIT-RECEPTACLE (8-PIN)	
			(EACH INCLUDES RECEPTACLE AS & WEDGE)	
	155-2270	5	KIT-CONNECTING PLUG (2-PIN)	
			(EACH INCLUDES PLUG AS, WEDGE & INTERFACE SEAL)	
	100-5041	4	TERMINAL-RECEPTACLE	
	125-7874		TUBE-HEAT SHRINK (5-CM)	
	125-7875		TUBE-HEAT SHRINK (5-CM)	
	9X-1054	1	PLUG AS-CONNECTOR (4-PIN)	
I	**233-5976**	1	HOSE AS	
I	**233-5897**	1	HOSE AS	
I	**233-5896**	2	HOSE AS	
I	**218-5915**	2	HOSE AS	
I	**218-5813**	1	HOSE AS	
	133-9931	1	JUMPER AS	
	115-1615	2	RELAY AS (12-VOLT)	
	214-4253	1	TEE AS	
	4J-5477	1	SEAL-O-RING	
	6V-8398	1	SEAL-O-RING	
	214-4252	1	TEE	
	252-0388	1	TUBE AS	
	238-7724	1	TUBE AS	
	238-7723	1	TUBE AS	
	218-5919	1	TUBE AS	
	218-5909	1	TUBE AS	
	218-5907	1	TUBE AS	
	218-5906	1	TUBE AS	
	9U-6993	1	ADAPTER AS	
	3D-2824	1	SEAL-O-RING	
	218-6140	1	ADAPTER	
	218-6005	2	BLOCK	
	218-6004	2	BLOCK	
	218-5564	3	BLOCK	
M	**108-2989**	3	BOLT (M8X1.25X130-MM)	
M	**8T-7547**	4	BOLT (M8X1.25X30-MM)	
M	**8T-4956**	2	BOLT (M12X1.75X35-MM)	
M	**8T-4908**	2	BOLT (M8X1.25X25-MM)	
M	**8T-4195**	2	BOLT (M10X1.5X30-MM)	
M	**8T-4178**	2	BOLT (M10X1.5X90-MM)	
M	**8T-4136**	3	BOLT (M10X1.5X25-MM)	
M	**8T-2192**	4	BOLT (M6X1X45-MM)	
M	**5C-9553**	4	BOLT (M6X1X16-MM)	
M	**8T-0269**	3	BOLT-SOCKET HEAD (M6X1X20-MM)	
M	**8T-0341**	4	BOLT-SOCKET HEAD (M10X1.5X60-MM)	
	180-3007	3	CLAMP-HOSE	
	5P-2230	3	CLAMP-HOSE	

218-6737 KIT-HIGH FLOW CONVERSION *(contd.)* **i02449958**

NOTE	PART NUMBER	QTY	PART NAME 1 2 3 4 5 6 (PRODUCT LEVEL)	SEE PAGE
	2S-3440	6	CLAMP-HOSE	
	4P-7581	2	CLIP	
	1S-1409	2	CLIP	
	229-5473	1	FITTING (QUICK DISCONNECT, MALE)	
	229-5471	1	FITTING (QUICK DISCONNECT, FEMALE)	
	229-5468	1	FITTING (QUICK DISCONNECT, MALE)	
	1P-4574	2	FLANGE-HALF	
	218-6147	1	HOSE	
	218-6142	1	HOSE	
	218-6141	1	HOSE	
	218-5818	1	HOSE	
	200-6345	1	MOUNT (DUAL SWIVEL)	
M	**095-1207**	1	NUT (M12X1.75-THD)	
	218-5764	3	PLATE	
	8T-5049	1	SEAL-O-RING	
	6V-9746	4	SEAL-O-RING	
	6V-8398	2	SEAL-O-RING	
	6V-8397	2	SEAL-O-RING	
	4J-5267	1	SEAL-O-RING	
	4J-5140	1	SEAL-O-RING	
	4J-0522	1	SEAL-O-RING	
	110-8760	1	STRAP	
	7K-1181	6	STRAP-CABLE	
M	**101-3129**	2	STUD (M10X1.15-THD)	
	7X-7729	2	WASHER (11X25X3-MM THK)	
	8T-4224	9	WASHER-HARD (8.8X16X2-MM THK)	
	8T-4223	2	WASHER-HARD (13.5X25.5X3-MM THK)	
	8T-4205	11	WASHER-HARD (7.2X14.5X2-MM THK)	
	8T-4121	7	WASHER-HARD (11X21X2.5-MM THK)	
	5P-1076	2	WASHER-HARD (13.5X30X4-MM THK)	
	236-4707	2	FILM (HIGH FLOW)	
			(2-1 ON LH & 1 ON RH SIDE TANGENT TO MODEL NAME PARALLEL WITH DOOR)	
	235-5243	1	FILM-INSTRUCTION (MACHINE CONTROLS)	
			(RH SIDE OF CONTROL)	

I-REFER TO HYDRAULIC INFORMATION SYSTEM
M-METRIC PART
Y-SEPARATE ILLUSTRATION

<END>

218-6738 KIT-HIGH FLOW CONVERSION—KIT

S/N: BXM1-UP
HIGH FLOW
AN ATTACHMENT

SMCS-1408, 5057, 5264, 5705 **i02293242**

NOTE	PART NUMBER	QTY	PART NAME 1 2 3 4 5 6 (PRODUCT LEVEL)	SEE PAGE
Y	**231-4259**	1	CONTROL GP-HANDLE (RH)	330
Y	**218-5841**	1	FITTING GP-HYDRAULIC (QUICK DISCONNECT)	371
Y	**218-5840**	1	FITTING GP-HYDRAULIC (QUICK DISCONNECT)	370
Y	**248-7696**	1	MANIFOLD GP-CONTROL (HIGH FLOW)	499
Y	**225-9238**	1	PUMP GP-GEAR (WORK TOOL, HIGH FLOW)	517
	257-5877	2	ADAPTER	
	218-6598	1	ADAPTER	
	9U-6994	2	FITTING GP-HYDRAULIC	
			(EACH INCLUDES)	

218-6738 KIT-HIGH FLOW CONVERSION *(contd.)* i02293242

NOTE	PART NUMBER	QTY	PART NAME 1 2 3 4 5 6 (PRODUCT LEVEL)	SEE PAGE
	7M-8485	1	SEAL-O-RING	
	9U-6993	1	ADAPTER AS	
	3D-2824	1	SEAL-O-RING	
	218-5564	3	BLOCK	
M	**108-2989**	3	BOLT (M8X1.25X130-MM)	
M	**096-5866**	2	BOLT (M8X1.25X75-MM)	
M	**8T-7547**	4	BOLT (M8X1.25X30-MM)	
M	**8T-6912**	1	BOLT (M8X1.25X50-MM)	
M	**8T-4956**	2	BOLT (M12X1.75X35-MM)	
M	**8T-4908**	3	BOLT (M8X1.25X25-MM)	
M	**8T-4198**	2	BOLT (M10X1.5X100-MM)	
M	**8T-4195**	3	BOLT (M10X1.5X30-MM)	
M	**8T-4183**	2	BOLT (M12X1.75X40-MM)	
M	**8T-4137**	3	BOLT (M10X1.5X20-MM)	
M	**8T-4136**	3	BOLT (M10X1.5X25-MM)	
M	**8T-0341**	4	BOLT-SOCKET HEAD (M10X1.5X60-MM)	
M	**8T-0269**	3	BOLT-SOCKET HEAD (M6X1X20-MM)	
	218-6727	1	BRACKET AS	
	218-5927	1	BRACKET AS	
	218-5926	1	BRACKET AS	
	180-3007	3	CLAMP-HOSE	
	5P-2230	3	CLAMP-HOSE	
	2S-3440	6	CLAMP-HOSE	
	218-6176	1	CLIP	
	215-3935	3	CLIP	
	9F-2947	2	CLIP	
	8T-1888	2	CLIP (TAB)	
	8T-1887	2	CLIP (SLOT)	
	6D-4244	2	CLIP	
	5P-9297	2	CLIP	
	5P-7467	4	CLIP (TAB)	
	5P-7466	4	CLIP (SLOT)	
	5M-8429	1	CLIP	
	4P-8134	1	CLIP	
	4P-7581	1	CLIP	
	4D-6466	2	CLIP	
	1S-1409	1	CLIP	
	148-8340	3	CONNECTOR AS	
			(EACH INCLUDES)	
	3K-0360	1	SEAL-O-RING	
	6V-8398	1	SEAL-O-RING	
	6V-8639	1	CONNECTOR	
	148-8336	2	CONNECTOR AS	
			(EACH INCLUDES)	
	3J-1907	1	SEAL-O-RING	
	6V-8397	1	SEAL-O-RING	
	6V-8636	1	CONNECTOR	
	148-8327	2	CONNECTOR GP	
			(EACH INCLUDES)	
	3D-2824	1	SEAL-O-RING	
	6V-8637	1	CONNECTOR	
	6V-9746	1	SEAL-O-RING	
	176-4074	1	CONNECTOR GP	
	2S-4078	1	SEAL-O-RING	
	177-9567		TEE AS	
	218-6776	1	COVER AS	
	236-4707	2	FILM (HIGH FLOW)	
	235-5243	1	FILM-INSTRUCTION (MACHINE CONTROLS)	
	229-5473	1	FITTING (QUICK DISCONNECT, MALE)	

218-6738 KIT-HIGH FLOW CONVERSION *(contd.)* i02293242

NOTE	PART NUMBER	QTY	PART NAME 1 2 3 4 5 6 (PRODUCT LEVEL)	SEE PAGE
	229-5471	1	FITTING (QUICK DISCONNECT, FEMALE)	
	229-5468	1	FITTING (QUICK DISCONNECT, MALE)	
	1P-4574	2	FLANGE-HALF	
	5P-8112	4	GROMMET	
	225-8009	1	HARNESS AS-OPERATOR CONTROLS (JOYSTICK)	
	9X-1054	1	PLUG AS-CONNECTOR (4-PIN)	
	155-2260	1	KIT-CONNECTING PLUG (3-PIN)	
			(INCLUDES PLUG AS, WEDGES, & INTERFACE SEAL)	
	155-2255	1	KIT-CONNECTING PLUG (12-PIN)	
	155-2270	2	KIT-CONNECTING PLUG (2-PIN)	
			(EACH INCLUDES PLUG AS, WEDGE, & INTERFACE SEAL)	
	102-8802	1	KIT-RECEPTACLE (2-PIN)	
	102-8801	1	KIT-RECEPTACLE (12-PIN)	
			(EACH INCLUDES RECEPTACLE AS & WEDGE)	
	8L-8413	10	STRAP-CABLE	
	225-8005	1	HARNESS AS-OPERATOR CONTROLS (HIGH FLOW)	
	9X-1054	1	PLUG AS-CONNECTOR (4-PIN)	
	102-8802	1	KIT-RECEPTACLE (2-PIN)	
	102-8806	1	KIT-RECEPTACLE (8-PIN)	
			(EACH INCLUDES RECEPTACLE AS, & WEDGE)	
	155-2270	5	KIT-CONNECTING PLUG (2-PIN)	
			(INCLUDES PLUG AS, WEDGE, & INTERFACE SEAL)	
	218-6597	1	HOSE	
	218-6596	1	HOSE	
	218-6568	1	HOSE	
	218-6142	1	HOSE	
I	**233-5967**	1	HOSE AS	
I	**233-5966**	2	HOSE AS	
I	**233-5895**	1	HOSE AS	
I	**218-6323**	2	HOSE AS	
I	**218-6319**	1	HOSE AS	
	133-9931	1	JUMPER AS	
	102-8803	1	KIT-RECEPTACLE (3-PIN)	
BE	**5P-5677**		WIRE (18-GA, BLACK)	
	8T-8737	1	PLUG-SEAL	
	186-3735	2	PIN-CONNECTOR (16-GA TO 18-GA)	
M	**095-1207**	1	NUT (M12X1.75-THD)	
M	**8T-4244**	3	NUT (M12X1.75-THD)	
M	**8T-4133**	1	NUT (M10X1.5-THD)	
	219-4377	1	PLATE	
	218-6599	1	PLATE	
	218-5764	3	PLATE	
	115-1615	2	RELAY AS (12-VOLT)	
	8T-5049	1	SEAL-O-RING	
	6V-9746	4	SEAL-O-RING	
	6V-8398	2	SEAL-O-RING	
	6V-8397	2	SEAL-O-RING	
	4J-5267	1	SEAL-O-RING	
	4J-5140	1	SEAL-O-RING	
	4J-0522	1	SEAL-O-RING	
	110-8760	1	STRAP	
	7K-1181	6	STRAP-CABLE	
M	**101-3129**	3	STUD (M10X1.15-THD)	
	223-5942	1	SWITCH GP-ROCKER (HIGH FLOW)	
	214-4253	1	TEE AS	
	4J-5477	1	SEAL-O-RING	
	6V-8398	1	SEAL-O-RING	
	214-4252	1	TEE	

218-6738 KIT-HIGH FLOW CONVERSION *(contd.)* i02293242

NOTE	PART NUMBER	QTY	PART NAME 1 2 3 4 5 6 (PRODUCT LEVEL)	SEE PAGE
	218-6558	1	TUBE AS	
	218-6555	1	TUBE AS	
	218-6554	1	TUBE AS	
	218-6553	1	TUBE AS	
	218-6349	1	TUBE AS	
	218-6327	1	TUBE AS	
	218-6326	1	TUBE AS	
	8T-4224	13	WASHER-HARD (8.8X16X2-MM THK)	
	8T-4223	6	WASHER-HARD (13.5X25.5X3-MM THK)	
	8T-4205	3	WASHER-HARD (7.2X14.5X2-MM THK)	
	8T-4121	14	WASHER-HARD (11X21X2.5-MM THK)	

B-USE AS REQUIRED
E-ORDER BY THE CENTIMETER
I-REFER TO HYDRAULIC INFORMATION SYSTEM
M-METRIC PART
Y-SEPARATE ILLUSTRATION

<END>

HYDRAULIC SYSTEM

218-5957 KIT-QUICK COUPLER CONVERSION–KIT

S/N: SCH1-UP; BXM1-UP

AN ATTACHMENT

SMCS-5057, 5133, 5479, 6129 **i02183180**

NOTE	REF NO	GRAPHIC REF	PART NUMBER	QTY	PART NAME 1 2 3 4 5 6 (PRODUCT LEVEL)	SEE PAGE
	1	1	**2K-5232**	2	SPACER (0.406X0.75X1.81-IN THK)	
	2	1	**3S-2093**	3	STRAP-CABLE	
	3	1	**113-8490**	1	FUSE (10-AMPERE)	
	4	1	**124-2456**	1	FILM-INSTRUCTION (NO STEP)	
	5	1	**166-2560**	2	PIN-SPRING	
Y	6	1	**192-2640**	2	CYLINDER GP-COUPLER	360
	7	1	**195-6754**	2	PIN-SPRING	
	8	1	**207-9737**	1	BRACKET AS	
M		1	**8T-3612**	2	NUT-WELD (M8X1.25-THD)	
I	9	1	**207-9756**	4	HOSE AS	
	10	1	**207-9785**	2	PIN	
	11	1	**212-6521**	1	SWITCH AS-ROCKER (QUICK COUPLER)	
		1	**111-7899**	1	GASKET	
	12	1	**212-6690**	1	GUARD	
Y	13	1	*215-3957*	2	LINK GP-COUPLER	636
I	14	1	**218-6241**	1	HOSE AS	
	15	1	**218-6334**	1	BRACKET AS	
M		1	**9R-2672**	1	BOSS-THREADED	
	16	1	**218-6335**	1	BRACKET AS	
I	17	1	**219-4335**	2	HOSE AS	
Y	18	1	**233-7128**	1	VALVE & MTG GP-SOLENOID (QUICK COUPLER)	544
	19	1	**238-7741**	1	TUBE AS	
	20	1	**238-7742**	1	TUBE AS	
I	21	1	**238-7743**	2	HOSE AS	
I	22	1	**238-7748**	1	HOSE AS	
	23	1	**238-7749**	1	BRACKET	
	24	1	*148-8325*	4	CONNECTOR AS	
					(EACH INCLUDES)	
		1	**6V-8641**	1	CONNECTOR	
		1	**3J-1907**	1	SEAL-O-RING	
		1	**4J-5477**	1	SEAL-O-RING	
	25	1	*148-8336*	2	CONNECTOR AS	
					(EACH INCLUDES)	
		1	**6V-8636**	1	CONNECTOR	
		1	**3J-1907**	1	SEAL-O-RING	
		1	**6V-8397**	1	SEAL-O-RING	
	26	1	*148-8353*	1	ELBOW AS	
		1	**3J-1907**	1	SEAL-O-RING	
		1	**6V-8397**	1	SEAL-O-RING	
	27	1	*148-8378*	1	ELBOW AS	
		1	**6V-8724**	1	ELBOW	
		1	**3J-1907**	1	SEAL-O-RING	
		1	**6V-8397**	1	SEAL-O-RING	
	28	1	*148-8446*	1	TEE GP-SWIVEL	
		1	**6V-9838**	1	TEE-SWIVEL	
		1	**7J-9108**	2	SEAL-O-RING	
	29	1	*150-4034*	2	TEE GP	
					(EACH INCLUDES)	
		1	**8T-0379**	1	TEE-BULKHEAD	
		1	**6V-8397**	3	SEAL-O-RING	
	30	1	*156-4282*	1	REDUCER AS	
		1	**6V-8938**	1	REDUCER-O-RING	
		1	**6V-8397**	1	SEAL-O-RING	
	31	1	**164-4225**	2	CLIP	
	32	1	**3B-4628**	2	PIN-COTTER	
	33	1	**4P-7581**	1	CLIP	

218-5957 KIT-QUICK COUPLER CONVERSION *(contd.)* i02183180

NOTE	REF NO	GRAPHIC REF	PART NUMBER	QTY	PART NAME 1 2 3 4 5 6 (PRODUCT LEVEL)	SEE PAGE
M	34	1	**5C-7261**	1	NUT (M8X1.25-THD)	
	35	1	**5K-8451**	1	CLIP	
	36	1	**5P-0372**	2	LOCK PIN	
	37	1	**6K-8178**	2	CLIP	
	38	1	**6V-8397**	4	SEAL-O-RING	
	39	1	**9X-6581**	1	NUT (1-14-THD)	
	40	1	**6V-9168**	2	NUT (11/16-16-THD)	
	41	1	**7G-2950**	1	CLIP (SLOT)	
	42	1	**7G-2951**	1	CLIP (TAB)	
	43	1	**7H-7055**	6	CLIP	
	44	1	**7X-7729**	6	WASHER (11X25X3-MM THK)	
	45	1	**8L-5188**	2	PIN	
	46	1	**8T-4121**	18	WASHER-HARD (11X21X2.5-MM THK)	
M	47	1	**8T-4133**	8	NUT (M10X1.5-THD)	
M	48	1	**8T-4136**	1	BOLT (M10X1.5X25-MM)	
M	49	1	**8T-4189**	2	BOLT (M8X1.25X20-MM)	
M	50	1	**8T-4191**	2	BOLT (M10X1.5X16-MM)	
M	51	1	**8T-4196**	4	BOLT (M10X1.5X35-MM)	
M	52	1	**8T-4201**	4	BOLT-LOCKING (M10X1.5X20-MM)	
	53	1	**8T-4224**	4	WASHER-HARD (8.8X16X2-MM THK)	
M	54	1	**8T-4908**	1	BOLT (M8X1.25X25-MM)	
M	55	1	**8T-5005**	4	BOLT (M10X1.5X70-MM)	
	56	1	**9M-8406**	3	CLIP	
	57	1	**9R-1004**	1	CLIP (TAB)	
	58	1	**9R-1005**	1	CLIP (SLOT)	
	59	1	**9T-7303**	4	SPACER (16X28X1.5-MM THK)	

I-REFER TO HYDRAULIC INFORMATION SYSTEM
M-METRIC PART
Y-SEPARATE ILLUSTRATION

218-5957 **KIT-QUICK COUPLER CONVERSION** *(contd.)* **i02183180**

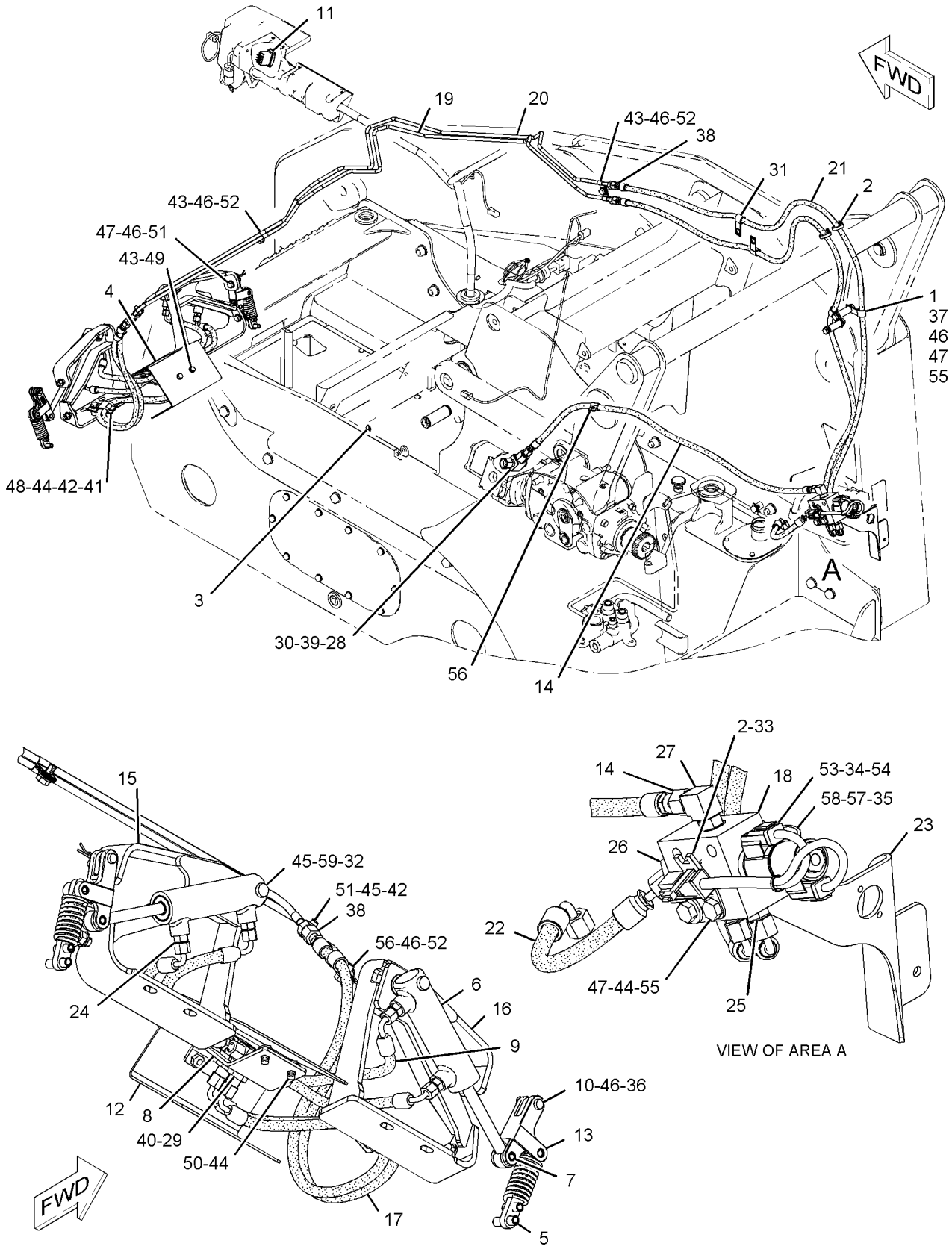

GRAPHIC #1 **<END>** g01130759

HYDRAULIC SYSTEM

154-5019 LINES GP-BUCKET

S/N: MJH1-UP; SCH1-UP; RLL1-UP; BXM1-UP
PART OF 154-5004 BUCKET AR-MULTIPURPOSE
AN ATTACHMENT

SMCS-5057 **i01987435**

NOTE	REF NO	GRAPHIC REF	PART NUMBER	QTY	PART NAME 1 2 3 4 5 6 (PRODUCT LEVEL)	SEE PAGE
	1	1	**153-2994**	1	FITTING AS (QUICK DISCONNECT, FEMALE)	
	2	1	**185-7887**	1	FITTING AS (QUICK DISCONNECT, MALE)	
I	3	1	**154-5020**	2	HOSE AS	
I	4	1	**154-5021**	1	HOSE AS	
I	5	1	**154-5022**	1	HOSE AS	
I	6	1	**154-5024**	1	HOSE AS	
I	7	1	**154-5025**	1	HOSE AS	
	8	1	**163-1386**	1	TEE-UNION	
	9	1	*148-8319*	2	CONNECTOR AS	
					(EACH INCLUDES)	
		1	**2M-9780**	1	SEAL-O-RING	
		1	**6V-8397**	1	SEAL-O-RING	
		1	**6V-8715**	1	CONNECTOR	
	10	1	*150-3056*	1	TEE AS	
		1	**6V-8397**	3	SEAL-O-RING	
		1	**6V-8788**	1	TEE	
	11	1	**1S-0994**	1	CLIP (SLOT)	
M	12	1	**5C-7261**	4	NUT (M8X1.25-THD)	
	13	1	**6D-4247**	3	CLIP	
	14	1	**6V-8397**	7	SEAL-O-RING	
	15	1	**9X-6273**	2	WASHER (32.5X50X0.8-MM THK)	
	16	1	**9X-6274**	2	WASHER (32.5X50X1.6-MM THK)	

I-REFER TO HYDRAULIC INFORMATION SYSTEM
M-METRIC PART

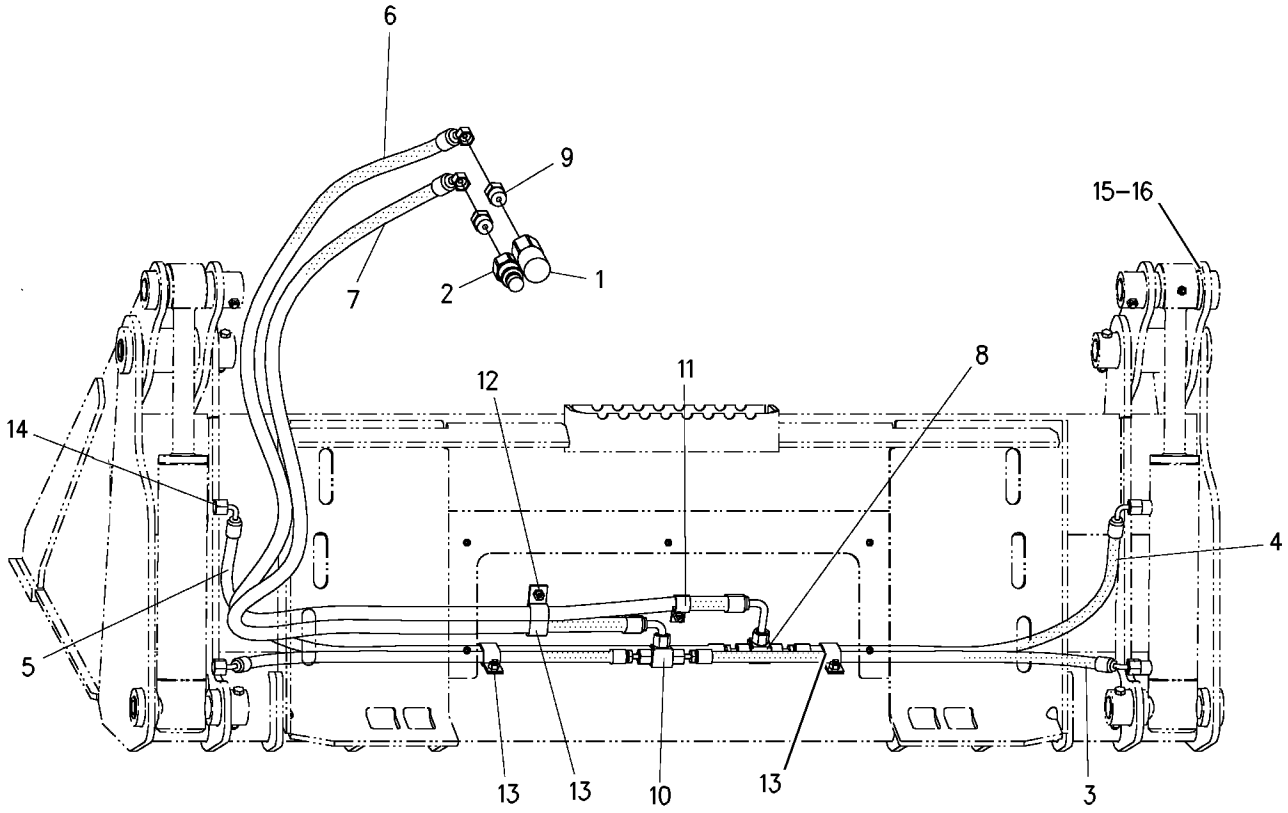

GRAPHIC #1 **<END>** g00922568

154-5051 LINES GP-BUCKET

S/N: MJH1-UP; SCH1-UP; RLL1-UP; BXM1-UP
PART OF 154-5008 BUCKET AR-MULTIPURPOSE
AN ATTACHMENT

SMCS-5057 **i02014483**

NOTE	REF NO	GRAPHIC REF	PART NUMBER	QTY	PART NAME 1 2 3 4 5 6 (PRODUCT LEVEL)	SEE PAGE
	1	1	**153-2994**	1	FITTING AS (QUICK DISCONNECT, FEMALE)	
I	2	1	**154-5024**	1	HOSE AS	
I	3	1	**154-5025**	1	HOSE AS	
I	4	1	**156-5508**	1	HOSE AS	
I	5	1	**156-5509**	2	HOSE AS	
I	6	1	**156-5510**	1	HOSE AS	
	7	1	**163-1386**	1	TEE-UNION	
	8	1	**185-7887**	1	FITTING AS (QUICK DISCONNECT, MALE)	
	9	1	*148-8319*	2	CONNECTOR AS	
					(EACH INCLUDES)	
		1	**2M-9780**	1	SEAL-O-RING	
		1	**6V-8397**	1	SEAL-O-RING	
		1	**6V-8715**	1	CONNECTOR	
	10	1	*150-3056*	1	TEE AS	
		1	**6V-8397**	3	SEAL-O-RING	
		1	**6V-8788**	1	TEE	
	11	1	**1S-0994**	1	CLIP (SLOT)	
M	12	1	**5C-7261**	4	NUT (M8X1.25-THD)	
	13	1	**6D-4247**	3	CLIP	
	14	1	**6V-8397**	7	SEAL-O-RING	
	15	1	**9X-6273**	2	WASHER (32.5X50X0.8-MM THK)	
	16	1	**9X-6274**	2	WASHER (32.5X50X1.6-MM THK)	

I-REFER TO HYDRAULIC INFORMATION SYSTEM
M-METRIC PART

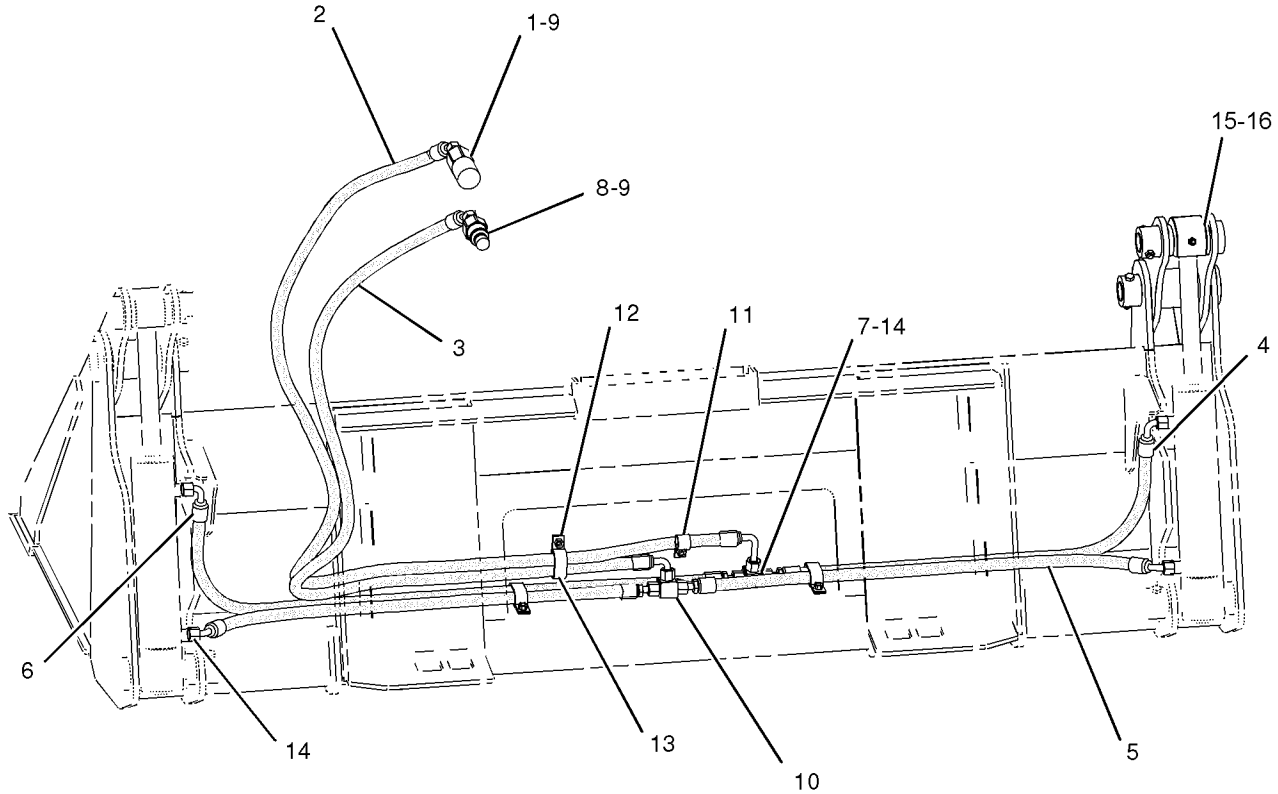

GRAPHIC #1 **<END>** g01041467

HYDRAULIC SYSTEM

154-5052 LINES GP-BUCKET

S/N: SCH1-UP
PART OF 154-5010 BUCKET AR-MULTIPURPOSE
AN ATTACHMENT

SMCS-5057 **i01815952**

NOTE	REF NO	GRAPHIC REF	PART NUMBER	QTY	PART NAME 1 2 3 4 5 6 (PRODUCT LEVEL)	SEE PAGE
	1	1	**153-2994**	1	FITTING AS (QUICK DISCONNECT, FEMALE)	
	2	1	**185-7887**	1	FITTING AS (QUICK DISCONNECT, MALE)	
I	3	1	**154-5024**	1	HOSE AS	
I	4	1	**154-5025**	1	HOSE AS	
I	5	1	**159-4535**	1	HOSE AS	
I	6	1	**159-4536**	2	HOSE AS	
I	7	1	**159-4537**	1	HOSE AS	
	8	1	**163-1386**	1	TEE-UNION	
	9	1	*148-8319*	2	CONNECTOR AS	
					(EACH INCLUDES)	
		1	**2M-9780**	1	SEAL-O-RING	
		1	**6V-8397**	1	SEAL-O-RING	
		1	**6V-8715**	1	CONNECTOR	
	10	1	*150-3056*	1	TEE AS	
		1	**6V-8397**	3	SEAL-O-RING	
		1	**6V-8788**	1	TEE	
	11	1	**1S-0994**	1	CLIP (SLOT)	
M	12	1	**5C-7261**	4	NUT (M8X1.25-THD)	
	13	1	**6D-4247**	3	CLIP	
	14	1	**6V-8397**	7	SEAL-O-RING	
	15	1	**9X-6273**	2	WASHER (32.5X50X0.8-MM THK)	
	16	1	**9X-6274**	2	WASHER (32.5X50X1.6-MM THK)	

I-REFER TO HYDRAULIC INFORMATION SYSTEM
M-METRIC PART

154-5052 **LINES GP-BUCKET** *(contd.)* **i01815952**

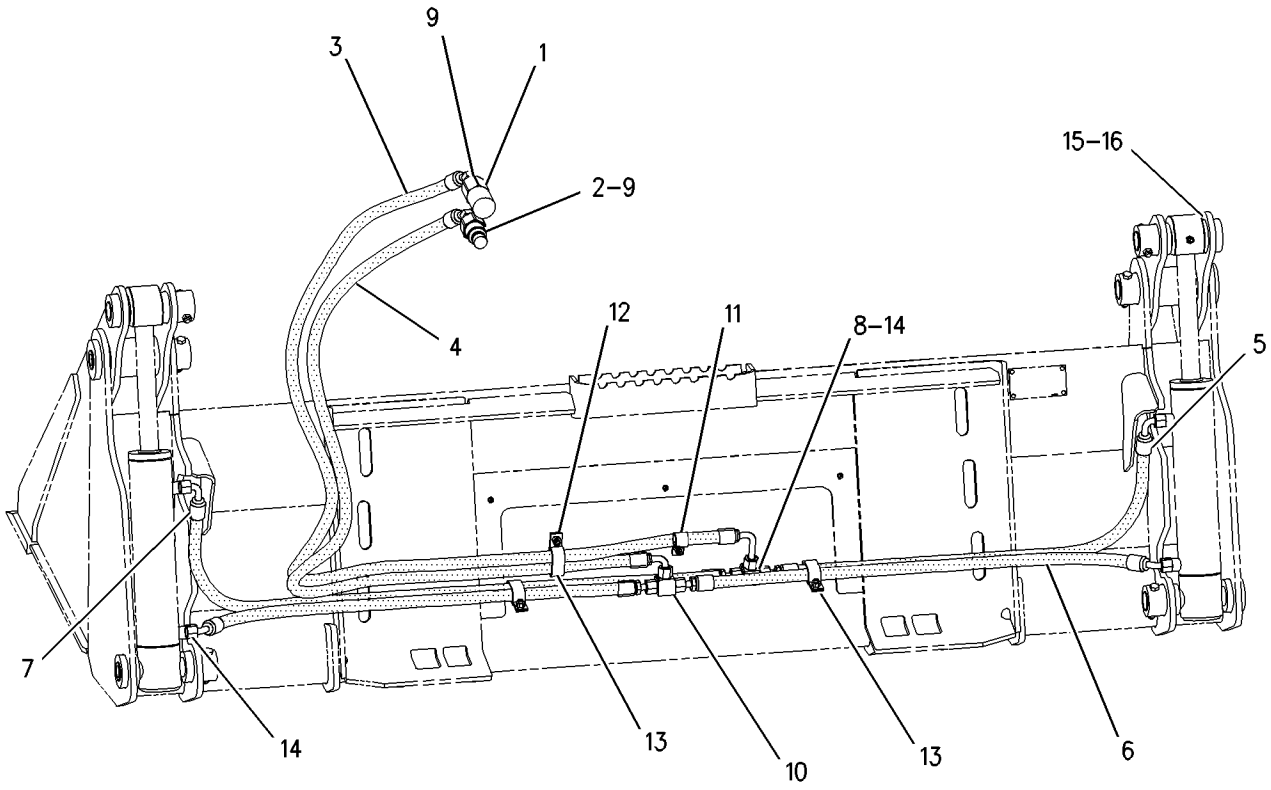

GRAPHIC #1 **<END>** g00927034

HYDRAULIC SYSTEM

177-1986 LINES GP-CONNECTING

S/N: MJH1-UP; SCH1-UP; RLL1-UP; BXM1-UP
PART OF 177-1989, 177-1990 BLADE AR
AN ATTACHMENT

SMCS-5057 **i01928980**

NOTE	REF NO	GRAPHIC REF	PART NUMBER	QTY	PART NAME 1 2 3 4 5 6 (PRODUCT LEVEL)	SEE PAGE
	1	1	**153-2994**	1	FITTING AS (QUICK DISCONNECT, FEMALE)	
	2	1	**153-2995**	1	FITTING (QUICK DISCONNECT, MALE)	
	3	1	**163-1385**	2	ELBOW	
I	4	1	**177-1910**	2	HOSE AS	
I	5	1	**177-1911**	1	HOSE AS	
I	6	1	**177-1912**	1	HOSE AS	
	7	1	*148-8319*	2	CONNECTOR AS	
					(EACH INCLUDES)	
		1	**2M-9780**	1	SEAL-O-RING	
		1	**6V-8397**	1	SEAL-O-RING	
		1	**6V-8715**	1	CONNECTOR	
	8	1	**148-8378**	2	ELBOW AS	
					(EACH INCLUDES)	
		1	**3J-1907**	1	SEAL-O-RING	
		1	**6V-8397**	1	SEAL-O-RING	
		1	**6V-8724**	1	ELBOW	
	9	1	**6V-8397**	4	SEAL-O-RING	
	10	1	**8T-4121**	4	WASHER-HARD (11X21X2.5-MM THK)	
M	11	1	**8T-4133**	2	NUT (M10X1.5-THD)	
M	12	1	**8T-4185**	1	BOLT (M10X1.5X50-MM)	
M	13	1	**8T-4195**	1	BOLT (M10X1.5X30-MM)	
	14	1	**8T-8192**	2	CLIP (SLOT)	
	15	1	**8T-8193**	2	CLIP (TAB)	

I-REFER TO HYDRAULIC INFORMATION SYSTEM
M-METRIC PART

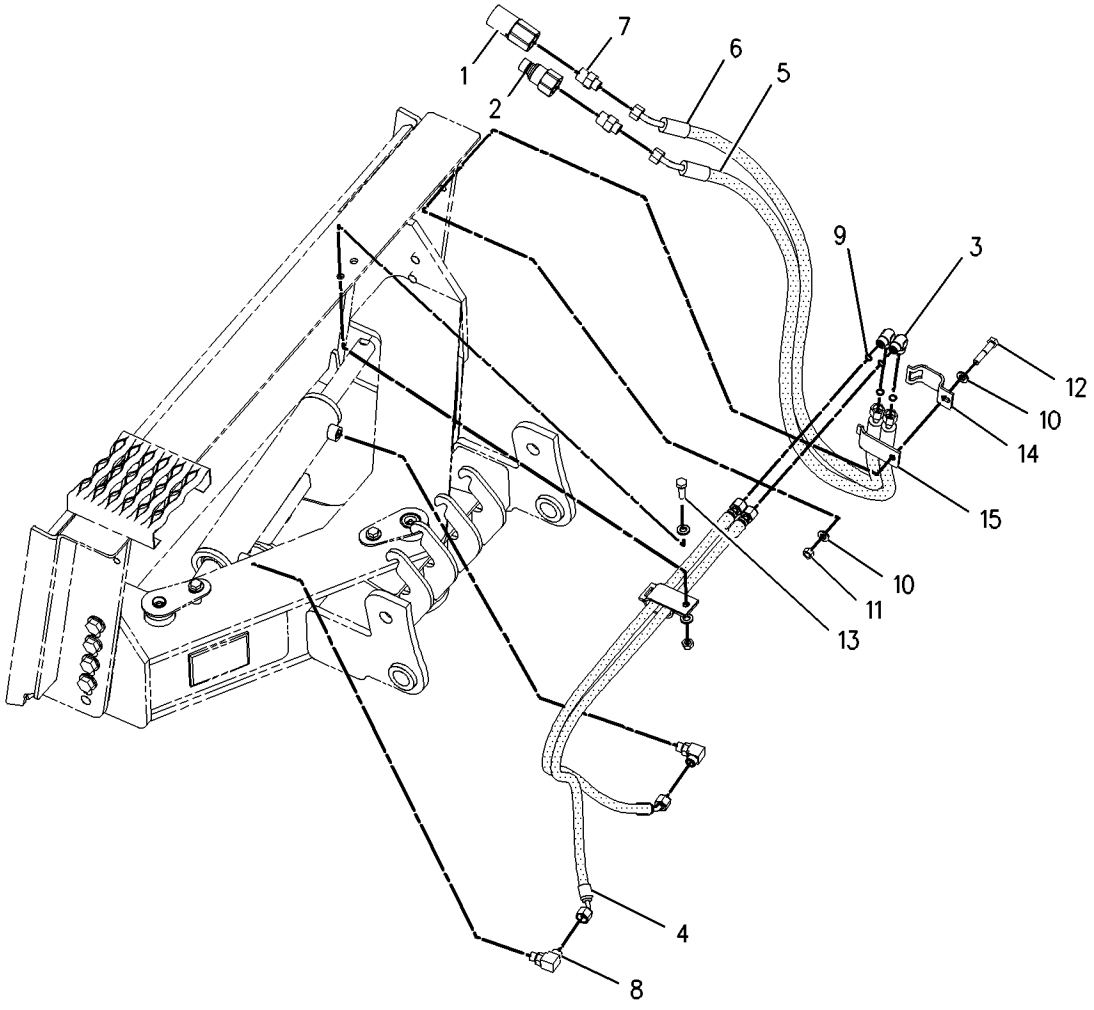

GRAPHIC #1 **<END>** g00978933

HYDRAULIC SYSTEM

231-5273 LINES GP-CONNECTING

S/N: MJH1-UP; BXM1-UP
PART OF 231-5275, 231-5277 BLADE AR
AN ATTACHMENT

SMCS-5057 **i01964116**

NOTE	REF NO	GRAPHIC REF	PART NUMBER	QTY	PART NAME 1 2 3 4 5 6 (PRODUCT LEVEL)	SEE PAGE
	1	1	**153-2994**	1	FITTING AS (QUICK DISCONNECT, FEMALE)	
	2	1	**153-2995**	1	FITTING (QUICK DISCONNECT, MALE)	
I	3	1	**231-0124**	2	HOSE AS	
I	4	1	**231-0125**	1	HOSE AS	
I	5	1	**231-0126**	2	HOSE AS	
I	6	1	**231-0127**	2	HOSE AS	
I	7	1	**238-1003**	1	HOSE AS	
	8	1	*148-8315*	2	CONNECTOR AS	
					(EACH INCLUDES)	
		1	**2M-9780**	1	SEAL-O-RING	
		1	**6V-8642**	1	CONNECTOR	
		1	**7J-9108**	1	SEAL-O-RING	
	9	1	*148-8336*	6	CONNECTOR AS	
					(EACH INCLUDES)	
		1	**3J-1907**	1	SEAL-O-RING	
		1	**6V-8397**	1	SEAL-O-RING	
		1	**6V-8636**	1	CONNECTOR	
	10	1	*148-8342*	2	CONNECTOR AS	
					(EACH INCLUDES)	
		1	**3K-0360**	1	SEAL-O-RING	
		1	**6V-8632**	1	CONNECTOR	
		1	**7J-9108**	1	SEAL-O-RING	
	11	1	**5P-1076**	2	WASHER-HARD (13.5X30X4-MM THK)	
	12	1	**7G-5984**	1	CLIP (TAB)	
	13	1	**7G-5985**	1	CLIP (SLOT)	
	14	1	**7G-5986**	1	GROMMET	
M	15	1	**8T-4139**	2	BOLT (M12X1.75X30-MM)	

I-REFER TO HYDRAULIC INFORMATION SYSTEM
M-METRIC PART

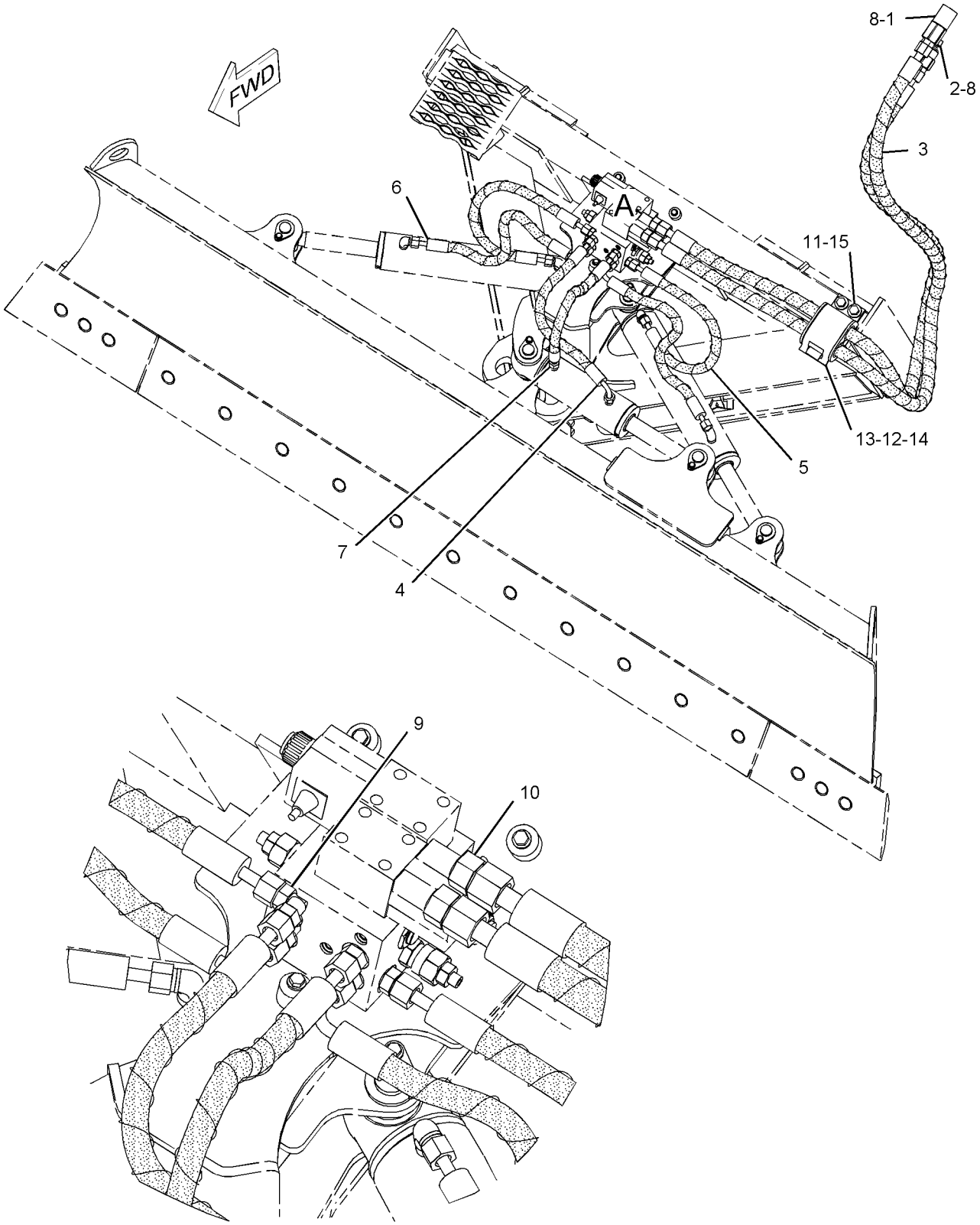

VIEW OF AREA A

GRAPHIC #1 **<END>** g01041993

HYDRAULIC SYSTEM

161-0187 LINES GP-GRAPPLE

S/N: MJH1-UP; SCH1-UP; RLL1-UP; BXM1-UP
INDUSTRIAL
PART OF 157-7223, 157-7224, 157-7225 BUCKET AR-GRAPPLE, 162-8139, 163-4812 FORK AR-GRAPPLE
AN ATTACHMENT

SMCS-5057, 5555 **i01928983**

NOTE	REF NO	GRAPHIC REF	PART NUMBER	QTY	PART NAME 1 2 3 4 5 6 (PRODUCT LEVEL)	SEE PAGE
	1	1	**3E-7404**	2	CLAMP-HOSE	
	2	1	**153-2994**	1	FITTING AS (QUICK DISCONNECT, FEMALE)	
	3	1	**153-2995**	1	FITTING (QUICK DISCONNECT, MALE)	
	4	1	**161-0185**	1	TUBE AS	
	5	1	**161-0186**	1	TUBE AS	
	6	1	**161-0188**	2	TUBE AS	
I	7	1	**161-0189**	2	HOSE AS	
I	8	1	**161-0190**	2	HOSE AS	
	9	1	**163-1385**	1	ELBOW	
I	10	1	**163-9320**	1	HOSE AS	
I	11	1	**166-9312**	1	HOSE AS	
	12	1	*148-8319*	2	CONNECTOR AS	
					(EACH INCLUDES)	
		1	**2M-9780**	1	SEAL-O-RING	
		1	**6V-8397**	1	SEAL-O-RING	
		1	**6V-8715**	1	CONNECTOR	
	13	1	**2V-3216**	6	CLIP	
	14	1	**6V-8397**	13	SEAL-O-RING	
	15	1	**7S-3916**	2	CLIP (TAB)	
	16	1	**7S-3919**	2	CLIP (SLOT)	
	17	1	**8T-4121**	2	WASHER-HARD (11X21X2.5-MM THK)	
M	18	1	**8T-4136**	2	BOLT (M10X1.5X25-MM)	
M	19	1	**8T-4171**	4	BOLT (M6X1X12-MM)	
	20	1	**9R-2004**	2	BLOCK	

I-REFER TO HYDRAULIC INFORMATION SYSTEM
M-METRIC PART

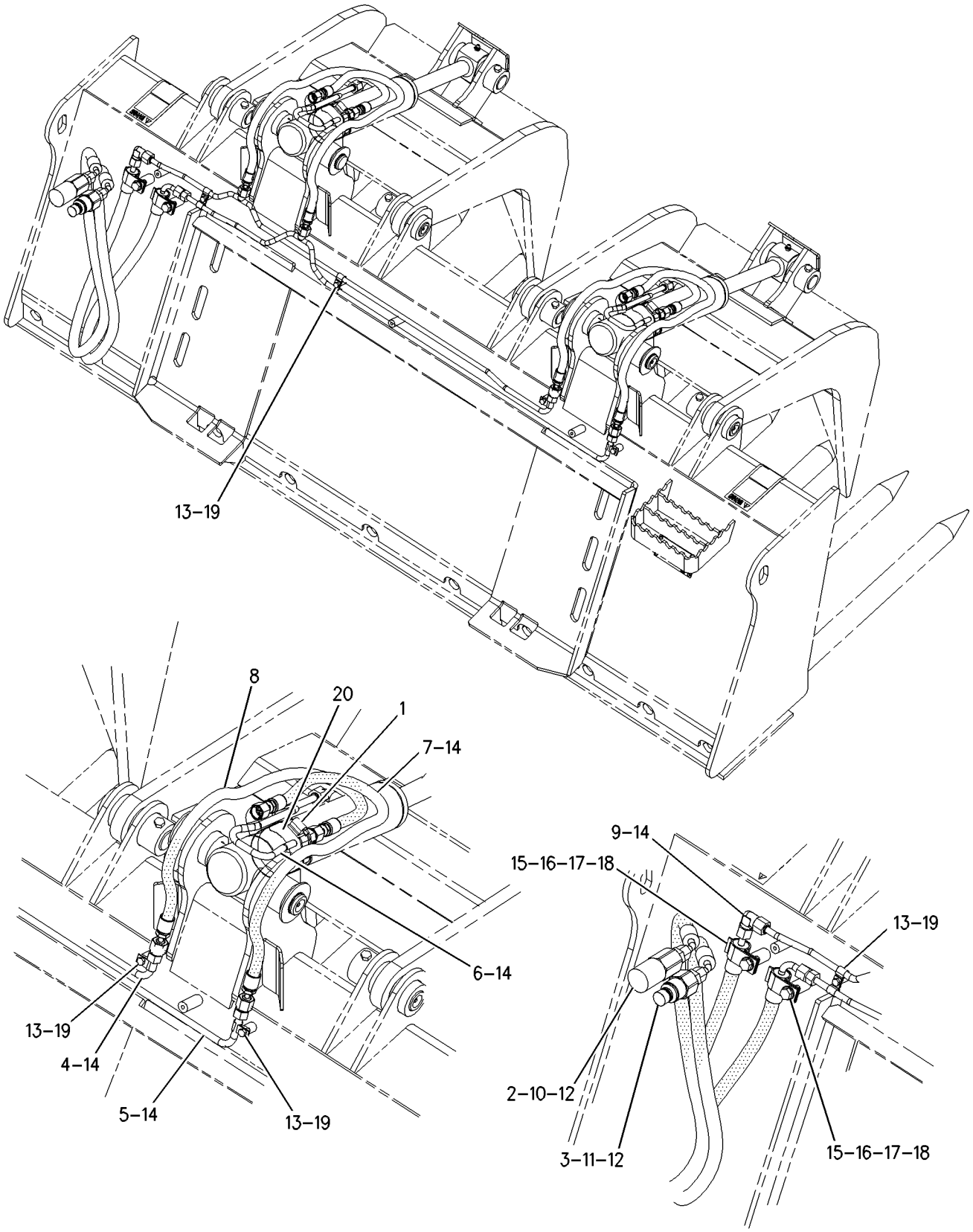

GRAPHIC #1 **<END>** g00733464

HYDRAULIC SYSTEM

165-8733 LINES GP-GRAPPLE

S/N: MJH1-UP; SCH1-UP; RLL1-UP; BXM1-UP
UTILITY
PART OF 165-8734 GRAPPLE & CYLINDER GP-UTILITY
AN ATTACHMENT

SMCS-5057, 5555 **i01788832**

NOTE	REF NO	GRAPHIC REF	PART NUMBER	QTY	PART NAME 1 2 3 4 5 6 (PRODUCT LEVEL)	SEE PAGE
	1	1	**2J-6540**	1	CLAMP (HOSE)	
	2	1	**153-2994**	1	FITTING AS (QUICK DISCONNECT, FEMALE)	
	3	1	**153-2995**	1	FITTING (QUICK DISCONNECT, MALE)	
I	4	1	**174-2384**	1	HOSE AS	
I	5	1	**174-2385**	1	HOSE AS	
	6	1	**174-2388**	1	TUBE AS	
	7	1	**174-2389**	1	TUBE AS	
I	8	1	**174-2393**	2	HOSE AS	
	9	1	**174-3097**	1	TUBE AS	
	10	1	**183-4085**	1	ELBOW AS	
	11	1	*148-8319*	2	CONNECTOR AS	
					(EACH INCLUDES)	
		1	**2M-9780**	1	SEAL-O-RING	
		1	**6V-8397**	1	SEAL-O-RING	
		1	**6V-8715**	1	CONNECTOR	
	12	1	**6V-8397**	6	SEAL-O-RING	
	13	1	**7S-3912**	2	CLIP (TAB)	
	14	1	**7S-3913**	2	CLIP (SLOT)	
	15	1	**8T-1893**	2	CLIP (SLOT)	
	16	1	**8T-1894**	2	CLIP (TAB)	
	17	1	**8T-4121**	6	WASHER-HARD (11X21X2.5-MM THK)	
M	18	1	**8T-4137**	4	BOLT (M10X1.5X20-MM)	
	19	1	**9R-2004**	1	BLOCK	

I-REFER TO HYDRAULIC INFORMATION SYSTEM
M-METRIC PART

165-8733 **LINES GP-GRAPPLE** *(contd.)* **i01788832**

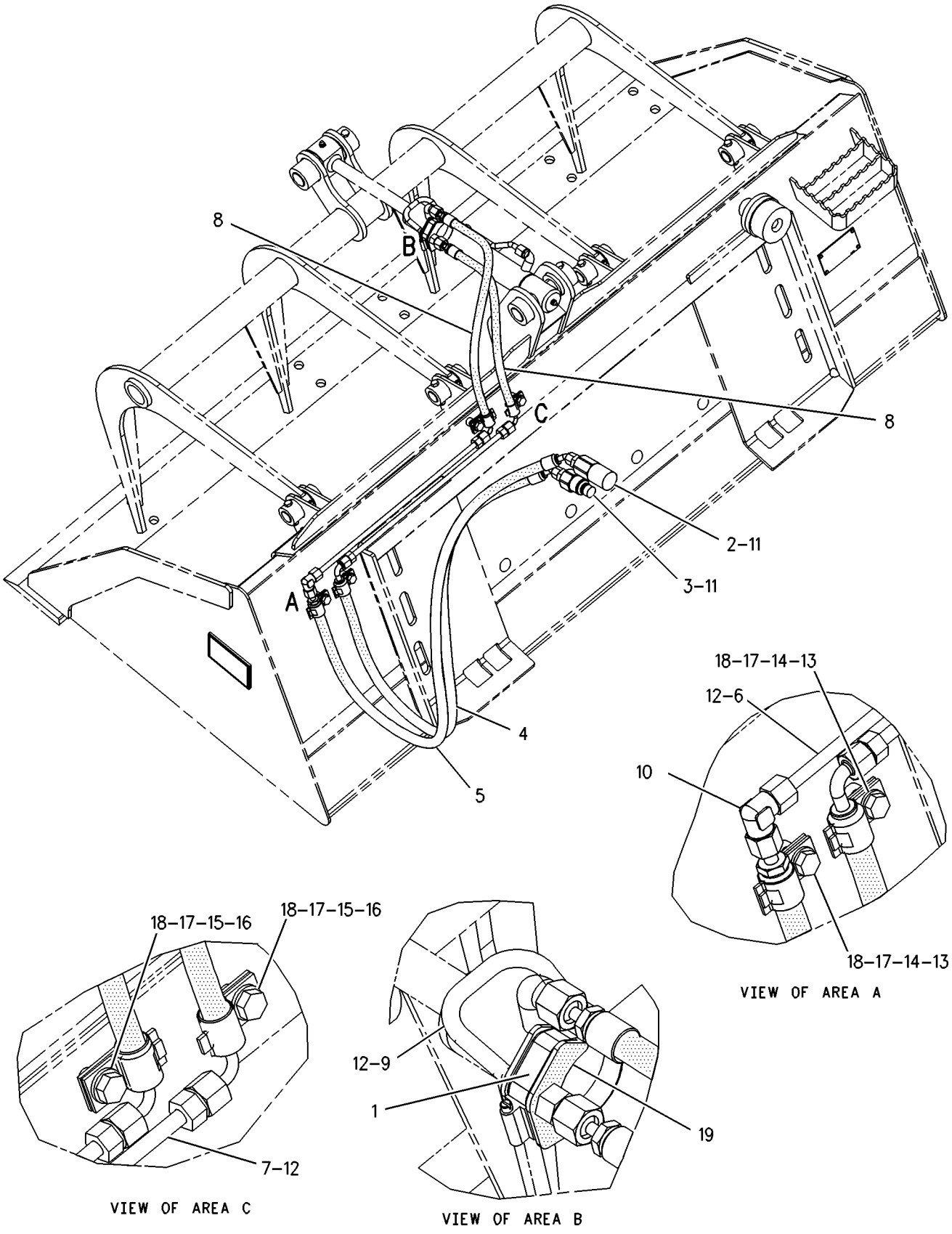

GRAPHIC #1 **<END>** g00915477

HYDRAULIC SYSTEM

218-6059 LINES GP-HYDRAULIC FAN

S/N: MJH1-5515; RLL1-3151
PART OF 218-6272 HEATER AR-CAB, 218-6271 INSTALLATION GP
AN ATTACHMENT

SMCS-5057 **i02249634**

NOTE	REF NO	GRAPHIC REF	PART NUMBER	QTY	PART NAME 1 2 3 4 5 6 (PRODUCT LEVEL)	SEE PAGE
	1	1	**3S-2093**	1	STRAP-CABLE	
I	2	1	**218-6061**	1	HOSE AS	
I	3	1	**218-6063**	1	HOSE AS	
	4	1	*229-5466*	1	FITTING AS	
		1	**229-5465**	1	FITTING	
		1	**3J-7354**	1	SEAL-O-RING	
	5	1	*148-8315*	1	CONNECTOR AS	
		1	**6V-8642**	1	CONNECTOR	
		1	**2M-9780**	1	SEAL-O-RING	
		1	**7J-9108**	1	SEAL-O-RING	
	6	1	*148-8316*	1	CONNECTOR AS	
		1	**6V-8647**	1	CONNECTOR	
		1	**3J-7354**	1	SEAL-O-RING	
		1	**4J-5477**	1	SEAL-O-RING	
	7	1	*148-8369*	1	ELBOW AS	
		1	**6V-8628**	1	ELBOW	
		1	**3J-7354**	1	SEAL-O-RING	
		1	**4J-5477**	1	SEAL-O-RING	
	8	1	**6D-4636**	2	CLIP	
	9	1	**6V-9829**	1	CAP AS	
	10	1	**8C-3451**	1	CAP-DUST	
	11	1	**8T-4121**	5	WASHER-HARD (11X21X2.5-MM THK)	
M	12	1	**8T-4133**	2	NUT (M10X1.5-THD)	
M	13	1	**101-3129**	1	STUD (M10X1.15-THD)	
M	14	1	**8T-4191**	1	BOLT (M10X1.5X16-MM)	
	15	1	**4P-7581**	1	CLIP	

I-REFER TO HYDRAULIC INFORMATION SYSTEM
M-METRIC PART

218-6059 **LINES GP-HYDRAULIC FAN** *(contd.)* **i02249634**

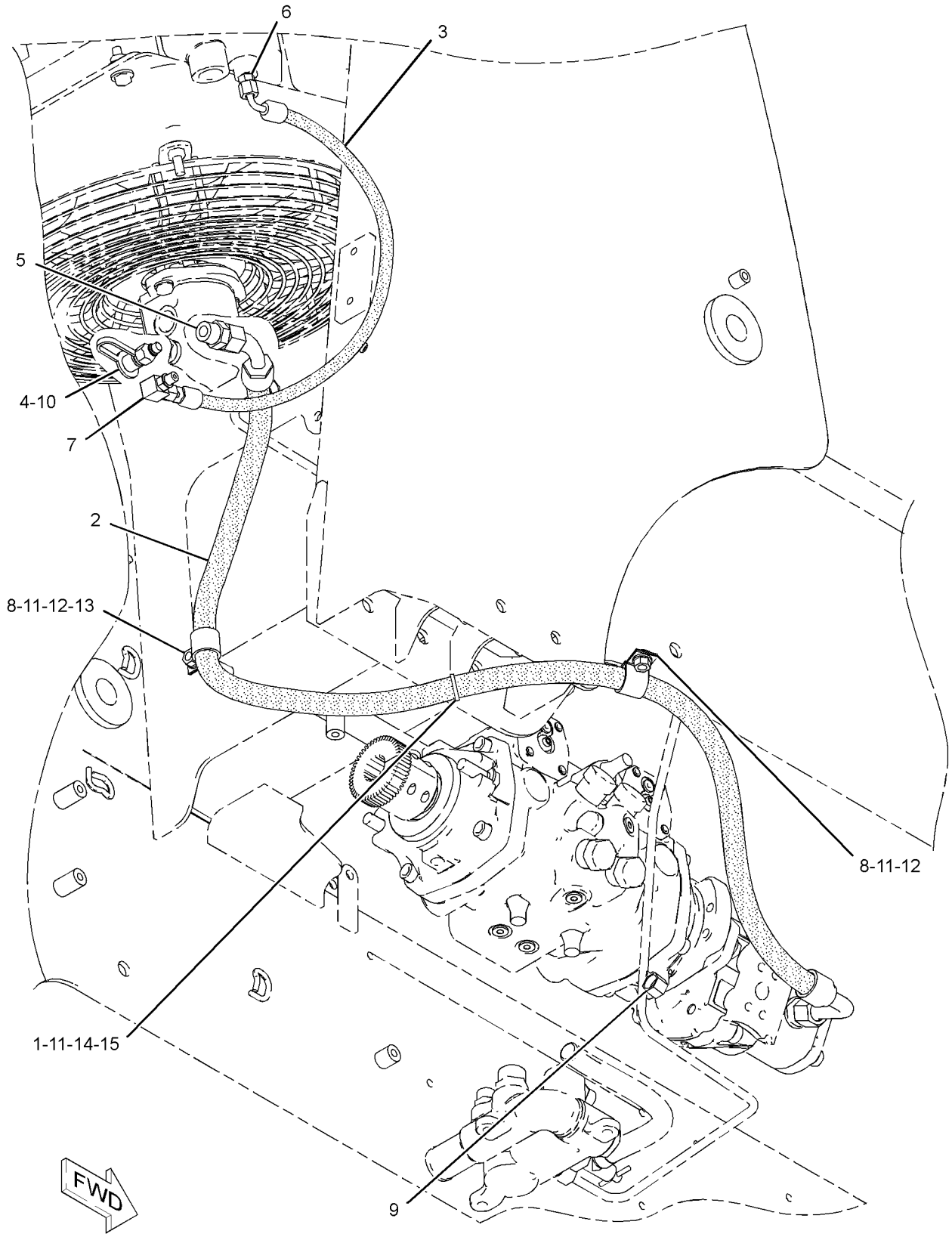

GRAPHIC #1

<END>

g01153219

HYDRAULIC SYSTEM

218-6059 LINES GP-HYDRAULIC FAN

S/N: MJH5516-UP; RLL3152-UP
PART OF 218-6272 HEATER AR-CAB, 218-6271 INSTALLATION GP
AN ATTACHMENT

SMCS-5057 **i02444327**

NOTE	REF NO	GRAPHIC REF	PART NUMBER	QTY	PART NAME 1 2 3 4 5 6 (PRODUCT LEVEL)	SEE PAGE
C	1	1	**7K-1181**	1	STRAP-CABLE	
M	2	1	**101-3129**	1	STUD (M10X1.15-THD)	
I	3	1	**218-6063**	1	HOSE AS	
	4	1	*229-5466*	1	FITTING AS	
		1	**229-5465**	1	FITTING	
		1	**3J-7354**	1	SEAL-O-RING	
CI	5	1	**282-9826**	1	HOSE AS	
	6	1	*148-8315*	1	CONNECTOR AS	
		1	**6V-8642**	1	CONNECTOR	
		1	**2M-9780**	1	SEAL-O-RING	
		1	**7J-9108**	1	SEAL-O-RING	
	7	1	*148-8316*	1	CONNECTOR AS	
		1	**6V-8647**	1	CONNECTOR	
		1	**3J-7354**	1	SEAL-O-RING	
		1	**4J-5477**	1	SEAL-O-RING	
	8	1	*148-8369*	1	ELBOW AS	
		1	**6V-8628**	1	ELBOW	
		1	**3J-7354**	1	SEAL-O-RING	
		1	**4J-5477**	1	SEAL-O-RING	
C	9	1	*153-6256*	1	ELBOW AS	
		1	**7J-9108**	1	SEAL-O-RING	
		1	**8C-7563**	1	ELBOW	
C	10	1	**6D-4636**	2	CLIP	
	11	1	**6V-9829**	1	CAP AS	
	12	1	**8C-3451**	1	CAP-DUST	
C	13	1	**8T-4121**	2	WASHER-HARD (11X21X2.5-MM THK)	
CM	14	1	**8T-4133**	1	NUT (M10X1.5-THD)	

C-CHANGE FROM PREVIOUS TYPE
I-REFER TO HYDRAULIC INFORMATION SYSTEM
M-METRIC PART

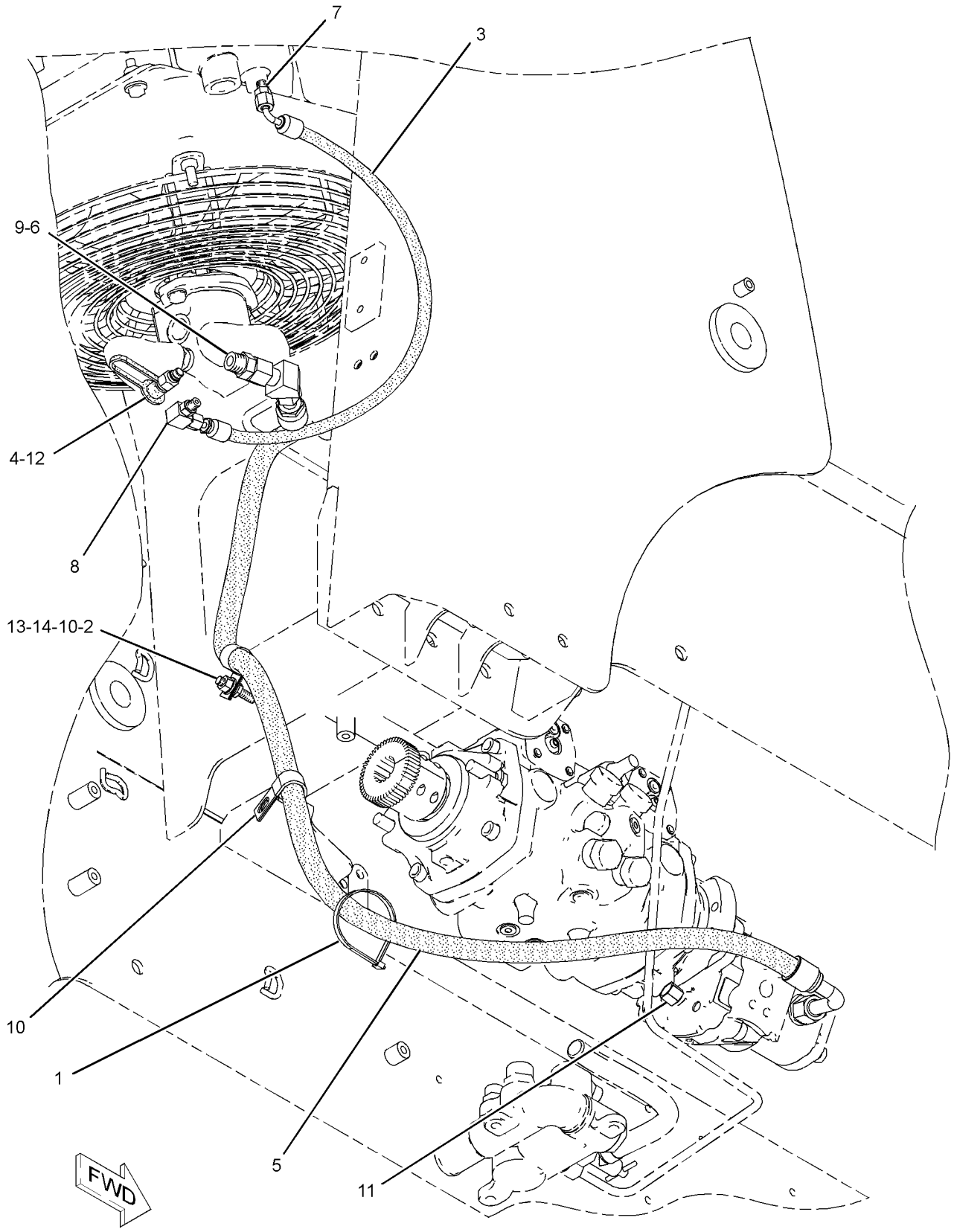

GRAPHIC #1 **<END>** g01222002

HYDRAULIC SYSTEM

218-6528 LINES GP-HYDRAULIC FAN

S/N: SCH1-UP; BXM1-UP
PART OF 218-6703 HEATER AR-CAB, 218-6701 INSTALLATION GP
AN ATTACHMENT

SMCS-5057 **i02271031**

NOTE	REF NO	GRAPHIC REF	PART NUMBER	QTY	PART NAME 1 2 3 4 5 6 (PRODUCT LEVEL)	SEE PAGE
	1	1	**7K-1181**	2	STRAP-CABLE	
	2	1	**8C-3451**	1	CAP-DUST	
I	3	1	**218-6063**	1	HOSE AS	
I	4	1	**218-6098**	1	HOSE AS	
	5	1	*229-5466*	1	FITTING AS	
		1	**3J-7354**	2	SEAL-O-RING	
		1	**229-5465**	2	FITTING	
	6	1	*148-8315*	1	CONNECTOR AS	
		1	**2M-9780**	1	SEAL-O-RING	
		1	**6V-8642**	1	CONNECTOR	
		1	**7J-9108**	1	SEAL-O-RING	
	7	1	*148-8316*	1	CONNECTOR AS	
		1	**3J-7354**	1	SEAL-O-RING	
		1	**4J-5477**	1	SEAL-O-RING	
		1	**6V-8647**	1	CONNECTOR	
	8	1	*148-8369*	1	ELBOW AS	
		1	**3J-7354**	1	SEAL-O-RING	
		1	**4J-5477**	1	SEAL-O-RING	
		1	**6V-8628**	1	ELBOW	
	9	1	*153-6256*	1	ELBOW AS	
		1	**7J-9108**	1	SEAL-O-RING	
		1	**8C-7563**	1	ELBOW	
	10	1	**5P-6994**	1	CLIP	
	11	1	**6V-9829**	1	CAP AS	
	12	1	**7X-7729**	2	WASHER (11X25X3-MM THK)	
M	13	1	**8T-4133**	1	NUT (M10X1.5-THD)	
M	14	1	**101-3129**	1	STUD (M10X1.15-THD)	

I-REFER TO HYDRAULIC INFORMATION SYSTEM
M-METRIC PART

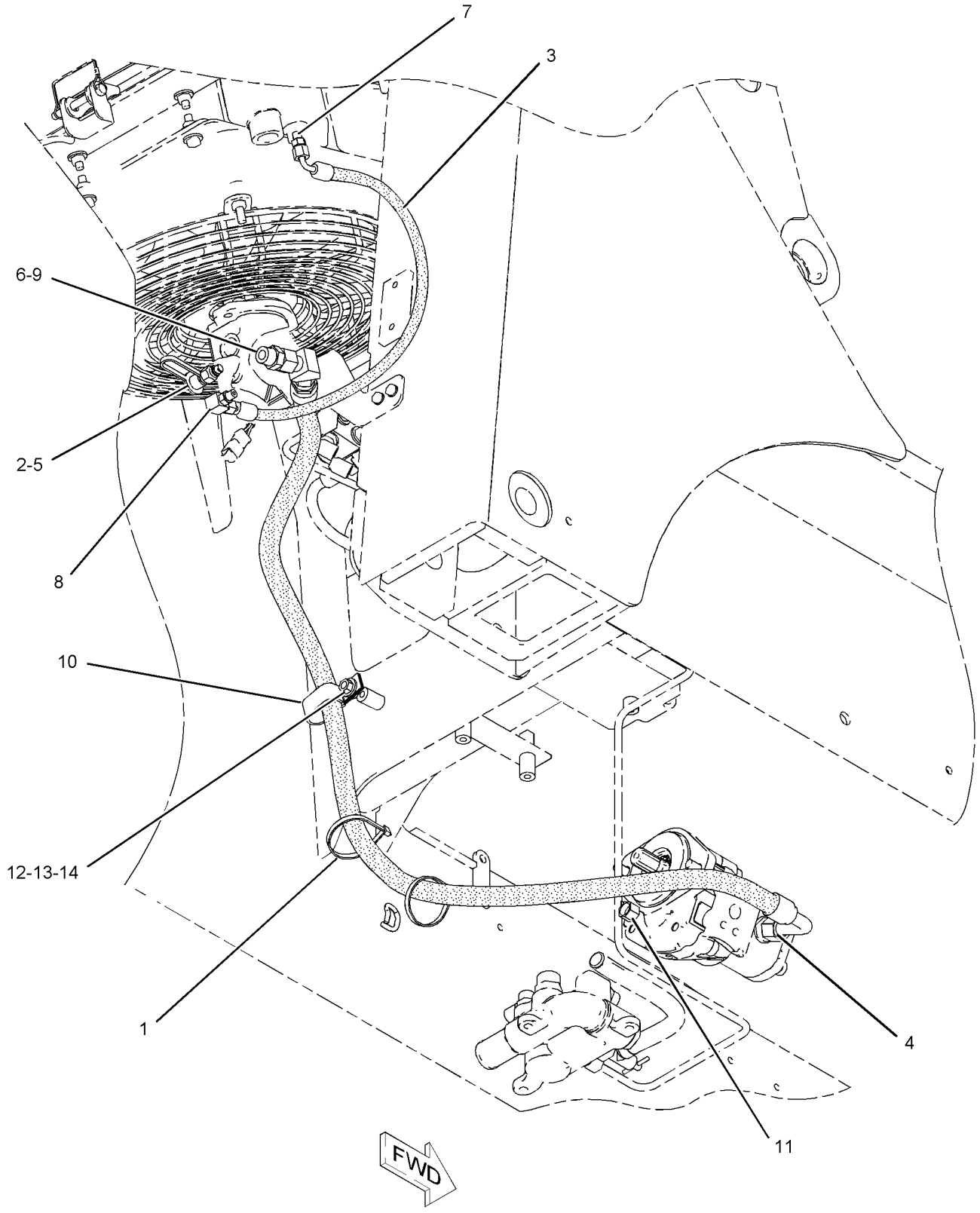

GRAPHIC #1 **<END>** g01138451

HYDRAULIC SYSTEM

218-6533 LINES GP-HYDRAULIC FAN

S/N: BXM1-UP
PART OF 218-6302 AIR CONDITIONER AR
AN ATTACHMENT

SMCS-5057 **i02258247**

NOTE	REF NO	GRAPHIC REF	PART NUMBER	QTY	PART NAME 1 2 3 4 5 6 (PRODUCT LEVEL)	SEE PAGE
	1	1	**7K-1181**	2	STRAP-CABLE	
	2	1	**8C-3451**	1	CAP-DUST	
I	3	1	**218-6063**	1	HOSE AS	
I	4	1	**218-6531**	1	HOSE AS	
I	5	1	**218-6534**	1	HOSE AS	
I	6	1	**218-6535**	1	HOSE AS	
	7	1	*229-5466*	1	FITTING AS	
		1	**3J-7354**	1	SEAL-O-RING	
		1	**229-5465**	1	FITTING	
	8	1	*148-8315*	3	CONNECTOR AS	
					(EACH INCLUDES)	
		1	**2M-9780**	1	SEAL-O-RING	
		1	**6V-8642**	1	CONNECTOR	
		1	**7J-9108**	1	SEAL-O-RING	
	9	1	*148-8316*	1	CONNECTOR AS	
		1	**3J-7354**	1	SEAL-O-RING	
		1	**4J-5477**	1	SEAL-O-RING	
		1	**6V-8647**	1	CONNECTOR	
	10	1	*148-8326*	1	CONNECTOR AS	
		1	**3J-7354**	1	SEAL-O-RING	
		1	**6V-8397**	1	SEAL-O-RING	
		1	**6V-9872**	1	CONNECTOR	
	11	1	*148-8369*	1	ELBOW AS	
		1	**3J-7354**	1	SEAL-O-RING	
		1	**4J-5477**	1	SEAL-O-RING	
		1	**6V-8628**	1	ELBOW	
	12	1	*153-6256*	1	ELBOW AS	
		1	**7J-9108**	1	SEAL-O-RING	
		1	**8C-7563**	1	ELBOW	
	13	1	**5P-6994**	1	CLIP	
	14	1	**7X-7729**	2	WASHER (11X25X3-MM THK)	
M	15	1	**8T-4133**	1	NUT (M10X1.5-THD)	
M	16	1	**101-3129**	1	STUD (M10X1.15-THD)	

I-REFER TO HYDRAULIC INFORMATION SYSTEM
M-METRIC PART

218-6533 **LINES GP-HYDRAULIC FAN** *(contd.)* **i02258247**

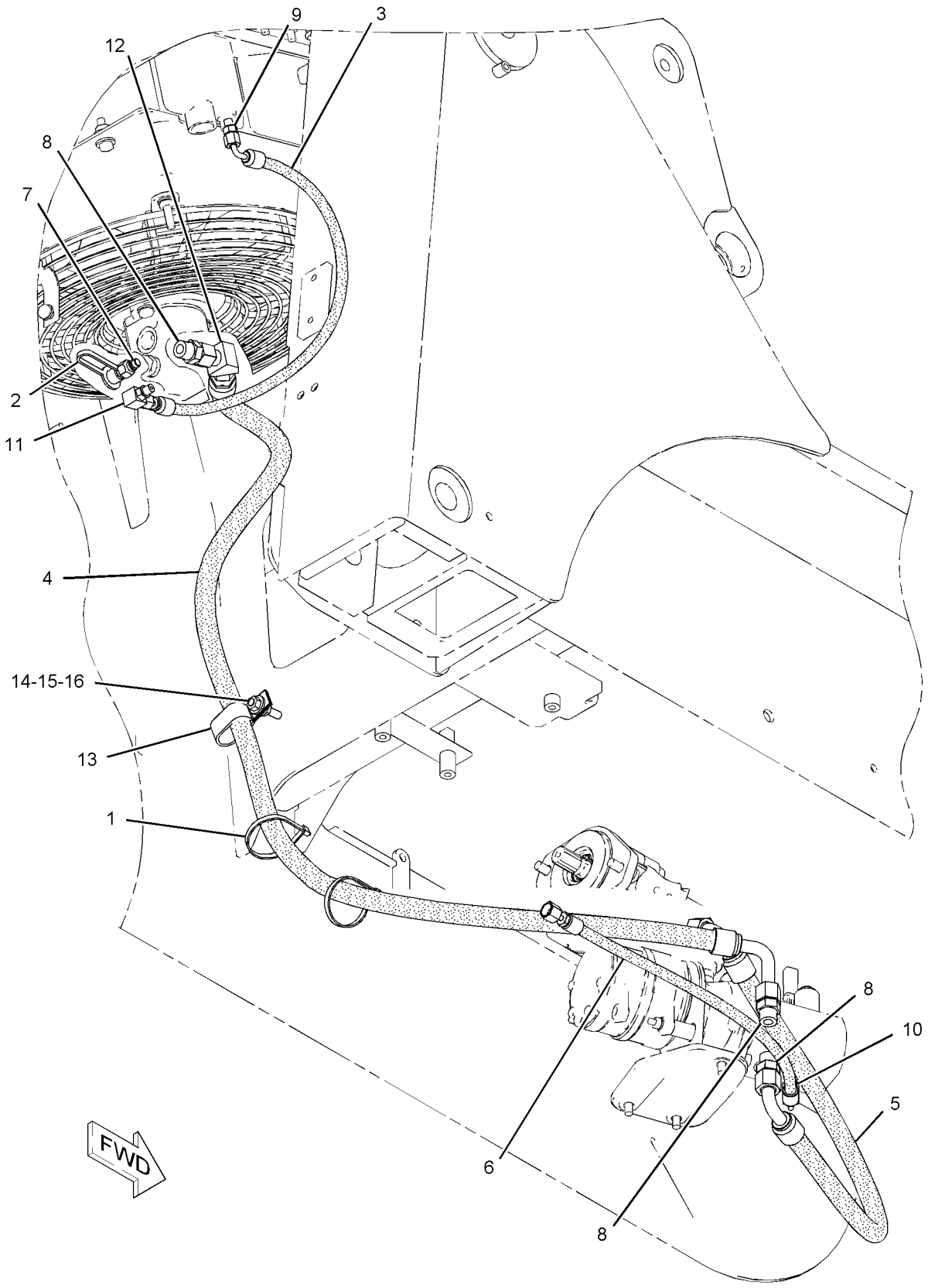

GRAPHIC #1 **<END>** g01139213

HYDRAULIC SYSTEM

218-6693 LINES GP-HYDRAULIC FAN

S/N: MJH1-5515
PART OF 218-6273 AIR CONDITIONER AR
AN ATTACHMENT

SMCS-5057 **i02456868**

NOTE	REF NO	GRAPHIC REF	PART NUMBER	QTY	PART NAME 1 2 3 4 5 6 (PRODUCT LEVEL)	SEE PAGE
	1	1	**3S-2093**	1	STRAP-CABLE	
I	2	1	**218-6063**	1	HOSE AS	
I	3	1	**218-6107**	1	HOSE AS	
I	4	1	**218-6108**	1	HOSE AS	
I	5	1	**218-6808**	1	HOSE AS	
	6	1	*229-5466*	1	FITTING AS	
		1	**3J-7354**	1	SEAL-O-RING	
		1	**229-5465**	1	FITTING	
	7	1	*148-8315*	3	CONNECTOR AS	
					(EACH INCLUDES)	
		1	**2M-9780**	1	SEAL-O-RING	
		1	**6V-8642**	1	CONNECTOR	
		1	**7J-9108**	1	SEAL-O-RING	
	8	1	*148-8316*	1	CONNECTOR AS	
		1	**3J-7354**	1	SEAL-O-RING	
		1	**4J-5477**	1	SEAL-O-RING	
		1	**6V-8647**	1	CONNECTOR	
	9	1	*148-8326*	1	CONNECTOR AS	
		1	**3J-7354**	1	SEAL-O-RING	
		1	**6V-8397**	1	SEAL-O-RING	
		1	**6V-9872**	1	CONNECTOR	
	10	1	*148-8369*	1	ELBOW AS	
		1	**3J-7354**	1	SEAL-O-RING	
		1	**4J-5477**	1	SEAL-O-RING	
		1	**6V-8628**	1	ELBOW	
	11	1	**6D-4636**	3	CLIP	
	12	1	**8C-3451**	1	CAP-DUST	
	13	1	**8T-4121**	5	WASHER-HARD (11X21X2.5-MM THK)	
M	14	1	**8T-4133**	2	NUT (M10X1.5-THD)	
M	15	1	**101-3129**	1	STUD (M10X1.15-THD)	
M	16	1	**8T-4191**	1	BOLT (M10X1.5X16-MM)	
	17	1	**4P-7581**	1	CLIP	

I-REFER TO HYDRAULIC INFORMATION SYSTEM
M-METRIC PART

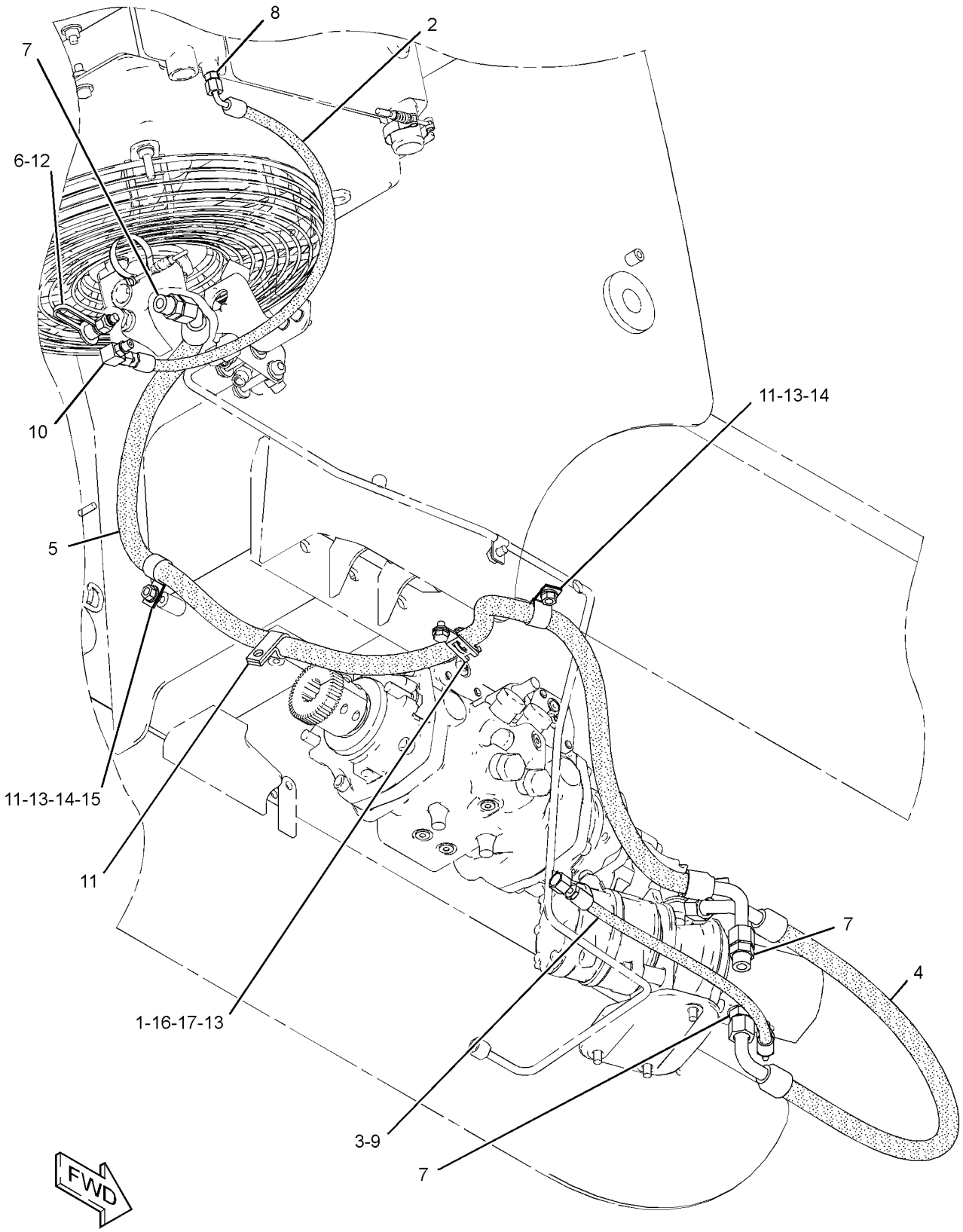

GRAPHIC #1 **<END>** g01225335

HYDRAULIC SYSTEM

218-6693 LINES GP-HYDRAULIC FAN

S/N: MJH5516-UP
PART OF 218-6273 AIR CONDITIONER AR
AN ATTACHMENT

SMCS-5057 **i02454858**

NOTE	REF NO	GRAPHIC REF	PART NUMBER	QTY	PART NAME 1 2 3 4 5 6 (PRODUCT LEVEL)	SEE PAGE
C	1	1	**7K-1181**	1	STRAP-CABLE	
M	2	1	**101-3129**	1	STUD (M10X1.15-THD)	
I	3	1	**218-6063**	1	HOSE AS	
I	4	1	**218-6107**	1	HOSE AS	
I	5	1	**218-6108**	1	HOSE AS	
	6	1	*229-5466*	1	FITTING AS	
		1	**3J-7354**	2	SEAL-O-RING	
		1	**229-5465**	2	FITTING	
	7	1	*148-8315*	3	CONNECTOR AS	
					(EACH INCLUDES)	
		1	**2M-9780**	1	SEAL-O-RING	
		1	**6V-8642**	1	CONNECTOR	
		1	**7J-9108**	1	SEAL-O-RING	
	8	1	*148-8316*	1	CONNECTOR AS	
		1	**3J-7354**	1	SEAL-O-RING	
		1	**4J-5477**	1	SEAL-O-RING	
		1	**6V-8647**	1	CONNECTOR	
	9	1	*148-8326*	1	CONNECTOR AS	
		1	**3J-7354**	1	SEAL-O-RING	
		1	**6V-8397**	1	SEAL-O-RING	
		1	**6V-9872**	1	CONNECTOR	
	10	1	*148-8369*	1	ELBOW AS	
		1	**3J-7354**	1	SEAL-O-RING	
		1	**4J-5477**	1	SEAL-O-RING	
		1	**6V-8628**	1	ELBOW	
C	11	1	*153-6256*	1	ELBOW AS	
		1	**7J-9108**	1	SEAL-O-RING	
		1	**8C-7563**	1	ELBOW	
CI	12	1	**282-9827**	1	HOSE AS	
C	13	1	**6D-4636**	2	CLIP	
	14	1	**8C-3451**	1	CAP-DUST	
C	15	1	**8T-4121**	2	WASHER-HARD (11X21X2.5-MM THK)	
CM	16	1	**8T-4133**	1	NUT (M10X1.5-THD)	

C-CHANGE FROM PREVIOUS TYPE
I-REFER TO HYDRAULIC INFORMATION SYSTEM
M-METRIC PART

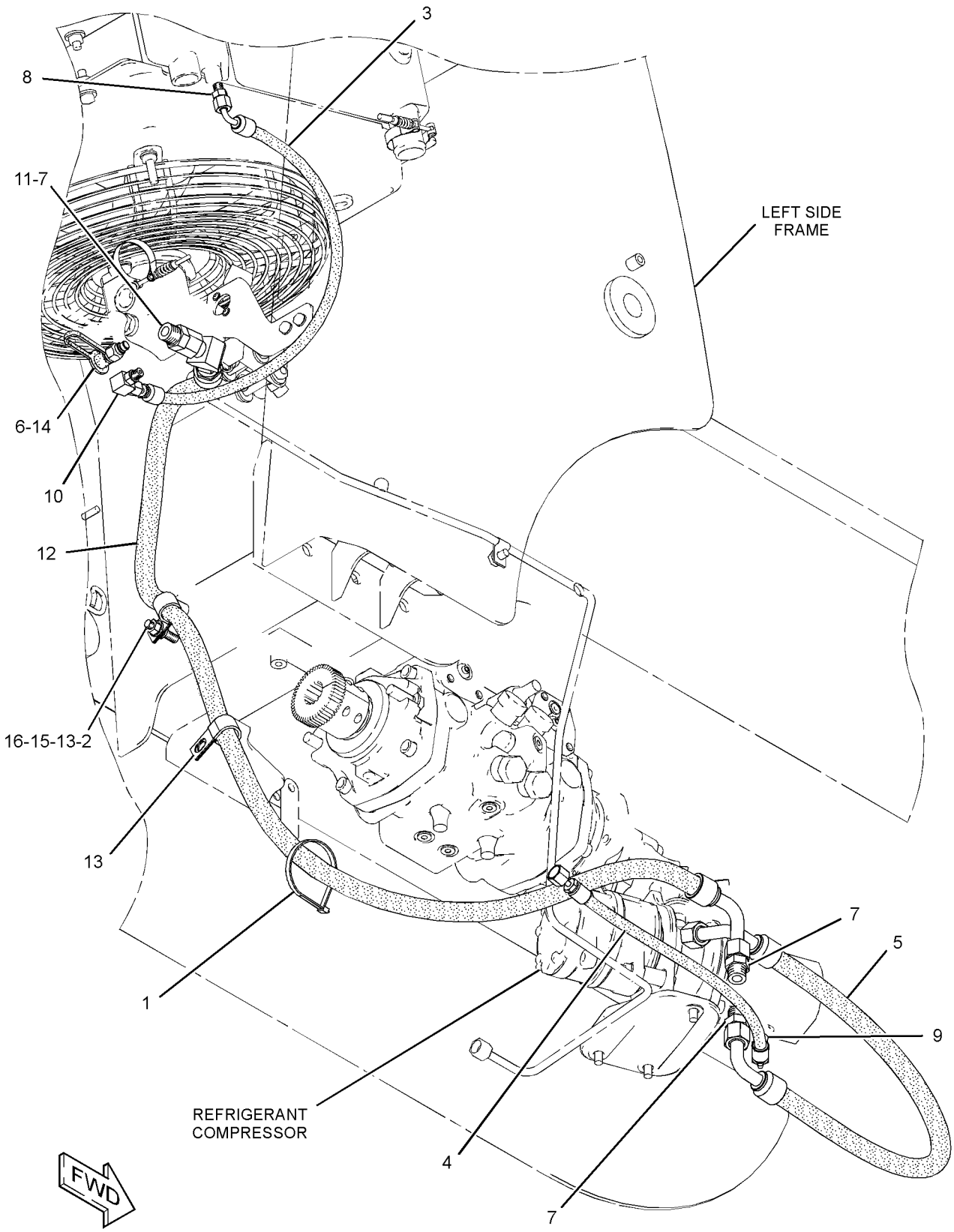

GRAPHIC #1 **<END>** g01224007

HYDRAULIC SYSTEM

218-6143 LINES GP-HYDRAULIC OIL COOLER

S/N: MJH1-UP; RLL1-UP

PART OF 218-5620, 218-5820, 278-1217, 278-1227 HYDRAULIC AR

SMCS-5057 **i02474809**

NOTE	REF NO	GRAPHIC REF	PART NUMBER	QTY	PART NAME 1 2 3 4 5 6 (PRODUCT LEVEL)	SEE PAGE
	1	1	*106-8715*	2	ELBOW GP	
					(EACH INCLUDES)	
		1	**3D-2824**	1	SEAL-O-RING	
		1	**6V-9746**	1	SEAL-O-RING	
		1	**8C-8400**	1	ELBOW	
I	2	1	**218-6144**	1	HOSE AS	
I	3	1	**218-6145**	1	HOSE AS	
	4	1	**5D-0718**	2	CLIP	
	5	1	**6V-1889**	3	CLIP	
	6	1	**7X-7729**	3	WASHER (11X25X3-MM THK)	
	7	1	**8T-4121**	4	WASHER-HARD (11X21X2.5-MM THK)	
M	8	1	**8T-4133**	3	NUT (M10X1.5-THD)	
M	9	1	**8T-4136**	1	BOLT (M10X1.5X25-MM)	
M	10	1	**8T-4137**	1	BOLT (M10X1.5X20-MM)	
	11	1	**234-9525**	1	STUD	
	12	1	**122-7052**	1	SPACER (10.5X20X28-MM THK)	
	13	1	**9D-1829**	1	CLIP	
M	14	1	**8T-4196**	1	BOLT (M10X1.5X35-MM)	

I-REFER TO HYDRAULIC INFORMATION SYSTEM
M-METRIC PART

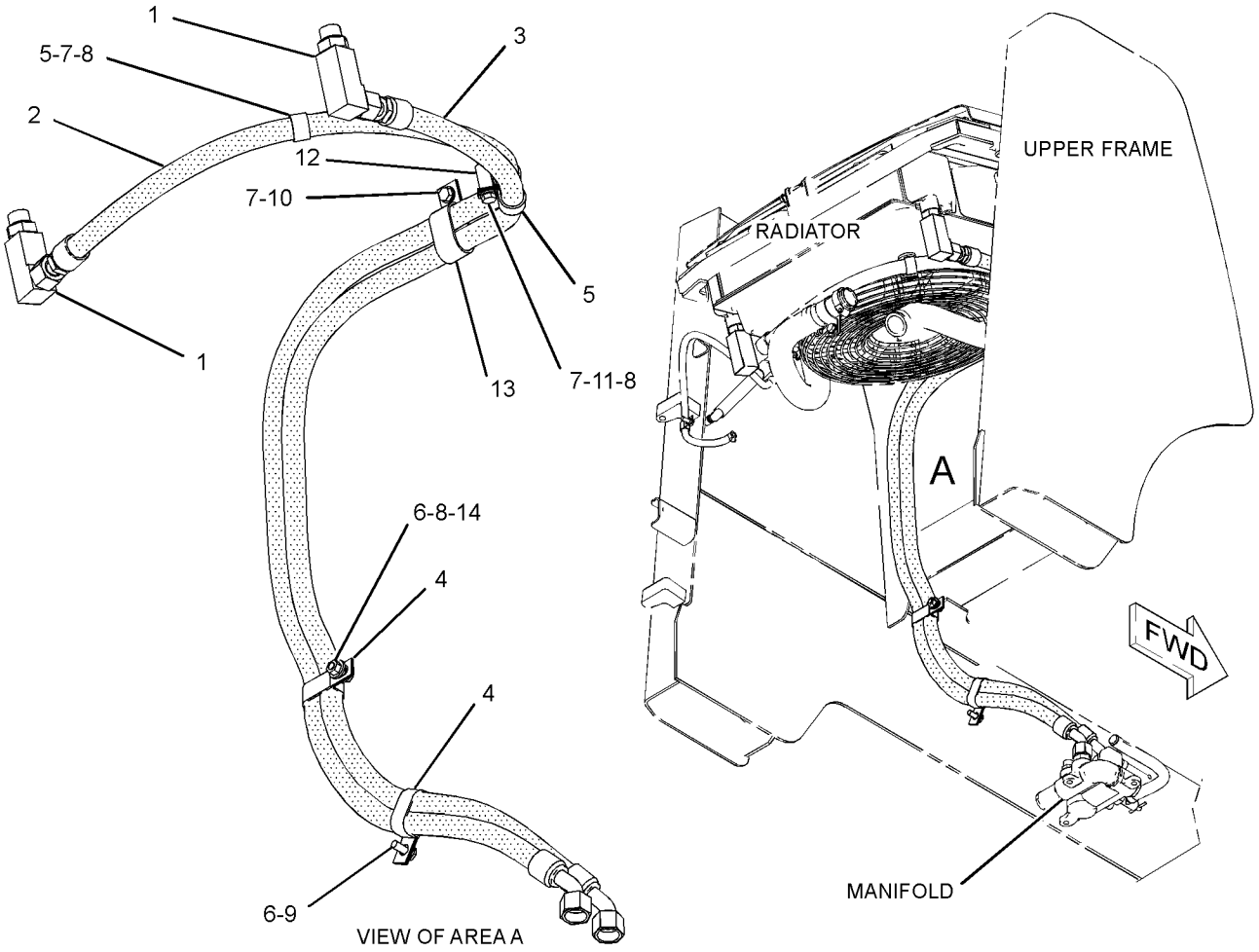

GRAPHIC #1 **<END>** g01224296

218-6541 LINES GP-HYDRAULIC OIL COOLER

S/N: SCH1-UP; BXM1-UP

PART OF 218-6820, 218-6920, 278-1233, 278-1243 HYDRAULIC AR

SMCS-5057 **i02271032**

NOTE	REF NO	GRAPHIC REF	PART NUMBER	QTY	PART NAME 1 2 3 4 5 6 (PRODUCT LEVEL)	SEE PAGE
M	1	1	**8T-4196**	1	BOLT (M10X1.5X35-MM)	
	2	1	*106-8715*	2	ELBOW GP	
					(EACH INCLUDES)	
		1	**3D-2824**	1	SEAL-O-RING	
		1	**6V-9746**	1	SEAL-O-RING	
		1	**8C-8400**	1	ELBOW	
	3	1	**218-6539**	1	PLATE	
I	4	1	**218-6543**	1	HOSE AS	
I	5	1	**218-6544**	1	HOSE AS	
	6	1	**5D-0718**	3	CLIP	
	7	1	**6V-1889**	1	CLIP	
	8	1	**7X-7729**	1	WASHER (11X25X3-MM THK)	
	9	1	**8T-4121**	5	WASHER-HARD (11X21X2.5-MM THK)	
M	10	1	**8T-4133**	2	NUT (M10X1.5-THD)	
M	11	1	**8T-4136**	1	BOLT (M10X1.5X25-MM)	
M	12	1	**8T-4195**	1	BOLT (M10X1.5X30-MM)	
	13	1	**9D-1829**	1	CLIP	

I-REFER TO HYDRAULIC INFORMATION SYSTEM
M-METRIC PART

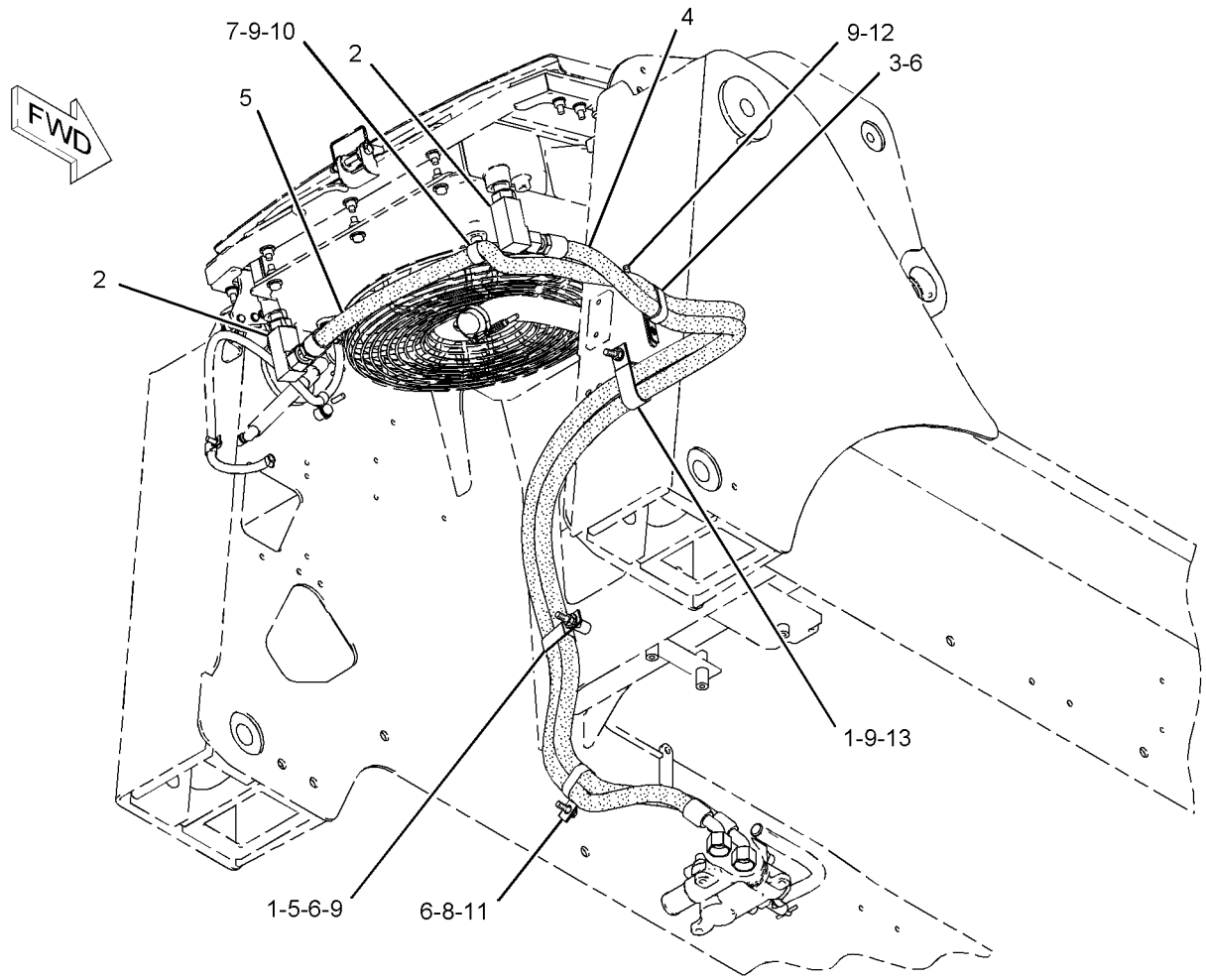

GRAPHIC #1 **<END>** g01138525

HYDRAULIC SYSTEM

218-5707 LINES GP-LIFT CYLINDER

S/N: SCH1-521; BXM1-805
PART OF 218-5709 HYDRAULIC AR
FOR USE WITH WORK TOOL POSITIONER
AN ATTACHMENT

SMCS-5057, 5102 **i02003519**

NOTE	REF NO	GRAPHIC REF	PART NUMBER	QTY	PART NAME 1 2 3 4 5 6 (PRODUCT LEVEL)	SEE PAGE
	1	1	**6V-3582**	2	CLAMP-HOSE	
	2	1	**142-8997**	2	BLOCK	
I	3	1	**212-4126**	2	HOSE AS	
I	4	1	**212-4127**	2	HOSE AS	
	5	1	**212-4131**	1	TUBE AS	
	6	1	**212-6525**	1	TUBE AS	
	7	1	**212-6526**	1	TUBE AS	
	8	1	**218-5599**	1	BLOCK	
	9	1	**218-5658**	1	TUBE AS	
	10	1	**218-5668**	1	TUBE AS	
	11	1	**218-5764**	1	PLATE	
	12	1	**218-5869**	1	TUBE AS	
	13	1	**233-5591**	1	TUBE AS	
	14	1	**233-5592**	1	TUBE AS	
	15	1	*148-8341*	2	CONNECTOR AS	
					(EACH INCLUDES)	
		1	**3D-2824**	1	SEAL-O-RING	
		1	**6V-8713**	1	CONNECTOR	
		1	**7J-9108**	1	SEAL-O-RING	
	16	1	*148-8345*	1	CONNECTOR AS	
		1	**2M-9780**	1	SEAL-O-RING	
		1	**6V-8398**	1	SEAL-O-RING	
		1	**6V-8638**	1	CONNECTOR	
	17	1	*148-8390*	1	ELBOW AS	
		1	**2M-9780**	1	SEAL-O-RING	
		1	**6V-8626**	1	ELBOW	
		1	**7J-9108**	1	SEAL-O-RING	
	18	1	**6V-8398**	12	SEAL-O-RING	
	19	1	**7J-9108**	2	SEAL-O-RING	
	20	1	**8T-4121**	2	WASHER-HARD (11X21X2.5-MM THK)	
M	21	1	**8T-4136**	2	BOLT (M10X1.5X25-MM)	

I-REFER TO HYDRAULIC INFORMATION SYSTEM
M-METRIC PART

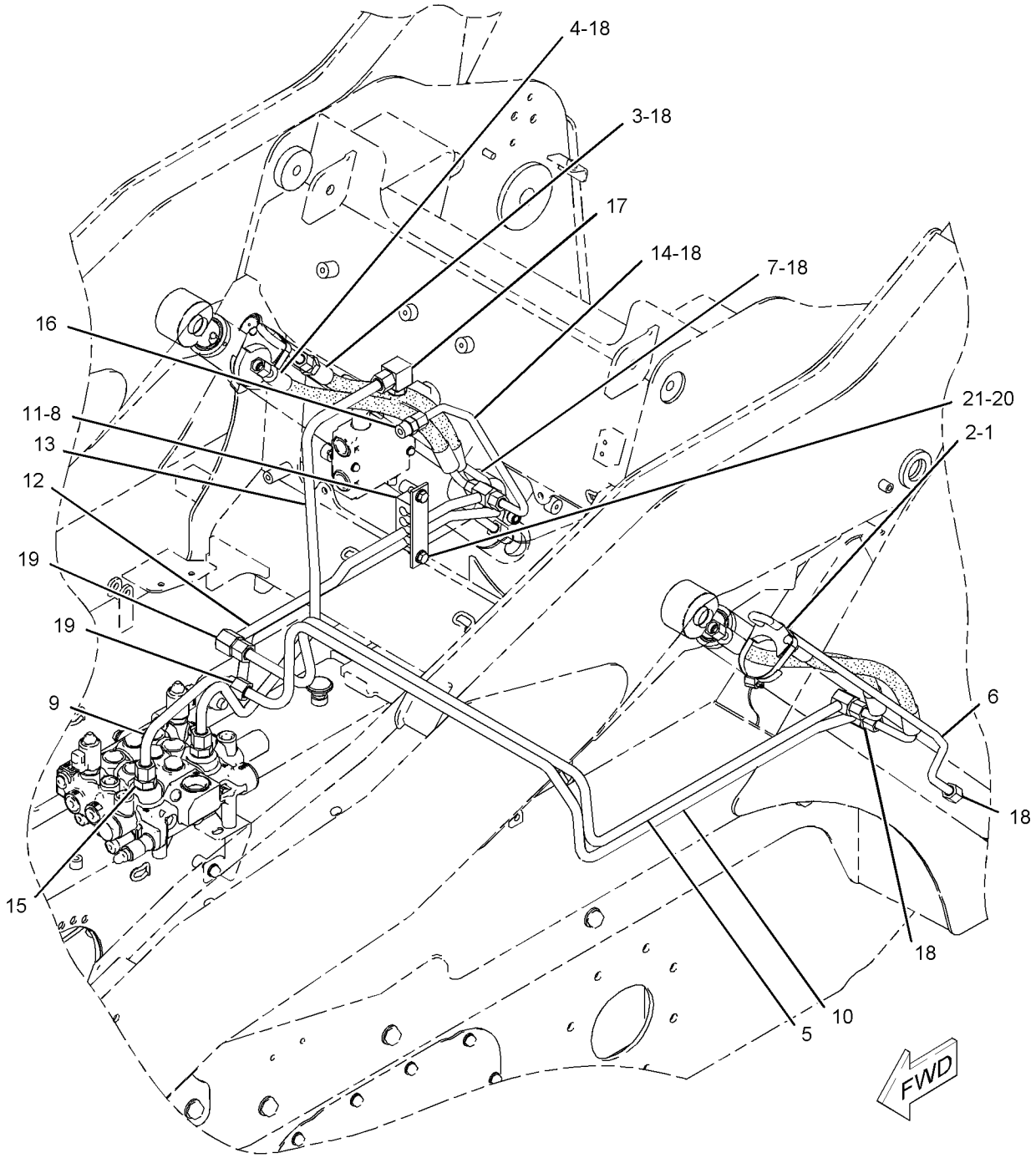

GRAPHIC #1 **<END>** g01036206

HYDRAULIC SYSTEM

218-5707 LINES GP-LIFT CYLINDER

S/N: SCH522-UP; BXM806-UP
PART OF 218-5709 HYDRAULIC AR
FOR USE WITH WORK TOOL POSITIONER
AN ATTACHMENT

SMCS-5057, 5102 **i02286597**

NOTE	REF NO	GRAPHIC REF	PART NUMBER	QTY	PART NAME 1 2 3 4 5 6 (PRODUCT LEVEL)	SEE PAGE
	1	1	**6V-3582**	2	CLAMP-HOSE	
	2	1	**142-8997**	2	BLOCK	
I	3	1	**212-4126**	2	HOSE AS	
I	4	1	**212-4127**	2	HOSE AS	
	5	1	**212-4131**	1	TUBE AS	
	6	1	**212-6525**	1	TUBE AS	
	7	1	**212-6526**	1	TUBE AS	
	8	1	**218-5599**	1	BLOCK	
	9	1	**218-5658**	1	TUBE AS	
	10	1	**218-5668**	1	TUBE AS	
	11	1	**218-5764**	1	PLATE	
	12	1	**218-5869**	1	TUBE AS	
C	13	1	**252-0353**	1	TUBE AS	
C	14	1	**252-0354**	1	TUBE AS	
	15	1	*148-8341*	2	CONNECTOR AS	
					(EACH INCLUDES)	
		1	**3D-2824**	1	SEAL-O-RING	
		1	**6V-8713**	1	CONNECTOR	
		1	**7J-9108**	1	SEAL-O-RING	
	16	1	*148-8345*	1	CONNECTOR AS	
		1	**2M-9780**	1	SEAL-O-RING	
		1	**6V-8398**	1	SEAL-O-RING	
		1	**6V-8638**	1	CONNECTOR	
	17	1	*148-8390*	1	ELBOW AS	
		1	**2M-9780**	1	SEAL-O-RING	
		1	**6V-8626**	1	ELBOW	
		1	**7J-9108**	1	SEAL-O-RING	
	18	1	**6V-8398**	12	SEAL-O-RING	
	19	1	**7J-9108**	2	SEAL-O-RING	
	20	1	**8T-4121**	2	WASHER-HARD (11X21X2.5-MM THK)	
M	21	1	**8T-4136**	2	BOLT (M10X1.5X25-MM)	

C-CHANGE FROM PREVIOUS TYPE
I-REFER TO HYDRAULIC INFORMATION SYSTEM
M-METRIC PART

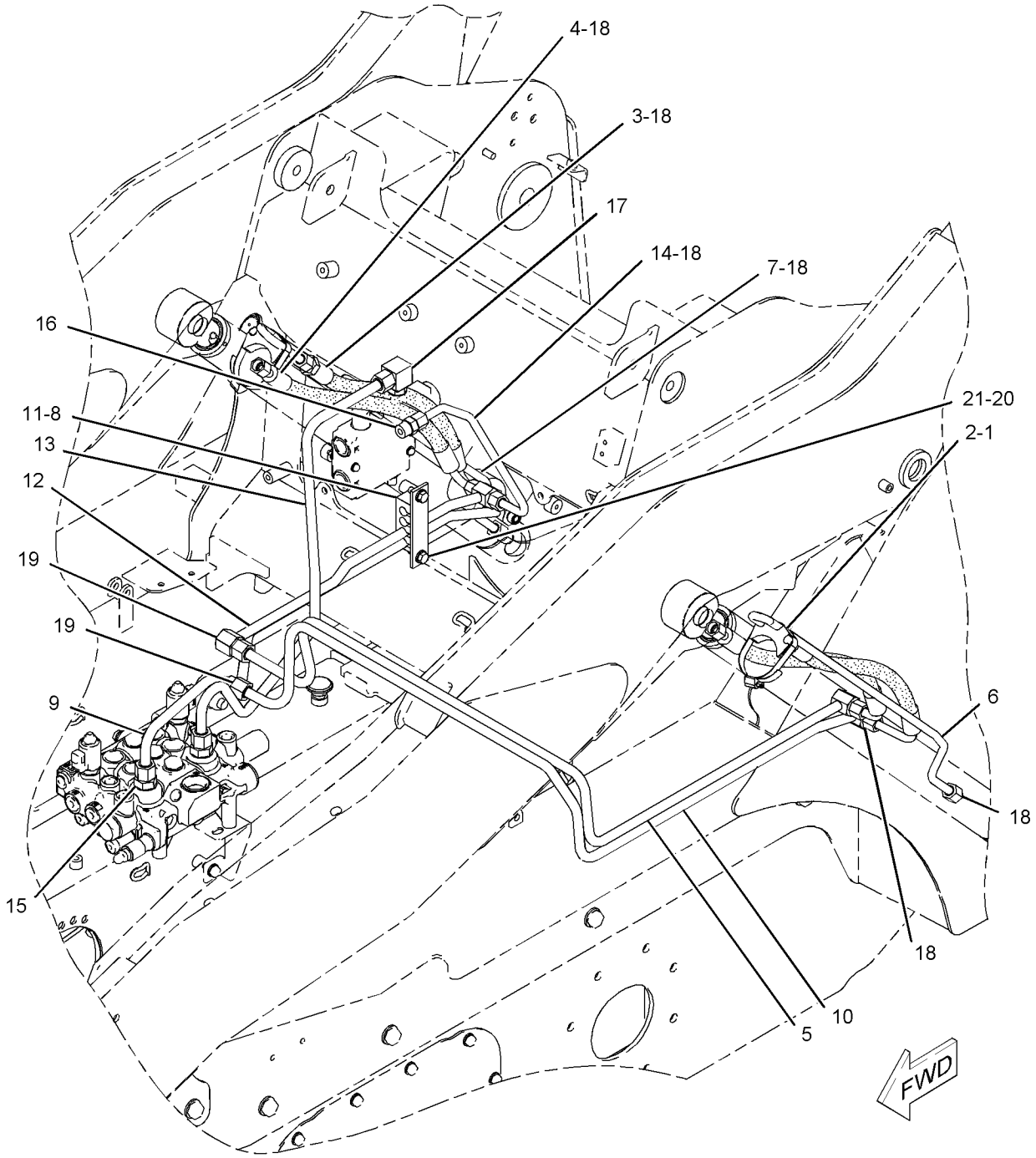

GRAPHIC #1 **<END>** g01036206

HYDRAULIC SYSTEM

218-5851 LINES GP-LIFT CYLINDER

S/N: MJH1-UP; RLL1-UP
PART OF 218-6181 HYDRAULIC AR
FOR USE WITH WORK TOOL POSITIONER
AN ATTACHMENT

SMCS-5057, 5102 **i01996272**

NOTE	REF NO	GRAPHIC REF	PART NUMBER	QTY	PART NAME 1 2 3 4 5 6 (PRODUCT LEVEL)	SEE PAGE
	1	1	**3E-7404**	2	CLAMP-HOSE	
	2	1	**142-8997**	2	BLOCK	
	3	1	**187-1273**	2	TUBE AS	
	4	1	**187-3231**	1	TUBE AS	
	5	1	**187-3232**	1	TUBE AS	
	6	1	**218-5599**	1	BLOCK	
	7	1	**218-5764**	1	PLATE	
	8	1	**218-6183**	1	TUBE AS	
	9	1	**218-6184**	1	TUBE AS	
	10	1	**218-6185**	1	TUBE AS	
	11	1	**218-6186**	1	TUBE AS	
	12	1	**218-6187**	1	TUBE AS	
	13	1	**218-6188**	1	TUBE AS	
I	14	1	**218-6189**	4	HOSE AS	
	15	1	*148-8315*	2	CONNECTOR AS	
					(EACH INCLUDES)	
		1	**2M-9780**	1	SEAL-O-RING	
		1	**6V-8642**	1	CONNECTOR	
		1	**7J-9108**	1	SEAL-O-RING	
	16	1	*148-8341*	2	CONNECTOR AS	
					(EACH INCLUDES)	
		1	**3D-2824**	1	SEAL-O-RING	
		1	**6V-8713**	1	CONNECTOR	
		1	**7J-9108**	1	SEAL-O-RING	
	17	1	**6V-8398**	13	SEAL-O-RING	
	18	1	**7J-9108**	3	SEAL-O-RING	
	19	1	**8T-4121**	2	WASHER-HARD (11X21X2.5-MM THK)	
M	20	1	**8T-4136**	2	BOLT (M10X1.5X25-MM)	

I-REFER TO HYDRAULIC INFORMATION SYSTEM
M-METRIC PART

218-5851 **LINES GP-LIFT CYLINDER** *(contd.)* **i01996272**

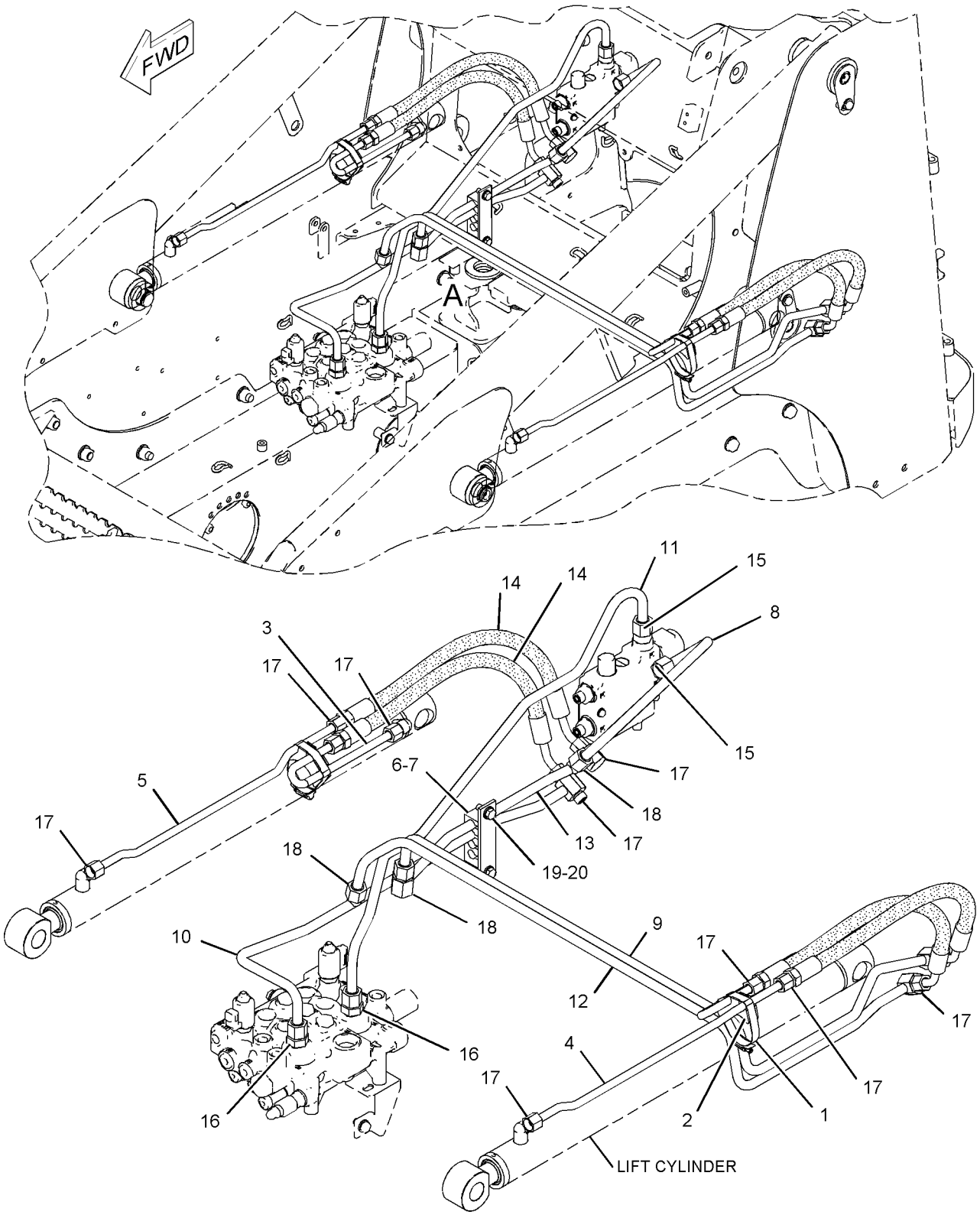

VIEW OF AREA A

GRAPHIC #1

<END>

g01033259

HYDRAULIC SYSTEM

218-5890 LINES GP-LIFT CYLINDER

S/N: SCH1-UP; BXM1-UP
PART OF 218-6641 HYDRAULIC AR
FOR USE WITH WORK TOOL POSITIONER
AN ATTACHMENT

SMCS-5057, 5102 **i01962075**

NOTE	REF NO	GRAPHIC REF	PART NUMBER	QTY	PART NAME 1 2 3 4 5 6 (PRODUCT LEVEL)	SEE PAGE
	1	1	**6V-3582**	2	CLAMP-HOSE	
	2	1	**142-8997**	2	BLOCK	
I	3	1	**212-4126**	2	HOSE AS	
I	4	1	**212-4127**	2	HOSE AS	
	5	1	**212-6525**	1	TUBE AS	
	6	1	**212-6526**	1	TUBE AS	
	7	1	**218-5599**	1	BLOCK	
	8	1	**218-5764**	1	PLATE	
	9	1	**218-6456**	1	TUBE AS	
	10	1	**218-6457**	1	TUBE AS	
	11	1	**218-6458**	1	TUBE AS	
	12	1	**218-6459**	1	TUBE AS	
	13	1	**218-6464**	1	TUBE AS	
	14	1	**218-6477**	1	TUBE AS	
	15	1	*148-8315*	4	CONNECTOR AS	
					(EACH INCLUDES)	
		1	**2M-9780**	1	SEAL-O-RING	
		1	**6V-8642**	1	CONNECTOR	
		1	**7J-9108**	1	SEAL-O-RING	
	16	1	*148-8341*	2	CONNECTOR AS	
					(EACH INCLUDES)	
		1	**3D-2824**	1	SEAL-O-RING	
		1	**6V-8713**	1	CONNECTOR	
		1	**7J-9108**	1	SEAL-O-RING	
	17	1	**6V-8398**	11	SEAL-O-RING	
	18	1	**7J-9108**	2	SEAL-O-RING	
	19	1	**8T-4121**	2	WASHER-HARD (11X21X2.5-MM THK)	
M	20	1	**8T-4136**	2	BOLT (M10X1.5X25-MM)	

I-REFER TO HYDRAULIC INFORMATION SYSTEM
M-METRIC PART

218-5890 **LINES GP-LIFT CYLINDER** *(contd.)* **i01962075**

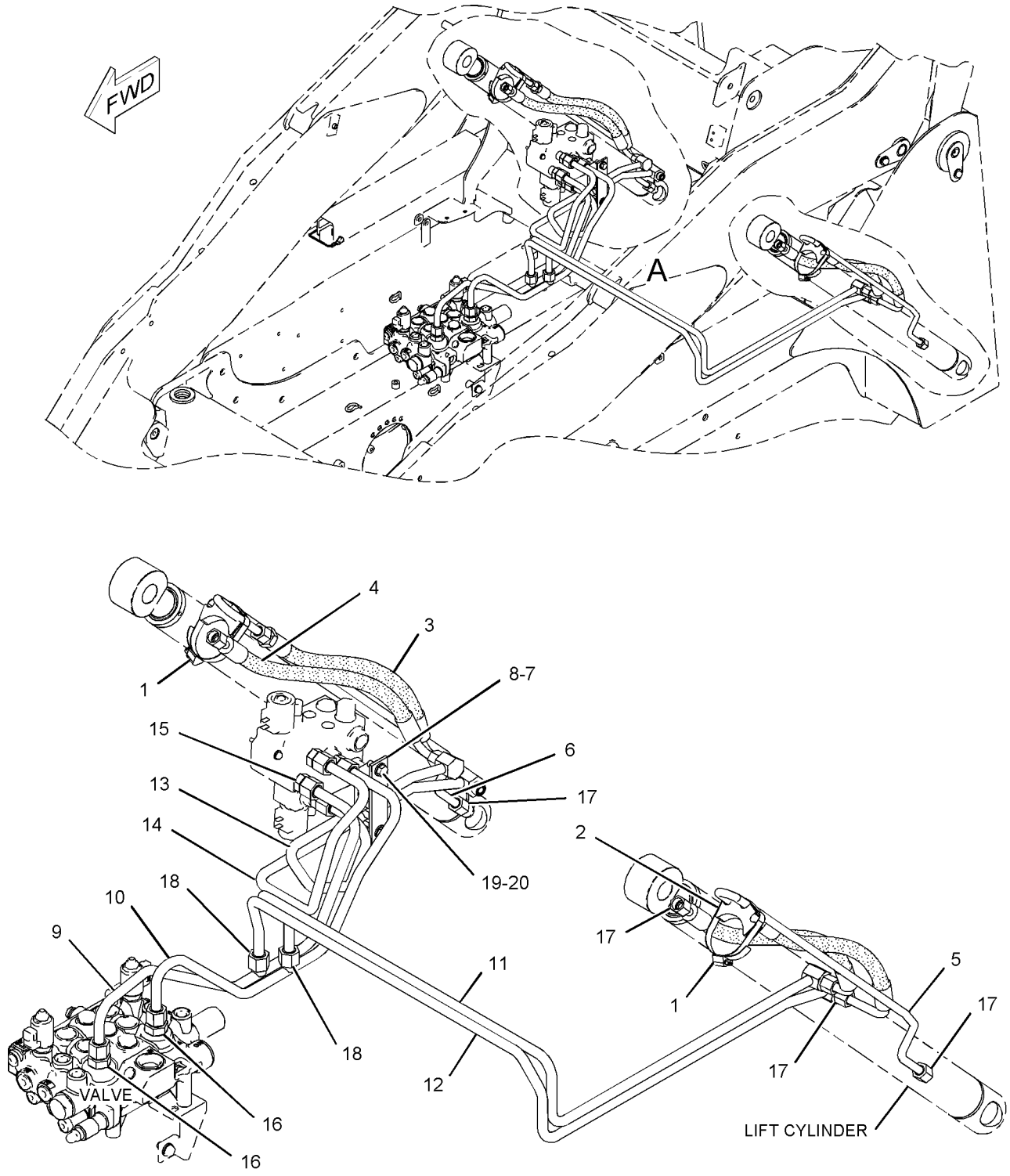

VIEW OF AREA A

GRAPHIC #1

<END>

g01020776

HYDRAULIC SYSTEM

218-6207 LINES GP-LIFT CYLINDER

S/N: MJH1-UP; RLL1-UP
PART OF 218-6180 HYDRAULIC AR
AN ATTACHMENT

SMCS-5057, 5102 **i01955353**

NOTE	REF NO	GRAPHIC REF	PART NUMBER	QTY	PART NAME 1 2 3 4 5 6 (PRODUCT LEVEL)	SEE PAGE
	1	1	**3E-7404**	2	CLAMP-HOSE	
	2	1	**142-8997**	2	BLOCK	
	3	1	**187-1273**	2	TUBE AS	
	4	1	**187-3231**	1	TUBE AS	
	5	1	**187-3232**	1	TUBE AS	
	6	1	**218-5599**	1	BLOCK	
	7	1	**218-5764**	1	PLATE	
	8	1	**218-6184**	1	TUBE AS	
	9	1	**218-6185**	1	TUBE AS	
	10	1	**218-6187**	1	TUBE AS	
I	11	1	**218-6189**	4	HOSE AS	
	12	1	**218-6208**	1	TUBE AS	
	13	1	*148-8341*	2	CONNECTOR AS	
					(EACH INCLUDES)	
		1	**3D-2824**	1	SEAL-O-RING	
		1	**6V-8713**	1	CONNECTOR	
		1	**7J-9108**	1	SEAL-O-RING	
	14	1	**6V-8398**	13	SEAL-O-RING	
	15	1	**7J-9108**	2	SEAL-O-RING	
	16	1	**8T-4121**	2	WASHER-HARD (11X21X2.5-MM THK)	
M	17	1	**8T-4136**	2	BOLT (M10X1.5X25-MM)	

I-REFER TO HYDRAULIC INFORMATION SYSTEM
M-METRIC PART

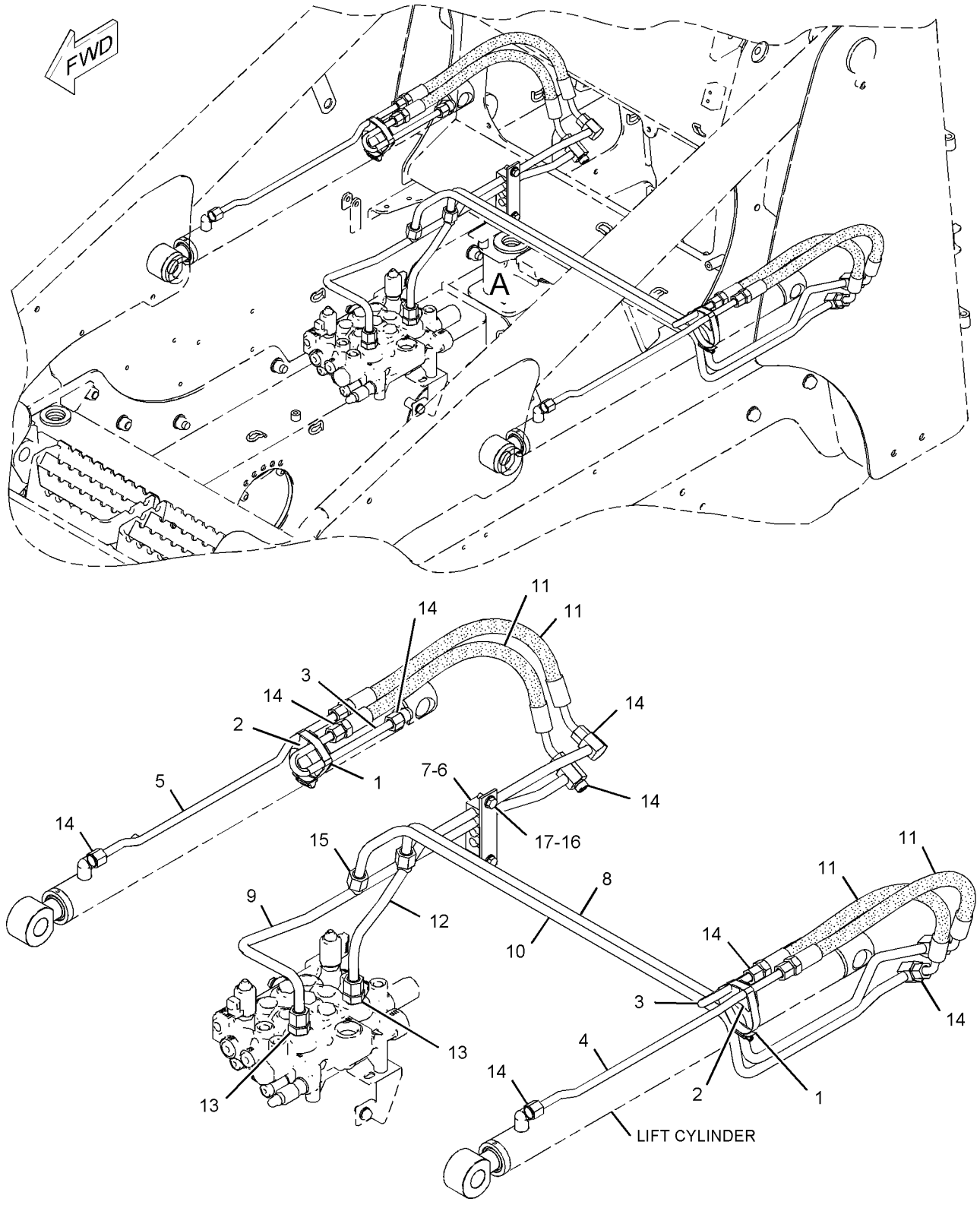

VIEW OF AREA A

GRAPHIC #1 **<END>** g01021176

HYDRAULIC SYSTEM

218-6604 LINES GP-LIFT CYLINDER

S/N: SCH1-UP; BXM1-UP
PART OF 218-6640 HYDRAULIC AR
AN ATTACHMENT

SMCS-5057, 5102 **i01962068**

NOTE	REF NO	GRAPHIC REF	PART NUMBER	QTY	PART NAME 1 2 3 4 5 6 (PRODUCT LEVEL)	SEE PAGE
	1	1	**6V-3582**	2	CLAMP-HOSE	
	2	1	**142-8997**	2	BLOCK	
I	3	1	**212-4126**	2	HOSE AS	
I	4	1	**212-4127**	2	HOSE AS	
	5	1	**212-6525**	1	TUBE AS	
	6	1	**212-6526**	1	TUBE AS	
	7	1	**218-5599**	1	BLOCK	
	8	1	**218-5764**	1	PLATE	
	9	1	**218-6458**	1	TUBE AS	
	10	1	**218-6459**	1	TUBE AS	
	11	1	**218-6605**	1	TUBE AS	
	12	1	**218-6606**	1	TUBE AS	
	13	1	*148-8341*	2	CONNECTOR AS	
					(EACH INCLUDES)	
		1	**3D-2824**	1	SEAL-O-RING	
		1	**6V-8713**	1	CONNECTOR	
		1	**7J-9108**	1	SEAL-O-RING	
	14	1	**6V-8398**	11	SEAL-O-RING	
	15	1	**7J-9108**	2	SEAL-O-RING	
	16	1	**8T-4121**	2	WASHER-HARD (11X21X2.5-MM THK)	
M	17	1	**8T-4136**	2	BOLT (M10X1.5X25-MM)	

I-REFER TO HYDRAULIC INFORMATION SYSTEM
M-METRIC PART

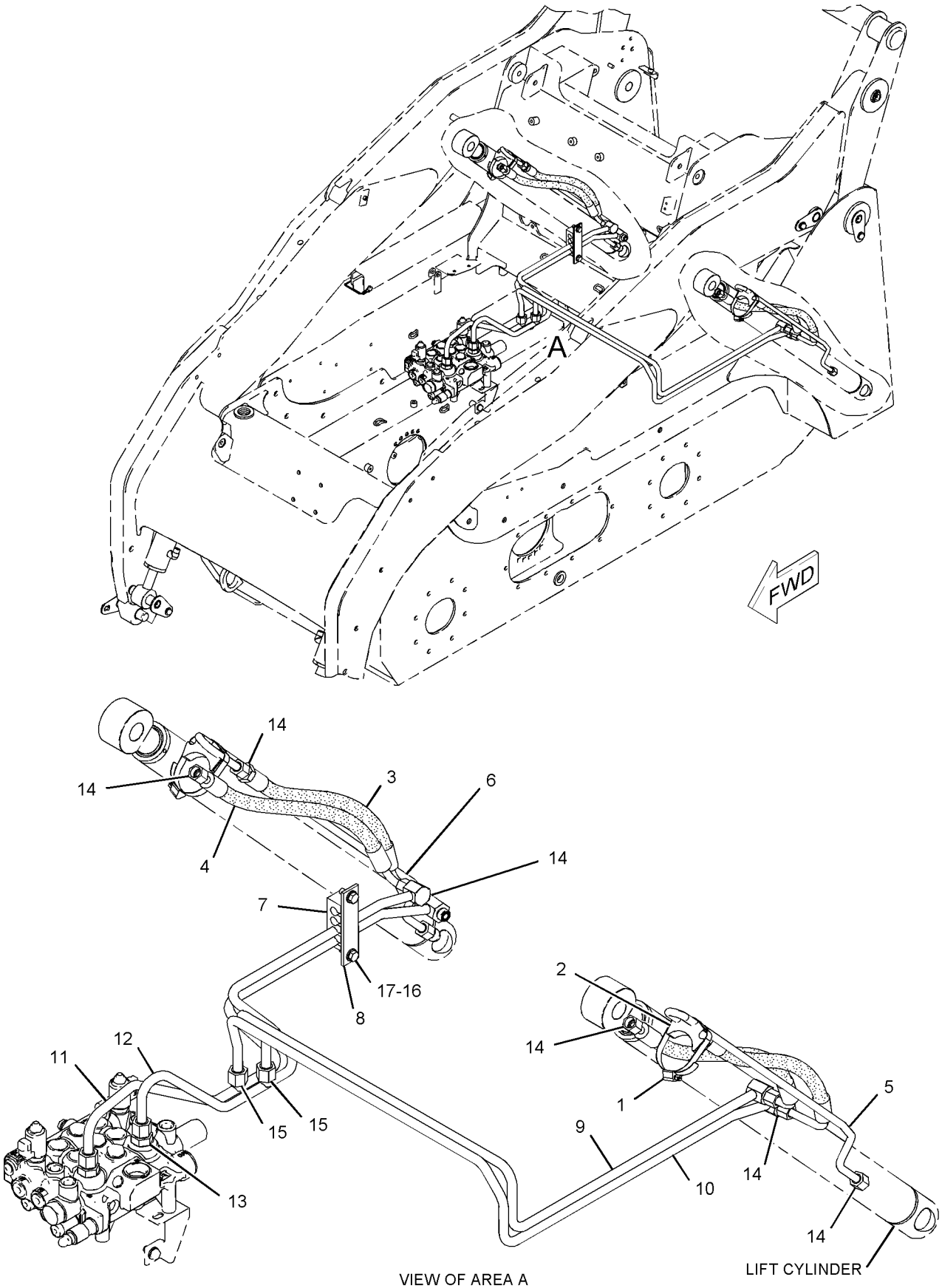

GRAPHIC #1

VIEW OF AREA A

<END>

g01020865

HYDRAULIC SYSTEM

218-5882 LINES GP-LOAD CONTROL VALVE

S/N: SCH1-UP; BXM1-UP
MANUAL LOWERING CONTROL
PART OF 218-6721 COUPLER AR-QUICK
AN ATTACHMENT

SMCS-5057, 5147 **i02421669**

NOTE	REF NO	GRAPHIC REF	PART NUMBER	QTY	PART NAME 1 2 3 4 5 6 (PRODUCT LEVEL)	SEE PAGE
	1	1	**191-9783**	1	VALVE GP-MANUAL (LOWERING CONTROL)	
	2	1	**238-7745**	1	BRACKET	
	3	1	**238-7746**	1	TUBE AS	
I	4	1	**276-4812**	1	HOSE AS	
	5	1	*148-8365*	1	ELBOW AS	
		1	**3J-1907**	1	SEAL-O-RING	
		1	**8T-6876**	1	ELBOW	
			6V-8398	1	SEAL-O-RING	
	6	1	*148-8378*	1	ELBOW AS	
		1	**3J-1907**	1	SEAL-O-RING	
		1	**6V-8397**	1	SEAL-O-RING	
		1	**6V-8724**	1	ELBOW	
	7	1	**1F-7567**	1	CLIP	
	8	1	**4B-4863**	2	WASHER (4.7X11X1.2-MM THK)	
M	9	1	**6V-5698**	2	SCREW-BUTTON HEAD (M4X0.7X10-MM)	
	10	1	**6V-8397**	2	SEAL-O-RING	
	11	1	**6V-9829**	1	CAP AS	
	12	1	**8T-4121**	1	WASHER-HARD (11X21X2.5-MM THK)	
M	13	1	**8T-4189**	2	BOLT (M8X1.25X20-MM)	
M	14	1	**8T-4191**	1	BOLT (M10X1.5X16-MM)	
	15	1	**8T-4224**	2	WASHER-HARD (8.8X16X2-MM THK)	

I-REFER TO HYDRAULIC INFORMATION SYSTEM
M-METRIC PART

218-5882 **LINES GP-LOAD CONTROL VALVE** *(contd.)* **i02421669**

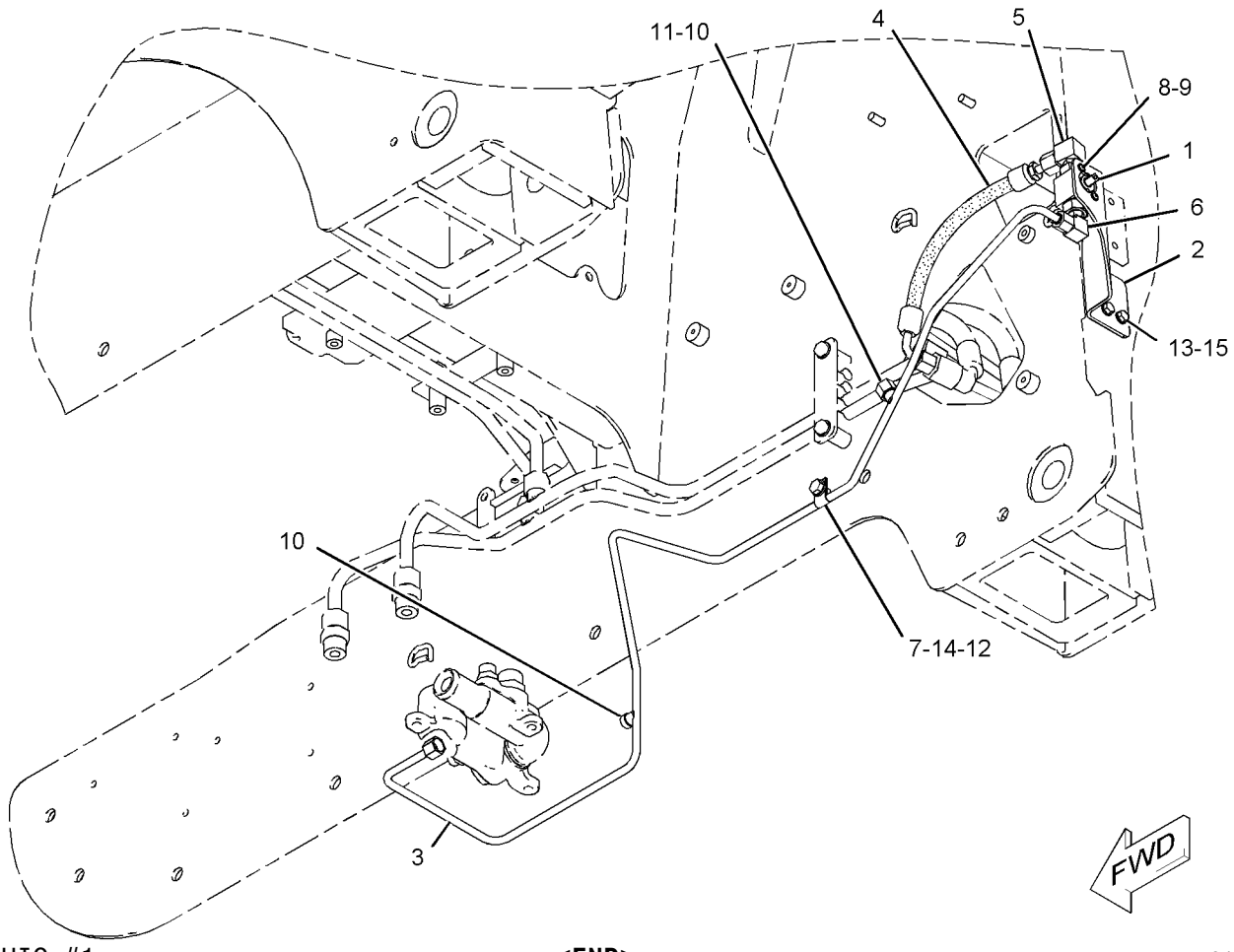

GRAPHIC #1 **<END>** g01038432

218-6211 LINES GP-LOAD CONTROL VALVE

S/N: MJH1-UP; RLL1-UP
MANUAL LOWERING CONTROL
PART OF 218-6321 COUPLER AR-QUICK
AN ATTACHMENT

SMCS-5057, 5147 **i02421672**

NOTE	REF NO	GRAPHIC REF	PART NUMBER	QTY	PART NAME 1 2 3 4 5 6 (PRODUCT LEVEL)	SEE PAGE
I	1	1	**276-4811**	1	HOSE AS	
	2	1	**218-6213**	1	TUBE AS	
	3	1	**218-6937**	1	BRACKET	
	4	1	*148-8378*	1	ELBOW AS	
		1	**3J-1907**	1	SEAL-O-RING	
		1	**6V-8397**	1	SEAL-O-RING	
		1	**6V-8724**	1	ELBOW	
	5	1	*164-5624*	1	ELBOW GP	
		1	**3J-1907**	1	SEAL-O-RING	
		1	**6V-8398**	1	SEAL-O-RING	
		1	**9X-2085**	1	ELBOW	
	6	1	**191-9783**	1	VALVE GP-MANUAL (MANUAL LOWERING CONTROL)	
	7	1	**1F-7567**	1	CLIP	
	8	1	**4B-4863**	2	WASHER (4.7X11X1.2-MM THK)	
M	9	1	**6V-5698**	2	SCREW-BUTTON HEAD (M4X0.7X10-MM)	
	10	1	**6V-8397**	2	SEAL-O-RING	
	11	1	**6V-9829**	1	CAP AS	
	12	1	**8T-4121**	1	WASHER-HARD (11X21X2.5-MM THK)	
M	13	1	**8T-4189**	2	BOLT (M8X1.25X20-MM)	
M	14	1	**8T-4191**	1	BOLT (M10X1.5X16-MM)	
	15	1	**8T-4224**	2	WASHER-HARD (8.8X16X2-MM THK)	

I-REFER TO HYDRAULIC INFORMATION SYSTEM
M-METRIC PART

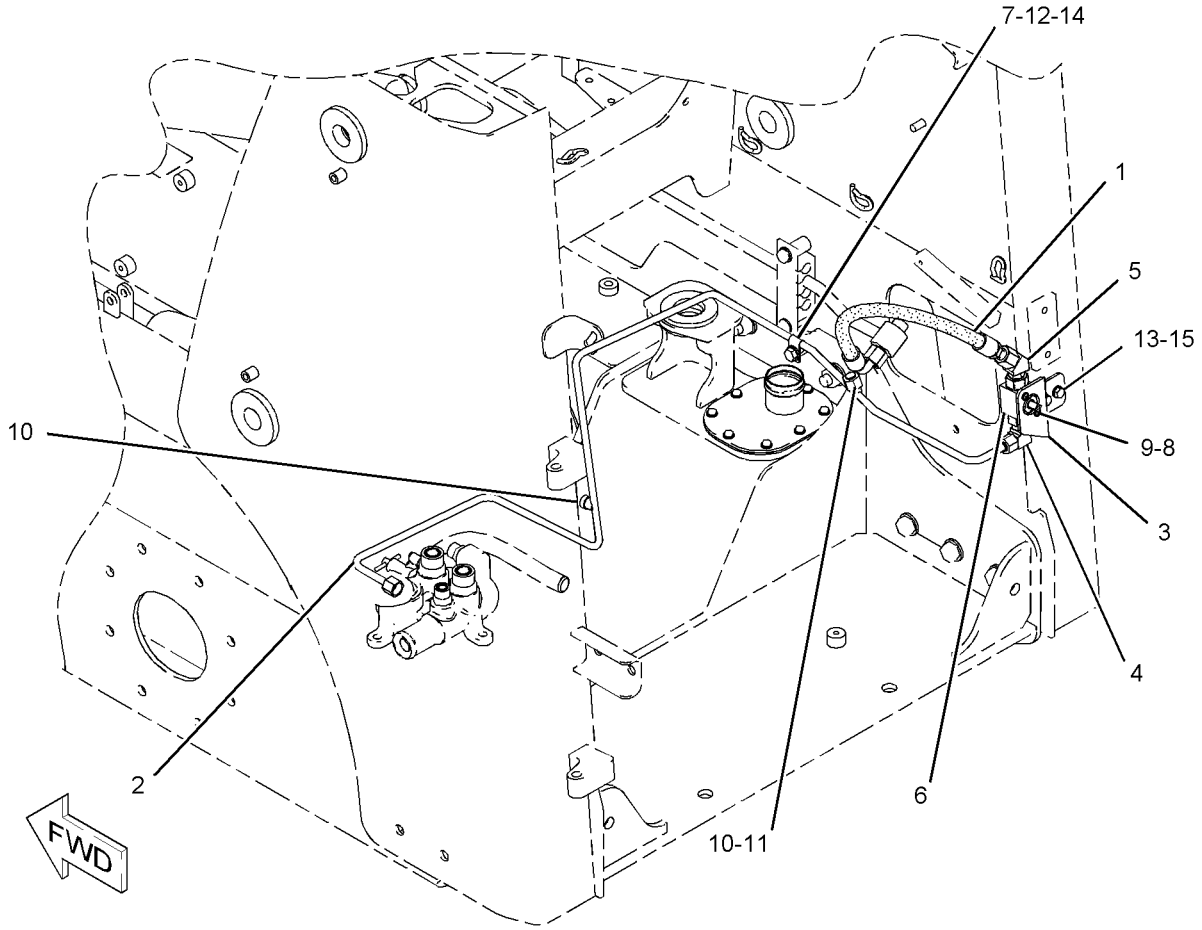

GRAPHIC #1 **<END>** g01021488

HYDRAULIC SYSTEM

218-5978 LINES GP-PILOT—DIRECTION, SPEED

S/N: MJH1-UP; RLL1-UP

PART OF 218-5620, 218-5820, 278-1217, 278-1227 HYDRAULIC AR

SMCS-5057, 5059 **i02059897**

NOTE	REF NO	GRAPHIC REF	PART NUMBER	QTY	PART NAME 1 2 3 4 5 6 (PRODUCT LEVEL)	SEE PAGE
	1	1	**6V-0852**	1	CAP-DUST	
	2	1	**7K-1181**	2	STRAP-CABLE	
	3	1	*148-8423*	1	FITTING GP-HYDRAULIC	
		1	**3J-1907**	1	SEAL-O-RING	
		1	**4J-5477**	1	SEAL-O-RING	
		1	**8T-3311**	1	TEE	
	4	1	*164-5567*	1	FITTING AS	
		1	**3J-1907**	1	SEAL-O-RING	
		1	**6V-3965**	1	FITTING AS (QUICK DISCONNECT)	
	5	1	**193-8392**	2	HOSE AS	
	6	1	**218-5968**	1	BRACKET	
	7	1	**218-6644**	1	HOSE AS	
	8	1	**218-6864**	1	HOSE AS	
	9	1	*148-8316*	2	CONNECTOR AS	
					(EACH INCLUDES)	
		1	**3J-7354**	1	SEAL-O-RING	
		1	**4J-5477**	1	SEAL-O-RING	
		1	**6V-8647**	1	CONNECTOR	
	10	1	*148-8325*	5	CONNECTOR AS	
					(EACH INCLUDES)	
		1	**3J-1907**	1	SEAL-O-RING	
		1	**4J-5477**	1	SEAL-O-RING	
		1	**6V-8641**	1	CONNECTOR	
	11	1	*148-8369*	2	ELBOW AS	
					(EACH INCLUDES)	
		1	**3J-7354**	1	SEAL-O-RING	
		1	**4J-5477**	1	SEAL-O-RING	
		1	**6V-8628**	1	ELBOW	
	12	1	*150-4043*	1	CONNECTOR AS	
		1	**3J-1907**	1	SEAL-O-RING	
		1	**6V-8398**	1	SEAL-O-RING	
		1	**6V-9873**	1	CONNECTOR	
	13	1	**234-0786**	2	HOSE AS	

218-5978 **LINES GP-PILOT** *(contd.)* **i02059897**

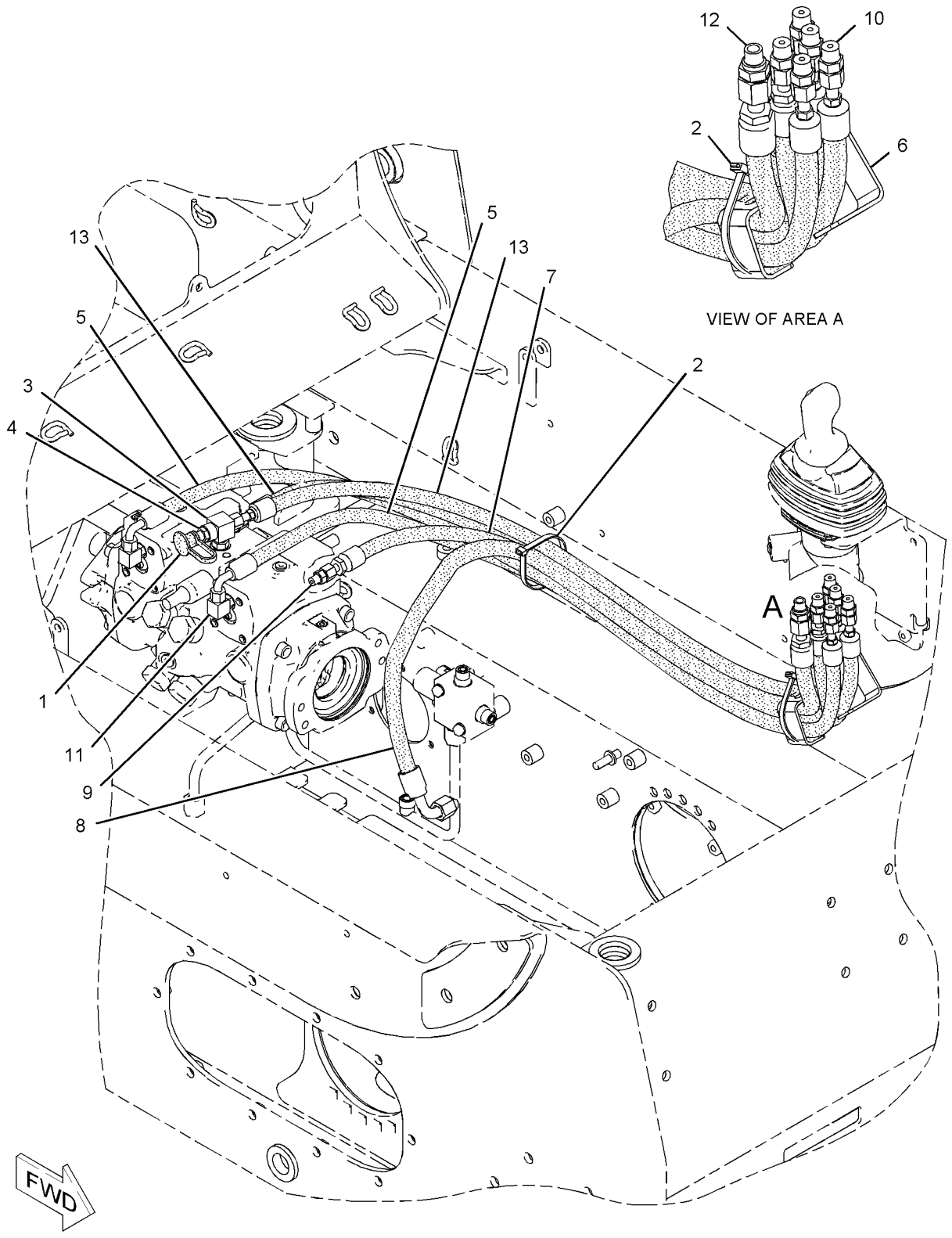

GRAPHIC #1 **<END>** g01086809

HYDRAULIC SYSTEM

218-6099 LINES GP-PILOT—WORK TOOL

S/N: MJH1-UP; RLL1-UP

PART OF 218-5620, 218-5820, 278-1217, 278-1227 HYDRAULIC AR

SMCS-5057, 5059 **i02317491**

NOTE	REF NO	GRAPHIC REF	PART NUMBER	QTY	PART NAME 1 2 3 4 5 6 (PRODUCT LEVEL)	SEE PAGE
Y	1	1	*179-7001*	1	ADAPTER GP-OIL LINE	323
	2	1	**195-6768**	1	SCREEN	
	3	1	**195-6769**	1	WASHER (6.99X12.7X5.46-MM THK)	
	4	1	**218-6109**	1	HOSE AS	
	5	1	**218-5571**	2	HOSE AS	
	6	1	**218-5572**	2	HOSE AS	
I	7	1	**193-8313**	1	HOSE AS	
	8	1	**234-0782**	1	HOSE AS	
	9	1	**123-4750**	1	VALVE-CHECK	
	10	1	*148-8325*	9	CONNECTOR AS	
					(EACH INCLUDES)	
		1	**3J-1907**	1	SEAL-O-RING	
		1	**4J-5477**	1	SEAL-O-RING	
		1	**6V-8641**	1	CONNECTOR	
	11	1	*148-8435*	1	TEE AS	
		1	**3J-1907**	1	SEAL-O-RING	
		1	**6V-8397**	2	SEAL-O-RING	
		1	**6V-8781**	1	TEE-FACE SEAL	
	12	1	*150-4027*	1	TEE AS	
		1	**3E-2310**	1	TEE	
		1	**3J-1907**	1	SEAL-O-RING	
		1	**6V-8397**	1	SEAL-O-RING	
	13	1	**6D-3479**	1	CLIP	
	14	1	**8T-4121**	1	WASHER-HARD (11X21X2.5-MM THK)	
M	15	1	**8T-4191**	1	BOLT (M10X1.5X16-MM)	

I-REFER TO HYDRAULIC INFORMATION SYSTEM
M-METRIC PART
Y-SEPARATE ILLUSTRATION

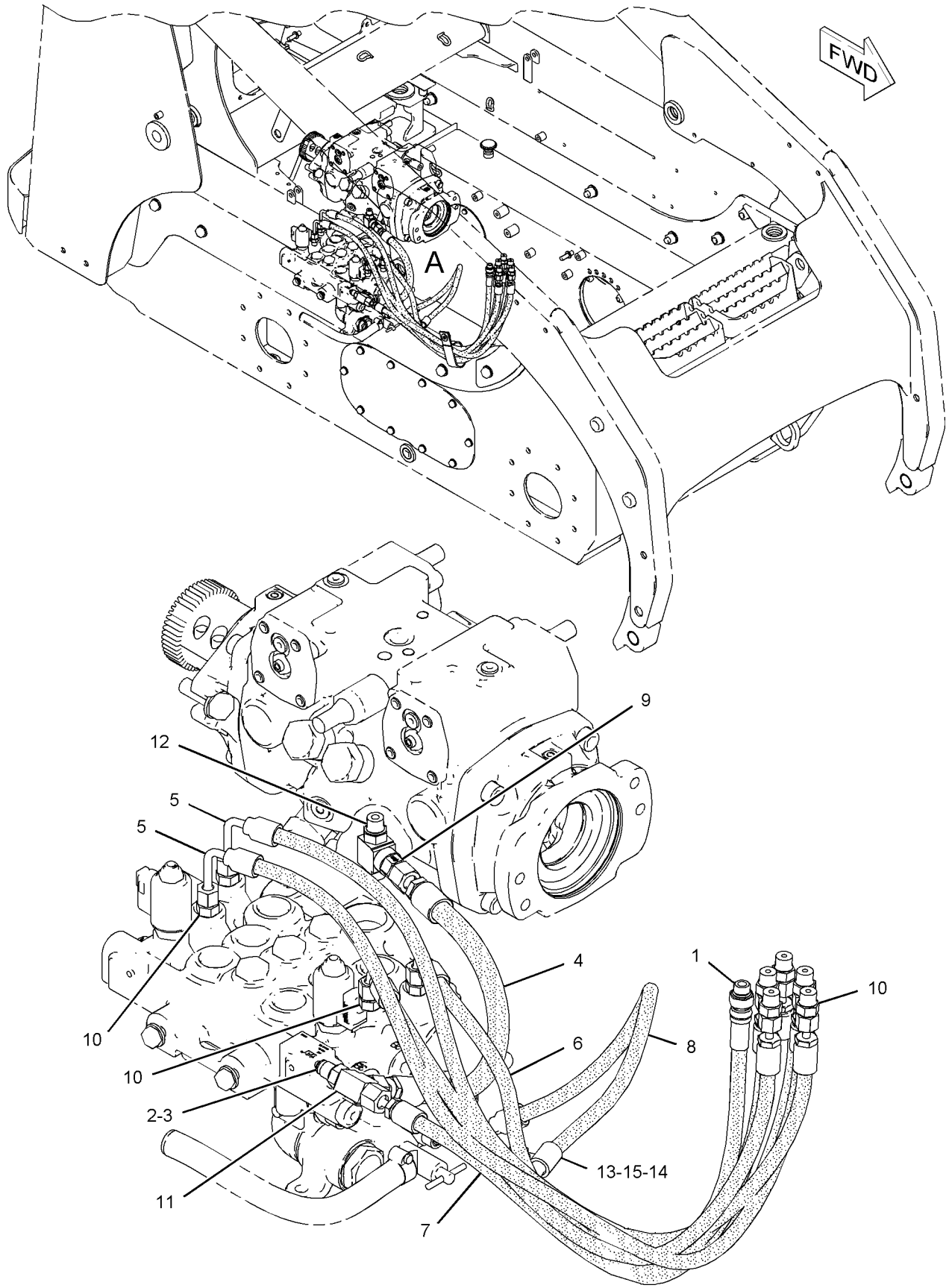

VIEW OF AREA A

GRAPHIC #1

<END>

g01033214

HYDRAULIC SYSTEM

218-6503 LINES GP-PILOT—WORK TOOL

S/N: SCH1-UP; BXM1-UP

PART OF 218-6820, 218-6920, 278-1233, 278-1243 HYDRAULIC AR

SMCS-5057, 5059 **i02319867**

NOTE	REF NO	GRAPHIC REF	PART NUMBER	QTY	PART NAME 1 2 3 4 5 6 (PRODUCT LEVEL)	SEE PAGE
Y	1	1	*179-7001*	1	ADAPTER GP-OIL LINE	323
	2	1	**195-6768**	1	SCREEN	
	3	1	**195-6769**	1	WASHER (6.99X12.7X5.46-MM THK)	
	4	1	**218-5704**	1	HOSE AS	
	5	1	**218-5571**	2	HOSE AS	
	6	1	**218-5572**	2	HOSE AS	
I	7	1	**193-8313**	1	HOSE AS	
	8	1	**123-4750**	1	VALVE-CHECK	
	9	1	*148-8325*	9	CONNECTOR AS	
					(EACH INCLUDES)	
		1	**3J-1907**	1	SEAL-O-RING	
		1	**4J-5477**	1	SEAL-O-RING	
		1	**6V-8641**	1	CONNECTOR	
	10	1	*148-8435*	1	TEE AS	
		1	**3J-1907**	1	SEAL-O-RING	
		1	**6V-8397**	2	SEAL-O-RING	
		1	**6V-8781**	1	TEE-FACE SEAL	
	11	1	*150-4027*	1	TEE AS	
		1	**3E-2310**	1	TEE	
		1	**3J-1907**	1	SEAL-O-RING	
		1	**6V-8397**	1	SEAL-O-RING	
I	12	1	**190-7453**	1	HOSE AS	
	13	1	**6D-3479**	1	CLIP	
	14	1	**8T-4121**	1	WASHER-HARD (11X21X2.5-MM THK)	
M	15	1	**8T-4191**	1	BOLT (M10X1.5X16-MM)	

I-REFER TO HYDRAULIC INFORMATION SYSTEM
M-METRIC PART
Y-SEPARATE ILLUSTRATION

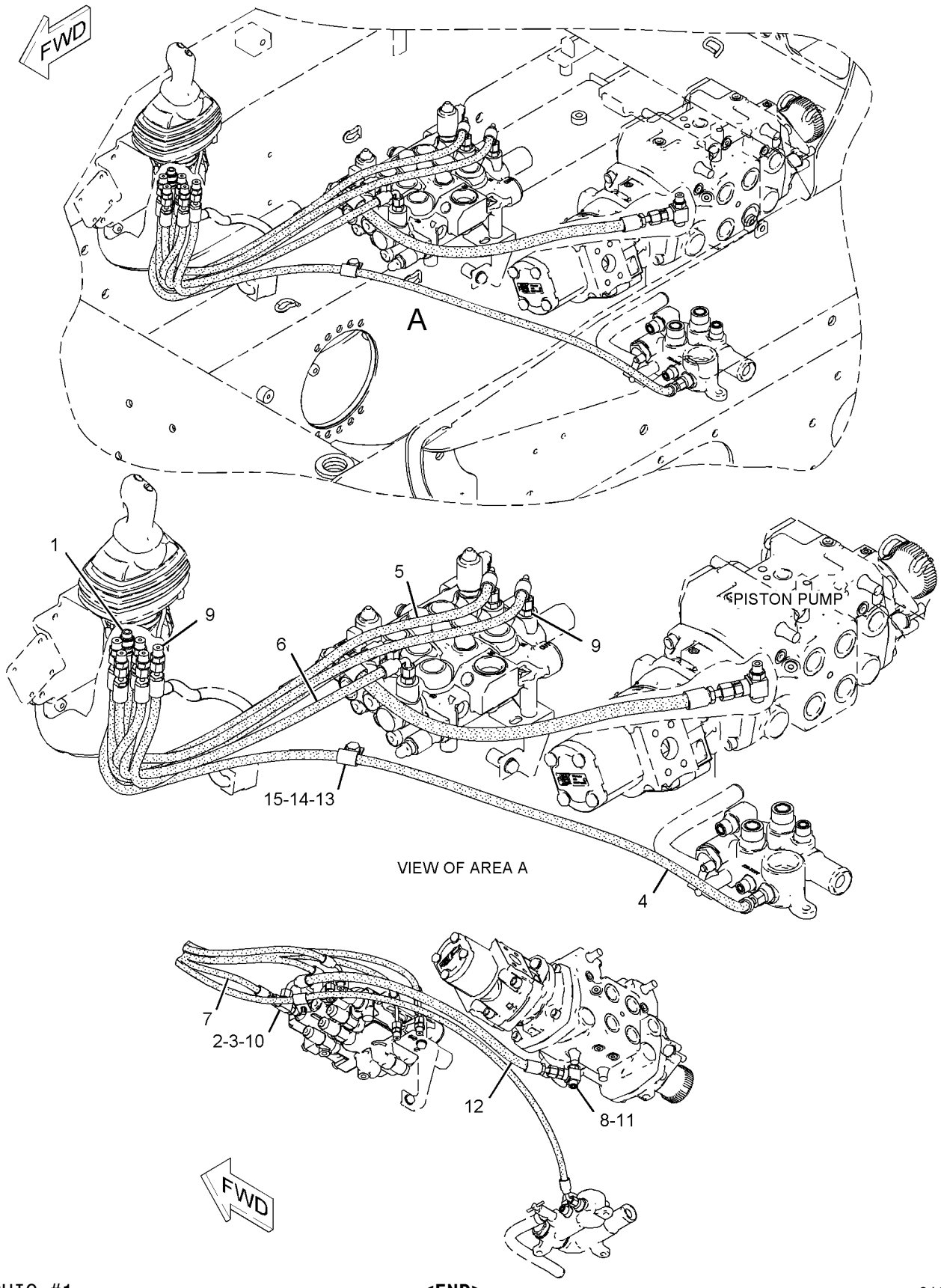

GRAPHIC #1 **<END>** g01037049

HYDRAULIC SYSTEM

234-0788 LINES GP-PILOT—DIRECTION, SPEED

S/N: SCH1-UP; BXM1-UP

PART OF 218-6820, 218-6920, 278-1233, 278-1243 HYDRAULIC AR

SMCS-5057, 5059 **i02319861**

NOTE	REF NO	GRAPHIC REF	PART NUMBER	QTY	PART NAME 1 2 3 4 5 6 (PRODUCT LEVEL)	SEE PAGE
	1	1	**6V-0852**	1	CAP-DUST	
	2	1	**7K-1181**	1	STRAP-CABLE	
	3	1	*148-8423*	1	FITTING GP-HYDRAULIC	
		1	**3J-1907**	1	SEAL-O-RING	
		1	**4J-5477**	1	SEAL-O-RING	
		1	**8T-3311**	1	TEE	
	4	1	*164-5567*	1	FITTING AS	
		1	**3J-1907**	1	SEAL-O-RING	
		1	**6V-3965**	1	FITTING AS (QUICK DISCONNECT)	
	5	1	**218-5968**	1	BRACKET	
	6	1	**218-6864**	1	HOSE AS	
	7	1	**193-8392**	2	HOSE AS	
	8	1	**234-0786**	1	HOSE AS	
	9	1	*148-8316*	2	CONNECTOR AS	
					(EACH INCLUDES)	
		1	**3J-7354**	1	SEAL-O-RING	
		1	**4J-5477**	1	SEAL-O-RING	
		1	**6V-8647**	1	CONNECTOR	
	10	1	*148-8325*	5	CONNECTOR AS	
					(EACH INCLUDES)	
		1	**3J-1907**	1	SEAL-O-RING	
		1	**4J-5477**	1	SEAL-O-RING	
		1	**6V-8641**	1	CONNECTOR	
	11	1	*148-8369*	2	ELBOW AS	
					(EACH INCLUDES)	
		1	**3J-7354**	1	SEAL-O-RING	
		1	**4J-5477**	1	SEAL-O-RING	
		1	**6V-8628**	1	ELBOW	
	12	1	*150-4043*	1	CONNECTOR AS	
		1	**3J-1907**	1	SEAL-O-RING	
		1	**6V-8398**	1	SEAL-O-RING	
		1	**6V-9873**	1	CONNECTOR	
	13	1	**193-8393**	2	HOSE AS	

234-0788 **LINES GP-PILOT** *(contd.)* **i02319861**

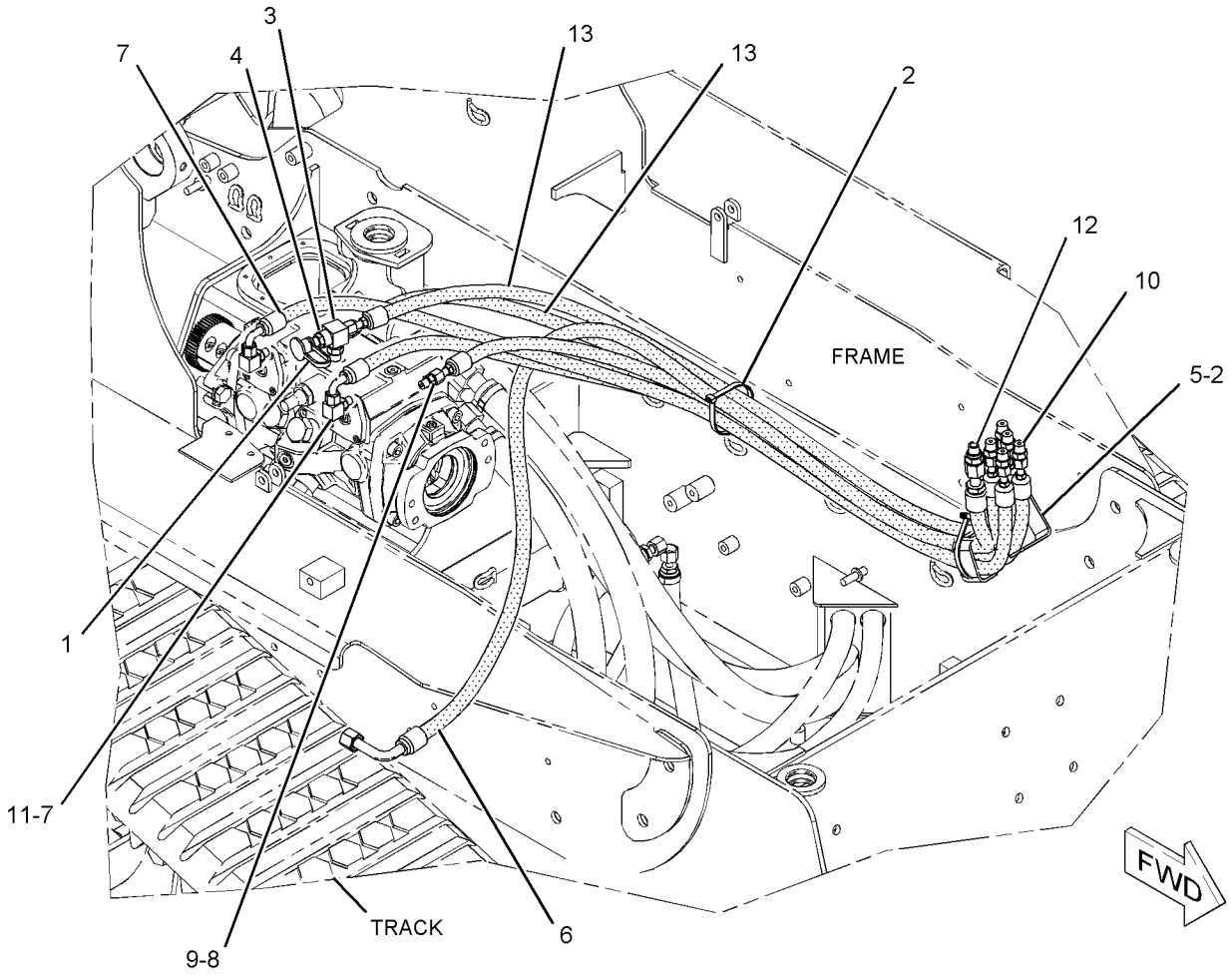

GRAPHIC #1 **<END>** g01093958

HYDRAULIC SYSTEM

218-5901 LINES GP-PUMP

S/N: SCH1-UP; BXM1-UP

PART OF 218-6760, 218-6820, 261-6142, 278-1233 HYDRAULIC AR

ALSO AN ATTACHMENT

SMCS-5057 **i02474808**

NOTE	REF NO	GRAPHIC REF	PART NUMBER	QTY	PART NAME 1 2 3 4 5 6 (PRODUCT LEVEL)	SEE PAGE
	1	1	**2S-3440**	2	CLAMP-HOSE	
	2	1	**6V-0852**	1	CAP-DUST	
	3	1	**9U-6994**	1	FITTING GP-HYDRAULIC	
		1	**7M-8485**	1	SEAL-O-RING	
	4	1	**9U-6995**	1	FITTING GP-HYDRAULIC	
		1	**2S-4078**		SEAL-O-RING	
	5	1	**159-5740**	1	HOSE	
	6	1	*164-5567*	1	FITTING AS	
		1	**3J-1907**	1	SEAL-O-RING	
		1	**6V-3965**	1	FITTING AS (QUICK DISCONNECT)	
	7	1	**283-9478**	1	HOSE	
	8	1	**193-8308**	1	ADAPTER	
I	9	1	**193-8321**	1	HOSE AS	
	10	1	**218-5637**	1	HOSE	
	11	1	**218-6137**	1	TUBE	
	12	1	**218-6593**	1	HOSE	
	13	1	*148-8315*	1	CONNECTOR AS	
		1	**2M-9780**	1	SEAL-O-RING	
		1	**6V-8642**	1	CONNECTOR	
		1	**7J-9108**	1	SEAL-O-RING	
	14	1	*148-8360*	1	ELBOW AS	
		1	**6V-9182**	1	ELBOW	
		1	**6V-9746**	1	SEAL-O-RING	
		1	**7M-8485**	1	SEAL-O-RING	
	15	1	**1P-4578**	2	FLANGE-HALF	
	16	1	**4J-0522**	1	SEAL-O-RING	
	17	1	**4J-5267**	1	SEAL-O-RING	
	18	1	**180-3007**	3	CLAMP-HOSE	
	19	1	**5P-2230**	3	CLAMP-HOSE	
	20	1	**8C-3205**	2	FLANGE-HALF	
	21	1	**8T-4121**	8	WASHER-HARD (11X21X2.5-MM THK)	
M	22	1	**8T-4196**	8	BOLT (M10X1.5X35-MM)	

I-REFER TO HYDRAULIC INFORMATION SYSTEM
M-METRIC PART

218-5901 **LINES GP-PUMP** *(contd.)* **i02474808**

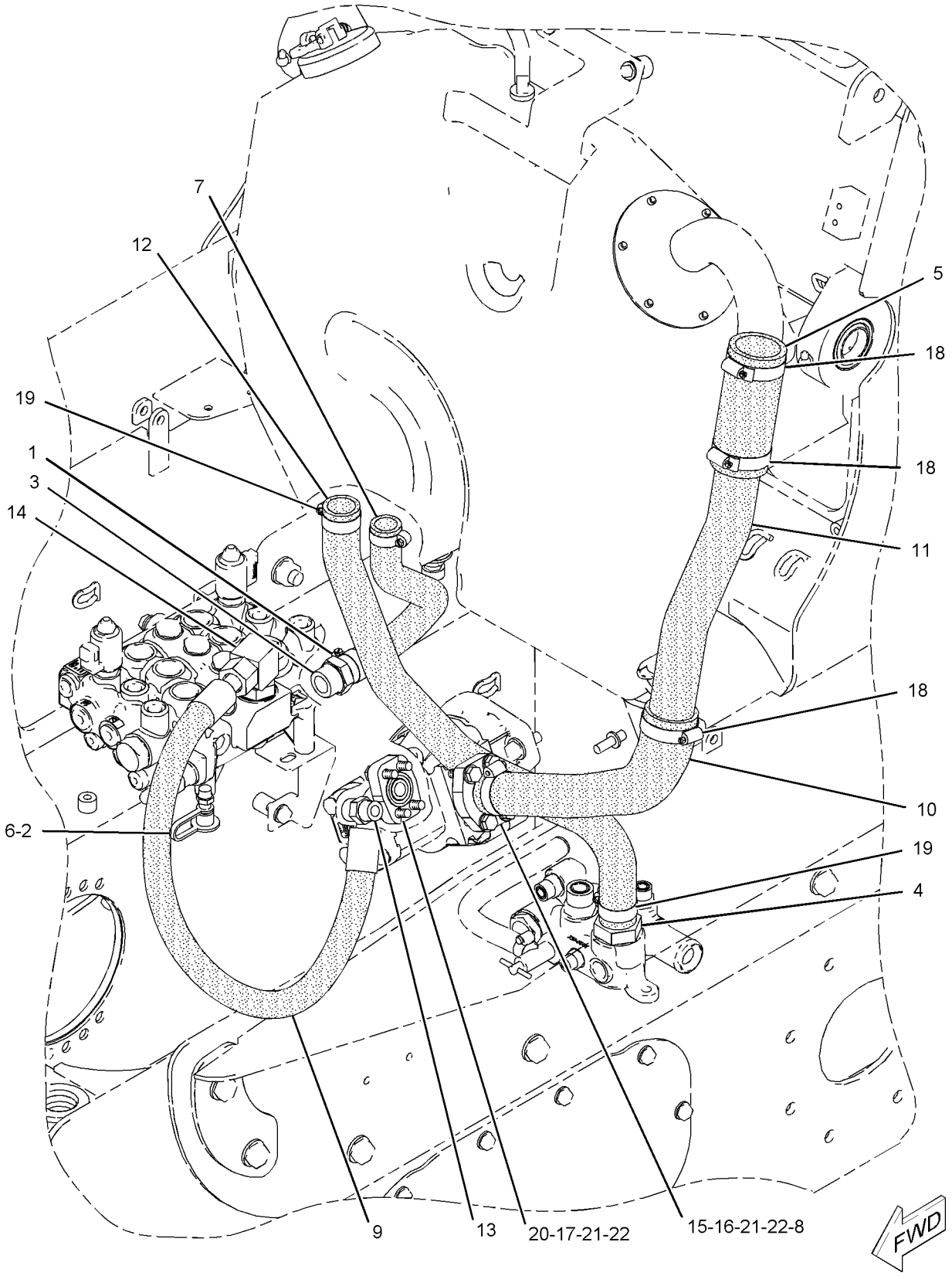

GRAPHIC #1 **<END>** g01036317

HYDRAULIC SYSTEM

218-5903 LINES GP-PUMP

S/N: BXM1-UP
PART OF 218-6762, 261-6149 HYDRAULIC AR
AN ATTACHMENT

SMCS-5057 **i02448004**

NOTE	REF NO	GRAPHIC REF	PART NUMBER	QTY	PART NAME 1 2 3 4 5 6 (PRODUCT LEVEL)	SEE PAGE
	1	1	**2S-3440**	4	CLAMP-HOSE	
	2	1	**6V-0852**	1	CAP-DUST	
	3	1	**9U-6994**	2	FITTING GP-HYDRAULIC	
					(EACH INCLUDES)	
		1	**7M-8485**	1	SEAL-O-RING	
	4	1	**159-5740**	1	HOSE	
	5	1	*164-5567*	1	FITTING AS	
		1	**3J-1907**	1	SEAL-O-RING	
		1	**6V-3965**	1	FITTING AS (QUICK DISCONNECT)	
	6	1	*176-4074*	1	CONNECTOR GP	
		1	**2S-4078**	1	SEAL-O-RING	
		1	**177-9567**	1	TEE AS	
	7	1	**180-3007**	3	CLAMP-HOSE	
	8	1	**283-9478**	1	HOSE	
I	9	1	**193-8321**	1	HOSE AS	
	10	1	**218-6137**	1	TUBE	
	11	1	**218-6142**	1	HOSE	
	12	1	**218-6596**	1	HOSE	
	13	1	**218-6597**	1	HOSE	
	14	1	**218-6598**	1	ADAPTER	
	15	1	*148-8315*	1	CONNECTOR AS	
		1	**2M-9780**	1	SEAL-O-RING	
		1	**6V-8642**	1	CONNECTOR	
		1	**7J-9108**	1	SEAL-O-RING	
	16	1	*148-8360*	1	ELBOW AS	
		1	**6V-9182**	1	ELBOW	
		1	**6V-9746**	1	SEAL-O-RING	
		1	**7M-8485**	1	SEAL-O-RING	
	17	1	**1P-4578**	2	FLANGE-HALF	
	18	1	**4J-0522**	1	SEAL-O-RING	
	19	1	**4J-5267**	1	SEAL-O-RING	
	20	1	**5P-2230**	3	CLAMP-HOSE	
	21	1	**8C-3205**	2	FLANGE-HALF	
	22	1	**8T-4121**	8	WASHER-HARD (11X21X2.5-MM THK)	
M	23	1	**8T-4196**	8	BOLT (M10X1.5X35-MM)	

I-REFER TO HYDRAULIC INFORMATION SYSTEM
M-METRIC PART

218-5903 **LINES GP-PUMP** *(contd.)* **i02448004**

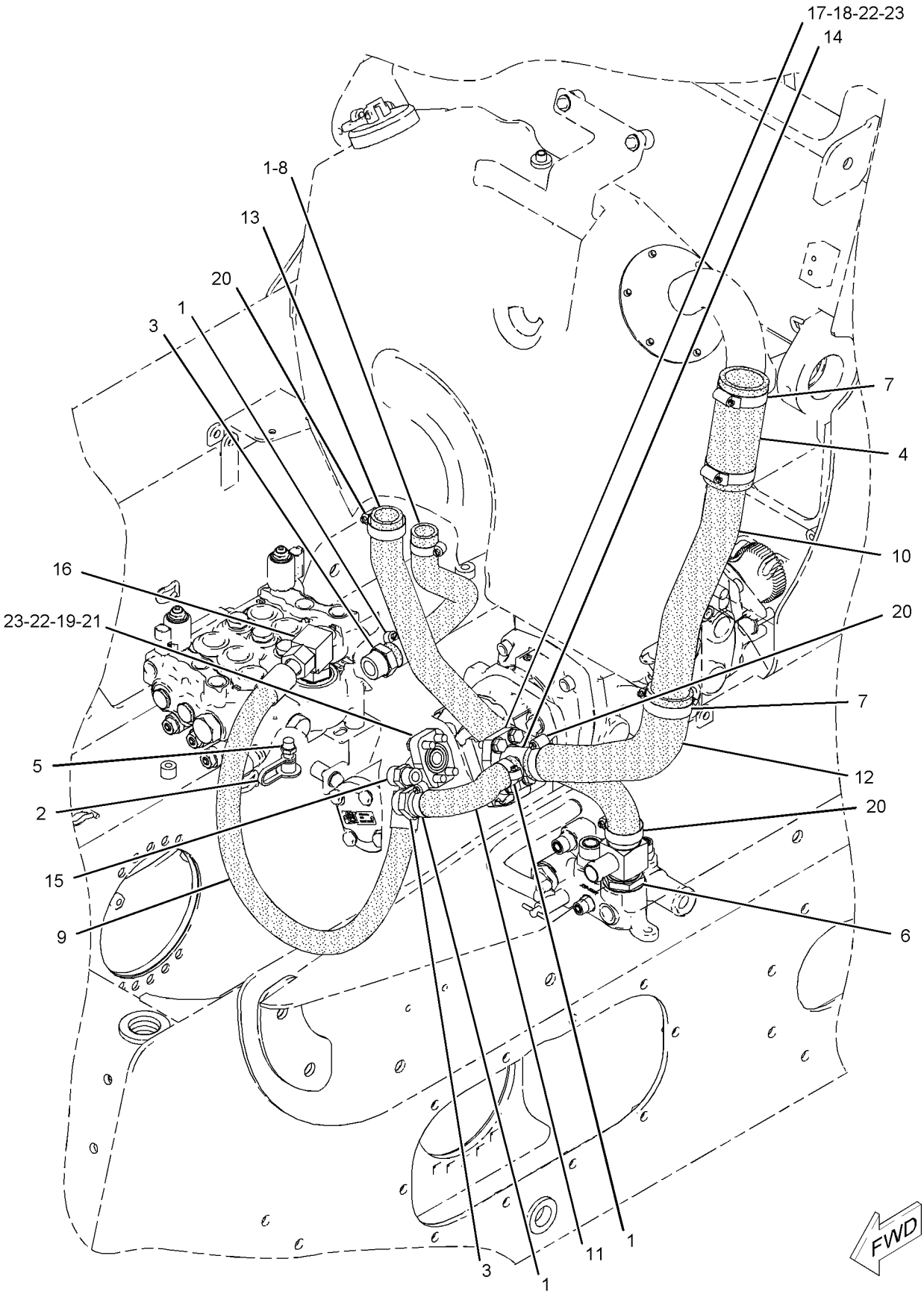

GRAPHIC #1 **<END>** g01037652

HYDRAULIC SYSTEM

218-6132 LINES GP-PUMP

S/N: MJH1-UP; RLL1-UP
PART OF 218-5620, 218-6130, 261-6132, 278-1217 HYDRAULIC AR
ALSO AN ATTACHMENT

SMCS-5057 **i02447976**

NOTE	REF NO	GRAPHIC REF	PART NUMBER	QTY	PART NAME 1 2 3 4 5 6 (PRODUCT LEVEL)	SEE PAGE
	1	1	**2S-3440**	2	CLAMP-HOSE	
	2	1	**6V-0852**	1	CAP-DUST	
	3	1	**9U-6994**	1	FITTING GP-HYDRAULIC	
		1	**7M-8485**	1	SEAL-O-RING	
Y	4	1	**9U-6995**	1	FITTING GP-HYDRAULIC	369
	5	1	**159-5740**	1	HOSE	
	6	1	*164-5567*	1	FITTING AS	
		1	**3J-1907**	1	SEAL-O-RING	
		1	**6V-3965**	1	FITTING AS (QUICK DISCONNECT)	
	7	1	**180-3007**	3	CLAMP-HOSE	
	8	1	**283-9478**	1	HOSE	
	9	1	**193-8308**	1	ADAPTER	
I	10	1	**193-8321**	1	HOSE AS	
	11	1	**218-6137**	1	TUBE	
	12	1	**218-6138**	1	HOSE	
	13	1	**218-6146**	1	HOSE	
	14	1	*148-8315*	1	CONNECTOR AS	
		1	**2M-9780**	1	SEAL-O-RING	
		1	**6V-8642**	1	CONNECTOR	
		1	**7J-9108**	1	SEAL-O-RING	
	15	1	*148-8360*	1	ELBOW AS	
		1	**6V-9182**	1	ELBOW	
		1	**6V-9746**	1	SEAL-O-RING	
		1	**7M-8485**	1	SEAL-O-RING	
	16	1	**1P-4578**	2	FLANGE-HALF	
	17	1	**4J-0522**	1	SEAL-O-RING	
	18	1	**4J-5267**	1	SEAL-O-RING	
M	19	1	**8T-4196**	8	BOLT (M10X1.5X35-MM)	
	20	1	**5P-2230**	3	CLAMP-HOSE	
	21	1	**8C-3205**	2	FLANGE-HALF	
	22	1	**8T-4121**	8	WASHER-HARD (11X21X2.5-MM THK)	

I-REFER TO HYDRAULIC INFORMATION SYSTEM
M-METRIC PART
Y-SEPARATE ILLUSTRATION

218-6132 **LINES GP-PUMP** *(contd.)* **i02447976**

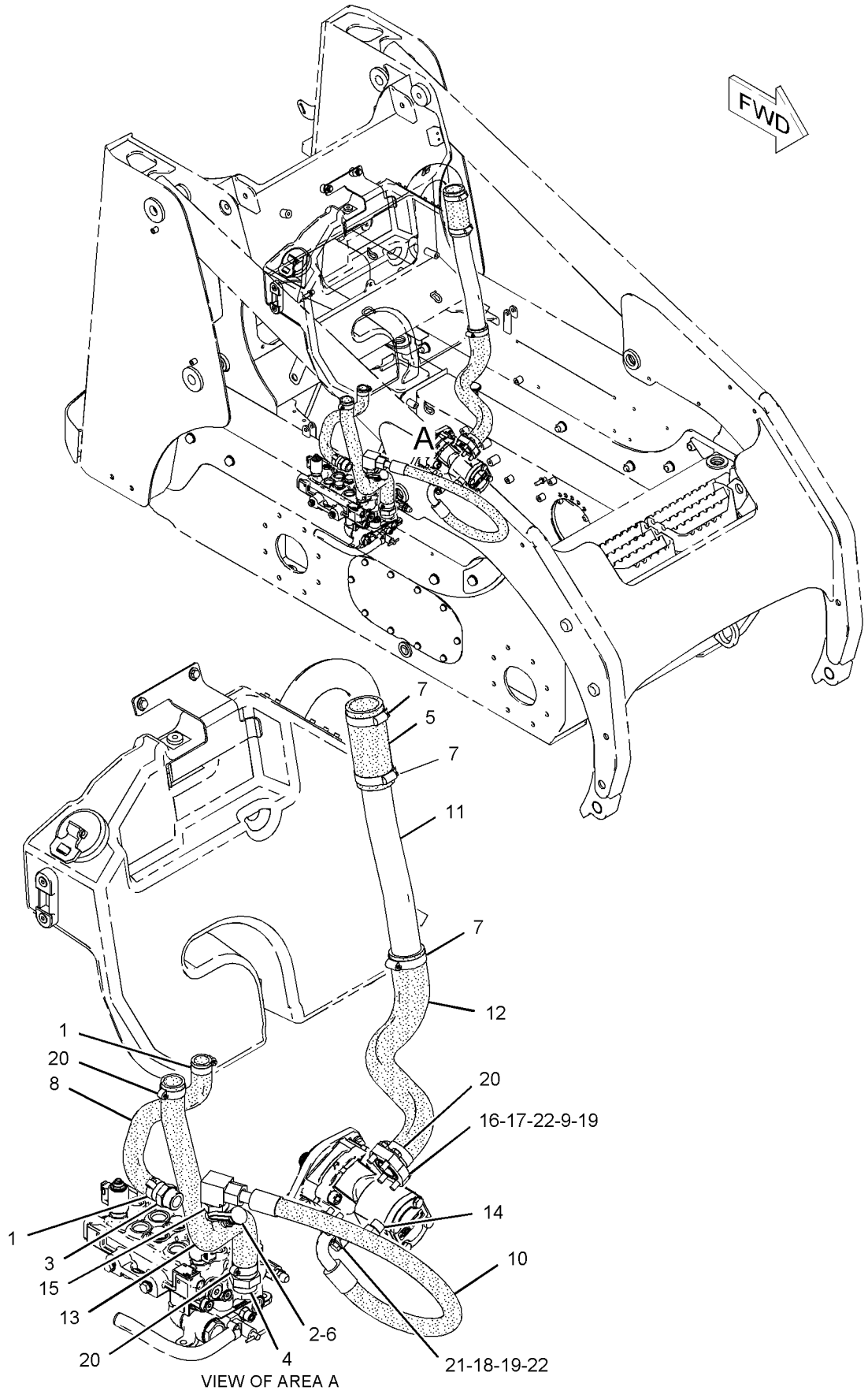

GRAPHIC #1 **<END>** g01036390

HYDRAULIC SYSTEM

218-6133 LINES GP-PUMP—HIGH FLOW

S/N: MJH1-UP

PART OF 218-6131, 261-6139 HYDRAULIC AR

AN ATTACHMENT

SMCS-5057 **i02447938**

NOTE	REF NO	GRAPHIC REF	PART NUMBER	QTY	PART NAME 1 2 3 4 5 6 (PRODUCT LEVEL)	SEE PAGE
	1	1	**2S-3440**	4	CLAMP-HOSE	
	2	1	**6V-0852**	1	CAP-DUST	
	3	1	**9U-6994**	2	FITTING GP-HYDRAULIC	
					(EACH INCLUDES)	
		1	**7M-8485**	1	SEAL-O-RING	
	4	1	**159-5740**	1	HOSE	
	5	1	*164-5567*	1	FITTING AS	
		1	**3J-1907**	1	SEAL-O-RING	
		1	**6V-3965**	1	FITTING AS (QUICK DISCONNECT)	
	6	1	*176-4074*	1	CONNECTOR GP	
		1	**2S-4078**	1	SEAL-O-RING	
		1	**177-9567**	1	TEE AS	
	7	1	**180-3007**	3	CLAMP-HOSE	
	8	1	**283-9478**	1	HOSE	
I	9	1	**193-8321**	1	HOSE AS	
	10	1	**218-6137**	1	TUBE	
	11	1	**218-6140**	1	ADAPTER	
	12	1	**218-6141**	1	HOSE	
	13	1	**218-6142**	1	HOSE	
	14	1	**218-6147**	1	HOSE	
	15	1	*148-8315*	1	CONNECTOR AS	
		1	**2M-9780**	1	SEAL-O-RING	
		1	**6V-8642**	1	CONNECTOR	
		1	**7J-9108**	1	SEAL-O-RING	
	16	1	*148-8360*	1	ELBOW AS	
		1	**6V-9182**	1	ELBOW	
		1	**6V-9746**	1	SEAL-O-RING	
		1	**7M-8485**	1	SEAL-O-RING	
	17	1	**1P-4578**	2	FLANGE-HALF	
	18	1	**4J-0522**	1	SEAL-O-RING	
	19	1	**4J-5267**	1	SEAL-O-RING	
	20	1	**5P-2230**	3	CLAMP-HOSE	
	21	1	**8C-3205**	2	FLANGE-HALF	
	22	1	**8T-4121**	8	WASHER-HARD (11X21X2.5-MM THK)	
M	23	1	**8T-4196**	8	BOLT (M10X1.5X35-MM)	

I-REFER TO HYDRAULIC INFORMATION SYSTEM
M-METRIC PART

218-6133 **LINES GP-PUMP** *(contd.)* **i02447938**

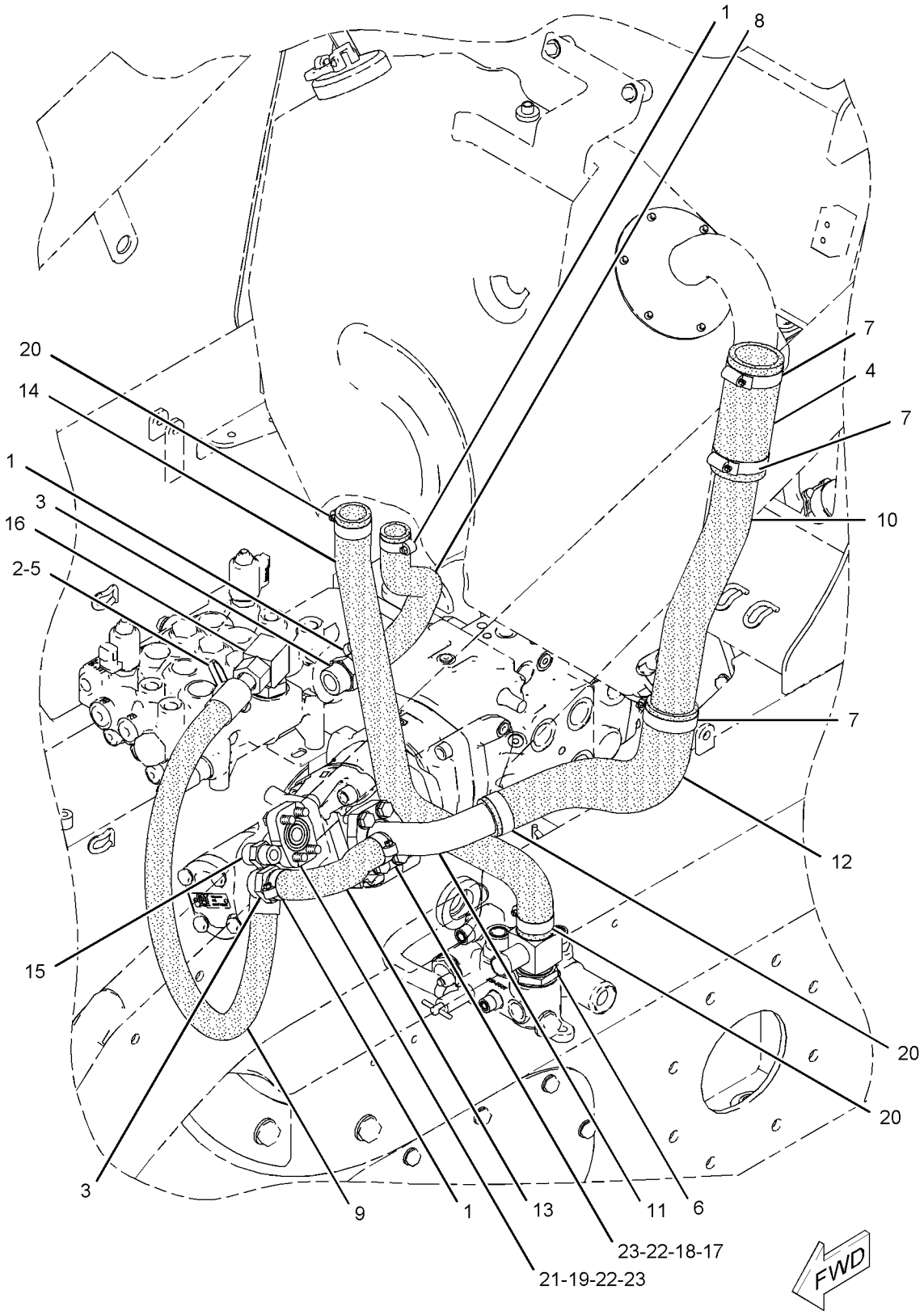

GRAPHIC #1 **<END>** g01034169

HYDRAULIC SYSTEM

218-5708 LINES GP-TILT CYLINDER

S/N: SCH1-362; BXM1-561
PART OF 218-5709 HYDRAULIC AR
FOR USE WITH WORK TOOL POSITIONER
AN ATTACHMENT

SMCS-5057, 5104 **i02444394**

NOTE	REF NO	GRAPHIC REF	PART NUMBER	QTY	PART NAME 1 2 3 4 5 6 (PRODUCT LEVEL)	SEE PAGE
I	1	1	**142-9234**	4	HOSE AS	
	2	1	**193-0474**	1	PLATE	
I	3	1	**212-4091**	2	HOSE AS	
	4	1	**218-5713**	1	TUBE AS	
	5	1	**218-5728**	1	TUBE AS	
	6	1	**218-6574**	3	CLIP	
	7	1	**218-6602**	1	TUBE AS	
	8	1	**218-6603**	1	TUBE AS	
	9	1	**219-4377**	1	PLATE	
	10	1	**233-5593**	2	TUBE AS	
M	11	1	**096-5866**	2	BOLT (M8X1.25X75-MM)	
	12	1	*148-8341*	2	CONNECTOR AS	
					(EACH INCLUDES)	
		1	**3D-2824**	1	SEAL-O-RING	
		1	**6V-8713**	1	CONNECTOR	
		1	**7J-9108**	1	SEAL-O-RING	
	13	1	*148-8390*	2	ELBOW AS	
					(EACH INCLUDES)	
		1	**2M-9780**	1	SEAL-O-RING	
		1	**6V-8626**	1	ELBOW	
		1	**7J-9108**	1	SEAL-O-RING	
	14	1	**5P-7464**	4	CLIP (SLOT)	
	15	1	**5P-7465**	4	CLIP (TAB)	
	16	1	**6V-7359**	4	GROMMET	
	17	1	**6V-8398**	8	SEAL-O-RING	
	18	1	**7J-9108**	6	SEAL-O-RING	
	19	1	**8T-4121**	2	WASHER-HARD (11X21X2.5-MM THK)	
M	20	1	**8T-4136**	2	BOLT (M10X1.5X25-MM)	
M	21	1	**8T-4139**	2	BOLT (M12X1.75X30-MM)	
M	22	1	**8T-4183**	2	BOLT (M12X1.75X40-MM)	
M	23	1	**8T-4189**	1	BOLT (M8X1.25X20-MM)	
	24	1	**8T-4223**	6	WASHER-HARD (13.5X25.5X3-MM THK)	
	25	1	**8T-4224**	4	WASHER-HARD (8.8X16X2-MM THK)	
M	26	1	**8T-4244**	2	NUT (M12X1.75-THD)	
M	27	1	**8T-6912**	1	BOLT (M8X1.25X50-MM)	
	28	1	**9R-1005**	3	CLIP (SLOT)	
	29	1	**9R-7802**	3	CLIP (SLOT)	
	30	1	**9R-7803**	3	CLIP (TAB)	

I-REFER TO HYDRAULIC INFORMATION SYSTEM
M-METRIC PART

218-5708 **LINES GP-TILT CYLINDER** *(contd.)* **i02444394**

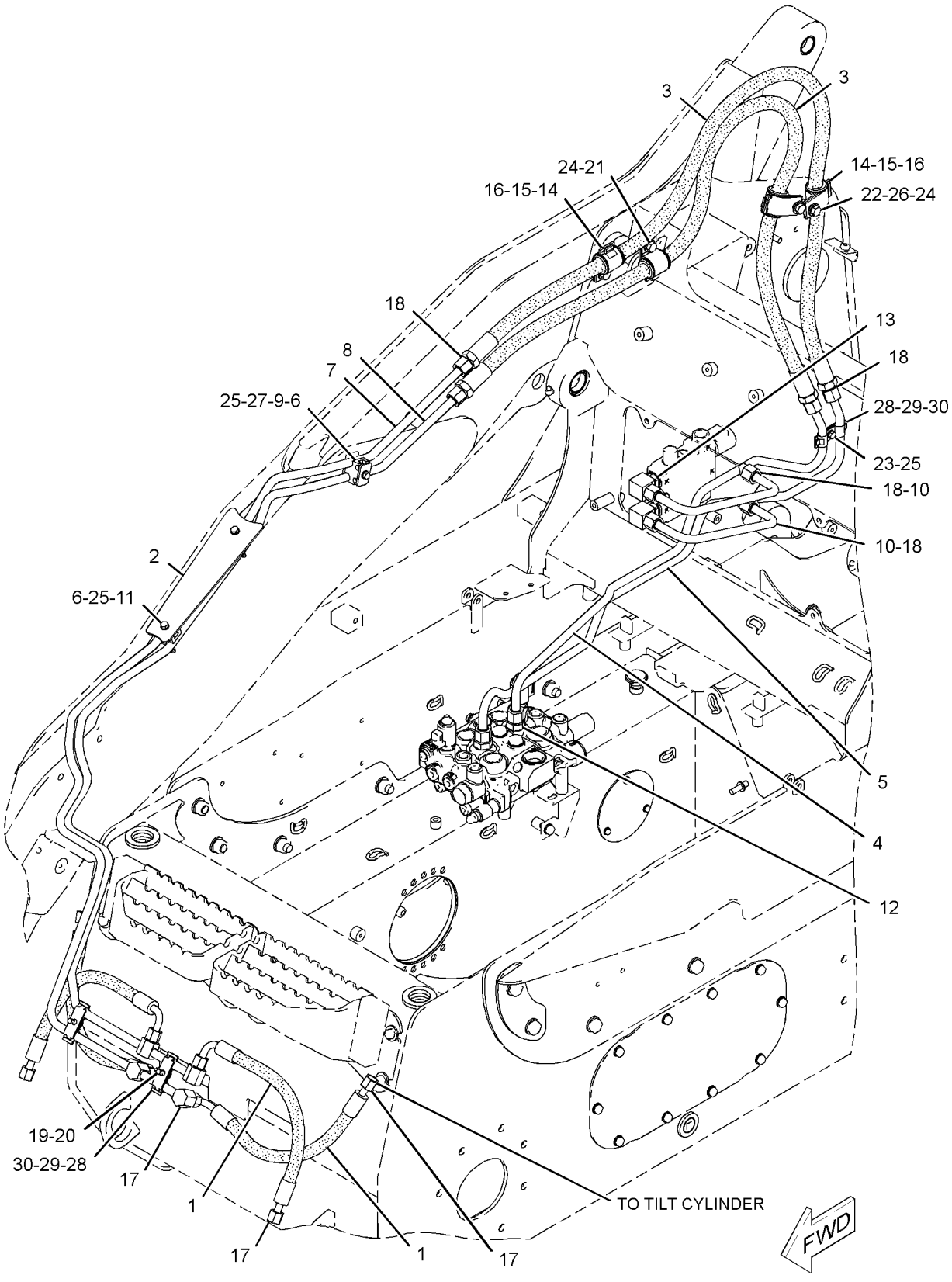

GRAPHIC #1 **<END>** g01221270

HYDRAULIC SYSTEM

218-5708 LINES GP-TILT CYLINDER

S/N: SCH363-521; BXM562-805
PART OF 218-5709 HYDRAULIC AR
FOR USE WITH WORK TOOL POSITIONER
AN ATTACHMENT

SMCS-5057, 5104 **i02169150**

NOTE	REF NO	GRAPHIC REF	PART NUMBER	QTY	PART NAME 1 2 3 4 5 6 (PRODUCT LEVEL)	SEE PAGE
I	1	1	**142-9234**	4	HOSE AS	
	2	1	**193-0474**	1	PLATE	
I	3	1	**212-4091**	2	HOSE AS	
	4	1	**218-5713**	1	TUBE AS	
	5	1	**218-5728**	1	TUBE AS	
	6	1	**218-6574**	3	CLIP	
	7	1	**218-6602**	1	TUBE AS	
	8	1	**218-6603**	1	TUBE AS	
	9	1	**219-4377**	1	PLATE	
	10	1	**233-5593**	2	TUBE AS	
M	11	1	**096-5866**	2	BOLT (M8X1.25X75-MM)	
C	12	1	*148-8315*	2	CONNECTOR AS	
					(EACH INCLUDES)	
		1	**2M-9780**	1	SEAL-O-RING	
		1	**6V-8642**	1	CONNECTOR	
		1	**7J-9108**	1	SEAL-O-RING	
	13	1	*148-8390*	2	ELBOW AS	
					(EACH INCLUDES)	
		1	**2M-9780**	1	SEAL-O-RING	
		1	**6V-8626**	1	ELBOW	
		1	**7J-9108**	1	SEAL-O-RING	
	14	1	**5P-7464**	4	CLIP (SLOT)	
	15	1	**5P-7465**	4	CLIP (TAB)	
	16	1	**6V-7359**	4	GROMMET	
	17	1	**6V-8398**	8	SEAL-O-RING	
	18	1	**7J-9108**	6	SEAL-O-RING	
	19	1	**8T-4121**	2	WASHER-HARD (11X21X2.5-MM THK)	
M	20	1	**8T-4136**	2	BOLT (M10X1.5X25-MM)	
M	21	1	**8T-4139**	2	BOLT (M12X1.75X30-MM)	
M	22	1	**8T-4183**	2	BOLT (M12X1.75X40-MM)	
M	23	1	**8T-4189**	1	BOLT (M8X1.25X20-MM)	
	24	1	**8T-4223**	6	WASHER-HARD (13.5X25.5X3-MM THK)	
	25	1	**8T-4224**	4	WASHER-HARD (8.8X16X2-MM THK)	
M	26	1	**8T-4244**	2	NUT (M12X1.75-THD)	
M	27	1	**8T-6912**	1	BOLT (M8X1.25X50-MM)	
	28	1	**9R-1005**	3	CLIP (SLOT)	
	29	1	**9R-7802**	3	CLIP (SLOT)	
	30	1	**9R-7803**	3	CLIP (TAB)	

C-CHANGE FROM PREVIOUS TYPE
I-REFER TO HYDRAULIC INFORMATION SYSTEM
M-METRIC PART

218-5708 **LINES GP-TILT CYLINDER** *(contd.)* **i02169150**

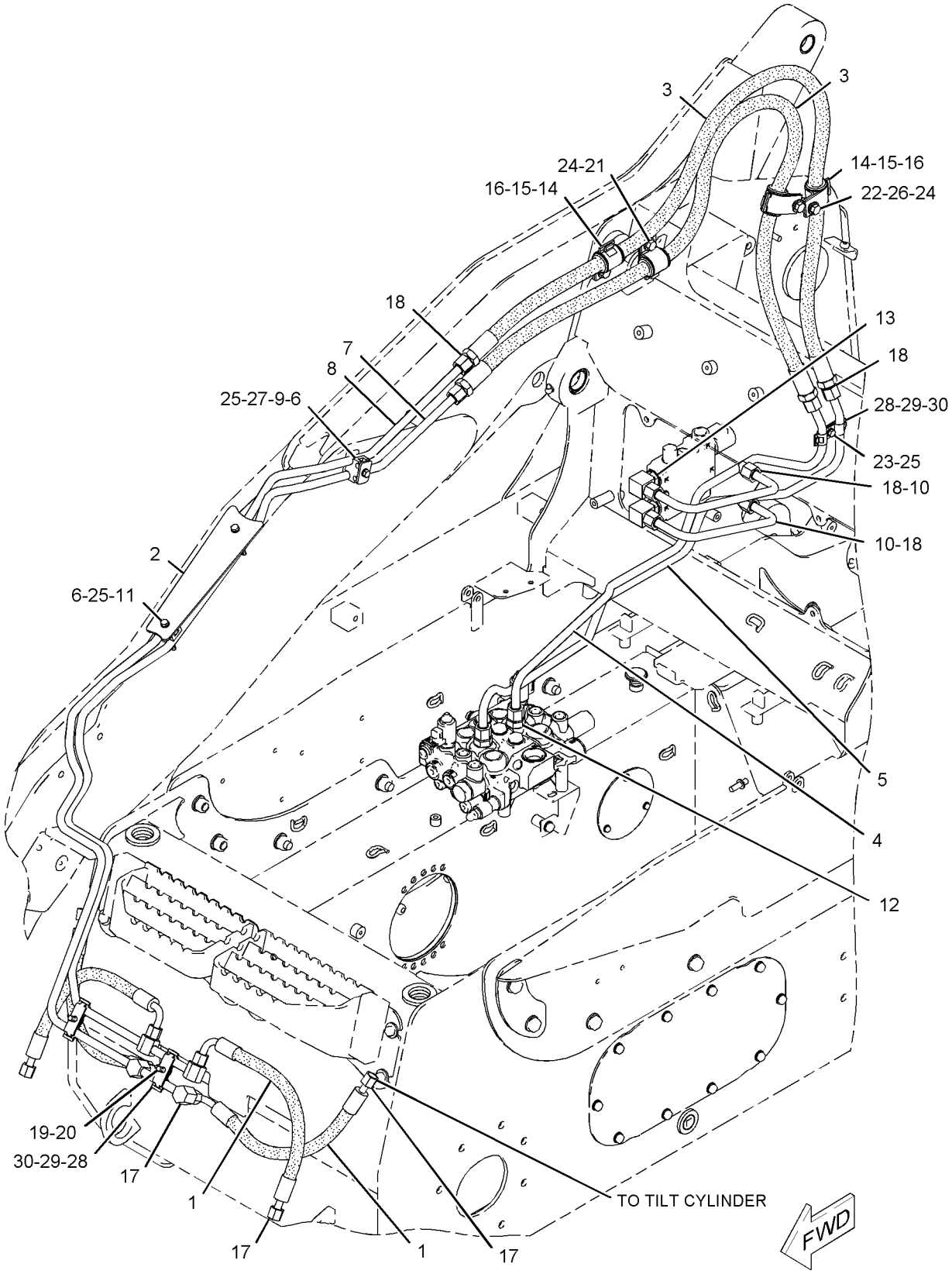

GRAPHIC #1 **<END>** g01036265

HYDRAULIC SYSTEM

218-5708 LINES GP-TILT CYLINDER

S/N: SCH522-UP; BXM806-UP
PART OF 218-5709 HYDRAULIC AR
FOR USE WITH WORK TOOL POSITIONER
AN ATTACHMENT

SMCS-5057, 5104 **i02286614**

NOTE	REF NO	GRAPHIC REF	PART NUMBER	QTY	PART NAME 1 2 3 4 5 6 (PRODUCT LEVEL)	SEE PAGE
I	1	1	**142-9234**	4	HOSE AS	
	2	1	**193-0474**	1	PLATE	
I	3	1	**212-4091**	2	HOSE AS	
	4	1	**252-0335**	1	TUBE AS	
	5	1	**252-0336**	1	TUBE AS	
	6	1	**215-3935**	3	CLIP	
	7	1	**252-0331**	1	TUBE AS	
	8	1	**252-0332**	1	TUBE AS	
	9	1	**219-4377**	1	PLATE	
	10	1	**252-0337**	1	TUBE AS	
M	11	1	**096-5866**	2	BOLT (M8X1.25X75-MM)	
	12	1	*148-8315*	2	CONNECTOR AS	
					(EACH INCLUDES)	
		1	**2M-9780**	1	SEAL-O-RING	
		1	**6V-8642**	1	CONNECTOR	
		1	**7J-9108**	1	SEAL-O-RING	
	13	1	*148-8390*	2	ELBOW AS	
					(EACH INCLUDES)	
		1	**2M-9780**	1	SEAL-O-RING	
		1	**6V-8626**	1	ELBOW	
		1	**7J-9108**	1	SEAL-O-RING	
	14	1	**5P-7464**	4	CLIP (SLOT)	
	15	1	**5P-7465**	4	CLIP (TAB)	
	16	1	**6V-7359**	4	GROMMET	
	17	1	**6V-8398**	8	SEAL-O-RING	
	18	1	**7J-9108**	6	SEAL-O-RING	
	19	1	**8T-4121**	2	WASHER-HARD (11X21X2.5-MM THK)	
M	20	1	**8T-4136**	2	BOLT (M10X1.5X25-MM)	
M	21	1	**8T-4139**	2	BOLT (M12X1.75X30-MM)	
CM	22	1	**8T-4194**	2	BOLT (M12X1.75X50-MM)	
CM	23	1	**099-3649**	1	BOLT (M8X1.25X40-MM)	
	24	1	**8T-4223**	6	WASHER-HARD (13.5X25.5X3-MM THK)	
C	25	1	**8T-4224**	5	WASHER-HARD (8.8X16X2-MM THK)	
M	26	1	**8T-4244**	2	NUT (M12X1.75-THD)	
M	27	1	**8T-6912**	1	BOLT (M8X1.25X50-MM)	
	28	1	**9R-1005**	3	CLIP (SLOT)	
	29	1	**9R-7802**	3	CLIP (SLOT)	
	30	1	**9R-7803**	3	CLIP (TAB)	
C	31	1	**7W-9094**	1	SPACER (10.5X20X9-MM THK)	
CM	32	1	**5C-7261**	1	NUT (M8X1.25-THD)	
	33	1	**252-0338**	1	TUBE AS	

C-CHANGE FROM PREVIOUS TYPE
I-REFER TO HYDRAULIC INFORMATION SYSTEM
M-METRIC PART

218-5708 **LINES GP-TILT CYLINDER** *(contd.)* **i02286614**

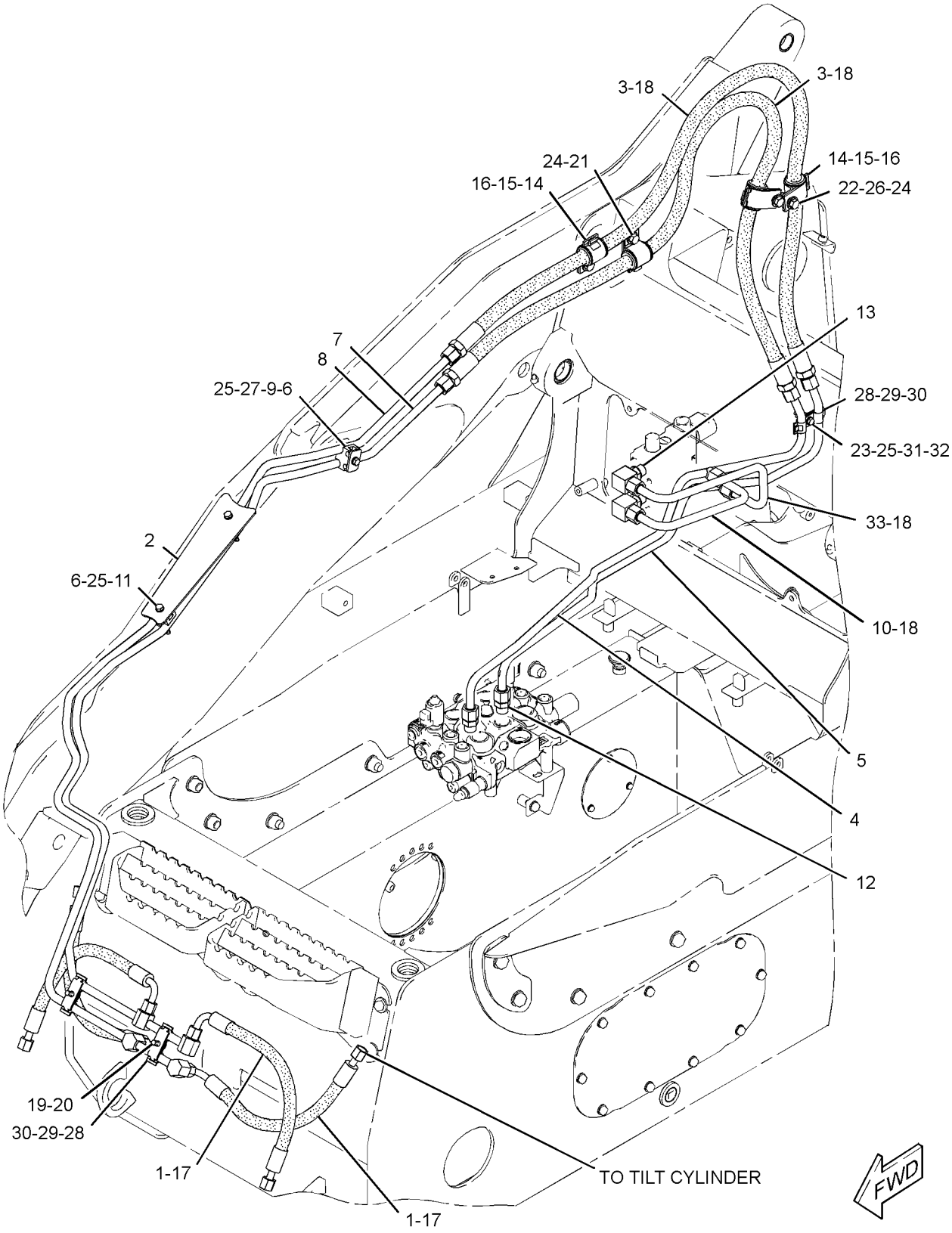

GRAPHIC #1 **<END>** g01145039

HYDRAULIC SYSTEM

218-5819 LINES GP-TILT CYLINDER

S/N: MJH1-721; RLL1-729
PART OF 218-6180 HYDRAULIC AR
AN ATTACHMENT

SMCS-5057, 5104 **i01955351**

NOTE	REF NO	GRAPHIC REF	PART NUMBER	QTY	PART NAME 1 2 3 4 5 6 (PRODUCT LEVEL)	SEE PAGE
	1	2	**116-4415**	2	PLATE-COVER	
	2	2	**142-8998**	2	CLIP	
I	3	2	**142-9234**	4	HOSE AS	
I	4	2	**218-6194**	2	HOSE AS	
	5	2	**218-6196**	1	TUBE AS	
	6	2	**218-6198**	1	TUBE AS	
	7	2	**218-6205**	1	TUBE AS	
	8	2	**218-6206**	1	TUBE AS	
	9	2	*148-8341*	2	CONNECTOR AS	
					(EACH INCLUDES)	
		2	**3D-2824**	1	SEAL-O-RING	
		2	**6V-8713**	1	CONNECTOR	
		2	**7J-9108**	1	SEAL-O-RING	
	10	2	**6V-8398**	8	SEAL-O-RING	
	11	2	**7J-9108**	3	SEAL-O-RING	
M	12	2	**8T-2192**	2	BOLT (M6X1X45-MM)	
	13	2	**8T-4121**	2	WASHER-HARD (11X21X2.5-MM THK)	
M	14	2	**8T-4136**	2	BOLT (M10X1.5X25-MM)	
	15	2	**9R-1005**	2	CLIP (SLOT)	
	16	2	**9R-7802**	2	CLIP (SLOT)	
	17	2	**9R-7803**	2	CLIP (TAB)	

I-REFER TO HYDRAULIC INFORMATION SYSTEM
M-METRIC PART

218-5819 **LINES GP-TILT CYLINDER** *(contd.)* **i01955351**

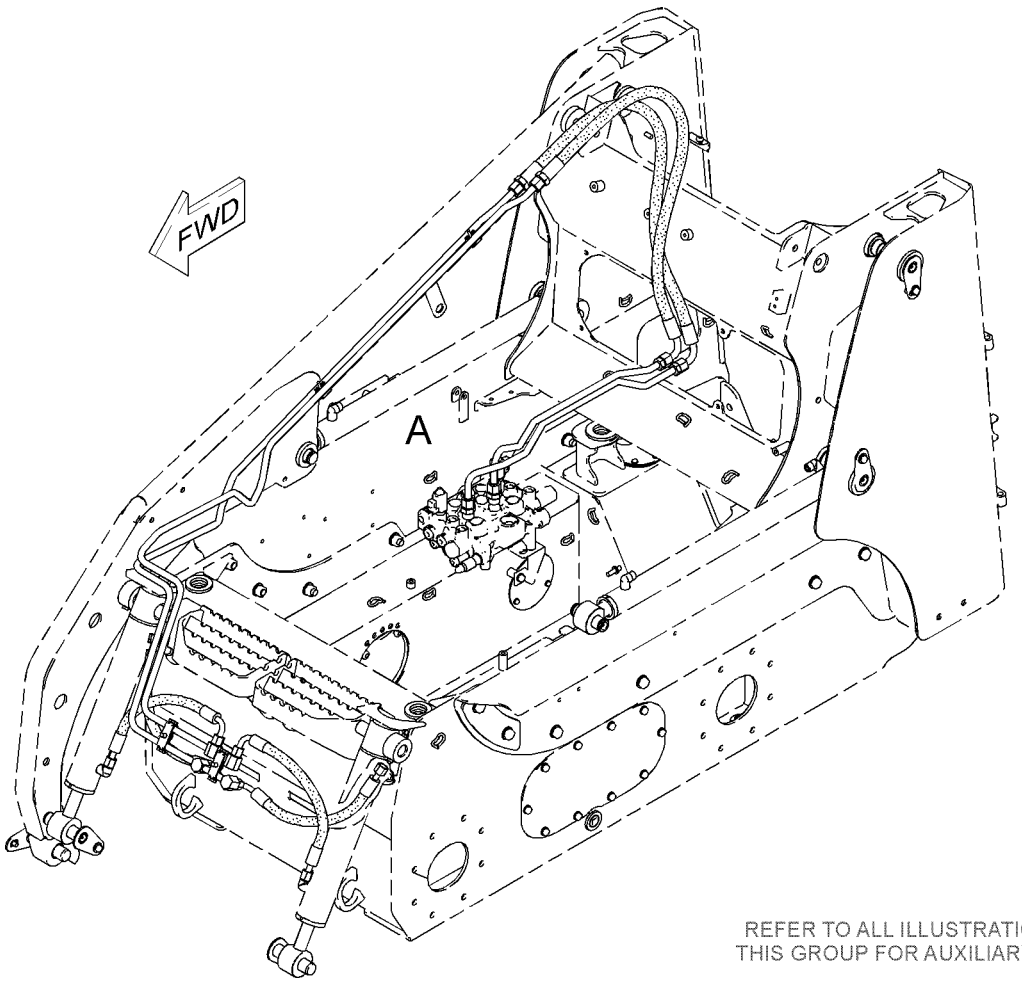

REFER TO ALL ILLUSTRATIONS OF
THIS GROUP FOR AUXILIARY VIEWS

GRAPHIC #1 g01019920

218-5819 **LINES GP-TILT CYLINDER** *(contd.)* **i01955351**

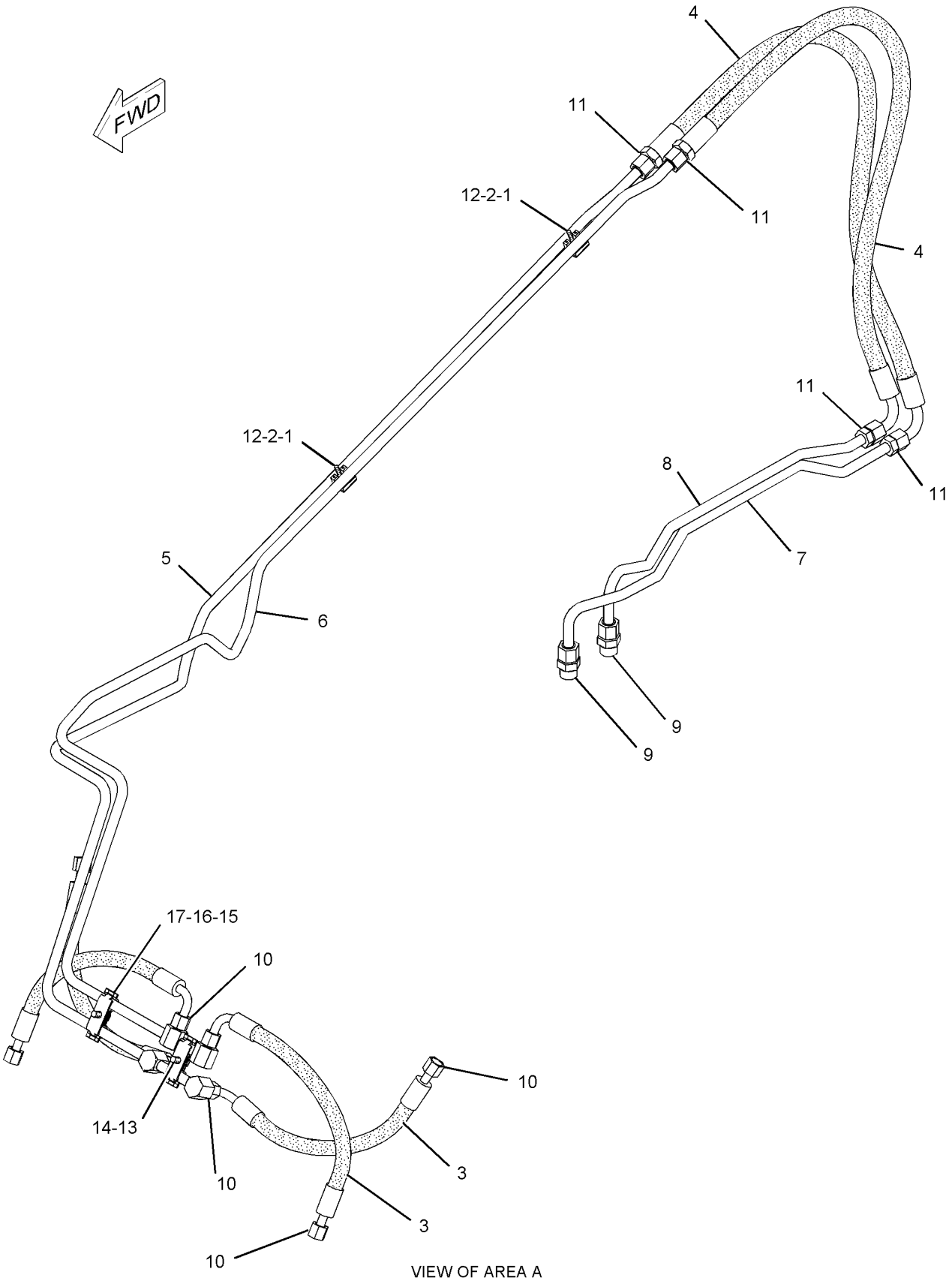

VIEW OF AREA A

GRAPHIC #2 **<END>** g01019959

HYDRAULIC SYSTEM

218-5819 LINES GP-TILT CYLINDER

S/N: MJH722-2449; RLL730-1316
PART OF 218-6180 HYDRAULIC AR
AN ATTACHMENT

SMCS-5057, 5104 **i02189410**

NOTE	REF NO	GRAPHIC REF	PART NUMBER	QTY	PART NAME 1 2 3 4 5 6 (PRODUCT LEVEL)	SEE PAGE
	1	2	**116-4415**	2	PLATE-COVER	
	2	2	**142-8998**	2	CLIP	
I	3	2	**142-9234**	4	HOSE AS	
I	4	2	**218-6194**	2	HOSE AS	
	5	2	**218-6196**	1	TUBE AS	
	6	2	**218-6198**	1	TUBE AS	
	7	2	**218-6205**	1	TUBE AS	
	8	2	**218-6206**	1	TUBE AS	
	9	2	*148-8315*	2	CONNECTOR AS	
					(EACH INCLUDES)	
		2	**2M-9780**	1	SEAL-O-RING	
		2	**6V-8642**	1	CONNECTOR	
		2	**7J-9108**	1	SEAL-O-RING	
	10	2	**6V-8398**	8	SEAL-O-RING	
	11	2	**7J-9108**	4	SEAL-O-RING	
M	12	2	**8T-2192**	2	BOLT (M6X1X45-MM)	
	13	2	**8T-4121**	2	WASHER-HARD (11X21X2.5-MM THK)	
M	14	2	**8T-4136**	2	BOLT (M10X1.5X25-MM)	
	15	2	**9R-1005**	2	CLIP (SLOT)	
	16	2	**9R-7802**	2	CLIP (SLOT)	
	17	2	**9R-7803**	2	CLIP (TAB)	

I-REFER TO HYDRAULIC INFORMATION SYSTEM
M-METRIC PART

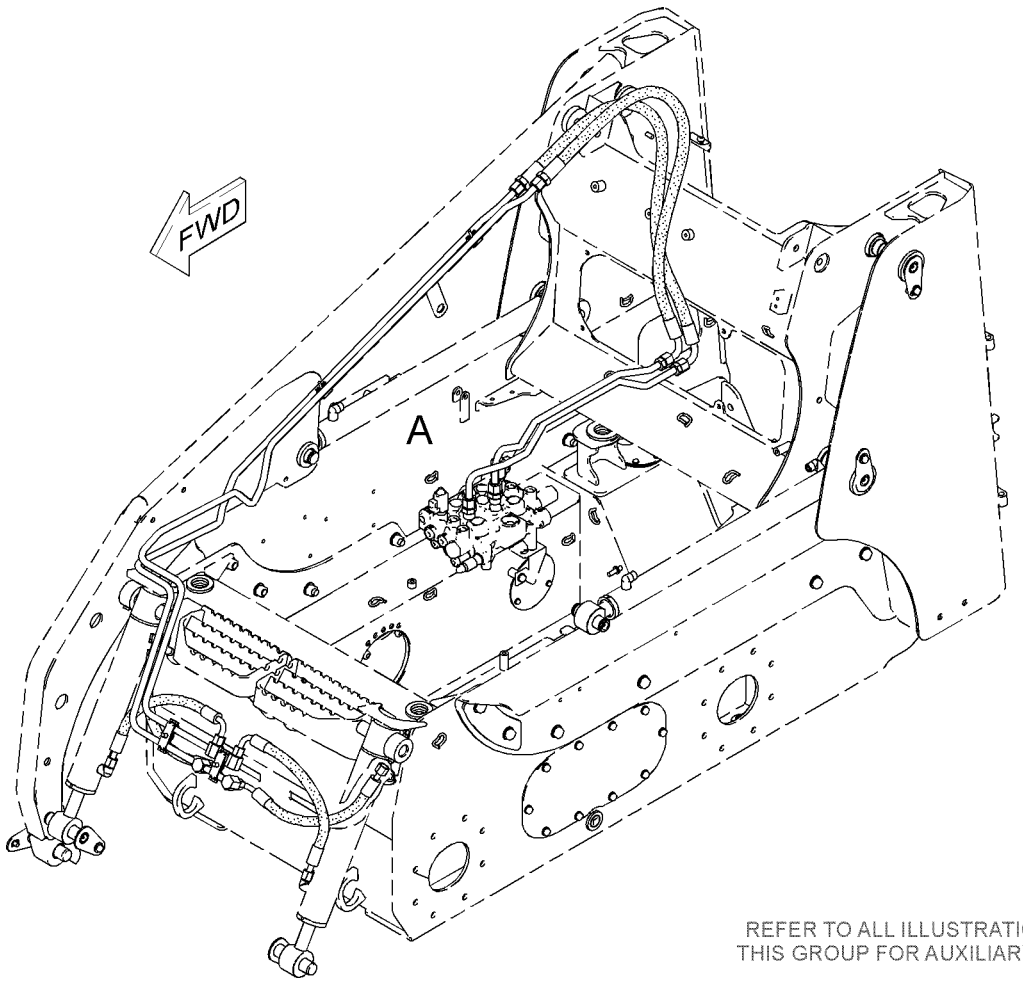

REFER TO ALL ILLUSTRATIONS OF
THIS GROUP FOR AUXILIARY VIEWS

GRAPHIC #1 g01019920

218-5819 **LINES GP-TILT CYLINDER** *(contd.)* **i02189410**

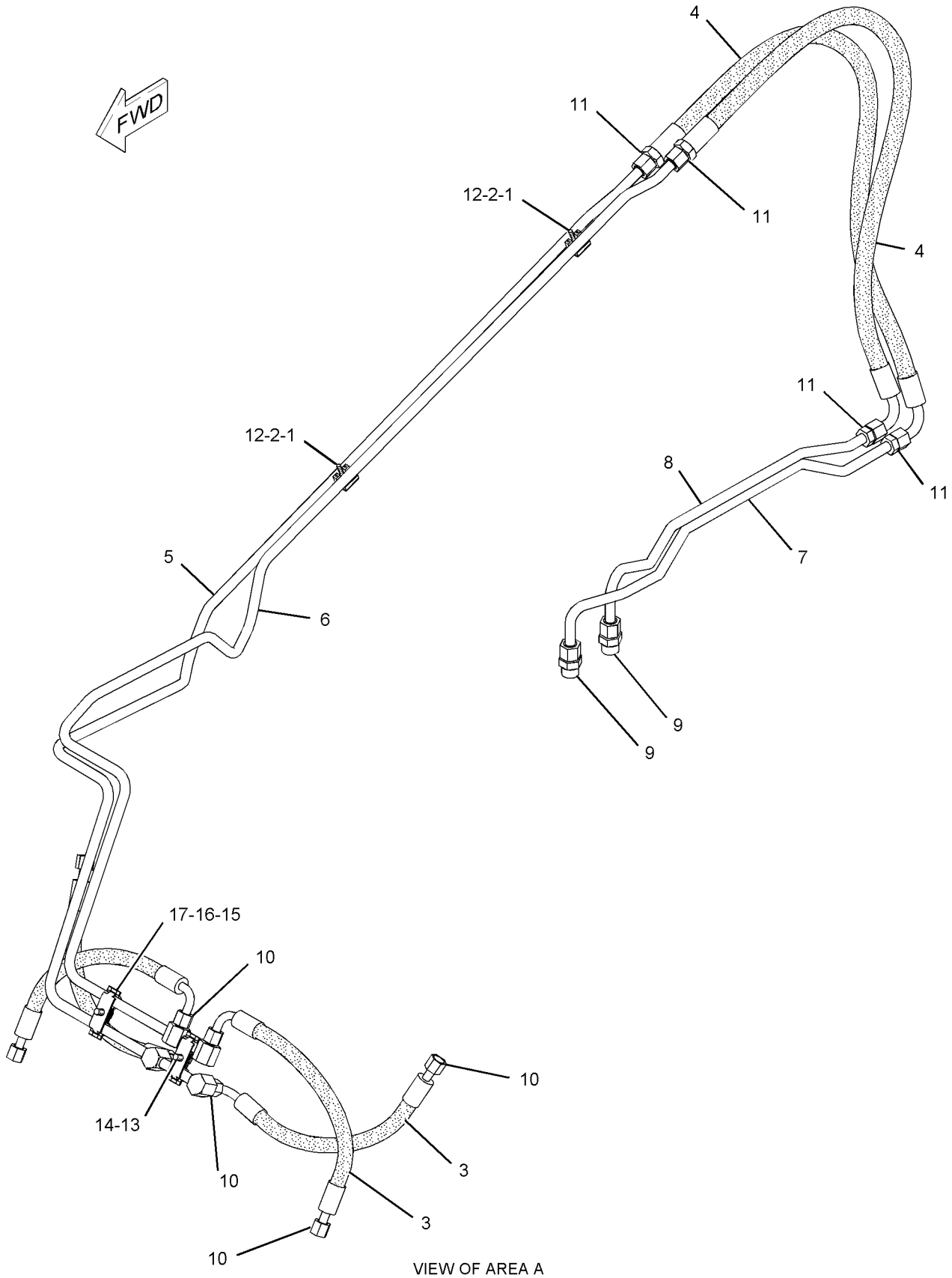

VIEW OF AREA A

GRAPHIC #2

<END>

g01019959

HYDRAULIC SYSTEM

218-5819 LINES GP-TILT CYLINDER

S/N: MJH2450-UP; RLL1317-UP
PART OF 218-6180 HYDRAULIC AR
AN ATTACHMENT

SMCS-5057, 5104 **i02241309**

NOTE	REF NO	GRAPHIC REF	PART NUMBER	QTY	PART NAME 1 2 3 4 5 6 (PRODUCT LEVEL)	SEE PAGE
	1	1	**116-4415**	2	PLATE-COVER	
	2	1	**142-8998**	2	CLIP	
I	3	1	**142-9234**	4	HOSE AS	
I	4	1	**218-6194**	2	HOSE AS	
	5	1	**218-6196**	1	TUBE AS	
	6	1	**218-6198**	1	TUBE AS	
C	7	1	**238-7725**	1	TUBE AS	
C	8	1	**238-7726**	1	TUBE AS	
	9	1	*148-8315*	2	CONNECTOR AS	
					(EACH INCLUDES)	
		1	**2M-9780**	1	SEAL-O-RING	
		1	**6V-8642**	1	CONNECTOR	
		1	**7J-9108**	1	SEAL-O-RING	
	10	1	**6V-8398**	8	SEAL-O-RING	
	11	1	**7J-9108**	3	SEAL-O-RING	
M	12	1	**8T-2192**	2	BOLT (M6X1X45-MM)	
	13	1	**8T-4121**	2	WASHER-HARD (11X21X2.5-MM THK)	
M	14	1	**8T-4136**	2	BOLT (M10X1.5X25-MM)	
	15	1	**9R-1005**	2	CLIP (SLOT)	
	16	1	**9R-7802**	2	CLIP (SLOT)	
	17	1	**9R-7803**	2	CLIP (TAB)	

C-CHANGE FROM PREVIOUS TYPE
I-REFER TO HYDRAULIC INFORMATION SYSTEM
M-METRIC PART

218-5819 **LINES GP-TILT CYLINDER** *(contd.)* **i02241309**

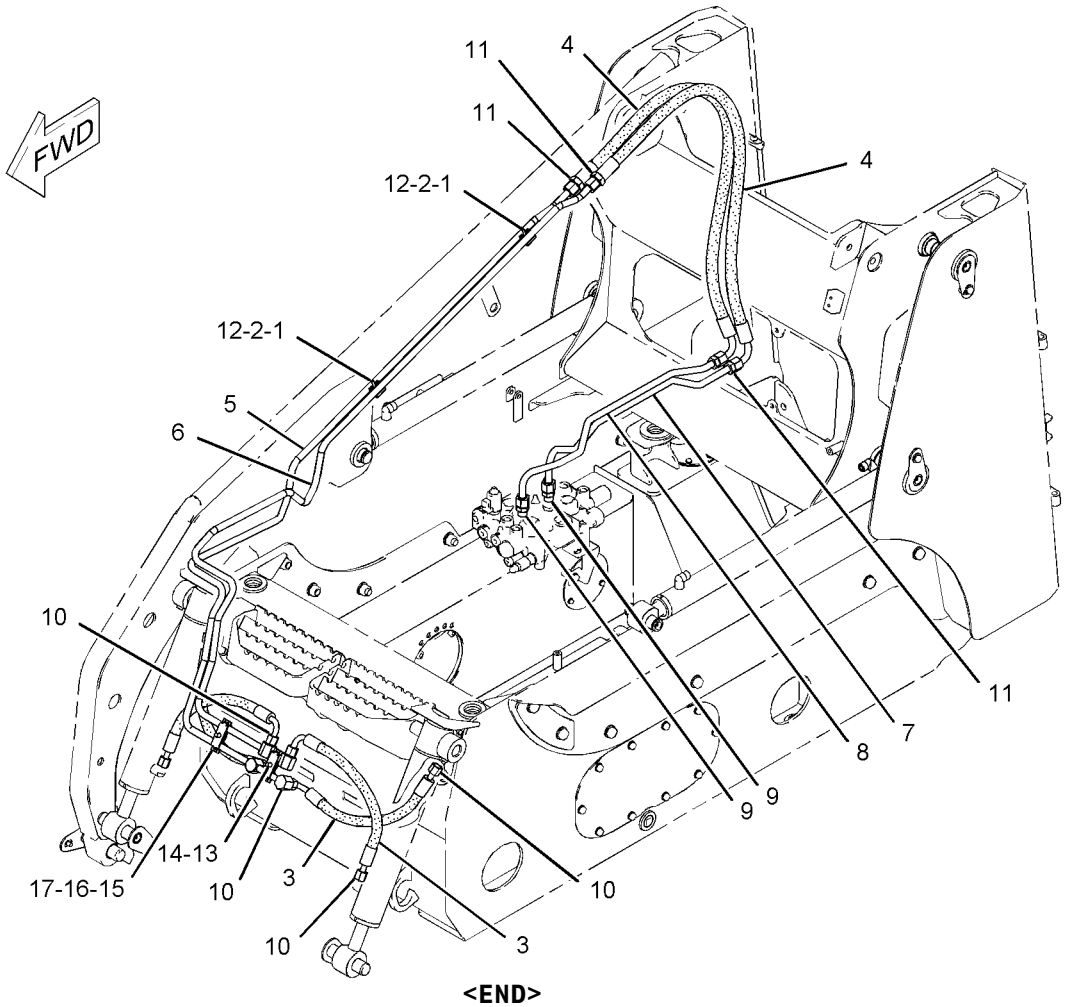

GRAPHIC #1 **<END>** g01132638

HYDRAULIC SYSTEM

218-5852 LINES GP-TILT CYLINDER

S/N: MJH1-721; RLL1-729
PART OF 218-6181 HYDRAULIC AR
FOR USE WITH WORK TOOL POSITIONER
AN ATTACHMENT

SMCS-5057, 5104 **i01996267**

NOTE	REF NO	GRAPHIC REF	PART NUMBER	QTY	PART NAME 1 2 3 4 5 6 (PRODUCT LEVEL)	SEE PAGE
	1	1	**116-4415**	2	PLATE-COVER	
	2	1	**142-8998**	2	CLIP	
I	3	1	**142-9234**	4	HOSE AS	
	4	1	**218-6190**	1	TUBE AS	
	5	1	**218-6191**	1	TUBE AS	
	6	1	**218-6192**	1	TUBE AS	
	7	1	**218-6193**	1	TUBE AS	
I	8	1	**218-6194**	2	HOSE AS	
	9	1	**218-6196**	1	TUBE AS	
	10	1	**218-6198**	1	TUBE AS	
	11	1	*148-8319*	2	CONNECTOR AS	
					(EACH INCLUDES)	
		1	**2M-9780**	1	SEAL-O-RING	
		1	**6V-8397**	1	SEAL-O-RING	
		1	**6V-8715**	1	CONNECTOR	
	12	1	*148-8341*	2	CONNECTOR AS	
					(EACH INCLUDES)	
		1	**3D-2824**	1	SEAL-O-RING	
		1	**6V-8713**	1	CONNECTOR	
		1	**7J-9108**	1	SEAL-O-RING	
	13	1	**6V-8397**	2	SEAL-O-RING	
	14	1	**6V-8398**	8	SEAL-O-RING	
	15	1	**7J-9108**	4	SEAL-O-RING	
M	16	1	**8T-2192**	2	BOLT (M6X1X45-MM)	
	17	1	**8T-4121**	2	WASHER-HARD (11X21X2.5-MM THK)	
M	18	1	**8T-4136**	2	BOLT (M10X1.5X25-MM)	
	19	1	**9R-1005**	2	CLIP (SLOT)	
	20	1	**9R-7802**	2	CLIP (SLOT)	
	21	1	**9R-7803**	2	CLIP (TAB)	

I-REFER TO HYDRAULIC INFORMATION SYSTEM
M-METRIC PART

218-5852 **LINES GP-TILT CYLINDER** *(contd.)* **i01996267**

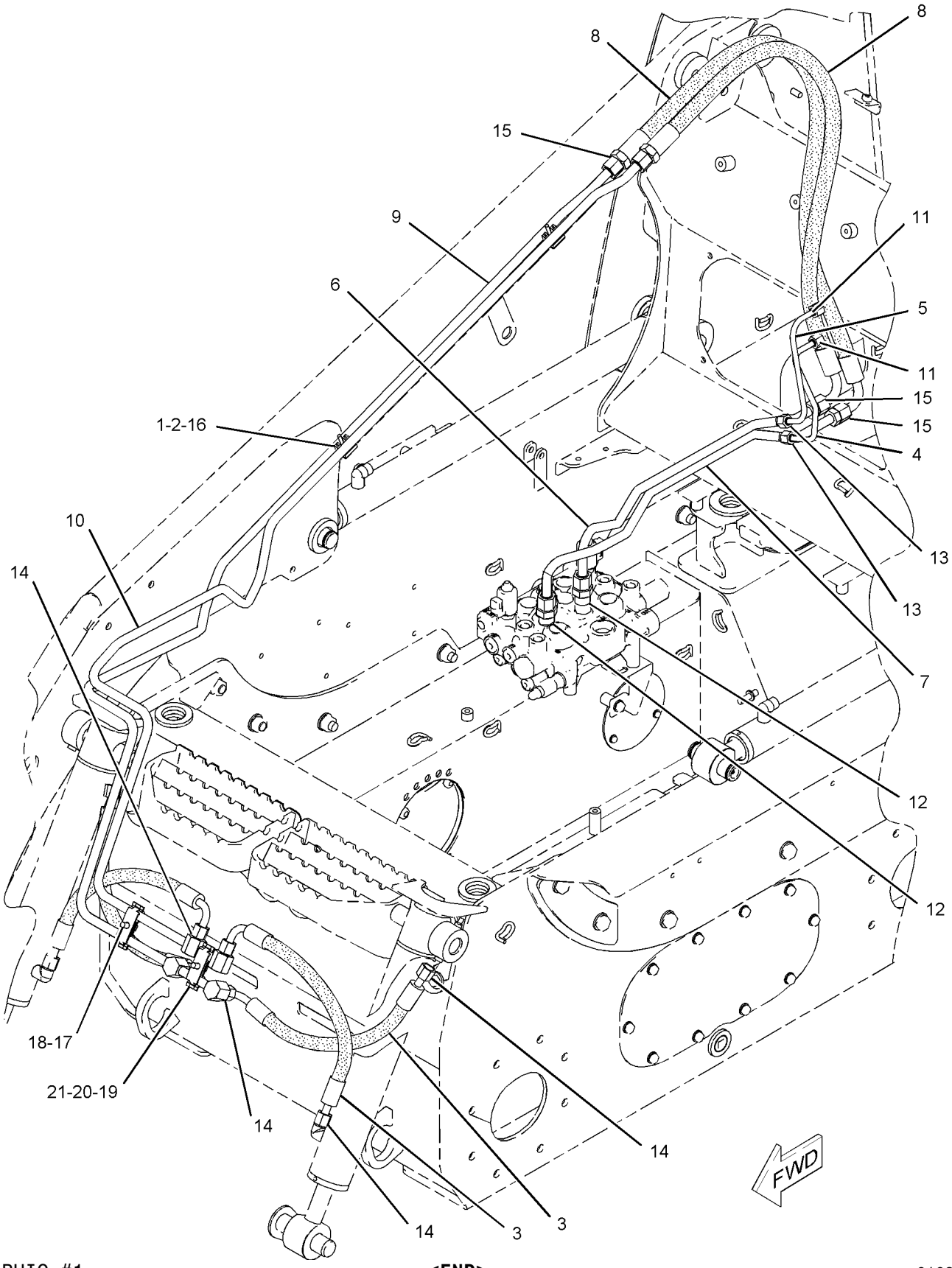

GRAPHIC #1 **<END>** g01033255

HYDRAULIC SYSTEM

218-5852 LINES GP-TILT CYLINDER

S/N: MJH722-2449; RLL730-1316
PART OF 218-6181 HYDRAULIC AR
FOR USE WITH WORK TOOL POSITIONER
AN ATTACHMENT

SMCS-5057, 5104 **i02189450**

NOTE	REF NO	GRAPHIC REF	PART NUMBER	QTY	PART NAME 1 2 3 4 5 6 (PRODUCT LEVEL)	SEE PAGE
	1	1	**116-4415**	2	PLATE-COVER	
	2	1	**142-8998**	2	CLIP	
I	3	1	**142-9234**	4	HOSE AS	
	4	1	**218-6190**	1	TUBE AS	
	5	1	**218-6191**	1	TUBE AS	
	6	1	**218-6192**	1	TUBE AS	
	7	1	**218-6193**	1	TUBE AS	
I	8	1	**218-6194**	2	HOSE AS	
	9	1	**218-6196**	1	TUBE AS	
	10	1	**218-6198**	1	TUBE AS	
	11	1	*148-8319*	2	CONNECTOR AS	
					(EACH INCLUDES)	
		1	**2M-9780**	1	SEAL-O-RING	
		1	**6V-8397**	1	SEAL-O-RING	
		1	**6V-8715**	1	CONNECTOR	
	12	1	*148-8315*	2	CONNECTOR AS	
					(EACH INCLUDES)	
		1	**3D-2824**	1	SEAL-O-RING	
		1	**6V-8642**	1	CONNECTOR	
		1	**7J-9108**	1	SEAL-O-RING	
	13	1	**6V-8397**	2	SEAL-O-RING	
	14	1	**6V-8398**	8	SEAL-O-RING	
	15	1	**7J-9108**	4	SEAL-O-RING	
M	16	1	**8T-2192**	2	BOLT (M6X1X45-MM)	
	17	1	**8T-4121**	2	WASHER-HARD (11X21X2.5-MM THK)	
M	18	1	**8T-4136**	2	BOLT (M10X1.5X25-MM)	
	19	1	**9R-1005**	2	CLIP (SLOT)	
	20	1	**9R-7802**	2	CLIP (SLOT)	
	21	1	**9R-7803**	2	CLIP (TAB)	

I-REFER TO HYDRAULIC INFORMATION SYSTEM
M-METRIC PART

218-5852 **LINES GP-TILT CYLINDER** *(contd.)* **i02189450**

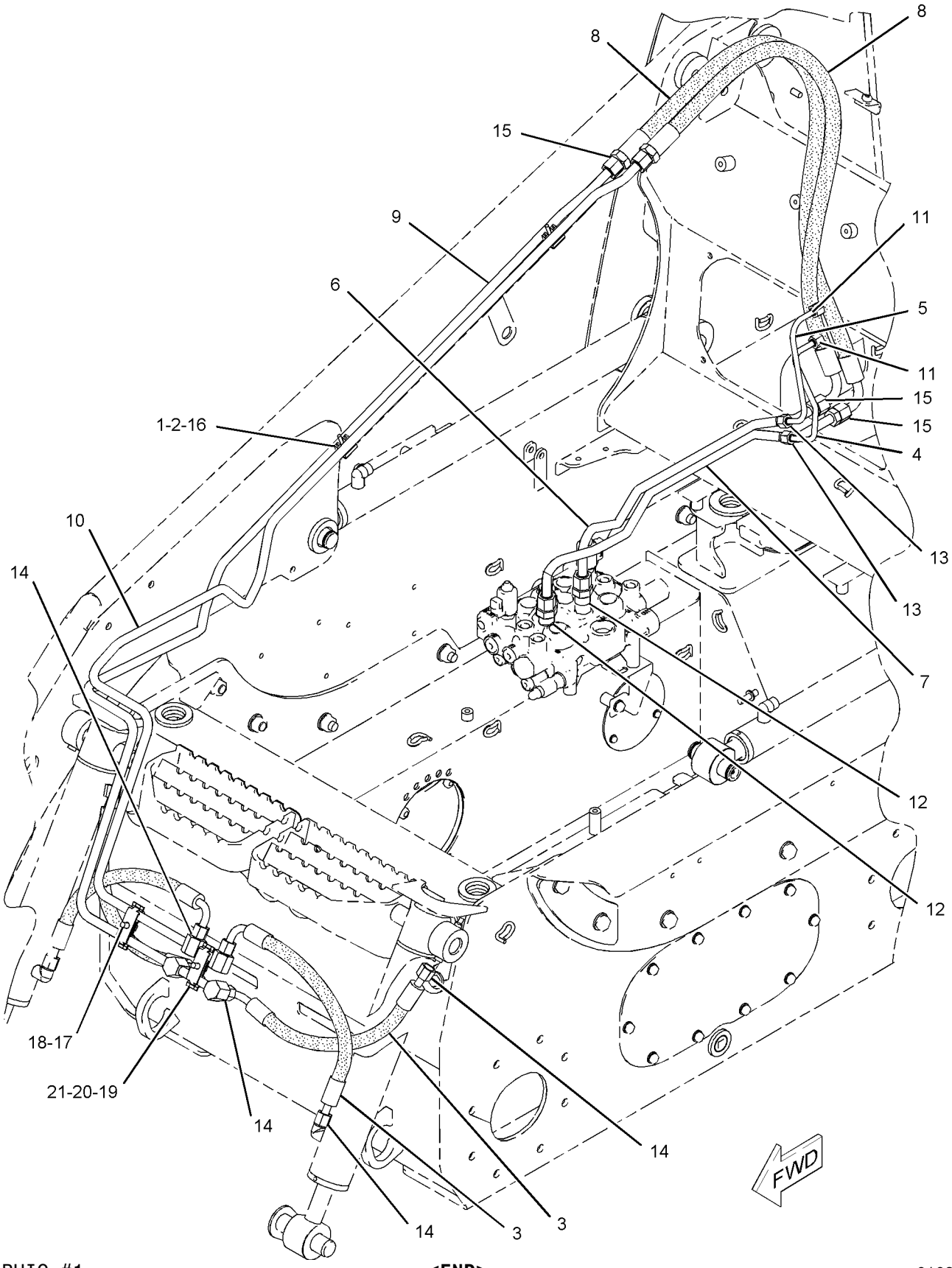

GRAPHIC #1 **<END>** g01033255

HYDRAULIC SYSTEM

218-5852 LINES GP-TILT CYLINDER

S/N: MJH2450-UP; RLL1317-UP
PART OF 218-6181 HYDRAULIC AR
FOR USE WITH WORK TOOL POSITIONER
AN ATTACHMENT

SMCS-5057, 5104 **i02286687**

NOTE	REF NO	GRAPHIC REF	PART NUMBER	QTY	PART NAME 1 2 3 4 5 6 (PRODUCT LEVEL)	SEE PAGE
	1	1	**116-4415**	2	PLATE-COVER	
	2	1	**142-8998**	2	CLIP	
I	3	1	**142-9234**	4	HOSE AS	
I	4	1	**218-6194**	2	HOSE AS	
	5	1	**218-6196**	1	TUBE AS	
	6	1	**218-6198**	1	TUBE AS	
C	7	1	**238-7727**	1	TUBE AS	
C	8	1	**238-7731**	1	TUBE AS	
C	9	1	**238-7732**	1	TUBE AS	
C	10	1	**252-0341**	1	TUBE AS	
	11	1	*148-8315*	2	CONNECTOR AS	
					(EACH INCLUDES)	
		1	**3D-2824**	1	SEAL-O-RING	
		1	**6V-8642**	1	CONNECTOR	
		1	**7J-9108**	1	SEAL-O-RING	
	12	1	*148-8319*	2	CONNECTOR AS	
					(EACH INCLUDES)	
		1	**2M-9780**	1	SEAL-O-RING	
		1	**6V-8397**	1	SEAL-O-RING	
		1	**6V-8715**	1	CONNECTOR	
	13	1	**6V-8397**	2	SEAL-O-RING	
	14	1	**6V-8398**	8	SEAL-O-RING	
	15	1	**7J-9108**	4	SEAL-O-RING	
M	16	1	**8T-2192**	2	BOLT (M6X1X45-MM)	
	17	1	**8T-4121**	2	WASHER-HARD (11X21X2.5-MM THK)	
M	18	1	**8T-4136**	2	BOLT (M10X1.5X25-MM)	
	19	1	**9R-1005**	2	CLIP (SLOT)	
	20	1	**9R-7802**	2	CLIP (SLOT)	
	21	1	**9R-7803**	2	CLIP (TAB)	

C-CHANGE FROM PREVIOUS TYPE
I-REFER TO HYDRAULIC INFORMATION SYSTEM
M-METRIC PART

218-5852 **LINES GP-TILT CYLINDER** *(contd.)* **i02286687**

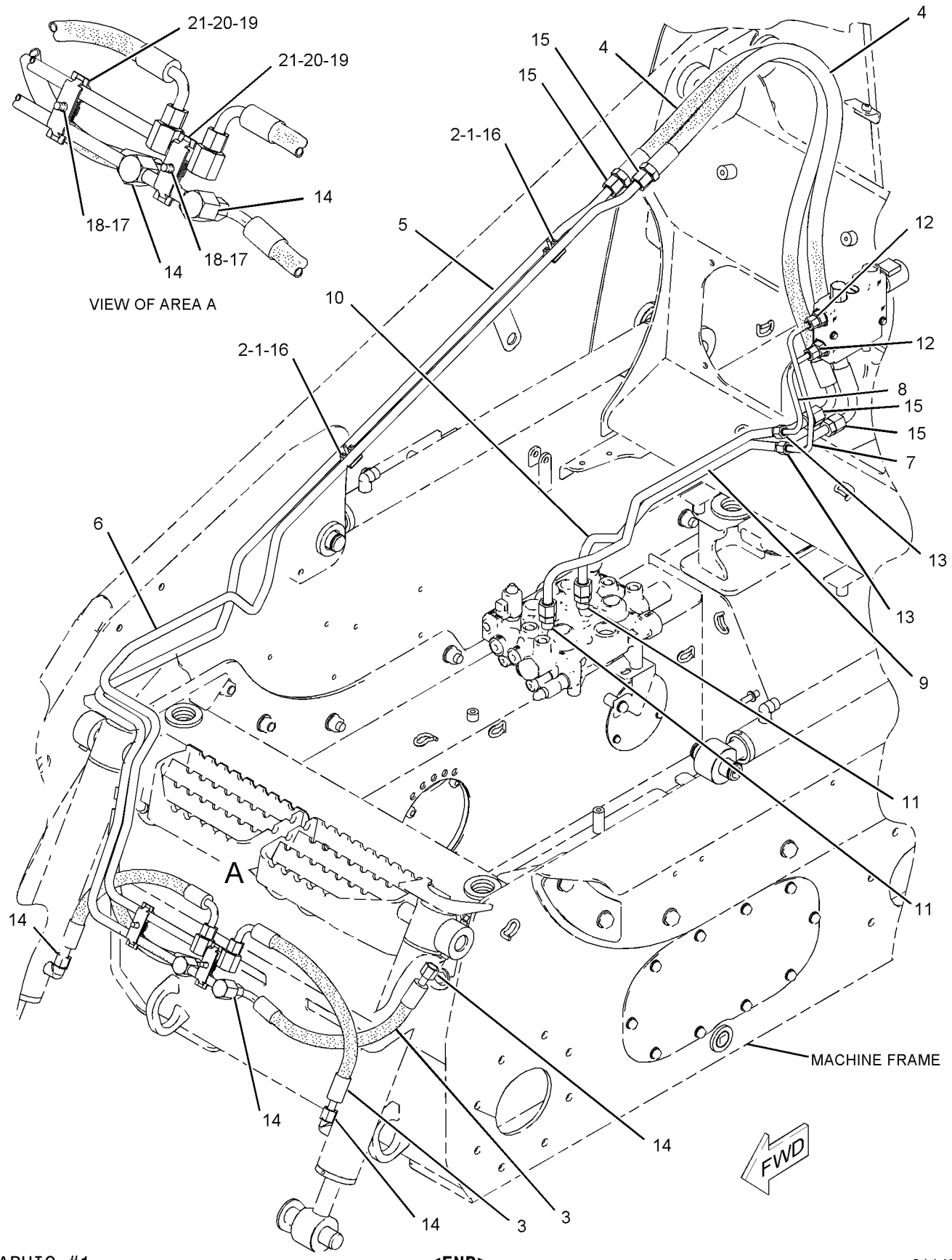

GRAPHIC #1 **<END>** g01147734

HYDRAULIC SYSTEM

218-5891 LINES GP-TILT CYLINDER

S/N: SCH1-UP; BXM1-UP
PART OF 218-6641 HYDRAULIC AR
FOR USE WITH WORK TOOL POSITIONER
AN ATTACHMENT
TYPE 1

SMCS-5057, 5104 **i01999929**

NOTE	REF NO	GRAPHIC REF	PART NUMBER	QTY	PART NAME 1 2 3 4 5 6 (PRODUCT LEVEL)	SEE PAGE
I	1	1	**142-9234**	4	HOSE AS	
	2	1	**193-0474**	1	PLATE	
I	3	1	**212-4091**	2	HOSE AS	
	4	1	**218-6478**	1	TUBE AS	
	5	1	**218-6479**	1	TUBE AS	
	6	1	**218-6481**	1	TUBE AS	
	7	1	**218-6482**	1	TUBE AS	
	8	1	**218-6574**	3	CLIP	
	9	1	**218-6602**	1	TUBE AS	
	10	1	**218-6603**	1	TUBE AS	
	11	1	**219-4377**	1	PLATE	
M	12	1	**096-5866**	2	BOLT (M8X1.25X75-MM)	
	13	1	*148-8319*	2	CONNECTOR AS	
					(EACH INCLUDES)	
		1	**6V-8715**	1	CONNECTOR	
		1	**2M-9780**	1	SEAL-O-RING	
		1	**6V-8397**	1	SEAL-O-RING	
	14	1	*148-8341*	2	CONNECTOR AS	
					(EACH INCLUDES)	
		1	**6V-8713**	1	CONNECTOR	
		1	**3D-2824**	1	SEAL-O-RING	
		1	**7J-9108**	1	SEAL-O-RING	
	15	1	**5P-7464**	4	CLIP (SLOT)	
	16	1	**5P-7465**	4	CLIP (TAB)	
	17	1	**6V-7359**	4	GROMMET	
	18	1	**6V-8397**	2	SEAL-O-RING	
	19	1	**6V-8398**	8	SEAL-O-RING	
	20	1	**7J-9108**	4	SEAL-O-RING	
	21	1	**8T-4121**	2	WASHER-HARD (11X21X2.5-MM THK)	
M	22	1	**8T-4136**	2	BOLT (M10X1.5X25-MM)	
M	23	1	**8T-4139**	2	BOLT (M12X1.75X30-MM)	
M	24	1	**8T-4183**	2	BOLT (M12X1.75X40-MM)	
M	25	1	**8T-4189**	1	BOLT (M8X1.25X20-MM)	
M	26	1	**8T-6912**	1	BOLT (M8X1.25X50-MM)	
	27	1	**8T-4223**	6	WASHER-HARD (13.5X25.5X3-MM THK)	
	28	1	**8T-4224**	4	WASHER-HARD (8.8X16X2-MM THK)	
M	29	1	**8T-4244**	2	NUT (M12X1.75-THD)	
	30	1	**9R-1005**	3	CLIP (SLOT)	
	31	1	**9R-7802**	3	CLIP (SLOT)	
	32	1	**9R-7803**	3	CLIP (TAB)	

I-REFER TO HYDRAULIC INFORMATION SYSTEM
M-METRIC PART

218-5891 **LINES GP-TILT CYLINDER** *(contd.)* **i01999929**

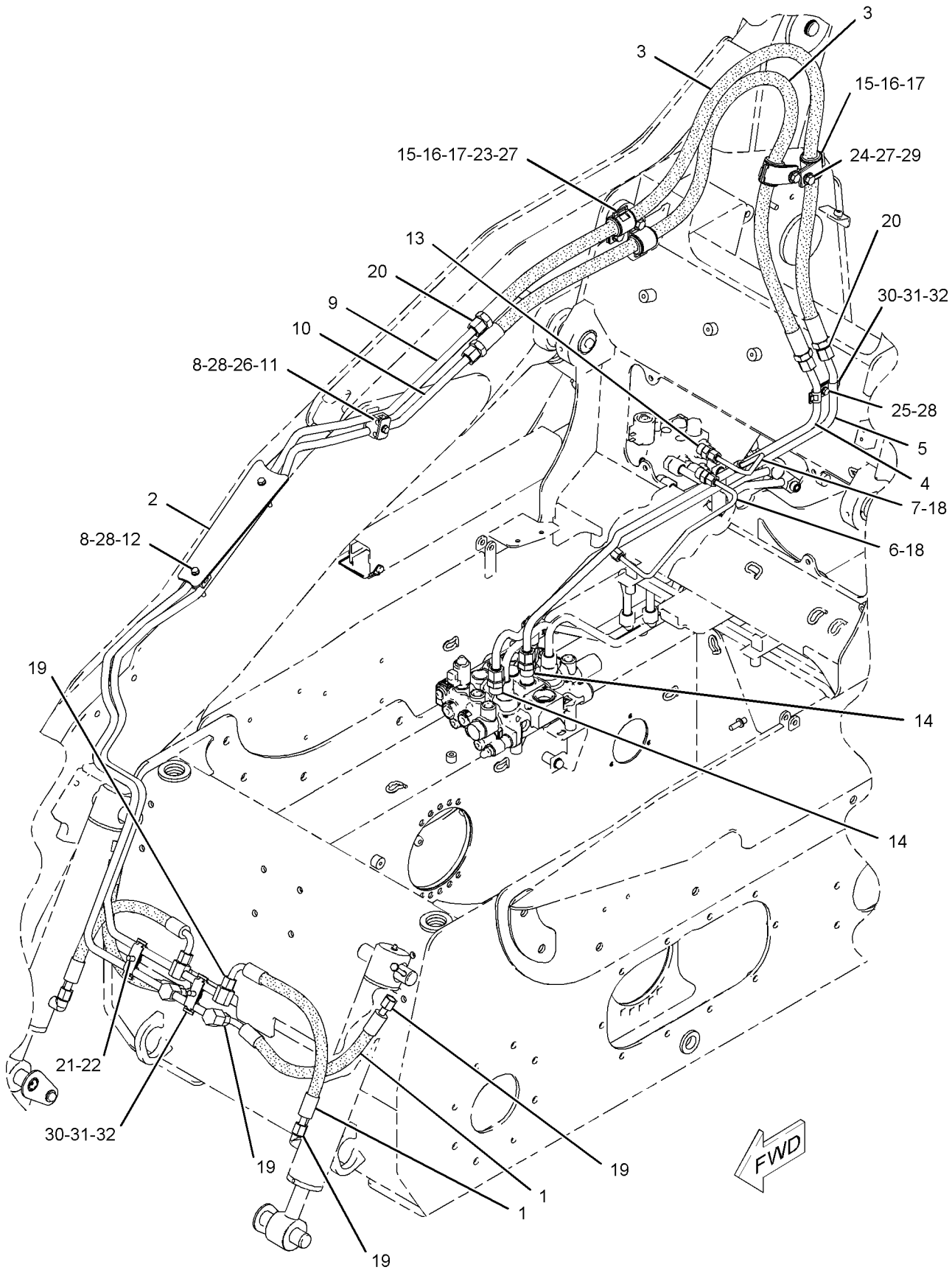

GRAPHIC #1 **<END>** g01019727

HYDRAULIC SYSTEM

218-5891 LINES GP-TILT CYLINDER

S/N: SCH1-UP; BXM1-UP
PART OF 218-6641 HYDRAULIC AR
FOR USE WITH WORK TOOL POSITIONER
AN ATTACHMENT
TYPE 2

SMCS-5057, 5104 **i02169147**

NOTE	REF NO	GRAPHIC REF	PART NUMBER	QTY	PART NAME 1 2 3 4 5 6 (PRODUCT LEVEL)	SEE PAGE
I	1	1	**142-9234**	4	HOSE AS	
	2	1	**193-0474**	1	PLATE	
I	3	1	**212-4091**	2	HOSE AS	
	4	1	**218-6478**	1	TUBE AS	
	5	1	**218-6479**	1	TUBE AS	
	6	1	**218-6481**	1	TUBE AS	
	7	1	**218-6482**	1	TUBE AS	
	8	1	**218-6574**	3	CLIP	
	9	1	**218-6602**	1	TUBE AS	
	10	1	**218-6603**	1	TUBE AS	
	11	1	**219-4377**	1	PLATE	
M	12	1	**096-5866**	2	BOLT (M8X1.25X75-MM)	
	13	1	*148-8319*	2	CONNECTOR AS	
					(EACH INCLUDES)	
		1	**6V-8715**	1	CONNECTOR	
		1	**2M-9780**	1	SEAL-O-RING	
		1	**6V-8397**	1	SEAL-O-RING	
C	14	1	*148-8315*	2	CONNECTOR AS	
					(EACH INCLUDES)	
		1	**2M-9780**	1	SEAL-O-RING	
		1	**6V-8642**	1	CONNECTOR	
		1	**7J-9108**	1	SEAL-O-RING	
	15	1	**5P-7464**	4	CLIP (SLOT)	
	16	1	**5P-7465**	4	CLIP (TAB)	
	17	1	**6V-7359**	4	GROMMET	
	18	1	**6V-8397**	2	SEAL-O-RING	
	19	1	**6V-8398**	8	SEAL-O-RING	
	20	1	**7J-9108**	4	SEAL-O-RING	
	21	1	**8T-4121**	2	WASHER-HARD (11X21X2.5-MM THK)	
M	22	1	**8T-4136**	2	BOLT (M10X1.5X25-MM)	
M	23	1	**8T-4139**	2	BOLT (M12X1.75X30-MM)	
M	24	1	**8T-4183**	2	BOLT (M12X1.75X40-MM)	
M	25	1	**8T-4189**	1	BOLT (M8X1.25X20-MM)	
M	26	1	**8T-6912**	1	BOLT (M8X1.25X50-MM)	
	27	1	**8T-4223**	6	WASHER-HARD (13.5X25.5X3-MM THK)	
	28	1	**8T-4224**	4	WASHER-HARD (8.8X16X2-MM THK)	
M	29	1	**8T-4244**	2	NUT (M12X1.75-THD)	
	30	1	**9R-1005**	3	CLIP (SLOT)	
	31	1	**9R-7802**	3	CLIP (SLOT)	
	32	1	**9R-7803**	3	CLIP (TAB)	

C-CHANGE FROM PREVIOUS TYPE
I-REFER TO HYDRAULIC INFORMATION SYSTEM
M-METRIC PART

218-5891 **LINES GP-TILT CYLINDER** *(contd.)* **i02169147**

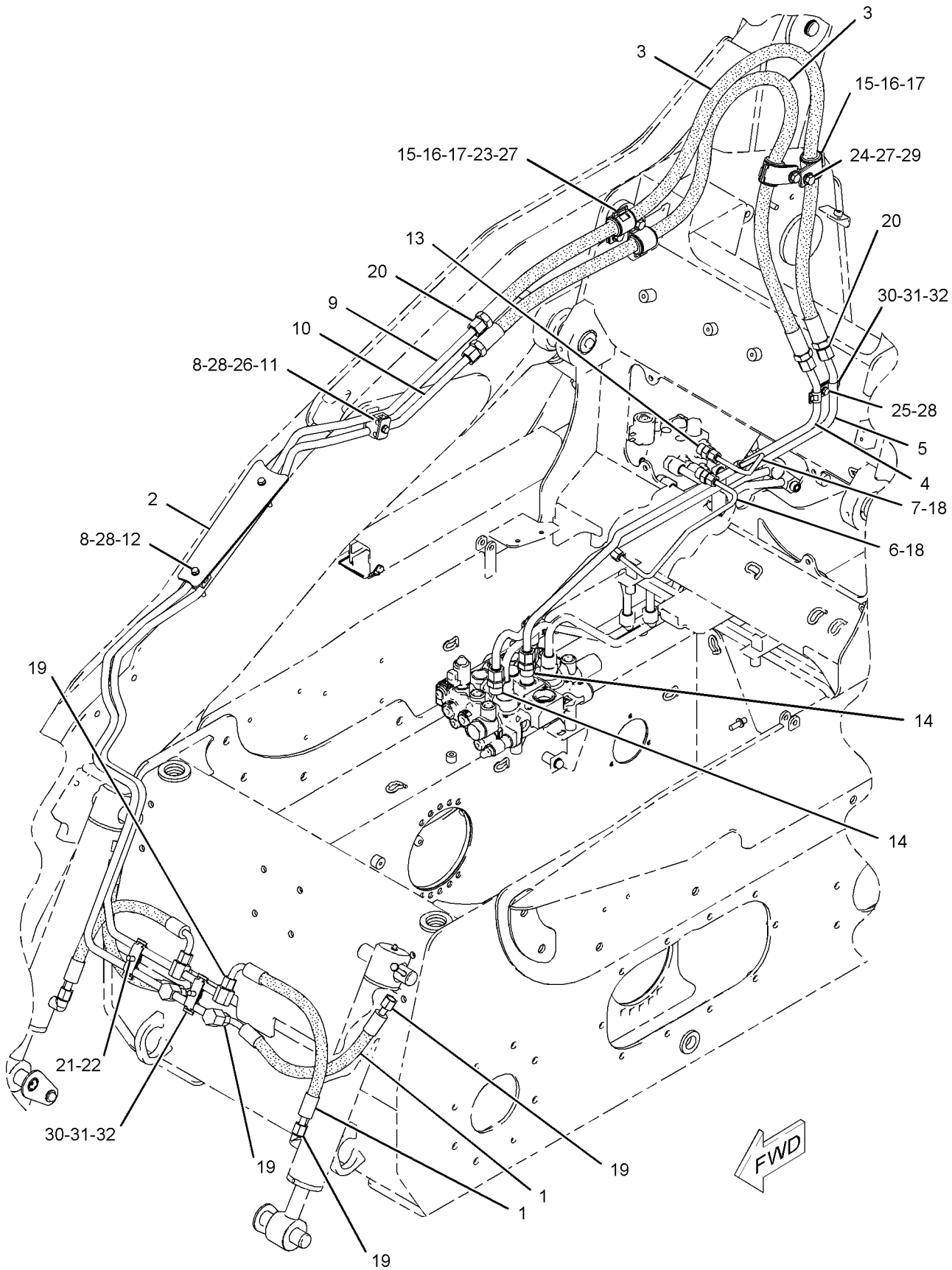

GRAPHIC #1 **<END>** g01019727

HYDRAULIC SYSTEM

218-6607 LINES GP-TILT CYLINDER

S/N: SCH1-UP; BXM1-561
PART OF 218-6640 HYDRAULIC AR
AN ATTACHMENT

SMCS-5057, 5104 **i02000469**

NOTE	REF NO	GRAPHIC REF	PART NUMBER	QTY	PART NAME 1 2 3 4 5 6 (PRODUCT LEVEL)	SEE PAGE
I	1	1	**142-9234**	4	HOSE AS	
	2	1	**193-0474**	1	PLATE	
I	3	1	**212-4091**	2	HOSE AS	
	4	1	**218-6574**	3	CLIP	
	5	1	**218-6602**	1	TUBE AS	
	6	1	**218-6603**	1	TUBE AS	
	7	1	**218-6608**	1	TUBE AS	
	8	1	**218-6609**	1	TUBE AS	
	9	1	**219-4377**	1	PLATE	
M	10	1	**096-5866**	2	BOLT (M8X1.25X75-MM)	
	11	1	*148-8341*	2	CONNECTOR AS	
					(EACH INCLUDES)	
		1	**6V-8713**	1	CONNECTOR	
		1	**3D-2824**	1	SEAL-O-RING	
		1	**7J-9108**	1	SEAL-O-RING	
	12	1	**5P-7464**	4	CLIP (SLOT)	
	13	1	**5P-7465**	4	CLIP (TAB)	
	14	1	**6V-7359**	4	GROMMET	
	15	1	**6V-8398**	8	SEAL-O-RING	
	16	1	**7J-9108**	4	SEAL-O-RING	
	17	1	**8T-4121**	2	WASHER-HARD (11X21X2.5-MM THK)	
M	18	1	**8T-4136**	2	BOLT (M10X1.5X25-MM)	
M	19	1	**8T-4139**	2	BOLT (M12X1.75X30-MM)	
M	20	1	**8T-4183**	2	BOLT (M12X1.75X40-MM)	
M	21	1	**8T-4189**	1	BOLT (M8X1.25X20-MM)	
M	22	1	**8T-6912**	1	BOLT (M8X1.25X50-MM)	
	23	1	**8T-4223**	6	WASHER-HARD (13.5X25.5X3-MM THK)	
	24	1	**8T-4224**	4	WASHER-HARD (8.8X16X2-MM THK)	
M	25	1	**8T-4244**	2	NUT (M12X1.75-THD)	
	26	1	**9R-1005**	3	CLIP (SLOT)	
	27	1	**9R-7802**	3	CLIP (SLOT)	
	28	1	**9R-7803**	3	CLIP (TAB)	

I-REFER TO HYDRAULIC INFORMATION SYSTEM
M-METRIC PART

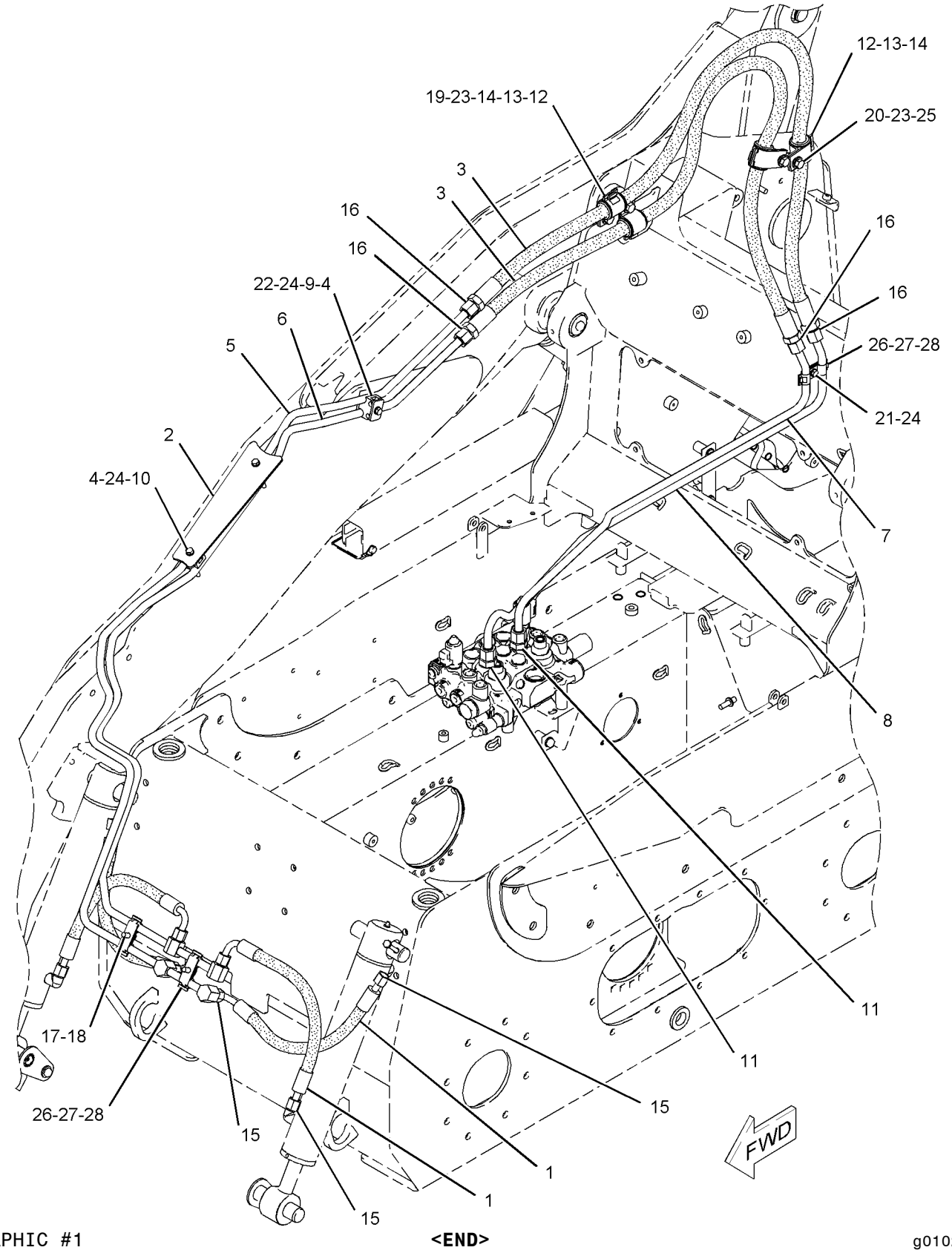

GRAPHIC #1 **<END>** g01022549

HYDRAULIC SYSTEM

218-6607 LINES GP-TILT CYLINDER

S/N: SCH1-521; BXM562-805
PART OF 218-6640 HYDRAULIC AR
AN ATTACHMENT

SMCS-5057, 5104 **i02169142**

NOTE	REF NO	GRAPHIC REF	PART NUMBER	QTY	PART NAME 1 2 3 4 5 6 (PRODUCT LEVEL)	SEE PAGE
I	1	1	**142-9234**	4	HOSE AS	
	2	1	**193-0474**	1	PLATE	
I	3	1	**212-4091**	2	HOSE AS	
	4	1	**218-6574**	3	CLIP	
	5	1	**218-6602**	1	TUBE AS	
	6	1	**218-6603**	1	TUBE AS	
	7	1	**218-6608**	1	TUBE AS	
	8	1	**218-6609**	1	TUBE AS	
	9	1	**219-4377**	1	PLATE	
M	10	1	**096-5866**	2	BOLT (M8X1.25X75-MM)	
C	11	1	*148-8315*	2	CONNECTOR AS	
					(EACH INCLUDES)	
		1	**2M-9780**	1	SEAL-O-RING	
		1	**6V-8642**	1	CONNECTOR	
		1	**7J-9108**	1	SEAL-O-RING	
	12	1	**5P-7464**	4	CLIP (SLOT)	
	13	1	**5P-7465**	4	CLIP (TAB)	
	14	1	**6V-7359**	4	GROMMET	
	15	1	**6V-8398**	8	SEAL-O-RING	
	16	1	**7J-9108**	4	SEAL-O-RING	
	17	1	**8T-4121**	2	WASHER-HARD (11X21X2.5-MM THK)	
M	18	1	**8T-4136**	2	BOLT (M10X1.5X25-MM)	
M	19	1	**8T-4139**	2	BOLT (M12X1.75X30-MM)	
M	20	1	**8T-4183**	2	BOLT (M12X1.75X40-MM)	
M	21	1	**8T-4189**	1	BOLT (M8X1.25X20-MM)	
M	22	1	**8T-6912**	1	BOLT (M8X1.25X50-MM)	
	23	1	**8T-4223**	6	WASHER-HARD (13.5X25.5X3-MM THK)	
	24	1	**8T-4224**	4	WASHER-HARD (8.8X16X2-MM THK)	
M	25	1	**8T-4244**	2	NUT (M12X1.75-THD)	
	26	1	**9R-1005**	3	CLIP (SLOT)	
	27	1	**9R-7802**	3	CLIP (SLOT)	
	28	1	**9R-7803**	3	CLIP (TAB)	

C-CHANGE FROM PREVIOUS TYPE
I-REFER TO HYDRAULIC INFORMATION SYSTEM
M-METRIC PART

218-6607 **LINES GP-TILT CYLINDER** *(contd.)* **i02169142**

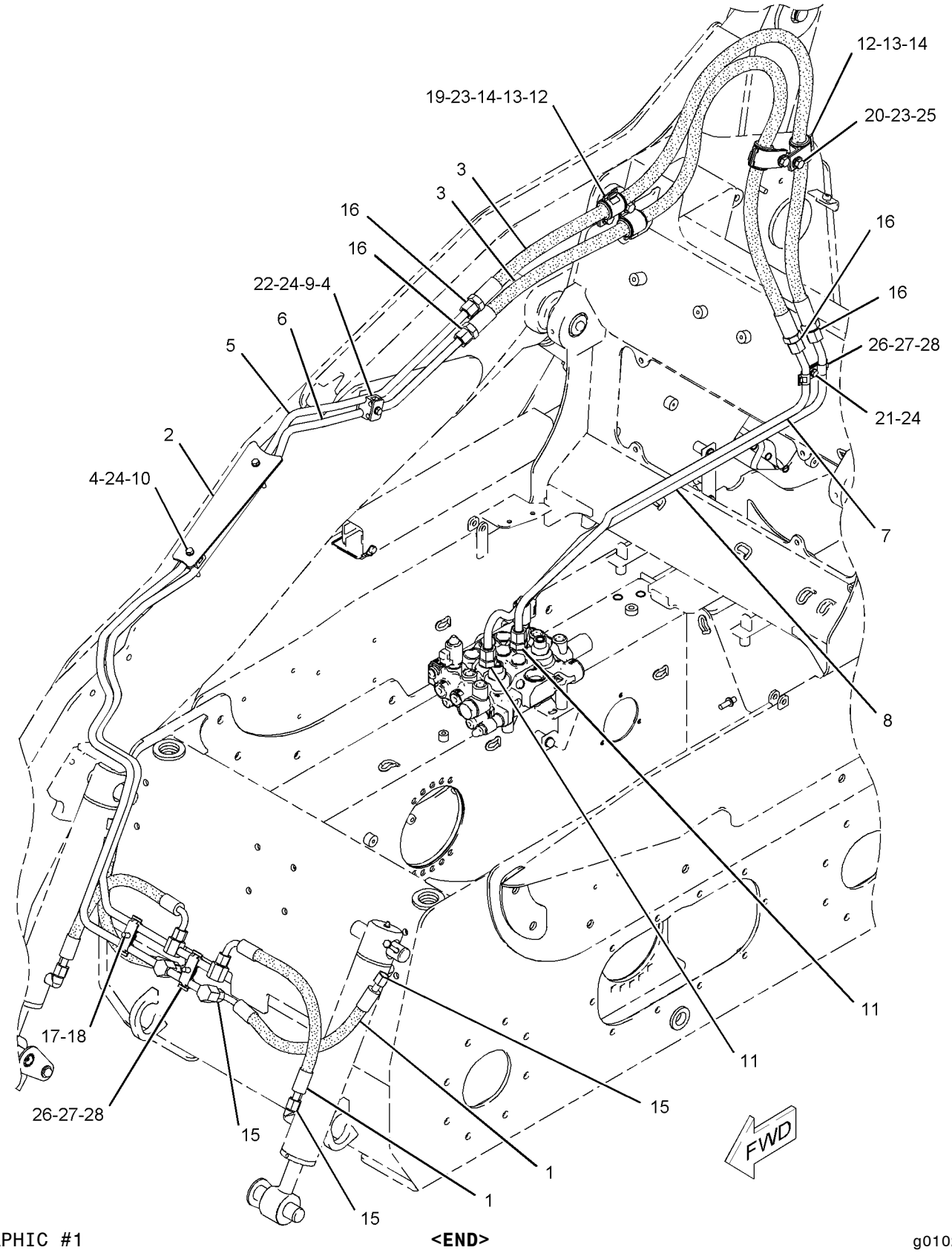

GRAPHIC #1 **<END>** g01022549

HYDRAULIC SYSTEM

218-6607 LINES GP-TILT CYLINDER

S/N: SCH522-UP; BXM806-UP
PART OF 218-6640 HYDRAULIC AR
AN ATTACHMENT

SMCS-5057, 5104 **i02289217**

NOTE	REF NO	GRAPHIC REF	PART NUMBER	QTY	PART NAME 1 2 3 4 5 6 (PRODUCT LEVEL)	SEE PAGE
C	1	1	**7W-9094**	1	SPACER (10.5X20X9-MM THK)	
I	2	1	**142-9234**	4	HOSE AS	
	3	1	**193-0474**	1	PLATE	
I	4	1	**212-4091**	2	HOSE AS	
	5	1	**215-3935**	3	CLIP	
	6	1	**219-4377**	1	PLATE	
	7	1	**252-0331**	1	TUBE AS	
	8	1	**252-0332**	1	TUBE AS	
	9	1	**252-0333**	1	TUBE AS	
	10	1	**252-0334**	1	TUBE AS	
M	11	1	**096-5866**	2	BOLT (M8X1.25X75-MM)	
CM	12	1	**099-3649**	1	BOLT (M8X1.25X40-MM)	
	13	1	*148-8315*	2	CONNECTOR AS	
					(EACH INCLUDES)	
		1	**2M-9780**	1	SEAL-O-RING	
		1	**6V-8642**	1	CONNECTOR	
		1	**7J-9108**	1	SEAL-O-RING	
CM	14	1	**5C-7261**	1	NUT (M8X1.25-THD)	
	15	1	**5P-7464**	4	CLIP (SLOT)	
	16	1	**5P-7465**	4	CLIP (TAB)	
	17	1	**6V-7359**	4	GROMMET	
	18	1	**6V-8398**	8	SEAL-O-RING	
	19	1	**7J-9108**	4	SEAL-O-RING	
	20	1	**8T-4121**	2	WASHER-HARD (11X21X2.5-MM THK)	
M	21	1	**8T-4136**	2	BOLT (M10X1.5X25-MM)	
M	22	1	**8T-4139**	2	BOLT (M12X1.75X30-MM)	
CM	23	1	**8T-4194**	2	BOLT (M12X1.75X50-MM)	
	24	1	**8T-4223**	6	WASHER-HARD (13.5X25.5X3-MM THK)	
C	25	1	**8T-4224**	5	WASHER-HARD (8.8X16X2-MM THK)	
M	26	1	**8T-4244**	2	NUT (M12X1.75-THD)	
M	27	1	**8T-6912**	1	BOLT (M8X1.25X50-MM)	
	28	1	**9R-1005**	3	CLIP (SLOT)	
	29	1	**9R-7802**	3	CLIP (SLOT)	
	30	1	**9R-7803**	3	CLIP (TAB)	

C-CHANGE FROM PREVIOUS TYPE
I-REFER TO HYDRAULIC INFORMATION SYSTEM
M-METRIC PART

218-6607 **LINES GP-TILT CYLINDER** *(contd.)* **i02289217**

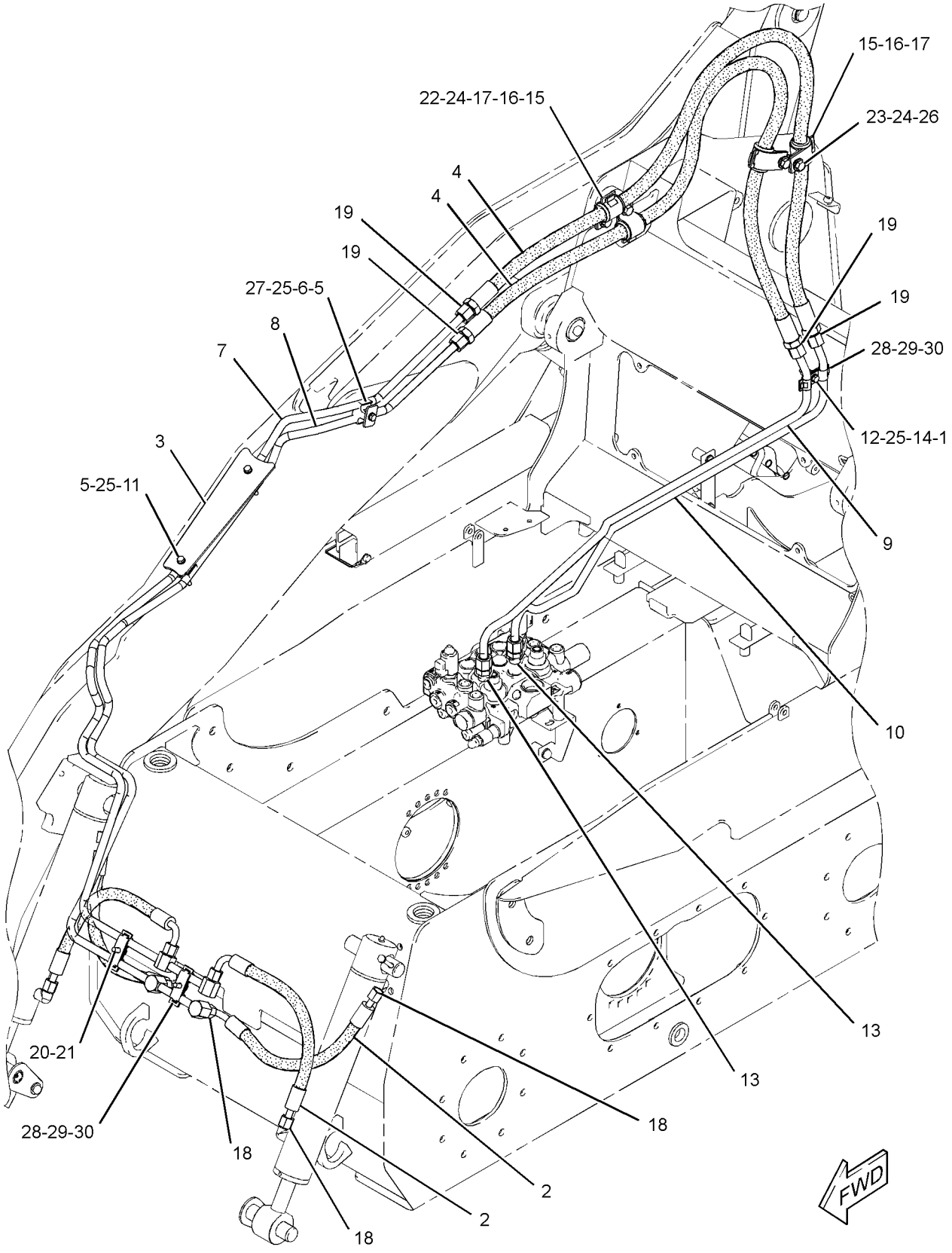

GRAPHIC #1 **<END>** g01166346

HYDRAULIC SYSTEM

218-5853 LINES GP-WORK TOOL

S/N: MJH1-UP
HIGH FLOW
PART OF 218-6131 HYDRAULIC AR
AN ATTACHMENT
TYPE 1

SMCS-5057 **i02064909**

NOTE	REF NO	GRAPHIC REF	PART NUMBER	QTY	PART NAME 1 2 3 4 5 6 (PRODUCT LEVEL)	SEE PAGE
	1	1	**2S-3440**	2	CLAMP-HOSE	
	2	1	**7K-1181**	1	STRAP-CABLE	
	3	1	**9U-6993**	1	ADAPTER AS	
		1	**3D-2824**	1	SEAL-O-RING	
M	4	1	**101-3129**	4	STUD (M10X1.15-THD)	
	5	1	**218-5564**	3	BLOCK	
	6	1	**218-5764**	3	PLATE	
I	7	1	**218-5813**	1	HOSE AS	
	8	1	**218-5815**	1	TUBE AS	
	9	1	**218-5818**	1	HOSE	
Y	10	1	**218-5840**	1	FITTING GP-HYDRAULIC (QUICK DISCONNECT)	370
Y	11	1	**218-5841**	1	FITTING GP-HYDRAULIC (QUICK DISCONNECT)	371
	12	1	**218-5886**	1	TUBE AS	
	13	1	**218-5887**	1	TUBE AS	
	14	1	**218-5906**	1	TUBE AS	
	15	1	**218-5907**	1	TUBE AS	
	16	1	**218-5908**	1	TUBE AS	
	17	1	**218-5909**	1	TUBE AS	
I	18	1	**218-5915**	2	HOSE AS	
I	19	1	**218-5916**	2	HOSE AS	
	20	1	**218-5917**	1	TUBE AS	
I	21	1	**218-5918**	1	HOSE AS	
	22	1	**218-5919**	1	TUBE AS	
	23	1	**218-6002**	2	BRACKET AS	
	24	1	**218-6004**	2	BLOCK	
	25	1	**218-6005**	2	BLOCK	
	26	1	**218-6727**	1	BRACKET AS	
	27	1	**218-6776**	1	COVER AS	
	28	1	**218-6784**	1	TUBE AS	
	29	1	**218-6785**	1	TUBE AS	
	30	1	**229-5468**	1	FITTING (QUICK DISCONNECT, MALE)	
	31	1	**229-5471**	1	FITTING (QUICK DISCONNECT, FEMALE)	
	32	1	**229-5473**	1	FITTING (QUICK DISCONNECT, MALE)	
	33	1	*148-8327*	2	CONNECTOR GP	
					(EACH INCLUDES)	
		1	**3D-2824**	1	SEAL-O-RING	
		1	**6V-8637**	1	CONNECTOR	
		1	**6V-9746**	1	SEAL-O-RING	
	34	1	*148-8336*	2	CONNECTOR AS	
					(EACH INCLUDES)	
		1	**3J-1907**	1	SEAL-O-RING	
		1	**6V-8397**	1	SEAL-O-RING	
		1	**6V-8636**	1	CONNECTOR	
	35	1	*148-8340*	3	CONNECTOR AS	
					(EACH INCLUDES)	
		1	**3K-0360**	1	SEAL-O-RING	
		1	**6V-8398**	1	SEAL-O-RING	
		1	**6V-8639**	1	CONNECTOR	
	36	1	**1P-4574**	2	FLANGE-HALF	
	37	1	**4J-5140**	1	SEAL-O-RING	
	38	1	**4J-5477**	1	SEAL-O-RING	
M	39	1	**5C-9553**	4	BOLT (M6X1X16-MM)	
	40	1	**5M-8429**	1	CLIP	

218-5853 **LINES GP-WORK TOOL** *(contd.)* **i02064909**

NOTE	REF NO	GRAPHIC REF	PART NUMBER	QTY	PART NAME 1 2 3 4 5 6 (PRODUCT LEVEL)	SEE PAGE
	41	1	**6V-8397**	4	SEAL-O-RING	
	42	1	**6V-8398**	3	SEAL-O-RING	
	43	1	**6V-9168**	2	NUT (11/16-16-THD)	
	44	1	**6V-9169**	1	NUT-BULKHEAD (13/16-16-THD)	
	45	1	**6V-9746**	4	SEAL-O-RING	
	46	1	**7B-1597**	2	CLIP	
	47	1	**1F-7567**	1	CLIP	
M	48	1	**8T-0341**	4	BOLT-SOCKET HEAD (M10X1.5X60-MM)	
M	49	1	**8T-2192**	4	BOLT (M6X1X45-MM)	
	50	1	**8T-4121**	8	WASHER-HARD (11X21X2.5-MM THK)	
M	51	1	**8T-4133**	2	NUT (M10X1.5-THD)	
M	52	1	**8T-4136**	2	BOLT (M10X1.5X25-MM)	
M	53	1	**8T-4178**	2	BOLT (M10X1.5X90-MM)	
	54	1	**8T-4205**	10	WASHER-HARD (7.2X14.5X2-MM THK)	
	55	1	**8T-4224**	6	WASHER-HARD (8.8X16X2-MM THK)	
M	56	1	**8T-4908**	2	BOLT (M8X1.25X25-MM)	
M	57	1	**8T-7547**	4	BOLT (M8X1.25X30-MM)	
M	58	1	**8T-4195**	2	BOLT (M10X1.5X30-MM)	
	59	1	**4B-0418**	1	CLIP	
	60	1	**5P-1076**	2	WASHER-HARD (13.5X30X4-MM THK)	
	61	1	**7H-7055**	1	CLIP	
	62	1	**7X-7729**	2	WASHER (11X25X3-MM THK)	

I-REFER TO HYDRAULIC INFORMATION SYSTEM
M-METRIC PART
Y-SEPARATE ILLUSTRATION

218-5853 **LINES GP-WORK TOOL** *(contd.)* **i02064909**

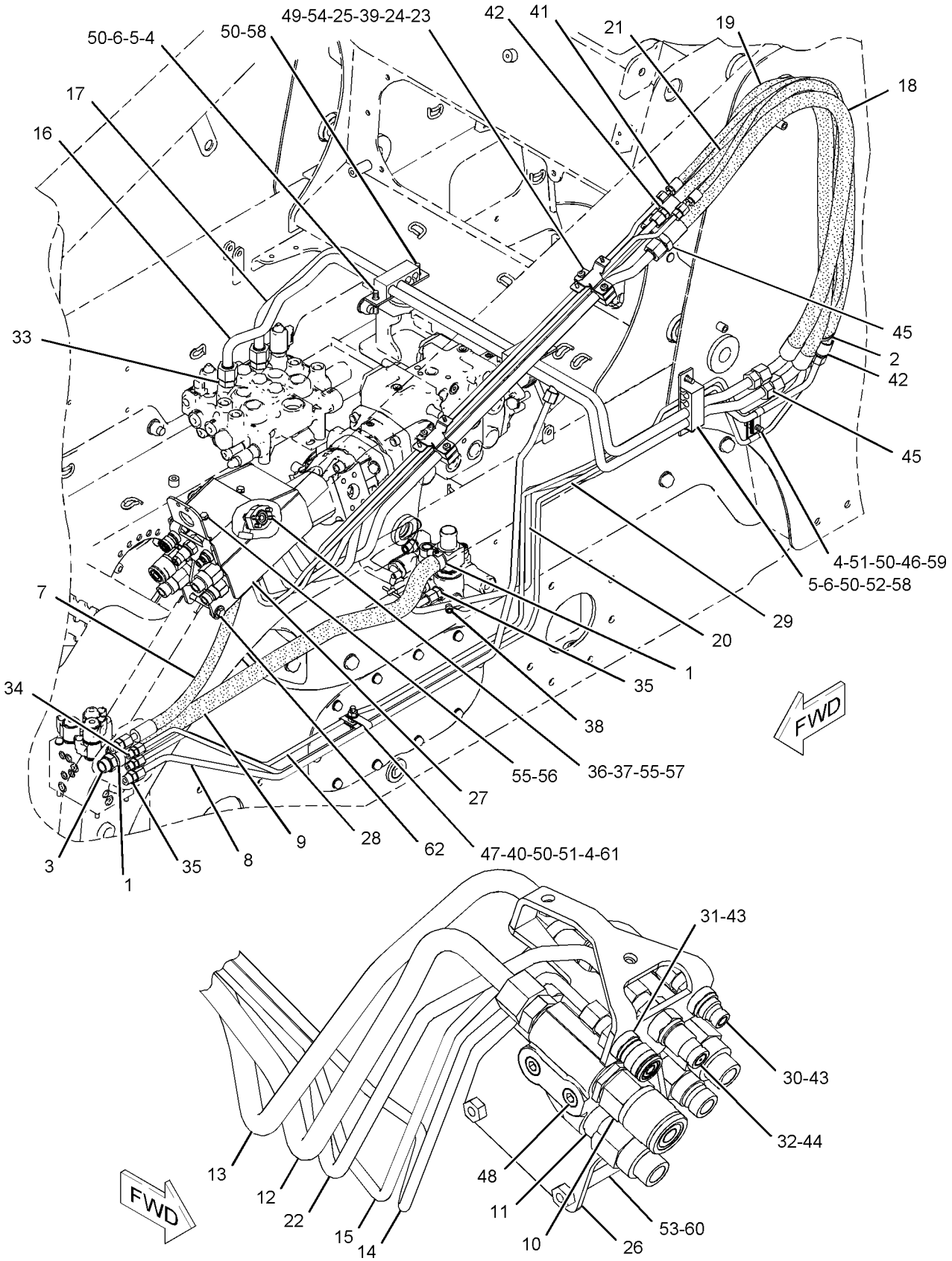

GRAPHIC #1 **<END>** g01086844

HYDRAULIC SYSTEM

218-5853 LINES GP-WORK TOOL

S/N: MJH1-UP
HIGH FLOW
PART OF 218-6131, 261-6139 HYDRAULIC AR
AN ATTACHMENT
TYPE 2

SMCS-5057 **i02449951**

NOTE	REF NO	GRAPHIC REF	PART NUMBER	QTY	PART NAME 1 2 3 4 5 6 (PRODUCT LEVEL)	SEE PAGE
	1	1	**2S-3440**	2	CLAMP-HOSE	
C	2	1	**7K-1181**	4	STRAP-CABLE	
	3	1	**9U-6993**	1	ADAPTER AS	
		1	**3D-2824**	1	SEAL-O-RING	
M	4	1	**101-3129**	4	STUD (M10X1.15-THD)	
	5	1	**218-5564**	3	BLOCK	
	6	1	**218-5764**	3	PLATE	
I	7	1	**218-5813**	1	HOSE AS	
	8	1	**218-5815**	1	TUBE AS	
	9	1	**218-5818**	1	HOSE	
Y	10	1	**218-5840**	1	FITTING GP-HYDRAULIC (QUICK DISCONNECT)	370
Y	11	1	**218-5841**	1	FITTING GP-HYDRAULIC (QUICK DISCONNECT)	371
C	12	1	**238-7723**	1	TUBE AS	
C	13	1	**238-7724**	1	TUBE AS	
	14	1	**218-5906**	1	TUBE AS	
	15	1	**218-5907**	1	TUBE AS	
C	16	1	**252-0388**	1	TUBE AS	
	17	1	**218-5909**	1	TUBE AS	
I	18	1	**218-5915**	2	HOSE AS	
I	19	1	**218-5916**	2	HOSE AS	
	20	1	**218-5917**	1	TUBE AS	
I	21	1	**218-5918**	1	HOSE AS	
	22	1	**218-5919**	1	TUBE AS	
	23	1	**218-6002**	2	BRACKET AS	
	24	1	**218-6004**	2	BLOCK	
	25	1	**218-6005**	2	BLOCK	
	26	1	**218-6727**	1	BRACKET AS	
	27	1	**218-6776**	1	COVER AS	
	28	1	**218-6784**	1	TUBE AS	
	29	1	**218-6785**	1	TUBE AS	
	30	1	**229-5468**	1	FITTING (QUICK DISCONNECT, MALE)	
	31	1	**229-5471**	1	FITTING (QUICK DISCONNECT, FEMALE)	
	32	1	**229-5473**	1	FITTING (QUICK DISCONNECT, MALE)	
	33	1	*148-8327*	2	CONNECTOR GP	
					(EACH INCLUDES)	
		1	**3D-2824**	1	SEAL-O-RING	
		1	**6V-8637**	1	CONNECTOR	
		1	**6V-9746**	1	SEAL-O-RING	
	34	1	*148-8336*	2	CONNECTOR AS	
					(EACH INCLUDES)	
		1	**3J-1907**	1	SEAL-O-RING	
		1	**6V-8397**	1	SEAL-O-RING	
		1	**6V-8636**	1	CONNECTOR	
	35	1	*148-8340*	3	CONNECTOR AS	
					(EACH INCLUDES)	
		1	**3K-0360**	1	SEAL-O-RING	
		1	**6V-8398**	1	SEAL-O-RING	
		1	**6V-8639**	1	CONNECTOR	
	36	1	**1P-4574**	2	FLANGE-HALF	
	37	1	**4J-5140**	1	SEAL-O-RING	
	38	1	**4J-5477**	1	SEAL-O-RING	
M	39	1	**5C-9553**	4	BOLT (M6X1X16-MM)	
	40	1	**5M-8429**	1	CLIP	

218-5853 **LINES GP-WORK TOOL** *(contd.)* **i02449951**

NOTE	REF NO	GRAPHIC REF	PART NUMBER	QTY	PART NAME 1 2 3 4 5 6 (PRODUCT LEVEL)	SEE PAGE
	41	1	**6V-8397**	4	SEAL-O-RING	
	42	1	**6V-8398**	3	SEAL-O-RING	
	43	1	**200-6345**	1	MOUNT (DUAL SWIVEL)	
	45	1	**6V-9746**	4	SEAL-O-RING	
	46	1	**7B-1597**	2	CLIP	
	47	1	**1F-7567**	1	CLIP	
M	48	1	**8T-0341**	4	BOLT-SOCKET HEAD (M10X1.5X60-MM)	
M	49	1	**8T-2192**	4	BOLT (M6X1X45-MM)	
	50	1	**8T-4121**	8	WASHER-HARD (11X21X2.5-MM THK)	
M	51	1	**8T-4133**	2	NUT (M10X1.5-THD)	
M	52	1	**8T-4136**	2	BOLT (M10X1.5X25-MM)	
M	53	1	**8T-4178**	2	BOLT (M10X1.5X90-MM)	
	54	1	**8T-4205**	10	WASHER-HARD (7.2X14.5X2-MM THK)	
	55	1	**8T-4224**	6	WASHER-HARD (8.8X16X2-MM THK)	
M	56	1	**8T-4908**	2	BOLT (M8X1.25X25-MM)	
M	57	1	**8T-7547**	4	BOLT (M8X1.25X30-MM)	
M	58	1	**8T-4195**	2	BOLT (M10X1.5X30-MM)	
	59	1	**4B-0418**	1	CLIP	
	60	1	**5P-1076**	2	WASHER-HARD (13.5X30X4-MM THK)	
	61	1	**7H-7055**	1	CLIP	
	62	1	**7X-7729**	2	WASHER (11X25X3-MM THK)	

C-CHANGE FROM PREVIOUS TYPE
I-REFER TO HYDRAULIC INFORMATION SYSTEM
M-METRIC PART
Y-SEPARATE ILLUSTRATION

218-5853 **LINES GP-WORK TOOL** *(contd.)* **i02449951**

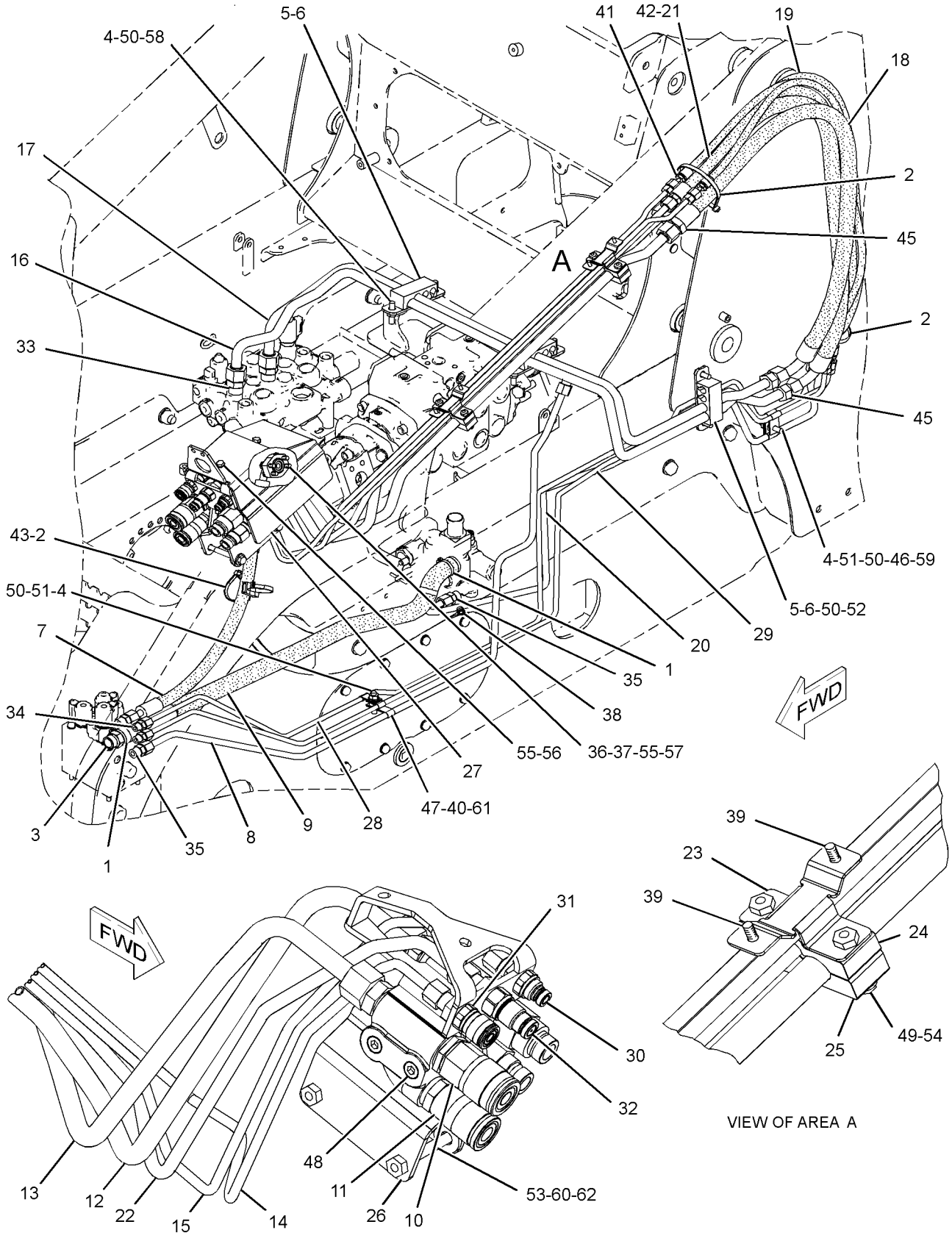

VIEW OF AREA A

GRAPHIC #1 **<END>** g01223621

HYDRAULIC SYSTEM

218-6197 LINES GP-WORK TOOL

S/N: MJH1-1974, 5600-UP; RLL1-962, 3150-UP
PART OF 218-5620, 218-6130, 261-6132, 278-1217 HYDRAULIC AR
ALSO AN ATTACHMENT

SMCS-5057 **i02206671**

NOTE	REF NO	GRAPHIC REF	PART NUMBER	QTY	PART NAME 1 2 3 4 5 6 (PRODUCT LEVEL)	SEE PAGE
M	1	1	**101-3129**	2	STUD (M10X1.15-THD)	
	2	1	**102-8703**	2	PLATE-COVER	
	3	1	*154-5232*	1	ADAPTER AS	
		1	**3K-0360**	1	SEAL-O-RING	
		1	**4J-5477**	1	SEAL-O-RING	
		1	**112-9783**	1	ADAPTER	
	4	1	**193-8334**	1	COUPLING	
	5	1	**193-8335**	1	COUPLING	
	6	1	**195-6750**	4	CLAMP-DOUBLE	
	7	1	**218-5599**	3	BLOCK	
	8	1	**218-5764**	3	PLATE	
	9	1	**218-6011**	2	BRACKET AS	
I	10	1	**218-6194**	2	HOSE AS	
	11	1	**252-0387**	1	TUBE AS	
	12	1	**218-6201**	1	TUBE AS	
	13	1	**218-6202**	1	TUBE AS	
	14	1	**218-6203**	1	TUBE AS	
	15	1	**218-6204**	1	BRACKET	
M	16	1	**121-9874**	2	BOLT (M8X1.25X50-MM)	
	17	1	*148-8341*	2	CONNECTOR AS	
					(EACH INCLUDES)	
		1	**3D-2824**	1	SEAL-O-RING	
		1	**6V-8713**	1	CONNECTOR	
		1	**7J-9108**	1	SEAL-O-RING	
M	18	1	**5C-9553**	4	BOLT (M6X1X16-MM)	
	19	1	**6V-9170**	2	NUT-BULKHEAD (1-14-THD)	
	20	1	**7J-9108**	6	SEAL-O-RING	
	21	1	**8T-4121**	8	WASHER-HARD (11X21X2.5-MM THK)	
M	22	1	**8T-4136**	2	BOLT (M10X1.5X25-MM)	
M	23	1	**8T-4178**	2	BOLT (M10X1.5X90-MM)	
M	24	1	**8T-4195**	2	BOLT (M10X1.5X30-MM)	
	25	1	**8T-4205**	4	WASHER-HARD (7.2X14.5X2-MM THK)	
	26	1	**8T-4224**	2	WASHER-HARD (8.8X16X2-MM THK)	

I-REFER TO HYDRAULIC INFORMATION SYSTEM
M-METRIC PART

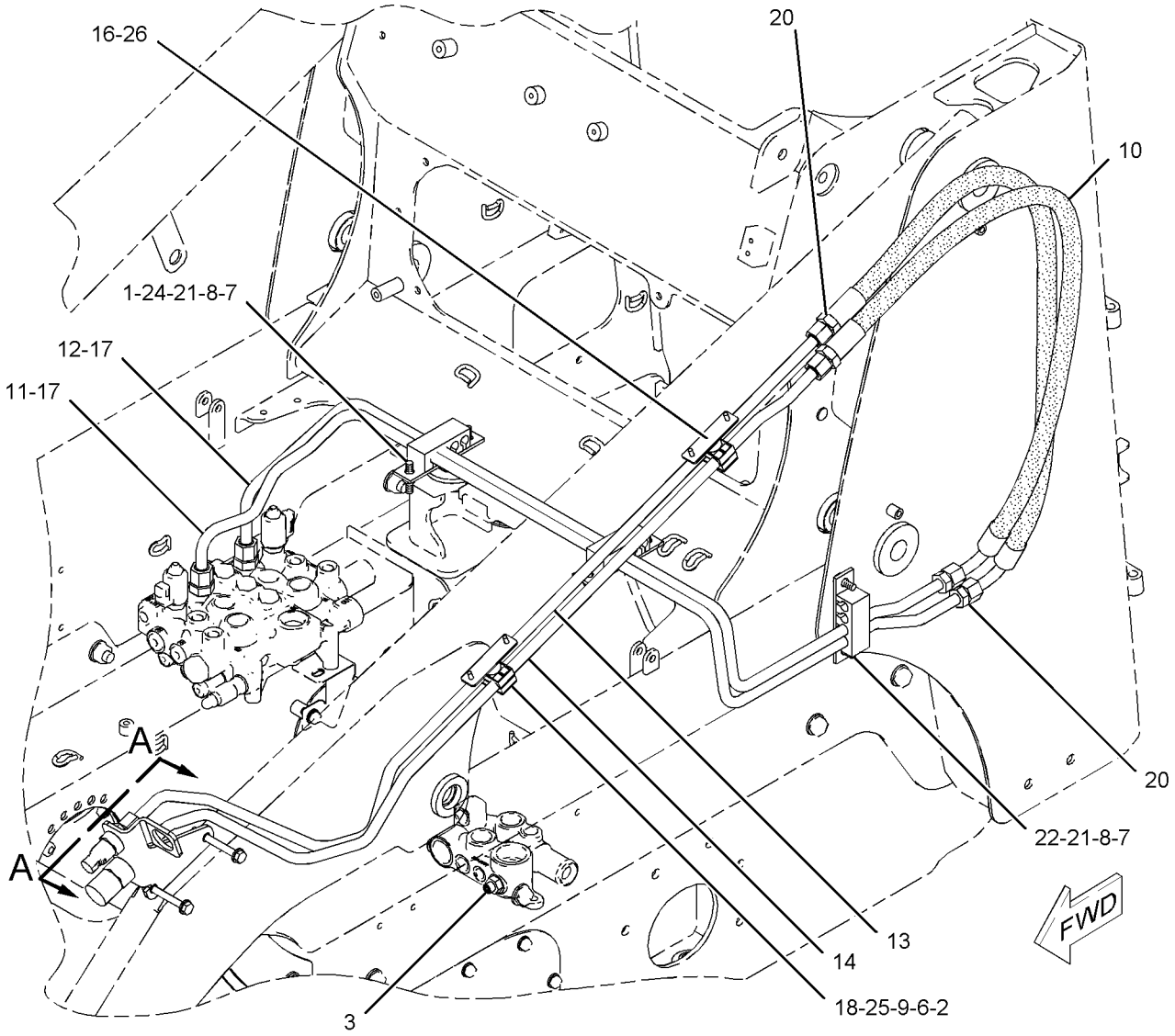

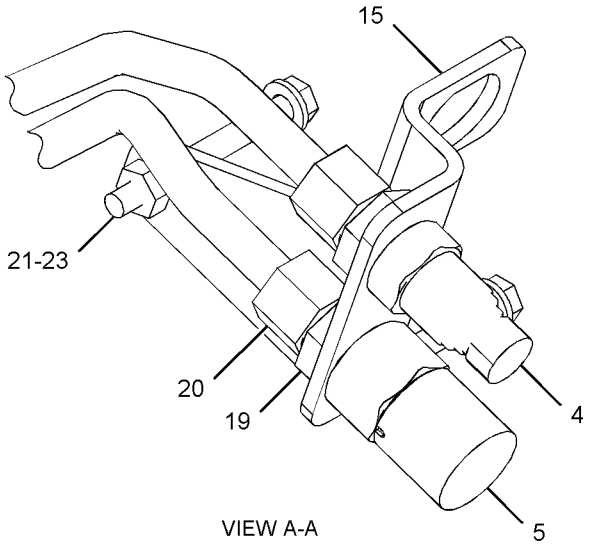

VIEW A-A

GRAPHIC #1 **<END>** g01034837

HYDRAULIC SYSTEM

218-6311 LINES GP-WORK TOOL

S/N: SCH1-521; BXM1-805
PART OF 218-6760, 218-6820 HYDRAULIC AR
ALSO AN ATTACHMENT

SMCS-5057 **i02007668**

NOTE	REF NO	GRAPHIC REF	PART NUMBER	QTY	PART NAME 1 2 3 4 5 6 (PRODUCT LEVEL)	SEE PAGE
M	1	1	**101-3129**	2	STUD (M10X1.15-THD)	
	2	1	*154-5232*	1	ADAPTER AS	
		1	**112-9783**	1	ADAPTER	
		1	**3K-0360**	1	SEAL-O-RING	
		1	**4J-5477**	1	SEAL-O-RING	
	3	1	**193-0474**	1	PLATE	
	4	1	**193-8334**	1	COUPLING	
	5	1	**193-8335**	1	COUPLING	
	6	1	**215-3935**	3	CLIP	
	7	1	**218-5599**	3	BLOCK	
	8	1	**218-5764**	3	PLATE	
	9	1	**218-6204**	1	BRACKET	
	10	1	**218-6313**	1	TUBE AS	
	11	1	**218-6314**	1	TUBE AS	
I	12	1	**218-6315**	2	HOSE AS	
	13	1	**218-6316**	1	TUBE AS	
	14	1	**218-6317**	1	TUBE AS	
	15	1	**219-4377**	1	PLATE	
M	16	1	**096-5866**	2	BOLT (M8X1.25X75-MM)	
	17	1	*148-8341*	2	CONNECTOR AS	
					(EACH INCLUDES)	
		1	**6V-8713**	1	CONNECTOR	
		1	**3D-2824**	1	SEAL-O-RING	
		1	**7J-9108**	1	SEAL-O-RING	
	18	1	**5P-7464**	4	CLIP (SLOT)	
	19	1	**5P-7465**	4	CLIP (TAB)	
	20	1	**6V-7359**	4	GROMMET	
	21	1	**6V-9170**	2	NUT-BULKHEAD (1-14-THD)	
	22	1	**7J-9108**	6	SEAL-O-RING	
	23	1	**8T-4121**	9	WASHER-HARD (11X21X2.5-MM THK)	
M	24	1	**8T-4133**	1	NUT (M10X1.5-THD)	
M	25	1	**8T-4136**	2	BOLT (M10X1.5X25-MM)	
M	26	1	**8T-4139**	2	BOLT (M12X1.75X30-MM)	
M	27	1	**8T-4178**	2	BOLT (M10X1.5X90-MM)	
M	28	1	**8T-4183**	2	BOLT (M12X1.75X40-MM)	
	29	1	**8T-4223**	6	WASHER-HARD (13.5X25.5X3-MM THK)	
	30	1	**8T-4224**	4	WASHER-HARD (8.8X16X2-MM THK)	
M	31	1	**8T-4244**	2	NUT (M12X1.75-THD)	
M	32	1	**8T-4908**	1	BOLT (M8X1.25X25-MM)	
M	33	1	**8T-6912**	1	BOLT (M8X1.25X50-MM)	
	34	1	**9R-1005**	1	CLIP (SLOT)	
	35	1	**9R-7802**	1	CLIP (SLOT)	
	36	1	**9R-7803**	1	CLIP (TAB)	
M	37	1	**8T-4195**	2	BOLT (M10X1.5X30-MM)	

I-REFER TO HYDRAULIC INFORMATION SYSTEM
M-METRIC PART

218-6311 **LINES GP-WORK TOOL** *(contd.)* **i02007668**

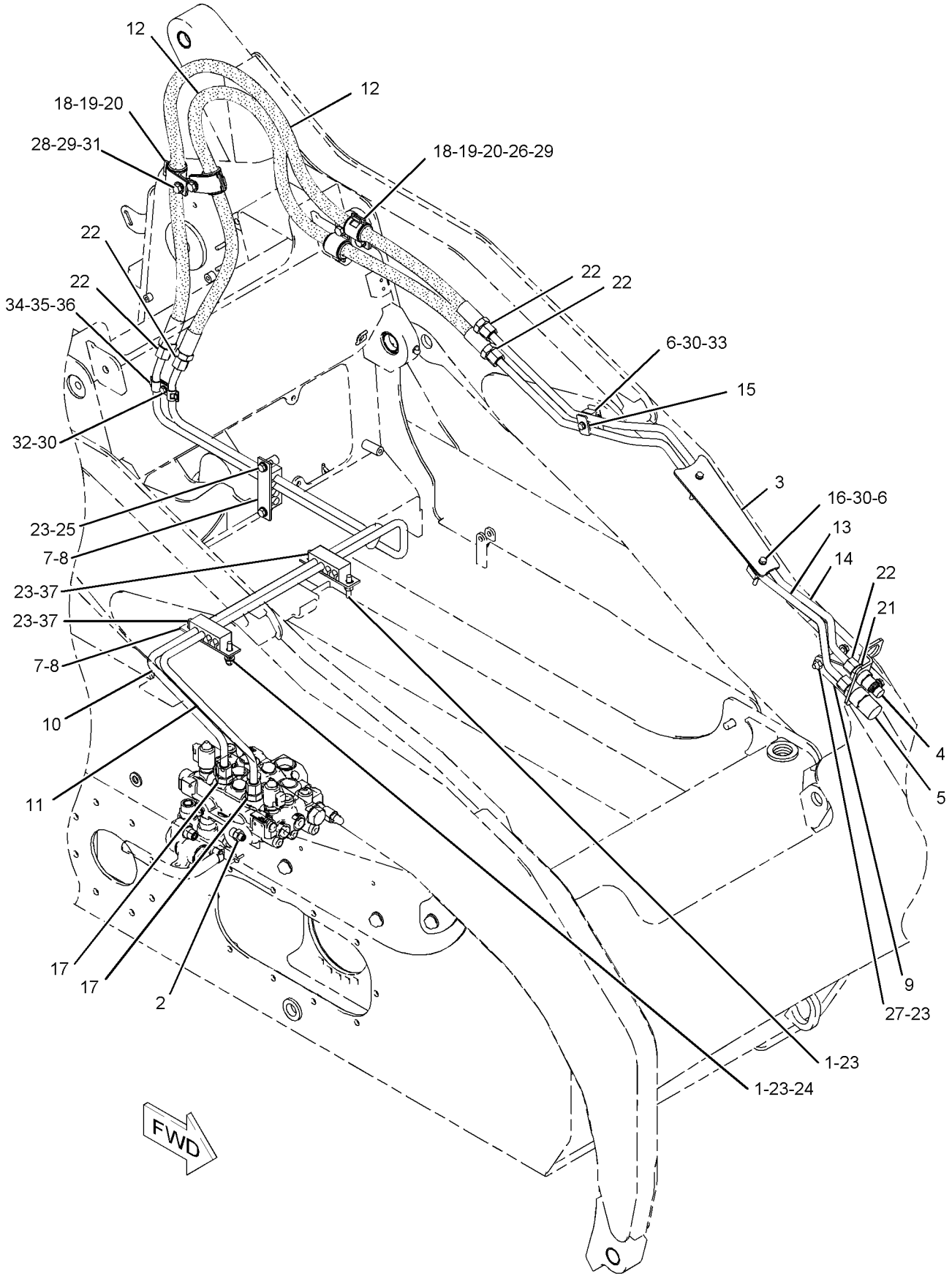

GRAPHIC #1 **<END>** g01038609

HYDRAULIC SYSTEM

218-6311 LINES GP-WORK TOOL

S/N: SCH522-UP; BXM806-UP

PART OF 218-6760, 218-6820, 261-6142, 278-1233 HYDRAULIC AR

ALSO AN ATTACHMENT

SMCS-5057 **i02286718**

NOTE	REF NO	GRAPHIC REF	PART NUMBER	QTY	PART NAME 1 2 3 4 5 6 (PRODUCT LEVEL)	SEE PAGE
M	1	1	**101-3129**	2	STUD (M10X1.15-THD)	
	2	1	*154-5232*	1	ADAPTER AS	
		1	**112-9783**	1	ADAPTER	
		1	**3K-0360**	1	SEAL-O-RING	
		1	**4J-5477**	1	SEAL-O-RING	
	3	1	**193-0474**	1	PLATE	
	4	1	**193-8334**	1	COUPLING	
	5	1	**193-8335**	1	COUPLING	
	6	1	**215-3935**	3	CLIP	
	7	1	**218-5599**	3	BLOCK	
	8	1	**218-5764**	3	PLATE	
	9	1	**218-6204**	1	BRACKET	
	10	1	**218-6313**	1	TUBE AS	
	11	1	**218-6314**	1	TUBE AS	
CI	12	1	**212-4091**	2	HOSE AS	
	13	1	**218-6316**	1	TUBE AS	
	14	1	**218-6317**	1	TUBE AS	
	15	1	**219-4377**	1	PLATE	
M	16	1	**096-5866**	2	BOLT (M8X1.25X75-MM)	
	17	1	*148-8341*	2	CONNECTOR AS	
					(EACH INCLUDES)	
		1	**6V-8713**	1	CONNECTOR	
		1	**3D-2824**	1	SEAL-O-RING	
		1	**7J-9108**	1	SEAL-O-RING	
	18	1	**5P-7464**	4	CLIP (SLOT)	
	19	1	**5P-7465**	4	CLIP (TAB)	
	20	1	**6V-7359**	4	GROMMET	
	21	1	**6V-9170**	2	NUT-BULKHEAD (1-14-THD)	
	22	1	**7J-9108**	6	SEAL-O-RING	
	23	1	**8T-4121**	9	WASHER-HARD (11X21X2.5-MM THK)	
M	24	1	**8T-4133**	1	NUT (M10X1.5-THD)	
M	25	1	**8T-4136**	2	BOLT (M10X1.5X25-MM)	
M	26	1	**8T-4139**	2	BOLT (M12X1.75X30-MM)	
M	27	1	**8T-4178**	2	BOLT (M10X1.5X90-MM)	
CM	28	1	**8T-4194**	2	BOLT (M12X1.75X50-MM)	
	29	1	**8T-4223**	6	WASHER-HARD (13.5X25.5X3-MM THK)	
	30	1	**8T-4224**	5	WASHER-HARD (8.8X16X2-MM THK)	
M	31	1	**8T-4244**	2	NUT (M12X1.75-THD)	
CM	32	1	**099-3649**	1	BOLT (M8X1.25X40-MM)	
M	33	1	**8T-6912**	1	BOLT (M8X1.25X50-MM)	
	34	1	**9R-1005**	1	CLIP (SLOT)	
	35	1	**9R-7802**	1	CLIP (SLOT)	
	36	1	**9R-7803**	1	CLIP (TAB)	
M	37	1	**8T-4195**	2	BOLT (M10X1.5X30-MM)	
C	38	1	**7W-9094**	1	SPACER (10.5X20X9-MM THK)	
CM	39	1	**5C-7261**	1	NUT (M8X1.25-THD)	

C-CHANGE FROM PREVIOUS TYPE
I-REFER TO HYDRAULIC INFORMATION SYSTEM
M-METRIC PART

218-6311 **LINES GP-WORK TOOL** *(contd.)* **i02286718**

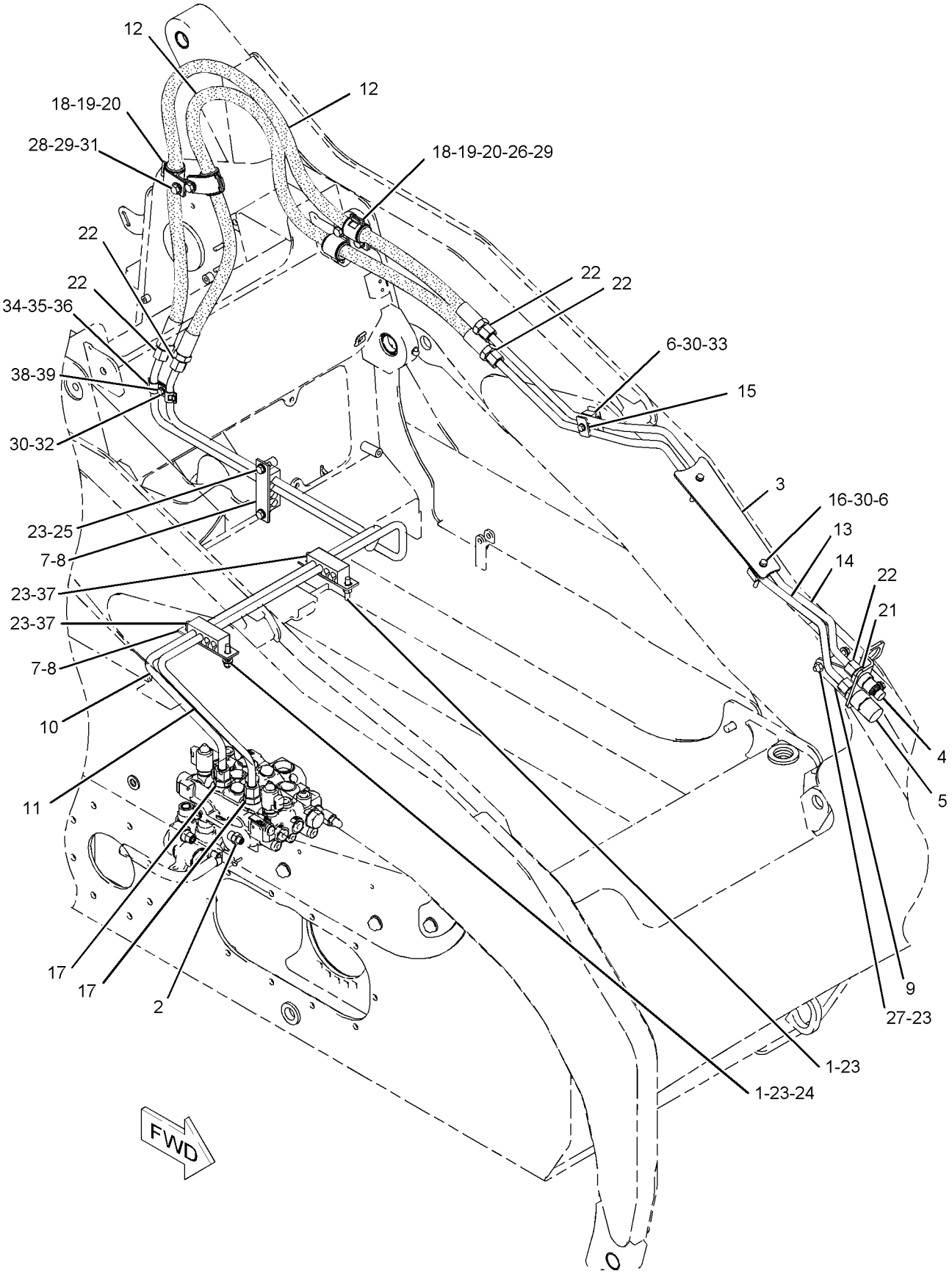

GRAPHIC #1 **<END>** g01145570

HYDRAULIC SYSTEM

218-6312 LINES GP-WORK TOOL

S/N: BXM1-UP
PART OF 218-6762, 261-6149 HYDRAULIC AR
AN ATTACHMENT

SMCS-5057 **i01968320**

NOTE	REF NO	GRAPHIC REF	PART NUMBER	QTY	PART NAME 1 2 3 4 5 6 (PRODUCT LEVEL)	SEE PAGE
	1	1	**2K-5232**	2	SPACER (0.406X0.75X1.81-IN THK)	
	2	1	**2S-3440**	2	CLAMP-HOSE	
	3	1	**7K-1181**	4	STRAP-CABLE	
	4	1	**8B-9725**	2	BOSS	
	5	1	**9U-6993**	1	ADAPTER AS	
		1	**3D-2824**	1	SEAL-O-RING	
M	6	1	**101-3129**	4	STUD (M10X1.15-THD)	
	7	1	**218-5564**	3	BLOCK	
	8	1	**218-5764**	3	PLATE	
Y	9	1	*218-5840*	1	FITTING GP-HYDRAULIC (QUICK DISCONNECT)	370
Y	10	1	*218-5841*	1	FITTING GP-HYDRAULIC (QUICK DISCONNECT)	371
	11	1	**218-5926**	1	BRACKET AS	
	12	1	**218-6176**	1	CLIP	
I	13	1	**218-6319**	1	HOSE AS	
I	14	1	**218-6323**	2	HOSE AS	
I	15	1	**218-6324**	2	HOSE AS	
I	16	1	**218-6325**	1	HOSE AS	
	17	1	**218-6326**	1	TUBE AS	
	18	1	**218-6327**	1	TUBE AS	
	19	1	**218-6328**	1	TUBE AS	
	20	1	**218-6349**	1	TUBE AS	
	21	1	**218-6553**	1	TUBE AS	
	22	1	**218-6554**	1	TUBE AS	
	23	1	**218-6555**	1	TUBE AS	
	24	1	**218-6556**	1	TUBE AS	
	25	1	**218-6558**	1	TUBE AS	
	26	1	**218-6568**	1	HOSE	
	27	1	**218-6569**	3	CLIP	
	28	1	**218-6599**	1	PLATE	
	29	1	**218-6611**	1	TUBE AS	
	30	1	**218-6612**	1	TUBE AS	
	31	1	**218-6727**	1	BRACKET AS	
	32	1	**218-6776**	1	COVER AS	
	33	1	**219-4377**	1	PLATE	
	34	1	**229-5468**	1	FITTING (QUICK DISCONNECT, MALE)	
	35	1	**229-5471**	1	FITTING (QUICK DISCONNECT, FEMALE)	
	36	1	**229-5473**	1	FITTING (QUICK DISCONNECT, MALE)	
M	37	1	**096-5866**	2	BOLT (M8X1.25X75-MM)	
	38	1	*148-8327*	2	CONNECTOR GP	
					(EACH INCLUDES)	
		1	**3D-2824**	1	SEAL-O-RING	
		1	**6V-8637**	1	CONNECTOR	
		1	**6V-9746**	1	SEAL-O-RING	
	39	1	*148-8336*	2	CONNECTOR AS	
					(EACH INCLUDES)	
		1	**3J-1907**	1	SEAL-O-RING	
		1	**6V-8397**	1	SEAL-O-RING	
		1	**6V-8636**	1	CONNECTOR	
	40	1	*148-8340*	3	CONNECTOR AS	
					(EACH INCLUDES)	
		1	**3K-0360**	1	SEAL-O-RING	
		1	**6V-8398**	1	SEAL-O-RING	
		1	**6V-8639**	1	CONNECTOR	
	41	1	**186-0357**	2	CLIP	
	42	1	**1P-4574**	2	FLANGE-HALF	

218-6312 **LINES GP-WORK TOOL** *(contd.)* **i01968320**

NOTE	REF NO	GRAPHIC REF	PART NUMBER	QTY	PART NAME 1 2 3 4 5 6 (PRODUCT LEVEL)	SEE PAGE
	43	1	**4D-6466**	2	CLIP	
	44	1	**4D-9517**	2	CLIP	
	45	1	**4J-5140**	1	SEAL-O-RING	
	46	1	**4J-5477**	1	SEAL-O-RING	
	47	1	**5P-7466**	4	CLIP (SLOT)	
	48	1	**5P-7467**	4	CLIP (TAB)	
	49	1	**5P-8112**	4	GROMMET	
	50	1	**5P-9297**	4	CLIP	
	51	1	**5P-9299**	1	CLIP	
	52	1	**6D-4244**	2	CLIP	
	53	1	**6V-8397**	4	SEAL-O-RING	
	54	1	**6V-8398**	3	SEAL-O-RING	
	55	1	**6V-9168**	2	NUT (11/16-16-THD)	
	56	1	**6V-9169**	1	NUT-BULKHEAD (13/16-16-THD)	
	57	1	**6V-9746**	4	SEAL-O-RING	
M	58	1	**8T-0341**	4	BOLT-SOCKET HEAD (M10X1.5X60-MM)	
	59	1	**8T-1887**	2	CLIP (SLOT)	
	60	1	**8T-1888**	2	CLIP (TAB)	
	61	1	**8T-4121**	19	WASHER-HARD (11X21X2.5-MM THK)	
M	62	1	**8T-4133**	6	NUT (M10X1.5-THD)	
M	63	1	**8T-4136**	4	BOLT (M10X1.5X25-MM)	
M	64	1	**8T-4137**	3	BOLT (M10X1.5X20-MM)	
M	65	1	**8T-4183**	2	BOLT (M12X1.75X40-MM)	
M	66	1	**8T-4198**	2	BOLT (M10X1.5X100-MM)	
	67	1	**8T-4223**	6	WASHER-HARD (13.5X25.5X3-MM THK)	
	68	1	**8T-4224**	10	WASHER-HARD (8.8X16X2-MM THK)	
M	69	1	**8T-4244**	2	NUT (M12X1.75-THD)	
M	70	1	**8T-4908**	3	BOLT (M8X1.25X25-MM)	
M	71	1	**8T-4956**	2	BOLT (M12X1.75X35-MM)	
M	72	1	**8T-5005**	2	BOLT (M10X1.5X70-MM)	
M	73	1	**8T-6912**	1	BOLT (M8X1.25X50-MM)	
M	74	1	**8T-7547**	4	BOLT (M8X1.25X30-MM)	

I-REFER TO HYDRAULIC INFORMATION SYSTEM
M-METRIC PART
Y-SEPARATE ILLUSTRATION

218-6312 **LINES GP-WORK TOOL** *(contd.)* **i01968320**

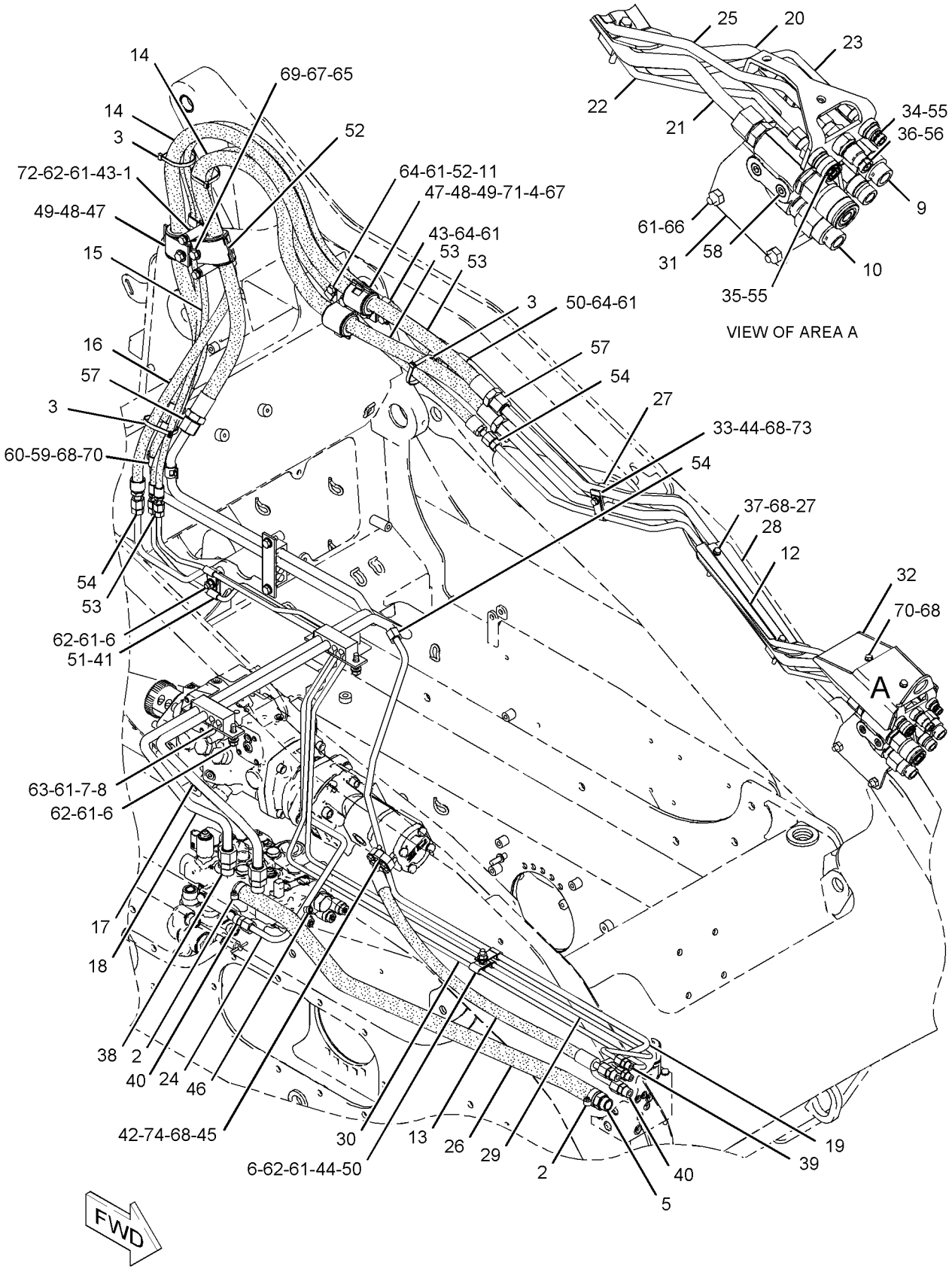

GRAPHIC #1 **<END>** g01022791

HYDRAULIC SYSTEM

218-5812 MANIFOLD & MTG GP-CONTROL

S/N: MJH1-3250; BXM1-1325
HIGH FLOW
PART OF 218-6131, 218-6762 HYDRAULIC AR
AN ATTACHMENT

SMCS-5264 **i01958230**

NOTE	REF NO	GRAPHIC REF	PART NUMBER	QTY	PART NAME 1 2 3 4 5 6 (PRODUCT LEVEL)	SEE PAGE
M	1	1	**108-2989**	3	BOLT (M8X1.25X130-MM)	
Y	2	1	**231-0295**	1	MANIFOLD GP-CONTROL (HIGH FLOW)	498
	3	1	**8T-4224**	3	WASHER-HARD (8.8X16X2-MM THK)	

M-METRIC PART
Y-SEPARATE ILLUSTRATION

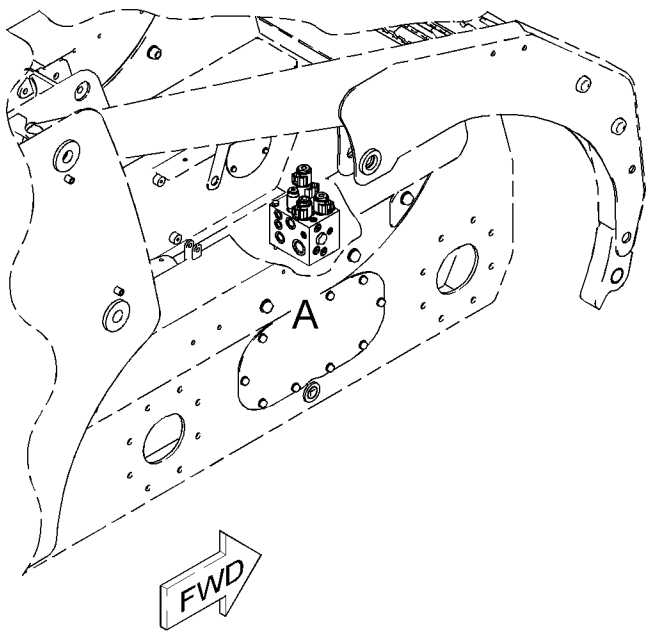

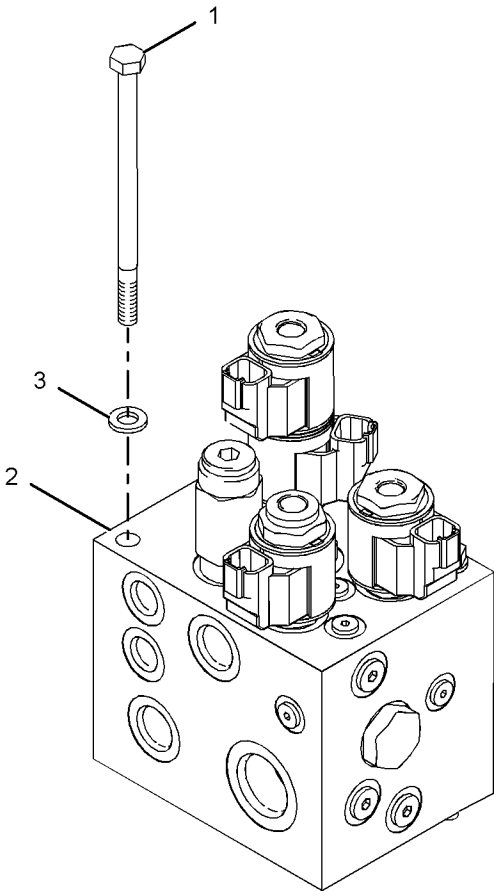

VIEW OF AREA A

GRAPHIC #1 **<END>** g01017940

218-5812 MANIFOLD & MTG GP-CONTROL

S/N: MJH3251-UP; BXM1326-UP
HIGH FLOW
PART OF 218-6131, 218-6762, 261-6139, 261-6149 HYDRAULIC AR
AN ATTACHMENT

SMCS-5264 **i02292955**

NOTE	REF NO	GRAPHIC REF	PART NUMBER	QTY	PART NAME 1 2 3 4 5 6 (PRODUCT LEVEL)	SEE PAGE
M	1	1	**108-2989**	3	BOLT (M8X1.25X130-MM)	
CY	2	1	**248-7696**	1	MANIFOLD GP-CONTROL (HIGH FLOW)	499
	3	1	**8T-4224**	3	WASHER-HARD (8.8X16X2-MM THK)	

C-CHANGE FROM PREVIOUS TYPE
M-METRIC PART
Y-SEPARATE ILLUSTRATION

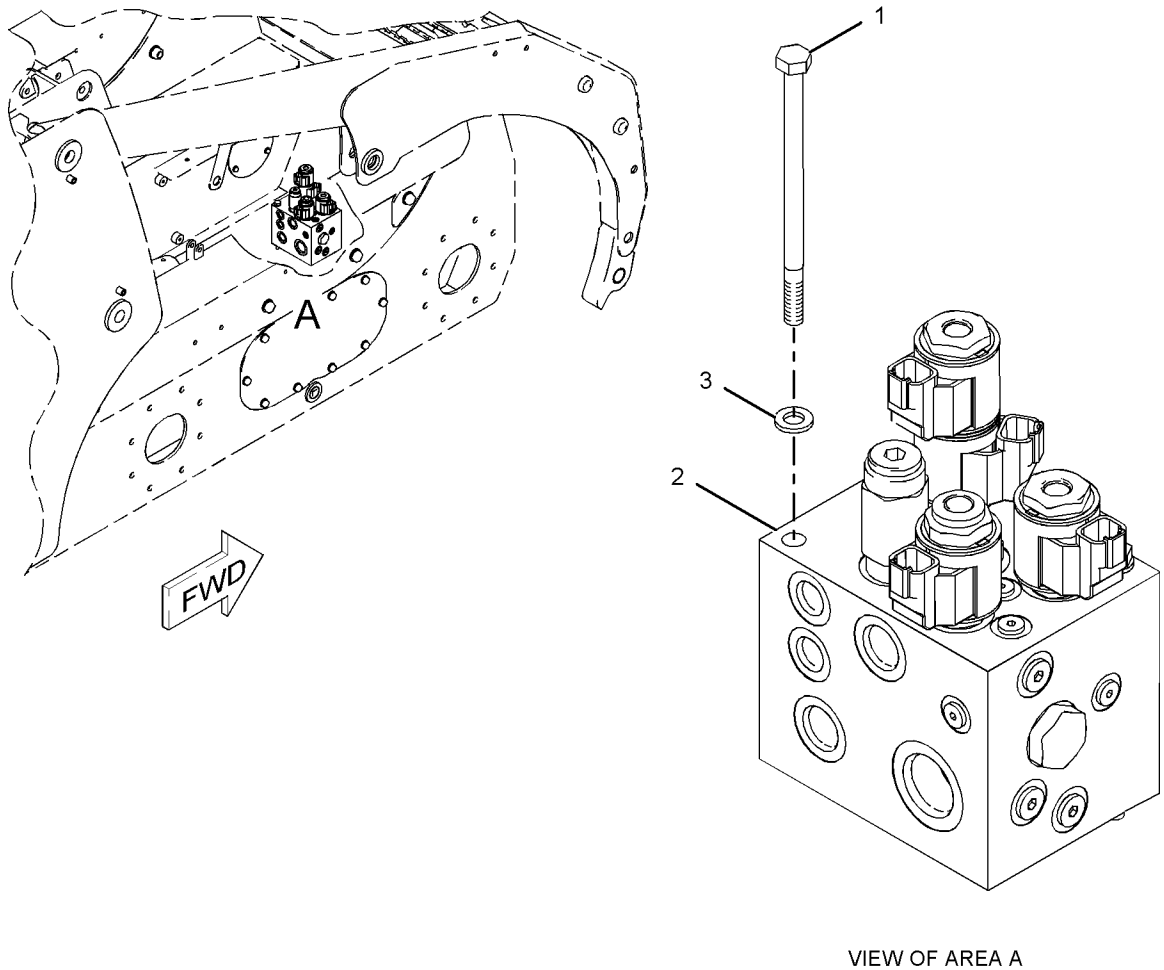

VIEW OF AREA A

GRAPHIC #1 **<END>** g01017940

231-5278 MANIFOLD & MTG GP-CONTROL–ANGLING BLADE

S/N: MJH1-UP; BXM1-UP
PART OF 231-5275, 231-5277 BLADE AR
AN ATTACHMENT

SMCS-5264 **i02337085**

NOTE	REF NO	GRAPHIC REF	PART NUMBER	QTY	PART NAME 1 2 3 4 5 6 (PRODUCT LEVEL)	SEE PAGE
Y	1	1	**258-9011**	1	MANIFOLD GP-CONTROL (ANGLING BLADE)	500
	2	1	**231-5279**	1	COVER	
	3	1	**5P-4116**	3	WASHER-HARD (8.8X20.5X2-MM THK)	
M	4	1	**8T-4189**	2	BOLT (M8X1.25X20-MM)	
M	5	1	**8T-4200**	3	BOLT (M8X1.25X16-MM)	
	6	1	**8T-4224**	2	WASHER-HARD (8.8X16X2-MM THK)	

M-METRIC PART
Y-SEPARATE ILLUSTRATION

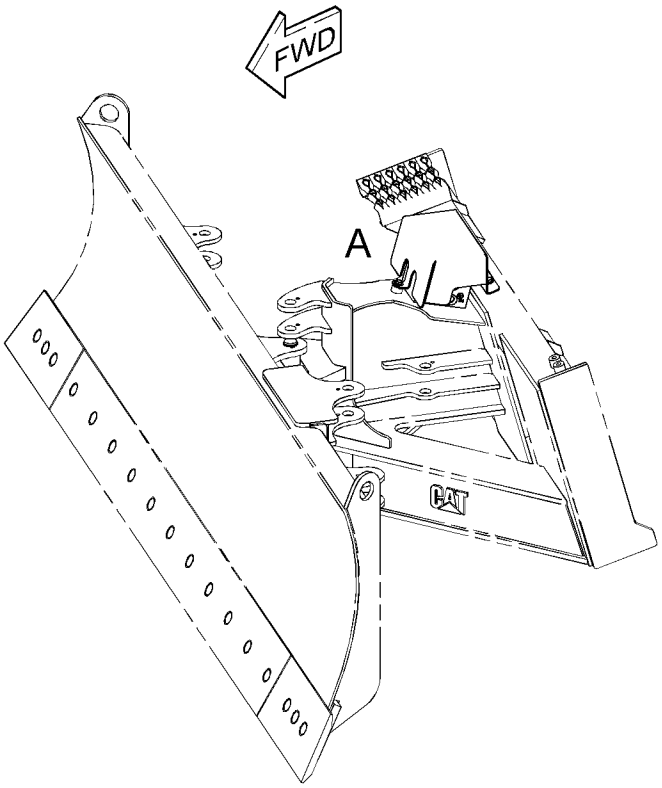

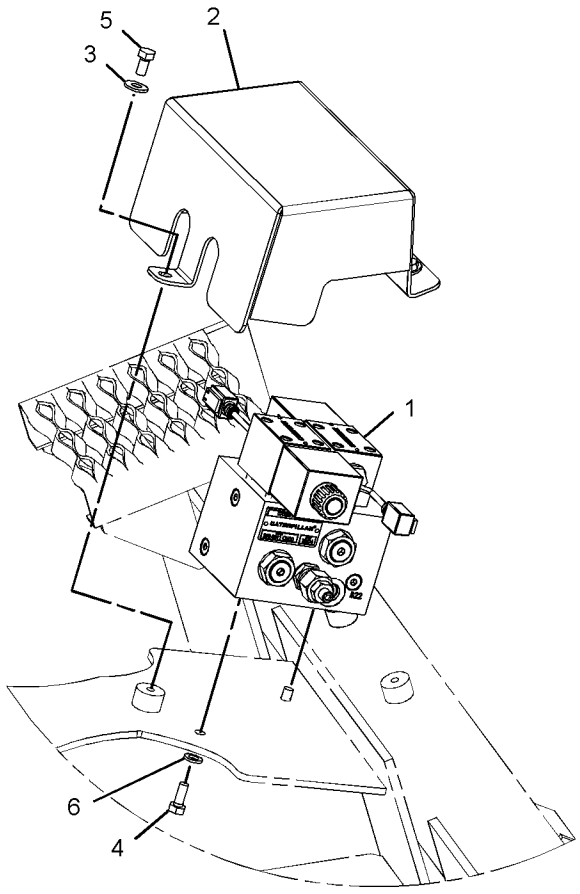

VIEW OF AREA A

GRAPHIC #1 **<END>** g01167422

HYDRAULIC SYSTEM

231-0295 MANIFOLD GP-CONTROL

S/N: MJH1-3250; BXM1-1325
PART OF 218-5812 MANIFOLD & MTG GP-CONTROL
AN ATTACHMENT

SMCS-5117, 5264, 5479 **i02301211**

NOTE	REF NO	GRAPHIC REF	PART NUMBER	QTY	PART NAME 1 2 3 4 5 6 (PRODUCT LEVEL)	SEE PAGE
J	1	1	**238-4624**	1	VALVE GP-SOLENOID (AUXILIARY FLOW)	
		1	**238-4626**	1	COIL AS	
		1	**250-3483**	1	NUT	
L	2	1	**238-4625**	1	VALVE GP-SOLENOID (HIGH FLOW)	
		1	**238-4626**	2	COIL AS	
	3	1	**238-4629**	1	VALVE GP-RELIEF	
L	4	1	**240-6866**	1	VALVE GP-SOLENOID (HIGH FLOW BOOST)	
		1	**238-4626**	1	COIL AS	
					AVAILABLE REPAIR KIT(S):	
J			**120-9051**	1	KIT-SEAL	
L			**106-3108**	1	KIT-SEAL	

J-KIT MARKED J AVAILABLE FOR PART(S) MARKED J
L-KIT MARKED L AVAILABLE FOR PART(S) MARKED L

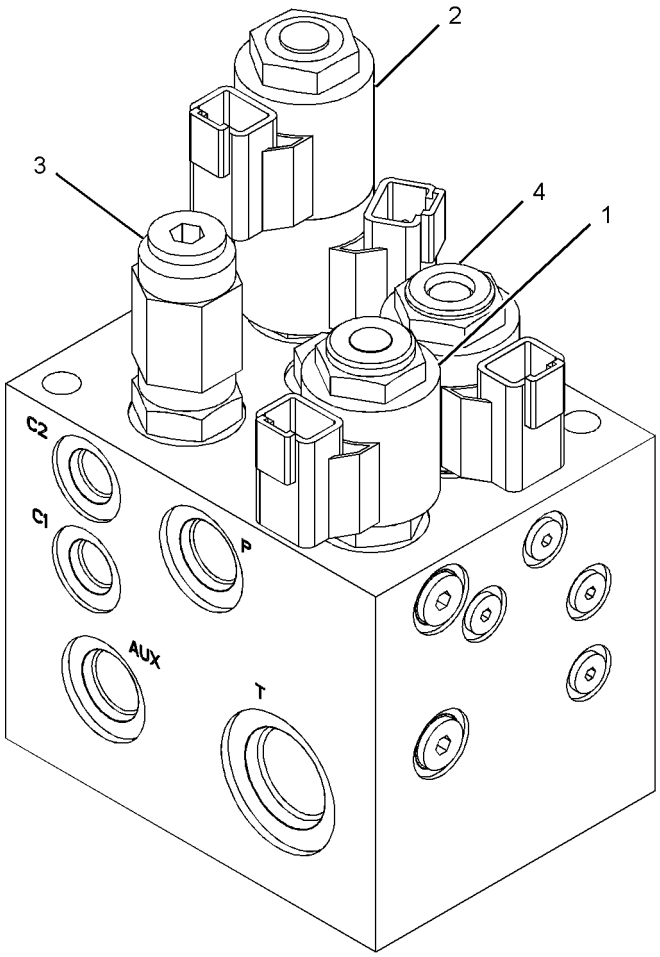

GRAPHIC #1 **<END>** g01019720

248-7696 MANIFOLD GP-CONTROL

S/N: MJH1-UP; BXM1-UP
PART OF 218-6737, 218-6738 KIT-HIGH FLOW CONVERSION, 218-5812 MANIFOLD & MTG GP-CONTROL
AN ATTACHMENT

SMCS-5117, 5264, 5479 **i02359407**

NOTE	REF NO	GRAPHIC REF	PART NUMBER	QTY	PART NAME 1 2 3 4 5 6 (PRODUCT LEVEL)	SEE PAGE
	1	1	**134-9911**	1	VALVE-CHECK	
	2	1	**148-9364**	1	VALVE GP-CHECK	
J	3	1	**238-4625**	1	VALVE GP-SOLENOID (HIGH FLOW)	
		1	**238-4626**	1	COIL AS	
	4	1	**238-4629**	1	VALVE GP-RELIEF	
J	5	1	**240-6866**	1	VALVE GP-SOLENOID (HIGH FLOW BOOST)	
		1	**238-4626**	1	COIL AS	
L	6	1	**249-7707**	1	VALVE GP-SOLENOID (HIGH FLOW)	
		1	**238-4628**	1	COIL AS	
	7	1	**250-7662**	1	VALVE GP-CHECK	
					AVAILABLE REPAIR KIT(S):	
J			**106-3108**	1	KIT-SEAL	
L			**141-0888**	1	KIT-SEAL	

J-KIT MARKED J AVAILABLE FOR PART(S) MARKED J
L-KIT MARKED L AVAILABLE FOR PART(S) MARKED L

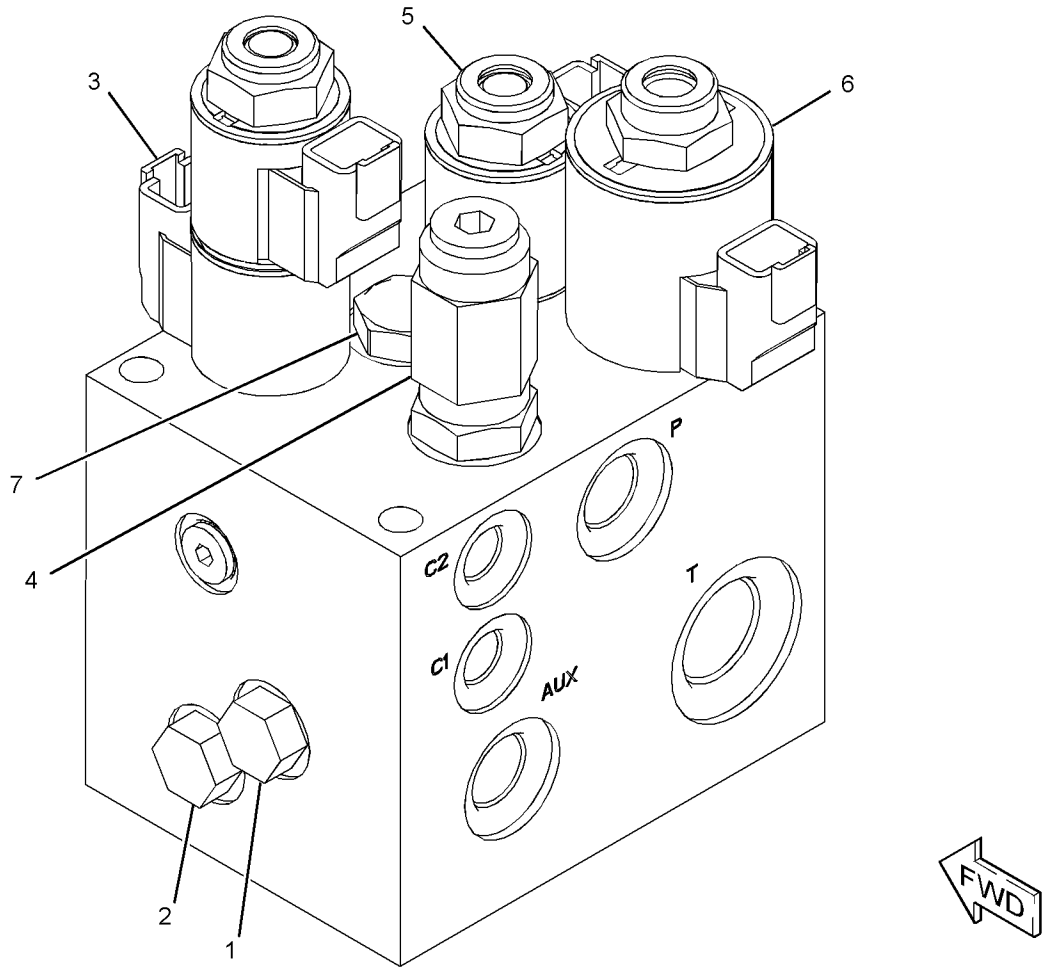

GRAPHIC #1 **<END>** g01151254

HYDRAULIC SYSTEM

258-9011 MANIFOLD GP-CONTROL–ANGLING BLADE

S/N: MJH1-UP; BXM1-UP
PART OF 231-5278 MANIFOLD & MTG GP-CONTROL
AN ATTACHMENT

SMCS-5117, 5264, 5479 **i02318509**

NOTE	REF NO	GRAPHIC REF	PART NUMBER	QTY	PART NAME 1 2 3 4 5 6 (PRODUCT LEVEL)	SEE PAGE
M	1	1	**9X-6615**	8	BOLT (M5X0.8X30-MM)	
	2	1	**243-5601**	7	PLUG	
	3	1	**244-1363**	1	VALVE GP-SOLENOID	
	4	1	**244-1364**	1	VALVE GP-SOLENOID	
	5	1	**244-1365**	2	VALVE GP-RELIEF	
	6	1	**266-8903**	4	VALVE GP-CHECK	
	7	1	**180-7451**	8	WASHER-HARD (5.3X8.8X2-MM THK)	

M-METRIC PART

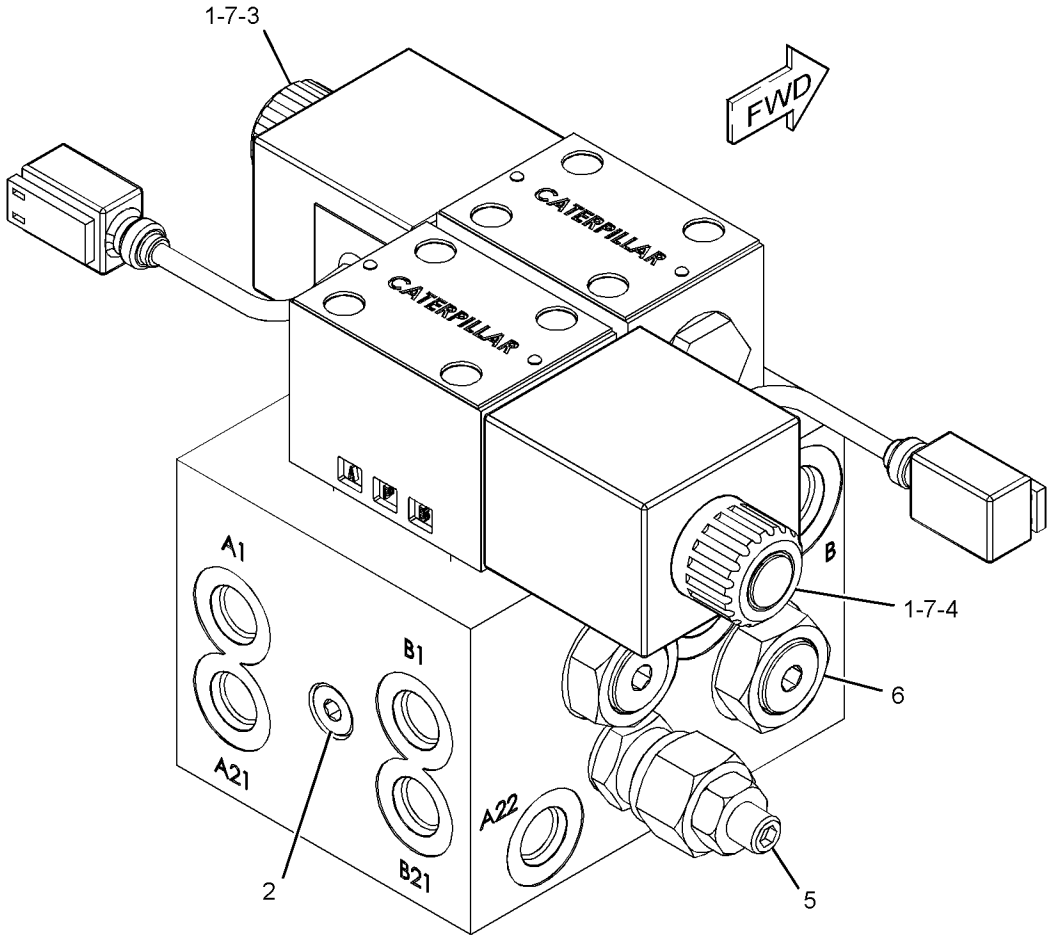

GRAPHIC #1 **<END>** g01178679

218-6058 MOTOR & MTG GP-HYDRAULIC FAN

S/N: MJH1-5599; BXM1-2399
PART OF 261-6160 CONVERSION AR-MACHINE, 218-5820, 218-6920 HYDRAULIC AR
ALSO AN ATTACHMENT

SMCS-1386 **i01964111**

NOTE	REF NO	GRAPHIC REF	PART NUMBER	QTY	PART NAME 1 2 3 4 5 6 (PRODUCT LEVEL)	SEE PAGE
Y	1	1	**230-3727**	1	MOTOR GP-GEAR (HYDRAULIC FAN)	507
	2	1	**8T-4121**	2	WASHER-HARD (11X21X2.5-MM THK)	
M	3	1	**8T-4196**	2	BOLT (M10X1.5X35-MM)	
	4	1	**8T-4224**	1	WASHER-HARD (8.8X16X2-MM THK)	
M	5	1	**8T-7547**	1	BOLT (M8X1.25X30-MM)	

M-METRIC PART
Y-SEPARATE ILLUSTRATION

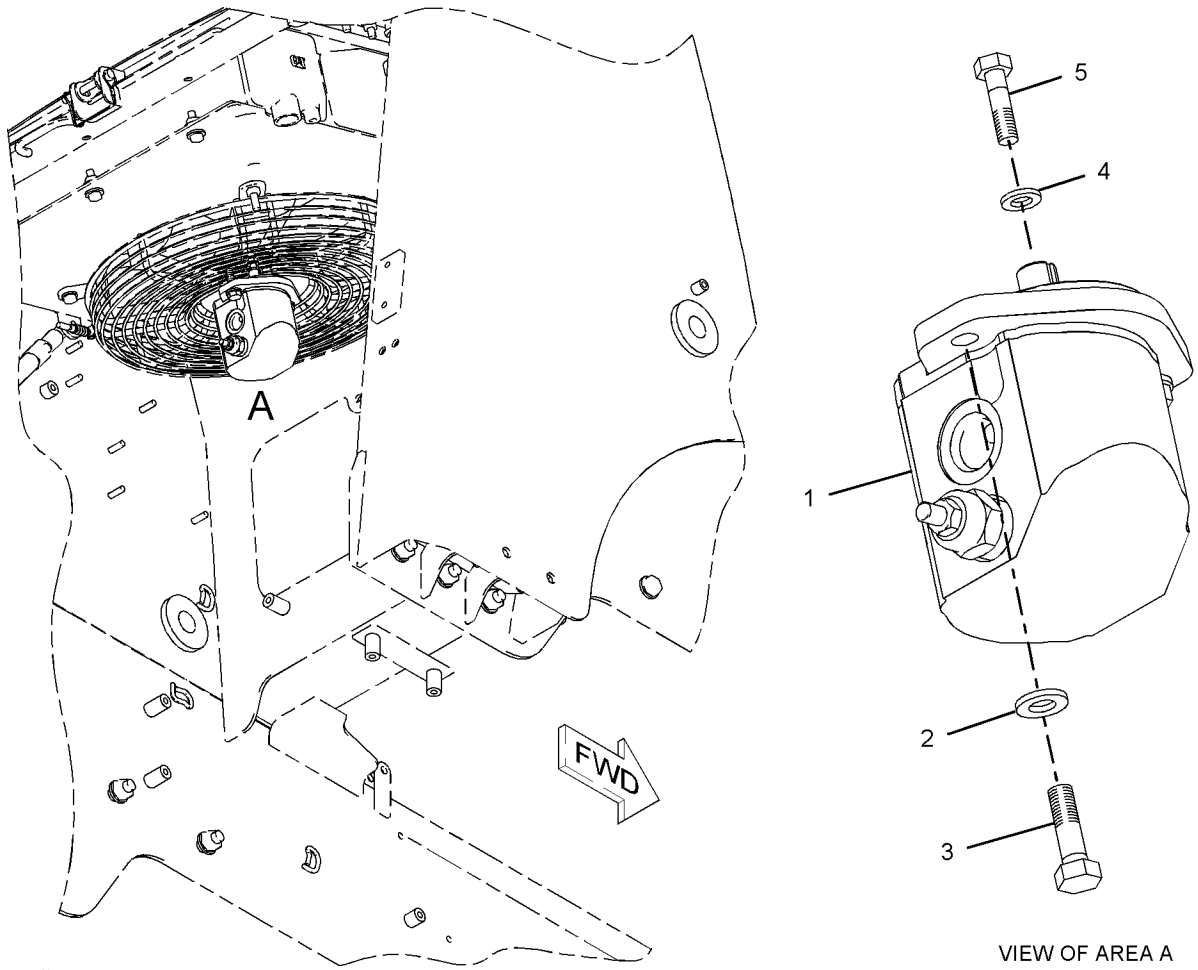

VIEW OF AREA A

GRAPHIC #1 **<END>** g01023064

218-6758 MOTOR & MTG GP-HYDRAULIC FAN

S/N: SCH1-UP; RLL1-UP

PART OF 218-5620, 218-6820, 278-1217, 278-1233 HYDRAULIC AR

SMCS-1386 **i01986639**

NOTE	REF NO	GRAPHIC REF	PART NUMBER	QTY	PART NAME 1 2 3 4 5 6 (PRODUCT LEVEL)	SEE PAGE
Y	1	1	**216-6179**	1	MOTOR GP-GEAR (HYDRAULIC FAN)	505
	2	1	**8T-4121**	2	WASHER-HARD (11X21X2.5-MM THK)	
M	3	1	**8T-4196**	2	BOLT (M10X1.5X35-MM)	
	4	1	**8T-4224**	1	WASHER-HARD (8.8X16X2-MM THK)	
M	5	1	**8T-7547**	1	BOLT (M8X1.25X30-MM)	

M-METRIC PART
Y-SEPARATE ILLUSTRATION

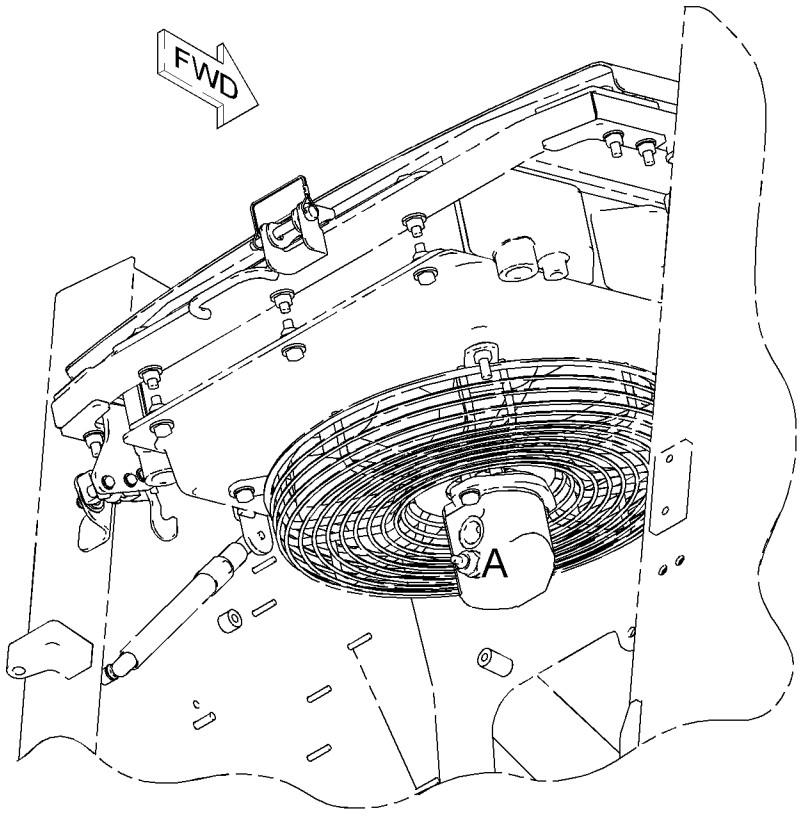

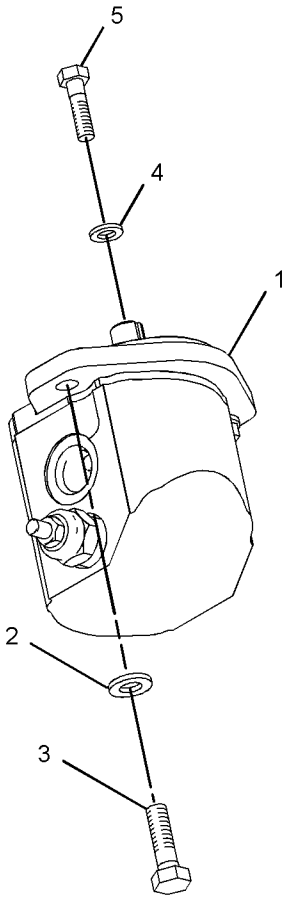

VIEW OF AREA A

GRAPHIC #1 **<END>** g01015870

261-6121 MOTOR & MTG GP-HYDRAULIC FAN

S/N: MJH5600-UP; BXM2400-UP
STAGE II SOUND
PART OF 261-6157, 261-6158, 261-6187, 261-6197, 278-1212, 278-1213, 278-1220, 278-1221, 278-1224, 278-1225, 278-5408, 278-5409, 278-5441, 278-5442 CONVERSION AR-MACHINE
AN ATTACHMENT

SMCS-1386 **i02431657**

NOTE	REF NO	GRAPHIC REF	PART NUMBER	QTY	PART NAME 1 2 3 4 5 6 (PRODUCT LEVEL)	SEE PAGE
	1	1	**107-5630**	1	WIRE AS	
		1	**102-8804**	1	KIT-RECEPTACLE (4-PIN)	
					(INCLUDES RECEPTACLE AS & WEDGE)	
H		1	**5P-5677**		WIRE (18-GA, BLACK) (3-DM)	
		1	**186-3735**	3	PIN-CONNECTOR (16-GA TO 18-GA)	
		1	**8T-8737**	1	PLUG-SEAL	
	2	1	**261-6727**	1	VALVE GP-SOLENOID	
		1	**261-6728**	1	COIL AS	
	3	1	*264-4297*	1	SENSOR GP-TEMPERATURE (HYDRAULIC OIL)	
		1	**137-6645**	1	PAD	
Y	4	1	**269-9467**	1	MOTOR GP-GEAR (HYDRAULIC FAN)	508
	5	1	**8T-4121**	2	WASHER-HARD (11X21X2.5-MM THK)	
M	6	1	**8T-4196**	2	BOLT (M10X1.5X35-MM)	
	7	1	**8T-4224**	1	WASHER-HARD (8.8X16X2-MM THK)	
M	8	1	**8T-7547**	1	BOLT (M8X1.25X30-MM)	

H-(ORDER BY THE DECIMETER)
M-METRIC PART
Y-SEPARATE ILLUSTRATION

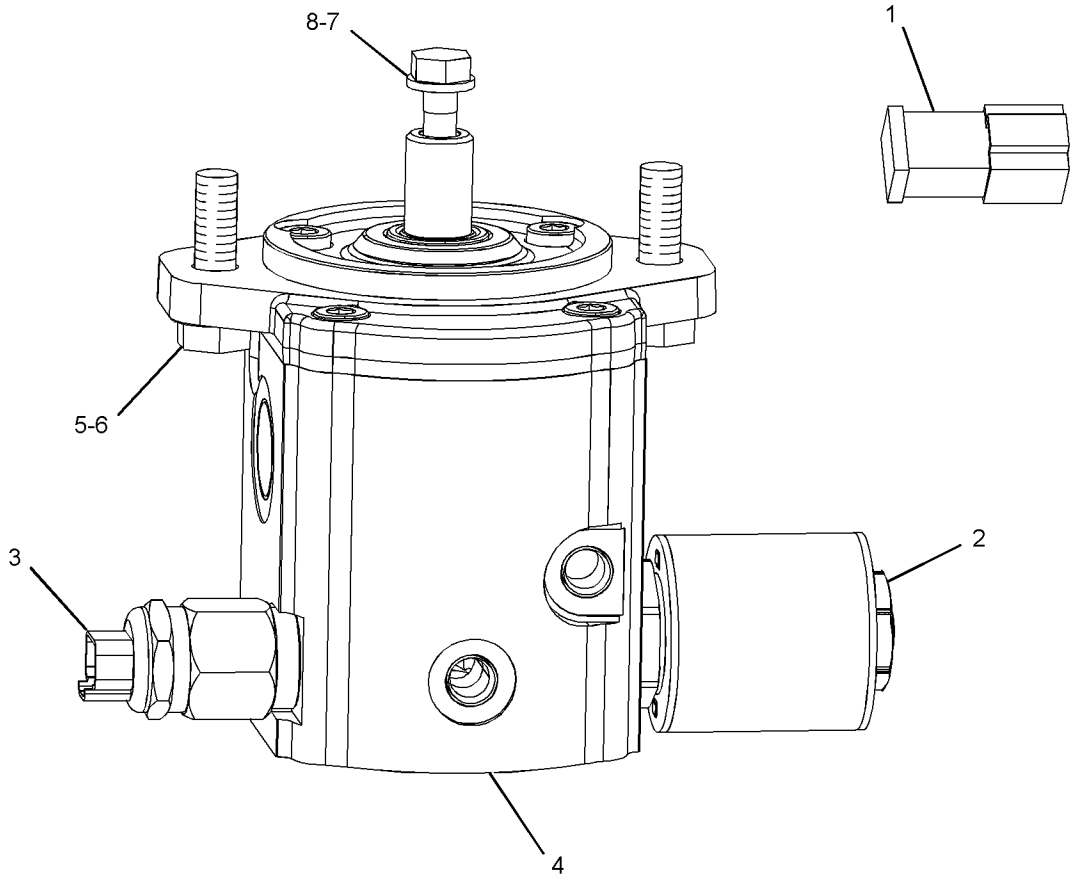

LEFT SIDE VIEW

GRAPHIC #1 **<END>** g01229655

216-6179 MOTOR GP-GEAR–HYDRAULIC FAN

S/N: SCH1-UP; RLL1-UP

PART OF 218-6758 MOTOR & MTG GP-HYDRAULIC FAN

SMCS-1386, 5061 **i01954492**

NOTE	REF NO	GRAPHIC REF	PART NUMBER	QTY	PART NAME 1 2 3 4 5 6 (PRODUCT LEVEL)	SEE PAGE
	1	1	**228-9240**	1	VALVE GP-RELIEF (FAN SPEED)	
	1A	1	**6F-6672**	1	SEAL-O-RING	
	2	1	**230-3686**	1	SEAL GP-LIP TYPE	
	3	1	**230-3726**	1	SEAL-SHAFT	
	4	1	**096-0194**	1	RING-RETAINING	

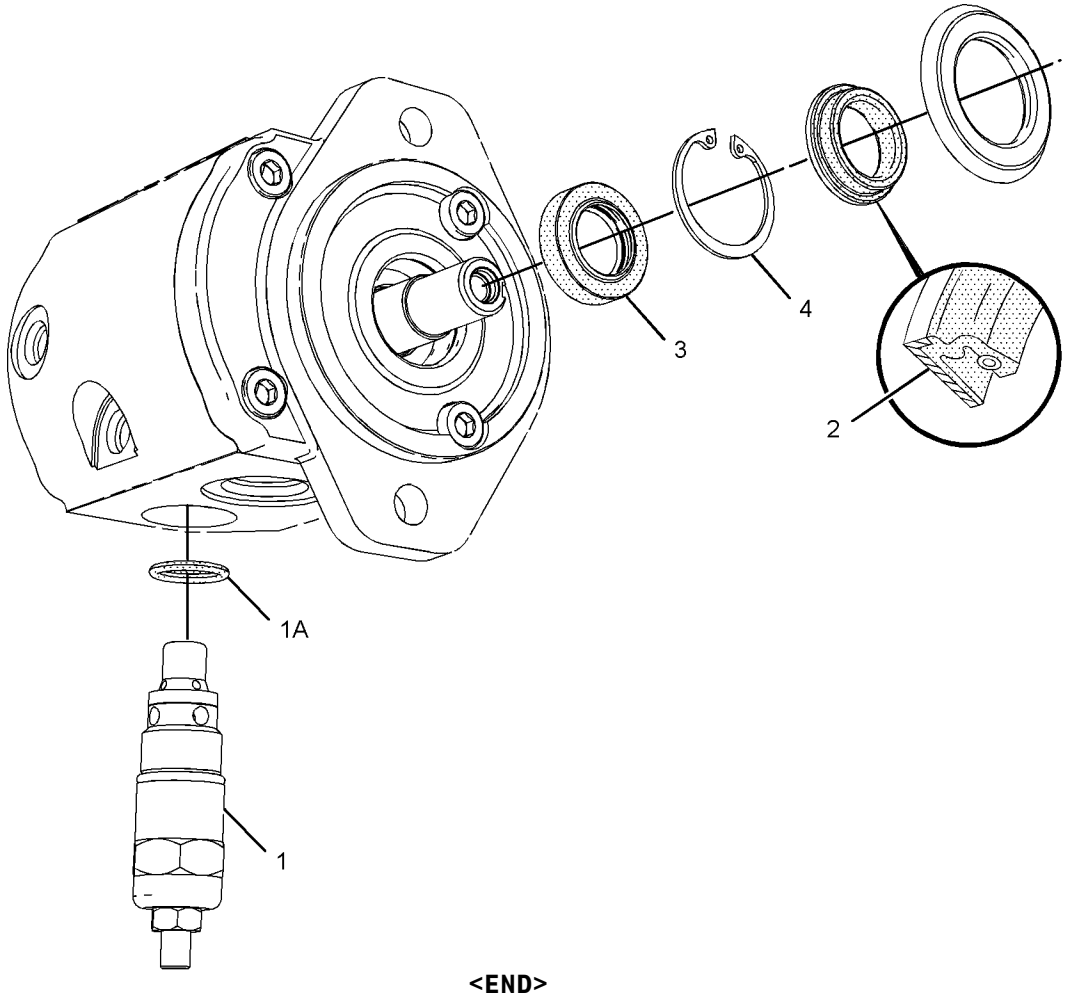

GRAPHIC #1 **<END>** g01018550

218-6840 MOTOR GP-GEAR–A/C COMPRESSOR

S/N: MJH1-UP; BXM1-UP
PART OF 218-6832 COMPRESSOR & MOTOR GP-REFRIG, 233-5588, 233-5589
INSTALLATION AR
AN ATTACHMENT

SMCS-1386, 5061 **i01962141**

NOTE	REF NO	GRAPHIC REF	PART NUMBER	QTY	PART NAME 1 2 3 4 5 6 (PRODUCT LEVEL)	SEE PAGE
	1	1	**230-3726**	2	SEAL-SHAFT	
Y	2	1	**231-6287**	1	VALVE GP-SOLENOID (A/C COMPRESSOR)	561
	3	1	**096-0194**	1	RING-RETAINING	
	4	1	**2M-9780**	1	SEAL-O-RING	
	5	1	**3D-2824**	1	SEAL-O-RING	
	6	1	**9S-8006**	1	PLUG	

Y-SEPARATE ILLUSTRATION

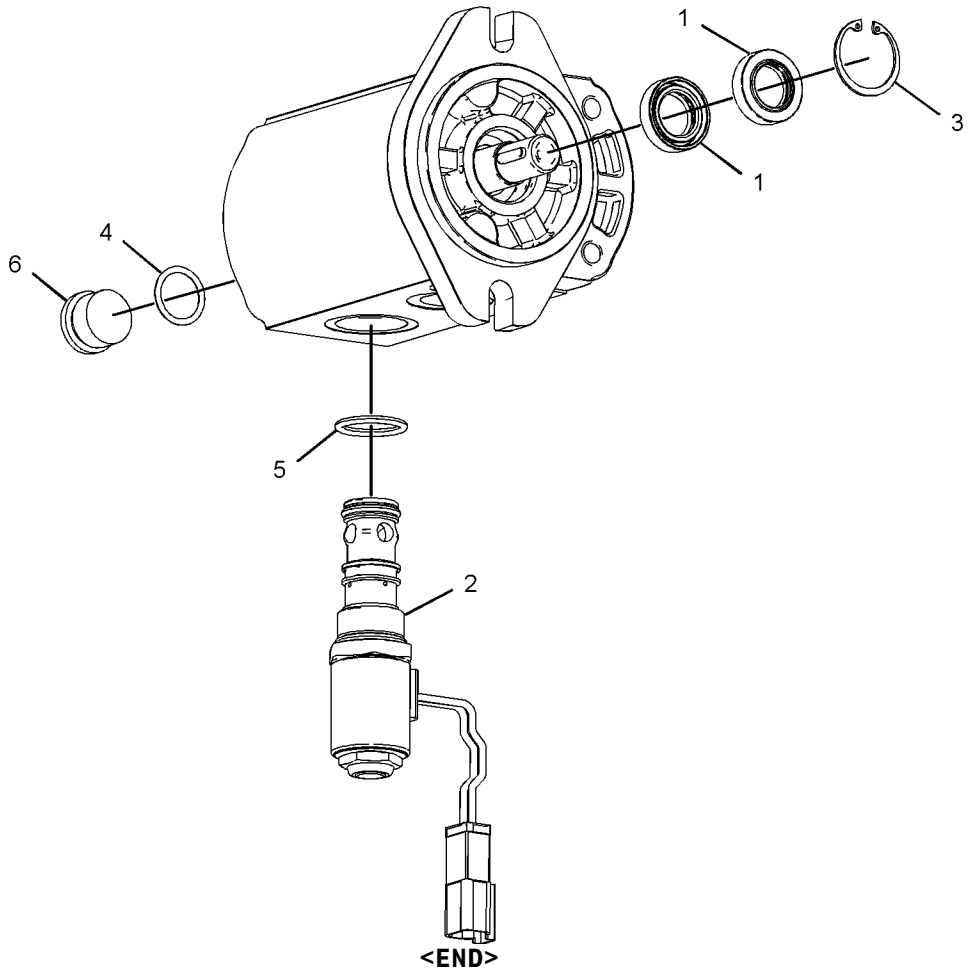

GRAPHIC #1 **<END>** g01020004

230-3727 MOTOR GP-GEAR–HYDRAULIC FAN

S/N: MJH1-5599; BXM1-2399
PART OF 218-6058 MOTOR & MTG GP-HYDRAULIC FAN
ALSO AN ATTACHMENT

SMCS-1386, 5061 **i01966751**

NOTE	REF NO	GRAPHIC REF	PART NUMBER	QTY	PART NAME 1 2 3 4 5 6 (PRODUCT LEVEL)	SEE PAGE
	1	1	**228-9240**	1	VALVE GP-RELIEF (FAN SPEED)	
		1	**6F-6672**	1	SEAL-O-RING	
	2	1	**230-3686**	1	SEAL GP-LIP TYPE	
	3	1	**230-3726**	1	SEAL-SHAFT	
	4	1	**096-0194**	1	RING-RETAINING	

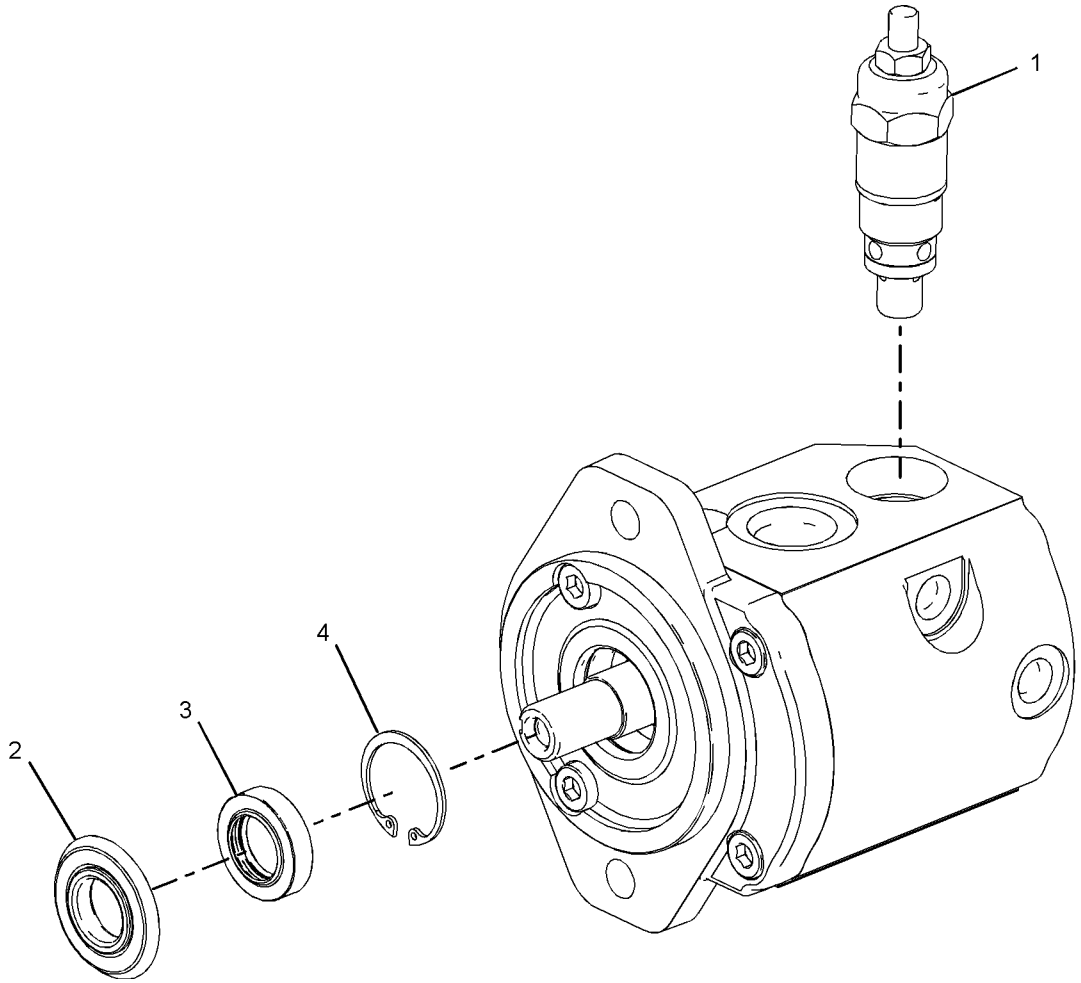

GRAPHIC #1 **<END>** g01022086

HYDRAULIC SYSTEM

269-9467 MOTOR GP-GEAR

S/N: MJH5600-UP; BXM2400-UP
STAGE II SOUND
PART OF 261-6121 MOTOR & MTG GP-HYDRAULIC FAN
AN ATTACHMENT

SMCS-1386, 5061 **i02430228**

NOTE	REF NO	GRAPHIC REF	PART NUMBER	QTY	PART NAME 1 2 3 4 5 6 (PRODUCT LEVEL)	SEE PAGE
	1	1	**4D-2297**	1	SEAL-O-RING	
	2	1	**6V-5049**	1	SEAL-O-RING	
	3	1	**230-3686**	1	SEAL-LIP TYPE	
	4	1	**096-0194**	1	RING-RETAINING	
	5	1	**278-8713**	1	SENSOR-SPEED	
	6	1	**278-8717**	1	SEAL-SHAFT	

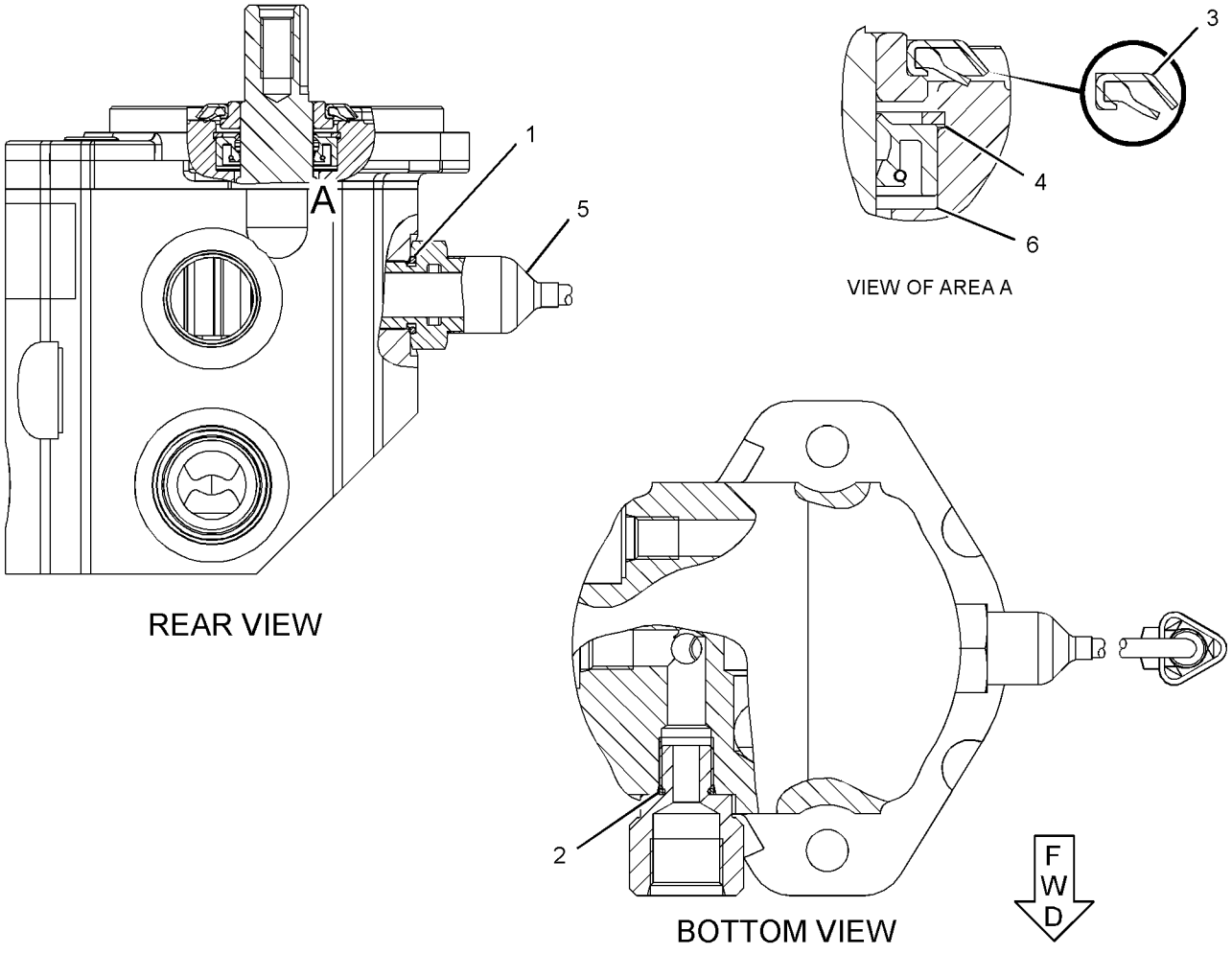

GRAPHIC #1 **<END>** g01229839

HYDRAULIC SYSTEM

154-5011 MOUNTING GP-CYLINDER

S/N: MJH1-UP; SCH1-UP; RLL1-UP; BXM1-UP
PART OF 154-5004, 154-5008, 154-5010 BUCKET AR-MULTIPURPOSE
AN ATTACHMENT

SMCS-5498 **i01066088**

NOTE	REF NO	GRAPHIC REF	PART NUMBER	QTY	PART NAME 1 2 3 4 5 6 (PRODUCT LEVEL)	SEE PAGE
	1	1	**154-5012**	2	PIN	
	2	1	**154-5013**	2	PIN	
	3	1	**3B-8489**	2	FITTING-GREASE	
M	4	1	**6V-9189**	4	LOCKNUT (M8X1.25-THD)	
M	5	1	**8T-6869**	4	BOLT (M8X1.25X60-MM)	

M-METRIC PART

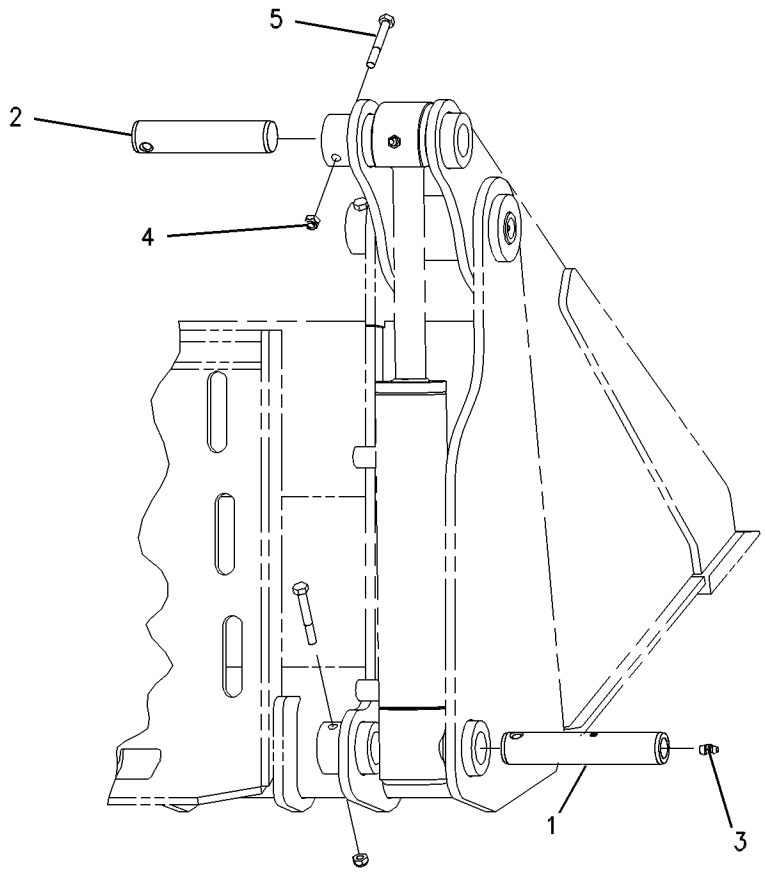

GRAPHIC #1 **<END>** g00560356

HYDRAULIC SYSTEM

156-0891 MOUNTING GP-CYLINDER

S/N: MJH1-UP; SCH1-UP; RLL1-UP; BXM1-UP
INDUSTRIAL
PART OF 157-7223, 157-7224, 157-7225 BUCKET AR-GRAPPLE, 162-8139, 163-4812 FORK AR-GRAPPLE
AN ATTACHMENT

SMCS-5498 **i02140762**

NOTE	REF NO	GRAPHIC REF	PART NUMBER	QTY	PART NAME 1 2 3 4 5 6 (PRODUCT LEVEL)	SEE PAGE
	1	1	**255-8058**	2	PLATE	
	2	1	**156-0913**	1	PLATE	
	3	1	**157-0941**	2	PIN	
	4	1	**157-0942**	2	PIN	
	5	1	**159-8035**	2	FILM-WARNING (NO HANDS, STAY BACK)	
	6	1	**3B-8489**	2	FITTING-GREASE	
	7	1	**4M-5285**	4	RING-RETAINING (EXTERNAL)	
M	8	1	**6V-9189**	2	LOCKNUT (M8X1.25-THD)	
M	9	1	**8T-4138**	3	BOLT (M6X1X20-MM)	
M	10	1	**8T-6869**	2	BOLT (M8X1.25X60-MM)	
	11	1	**9X-2026**	3	WASHER (6.5X17X1-MM THK)	
	12	1	**9X-6274**	4	WASHER (32.5X50X1.6-MM THK)	

M-METRIC PART

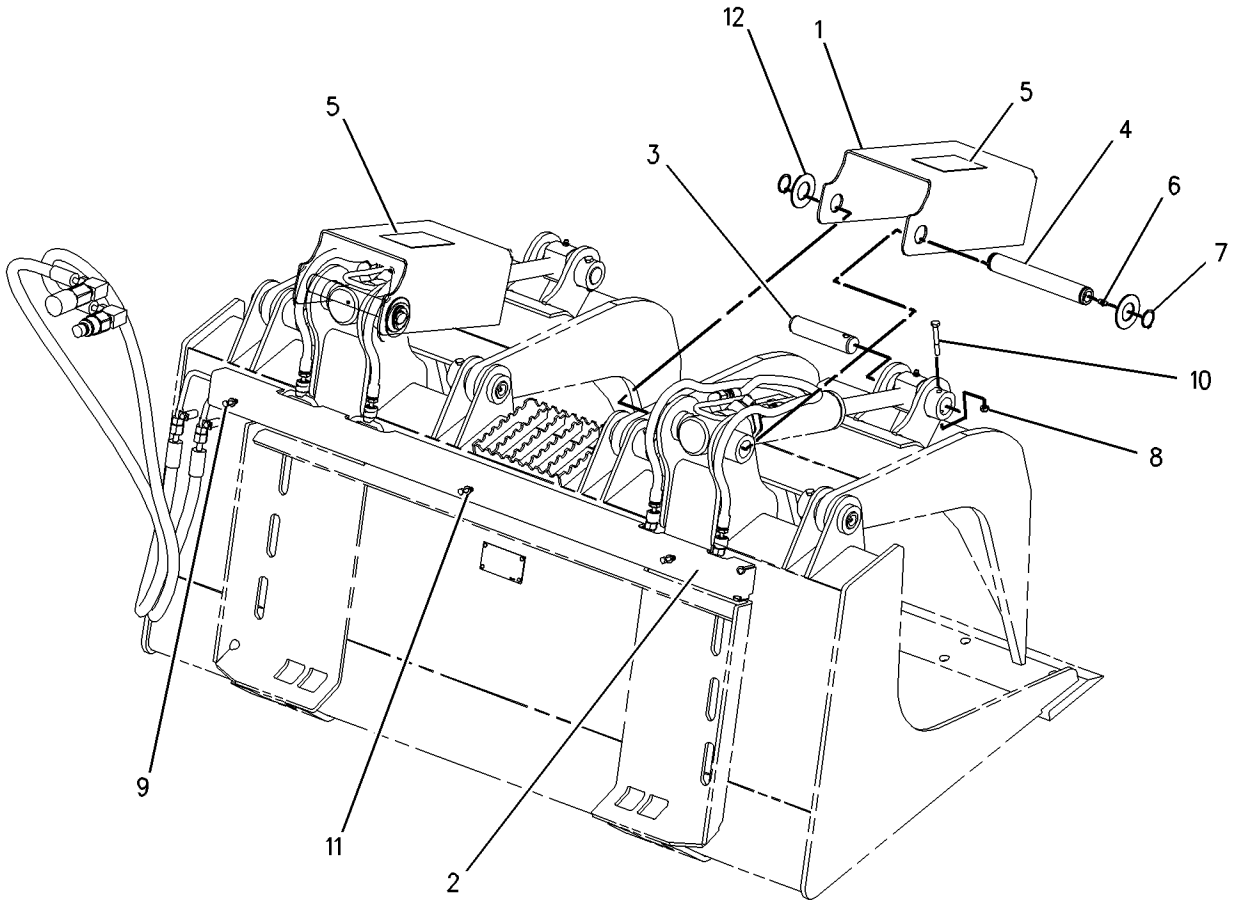

GRAPHIC #1 **<END>** g00777681

165-8731 MOUNTING GP-CYLINDER

S/N: MJH1-UP; SCH1-UP; RLL1-UP; BXM1-UP
UTILITY
PART OF 165-8734 GRAPPLE & CYLINDER GP-UTILITY
AN ATTACHMENT

SMCS-5498 **i02017132**

NOTE	REF NO	GRAPHIC REF	PART NUMBER	QTY	PART NAME 1 2 3 4 5 6 (PRODUCT LEVEL)	SEE PAGE
	1	1	**154-5013**	2	PIN	
M	2	1	**6V-9189**	2	LOCKNUT (M8X1.25-THD)	
M	3	1	**8T-6869**	2	BOLT (M8X1.25X60-MM)	

M-METRIC PART

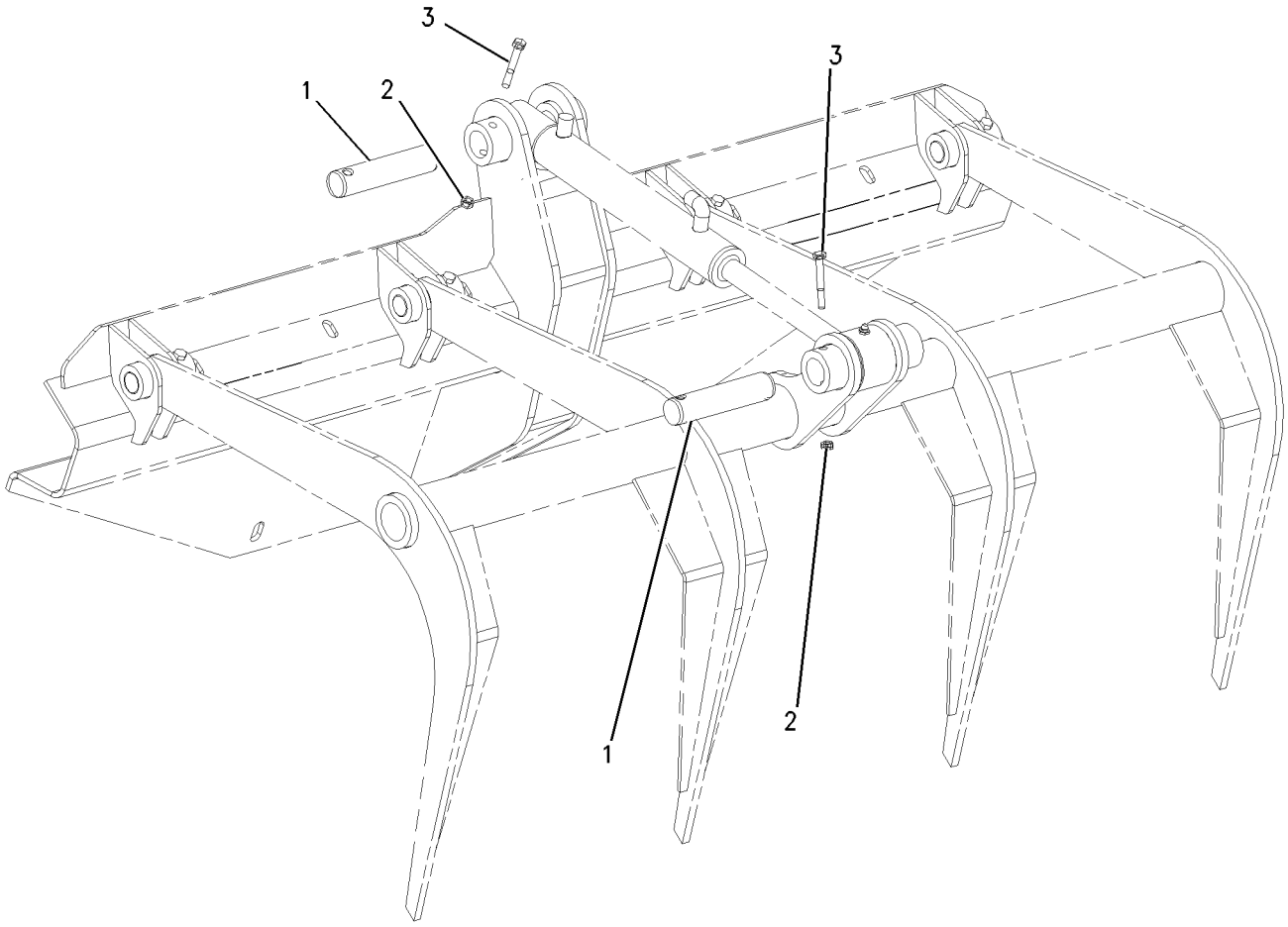

GRAPHIC #1 **<END>** g00652937

142-8714 PLUG GP-PILOT VALVE

S/N: MJH1-UP; SCH1-UP; RLL1-UP; BXM1-UP
AN ATTACHMENT

SMCS-5059 **i01788841**

NOTE	REF NO	GRAPHIC REF	PART NUMBER	QTY	PART NAME 1 2 3 4 5 6 (PRODUCT LEVEL)	SEE PAGE
	1	1	*148-8407*	1	PLUG AS	
		1	**3J-1907**	1	SEAL-O-RING	
		1	**9S-4191**	1	PLUG-O RING	

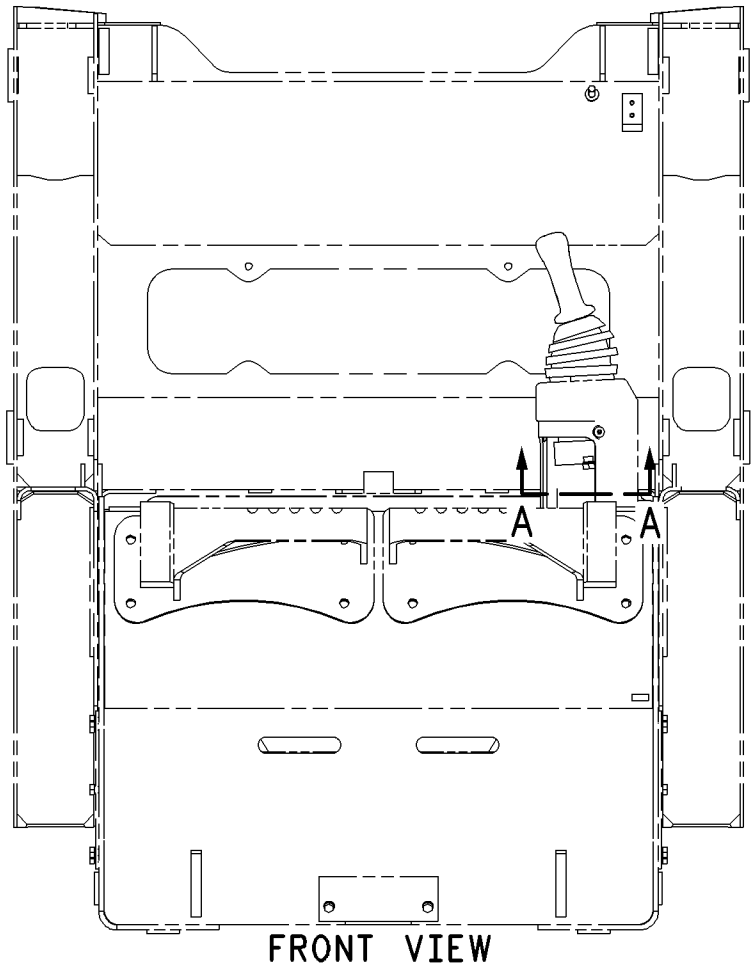

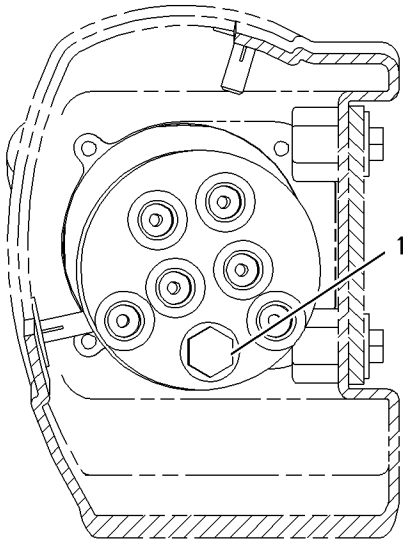

VIEW A-A

GRAPHIC #1 **<END>** g00915486

218-6079 PUMP & MTG GP-WORK TOOL

S/N: MJH1-UP; BXM1-UP
PART OF 218-6131, 218-6762 HYDRAULIC AR
AN ATTACHMENT

SMCS-6700 **i02014441**

NOTE	REF NO	GRAPHIC REF	PART NUMBER	QTY	PART NAME 1 2 3 4 5 6 (PRODUCT LEVEL)	SEE PAGE
Y	1	1	**225-9238**	1	PUMP GP-GEAR (WORK TOOL, HIGH FLOW)	517
	2	1	**8T-4223**	2	WASHER-HARD (13.5X25.5X3-MM THK)	
M	3	1	**8T-4956**	2	BOLT (M12X1.75X35-MM)	
	4	1	**8T-5049**	1	SEAL-O-RING	

M-METRIC PART
Y-SEPARATE ILLUSTRATION

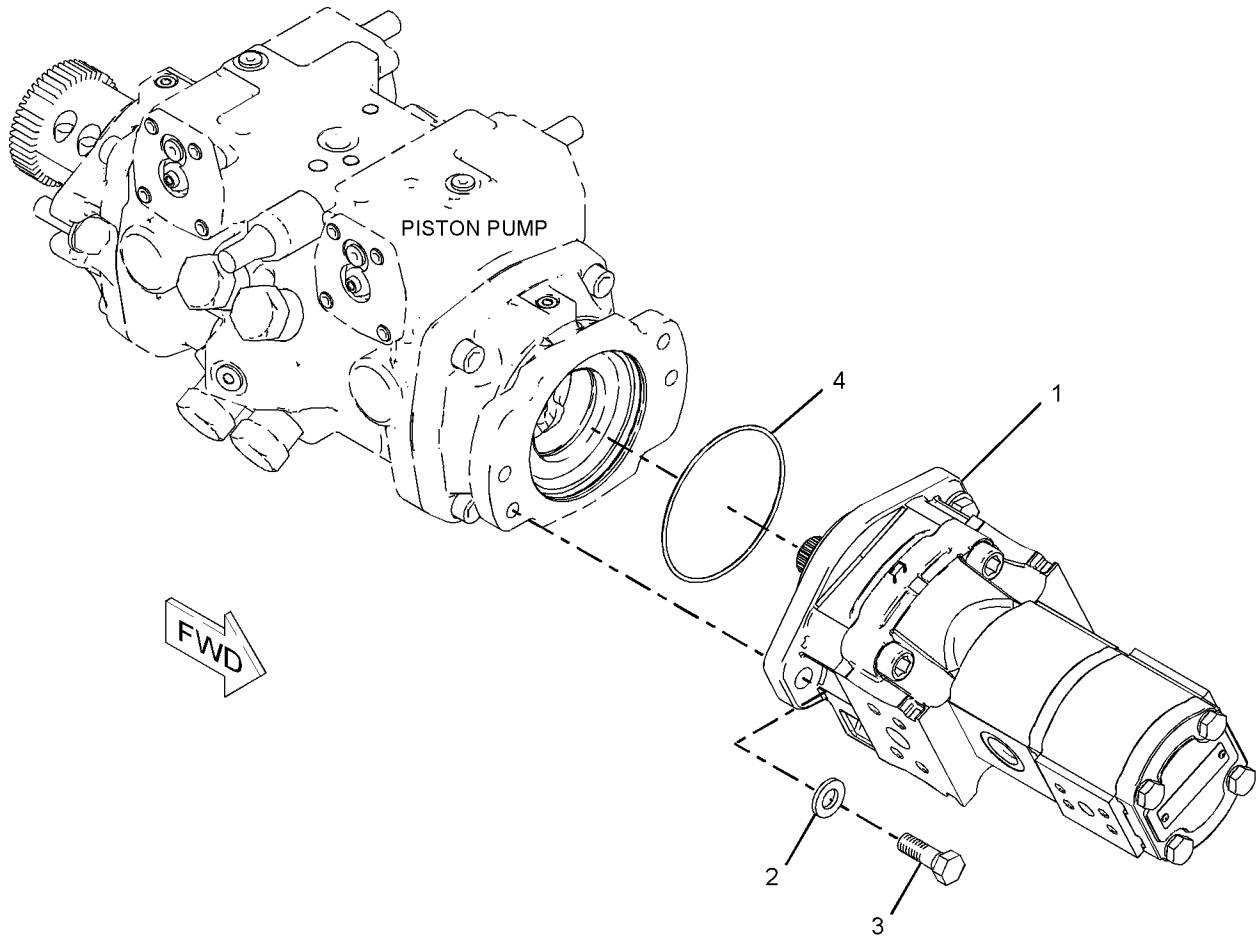

GRAPHIC #1 **<END>** g01017958

218-6175 PUMP & MTG GP-WORK TOOL

S/N: MJH1-UP; SCH1-1599; RLL1-3199; BXM1-UP
PART OF 252-0449 CONVERSION AR-MACHINE, 218-5620, 218-6130, 218-6760, 218-6820 HYDRAULIC AR
ALSO AN ATTACHMENT

SMCS-6700 **i02360188**

NOTE	REF NO	GRAPHIC REF	PART NUMBER	QTY	PART NAME 1 2 3 4 5 6 (PRODUCT LEVEL)	SEE PAGE
Y	1	1	**236-5106**	1	PUMP GP-GEAR (WORK TOOL)	518
	2	1	**8T-4223**	2	WASHER-HARD (13.5X25.5X3-MM THK)	
M	3	1	**8T-4956**	2	BOLT (M12X1.75X35-MM)	
	4	1	**8T-5049**	1	SEAL-O-RING	

M-METRIC PART
Y-SEPARATE ILLUSTRATION

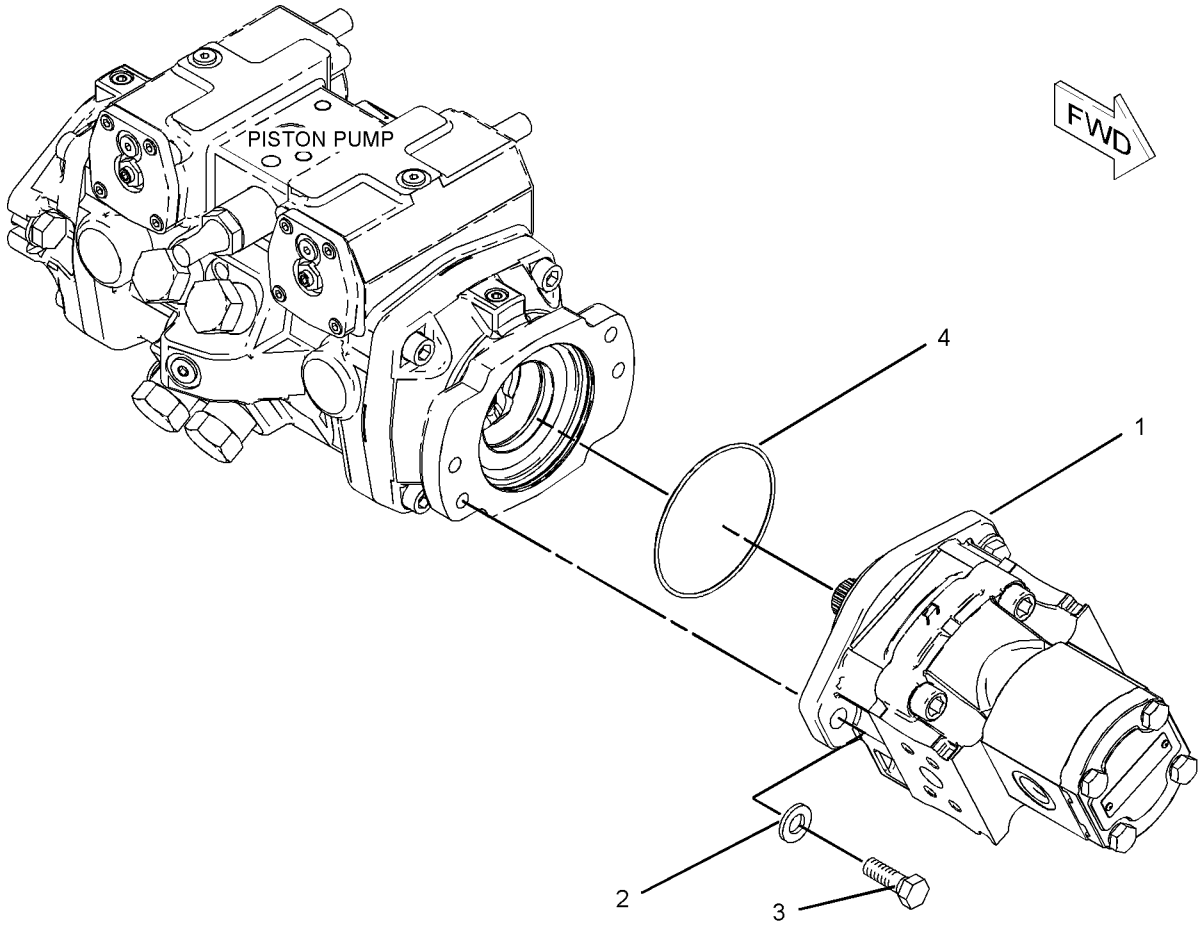

GRAPHIC #1 **<END>** g01017552

261-6094 PUMP & MTG GP-WORK TOOL

S/N: MJH5600-UP; SCH1600-UP; RLL3200-UP; BXM2400-UP
STAGE II SOUND
PART OF 261-6155, 261-6156, 278-5347, 278-5348, 278-5369, 278-5370, 278-5413, 278-5414 CONVERSION AR-MACHINE, 261-6132, 261-6142 HYDRAULIC AR AN ATTACHMENT

SMCS-6700 **i02431671**

NOTE	REF NO	GRAPHIC REF	PART NUMBER	QTY	PART NAME 1 2 3 4 5 6 (PRODUCT LEVEL)	SEE PAGE
	1	1	**269-9462**	1	PUMP GP-GEAR	
		1	**8C-3110**	1	RING-RETAINING	
		1	**230-3757**	2	SEAL-SHAFT	
	2	1	**8T-4223**	2	WASHER-HARD (13.5X25.5X3-MM THK)	
M	3	1	**8T-4956**	2	BOLT (M12X1.75X35-MM)	
	4	1	**8T-5049**	1	SEAL-O-RING	

M-METRIC PART

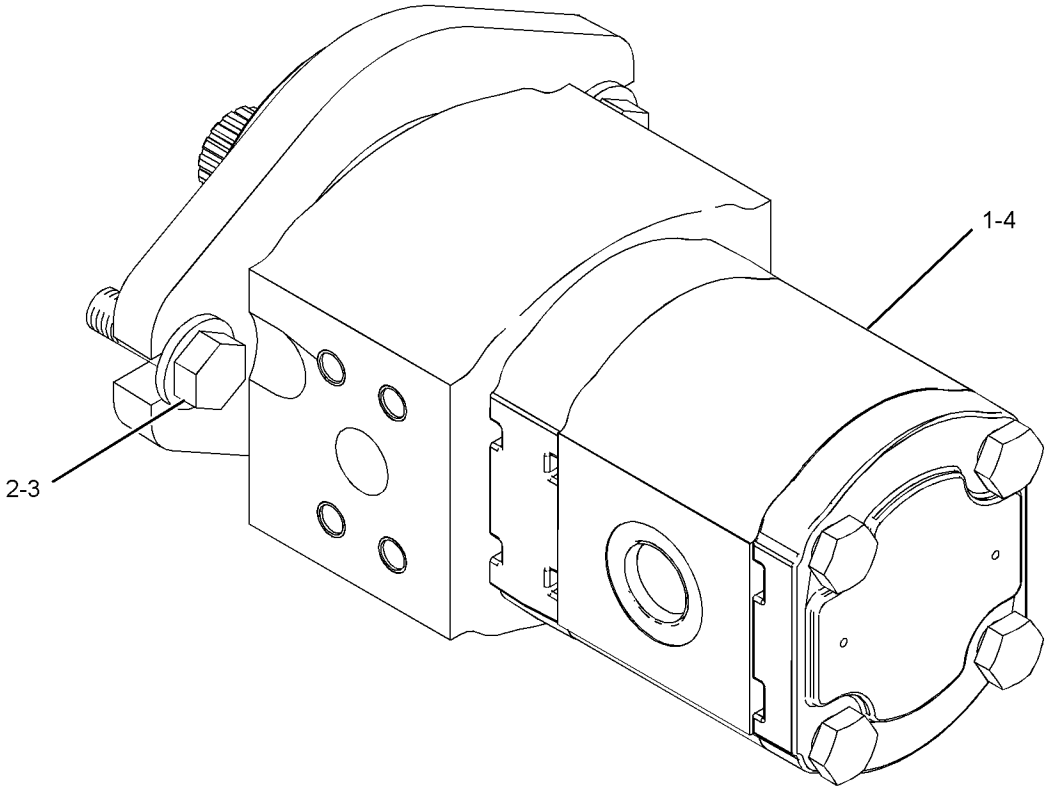

GRAPHIC #1 **<END>** g01229588

HYDRAULIC SYSTEM

261-6095 PUMP & MTG GP-WORK TOOL

S/N: MJH5600-UP; BXM2400-UP
PART OF 261-6139, 261-6149 HYDRAULIC AR
AN ATTACHMENT

SMCS-6700 **i02453730**

NOTE	REF NO	GRAPHIC REF	PART NUMBER	QTY	PART NAME 1 2 3 4 5 6 (PRODUCT LEVEL)	SEE PAGE
	1	1	**269-9465**	1	PUMP GP-GEAR	
		1	**8C-3110**	1	RING-RETAINING	
		1	**230-3757**	2	SEAL-SHAFT	
	2	1	**8T-4223**	2	WASHER-HARD (13.5X25.5X3-MM THK)	
M	3	1	**8T-4956**	2	BOLT (M12X1.75X35-MM)	
	4	1	**8T-5049**	1	SEAL-O-RING	

M-METRIC PART

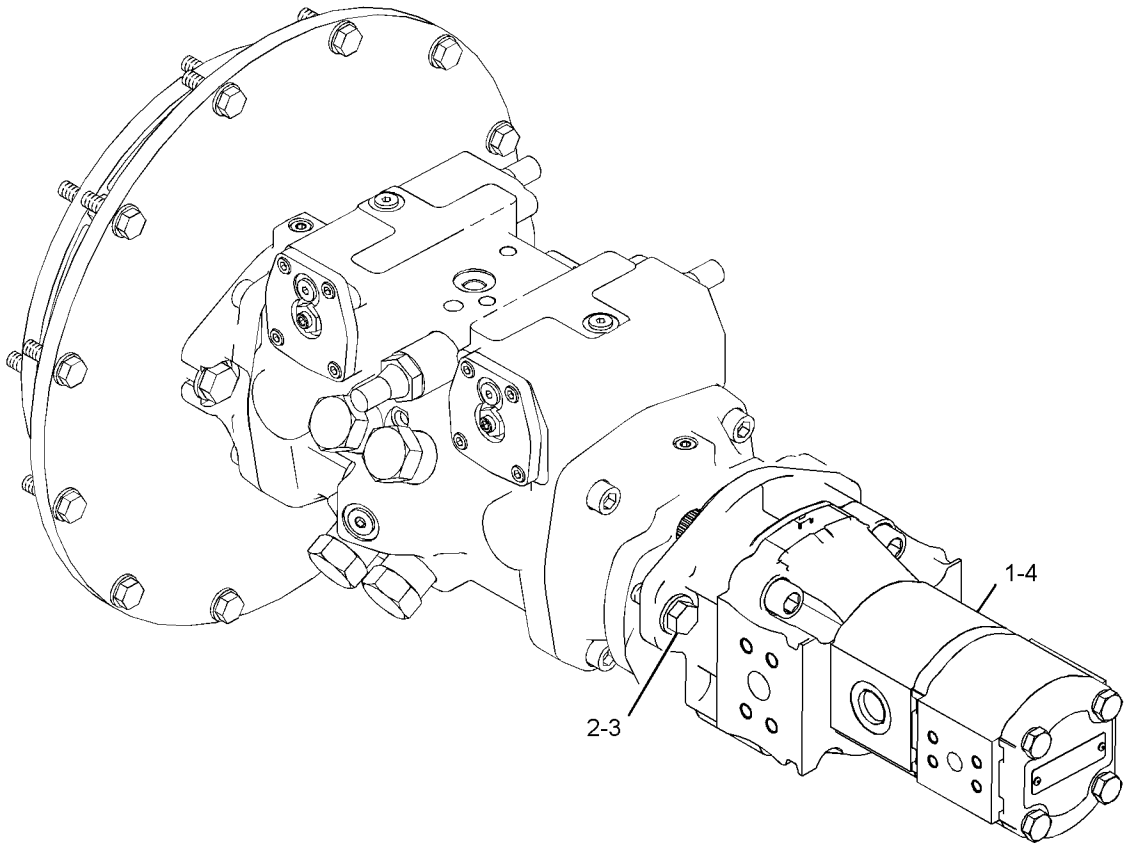

GRAPHIC #1 **<END>** g01229699

225-9238 PUMP GP-GEAR–WORK TOOL

S/N: MJH1-UP; BXM1-UP
HIGH FLOW
PART OF 218-6737, 218-6738 KIT-HIGH FLOW CONVERSION, 218-6079 PUMP & MTG
GP-WORK TOOL
AN ATTACHMENT

SMCS-5073 **i01964579**

NOTE	REF NO	GRAPHIC REF	PART NUMBER	QTY	PART NAME 1 2 3 4 5 6 (PRODUCT LEVEL)	SEE PAGE
	1	1	**230-3757**	2	SEAL-SHAFT	
	2	1	**8C-3110**	1	RING-RETAINING	

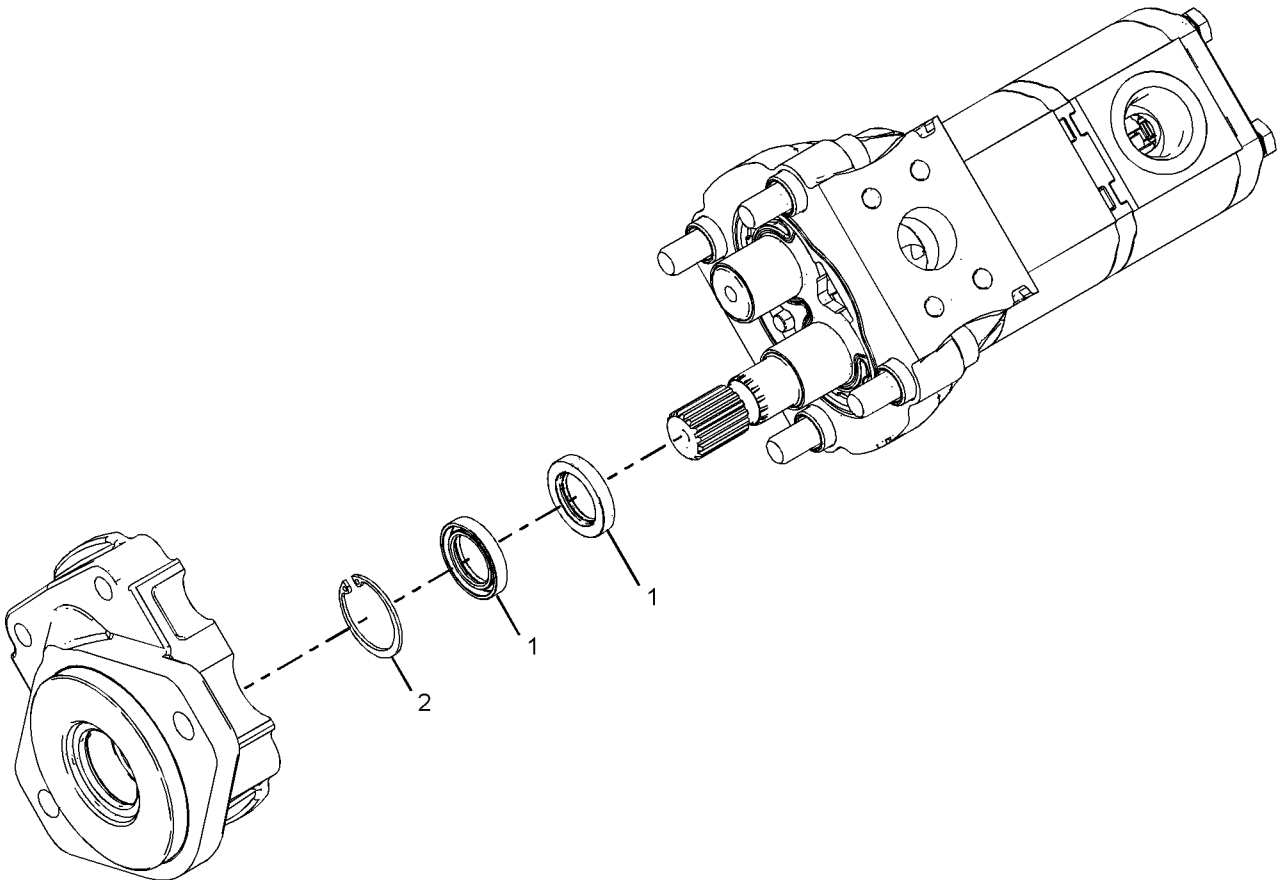

GRAPHIC #1 **<END>** g01023802

HYDRAULIC SYSTEM

236-5106 PUMP GP-GEAR—WORK TOOL

S/N: MJH1-UP; SCH1-UP; RLL1-UP; BXM1-UP
PART OF 218-6175 PUMP & MTG GP-WORK TOOL
ALSO AN ATTACHMENT

SMCS-5073 **i01952024**

NOTE	REF NO	GRAPHIC REF	PART NUMBER	QTY	PART NAME 1 2 3 4 5 6 (PRODUCT LEVEL)	SEE PAGE
	1	1	**230-3757**	2	SEAL-SHAFT	
	2	1	**8C-3110**	1	RING-RETAINING	

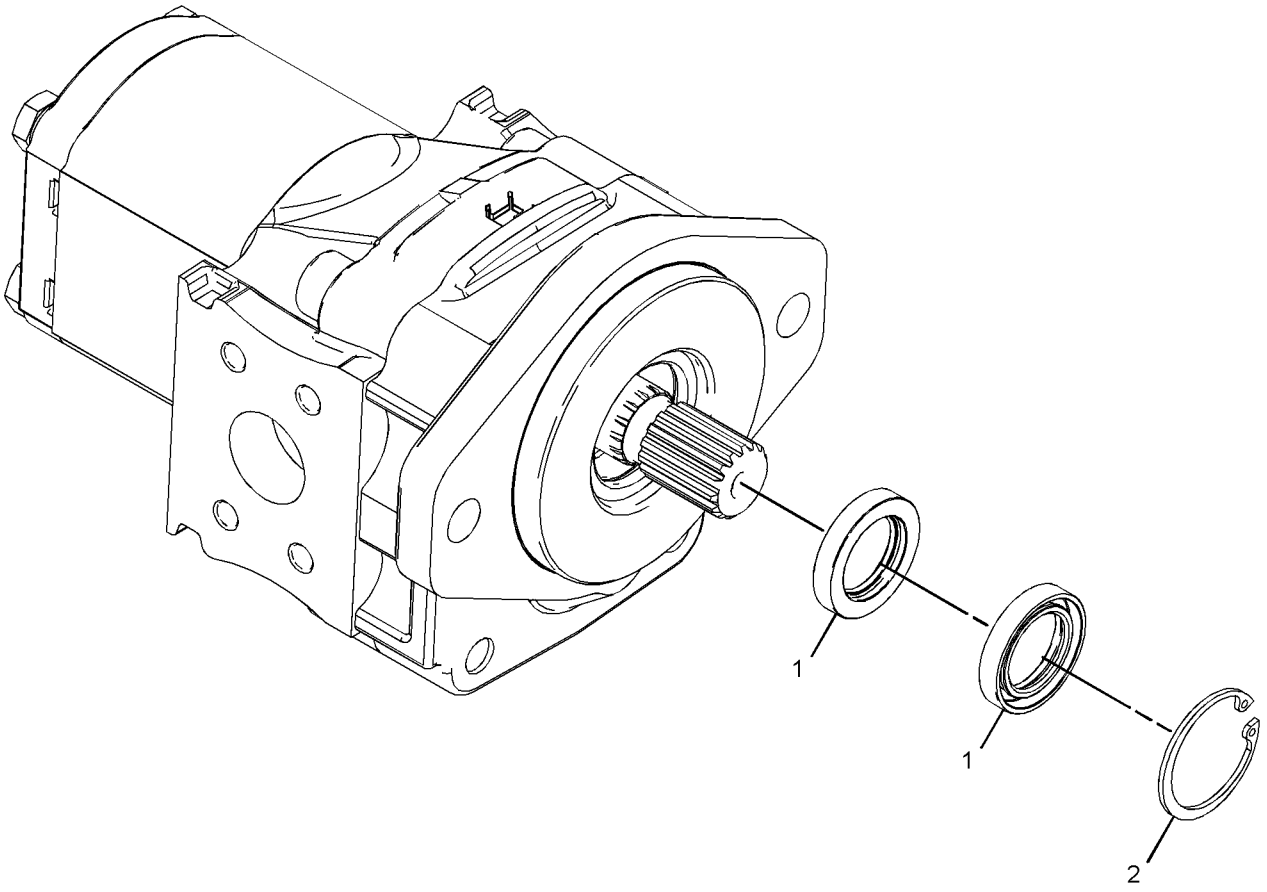

GRAPHIC #1 **<END>** g01017583

233-5980 TANK & MTG GP-HYDRAULIC

S/N: MJH1-UP; SCH1-UP; RLL1-UP; BXM1-UP
PART OF 218-5620, 218-5820, 218-6820, 218-6920, 278-1217, 278-1227, 278-1233, 278-1243 HYDRAULIC AR

SMCS-5056 **i02160229**

NOTE	REF NO	GRAPHIC REF	PART NUMBER	QTY	PART NAME 1 2 3 4 5 6 (PRODUCT LEVEL)	SEE PAGE
	1	1	**5P-4961**	2	CLAMP-HOSE	
	2	1	**154-4014**	1	BRACKET	
Y	3	1	**204-1491**	1	TANK GP-HYDRAULIC	520
	4	1	**207-9729**	1	FILTER AS (BREATHER)(HYDRAULIC OIL)	
	5	1	**5P-4116**	2	WASHER-HARD (8.8X20.5X2-MM THK)	
	6	1	**6D-4246**	1	CLIP	
	7	1	**8T-4121**	1	WASHER-HARD (11X21X2.5-MM THK)	
M	8	1	**8T-4136**	1	BOLT (M10X1.5X25-MM)	
M	9	1	**8T-4189**	2	BOLT (M8X1.25X20-MM)	
E	10	1	**5P-1442**		HOSE (65-CM)	
BE	11	1	**233-5997**		HOSE	

B-USE AS REQUIRED
E-ORDER BY THE CENTIMETER
M-METRIC PART
Y-SEPARATE ILLUSTRATION

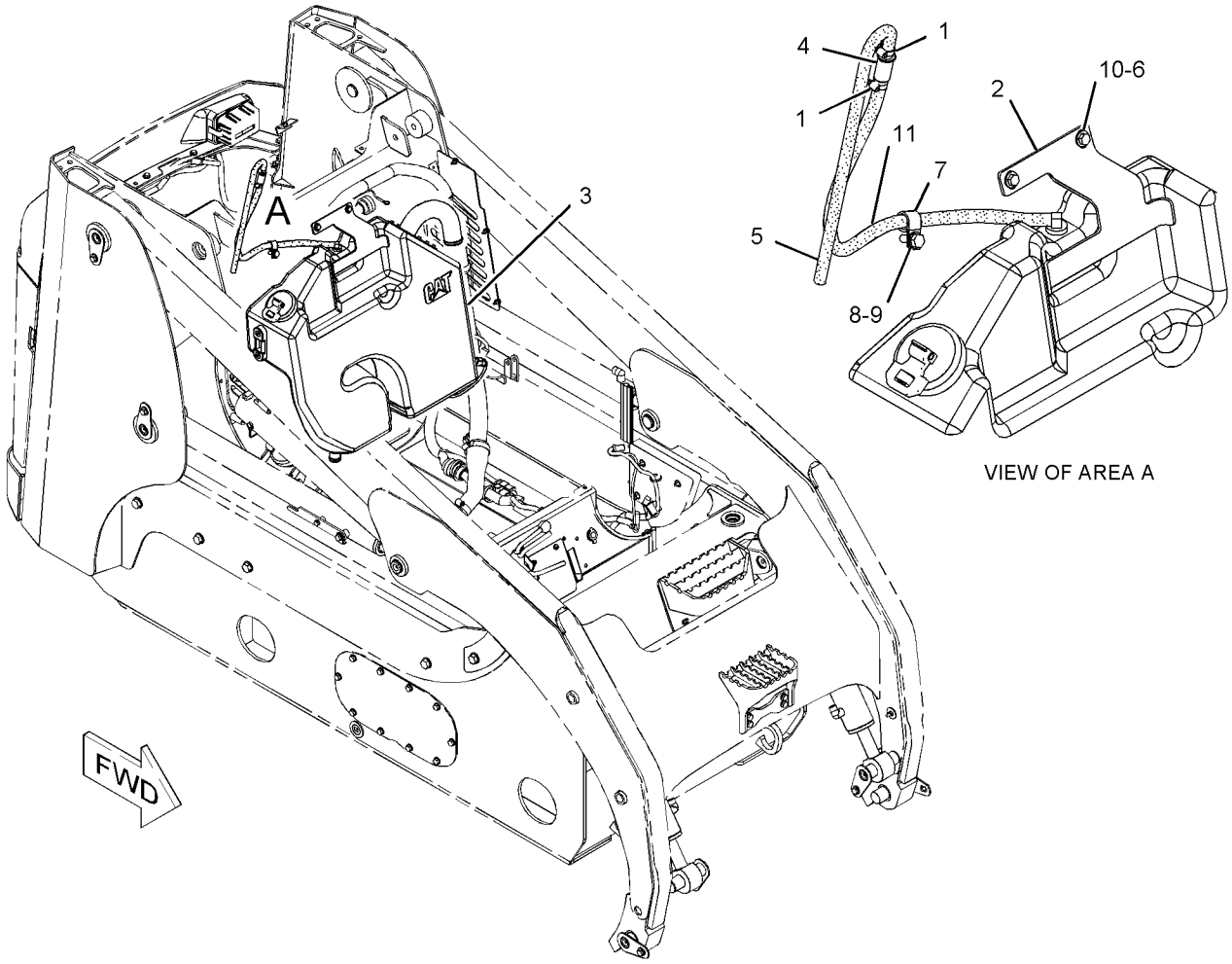

GRAPHIC #1 **<END>** g01132130

HYDRAULIC SYSTEM

204-1491 TANK GP-HYDRAULIC

S/N: MJH1-UP; SCH1-UP; RLL1-UP; BXM1-UP
PART OF 233-5980 TANK & MTG GP-HYDRAULIC

SMCS-5056 **i02014392**

NOTE	REF NO	GRAPHIC REF	PART NUMBER	QTY	PART NAME 1 2 3 4 5 6 (PRODUCT LEVEL)	SEE PAGE
	1	1	**6W-5698**	1	GROMMET	
M	2	1	**099-2374**	6	BOLT-SOCKET HEAD (M5X0.8X12-MM)	
	3	1	**132-3056**	1	SEAL-O-RING	
	4	1	**142-8928**	1	ELBOW	
	5	1	**142-8929**	1	SCREEN-SUCTION (HYDRAULIC TANK)	
	6	1	**142-8937**	1	CAP AS-FILLER (HYDRAULIC TANK)	
	7	1	**204-1492**	1	TANK GP-HYDRAULIC	
		1	**192-2668**	1	GAUGE-SIGHT (HYDRAULIC TANK)	
	8	1	**204-1499**	1	TUBE AS	
	9	1	**236-1872**	1	SWITCH AS-TEMPERATURE (HYDRAULIC OIL)	
		1	**102-8803**	1	KIT-RECEPTACLE (3-PIN)	
	10	1	**3K-0360**	1	SEAL-O-RING	

M-METRIC PART

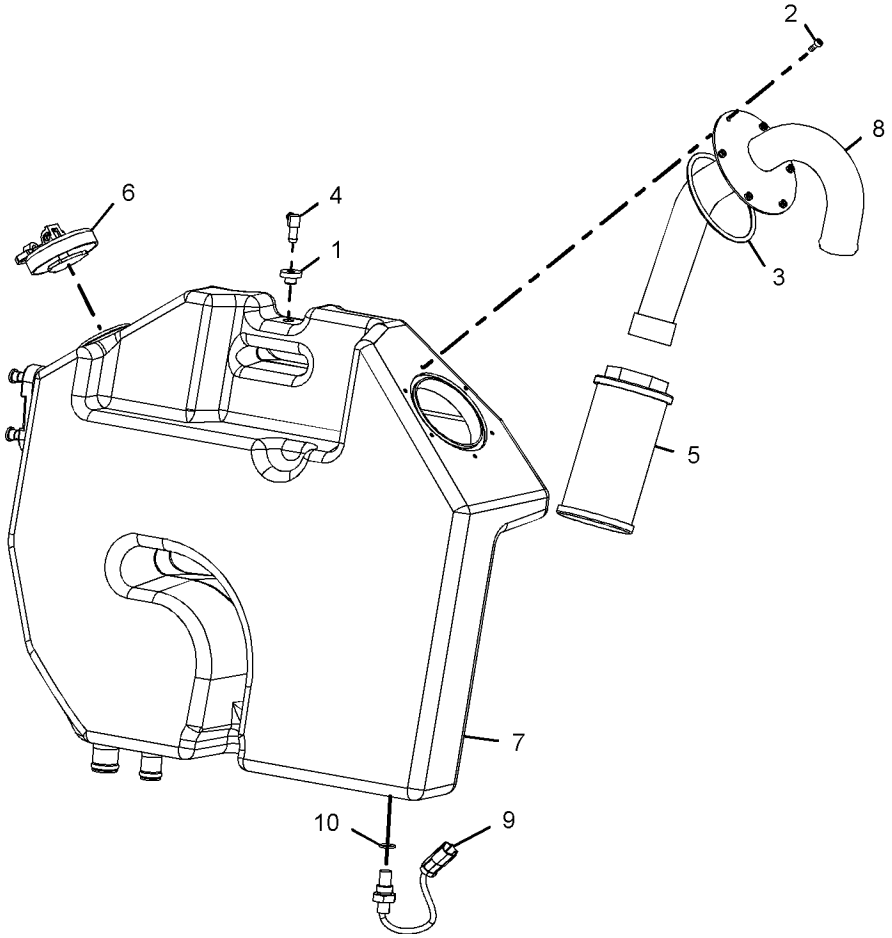

GRAPHIC #1 **<END>** g01032724

HYDRAULIC SYSTEM

218-6240 VALVE & LINES GP-COUPLER

S/N: MJH1-1928; RLL1-940
WITH MANUAL LOWERING CONTROL
PART OF 218-6322 COUPLER AR-QUICK
AN ATTACHMENT

SMCS-5057, 5147, 5479 **i02003957**

NOTE	REF NO	GRAPHIC REF	PART NUMBER	QTY	PART NAME 1 2 3 4 5 6 (PRODUCT LEVEL)	SEE PAGE
	1	1	**124-2456**	1	FILM-INSTRUCTION (NO STEP)	
	2	1	**191-9783**	1	VALVE GP-MANUAL (MANUAL LOWERING CONTROL)	
	3	1	**207-9737**	1	BRACKET AS	
I	4	1	**207-9756**	4	HOSE AS	
Y	5	1	**209-0640**	1	VALVE & MTG GP-SOLENOID (QUICK COUPLER)	543
	6	1	**212-6690**	1	GUARD	
I	7	1	**218-6212**	1	HOSE AS	
	8	1	**218-6213**	1	TUBE AS	
I	9	1	**218-6241**	1	HOSE AS	
	10	1	**218-6243**	1	TUBE AS	
	11	1	**218-6244**	1	TUBE AS	
I	12	1	**218-6245**	2	HOSE AS	
I	13	1	**218-6249**	1	HOSE AS	
	14	1	**218-6938**	1	BRACKET	
I	15	1	**219-4335**	2	HOSE AS	
	16	1	*148-8325*	4	CONNECTOR AS	
					(EACH INCLUDES)	
		1	**3J-1907**	1	SEAL-O-RING	
		1	**4J-5477**	1	SEAL-O-RING	
		1	**6V-8641**	1	CONNECTOR	
	17	1	*148-8336*	3	CONNECTOR AS	
					(EACH INCLUDES)	
		1	**3J-1907**	1	SEAL-O-RING	
		1	**6V-8397**	1	SEAL-O-RING	
		1	**6V-8636**	1	CONNECTOR	
	18	1	*148-8378*	2	ELBOW AS	
					(EACH INCLUDES)	
		1	**3J-1907**	1	SEAL-O-RING	
		1	**6V-8397**	1	SEAL-O-RING	
		1	**6V-8724**	1	ELBOW	
	19	1	*148-8446*	1	TEE GP-SWIVEL	
		1	**6V-9838**	1	TEE-SWIVEL	
		1	**7J-9108**	2	SEAL-O-RING	
	20	1	*150-4034*	2	TEE GP	
					(EACH INCLUDES)	
		1	**6V-8397**	3	SEAL-O-RING	
		1	**8T-0379**	1	TEE-BULKHEAD	
	21	1	*156-4282*	1	REDUCER AS	
		1	**6V-8397**	1	SEAL-O-RING	
		1	**6V-8938**	1	REDUCER-O-RING	
	22	1	*164-5624*	1	ELBOW GP	
		1	**3J-1907**	1	SEAL-O-RING	
		1	**6V-8398**	1	SEAL-O-RING	
		1	**9X-2085**	1	ELBOW	
	23	1	**1F-7567**	1	CLIP	
	24	1	**2V-3216**	4	CLIP	
	25	1	**4B-4863**	2	WASHER (4.7X11X1.2-MM THK)	
M	26	1	**6V-5698**	2	SCREW-BUTTON HEAD (M4X0.7X10-MM)	
	27	1	**6V-8397**	6	SEAL-O-RING	
	28	1	**6V-8555**	1	NUT-FACE SEAL (1-14-THD)	
	29	1	**6V-9168**	2	NUT (11/16-16-THD)	
	30	1	**7B-1597**	1	CLIP	
	31	1	**7G-2950**	1	CLIP (SLOT)	
	32	1	**7G-2951**	1	CLIP (TAB)	

218-6240 VALVE & LINES GP-COUPLER *(contd.)* i02003957

NOTE	REF NO	GRAPHIC REF	PART NUMBER	QTY	PART NAME 1 2 3 4 5 6 (PRODUCT LEVEL)	SEE PAGE
	33	1	**7H-7055**	2	CLIP	
	34	1	**7X-7729**	7	WASHER (11X25X3-MM THK)	
	35	1	**8T-4121**	4	WASHER-HARD (11X21X2.5-MM THK)	
M	36	1	**8T-4133**	2	NUT (M10X1.5-THD)	
M	37	1	**8T-4136**	1	BOLT (M10X1.5X25-MM)	
M	38	1	**8T-4189**	4	BOLT (M8X1.25X20-MM)	
M	39	1	**8T-4191**	3	BOLT (M10X1.5X16-MM)	
M	40	1	**8T-4201**	3	BOLT-LOCKING (M10X1.5X20-MM)	
	41	1	**8T-4224**	4	WASHER-HARD (8.8X16X2-MM THK)	
M	42	1	**8T-5005**	2	BOLT (M10X1.5X70-MM)	
	43	1	**9M-8406**	2	CLIP	
	44	1	**9S-1350**	1	CLIP	

I-REFER TO HYDRAULIC INFORMATION SYSTEM
M-METRIC PART
Y-SEPARATE ILLUSTRATION

218-6240 **VALVE & LINES GP-COUPLER** *(contd.)* **i02003957**

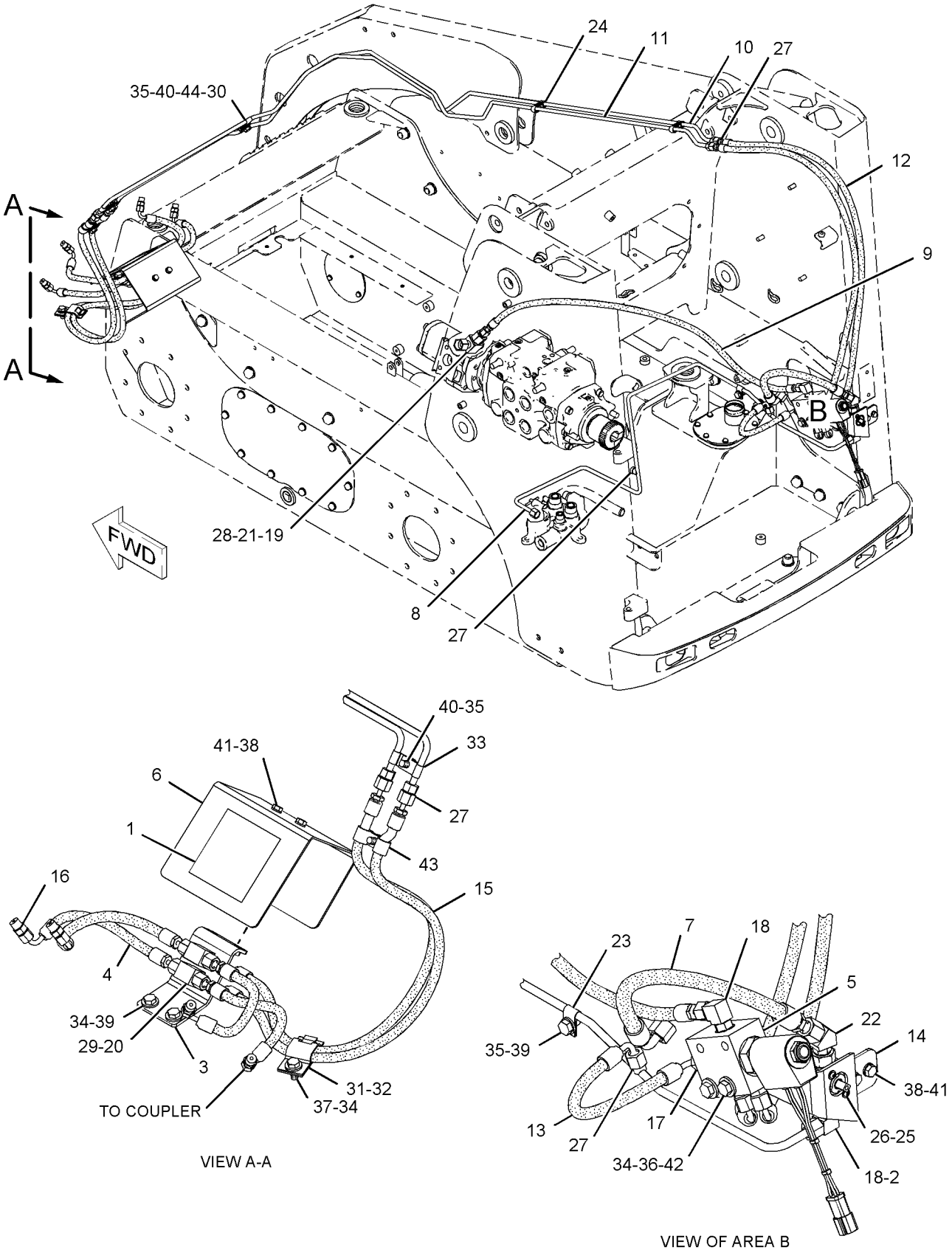

GRAPHIC #1 **<END>** g01037075

HYDRAULIC SYSTEM

218-6240 VALVE & LINES GP-COUPLER

S/N: MJH1929-2449; RLL941-1316
WITH MANUAL LOWERING CONTROL
PART OF 218-6322 COUPLER AR-QUICK
AN ATTACHMENT

SMCS-5057, 5147, 5479 **i02232133**

NOTE	REF NO	GRAPHIC REF	PART NUMBER	QTY	PART NAME 1 2 3 4 5 6 (PRODUCT LEVEL)	SEE PAGE
	1	1	**124-2456**	1	FILM-INSTRUCTION (NO STEP)	
	2	1	**191-9783**	1	VALVE GP-MANUAL (MANUAL LOWERING CONTROL)	
	3	1	**207-9737**	1	BRACKET AS	
M		1	**8T-3612**	2	NUT-WELD (M8X1.25-THD)	
I	4	1	**207-9756**	4	HOSE AS	
	5	1	**212-6690**	1	GUARD	
I	6	1	**218-6212**	1	HOSE AS	
	7	1	**218-6213**	1	TUBE AS	
I	8	1	**218-6241**	1	HOSE AS	
	9	1	**218-6243**	1	TUBE AS	
	10	1	**218-6244**	1	TUBE AS	
I	11	1	**218-6245**	2	HOSE AS	
I	12	1	**218-6249**	1	HOSE AS	
	13	1	**218-6938**	1	BRACKET	
I	14	1	**219-4335**	2	HOSE AS	
CY	15	1	**233-7128**	1	VALVE & MTG GP-SOLENOID (QUICK COUPLER) (QUICK COUPLER)	544
	16	1	*148-8325*	4	CONNECTOR AS	
					(EACH INCLUDES)	
		1	**3J-1907**	1	SEAL-O-RING	
		1	**4J-5477**	1	SEAL-O-RING	
		1	**6V-8641**	1	CONNECTOR	
	17	1	*148-8336*	3	CONNECTOR AS	
					(EACH INCLUDES)	
		1	**3J-1907**	1	SEAL-O-RING	
		1	**6V-8397**	1	SEAL-O-RING	
		1	**6V-8636**	1	CONNECTOR	
	18	1	*148-8378*	2	ELBOW AS	
					(EACH INCLUDES)	
		1	**3J-1907**	1	SEAL-O-RING	
		1	**6V-8397**	1	SEAL-O-RING	
		1	**6V-8724**	1	ELBOW	
	19	1	*148-8446*	1	TEE GP-SWIVEL	
		1	**6V-9838**	1	TEE-SWIVEL	
		1	**7J-9108**	2	SEAL-O-RING	
	20	1	*150-4034*	2	TEE GP	
					(EACH INCLUDES)	
		1	**6V-8397**	3	SEAL-O-RING	
		1	**8T-0379**	1	TEE-BULKHEAD	
	21	1	*156-4282*	1	REDUCER AS	
		1	**6V-8397**	1	SEAL-O-RING	
		1	**6V-8938**	1	REDUCER-O-RING	
	22	1	*164-5624*	1	ELBOW GP	
		1	**3J-1907**	1	SEAL-O-RING	
		1	**6V-8398**	1	SEAL-O-RING	
		1	**9X-2085**	1	ELBOW	
	23	1	**1F-7567**	1	CLIP	
	24	1	**2V-3216**	4	CLIP	
C	25	1	**3S-2093**	1	STRAP-CABLE	
	26	1	**4B-4863**	2	WASHER (4.7X11X1.2-MM THK)	
C	27	1	**4P-7581**	1	CLIP	
M	28	1	**6V-5698**	2	SCREW-BUTTON HEAD (M4X0.7X10-MM)	
	29	1	**6V-8397**	6	SEAL-O-RING	
	30	1	**6V-8555**	1	NUT-FACE SEAL (1-14-THD)	

218-6240 VALVE & LINES GP-COUPLER *(contd.)* i02232133

NOTE	REF NO	GRAPHIC REF	PART NUMBER	QTY	PART NAME 1 2 3 4 5 6 (PRODUCT LEVEL)	SEE PAGE
	31	1	**6V-9168**	2	NUT (11/16-16-THD)	
	32	1	**7B-1597**	1	CLIP	
	33	1	**7G-2950**	1	CLIP (SLOT)	
	34	1	**7G-2951**	1	CLIP (TAB)	
	35	1	**7H-7055**	2	CLIP	
C	36	1	**7X-7729**	6	WASHER (11X25X3-MM THK)	
	37	1	**8T-4121**	4	WASHER-HARD (11X21X2.5-MM THK)	
M	38	1	**8T-4133**	2	NUT (M10X1.5-THD)	
M	39	1	**8T-4136**	1	BOLT (M10X1.5X25-MM)	
M	40	1	**8T-4189**	4	BOLT (M8X1.25X20-MM)	
M	41	1	**8T-4191**	3	BOLT (M10X1.5X16-MM)	
M	42	1	**8T-4201**	3	BOLT-LOCKING (M10X1.5X20-MM)	
	43	1	**8T-4224**	4	WASHER-HARD (8.8X16X2-MM THK)	
M	44	1	**8T-5005**	2	BOLT (M10X1.5X70-MM)	
	45	1	**9M-8406**	2	CLIP	
	46	1	**9S-1350**	1	CLIP	

C-CHANGE FROM PREVIOUS TYPE
I-REFER TO HYDRAULIC INFORMATION SYSTEM
M-METRIC PART
Y-SEPARATE ILLUSTRATION

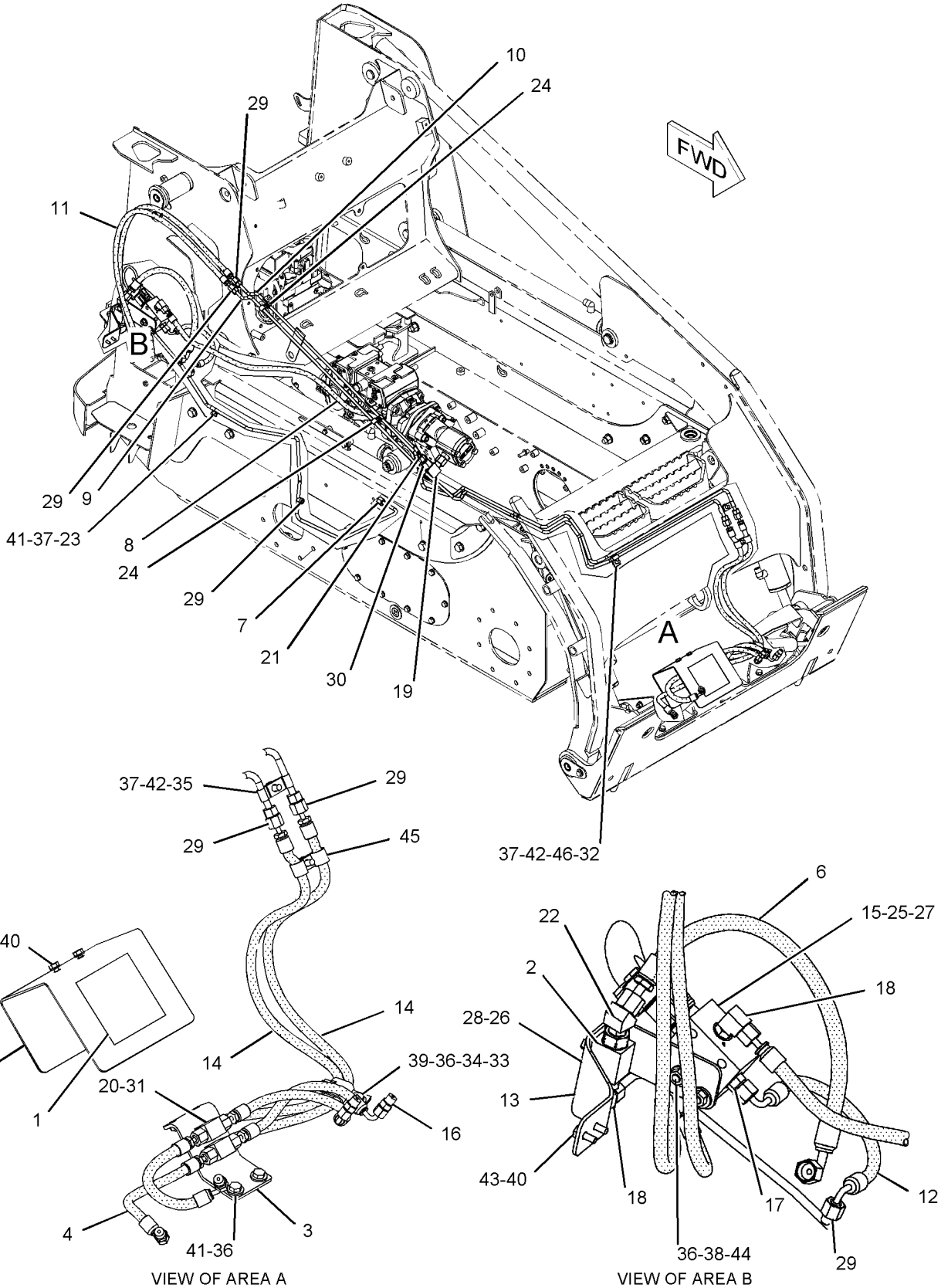

GRAPHIC #1 **<END>** g01127232

HYDRAULIC SYSTEM

218-6240 VALVE & LINES GP-COUPLER

S/N: MJH2450-UP; RLL1317-UP
WITH MANUAL LOWERING CONTROL
PART OF 218-6322 COUPLER AR-QUICK
AN ATTACHMENT

SMCS-5057, 5147, 5479 **i02232139**

NOTE	REF NO	GRAPHIC REF	PART NUMBER	QTY	PART NAME 1 2 3 4 5 6 (PRODUCT LEVEL)	SEE PAGE
	1	1	**124-2456**	1	FILM-INSTRUCTION (NO STEP)	
	2	1	**191-9783**	1	VALVE GP-MANUAL (MANUAL LOWERING CONTROL)	
	3	1	**207-9737**	1	BRACKET AS	
I	4	1	**207-9756**	4	HOSE AS	
	5	1	**212-6690**	1	GUARD	
I	6	1	**218-6212**	1	HOSE AS	
	7	1	**218-6213**	1	TUBE AS	
I	8	1	**218-6241**	1	HOSE AS	
C	9	1	**252-0342**	1	TUBE AS	
C	10	1	**252-0343**	1	TUBE AS	
I	11	1	**218-6245**	2	HOSE AS	
I	12	1	**218-6249**	1	HOSE AS	
	13	1	**218-6938**	1	BRACKET	
I	14	1	**219-4335**	2	HOSE AS	
Y	15	1	**233-7128**	1	VALVE & MTG GP-SOLENOID (QUICK COUPLER)	544
	16	1	*148-8325*	4	CONNECTOR AS	
					(EACH INCLUDES)	
		1	**3J-1907**	1	SEAL-O-RING	
		1	**4J-5477**	1	SEAL-O-RING	
		1	**6V-8641**	1	CONNECTOR	
	17	1	*148-8336*	3	CONNECTOR AS	
					(EACH INCLUDES)	
		1	**3J-1907**	1	SEAL-O-RING	
		1	**6V-8397**	1	SEAL-O-RING	
		1	**6V-8636**	1	CONNECTOR	
	18	1	*148-8378*	2	ELBOW AS	
					(EACH INCLUDES)	
		1	**3J-1907**	1	SEAL-O-RING	
		1	**6V-8397**	1	SEAL-O-RING	
		1	**6V-8724**	1	ELBOW	
	19	1	*148-8446*	1	TEE GP-SWIVEL	
		1	**6V-9838**	1	TEE-SWIVEL	
		1	**7J-9108**	2	SEAL-O-RING	
	20	1	*150-4034*	2	TEE GP	
					(EACH INCLUDES)	
		1	**6V-8397**	3	SEAL-O-RING	
		1	**8T-0379**	1	TEE-BULKHEAD	
	21	1	*156-4282*	1	REDUCER AS	
		1	**6V-8397**	1	SEAL-O-RING	
		1	**6V-8938**	1	REDUCER-O-RING	
	22	1	*164-5624*	1	ELBOW GP	
		1	**3J-1907**	1	SEAL-O-RING	
		1	**6V-8398**	1	SEAL-O-RING	
		1	**9X-2085**	1	ELBOW	
	23	1	**1F-7567**	1	CLIP	
	24	1	**2V-3216**	4	CLIP	
	25	1	**3S-2093**	1	STRAP-CABLE	
	26	1	**4B-4863**	2	WASHER (4.7X11X1.2-MM THK)	
	27	1	**4P-7581**	1	CLIP	
M	28	1	**6V-5698**	2	SCREW-BUTTON HEAD (M4X0.7X10-MM)	
	29	1	**6V-8397**	6	SEAL-O-RING	
C	30	1	**9X-6581**	1	NUT (1-14-THD)	
	31	1	**6V-9168**	2	NUT (11/16-16-THD)	
	32	1	**7B-1597**	1	CLIP	

218-6240 VALVE & LINES GP-COUPLER *(contd.)* i02232139

NOTE	REF NO	GRAPHIC REF	PART NUMBER	QTY	PART NAME 1 2 3 4 5 6 (PRODUCT LEVEL)	SEE PAGE
	33	1	**7G-2950**	1	CLIP (SLOT)	
	34	1	**7G-2951**	1	CLIP (TAB)	
	35	1	**7H-7055**	2	CLIP	
	36	1	**7X-7729**	6	WASHER (11X25X3-MM THK)	
	37	1	**8T-4121**	4	WASHER-HARD (11X21X2.5-MM THK)	
M	38	1	**8T-4133**	2	NUT (M10X1.5-THD)	
M	39	1	**8T-4136**	1	BOLT (M10X1.5X25-MM)	
M	40	1	**8T-4189**	4	BOLT (M8X1.25X20-MM)	
M	41	1	**8T-4191**	3	BOLT (M10X1.5X16-MM)	
M	42	1	**8T-4201**	3	BOLT-LOCKING (M10X1.5X20-MM)	
	43	1	**8T-4224**	4	WASHER-HARD (8.8X16X2-MM THK)	
M	44	1	**8T-5005**	2	BOLT (M10X1.5X70-MM)	
	45	1	**9M-8406**	2	CLIP	
	46	1	**9S-1350**	1	CLIP	

C-CHANGE FROM PREVIOUS TYPE
I-REFER TO HYDRAULIC INFORMATION SYSTEM
M-METRIC PART
Y-SEPARATE ILLUSTRATION

218-6240 **VALVE & LINES GP-COUPLER** *(contd.)* **i02232139**

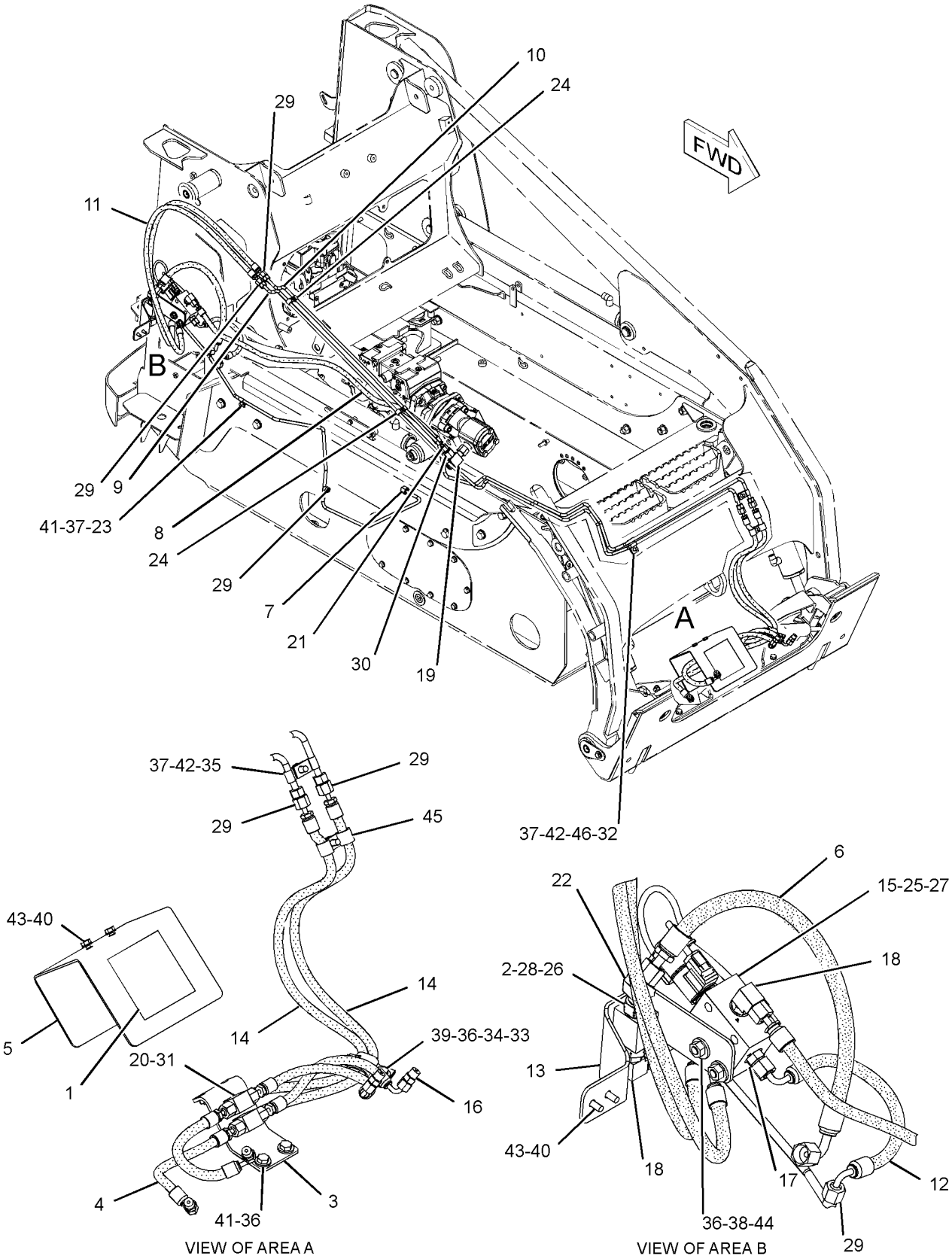

GRAPHIC #1 **<END>** g01162124

HYDRAULIC SYSTEM

218-6263 VALVE & LINES GP-COUPLER

S/N: SCH1-544; BXM1-833
WITH MANUAL LOWERING CONTROL
PART OF 218-6722 COUPLER AR-QUICK
AN ATTACHMENT

SMCS-5057, 5147, 5479 **i02007365**

NOTE	REF NO	GRAPHIC REF	PART NUMBER	QTY	PART NAME 1 2 3 4 5 6 (PRODUCT LEVEL)	SEE PAGE
	1	1	**2K-5232**	2	SPACER (0.406X0.75X1.81-IN THK)	
	2	1	**3S-2093**	4	STRAP-CABLE	
	3	1	**124-2456**	1	FILM-INSTRUCTION (NO STEP)	
	4	1	**191-9783**	1	VALVE GP-MANUAL (MANUAL LOWERING CONTROL)	
	5	1	**207-9737**	1	BRACKET AS	
I	6	1	**207-9756**	4	HOSE AS	
Y	7	1	**209-0640**	1	VALVE & MTG GP-SOLENOID	543
	8	1	**212-6690**	1	GUARD	
I	9	1	**218-6241**	1	HOSE AS	
I	10	1	**219-4335**	2	HOSE AS	
	11	1	**238-7741**	1	TUBE AS	
	12	1	**238-7742**	1	TUBE AS	
I	13	1	**238-7743**	2	HOSE AS	
	14	1	**238-7746**	1	TUBE AS	
I	15	1	**238-7747**	1	HOSE AS	
I	16	1	**238-7748**	1	HOSE AS	
	17	1	**238-7749**	1	BRACKET	
	18	1	*148-8325*	4	CONNECTOR AS	
					(EACH INCLUDES)	
		1	**3J-1907**	1	SEAL-O-RING	
		1	**4J-5477**	1	SEAL-O-RING	
		1	**6V-8641**	1	CONNECTOR	
	19	1	*148-8336*	2	CONNECTOR AS	
					(EACH INCLUDES)	
		1	**3J-1907**	1	SEAL-O-RING	
		1	**6V-8397**	1	SEAL-O-RING	
		1	**6V-8636**	1	CONNECTOR	
	20	1	*148-8353*	1	ELBOW AS	
		1	**3J-1907**	1	SEAL-O-RING	
		1	**6V-8397**	1	SEAL-O-RING	
		1	**6V-9001**	1	ELBOW	
	21	1	*148-8365*	1	ELBOW AS	
		1	**3J-1907**	1	SEAL-O-RING	
		1	**6V-8398**	1	SEAL-O-RING	
		1	**8T-6876**	1	ELBOW	
	22	1	*148-8378*	2	ELBOW AS	
					(EACH INCLUDES)	
		1	**3J-1907**	1	SEAL-O-RING	
		1	**6V-8397**	1	SEAL-O-RING	
		1	**6V-8724**	1	ELBOW	
	23	1	*148-8446*	1	TEE GP-SWIVEL	
		1	**6V-9838**	1	TEE-SWIVEL	
		1	**7J-9108**	2	SEAL-O-RING	
	24	1	*150-4034*	2	TEE GP	
					(EACH INCLUDES)	
		1	**6V-8397**	3	SEAL-O-RING	
		1	**8T-0379**	1	TEE-BULKHEAD	
	25	1	*156-4282*	1	REDUCER AS	
		1	**6V-8397**	1	SEAL-O-RING	
		1	**6V-8938**	1	REDUCER-O-RING	
	26	1	**164-4225**	2	CLIP	
	27	1	**1F-7567**	1	CLIP	
	28	1	**4B-4863**	2	WASHER (4.7X11X1.2-MM THK)	
M	29	1	**5C-7261**	1	NUT (M8X1.25-THD)	

218-6263 **VALVE & LINES GP-COUPLER** *(contd.)* **i02007365**

NOTE	REF NO	GRAPHIC REF	PART NUMBER	QTY	PART NAME 1 2 3 4 5 6 (PRODUCT LEVEL)	SEE PAGE
	30	1	**5K-8451**	1	CLIP	
	31	1	**6K-8178**	2	CLIP	
M	32	1	**6V-5698**	2	SCREW-BUTTON HEAD (M4X0.7X10-MM)	
	33	1	**6V-8397**	6	SEAL-O-RING	
	34	1	**6V-8555**	1	NUT-FACE SEAL (1-14-THD)	
	35	1	**6V-9168**	2	NUT (11/16-16-THD)	
	36	1	**7G-2950**	1	CLIP (SLOT)	
	37	1	**7G-2951**	1	CLIP (TAB)	
	38	1	**7H-7055**	6	CLIP	
	39	1	**7X-7729**	7	WASHER (11X25X3-MM THK)	
	40	1	**8T-4121**	9	WASHER-HARD (11X21X2.5-MM THK)	
M	41	1	**8T-4133**	4	NUT (M10X1.5-THD)	
M	42	1	**8T-4136**	1	BOLT (M10X1.5X25-MM)	
M	43	1	**8T-4189**	4	BOLT (M8X1.25X20-MM)	
M	44	1	**8T-4191**	3	BOLT (M10X1.5X16-MM)	
M	45	1	**8T-4201**	4	BOLT-LOCKING (M10X1.5X20-MM)	
	46	1	**8T-4224**	6	WASHER-HARD (8.8X16X2-MM THK)	
M	47	1	**8T-4908**	1	BOLT (M8X1.25X25-MM)	
M	48	1	**8T-5005**	4	BOLT (M10X1.5X70-MM)	
	49	1	**9M-8406**	3	CLIP	
	50	1	**9R-1004**	1	CLIP (TAB)	
	51	1	**9R-1005**	1	CLIP (SLOT)	

I-REFER TO HYDRAULIC INFORMATION SYSTEM
M-METRIC PART
Y-SEPARATE ILLUSTRATION

218-6263 **VALVE & LINES GP-COUPLER** *(contd.)* **i02007365**

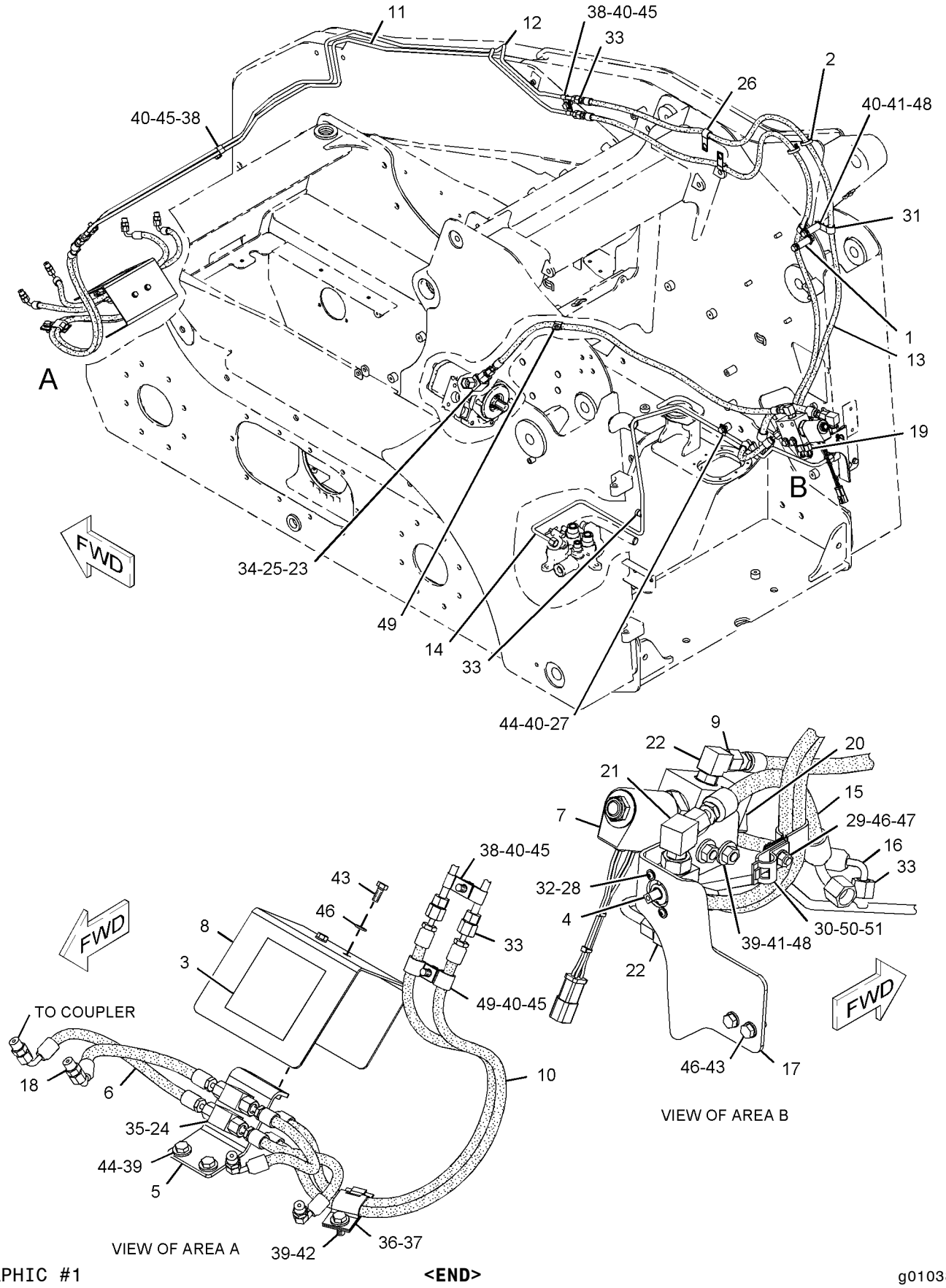

GRAPHIC #1 **<END>** g01038907

HYDRAULIC SYSTEM

218-6263 VALVE & LINES GP-COUPLER

S/N: SCH545-UP; BXM834-UP
WITH MANUAL LOWERING CONTROL
PART OF 218-6722 COUPLER AR-QUICK
AN ATTACHMENT

SMCS-5057, 5147, 5479 **i02425841**

NOTE	REF NO	GRAPHIC REF	PART NUMBER	QTY	PART NAME 1 2 3 4 5 6 (PRODUCT LEVEL)	SEE PAGE
	1	1	**2K-5232**	2	SPACER (0.406X0.75X1.81-IN THK)	
	2	1	**3S-2093**	5	STRAP-CABLE	
	3	1	**124-2456**	1	FILM-INSTRUCTION (NO STEP)	
	4	1	**191-9783**	1	VALVE GP-MANUAL (MANUAL LOWERING CONTROL)	
	5	1	**207-9737**	1	BRACKET AS	
I	6	1	**207-9756**	4	HOSE AS	
CY	7	1	**233-7128**	1	VALVE & MTG GP-SOLENOID (QUICK COUPLER)	544
	8	1	**212-6690**	1	GUARD	
I	9	1	**218-6241**	1	HOSE AS	
I	10	1	**219-4335**	2	HOSE AS	
	11	1	**238-7741**	1	TUBE AS	
	12	1	**238-7742**	1	TUBE AS	
I	13	1	**238-7743**	2	HOSE AS	
	14	1	**238-7746**	1	TUBE AS	
I	15	1	**276-4812**	1	HOSE AS	
I	16	1	**238-7748**	1	HOSE AS	
	17	1	**238-7749**	1	BRACKET	
	18	1	*148-8325*	4	CONNECTOR AS	
					(EACH INCLUDES)	
		1	**3J-1907**	1	SEAL-O-RING	
		1	**4J-5477**	1	SEAL-O-RING	
		1	**6V-8641**	1	CONNECTOR	
	19	1	*148-8336*	2	CONNECTOR AS	
					(EACH INCLUDES)	
		1	**3J-1907**	1	SEAL-O-RING	
		1	**6V-8397**	1	SEAL-O-RING	
		1	**6V-8636**	1	CONNECTOR	
	20	1	*148-8353*	1	ELBOW AS	
		1	**3J-1907**	1	SEAL-O-RING	
		1	**6V-8397**	1	SEAL-O-RING	
		1	**6V-9001**	1	ELBOW	
	21	1	*148-8365*	1	ELBOW AS	
		1	**3J-1907**	1	SEAL-O-RING	
		1	**6V-8398**	1	SEAL-O-RING	
		1	**8T-6876**	1	ELBOW	
	22	1	*148-8378*	2	ELBOW AS	
					(EACH INCLUDES)	
		1	**3J-1907**	1	SEAL-O-RING	
		1	**6V-8397**	1	SEAL-O-RING	
		1	**6V-8724**	1	ELBOW	
	23	1	*148-8446*	1	TEE GP-SWIVEL	
		1	**6V-9838**	1	TEE-SWIVEL	
		1	**7J-9108**	2	SEAL-O-RING	
	24	1	*150-4034*	2	TEE GP	
					(EACH INCLUDES)	
		1	**6V-8397**	3	SEAL-O-RING	
		1	**8T-0379**	1	TEE-BULKHEAD	
	25	1	*156-4282*	1	REDUCER AS	
		1	**6V-8397**	1	SEAL-O-RING	
		1	**6V-8938**	1	REDUCER-O-RING	
	26	1	**164-4225**	2	CLIP	
	27	1	**1F-7567**	1	CLIP	
	28	1	**4B-4863**	2	WASHER (4.7X11X1.2-MM THK)	
M	29	1	**5C-7261**	1	NUT (M8X1.25-THD)	

218-6263 VALVE & LINES GP-COUPLER *(contd.)* i02425841

NOTE	REF NO	GRAPHIC REF	PART NUMBER	QTY	PART NAME 1 2 3 4 5 6 (PRODUCT LEVEL)	SEE PAGE
	30	1	**5K-8451**	1	CLIP	
	31	1	**6K-8178**	2	CLIP	
M	32	1	**6V-5698**	2	SCREW-BUTTON HEAD (M4X0.7X10-MM)	
	33	1	**6V-8397**	6	SEAL-O-RING	
	34	1	**9X-6581**	1	NUT (1-14-THD)	
	35	1	**6V-9168**	2	NUT (11/16-16-THD)	
	36	1	**7G-2950**	1	CLIP (SLOT)	
	37	1	**7G-2951**	1	CLIP (TAB)	
	38	1	**7H-7055**	6	CLIP	
	39	1	**7X-7729**	6	WASHER (11X25X3-MM THK)	
	40	1	**8T-4121**	9	WASHER-HARD (11X21X2.5-MM THK)	
M	41	1	**8T-4133**	4	NUT (M10X1.5-THD)	
M	42	1	**8T-4136**	1	BOLT (M10X1.5X25-MM)	
M	43	1	**8T-4189**	4	BOLT (M8X1.25X20-MM)	
M	44	1	**8T-4191**	3	BOLT (M10X1.5X16-MM)	
M	45	1	**8T-4201**	4	BOLT-LOCKING (M10X1.5X20-MM)	
	46	1	**8T-4224**	6	WASHER-HARD (8.8X16X2-MM THK)	
M	47	1	**8T-4908**	1	BOLT (M8X1.25X25-MM)	
M	48	1	**8T-5005**	4	BOLT (M10X1.5X70-MM)	
	49	1	**9M-8406**	3	CLIP	
	50	1	**9R-1004**	1	CLIP (TAB)	
	51	1	**9R-1005**	1	CLIP (SLOT)	
	53	1	**4P-7581**	1	CLIP	

C-CHANGE FROM PREVIOUS TYPE
I-REFER TO HYDRAULIC INFORMATION SYSTEM
M-METRIC PART
Y-SEPARATE ILLUSTRATION

218-6263 **VALVE & LINES GP-COUPLER** *(contd.)* **i02425841**

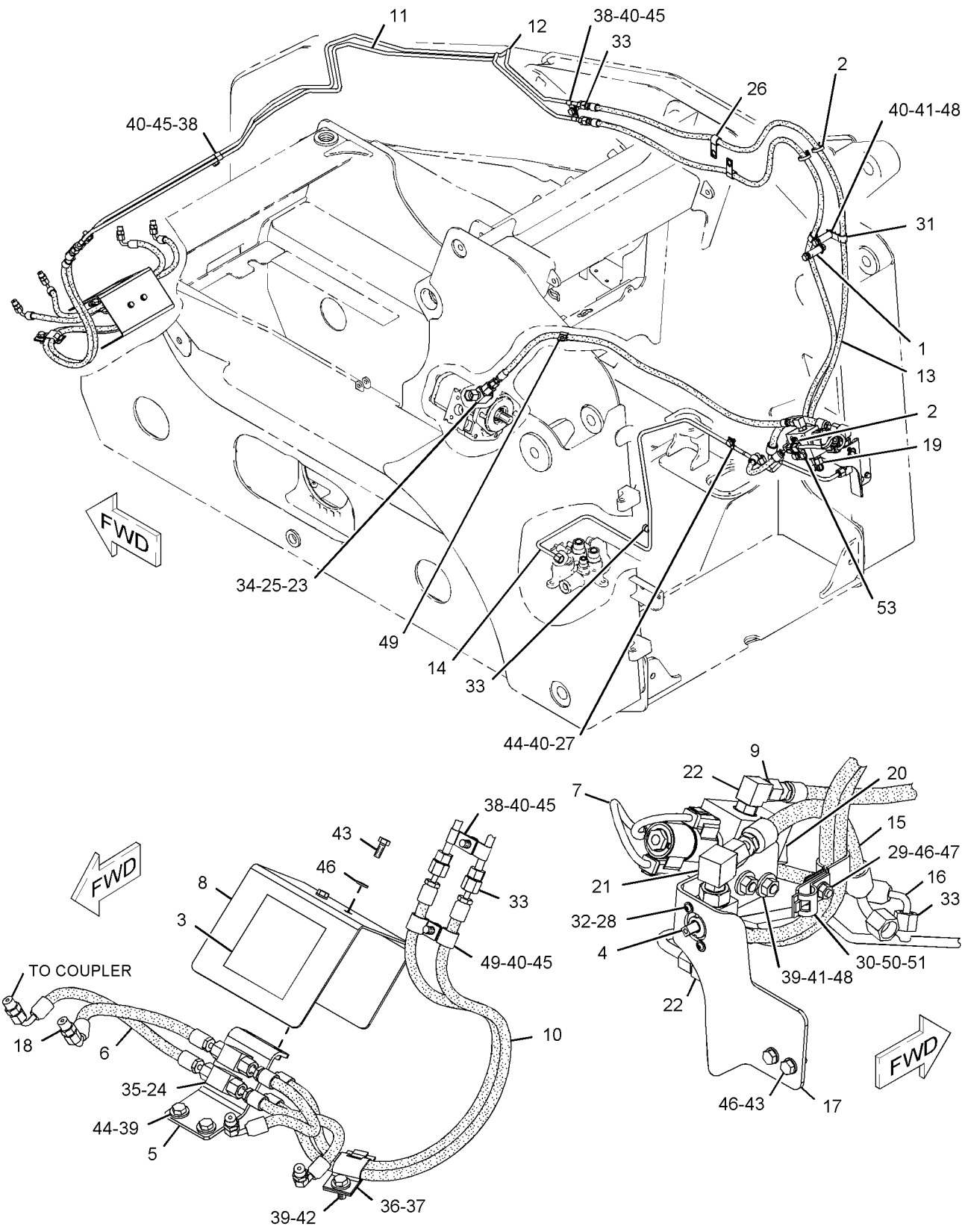

GRAPHIC #1 **<END>** g01134786

218-6781 VALVE & MTG GP-CONTROL

S/N: MJH1-UP
WORK TOOL
PART OF 218-5820, 278-1227 HYDRAULIC AR

SMCS-5051 **i01946045**

NOTE	REF NO	GRAPHIC REF	PART NUMBER	QTY	PART NAME 1 2 3 4 5 6 (PRODUCT LEVEL)	SEE PAGE
Y	1	1	**216-6167**	1	VALVE GP-CONTROL (WORK TOOL)	549
	2	1	**218-6561**	1	BRACKET	
	3	1	**8T-4121**	4	WASHER-HARD (11X21X2.5-MM THK)	
M	4	1	**8T-4136**	2	BOLT (M10X1.5X25-MM)	
M	5	1	**8T-4137**	2	BOLT (M10X1.5X20-MM)	

M-METRIC PART
Y-SEPARATE ILLUSTRATION

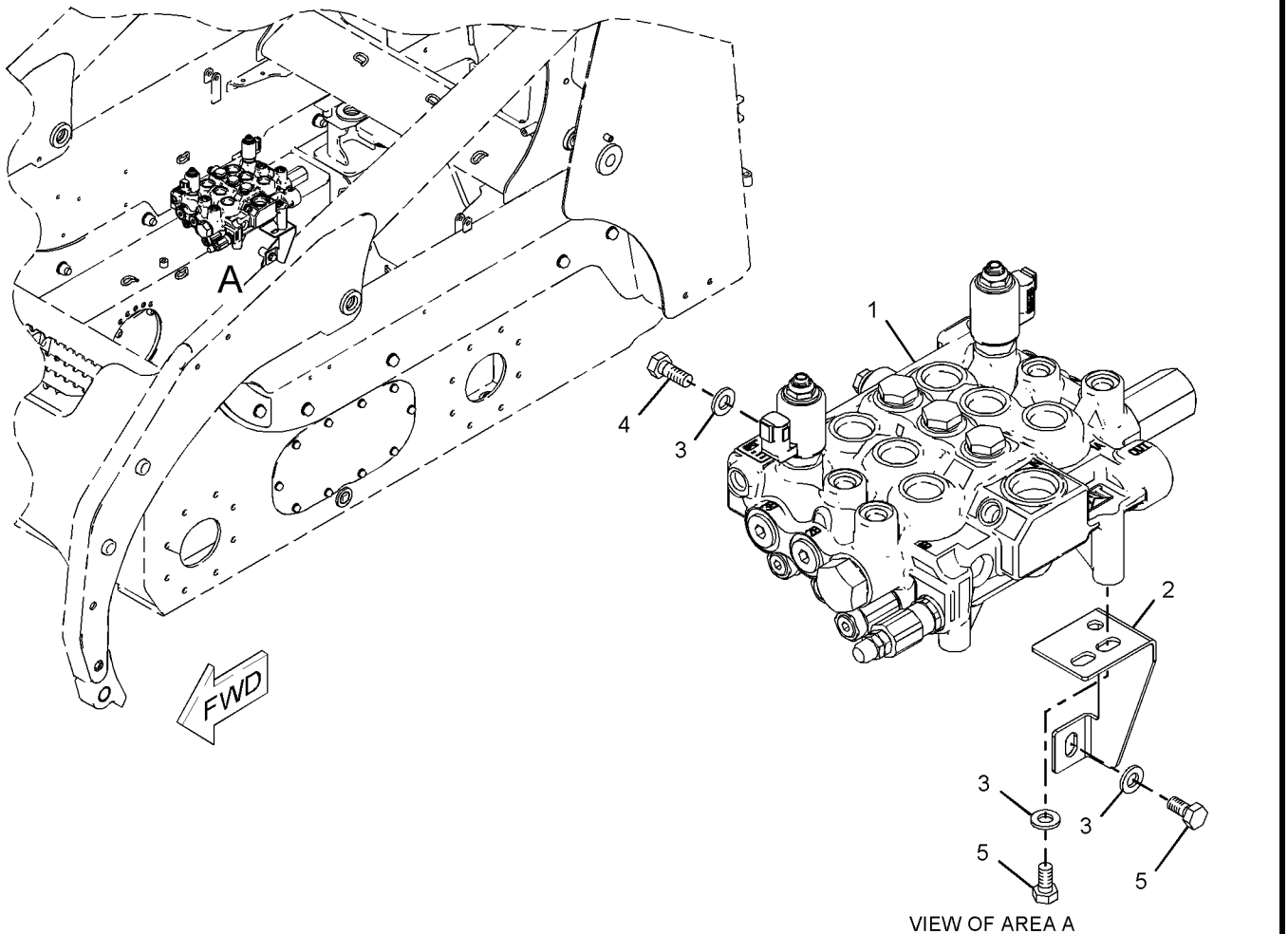

VIEW OF AREA A

GRAPHIC #1 **<END>** g01017870

218-6783 VALVE & MTG GP-CONTROL

S/N: BXM1-UP
WORK TOOL
PART OF 218-6920, 278-1243 HYDRAULIC AR

SMCS-5051 **i01946033**

NOTE	REF NO	GRAPHIC REF	PART NUMBER	QTY	PART NAME 1 2 3 4 5 6 (PRODUCT LEVEL)	SEE PAGE
Y	1	1	**191-9686**	1	VALVE GP-CONTROL (WORK TOOL)	545
	2	1	**218-6561**	1	BRACKET	
	3	1	**8T-4121**	4	WASHER-HARD (11X21X2.5-MM THK)	
M	4	1	**8T-4136**	2	BOLT (M10X1.5X25-MM)	
M	5	1	**8T-4137**	2	BOLT (M10X1.5X20-MM)	

M-METRIC PART
Y-SEPARATE ILLUSTRATION

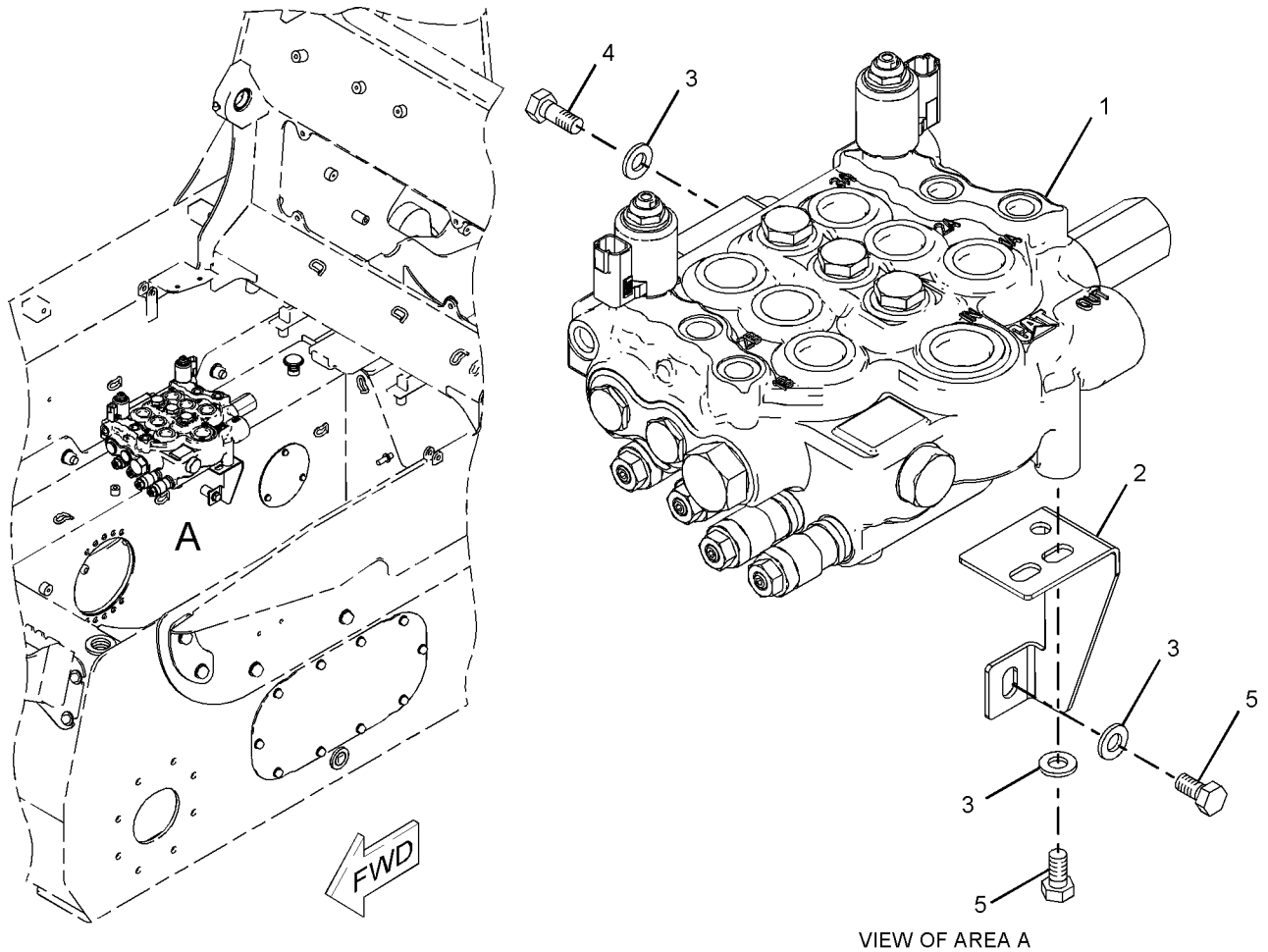

VIEW OF AREA A

GRAPHIC #1 **<END>** g01022495

218-6786 VALVE & MTG GP-CONTROL

S/N: RLL1-UP
WORK TOOL
PART OF 218-5620, 278-1217 HYDRAULIC AR

SMCS-5051 **i01946044**

NOTE	REF NO	GRAPHIC REF	PART NUMBER	QTY	PART NAME 1 2 3 4 5 6 (PRODUCT LEVEL)	SEE PAGE
Y	1	1	**216-6166**	1	VALVE GP-CONTROL (WORK TOOL)	547
	2	1	**218-6561**	1	BRACKET	
	3	1	**8T-4121**	4	WASHER-HARD (11X21X2.5-MM THK)	
M	4	1	**8T-4136**	2	BOLT (M10X1.5X25-MM)	
M	5	1	**8T-4137**	2	BOLT (M10X1.5X20-MM)	

M-METRIC PART
Y-SEPARATE ILLUSTRATION

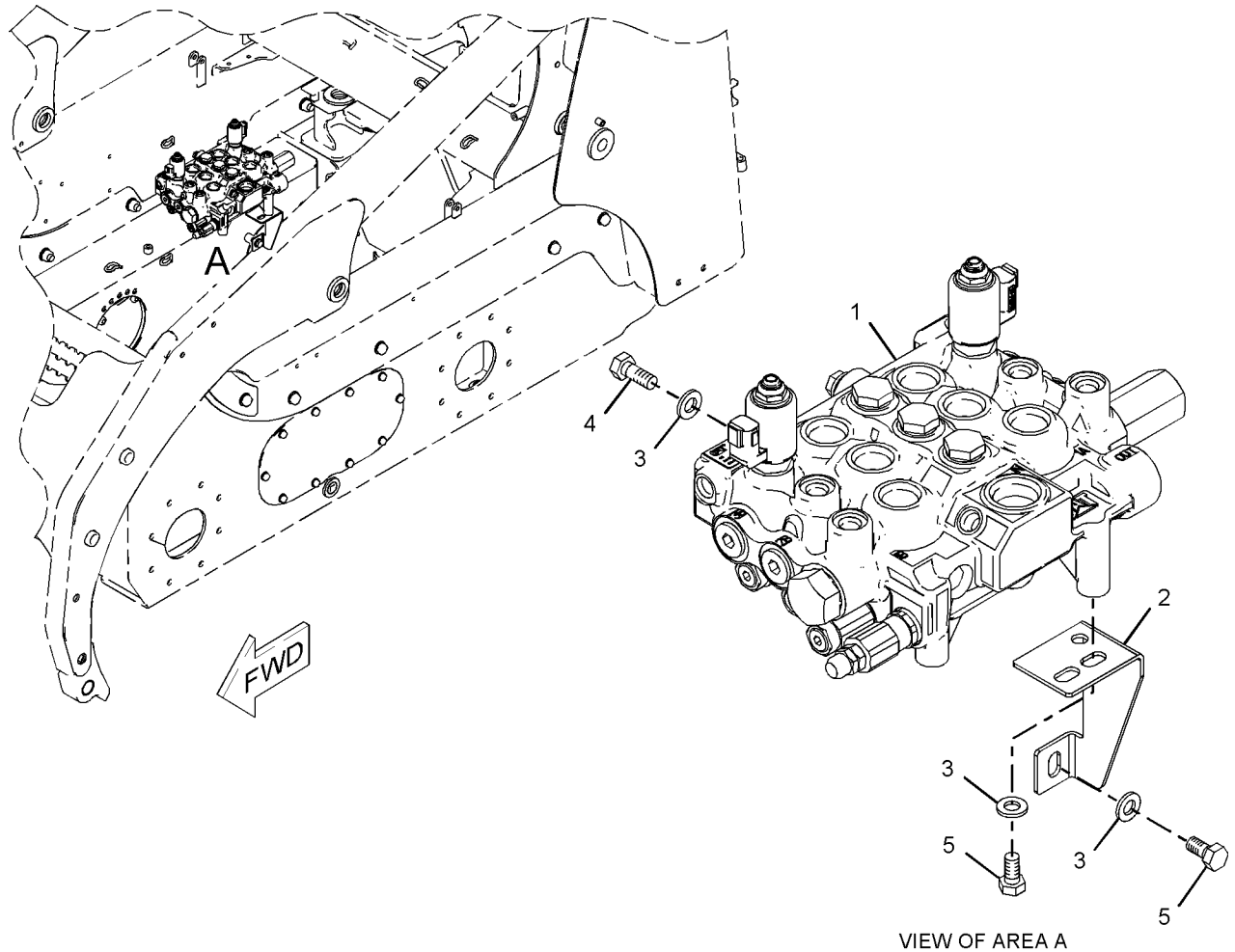

VIEW OF AREA A

GRAPHIC #1 **<END>** g01017916

218-6787 VALVE & MTG GP-CONTROL

S/N: SCH1-UP
WORK TOOL
PART OF 218-6820, 278-1233 HYDRAULIC AR

SMCS-5051 **i01946037**

NOTE	REF NO	GRAPHIC REF	PART NUMBER	QTY	PART NAME 1 2 3 4 5 6 (PRODUCT LEVEL)	SEE PAGE
Y	1	1	**216-6168**	1	VALVE GP-CONTROL (WORK TOOL)	551
	2	1	**218-6561**	1	BRACKET	
	3	1	**8T-4121**	4	WASHER-HARD (11X21X2.5-MM THK)	
M	4	1	**8T-4136**	2	BOLT (M10X1.5X25-MM)	
M	5	1	**8T-4137**	2	BOLT (M10X1.5X20-MM)	

M-METRIC PART
Y-SEPARATE ILLUSTRATION

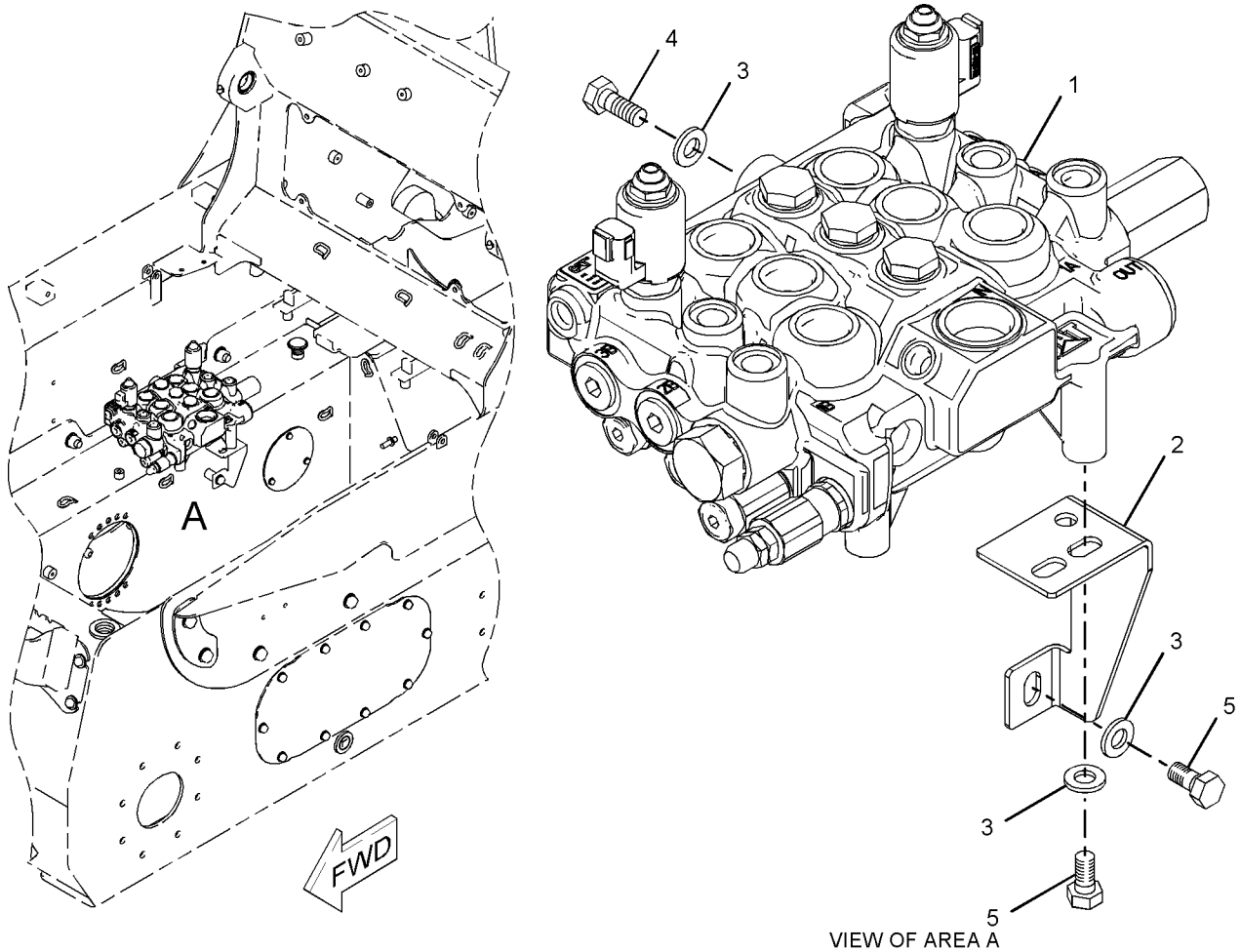

VIEW OF AREA A

GRAPHIC #1 **<END>** g01022516

HYDRAULIC SYSTEM

159-5753 VALVE & MTG GP-DIVERTER

S/N: MJH1-UP; RLL1-UP
WORK TOOL POSITIONER
PART OF 218-6181 HYDRAULIC AR
AN ATTACHMENT

SMCS-5066 **i01951651**

NOTE	REF NO	GRAPHIC REF	PART NUMBER	QTY	PART NAME 1 2 3 4 5 6 (PRODUCT LEVEL)	SEE PAGE
Y	1	1	**224-9418**	1	VALVE GP-DIVERTER	554
CM	2	1	**7X-2535**	2	BOLT (M6X1X60MM)	
C	3	1	**8T-4205**	2	WASHER-HARD (7.2X14.5X2MM THK)	

C-CHANGE FROM PREVIOUS TYPE
M-METRIC PART
Y-SEPARATE ILLUSTRATION

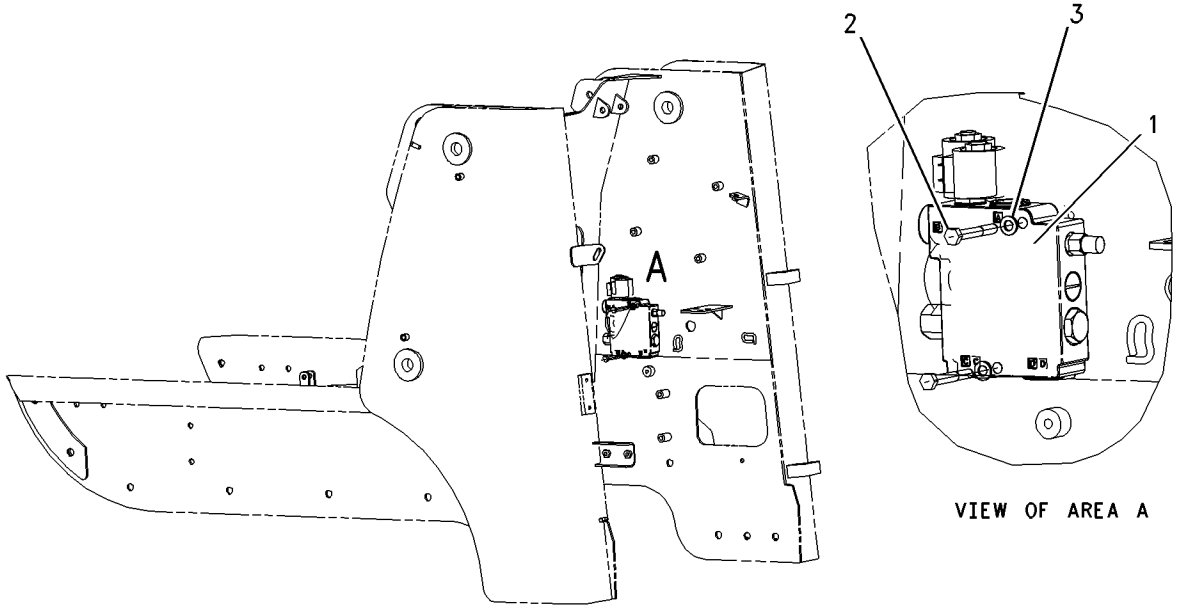

GRAPHIC #1 **<END>** g01003425

HYDRAULIC SYSTEM

191-9652 VALVE & MTG GP-DIVERTER

S/N: SCH1-UP; BXM1-UP
WORK TOOL POSITIONER
PART OF 218-5709 HYDRAULIC AR
AN ATTACHMENT

SMCS-5066 **i01999919**

NOTE	REF NO	GRAPHIC REF	PART NUMBER	QTY	PART NAME 1 2 3 4 5 6 (PRODUCT LEVEL)	SEE PAGE
Y	1	1	**223-8408**	1	VALVE GP-DIVERTER	553
M	2	1	**7X-2535**	2	BOLT (M6X1X60MM)	
	3	1	**8T-4205**	2	WASHER-HARD (7.2X14.5X2MM THK)	

M-METRIC PART
Y-SEPARATE ILLUSTRATION

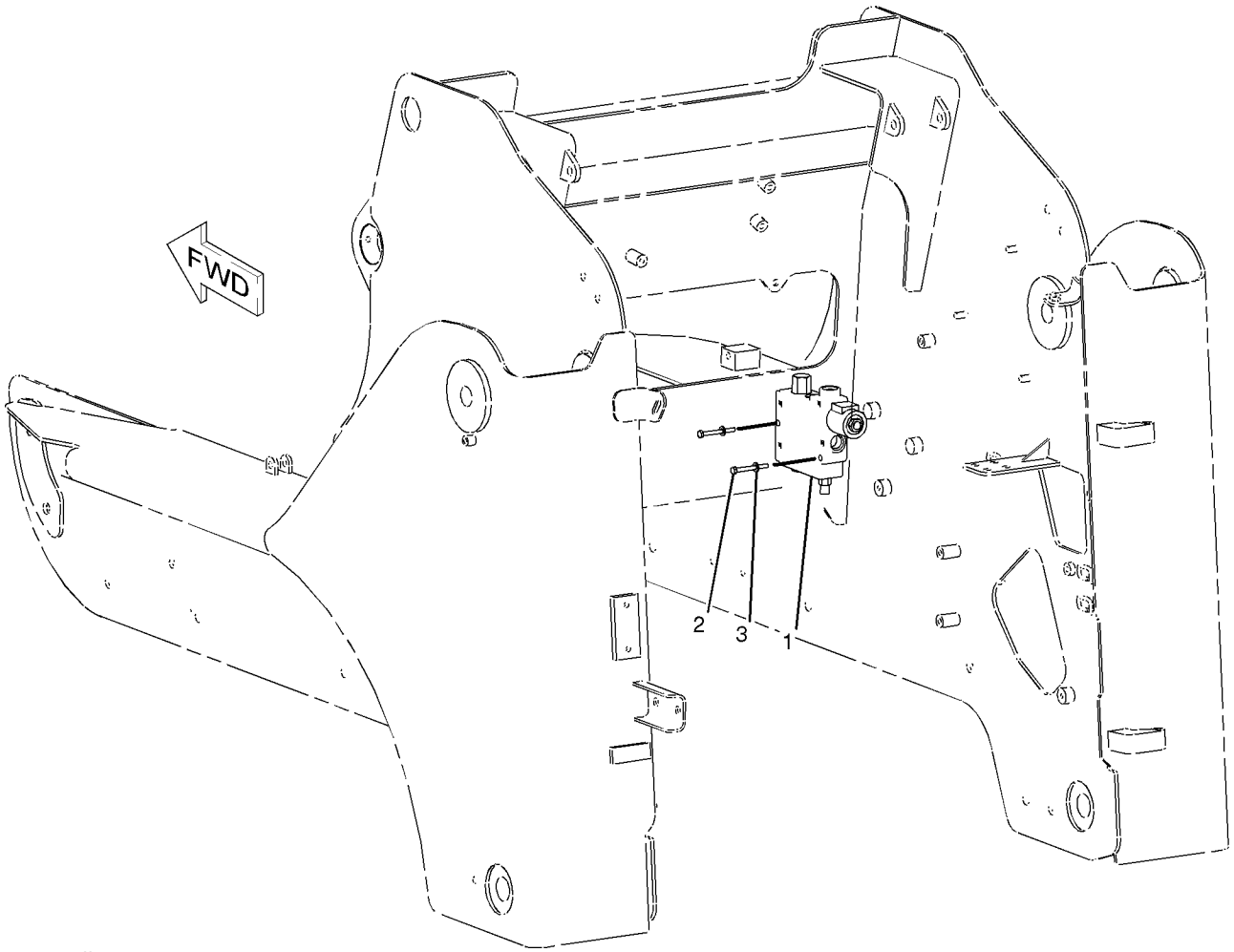

GRAPHIC #1 **<END>** g01034850

HYDRAULIC SYSTEM

218-5892 VALVE & MTG GP-DIVERTER

S/N: SCH1-UP; BXM1-UP
WORK TOOL POSTIONER
PART OF 218-6641 HYDRAULIC AR
AN ATTACHMENT

SMCS-5066 **i01986646**

NOTE	REF NO	GRAPHIC REF	PART NUMBER	QTY	PART NAME 1 2 3 4 5 6 (PRODUCT LEVEL)	SEE PAGE
	1	1	**228-9218**	1	VALVE GP-DIVERTER	
M	2	1	**7X-2535**	2	BOLT (M6X1X60MM)	
	3	1	**8T-4205**	2	WASHER-HARD (7.2X14.5X2MM THK)	

M-METRIC PART

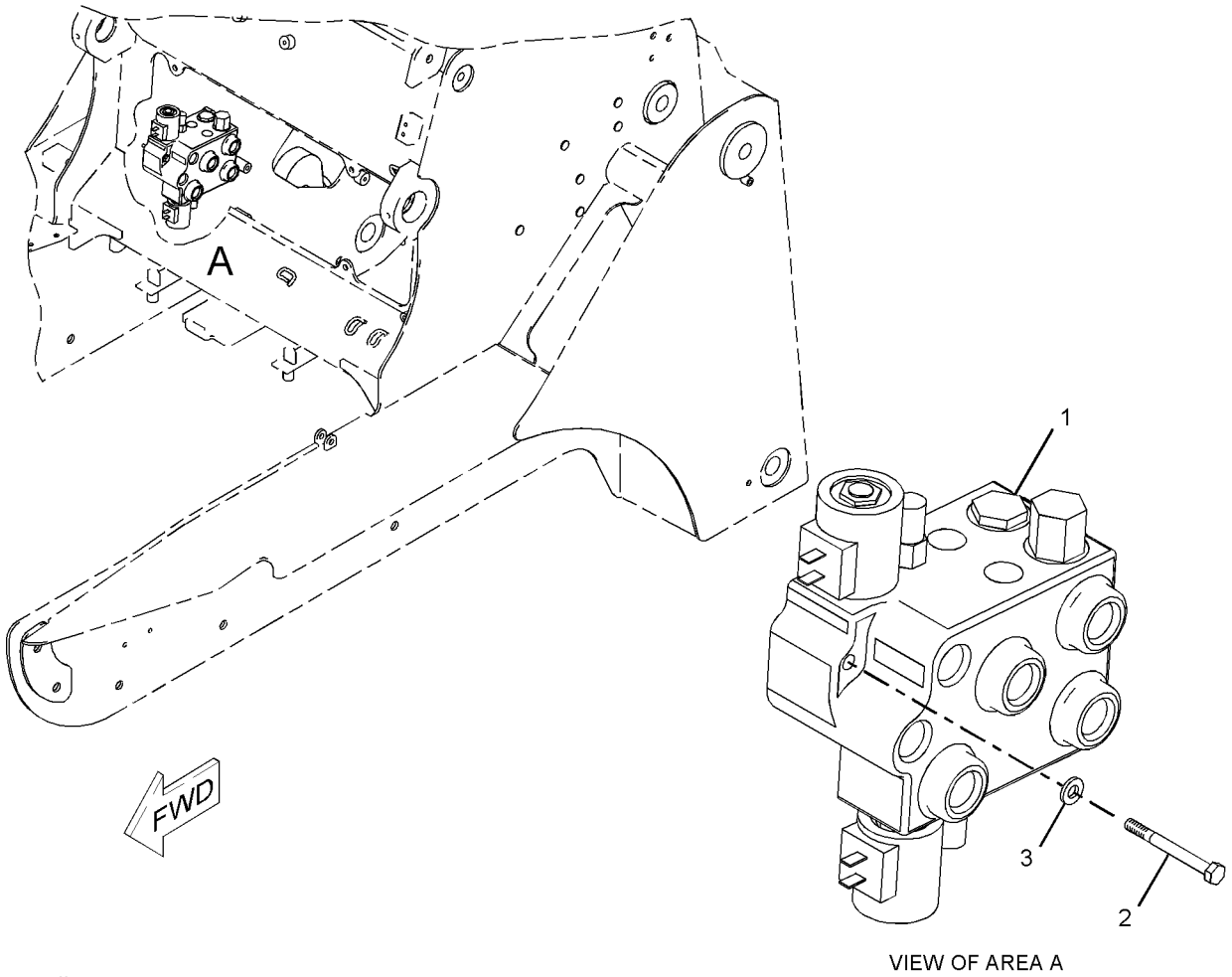

VIEW OF AREA A

GRAPHIC #1 **<END>** g01019816

209-0640 VALVE & MTG GP-SOLENOID

S/N: MJH1-1928; SCH1-544; RLL1-940; BXM1-833
QUICK COUPLER
PART OF 218-6240, 218-6263 VALVE & LINES GP-COUPLER
FIELD REPLACEMENT ORDER 233-7128—PAGE 544
AN ATTACHMENT

SMCS-5479 **i02024104**

NOTE	REF NO	GRAPHIC REF	PART NUMBER	QTY	PART NAME 1 2 3 4 5 6 (PRODUCT LEVEL)	SEE PAGE
Y	1	1	**144-1644**	1	VALVE GP-SOLENOID (QUICK COUPLER)	558
	2	1	**185-2269**	1	MANIFOLD	

Y-SEPARATE ILLUSTRATION

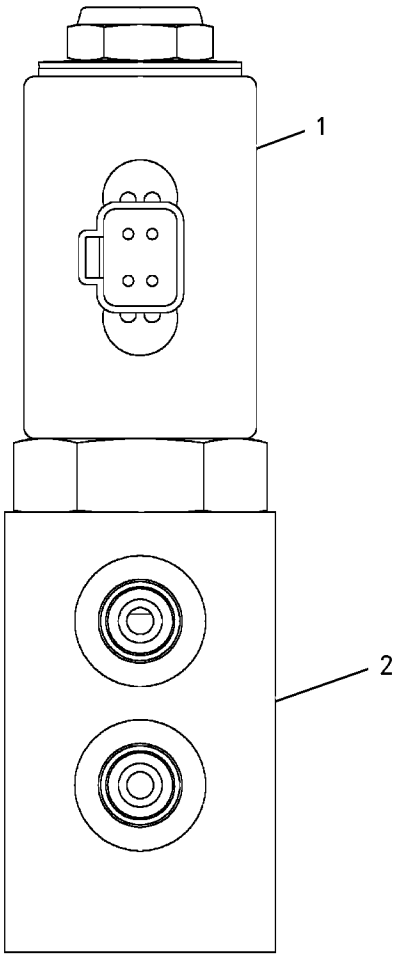

GRAPHIC #1 **<END>** g00848426

HYDRAULIC SYSTEM

233-7128 VALVE & MTG GP-SOLENOID

S/N: MJH1-UP; SCH1-UP; RLL1-UP; BXM1-UP
QUICK COUPLER
PART OF 218-6757 CONVERSION AR-QUICK COUPLER, 218-5957 KIT-QUICK COUPLER CONVERSION, 218-6240, 218-6263 VALVE & LINES GP-COUPLER
FIELD REPLACEMENT FOR 209-0640—PAGE 543
AN ATTACHMENT

SMCS-5479 **i02216438**

NOTE	REF NO	GRAPHIC REF	PART NUMBER	QTY	PART NAME 1 2 3 4 5 6 (PRODUCT LEVEL)	SEE PAGE
	1	1	**245-1911**	1	WIRE AS	
J	2	1	**249-7160**	1	VALVE GP-SOLENOID (QUICK COUPLER)	
		1	**238-4626**	2	COIL AS	
					AVAILABLE REPAIR KIT(S):	
J			**106-3108**	1	KIT-SEAL	

J-KIT MARKED J IS AVAILABLE FOR PART MARKED J

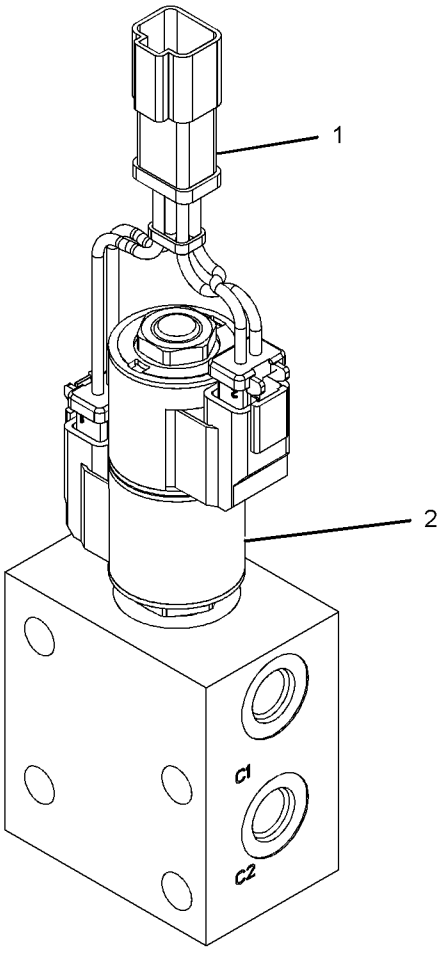

GRAPHIC #1 **<END>** g01132286

HYDRAULIC SYSTEM

191-9686 VALVE GP-CONTROL

S/N: BXM1-UP

PART OF 218-6783 VALVE & MTG GP-CONTROL

SMCS-5051 **i02469497**

NOTE	REF NO	GRAPHIC REF	PART NUMBER	QTY	PART NAME 1 2 3 4 5 6 (PRODUCT LEVEL)	SEE PAGE
Y	1	1	**188-0878**	1	VALVE GP-RELIEF (MAIN)	557
	2	1	**216-6160**	2	VALVE GP-RELIEF (TILT, AUXILARY)	
	3	1	**216-6161**	2	VALVE GP-RELIEF (LIFT)	
Y	4	1	**185-4254**	2	VALVE GP-SOLENOID (PILOT)	559
	5	1	**204-1470**	2	SEAL-O-RING	
	6	1	**204-1485**	6	WASHER (0.47X0.75X0.02-MM THK)	
	7	1	**204-1482**	1	SPRING	
	8	1	**204-1488**	1	SPRING	
	9	1	**204-1489**	4	SPRING	
	10	1	**204-1486**	1	WASHER (0.32X0.74X0.02-MM THK)	
	11	1	**127-6316**	1	BOLT-SHOULDER	
	12	1	**204-1476**	4	PLUG	
	13	1	**204-1472**	2	SEAL-O-RING	
	14	1	**204-1471**	1	CAP	
	15	1	**204-1481**	1	CAP	
	16	1	**144-4531**	3	VALVE-CHECK	
	17	1	**003-3082**	3	SPRING	
	18	1	**8I-5078**	3	SEAL-O-RING	
	19	1	**144-4532**	3	PLUG	
	20	1	**216-6156**	1	VALVE-CHECK	
	21	1	**216-6157**	1	SPRING	
	22	1	**216-6158**	1	SEAL-O-RING	
	23	1	**216-6159**	1	PLUG	

Y-SEPARATE ILLUSTRATION

191-9686 VALVE GP-CONTROL *(contd.)* i02469497

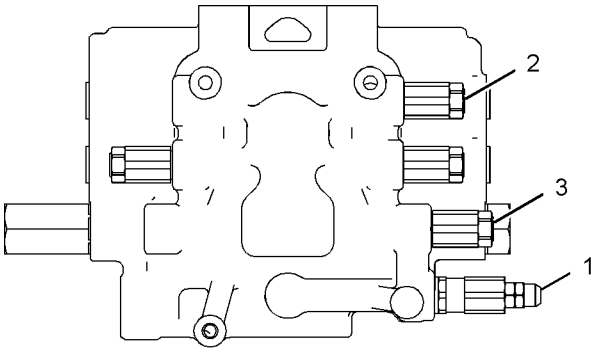

BOTTOM VIEW

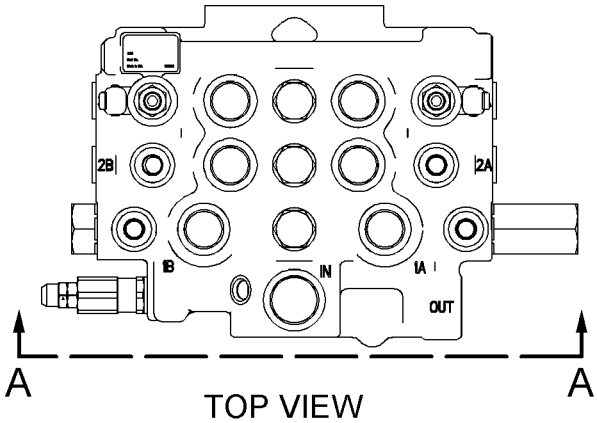

TOP VIEW

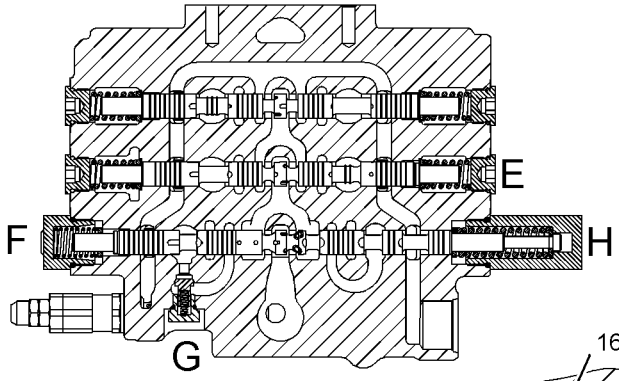

SECTION B-B

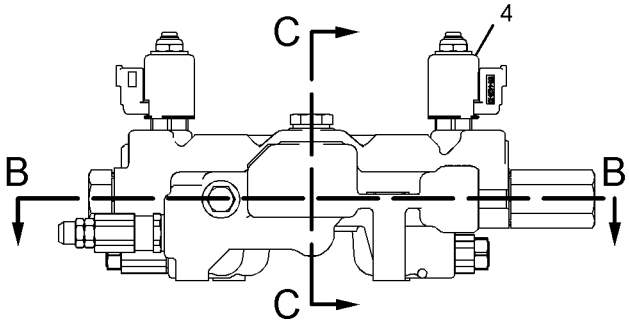

VIEW A-A

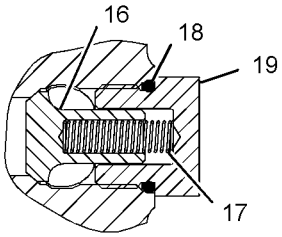

VIEW OF AREA D

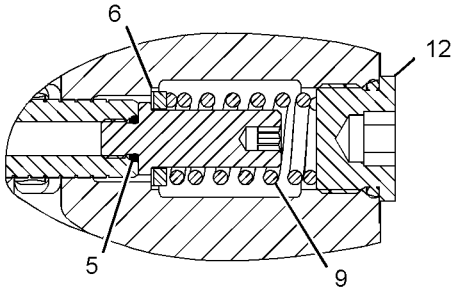

VIEW OF AREA E

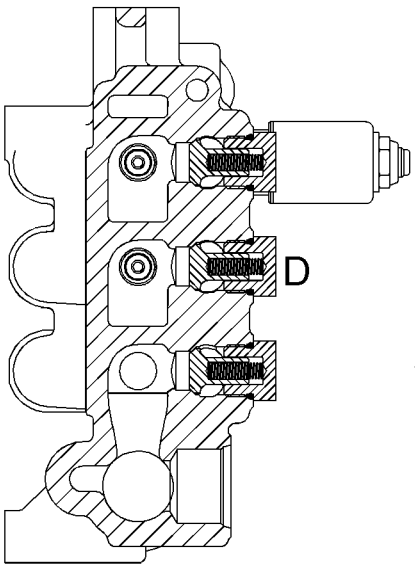

SECTION C-C

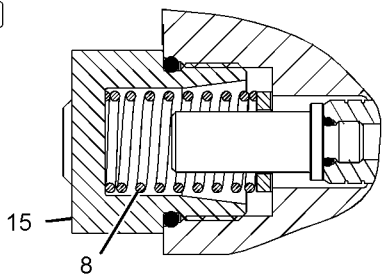

VIEW OF AREA F

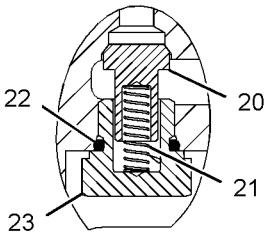

VIEW OF AREA G

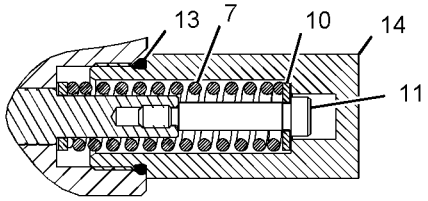

VIEW OF AREA H

GRAPHIC #1 **<END>** g01030999

HYDRAULIC SYSTEM

216-6166 VALVE GP-CONTROL

S/N: RLL1-UP

PART OF 218-6786 VALVE & MTG GP-CONTROL

SMCS-5051 **i02469564**

NOTE	REF NO	GRAPHIC REF	PART NUMBER	QTY	PART NAME 1 2 3 4 5 6 (PRODUCT LEVEL)	SEE PAGE
Y	1	1	**188-0878**	1	VALVE GP-RELIEF (MAIN)	557
	2	1	**216-6160**	2	VALVE GP-RELIEF (TILT, AUXILARY)	
	3	1	**216-6161**	2	VALVE GP-RELIEF (LIFT)	
Y	4	1	**185-4254**	2	VALVE GP-SOLENOID (PILOT)	559
	5	1	**204-1470**	2	SEAL-O-RING	
	6	1	**204-1485**	6	WASHER (0.47X0.75X0.02-MM THK)	
	7	1	**204-1482**	1	SPRING	
	8	1	**204-1488**	1	SPRING	
	9	1	**204-1489**	4	SPRING	
	10	1	**204-1486**	1	WASHER (0.32X0.74X0.02-MM THK)	
	11	1	**127-6316**	1	BOLT-SHOULDER	
	12	1	**204-1476**	4	PLUG	
	13	1	**204-1472**	2	SEAL-O-RING	
	14	1	**204-1471**	1	CAP	
	15	1	**204-1481**	1	CAP	
	16	1	**144-4531**	3	VALVE-CHECK	
	17	1	**003-3082**	3	SPRING	
	18	1	**8I-5078**	3	SEAL-O-RING	
	19	1	**144-4532**	3	PLUG	
	20	1	**216-6156**	1	VALVE-CHECK	
	21	1	**216-6157**	1	SPRING	
	22	1	**216-6158**	1	SEAL-O-RING	
	23	1	**216-6159**	1	PLUG	

Y-SEPARATE ILLUSTRATION

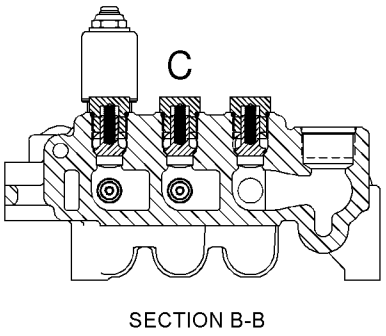

SECTION B-B

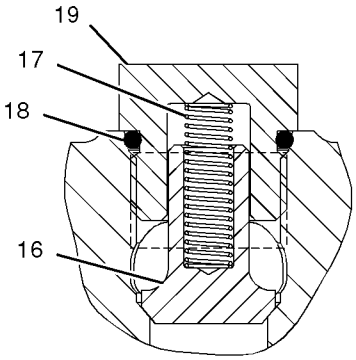

VIEW OF AREA C

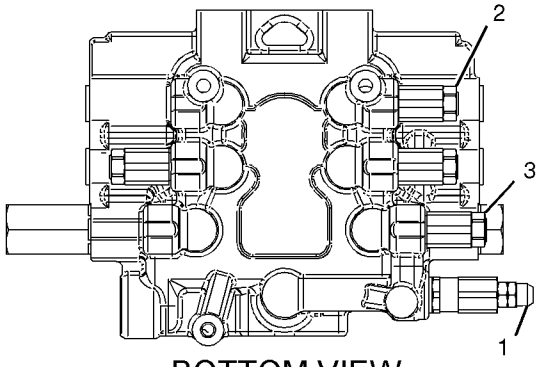

BOTTOM VIEW

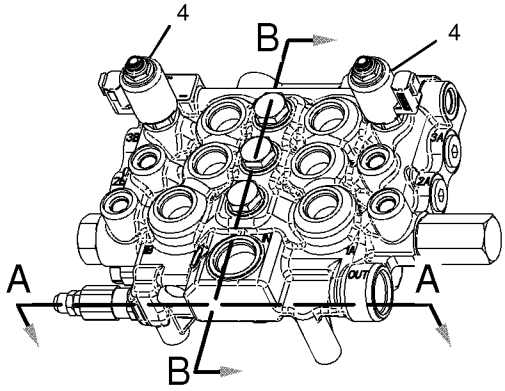

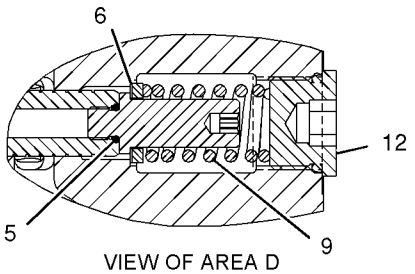

VIEW OF AREA D

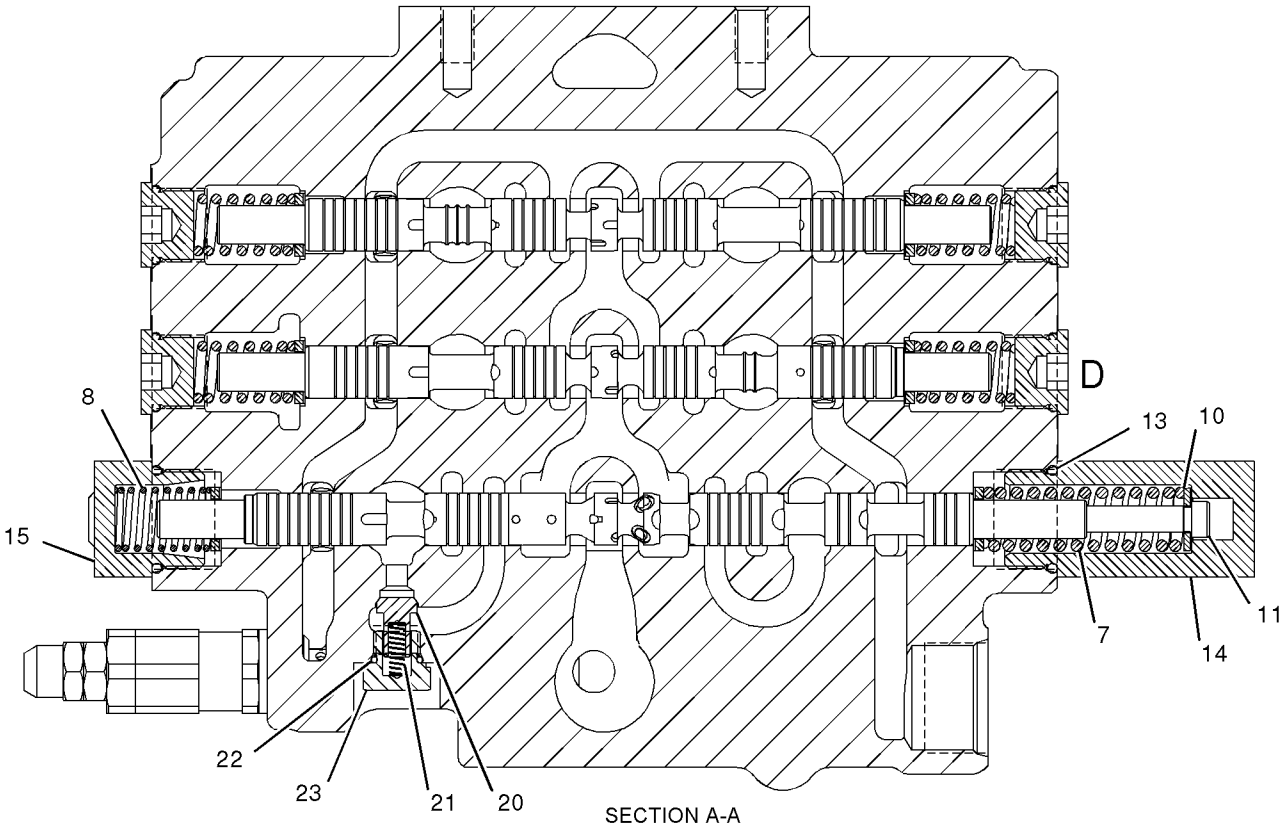

SECTION A-A

GRAPHIC #1 **<END>** g01041461

216-6167 VALVE GP-CONTROL

S/N: MJH1-UP

PART OF 218-6781 VALVE & MTG GP-CONTROL

SMCS-5051 **i02469690**

NOTE	REF NO	GRAPHIC REF	PART NUMBER	QTY	PART NAME 1 2 3 4 5 6 (PRODUCT LEVEL)	SEE PAGE
Y	1	1	**188-0878**	1	VALVE GP-RELIEF (MAIN)	557
	2	1	**216-6160**	2	VALVE GP-RELIEF (TILT, AUXILIARY)	
	3	1	**216-6161**	2	VALVE GP-RELIEF (LIFT)	
Y	4	1	**185-4254**	2	VALVE GP-SOLENOID (PILOT)	559
	5	1	**204-1470**	2	SEAL-O-RING	
	6	1	**204-1485**	6	WASHER (0.47X0.75X0.02-MM THK)	
	7	1	**204-1482**	1	SPRING	
	8	1	**204-1488**	1	SPRING	
	9	1	**204-1489**	4	SPRING	
	10	1	**204-1486**	1	WASHER (0.32X0.74X0.02-MM THK)	
	11	1	**127-6316**	1	BOLT-SHOULDER	
	12	1	**204-1476**	4	PLUG	
	13	1	**204-1472**	2	SEAL-O-RING	
	14	1	**204-1471**	1	CAP	
	15	1	**204-1481**	1	CAP	
	16	1	**144-4531**	3	VALVE-CHECK	
	17	1	**003-3082**	3	SPRING	
	18	1	**8I-5078**	3	SEAL-O-RING	
	19	1	**144-4532**	3	PLUG	
	20	1	**216-6156**	1	VALVE-CHECK	
	21	1	**216-6157**	1	SPRING	
	22	1	**216-6158**	1	SEAL-O-RING	
	23	1	**216-6159**	1	PLUG	

Y-SEPARATE ILLUSTRATION

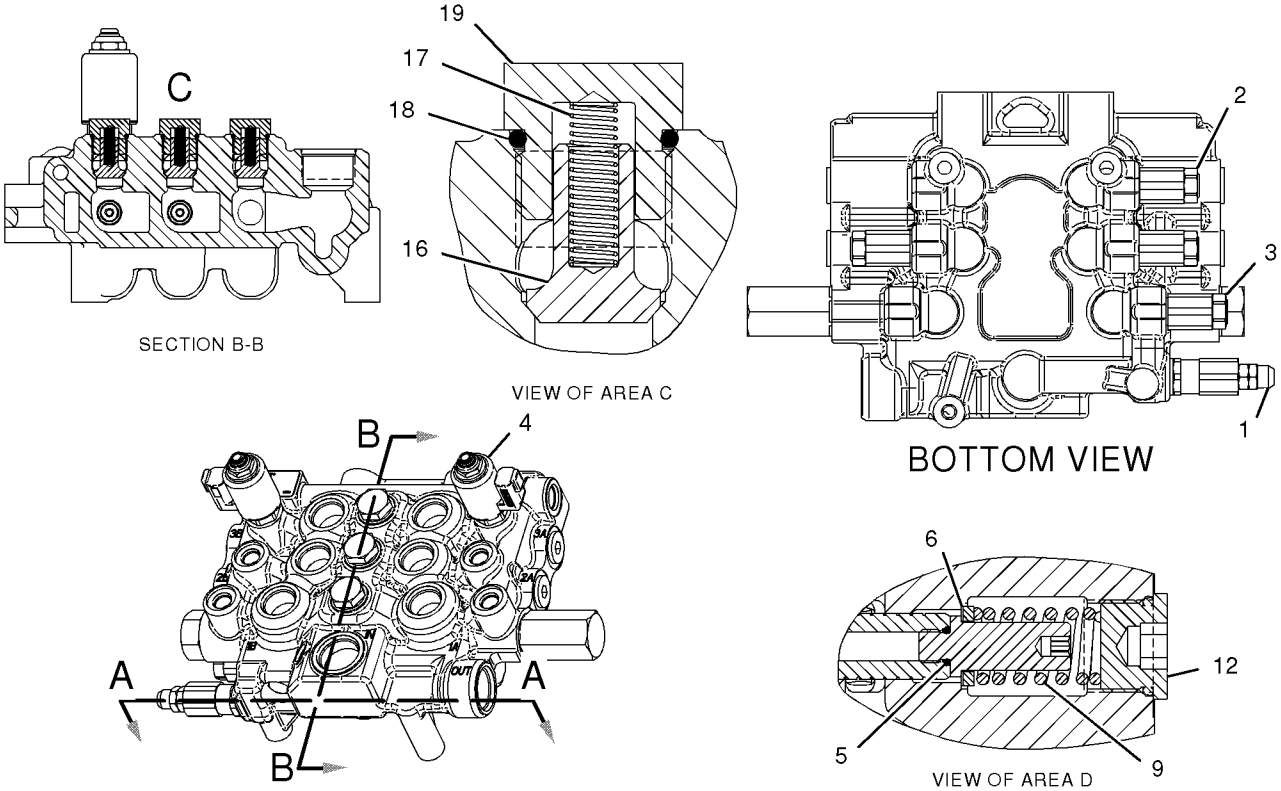

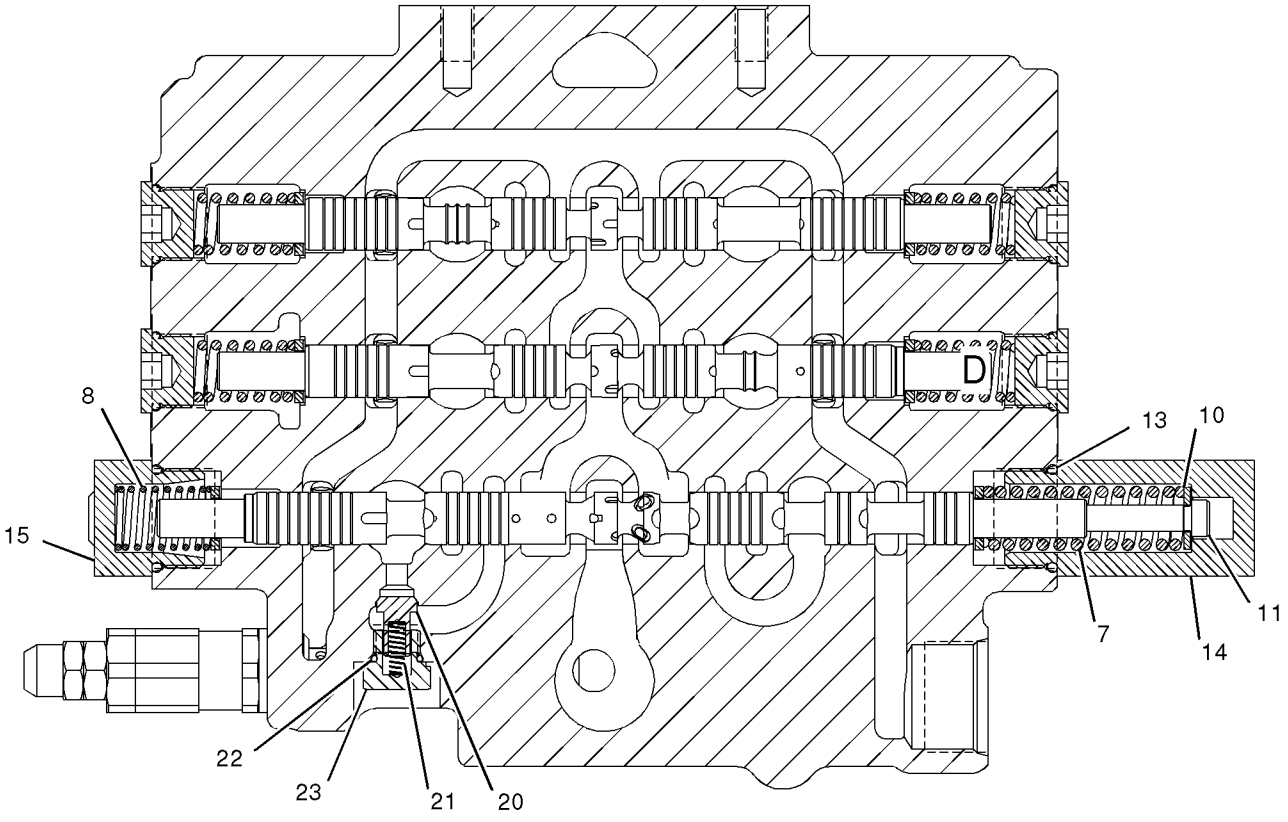

GRAPHIC #1

<END>

g01037804

216-6168 VALVE GP-CONTROL

S/N: SCH1-UP
WORK TOOL
PART OF 218-6787 VALVE & MTG GP-CONTROL

SMCS-5051 **i02469691**

NOTE	REF NO	GRAPHIC REF	PART NUMBER	QTY	PART NAME 1 2 3 4 5 6 (PRODUCT LEVEL)	SEE PAGE
Y	1	1	**188-0878**	1	VALVE GP-RELIEF (MAIN)	557
	2	1	**216-6160**	2	VALVE GP-RELIEF (TILT, AUXILIARY)	
	3	1	**216-6161**	2	VALVE GP-RELIEF (LIFT)	
Y	4	1	**185-4254**	2	VALVE GP-SOLENOID (PILOT)	559
	5	1	**204-1470**	2	SEAL-O-RING	
	6	1	**204-1485**	6	WASHER (0.47X0.75X0.02-MM THK)	
	7	1	**204-1482**	1	SPRING	
	8	1	**204-1488**	1	SPRING	
	9	1	**204-1489**	4	SPRING	
	10	1	**204-1486**	1	WASHER (0.32X0.74X0.02-MM THK)	
	11	1	**127-6316**	1	BOLT-SHOULDER	
	12	1	**204-1476**	4	PLUG	
	13	1	**204-1472**	2	SEAL-O-RING	
	14	1	**204-1471**	1	CAP	
	15	1	**204-1481**	1	CAP	
	16	1	**144-4531**	3	VALVE-CHECK	
	17	1	**003-3082**	3	SPRING	
	18	1	**8I-5078**	3	SEAL-O-RING	
	19	1	**144-4532**	3	PLUG	
	20	1	**216-6156**	1	VALVE-CHECK	
	21	1	**216-6157**	1	SPRING	
	22	1	**216-6158**	1	SEAL-O-RING	
	23	1	**216-6159**	1	PLUG	

Y-SEPARATE ILLUSTRATION

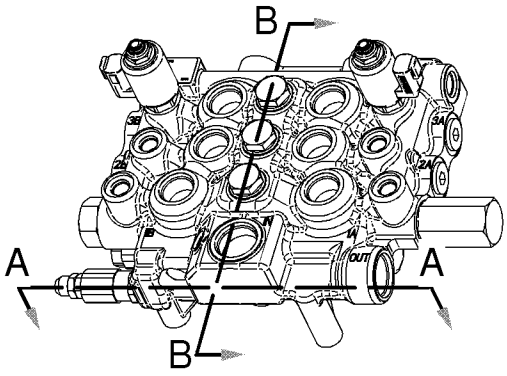

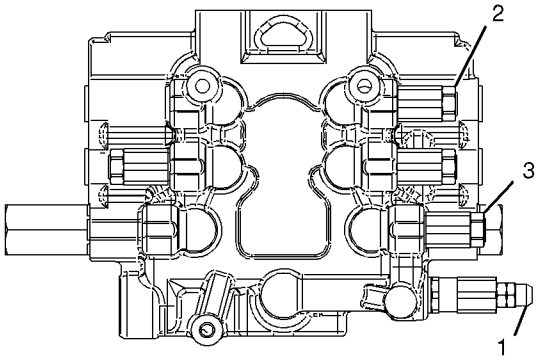

BOTTOM VIEW

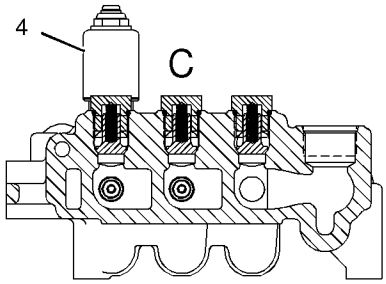

SECTION B-B

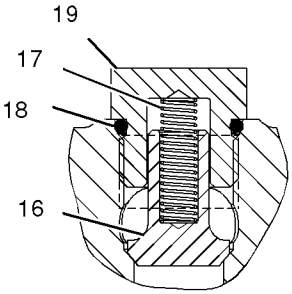

VIEW OF AREA C

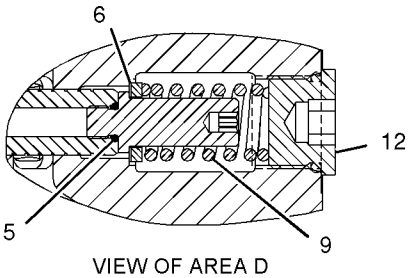

VIEW OF AREA D

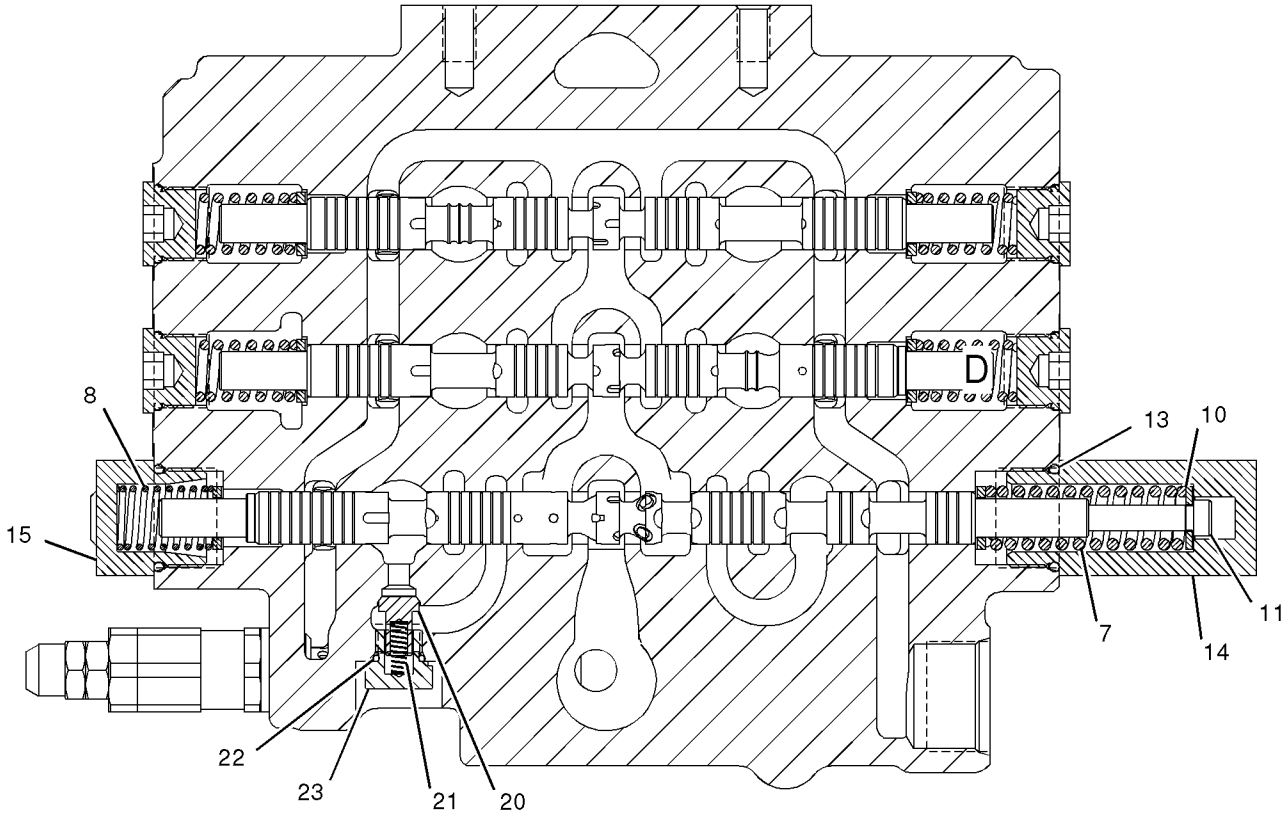

SECTION A-A

GRAPHIC #1

<END>

g01038050

HYDRAULIC SYSTEM

223-8408 VALVE GP-DIVERTER

S/N: SCH1-UP; BXM1-UP
PART OF 191-9652 VALVE & MTG GP-DIVERTER
AN ATTACHMENT

SMCS-5066 **i02359411**

NOTE	REF NO	GRAPHIC REF	PART NUMBER	QTY	PART NAME 1 2 3 4 5 6 (PRODUCT LEVEL)	SEE PAGE
	1	1	**102-8804**	1	KIT-RECEPTACLE (4-PIN)	
					(INCLUDES RECEPTACLE AS & WEDGE)	
	2	1	**3E-3377**	1	WEDGE-RECEPTACLE LOCK (4-PIN)	
	3	1	**186-3735**	2	PIN-CONNECTOR (16-GA TO 18-GA)	
	4	1	**9G-3695**	2	PLUG (GROMMET SEALING)	
J	5	1	**218-6858**	1	CARTRIDGE AS-VALVE	
J	6	1	**218-6857**	1	COIL AS	
					AVAILABLE REPAIR KIT(S):	
			218-6856	1	KIT-SEAL	
					(INCLUDES O-RINGS, COVER & BACK-UP RING)	
J			**155-1279**	1	KIT-SEAL	

J-KIT MARKED J SERVICES PARTS MARKED J

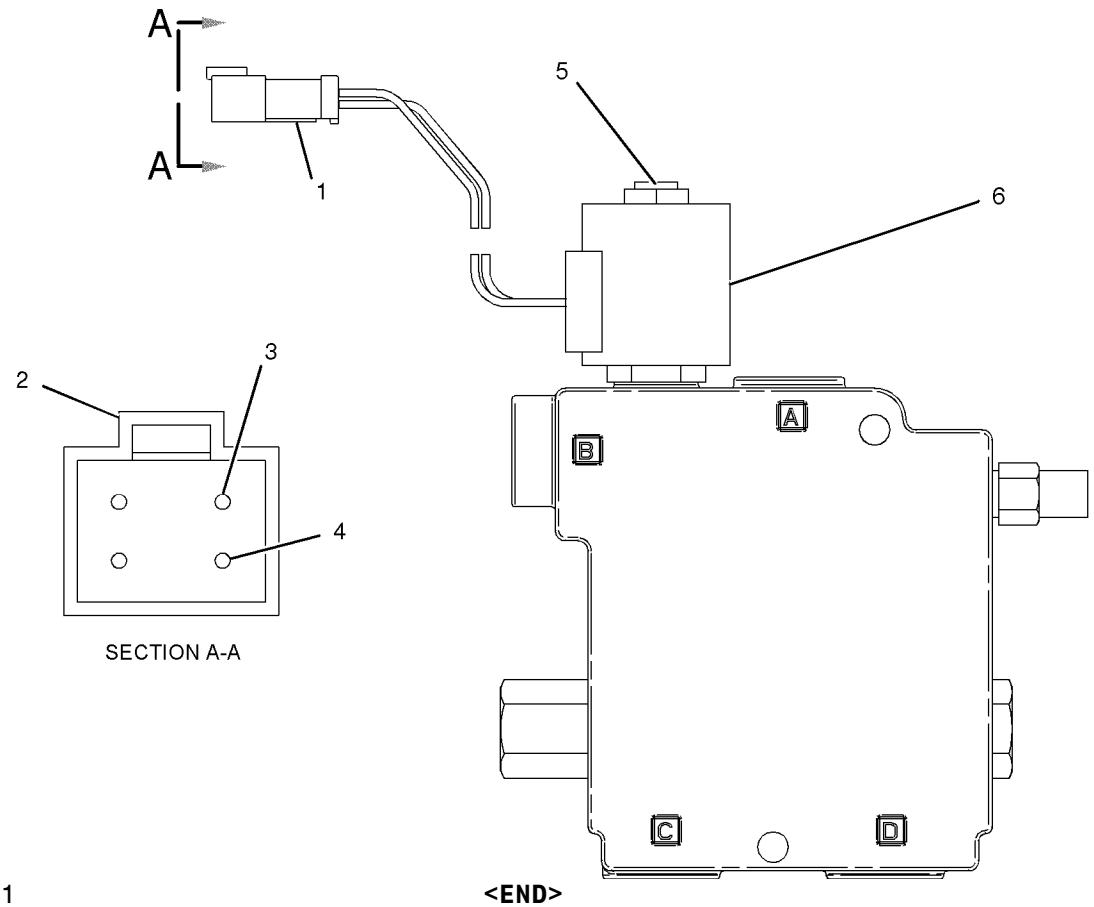

SECTION A-A

GRAPHIC #1 **<END>** g01014991

224-9418 VALVE GP-DIVERTER

S/N: MJH1-UP; RLL1-UP
WITH WORK TOOL POSITIONER
PART OF 159-5753 VALVE & MTG GP-DIVERTER
AN ATTACHMENT

SMCS-5066 **i02359412**

NOTE	REF NO	GRAPHIC REF	PART NUMBER	QTY	PART NAME 1 2 3 4 5 6 (PRODUCT LEVEL)	SEE PAGE
	1	1	**102-8804**	1	KIT-RECEPTACLE (4-PIN)	
					(INCLUDES RECEPTACLE AS & WEDGE)	
	2	1	**3E-3377**	1	WEDGE-RECEPTACLE LOCK (4-PIN)	
	3	1	**186-3735**	2	PIN-CONNECTOR (16-GA TO 18-GA)	
	4	1	**9G-3695**	2	PLUG (GROMMET SEALING)	
J	5	1	**218-6858**	1	CARTRIDGE AS-VALVE	
J	6	1	**218-6857**	1	COIL AS	
					AVAILABLE REPAIR KIT(S):	
			218-6856	1	KIT-SEAL	
					(INCLUDES O-RINGS, COVER & BACK-UP WASHER)	
J			**155-1279**	1	KIT-SEAL	

J-KIT MARKED J SERVICES PARTS MARKED J

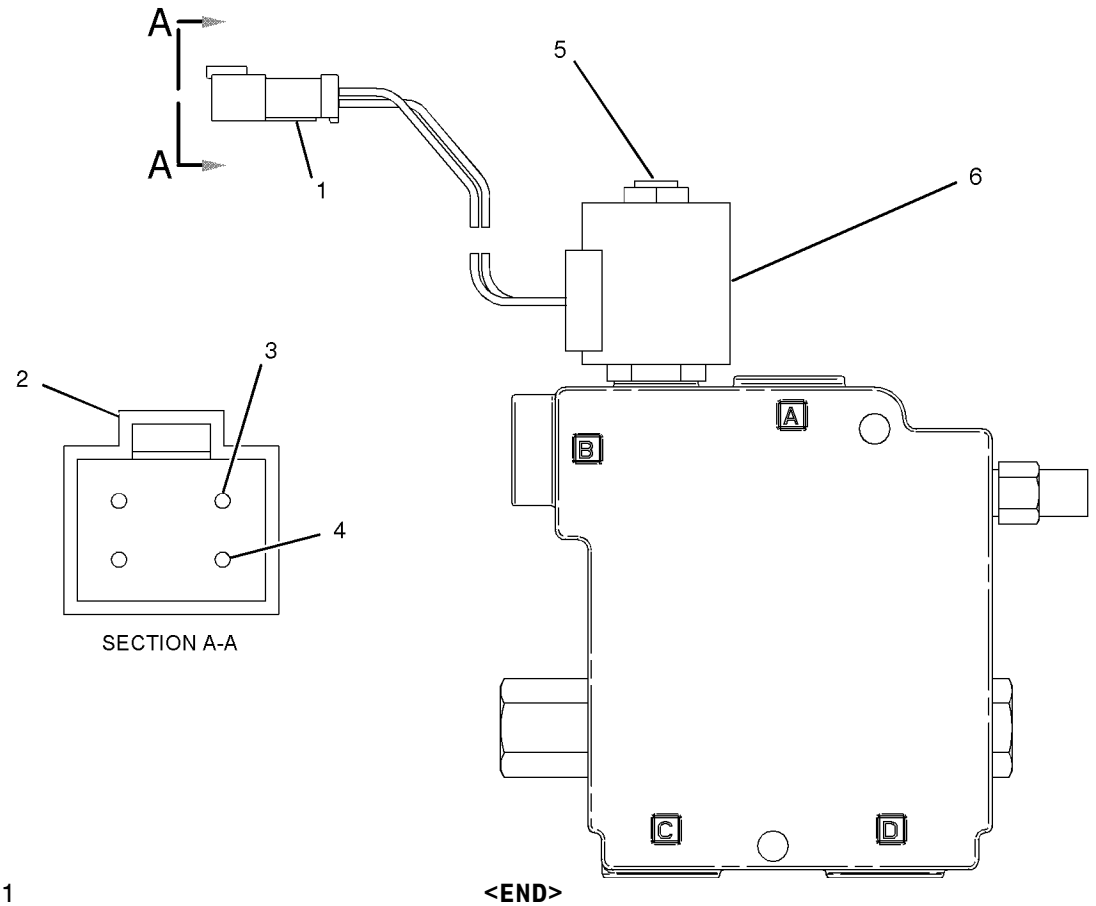

GRAPHIC #1 **<END>** g01014949

218-6119 VALVE GP-PILOT

S/N: MJH1-UP; SCH1-UP; RLL1-UP; BXM1-UP
PART OF 218-5930, 218-5931, 218-5932, 218-5933, 218-5947 CONTROL GP-PILOT OPERATED HYD AN ATTACHMENT

SMCS-5059, 5705 **i01954550**

NOTE	REF NO	GRAPHIC REF	PART NUMBER	QTY	PART NAME 1 2 3 4 5 6 (PRODUCT LEVEL)	SEE PAGE
Y	1	1	**195-9700**	1	VALVE GP-SOLENOID	560
M	2	1	**8T-1158**	1	BOLT-SOCKET HEAD (M8X1.25X20-MM)	

M-METRIC PART
Y-SEPARATE ILLUSTRATION

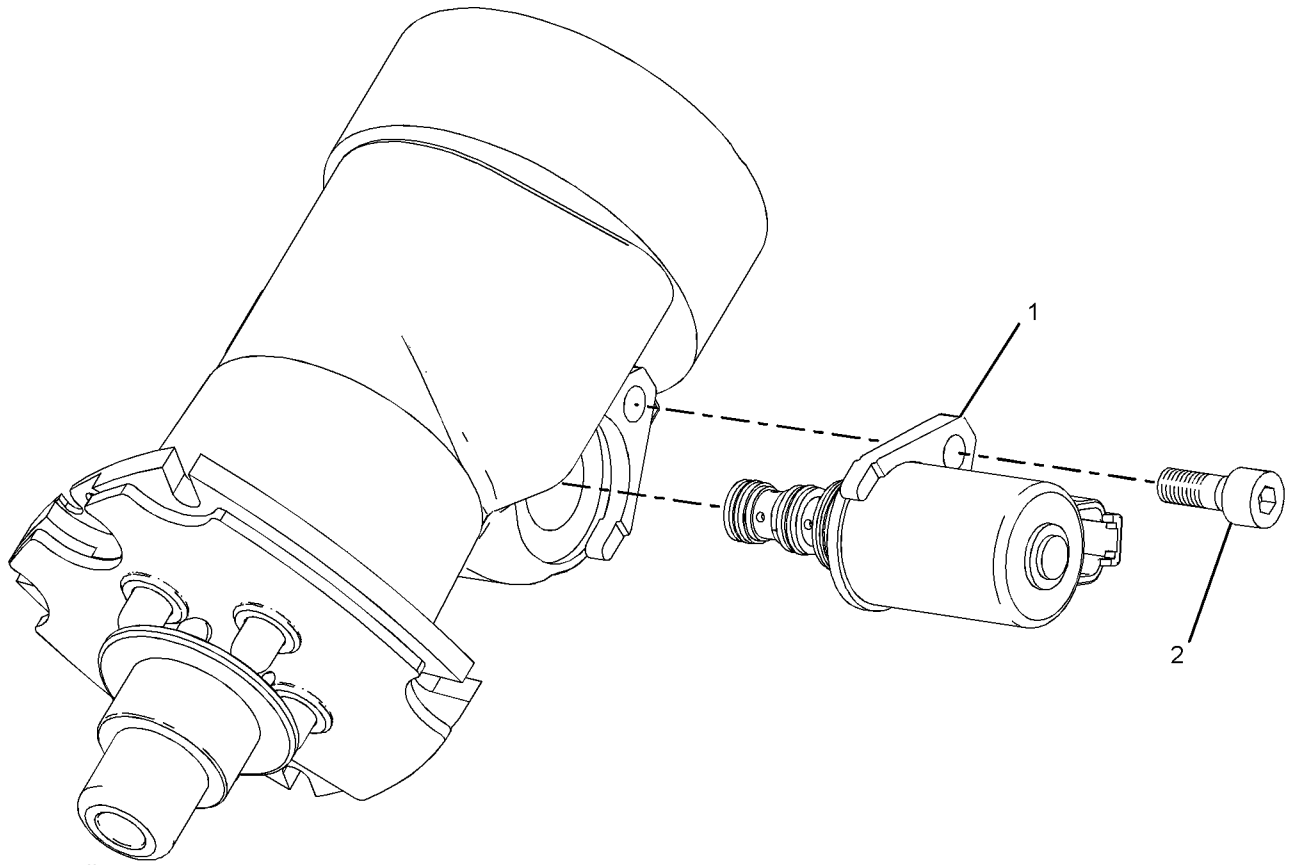

GRAPHIC #1 **<END>** g01017286

228-9228 VALVE GP-PILOT—WORK TOOL

S/N: MJH1-UP; SCH1-UP; RLL1-UP; BXM1-UP

PART OF 218-5611, 218-5612, 218-5618, 218-6571 CONTROL GP-PILOT OPERATED HYD AN ATTACHMENT

SMCS-5059, 5705 **i02359414**

NOTE	REF NO	GRAPHIC REF	PART NUMBER	QTY	PART NAME 1 2 3 4 5 6 (PRODUCT LEVEL)	SEE PAGE
	1	1	**7K-1181**	1	STRAP-CABLE	
	2	1	**172-0970**	1	COIL AS	
	2A	1	**102-8802**	1	KIT-RECEPTACLE (2-PIN)	
					(INCLUDES RECEPTACLE AS & WEDGE)	
		1	**8T-8729**	2	PIN-CONNECTOR	
Y	3	1	**195-9700**	1	VALVE GP-SOLENOID	560
M	4	1	**8T-1158**	1	BOLT-SOCKET HEAD (M8X1.25X20-MM)	
M	5	1	**8T-9405**	1	BOLT-SOCKET HEAD (M4X0.7X16-MM)	

M-METRIC PART
Y-SEPARATE ILLUSTRATION

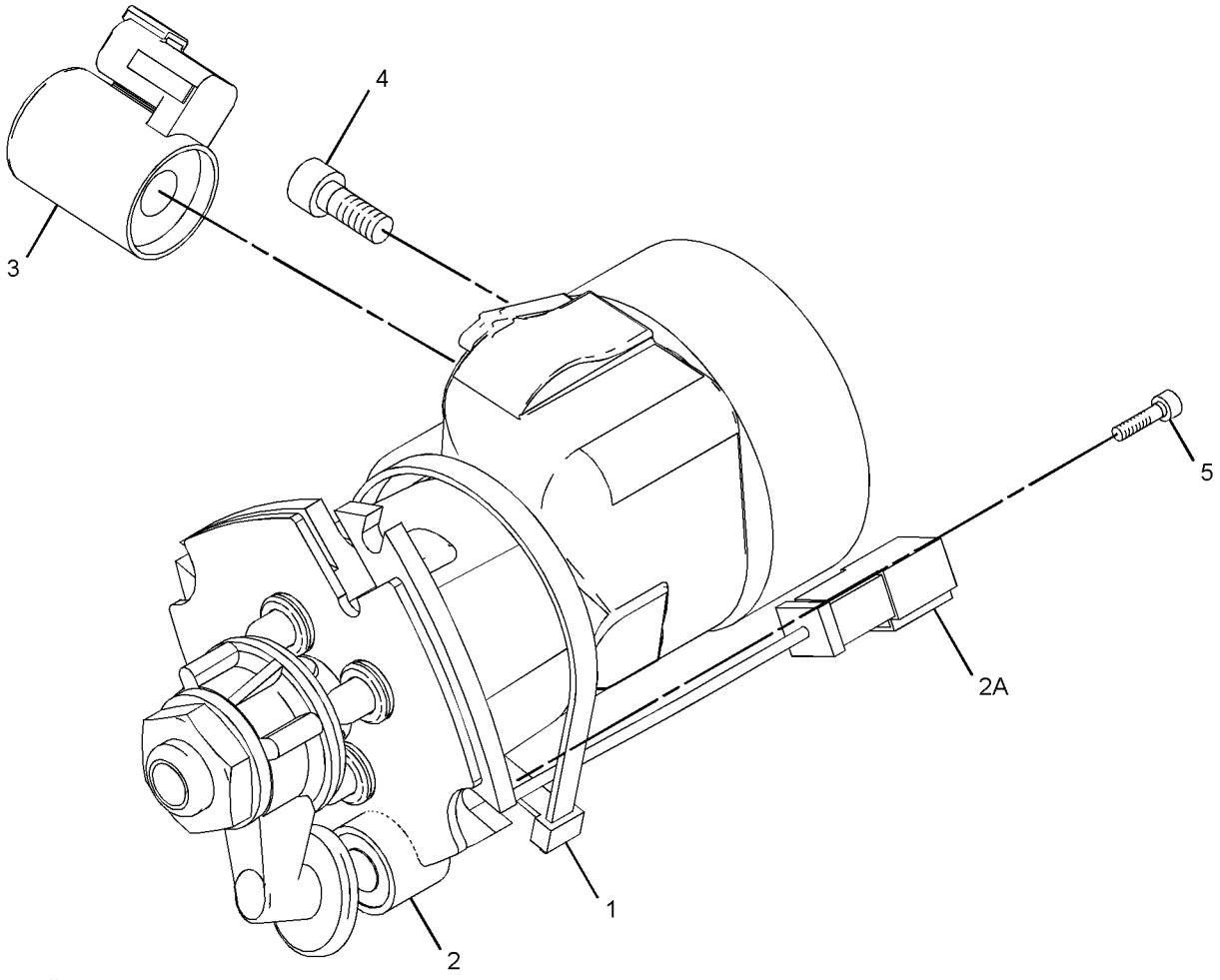

GRAPHIC #1 **<END>** g01017348

188-0878 VALVE GP-RELIEF–MAIN

S/N: MJH1-UP; SCH1-UP; RLL1-UP; BXM1-UP

PART OF 191-9686, 216-6166, 216-6167, 216-6168 VALVE GP-CONTROL

SMCS-5069, 5117 **i01901058**

NOTE	REF NO	GRAPHIC REF	PART NUMBER	QTY	PART NAME 1 2 3 4 5 6 (PRODUCT LEVEL)	SEE PAGE
	1	1	**039-5069**	1	NUT (3/8-24 THD)	
	2	1	**033-5879**	3	SEAL-O-RING	
	3	1	**039-5070**	1	NUT (3/8-24 THD)	
	4	1	**186-2487**	1	RING-BACKUP	
	5	1	**033-6027**	2	SEAL-O-RING	
	6	1	**9N-1756**	1	SEAL-O-RING	
	7	1	**186-2488**	1	RING-BACKUP	
					AVAILABLE REPAIR KIT(S):	
			151-4003	1	KIT-SERVICE	
					(INCLUDES SEALS, RINGS, SPRINGS)	

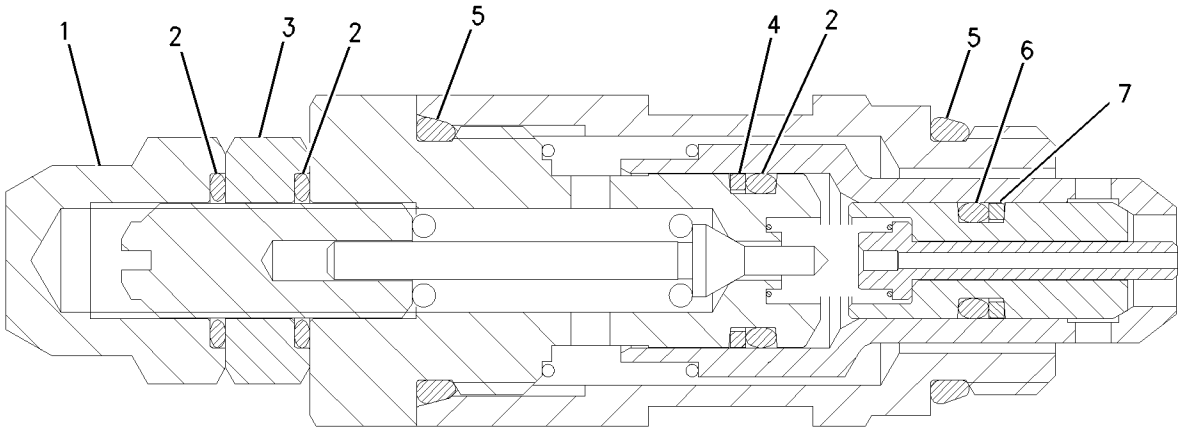

GRAPHIC #1 **<END>** g00702880

144-1644 VALVE GP-SOLENOID–INTERLOCK

S/N: MJH1-UP; SCH1-UP; RLL1-UP; BXM1-UP
PART OF 209-0640 VALVE & MTG GP-SOLENOID
AN ATTACHMENT

SMCS-5479 **i02359418**

NOTE	REF NO	GRAPHIC REF	PART NUMBER	QTY	PART NAME 1 2 3 4 5 6 (PRODUCT LEVEL)	SEE PAGE
	1	1	**160-5843**	1	WASHER (16.8X38.1X0.5-MM THK)	
	2	1	**157-2284**	1	LOCKNUT-SPECIAL (5/8-18-THD)	
	3	1	**160-5844**	1	WASHER-SPRING (16.3X31.5X1.85-MM THK)	
	4	1	**6T-9244**	1	CARTRIDGE AS	
		1	**160-5843**	1	WASHER (16.8X38.1X0.5-MM THK)	
		1	**157-2284**	1	LOCKNUT-SPECIAL (5/8-18-THD)	
		1	**160-5844**	1	WASHER-SPRING (16.3X31.5X1.85-MM THK)	
	5	1	**144-1643**	1	SOLENOID AS	
		1	**102-8804**	1	KIT-RECEPTACLE (4-PIN)	
					(INCLUDES RECEPTACLE AS & WEDGE)	
					AVAILABLE REPAIR KIT(S):	
			126-5948	1	KIT-SEAL	
					(INCLUDES SEALS AND RINGS)	

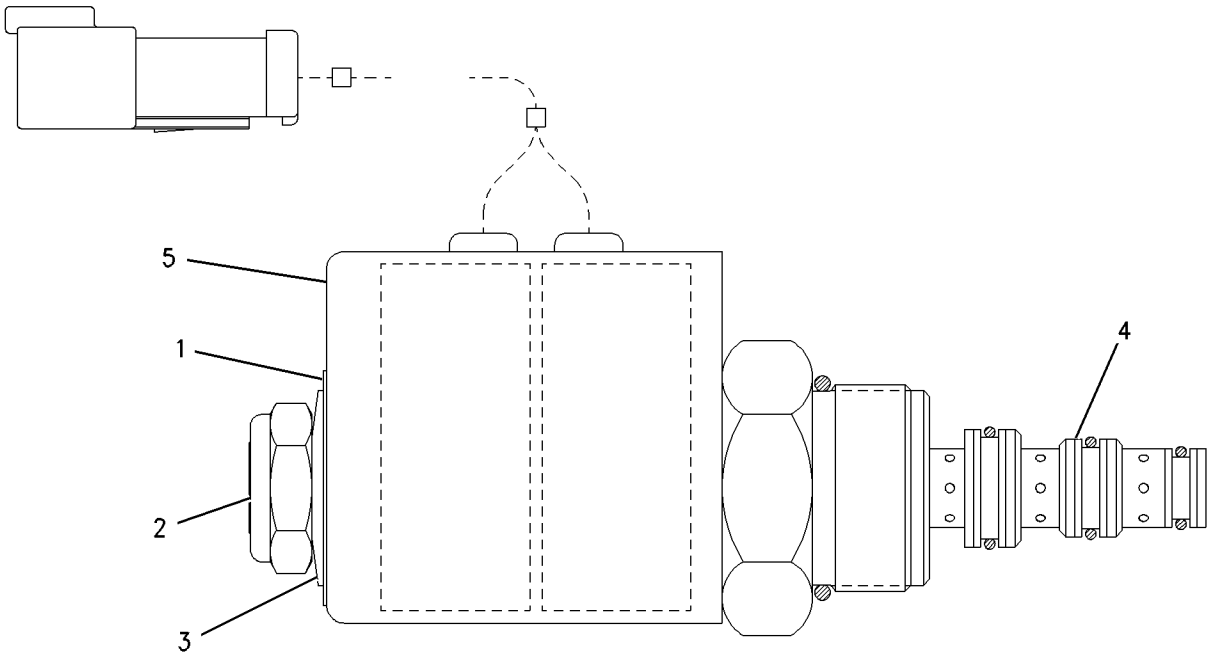

GRAPHIC #1 **<END>** g00702279

185-4254 VALVE GP-SOLENOID

S/N: MJH1-UP; SCH1-UP; RLL1-UP; BXM1-UP

PART OF 191-9686, 216-6166, 216-6167, 216-6168 VALVE GP-CONTROL

SMCS-5479 **i02372783**

NOTE	REF NO	GRAPHIC REF	PART NUMBER	QTY	PART NAME 1 2 3 4 5 6 (PRODUCT LEVEL)	SEE PAGE
	1	1	**226-9629**	1	COIL AS-SOLENOID (12-VOLT)	
	2	1	**164-2108**	1	WASHER (13.03X25.4X2.38-MM THK)	
	3	1	**218-2373**	1	NUT (1/2-28-THD)	
	4	1	*185-4253*	1	VALVE AS	

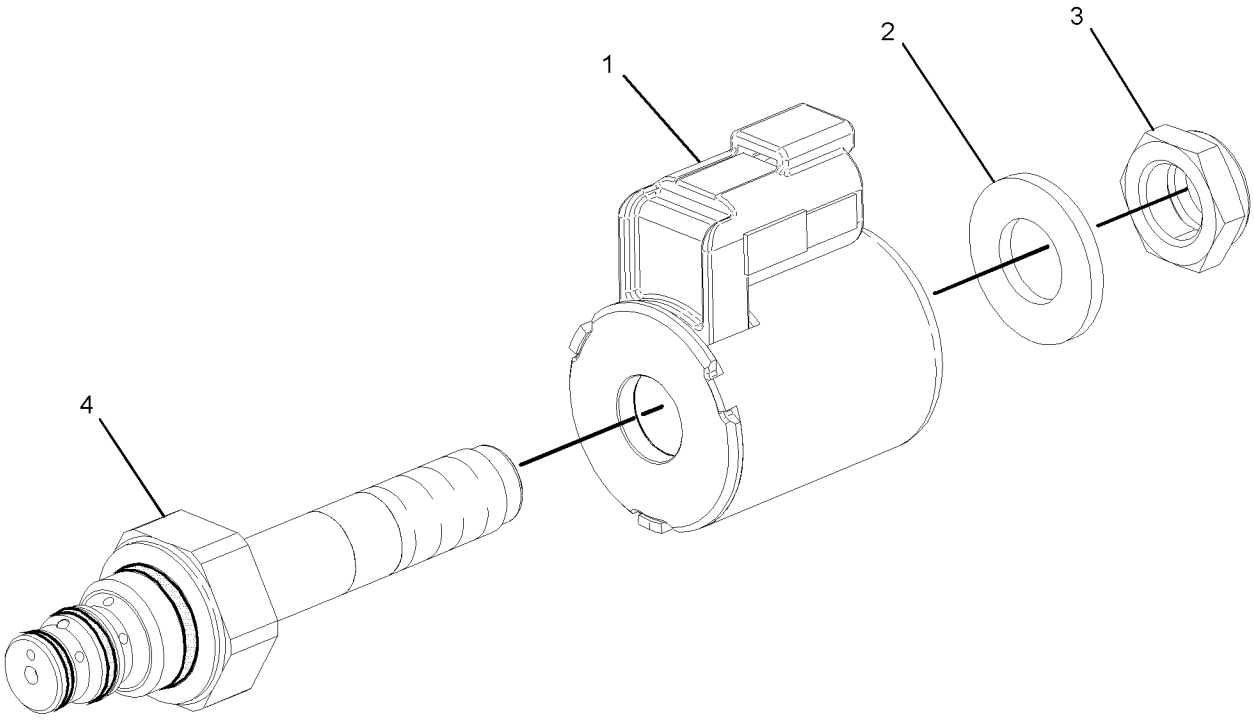

GRAPHIC #1 **<END>** g01185611

HYDRAULIC SYSTEM

195-9700 VALVE GP-SOLENOID

S/N: MJH1-UP; SCH1-476; RLL1-UP; BXM1-714
PART OF 208-5681 VALVE & MTG GP-SOLENOID, 218-6119, 228-9228 VALVE GP-PILOT
ALSO AN ATTACHMENT

SMCS-5479 **i01858086**

NOTE	REF NO	GRAPHIC REF	PART NUMBER	QTY	PART NAME 1 2 3 4 5 6 (PRODUCT LEVEL)	SEE PAGE
	1	1	**212-0061**	1	FLANGE	
					AVAILABLE REPAIR KIT(S):	
			200-2371	1	KIT-SEAL	
					(INCLUDES 3 SEALS)	

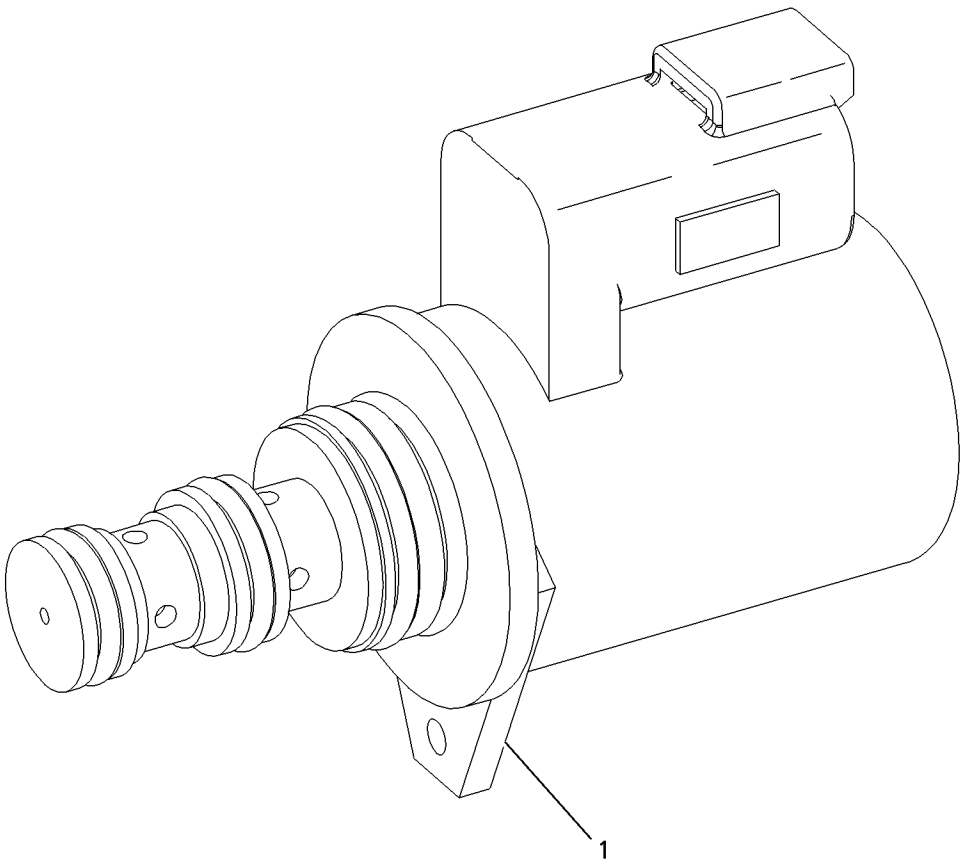

GRAPHIC #1 **<END>** g00947284

231-6287 VALVE GP-SOLENOID–A/C COMPRESSOR

S/N: MJH1-UP; BXM1-UP
PART OF 218-6840 MOTOR GP-GEAR
AN ATTACHMENT

SMCS-5479 **i01961984**

NOTE	REF NO	GRAPHIC REF	PART NUMBER	QTY	PART NAME 1 2 3 4 5 6 (PRODUCT LEVEL)	SEE PAGE
	1	1	**3E-8621**	1	COIL AS	
		1	**1S-9593**	1	STRAP-CABLE	
		1	**3E-3365**	1	WEDGE-RECEPTACLE LOCK (2-PIN)	
		1	**186-3735**	2	PIN-CONNECTOR (16-GA TO 18-GA)	
		1	**102-8802**	1	KIT-RECEPTACLE (2-PIN)	
					(INCLUDES RECEPTACLE AS & WEDGE)	
	2	1	**156-5970**	1	NUT (1/2-20-2B THD)	
	3	1	**231-6564**	1	CARTRIDGE AS-VALVE	
		1	**3D-2824**	1	SEAL-O-RING	
		1	**6F-6672**	1	SEAL-O-RING	
		1	**156-5970**	1	NUT (1/2-20-2B THD)	
		1	**194-3873**	2	RING-BACKUP	
	4	1	**3D-2824**	1	SEAL-O-RING	
	5	1	**6F-6672**	1	SEAL-O-RING	

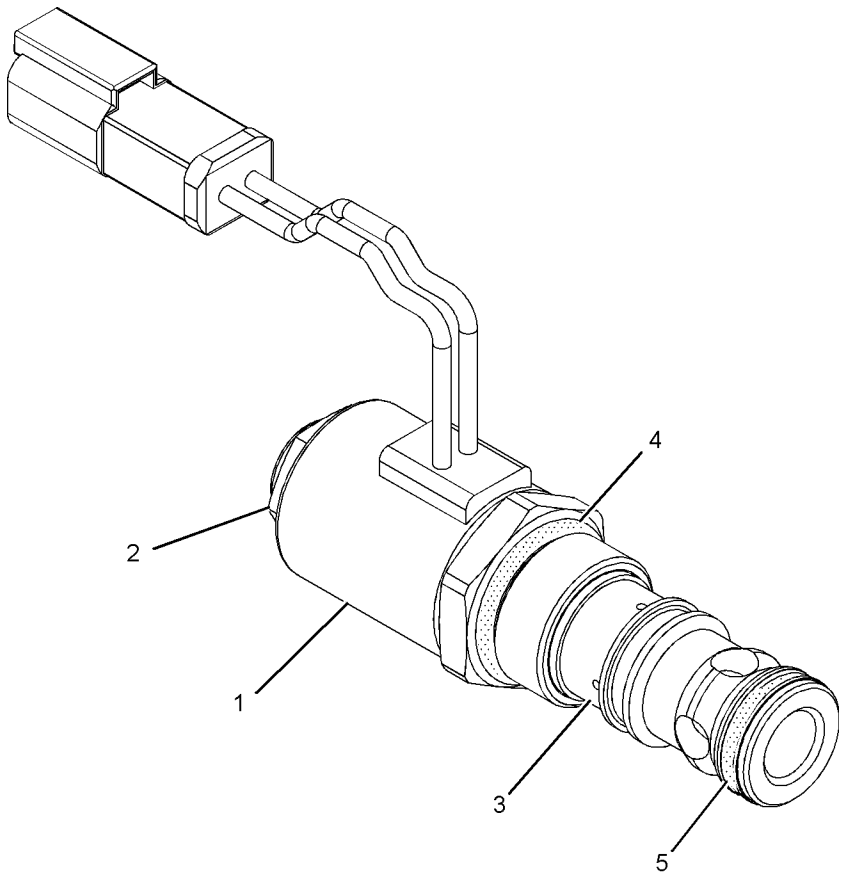

GRAPHIC #1 **<END>** g01026804

WORK TOOLS

216-8756 ARM GP-MATERIAL HANDLING

S/N: MJH1-UP; SCH1-UP; RLL1-UP; BXM1-UP

AN ATTACHMENT

SMCS-6542 **i02342557**

NOTE	REF NO	GRAPHIC REF	PART NUMBER	QTY	PART NAME 1 2 3 4 5 6 (PRODUCT LEVEL)	SEE PAGE
	1	1	**9V-2714**	1	HOOK	
	2	1	**9V-2715**	1	SHACKLE AS	
	3	1	**156-5762**	2	FILM-INFORMATION (TIE-DOWN LOCATION)	
Y	4	1	*188-7733*	1	STEP GP-MATERIAL HANDLING ARM	644
	5	1	**216-8850**	1	ARM AS	
M	6	1	**7X-2475**	1	BOLT (M16X2X130-MM)	
M	7	1	**8T-4122**	1	WASHER-HARD (17X32X3.5-MM THK)	
M	8	1	**8T-1757**	1	NUT (M16X2-THD)	

M-METRIC PART
Y-SEPARATE ILLUSTRATION

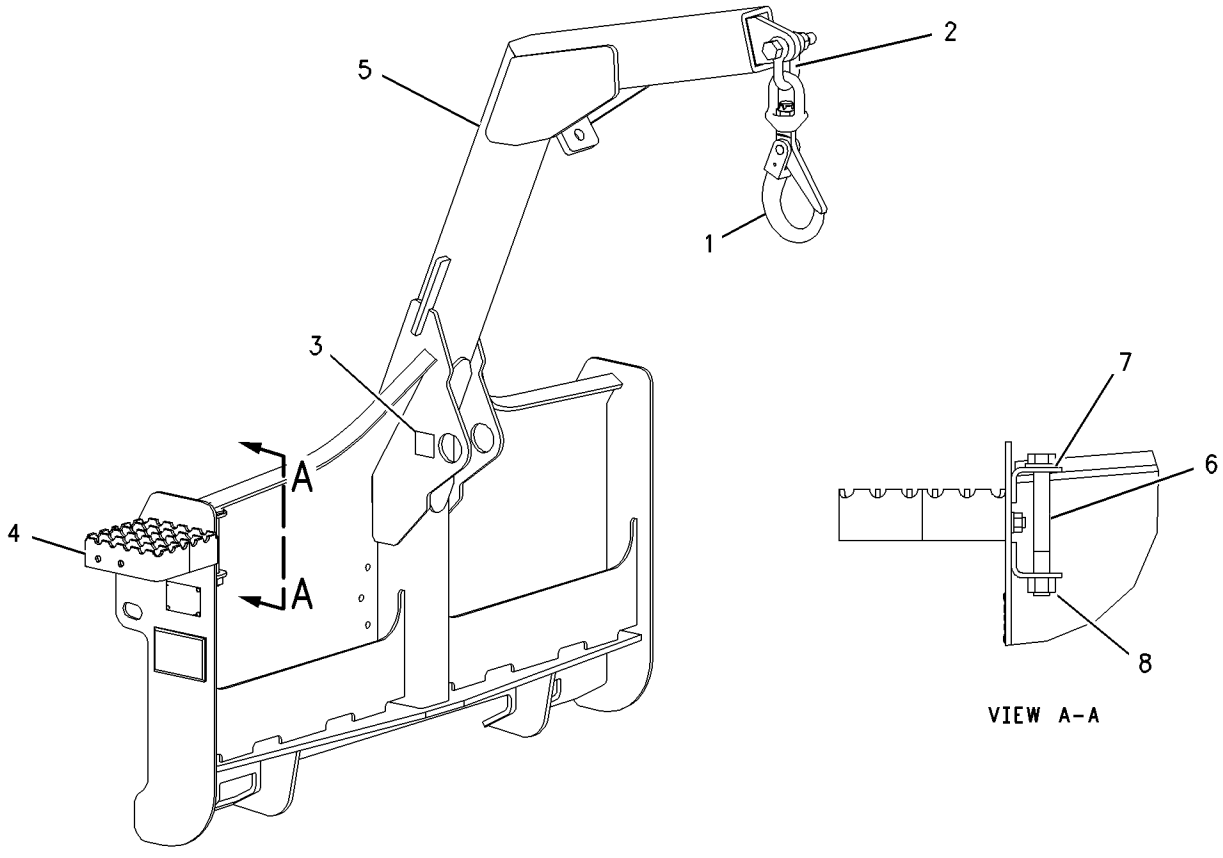

GRAPHIC #1 **<END>** g00934159

177-1989 BLADE AR–ANGLING

S/N: MJH1-UP; SCH1-UP; RLL1-UP; BXM1-UP
72-IN
AN ATTACHMENT

SMCS-6060, 6701 **i01860746**

NOTE	PART NUMBER	QTY	PART NAME 1 2 3 4 5 6 (PRODUCT LEVEL)	SEE PAGE
Y	*177-1981*	1	BLADE GP-ANGLING	566
Y	*230-5406*	1	CYLINDER & MTG GP-ANGLE BLADE	352
Y	*135-9386*	1	EDGE GP-CUTTING	615
Y	*230-5670*	1	FRAME GP-BLADE	308
Y	*177-1986*	1	LINES GP-CONNECTING	396
Y	*177-1983*	1	SPRING GP-BLADE	643
Y-SEPARATE ILLUSTRATION				

<END>

177-1990 BLADE AR–ANGLING

S/N: MJH1-UP; SCH1-UP; RLL1-UP; BXM1-UP
84-IN
AN ATTACHMENT

SMCS-6060, 6701 **i01861063**

NOTE	PART NUMBER	QTY	PART NAME 1 2 3 4 5 6 (PRODUCT LEVEL)	SEE PAGE
Y	*177-1982*	1	BLADE GP-ANGLING	567
Y	*230-5406*	1	CYLINDER & MTG GP-ANGLE BLADE	352
Y	*149-5741*	1	EDGE GP-CUTTING	616
Y	*230-5670*	1	FRAME GP-BLADE	308
Y	*177-1986*	1	LINES GP-CONNECTING	396
Y	*177-1983*	1	SPRING GP-BLADE	643
Y-SEPARATE ILLUSTRATION				

<END>

WORK TOOLS

231-5275 BLADE AR—ANGLING

S/N: MJH1-UP; BXM1-UP
92-IN
AN ATTACHMENT

SMCS-6060, 6701 **i02150886**

NOTE	REF NO	GRAPHIC REF	PART NUMBER	QTY	PART NAME 1 2 3 4 5 6 (PRODUCT LEVEL)	SEE PAGE
	1	1	**7K-1181**	3	STRAP-CABLE	
Y	2	1	*222-7724*	1	BLADE GP-ANGLING	568
	3	1	**225-8015**	1	HARNESS AS-WORK TOOL	
		1	**172-3998**	1	PLUG AS	
		1	**155-2270**	12	KIT-CONNECTING PLUG (2-PIN)	
					(EACH INCLUDES PLUG AS & WEDGE)	
Y	4	1	*231-5273*	1	LINES GP-CONNECTING	398
Y	5	1	*231-5274*	1	CYLINDER & MTG GP-ANGLE BLADE	353
Y	6	1	*231-5278*	1	MANIFOLD & MTG GP-CONTROL (ANGLING BLADE)	497
Y	7	1	*247-0678*	1	PLATE & FILM GP	786

Y-SEPARATE ILLUSTRATION

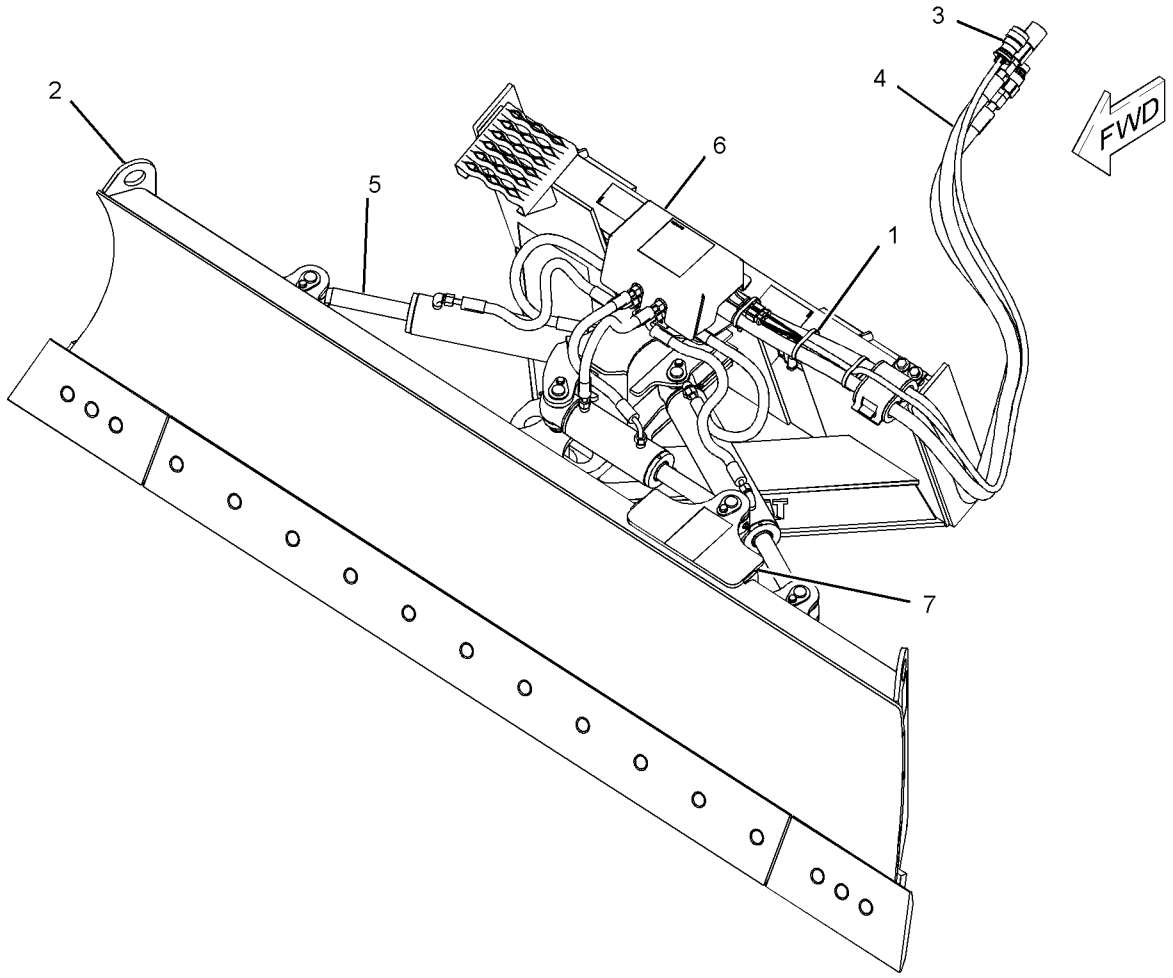

GRAPHIC #1 **<END>** g01090801

231-5277 BLADE AR–ANGLING

S/N: MJH1-UP; BXM1-UP
72-IN
AN ATTACHMENT

SMCS-6060, 6701 **i02105105**

NOTE	REF NO	GRAPHIC REF	PART NUMBER	QTY	PART NAME 1 2 3 4 5 6 (PRODUCT LEVEL)	SEE PAGE
	1	1	**7K-1181**	4	STRAP-CABLE	
	2	1	**225-8015**	1	HARNESS AS-WORK TOOL	
		1	**172-3998**	1	PLUG AS	
		1	**155-2270**	12	KIT-CONNECTING PLUG (2-PIN)	
					(EACH INCLUDES PLUG & WEDGE)	
Y	3	1	*231-5273*	1	LINES GP-CONNECTING	398
Y	4	1	*231-5274*	1	CYLINDER & MTG GP-ANGLE BLADE	353
Y	5	1	*231-5276*	1	BLADE GP-ANGLING	569
Y	6	1	*231-5278*	1	MANIFOLD & MTG GP-CONTROL (ANGLING BLADE)	497
Y	7	1	*247-0678*	1	PLATE & FILM GP	786

Y-SEPARATE ILLUSTRATION

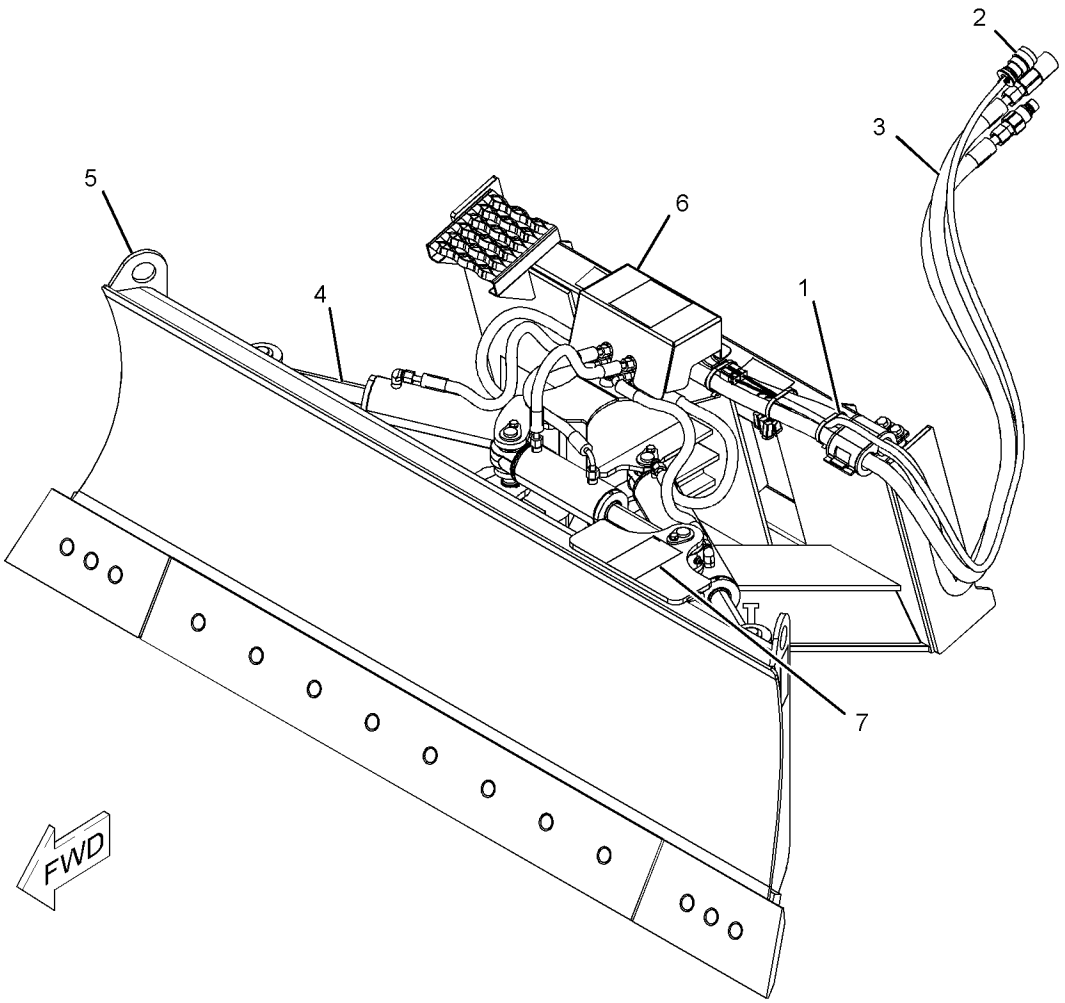

GRAPHIC #1 **<END>** g01093329

177-1981 BLADE GP-ANGLING

S/N: MJH1-UP; SCH1-UP; RLL1-UP; BXM1-UP
182.88-CM (72-IN) BLADE
PART OF 177-1989 BLADE AR
AN ATTACHMENT

SMCS-6060, 6701 **i01905763**

NOTE	REF NO	GRAPHIC REF	PART NUMBER	QTY	PART NAME 1 2 3 4 5 6 (PRODUCT LEVEL)	SEE PAGE
	1	1	**157-0940**	2	PIN	
	2	1	**166-0319**	2	PIN AS	
	3	1	**169-4868**	2	FILM-WARNING (NO CLEARANCE, STAY BACK)	
	4	1	**177-1921**	2	PIN AS	
	5	1	**177-1972**	2	SKID AS	
	6	1	**177-1987**	1	BLADE AS	
	7	1	**3B-8489**	2	FITTING-GREASE	
M	8	1	**6V-9189**	2	LOCKNUT (M8X1.25-THD)	
M	9	1	**8T-6869**	2	BOLT (M8X1.25X60-MM)	
	10	1	**9R-2959**	2	CLIP	

M-METRIC PART

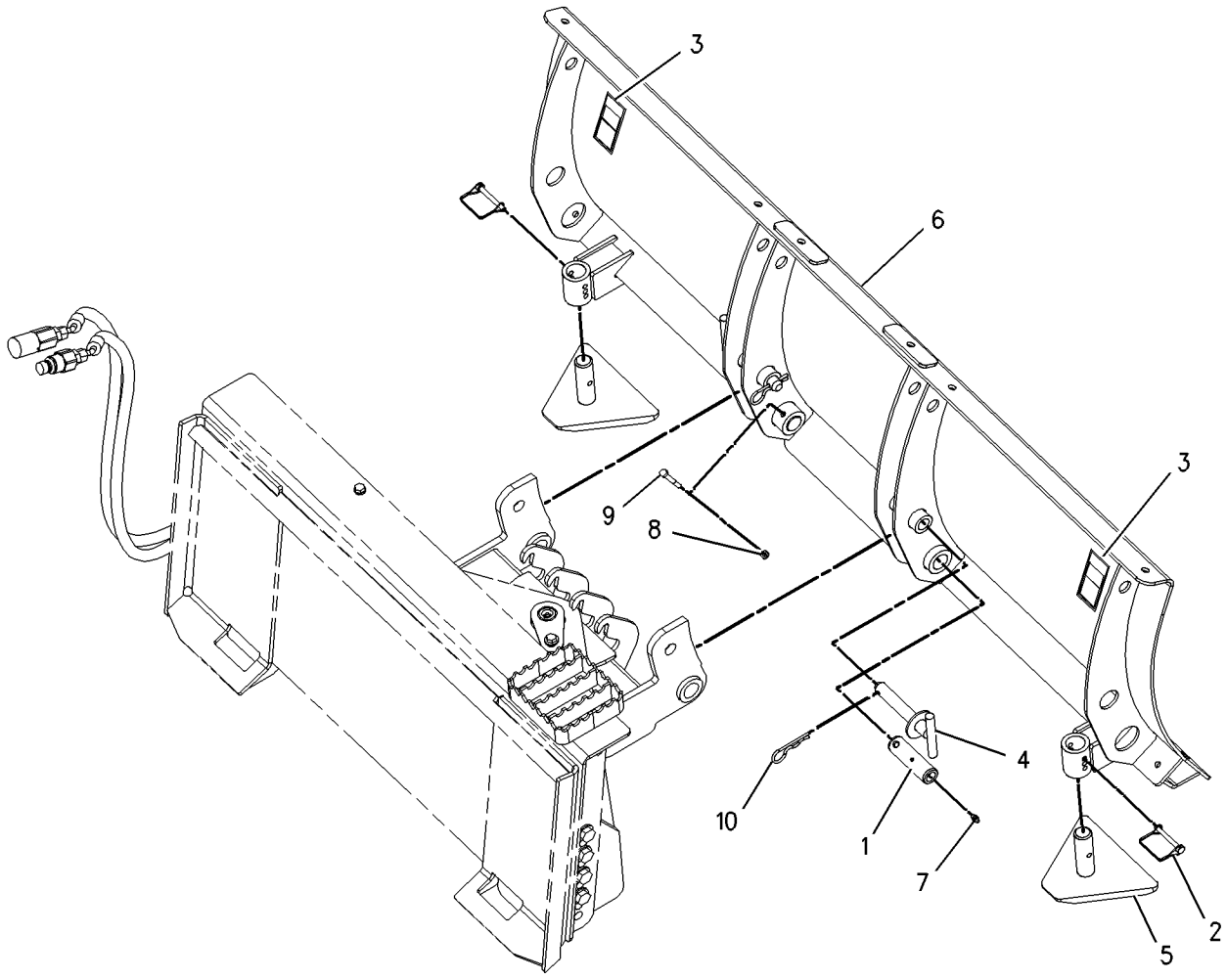

GRAPHIC #1 **<END>** g00777694

177-1982 BLADE GP-ANGLING

S/N: MJH1-UP; SCH1-UP; RLL1-UP; BXM1-UP
213.36-CM (84-IN) BLADE
PART OF 177-1990 BLADE AR
AN ATTACHMENT

SMCS-6060, 6701 **i01911992**

NOTE	REF NO	GRAPHIC REF	PART NUMBER	QTY	PART NAME 1 2 3 4 5 6 (PRODUCT LEVEL)	SEE PAGE
	1	1	**157-0940**	2	PIN	
	2	1	**166-0319**	2	PIN AS	
	3	1	**169-4868**	2	FILM-WARNING (NO CLEARANCE, STAY BACK)	
	4	1	**177-1921**	2	PIN AS	
	5	1	**177-1972**	2	SKID AS	
	6	1	**177-1988**	1	BLADE AS	
	7	1	**3B-8489**	2	FITTING-GREASE	
M	8	1	**6V-9189**	2	LOCKNUT (M8X1.25-THD)	
M	9	1	**8T-6869**	2	BOLT (M8X1.25X60-MM)	
	10	1	**9R-2959**	2	CLIP	

M-METRIC PART

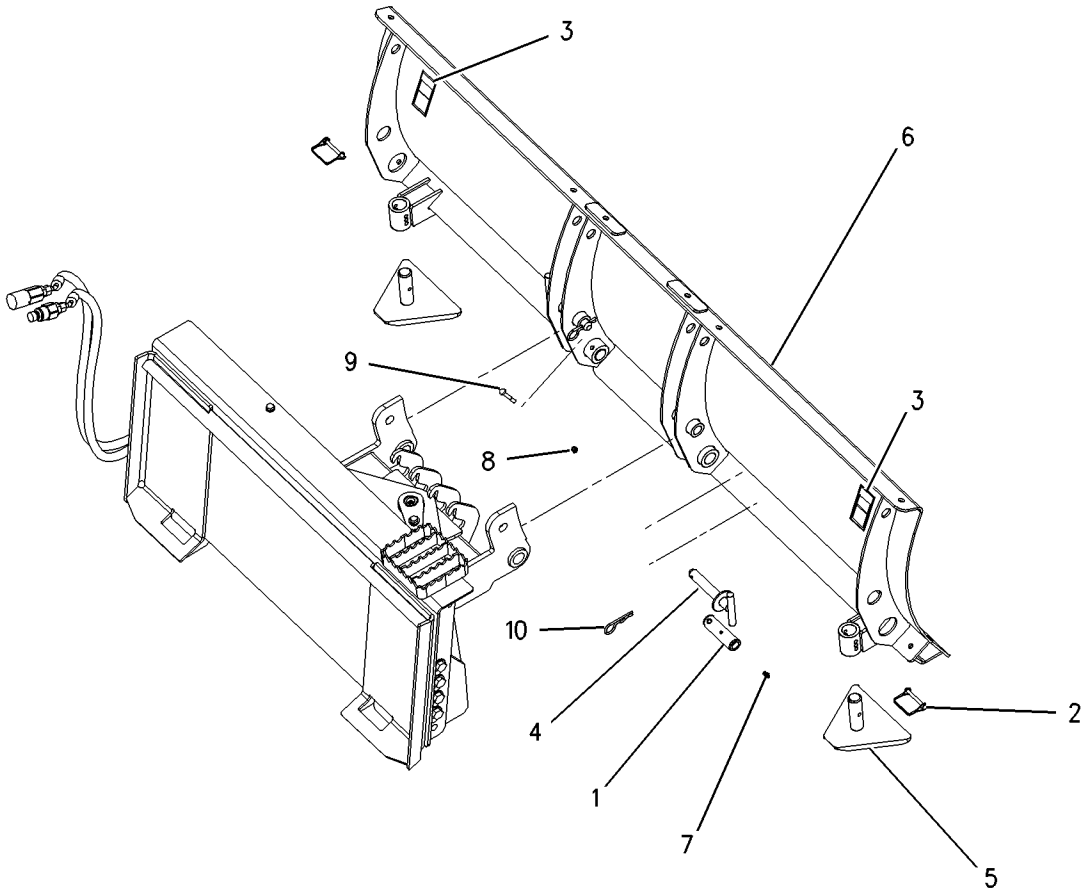

GRAPHIC #1 **<END>** g00710327

WORK TOOLS

222-7724 BLADE GP-ANGLING

S/N: MJH1-UP; BXM1-UP
84 IN
PART OF 231-5275 BLADE AR
AN ATTACHMENT

SMCS-6060, 6701 **i02280909**

NOTE	REF NO	GRAPHIC REF	PART NUMBER	QTY	PART NAME 1 2 3 4 5 6 (PRODUCT LEVEL)	SEE PAGE
B	1	1	**8E-5702**	22	SHIM (0.8-MM THK)	
	2	1	**255-6540**	1	PLATE-INSTRUCTION (BUCKET SPECIFICATIONS)	
	3	1	**168-8389**	4	TACK-FASTENER	
	4	1	**222-7412**	1	BLADE AS-ANGLING	
	5	1	**222-7725**	1	FRAME GP-BLADE	
	6	1	**231-5271**	1	PIN	
	7	1	**238-1004**	2	MOUNT AS	
	8	1	**238-1005**	2	SKID AS	
	9	1	**244-1367**	1	BUSHING	
Y	10	1	*222-7546*	1	EDGE GP-BIT & CUTTING	612
	11	1	**5P-1076**	8	WASHER-HARD (13.5X30X4-MM THK)	
	12	1	**6V-7644**	2	RING-RETAINING	
M	13	1	**8C-8478**	4	BOLT (M20X2.5X140-MM)	
	14	1	**8J-2880**	1	CAP-BEARING	
	15	1	**8T-4123**	4	WASHER-PLATED (22X35X3.5-MM THK)	
M	16	1	**8T-4139**	8	BOLT (M12X1.75X30-MM)	

B-USE AS REQUIRED
M-METRIC PART
Y-SEPARATE ILLUSTRATION

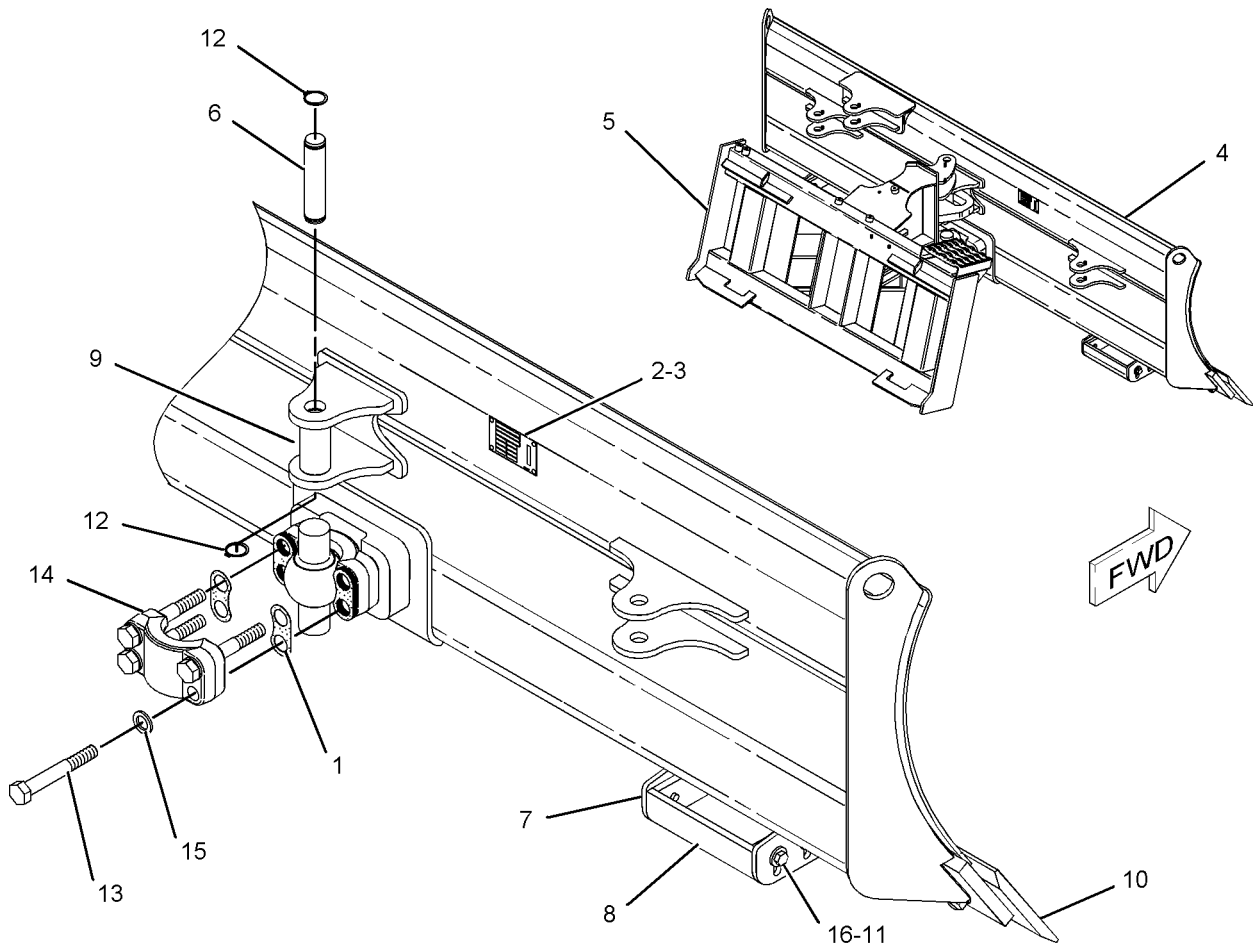

GRAPHIC #1 **<END>** g01021080

WORK TOOLS

231-5276 BLADE GP-ANGLING

S/N: MJH1-UP; BXM1-UP
72-IN
PART OF 231-5277 BLADE AR
AN ATTACHMENT

SMCS-6060, 6701 **i02280916**

NOTE	REF NO	GRAPHIC REF	PART NUMBER	QTY	PART NAME 1 2 3 4 5 6 (PRODUCT LEVEL)	SEE PAGE
B	1	1	**8E-5702**	22	SHIM (0.8-MM THK)	
	2	1	**255-6540**	1	PLATE-INSTRUCTION (BUCKET SPECIFICATIONS)	
	3	1	**168-8389**	4	TACK-FASTENER	
	4	1	**222-7725**	1	FRAME GP-BLADE	
	5	1	**230-4596**	1	BLADE AS-ANGLING	
	6	1	**231-5271**	1	PIN	
	7	1	**238-1004**	2	MOUNT AS	
	8	1	**238-1005**	2	SKID AS	
	9	1	**244-1367**	1	BUSHING	
Y	10	1	*222-7545*	1	EDGE GP-BIT & CUTTING	612
	11	1	**5P-1076**	8	WASHER-HARD (13.5X30X4-MM THK)	
	12	1	**6V-7644**	2	RING-RETAINING	
M	13	1	**8C-8478**	4	BOLT (M20X2.5X140-MM)	
	14	1	**8J-2880**	1	CAP-BEARING	
	15	1	**8T-4123**	4	WASHER-PLATED (22X35X3.5-MM THK)	
M	16	1	**8T-4139**	8	BOLT (M12X1.75X30-MM)	

B-USE AS REQUIRED
M-METRIC PART
Y-SEPARATE ILLUSTRATION

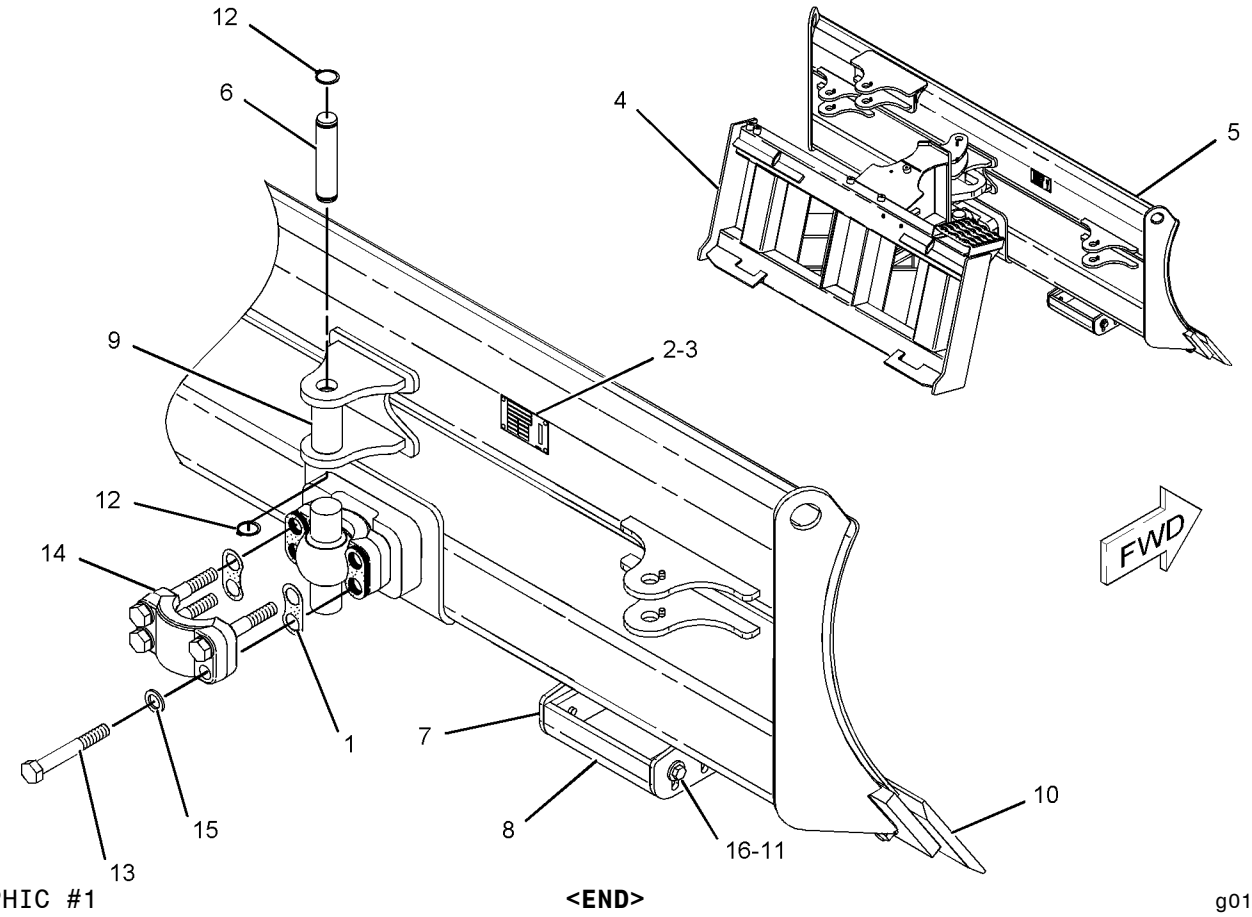

GRAPHIC #1 **<END>** g01020723

157-7223 BUCKET AR-GRAPPLE

S/N: MJH1-UP; SCH1-UP; RLL1-UP; BXM1-UP
INDUSTRIAL
PART OF 157-7226 BUCKET AR-GRAPPLE
AN ATTACHMENT

SMCS-6704 **i02024103**

NOTE	PART NUMBER	QTY	PART NAME 1 2 3 4 5 6 (PRODUCT LEVEL)	SEE PAGE
Y	*156-0884*	1	BUCKET GP-GRAPPLE	585
Y	**156-5512**	2	CYLINDER GP-GRAPPLE	361
Y	*161-0187*	1	LINES GP-GRAPPLE	400
Y	*156-0891*	1	MOUNTING GP-CYLINDER	510
Y-SEPARATE ILLUSTRATION				

<END>

157-7224 BUCKET AR-GRAPPLE

S/N: MJH1-UP; SCH1-UP; RLL1-UP; BXM1-UP
INDUSTRIAL
PART OF 157-7227 BUCKET AR-GRAPPLE
AN ATTACHMENT

SMCS-6704 **i01529477**

NOTE	PART NUMBER	QTY	PART NAME 1 2 3 4 5 6 (PRODUCT LEVEL)	SEE PAGE
Y	*156-0885*	1	BUCKET GP-GRAPPLE	586
Y	*156-0891*	1	MOUNTING GP-CYLINDER	510
Y	**156-5512**	2	CYLINDER GP-GRAPPLE	361
Y	*161-0187*	1	LINES GP-GRAPPLE	400
Y-SEPARATE ILLUSTRATION				

<END>

157-7225 BUCKET AR-GRAPPLE

S/N: SCH1-UP; BXM1-UP
INDUSTRIAL
PART OF 158-6095 BUCKET AR-GRAPPLE
AN ATTACHMENT

SMCS-6704 **i02016623**

NOTE	PART NUMBER	QTY	PART NAME 1 2 3 4 5 6 (PRODUCT LEVEL)	SEE PAGE
Y	*156-0886*	1	BUCKET GP-GRAPPLE	587
Y	**156-5512**	2	CYLINDER GP-GRAPPLE	361
Y	*161-0187*	1	LINES GP-GRAPPLE	400
Y	*156-0891*	1	MOUNTING GP-CYLINDER	510
Y-SEPARATE ILLUSTRATION				

<END>

WORK TOOLS

157-7226 BUCKET AR-GRAPPLE

S/N: MJH1-UP; SCH1-UP; RLL1-UP; BXM1-UP
INDUSTRIAL
AN ATTACHMENT

SMCS-6704 **i01788957**

NOTE	PART NUMBER	QTY	PART NAME 1 2 3 4 5 6 (PRODUCT LEVEL)	SEE PAGE
Y	**157-7223**	1	BUCKET AR-GRAPPLE	570
Y	*135-9384*	1	EDGE GP-CUTTING	613
Y-SEPARATE ILLUSTRATION				

<END>

157-7227 BUCKET AR-GRAPPLE

S/N: MJH1-UP; SCH1-UP; RLL1-UP; BXM1-UP
INDUSTRIAL
AN ATTACHMENT

SMCS-6704 **i01788965**

NOTE	PART NUMBER	QTY	PART NAME 1 2 3 4 5 6 (PRODUCT LEVEL)	SEE PAGE
Y	**157-7224**	1	BUCKET AR-GRAPPLE	570
Y	*135-9385*	1	EDGE GP-CUTTING	614
Y-SEPARATE ILLUSTRATION				

<END>

158-6095 BUCKET AR-GRAPPLE

S/N: SCH1-UP; BXM1-UP
INDUSTRIAL
AN ATTACHMENT

SMCS-6704 **i01060288**

NOTE	PART NUMBER	QTY	PART NAME 1 2 3 4 5 6 (PRODUCT LEVEL)	SEE PAGE
Y	**157-7225**	1	BUCKET AR-GRAPPLE	570
Y	*135-9386*	1	EDGE GP-CUTTING	615
Y-SEPARATE ILLUSTRATION				

<END>

165-8779 BUCKET AR-GRAPPLE

S/N: MJH1-UP; SCH1-UP; RLL1-UP; BXM1-UP
UTILITY
AN ATTACHMENT

SMCS-6704 **i02010302**

NOTE	PART NUMBER	QTY	PART NAME 1 2 3 4 5 6 (PRODUCT LEVEL)	SEE PAGE
Y	**165-8777**	1	BUCKET GP-UTILITY	593
Y	**165-8734**	1	GRAPPLE & CYLINDER GP-UTILITY	628
Y-SEPARATE ILLUSTRATION				

<END>

WORK TOOLS

165-8780 BUCKET AR-GRAPPLE

S/N: MJH1-UP; SCH1-UP; RLL1-UP; BXM1-UP
UTILITY
AN ATTACHMENT

SMCS-6704 **i02010301**

NOTE	PART NUMBER	QTY	PART NAME 1 2 3 4 5 6 (PRODUCT LEVEL)	SEE PAGE
Y	**165-8778**	1	BUCKET GP-UTILITY	594
Y	**165-8734**	1	GRAPPLE & CYLINDER GP-UTILITY	628

Y-SEPARATE ILLUSTRATION

<END>

154-5004 BUCKET AR-MULTIPURPOSE

S/N: MJH1-UP; SCH1-UP; RLL1-UP; BXM1-UP
PART OF 154-5045, 154-5046 BUCKET AR-MULTIPURPOSE
AN ATTACHMENT

SMCS-6104 **i01519821**

NOTE	PART NUMBER	QTY	PART NAME 1 2 3 4 5 6 (PRODUCT LEVEL)	SEE PAGE
Y	**154-5005**	1	BUCKET GP-MULTIPURPOSE	590
Y	*162-5236*	1	COVER GP-LINES	609
Y	**154-5018**	2	CYLINDER GP-BUCKET	359
Y	*154-5019*	1	LINES GP-BUCKET	391
Y	*154-5011*	1	MOUNTING GP-CYLINDER	509

Y-SEPARATE ILLUSTRATION

<END>

154-5008 BUCKET AR-MULTIPURPOSE

S/N: MJH1-UP; SCH1-UP; RLL1-UP; BXM1-UP
PART OF 154-5047, 154-5048 BUCKET AR-MULTIPURPOSE
AN ATTACHMENT

SMCS-6104 **i01218109**

NOTE	PART NUMBER	QTY	PART NAME 1 2 3 4 5 6 (PRODUCT LEVEL)	SEE PAGE
Y	**154-5007**	1	BUCKET GP-MULTIPURPOSE	591
Y	**154-5018**	2	CYLINDER GP-BUCKET	359
Y	*162-5236*	1	COVER GP-LINES	609
Y	*154-5051*	1	LINES GP-BUCKET	393
Y	*154-5011*	1	MOUNTING GP-CYLINDER	509

Y-SEPARATE ILLUSTRATION

<END>

WORK TOOLS

154-5010 BUCKET AR-MULTIPURPOSE

S/N: SCH1-UP

PART OF 154-5049, 154-5050 BUCKET AR-MULTIPURPOSE

AN ATTACHMENT

SMCS-6104 **i01092083**

NOTE	PART NUMBER	QTY	PART NAME 1 2 3 4 5 6 (PRODUCT LEVEL)	SEE PAGE
Y	**154-5009**	1	BUCKET GP-MULTIPURPOSE	592
Y	**154-5018**	2	CYLINDER GP-BUCKET	359
Y	*162-5236*	1	COVER GP-LINES	609
Y	*154-5052*	1	LINES GP-BUCKET	394
Y	*154-5011*	1	MOUNTING GP-CYLINDER	509
Y-SEPARATE ILLUSTRATION				

<END>

154-5045 BUCKET AR-MULTIPURPOSE

S/N: MJH1-UP; SCH1-UP; RLL1-UP; BXM1-UP

AN ATTACHMENT

SMCS-6104 **i01218111**

NOTE	PART NUMBER	QTY	PART NAME 1 2 3 4 5 6 (PRODUCT LEVEL)	SEE PAGE
Y	**154-5004**	1	BUCKET AR-MULTIPURPOSE	572
Y	*135-9384*	1	EDGE GP-CUTTING	613
Y-SEPARATE ILLUSTRATION				

<END>

154-5046 BUCKET AR-MULTIPURPOSE

S/N: MJH1-UP; SCH1-UP; RLL1-UP; BXM1-UP

AN ATTACHMENT

SMCS-6104 **i01218112**

NOTE	PART NUMBER	QTY	PART NAME 1 2 3 4 5 6 (PRODUCT LEVEL)	SEE PAGE
Y	**154-5004**	1	BUCKET AR-MULTIPURPOSE	572
Y	*141-4999*	8	TOOTH GP-UNI	654
Y-SEPARATE ILLUSTRATION				

<END>

154-5047 BUCKET AR-MULTIPURPOSE

S/N: MJH1-UP; SCH1-UP; RLL1-UP; BXM1-UP

AN ATTACHMENT

SMCS-6104 **i01218113**

NOTE	PART NUMBER	QTY	PART NAME 1 2 3 4 5 6 (PRODUCT LEVEL)	SEE PAGE
Y	**154-5008**	1	BUCKET AR-MULTIPURPOSE	572
Y	*135-9385*	1	EDGE GP-CUTTING	614
Y-SEPARATE ILLUSTRATION				

<END>

154-5048 BUCKET AR-MULTIPURPOSE

S/N: MJH1-UP; SCH1-UP; RLL1-UP; BXM1-UP

AN ATTACHMENT

SMCS-6104 **i01218115**

NOTE	PART NUMBER	QTY	PART NAME 1 2 3 4 5 6 (PRODUCT LEVEL)	SEE PAGE
Y	**154-5008**	1	BUCKET AR-MULTIPURPOSE	572
Y	*141-4999*	8	TOOTH GP-UNI	654

Y-SEPARATE ILLUSTRATION

<END>

154-5049 BUCKET AR-MULTIPURPOSE

S/N: SCH1-UP

AN ATTACHMENT

SMCS-6104 **i01112307**

NOTE	PART NUMBER	QTY	PART NAME 1 2 3 4 5 6 (PRODUCT LEVEL)	SEE PAGE
Y	*135-9386*	1	EDGE GP-CUTTING	615
Y	**154-5010**	1	BUCKET AR-MULTIPURPOSE	573

Y-SEPARATE ILLUSTRATION

<END>

154-5050 BUCKET AR-MULTIPURPOSE

S/N: SCH1-UP

AN ATTACHMENT

SMCS-6104 **i01092089**

NOTE	PART NUMBER	QTY	PART NAME 1 2 3 4 5 6 (PRODUCT LEVEL)	SEE PAGE
Y	**154-5010**	1	BUCKET AR-MULTIPURPOSE	573
Y	*141-4999*	8	TOOTH GP-UNI	654

Y-SEPARATE ILLUSTRATION

<END>

WORK TOOLS

152-0230 BUCKET GP-DIRT

S/N: MJH1-UP; SCH1-UP; RLL1-UP; BXM1-UP
137.16-CM (54-IN) WIDE X 0.03-CU M (0.39-CU YD)CAPACITY
AN ATTACHMENT

SMCS-6001 **i01353252**

NOTE	REF NO	GRAPHIC REF	PART NUMBER	QTY	PART NAME 1 2 3 4 5 6 (PRODUCT LEVEL)	SEE PAGE
	1	1	**165-6155**	1	BUCKET AS-DIRT	
	2	1	**149-5434**	1	EDGE	
	3	1	*135-9383*	1	EDGE GP-CUTTING	
	4	1	**135-9393**		EDGE-CUTTING	
M	5	1	**8T-4778**	6	LOCKNUT (M16X2.00 THD)	
M	6	1	**159-2953**	6	SCREW-FLAT HEAD (M16X2.00 THD)	

M-METRIC PART

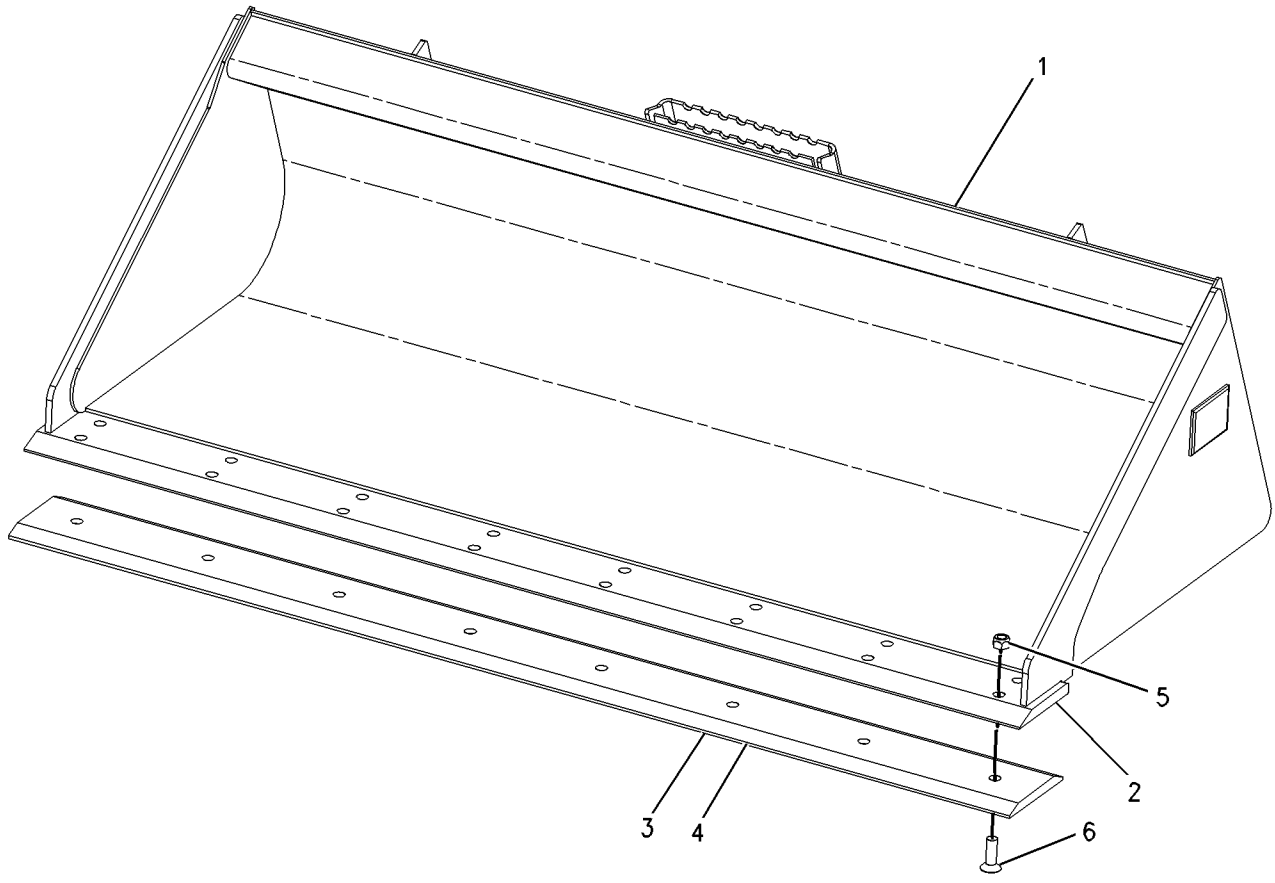

GRAPHIC #1 **<END>** g00714123

152-0231 BUCKET GP-DIRT

S/N: MJH1-UP; SCH1-UP; RLL1-UP; BXM1-UP
152.40-CM (60-IN) WIDE X 0.34-CU M (0.44-CU YD) CAPACITY
FIELD REPLACEMENT FOR 165-6156 BUCKET AS-DIRT
AN ATTACHMENT

SMCS-6001 **i01788898**

NOTE	REF NO	GRAPHIC REF	PART NUMBER	QTY	PART NAME 1 2 3 4 5 6 (PRODUCT LEVEL)	SEE PAGE
	1	1	**165-6156**	1	BUCKET AS-DIRT	
	2	1	**149-5435**	1	EDGE	
	3	1	*135-9384*	1	EDGE GP-CUTTING	
	4	1	**135-9394**	1	EDGE-CUTTING	
M	5	1	**8T-4778**	8	LOCKNUT (M16X2 THD)	
M	6	1	**159-2953**	8	SCREW-FLAT HEAD (M16X2.00 THD)	

M-METRIC PART

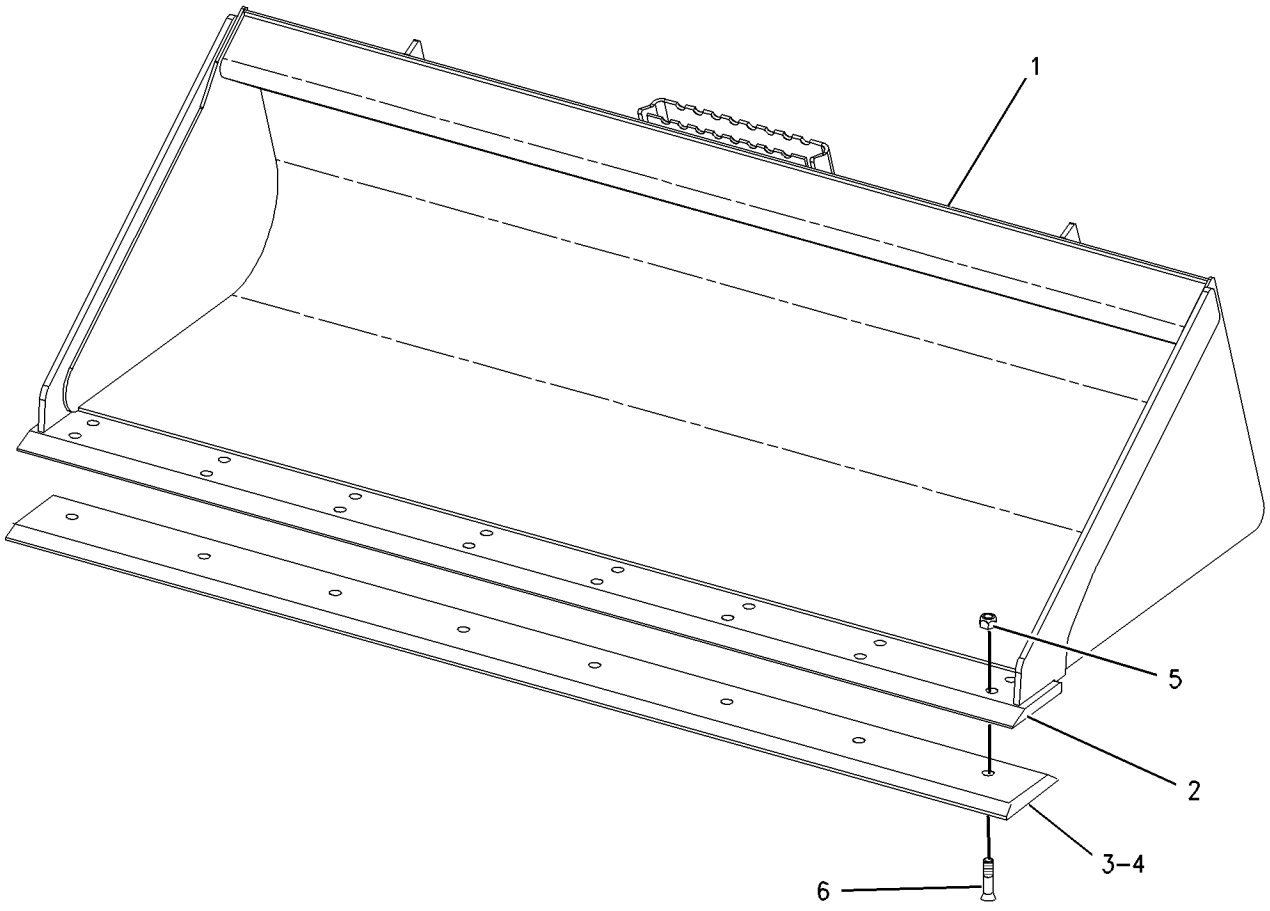

GRAPHIC #1 **<END>** g00915536

152-0232 BUCKET GP-DIRT

S/N: MJH1-UP; RLL1-UP; BXM1-UP
167.64-CM (66-IN) WIDE X 0.37-CU M (0.48-CU YD) CAPACITY
FIELD REPLACEMENT FOR 165-6157 BUCKET AS-DIRT
AN ATTACHMENT

SMCS-6001 **i01905274**

NOTE	REF NO	GRAPHIC REF	PART NUMBER	QTY	PART NAME 1 2 3 4 5 6 (PRODUCT LEVEL)	SEE PAGE
	1	1	**165-6157**	1	BUCKET AS-DIRT	
	2	1	**149-5436**	1	EDGE	
	3	1	*135-9385*	1	EDGE GP-CUTTING	
	4	1	**135-9395**	1	EDGE-CUTTING	
M	5	1	**8T-4778**	8	LOCKNUT (M16X2 THD)	
M	6	1	**159-2953**	8	SCREW-FLAT HEAD (M16X2.00 THD)	

M-METRIC PART

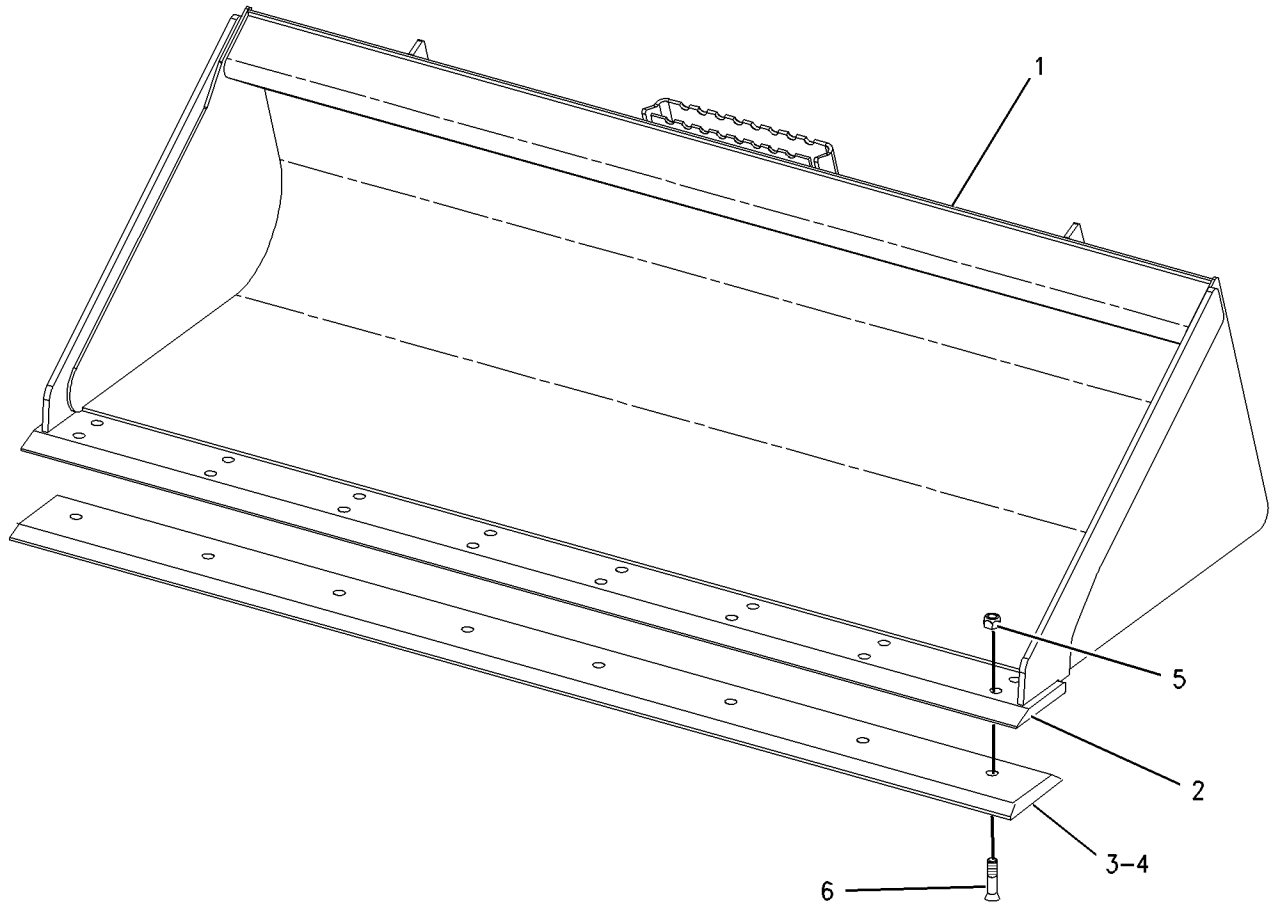

GRAPHIC #1 **<END>** g00915536

WORK TOOLS

188-2719 BUCKET GP-DIRT

S/N: SCH1-UP; BXM1-UP
182.88-CM (72-IN) WIDE X 0.41-CU M (0.53-CU YD) CAPACITY
FIELD REPLACEMENT FOR 188-3526 BUCKET AS-DIRT
AN ATTACHMENT

SMCS-6001 **i01940640**

NOTE	REF NO	GRAPHIC REF	PART NUMBER	QTY	PART NAME 1 2 3 4 5 6 (PRODUCT LEVEL)	SEE PAGE
	1	1	**188-3526**	1	BUCKET AS-DIRT	
	2	1	**149-5437**	1	EDGE	
	3	1	*135-9386*	1	EDGE GP-CUTTING	
	4	1	**135-9396**	1	EDGE-CUTTING	
M	5	1	**8T-4778**	11	LOCKNUT	
M	6	1	**159-2953**	11	SCREW-FLAT HEAD (M16X2.00 THD)	

M-METRIC PART

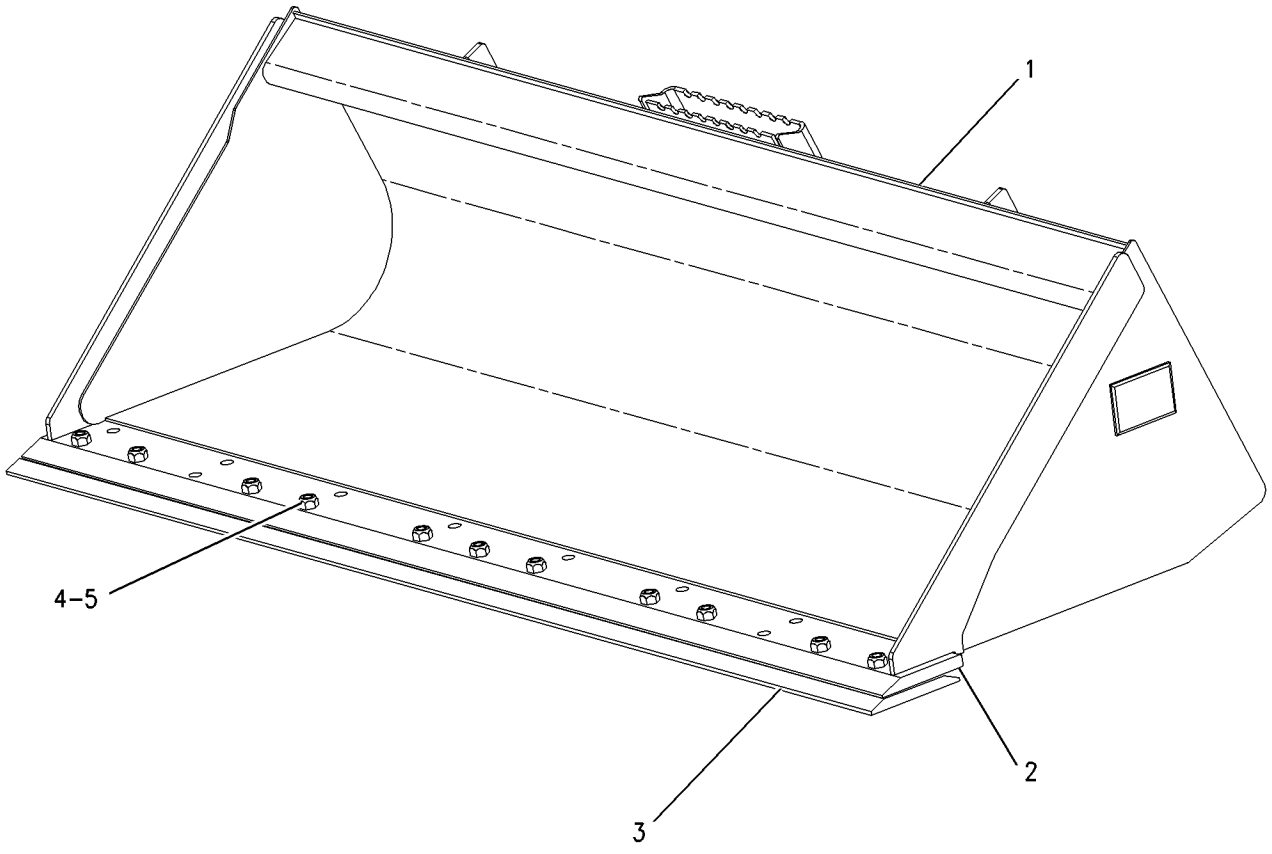

GRAPHIC #1 **<END>** g01003957

152-0223 BUCKET GP-GENERAL PURPOSE

S/N: MJH1-UP; SCH1-UP; RLL1-UP; BXM1-UP
152.40-CM (60-IN) WIDE X 0.36-CU M (0.47-CU YD) CAPACITY
AN ATTACHMENT

SMCS-6101 **i01353246**

NOTE	REF NO	GRAPHIC REF	PART NUMBER	QTY	PART NAME 1 2 3 4 5 6 (PRODUCT LEVEL)	SEE PAGE
	1	1	**165-6152**	1	BUCKET AS-GENERAL PURPOSE	
	2	1	**149-5435**	1	EDGE	
	3	1	*141-4999*	8	TOOTH GP-UNI	
	4	1	**132-4720**	1	TOOTH-UNI-SINGLE STRAP	
M	5	1	**159-2953**	2	SCREW-FLAT HEAD (M16X2.00 THD)	
M	6	1	**8T-4778**	2	LOCKNUT (M16X2.00 THD)	

M-METRIC PART

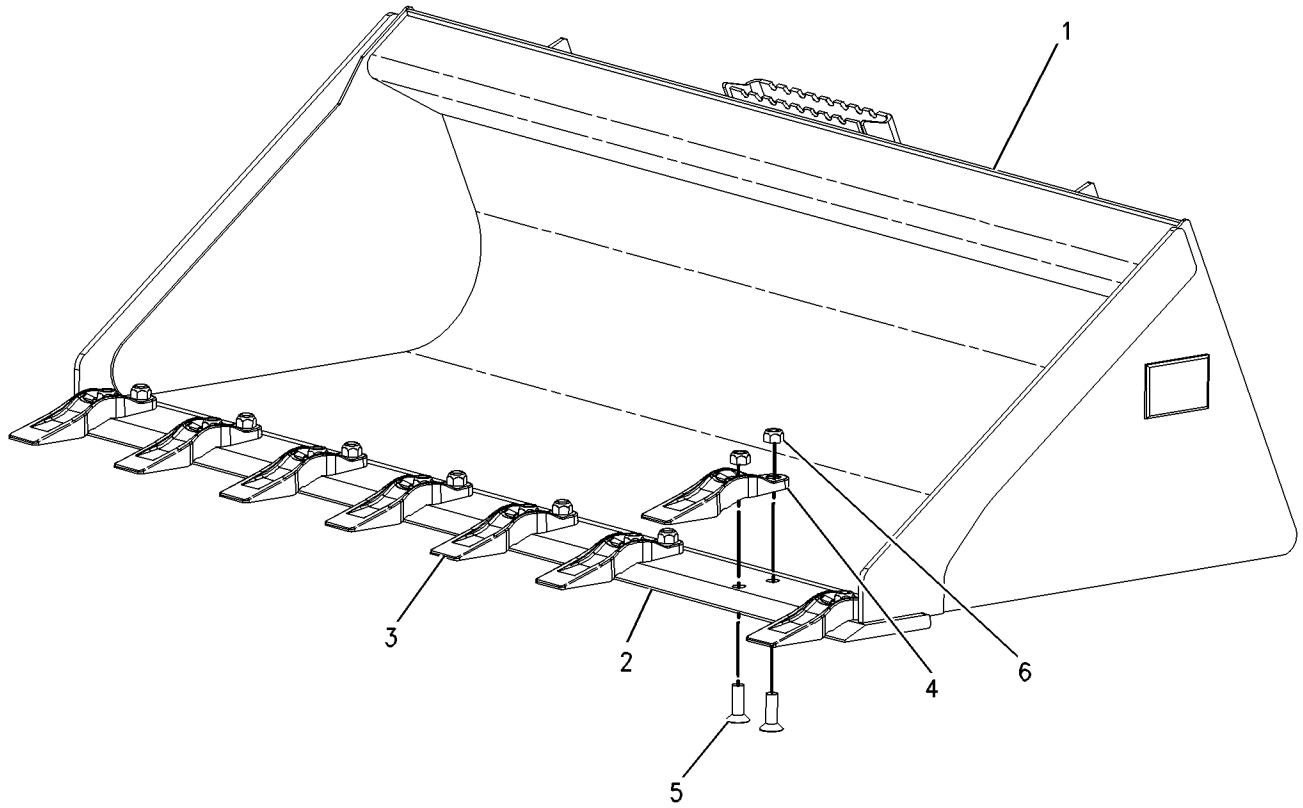

GRAPHIC #1 **<END>** g00714118

152-0224 BUCKET GP-GENERAL PURPOSE

S/N: MJH1-UP; SCH1-UP; RLL1-UP; BXM1-UP
152.40-CM (60-IN) WIDE X 0.36-CU M (0.47-CU YD) CAPACITY
AN ATTACHMENT

SMCS-6101 **i01353240**

NOTE	REF NO	GRAPHIC REF	PART NUMBER	QTY	PART NAME 1 2 3 4 5 6 (PRODUCT LEVEL)	SEE PAGE
	1	1	**165-6152**	1	BUCKET AS-GENERAL PURPOSE	
	2	1	**149-5435**	1	EDGE	
	3	1	*135-9384*	1	EDGE GP-CUTTING	
	4	1	**135-9394**	1	EDGE-CUTTING	
M	5	1	**8T-4778**	8	LOCKNUT (M16X2.00 THD)	
M	6	1	**159-2953**	8	SCREW-FLAT HEAD (M16X2.00 THD)	

M-METRIC PART

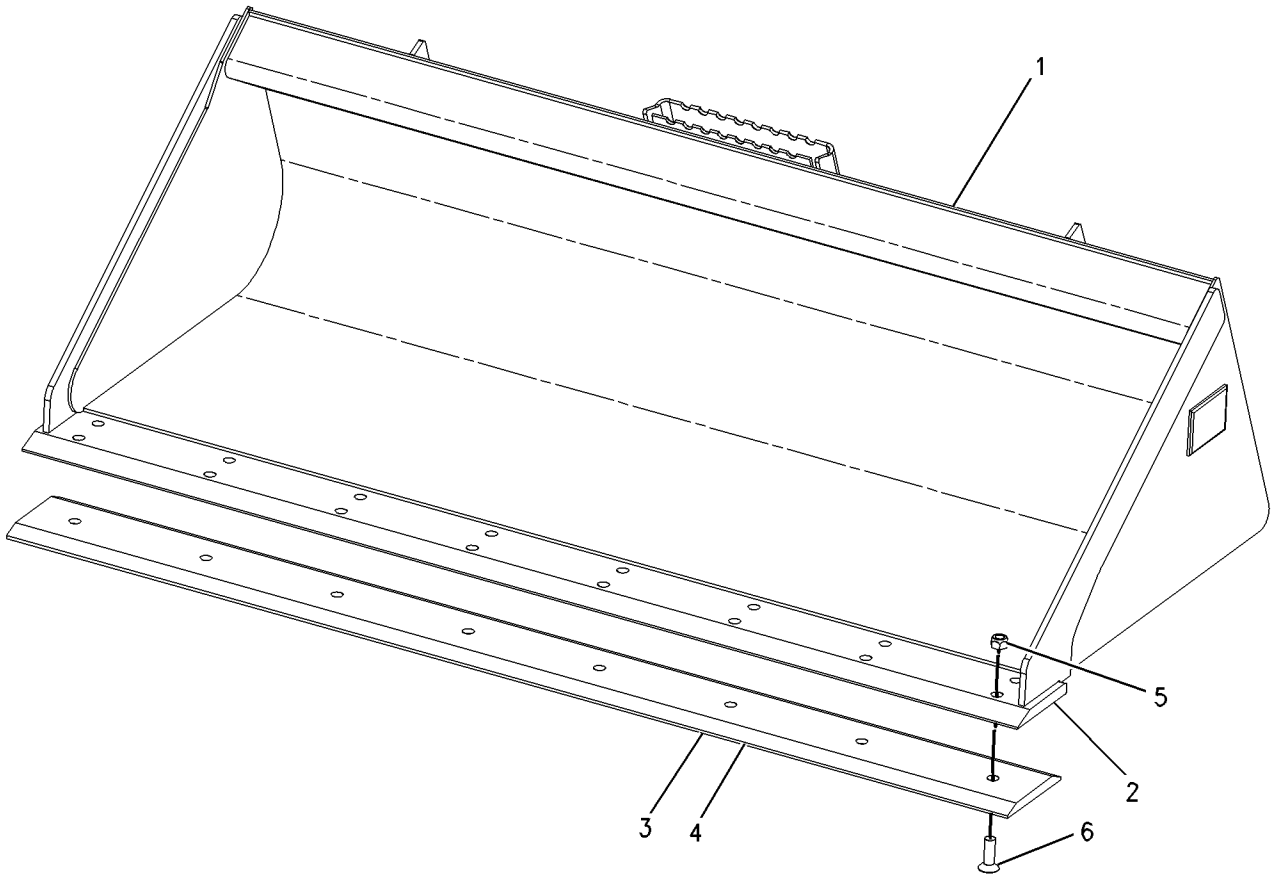

GRAPHIC #1 **<END>** g00714114

WORK TOOLS

152-0225 BUCKET GP-GENERAL PURPOSE

S/N: MJH1-UP; SCH1-UP; RLL1-UP; BXM1-UP
167.64-CM (66-IN) WIDE X 0.40-CU M (0.52-CU YD) CAPACITY
AN ATTACHMENT

SMCS-6101 **i01788949**

NOTE	REF NO	GRAPHIC REF	PART NUMBER	QTY	PART NAME 1 2 3 4 5 6 (PRODUCT LEVEL)	SEE PAGE
	1	1	**165-6153**	1	BUCKET AS-GENERAL PURPOSE	
	2	1	**149-5436**	1	EDGE	
	3	1	*141-4999*	8	TOOTH GP-UNI	
	4	1	**132-4720**	1	TOOTH-UNI-SINGLE STRAP	
M	5	1	**159-2953**	2	SCREW-FLAT HEAD (M16X2.00 THD)	
M	6	1	**8T-4778**	2	LOCKNUT (M16X2 THD)	

M-METRIC PART

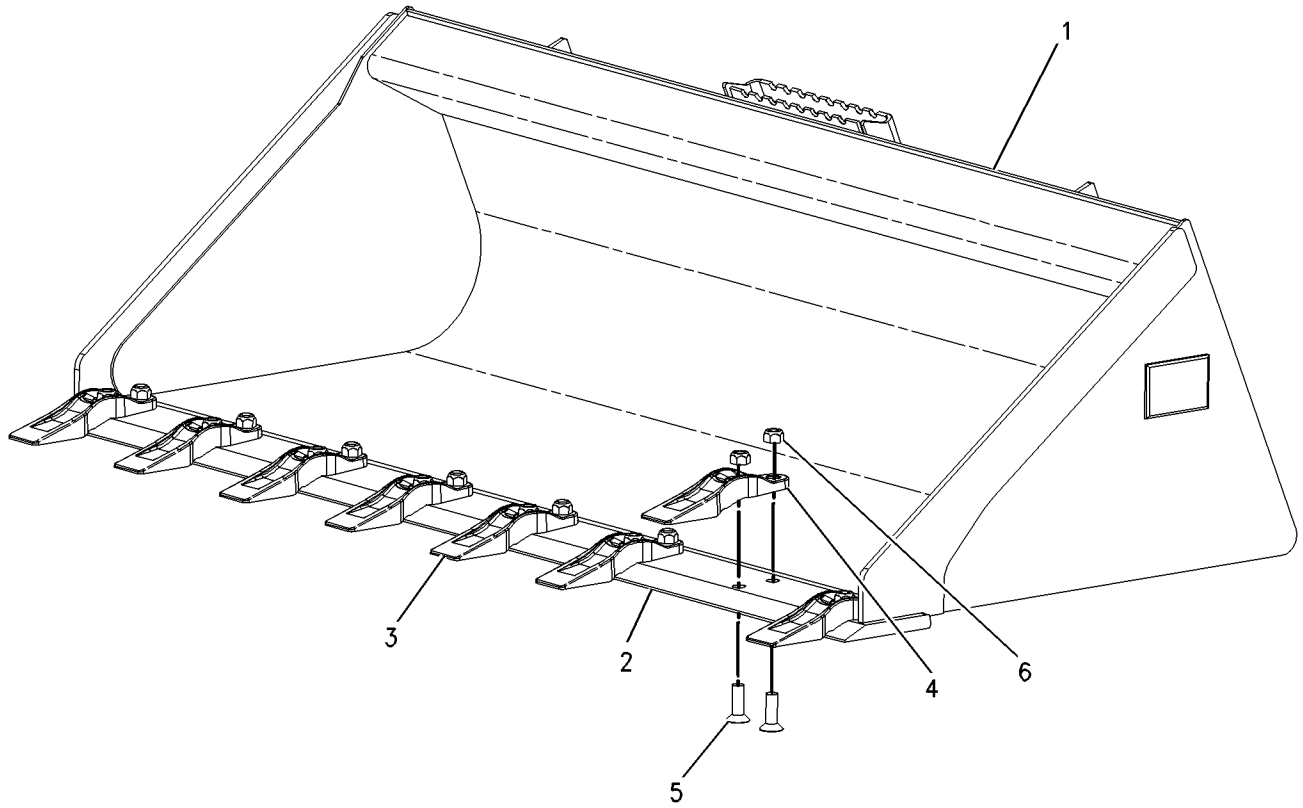

GRAPHIC #1 **<END>** g00714118

152-0226 BUCKET GP-GENERAL PURPOSE

S/N: MJH1-UP; SCH1-UP; RLL1-UP; BXM1-UP
167.64-CM (66-IN) WIDE X 0.40-CU M (0.52-CU YD) CAPACITY
AN ATTACHMENT

SMCS-6101 **i01788943**

NOTE	REF NO	GRAPHIC REF	PART NUMBER	QTY	PART NAME 1 2 3 4 5 6 (PRODUCT LEVEL)	SEE PAGE
	1	1	**165-6153**	1	BUCKET AS-GENERAL PURPOSE	
	2	1	**149-5436**	1	EDGE	
	3	1	*135-9385*	1	EDGE GP-CUTTING	
	4	1	**135-9395**	1	EDGE-CUTTING	
M	5	1	**8T-4778**	8	LOCKNUT (M16X2 THD)	
M	6	1	**159-2953**	8	SCREW-FLAT HEAD (M16X2.00 THD)	

M-METRIC PART

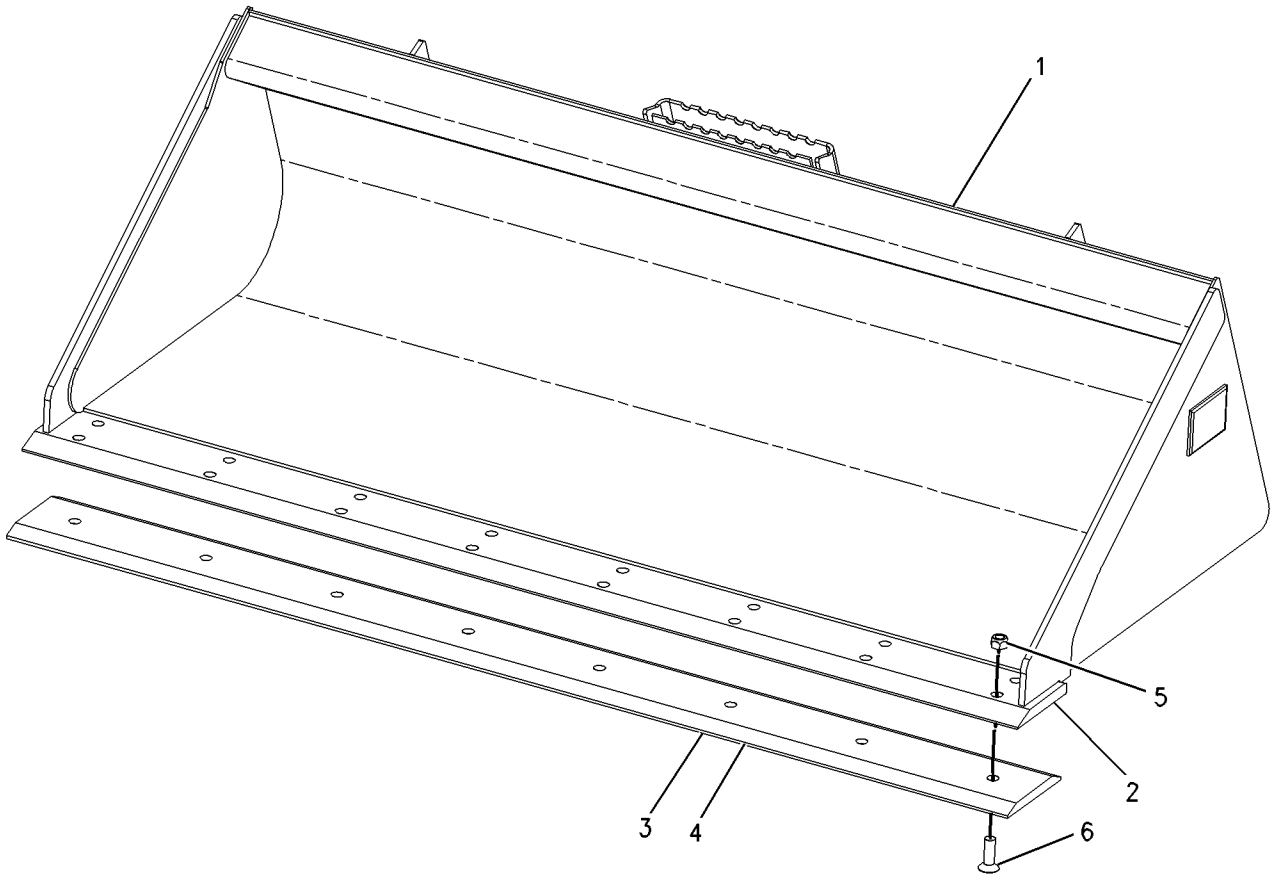

GRAPHIC #1 **<END>** g00714114

WORK TOOLS

152-0228 BUCKET GP-GENERAL PURPOSE

S/N: SCH1-UP

182.9-CM (72-IN) WIDE X 0.44-CU M (0.57-CU YD) CAPACITY

AN ATTACHMENT

SMCS-6101 **i01984094**

NOTE	REF NO	GRAPHIC REF	PART NUMBER	QTY	PART NAME 1 2 3 4 5 6 (PRODUCT LEVEL)	SEE PAGE
	1	1	**165-6154**	1	BUCKET AS-GENERAL PURPOSE	
	2	1	**149-5437**	1	EDGE	
	3	1	*141-4999*	8	TOOTH GP-UNI	
					(EACH INCLUDES)	
	4	1	**132-4720**	1	TOOTH-UNI-SINGLE STRAP	
M	5	1	**159-2953**	2	SCREW-FLAT HEAD (M16X2.00 THD)	
M	6	1	**8T-4778**	2	LOCKNUT (M16X2 THD)	

M-METRIC PART

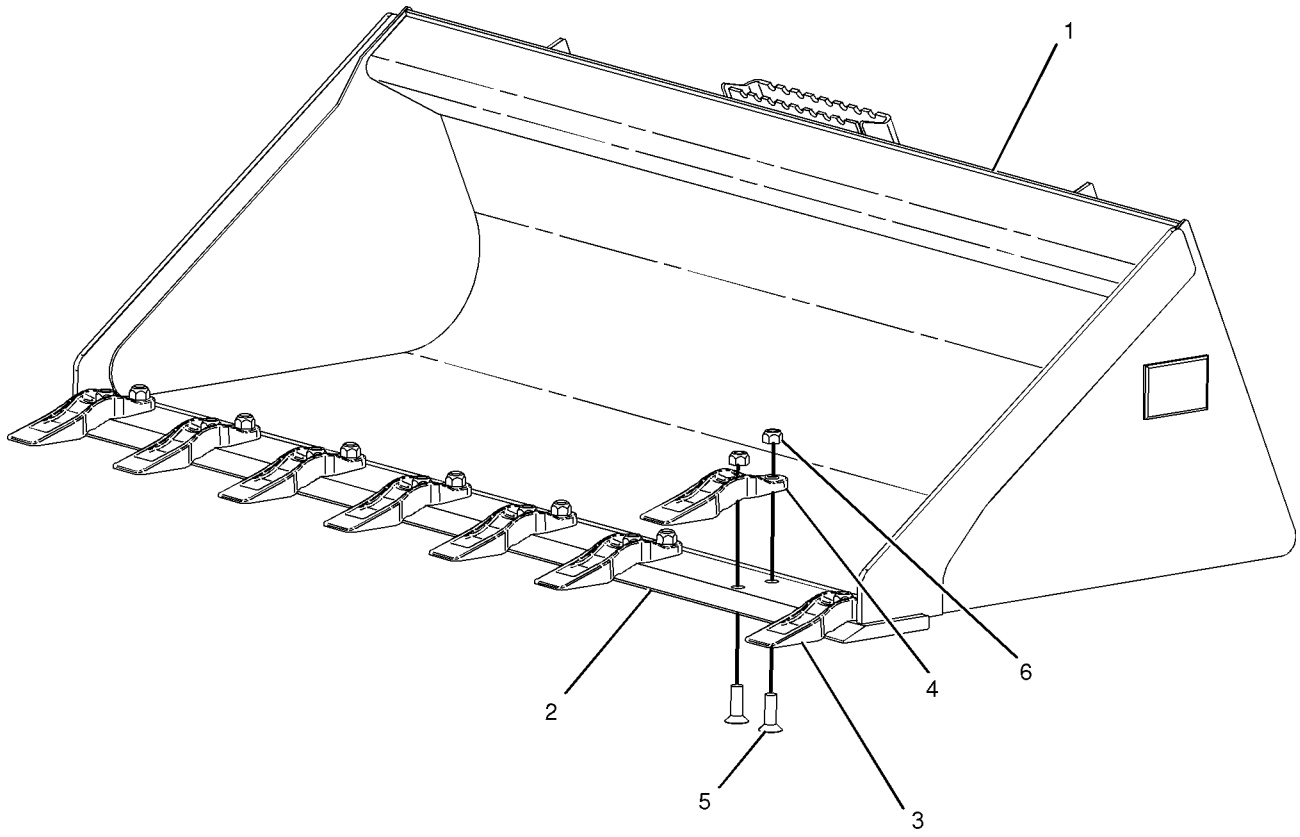

GRAPHIC #1 **<END>** g01028231

WORK TOOLS

152-0229 BUCKET GP-GENERAL PURPOSE

S/N: SCH1-UP
182.9-CM (72-IN) WIDE X 0.44-CU M (0.57-CU YD) CAPACITY
AN ATTACHMENT

SMCS-6101 **i01905373**

NOTE	REF NO	GRAPHIC REF	PART NUMBER	QTY	PART NAME 1 2 3 4 5 6 (PRODUCT LEVEL)	SEE PAGE
	1	1	**165-6154**	1	BUCKET AS-GENERAL PURPOSE	
	2	1	**149-5437**	1	EDGE	
	3	1	*135-9386*	1	EDGE GP-CUTTING	
	4	1	**135-9396**	1	EDGE-CUTTING	
M	5	1	**8T-4778**	11	LOCKNUT (M16X2 THD)	
M	6	1	**159-2953**	11	SCREW-FLAT HEAD (M16X2.00 THD)	

M-METRIC PART

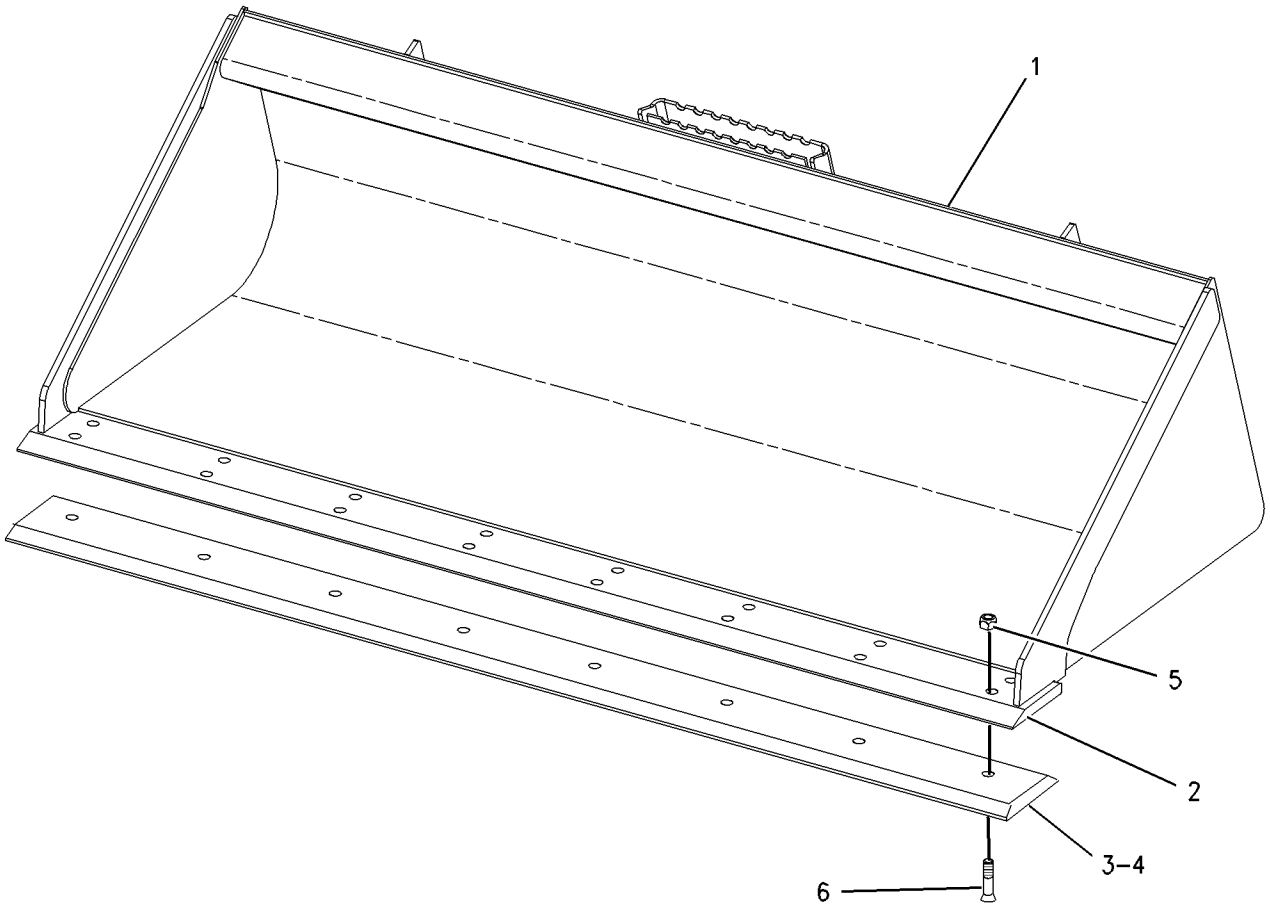

GRAPHIC #1 **<END>** g00915536

156-0884 BUCKET GP-GRAPPLE

S/N: MJH1-UP; SCH1-UP; RLL1-UP; BXM1-UP
152.4-CM (60-IN). INDUSTRIAL
PART OF 157-7223 BUCKET AR-GRAPPLE
AN ATTACHMENT

SMCS-6704 **i02024106**

NOTE	REF NO	GRAPHIC REF	PART NUMBER	QTY	PART NAME 1 2 3 4 5 6 (PRODUCT LEVEL)	SEE PAGE
	1	1	**157-0940**	4	PIN	
	2	1	**169-8941**	1	BUCKET AS-GRAPPLE	
		1	**8Y-4489**	2	BOSS-THREADED	
		1	**149-5435**	1	EDGE	
	3	1	**222-7467**	2	FORK AS	
					(EACH INCLUDES)	
		1	**158-5648**	2	BEARING-SLEEVE	
	4	1	**3B-8489**	4	FITTING-GREASE	
M	5	1	**6V-9189**	4	LOCKNUT (M8X1.25-THD)	
M	6	1	**8T-6869**	4	BOLT (M8X1.25X60-MM)	

M-METRIC PART

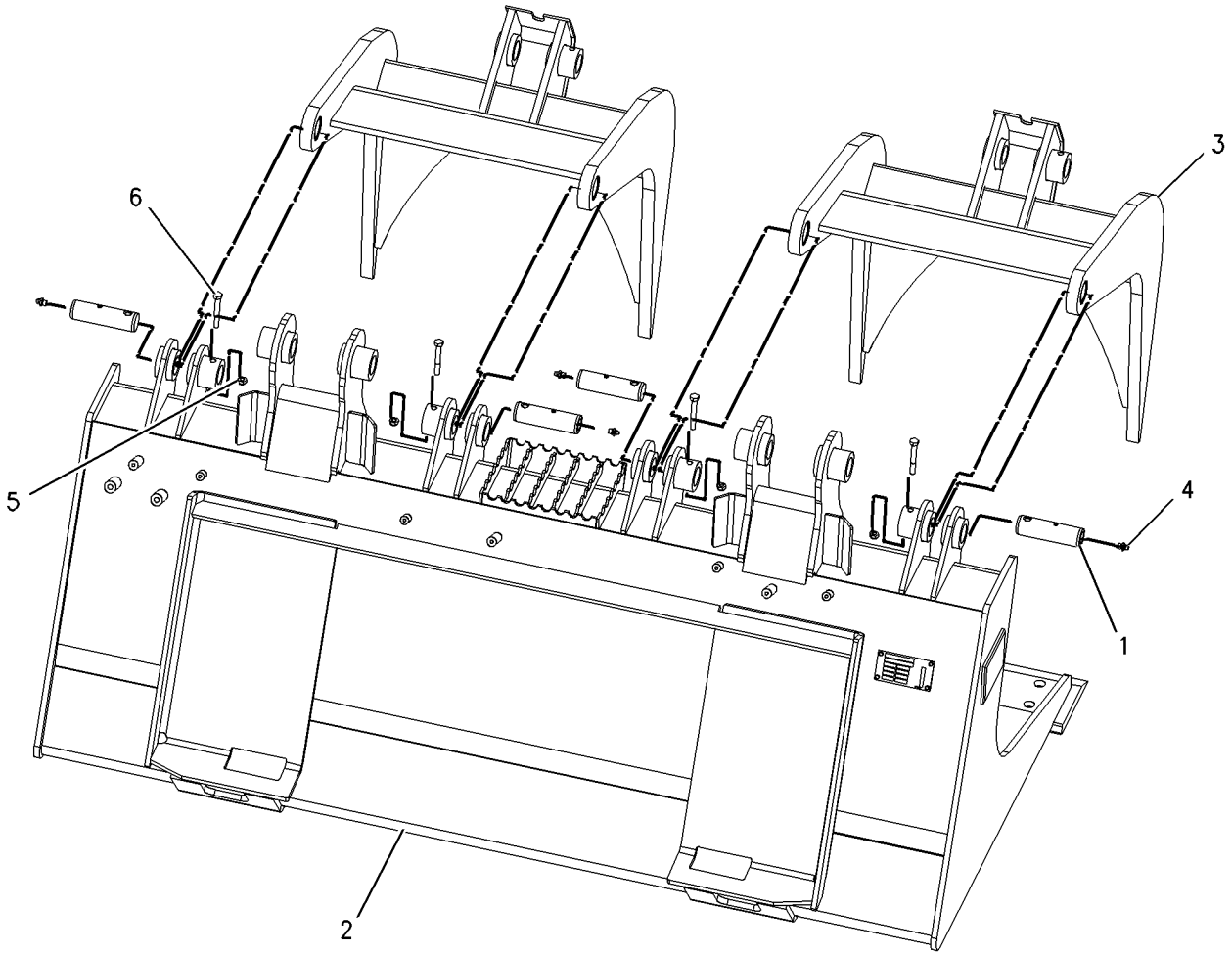

GRAPHIC #1 **<END>** g00978796

WORK TOOLS

156-0885 BUCKET GP-GRAPPLE

S/N: MJH1-UP; SCH1-UP; RLL1-UP; BXM1-UP
167.64-CM (66-IN). INDUSTRIAL
PART OF 157-7224 BUCKET AR-GRAPPLE
AN ATTACHMENT

SMCS-6704 **i01886368**

NOTE	REF NO	GRAPHIC REF	PART NUMBER	QTY	PART NAME 1 2 3 4 5 6 (PRODUCT LEVEL)	SEE PAGE
	1	1	**157-0940**	4	PIN	
	2	1	**169-8942**	1	BUCKET AS-GRAPPLE	
		1	**8Y-4489**	2	BOSS-THREADED	
		1	**149-5436**	1	EDGE	
	3	1	**222-7467**	2	FORK AS	
					(EACH INCLUDES)	
		1	**158-5648**	2	BEARING-SLEEVE	
	4	1	**3B-8489**	4	FITTING-GREASE	
M	5	1	**6V-9189**	4	LOCKNUT (M8X1.25-THD)	
M	6	1	**8T-6869**	4	BOLT (M8X1.25X60-MM)	

M-METRIC PART

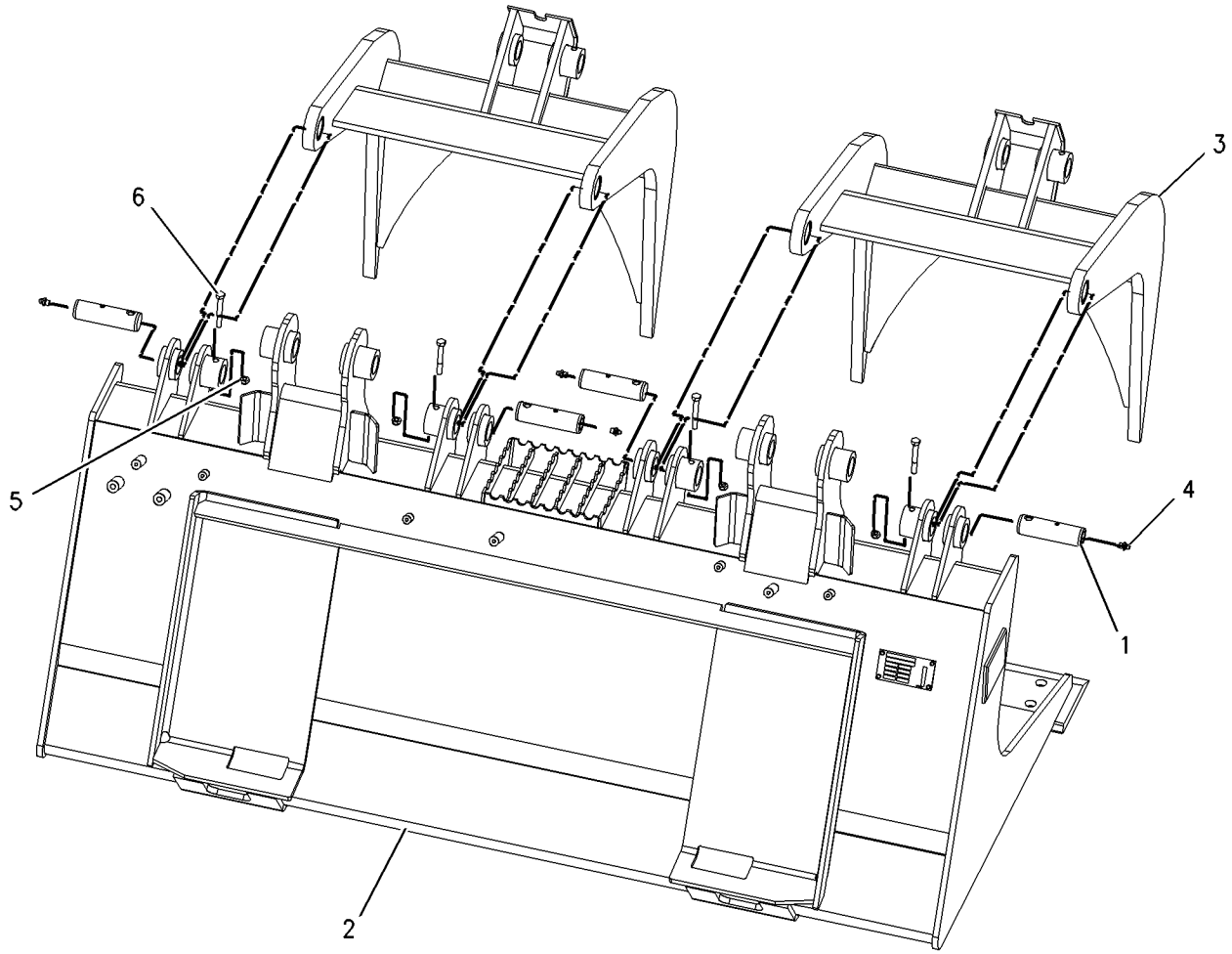

GRAPHIC #1 **<END>** g00978796

156-0886 BUCKET GP-GRAPPLE

S/N: SCH1-UP; BXM1-UP
182.88-CM (72-IN). INDUSTRIAL
PART OF 157-7225 BUCKET AR-GRAPPLE
AN ATTACHMENT

SMCS-6704 **i02359451**

NOTE	REF NO	GRAPHIC REF	PART NUMBER	QTY	PART NAME 1 2 3 4 5 6 (PRODUCT LEVEL)	SEE PAGE
	1	1	**157-0940**	4	PIN	
	2	1	**169-8943**	1	BUCKET AS-GRAPPLE (INDUSTRIAL)	
		1	**149-5437**	1	EDGE	
	3	1	**222-7467**	2	FORK AS	
					(EACH INCLUDES)	
		1	**158-5648**	2	BEARING-SLEEVE	
	4	1	**3B-8489**	4	FITTING-GREASE	
M	5	1	**6V-9189**	4	LOCKNUT (M8X1.25-THD)	
M	6	1	**8T-6869**	4	BOLT (M8X1.25X60-MM)	

M-METRIC PART

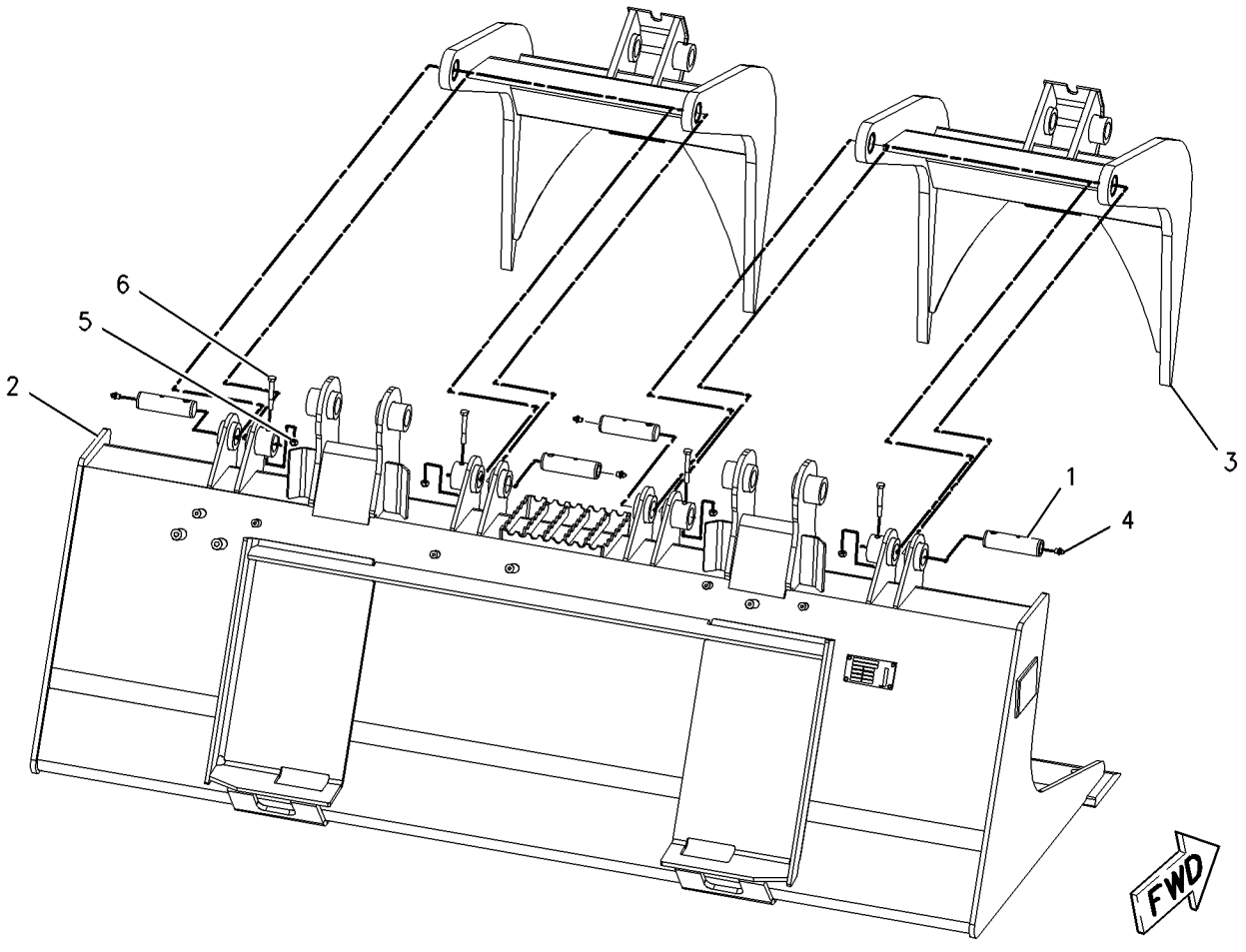

GRAPHIC #1 **<END>** g00993692

164-7412 BUCKET GP-LIGHT MATERIAL

S/N: MJH1-UP; SCH1-UP; RLL1-UP; BXM1-UP
182.88-CM (72-IN) WIDE X 0.69-CU M (0.90-CU YD) CAPACITY
AN ATTACHMENT

SMCS-6103 **i01446891**

NOTE	REF NO	GRAPHIC REF	PART NUMBER	QTY	PART NAME 1 2 3 4 5 6 (PRODUCT LEVEL)	SEE PAGE
	1	1	**164-7414**	1	BUCKET AS-LIGHT MATERIAL	
	2	1	**149-5437**	1	EDGE	
	3	1	*135-9386*	1	EDGE GP-CUTTING	
	4	1	**135-9396**	1	EDGE-CUTTING	
M	5	1	**8T-4778**	11	LOCKNUT	
M	6	1	**159-2953**	11	SCREW-FLAT HEAD (M16X2.00 THD)	

M-METRIC PART

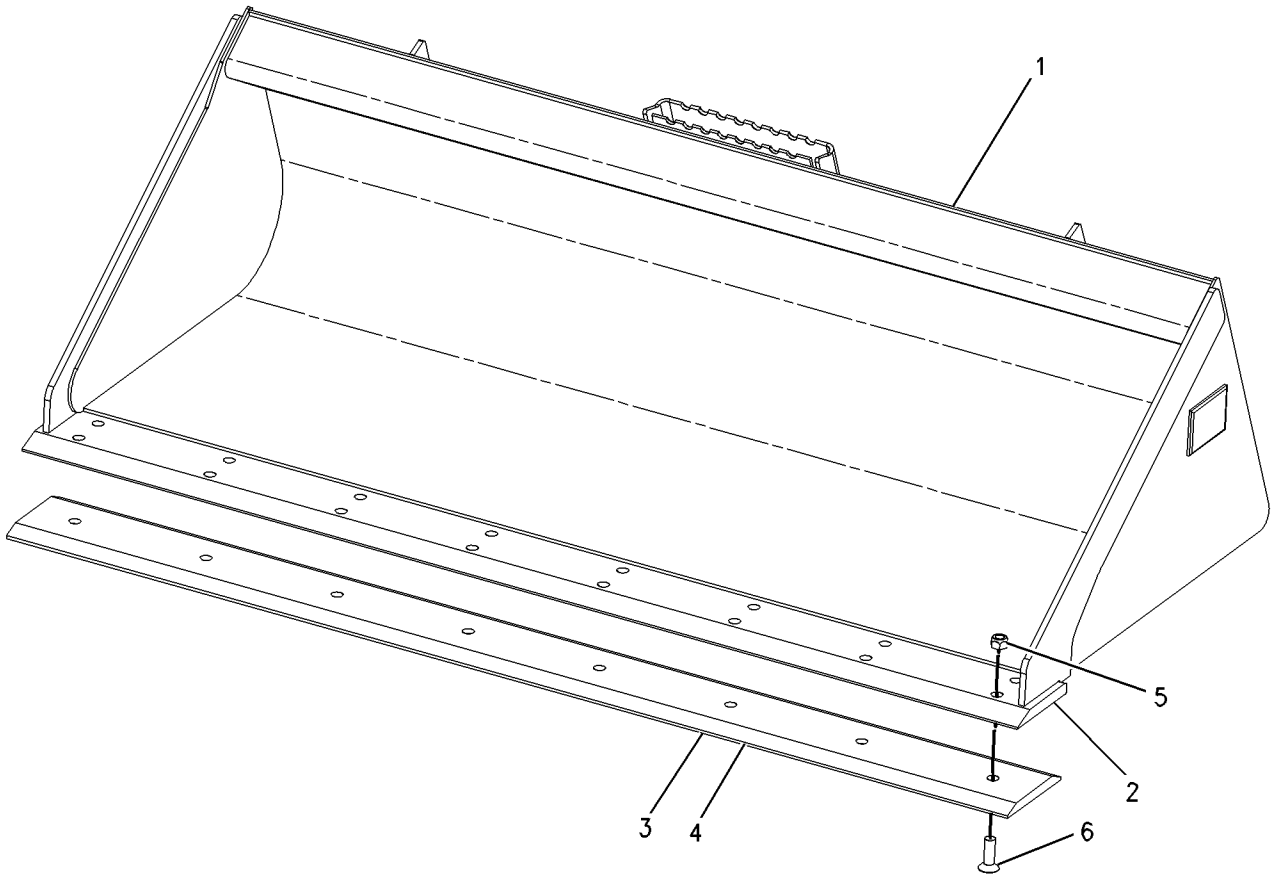

GRAPHIC #1 **<END>** g00714113

164-7413 BUCKET GP-LIGHT MATERIAL

S/N: SCH1-UP; BXM1-UP
198.12-CM (78-IN) WIDE X 0.75-CU M (0.98-CU YD) CAPACITY
AN ATTACHMENT

SMCS-6103 **i01345492**

NOTE	REF NO	GRAPHIC REF	PART NUMBER	QTY	PART NAME 1 2 3 4 5 6 (PRODUCT LEVEL)	SEE PAGE
	1	1	**164-7415**	1	BUCKET AS-LIGHT MATERIAL	
	2	1	**164-7433**	1	EDGE	
	3	1	*135-9387*	1	EDGE GP-CUTTING	
	4	1	**135-9397**	1	EDGE-CUTTING	
M	5	1	**8T-4778**	11	LOCKNUT (M16X2.00 THD)	
M	6	1	**159-2953**	11	SCREW-FLAT HEAD (M16X2.00 THD)	

M-METRIC PART

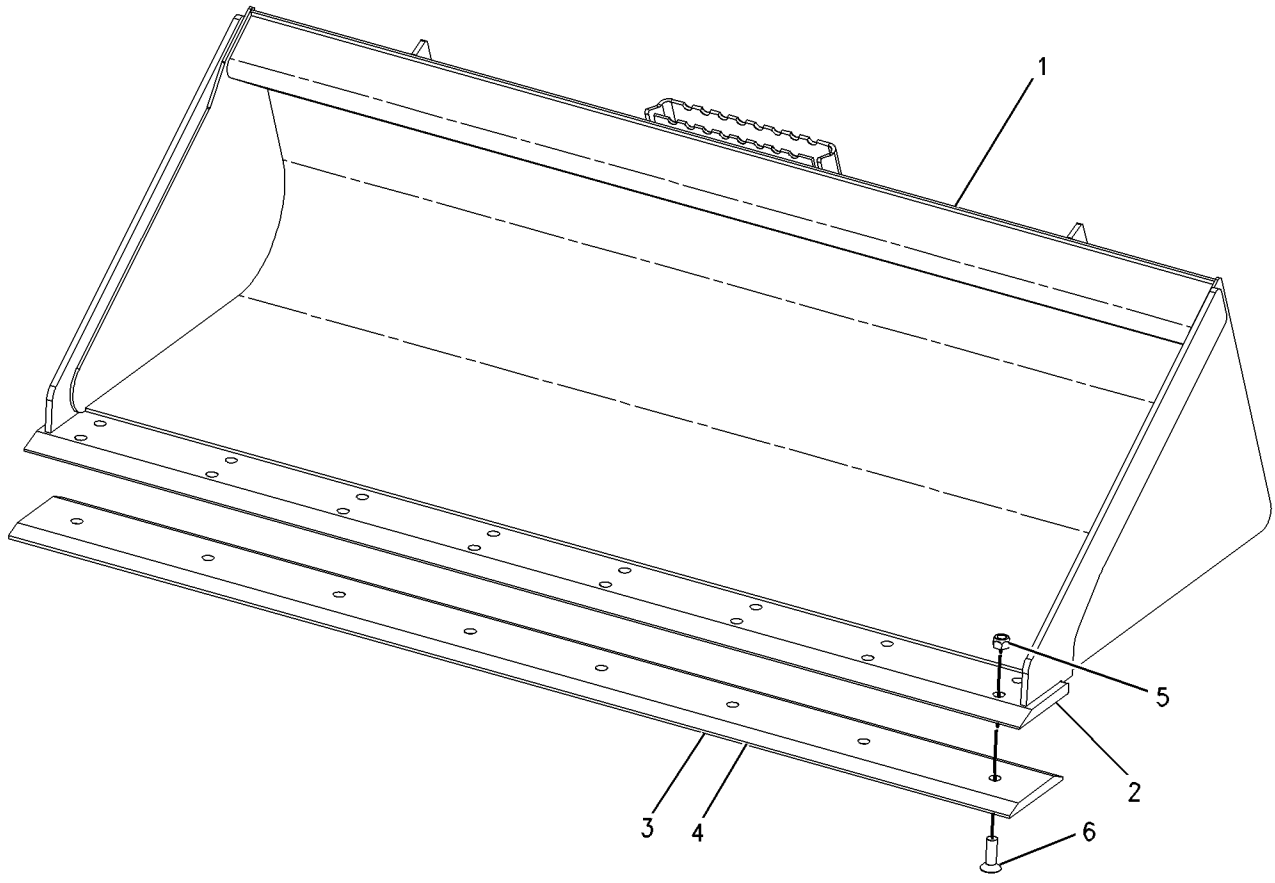

GRAPHIC #1 **<END>** g00710585

154-5005 BUCKET GP-MULTIPURPOSE

S/N: MJH1-UP; SCH1-UP; RLL1-UP; BXM1-UP
152.40-CM (60-IN) WIDE X 0.30-CU M (0.39-CU YD) CAPACITY
PART OF 154-5004 BUCKET AR-MULTIPURPOSE
AN ATTACHMENT

SMCS-6104 **i02024108**

NOTE	REF NO	GRAPHIC REF	PART NUMBER	QTY	PART NAME 1 2 3 4 5 6 (PRODUCT LEVEL)	SEE PAGE
	1	1	**149-4232**	1	CLAM AS	
	2	1	**142-8805**	4	BEARING-SLEEVE	
	3	1	**149-5435**	1	EDGE	
	4	1	**154-5012**	2	PIN	
	5	1	**159-5345**	1	BLADE GP	
	5A	1	**154-5037**	1	EDGE	
M	6	1	**6V-9189**	2	LOCKNUT (M8X1.25-THD)	
M	7	1	**8T-6869**	2	BOLT (M8X1.25X60-MM)	
	8	1	**159-8038**	2	FILM-WARNING (CRUSH POINT)	
	9	1	**3B-8489**	2	FITTING-GREASE	

M-METRIC PART

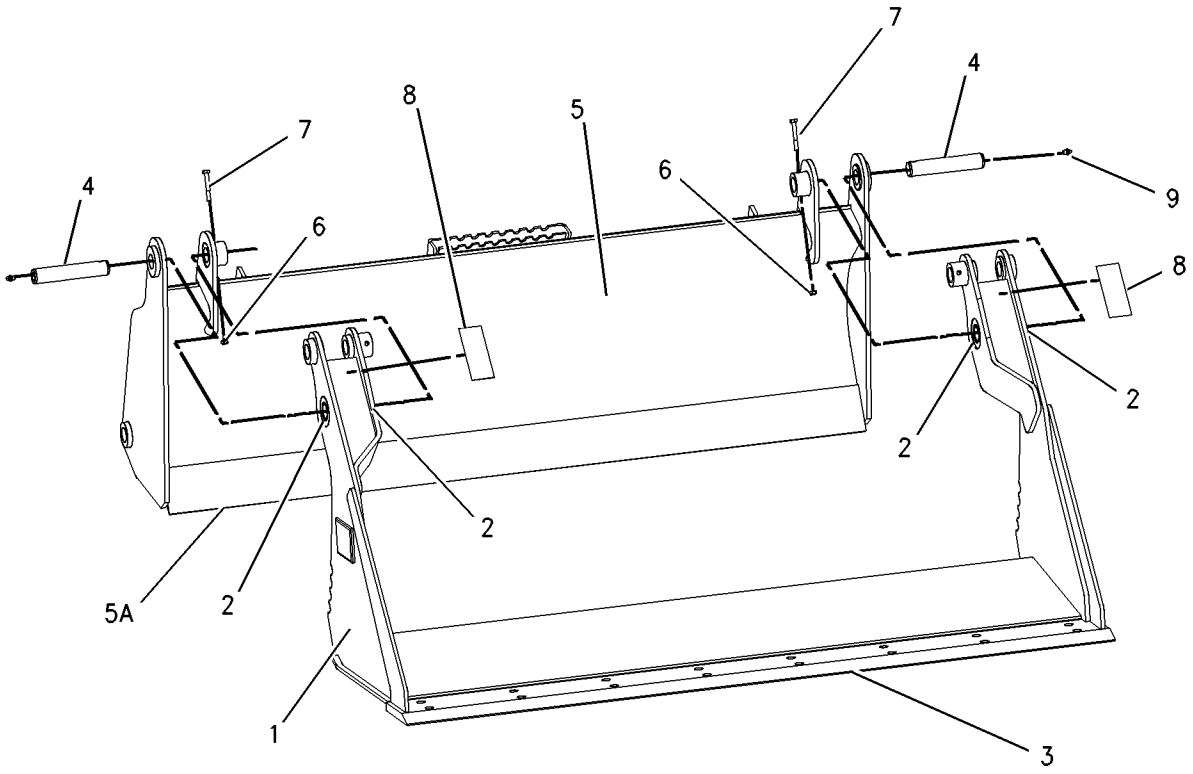

GRAPHIC #1 **<END>** g00780644

154-5007 BUCKET GP-MULTIPURPOSE

S/N: MJH1-UP; SCH1-UP; RLL1-UP; BXM1-UP
167.64-CM (66-IN) WIDE X 0.34-CU M (0.44-CU YD) CAPACITY
PART OF 154-5008 BUCKET AR-MULTIPURPOSE
AN ATTACHMENT

SMCS-6104 **i02024109**

NOTE	REF NO	GRAPHIC REF	PART NUMBER	QTY	PART NAME 1 2 3 4 5 6 (PRODUCT LEVEL)	SEE PAGE
	1	1	**154-5012**	1	PIN	
	2	1	**154-5053**	1	CLAM AS	
	3	1	**142-8805**	4	BEARING-SLEEVE	
	4	1	**149-5436**	1	EDGE	
	5	1	**159-5346**	1	BLADE GP	
	5A	1	**154-5059**	1	EDGE	
M	6	1	**6V-9189**	2	LOCKNUT (M8X1.25-THD)	
M	7	1	**8T-6869**	2	BOLT (M8X1.25X60-MM)	
	8	1	**159-8038**	2	FILM-WARNING (CRUSH POINT)	
	9	1	**3B-8489**	2	FITTING-GREASE	

M-METRIC PART

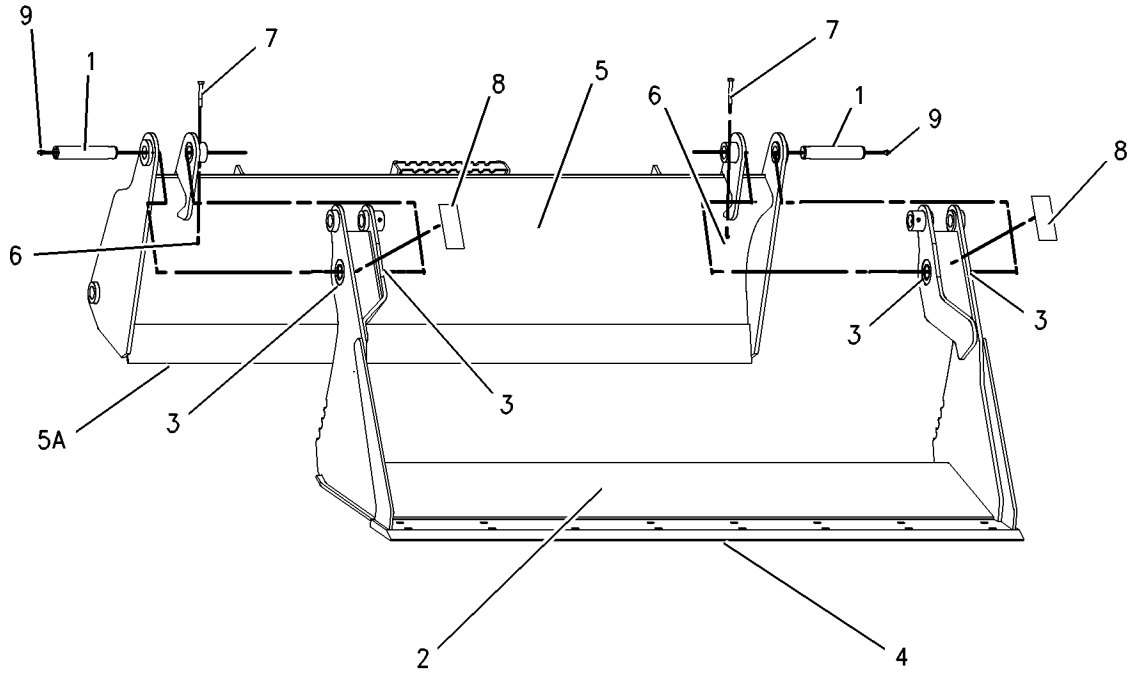

GRAPHIC #1 **<END>** g00780675

WORK TOOLS

154-5009 BUCKET GP-MULTIPURPOSE

S/N: SCH1-UP
182.88-CM (72-IN) WIDE X 0.37-CU M (0.48-CU YD) CAPACITY
PART OF 154-5010 BUCKET AR-MULTIPURPOSE
AN ATTACHMENT

SMCS-6104 **i02014387**

NOTE	REF NO	GRAPHIC REF	PART NUMBER	QTY	PART NAME 1 2 3 4 5 6 (PRODUCT LEVEL)	SEE PAGE
	1	1	**154-5012**	2	PIN	
	2	1	**154-5070**	1	CLAM AS	
	3	1	**142-8805**	4	BEARING-SLEEVE	
	4	1	**149-5437**	1	EDGE	
	5	1	**159-5347**	1	BLADE GP	
		1	**154-5077**	1	EDGE	
M	6	1	**6V-9189**	2	LOCKNUT (M8X1.25-THD)	
M	7	1	**8T-6869**	2	BOLT (M8X1.25X60-MM)	
	8	1	**159-8038**	2	FILM-WARNING (CRUSH POINT)	
	9	1	**3B-8489**	2	FITTING-GREASE	

M-METRIC PART

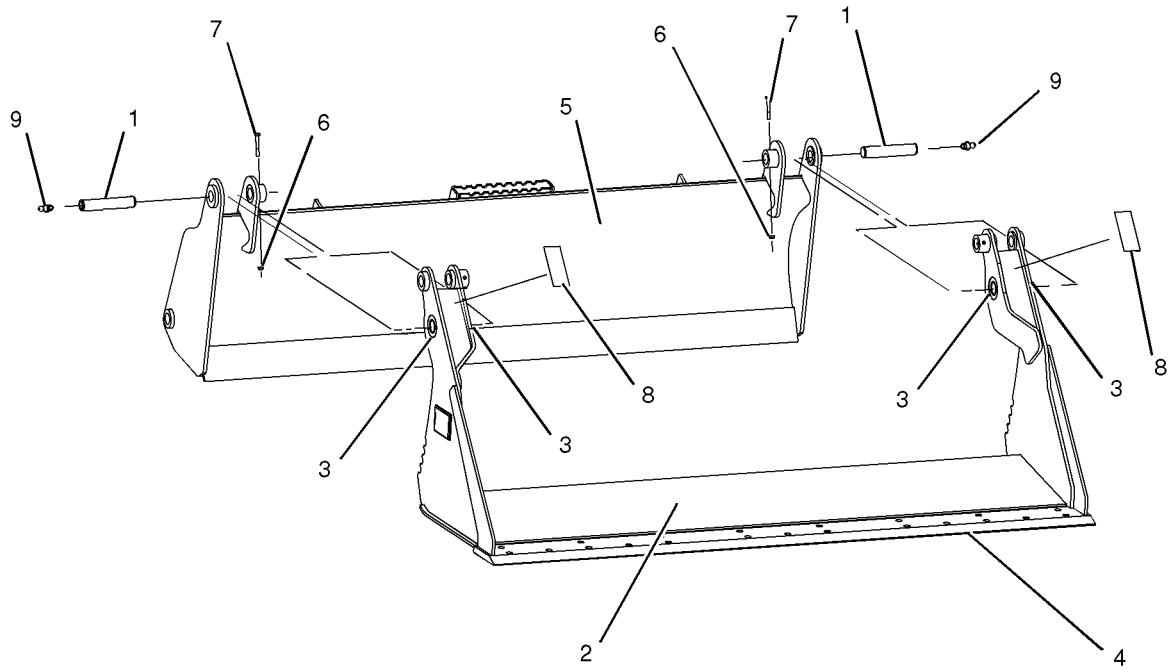

GRAPHIC #1 **<END>** g01041436

165-8777 BUCKET GP-UTILITY

S/N: MJH1-UP; SCH1-UP; RLL1-UP; BXM1-UP
167.64-CM (66-IN) WIDE X 0.47-CU M (0.61-CU YD) CAPACITY
PART OF 165-8779 BUCKET AR-GRAPPLE
AN ATTACHMENT

SMCS-6101 **i01345530**

NOTE	REF NO	GRAPHIC REF	PART NUMBER	QTY	PART NAME 1 2 3 4 5 6 (PRODUCT LEVEL)	SEE PAGE
	1	1	**165-8746**	1	BUCKET AS-UTILITY	
	2	1	**149-5436**	1	EDGE	
M	3	1	**111-0483**	4	BOSS (M10X1.5-MM THD)	
	4	1	*135-9385*	1	EDGE GP-CUTTING	
	5	1	**135-9395**	1	EDGE-CUTTING	
M	6	1	**8T-4778**	8	LOCKNUT (M16X2-THD)	
M	7	1	**159-2953**	8	SCREW-FLAT HEAD (M16X2-THD)	

M-METRIC PART

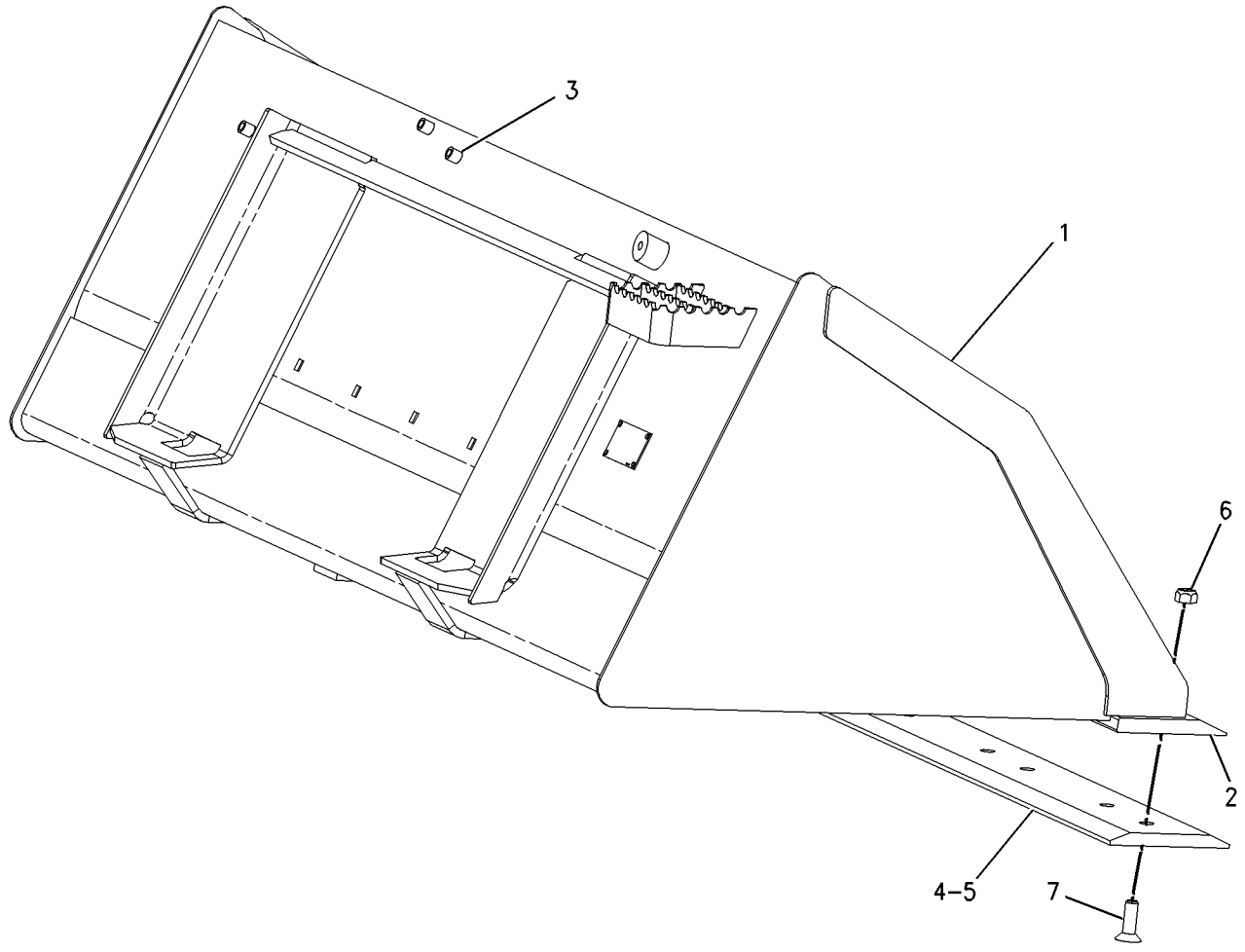

GRAPHIC #1 **<END>** g00710611

165-8778 BUCKET GP-UTILITY

S/N: MJH1-UP; SCH1-UP; RLL1-UP; BXM1-UP
182.88-CM (72-IN) WIDE X 0.51-CU M (0.66-CU YD) CAPACITY
PART OF 165-8780 BUCKET AR-GRAPPLE
AN ATTACHMENT

SMCS-6101 **i01345562**

NOTE	REF NO	GRAPHIC REF	PART NUMBER	QTY	PART NAME 1 2 3 4 5 6 (PRODUCT LEVEL)	SEE PAGE
	1	1	**165-8747**	1	BUCKET AS-UTILITY	
	2	1	**149-5437**	1	EDGE	
M	3	1	**111-0483**	4	BOSS (M10X1.5-MM THD)	
	4	1	*135-9386*	1	EDGE GP-CUTTING	
	5	1	**135-9396**	1	EDGE-CUTTING	
M	6	1	**8T-4778**	11	LOCKNUT (M16X2-THD)	
M	7	1	**159-2953**	11	SCREW-FLAT HEAD (M16X2-THD)	

M-METRIC PART

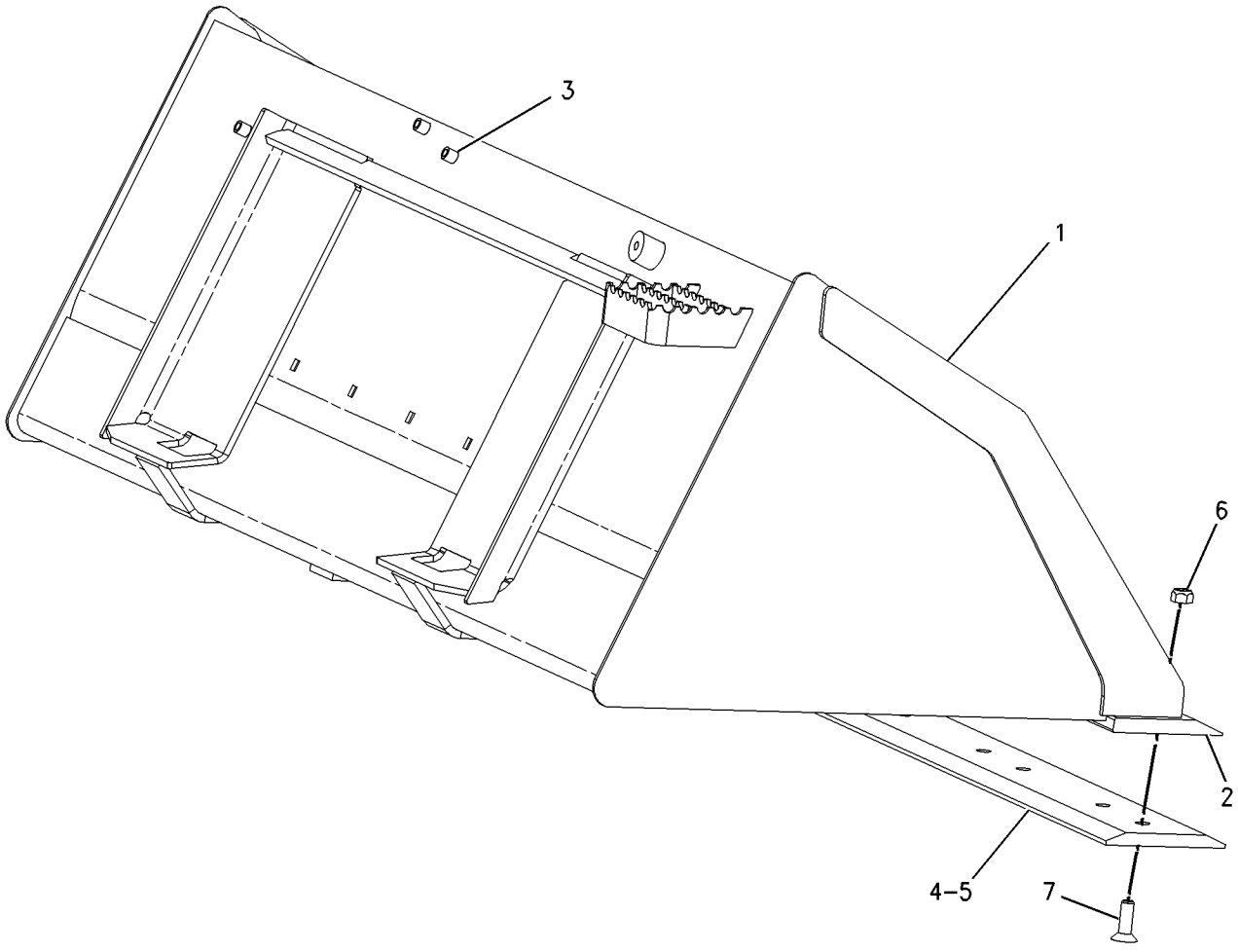

GRAPHIC #1 **<END>** g00710617

165-8836 BUCKET GP-UTILITY

S/N: MJH1-UP; SCH1-UP; RLL1-UP; BXM1-UP
152.40-CM (60-IN) WIDE X 0.42-CU M (0.55-CU YD) CAPACITY
AN ATTACHMENT

SMCS-6101 **i01345577**

NOTE	REF NO	GRAPHIC REF	PART NUMBER	QTY	PART NAME 1 2 3 4 5 6 (PRODUCT LEVEL)	SEE PAGE
	1	1	**165-8835**	1	BUCKET AS-UTILITY	
	2	1	**149-5435**	1	EDGE	
M	3	1	**111-0483**	1	BOSS (M10X1.5-MM THD)	
	4	1	*135-9384*	1	EDGE GP-CUTTING	
	5	1	**135-9394**	1	EDGE-CUTTING	
M	6	1	**8T-4778**	8	LOCKNUT (M16X2-THD)	
M	7	1	**159-2953**	8	SCREW-FLAT HEAD (M16X2-THD)	

M-METRIC PART

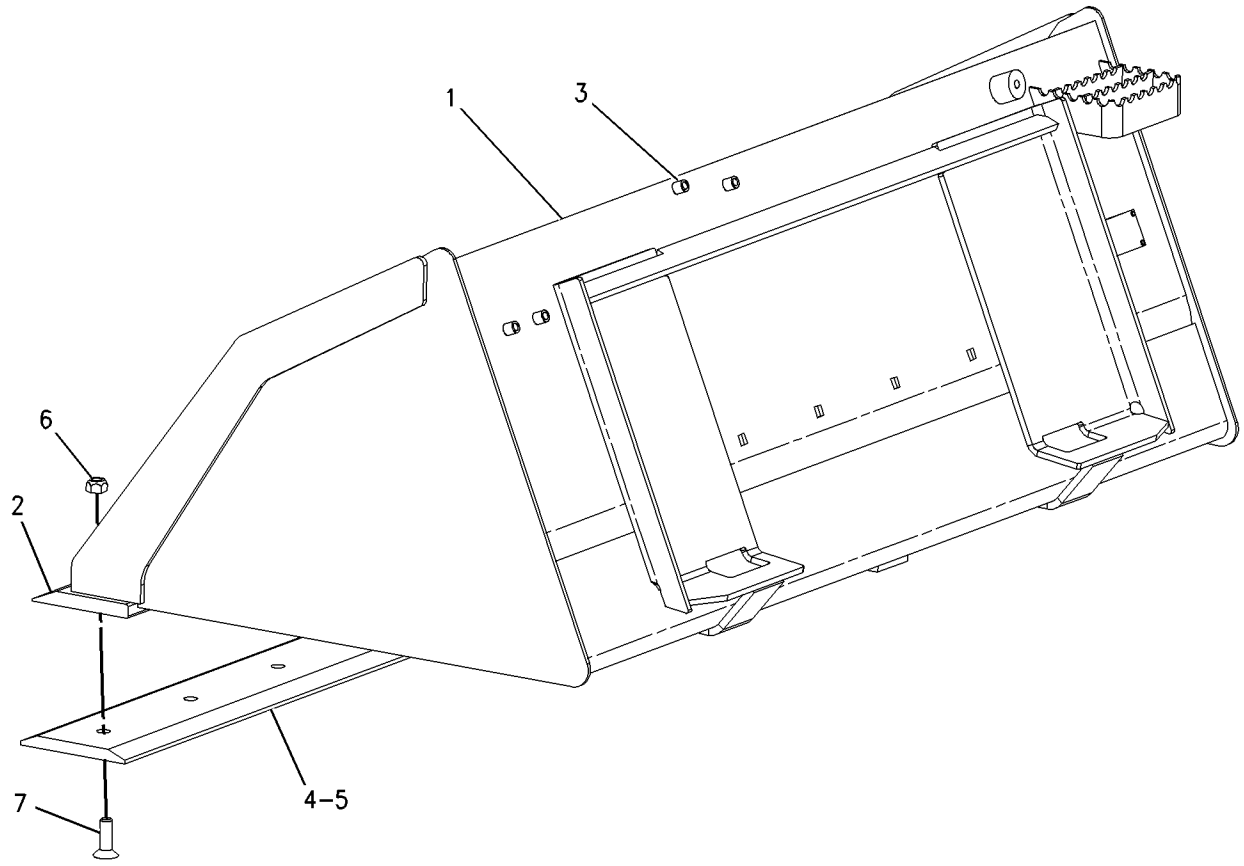

GRAPHIC #1 **<END>** g00710625

WORK TOOLS

242-9998 CARRIAGE & FORK AR

S/N: MJH1-UP; SCH1-UP; RLL1-UP; BXM1-UP
36-IN
AN ATTACHMENT

SMCS-6136, 6402 **i01964038**

NOTE	PART NUMBER	QTY	PART NAME 1 2 3 4 5 6 (PRODUCT LEVEL)	SEE PAGE
	149-1411	1	CARRIAGE AS-FORK	
	157-4835	1	PLATE-INSTRUCTION	
	168-8389	4	TACK-FASTENER	
	195-6943	2	FORK GP-PALLET (36 IN)	
			(EACH INCLUDES)	
	221-3429	1	POSITIONER GP-FORK	

<END>

242-9999 CARRIAGE & FORK AR

S/N: MJH1-UP; SCH1-UP; RLL1-UP; BXM1-UP
42-IN
AN ATTACHMENT

SMCS-6136, 6402 **i01964037**

NOTE	PART NUMBER	QTY	PART NAME 1 2 3 4 5 6 (PRODUCT LEVEL)	SEE PAGE
	149-1411	1	CARRIAGE AS-FORK	
	157-4835	1	PLATE-INSTRUCTION	
	168-8389	4	TACK-FASTENER	
	195-6942	2	FORK GP-PALLET (42 IN)	
			(EACH INCLUDES)	
	221-3429	1	POSITIONER GP-FORK	

<END>

243-0000 CARRIAGE & FORK AR

S/N: MJH1-UP; SCH1-UP; RLL1-UP; BXM1-UP
48-IN
AN ATTACHMENT

SMCS-6136, 6402 **i01964580**

NOTE	PART NUMBER	QTY	PART NAME 1 2 3 4 5 6 (PRODUCT LEVEL)	SEE PAGE
	149-1411	1	CARRIAGE AS-FORK	
	157-4835	1	PLATE-INSTRUCTION	
	168-8389	4	TACK-FASTENER	
	195-8545	2	FORK GP-PALLET (48 IN)	
			(EACH INCLUDES)	
	221-3429	1	POSITIONER GP-FORK	

<END>

WORK TOOLS

218-6757 CONVERSION AR-QUICK COUPLER–KIT

S/N: MJH1-2449; RLL1-1316

AN ATTACHMENT

SMCS-6129 **i02182974**

NOTE	REF NO	GRAPHIC REF	PART NUMBER	QTY	PART NAME 1 2 3 4 5 6 (PRODUCT LEVEL)	SEE PAGE
	1	1	**3S-2093**	1	STRAP-CABLE	
	2	1	**113-8490**	1	FUSE (10-AMPERE)	
	3	1	**124-2456**	1	FILM-INSTRUCTION (NO STEP)	
	4	1	**166-2560**	2	PIN-SPRING	
Y	5	1	**192-2640**	2	CYLINDER GP-COUPLER	360
	6	1	**195-6754**	2	PIN-SPRING	
	7	1	**207-9737**	1	BRACKET AS	
I	8	1	**207-9756**	4	HOSE AS	
	9	1	**207-9785**	2	PIN	
	10	1	**212-6521**	1	SWITCH AS-ROCKER (QUICK COUPLER)	
		1	**111-7899**	1	GASKET	
	11	1	**212-6690**	1	GUARD	
Y	12	1	*215-3957*	2	LINK GP-COUPLER	636
I	13	1	**218-6241**	1	HOSE AS	
	14	1	**218-6243**	1	TUBE AS	
	15	1	**218-6244**	1	TUBE AS	
I	16	1	**218-6245**	2	HOSE AS	
I	17	1	**218-6249**	1	HOSE AS	
	18	1	**218-6334**	1	BRACKET AS	
	19	1	**218-6335**	1	BRACKET AS	
	20	1	**218-6938**	1	BRACKET	
I	21	1	**219-4335**	2	HOSE AS	
Y	22	1	**233-7128**	1	VALVE & MTG GP-SOLENOID (QUICK COUPLER)	544
	23	1	*148-8325*	4	CONNECTOR AS	
					(EACH INCLUDES)	
		1	**6V-8641**	1	CONNECTOR	
		1	**3J-1907**	1	SEAL-O-RING	
		1	**4J-5477**	1	SEAL-O-RING	
	24	1	*148-8336*	3	CONNECTOR AS	
					(EACH INCLUDES)	
		1	**6V-8636**	1	CONNECTOR	
		1	**3J-1907**	1	SEAL-O-RING	
		1	**6V-8397**	1	SEAL-O-RING	
	25	1	*148-8378*	1	ELBOW AS	
		1	**6V-8724**	1	ELBOW	
		1	**3J-1907**	1	SEAL-O-RING	
		1	**6V-8397**	1	SEAL-O-RING	
	26	1	*148-8446*	1	TEE GP-SWIVEL	
		1	**6V-9838**	1	TEE-SWIVEL	
		1	**7J-9108**	2	SEAL-O-RING	
	27	1	*150-4034*	2	TEE GP	
					(EACH INCLUDES)	
		1	**8T-0379**	1	TEE-BULKHEAD	
		1	**6V-8397**	3	SEAL-O-RING	
	28	1	*156-4282*	1	REDUCER AS	
		1	**6V-8938**	1	REDUCER-O-RING	
		1	**6V-8397**	1	SEAL-O-RING	
	29	1	**2V-3216**	4	CLIP	
	30	1	**3B-4628**	2	PIN-COTTER	
	31	1	**4P-7581**	1	CLIP	
	32	1	**5P-0372**	2	LOCK PIN	
	33	1	**6V-8397**	4	SEAL-O-RING	
	34	1	**6V-8555**	1	NUT-FACE SEAL (1-14-THD)	
	35	1	**6V-9168**	2	NUT (11/16-16-THD)	
	36	1	**7B-1597**	1	CLIP	
	37	1	**7G-2950**	1	CLIP (SLOT)	

218-6757 CONVERSION AR-QUICK COUPLER *(contd.)* i02182974

NOTE	REF NO	GRAPHIC REF	PART NUMBER	QTY	PART NAME 1 2 3 4 5 6 (PRODUCT LEVEL)	SEE PAGE
	38	1	**7G-2951**	1	CLIP (TAB)	
	39	1	**7H-7055**	2	CLIP	
	40	1	**7X-7729**	6	WASHER (11X25X3-MM THK)	
	41	1	**8L-5188**	2	PIN	
	42	1	**8T-4121**	13	WASHER-HARD (11X21X2.5-MM THK)	
M	43	1	**8T-4133**	6	NUT (M10X1.5-THD)	
M	44	1	**8T-4136**	1	BOLT (M10X1.5X25-MM)	
M	45	1	**8T-4189**	2	BOLT (M8X1.25X20-MM)	
M	46	1	**8T-4191**	2	BOLT (M10X1.5X16-MM)	
M	47	1	**8T-4196**	4	BOLT (M10X1.5X35-MM)	
M	48	1	**8T-4201**	3	BOLT-LOCKING (M10X1.5X20-MM)	
	49	1	**8T-4224**	2	WASHER-HARD (8.8X16X2-MM THK)	
M	50	1	**8T-5005**	2	BOLT (M10X1.5X70-MM)	
	51	1	**9M-8406**	2	CLIP	
	52	1	**9S-1350**	1	CLIP	
	53	1	**9T-7303**	4	SPACER (16X28X1.5-MM THK)	

I-REFER TO HYDRAULIC INFORMATION SYSTEM
M-METRIC PART
Y-SEPARATE ILLUSTRATION

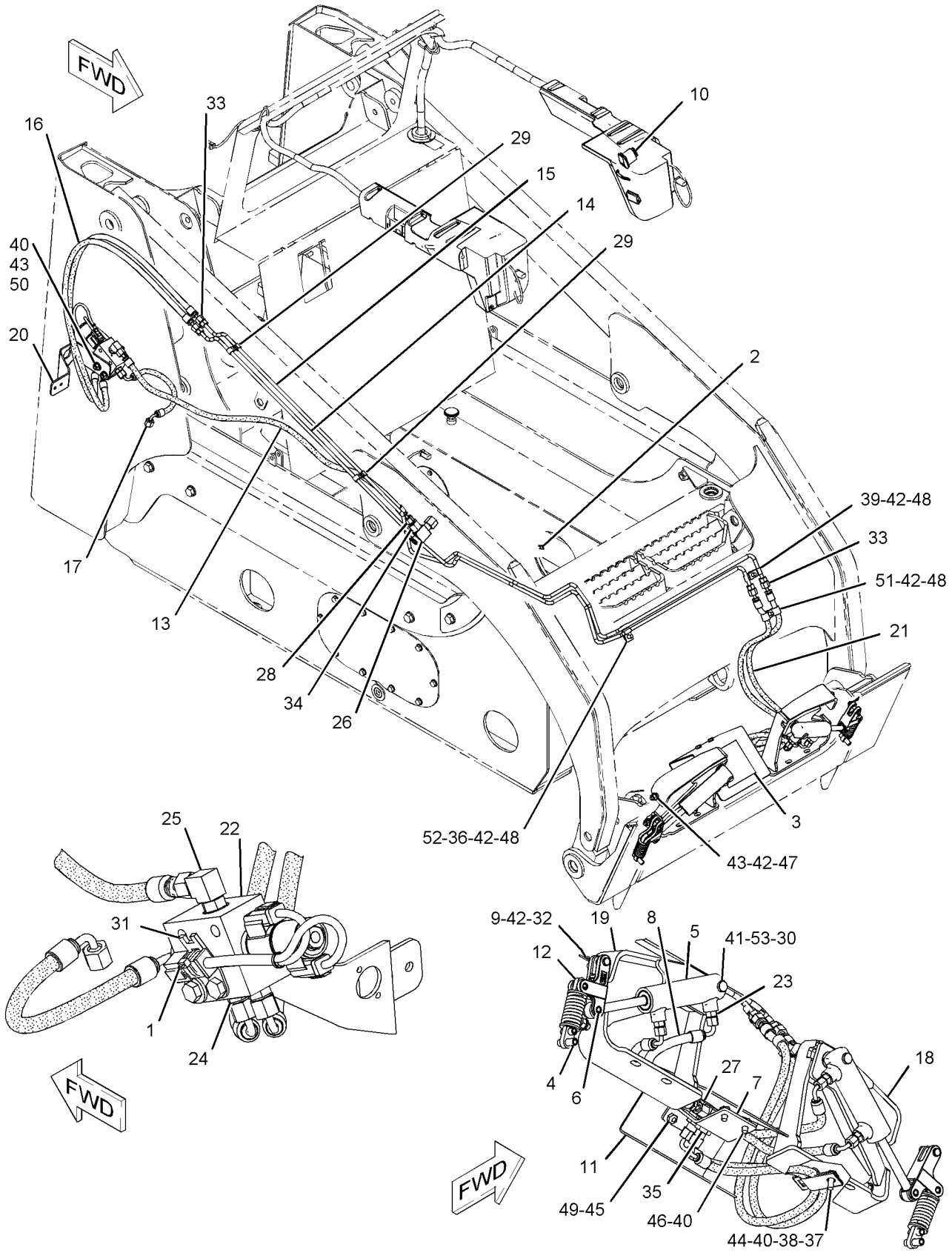

GRAPHIC #1 **<END>** g01134783

WORK TOOLS

218-6757 CONVERSION AR-QUICK COUPLER—KIT

S/N: MJH2450-UP; RLL1317-UP

AN ATTACHMENT

SMCS-6129 **i02233157**

NOTE	REF NO	GRAPHIC REF	PART NUMBER	QTY	PART NAME 1 2 3 4 5 6 (PRODUCT LEVEL)	SEE PAGE
	1	1	**3S-2093**	1	STRAP-CABLE	
C	2	1	**9X-6581**	1	NUT (1-14-THD)	
	3	1	**113-8490**	1	FUSE (10-AMPERE)	
	4	1	**124-2456**	1	FILM-INSTRUCTION (NO STEP)	
	5	1	**166-2560**	2	PIN-SPRING	
Y	6	1	**192-2640**	2	CYLINDER GP-COUPLER	360
	7	1	**195-6754**	2	PIN-SPRING	
	8	1	**207-9737**	1	BRACKET AS	
I	9	1	**207-9756**	4	HOSE AS	
	10	1	**207-9785**	2	PIN	
	11	1	**212-6521**	1	SWITCH AS-ROCKER (QUICK COUPLER)	
	12	1	**212-6690**	1	GUARD	
Y	13	1	*215-3957*	2	LINK GP-COUPLER	636
I	14	1	**218-6241**	1	HOSE AS	
I	15	1	**218-6245**	2	HOSE AS	
I	16	1	**218-6249**	1	HOSE AS	
	17	1	**218-6334**	1	BRACKET AS	
	18	1	**218-6335**	1	BRACKET AS	
	19	1	**218-6938**	1	BRACKET	
I	20	1	**219-4335**	2	HOSE AS	
Y	21	1	**233-7128**	1	VALVE & MTG GP-SOLENOID (QUICK COUPLER)	544
C	22	1	**252-0342**	1	TUBE AS	
C	23	1	**252-0343**	1	TUBE AS	
	24	1	*148-8325*	4	CONNECTOR AS	
					(EACH INCLUDES)	
		1	**6V-8641**	1	CONNECTOR	
		1	**3J-1907**	1	SEAL-O-RING	
		1	**4J-5477**	1	SEAL-O-RING	
	25	1	*148-8336*	3	CONNECTOR AS	
					(EACH INCLUDES)	
		1	**6V-8636**	1	CONNECTOR	
		1	**3J-1907**	1	SEAL-O-RING	
		1	**6V-8397**	1	SEAL-O-RING	
	26	1	*148-8378*	1	ELBOW AS	
		1	**6V-8724**	1	ELBOW	
		1	**3J-1907**	1	SEAL-O-RING	
		1	**6V-8397**	1	SEAL-O-RING	
	27	1	*148-8446*	1	TEE GP-SWIVEL	
		1	**6V-9838**	1	TEE-SWIVEL	
		1	**7J-9108**	2	SEAL-O-RING	
	28	1	*150-4034*	2	TEE GP	
					(EACH INCLUDES)	
		1	**8T-0379**	1	TEE-BULKHEAD	
		1	**6V-8397**	3	SEAL-O-RING	
	29	1	*156-4282*	1	REDUCER AS	
		1	**6V-8938**	1	REDUCER-O-RING	
		1	**6V-8397**	1	SEAL-O-RING	
	30	1	**2V-3216**	4	CLIP	
	31	1	**3B-4628**	2	PIN-COTTER	
	32	1	**4P-7581**	1	CLIP	
	33	1	**5P-0372**	2	LOCK PIN	
	34	1	**6V-8397**	4	SEAL-O-RING	
	35	1	**6V-9168**	2	NUT (11/16-16-THD)	
	36	1	**7B-1597**	1	CLIP	
	37	1	**7G-2950**	1	CLIP (SLOT)	
	38	1	**7G-2951**	1	CLIP (TAB)	

218-6757 CONVERSION AR-QUICK COUPLER *(contd.)* i02233157

NOTE	REF NO	GRAPHIC REF	PART NUMBER	QTY	PART NAME 1 2 3 4 5 6 (PRODUCT LEVEL)	SEE PAGE
	39	1	**7H-7055**	2	CLIP	
	40	1	**7X-7729**	6	WASHER (11X25X3-MM THK)	
	41	1	**8L-5188**	2	PIN	
	42	1	**8T-4121**	13	WASHER-HARD (11X21X2.5-MM THK)	
M	43	1	**8T-4133**	6	NUT (M10X1.5-THD)	
M	44	1	**8T-4136**	1	BOLT (M10X1.5X25-MM)	
M	45	1	**8T-4189**	2	BOLT (M8X1.25X20-MM)	
M	46	1	**8T-4191**	2	BOLT (M10X1.5X16-MM)	
M	47	1	**8T-4196**	4	BOLT (M10X1.5X35-MM)	
M	48	1	**8T-4201**	3	BOLT-LOCKING (M10X1.5X20-MM)	
	49	1	**8T-4224**	2	WASHER-HARD (8.8X16X2-MM THK)	
M	50	1	**8T-5005**	2	BOLT (M10X1.5X70-MM)	
	51	1	**9M-8406**	2	CLIP	
	52	1	**9S-1350**	1	CLIP	
	53	1	**9T-7303**	4	SPACER (16X28X1.5-MM THK)	

C-CHANGE FROM PREVIOUS TYPE
I-REFER TO HYDRAULIC INFORMATION SYSTEM
M-METRIC PART
Y-SEPARATE ILLUSTRATION

218-6757 CONVERSION AR-QUICK COUPLER *(contd.)* i02233157

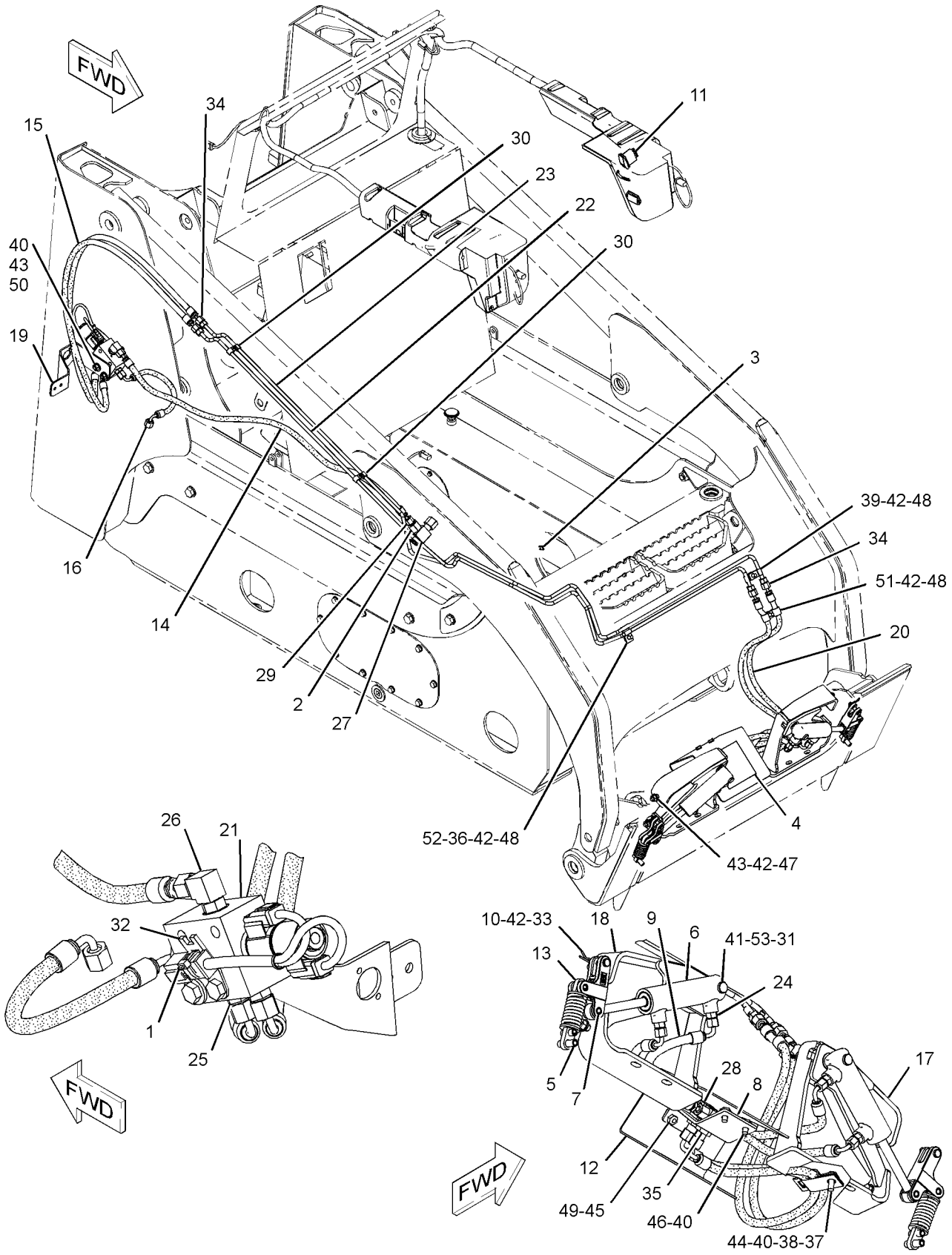

GRAPHIC #1 **<END>** g01151070

241-8672 CONVERSION GP-WORK TOOL–KIT, HIGH FLOW

S/N: MJH1-UP; BXM1-UP

AN ATTACHMENT

SMCS-1408, 4283, 5057, 7553 **i02060927**

NOTE	REF NO	GRAPHIC REF	PART NUMBER	QTY	PART NAME 1 2 3 4 5 6 (PRODUCT LEVEL)	SEE PAGE
	1	1	**142-8948**	1	FITTING AS (QUICK DISCONNECT, MALE)	
	2	1	**142-8949**	1	FITTING AS (QUICK DISCONNECT, FEMALE)	
	3	1	**152-8181**	1	FITTING (QUICK DISCONNECT, MALE)	
	4	1	**204-5098**	1	FITTING AS (QUICK DISCONNECT, FEMALE)	
	5	1	**225-8014**	1	HARNESS AS-WORK TOOL (POWER)	
		1	**155-2270**	6	KIT-CONNECTING PLUG (2-PIN)	
	6	1	**241-3763**	1	PLUG AS	
	7	1	**3D-2824**	4	SEAL-O-RING	
	8	1	**3J-1907**	2	SEAL-O-RING	
	9	1	**5K-9090**	2	SEAL-O-RING	
	10	1	**6V-8397**	2	SEAL-O-RING	
	11	1	**6V-8636**	2	CONNECTOR	
	12	1	**6V-8637**	2	CONNECTOR	
	13	1	**6V-8714**	2	CONNECTOR	
	14	1	**6V-9746**	2	SEAL-O-RING	
	15	1	**5C-8311**	1	RING	
	16	1	**246-1501**	1	PLATE	

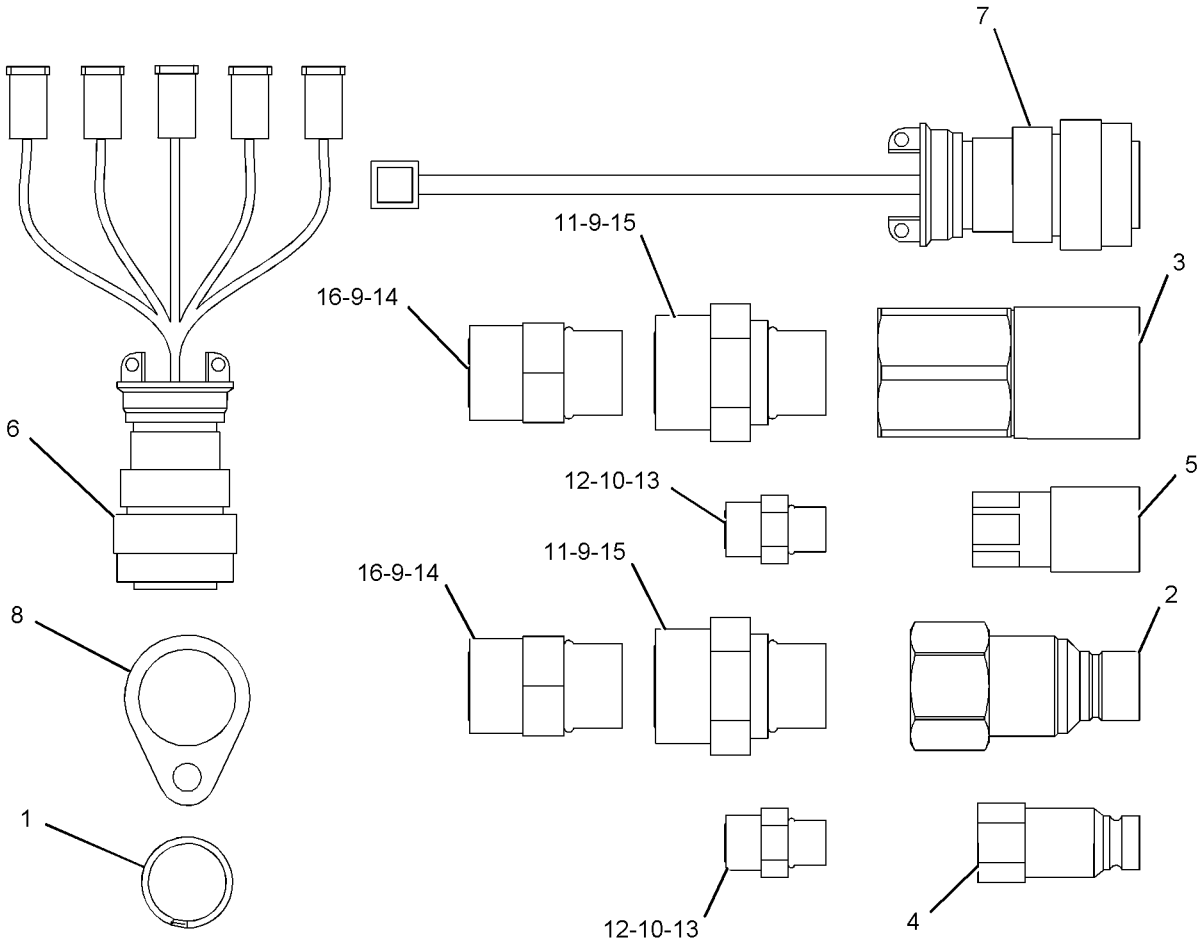

GRAPHIC #1 **<END>** g01056078

WORK TOOLS

218-6321 COUPLER AR-QUICK

S/N: MJH1-UP; RLL1-UP
MANUAL
AN ATTACHMENT

SMCS-6129 **i01971828**

NOTE	PART NUMBER	QTY	PART NAME 1 2 3 4 5 6 (PRODUCT LEVEL)	SEE PAGE
Y	*206-3820*	1	COUPLER GP-QUICK	606
Y	*218-6211*	1	LINES GP-LOAD CONTROL VALVE	432
Y-SEPARATE ILLUSTRATION				

<END>

218-6322 COUPLER AR-QUICK

S/N: MJH1-UP; RLL1-UP
HYDRAULIC
AN ATTACHMENT

SMCS-6129 **i01990735**

NOTE	PART NUMBER	QTY	PART NAME 1 2 3 4 5 6 (PRODUCT LEVEL)	SEE PAGE
Y	*206-3821*	1	COUPLER GP-QUICK	607
	113-8490		FUSE (10-AMPERE)	
	212-6521	1	SWITCH AS-ROCKER (QUICK COUPLER)	
			(LOCATE IN FOURTH SLOT FROM REAR OF LH INSTRUMENT PANEL)	
	111-7899	1	GASKET	
Y	*218-6240*	1	VALVE & LINES GP-COUPLER	521
Y-SEPARATE ILLUSTRATION				

<END>

218-6721 COUPLER AR-QUICK

S/N: SCH1-UP; BXM1-UP
MANUAL
AN ATTACHMENT

SMCS-6129 **i01986648**

NOTE	PART NUMBER	QTY	PART NAME 1 2 3 4 5 6 (PRODUCT LEVEL)	SEE PAGE
Y	*206-3820*	1	COUPLER GP-QUICK	606
Y	*218-5882*	1	LINES GP-LOAD CONTROL VALVE	430
Y-SEPARATE ILLUSTRATION				

<END>

WORK TOOLS

218-6722 COUPLER AR-QUICK

S/N: SCH1-UP; BXM1-UP
HYDRAULIC
AN ATTACHMENT

SMCS-6129 **i01992200**

NOTE	PART NUMBER	QTY	PART NAME 1 2 3 4 5 6 (PRODUCT LEVEL)	SEE PAGE
Y	*206-3821*	1	COUPLER GP-QUICK	607
	113-8490	1	FUSE (10-AMPERE)	
	212-6521	1	SWITCH AS-ROCKER (QUICK COUPLER)	
	111-7899	1	GASKET	
			(LOCATE FOURTH SLOT FROM REAR ON LH INSTRUMENT PANEL)	
Y	*218-6263*	1	VALVE & LINES GP-COUPLER	530

Y-SEPARATE ILLUSTRATION

<END>

WORK TOOLS

206-3820 COUPLER GP-QUICK

S/N: MJH1-UP; SCH1-UP; RLL1-UP; BXM1-UP
PART OF 218-6321, 218-6721 COUPLER AR-QUICK
AN ATTACHMENT

SMCS-6129 **i02359462**

NOTE	REF NO	GRAPHIC REF	PART NUMBER	QTY	PART NAME 1 2 3 4 5 6 (PRODUCT LEVEL)	SEE PAGE
	1	1	**159-5797**	2	SPRING	
	2	1	**252-0425**	1	COUPLER AS	
		1	**126-5701**	2	PLATE-RETAINER	
Y	3	1	*215-3960*	1	HANDLE & PIN GP-COUPLER (LH)	631
Y	4	1	*215-3961*	1	HANDLE & PIN GP-COUPLER (RH)	632
	5	1	**131-5879**	2	WASHER (11X32X3-MM THK)	
	6	1	**132-7551**	2	SPACER (11X19X6-MM THK)	
	7	1	**5B-0651**	2	FITTING-STRAIGHT	
M	8	1	**6V-7744**	2	LOCKNUT (M10X1.5-THD)	
M	9	1	**7X-2621**	2	BOLT (M10X1.5X12-MM)	
	10	1	**7X-7729**	4	WASHER (11X25X3-MM THK)	
	11	1	**8T-4121**	6	WASHER-HARD (11X21X2.5-MM THK)	
M	12	1	**8T-4172**	2	BOLT (M10X1.5X80-MM)	
M	13	1	**8T-4196**	4	BOLT (M10X1.5X35-MM)	

M-METRIC PART
Y-SEPARATE ILLUSTRATION

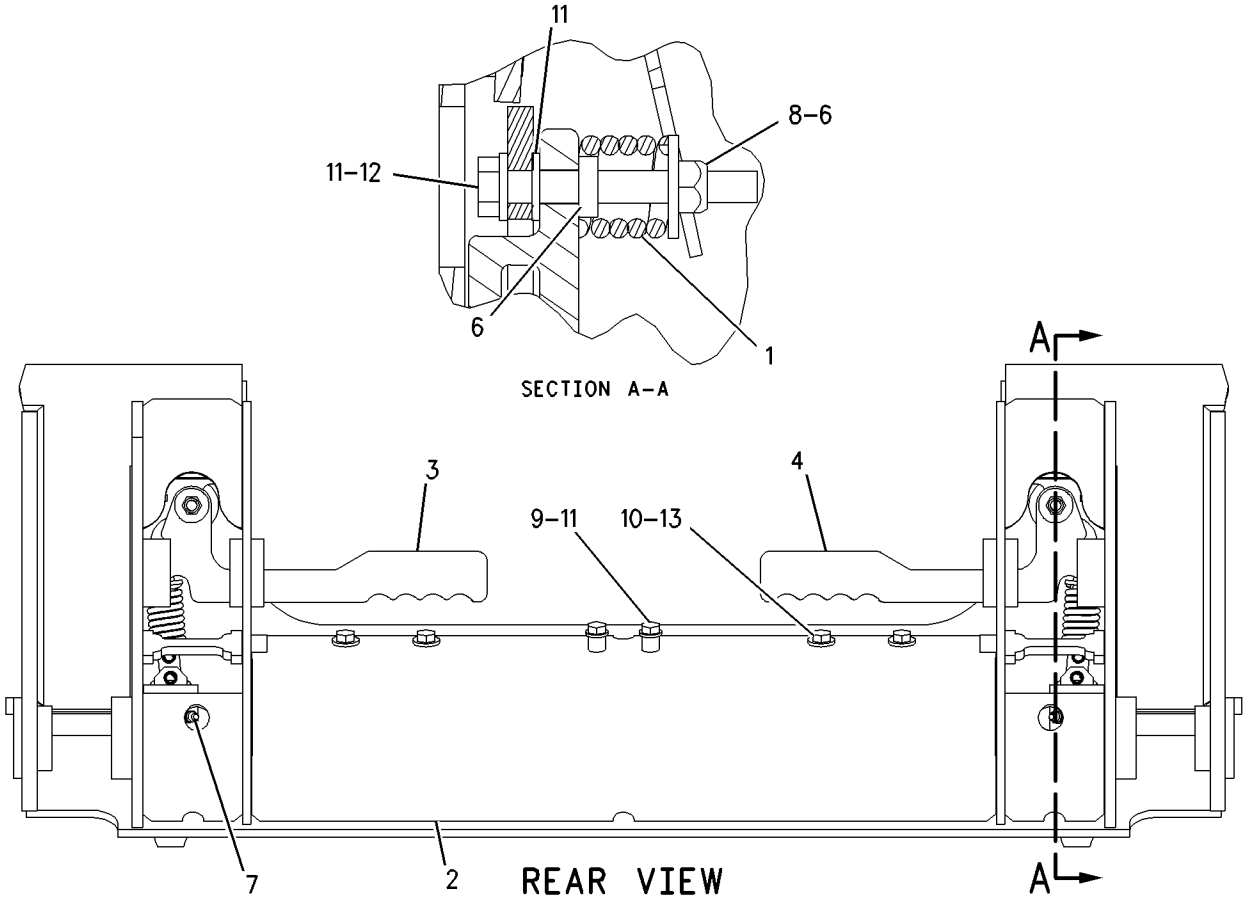

GRAPHIC #1 **<END>** g00914702

WORK TOOLS

206-3821 COUPLER GP-QUICK

S/N: MJH1-UP; SCH1-UP; RLL1-UP; BXM1-UP
PART OF 218-6322, 218-6722 COUPLER AR-QUICK
AN ATTACHMENT

SMCS-6129 **i02195792**

NOTE	REF NO	GRAPHIC REF	PART NUMBER	QTY	PART NAME 1 2 3 4 5 6 (PRODUCT LEVEL)	SEE PAGE
	1	1	**5P-0372**	2	LOCK PIN	
	2	1	**252-0425**	1	COUPLER AS	
		1	**126-5701**	2	PLATE-RETAINER	
	3	1	**207-9785**	2	PIN	
Y	4	1	*215-3962*	1	CYLINDER & LINK GP-COUPLER (LH)	610
Y	5	1	*215-3963*	1	CYLINDER & LINK GP-COUPLER (RH)	611
C	6	1	**218-6334**	1	BRACKET AS (LH)	
C	7	1	**218-6335**	1	BRACKET AS (RH)	
	8	1	**3B-4628**	2	PIN-COTTER	
	9	1	**5B-0651**	2	FITTING-STRAIGHT	
	10	1	**8L-5188**	2	PIN	
	11	1	**8T-4121**	14	WASHER-HARD (11X21X2.5-MM THK)	
M	12	1	**8T-4133**	4	NUT (M10X1.5-THD)	
M	13	1	**8T-4196**	8	BOLT (M10X1.5X35-MM)	
	14	1	**9T-7303**	4	SPACER (16X28X1.5-MM THK)	

C-CHANGE FROM PREVIOUS TYPE
M-METRIC PART
Y-SEPARATE ILLUSTRATION

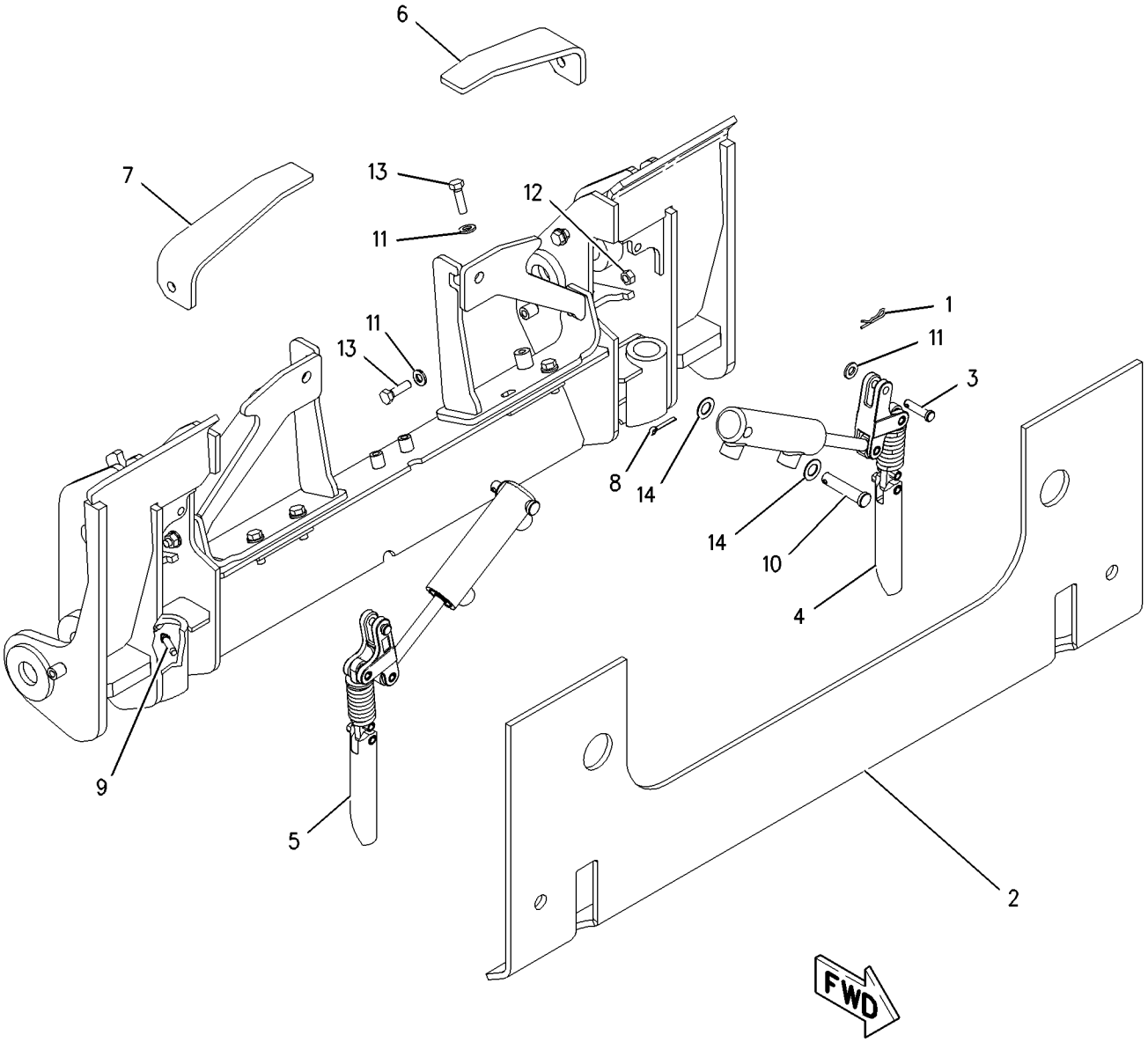

GRAPHIC #1 **<END>** g00983866

162-5236 COVER GP-LINES

S/N: MJH1-UP; SCH1-UP; RLL1-UP; BXM1-UP
PART OF 154-5004, 154-5008, 154-5010 BUCKET AR-MULTIPURPOSE
AN ATTACHMENT

SMCS-5057 **i01227894**

NOTE	REF NO	GRAPHIC REF	PART NUMBER	QTY	PART NAME 1 2 3 4 5 6 (PRODUCT LEVEL)	SEE PAGE
	1	1	**161-4128**	1	PLATE	
M	2	1	**5C-9553**	5	BOLT (M6X1.0X16MM)	
	3	1	**9X-2026**	5	WASHER (1MM THK)	

M-METRIC PART

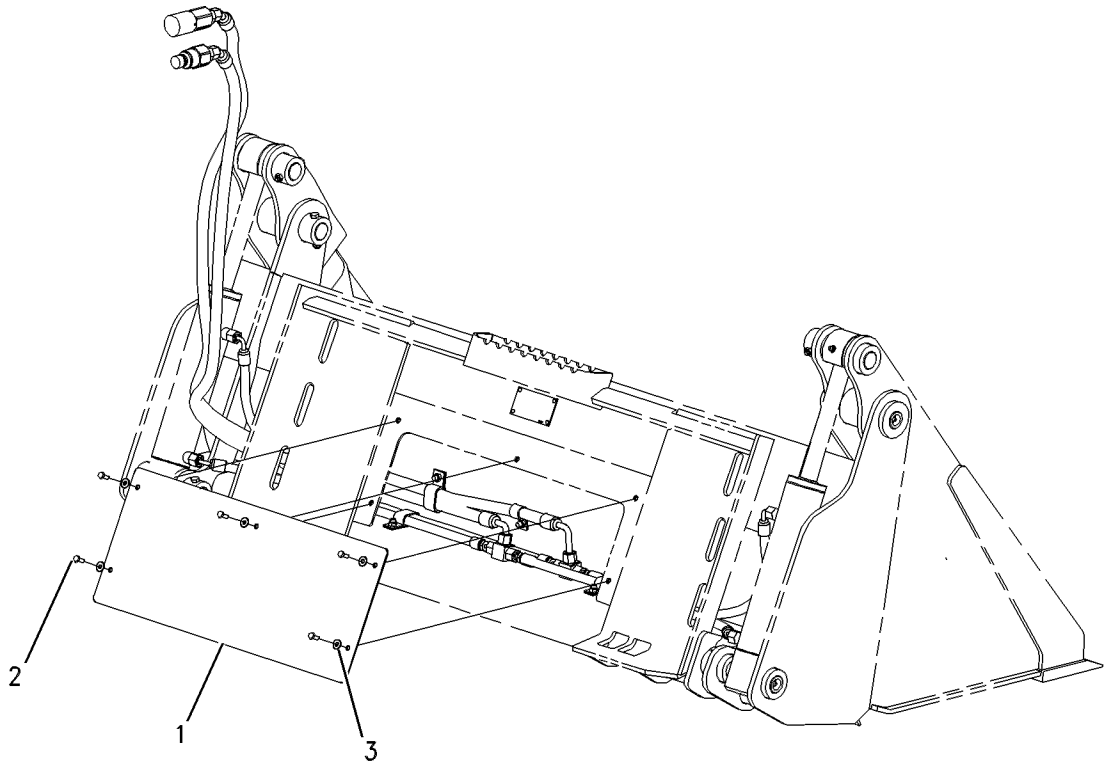

GRAPHIC #1 **<END>** g00560360

215-3962 CYLINDER & LINK GP-COUPLER–LH

S/N: MJH1-UP; SCH1-UP; RLL1-UP; BXM1-UP
PART OF 206-3821 COUPLER GP-QUICK
AN ATTACHMENT

SMCS-5133, 6129 **i02474665**

NOTE	REF NO	GRAPHIC REF	PART NUMBER	QTY	PART NAME 1 2 3 4 5 6 (PRODUCT LEVEL)	SEE PAGE
	1	1	**166-2560**	1	PIN-SPRING	
	2	1	**192-2640**	1	CYLINDER GP-COUPLER	
	3	1	**192-2642**	1	PIN	
	4	1	**195-6754**	1	PIN-SPRING	
Y	5	1	*215-3957*	1	LINK GP-COUPLER	636

Y-SEPARATE ILLUSTRATION

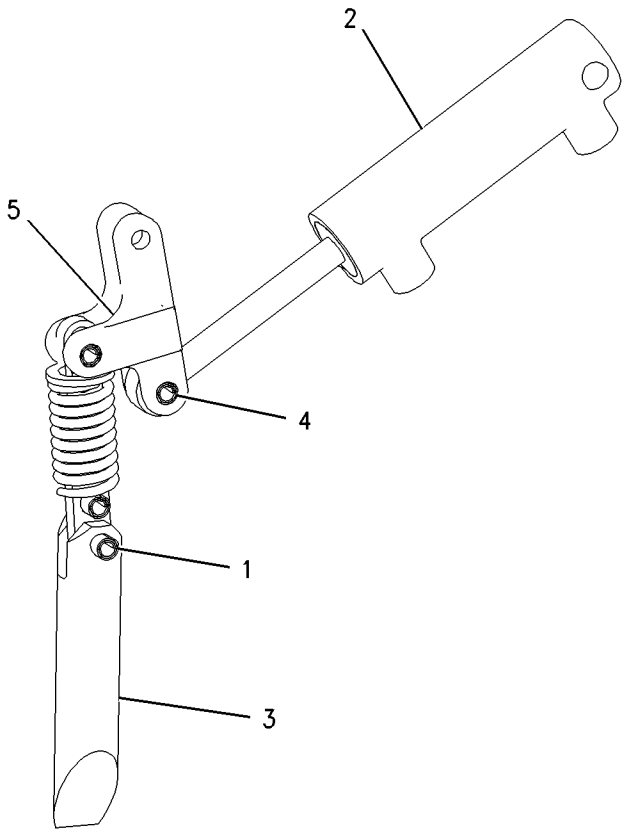

GRAPHIC #1 **<END>** g00871294

WORK TOOLS

215-3963 CYLINDER & LINK GP-COUPLER—RH

S/N: MJH1-UP; SCH1-UP; RLL1-UP; BXM1-UP
PART OF 206-3821 COUPLER GP-QUICK
AN ATTACHMENT

SMCS-5133, 6129 **i02474667**

NOTE	REF NO	GRAPHIC REF	PART NUMBER	QTY	PART NAME 1 2 3 4 5 6 (PRODUCT LEVEL)	SEE PAGE
	1	1	**166-2560**	1	PIN-SPRING	
	2	1	**192-2640**	1	CYLINDER GP-COUPLER	
	3	1	**192-2642**	1	PIN	
	4	1	**195-6754**	1	PIN-SPRING	
Y	5	1	*215-3957*	1	LINK GP-COUPLER	636

Y-SEPARATE ILLUSTRATION

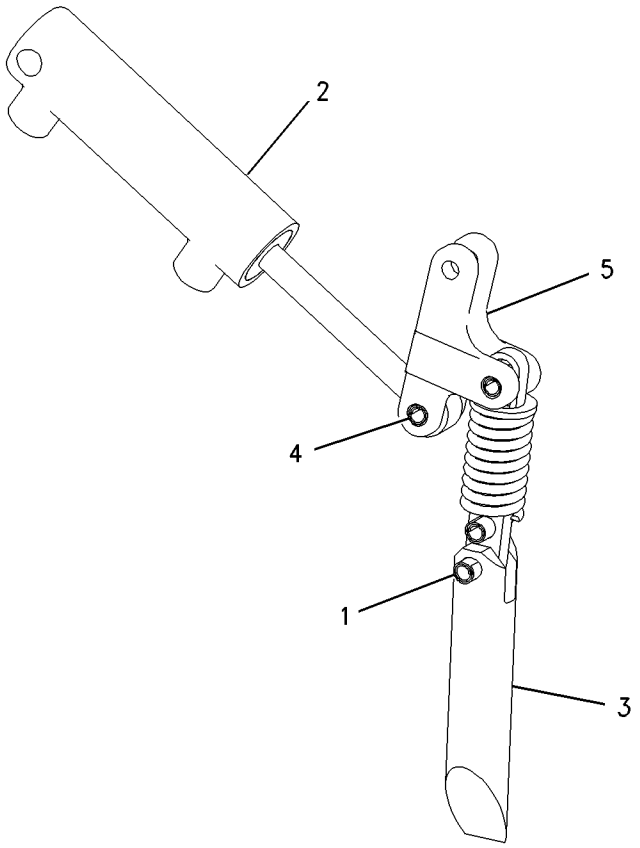

GRAPHIC #1 **<END>** g00871299

222-7545 EDGE GP-BIT & CUTTING

S/N: MJH1-UP; BXM1-UP
PART OF 231-5276 BLADE GP-ANGLING
AN ATTACHMENT

SMCS-6801, 6804 **i02103534**

NOTE	PART NUMBER	QTY	PART NAME 1 2 3 4 5 6 (PRODUCT LEVEL)	SEE PAGE
	6Y-5839	1	BIT-END	
	6Y-5840	1	BIT-END	
	3F-5108	10	BOLT-PLOW (5/8-11X2.25-IN)	
	4F-3658	4	BOLT-PLOW (5/8-11X3-IN)	
	142-4914	1	EDGE-CUTTING	
	4K-0367	14	NUT-FULL (5/8-11-THD)	
	5P-8247	14	WASHER-HARD (17X32X3.5-MM THK)	

<END>

222-7546 EDGE GP-BIT & CUTTING

S/N: MJH1-UP; BXM1-UP
PART OF 222-7724 BLADE GP-ANGLING
AN ATTACHMENT

SMCS-6801, 6804 **i01966750**

NOTE	PART NUMBER	QTY	PART NAME 1 2 3 4 5 6 (PRODUCT LEVEL)	SEE PAGE
	6Y-5839	1	BIT-END	
	6Y-5840	1	BIT-END	
	3F-5108	17	BOLT-PLOW (5/8-11 X 2.25 IN)	
	143-3088	1	EDGE-CUTTING	
	4K-0367	17	NUT-FULL (5/8-11 THD)	
	5P-8247	17	WASHER-HARD (17X32X3.5MM THK)	

<END>

135-9384 EDGE GP-CUTTING

S/N: MJH1-UP; SCH1-UP; RLL1-UP; BXM1-UP
PART OF 157-7226 BUCKET AR-GRAPPLE, 154-5045 BUCKET AR-MULTIPURPOSE
FOR USE WITH 152.40-CM (60-IN) BUCKET
AN ATTACHMENT

SMCS-6801 **i01372033**

NOTE	REF NO	GRAPHIC REF	PART NUMBER	QTY	PART NAME 1 2 3 4 5 6 (PRODUCT LEVEL)	SEE PAGE
	1	1	**135-9394**	1	EDGE-CUTTING	
M	2	1	**8T-4778**	8	LOCKNUT (M16X2.00 THD)	
M	3	1	**159-2953**	8	SCREW-FLAT HEAD (M16X2.00 THD)	

M-METRIC PART

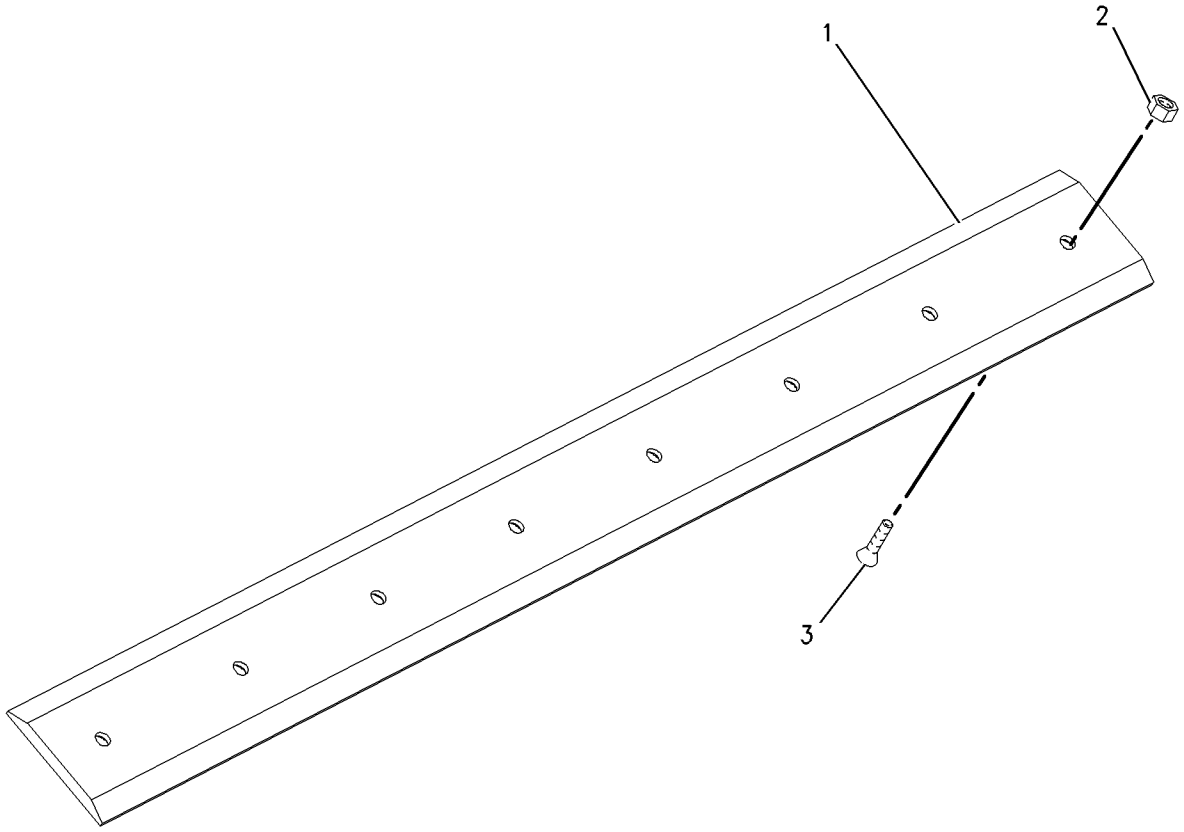

GRAPHIC #1 **<END>** g00724087

WORK TOOLS

135-9385 EDGE GP-CUTTING

S/N: MJH1-UP; SCH1-UP; RLL1-UP; BXM1-UP
PART OF 157-7227 BUCKET AR-GRAPPLE, 154-5047 BUCKET AR-MULTIPURPOSE
FOR USE WITH 167.64-CM (66-IN) BUCKET
AN ATTACHMENT

SMCS-6801 **i01228508**

NOTE	REF NO	GRAPHIC REF	PART NUMBER	QTY	PART NAME 1 2 3 4 5 6 (PRODUCT LEVEL)	SEE PAGE
	1	1	**135-9395**	1	EDGE-CUTTING	
M	2	1	**8T-4778**	8	LOCKNUT (M16X2.00 THD)	
M	3	1	**159-2953**	8	SCREW-FLAT HEAD (M16X2.00 THD)	

M-METRIC PART

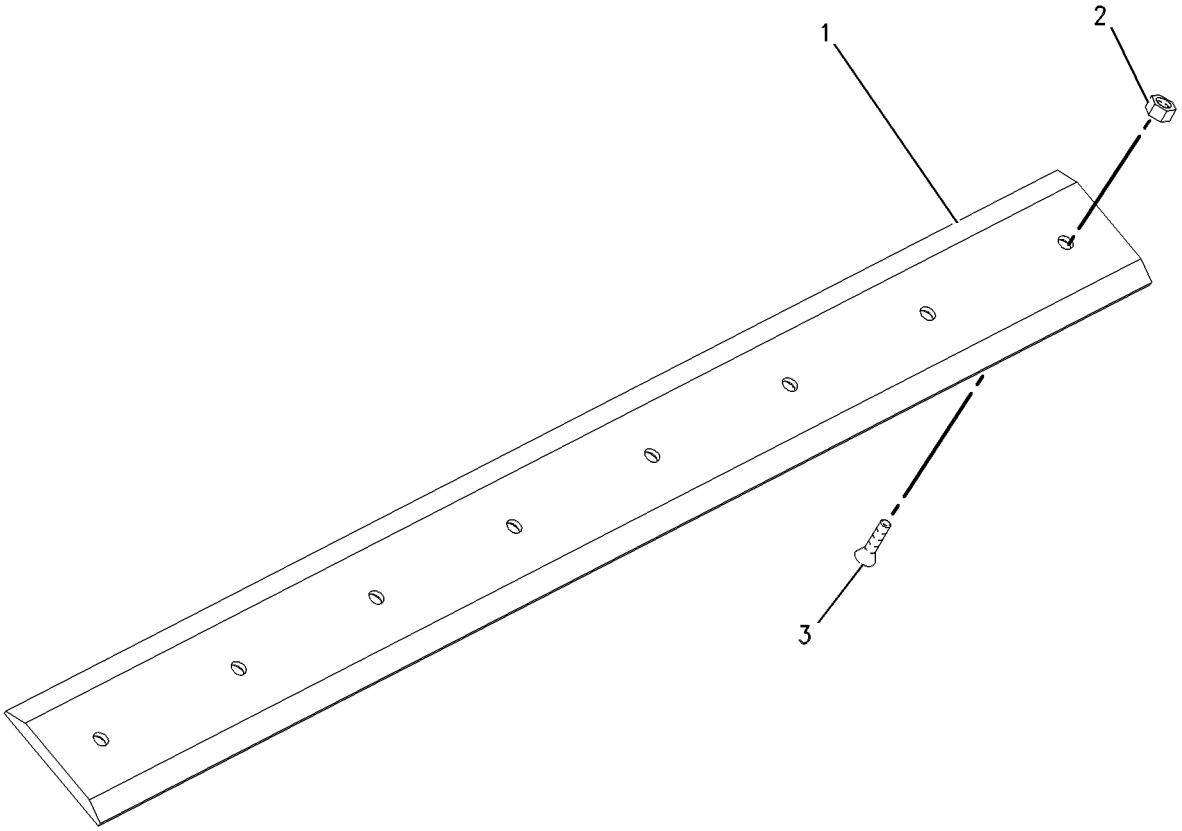

GRAPHIC #1 **<END>** g00657004

135-9386 EDGE GP-CUTTING

S/N: MJH1-UP; SCH1-UP; RLL1-UP; BXM1-UP
PART OF 177-1989 BLADE AR, 158-6095 BUCKET AR-GRAPPLE, 154-5049 BUCKET AR-MULTIPURPOSE
FOR USE WITH 182.88-CM (72-IN) BUCKET
AN ATTACHMENT

SMCS-6801 **i01372498**

NOTE	REF NO	GRAPHIC REF	PART NUMBER	QTY	PART NAME 1 2 3 4 5 6 (PRODUCT LEVEL)	SEE PAGE
	1	1	**135-9396**	1	EDGE-CUTTING	
M	2	1	**8T-4778**	11	LOCKNUT (M16X2.00 THD)	
M	3	1	**159-2953**	11	SCREW-FLAT HEAD (M16X2.00 THD)	

M-METRIC PART

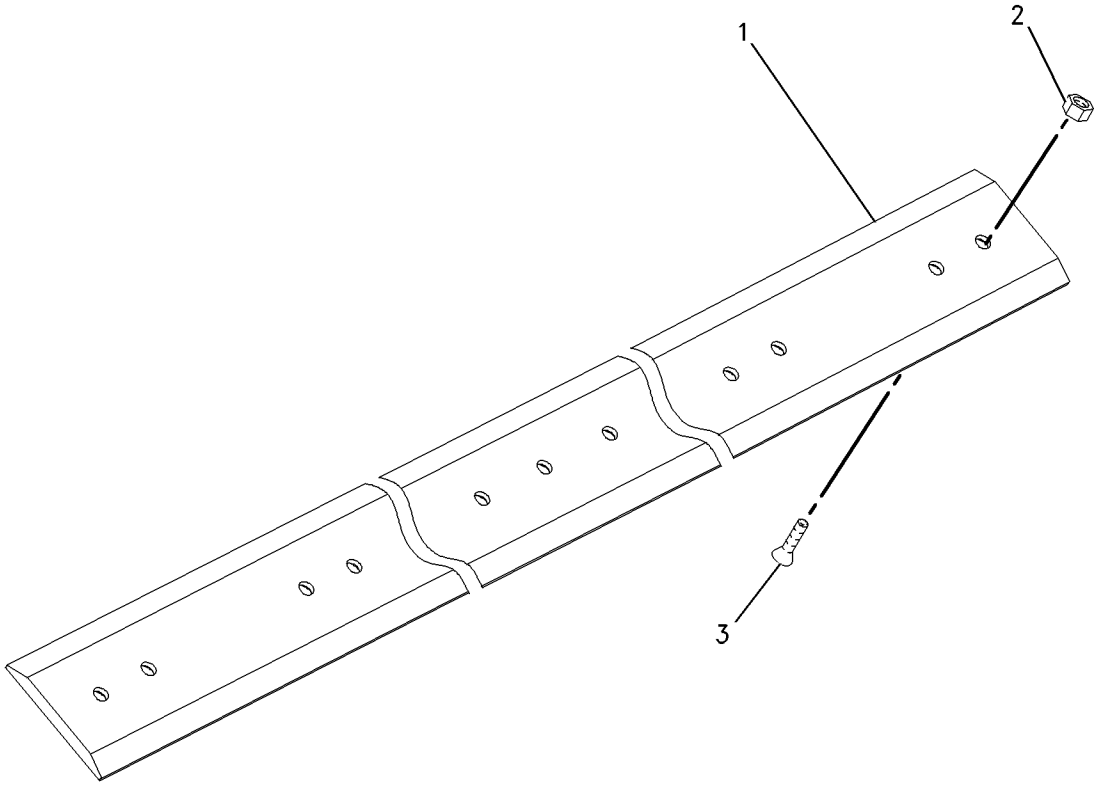

GRAPHIC #1 **<END>** g00724435

149-5741 EDGE GP-CUTTING

S/N: MJH1-UP; SCH1-UP; RLL1-UP; BXM1-UP
PART OF 177-1990 BLADE AR
AN ATTACHMENT

SMCS-6801 **i01832720**

NOTE	REF NO	GRAPHIC REF	PART NUMBER	QTY	PART NAME 1 2 3 4 5 6 (PRODUCT LEVEL)	SEE PAGE
	1	1	**195-5124**	1	EDGE-CUTTING	
M	2	1	**8T-4778**	7	LOCKNUT (M16X2 THD)	
M	3	1	**159-2953**	7	SCREW-FLAT HEAD (M16X2.00 THD)	

M-METRIC PART

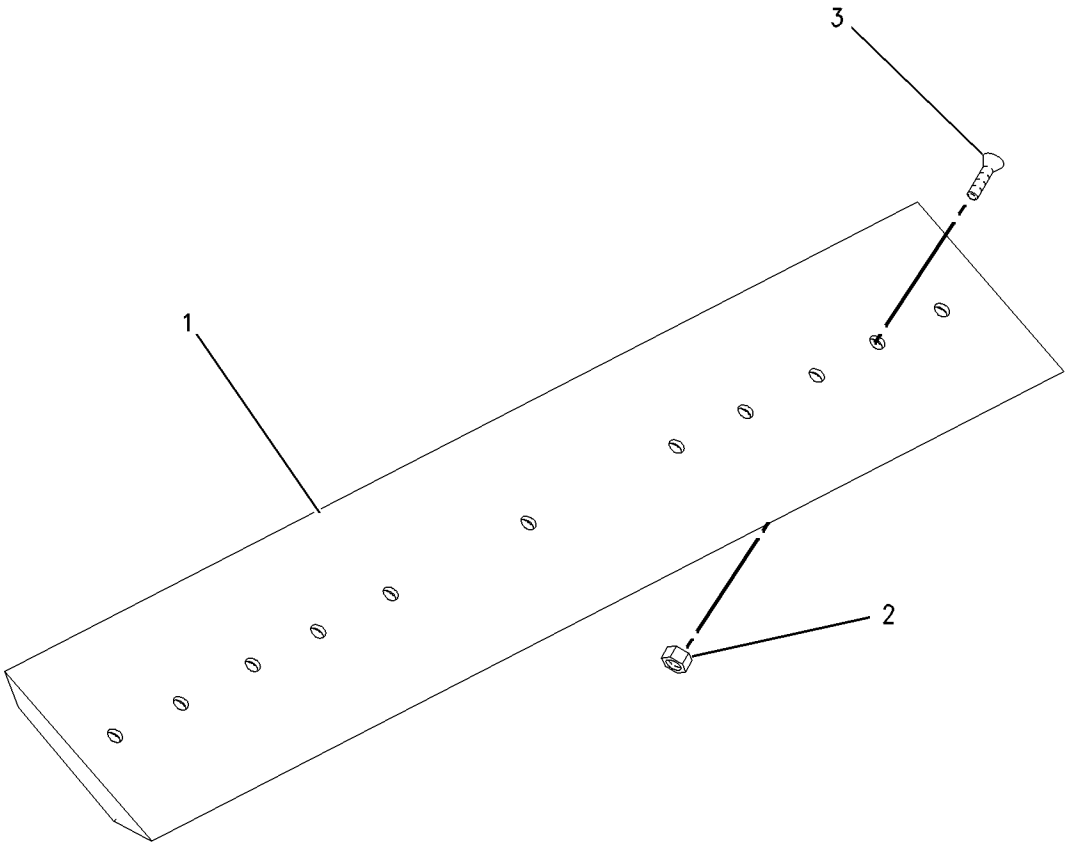

GRAPHIC #1 **<END>** g00936281

162-8139 FORK AR-GRAPPLE

S/N: MJH1-UP; SCH1-UP; RLL1-UP; BXM1-UP
167.64-CM (66-IN). INDUSTRIAL
AN ATTACHMENT

SMCS-6705 **i01520325**

NOTE	PART NUMBER	QTY	PART NAME 1 2 3 4 5 6 (PRODUCT LEVEL)	SEE PAGE
Y	*156-0891*	1	MOUNTING GP-CYLINDER	510
Y	**156-5512**	2	CYLINDER GP-GRAPPLE	361
Y	*162-8140*	1	FORK GP-GRAPPLE	619
Y	*164-9614*	9	FORK GP-GRAPPLE	621
Y	*161-0187*	1	LINES GP-GRAPPLE	400
Y-SEPARATE ILLUSTRATION				

<END>

163-4812 FORK AR-GRAPPLE

S/N: SCH1-UP; BXM1-UP
182.88-CM (72-IN). INDUSTRIAL
AN ATTACHMENT

SMCS-6705 **i01520322**

NOTE	PART NUMBER	QTY	PART NAME 1 2 3 4 5 6 (PRODUCT LEVEL)	SEE PAGE
Y	*156-0891*	1	MOUNTING GP-CYLINDER	510
Y	**156-5512**	2	CYLINDER GP-GRAPPLE	361
Y	*163-4811*	1	FORK GP-GRAPPLE	620
Y	*164-9614*	11	FORK GP-GRAPPLE	621
Y	*161-0187*	1	LINES GP-GRAPPLE	400
Y-SEPARATE ILLUSTRATION				

<END>

165-8727 FORK AR-GRAPPLE

S/N: MJH1-UP; SCH1-UP; RLL1-UP; BXM1-UP
167.64-CM (66-IN). UTILITY
AN ATTACHMENT

SMCS-6705 **i02193879**

NOTE	PART NUMBER	QTY	PART NAME 1 2 3 4 5 6 (PRODUCT LEVEL)	SEE PAGE
Y	**252-8025**	1	FORK GP-UTILITY	626
Y	**165-8734**	1	GRAPPLE & CYLINDER GP-UTILITY	628
Y-SEPARATE ILLUSTRATION				

<END>

WORK TOOLS

165-8728 FORK AR-GRAPPLE

S/N: SCH1-UP; BXM1-UP
85.0-CM (33.49-IN). UTILITY
AN ATTACHMENT

SMCS-6705 **i02193885**

NOTE	PART NUMBER	QTY	PART NAME 1 2 3 4 5 6 (PRODUCT LEVEL)	SEE PAGE
Y	**252-8026**	1	FORK GP-UTILITY	627
Y	**165-8734**	1	GRAPPLE & CYLINDER GP-UTILITY	628

Y-SEPARATE ILLUSTRATION

<END>

162-8140 FORK GP-GRAPPLE

S/N: MJH1-UP; SCH1-UP; RLL1-UP; BXM1-UP
INDUSTRIAL
PART OF 162-8139 FORK AR-GRAPPLE
AN ATTACHMENT

SMCS-6705 **i01886375**

NOTE	REF NO	GRAPHIC REF	PART NUMBER	QTY	PART NAME 1 2 3 4 5 6 (PRODUCT LEVEL)	SEE PAGE
	1	1	**157-0940**	4	PIN	
	2	1	**164-9989**	2	FILM-WARNING (IMPALED POINT)	
	3	1	**169-3567**	1	FORK AS	
		1	**8Y-4489**	2	BOSS-THREADED	
	4	1	**222-7467**	2	FORK AS	
					(EACH INCLUDES)	
		1	**158-5648**	2	BEARING-SLEEVE	
	5	1	**3B-8489**	4	FITTING-GREASE	
M	6	1	**6V-9189**	4	LOCKNUT (M8X1.25-THD)	
M	7	1	**8T-6869**	4	BOLT (M8X1.25X60-MM)	

M-METRIC PART

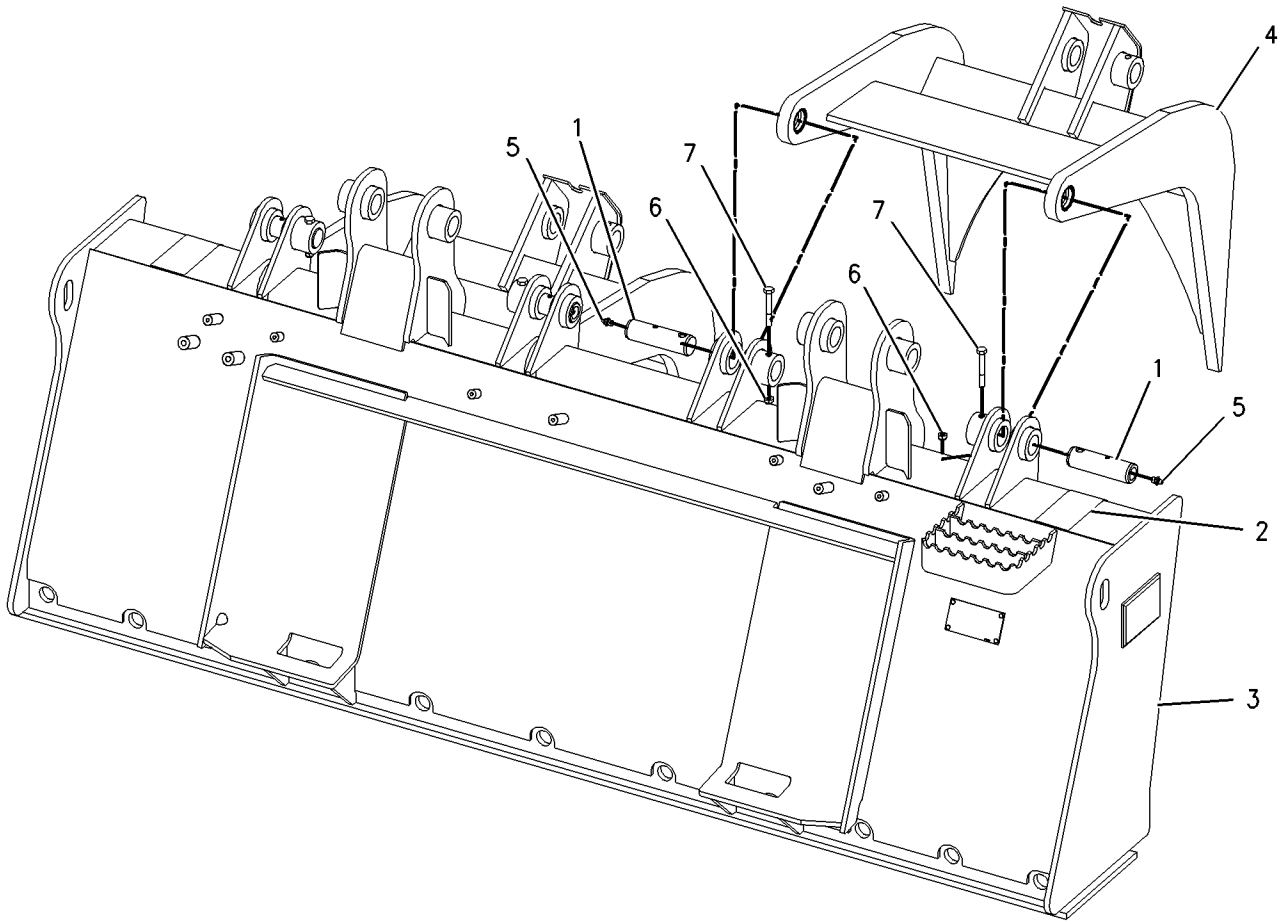

GRAPHIC #1 **<END>** g00978822

163-4811 FORK GP-GRAPPLE

S/N: SCH1-UP; BXM1-UP
INDUSTRIAL
PART OF 163-4812 FORK AR-GRAPPLE
AN ATTACHMENT

SMCS-6705 **i01886374**

NOTE	REF NO	GRAPHIC REF	PART NUMBER	QTY	PART NAME 1 2 3 4 5 6 (PRODUCT LEVEL)	SEE PAGE
	1	1	**157-0940**	4	PIN	
	2	1	**164-9989**	2	FILM-WARNING (IMPALED POINT)	
	3	1	**169-3568**	1	FORK AS	
		1	**8Y-4489**	2	BOSS-THREADED	
	4	1	**222-7467**	2	FORK AS	
					(EACH INCLUDES)	
		1	**158-5648**	2	BEARING-SLEEVE	
	5	1	**3B-8489**	4	FITTING-GREASE	
M	6	1	**6V-9189**	4	LOCKNUT (M8X1.25-THD)	
M	7	1	**8T-6869**	4	BOLT (M8X1.25X60-MM)	

M-METRIC PART

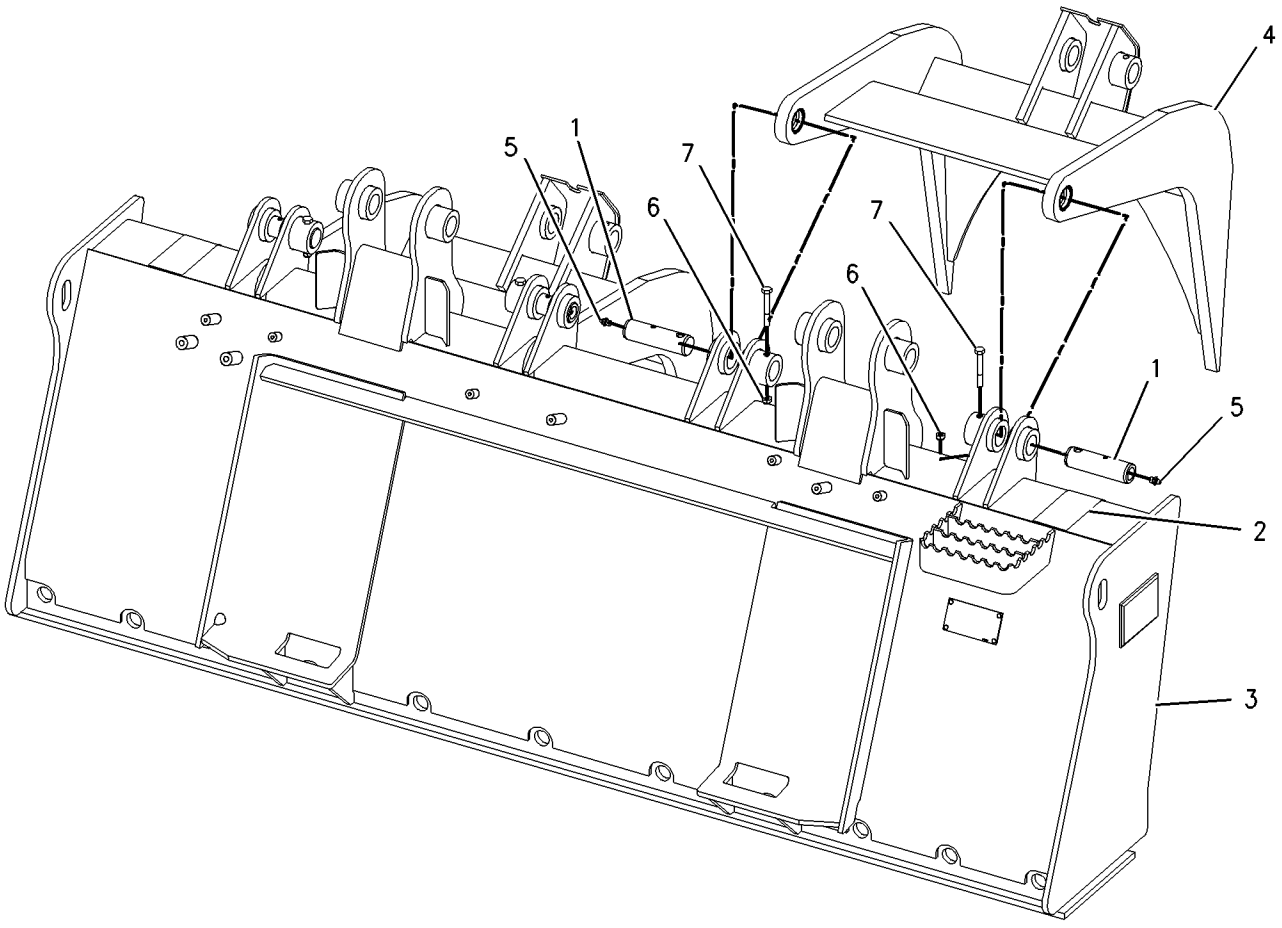

GRAPHIC #1 **<END>** g00978822

164-9614 FORK GP-GRAPPLE

S/N: MJH1-UP; SCH1-UP; RLL1-UP; BXM1-UP
INDUSTRIAL
PART OF 162-8139, 163-4812 FORK AR-GRAPPLE
AN ATTACHMENT

SMCS-6705 **i01075196**

NOTE	REF NO	GRAPHIC REF	PART NUMBER	QTY	PART NAME 1 2 3 4 5 6 (PRODUCT LEVEL)	SEE PAGE
	1	1	**3E-4370**	1	PIN-SPRING	
	2	1	**162-8154**	1	TINE	

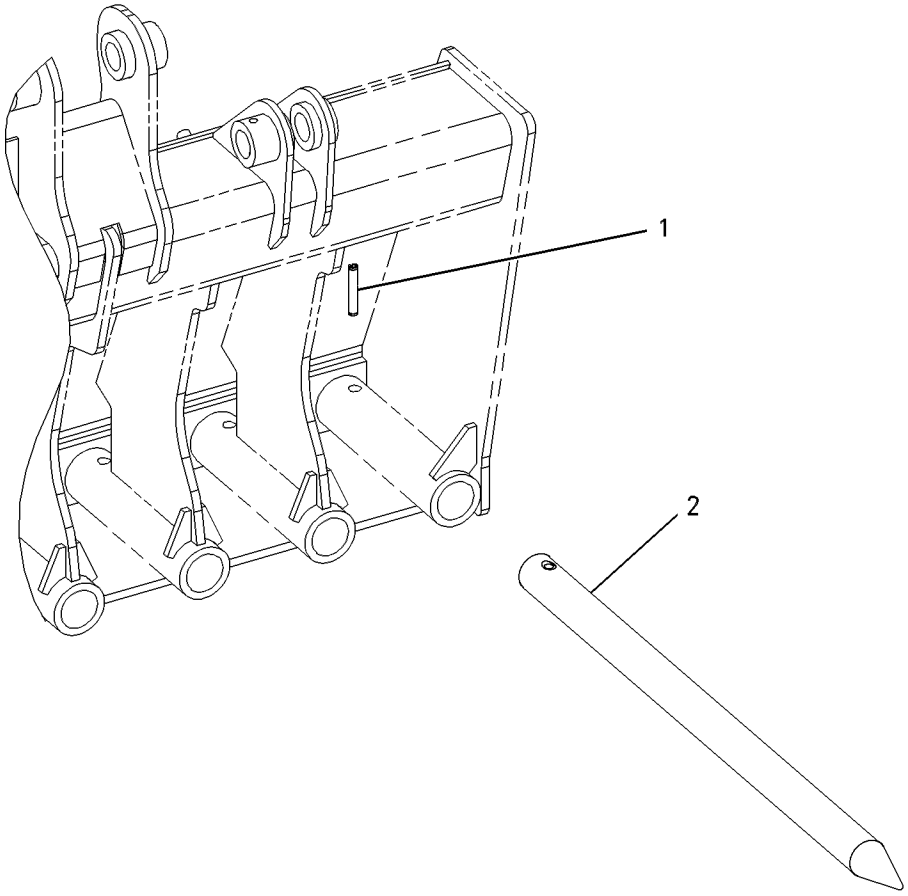

GRAPHIC #1 **<END>** g00559648

WORK TOOLS

243-0001 FORK GP-PALLET—KIT

S/N: MJH1-UP; SCH1-UP; RLL1-UP; BXM1-UP
36-IN
AN ATTACHMENT

SMCS-6136 **i01964024**

NOTE	PART NUMBER	QTY	PART NAME 1 2 3 4 5 6 (PRODUCT LEVEL)	SEE PAGE
	195-6943	12	FORK GP-PALLET (36 IN)	
			(EACH INCLUDES)	
	221-3429	1	POSITIONER GP-FORK	

<END>

243-0002 FORK GP-PALLET—KIT

S/N: MJH1-UP; SCH1-UP; RLL1-UP; BXM1-UP
42-IN
AN ATTACHMENT

SMCS-6136 **i01964030**

NOTE	PART NUMBER	QTY	PART NAME 1 2 3 4 5 6 (PRODUCT LEVEL)	SEE PAGE
	195-6942	12	FORK GP-PALLET (42 IN)	
			(EACH INCLUDES)	
	221-3429	1	POSITIONER GP-FORK	

<END>

243-0003 FORK GP-PALLET—KIT

S/N: MJH1-UP; SCH1-UP; RLL1-UP; BXM1-UP
48-IN
AN ATTACHMENT

SMCS-6136 **i01964031**

NOTE	PART NUMBER	QTY	PART NAME 1 2 3 4 5 6 (PRODUCT LEVEL)	SEE PAGE
	195-8545	12	FORK GP-PALLET (48 IN)	
			(EACH INCLUDES)	
	221-3429	1	POSITIONER GP-FORK	

<END>

165-8732 FORK GP-UTILITY

S/N: MJH1-UP; SCH1-UP; RLL1-UP; BXM1-UP
85.0-CM (33.4-IN)
PART OF 165-8736, 165-8737, 252-8025, 252-8026 FORK GP-UTILITY
AN ATTACHMENT

SMCS-6458 **i01204324**

NOTE	REF NO	GRAPHIC REF	PART NUMBER	QTY	PART NAME 1 2 3 4 5 6 (PRODUCT LEVEL)	SEE PAGE
	1	1	**9R-2959**	1	CLIP	
	2	1	**166-4041**	1	TINE	

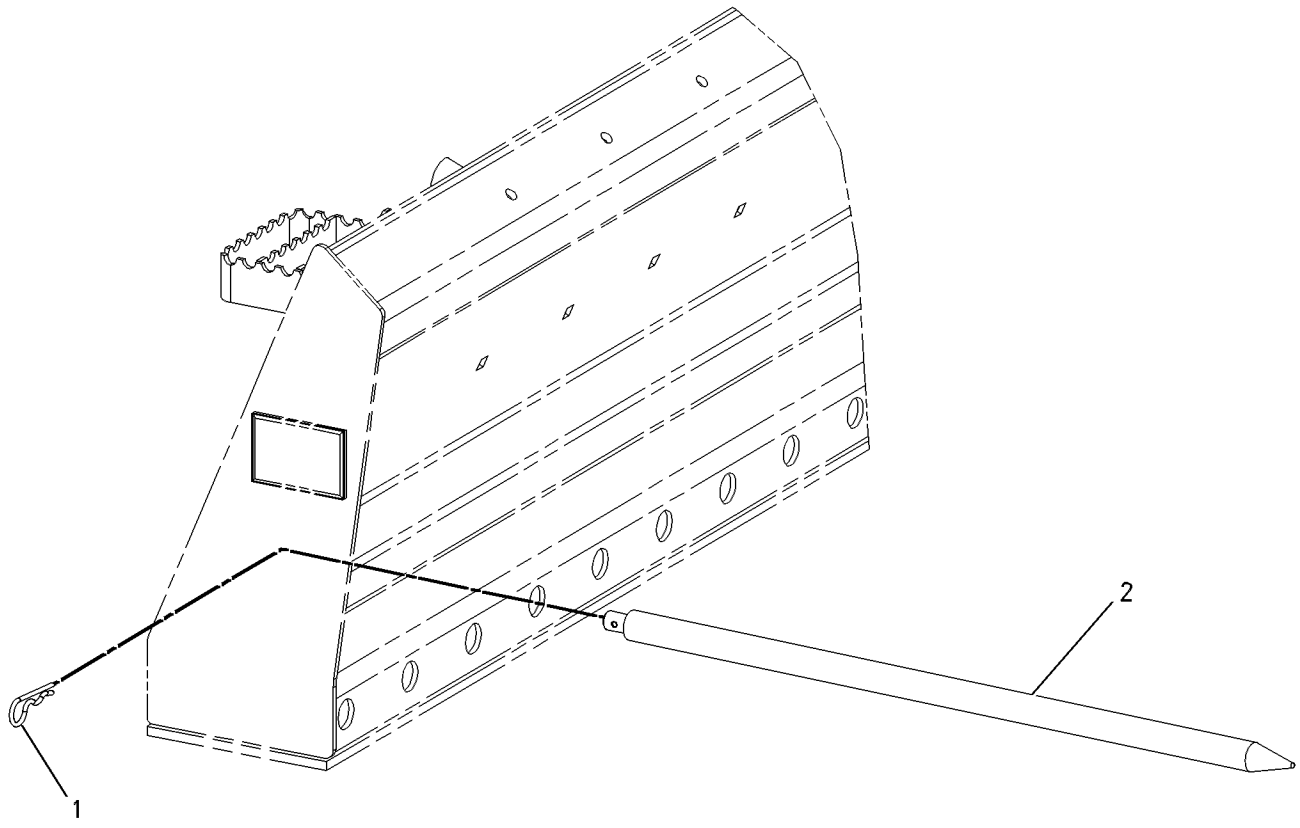

GRAPHIC #1 **<END>** g00639778

165-8736 FORK GP-UTILITY

S/N: MJH1-99999; SCH1-99999; RLL1-99999; BXM1-99999
167.64-CM (66-IN)
PART OF 165-8727 FORK AR-GRAPPLE
AN ATTACHMENT

SMCS-6458 **i02469326**

NOTE	REF NO	GRAPHIC REF	PART NUMBER	QTY	PART NAME 1 2 3 4 5 6 (PRODUCT LEVEL)	SEE PAGE
	1	1	**164-9989**	2	FILM-WARNING (IMPALED POINT)	
Y	2	1	*165-8732*	7	FORK GP-UTILITY	623

Y-SEPARATE ILLUSTRATION

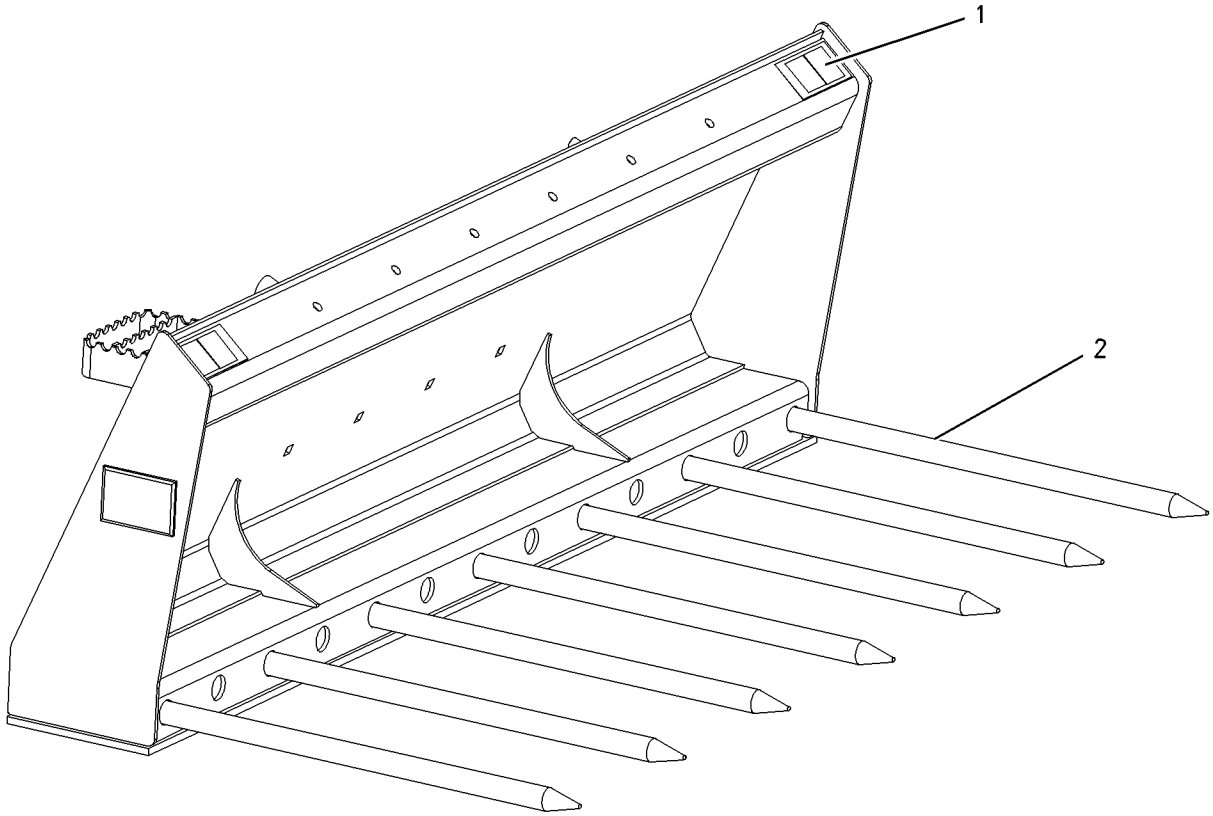

GRAPHIC #1 **<END>** g00844429

165-8737 FORK GP-UTILITY

S/N: SCH1-99999; BXM1-99999
182.88-CM (72-IN)
PART OF 165-8728 FORK AR-GRAPPLE
AN ATTACHMENT

SMCS-6458 **i02253409**

NOTE	REF NO	GRAPHIC REF	PART NUMBER	QTY	PART NAME 1 2 3 4 5 6 (PRODUCT LEVEL)	SEE PAGE
	1	1	**164-9989**	2	FILM-WARNING (IMPALED POINT)	
Y	2	1	*165-8732*	9	FORK GP-UTILITY	623

Y-SEPARATE ILLUSTRATION

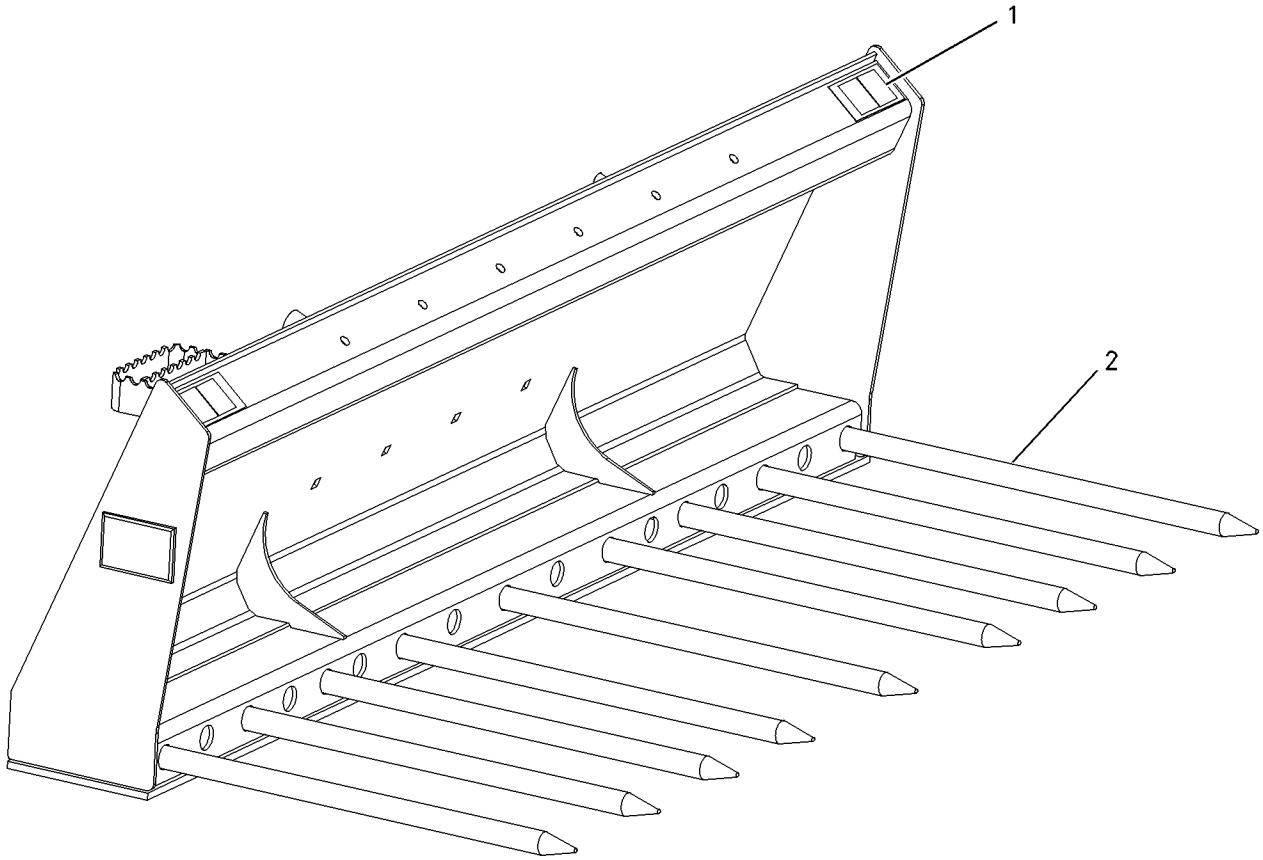

GRAPHIC #1 **<END>** g00844486

252-8025 FORK GP-UTILITY

S/N: MJH1-UP; SCH1-UP; RLL1-UP; BXM1-UP
167.64-CM(66-IN)
PART OF 165-8727 FORK AR-GRAPPLE
AN ATTACHMENT

SMCS-6458 **i02088271**

NOTE	REF NO	GRAPHIC REF	PART NUMBER	QTY	PART NAME 1 2 3 4 5 6 (PRODUCT LEVEL)	SEE PAGE
	1	1	**164-9989**	2	FILM-WARNING (IMPALED POINT)	
Y	2	1	*165-8732*	7	FORK GP-UTILITY	623

Y-SEPARATE ILLUSTRATION

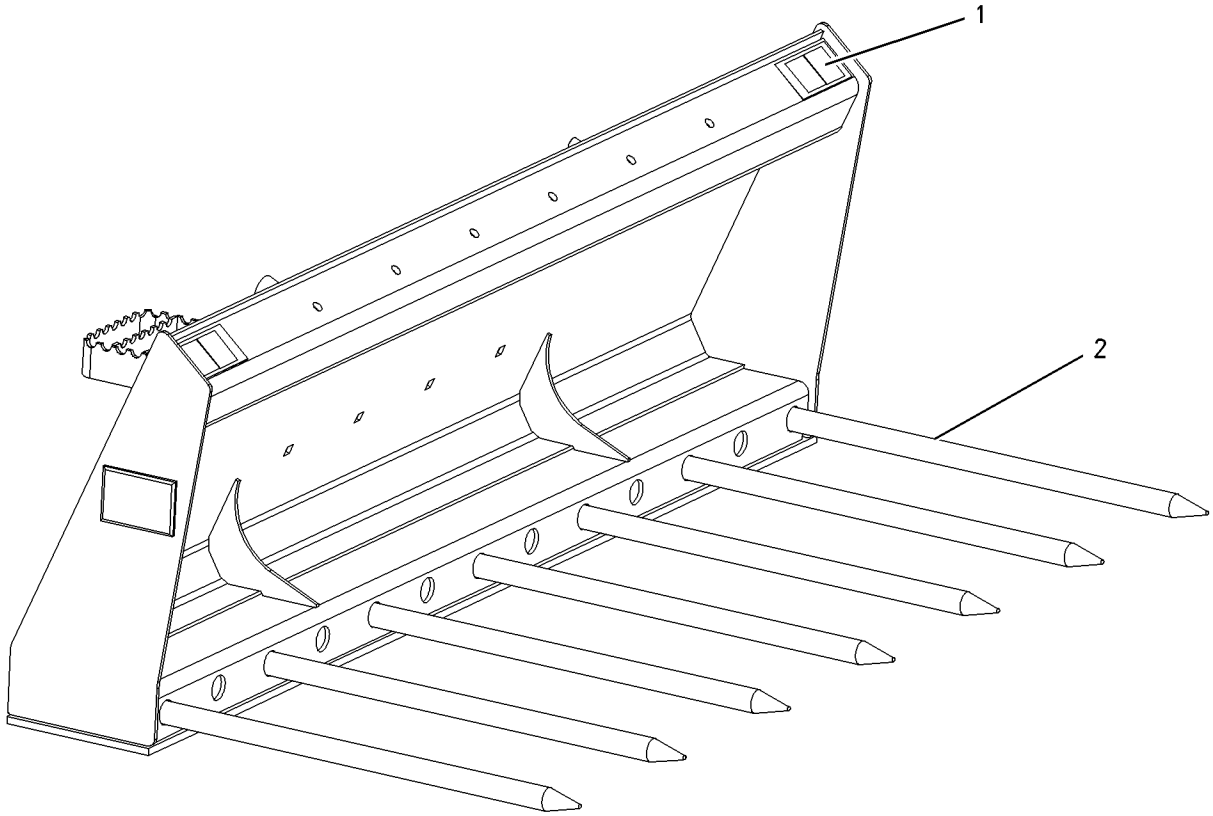

GRAPHIC #1 **<END>** g00844429

252-8026 FORK GP-UTILITY

S/N: SCH1-UP; BXM1-UP
182.88-CM(72-IN)
PART OF 165-8728 FORK AR-GRAPPLE
AN ATTACHMENT

SMCS-6458 **i02088290**

NOTE	REF NO	GRAPHIC REF	PART NUMBER	QTY	PART NAME 1 2 3 4 5 6 (PRODUCT LEVEL)	SEE PAGE
	1	1	**164-9989**	2	FILM-WARNING (IMPALED POINT)	
Y	2	1	*165-8732*	9	FORK GP-UTILITY	623

Y-SEPARATE ILLUSTRATION

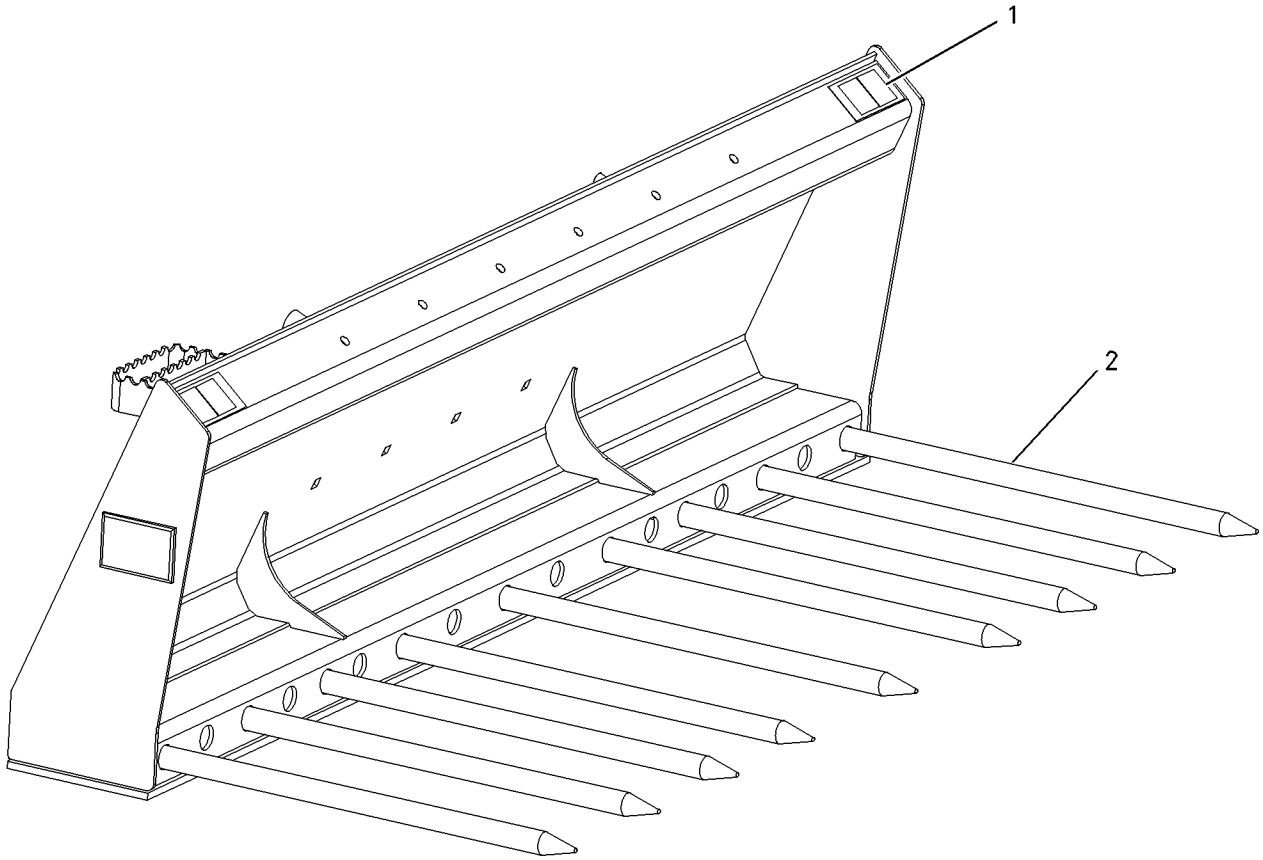

GRAPHIC #1 **<END>** g00844486

165-8734 GRAPPLE & CYLINDER GP-UTILITY

S/N: MJH1-UP; SCH1-UP; RLL1-UP; BXM1-UP
PART OF 165-8779, 165-8780 BUCKET AR-GRAPPLE, 165-8727, 165-8728 FORK AR-GRAPPLE
FOR USE WITH 165-8777—PAGE 593, 165-8778—PAGE 594, 165-8836—PAGE 595 AN ATTACHMENT

SMCS-5057, 5555, 6307 **i02016625**

NOTE	REF NO	GRAPHIC REF	PART NUMBER	QTY	PART NAME 1 2 3 4 5 6 (PRODUCT LEVEL)	SEE PAGE
Y	1	1	**164-9295**	1	CYLINDER GP-GRAPPLE	362
Y	2	1	*165-8731*	1	MOUNTING GP-CYLINDER	511
Y	3	1	*165-8733*	1	LINES GP-GRAPPLE	402
Y	4	1	*165-8740*	1	GRAPPLE GP-UTILITY	630
M	5	1	**170-5836**	4	BOLT (M12X1.75X35MM)	
	6	1	*173-7407*	1	STOP GP-GRAPPLE	
B	6A	1	**8Y-7386**	1	SPACER (12.5X17.1X16.5-MM THK)	
	6B	1	**2S-6408**	2	WASHER-RETAINING (0.531X3.25X0.438-IN THK)	
	6C	1	**8T-4223**	1	WASHER-HARD (13.5X25.5X3-MM THK)	
M	6D	1	**8T-4910**	1	BOLT (M12X1.75X60-MM)	
	6E	1	**8Y-7385**	1	STOP	
	7	1	**239-5029**	1	GUARD	
	8	1	**5P-1076**	4	WASHER-HARD (13.5X30X4-MM THK)	
M	9	1	**8T-4139**	6	BOLT (M12X1.75X30-MM)	
	10	1	**8T-4223**	6	WASHER-HARD (13.5X25.5X3-MM THK)	
M	11	1	**8T-4244**	10	NUT (M12X1.75-THD)	

B-USE AS REQUIRED
M-METRIC PART
Y-SEPARATE ILLUSTRATION

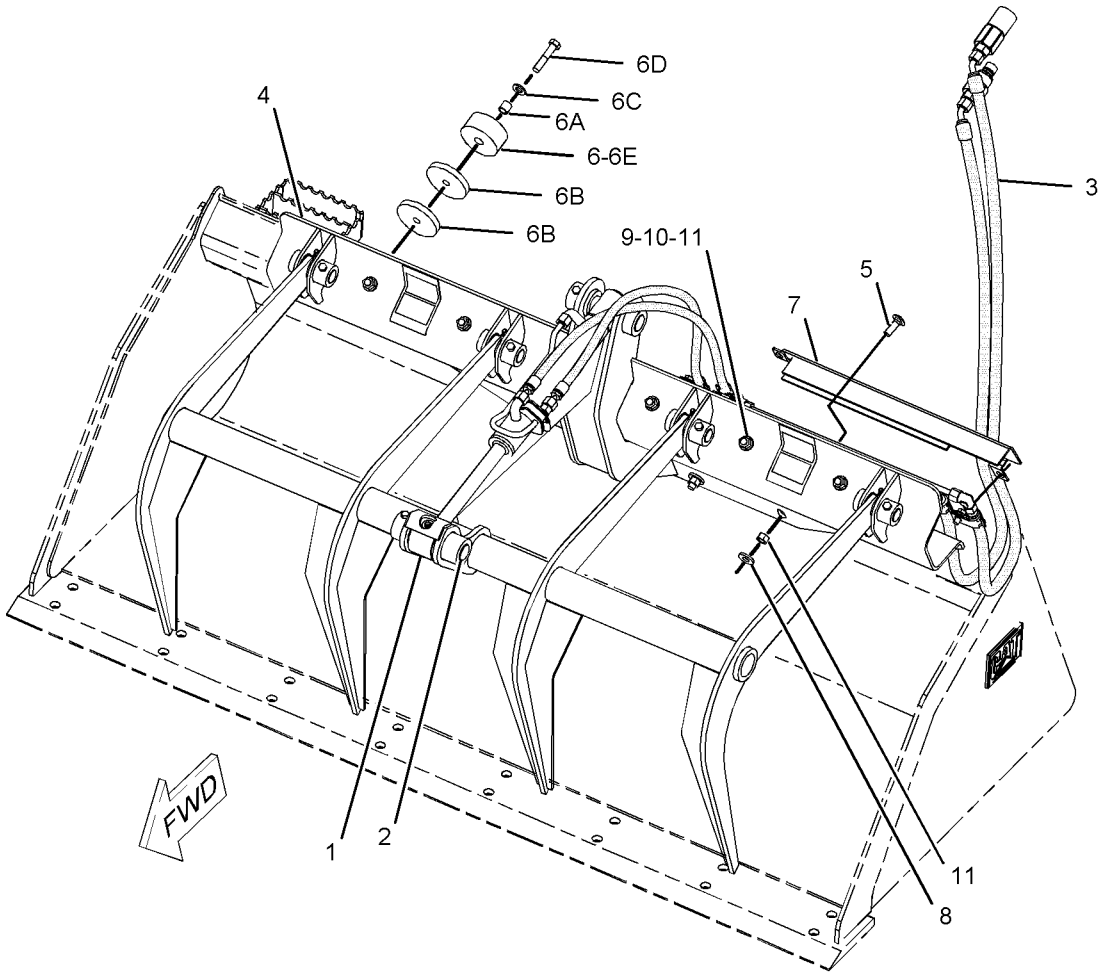

GRAPHIC #1 **<END>** g01028631

165-8740 GRAPPLE GP-UTILITY

S/N: MJH1-UP; SCH1-UP; RLL1-UP; BXM1-UP
PART OF 165-8734 GRAPPLE & CYLINDER GP-UTILITY
AN ATTACHMENT

SMCS-6307 **i01905762**

NOTE	REF NO	GRAPHIC REF	PART NUMBER	QTY	PART NAME 1 2 3 4 5 6 (PRODUCT LEVEL)	SEE PAGE
	1	1	**3B-8488**	4	FITTING-GREASE (1/8-27 THD)	
	2	1	**159-5411**	4	PIN	
	3	1	**165-8743**	1	ARM AS	
	4	1	**169-3569**	1	BRACKET AS	
		1	**159-8035**	2	FILM-WARNING (CRUSH POINT)	
M	5	1	**6V-9189**	4	LOCKNUT (M8X1.25 THD)	
M	6	1	**8T-6912**	4	BOLT (M8X1.25X50MM)	

M-METRIC PART

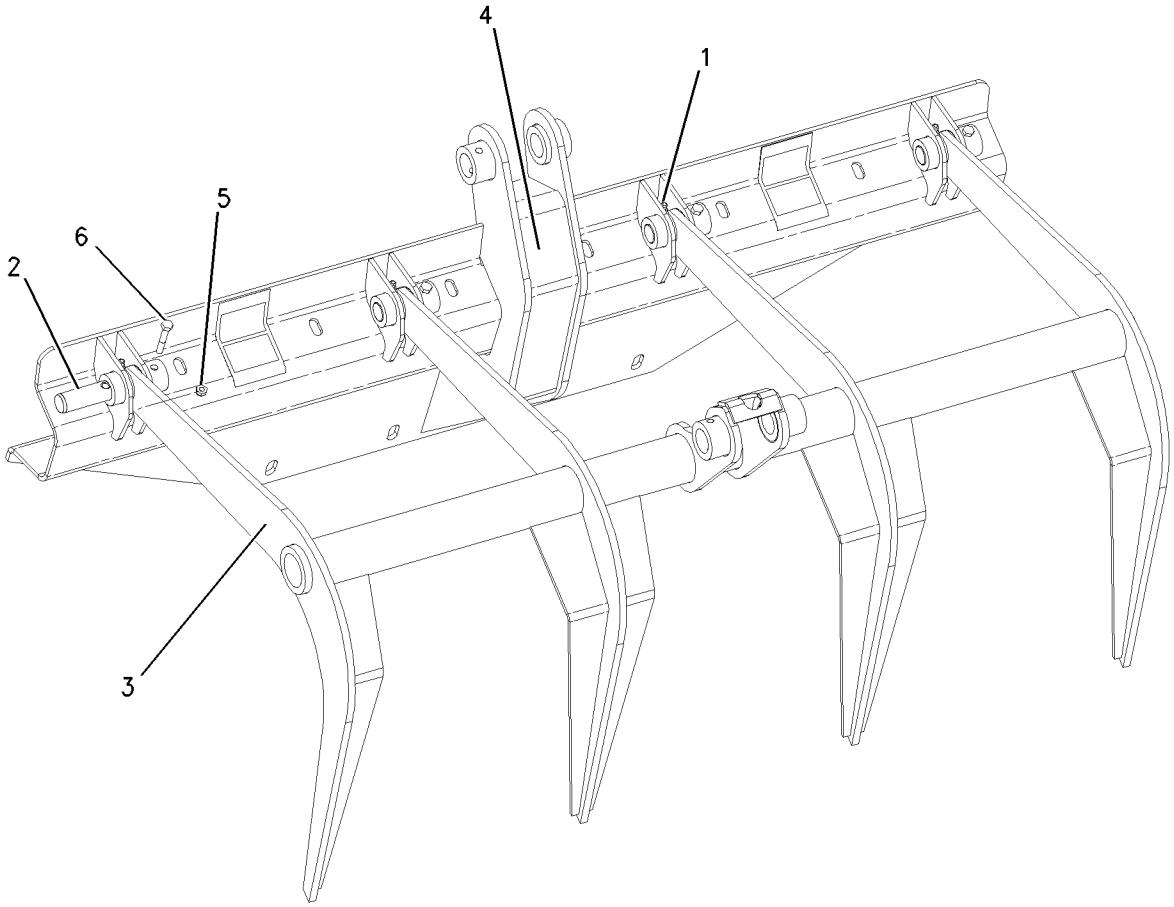

GRAPHIC #1 **<END>** g00777325

WORK TOOLS

215-3960 HANDLE & PIN GP-COUPLER–LH

S/N: MJH1-UP; SCH1-UP; RLL1-UP; BXM1-UP
PART OF 206-3820 COUPLER GP-QUICK
AN ATTACHMENT

i01928985

NOTE	REF NO	GRAPHIC REF	PART NUMBER	QTY	PART NAME 1 2 3 4 5 6 (PRODUCT LEVEL)	SEE PAGE
	1	1	**166-2560**	1	PIN-SPRING	
	2	1	**192-2642**	1	PIN	
Y	3	1	*215-3958*	1	HANDLE GP-COUPLER (LH)	633

Y-SEPARATE ILLUSTRATION

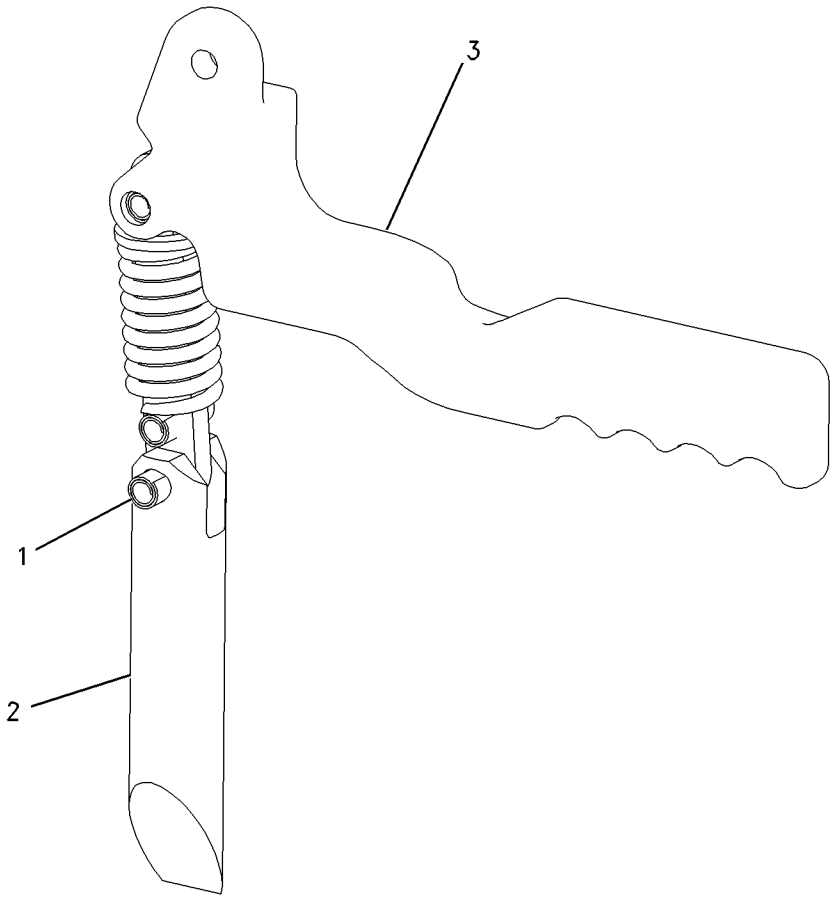

GRAPHIC #1 **<END>** g00861964

215-3961 HANDLE & PIN GP-COUPLER–RH

S/N: MJH1-UP; SCH1-UP; RLL1-UP; BXM1-UP
PART OF 206-3820 COUPLER GP-QUICK
AN ATTACHMENT

i01928984

NOTE	REF NO	GRAPHIC REF	PART NUMBER	QTY	PART NAME 1 2 3 4 5 6 (PRODUCT LEVEL)	SEE PAGE
	1	1	**166-2560**	1	PIN-SPRING	
	2	1	**192-2642**	1	PIN	
Y	3	1	*215-3959*	1	HANDLE GP-COUPLER (RH)	634

Y-SEPARATE ILLUSTRATION

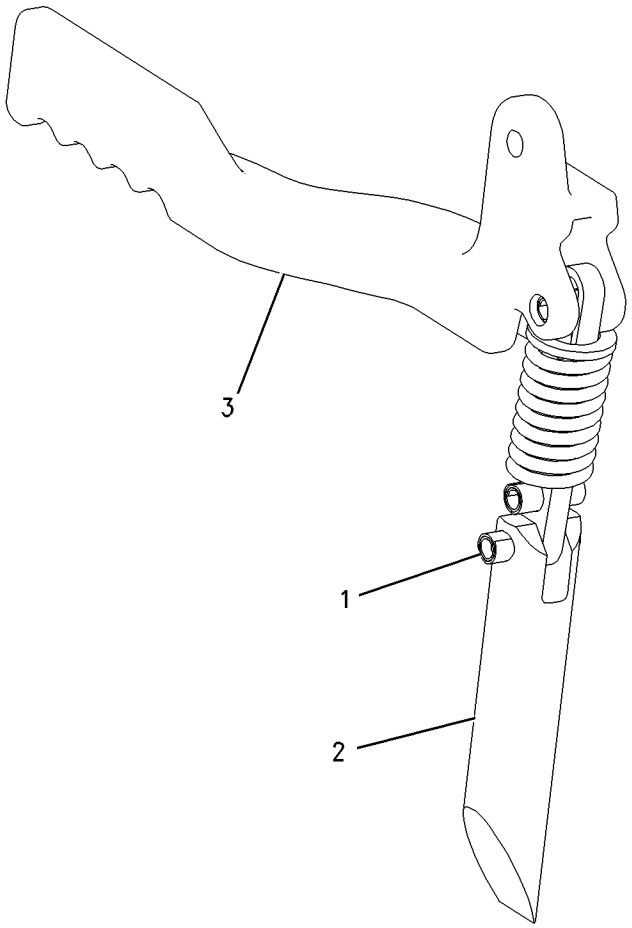

GRAPHIC #1 **<END>** g00861970

215-3958 HANDLE GP-COUPLER–LH

S/N: MJH1-UP; SCH1-UP; RLL1-UP; BXM1-UP
PART OF 215-3960 HANDLE & PIN GP-COUPLER
AN ATTACHMENT

i02290613

NOTE	REF NO	GRAPHIC REF	PART NUMBER	QTY	PART NAME 1 2 3 4 5 6 (PRODUCT LEVEL)	SEE PAGE
	1	1	**192-2637**	1	PLATE	
	2	1	**238-7693**	1	SPRING	
	3	1	**192-2648**	1	HANDLE	
	4	1	**195-6754**	2	PIN-SPRING	
	5	1	**8T-4123**	2	WASHER-PLATED (22X35X3.5-MM THK)	

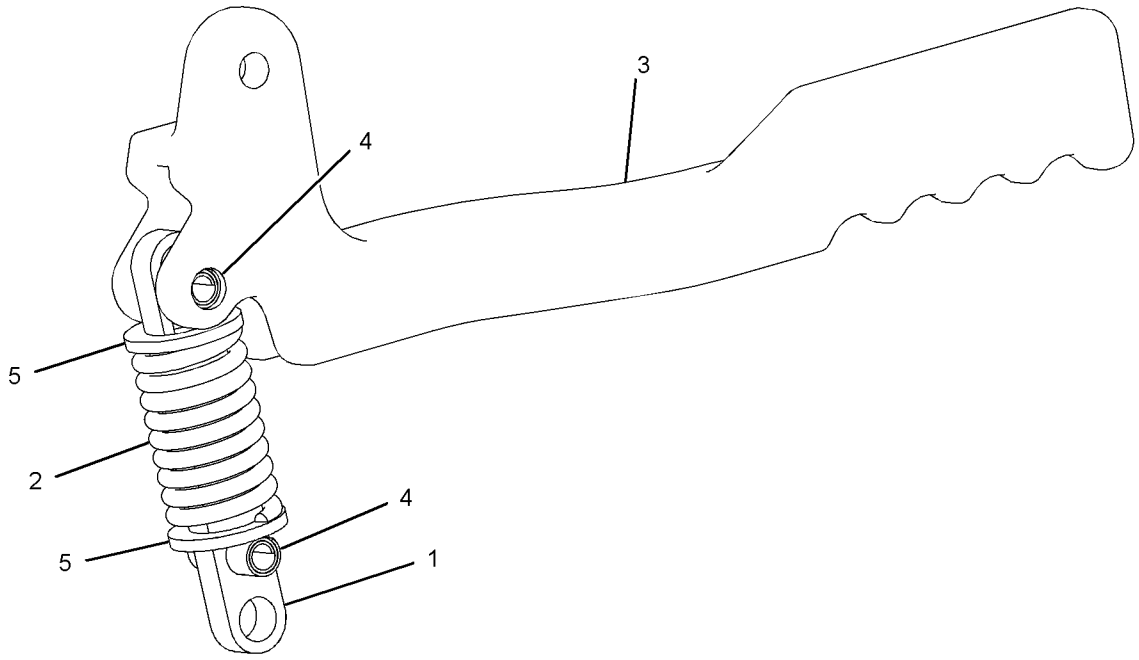

GRAPHIC #1 **<END>** g01154451

215-3959 HANDLE GP-COUPLER–RH

S/N: MJH1-UP; SCH1-UP; RLL1-UP; BXM1-UP
PART OF 215-3961 HANDLE & PIN GP-COUPLER
AN ATTACHMENT

i02179181

NOTE	REF NO	GRAPHIC REF	PART NUMBER	QTY	PART NAME 1 2 3 4 5 6 (PRODUCT LEVEL)	SEE PAGE
	1	1	**192-2637**	1	PLATE	
	2	1	**192-2653**	1	HANDLE	
	3	1	**195-6754**	2	PIN-SPRING	
	4	1	**238-7693**	1	SPRING	
	5	1	**8T-4123**	2	WASHER-PLATED (22X35X3.5-MM THK)	

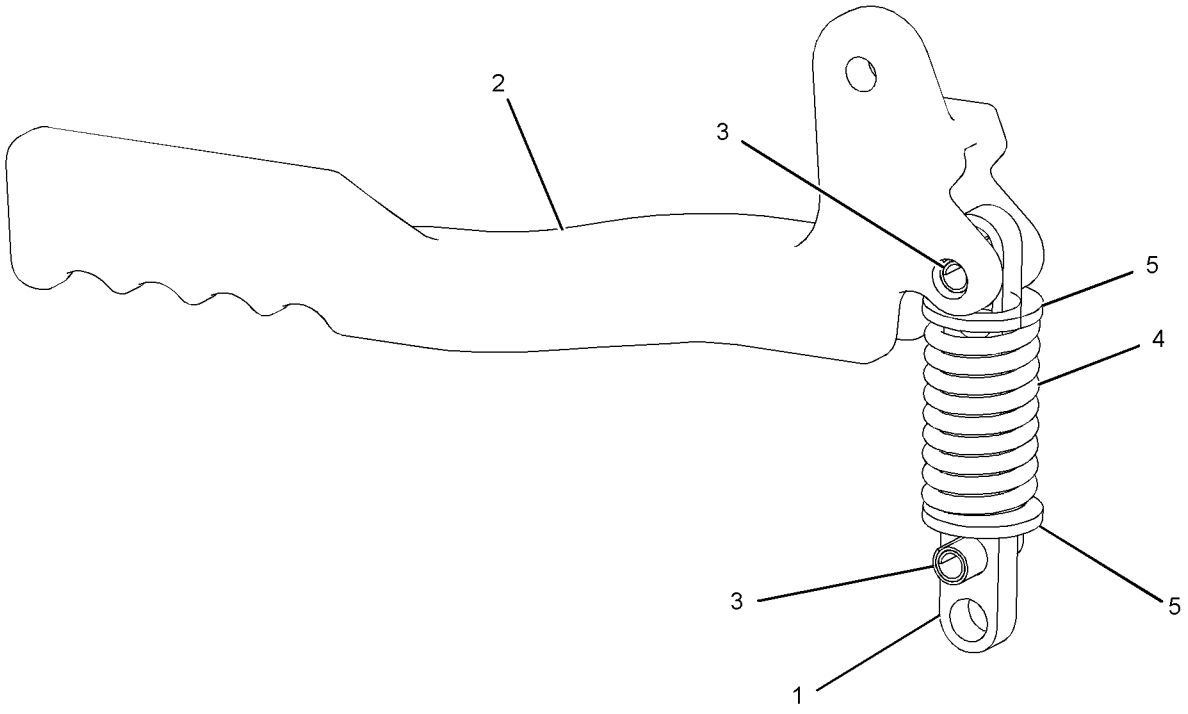

GRAPHIC #1 **<END>** g01104663

177-9152 KIT-ROADING PLATE & MOUNTING–BUCKET

S/N: MJH1-UP; SCH1-UP; RLL1-UP; BXM1-UP
PART OF 261-6187, 278-1212, 278-1213, 278-1224, 278-1225, 278-5369, 278-5370, 278-5408, 278-5409, 278-5413, 278-5414, 278-5441, 278-5442 CONVERSION AR-MACHINE, 233-5672, 233-5673, 233-5675, 233-5676, 233-5682, 233-5683, 233-5685, 233-5686, 257-5716, 257-5717, 257-5721, 257-5722 CONVERSION AR-ROADING
AN ATTACHMENT

SMCS-7405, 7557 **i01905397**

NOTE	REF NO	GRAPHIC REF	PART NUMBER	QTY	PART NAME 1 2 3 4 5 6 (PRODUCT LEVEL)	SEE PAGE
	1	1	**177-9153**	2	PLATE	
Y	2	1	*184-6097*	1	PLATE GP-ROADING (LH)	639
Y	3	1	*184-6098*	1	PLATE GP-ROADING (RH)	640
	4	1	**039-8557**	2	WASHER (13X26X6-MM THK)	
M	5	1	**6V-8949**	4	NUT (M10X1.5-6H THD)	
	6	1	**8T-4121**	8	WASHER-HARD (11X21X2.5-MM THK)	
M	7	1	**8T-4137**	2	BOLT (M10X1.5X20-MM)	
M	8	1	**8T-4186**	2	BOLT (M10X1.5X40-MM)	

M-METRIC PART
Y-SEPARATE ILLUSTRATION

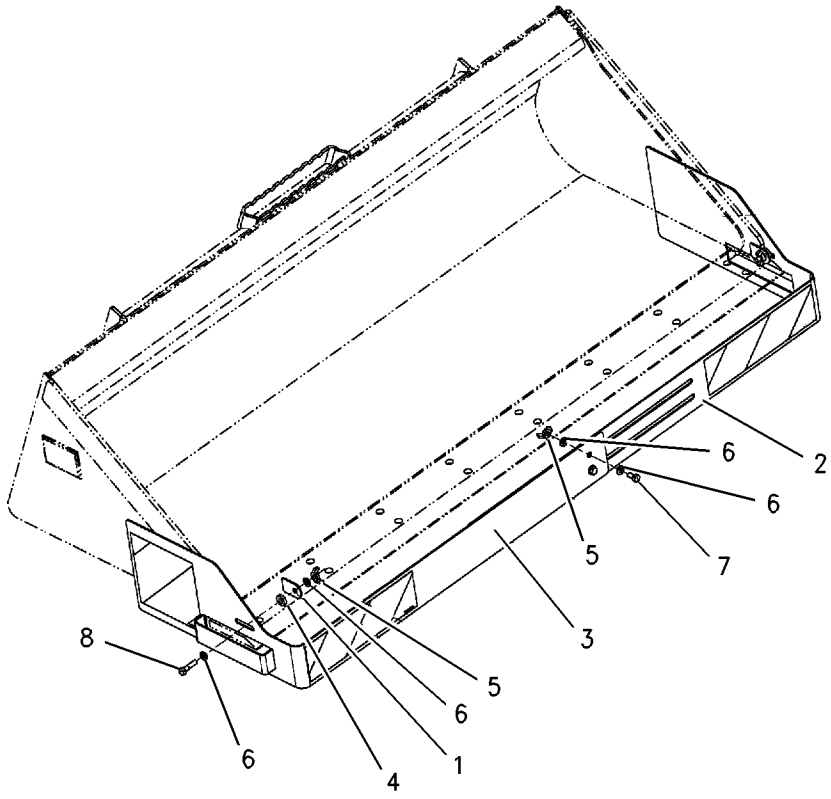

GRAPHIC #1 **<END>** g00778934

215-3957 LINK GP-COUPLER

S/N: MJH1-1832; SCH1-525; RLL1-927; BXM1-812
PART OF 218-6757 CONVERSION AR-QUICK COUPLER, 215-3962, 215-3963 CYLINDER & LINK GP-COUPLER, 218-5957 KIT-QUICK COUPLER CONVERSION
AN ATTACHMENT

SMCS-6129 **i01692249**

NOTE	REF NO	GRAPHIC REF	PART NUMBER	QTY	PART NAME 1 2 3 4 5 6 (PRODUCT LEVEL)	SEE PAGE
	1	1	**192-2637**	1	PLATE	
	2	1	**192-2638**	1	BRACKET	
	3	1	**192-2645**	1	SPRING	
	4	1	**195-6754**	2	PIN-SPRING	
	5	1	**8T-4123**	1	WASHER-PLATED (22X35X3.5-MM THK)	

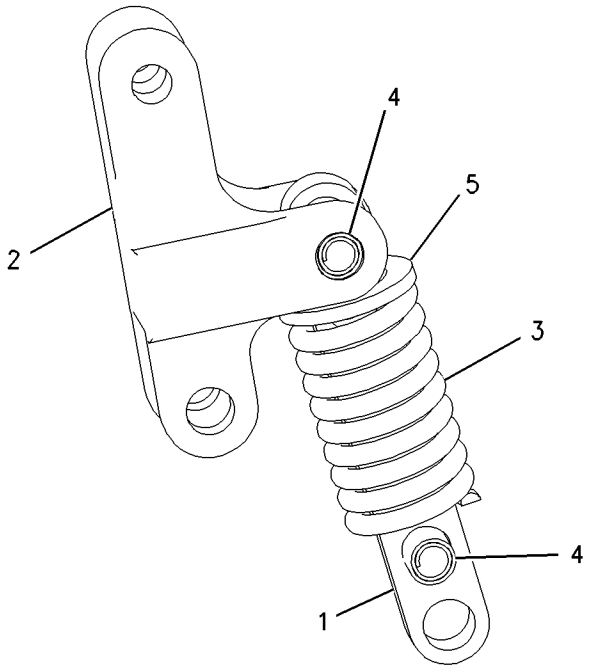

GRAPHIC #1 **<END>** g00871291

215-3957 LINK GP-COUPLER

S/N: MJH1833-UP; SCH526-UP; RLL928-UP; BXM813-UP
PART OF 218-6757 CONVERSION AR-QUICK COUPLER, 215-3962, 215-3963 CYLINDER & LINK GP-COUPLER, 218-5957 KIT-QUICK COUPLER CONVERSION
AN ATTACHMENT

SMCS-6129 **i02232650**

NOTE	REF NO	GRAPHIC REF	PART NUMBER	QTY	PART NAME 1 2 3 4 5 6 (PRODUCT LEVEL)	SEE PAGE
	1	1	**192-2637**	1	PLATE	
	2	1	**192-2638**	1	BRACKET	
C	3	1	**238-7693**	1	SPRING	
	4	1	**195-6754**	2	PIN-SPRING	
C	5	1	**8T-4123**	2	WASHER-PLATED (22X35X3.5-MM THK)	

C-CHANGE FROM PREVIOUS TYPE

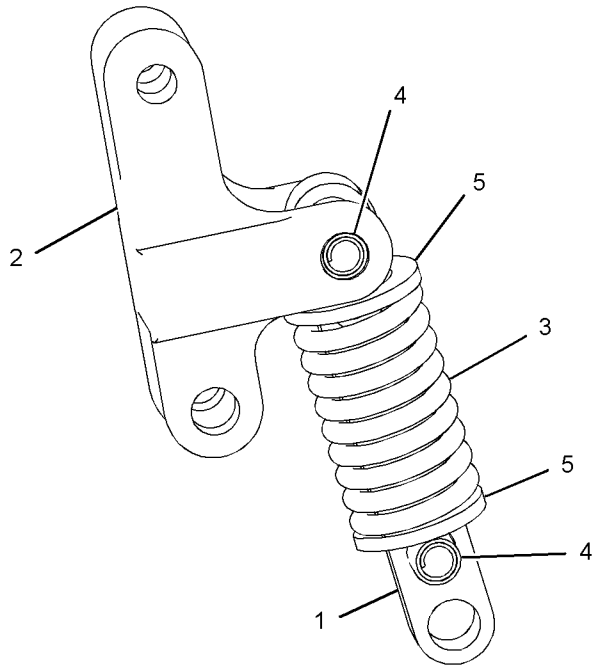

GRAPHIC #1 **<END>** g01130555

175-4238 LOCK GP-QUICK COUPLER

S/N: MJH1-UP; SCH1-UP; RLL1-UP; BXM1-UP
PART OF 261-6187, 278-1212, 278-1213, 278-1224, 278-1225, 278-5369, 278-5370, 278-5408, 278-5409, 278-5413, 278-5414, 278-5441, 278-5442 CONVERSION AR-MACHINE, 233-5672, 233-5673, 233-5675, 233-5676, 233-5682, 233-5683, 233-5685, 233-5686, 257-5716, 257-5717, 257-5721, 257-5722 CONVERSION AR-ROADING
AN ATTACHMENT

SMCS-6129 **i01408856**

NOTE	REF NO	GRAPHIC REF	PART NUMBER	QTY	PART NAME 1 2 3 4 5 6 (PRODUCT LEVEL)	SEE PAGE
	1	1	**9R-5301**	1	PIN-COTTER	
	2	1	**178-2247**	1	PIN	
	3	1	**9X-8257**	1	WASHER (17.5X30X3.5MM THK)	

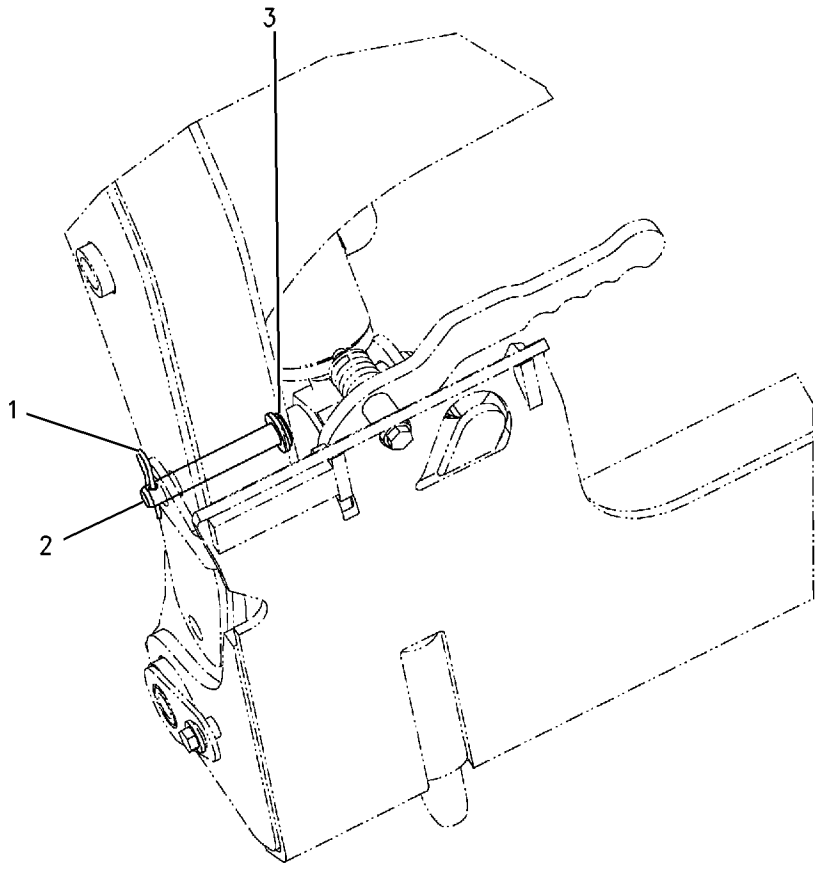

GRAPHIC #1 **<END>** g00741828

184-6097 PLATE GP-ROADING–LH

S/N: MJH1-UP; SCH1-UP; RLL1-UP; BXM1-UP
PART OF 177-9152 KIT-ROADING PLATE & MOUNTING
AN ATTACHMENT

SMCS-7405, 7557 **i02253410**

NOTE	REF NO	GRAPHIC REF	PART NUMBER	QTY	PART NAME 1 2 3 4 5 6 (PRODUCT LEVEL)	SEE PAGE
	1	1	**177-7414**	1	FILM-STRIPE (REFLECTIVE, RED, WHITE)	
	2	1	**177-7415**	1	FILM (REFLECTIVE)	
	3	1	**177-9150**	1	PLATE AS (LH)	

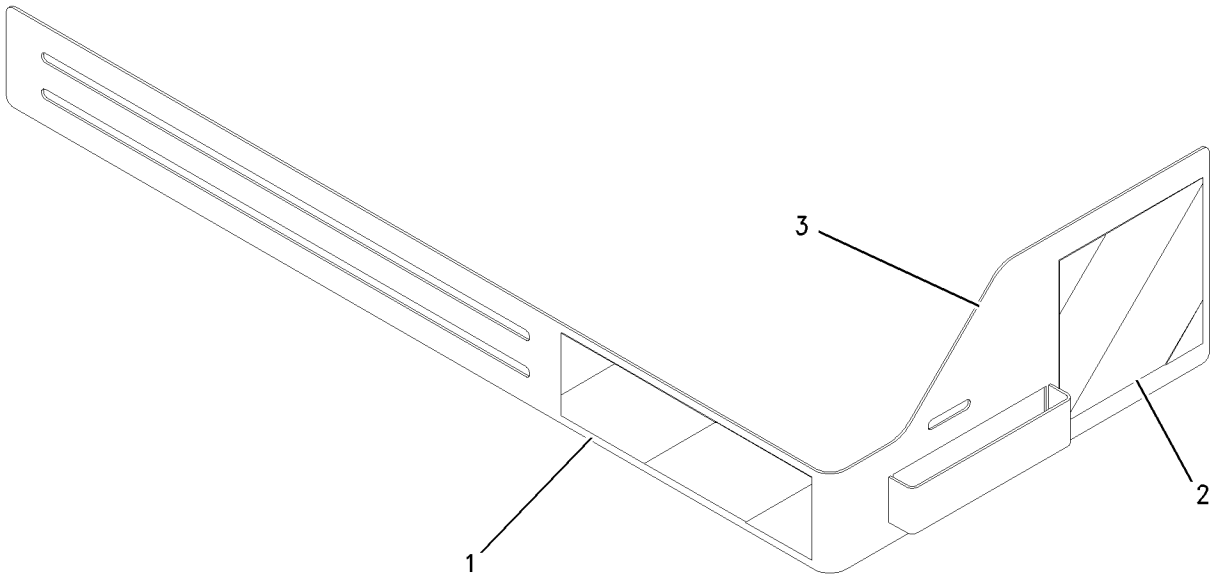

GRAPHIC #1 **<END>** g00995785

184-6098 PLATE GP-ROADING–RH

S/N: MJH1-UP; SCH1-UP; RLL1-UP; BXM1-UP
PART OF 177-9152 KIT-ROADING PLATE & MOUNTING
AN ATTACHMENT

SMCS-7405, 7557 **i02253411**

NOTE	REF NO	GRAPHIC REF	PART NUMBER	QTY	PART NAME 1 2 3 4 5 6 (PRODUCT LEVEL)	SEE PAGE
	1	1	**177-7414**	1	FILM-STRIPE (REFLECTIVE, RED, WHITE)	
	2	1	**177-7415**	1	FILM (REFLECTIVE)	
	3	1	**177-9151**	1	PLATE AS (RH)	

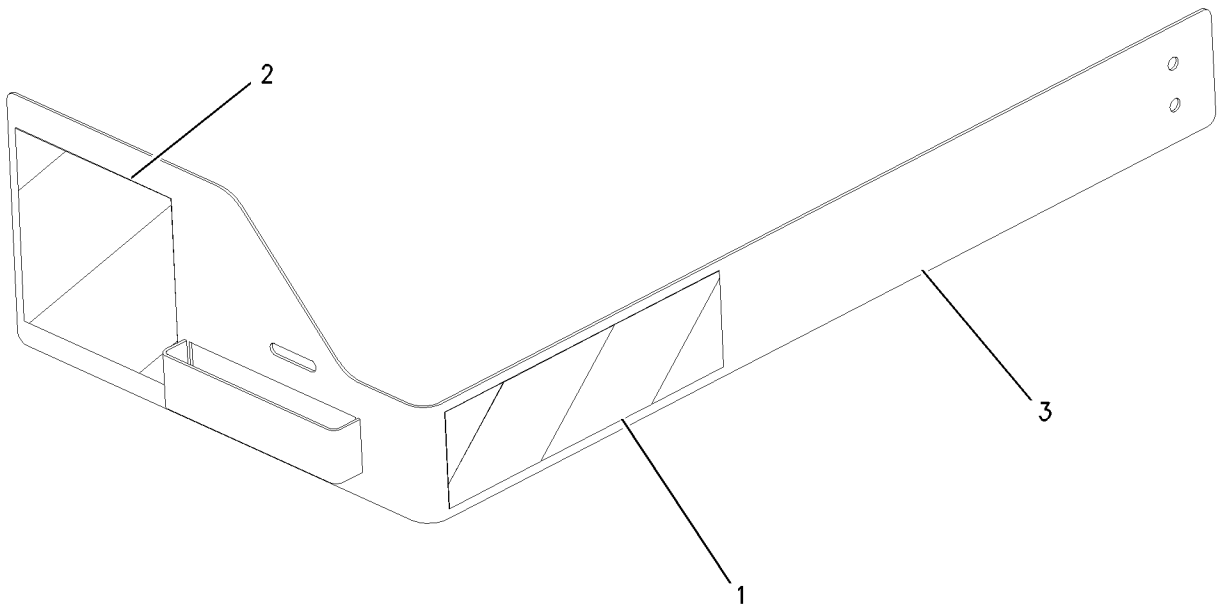

GRAPHIC #1 **<END>** g00995786

161-7290 PUMP GP-DIAPHRAGM

S/N: MJH1-UP; SCH1-UP; RLL1-UP; BXM1-UP
PART OF 233-5992, 233-5993 TANK & MTG GP-WATER
FIELD REPLACEMENT ORDER 247-6742—PAGE 642
AN ATTACHMENT

SMCS-5612 **i02092233**

NOTE	REF NO	GRAPHIC REF	PART NUMBER	QTY	PART NAME 1 2 3 4 5 6 (PRODUCT LEVEL)	SEE PAGE
	1	1	**174-6633**	1	HEAD-PUMP	
	2	1	**160-0663**	1	MOTOR-ELECTRIC	

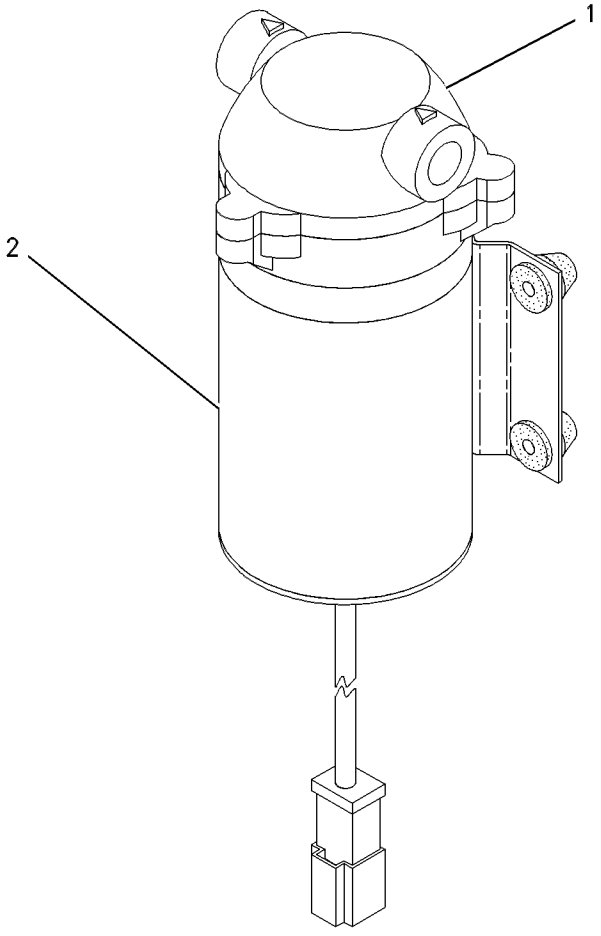

GRAPHIC #1 **<END>** g00652915

247-6742 PUMP GP-DIAPHRAGM

S/N: MJH1-UP; SCH1-UP; RLL1-UP; BXM1-UP
PART OF 166-2550 TANK & MTG GP-WATER
FIELD REPLACEMENT FOR 161-7290—PAGE 641

SMCS-5612 **i02093094**

NOTE	REF NO	GRAPHIC REF	PART NUMBER	QTY	PART NAME 1 2 3 4 5 6 (PRODUCT LEVEL)	SEE PAGE
	1	1	**247-8023**	1	HEAD-PUMP	
	2	1	**160-0663**	1	MOTOR-ELECTRIC	

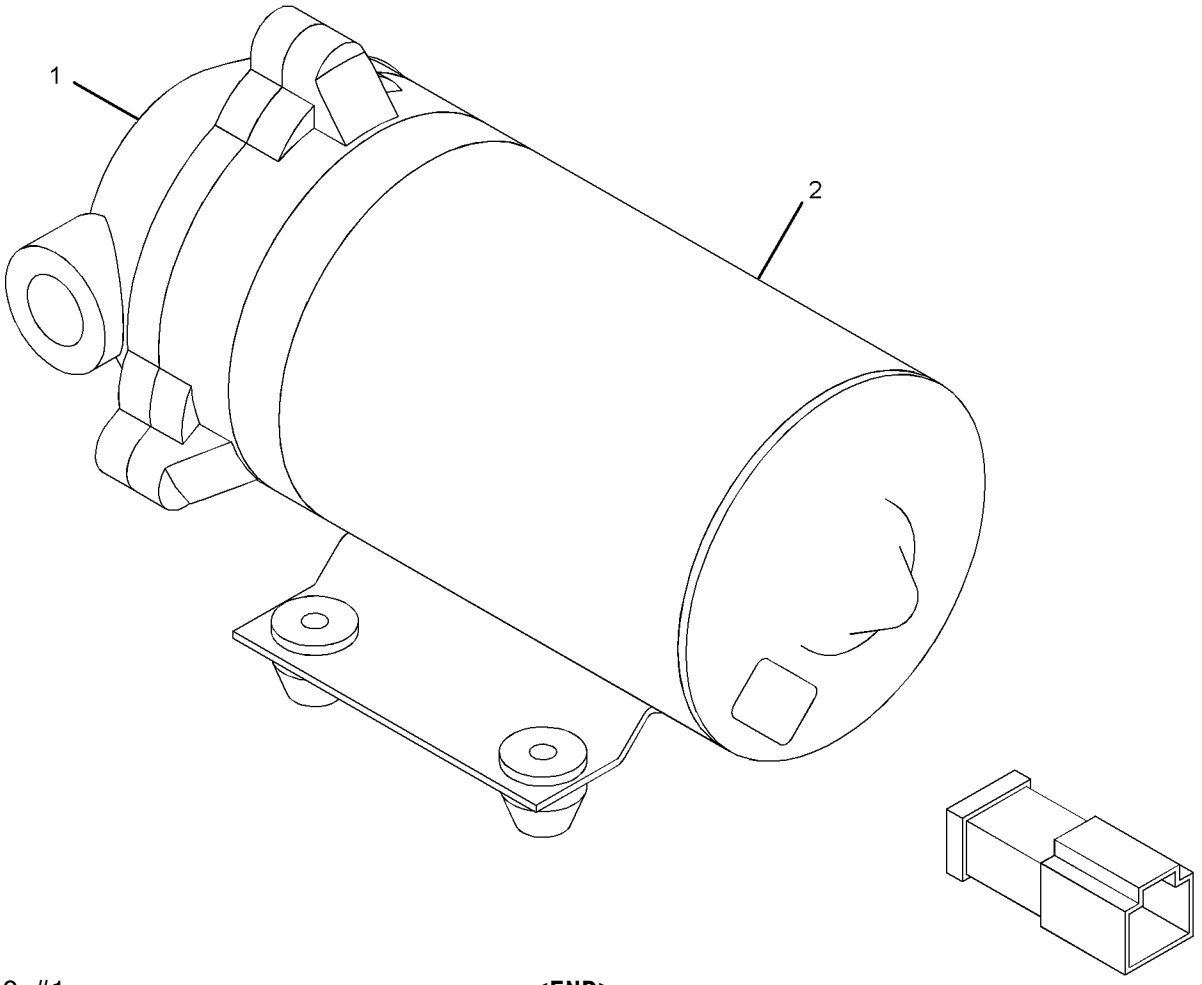

GRAPHIC #1 **<END>** g01071967

177-1983 SPRING GP-BLADE

S/N: MJH1-UP; SCH1-UP; RLL1-UP; BXM1-UP
PART OF 177-1989, 177-1990 BLADE AR
AN ATTACHMENT

SMCS-6060 **i01497986**

NOTE	REF NO	GRAPHIC REF	PART NUMBER	QTY	PART NAME 1 2 3 4 5 6 (PRODUCT LEVEL)	SEE PAGE
	1	1	**177-1941**	4	SPRING	
	2	1	**177-1973**	1	PLATE AS	
M	3	1	**8T-4194**	2	BOLT (M12X1.75X50-MM)	
	4	1	**8T-4223**	4	WASHER-HARD (13.5X25.5X3-MM THK)	
M	5	1	**8T-4244**	2	NUT (M12X1.75-THD)	

M-METRIC PART

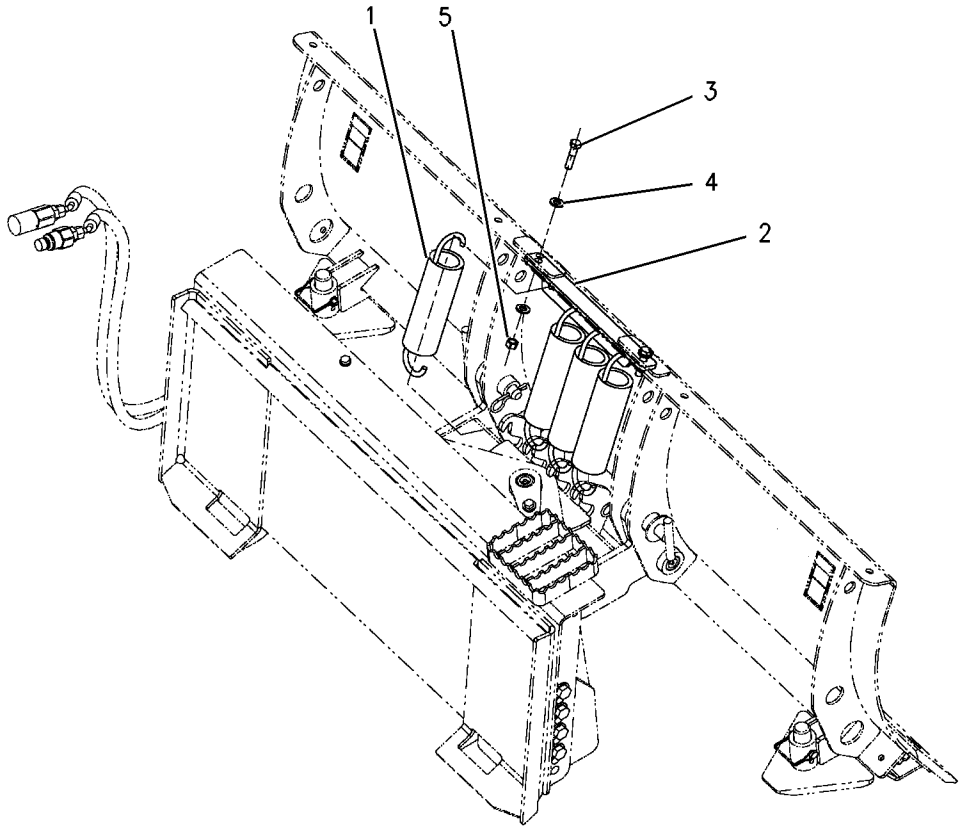

GRAPHIC #1 **<END>** g00777337

188-7733 STEP GP-MATERIAL HANDLING ARM

S/N: MJH1-UP; SCH1-UP; RLL1-UP; BXM1-UP
PART OF 216-8756 ARM GP-MATERIAL HANDLING
AN ATTACHMENT

SMCS-6542 **i01498007**

NOTE	REF NO	GRAPHIC REF	PART NUMBER	QTY	PART NAME 1 2 3 4 5 6 (PRODUCT LEVEL)	SEE PAGE
	1	1	**186-5186**	1	STEP AS	
	2	1	**8T-4121**	2	WASHER-HARD (11X21X2.5-MM THK)	
M	3	1	**8T-4133**	2	NUT (M10X1.5-THD)	
M	4	1	**8T-4136**	2	BOLT (M10X1.5X25-MM)	

M-METRIC PART

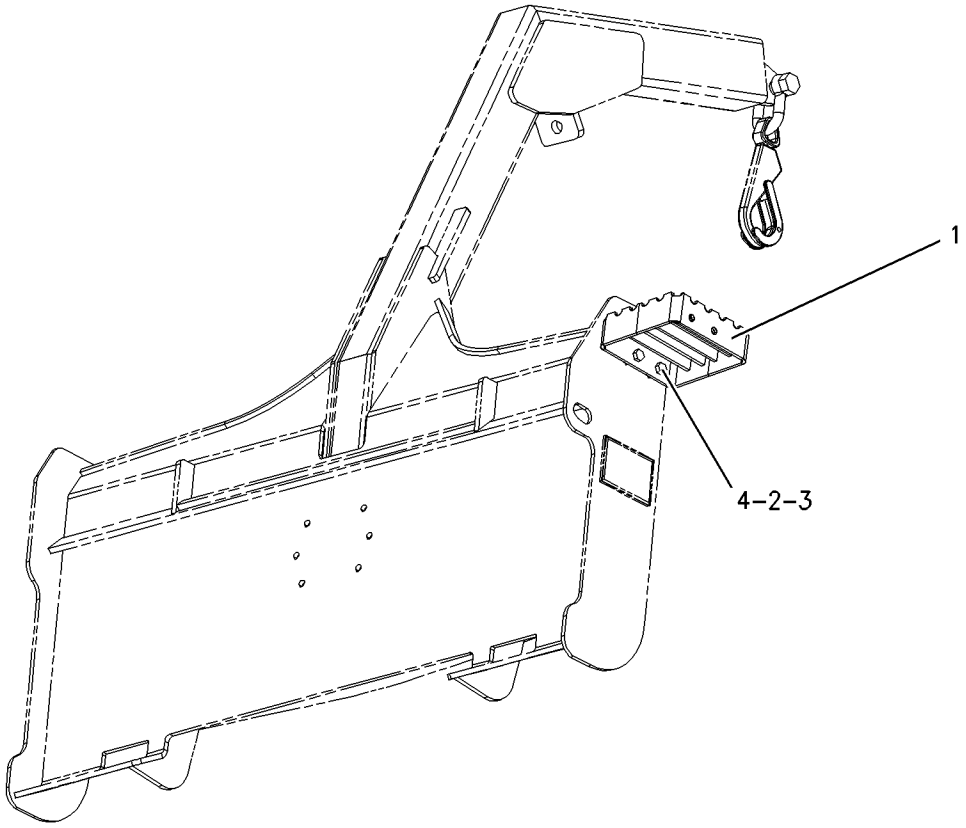

GRAPHIC #1 **<END>** g00777345

WORK TOOLS

116-2001 STRAINER GP-WATER

S/N: MJH1-UP; SCH1-UP; RLL1-UP; BXM1-UP
PART OF 233-5992, 233-5993, 252-0386 TANK & MTG GP-WATER
AN ATTACHMENT

SMCS-5612 **i02016348**

NOTE	REF NO	GRAPHIC REF	PART NUMBER	QTY	PART NAME 1 2 3 4 5 6 (PRODUCT LEVEL)	SEE PAGE
	1	1	**119-1415**	1	GASKET	
	2	1	**119-1414**	1	SCREEN (WATER)	

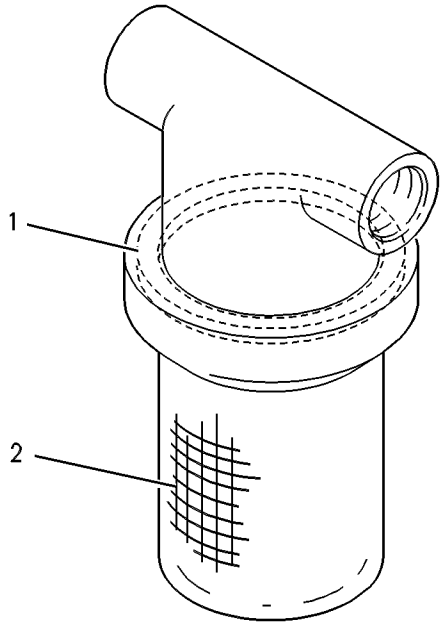

GRAPHIC #1 **<END>** g00293866

WORK TOOLS

233-5992 TANK & MTG GP-WATER

S/N: MJH1-UP; RLL1-UP

AN ATTACHMENT

SMCS-5613 **i02359466**

NOTE	REF NO	GRAPHIC REF	PART NUMBER	QTY	PART NAME 1 2 3 4 5 6 (PRODUCT LEVEL)	SEE PAGE
	1	1	**3B-7255**	1	BUSHING-REDUCING	
	2	1	**3S-2093**	4	STRAP-CABLE	
	3	1	**4E-0724**	1	SPACER (9X20X28-MM THK)	
	4	1	**7X-0495**	1	ADAPTER	
	5	1	**8T-0737**	1	VALVE-SHUTOFF	
Y	6	1	**116-2001**	1	STRAINER GP-WATER	645
Y	7	1	**161-7290**	1	PUMP GP-DIAPHRAGM	641
	8	1	**165-4894**	1	HARNESS AS-WORK TOOL	
		1	**102-8806**	1	KIT-RECEPTACLE (8-PIN)	
					(INCLUDES RECEPTACLE AS & WEDGE)	
		1	**155-2265**	1	KIT-CONNECTING PLUG (8-PIN)	
		1	**155-2270**	1	KIT-CONNECTING PLUG (2-PIN)	
					(EACH KIT INCLUDES PLUG AS, WEDGE & INTERFACE SEAL)	
Y	9	1	**166-2551**	1	TANK GP-WATER	653
I	10	1	**166-2552**	1	HOSE AS	
I	11	1	**166-2554**	1	HOSE AS	
	12	1	**166-2557**	1	PLATE	
	13	1	**166-2558**	1	COUPLING	
	14	1	**166-2559**	2	BRACKET	
	15	1	**218-5847**	1	PLATE	
	16	1	**218-5975**	1	BRACKET AS	
	17	1	**233-5892**	1	PLATE AS	
	18	1	**233-5893**	1	PLATE AS	
	19	1	**003-2143**	1	ELBOW	
	20	1	**067-2551**	2	CLIP	
	21	1	**095-0912**	2	CLIP	
M	22	1	**111-4627**	4	SCREW-MACHINE (M6X1X30-MM)	
	23	1	**119-3859**	6	SCREW-PAN HEAD (10-16X0.75-IN)	
M	24	1	**129-3178**	4	LOCKNUT (M6X1-THD)	
	25	1	**1L-2279**	1	ELBOW	
M	26	1	**5C-7261**	3	NUT (M8X1.25-THD)	
	27	1	**5P-4116**	1	WASHER-HARD (8.8X20.5X2-MM THK)	
	28	1	**5P-8246**	2	WASHER-HARD (15.5X29X3-MM THK)	
	29	1	**8T-4121**	1	WASHER-HARD (11X21X2.5-MM THK)	
M	30	1	**8T-4122**	16	WASHER-HARD (17X32X3.5-MM THK)	
M	31	1	**8T-4132**	4	NUT (M16X2-THD)	
	32	1	**8T-4205**	6	WASHER-HARD (7.2X14.5X2-MM THK)	
	33	1	**8T-4224**	8	WASHER-HARD (8.8X16X2-MM THK)	
M	34	1	**8T-4779**	12	BOLT (M16X2X35-MM)	
M	35	1	**8T-4908**	6	BOLT (M8X1.25X25-MM)	
M	36	1	**8T-6869**	1	BOLT (M8X1.25X60-MM)	
E	37	1	**167-0608**		SEAL (82-CM)	

E-ORDER BY THE CENTIMETER
I-REFER TO HYDRAULIC INFORMATION SYSTEM
M-METRIC PART
Y-SEPARATE ILLUSTRATION

233-5992 TANK & MTG GP-WATER *(contd.)* i02359466

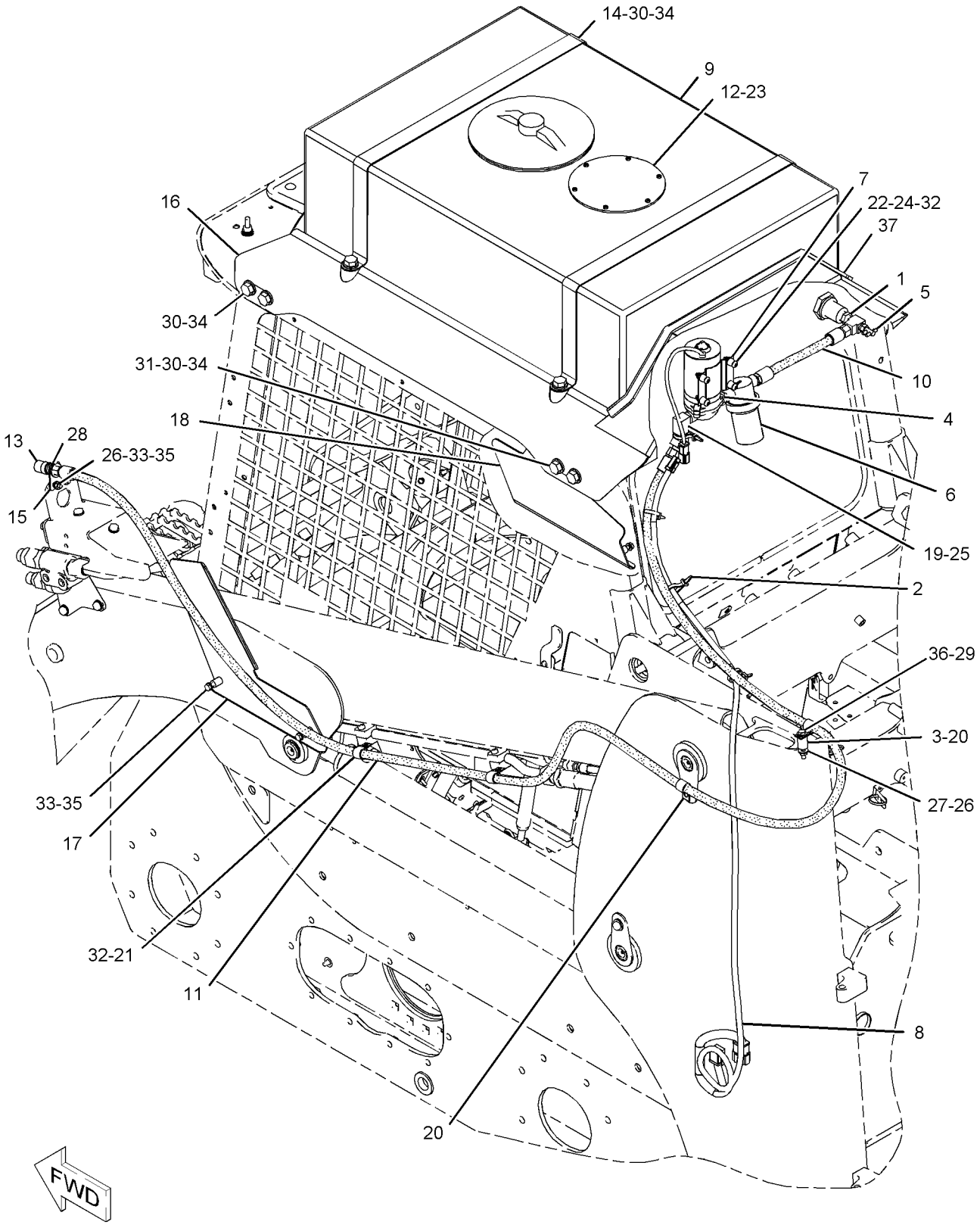

GRAPHIC #1 **<END>** g01030298

WORK TOOLS

233-5993 TANK & MTG GP-WATER

S/N: SCH1-UP; BXM1-UP

AN ATTACHMENT

SMCS-5613 **i02359472**

NOTE	REF NO	GRAPHIC REF	PART NUMBER	QTY	PART NAME 1 2 3 4 5 6 (PRODUCT LEVEL)	SEE PAGE
	1	1	**3B-7255**	1	BUSHING-REDUCING	
	2	1	**3S-2093**	4	STRAP-CABLE	
			5P-8249	2	WASHER-HARD (24X41.5X4-MM THK)	
	3	1	**7K-1181**	2	STRAP-CABLE	
	4	1	**7X-0495**	1	ADAPTER	
	5	1	**8T-0737**	1	VALVE-SHUTOFF	
Y	6	1	**116-2001**	1	STRAINER GP-WATER	645
Y	7	1	**161-7290**	1	PUMP GP-DIAPHRAGM	641
	8	1	**165-4894**	1	HARNESS AS-WORK TOOL	
		1	**102-8806**	1	KIT-RECEPTACLE (8-PIN)	
					(INCLUDES RECEPTACLE AS & WEDGE)	
		1	**155-2265**	1	KIT-CONNECTING PLUG (8-PIN)	
		1	**155-2270**	1	KIT-CONNECTING PLUG (2-PIN)	
					(EACH KIT INCLUDES PLUG AS, WEDGE & INTERFACE SEAL)	
Y	9	1	**166-2551**	1	TANK GP-WATER	653
I	10	1	**166-2552**	1	HOSE AS	
	11	1	**166-2557**	1	PLATE	
	12	1	**166-2558**	1	COUPLING	
	13	1	**166-2559**	2	BRACKET	
	14	1	**218-5847**	1	PLATE	
	15	1	**218-5975**	1	BRACKET AS	
I	16	1	**233-5994**	1	HOSE AS	
	17	1	**003-2143**	1	ELBOW	
	18	1	**095-0912**	2	CLIP	
M	19	1	**111-4627**	4	SCREW-MACHINE (M6X1X30-MM)	
	20	1	**119-3859**	6	SCREW-PAN HEAD (10-16X0.75-IN)	
M	21	1	**129-3178**	4	LOCKNUT (M6X1-THD)	
	22	1	**5P-8246**	1	WASHER-HARD (15.5X29X3-MM THK)	
	23	1	**8T-4121**	4	WASHER-HARD (11X21X2.5-MM THK)	
M	24	1	**8T-4122**	16	WASHER-HARD (17X32X3.5-MM THK)	
M	25	1	**8T-4132**	4	NUT (M16X2-THD)	
M	26	1	**8T-4133**	2	NUT (M10X1.5-THD)	
M	27	1	**8T-4136**	2	BOLT (M10X1.5X25-MM)	
	28	1	**8T-4205**	6	WASHER-HARD (7.2X14.5X2-MM THK)	
M	29	1	**8T-4779**	12	BOLT (M16X2X35-MM)	
	30	1	**167-0608**		SEAL (82-CM)	

I-REFER TO HYDRAULIC INFORMATION SYSTEM
M-METRIC PART
Y-SEPARATE ILLUSTRATION

233-5993 TANK & MTG GP-WATER *(contd.)* **i02359472**

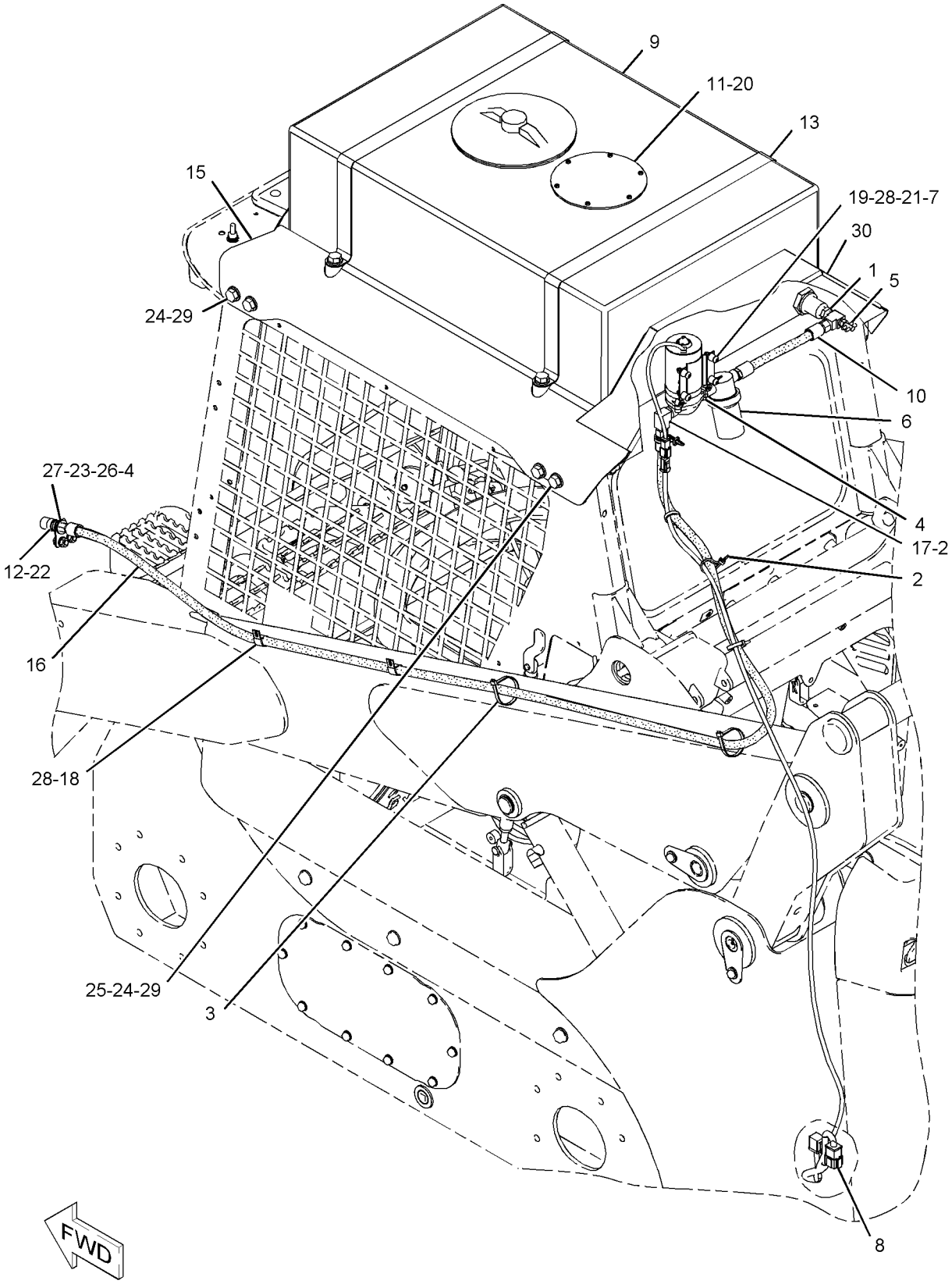

GRAPHIC #1 **<END>** g01034526

WORK TOOLS

252-0386 TANK & MTG GP-WATER

S/N: MJH1-UP; SCH1-UP; RLL1-UP; BXM1-UP

AN ATTACHMENT

SMCS-5613 **i02156558**

NOTE	REF NO	GRAPHIC REF	PART NUMBER	QTY	PART NAME 1 2 3 4 5 6 (PRODUCT LEVEL)	SEE PAGE
	1	1	**3B-7255**	1	BUSHING-REDUCING	
	2	1	**3S-2093**	4	STRAP-CABLE	
	3	1	**4E-0724**	1	SPACER (9X20X28-MM THK)	
	4	1	**7X-0495**	1	ADAPTER	
	5	1	**8T-0737**	1	VALVE-SHUTOFF	
Y	6	1	**116-2001**	1	STRAINER GP-WATER	645
	7	1	**124-1916**	1	COUPLING-PERMANENT	
	8	1	**124-1917**	1	COUPLING-PERMANENT	
	9	1	**165-4894**	1	HARNESS AS-WORK TOOL	
		1	**102-8806**	1	KIT-RECEPTACLE (8-PIN)	
					(INCLUDES RECEPTACLE AS & WEDGE)	
		1	**155-2265**	1	KIT-CONNECTING PLUG (8-PIN)	
		1	**155-2270**	1	KIT-CONNECTING PLUG (2-PIN)	
					(EACH PLUG KIT INCLUDES PLUG AS, WEDGE & INTERFACE SEAL)	
Y	10	1	**166-2551**	1	TANK GP-WATER	653
I	11	1	**166-2552**	1	HOSE AS	
	12	1	**166-2557**	1	PLATE	
	13	1	**166-2558**	1	COUPLING	
	14	1	**166-2559**	2	BRACKET	
	15	1	**218-5847**	1	PLATE	
	16	1	**218-5975**	1	BRACKET AS	
	17	1	**233-5719**	1	PUMP GP-DIAPHRAGM	
	18	1	**233-5892**	1	PLATE AS	
	19	1	**233-5893**	1	PLATE AS	
	20	1	**003-2143**	1	ELBOW	
	21	1	**067-2551**	2	CLIP	
	22	1	**095-0912**	2	CLIP	
M	23	1	**111-4627**	4	SCREW-MACHINE (M6X1X30-MM)	
	24	1	**119-3859**	6	SCREW-PAN HEAD (10-16X0.75-IN)	
M	25	1	**129-3178**	4	LOCKNUT (M6X1-THD)	
	26	1	**1L-2279**	1	ELBOW	
M	27	1	**5C-7261**	3	NUT (M8X1.25-THD)	
	28	1	**5P-4116**	1	WASHER-HARD (8.8X20.5X2-MM THK)	
	29	1	**5P-8246**	2	WASHER-HARD (15.5X29X3-MM THK)	
M	30	1	**8T-4122**	16	WASHER-HARD (17X32X3.5-MM THK)	
M	31	1	**8T-4132**	4	NUT (M16X2-THD)	
	32	1	**8T-4205**	6	WASHER-HARD (7.2X14.5X2-MM THK)	
	33	1	**8T-4224**	8	WASHER-HARD (8.8X16X2-MM THK)	
M	34	1	**8T-4779**	12	BOLT (M16X2X35-MM)	
M	35	1	**8T-4908**	6	BOLT (M8X1.25X25-MM)	
M	36	1	**8T-6869**	1	BOLT (M8X1.25X60-MM)	
G	37	1	**122-6869**		HOSE-HYDRAULIC (142-IN)	
	38	1	**142-7505**	2	PLATE AS	
	39	1	**166-2556**	1	BRACKET	
BE	40	1	**167-0608**		SEAL	
	41	1	**195-6696**	1	PLATE	
	42	1	**7K-1181**	2	STRAP-CABLE	
	43	1	**8T-4121**	7	WASHER-HARD (11X21X2.5-MM THK)	
M	44	1	**8T-4133**	2	NUT (M10X1.5-THD)	
M	45	1	**8T-4136**	2	BOLT (M10X1.5X25-MM)	
M	46	1	**8T-4137**	5	BOLT (M10X1.5X20-MM)	
M	47	1	**8T-4191**	2	BOLT (M10X1.5X16-MM)	

252-0386 TANK & MTG GP-WATER *(contd.)* i02156558

B-USE AS REQUIRED
E-ORDER BY THE CENTIMETER
G-ORDER BY THE INCH
I-REFER TO HYDRAULIC INFORMATION SYSTEM
M-METRIC PART
Y-SEPARATE ILLUSTRATION

252-0386 TANK & MTG GP-WATER *(contd.)* i02156558

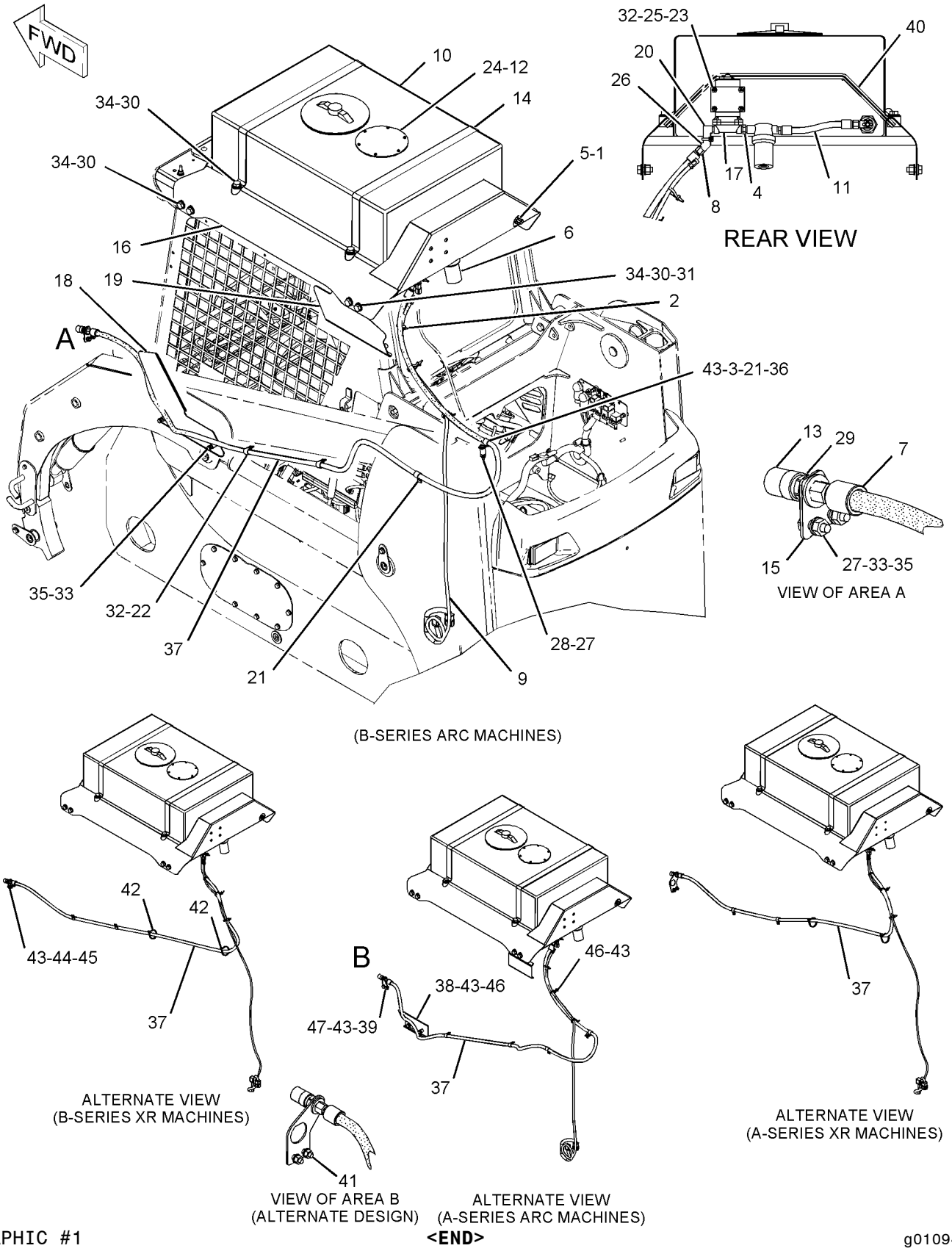

GRAPHIC #1

<END>

g01094533

166-2551 TANK GP-WATER

S/N: MJH1-UP; SCH1-UP; RLL1-UP; BXM1-UP
PART OF 233-5992, 233-5993, 252-0386 TANK & MTG GP-WATER
AN ATTACHMENT

SMCS-5613 **i01411266**

NOTE	REF NO	GRAPHIC REF	PART NUMBER	QTY	PART NAME 1 2 3 4 5 6 (PRODUCT LEVEL)	SEE PAGE
	1	1	**192-2606**	1	CAP AS	
	2	1	**192-2607**	1	OUTLET	

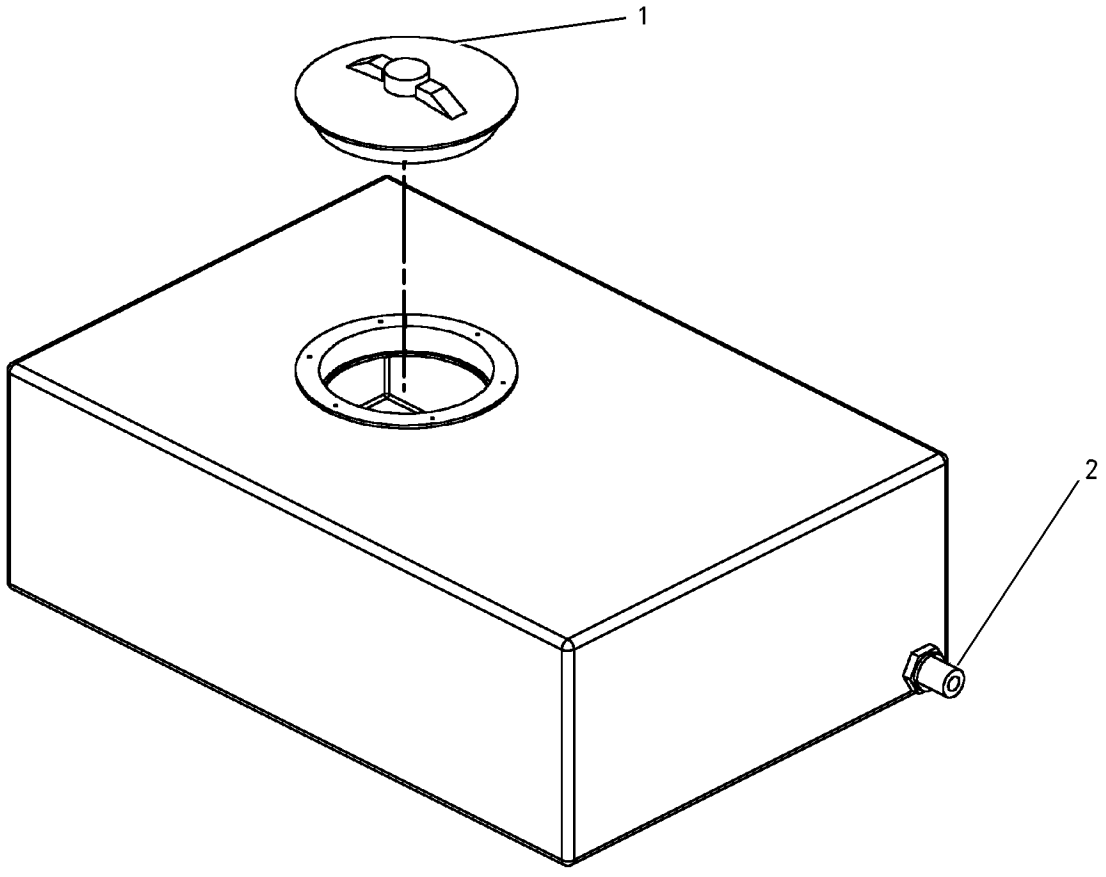

GRAPHIC #1 **<END>** g00742953

WORK TOOLS

141-4999 TOOTH GP-UNI

S/N: MJH1-UP; SCH1-UP; RLL1-UP; BXM1-UP
PART OF 154-5046, 154-5048, 154-5050 BUCKET AR-MULTIPURPOSE
AN ATTACHMENT

SMCS-6822 **i02163942**

NOTE	REF NO	GRAPHIC REF	PART NUMBER	QTY	PART NAME 1 2 3 4 5 6 (PRODUCT LEVEL)	SEE PAGE
	1	1	**132-4720**	1	TOOTH-UNI-SINGLE STRAP	
	2	1	**246-4349**	2	SCREW-FLAT HEAD (M16X2-THD)	
M	3	1	**8T-4778**	2	LOCKNUT (M16X2-THD)	

M-METRIC PART

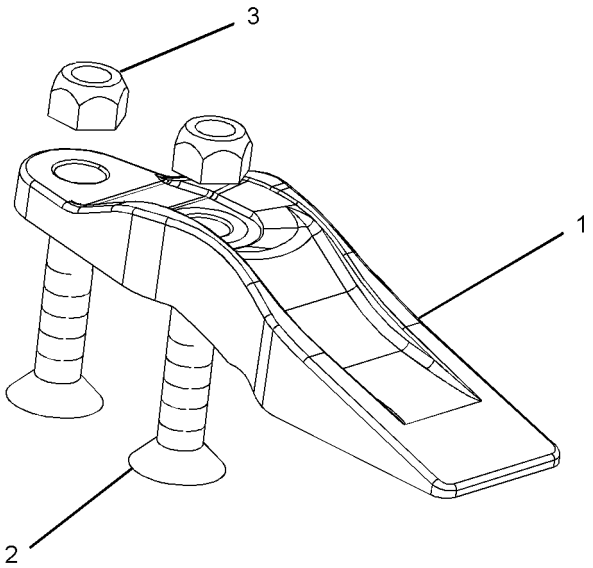

GRAPHIC #1 **<END>** g01097424

OPERATOR STATION

176-3900 ACCUMULATOR GP-REFRIGERANT—WITH DESICCANT

S/N: MJH1-UP; BXM1-UP

FIELD REPLACEMENT FOR 186-6190—PAGE 656

SMCS-7320 **i02195254**

NOTE	REF NO	GRAPHIC REF	PART NUMBER	QTY	PART NAME 1 2 3 4 5 6 (PRODUCT LEVEL)	SEE PAGE
					(NO SERVICED PARTS)	

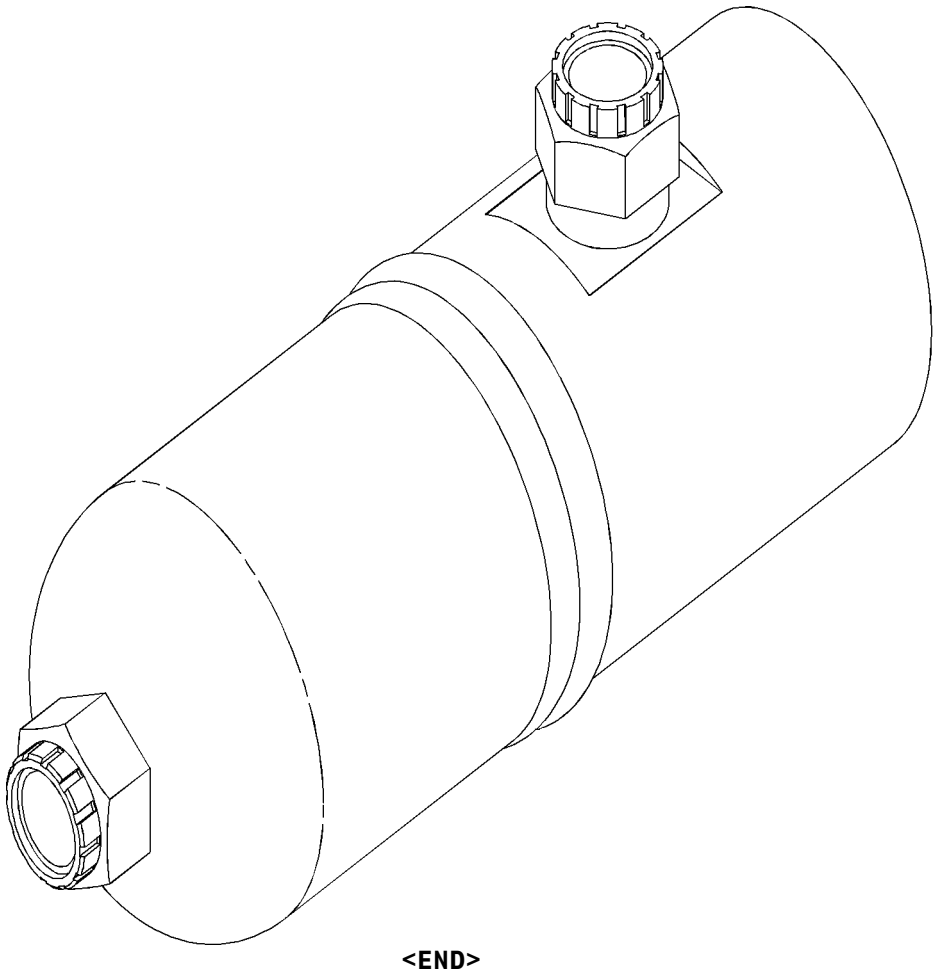

GRAPHIC #1 **<END>** g01035076

OPERATOR STATION

186-6190 ACCUMULATOR GP-REFRIGERANT—WITH DESICCANT

S/N: MJH1-UP; BXM1-UP
PART OF 233-5588, 233-5589 INSTALLATION AR, 218-6560, 218-6590 LINES GP-AIR CONDITIONER
FIELD REPLACEMENT ORDER 176-3900—PAGE 655
AN ATTACHMENT

SMCS-7320 **i02306357**

NOTE	REF NO	GRAPHIC REF	PART NUMBER	QTY	PART NAME 1 2 3 4 5 6 (PRODUCT LEVEL)	SEE PAGE
					(NO SERVICED PARTS)	

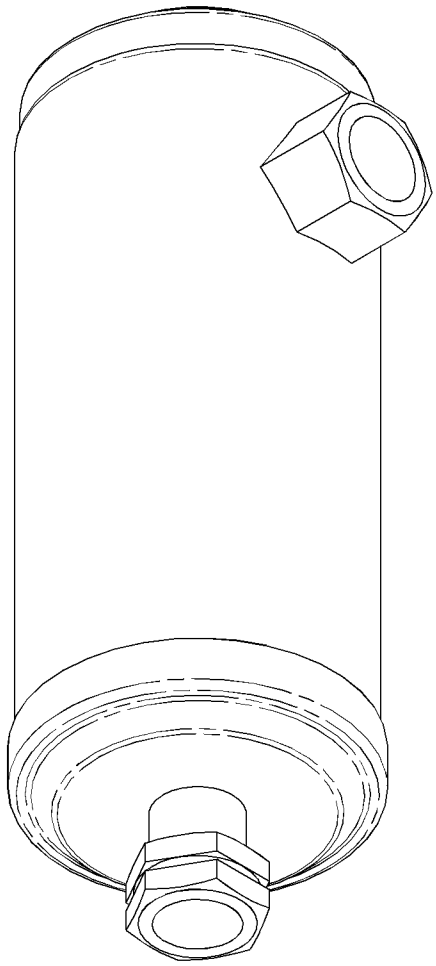

GRAPHIC #1 **<END>** g01155244

229-8747 AIR CONDITIONER & MOUNTING GP

S/N: MJH1-UP; BXM1-UP
PART OF 218-6273, 218-6302 AIR CONDITIONER AR
AN ATTACHMENT

SMCS-7320 **i02010226**

NOTE	REF NO	GRAPHIC REF	PART NUMBER	QTY	PART NAME 1 2 3 4 5 6 (PRODUCT LEVEL)	SEE PAGE
Y	1	1	*218-6405*	1	AIR CONDITIONER GP	659
M	2	1	**7X-2537**	4	BOLT (M8X1.25X35MM)	
	3	1	**8T-4224**	4	WASHER-HARD (8.8X16X2MM THK)	

M-METRIC PART
Y-SEPARATE ILLUSTRATION

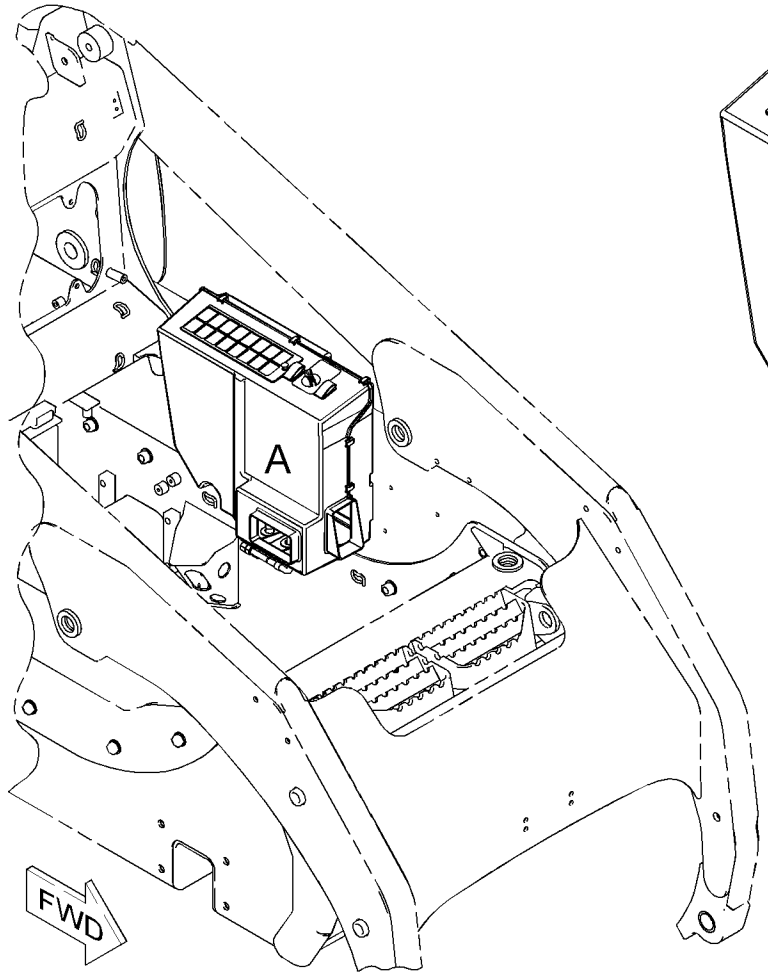

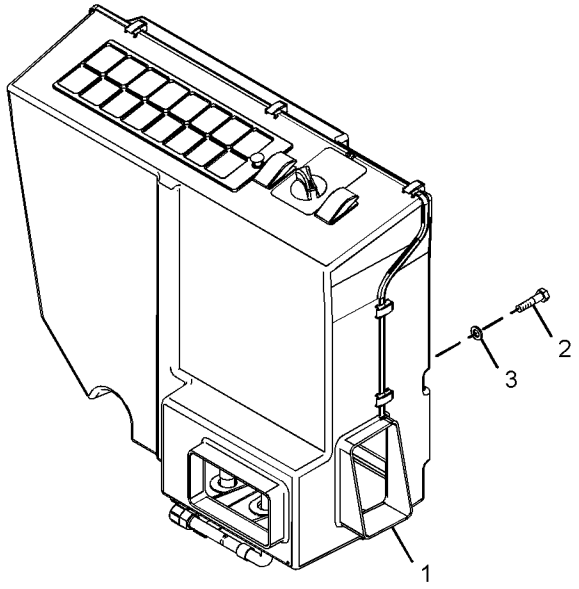

VIEW OF AREA A

GRAPHIC #1 **<END>** g01018777

OPERATOR STATION

218-6273 AIR CONDITIONER AR

S/N: MJH1-UP

AN ATTACHMENT

SMCS-7320 **i01951408**

NOTE	PART NUMBER	QTY	PART NAME 1 2 3 4 5 6 (PRODUCT LEVEL)	SEE PAGE
Y	*229-8747*	1	AIR CONDITIONER & MOUNTING GP	657
Y	*218-6830*	1	COMPRESSOR & MTG GP-REFRIG	668
Y	*218-6348*	1	CONDENSER & MTG GP-REFRIGERANT	669
Y	*218-6394*	1	DUCT & CONTROL GP	687
Y	*218-6560*	1	LINES GP-AIR CONDITIONER	712
Y	*218-6086*	1	LINES GP-HEATER	720
Y	*218-6693*	1	LINES GP-HYDRAULIC FAN	412
Y	*225-7948*	1	WIRING GP-AIR CONDITIONER	188

Y-SEPARATE ILLUSTRATION

<END>

218-6302 AIR CONDITIONER AR

S/N: BXM1-UP

AN ATTACHMENT

SMCS-7320 **i02357642**

NOTE	PART NUMBER	QTY	PART NAME 1 2 3 4 5 6 (PRODUCT LEVEL)	SEE PAGE
Y	*229-8747*	1	AIR CONDITIONER & MOUNTING GP	657
Y	*218-6830*	1	COMPRESSOR & MTG GP-REFRIG	668
Y	*218-6348*	1	CONDENSER & MTG GP-REFRIGERANT	669
Y	*218-6394*	1	DUCT & CONTROL GP	687
Y	*218-6590*	1	LINES GP-AIR CONDITIONER	716
Y	*218-6086*	1	LINES GP-HEATER	720
Y	*218-6533*	1	LINES GP-HYDRAULIC FAN	410
Y	*225-7948*	1	WIRING GP-AIR CONDITIONER	188

Y-SEPARATE ILLUSTRATION

<END>

OPERATOR STATION

218-6405 AIR CONDITIONER GP

S/N: MJH1-UP; BXM1-UP
PART OF 229-8747 AIR CONDITIONER & MOUNTING GP, 233-5588, 233-5589
INSTALLATION AR
AN ATTACHMENT

SMCS-7320 **i02359964**

NOTE	REF NO	GRAPHIC REF	PART NUMBER	QTY	PART NAME 1 2 3 4 5 6 (PRODUCT LEVEL)	SEE PAGE
	1	1	**185-4015**	10	CLIP	
	2	1	**202-2284**	1	SWITCH AS-ROCKER (AIR CONDITIONER)	
	3	1	**218-6399**	1	SEAL	
	4	1	**206-7398**	1	KNOB-CONTROL (TEMPERATURE SELECT)	
	5	1	**119-9631**	1	SWITCH-TEMPERATURE (AIR CONDITIONER)	
	6	1	**205-9980**	2	SCREW-TRUSS HEAD (M6X1X20-MM)	
	7	1	**231-8123**	1	COIL AS-EVAPORATOR	
	8	1	**231-8124**	1	COIL AS-HEATER	
	9	1	**231-8125**	1	BLOWER GP-CAB	
	10	1	**236-5067**	1	SWITCH AS-ROCKER (HEATER)	
	11	1	**231-8127**	2	GROMMET	
	12	1	**231-8128**	1	GRILL	
	13	1	**231-8129**	1	PIN	
	14	1	**231-8130**	1	FILTER-CAB AIR	
	15	1	**231-8131**	1	PLATE	
	16	1	**231-8132**	1	FILTER-CAB AIR	
	17	1	**231-8133**	1	PANEL	
	18	1	**231-8137**	1	FILM (TEMPERATURE CONTROL)	
	19	1	**231-8141**	1	GROMMET	
	20	1	**231-8142**	1	RETAINER	
	21	1	**236-5069**	3	RELAY AS (12-VOLT)	
	22	1	**231-8121**	1	HOUSING	
Y	23	1	**231-8122**	1	HOUSING AS-SIDE (AIR CONDITIONER, HEATER)	700
	24	1	**231-8126**	1	VALVE AS	
	25	1	**232-1384**	1	TUBE	
	26	1	**218-6948**	1	HARNESS AS-HEATER & AIR COND	

Y-SEPARATE ILLUSTRATION

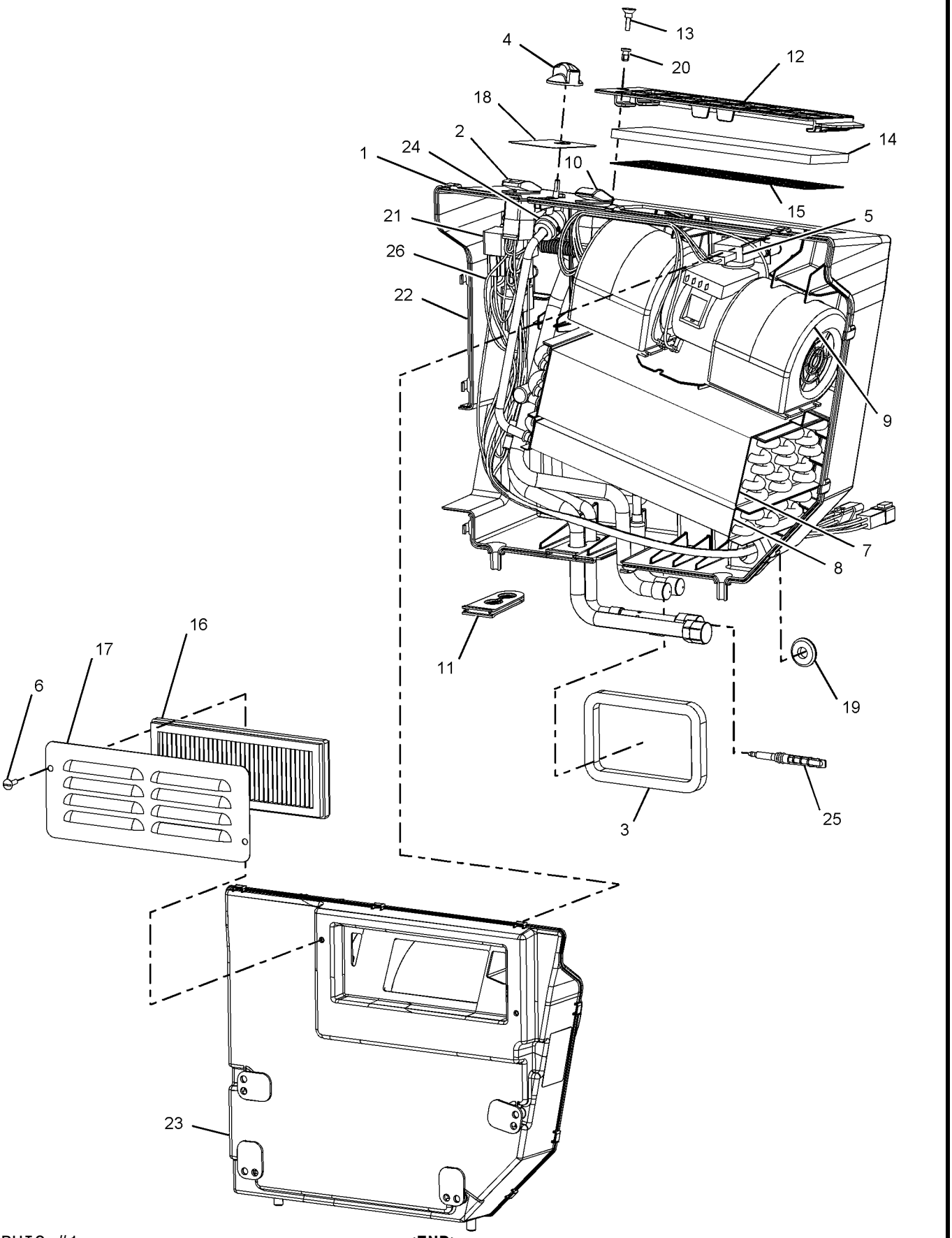

GRAPHIC #1 **<END>** g01039889

OPERATOR STATION

236-4830 ARMREST & MOUNTING GP

S/N: MJH1-UP; SCH1-UP; RLL1-UP; BXM1-UP
PART OF 218-6350 CAB AR-ENCLOSED ROPS

SMCS-7307, 7312 **i01955195**

NOTE	REF NO	GRAPHIC REF	PART NUMBER	QTY	PART NAME 1 2 3 4 5 6 (PRODUCT LEVEL)	SEE PAGE
	1	1	**4E-1384**	2	BUMPER-CONICAL	
	2	1	**195-0939**	4	STUD	
	3	1	**218-6442**	2	PLATE	
Y	4	1	**236-4833**	1	ARMREST GP	662
	5	1	**195-0937**	2	INSERT-THREADED (M8X1.25)	
M	6	1	**5C-7261**	2	NUT (M8X1.25-THD)	
	7	1	**8T-4121**	4	WASHER-HARD (11X21X2.5-MM THK)	
M	8	1	**8T-4133**	4	NUT (M10X1.5-THD)	

M-METRIC PART
Y-SEPARATE ILLUSTRATION

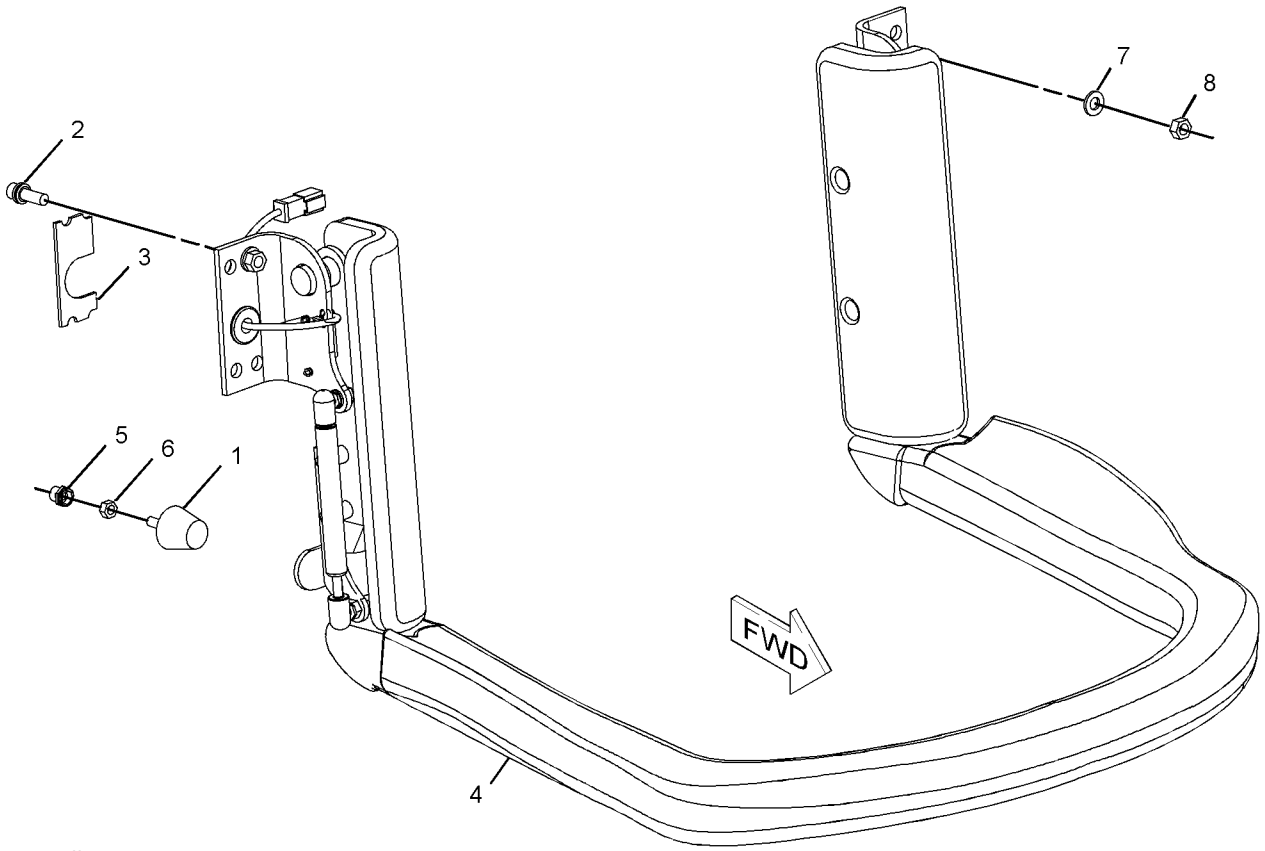

GRAPHIC #1 **<END>** g01016683

OPERATOR STATION

236-4833 ARMREST GP

S/N: MJH1-UP; SCH1-UP; RLL1-UP; BXM1-UP
PART OF 236-4830 ARMREST & MOUNTING GP

SMCS-7307, 7312 **i01955198**

NOTE	REF NO	GRAPHIC REF	PART NUMBER	QTY	PART NAME 1 2 3 4 5 6 (PRODUCT LEVEL)	SEE PAGE
	1	1	**3S-2093**	1	STRAP-CABLE	
	2	1	**7D-8431**	2	RING-RETAINING	
	3	1	**7G-7053**	1	GROMMET	
	4	1	**9P-4609**	1	ACTUATOR-MAGNETIC	
	5	1	**9S-0285**	2	BEARING-SLEEVE	
	6	1	**130-1916**	2	STUD-BALL	
	7	1	**142-9278**	1	BRACKET AS	
	8	1	**142-9279**	1	BRACKET AS	
	9	1	**142-9287**	1	SPRING AS-GAS	
	10	1	**142-9386**	1	BRACKET AS (LH)	
	11	1	**152-4875**	2	COVER AS	
	12	1	**152-4884**	1	BRACKET AS (RH)	
	13	1	**162-0223**	1	SWITCH AS (INTERLOCK)	
		1	**3E-3374**	1	WEDGE-PLUG LOCK (4-PIN)	
		1	**186-3736**	1	SOCKET-CONNECTOR (16-GA TO 18-GA)	
		1	**9G-3695**	1	PLUG (GROMMET SEALING)	
		1	**9X-1813**		SLEEVE (24CM)	
		1	**176-2947**	1	PLUG KIT-CONN	
	14	1	**236-4832**	1	ARMREST AS	
	15	1	**103-6262**	4	SCREW-MACHINE (4-40X0.63-IN)	
	16	1	**142-2928**	4	LOCKNUT (4-40-THD)	
M	17	1	**5C-9553**	4	BOLT (M6X1X16-MM)	
	18	1	**8T-4205**	4	WASHER-HARD (7.2X14.5X2-MM THK)	
	19	1	**8T-4224**	1	WASHER-HARD (8.8X16X2-MM THK)	
M	20	1	**9X-2042**	4	SCREW-TRUSS HEAD (M6X1X12-MM)	

M-METRIC PART

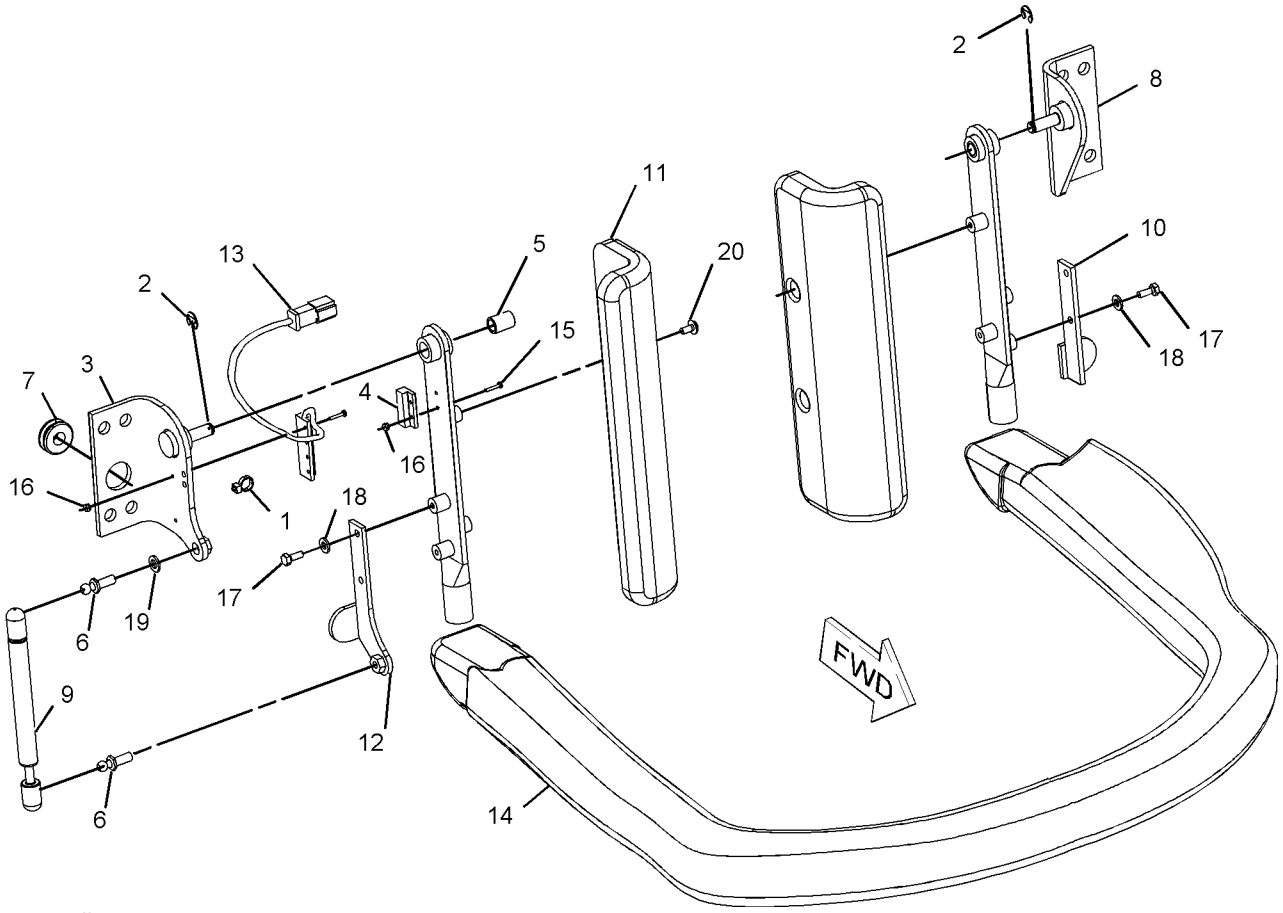

GRAPHIC #1 **<END>** g01016724

OPERATOR STATION

216-6146 BOX GP-STORAGE

S/N: MJH1-UP; SCH1-UP; RLL1-UP; BXM1-UP
PART OF 261-6155, 261-6156, 261-6157, 261-6158, 261-6187, 261-6197, 278-1212, 278-1213, 278-1220, 278-1221, 278-1224, 278-1225, 278-5347, 278-5348, 278-5369, 278-5370, 278-5408, 278-5409, 278-5413, 278-5414, 278-5441, 278-5442 CONVERSION AR-MACHINE, 233-5671, 233-5672, 233-5673, 233-5674, 233-5675, 233-5676, 233-5681, 233-5682, 233-5683, 233-5684, 233-5685, 233-5686, 257-5716, 257-5717, 257-5718, 257-5721, 257-5722, 257-5723 CONVERSION AR-ROADING
AN ATTACHMENT

SMCS-7268 **i02014480**

NOTE	REF NO	GRAPHIC REF	PART NUMBER	QTY	PART NAME 1 2 3 4 5 6 (PRODUCT LEVEL)	SEE PAGE
J	1	1	**8T-2895**	1	LOCK GP-CYLINDER	
		1	**226-0323**	1	CAM-LOCK	
		1	**226-0291**	1	LOCK AS	
	2	1	**216-6145**	1	BOX AS-STORAGE	
		1	**7G-4262**	1	HINGE	
D	3	1	**6V-1392**		SEAL (1M)	

D-ORDER BY THE METER
J-REQUIRES 5P8500 KEY

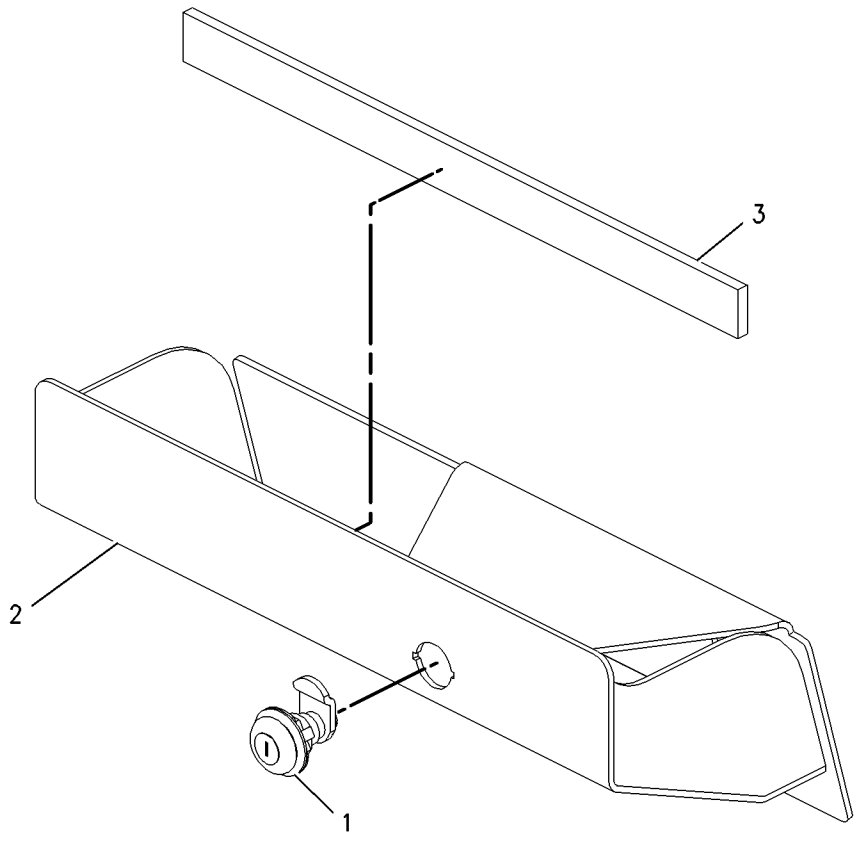

GRAPHIC #1 **<END>** g00932357

OPERATOR STATION

218-6350 CAB AR-ENCLOSED ROPS

S/N: MJH1-UP; SCH1-UP; RLL1-UP; BXM1-UP
PART OF 218-6216, 218-6226, 218-6232, 218-6242, 278-1216, 278-1226, 278-1232, 278-1242 COMMON AR

SMCS-7301 **i02014475**

NOTE	PART NUMBER	QTY	PART NAME 1 2 3 4 5 6 (PRODUCT LEVEL)	SEE PAGE
Y	*236-4830*	1	ARMREST & MOUNTING GP	661
Y	*218-6367*	1	CAB GP-ENCLOSED ROPS	666
Y	*216-4750*	1	FASTENER GP-WIRING HARNESS	154
Y	*218-6425*	1	LIGHTING GP-FLOOD (FRONT)	172
Y	*218-6356*	1	LINER GP-CAB	710
Y	*218-6395*	1	MIRROR GP-REAR VIEW	722
Y	*218-6370*	1	MOUNTING GP-ROPS	726
Y	*218-6380*	1	SPRING GP-GAS	749
Y	*195-6723*	1	WINDOW GP-CAB (UPPER REAR)	753
	218-6420	1	BOX GP-STORAGE (LITERATURE)	
	152-4871	1	BOX-STORAGE	
	5P-7957	1	LANYARD	
M	**9X-2042**	4	SCREW-TRUSS HEAD	
	195-0935	4	INSERT-THREADED (M6X1)	

M-METRIC PART
Y-SEPARATE ILLUSTRATION

<END>

OPERATOR STATION

218-6367 CAB GP-ENCLOSED ROPS

S/N: MJH1-UP; SCH1-UP; RLL1-UP; BXM1-UP
PART OF 218-6350 CAB AR-ENCLOSED ROPS

SMCS-7301 **i02014503**

NOTE	REF NO	GRAPHIC REF	PART NUMBER	QTY	PART NAME 1 2 3 4 5 6 (PRODUCT LEVEL)	SEE PAGE
	1	1	**229-8758**	1	CAB AS	
	2	1	**195-0937**	8	INSERT-THREADED (M8X1.25)	
	3	1	**195-0935**	4	INSERT-THREADED (M6X1)	
	4	1	**195-0936**	12	INSERT-THREADED (M6X1)	
	5	1	**195-0939**	2	STUD	

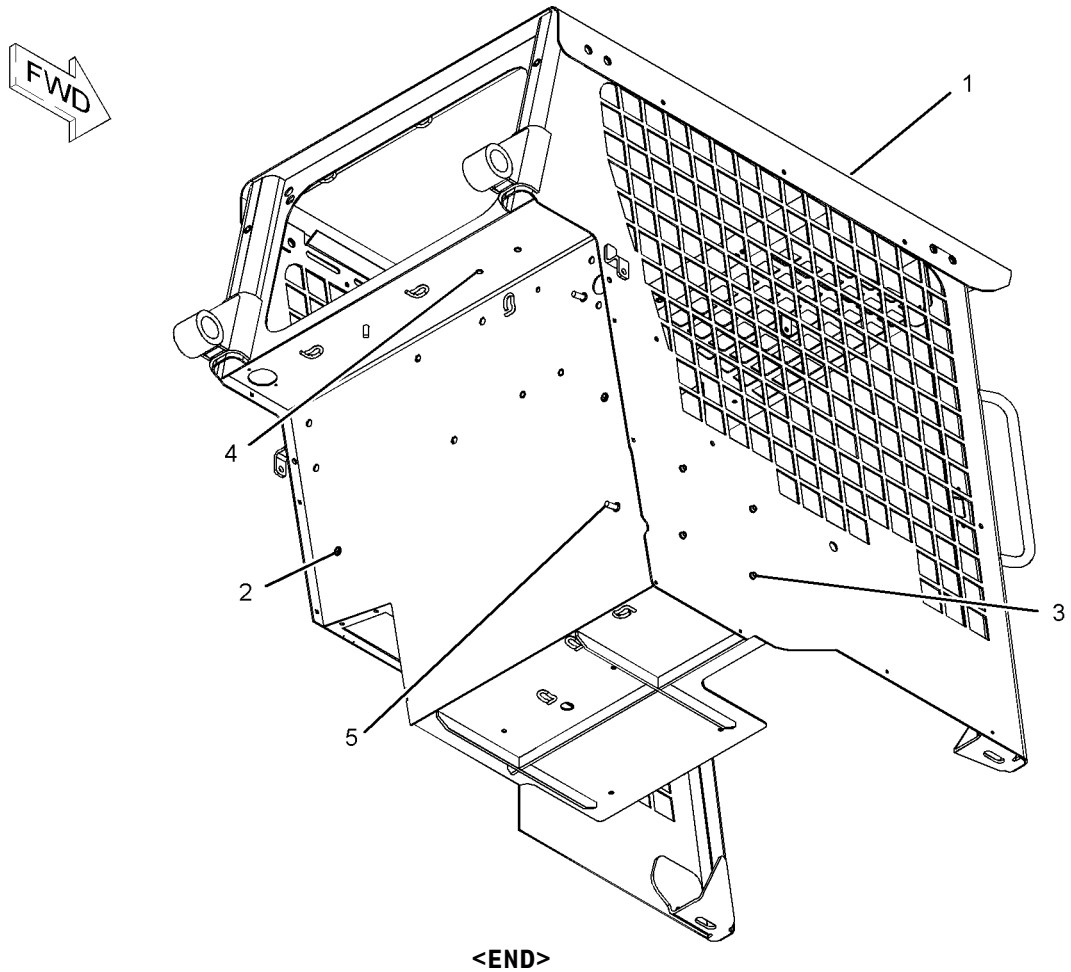

GRAPHIC #1 **<END>** g01041679

218-6832 COMPRESSOR & MOTOR GP-REFRIG

S/N: MJH1-UP; BXM1-UP

PART OF 218-6830 COMPRESSOR & MTG GP-REFRIG

AN ATTACHMENT

SMCS-1802, 5061 **i02454674**

NOTE	REF NO	GRAPHIC REF	PART NUMBER	QTY	PART NAME 1 2 3 4 5 6 (PRODUCT LEVEL)	SEE PAGE
	1	1	**2D-5248**	1	GASKET	
	2	1	**9G-5127**	1	BREATHER AS (AIR CONDITIONER)	
	3	1	**9G-7101**	2	SPACER (10.5X20X30-MM THK)	
	4	1	**218-6833**	1	COMPRESSOR GP-REFRIGERANT	
Y	5	1	*276-5708*	1	COUPLING GP-DRIVE	671
Y	6	1	**218-6840**	1	MOTOR GP-GEAR	506
	7	1	**233-5590**	1	HOUSING-SUPPORT	
M	8	1	**5C-7261**	2	NUT (M8X1.25-THD)	
	9	1	**5P-4116**	2	WASHER-HARD (8.8X20.5X2-MM THK)	
	10	1	**8T-4121**	2	WASHER-HARD (11X21X2.5-MM THK)	
	11	1	**8T-4224**	2	WASHER-HARD (8.8X16X2-MM THK)	
M	12	1	**8T-6870**	2	BOLT (M8X1.25X70-MM)	
M	13	1	**9X-6032**	2	BOLT-SOCKET HEAD (M10X1.5X30-MM)	

M-METRIC PART
Y-SEPARATE ILLUSTRATION

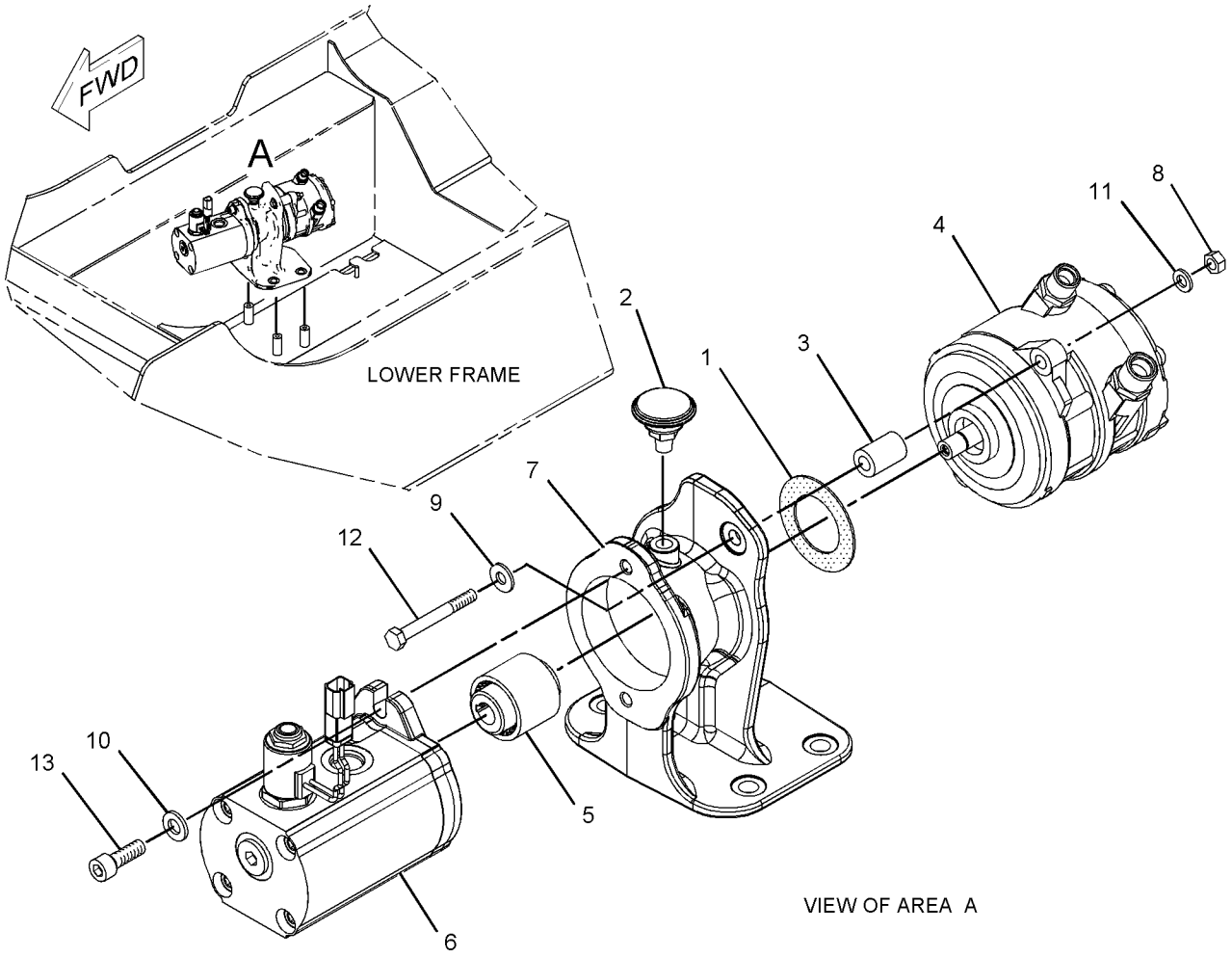

GRAPHIC #1 **<END>** g01059394

OPERATOR STATION

218-6830 COMPRESSOR & MTG GP-REFRIG

S/N: MJH1-UP; BXM1-UP
PART OF 218-6273, 218-6302 AIR CONDITIONER AR
AN ATTACHMENT

SMCS-1802 **i01958280**

NOTE	REF NO	GRAPHIC REF	PART NUMBER	QTY	PART NAME 1 2 3 4 5 6 (PRODUCT LEVEL)	SEE PAGE
Y	1	1	*218-6832*	1	COMPRESSOR & MOTOR GP-REFRIG	667
	2	1	**8T-4121**	3	WASHER-HARD (11X21X2.5-MM THK)	
M	3	1	**8T-4136**	3	BOLT (M10X1.5X25-MM)	

M-METRIC PART
Y-SEPARATE ILLUSTRATION

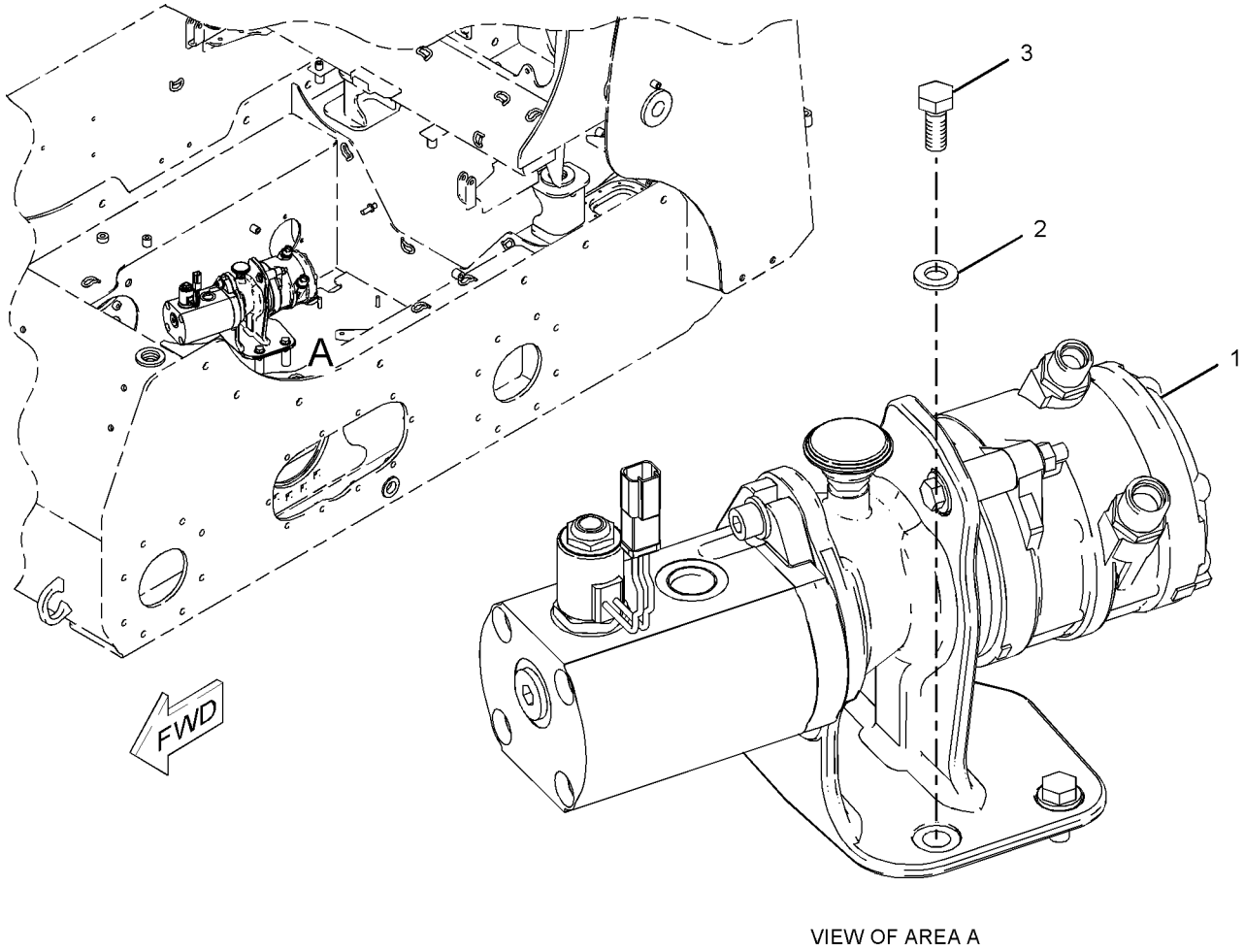

VIEW OF AREA A

GRAPHIC #1 **<END>** g01018664

218-6348 CONDENSER & MTG GP-REFRIGERANT

S/N: BXM1-1600
PART OF 218-6302 AIR CONDITIONER AR
AN ATTACHMENT

SMCS-1805 **i02046524**

NOTE	REF NO	GRAPHIC REF	PART NUMBER	QTY	PART NAME 1 2 3 4 5 6 (PRODUCT LEVEL)	SEE PAGE
	1	2	**218-6060**	1	SHROUD AS	
	2	2	**218-6250**	2	FAN AS	
	3	2	**218-6806**	1	COIL AS	
M	4	2	**5C-7261**	14	NUT (M8X1.25-THD)	
	5	2	**8T-4121**	4	WASHER-HARD (11X21X2.5-MM THK)	
M	6	2	**8T-4133**	4	NUT (M10X1.5-THD)	
M	7	2	**8T-4189**	14	BOLT (M8X1.25X20-MM)	
	8	2	**8T-4224**	20	WASHER-HARD (8.8X16X2-MM THK)	

M-METRIC PART

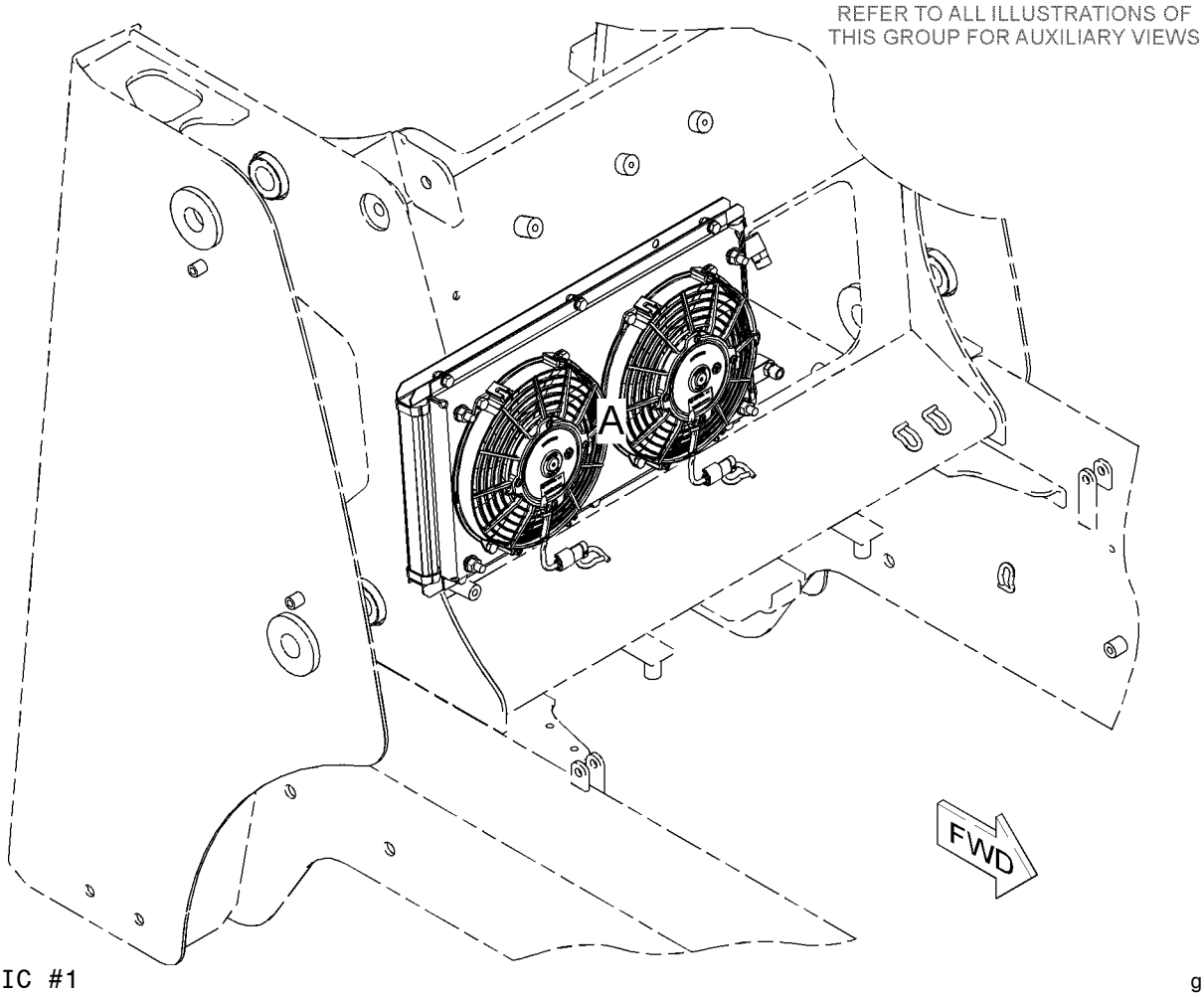

GRAPHIC #1 g01028410

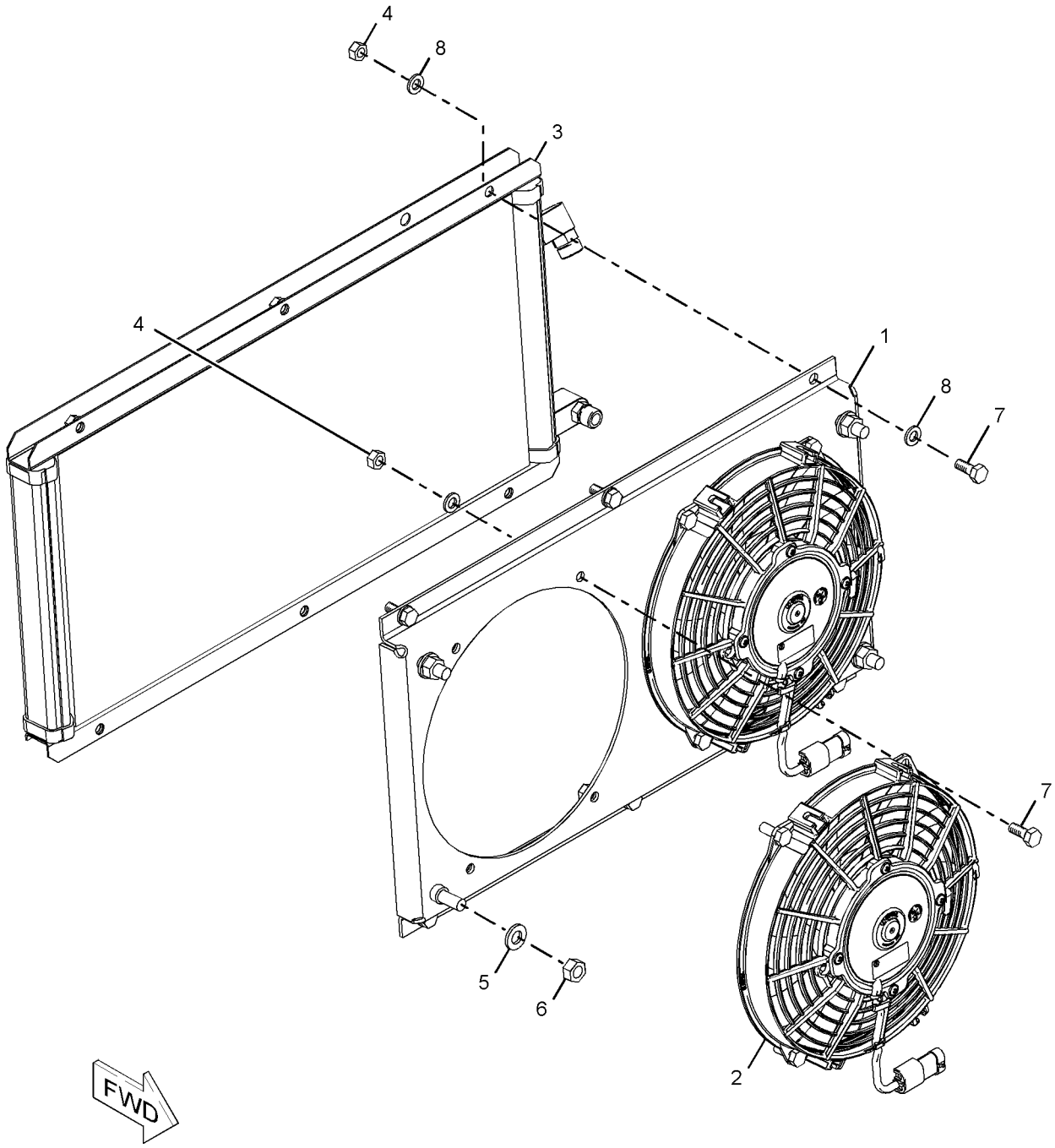

VIEW OF AREA A

GRAPHIC #2

<END>

g01051187

OPERATOR STATION

276-5708 COUPLING GP-DRIVE

S/N: MJH1-UP; BXM1-UP
PART OF 218-6832 COMPRESSOR & MOTOR GP-REFRIG
AN ATTACHMENT

SMCS-1802, 5061 **i02445864**

NOTE	REF NO	GRAPHIC REF	PART NUMBER	QTY	PART NAME 1 2 3 4 5 6 (PRODUCT LEVEL)	SEE PAGE
	1	1	**218-6836**	1	COUPLING GP-DRIVE	
		1	**218-6837**	1	COUPLING	
		1	**218-6838**	1	HUB (COMPRESSOR)	
		1	**276-4063**	1	HUB (MOTOR)	
M	2	1	**233-1012**	1	SETSCREW-HEX SOCKET (M5X0.8X8-MM)	

M-METRIC PART

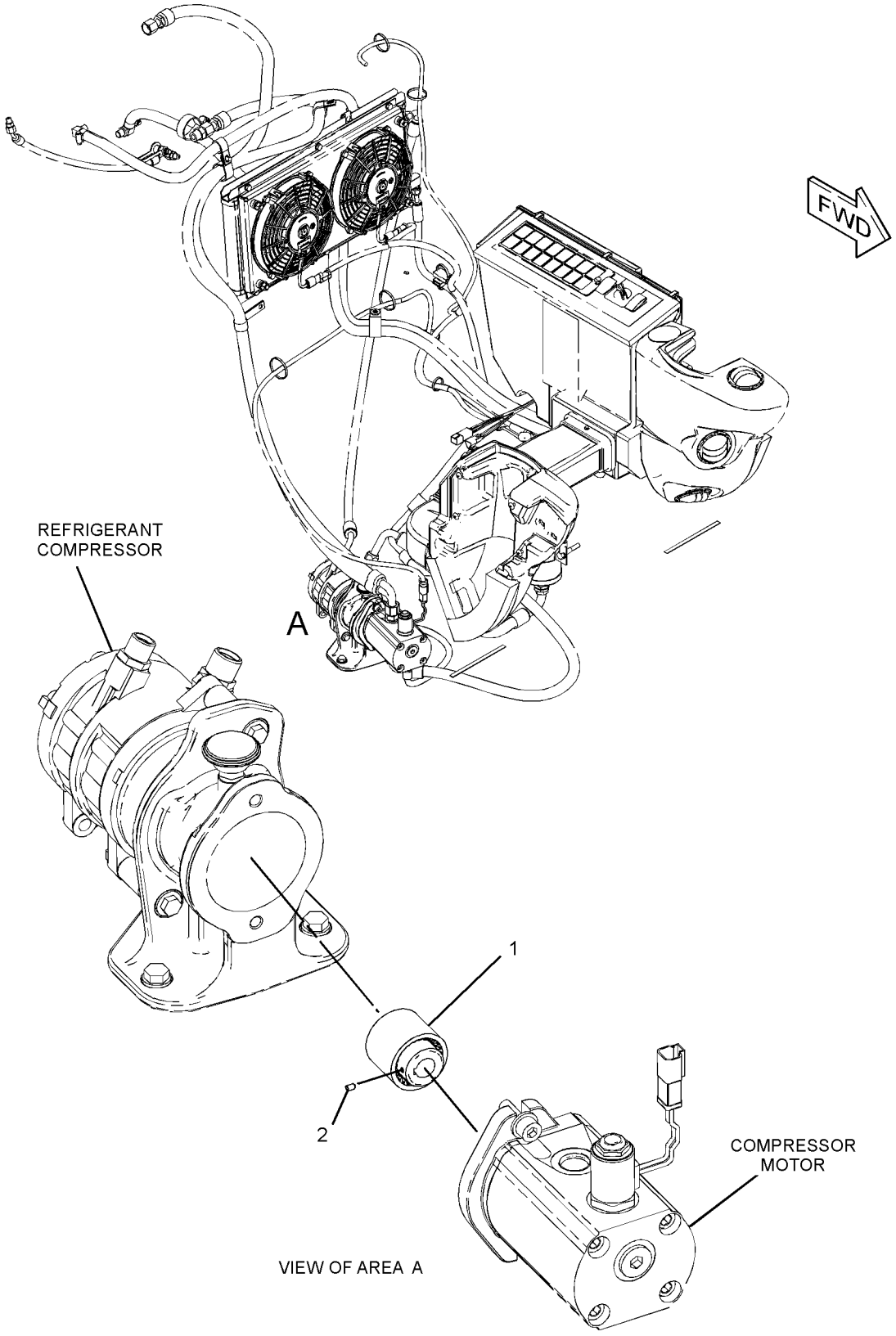

GRAPHIC #1 **<END>** g01229666

OPERATOR STATION

218-6419 COVER GP-CONSOLE

S/N: MJH1-UP; SCH1-UP; RLL1-UP; BXM1-UP
PART OF 218-6271, 218-6701 INSTALLATION GP
AN ATTACHMENT

SMCS-5258 **i02392269**

NOTE	REF NO	GRAPHIC REF	PART NUMBER	QTY	PART NAME 1 2 3 4 5 6 (PRODUCT LEVEL)	SEE PAGE
	1	1	**218-6389**	1	CONSOLE (RH)	
	2	1	**218-6391**	1	CONSOLE (LH)	
M	3	1	**175-0005**	8	SCREW-BUTTON HEAD (M6X1X25-MM)	

M-METRIC PART

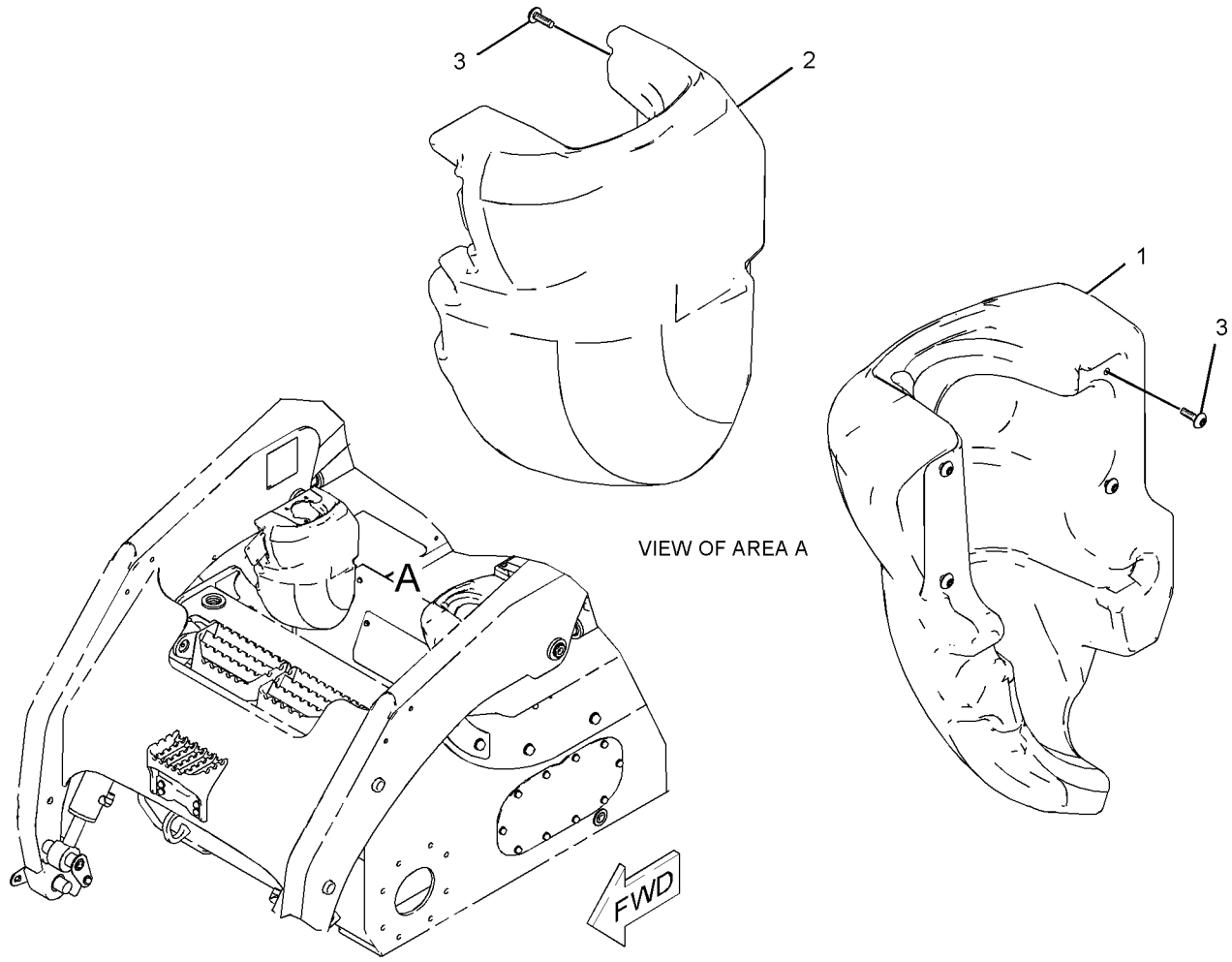

GRAPHIC #1 **<END>** g01019449

OPERATOR STATION

229-8744 COVER GP-CONSOLE

S/N: MJH1-UP; SCH1-UP; RLL1-UP; BXM1-UP
WITHOUT HEATER & AIR COND
PART OF 218-6271, 218-6701 INSTALLATION GP
AN ATTACHMENT

SMCS-5258 **i02392270**

NOTE	REF NO	GRAPHIC REF	PART NUMBER	QTY	PART NAME 1 2 3 4 5 6 (PRODUCT LEVEL)	SEE PAGE
	1	1	**114-6658**	4	WASHER (6.5X17X1-MM THK)	
	2	1	**218-6386**	1	COVER AS	
	3	1	**218-6387**	1	COVER AS	
	4	1	**218-6388**	1	COVER AS	
M	5	1	**8T-4189**	2	BOLT (M8X1.25X20-MM)	
	6	1	**8T-4224**	2	WASHER-HARD (8.8X16X2-MM THK)	
M	7	1	**9X-2044**	7	SCREW-TRUSS HEAD (M6X1X16-MM)	
	8	1	**9X-6165**	1	WASHER (6.5X22X2.5-MM THK)	
BE	9	1	**124-3243**		SEAL	

B-USE AS REQUIRED
E-ORDER BY THE CENTIMETER
M-METRIC PART

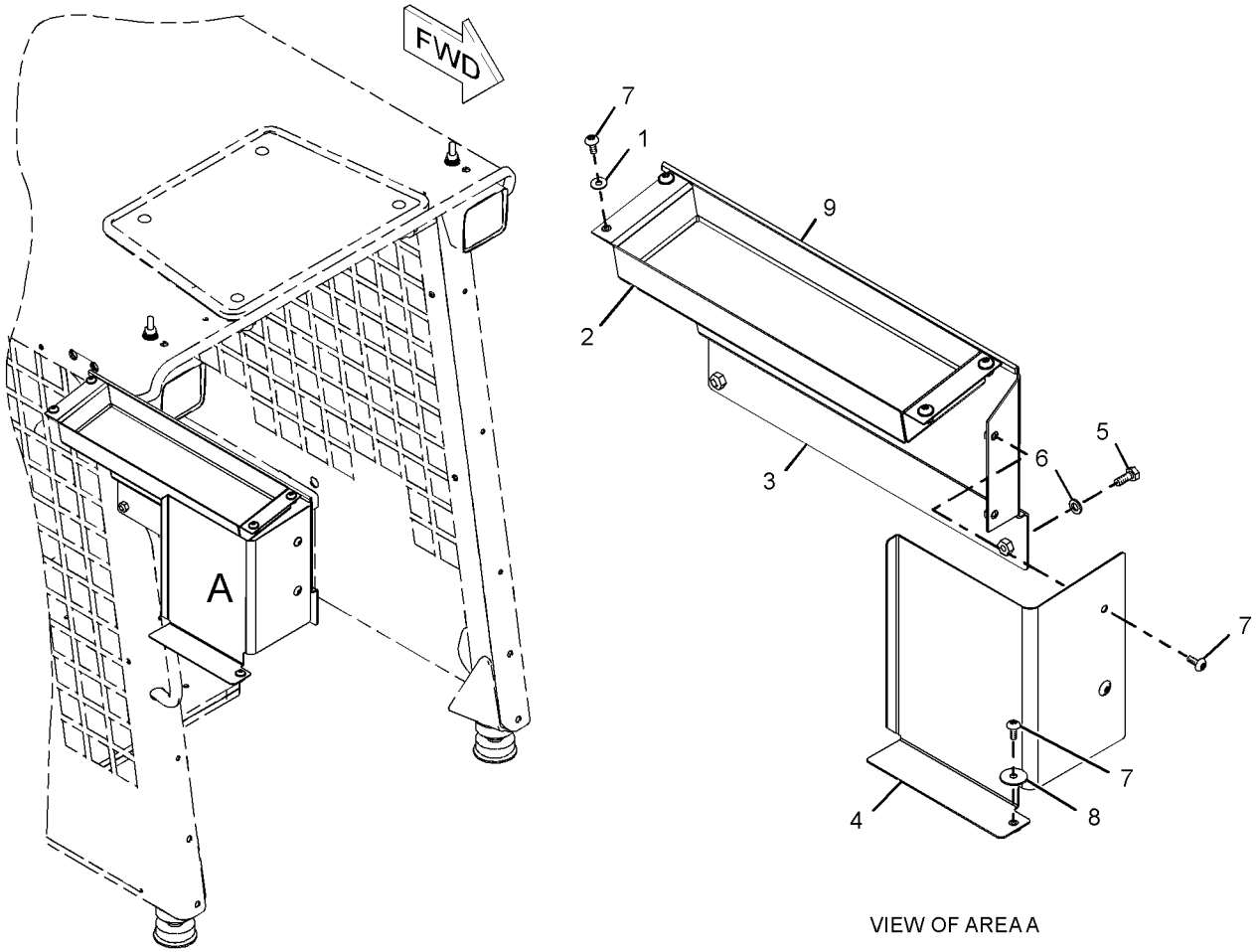

VIEW OF AREA A

GRAPHIC #1 **<END>** g01198919

OPERATOR STATION

142-9118 COVER GP-INSTRUMENT PANEL

S/N: MJH1-UP; SCH1-UP; RLL1-UP; BXM1-UP
PART OF 216-4751, 225-7998 PANEL GP-INSTRUMENT
AN ATTACHMENT

SMCS-1408, 7451, 7478 **i02359500**

NOTE	REF NO	GRAPHIC REF	PART NUMBER	QTY	PART NAME 1 2 3 4 5 6 (PRODUCT LEVEL)	SEE PAGE
	1	1	**158-6695**	1	COVER	
	2	1	**200-5717**	1	METER GP-SERVICE	
		1	**214-2465**	1	KIT-SERVICE METER	
					(INCLUDES BOLTS, LOCKNUT & FILM)	
	3	1	**215-3207**	1	HARNESS AS-MONITOR (SERVICE METER)	
		1	**102-8803**	1	KIT-RECEPTACLE (3-PIN)	
					(INCLUDES RECEPTACLE AS & WEDGE)	
	4	1	**103-2006**	2	SCREW-PAN HEAD (6-19X0.37-IN)	

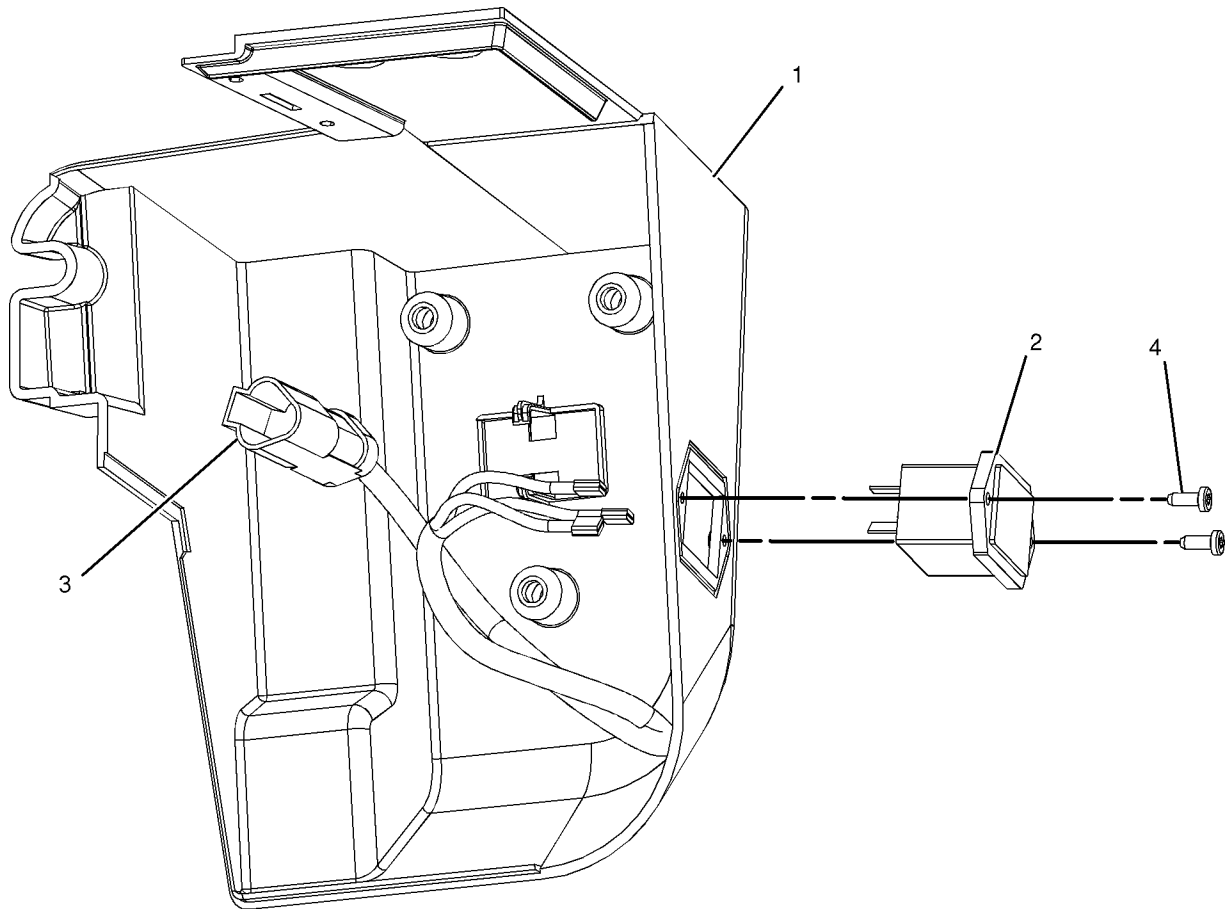

GRAPHIC #1 **<END>** g01025539

OPERATOR STATION

218-6440 DOOR & MTG GP-CAB

S/N: MJH1-UP; SCH1-UP; RLL1-UP; BXM1-UP
POLYCARBONATE
AN ATTACHMENT

SMCS-7308 **i02359501**

NOTE	REF NO	GRAPHIC REF	PART NUMBER	QTY	PART NAME 1 2 3 4 5 6 (PRODUCT LEVEL)	SEE PAGE
E	1	2	**3E-8082**		SEAL (72-CM)	
E	2	2	**125-3518**		SEAL (69-CM)	
E	3	2	**144-0195**		HOSE (40-CM)	
D	4	2	**5P-9909**		SEAL (0.05-M EACH)	
	5	1	**5P-0372**	2	LOCK PIN	
	6	2	**8T-2444**	2	STUD-BALL	
	7	2	**8T-3848**	1	STRIKER AS-LATCH	
		2	**6V-4270**	1	LOCKWASHER	
	8	1	**9C-5344**	1	SPACER (10.5X20X18-MM THK)	
	9	1	**095-1325**	1	PIN-CLEVIS	
	10	1	**153-2683**	1	SPRING AS-GAS	
	11	1	**177-3405**	1	PIN	
	12	2	**218-0728**	2	SPRING	
Y	13	2	*218-6441*	1	DOOR GP-CAB (POLYCARBONATE)	683
	14	2	**219-9739**	1	TANK AS-WINDOW WASHER	
	15	2	**221-3877**	1	HARNESS AS-WINDOW WIPER	
		2	**155-2274**	1	KIT-CONNECTING PLUG (6-PIN)	
					(INCLUDES PLUG AS, WEDGE & INTERFACE SEAL)	
	16	2	**223-0587**	1	PLATE AS	
	17	2	**223-0591**	1	PLATE AS	
	18	2	**223-0601**	2	PLATE AS	
	19	2	**223-0608**	1	HINGE AS	
	20	2	**223-0617**	1	MOUNT	
	21	2	**230-3214**	1	SPRING AS-GAS	
M	22	2	**127-2170**	8	SCREW-TRUSS HEAD (M8X1.25X20-MM)	
	23	2	**142-9356**	1	BLOCK	
	24	2	**195-0937**	4	INSERT-THREADED (M8X1.25)	
	25	2	**3S-2093**	3	STRAP-CABLE	
M	26	2	**5C-2890**	13	NUT (M6X1-THD)	
M	27	2	**5C-7261**	4	NUT (M8X1.25-THD)	
	28	2	**8T-4121**	4	WASHER-HARD (11X21X2.5-MM THK)	
M	29	2	**8T-4133**	4	NUT (M10X1.5-THD)	
	30	2	**8T-4205**	13	WASHER-HARD (7.2X14.5X2-MM THK)	
	31	2	**8T-4222**	1	WASHER-PLATED (11X32X2.5-MM THK)	
	32	2	**8T-4224**	6	WASHER-HARD (8.8X16X2-MM THK)	
M	33	2	**9X-2041**	4	SCREW-TRUSS HEAD (M10X1.5X20-MM)	
M	34	2	**9X-2044**	3	SCREW-TRUSS HEAD (M6X1X16-MM)	
M	35	2	**9X-2045**	4	SCREW-TRUSS HEAD (M6X1X20-MM)	
E	36	2	**125-3518**		SEAL (6-CM EACH)	

D-ORDER BY THE METER
E-ORDER BY THE CENTIMETER
M-METRIC PART
Y-SEPARATE ILLUSTRATION

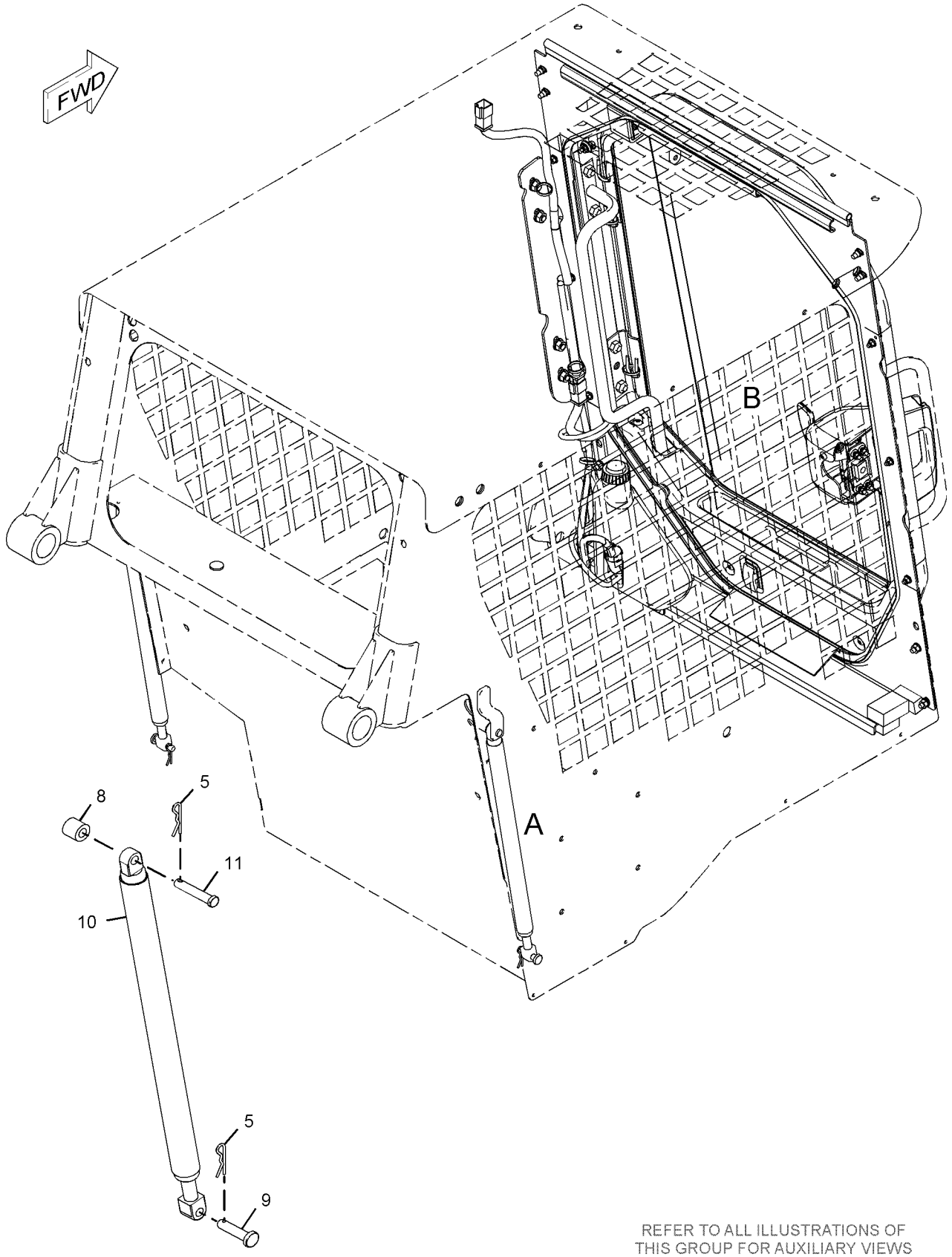

REFER TO ALL ILLUSTRATIONS OF
THIS GROUP FOR AUXILIARY VIEWS

VIEW OF AREA A

GRAPHIC #1

g01036326

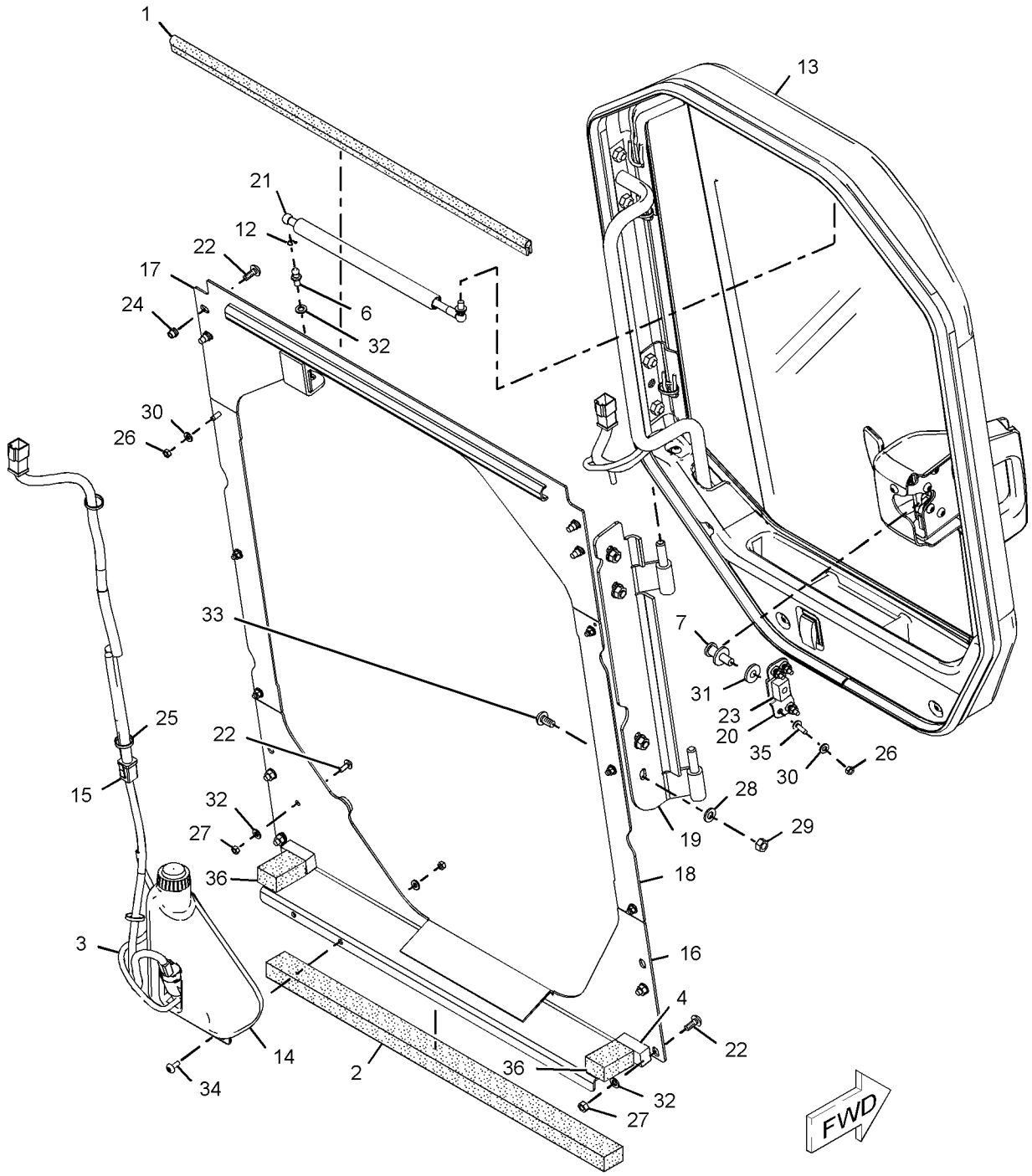

VIEW OF AREA B

GRAPHIC #2

<END>

g01036331

OPERATOR STATION

223-0600 DOOR & MTG GP-CAB

S/N: MJH1-UP; SCH1-UP; RLL1-UP; BXM1-UP
GLASS
AN ATTACHMENT

SMCS-7308 **i02359508**

NOTE	REF NO	GRAPHIC REF	PART NUMBER	QTY	PART NAME 1 2 3 4 5 6 (PRODUCT LEVEL)	SEE PAGE
E	1	2	**3E-8082**		SEAL (72-CM)	
E	2	2	**125-3518**		SEAL (69-CM)	
E	3	2	**144-0195**		HOSE (40-CM)	
D	4	2	**5P-9909**		SEAL (.05-M EACH)	
	5	1	**5P-0372**	2	LOCK PIN	
	6	2	**8T-2444**	2	STUD-BALL	
	7	2	**8T-3848**	1	STRIKER AS-LATCH	
		2	**6V-4270**	1	LOCKWASHER	
	8	1	**9C-5344**	1	SPACER (10.5X20X18-MM THK)	
	9	1	**095-1325**	1	PIN-CLEVIS	
	10	1	**153-2683**	1	SPRING AS-GAS	
	11	1	**177-3405**	1	PIN	
	12	2	**218-0728**	2	SPRING	
	13	2	**219-9739**	1	TANK AS-WINDOW WASHER	
	14	2	**221-3877**	1	HARNESS AS-WINDOW WIPER	
		2	**155-2274**	1	KIT-CONNECTING PLUG (6-PIN)	
					(INCLUDES PLUG AS, WEDGE & INTERFACE SEAL)	
	15	2	**223-0587**	1	PLATE AS	
	16	2	**223-0591**	1	PLATE AS	
	17	2	**223-0601**	2	PLATE AS	
	18	2	**223-0608**	1	HINGE AS	
Y	19	2	*223-0616*	1	DOOR GP-CAB (GLASS)	685
	20	2	**223-0617**	1	MOUNT	
	21	2	**230-3214**	1	SPRING AS-GAS	
M	22	2	**127-2170**	8	SCREW-TRUSS HEAD (M8X1.25X20-MM)	
	23	2	**142-9356**	1	BLOCK	
	24	2	**195-0935**	4	INSERT-THREADED (M6X1)	
	25	2	**3S-2093**	3	STRAP-CABLE	
M	26	2	**5C-2890**	13	NUT (M6X1-THD)	
M	27	2	**5C-7261**	4	NUT (M8X1.25-THD)	
	28	2	**8T-4121**	4	WASHER-HARD (11X21X2.5-MM THK)	
M	29	2	**8T-4133**	4	NUT (M10X1.5-THD)	
	30	2	**8T-4205**	13	WASHER-HARD (7.2X14.5X2-MM THK)	
B	31	2	**8T-4222**	1	WASHER-PLATED (11X32X2.5-MM THK)	
	32	2	**8T-4224**	6	WASHER-HARD (8.8X16X2-MM THK)	
M	33	2	**9X-2041**	4	SCREW-TRUSS HEAD (M10X1.5X20-MM)	
M	34	2	**9X-2044**	3	SCREW-TRUSS HEAD (M6X1X16-MM)	
M	35	2	**9X-2045**	4	SCREW-TRUSS HEAD (M6X1X20-MM)	
E	36	2	**125-3518**		SEAL (6-CM EACH)	

B-USE AS REQUIRED
D-ORDER BY THE METER
E-ORDER BY THE CENTIMETER
M-METRIC PART
Y-SEPARATE ILLUSTRATION

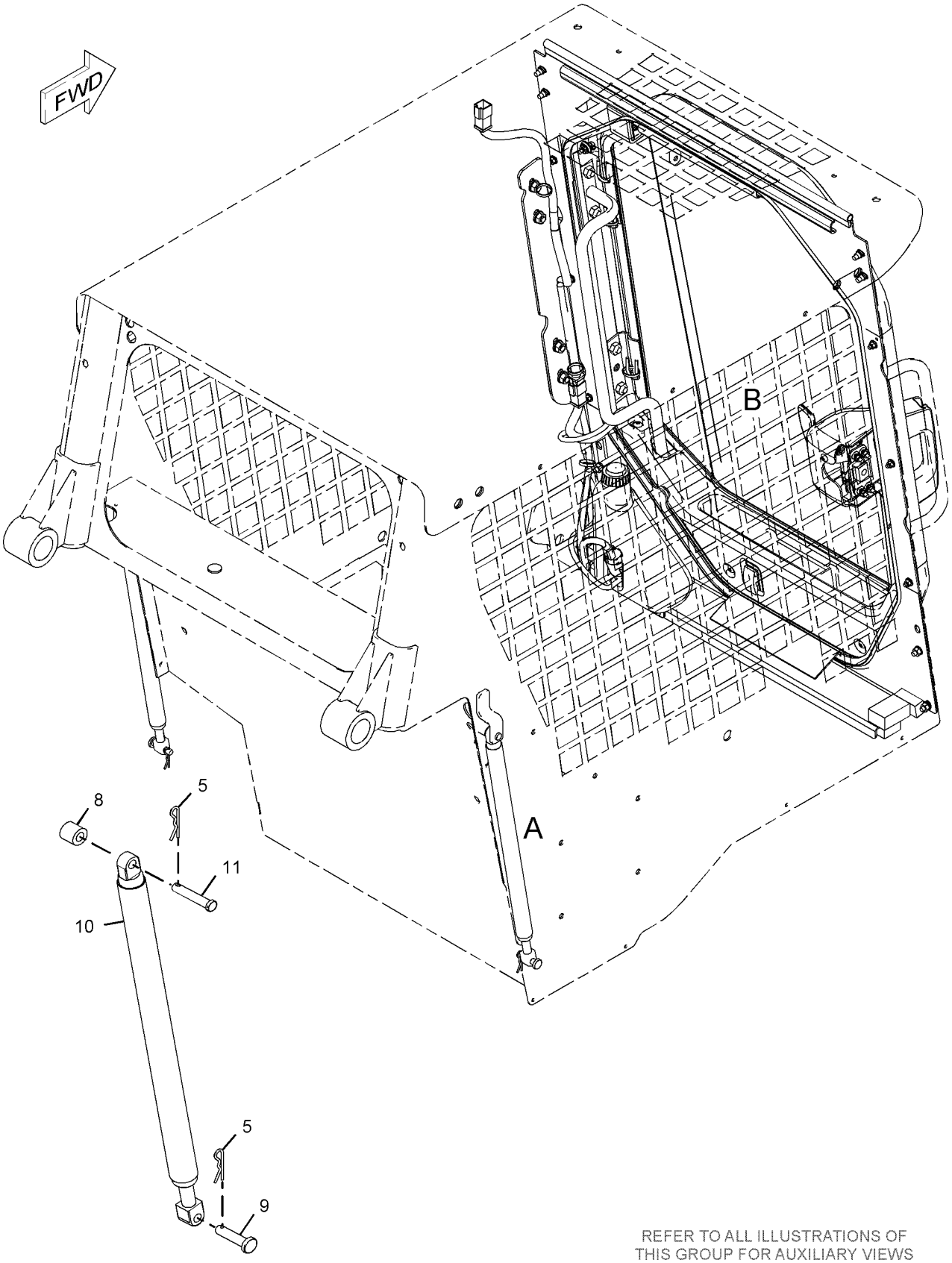

REFER TO ALL ILLUSTRATIONS OF
THIS GROUP FOR AUXILIARY VIEWS

VIEW OF AREA A

GRAPHIC #1 g01036339

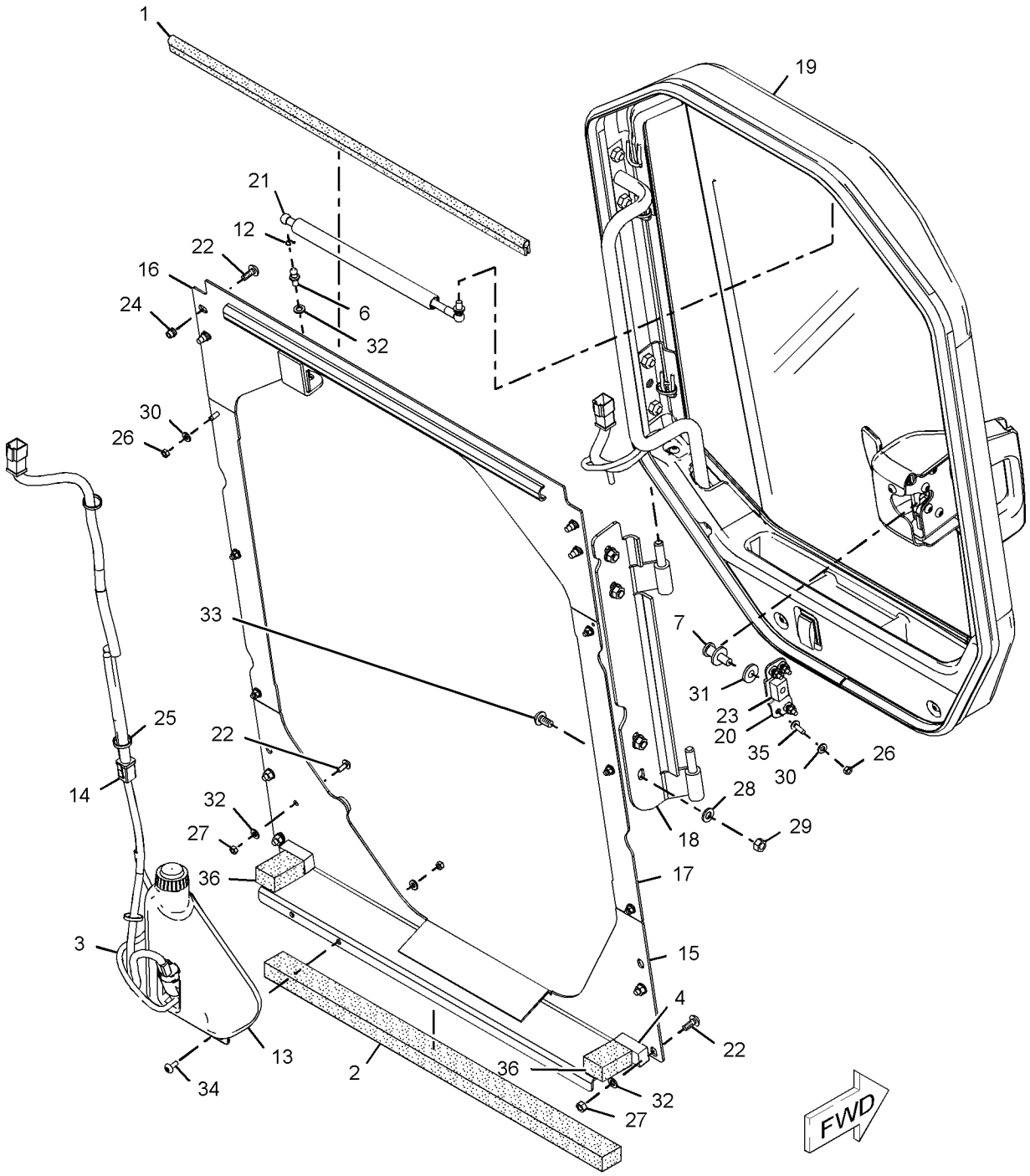

VIEW OF AREA B

GRAPHIC #2

<END>

g01036340

OPERATOR STATION

218-6431 DOOR GP-CAB–GLASS

S/N: MJH1-UP; SCH1-UP; RLL1-UP; BXM1-UP
PART OF 223-0616 DOOR GP-CAB
AN ATTACHMENT

SMCS-7308 **i01934871**

NOTE	REF NO	GRAPHIC REF	PART NUMBER	QTY	PART NAME 1 2 3 4 5 6 (PRODUCT LEVEL)	SEE PAGE
	1	1	**223-0609**	1	GLASS-DOOR	
	2	1	**223-0610**	1	GLASS-DOOR	
	3	1	**223-0612**	1	GLASS-DOOR	
	4	1	**223-0614**	1	FRAME AS	

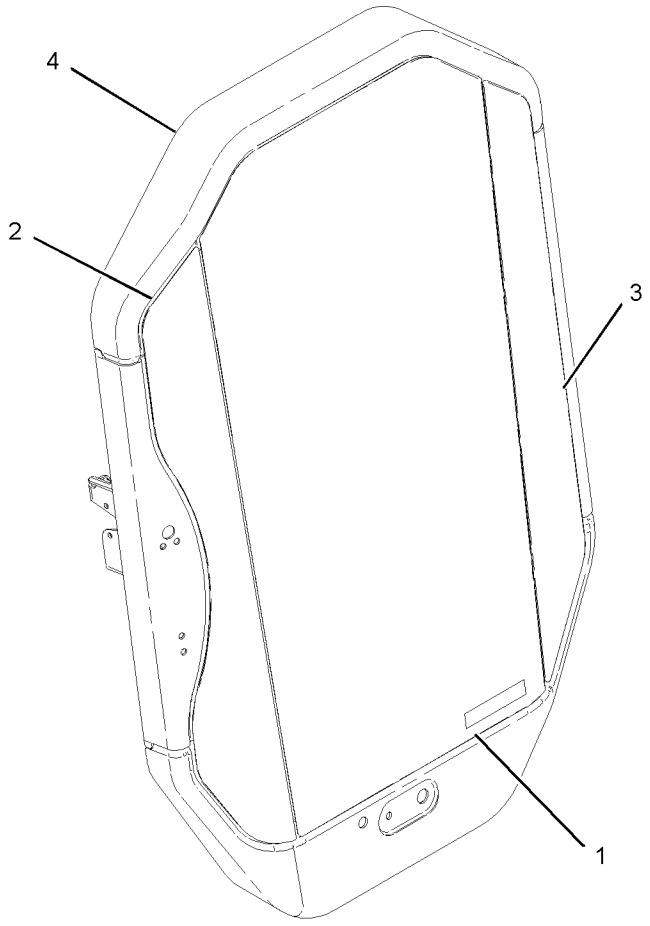

GRAPHIC #1 **<END>** g01010846

OPERATOR STATION

218-6441 DOOR GP-CAB

S/N: MJH1-UP; SCH1-UP; RLL1-UP; BXM1-UP
POLYCARBONATE
PART OF 218-6440 DOOR & MTG GP-CAB, 218-6743 KIT-CAB DOOR & MOUNTING AN ATTACHMENT

SMCS-7308 **i02456059**

NOTE	REF NO	GRAPHIC REF	PART NUMBER	QTY	PART NAME 1 2 3 4 5 6 (PRODUCT LEVEL)	SEE PAGE
	1	1	**8G-1151**	2	CONNECTOR	
	2	1	**101-0745**	1	BLADE AS-WIPER (WIPER)	
	3	1	**109-2355**	1	HOUSING-SWITCH	
	4	1	**138-4883**	1	SWITCH AS-ROCKER (REAR WIPER)	
		1	**111-7899**	1	GASKET	
	5	1	**248-2376**	1	MOTOR GP-WINDOW WIPER	
		1	**102-8804**	1	KIT-RECEPTACLE (4-PIN)	
					(INCLUDES RECEPTACLE AS & WEDGE)	
		1	**186-3735**	4	PIN-CONNECTOR (16-GA TO 18-GA)	
	6	1	**248-2171**	1	HANDLE AS	
	7	1	**205-5148**	2	SCREW-FLAT HEAD (M6X1X25-MM)	
	8	1	*218-6432*	1	DOOR GP-CAB (POLYCARBONATE)	
		1	**223-0619**	1	WINDOW (POLYCARBONATE)	
		1	**223-0614**	1	FRAME AS	
	9	1	**221-3876**	1	HARNESS AS-WINDOW WIPER	
		1	**8L-8413**	8	STRAP-CABLE	
		1	**111-7898**	1	CONNECTOR	
		1	**112-9611**	1	TERMINAL-BLADE	
		1	**122-4406**	3	TERMINAL	
		1	**3E-9179**	3	TERMINAL-RECEPTACLE	
		1	**102-8805**	1	KIT-RECEPTACLE (6-PIN)	
					(INCLUDES RECEPTACLE AS & WEDGE)	
		1	**155-2260**	1	KIT-CONNECTING PLUG (3-PIN)	
		1	**155-2271**	1	KIT-CONNECTING PLUG (4-PIN)	
					(EACH PLUG KIT INCLUDES PLUG AS, WEDGE & INTERFACE SEAL)	
	10	1	**263-2135**	1	ARM GP-WINDOW WIPER	
		1	**240-8666**	2	CLIP	
		1	**136-3191**	1	NOZZLE AS-WASHER	
E		1	**194-5171**		HOSE (60-CM)	
	11	1	**223-0613**	1	COVER AS	
	12	1	**223-8488**	1	COVER-LATCH	
	13	1	**223-8495**	1	HANDLE AS	
M		1	**6V-9632**	1	NUT-WELD (M6X1-THD)	
	14	1	**225-3187**	1	LATCH AS	
	15	1	**229-8757**	1	SWITCH AS-LIMIT	
	16	1	**235-4768**	2	HINGE	
	18	1	**032-9828**	1	GROMMET	
	19	1	**3S-2093**	3	STRAP-CABLE	
M	20	1	**134-8273**	4	SCREW-FLAT HEAD (M10X1.15-THD)	
M	21	1	**9X-2044**	14	SCREW-TRUSS HEAD (M6X1X16-MM)	
M	22	1	**9X-2045**	2	SCREW-TRUSS HEAD (M6X1X20-MM)	
E	23	1	**144-0195**		HOSE (73-CM)	
E	24	1	**124-3243**		SEAL (306-CM)	

E-ORDER BY THE CENTIMETER
M-METRIC PART

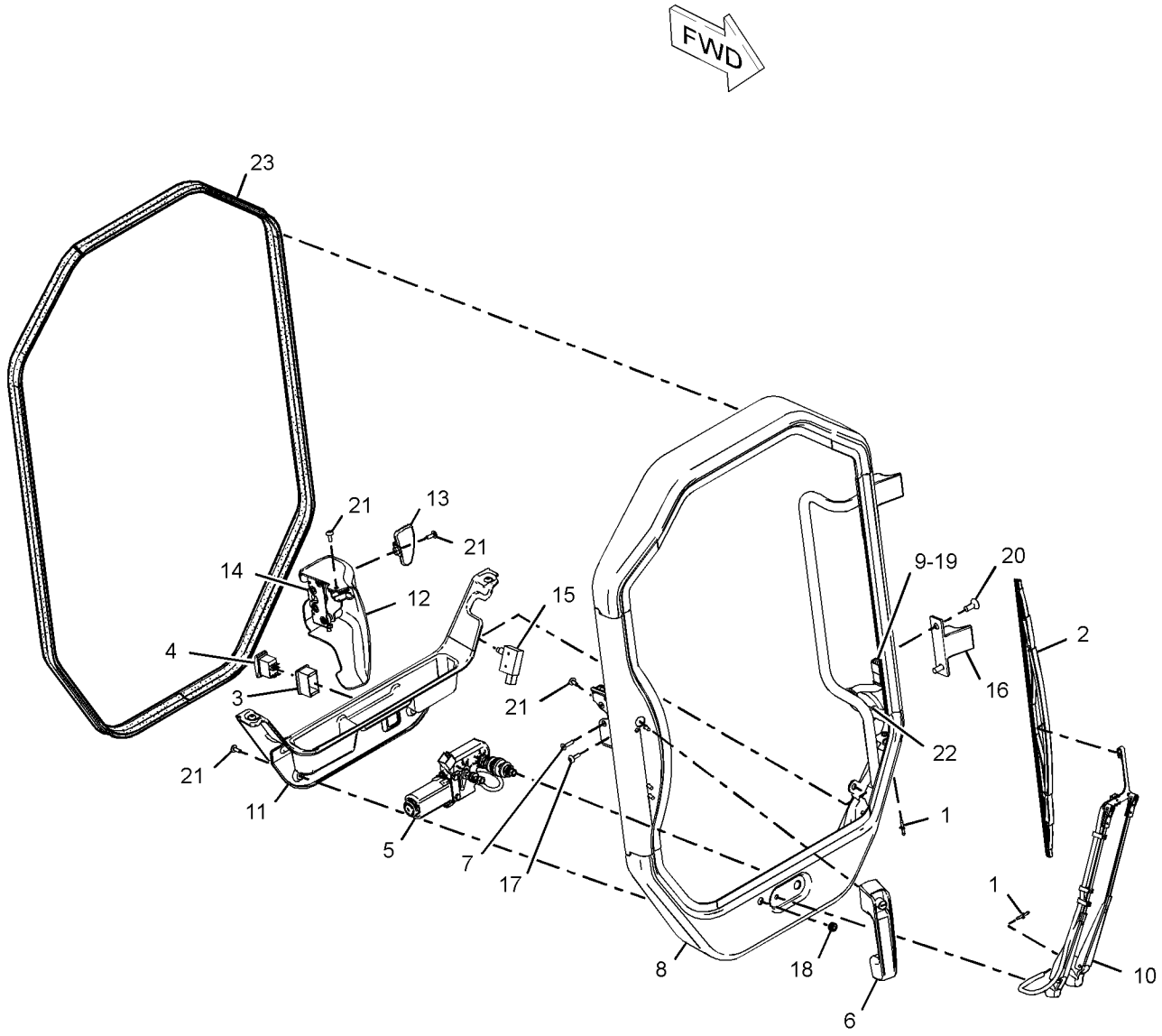

GRAPHIC #1 **<END>** g01226089

OPERATOR STATION

223-0616 DOOR GP-CAB—GLASS

S/N: MJH1-UP; SCH1-UP; RLL1-UP; BXM1-UP

PART OF 223-0600 DOOR & MTG GP-CAB, 218-6744 KIT-CAB DOOR & MOUNTING

AN ATTACHMENT

SMCS-7308 **i02456090**

NOTE	REF NO	GRAPHIC REF	PART NUMBER	QTY	PART NAME 1 2 3 4 5 6 (PRODUCT LEVEL)	SEE PAGE
BE	1	1	**124-3243**		SEAL	
E	2	1	**144-0195**		HOSE (105-CM)	
	3	1	**8G-1151**	2	CONNECTOR	
	4	1	**101-0745**	1	BLADE AS-WIPER	
	5	1	**109-2355**	1	HOUSING-SWITCH	
	6	1	**138-4883**	1	SWITCH AS-ROCKER (REAR WIPER)	
		1	**111-7899**	1	GASKET	
	7	1	**248-2376**	1	MOTOR GP-WINDOW WIPER	
		1	**102-8804**	1	KIT-RECEPTACLE (4-PIN)	
					(INCLUDES RECEPTACLE AS & WEDGE)	
		1	**186-3735**	4	PIN-CONNECTOR (16-GA TO 18-GA)	
	8	1	**248-2171**	1	HANDLE AS	
	9	1	**205-5148**	2	SCREW-FLAT HEAD (M6X1X25-MM)	
Y	10	1	*218-6431*	1	DOOR GP-CAB (GLASS)	682
	11	1	**221-3876**	1	HARNESS AS-WINDOW WIPER	
		1	**102-8805**	1	KIT-RECEPTACLE (6-PIN)	
					(INCLUDES RECEPTACLE AS & WEDGE)	
		1	**155-2260**	1	KIT-CONNECTING PLUG (3-PIN)	
		1	**155-2271**	1	KIT-CONNECTING PLUG (4-PIN)	
					(EACH PLUG KIT INCLUDES PLUG AS, WEDGE & INTERFACE SEAL)	
	12	1	**263-2135**	1	ARM GP-WINDOW WIPER	
		1	**136-3191**	1	NOZZLE AS-WASHER	
E		1	**194-5171**		HOSE (60-CM)	
		1	**240-8666**	2	CLIP	
	13	1	**223-0613**	1	COVER AS	
	14	1	**223-8488**	1	COVER-LATCH	
	15	1	**223-8495**	1	HANDLE AS	
	16	1	**225-3187**	1	LATCH AS	
	17	1	**229-8757**	1	SWITCH AS-LIMIT	
		1	**102-8803**	1	KIT-RECEPTACLE (3-PIN)	
					(INCLUDES RECEPTACLE AS & WEDGE)	
		1	**186-3735**	1	PIN-CONNECTOR (16-GA TO 18-GA)	
	18	1	**235-4768**	2	HINGE	
M	19	1	**9X-2045**	2	SCREW-TRUSS HEAD (M6X1X20-MM)	
	20	1	**032-9828**	1	GROMMET	
	21	1	**3S-2093**	3	STRAP-CABLE	
M	22	1	**134-8273**	4	SCREW-FLAT HEAD (M10X1.15-THD)	
M	23	1	**9X-2044**	14	SCREW-TRUSS HEAD (M6X1X16-MM)	

B-USE AS REQUIRED
E-ORDER BY THE CENTIMETER
M-METRIC PART
Y-SEPARATE ILLUSTRATION

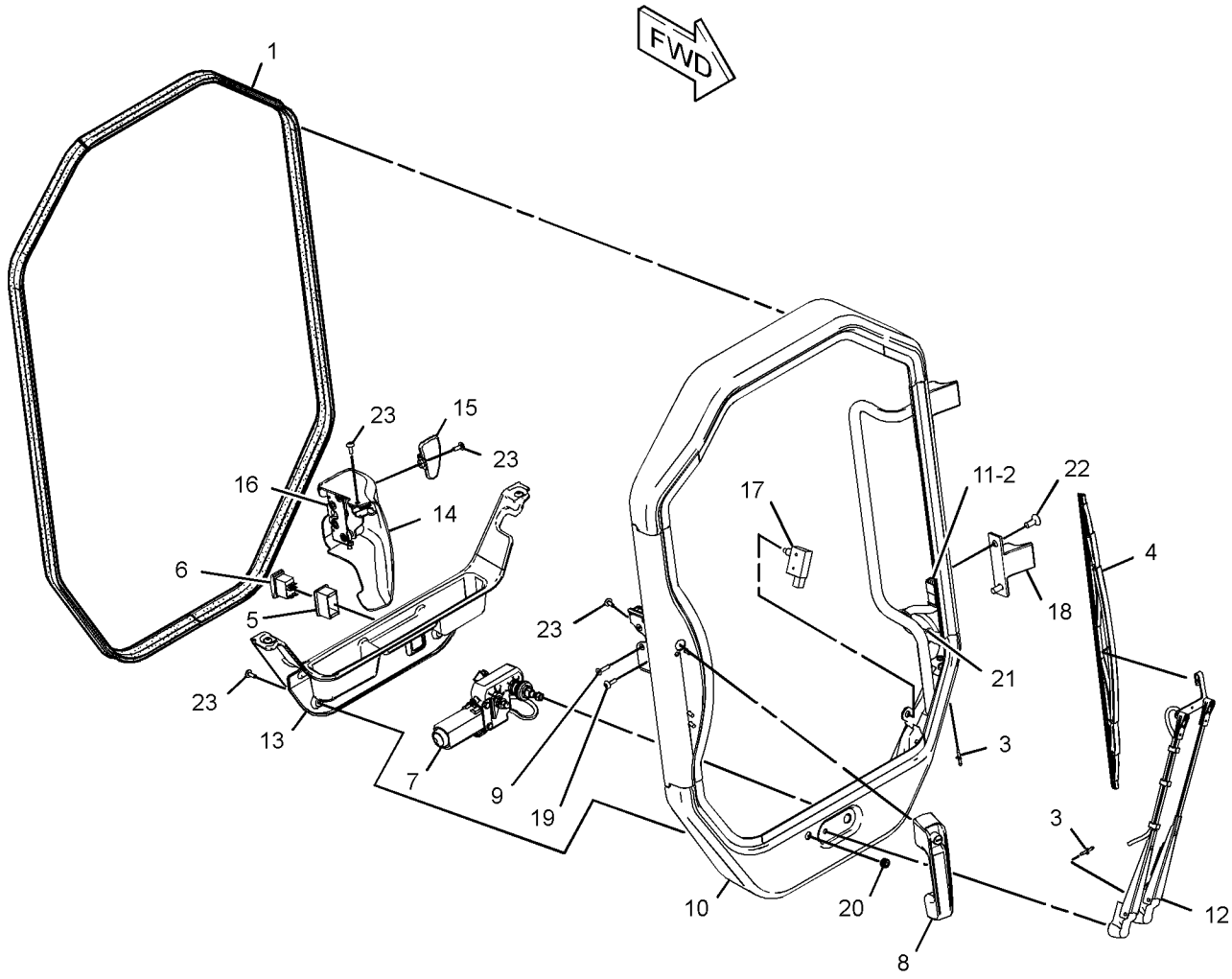

GRAPHIC #1 **<END>** g01229711

OPERATOR STATION

218-6394 DUCT & CONTROL GP

S/N: MJH1-UP; SCH1-UP; RLL1-UP; BXM1-UP
PART OF 218-6273, 218-6302 AIR CONDITIONER AR, 218-6272, 218-6703 HEATER AR-CAB
AN ATTACHMENT

SMCS-7337, 734D **i02474709**

NOTE	REF NO	GRAPHIC REF	PART NUMBER	QTY	PART NAME 1 2 3 4 5 6 (PRODUCT LEVEL)	SEE PAGE
E	1	1	**8T-5372**		SEAL (40-CM)	
	2	1	**146-6371**	6	LOUVER AS	
	3	1	**218-6396**	1	DUCT	
	4	1	**218-6397**	1	CONSOLE (RH)	
	5	1	**218-6398**	1	CONSOLE (LH)	
	6	1	**218-6401**	1	SEAL	
	7	1	**218-6414**	1	SEAL	
	8	1	**218-6437**	1	INSULATION	
M	9	1	**175-0005**	8	SCREW-BUTTON HEAD (M6X1X25-MM)	
	10	1	**230-9696**	1	SEAL	
	11	1	**240-6877**	1	SEAL	
	12	1	**240-6878**	1	SEAL	
	13	1	**240-6879**	2	SEAL	
	14	1	**6V-6689**	2	SCREW-SELF-TAPPING (10-16X.625-IN)	

E-ORDER BY THE CENTIMETER
M-METRIC PART

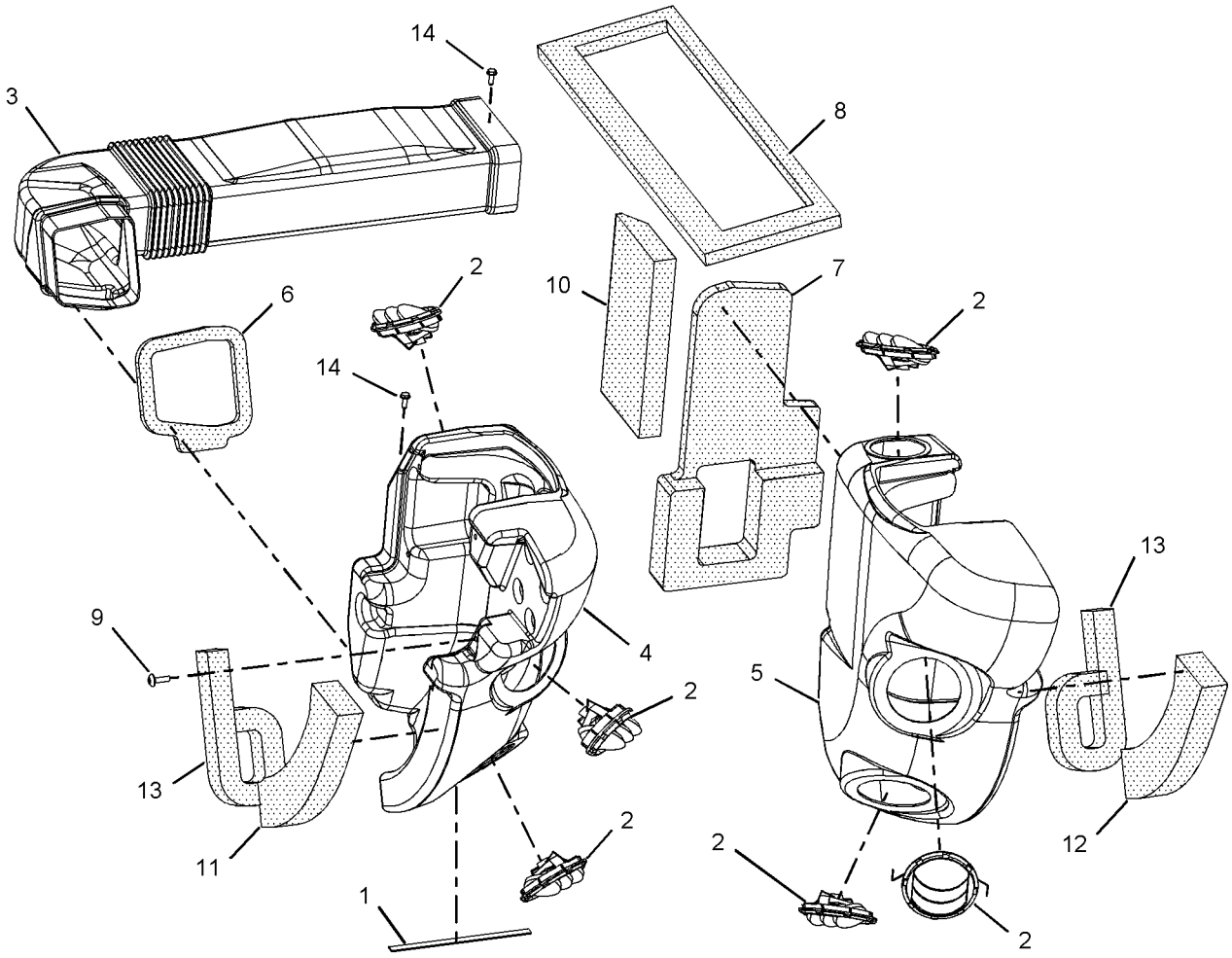

GRAPHIC #1 **<END>** g01037814

OPERATOR STATION

231-7325 FRAME GP-WINDOW–RH

S/N: MJH1-UP; SCH1-UP; RLL1-UP; BXM1-UP
PART OF 224-7058 WINDOW GP-CAB
AN ATTACHMENT

SMCS-7310 **i02064824**

NOTE	REF NO	GRAPHIC REF	PART NUMBER	QTY	PART NAME 1 2 3 4 5 6 (PRODUCT LEVEL)	SEE PAGE
	1	1	**231-7326**	1	FRAME AS-WINDOW (RH)	
	1A	1	**5C-7682**	1	SCREW (8-32-THD)	
JZ	1B	1		1	BOLT	
JZ	1C	1		1	LATCH	
JZ	1D	1		1	SCREW	
JZ	1E	1		1	SPRING	
JZ	1F	1		2	CLIP	
JZ	1G	1		2	WASHER	
	1H	1	**231-7401**	1	HINGE	
	2	1	**239-6138**	1	BRACKET AS	
	3	1	**5C-7682**	2	SCREW (8-32-THD)	
					AVAILABLE REPAIR KIT(S):	
J			**231-7329**	1	KIT-LATCH	

J-KIT MARKED J SERVICES PART MARKED J
Z-NOT SERVICED SEPARATELY

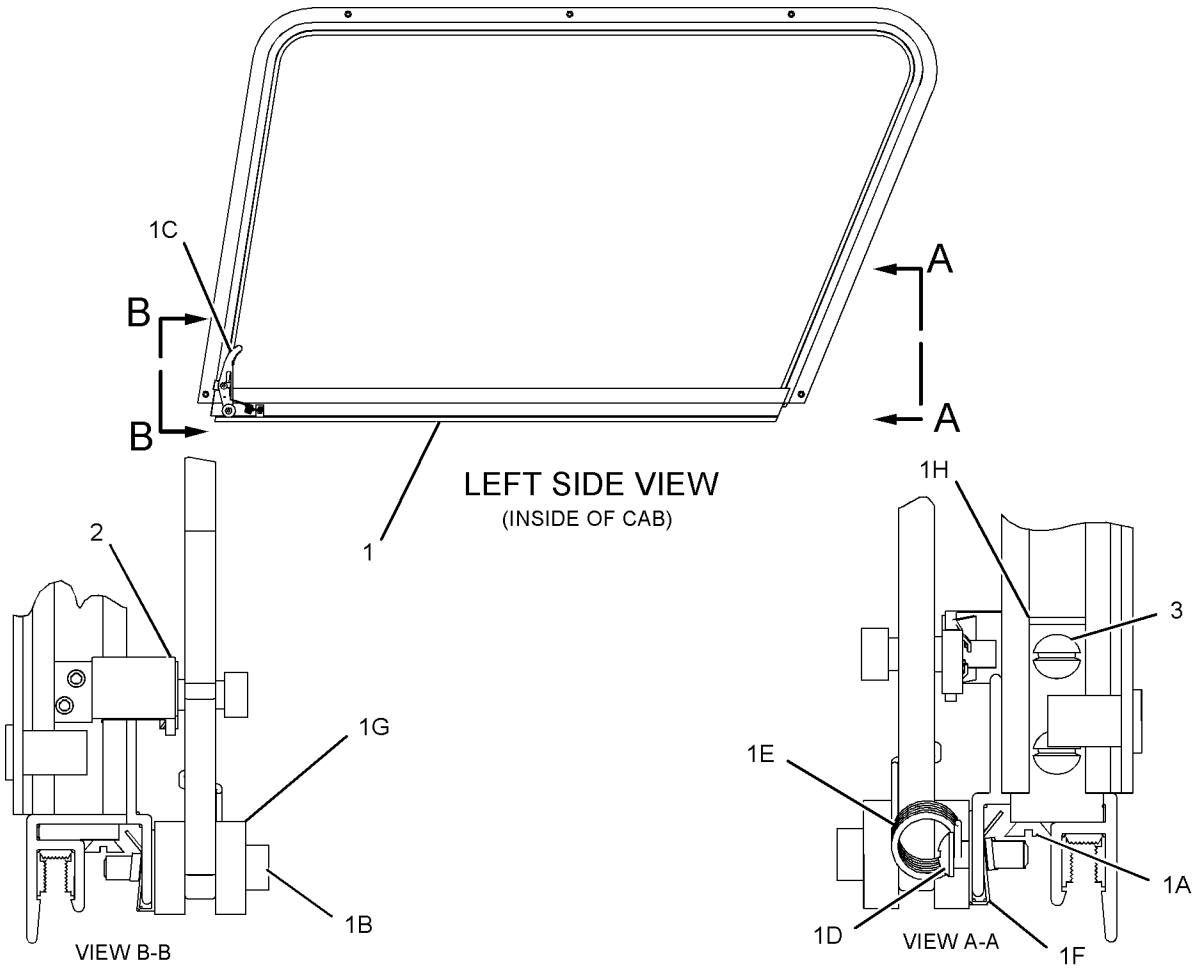

GRAPHIC #1 **<END>** g01066130

231-7327 FRAME GP-WINDOW–LH

S/N: MJH1-UP; SCH1-UP; RLL1-UP; BXM1-UP
PART OF 224-7057 WINDOW GP-CAB
AN ATTACHMENT

SMCS-7310 **i02064823**

NOTE	REF NO	GRAPHIC REF	PART NUMBER	QTY	PART NAME 1 2 3 4 5 6 (PRODUCT LEVEL)	SEE PAGE
	1	1	**231-7328**	1	FRAME AS-WINDOW (LH)	
	1A	1	**5C-7682**	1	SCREW (8-32-THD)	
JZ	1B	1		1	BOLT	
JZ	1C	1		1	LATCH	
JZ	1D	1		1	SCREW	
JZ	1E	1		1	SPRING	
JZ	1F	1		2	CLIP	
JZ	1G	1		2	WASHER	
	1H	1	**231-7401**	1	HINGE	
	2	1	**239-6138**	1	BRACKET AS	
	3	1	**5C-7682**	2	SCREW (8-32-THD)	
					AVAILABLE REPAIR KIT(S):	
J			**231-7329**	1	KIT-LATCH	

J-KIT MARKED J SERVICES PARTS MAKED J
Z-NOT SERVICED SEPARATELY

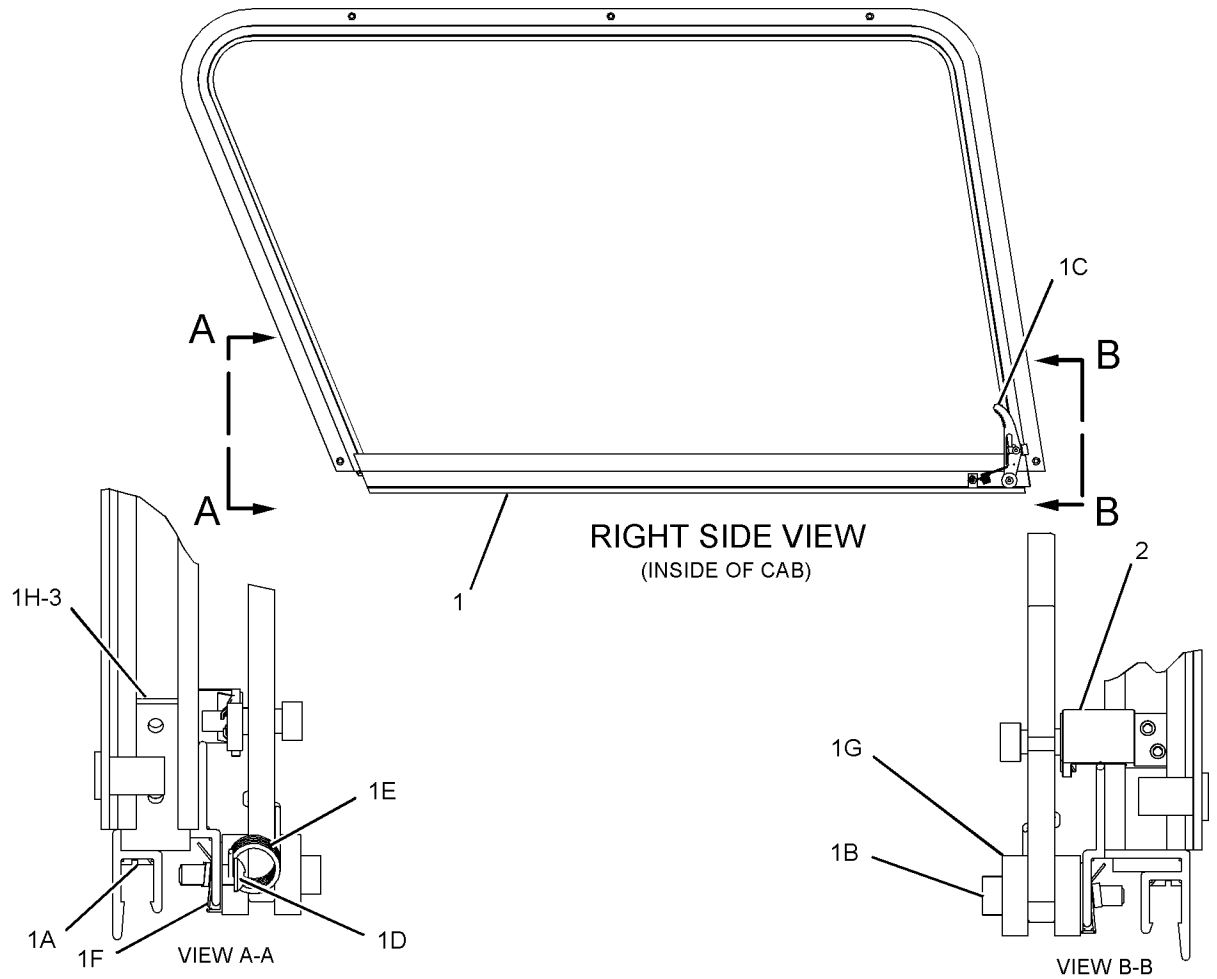

GRAPHIC #1 **<END>** g01066272

OPERATOR STATION

216-4712 GAUGE & WARNING GP–LH

S/N: MJH1-UP; SCH1-UP; RLL1-UP; BXM1-UP
PART OF 216-4751, 225-7998 PANEL GP-INSTRUMENT
AN ATTACHMENT

SMCS-7450, 7451 **i02014376**

NOTE	REF NO	GRAPHIC REF	PART NUMBER	QTY	PART NAME 1 2 3 4 5 6 (PRODUCT LEVEL)	SEE PAGE
J	1	1	**142-8858**	1	SWITCH AS-KEY START	
		1	**167-1530**	1	NUT	
	2	1	**158-6694**	1	PANEL	
	3	1	**197-6894**	1	FILM-INSTRUCTION (INSTRUMENT PANEL)	
	4	1	**216-4753**	1	FILM (KEY SWITCH)	
Y	5	1	**223-6537**	1	MODULE GP-WARNING INDICATOR	723
	6	1	**103-2006**	2	SCREW-PAN HEAD (6-19X.37-IN)	

J-REQUIRES 5P-8500 KEY
Y-SEPARATE ILLUSTRATION

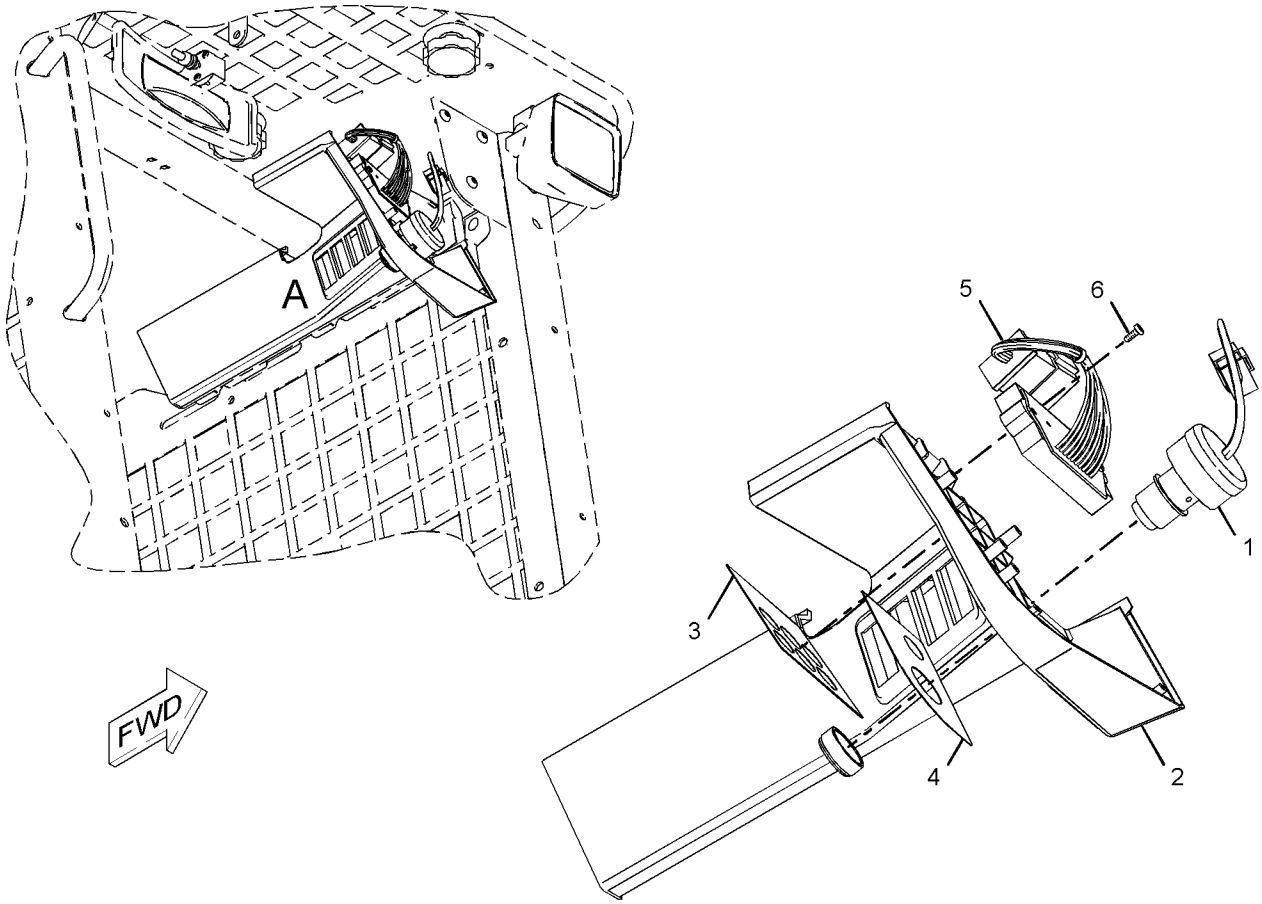

VIEW OF AREA A

GRAPHIC #1 **<END>** g01028652

OPERATOR STATION

216-4713 GAUGE & WARNING GP–RH

S/N: MJH1-3144; SCH1-911; RLL1-1330; BXM1-1301
PART OF 216-4751, 225-7998 PANEL GP-INSTRUMENT
AN ATTACHMENT

SMCS-7450, 7451 **i02024150**

NOTE	REF NO	GRAPHIC REF	PART NUMBER	QTY	PART NAME 1 2 3 4 5 6 (PRODUCT LEVEL)	SEE PAGE
	1	1	**084-4277**	1	LAMP GP-DOME	
		1	**6R-7490**	1	LAMP (12-VOLT, 10-WATT)	
	2	1	**158-6697**	1	PANEL	
	3	1	**216-4754**	1	FILM-INSTRUCTION (DASH)	
Y	4	1	**229-7224**	1	MODULE GP-WARNING INDICATOR	724
	5	1	**103-2006**	2	SCREW-PAN HEAD (6-19X0.37-IN)	
	6	1	**170-6305**	1	GAUGE GP-FUEL LEVEL	
		1	**4B-2043**	3	NUT (8-32-MM)	
		1	**7X-9065**	1	LAMP (12-VOLT)	
		1	**9B-7233**	3	LOCKWASHER	
	7	1	**167-7801**	1	RESISTOR AS	

Y-SEPARATE ILLUSTRATION

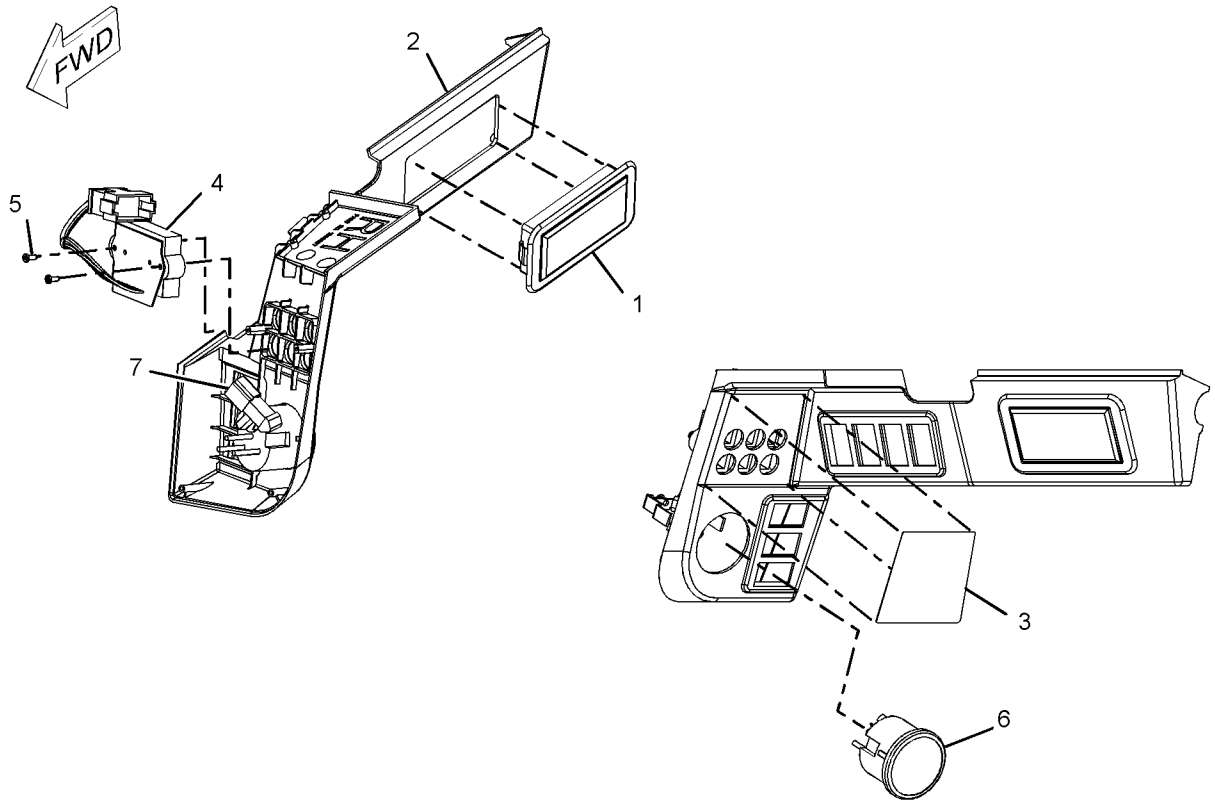

RIGHT SIDE VIEW

GRAPHIC #1 **<END>** g01039158

OPERATOR STATION

216-4713 GAUGE & WARNING GP–RH

S/N: MJH3145-UP; SCH912-UP; RLL1331-UP; BXM1302-UP
PART OF 216-4751, 225-7998 PANEL GP-INSTRUMENT
AN ATTACHMENT

SMCS-7450, 7451 **i02338047**

NOTE	REF NO	GRAPHIC REF	PART NUMBER	QTY	PART NAME 1 2 3 4 5 6 (PRODUCT LEVEL)	SEE PAGE
	1	1	**084-4277**	1	LAMP GP-DOME	
		1	**6R-7490**	1	LAMP (12-VOLT, 10-WATT)	
	2	1	**158-6697**	1	PANEL	
	3	1	**216-4754**	1	FILM-INSTRUCTION	
Y	4	1	**249-2910**	1	MODULE GP-WARNING INDICATOR	725
	5	1	**103-2006**	2	SCREW-PAN HEAD (6-19X0.37-IN)	
	6	1	**170-6305**	1	GAUGE GP-FUEL LEVEL	
		1	**4B-2043**	3	NUT (8-32-MM)	
		1	**7X-9065**	1	LAMP (12-VOLT)	
		1	**9B-7233**	3	LOCKWASHER	

Y-SEPARATE ILLUSTRATION

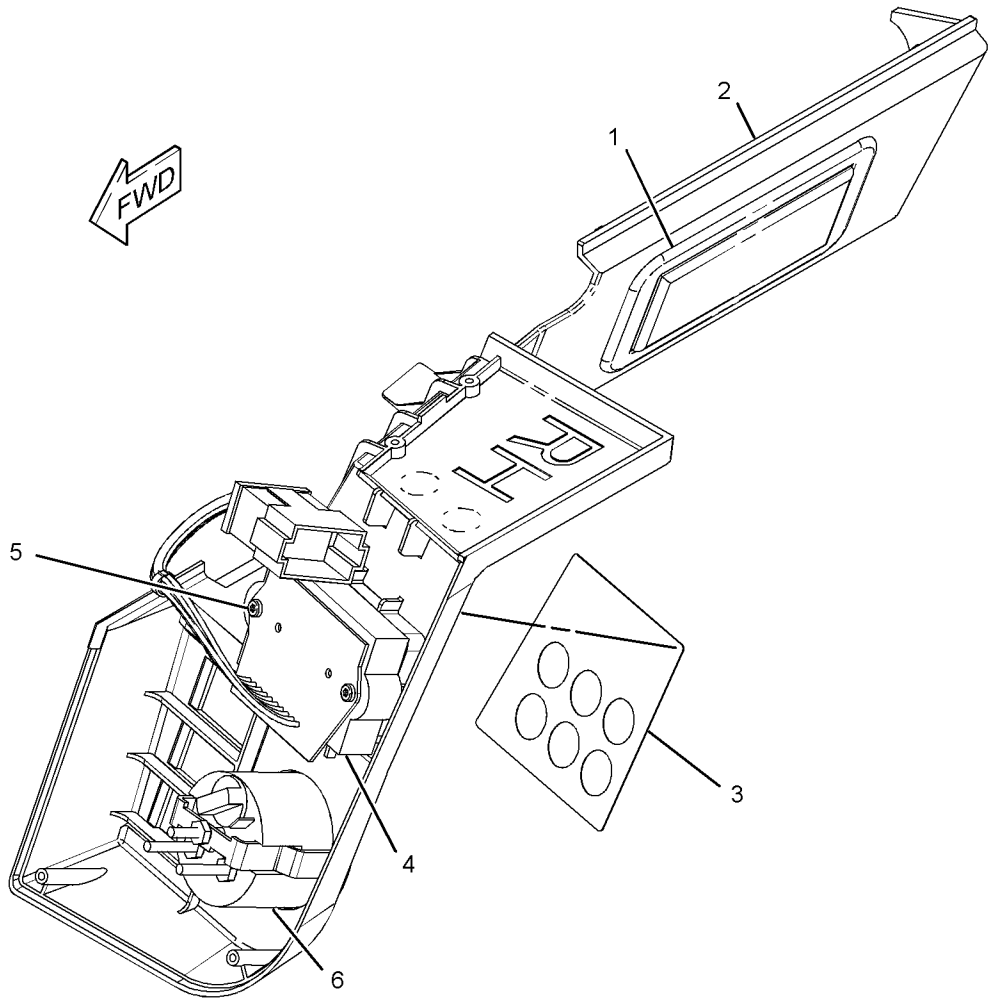

GRAPHIC #1 **<END>** g01142720

OPERATOR STATION

233-5632 GUARD GP-ROPS/FOPS

S/N: MJH1-UP; SCH1-UP; RLL1-UP; BXM1-UP

AN ATTACHMENT

SMCS-7323 **i02359513**

NOTE	REF NO	GRAPHIC REF	PART NUMBER	QTY	PART NAME 1 2 3 4 5 6 (PRODUCT LEVEL)	SEE PAGE
	1	1	**152-1161**	1	PLATE AS-FOPS	
	2	1	**233-5633**	1	FILM	
	3	1	**233-5634**	1	FILM	
D	4	1	**5P-5927**	1	SEAL (0.21M)	
M	5	1	**7X-2553**	8	BOLT (M16X2X40-MM)	
M	6	1	**8T-4122**	12	WASHER-HARD (17X32X3.5-MM THK)	
M	7		**8T-4132**	4	NUT (M16X2-THD)	

D-ORDER BY THE METER
M-METRIC PART

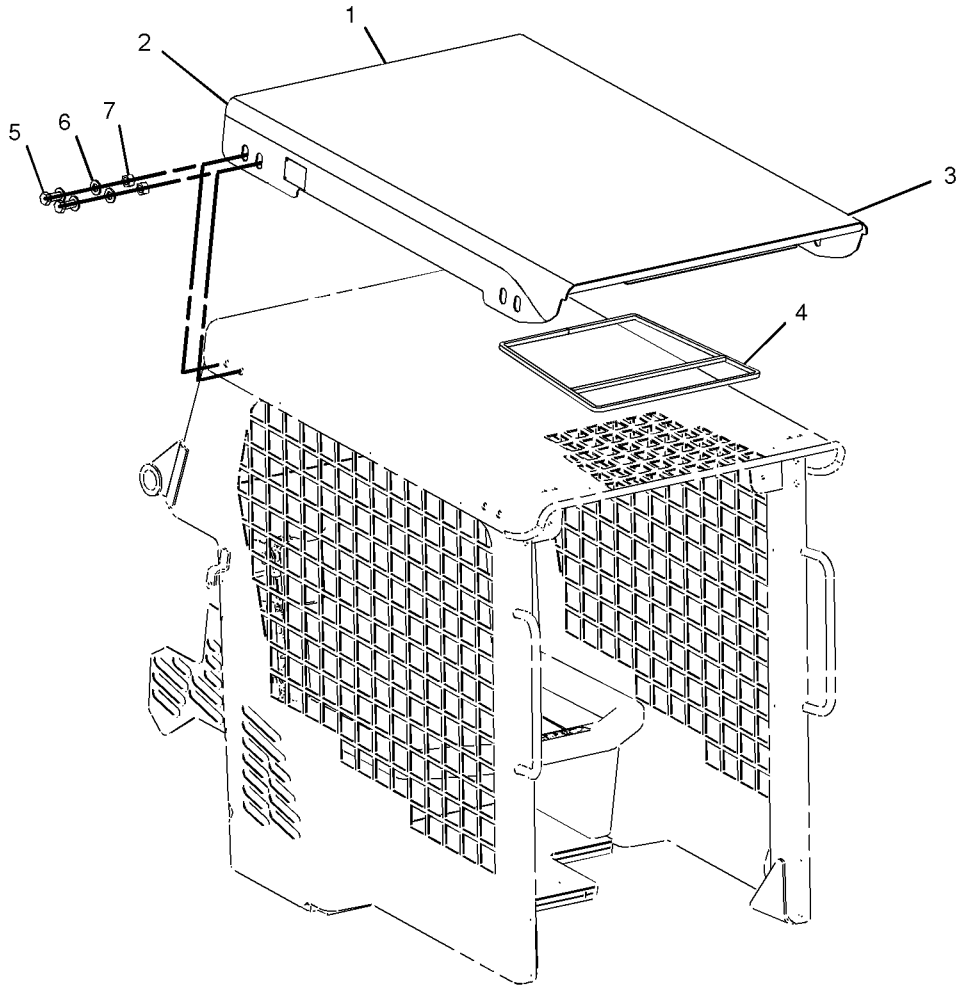

GRAPHIC #1 **<END>** g01042727

OPERATOR STATION

218-6400 HANDHOLD GP

S/N: MJH1-UP; SCH1-UP; RLL1-UP; BXM1-UP

AN ATTACHMENT

SMCS-7256 **i01908092**

NOTE	REF NO	GRAPHIC REF	PART NUMBER	QTY	PART NAME 1 2 3 4 5 6 (PRODUCT LEVEL)	SEE PAGE
	1	1	**218-6377**	1	HANDLE	
	2	1	**8T-4121**	2	WASHER-HARD (11X21X2.5-MM THK)	
M	3	1	**8T-4133**	2	NUT (M10X1.5-THD)	
M	4	1	**9X-2041**	2	SCREW-TRUSS HEAD (M10X1.5X20-MM)	

M-METRIC PART

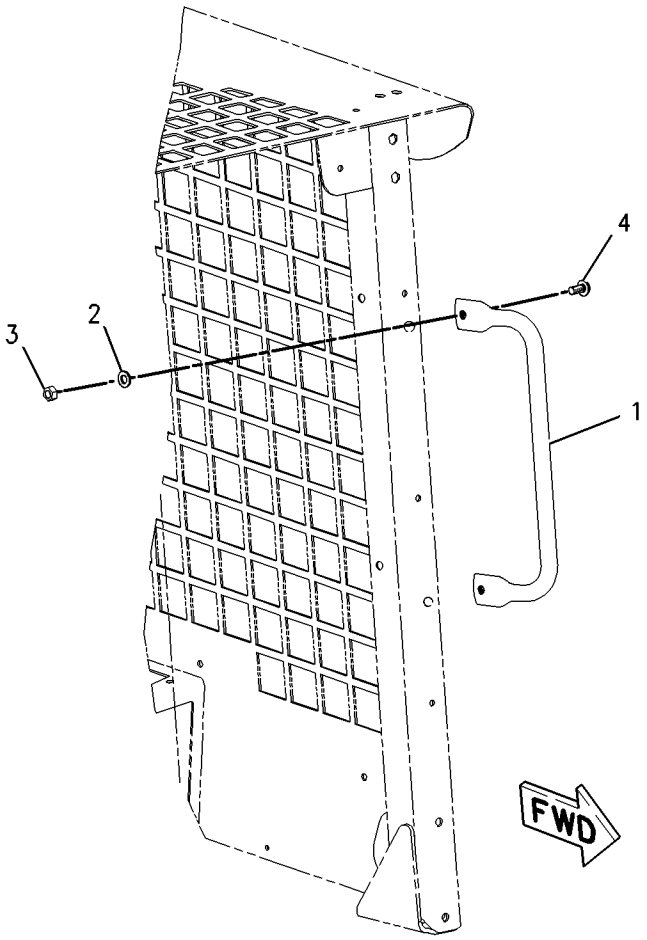

GRAPHIC #1 **<END>** g01002446

OPERATOR STATION

229-8746 HEATER & MTG GP-CAB

S/N: MJH1-UP; SCH1-UP; RLL1-UP; BXM1-UP
PART OF 218-6272, 218-6703 HEATER AR-CAB
AN ATTACHMENT

SMCS-7304 **i02010980**

NOTE	REF NO	GRAPHIC REF	PART NUMBER	QTY	PART NAME 1 2 3 4 5 6 (PRODUCT LEVEL)	SEE PAGE
Y	1	1	*218-6393*	1	HEATER GP-CAB	697
M	2	1	**7X-2537**	4	BOLT (M8X1.25X35MM)	
	3	1	**8T-4224**	4	WASHER-HARD (8.8X16X2MM THK)	

M-METRIC PART
Y-SEPARATE ILLUSTRATION

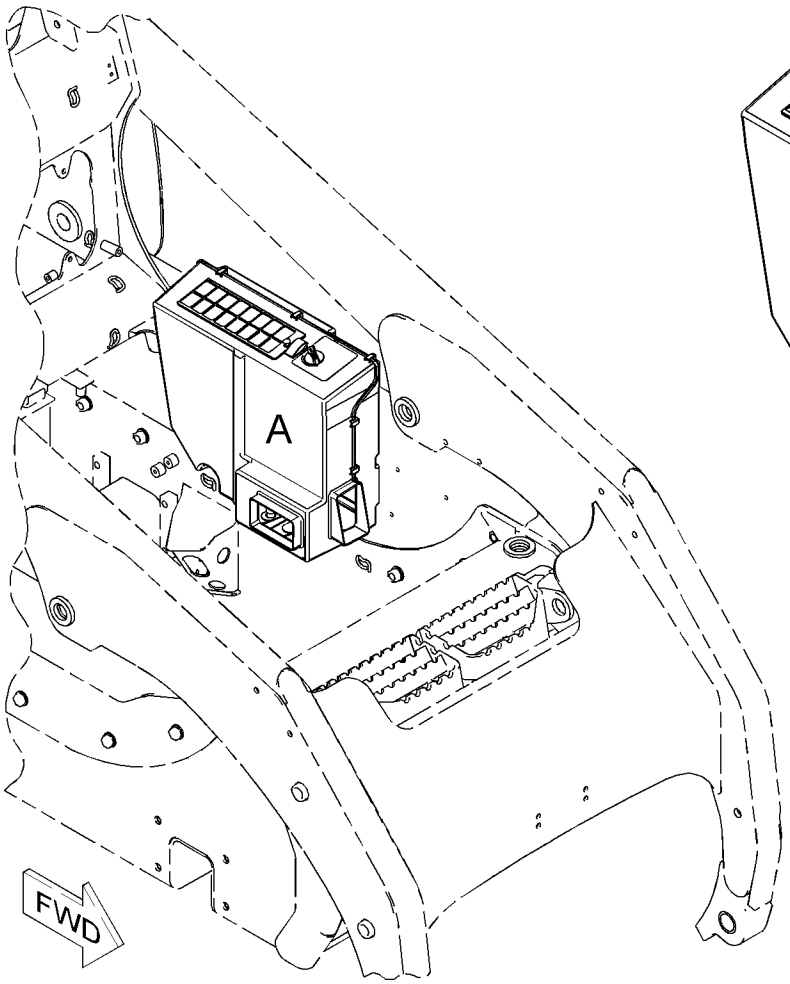

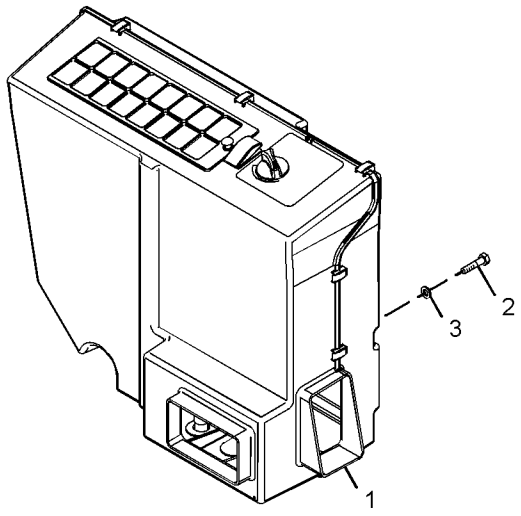

VIEW OF AREA A

GRAPHIC #1 **<END>** g01018708

OPERATOR STATION

218-6272 HEATER AR-CAB

S/N: MJH1-UP; RLL1-UP

AN ATTACHMENT

SMCS-7304 **i01990910**

NOTE	PART NUMBER	QTY	PART NAME 1 2 3 4 5 6 (PRODUCT LEVEL)	SEE PAGE
Y	*218-6394*	1	DUCT & CONTROL GP	687
Y	*229-8746*	1	HEATER & MTG GP-CAB	695
Y	*218-6086*	1	LINES GP-HEATER	720
Y	*218-6059*	1	LINES GP-HYDRAULIC FAN	404

Y-SEPARATE ILLUSTRATION

<END>

218-6703 HEATER AR-CAB

S/N: SCH1-UP; BXM1-UP

AN ATTACHMENT

SMCS-7304 **i01958505**

NOTE	PART NUMBER	QTY	PART NAME 1 2 3 4 5 6 (PRODUCT LEVEL)	SEE PAGE
Y	*218-6394*	1	DUCT & CONTROL GP	687
Y	*229-8746*	1	HEATER & MTG GP-CAB	695
Y	*218-6086*	1	LINES GP-HEATER	720
Y	*218-6528*	1	LINES GP-HYDRAULIC FAN	408

Y-SEPARATE ILLUSTRATION

<END>

OPERATOR STATION

218-6393 HEATER GP-CAB

S/N: MJH1-UP; SCH1-UP; RLL1-UP; BXM1-UP
PART OF 229-8746 HEATER & MTG GP-CAB, 218-6746 HEATER GP-CAB
AN ATTACHMENT

SMCS-7304 **i02392268**

NOTE	REF NO	GRAPHIC REF	PART NUMBER	QTY	PART NAME 1 2 3 4 5 6 (PRODUCT LEVEL)	SEE PAGE
	1	1	**185-4015**	10	CLIP	
	2	1	**218-6399**	1	SEAL	
	3	1	**231-8121**	1	HOUSING	
Y	4	1	**231-8122**	1	HOUSING AS-SIDE (AIR CONDITIONER, HEATER)	700
	5	1	**231-8124**	1	COIL AS-HEATER	
	6	1	**231-8125**	1	BLOWER GP-CAB	
	7	1	**231-8126**	1	VALVE AS	
	8	1	**231-8127**	1	GROMMET	
	9	1	**231-8128**	1	GRILL	
	10	1	**231-8129**	1	PIN	
	11	1	**231-8130**	1	FILTER-CAB AIR	
	12	1	**231-8131**	1	PLATE	
	13	1	**231-8132**	1	FILTER-CAB AIR	
	14	1	**231-8133**	1	PANEL	
	15	1	**231-8141**	1	GROMMET	
	16	1	**231-8142**	1	RETAINER	
	17	1	**231-8143**	1	FILM (TEMPERATURE CONTROL)	
	18	1	**231-8144**	1	BAFFLE	
	19	1	**231-8145**	1	GROMMET	
	20	1	**206-7398**	1	KNOB-CONTROL (TEMPERATURE SELECT) (TEMPERATURE CONTROL)	
	21	1	**205-9980**	2	SCREW-TRUSS HEAD (M6X1X20-MM)	
	22	1	**218-6947**	1	HARNESS AS-HEATER & AIR COND	
	23	1	**236-5067**	1	SWITCH AS-ROCKER (HEATER)	
	24	1	**236-5069**	1	RELAY AS (12-VOLT) (HEATER)	

Y-SEPARATE ILLUSTRATION

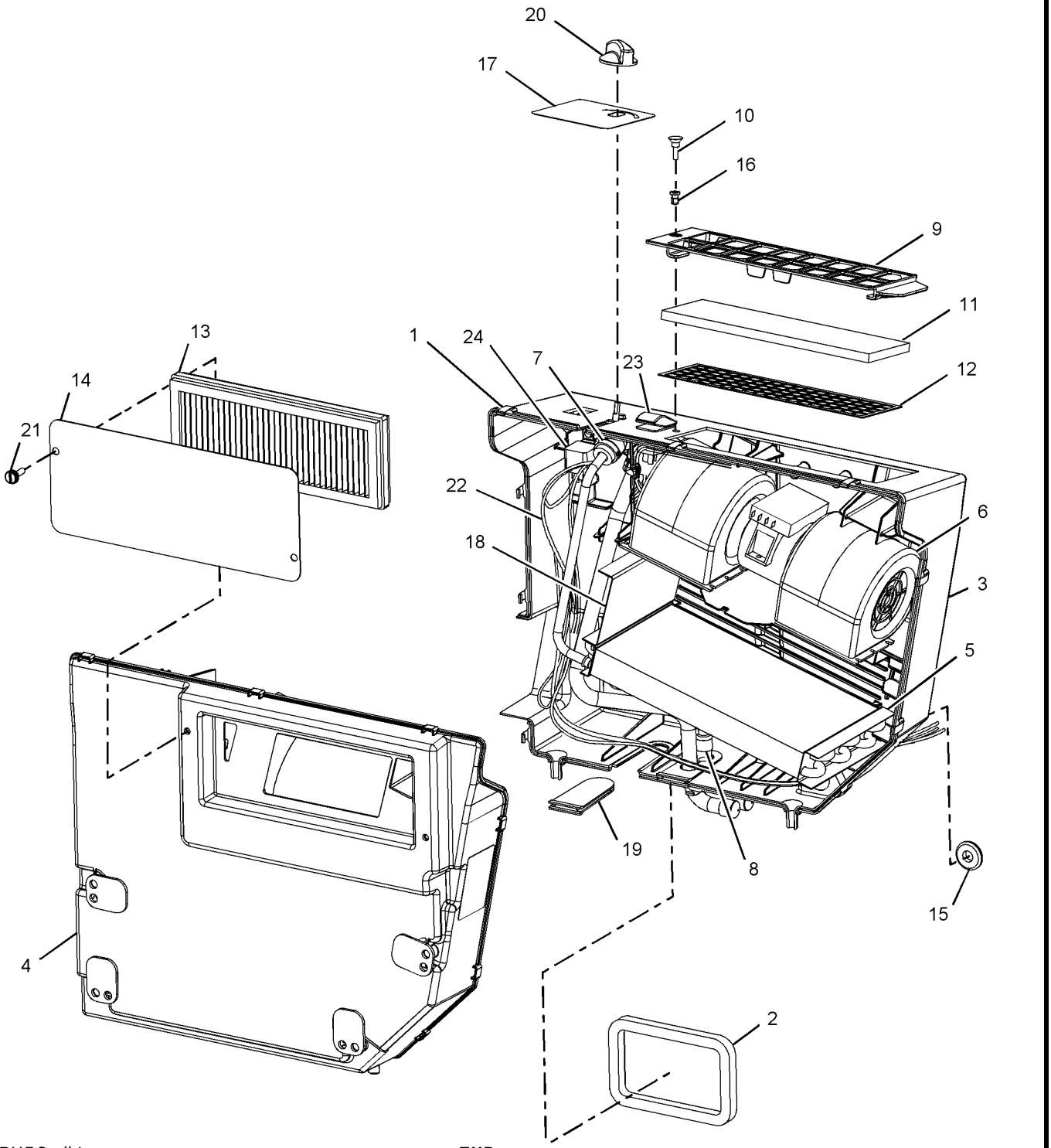

GRAPHIC #1 **<END>** g01027810

OPERATOR STATION

218-6746 HEATER GP-CAB–KIT

S/N: MJH1-UP; SCH1-UP; RLL1-UP; BXM1-UP

AN ATTACHMENT

SMCS-7304 **i02474715**

NOTE	PART NUMBER	QTY	PART NAME 1 2 3 4 5 6 (PRODUCT LEVEL)	SEE PAGE
Y	*218-6393*	1	HEATER GP-CAB	697
	218-6402	1	INSULATION AS	
	218-6435	4	SPACER (16.6X21.8X25.4-MM THK)	
	146-6371	6	LOUVER AS	
	8F-8151	1	VALVE AS-SHUTOFF (WATER)	
	150-7568	1	ADAPTER	
M	**7X-2537**	4	BOLT (M8X1.25X35-MM)	
M	**8T-4137**	1	BOLT (M10X1.5X20-MM)	
M	**8T-4189**	1	BOLT (M8X1.25X20-MM)	
M	**8T-4191**	2	BOLT (M10X1.5X16-MM)	
M	**8T-4200**	1	BOLT (M8X1.25X16-MM)	
M	**8T-6869**	4	BOLT (M8X1.25X60-MM)	
	8T-0154	4	CLAMP-HOSE	
	3S-8665	1	CLIP	
	6D-1641	2	CLIP	
	6V-2235	1	CLIP	
	9X-8250	4	CLIP	
	7D-7026	1	CONNECTOR-HOSE	
	218-6398	1	CONSOLE (LH)	
	218-6397	1	CONSOLE (RH)	
	218-6396	1	DUCT	
	004-6810	1	ELBOW	
	218-6645	1	ELBOW	
E	**136-1953**		HOSE (395-CM)	
	218-6437	1	INSULATION	
M	**8T-4133**	2	NUT (M10X1.5-THD)	
	6V-6689	2	SCREW-SELF-TAPPING (10-16X.625-IN) (10-16X0.625-IN)	
M	**9X-2045**	8	SCREW-TRUSS HEAD (M6X1X20-MM)	
	240-6879	2	SEAL	
	240-6878	1	SEAL	
	240-6877	1	SEAL	
	230-9696	1	SEAL	
	218-6414	1	SEAL	
	218-6401	1	SEAL	
D	**8T-5372**		SEAL (0.4-M)	
M	**101-3129**	1	STUD (M10X1.15-THD)	
	5P-4116	1	WASHER-HARD (8.8X20.5X2-MM THK)	
	8T-4121	6	WASHER-HARD (11X21X2.5-MM THK)	
	8T-4224	5	WASHER-HARD (8.8X16X2-MM THK)	

D-ORDER BY THE METER
E-ORDER BY THE CENTIMETER
M-METRIC PART
Y-SEPARATE ILLUSTRATION

<END>

OPERATOR STATION

231-8122 HOUSING AS-SIDE–A/C, HEATER

S/N: MJH1-UP; SCH1-UP; RLL1-UP; BXM1-UP
PART OF 218-6405 AIR CONDITIONER GP, 218-6393 HEATER GP-CAB
AN ATTACHMENT

SMCS-7320 **i02014573**

NOTE	REF NO	GRAPHIC REF	PART NUMBER	QTY	PART NAME 1 2 3 4 5 6 (PRODUCT LEVEL)	SEE PAGE
	1	1	**233-5929**	2	LOCKWASHER	
	2	1	**233-5931**	4	LOCKWASHER	
M	3	1	**131-3540**	4	LOCKNUT (M8X1.25 THD)	
	4	1	**233-5934**	4	MOUNT	
M	5	1	**129-3178**	2	LOCKNUT (M6X1 THD)	

M-METRIC PART

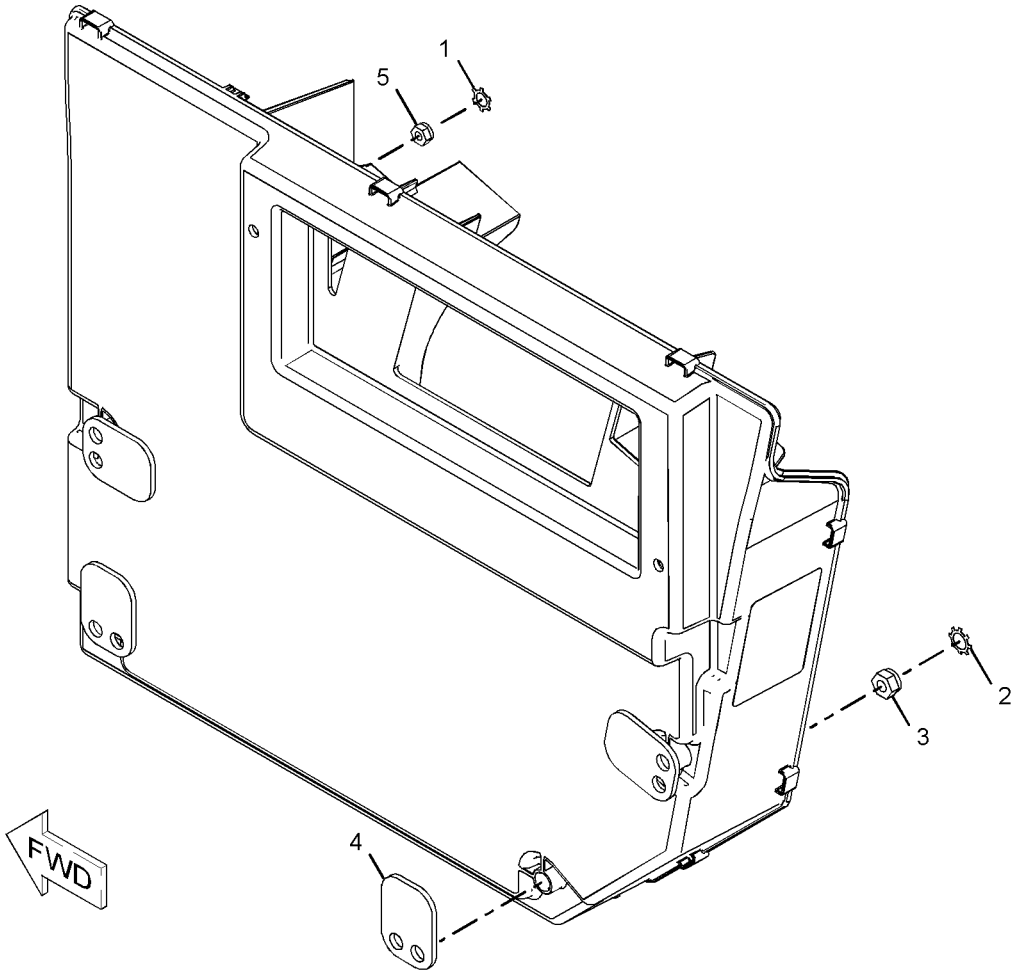

GRAPHIC #1 **<END>** g01041727

OPERATOR STATION

233-5588 INSTALLATION AR–KIT

S/N: MJH1-UP; BXM1-UP

AN ATTACHMENT

SMCS-1405, 1802, 1805, 1808, 7174, 7304, 7320, 734D **i02469374**

NOTE	PART NUMBER	QTY	PART NAME 1 2 3 4 5 6 (PRODUCT LEVEL)	SEE PAGE
Y	*186-6190*	1	ACCUMULATOR GP-REFRIGERANT	656
Y	**218-6405**	1	AIR CONDITIONER GP	659
Y	**218-6840**	1	MOTOR GP-GEAR	506
	218-6833	1	COMPRESSOR GP-REFRIGERANT	
	218-6836	1	COUPLING GP-DRIVE	
	218-6837	1	COUPLING	
	218-6838		HUB (COMPRESSOR)	
	276-4063	1	HUB (MOTOR)	
M	**8T-4191**	1	BOLT (M10X1.5X16-MM)	
M	**085-8091**	2	BOLT (M10X1.5X55-MM)	
M	**8T-6870**	2	BOLT (M8X1.25X70-MM)	
M	**8T-4136**	3	BOLT (M10X1.5X25-MM)	
M	**8T-4189**	14	BOLT (M8X1.25X20-MM)	
M	**9X-6032**	2	BOLT-SOCKET HEAD (M10X1.5X30-MM)	
	9G-5127	1	BREATHER AS	
	101-8296	2	CLIP	
	4P-8134	1	CLIP	
	233-5927	1	COIL AS	
	148-8315	2	CONNECTOR AS	
			(EACH INCLUDES)	
	2M-9780	1	SEAL-O-RING	
	6V-8642	1	CONNECTOR	
	7J-9108	1	SEAL-O-RING	
	148-8326	1	CONNECTOR AS	
	3J-7354	1	SEAL-O-RING	
	6V-8397	1	SEAL-O-RING	
	6V-9872	1	CONNECTOR	
	124-2113	1	COUPLING-PERMANENT	
	124-2119	1	COUPLING-PERMANENT	
	124-2141	1	COUPLING-PERMANENT	
	124-2150	2	COUPLING-PERMANENT	
	124-2164	2	COUPLING-PERMANENT	
	124-2168	1	COUPLING-PERMANENT	
	153-6256	1	ELBOW AS	
	7J-9108	1	SEAL-O-RING	
	8C-7563	1	ELBOW	
	218-6250	2	FAN AS	
	234-0566	1	FITTING AS	
	3E-4051	1	CAP-SEAL (AIR CONDITIONER)	
	3E-4057	1	VALVE AS	
	124-3548	1	FUSE (30-AMPERE)	
	2D-5248	1	GASKET	
	202-2168	1	HARNESS AS-FUEL TANK	
	102-8802	1	KIT-RECEPTACLE (2-PIN)	
			(INCLUDES RECEPTACLE AS & WEDGE)	
	155-2270		KIT-CONNECTING PLUG (2-PIN)	
			(INCLUDES PLUG AS, WEDGE & INTERFACE SEAL)	
	221-3879	1	HARNESS AS-HEATER & AIR COND	
	100-6674	2	SEAL-CONNECTOR	
E	**119-3662**		TUBE-HEAT SHRINK (13-CM)	
	155-2260	1	KIT-CONNECTING PLUG (3-PIN)	
	155-2270	3	KIT-CONNECTING PLUG (2-PIN)	
			(EACH PLUG KIT INCLUDES PLUG AS, WEDGE & INTERFACE SEAL)	

233-5588 **INSTALLATION AR** ***(contd.)*** **i02469374**

NOTE	PART NUMBER	QTY	PART NAME 1 2 3 4 5 6 (PRODUCT LEVEL)	SEE PAGE
EI	**122-6867**		HOSE (48-CM)	
I	**233-5951**	1	HOSE AS	
	218-6584	1	HOSE AS	
I	**233-5856**	1	HOSE AS	
I	**233-5863**	1	HOSE AS	
	252-0330	1	HOSE AS	
G	**122-6871**		HOSE-HYDRAULIC (97-IN)	
	233-5590	1	HOUSING-SUPPORT	
M	**5C-7261**	16	NUT (M8X1.25-THD)	
M	**8T-4133**	3	NUT (M10X1.5-THD)	
	246-9039	1	PLATE-INFORMATION (AIR CONDITIONER REFRIGERANT)	
D	**5P-5924**		SEAL (0.3-M)	
	9X-7378	1	SEAL-O-RING	
	9X-7380	1	SEAL-O-RING	
	9X-7381	3	SEAL-O-RING	
	9X-7382	2	SEAL-O-RING	
	9X-7383	3	SEAL-O-RING	
	218-6060	1	SHROUD AS	
	9C-2741	2	SPACER (13.94X17.14X34-MM THK)	
	9G-7101	2	SPACER (10.5X20X30-MM THK)	
	3S-2093	13	STRAP-CABLE	
	7K-1181	1	STRAP-CABLE	
	236-6923	1	SWITCH AS-PRESSURE (REFRIGERANT)	
	8T-4121	9	WASHER-HARD (11X21X2.5-MM THK)	
	5P-4116	2	WASHER-HARD (8.8X20.5X2-MM THK)	
	8T-4224	22	WASHER-HARD (8.8X16X2-MM THK)	

D-ORDER BY THE METER
E-ORDER BY THE CENTIMETER
G-ORDER BY THE INCH
I-REFER TO HYDRAULIC INFORMATION SYSTEM
M-METRIC PART
Y-SEPARATE ILLUSTRATION

<END>

233-5589 INSTALLATION AR—A/C, HEATER

S/N: MJH1-UP; BXM1-UP
AN ATTACHMENT

SMCS-1405, 1802, 1805, 1808, 7174, 7304, 7320, 734D **i02452384**

NOTE	PART NUMBER	QTY	PART NAME 1 2 3 4 5 6 (PRODUCT LEVEL)	SEE PAGE
Y	*186-6190*	1	ACCUMULATOR GP-REFRIGERANT	656
Y	*218-6405*	1	AIR CONDITIONER GP	659
Y	**218-6840**	1	MOTOR GP-GEAR	506
	218-6833	1	COMPRESSOR GP-REFRIGERANT	
	218-6836	1	COUPLING GP-DRIVE	
	218-6837	1	COUPLING	
	218-6838	1	HUB (COMPRESSOR)	
	276-4063	1	HUB (MOTOR)	
	150-7568	1	ADAPTER	
M	**8T-4191**	2	BOLT (M10X1.5X16-MM)	
M	**085-8091**	2	BOLT (M10X1.5X55-MM)	
M	**7X-2537**	4	BOLT (M8X1.25X35-MM)	
M	**8T-4136**	3	BOLT (M10X1.5X25-MM)	
M	**8T-4189**	14	BOLT (M8X1.25X20-MM)	
M	**8T-4200**	1	BOLT (M8X1.25X16-MM)	

NOTE	PART NUMBER	QTY	PART NAME 1 2 3 4 5 6 (PRODUCT LEVEL)	SEE PAGE
M	**8T-6870**	2	BOLT (M8X1.25X70-MM)	
M	**9X-6032**	2	BOLT-SOCKET HEAD (M10X1.5X30-MM)	
	9G-5127	1	BREATHER AS	
	8T-0154	4	CLAMP-HOSE	
	101-8296	2	CLIP	
	4P-8134	1	CLIP	
	3S-8665	1	CLIP	
	6D-1641	2	CLIP	
	233-5927	1	COIL AS	
	148-8326	1	CONNECTOR AS	
	3J-7354	1	SEAL-O-RING	
	6V-8397	1	SEAL-O-RING	
	6V-9872	1	CONNECTOR	
	148-8315	2	CONNECTOR AS	
			(EACH INCLUDES)	
	2M-9780	1	SEAL-O-RING	
	6V-8642	1	CONNECTOR	
	7J-9108	1	SEAL-O-RING	
	218-6397		CONSOLE (RH)	
	218-6398	1	CONSOLE (LH)	
	124-2119	1	COUPLING-PERMANENT	
	124-2113	1	COUPLING-PERMANENT	
	124-2141	1	COUPLING-PERMANENT	
	124-2150	2	COUPLING-PERMANENT	
	124-2164	2	COUPLING-PERMANENT	
	124-2168	1	COUPLING-PERMANENT	
	218-6396	1	DUCT	
	250-1493	1	ELBOW	
	153-6256	1	ELBOW AS	
	7J-9108	1	SEAL-O-RING	
	8C-7563	1	ELBOW	
	218-6250	2	FAN AS	
	234-0566	1	FITTING AS	
	3E-4051	1	CAP-SEAL (AIR CONDITIONER)	
	3E-4057	1	VALVE AS	
	124-3548	1	FUSE (30-AMPERE)	
	2D-5248	1	GASKET	
	202-2168	1	HARNESS AS-FUEL TANK	
	102-8802	1	KIT-RECEPTACLE (2-PIN)	
			(INCLUDES RECEPTACLE AS & WEDGE)	
	155-2270	1	KIT-CONNECTING PLUG (2-PIN)	
			(INCLUDES PLUG AS, WEDGE & INTERFACE SEAL)	
	221-3879	1	HARNESS AS-HEATER & AIR COND	
	100-6674	2	SEAL-CONNECTOR	
E	**119-3662**		TUBE-HEAT SHRINK (13-CM)	
	155-2260	1	KIT-CONNECTING PLUG (3-PIN)	
	155-2270	3	KIT-CONNECTING PLUG (2-PIN)	
			(EACH PLUG KIT INCLUDES PLUG AS, WEDGE & INTERFACE SEAL)	
E	**136-1953**		HOSE (330-CM)	
GI	**122-6867**		HOSE (19-IN)	
	218-6582	1	HOSE AS	
	218-6584	1	HOSE AS	
I	**233-5856**	1	HOSE AS	
I	**233-5863**	1	HOSE AS	
I	**233-5951**	1	HOSE AS	
	252-0330	1	HOSE AS	
E	**122-6877**		HOSE-HYDRAULIC (48-CM)	
G	**122-6871**		HOSE-HYDRAULIC (97-IN)	
	233-5590	1	HOUSING-SUPPORT	

233-5589 **INSTALLATION AR** *(contd.)* **i02452384**

NOTE	PART NUMBER	QTY	PART NAME 1 2 3 4 5 6 (PRODUCT LEVEL)	SEE PAGE
	176-4079	1	INSULATION	
	218-6437	1	INSULATION	
	146-6371	6	LOUVER AS	
M	**5C-7261**	16	NUT (M8X1.25-THD)	
M	**8T-4133**	3	NUT (M10X1.5-THD)	
	246-9039	1	PLATE-INFORMATION (AIR CONDITIONER REFRIGERANT)	
	6V-6689	2	SCREW-SELF-TAPPING (10-16X.625-IN)	
M	**9X-2045**	8	SCREW-TRUSS HEAD (M6X1X20-MM)	
D	**5P-5924**		SEAL (0.3-M)	
D	**8T-5372**		SEAL (0.4-M)	
	218-6401	1	SEAL	
	218-6414	1	SEAL	
	230-9696	1	SEAL	
	240-6877	1	SEAL	
	240-6878	1	SEAL	
	240-6879	2	SEAL	
	9X-7378	1	SEAL-O-RING	
	9X-7380	1	SEAL-O-RING	
	9X-7381	3	SEAL-O-RING	
	9X-7382	2	SEAL-O-RING	
	9X-7383	3	SEAL-O-RING	
	218-6060	1	SHROUD AS	
	9C-2741	2	SPACER (13.94X17.14X34-MM THK)	
	9G-7101	2	SPACER (10.5X20X30-MM THK)	
	3S-2093	13	STRAP-CABLE	
	7K-1181	1	STRAP-CABLE	
	236-6923	1	SWITCH AS-PRESSURE (REFRIGERANT)	
	8F-8151	1	VALVE AS-SHUTOFF	
	8T-4121	10	WASHER-HARD (11X21X2.5-MM THK)	
	5P-4116	2	WASHER-HARD (8.8X20.5X2-MM THK)	
	8T-4224	27	WASHER-HARD (8.8X16X2-MM THK)	

D-ORDER BY THE METER
E-ORDER BY THE CENTIMETER
G-ORDER BY THE INCH
I-REFER TO HYDRAULIC INFORMATION SYSTEM
M-METRIC PART
Y-SEPARATE ILLUSTRATION

<END>

218-6271 INSTALLATION GP

S/N: MJH1-UP; RLL1-UP
WITHOUT HEATER OR AIR COND
AN ATTACHMENT

SMCS-5057, 5258 **i01971142**

NOTE	PART NUMBER	QTY	PART NAME 1 2 3 4 5 6 (PRODUCT LEVEL)	SEE PAGE
Y	*218-6419*	1	COVER GP-CONSOLE	673
Y	*229-8744*	1	COVER GP-CONSOLE	674
Y	*218-6059*	1	LINES GP-HYDRAULIC FAN	404

Y-SEPARATE ILLUSTRATION

<END>

OPERATOR STATION

218-6701 INSTALLATION GP

S/N: SCH1-UP; BXM1-UP
WITHOUT HEATER OR AIR CONDITIONER
AN ATTACHMENT

SMCS-5057, 5258 **i02009396**

NOTE	PART NUMBER	QTY	PART NAME 1 2 3 4 5 6 (PRODUCT LEVEL)	SEE PAGE
Y	*218-6419*	1	COVER GP-CONSOLE	673
Y	*229-8744*	1	COVER GP-CONSOLE	674
Y	*218-6528*	1	LINES GP-HYDRAULIC FAN	408

Y-SEPARATE ILLUSTRATION

<END>

OPERATOR STATION

218-6743 KIT-CAB DOOR & MOUNTING—POLYCARBONATE

S/N: MJH1-UP; SCH1-UP; RLL1-UP; BXM1-UP

AN ATTACHMENT

SMCS-7308 **i02337101**

NOTE	PART NUMBER	QTY	PART NAME 1 2 3 4 5 6 (PRODUCT LEVEL)	SEE PAGE
Y	*218-6441*	1	DOOR GP-CAB (POLYCARBONATE)	683
	142-9356	1	BLOCK	
	221-3877	1	HARNESS AS-WINDOW WIPER	
	102-8805	1	KIT-RECEPTACLE (6-PIN)	
			(INCLUDES RECEPTACLE AS & WEDGE)	
	155-2274	1	KIT-CONNECTING PLUG (6-PIN)	
			(INCLUDES PLUG AS, WEDGE & INTERFACE SEAL)	
	223-0608	1	HINGE AS	
E	**144-0195**		HOSE (40-CM)	
	195-0937	4	INSERT-THREADED (M8X1.25)	
	5P-0372	2	LOCK PIN	
	223-0617	1	MOUNT	
M	**5C-2890**	13	NUT (M6X1-THD)	
M	**5C-7261**	4	NUT (M8X1.25-THD)	
M	**8T-4133**	4	NUT (M10X1.5-THD)	
	177-3405	1	PIN	
	095-1325	1	PIN-CLEVIS	
	223-0587	1	PLATE AS	
	223-0591	1	PLATE AS	
	223-0601	2	PLATE AS	
M	**9X-2041**	4	SCREW-TRUSS HEAD (M10X1.5X20-MM)	
M	**9X-2044**	3	SCREW-TRUSS HEAD (M6X1X16-MM)	
M	**9X-2045**	4	SCREW-TRUSS HEAD (M6X1X20-MM)	
M	**127-2170**	8	SCREW-TRUSS HEAD (M8X1.25X20-MM)	
D	**5P-8309**		SEAL (0.72-M)	
D	**5P-9909**		SEAL (0.1-M)	
E	**125-3518**		SEAL (81-CM)	
	9C-5344	1	SPACER (10.5X20X18-MM THK)	
	218-0728	2	SPRING	
	153-2683	1	SPRING AS-GAS	
	230-3214	1	SPRING AS-GAS	
	3S-2093	3	STRAP-CABLE	
	8T-3848	1	STRIKER AS-LATCH	
	8T-2444	2	STUD-BALL	
	219-9739	1	TANK AS-WINDOW WASHER	
	8T-4121	4	WASHER-HARD (11X21X2.5-MM THK)	
	8T-4205	13	WASHER-HARD (7.2X14.5X2-MM THK)	
	8T-4224	6	WASHER-HARD (8.8X16X2-MM THK)	
	8T-4222	1	WASHER-PLATED (11X32X2.5-MM THK)	

D-ORDER BY THE METER
E-ORDER BY THE CENTIMETER
M-METRIC PART
Y-SEPARATE ILLUSTRATION

<END>

OPERATOR STATION

218-6744 KIT-CAB DOOR & MOUNTING—GLASS

S/N: MJH1-UP; SCH1-UP; RLL1-UP; BXM1-UP

AN ATTACHMENT

SMCS-7308 **i02337105**

NOTE	PART NUMBER	QTY	PART NAME 1 2 3 4 5 6 (PRODUCT LEVEL)	SEE PAGE
Y	*223-0616*	1	DOOR GP-CAB (GLASS)	685
	142-9356	1	BLOCK	
	221-3877	1	HARNESS AS-WINDOW WIPER	
	102-8805	1	KIT-RECEPTACLE (6-PIN)	
			(INCLUDES RECEPTACLE AS & WEDGE)	
	155-2274	1	KIT-CONNECTING PLUG (6-PIN)	
			(INCLUDES PULG AS, WEDGE & INTERFACE SEAL)	
	223-0608	1	HINGE AS	
E	**144-0195**		HOSE (40-CM)	
	195-0937	4	INSERT-THREADED (M8X1.25)	
	5P-0372	2	LOCK PIN	
	223-0617	1	MOUNT	
M	**5C-2890**	13	NUT (M6X1-THD)	
M	**5C-7261**	4	NUT (M8X1.25-THD)	
M	**8T-4133**	4	NUT (M10X1.5-THD)	
	177-3405	1	PIN	
	095-1325	1	PIN-CLEVIS	
	223-0587	1	PLATE AS	
	223-0591	1	PLATE AS	
	223-0601	2	PLATE AS	
M	**9X-2041**	4	SCREW-TRUSS HEAD (M10X1.5X20-MM)	
M	**9X-2044**	3	SCREW-TRUSS HEAD (M6X1X16-MM)	
M	**9X-2045**	4	SCREW-TRUSS HEAD (M6X1X20-MM)	
M	**127-2170**	8	SCREW-TRUSS HEAD (M8X1.25X20-MM)	
D	**5P-8309**		SEAL (0.72-M)	
D	**5P-9909**		SEAL (0.1-M)	
E	**125-3518**		SEAL (81-CM)	
	9C-5344	1	SPACER (10.5X20X18-MM THK)	
	218-0728	2	SPRING	
	153-2683	1	SPRING AS-GAS	
	230-3214	1	SPRING AS-GAS	
	3S-2093	3	STRAP-CABLE	
	8T-3848	1	STRIKER AS-LATCH	
	6V-4270	1	LOCKWASHER	
	8T-2444	2	STUD-BALL	
	219-9739	1	TANK AS-WINDOW WASHER	
	8T-4121	4	WASHER-HARD (11X21X2.5-MM THK)	
	8T-4205	13	WASHER-HARD (7.2X14.5X2-MM THK)	
	8T-4224	6	WASHER-HARD (8.8X16X2-MM THK)	
	8T-4222	1	WASHER-PLATED (11X32X2.5-MM THK)	

D-ORDER BY THE METER
E-ORDER BY THE CENTIMETER
M-METRIC PART
Y-SEPARATE ILLUSTRATION

<END>

OPERATOR STATION

233-5864 KIT-CAB SEAL—DEBRIS BARRIER

S/N: MJH1-UP; SCH1-UP; RLL1-UP; BXM1-UP

AN ATTACHMENT

SMCS-7301 **i02293295**

NOTE	PART NUMBER	QTY	PART NAME 1 2 3 4 5 6 (PRODUCT LEVEL)	SEE PAGE
	187-3217	2	BLOCK AS	
M	**7X-2537**	2	BOLT (M8X1.25X35-MM)	
M	**7X-2552**	8	BOLT (M16X2X30-MM)	
	189-4523	2	BOSS	
M	**8T-4132**	4	NUT (M16X2-THD)	
	187-3212	1	PLATE	
	187-3211	1	PLATE AS	
	3T-7856	2	PLUG-BUTTON	
E	**128-7037**		SEAL (98-CM)	
M	**8T-4122**	12	WASHER-HARD (17X32X3.5-MM THK)	
	8T-4224	2	WASHER-HARD (8.8X16X2-MM THK)	

E-ORDER BY THE CENTIMETER
M-METRIC PART

<END>

OPERATOR STATION

234-0774 LEVER GP-GOVERNOR

S/N: MJH1-UP; SCH1-UP; RLL1-UP; BXM1-UP
PART OF 218-5565 PEDAL GP-GOVERNOR

SMCS-1265, 1276 **i01910964**

NOTE	REF NO	GRAPHIC REF	PART NUMBER	QTY	PART NAME 1 2 3 4 5 6 (PRODUCT LEVEL)	SEE PAGE
	1	1	**192-2663**	1	LEVER GP-GOVERNOR	
M		1	**8T-4971**	1	BOLT (M6X1X30-MM)	
M		1	**129-3178**	1	LOCKNUT (M6X1-THD)	
	2	1	**234-0732**	1	CABLE AS	
	3	1	**8T-4742**	1	END-YOKE ROD	
	4	1	**8T-4744**	1	PIN AS-SPRING	
M	5	1	**5C-2890**	1	NUT (M6X1-THD)	
M	6	1	**8T-4971**	1	BOLT (M6X1X30-MM)	
M	7	1	**129-3178**	1	LOCKNUT (M6X1-THD)	

M-METRIC PART

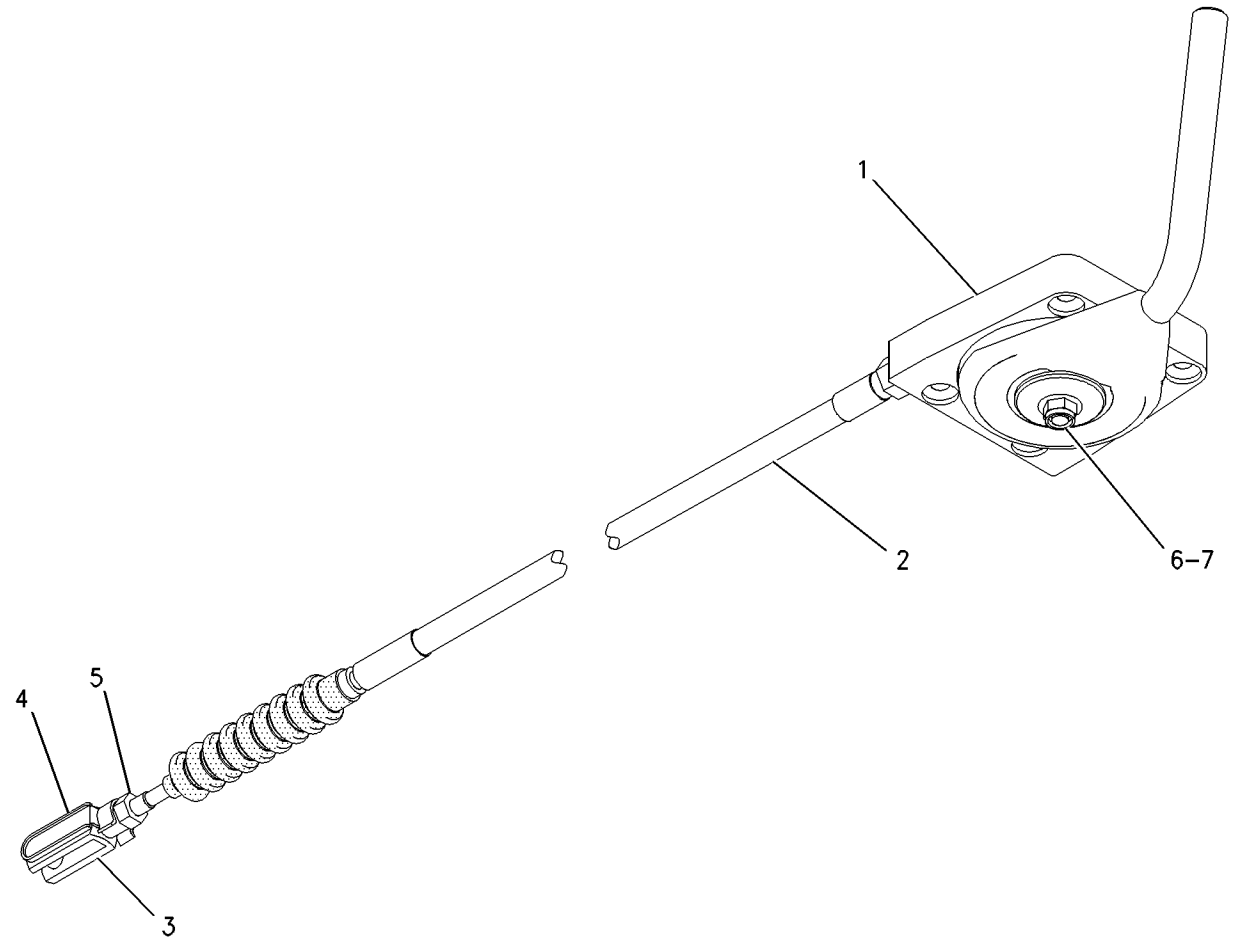

GRAPHIC #1 **<END>** g00995803

OPERATOR STATION

218-6356 LINER GP-CAB

S/N: MJH1-UP; SCH1-UP; RLL1-UP; BXM1-UP
PART OF 218-6350 CAB AR-ENCLOSED ROPS

SMCS-7268, 7329 **i01934867**

NOTE	REF NO	GRAPHIC REF	PART NUMBER	QTY	PART NAME 1 2 3 4 5 6 (PRODUCT LEVEL)	SEE PAGE
E	1	1	**9X-2092**		STRIP-EDGE (113CM)	
	2	1	**218-6357**	1	INSULATION	
	3	1	**218-6359**	1	LINER-REAR WALL	
	4	1	**218-6436**	1	INSULATION	

E-ORDER BY THE CENTIMETER

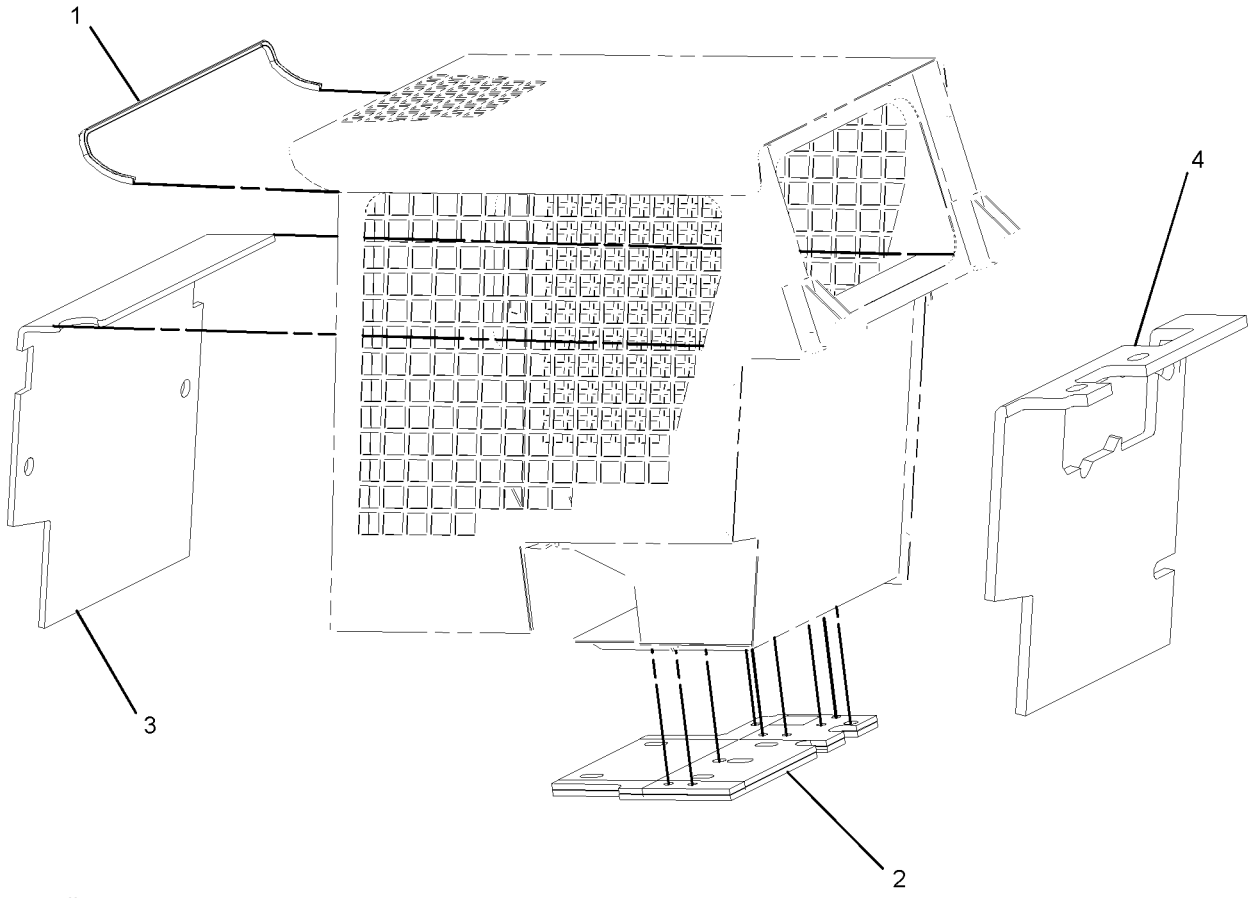

GRAPHIC #1 **<END>** g01010869

OPERATOR STATION

142-9311 LINER-CAB

S/N: MJH1-UP; SCH1-UP; RLL1-UP; BXM1-UP

AN ATTACHMENT

SMCS-7329 **i02016735**

NOTE	REF NO	GRAPHIC REF	PART NUMBER	QTY	PART NAME 1 2 3 4 5 6 (PRODUCT LEVEL)	SEE PAGE
					(NO SERVICED PARTS)	

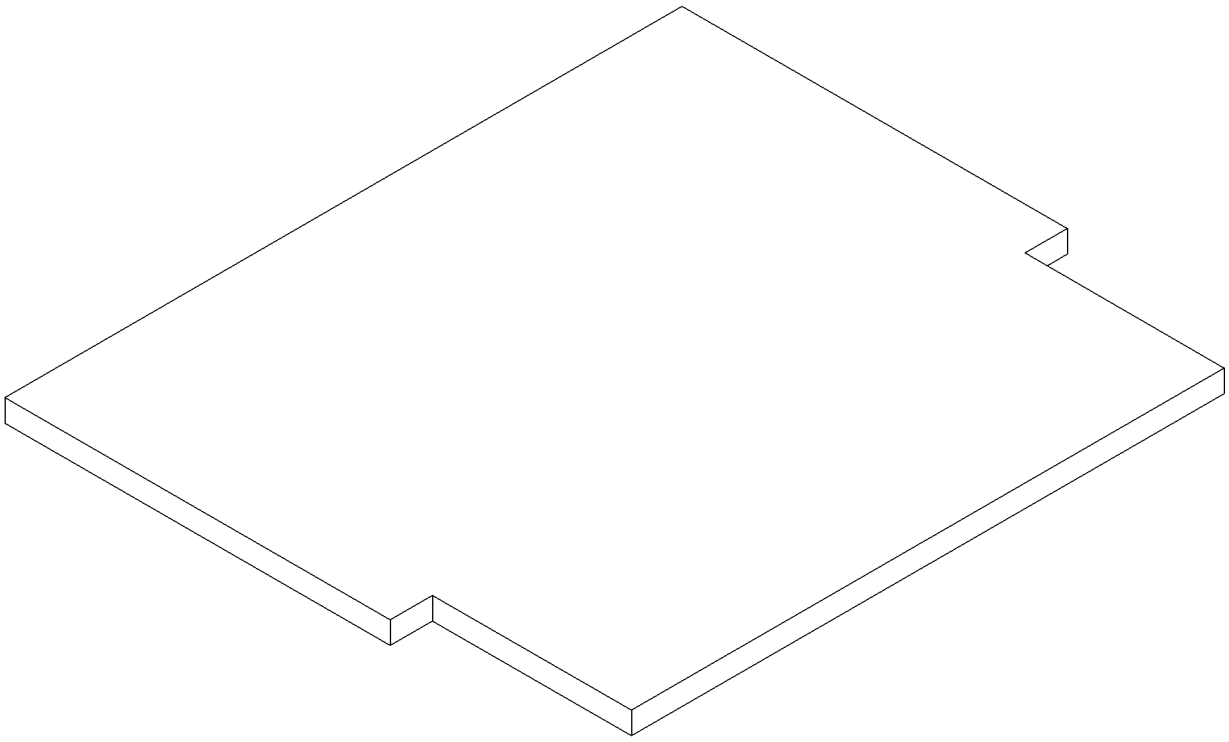

GRAPHIC #1 **<END>** g00782727

OPERATOR STATION

218-6560 LINES GP-AIR CONDITIONER

S/N: MJH1-3794
PART OF 218-6273 AIR CONDITIONER AR
AN ATTACHMENT

SMCS-1808, 7320 **i02249637**

NOTE	REF NO	GRAPHIC REF	PART NUMBER	QTY	PART NAME 1 2 3 4 5 6 (PRODUCT LEVEL)	SEE PAGE
	1	1	**3S-2093**	2	STRAP-CABLE	
	3	1	**236-6923**	1	SWITCH AS-PRESSURE (AIR CONDITIONER)	
M	4	1	**085-8091**	2	BOLT (M10X1.5X55-MM)	
	5	1	**101-8296**	2	CLIP	
Y	6	1	*186-6190*	1	ACCUMULATOR GP-REFRIGERANT	656
I	7	1	**218-6563**	1	HOSE AS	
I	8	1	**218-6564**	1	HOSE AS	
	9	1	**218-6582**	1	HOSE AS	
	10	1	**218-6584**	1	HOSE AS	
	11	1	*234-0566*	1	FITTING AS	
		1	**3E-4051**	1	CAP-SEAL	
		1	**3E-4057**	1	VALVE AS	
	12	1	**246-9039**	1	PLATE-INFORMATION (AIR CONDITIONER REFRIGERANT)	
	13	1	**8T-4121**	2	WASHER-HARD (11X21X2.5-MM THK)	
	15	1	**9C-2741**	2	SPACER (13.94X17.14X34-MM THK)	
	16	1	**9X-7378**	1	SEAL-O-RING	
	17	1	**9X-7380**	1	SEAL-O-RING	
	18	1	**9X-7381**	3	SEAL-O-RING	
	19	1	**9X-7382**	2	SEAL-O-RING	
	20	1	**9X-7383**	3	SEAL-O-RING	
BD	21	1	**5P-5924**		SEAL	

B-USE AS REQUIRED
D-ORDER BY THE METER
I-REFER TO HYDRAULIC INFORMATION SYSTEM
M-METRIC PART
Y-SEPARATE ILLUSTRATION

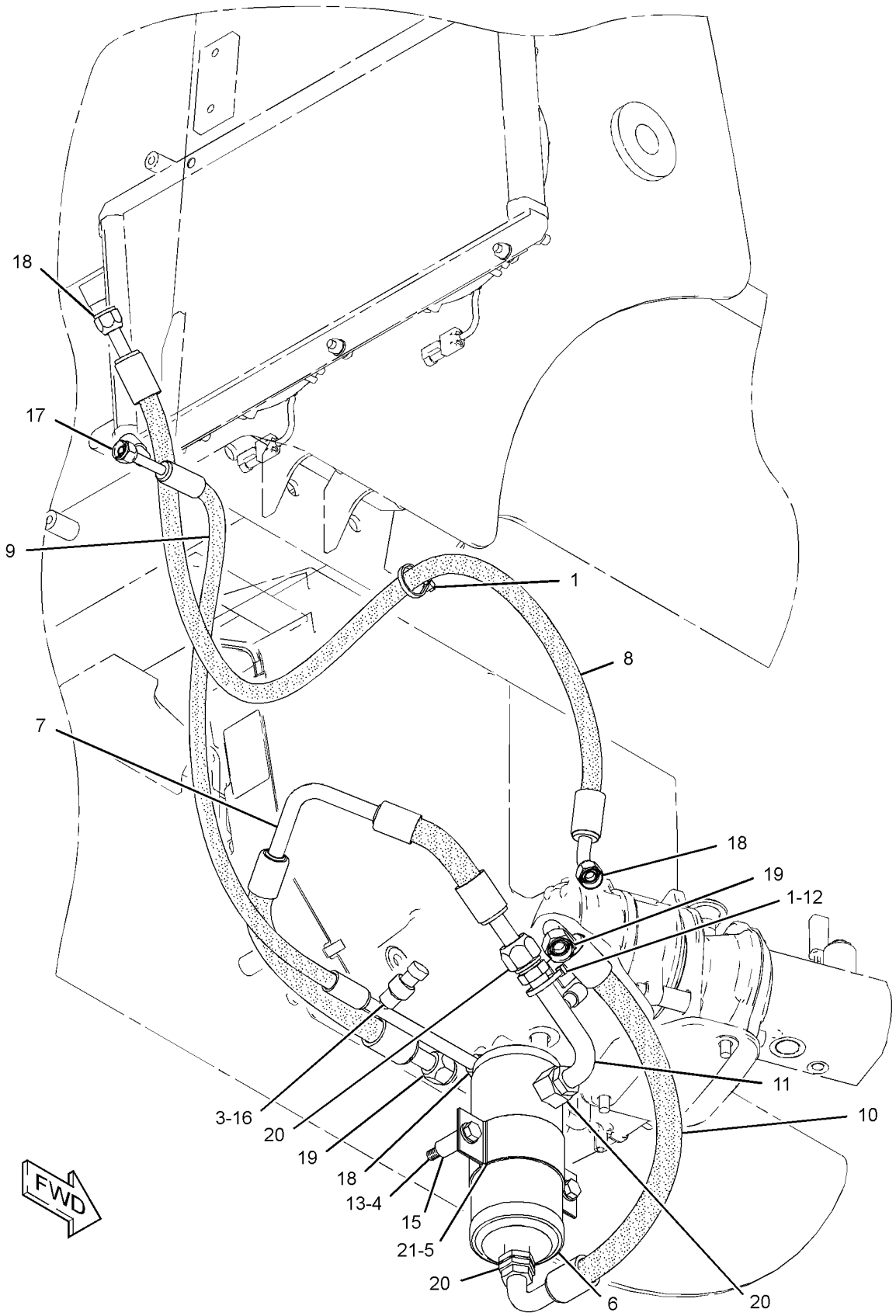

GRAPHIC #1 **<END>** g01153173

OPERATOR STATION

218-6560 LINES GP-AIR CONDITIONER

S/N: MJH3795-UP
PART OF 218-6273 AIR CONDITIONER AR
AN ATTACHMENT

SMCS-1808, 7320 **i02475389**

NOTE	REF NO	GRAPHIC REF	PART NUMBER	QTY	PART NAME 1 2 3 4 5 6 (PRODUCT LEVEL)	SEE PAGE
	1	1	**3S-2093**	2	STRAP-CABLE	
	3	1	**236-6923**	1	SWITCH AS-PRESSURE (AIR CONDITIONER)	
M	4	1	**085-8091**	2	BOLT (M10X1.5X55-MM)	
	5	1	**101-8296**	2	CLIP	
Y	6	1	*186-6190*	1	ACCUMULATOR GP-REFRIGERANT	656
CI	7	1	**233-5856**	1	HOSE AS	
CI	8	1	**233-5951**	1	HOSE AS	
	9	1	**218-6582**	1	HOSE AS	
	10	1	**218-6584**	1	HOSE AS	
	11	1	*234-0566*	1	FITTING AS	
		1	**3E-4051**	1	CAP-SEAL (AIR CONDITIONER)	
		1	**3E-4057**	1	VALVE AS	
	12	1	**246-9039**	1	PLATE-INFORMATION (AIR CONDITIONER REFRIGERANT)	
	13	1	**8T-4121**	2	WASHER-HARD (11X21X2.5-MM THK)	
	15	1	**9C-2741**	2	SPACER (13.94X17.14X34-MM THK)	
	16	1	**9X-7378**	1	SEAL-O-RING	
	17	1	**9X-7380**	1	SEAL-O-RING	
	18	1	**9X-7381**	3	SEAL-O-RING	
	19	1	**9X-7382**	2	SEAL-O-RING	
	20	1	**9X-7383**	3	SEAL-O-RING	
D	21	1	**5P-5924**		SEAL (0.15-M EACH)	

C-CHANGE FROM PREVIOUS TYPE
D-ORDER BY THE METER
I-REFER TO HYDRAULIC INFORMATION SYSTEM
M-METRIC PART
Y-SEPARATE ILLUSTRATION

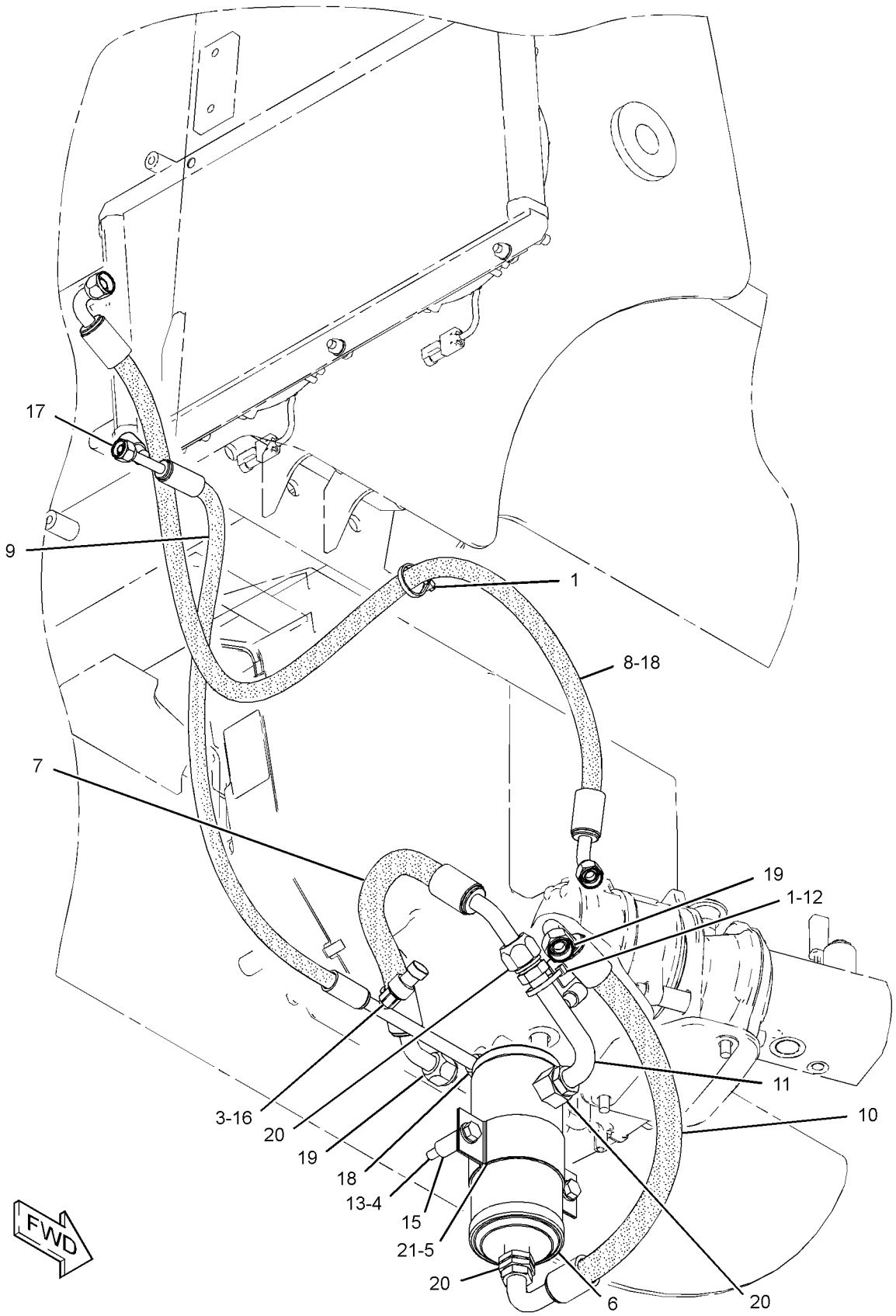

GRAPHIC #1

<END>

g01178590

OPERATOR STATION

218-6590 LINES GP-AIR CONDITIONER

S/N: BXM1-1600
PART OF 218-6302 AIR CONDITIONER AR
AN ATTACHMENT

SMCS-1808, 7320 **i02271030**

NOTE	REF NO	GRAPHIC REF	PART NUMBER	QTY	PART NAME 1 2 3 4 5 6 (PRODUCT LEVEL)	SEE PAGE
	1	1	**3S-2093**	2	STRAP-CABLE	
	2	1	**4P-8134**	1	CLIP	
	3	1	**236-6923**	1	SWITCH AS-PRESSURE (AIR CONDITIONER)	
M	4	1	**085-8091**	2	BOLT (M10X1.5X55-MM)	
	5	1	**101-8296**	2	CLIP	
Y	6	1	*186-6190*	1	ACCUMULATOR GP-REFRIGERANT	656
I	7	1	**218-6564**	1	HOSE AS	
	8	1	**218-6582**	1	HOSE AS	
	9	1	**252-0330**	1	HOSE AS	
I	10	1	**218-6591**	1	HOSE AS	
	11	1	*234-0566*	1	FITTING AS	
		1	**3E-4051**	1	CAP-SEAL	
		1	**3E-4057**	1	VALVE AS	
	12	1	**246-9039**	1	PLATE-INFORMATION (AIR CONDITIONER REFRIGERANT)	
	13	1	**8T-4121**	3	WASHER-HARD (11X21X2.5-MM THK)	
M	14	1	**8T-4191**	1	BOLT (M10X1.5X16-MM)	
	15	1	**9C-2741**	2	SPACER (13.94X17.14X34-MM THK)	
	16	1	**9X-7378**	1	SEAL-O-RING	
	17	1	**9X-7380**	1	SEAL-O-RING	
	18	1	**9X-7381**	3	SEAL-O-RING	
	19	1	**9X-7382**	2	SEAL-O-RING	
	20	1	**9X-7383**	3	SEAL-O-RING	
BD	21	1	**5P-5924**		SEAL	

B-USE AS REQUIRED
D-ORDER BY THE METER
I-REFER TO HYDRAULIC INFORMATION SYSTEM
M-METRIC PART
Y-SEPARATE ILLUSTRATION

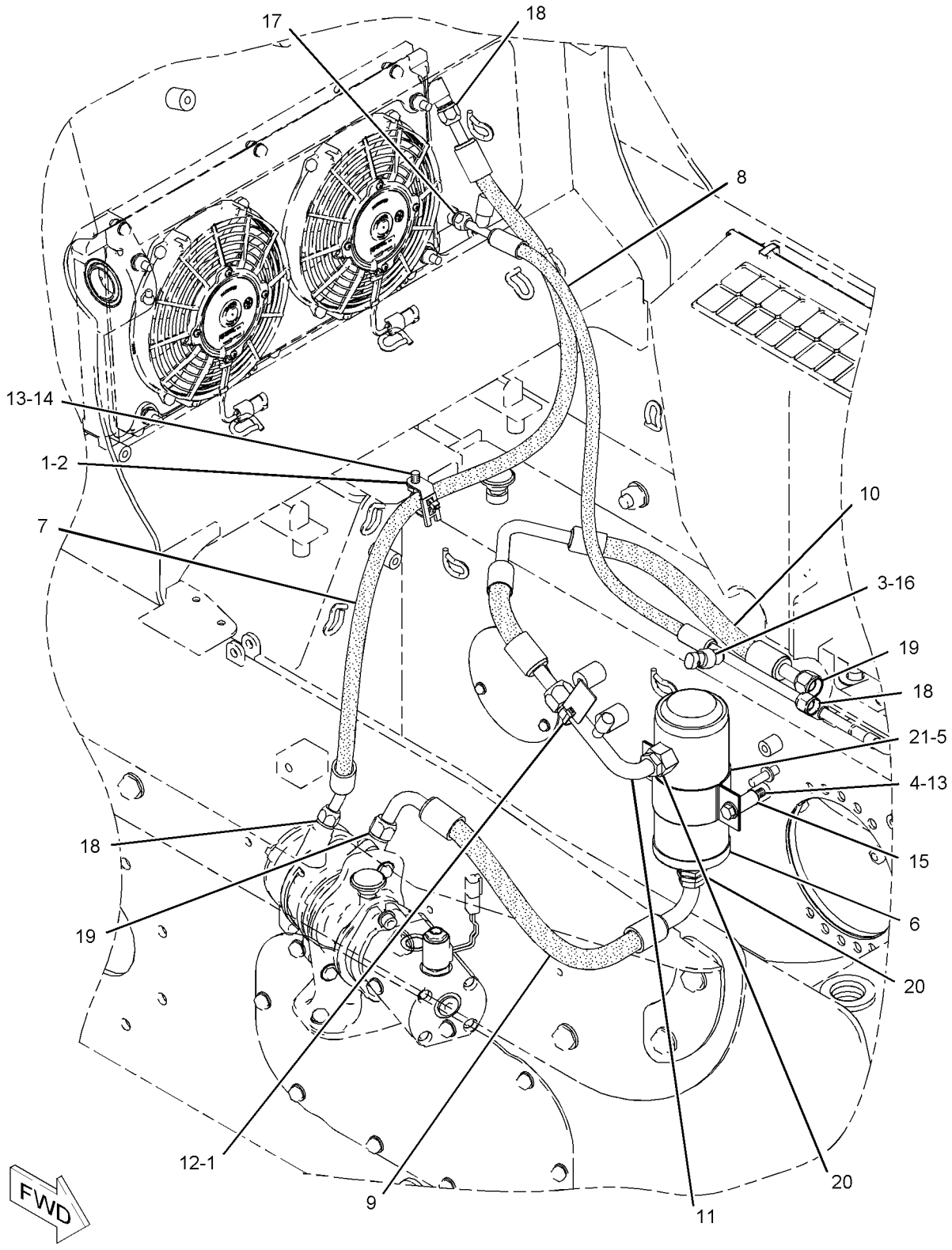

GRAPHIC #1 **<END>** g01038475

OPERATOR STATION

218-6590 LINES GP-AIR CONDITIONER

S/N: BXM1601-UP
PART OF 218-6302 AIR CONDITIONER AR
AN ATTACHMENT

SMCS-1808, 7320 **i02367123**

NOTE	REF NO	GRAPHIC REF	PART NUMBER	QTY	PART NAME 1 2 3 4 5 6 (PRODUCT LEVEL)	SEE PAGE
	1	1	**3S-2093**	2	STRAP-CABLE	
	2	1	**4P-8134**	1	CLIP	
	3	1	**236-6923**	1	SWITCH AS-PRESSURE (AIR CONDITIONER)	
M	4	1	**085-8091**	2	BOLT (M10X1.5X55-MM)	
	5	1	**101-8296**	2	CLIP	
Y	6	1	*186-6190*	1	ACCUMULATOR GP-REFRIGERANT	656
CI	7	1	**233-5951**	1	HOSE AS	
	8	1	**218-6582**	1	HOSE AS	
	9	1	**252-0330**	1	HOSE AS	
CI	10	1	**233-5863**	1	HOSE AS	
	11	1	*234-0566*	1	FITTING AS	
		1	**3E-4051**	1	CAP-SEAL	
		1	**3E-4057**	1	VALVE AS	
	12	1	**246-9039**	1	PLATE-INFORMATION (AIR CONDITIONER REFRIGERANT)	
	13	1	**8T-4121**	3	WASHER-HARD (11X21X2.5-MM THK)	
M	14	1	**8T-4191**	1	BOLT (M10X1.5X16-MM)	
	15	1	**9C-2741**	2	SPACER (13.94X17.14X34-MM THK)	
	16	1	**9X-7378**	1	SEAL-O-RING	
	17	1	**9X-7380**	1	SEAL-O-RING	
	18	1	**9X-7381**	3	SEAL-O-RING	
	19	1	**9X-7382**	2	SEAL-O-RING	
	20	1	**9X-7383**	3	SEAL-O-RING	
D	21	1	**5P-5924**		SEAL (0.3-M)	

C-CHANGE FROM PREVIOUS TYPE
D-ORDER BY THE METER
I-REFER TO HYDRAULIC INFORMATION SYSTEM
M-METRIC PART
Y-SEPARATE ILLUSTRATION

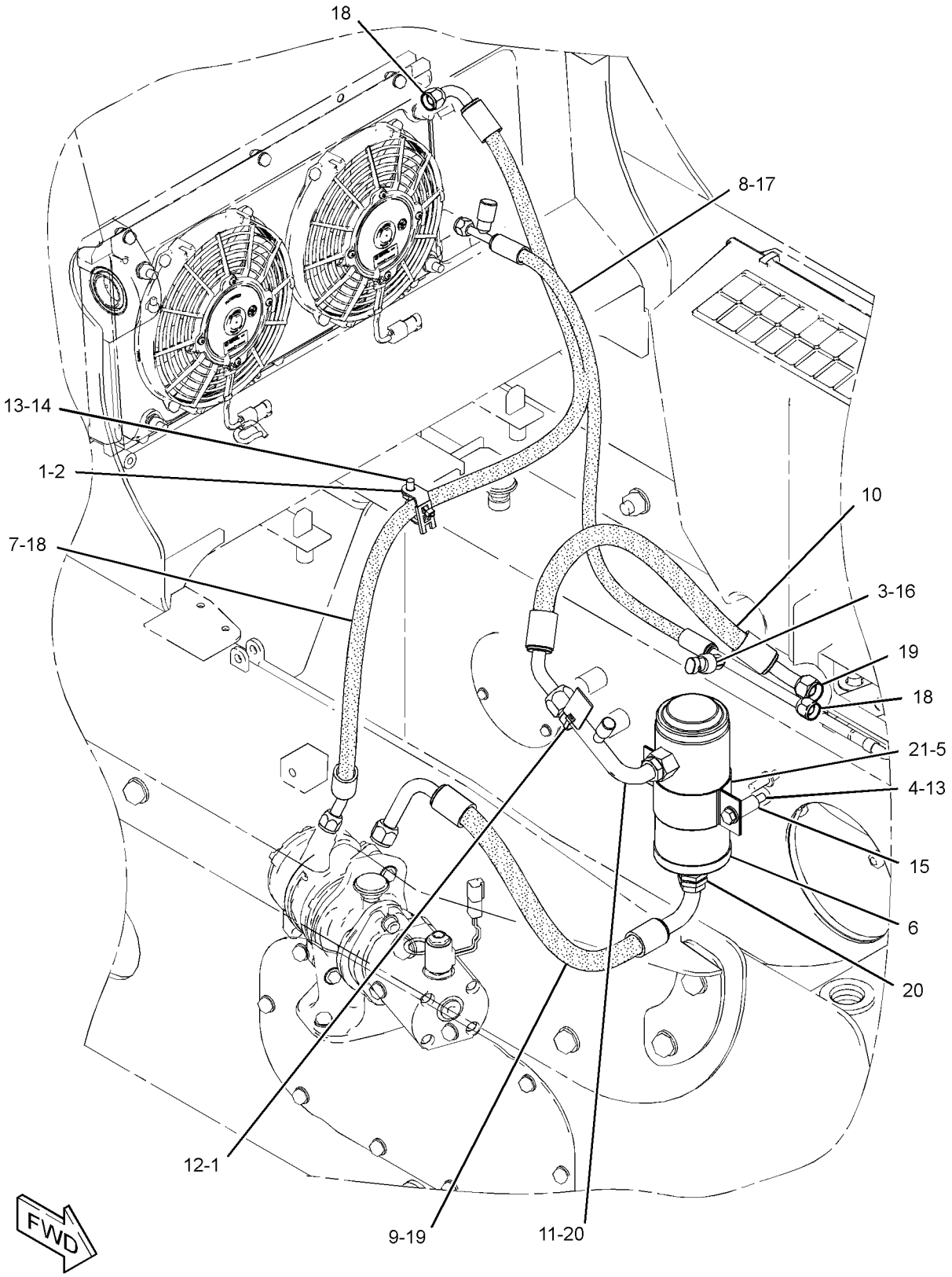

GRAPHIC #1 **<END>** g01178945

OPERATOR STATION

218-6086 LINES GP-HEATER

S/N: MJH1-UP; SCH1-UP; RLL1-UP; BXM1-UP
PART OF 218-6273, 218-6302 AIR CONDITIONER AR, 218-6272, 218-6703 HEATER AR-CAB
AN ATTACHMENT

SMCS-1812, 7304 **i02293792**

NOTE	REF NO	GRAPHIC REF	PART NUMBER	QTY	PART NAME 1 2 3 4 5 6 (PRODUCT LEVEL)	SEE PAGE
BE	1	1	**136-1953**		HOSE (330-CM)	
	2	1	**176-4079**	1	INSULATION	
	3	1	**8F-8151**	1	VALVE AS-SHUTOFF	
	4	1	**8T-0154**	4	CLAMP-HOSE	
	5	1	**250-1493**	1	ELBOW	
	6	1	**150-7568**	1	ADAPTER	
	7	1	**3S-8665**	1	CLIP	
	8	1	**6D-1641**	2	CLIP	
	9	1	**8T-4121**	1	WASHER-HARD (11X21X2.5-MM THK)	
M	10	1	**8T-4200**	1	BOLT (M8X1.25X16-MM)	
	11	1	**8T-4224**	1	WASHER-HARD (8.8X16X2-MM THK)	

B-USE AS REQUIRED
E-ORDER BY THE CENTIMETER
M-METRIC PART

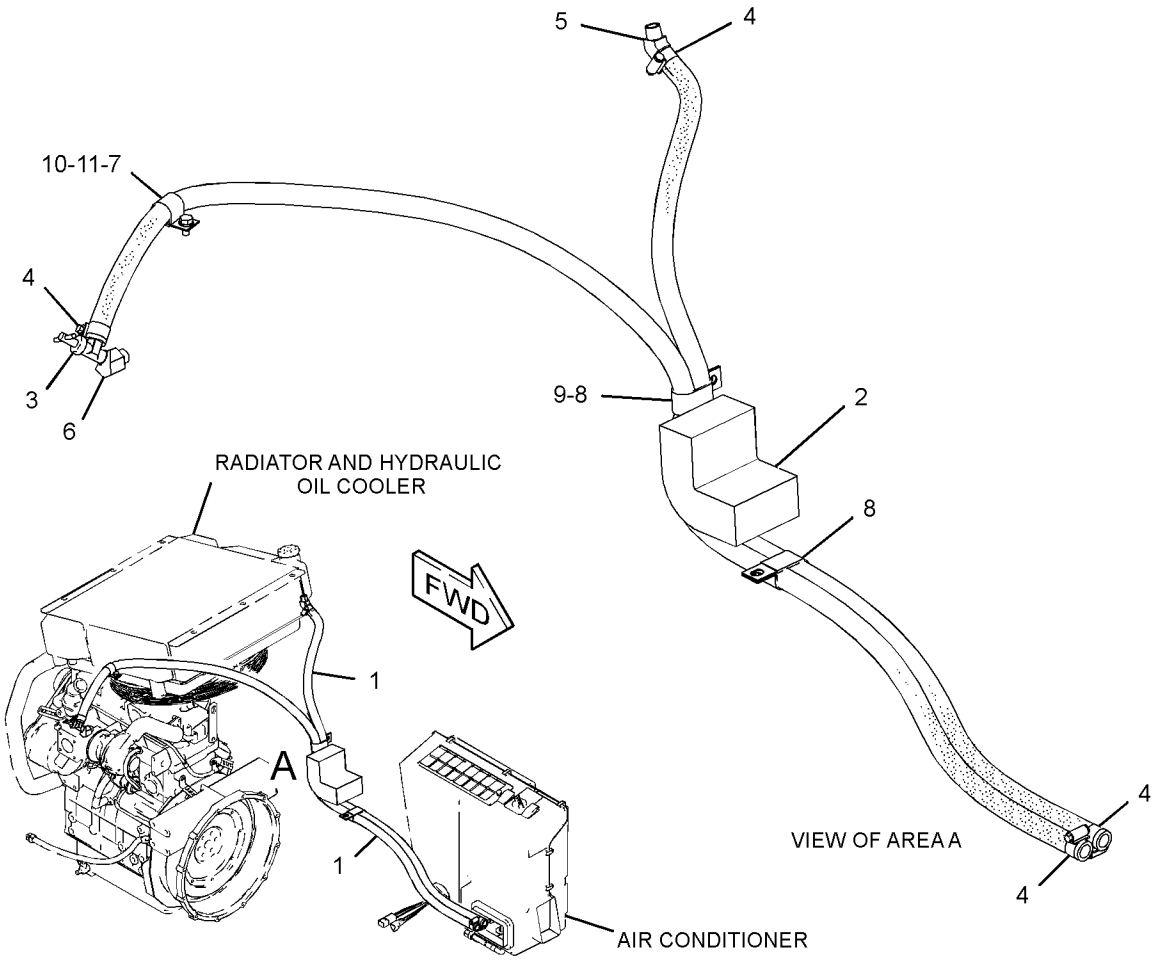

GRAPHIC #1 **<END>** g01166995

OPERATOR STATION

6V-1970 LITERATURE GP

S/N: MJH5600-UP; RLL3200-UP
PART OF 278-1216, 278-1226 COMMON AR

SMCS-0374, 0375, 7300 **i02300827**

NOTE	PART NUMBER	QTY	PART NAME 1 2 3 4 5 6 (PRODUCT LEVEL)	SEE PAGE
	5P-8500	2	KEY (LITERATURE COMPARTMENT)	
	5P-7958	1	SLEEVE-CABLE SPLICE	

<END>

OPERATOR STATION

218-6395 MIRROR GP-REAR VIEW

S/N: MJH1-UP; SCH1-UP; RLL1-UP; BXM1-UP
PART OF 218-6350 CAB AR-ENCLOSED ROPS

SMCS-7319 **i02007402**

NOTE	REF NO	GRAPHIC REF	PART NUMBER	QTY	PART NAME 1 2 3 4 5 6 (PRODUCT LEVEL)	SEE PAGE
	1	1	**218-6384**	1	MIRROR AS	
	2	1	**3B-4505**	1	LOCKWASHER	
M	3	1	**5C-7261**	1	NUT (M8X1.25-THD)	
	4	1	**8T-4224**		WASHER-HARD (8.8X16X2-MM THK)	

M-METRIC PART

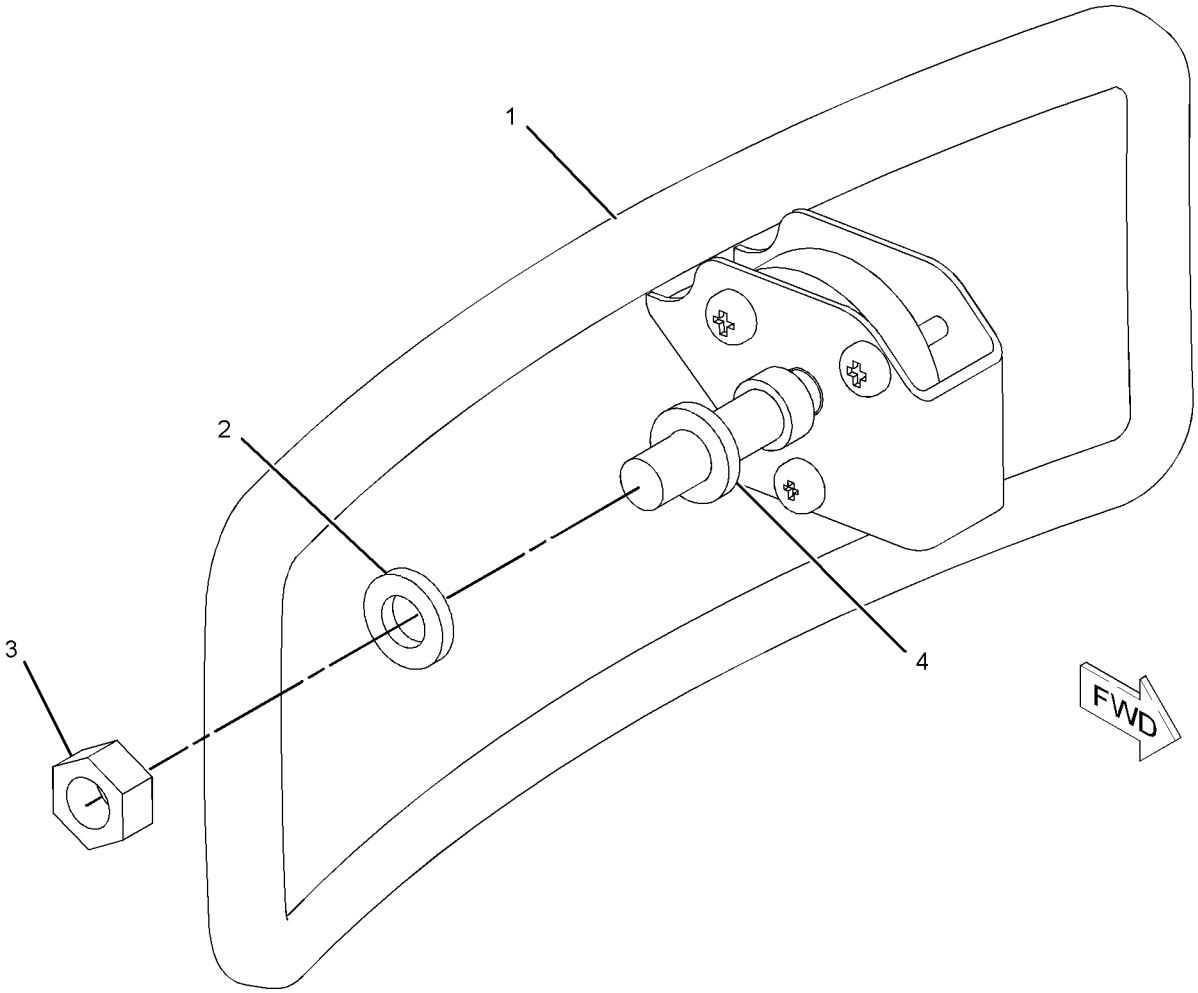

GRAPHIC #1 **<END>** g01038484

223-6537 MODULE GP-WARNING INDICATOR

S/N: MJH1-UP; SCH1-UP; RLL1-UP; BXM1-UP
PART OF 216-4712 GAUGE & WARNING GP
AN ATTACHMENT

SMCS-7407, 7431 **i02359530**

NOTE	REF NO	GRAPHIC REF	PART NUMBER	QTY	PART NAME 1 2 3 4 5 6 (PRODUCT LEVEL)	SEE PAGE
	1	1	**102-8801**	1	KIT-RECEPTACLE (12-PIN)	
					(INCLUDES RECEPTACLE AS & WEDGE)	
	2	1	**232-4706**	1	GASKET	
	3	1	**3E-5180**	1	WEDGE-RECEPTACLE LOCK (12-PIN)	
	4	1	**186-3735**	9	PIN-CONNECTOR (16-GA TO 18-GA)	
	5	1	**8T-8737**	1	PLUG-SEAL	

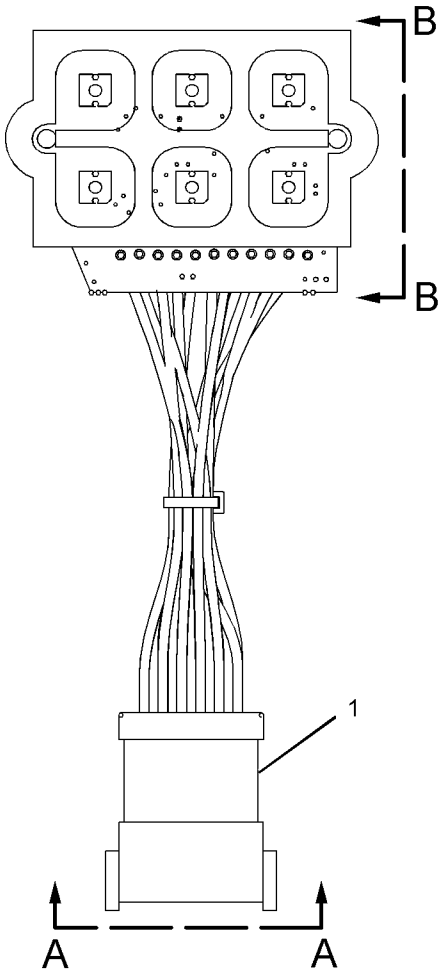

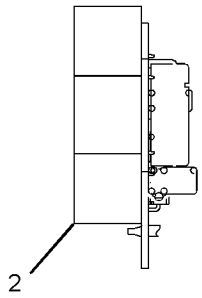

VIEW B-B

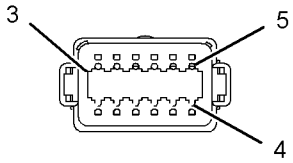

VIEW A-A

GRAPHIC #1 **<END>** g01029187

OPERATOR STATION

229-7224 MODULE GP-WARNING INDICATOR–12-VOLT

S/N: MJH1-3144; SCH1-911; RLL1-1330; BXM1-1301
PART OF 216-4713 GAUGE & WARNING GP
AN ATTACHMENT

SMCS-7407, 7431 **i02279558**

NOTE	REF NO	GRAPHIC REF	PART NUMBER	QTY	PART NAME 1 2 3 4 5 6 (PRODUCT LEVEL)	SEE PAGE
	1	1	**102-8801**	1	KIT-RECEPTACLE (12-PIN)	
					(INCLUDES RECEPTACLE AS & WEDGE)	
	2	1	**232-4706**	1	GASKET	
	3	1	**186-3736**	4	SOCKET-CONNECTOR (16-GA TO 18-GA)	
	4	1	**186-3735**	9	PIN-CONNECTOR (16-GA TO 18-GA)	
	5	1	**8T-8737**	3	PLUG-SEAL	
	6	1	**155-2270**	2	KIT-CONNECTING PLUG (2-PIN)	
					(EACH INCLUDES PLUG AS, WEDGE & INTERFACE SEAL)	

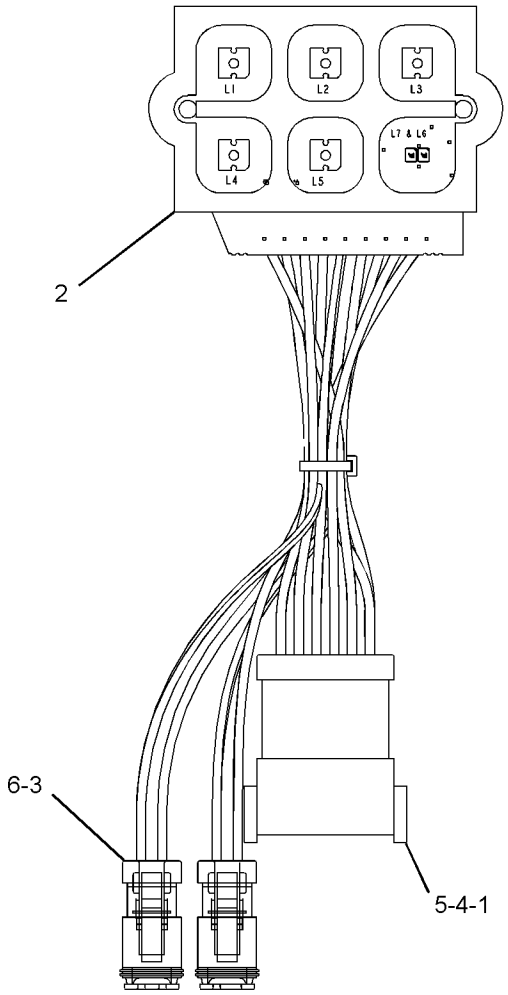

GRAPHIC #1 **<END>** g01141474

OPERATOR STATION

249-2910 MODULE GP-WARNING INDICATOR

S/N: MJH3145-UP; SCH912-UP; RLL1331-UP; BXM1302-UP
PART OF 216-4713 GAUGE & WARNING GP
AN ATTACHMENT

SMCS-7407, 7431 **i02279562**

NOTE	REF NO	GRAPHIC REF	PART NUMBER	QTY	PART NAME 1 2 3 4 5 6 (PRODUCT LEVEL)	SEE PAGE
	1	1	**8T-8737**	3	PLUG-SEAL	
	2	1	**232-4706**	1	GASKET	
	3	1	**186-3735**	9	PIN-CONNECTOR (16-GA TO 18-GA)	
	4	1	**102-8801**	1	KIT-RECEPTACLE (12-PIN)	
					(INCLUDES RECEPTACLE AS & WEDGE)	

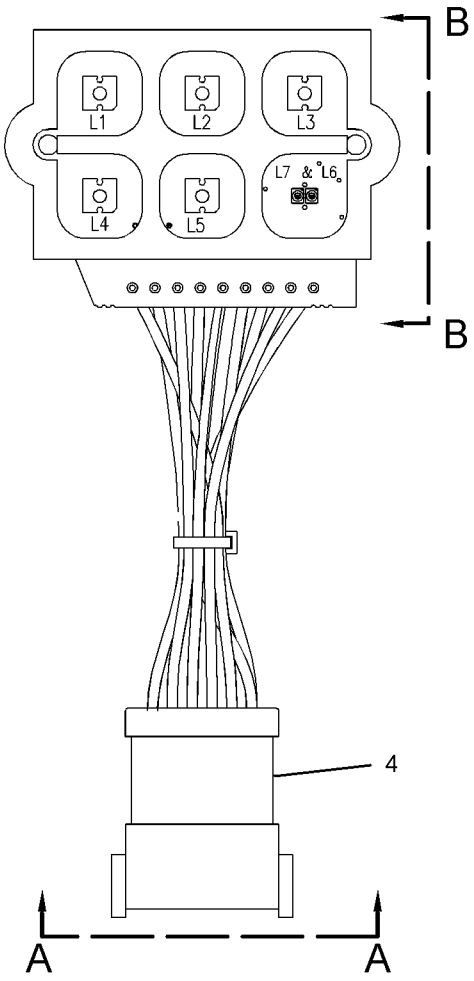

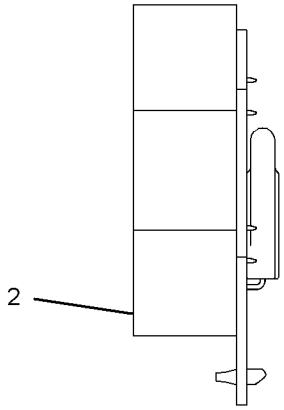

VIEW B-B

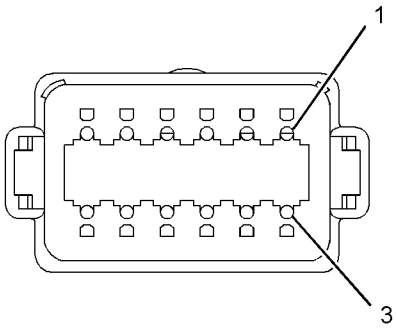

VIEW A-A

GRAPHIC #1 **<END>** g01152784

OPERATOR STATION

218-6370 MOUNTING GP-ROPS

S/N: MJH1-UP; SCH1-UP; RLL1-UP; BXM1-UP
PART OF 218-6350 CAB AR-ENCLOSED ROPS

SMCS-7266, 7323 **i01955254**

NOTE	REF NO	GRAPHIC REF	PART NUMBER	QTY	PART NAME 1 2 3 4 5 6 (PRODUCT LEVEL)	SEE PAGE
	1	1	**152-5878**	2	MOUNT AS	
	2	1	**153-6981**	2	MOUNT	
	3	1	**159-5790**	1	BRACKET	
	4	1	**159-5792**	1	BAR AS	
	5	1	**159-5794**	1	SPRING	
	6	1	**218-6381**	2	SPACER	
	7	1	**165-7095**	4	WASHER (16.5X71.5X3-MM THK)	
	8	1	**4P-7581**	1	CLIP	
M	9	1	**6V-9805**	2	BOLT (M6X1X20-MM)	
M	10	1	**7X-2475**	2	BOLT (M16X2X130-MM)	
M	11	1	**8T-4122**	4	WASHER-HARD (17X32X3.5-MM THK)	
M	12	1	**8T-4173**	2	BOLT (M16X2X110-MM)	
	13	1	**8T-4205**	2	WASHER-HARD (7.2X14.5X2-MM THK)	
M	14	1	**8T-4778**	4	LOCKNUT (M16X2-THD)	

M-METRIC PART

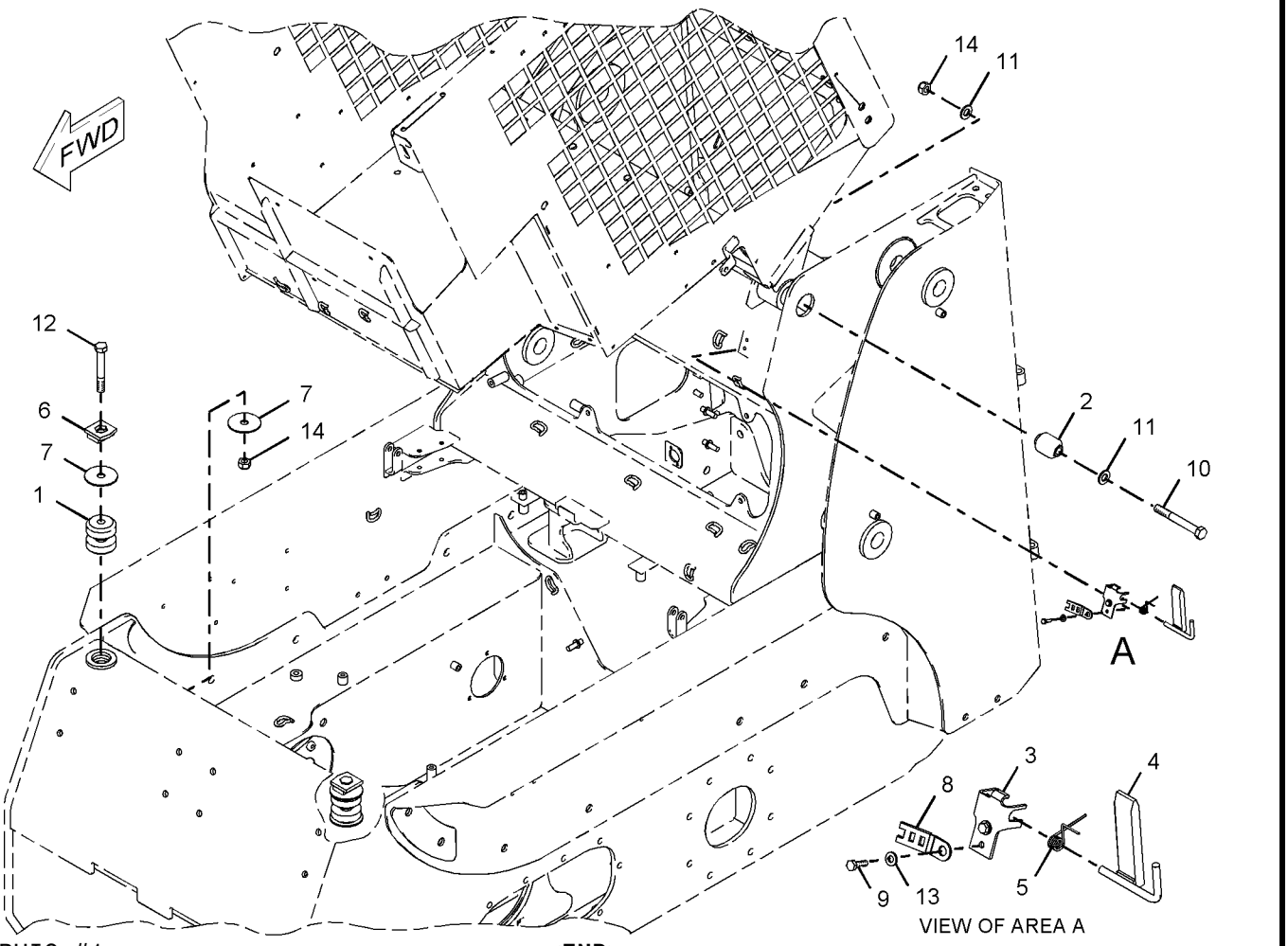

GRAPHIC #1 **<END>** g01018977

OPERATOR STATION

218-5790 PANEL AR-INSTRUMENT

S/N: MJH1-UP; SCH1-UP; RLL1-UP; BXM1-UP
NACD
PART OF 252-0449, 261-6160 CONVERSION AR-MACHINE, 233-5670 CONVERSION AR-NON-ROADING
AN ATTACHMENT

SMCS-7451 **i01957627**

NOTE	PART NUMBER	QTY	PART NAME 1 2 3 4 5 6 (PRODUCT LEVEL)	SEE PAGE
Y	**225-7998**	1	PANEL GP-INSTRUMENT	730
Y-SEPARATE ILLUSTRATION				

<END>

218-5791 PANEL AR-INSTRUMENT

S/N: MJH1-UP; SCH1-UP; RLL1-UP; BXM1-UP
EAME
PART OF 261-6155, 261-6156, 261-6157, 261-6158, 261-6187, 261-6197, 278-1212, 278-1213, 278-1220, 278-1221, 278-1224, 278-1225, 278-5347, 278-5348, 278-5369, 278-5370, 278-5408, 278-5409, 278-5413, 278-5414, 278-5441, 278-5442 CONVERSION AR-MACHINE, 233-5671, 233-5672, 233-5673, 233-5674, 233-5675, 233-5676, 233-5681, 233-5682, 233-5683, 233-5684, 233-5685, 233-5686, 257-5716, 257-5717, 257-5718, 257-5721, 257-5723 CONVERSION AR-ROADING
AN ATTACHMENT

SMCS-7451 **i01957887**

NOTE	PART NUMBER	QTY	PART NAME 1 2 3 4 5 6 (PRODUCT LEVEL)	SEE PAGE
Y	**216-4751**	1	PANEL GP-INSTRUMENT	728
Y-SEPARATE ILLUSTRATION				

<END>

OPERATOR STATION

216-4751 PANEL GP-INSTRUMENT

S/N: MJH1-UP; SCH1-UP; RLL1-UP; BXM1-UP
EAME
PART OF 218-5791 PANEL AR-INSTRUMENT
AN ATTACHMENT

SMCS-7451 **i02360197**

NOTE	REF NO	GRAPHIC REF	PART NUMBER	QTY	PART NAME 1 2 3 4 5 6 (PRODUCT LEVEL)	SEE PAGE
	1	1	**109-2356**	5	PLUG	
Y	2	1	*142-9118*	1	COVER GP-INSTRUMENT PANEL (SERVICE METER)	675
	3	1	**142-9320**	1	SWITCH AS-ROCKER (PARKING BRAKE)	
		1	**111-7899**	1	GASKET	
	4	1	**142-9325**	1	SWITCH AS-ROCKER (COLD START)	
		1	**111-7899**	1	GASKET	
	5	1	**142-9328**	1	SWITCH AS-ROCKER (FRONT WORK LIGHT)	
		1	**111-7899**	1	GASKET	
	6	1	**158-6696**	1	COVER	
	7	1	**158-6698**	1	COVER	
	8	1	**158-6699**	1	COVER	
	9	1	**165-0312**	1	WIRE AS	
Y	10	1	*216-4712*	1	GAUGE & WARNING GP (LH)	690
Y	11	1	*216-4713*	1	GAUGE & WARNING GP (RH)	691
	12	1	**216-4752**	1	HARNESS AS-INSTRUMENT PANEL	
		1	**155-2255**	2	KIT-CONNECTING PLUG (12-PIN)	
		1	**155-2260**	1	KIT-CONNECTING PLUG (3-PIN)	
		1	**155-2270**	6	KIT-CONNECTING PLUG (2-PIN)	
		1	**155-2271**	3	KIT-CONNECTING PLUG (4-PIN)	
		1	**155-2274**	1	KIT-CONNECTING PLUG (6-PIN)	
					(EACH PLUG KIT INCLUDES PLUG AS, WEDGE & INTERFACE SEAL)	
		1	**102-8804**	2	KIT-RECEPTACLE (4-PIN)	
		1	**102-8805**	1	KIT-RECEPTACLE (6-PIN)	
		1	**102-8801**	1	KIT-RECEPTACLE (12-PIN)	
					(EACH RECEPTACLE KIT INCLUDES RECEPTACLE AS & WEDGE)	
	13	1	**223-5941**	1	SWITCH AS-ROCKER (WORK TOOL HYD PRESS RELEASE)	
		1	**111-7899**	1	GASKET	
	14	1	**226-5901**	1	SWITCH AS-ROCKER (INTERLOCK OVERRIDE)	
		1	**111-7899**	1	GASKET	
	15	1	**103-2006**	16	SCREW-PAN HEAD (6-19X0.37-IN)	

Y-SEPARATE ILLUSTRATION

216-4751 **PANEL GP-INSTRUMENT** *(contd.)* **i02360197**

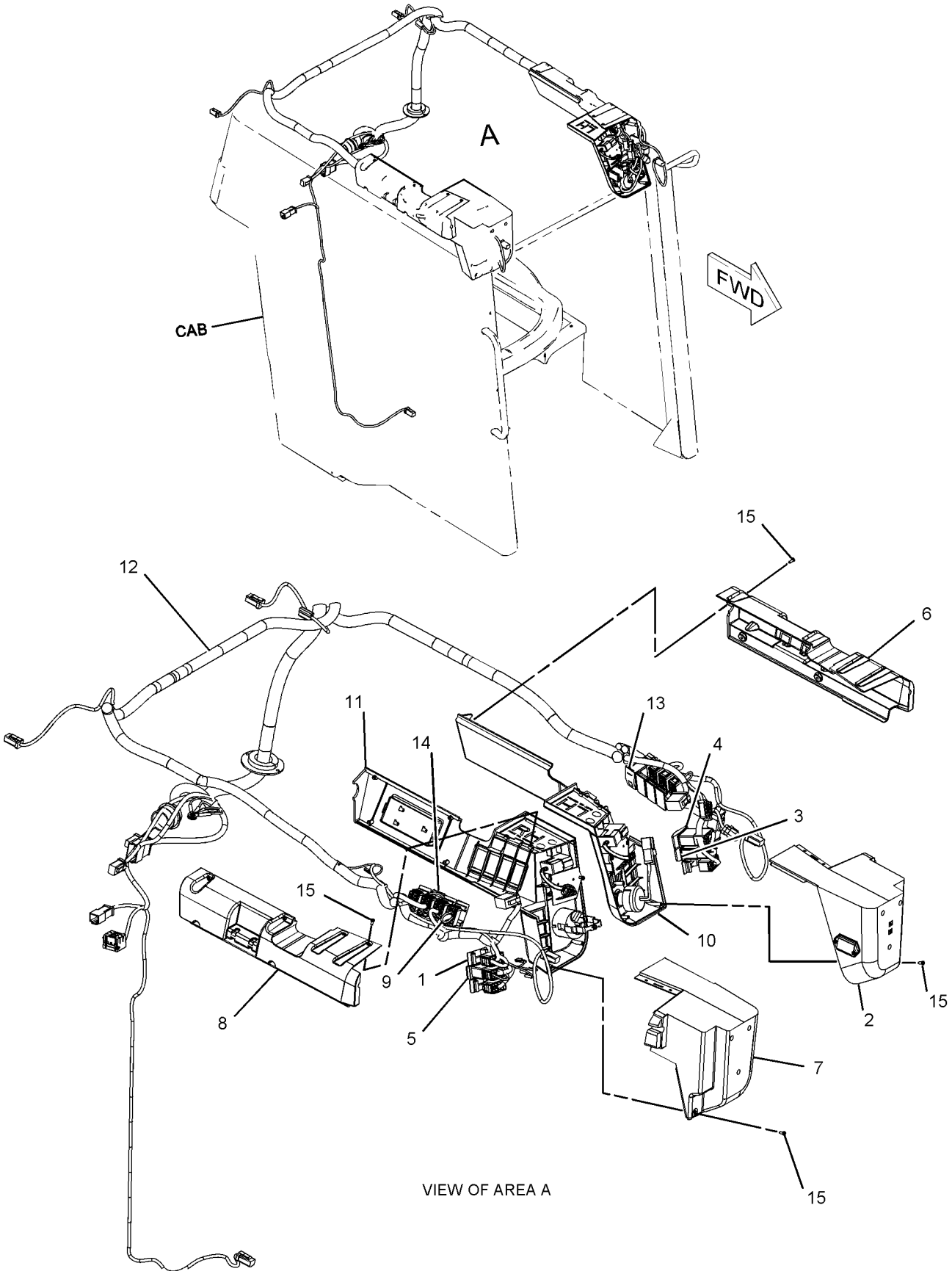

VIEW OF AREA A

GRAPHIC #1 **<END>** g01125969

OPERATOR STATION

225-7998 PANEL GP-INSTRUMENT

S/N: MJH1-UP; SCH1-UP; RLL1-UP; BXM1-UP
NACD
PART OF 218-5790 PANEL AR-INSTRUMENT
AN ATTACHMENT

SMCS-7451 **i02259865**

NOTE	REF NO	GRAPHIC REF	PART NUMBER	QTY	PART NAME 1 2 3 4 5 6 (PRODUCT LEVEL)	SEE PAGE
	1	1	**109-2356**	5	PLUG	
Y	2	1	*142-9118*	1	COVER GP-INSTRUMENT PANEL (SERVICE METER)	675
	3	1	**142-9320**	1	SWITCH AS-ROCKER (PARKING BRAKE)	
		1	**111-7899**	1	GASKET	
	4	1	**142-9325**	1	SWITCH AS-ROCKER (COLD START)	
		1	**111-7899**	1	GASKET	
	5	1	**142-9328**	1	SWITCH AS-ROCKER (FRONT WORK LIGHT)	
		1	**111-7899**	1	GASKET	
	6	1	**158-6696**	1	COVER	
	7	1	**158-6698**	1	COVER	
	8	1	**158-6699**	1	COVER	
Y	9	1	*216-4712*	1	GAUGE & WARNING GP (LH)	690
Y	10	1	*216-4713*	1	GAUGE & WARNING GP (RH)	691
	11	1	**223-5941**	1	SWITCH AS-ROCKER (WORK TOOL HYD PRESS RELEASE)	
		1	**111-7899**	1	GASKET	
	12	1	**225-7999**	1	HARNESS AS-INSTRUMENT PANEL	
		1	**102-8804**	2	KIT-RECEPTACLE (4-PIN)	
		1	**102-8805**	1	KIT-RECEPTACLE (6-PIN)	
		1	**102-8801**	1	KIT-RECEPTACLE (12-PIN)	
					(EACH RECEPTACLE KIT INCLUDES RECEPTACLE AS & WEDGE)	
		1	**155-2255**	1	KIT-CONNECTING PLUG (12-PIN)	
		1	**155-2271**	2	KIT-CONNECTING PLUG (4-PIN)	
		1	**155-2274**	1	KIT-CONNECTING PLUG (6-PIN)	
		1	**155-2270**	6	KIT-CONNECTING PLUG (2-PIN)	
					(EACH PLUG KIT INCLUDES PLUG AS, WEDGE, & INTERFACE SEAL)	
		1	**155-2260**	1	KIT-CONNECTING PLUG (3-PIN)	
					(INCLUDES PLUG AS, WEDGES, & INTERFACE SEAL)	
	13	1	**226-5901**	1	SWITCH AS-ROCKER (INTERLOCK OVERRIDE)	
		1	**111-7899**	1	GASKET	
	14	1	**103-2006**	16	SCREW-PAN HEAD (6-19X0.37-IN)	

Y-SEPARATE ILLUSTRATION

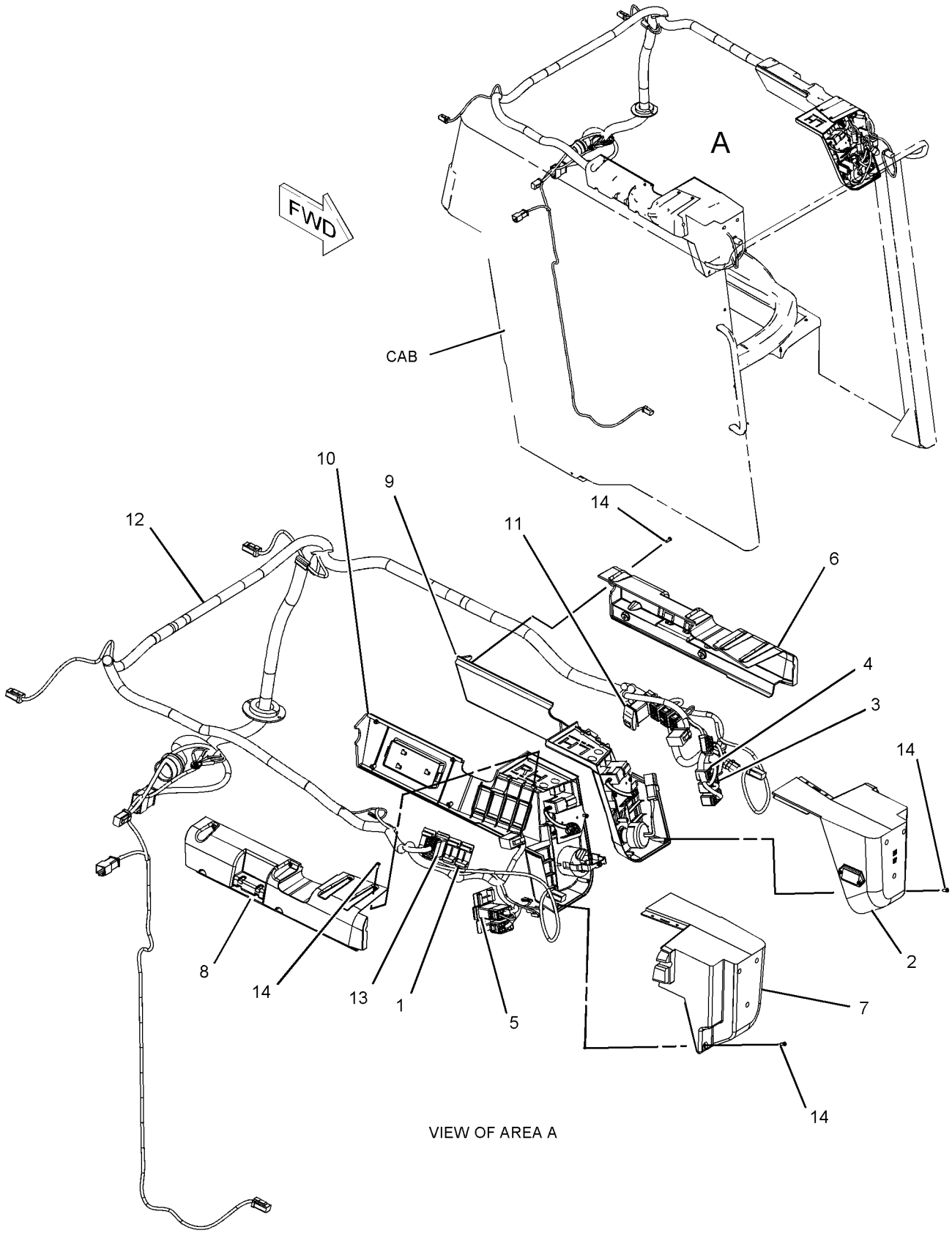

GRAPHIC #1 **<END>** g01136068

OPERATOR STATION

218-6428 PANEL GP-SIDE

S/N: SCH1-UP; BXM1-UP

PART OF 218-6610 CHASSIS AR

SMCS-7267 **i01966886**

NOTE	REF NO	GRAPHIC REF	PART NUMBER	QTY	PART NAME 1 2 3 4 5 6 (PRODUCT LEVEL)	SEE PAGE
	1	1	**193-8385**	1	PLATE (RH)	
	2	1	**218-6434**	1	PLATE (LH)	
M	3	1	**131-3543**	5	BOLT-ROUND HEAD (M6X1-6G-THD)	
M	4	1	**5C-2890**	5	NUT (M6X1-THD)	
	5	1	**8T-4205**	5	WASHER-HARD (7.2X14.5X2-MM THK)	

M-METRIC PART

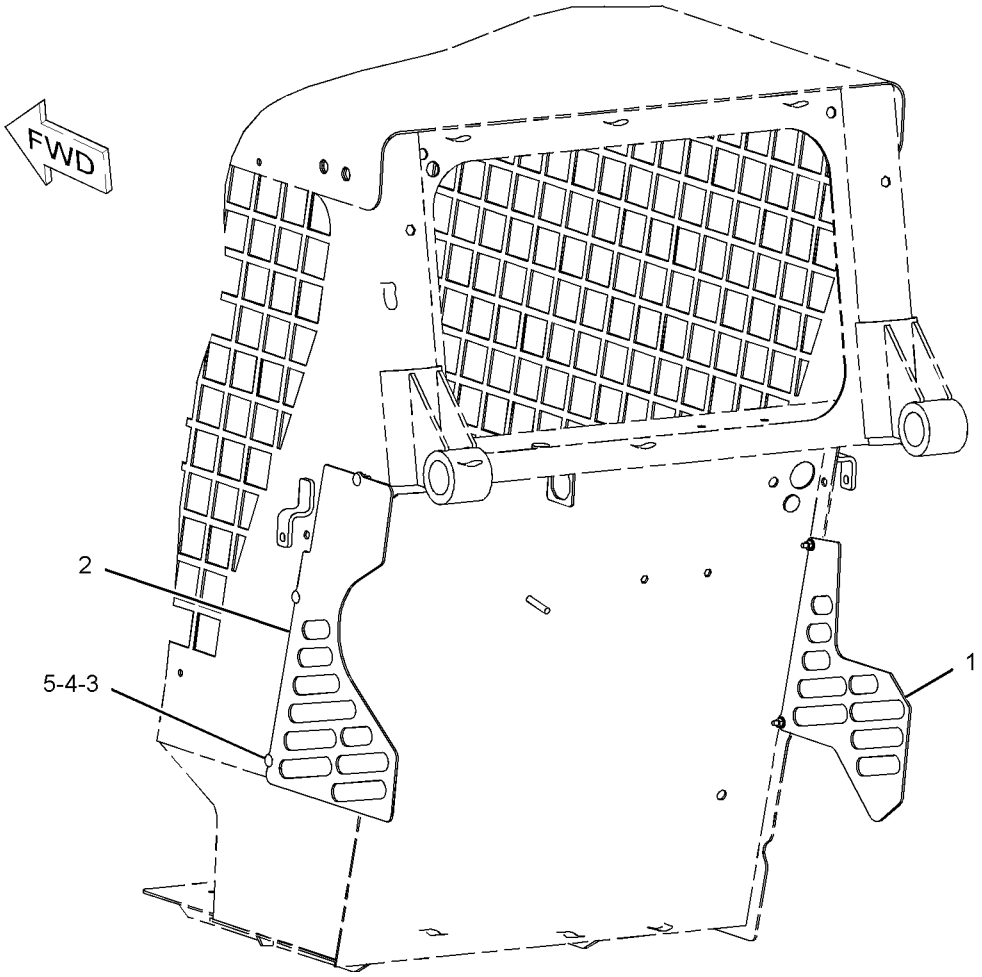

GRAPHIC #1 **<END>** g01021358

OPERATOR STATION

218-6430 PANEL GP-SIDE

S/N: MJH1-UP; RLL1-UP
PART OF 218-5910 CHASSIS AR

SMCS-7267 **i01955463**

NOTE	REF NO	GRAPHIC REF	PART NUMBER	QTY	PART NAME 1 2 3 4 5 6 (PRODUCT LEVEL)	SEE PAGE
	1	1	**193-8385**	1	PLATE (RH)	
	2	1	**218-6423**	1	PLATE (LH)	
M	3	1	**131-3543**	5	BOLT-ROUND HEAD (M6X1-6G-THD)	
M	4	1	**5C-2890**	5	NUT (M6X1-THD)	
	5	1	**8T-4205**	5	WASHER-HARD (7.2X14.5X2-MM THK)	

M-METRIC PART

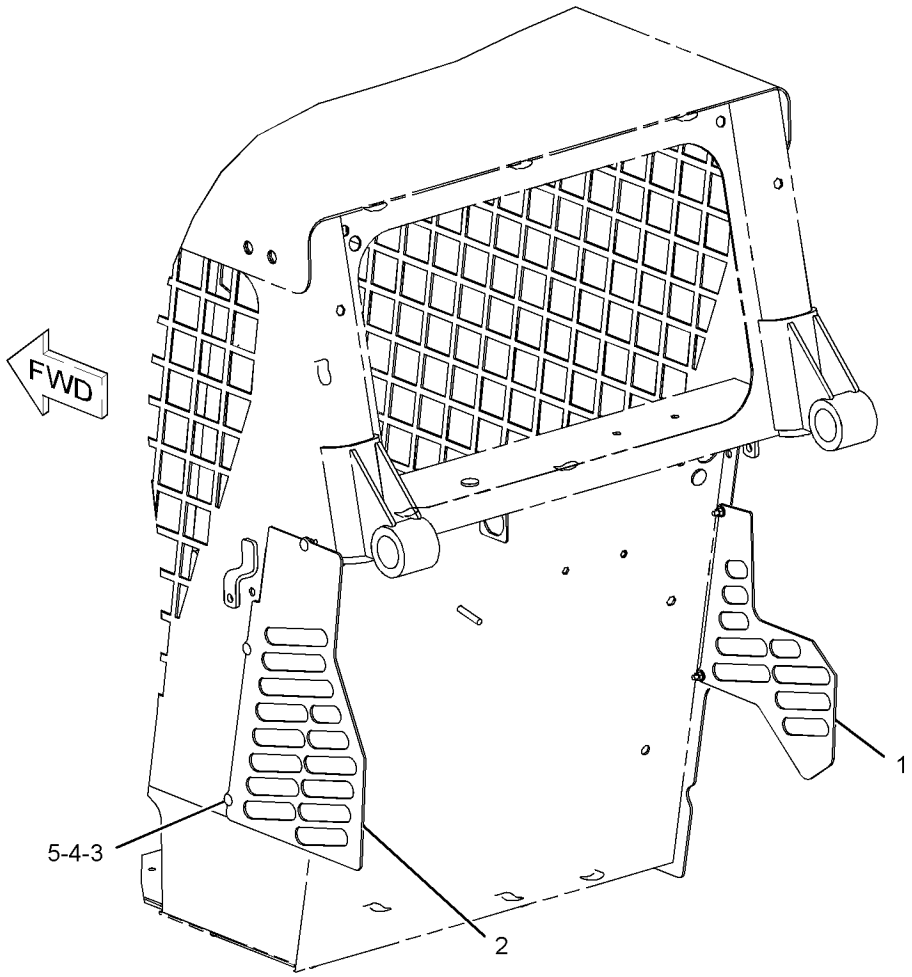

GRAPHIC #1 **<END>** g01017460

OPERATOR STATION

218-5565 PEDAL GP-GOVERNOR

S/N: MJH1-UP; SCH1-UP; RLL1-UP; BXM1-UP

PART OF 218-5602 CONTROL GP-GOVERNOR

SMCS-1265, 1276 **i02312058**

NOTE	REF NO	GRAPHIC REF	PART NUMBER	QTY	PART NAME 1 2 3 4 5 6 (PRODUCT LEVEL)	SEE PAGE
Y	1	1	**218-5566**	1	CABLE GP-GOVERNOR CONTROL	123
Y	2	1	**263-6688**	1	PEDAL GP-GOVERNOR	735
Y	3	1	**234-0774**	1	LEVER GP-GOVERNOR	709

Y-SEPARATE ILLUSTRATION

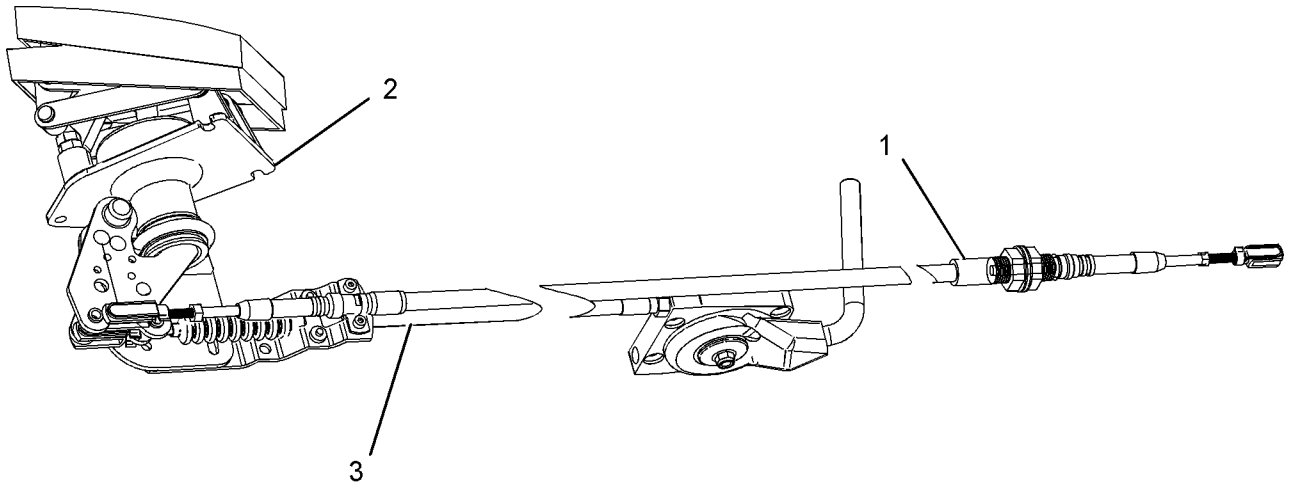

GRAPHIC #1 **<END>** g01010528

OPERATOR STATION

263-6688 PEDAL GP-GOVERNOR

S/N: MJH1-UP; SCH1-UP; RLL1-UP; BXM1-UP
PART OF 218-5565 PEDAL GP-GOVERNOR

SMCS-1265, 1276 **i02312047**

NOTE	REF NO	GRAPHIC REF	PART NUMBER	QTY	PART NAME 1 2 3 4 5 6 (PRODUCT LEVEL)	SEE PAGE
M	1	1	**095-0641**	4	BOLT-SOCKET HEAD (M4X0.7X10-MM)	
M	2	1	**129-3178**	1	LOCKNUT (M6X1 THD)	
	3	1	**3F-9556**	2	LOCKWASHER	
M	4	1	**5C-7261**	1	NUT (M8X1.25-THD)	
M	5	1	**5C-9553**	1	BOLT (M6X1X16-MM)	
	6	1	**6V-8186**	2	NUT-FULL (5/16-24-THD)	
M	7	1	**8T-4197**	1	BOLT (M8X1.25X40-MM)	
	8	1	**8T-4205**	1	WASHER-HARD (7.2X14.5X2-MM THK)	
	9	1	**8T-6902**	1	CLIP	
					AVAILABLE REPAIR KIT(S):	
			164-1154	1	KIT-SERVICE	
					(INCLUDES CLAMPS & SCREWS)	

M-METRIC PART

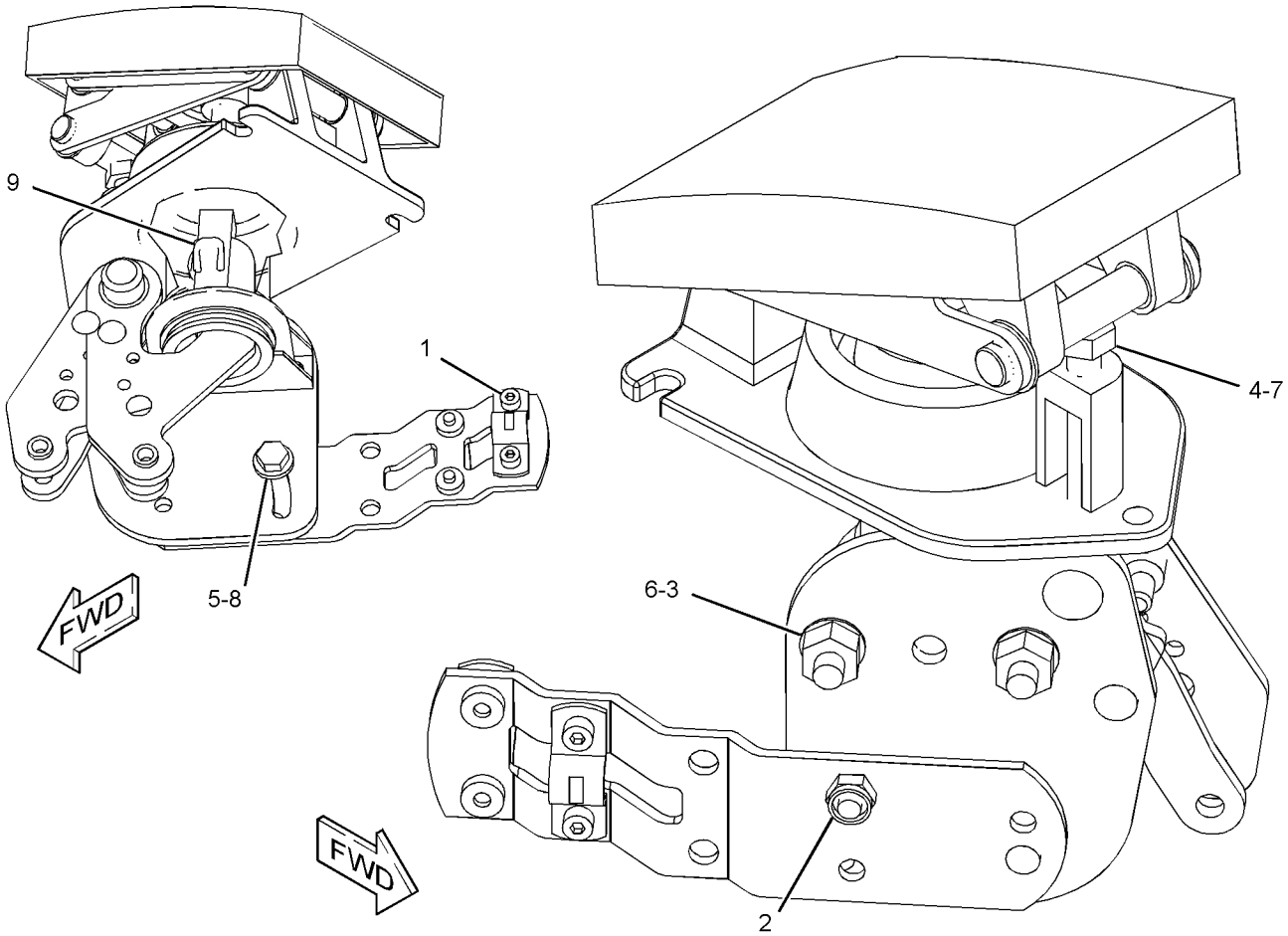

GRAPHIC #1 **<END>** g01164366

OPERATOR STATION

218-6360 PLATFORM GP-OPERATOR

S/N: MJH1-UP; SCH1-UP; RLL1-UP; BXM1-UP
PART OF 218-5910, 218-6610 CHASSIS AR

SMCS-7253 **i02360204**

NOTE	REF NO	GRAPHIC REF	PART NUMBER	QTY	PART NAME 1 2 3 4 5 6 (PRODUCT LEVEL)	SEE PAGE
E	1	2	**124-3243**		SEAL (19.5-CM)	
D	2	2	**5P-0805**		SEAL (0.31-M EACH)	
	3	2	**218-6416**	1	PLATE AS	
	4	2	**218-6417**	1	FLOORPLATE AS	
	5	2	**218-6424**	1	PLATE AS	
	6	2	**218-6438**	1	SEAL	
	7	2	**101-2867**	1	WASHER-HARD (7.2X25X2-MM THK)	
M	8	2	**5C-7261**	1	NUT (M8X1.25-THD)	
EM	9	2	**5C-9553**	6	BOLT (M6X1X16-MM)	
M	10	2	**8T-4138**	2	BOLT (M6X1X20-MM)	
M	11	2	**8T-4197**	2	BOLT (M8X1.25X40-MM)	
	12	2	**8T-4205**	6	WASHER-HARD (7.2X14.5X2-MM THK)	
	13	2	**8T-4224**	10	WASHER-HARD (8.8X16X2-MM THK)	
M	14	2	**8T-4908**	7	BOLT (M8X1.25X25-MM)	
M	15	2	**9X-2045**	1	SCREW-TRUSS HEAD (M6X1X20-MM)	
	16	2	**9X-6165**	2	WASHER (6.5X22X2.5-MM THK)	
	17	2	**124-3243**		SEAL (6-CM EACH)	

D-ORDER BY THE METER
E-ORDER BY THE CENTIMETER
M-METRIC PART

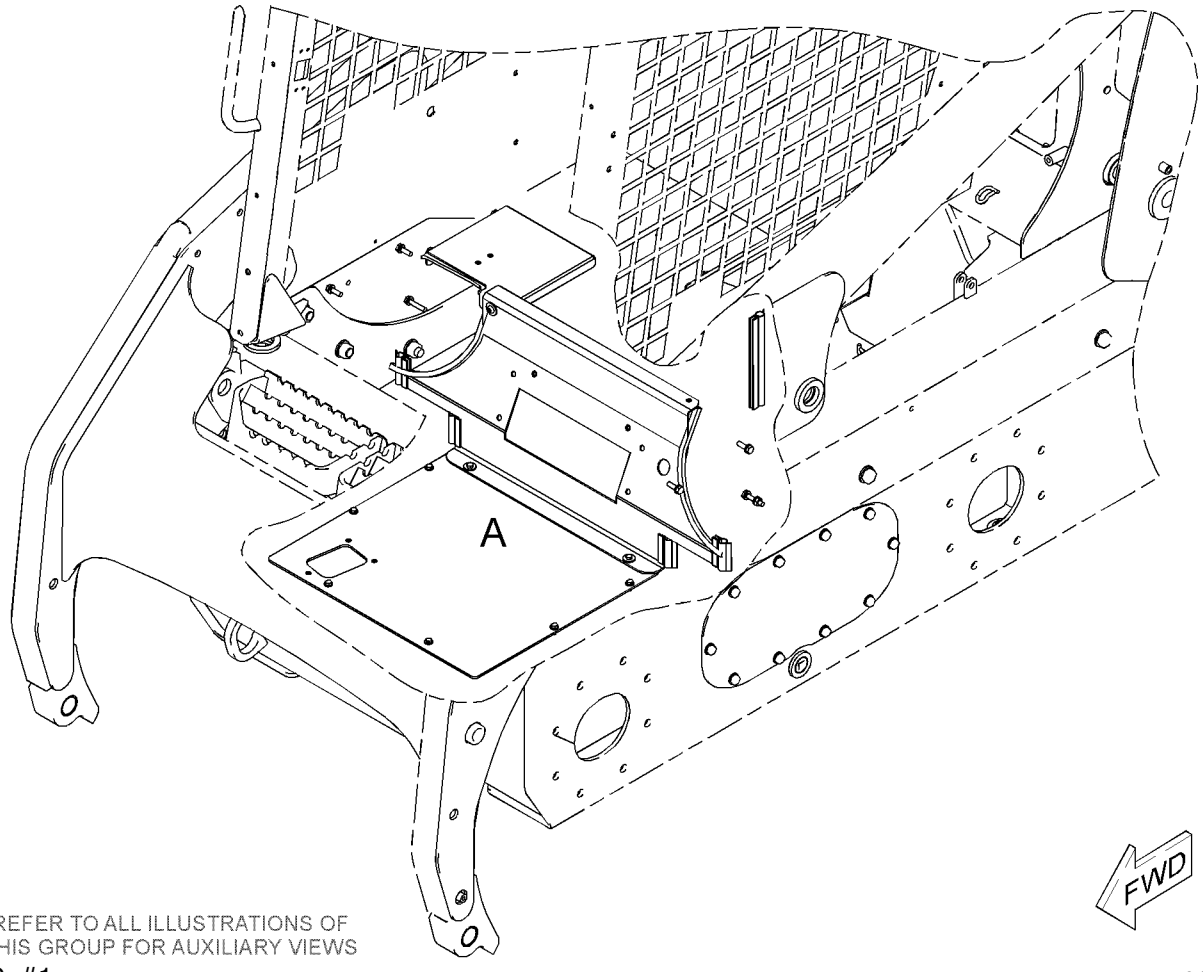

REFER TO ALL ILLUSTRATIONS OF THIS GROUP FOR AUXILIARY VIEWS

GRAPHIC #1 g01038638

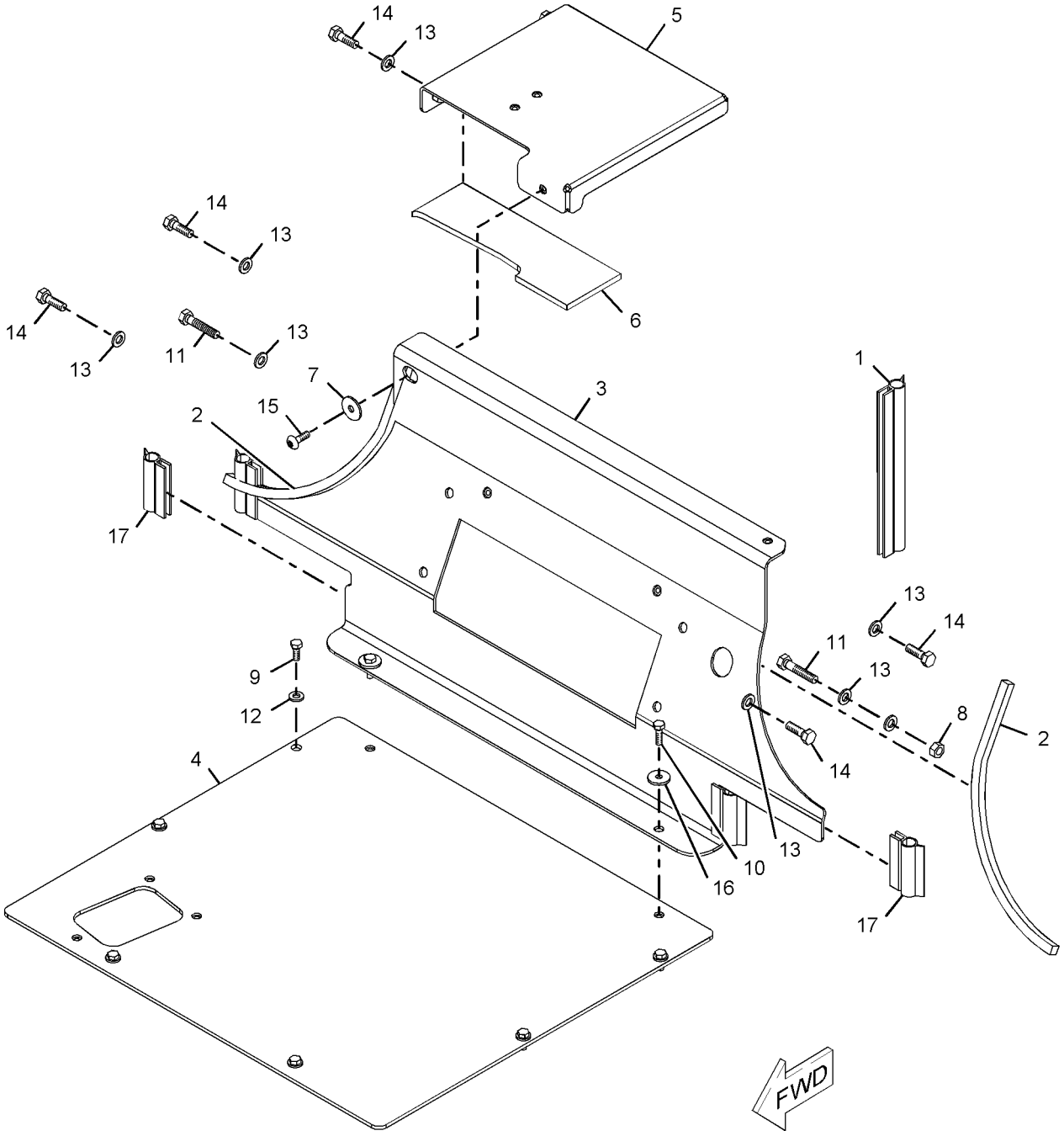

VIEW OF AREA A

GRAPHIC #2

<END>

g01040543

OPERATOR STATION

218-6407 SEAL GP-CAB

S/N: MJH1-UP; SCH1-UP; RLL1-UP; BXM1-UP
AN ATTACHMENT

SMCS-7301 **i02270747**

NOTE	REF NO	GRAPHIC REF	PART NUMBER	QTY	PART NAME 1 2 3 4 5 6 (PRODUCT LEVEL)	SEE PAGE
E	1	1	**128-7037**		SEAL (98-CM)	
	2	1	**3T-7856**	2	PLUG-BUTTON	
	3	1	**187-3211**	1	PLATE AS	
M		1	**8T-3612**	2	NUT-WELD (M8X1.25-THD)	
	4	1	**187-3212**	1	PLATE	
	5	1	**187-3217**	2	BLOCK AS	
	6	1	**189-4523**	2	BOSS	
M	7	1	**7X-2537**	2	BOLT (M8X1.25X35-MM)	
BM	8	1	**7X-2552**	8	BOLT (M16X2X30-MM)	
M	9	1	**8T-4122**	12	WASHER-HARD (17X32X3.5-MM THK)	
M	10	1	**8T-4132**	4	NUT (M16X2-THD)	
	12	1	**8T-4224**	2	WASHER-HARD (8.8X16X2-MM THK)	

B-USE AS REQUIRED
E-ORDER BY THE CENTIMETER
M-METRIC PART

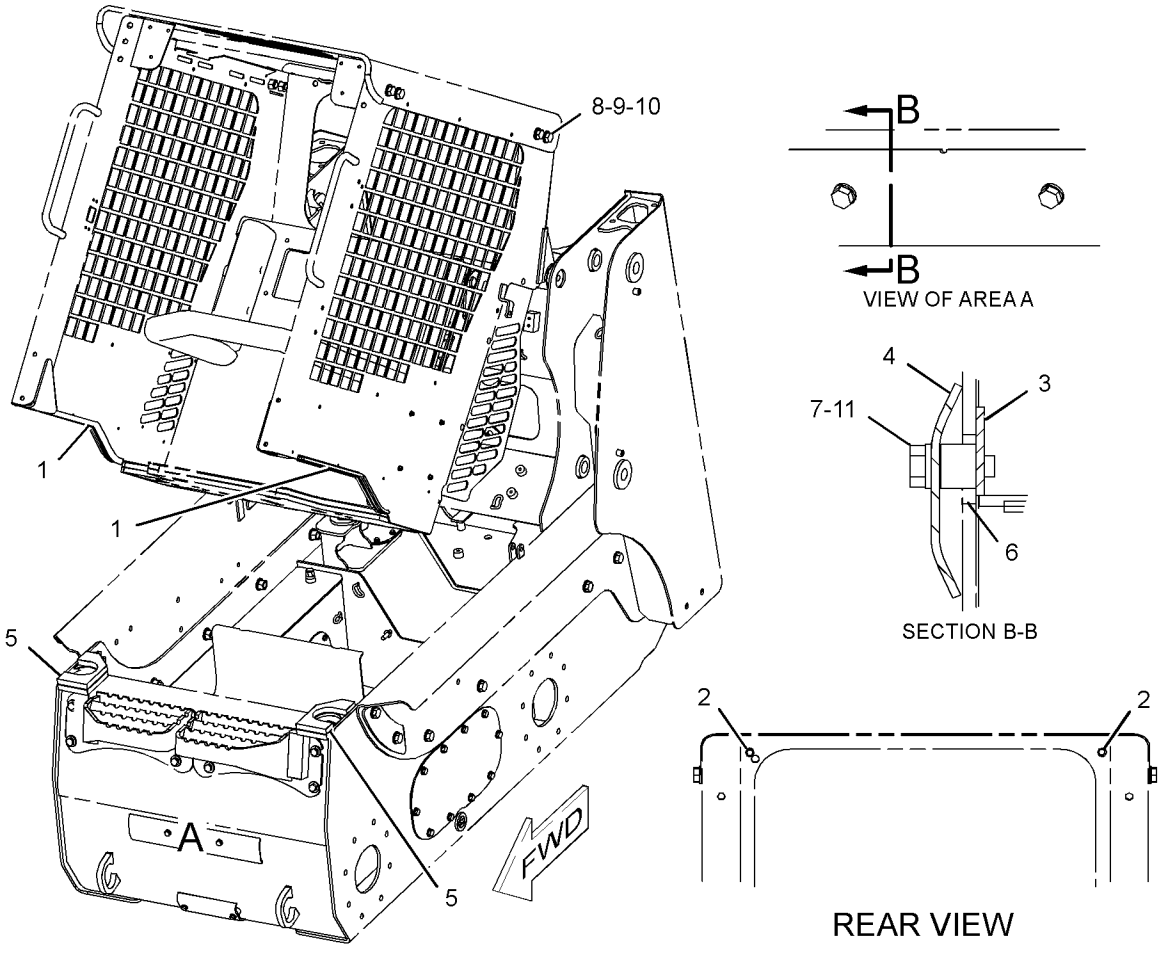

GRAPHIC #1 **<END>** g01137714

OPERATOR STATION

218-6653 SEAT BELT GP

S/N: MJH1-UP; SCH1-UP; RLL1-UP; BXM1-UP
2-IN
FOR USE WITH SUSPENSION SEAT
AN ATTACHMENT

SMCS-7327 **i01947762**

NOTE	REF NO	GRAPHIC REF	PART NUMBER	QTY	PART NAME 1 2 3 4 5 6 (PRODUCT LEVEL)	SEE PAGE
	1	1	**6E-6549**	2	PLATE	
	2	1	**0T-0244**	2	BOLT (7/16-20X1.25-IN)	
	3	1	**8S-0934**	2	LOCKNUT-FLANGE (7/16-20-THD)	
	4	1	**8T-4223**	2	WASHER-HARD (13.5X25.5X3-MM THK)	

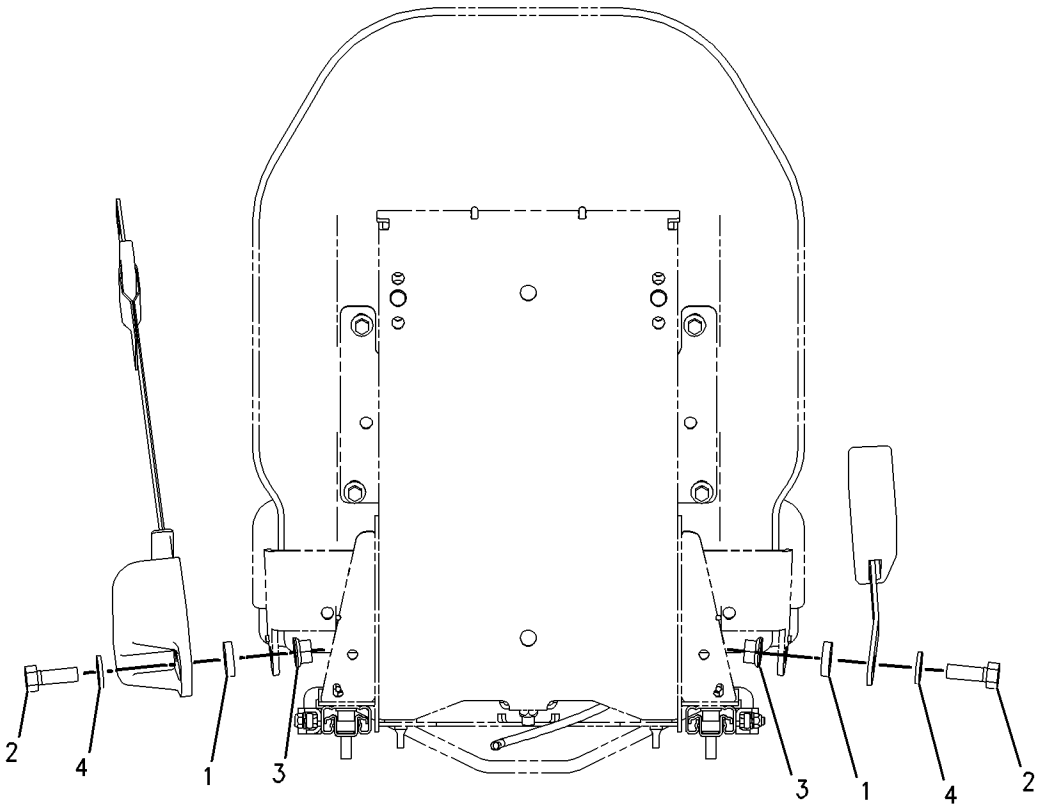

REAR VIEW

GRAPHIC #1 **<END>** g00910070

OPERATOR STATION

218-6654 SEAT BELT GP

S/N: MJH1-UP; BXM1-UP
3-IN
FOR USE WITH SUSPENSION SEAT
AN ATTACHMENT

SMCS-7327 **i01947786**

NOTE	REF NO	GRAPHIC REF	PART NUMBER	QTY	PART NAME 1 2 3 4 5 6 (PRODUCT LEVEL)	SEE PAGE
	1	1	**6E-6549**	2	PLATE	
	2	1	**0T-0244**	2	BOLT (7/16-20X1.25-IN)	
	3	1	**8S-0934**	2	LOCKNUT-FLANGE (7/16-20-THD)	
	4	1	**8T-4223**	2	WASHER-HARD (13.5X25.5X3-MM THK)	

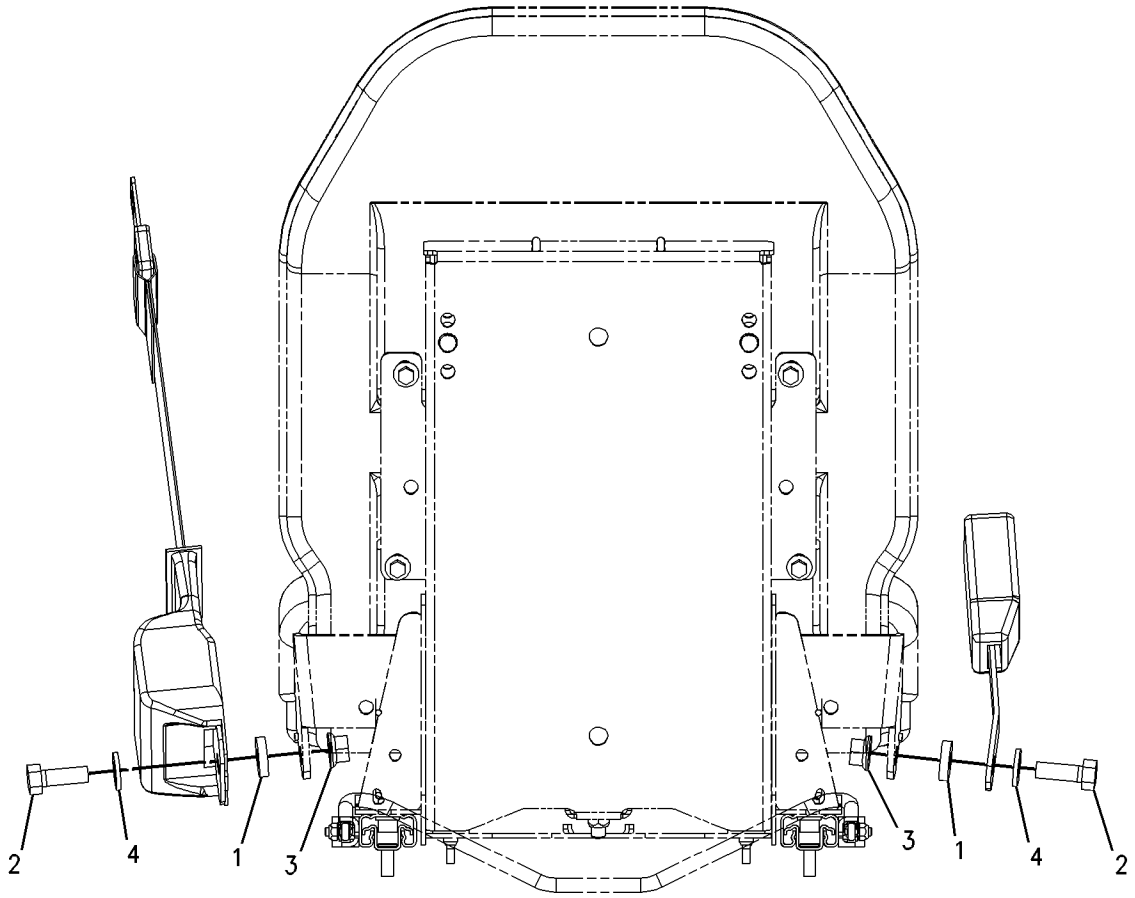

REAR VIEW

GRAPHIC #1 **<END>** g00914900

OPERATOR STATION

218-6663 SEAT BELT GP

S/N: MJH1-UP; SCH1-UP; RLL1-UP; BXM1-UP
2-IN
FOR USE WITH STATIC SEAT
AN ATTACHMENT

SMCS-7327 **i01941397**

NOTE	REF NO	GRAPHIC REF	PART NUMBER	QTY	PART NAME 1 2 3 4 5 6 (PRODUCT LEVEL)	SEE PAGE
	1	1	**6E-6549**	2	PLATE	
	2	1	**0T-0244**	2	BOLT (7/16-20X1.25-IN)	
	3	1	**8S-0934**	2	LOCKNUT-FLANGE (7/16-20-THD)	
	4	1	**8T-4223**	2	WASHER-HARD (13.5X25.5X3-MM THK)	

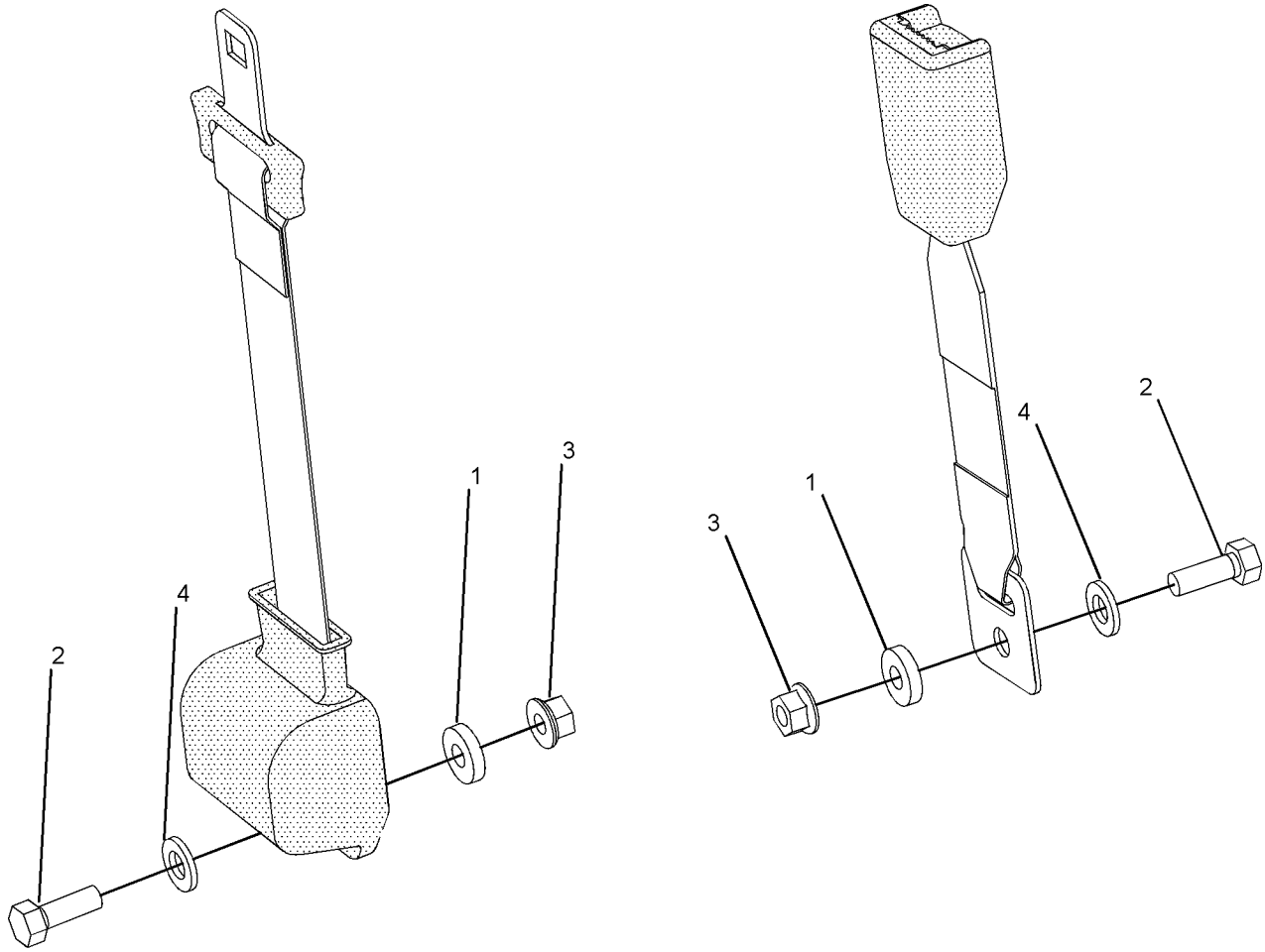

GRAPHIC #1 **<END>** g01010719

OPERATOR STATION

218-6664 SEAT BELT GP

S/N: MJH1-UP; SCH1-UP; RLL1-UP; BXM1-UP
3-IN
FOR USE WITH STATIC SEAT
AN ATTACHMENT

SMCS-7327 **i01996269**

NOTE	REF NO	GRAPHIC REF	PART NUMBER	QTY	PART NAME 1 2 3 4 5 6 (PRODUCT LEVEL)	SEE PAGE
	1	1	**6E-6549**	2	PLATE	
	2	1	**0T-0244**	2	BOLT (7/16-20X1.25-IN)	
	3	1	**8S-0934**	2	LOCKNUT-FLANGE (7/16-20-THD)	
	4	1	**8T-4223**	2	WASHER-HARD (13.5X25.5X3-MM THK)	

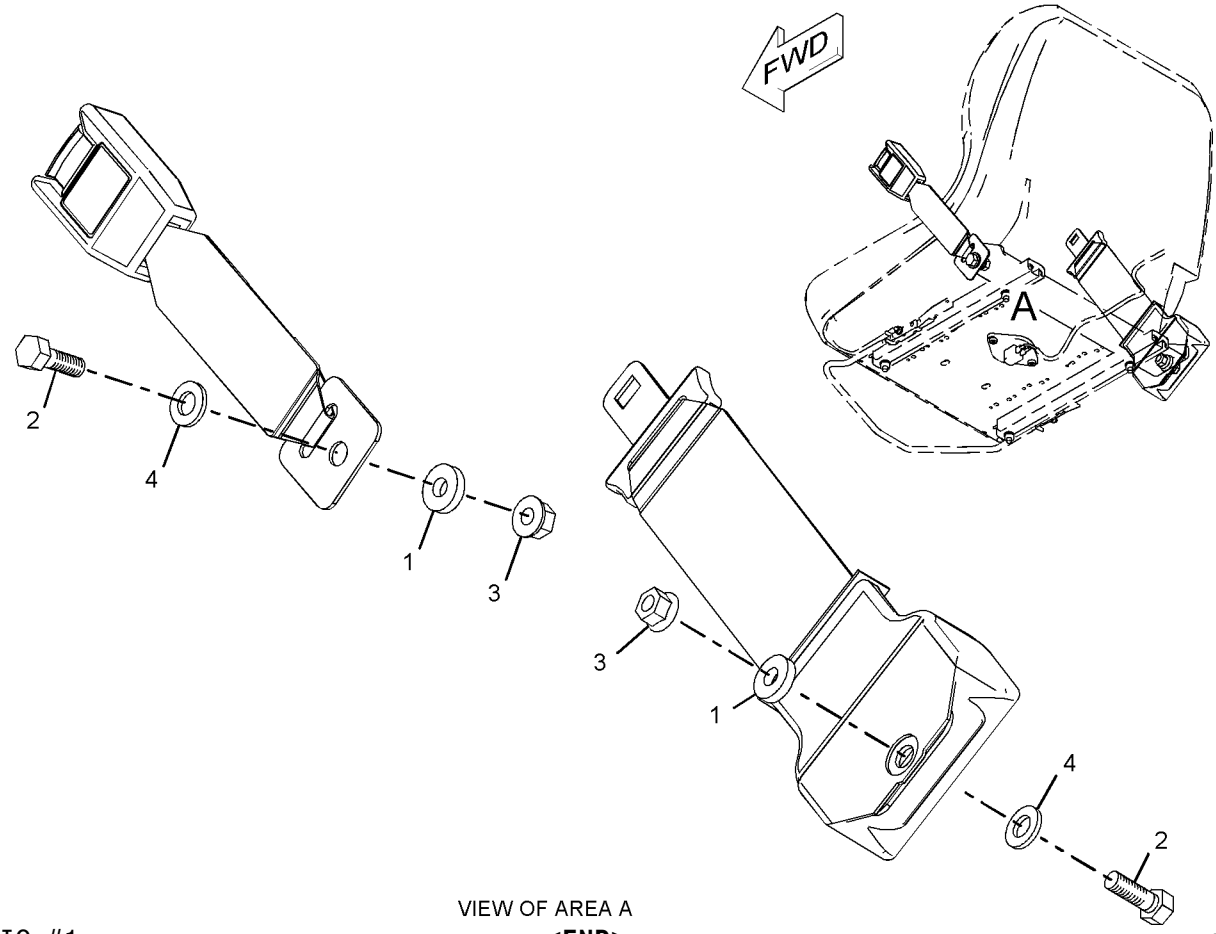

VIEW OF AREA A

GRAPHIC #1 **<END>** g01033548

OPERATOR STATION

276-6019 SEAT BELT GP

S/N: MJH1-UP; BXM1-UP
3-INCH, RETRACTABLE SUSPENSION
AN ATTACHMENT

SMCS-7327 **i02450731**

NOTE	REF NO	GRAPHIC REF	PART NUMBER	QTY	PART NAME 1 2 3 4 5 6 (PRODUCT LEVEL)	SEE PAGE
	1	1	**6E-6549**	2	PLATE	
	2	1	**0T-0244**	2	BOLT (7/16-20X1.25-IN)	
	3	1	**8S-0934**	2	LOCKNUT-FLANGE (7/16-20-THD)	
	4	1	**8T-4223**	2	WASHER-HARD (13.5X25.5X3-MM THK)	

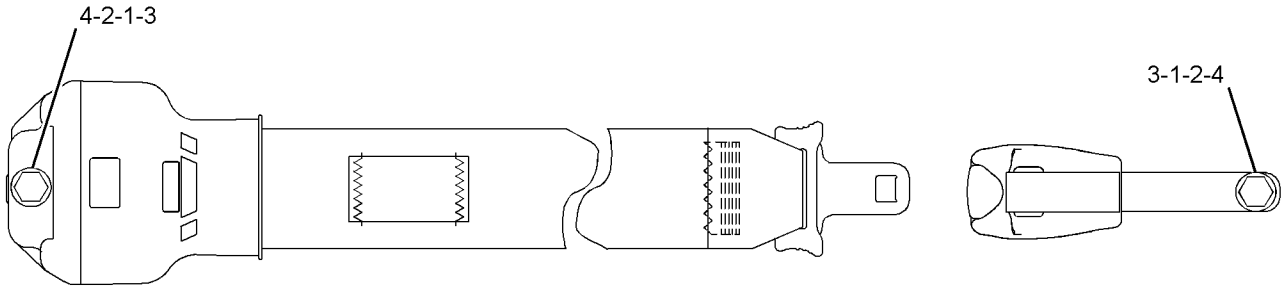

GRAPHIC #1 **<END>** g01230176

OPERATOR STATION

276-6020 SEAT BELT GP

S/N: MJH1-UP; SCH1-UP; RLL1-UP; BXM1-UP
3-INCH, RETRACTABLE STATIC
AN ATTACHMENT

SMCS-7327 **i02450800**

NOTE	REF NO	GRAPHIC REF	PART NUMBER	QTY	PART NAME 1 2 3 4 5 6 (PRODUCT LEVEL)	SEE PAGE
	1	1	**6E-6549**	2	PLATE	
	2	1	**0T-0244**	2	BOLT (7/16-20X1.25-IN)	
	3	1	**8S-0934**	2	LOCKNUT-FLANGE (7/16-20-THD)	
	4	1	**8T-4223**	2	WASHER-HARD (13.5X25.5X3-MM THK)	

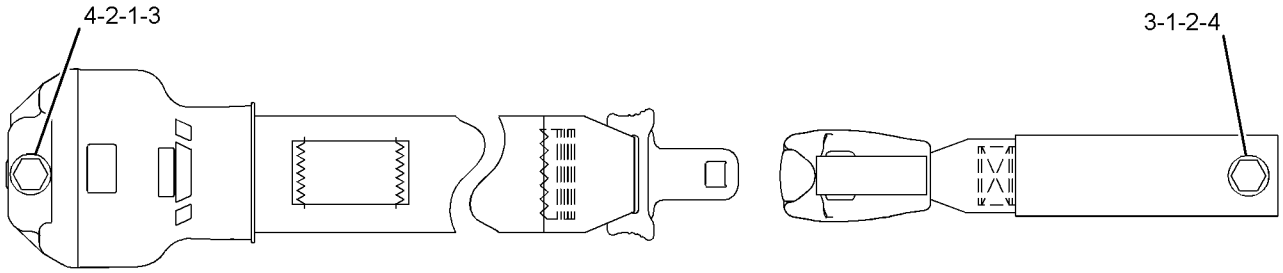

GRAPHIC #1 **<END>** g01230231

OPERATOR STATION

276-7276 SEAT BELT GP

S/N: MJH1-UP; BXM1-UP
2-INCH, SUSPENSION
AN ATTACHMENT

SMCS-7327 **i02450683**

NOTE	REF NO	GRAPHIC REF	PART NUMBER	QTY	PART NAME 1 2 3 4 5 6 (PRODUCT LEVEL)	SEE PAGE
	1	1	**6E-6549**	2	PLATE	
	2	1	**0T-0244**	2	BOLT (7/16-20X1.25-IN)	
	3	1	**8S-0934**	2	LOCKNUT-FLANGE (7/16-20-THD)	
	4	1	**8T-4223**	2	WASHER-HARD (13.5X25.5X3-MM THK)	

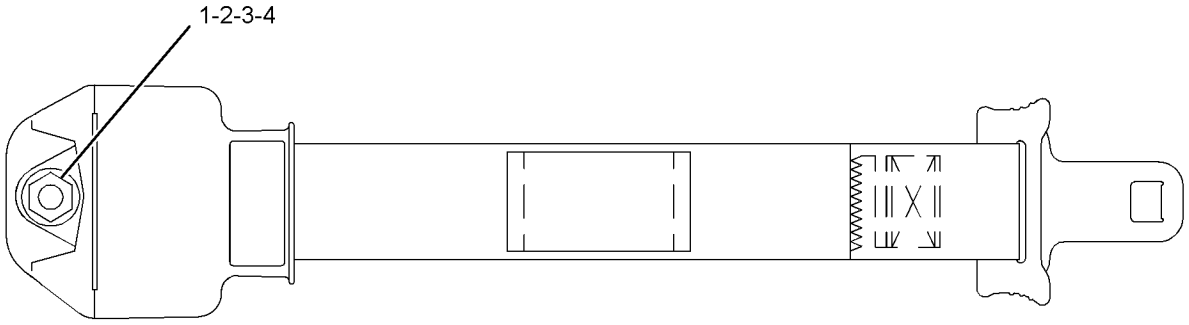

GRAPHIC #1 **<END>** g01230125

OPERATOR STATION

276-7277 SEAT BELT GP

S/N: MJH1-UP; SCH1-UP; RLL1-UP; BXM1-UP
2-INCH, RETRACTABLE SUSPENSION
AN ATTACHMENT

SMCS-7327 **i02450784**

NOTE	REF NO	GRAPHIC REF	PART NUMBER	QTY	PART NAME 1 2 3 4 5 6 (PRODUCT LEVEL)	SEE PAGE
	1	1	**6E-6549**	2	PLATE	
	2	1	**0T-0244**	2	BOLT (7/16-20X1.25-IN)	
	3	1	**8S-0934**	2	LOCKNUT-FLANGE (7/16-20-THD)	
	4	1	**8T-4223**	2	WASHER-HARD (13.5X25.5X3-MM THK)	

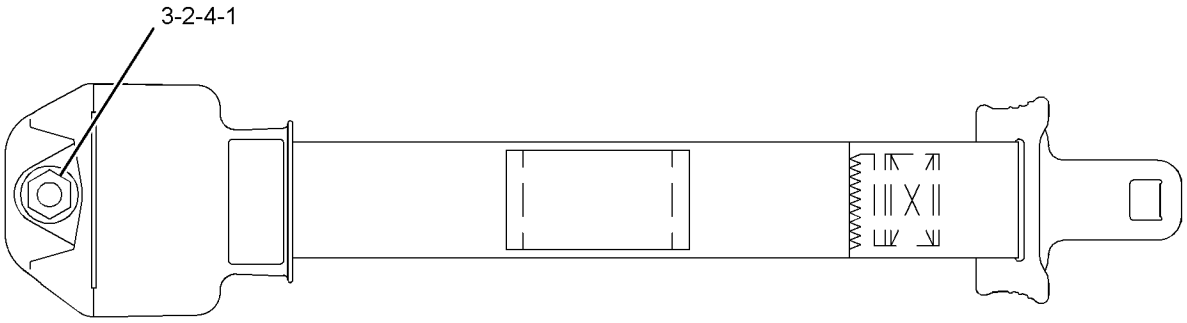

GRAPHIC #1 **<END>** g01230239

OPERATOR STATION

142-9305 SEAT GP–SUSPENSION

S/N: MJH1-UP; SCH1-UP; RLL1-UP; BXM1-UP

AN ATTACHMENT

SMCS-7312, 7324 **i01787823**

NOTE	REF NO	GRAPHIC REF	PART NUMBER	QTY	PART NAME 1 2 3 4 5 6 (PRODUCT LEVEL)	SEE PAGE
Y	1	1	**219-4380**	1	SUSPENSION GP-SEAT	750
M	2	1	**5C-7261**	4	NUT (M8X1.25-THD)	
	3	1	**8T-4224**	4	WASHER-HARD (8.8X16X2-MM THK)	

M-METRIC PART
Y-SEPARATE ILLUSTRATION

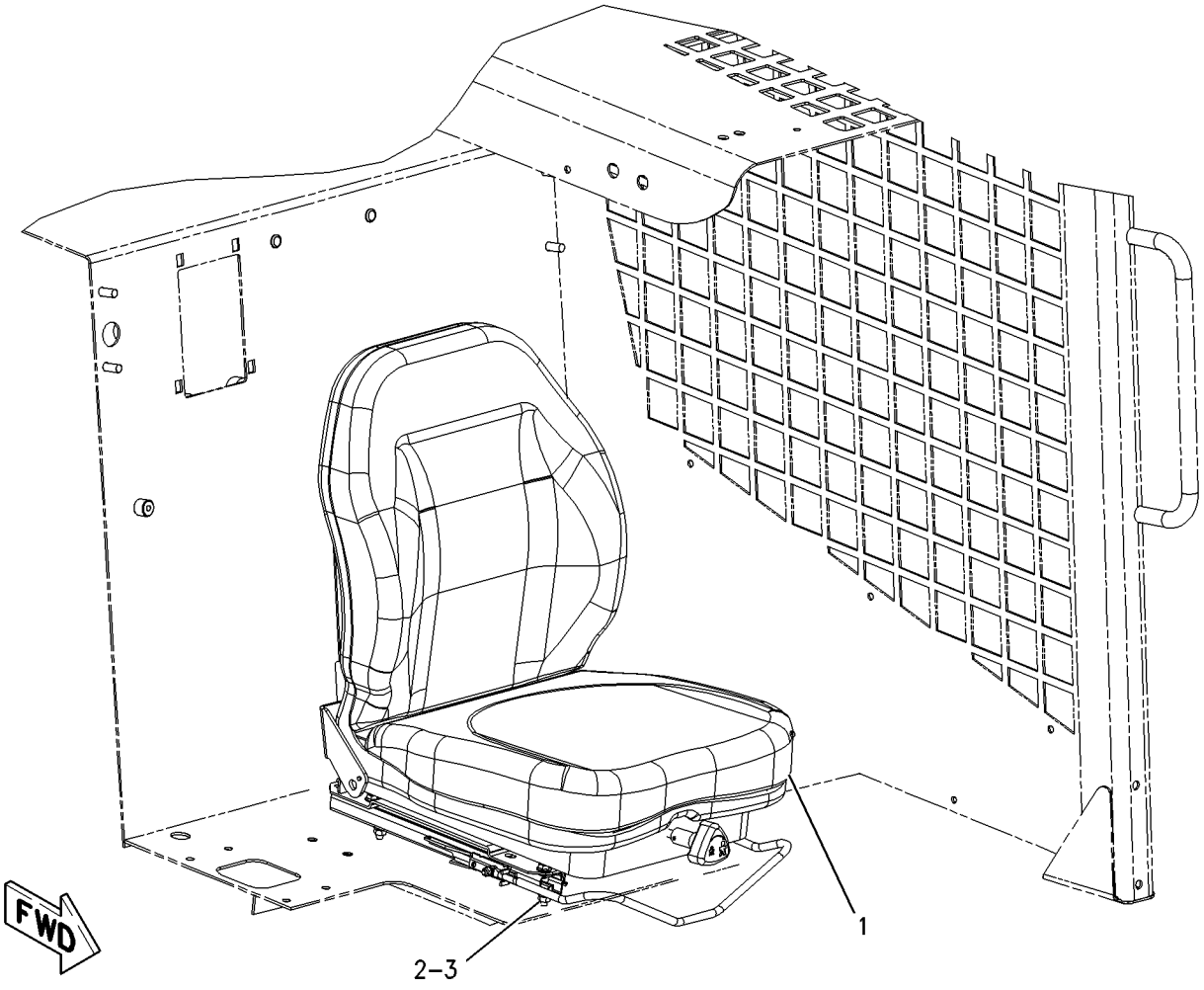

GRAPHIC #1 **<END>** g00914893

OPERATOR STATION

218-5562 SEAT GP

S/N: MJH1-UP; SCH1-UP; RLL1-UP; BXM1-UP
STATIC
AN ATTACHMENT

SMCS-7312, 7324 **i01955636**

NOTE	REF NO	GRAPHIC REF	PART NUMBER	QTY	PART NAME 1 2 3 4 5 6 (PRODUCT LEVEL)	SEE PAGE
	1	1	**218-6662**	1	SEAT GP (STATIC)	
		1	**153-1260**	1	SWITCH (SEAT) (SEAT)	
		1	**154-3985**	1	WIRE AS	
		1	**219-4379**	1	HANDLE	
M	2	1	**5C-7261**	4	NUT (M8X1.25-THD)	
	3	1	**8T-4224**	4	WASHER-HARD (8.8X16X2-MM THK)	

M-METRIC PART

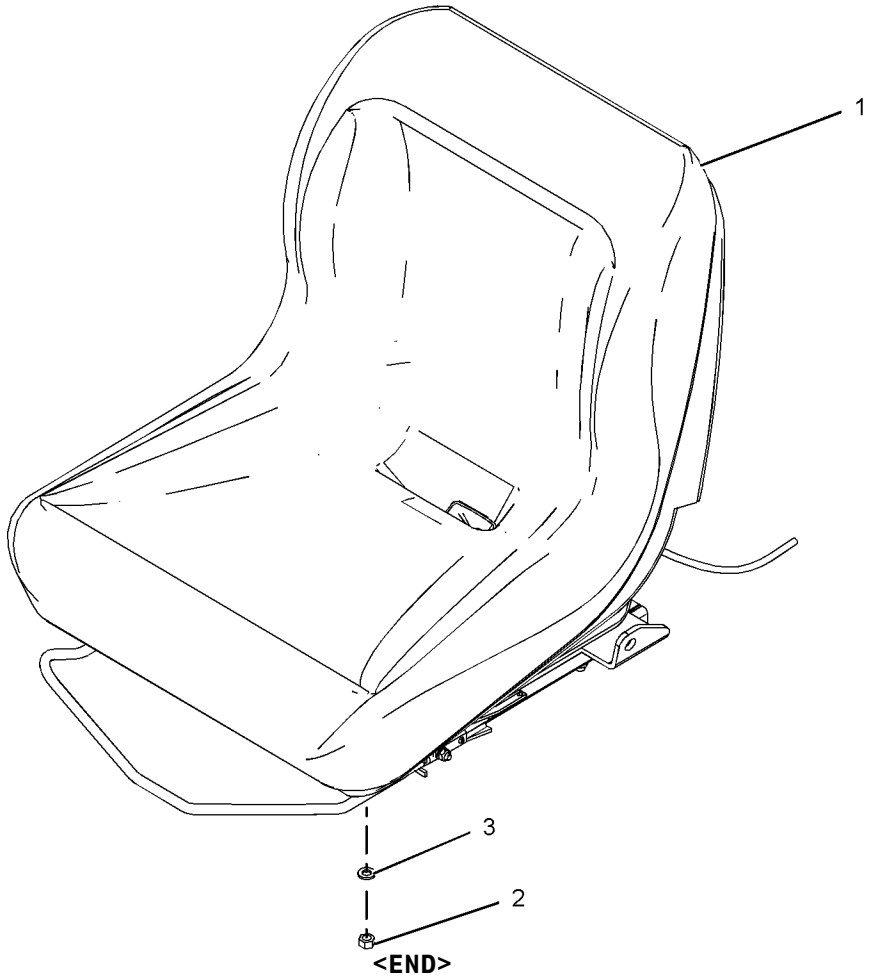

GRAPHIC #1 **<END>** g01018112

OPERATOR STATION

218-6380 SPRING GP-GAS

S/N: MJH1-UP; SCH1-UP; RLL1-UP; BXM1-UP
PART OF 218-6350 CAB AR-ENCLOSED ROPS

SMCS-7301 **i01991139**

NOTE	REF NO	GRAPHIC REF	PART NUMBER	QTY	PART NAME 1 2 3 4 5 6 (PRODUCT LEVEL)	SEE PAGE
	1	1	**5P-0372**	2	LOCK PIN	
	2	1	**9C-5344**	1	SPACER (10.5X20X18MM THK)	
	3	1	**095-1325**	1	PIN-CLEVIS	
	4	1	**153-2682**	1	SPRING AS-GAS	
	5	1	**177-3405**	1	PIN	

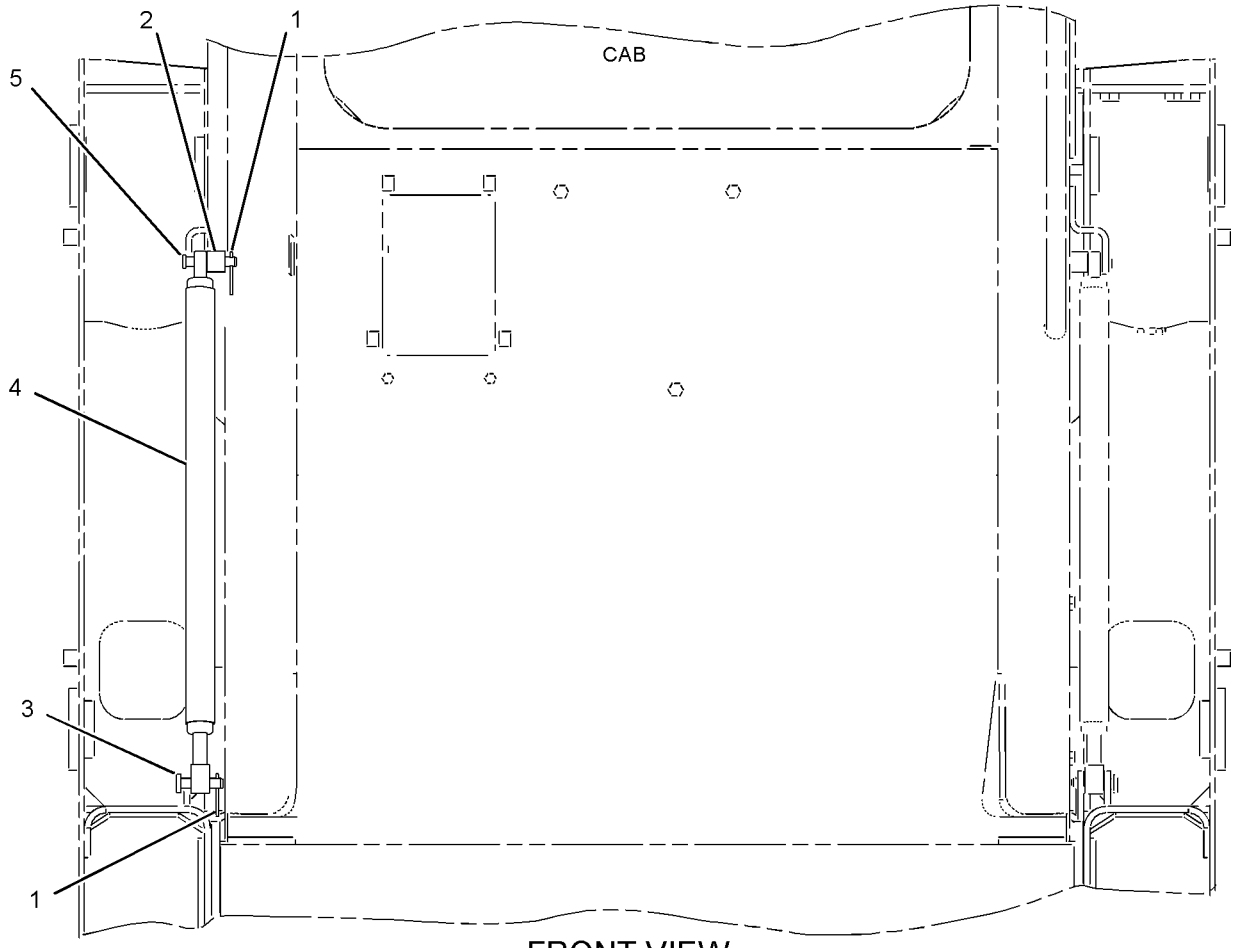

FRONT VIEW

GRAPHIC #1

<END>

g01031997

OPERATOR STATION

219-4380 SUSPENSION GP-SEAT

S/N: MJH1-UP; SCH1-UP; RLL1-UP; BXM1-UP
PART OF 142-9305 SEAT GP
AN ATTACHMENT

SMCS-7312, 7324 **i01901346**

NOTE	REF NO	GRAPHIC REF	PART NUMBER	QTY	PART NAME 1 2 3 4 5 6 (PRODUCT LEVEL)	SEE PAGE
	1	1	**154-3985**	1	WIRE AS	
	2	1	**154-3986**	1	SWITCH AS (SEAT)	
	3	1	**154-8711**	1	KIT-SPRING	
Z		1		2	SPRING	
Z	3A	1		1	CABLE AS	
Z	3B	1		2	NUT-PUSH	
	4	1	**154-8715**	1	KIT-DAMPER	
					(INCLUDES DAMPER, NUT-LOCK, WASHER & SPACER)	
	5	1	**173-2543**	1	KIT-CUSHION	
	6	1	**219-4379**	1	HANDLE	
	7	1	**219-4388**	1	KIT-HANDLE (KNOB)	
Z		1		1	KNOB	
Z	7A	1		1	SHAFT	
Z	7B	1		2	PIN-SPRING	
Z	7C	1		1	HANGER (SPRING)	
Z	7D	1		1	NUT-PUSH	
Z		1		2	SPACER	

Z-NOT SERVICED SEPARATELY

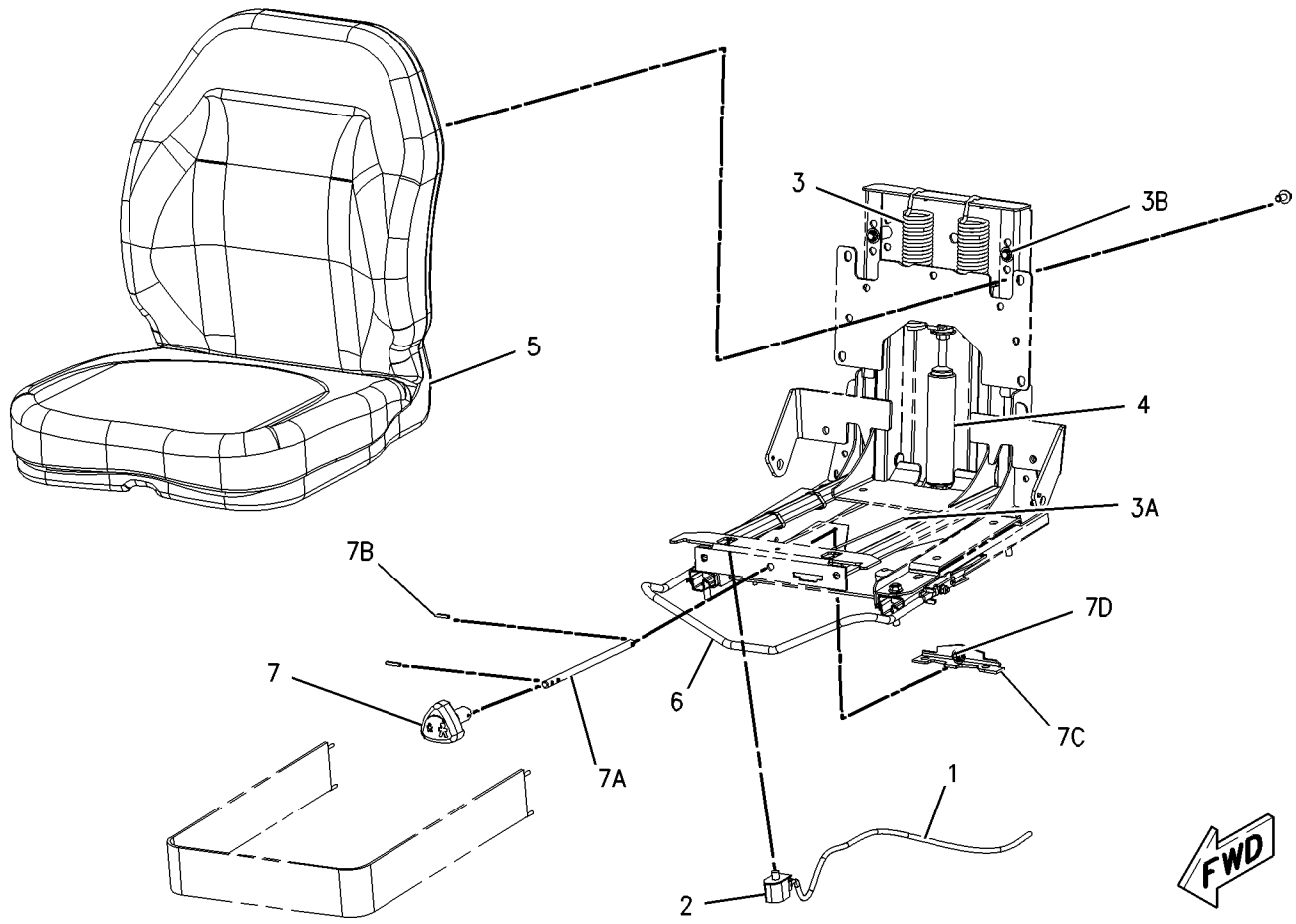

GRAPHIC #1 **<END>** g00915009

OPERATOR STATION

166-2569 VISOR GP-CAB

S/N: MJH1-UP; SCH1-UP; RLL1-UP; BXM1-UP
PART OF 257-5726 CONVERSION AR-ROADING, 173-3022 VISOR GP-CAB
AN ATTACHMENT

SMCS-7301 **i01297216**

NOTE	REF NO	GRAPHIC REF	PART NUMBER	QTY	PART NAME 1 2 3 4 5 6 (PRODUCT LEVEL)	SEE PAGE
	1	1	**2S-5717**	1	LOCKNUT (3/8-16-THD)	
	2	1	**5T-7869**	2	CLAMP	
	3	1	**5T-7870**	1	KNOB	
	4	1	**1D-4677**	2	BOLT-ROUND HEAD (3/8-16X1-IN)	
M	5	1	**9X-2042**	4	SCREW-TRUSS HEAD (M6X1X12-MM)	

M-METRIC PART

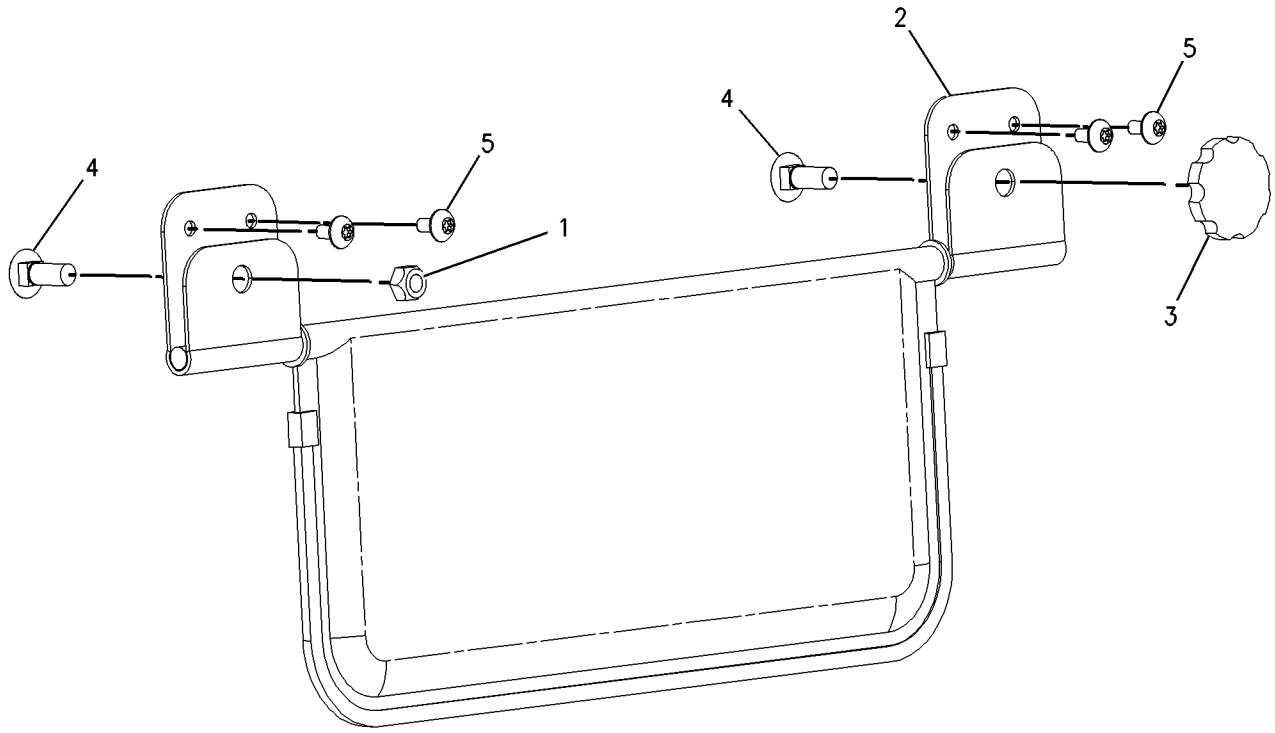

GRAPHIC #1 **<END>** g00695703

OPERATOR STATION

173-3022 VISOR GP-CAB

S/N: MJH1-UP; SCH1-UP; RLL1-UP; BXM1-UP
PART OF 278-1224, 278-1225, 278-5413, 278-5414, 278-5441, 278-5442 CONVERSION AR-MACHINE, 233-5672, 233-5675, 233-5682, 233-5685 CONVERSION AR-ROADING
AN ATTACHMENT

SMCS-7301 **i01486233**

NOTE	REF NO	GRAPHIC REF	PART NUMBER	QTY	PART NAME 1 2 3 4 5 6 (PRODUCT LEVEL)	SEE PAGE
	1	1	**166-2562**	1	PLATE AS	
Y	2	1	**166-2569**	1	VISOR GP-CAB	751
	3	1	**195-0936**	4	INSERT-THREADED (M6X1)	
M	4	1	**9X-2045**	4	SCREW-TRUSS HEAD (M6X1X20-MM)	

M-METRIC PART
Y-SEPARATE ILLUSTRATION

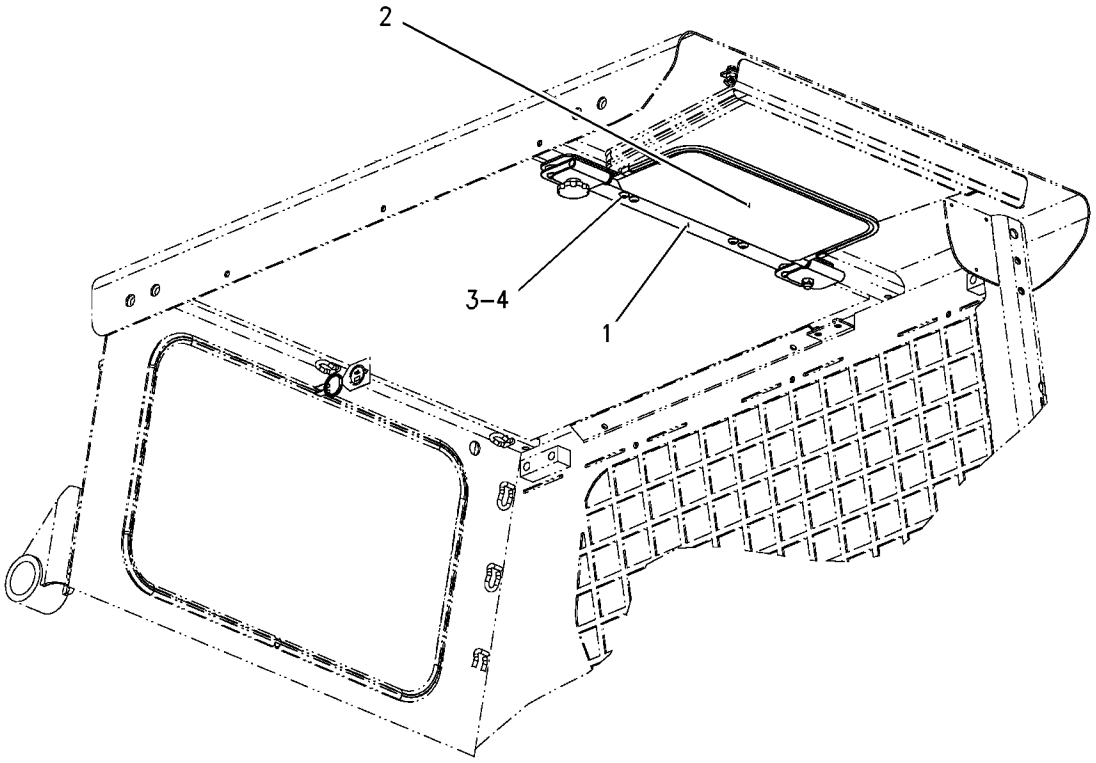

GRAPHIC #1 **<END>** g00772669

OPERATOR STATION

195-6723 WINDOW GP-CAB

S/N: MJH1-UP; SCH1-UP; RLL1-UP; BXM1-UP
TOP & REAR
PART OF 218-6350 CAB AR-ENCLOSED ROPS

SMCS-7310 **i02474661**

NOTE	REF NO	GRAPHIC REF	PART NUMBER	QTY	PART NAME 1 2 3 4 5 6 (PRODUCT LEVEL)	SEE PAGE
C	1	1	**2G-8767**	4	WASHER (10.5X60X3-MM THK)	
	2	1	**5C-8310**	1	BRACKET-RING	
	3	1	**5C-8311**	1	RING	
C	4	1	**6D-6812**	4	KNOB AS	
	5	1	**8T-6842**	1	FILM-INSTRUCTION (ALTERNATE EXIT)	
	6	1	**142-9319**	1	WINDOW	
C	7	1	**191-9668**	1	INSULATION	
C	8	1	**206-3818**	1	WINDOW	
C	9	1	**3J-1907**	4	SEAL-O-RING	
C	10	1	**6V-8801**	4	NUT (3/8-16-THD)	
C	11	1	**8T-4121**	4	WASHER-HARD (11X21X2.5-MM THK)	
C	12	1	**8T-9407**	4	BOLT-CARRIAGE (3/8-16X1.25-IN)	
CE	13	1	**206-7951**		SEAL (191CM)	
CE	14	1	**206-7952**		STRIP (191CM)	
D	15	1	**5P-7483**		SEAL (1.5-M)	

C-CHANGE FROM PREVIOUS TYPE
D-ORDER BY THE METER
E-ORDER BY THE CENTIMETER

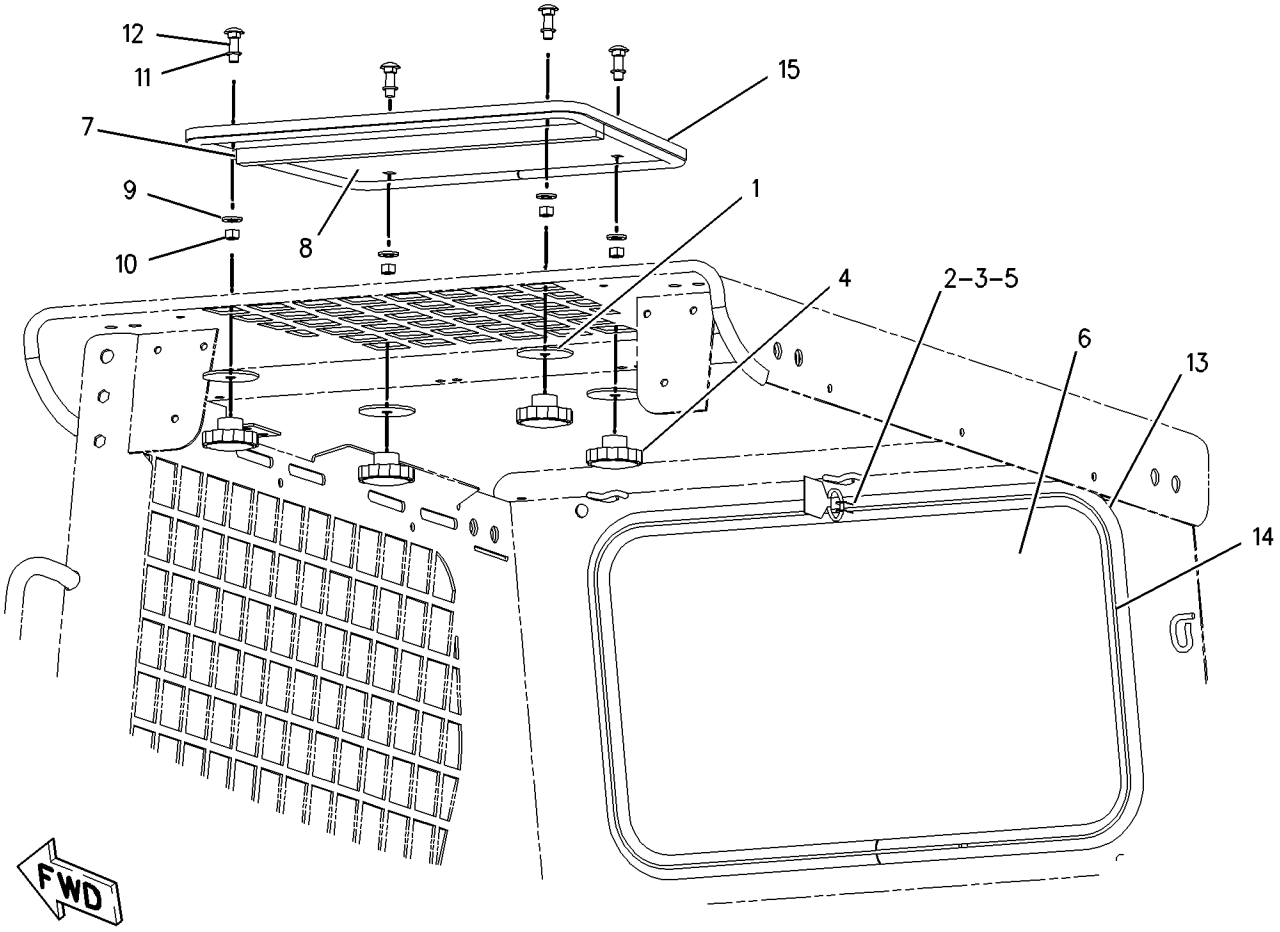

GRAPHIC #1 **<END>** g00915027

OPERATOR STATION

218-6411 WINDOW GP-CAB

S/N: MJH1-UP; SCH1-UP; RLL1-UP; BXM1-UP
SIDE
AN ATTACHMENT

SMCS-7310 **i02253505**

NOTE	REF NO	GRAPHIC REF	PART NUMBER	QTY	PART NAME 1 2 3 4 5 6 (PRODUCT LEVEL)	SEE PAGE
Y	1	1	**224-7057**	1	WINDOW GP-CAB (UPPER, LH)	756
Y	2	1	**224-7058**	1	WINDOW GP-CAB (UPPER, RH)	758
	3	1	**231-7321**	1	WINDOW AS-CAB (LOWER, RH)	
		1	**239-6109**	1	LATCH AS	
E		1	**5P-5930**		SEAL (114-CM)	
	4	1	**231-7324**	1	WINDOW AS-CAB (LOWER, LH)	
		1	**239-6109**	1	LATCH AS	
E		1	**5P-5930**		SEAL (114-CM)	
M	5	1	**9X-2045**	10	SCREW-TRUSS HEAD (M6X1X20-MM)	

E-ORDER BY THE CENTIMETER
M-METRIC PART
Y-SEPARATE ILLUSTRATION

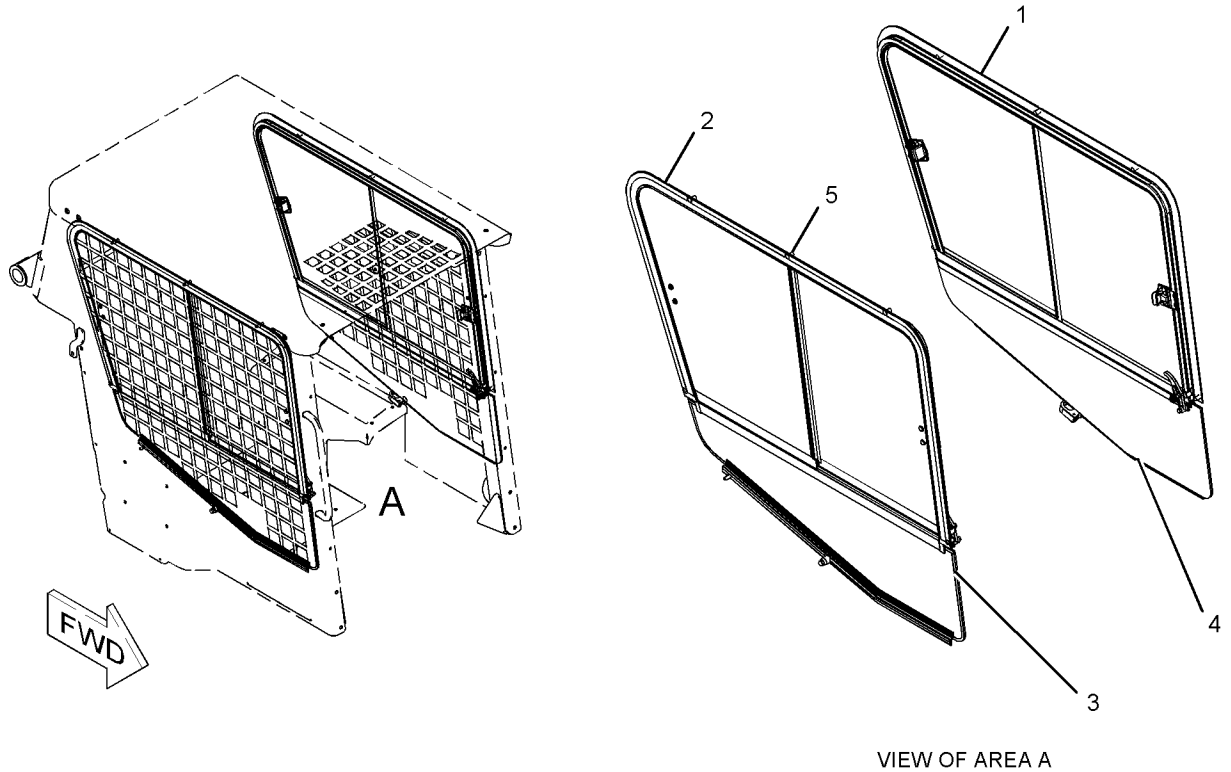

VIEW OF AREA A

GRAPHIC #1 **<END>** g01057739

OPERATOR STATION

218-6745 WINDOW GP-CAB—KIT

S/N: MJH1-UP; SCH1-UP; RLL1-UP; BXM1-UP

SIDE

AN ATTACHMENT

SMCS-7310 **i02300613**

NOTE	PART NUMBER	QTY	PART NAME 1 2 3 4 5 6 (PRODUCT LEVEL)	SEE PAGE
Y	**224-7057**	1	WINDOW GP-CAB (UPPER, LH)	756
Y	**224-7058**	1	WINDOW GP-CAB (UPPER, RH)	758
	231-7321	1	WINDOW AS-CAB (LOWER, RH)	
D	**5P-5930**		SEAL (12-M)	
	239-6109		LATCH AS	
	231-7324	1	WINDOW AS-CAB (LOWER, LH)	
	239-6109	1	LATCH AS	
D	**5P-5930**		SEAL (2-M)	
M	**9X-2045**	10	SCREW-TRUSS HEAD (M6X1X20-MM)	

D-ORDER BY THE METER
M-METRIC PART
Y-SEPARATE ILLUSTRATION

<END>

OPERATOR STATION

224-7057 WINDOW GP-CAB–UPPER,LH

S/N: MJH1-UP; SCH1-UP; RLL1-UP; BXM1-UP
PART OF 218-6411, 218-6745 WINDOW GP-CAB
AN ATTACHMENT

SMCS-7310 **i02474664**

NOTE	REF NO	GRAPHIC REF	PART NUMBER	QTY	PART NAME 1 2 3 4 5 6 (PRODUCT LEVEL)	SEE PAGE
	1	1	**231-7322**	1	WINDOW AS-CAB (SLIDING, REAR)	
BE		1	**207-0573**		SEAL	
		1	**231-7331**	1	LATCH AS	
	2	1	**231-7323**	1	WINDOW AS-CAB (SLIDING, FRONT)	
BE		1	**3E-3892**		SEAL	
		1	**231-7331**	1	LATCH AS	
Y	3	1	**231-7327**	1	FRAME GP-WINDOW (LH)	689
	4	1	**231-7372**	1	CATCH	
	5	1	**243-1323**	1	CATCH	
	6	1	**6D-5797**	2	SCREW-SOCKET	
	7	1	**8T-3427**	2	SCREW-MACHINE	
B	8	1	**207-0539**		SEAL	
B	9	1	**207-0573**		SEAL	
B	10	1	**3E-3892**		SEAL	

B-USE AS REQUIRED
E-ORDER BY THE CENTIMETER
Y-SEPARATE ILLUSTRATION

224-7057 WINDOW GP-CAB *(contd.)* i02474664

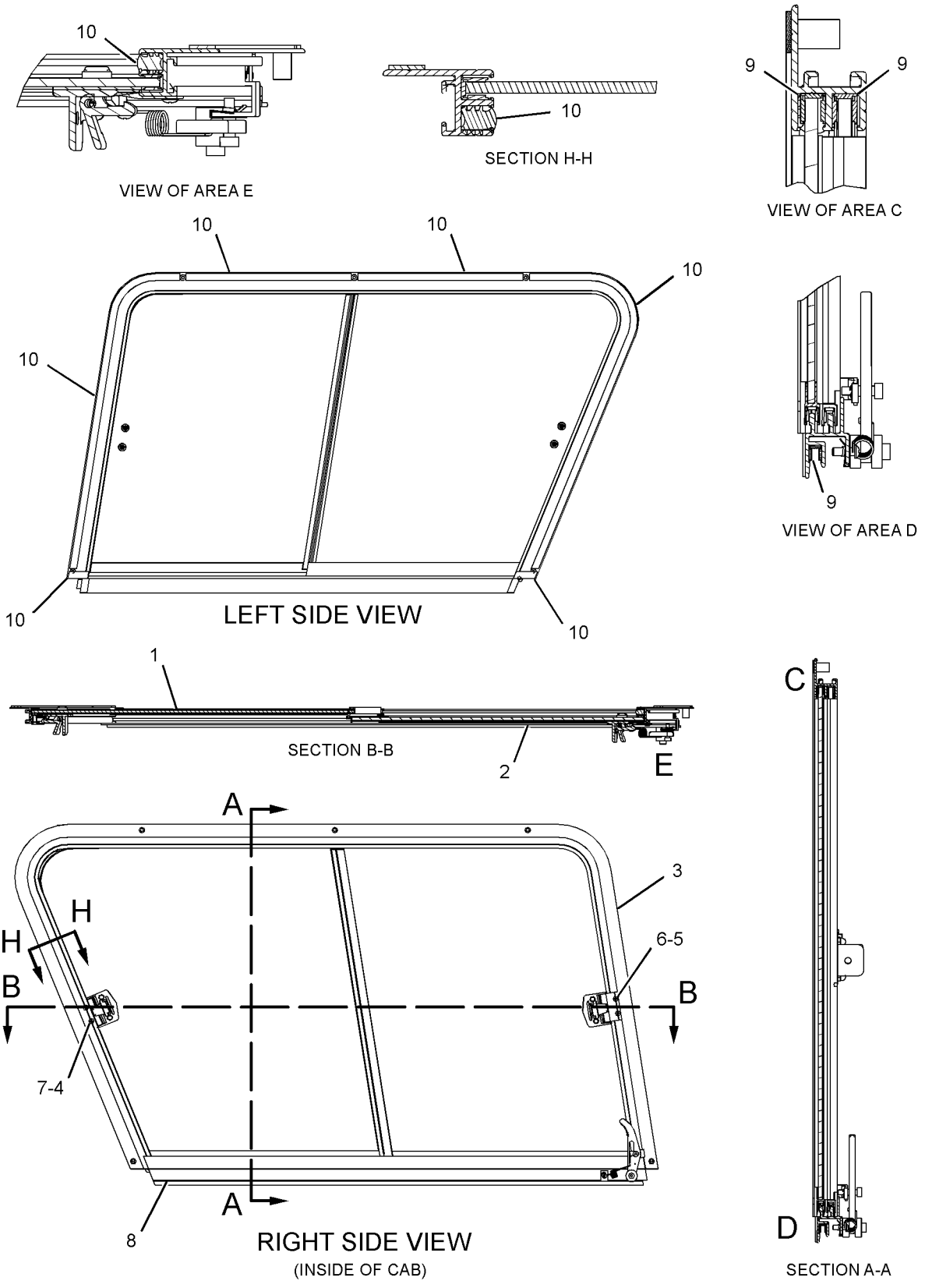

GRAPHIC #1 **<END>** g01216647

OPERATOR STATION

224-7058 WINDOW GP-CAB–RH,UPPER

S/N: MJH1-UP; SCH1-UP; RLL1-UP; BXM1-UP
PART OF 218-6411, 218-6745 WINDOW GP-CAB
AN ATTACHMENT

SMCS-7310 **i02474720**

NOTE	REF NO	GRAPHIC REF	PART NUMBER	QTY	PART NAME 1 2 3 4 5 6 (PRODUCT LEVEL)	SEE PAGE
	1	1	**231-7319**	1	WINDOW AS-CAB (SLIDING, REAR)	
BE			**207-0573**		SEAL	
			231-7331	1	LATCH AS	
	2	1	**231-7320**	1	WINDOW AS-CAB (SLIDING, FRONT)	
BE		1	**207-0573**		SEAL	
		1	**231-7331**	1	LATCH AS	
Y	3	1	**231-7325**	1	FRAME GP-WINDOW (RH)	688
	4	1	**231-7372**	1	CATCH	
	5	1	**243-1323**	1	CATCH	
	6	1	**6D-5797**	2	SCREW-SOCKET	
	7	1	**8T-3427**	2	SCREW-MACHINE	
B	8	1	**3E-3892**		SEAL	
B	9	1	**207-0539**		SEAL	
B	10	1	**207-0572**		SEAL	
B	11	1	**207-0573**		SEAL	

B-USE AS REQUIRED
E-ORDER BY THE CENTIMETER
Y-SEPARATE ILLUSTRATION

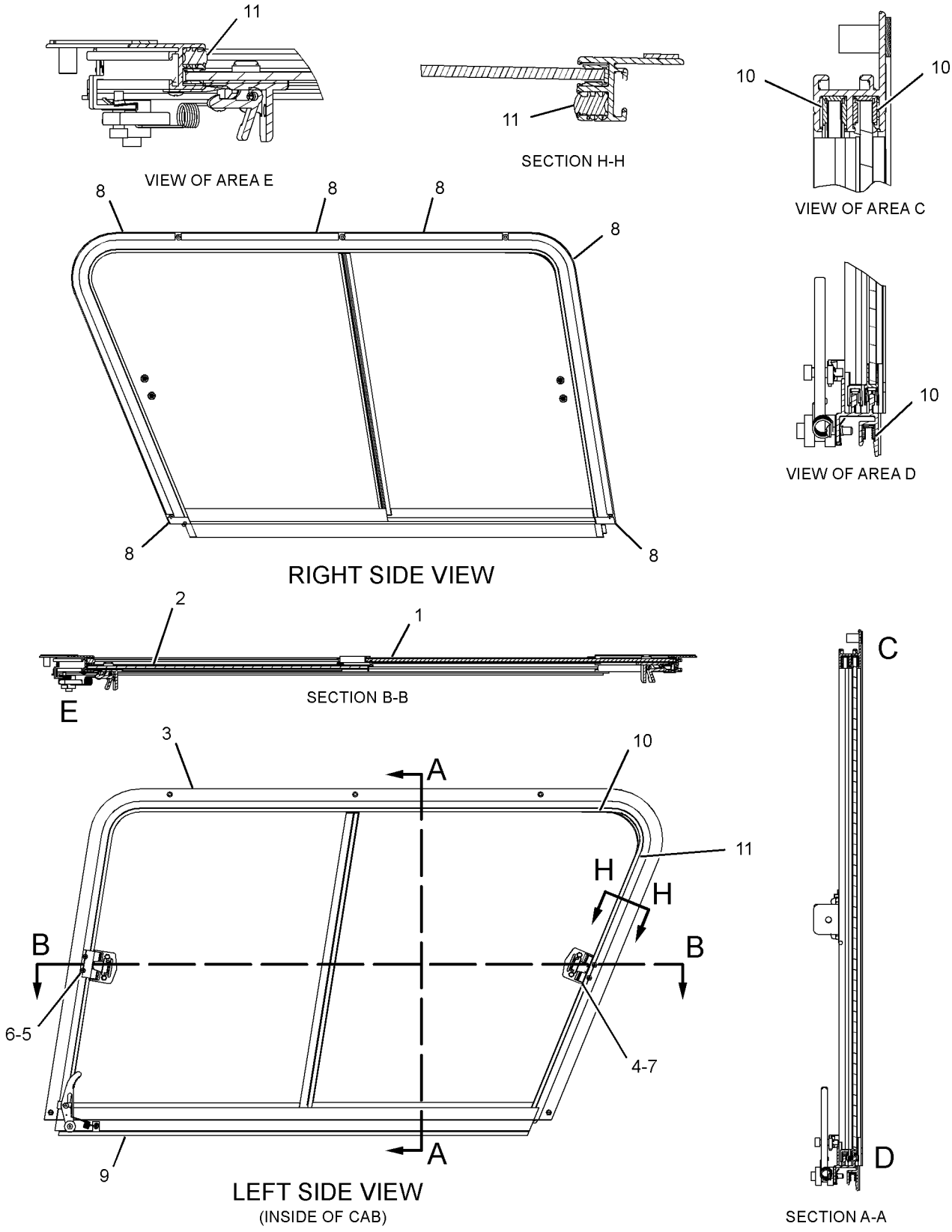

GRAPHIC #1 **<END>** g01216653

SERVICE EQUIPMENT AND SUPPLIES

191-9684 FILM GP

S/N: MJH1-UP; SCH1-UP; RLL1-UP; BXM1-UP
PART OF 278-1220, 278-1221, 278-5347, 278-5348 CONVERSION AR-MACHINE,
233-5674, 233-5684 CONVERSION AR-ROADING
AN ATTACHMENT

SMCS-7557 **i01983232**

NOTE	REF NO	GRAPHIC REF	PART NUMBER	QTY	PART NAME 1 2 3 4 5 6 (PRODUCT LEVEL)	SEE PAGE
	1	1	**160-1600**	1	FILM-WARNING (CLEARANCE)	

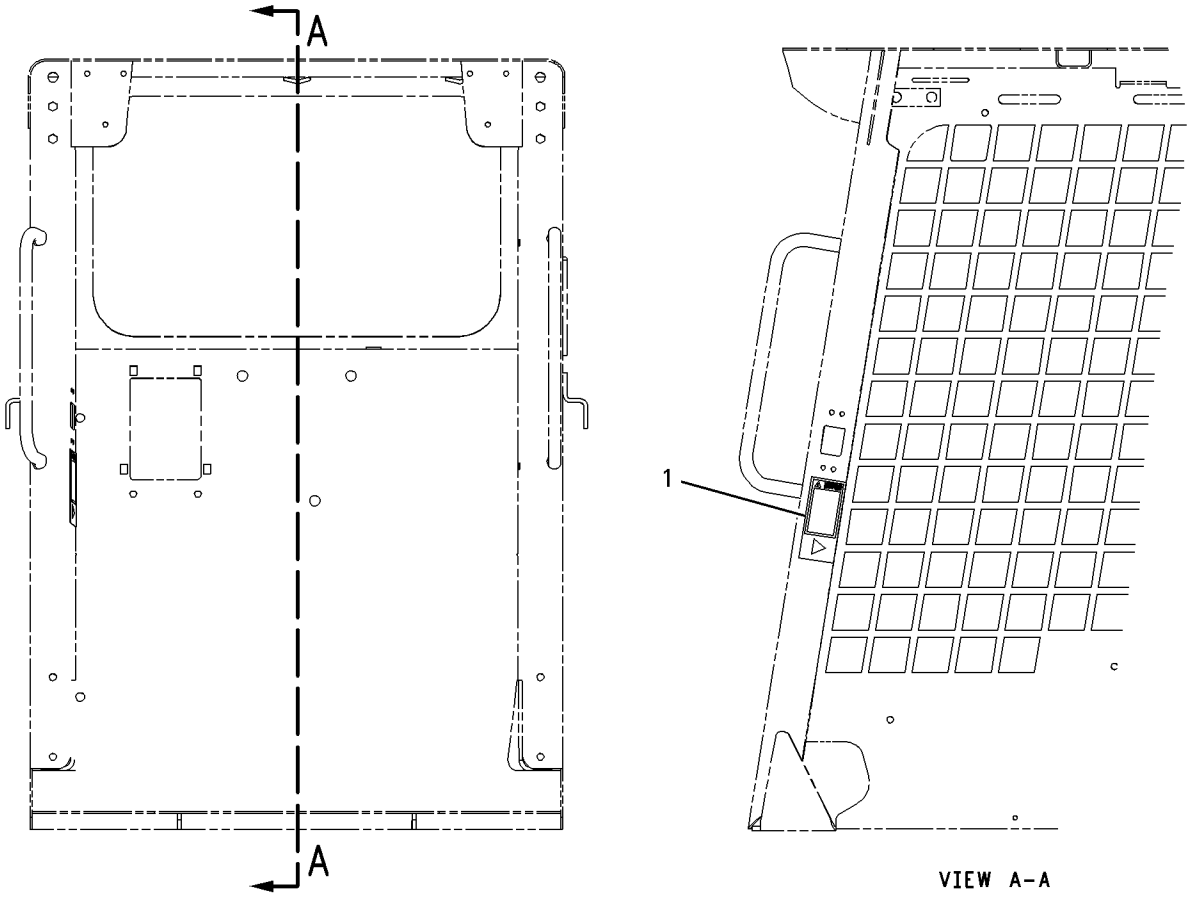

GRAPHIC #1 **<END>** g00771257

SERVICE EQUIPMENT AND SUPPLIES

218-6177 FILM GP

S/N: RLL1-UP

PART OF 218-6216, 278-1216 COMMON AR

SMCS-7557 **i02106148**

NOTE	REF NO	GRAPHIC REF	PART NUMBER	QTY	PART NAME 1 2 3 4 5 6 (PRODUCT LEVEL)	SEE PAGE
	1	1	**9X-2754**	1	FILM (CAT)	
	2	1	**162-6889**	1	FILM (CATERPILLAR)	
	3	1	**218-6222**	1	FILM (216B, RH)	
	4	1	**218-6221**	1	FILM (216B, LH)	
	5	1	**234-0744**	1	FILM (ROOF, LH)	
	6	1	**234-0745**	1	FILM (ROOF, RH)	
	7	1	**238-7669**	1	FILM (CAT, RH)	
	8	1	**238-7670**	1	FILM (CAT, LH)	
E	9	1	**120-0210**		FILM (RED STRIPE) (27CM)	
E	10	1	**120-0210**		FILM (RED STRIPE) (33CM)	
AF		1	**4P-6422**	1	FILM-WARNING (NO ETHER SPRAY/AIR INTAKE)	
AF		1	**150-4074**	1	PLATE	
AF		1	**150-4075**	1	PLATE-INFORMATION	
AF		1	**150-4076**	1	PLATE-TRADEMARK	

A-NOT PART OF THIS GROUP
E-ORDER BY THE CENTIMETER
F-NOT SHOWN

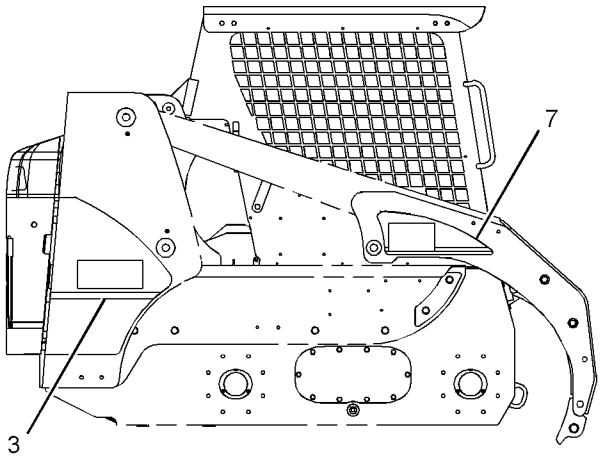

RIGHT SIDE VIEW

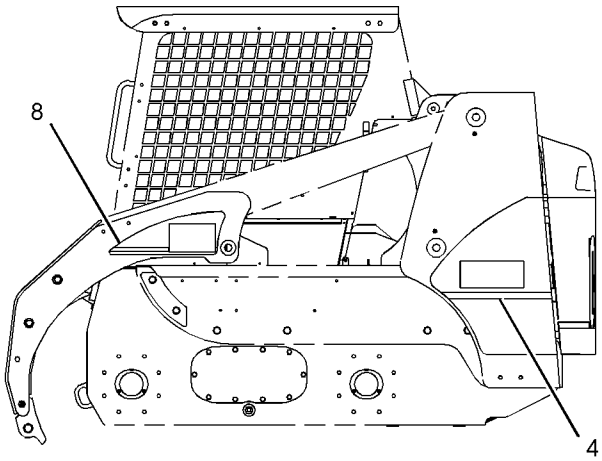

LEFT SIDE VIEW

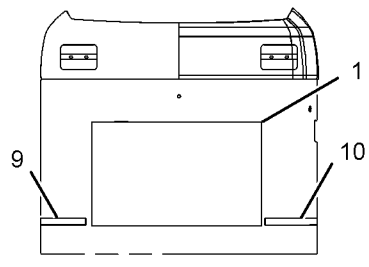

REAR VIEW

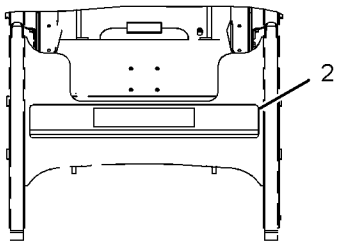

FRONT VIEW

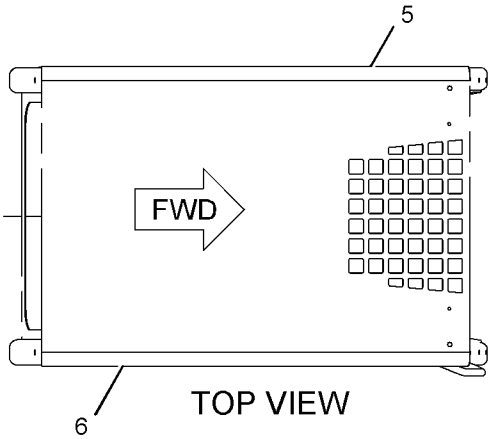

TOP VIEW

GRAPHIC #1 **<END>** g01027666

SERVICE EQUIPMENT AND SUPPLIES

218-6178 FILM GP

S/N: MJH1-UP

PART OF 218-6226, 278-1226 COMMON AR

SMCS-7557 **i02003948**

NOTE	REF NO	GRAPHIC REF	PART NUMBER	QTY	PART NAME 1 2 3 4 5 6 (PRODUCT LEVEL)	SEE PAGE
	1	1	**9X-2754**	1	FILM (CAT)	
	2	1	**162-6889**	1	FILM (CATERPILLAR)	
	3	1	**218-6223**	1	FILM-STRIPE	
	4	1	**218-6224**	1	FILM-STRIPE	
	5	1	**234-0744**	1	FILM (ROOF, LH) (LH)	
	6	1	**234-0745**	1	FILM (ROOF, RH) (RH)	
	7	1	**234-0748**	2	FILM (TURBOCHARGER)	
	8	1	**238-7669**	1	FILM (CAT, RH)	
	9	1	**238-7670**	1	FILM (CAT, LH)	
E	10	1	**120-0210**		FILM (RED STRIPE) (27CM)	
E	11	1	**120-0210**		FILM (RED STRIPE) (33CM)	
AF		1	**4P-6422**	1	FILM-WARNING (NO ETHER SPRAY/AIR INTAKE)	
AF		1	**150-4074**	1	PLATE	
AF		1	**150-4075**	1	PLATE-INFORMATION	
AF		1	**150-4076**	1	PLATE-TRADEMARK	

A-NOT PART OF THIS GROUP
E-ORDER BY THE CENTIMETER
F-NOT SHOWN

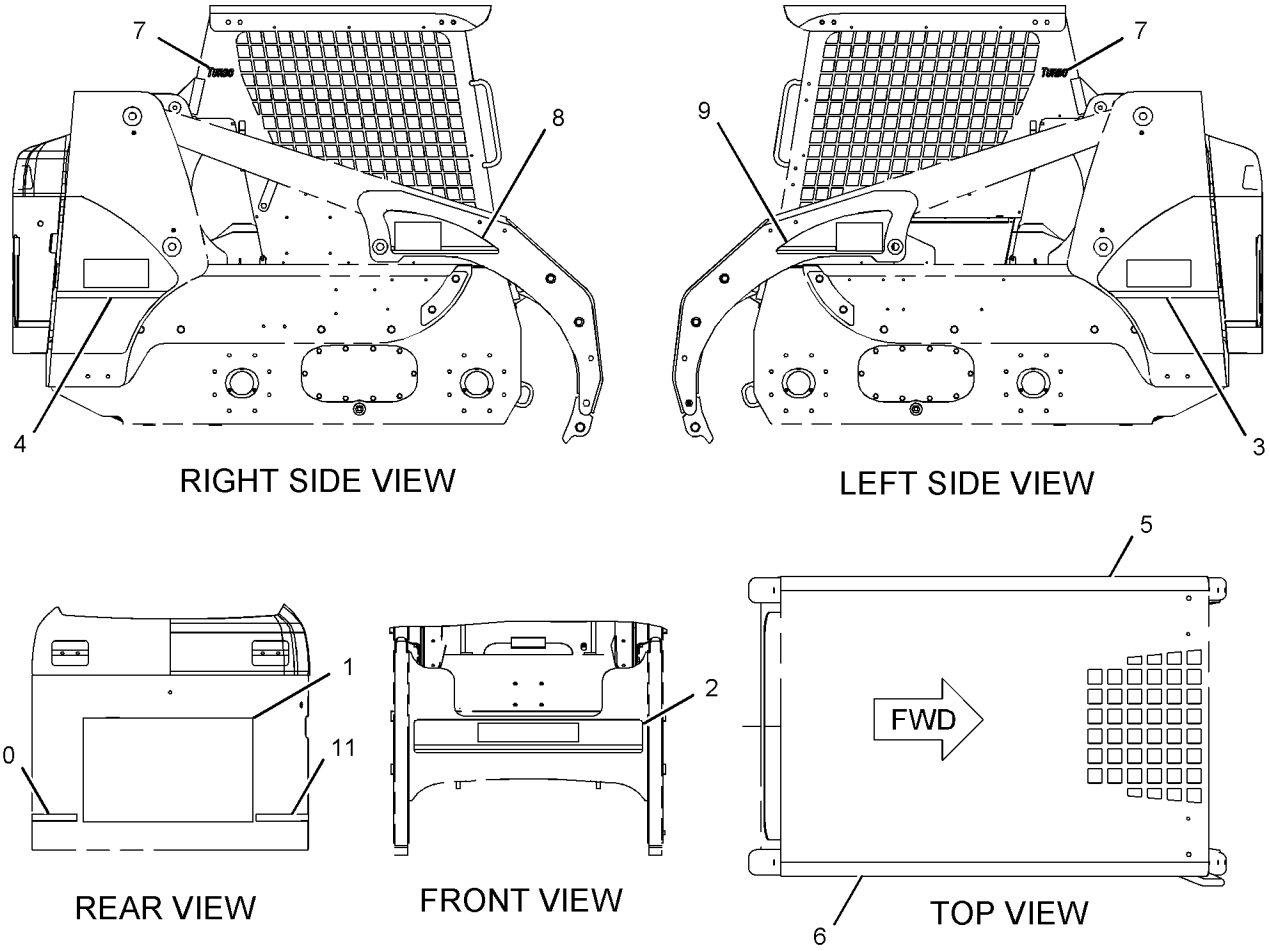

GRAPHIC #1 **<END>** g01030527

SERVICE EQUIPMENT AND SUPPLIES

218-6217 FILM GP

S/N: SCH1-UP

PART OF 218-6232, 278-1232 COMMON AR

SMCS-7557 **i02003951**

NOTE	REF NO	GRAPHIC REF	PART NUMBER	QTY	PART NAME 1 2 3 4 5 6 (PRODUCT LEVEL)	SEE PAGE
	1	1	**9X-2754**	1	FILM (CAT)	
	2	1	**162-6889**	1	FILM (CATERPILLAR)	
	3	1	**218-6229**	1	FILM-STRIPE (232B)	
	4	1	**218-6230**	1	FILM-STRIPE (232B)	
	5	1	**234-0744**	1	FILM (ROOF, LH) (LH)	
	6	1	**234-0745**	1	FILM (ROOF, RH) (RH)	
	7	1	**238-7669**	1	FILM (CAT, RH)	
	8	1	**238-7670**	1	FILM (CAT, LH)	
E	9	1	**120-0210**		FILM (RED STRIPE) (27CM)	
E	10	1	**120-0210**		FILM (RED STRIPE) (33CM)	
AF		1	**4P-6422**	1	FILM-WARNING (NO ETHER SPRAY/AIR INTAKE)	
AF		1	**150-4074**	1	PLATE	
AF		1	**150-4075**	1	PLATE-INFORMATION	
AF		1	**150-4076**	1	PLATE-TRADEMARK	

A-NOT PART OF THIS GROUP
E-ORDER BY THE CENTIMETER
F-NOT SHOWN

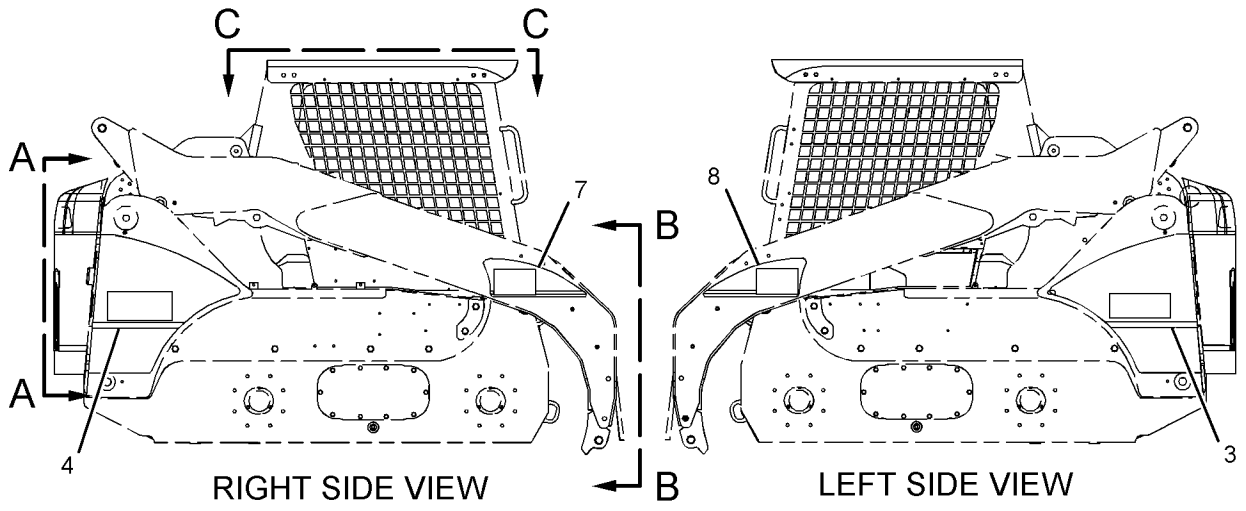

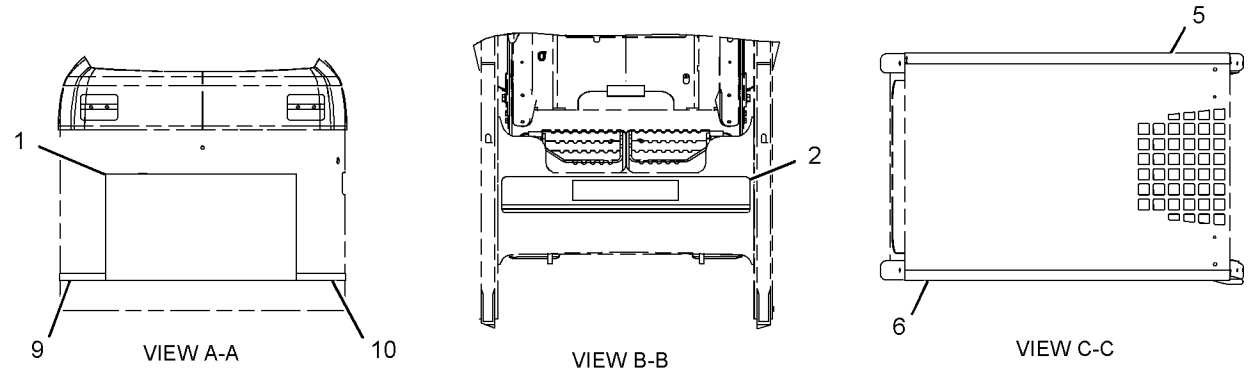

GRAPHIC #1

<END>

g01022033

SERVICE EQUIPMENT AND SUPPLIES

218-6218 FILM GP

S/N: BXM1-UP

PART OF 218-6242, 278-1242 COMMON AR

SMCS-7557 **i02003952**

NOTE	REF NO	GRAPHIC REF	PART NUMBER	QTY	PART NAME 1 2 3 4 5 6 (PRODUCT LEVEL)	SEE PAGE
	1	1	**9X-2754**	1	FILM (CAT)	
	2	1	**162-6889**	1	FILM (CATERPILLAR)	
	3	1	**218-6233**	1	FILM-STRIPE (242B)	
	4	1	**218-6234**	1	FILM-STRIPE (242B)	
	5	1	**234-0744**	1	FILM (ROOF, LH) (LH)	
	6	1	**234-0745**	1	FILM (ROOF, RH) (RH)	
	7	1	**234-0748**	2	FILM (TURBOCHARGER)	
	8	1	**238-7669**	1	FILM (CAT, RH)	
	9	1	**238-7670**	1	FILM (CAT, LH)	
E	10	1	**120-0210**		FILM (RED STRIPE) (27CM)	
E	11	1	**120-0210**		FILM (RED STRIPE) (33CM)	
AF		1	**4P-6422**	1	FILM-WARNING (NO ETHER SPRAY/AIR INTAKE)	
AF		1	**150-4074**	1	PLATE	
AF		1	**150-4075**	1	PLATE-INFORMATION	
AF		1	**150-4076**	1	PLATE-TRADEMARK	

A-NOT PART OF THIS GROUP
E-ORDER BY THE CENTIMETER
F-NOT SHOWN

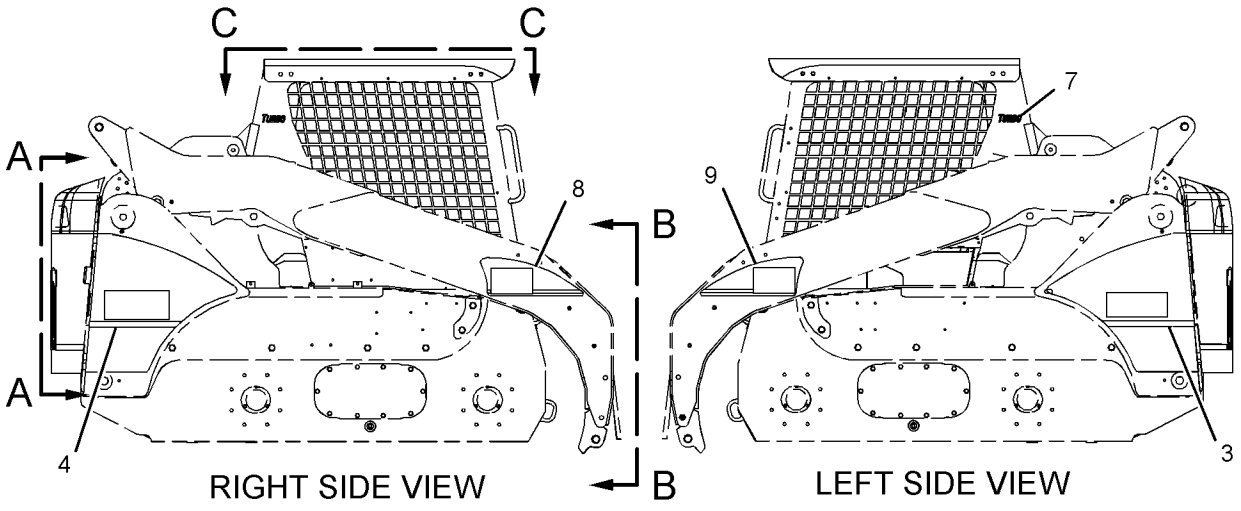

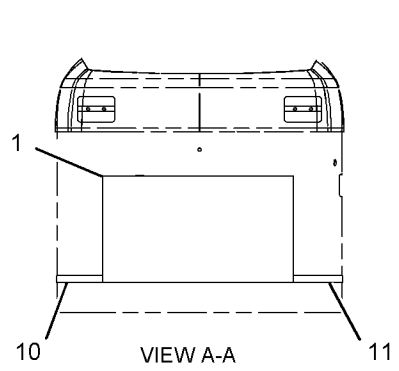

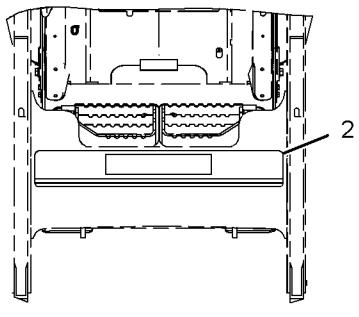

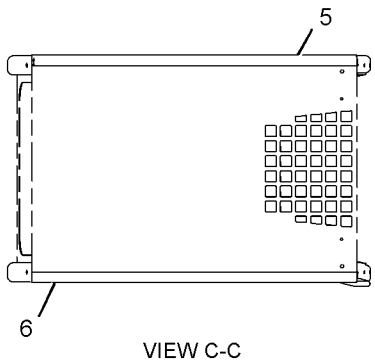

GRAPHIC #1

<END>

g01021916

SERVICE EQUIPMENT AND SUPPLIES

218-6731 FILM GP–KIT

S/N: RLL1-UP

AN ATTACHMENT

SMCS-7557 **i02016007**

NOTE	REF NO	GRAPHIC REF	PART NUMBER	QTY	PART NAME 1 2 3 4 5 6 (PRODUCT LEVEL)	SEE PAGE
	1	1	**9X-2754**	1	FILM (CAT)	
	2	1	**162-6889**	1	FILM (CATERPILLAR)	
	3	1	**218-6221**	1	FILM (216B, LH)	
	4	1	**218-6222**	1	FILM (216B, RH)	
	5	1	**234-0744**	1	FILM (ROOF, LH)	
	6	1	**234-0745**	1	FILM (ROOF, RH)	
	7	1	**234-0748**	2	FILM (TURBOCHARGER)	
	8	1	**238-7669**	1	FILM (CAT, RH)	
	9	1	**238-7670**	1	FILM (CAT, LH)	
	10	1	**120-0210**		FILM (RED STRIPE) (27CM)	
	11	1	**120-0210**		FILM (RED STRIPE) (33CM)	
	12	1	**156-5762**	4	FILM-INFORMATION (TIE-DOWN LOCATION)	
	13	1	**233-5711**	1	FILM-INSTRUCTION (SERVICE CHART)	

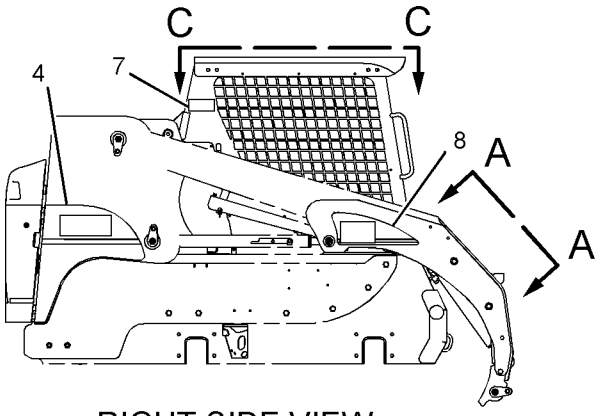

RIGHT SIDE VIEW

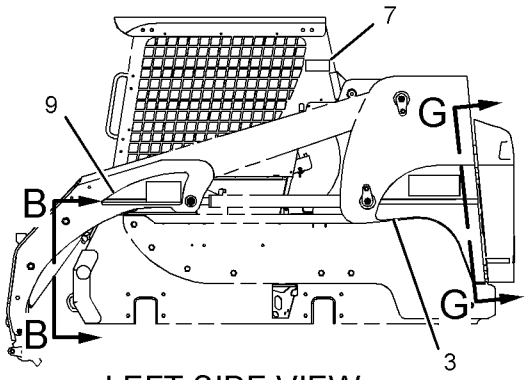

LEFT SIDE VIEW

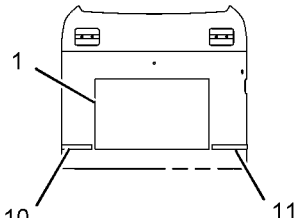

REAR VIEW

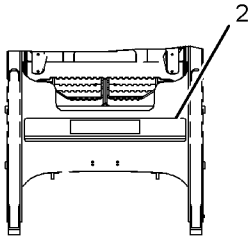

VIEW A-A

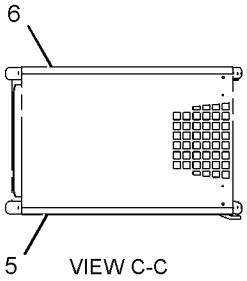

VIEW C-C

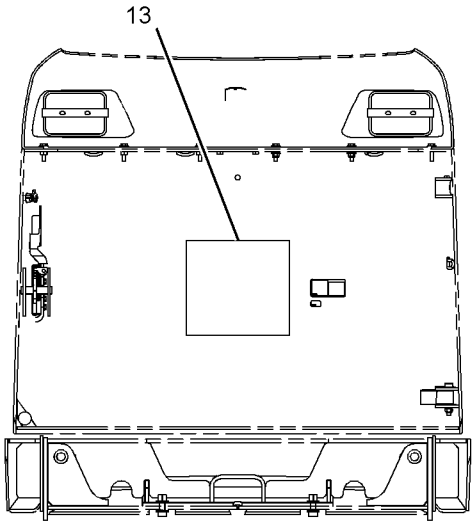

VIEW G-G

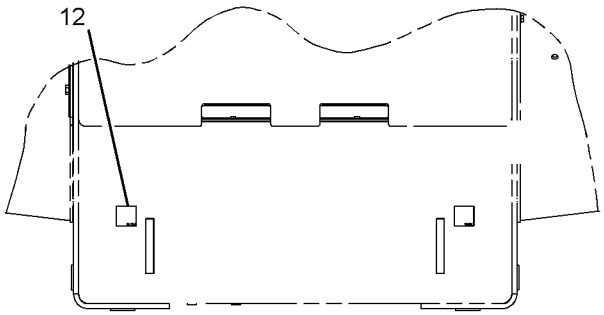

VIEW B-B

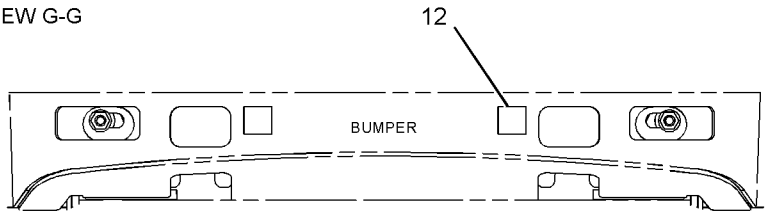

REAR VIEW

GRAPHIC #1 **<END>** g01023701

SERVICE EQUIPMENT AND SUPPLIES

218-6732 FILM GP–KIT

S/N: MJH1-UP

AN ATTACHMENT

SMCS-7557 **i01988975**

NOTE	REF NO	GRAPHIC REF	PART NUMBER	QTY	PART NAME 1 2 3 4 5 6 (PRODUCT LEVEL)	SEE PAGE
	1	1	**9X-2754**	1	FILM (CAT)	
	2	1	**162-6889**	1	FILM (CATERPILLAR)	
	3	1	**218-6223**	1	FILM-STRIPE (226B)	
	4	1	**218-6224**	1	FILM-STRIPE (226B)	
	5	1	**234-0744**	1	FILM (ROOF, LH) (LH)	
	6	1	**234-0745**	1	FILM (ROOF, RH) (RH)	
	7	1	**234-0748**	2	FILM (TURBOCHARGER)	
	8	1	**238-7669**	1	FILM (CAT, RH)	
	9	1	**238-7670**	1	FILM (CAT, LH)	
E	10	1	**120-0210**		FILM (RED STRIPE) (27CM)	
E	11	1	**120-0210**		FILM (RED STRIPE) (33CM)	
	12	1	**156-5762**	4	FILM-INFORMATION (TIE-DOWN LOCATION)	
	13	1	**233-5711**	1	FILM-INSTRUCTION (SERVICE CHART)	

E-ORDER BY THE CENTIMETER

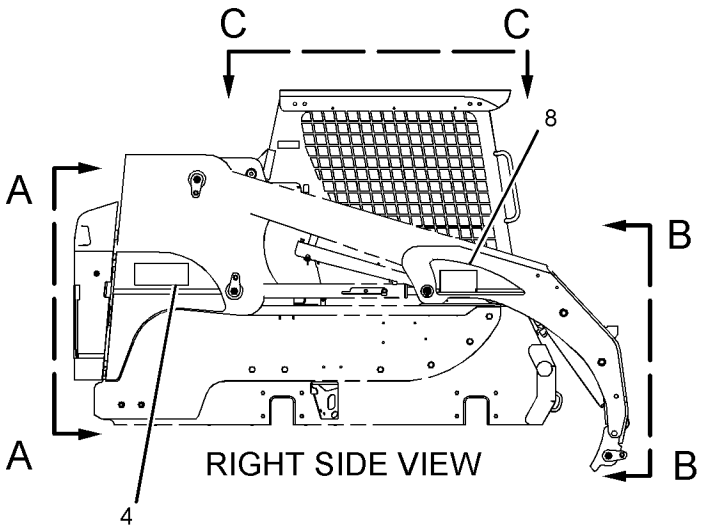

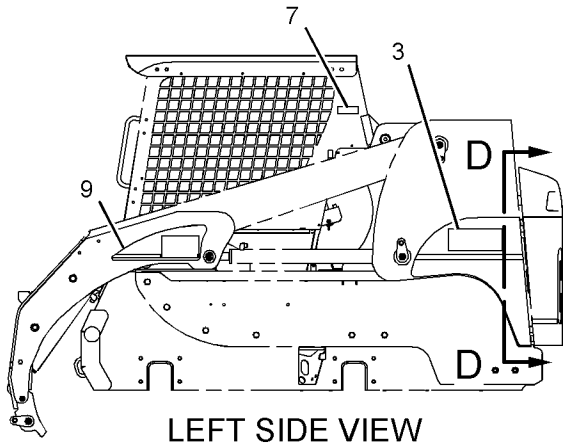

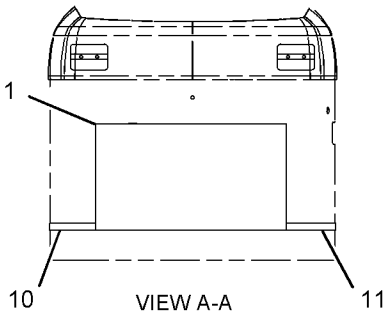

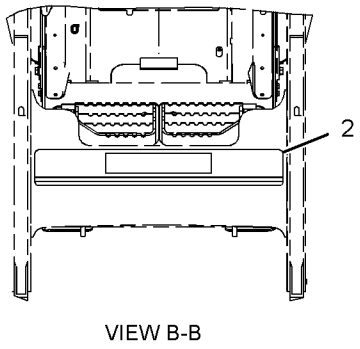

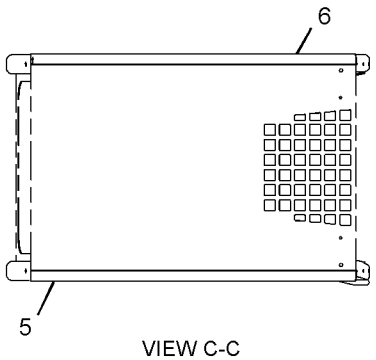

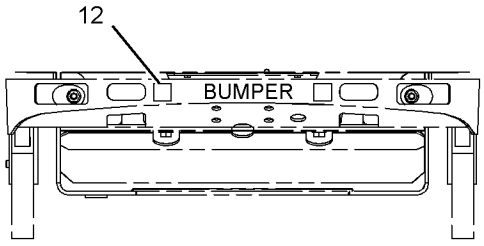

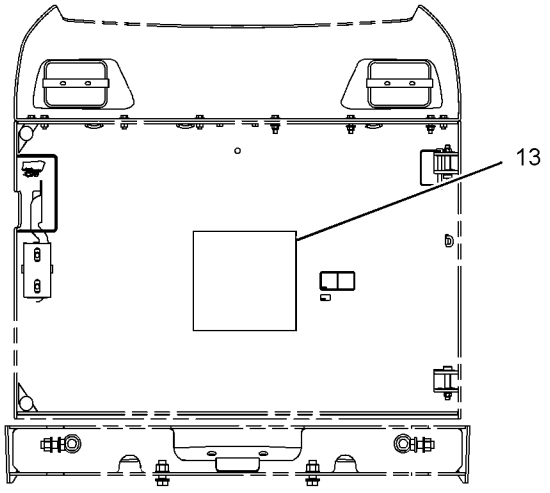

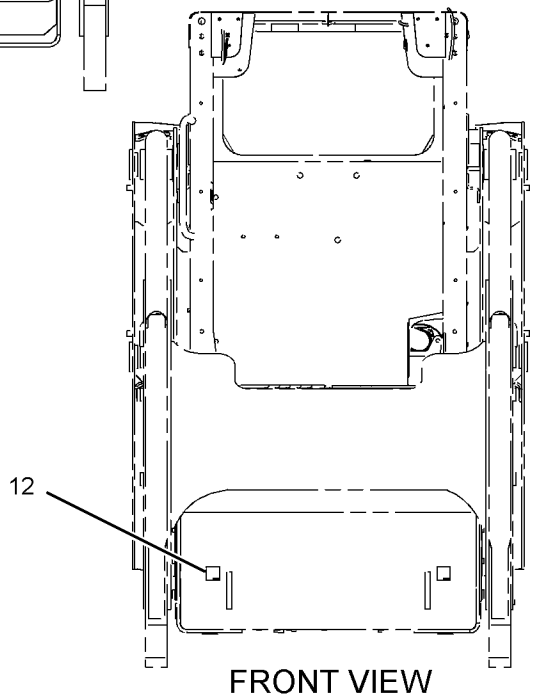

GRAPHIC #1 **<END>** g01031364

SERVICE EQUIPMENT AND SUPPLIES

218-6734 FILM GP–KIT

S/N: SCH1-UP

AN ATTACHMENT

SMCS-7557 **i02016008**

NOTE	REF NO	GRAPHIC REF	PART NUMBER	QTY	PART NAME 1 2 3 4 5 6 (PRODUCT LEVEL)	SEE PAGE
	1	1	**9X-2754**	1	FILM (CAT)	
	2	1	**162-6889**	1	FILM (CATERPILLAR)	
	3	1	**218-6229**	1	FILM-STRIPE (232B)	
	4	1	**218-6230**	1	FILM-STRIPE (232B)	
	5	1	**234-0744**	1	FILM (ROOF, LH) (LH)	
	6	1	**234-0745**	1	FILM (ROOF, RH) (RH)	
	7	1	**234-0748**	2	FILM (TURBOCHARGER)	
	8	1	**238-7669**	1	FILM (CAT, RH)	
	9	1	**238-7670**	1	FILM (CAT, LH)	
	10	1	**120-0210**		FILM (RED STRIPE) (27CM)	
	11	1	**120-0210**		FILM (RED STRIPE) (33CM)	
	12	1	**156-5762**	4	FILM-INFORMATION (TIE-DOWN LOCATION)	
	13	1	**233-5715**	1	FILM-INSTRUCTION (SERVICE CHART)	

218-6734 FILM GP *(contd.)* **i02016008**

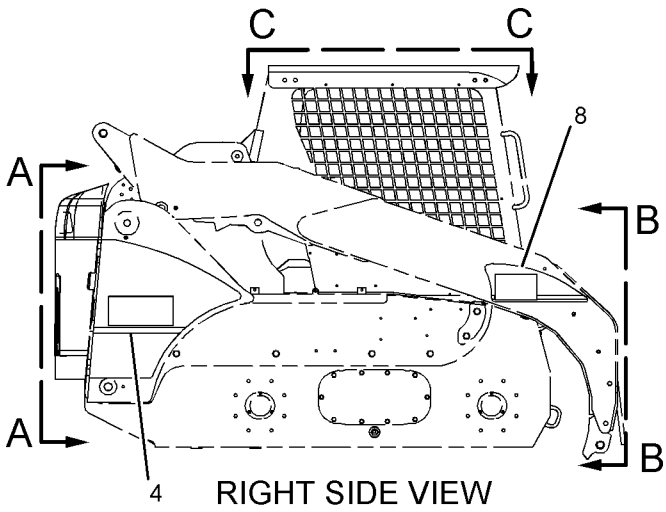

RIGHT SIDE VIEW

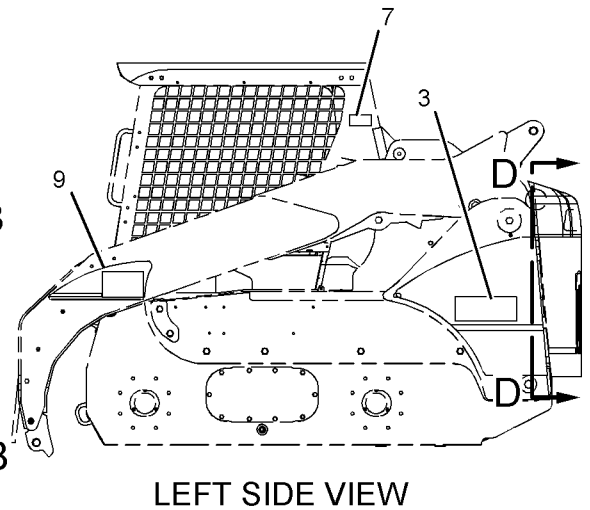

LEFT SIDE VIEW

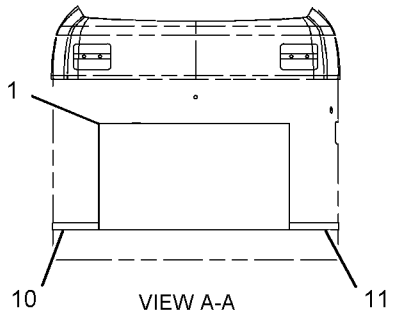

VIEW A-A

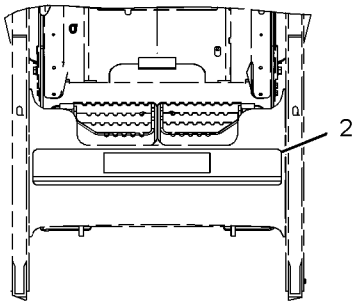

VIEW B-B

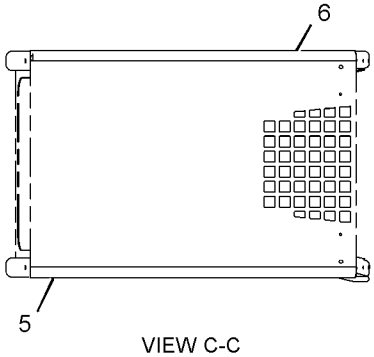

VIEW C-C

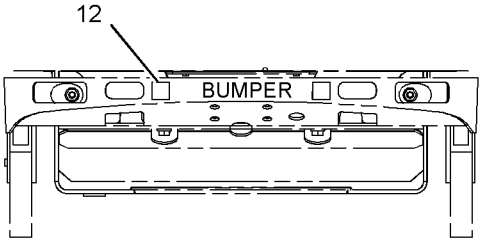

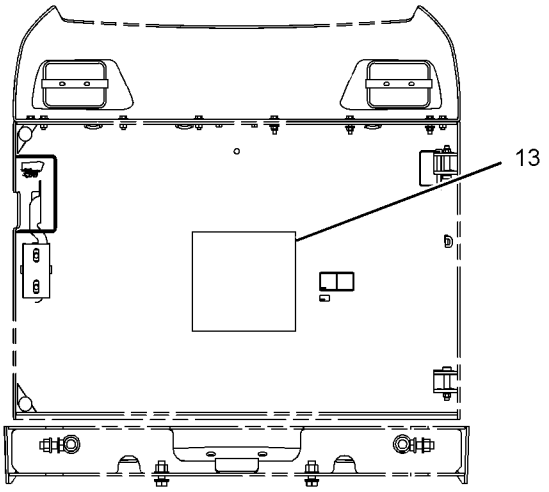

VIEW D-D

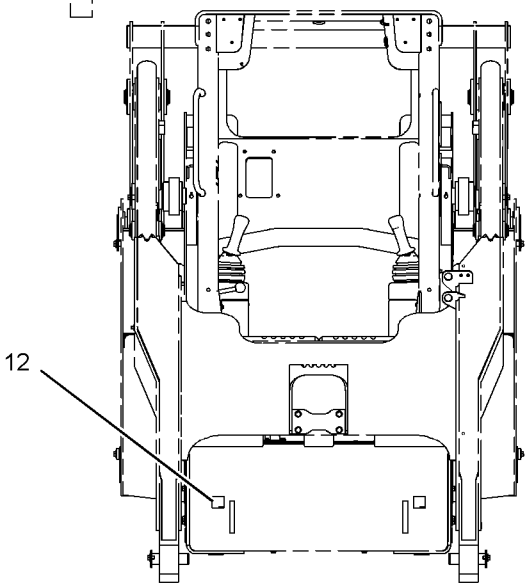

FRONT VIEW

GRAPHIC #1 **<END>** g01027538

SERVICE EQUIPMENT AND SUPPLIES

218-6735 FILM GP–KIT

S/N: BXM1-UP

AN ATTACHMENT

SMCS-7557 **i02016009**

NOTE	REF NO	GRAPHIC REF	PART NUMBER	QTY	PART NAME 1 2 3 4 5 6 (PRODUCT LEVEL)	SEE PAGE
	1	1	**9X-2754**	1	FILM (CAT)	
	2	1	**162-6889**	1	FILM (CATERPILLAR)	
	3	1	**218-6233**	1	FILM-STRIPE (242B) (RH)	
	4	1	**218-6234**	1	FILM-STRIPE (242B) (LH)	
	5	1	**234-0744**	1	FILM (ROOF, LH) (LH)	
	6	1	**234-0745**	1	FILM (ROOF, RH) (RH)	
	7	1	**234-0748**	2	FILM (TURBOCHARGER)	
	8	1	**238-7669**	1	FILM (CAT, RH)	
	9	1	**238-7670**	1	FILM (CAT, LH)	
E	10	1	**120-0210**		FILM (RED STRIPE) (27CM)	
E	11	1	**120-0210**		FILM (RED STRIPE) (33CM)	
	12	1	**156-5762**	4	FILM-INFORMATION (TIE-DOWN LOCATION)	
	13	1	**233-5715**	1	FILM-INSTRUCTION (SERVICE CHART)	

E-ORDER BY THE CENTIMETER

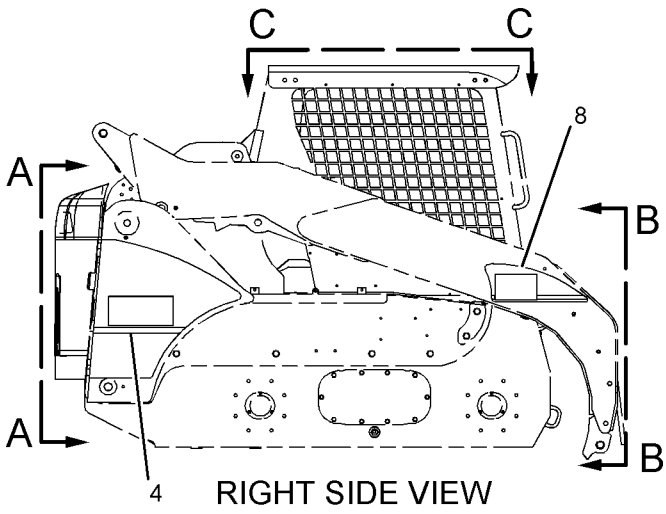

RIGHT SIDE VIEW

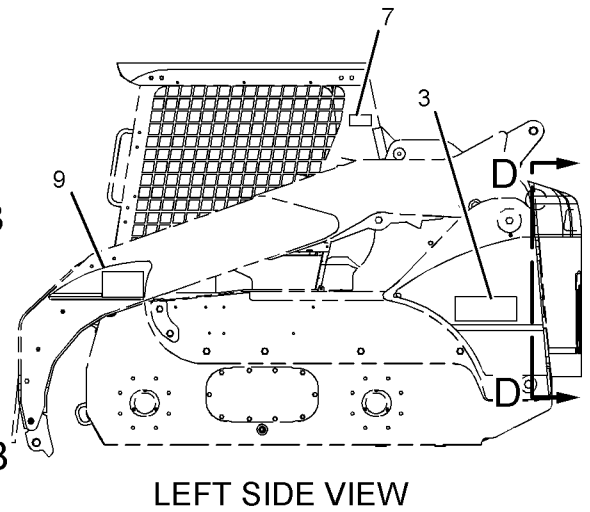

LEFT SIDE VIEW

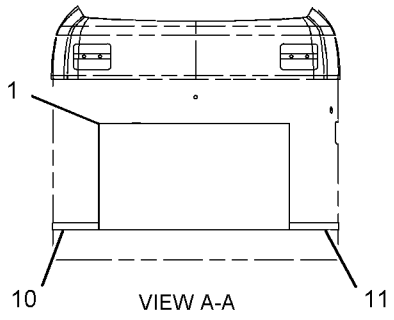

VIEW A-A

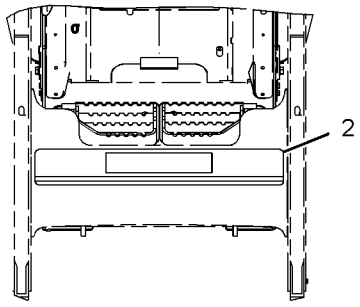

VIEW B-B

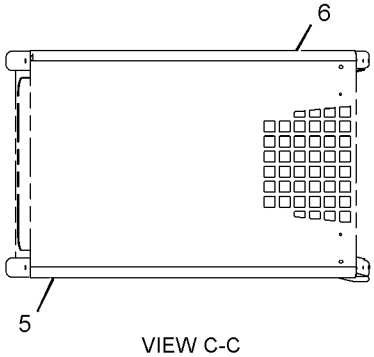

VIEW C-C

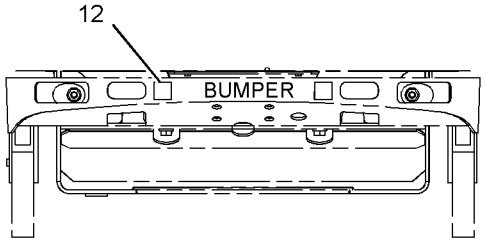

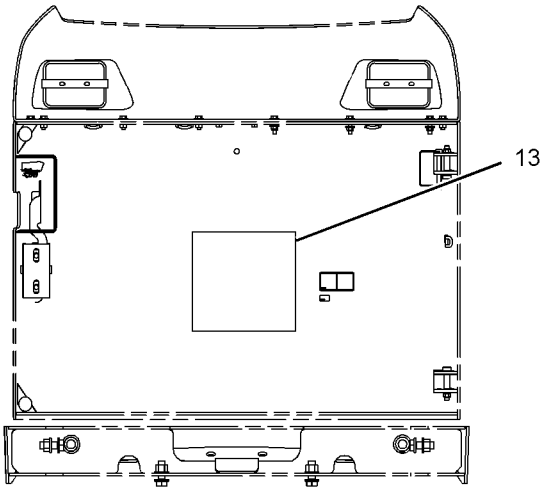

VIEW D-D

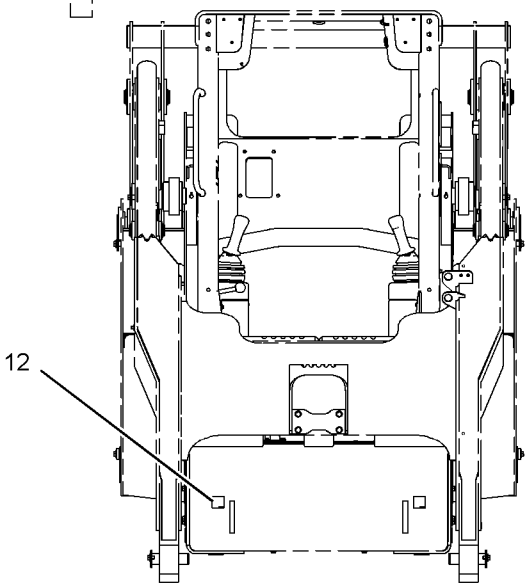

FRONT VIEW

GRAPHIC #1 **<END>** g01027538

SERVICE EQUIPMENT AND SUPPLIES

195-6740 PLATE & FILM GP

S/N: MJH1-UP; SCH1-UP; RLL1-UP; BXM1-UP
AN ATTACHMENT

SMCS-7405, 7557 **i02106528**

NOTE	REF NO	GRAPHIC REF	PART NUMBER	QTY	PART NAME 1 2 3 4 5 6 (PRODUCT LEVEL)	SEE PAGE
	1	1	**199-3410**	1	FILM (SYNTHETIC HYD OIL)	

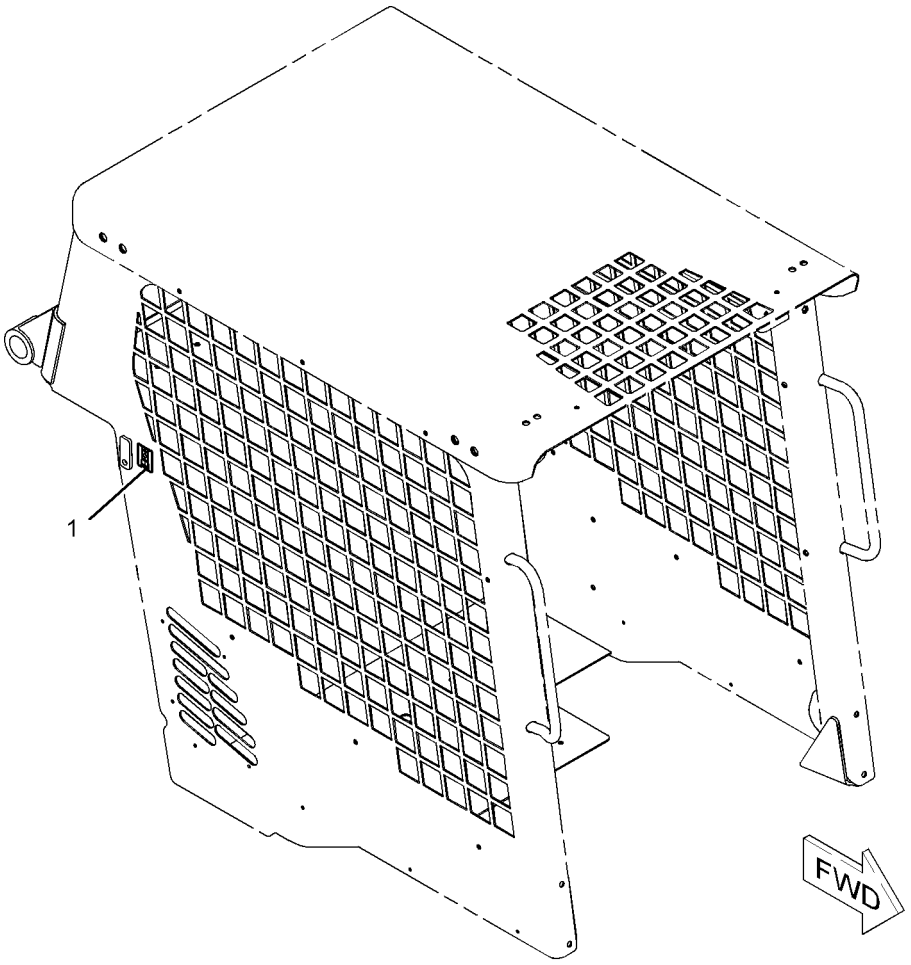

GRAPHIC #1 **<END>** g01086583

SERVICE EQUIPMENT AND SUPPLIES

218-5911 PLATE & FILM GP

S/N: SCH1-UP; BXM1-UP

AN ATTACHMENT

SMCS-7405, 7557 **i02116768**

NOTE	REF NO	GRAPHIC REF	PART NUMBER	QTY	PART NAME 1 2 3 4 5 6 (PRODUCT LEVEL)	SEE PAGE
	1	1	**156-5762**	4	FILM-INFORMATION (TIE-DOWN LOCATION)	
	2	1	**157-2853**	1	FILM (READ OMM)	
	4	1	**224-0554**	1	FILM-WARNING (READ OMM)	
	5	2	**224-8646**	2	FILM-WARNING (CRUSH HAZARD, STAY BACK)	
	6	1	**224-9022**	1	FILM-WARNING (SEAT BELT)	
	7	1	**234-6065**	1	FILM-INFORMATION (ROPS, FOPS, READ OMM)	
	8	2	**234-6071**	1	FILM-WARNING (LIFT ARM BRACE)	
	9	1	**234-6076**	1	FILM-WARNING (NO ACCESS)	
	10	1,2	**234-6078**	2	FILM-WARNING (CAB TILT SUPPORT)	
	11	1	**234-6081**	1	FILM-WARNING (WORK TOOL)	
	12	2	**235-1368**	1	FILM-WARNING (RADIATOR)	
	13	2	**239-6986**	1	PLATE-PRODUCT IDENTIFICATION	
	14	2	**169-2876**	1	FILM-IDENTIFICATION (12-VOLT)	
	15	1	**219-0302**	1	FILM-WARNING (NO WELD, NO DRILL)	
	16	1	**224-0672**	1	FILM-WARNING (HIGH PRESSURE, READ OMM, ISO)	
	17	1	**224-9855**	1	FILM-INSTRUCTION (START AID, READ OMM)	
	18	2	**225-0312**	1	FILM-WARNING (JUMP START, READ OMM)	
	19	1	**225-7976**	1	FILM (RELAY LAYOUT)	
	20	1	**225-7977**	1	FILM (RELAY LAYOUT)	
	21	2	**233-5715**	1	FILM-INSTRUCTION (SERVICE CHART)	
	22	1	**234-6069**	1	FILM-WARNING (CRUSH HAZARD)	
	23	1	**234-9575**	1	FILM (THROTTLE)	
	25	2	**4P-6422**	1	FILM-WARNING (NO ETHER SPRAY/AIR INTAKE)	
AF			**246-4291**	1	PLATE-SERIAL NUMBER	

A-NOT PART OF THIS GROUP
F-NOT SHOWN

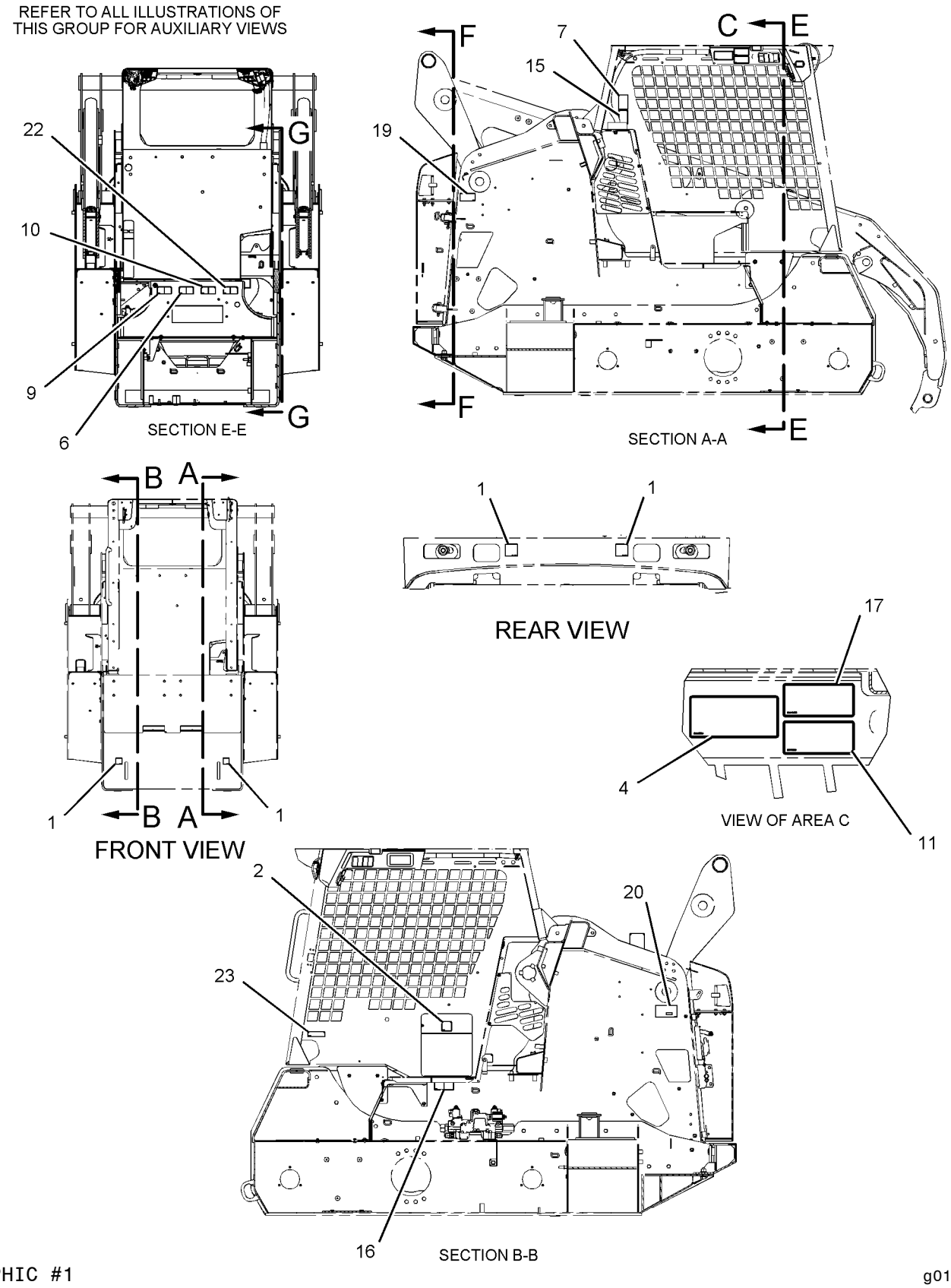

GRAPHIC #1

g01086254

REFER TO ALL ILLUSTRATIONS OF
THIS GROUP FOR AUXILIARY VIEWS

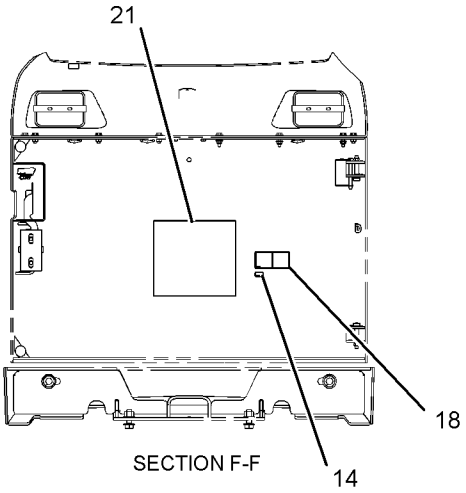

SECTION F-F

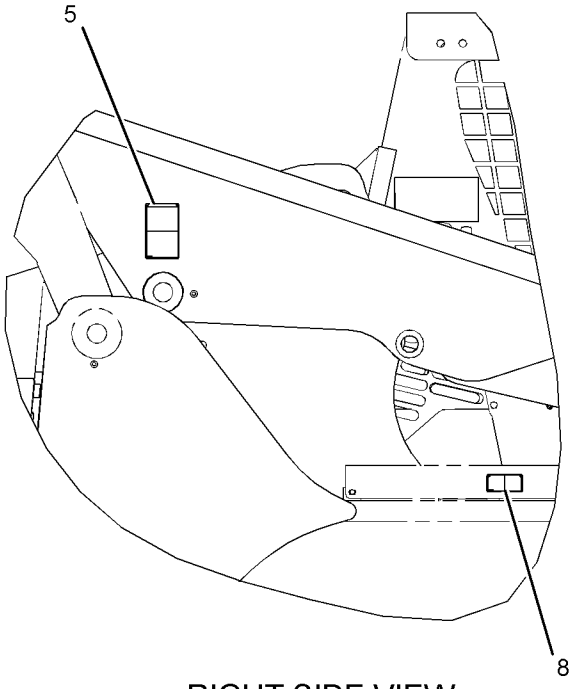

RIGHT SIDE VIEW

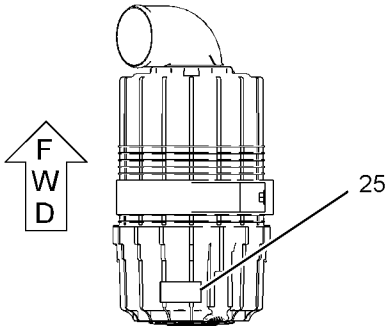

TOP VIEW
(AIR CLEANER)

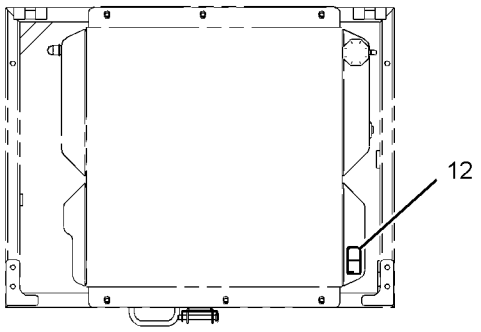

TOP VIEW
(RADIATOR)

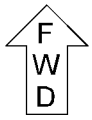

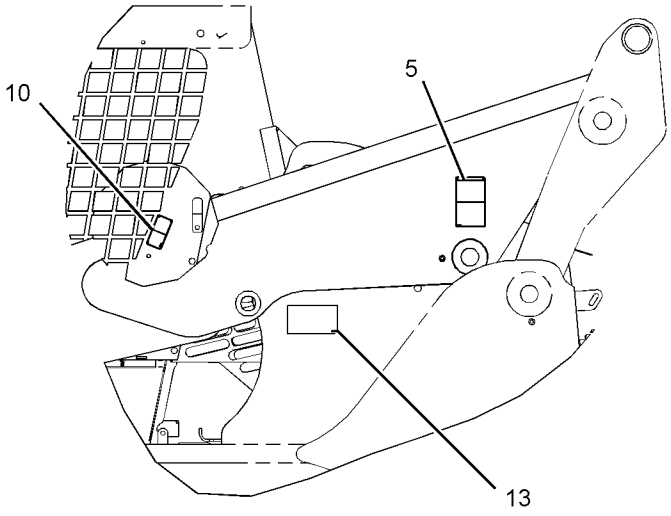

SECTION G-G

GRAPHIC #2 **<END>** g01086256

218-5951 PLATE & FILM GP

S/N: MJH1-UP; RLL1-UP

AN ATTACHMENT

SMCS-7405, 7557 **i02114863**

NOTE	REF NO	GRAPHIC REF	PART NUMBER	QTY	PART NAME 1 2 3 4 5 6 (PRODUCT LEVEL)	SEE PAGE
	1	2	**239-6986**	1	PLATE-PRODUCT IDENTIFICATION	
	2	1	**157-2853**	1	FILM (READ OMM)	
	3	1	**225-7977**	1	FILM (RELAY LAYOUT)	
	4	1	**224-0554**	1	FILM-WARNING (READ OMM)	
	5	2	**224-9022**	1	FILM-WARNING (SEAT BELT)	
	6	2	**233-5711**	1	FILM-INSTRUCTION (SERVICE CHART)	
	7	2	**4P-6422**	1	FILM-WARNING (NO ETHER SPRAY/AIR INTAKE)	
	8	2	**235-1368**	1	FILM-WARNING (RADIATOR)	
	9	2	**169-2876**	1	FILM-IDENTIFICATION (12-VOLT)	
	10	1	**219-0302**	1	FILM-WARNING (NO WELD, NO DRILL)	
	11	1	**224-0672**	1	FILM-WARNING (HIGH PRESSURE, READ OMM, ISO)	
	12	1	**224-9855**	1	FILM-INSTRUCTION (START AID, READ OMM)	
	13	2	**225-0312**	1	FILM-WARNING (JUMP START, READ OMM)	
	14	1	**225-7976**	1	FILM (RELAY LAYOUT)	
	15	2	**234-6069**	1	FILM-WARNING (CRUSH HAZARD)	
	16	2	**234-6071**	1	FILM-WARNING (LIFT ARM BRACE)	
	17	2	**234-6076**	1	FILM-WARNING (NO ACCESS)	
	18	1,2	**234-6078**	2	FILM-WARNING (CAB TILT SUPPORT)	
	19	1	**234-6081**	1	FILM-WARNING (WORK TOOL)	
	20	1	**234-9575**	1	FILM (THROTTLE)	
	21	2	**156-5762**	4	FILM-INFORMATION (TIE-DOWN LOCATION)	
	22	1	**234-6065**	1	FILM-INFORMATION (ROPS, FOPS, READ OMM)	

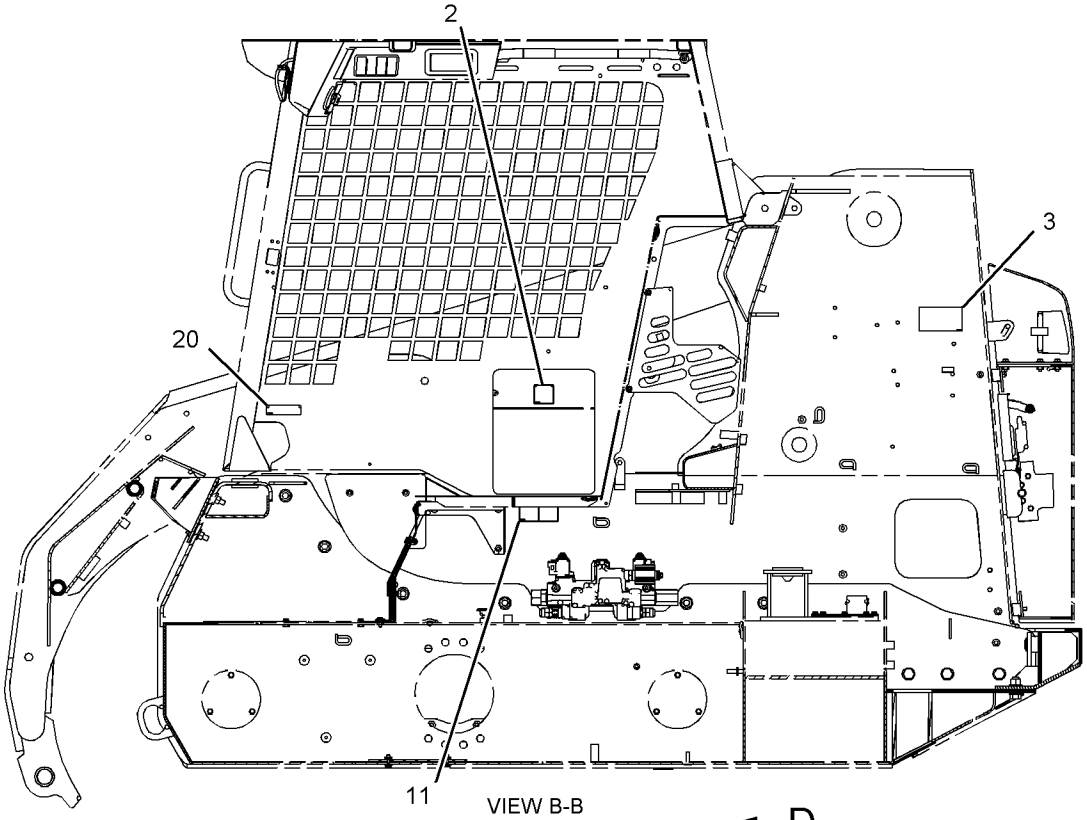

VIEW B-B

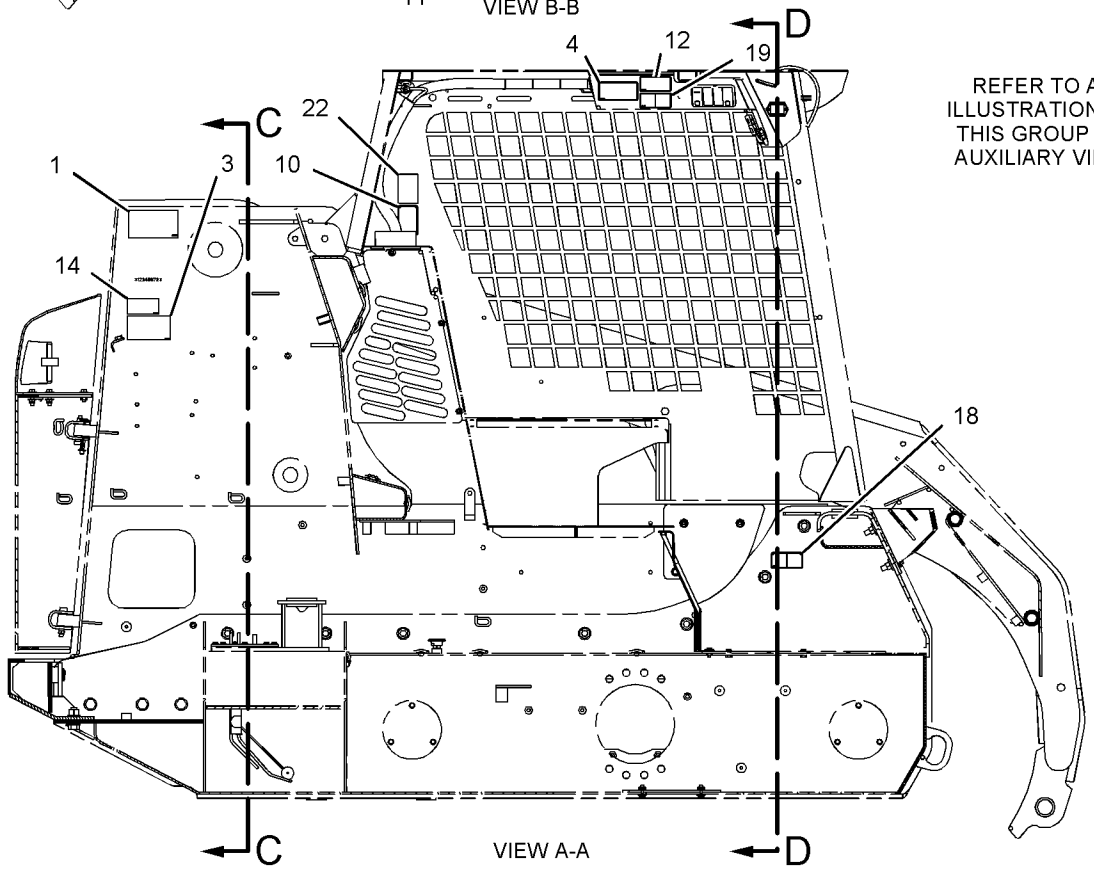

REFER TO ALL ILLUSTRATIONS OF THIS GROUP FOR AUXILIARY VIEWS

VIEW A-A

GRAPHIC #1

g01079303

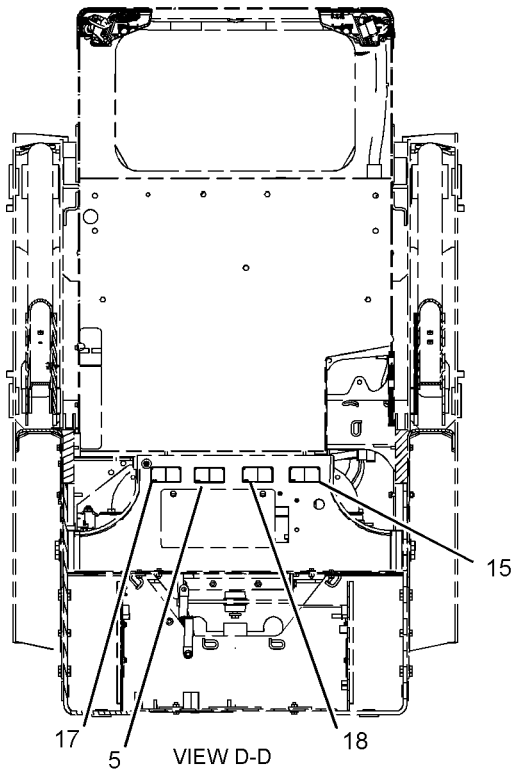

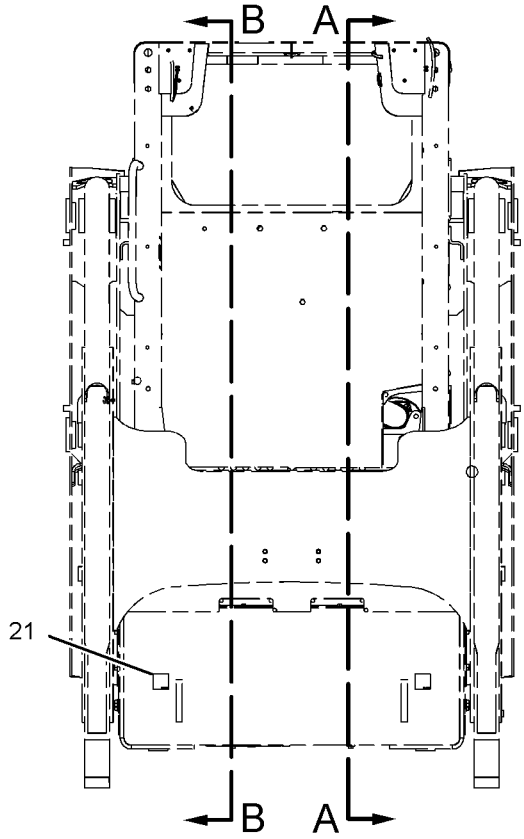

REFER TO ALL ILLUSTRATIONS OF THIS GROUP FOR AUXILIARY VIEWS

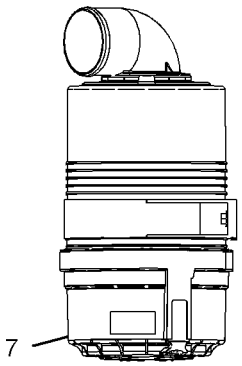

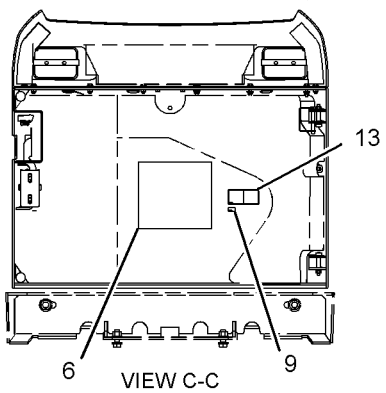

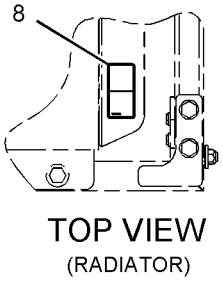

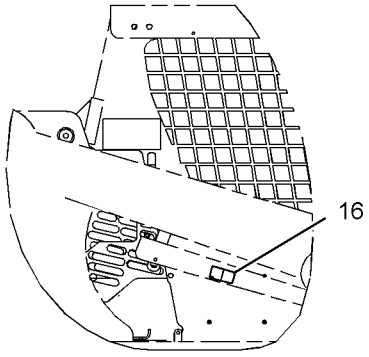

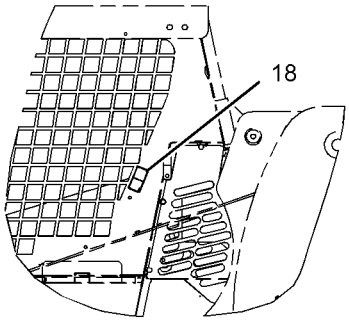

GRAPHIC #2

<END>

g01079306

SERVICE EQUIPMENT AND SUPPLIES

218-6291 PLATE & FILM GP

S/N: MJH1-UP; RLL1-UP

AN ATTACHMENT

SMCS-7405, 7557 **i02114859**

NOTE	REF NO	GRAPHIC REF	PART NUMBER	QTY	PART NAME 1 2 3 4 5 6 (PRODUCT LEVEL)	SEE PAGE
	1	1	**239-6986**	1	PLATE-PRODUCT IDENTIFICATION	
	2	2	**157-2853**	1	FILM (READ OMM)	
	3	1	**225-7977**	1	FILM (RELAY LAYOUT)	
	4	1	**224-7830**	1	FILM-WARNING (HIGH PRESSURE, READ OMM, ANSI)	
	5	1	**224-9021**	1	FILM-WARNING (SEAT BELT)	
	6	1	**225-3305**	1	FILM-WARNING (UNIVERSAL, READ OMM)	
	7	2	**233-5711**	1	FILM-INSTRUCTION (SERVICE CHART)	
	8	2	**4P-6422**	1	FILM-WARNING (NO ETHER SPRAY/AIR INTAKE)	
	9	2	**235-1365**	1	FILM-WARNING (HOT FLUID UNDER PRESSURE)	
	10	2	**169-2876**	1	FILM-IDENTIFICATION (12-VOLT)	
	11	1	**219-0302**	1	FILM-WARNING (NO WELD, NO DRILL)	
	12	2	**224-9855**	1	FILM-INSTRUCTION (START AID, READ OMM)	
	13	2	**225-0313**	1	FILM-WARNING (JUMP START, READ OMM)	
	14	1	**225-7976**	1	FILM (RELAY LAYOUT)	
	15	1,2	**234-6067**	2	FILM-WARNING (CAB TILT SUPPORT)	
	16	2	**234-6070**	1	FILM-WARNING (LIFT ARM BRACE)	
	17	1	**234-6072**	1	FILM-WARNING (CRUSH HAZARD)	
	18	1	**234-6074**	1	FILM-WARNING (NO ACCESS)	
	19	1	**234-6077**	1	FILM-WARNING (WORK TOOL)	
	20	1	**234-9575**	1	FILM (THROTTLE)	
	21	1	**156-5762**	4	FILM-INFORMATION (TIE-DOWN LOCATION)	
	22	1	**234-6065**	1	FILM-INFORMATION (ROPS, FOPS, READ OMM)	

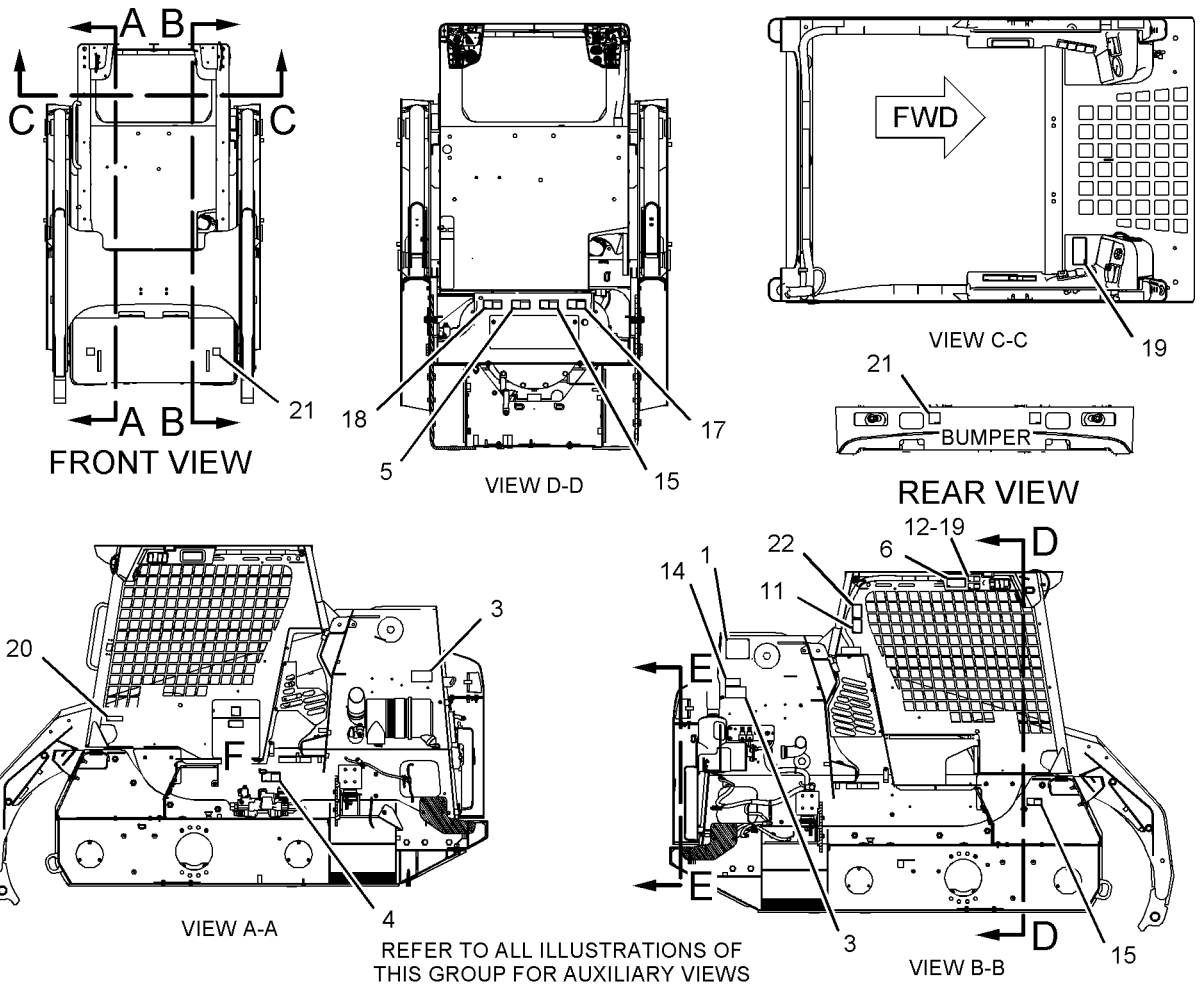

GRAPHIC #1

g01082419

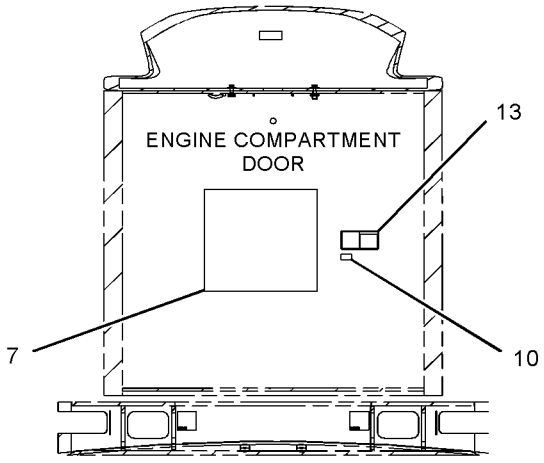

SECTION E-E

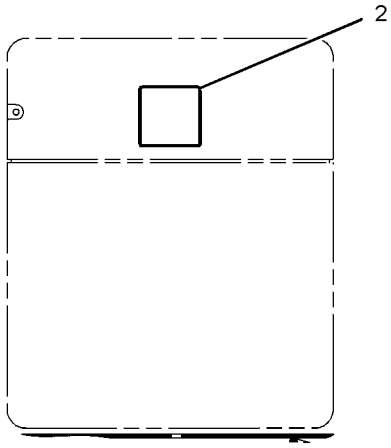

VIEW OF AREA F

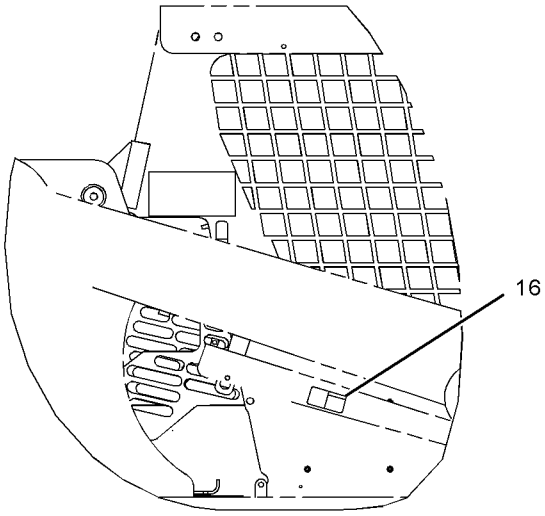

LEFT SIDE VIEW

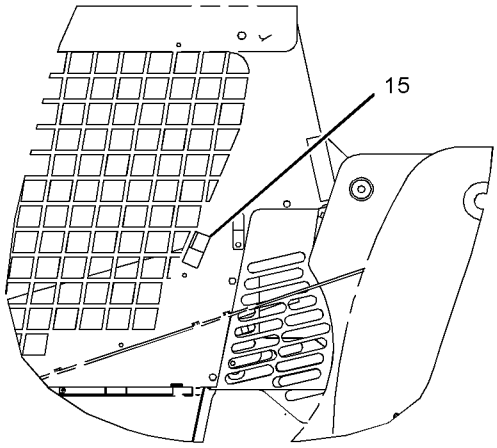

RIGHT SIDE VIEW

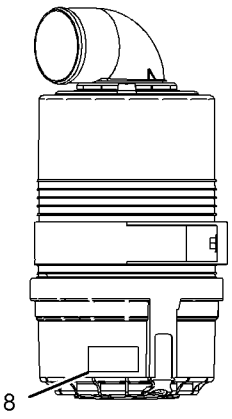

TOP VIEW OF AIR CLEANER

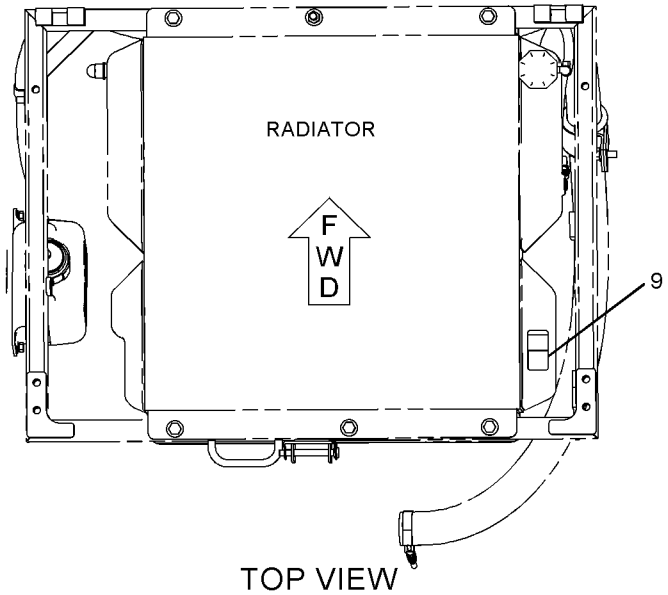

TOP VIEW

GRAPHIC #2 **<END>** g01082418

SERVICE EQUIPMENT AND SUPPLIES

218-6292 PLATE & FILM GP

S/N: SCH1-UP; BXM1-UP

AN ATTACHMENT

SMCS-7405, 7557 **i02101606**

NOTE	REF NO	GRAPHIC REF	PART NUMBER	QTY	PART NAME 1 2 3 4 5 6 (PRODUCT LEVEL)	SEE PAGE
	1	1,2	**156-5762**	4	FILM-INFORMATION (TIE-DOWN LOCATION)	
	2	1	**157-2853**	1	FILM (READ OMM)	
	3	1	**4P-6422**	1	FILM-WARNING (NO ETHER SPRAY/AIR INTAKE)	
	4	1	**224-7830**	1	FILM-WARNING (HIGH PRESSURE, READ OMM, ANSI)	
	5	1	**224-9021**	1	FILM-WARNING (SEAT BELT)	
	6	1	**225-3305**	1	FILM-WARNING (UNIVERSAL, READ OMM)	
	7	2	**235-1365**	1	FILM-WARNING (HOT FLUID UNDER PRESSURE)	
	8	1	**234-9575**	1	FILM (THROTTLE)	
	9	1	**224-8645**	2	FILM-WARNING (CRUSH HAZARD, STAY BACK)	
	10	2	**169-2876**	1	FILM-IDENTIFICATION (12-VOLT)	
	11	1	**219-0302**	1	FILM-WARNING (NO WELD, NO DRILL)	
	12	1	**224-9855**	1	FILM-INSTRUCTION (START AID, READ OMM)	
	13	2	**225-0313**	1	FILM-WARNING (JUMP START, READ OMM)	
	14	1	**225-7976**	1	FILM (RELAY LAYOUT)	
	15	1	**225-7977**	1	FILM (RELAY LAYOUT)	
	16	2	**233-5715**	1	FILM-INSTRUCTION (SERVICE CHART)	
	17	1,2	**234-6067**	2	FILM-WARNING (CAB TILT SUPPORT)	
	18	2	**234-6070**	1	FILM-WARNING (LIFT ARM BRACE)	
	19	2	**234-6072**	1	FILM-WARNING (CRUSH HAZARD)	
	20	2	**234-6074**	1	FILM-WARNING (NO ACCESS)	
	21	1	**234-6077**	1	FILM-WARNING (WORK TOOL)	

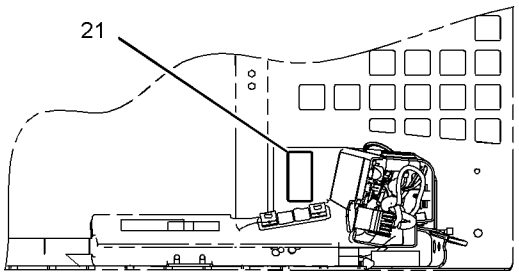

SECTION F-F

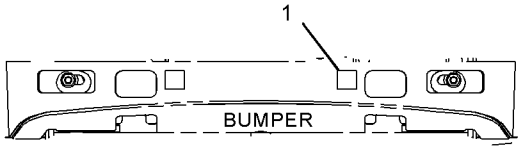

REAR VIEW

REFER TO ALL ILLUSTRATIONS OF THIS GROUP FOR AUXILIARY VIEWS

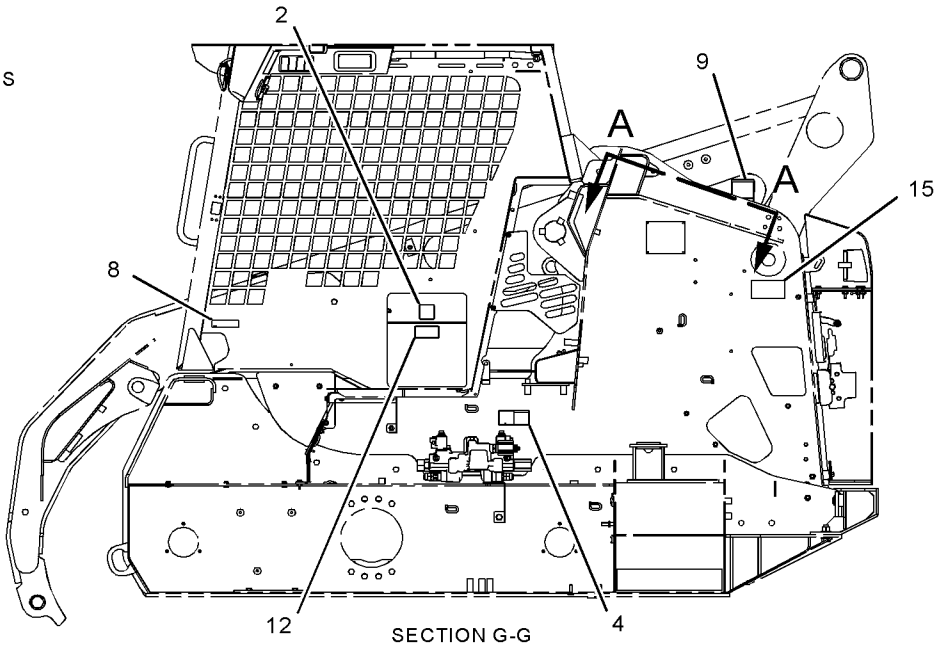

SECTION G-G

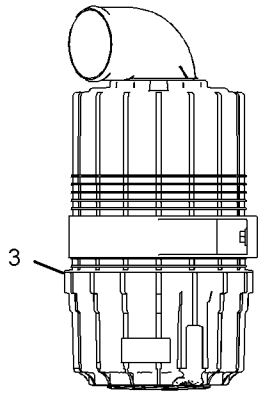

TOP VIEW OF AIR CLEANER

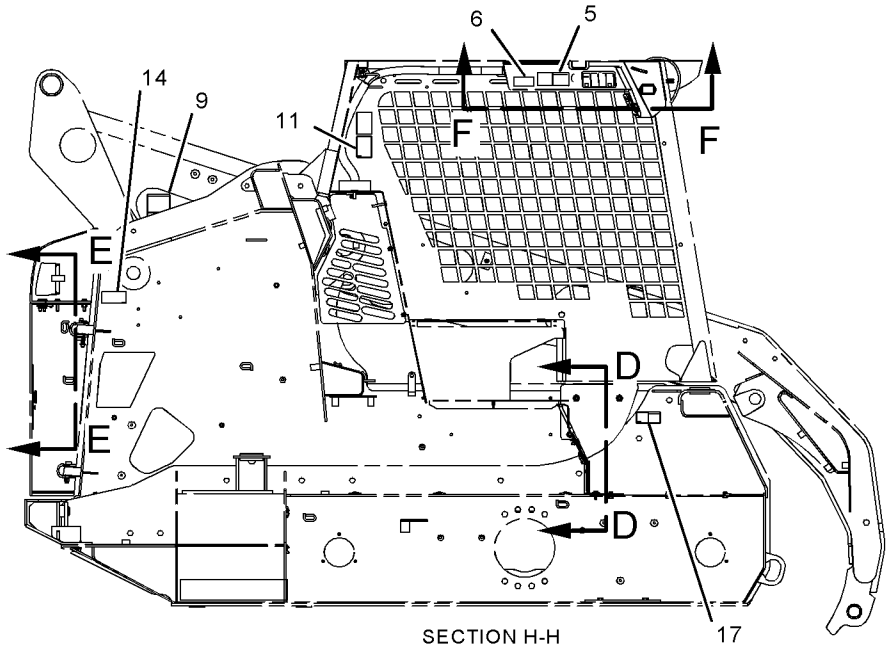

SECTION H-H

GRAPHIC #1

g01044469

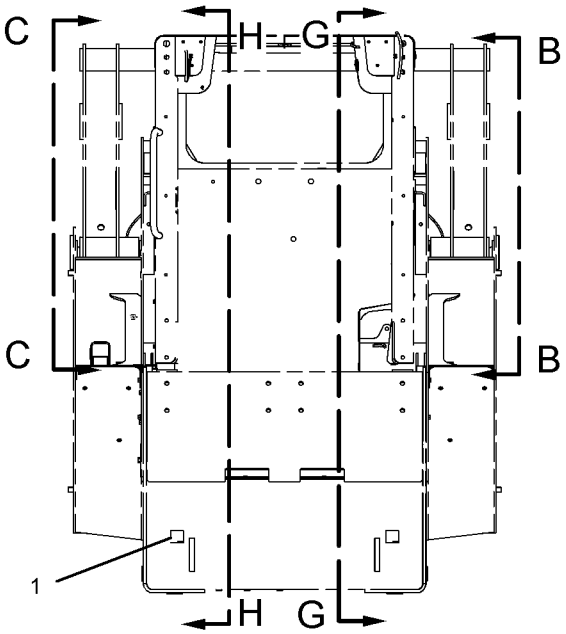

FRONT VIEW

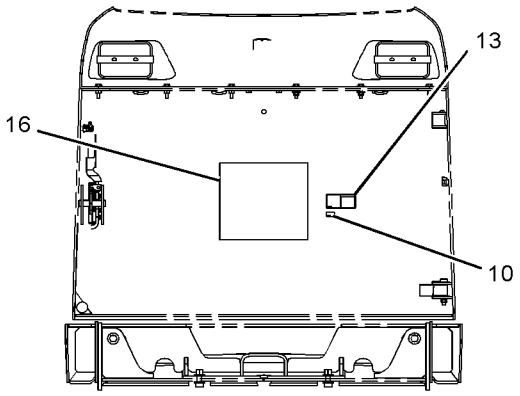

SECTION E-E

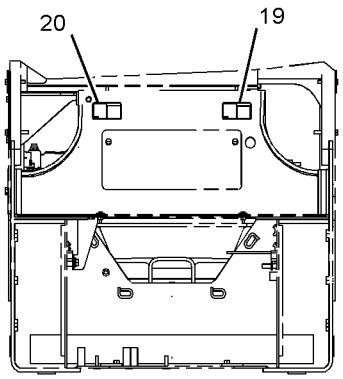

SECTION D-D

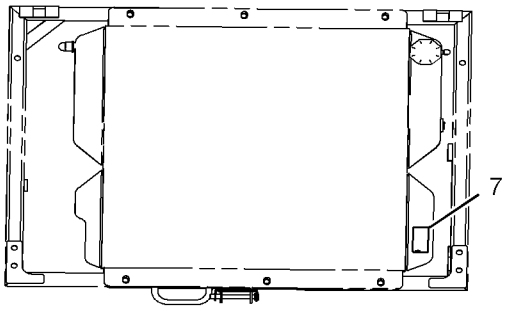

SECTION A-A

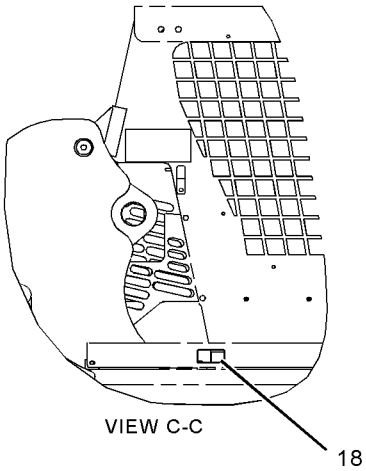

VIEW C-C

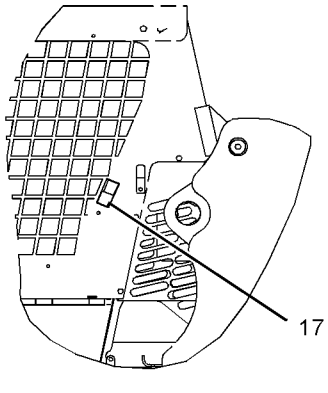

VIEW B-B

GRAPHIC #2 **<END>** g01044470

SERVICE EQUIPMENT AND SUPPLIES

247-0678 PLATE & FILM GP

S/N: MJH1-UP; BXM1-UP
PART OF 231-5275, 231-5277 BLADE AR
AN ATTACHMENT

SMCS-7405, 7557 **i02469823**

NOTE	REF NO	GRAPHIC REF	PART NUMBER	QTY	PART NAME 1 2 3 4 5 6 (PRODUCT LEVEL)	SEE PAGE
	1	1	**7X-3229**	4	FILM-INSTRUCTION (LIFT EYE, TIE-DOWN LOCATION)	
	2	1	**226-1242**	2	FILM-WARNING (CRUSH HAZARD, STAY BACK)	
	3	1	**228-3581**	1	FILM-WARNING (READ OMM)	
	4	1	**159-8035**	1	FILM-WARNING (CRUSH HAZARD, STAY BACK)	
	5	1	**124-2456**	1	FILM-INSTRUCTION (NO STEP)	

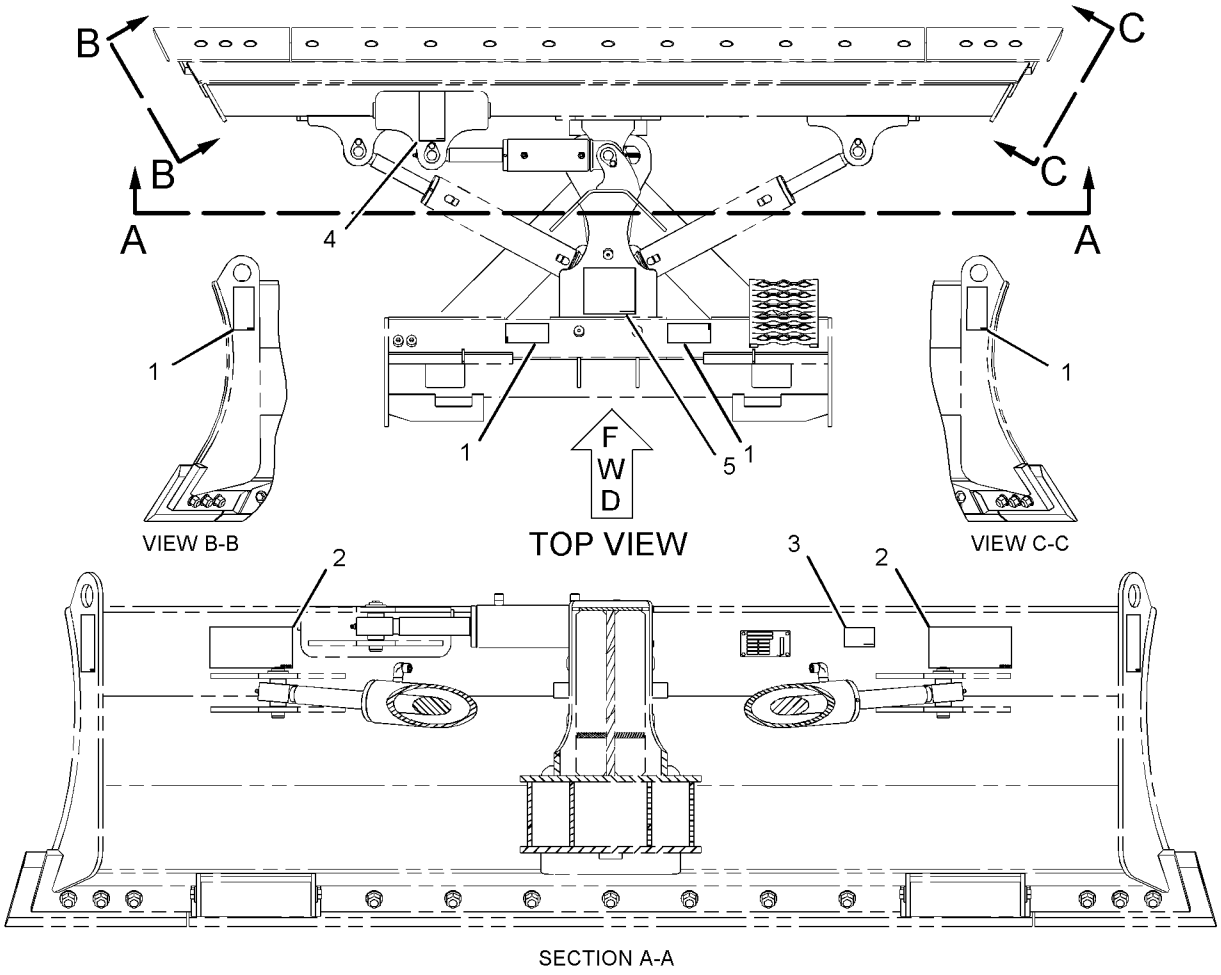

GRAPHIC #1 **<END>** g01120449

MEMORANDA

PART NUMBER INDEX

Part	Page
0	
0T-0244	739
	740
	741
	742
	743
	744
	745
	746
1	
1D-4677	751
1F-7567	430
	432
	481
	484
	521
	524
	527
	530
	533
1G-3410	247
	249
1G-8878	229
1H-3244	169
	192
	194
1L-2279	646
	650
1M-6119	143
	144
	192
	194
1M-6120	143
	144
	192
	194
1P-4278	102
	104
	106
	132
	134
1P-4574	384
	386
	480
	483
	492
1P-4578	442
	444
	446
	448
1S-0994	391
	393
	394
1S-1409	384
	385
1S-7252	192
	194
1S-9593	160
	161
	162
	163
	327
	328
	329
	330
	331
	561
2	
2B-0858	205
2D-5248	667
	701
	703
2G-8767	753
2J-6540	402
2K-4973	85
	87
	301
2K-5232	388
	492
	530
	533
2K-5964	357
2M-9780	225
	227
	230
	232
	370
	371
	391
	393
	394
	396
	398
	400
	402
	404
	406
	408
	410
	412
	414
	418
	420
	422
	424
	442
	444
	446
	448
	450
	452
	454
	459
	462
	464
	466
	468
	470
	472
	476
	478
	506
	701
	703
2S-3440	230
	232
	384
	385
	442
	444
	446
	448
	480
	483
	492
2S-4078	369
	382
	385
	442
	444
	448
2S-5717	751
2S-6408	628
2V-3216	400
	521
	524
	527
	597
	600
3	
3B-4505	722
3B-4628	388
	597
	600
	607
3B-7255	646
	648
	650
3B-8488	303
	357
	630
3B-8489	308
	352
	353
	354
	357
	359
	361
	362
	367
	368
	509
	510
	566
	567
	585
	586
	587
	590
	591
	592
	619
	620
3D-2824	225
	227
	230
	232
	234
	236
	382
	383
	385
	416
	417
	418
	420
	422
	424
	426
	428
	450
	456
	464
	466
	468
	470
	474
	480
	483
	486
	488
	490
	492
	506
	561
	603
3E-2310	436
	438
3E-3365	158
	186
	187
	305
	561
3E-3374	662
3E-3377	553
	554
3E-3383	166
3E-3389	160
	161
	162
	200
	202
3E-3892	756
	758
3E-4051	701
	703
	712
	714
	716
	718
3E-4057	701
	703
	712
	714
	716
	718
3E-4370	621
3E-5180	330
	723
3E-6708	239

► **PRIMARY REFERENCE**

PART NUMBER INDEX

Part	Page
3E-7404	132
	134
	400
	422
	426
3E-7584	►166
	173
	175
3E-8082	85
	87
	676
	679
3E-8621	561
3E-9179	683
3F-5108	612
3F-9556	735
3J-1907	186
	187
	207
	209
	211
	213
	215
	217
	219
	221
	229
	230
	232
	234
	236
	382
	385
	388
	396
	398
	430
	432
	434
	436
	438
	440
	442
	444
	446
	448
	480
	483
	492
	512
	521
	524
	527
	530
	533
	597
	600
	603
	753
3J-7354	247
	249
	404
	406
	408
	410
	412
	414
	416
	434
	440
	701
	703
3K-0360	225
	227
	234
	236
	322
	382
	385
	398
	480
	483
	486
	488
	490
	492
	520
3K-0715	247
	249
3S-2093	154
	158
	160
	161
	162
	163
	173
	175
	177
	188
	190
	192
	194
	196
	197
	199
	200
	202
	291
	319
	388
	404
	412
	524
	527
	530
	533
	597
	600
	646
	648
	650
	662
	676
	679
	683
	685
	702
	704
	706
	707
	712
	714
	716
	718
3S-6049	192
	194
3S-6050	143
	144
3S-8536	354
3S-8665	699
	703
	720
3S-9182	303
	305
3T-7856	708
	738

4

Part	Page
4B-0418	481
	484
4B-2043	691
	692
4B-4274	192
	194
4B-4863	124
	154
	160
	161
	162
	163
	173
	175
	189
	200
	202
	291
	317
	430
	432
	521
	524
	527
	530
	533
4D-0298	303
4D-2297	508
4D-6466	132
	134
	385
	493
4D-9517	493
4E-0724	646
	650
4E-1384	661
4F-3658	612
4J-0522	384
	386
	442
	444
	446
	448
4J-5140	384
	386
	480
	483
	493
4J-5267	384
	386
	442
	444
	446
	448
4J-5477	199
	291
	383
	386
	388
	404
	406
	408
	410
	412
	414
	434
	436
	438
	440
	480
	483
	486
	488
	490
	493
	521
	524
	527
	530
	533
	597
	600
4K-0367	612
4K-8864	102
	104
	106
4M-5285	354
	357
	510
4P-6422	761
	762
	763
	764
	774
	777
	780
	783
4P-7581	159
	173
	175
	177
	190
	384
	385
	388
	404
	412
	524
	527
	534
	597

► PRIMARY REFERENCE

PART NUMBER INDEX

Part	Page	Part	Page	Part	Page	Part	Page
	600		702		607		704
	726		704		676	5P-4868	110
4P-8134	158		706		679	5P-4961	53
	190		707		706		111
	192		722		707		132
	194		735		749		134
	197		736	5P-0597	110		519
	385		747	5P-0743	234	5P-5677	158
	701		748	5P-0747	143		159
	703	5C-7682	688		144		386
	716		689	5P-0761	192		503
	718	5C-7883	239		194	5P-5924	702
4S-1962	225	5C-8310	753	5P-0805	736		704
		5C-8311	603	5P-1076	299		712
			753		300		714
5		5C-8312	154		303		716
			291		305		718
5B-0651	357		317		384	5P-5927	693
	606	5C-9553	132		398	5P-5930	754
	607		134		481		755
5B-0935	308		160		484	5P-6994	408
5C-2874	123		161		568		410
	192		162		569	5P-7464	450
	194		163		628		452
5C-2890	123		190	5P-1420	102		454
	124		192		104		470
	129		194		106		472
	168		200	5P-1442	53		474
	169		202		132		476
	192		303		134		478
	194		305		519		488
	319		315	5P-1505	111		490
	676		316	5P-2230	94	5P-7465	450
	679		383		96		452
	706		480		230		454
	707		483		232		470
	709		486		383		472
	732		609		385		474
	733		662		442		476
5C-7261	85		735		444		478
	87		736		446		488
	158	5D-0718	416		448		490
	159		417	5P-2369	92	5P-7466	385
	190	5D-1026	234		94		493
	192	5G-3244	166		96	5P-7467	385
	194	5H-9743	354	5P-4116	55		493
	230	5K-1787	223		108	5P-7483	753
	232		224		114	5P-7957	665
	301	5K-8451	389		115	5P-7958	721
	389		531		117	5P-8112	386
	391		534		118		493
	393	5K-9090	603		145	5P-8246	646
	394	5L-3233	109		146		648
	454	5L-4507	192		230		650
	478		194		232	5P-8247	612
	490	5M-8429	385		301	5P-8249	648
	530		480		303	5P-8309	706
	533		483		305		707
	646	5P-0372	85		497	5P-8439	171
	650		87		519		172
	661		312		646	5P-8500	290
	667		314		650		292
	669		389		667		294
	676		597		699		721
	679		600		702	5P-9297	385

► **PRIMARY REFERENCE**

PART NUMBER INDEX

Part	Page
	493
5P-9299	493
5P-9770	132
	134
5P-9909	676
	679
	706
	707
5T-7869	751
5T-7870	751
5V-8309	85
	87
6	
6B-0924	44
	47
6B-2882	227
6D-1641	699
	703
	720
6D-3479	436
	438
6D-4244	385
	493
6D-4246	519
6D-4247	391
	393
	394
6D-4636	404
	406
	412
	414
6D-5797	756
	758
6D-6812	753
6E-0725	247
	249
6E-5060	247
	249
6E-6549	739
	740
	741
	742
	743
	744
	745
	746
6F-6672	505
	507
	561
6I-1201	83
6I-1418	158
	159
	189
6K-8178	389
	531
	534
6N-2944	234
6R-7490	691
	692
6T-9244	558
6V-0852	230
	232
	434
	440
	442
	444
	446
	448
6V-1228	225
	227
6V-1392	664
6V-1889	416
	417
6V-1970	3
	►721
6V-2235	699
6V-2317	171
6V-3582	418
	420
	424
	428
6V-3965	230
	232
	434
	440
	442
	444
	446
	448
6V-4270	676
	679
	707
6V-5049	508
6V-5192	243
	245
6V-5326	247
	249
6V-5586	247
	249
6V-5698	190
	430
	432
	521
	524
	527
	531
	534
6V-6689	687
	699
	704
6V-7238	234
6V-7357	187
	319
6V-7359	450
	452
	454
	470
	472
	474
	476
	478
	488
	490
6V-7644	568
	569
6V-7687	238
6V-7744	606
6V-8186	735
6V-8187	192
	194
6V-8352	247
	249
6V-8378	173
	175
6V-8397	207
	209
	211
	213
	215
	217
	219
	221
	225
	227
	234
	236
	382
	383
	384
	385
	386
	418
	420
	422
	424
	426
	428
	430
	432
	434
	440
	450
	452
	454
	456
	459
	462
	464
	466
	468
	470
	472
	474
	476
	478
	480
	481
	483
	484
	492
	493
	521
	524
	527
	530
	533
6V-8555	521
	524
	531
	597
6V-8626	418
	420
	450
	452
	454
6V-8628	404
	406
	408
	410
	412
	414

► PRIMARY REFERENCE

PART NUMBER INDEX

Part	Page	Part	Page	Part	Page	Part	Page
	434		527	6V-8724	388		566
	440		530		396		567
6V-8632	234		533		430		585
	236		597		432		586
	398		600		521		587
6V-8633	225	6V-8642	225		524		590
	227		227		527		591
6V-8634	236		398		530		592
6V-8636	207		404		533		619
	209		406		597		620
	211		408		600		630
	213		410	6V-8781	207	6V-9508	236
	215		412		209	6V-9632	332
	217		414		211		683
	219		422		213	6V-9672	291
	221		424		215		317
	234		442		217	6V-9746	230
	236		444		219		232
	382		446		221		234
	385		448		436		236
	388		452		438		370
	398		454	6V-8788	391		371
	480		459		393		382
	483		462		394		384
	492		466	6V-8801	753		385
	521		468	6V-8918	241		386
	524		472	6V-8937	236		416
	527		476	6V-8938	388		417
	530		478		521		442
	533		701		524		444
	597		703		527		446
	600	6V-8647	404		530		448
	603		406		533		480
6V-8637	230		408		597		481
	232		410		600		483
	234		412	6V-8949	635		484
	236		414	6V-8978	234		492
	382		434		236		493
	385		440	6V-9001	530		603
	480	6V-8713	418		533	6V-9805	726
	483		420	6V-9028	100	6V-9829	404
	492		422	6V-9168	389		406
	603		424		481		408
6V-8638	418		426		493		430
	420		428		521		432
6V-8639	225		450		525	6V-9838	388
	227		456		527		521
	234		464		531		524
	236		470		534		527
	382		474		597		530
	385		486		600		533
	480		488	6V-9169	481		597
	483		490		493		600
	492	6V-8714	603	6V-9170	486	6V-9872	410
6V-8640	230	6V-8715	391		488		412
	232		393		490		414
	370		394	6V-9182	442		701
	371		396		444		703
6V-8641	388		400		446	6V-9873	207
	434		402		448		215
	436		464	6V-9189	309		434
	438		466		354		440
	440		468		509	6W-5698	132
	521		470		510		134
	524		472		511		520

► **PRIMARY REFERENCE**

PART NUMBER INDEX

Part	Page
6Y-5839	612
6Y-5840	612
7	
7B-1597	481
	484
	521
	525
	527
	597
	600
7D-5473	173
	175
7D-7026	699
7D-8431	662
7E-2700	311
	312
	313
	314
7G-1060	154
	192
	194
7G-2950	389
	521
	525
	528
	531
	534
	597
	600
7G-2951	389
	521
	525
	528
	531
	534
	598
	600
7G-4262	664
7G-5984	398
7G-5985	398
7G-5986	398
7G-7053	154
	662
7G-8839	223
	224
7H-7055	389
	481
	484
	522
	525
	528
	531
	534
	598
	601
7I-2750	239
7J-0204	53
7J-9108	209
	211
	213
	217
	219
	221
	225
	227
	234
	236
	388
	398
	404
	406
	408
	410
	412
	414
	418
	420
	422
	424
	426
	428
	442
	444
	446
	448
	450
	452
	454
	456
	459
	462
	464
	466
	468
	470
	472
	474
	476
	478
	486
	488
	490
	521
	524
	527
	530
	533
	597
	600
	701
	703
7K-1181	124
	158
	159
	189
	194
	197
	236
	384
	386
	406
	408
	410
	414
	434
	440
	480
	483
	492
	556
	564
	565
	648
	650
	702
	704
7M-7410	98
	99
	100
7M-8485	382
	385
	442
	444
	446
	448
7M-9957	291
	317
7N-5274	143
	144
7S-3912	402
7S-3913	402
7S-3916	400
7S-3919	400
7T-1099	332
7W-9094	454
	478
	490
7X-0495	646
	648
	650
7X-0510	83
7X-0579	158
	190
7X-0590	296
7X-0603	309
7X-0610	223
	224
7X-0818	159
	190
	316
7X-1443	102
	104
	106
	111
7X-2444	199
	291
7X-2475	562
	726
7X-2535	540
	541
	542
7X-2537	301
	657
	695
	699
	702
	708
	738
7X-2552	708
	738
7X-2553	308
	693
7X-2556	64
7X-2621	606
7X-3229	786
7X-6312	156
7X-6315	150
	153
	182
7X-7729	85
	87
	98
	99
	100
	102
	104
	106
	114
	115
	117
	118
	301
	308
	352
	354
	357
	384
	389
	408
	410
	416
	417
	481
	484
	522
	525
	528
	531
	534
	598
	601
	606
7X-9065	691
	692
8	
8B-9725	492
8C-3110	515
	516
	517
	518
8C-3205	442
	444
	446
	448
8C-3445	53
8C-3446	53
8C-3451	404
	406
	408
	410
	412
	414
8C-6758	209
	211

PART NUMBER INDEX

Part	Page	Part	Page	Part	Page	Part	Page
	213		232		481		414
	217	8T-0087	168		484		416
	219	8T-0154	699	8T-2444	676		417
	221		703		679		418
8C-6959	132		720		706		420
	134	8T-0267	247		707		422
8C-7563	406		249	8T-2895	664		424
	408	8T-0269	332	8T-3311	434		426
	410		334		440		428
	414		336	8T-3427	756		430
	701		338		758		432
	703		340	8T-3490	55		436
8C-8400	416		341	8T-3612	55		438
	417		343		106		442
8C-8478	568		346		332		444
	569		349		388		446
8C-8558	190		383		524		448
8E-5702	568		385		738		450
	569	8T-0271	239	8T-3647	354		452
8F-1434	173	8T-0318	85	8T-3848	676		454
	175		87		679		456
	192	8T-0328	173		706		459
	194		175		707		462
8F-8151	699		192	8T-3984	124		464
	704		194	8T-3998	124		466
	720	8T-0341	383	8T-4121	85		468
8F-8513	132		385		87		470
	134		481		98		472
8G-1151	683		484		99		474
	685		493		100		476
8I-5078	545	8T-0379	388		102		478
	547		521		104		481
	549		524		106		484
	551		527		132		486
8J-2880	568		530		134		488
	569		533		154		490
8L-2779	53		597		172		493
8L-5188	389		600		190		501
	598	8T-0389	166		192		502
	601	8T-0404	225		194		503
	607		227		196		519
8L-8413	143	8T-0737	646		225		522
	144		648		227		525
	189		650		241		528
	190	8T-1158	267		303		531
	197		555		305		534
	372		556		313		536
	373	8T-1757	562		314		537
	383	8T-1887	173		315		538
	386		175		316		539
	683		385		340		598
8M-4963	189		493		341		601
8N-0869	192	8T-1888	173		343		606
	194		175		346		607
8N-1725	192		385		354		635
	194		493		357		644
8S-0934	739	8T-1893	402		384		646
	740	8T-1894	402		387		648
	741	8T-2192	383		389		650
	742		456		396		661
	743		459		400		667
	744		462		402		668
	745		464		404		669
	746		466		406		676
8T-0075	230		468		412		679

► **PRIMARY REFERENCE**

PART NUMBER INDEX

Part	Page
	694
	699
	702
	704
	706
	707
	712
	714
	716
	718
	720
	753
8T-4122	63
	64
	223
	224
	279
	280
	303
	305
	308
	311
	312
	313
	314
	562
	646
	648
	650
	693
	708
	726
	738
8T-4123	568
	569
	633
	634
	636
	637
8T-4132	64
	279
	280
	303
	305
	311
	312
	313
	314
	646
	648
	650
	693
	708
	738
8T-4133	85
	87
	98
	99
	100
	102
	104
	106
	114
	115
	117
	118
	132
	134
	154
	164
	190
	192
	194
	196
	225
	227
	315
	316
	357
	386
	389
	396
	404
	406
	408
	410
	412
	414
	416
	417
	481
	484
	488
	490
	493
	522
	525
	528
	531
	534
	598
	601
	607
	644
	648
	650
	661
	669
	676
	679
	694
	699
	702
	704
	706
	707
8T-4136	102
	104
	106
	225
	303
	305
	354
	383
	385
	389
	400
	416
	417
	418
	420
	422
	424
	426
	428
	450
	452
	454
	456
	459
	462
	464
	466
	468
	470
	472
	474
	476
	478
	481
	484
	486
	488
	490
	493
	519
	522
	525
	528
	531
	534
	536
	537
	538
	539
	598
	601
	644
	648
	650
	668
	701
	702
8T-4137	102
	104
	106
	134
	225
	227
	301
	308
	313
	314
	340
	341
	343
	346
	352
	385
	402
	416
	493
	536
	537
	538
8T-4138	124
	197
	319
	510
	736
8T-4139	398
	450
	452
	454
	470
	472
	474
	476
	478
	488
	490
	568
	569
	628
8T-4159	85
	87
8T-4171	290
	291
	292
	294
	317
	400
8T-4172	606
8T-4173	726
8T-4177	309
8T-4178	315
	316
	383
	481
	484
	486
	488
	490
8T-4181	85
	87
	301
8T-4183	385
	450
	452
	470
	472
	474
	476
	488
	493
8T-4185	396
8T-4186	196
	357
	635
8T-4189	55
	145
	146
	297
	298
	354
	389

PART NUMBER INDEX

Part	Page	Part	Page	Part	Page	Part	Page
	430		99		317		745
	432		100		319		746
	450		132		332	8T-4224	98
	452		134		334		99
	470		225		336		100
	472		241		338		102
	474		389		340		104
	476		416		341		106
	497		417		343		171
	519		442		346		190
	522		444		349		192
	525		446		384		194
	528		448		387		207
	531		501		481		209
	534		502		484		211
	598		503		486		213
	601		598		540		215
	669		601		541		217
	674		606		542		219
	699		607		646		221
	701	8T-4197	735		648		297
	702		736		650		298
8T-4191	190	8T-4198	385		662		309
	354		493		676		353
	357	8T-4200	192		679		354
	389		194		706		357
	404		353		707		384
	412		497		726		387
	430		699		732		389
	432		702		733		430
	436		720		735		432
	438	8T-4201	173		736		450
	522		175	8T-4222	676		452
	525		389		679		454
	528		522		706		470
	531		525		707		472
	534		528	8T-4223	63		474
	598		531		238		476
	601		534		297		478
	650		598		298		481
	699		601		384		484
	701	8T-4205	85		387		486
	702		87		450		488
	716		124		452		490
	718		160		454		493
8T-4192	63		161		470		495
8T-4194	303		162		472		496
	305		163		474		497
	454		177		476		501
	478		187		478		502
	490		190		488		503
	643		192		490		522
8T-4195	225		194		493		525
	227		197		513		528
	357		200		514		531
	383		202		515		534
	385		290		516		598
	396		291		628		601
	417		292		643		646
	481		294		739		650
	484		301		740		657
	486		303		741		662
	488		305		742		667
	490		315		743		669
8T-4196	98		316		744		674

► **PRIMARY REFERENCE**

PART NUMBER INDEX

Part	Page
	676
	679
	695
	699
	702
	704
	706
	707
	708
	720
	722
	736
	738
	747
	748
8T-4226	357
8T-4244	299
	300
	303
	305
	386
	450
	452
	454
	470
	472
	474
	476
	478
	488
	490
	493
	628
	643
8T-4648	297
	298
8T-4742	123
	709
8T-4744	123
	709
8T-4778	575
	576
	577
	578
	579
	580
	581
	582
	583
	584
	588
	589
	593
	594
	595
	613
	614
	615
	616
	654
	726
8T-4779	646
	648
	650
8T-4908	55
	98
	99
	100
	114
	115
	117
	118
	301
	303
	305
	383
	385
	389
	481
	484
	488
	493
	531
	534
	646
	650
	736
8T-4910	299
	300
	628
8T-4956	383
	385
	493
	513
	514
	515
	516
8T-4970	303
	305
8T-4971	197
	709
8T-5005	85
	87
	102
	104
	106
	166
	389
	493
	522
	525
	528
	531
	534
	598
	601
8T-5049	384
	386
	513
	514
	515
	516
8T-5091	102
	104
	106
8T-5093	55
8T-5372	152
	687
	699
	704
8T-6466	102
	104
	106
8T-6842	753
8T-6869	207
	209
	211
	213
	215
	217
	219
	221
	509
	510
	511
	566
	567
	585
	586
	587
	590
	591
	592
	619
	620
	646
	650
	699
8T-6870	667
	701
	703
8T-6876	430
	530
	533
8T-6902	123
	735
8T-6904	123
8T-6912	145
	385
	450
	452
	454
	470
	472
	474
	476
	478
	488
	490
	493
	630
8T-7338	279
	280
	303
	305
8T-7547	316
	383
	385
	481
	484
	493
	501
	502
	503
8T-7930	296
8T-8192	396
8T-8193	396
8T-8729	166
	186
	187
	556
8T-8737	159
	166
	190
	197
	327
	328
	329
	330
	331
	372
	373
	386
	503
	723
	724
	725
8T-8799	189
8T-9405	556
8T-9407	753
8T-9655	158
	159
	189
8W-8909	173
	175
8Y-4489	585
	586
	619
	620
8Y-7385	628
8Y-7386	628
9	
9B-7233	691
	692
9C-2741	702
	704
	712
	714
	716
	718
9C-5344	312
	314
	676
	679
	706
	707
	749
9D-1829	416
	417
9F-2947	385
9G-3695	553
	554
	662
9G-5127	303
	305
	667
	701

► **PRIMARY REFERENCE**

PART NUMBER INDEX

Part	Page	Part	Page	Part	Page	Part	Page
	703	9R-7803	450	9X-2026	510		394
9G-7101	667		452		609		510
	702		454	9X-2038	132	9X-6581	389
	704		456		134		527
9M-8406	389		459	9X-2041	676		534
	522		462		679		600
	525		464		694	9X-6606	247
	528		466		706		249
	531		468		707	9X-6615	500
	534		470	9X-2042	154	9X-6772	156
	598		472		173		157
	601		474		175	9X-7378	702
9N-0869	159		476		662		704
9N-1756	557		478		665		712
9P-4609	662		488		751		714
9R-1004	389		490	9X-2044	190		716
	531	9R-7941	154		674		718
	534	9R-7942	170		676	9X-7380	702
9R-1005	389	9R-7958	170		679		704
	450	9R-7980	154		683		712
	452	9S-0285	662		685		714
	454	9S-1350	522		706		716
	456		525		707		718
	459		528	9X-2045	290	9X-7381	702
	462		598		676		704
	464		601		679		712
	466	9S-4191	512		683		714
	468	9S-8002	247		685		716
	470		249		699		718
	472	9S-8006	506		704	9X-7382	702
	474	9T-7303	389		706		704
	476		598		707		712
	478		601		736		714
	488		607		752		716
	490	9U-6993	230		754		718
	531		232		755	9X-7383	702
	534		383	9X-2085	432		704
9R-1499	173		385		521		712
	175		480		524		714
	177		483		527		716
	319		492	9X-2092	189		718
9R-2004	400	9U-6994	382		710	9X-8118	170
	402		384	9X-2754	761	9X-8121	170
9R-2672	314		442		762	9X-8139	170
	388		444		763	9X-8250	699
9R-2959	566		446		764	9X-8257	638
	567		448		765	9X-9865	166
	623	9U-6995	▶369		767		
9R-5301	638		442		769		
9R-7802	450		446		771		
	452	9V-2714	562	9X-2842	108		
	454	9V-2715	562	9X-3401	190	003-2143	646
	456	9W-0607	164	9X-4244	164		648
	459		165		165		650
	462	9W-3324	166		166	003-3082	545
	464	9W-3326	169	9X-6032	667		547
	466	9X-1046	154		701		549
	468	9X-1054	189		703		551
	470		291	9X-6165	674	004-6810	699
	472		383		736	032-8100	132
	474		386	9X-6273	391		134
	476	9X-1813	158		393	032-9828	683
	478		159		394		685
	488		186	9X-6274	391	033-5853	239
	490		662		393	033-5879	557

0

▶ **PRIMARY REFERENCE**

PART NUMBER INDEX

Part	Page
033-6027	557
033-7849	132
	134
036-1865	98
	99
	100
039-5069	557
039-5070	557
039-8557	635
064-3058	119
	121
064-3843	352
067-2551	646
	650
069-4080	98
	99
	100
084-4277	691
	692
084-4348	168
	169
085-8091	701
	702
	712
	714
	716
	718
090-9434	189
	192
	194
095-0641	735
095-0733	160
	161
	162
	163
	190
	200
	202
095-0912	646
	648
	650
095-1207	324
	325
	326
	334
	336
	341
	343
	346
	349
	384
	386
095-1325	312
	314
	676
	679
	706
	707
	749
096-0194	243
	244
	245
	246
	505
	506
	507
	508
096-5866	385
	450
	452
	454
	470
	472
	474
	476
	478
	488
	490
	492
096-5968	269
099-2374	520
099-3649	454
	478
	490
099-4691	223
	224

1

Part	Page
100-3246	166
100-3247	166
100-3248	166
100-3250	166
100-3251	166
100-3253	166
100-3254	166
100-3255	166
100-3320	189
100-3866	223
	224
100-5041	383
100-6674	701
	703
100-7530	207
	209
	211
	213
	215
	217
	219
	221
100-8451	143
	144
101-0745	683
	685
101-2867	736
101-3129	384
	386
	404
	406
	408
	410
	412
	414
	480
	483
	486
	488
	490
	492
	699
101-8296	701
	703
	712
	714
	716
	718
102-8703	486
102-8801	158
	159
	189
	190
	192
	194
	332
	334
	336
	349
	383
	386
	723
	724
	725
	728
	730
102-8802	158
	159
	186
	187
	188
	190
	194
	196
	197
	303
	305
	349
	383
	386
	556
	561
	701
	703
102-8803	159
	190
	197
	199
	291
	349
	386
	520
	675
	685
102-8804	158
	159
	168
	169
	190
	291
	318
	319
	503
	553
	554
	558
	683
	685
	728
	730
102-8805	166
	173
	175
	189
	373
	683
	685
	706
	707
	728
	730
102-8806	160
	161
	163
	173
	175
	189
	190
	200
	202
	349
	383
	386
	646
	648
	650
103-2006	675
	690
	691
	692
	728
	730
103-2543	152
103-6262	662
105-4593	234
	236
106-3108	498
	499
	544
106-8704	194
106-8715	416
	417
107-0307	247
	249
107-0309	247
	249
107-5630	503
108-2989	383
	385
	495
	496
108-3565	247
	249
109-2355	683
	685
109-2356	728
	730
110-0885	301
110-2570	53
110-8760	332

► **PRIMARY REFERENCE**

PART NUMBER INDEX

Part	Page	Part	Page	Part	Page	Part	Page
	334		189	122-6869	650	127-8281	84
	336		200	122-6871	702	127-8609	157
	338		202		703	128-6985	▶170
	340	113-8492	189	122-6877	703		178
	341	113-9491	162	122-7052	416		291
	343	114-4516	189	123-4750	436		293
	346	114-6658	674		438		295
	349	115-1615	160	124-1916	650	128-7037	708
	384		161	124-1917	650		738
	386		162	124-2113	701	128-8614	125
111-0483	593		163		703	129-1854	293
	594		189	124-2119	701		295
	595		192		703	129-1855	293
111-4627	154		194	124-2141	701		295
	646		199		703	129-3178	646
	648		200	124-2150	701		648
	650		202		703		650
111-7898	683		291	124-2164	701		700
111-7899	171		349		703		709
	173		383	124-2168	701		735
	175		386		703	129-6259	142
	178	115-8109	159	124-2456	388	129-6262	142
	200	116-2001	▶645		521	130-1916	662
	202		646		524	131-3540	301
	349		648		527		700
	374		650		530	131-3543	732
	376	116-4415	456		533		733
	377		459		597	131-5879	606
	382		462		600	132-3056	520
	388		464		786	132-4720	579
	597		466	124-3243	674		581
	604		468		683		583
	605	116-7471	152		685		654
	683	118-8118	125		736	132-5166	315
	685	118-8119	125	124-3548	188		316
	728	118-9145	83		701	132-7551	606
	730	119-1414	645		703	133-5512	126
112-9401	125	119-1415	645	124-6264	92	133-6517	156
112-9611	683	119-3662	197		102		157
112-9717	109		701		104	133-9931	343
112-9783	486		703		106		346
	488	119-3859	646	125-2458	123		349
	490		648	125-3518	676		383
113-7634	290		650		679		386
	292	119-4594	357		706	134-0404	229
	294	119-9631	659		707	134-4126	150
113-8490	160	120-0210	761	125-7874	159		153
	161		762		197		182
	162		763		383	134-8273	683
	163		764	125-7875	383		685
	187		765	126-1767	190	134-9911	499
	189		767	126-5011	189	135-2655	247
	200		769	126-5640	247		249
	202		771		249	135-9383	575
	343	120-4897	153	126-5701	606	135-9384	571
	346	120-9051	498		607		573
	388	121-4459	247	126-5948	558		576
	597		249	127-2170	676		580
	600	121-4480	125		679		595
	604	121-4870	247		706		▶613
	605		249		707	135-9385	571
113-8491	160	121-9874	486	127-6316	545		573
	161	122-4406	683		547		577
	163	122-6867	702		549		582
	188		703		551		593

▶ **PRIMARY REFERENCE**

PART NUMBER INDEX

Part	Page
	▶614
135-9386	563
	571
	574
	578
	584
	588
	594
	▶615
135-9387	589
135-9393	575
135-9394	576
	580
	595
	613
135-9395	577
	582
	593
	614
135-9396	578
	584
	588
	594
	615
135-9397	589
136-1953	699
	703
	720
136-3191	683
	685
137-6645	503
138-4883	683
	685
138-7162	56
138-7402	56
138-7446	54
139-5511	126
	129
140-1802	247
	249
140-2490	239
140-2492	239
140-2513	239
140-2514	239
141-0888	499
141-4999	573
	574
	579
	581
	583
	▶654
141-5453	63
141-7562	241
142-2928	662
142-4914	612
142-7481	263
	264
142-7484	▶251
	272
142-7485	251
	253
	254
	255
	256
	259
	263
	265
142-7486	251
	253
142-7487	▶251
	272
142-7488	251
	252
	253
	254
142-7489	▶251
	271
142-7490	251
	252
	253
	255
	259
	260
	263
	264
142-7491	▶252
	271
142-7493	271
	272
	273
	274
	275
	276
	277
	278
142-7494	▶271
142-7503	▶168
	177
142-7505	650
142-8633	160
	161
	162
	163
	200
	202
142-8634	▶169
	173
	175
142-8648	▶271
142-8649	▶271
142-8652	4
	5
	6
	7
	9
	12
	151
	▶177
	281
	282
	284
	285
	288
	289
142-8653	▶178
142-8666	▶272
142-8667	▶272
142-8714	▶512
142-8719	241
142-8723	204
142-8724	204
	205
142-8726	252
142-8728	▶252
	271
142-8729	204
	205
142-8731	252
	254
	256
	260
	261
	265
	266
142-8732	223
	224
142-8734	223
142-8737	▶252
	271
142-8757	223
142-8758	▶204
	206
142-8760	▶223
	242
142-8789	354
142-8790	354
142-8791	354
	357
142-8792	354
142-8793	354
	357
142-8794	354
142-8801	301
142-8805	590
	591
	592
142-8808	354
142-8810	303
	305
142-8812	85
	87
142-8818	114
	115
	116
	118
142-8823	303
	305
142-8826	311
	313
142-8828	132
	134
142-8830	2
	3
	▶296
142-8831	301
142-8832	85
	87
	301
142-8833	196
142-8858	690
142-8861	99
142-8880	354
142-8881	354
142-8897	305
142-8928	132
	134
	▶520
142-8929	520
142-8937	520
142-8948	603
142-8949	603
142-8997	418
	420
	422
	424
	426
	428
142-8998	456
	459
	462
	464
	466
	468
142-9021	280
142-9036	223
	224
142-9116	374
	376
	377
142-9118	▶675
	728
	730
142-9121	▶272
142-9234	450
	452
	454
	456
	459
	462
	464
	466
	468
	470
	472
	474
	476
	478
142-9241	230
	232
142-9278	662
142-9279	662
142-9287	662
142-9305	▶747
142-9311	▶711
142-9319	753
142-9320	728
	730
142-9325	728
	730
142-9326	171
142-9327	178
142-9328	728
	730
142-9329	173
	175
142-9331	173
	175
142-9356	676

▶ **PRIMARY REFERENCE**

PART NUMBER INDEX

Part	Page	Part	Page	Part	Page	Part	Page
	679		448		213		412
	706		452		215		414
	707		454		217		434
142-9386	662		459		219		440
143-3088	612		462		221	148-8378	388
143-4535	102		466		234		396
	104		468		236		430
	106		472		382		432
143-4536	102		476		385		521
	104		478		388		524
	106		701		398		527
144-0195	676		703		480		530
	679	148-8316	404		483		533
	683		406		492		597
	685		408		521		600
	706		410		524	148-8382	225
	707		412		527		227
144-1643	558		414		530	148-8390	418
144-1644	543		434		533		420
	▶558		440		597		450
144-4531	545	148-8318	236		600		452
	547	148-8319	391	148-8338	230		454
	549		393		232	148-8407	512
	551		394	148-8340	225	148-8423	434
144-4532	545		396		227		440
	547		400		234	148-8435	207
	549		402		236		209
	551		464		382		211
144-9961	66		466		385		213
	70		468		480		215
144-9962	▶125		470		483		217
	142		472		492		219
146-2438	169	148-8322	230	148-8341	418		221
146-6371	687		232		420		436
	699	148-8325	388		422		438
	704		434		424	148-8446	388
146-7808	74		436		426		521
	75		438		428		524
	76		440		450		527
146-9439	160		521		456		530
	161		524		464		533
	162		527		470		597
	163		530		474		600
	200		533		486	148-9364	499
	202		597		488	149-0686	322
147-1773	173		600		490	149-1411	596
	175	148-8326	410	148-8342	234	149-3499	156
148-2371	315		412		236	149-3516	125
	316		414		398	149-4232	590
148-2372	315		701	148-8345	418	149-5434	575
	316		703		420	149-5435	576
148-8315	225	148-8327	230	148-8353	388		579
	227		232		530		580
	398		234		533		585
	404		236	148-8360	442		590
	406		382		444		595
	408		385		446	149-5436	577
	410		480		448		581
	412		483	148-8365	430		582
	414		492		530		586
	422	148-8328	225		533		591
	424		227	148-8369	404		593
	442	148-8336	207		406	149-5437	578
	444		209		408		583
	446		211		410		584

▶ **PRIMARY REFERENCE**

PART NUMBER INDEX

Part	Page
	587
	588
	592
	594
149-5741	563
	▶616
149-7694	55
150-3056	391
	393
	394
150-4027	436
	438
150-4034	388
	521
	524
	527
	530
	533
	597
	600
150-4043	207
	215
	434
	440
150-4074	761
	762
	763
	764
150-4075	761
	762
	763
	764
150-4076	761
	762
	763
	764
150-4385	204
	205
150-4386	204
	205
150-5472	204
150-6764	189
150-6765	189
150-7568	699
	702
	720
150-8590	▶253
	271
150-8591	▶253
	271
150-8592	▶253
	272
150-8593	▶254
	272
150-8599	251
	252
	253
	254
	255
	256
	257
	258
	259
	260
	261
	262
	263
	264
	265
	266
151-1394	157
151-4003	557
152-0223	▶579
152-0224	▶580
152-0225	▶581
152-0226	▶582
152-0228	▶583
152-0229	▶584
152-0230	▶575
152-0231	▶576
152-0232	▶577
152-1154	312
	314
152-1156	312
	314
152-1157	223
	224
152-1161	693
152-4871	665
152-4875	662
152-4884	662
152-5878	726
152-8181	603
153-1260	748
153-2682	749
153-2683	312
	314
	676
	679
	706
	707
153-2994	391
	393
	394
	396
	398
	400
	402
153-2995	396
	398
	400
	402
153-5382	47
	49
	51
153-5387	42
	44
	47
153-5390	42
153-5391	42
	44
153-5394	42
	44
	47
153-5395	42
	44
	47
153-5396	42
	44
	47
153-5402	36
	38
	40
	42
	44
	47
153-5518	35
	36
	38
153-5552	49
	51
153-5553	49
	51
153-5554	49
	51
153-5556	49
	51
153-5557	49
	51
153-5558	49
	51
153-5559	49
	51
153-5573	50
	52
153-5587	80
	81
153-5590	80
	81
153-5592	77
	112
	113
	137
	140
153-5656	145
153-5933	66
	70
153-5936	66
	70
	179
	180
	181
153-5939	29
	31
	33
153-5960	57
	59
	90
	92
	94
	96
	126
	129
	137
	140
153-5961	29
	31
	33
	80
	90
	92
	94
	96
153-5962	29
	31
153-5967	90
	94
153-6256	406
	408
	410
	414
	701
	703
153-6375	56
	61
	144
153-6393	137
	140
153-6412	137
	140
153-6492	27
	28
	77
153-6494	77
153-6497	77
153-6832	66
	70
153-6833	66
	70
153-6835	66
	70
	80
	81
153-6838	42
	44
	47
	57
	59
	66
	70
	119
	121
153-6841	66
	70
153-6848	66
	70
153-6849	66
	70
153-6850	66
	70
153-6851	66
	70
153-6853	66
	70
	119
	121
153-6856	57
	59
	90
	92
	94
	96
153-6868	56
153-6873	136
153-6879	66
	83
153-6881	66

▶ **PRIMARY REFERENCE**

PART NUMBER INDEX

Part	Page	Part	Page	Part	Page	Part	Page
	70		76	154-1638	126	154-2405	54
153-6981	726	154-0874	74		129	154-2406	54
153-7640	29		75	154-1639	126	154-2426	112
	31		76		129	154-2427	112
	33	154-0887	49	154-1641	126		113
	65		51		129	154-2428	112
153-7920	114	154-0888	49	154-1672	57		113
	115		51		59	154-2433	65
	117	154-0889	49	154-1673	57	154-2435	21
	118		51		59		22
153-7983	126	154-1201	▶35	154-1675	57		▶65
	129		36		59	154-2700	90
153-7985	57		38	154-1676	57		92
	59		40		59	154-2713	137
153-7987	126	154-1202	35	154-1677	57		140
	129		36		59	154-2715	137
153-7988	80		38	154-1678	57	154-2716	137
	81	154-1203	36		59	154-3017	137
154-0175	42		38	154-1679	57		140
	44		40		59	154-3018	137
	47	154-1230	36	154-1680	57	154-3927	156
154-0176	42		38		59	154-3928	157
	44		40	154-1816	▶89	154-3972	▶273
	47	154-1231	36		90	154-3978	▶254
154-0177	42		38		92		273
	44		40		94	154-3979	▶254
	47	154-1240	80		96		273
154-0178	42		81	154-1818	89	154-3982	254
	44	154-1241	80	154-1819	89	154-3985	748
	47		81	154-1820	89		750
154-0181	36	154-1242	80	154-1822	78	154-3986	750
	38		81		79	154-4006	280
	40	154-1243	80	154-1823	90	154-4014	519
154-0385	36		81		92	154-4233	▶150
	38	154-1246	80		94		189
	40		81		96	154-4504	28
154-0386	36	154-1248	80	154-1824	90	154-4505	27
	38		81		92		28
	40	154-1249	80		94	154-4506	28
154-0388	36		81		96	154-4507	28
	38	154-1347	29	154-1828	90	154-4508	27
	40		31		92		28
154-0389	36		33		94	154-5004	▶572
	38	154-1351	31		96		573
	40	154-1396	126	154-1877	21	154-5005	572
154-0391	42		129		▶61		▶590
	44	154-1399	185	154-1880	77	154-5007	572
	47	154-1401	126	154-1882	77		▶591
154-0393	42		129	154-1941	66	154-5008	▶572
	44	154-1403	126		70		573
	47		129	154-1942	66		574
154-0867	74	154-1405	126		70	154-5009	573
	75		129	154-1945	66		▶592
	76	154-1408	126		70	154-5010	▶573
154-0869	74		129	154-1947	66		574
	75	154-1410	126		70	154-5011	▶509
	76		129	154-1948	66		572
154-0870	74	154-1411	126		70		573
	75		129	154-2353	66	154-5012	509
	76	154-1416	126		70		590
154-0871	74		129	154-2394	56		591
	75	154-1636	126	154-2395	56		592
	76		129	154-2401	185	154-5013	509
154-0873	74	154-1637	126	154-2403	56		511
	75		129		185	154-5018	▶359

▶ **PRIMARY REFERENCE**

PART NUMBER INDEX

Part	Page
	572
	573
154-5019	▶391
	572
154-5020	391
154-5021	391
154-5022	391
154-5024	391
	393
	394
154-5025	391
	393
	394
154-5037	590
154-5045	▶573
154-5046	▶573
154-5047	▶573
154-5048	▶574
154-5049	▶574
154-5050	▶574
154-5051	▶393
	572
154-5052	▶394
	573
154-5053	591
154-5059	591
154-5070	592
154-5077	592
154-5232	486
	488
	490
154-8711	750
154-8715	750
155-1279	553
	554
155-2255	160
	161
	162
	163
	189
	190
	200
	202
	332
	334
	336
	349
	373
	383
	386
	728
	730
155-2258	190
155-2260	159
	188
	190
	197
	349
	386
	683
	685
	701
	703
	728
	730
155-2262	190
155-2265	160
	161
	162
	163
	173
	175
	189
	190
	200
	202
	646
	648
	650
155-2270	158
	159
	188
	189
	190
	194
	196
	197
	199
	291
	332
	334
	336
	349
	383
	386
	564
	565
	603
	646
	648
	650
	701
	703
	724
	728
	730
155-2271	190
	192
	194
	197
	318
	683
	685
	728
	730
155-2272	189
	190
	291
155-2274	173
	175
	190
	676
	679
	706
	707
	728
	730
155-7984	62
	84
	119
	121
	143
	144
155-8009	126
	129
155-8076	155
155-8077	155
155-8084	66
	70
156-0884	570
	▶585
156-0885	570
	▶586
156-0886	570
	▶587
156-0891	▶510
	570
	617
156-0913	510
156-1200	125
156-1458	160
	161
	162
	163
156-1460	160
	161
	162
	163
	200
156-4282	388
	521
	524
	527
	530
	533
	597
	600
156-5508	393
156-5509	393
156-5510	393
156-5512	▶361
	570
	617
156-5762	562
	765
	767
	769
	771
	774
	777
	780
	783
156-5970	561
156-6155	182
156-6971	36
	40
	44
156-6988	50
	52
156-6989	50
	52
156-9809	1
	▶309
157-0940	566
	567
	585
	586
	587
	619
	620
157-0941	510
157-0942	510
157-2284	558
157-2853	774
	777
	780
	783
157-4835	596
157-7223	▶570
	571
157-7224	▶570
	571
157-7225	▶570
	571
157-7226	▶571
157-7227	▶571
158-3770	324
	325
	326
158-5648	585
	586
	587
	619
	620
158-6067	132
	134
158-6095	▶571
158-6694	690
158-6695	675
158-6696	728
	730
158-6697	691
	692
158-6698	728
	730
158-6699	728
	730
158-7936	126
	129
159-2953	311
	312
	313
	314
	575
	576
	577
	578
	579
	580
	581
	582
	583
	584
	588
	589
	593
	594
	595
	613
	614

▶ PRIMARY REFERENCE

PART NUMBER INDEX

Part	Page
	615
	616
159-4535	394
159-4536	394
159-4537	394
159-5345	590
159-5346	591
159-5347	592
159-5411	630
159-5740	442
	444
	446
	448
159-5753	376
	▶540
159-5761	▶273
159-5772	204
	205
159-5790	726
159-5792	726
159-5793	223
	224
159-5794	726
159-5797	606
159-7342	290
	291
	292
	293
	294
159-8035	510
	630
	786
159-8038	590
	591
	592
159-8405	301
159-9322	189
159-9495	160
	162
	163
	200
	202
159-9496	160
	161
	162
	163
	200
	202
159-9853	372
	373
160-0663	641
	642
160-1600	310
	760
160-3555	137
	140
160-3556	137
	140
160-3557	137
	140
160-3558	137
	140
160-3568	21
	▶112
160-4150	66
	70
160-4151	66
	70
160-4152	66
	70
160-4153	66
	70
160-4826	84
160-5843	558
160-5844	558
160-7626	50
	59
161-0185	400
161-0186	400
161-0187	▶400
	570
	617
161-0188	400
161-0189	400
161-0190	400
161-2347	85
	87
161-2539	187
161-4128	609
161-7290	▶641
	646
	648
161-8560	209
	211
	213
	217
	219
	221
162-0223	662
162-2207	126
	129
162-5236	572
	573
	▶609
162-6889	761
	762
	763
	764
	765
	767
	769
	771
162-8139	▶617
162-8140	617
	▶619
162-8154	621
163-1385	396
	400
163-1386	391
	393
	394
163-3361	▶183
	185
163-4811	617
	▶620
163-4812	▶617
163-5372	113
	140
	143
	144
163-9320	400
164-1154	735
164-2108	559
164-3213	359
	361
164-3765	152
164-4225	388
	530
	533
164-5567	230
	232
	434
	440
	442
	444
	446
	448
164-5624	432
	521
	524
	527
164-7412	▶588
164-7413	▶589
164-7414	588
164-7415	589
164-7433	589
164-7556	164
	165
164-7619	83
164-9295	▶362
	628
164-9425	340
	341
	343
	346
164-9614	617
	▶621
164-9989	619
	620
	624
	625
	626
	627
165-0142	243
	244
	245
	246
165-0312	728
165-2139	57
	59
165-2141	62
	90
	92
	94
	96
	119
	121
	143
	144
165-2142	56
165-2273	234
165-2602	▶273
165-2605	▶255
	273
165-2606	▶255
	273
165-2609	▶255
	273
165-2610	▶256
	273
165-3605	66
	70
165-4891	▶273
165-4894	646
	648
	650
165-4895	168
165-4898	▶274
165-4901	▶256
	274
165-4902	▶256
	274
165-4908	255
	256
165-4909	256
165-4934	236
165-5655	159
165-6152	579
	580
165-6153	581
	582
165-6154	583
	584
165-6155	575
165-6156	576
165-6157	577
165-7095	64
	726
165-7098	319
165-8727	▶617
165-8728	▶618
165-8731	▶511
	628
165-8732	▶623
	624
	625
	626
	627
165-8733	▶402
	628
165-8734	571
	572
	617
	618
	▶628
165-8736	▶624
165-8737	▶625
165-8740	628
	▶630
165-8743	630
165-8746	593
165-8747	594
165-8777	571
	▶593
165-8778	572
	▶594
165-8779	▶571
165-8780	▶572
165-8835	595
165-8836	▶595

▶ **PRIMARY REFERENCE**

PART NUMBER INDEX

Part	Page
166-0319	566
	567
166-2033	199
	291
166-2338	56
166-2551	646
	648
	650
	▶653
166-2552	646
	648
	650
166-2554	646
166-2556	650
166-2557	646
	648
	650
166-2558	646
	648
	650
166-2559	646
	648
	650
166-2560	388
	597
	600
	610
	611
	631
	632
166-2561	319
166-2562	290
	752
166-2569	290
	▶751
	752
166-3678	204
166-4041	623
166-5268	126
166-9312	400
167-0608	646
	648
	650
167-1530	690
167-3692	189
167-3693	190
167-4339	243
	244
	245
	246
167-7713	247
	249
167-7801	691
168-7572	223
168-8389	290
	291
	292
	293
	294
	568
	569
	596
168-8979	21
	22
	▶185
168-8999	143
	144
168-9001	119
	121
	143
	144
168-9002	143
	144
169-2876	774
	777
	780
	783
169-3567	619
169-3568	620
169-3569	630
169-4868	566
	567
169-6715	102
	104
	106
169-8941	585
169-8942	586
169-8943	587
170-5836	628
170-6305	691
	692
171-2212	192
	194
172-0970	556
172-3998	564
	565
172-4445	▶156
172-4446	▶157
172-4585	155
172-5285	362
172-8173	239
172-8175	239
172-9200	192
	194
173-0702	324
	325
173-0703	326
173-2543	750
173-3015	290
	292
	294
173-3016	290
	292
	294
173-3018	290
	292
	294
173-3021	▶317
	318
173-3022	10
	11
	15
	16
	17
	18
	281
	283
	284
	286
	▶752
173-7407	628
174-2384	402
174-2385	402
174-2388	402
174-2389	402
174-2393	402
174-3091	327
	328
	329
	330
	331
	372
	373
174-3097	402
174-6633	641
175-0005	673
	687
175-4228	▶319
175-4236	291
	317
175-4237	315
	316
175-4238	7
	8
	10
	11
	13
	14
	15
	16
	17
	18
	281
	282
	283
	284
	285
	286
	287
	▶638
175-4239	315
	316
176-2947	662
176-3900	▶655
176-4074	382
	385
	444
	448
176-4079	321
	704
	720
176-7711	21
	22
	▶136
176-7712	136
176-7719	136
176-9954	132
	134
	▶142
177-0337	247
177-1910	396
177-1911	396
177-1912	396
177-1914	308
177-1921	566
	567
177-1941	643
177-1955	308
177-1956	308
177-1957	308
177-1958	363
177-1971	308
177-1972	566
	567
177-1973	643
177-1975	308
177-1981	563
	▶566
177-1982	563
	▶567
177-1983	563
	▶643
177-1986	▶396
	563
177-1987	566
177-1988	567
177-1989	▶563
177-1990	▶563
177-3405	312
	314
	676
	679
	706
	707
	749
177-7414	639
	640
177-7415	639
	640
177-9150	639
177-9151	640
177-9152	7
	8
	10
	11
	13
	14
	15
	16
	17
	18
	281
	283
	284
	285
	286
	287
	288
	289
	▶635
177-9153	635
177-9567	382
	385
	444
	448
177-9580	296
177-9643	163

▶ **PRIMARY REFERENCE**

PART NUMBER INDEX

Part	Page	Part	Page	Part	Page	Part	Page
177-9644	163		140		276		426
177-9645	160	183-3572	119	185-9930	▶260	187-3232	422
	161		121		276		426
	162		126	185-9931	▶260	187-3239	▶276
	163		129		276	188-0124	▶261
	189	183-3606	27	185-9932	259		276
	200	183-4037	147		260	188-0125	▶261
	202	183-4085	402	185-9933	260		276
177-9648	190	183-7117	319		261	188-0147	5
177-9656	190	183-7122	▶297	185-9934	257		6
177-9853	343	183-7123	297		258		8
	346		298	185-9935	258		9
178-2247	638	183-7124	297	185-9937	258		11
178-2255	85		298	185-9940	▶298		12
	87	183-7131	297	186-0239	291		13
178-2256	▶274		298		318		14
178-2270	261	184-1564	▶186	186-0357	492		16
	262		199	186-2360	291		18
178-3586	343		291		293		284
	346	184-2472	150		295		285
178-7539	189		182	186-2487	557		286
178-9983	327	184-6097	635	186-2488	557		288
	328		▶639	186-3362	196		289
	329	184-6098	635	186-3735	158		▶311
	330		▶640		159	188-0878	545
	331	185-2269	543		169		547
179-1808	19	185-4015	659		305		549
	▶21		697		327		551
179-7001	▶323	185-4253	559		328		▶557
	436	185-4254	545		329	188-2719	▶578
	438		547		330	188-3526	578
179-7002	323		549		331	188-7733	562
180-3007	132		551		372		▶644
	134		▶559		373	189-4523	708
	383	185-7887	391		386		738
	385		393		503	190-3762	29
	442		394		553		33
	444	185-8660	▶274		554	190-3803	137
	446	185-8661	▶275		561	190-7453	438
	448	185-8663	▶275		683	190-7967	357
180-6115	77	185-8664	▶275		685	190-7971	357
180-6118	84	185-8665	▶276		723	190-7979	357
180-7451	500	185-8667	▶276		724	190-8038	357
180-8579	143	185-8668	257		725	190-8962	291
	144	185-8669	257	186-3736	159		317
183-1163	42		258		662	191-0542	126
	44	185-8670	▶257		724		129
	47		274	186-5186	644	191-0573	61
183-1164	42	185-8671	▶257	186-6190	▶656	191-0574	61
	44		274		701	191-2894	303
	47	185-8672	▶257		702	191-9293	129
	52		275		712	191-9296	126
183-1165	31	185-8673	▶258		714		129
	33		275		716	191-9297	126
	42	185-8676	▶258		718		129
	179		275	187-1273	422	191-9566	▶299
183-1168	42	185-8677	▶258		426	191-9576	303
	44		275	187-3211	708		305
	47	185-8678	▶259		738	191-9588	354
183-1336	36		275	187-3212	708		357
	40	185-8679	▶259		738	191-9589	357
	44		275	187-3217	708	191-9594	303
183-3213	50	185-9926	▶259		738	191-9633	357
	52		276	187-3230	273	191-9635	357
183-3353	137	185-9927	▶260	187-3231	422	191-9636	357

▶ **PRIMARY REFERENCE**

PART NUMBER INDEX

Part	Page
191-9637	357
191-9638	357
191-9650	▶238
	242
191-9652	374
	▶541
191-9659	224
191-9661	224
191-9668	753
191-9684	9
	12
	282
	285
	▶760
191-9686	537
	▶545
191-9783	430
	432
	521
	524
	527
	530
	533
192-0104	21
	22
	▶155
192-0105	155
192-0836	187
192-2606	653
192-2607	653
192-2637	633
	634
	636
	637
192-2638	636
	637
192-2640	▶360
	388
	597
	600
	610
	611
192-2642	610
	611
	631
	632
192-2645	636
192-2648	633
192-2653	634
192-2663	709
192-2668	520
193-0161	148
193-0447	▶322
	374
	375
	378
	380
	381
	382
193-0474	450
	452
	454
	470
	472
	474
	476
	478
	488
	490
193-8308	442
	446
193-8313	436
	438
193-8321	442
	444
	446
	448
193-8329	145
	146
193-8334	486
	488
	490
193-8335	486
	488
	490
193-8345	85
	87
193-8385	732
	733
193-8392	434
	440
193-8393	440
194-3873	561
194-5171	683
	685
194-7631	322
194-7632	322
195-0935	173
	175
	665
	666
	679
195-0936	154
	290
	666
	752
195-0937	159
	171
	661
	666
	676
	706
	707
195-0939	661
	666
195-5124	616
195-6696	650
195-6723	665
	▶753
195-6740	▶773
195-6750	486
195-6754	388
	597
	600
	610
	611
	633
	634
	636
	637
195-6768	436
	438
195-6769	436
	438
195-6942	596
	622
195-6943	596
	622
195-8545	596
	622
195-9700	267
	555
	556
	▶560
195-9712	291
196-2381	162
	189
196-2382	160
	161
	163
	189
	200
196-2383	160
	161
	163
	189
	200
	202
196-2384	160
	161
	163
	200
	202
197-6894	690
198-2663	83
198-5389	158
	159
199-3410	773
199-5434	▶261
	272
199-5435	▶262
	272
199-5436	261
	262
199-5438	▶262
	274
199-5439	▶262
	274
199-5440	262
199-6309	290

PART NUMBER INDEX

Part	Page	Part	Page	Part	Page	Part	Page
205-3727	98	207-9737	388	212-4131	418		490
	99		521		420	215-3957	388
	100		524	212-6521	388		597
205-4585	92		527		597		600
	94		530		600		610
	96		533		604		611
205-4597	243		597		605		▶636
	245		600	212-6525	418		▶637
205-4726	137	207-9756	388		420	215-3958	631
	140		521		424		▶633
205-4727	137		524		428	215-3959	632
	140		527	212-6526	418		▶634
205-4728	137		530		420	215-3960	606
	140		533		424		▶631
205-4731	137		597		428	215-3961	606
205-5148	683		600	212-6603	234		▶632
	685	207-9780	291		236	215-3962	607
205-6383	102		317	212-6604	234		▶610
	104	207-9785	388		236	215-3963	607
	106		597	212-6627	132		▶611
205-7048	197		600	212-6690	388	215-4001	291
205-8257	158		607		521		317
	159	208-0044	55		524	215-5564	160
205-9980	659	208-5681	207		527		161
	697		209		530		162
206-1346	173		215		533		200
	175		217		597		202
206-2423	197		▶267		600	215-8307	331
206-3499	80	208-6176	85	212-6692	▶224	215-8308	330
	81		87		242	216-0658	153
206-3818	753	209-0640	521	213-3943	352	216-4703	189
206-3820	604		530	213-7489	327	216-4704	332
	▶606		▶543		328		334
206-3821	604	210-0855	352		329		336
	605	210-4649	239		330	216-4709	158
	▶607	211-7739	126		331		159
206-5143	238		129	214-2465	675	216-4711	199
206-5162	158	211-9061	64	214-4252	383		291
	182	212-0061	267		386	216-4712	▶690
206-5165	158		560	214-4253	383		728
	182	212-0743	126		386		730
206-7398	659		129	214-7568	323	216-4713	▶691
	697	212-0744	126	215-2605	66		▶692
206-7951	753		129		70		728
206-7952	753	212-0745	126	215-2616	90		730
207-0539	756		129		92	216-4714	152
	758	212-0747	126		94	216-4715	7
207-0572	758		129		96		8
207-0573	756	212-4091	450	215-2617	90		10
	758		452		92		13
207-3814	159		454		94		14
207-5262	158		470		96		15
	159		472	215-2620	42		17
	▶182		474		44		▶173
207-6154	98		476		47		281
	99		478	215-2621	57		282
	100		490		59		283
207-9717	239	212-4126	418	215-3207	675		287
207-9718	239		420	215-3926	▶300	216-4716	8
207-9719	239		424	215-3927	299		11
207-9729	519		428		300		13
207-9731	303	212-4127	418	215-3935	385		14
	305		420		454		16
207-9732	303		424		478		18
	305		428		488		▶175

▶ **PRIMARY REFERENCE**

PART NUMBER INDEX

Part	Page
	284
	285
	286
	288
	289
216-4724	▶200
	346
216-4725	160
	163
	200
216-4726	175
216-4727	173
	175
216-4746	▶171
216-4750	▶154
	665
216-4751	727
	▶728
216-4752	728
216-4753	690
216-4754	691
	692
216-4755	▶152
	189
216-6124	239
216-6144	10
	11
	15
	16
	17
	18
	281
	283
	284
	286
	290
216-6145	664
216-6146	4
	5
	6
	7
	8
	9
	10
	11
	12
	13
	14
	15
	16
	17
	18
	281
	282
	283
	284
	285
	286
	287
	288
	289
	▶664
216-6156	545
	547
	549
216-6157	545
	547
	549
	551
216-6158	545
	547
	549
	551
216-6159	545
	547
	549
	551
216-6160	545
	547
	549
	551
216-6161	545
	547
	549
	551
216-6166	538
	▶547
216-6167	536
	▶549
216-6168	539
	▶551
216-6179	502
	▶505
216-6945	111
216-8756	▶562
216-8850	562
217-1447	21
	▶36
217-1451	74
217-1456	74
217-1480	21
	▶74
217-1481	▶49
	50
217-2743	50
	52
217-2744	50
	52
217-2746	21
	▶50
217-2749	80
	81
217-2752	80
	81
217-2753	21
	▶80
217-2754	137
	140
217-2760	137
	140
217-2761	137
	140
217-2762	137
	140
217-2763	137
	140
217-2764	21
	22
	▶137
217-2776	77
217-2777	21
	22
	▶77
217-2778	21
	22
	▶147
217-5204	137
217-5770	42
	44
	47
217-5771	42
	44
	47
217-5792	179
	180
	181
217-5793	179
	181
217-5794	126
	129
217-5795	▶179
217-5859	29
	31
	33
217-5860	29
217-5861	29
	31
	33
217-5862	29
	31
	33
217-5863	29
217-5864	29
	31
	33
217-5867	21
	▶29
217-5884	21
	22
	▶148
217-7103	126
217-7108	126
	129
217-7111	126
	129
217-7115	126
	129
217-7118	21
	▶57
217-7139	27
217-7143	21
	▶27
217-7174	27
	28
217-7221	21
	22
	▶54
217-7225	56
217-7238	21
	22
	▶56
217-7352	66
	70
217-7357	66
	70
217-7358	66
	70
217-7360	21
	▶66
217-7379	90
	92
217-7381	89
	90
	92
	94
	96
217-7384	21
	▶90
	▶92
217-7395	21
	▶42
217-7748	21
217-7832	21
	▶78
218-0728	676
	679
	706
	707
218-0911	2
	▶23
218-0913	85
218-0925	24
	25
	▶102
218-0933	1
	▶132
218-0934	24
	25
	▶85
218-0937	24
	▶114
218-0944	24
	25
	▶110
218-2317	92
	96
218-2373	559
218-5551	303
	305
218-5560	230
	232
	▶234
	▶236
218-5561	234
	236
218-5562	▶748
218-5564	383
	385
	480
	483
	492
218-5565	124
	▶734
218-5566	▶123
	734
218-5571	436
	438

▶ **PRIMARY REFERENCE**

PART NUMBER INDEX

Part	Page	Part	Page	Part	Page	Part	Page
218-5572	436	218-5708	374		▶495		▶444
	438		▶450		▶496	218-5906	383
218-5580	207		▶452	218-5813	383		480
	209		▶454		480		483
	211	218-5709	▶374		483	218-5907	383
	213	218-5713	450	218-5815	480		480
	215		452		483		483
	217	218-5719	242	218-5818	384	218-5908	480
	219		▶243		480	218-5909	383
	221		▶244		483		480
218-5599	418	218-5728	450	218-5819	376		483
	420		452		▶456	218-5910	▶1
	422	218-5764	384		▶459		2
	424		386		▶462		3
	426		418	218-5820	2	218-5911	▶774
	428		420		▶375	218-5915	383
	486		422	218-5840	▶370		480
	488		424		382		483
	490		426		384	218-5916	480
218-5601	4		428		480		483
	5		480		483	218-5917	480
	6		483		492		483
	7		486	218-5841	▶371	218-5918	480
	8		488		382		483
	9		490		384	218-5919	383
	10		492		480		480
	11	218-5772	1		483		483
	12		▶280		492	218-5926	385
	13	218-5773	279	218-5843	370		492
	14	218-5790	4	218-5844	370	218-5927	385
	15		6	218-5845	371	218-5930	▶338
	16		151	218-5846	371	218-5931	▶340
	17		▶727	218-5847	646	218-5932	▶341
	18	218-5791	4		648	218-5933	▶343
	281		5		650	218-5947	▶346
	282		6	218-5851	376	218-5951	▶777
	283		7		▶422	218-5957	▶388
	284		8	218-5852	376	218-5968	434
	285		9		▶464		440
	286		10		▶466	218-5969	▶312
	287		11		▶468	218-5975	646
	288		12	218-5853	375		648
	289		13		379		650
218-5602	1		14		▶480	218-5978	374
	▶124		15		▶483		375
218-5611	▶332		16	218-5869	418		380
218-5612	▶334		17		420		381
218-5618	▶336		18	218-5882	▶430		▶434
218-5620	1		281		604	218-6002	382
	▶374		282	218-5886	480		480
218-5637	442		283	218-5887	480		483
218-5647	279		284	218-5890	377	218-6004	383
218-5650	1		285		▶424		480
	▶279		286	218-5891	377		483
218-5651	279		287		▶470	218-6005	383
	280		288		▶472		480
218-5658	418		289	218-5892	377		483
	420		▶727		▶542	218-6011	486
218-5668	418	218-5802	301	218-5901	377	218-6058	6
	420	218-5803	1		378		375
218-5671	227		▶301		379		378
218-5704	438	218-5812	375		381		▶501
218-5707	374		377		▶442	218-6059	▶404
	▶418		379	218-5903	377		▶406
	▶420		380		380		696

▶ **PRIMARY REFERENCE**

PART NUMBER INDEX

Part	Page
	704
218-6060	669
	702
	704
218-6061	404
218-6062	227
218-6063	404
	406
	408
	410
	412
	414
218-6079	375
	377
	▶513
218-6086	658
	696
	▶720
218-6089	▶230
	374
	375
	380
	381
218-6095	230
	232
218-6096	230
218-6098	408
218-6099	374
	375
	380
	381
	▶436
218-6107	412
	414
218-6108	412
	414
218-6109	436
218-6117	324
	▶372
218-6118	325
	326
	▶373
218-6119	338
	340
	341
	343
	346
	▶555
218-6130	▶375
218-6131	▶375
218-6132	374
	375
	379
	380
	▶446
218-6133	375
	379
	▶448
218-6137	442
	444
	446
	448
218-6138	446
218-6140	383
	448
218-6141	384
	448
218-6142	384
	386
	444
	448
218-6143	374
	375
	380
	381
	▶416
218-6144	416
218-6145	416
218-6146	446
218-6147	384
	448
218-6175	4
	374
	375
	377
	378
	▶514
218-6176	385
	492
218-6177	1
	3
	▶761
218-6178	2
	3
	▶762
218-6180	▶376
218-6181	▶376
218-6183	422
218-6184	422
	426
218-6185	422
	426
218-6186	422
218-6187	422
	426
218-6188	422
218-6189	422
	426
218-6190	464
	466
218-6191	464
	466
218-6192	464
	466
218-6193	464
	466
218-6194	456
	459
	462
	464
	466
218-6196	456
	459
	462
	464
	466
	468
218-6197	374
	375
	379
	380
	▶486
218-6198	456
	459
	462
	464
	466
	468
218-6200	2
	3
	▶242
218-6201	486
218-6202	486
218-6203	486
218-6204	486
	488
	490
218-6205	456
	459
218-6206	456
	459
218-6207	376
	▶426
218-6208	426
218-6211	▶432
	604
218-6212	521
	524
	527
218-6213	432
	521
	524
	527
218-6215	207
218-6216	▶1
218-6217	2
	3
	▶763
218-6218	2
	4
	▶764
218-6221	761
	765
218-6222	761
	765
218-6223	762
	767
218-6224	762
	767
218-6226	▶2
218-6229	763
	769
218-6230	763
	769
218-6231	207
	209
	211
	213
	215
	217
	219
	221
218-6232	▶2
218-6233	764
	771
218-6234	764
	771
218-6235	▶207
	▶209
	▶211
	▶213
	374
	375
	380
	381
218-6240	▶521
	▶524
	▶527
	604
218-6241	388
	521
	524
	527
	530
	533
	597
	600
218-6242	▶2
218-6243	521
	524
	597
218-6244	521
	524
	597
218-6245	521
	524
	527
	597
	600
218-6249	521
	524
	527
	597
	600
218-6250	669
	701
	703
218-6263	▶530
	▶533
	605
218-6271	▶704
218-6272	▶696
218-6273	▶658
218-6291	▶780
218-6292	▶783
218-6302	▶658
218-6311	377
	378
	379
	381
	▶488
	▶490
218-6312	377
	380
	▶492
218-6313	488
	490
218-6314	488

▶ PRIMARY REFERENCE

PART NUMBER INDEX

Part	Page	Part	Page	Part	Page	Part	Page
	490		699		428		492
218-6315	488		703	218-6459	424	218-6554	387
218-6316	488	218-6397	687		428		492
	490		699	218-6464	424	218-6555	387
218-6317	488		703	218-6477	424		492
	490	218-6398	687	218-6478	470	218-6556	492
218-6319	386		699		472	218-6558	387
	492		703	218-6479	470		492
218-6321	▶604	218-6399	659		472	218-6560	658
218-6322	▶604		697	218-6480	▶324		▶712
218-6323	386	218-6400	▶694		338		▶714
	492	218-6401	687	218-6481	470	218-6561	536
218-6324	492		699		472		537
218-6325	492		704	218-6482	470		538
218-6326	387	218-6402	699		472		539
	492	218-6405	657	218-6485	▶325	218-6563	712
218-6327	387		▶659		340	218-6564	712
	492		701	218-6490	▶326		716
218-6328	492		702		332	218-6568	386
218-6334	388	218-6407	▶738	218-6500	1		492
	597	218-6411	▶754		2	218-6569	492
	600	218-6414	687		3	218-6571	▶349
	607		699		▶242	218-6574	450
218-6335	388		704	218-6503	378		452
	597	218-6416	736		381		470
	600	218-6417	736		382		472
	607	218-6419	▶673		▶438		474
218-6348	658		704	218-6506	▶232		476
	▶669		705		378	218-6582	703
218-6349	387	218-6420	665		381		712
	492	218-6421	332		382		714
218-6350	1		334	218-6508	232		716
	2		336	218-6526	305		718
	3		349	218-6528	▶408	218-6584	702
	4	218-6422	338		696		703
	▶665		340		705		712
218-6356	665		341	218-6529	225		714
	▶710		343	218-6531	410	218-6590	658
218-6357	710		346	218-6533	▶410		▶716
218-6359	710	218-6423	733		658		▶718
218-6360	1	218-6424	736	218-6534	410	218-6591	716
	▶736	218-6425	▶172	218-6535	410	218-6593	442
218-6367	665		665	218-6536	▶215	218-6596	386
	▶666	218-6428	1		▶217		444
218-6370	665		▶732		▶219	218-6597	386
	▶726	218-6430	1		▶221		444
218-6377	694		▶733		378	218-6598	384
218-6380	665	218-6431	▶682		381		444
	▶749		685		382	218-6599	386
218-6381	726	218-6432	683	218-6537	215		492
218-6384	722	218-6434	732	218-6539	417	218-6602	450
218-6386	674	218-6435	699	218-6541	378		452
218-6387	674	218-6436	710		381		470
218-6388	674	218-6437	687		382		472
218-6389	673		699		▶417		474
218-6391	673		704	218-6542	303		476
218-6393	695	218-6438	736	218-6543	417	218-6603	450
	▶697	218-6440	▶676	218-6544	417		452
	699	218-6441	676	218-6545	▶225		470
218-6394	658		▶683		378		472
	▶687		706		381		474
	696	218-6442	661		382		476
218-6395	665	218-6456	424	218-6548	225	218-6604	376
	▶722	218-6457	424	218-6550	▶19		▶428
218-6396	687	218-6458	424	218-6553	387	218-6605	428

▶ **PRIMARY REFERENCE**

PART NUMBER INDEX

Part	Page
218-6606	428
218-6607	376
	▶474
	▶476
	▶478
218-6608	474
	476
218-6609	474
	476
218-6610	▶1
	2
	3
	4
218-6611	492
218-6612	492
218-6616	124
218-6617	124
218-6624	▶227
	374
	375
	380
	381
218-6640	▶376
218-6641	▶377
218-6644	434
218-6645	699
218-6653	▶739
218-6654	▶740
218-6661	134
218-6662	748
218-6663	▶741
218-6664	▶742
218-6677	227
218-6693	▶412
	▶414
	658
218-6701	▶705
218-6703	▶696
218-6708	4
	5
	7
	8
	9
	10
	12
	13
	14
	15
	17
	281
	282
	283
	287
	288
	▶313
218-6709	▶314
218-6711	313
	314
218-6721	▶604
218-6722	▶605
218-6726	313
	314
218-6727	382
	385
	480
	483
	492
218-6731	▶765
218-6732	▶767
218-6734	▶769
218-6735	▶771
218-6737	▶382
218-6738	▶384
218-6741	▶162
218-6742	▶163
218-6743	▶706
218-6744	▶707
218-6745	▶755
218-6746	▶699
218-6750	▶20
218-6757	▶597
	▶600
218-6758	374
	378
	380
	381
	▶502
218-6760	▶377
218-6762	▶377
218-6776	382
	385
	480
	483
	492
218-6781	375
	381
	▶536
218-6783	378
	382
	▶537
218-6784	480
	483
218-6785	480
	483
218-6786	374
	380
	▶538
218-6787	378
	381
	▶539
218-6798	305
218-6799	1
	▶354
218-6806	669
218-6808	412
218-6820	2
	▶378
218-6825	367
	368
218-6826	364
	365
218-6827	366
218-6830	658
	▶668
218-6832	▶667
	668
218-6833	667
	701
	702
218-6836	671
	701
	702
218-6837	671
	701
	702
218-6838	671
	701
	702
218-6840	▶506
	667
	701
	702
218-6856	553
	554
218-6857	553
	554
218-6858	553
	554
218-6862	230
218-6863	232
218-6864	434
	440
218-6873	303
218-6875	1
	▶303
218-6898	303
218-6899	1
	▶357
218-6920	2
	▶378
218-6937	432
218-6938	521
	524
	527
	597
	600
218-6947	697
218-6948	659
218-6973	305
218-6975	1
	▶305
219-0302	774
	777
	780
	783
219-4335	388
	521
	524
	527
	530
	533
	597
	600
219-4377	386
	450
	452
	454
	470
	472
	474
	476
	478
	488
	490
	492
219-4379	748
	750
219-4380	747
	▶750
219-4388	750
219-6314	182
219-9739	676
	679
	706
	707
220-1523	66
	83
220-8152	238
	▶239
220-8169	239
221-1136	42
	44
	47
221-3429	596
	622
221-3876	683
	685
221-3877	676
	679
	706
	707
221-3879	188
	701
	703
221-3880	189
221-3881	160
	161
	162
	163
	200
	202
222-1178	102
	104
	106
	111
222-3870	158
	159
222-3962	264
	265
222-3963	265
	266
222-5693	239
222-5695	10
	11
	15
	16
	17
	18
	281
	283
	284
	286
222-7412	568
222-7467	585
	586
	587
	619
	620
222-7545	569
	▶612

▶ PRIMARY REFERENCE

PART NUMBER INDEX

Part	Page
222-7546	568
	▶612
222-7724	564
	▶568
222-7725	568
	569
223-0587	676
	679
	706
	707
223-0591	676
	679
	706
	707
223-0600	▶679
223-0601	676
	679
	706
	707
223-0608	676
	679
	706
	707
223-0609	682
223-0610	682
223-0612	682
223-0613	683
	685
223-0614	682
	683
223-0616	679
	▶685
	707
223-0617	676
	679
	706
	707
223-0619	683
223-3725	327
	328
223-3726	329
223-3728	327
	328
	329
	330
	331
223-4240	301
223-5941	728
	730
223-5942	349
	382
	386
223-6465	267
223-6537	690
	▶723
223-8408	541
	▶553
223-8488	683
	685
223-8495	683
	685
223-9974	225
	227
	▶229
224-0554	774
	777
224-0672	774
	777
224-3875	301
224-7057	754
	755
	▶756
224-7058	754
	755
	▶758
224-7830	780
	783
224-8645	783
224-8646	774
224-9021	780
	783
224-9022	774
	777
224-9418	540
	▶554
224-9855	774
	777
	780
	783
225-0312	774
	777
225-0313	780
	783
225-3143	143
	144
225-3187	683
	685
225-3305	780
	783
225-4123	137
225-4148	17
225-5190	189
225-5193	152
225-7948	▶188
	658
225-7950	▶145
225-7952	▶146
225-7954	192
	194
225-7955	143
	144
225-7956	143
	144
225-7960	▶202
	343
225-7961	161
	162
	202
225-7962	173
	175
225-7963	8
	13
	14
	282
225-7964	8
	13
	14
	▶199
225-7969	▶187
225-7976	774
	777
	780
	783
225-7977	774
	777
	780
	783
225-7980	192
	194
225-7981	189
225-7982	189
225-7990	173
225-7991	▶158
225-7998	727
	▶730
225-7999	730
225-8000	▶153
	189
225-8001	1
	▶189
225-8002	189
225-8003	189
225-8005	349
	383
	386
225-8009	349
	382
	386
225-8010	23
	24
	25
	26
	▶192
	▶194
225-8011	192
	194
225-8012	160
	161
	162
	163
	200
	202
225-8013	173
	175
225-8014	603
225-8015	564
	565
225-8526	119
	121
225-8533	119
	121
225-9238	382
	384
	513
	▶517
225-9267	263
225-9270	▶263
225-9271	▶263
	277
225-9521	352
	▶363
226-0291	301
	664
226-0323	664
226-1242	786
226-3736	278
226-3737	278
226-5900	173
	175
226-5901	728
	730
226-9629	559
227-4315	309
227-6715	98
	99
	100
227-8807	322
228-1762	23
	26
	▶87
228-1763	23
	24
	25
	26
	▶241
228-1764	23
	24
	25
	26
	▶63
228-1767	1
	2
	▶24
228-1770	115
228-1771	115
228-1772	23
	▶115
228-1773	23
	24
	25
	26
	▶108
228-1781	1
	▶134
228-1783	6
	23
	▶104
228-1784	23
	26
	▶111
228-1805	111
228-2524	115
	116
228-2723	98
228-3350	98
	100
	▶98
	104
	786
228-3581	786
228-3724	85
	87

▶ **PRIMARY REFERENCE**

PART NUMBER INDEX

Part	Page
228-9214	▶277
228-9215	▶277
228-9216	243
	244
	▶247
228-9218	542
228-9222	303
228-9228	332
	334
	336
	349
	▶556
228-9240	505
	507
228-9641	87
228-9935	110
228-9953	55
228-9954	114
229-0294	114
229-4895	279
229-5465	404
	406
	408
	410
	412
	414
229-5466	404
	406
	408
	410
	412
	414
229-5468	384
	386
	480
	483
	492
229-5471	384
	386
	480
	483
	492
229-5473	384
	385
	480
	483
	492
229-7224	691
	▶724
229-8728	53
229-8729	53
229-8730	23
	24
	25
	26
	▶53
229-8744	▶674
	704
	705
229-8746	▶695
	696
229-8747	▶657
	658
229-8757	683
	685
229-8758	666
229-8796	98
	99
	100
230-3214	676
	679
	706
	707
230-3683	354
	▶364
230-3684	354
	357
	▶367
230-3686	505
	507
	508
230-3693	354
	▶365
230-3694	354
	357
	▶368
230-3703	357
	▶366
230-3726	505
	506
	507
230-3727	501
	▶507
230-3731	114
	118
230-3743	4
	5
	6
	7
	8
	9
	10
	11
	12
	13
	14
	15
	16
	17
	18
	▶196
	281
	282
	283
	284
	285
	286
	287
	288
	289
230-3757	515
	516
	517
	518
230-4011	197
230-4596	569
230-4604	353
230-4605	353
230-5088	102
	104
	106
230-5406	▶352
	563
230-5407	308
230-5670	▶308
	563
230-6263	90
	92
230-6368	146
230-9126	51
230-9696	687
	699
	704
231-0124	398
231-0125	398
231-0126	398
231-0127	398
231-0167	109
231-0168	109
231-0169	109
231-0295	495
	▶498
231-2105	303
	305
231-2999	180
231-3041	132
	134
231-3578	102
	104
	106
231-3579	102
	104
	106
231-3925	102
	104
	106
231-4256	▶327
	341
231-4257	▶328
	334
231-4258	160
	161
	▶329
	343
	346
231-4259	▶330
	349
	382
	384
231-4260	▶331
	336
231-4261	327
	329
231-4262	328
	330
	331
231-5129	21
	▶126
231-5266	353
231-5271	568
	569
231-5273	▶398
	564
	565
231-5274	▶353
	564
	565
231-5275	▶564
231-5276	565
	▶569
231-5277	▶565
231-5278	▶497
	564
	565
231-5279	497
231-6287	506
	▶561
231-6564	561
231-7319	758
231-7320	758
231-7321	754
	755
231-7322	756
231-7323	756
231-7324	754
	755
231-7325	▶688
	758
231-7326	688
231-7327	▶689
	756
231-7328	689
231-7329	688
	689
231-7331	756
	758
231-7372	756
	758
231-7401	688
	689
231-8121	659
	697
231-8122	659
	697
	▶700
231-8123	659
231-8124	659
	697
231-8125	659
	697
231-8126	659
	697
231-8127	659
	697
231-8128	659
	697
231-8129	659
	697
231-8130	659
	697
231-8131	659
	697
231-8132	659
	697
231-8133	659
	697
231-8137	659
231-8141	659
	697
231-8142	659

▶ PRIMARY REFERENCE

PART NUMBER INDEX

Part	Page	Part	Page	Part	Page	Part	Page
	697	233-5673	▶282		380		286
231-8143	697	233-5674	▶282		381		▶292
231-8144	697	233-5675	▶283		382	234-0793	14
231-8145	697	233-5676	▶283		▶519		282
231-8920	83	233-5680	10	233-5992	▶646		283
232-1384	659		11	233-5993	▶648		285
232-1789	85		15	233-5994	648		286
	87		16	233-5997	519		▶293
232-4706	723		17	233-6648	20	234-4328	▶164
	724		18		▶22		172
	725		281	233-6683	98	234-5130	353
232-4901	102		284		99	234-6065	774
	104		290		100		777
	106	233-5681	▶284	233-7061	29		780
232-6692	152	233-5682	▶284	233-7128	388	234-6067	780
232-9737	158	233-5683	▶285		524		783
233-0695	29	233-5684	▶285		527	234-6069	774
	31	233-5685	▶286		533		777
	33	233-5686	▶286		▶544	234-6070	780
233-1012	671	233-5706	▶161		597		783
233-4872	301	233-5711	765		600	234-6071	774
233-5588	▶701		767	233-7131	211		777
233-5589	▶702		777		219	234-6072	780
233-5590	667		780		▶268		783
	702	233-5715	769	234-0566	701	234-6074	780
	703		771		703		783
233-5591	418		774		712	234-6076	774
233-5592	418		783		714		777
233-5593	450	233-5716	236		716	234-6077	780
	452	233-5719	650		718		783
233-5616	4	233-5847	217	234-0732	709	234-6078	774
	5		219	234-0744	761		777
	6		221		762	234-6081	774
	7	233-5849	209		763		777
	8		211		764	234-7727	▶165
	9		213		765		171
	10	233-5856	702		767	234-7730	164
	11		703		769	234-7731	164
	12		714		771	234-7756	165
	13	233-5863	702	234-0745	761	234-7758	165
	14		703		762	234-9525	416
	15		718		763	234-9575	774
	16	233-5864	▶708		764		777
	17	233-5892	646		765		780
	18		650		767		783
	281	233-5893	646		769	235-1365	780
	282		650		771		783
	283	233-5895	386	234-0748	762	235-1368	774
	284	233-5896	383		764		777
	285	233-5897	383		765	235-4768	683
	286	233-5927	701		767		685
	287		703		769	235-5243	336
	288	233-5929	700		771		349
	289	233-5931	700	234-0774	▶709		384
	▶321	233-5934	700		734		385
233-5632	▶693	233-5951	702	234-0782	436	235-5246	341
233-5633	693		703	234-0786	434		343
233-5634	693		714		440		346
233-5638	▶160		718	234-0788	378	235-6973	51
233-5649	245	233-5966	386		381	236-1872	520
	246	233-5967	386		382	236-4706	375
	▶249	233-5976	383		▶440		377
233-5670	▶151	233-5980	374	234-0792	281		379
233-5671	▶281		375		283		380
233-5672	▶281		378		284	236-4707	375

▶ **PRIMARY REFERENCE**

PART NUMBER INDEX

Part	Page
	377
	379
	380
	384
	385
236-4830	▶661
	665
236-4832	662
236-4833	661
	▶662
236-5051	22
	▶44
236-5052	22
	▶38
236-5067	659
	697
236-5069	659
	697
236-5088	321
236-5106	514
	▶518
236-5123	75
236-5124	75
236-5125	22
	▶75
236-5127	▶51
	52
236-5129	22
	▶52
236-5156	22
	▶81
236-5170	129
236-5375	▶99
	102
236-5816	98
	99
	100
236-6923	702
	704
	712
	714
	716
	718
236-9985	94
	96
236-9987	113
237-0419	63
237-0420	63
237-5331	338
	340
237-5332	332
237-7296	124
237-9315	42
	46
237-9316	42
	46
238-0112	100
238-0999	353
238-1003	398
238-1004	568
	569
238-1005	568
	569
238-1266	129
238-2685	66
	70
238-4624	270
	498
238-4625	498
	499
238-4626	270
	498
	499
	544
238-4628	499
238-4629	498
	499
238-6914	140
238-7669	761
	762
	763
	764
	765
	767
	769
	771
238-7670	761
	762
	763
	764
	765
	767
	769
	771
238-7671	7
	8
	13
	15
	16
	281
	282
	284
	285
	287
	288
	▶315
238-7672	10
	11
	14
	17
	18
	283
	286
	287
	289
	▶316
238-7675	315
	316
238-7676	316
238-7693	633
	634
	637
238-7720	357
238-7723	383
	483
238-7724	383
	483
238-7725	462
238-7726	462
238-7727	468
238-7731	468
238-7732	468
238-7733	225
238-7737	▶277
238-7738	▶263
	277
238-7739	▶264
	277
238-7740	263
	264
238-7741	388
	530
	533
238-7742	388
	530
	533
238-7743	388
	530
	533
238-7745	430
238-7746	430
	530
	533
238-7747	530
238-7748	388
	530
	533
238-7749	388
	530
	533
238-8731	31
	33
238-9137	84
238-9143	84
238-9196	113
238-9198	113
238-9199	113
238-9200	113
238-9289	31
	33
238-9295	31
	33
238-9315	31
238-9332	31
238-9348	22
	▶31
	▶33
238-9349	119
	121
238-9351	119
238-9397	192
	194
239-0169	119
	121
239-0177	119
	121
239-0187	119
	121
239-0227	119
	121
239-0228	119
	121
239-0229	119
	121
239-0230	22
	▶119
	▶121
239-0232	113
239-0233	22
	▶113
239-5010	▶159
239-5029	628
239-6109	754
	755
239-6138	688
	689
239-6986	774
	777
	780
240-0648	21
	▶46
240-6866	498
	499
240-6877	687
	699
	704
240-6878	687
	699
	704
240-6879	687
	699
	704
240-8666	683
	685
241-3010	99
241-3394	109
241-3763	603
241-5648	321
241-5649	321
241-5789	23
	24
	25
	26
	▶64
241-8672	▶603
242-0171	108
	▶109
242-0172	109
242-0173	109
242-7070	183
242-7071	183
242-7073	183
242-7074	183
242-7075	183
242-7076	183
242-7077	183
242-7078	183
242-8277	373
242-9000	173
	175
242-9998	▶596
242-9999	▶596
243-0000	▶596
243-0001	▶622
243-0002	▶622
243-0003	▶622
243-1323	756
	758
243-5601	500
243-6464	182

▶ **PRIMARY REFERENCE**

PART NUMBER INDEX

Part	Page	Part	Page	Part	Page	Part	Page
244-1363	500		▶786	252-0386	▶650		379
244-1364	500	247-4877	309	252-0387	486		▶515
244-1365	500	247-6398	49	252-0388	383	261-6095	379
244-1367	568	247-6462	269		483		380
	569	247-6742	▶642	252-0425	606		▶516
244-1368	353	247-8023	642		607	261-6118	5
244-1369	353	247-9912	21	252-0449	▶4		6
244-1370	353		▶144	252-0787	83		7
245-1361	84	248-2171	683	252-0788	83		8
245-1362	84		685	252-6934	327		9
245-1364	84	248-2376	683		328		10
245-1911	544		685		329		11
246-1501	603	248-7696	382		330		14
246-2622	132		384		331		17
	134		496	252-8025	617		18
246-2641	290		▶499		▶626		▶106
	292	249-1486	33	252-8026	618	261-6119	▶100
	294	249-1532	121		▶627		106
246-3198	143	249-2910	692	252-9167	244	261-6121	5
	144		▶725		246		6
246-3336	132	249-5541	94	253-8001	21		7
246-3337	22		96	253-8003	21		8
	▶28	249-7160	544	253-8110	197		9
246-3338	22	249-7707	499	254-9215	153		10
	▶59	250-1493	703	254-9216	153		11
246-3415	22		720	255-6540	568		14
	▶129	250-3483	270		569		17
246-3451	22		498	255-8058	510		18
	▶94	250-7662	499	257-5716	▶287		▶503
	▶96	250-8330	269	257-5717	▶287	261-6132	▶379
246-3470	84	251-6789	79	257-5718	▶288	261-6139	▶379
246-3471	84	251-6791	21	257-5721	▶288	261-6142	▶379
246-3472	22		22	257-5722	▶289	261-6149	▶380
	▶84		▶79	257-5723	▶289	261-6155	▶4
246-3481	21	251-7615	62	257-5726	▶290	261-6156	▶5
	22	251-7618	22	257-5727	▶291	261-6157	▶5
	▶70		▶62	257-5730	▶310	261-6158	▶6
246-3515	21	252-0330	702	257-5877	384	261-6160	▶6
	22		703	258-2751	205	261-6187	▶7
	▶83		716	258-2759	▶205	261-6197	▶7
246-4267	143		718		206	261-6200	305
	144	252-0331	454	258-9011	497	261-6201	303
246-4291	774		478		▶500	261-6245	▶206
246-4318	143	252-0332	454	259-8194	268	261-6255	▶206
	144		478		▶270	261-6362	17
246-4319	22	252-0333	478	259-8195	268	261-6727	503
	▶143	252-0334	478	259-8210	213	261-6728	503
246-4349	654	252-0335	454		221	262-2915	205
246-8723	23	252-0336	454		▶269	262-3975	33
	24	252-0337	454	261-5659	249	262-7668	334
	25	252-0338	454	261-5660	242	263-2135	683
	26	252-0341	468		▶245		685
	▶55	252-0342	527		▶246	263-3256	21
246-9039	702		600	261-5750	2		22
	704	252-0343	527		3		▶181
	712		600		▶242	263-4997	244
	714	252-0344	▶277	261-5751	2		246
	716	252-0345	▶278		4	263-6688	734
	718	252-0346	▶278		▶242		▶735
246-9371	190	252-0353	420	261-6094	4	264-4297	503
247-0323	21	252-0354	420		5	264-4319	205
	22	252-0367	▶278		12	265-2894	▶264
	▶180	252-0368	132		13		277
247-0678	564		134		15	265-2895	▶264
	565	252-0378	▶278		16		277

▶ **PRIMARY REFERENCE**

PART NUMBER INDEX

Part	Page
265-2896	▶265
	278
265-2897	▶265
	278
265-2898	▶265
	278
265-2899	▶266
	278
265-5193	205
265-5624	126
	129
265-5625	126
	129
265-6944	126
	129
266-0226	179
	181
266-0227	180
266-8903	500
268-1925	239
268-1929	247
	249
268-1930	247
	249
268-1931	247
	249
268-1934	249
268-1936	239
268-9529	247
	249
269-9462	515
269-9465	516
269-9467	503
	▶508
270-1629	197
270-2702	194
270-6915	22
	▶40
270-6930	22
	▶76
270-6932	22
	▶47
270-6968	76
270-6970	76
271-2117	140
271-2120	21
	22
	▶140
272-1625	5
	6
	7
	8
	9
	10
	11
	14
	17
	18
	▶197
272-1626	197
272-3046	▶116
	117
272-3047	5
	6
	7
	8
	9
	10
	11
	14
	17
	18
	▶117
272-3048	118
272-3049	4
	5
	12
	13
	15
	16
	▶118
272-3058	118
272-9496	149
272-9497	21
	22
	▶149
275-0623	230
275-0625	232
276-3076	100
276-4063	671
	701
	702
276-4811	432
276-4812	430
	533
276-5708	667
	▶671
276-6019	▶743
276-6020	▶744
276-7276	▶745
276-7277	▶746
278-1061	197
278-1212	▶8
278-1213	▶8
278-1216	▶3
278-1217	3
	▶380
278-1218	3
	▶25
278-1220	▶9
278-1221	▶9
278-1224	▶10
278-1225	▶11
278-1226	▶3
278-1227	3
	▶381
278-1228	3
	4
	▶26
278-1232	▶3
278-1233	3
	▶381
278-1242	▶4
278-1243	4
	▶382
278-1292	10
	11
	15
	16
	17
	18
	▶294
278-1293	8
	13
	14
	▶295
278-5347	▶12
278-5348	▶12
278-5369	▶13
278-5370	▶13
278-5408	▶14
278-5409	▶14
278-5413	▶15
278-5414	▶16
278-5441	▶17
278-5442	▶18
278-8713	508
278-8717	508
279-0733	239
280-7805	249
282-9826	406
282-9827	414
283-9478	442
	444
	446
	448

▶ PRIMARY REFERENCE



© 2006 Caterpillar
All Rights Reserved

Printed in U.S.A.