3C 3CPLUS 3CX 4CX 214 215 217

9812/0080 A1-1-1 SHOVEL, G.P 1.0M3, 2253MM (7'4") WIDE

RUTHZIL TRATOR COMERCIAL DE PEÇAS LTDA 11 97083-6812 ROLANDO CITRANGULO

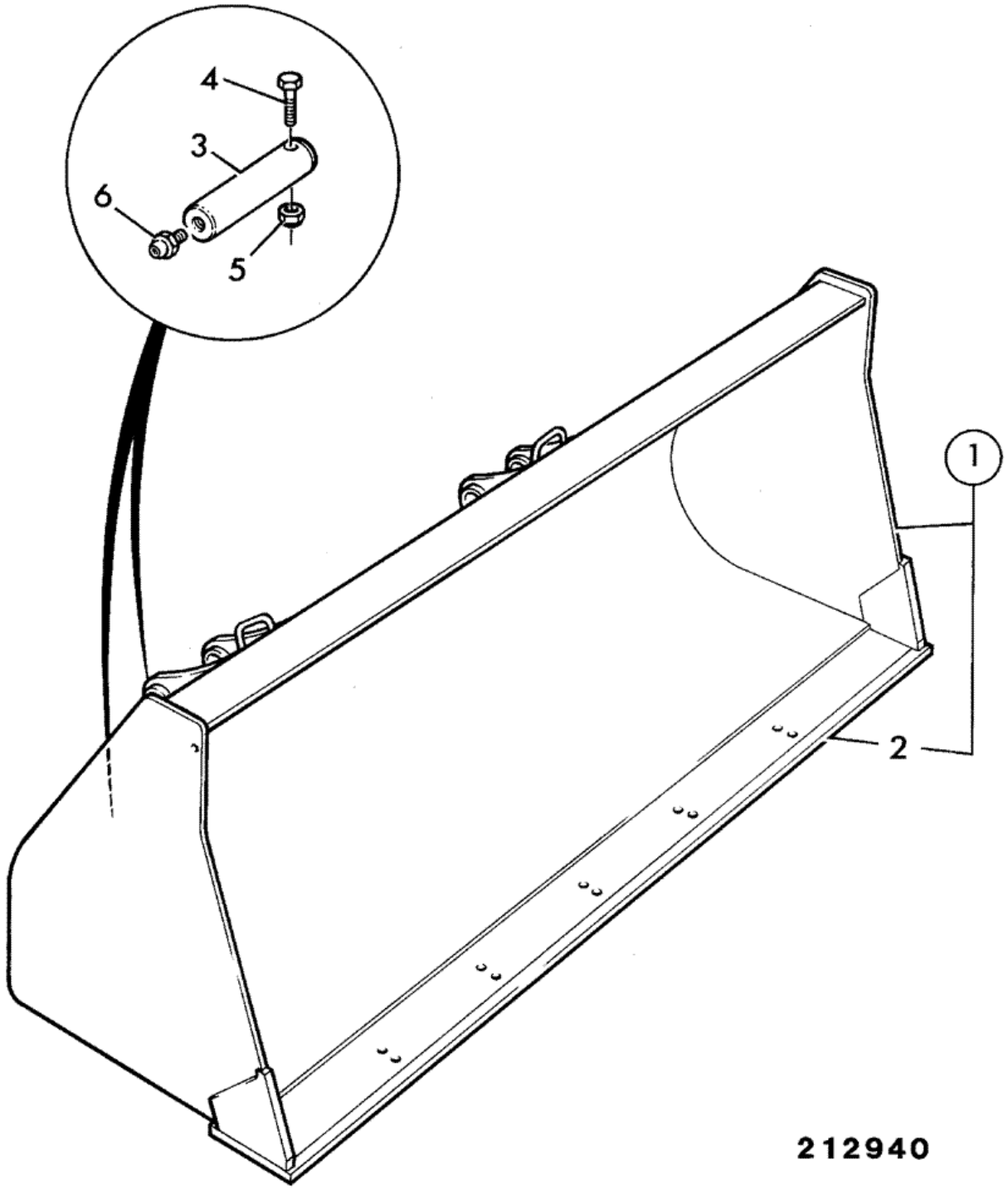

Item	Part #	Change No	Description	Usage Code	QTY

1	335/05773		Shovel GP 1.0m3 7'4" 214e Brazil		1
2	:123/04023		Toeplate		1
3	811/80001		Pin pivot		4
4	1305/3222Z		Bolt 3/8"UNF x 3"		4
5	1340/0203Z		Nut		4
6	1450/0002		Nipple grease, straight 1/4		4

9812/0080 A1-1-2 SHOVEL, G.P 1.0M3, 2253MM (7'4") WIDE, HEAVY DUTY

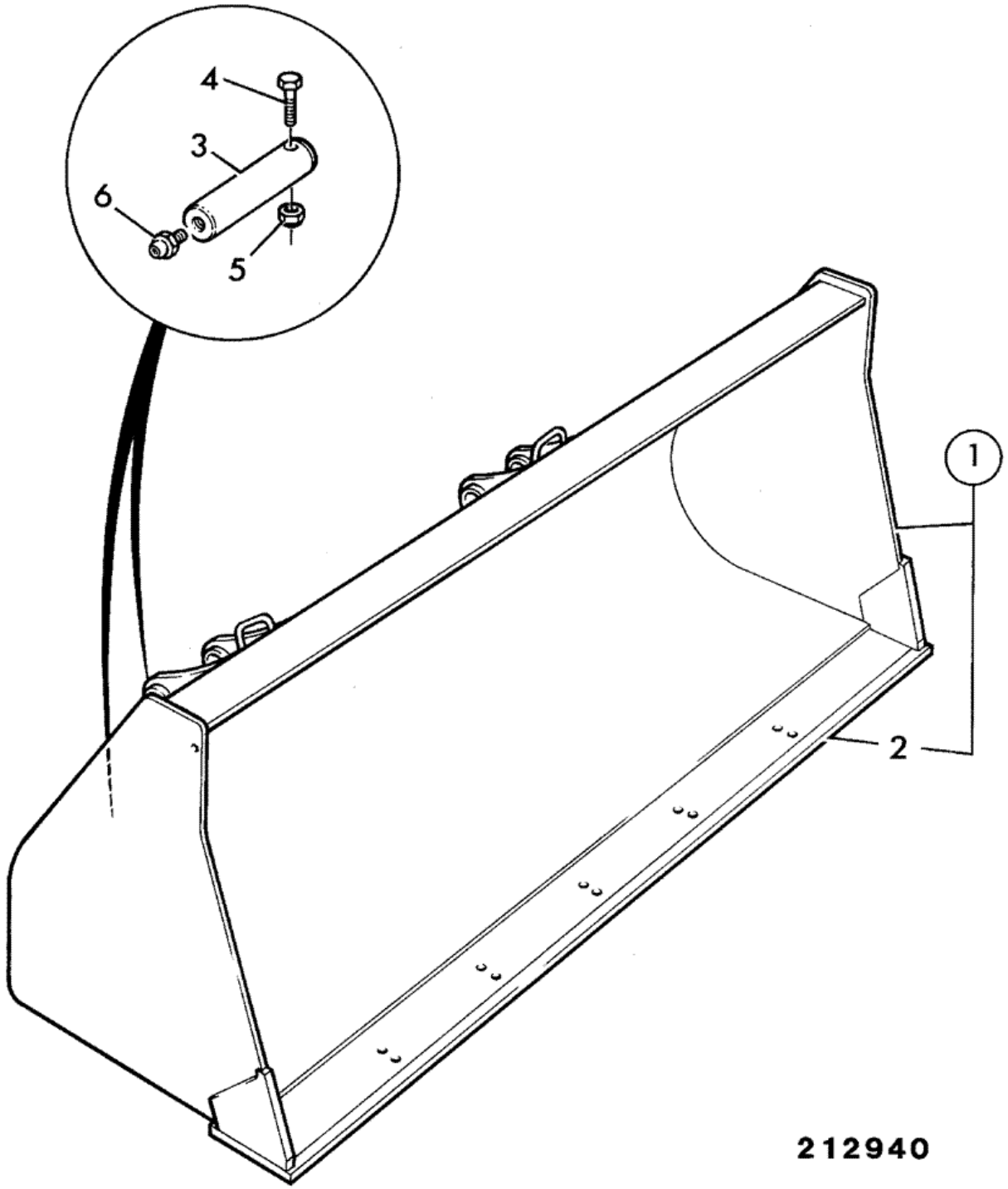

Item	Part #	Change No	Description	Usage Code	QTY

1	335/05774		Shovel GP 1.0m3 7'4"H/Duty 214e Brazil		1
2	:123/04256		Toeplate		1
3	811/80001		Pin pivot		4
4	1305/3222Z		Bolt 3/8"UNF x 3"		4
5	1340/0203Z		Nut		4
6	1450/0002		Nipple grease, straight 1/4		4

Product Catalog \ CONSTRUCTION \ NORTH AMERICA \ CONSTRUCTION / INDUSTRIAL \ BACKHOE LOADER 3CX,4CX,214,215,217 \ 3C PLUS (91HP) , Made in Brazil with Dieselmax/IESA Engine 9812/0080 \ A ATTACHMENTS \ A01 SHOVELS

9812/0080 A1-1-3 SHOVEL, G.P 1.0M3, 2253MM (7'4") WIDE, HEAVY DUTY ,HIGH PIVOT 4WD

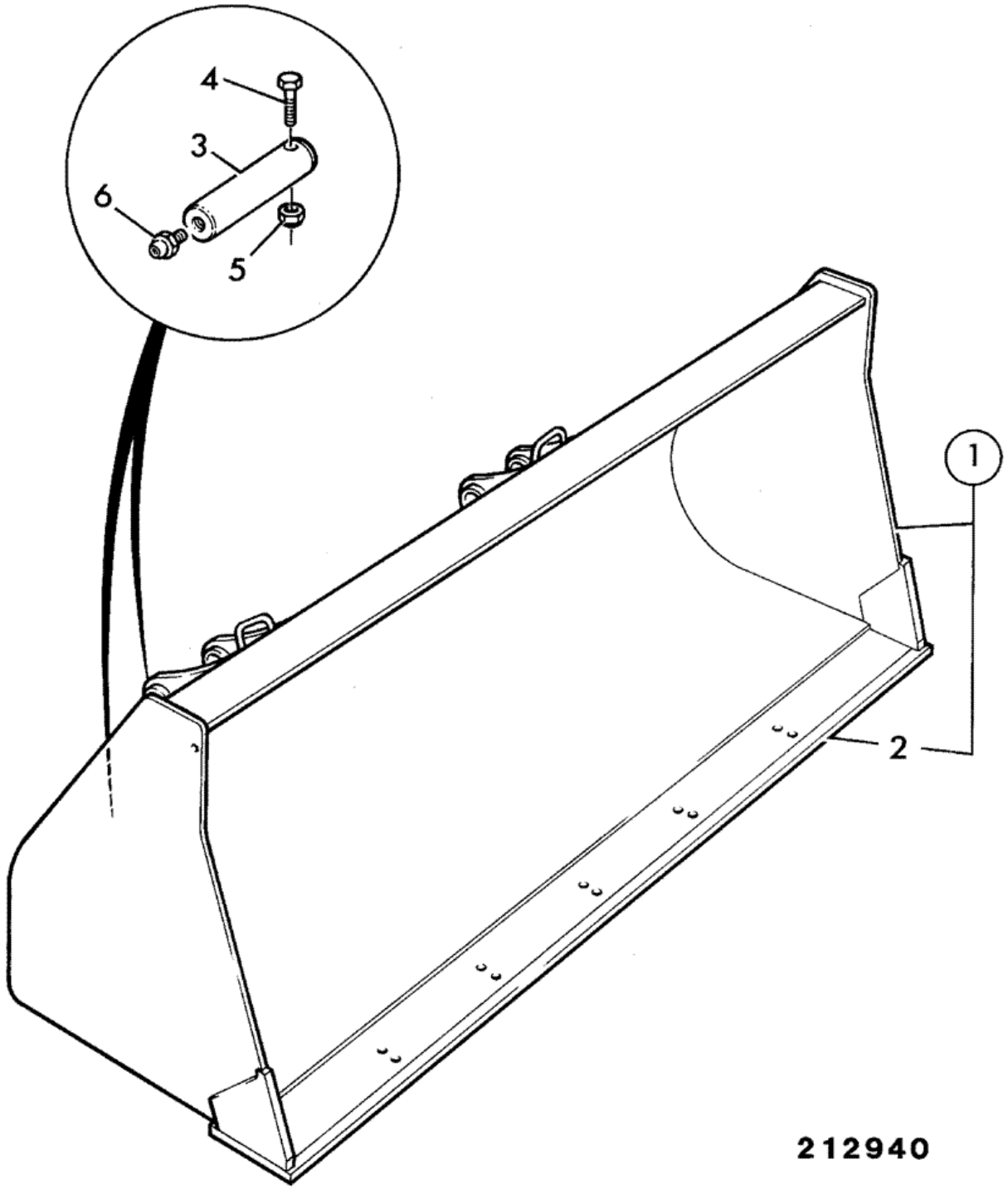

Item	Part #	Change No	Description	Usage Code	QTY

1	335/05775		Shovel GP 1.0m3 7,4"H/Duty 214e high pivots 4WD *Brazil*		1
2	:123/04256		Toeplate		1
3	811/80001		Pin pivot		4
4	1305/3222Z		Bolt 3/8"UNF x 3"		4
5	1340/0203Z		Nut		4
6	1450/0002		Nipple grease, straight 1/4		4

9812/0080 A1-4-2 SHOVEL, G.P 1.1M3, 2350MM (7'8.5") WIDE, QUICKHITCH

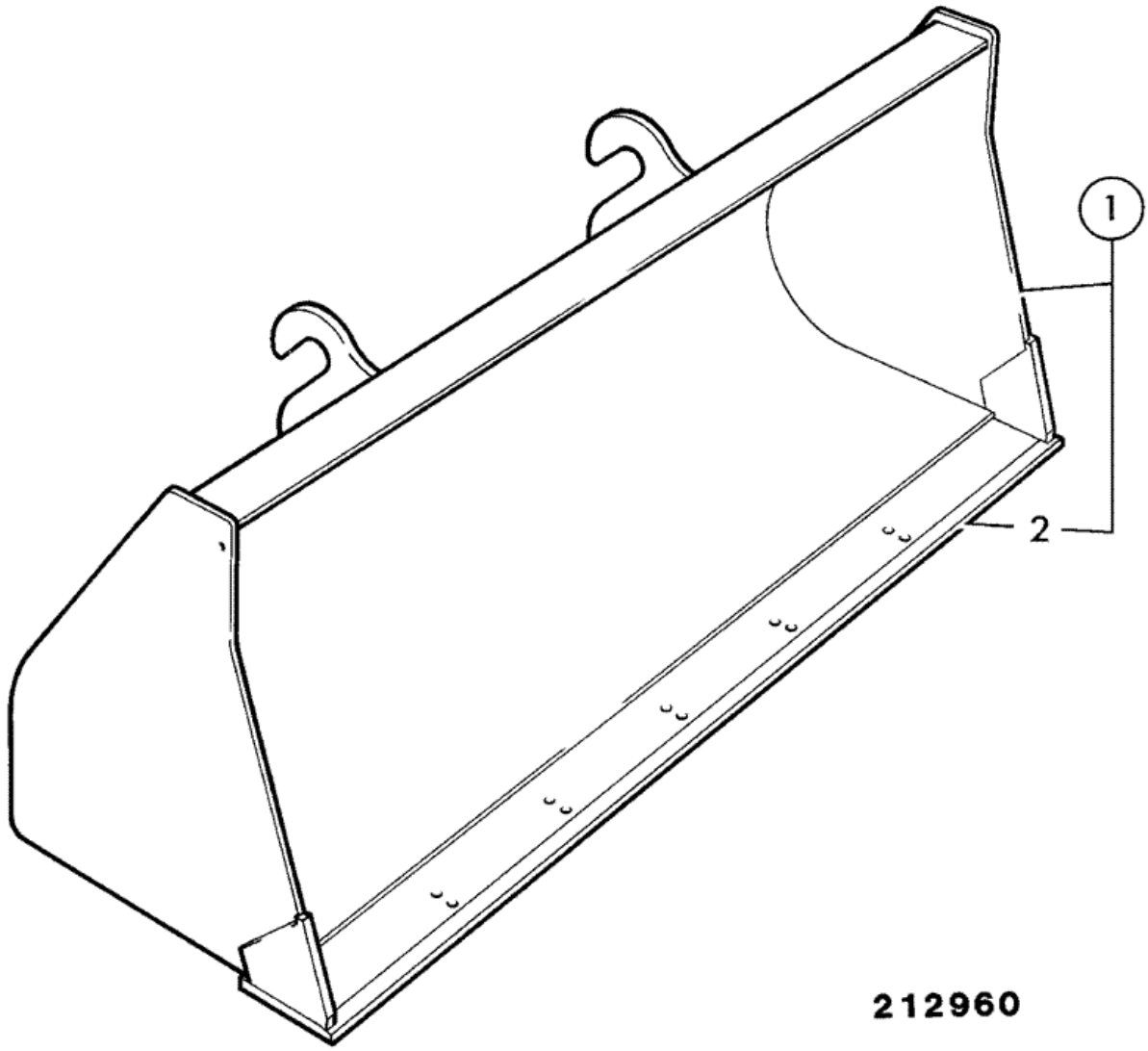

Item	Part #	Change No	Description	Usage Code	QTY
1	126/00186		Shovel GP 1.1m3 heavy duty quickhitch 2350mm		1
2	:123/04004		Toeplate		1

9812/0080 A1-7-1 SHOVEL, CLAM, 6 IN 1, 7'4" WIDE 1.0M3

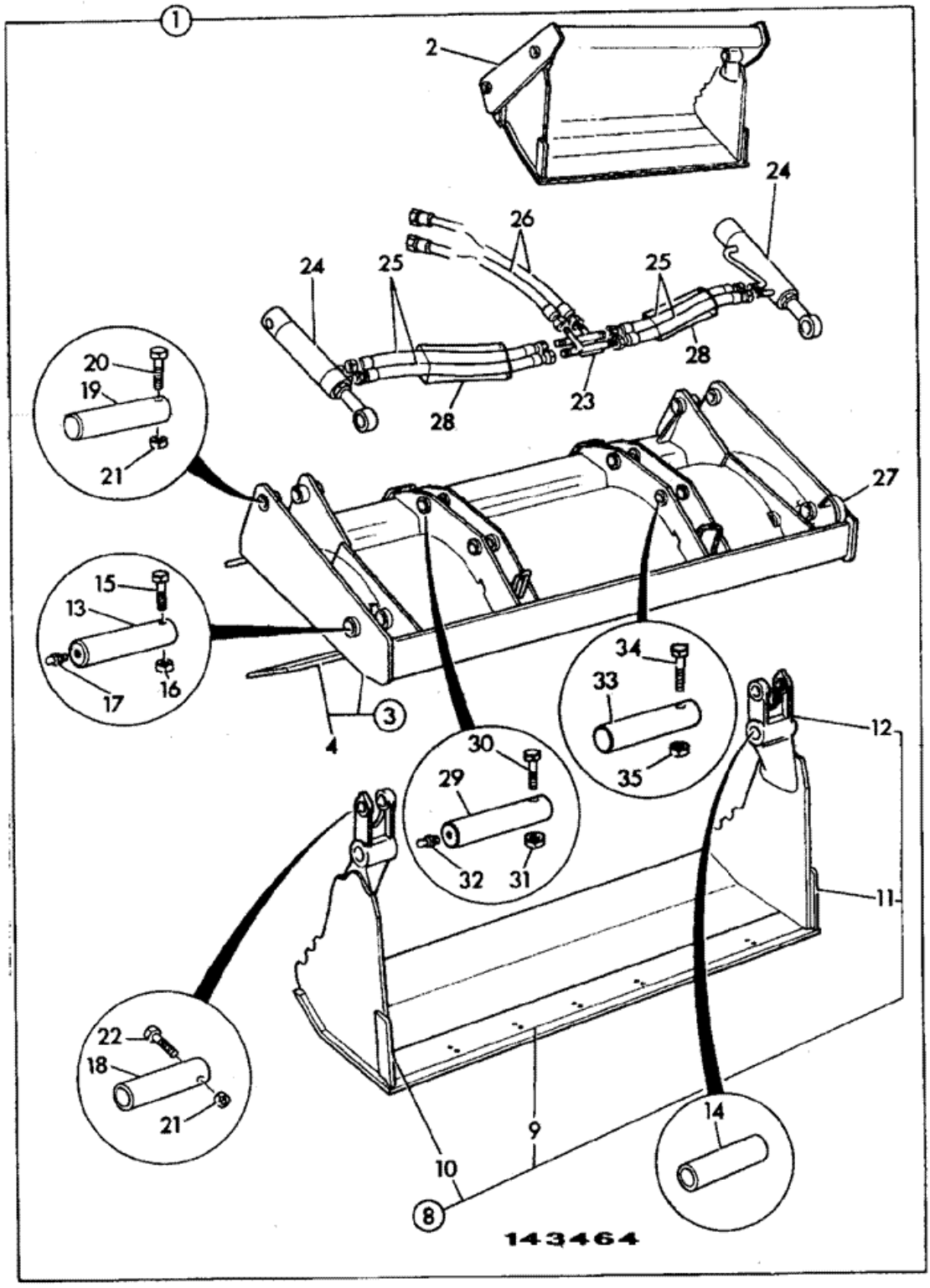

Item	Part #	Change No	Description	Usage Code	QTY
1	126/02542		Shovel 6 in 1 clam, 1.0m3 7'4" wide		1
1	128/14662		Shovel 6 in 1, 7' 4" wide 1.Om3 with forks		1
2	:NSP		None serviced part		1
3	:125/00366		Blade back 1.0m3 7'4" wide *no forks*		1
3	:331/44826		Blade back, 7' 4" wide 1.0m3 with fork bkts		1
3A	::123/04049		Bracket indicator		1
4	::531/38111		Toeplate 2253mm (7'4") wide		1
8	:125/50200		Jaw clamshovel		1
9	::123/04145		Toeplate 6 in 1 shovel 7'4" wide		1
10	::123/04423		Sidecutter right hand		1
11	::123/04422		Sidecutter left hand		1
12	::123/04274		Pivot casting right hand		1
12	::123/04275		Pivot casting left hand		1
13	:811/80007		Pin pivot		2
13A	:811/80007A		Pin pivot 0.1mm oversize		2
13B	:811/80007B		Pin pivot 0.25mm oversize		2
14	:1208/0023		Bush		2
15	:1305/3226Z		Bolt		2
16	:1340/0204Z		Nut philidas thin		2
17	:1450/1001		Nipple grease 90deg. angle		2
18	:811/50398		Pin pivot		2
18A	:811/50398A		Pin pivot 0.1mm oversize		2
18B	:811/50398B		Pin pivot 0.25mm oversize		2
19	:811/80018		Pin pivot		2
20	:1305/3222Z		Bolt 3/8"UNF x 3"		2
21	:1340/0203Z		Nut		5
22	:1305/3226Z		Bolt		2
23	:123/05538	Superseded	Pipe assembly backblade		1
23	:335/13748		Pipe assembly, backblade		1
24	:556/60331	Superseded	Ram clamshovel		2
24	:556/60401		Ram clamshovel 557 closed centres		2
25	:612/02900		Hose 3/8"BSP x 360mm		4
26	612/80266		Hose 3/8BSP 665mm with wire guard *not supplied with shovel*		2
26	:612/80266		Hose 3/8BSP 665mm with wire guard		1
27	:817/03808		Label indicator		1
28	.		'See Remark' *Not fitted*		0
29	811/80001		Pin pivot		2
30	1305/3222Z		Bolt 3/8"UNF x 3"		2
31	1340/0203Z		Nut		2
32	1450/0001		Nipple grease, straight 1/8 BSP		2
33	811/80001		Pin pivot		2
34	1305/3222Z		Bolt 3/8"UNF x 3"		2
35	1340/0203Z		Nut		2

Product Catalog \ CONSTRUCTION \ NORTH AMERICA \ CONSTRUCTION / INDUSTRIAL \ BACKHOE LOADER 3CX,4CX,214,215,217 \ 3C PLUS (91HP) , Made in Brazil with Dieselmax/IESA Engine 9812/0080 \ A ATTACHMENTS \ A01 SHOVELS

9812/0080 A1-8-2 SHOVEL, CLAM, 6 IN 1, 2350MM (7'8.5") WIDE, QUICKHITCH

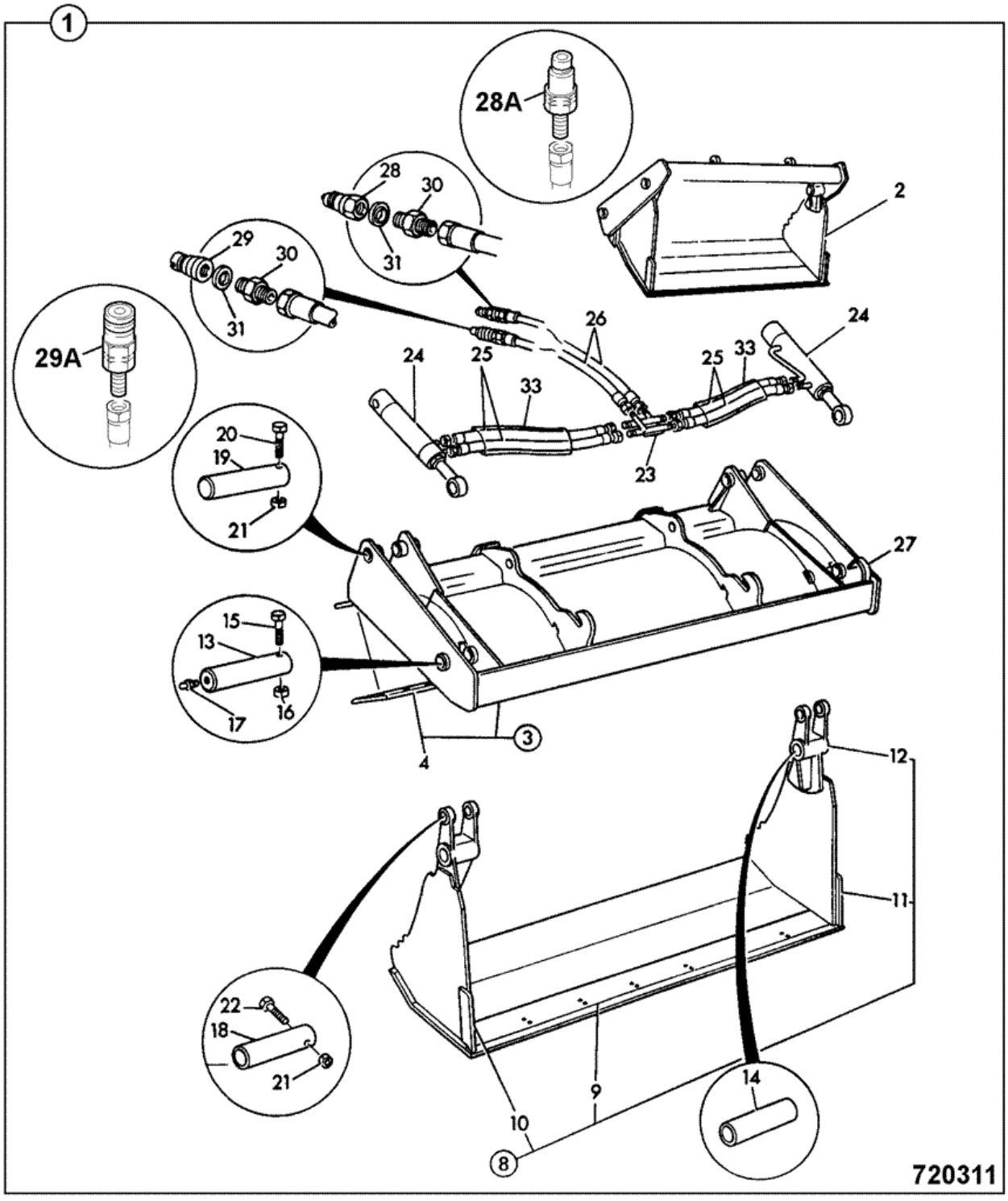

Item	Part #	Change No	Description	Usage Code	QTY
			Shovel 6 in 1 quickhitch 2350mm (7'8.5") wide		

1	126/00581		*1.0m3 SAE struck capacity.*		1
2	:NSP		None serviced part		1
3	:125/00173		Blade back quickhitch 2350mm (7'8.5") wide *1.0m3 SAE struck capacity.*		1
4	::123/02362		Toeplate 2343mm long		1
8	:125/50100		Jaw clamshovel 2350mm (7'8.5") wide		1
9	::123/04144		Toeplate 6 in 1 7'8" wide		1
10	::123/04423		Sidecutter right hand		1
11	::123/04422		Sidecutter left hand		1
12	::123/04274		Pivot casting right hand		1
12	::123/04275		Pivot casting left hand		1
13	:811/80007		Pin pivot		2
13A	:811/80007A		Pin pivot 0.1mm oversize		2
13B	:811/80007B		Pin pivot 0.25mm oversize		2
14	:1208/0023		Bush		2
15	:1305/3226Z		Bolt		2
16	:1340/0204Z		Nut philidas thin		2
17	:1450/1001		Nipple grease 90deg. angle		2
18	:811/50398		Pin pivot		2
18A	:811/50398A		Pin pivot 0.1mm oversize		2
18B	:811/50398B		Pin pivot 0.25mm oversize		2
19	:811/80018		Pin pivot		2
20	:1305/3222Z		Bolt 3/8"UNF x 3"		2
21	:1340/0203Z		Nut		5
22	:1305/3226Z		Bolt		2
23	:123/05538	Superseded	Pipe assembly backblade		1
23	:335/13748		Pipe assembly, backblade		1
24	:556/60331	Superseded	Ram clamshovel *For components see index E4*		2
24	:556/60401		Ram clamshovel 557 closed centres		2
25	:612/07700		Hose 3/8BSPx405		4
26	:612/00800		Hose		2
27	:817/03808		Label indicator		1
28	:45/910700		Coupling 3/8" BSP male quick hitch		1
28A	:45/920067		Coupling 3/8"BSP male quick release		1
29	:45/910600		Coupling 3/8" BSP female quick release		1
29A	:45/920066		Coupling 3/8"BSP female quick release		1
30	:1604/0003		Adapter male/male		2
30	1612/0003		Adapter male/female		2
31	:1406/0015		Washer seal		2
33	.		'See Remark' *Not fitted*		0

Product Catalog \ CONSTRUCTION \ NORTH AMERICA \ CONSTRUCTION / INDUSTRIAL \ BACKHOE LOADER 3CX,4CX,214,215,217 \ 3C PLUS (91HP) , Made in Brazil with Dieselmax/IESA Engine 9812/0080 \ A ATTACHMENTS \ A02 BUCKETS

9812/0080 A2-1-2 BUCKET, GENERAL PURPOSE, BOLT ON TEETH

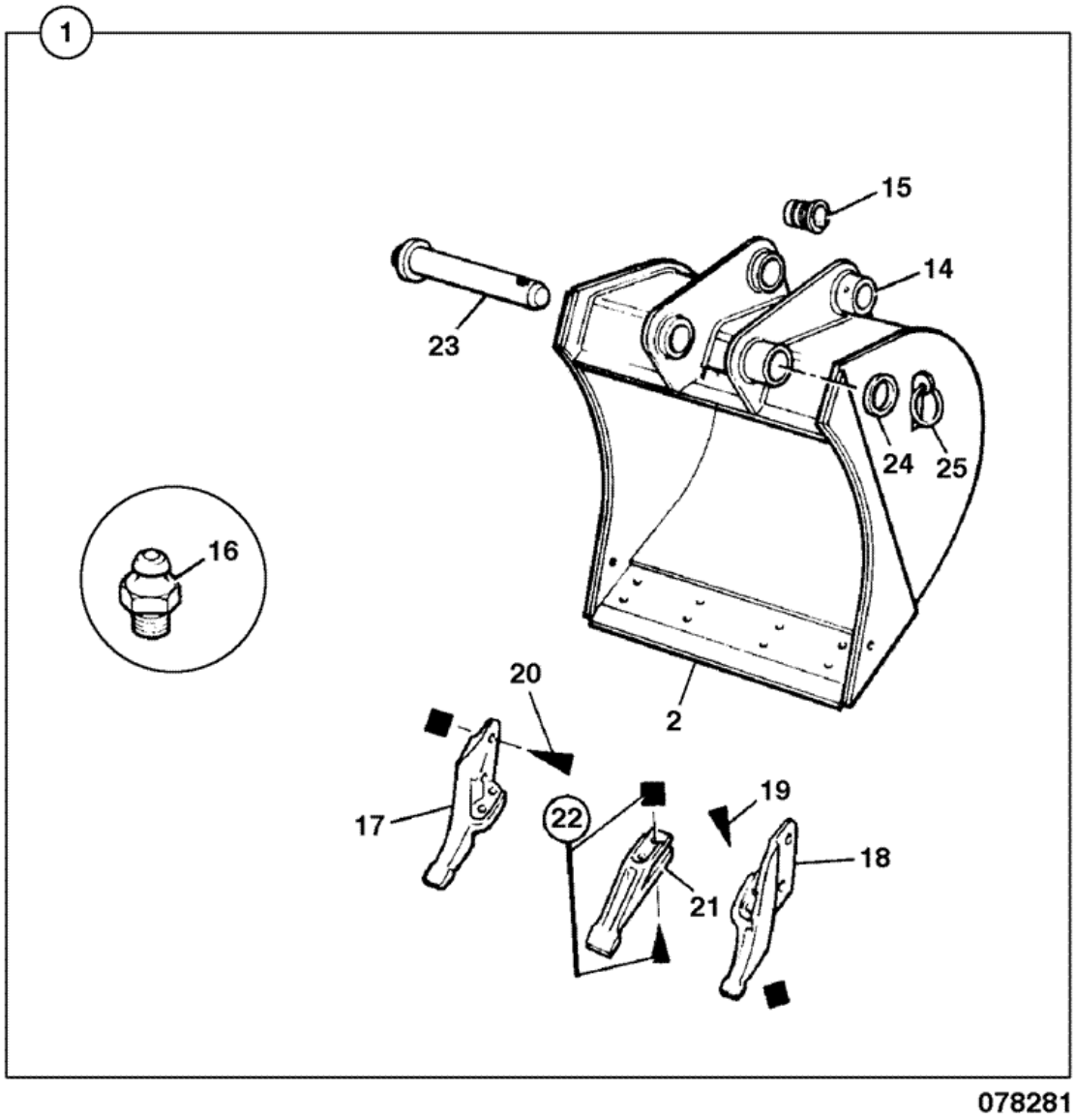

Item	Part #	Change No	Description	Usage Code	QTY
1	980/89818		Bucket 12in (305mm)	B	1

1	980/89989		Bucket 300mm	M	1
1	980/89990		Bucket 400mm	D	1
1	980/89991		Bucket 450mm	E	1
1	980/89992		Bucket 500mm	F	1
1	980/89993		Bucket 600mm	G	1
1	980/89994		Bucket 800mm	H	1
2	:531/24703		Toeplate 12in bucket	B	1
2	:331/47988		Toeplate 14" bucket	C	1
2	:331/49462		Toeplate 400mm bucket	D	1
2	:331/49466		Toeplate 450mm bucket	E	1
2	:331/49468		Toeplate 500mm bucket	F	1
2	:331/49470		Toeplate 600mm bucket	G	1
2	:331/49472		Toeplate 800mm bucket	H	1
2	331/49457		Toeplate 300mm bucket	M	1
14	NSP		None serviced part		1
15	:G65/0		Bush pivot	C to H	4
15	:809/10032		Bush Spring *12" bucket only*	B	4
16	:1450/0001		Nipple grease, straight 1/8 BSP	B to H	4
17	:531/03208		Sidecutter double flange right hand	B to H	1
18	:531/03209		Sidecutter double flange left hand	B to H	1
19	:826/00303		Ploughbolt 3/4unf x 70mm	B to H	4
19	:1340/0701Z		Nut	A to H	4
20	:1305/0714Z		Bolt	B to H	2
20	:1340/0701Z		Nut	B to H	2
21	:531/03205		Tooth	B to H	0
22	:826/00303		Ploughbolt 3/4unf x 70mm	B to H	0
22	:1340/0701Z		Nut	B to H	0
23	911/12400		Pin pivot	C to H	2
23	911/16600		Pin pivot 305mm *12" bucket only*	B	2
23	826/01598		Pin lynch	M	2
23	1019/2073		Pin pivot	M	2
24	823/00470		Washer	B to H	2
25	826/00512		Pin lynch	B to H	2

9812/0080 A2-1-3 BUCKET, GENERAL PURPOSE, BOLT ON TEETH

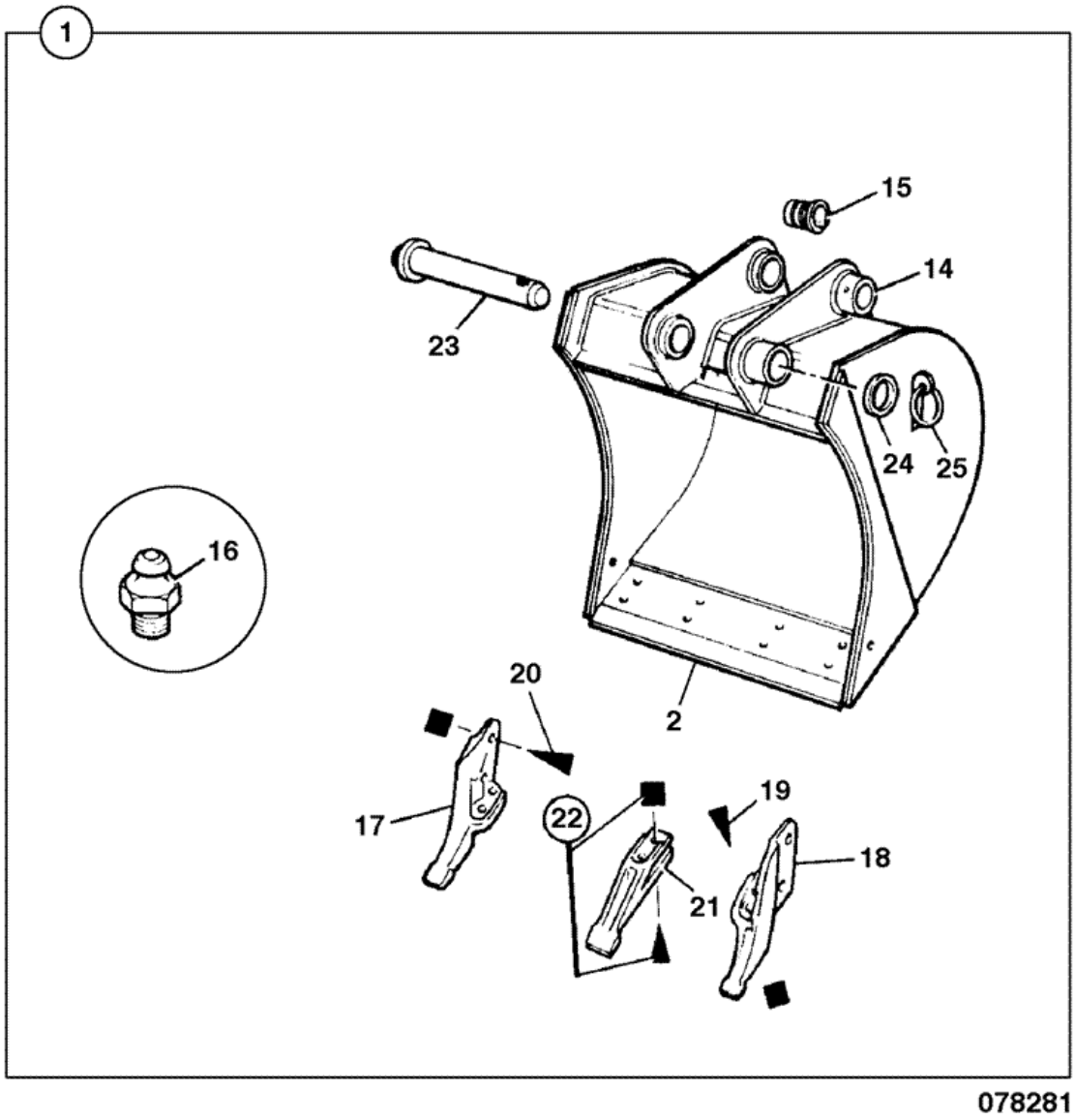

Item	Part #	Change No	Description	Usage Code	QTY
1	980/89993		Bucket 600mm	G	1

1	980/89994		Bucket 800mm	H	1
2	:331/49470		Toeplate 600mm bucket	G	1
2	:331/49472		Toeplate 800mm bucket	H	1
14	NSP		None serviced part		1
15	:G65/0		Bush pivot	G & H	4
16	:1450/0001		Nipple grease, straight 1/8 BSP	G & H	4
17	:531/03208		Sidecutter double flange right hand	G & H	1
18	:531/03209		Sidecutter double flange left hand	G & H	1
19	:826/00303		Ploughbolt 3/4unf x 70mm	G & H	4
19	:1340/0701Z		Nut	G & H	4
20	:1305/0714Z		Bolt	G & H	2
20	:1340/0701Z		Nut	G & H	2
21	:531/03205		Tooth	G & H	0
22	:826/00303		Ploughbolt 3/4unf x 70mm	G & H	0
22	:1340/0701Z		Nut	G & H	0
23	911/12400		Pin pivot	G & H	2
24	823/00470		Washer	G & H	2
25	826/00512		Pin lynch	G & H	2

9812/0080 A2-1-7 BUCKET, EXCAVATOR, HEAVY DUTY AND, HEAVY DUTY-HIGH CAPACITY

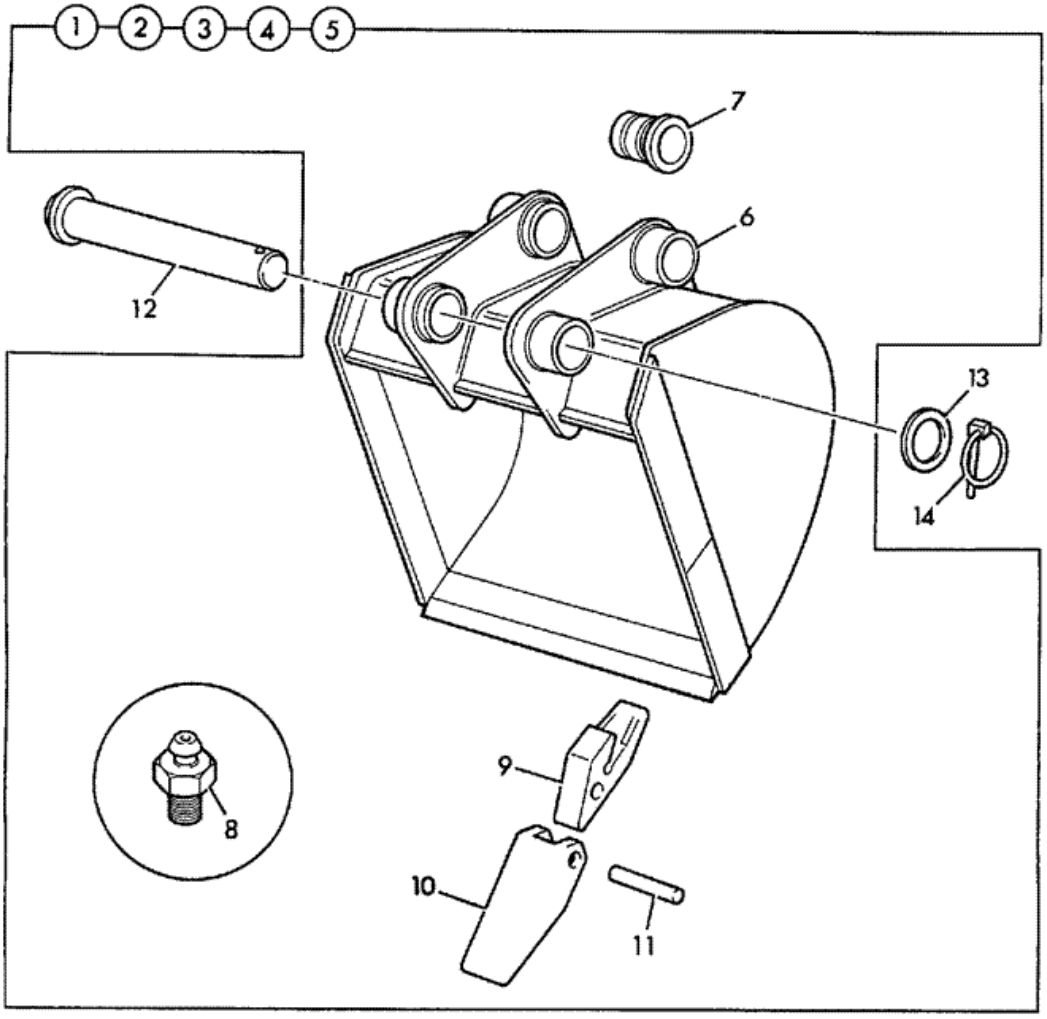

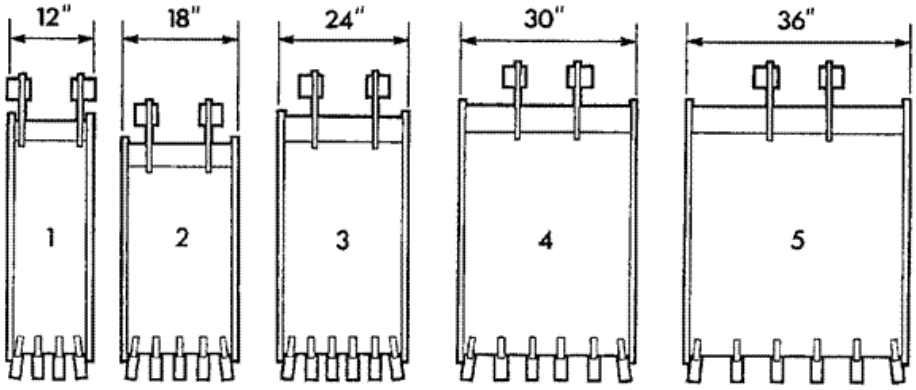

190570

Item	Part #	Change No	Description	Usage Code	QTY
1	980/88295		Bucket 305mm wide	A	1
1A	:980/84403		Toeplate 12"		1
2	980/88296		Bucket 457mm wide	B	1
2	980/88400		Bucket HIGH CAPACITY 18" heavy duty		1
2A	:980/84407		Toeplate 18"		1

3	980/88297		Bucket 610mm wide	C	1
3	980/88299		Bucket 610mm wide HD high capacity		1
3A	:980/84411		Toeplate 24"		1
4	980/88298		Bucket 762mm wide	D	1
4	980/88300		Bucket 762mm wide HD high capacity		1
4A	:980/84415		Toeplate 30"		1
5	980/88302		Bucket 914mm wide	E	1
5	980/88301		Bucket 914mm wide HD high capacity		1
5A	:980/84419		Toeplate 36"		1
6	:1096/2004		Boss pivot	ABCDE	4
7	:G65/0		Bush pivot	ABCDE	4
8	:1450/0001		Nipple grease, straight 1/8 BSP	ABCDE	4
9	:980/68209		Adapter tooth	ABCDE	0
10	:980/33601		Tooth tip-forged	ABCDE	0
11	:980/33603		Pin flex	ABCDE	0
12	911/12400		Pin pivot	ABCDE	2
13	823/00470		Washer	ABCDE	2
14	826/00512		Pin lynch	ABCDE	2

Product Catalog \ CONSTRUCTION \ NORTH AMERICA \ CONSTRUCTION / INDUSTRIAL \ BACKHOE LOADER 3CX,4CX,214,215,217 \ 3C PLUS (91HP) , Made in Brazil with Dieselmax/IESA Engine 9812/0080 \ A ATTACHMENTS \ A02 BUCKETS

9812/0080 A2-2-1 TOOTH, RIPPER

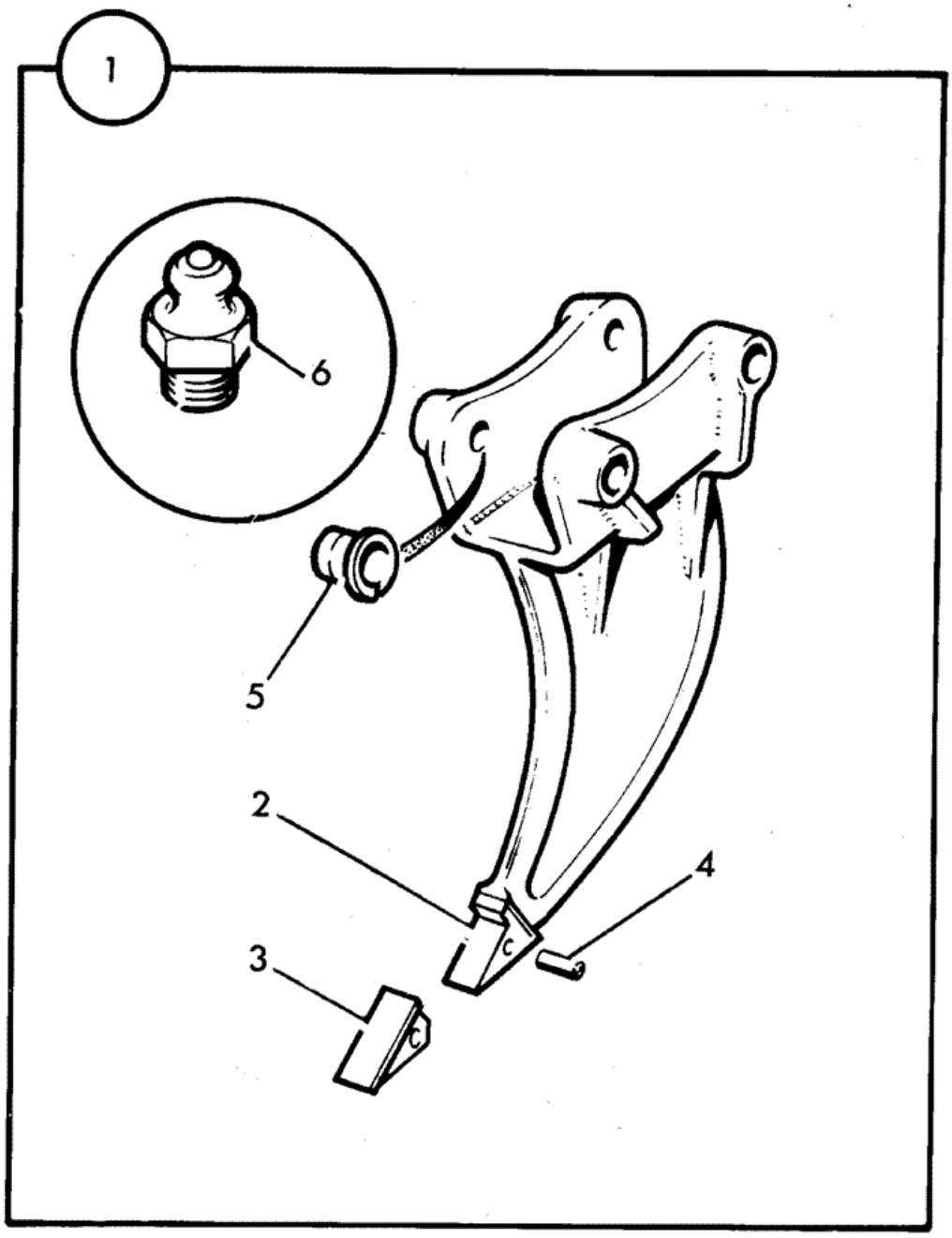

Item	Part #	Change No	Description	Usage Code	QTY
1	529/03000		Tooth Ripper Fabrication		1
2	:529/03102		Holder tooth,ripper casting		1

3	:529/03001		Tooth tip		1
4	:529/03002		Pin flex		1
5	:G65/0		Bush pivot		4
6	:1450/0001		Nipple grease, straight 1/8 BSP		1

9812/0080 A2-3-1 BLADE, DITCH CLEANING

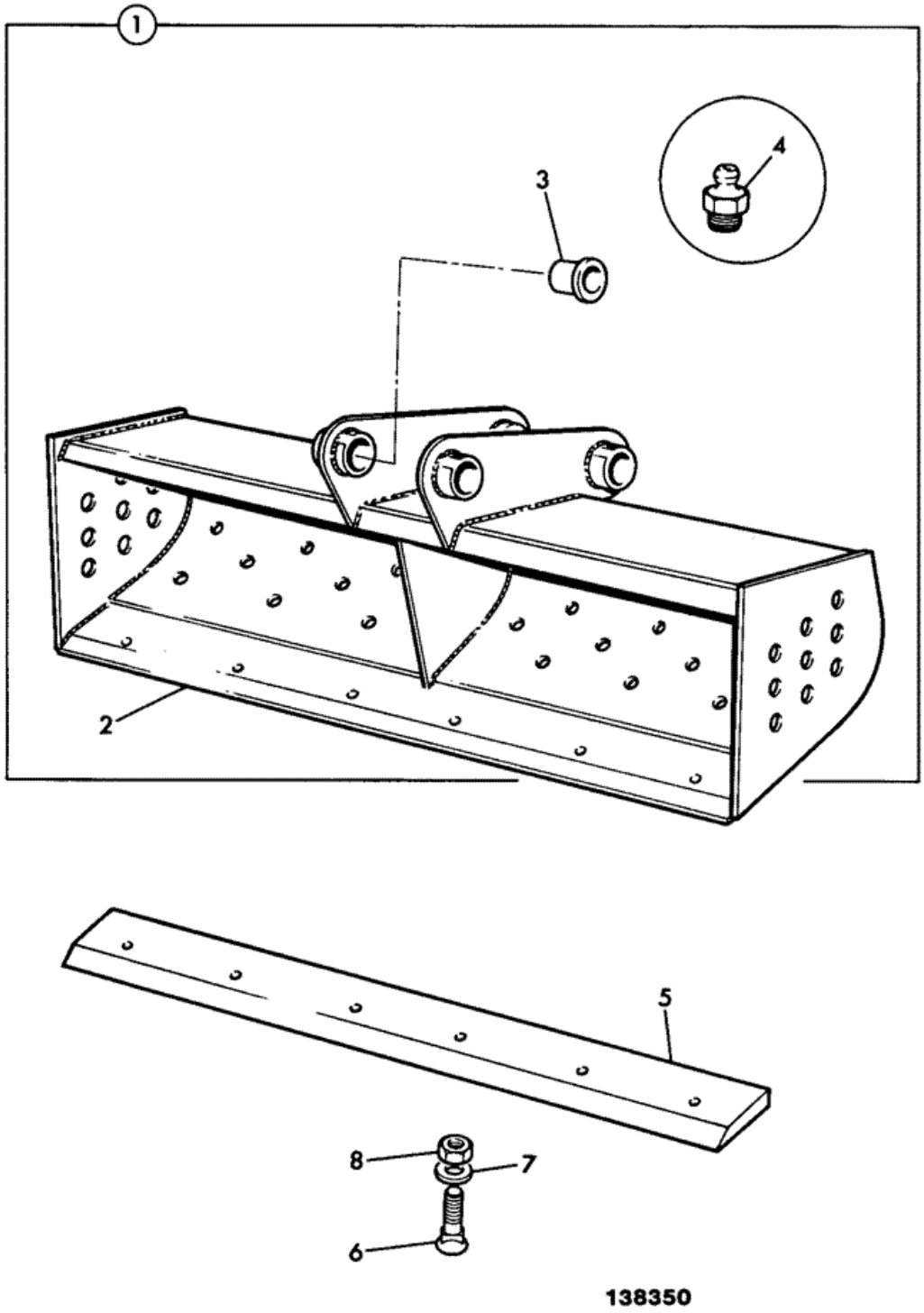

Item	Part #	Change No	Description	Usage Code	QTY
1	993/35700		Blade grading 1525mm wide	A	1
1	993/35800		Blade grading 1830mm wide	B	1
2	:534/02505		Toeplate 5'0" (1525mm)	A	1
2	:533/04704		Toeplate 6'0" (1830mm)	B	1
3	:G65/0		Bush pivot		4
4	:1450/0002		Nipple grease, straight 1/4		4
5	NSP		None serviced part		1
6	NSP		None serviced part		1
7	NSP		None serviced part		1
8	NSP		None serviced part		1

Product Catalog \ CONSTRUCTION \ NORTH AMERICA \ CONSTRUCTION / INDUSTRIAL \ BACKHOE LOADER 3CX,4CX,214,215,217 \ 3C PLUS (91HP) , Made in Brazil with Dieselmax/IESA Engine 9812/0080 \ A ATTACHMENTS \ A02 BUCKETS

9812/0080 A2-4-1 BUCKET, JAW, 460MM WIDE, JAW, 600MM WIDE

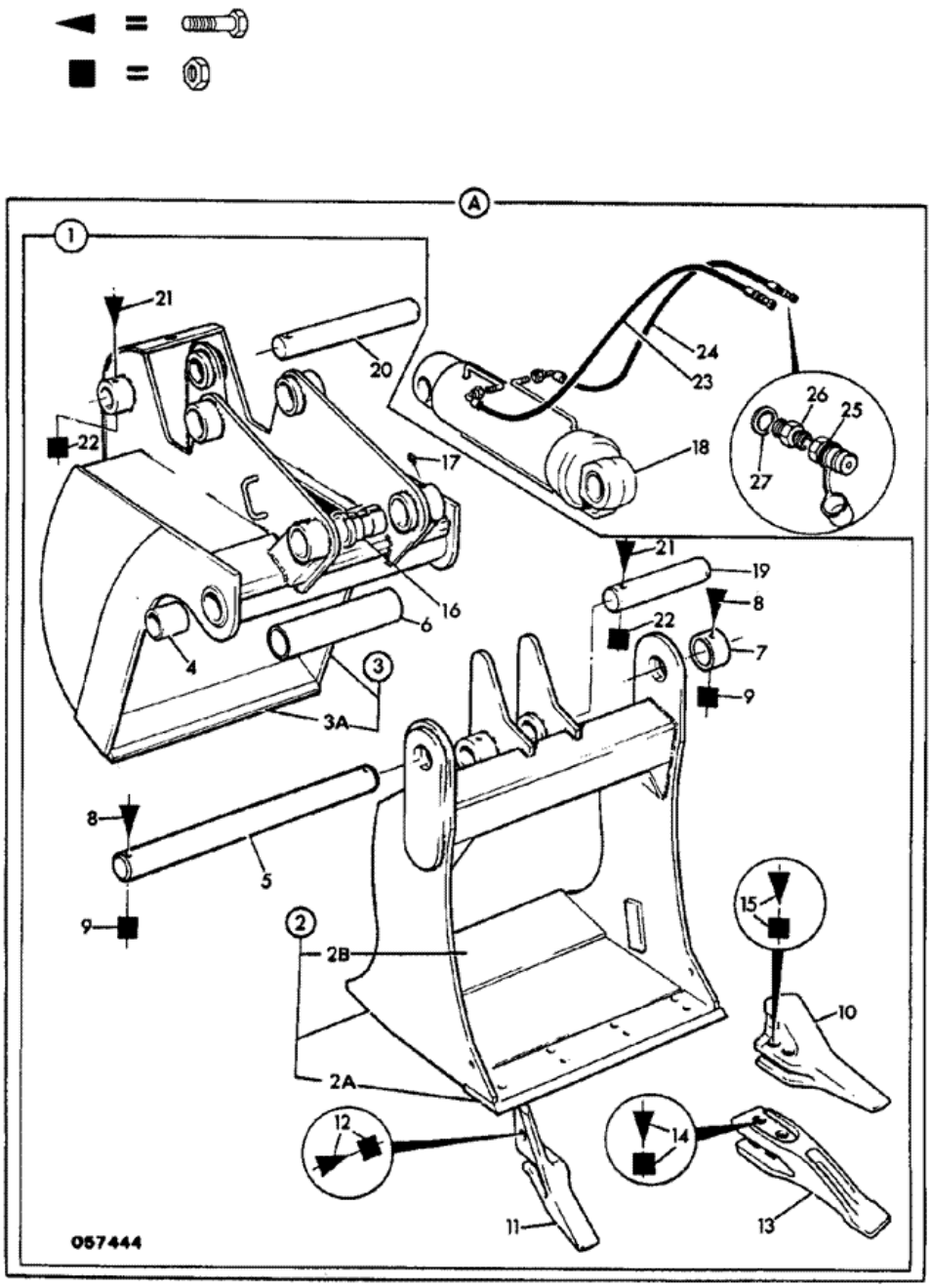

Item	Part #	Change No	Description	Usage Code	QTY
A	531/20100		Bucket jaw 460mm (18") wide	A	1

A	531/19800		Bucket jaw 600mm (23") wide	B	1
1	:531/20200		Bucket jaw 460mm (18") wide	A	1
1	:531/19900		Bucket jaw 600mm (23")	B	1
2	::529/69000		Jaw 460mm (18") wide	A	1
2	::529/69200		Jaw 600mm (23") wide	B	1
2A	:::529/69001		Toeplate front 460mm (18") wide *Welded to jaw*	A	1
2A	:::529/69201		Toeplate front 600mm (23") wide *Welded to jaw*	B	1
2B	:::529/24603		Toeplate rear 460mm (18") wide *Welded to jaw*	A	1
2B	:::529/24506		Toeplate rear 600mm (23") wide *Welded to jaw*	B	1
3	::531/20300		Blade dozer 460mm (18") wide	A	1
3	::531/20000		Blade dozer 600mm (23") wide	B	1
3A	:::529/25108		Toeplate 460mm (18") wide *Welded to blade*	A	1
3A	:::529/25204		Toeplate 600mm (23") wide *Welded to blade*	B	1
4	::1208/0017		Bush	AB	2
5	::811/20007		Pin pivot 460mm (18") wide jaw	A	1
5	::811/20008		Pin pivot 600mm (23") wide jaw	B	1
6	::830/00207		Spacer 460mm (18") wide jaw	A	1
6	::830/00208		Spacer 305mm wide jaw	B	1
7	::1089/0005		Collar	AB	1
8	::1305/3224		Bolt	AB	2
9	::1340/0203Z		Nut	AB	2
10	:531/03206		Sidecutter single flange	AB	1
10	:531/03208		Sidecutter double flange right hand	AB	1
11	:531/03207		Sidecutter single flange	AB	1
11	:531/03209		Sidecutter double flange left hand	AB	1
12	:1305/0714		Bolt	AB	2
12	:1340/0701		Nut	AB	2
13	:531/03205		Tooth	AB	2
14	:826/00303		Ploughbolt 3/4unf x 70mm	AB	4
14	:1340/0701		Nut	AB	4
15	:826/00303		Ploughbolt 3/4unf x 70mm	AB	4
15	:1340/0701		Nut	AB	4
16	:G65/0		Bush pivot	AB	4
17	:1450/0001		Nipple grease, straight 1/8 BSP	AB	6
18	:.		'See Remark' *See Index E4*	AB	1
19	:1019/2018		Pin Pivot	AB	1
20	:811/80013		Pin pivot	AB	1
21	:1305/3226		Bolt L=1.3/4"	AB	2
22	:1340/0203Z		Nut	AB	2
23	:613/22000		Hose	AB	1
24	:613/22000		Hose	AB	1
25	45/903400		Coupling *See Note 1*		2
26	1604/0004		Adapter male/male		2
27	1406/0018		Seal bonded 1/2" BSP		2

Note 1: A new design coupling 45/904800 & 45/904700 may be used to replace this part

Product Catalog \ CONSTRUCTION \ NORTH AMERICA \ CONSTRUCTION / INDUSTRIAL \ BACKHOE LOADER 3CX,4CX,214,215,217 \ 3C PLUS (91HP) , Made in Brazil with Dieselmax/IESA Engine 9812/0080 \ A ATTACHMENTS \ A03 ATTACHMENTS

9812/0080 A3-1-5 FORK LIFT, 6 IN 1 CLAM SHOVEL, MOUNTED 1.0M3

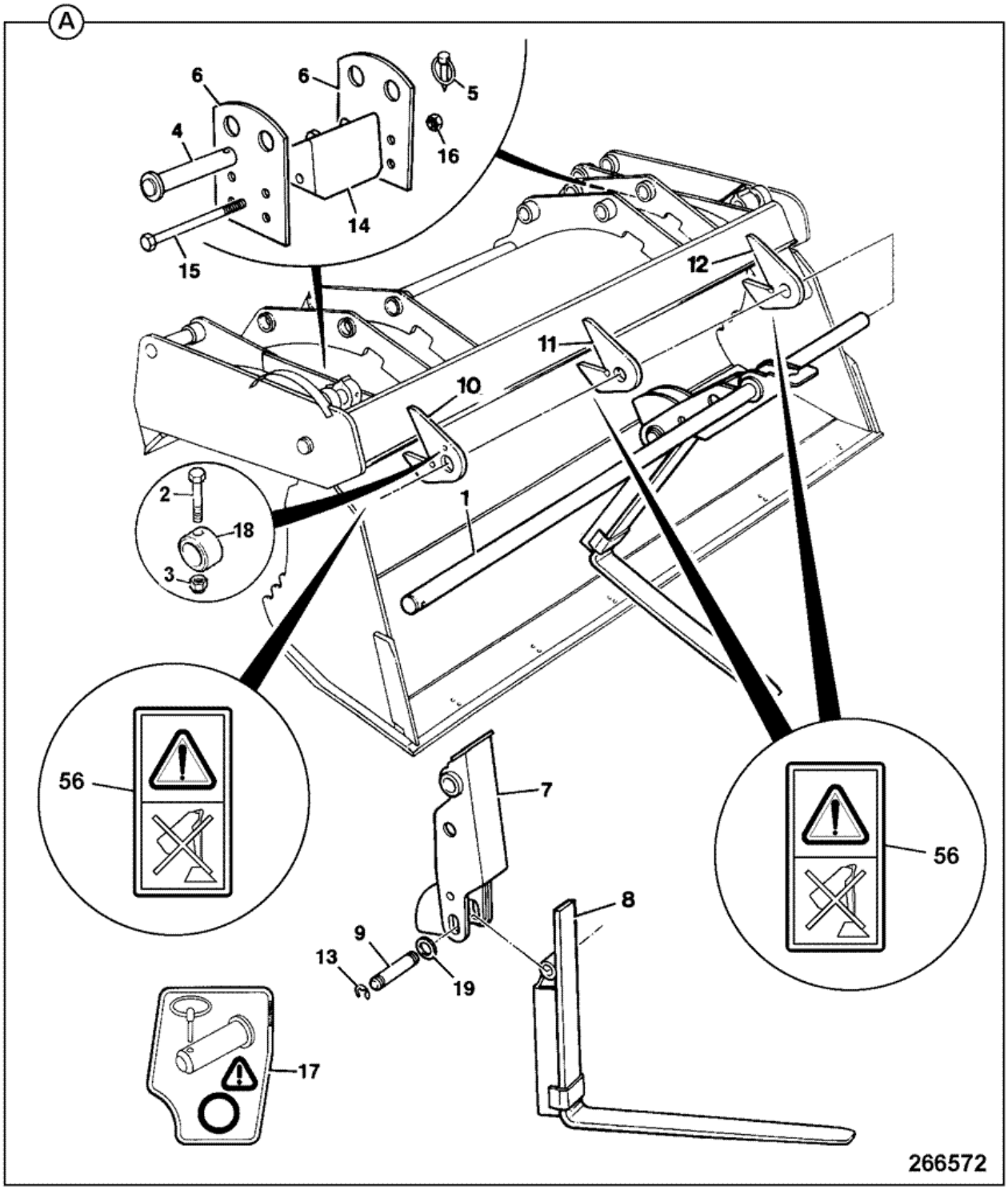

Item	Part #	Change No	Description	Usage Code	QTY
1	123/06667		Pin pivot		1

2	1315/3416Z		Bolt hex. head M10 x 70		2
3	1370/0303Z		Nut lock M10		1
4	123/00932		Pin pivot		2
5	826/00600		Pin linch		2
6	123/07329		Bracket		4
7	125/00224		Carrier link arm 1.0m3		2
8	123/04827		Fork		2
9	811/70109		Pin pivot		2
10	123/04293		Bracket fork rail support		1
11	123/04294		Bracket fork rail support		1
12	123/04293		Bracket fork rail support		1
13	821/00309		Clip 'E'		4
14	123/06296		Block rubber pad		2
15	1315/3424Z		Bolt M10 x 140		2
16	1370/0303Z		Nut lock M10		2
17	817/04503		Decal		2
18	123/06668		Collar		2
19	823/00569	Superseded	Spacer		4
19	332/C7128		Washer 39x60x3.2mm		4
56	817/70144		Label no pull		3

Product Catalog \ CONSTRUCTION \ NORTH AMERICA \ CONSTRUCTION / INDUSTRIAL \ BACKHOE LOADER 3CX,4CX,214,215,217 \ 3C PLUS (91HP) , Made in Brazil with Dieselmax/IESA Engine 9812/0080 \ A ATTACHMENTS \ A03 ATTACHMENTS

9812/0080 A3-3-1 ROCKBREAKER, HM265Q, 980/90241

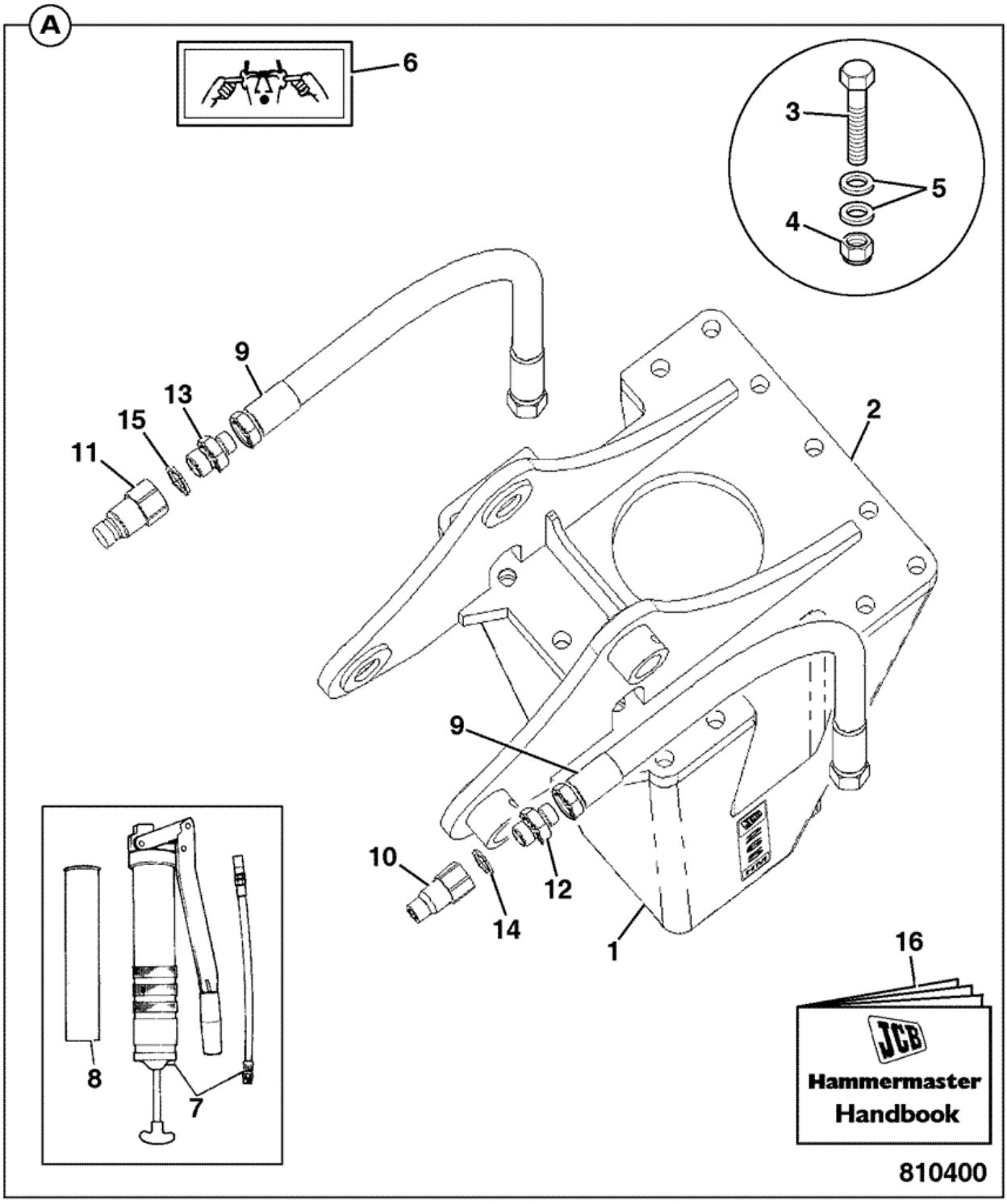

Item	Part #	Change No	Description	Usage Code	QTY
A	980/90241		Rockbreaker HM265Q assembly		1
1	:980/90192		Rockbreaker SB410 ABI		1

			For components see A3-3-11		
2	:335/10703		Bracket hanger HM265 JCB2CX		1
3	:1315/3717D		Bolt M16x75		14
4	:1370/0603Z		Nut M16		14
5	:823/10400		Washer Nord-lock M16		28
6	:332/P4712		Label ear protection		1
7	:992/11300		Tool grease gun		1
8	:4003/1119		Cartridge grease, hammer P64		1
9	:613/07900		Hose		2
10	:45/910500		Coupling 1/2" BSP male quick release		1
11	:45/910300		Coupling 3/4" BSP male quick release		1
12	:1606/0009		Adapter reducing		1
13	:1604/0004		Adapter male/male		1
14	:1406/0018		Seal bonded 1/2" BSP		1
15	:1406/0021		Seal bonded 3/4" BSP		1
16	:9814/0525		Book rockbreaker instruct HM165, 265, 385,495		1

9812/0080 A3-7-1 TOOTH & TOEPLATE, OPTIONS, SHOVELS

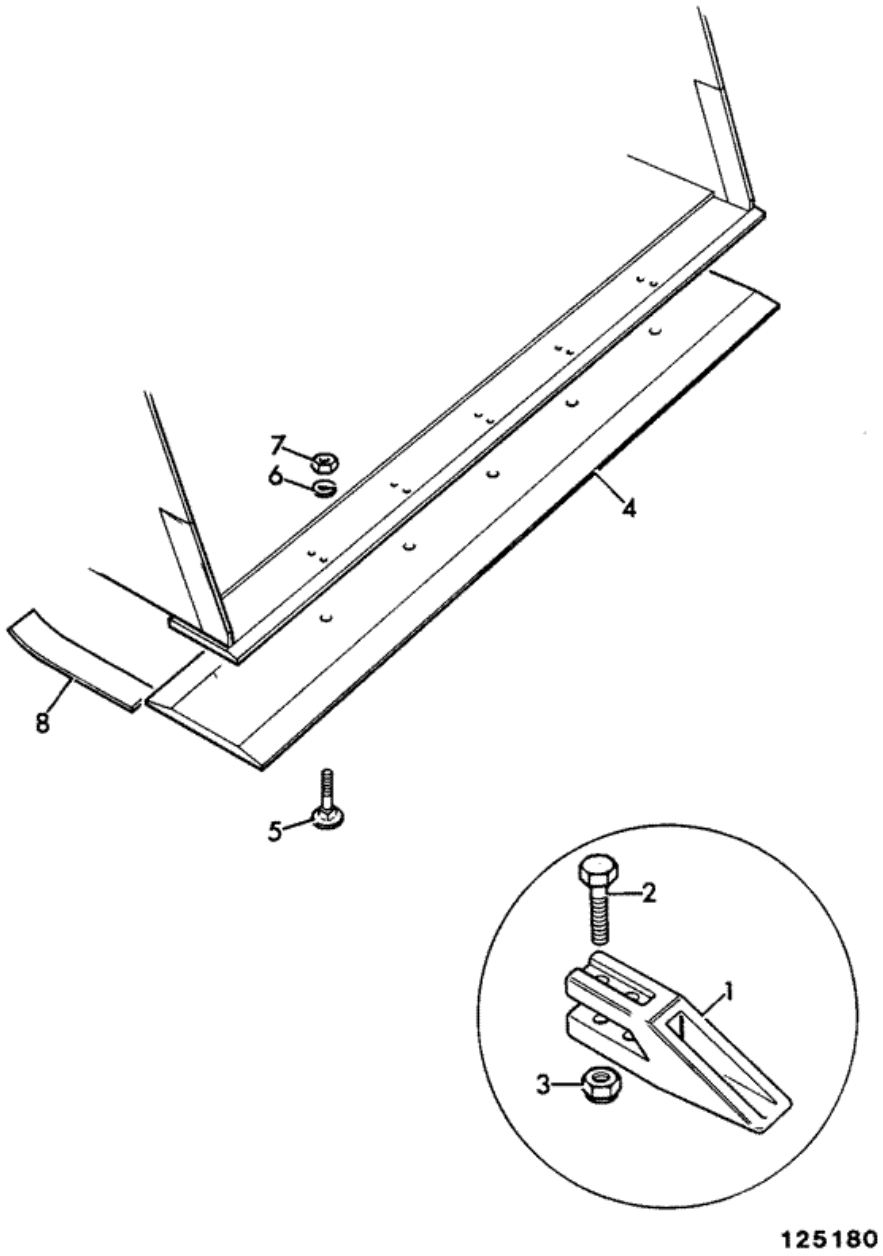

Item	Part #	Change No	Description	Usage Code	QTY
1	531/03205		Tooth		0
2	826/00303		Ploughbolt 3/4unf x 70mm *2 per tooth*		0
3	1340/0701Z		Nut		0
4	993/99391		Toeplate 8 hole, bolt on type 295mm x 2235mm long *double cutting edge*		1

5	826/00217		Ploughbolt 3/4UNF x 2 1/4		0
6	1416/0011		Washer		0
7	1340/0701Z		Nut		0

Product Catalog \ CONSTRUCTION \ NORTH AMERICA \ CONSTRUCTION / INDUSTRIAL \ BACKHOE LOADER 3CX,4CX,214,215,217 \ 3C PLUS (91HP) , Made in Brazil with Dieselmax/IESA Engine 9812/0080 \ A ATTACHMENTS \ A03 ATTACHMENTS

9812/0080 A3-8-1 FORK FRAMES & FORKS, INDUSTRIAL

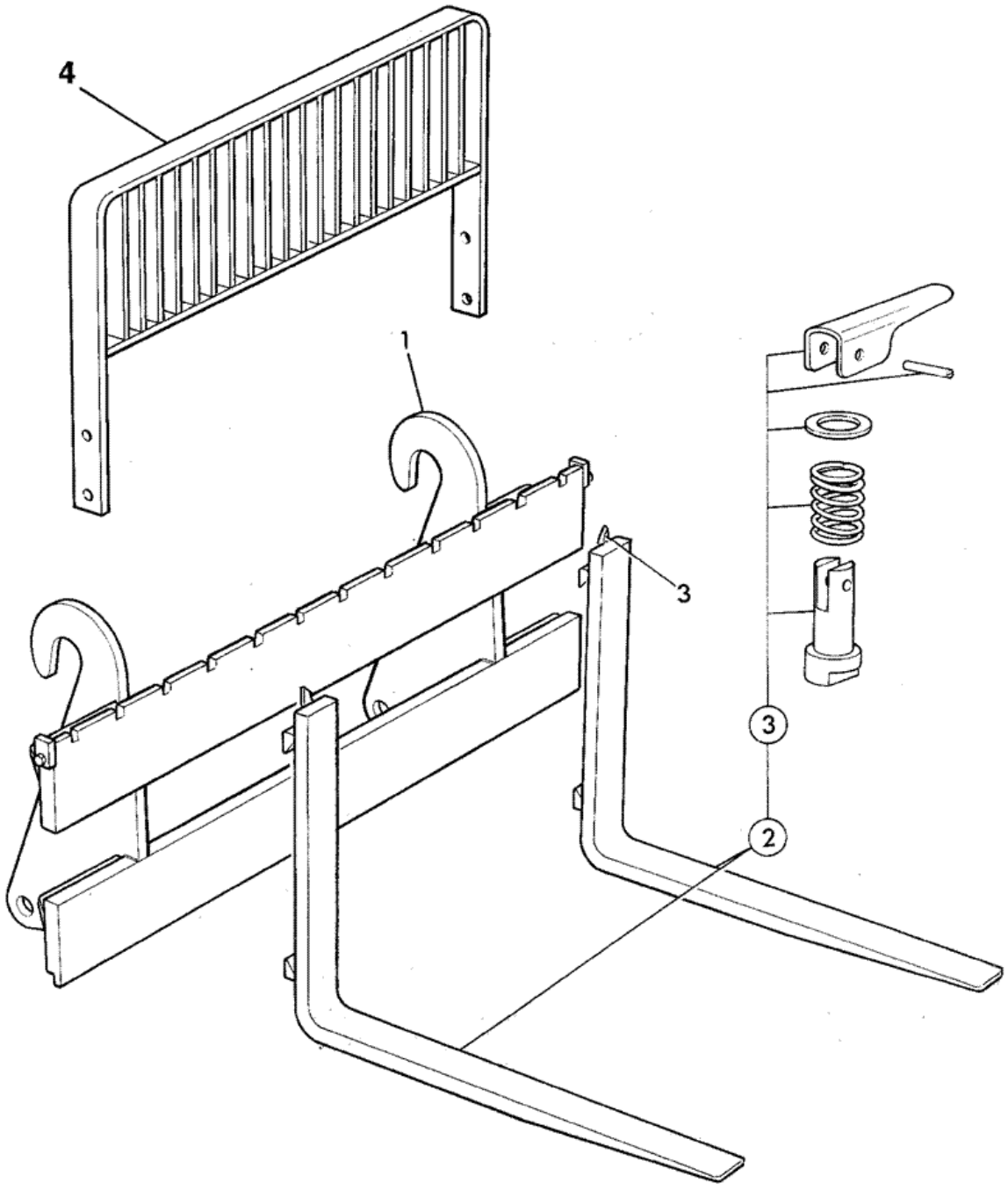

251310

Item	Part #	Change No	Description	Usage Code	QTY
1	980/07200		Frame fork		1
2	123/01374		Fork 2T S.W.L.		1

3	993/51100		Kit-fork retention Class 2 fork		1
4	980/14200		Guard load		1

9812/0080 A1-1-10 SHOVEL, G.P 1.1M3, 2350MM (7'8") H/DUTY, BRAZIL HIGH PIVOT

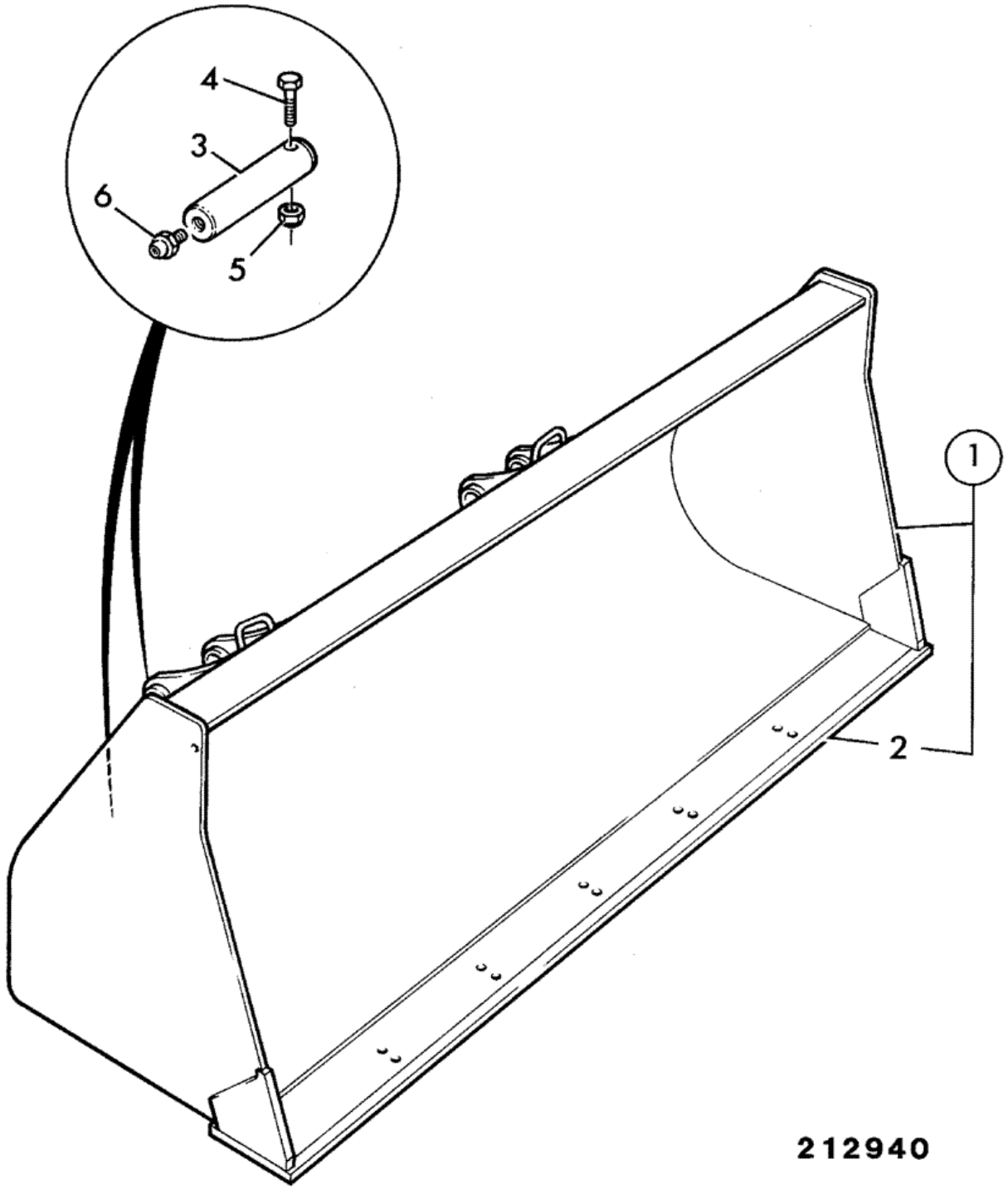

Item	Part #	Change No	Description	Usage Code	QTY

1	339/01033		Shovel 1.1m3(7'8") H/Duty Brazil, High pivots		1
2	:331/37529		Toeplate 1.1m3 shovel 214e Brazil		1
3	811/80001		Pin pivot		4
4	1305/3222Z		Bolt 3/8"UNF x 3"		4
5	1340/0203Z		Nut		4
6	1450/0001		Nipple grease, straight 1/8 BSP		4

Product Catalog \ CONSTRUCTION \ NORTH AMERICA \ CONSTRUCTION / INDUSTRIAL \ BACKHOE LOADER 3CX,4CX,214,215,217 \ 3C PLUS (91HP) , Made in Brazil with Dieselmax/IESA Engine 9812/0080 \ A ATTACHMENTS \ A03 ATTACHMENTS

9812/0080 A3-24-5 QUICKHITCH, EXCAVATOR

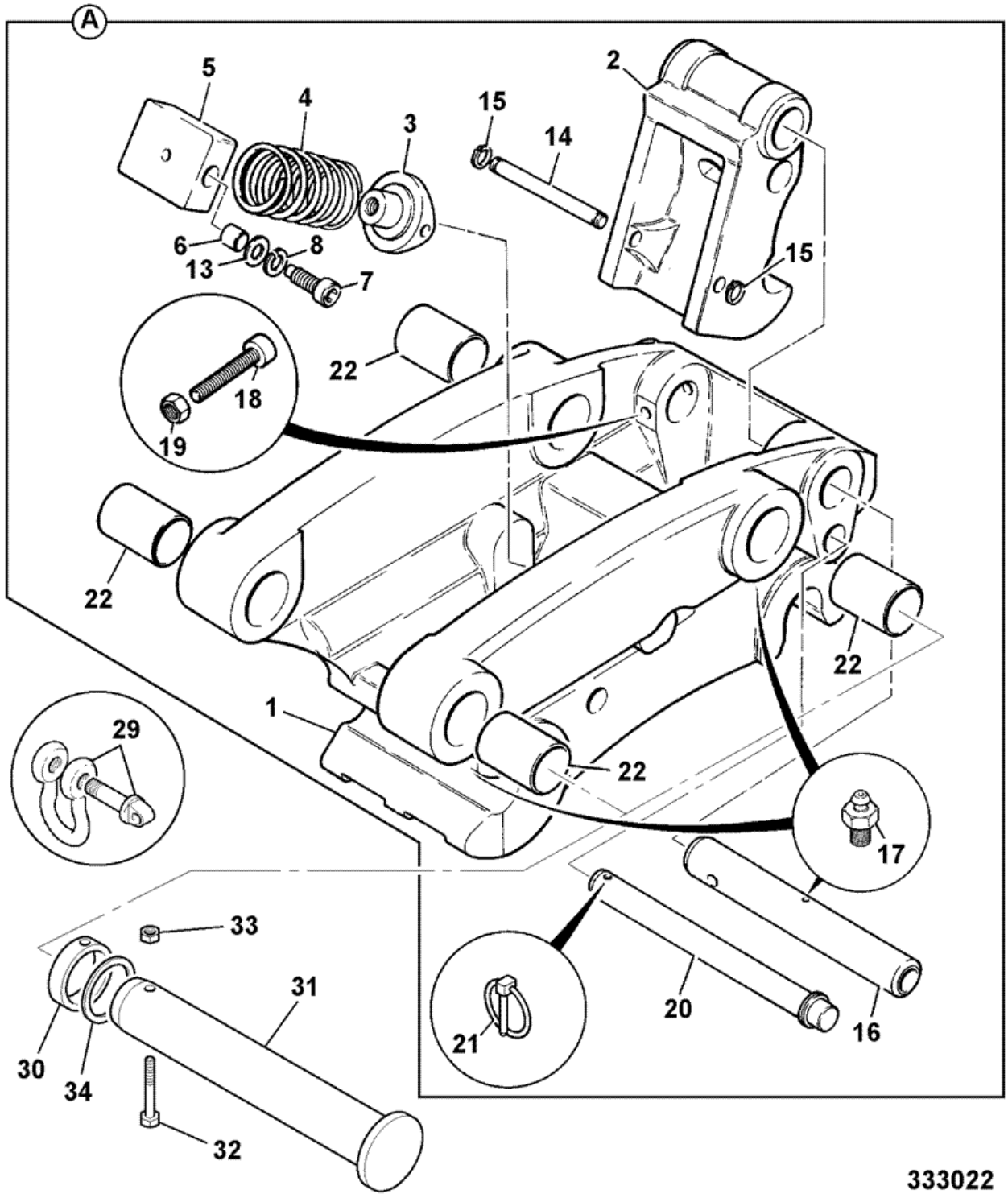

Item	Part #	Change No	Description	Usage Code	QTY
A	126/03077		Kit-quickhitch mechanical		1
1	:128/10412		Body c/w bearings quickhitch		1

2	:123/07757		Latch		1
3	:123/07772		Pivot quickhitch		1
4	:814/10143		Spring off-pins quichhitch		1
5	:128/10413		Block pivot c/w bearings		1
6	::831/00137		Bush		2
7	:123/07761		Bolt trunnion		2
8	:1425/0014Z		Washer		2
13	:.		'See Remark' *no longer fitted*		2
14	:123/07762		Pin pivot		1
15	:826/00614		Circlip		2
16	:811/50578		Pin pivot		1
17	:1450/0001		Nipple grease, straight 1/8 BSP		5
18	:1391/3419Z		Capscrew		1
19	:1370/0303Z		Nut lock M10		1
20	:123/07763		Pin lock		1
21	:826/00600		Pin linch		1
22	:809/00192		Bearing		4
27	:123/09001		Plate SWL 1ton		1
28	:826/00562		Screw hammer drive		2
29	918/66900		Link bow. 1 TON SWL		1
30	123/06668		Collar		2
31	911/12400		Pin pivot		2
32	1315/3416Z		Bolt hex. head M10 x 70		2
33	1370/0303Z		Nut lock M10		2
34	823/00470		Washer		2

9812/0080 A3-3-11 ROCKBREAKER, HM265Q, COMPONENTS

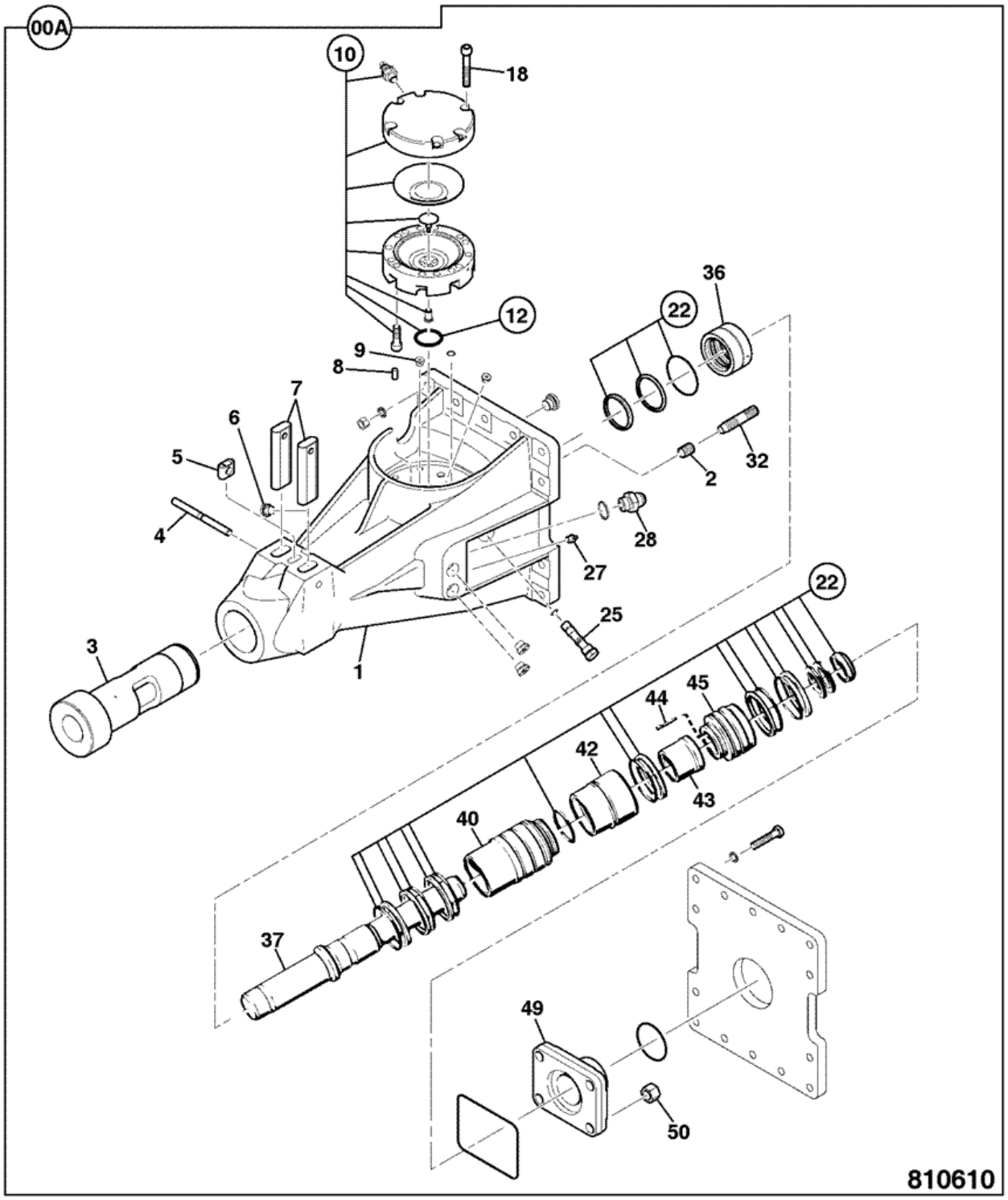

Item	Part #	Change No	Description	Usage Code	QTY
			'See Remark'		

A	.		*See A3-3-1*		1
1	:980/90192		Rockbreaker SB410 ABI		1
2	::331/56106		Insert thread		4
3	::331/56109		Bush BUSH		1
3	::331/56110		Bush 1mm oversize		1
4	::331/56113		Pin lock		1
5	::331/56085		Lock buffer		1
6	::331/56118		Plug		3
7	::331/56120		Retainer tool		2
8	::331/56121		Pin parallel		1
9	::331/56122		Plug		2
10	::331/56123		Accumulator assembly		1
10A	331/62382		Valve charge		1
12	::331/56136		Kit-repair accumulator		1
18	::331/56124		Screw		4
22	::331/56139		Kit-repair breaker		1
24	::331/56013		Plug hex socket		1
25	::331/56125		Restrictor		1
27	::816/13445		Nipple grease		1
28	::1604/0004		Adapter male/male		2
32	::331/56127		Stud		4
36	::331/56128		Guide piston		1
37	::331/56129		Piston		1
40	::331/56130		Liner		1
42	::331/56131		Housing valve		1
43	::331/56132		Valve main		1
44	::331/55931		Plunger		6
45	::331/56133		Housing seal		1
49	::331/56134		Bracket end piece		1
50	::331/56135		Nut		4
51	817/20107		Decal HM265		2

Product Catalog \ CONSTRUCTION \ NORTH AMERICA \ CONSTRUCTION / INDUSTRIAL \ BACKHOE LOADER 3CX,4CX,214,215,217 \ 3C PLUS (91HP) , Made in Brazil with Dieselmax/IESA Engine 9812/0080 \ A ATTACHMENTS \ A03 ATTACHMENTS

9812/0080 A3-3-21 ROCKBREAKER, HM385Q, 980/90239

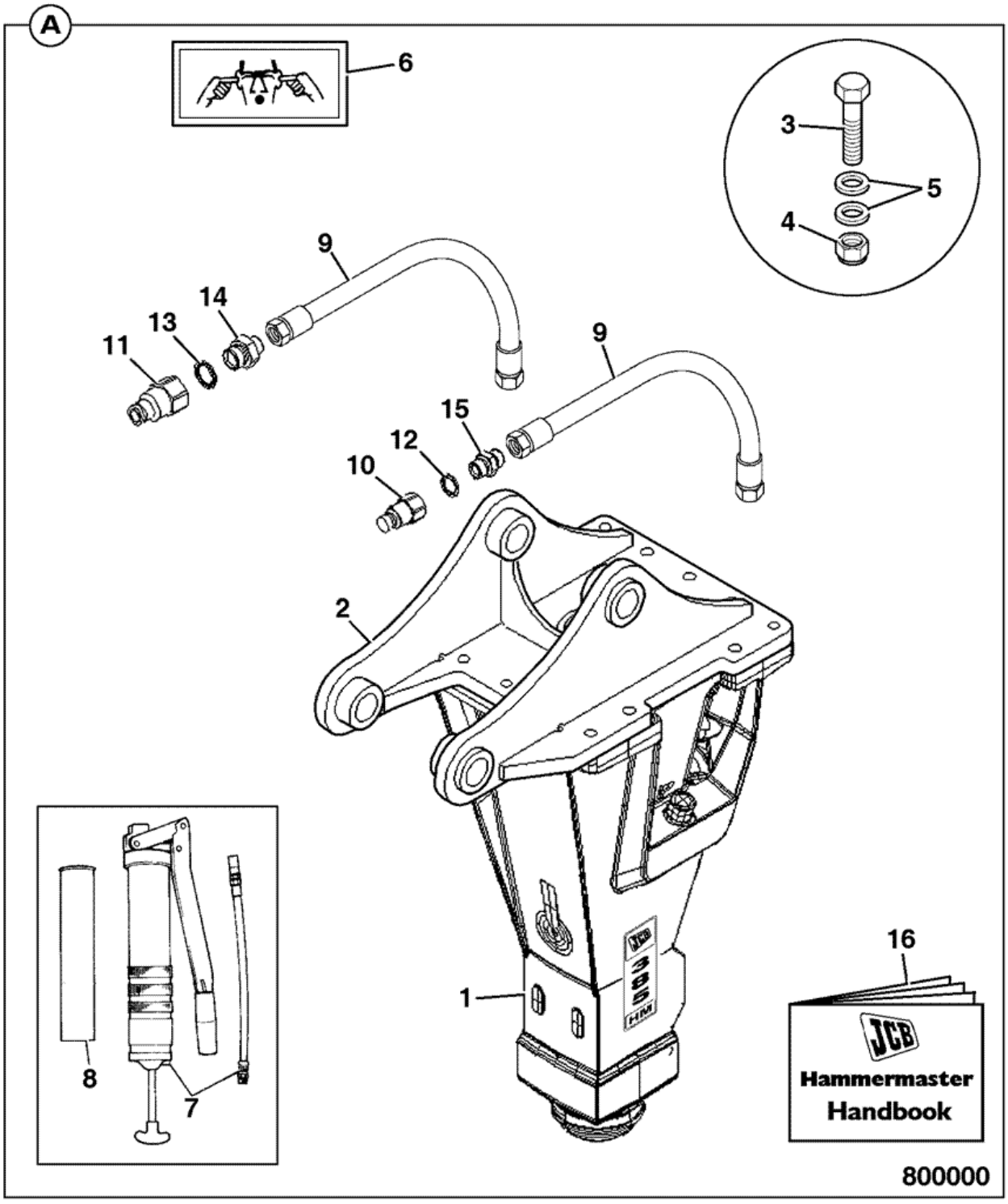

Item	Part #	Change No	Description	Usage Code	QTY
A	980/90239		Rockbreaker HM385Q assembly 3CX 4CX		1
1	:980/90191		Rockbreaker HM385Q ABI		1

			For components see A3-3-31		
2	:335/09865	Superseded	Bracket hanger HM385 3CX, 4CX		1
2	335/11592		Bracket HANGER BRACKET 3CX - HM365Q		1
3	:1315/3718D		Bolt		14
4	:1370/0603Z		Nut M16		14
5	:823/10400		Washer Nord-lock M16		28
6	:332/P4712		Label ear protection		1
7	:992/11300		Tool grease gun		1
8	:4003/1119		Cartridge grease, hammer P64		1
9	:615/80103		Hose		2
10	:45/910300		Coupling 3/4" BSP male quick release		1
11	:45/910200		Coupling 1"BSP male quick release		1
12	:1406/0021		Seal bonded 3/4" BSP		1
13	:1406/0026		Washer seal		1
14	:1606/0012		Adapter		1
15	:1604/0006		Adapter 3/4" BSP M/M		1
16	:9814/0525		Book rockbreaker instruct HM165, 265, 385,495		1
17	817/20423		Label pump flow/rpm		1
18	:335/12566		Lever bent		1

Product Catalog \ CONSTRUCTION \ NORTH AMERICA \ CONSTRUCTION / INDUSTRIAL \ BACKHOE LOADER 3CX,4CX,214,215,217 \ 3C PLUS (91HP) , Made in Brazil with Dieselmax/IESA Engine 9812/0080 \ A ATTACHMENTS \ A03 ATTACHMENTS

9812/0080 A3-3-31 ROCKBREAKER, HM385Q, COMPONENTS

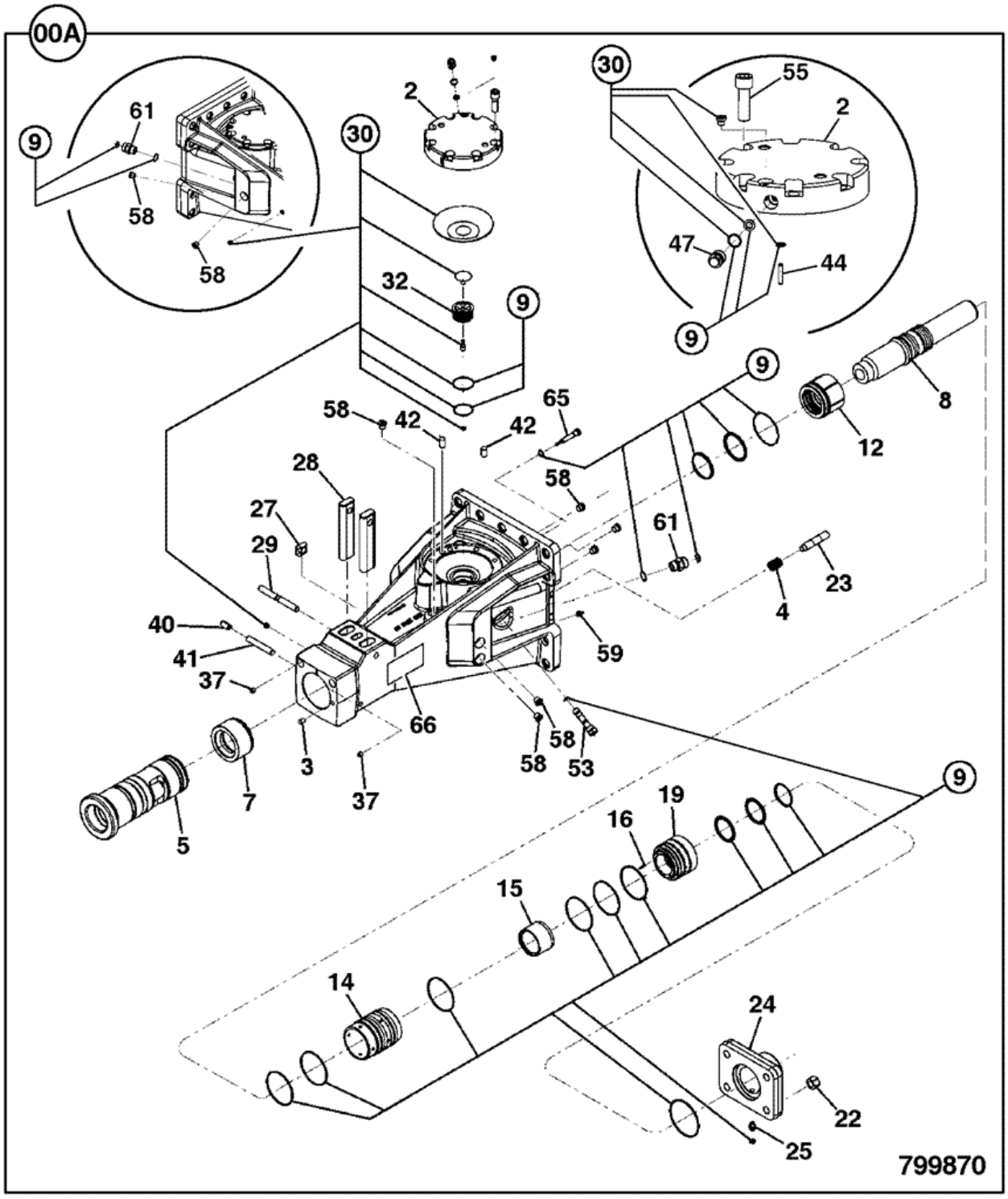

Item	Part #	Change No	Description	Usage Code	QTY
			'See Remark'		

A	.		*See A3-3-21*		1
1	:980/90191		Rockbreaker HM385Q ABI		1
2	::331/55898		Housing Accumulator		1
3	::331/56022		Plug		1
4	::331/55983		Insert thread		4
5	::331/55979		Bush		1
7	::331/55903		Stop ring		1
8	::331/55907		Piston		1
9	::331/55895		Kit-repair Breaker		1
12	::331/55909		Guide piston		1
14	::331/55911		Liner		1
15	::331/55913		Valve main		1
16	::331/55931		Plunger		8
19	::331/55932		Housing seal		1
22	::331/55933		Nut		4
23	::331/55936		Stud		4
24	::331/55938		Bracket end piece		1
25	::331/55940		Valve check complete		1
27	::331/55945		Buffer lock		1
28	::331/55947		Retainer Tool		1
29	::331/55949		Pin lock		1
30	::331/55930		Kit-repair accumulator		1
32	::331/55956		Seat diaphragm support		1
37	::331/55996		Plug		2
40	::826/11502		Pin spring		1
41	::331/55958		Pin parallel		1
42	::331/56010		Pin parallel		2
44	::331/56011		Pin parallel		1
47	::331/55951		Valve charge		1
53	::331/55990		Restrictor		1
55	::331/55966		Capscrew		8
58	::331/56013		Plug hex socket		8
59	::816/13445		Nipple grease		1
61	:1604/0006		Adapter 3/4" BSP M/M		2
65	::331/56018		Pin lock		1
66	:817/20106		Decal HM385		2
67	817/20423		Label pump flow/rpm		1

Product Catalog \ CONSTRUCTION \ NORTH AMERICA \ CONSTRUCTION / INDUSTRIAL \ BACKHOE LOADER 3CX,4CX,214,215,217 \ 3C PLUS (91HP) , Made in Brazil with Dieselmax/IESA Engine 9812/0080 \ A ATTACHMENTS \ A03 ATTACHMENTS

9812/0080 A3-6-10 QUICKHITCH, LOADER, MANUAL

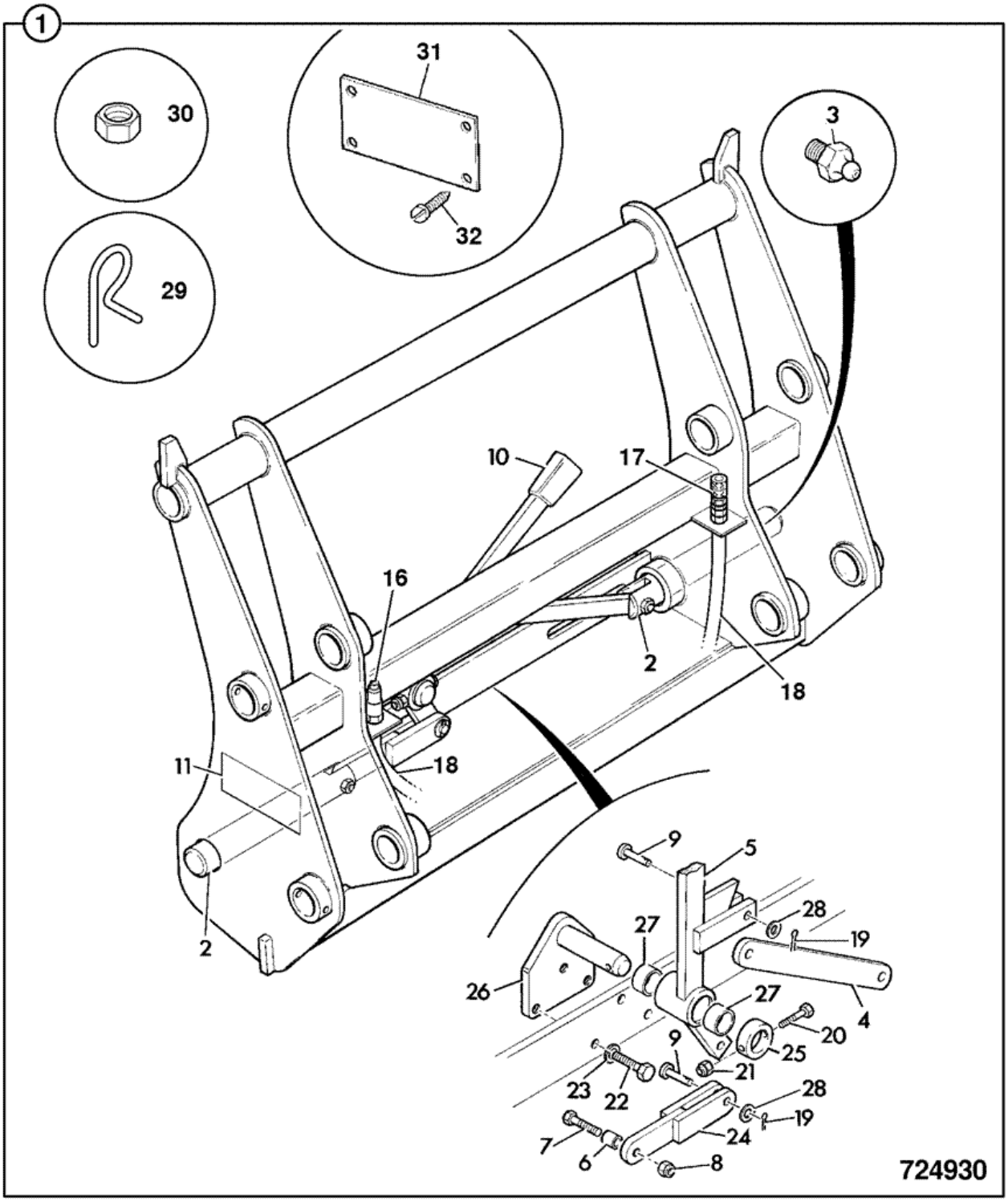

Item	Part #	Change No	Description	Usage Code	QTY
A	980/89601		Attachment Quickhitch		1
1	:335/06316		Quickhitch loader		1

2	:980/11401		Pin pivot		2
3	:1450/0001A		Nipple grease		2
4	:980/84223		Link LONG		1
5	:980/86033		Handle		1
6	:980/82200		Spacer 22mm long		2
7	:1315/3419Z		Bolt M10x90mm		2
8	:1370/0303Z		Nut lock M10		2
9	:980/84225		Pin		3
10	:123/01256		Handle grip		1
11	:N.S.P		None serviced part		1
13	:45/920067		Coupling 3/8"BSP male quick release		1
14	:45/920066		Coupling 3/8"BSP female quick release		1
15	:612/07600		Hose high pressure, 3/8" L=610		2
16	:2103/0709		Pin split		2
17	:1315/3213Z		Bolt M6x55		1
18	:1370/0103Z		Nut Self lock M6		1
19	:1315/0507Z		Bolt		3
20	:1425/0009Z		Washer Spring M12		3
21	:980/86035		Link short		1
22	:980/84224		Boss		1
23	:980/86034		Bracket		1
24	:980/11402		Bush		1
25	:1420/0008Z		Washer Plain M10		2
26	:826/00479		Clip 'R'		1
27	:1356/0203Z		Nut backing		2
28	:817/19231		Label 1.1M3 Max.		1
29	:826/10511		Fastener		8

Product Catalog \ CONSTRUCTION \ NORTH AMERICA \ CONSTRUCTION / INDUSTRIAL \ BACKHOE LOADER 3CX,4CX,214,215,217 \ 3C PLUS (91HP) , Made in Brazil with Dieselmax/IESA Engine 9812/0080 \ B BODYWORK, CAB, LOADER END \ B01 BODYWORK/FRAME

9812/0080 B1-5-1 BONNET ASSEMBLY, 2WS

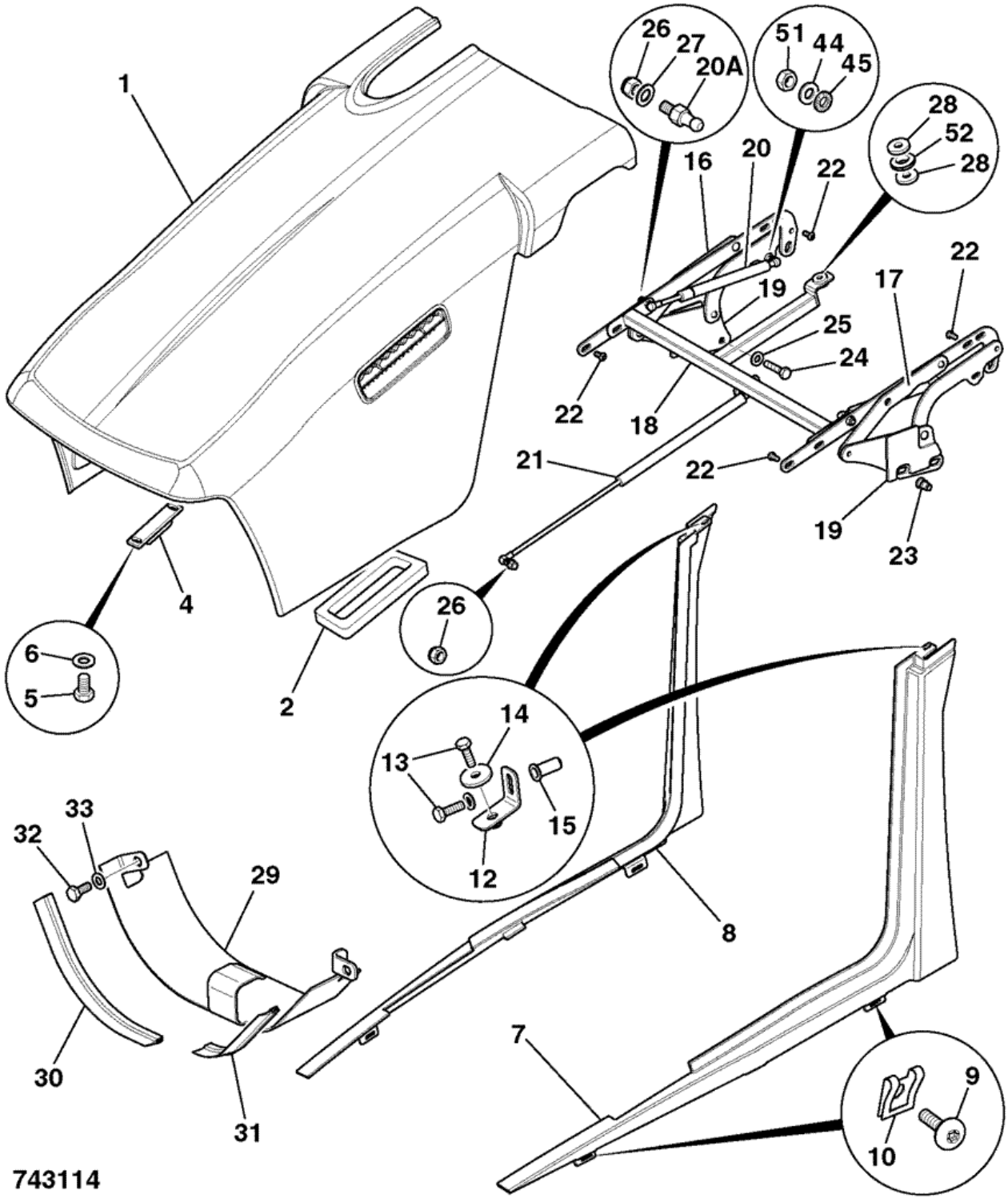

Item	Part #	Change No	Description	Usage Code	QTY
1	346/90019	Superseded	Bonnet		1
1	128/C6611		Bonnet		1

1A	:128/15667		Vent assembly air induction		1
1B	:1430/1206Z		Screw No 8 x 1 1/4" *holds item 1A to item 1*		2
2	926/51401		Gasket air intake		1
4	331/26981		Catch bonnet		1
5	1315/0301Z		Screw hex head M8 X 12		2
6	1420/0007Z		Washer plain M8		2
7	346/00064		Rail bonnet LH, 2WS NLA see TI 2/503		1
8	346/00065		Rail bonnet RH, 2WS NLA see TI 2/503		1
9	826/01768		Screw M6x25mm		6
10	826/01465		Retainer "U" nut		6
12	331/47298		Bracket upper rail		2
13	1315/0205Z		Bolt		4
14	823/00030		Washer 25mm o/dia 7mm i/dia		2
15	826/01810		Nut rivet, M6 open end for 5.5 to 8mm plate		2
16	128/14553	<M TBA	Hinge bonnet RH		1
16	128/C1888		Hinge bonnet, RH		1
17	128/14552	<M TBA	Hinge bonnet LH		1
17	128/C1889		Hinge bonnet, LH		1
18	335/07952		Hinge torsion beam		1
20	331/60675	Superseded	Strut gas 244-390		2
20	331/66727		Strut gas 235-390		2
20A	331/60391		Ball fitting 10 X M8		1
21	331/47026	Superseded	Strut gas 335-585		1
21	331/66785		Strut gas 585x327		1
22	826/11284		Screw M8x16 button head		8
23	826/01249		Nut rivet M10 open end for 6 to 8.5mm plate		4
24	1315/0409Z		Screw M10x35mm		4
25	1420/0008Z		Washer Plain M10		4
26	1371/0203Z		Nut		3
27	1420/0007Z		Washer plain M8		4
28	823/10639		Washer 9x26x5		2
29	.		'See Remark' *only used on 4WS*		1
44	1418/0011Z		Washer lock		2
45	1370/0202Z		Nut M8		4
51	1370/0201Z		Nut M8		2
52	2410/0304		Grommet		1

Product Catalog \ CONSTRUCTION \ NORTH AMERICA \ CONSTRUCTION / INDUSTRIAL \ BACKHOE LOADER 3CX,4CX,214,215,217 \ 3C PLUS (91HP) , Made in Brazil with Dieselmax/IESA Engine 9812/0080 \ B BODYWORK, CAB, LOADER END \ B01 BODYWORK/FRAME

9812/0080 B1-5-3 BONNET ASSEMBLY, 2WS

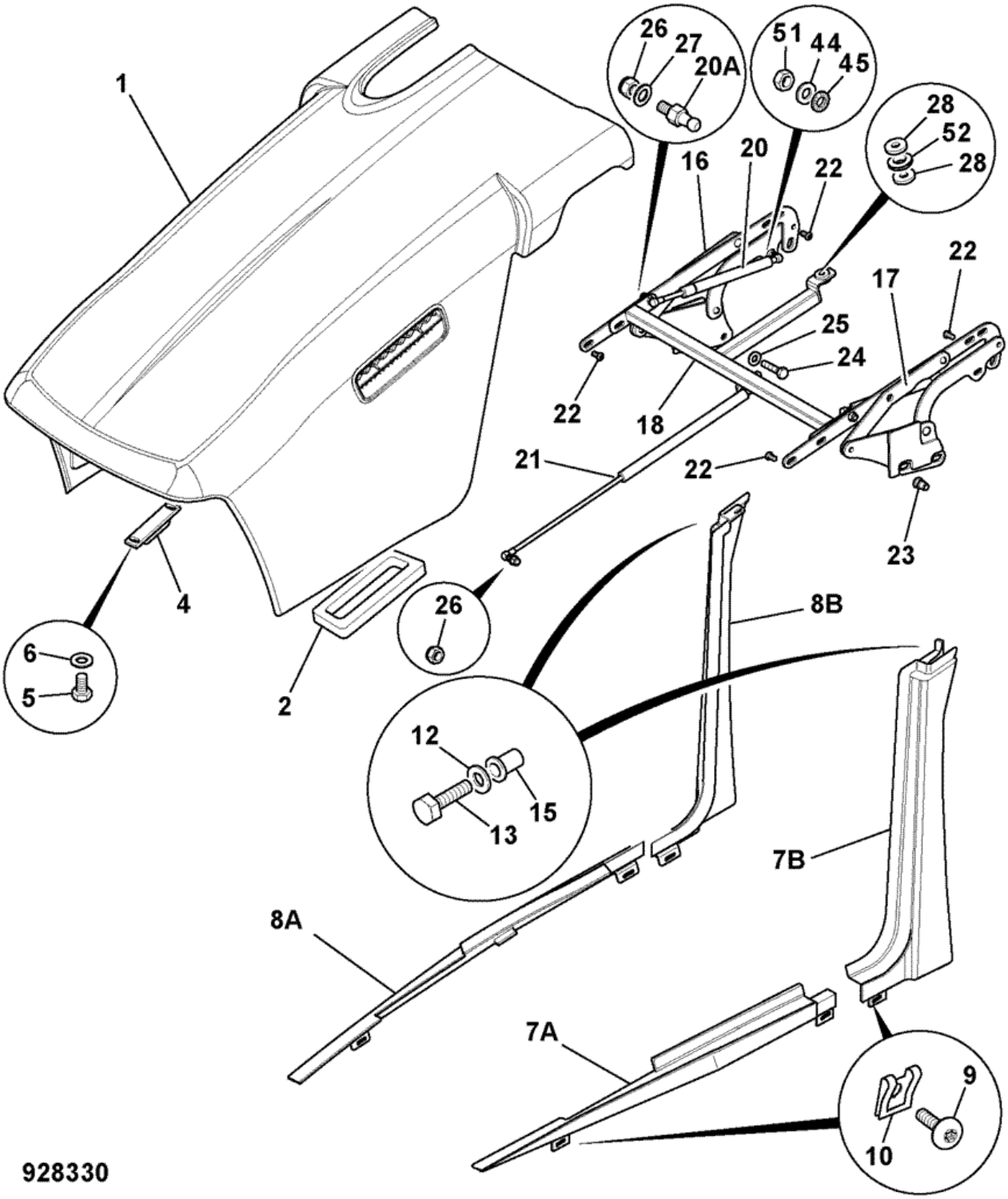

Item	Part #	Change No	Description	Usage Code	QTY
1	128/C6611	<M TBA	Bonnet	A	1
1	128/C0484		Bonnet	B	1

1A	:128/15667		Vent assembly air induction	A	1
1A	:128/C0485		Vent assembly air induction	B	1
1B	:1430/1206Z		Screw No 8 x 1 1/4" *to hold 1A to 1*	A	2
1B	:1430/1205Z		Screw No 8x1"	B	2
2	926/51401	Superseded	Gasket air intake		1
2	332/D5552		Seal air filter		1
4	332/C0442		Catch bonnet striker		1
5	1315/0301Z		Screw hex head M8 X 12		2
6	1420/0007Z		Washer plain M8		2
7A	346/00565	<M TBA	Rail bonnet lower LH yellow		1
7A	332/P5275		Rail bonnet lower LH yellow		1
7B	346/00563	<M TBA	Rail bonnet upper LH yellow		1
7B	332/P5245		Rail bonnet upper LH yellow		1
8A	346/00566	<M TBA	Rail bonnet lower RH yellow		1
8A	332/P5292		Rail bonnet lower RH yellow		1
8B	346/00564	<M TBA	Rail bonnet upper RH yellow		1
8B	332/P5260		Rail bonnet, upper RH yellow		1
9	826/11692		Screw Torx M6x35		4
10	826/01465		Retainer "U" nut		4
12	1420/0006Z		Washer M6		2
13	1315/0207Z		Screw M6 x 25mm long		2
15	826/01810		Nut rivet, M6 open end for 5.5 to 8mm plate		2
16	128/14553	<M TBA	Hinge bonnet RH		1
16	128/C1888		Hinge bonnet, RH		1
17	128/14552	<M TBA	Hinge bonnet LH		1
17	128/C1889		Hinge bonnet, LH		1
18	335/07952		Hinge torsion beam		1
20	331/66727		Strut gas 235-390		2
20A	331/60391		Ball fitting 10 X M8		1
21	331/66785		Strut gas 585x327		1
22	826/11284		Screw M8x16 button head		8
23	826/01249		Nut rivet M10 open end for 6 to 8.5mm plate		4
24	1315/0409Z		Screw M10x35mm		4
25	1420/0008Z		Washer Plain M10		4
26	1371/0203Z		Nut		3
27	1420/0007Z		Washer plain M8		4
28	823/10639		Washer 9x26x5		2
44	1418/0011Z		Washer lock		2
45	1370/0202Z		Nut M8		4
51	1370/0201Z		Nut M8		2
52	2410/0304		Grommet		1

9812/0080 B1-7-1 STEP, CAB ACCESS, HYDRAULIC TANK SIDE

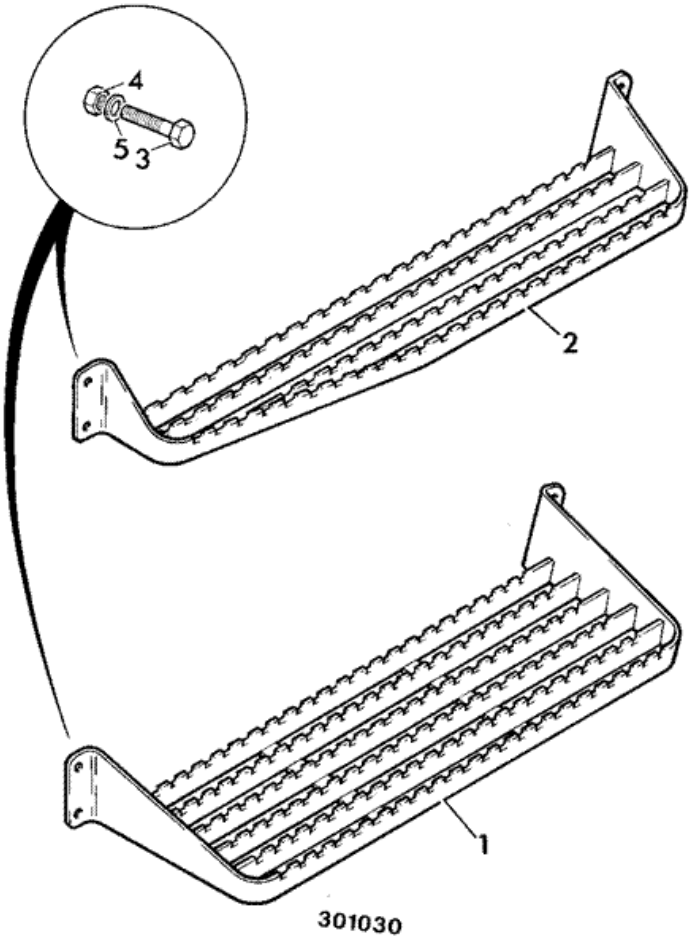

Item	Part #	Change No	Description	Usage Code	QTY
1	331/27895		Step lower, 214e		1
2	331/27897		Step upper, 214e		1
3	1315/0405Z		Screw M10 x 20mm long		8
4	1370/0303Z		Nut lock M10		8
5	1420/0008Z		Washer Plain M10		8

Product Catalog \ CONSTRUCTION \ NORTH AMERICA \ CONSTRUCTION / INDUSTRIAL \ BACKHOE LOADER 3CX,4CX,214,215,217 \ 3C PLUS (91HP) , Made in Brazil with Dieselmax/IESA Engine 9812/0080 \ B BODYWORK, CAB, LOADER END \ B02 CAB

9812/0080 B2-6-5 SOUNDPROOFING, AND FLOOR MAT, CAB BASE

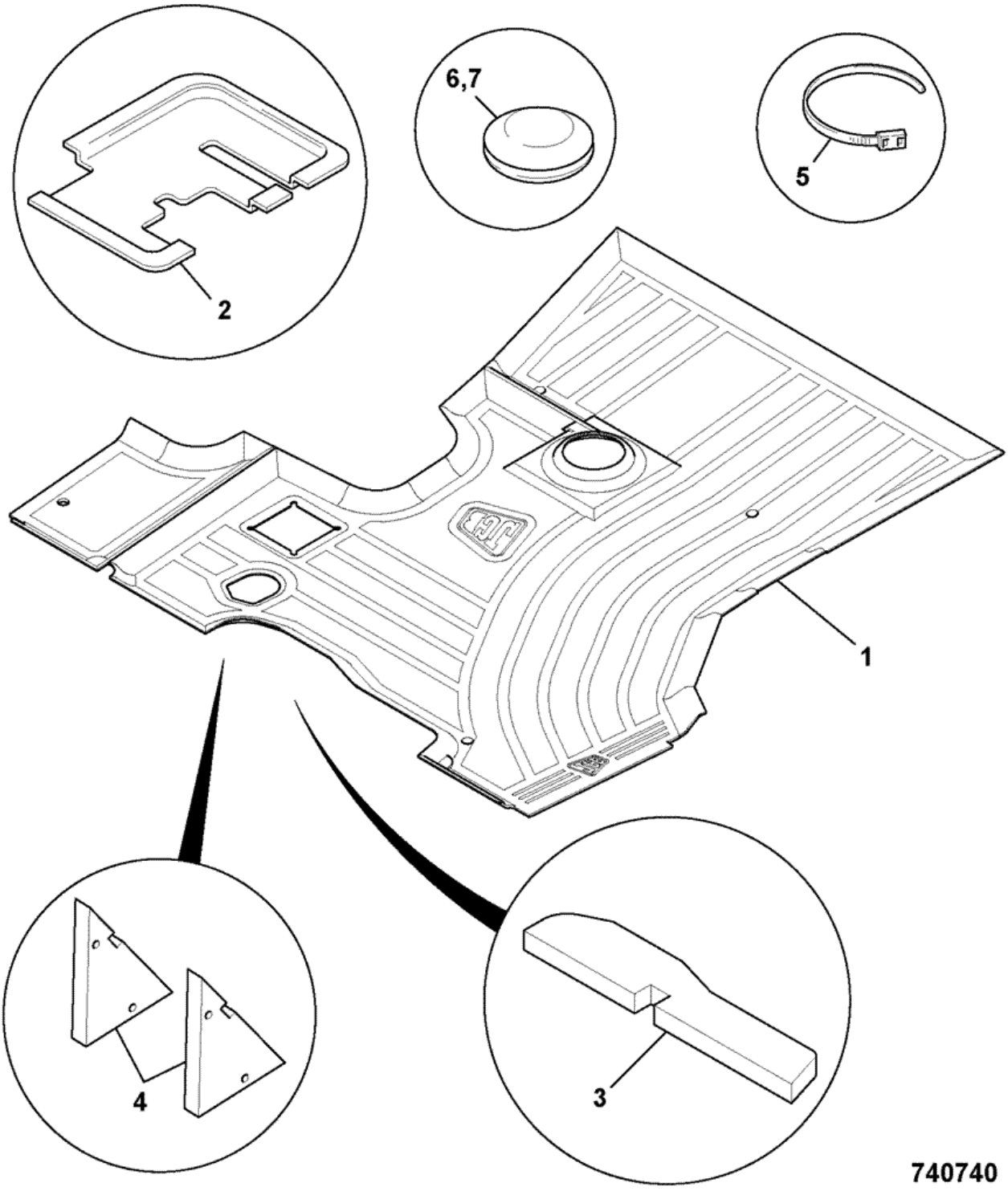

Item	Part #	Change No	Description	Usage Code	QTY
			Floormat		

1	123/07620	<M TBA	*214e only*		1
1	332/E6882	>M TBA	Floormat 3C 14 (Centremount)		1
2	123/07940		Panel seal support		1
2A	123/07672		Mat soundproofing loader valve		1
3	331/60578		Seal front bulkhead		1
4	123/07720		Mat brake cylinder		2
5	826/01144		Tie cable 200mm long		4
6	2410/1109		Grommet *drain holes -floor*		4
7	2410/1104		Grommet blind 11.1mm *front bulkhead*		2

Product Catalog \ CONSTRUCTION \ NORTH AMERICA \ CONSTRUCTION / INDUSTRIAL \ BACKHOE LOADER 3CX,4CX,214,215,217 \ 3C PLUS (91HP) , Made in Brazil with Dieselmax/IESA Engine 9812/0080 \ B BODYWORK, CAB, LOADER END \ B02 CAB

9812/0080 B2-8-1 WASH/WIPE, CANOPY

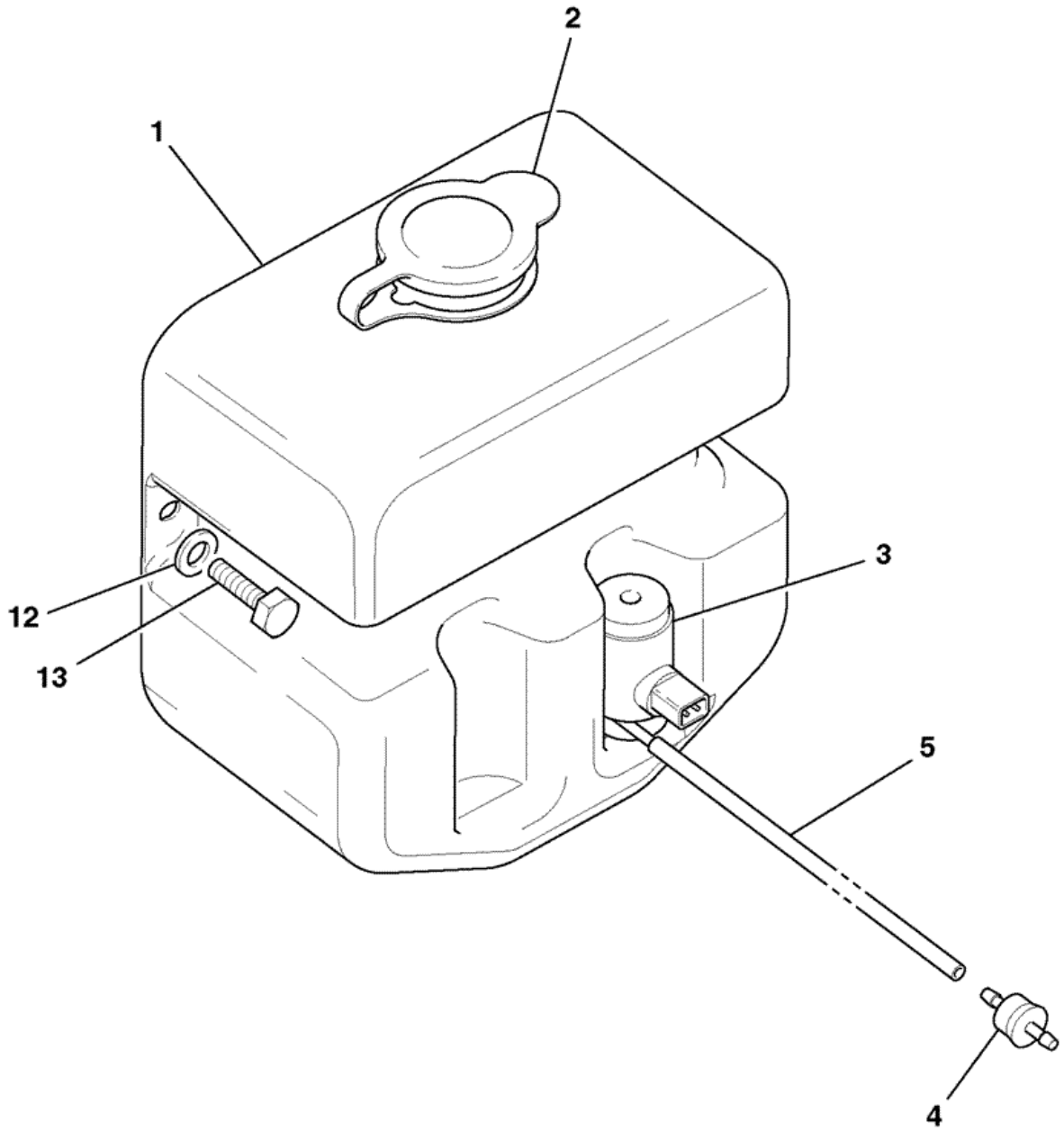

774810

Item	Part #	Change No	Description	Usage Code	QTY
1	331/46930		Bottle front screen wash *Canopy build single pump*		1

2	717/06031		Cap washer bottle		1
3	714/20600		Pump twin motor 12 volt		1
4	534/09703		Valve non-return		1
5	647/02000		Tube		0
12	.		'See Remark' *no longer fitted*		2
13	.		'See Remark' *no longer fitted*		2
22	826/01144		Tie cable 200mm long		1
31	715/06200		Plug dummy, 2 way sealed		1
32	835/10086		Plug blanking black,9mm		1

Product Catalog \ CONSTRUCTION \ NORTH AMERICA \ CONSTRUCTION / INDUSTRIAL \ BACKHOE LOADER 3CX,4CX,214,215,217 \ 3C PLUS (91HP) , Made in Brazil with Dieselmax/IESA Engine 9812/0080 \ B BODYWORK, CAB, LOADER END \ B02 CAB

9812/0080 B2-8-2 WASH/WIPE, FRONT & REAR SCREEN

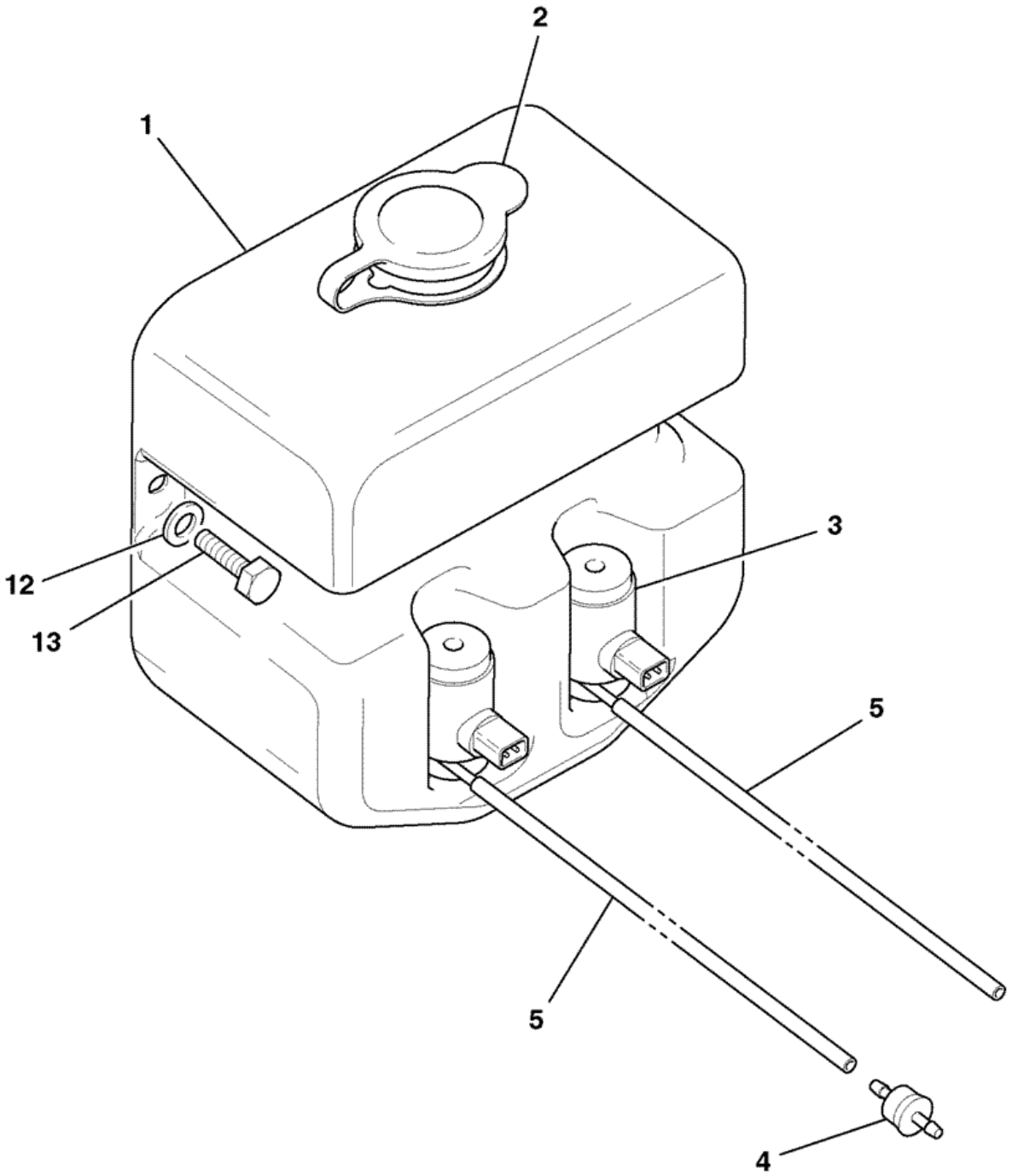

774820

Item	Part #	Change No	Description	Usage Code	QTY
1	331/46268		Bottle screenwash		1
2	717/06031		Cap washer bottle		1

3	714/20600		Pump twin motor 12 volt		2
4	534/09703		Valve non-return		2
5	647/02027		Tube 620mm long *620mm long*		2
5	647/02000		Tube *6200mm roll*		0
12	.		'See Remark' *no longer fitted*		2
13	.		'See Remark' *no longer fitted*		2
22	826/01144		Tie cable 200mm long		1
23	647/02000		Tube		0
24	331/20304		Tube split conduit		1
31	255/27003		Jet Screen washer		1

Product Catalog \ CONSTRUCTION \ NORTH AMERICA \ CONSTRUCTION / INDUSTRIAL \ BACKHOE LOADER 3CX,4CX,214,215,217 \ 3C PLUS (91HP) , Made in Brazil with Dieselmax/IESA Engine 9812/0080 \ B BODYWORK, CAB, LOADER END \ B02 CAB

9812/0080 B2-8-3 WASH/WIPE, CANOPY,

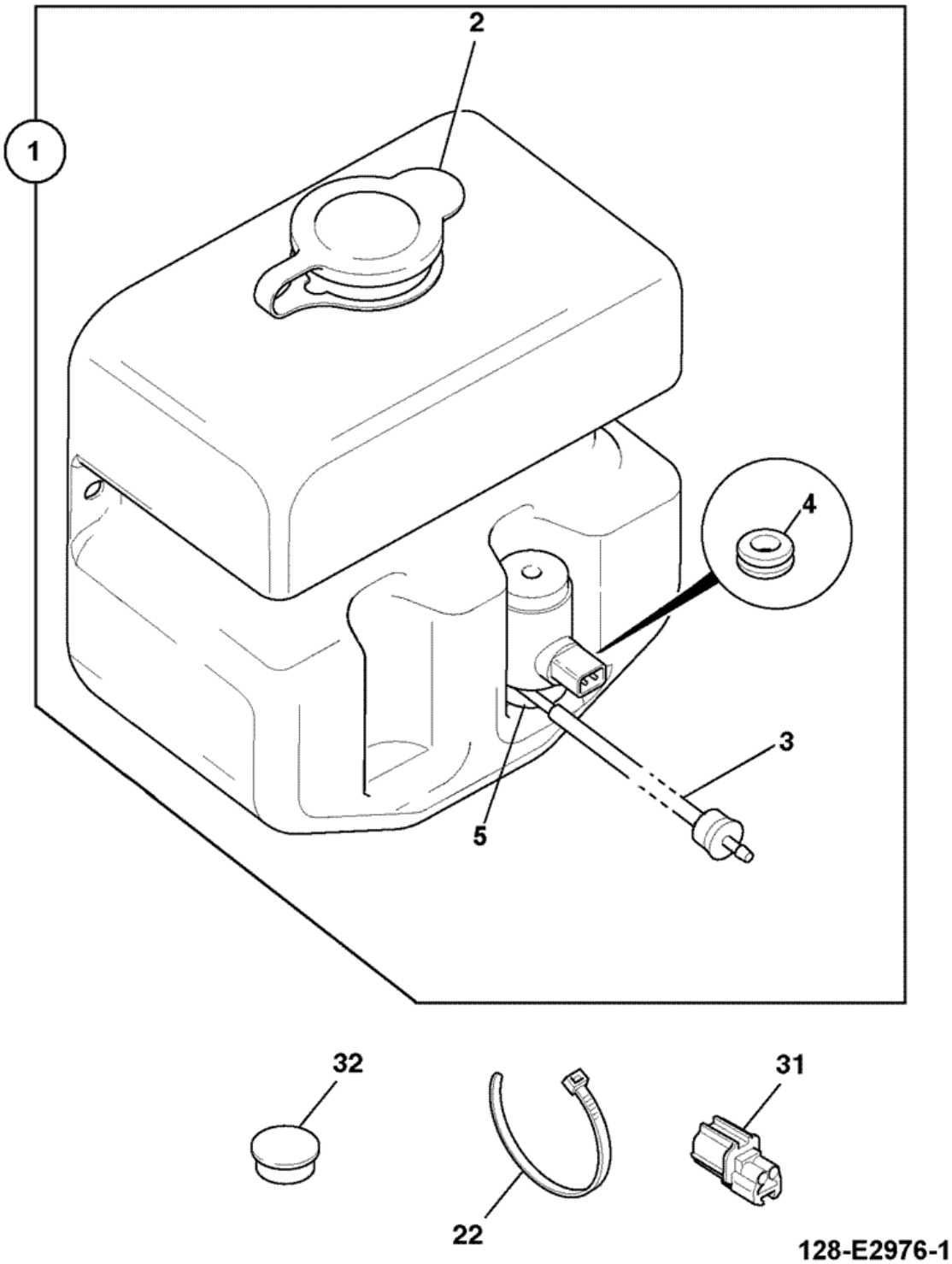

Item	Part #	Change No	Description	Usage Code	QTY
1	.		'See Remark' *128/E2976*		1

2	:332/G1893		Cap blue		1
3	:332/G1894		Tube PVC 600mm		1
4	:332/G1896		Grommet		1
5	:332/G1897		Motor pump		1
22	826/01144		Tie cable 200mm long		1
31	715/06200		Plug dummy, 2 way sealed		1
32	835/10086		Plug blanking black,9mm		1

Product Catalog \ CONSTRUCTION \ NORTH AMERICA \ CONSTRUCTION / INDUSTRIAL \ BACKHOE LOADER 3CX,4CX,214,215,217 \ 3C PLUS (91HP) , Made in Brazil with Dieselmax/IESA Engine 9812/0080 \ B BODYWORK, CAB, LOADER END \ B02 CAB

9812/0080 B2-8-4 WASH/WIPE, FRONT & REAR SCREEN,

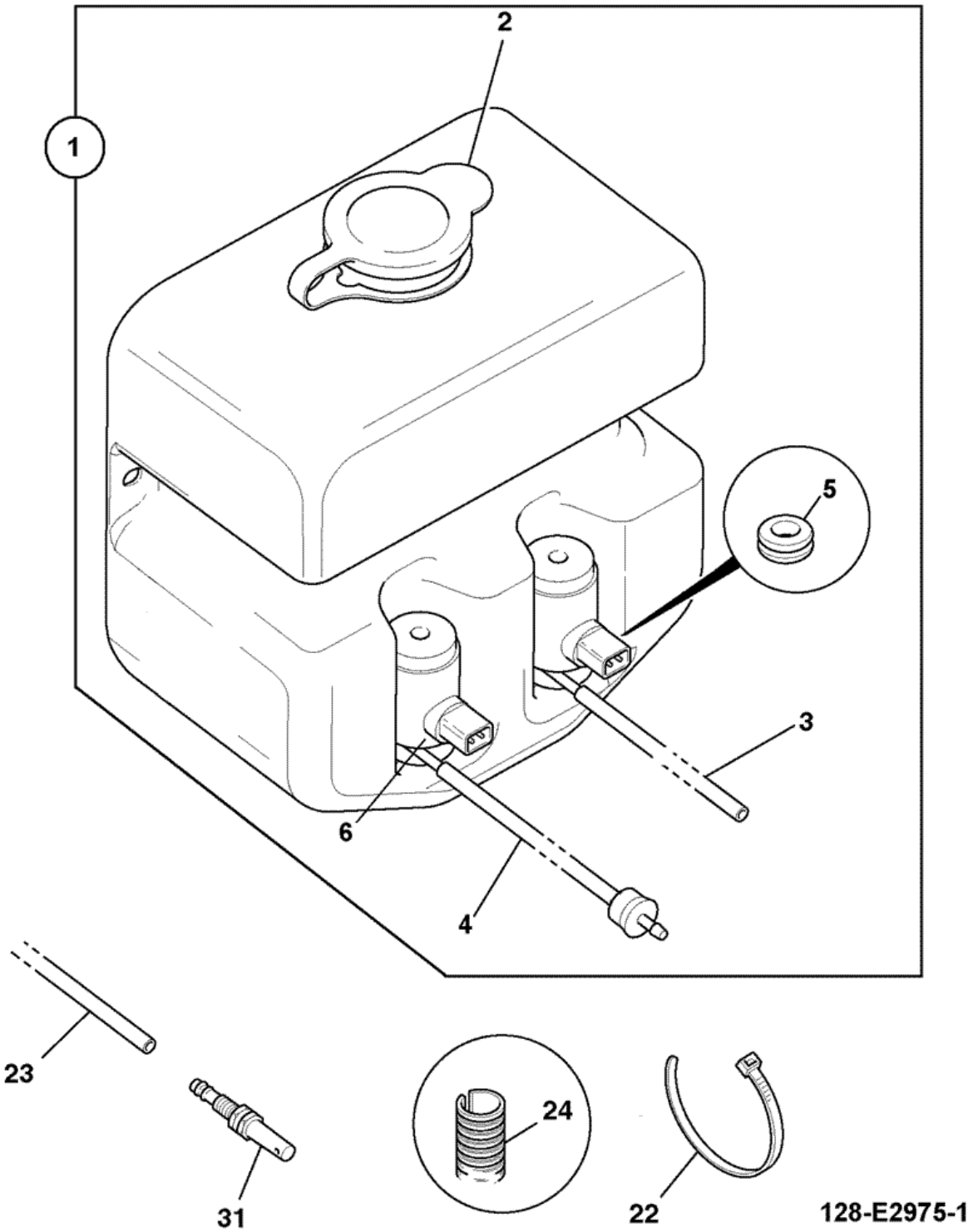

Item	Part #	Change No	Description	Usage Code	QTY
1	128/E2975		Bottle screen washer bottle cab		1
2	:332/G1893		Cap blue		1

3	:332/G1894		Tube PVC 600mm		1
4	:332/G1895		Tube PVC 600mm with non return valve		1
5	:332/G1896		Grommet		2
6	:332/G1897		Motor pump		2
22	826/01144		Tie cable 200mm long		1
23	647/02000		Tube		1
24	331/20304		Tube split conduit		1
31	255/27003		Jet Screen washer		1

Product Catalog \ CONSTRUCTION \ NORTH AMERICA \ CONSTRUCTION / INDUSTRIAL \ BACKHOE LOADER 3CX,4CX,214,215,217 \ 3C PLUS (91HP) , Made in Brazil with Dieselmax/IESA Engine 9812/0080 \ B BODYWORK, CAB, LOADER END \ B03 LOADER, FRONT END

9812/0080 B3-4-2 SAFETY STRUT, LOADER ARMS

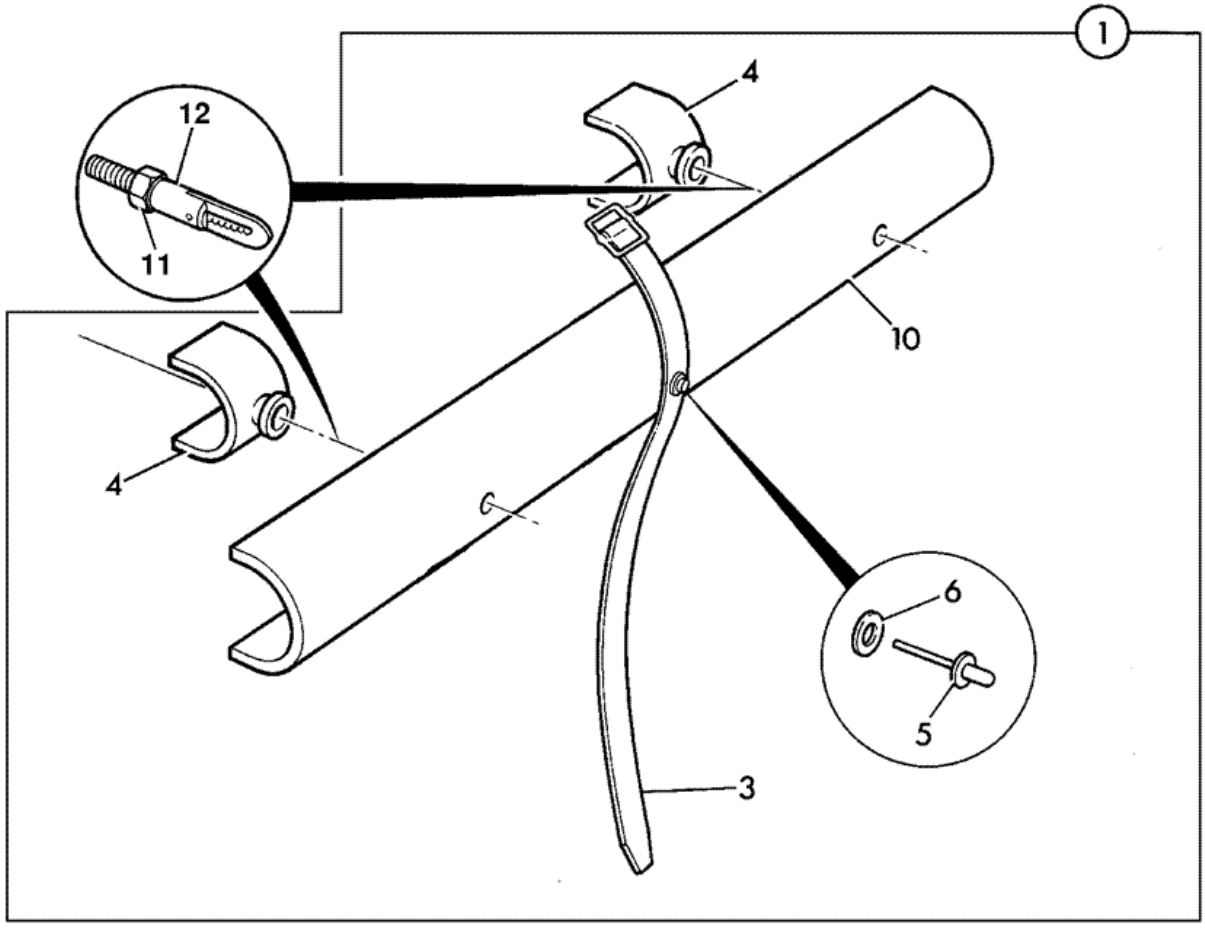

143496

Item	Part #	Change No	Description	Usage Code	QTY
1	128/14206		Strut safety,assembly loader arms,Tier 2		1
3	:123/04744		Strap		1

4	:123/02971		Stop		2
5	:826/01345		Rivet pop		1
6	:1414/0011Z		Washer 2 BA		1
7	123/04734		Fastener antiluce		2
10	:331/39126		Strut safety 690mm		1
11	1370/0301Z		Nut		2
12	123/07718		Mounting strut		2

Product Catalog \ CONSTRUCTION \ NORTH AMERICA \ CONSTRUCTION / INDUSTRIAL \ BACKHOE LOADER 3CX,4CX,214,215,217 \ 3C PLUS (91HP) , Made in Brazil with Dieselmax/IESA Engine 9812/0080 \ B BODYWORK, CAB, LOADER END \ B03 LOADER, FRONT END

9812/0080 B3-5-1 ARMS, LOADER, ANTI-SPILL, LINKAGE

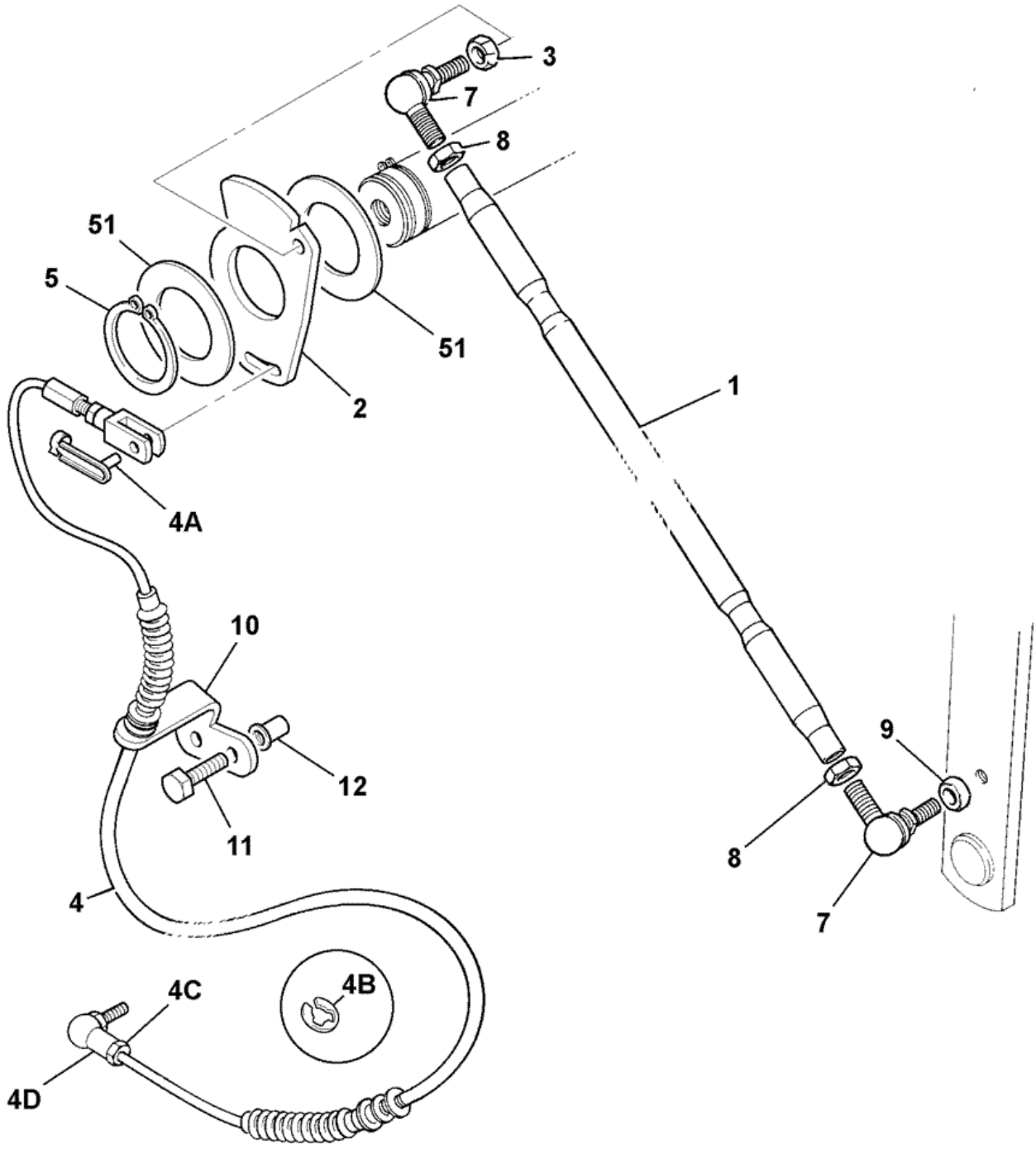

789770

Item	Part #	Change No	Description	Usage Code	QTY
1	123/07739		Link anti-spill		1
2	331/50773		Cam plate		1

3	1370/0401Z		Nut		1
4	910/60241		Cable anti-spill		1
4A	:331/56804		Clip M8 spring pin		1
4B	:331/56802		Clip "E"		1
4C	:1370/0203Z		Nut self lock M8		1
4D	:913/02902		Joint ball		1
5	821/00517		Circlip 60mm pin		1
7	913/00049		Joint ball M16		2
8	1370/0602Z		Nut lock		2
9	123/07745		Spacer		1
10	331/51174		Bracket anti-spill		1
11	1315/0409Z		Screw M10x35mm		2
12	826/01617		Nut rivet M10 open end for 8.5 to 11mm plt		2
51	823/00471		Washer 1.45mm max		0
51	819/00099		Spacer 5mm		0
51	819/00147		Spacer 3mm		0

9812/0080 B4-2-1 SLEW/SWING, COMPONENTS

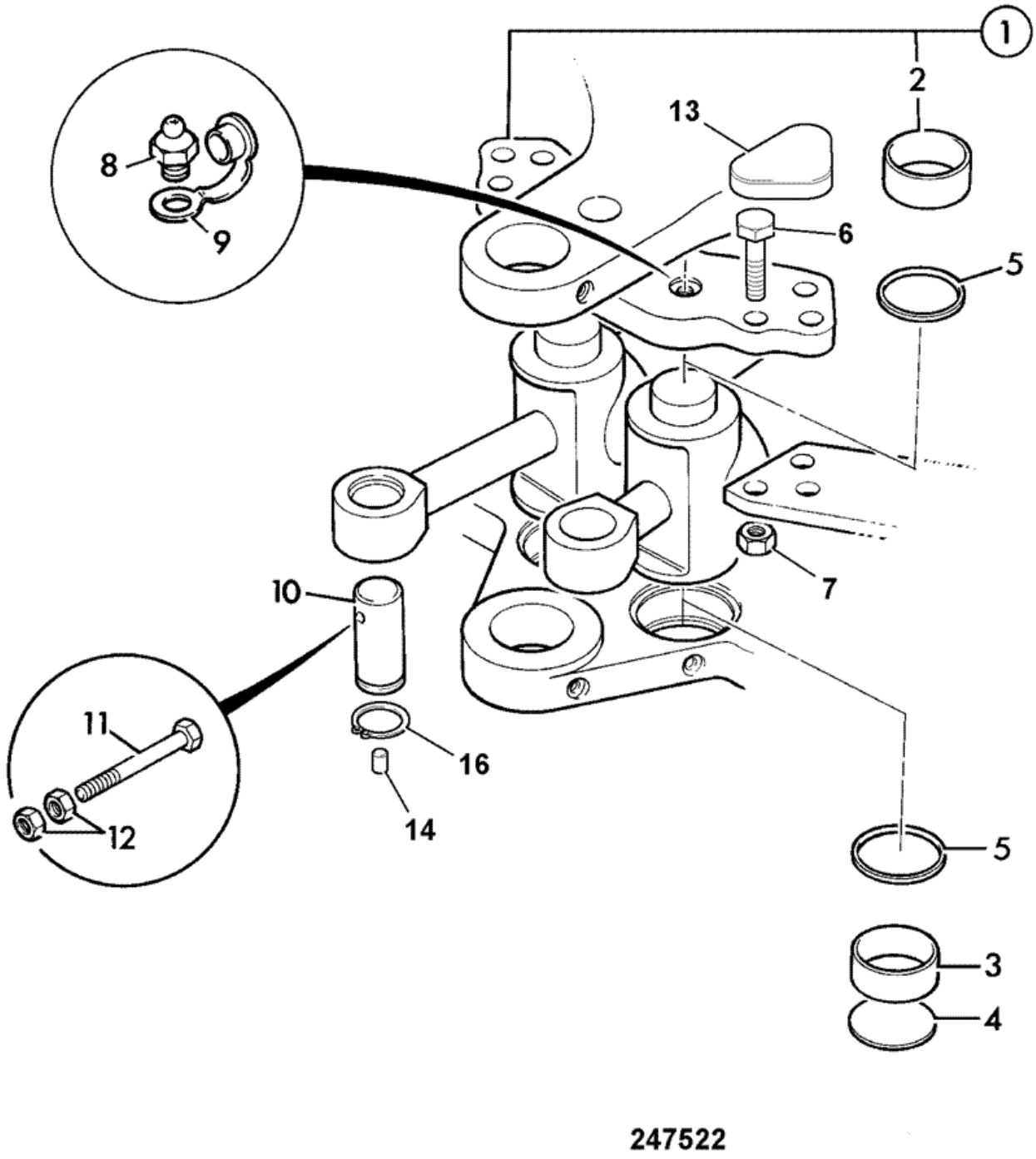

Item	Part #	Change No	Description	Usage Code	QTY
1	126/01082		Bracket trunnion		1
2	:808/00388		Bearing liner		2
3	808/00388		Bearing liner		2
4	123/05228		Disc blanking		1
5	123/04237		Seal		4
6	1316/3818Z		Bolt M20 x 80 (10.9)		6
7	1371/0701Z		Nut hex M20 high strength		6
8	1450/0001		Nipple grease, straight 1/8 BSP		2
9	835/00017		Cap grease nipple		2
10	811/90198		Pin pivot, 172mm long with groove		2
11	1315/3526Z		Bolt		2
12	1370/0402Z		Nut M12		4
13	123/07540		Cap bolt cover		2
14	835/00188		Plug *Use with item 10.*		2
15	823/00604		Washer hardened,zinc plated M20		12
16	2203/0067		Circlip		2

Product Catalog \ CONSTRUCTION \ NORTH AMERICA \ CONSTRUCTION / INDUSTRIAL \ BACKHOE LOADER 3CX,4CX,214,215,217 \ 3C PLUS (91HP) , Made in Brazil with Dieselmax/IESA Engine 9812/0080 \ B BODYWORK, CAB, LOADER END \ B04 BACKHOE

9812/0080 B4-3-2 KINGPOST CENTREMOUNT, 14' 0" BACKHOE

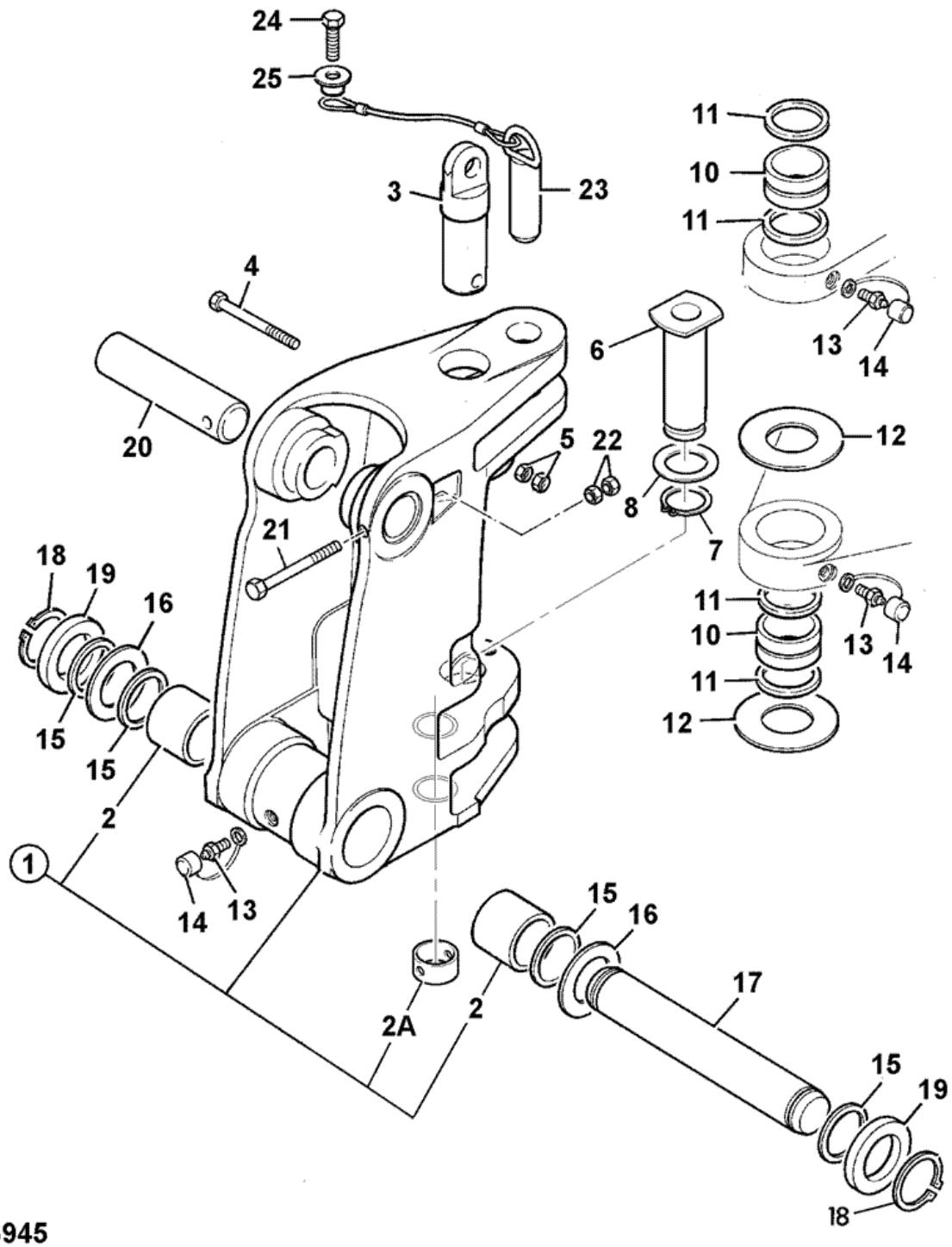

246945

Item	Part #	Change No	Description	Usage Code	QTY
1	128/15200		Kingpost assembly centrmount 14ft 0ins		1

2	:808/00385		Bearing liner 70mm OD x 60mm ID.		2
2A	:831/10229		Bearing liner		4
3	913/10079		Pin kingpost top centremount		1
4	1315/3524Z		Bolt M12 x 140 Lg.		1
5	1370/0402Z		Nut M12		2
6	911/40106		Pin bottom c/m kingpost		1
7	821/10354		Circlip		1
8	823/10638		Shim 82od x 71id x 0.5thk		0
8	823/10704		Shim 82od x 71id X 1.5thk		0
10	831/10211		Bearing liner, 70x84x57 slew pivot		2
11	813/00456		Seal pivot pin grease		4
12	823/10270		Washer thrust, 71x150x6.05		2
12	998/00007		Washer 4mm thrust		0
12	998/00006		Washer 7mm thust		0
13	1450/0001		Nipple grease, straight 1/8 BSP		3
14	835/00017		Cap grease nipple		3
15	813/00427		Seal grease *Kingpost*		2
16	819/00143		Shim 1.4mm		2
17	811/70098		Pin pivot		1
17	811/70098A		Pin pivot, 60X440mm 0.1mm O/S		1
17	811/70098B		Pin pivot, 60X440mm 0.25mm O/S		1
18	821/00297		Circlip		2
19	819/00099		Spacer 5mm		0
19	819/00144		Spacer 6mm		0
19	819/00145		Spacer 8mm		0
20	811/50483		Pin pivot *Boom ram pivot*		1
20	811/50483A		Pin pivot, 50X250mm 0.1mm O/S		1
20	811/50483B		Pin pivot, 50X250mm 0.25mm O/S		1
21	1315/3523Z		Bolt M12x130		1
22	1370/0402Z		Nut M12		2
23	125/81200		Pin slewlock		1
24	1315/3518Z		Bolt M12 x 80mm		1
25	123/05243		Spacer		1
26	1370/0403Z		Nut M12		1

9812/0080 B4-5-1 DIPPER (STICK), MONO

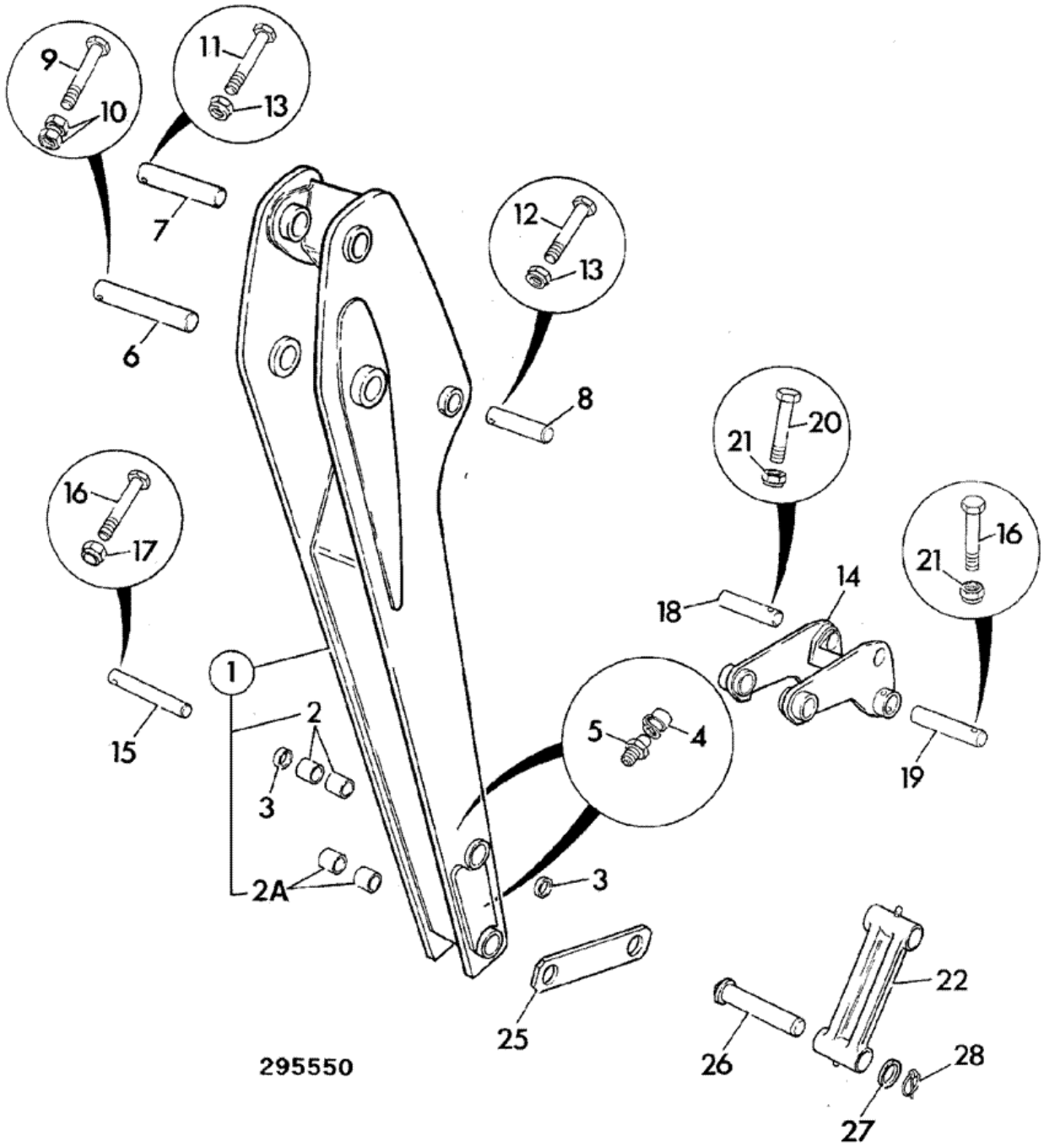

Item	Part #	Change No	Description	Usage Code	QTY
1	126/02331	<M MAY-2009	Dipper lightlift 2339mm long *Light duty*		1

1	128/15167	>M MAY-2009	Dipper mono standard lift		1
1	:829/08117		Boss pivot *Bucket/lever pivot*		2
2	:809/00125		Bearing liner 45mm pivot bore		2
2A	809/00176		Bearing liner 44.5IDx55.5ODx50long		2
3	813/00425		Seal pivot pin grease		2
4	835/00017		Cap grease nipple		2
5	1450/0001		Nipple grease, straight 1/8 BSP		2
6	811/50372		Pin pivot *Boom, dipper pivot*		1
6	811/50372A		Pin pivot 60x350mm, 0.1mm O/S		1
6	811/50372B		Pin pivot 60x350mm, 0.25mm O/S		1
7	811/50381		Pin pivot *dipper ram eye end pivot. std duty dipper*		1
7	811/50381A		Pin pivot 50x340mm, 0.1mm O/S		1
7	811/50381B		Pin pivot, 50X340mm 0.25mm O/S		1
8	811/50375		Pin pivot *Bucket ram dump end*		1
9	826/01642		Capscrew		1
10	1370/0403Z		Nut M12		1
11	1315/3521Z		Bolt M12x110		1
12	1315/3418Z		Bolt M10x80		1
13	1370/0303Z		Nut lock M10 *Bucket ram*		1
13	1370/0403Z		Nut M12 *Dipper ram*		1
14	335/05602		Lever tipping, 14'0" 4 holes per side		1
15	811/20061		Pin pivot 45X300MM		1
16	1315/3418Z		Bolt M10x80		3
17	1370/0303Z		Nut lock M10		2
18	811/90409		Pin Pivot 45 x 206		1
19	811/50369		Pin pivot 45X290MM		1
20	1315/3419Z		Bolt M10x90mm		1
21	1370/0303Z		Nut lock M10		2
22	.		'See Remark' *Tipping link, see B4 index.*		1
25	106/50001		Strap *Optional*		1
26	911/12400		Pin pivot		2
27	823/00470		Washer		2
28	826/00512		Pin lynch		2
29	819/00100		Shim 120x60.5x1.4thick		0

9812/0080 B4-6-1 DIPPER (STICK), 214 EXTRADIG

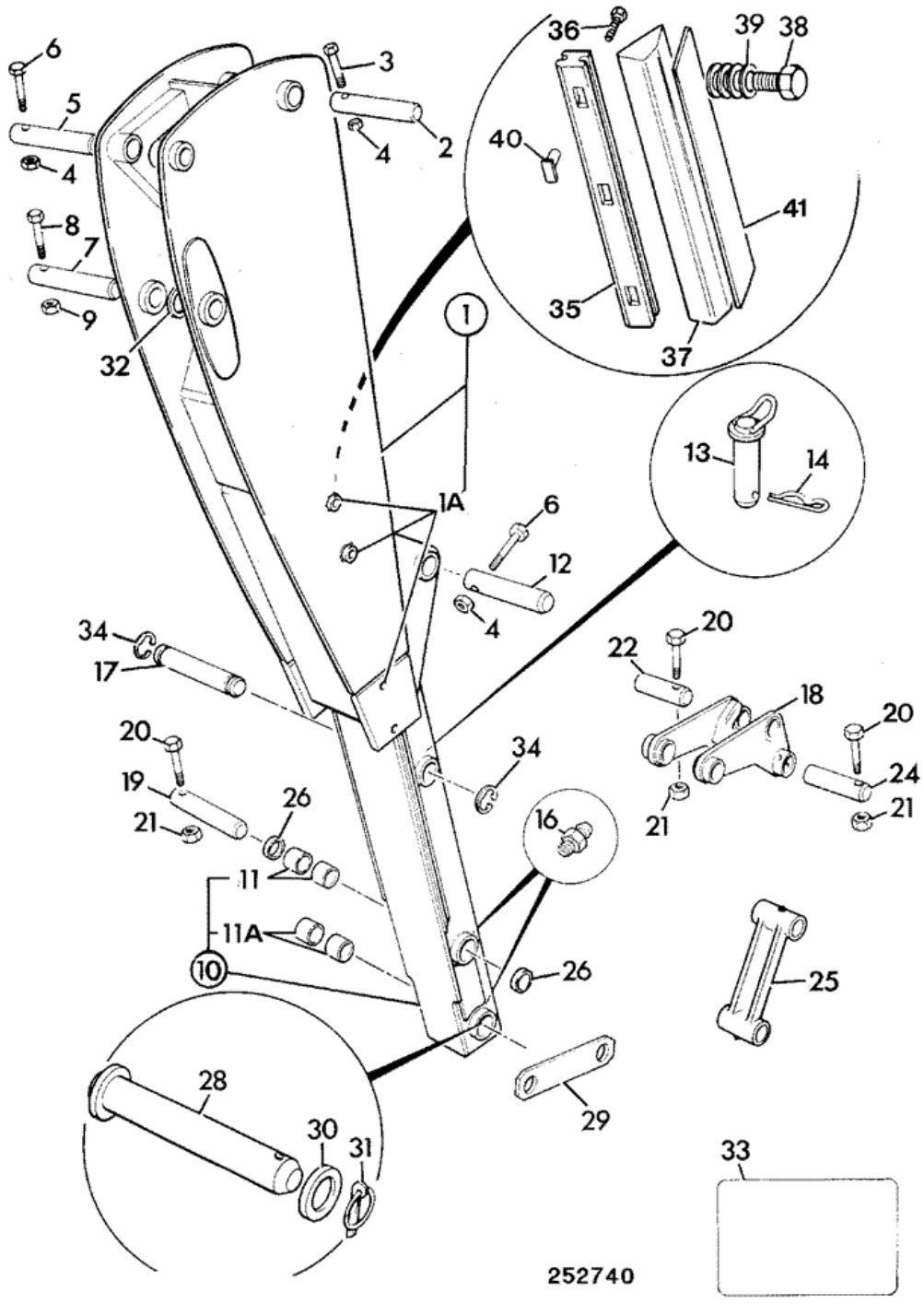

Item	Part #	Change No	Description	Usage Code	QTY
1	331/19806		Carrier 14' extradig S/L		1
1A	:826/10345		Boss wear pad adjuster M20 thread		8

2	811/90583		Pin pivot		1
3	1315/3317Z		Bolt M8 x75mm long		2
4	1370/0203Z		Nut self lock M8 *use with items 2*		1
4	1370/0303Z		Nut lock M10 *use with item 12*		1
4	1370/0403Z		Nut M12 *For use with item 5*		1
5	811/90183		Pin pivot		1
5	811/90183A		Pin pivot		1
5	811/90183B		Pin pivot		1
6	1315/3418Z		Bolt M10x80 *For use with item 12*		1
6	1315/3520Z		Bolt M12 x 100mm *For use with item 5*		1
7	811/50372		Pin pivot		1
7	811/50372A		Pin pivot 60x350mm, 0.1mm O/S		1
7	811/50372B		Pin pivot 60x350mm, 0.25mm O/S		1
7A	823/10536		Shim 2mm		1
8	826/01642		Capscrew		1
9	1370/0403Z		Nut M12		1
10	128/10774		Dipper inner		1
10A	:829/01201		Boss locking		1
11	:809/00125		Bearing liner 45mm pivot bore *Lever pivot*		2
11A	:809/00176		Bearing liner 44.5IDx55.5ODx50long		2
12	811/50367		Pin pivot		1
13	911/40092		Pin locking		1
14	122/34401		Clip		1
16	1450/0002		Nipple grease, straight 1/4		2
17	811/90585		Pin pivot		1
18	335/05602		Lever tipping, 14'0" 4 holes per side		1
19	811/20061		Pin pivot 45X300MM		1
20	1315/3418Z		Bolt M10x80 *items 19 & 24*		2
20	1315/3419Z		Bolt M10x90mm *item 22*		1
21	1370/0303Z		Nut lock M10		4
22	811/90409		Pin Pivot 45 x 206		1
23	1305/3226Z		Bolt		1
24	811/50369		Pin pivot 45X290MM		1
25	.		'See Remark' *Tipping link, B4 index*		1
26	813/00425		Seal pivot pin grease		2
27	1416/0008Z		Washer spring		8
28	911/12400		Pin pivot		2
29	106/50001		Strap		1
30	823/00470		Washer		2
31	826/00512		Pin lynch		2
32	819/00100		Shim 120x60.5x1.4thick		0
33	817/00502		Label greasing		1
34	823/00334		Clip		1
35	123/06189		Pad top wear		4
36	1318/3410Z		Bolt		8

37	331/27389		Pad wear strip bottom, red		4
38	1315/0811Z		Bolt M20 X 45 long		8
39	1370/0702Z		Nut thin M20		8
40	NSP		None serviced part *Now part of item 35.*		8
41	331/30894		Plate spreader		4
42	123/06256		Spacer steel *Fitted between item 36 & 35*		8
42	1420/0008Z		Washer Plain M10 *replaces 123/06256*		16

Product Catalog \ CONSTRUCTION \ NORTH AMERICA \ CONSTRUCTION / INDUSTRIAL \ BACKHOE LOADER 3CX,4CX,214,215,217 \ 3C PLUS (91HP) , Made in Brazil with Dieselmax/IESA Engine 9812/0080 \ B BODYWORK, CAB, LOADER END \ B04 BACKHOE

9812/0080 B4-8-1 TIPPING LINK, STANDARD

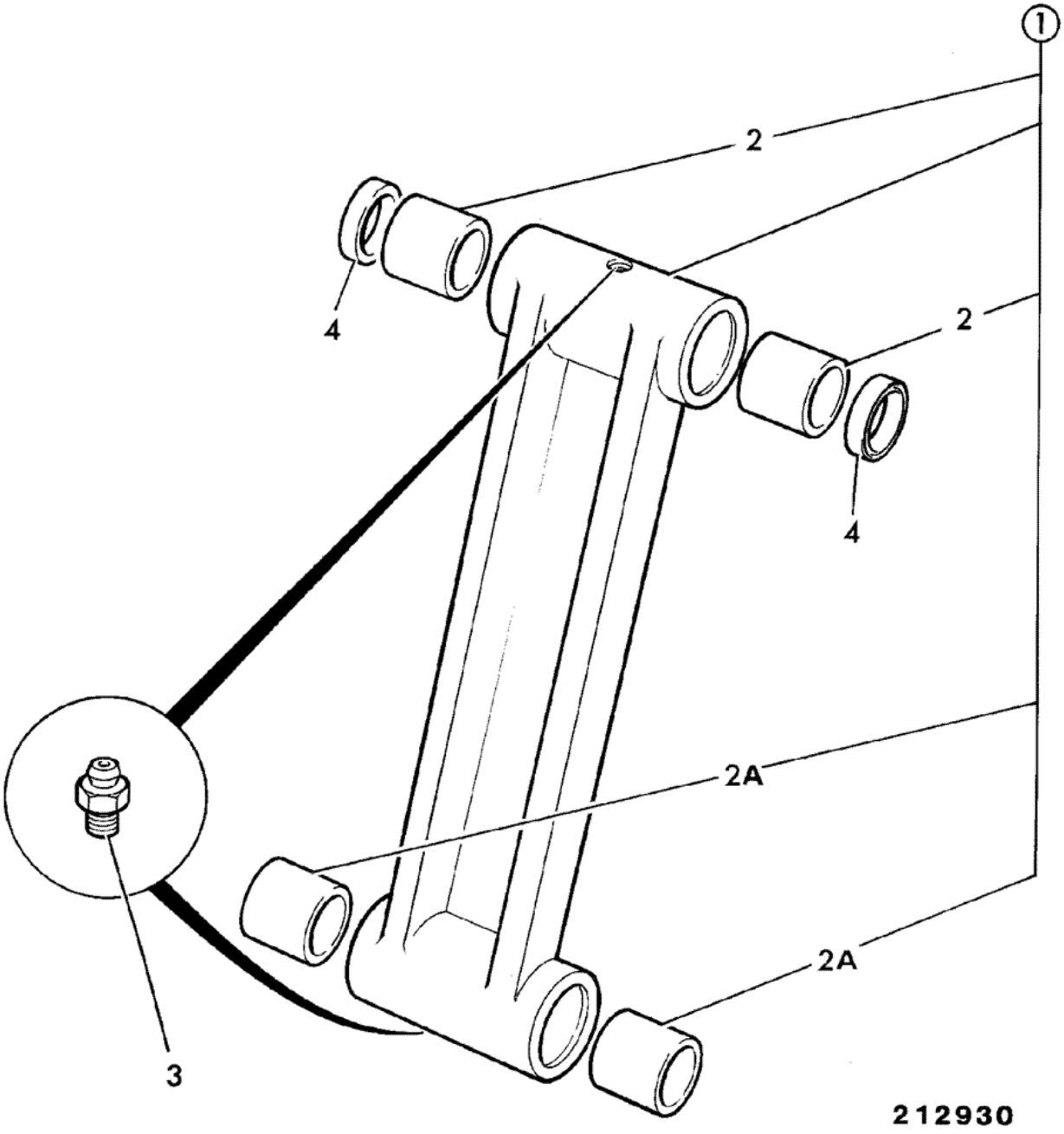

Item	Part #	Change No	Description	Usage Code	QTY
1	126/00247		Link tipping		1
2	:809/00125		Bearing liner 45mm pivot bore		2
2A	809/00176		Bearing liner 44.5IDx55.5ODx50long		2
3	1450/0002		Nipple grease, straight 1/4		2
4	813/00425		Seal pivot pin grease		2

Product Catalog \ CONSTRUCTION \ NORTH AMERICA \ CONSTRUCTION / INDUSTRIAL \ BACKHOE LOADER 3CX,4CX,214,215,217 \ 3C PLUS (91HP) , Made in Brazil with Dieselmax/IESA Engine 9812/0080 \ B BODYWORK, CAB, LOADER END \ B05 REFURBISHMENTS

9812/0080 B5-3-2 TOOL KIT

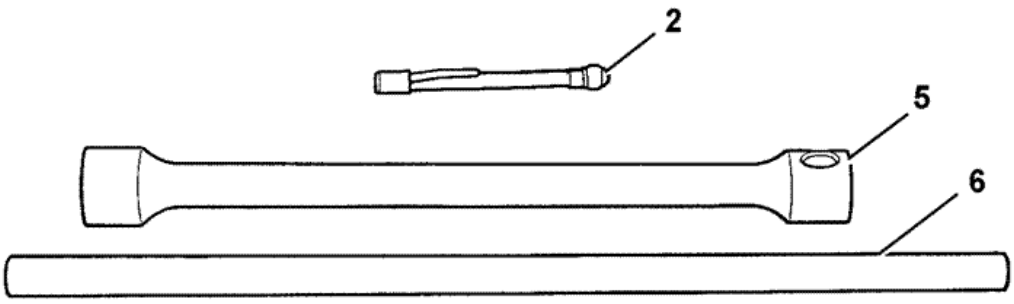

734270

Item	Part #	Change No	Description	Usage Code	QTY
2	339/03600		Gauge tyre pressure Brazil		1
5	339/99928		Wheelbrace bar Brazil		1

6	339/10102		Lever wheel nut wrench Brazil		1

Product Catalog \ CONSTRUCTION \ NORTH AMERICA \ CONSTRUCTION / INDUSTRIAL \ BACKHOE LOADER 3CX,4CX,214,215,217 \ 3C PLUS (91HP) , Made in Brazil with Dieselmax/IESA Engine 9812/0080 \ B BODYWORK, CAB, LOADER END \ B01 BODYWORK/FRAME

9812/0080 B1-13-1 VALVE MOUNTINGS, EXCAVATOR

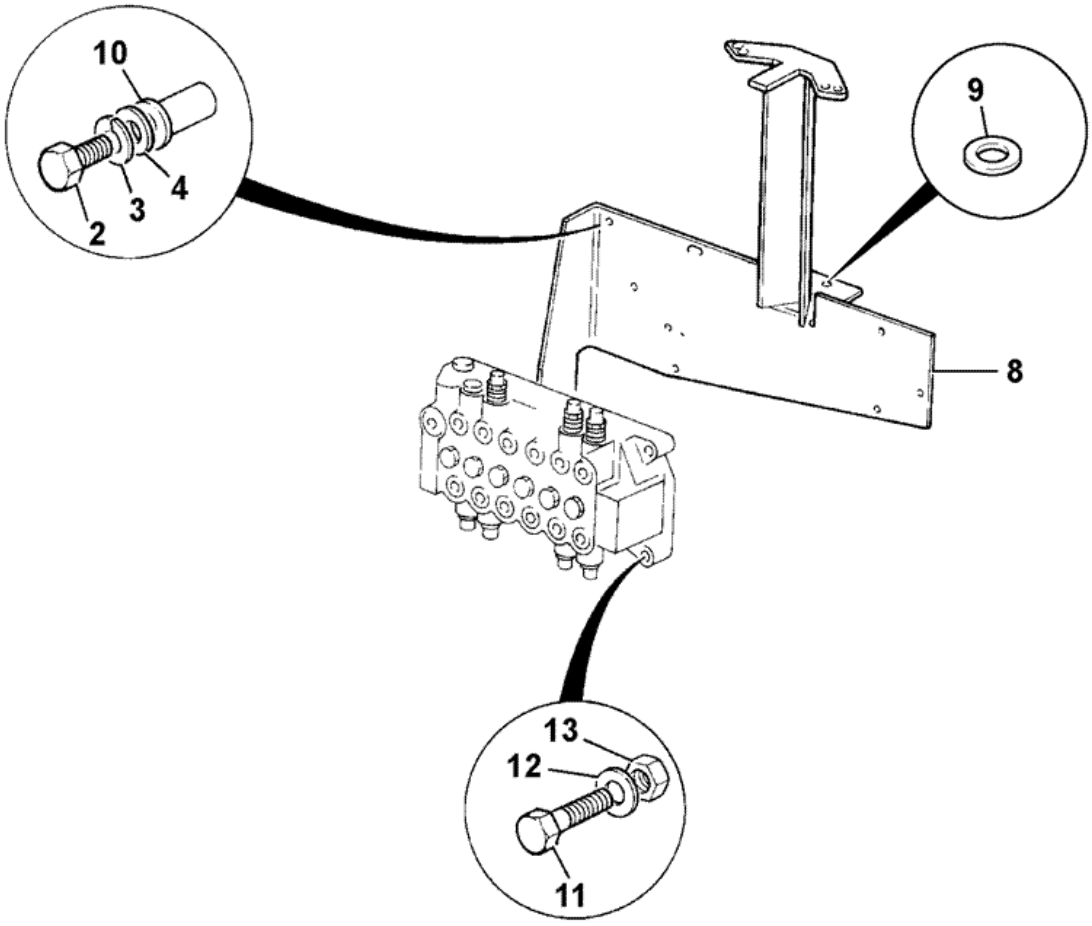

870290

Item	Part #	Change No	Description	Usage Code	QTY
2	1315/0410Z		Bolt M10 x 40		4
3	1425/0008Z		Washer Spring M10		4

4	1411/0004Z		Washer		4
8	331/19085		Mounting excavator valve		1
9	1412/0005Z		Washer plain 1/2" X 41mm OD		1
10	826/01249		Nut rivet M10 open end for 6 to 8.5mm plate		3
11	1315/3414Z		Bolt M10x60		3
12	1420/0008Z		Washer Plain M10		3
13	1370/0303Z		Nut lock M10		3

Product Catalog \ CONSTRUCTION \ NORTH AMERICA \ CONSTRUCTION / INDUSTRIAL \ BACKHOE LOADER 3CX,4CX,214,215,217 \ 3C PLUS (91HP) , Made in Brazil with Dieselmax/IESA Engine 9812/0080 \ B BODYWORK, CAB, LOADER END \ B01 BODYWORK/FRAME

9812/0080 B1-1-51 CHASSIS CENTREMOUNT, 2WS

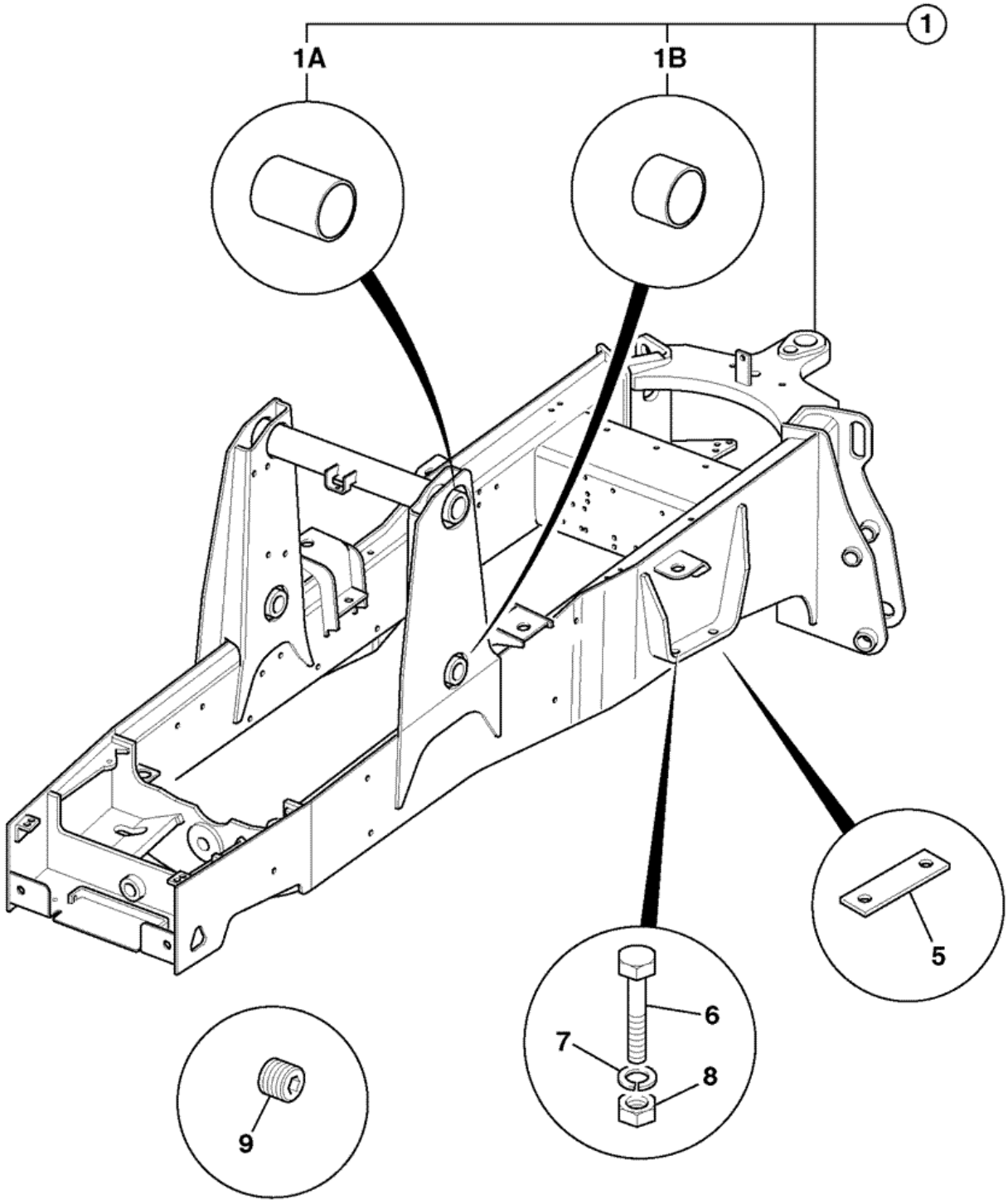

Item	Part #	Change No	Description	Usage Code	QTY
1	128/15678	Superseded	Chassis 2WS centremount		1
1	128/C0138		Chassis 2WS centremount		1

			Dieselmax		
1	128/17704		Chassis 2WS centremount *IESA engine*		1
1A	:809/00102		Bearing liner		2
1B	:809/00093		Bearing liner		2
5	123/06350		Spacer rear axle 25mm *use with 16" Armstrong front wheels*	A	2
5	331/17737		Spacer rear axle 20mm *use with 826/01712 for 17.5" front wheels*	B	1
6	826/11353		Bolt 1"unf X 8" long		4
6	826/01712		Bolt 1"unf X 9" long *use with 16" Armstrong front wheels*	A	4
6	826/11352		Bolt 1"unf X 9 1/2" long	B	1
7	826/01714		Nut		4
8	823/00578		Washer		4
9	835/10026		Plug plastic		17

Product Catalog \ CONSTRUCTION \ NORTH AMERICA \ CONSTRUCTION / INDUSTRIAL \ BACKHOE LOADER 3CX,4CX,214,215,217 \ 3C PLUS (91HP) , Made in Brazil with Dieselmax/IESA Engine 9812/0080 \ B BODYWORK, CAB, LOADER END \ B01 BODYWORK/FRAME

9812/0080 B1-2-10 TANK, HYDRAULIC

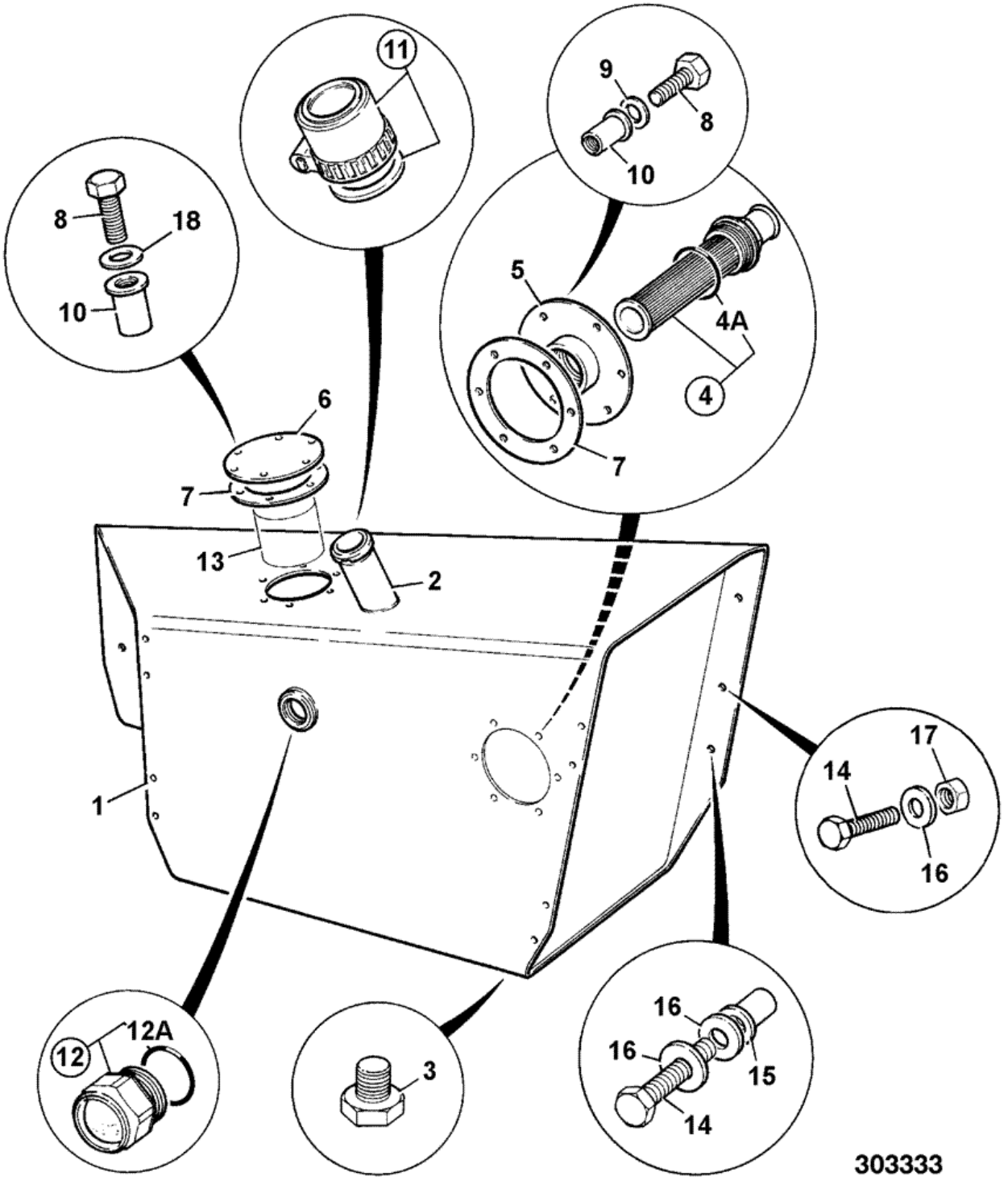

Item	Part #	Change No	Description	Usage Code	QTY
1	128/13783		Tank hydraulic 214e		1
2	:NSP		None serviced part		1

			Replace tank		
3	:32/925390		Plug drain		1
3A	:2401/0510		O Ring		1
4	:32/920300		Element suction		1
4A	:32/920301		O Ring		1
5	:125/00430		Cover		1
6	:123/06717		Cover plate		1
7	:813/00466	<M TBA	Gasket	A	2
7	:813/10186		Gasket hyd filter cover	B	2
8	:1315/0307Z		Screw Hexagon M8 X 25		12
9	:1420/0007Z		Washer plain M8		6
10	:826/10381		Rivet nut M8 closed		12
11	:32/925421	<M TBA	Cap filler/breather lockable *available as Service replacement on later machines*	C	1
11	:123/04055	>M TBA	Cap hydraulic filler non lockable	D	1
11A	:123/04056		Seal cap	C	1
12	:123/08053		Gauge sight		1
12A	::25/700013		O Ring		1
13	:.		'See Remark' *Filter see frame E3-7-1*		1
14	1315/0512Z		Bolt M12 x 50mm		6
15	826/01717		Nut rivet M12		4
16	823/00589		Washer		8
17	1370/0403Z		Nut M12		2
18	:1420/0007Z	<M TBA	Washer plain M8	A	6
18	:823/10874		Washer sealing,M8	B	6

Product Catalog \ CONSTRUCTION \ NORTH AMERICA \ CONSTRUCTION / INDUSTRIAL \ BACKHOE LOADER 3CX,4CX,214,215,217 \ 3C PLUS (91HP) , Made in Brazil with Dieselmax/IESA Engine 9812/0080 \ B BODYWORK, CAB, LOADER END \ B01 BODYWORK/FRAME

9812/0080 B1-2-11 GUARD, SUCTION HOSE

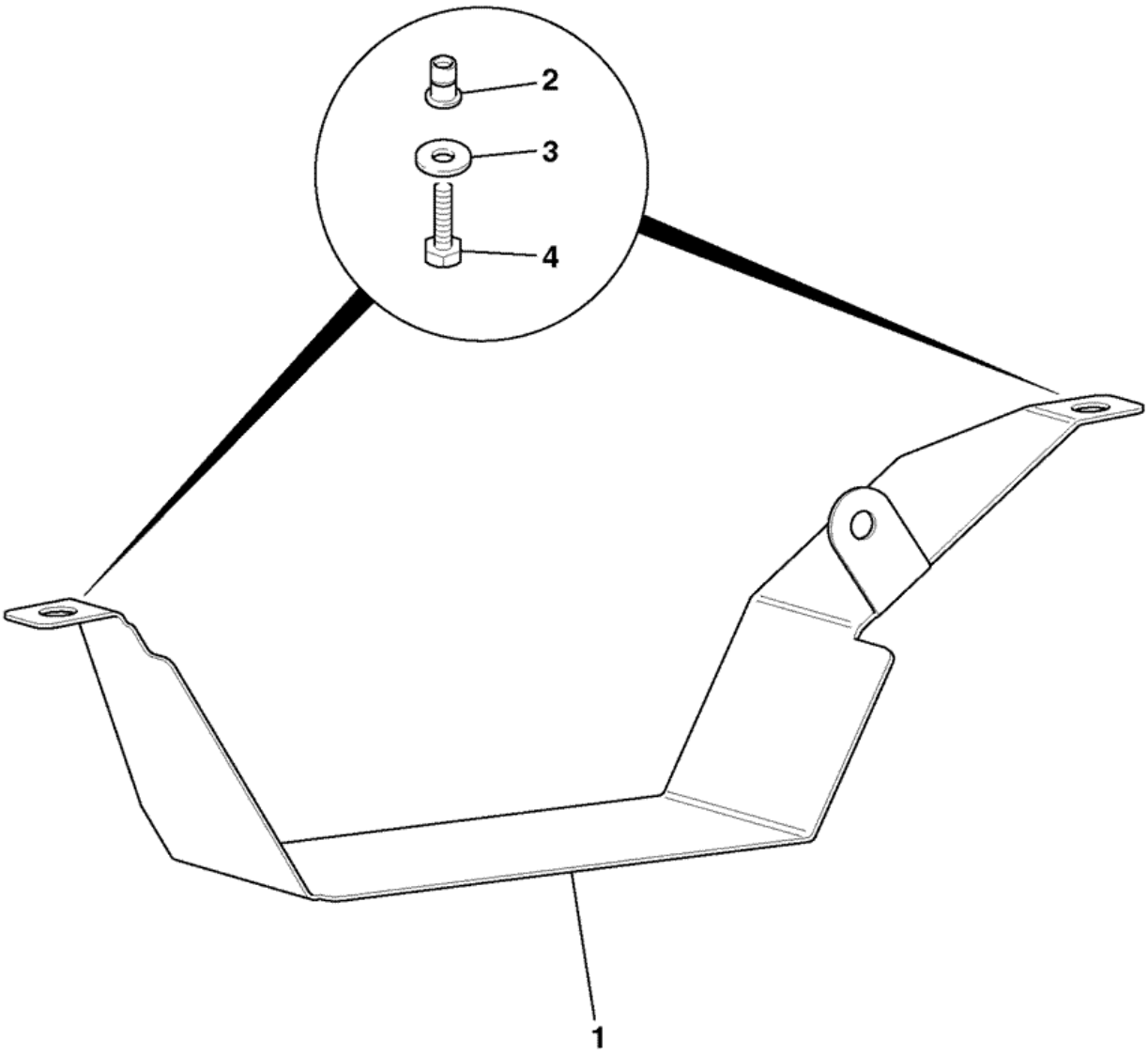

781200

Item	Part #	Change No	Description	Usage Code	QTY
1	339/01056		Guard suction hose		1
2	826/01717		Nut rivet M12		2

3	823/00589		Washer		2
4	1315/3510Z		Bolt		2

Product Catalog \ CONSTRUCTION \ NORTH AMERICA \ CONSTRUCTION / INDUSTRIAL \ BACKHOE LOADER 3CX,4CX,214,215,217 \ 3C PLUS (91HP) , Made in Brazil with Dieselmax/IESA Engine 9812/0080 \ B BODYWORK, CAB, LOADER END \ B01 BODYWORK/FRAME

9812/0080 B1-3-10 TANK, DIESEL FUEL, 130 LITRES

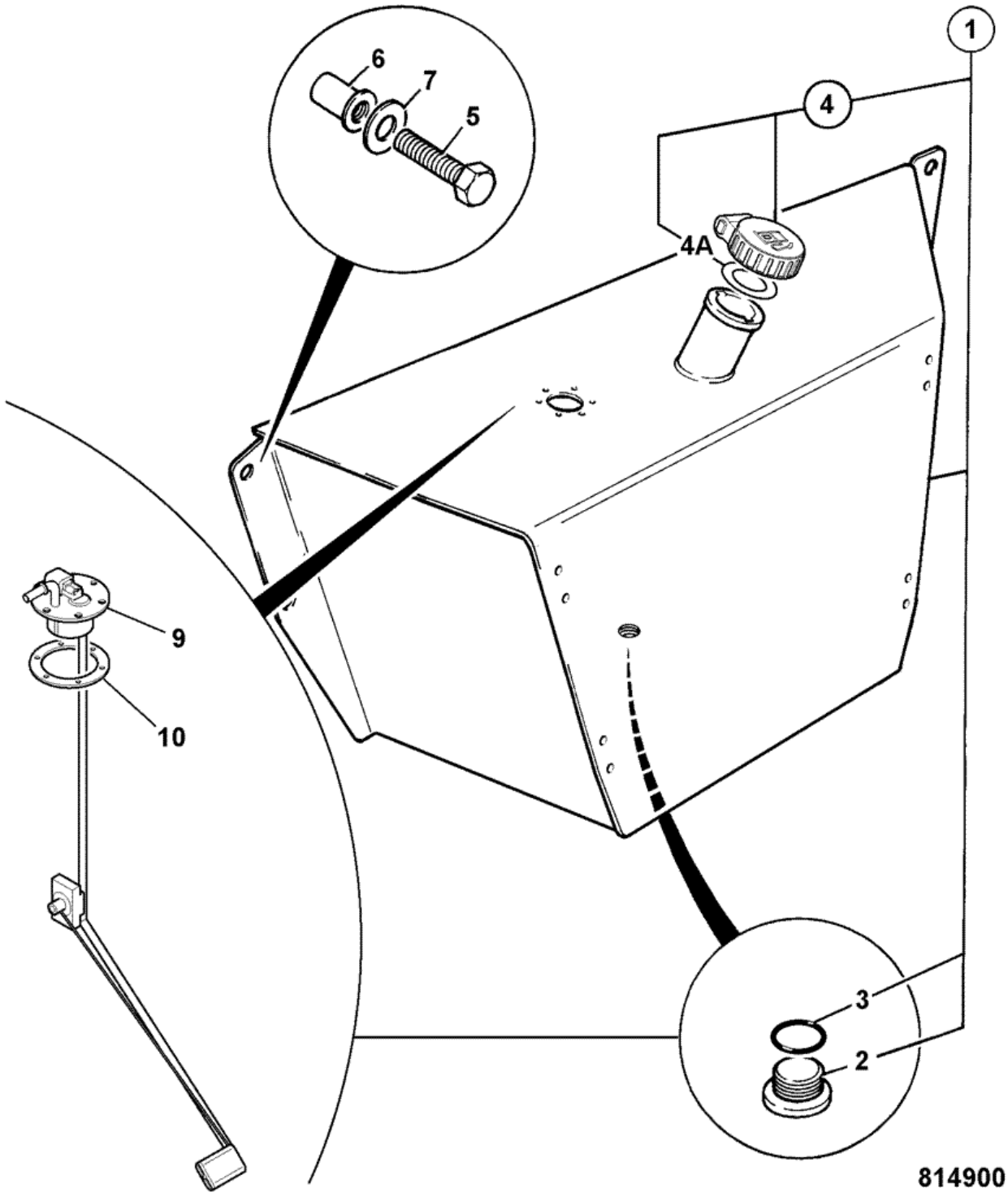

Item	Part #	Change No	Description	Usage Code	QTY
1	128/15230		Tank diesel, 130 litres		1
2	:32/925390		Plug drain		1

3	::2401/0510		O Ring		1
4	:331/45908	<M TBA	Cap filler, diesel lockable *For key use 701/45501*		1
4	:123/05892		Cap filler, lockable supplied without key *use key 701/45501*		1
4A	::904/20333	<M TBA	Seal fuel cap		1
4A	::123/06343		Seal		1
5	1315/0512Z		Bolt M12 x 50mm		4
6	826/01717		Nut rivet M12		4
7	823/00589		Washer		4
8	:826/00520		Screw		6
9	:716/27600		Gauge fuel sender unit		1
10	:813/10331		Gasket sensor, fuel level		1

9812/0080 B1-4-20 STABILISER, CENTREMOUNT

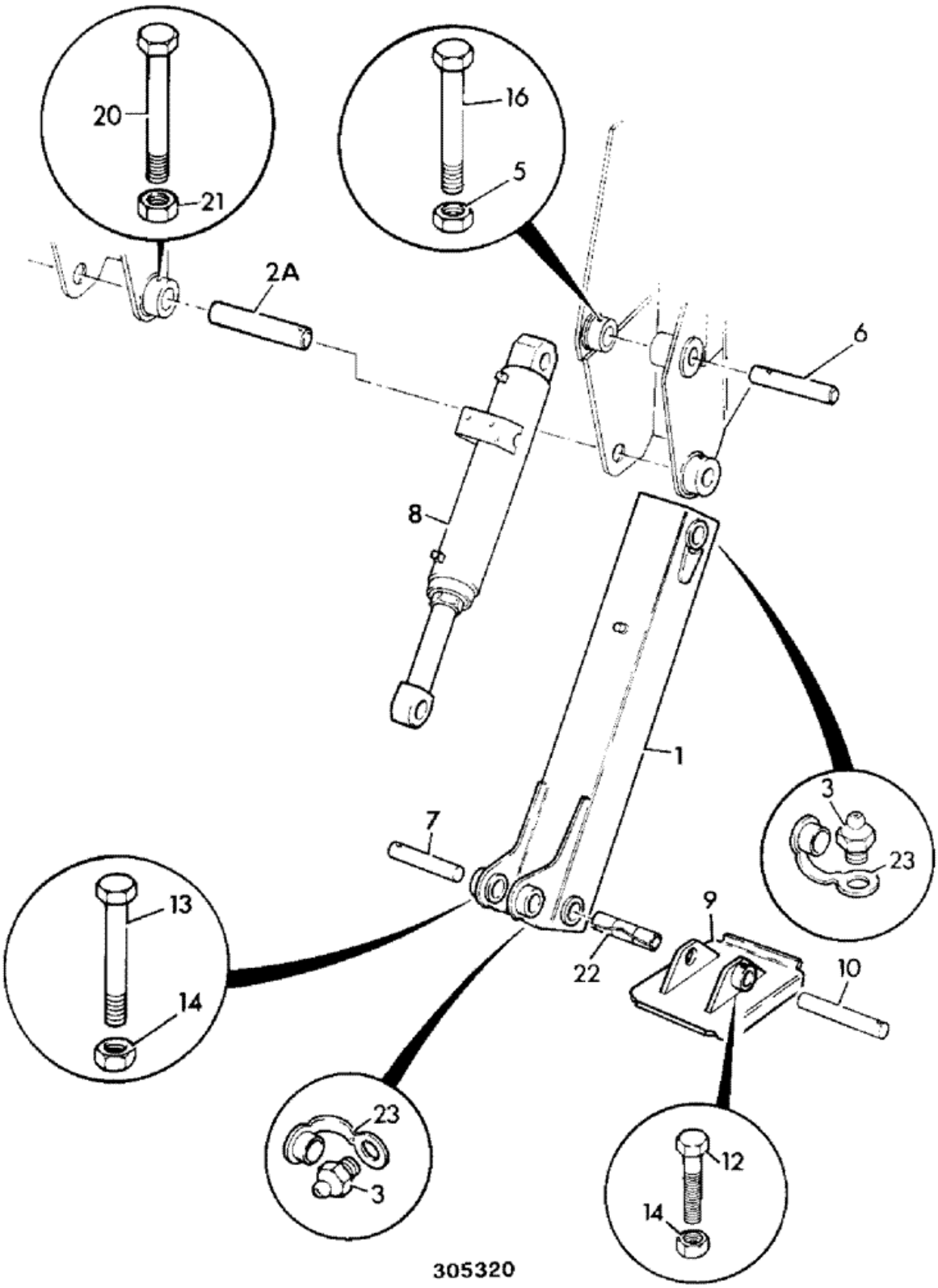

Item	Part #	Change No	Description	Usage Code	QTY
1	335/04734		Leg stabiliser centremount, Brazil		2
2A	811/50536		Pin pivot		2
2A	811/50536A		Pin pivot plus 0.005"		2
2A	811/50536B		Pin pivot plus 0.010"		2
3	1450/1002		Nipple grease 1/4" BSP 90deg.		2
5	1370/0403Z		Nut M12		4
6	811/50565		Pin pivot		2
7	811/90339		Pin black version of 1019/2019		2
8	557/60073		Ram stabiliser c. mount 90 X 50		2
9	339/01051		Foot dirt Brazil		2
10	811/50038		Pin 44.5dia x 279.5		2
12	1315/3419Z		Bolt M10x90mm		2
13	1305/3226Z		Bolt		2
14	1340/0203Z		Nut		4
14	1370/0303Z		Nut lock M10 *for item 12*		2
16	1315/3519Z		Bolt M12x90mm		2
20	1315/3520Z		Bolt M12 x 100mm		2
21	1370/0403Z		Nut M12		2
22	.		'See Remark' *not fitted*		1
23	835/00017		Cap grease nipple		8

9812/0080 B1-4-30 GUARD, STABILISER RAM, CENTREMOUNT

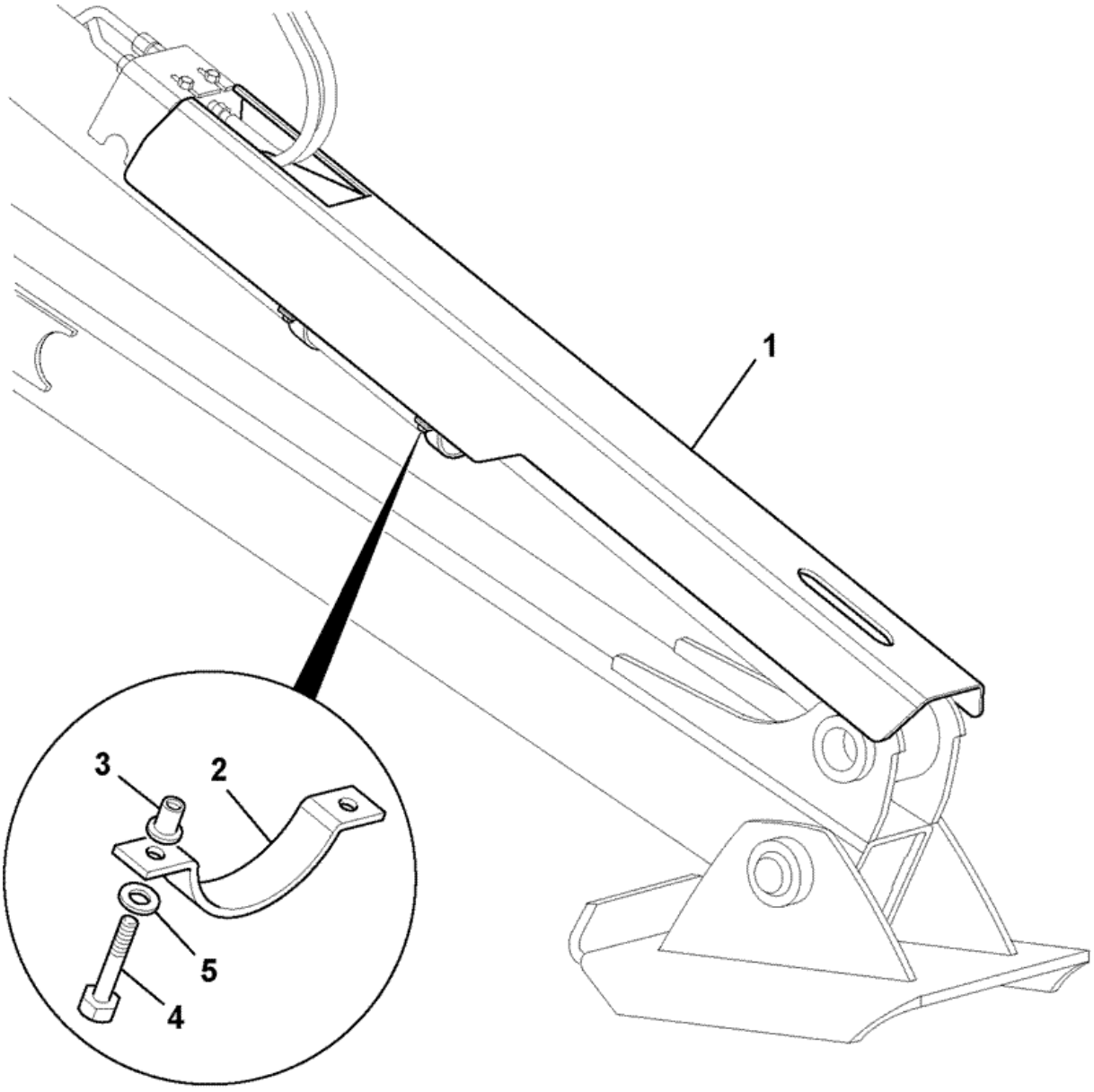

868120

Item	Part #	Change No	Description	Usage Code	QTY
1	335/11063		Guard stabiliser ram		2
2	331/59515		Clamp stabiliser guard		4
3	826/01681		Nut rivet		8
4	1315/3510Z		Bolt		8
5	1420/0009Z		Washer Plain M12		8

Product Catalog \ CONSTRUCTION \ NORTH AMERICA \ CONSTRUCTION / INDUSTRIAL \ BACKHOE LOADER 3CX,4CX,214,215,217 \ 3C PLUS (91HP) , Made in Brazil with Dieselmax/IESA Engine 9812/0080 \ B BODYWORK, CAB, LOADER END \ B01 BODYWORK/FRAME

9812/0080 B1-6-11 GRILLE, FRONT, 2WS

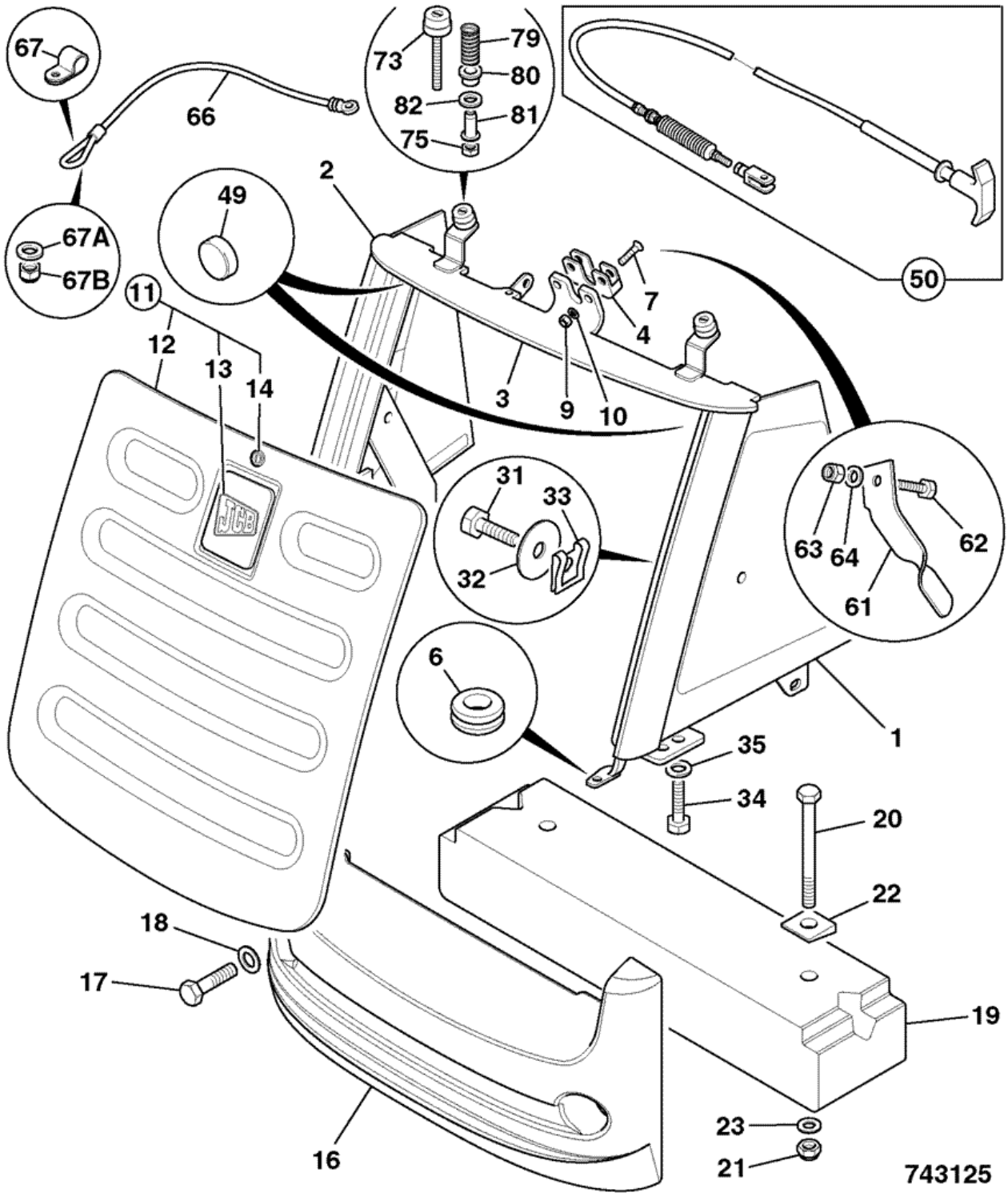

Item	Part #	Change No	Description	Usage Code	QTY
1	335/08369		Grille side LH 2WS		1
2	335/08370		Grille side,RH 2WS		1

3	335/09817		Grille housing, 2WS		1
4	331/27126		Lock bonnet		1
6	2410/0304		Grommet		2
7	826/01814		Screw M8x35 countersunk		2
9	1370/0203Z		Nut self lock M8		2
10	1420/0007Z		Washer plain M8		2
11	N.S.P.		None serviced part		1
12	335/08180		Grille front black		1
13	817/19661		Decal JCB logo 100x100		1
14	162/03434		Lock barrel assembly		1
16	331/46249		Bumper front 46kg *Standard*		1
16	331/46250		Bumper front 100kg		1
17	1315/3816Z		Bolt M20 x 70		2
18	1420/0012Z		Washer M20		2
19	.		'See Remark' *items 19 to 23 not fitted*		1
31	1315/0205Z		Bolt		2
32	1411/0001Z		Washer		2
33	826/11392		Nut M6 clip on		2
34	1315/0408Z		Bolt M10 x 30		4
35	1420/0008Z		Washer Plain M10		4
49	926/22100		Spacer block		2
50	910/60199		Cable bonnet release *Cab builds only*		1
61	331/48761		Lever bonnet release *Canopy builds only*		1
62	1315/0205Z		Bolt *Canopy builds only#*		1
63	1370/0103Z		Nut Self lock M6 *Canopy builds only*		1
64	1420/0006Z		Washer M6 *Canopy builds only*		1
66	331/47156		Wire bonnet pull down 1800mm long		1
67	821/10227		Clip P		1
67A	1412/0002Z		Washer		1
67B	1370/0203Z		Nut self lock M8		1
73	835/10129		Buffer M8x65		2
75	1370/0203Z		Nut self lock M8		2
79	814/10201	Superseded	Spring compression		2
79	814/10213		Spring compression		2
80	829/31270		Bush		2
81	826/01627		Nut rivet M8 open end for 8 to 10.5mm plt.		2
82	1411/0004Z		Washer		2

Product Catalog \ CONSTRUCTION \ NORTH AMERICA \ CONSTRUCTION / INDUSTRIAL \ BACKHOE LOADER 3CX,4CX,214,215,217 \ 3C PLUS (91HP) , Made in Brazil with Dieselmax/IESA Engine 9812/0080 \ B BODYWORK, CAB, LOADER END \ B01 BODYWORK/FRAME

9812/0080 B1-6-21 GRILLE, FRONT, 2WS

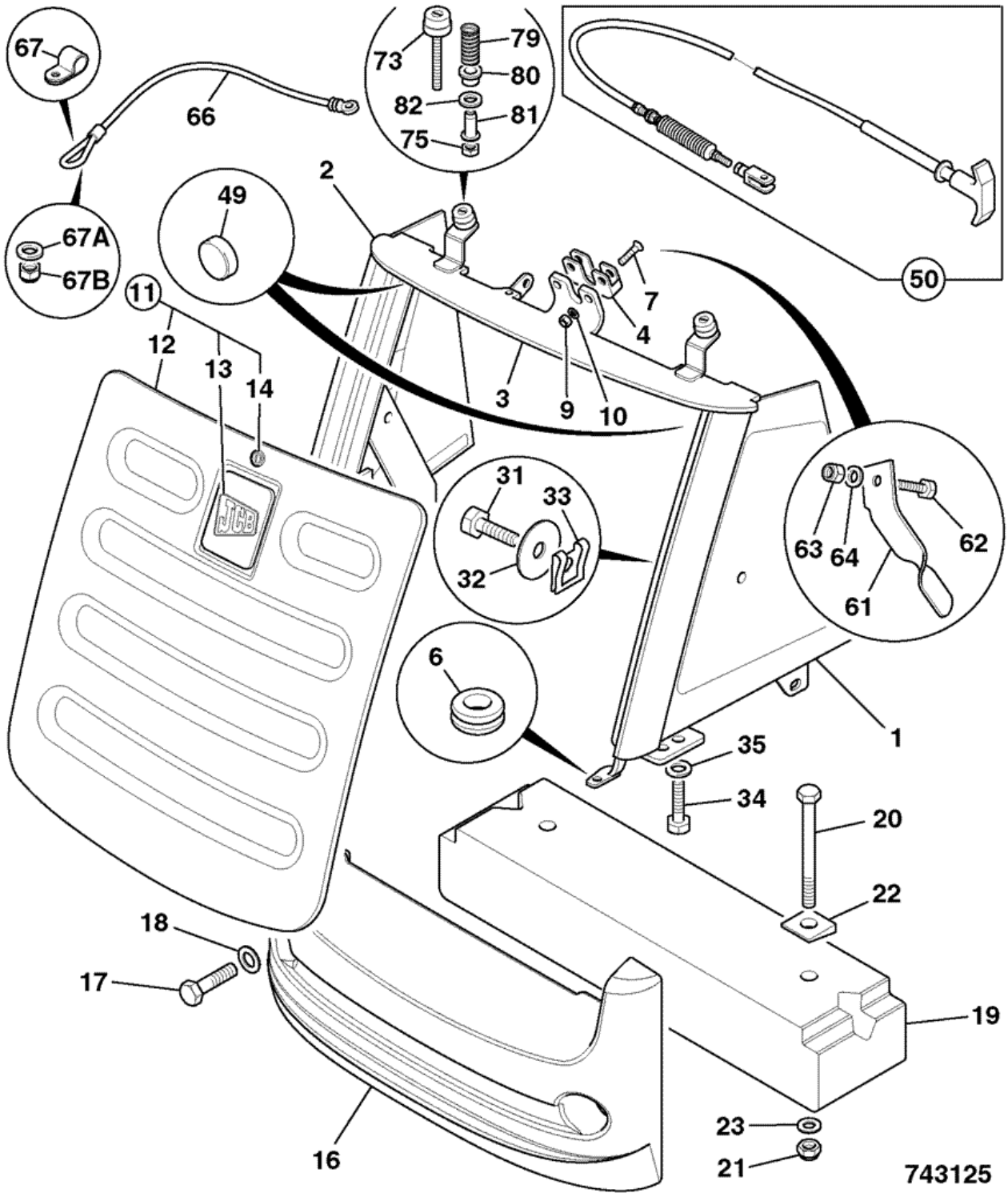

Item	Part #	Change No	Description	Usage Code	QTY
1	128/C6734		Grille LH side 2WS		1
2	128/C6733		Grille RH side 2WS		1

3	128/C0428		Grille housing		1
4	331/27126		Lock bonnet		1
6	2410/0304		Grommet		2
7	826/01814		Screw M8x35 countersunk		2
9	1370/0203Z		Nut self lock M8		2
10	1420/0007Z		Washer plain M8		2
11	128/14741		Grille assembly front		1
12	:335/08180		Grille front black		1
13	:817/19661		Decal JCB logo 100x100		1
14	:162/03434		Lock barrel assembly		1
16	331/46249		Bumper front 46kg *Standard*	A	1
16	331/46250		Bumper front 100kg	A	1
16	331/46251		Bumper front 180kg	B	1
17	1315/3816Z		Bolt M20 x 70	A	2
17	1315/3820Z		Bolt M20 x 100mm	B	2
18	1420/0012Z		Washer M20		2
19	331/34478		Counterweight AWS only, 75 Kg *If fitted*	B	1
19	331/34480		Counterweight 2WS only, 156 Kg *If fitted*	B	1
20	1315/3824Z		Bolt M20 x 140lg *To fit item 19*		2
21	1370/0703Z		Nut M20 *To fit item 19*		2
22	823/10429		Washer taper M20 *To fit item 19*		2
23	1420/0012Z		Washer M20 *To fit item 19*		2
31	1315/0205Z		Bolt		2
32	1412/0001Z		Washer		2
33	826/11392		Nut M6 clip on *supplied with items 1 & 2*		2
34	1315/0408Z		Bolt M10 x 30		4
35	1420/0008Z		Washer Plain M10		4
49	926/22100		Spacer block		2
50	332/C7664		Cable bonnet release *Cab builds only*		1
50A	826/01144		Tie cable 200mm long *for item 50*		1
61	331/48761		Lever bonnet release *Canopy builds only*		1
62	1315/0205Z		Bolt *Canopy builds only#*		1
63	1370/0103Z		Nut Self lock M6 *Canopy builds only*		1
64	1420/0006Z		Washer M6 *Canopy builds only*		1
66	331/47156		Wire bonnet pull down 1800mm long		1
67	821/10227		Clip P		1
67A	1412/0002Z		Washer		1
67B	1370/0203Z		Nut self lock M8		1
73	835/10129		Buffer M8x65		2
75	1370/0203Z		Nut self lock M8		2
79	814/10201	Superseded	Spring compression		2

79	814/10213		Spring compression		2
80	829/31270		Bush		2
81	826/01627		Nut rivet M8 open end for 8 to 10.5mm plt.		2
82	1411/0004Z		Washer		2

9812/0080 B1-8-20 MUDGUARDS, REAR, YELLOW

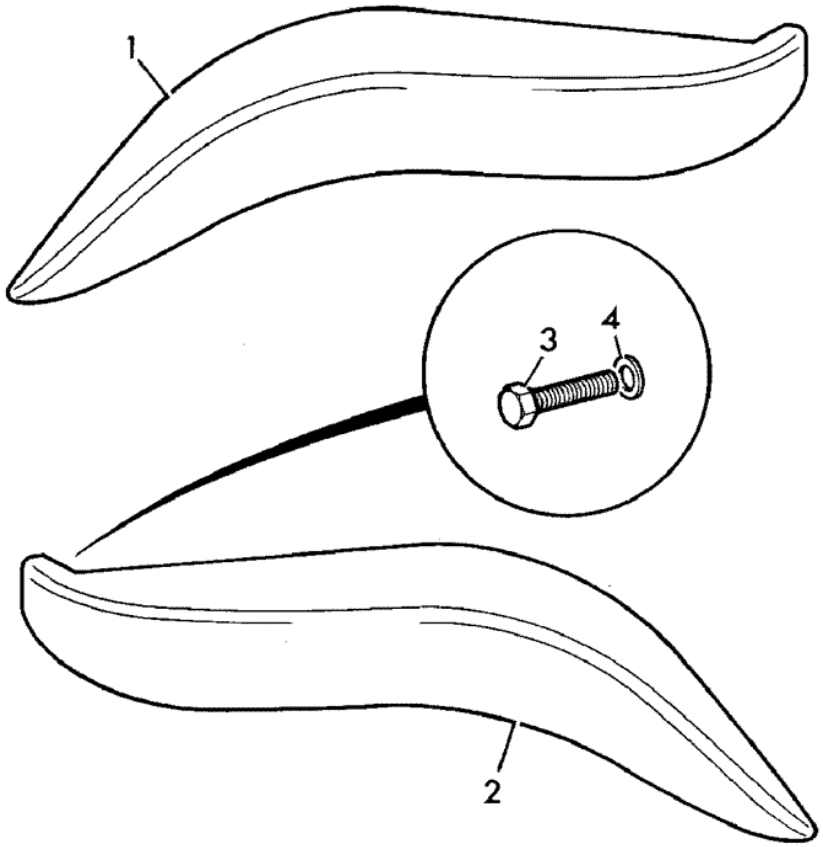

228801

Item	Part #	Change No	Description	Usage Code	QTY
1	331/14351		Fender left hand, yellow 214e		1
2	331/14352		Fender right hand, yellow 214e		1
3	1315/0205Z		Bolt		10
4	1425/0006Z		Washer Spring		10
5	1412/0001Z		Washer		10
6	826/01101		Nut rivet,M6 open ended for 3 to 5.5mm plt		10

Product Catalog \ CONSTRUCTION \ NORTH AMERICA \ CONSTRUCTION / INDUSTRIAL \ BACKHOE LOADER 3CX,4CX,214,215,217 \ 3C PLUS (91HP) , Made in Brazil with Dieselmax/IESA Engine 9812/0080 \ B BODYWORK, CAB, LOADER END \ B02 CAB

9812/0080 B2-1-10 CAB SHELL, UNGLAZED

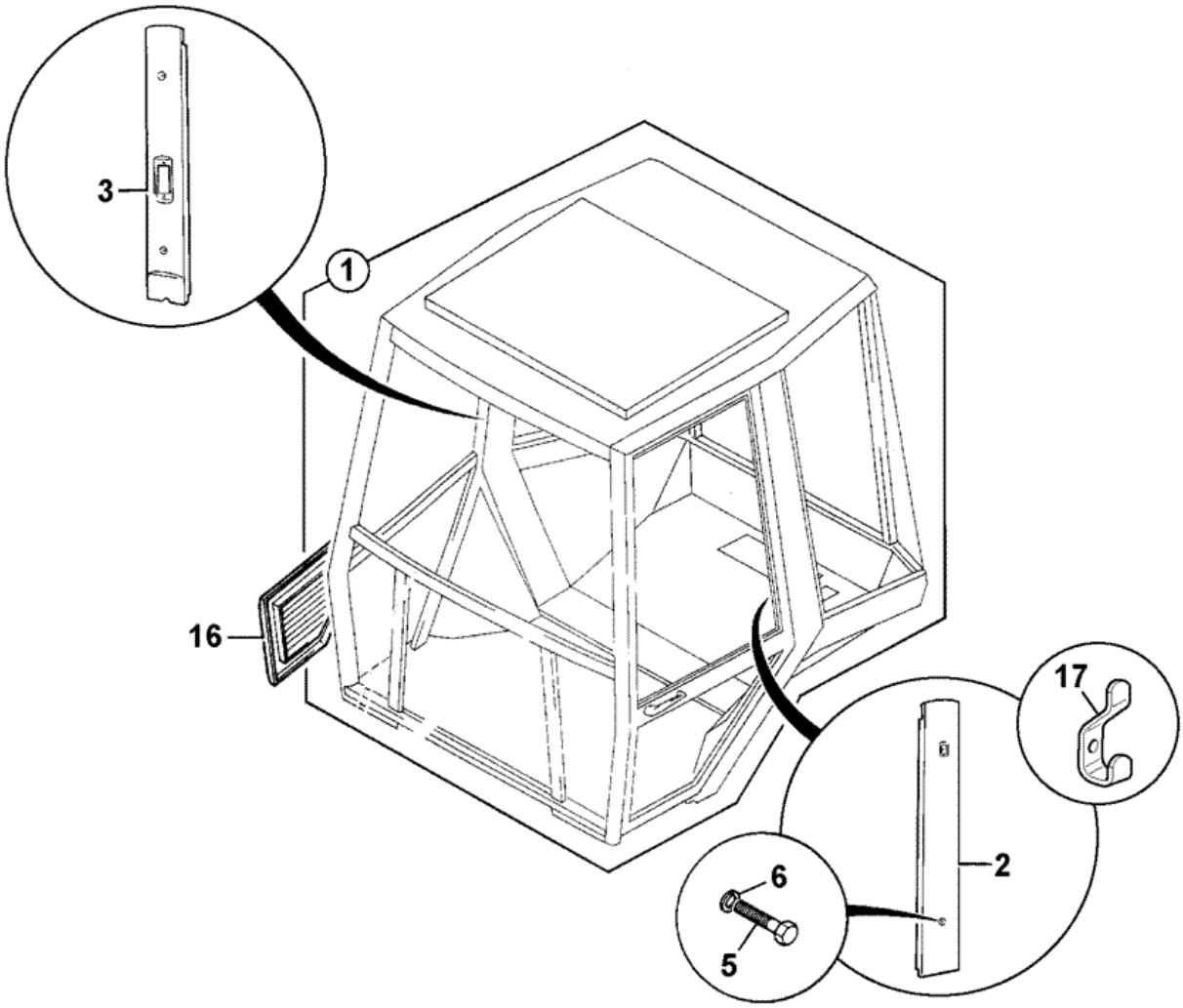

305782

Item	Part #	Change No	Description	Usage Code	QTY
1	126/02572		Cab shell as supplied		1
1A	:332/F2535		Cover blanking sticker 60 dia black polycarbonate		1

			fitted over 32mm hole in rear floorplate		
2	331/27481		Cover left hand B post		1
3	331/27482		Cover right hand B post		1
4	:NSP		None serviced part *Part of items 1 & 2*		0
5	826/01561		Screw button head M6x45		4
6	823/00554		Washer plain		4
6	823/00516		Washer nylon M6		4
16	123/07467		Cover heater		1
16	123/07649		Cover heaterless cab		1
17	142/01083		Hook coat		1
18	826/01768		Screw M6x25mm *Air intake filter*		3
18	826/01413		Screw M6 x 16mm long pan head *Air intake filter*		1
19	123/04791		Washer nylon		4
20	826/01101		Nut rivet,M6 open ended for 3 to 5.5mm plt		4
21	926/14500		Seal w/screen assy felt *2000mm long. Fit to item 16.*		0

Product Catalog \ CONSTRUCTION \ NORTH AMERICA \ CONSTRUCTION / INDUSTRIAL \ BACKHOE LOADER 3CX,4CX,214,215,217 \ 3C PLUS (91HP) , Made in Brazil with Dieselmax/IESA Engine 9812/0080 \ B BODYWORK, CAB, LOADER END \ B02 CAB

9812/0080 B2-11-3 MIRROR, EXTERNAL & INTERIOR

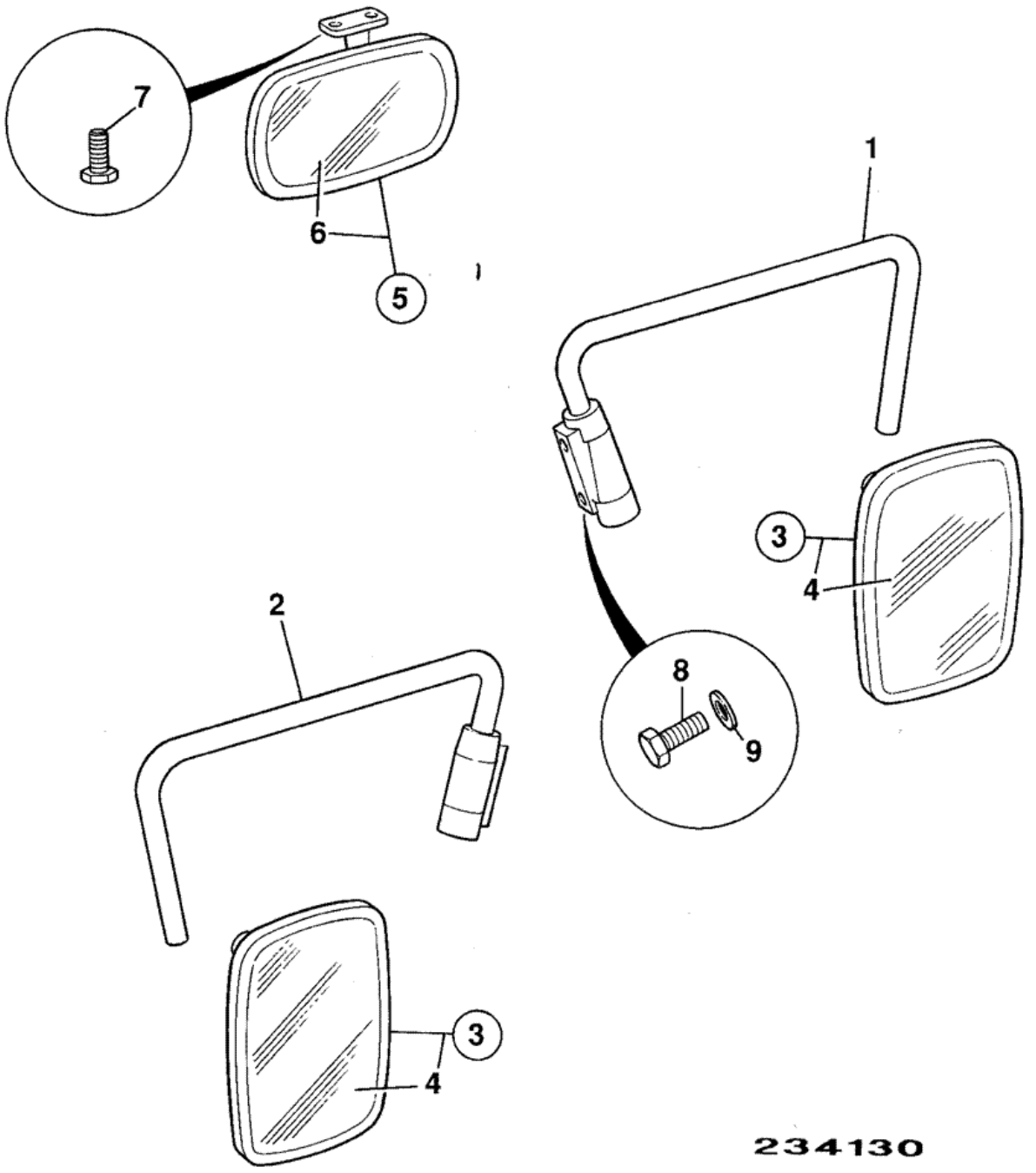

Item	Part #	Change No	Description	Usage Code	QTY
1	123/04968		Arm right hand mirror		1
2	123/04969		Arm left hand mirror		1
3	123/04970		Mirror exterior head assy		2

4	:477/01068		Mirror		1
5	123/04971		Mirror interior assembly		1
6	:123/04975		Glass interior mirror		1
7	826/01524		Screw selftap		2
8	826/01559		Screw button head socket M6 x 16mm		4
9	823/00554		Washer plain		4
9A	823/00597		Washer spring		4
10	835/00171		Plug blanking 7mm *Use inplace of mirror bracket.*		8

Product Catalog \ CONSTRUCTION \ NORTH AMERICA \ CONSTRUCTION / INDUSTRIAL \ BACKHOE LOADER 3CX,4CX,214,215,217 \ 3C PLUS (91HP) , Made in Brazil with Dieselmax/IESA Engine 9812/0080 \ B BODYWORK, CAB, LOADER END \ B02 CAB

9812/0080 B2-1-30 CANOPY

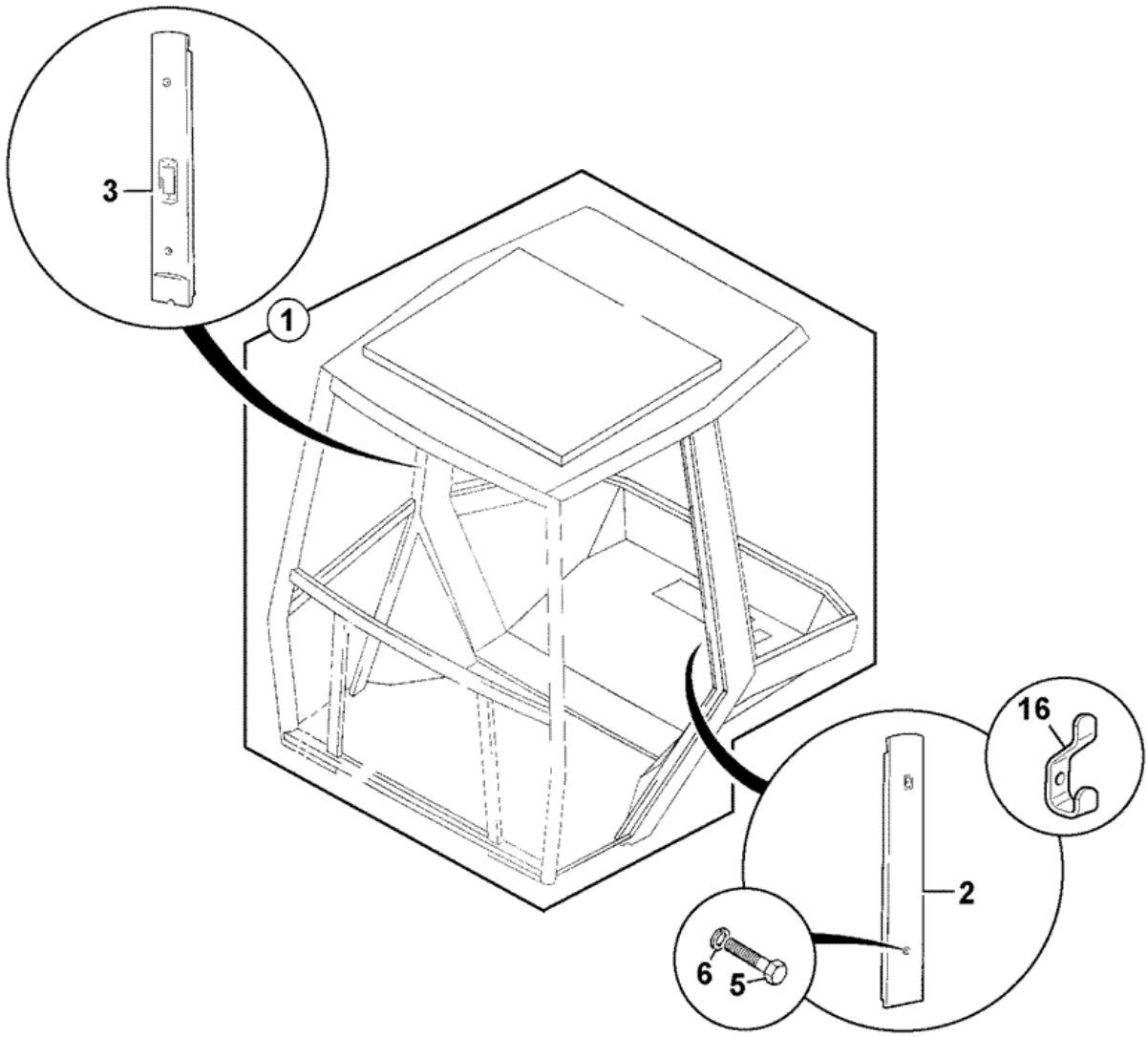

305792

Item	Part #	Change No	Description	Usage Code	QTY
1	126/02571		Canopy frame		1
1	:332/F2535		Cover blanking sticker 60 dia black polycarbonate		1

			fitted over 32mm hole in rear floorplate		
2	331/27481		Cover left hand B post		1
3	331/27482		Cover right hand B post		1
5	826/01561		Screw button head M6x45		4
5	826/01101		Nut rivet,M6 open ended for 3 to 5.5mm plt		4
6	823/00554		Washer plain		4
6	823/00516		Washer nylon M6		4
16	142/01083		Hook coat		1

Product Catalog \ CONSTRUCTION \ NORTH AMERICA \ CONSTRUCTION / INDUSTRIAL \ BACKHOE LOADER 3CX,4CX,214,215,217 \ 3C PLUS (91HP) , Made in Brazil with Dieselmax/IESA Engine 9812/0080 \ B BODYWORK, CAB, LOADER END \ B02 CAB

9812/0080 B2-13-1 CAB REAR VALANCE, CENTREMOUNT

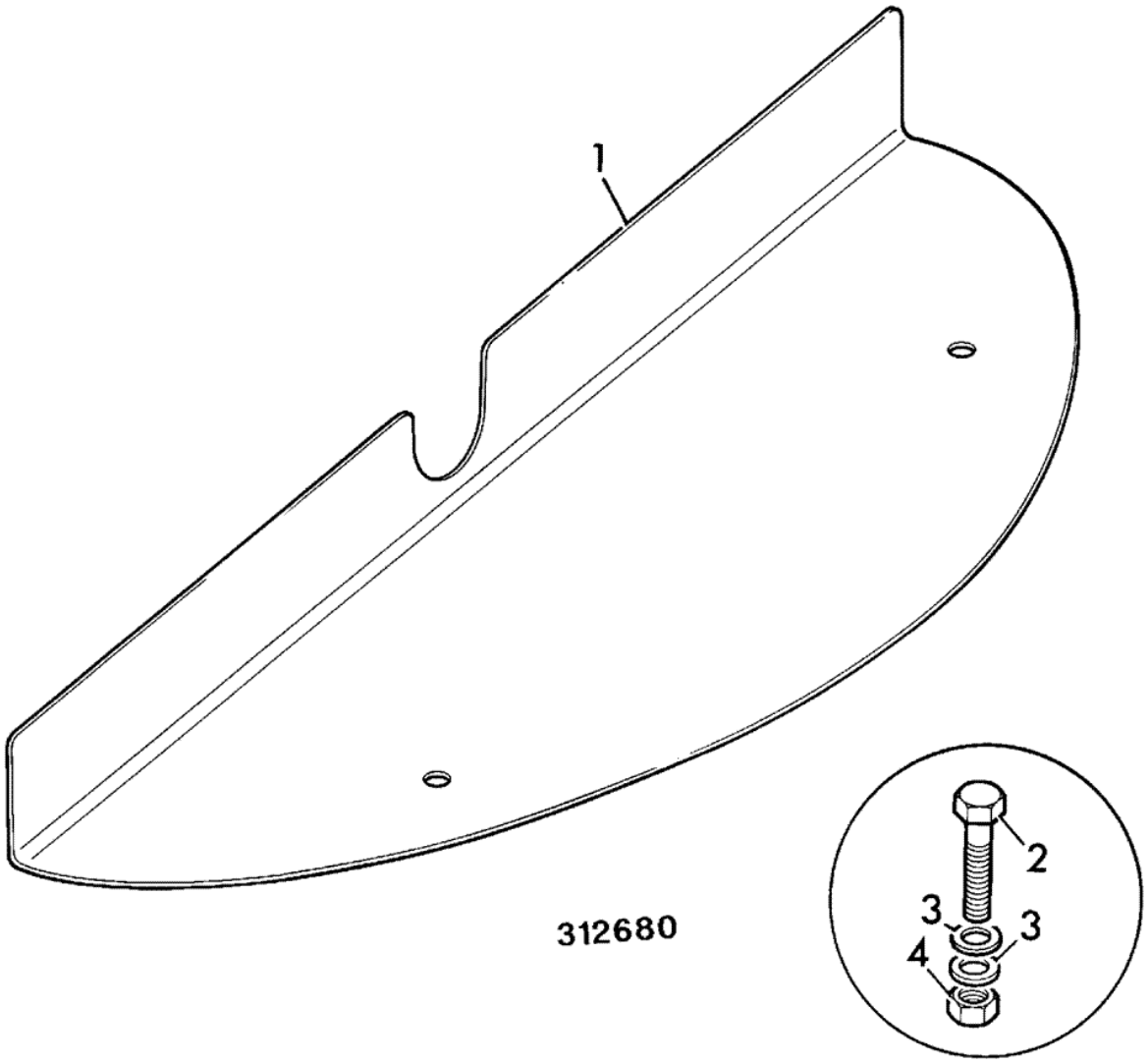

Item	Part #	Change No	Description	Usage Code	QTY
1	123/07703		Cover rear valance		1
2	1315/3313Z		Bolt M8 X 55		2
3	1420/0007Z		Washer plain M8		4
4	1370/0203Z		Nut self lock M8		2

Product Catalog \ CONSTRUCTION \ NORTH AMERICA \ CONSTRUCTION / INDUSTRIAL \ BACKHOE LOADER 3CX,4CX,214,215,217 \ 3C PLUS (91HP) , Made in Brazil with Dieselmax/IESA Engine 9812/0080 \ B BODYWORK, CAB, LOADER END \ B02 CAB

9812/0080 B2-18-1 DIRECT GLAZING, REPLACEMENT MATERIAL

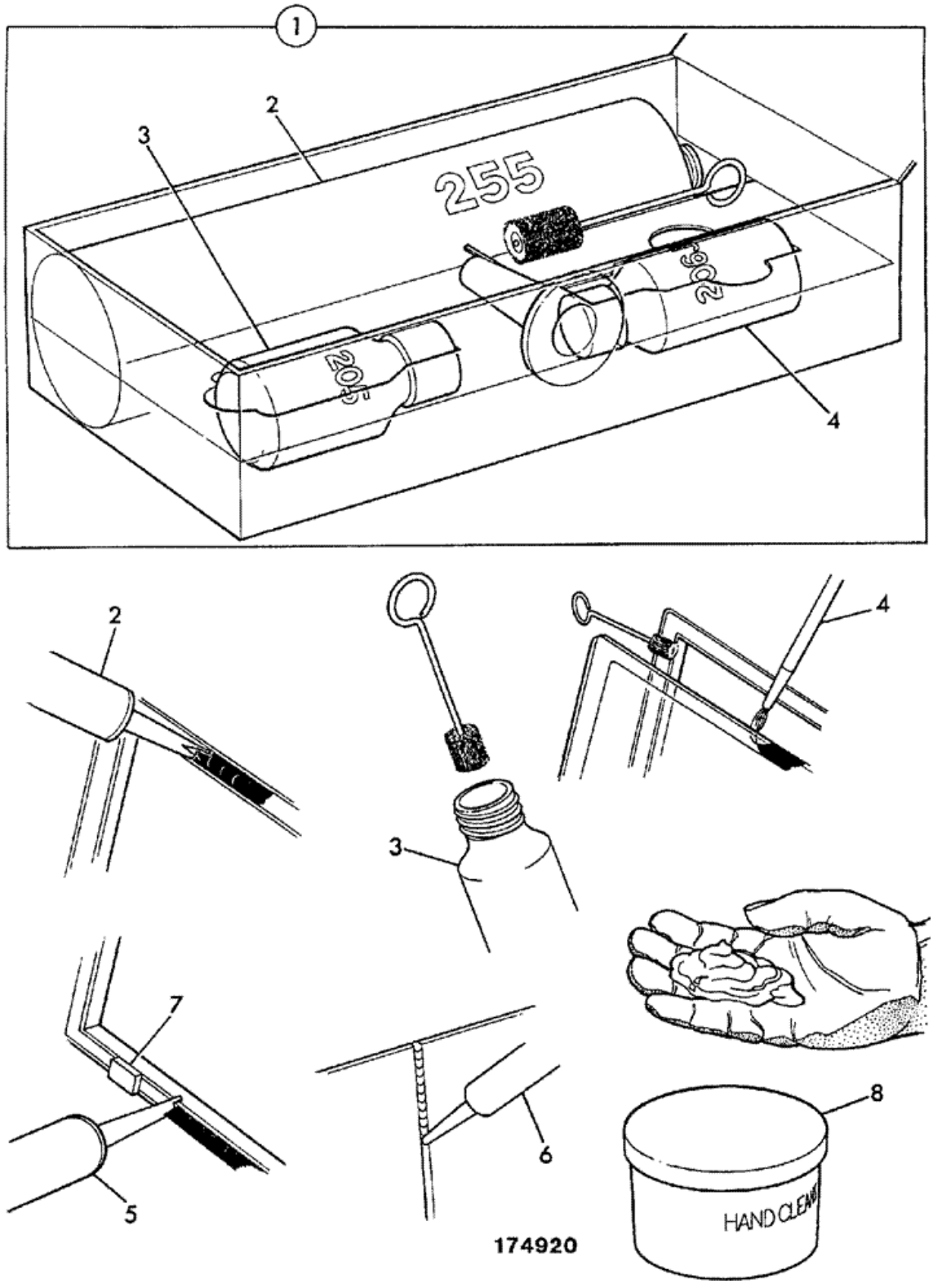

Item	Part #	Change No	Description	Usage Code	QTY
1	993/55700		Adhesive kit-JCB ultrafast glazing		1
2	:4103/2109		Adhesive JCB ultrafast 310ml cartridge *See foot note 1*		0
3	:4104/1206		Cleaner active wiper 205 30ml		0
3	:4104/1203		Cleaner primer SIKA 205 250ml		0
			Paint black primer 206J 30ml		

4	:4201/4906		*Black ceramic ink band around glass border.*		0
4	:4201/4911		Paint black primer 206J 200gm		0
5	4102/2309		Sealant black acrylic 221 310ml cartridge		0
6	4102/0933		Sealant DP2205 clear silicone		0
7	926/15500		Spacer block		34
7	926/22100		Spacer block		2
8	4104/1310		Cleaner hand, polyurethane 454gm/1lb		0

Product Catalog \ CONSTRUCTION \ NORTH AMERICA \ CONSTRUCTION / INDUSTRIAL \ BACKHOE LOADER 3CX,4CX,214,215,217 \ 3C PLUS (91HP) , Made in Brazil with Dieselmax/IESA Engine 9812/0080 \ B BODYWORK, CAB, LOADER END \ B02 CAB

9812/0080 B2-2-11 CAB GLAZING

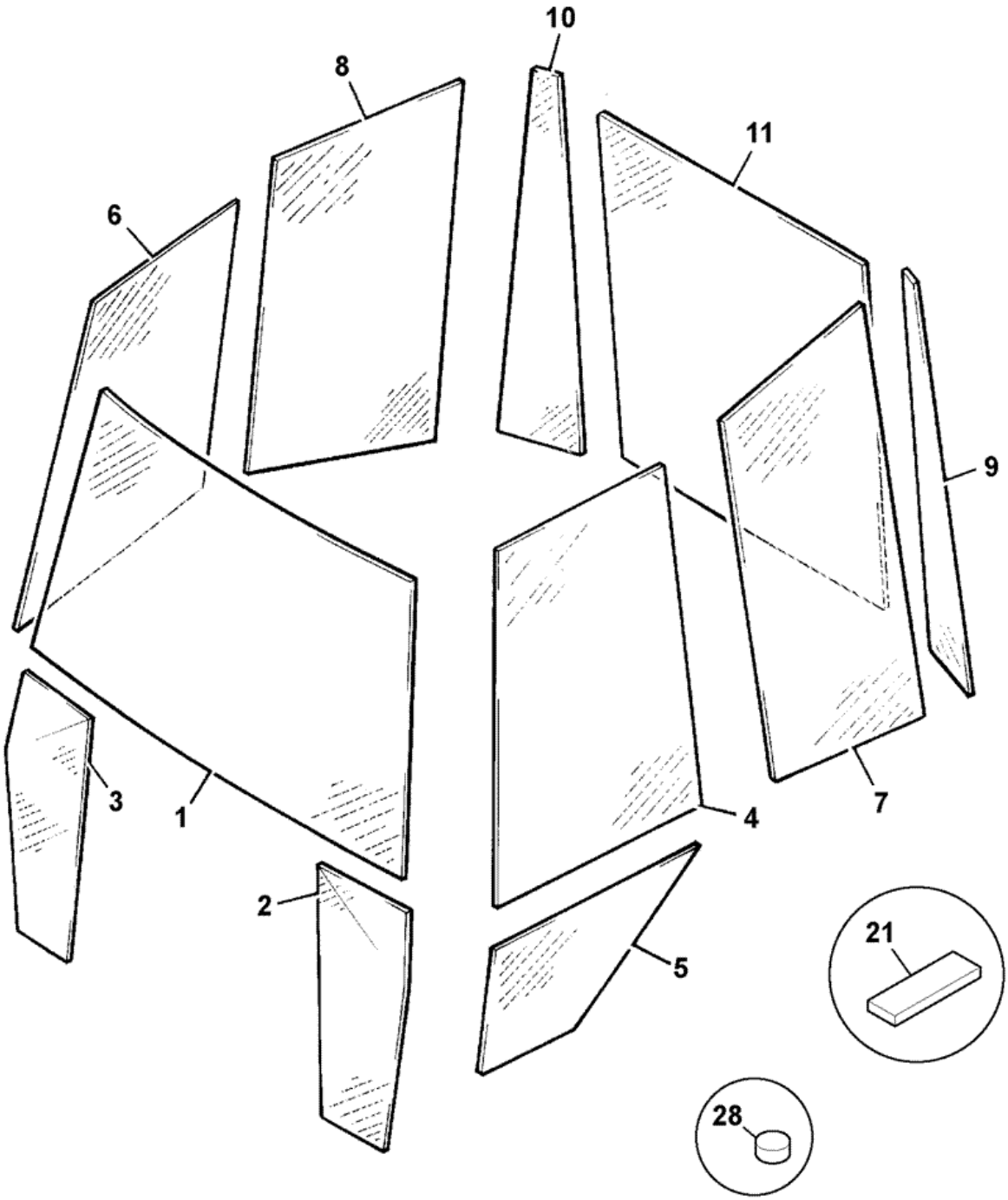

308421

Item	Part #	Change No	Description	Usage Code	QTY
1	827/80382		Windscreen laminated		1
2	827/80371		Glass left hand 1/4 light		1

3	827/80370		Glass right hand 1/4 light		1
4	827/80372		Glass upper door		1
5	827/80369		Glass lower door		1
6	827/80373		Glass right hand front		1
7	827/80374		Glass left hand window		1
8	827/80375		Glass right hand window		1
9	827/80376		Glass left hand sixlight		1
10	827/80377		Glass right hand sixlight		1
11	827/80378		Glass rear window		1
21	926/15500		Spacer block *6X15X4 approx 34/cab*		0
28	926/22100		Spacer block *front screen*		2

Product Catalog \ CONSTRUCTION \ NORTH AMERICA \ CONSTRUCTION / INDUSTRIAL \ BACKHOE LOADER 3CX,4CX,214,215,217 \ 3C PLUS (91HP) , Made in Brazil with Dieselmax/IESA Engine 9812/0080 \ B BODYWORK, CAB, LOADER END \ B02 CAB

9812/0080 B2-29-1 STORAGE NET

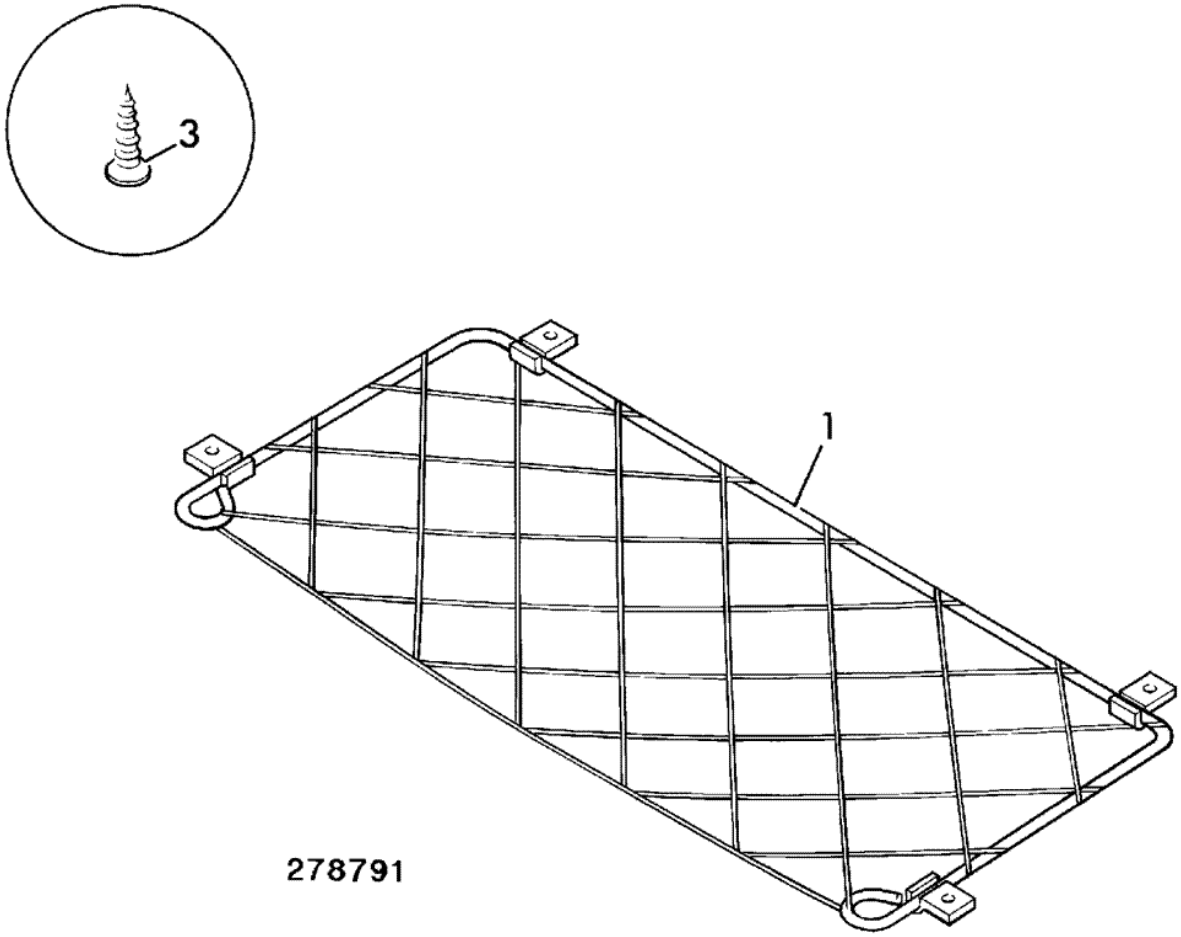

Item	Part #	Change No	Description	Usage Code	QTY
1	267/33501		Net stowage		1
2	826/01533		Screw		4

Product Catalog \ CONSTRUCTION \ NORTH AMERICA \ CONSTRUCTION / INDUSTRIAL \ BACKHOE LOADER 3CX,4CX,214,215,217 \ 3C PLUS (91HP) , Made in Brazil with Dieselmax/IESA Engine 9812/0080 \ B BODYWORK, CAB, LOADER END \ B02 CAB

9812/0080 B2-30-1 COVER, BRAKE PEDALS

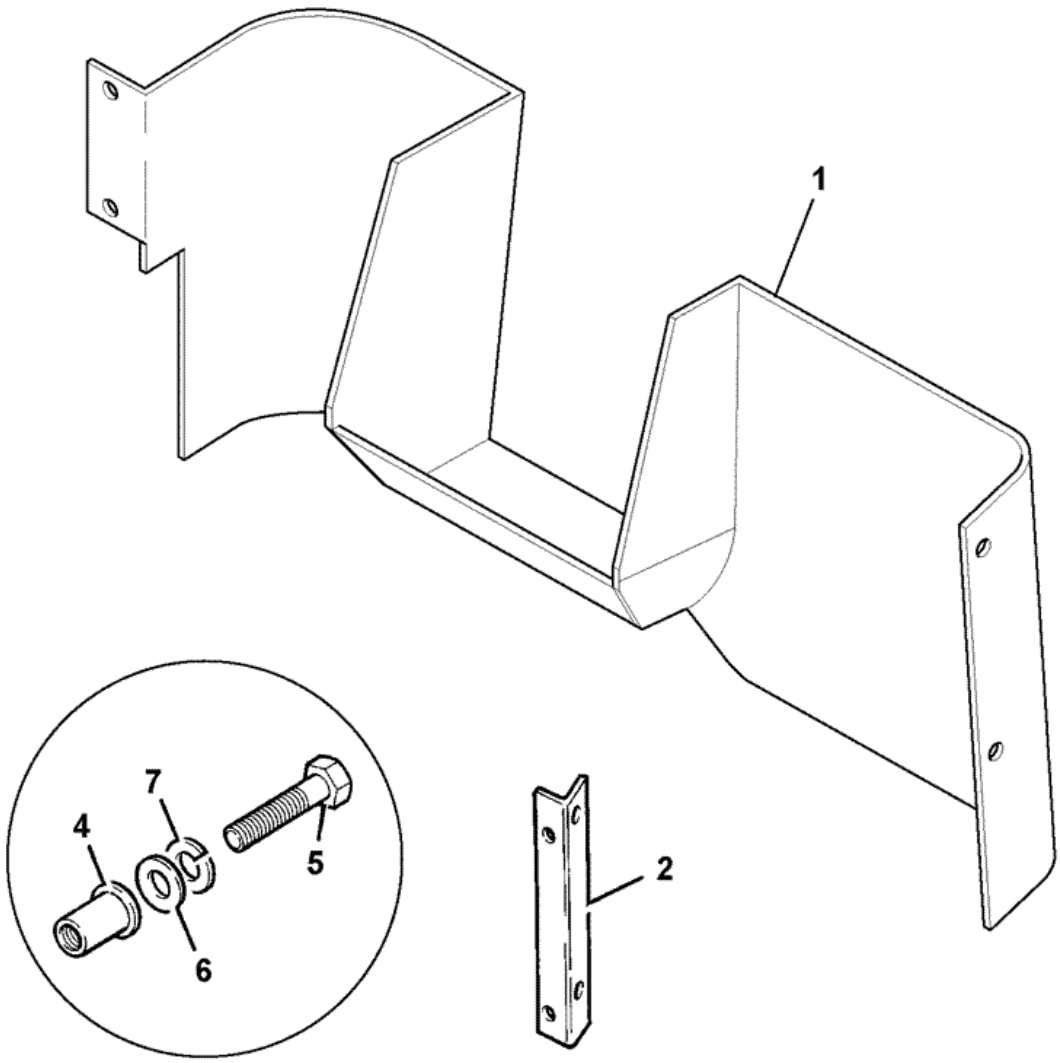

261762

Item	Part #	Change No	Description	Usage Code	QTY
1	335/12048		Cover brake pedals		1
2	123/08076		Bracket pedal cover		1

4	826/01099		Nut rivet,M6 open ended		6
5	1315/0205Z		Bolt		6
6	1420/0006Z		Washer M6		6
7	1425/0006Z		Washer Spring		6
8	926/01100		Strip sealing		0

9812/0080 B2-3-21 DOOR

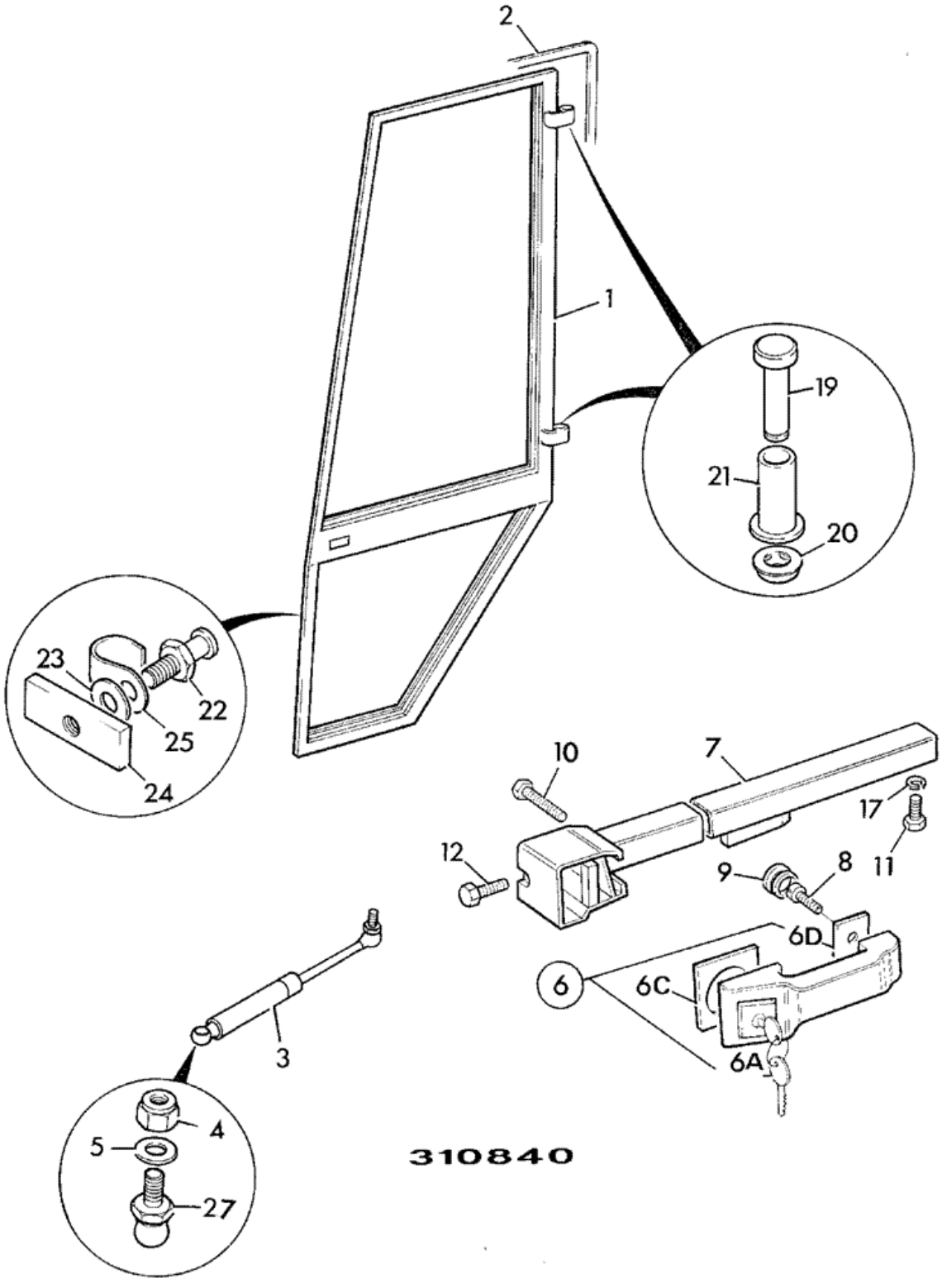

Item	Part #	Change No	Description	Usage Code	QTY
1	125/00478		Frame door		1
2	331/15237		Seal		0
3	331/14573	Superseded	Strut door stay		1
3	331/66778		Strut gas 201-329		1
4	1370/0203Z		Nut self lock M8		2
5	1417/0007Z		Washer		2
6	123/06547		Handle c/w barrel lock only		1
6A	:701/45501		Key Door/Ignition Ref 14657		2
6C	:123/00529		Grommet		1
6D	:123/00530		Grommet		1
7	123/02450		Lock door left hand		1
8	826/00792		Screw		2
9	2410/1008		Grommet		2
10	826/01077		Screw		3
11	1315/0203Z		Screw M6x16		1
12	826/01077		Screw		2
17	1425/0006Z		Washer Spring		1
19	142/00956		Pin hinge		2
20	142/00957		Cap hinge pin		2
21	120/92808		Bush Hinge		2
22	120/77505		Bolt closing		1
23	1420/0009Z		Washer Plain M12		1
24	826/00622		Nut		1
25	140/00618		Guard		1
26	1370/0103Z		Nut Self lock M6		2
27	123/06335		Joint ball		2

Product Catalog \ CONSTRUCTION \ NORTH AMERICA \ CONSTRUCTION / INDUSTRIAL \ BACKHOE LOADER 3CX,4CX,214,215,217 \ 3C PLUS (91HP) , Made in Brazil with Dieselmax/IESA Engine 9812/0080 \ B BODYWORK, CAB, LOADER END \ B02 CAB

9812/0080 B2-4-11 WINDOW, SIDE, OPENING

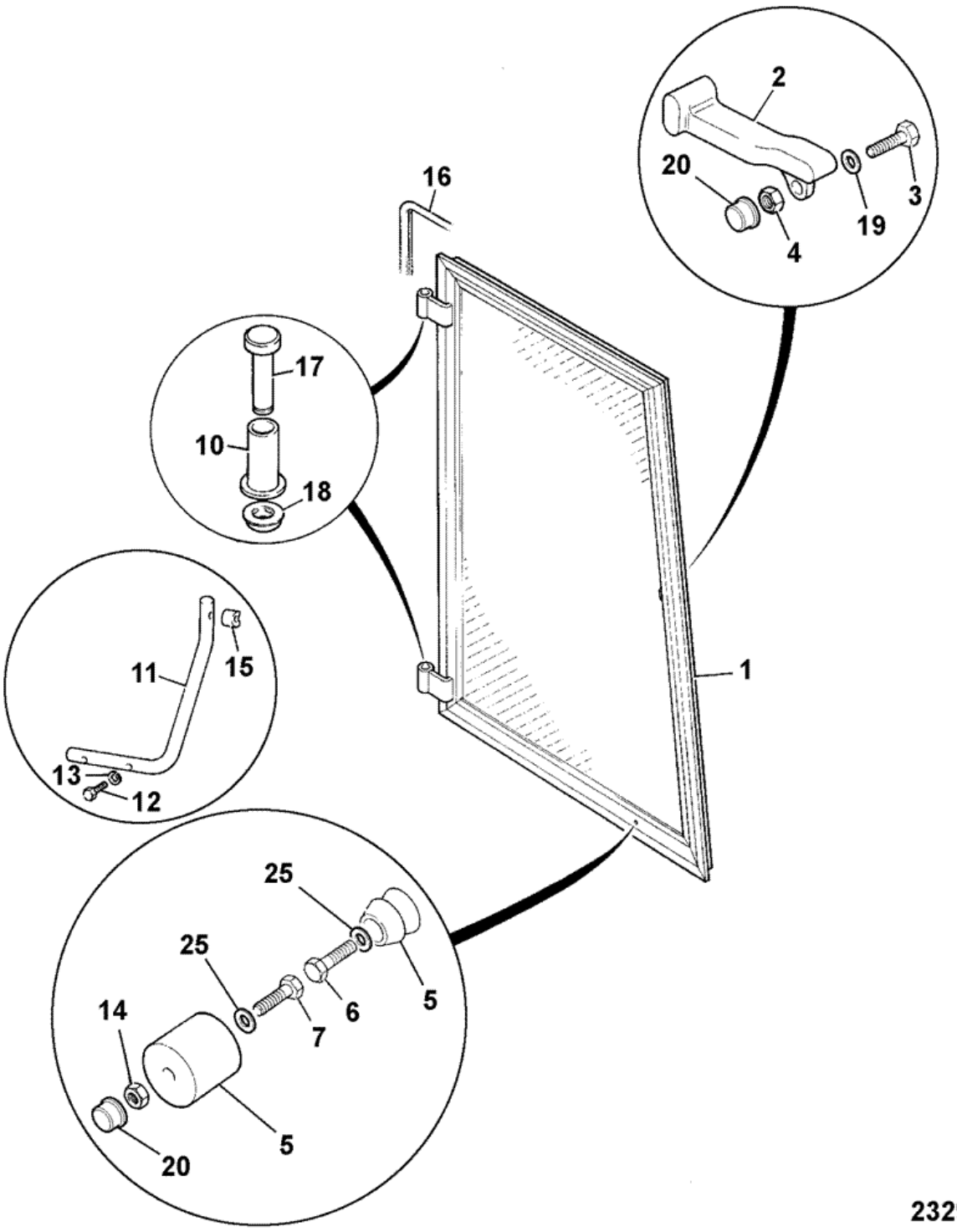

Item	Part #	Change No	Description	Usage Code	QTY
1	927/20025		Frame window		1
2	116/00822		Handle		1

3	1315/3212Z		Bolt M6 x 50		1
4	1370/0103Z		Nut Self lock M6		1
5	826/00670		Catch door		1
6	1315/0207Z		Screw M6 x 25mm long		1
7	1315/0211Z		Bolt		1
8	1425/0006Z		Washer Spring		1
9	1370/0101Z		Nut		1
10	120/92808		Bush Hinge		2
11	331/15286		Bracket window stop		1
12	1315/3312Z		Bolt		2
13	1417/0012Z		Washer lock		2
14	1370/0103Z		Nut Self lock M6		1
15	331/15288		Spacer		1
16	331/15238		Seal		1
17	142/00956		Pin hinge		2
18	142/00957		Cap hinge pin		2
19	823/00426		Washer		1
20	835/00074		Cap		2
21	1315/0211Z		Bolt		1
22	122/23509		Cap Nut M8		2
23	826/01103		Nut rivet,M8 open ended		2
24	826/01099		Nut rivet,M6 open ended		1
25	823/00544		Washer special		2

9812/0080 B2-5-11 WINDOW, REAR OPENING

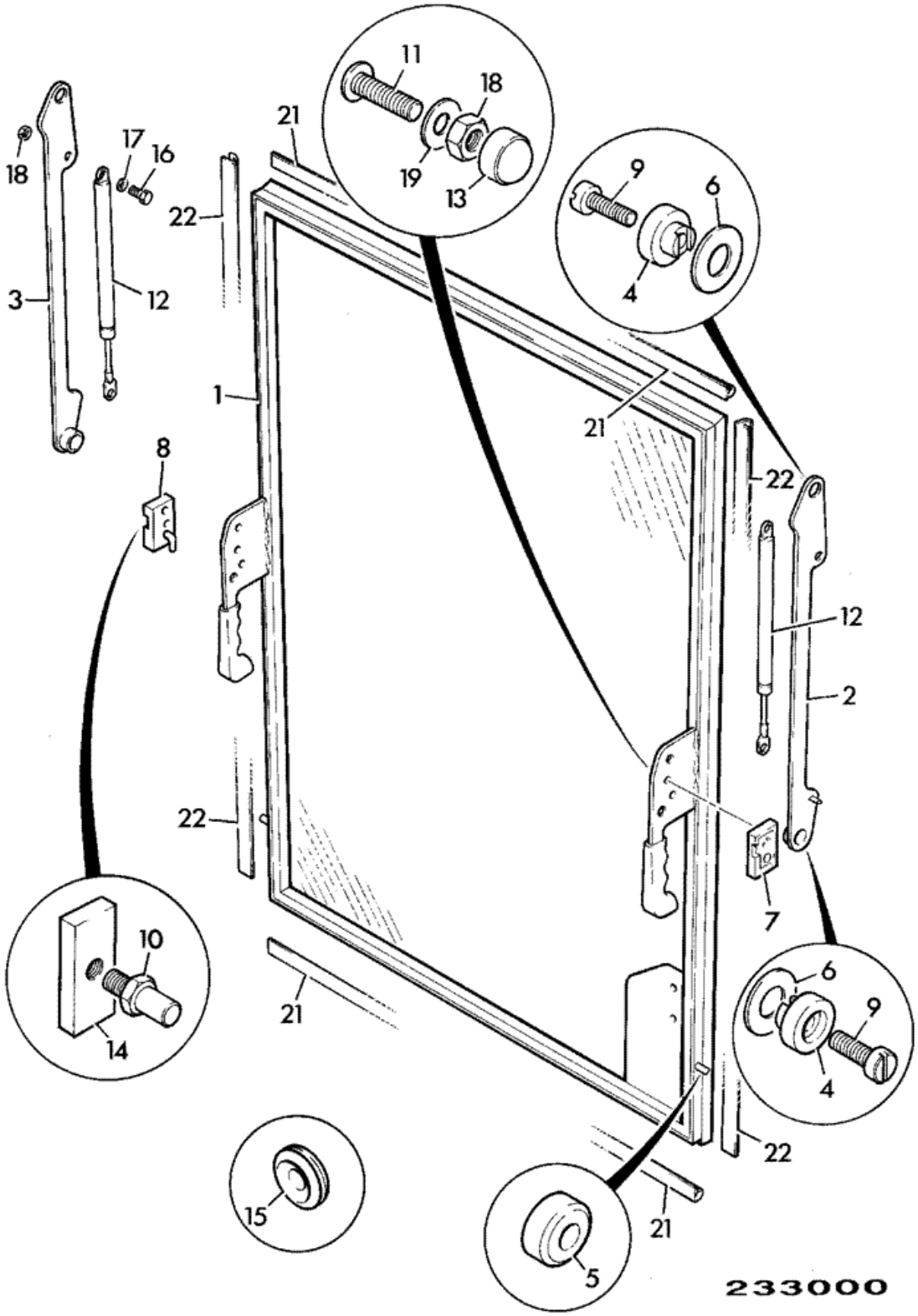

Item	Part #	Change No	Description	Usage Code	QTY
1	927/20026		Frame rear window		1
2	331/15293		Bracket left hand rear window		1
3	331/15294		Bracket right hand rear window		1
4	290/00806		Clamp		4
5	290/00809		Roller		2
6	823/00538		Washer		4
7	290/00812		Lock left side,		1
7A	331/28808		Cover		1
8	290/00813		Lock right side		1
8A	331/28808		Cover		1
9	826/01515		Screw M8 slot head		2
10	290/00807		Latch bolt		2
11	.		'See Remark' *Csk head Socket screw M8 X 40*		4
12	142/00953		Strut		2
13	122/23509		Cap Nut M8		4
14	826/00622		Nut		2
15	.		'See Remark' *Grommet*		2
16	1315/0307Z		Screw Hexagon M8 X 25		4
17	1417/0012Z		Washer lock		4
18	1370/0201Z		Nut M8		4
19	1420/0007Z		Washer plain M8		4
21	331/15239		Seal *Seal top and bottom*		2
22	331/15240		Seal *Seal, left and right*		2
23	1420/0008Z		Washer Plain M10 *item 10*		2
24	1411/0004Z		Washer *item 10*		2
25	1370/0301Z		Nut *item 10*		2
31	140/00619		Plug rubber stop *See Note 1*		2
32	1315/0203Z		Screw M6x16		2
33	1418/0010Z		Washer lock		2
34	1370/0101Z		Nut		2
35	835/00074		Cap		2
38	331/15234		Plug		2

Note 1: items 31 to 38 make rear window stop

Product Catalog \ CONSTRUCTION \ NORTH AMERICA \ CONSTRUCTION / INDUSTRIAL \ BACKHOE LOADER 3CX,4CX,214,215,217 \ 3C PLUS (91HP) , Made in Brazil with Dieselmax/IESA Engine 9812/0080 \ B BODYWORK, CAB, LOADER END \ B02 CAB

9812/0080 B2-6-10 SOUNDPROOFING, CAB ROOF

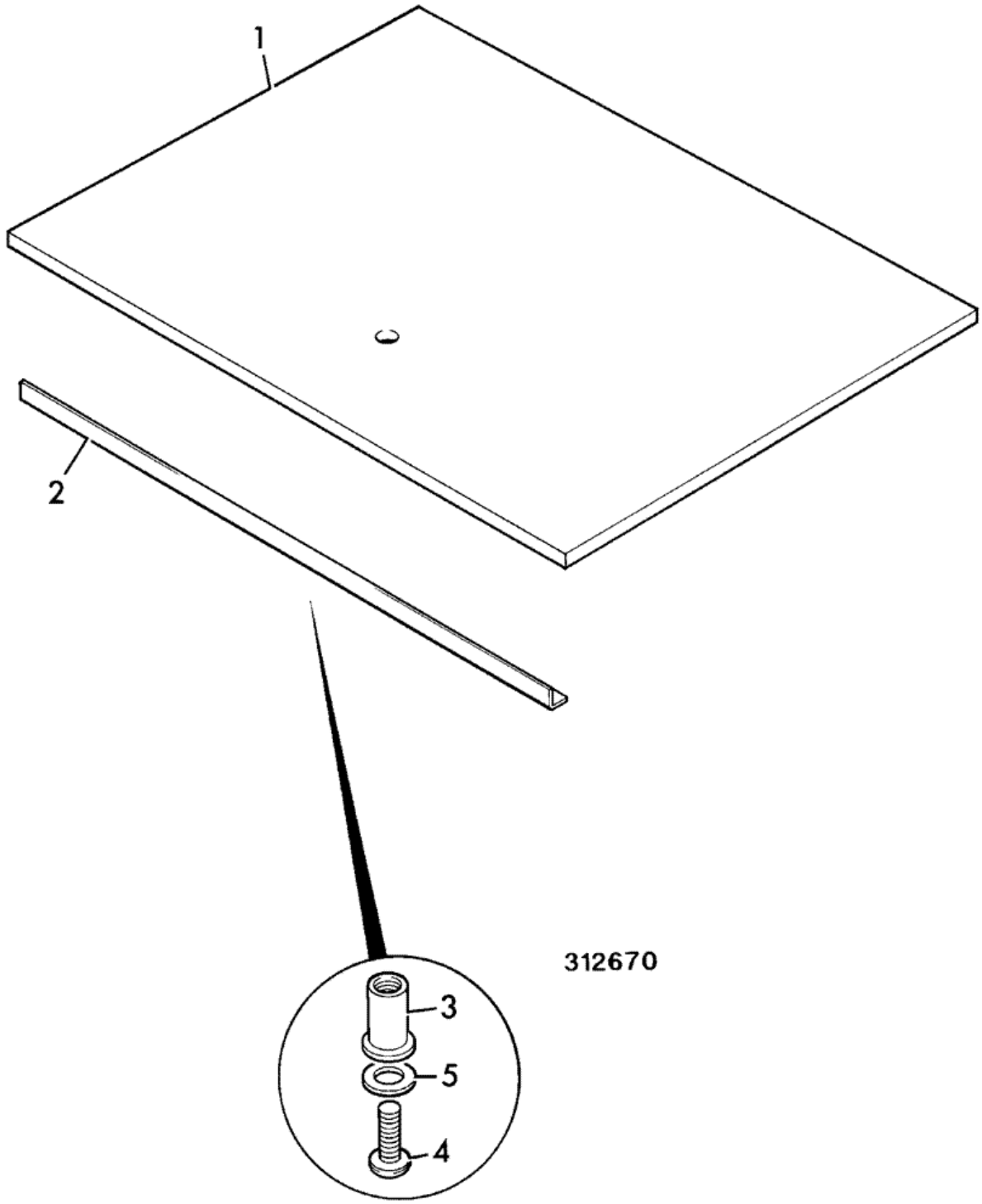

Item	Part #	Change No	Description	Usage Code	QTY
1	331/27483		Liner roof		1
2	123/07694		Bracket support		1

3	826/01101		Nut rivet,M6 open ended for 3 to 5.5mm plt		3
4	826/01768		Screw M6x25mm		3
5	823/00554		Washer plain		3

Product Catalog \ CONSTRUCTION \ NORTH AMERICA \ CONSTRUCTION / INDUSTRIAL \ BACKHOE LOADER 3CX,4CX,214,215,217 \ 3C PLUS (91HP) , Made in Brazil with Dieselmax/IESA Engine 9812/0080 \ B BODYWORK, CAB, LOADER END \ B02 CAB

9812/0080 B2-7-51 SEAT, STATIC

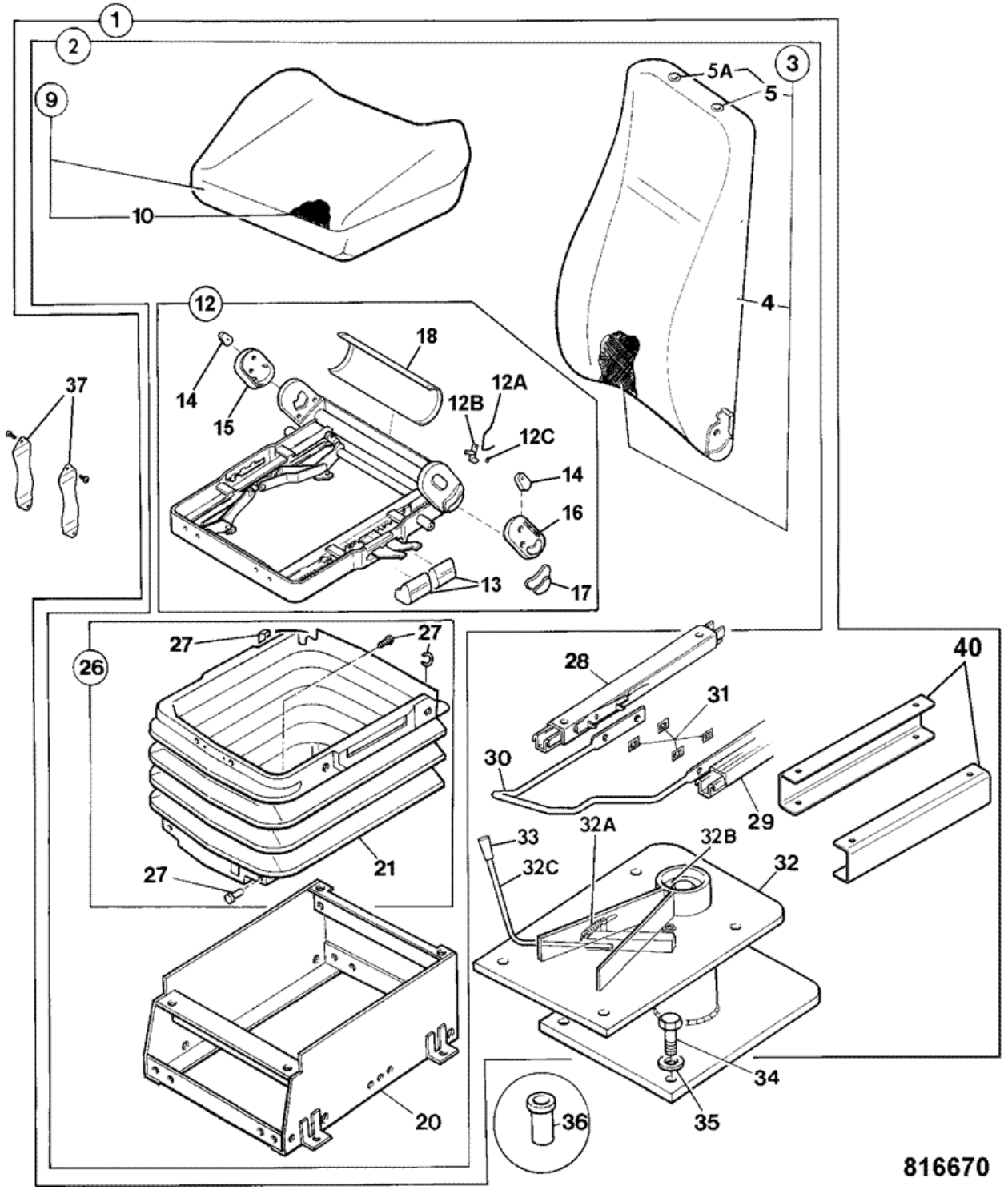

Item	Part #	Change No	Description	Usage Code	QTY
1	128/16497		Seat assembly static vinyl		1
2	:40/910460		Seat vinyl		1

3	::40/910431		Cushion vinyl		1
4	:::40/910397		Cover Seat, vinyl		1
5	:::40/903120		Plug headrest		2
5A	:::40/906903		Clip headrest		2
9	::40/910399		Cushion seat assembly, vinyl		1
10	:::40/910402		Cover seat cushion, vinyl		1
12	::40/910430		Frame assembly		1
12A	:::40/910447		Spring Squab handle		1
12B	:::40/910446		Handle Squab		1
12C	:::40/910448		Circlip height adjuster		1
13	:::40/910404		Handle grip front *Front*		2
13	:::40/910405		Handle grip rear		1
14	:::40/903108		Cap side plate		2
15	::40/903109		Cover slave right hand sideplate		1
16	:::40/903110		Cover upper left hand sideplate		1
17	:::40/910406		Handle Grip, squab recline		1
18	:::40/903112		Plate cushion frame back		1
20	::40/902901		Base		1
26	::40/905204		Kit-bellows		1
27	:::40/903116		Kit bellow fixings		1
28	:40/910138		Slide left hand		1
29	::40/910139		Slide right hand		1
30	:40/905205		Handle slide rail		1
31	:40/903125		Clip slide rail		4
32	:40/911069		Pedestal assembly		1
32A	::814/10156		Spring		1
32B	::40/910413		Kit-nut & bolt pedestal swivel		1
32C	::40/910414		Handle assembly		1
33	::40/910415		Handle grip		1
34	1315/3409Z		Bolt M10 x 35		4
35	1420/0008Z		Washer Plain M10		4
36	826/01105		Nut rivet,M10 open ended		4
37	40/904700		Kit-seat belt 50" long		1
38	40/905206		Kit-arm rest		1
39	40/903700		Kit head rest		1
40	40/911068		Spacer U profile		2

Product Catalog \ CONSTRUCTION \ NORTH AMERICA \ CONSTRUCTION / INDUSTRIAL \ BACKHOE LOADER 3CX,4CX,214,215,217 \ 3C PLUS (91HP) , Made in Brazil with Dieselmax/IESA Engine 9812/0080 \ B BODYWORK, CAB, LOADER END \ B02 CAB

9812/0080 B2-7-61 SEAT, SUSPENSION

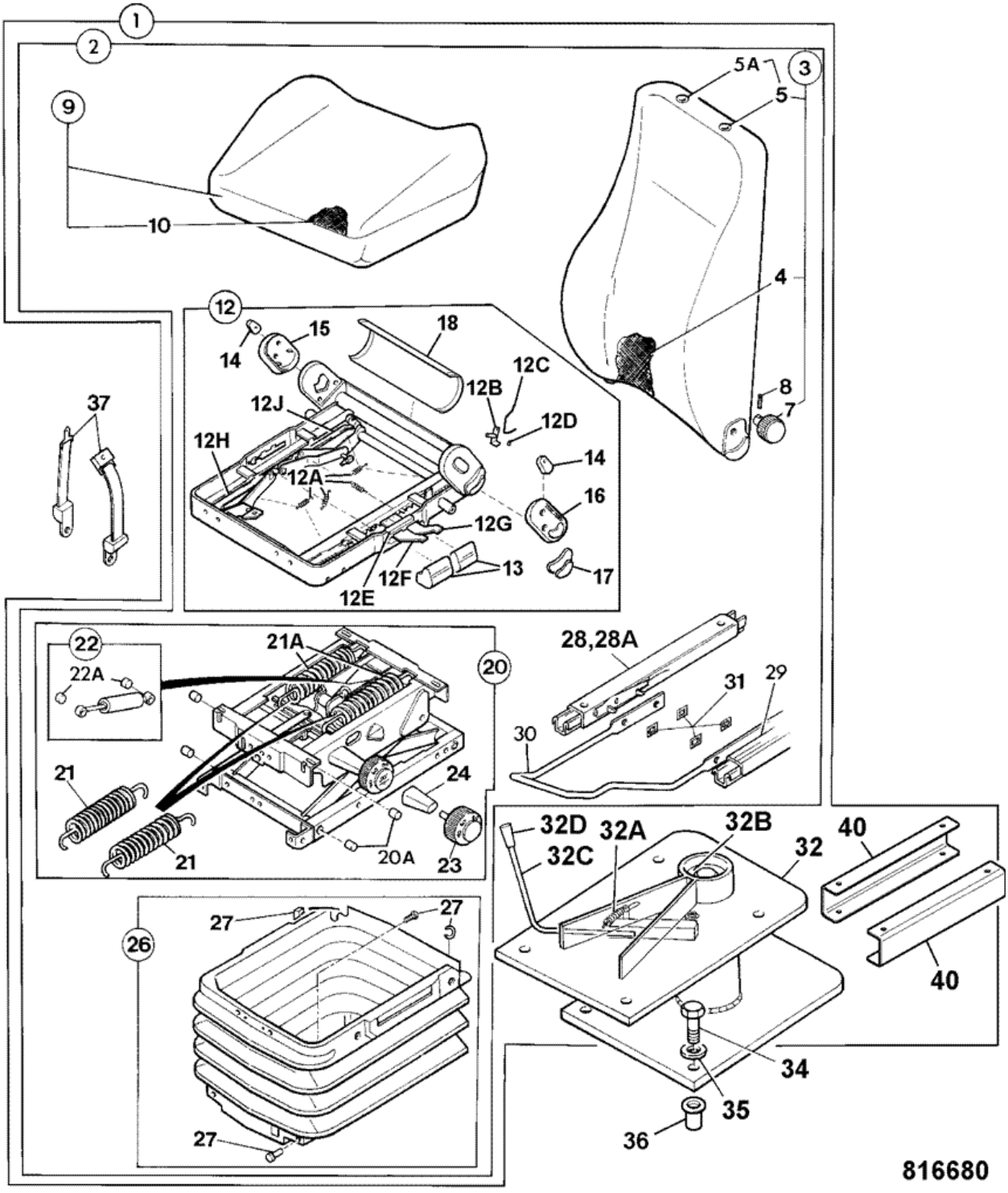

Item	Part #	Change No	Description	Usage Code	QTY
1	128/16499		Seat assembly suspension cloth		1
1	128/16498		Seat assembly suspension vinyl		1

2	:40/910469		Seat high back,fabric		1
2	:40/910470		Seat high back,vinyl		1
3	::40/910396		Kit rear squab assembly cloth		1
3	::40/910395		Kit seat squab assembly vinyl		1
4	:::40/910517		Cover squab assy fabric high back		1
4	:::40/910521		Cover squab assy Vinyl high back		1
5	40/903120		Plug headrest		2
5A	40/906903		Clip headrest		2
7	:::40/903119		Knob adjuster		1
8	:::40/903121		Pin tension		1
9	::40/910514		Cushion seat assy fabric high back		1
9	::40/910518		Cushion seat assy Vinyl high back		1
10	:::40/910515		Cover seat base fabric high back		1
10	:::40/910519		Cover seat base Vinyl high back		1
12	::40/910506		Frame seat base		1
12A	:::40/910445		Kit-spring 2 lever height rise		1
12B	::40/910446		Handle Squab		1
12C	::40/910447		Spring Squab handle		1
12D	::40/910448		Circlip height adjuster		1
12E	::40/910141		Clip black cushion frame		1
12F	::40/910142		Handle height adjustment front		1
12G	::40/910143		Handle height adjustment rear		1
12H	::40/910144		Adjuster height		1
12J	::40/910145		Adjuster height rear		1
13	:::40/910404		Handle grip front		1
13	:::40/910405		Handle grip rear		1
14	:::40/903108		Cap side plate		2
15	::40/903109		Cover slave right hand sideplate		1
16	:::40/903110		Cover upper left hand sideplate		1
17	:::40/910406		Handle Grip, squab recline		1
18	:::40/903112		Plate cushion frame back		1
20	::40/910526		Kit Suspension unit assy		1
21	:::40/910140		Spring		2
21A	:::40/903102		Spring tension		2
22	:::40/906902		Damper		1
22A	:::40/906905		Bush shock absorber		2
22B	:40/911070		Bolt *not supplied with item 22*		2
22C	:40/905208		Nut *not supplied with item 22*		2
23	:::40/910525		Knob Damper adjuster		1
24	:::40/903105		Bracket support		1
26	::40/905204		Kit-bellows		1
27	:::40/903116		Kit bellow fixings		1
28	:40/910139		Slide right hand		1
28A	:40/905207		Bolt *Slide to seat*		4
28A	:1315/0305Z		Screw Hexagon M8 x 20mm long *Slide to pedestal*		4
28A	:1391/3305Z		Capscrew		4
28A	::40/910138		Slide left hand		1
29	::40/910238		Adjuster seat angle		1

			Part of item 28		
30	:40/910411		Handle slide		1
31	:40/903125		Clip slide rail		4
32	:40/911069		Pedestal assembly		1
32A	::814/10156		Spring		1
32B	::NSP		None serviced part		1
32C	::40/910300		Handle assembly		1
32D	::40/910415		Handle grip		1
34	1315/3409Z		Bolt M10 x 35		4
35	1420/0008Z		Washer Plain M10		4
36	826/01105		Nut rivet,M10 open ended		4
37	40/904700		Kit-seat belt 50" long *Included with seat assy*		1
39	40/903700		Kit head rest *Not included with seat assy*		1
40	40/911068		Spacer U profile		2

Product Catalog \ CONSTRUCTION \ NORTH AMERICA \ CONSTRUCTION / INDUSTRIAL \ BACKHOE LOADER 3CX,4CX,214,215,217 \ 3C PLUS (91HP) , Made in Brazil with Dieselmax/IESA Engine 9812/0080 \ B BODYWORK, CAB, LOADER END \ B03 LOADER, FRONT END

9812/0080 B3-1-21 ARMS, LOADER

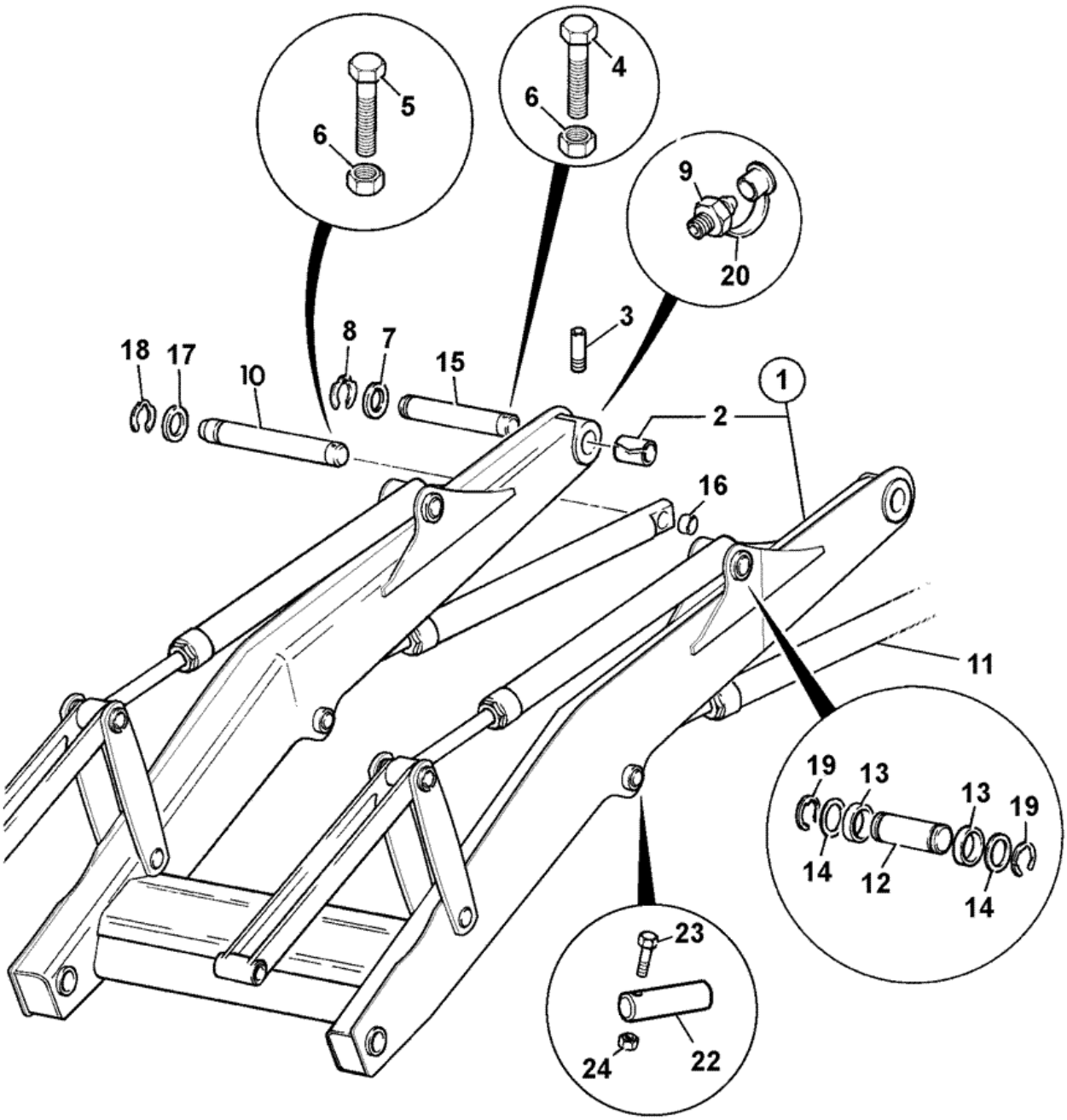

788240

Item	Part #	Change No	Description	Usage Code	QTY
1	128/15453		Arm loader *Dieselmax engine*		1

1	128/13054	<M TBA	Arm loader, 214e *IESA engine*		1
1	128/15453	>M TBA	Arm loader *IESA engine*		1
2	:808/00296		Bush		2
3	653/00162		Pipe grease		2
4	1315/3524Z		Bolt M12 x 140 Lg. *loader arm to chassis*		2
5	1315/3512Z		Bolt M12 x 50mm *lift ram to chassis*		2
6	1370/0401Z		Nut		4
7	819/00099		Spacer 5mm		0
7	819/00147		Spacer 3mm		0
7	823/00471		Washer 1.45mm max		0
8	821/00517		Circlip 60mm pin		2
9	1450/1007		Nipple grease 45 deg. angle		2
10	811/90593		Pin pivot, 50.8 diax251		2
11	.		'See Remark' *lift ram see index E4*		1
12	811/90471		Pin pivot black		2
13	809/10030		Bush		4
14	819/00049		Shim 1.4mm		0
14	819/00148		Spacer 3mm		0
14	823/10347		Shim 0.5/0.6mm o/dia 65mm		0
15	811/90473		Pin pivot black *left hand side*		1
15	811/90474		Pin pivot black *right hand side (twin circlip groove)*		1
16	819/00097		Spacer		2
17	823/00220		Washer 1.40mm thick		0
17	819/00097		Spacer		0
18	826/00874		Circlip		2
19	823/00334		Clip		4
20	835/00017		Cap grease nipple		6
21	2410/1308		Grommet blind *use with item 10*		2
22	811/90676		Pin pivot, 44.35x169 *was 811/90484*		2
23	1315/3418Z		Bolt M10x80		2
24	1370/0303Z		Nut lock M10		2

Product Catalog \ CONSTRUCTION \ NORTH AMERICA \ CONSTRUCTION / INDUSTRIAL \ BACKHOE LOADER 3CX,4CX,214,215,217 \ 3C PLUS (91HP) , Made in Brazil with Dieselmax/IESA Engine 9812/0080 \ B BODYWORK, CAB, LOADER END \ B03 LOADER, FRONT END

9812/0080 B3-3-21 ARMS, LOADER, SHOVEL LINKAGE

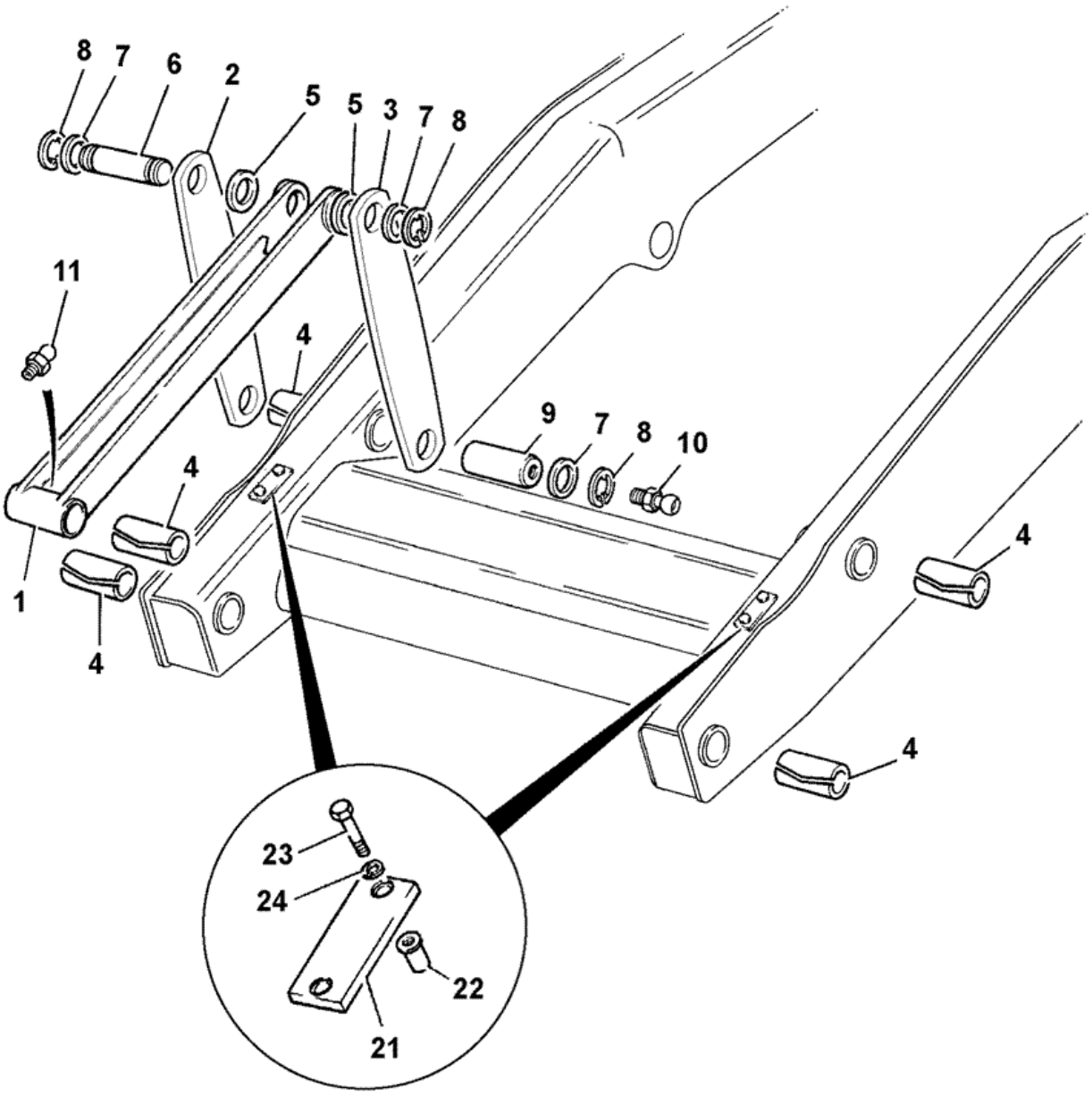

400731

Item	Part #	Change No	Description	Usage Code	QTY
1	125/00363		Link crowd 595mm long		2
2	331/43845		Lever crowd, anti spill with tapped hole		1

3	331/43841		Lever shovel pivot, plain		3
4	1208/0023		Bush		6
5	809/10030		Bush		4
6	811/90471		Pin pivot black		2
7	819/00049		Shim 1.4mm		8
7	823/10347		Shim 0.5/0.6mm o/dia 65mm		8
8	823/00334		Clip		8
9	811/90472		Pin pivot black		2
10	1450/0001		Nipple grease, straight 1/8 BSP		2
11	1450/0002		Nipple grease, straight 1/4		2
21	123/03326		Plate shovel stop 12mm		2
22	826/01249		Nut rivet M10 open end for 6 to 8.5mm plate		4
23	1315/0409Z		Screw M10x35mm		4
24	1425/0008Z		Washer Spring M10 *no longer fitted*		4

9812/0080 B4-10-1 BOOM LOCK, IN CAB CONTROLS, 14'0 CENTREMOUNT

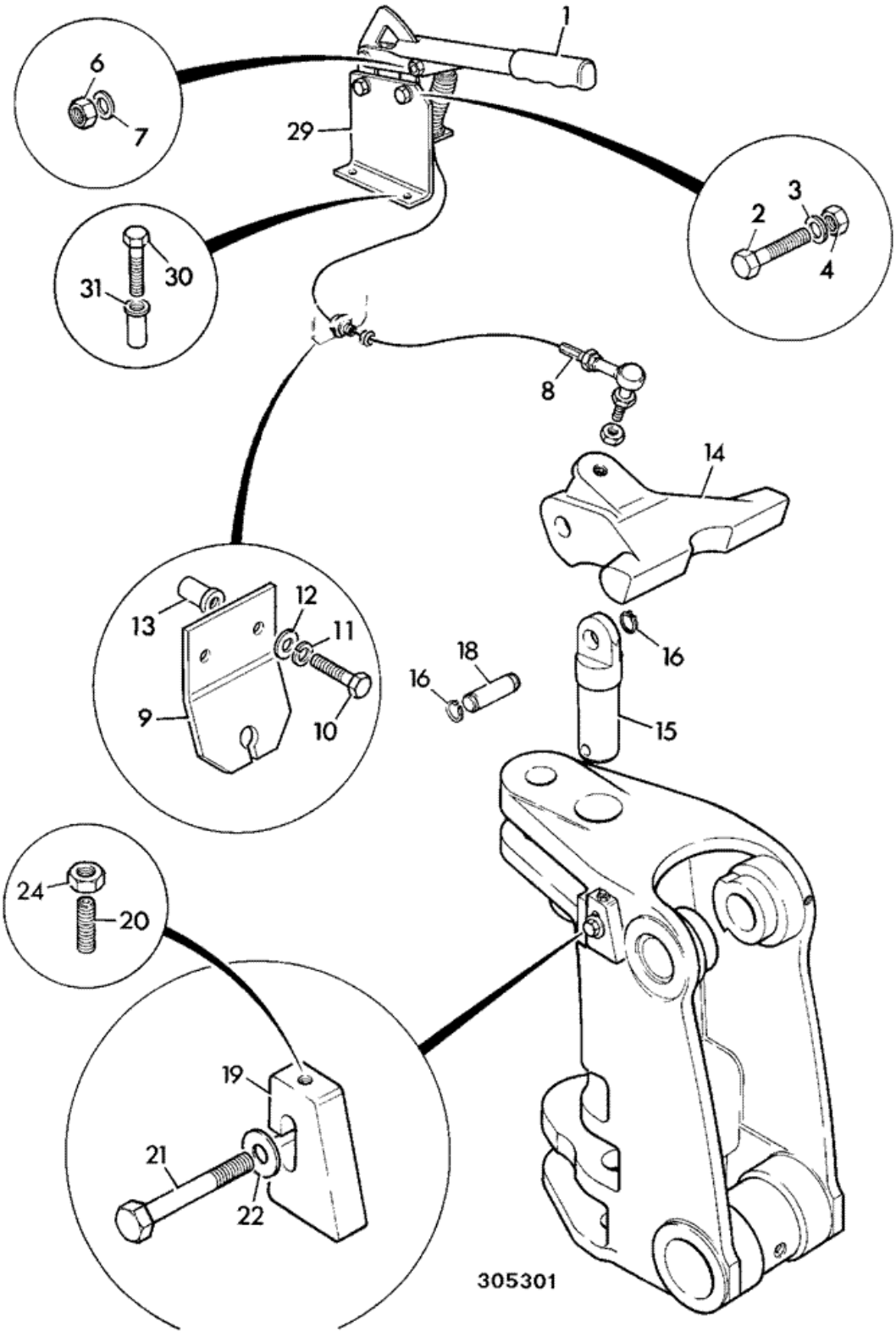

Item	Part #	Change No	Description	Usage Code	QTY
1	123/05234		Lever boomlock red grip		1
2	1315/0307Z		Screw Hexagon M8 X 25		2
3	1411/0003Z		Washer medium		2
4	1370/0203Z		Nut self lock M8		2
6	913/05903		Pin clevis		1

7	913/00005		Clip clevis		1
8	910/48400		Cable assembly boomlock centremount		1
8A	:123/07652		Joint ball end		1
9	331/30856		Bracket reaction		1
10	1315/0307Z		Screw Hexagon M8 X 25		2
11	1425/0007Z		Washer spring		2
12	1420/0007Z		Washer plain M8		2
13	826/01103		Nut rivet,M8 open ended		2
14	123/05862	Superseded	Casting boom lock 14'0 (Yellow)		1
14	332/C1897		Casting boom lock		1
15	913/10079		Pin kingpost top centremount		1
16	2203/0035		Circlip		2
18	811/70099		Pin boomlock		1
19	123/05236		Plate boom stop		1
20	1390/0412Z		Screw grub M10x50 long		1
21	1315/3814Z		Bolt M20 x 60mm		1
22	823/00491		Washer spacer		1
24	1370/0302Z		Nut lock		1
26	1450/0001		Nipple grease, straight 1/8 BSP *Use with item 15, 18*		1
27	835/00017		Cap grease nipple		1
28	835/00166		Plug		1
29	331/14484		Bracket boomlock cable reaction		1
30	.		'See Remark'		2
31	.		'See Remark'		2

Product Catalog \ CONSTRUCTION \ NORTH AMERICA \ CONSTRUCTION / INDUSTRIAL \ BACKHOE LOADER 3CX,4CX,214,215,217 \ 3C PLUS (91HP) , Made in Brazil with Dieselmax/IESA Engine 9812/0080 \ B BODYWORK, CAB, LOADER END \ B04 BACKHOE

9812/0080 B4-11-1 KINGPOST, BULKHEAD

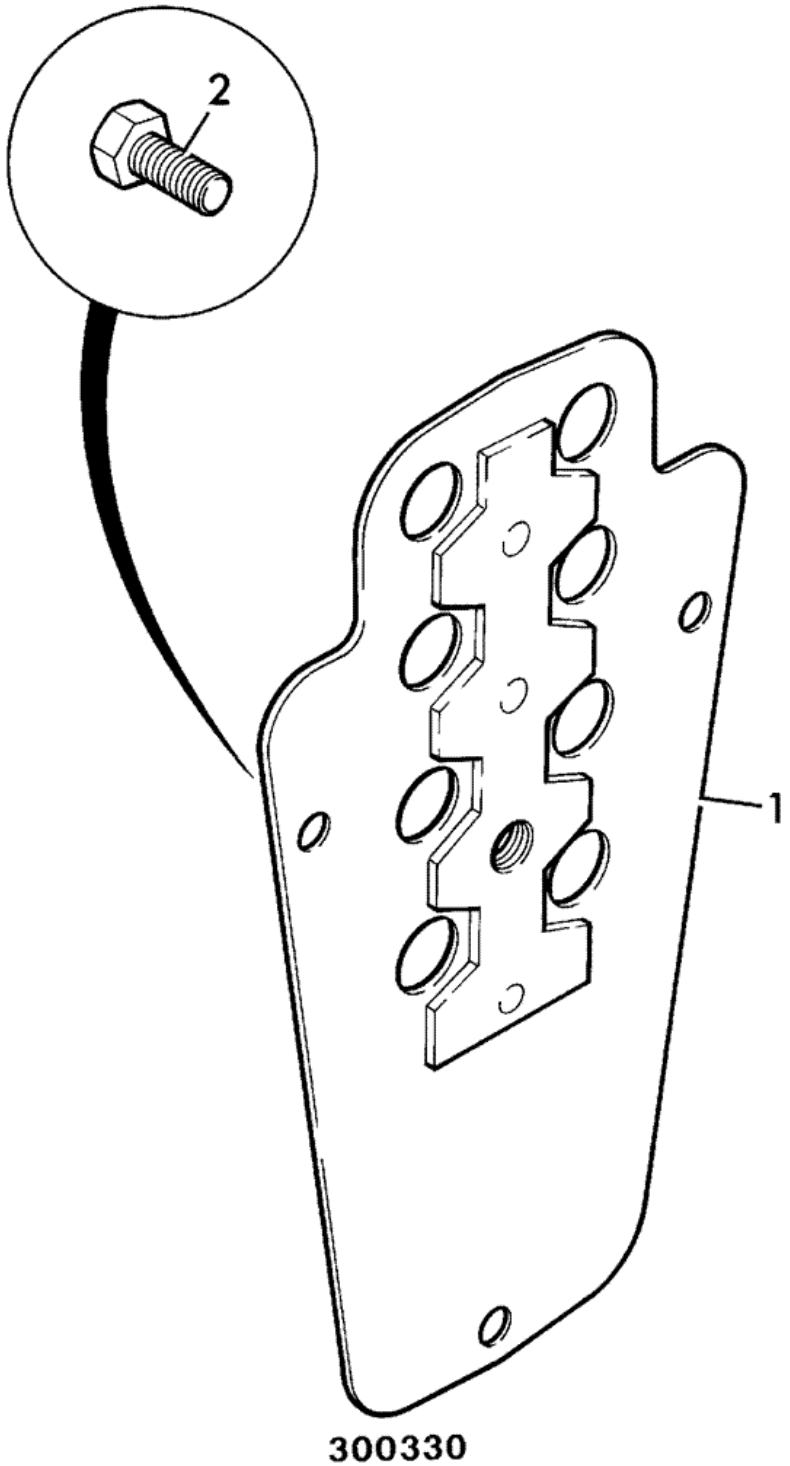

Item	Part #	Change No	Description	Usage Code	QTY
1	331/33337	Superseded	Plate bulkhead,kingpost centremount		1
1	331/64233		Plate bulkhead, kingpost centremount		1

2	1315/0408Z		Bolt M10 x 30 *Was 3 off*		2

9812/0080 B4-12-2 KINGPOST HOSE CLAMPS

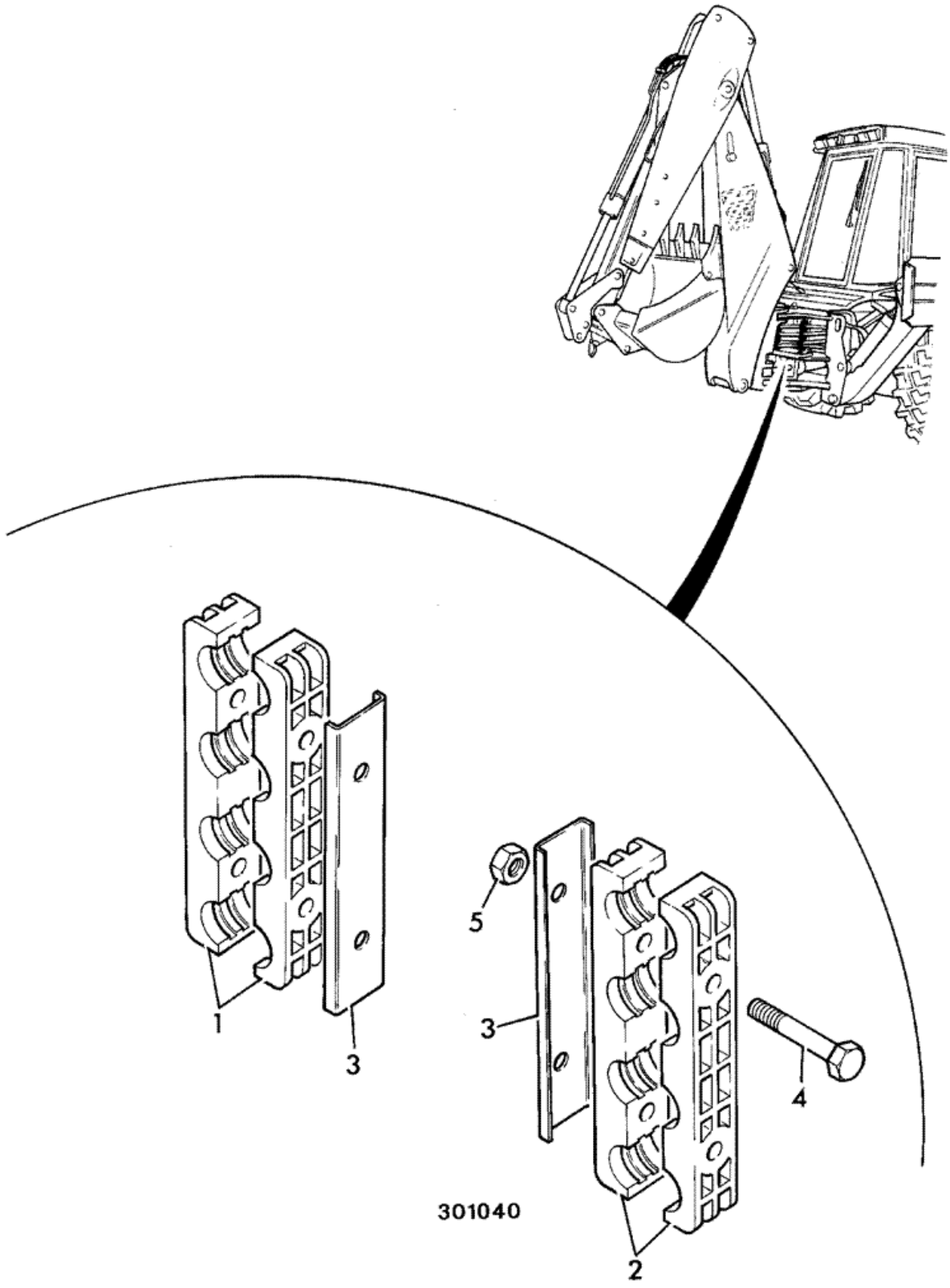

Item	Part #	Change No	Description	Usage Code	QTY
1	123/07468		Clamp 5/8" top centremount		2
2	123/07489		Clamp 5/8" middle		2
3	123/07469		Plate clamp		4
4	1315/3414Z		Bolt M10x60		4
5	1370/0303Z		Nut lock M10		4

Product Catalog \ CONSTRUCTION \ NORTH AMERICA \ CONSTRUCTION / INDUSTRIAL \ BACKHOE LOADER 3CX,4CX,214,215,217 \ 3C PLUS (91HP) , Made in Brazil with Dieselmax/IESA Engine 9812/0080 \ B BODYWORK, CAB, LOADER END \ B04 BACKHOE

9812/0080 B4-4-40 BOOM, 14'

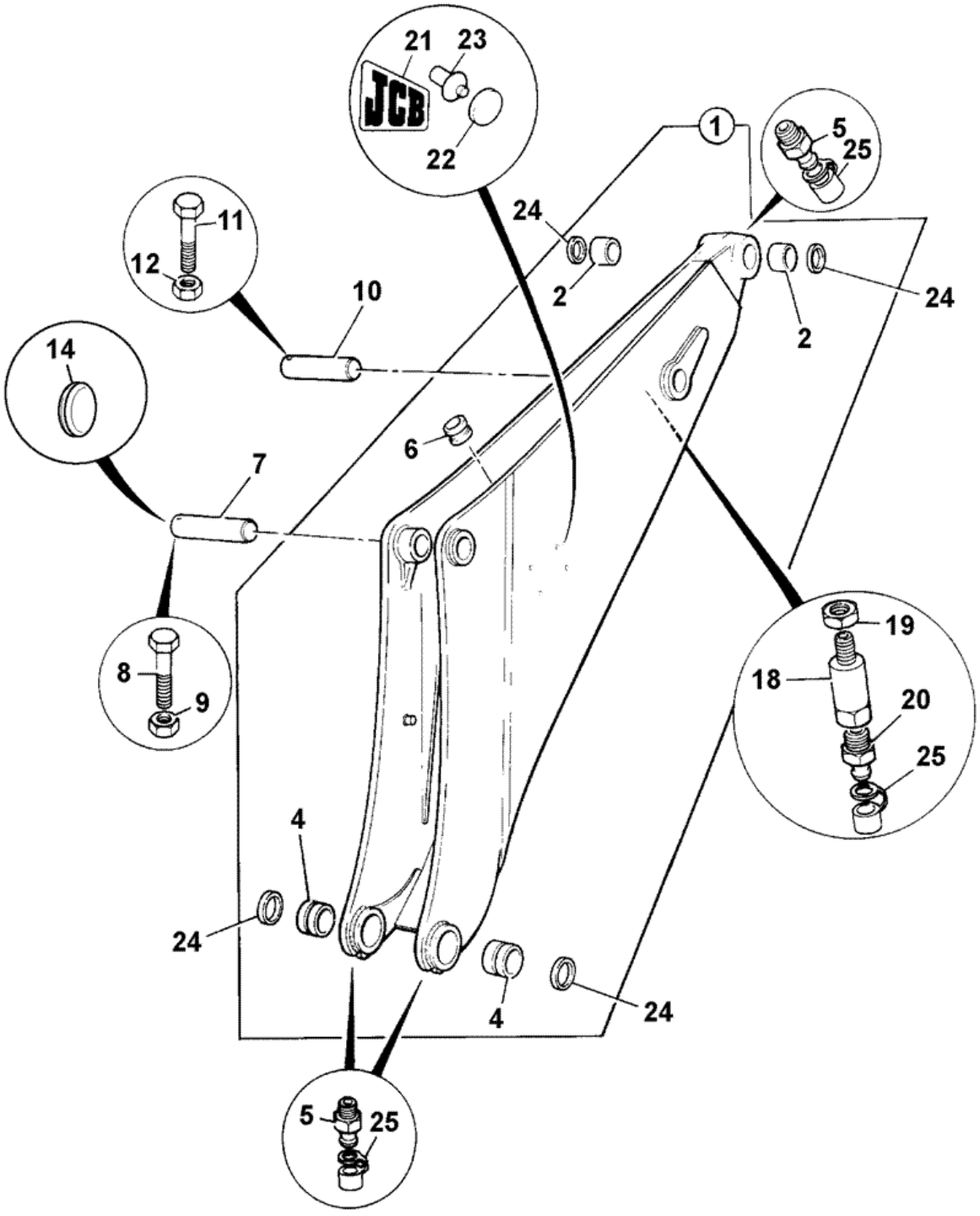

290871

Item	Part #	Change No	Description	Usage Code	QTY
1	126/02332		Boom 2390mm long		1
2	:809/00131		Bearing liner 60.06IDx70.07ODx62lg		2

4	:809/00131		Bearing liner 60.06IDx70.07ODx62lg		2
5	1450/0001		Nipple grease, straight 1/8 BSP		3
6	830/00314		Ferrule rubber		6
7	811/50569		Pin pivot		1
7	811/50569A		Pin pivot, 60X322mm 0.1mm O/S		1
7	811/50569B		Pin pivot, 60X322mm 0.25mm O/S		1
8	1315/3520Z		Bolt M12 x 100mm		1
9	1370/0403Z		Nut M12		1
10	811/50520		Pin pivot		1
10	811/50520A		Pin pivot, 50X275mm 0.1mm O/S		1
10	811/50520B		Pin pivot, 50X275mm 0.25mm O/S		1
11	1315/3520Z		Bolt M12 x 100mm		1
12	1370/0403Z		Nut M12		1
14	2410/1308		Grommet blind *fit ti item 7*		1
18	816/20049		Adapter		1
19	826/00871		Nut		1
20	1450/0001		Nipple grease, straight 1/8 BSP		1
21	817/17454	<M TBA	Decal JCB insignia 350mm high		2
21	817/17422	>M TBA	Decal JCB Insignia (Black)		2
22	835/00049	<M TBA	Plug blanking		8
22	332/E8179	>M TBA	Plug blanking 25mm dia *blanks 2X25mm tooling holes*		2
23	826/00867	<M TBA	Rivet logo		8
24	813/00427		Seal grease		4
25	835/00017		Cap grease nipple		4

Product Catalog \ CONSTRUCTION \ NORTH AMERICA \ CONSTRUCTION / INDUSTRIAL \ BACKHOE LOADER 3CX,4CX,214,215,217 \ 3C PLUS (91HP) , Made in Brazil with Dieselmax/IESA Engine 9812/0080 \ B BODYWORK, CAB, LOADER END \ B05 REFURBISHMENTS

9812/0080 B5-2-10 DECALS, WARNING, BRAZIL - PORTUGUESE

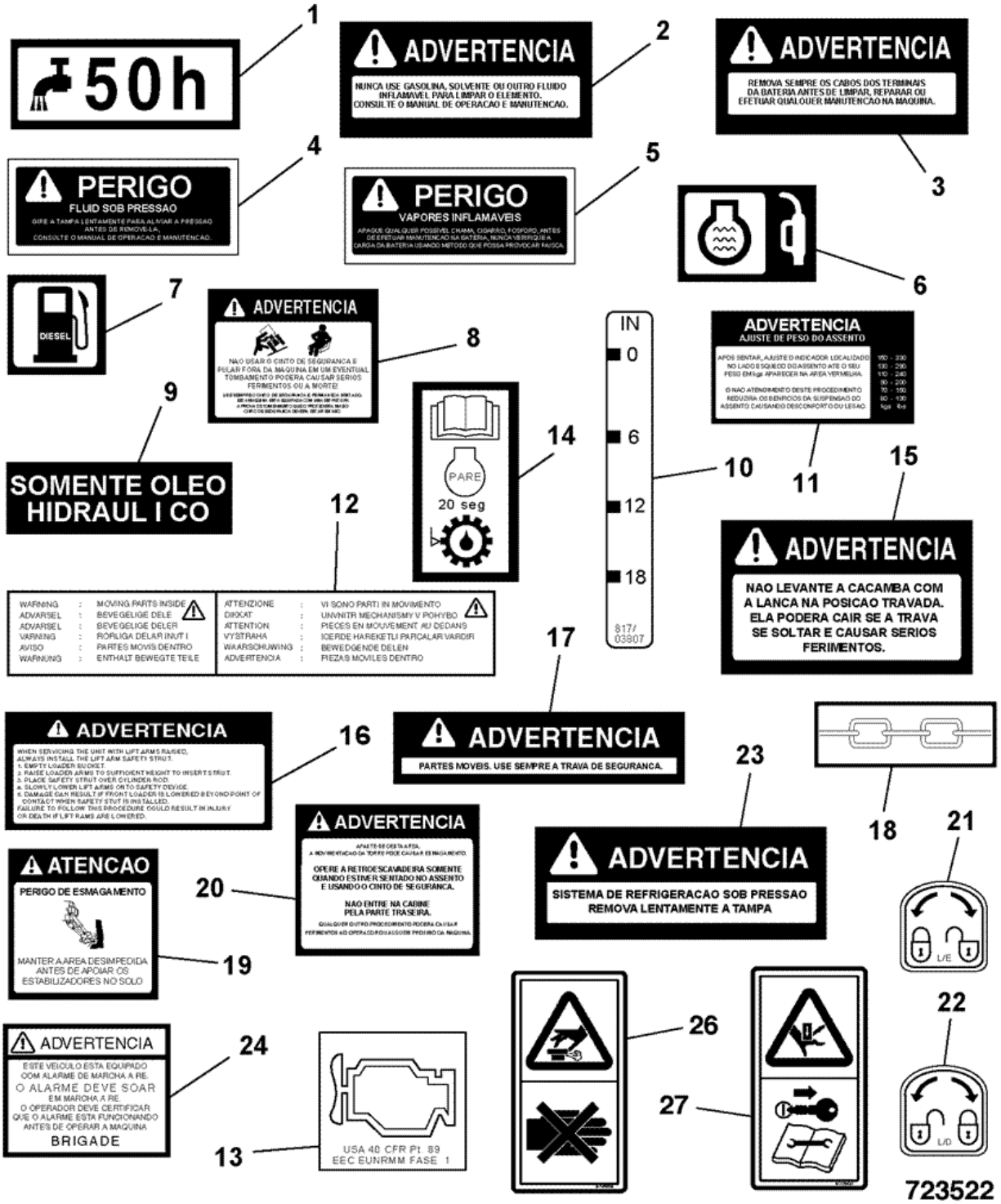

Item	Part #	Change No	Description	Usage Code	QTY
1	817/00380		Label DRAIN EVERY 50 HOURS		2

2	817/18866		Label air filter cleaning portuguese		1
3	817/18867		Label disconnect battery portuguese		1
4	817/18734		Label pressurised fluid portuguese		2
5	817/18735		Label flammable vapours portuguese		1
6	817/00824		Label filler coolant		1
7	817/02305		Label Diesel		1
8	817/18863		Label seatbelt portuguese		1
9	817/18732		Label hydraulic oil portuguese		1
10	817/03807		Decal 6in1 clam shovel		1
11	817/18862		Label seat weight adjstmnt portuguese		1
12	817/04776		Label warning moving parts inside		2
13	817/18733		Label engine emission portuguese		1
14	817/18728		Label transmission oil portuguese		1
15	817/18859		Label lift restriction portuguese		1
16	817/18865		Label safety procedure portuguese		2
17	817/18864		Label crushing hazard portuguese		2
18	817/01087		Decal tie down (chain)		6
19	817/18860		Label crushing hazard stabliser,portuguese		2
20	817/18861		Label crushing hazard,slew portuguese		2
20	817/04570		Decal 4x4x4		1
21	817/18730		Label LH sidepanel lock portuguese		1
22	817/18731		Label RH sidepanel lock portuguese		1
23	817/18858		Label pressurised coolant portuguese		1
24	817/18473		Label Reverse alarm (Portuguese)Brazil		1
25	817/18825		Label product liability read operator h.book		1
26	817/70005		Decal warning,hot fluid under pressure		1
27	817/70102		Decal warning,Moving parts remove key		2

Product Catalog \ CONSTRUCTION \ NORTH AMERICA \ CONSTRUCTION / INDUSTRIAL \ BACKHOE LOADER 3CX,4CX,214,215,217 \ 3C PLUS (91HP) , Made in Brazil with Dieselmax/IESA Engine 9812/0080 \ B BODYWORK, CAB, LOADER END \ B05 REFURBISHMENTS

9812/0080 B5-2-11 DECALS, WARNING, BRAZIL - PORTUGUESE

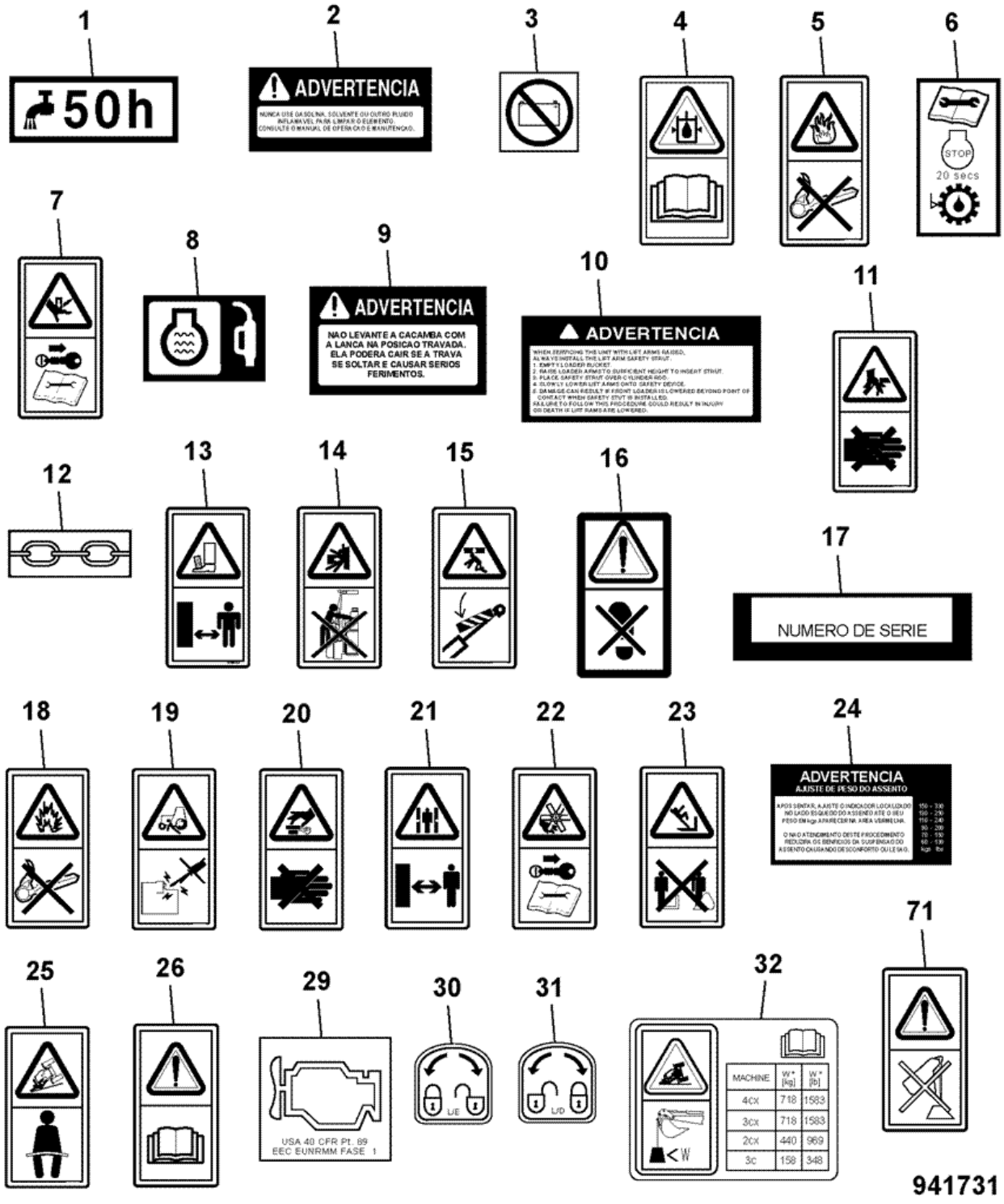

Item	Part #	Change No	Description	Usage Code	QTY
1	817/00380		Label DRAIN EVERY 50 HOURS		1

2	817/18866		Label air filter cleaning portuguese		1
3	817/01452		Label battery isolator		1
4	817/70041		Decal Pressure Hazard Read Handbook		2
5	817/70025		Label fire hazard		1
6	817/19906		Decal transmission oil 49mm X 24mm		1
7	817/70102		Decal warning,Moving parts remove key		2
8	817/00824		Label filler coolant		1
9	817/18859		Label lift restriction portuguese		1
10	817/18865		Label safety procedure portuguese		2
11	817/70003		Label warning hazard to hands		2
12	817/01087		Decal tie down (chain)		6
13	817/70043		Decal warning,crush hazard keep a safe distance		2
14	817/70018		Decal warning,operate from operators seat only		2
15	817/70104		Decal warning,safety strut		2
16	817/70024		Label warning do not use as step		2
17	817/18729		Label serial number hilite		1
18	817/70042		Decal explosion hazard remove ignitn.source		2
19	817/70012		Decal Warning,start engine from operators seat		1
20	817/70005		Decal warning,hot fluid under pressure		1
21	817/70027		Decal warning,crush danger keep clear		2
22	332/A0008		Decal Warning-fan blades remove key from ign.		1
23	817/70011		Decal warning,do not stand on/under bucket/fork		2
24	817/18862		Label seat weight adjstmnt portuguese		1
25	817/70029		Decal warning,overturn risk-wear seatbelt		1
26	817/70014		Decal warning,read manual before operating m/c		1
29	817/18733		Label engine emission portuguese		1
30	817/18730		Label LH sidepanel lock portuguese		1
31	817/18731		Label RH sidepanel lock portuguese		1
32	332/E2601		Decal safe load, ISO		1

Product Catalog \ CONSTRUCTION \ NORTH AMERICA \ CONSTRUCTION / INDUSTRIAL \ BACKHOE LOADER 3CX,4CX,214,215,217 \ 3C PLUS (91HP) , Made in Brazil with Dieselmax/IESA Engine 9812/0080 \ B BODYWORK, CAB, LOADER END \ B05 REFURBISHMENTS

9812/0080 B5-2-20 DECALS, WARNING, BRAZIL - SPANISH

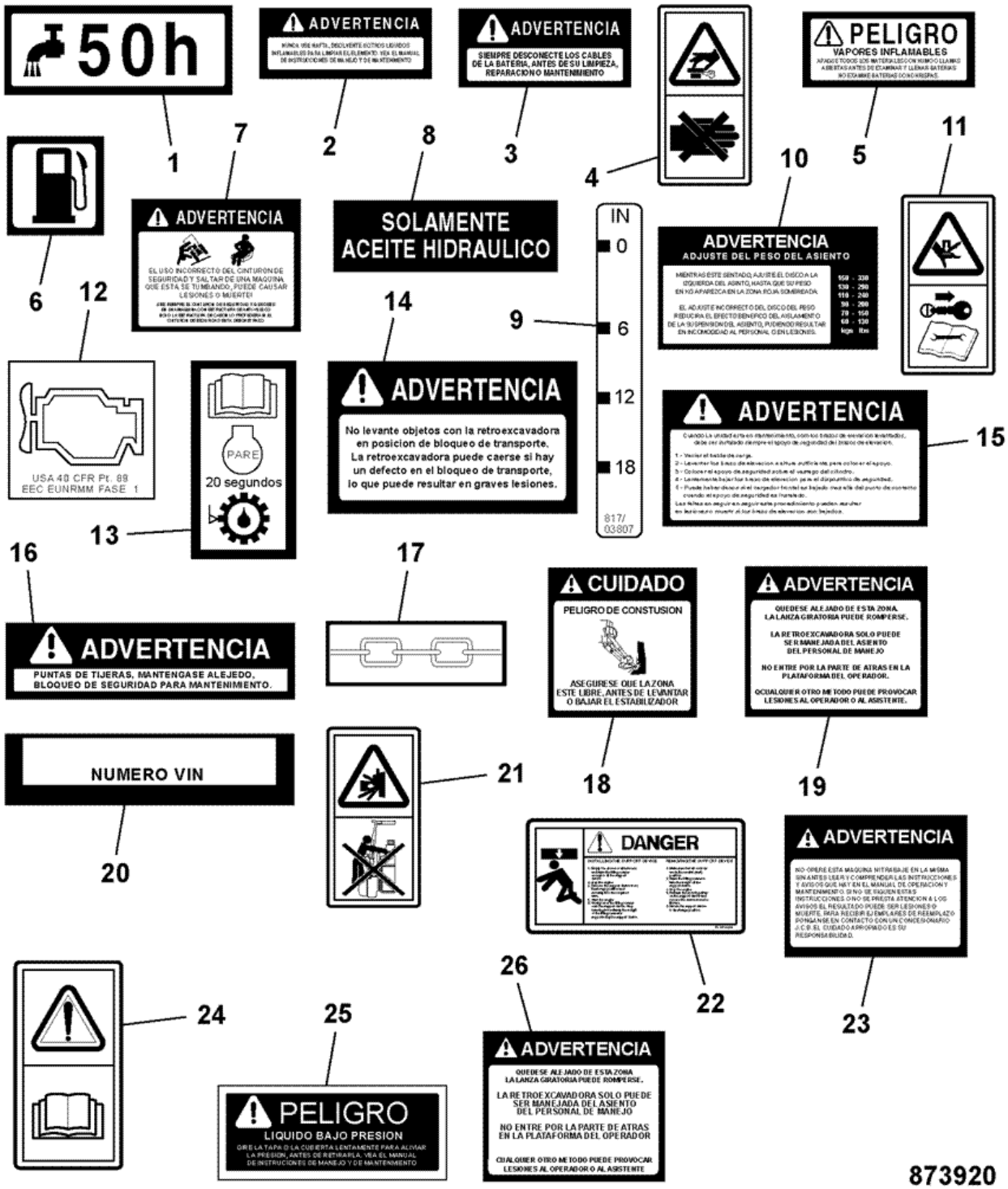

Item	Part #	Change No	Description	Usage Code	QTY
1	817/00380		Label DRAIN EVERY 50 HOURS		2
2	817/19039		Label airfilter cleaning Spanish		1

3	817/19040		Label battery disconnect Spanish		1
4	817/70005		Decal warning,hot fluid under pressure		1
5	817/19042		Label flammable vapours Spanish		1
6	817/02305		Label Diesel		1
7	817/19043		Label seat belt Spanish		1
8	817/19044		Label hydraulic oil Spanish		1
9	817/03807		Decal 6in1 clam shovel		1
10	817/19047		Label seat height adjust Spanish		1
11	817/70102		Decal warning,Moving parts remove key		2
12	817/18733		Label engine emission portuguese		1
13	817/19049		Label transmission oil Spanish		1
14	817/19036		Label lift restrict Spanish		1
15	817/19037		Label safety procedure Spanish		2
16	817/19038		Label crushing hazard Spanish		2
17	817/01087		Decal tie down (chain)		6
18	817/19045		Label crushing hazard Spanish		2
19	817/19046		Label crushing hazard Spanish		2
20	339/40782		Label VIN No surroud		1
21	817/70018		Decal warning,operate from operators seat only		1
22	817/70054		Decal Strut Guide *no longer fitted*		1
23	817/01648		Label WARNING Spanish Read operating book		1
24	817/18825		Label product liability read operator h.book		1
25	817/19041		Label pressurised fluid Spanish		1
26	817/19035		Label crushing hazard Spanish *no longer fitted*		1

Product Catalog \ CONSTRUCTION \ NORTH AMERICA \ CONSTRUCTION / INDUSTRIAL \ BACKHOE LOADER 3CX,4CX,214,215,217 \ 3C PLUS (91HP) , Made in Brazil with Dieselmax/IESA Engine 9812/0080 \ B BODYWORK, CAB, LOADER END \ B05 REFURBISHMENTS

9812/0080 B5-2-21 DECALS, WARNING, BRAZIL - SPANISH

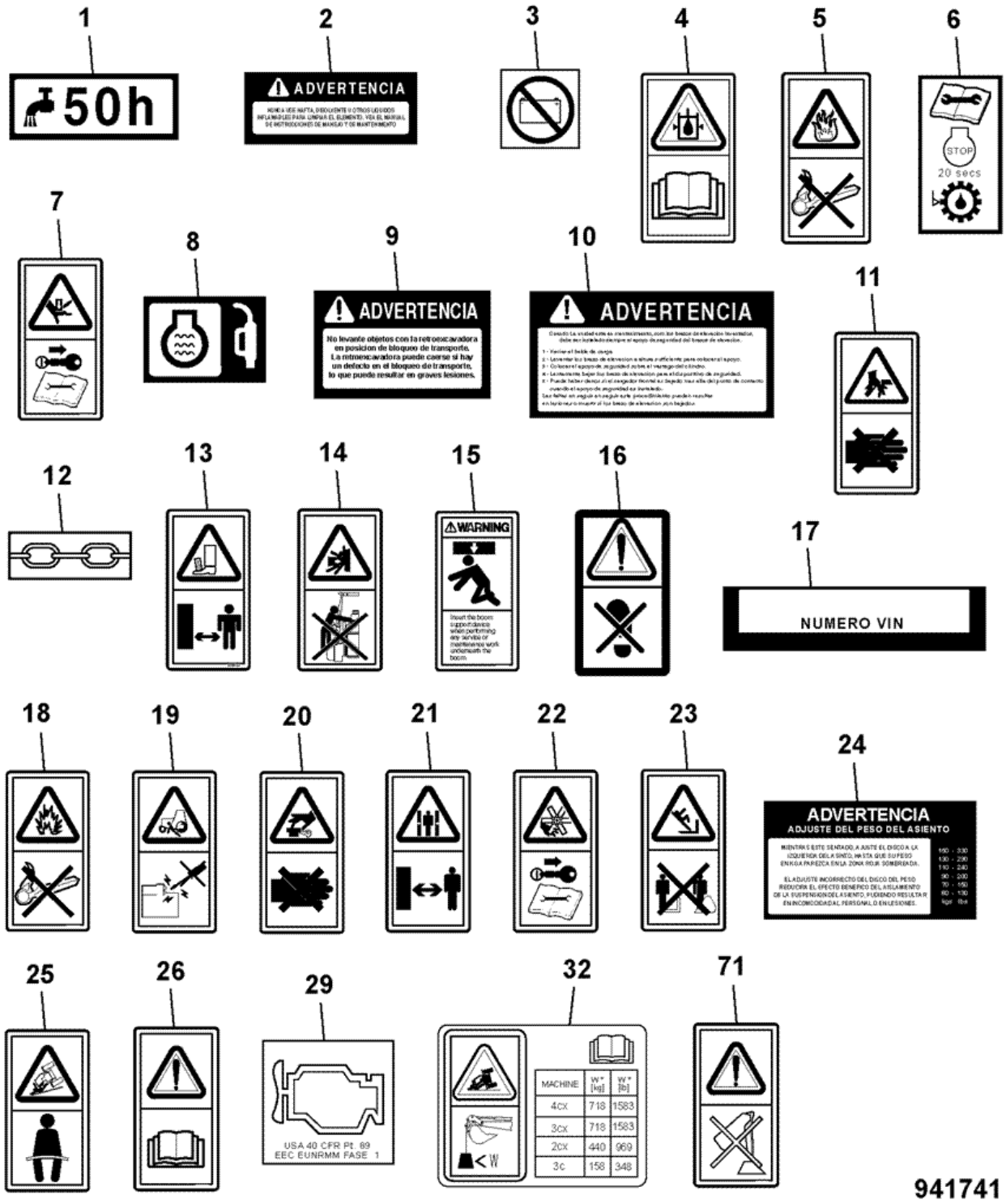

Item	Part #	Change No	Description	Usage Code	QTY
1	817/00380		Label DRAIN EVERY 50 HOURS		1
2	817/19039		Label airfilter cleaning Spanish		1

3	817/01452		Label battery isolator		1
4	817/70041		Decal Pressure Hazard Read Handbook		2
5	817/70025		Label fire hazard		1
6	817/19906		Decal transmission oil 49mm X 24mm		1
7	817/70102		Decal warning,Moving parts remove key		2
8	817/00824		Label filler coolant		1
9	817/19036		Label lift restrict Spanish		1
10	817/19037		Label safety procedure Spanish		2
11	817/70003		Label warning hazard to hands		2
12	817/01087		Decal tie down (chain)		6
13	817/70043		Decal warning,crush hazard keep a safe distance		2
14	817/70018		Decal warning,operate from operators seat only		2
15	332/S9999		Decal boom support		2
16	817/70024		Label warning do not use as step		2
17	339/40782		Label VIN No surroud		1
18	817/70042		Decal explosion hazard remove ignitn.source		2
19	817/70012		Decal Warning,start engine from operators seat		1
20	817/70005		Decal warning,hot fluid under pressure		1
21	817/70027		Decal warning,crush danger keep clear		2
22	332/A0008		Decal Warning-fan blades remove key from ign.		1
23	817/70011		Decal warning,do not stand on/under bucket/fork		2
24	817/19047		Label seat height adjust Spanish		1
25	817/70029		Decal warning,overturn risk-wear seatbelt		1
26	817/70014		Decal warning,read manual before operating m/c		1
29	817/18733		Label engine emission portuguese		1
32	332/E2601		Decal safe load, ISO		1

Product Catalog \ CONSTRUCTION \ NORTH AMERICA \ CONSTRUCTION / INDUSTRIAL \ BACKHOE LOADER 3CX,4CX,214,215,217 \ 3C PLUS (91HP) , Made in Brazil with Dieselmax/IESA Engine 9812/0080 \ B BODYWORK, CAB, LOADER END \ B05 REFURBISHMENTS

9812/0080 B5-2-50 DECALS, MACHINE, 3C

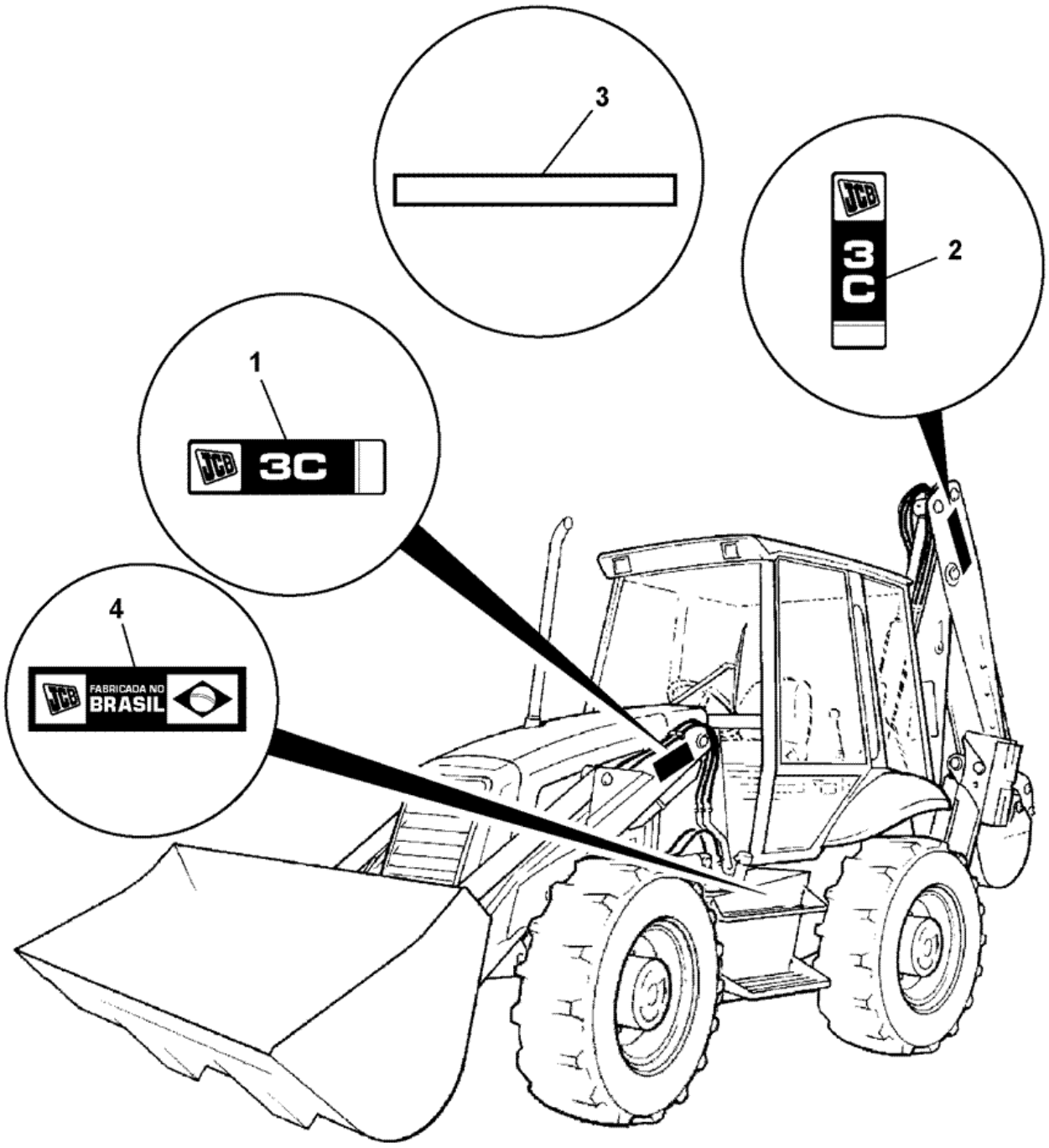

818160

Item	Part #	Change No	Description	Usage Code	QTY
1	817/20015		Decal 3C 14ft loader arm		2
1	817/20575		Decal 3C PLUS, loader arm		2

2	817/20016		Decal 3C 14ft dipper		2
2	817/20600		Decal 3C PLUS, dipper		2
3	817/05232		Decal cab rear trim		1
4	817/20125		Decal Fabricado no Brasil (made in Brazil)		1

9812/0080 B1-10-12 PADS, STREET, STABILISER, CENTREMOUNT

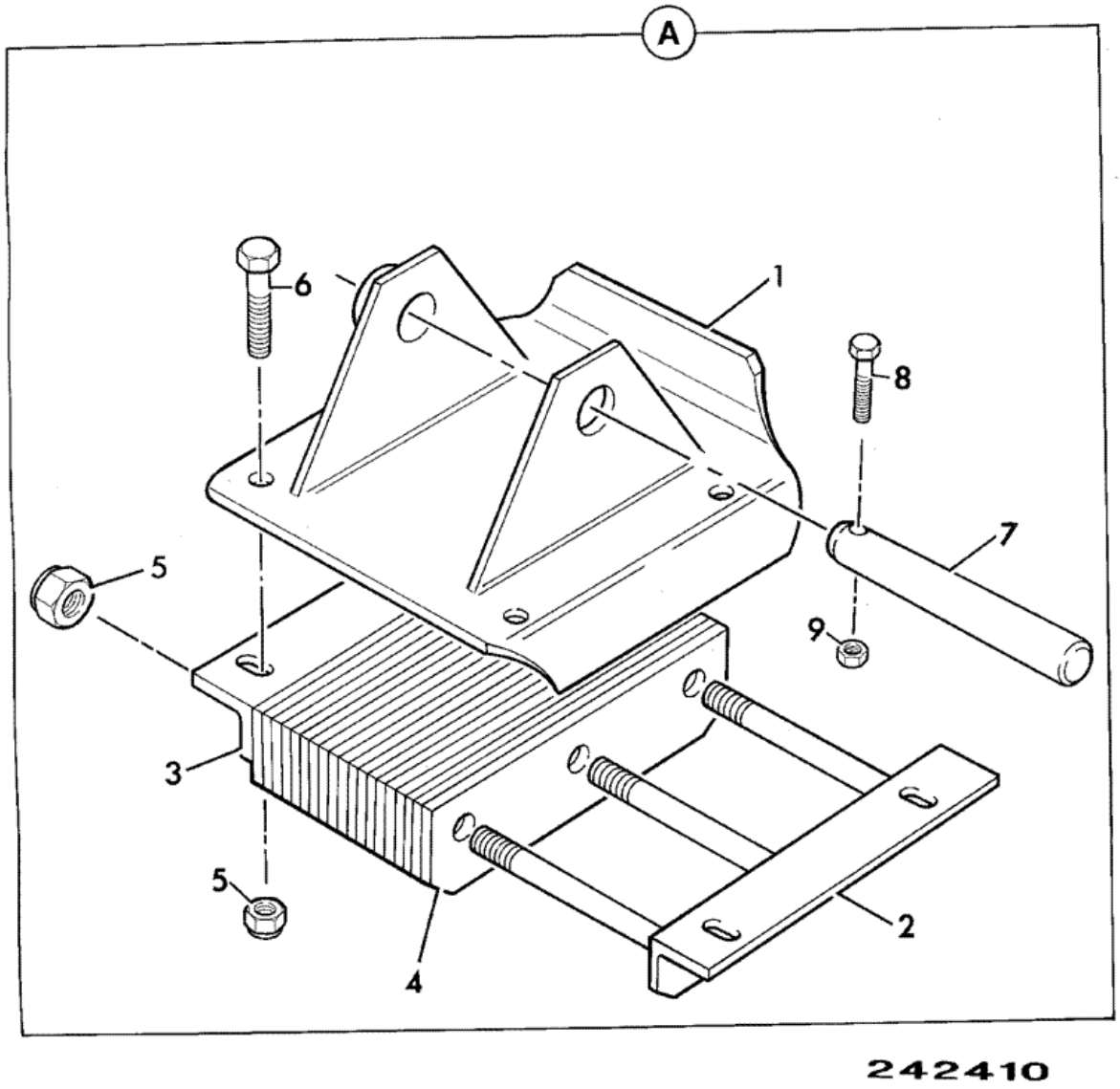

Item	Part #	Change No	Description	Usage Code	QTY
A	126/01644		Foot assembly street pad		2

1	:125/98100		Foot centremount		1
2	:125/60200		Clamp street foot		1
3	:123/04872		Clamp street foot		1
4	:123/04871		Strip rubber		19
5	:1370/0703Z		Nut M20		7
6	:1315/0810Z		Bolt M20 x 40 lg		4
7	811/50557		Pin pivot		2
8	1305/3224Z		Bolt		2
9	1340/0203Z		Nut		2

9812/0080 B1-10-14 PADS, FLIP, STABILISER, CENTREMOUNT

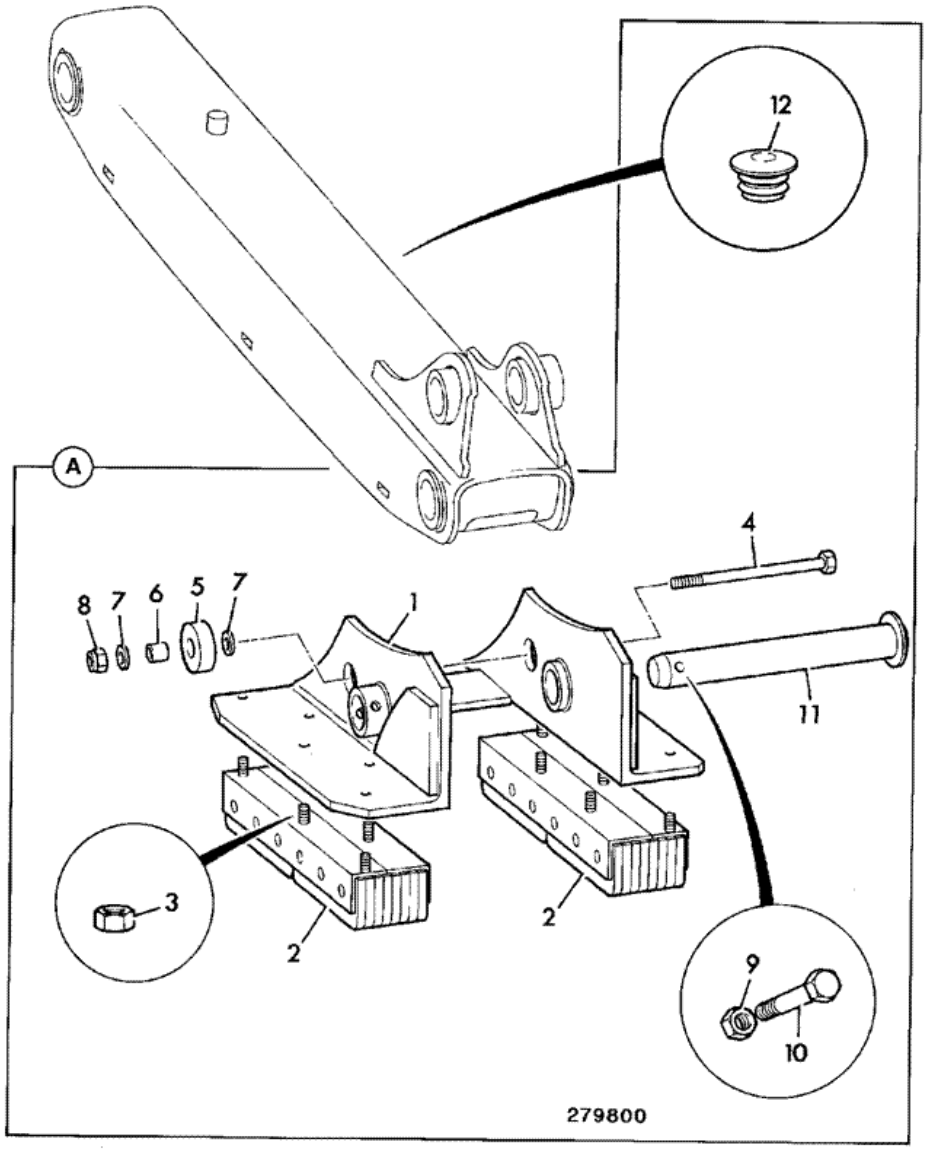

Item	Part #	Change No	Description	Usage Code	QTY
A	NSP		None serviced part		1

1	:126/02420		Foot right hand flip centremount		1
1	:126/02421		Foot left hand flip centremount		1
2	::123/06761		Pad street		2
3	::1340/1801		Nut		10
4	:1315/3731Z		Bolt M16 x 220mm		2
5	123/06762		Roller		2
6	:123/06763		Sleeve		2
7	:1420/0011Z		Washer M16 plain		2
8	:1370/0603Z		Nut M16		2
9	:1370/0403Z		Nut M12		2
10	:1315/3518Z		Bolt M12 x 80mm		2
11	:911/31800		Pin pivot		2
12	:835/00174		Plug plastic,black		2

Product Catalog \ CONSTRUCTION \ NORTH AMERICA \ CONSTRUCTION / INDUSTRIAL \ BACKHOE LOADER 3CX,4CX,214,215,217 \ 3C PLUS (91HP) , Made in Brazil with Dieselmax/IESA Engine 9812/0080 \ B BODYWORK, CAB, LOADER END \ B01 BODYWORK/FRAME

9812/0080 B1-12-11 COVER PLATES, LOADER TOWER

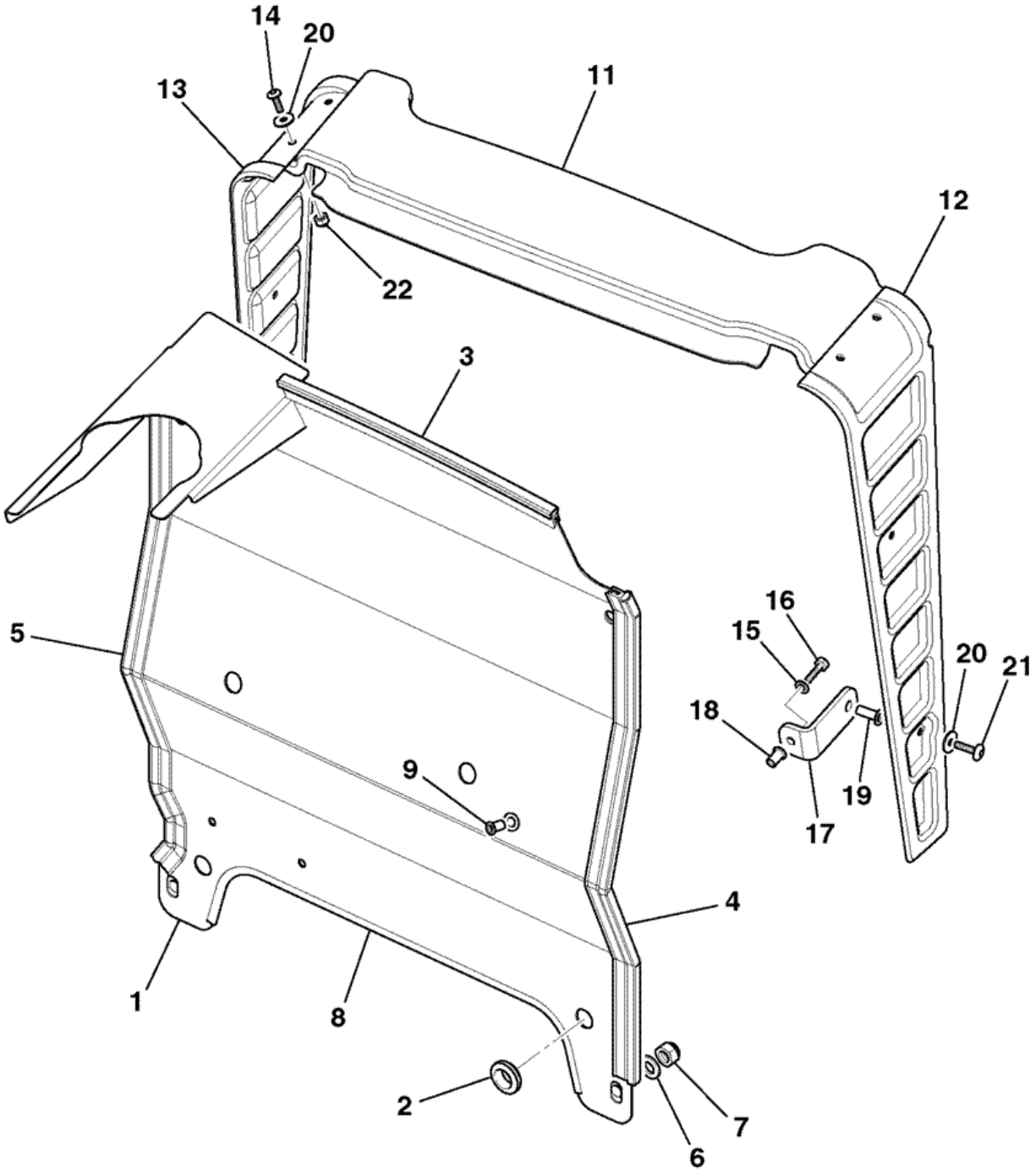

788760

Item	Part #	Change No	Description	Usage Code	QTY
1	335/09482		Plate tower		1
2	2410/0012		Grommet		2

3	926/01100		Strip sealing *approx 357mm long*		1
4	926/01100		Strip sealing *approx 620mm long*		1
5	926/01100		Strip sealing *approx 631mm long*		1
6	1420/0009Z		Washer Plain M12		4
7	1370/0403Z		Nut M12		4
8	926/51601		Strip edging 595mm long		1
10	2410/1012		Grommet		1
11	346/00251		Moulding tower cover		1
12	346/00275		Moulding L/H tower moulding		1
13	346/00276		Moulding R/H tower panel		1
14	826/10887		Screw button head torx		4
15	1420/0007Z		Washer plain M8		4
16	1315/0305Z		Screw Hexagon M8 x 20mm long		4
17	331/53645		Bracket mounting		4
18	826/01106		Nut rivet,M8		4
19	826/01767		Nut rivet M6 closed end for 12mm plate		4
20	823/00516		Washer nylon M6		8
21	826/01768		Screw M6x25mm		4
22	826/01728		Nut nyloc		4

Product Catalog \ CONSTRUCTION \ NORTH AMERICA \ CONSTRUCTION / INDUSTRIAL \ BACKHOE LOADER 3CX,4CX,214,215,217 \ 3C PLUS (91HP) , Made in Brazil with Dieselmax/IESA Engine 9812/0080 \ B BODYWORK, CAB, LOADER END \ B01 BODYWORK/FRAME

9812/0080 B1-13-11 VALVE MOUNTINGS, LOADER

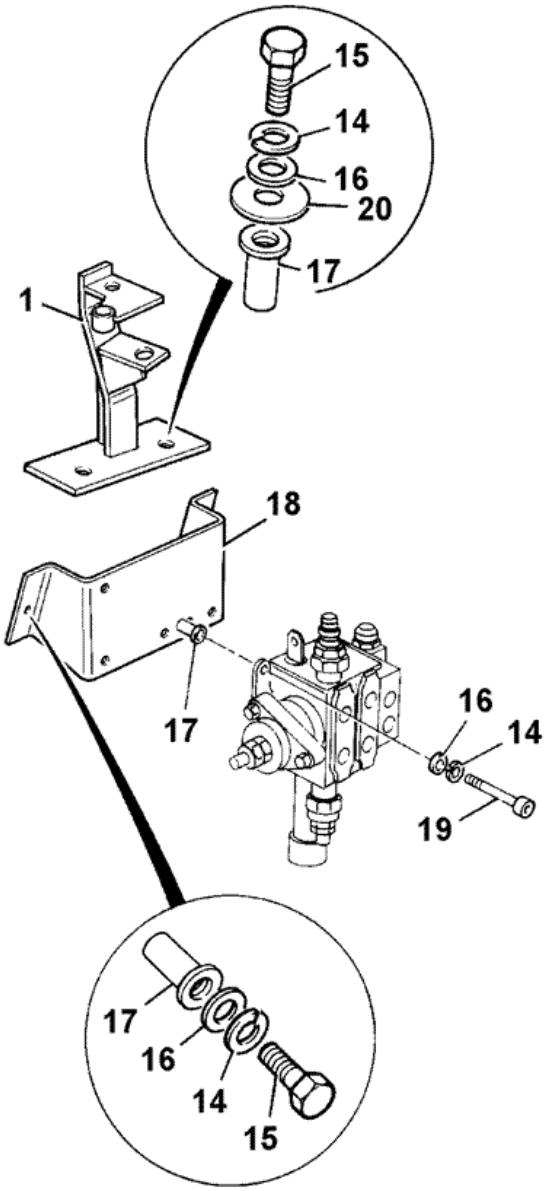

871520

Item	Part #	Change No	Description	Usage Code	QTY
1	125/00551		Bracket loader lever		1
14	1425/0008Z		Washer Spring M10		8

15	1315/0410Z		Bolt M10 x 40		5
16	1420/0008Z		Washer Plain M10		8
17	826/01249		Nut rivet M10 open end for 6 to 8.5mm plate		8
18	123/07289		Plate loader valve mount		1
19	1391/3411Z		Capscrew		3
20	1412/0004Z		Washer		2

9812/0080 B1-13-61 VALVE MOUNTING, LOADER, 3C - 90HP WITH OPTIONAL 36/26 CCR PUMP UPGRADE

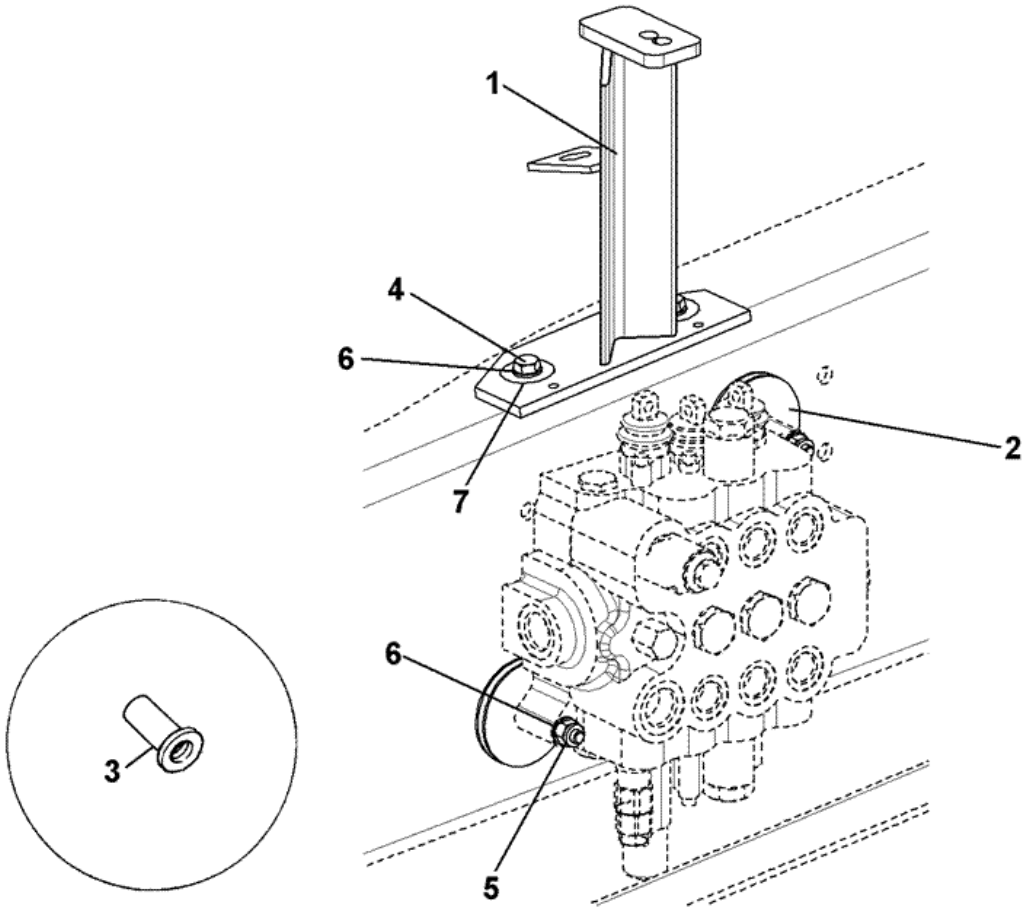

B01-10030-0-A20

Item	Part #	Change No	Description	Usage Code	QTY
1	332/P4958		Bracket mounting loader lever		1

2	123/03946		Mounting rubber		3
3	826/01249		Nut rivet M10 open end for 6 to 8.5mm plate		5
4	1315/0410Z		Bolt M10 x 40		2
5	1370/0303Z		Nut lock M10		3
6	1420/0008Z		Washer Plain M10		5
7	929/14907		Washer		2

Product Catalog \ CONSTRUCTION \ NORTH AMERICA \ CONSTRUCTION / INDUSTRIAL \ BACKHOE LOADER 3CX,4CX,214,215,217 \ 3C PLUS (91HP) , Made in Brazil with Dieselmax/IESA Engine 9812/0080 \ B BODYWORK, CAB, LOADER END \ B01 BODYWORK/FRAME

9812/0080 B1-14-11 TOOLBOX

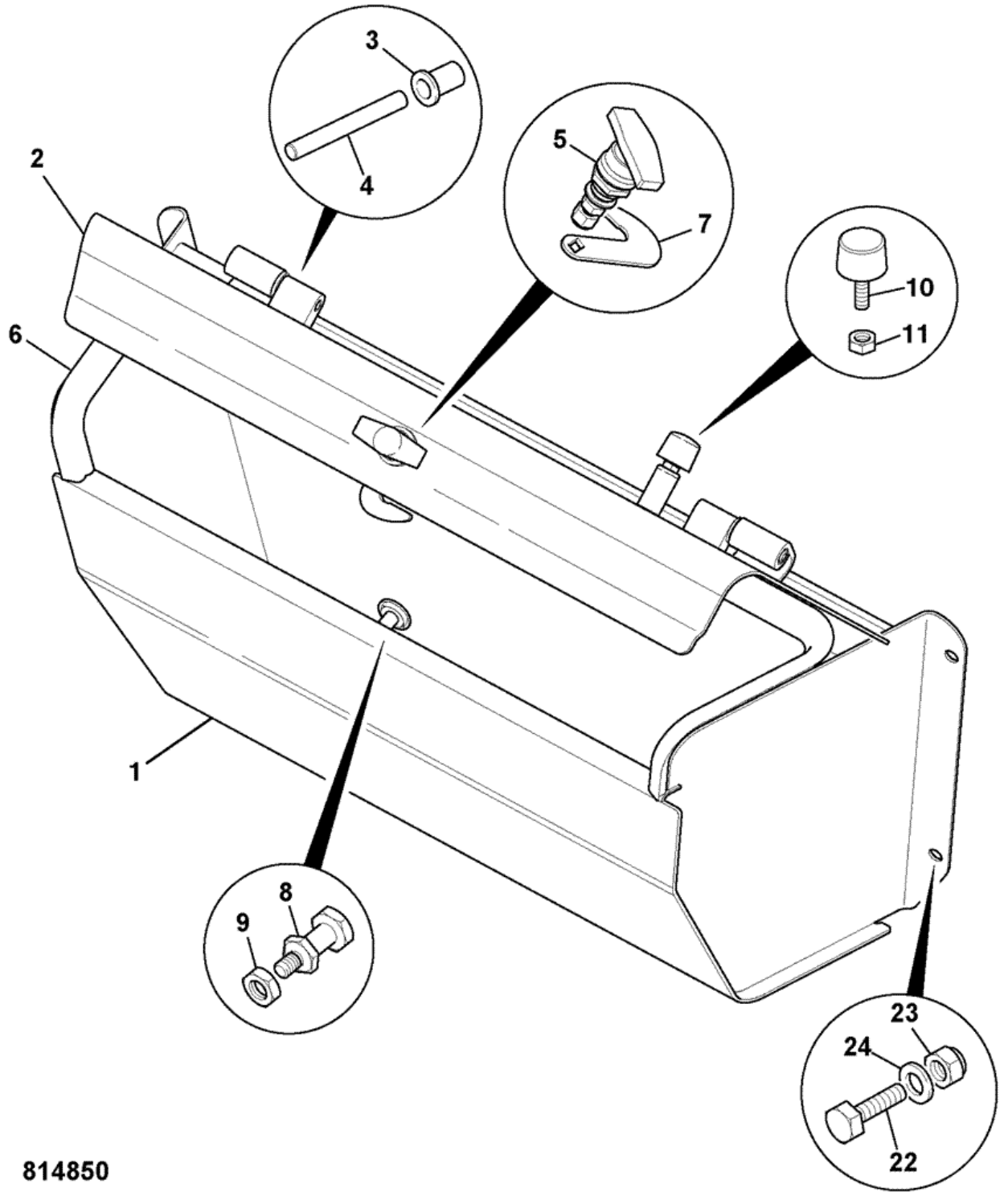

Item	Part #	Change No	Description	Usage Code	QTY
A	128/15526		Box tool, assembly		1
1	:.		'See Remark'		1

			NSP		
2	:335/10051		Cover toolbox lid		1
3	:122/67479		Bush hinge		2
4	:123/08089		Pin hinge		2
5	:123/08087		Handle locking		1
6	:904/20357		Seal toolbox		1
7	:331/13500		Plate latch		1
8	:331/36035		Spindle latch		1
9	:1370/0303Z		Nut lock M10		1
10	:123/07243		Buffer		1
11	:1370/0202Z		Nut M8		1
22	1315/0405Z		Screw M10 x 20mm long		4
23	1370/0303Z		Nut lock M10		4
24	1420/0008Z		Washer Plain M10		4

Product Catalog \ CONSTRUCTION \ NORTH AMERICA \ CONSTRUCTION / INDUSTRIAL \ BACKHOE LOADER 3CX,4CX,214,215,217 \ 3C PLUS (91HP) , Made in Brazil with Dieselmax/IESA Engine 9812/0080 \ B BODYWORK, CAB, LOADER END \ B02 CAB

9812/0080 B2-10-11 CAB MOUNTINGS

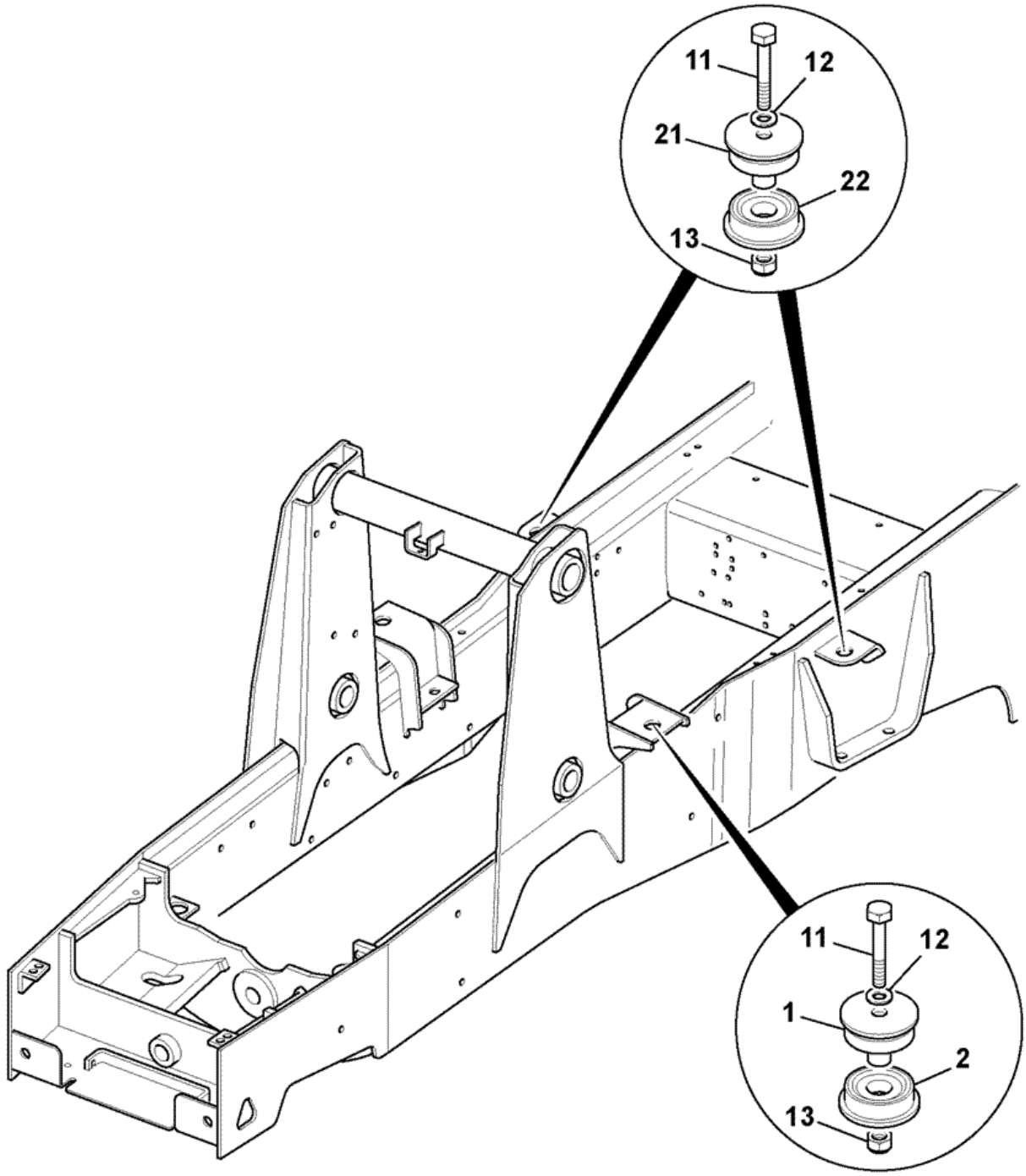

Item	Part #	Change No	Description	Usage Code	QTY
1	331/34392		Mounting cab upper blue		2
2	331/18442		Mounting cab lower		2

11	1315/3721Z		Bolt M16 x 110		4
12	1420/0011Z		Washer M16 plain		4
13	1370/0603Z		Nut M16		4
21	331/34393		Mounting cab upper green		2
22	331/25996		Mounting cab lower red		2

Product Catalog \ CONSTRUCTION \ NORTH AMERICA \ CONSTRUCTION / INDUSTRIAL \ BACKHOE LOADER 3CX,4CX,214,215,217 \ 3C PLUS (91HP) , Made in Brazil with Dieselmax/IESA Engine 9812/0080 \ B BODYWORK, CAB, LOADER END \ B02 CAB

9812/0080 B2-15-21 COVER, LOADER CONTROLS

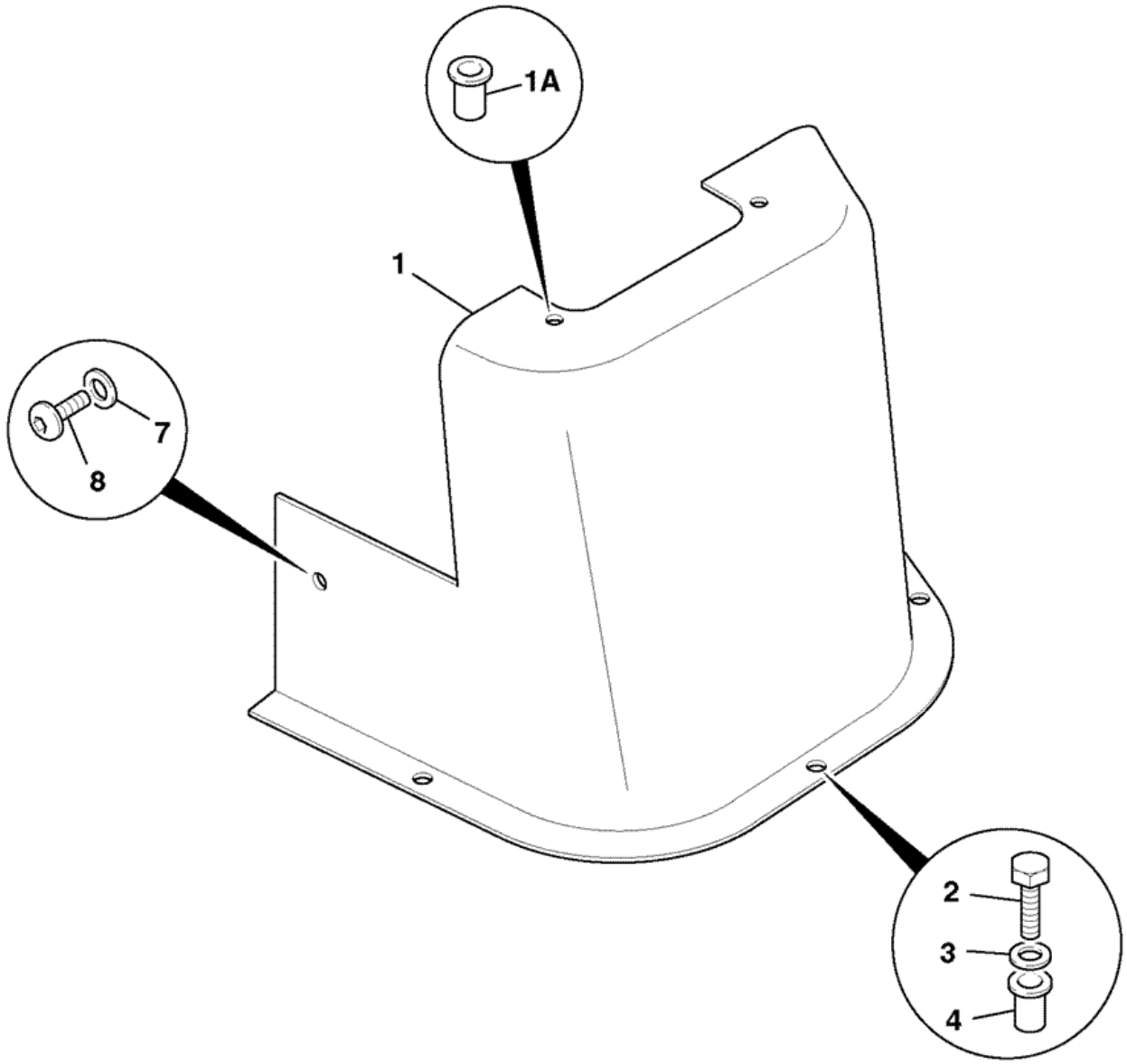

Item	Part #	Change No	Description	Usage Code	QTY
1	331/27757		Console end cap		1
1A	:826/01232		Nut M6 jack		2

2	1315/0207Z		Screw M6 x 25mm long		3
3	823/00384		Washer		3
4	826/01101		Nut rivet,M6 open ended for 3 to 5.5mm plt		3
7	823/00516		Washer nylon M6		1
8	826/01768		Screw M6x25mm		1

Product Catalog \ CONSTRUCTION \ NORTH AMERICA \ CONSTRUCTION / INDUSTRIAL \ BACKHOE LOADER 3CX,4CX,214,215,217 \ 3C PLUS (91HP) , Made in Brazil with Dieselmax/IESA Engine 9812/0080 \ B BODYWORK, CAB, LOADER END \ B02 CAB

9812/0080 B2-23-21 CAB ROOF, ECONOMY, ROW & USA

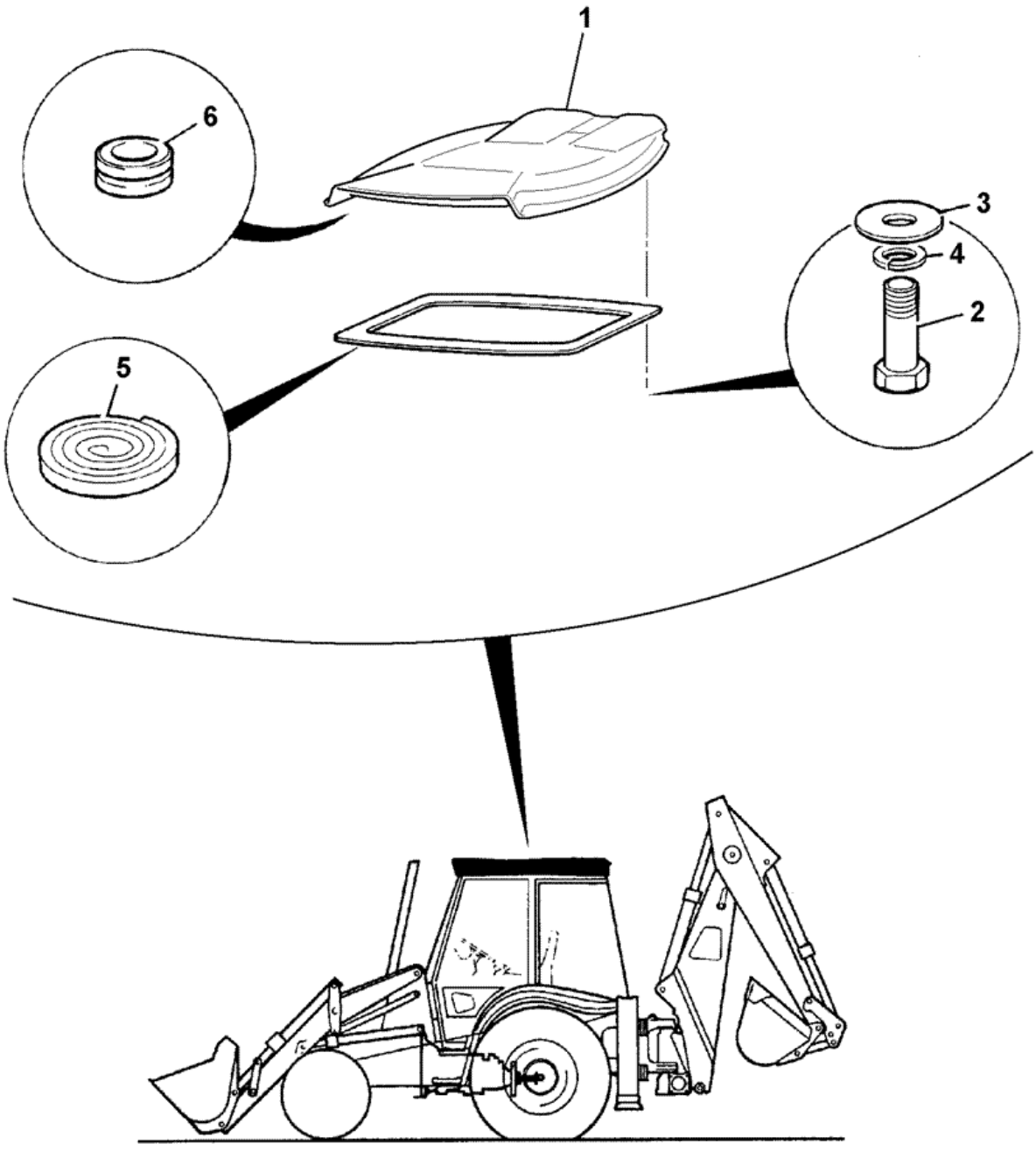

398060

Item	Part #	Change No	Description	Usage Code	QTY
1	123/07439		Roof cab,USA yellow *Yellow*		1

2	1315/0312Z		Bolt M8x50		4
3	1412/0002Z		Washer		4
4	1425/0007Z		Washer spring		4
5	926/13200		Strip foam seal *5000mm*		1
6	2410/1302		Grommet *aerial & rear washer*		2
6	828/10333		Plug blanking *rear beacon*		1
15	817/18078		Decal JCB Logo black		1

Product Catalog \ CONSTRUCTION \ NORTH AMERICA \ CONSTRUCTION / INDUSTRIAL \ BACKHOE LOADER 3CX,4CX,214,215,217 \ 3C PLUS (91HP) , Made in Brazil with Dieselmax/IESA Engine 9812/0080 \ C ELECTRICS-MACHINE CAB & ENGINE \ C01 ELECTRICS, MAIN MACHINE

9812/0080 C1-22-1 LIGHT, INDICATOR

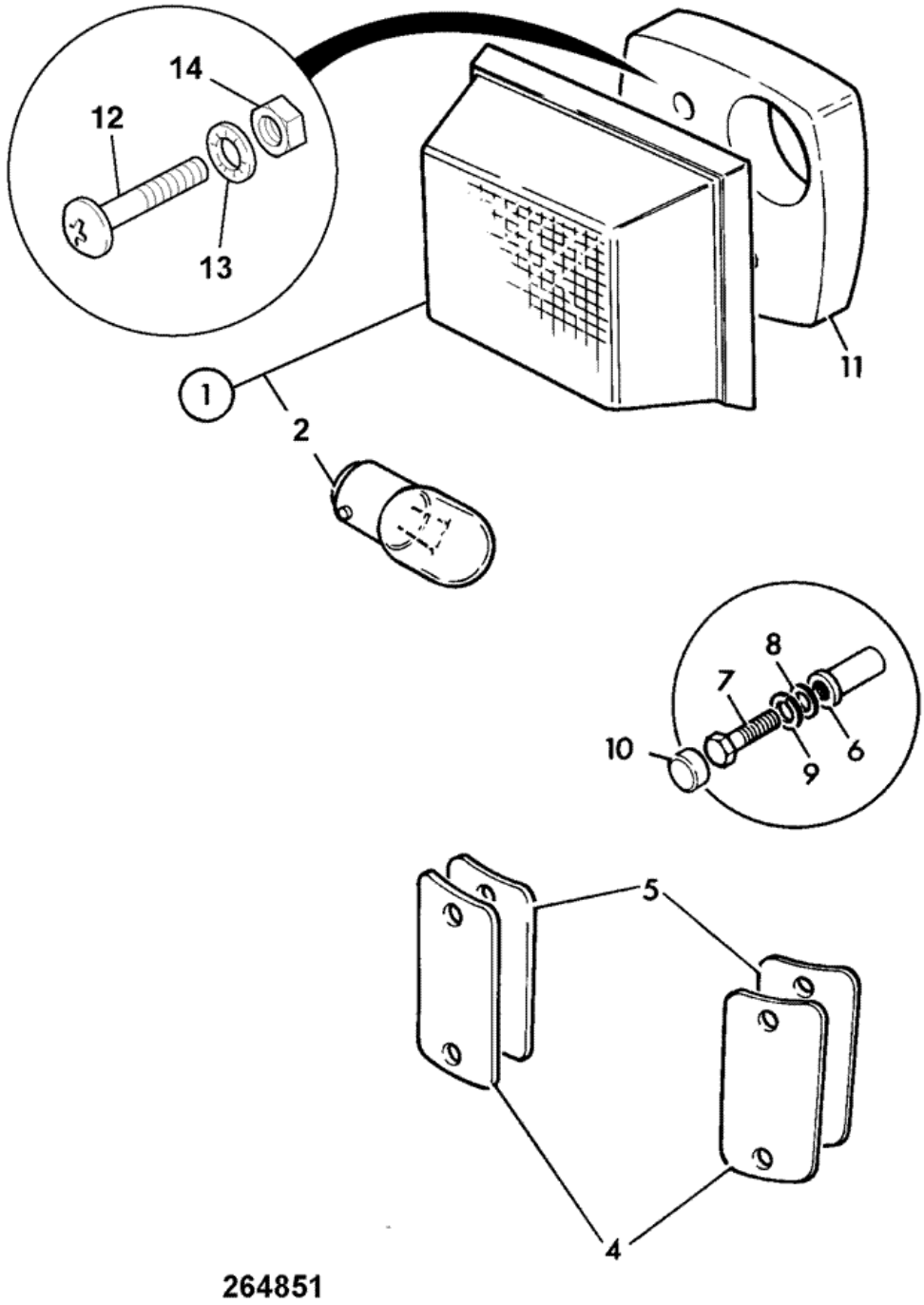

Item	Part #	Change No	Description	Usage Code	QTY
1	700/39600		Light indicator 12v		2
2	:720/10005		Bulb 12v 21w		1

4	331/27358		Plate blanking, Headlamp		2
5	813/10228		Gasket headlamp mount *If fitted*		2
6	826/01103		Nut rivet,M8 open ended		4
7	1315/0305Z		Screw Hexagon M8 x 20mm long		4
8	1420/0007Z		Washer plain M8		4
9	.		'See Remark' *Not fitted*		0
10	122/23509		Cap Nut M8 *If fitted*		4
11	123/06669		Gasket left hand indicator		1
11	123/06670		Gasket right hand idicator		1
12	826/00680		Screw		4
13	1414/0007Z		Washer		4
14	826/00461		Nut M4		4

Product Catalog \ CONSTRUCTION \ NORTH AMERICA \ CONSTRUCTION / INDUSTRIAL \ BACKHOE LOADER 3CX,4CX,214,215,217 \ 3C PLUS (91HP) , Made in Brazil with Dieselmax/IESA Engine 9812/0080 \ C ELECTRICS-MACHINE CAB & ENGINE \ C01 ELECTRICS, MAIN MACHINE

9812/0080 C1-4-5 LIGHT, HEAD, 12.VOLT, RIGHT HAND DIP, WHITE

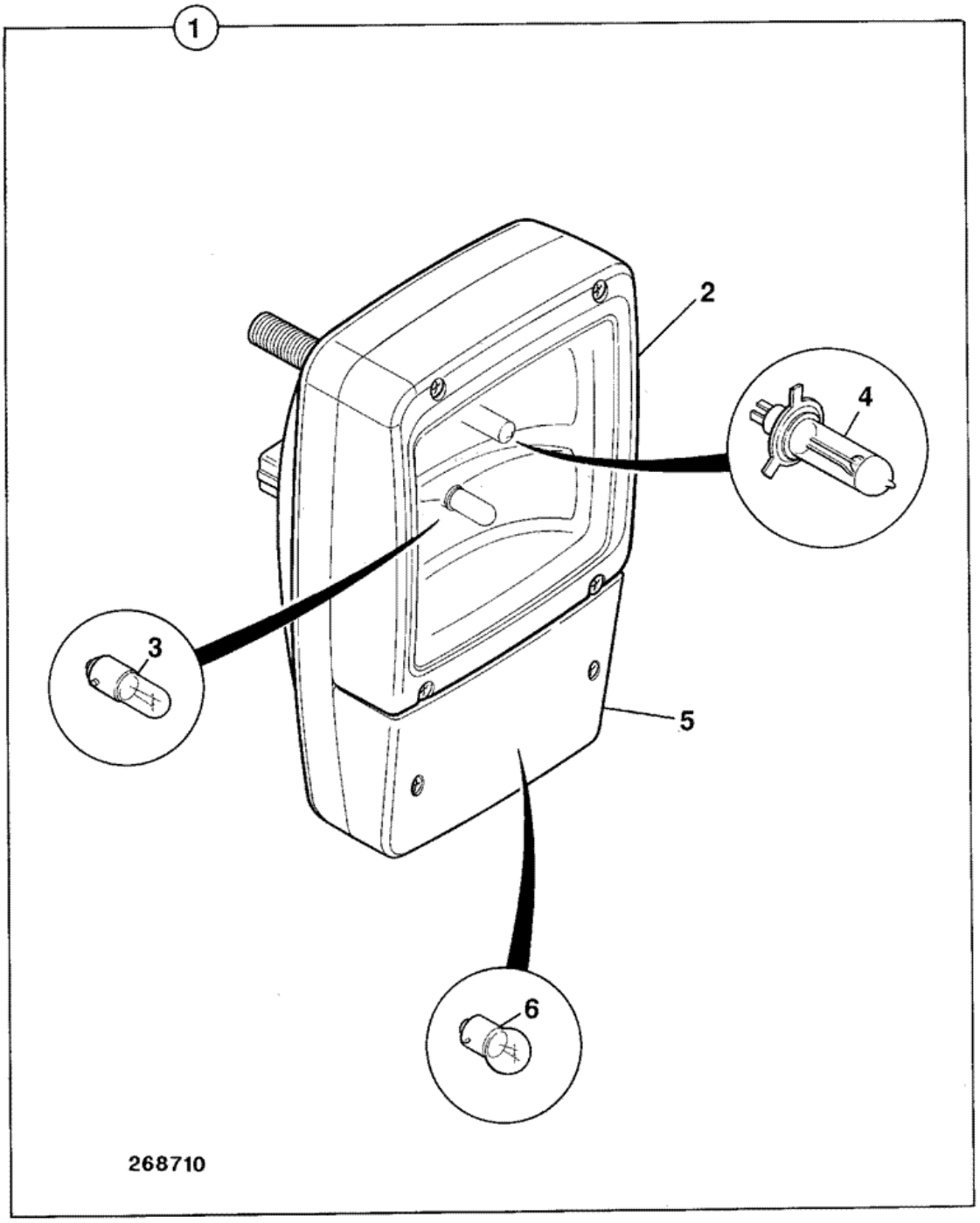

Item	Part #	Change No	Description	Usage Code	QTY
1	700/50055		Light head assembly right hand dip		2

2	:700/38501		Lens assembly, headlight		1
3	:720/10043		Bulb side light 12v 4w		1
4	:720/10061		Bulb 12V-55W H3 *Main*		1
4	:720/10068		Bulb 12v 55w H7 *Dip*		1
5	:700/38401		Lens indicator		1
6	:720/10002		Bulb 12v 21W		1
7	835/00075		Cap		2
8	828/00273		Grommet		2

Product Catalog \ CONSTRUCTION \ NORTH AMERICA \ CONSTRUCTION / INDUSTRIAL \ BACKHOE LOADER 3CX,4CX,214,215,217 \ 3C PLUS (91HP) , Made in Brazil with Dieselmax/IESA Engine 9812/0080 \ C ELECTRICS-MACHINE CAB & ENGINE \ C01 ELECTRICS, MAIN MACHINE

9812/0080 C1-5-1 LIGHT, WORKING, CAB FRONT

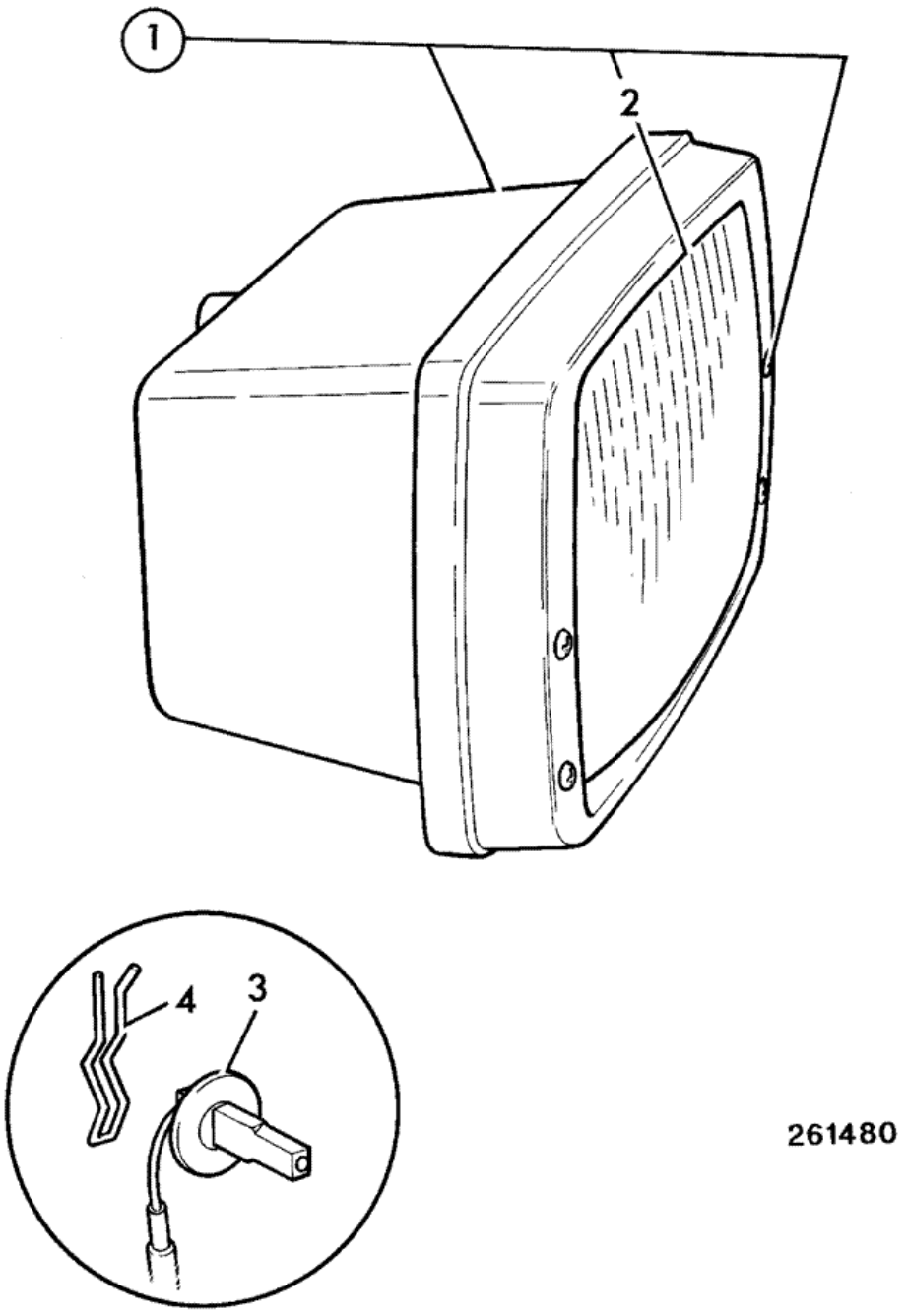

Item	Part #	Change No	Description	Usage Code	QTY
1	700/42300		Light front working		2
2	:NSP		None serviced part		1

3	:720/10061		Bulb 12V-55W H3		2
4	:700/10103		Spring		2
5	826/10538		Nut 'U' No 8		4
6	1430/0207		Screw		4

Product Catalog \ CONSTRUCTION \ NORTH AMERICA \ CONSTRUCTION / INDUSTRIAL \ BACKHOE LOADER 3CX,4CX,214,215,217 \ 3C PLUS (91HP) , Made in Brazil with Dieselmax/IESA Engine 9812/0080 \ C ELECTRICS-MACHINE CAB & ENGINE \ C01 ELECTRICS, MAIN MACHINE

9812/0080 C1-5-2 LIGHT, WORKING, CAB REAR

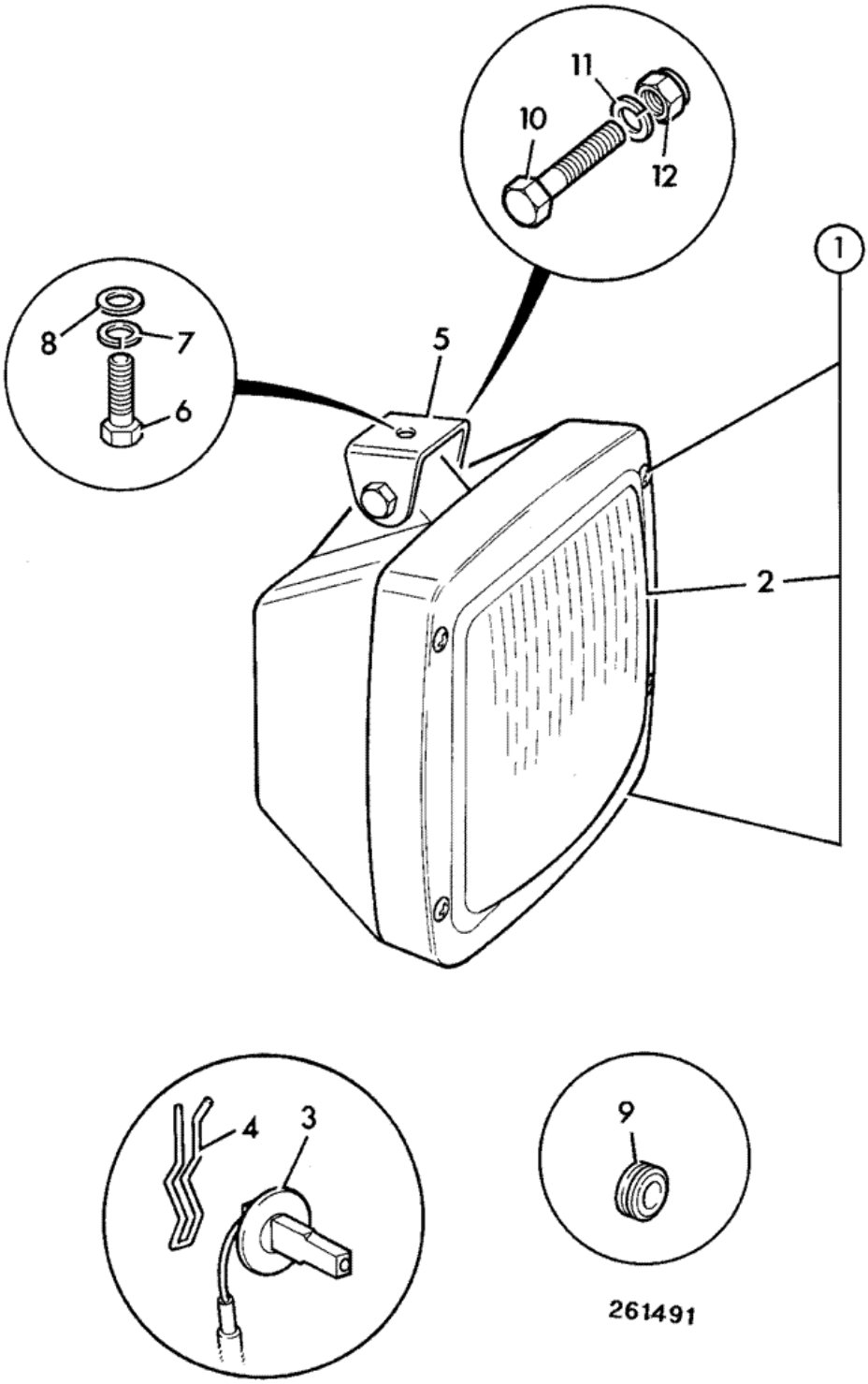

Item	Part #	Change No	Description	Usage Code	QTY
1	700/38800		Light working		0
2	:NSP		None serviced part		1

3	:720/10061		Bulb 12V-55W H3		1
4	:700/10103		Spring		1
5	123/06305		Bracket		0
6	1315/0305Z		Screw Hexagon M8 x 20mm long		0
7	1425/0007Z		Washer spring		0
8	1420/0007Z		Washer plain M8		0
9	828/00406		Grommet (2 holes) *4-lamp installation*		2
9	123/07770		Grommet (1 hole) *2-lamp installation*		2
10	1315/3313Z		Bolt M8 X 55		0
11	1413/0003Z		Washer		0
12	1370/0203Z		Nut self lock M8		0
13	122/23509		Cap Nut M8 *4-lamp installation (If fitted)*		2

Product Catalog \ CONSTRUCTION \ NORTH AMERICA \ CONSTRUCTION / INDUSTRIAL \ BACKHOE LOADER 3CX,4CX,214,215,217 \ 3C PLUS (91HP) , Made in Brazil with Dieselmax/IESA Engine 9812/0080 \ C ELECTRICS-MACHINE CAB & ENGINE \ C02 ELECTRICS, ENGINE

9812/0080 C2-1-1 SWITCHES & SENDERS

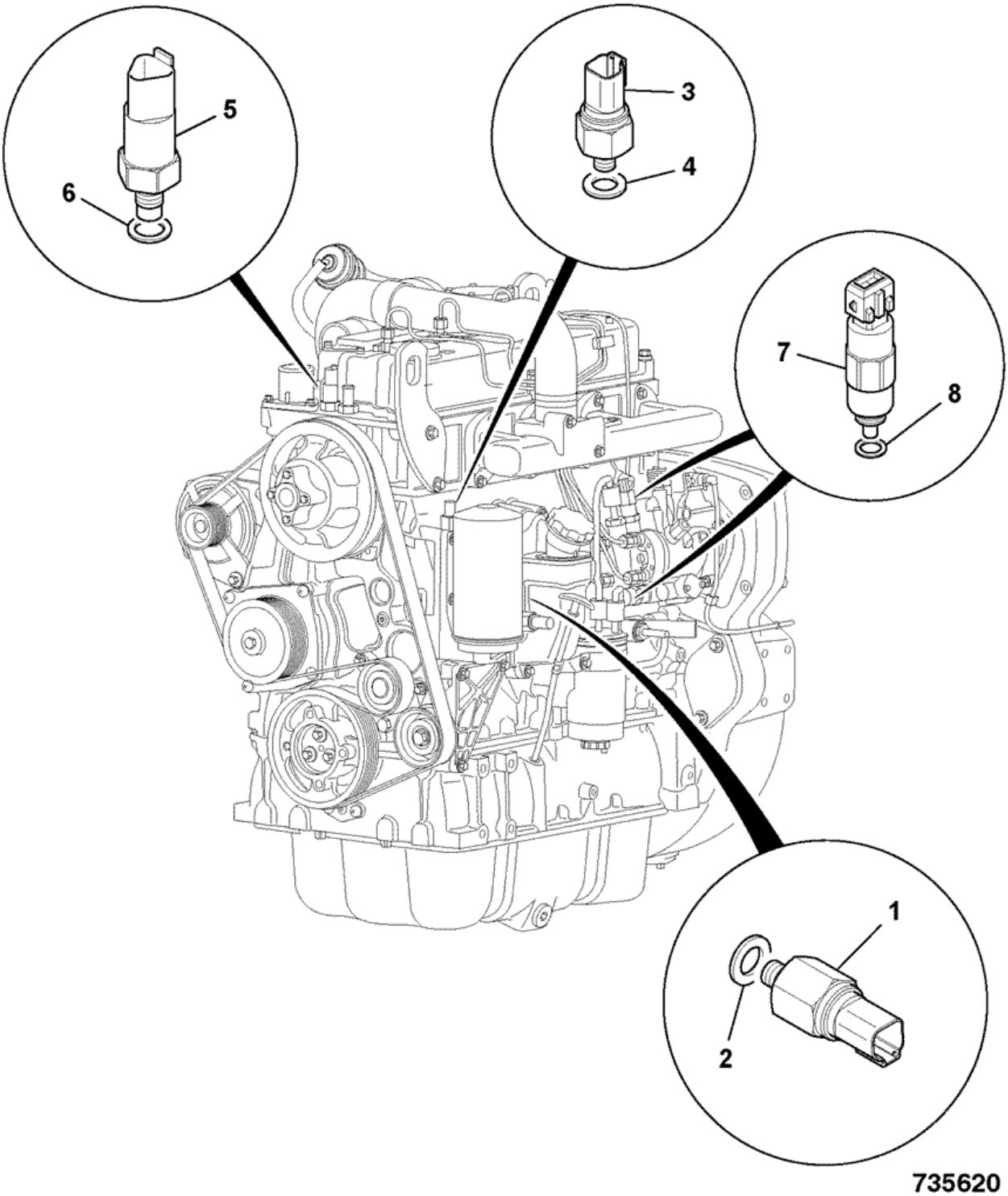

Item	Part #	Change No	Description	Usage Code	QTY
1	320/04038		Switch engine oil pressure		1
2	320/04057		Seal bonded		1

3	320/04544	<U0100005	Switch cold start advance		1
3	320/04554		Switch cold start advance		1
4	320/04521		Seal bonded		1
5	320/04545		Switch temperature sender		1
6	320/04521		Seal bonded		1
7	716/30255		Solenoid fuel pump - ESOS cold start advance		2
8	:17/105202		Seal Ring		1

Product Catalog \ CONSTRUCTION \ NORTH AMERICA \ CONSTRUCTION / INDUSTRIAL \ BACKHOE LOADER 3CX,4CX,214,215,217 \ 3C PLUS (91HP) , Made in Brazil with Dieselmax/IESA Engine 9812/0080 \ C ELECTRICS-MACHINE CAB & ENGINE \ C02 ELECTRICS, ENGINE

9812/0080 C2-2-1 ENGINE ELECTRICS, ACCESSORIES

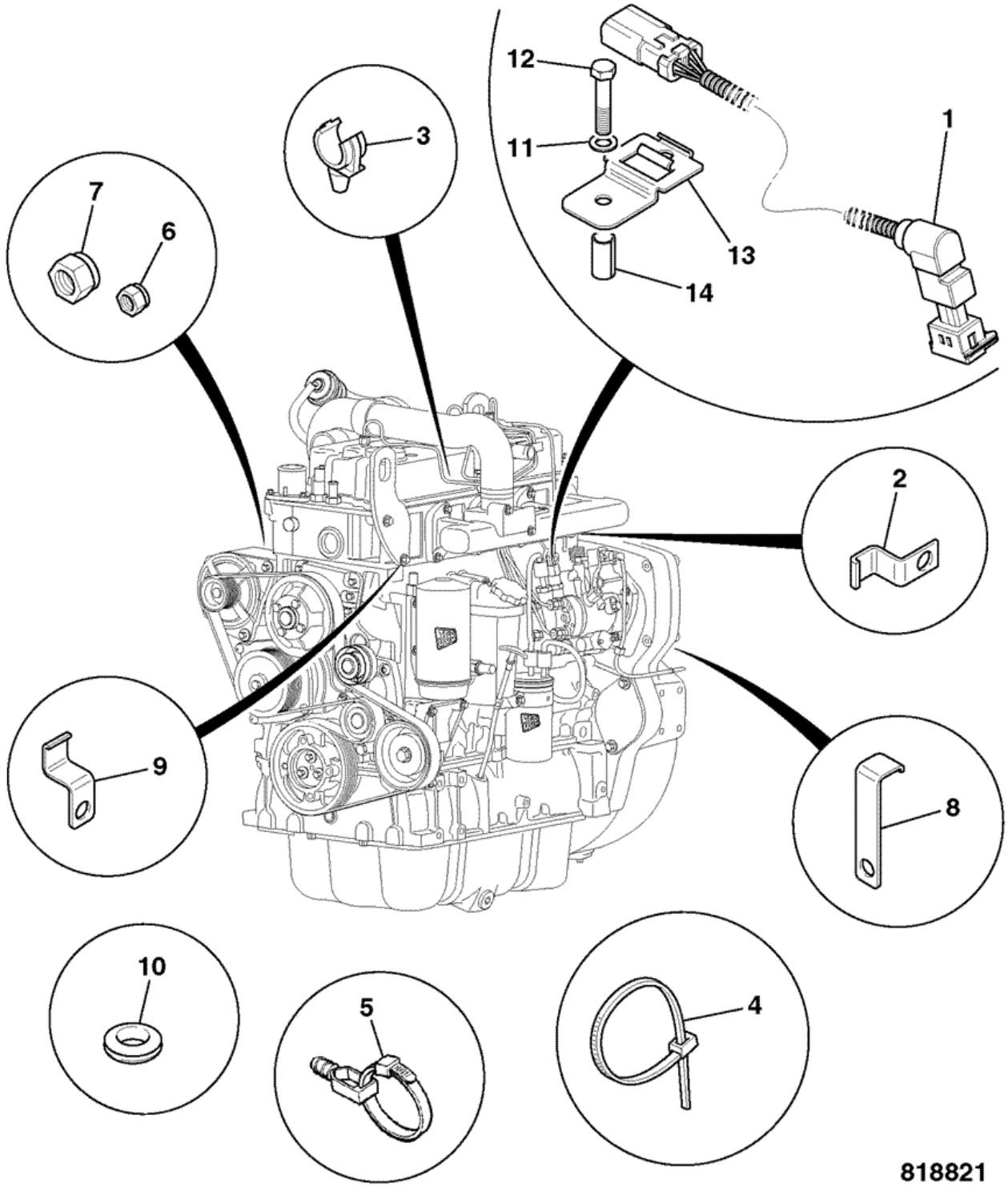

Item	Part #	Change No	Description	Usage Code	QTY
1	721/11639		Harness ESOS link		1
2	821/10321		Clip harness		2

3	821/00379		Clip		3
4	826/01144		Tie cable 200mm long		15
5	826/01347		Tie cable c/w mounting 4.6mm x 190mm		3
6	826/11430		Nut nyloc M5		2
7	826/10826		Nut nyloc M8		1
8	123/00195		Clip harness support		2
9	123/05247		Clip cable		2
10	2410/0205		Grommet hole dia 12.7mm panel thknss 5-6mm		6
11	1420/0007Z		Washer plain M8		1
12	1315/0310Z		Bolt M8x40		1
13	7210/0067		Clip Deutsch DT mounting clip		1
14	123/06253		Spacer		1

Product Catalog \ CONSTRUCTION \ NORTH AMERICA \ CONSTRUCTION / INDUSTRIAL \ BACKHOE LOADER 3CX,4CX,214,215,217 \ 3C PLUS (91HP) , Made in Brazil with Dieselmax/IESA Engine 9812/0080 \ C ELECTRICS-MACHINE CAB & ENGINE \ C02 ELECTRICS, ENGINE

9812/0080 C2-3-1 STARTER MOTOR, 12.VOLT

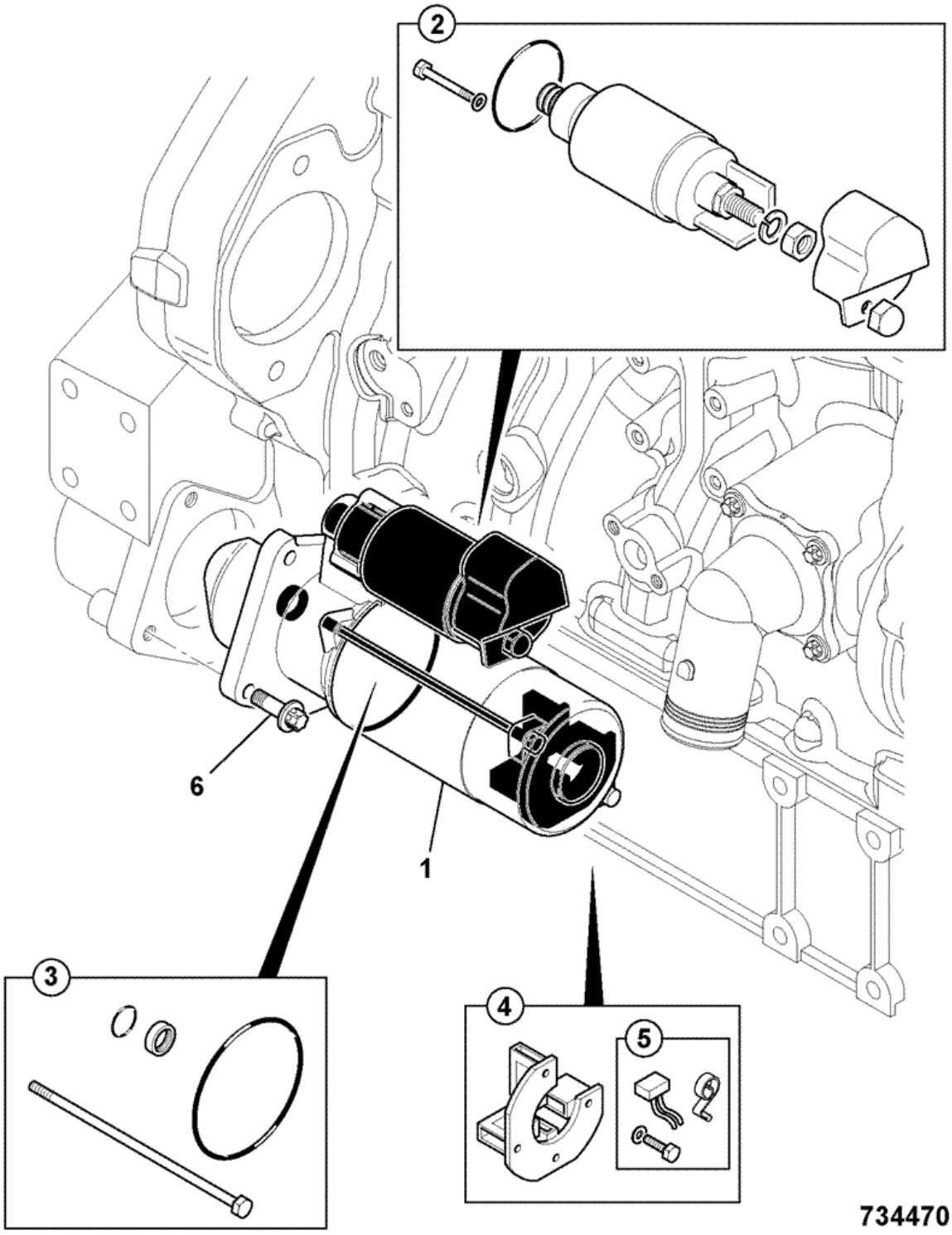

Item	Part #	Change No	Description	Usage Code	QTY
1	320/09022		Motor starter 12v		1
2	:714/40302		Switch starter solenoid 12 Volt		1

3	:714/40303		Kit-sundry parts		1
4	:714/40305		Brush holder assembly 12volt		1
5	:714/40306		Kit-brush 12 Volt		1
6	1319/0408Z		Screw star drive M10 x 30		3

Product Catalog \ CONSTRUCTION \ NORTH AMERICA \ CONSTRUCTION / INDUSTRIAL \ BACKHOE LOADER 3CX,4CX,214,215,217 \ 3C PLUS (91HP) , Made in Brazil with Dieselmax/IESA Engine 9812/0080 \ C ELECTRICS-MACHINE CAB & ENGINE \ C02 ELECTRICS, ENGINE

9812/0080 C2-3-2 MOTOR, STARTER, P4001/P4001T BUILDS, NAT ASP & TURBO 8C30/8C31

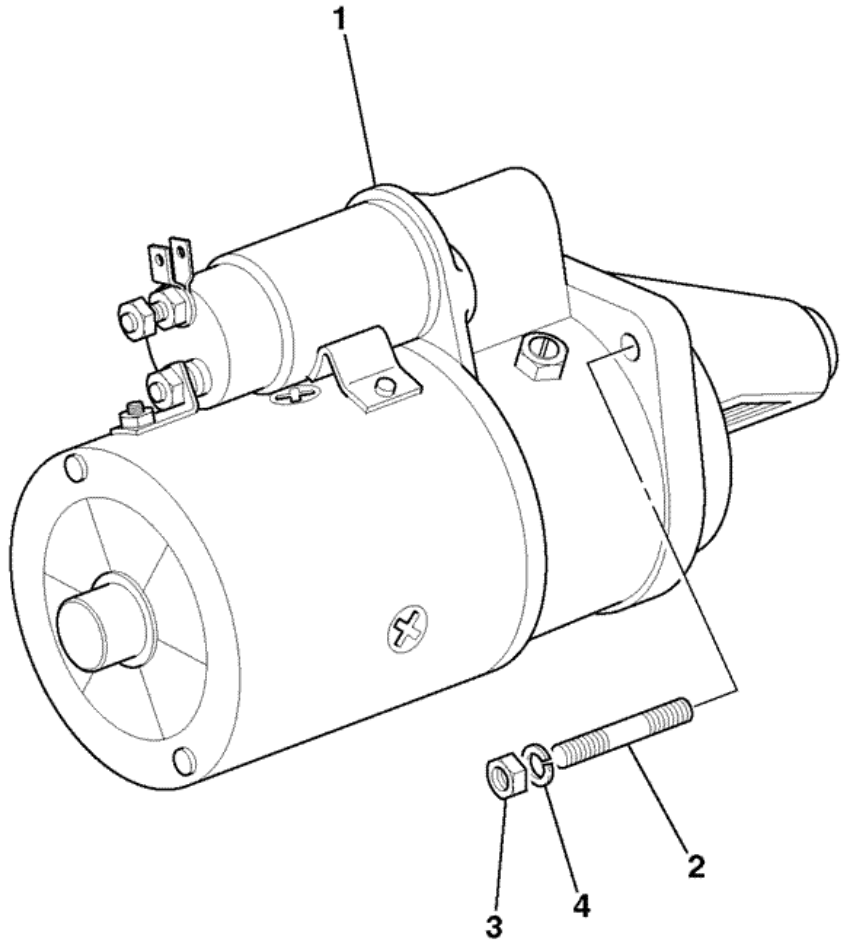

705650

Item	Part #	Change No	Description	Usage Code	QTY
1	714/40274		Motor starter		1

2	822/00142		Stud		3
3	1340/0201		Nut		3
4	1416/0006		Washer		3

Product Catalog \ CONSTRUCTION \ NORTH AMERICA \ CONSTRUCTION / INDUSTRIAL \ BACKHOE LOADER 3CX,4CX,214,215,217 \ 3C PLUS (91HP) , Made in Brazil with Dieselmax/IESA Engine 9812/0080 \ C ELECTRICS-MACHINE CAB & ENGINE \ C02 ELECTRICS, ENGINE

9812/0080 C2-4-1 ALTERNATOR, 12VOLT - 95AMP

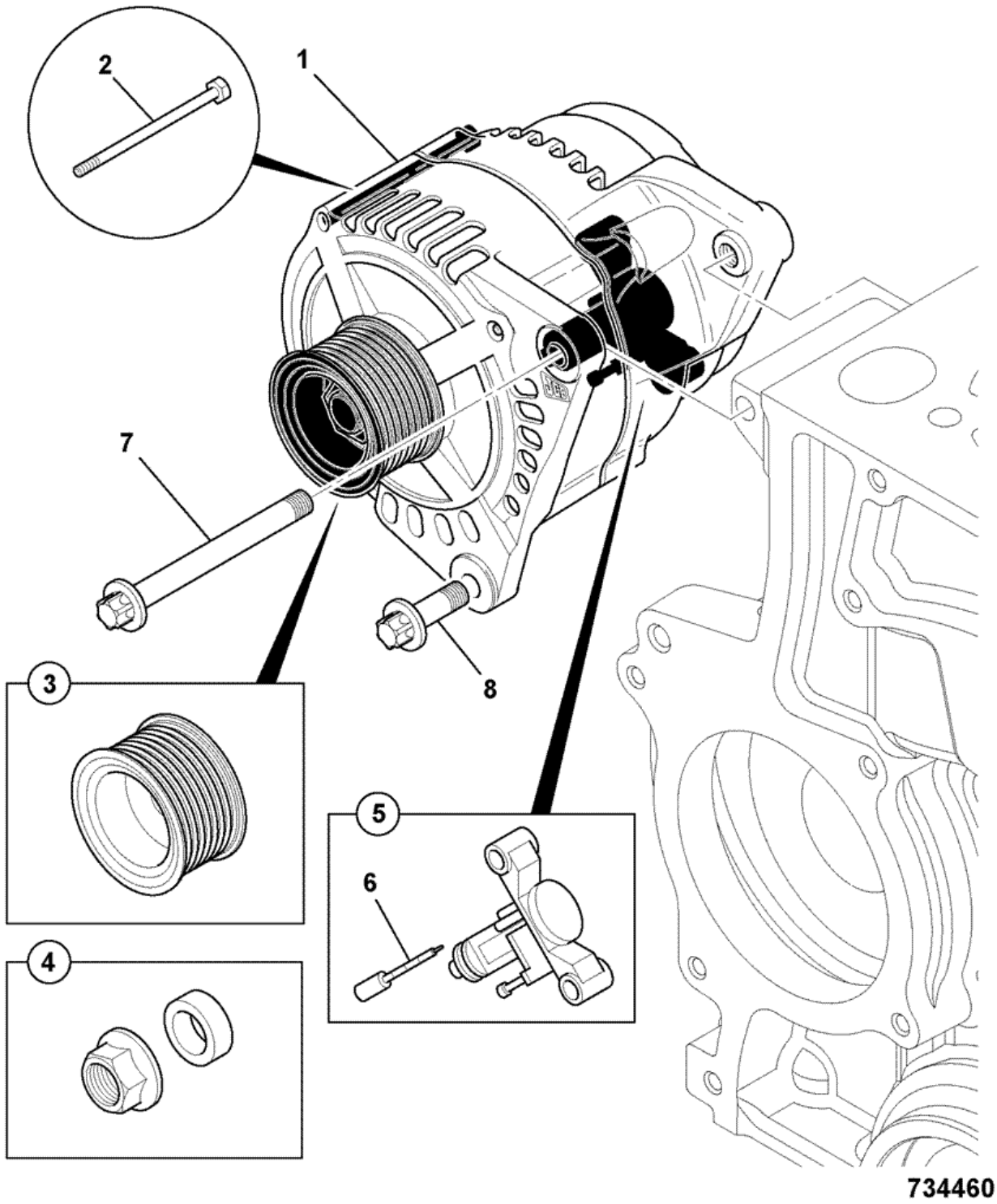

Item	Part #	Change No	Description	Usage Code	QTY
1	320/08560		Alternator 12V-95AMP		1
2	:714/40310		Kit-through bolt		1

3	:714/40312		Pulley alternator		1
4	:714/40311		Kit-nut & spacer		1
5	:714/40313		Regulator & brush box assembly		1
6	:714/40314		Kit-brush		1
7	1319/3422Z		Bolt star drive M10 x 120		1
8	1319/0408Z		Screw star drive M10 x 30		1

Product Catalog \ CONSTRUCTION \ NORTH AMERICA \ CONSTRUCTION / INDUSTRIAL \ BACKHOE LOADER 3CX,4CX,214,215,217 \ 3C PLUS (91HP) , Made in Brazil with Dieselmax/IESA Engine 9812/0080 \ C ELECTRICS-MACHINE CAB & ENGINE \ C02 ELECTRICS, ENGINE

9812/0080 C2-4-2 ALTERNATOR, P4001/P4001T, NAT ASP & TURBO 8C30/8C31

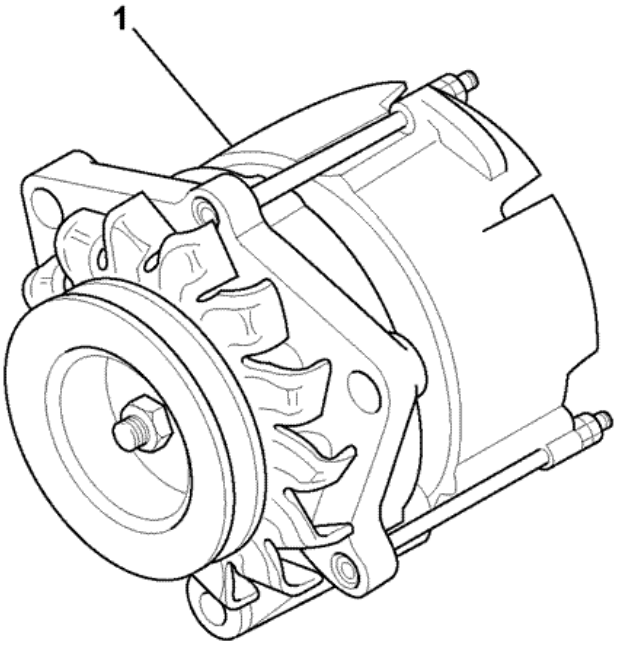

723192

Item	Part #	Change No	Description	Usage Code	QTY
1	714/40275		Alternator		1

Product Catalog \ CONSTRUCTION \ NORTH AMERICA \ CONSTRUCTION / INDUSTRIAL \ BACKHOE LOADER 3CX,4CX,214,215,217 \ 3C PLUS (91HP) , Made in Brazil with Dieselmax/IESA Engine 9812/0080 \ C ELECTRICS-MACHINE CAB & ENGINE \ C02 ELECTRICS, ENGINE

9812/0080 C2-4-3 ALTERNATOR MOUNTINGS, P4001/P4001T BUILDS, NAT ASP & TURBO 8C30/8C31

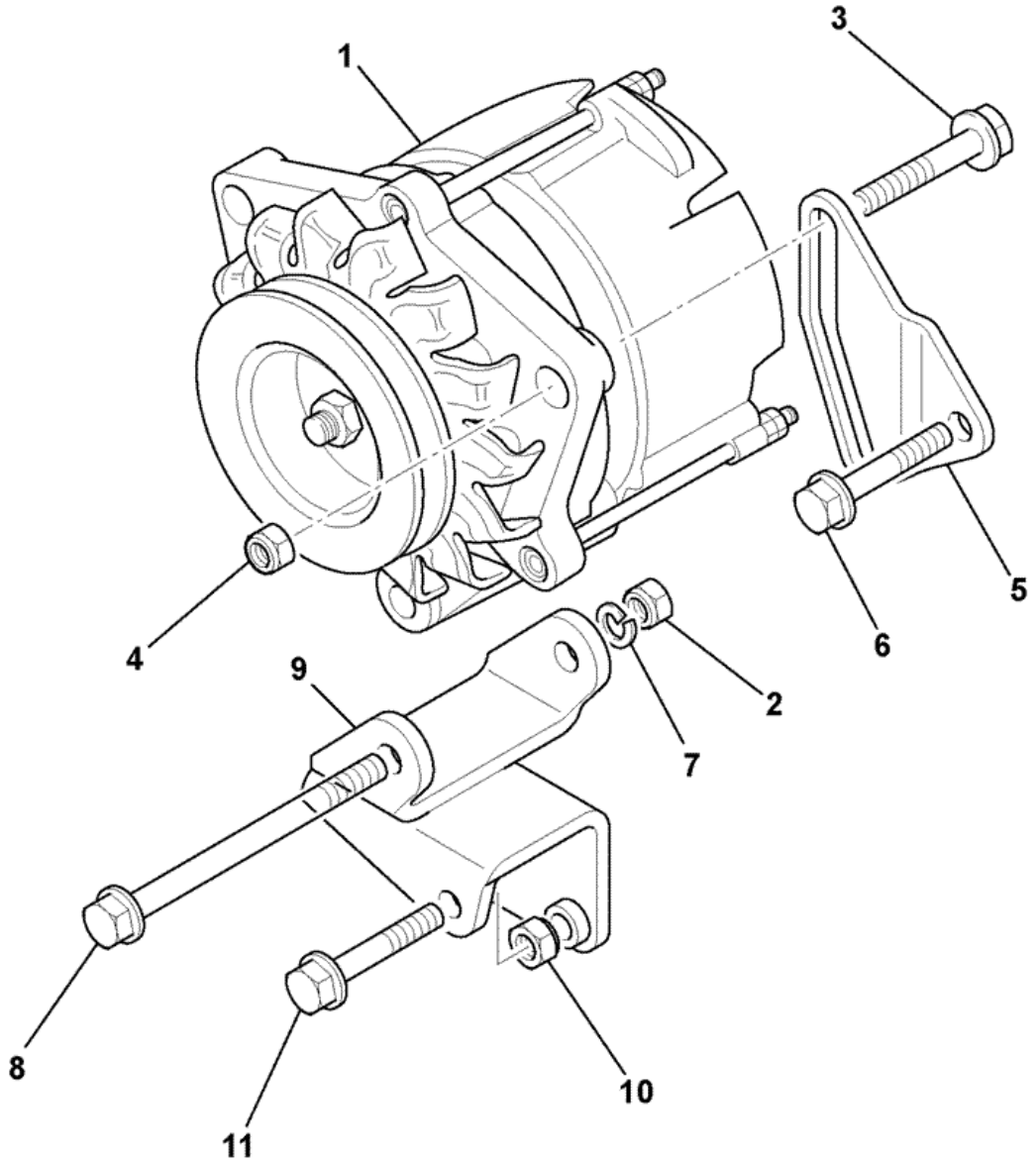

702572

Item	Part #	Change No	Description	Usage Code	QTY
			'See Remark'		

1	.		*For details see frame C2-4-2*		1
2	02/103544		Nut		1
3	02/103597		Bolt		1
4	02/103748		Nut nut		1
5	02/103599		Arm adjuster		1
6	02/103541		Bolt		1
7	1416/0006		Washer		1
8	02/103669		Bolt		1
9	02/103601		Bracket		1
10	02/103672		Nut M12		1
11	02/103749		Bolt bolt		1

Product Catalog \ CONSTRUCTION \ NORTH AMERICA \ CONSTRUCTION / INDUSTRIAL \ BACKHOE LOADER 3CX,4CX,214,215,217 \ 3C PLUS (91HP) , Made in Brazil with Dieselmax/IESA Engine 9812/0080 \ C ELECTRICS-MACHINE CAB & ENGINE \ C02 ELECTRICS, ENGINE

9812/0080 C2-5-2 GRID HEATER RELAY, INSTALLATION, TURBO

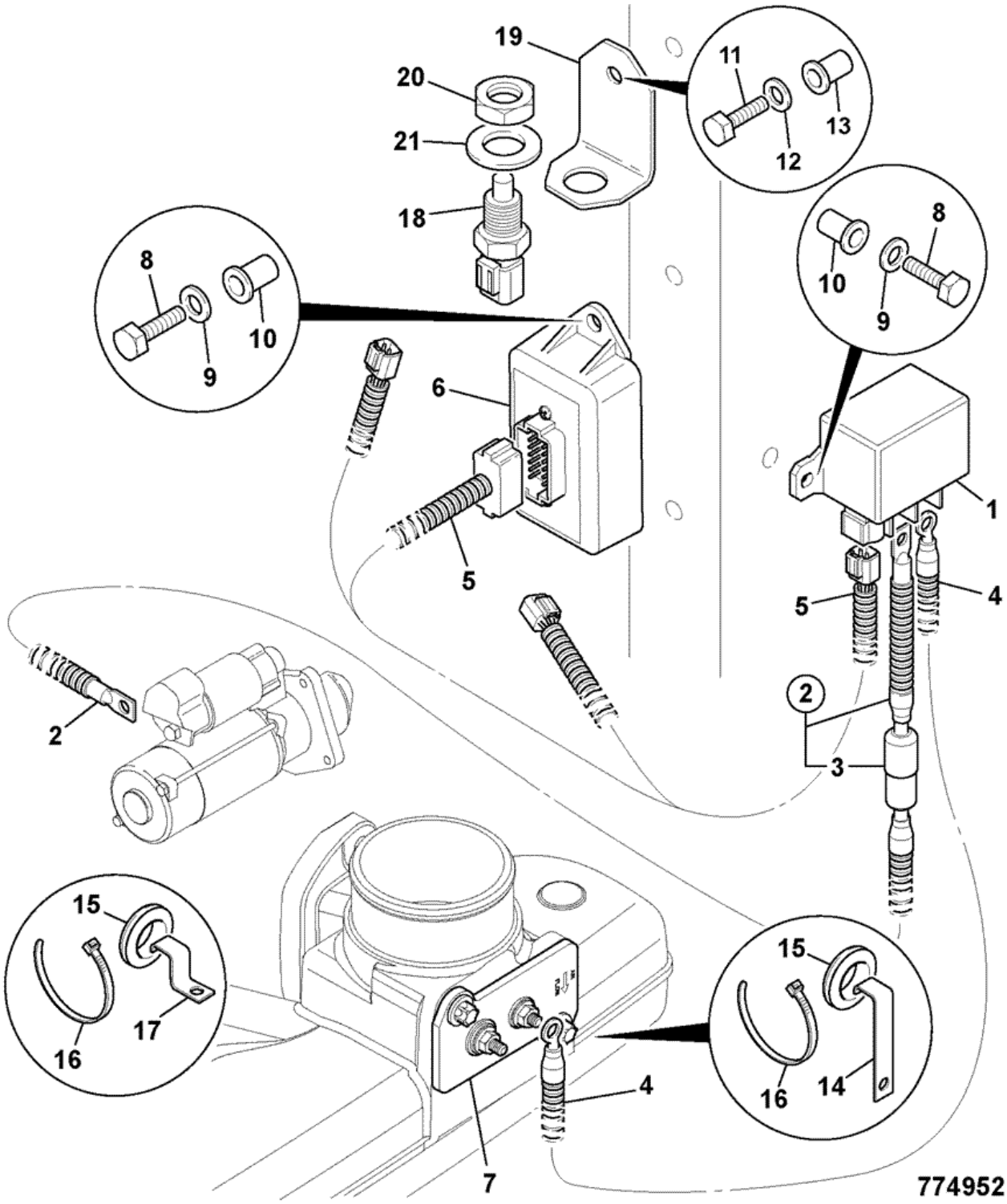

Item	Part #	Change No	Description	Usage Code	QTY
1	716/30252		Relay grid heater		1

2	718/20232		Lead grid heater +ve feed		1
3	:716/30225		Fuse 150Amp MEGAVAL		1
4	718/20234		Lead grid heater +ve TURBO		1
5	721/11846		Harness ECU to heater relay		1
6	728/26800		Unit ECU cold start		1
7	320/05527		Heater air intake -12v		1
8	1315/0203Z		Screw M6x16		2
9	1420/0006Z		Washer M6		2
10	826/01316		Nut M6 rivet		2
11	1315/0307Z		Screw Hexagon M8 X 25		2
12	1420/0007Z		Washer plain M8		2
13	826/01106		Nut rivet,M8		2
14	123/03965		Clip		1
15	2410/0205		Grommet hole dia 12.7mm panel thknss 5-6mm		5
16	826/01144		Tie cable 200mm long		7
17	123/05247		Clip cable		4
18	716/30126		Sender water temperature		1
19	331/48375		Bracket sensor mounting		1
20	1356/0204Z		Nut		1
21	1420/0013Z		Washer plain bright		1

Product Catalog \ CONSTRUCTION \ NORTH AMERICA \ CONSTRUCTION / INDUSTRIAL \ BACKHOE LOADER 3CX,4CX,214,215,217 \ 3C PLUS (91HP) , Made in Brazil with Dieselmax/IESA Engine 9812/0080 \ C ELECTRICS-MACHINE CAB & ENGINE \ C02 ELECTRICS, ENGINE

9812/0080 C2-5-4 GRID HEATER RELAY, INSTALLATION, TURBO

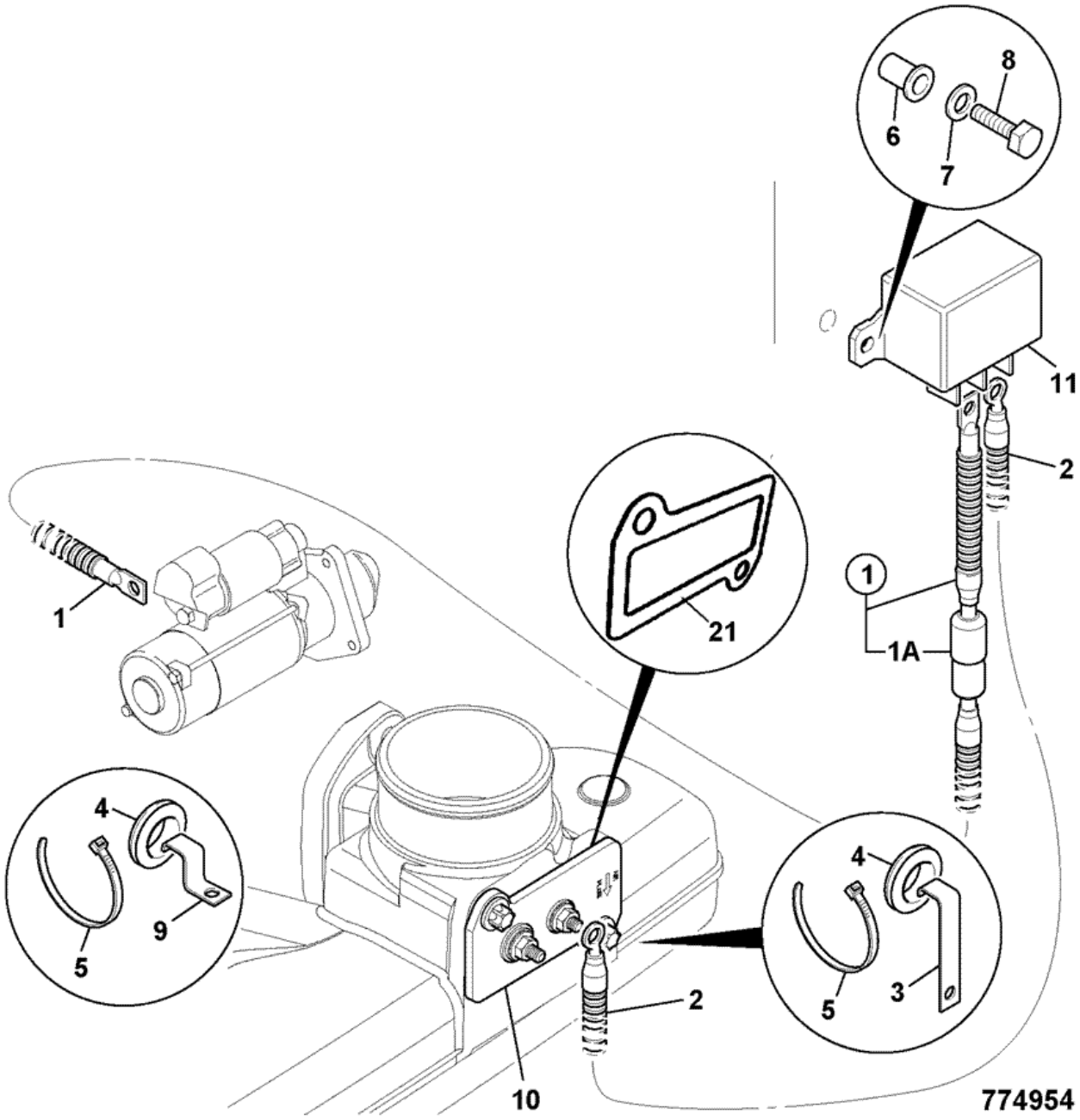

Item	Part #	Change No	Description	Usage Code	QTY
1	718/20232		Lead grid heater +ve feed		1

1A	:716/30225		Fuse 150Amp MEGAVAL		1
2	718/20234		Lead grid heater +ve TURBO		1
3	123/03965		Clip		1
4	2410/0205		Grommet hole dia 12.7mm panel thknss 5-6mm		6
5	826/01144		Tie cable 200mm long		8
6	826/01316		Nut M6 rivet		2
7	1420/0006Z		Washer M6		2
8	1315/0203Z		Screw M6x16		2
9	123/05247		Clip cable		5
10	320/05527		Heater air intake -12v		1
11	716/30252		Relay grid heater		1
21	320/05567		Gasket intake heater		1

Product Catalog \ CONSTRUCTION \ NORTH AMERICA \ CONSTRUCTION / INDUSTRIAL \ BACKHOE LOADER 3CX,4CX,214,215,217 \ 3C PLUS (91HP) , Made in Brazil with Dieselmax/IESA Engine 9812/0080 \ C ELECTRICS-MACHINE CAB & ENGINE \ C02 ELECTRICS, ENGINE

9812/0080 C2-6-1 ENGINE IMMOBILISER, 12.VOLT

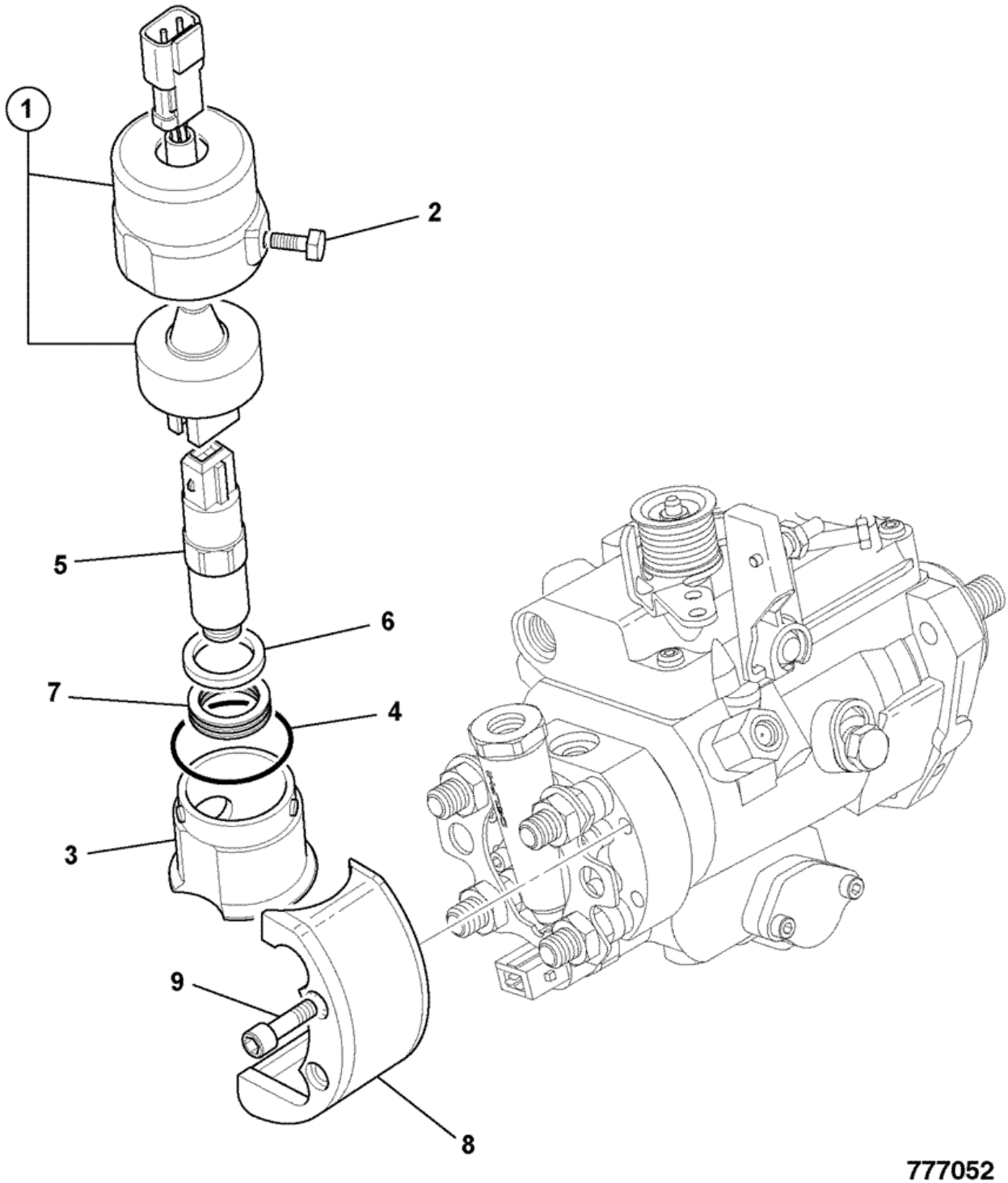

Item	Part #	Change No	Description	Usage Code	QTY
1	320/06597		Kit-cover immobiliser		1
2	826/11068		Bolt M6x27 shear		1

3	320/06598		Base engine immobiliser		1
4	320/06595		Seal o'ring immobiliser cover		1
5	716/30255		Solenoid fuel pump - ESOS cold start advance		1
6	320/06594		Spacer immobiliser		1
7	320/06593		Spring immobiliser		1
8	320/06635		Guard immobiliser		1
9	826/11318		Bolt M6 shear shear @ 11Nm		2

Product Catalog \ CONSTRUCTION \ NORTH AMERICA \ CONSTRUCTION / INDUSTRIAL \ BACKHOE LOADER 3CX,4CX,214,215,217 \ 3C PLUS (91HP) , Made in Brazil with Dieselmax/IESA Engine 9812/0080 \ C ELECTRICS-MACHINE CAB & ENGINE \ C02 ELECTRICS, ENGINE

9812/0080 C2-7-1 ENGINE BLOCK HEATER, 120V

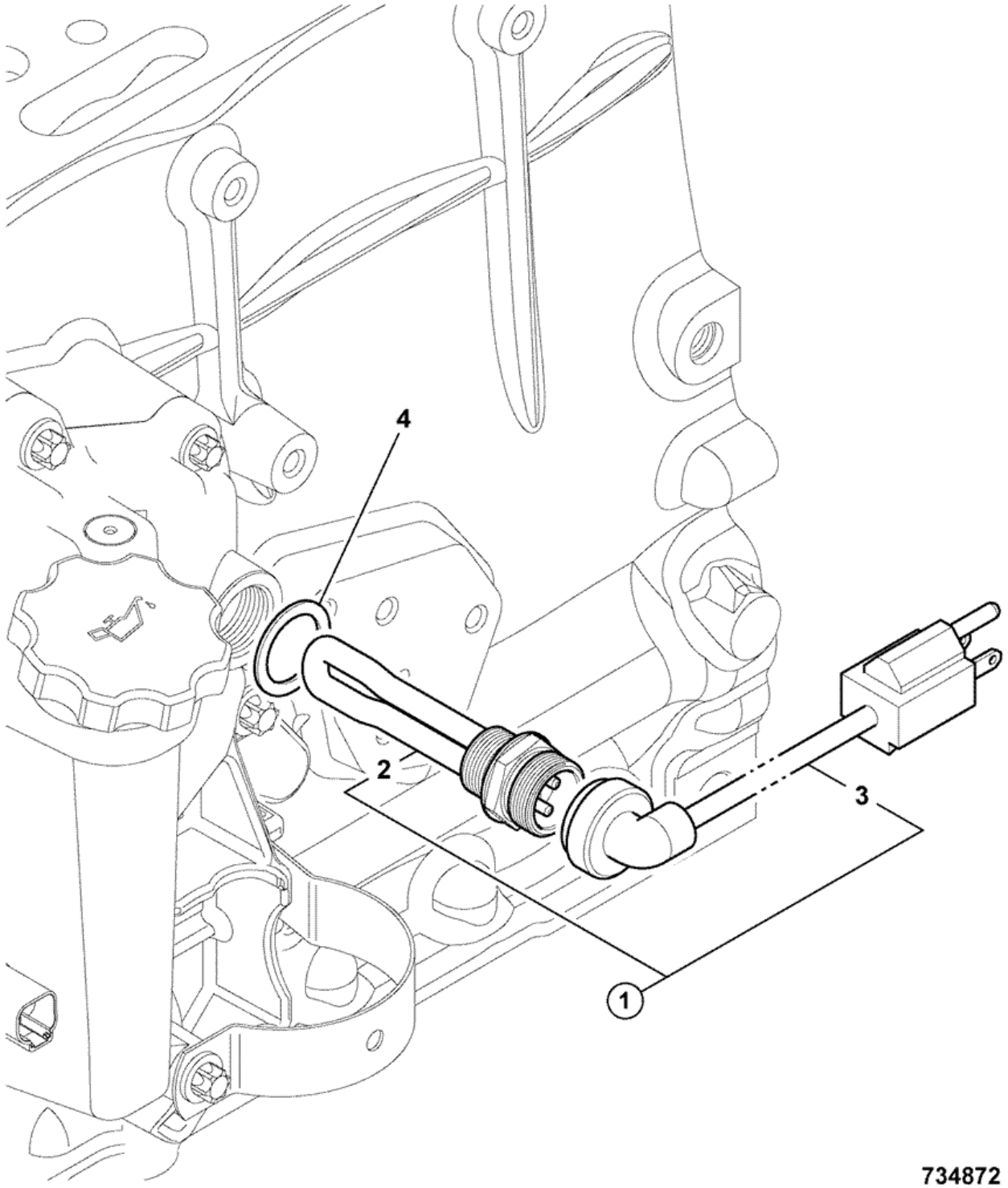

Item	Part #	Change No	Description	Usage Code	QTY
1	320/20082		Kit-heater engine Block 120V		1
2	:320/04550		Heater cylinder block 1000w - 120v mains		1

3	:721/11976		Harness 120V block heater mains power lead		1
4	320/04553		Washer copper sealing		1

Product Catalog \ CONSTRUCTION \ NORTH AMERICA \ CONSTRUCTION / INDUSTRIAL \ BACKHOE LOADER 3CX,4CX,214,215,217 \ 3C PLUS (91HP) , Made in Brazil with Dieselmax/IESA Engine 9812/0080 \ C ELECTRICS-MACHINE CAB & ENGINE \ C03 ELECTRICS, CAB

9812/0080 C3-2-4 COVER, COLUMN SWITCH

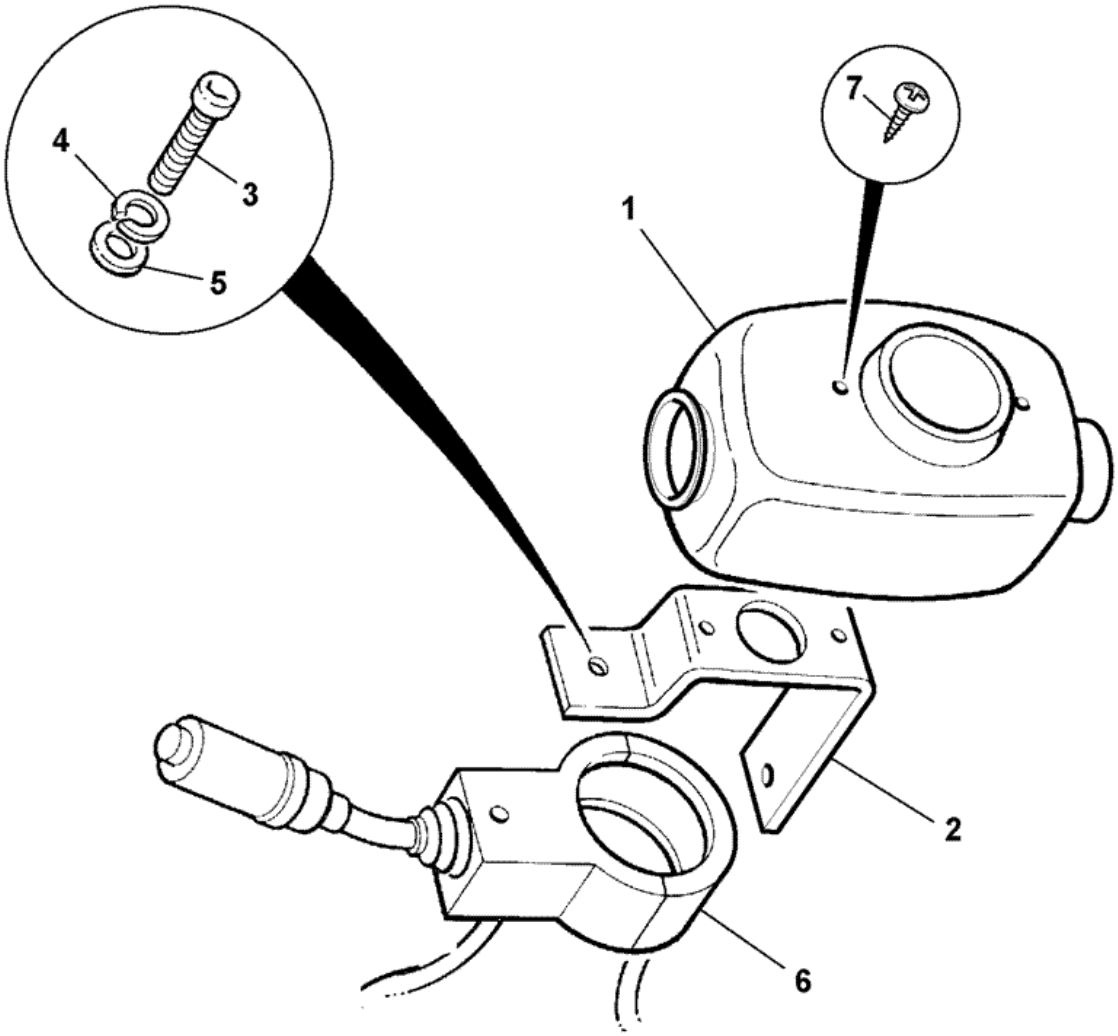

315471

Item	Part #	Change No	Description	Usage Code	QTY
1	331/27486		Cover column switch		1
2	123/05014		Bracket switch cover mount		1

3	826/01522		Screw *Switch mounting to switch*		2
3	826/01533		Screw *Cover to switch mounting*		2
3	826/01130		Screw M4		1
4	1425/0005Z		Washer spring M5		1
5	1420/0005Z		Washer M5		1
5	1414/0011Z		Washer 2 BA		1
5	1417/0007Z		Washer		1
6	.		'See Remark' *See C3-4-20*		1
7	826/01533		Screw		2

Product Catalog \ CONSTRUCTION \ NORTH AMERICA \ CONSTRUCTION / INDUSTRIAL \ BACKHOE LOADER 3CX,4CX,214,215,217 \ 3C PLUS (91HP) , Made in Brazil with Dieselmax/IESA Engine 9812/0080 \ C ELECTRICS-MACHINE CAB & ENGINE \ C01 ELECTRICS, MAIN MACHINE

9812/0080 C1-1-31 HARNESS CAB/CANOPY, MACHINE

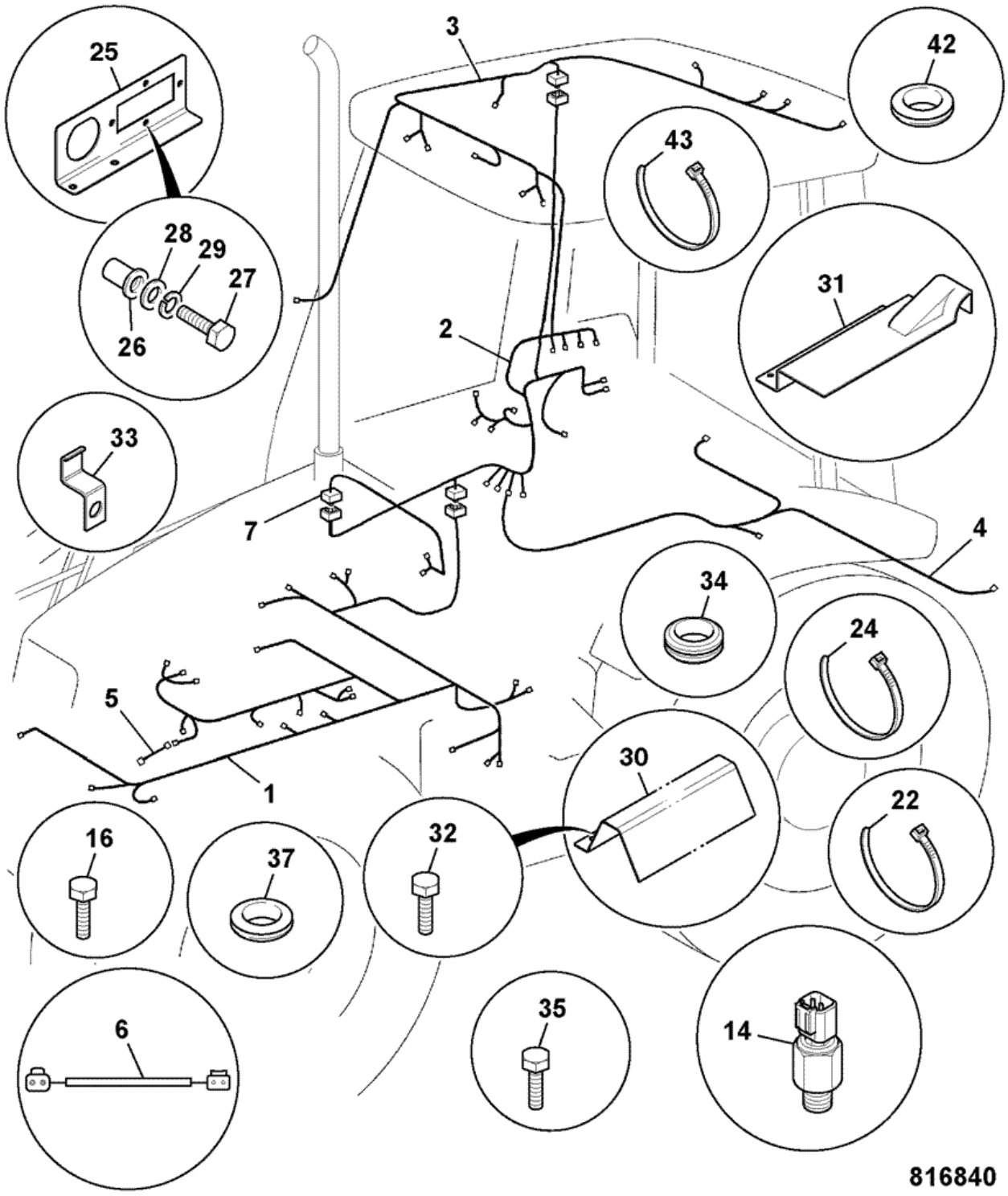

Item	Part #	Change No	Description	Usage Code	QTY
1	721/12352		Harness chassis *Dieselmax*		1

1	721/12488		Harness chassis International engine *International engine*		1
2	721/11954	<M TBA	Harness cab panel		1
2	721/12250	<M TBA	Harness console 3C		1
2	332/E9417		Harness cab, panel		1
3	721/10346		Harness cab/canopy roof		1
4	721/11998		Harness rearlamps		1
5	721/10383		Harness extension headlights		1
6	721/12073		Harness numberplate light		1
7	721/12036		Harness aircon link		1
14	701/80319	Superseded	Switch oil pressure,M12 green body,Deutsch		1
14	701/80459		Switch oil pressure, colour id-red o/d white i/d		1
16	826/01520		Screw M5 X 20		4
22	826/01144		Tie cable 200mm long		0
24	826/01347		Tie cable c/w mounting 4.6mm x 190mm		0
25	331/51990		Mounting harness		1
26	826/01099		Nut rivet,M6 open ended		4
27	1315/0203Z		Screw M6x16		4
28	1420/0006Z		Washer M6		4
29	1425/0006Z		Washer Spring		4
30	123/07747		Cover harness floor		1
31	123/07755		Cover harness bulkhead		1
32	826/00321		Screw		2
33	123/05247		Clip cable		2
34	2410/0205		Grommet hole dia 12.7mm panel thknss 5-6mm		2
35	1315/0407Z		Bolt M10x25		2
37	828/00273		Grommet		2
42	2410/0115		Grommet *cab roof*		1
43	826/01162		Tie cable *cab roof*		2
51	721/11412		Harness link *main harness to loader valve*		1

Product Catalog \ CONSTRUCTION \ NORTH AMERICA \ CONSTRUCTION / INDUSTRIAL \ BACKHOE LOADER 3CX,4CX,214,215,217 \ 3C PLUS (91HP) , Made in Brazil with Dieselmax/IESA Engine 9812/0080 \ C ELECTRICS-MACHINE CAB & ENGINE \ C01 ELECTRICS, MAIN MACHINE

9812/0080 C1-14-1 MOUNTINGS & SUPPORTS, HARNESS

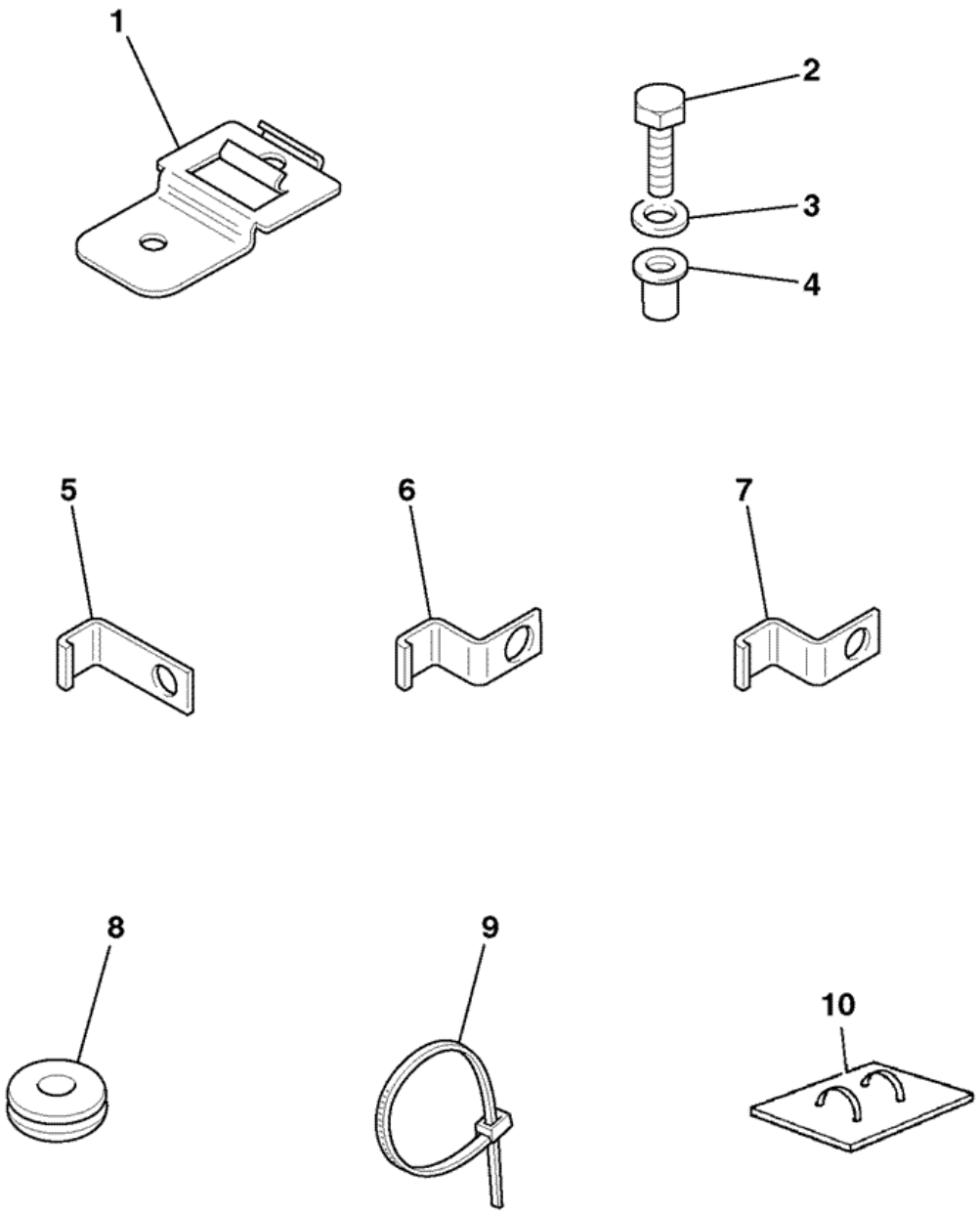

Item	Part #	Change No	Description	Usage Code	QTY
1	7210/0067		Clip Deutsch DT mounting clip		1
2	1315/0307Z		Screw Hexagon M8 X 25		1

3	1420/0007Z		Washer plain M8		2
4	826/01627		Nut rivet M8 open end for 8 to 10.5mm plt.		1
5	123/03965		Clip *80mm tall*		2
5	123/00195		Clip harness support *45mm tall*		2
6	123/02569		Clip 'S' *13 dia hole*		3
7	123/05247		Clip cable *10 dia hole 23mm tall*		3
7	821/10321		Clip harness *10.5 dia hole 35mm tall*		2
8	2410/0205		Grommet hole dia 12.7mm panel thknss 5-6mm		8
9	826/01144		Tie cable 200mm long		23
9	826/01347		Tie cable c/w mounting 4.6mm x 190mm		3
10	122/40304		Pad cable tie mounting self adhesive		1

Product Catalog \ CONSTRUCTION \ NORTH AMERICA \ CONSTRUCTION / INDUSTRIAL \ BACKHOE LOADER 3CX,4CX,214,215,217 \ 3C PLUS (91HP) , Made in Brazil with Dieselmax/IESA Engine 9812/0080 \ C ELECTRICS-MACHINE CAB & ENGINE \ C01 ELECTRICS, MAIN MACHINE

9812/0080 C1-2-11 BATTERY 12V, CARRIER, JCB DIESELMAX ENGINE

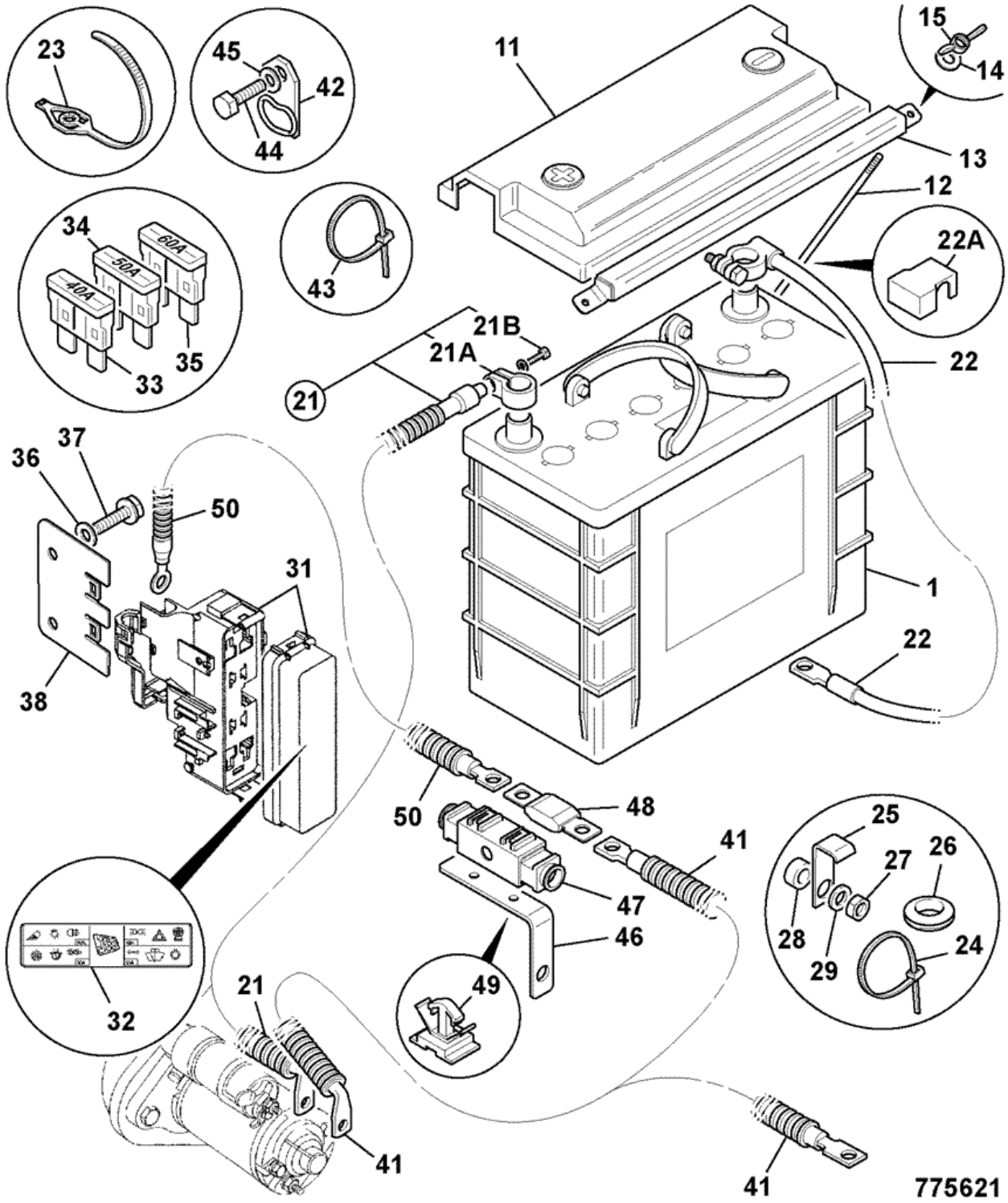

Item	Part #	Change No	Description	Usage Code	QTY
			Battery type 31 950cc Savannah		

1	708/10038		*Wet battery*		1
11	708/10056	Superseded	Cover battery		1
11	332/C3032		Cover battery		1
12	826/11285		Bolt battery, M6x268mm J bolt		2
13	260/28401		Clamp battery		1
14	1420/0006Z		Washer M6		2
15	826/01115		Nut wing		2
21	718/20216		Lead battery,positive 1600mm x 70sq.mm		1
21	332/C2218		Lead battery, positive 1600mm x 95sq.mm		1
21A	:998/11023		Terminal positive battery lug		1
21B	:998/10912		Bolt battery lug M6		1
22	718/20312		Lead battery,negative 1800mm x 70sq.mm		1
22	332/C2416		Lead battery, negative 1800mm x 95sq.mm		1
23	.		'See Remark' *not used in this assembly*		5
24	826/01144		Tie cable 200mm long		3
25	.		'See Remark' *not used in this assembly*		1
26	.		'See Remark' *not used in this assembly*		1
27	.		'See Remark' *not used in this assembly*		1
28	.		'See Remark' *not used in this assembly*		1
29	.		'See Remark' *not used in this assembly*		1
31	716/30077		Box fuselink plug 7232/0009, 7232/0008, Terminal 7201/0078		1
32	817/17068		Label fuselink box		1
33	716/15900		Fuse maxi fuse 40Amp		1
34	716/30081		Fuse maxi fuse 50Amp		2
35	716/16400		Fuse maxi fuse 60Amp		1
36	1420/0007Z		Washer plain M8		2
37	1317/3305Z		Bolt flange head M8 x 20 lg		2
38	331/42169		Bracket fuse link box		1
41	718/20218		Lead charge		1
42	264/36400		Clip		1
43	826/01144		Tie cable 200mm long		1
44	1315/0301Z		Screw hex head M8 X 12		1
45	1420/0007Z		Washer plain M8		1
46	331/42647		Bracket fuse mounting		1
47	716/30224		Housing fuse holder		1
48	716/30225		Fuse 150Amp MEGAVAL		1
49	826/11189		Clip fir-tree		2
50	718/20217		Lead fuse link		1

Product Catalog \ CONSTRUCTION \ NORTH AMERICA \ CONSTRUCTION / INDUSTRIAL \ BACKHOE LOADER 3CX,4CX,214,215,217 \ 3C PLUS (91HP) , Made in Brazil with Dieselmax/IESA Engine 9812/0080 \ C ELECTRICS-MACHINE CAB & ENGINE \ C01 ELECTRICS, MAIN MACHINE

9812/0080 C1-2-15 BATTERY 12V, CARRIER, JCB DIESELMAX AND IESA ENGINE

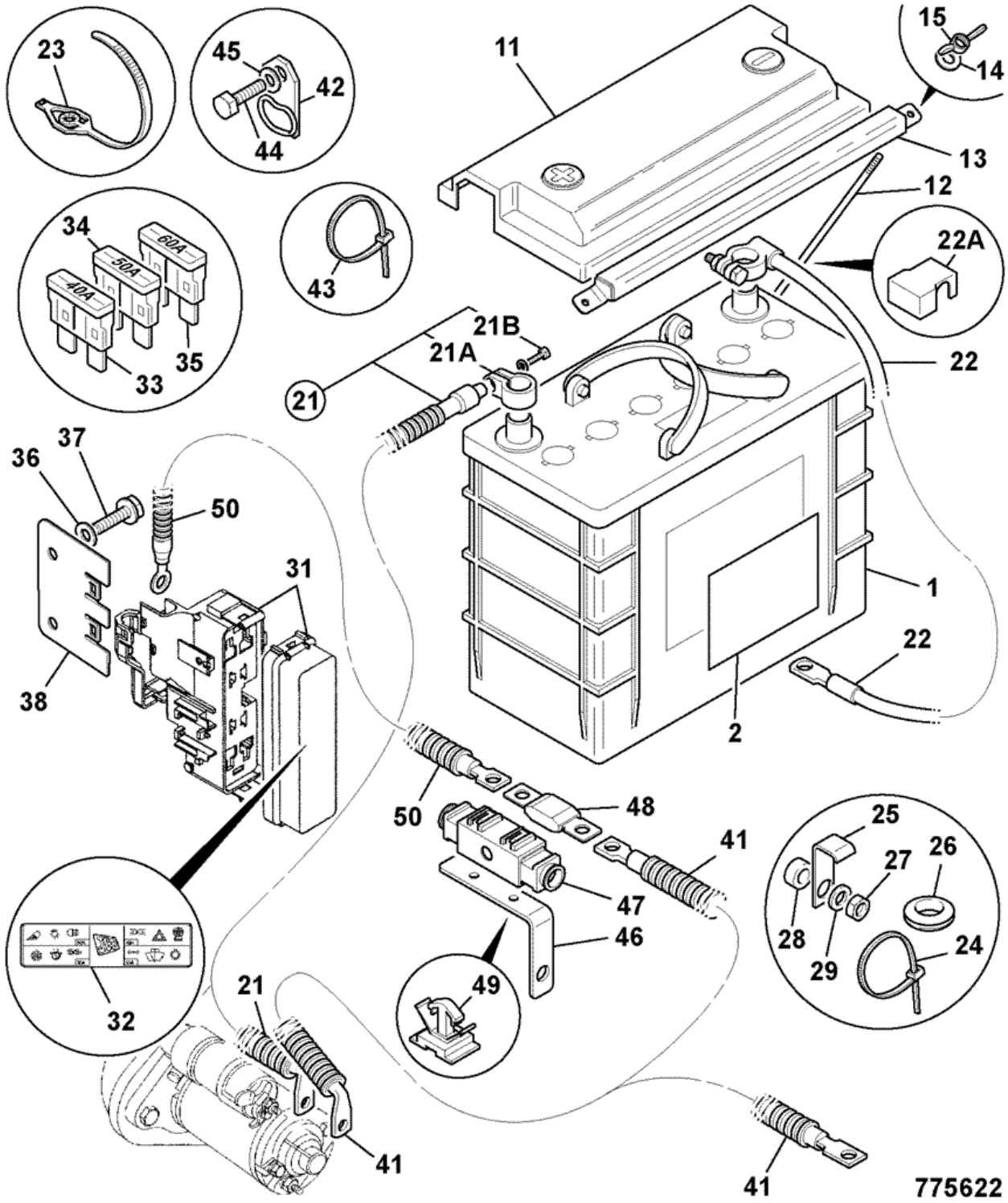

Item	Part #	Change No	Description	Usage Code	QTY
1	339/01044		Battery 100amp/hr 750cca		1

2	339/01043		Decal battery Brazil		1
11	332/C3032		Cover battery		1
12	826/11285		Bolt battery, M6x268mm J bolt		2
13	260/28401		Clamp battery		1
14	1420/0006Z		Washer M6		2
15	826/01115		Nut wing		2
21	718/20216		Lead battery,positive 1600mm x 70sq.mm		1
21A	:998/11023		Terminal positive battery lug		1
21B	:998/10912		Bolt battery lug M6		1
22	718/56078	<M TBA	Lead battery negative *IESA*		1
22	332/D8306	>M TBA	Lead battery, negative 1000mm x 70mm sq *IESA*	A	1
22	718/20312	<M TBA	Lead battery,negative 1800mm x 70sq.mm *Dieselmax*		1
22	332/D7945	>M TBA	Lead battey, negative 1800mm x 70sq mm *Dieselmax*	A	1
22A	:332/D8699		Terminal negative battery lug	A	1
22B	:331/64594		Bolt 1/4"UNC	A	1
23	.		'See Remark' *not used in this assembly*		5
24	826/01144		Tie cable 200mm long		3
25	.		'See Remark' *not used in this assembly*		1
26	.		'See Remark' *not used in this assembly*		1
27	.		'See Remark' *not used in this assembly*		1
28	.		'See Remark' *not used in this assembly*		1
29	.		'See Remark' *not used in this assembly*		1
31	716/30077		Box fuselink plug 7232/0009, 7232/0008, Terminal 7201/0078		1
32	817/17068		Label fuselink box		1
33	716/15900		Fuse maxi fuse 40Amp		1
34	716/30081		Fuse maxi fuse 50Amp		2
35	716/16400		Fuse maxi fuse 60Amp		1
36	1420/0007Z		Washer plain M8		2
37	1317/3305Z		Bolt flange head M8 x 20 lg		2
38	331/42169		Bracket fuse link box		1
41	718/20218		Lead charge		1
42	264/36400		Clip		1
43	826/01144		Tie cable 200mm long		1
44	1315/0301Z		Screw hex head M8 X 12		1
45	1420/0007Z		Washer plain M8		1
46	331/42647		Bracket fuse mounting		1
47	716/30224		Housing fuse holder		1
48	716/30225		Fuse 150Amp MEGAVAL		1
49	826/11189		Clip fir-tree		2
50	718/20217		Lead fuse link		1

Product Catalog \ CONSTRUCTION \ NORTH AMERICA \ CONSTRUCTION / INDUSTRIAL \ BACKHOE LOADER 3CX,4CX,214,215,217 \ 3C PLUS (91HP) , Made in Brazil with Dieselmax/IESA Engine 9812/0080 \ C ELECTRICS-MACHINE CAB & ENGINE \ C01 ELECTRICS, MAIN MACHINE

9812/0080 C1-2-20 ISOLATOR SWITCH, BATTERY

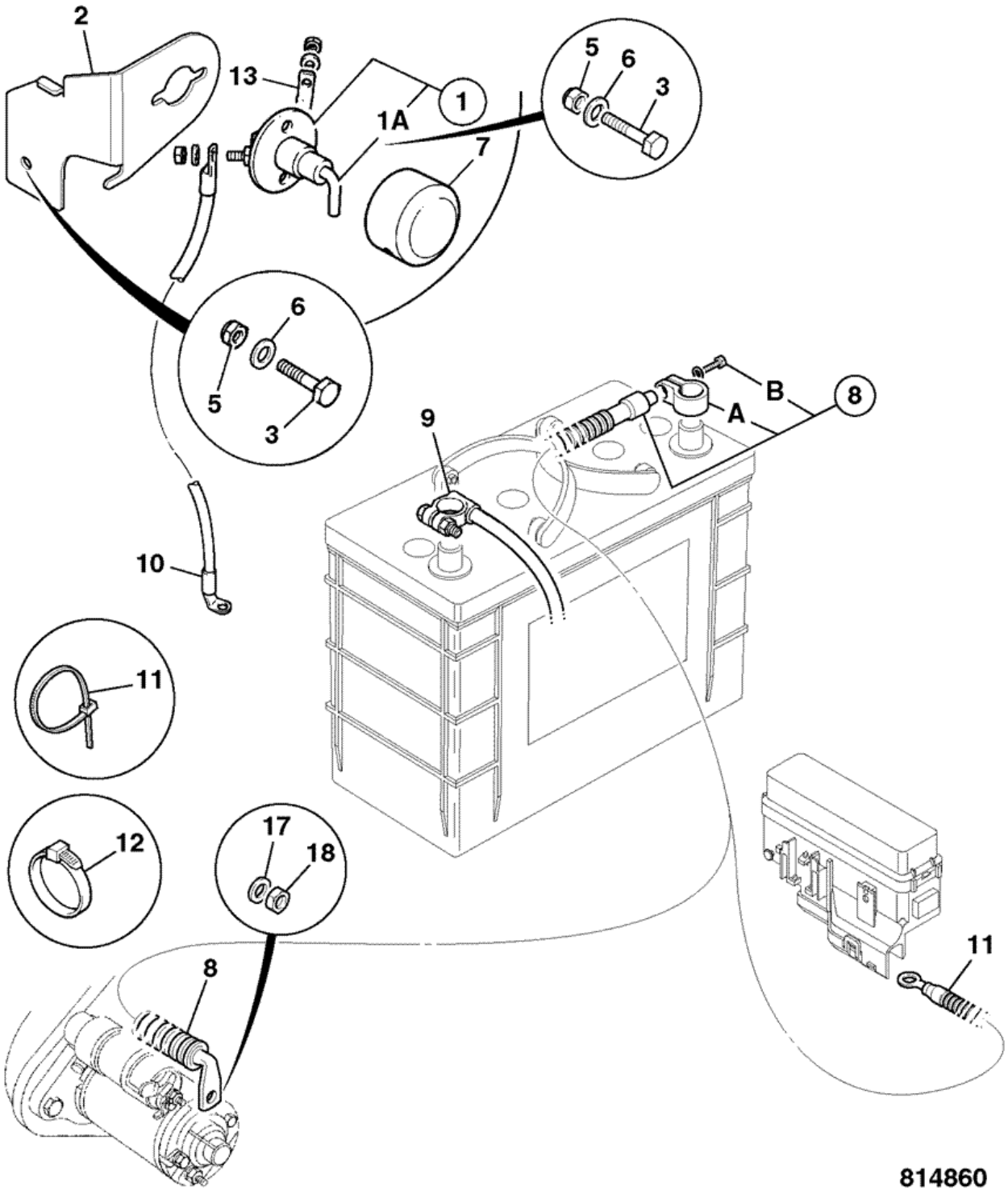

Item	Part #	Change No	Description	Usage Code	QTY
1	701/80552		Switch isolator		1
1A	:701/80553		Key isolator switch		1

2	331/51953		Bracket mounting battery isolator		1
3	1315/0308Z		Screw M8x30		1
4	1391/3307Z		Capscrew M8x25mm		2
5	1370/0203Z		Nut self lock M8		3
6	1420/0007Z		Washer plain M8		2
7	265/00893		Cover battery isolator		1
8	718/20216		Lead battery,positive 1600mm x 70sq.mm		1
8A	:998/11023		Terminal positive battery lug		1
8B	:998/10912		Bolt battery lug M6		1
9	718/20263		Lead battery negative 800mm		1
10	718/20264		Lead battery negative 2270mm		1
11	826/01347		Tie cable c/w mounting 4.6mm x 190mm		6
12	826/01144		Tie cable 200mm long		3
17	1370/0201Z		Nut M8		1
18	1420/0007Z		Washer plain M8		1

Product Catalog \ CONSTRUCTION \ NORTH AMERICA \ CONSTRUCTION / INDUSTRIAL \ BACKHOE LOADER 3CX,4CX,214,215,217 \ 3C PLUS (91HP) , Made in Brazil with Dieselmax/IESA Engine 9812/0080 \ C ELECTRICS-MACHINE CAB & ENGINE \ C01 ELECTRICS, MAIN MACHINE

9812/0080 C1-2-21 ISOLATOR SWITCH, BATTERY, JCB DIESELMAX ENGINE

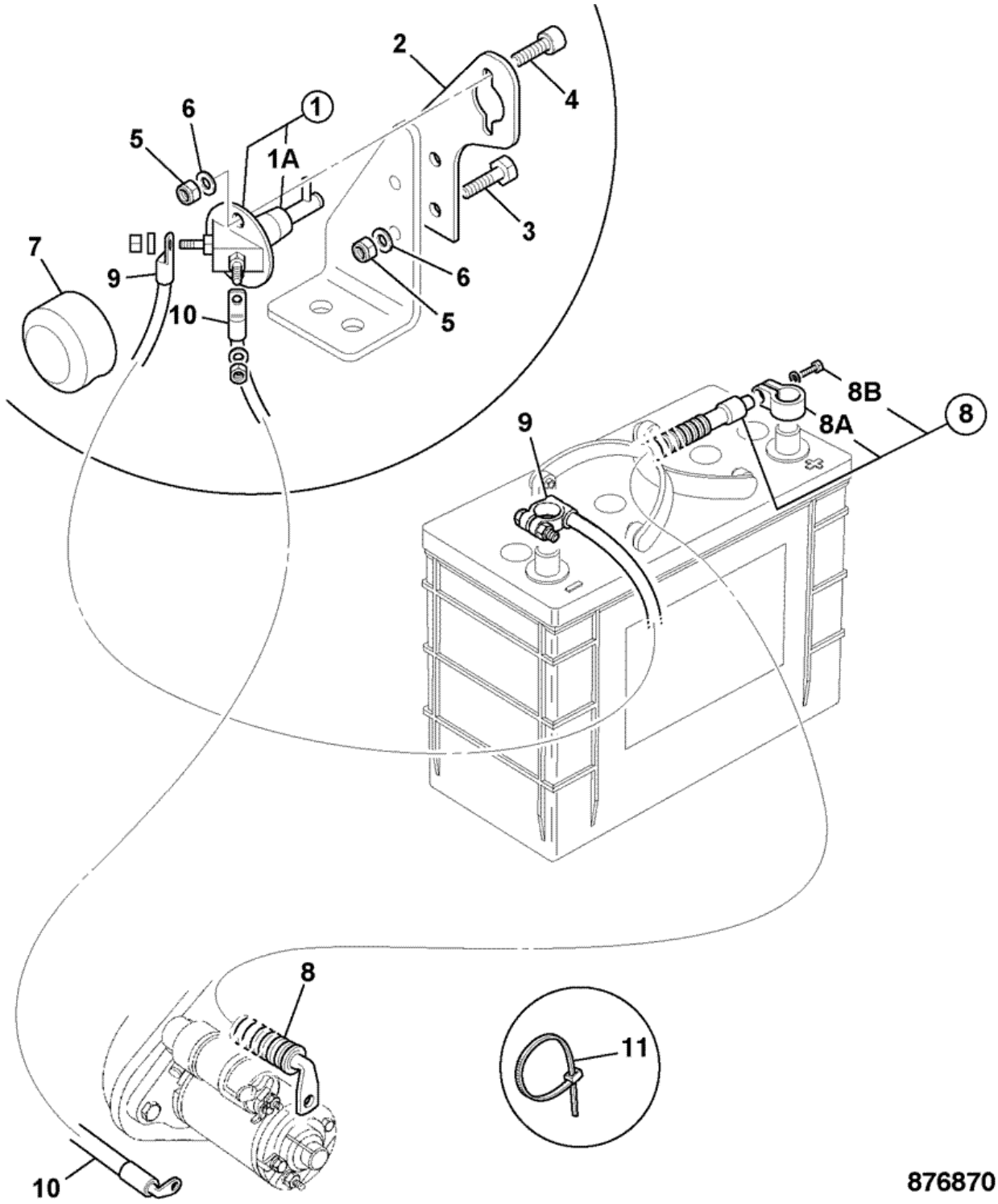

Item	Part #	Change No	Description	Usage Code	QTY
1	701/80552		Switch isolator		1

1A	701/80576		Key battery isolator with chain *not supplied with 701/80552*		1
2	331/61328		Bracket mounting battery isolator		1
3	1315/0308Z		Screw M8x30		2
4	1391/3307Z		Capscrew M8x25mm		2
5	1370/0203Z		Nut self lock M8		4
6	1420/0007Z		Washer plain M8		2
7	265/00893		Cover battery isolator		1
8	718/20216		Lead battery,positive 1600mm x 70sq.mm		1
8A	:998/11023		Terminal positive battery lug		1
8B	:998/10912		Bolt battery lug M6		1
9	706/68400		Lead battery,negative 400mm x 70sq.mm		1
10	718/20322		Lead battery,negative 1800mm x 70sq.mm		1
11	826/01347		Tie cable c/w mounting 4.6mm x 190mm		2

Product Catalog \ CONSTRUCTION \ NORTH AMERICA \ CONSTRUCTION / INDUSTRIAL \ BACKHOE LOADER 3CX,4CX,214,215,217 \ 3C PLUS (91HP) , Made in Brazil with Dieselmax/IESA Engine 9812/0080 \ C ELECTRICS-MACHINE CAB & ENGINE \ C01 ELECTRICS, MAIN MACHINE

9812/0080 C1-2-22 ISOLATOR SWITCH, BATTERY, JCB DIESELMAX ENGINE

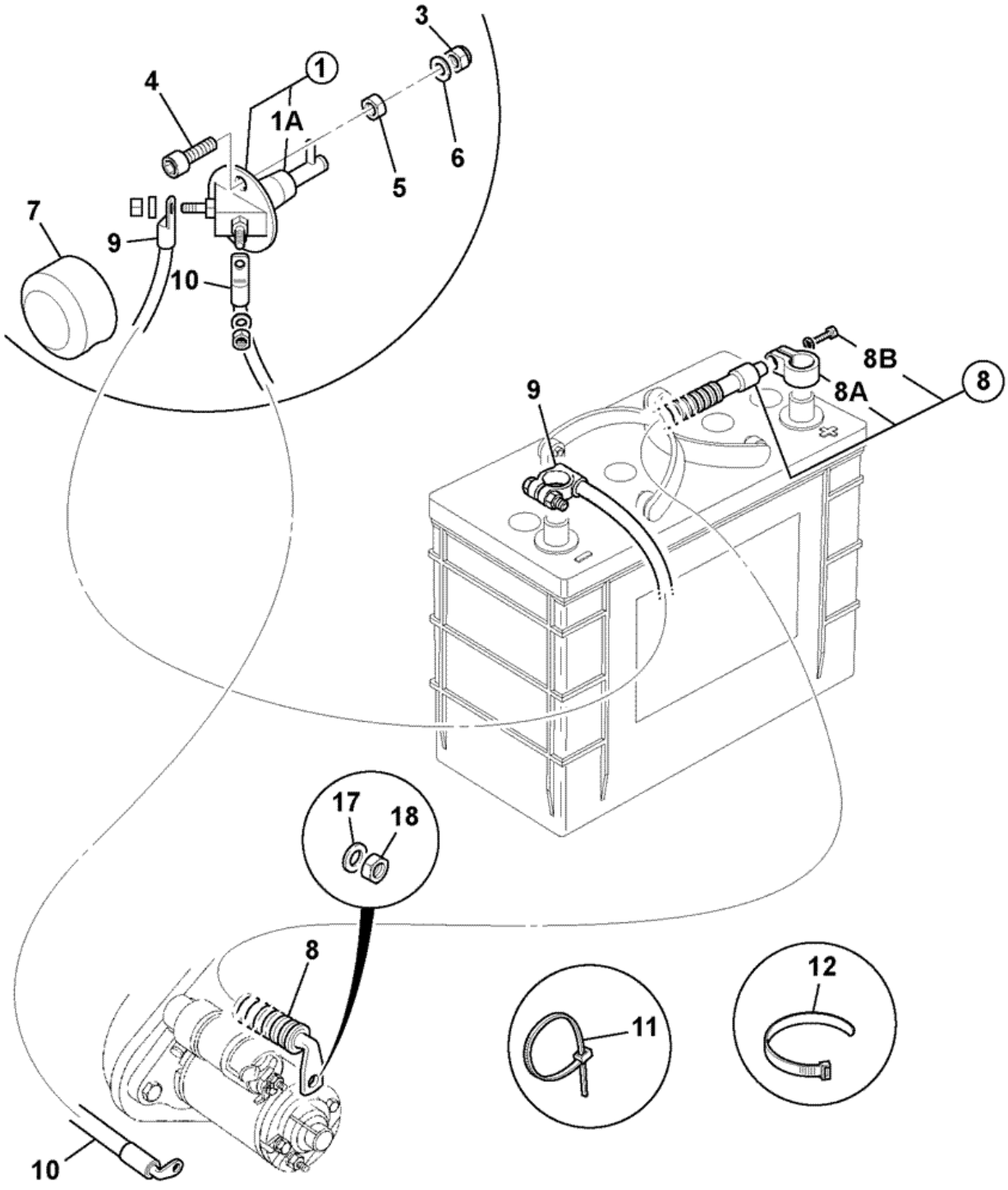

Item	Part #	Change No	Description	Usage Code	QTY
1	701/80552		Switch isolator		1

1A	:701/80553		Key isolator switch		1
3	1370/0203Z		Nut self lock M8		2
4	1391/3307Z		Capscrew M8x25mm		2
5	1370/0201Z		Nut M8		2
6	1411/0002Z		Washer		2
7	265/00893		Cover battery isolator		1
8	718/20216		Lead battery,positive 1600mm x 70sq.mm		1
8A	:998/11023		Terminal positive battery lug		1
8B	:998/10912		Bolt battery lug M6		1
9	706/68400		Lead battery,negative 400mm x 70sq.mm		1
10	718/20322		Lead battery,negative 1800mm x 70sq.mm *Dieselmax*		1
11	826/01347		Tie cable c/w mounting 4.6mm x 190mm		3
12	826/01144		Tie cable 200mm long		3
17	1370/0201Z		Nut M8		1
18	1420/0007Z		Washer plain M8		1

Product Catalog \ CONSTRUCTION \ NORTH AMERICA \ CONSTRUCTION / INDUSTRIAL \ BACKHOE LOADER 3CX,4CX,214,215,217 \ 3C PLUS (91HP) , Made in Brazil with Dieselmax/IESA Engine 9812/0080 \ C ELECTRICS-MACHINE CAB & ENGINE \ C01 ELECTRICS, MAIN MACHINE

9812/0080 C1-2-31 ISOLATOR SWITCH, BATTERY, INTERNATIONAL ENGINE

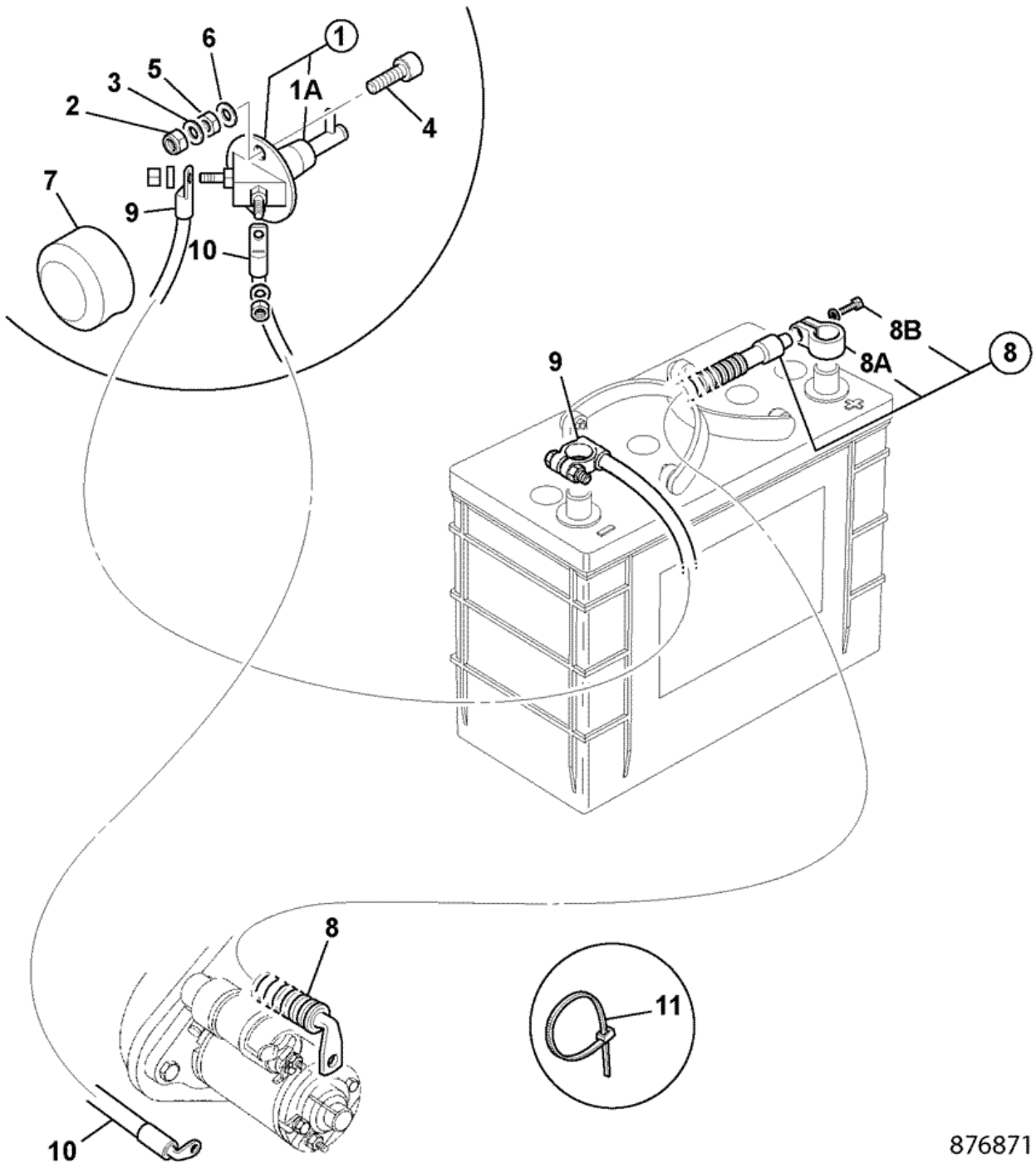

Item	Part #	Change No	Description	Usage Code	QTY
1	701/80552		Switch isolator		1

1A	:701/80553		Key isolator switch		1
2	1411/0002Z		Washer		2
3	1411/0002Z		Washer		2
4	1391/3307Z		Capscrew M8x25mm		2
5	1370/0203Z		Nut self lock M8		2
6	1420/0007Z		Washer plain M8		2
7	265/00893		Cover battery isolator		1
8	718/56127		Lead battery, cab positive		1
8A	:998/10911		Terminal battery lug		1
8B	:998/10912		Bolt battery lug M6		1
9	706/68400		Lead battery,negative 400mm x 70sq.mm		1
10	718/02500		Lead isolator		1
11	826/01347		Tie cable c/w mounting 4.6mm x 190mm		3

9812/0080 C1-28-1 EARTH LEADS

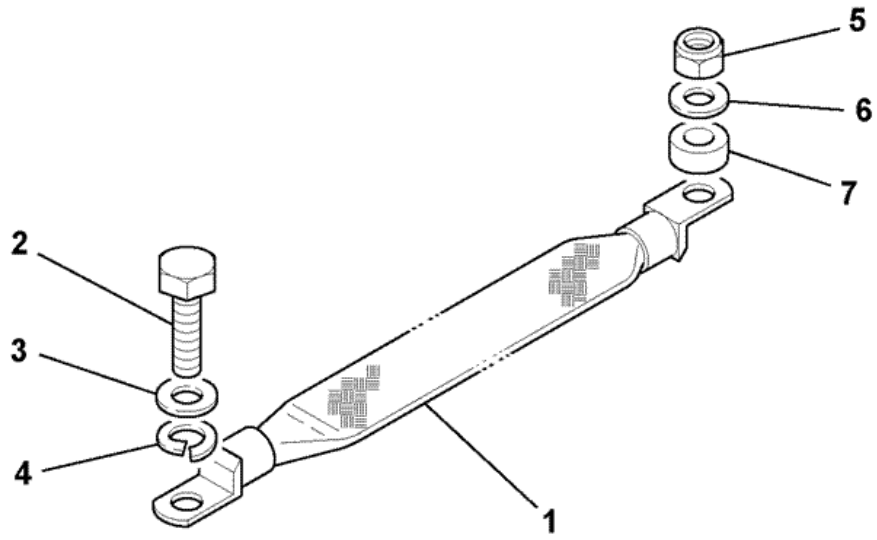

739580

Item	Part #	Change No	Description	Usage Code	QTY
1	718/20188		Strap earth 400mm *Transmission casing*		1

5	1370/0301Z		Nut		1
6	1420/0008Z		Washer Plain M10		1
7	123/06256		Spacer steel		1

Product Catalog \ CONSTRUCTION \ NORTH AMERICA \ CONSTRUCTION / INDUSTRIAL \ BACKHOE LOADER 3CX,4CX,214,215,217 \ 3C PLUS (91HP) , Made in Brazil with Dieselmax/IESA Engine 9812/0080 \ C ELECTRICS-MACHINE CAB & ENGINE \ C01 ELECTRICS, MAIN MACHINE

9812/0080 C1-3-20 LIGHT, REAR, ROOF MOUNTED

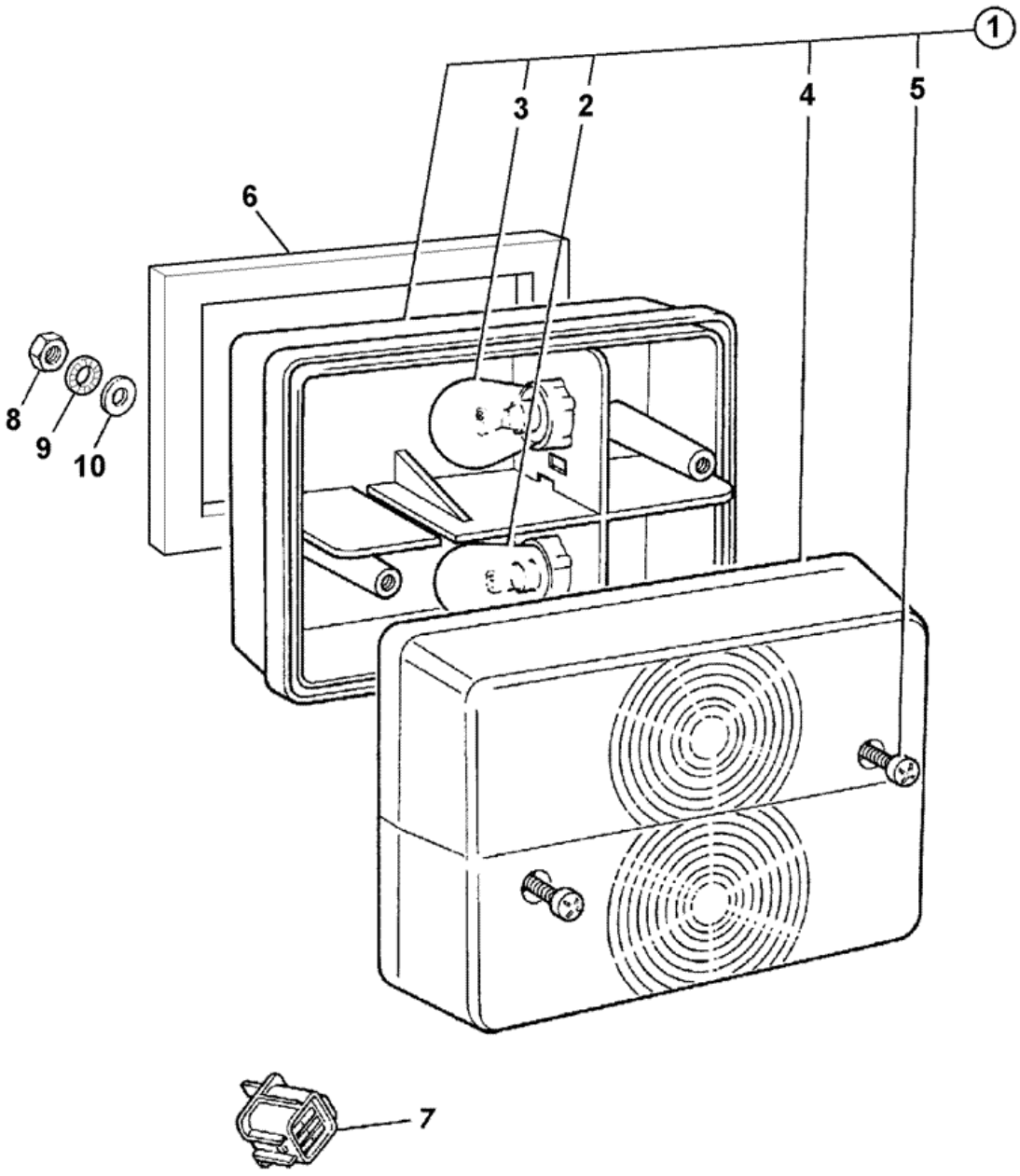

143861

Item	Part #	Change No	Description	Usage Code	QTY
1	700/38900		Light rear		2
2	:720/10038		Bulb 12v 21/5w		1

3	:720/10005		Bulb 12v 21w		1
4	:700/38901		Lens rear		1
5	:NSP		None serviced part		1
6	813/00463		Gasket rear light		2
7	715/06100		Plug		1
8	1370/0001Z		Nut M5-8		4
9	1417/0007Z		Washer		4
10	1414/0011Z		Washer 2 BA		4

9812/0080 C1-9-11 ALARM, REVERSE, INSTALLATION, OPTIONAL

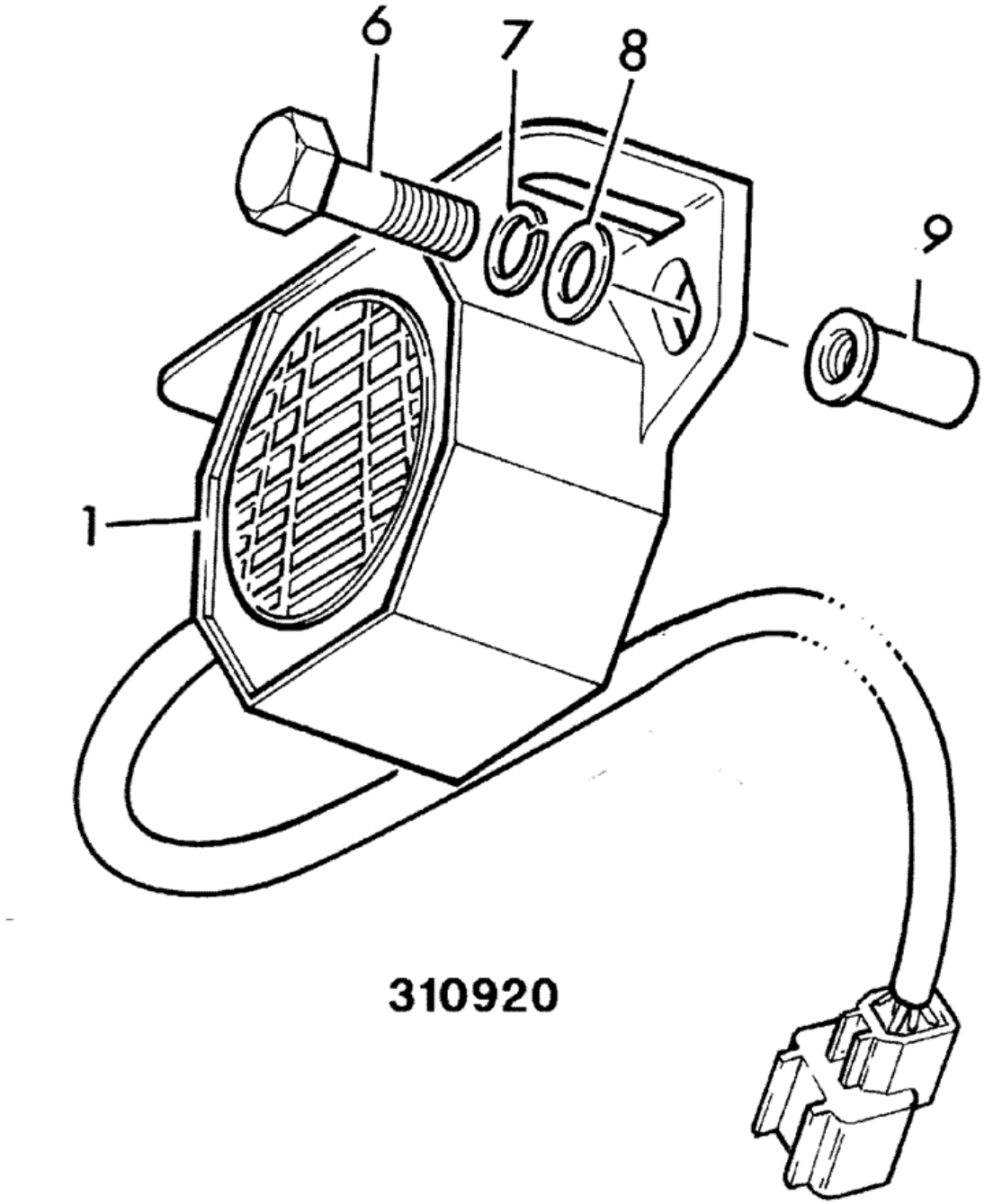

Item	Part #	Change No	Description	Usage Code	QTY
1	717/07700		Alarm reverse		1
6	826/01591		Screw		2
7	823/00555		Washer spring		2
8	823/00554		Washer plain		2
9	826/01101		Nut rivet,M6 open ended for 3 to 5.5mm plt		2
11	826/01144		Tie cable 200mm long		2
12	817/18473		Label Reverse alarm (Portuguese)Brazil		1

Product Catalog \ CONSTRUCTION \ NORTH AMERICA \ CONSTRUCTION / INDUSTRIAL \ BACKHOE LOADER 3CX,4CX,214,215,217 \ 3C PLUS (91HP) , Made in Brazil with Dieselmax/IESA Engine 9812/0080 \ C ELECTRICS-MACHINE CAB & ENGINE \ C03 ELECTRICS, CAB

9812/0080 C3-1-31 GAUGES AND SWITCHES, SIDE CONSOLE, CANOPY

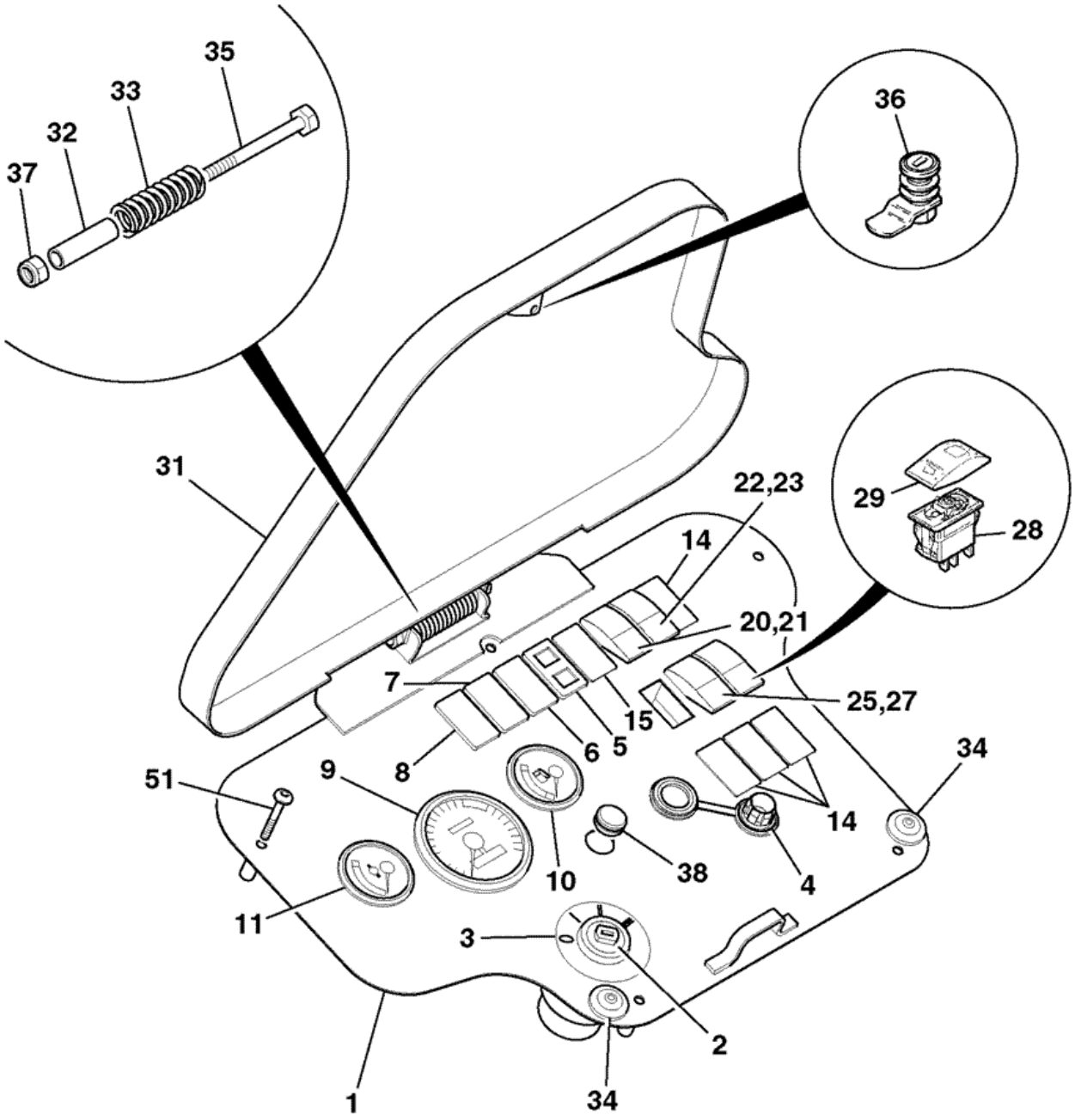

814971

Item	Part #	Change No	Description	Usage Code	QTY
1	335/10181		Panel instrument		1

2	701/80184		Switch ignition (Supplied with x2 Keys)		1
2A	:701/45501		Key Door/Ignition Ref 14657		1
3	817/05167		Decal ignition switch		1
4	715/08100		Socket accessory		1
5	700/50176		Light panel,LED		1
6	700/50050		Light panel LED eng/trans pressure		1
7	700/50051		Light panel LED eng/trans temp		1
8	700/50052		Light panel LED batt charge/park brk		1
9	704/50227		Gauge tacho and hourmeter		1
9A	:720/10057		Bulb 12V 5W Capless		1
9B	:700/50020		Cap *cover for bulb*		1
9C	:700/50085		Holder bulb		1
10	704/50098		Gauge fuel level		1
10A	:720/10057		Bulb 12V 5W Capless		1
10B	:700/50020		Cap *cover for bulb*		1
10C	:700/50085		Holder bulb		1
11	704/50099		Gauge water temp		1
11A	:720/10057		Bulb 12V 5W Capless		1
11B	:700/50020		Cap *cover for bulb*		1
11C	:700/50085		Holder bulb		1
14	701/80265		Blank		4
15	700/50191		Light panel LED		1
20	701/60004		Switch Panel		1
21	701/58826		Actuator front worklights switch decal		1
22	701/60003		Switch 12V		1
23	701/58854		Switch Actuator FrontWiper		1
25	701/60000		Switch 12V		1
27	701/58825		Actuator beacon convoy warning		1
28	701/60002		Switch 12V		1
29	701/58827		Cover rear working lights switch decal		1
31	335/03582		Cover vandal		1
32	123/07797		Spacer		1
33	123/07861		Spring		1
34	828/00261		Buffer (stop),rubber		2
35	1315/3319Z		Bolt M8 x 90mm long		1
36	123/04686		Catch vandal cover		1
37	1370/0203Z		Nut self lock M8		1
38	2410/1108		Grommet		1
43	701/60000		Switch 12V *4WD switch*		1
44	701/58822		Cover 4wd switch decal *4WD switch*		1
51	826/01804		Bolt		5
61	:926/29000		Buffer cable cover *fitted to B post*		1

Product Catalog \ CONSTRUCTION \ NORTH AMERICA \ CONSTRUCTION / INDUSTRIAL \ BACKHOE LOADER 3CX,4CX,214,215,217 \ 3C PLUS (91HP) , Made in Brazil with Dieselmax/IESA Engine 9812/0080 \ C ELECTRICS-MACHINE CAB & ENGINE \ C03 ELECTRICS, CAB

9812/0080 C3-1-41 GAUGES AND SWITCHES, SIDE CONSOLE, CAB

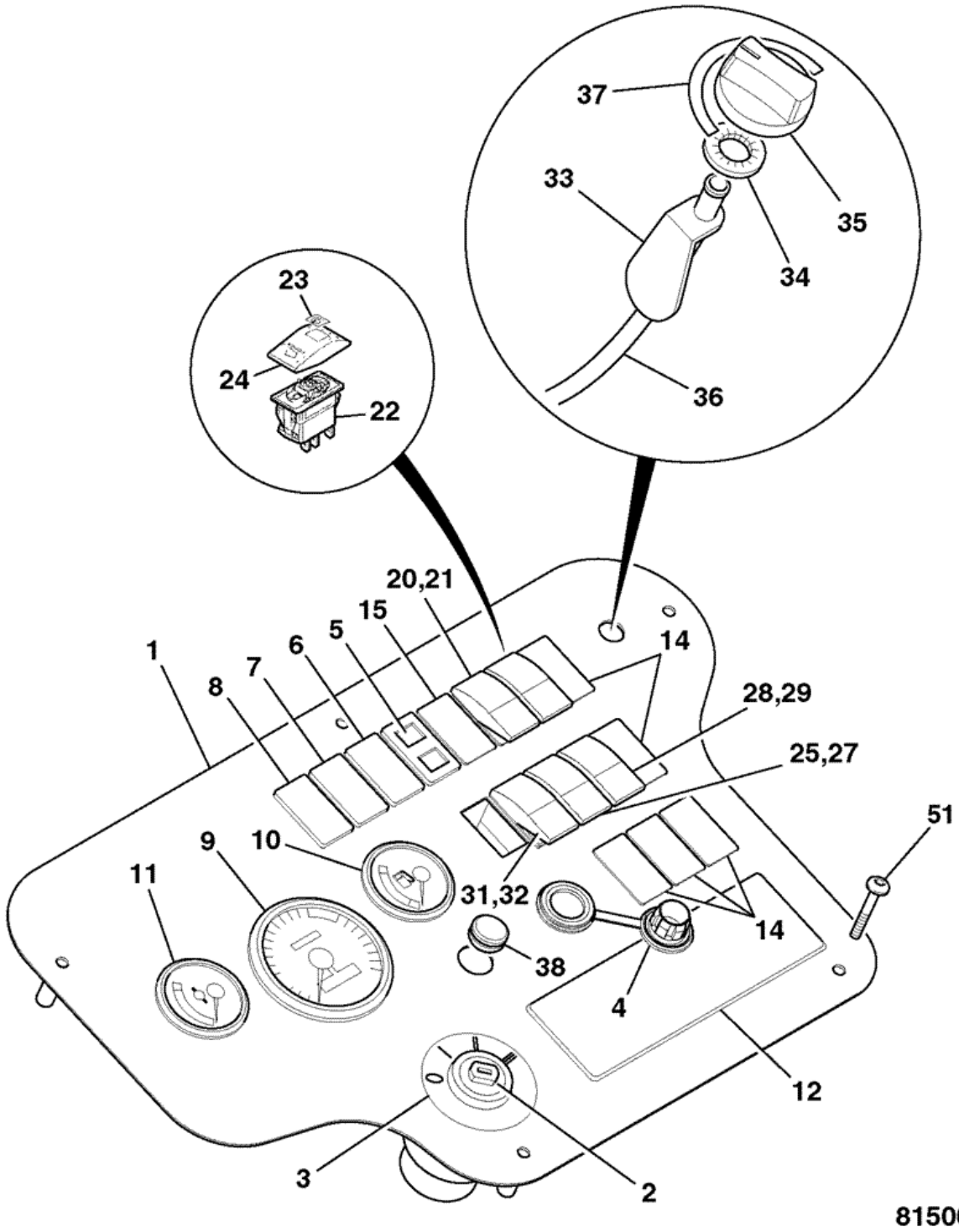

Item	Part #	Change No	Description	Usage Code	QTY
1	335/09801		Panel switch		1

2	701/80184		Switch ignition (Supplied with x2 Keys)		1
2A	:701/45501		Key Door/Ignition Ref 14657		1
3	817/05167		Decal ignition switch		1
4	715/08100		Socket accessory		1
5	700/50176		Light panel,LED		1
6	700/50050		Light panel LED eng/trans pressure		1
7	700/50051		Light panel LED eng/trans temp		1
8	700/50052		Light panel LED batt charge/park brk		1
9	704/50227		Gauge tacho and hourmeter		1
9A	:720/10057		Bulb 12V 5W Capless		1
9B	:700/50020		Cap *cover for bulb*		1
9C	:700/50085		Holder bulb		1
10	704/50098		Gauge fuel level		1
10A	:720/10057		Bulb 12V 5W Capless		1
10B	:700/50020		Cap *cover for bulb*		1
10C	:700/50085		Holder bulb		1
11	704/50099		Gauge water temp		1
11A	:720/10057		Bulb 12V 5W Capless		1
11B	:700/50020		Cap *cover for bulb*		1
11C	:700/50085		Holder bulb		1
12	717/08600		Cover Radio Blanking		1
14	701/80265		Blank		4
15	700/50191	>M TBA	Light panel LED		1
20	701/60004		Switch Panel		1
21	701/58826		Actuator front worklights switch decal		1
22	701/60003		Switch 12V		1
23	701/58854		Switch Actuator FrontWiper		1
24	701/58828		Actuator wash,wipe switch decal		1
25	701/60000		Switch 12V		1
27	701/58825		Actuator beacon convoy warning		1
28	701/60002		Switch 12V		1
29	701/58827		Cover rear working lights switch decal		1
31	701/60016		Switch 3 position 12V		1
32	701/58837		Decal Reversing Fan switch decal		1
33	142/00643		Actuator cable operated		1
34	826/00711		Washer M4'starloc'		2
35	162/00832		Knob control		1
36	910/46900		Cable control		1
37	817/04021		Decal heater		1
38	2410/1108		Grommet		1
41	701/60000		Switch 12V *aircon*		1
42	701/58831		Actuator aircon switch soft touch *aircon*		1
43	701/60000		Switch 12V *4WD switch*		1
44	701/58822		Cover 4wd switch decal *4WD switch*		1
51	826/01804		Bolt		5

9812/0080 C3-17-1 FAN, FACE LEVEL

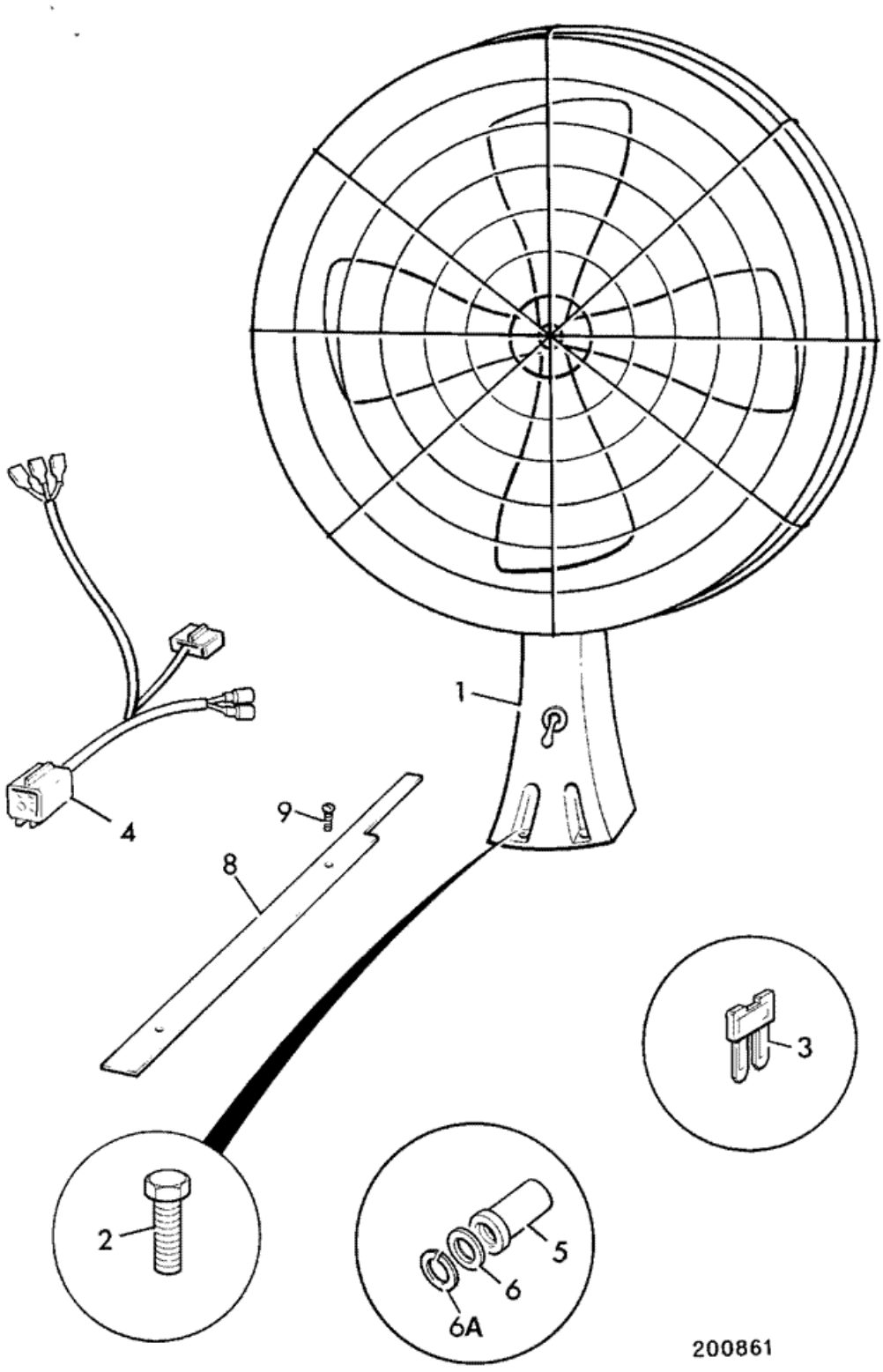

Item	Part #	Change No	Description	Usage Code	QTY
1	717/20040		Fan face level, l2V		1
2	1315/0207Z		Screw M6 x 25mm long		4
3	716/05706		Fuse 15 Amp		1
4	.		'See Remark' *not required*		1
5	826/01101		Nut rivet,M6 open ended for 3 to 5.5mm plt		4
6	1420/0006Z		Washer M6		4
6A	1425/0006Z		Washer Spring		4
7	.		'See Remark' *not fitted*		2
8	123/08011		Cover fan harness		1
9	826/01520		Screw M5 X 20		2

9812/0080 C3-18-1 INTERIOR MOULDINGS, CANOPY BUILDS

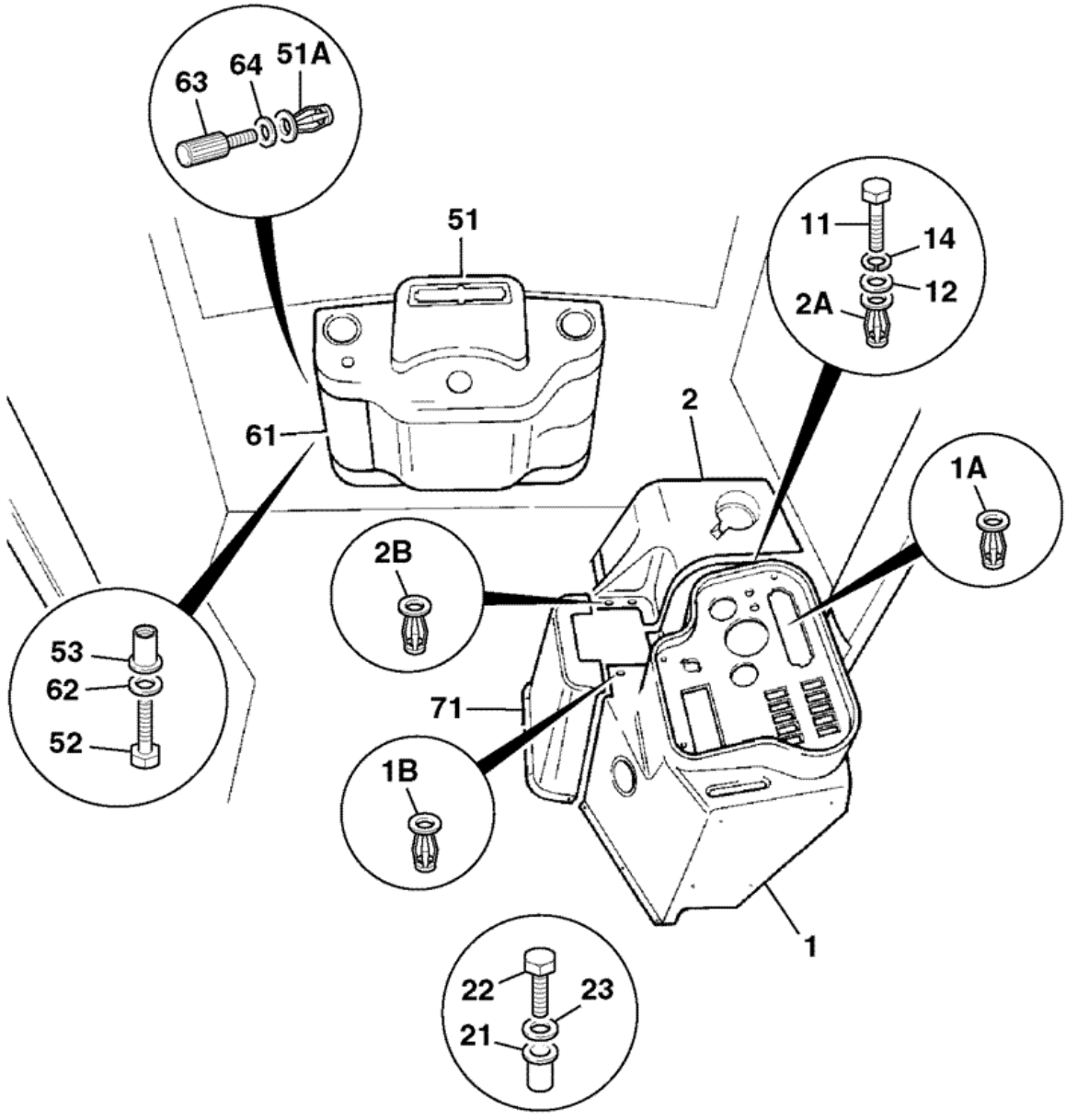

816650

Item	Part #	Change No	Description	Usage Code	QTY
1	128/12075		Console switch housing		1

1A	:826/00842		Nut M5 jacknut		5
1B	:826/01232		Nut M6 jack		2
2	331/27478		Cover side,canopy loader/landscaper		1
2A	826/00842		Nut M5 jacknut		3
2B	826/01232		Nut M6 jack		2
11	1315/0108Z		Bolt		3
12	1420/0005Z		Washer M5		3
14	1425/0005Z		Washer spring M5		3
21	826/01101		Nut rivet,M6 open ended for 3 to 5.5mm plt		6
22	1315/0207Z		Screw M6 x 25mm long		6
23	1420/0006Z		Washer M6		6
51	128/12074		Cover front console canopy		1
51A	:826/00842		Nut M5 jacknut		2
52	1315/0205Z		Bolt		4
53	826/01099		Nut rivet,M6 open ended		4
61	331/27718		Cover fuse front console		1
62	1420/0006Z		Washer M6		4
63	826/01301		Screw thumb 20mm long		2
64	826/00711		Washer M4'starloc'		2
71	.		'See Remark' *loader valve cover see index B2*		1

9812/0080 C3-4-30 SWITCH, COLUMN, SHUTTLE TRANSMISSION

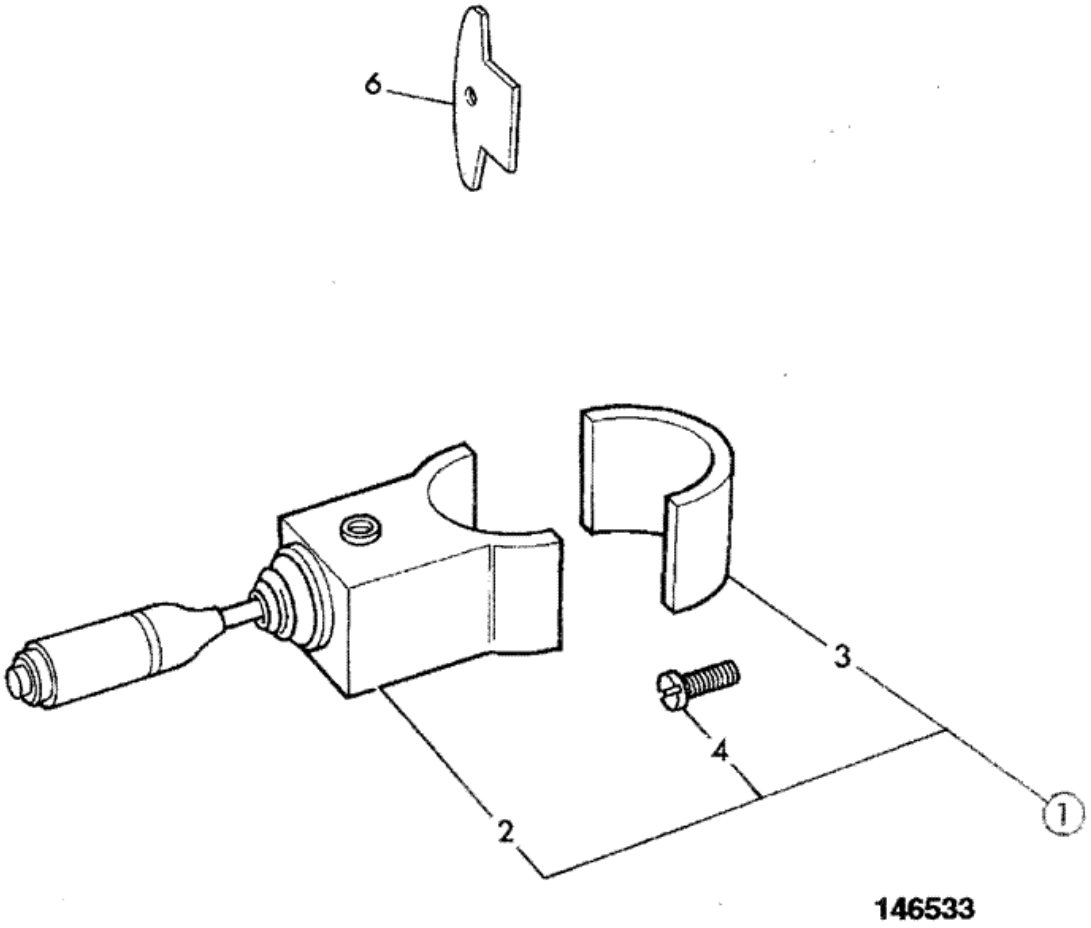

Item	Part #	Change No	Description	Usage Code	QTY
1	701/80295		Switch column, manual trans		1
2	:NSP		None serviced part		1
4	:1391/3103		Screw cap		2
6	123/04058		Plate retainer		1

Product Catalog \ CONSTRUCTION \ NORTH AMERICA \ CONSTRUCTION / INDUSTRIAL \ BACKHOE LOADER 3CX,4CX,214,215,217 \ 3C PLUS (91HP) , Made in Brazil with Dieselmax/IESA Engine 9812/0080 \ C ELECTRICS-MACHINE CAB & ENGINE \ C03 ELECTRICS, CAB

9812/0080 C3-5-30 HEATER ASSEMBLY

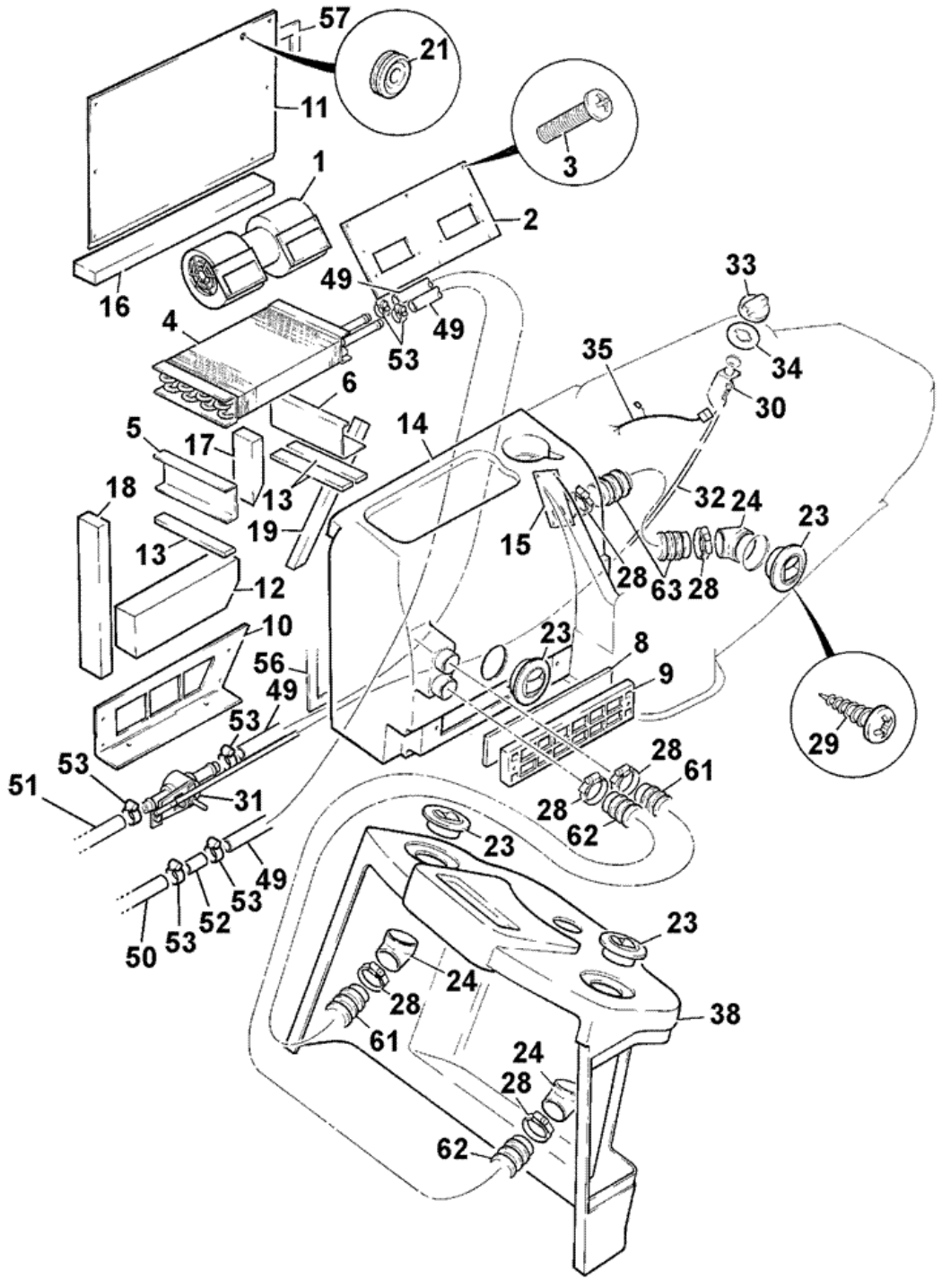

230894

Item	Part #	Change No	Description	Usage Code	QTY
A	128/12670		Heater assembly & cover as supplied		1
1	:142/00603		Motor blower		1

2	142/00605		Plate blower mounting		1
3	1360/0604Z		Screw *Use with items 69 & 70*		6
4	142/00601		Heater assembly		1
5	142/00629		Channel		1
6	142/00630		Channel		1
8	141/00843		Filter recirculation		1
9	142/18400		Cover filter		1
10	142/00607		Plate intake		1
11	142/00606		Plate blanking		1
12	142/00628		Filter		1
13	190/51912		Strip foam		3
14	331/30981		Console heater unit		1
15	123/07780		Adapter air vent outlet		1
16	142/00617		Strip foam		1
17	142/00618		Strip foam		1
18	142/00619		Strip foam		1
19	142/00620		Strip foam		1
21	828/00374		Grommet		1
23	141/00494		Vent		3
24	141/00495		Vent elbow		3
28	2201/0009		Clip jubilee		6
29	1430/1001		Screw ST		12
30	142/00643		Actuator cable operated		1
31	142/00644		Valve water		1
32	910/46900		Cable control		1
33	162/00832		Knob control		1
34	817/04021		Decal heater		1
35	721/00707		Harness heater		1
38	.		'See Remark' *See index interior mouldings C3*		1
42	816/17109		Adapter 3/4NPTF x 16		1
42	816/13380		Adapter 1/2NPTF x 16 *Tier 2 engine*		1
49	648/01917		Hose		2
50	.		'See Remark' *Bottom hose see index V*		1
51	834/11031		Hose heater		1
52	123/04950		Adapter bulkhead		1
53	2201/0005		Clip jubilee		8
56	926/02300		Strip foam roll *For item 14*		0
57	926/01100		Strip sealing *For item 11*		0
61	649/05400		Hose 50mm O/D x 44mm *Cut to length*		1
62	649/05400		Hose 50mm O/D x 44mm *Cut to length*		1
63	649/05400		Hose 50mm O/D x 44mm *Cut to length*		1
69	1414/0007Z		Washer *Use with item 3*		12
70	1358/0603Z		Nut *Use with item 3*		6

71	1315/0108Z		Bolt *Filter cover*		2
72	1414/0011Z		Washer 2 BA		21
73	1315/0105Z		Bolt M5 x 20mm long		19

Product Catalog \ CONSTRUCTION \ NORTH AMERICA \ CONSTRUCTION / INDUSTRIAL \ BACKHOE LOADER 3CX,4CX,214,215,217 \ 3C PLUS (91HP) , Made in Brazil with Dieselmax/IESA Engine 9812/0080 \ C ELECTRICS-MACHINE CAB & ENGINE \ C03 ELECTRICS, CAB

9812/0080 C3-5-31 HEATER ASSEMBLY

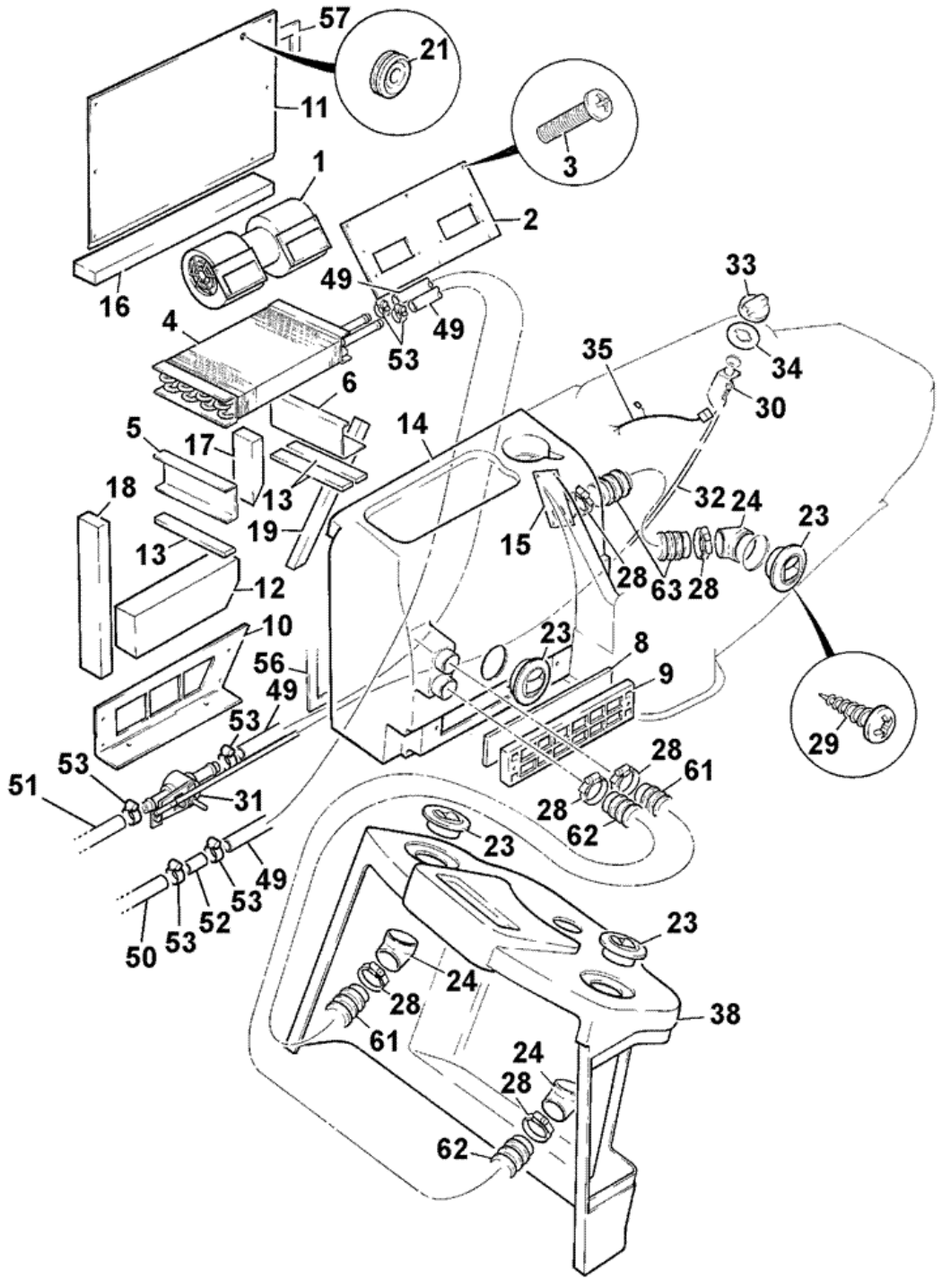

230894

Item	Part #	Change No	Description	Usage Code	QTY
A	128/12670		Heater assembly & cover as supplied		1
1	:142/00603		Motor blower		1

2	142/00605		Plate blower mounting		1
3	1360/0604Z		Screw *Use with items 69 & 70*		6
4	142/00601		Heater assembly		1
5	142/00629		Channel		1
6	142/00630		Channel		1
8	141/00843		Filter recirculation		1
9	142/18400		Cover filter		1
10	142/00607		Plate intake		1
11	142/00606		Plate blanking		1
12	142/00628		Filter		1
13	190/51912		Strip foam		3
14	331/30981		Console heater unit		1
15	123/07780		Adapter air vent outlet		1
16	142/00617		Strip foam		1
17	142/00618		Strip foam		1
18	142/00619		Strip foam		1
19	142/00620		Strip foam		1
21	828/00374		Grommet		1
23	141/00494		Vent		3
24	141/00495		Vent elbow		3
28	2201/0009		Clip jubilee		6
29	1430/1001		Screw ST		12
30	142/00643		Actuator cable operated		1
31	142/00644		Valve water		1
32	910/46900		Cable control		1
33	162/00832		Knob control		1
34	817/04021		Decal heater		1
35	721/00707		Harness heater		1
38	.		'See Remark' *See index interior mouldings C3*		1
42	816/17109		Adapter 3/4NPTF x 16		1
42	816/13380		Adapter 1/2NPTF x 16 *Tier 2 engine*		1
49	648/01917		Hose		2
50	332/C9130		Hose heater 16x1800		1
51	834/11405		Hose heater		1
52	123/04950		Adapter bulkhead		1
53	2201/0005		Clip jubilee		8
56	926/02300		Strip foam roll *For item 14*		0
57	926/01100		Strip sealing *For item 11*		0
61	649/05400		Hose 50mm O/D x 44mm *Cut to length*		1
62	649/05400		Hose 50mm O/D x 44mm *Cut to length*		1
63	649/05400		Hose 50mm O/D x 44mm *Cut to length*		1
69	1414/0007Z		Washer *Use with item 3*		12
70	1358/0603Z		Nut *Use with item 3*		6
			Bolt		

71	1315/0108Z		*Filter cover*		2
72	1414/0011Z		Washer 2 BA		21
73	1315/0105Z		Bolt M5 x 20mm long		19

Product Catalog \ CONSTRUCTION \ NORTH AMERICA \ CONSTRUCTION / INDUSTRIAL \ BACKHOE LOADER 3CX,4CX,214,215,217 \ 3C PLUS (91HP) , Made in Brazil with Dieselmax/IESA Engine 9812/0080 \ C ELECTRICS-MACHINE CAB & ENGINE \ C03 ELECTRICS, CAB

9812/0080 C3-5-40 AIR CONDITIONING, ASSEMBLY ABI

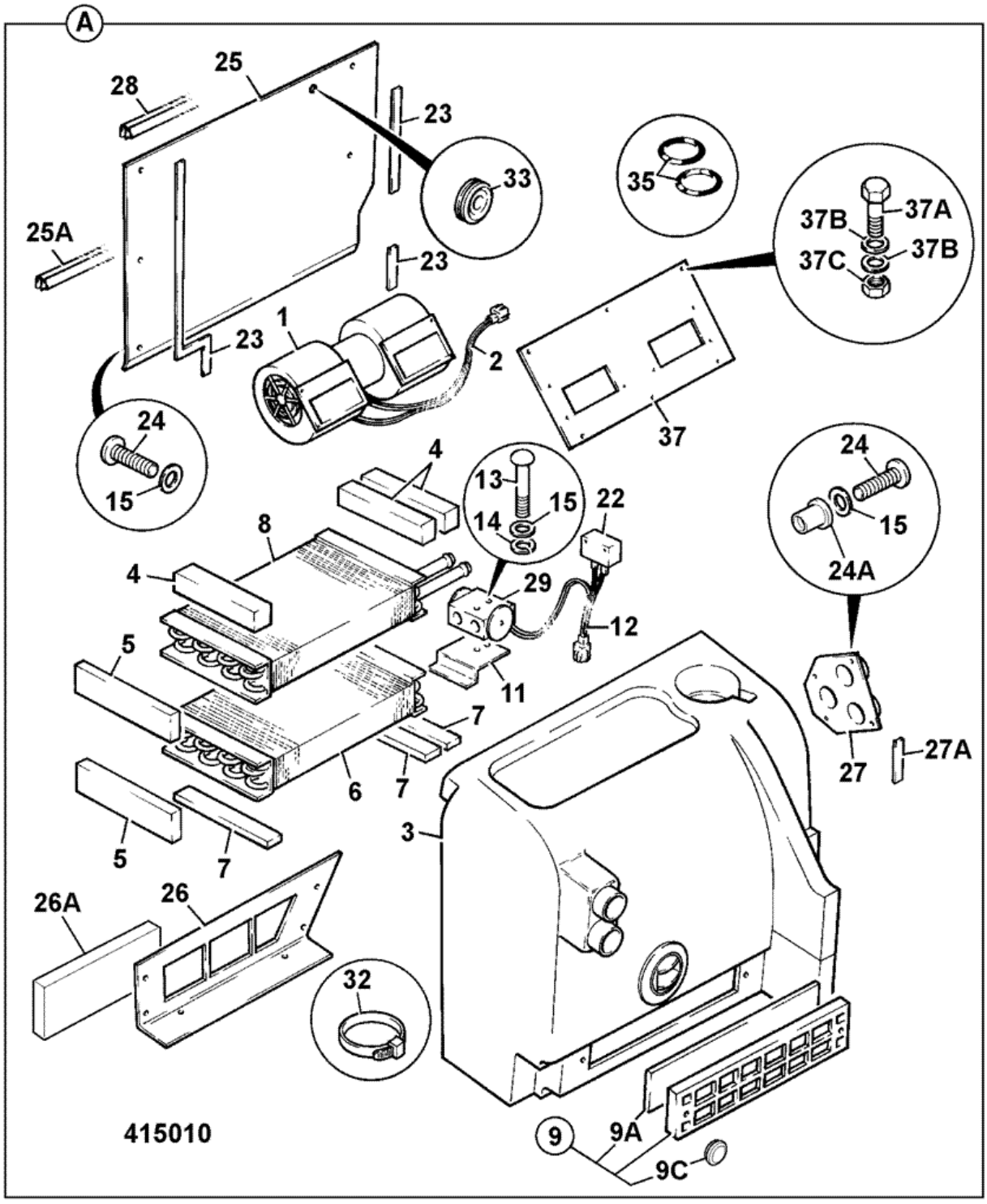

Item	Part #	Change No	Description	Usage Code	QTY
A	NSP		None serviced part		1
1	:142/00603		Motor blower		1

2	:721/11041		Harness heater *See Harnesses index C1*		1
3	.		'See Remark' *See Consoles index C3*		1
4	:190/51912		Strip foam		3
5	:.		'See Remark' *Seal*		3
6	:142/00904		Coil evaporator		1
7	:190/51912		Strip foam		3
8	:142/00601		Heater assembly		1
9	:142/18400		Cover filter		1
9A	:141/00843		Filter recirculation		1
9C	2410/1104		Grommet blind 11.1mm *Use with item 9A*		2
11	:142/00952		Bracket expansion valve		1
12	:NSP		None serviced part *Harness, use item 22*		1
13	1315/0108Z		Bolt		1
14	1425/0005Z		Washer spring M5		1
15	1420/0005Z		Washer M5		26
22	:142/00902		Thermostat		1
23	:926/02300		Strip foam roll		0
24	:1315/0105Z		Bolt M5 x 20mm long		26
24A	826/00842		Nut M5 jacknut		17
25	:142/00606		Plate blanking		1
25A	926/15601		Strip foam		1
26	:142/00607		Plate intake		1
26A	142/00628		Filter		1
27	:142/18300		Adapter air outlet		1
27A	4102/0900		Sealant *Use with item 27*		0
28	:926/01100		Strip sealing		0
29	142/00903		Valve expansion		1
33	828/00374		Grommet *Use with item 25*		1
35	476/14903		O Ring		2
37	142/00605		Plate blower mounting		1
37A	1360/0604Z		Screw *Use with item 37*		4
37B	1414/0007Z		Washer *Use with item 37*		8
37C	1358/0603Z		Nut *Use with item 37*		4

9812/0080 C3-6-30 SWITCHES, FRONT CONSOLE

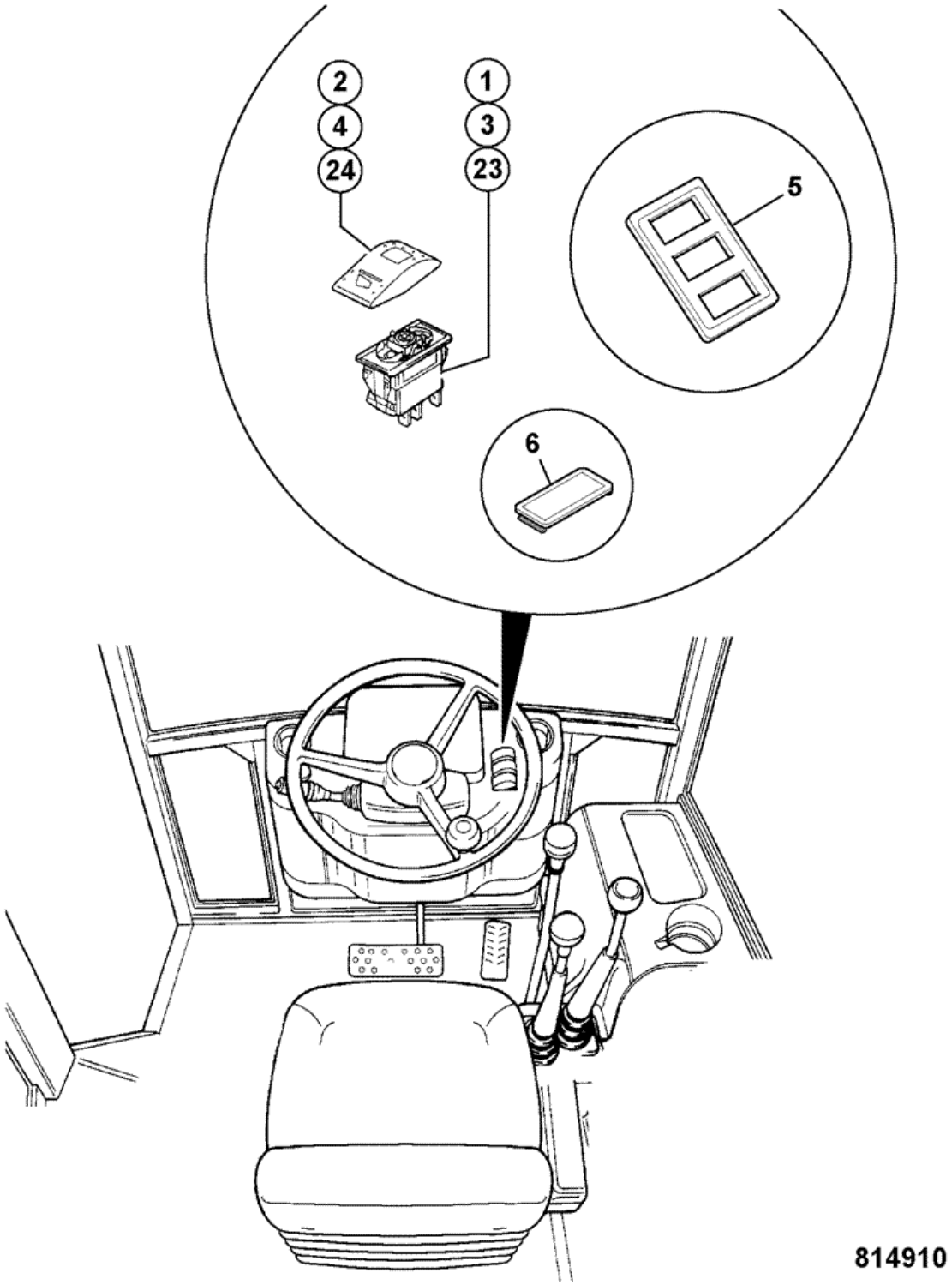

Item	Part #	Change No	Description	Usage Code	QTY
1	701/60005		Switch hazard 12V		1
2	701/58839		Cover switch,hazard		1

3	701/60006		Switch 12V		1
4	701/58834		Cover indicators switch decal		1
5	715/07700		Frame switch retaining		1
6	701/80265		Blank		1
23	701/80539		Switch panel		1
24	701/58936		Cover main/dip beam		1

Product Catalog \ CONSTRUCTION \ NORTH AMERICA \ CONSTRUCTION / INDUSTRIAL \ BACKHOE LOADER 3CX,4CX,214,215,217 \ 3C PLUS (91HP) , Made in Brazil with Dieselmax/IESA Engine 9812/0080 \ C ELECTRICS-MACHINE CAB & ENGINE \ C03 ELECTRICS, CAB

9812/0080 C3-7-60 FUSE BOX & RELAYS, SHUTTLE TRANSMISSION

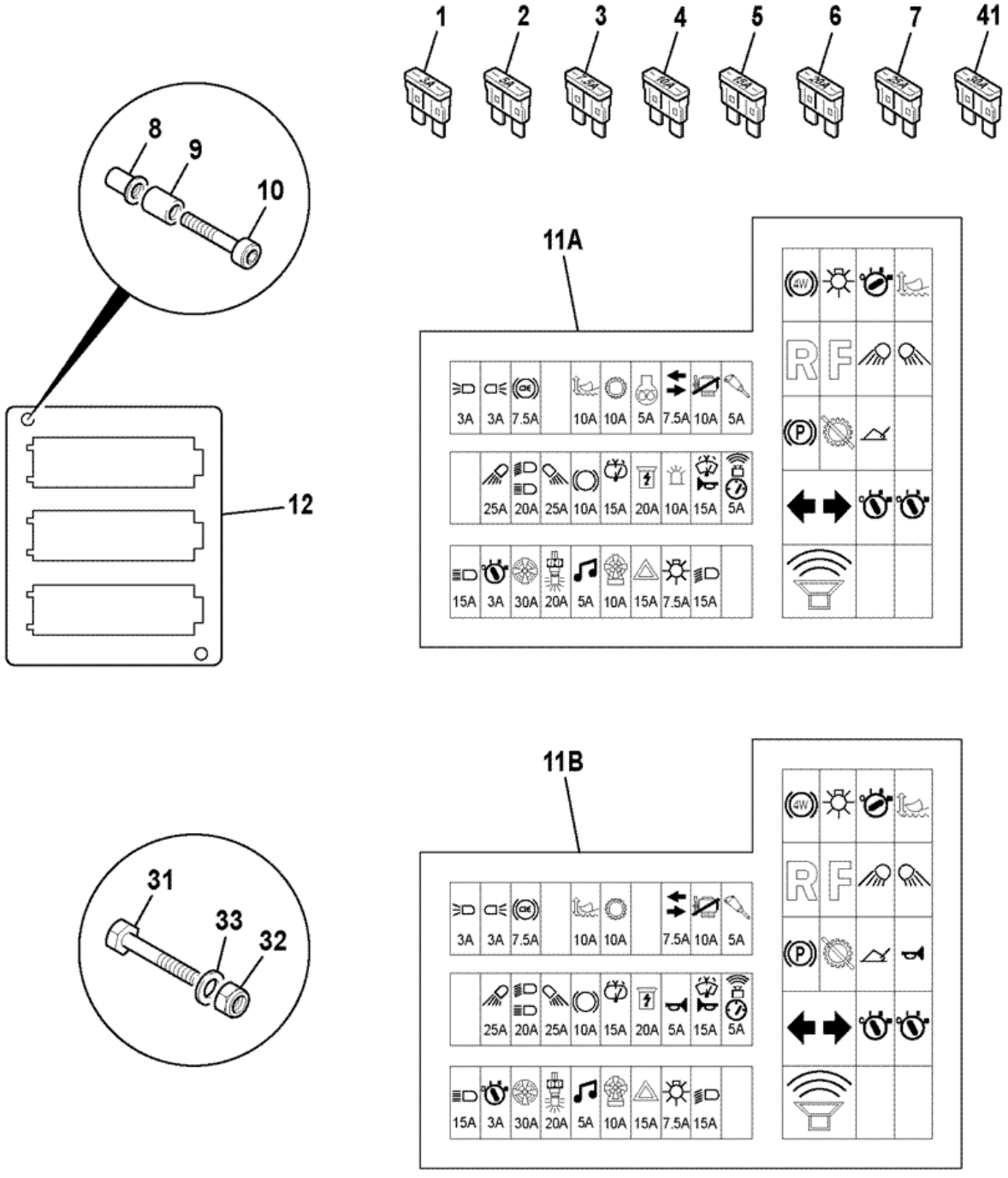

815672

Item	Part #	Change No	Description	Usage Code	QTY
1	716/05701		Fuse 3 amp		3

2	716/05703		Fuse 5 Amp		4
3	716/05704		Fuse 7.5 Amp		3
4	716/05705		Fuse 10 amp		5
5	716/05706		Fuse 15 Amp		5
6	716/05707		Fuse 20 amp		2
7	716/05708		Fuse 25 amp		2
8	826/01099		Nut rivet,M6 open ended		2
9	141/00899		Spacer threaded		2
10	1315/3216Z		Bolt M6x70		2
11A	817/20044		Label fuses and relays Dieselmax engines		1
11B	332/E7326		Label fuses and relays IESA engines *IEAS engines*		1
12	123/07634		Bracket fuse mounting		1
21	704/10000		Alarm buzzer		1
22	716/30285	Superseded	Relay 12v micro high capacity		14
22	332/C3148		Relay 12v micro high capacity		14
23	716/25800		Relay hazard 12v 6x21w		1
31	1315/0103Z		Screw *relay base*		2
32	1370/0001Z		Nut M5-8 *relay base*		2
33	1418/0007Z		Washer *relay base*		2
41	716/05709		Fuse 30 amp		1

9812/0080 C3-8-11 MOTOR, WIPER

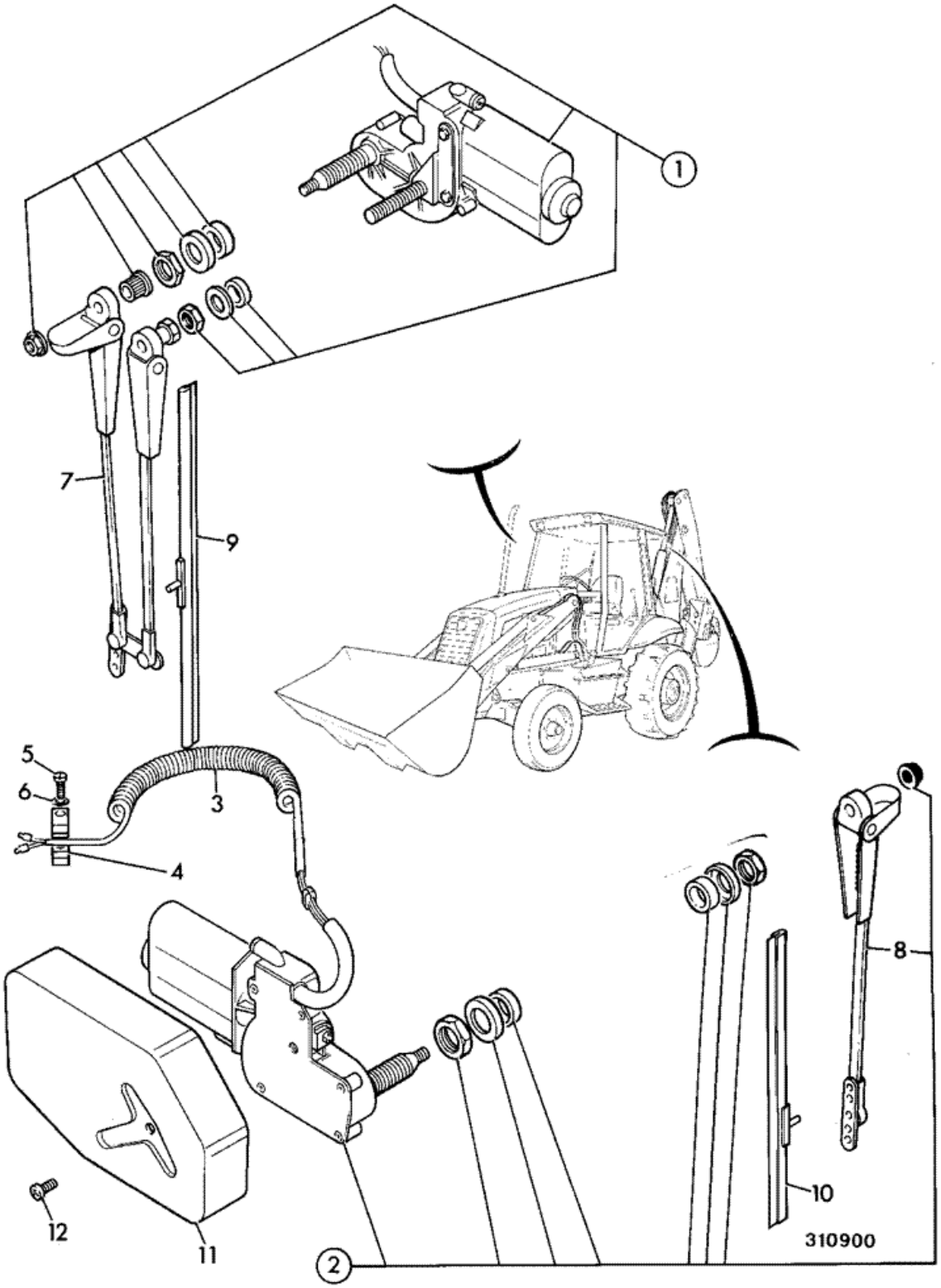

Item	Part #	Change No	Description	Usage Code	QTY
1	714/28200		Wiper motor (front)		1
2	714/28500	<M TBA	Motor wiper 90 DEG.	A	1
2	332/R8131		Motor wiper, 90deg	B	1
3	719/80900		Harness rear wiper		1
4	821/00531		Clip 'P'		5
5	826/00687		Screw		5
6	1414/0011Z		Washer 2 BA		2
7	714/04700		Arm wiper *Front wiper*		1
8	714/05000		Arm *rear*		1
9	714/14900		Blade wiper *front*		1
10	714/07700		Blade wiper 600mm long *rear*		1
11	714/09500		Cover	A	1
11	346/00317		Cover wiper motor	B	1
12	826/00687		Screw		1

Product Catalog \ CONSTRUCTION \ NORTH AMERICA \ CONSTRUCTION / INDUSTRIAL \ BACKHOE LOADER 3CX,4CX,214,215,217 \ 3C PLUS (91HP) , Made in Brazil with Dieselmax/IESA Engine 9812/0080 \ C ELECTRICS-MACHINE CAB & ENGINE \ C01 ELECTRICS, MAIN MACHINE

9812/0080 C1-12-10 HORN, SINGLE TONE, FRONT AND REAR

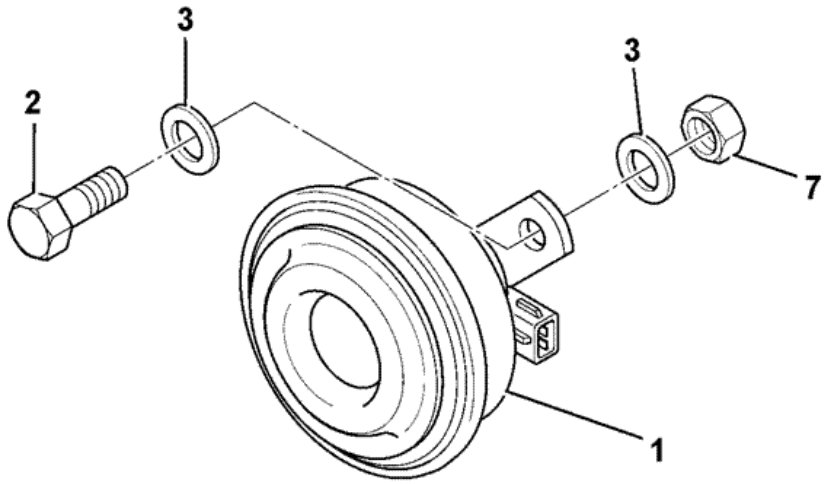

442440

Item	Part #	Change No	Description	Usage Code	QTY
1	704/37300		Horn disc 12V		1

2	1315/0407Z		Bolt M10x25		1
3	1420/0008Z		Washer Plain M10		2
7	1370/0303Z		Nut lock M10		1

Product Catalog \ CONSTRUCTION \ NORTH AMERICA \ CONSTRUCTION / INDUSTRIAL \ BACKHOE LOADER 3CX,4CX,214,215,217 \ 3C PLUS (91HP) , Made in Brazil with Dieselmax/IESA Engine 9812/0080 \ C ELECTRICS-MACHINE CAB & ENGINE \ C03 ELECTRICS, CAB

9812/0080 C3-18-11 INTERIOR MOULDINGS, CAB BUILDS

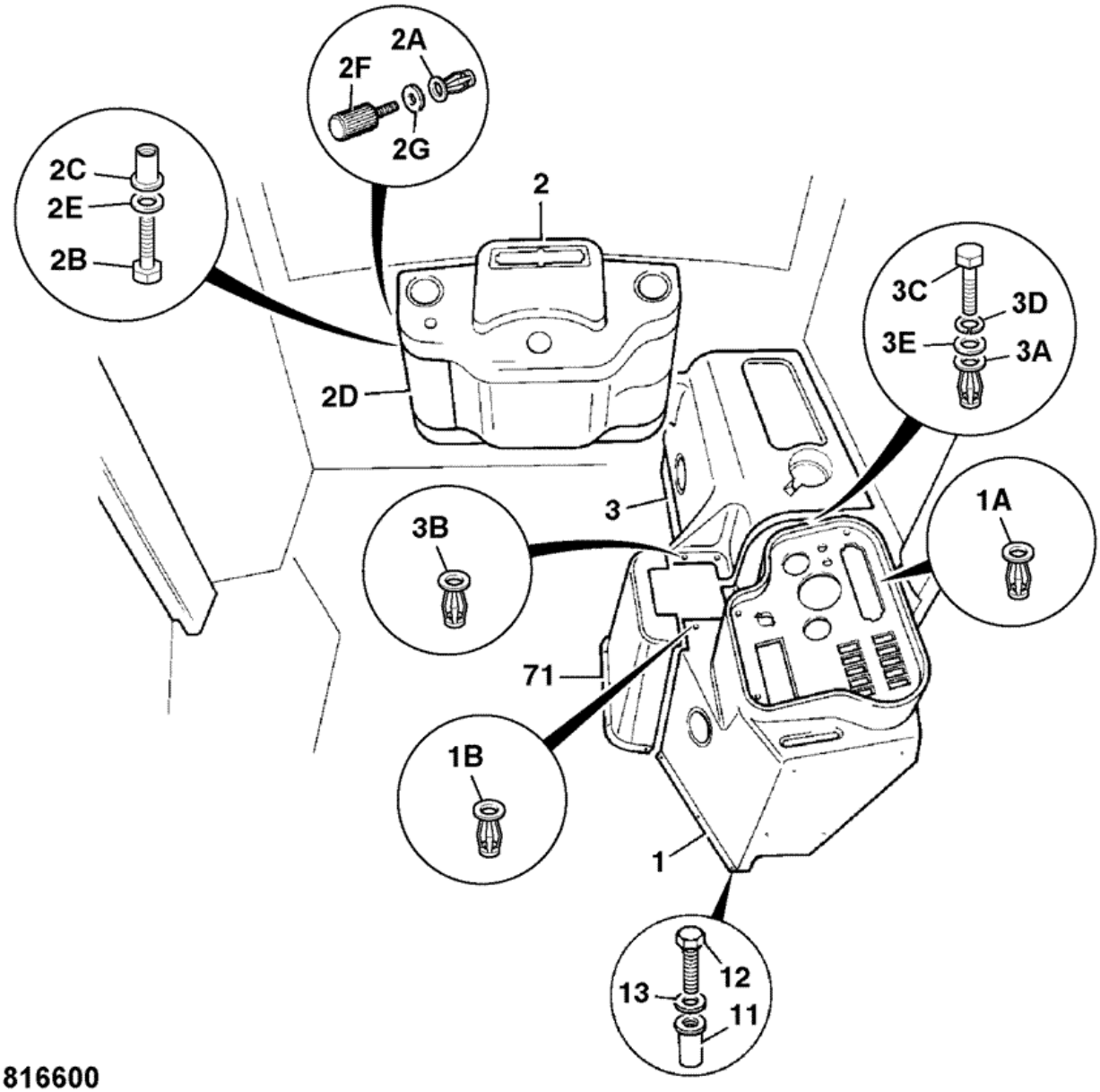

Item	Part #	Change No	Description	Usage Code	QTY
1	128/12073		Console switch housing heater build		1
1A	:826/00842		Nut M5 jacknut		5

1B	:826/01232		Nut M6 jack		2
2	128/12072		Cover front console cab		1
2A	:826/00842		Nut M5 jacknut		2
2B	1315/0205Z		Bolt		4
2C	826/01099		Nut rivet,M6 open ended		41
2D	331/27718		Cover fuse front console		1
2E	1420/0006Z		Washer M6		4
2F	826/01301		Screw thumb 20mm long		2
2G	826/00711		Washer M4'starloc'		2
3	331/30981		Console heater unit *heater builds*		1
3	346/00106		Console aircon unit *air conditioning builds*		1
3A	826/00842		Nut M5 jacknut		6
3B	826/01232		Nut M6 jack		2
3C	1315/0108Z		Bolt		6
3D	1420/0005Z		Washer M5		6
3E	1425/0005Z		Washer spring M5		6
11	826/01101		Nut rivet,M6 open ended for 3 to 5.5mm plt		6
12	1315/0207Z		Screw M6 x 25mm long		6
13	1420/0006Z		Washer M6		6
71	.		'See Remark' *loader valve cover see index B2*		1

Product Catalog \ CONSTRUCTION \ NORTH AMERICA \ CONSTRUCTION / INDUSTRIAL \ BACKHOE LOADER 3CX,4CX,214,215,217 \ 3C PLUS (91HP) , Made in Brazil with Dieselmax/IESA Engine 9812/0080 \ C ELECTRICS-MACHINE CAB & ENGINE \ C03 ELECTRICS, CAB

9812/0080 C3-19-11 AIR CONDITIONING, INSTALLATION

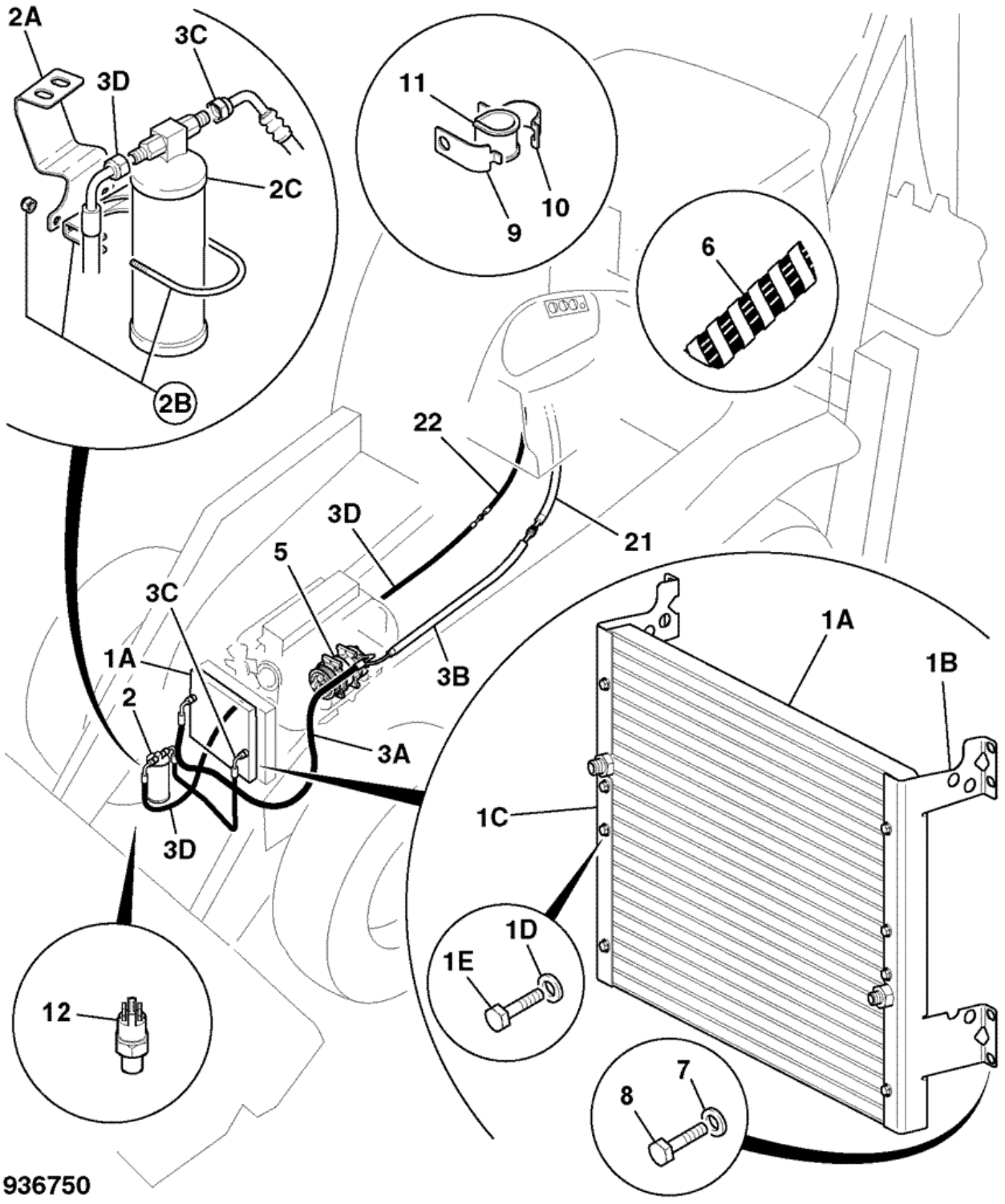

Item	Part #	Change No	Description	Usage Code	QTY
1A	30/925766		Condenser		1
1B	331/48472		Bracket L.H.		1

1C	331/48470		Bracket R.H.		1
1D	1420/0006Z		Washer M6		8
1E	1315/3210Z		Bolt		8
2A	331/46229		Bracket mounting receiver/drier		1
2B	821/00264		Clamp exhaust D=79		1
2C	30/925633		Drier receiver		1
3A	649/51953		Hose cond to comp 1525mm		1
3B	649/51954		Hose comp 1200mm		1
3C	649/51626		Hose aircon evap-rec/drier		1
3D	649/51955		Hose rec.drier 2000mm		1
5	320/08562		Compressor air conditioning 12v *see section V for installation*		1
6	647/12902		Tube spiral guard 1000mm long		2
7	1420/0007Z		Washer plain M8		14
8	1315/0307Z		Screw Hexagon M8 X 25		6
9	821/00214		Clamp Base		1
10	821/00213		Clamp Top		1
11	821/00215		Insert Clamp		1
12	701/58726		Switch Binary		1
21	649/51389		Hose		1
22	649/51390		Hose		1

Product Catalog \ CONSTRUCTION \ NORTH AMERICA \ CONSTRUCTION / INDUSTRIAL \ BACKHOE LOADER 3CX,4CX,214,215,217 \ 3C PLUS (91HP) , Made in Brazil with Dieselmax/IESA Engine 9812/0080 \ C ELECTRICS-MACHINE CAB & ENGINE \ C03 ELECTRICS, CAB

9812/0080 C3-31-21 IMMOBILISER, INSTALLATION, CAB, KEY OPERATED

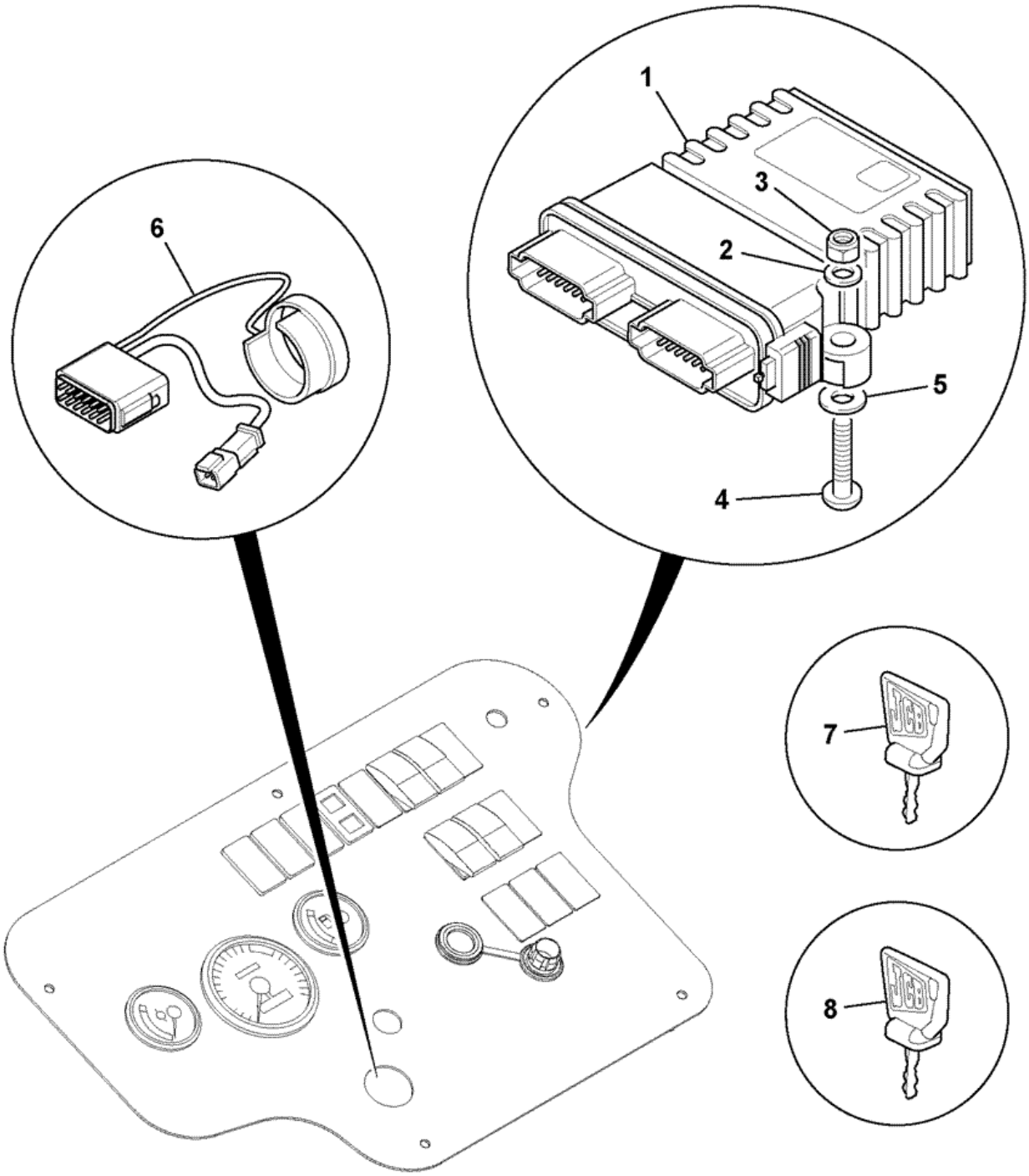

942040

Item	Part #	Change No	Description	Usage Code	QTY
1	332/C5822		Sensor Immobiliser ECU		1

2	1420/0006D		Washer M6 plain		2
3	1370/0103D		Nut M6 lock		2
4	826/11692		Screw Torx M6x35		2
5	1413/0001		Washer		2
6	332/C6666		Aerial Immobiliser Antenna		1
7	332/C7608		Key Transponder Black		2
8	332/C7763		Key Transponder Red, Master		1

Product Catalog \ CONSTRUCTION \ NORTH AMERICA \ CONSTRUCTION / INDUSTRIAL \ BACKHOE LOADER 3CX,4CX,214,215,217 \ 3C PLUS (91HP) , Made in Brazil with Dieselmax/IESA Engine 9812/0080 \ D CONTROLS-MACHINE ENGINE & STEERING \ D01 CONTROLS, MACHINE

9812/0080 D1-2-1 SEAL, EXCAVATOR CONTROLS

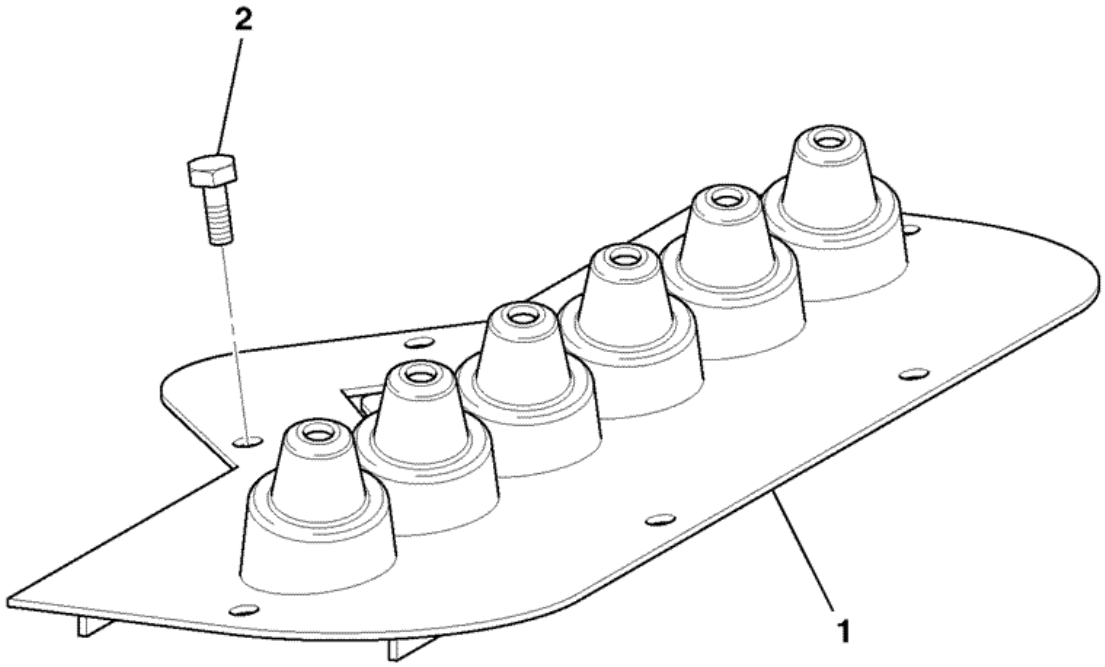

816790

Item	Part #	Change No	Description	Usage Code	QTY
1	123/04371		Seal excavator controls		1
2	826/00687		Screw		6

9812/0080 D1-6-1 CONTROLS, LEVER, IN CAB BOOM LOCK

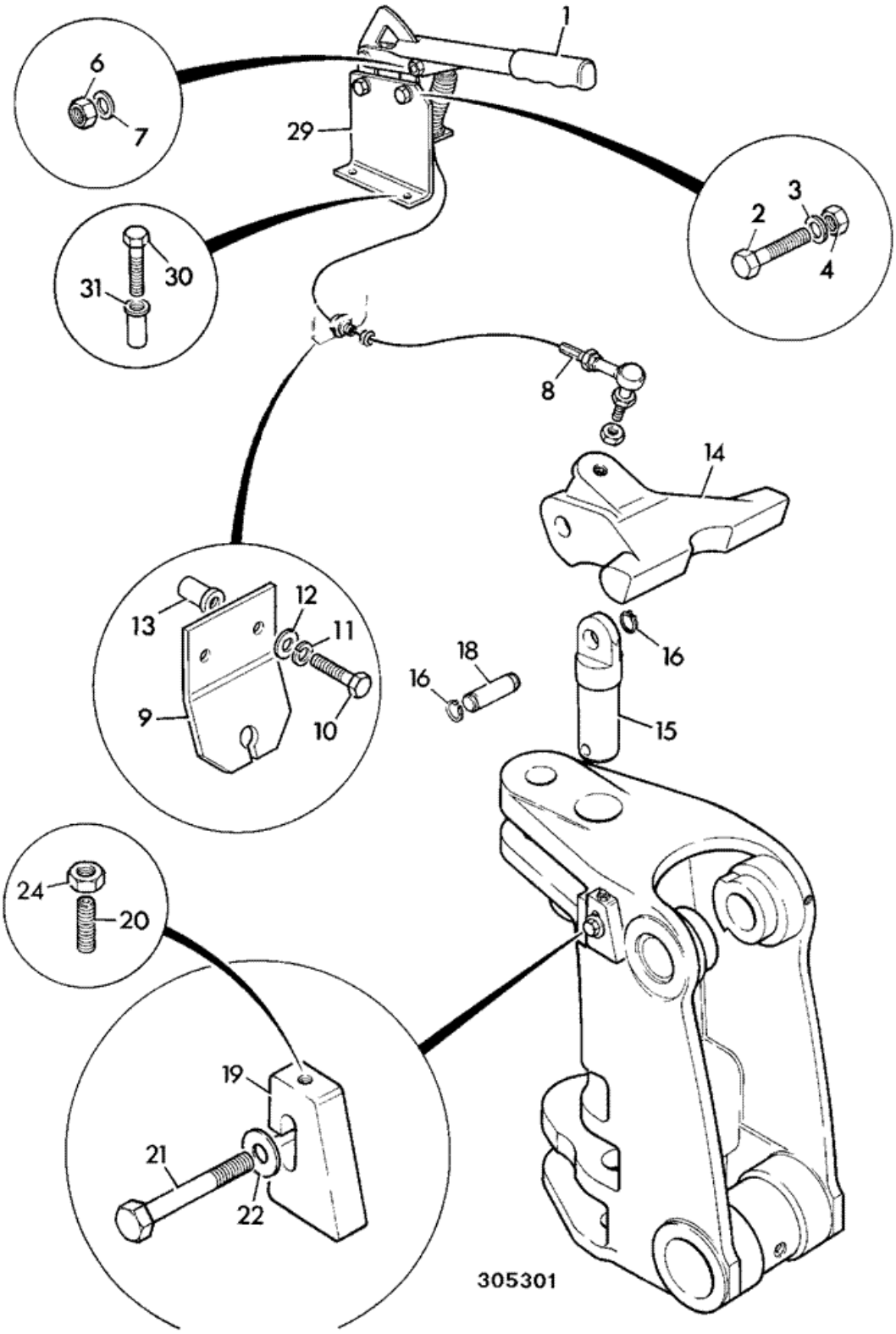

Item	Part #	Change No	Description	Usage Code	QTY
1	123/05234		Lever boomlock red grip		1
2	1315/0307Z		Screw Hexagon M8 X 25		2
3	1411/0003Z		Washer medium		2
4	1370/0203Z		Nut self lock M8		2
6	913/05903		Pin clevis		1
7	913/00005		Clip clevis		1
8	910/48400		Cable assembly boomlock centremount		1
8A	:123/07652		Joint ball end		1
9	331/30856		Bracket reaction		1
10	1315/0307Z		Screw Hexagon M8 X 25		2
11	1425/0007Z		Washer spring		2
12	1420/0007Z		Washer plain M8		2
13	826/01103		Nut rivet,M8 open ended		2
14	123/05862	Superseded	Casting boom lock 14'0 (Yellow)		1
14	332/C1897		Casting boom lock		1
15	913/10079		Pin kingpost top centremount		1
16	2203/0035		Circlip		2
18	811/70099		Pin boomlock		1
19	123/05236		Plate boom stop		1
20	1390/0412Z		Screw grub M10x50 long		1
21	1315/3814Z		Bolt M20 x 60mm		1
22	823/00491		Washer spacer		1
24	1370/0302Z		Nut lock		1
26	1450/0001		Nipple grease, straight 1/8 BSP *Use with item 15, 18*		1
27	835/00017		Cap grease nipple		1
28	835/00166		Plug		1
29	331/14484		Bracket boomlock cable reaction		1
30	.		'See Remark'		2
31	.		'See Remark'		2

9812/0080 D1-7-2 CONTROL KNOB, LOADER VALVE, SINGLE SWITCH

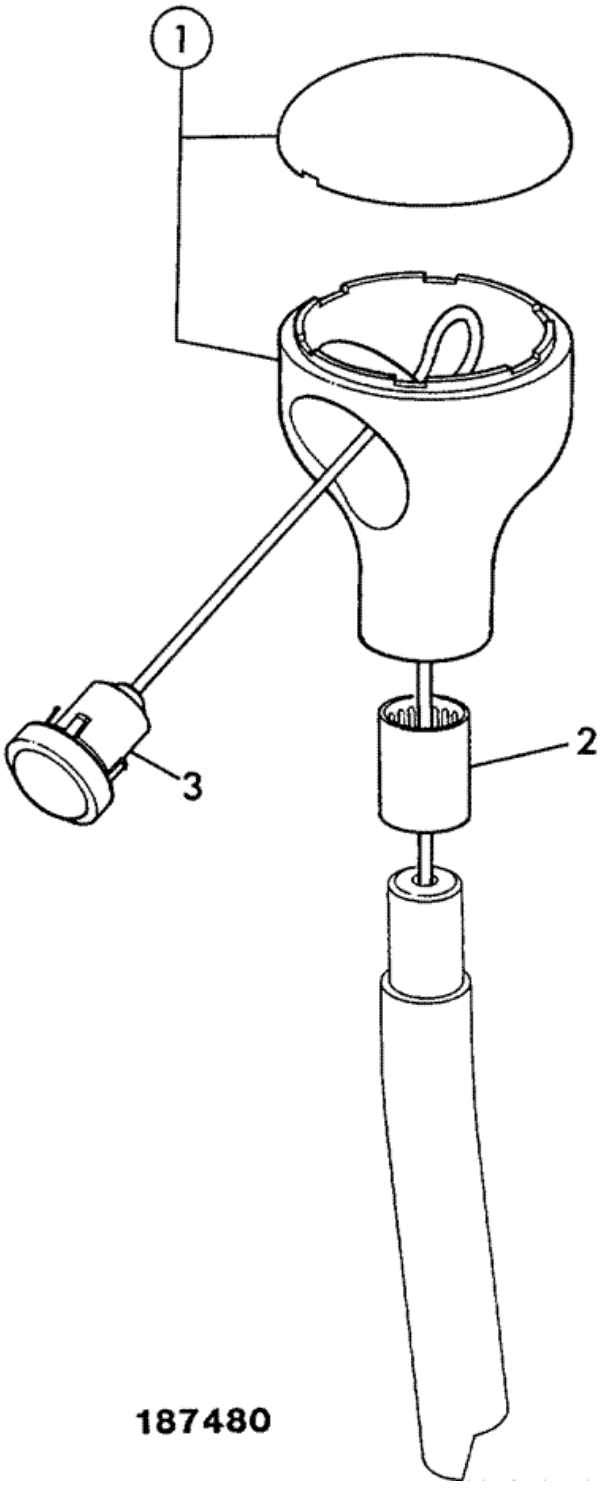

Item	Part #	Change No	Description	Usage Code	QTY
1	128/13807		Knob assembly 1-switch as supplied		1
2	:122/67459		Ring tolerance		1
3	:701/42600		Switch push button black with microswitch		1
4	817/17771		Decal loader lever with float, reset *insert into top of knob*		1

Product Catalog \ CONSTRUCTION \ NORTH AMERICA \ CONSTRUCTION / INDUSTRIAL \ BACKHOE LOADER 3CX,4CX,214,215,217 \ 3C PLUS (91HP) , Made in Brazil with Dieselmax/IESA Engine 9812/0080 \ D CONTROLS-MACHINE ENGINE & STEERING \ D02 CONTROLS, THROTTLE

9812/0080 D2-1-1 THROTTLE CONTROL, P4001/P400T

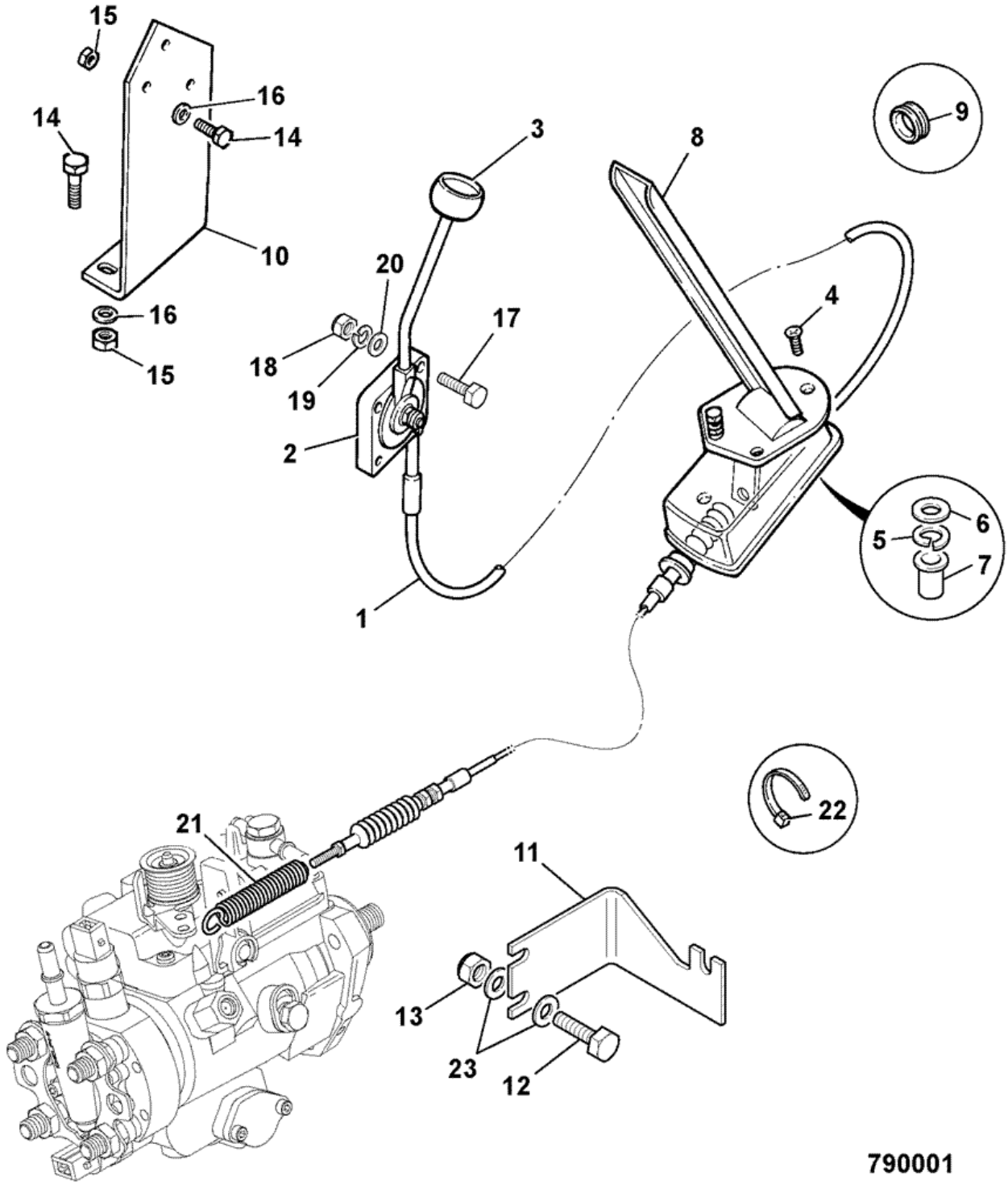

Item	Part #	Change No	Description	Usage Code	QTY
1	910/60176		Cable throttle control assembly		1
2	910/52501		Lever assembly throttle control		1

3	910/52502		Knob red throttle lever		1
4	826/01196		Screw taptite		3
5	1425/0005Z		Washer spring M5		3
6	1420/0005Z		Washer M5		3
7	1370/0001Z		Nut M5-8		3
8	123/07303		Pedal assembly throttle control		1
9	2410/0213		Grommet		1
10	142/00773		Bracket mounting hand throttle		1
11	331/67913		Bracket throttle international engine		1
12	1315/0205D		Setscrew M6 x 20mm long		2
13	1370/0103D		Nut M6 lock		2
14	1315/0205Z		Bolt		6
15	1370/0103Z		Nut Self lock M6		6
16	1420/0006Z		Washer M6		4
17	826/01218		Screw raised c/sk. head		3
18	1370/0001Z		Nut M5-8		3
19	1425/0006Z		Washer Spring		3
20	1420/0006D		Washer M6 plain		3
21	814/10179		Spring overload		1
22	826/01144		Tie cable 200mm long		3
23	1420/0006D		Washer M6 plain		4

Product Catalog \ CONSTRUCTION \ NORTH AMERICA \ CONSTRUCTION / INDUSTRIAL \ BACKHOE LOADER 3CX,4CX,214,215,217 \ 3C PLUS (91HP) , Made in Brazil with Dieselmax/IESA Engine 9812/0080 \ D CONTROLS-MACHINE ENGINE & STEERING \ D02 CONTROLS, THROTTLE

9812/0080 D2-2-1 THROTTLE CONTROL, JCB444

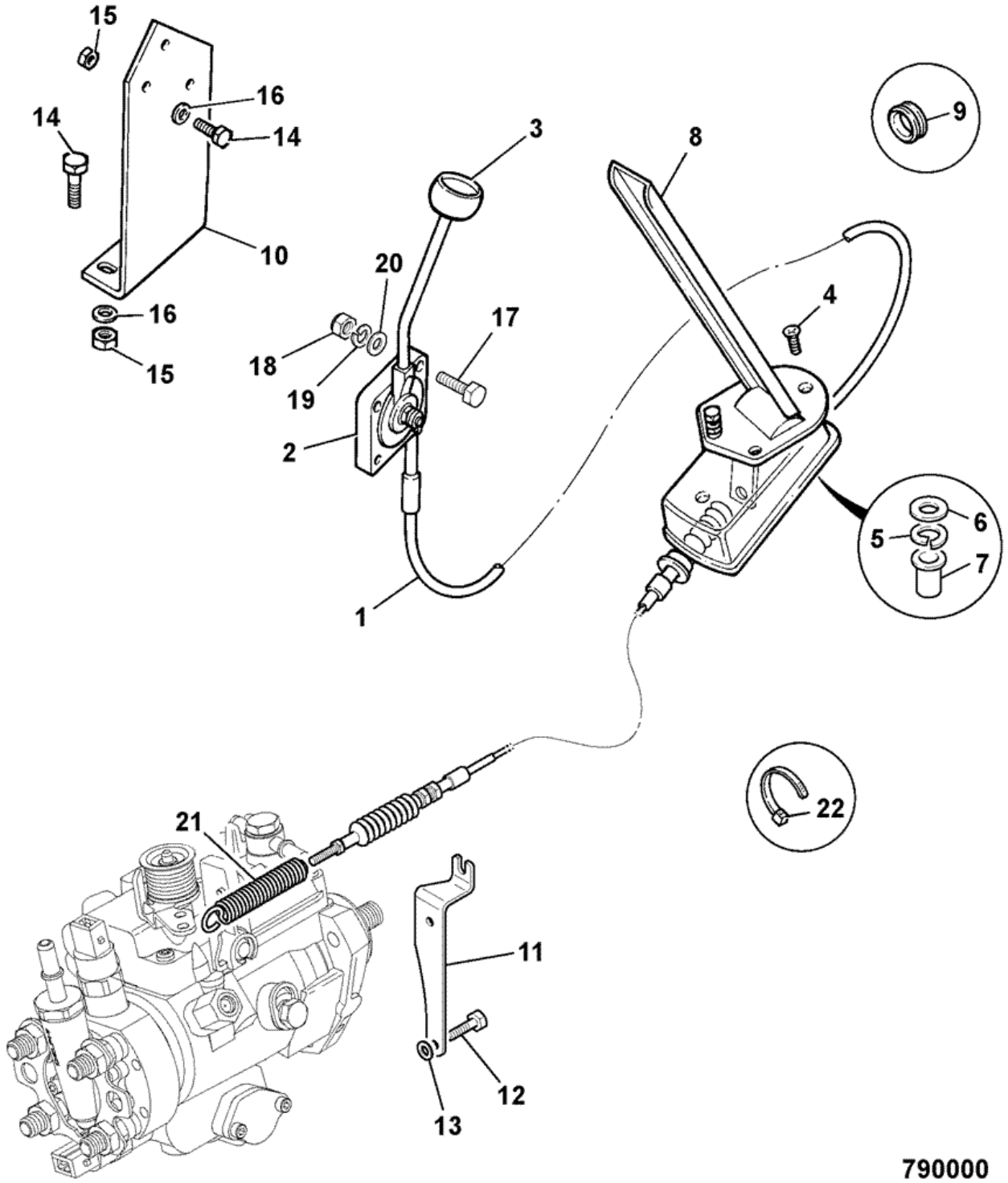

Item	Part #	Change No	Description	Usage Code	QTY
1	910/60176		Cable throttle control assembly		1
2	910/52501		Lever assembly throttle control		1

3	910/52502		Knob red throttle lever		1
4	826/01196		Screw taptite		3
5	1425/0006Z		Washer Spring		3
6	1420/0006D		Washer M6 plain		3
7	826/01101		Nut rivet,M6 open ended for 3 to 5.5mm plt		3
8	123/07303		Pedal assembly throttle control		1
9	2410/0013		Grommet		1
10	142/00773		Bracket mounting hand throttle		1
11	331/45385		Bracket throttle reaction		1
12	1315/0307Z		Screw Hexagon M8 X 25		2
13	1420/0007Z		Washer plain M8		2
14	1315/0205Z		Bolt		6
15	1370/0103Z		Nut Self lock M6		6
16	1420/0006Z		Washer M6		6
17	826/01218		Screw raised c/sk. head		3
18	1370/0001Z		Nut M5-8		3
19	1425/0006Z		Washer Spring		3
20	1420/0006D		Washer M6 plain		3
21	814/10179		Spring overload		1
22	826/01144		Tie cable 200mm long		3

9812/0080 D1-1-31 CONTROLS, LOADER, LOADER LIFT, SHOVEL

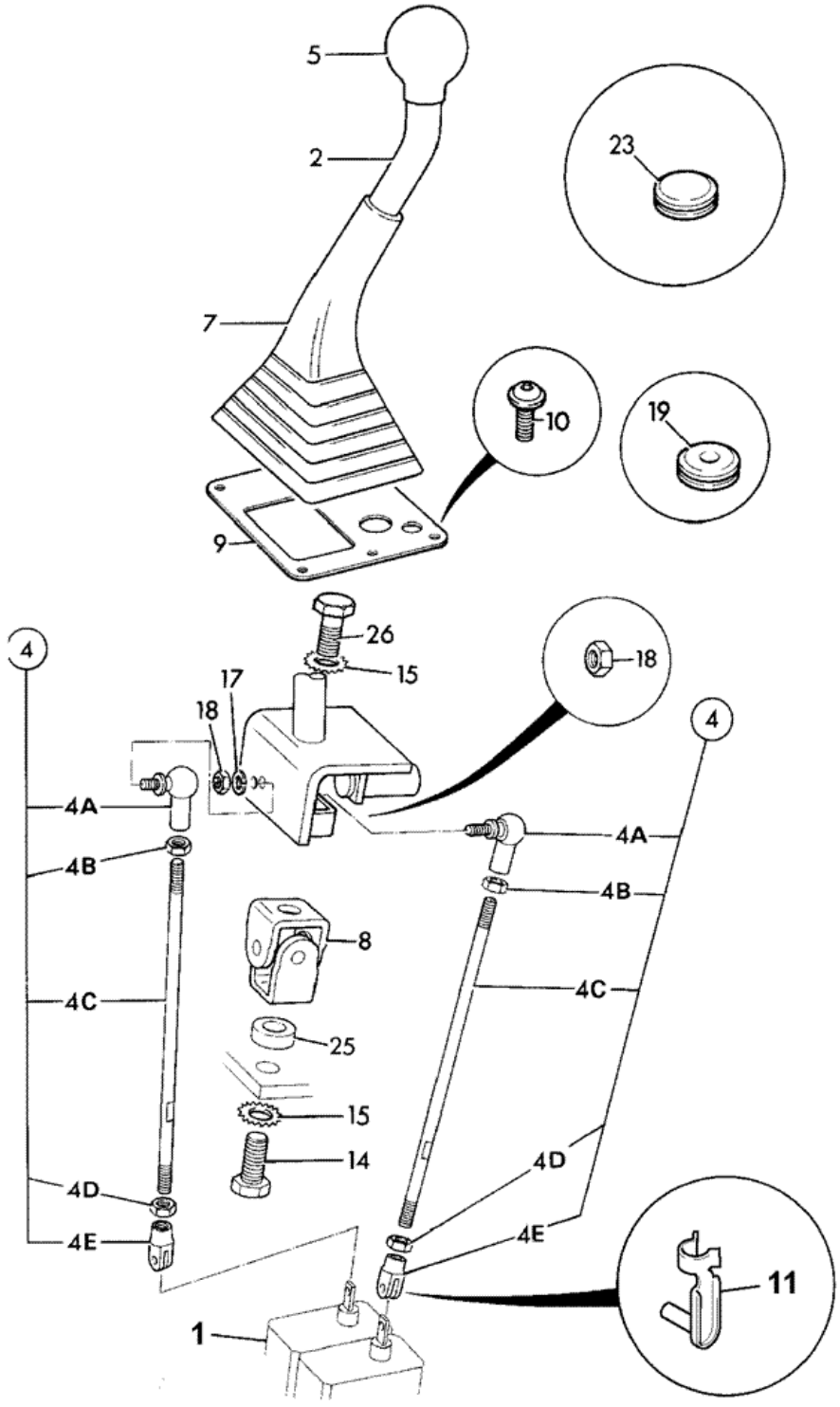

Item	Part #	Change No	Description	Usage Code	QTY
			'See Remark'		

1	.		*Valve, see index E3*		1
2	125/00446		Lever loader control		1
4	913/10060		Rod control assembly 266mm long		1
4	331/11267		Rod control assembly 270mm long		1
4A	:123/08002		Joint ball M8 right hand		1
4B	:1370/0202Z		Nut M8		1
4C	:.		'See Remark' *Control rod. NSP*		1
4D	:826/01108		Nut M8 LH thin		1
4E	913/02903		Clevis fork (6mm hole)		1
5	.		'See Remark' *Control knob see index D1*		1
7	263/05406		Gaiter control single lever		1
8	116/00416		Joint universal		1
9	141/01473		Plate gaiter retaining		1
10	826/01768		Screw M6x25mm		5
10A	826/01232		Nut M6 jack		5
11	913/00031		Pin spring,6mm clevis		2
14	1305/0404Z		Bolt		1
15	1417/0014Z		Washer star		2
17	1420/0007Z		Washer plain M8		1
18	1370/0203Z		Nut self lock M8		2
19	828/00325		Grommet blind		1
23	2410/1312		Grommet		1
25	266/31702		Spacer		1
26	1305/0410Z		Bolt 1/2" x 1.1/2" long		1
27	123/07672		Mat soundproofing loader valve		1

Product Catalog \ CONSTRUCTION \ NORTH AMERICA \ CONSTRUCTION / INDUSTRIAL \ BACKHOE LOADER 3CX,4CX,214,215,217 \ 3C PLUS (91HP) , Made in Brazil with Dieselmax/IESA Engine 9812/0080 \ D CONTROLS-MACHINE ENGINE & STEERING \ D01 CONTROLS, MACHINE

9812/0080 D1-1-51 CONTROLS, LOADER, AUXILIARY, OPTIONAL

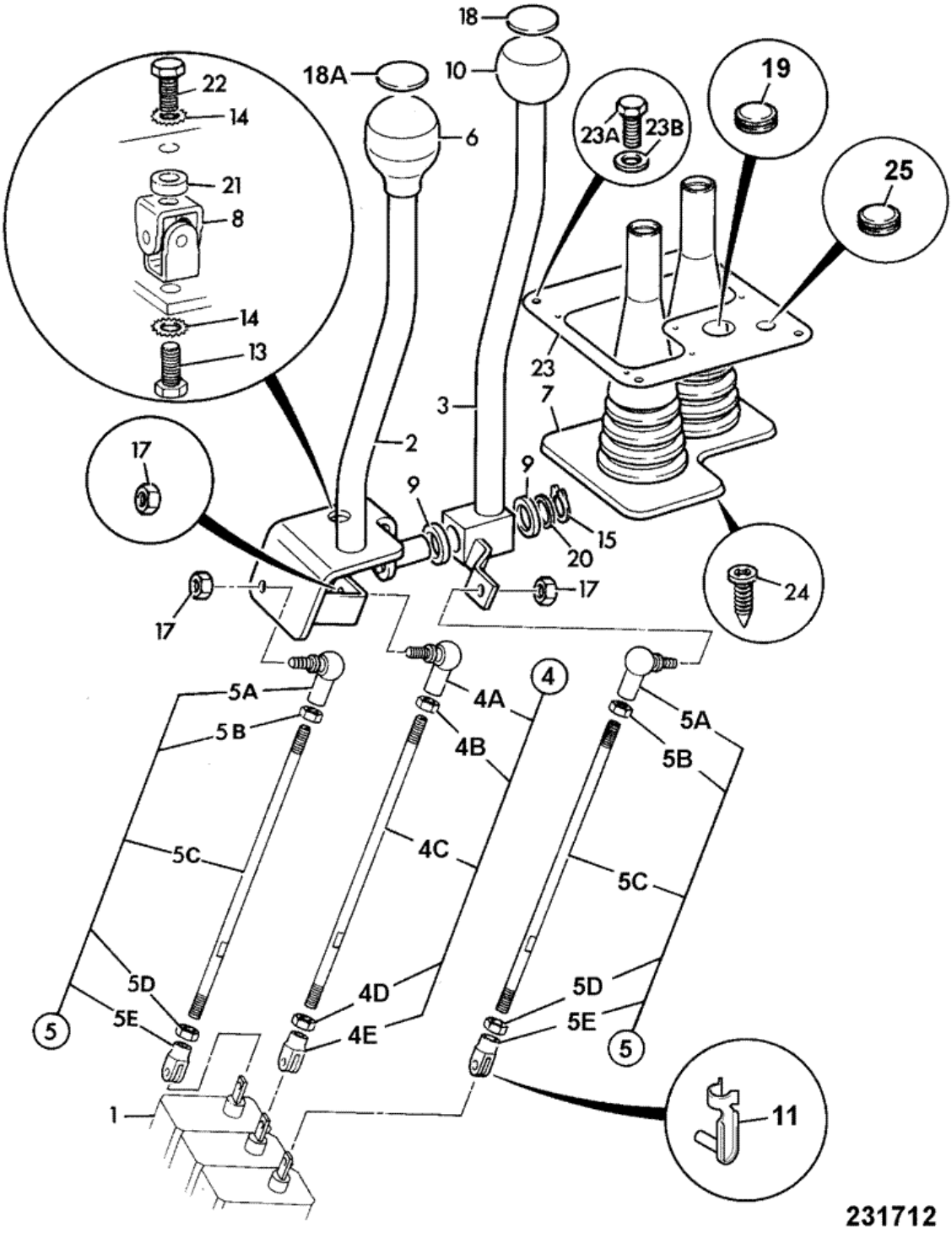

Item	Part #	Change No	Description	Usage Code	QTY
			'See Remark'		

1	.		*For Valve See E3*		1
2	125/00446		Lever loader control		1
3	331/33463		Lever Auxiliary Control		1
4	913/10060		Rod control assembly 266mm long		1
4A	:123/08002		Joint ball M8 right hand		1
4B	:1370/0202Z		Nut M8		1
4C	:NSP		None serviced part		1
4D	:826/01108		Nut M8 LH thin		1
4E	:913/02903		Clevis fork (6mm hole)		1
5	331/11267		Rod control assembly 270mm long		2
5A	:123/08002		Joint ball M8 right hand		1
5B	:1370/0202Z		Nut M8		1
5C	:NSP		None serviced part		1
5D	:826/01108		Nut M8 LH thin		1
5E	:913/02903		Clevis fork (6mm hole)		1
6	.		'See Remark' *See section D1*		1
7	123/07602		Gaiter control		1
8	116/00416		Joint universal		1
9	831/00063		Bush		2
10	331/26977		Base Knob		1
10A	331/30772		Knob Top, Silver		1
10B	122/67459		Ring tolerance		1
10C	142/00610		Plug		1
11	913/00031		Pin spring,6mm clevis		3
13	1305/0404Z		Bolt		1
14	1417/0014Z		Washer star		2
15	2203/0022		Circlip		1
17	1370/0203Z		Nut self lock M8		2
18	817/17772		Label loader aux clamshovel		1
18A	817/17771		Decal loader lever with float, reset *For Item 6*		1
19	2410/1312		Grommet		1
20	1420/0011Z		Washer M16 plain		1
21	266/31702		Spacer		1
22	1305/0410Z		Bolt 1/2" x 1.1/2" long		1
23	142/00540		Plate gaiter retaining		1
23A	826/01768		Screw M6x25mm		5
24	142/00680		Fastener fir tree		7
25	828/00325		Grommet blind		1
26	826/01232		Nut M6 jack		5

9812/0080 D1-1-71 CONTROLS, LOADER LIFT, SHOVEL, 3C - 90HP WITH OPTIONAL 36/26 CCR PUMP UPGRADE

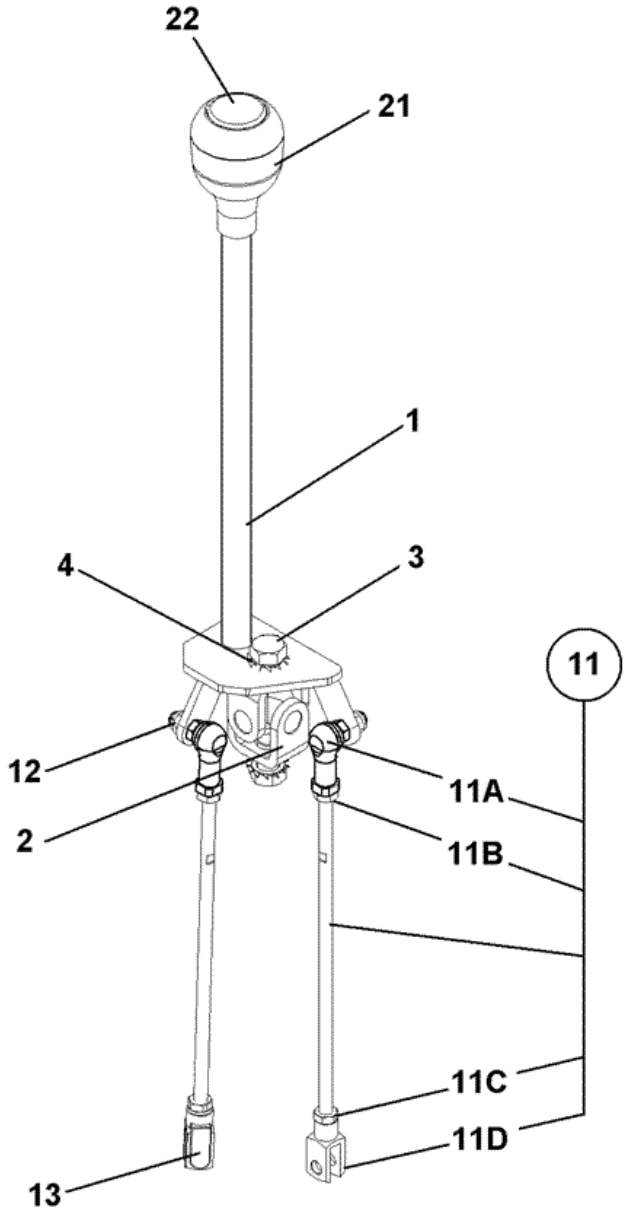

D01-10031-0-A20

Item	Part #	Change No	Description	Usage Code	QTY
1	335/08632		Lever loader control		1

2	116/00416		Joint universal		1
3	1305/0404Z		Bolt		2
4	1417/0014Z		Washer star		2
11	128/P1120		Rod control 306mm		2
11A	:123/08002		Joint ball M8 right hand		1
11B	:1370/0202Z		Nut M8		1
11C	:826/01108		Nut M8 LH thin		1
11D	:913/02601		Clevis fork (8mm hole)		1
12	1370/0203Z		Nut self lock M8		2
13	123/07389		Pin spring,8mm clevis		1
21	128/13807		Knob assembly 1-switch as supplied		1
22	817/17771		Decal loader lever with float, reset		1

9812/0080 D1-1-74 CONTROLS, LOADER LIFT, SHOVEL, 3C - 90HP WITH OPTIONAL 36/26 PUMP UPGRADE

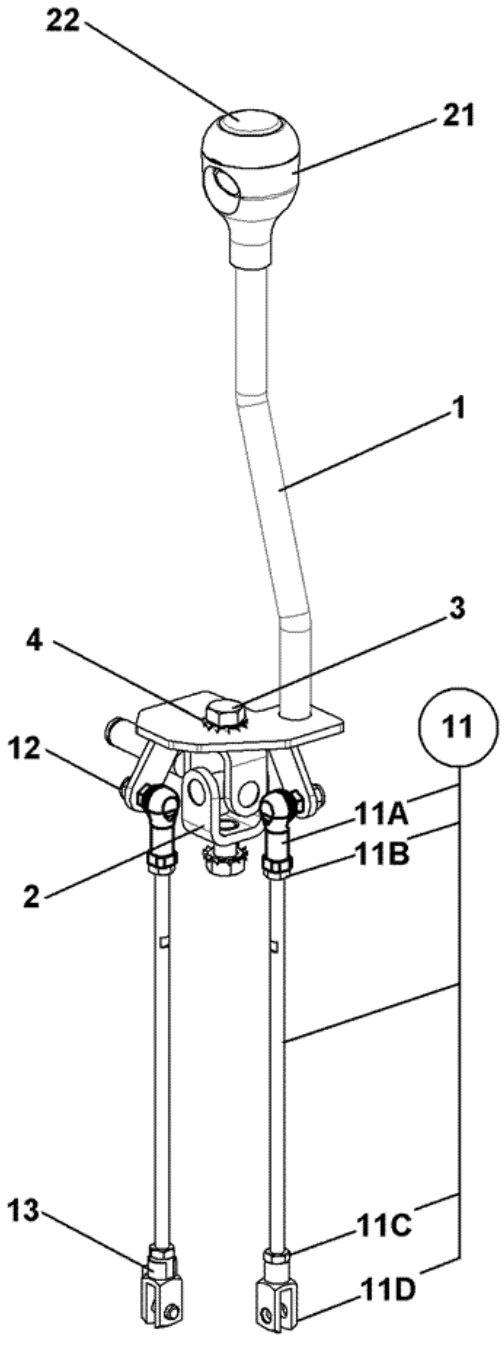

D01-10032-0-A20

Item	Part #	Change No	Description	Usage Code	QTY
1	332/P4966		Lever loader control		1

2	116/00416		Joint universal		1
3	1305/0404Z		Bolt		2
4	1417/0014Z		Washer star		2
11	128/P1120		Rod control 306mm		2
11A	:123/08002		Joint ball M8 right hand		1
11B	:1370/0202Z		Nut M8		1
11C	:826/01108		Nut M8 LH thin		1
11D	:913/02601		Clevis fork (8mm hole)		1
12	1370/0203Z		Nut self lock M8		2
13	123/07389		Pin spring,8mm clevis		1
21	128/13807		Knob assembly 1-switch as supplied		1
22	817/17771		Decal loader lever with float, reset		1

Product Catalog \ CONSTRUCTION \ NORTH AMERICA \ CONSTRUCTION / INDUSTRIAL \ BACKHOE LOADER 3CX,4CX,214,215,217 \ 3C PLUS (91HP) , Made in Brazil with Dieselmax/IESA Engine 9812/0080 \ D CONTROLS-MACHINE ENGINE & STEERING \ D01 CONTROLS, MACHINE

9812/0080 D1-1-75 CONTROLS, LOADER LIFT, SHOVEL, GAITER, 3C - 90HP WITH OPTIONAL 36/26 CCR PUMP UPGRADE

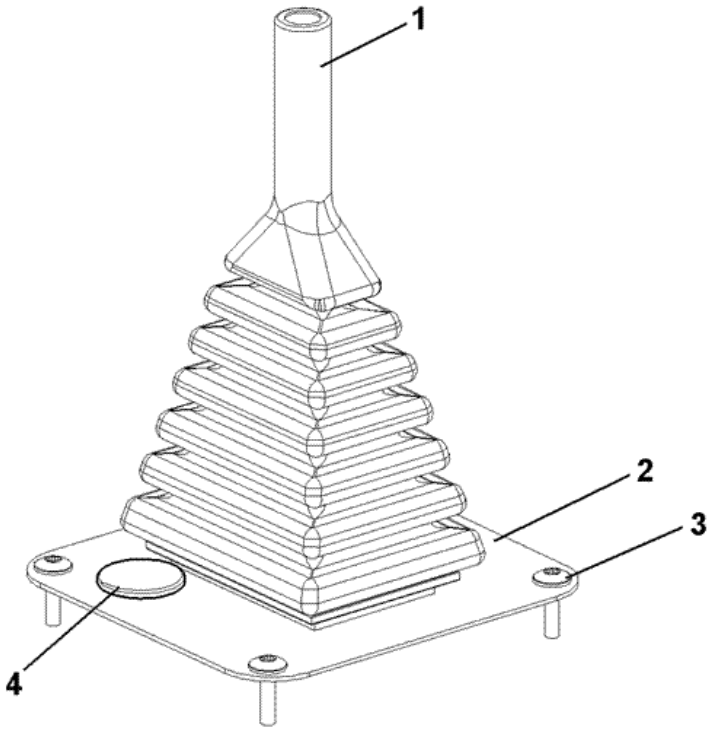

D01-10033-0-A20

Item	Part #	Change No	Description	Usage Code	QTY
1	263/05406		Gaiter control single lever		1

2	332/P4924		Plate gaiter		1
3	826/01768		Screw M6x25mm		5
4	2410/1312		Grommet		1

Product Catalog \ CONSTRUCTION \ NORTH AMERICA \ CONSTRUCTION / INDUSTRIAL \ BACKHOE LOADER 3CX,4CX,214,215,217 \ 3C PLUS (91HP) , Made in Brazil with Dieselmax/IESA Engine 9812/0080 \ D CONTROLS-MACHINE ENGINE & STEERING \ D01 CONTROLS, MACHINE

9812/0080 D1-1-77 CONTROLS, LOADER LIFT, SHOVEL, 3RD SPOOL, AUXILIARY

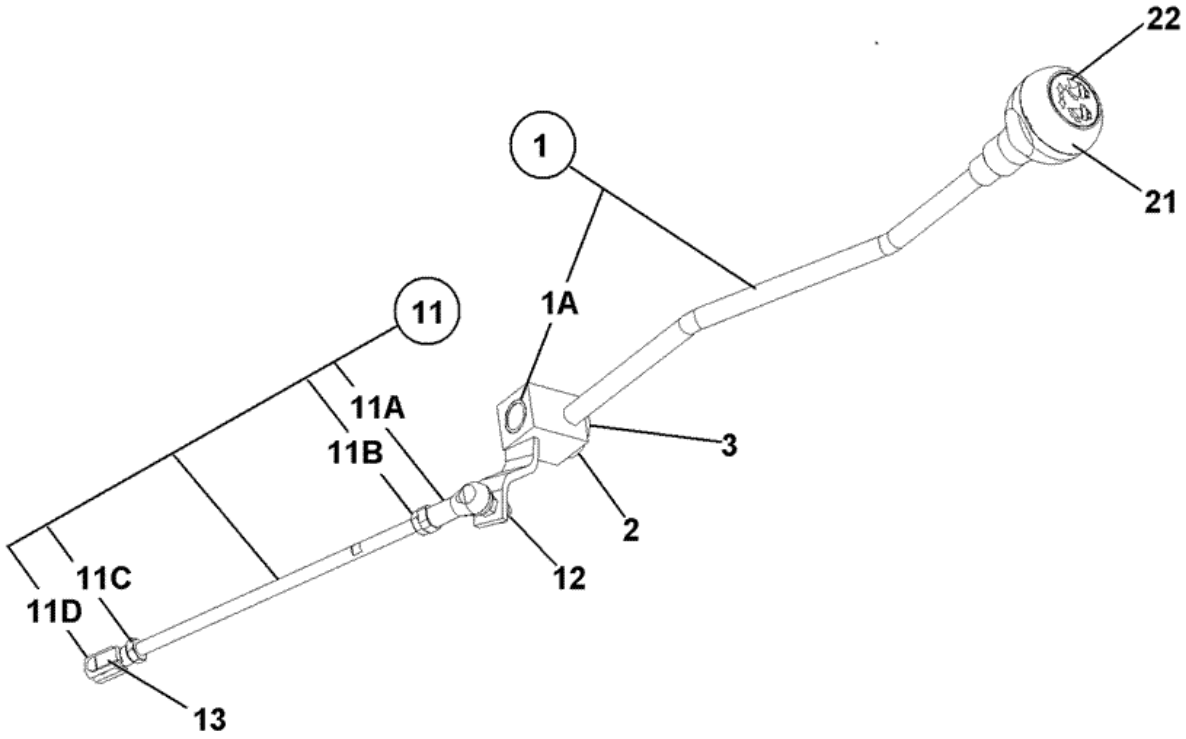

D01-10034-0-A20

Item	Part #	Change No	Description	Usage Code	QTY
1	128/13229		Lever loader control 3rd spool		1

1A	:831/00063		Bush		2
2	1420/0011Z		Washer M16 plain		1
3	2203/0022Z		Circlip		1
11	331/11267		Rod control assembly 270mm long		1
11A	:123/08002		Joint ball M8 right hand		1
11B	:1370/0202Z		Nut M8		1
11C	:826/01108		Nut M8 LH thin		1
11D	:913/02903		Clevis fork (6mm hole)		1
12	1370/0203Z		Nut self lock M8		1
13	913/00031		Pin spring,6mm clevis		1
21	128/12635		Knob assembly		1
22	817/17772		Label loader aux clamshovel		1

9812/0080 D1-20-1 CONTROLS, BRAKE PEDAL

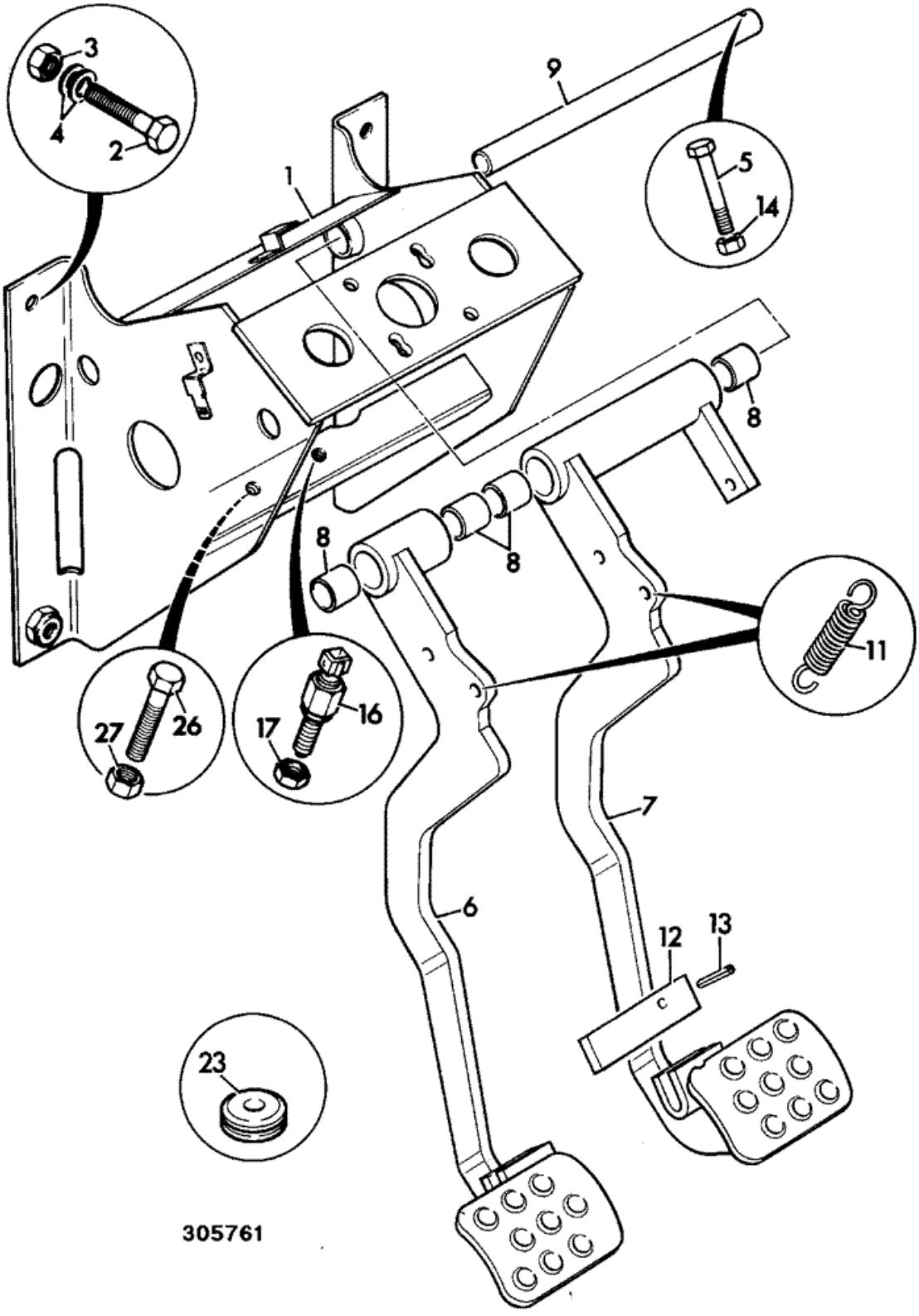

Item	Part #	Change No	Description	Usage Code	QTY
1	331/16346		Bracket carrier brake pedal 214e & 214Se		1
2	1315/0407Z		Bolt M10x25		4
3	1370/0303Z		Nut lock M10		4
4	1420/0008Z		Washer Plain M10		4
5	1315/3212Z		Bolt M6 x 50		1
6	128/16819		Pedal left hand brake		1
7	128/16820		Pedal right hand brake		1
8	:831/00065		Bush *Part of item 6 & 7*		4
9	123/04301		Pin pivot, brake pedal		1
10	1420/0012Z		Washer M20 *between items 6 & 7*		2
11	814/10122		Spring tension		2
12	331/31649		Plate pedal lock		1
13	2102/0615		Pin tension		1
14	1370/0103Z		Nut Self lock M6		1
16	701/80266		Switch footbrake white top		1
17	1340/0402Z		Nut		1
23	2410/1113		Grommet 31.8 panel hole x 3.5 thk		1
26	1315/0410Z		Bolt M10 x 40		1
27	1370/0302Z		Nut lock		1

Product Catalog \ CONSTRUCTION \ NORTH AMERICA \ CONSTRUCTION / INDUSTRIAL \ BACKHOE LOADER 3CX,4CX,214,215,217 \ 3C PLUS (91HP) , Made in Brazil with Dieselmax/IESA Engine 9812/0080 \ D CONTROLS-MACHINE ENGINE & STEERING \ D01 CONTROLS, MACHINE

9812/0080 D1-2-10 CONTROLS, EXCAVATOR, & STABILISER

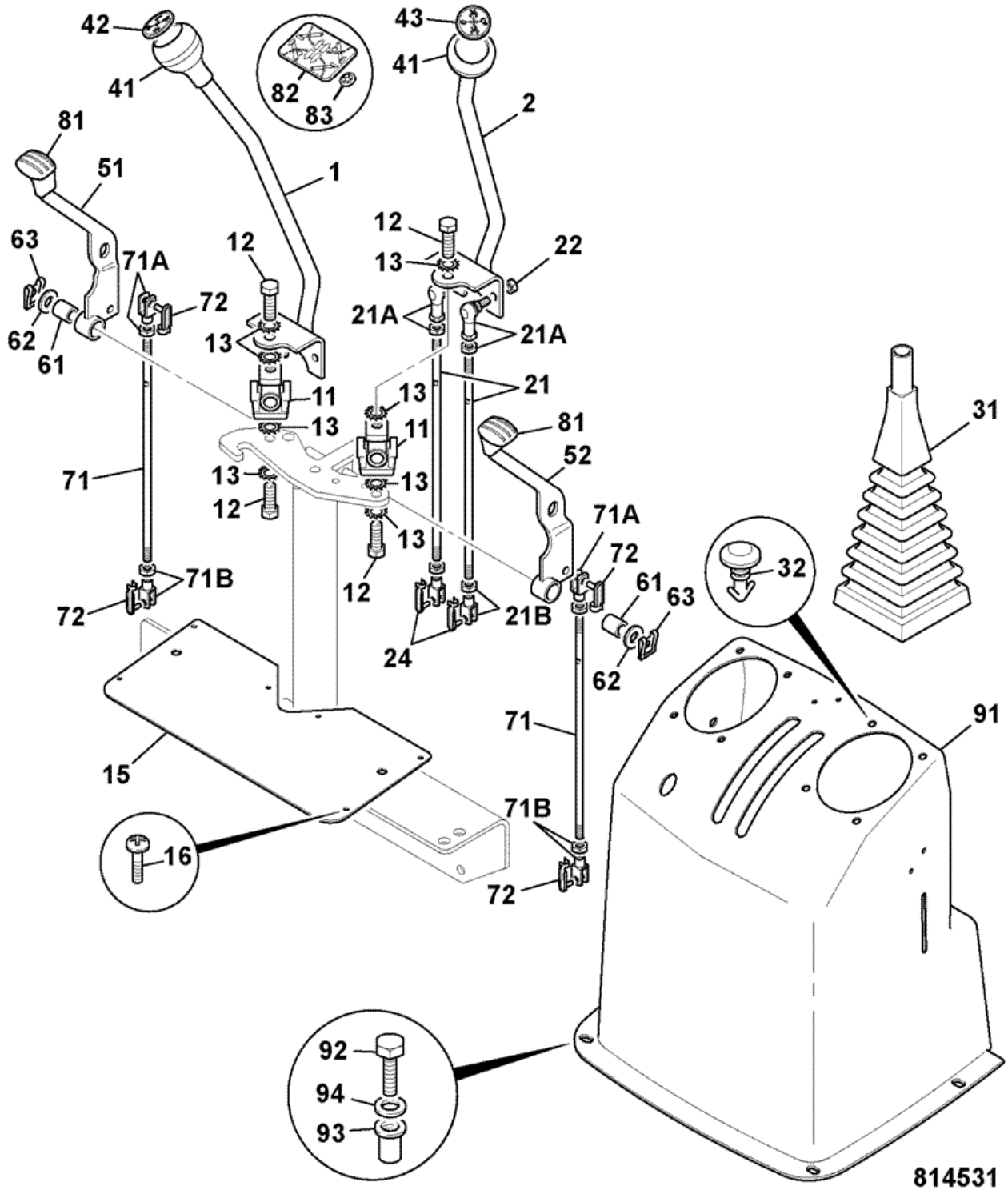

Item	Part #	Change No	Description	Usage Code	QTY
1	125/92000		Lever excavator control left hand + pattern		1

2	125/92100		Lever excavator control right hand + pattern		1
11	116/00416		Joint universal		2
12	1305/0404Z		Bolt		4
13	1417/0014Z		Washer star		8
15	128/10925		Plate access, excavator 214e as supplied		1
16	1430/1303		Screw		4
21	331/11275		Rod control assembly 343mm long		4
21A	:123/08002		Joint ball M8 right hand		1
21A	:1370/0202D		Nut thin		1
21B	:913/02601		Clevis fork (8mm hole)		1
21B	:826/01108		Nut M8 LH thin		1
22	1370/0203Z		Nut self lock M8		4
24	123/07389		Pin spring,8mm clevis		4
31	123/04714		Gaiter excavator control		2
32	826/00959		Fastener drive yellow		8
41	128/12635		Knob assembly		2
42	817/17773		Decal LEFT HAND CONTROL JCB & SAE		1
43	817/17774		Decal RIGHT HAND CONTROL JCB & SAE		1
51	331/46281		Lever stabiliser left hand		1
52	331/46282		Lever stabiliser right hand		1
61	831/00098		Bearing		2
62	1420/0008Z		Washer Plain M10		2
63	913/00026		Clip retaining		2
71	123/07395		Rod stabiliser control		2
71A	:913/01801		Clevis M8		1
71A	:1370/0202D		Nut thin		1
71B	:913/02601		Clevis fork (8mm hole)		1
71B	:826/01108		Nut M8 LH thin		1
72	123/07389		Pin spring,8mm clevis		4
81	331/30884		Knob throttle/ stabiliser control		2
82	817/17770		Decal stabiliser control		1
83	826/00711		Washer M4'starloc'		2
91	331/27759		Cover excavator		1
92	1315/0207Z		Screw M6 x 25mm long		4
93	826/01101		Nut rivet,M6 open ended for 3 to 5.5mm plt		2
94	823/00384		Washer		4

Product Catalog \ CONSTRUCTION \ NORTH AMERICA \ CONSTRUCTION / INDUSTRIAL \ BACKHOE LOADER 3CX,4CX,214,215,217 \ 3C PLUS (91HP) , Made in Brazil with Dieselmax/IESA Engine 9812/0080 \ D CONTROLS-MACHINE ENGINE & STEERING \ D01 CONTROLS, MACHINE

9812/0080 D1-3-20 CONTROLS, AUXILIARY VALVE, BACKHOE, OPTIONAL

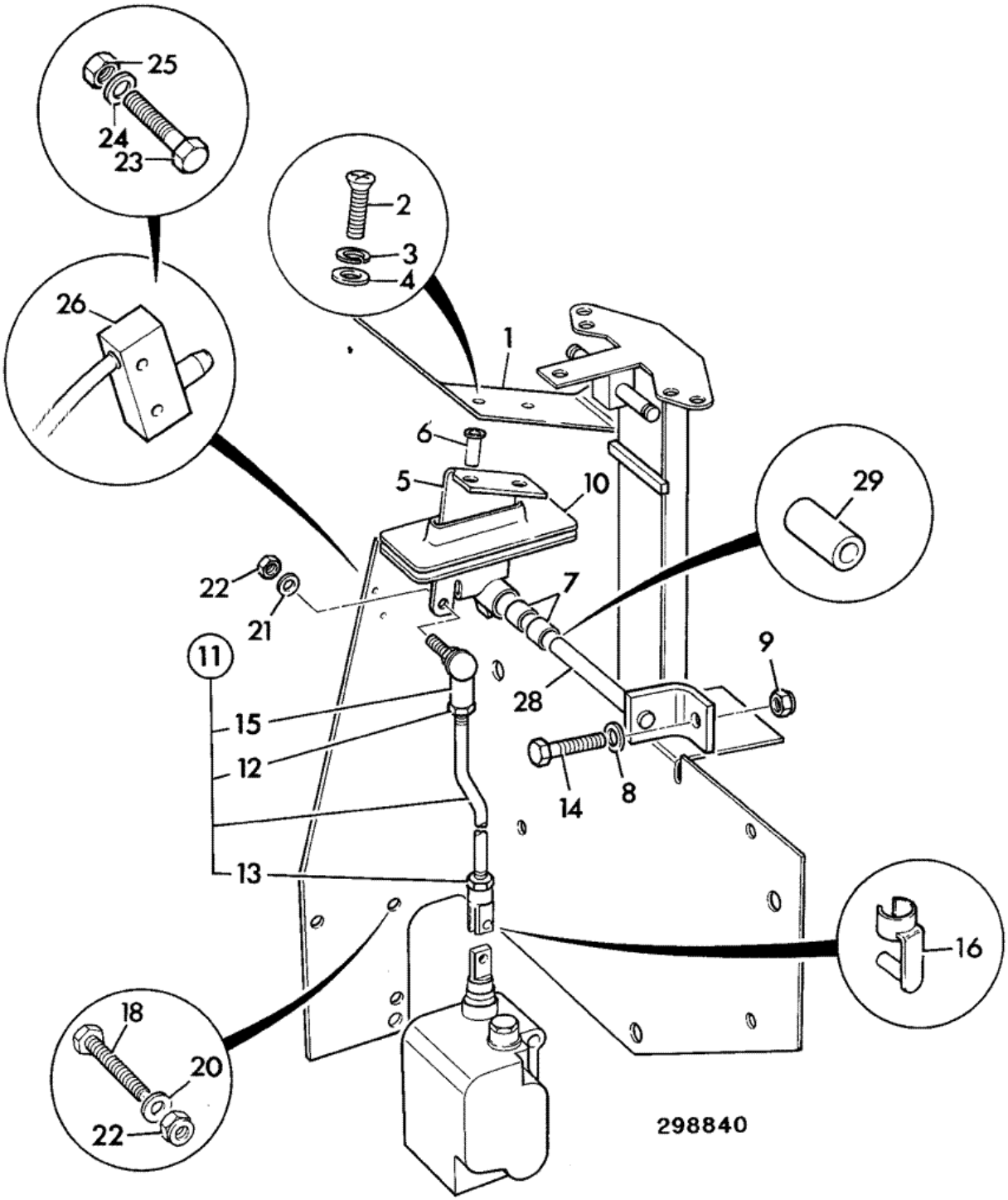

Item	Part #	Change No	Description	Usage Code	QTY
1	123/06353		Plate aux pedal		1
2	826/01591		Screw		2

3	1425/0006Z		Washer Spring		2
4	823/00573		Washer		2
5	128/14679		Pivot aux. pedal		1
6	:826/01101		Nut rivet,M6 open ended for 3 to 5.5mm plt		2
7	:831/00096		Bearing		2
8	1420/0008Z		Washer Plain M10		1
9	1370/0303Z		Nut lock M10		3
10	123/04384		Seal aux pedal		1
11	913/10303		Rod control assembly		1
12	:1370/0202Z		Nut M8		1
13	:913/01108		Nut left hand thread		1
14	:913/02601		Clevis fork (8mm hole)		1
15	:123/08002		Joint ball M8 right hand		1
16	123/07389		Pin spring,8mm clevis		1
18	1315/3410Z		Bolt M10 x 40		2
20	1420/0008Z		Washer Plain M10		2
21	1418/0011Z		Washer lock		3
22	1370/0303Z		Nut lock M10		3
23	.		'See Remark' *not fitted*		2
24	.		'See Remark' *not fitted*		2
25	.		'See Remark' *not fitted*		2
26	.		'See Remark' *not fitted*		1
28	123/07391		Bracket pivot		1
29	123/07392		Spacer		1

Product Catalog \ CONSTRUCTION \ NORTH AMERICA \ CONSTRUCTION / INDUSTRIAL \ BACKHOE LOADER 3CX,4CX,214,215,217 \ 3C PLUS (91HP) , Made in Brazil with Dieselmax/IESA Engine 9812/0080 \ D CONTROLS-MACHINE ENGINE & STEERING \ D01 CONTROLS, MACHINE

9812/0080 D1-4-11 CONTROL, SHOVEL RESET

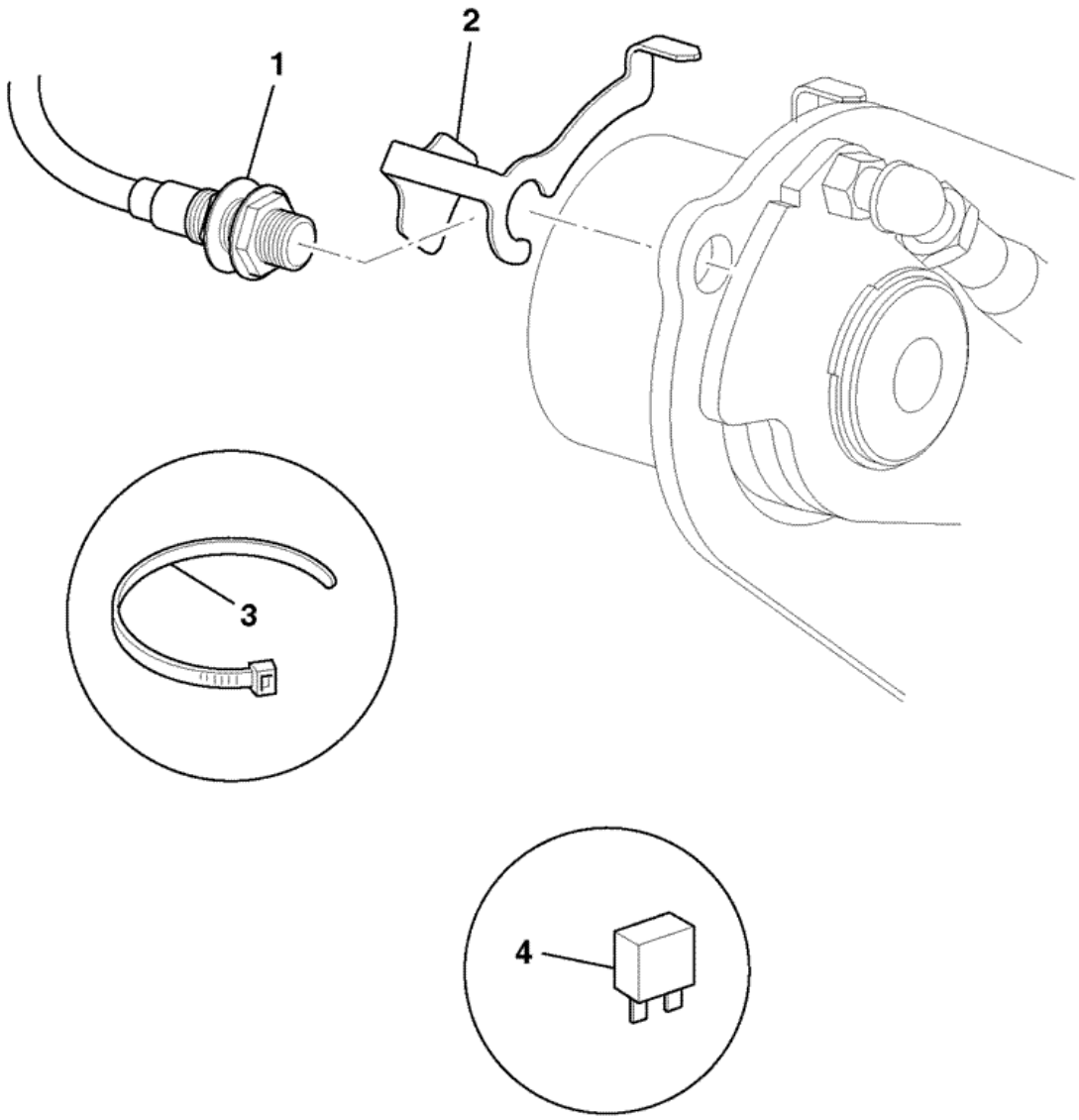

788270

Item	Part #	Change No	Description	Usage Code	QTY
1	701/80537		Sensor shovel reset		1
2	331/52128		Bracket level indicator		1

3	826/01144		Tie cable 200mm long *attach harness to loader pipes*		5
4	716/30149	Superseded	Relay 12v micro *fit to fusebox*		1
4	332/C3148		Relay 12v micro high capacity		1
5	721/11412		Harness link *if fitted- main harness to loader valve*		1

Product Catalog \ CONSTRUCTION \ NORTH AMERICA \ CONSTRUCTION / INDUSTRIAL \ BACKHOE LOADER 3CX,4CX,214,215,217 \ 3C PLUS (91HP) , Made in Brazil with Dieselmax/IESA Engine 9812/0080 \ D CONTROLS-MACHINE ENGINE & STEERING \ D03 COLUMN, STEERING

9812/0080 D3-1-11 STEERING COLUMN

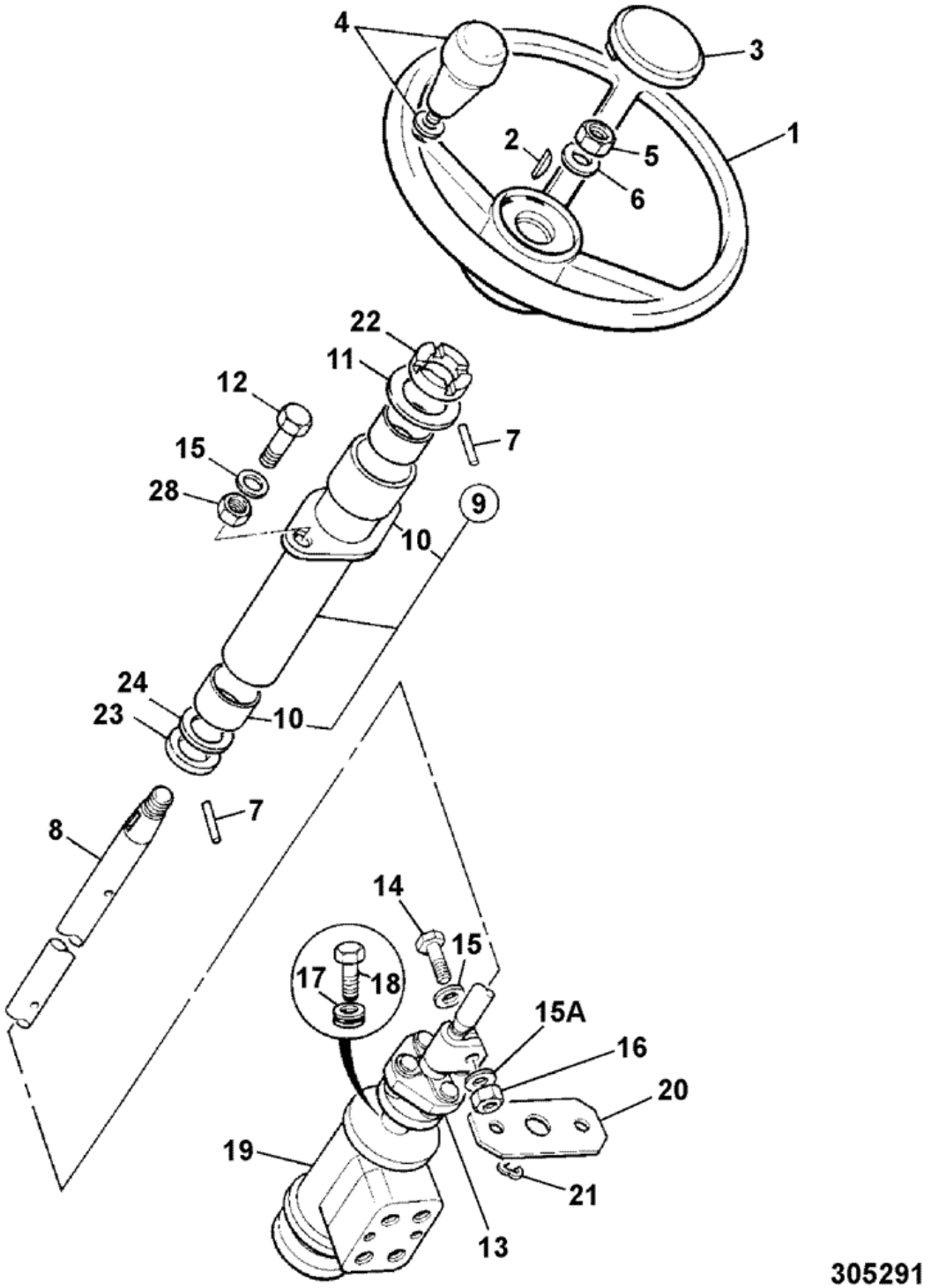

Item	Part #	Change No	Description	Usage Code	QTY
1	331/27410		Wheel steering		1
2	G18/2		Key		1

3	331/27487		Cap steering wheel		1
4	331/27411		Knob spinner *Optional*		1
4A	331/27488		Plug blanking		1
5	1340/0602Z		Nut		1
6	1411/0007Z		Washer 5/8" Medium		1
7	2102/0417		Pin tension		1
8	123/07285		Shaft fixed steer column		1
9	126/00314		Column steering outer		1
10	:NSP		None serviced part		2
11	1411/0009Z		Washer		1
12	1315/0408Z		Bolt M10 x 30		2
13	331/36009		Coupling		1
14	1315/0310Z		Bolt M8x40		2
15	1420/0008Z		Washer Plain M10		2
15A	1420/0008Z		Washer Plain M10		2
16	1370/0203Z		Nut self lock M8		2
17	255/35203		Insert mounting		4
18	1315/3409Z		Bolt M10 x 35		4
18A	1412/0004Z		Washer		2
19	.		'See Remark' *See frame E3-10-10*		1
20	123/04752		Plate retainer		1
21	821/00190		Clip 'E'		1
22	831/00074		Bearing thrust		1
23	1420/0012Z		Washer M20		1
24	823/00302		Washer 2mm		1

Product Catalog \ CONSTRUCTION \ NORTH AMERICA \ CONSTRUCTION / INDUSTRIAL \ BACKHOE LOADER 3CX,4CX,214,215,217 \ 3C PLUS (91HP) , Made in Brazil with Dieselmax/IESA Engine 9812/0080 \ D CONTROLS-MACHINE ENGINE & STEERING \ D01 CONTROLS, MACHINE

9812/0080 D1-21-10 CONTROL, PARKING BRAKE

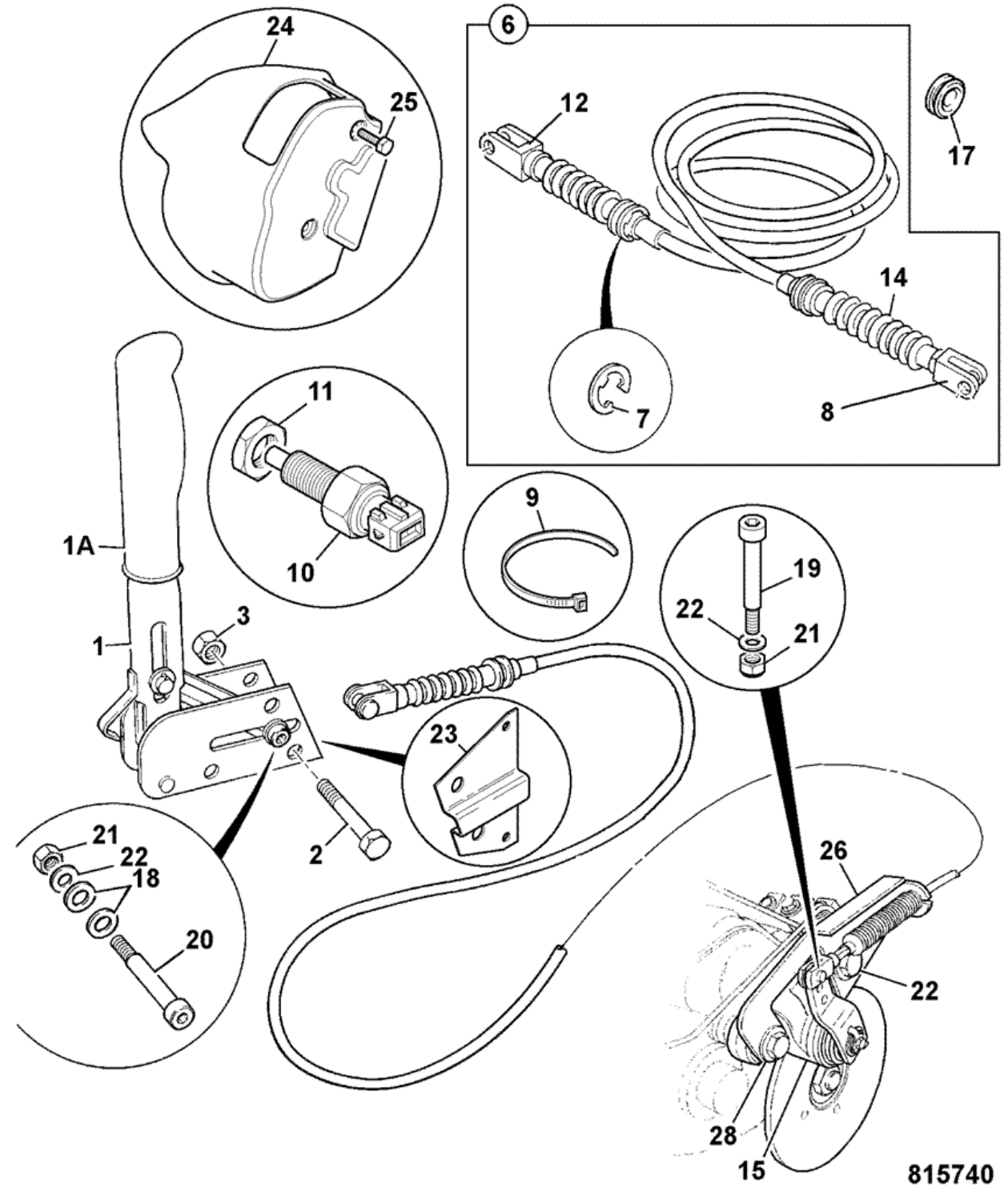

Item	Part #	Change No	Description	Usage Code	QTY
1	15/914100		Lever parking brake		1
1A	331/16848		Grip hand red		1

2	1315/3312Z		Bolt		2
3	1370/0203Z		Nut self lock M8		2
5	1420/0007Z		Washer plain M8		2
6	910/60253		Cable parkbrake		1
7	:826/00627		Clip 'E'		2
8	:NSP		None serviced part		1
9	121/77603		Tie cable L=300mm x W=7.6mm		1
10	701/72500		Switch red top		1
11	1340/0402Z		Nut		2
12	:NSP		None serviced part		1
14	:NSP		None serviced part		2
15	:.		'See Remark' *Parking brake, See page G1-3-1*		1
17	123/04561		Grommet cable/harness		1
18	1420/0007Z		Washer plain M8		2
19	826/01597		Screw shoulder 8 x 20 x M6		1
20	826/01596		Capscrew 40mm long		1
21	1370/0103Z		Nut Self lock M6		2
22	1420/0006Z		Washer M6		2
23	123/07792		Bracket brake lever cover		1
24	123/07793		Cover brake lever		1
25	826/01521		Screw M6 X 20		2
26	331/58423		Bracket reaction, parkbrake		1
27	826/10526		Bolt		2
28	823/00603		Washer hardened M16		2

9812/0080 D1-24-10 CONTROL, GEAR CHANGE

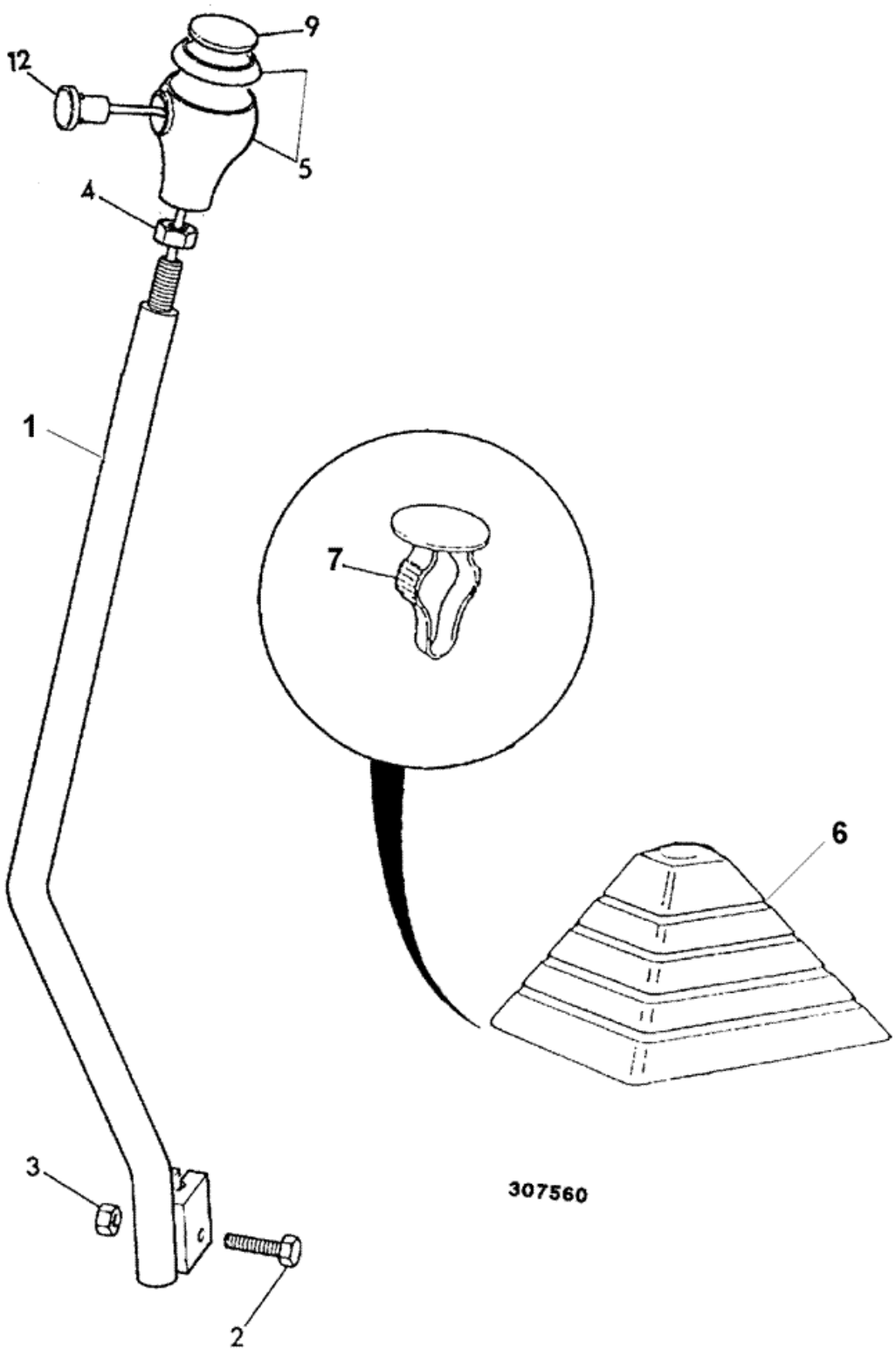

Item	Part #	Change No	Description	Usage Code	QTY
1	123/07588		Lever gear		1
2	1315/3411Z		Bolt M10 x 45mm		1
3	1370/0303Z		Nut lock M10		1
4	1340/0602Z		Nut		1
5	128/12634	<M TBA	Knob assembly		1
5	128/C0600	>M TBA	Knob assembly, gearlever black & silver		1
5B	:331/30772		Knob Top, Silver		1
6	122/67450		Gaiter		1
7	826/00959		Fastener drive yellow		4
9	817/17698		Decal gearlever knob 4 speed		1
12	701/49800		Switch micro		1

Product Catalog \ CONSTRUCTION \ NORTH AMERICA \ CONSTRUCTION / INDUSTRIAL \ BACKHOE LOADER 3CX,4CX,214,215,217 \ 3C PLUS (91HP) , Made in Brazil with Dieselmax/IESA Engine 9812/0080 \ E HYDRAULICS INCLUDING STEERING \ E04 RAMS

9812/0080 E4-1-41 RAM, LIFT, 50MM ROD X 80MM CYL

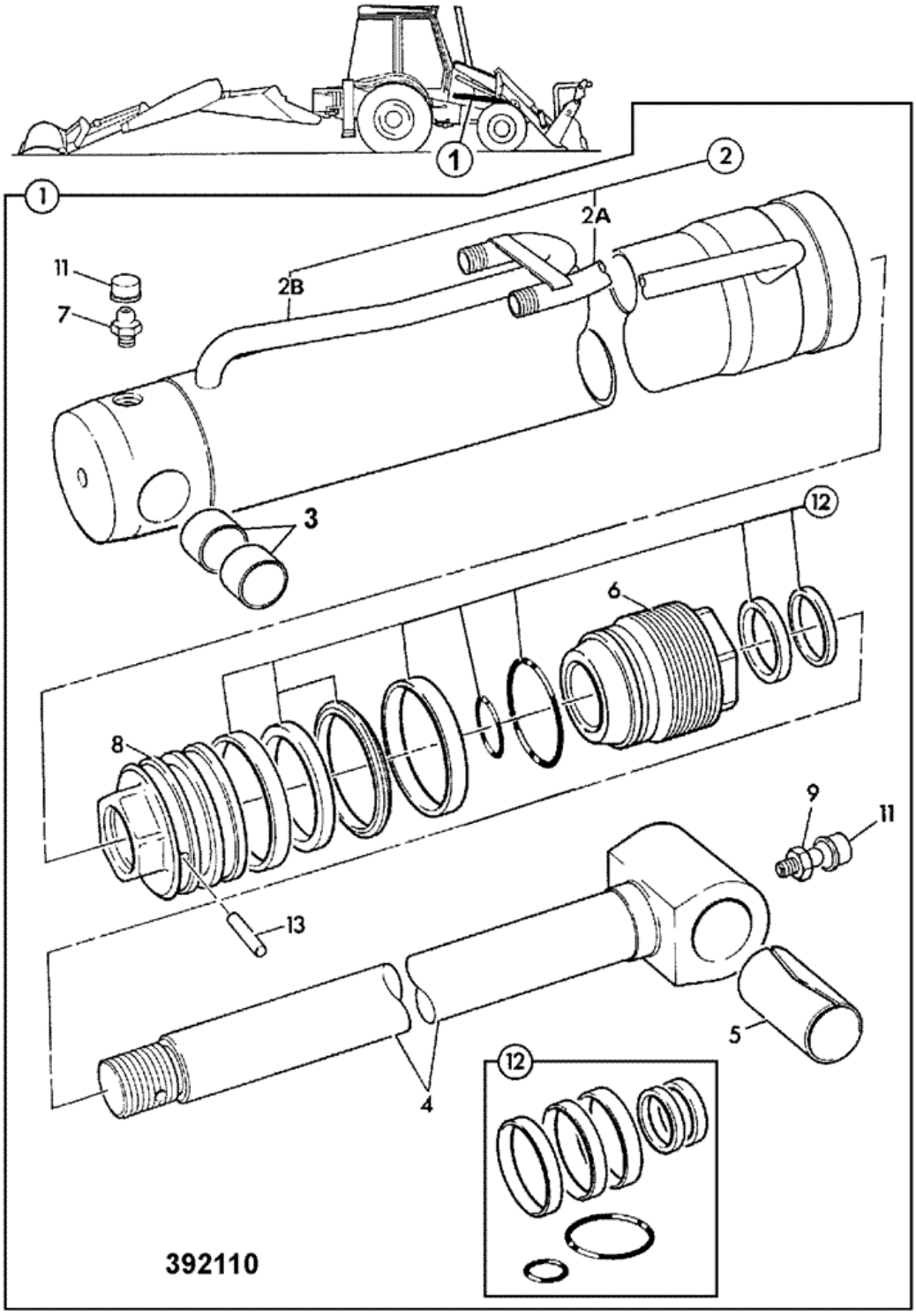

Item	Part #	Change No	Description	Usage Code	QTY
1	576/60163		Ram loader lift		1
2	:576/70161		Cylinder loader lift		1

2A	::NSP		None serviced part		1
2B	::NSP		None serviced part		1
3	:831/10181		Bearing 50.94-55.9		1
4	:590/40581		Rod piston, 50X957 lift ram		1
5	:1208/0015		Bush		1
6	:594/14279		Kit-end cap		1
7	:1450/0001		Nipple grease, straight 1/8 BSP		1
8	:595/27100		Head piston		1
9	:1450/0001		Nipple grease, straight 1/8 BSP		1
11	:835/00017		Cap grease nipple		2
12	:991/00102		Kit seal 50mm rod x 80mm cyl		1
13	:826/01182		Dowel		1

Product Catalog \ CONSTRUCTION \ NORTH AMERICA \ CONSTRUCTION / INDUSTRIAL \ BACKHOE LOADER 3CX,4CX,214,215,217 \ 3C PLUS (91HP) , Made in Brazil with Dieselmax/IESA Engine 9812/0080 \ E HYDRAULICS INCLUDING STEERING \ E01 HOSE & PIPEWORK

9812/0080 E1-9-1 CIRCUIT, DIPPER RAM

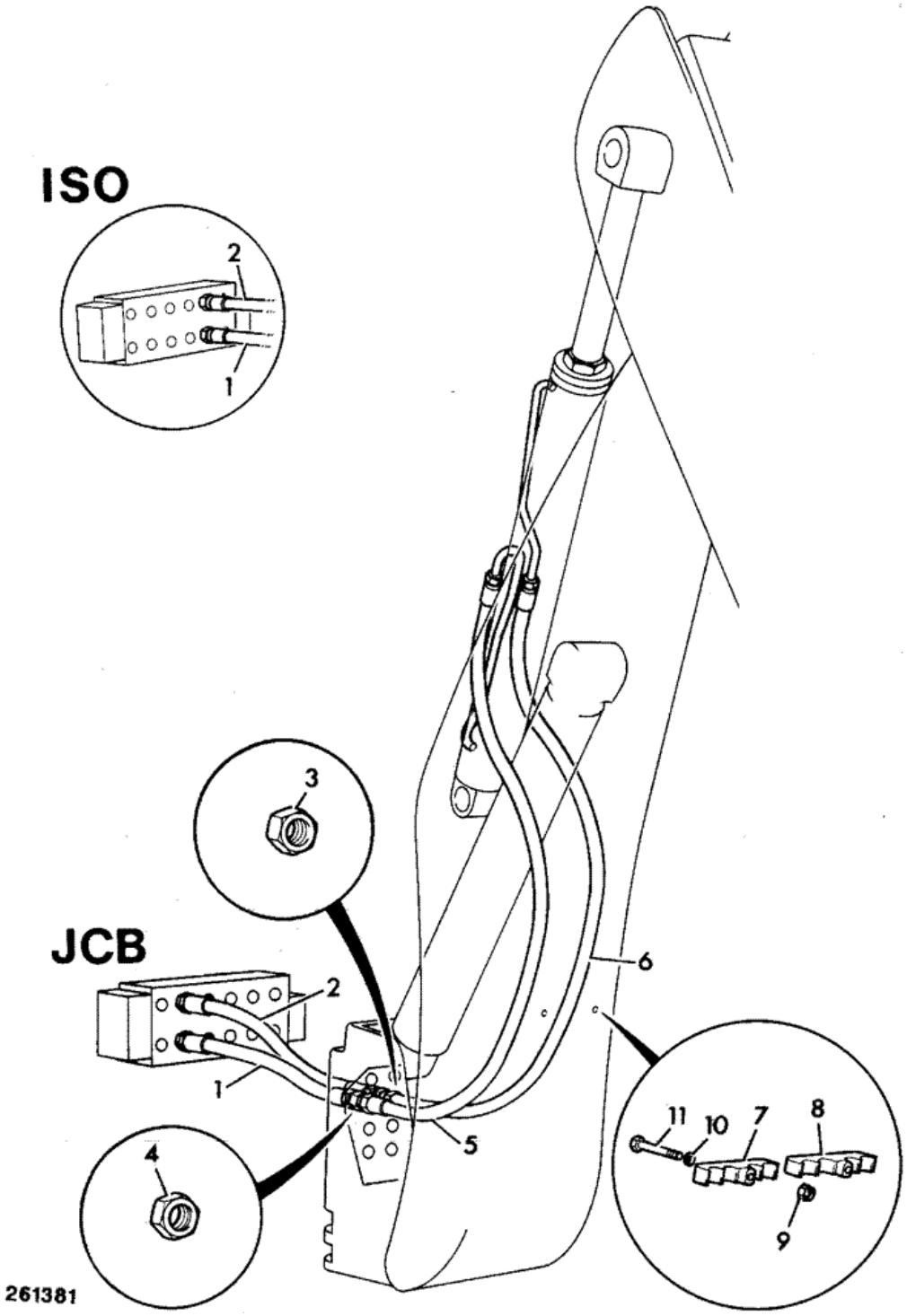

Item	Part #	Change No	Description	Usage Code	QTY
1	614/05000		Hose 5/8BSPx820		1
2	613/36012		Hose 1/2BSPx930		1

3	1356/0204Z		Nut		1
3A	1418/0018Z		Washer lock, internal teeth		1
4	1356/0205Z		Nut		1
4A	1418/0018Z		Washer lock, internal teeth		1
5	629/26900		Hose 5/8 BSP X 2520mm *5/8" BSP*		1
6	629/27300		Hose 1/2BSP x 2800 *1/2" BSP*		1
7	123/05836		Clamp		1
8	123/05836		Clamp		1
9	1370/0303Z		Nut lock M10		2
10	1420/0008Z		Washer Plain M10		8
11	1315/0414Z		Bolt		2

Product Catalog \ CONSTRUCTION \ NORTH AMERICA \ CONSTRUCTION / INDUSTRIAL \ BACKHOE LOADER 3CX,4CX,214,215,217 \ 3C PLUS (91HP) , Made in Brazil with Dieselmax/IESA Engine 9812/0080 \ E HYDRAULICS INCLUDING STEERING \ E02 PUMPS

9812/0080 E2-1-2 PUMP 36/26 CCR, MAIN HYDRAULIC

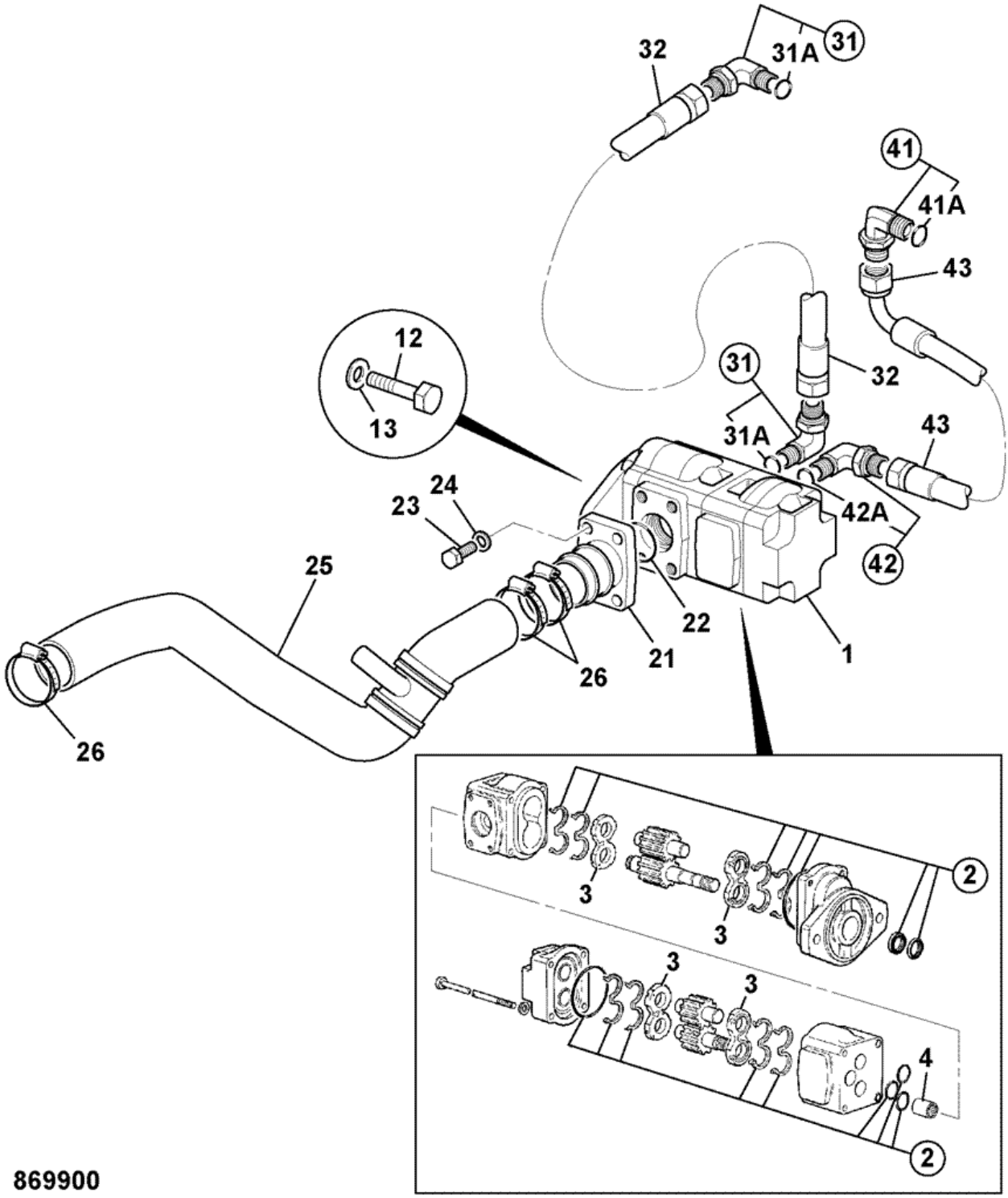

Item	Part #	Change No	Description	Usage Code	QTY
1	20/925579	Superseded	Pump main hydraulic 36/26 cc/r		1
1	332/F9029		Pump main hydraulic 36/26 cc/rev		1

2	:20/950906		Kit-seal main hydraulic pump		1
3	:20/902703		Kit pressure plates (2 off)		2
4	:20/903301		Coupling splined		1
12	1315/0509Z		Screw M12 x 35mm		2
13	1420/0009z		Washer		2
21	903/20774		Adaptor Suction port		1
22	2401/0218		O Ring		1
23	1305/1908Z		Bolt		4
24	823/00309		Washer hardened		4
25	834/10756	<M TBA	Hose suction hydraulic oil		1
25	834/11565	>M TBA	Hose suction manual transmission		1
26	2201/0013		Clip jubilee		3
31	816/90476		Adapter elbow M/M		2
31A	:2401/0508		O Ring		1
32	614/04700		Hose 5/8 X 485L		1
41	816/90460		Adapter elbow M/M		1
41A	:2401/0507		O Ring		1
42	816/90638		Adapter elbow with test point		1
42A	:2401/0507		O Ring		1
43	614/24200		Hose 5/8"BSP 640mm long		1

Product Catalog \ CONSTRUCTION \ NORTH AMERICA \ CONSTRUCTION / INDUSTRIAL \ BACKHOE LOADER 3CX,4CX,214,215,217 \ 3C PLUS (91HP) , Made in Brazil with Dieselmax/IESA Engine 9812/0080 \ E HYDRAULICS INCLUDING STEERING \ E02 PUMPS

9812/0080 E2-2-1 PUMP, TRANSMISSION, SYNCROSHUTTLE

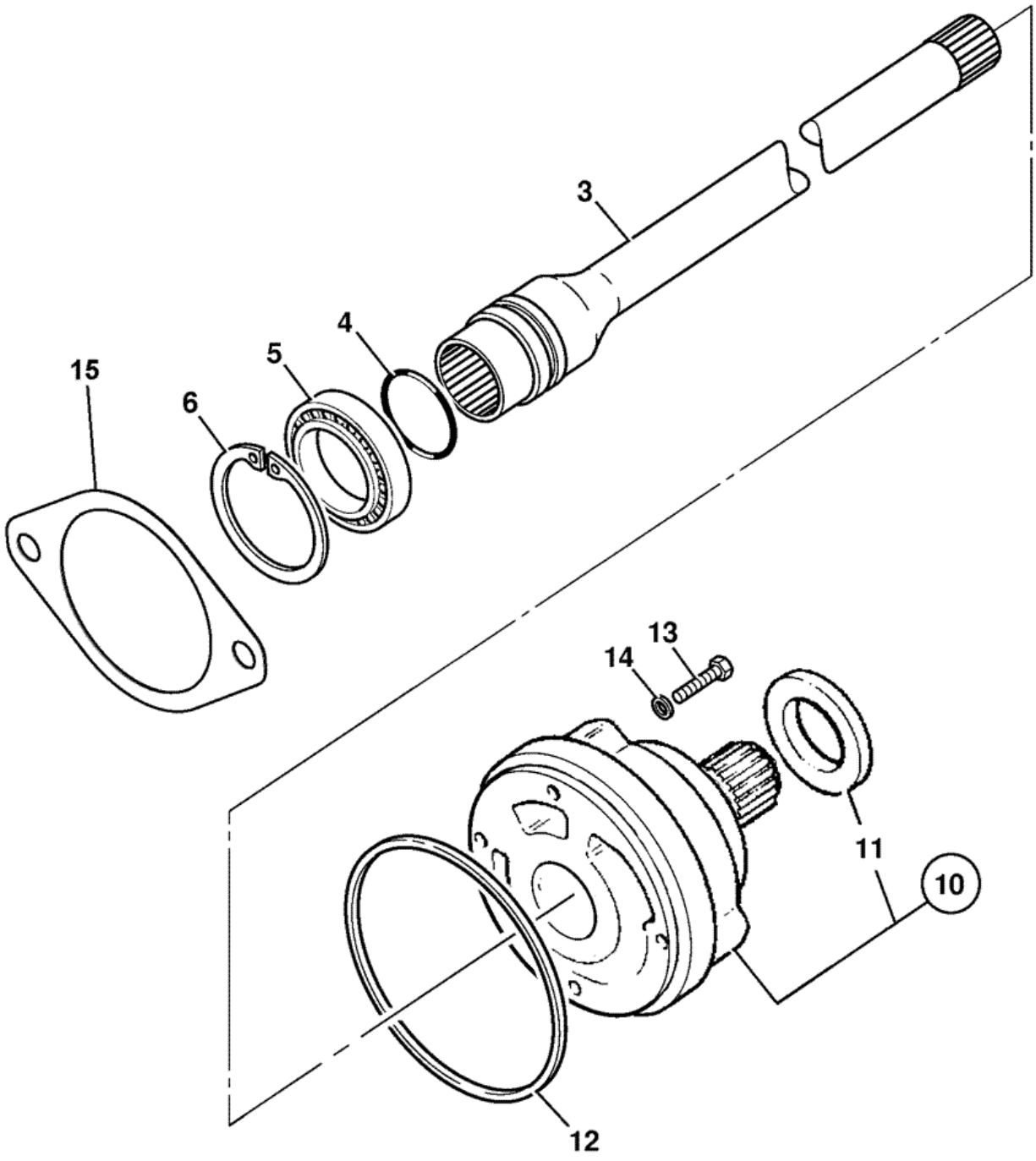

Item	Part #	Change No	Description	Usage Code	QTY
3	459/50431		Shaft pump drive SS700 gearbox		1

4	904/20210		Ring seal		1
5	916/10012		Bearing ball		1
6	2203/1068		Circlip internal		1
10	20/925552		Pump assembly transmission		1
11	:904/20226		Seal transmission pump		1
12	813/50041		Seal rear		1
13	1315/3311Z		Bolt M8 X 45		4
14	823/00291		Washer copper		4
15	4102/3402		Sealant gasket,Loctite 5910 50ml. container *Was 813/10184 gasket*		0

9812/0080 E3-2-1 VALVE, LOADER, 2 SPOOL, WITH FLOAT

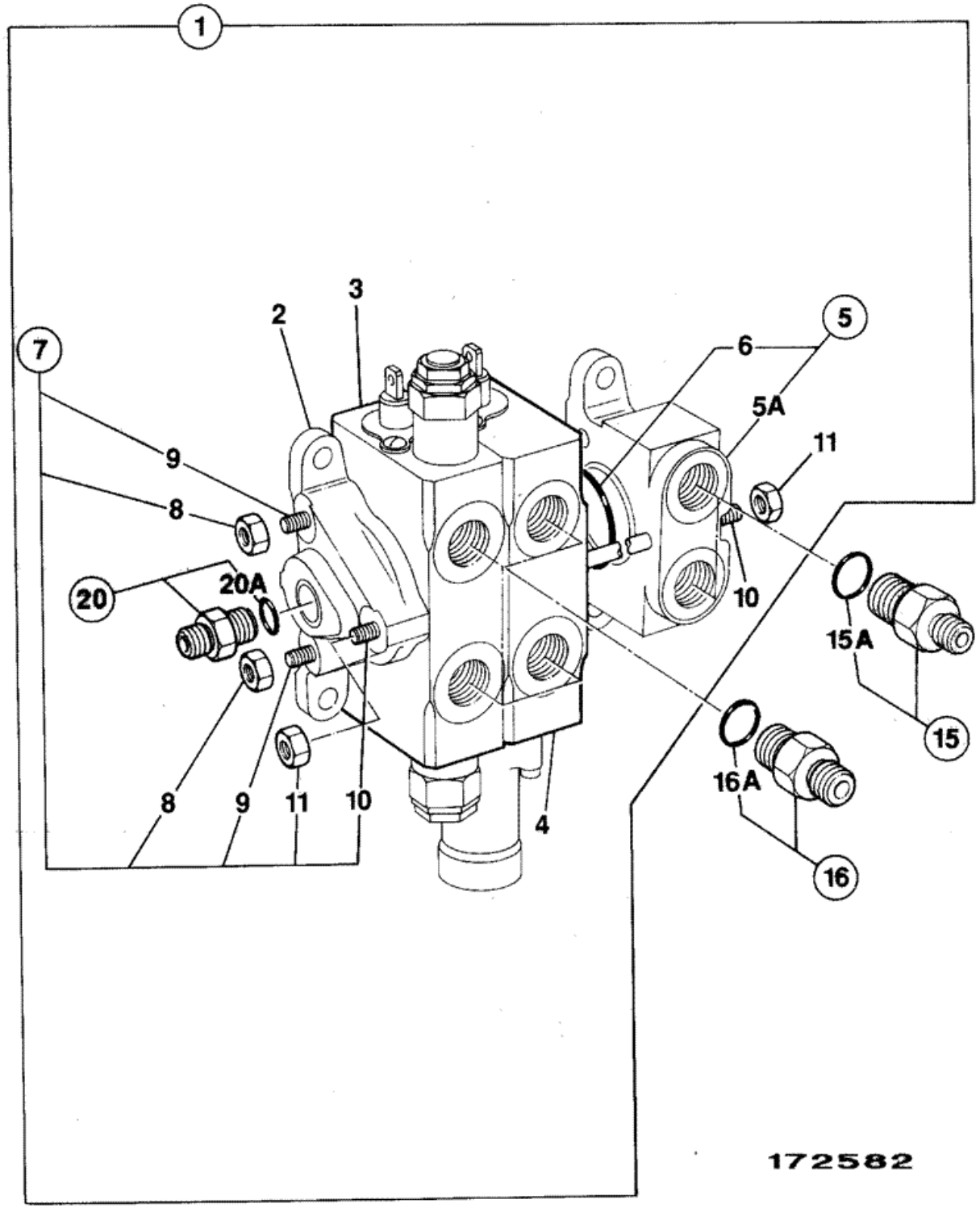

Item	Part #	Change No	Description	Usage Code	QTY
1	25/619300	Superseded	Valve 2 spool loader		1
1	25/223696		Valve loader, 2 spool with float		1
2	:25/987006		Cover HPCO		1
3	:25/222717		Valve section		1
4	:25/222714		Valve section		1
5	:25/987007		Cover inlet		1
5A	::NSP		None serviced part		1
6	::25/606812		O Ring interface valve sections		1
7	::25/607605		Kit-tie rod		1
8	::25/606817		Nut		4
9	::25/607606		Rod tie		2
10	::25/607607		Rod tie		1
11	::25/606815		Nut		2
15	1620/0009		Adapter *Feed line*		1
15	1620/0007		Adapter *Return line*		1
15A	:2401/0506		O Ring		1
16	1620/0005		Adapter 3/4"UNF o-ring boss 1/2"BSP male		4
16A	:2401/0506		O Ring		1
20	1620/0010		Adapter includes 'o'ring		1
20A	:2401/0506		O Ring		1

9812/0080 E3-7-1 FILTER, HYDRAULIC

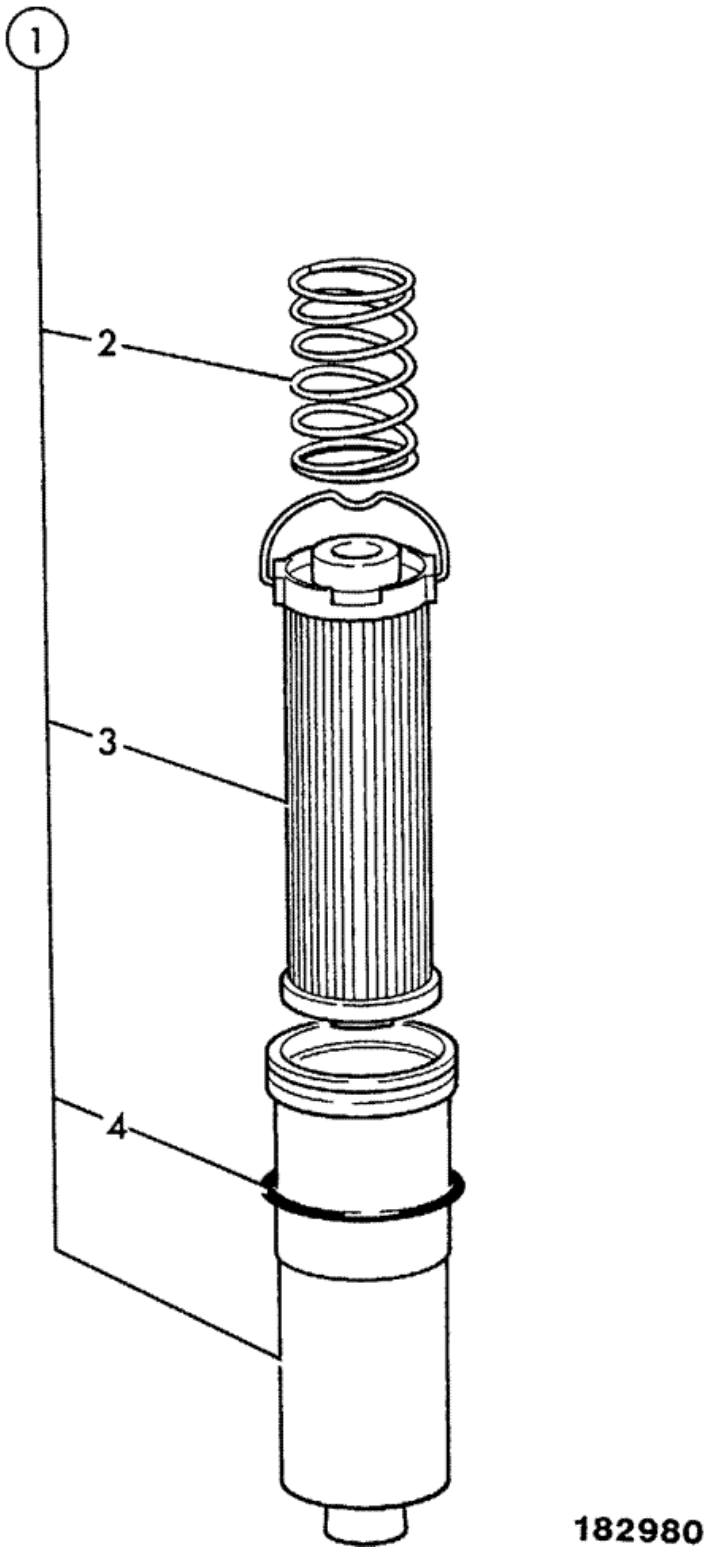

Item	Part #	Change No	Description	Usage Code	QTY
1	32/926051		Filter hydraulic 5 micro		1
2	:814/00358		Spring		1
3	32/925346		Element hydraulic filter 12 micron,229mm long *Normal service*		1
3	:32/926001		Element hydraulic filter 5 micron 254 long *System clean, max 50 hours only.*		1
4	:2403/0224		O Ring		1

9812/0080 E3-8-3 LUBRICANTS & FILTERS

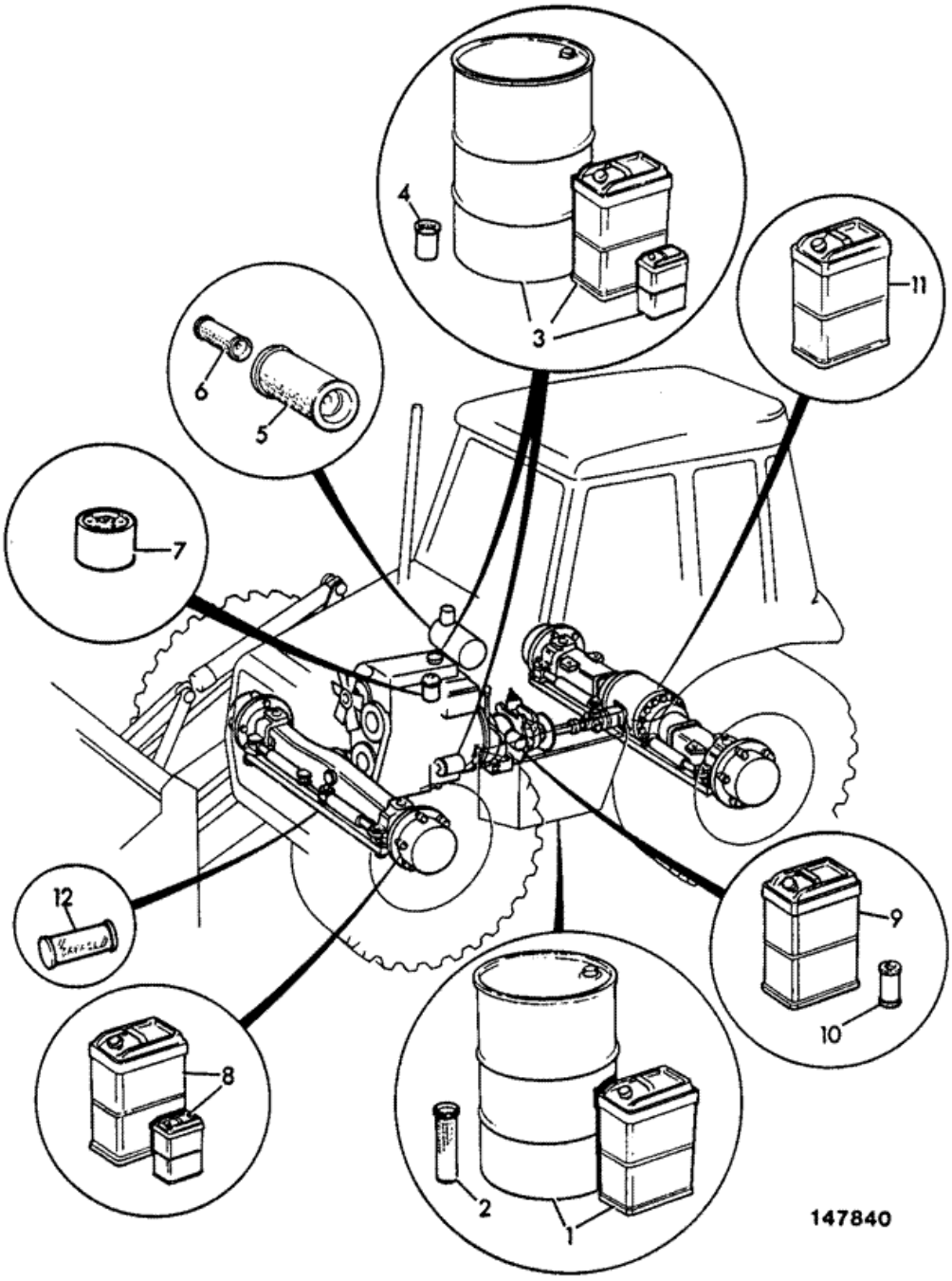

Item	Part #	Change No	Description	Usage Code	QTY
1	4002/1023		Fluid hydraulic JCB HP32 25 litre *25 litres. Machine capacity 130 litre* *See Note 1*		0
1	4002/1024		Fluid hydraulic JCB HP32 200 litre		0
1	4002/0801		Fluid hydraulic 46 5 litre *Optional Hot climate*		0
1	4002/0802		Fluid hydraulic 46 25 litre *Optional Hot climate*		0
1	4002/0803		Fluid hydraulic 46 200 litre		0
1	4002/1223		Fluid hydraulic, 25 litres Biodegradable		0
1	4002/1224		Fluid hydraulic 205 litres Biodegradable		0
2	32/926001		Element hydraulic filter 5 micron 254 long		1
2	32/925341		Element hydraulic filter 5 micron, 254mm long *System clean, max 50 hours only*		1
3	4001/1701		Oil JCB 10W/30 5 litres		0
3	4001/1501		Oil 15W/40, 5 litres		0
3	4001/1901		Oil JCB 20/W50 5 Litre		0
3A	4001/1702		Oil JCB 10W/30 25 litres		0
3A	4001/1502		Oil 15W/40, 25 litres		0
3A	4001/1902		Oil JCB 20/W50 25 Litre		0
3B	4001/1703		Oil JCB 10W/30 200 litres		0
3B	4001/1502		Oil 15W/40, 25 litres		0
3B	4001/1902		Oil JCB 20/W50 25 Litre		0
4	320/04133		Filter engine oil		1
5	32/925682		Element air filter main *Engine*		1
6	32/925683		Element air filter safety *Engine*		1
7	320/07057		Filter fuel *Engine*		1
8	4000/0301		Oil HD90 gear 5 litre		0
8	4000/0302		Oil HD90 gear 25 litre		0
8	4000/0303		Oil HD 90 gear 200 Litres		0
8	4000/0702		Oil JCB Special gear 5 litres *Front axle with LSD*		0
8	4000/0701		Oil Special Gear Oil Plus. 25 litre *Front axles with LSD*		0
8	4000/0703		Oil Special Gear Oil Plus. 200 litre *Front axle with LSD*		0
9	4000/2501		Fluid transmission 10W 5 litre		0
9	4000/2502		Fluid transmission 10W 25 litre		0
9	4000/2503		Fluid transmission 10W 200 litre		1
10	581/18076		Element transmission filter 120.7mm long *Manual, Powershift & Autoshift Transmission*		1
11	4000/0701		Oil Special Gear Oil Plus. 25 litre		0
11	4000/0703		Oil Special Gear Oil Plus. 200 litre		0
12	4003/2007		Grease cartridge HP 400 gm		0
12	4003/2006		Grease HP 12.5kg *12.5 kg*		0
12	4003/2010		Grease JCB high pressure 50kg		0
12	4003/2017		Grease HP 400g x 24		0
13	4004/0501		Sealant Waxoyl, aerosol		0
13	4004/0502		Sealant Waxoyl 5 ltr can		0
14	4006/0101		Fluid anti-freeze 1 Ltr		0

14	4006/0102		Fluid anti-freeze 5 litre		0
14	4006/0103		Fluid anti-freeze 25 Ltr		0
14	4006/0104		Fluid anti-freeze 200 Ltr		0
15	4002/0503		Brake fluid, 5 ltr		1

Note 1: For all items on this page, Refer to the Service Workshop Manual before use.

9812/0080 E4-3-1 RAM, STEERING, 2WD

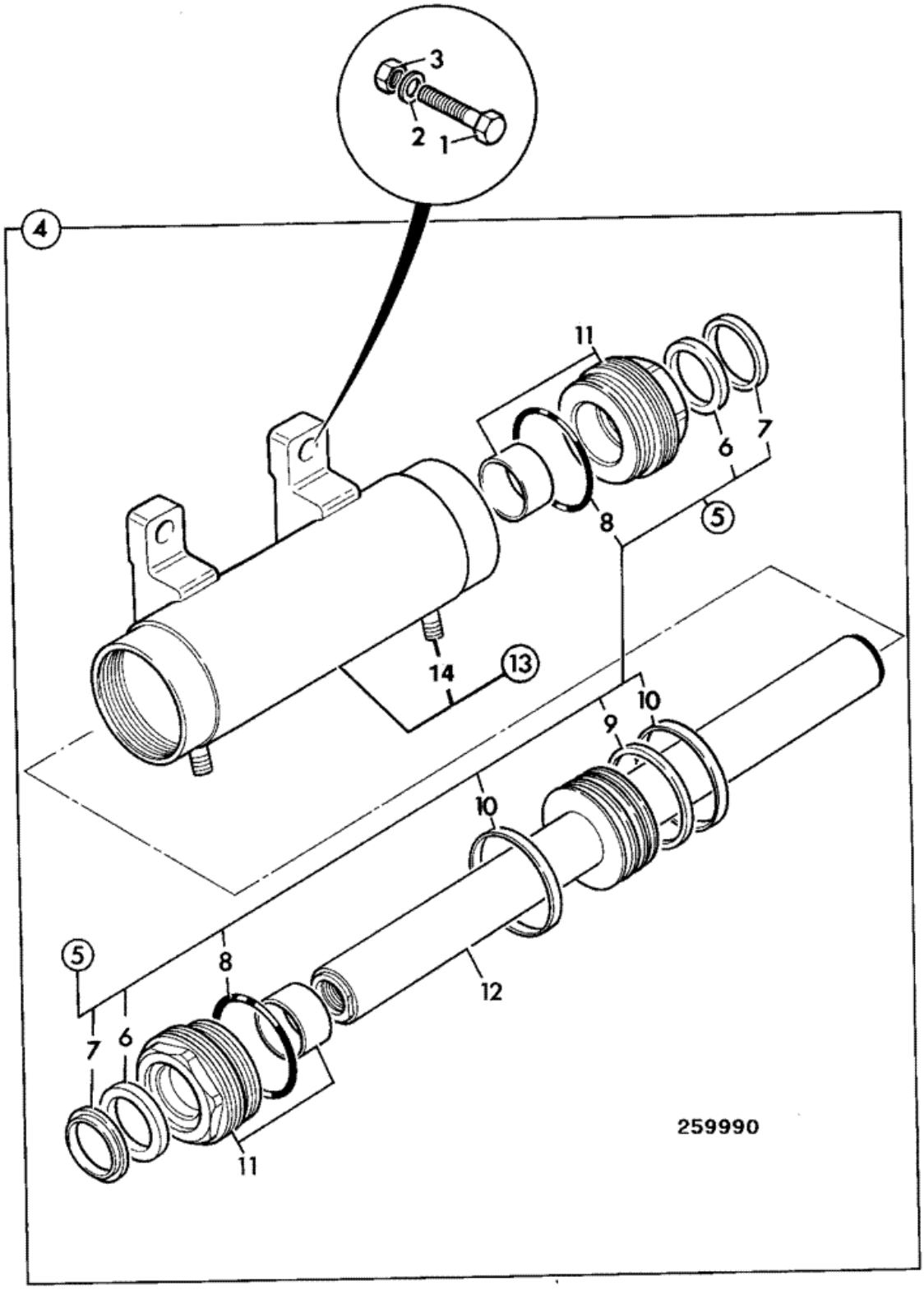

Item	Part #	Change No	Description	Usage Code	QTY
1	1315/3721Z		Bolt M16 x 110		4
2	1420/0011Z		Washer M16 plain		4
3	1370/0603Z		Nut M16		4
4	573/10031		Ram assembly, steer power trackrod		1
5	:991/00156		Kit-seal power track rod ram 75mm cyl x 45mm rod		1
6	::2411/0605		Seal gland 45mm rod		2
7	::2411/8705		Seal wiper 45mm rod		2
8	::2302/0307		O Ring		2
9	::2411/1132		Seal piston head 75mm		1
10	::2411/7975		Ring wear 75mm cyl		2
11	:594/14074		Kit-end cap 75mm cyl x 45mm rod		2
12	:590/40210		Rod piston		1
13	:573/20000		Cylinder power track rod 75mm		1

9812/0080 E4-3-2 RAM, STEERING, 4WD

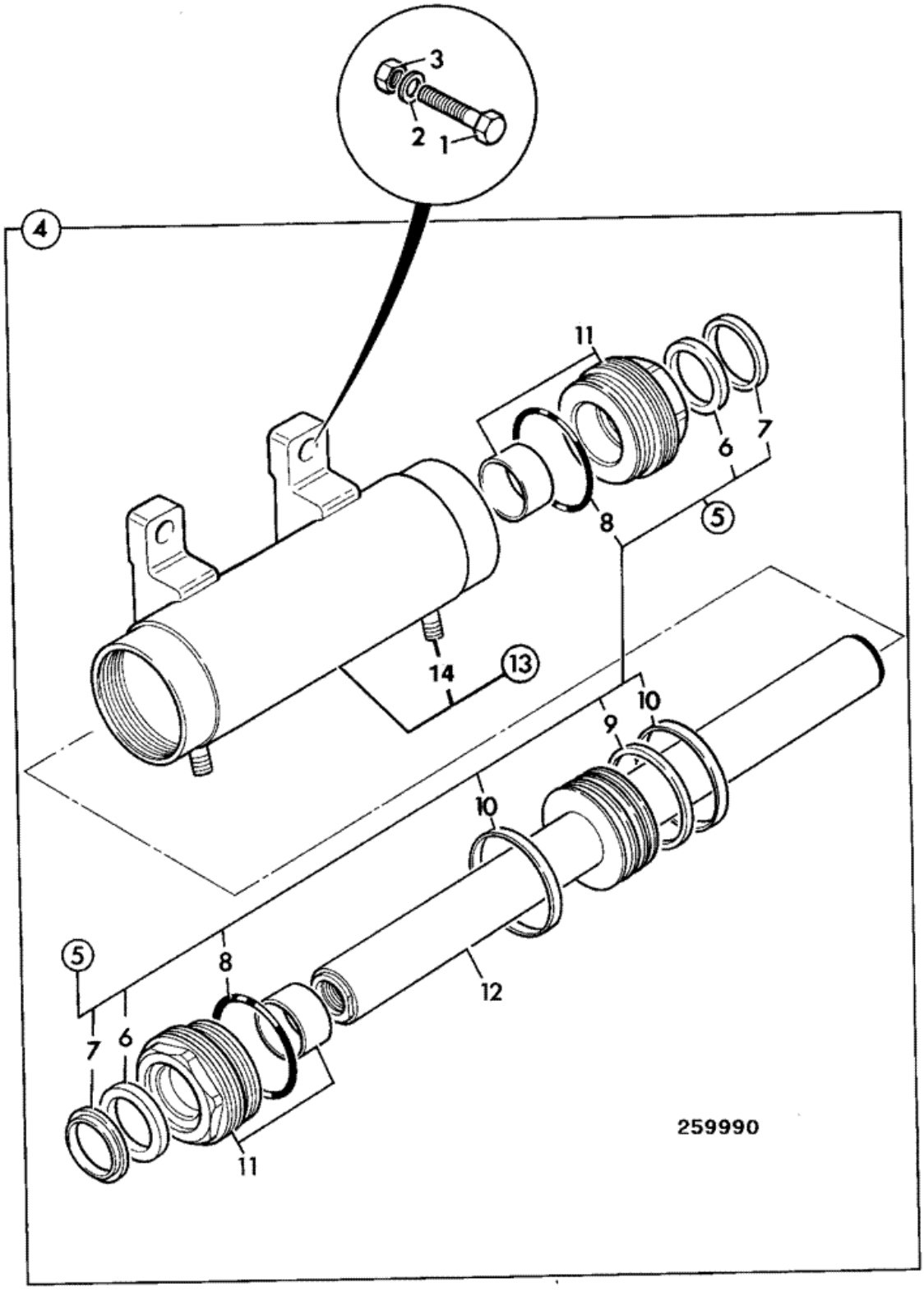

Item	Part #	Change No	Description	Usage Code	QTY
1	1315/3818Z		Bolt M20 x 80mm		2
1	1316/3821Z		Bolt Hex. hd M20x110		2
2	1420/0012Z		Washer M20 *for 1315/3818Z*		2
2	1422/0012D		Washer *for 1316/3812Z*		2
3	.		'See Remark' *Not fitted or required.*		0
4	573/10032	Superseded	Ram steer		1
4	573/10061		Ram steer Black Export Version		1
5	:991/00156		Kit-seal power track rod ram 75mm cyl x 45mm rod		1
6	::2411/0605		Seal gland 45mm rod		2
7	::2411/8705		Seal wiper 45mm rod		2
8	::2302/0307		O Ring		2
9	::2411/1132		Seal piston head 75mm		1
10	::2411/7975		Ring wear 75mm cyl		2
11	:594/14074		Kit-end cap 75mm cyl x 45mm rod		2
12	:590/40208		Rod piston		1
13	:573/20001		Cylinder power track rod 75mm		1

Product Catalog \ CONSTRUCTION \ NORTH AMERICA \ CONSTRUCTION / INDUSTRIAL \ BACKHOE LOADER 3CX,4CX,214,215,217 \ 3C PLUS (91HP) , Made in Brazil with Dieselmax/IESA Engine 9812/0080 \ E HYDRAULICS INCLUDING STEERING \ E04 RAMS

9812/0080 E4-4-2 RAM, CLAMSHOVEL, 6 IN 1

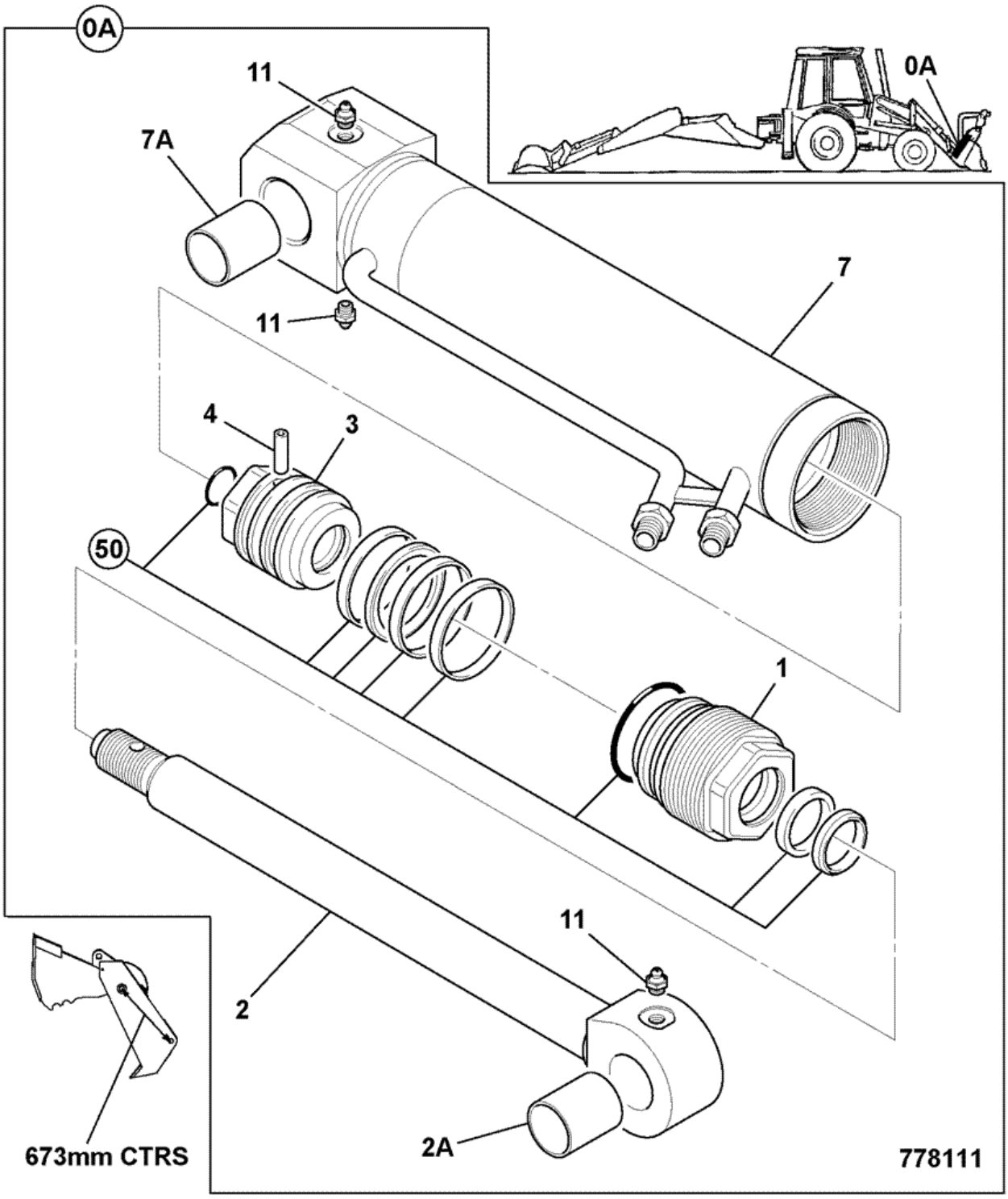

Item	Part #	Change No	Description	Usage Code	QTY
A	556/60331	Superseded	Ram clamshovel	A	1
A	556/60401		Ram clamshovel 557 closed centres	B	1

1	:594/14300		Cap end cap assembly 70 X 40	A	1
1	:332/D4842		Cap endcap assembly 70 X 40	B	1
2	:590/40111		Rod piston 6in1 shovel		1
2A	::1207/0011		Bush		1
3	:595/27600		Head piston		1
4	:826/01182		Dowel		1
7	:556/70345		Cylinder clamshovel		1
7A	::1207/0019		Bush		1
11	:1450/0001		Nipple grease, straight 1/8 BSP		3
50	:991/10151		Kit seal kit 70 x 40	A	1
50	:332/D4850		Kit seal kit 70X40	B	1

Product Catalog \ CONSTRUCTION \ NORTH AMERICA \ CONSTRUCTION / INDUSTRIAL \ BACKHOE LOADER 3CX,4CX,214,215,217 \ 3C PLUS (91HP) , Made in Brazil with Dieselmax/IESA Engine 9812/0080 \ E HYDRAULICS INCLUDING STEERING \ E04 RAMS

9812/0080 E4-5-1 RAM, BOOM, 110MM CYL X 60MM ROD

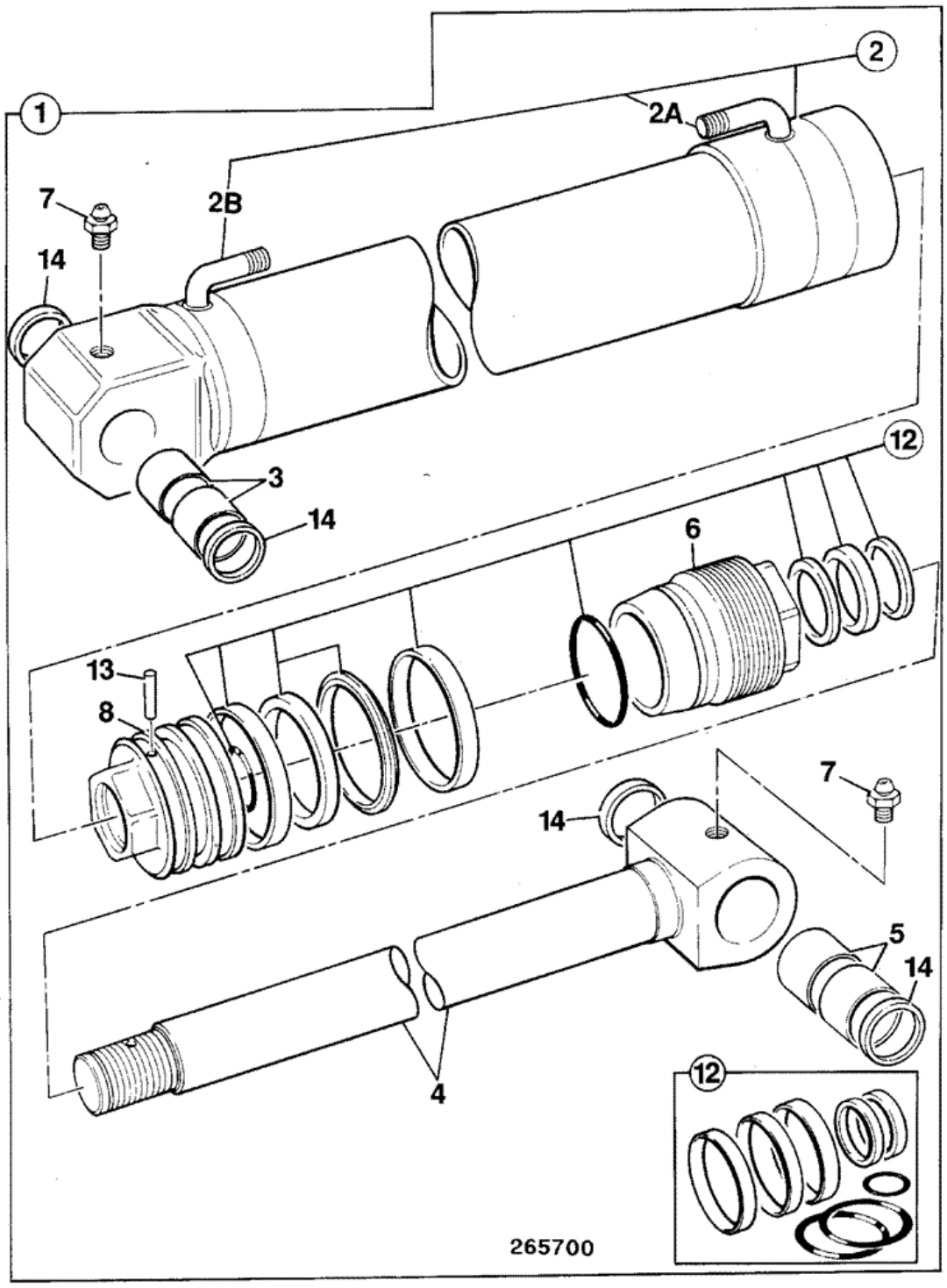

Item	Part #	Change No	Description	Usage Code	QTY
1	561/60200		Ram assembly, boom		1
2	:561/70199		Cylinder boom, 110X1221		1

2A	::NSP		None serviced part		1
2B	::NSP		None serviced part		1
3	:809/00126		Bearing liner 50mm pivot bore		2
4	:590/40154		Rod piston		1
5	:809/00126		Bearing liner 50mm pivot bore		2
6	:594/14266		Kit-end cap 110 x 60		1
7	:1450/0001		Nipple grease, straight 1/8 BSP		1
8	:595/10043		Head piston		1
9	:1450/0001		Nipple grease, straight 1/8 BSP		1
12	:991/00110		Kit-seal 60mm rod x 110mm cyl		1
13	:826/01180		Dowel		1
14	:813/00426		Seal pivot pin grease 60 x 50 x 5		4

Product Catalog \ CONSTRUCTION \ NORTH AMERICA \ CONSTRUCTION / INDUSTRIAL \ BACKHOE LOADER 3CX,4CX,214,215,217 \ 3C PLUS (91HP) , Made in Brazil with Dieselmax/IESA Engine 9812/0080 \ E HYDRAULICS INCLUDING STEERING \ E04 RAMS

9812/0080 E4-6-1 RAM, DIPPER, 100MM CYL X 60MM ROD

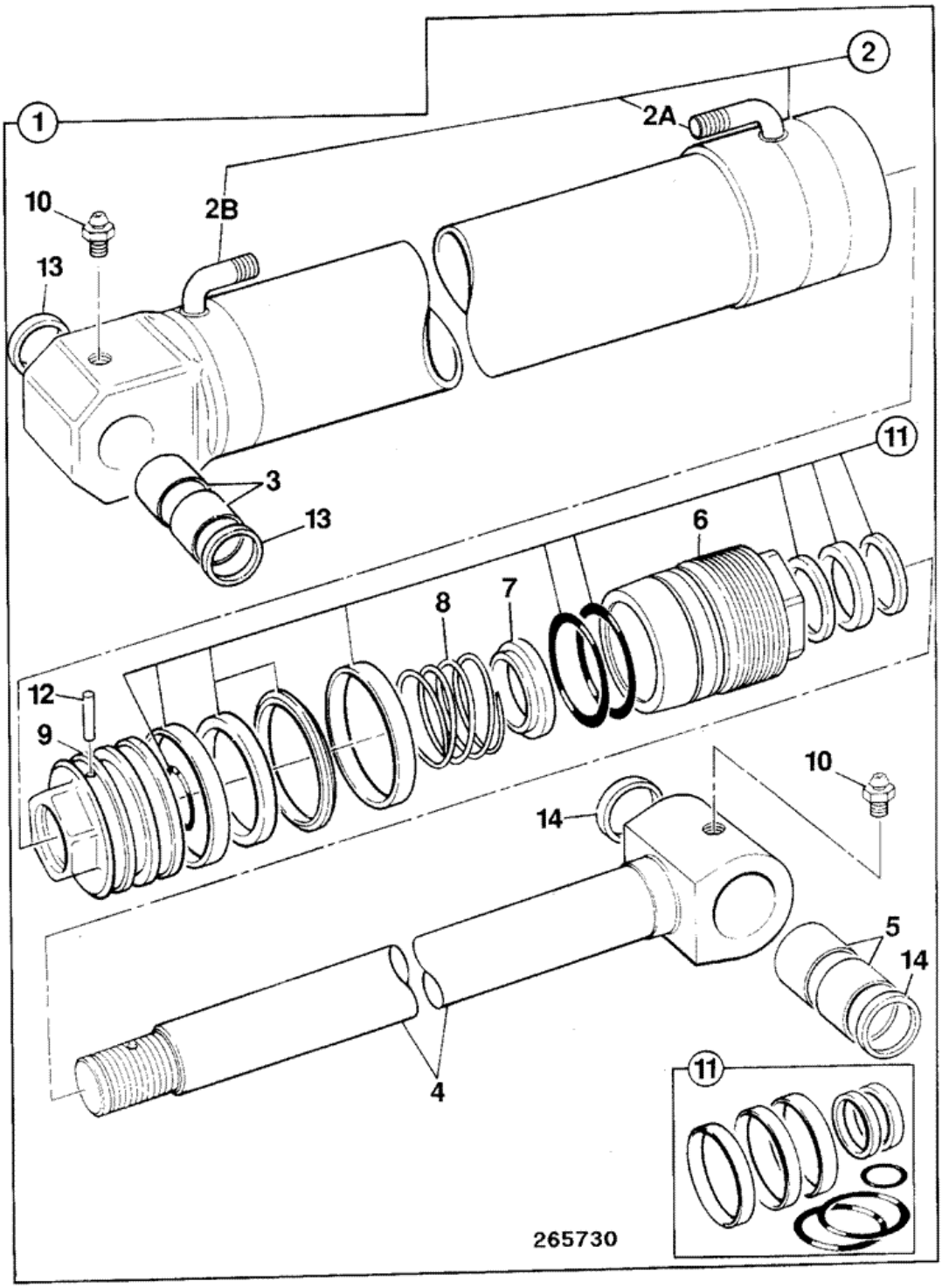

Item	Part #	Change No	Description	Usage Code	QTY
1	559/60172	Superseded	Ram dipper, 100x60 1898OC 1152.5CC		1
1	559/60230		Ram Dipper, 100x60 1898OC 1152.5CC		1

2	:559/70171	Superseded	Cylinder dipper ram		1
2	:559/70229		Cylinder dipper ram		1
2A	::NSP		None serviced part		1
2B	::NSP		None serviced part		1
3	:809/00179		Bearing 60x70x90L		1
4	:590/40583		Rod piston		1
5	:809/00127		Bearing liner 50mm pivot bore		2
6	:594/14025		Kit-end cap assembly 60mm x 100mm		1
7	:559/00105		Restrictor		1
8	:559/00104		Spring		1
9	:595/10057		Head piston		1
10	:1450/0001		Nipple grease, straight 1/8 BSP		2
11	:991/00145		Kit-seal ram 60mm rod x 100mm cyl *For component parts see fram E4-13-18*		1
12	:826/01179		Dowel		1
13	:813/00427		Seal grease		2
14	:813/00426		Seal pivot pin grease 60 x 50 x 5		2

Product Catalog \ CONSTRUCTION \ NORTH AMERICA \ CONSTRUCTION / INDUSTRIAL \ BACKHOE LOADER 3CX,4CX,214,215,217 \ 3C PLUS (91HP) , Made in Brazil with Dieselmax/IESA Engine 9812/0080 \ E HYDRAULICS INCLUDING STEERING \ E04 RAMS

9812/0080 E4-7-2 RAM, BUCKET, MONO DIPPER

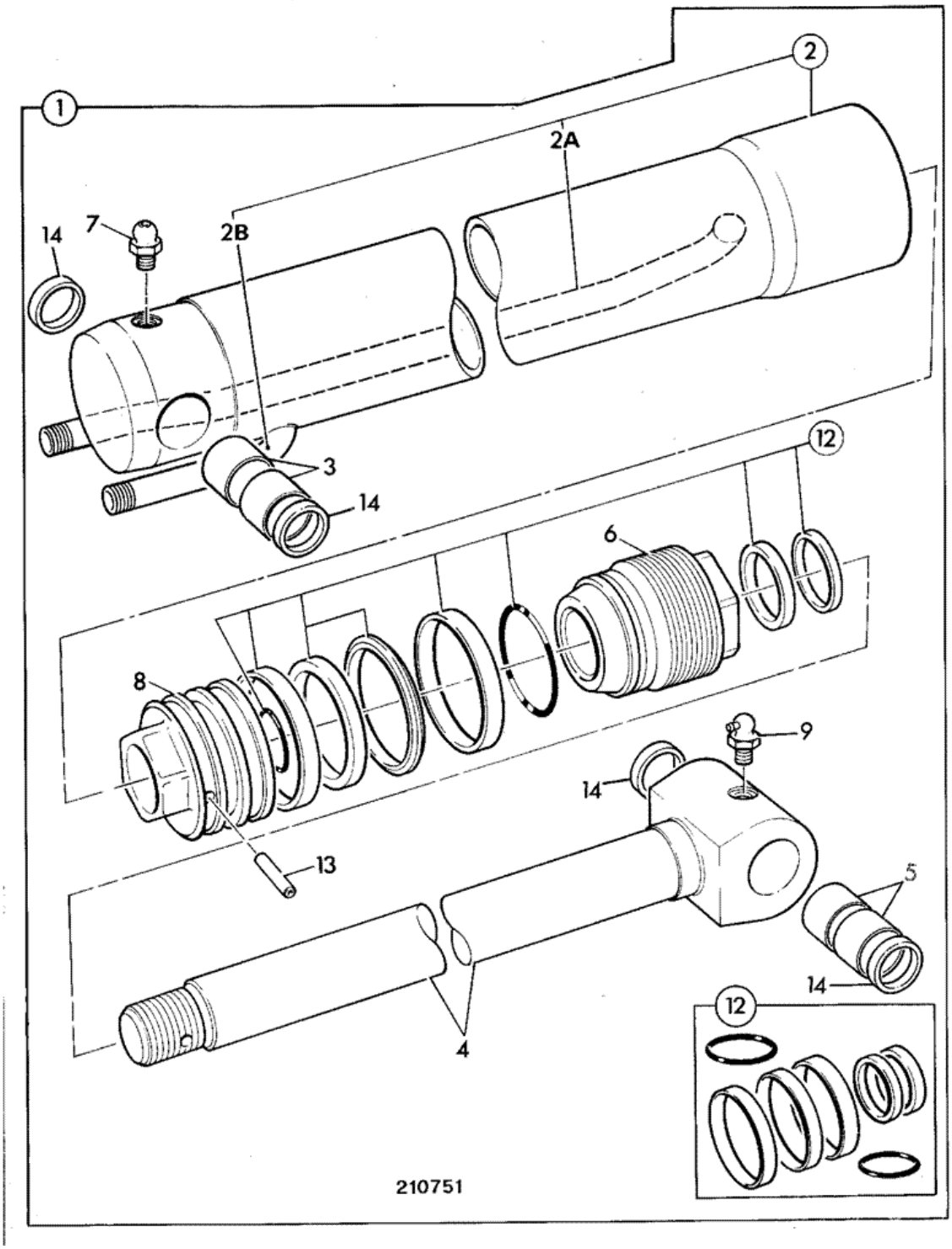

Item	Part #	Change No	Description	Usage Code	QTY
1	557/60156		Ram assembly bucket 90 X 60		1
1	557/60212		Ram assembly, bucket		1

			see E4-7-3 for breakdown		
2	:557/70137		Cylinder bucket ram 90mm		1
2A	::NSP		None serviced part		1
2B	::NSP		None serviced part		1
3	:809/00125		Bearing liner 45mm pivot bore		2
4	:590/40317		Rod piston 60mm		1
5	:809/00128		Bearing liner 45mm pivot bore		2
6	:594/14287		Cap end, 60mm rod x 90mm cylinder		1
7	:1450/0001		Nipple grease, straight 1/8 BSP		1
8	:595/10061		Head piston		1
9	:1450/1001		Nipple grease 90deg. angle		1
12	:991/00147		Kit-seal 90mm cyl x 60mm rod metric rams		1
13	:826/01179		Dowel		1
14	:813/00425		Seal pivot pin grease		4

9812/0080 E1-10-4 CIRCUIT, BUCKET RAM, MONO DIPPER

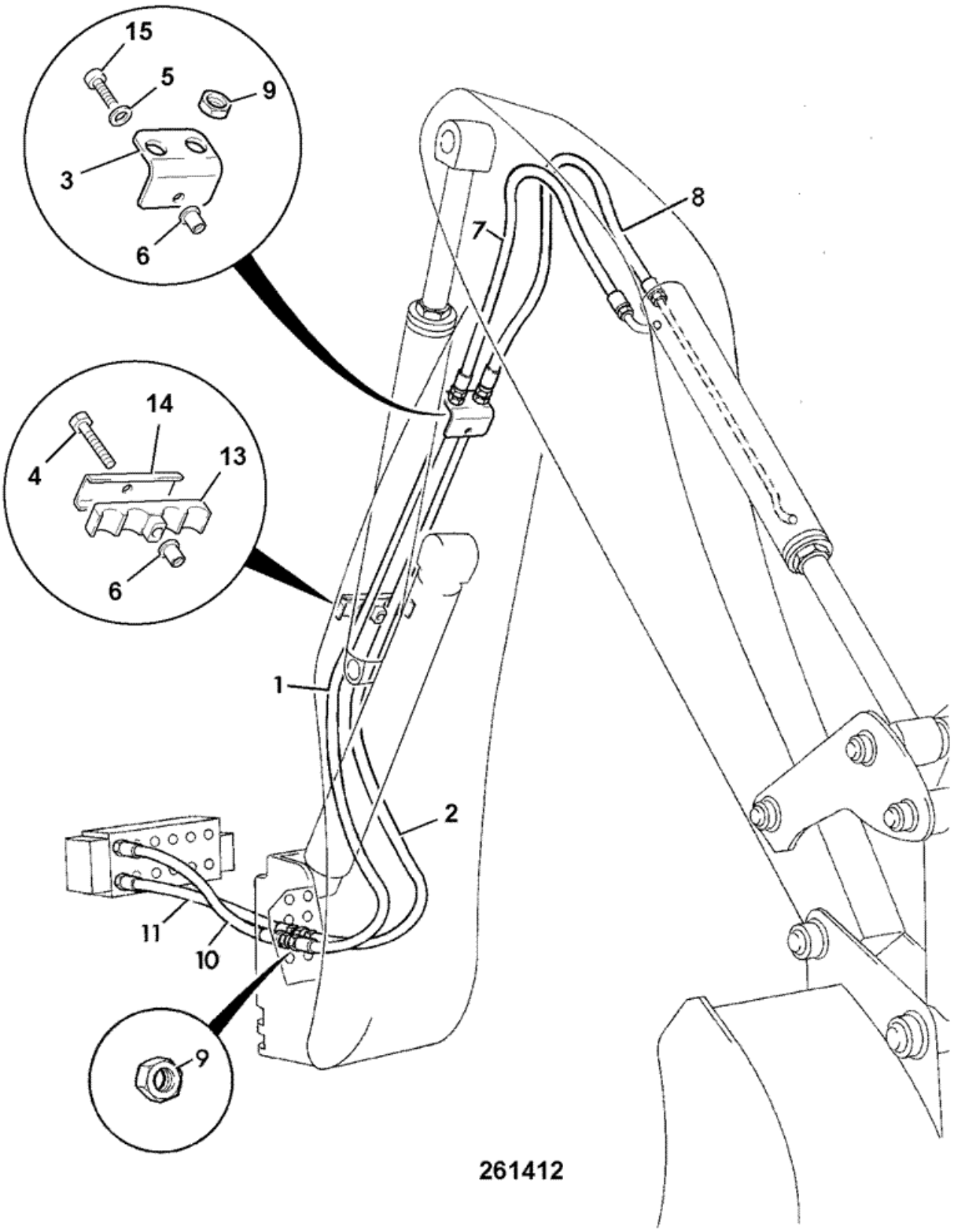

Item	Part #	Change No	Description	Usage Code	QTY
1	629/80005		Hose		1
1A	830/00314		Ferrule rubber		2
2	629/80005		Hose		1
3	331/14732		Plate hose support 2 X 1/2BSP		1
4	1315/0414Z	<M TB A	Bolt		1
4	1391/3414Z	>M TBA	Capscrew		1
5	1420/0008Z		Washer Plain M10		1
6	826/01249		Nut rivet M10 open end for 6 to 8.5mm plate		2
7	613/07100	<M TBA	Hose *680mm long*		1
7	332/G1233	>M TBA	Hose 1/2BSP x 710mm long		1
8	613/07100	<M TBA	Hose *680mm long*		1
8	332/G1233	>M TBA	Hose 1/2BSP x 710mm long		1
9	1356/0204Z		Nut		2
9A	1418/0018Z		Washer lock, internal teeth		2
10	613/36012		Hose 1/2BSPx930		1
11	613/36013		Hose 1/2BSP x 815		1
12	123/06256		Spacer steel		2
13	123/05836		Clamp		1
14	331/14805		Plate clamp backing		1
15	1315/3414Z		Bolt M10x60		1

9812/0080 E1-1-11 HOSE AND PIPEWORK, LOADER VALVE TO, EXCAVATOR VALVE TO TANK

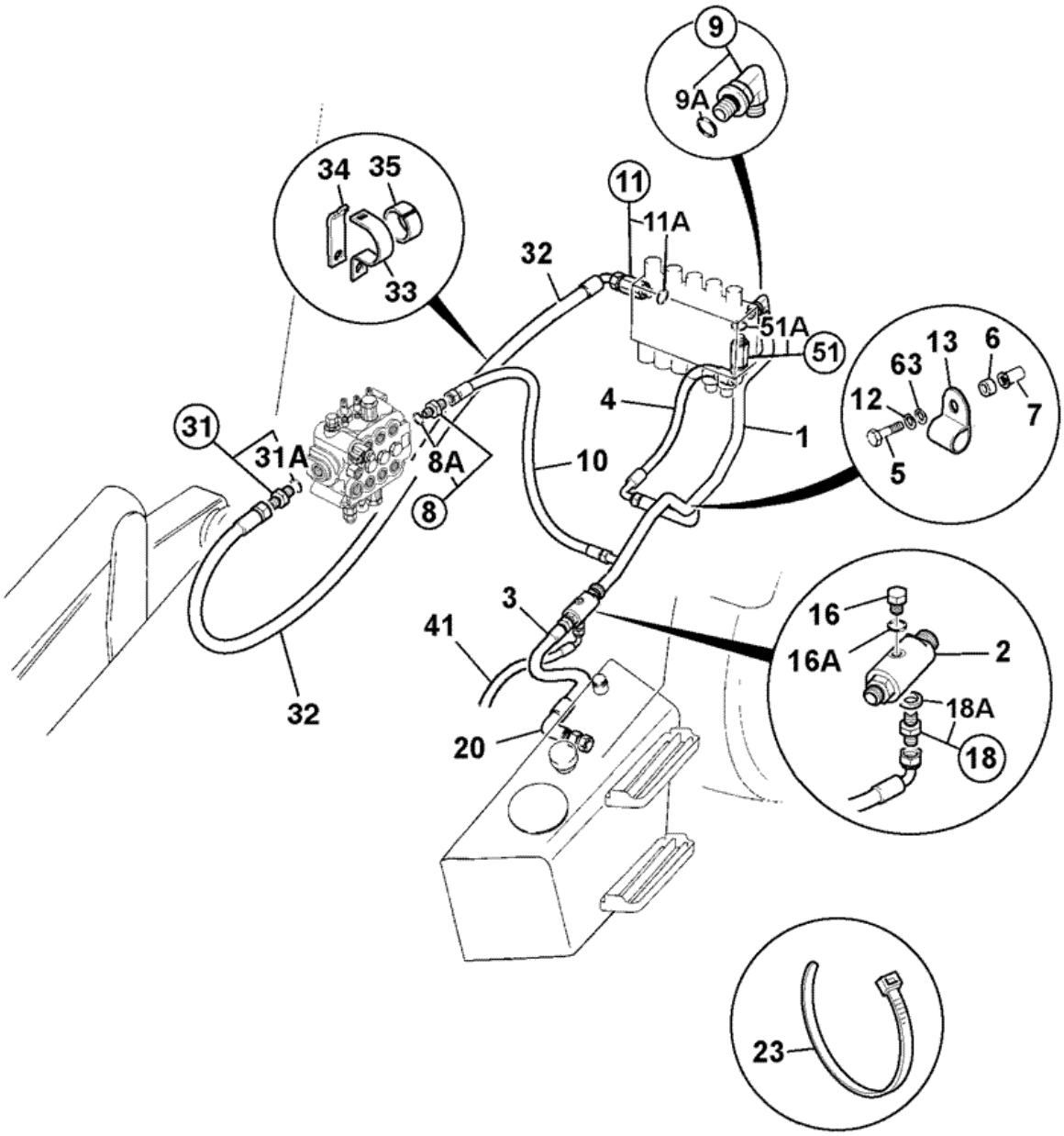

872850

Item	Part #	Change No	Description	Usage Code	QTY
1	335/04512		Pipe return,centremount		1

2	928/60149	<M TBA	Valve dual check manifold 2bar-2bar	A	1
2	332/D7251	>M TBA	Valve dual check 2bar-2bar	B	1
3	637/31200		Hose 1BSPx650 low pressure		1
4	629/80064		Hose 3/4BSP x 480mm		1
5	1315/0412Z		Bolt M10 x 1.5 x 50		2
6	829/31263		Spacer 10.2x20x16long		2
7	826/01249		Nut rivet M10 open end for 6 to 8.5mm plate		2
8	1620/2056		Adaptor		1
8A	:2401/0508		O Ring		1
9	1620/2060		Adapter M/M		1
9A	:2401/0510		O Ring		1
10	614/80055		Hose		1
11	1620/2059		Adaptor 3/4" includes O-ring 1745/0005		1
11A	:2401/0508		O Ring		1
12	1420/0008Z		Washer Plain M10		2
13	821/10423		Clamp pipe		2
16	1745/0001		Plug 7/16"UNF o ring boss		1
16A	:2401/0503		O Ring		1
18	816/90007	<M TBA	Adaptor M/M 5/8" x 3/4"	A	1
18	1620/2056	>M TBA	Adaptor	B	1
18A	:2401/0506		O Ring	A	1
18A	:2401/0507		O Ring	B	1
20	.		'See Remark' *not fitted*		1
23	826/01453		Tie cable double head		2
31	1620/2059		Adaptor 3/4" includes O-ring 1745/0005		1
31A	:2401/0508		O Ring		1
32	615/48200		Hose		1
33	821/00183		Clamp top		1
34	821/00184		Clamp base		1
35	821/00185		Insert clamp		1
41	649/51774		Hose 5/8x3575mm long		1
51	1620/2059		Adaptor 3/4" includes O-ring 1745/0005		1
51A	:2401/0508		O Ring		1
60	816/90452		Adapter elbow M/F 1"BSP		1
61	816/90467		Cap blanking 1/2"BSP female		1
62	816/90163		Adapter Elbow M/F		1
63	1425/0008Z		Washer Spring M10		2

Product Catalog \ CONSTRUCTION \ NORTH AMERICA \ CONSTRUCTION / INDUSTRIAL \ BACKHOE LOADER 3CX,4CX,214,215,217 \ 3C PLUS (91HP) , Made in Brazil with Dieselmax/IESA Engine 9812/0080 \ E HYDRAULICS INCLUDING STEERING \ E01 HOSE & PIPEWORK

9812/0080 E1-1-15 HOSE AND PIPEWORK, LOW FLOW, HIGH PRESSURE CARRYOVER

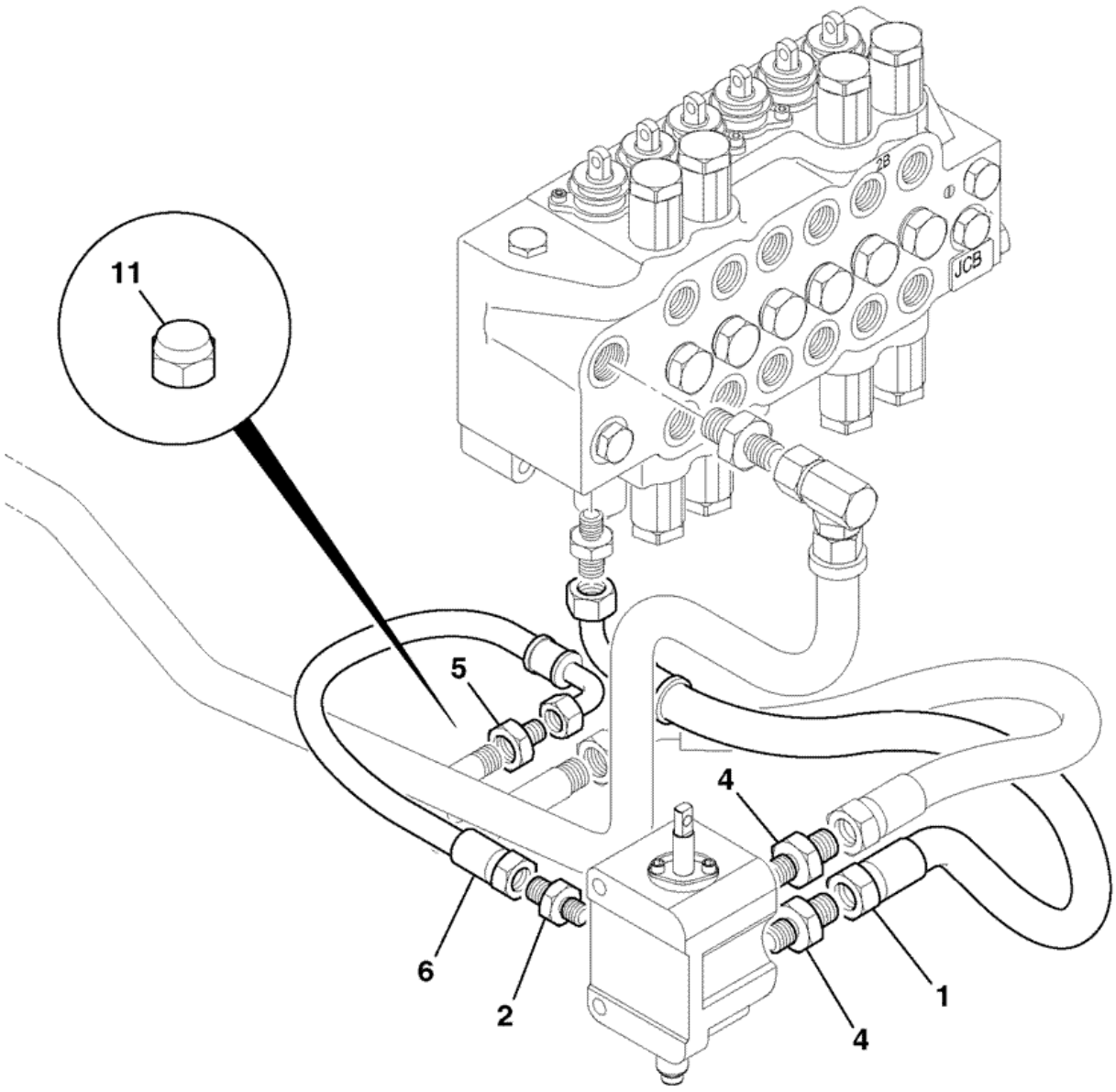

874050

Item	Part #	Change No	Description	Usage Code	QTY
1	629/80038		Hose 3/4"BSP 780mm		1

2	1620/2056		Adaptor		1
2A	:2401/0507		O Ring		1
4	1620/2058		Adaptor M/M includes O-ring 2401/0507		2
4A	:2401/0507		O Ring		1
5	816/90180		Adapter M/F		1
6	614/20200		Hose		1

Product Catalog \ CONSTRUCTION \ NORTH AMERICA \ CONSTRUCTION / INDUSTRIAL \ BACKHOE LOADER 3CX,4CX,214,215,217 \ 3C PLUS (91HP) , Made in Brazil with Dieselmax/IESA Engine 9812/0080 \ E HYDRAULICS INCLUDING STEERING \ E01 HOSE & PIPEWORK

9812/0080 E1-1-16 HOSE AND PIPEWORK, LOW FLOW, HIGH PRESSURE CARRYOVER

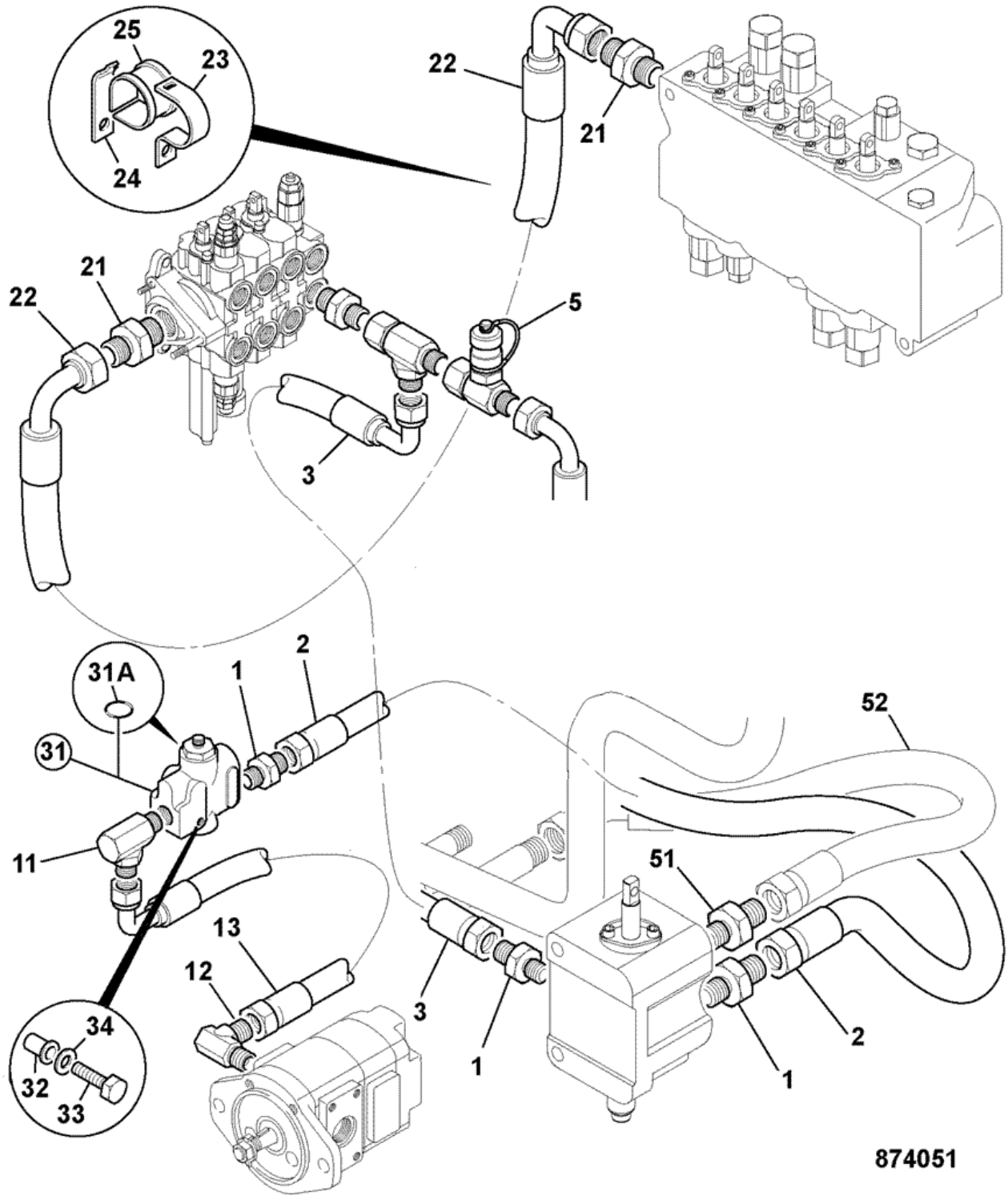

Item	Part #	Change No	Description	Usage Code	QTY
1	1620/2056		Adaptor		3

2	614/80067		Hose		1
3	614/24800		Hose		1
5	816/90427		Adapter test point 5/8 BSP		1
11	816/90460		Adapter elbow M/M		1
12	816/90638		Adapter elbow with test point		1
13	614/80055		Hose		1
21	1620/2059		Adaptor 3/4" includes O-ring 1745/0005		2
22	615/48200		Hose		1
23	821/00183		Clamp top		1
24	821/00184		Clamp base		1
25	821/00185		Insert clamp		1
31	35/901800		Valve priority		1
31A	:35/901701		Kit-seal priority valve		1
32	826/01106		Nut rivet,M8		1
33	1315/3316Z		Bolt M8 x 70		1
34	1420/0007Z		Washer plain M8		1
51	1620/2055		Adaptor 39.5mm Long. M/M 1/2" x 7/8"		1
52	613/07600		Hose 1/2"BSP x 570mm		1

Product Catalog \ CONSTRUCTION \ NORTH AMERICA \ CONSTRUCTION / INDUSTRIAL \ BACKHOE LOADER 3CX,4CX,214,215,217 \ 3C PLUS (91HP) , Made in Brazil with Dieselmax/IESA Engine 9812/0080 \ E HYDRAULICS INCLUDING STEERING \ E01 HOSE & PIPEWORK

9812/0080 E1-1-31 HOSE AND PIPEWORK, PUMP TO LOADER VALVE

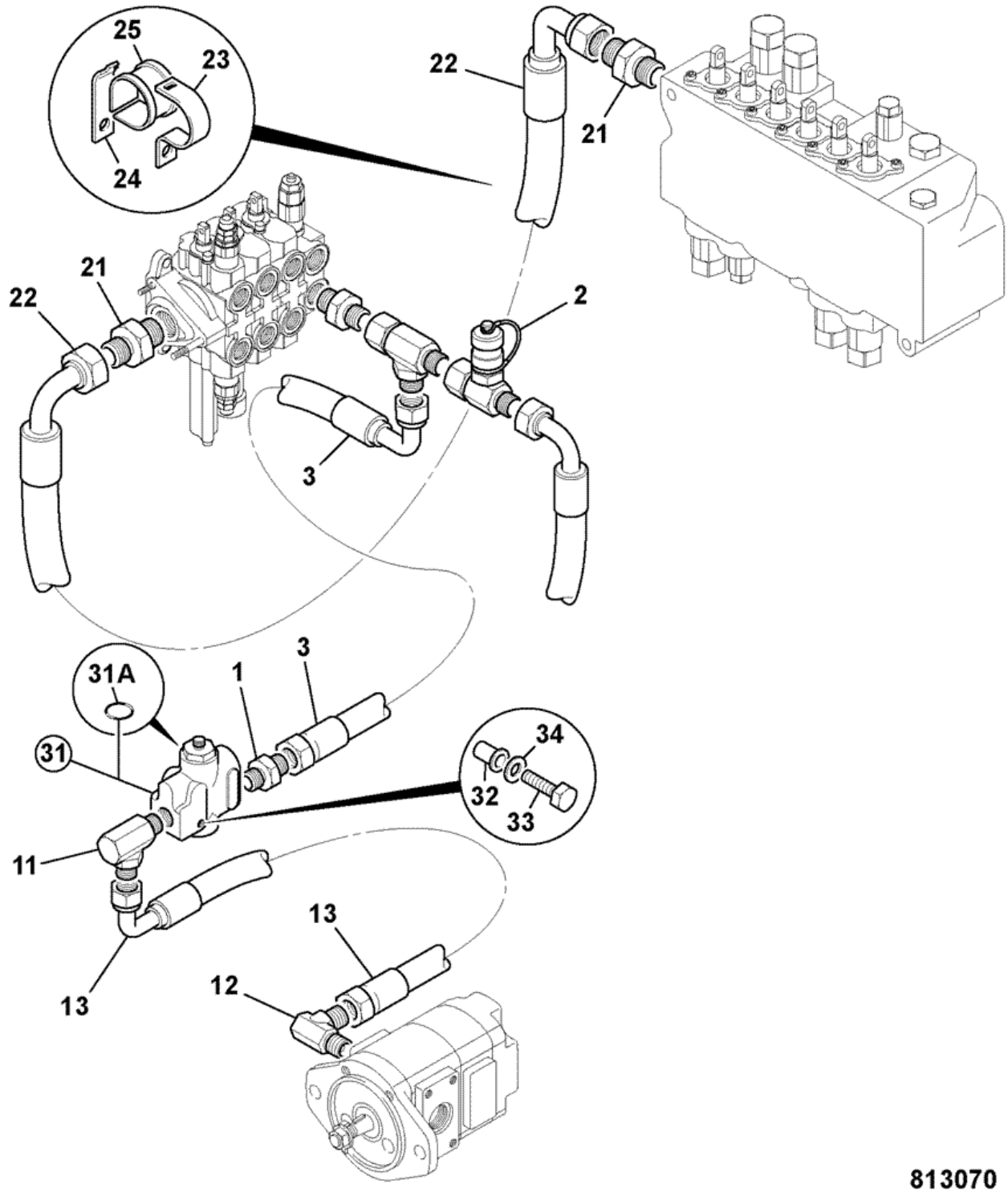

Item	Part #	Change No	Description	Usage Code	QTY
1	1620/2056		Adaptor		1

2	816/90427		Adapter test point 5/8 BSP		1
3	614/80055		Hose		1
11	816/90460		Adapter elbow M/M		1
12	816/90638		Adapter elbow with test point		1
13	614/80055		Hose		1
21	1620/2059		Adaptor 3/4" includes O-ring 1745/0005		2
22	615/48200		Hose		1
23	821/00183		Clamp top		1
24	821/00184		Clamp base		1
25	821/00185		Insert clamp		1
31	35/901800		Valve priority		1
31A	:35/901701		Kit-seal priority valve		1
32	826/01106		Nut rivet,M8		1
33	1315/3318Z		Bolt M8x80mm Long		1
34	1420/0007Z		Washer plain M8		1

Product Catalog \ CONSTRUCTION \ NORTH AMERICA \ CONSTRUCTION / INDUSTRIAL \ BACKHOE LOADER 3CX,4CX,214,215,217 \ 3C PLUS (91HP) , Made in Brazil with Dieselmax/IESA Engine 9812/0080 \ E HYDRAULICS INCLUDING STEERING \ E01 HOSE & PIPEWORK

9812/0080 E1-1-51 CIRCUIT, HAMMER, EXC. VALVE TO AUX VALVE

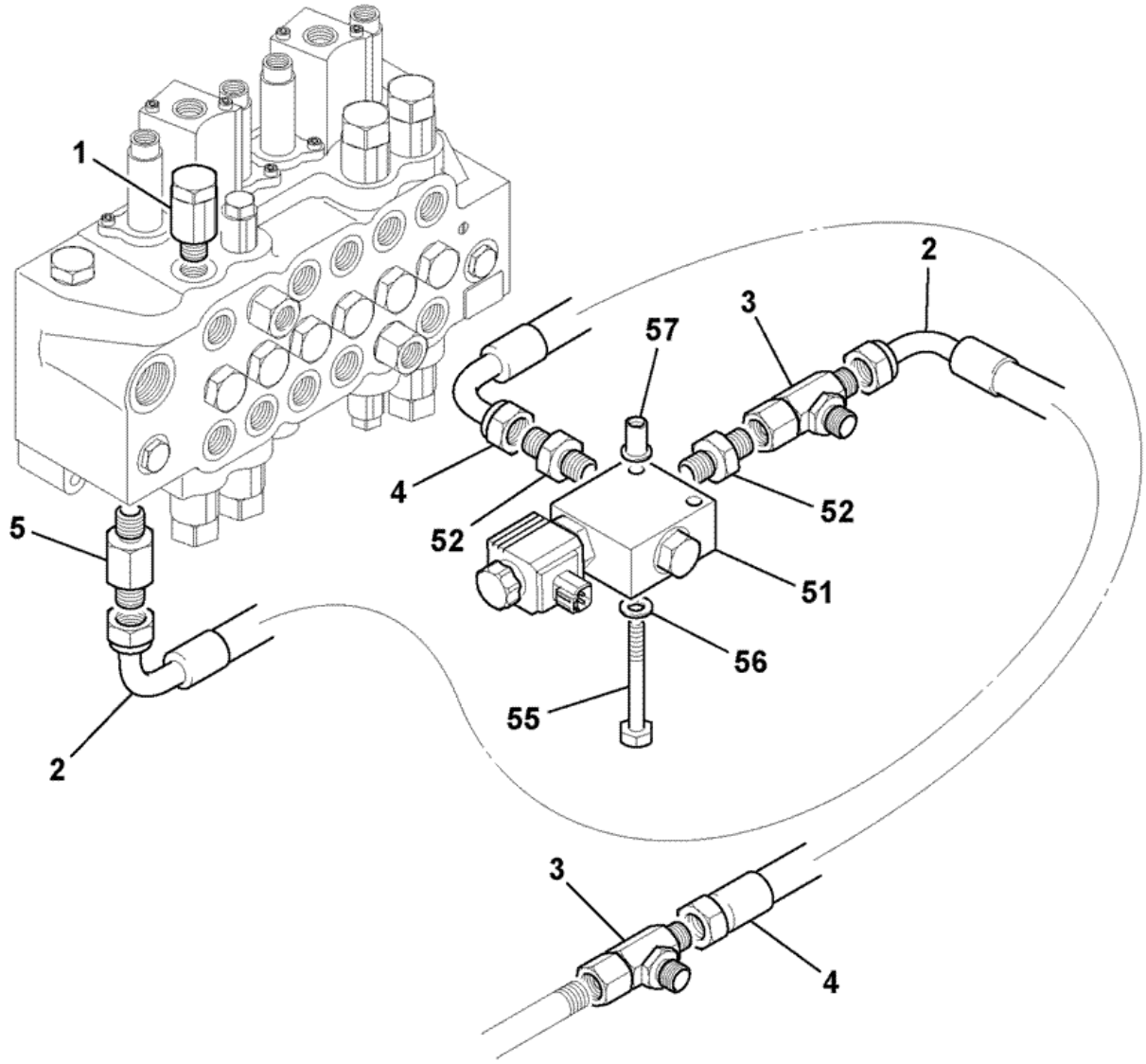

928870

Item	Part #	Change No	Description	Usage Code	QTY
1	25/222498		Valve relief, 3800/2.5		1

2	629/80056		Hose 3/4 BSP X 600mm		1
3	816/90043		Adaptor tee M/M/F		1
4	629/80041		Hose 3/4"BSP 650mm		1
5	816/90489		Adapter extended M/M		1
51	25/221087		Valve solenoid normally open		1
52	1620/2059		Adaptor 3/4" includes O-ring 1745/0005		2
55	1315/3316Z		Bolt M8 x 70		2
56	1420/0007Z		Washer plain M8		2
57	826/01106		Nut rivet,M8		2
99	128/C0653		G.A. CIRCUIT hiflo hpco		1
99	128/12263		G.A. GA VALVE diverter hammer		1

9812/0080 E1-18-1 COOLER, COMBINATION, RADIATOR/HYDRAULIC, & TRANSMISSION, 2WS JCB DIESELMAX ENGINE

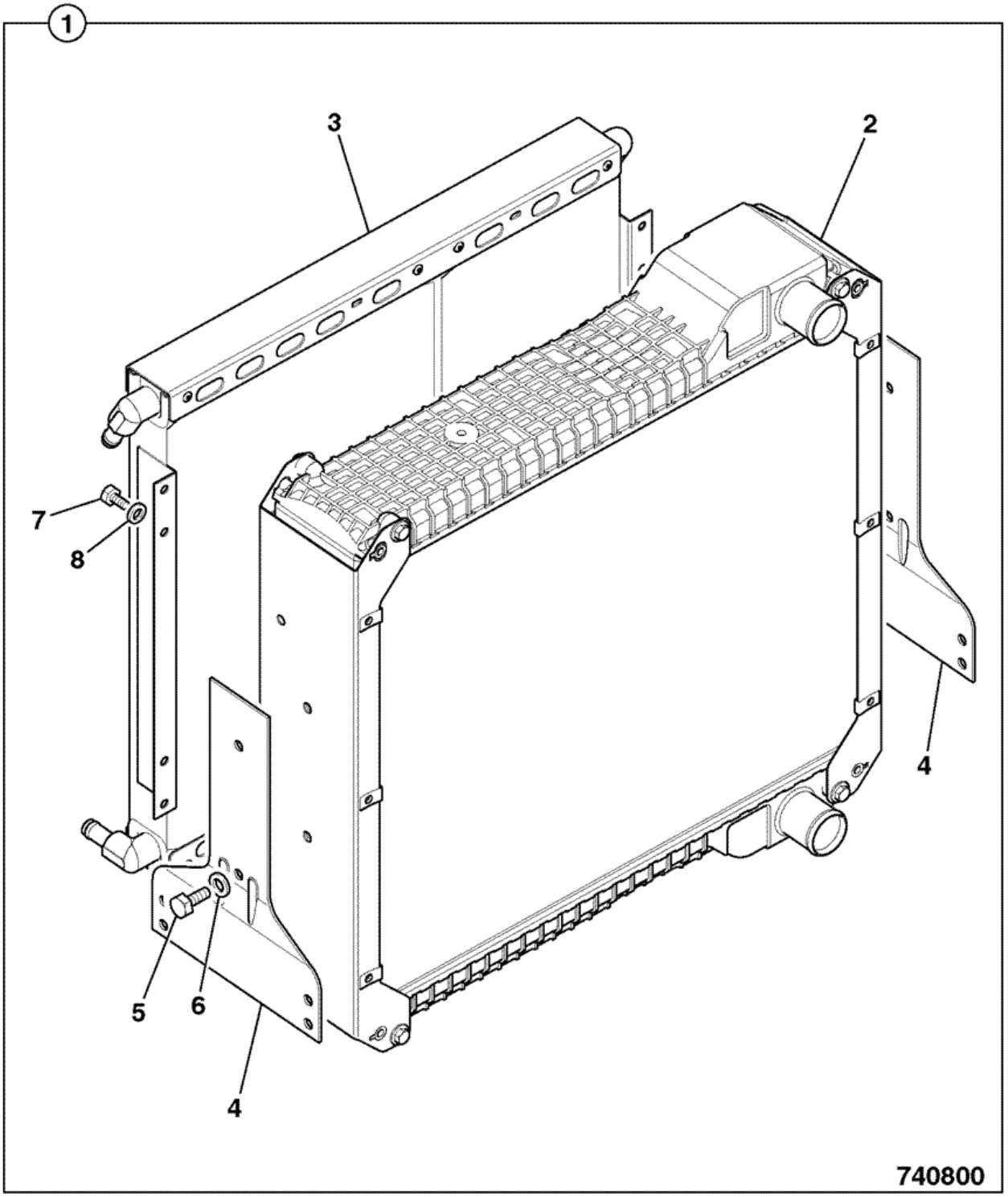

Item	Part #	Change No	Description	Usage Code	QTY
1	128/14326		Cooler assembly 5row 2ws non CAC		1
2	:30/915200		Radiator assembly, 5row-9fpi Blue spot		1
3	:30/925615		Cooler oil, double 14plates + 21 plates		1
4	:30/926257		Bracket radiator mounting		2
5	:30/926035		Bolt		4
6	:30/926036		Washer		4
7	1315/0301Z		Screw hex head M8 X 12		8
8	826/00846		Nut 'u'		8

Product Catalog \ CONSTRUCTION \ NORTH AMERICA \ CONSTRUCTION / INDUSTRIAL \ BACKHOE LOADER 3CX,4CX,214,215,217 \ 3C PLUS (91HP) , Made in Brazil with Dieselmax/IESA Engine 9812/0080 \ E HYDRAULICS INCLUDING STEERING \ E01 HOSE & PIPEWORK

9812/0080 E1-21-2 CIRCUIT, ATTACHMENT, HAMMER

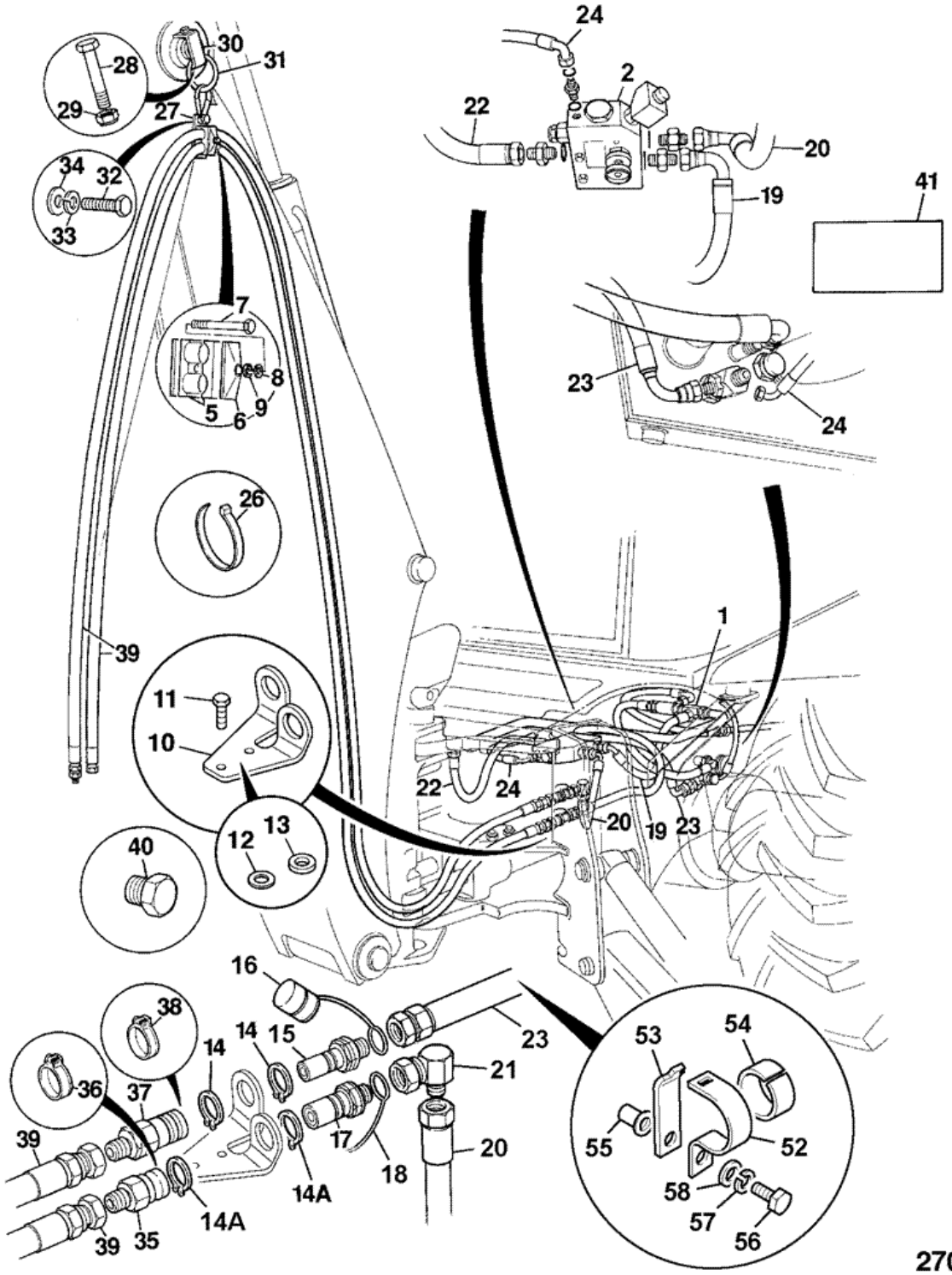

Item	Part #	Change No	Description	Usage Code	QTY
2	25/221197		Valve solenoid p. flow centre mount hammer *Flow regulator valve, see frame E3-37-1*		1

3	25/222498		Valve relief, 3800/2.5 *fit to excavator valve*		1
4	.		'See Remark' *Electrics, see frame C3-22-1.*		1
5	821/00442		Clamp body		2
6	821/00443		Plate cover		1
7	1315/3314Z		Bolt		1
8	1425/0007Z		Washer spring		1
9	1420/0007Z		Washer plain M8		1
10	331/45522		Bracket q/r coupling		1
11	1315/0409Z		Screw M10x35mm		2
12	1420/0008Z		Washer Plain M10		3
13	823/10710		Spacer nylon		1
14	2203/0043		Circlip	A	2
14A	2203/0049		Circlip	B	2
15	45/913400		Coupling male	A	1
16	45/910301		Cap dirt QRC 3/4" male	A	1
17	45/913500		Coupling male	B	1
18	45/912501		Cap dirt QRC 3/4" BSP male	B	1
19	629/80041		Hose 3/4"BSP 650mm		1
20	209/72200		Hose 3/4"BSP 500mm		1
21	816/90163		Adapter Elbow M/F		1
22	615/48700		Hose 3/4BSP 850mm long		1
23	635/80120		Hose 3/4BSP 2600mm long		1
24	611/20100		Hose 1/4BSPx1270		1
25	816/50032		Adapter Tee		1
26	826/01144		Tie cable 200mm long		2
27	123/05186		Ring support *214*		1
27	123/06294		Ring support *215*		1
28	1315/3524Z		Bolt M12 x 140 Lg.		1
30	123/05187		Mounting hook clamp		1
31	123/05188		Hook 4" spring		1
32	1315/0407Z		Bolt M10x25		1
33	1425/0008Z		Washer Spring M10		1
34	1420/0008Z		Washer Plain M10		1
35	45/914100		Coupling female		1
36	45/908401		Cap dirt, QRC 3/4"female		1
37	45/914200		Coupling female		1
38	45/911301		Cap dirt QRC 3/4" BSP female		1
39	615/05000		Hose		2
40	816/80011		Plug		2
41	817/00592		Label		2
41A	817/70021		Decal noise warning		1
52	821/00183		Clamp top		2
53	821/00184		Clamp base		2
54	821/00185		Insert clamp		2
55	826/01249		Nut rivet M10 open end for 6 to 8.5mm plate		2
56	1315/0410Z		Bolt M10 x 40		2
57	1425/0008Z		Washer Spring M10		2
58	1420/0008Z		Washer Plain M10		2

Product Catalog \ CONSTRUCTION \ NORTH AMERICA \ CONSTRUCTION / INDUSTRIAL \ BACKHOE LOADER 3CX,4CX,214,215,217 \ 3C PLUS (91HP) , Made in Brazil with Dieselmax/IESA Engine 9812/0080 \ E HYDRAULICS INCLUDING STEERING \ E01 HOSE & PIPEWORK

9812/0080 E1-23-1 HOSE AND PIPEWORK, HAMMER, FIXED DIPPER, FEED

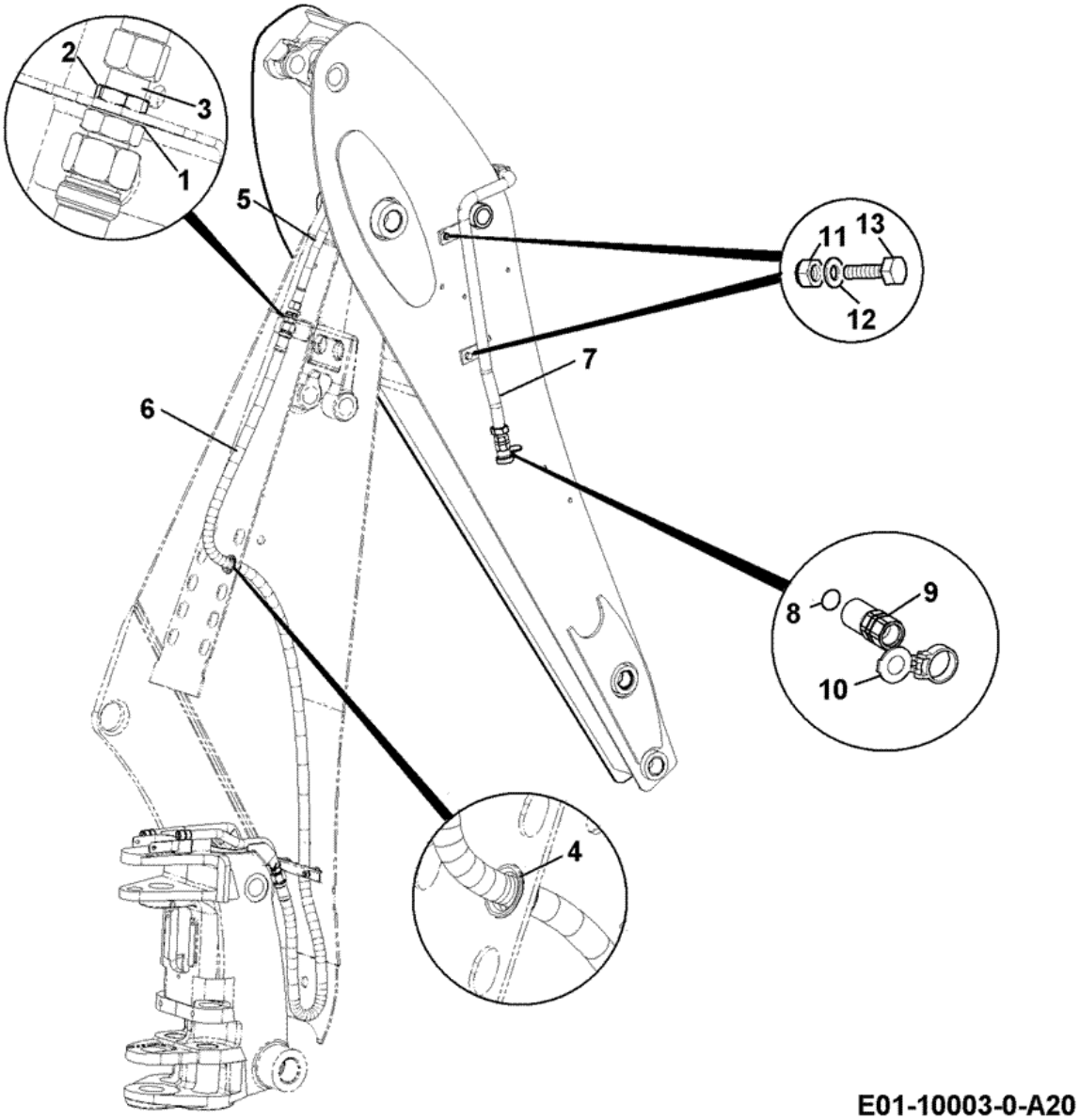

Item	Part #	Change No	Description	Usage Code	QTY
1	1418/0018Z		Washer lock, internal teeth		1
2	1356/0205Z		Nut		1
3	816/91044		Adaptor bulkhead G3/4A X G5/8A		1

4	830/00314		Ferrule rubber		1
5	614/00800		Hose		1
6	629/80235		Hose 3/4BSPx2850mm		1
7	332/E4852		PIPE hammer feed fxd		1
8	2401/0508		O Ring		1
9	45/920047		Coupling 1.1/16" 12 UNF female quick release		1
10	45/908401		Cap dirt, QRC 3/4"female		1
11	826/01249		Nut rivet M10 open end for 6 to 8.5mm plate		2
12	1420/0008Z		Washer Plain M10		2
13	1315/3409Z		Bolt M10 x 35		2

Product Catalog \ CONSTRUCTION \ NORTH AMERICA \ CONSTRUCTION / INDUSTRIAL \ BACKHOE LOADER 3CX,4CX,214,215,217 \ 3C PLUS (91HP) , Made in Brazil with Dieselmax/IESA Engine 9812/0080 \ E HYDRAULICS INCLUDING STEERING \ E01 HOSE & PIPEWORK

9812/0080 E1-2-42 CIRCUIT, LOADER ARM

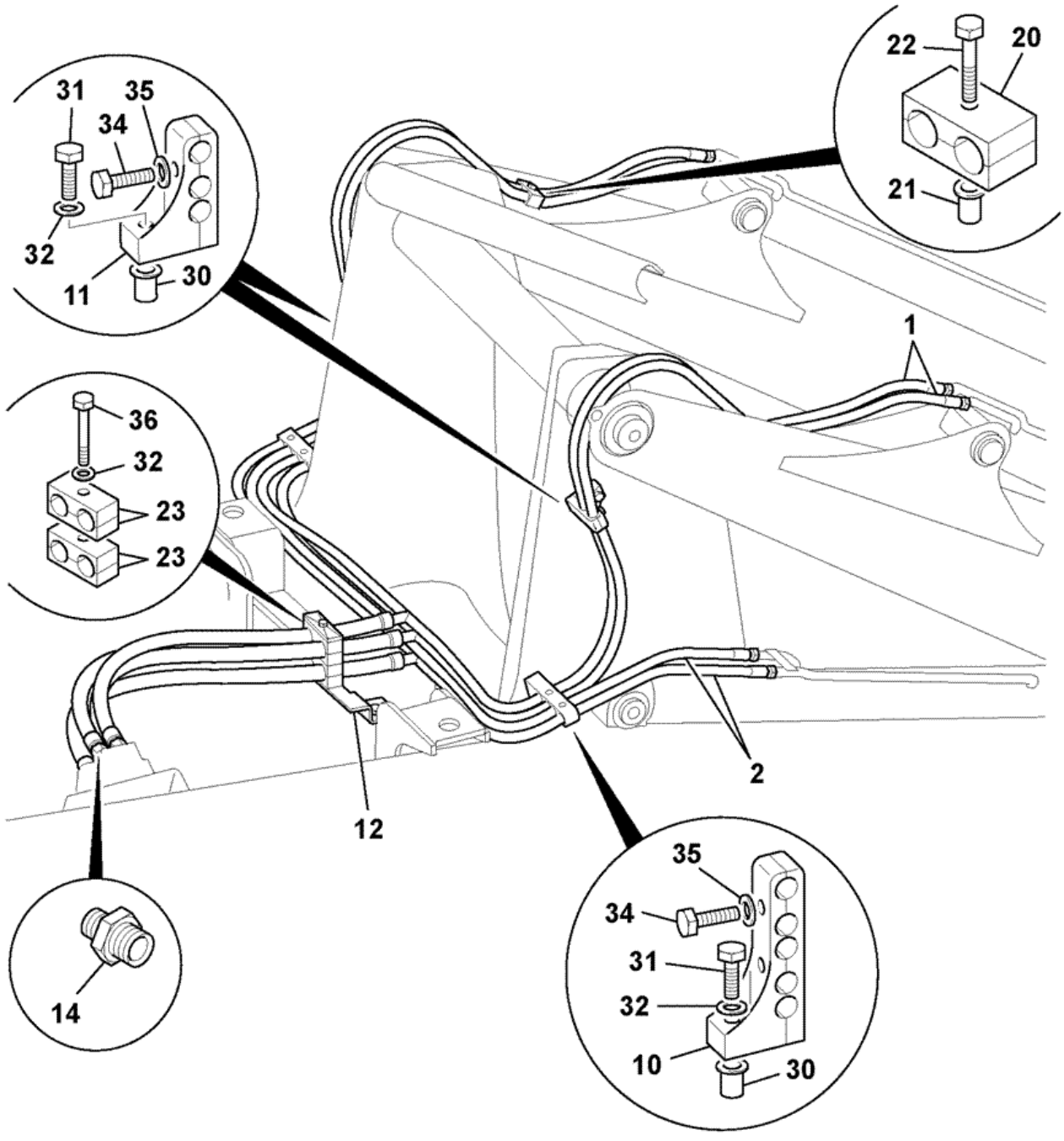

Item	Part #	Change No	Description	Usage Code	QTY
1	629/80238		Hose tee assembly		2
2	629/80237		Hose tee assembly		2

10	821/10231		Clamp assembly 5 hoses		2
11	821/10405		Clamp assembly 3 hoses		2
12	128/16844		Bracket hose		1
12A	:826/01249		Nut rivet M10 open end for 6 to 8.5mm plate		1
14	1620/2054		Adapter 1/2BSP X 3/4 SAE		4
20	821/10328		Clamp twin pipe 18 dia		2
21	826/01106		Nut rivet,M8		2
22	1315/3311Z		Bolt M8 X 45		2
23	821/10431		Clamp pair		2
30	826/01249		Nut rivet M10 open end for 6 to 8.5mm plate		4
31	1315/3412Z		Bolt		4
32	1420/0008Z		Washer Plain M10		7
33	1315/0408Z		Bolt M10 x 30		2
34	1315/0308Z		Screw M8x30		6
35	1420/0007Z		Washer plain M8		8
36	1315/3420Z		Bolt M10 X 100		1

Product Catalog \ CONSTRUCTION \ NORTH AMERICA \ CONSTRUCTION / INDUSTRIAL \ BACKHOE LOADER 3CX,4CX,214,215,217 \ 3C PLUS (91HP) , Made in Brazil with Dieselmax/IESA Engine 9812/0080 \ E HYDRAULICS INCLUDING STEERING \ E01 HOSE & PIPEWORK

9812/0080 E1-3-40 CIRCUIT, AUXILIARY, LOADER, (3/8" BSP PIPWORK)

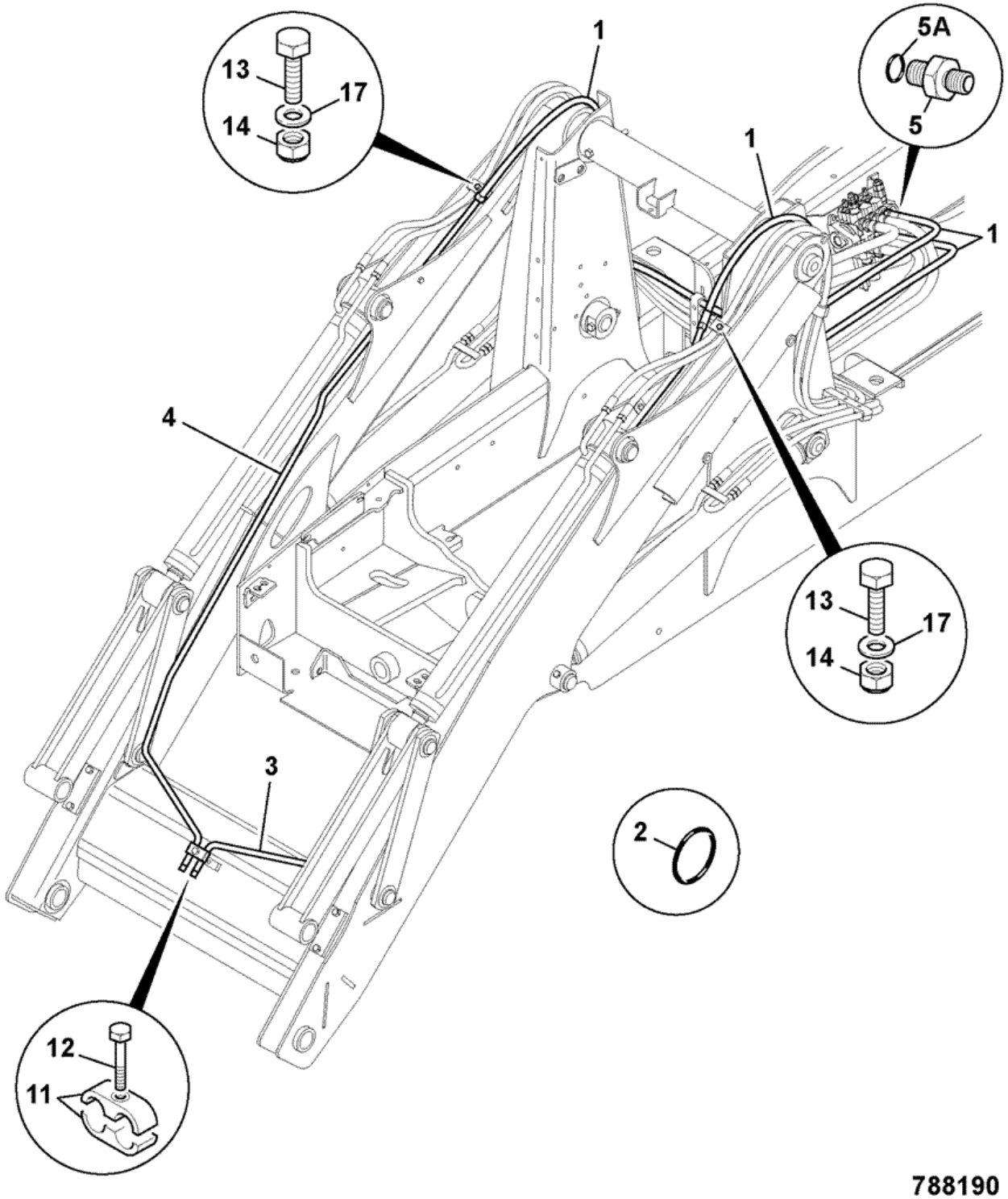

Item	Part #	Change No	Description	Usage Code	QTY
1	629/80052		Hose		2

2	828/00135		O Ring		6
3	335/07401		Pipe LH auxiliary loader arms		1
4	335/07402		Pipe RH auxiliary loader arms		1
5	1620/2053		Adaptor		2
5A	:2401/0506		O Ring		1
11	821/10389		Clamp pipe 6x30x75		1
11	829/31263		Spacer 10.2x20x16long		1
12	1315/0408Z		Bolt M10 x 30		1
13	1315/0308Z		Screw M8x30		2
14	1370/0203Z		Nut self lock M8		2
17	1420/0007Z		Washer plain M8		2

Product Catalog \ CONSTRUCTION \ NORTH AMERICA \ CONSTRUCTION / INDUSTRIAL \ BACKHOE LOADER 3CX,4CX,214,215,217 \ 3C PLUS (91HP) , Made in Brazil with Dieselmax/IESA Engine 9812/0080 \ E HYDRAULICS INCLUDING STEERING \ E01 HOSE & PIPEWORK

9812/0080 E1-4-12 CIRCUIT, COOLER, TRANSMISSION, 2 WHEEL STEER

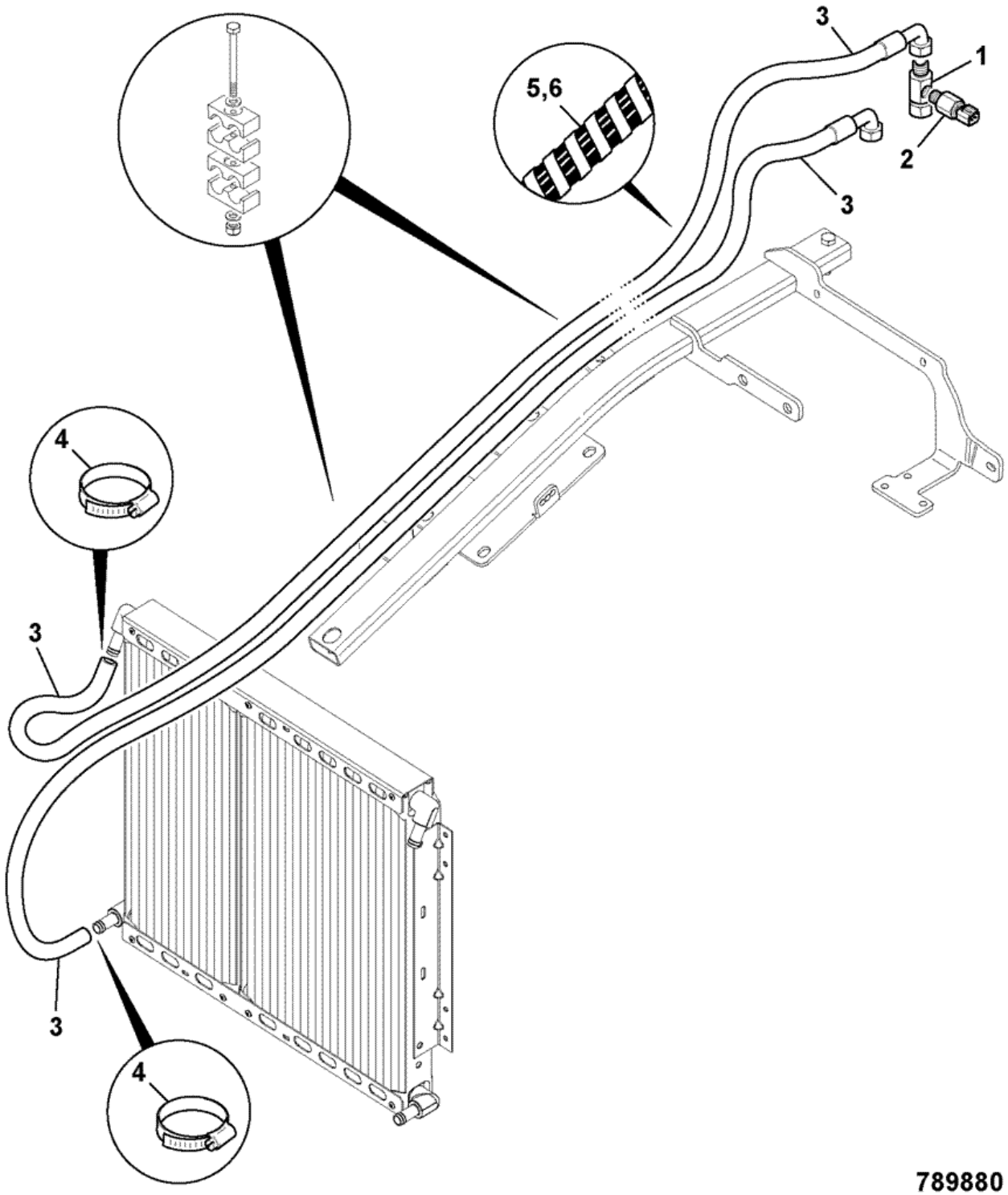

Item	Part #	Change No	Description	Usage Code	QTY
			'See Remark'		

0	.		*see index radiator fittings for centre beam*		1
0	.		'See Remark' *see frame E1-4-31 for clamps*		1
0	.		'See Remark' *see frame E1-18-1 for cooler details*		1
1	816/90865		Adapter M/F 9/16"tapping		1
2	701/80363		Switch oil temp 9/16"UNF Deutsch connector		1
3	649/51774		Hose 5/8x3575mm long		2
4	2201/0005		Clip jubilee		2
5	647/12905		Tube spiral guard 800mm long		1
6	.		'See Remark' *see item 5*		1

Product Catalog \ CONSTRUCTION \ NORTH AMERICA \ CONSTRUCTION / INDUSTRIAL \ BACKHOE LOADER 3CX,4CX,214,215,217 \ 3C PLUS (91HP) , Made in Brazil with Dieselmax/IESA Engine 9812/0080 \ E HYDRAULICS INCLUDING STEERING \ E01 HOSE & PIPEWORK

9812/0080 E1-4-23 CIRCUIT, COOLER, HYDRAULIC OIL, 2 WHEEL STEER

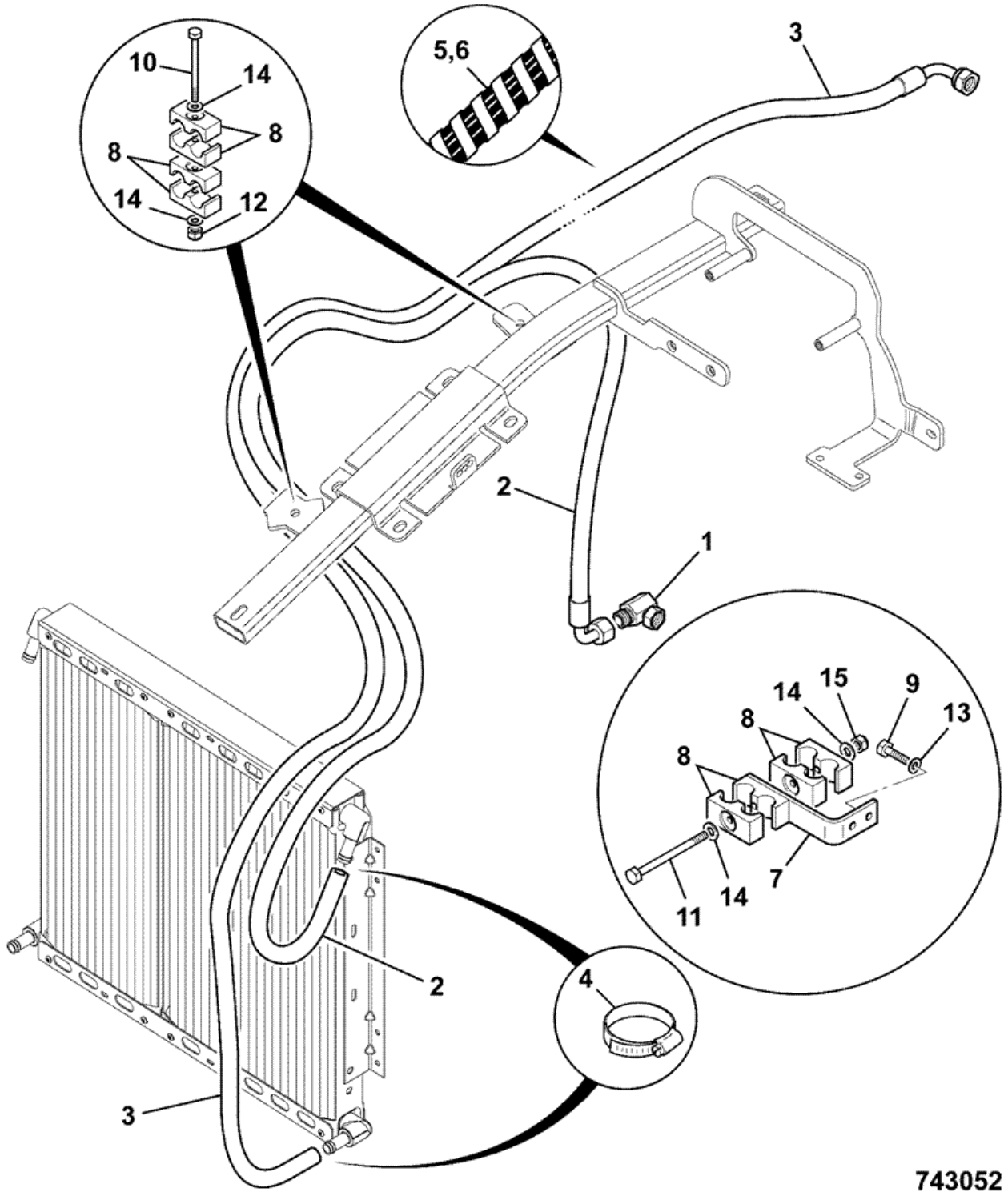

Item	Part #	Change No	Description	Usage Code	QTY
			'See Remark'		

0	.		*see index radiator fittings for centre beam*		1
1	816/91017		Adapter tee M/F/M G5/8AxG1xG3/8A		1
2	649/51774		Hose 5/8x3575mm long		1
3	649/51774		Hose 5/8x3575mm long		1
4	2201/0005		Clip jubilee		2
5	647/12905		Tube spiral guard 800mm long *fits onto item 2*		1
6	647/12905		Tube spiral guard 800mm long *fits onto item 3*		1
7	331/45861		Bracket hose guide		1
8	821/10431		Clamp pair		8
9	1315/3309Z		Bolt M8 x 35mm		2
10	1315/3419Z		Bolt M10x90mm		2
11	1315/3420Z		Bolt M10 X 100		2
12	1370/0303Z		Nut lock M10		2
13	1420/0007Z		Washer plain M8		2
14	1420/0008Z		Washer Plain M10		7
15	1370/0303Z		Nut lock M10 *was 826/01249*		1

Product Catalog \ CONSTRUCTION \ NORTH AMERICA \ CONSTRUCTION / INDUSTRIAL \ BACKHOE LOADER 3CX,4CX,214,215,217 \ 3C PLUS (91HP) , Made in Brazil with Dieselmax/IESA Engine 9812/0080 \ E HYDRAULICS INCLUDING STEERING \ E01 HOSE & PIPEWORK

9812/0080 E1-4-32 CIRCUIT, COOLER, HYDRAULIC OIL, 2 WHEEL STEER

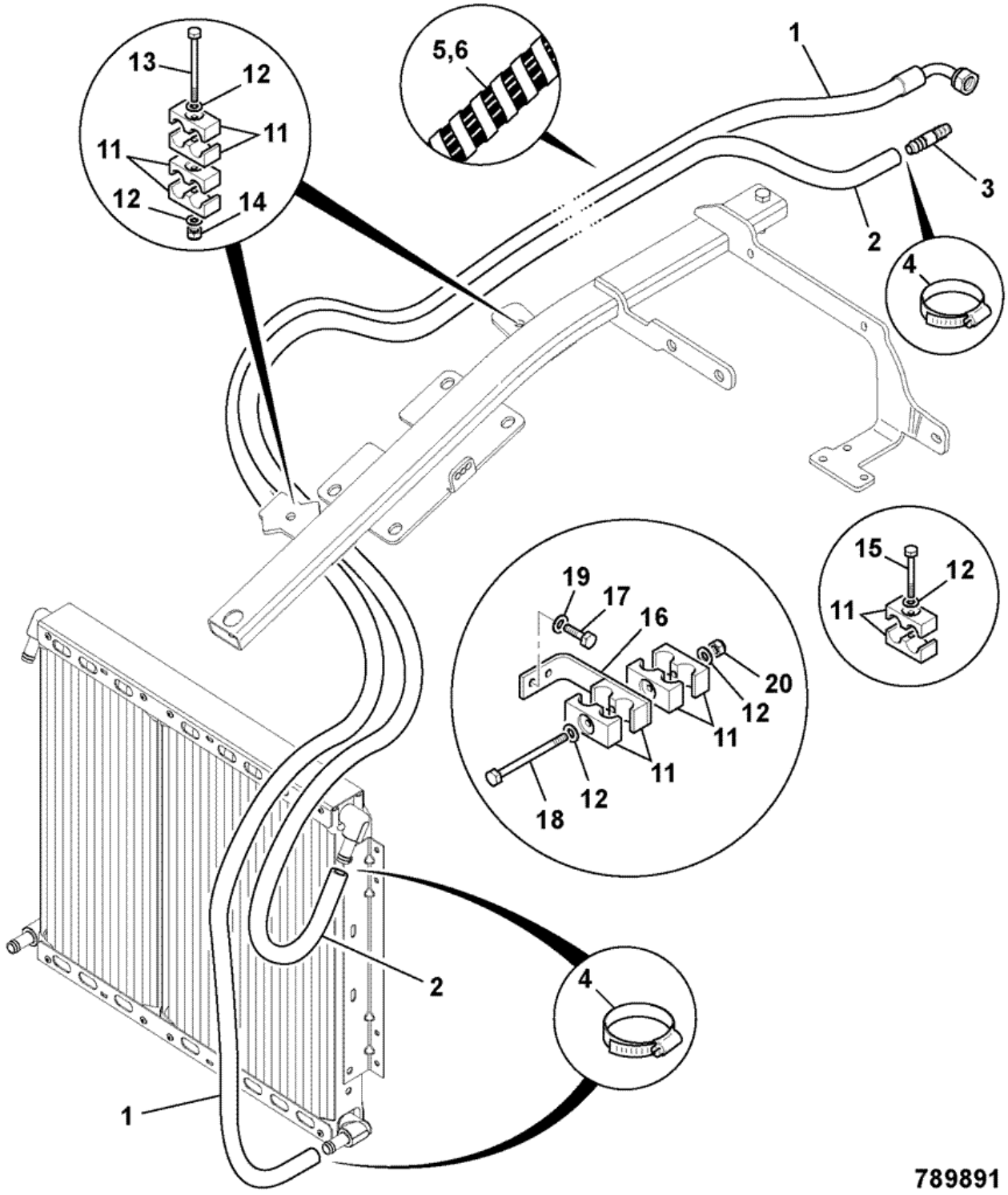

Item	Part #	Change No	Description	Usage Code	QTY
			'See Remark'		

0	.		*see index radiator fittings for centre beam*		1
0	.		'See Remark' *see frame E1-18-1 for cooler details*		1
1	649/51774		Hose 5/8x3575mm long		1
2	649/51775		Hose 5/8"BSP 2843mm long		1
3	650/10166		Adaptor hose connecter 16mm OD		1
4	2201/0005		Clip jubilee		4
5	647/12906		Tube spiral guard 900mm long		1
6	647/12905		Tube spiral guard 800mm long		1
11	821/10431		Clamp pair		8
12	1420/0008Z		Washer Plain M10		8
13	1315/3419Z		Bolt M10x90mm		2
14	1370/0303Z		Nut lock M10		2
15	1315/3413Z		Bolt M10 x 55		2
16	331/45861		Bracket hose guide		1
17	1315/3309Z		Bolt M8 x 35mm		2
18	1315/3420Z		Bolt M10 X 100		1
19	1420/0007Z		Washer plain M8		2
20	1370/0303Z		Nut lock M10 *was 826/01249*		1

Product Catalog \ CONSTRUCTION \ NORTH AMERICA \ CONSTRUCTION / INDUSTRIAL \ BACKHOE LOADER 3CX,4CX,214,215,217 \ 3C PLUS (91HP) , Made in Brazil with Dieselmax/IESA Engine 9812/0080 \ E HYDRAULICS INCLUDING STEERING \ E01 HOSE & PIPEWORK

9812/0080 E1-4-51 CIRCUIT, COOLERS, HYDRAULIC & TRANS, 2WS MANUAL TRANSMISSION

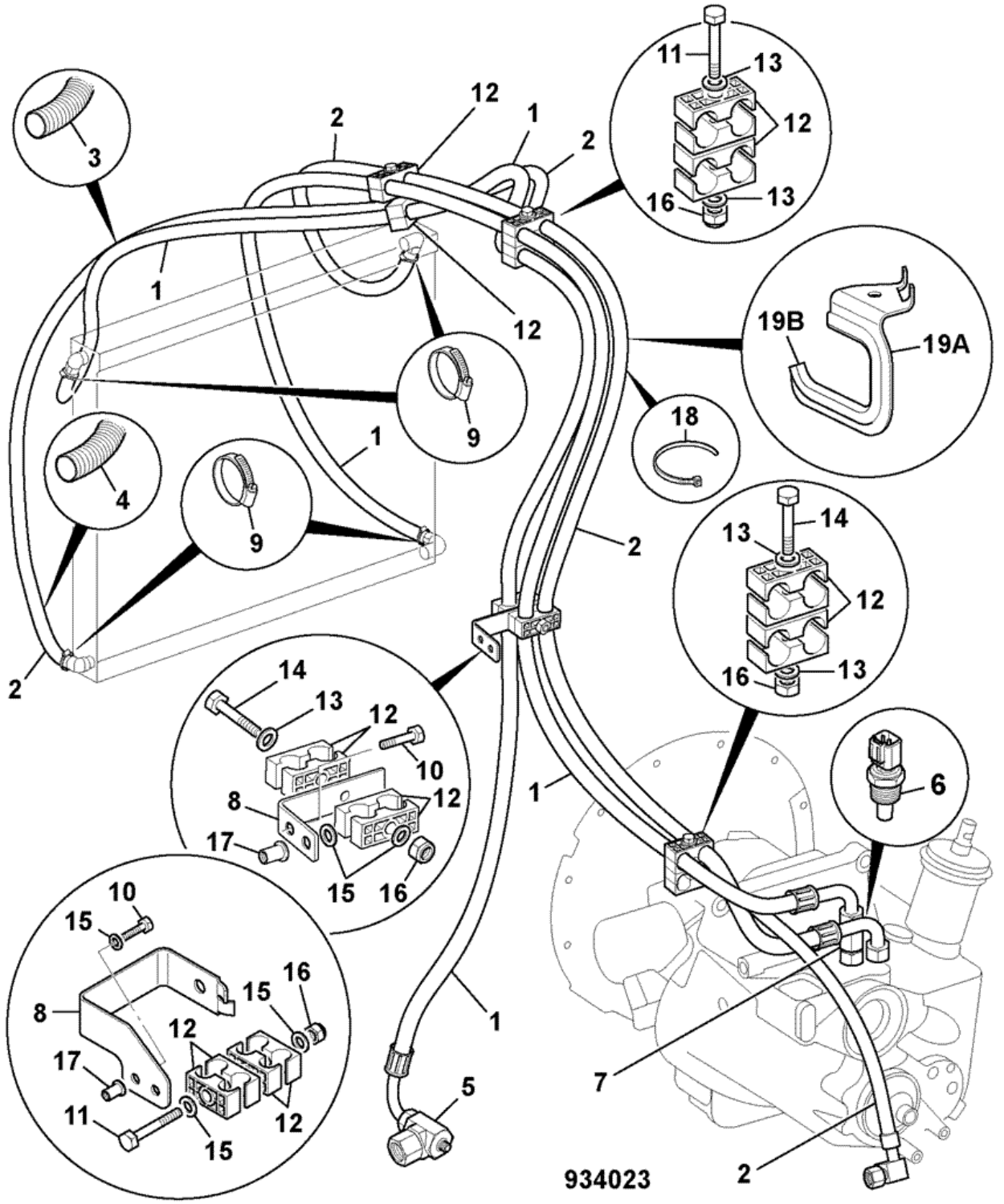

Item	Part #	Change No	Description	Usage Code	QTY
1	649/51774		Hose 5/8x3575mm long		2

2	332/D1594		Hose 5/8x3900mm		2
3	647/12905		Tube spiral guard 800mm long		2
4	647/12902		Tube spiral guard 1000mm long *was 332/D6249*		2
5	816/91017		Adapter tee M/F/M G5/8AxG1xG3/8A		1
6	701/80363		Switch oil temp 9/16"UNF Deutsch connector		1
7	816/90865		Adapter M/F 9/16"tapping		1
8	331/45861	<M TBA	Bracket hose guide		1
8	332/E5082	>M TBA	Bracket hose guide		1
9	2201/0005		Clip jubilee		4
10	1315/3309Z		Bolt M8 x 35mm		2
11	1315/3419Z		Bolt M10x90mm *QTY:A/R*		0
12	821/10431		Clamp pair		8
13	1420/0008Z		Washer Plain M10		7
14	1315/3420Z		Bolt M10 X 100 *QTY:A/R*		0
15	1420/0007Z		Washer plain M8		2
16	1370/0303Z		Nut lock M10		3
17	826/01106		Nut rivet,M8		2
18	270/00106		Tie Cable 385mm long		2
19A	332/E5084	>M TBA	Support hose		1
19B	926/04828	>M TBA	Strip edging 235mm		1

Product Catalog \ CONSTRUCTION \ NORTH AMERICA \ CONSTRUCTION / INDUSTRIAL \ BACKHOE LOADER 3CX,4CX,214,215,217 \ 3C PLUS (91HP) , Made in Brazil with Dieselmax/IESA Engine 9812/0080 \ E HYDRAULICS INCLUDING STEERING \ E01 HOSE & PIPEWORK

9812/0080 E1-4-95 CIRCUIT, COOLERS, HYDRAULIC & TRANS

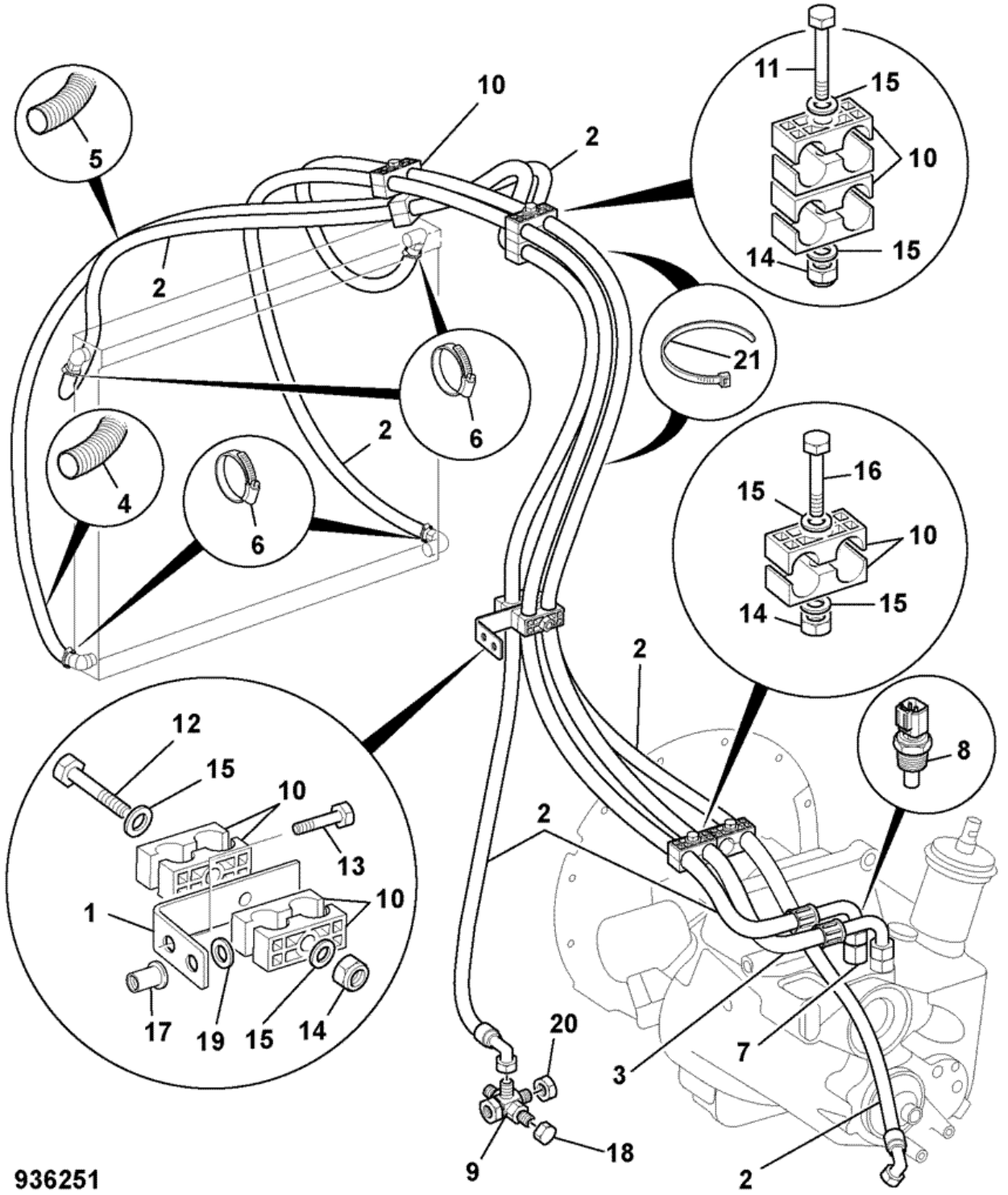

Item	Part #	Change No	Description	Usage Code	QTY
1	331/45861		Bracket hose guide		1

2	649/51774		Hose 5/8x3575mm long		3
3	332/D1594		Hose 5/8x3900mm		1
4	647/12902		Tube spiral guard 1000mm long *was 332/D6249*		2
5	647/12905		Tube spiral guard 800mm long		2
6	2201/0005		Clip jubilee		4
7	816/90865		Adapter M/F 9/16"tapping		1
8	701/80363		Switch oil temp 9/16"UNF Deutsch connector		1
9	332/D3321		Adapter 5 way		1
10	821/10431		Clamp pair		8
11	1315/3419Z		Bolt M10x90mm		2
12	1315/3420Z		Bolt M10 X 100		1
13	1315/3309Z		Bolt M8 x 35mm		2
14	1370/0303Z		Nut lock M10		3
15	1420/0008Z		Washer Plain M10		8
16	1315/3413Z		Bolt M10 x 55		2
17	826/01106		Nut rivet,M8		2
18	816/90045		Cap blanking 1/4"BSP steel		1
19	1420/0007Z		Washer plain M8		2
20	816/90274		Cap blanking 3/4"BSP female		1
21	270/00106		Tie Cable 385mm long		2

Product Catalog \ CONSTRUCTION \ NORTH AMERICA \ CONSTRUCTION / INDUSTRIAL \ BACKHOE LOADER 3CX,4CX,214,215,217 \ 3C PLUS (91HP) , Made in Brazil with Dieselmax/IESA Engine 9812/0080 \ E HYDRAULICS INCLUDING STEERING \ E01 HOSE & PIPEWORK

9812/0080 E1-5-50 CIRCUIT, STEERING, 2WS 2WD

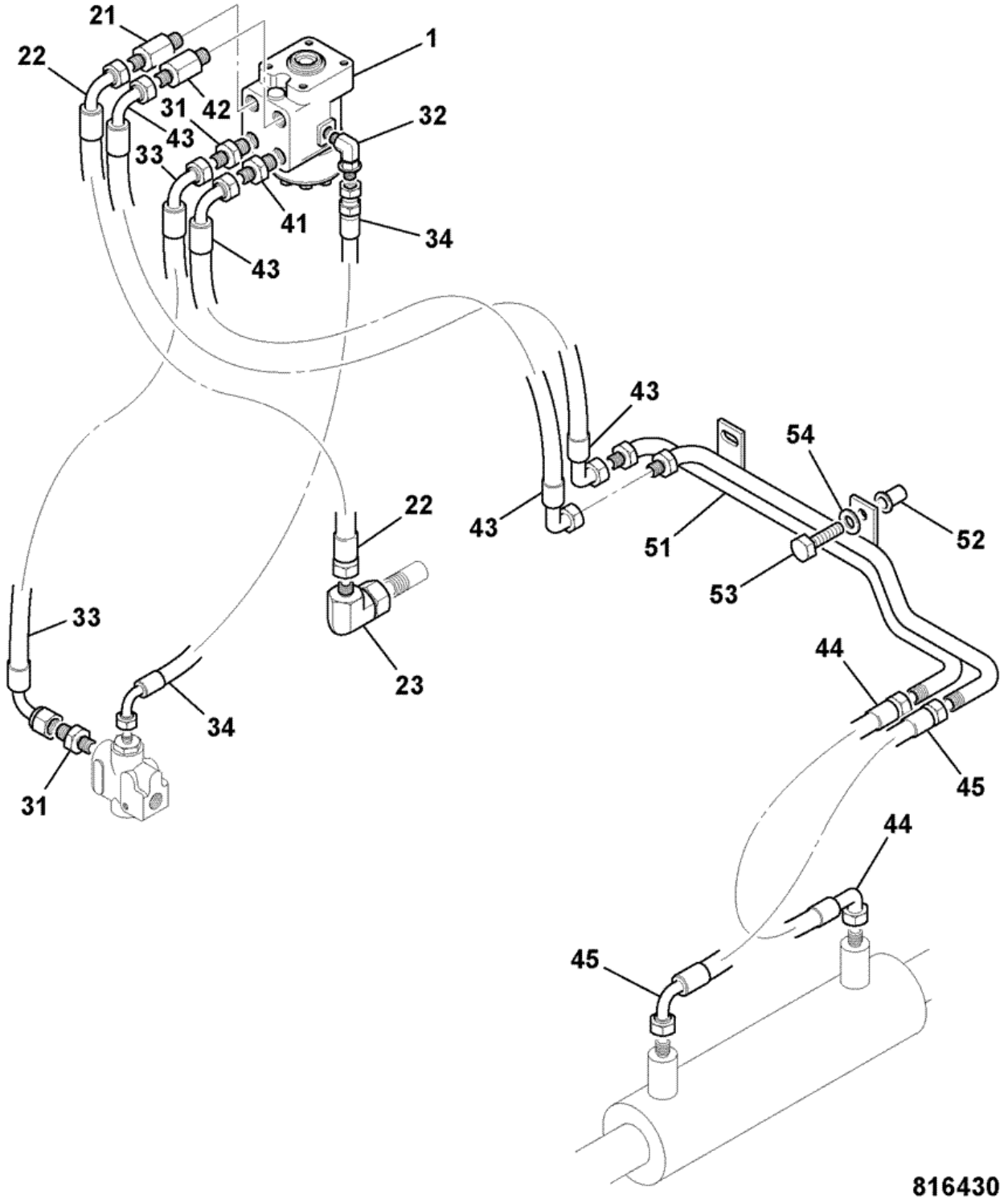

Item	Part #	Change No	Description	Usage Code	QTY
1	35/412300		Valve steer 250 load sens without anti-shock		1
21	816/90488		Adapter extended M/M		1

			port T		
22	612/28800		Hose 3/8 BSP x 1010mm		1
23	816/90718		Adapter elbow M/F		1
31	1620/2053		Adaptor		2
32	816/90459		Adapter elbow M/M		1
33	612/45800		Hose		1
34	649/51720		Hose 1200 long		1
41	1620/2053		Adaptor		1
42	816/90488		Adapter extended M/M		1
43	612/47000		Hose		2
44	612/80113		Hose 3/8BSP X 410mm long		1
45	612/80114		Hose 3/8 BSP X 645mm long		1
51	335/09190		Pipe steering 2WD/2WS *Dieselmax*		1
51	128/E3321		Pipe steering 2WD/2WS *IESA*		1
52	826/01249		Nut rivet M10 open end for 6 to 8.5mm plate		2
53	1315/0410Z		Bolt M10 x 40		2
54	1420/0008Z		Washer Plain M10		2

Product Catalog \ CONSTRUCTION \ NORTH AMERICA \ CONSTRUCTION / INDUSTRIAL \ BACKHOE LOADER 3CX,4CX,214,215,217 \ 3C PLUS (91HP) , Made in Brazil with Dieselmax/IESA Engine 9812/0080 \ E HYDRAULICS INCLUDING STEERING \ E01 HOSE & PIPEWORK

9812/0080 E1-5-60 CIRCUIT, STEERING, 2WS 4WD

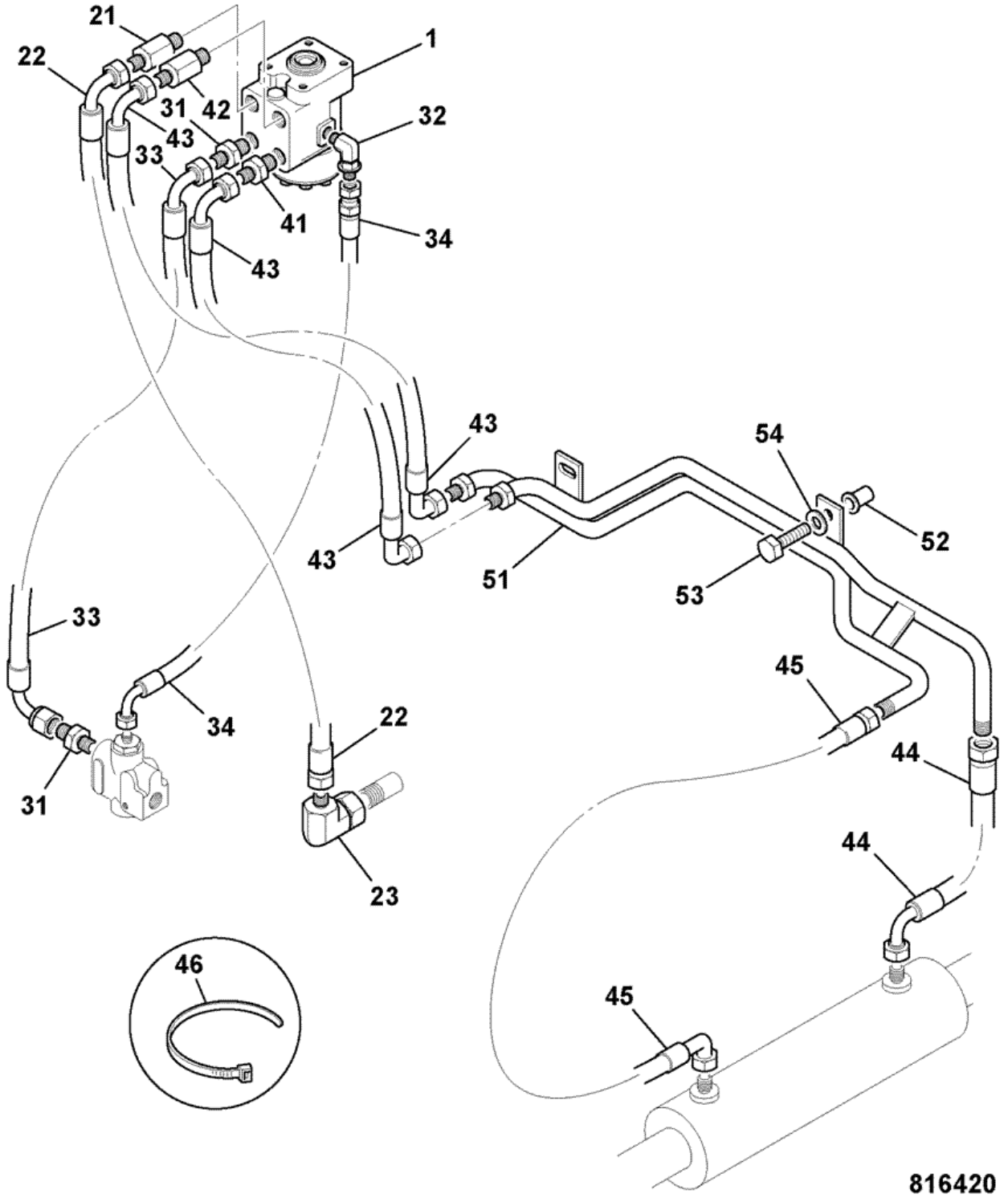

Item	Part #	Change No	Description	Usage Code	QTY
1	35/412300		Valve steer 250 load sens without anti-shock		1
21	816/90488		Adapter extended M/M		1

			port T		
22	612/28800		Hose 3/8 BSP x 1010mm		1
23	816/90718		Adapter elbow M/F		1
31	1620/2053		Adaptor		2
32	816/90459		Adapter elbow M/M		1
33	612/45800		Hose		1
34	649/51720		Hose 1200 long		1
41	1620/2053		Adaptor		1
42	816/90488		Adapter extended M/M		1
43	612/47000		Hose		2
44	612/26500		Hose sleeved 3/8BSPx270		1
45	612/80114		Hose 3/8 BSP X 645mm long		1
46	826/01144		Tie cable 200mm long		2
51	335/09189		Pipe Steering 2WS/4WD *Dieselmax*		1
51	128/E3317		Pipe steering, 2WS/4WD *IESA*		1
52	826/01249		Nut rivet M10 open end for 6 to 8.5mm plate		2
53	1315/0410Z		Bolt M10 x 40		2
54	1420/0008Z		Washer Plain M10		2

Product Catalog \ CONSTRUCTION \ NORTH AMERICA \ CONSTRUCTION / INDUSTRIAL \ BACKHOE LOADER 3CX,4CX,214,215,217 \ 3C PLUS (91HP) , Made in Brazil with Dieselmax/IESA Engine 9812/0080 \ E HYDRAULICS INCLUDING STEERING \ E01 HOSE & PIPEWORK

9812/0080 E1-6-20 CIRCUIT, SLEW/SWING, CENTREMOUNT

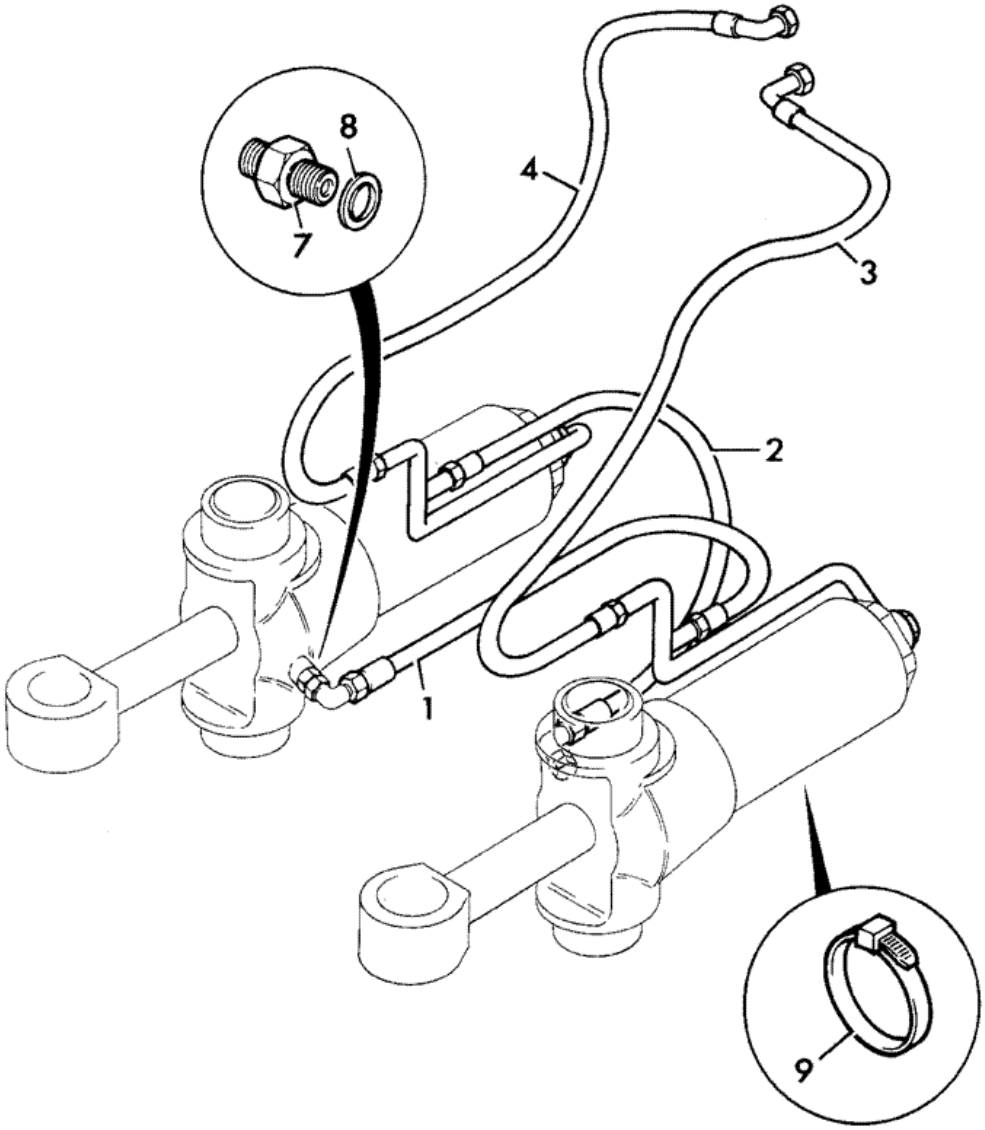

702810

Item	Part #	Change No	Description	Usage Code	QTY
1	629/80122		Hose 1/4BSP x 650Lg		1

2	629/80122		Hose 1/4BSP x 650Lg		1
3	612/26600		Hose 3/8"BSP x 700mm *was 629/80126*		1
4	612/26600		Hose 3/8"BSP x 700mm *was 629/80126*		1
7	1620/0002		Adapter		2
7	816/90676		Adapter 90deg elbow 9/16 SAE x G1/4		2
8	:2401/0505		O Ring		1
9	826/01144		Tie cable 200mm long		1

Product Catalog \ CONSTRUCTION \ NORTH AMERICA \ CONSTRUCTION / INDUSTRIAL \ BACKHOE LOADER 3CX,4CX,214,215,217 \ 3C PLUS (91HP) , Made in Brazil with Dieselmax/IESA Engine 9812/0080 \ E HYDRAULICS INCLUDING STEERING \ E01 HOSE & PIPEWORK

9812/0080 E1-7-30 CIRCUIT, STABILISER, CENTREMOUNT

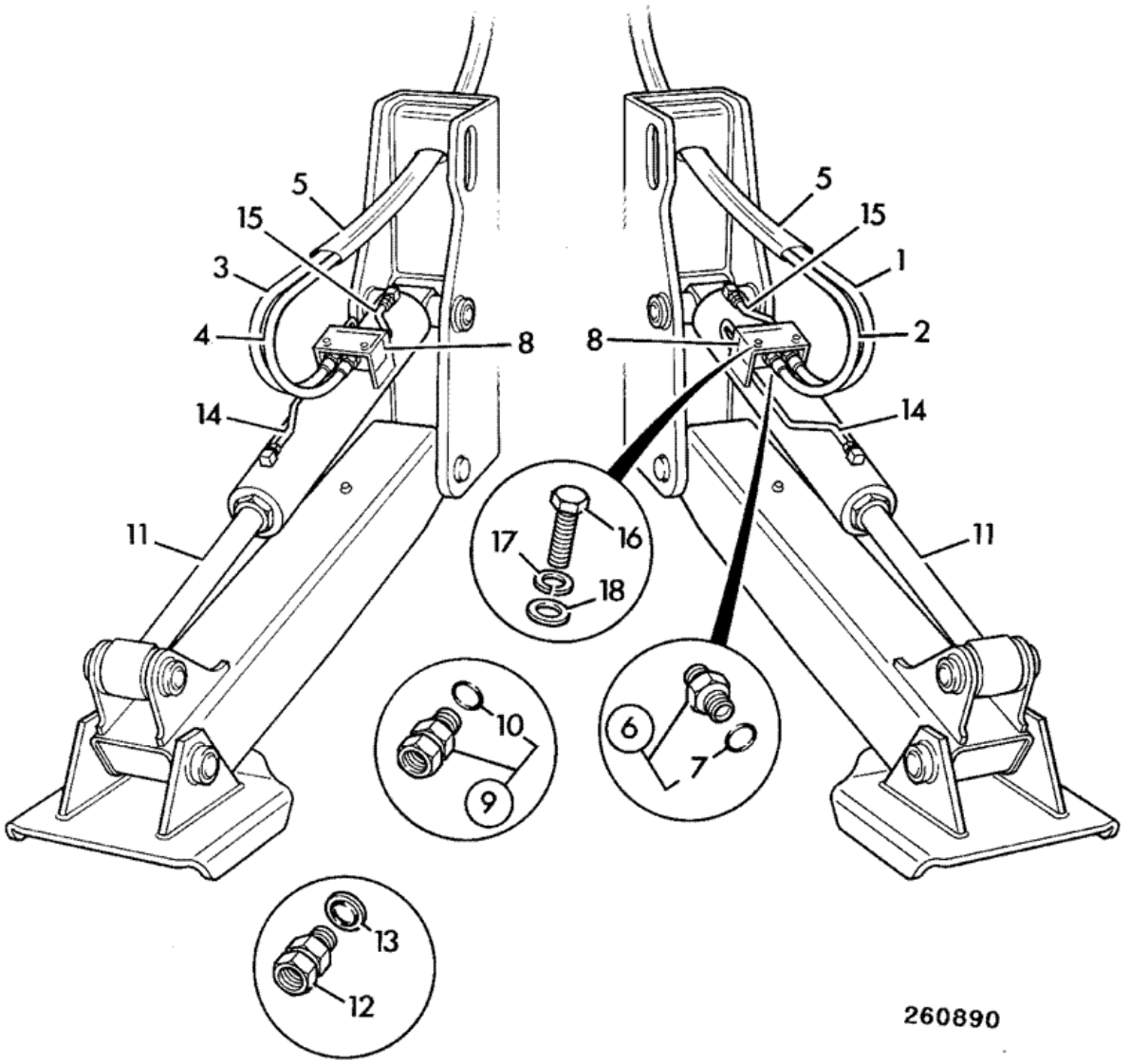

Item	Part #	Change No	Description	Usage Code	QTY
1	611/24600		Hose 1/4"BSP x 1430mm		1
2	611/24600		Hose 1/4"BSP x 1430mm		1

3	611/24600		Hose 1/4"BSP x 1430mm		1
4	611/24600		Hose 1/4"BSP x 1430mm		1
5	647/02703		Tube black pvc 2400mm *1350mm long per side.*		2
6	1620/2051		Adaptor 1/4"BSP x 9/16"SAE		4
7	:2401/0505		O Ring		1
8	25/994800	<M TBA	Valve ram lockout	A	2
8	332/E3382	>M TBA	Valve lockout double *no user serviceable parts*		2
8A	:998/10409	<M TBA	Kit-seal	A	1
9	816/90009		Adapter M/F *item 8 to item 15*		2
10	:2401/0505		O Ring		1
11	.		'See Remark' *Stabiliser ram see section E4*		2
12	816/90776		Adapter extended M/F *item 8 to item 14*		2
13	:2401/0505		O Ring		1
14	653/40114		Pipe stabiliser ram R/H rod side *90 X 50 ram*		1
14	332/P0621		Pipe stabiliser ram L/H rod side *90 X 60 ram*		1
14	653/40113		Pipe stabiliser ram L/H rod side *90 X 50 ram*		1
14	332/P0622		Pipe stabiliser ram R/H rod side *90 X 60 ram*		1
15	653/40112		Pipe stabiliser ram head side		2
16	1315/0308Z		Screw M8x30		4
17	.		'See Remark' *not fitted*		4
18	1420/0007Z		Washer plain M8		4

Product Catalog \ CONSTRUCTION \ NORTH AMERICA \ CONSTRUCTION / INDUSTRIAL \ BACKHOE LOADER 3CX,4CX,214,215,217 \ 3C PLUS (91HP) , Made in Brazil with Dieselmax/IESA Engine 9812/0080 \ E HYDRAULICS INCLUDING STEERING \ E01 HOSE & PIPEWORK

9812/0080 E1-8-10 CIRCUIT, BOOM RAM

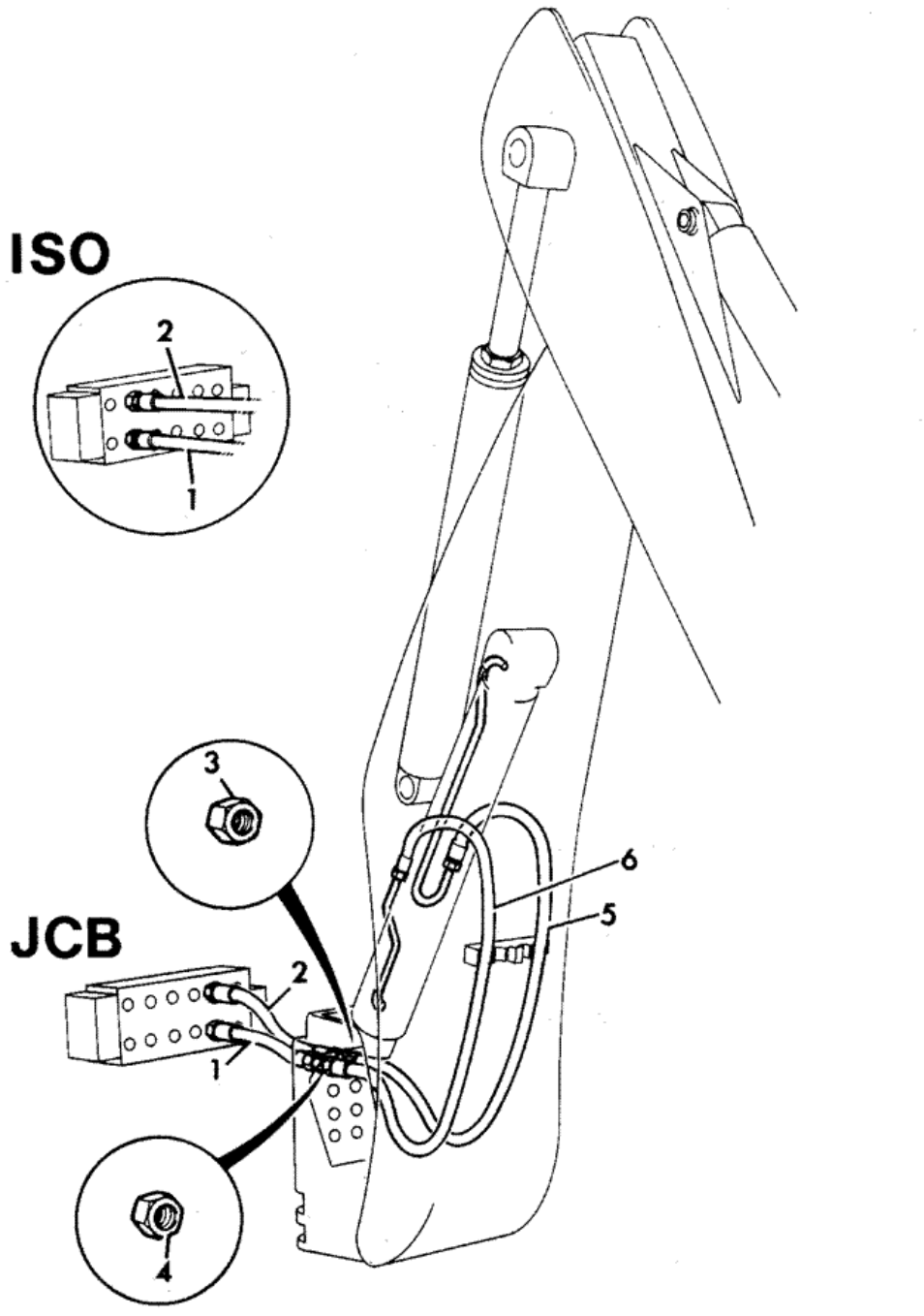

Item	Part #	Change No	Description	Usage Code	QTY
1	613/36009		Hose 1/2"BSP x 850mm		1
2	614/05000		Hose 5/8BSPx820		1

3	1356/0204Z		Nut		1
3A	1418/0018Z		Washer lock, internal teeth		1
4	1356/0205Z		Nut		1
4A	1418/0018Z		Washer lock, internal teeth		1
5	629/27000		Hose 5/8BSP X 980mm		1
6	629/20600		Hose 1/2BSP X 940mm		1

Product Catalog \ CONSTRUCTION \ NORTH AMERICA \ CONSTRUCTION / INDUSTRIAL \ BACKHOE LOADER 3CX,4CX,214,215,217 \ 3C PLUS (91HP) , Made in Brazil with Dieselmax/IESA Engine 9812/0080 \ E HYDRAULICS INCLUDING STEERING \ E02 PUMPS

9812/0080 E2-1-12 PUMP, , 36/26 CCR MAIN HYDRAULIC

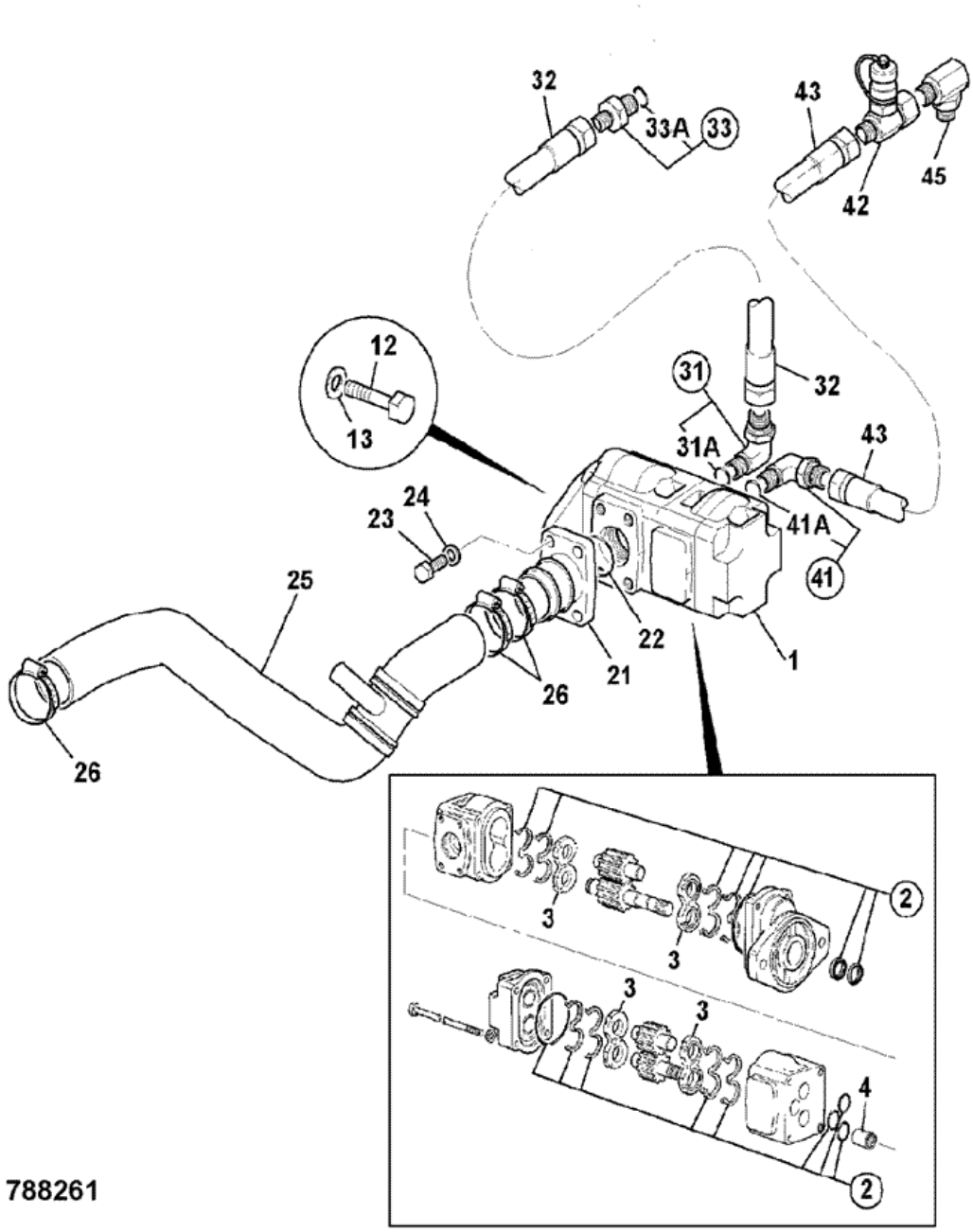

Item	Part #	Change No	Description	Usage Code	QTY
1	20/925579		Pump main hydraulic 36/26 cc/r		1
2	:20/950906		Kit-seal main hydraulic pump		1

3	:20/902703		Kit pressure plates (2 off)		2
4	:20/903301		Coupling splined		1
12	1315/0509Z		Screw M12 x 35mm		2
13	1420/0009Z		Washer Plain M12		2
21	903/20774		Adaptor Suction port		1
22	2401/0218		O Ring		1
23	1305/1908Z		Bolt		4
24	823/00309		Washer hardened		4
25	834/11565		Hose suction manual transmission		1
26	2201/0013		Clip jubilee		3
31	816/90476		Adapter elbow M/M		2
31A	:2401/0508		O Ring		1
32	614/24200		Hose 5/8"BSP 640mm long		1
33	1620/2057		Adaptor		1
33A	:2401/0508		O Ring		1
41	816/90460		Adapter elbow M/M		1
41A	:2401/0507		O Ring		1
42	816/90427		Adapter test point 5/8 BSP		1
43	614/80055		Hose		1
45	816/90460		Adapter elbow M/M		1
45A	:2401/0507		O Ring		1

Product Catalog \ CONSTRUCTION \ NORTH AMERICA \ CONSTRUCTION / INDUSTRIAL \ BACKHOE LOADER 3CX,4CX,214,215,217 \ 3C PLUS (91HP) , Made in Brazil with Dieselmax/IESA Engine 9812/0080 \ E HYDRAULICS INCLUDING STEERING \ E03 VALVES & HYDRAULIC FILTERS

9812/0080 E3-13-1 VALVE, DIVERTER,

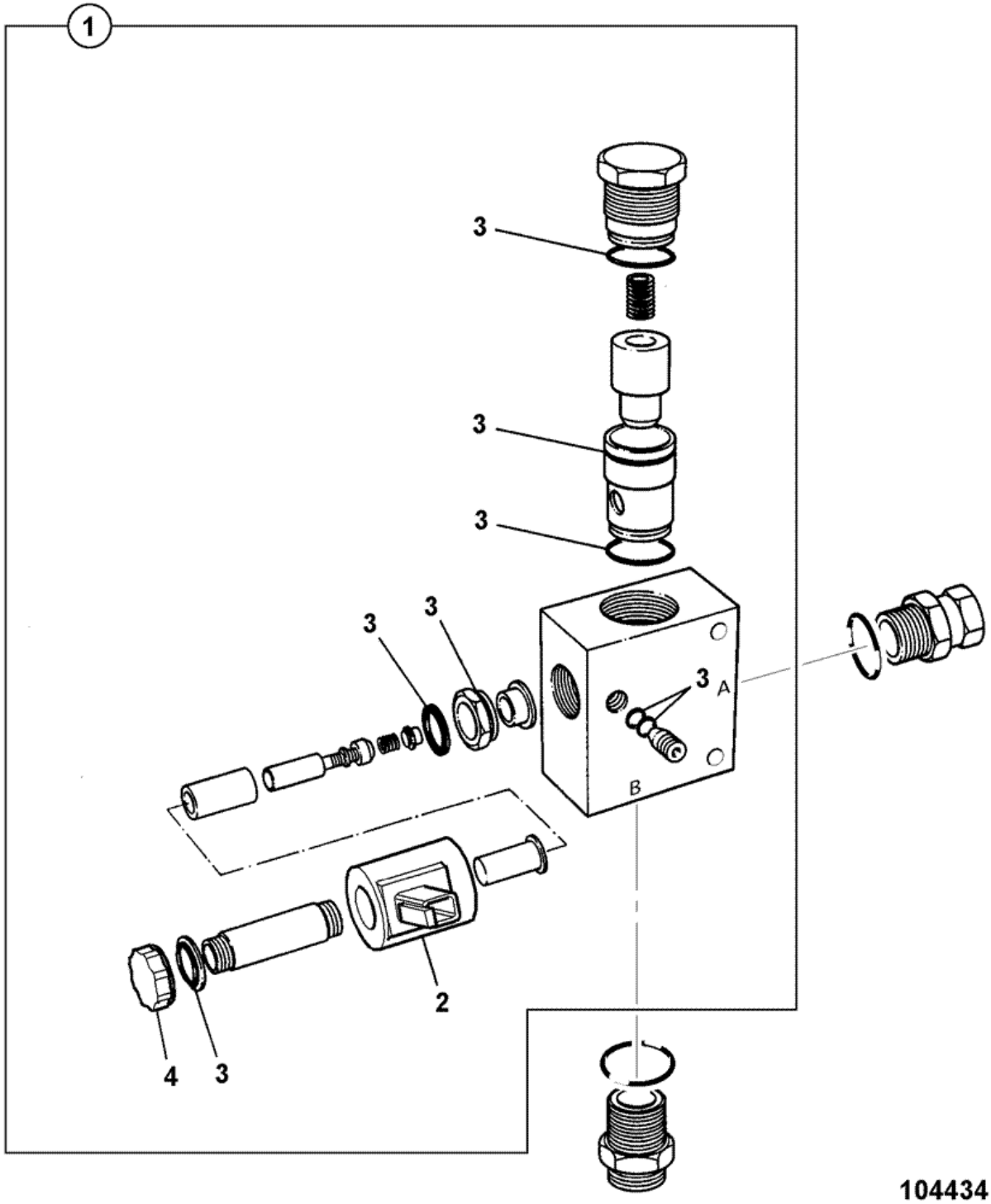

Item	Part #	Change No	Description	Usage Code	QTY
1	25/221087		Valve solenoid normally open *not on PC machines*		1

2	:717/20137		Coil 12v		1
3	:25/970603		Kit-seal pump offload valve		1
4	:25/970606		Nut		1
5	:25/970607		O Ring		1

9812/0080 E3-2-10 VALVE, LOADER, 3 SPOOL, WITH FLOAT & RESET

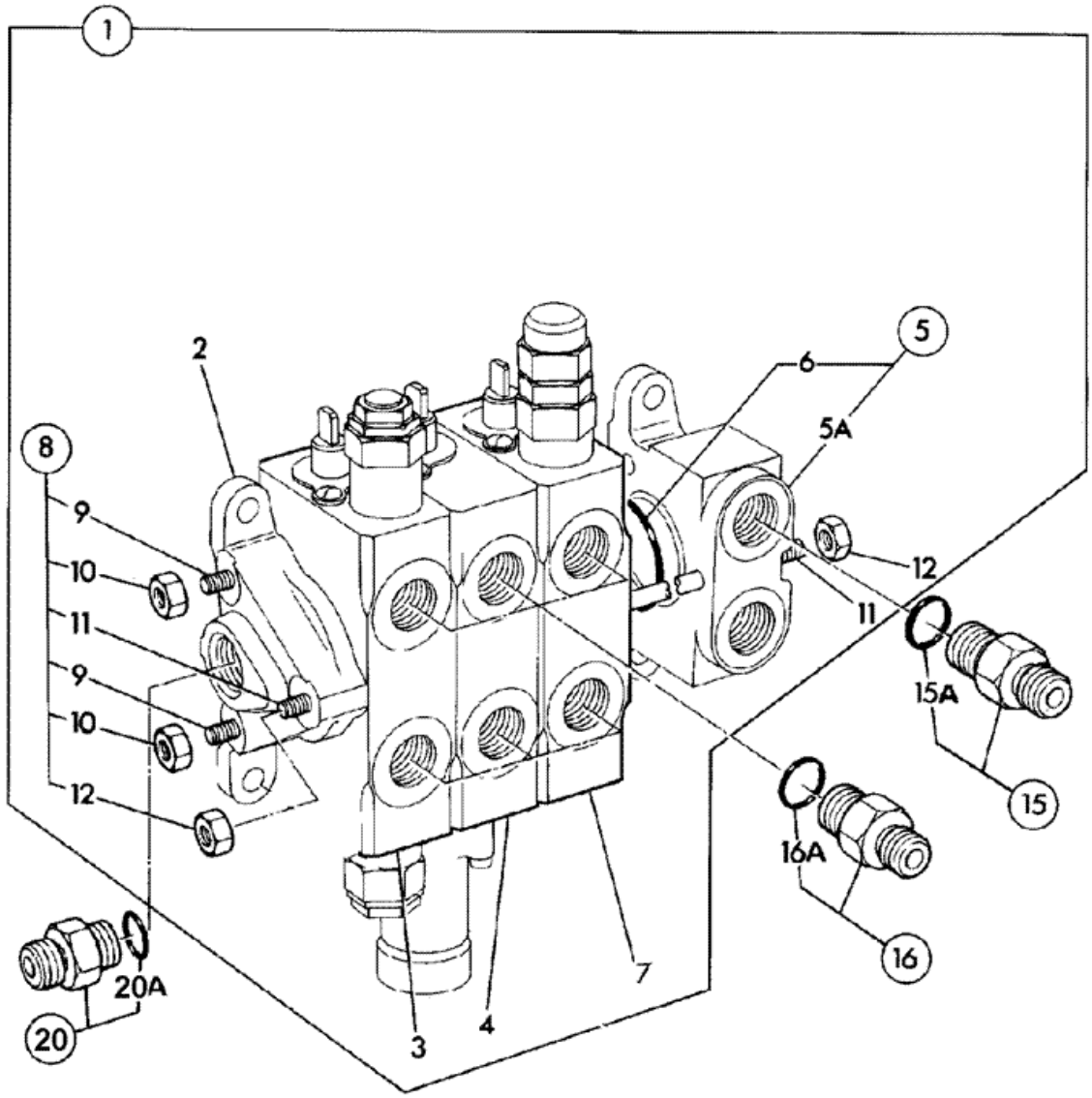

172593

Item	Part #	Change No	Description	Usage Code	QTY
1	25/221438	Superseded	Valve 3spool loader float & reset		1
1	25/223695		Valve loader, 3 spool float and reset		1
2	:25/987006		Cover HPCO		1
3	:25/222713		Valve section		1
4	:25/222714		Valve section		1

5	:25/987007		Cover inlet		1
5A	::NSP		None serviced part		1
6	::25/606812		O Ring interface valve sections		1
7	:25/222715		Valve section		1
8	:25/607702		Kit-tie rod		1
9	::25/607606		Rod tie		2
10	::25/606817		Nut		4
11	::25/607704		Rod tie		1
12	::25/606815		Nut		2
15	1620/0009		Adapter *Feed line*		1
15	1620/0007		Adapter *Return line*		1
15A	:2401/0506		O Ring		1
16	1620/0005		Adapter 3/4"UNF o-ring boss 1/2"BSP male		6
16A	:2401/0506		O Ring		1
20	1620/0010		Adapter includes 'o'ring		1
20A	:2401/0506		O Ring		1

Product Catalog \ CONSTRUCTION \ NORTH AMERICA \ CONSTRUCTION / INDUSTRIAL \ BACKHOE LOADER 3CX,4CX,214,215,217 \ 3C PLUS (91HP) , Made in Brazil with Dieselmax/IESA Engine 9812/0080 \ E HYDRAULICS INCLUDING STEERING \ E03 VALVES & HYDRAULIC FILTERS

9812/0080 E3-2-11 VALVE, LOADER, 3 SPOOL, WITH FLOAT

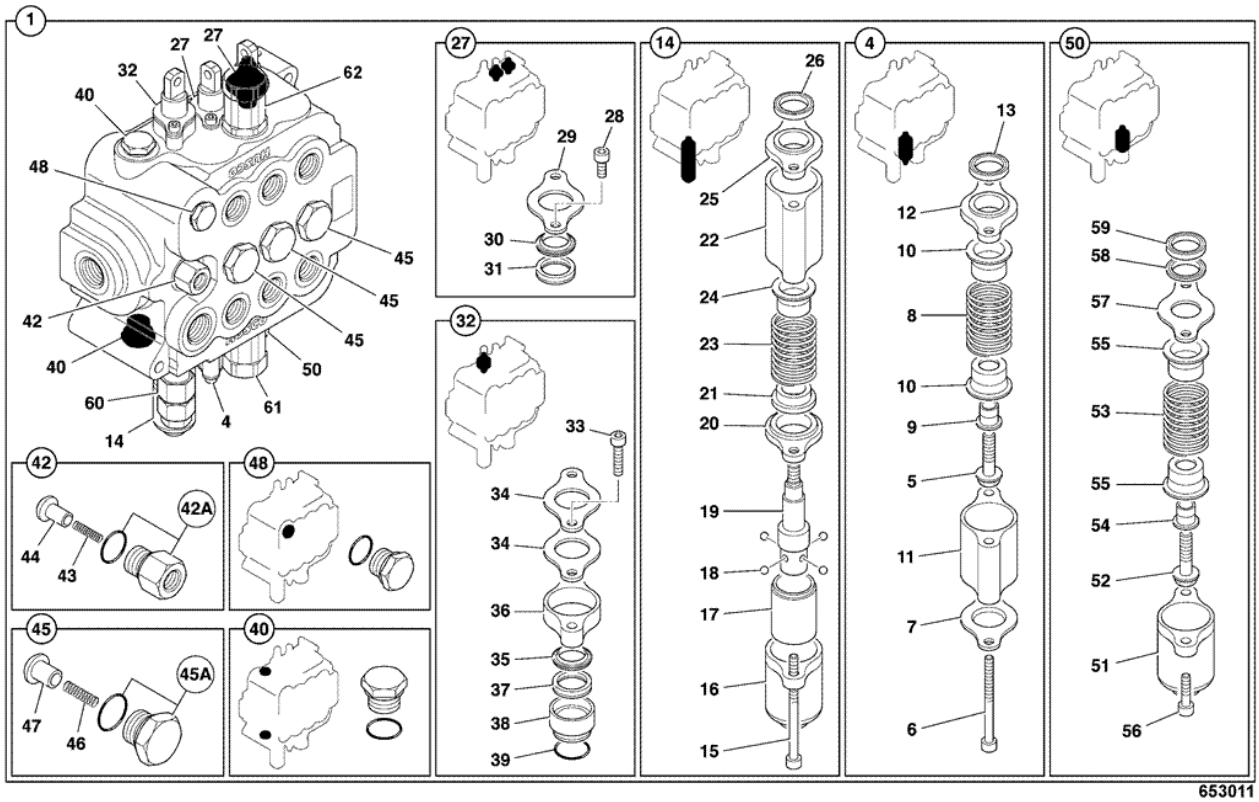

Item	Part #	Change No	Description	Usage Code	QTY
1	25/222643		Valve 3 spool loader float and reset		1
4	:25/222411		Kit-spool cap		1
5	::25/608204		Screw spring retainer		1
6	::25/608607		Capscrew		2
7	::25/974606		Plate seal		1
8	::25/222670		Spring		1
9	::25/974605		Spacer		1
10	::25/608201		Retainer spring		2
11	::25/222671		Spacer		1
12	::25/975702		Plate seal		1
13	::25/221208		Seal		1
14	:25/222412		Kit-spool end		1
15	::25/974622		Capscrew		2
16	::25/222199		Cap spool		1
17	::25/222672		Sleeve		1
18	::25/974621		Ball 5mm dia		4
19	::25/222673		Cap Spool end		1
20	::25/222674		Plate seal		1
21	::25/974615		Retainer spring		1
22	::25/222675		Spacer		1

23	::25/974619		Spring		1
24	::25/608201		Retainer spring		1
25	::25/975702		Plate seal		1
26	::25/221208		Seal		1
27	:25/222660		Kit std spool gland		2
28	::25/606101		Screw		2
29	::25/222198		Plate seal		1
30	::25/222661		Wiper seal		1
31	::25/221208		Seal		1
32	:25/222669		Kit float spool gland		1
33	::25/606839		Screw		2
34	::25/222198		Plate seal		2
35	::25/222661		Wiper seal		1
36	::25/974609		Spacer		1
37	::25/221208		Seal		1
38	::25/974608		Housing seal		1
39	::25/974607		O Ring		1
40	:25/606822		Plug assembly		2
42	:25/222414		Kit-plug		1
42A	::25/612835		Plug assembly		1
43	::25/606117		Spring		1
44	::25/974645		Seat check valve		1
45	:25/221746		Kit-anti-cavitation		3
45A	::25/606111		Cap		3
46	::25/606113		Spring		3
47	::25/606114		Seat		3
48	25/606823		Plug assembly		1
50	:25/222668		Kit Spool cap assembly		1
51	::25/222199		Cap spool		1
52	::25/608204		Screw spring retainer		1
53	::25/222670		Spring		1
54	::25/608206		Spacer		1
55	::25/608201		Retainer spring		2
56	::25/606110		Screw cap		2
57	::25/222198		Plate seal		1
58	::25/222661		Wiper seal		1
59	::25/221208		Seal		1
60	25/618901		Valve relief		1
60A	25/618902		Kit-repair relief valve		1
61	25/222415		Valve relief		1
61A	25/222305		Seal ARV service kit		1
62	25/222416		Valve relief, 4500/2.5		1
62A	25/222305		Seal ARV service kit		1

Product Catalog \ CONSTRUCTION \ NORTH AMERICA \ CONSTRUCTION / INDUSTRIAL \ BACKHOE LOADER 3CX,4CX,214,215,217 \ 3C PLUS (91HP) , Made in Brazil with Dieselmax/IESA Engine 9812/0080 \ E HYDRAULICS INCLUDING STEERING \ E03 VALVES & HYDRAULIC FILTERS

9812/0080 E3-2-12 VALVE, LOADER, 3 SPOOL, WITH FLOAT AND UNLOADER, BRAZIL BUILDS

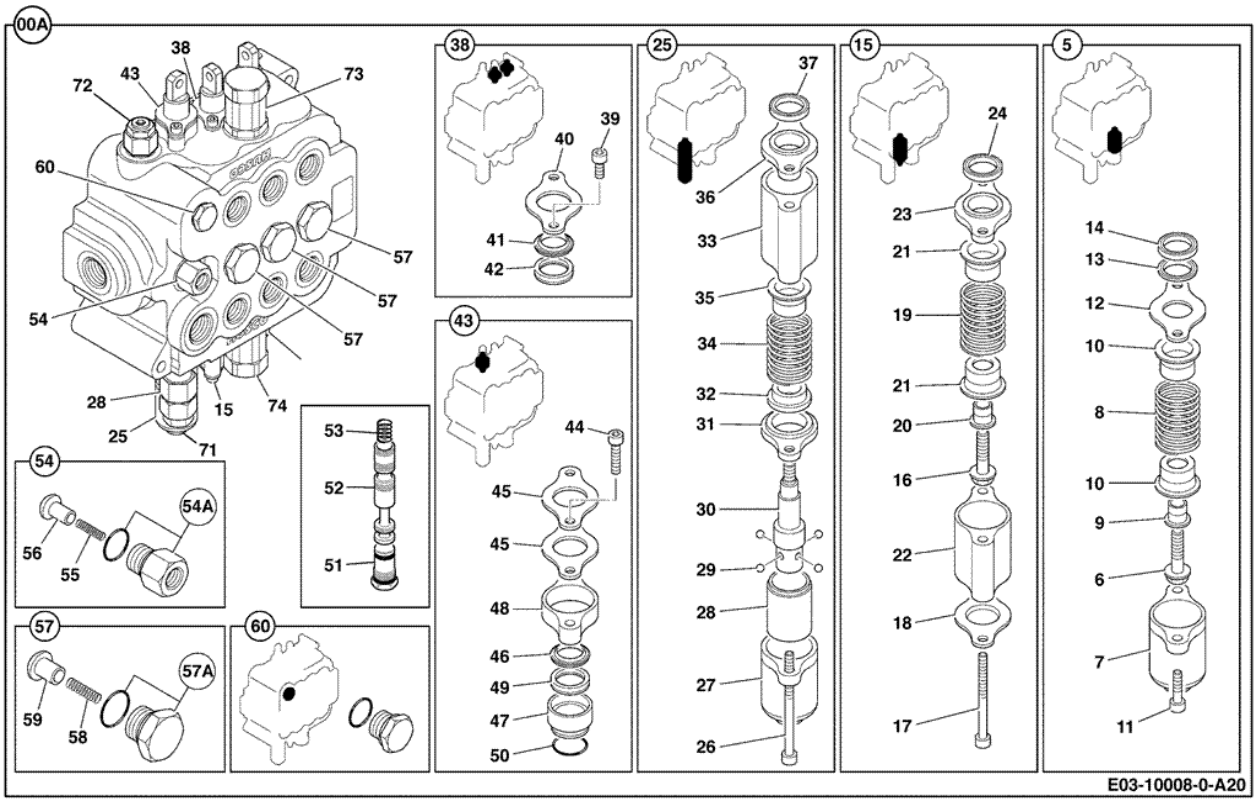

Item	Part #	Change No	Description	Usage Code	QTY
00A	332/P8700		Valve 3 spool with float and unloader		1
5	:25/222668		Kit Spool cap assembly		1
6	:25/608204		Screw spring retainer		1
7	::25/222199		Cap spool		1
8	::25/222670		Spring		1
9	::25/608206		Spacer		1
10	::25/608201		Retainer spring		2
11	::25/606110		Screw cap		2
12	::25/222198		Plate seal		1
13	::25/222661		Wiper seal		1
14	::25/221208		Seal		1
15	:25/222411		Kit-spool cap		1
16	::25/608204		Screw spring retainer		1
17	::25/608607		Capscrew		2
18	::25/974606		Plate seal		1
19	::25/222670		Spring		1
20	::25/974605		Spacer		1
21	::25/608201		Retainer spring		2
22	::25/222671		Spacer		1
23	::25/975702		Plate seal		1

24	::25/221208		Seal		1
25	:25/222412		Kit-spool end		1
26	::25/974622		Capscrew		2
27	::25/222199		Cap spool		1
28	::25/222672		Sleeve		1
29	::25/974621		Ball 5mm dia		4
30	::25/222673		Cap Spool end		1
31	::25/222674		Plate seal		1
32	::25/974615		Retainer spring		1
33	::25/222675		Spacer		1
34	::25/974619		Spring		1
35	::25/608201		Retainer spring		1
36	::25/975702		Plate seal		1
37	::25/221208		Seal		1
38	:25/222660		Kit std spool gland		2
39	::25/606101		Screw		2
40	::25/222198		Plate seal		1
41	::25/222661		Wiper seal		1
42	::25/221208		Seal		1
43	:25/222669		Kit float spool gland		1
44	::25/606839		Screw		2
45	::25/222198		Plate seal		2
46	::25/222661		Wiper seal		1
47	::25/974608		Housing seal		1
48	::25/974609		Spacer		1
49	::25/221208		Seal		1
50	::25/974607		O Ring		1
51	:25/974631		Plug assembly		1
52	:NSP		None serviced part		1
53	:25/974629		Spring		1
54	:25/222414		Kit-plug		1
54A	::25/612835		Plug assembly		1
55	::25/606117		Spring		1
56	::25/974645		Seat check valve		1
57	:25/221746		Kit-anti-cavitation		3
57A	::25/606111		Cap		1
58	::25/606113		Spring		1
59	::25/606114		Seat		1
60	25/612834		Plug shut-off assembly		1
71	:25/618901		Valve relief		1
71A	::25/618902		Kit-repair relief valve		1
72	:25/974643		Valve pilot unloader		1
72A	::25/974633		Kit-seal unloader pilot valve		1
73	:25/222416		Valve relief, 4500/2.5		1
73A	::25/222305		Seal ARV service kit		1
74	:25/222415		Valve relief		1
74A	::25/222305		Seal ARV service kit		1

Product Catalog \ CONSTRUCTION \ NORTH AMERICA \ CONSTRUCTION / INDUSTRIAL \ BACKHOE LOADER 3CX,4CX,214,215,217 \ 3C PLUS (91HP) , Made in Brazil with Dieselmax/IESA Engine 9812/0080 \ E HYDRAULICS INCLUDING STEERING \ E03 VALVES & HYDRAULIC FILTERS

9812/0080 E3-2-20 VALVE, SECTION, SHOVEL, 2 SPOOL, LOADER VALVE

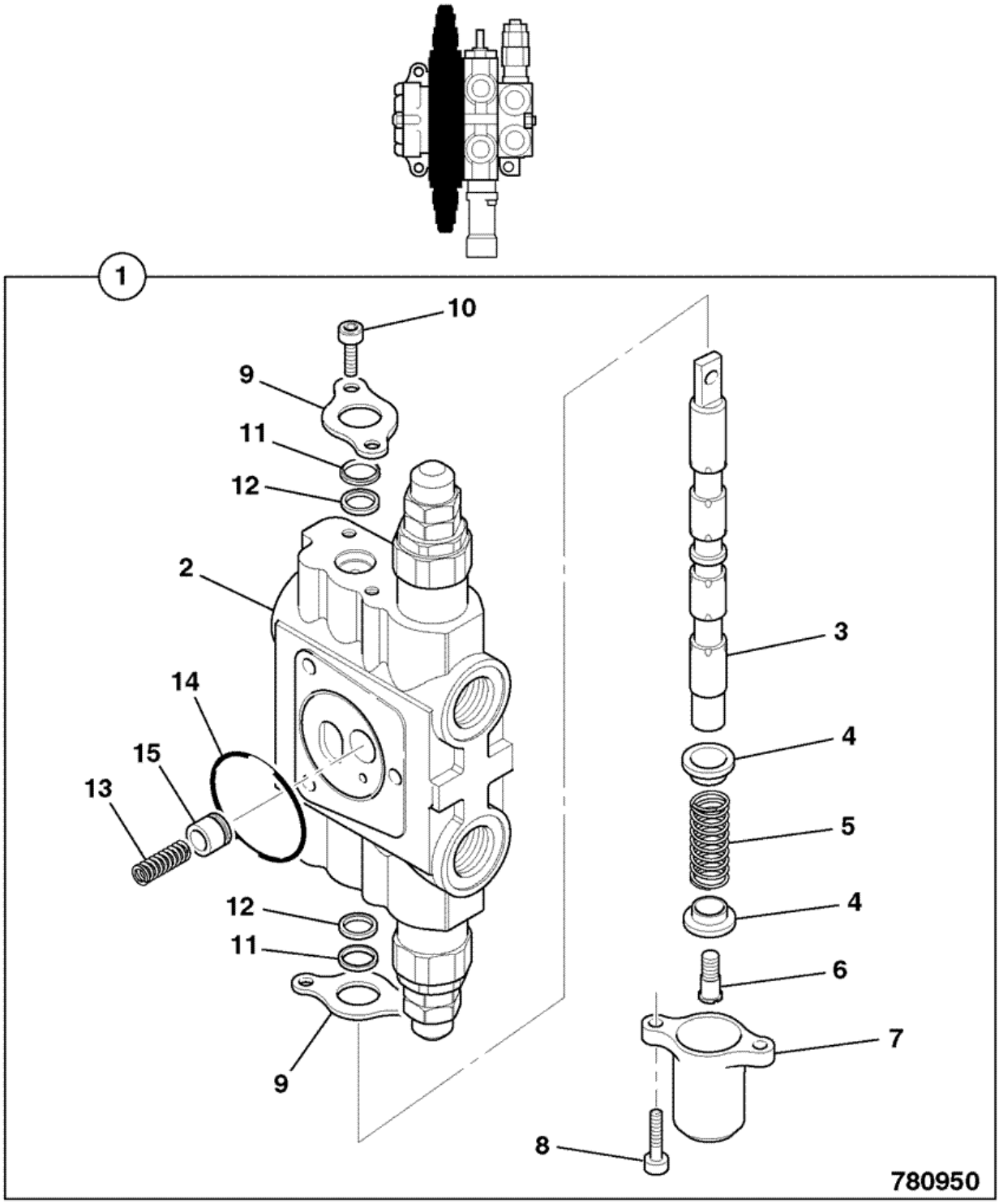

Item	Part #	Change No	Description	Usage Code	QTY
1	25/222717		Valve section		1

2	:NSP		None serviced part *Spool and body are matched pairs.*		1
3	:NSP		None serviced part		1
4	:25/606834		Seat spring		2
5	:25/606833		Spring		1
6	:25/606828		Spool end		1
7	:25/606846		Cap spool		1
8	:25/606827		Screw		2
9	:25/222718		Plate end plate		2
10	:25/606101		Screw		2
11	:25/221933		Seal		2
12	:25/221934		Seal		2
13	:25/606844		Spring		1
14	:25/606812		O Ring interface valve sections		1
15	:25/606843		Poppet		1

Product Catalog \ CONSTRUCTION \ NORTH AMERICA \ CONSTRUCTION / INDUSTRIAL \ BACKHOE LOADER 3CX,4CX,214,215,217 \ 3C PLUS (91HP) , Made in Brazil with Dieselmax/IESA Engine 9812/0080 \ E HYDRAULICS INCLUDING STEERING \ E03 VALVES & HYDRAULIC FILTERS

9812/0080 E3-2-25 VALVE, SECTION, LIFT, 2 & 3 SPOOL, MECHANICAL DETENT, LOADER VALVE

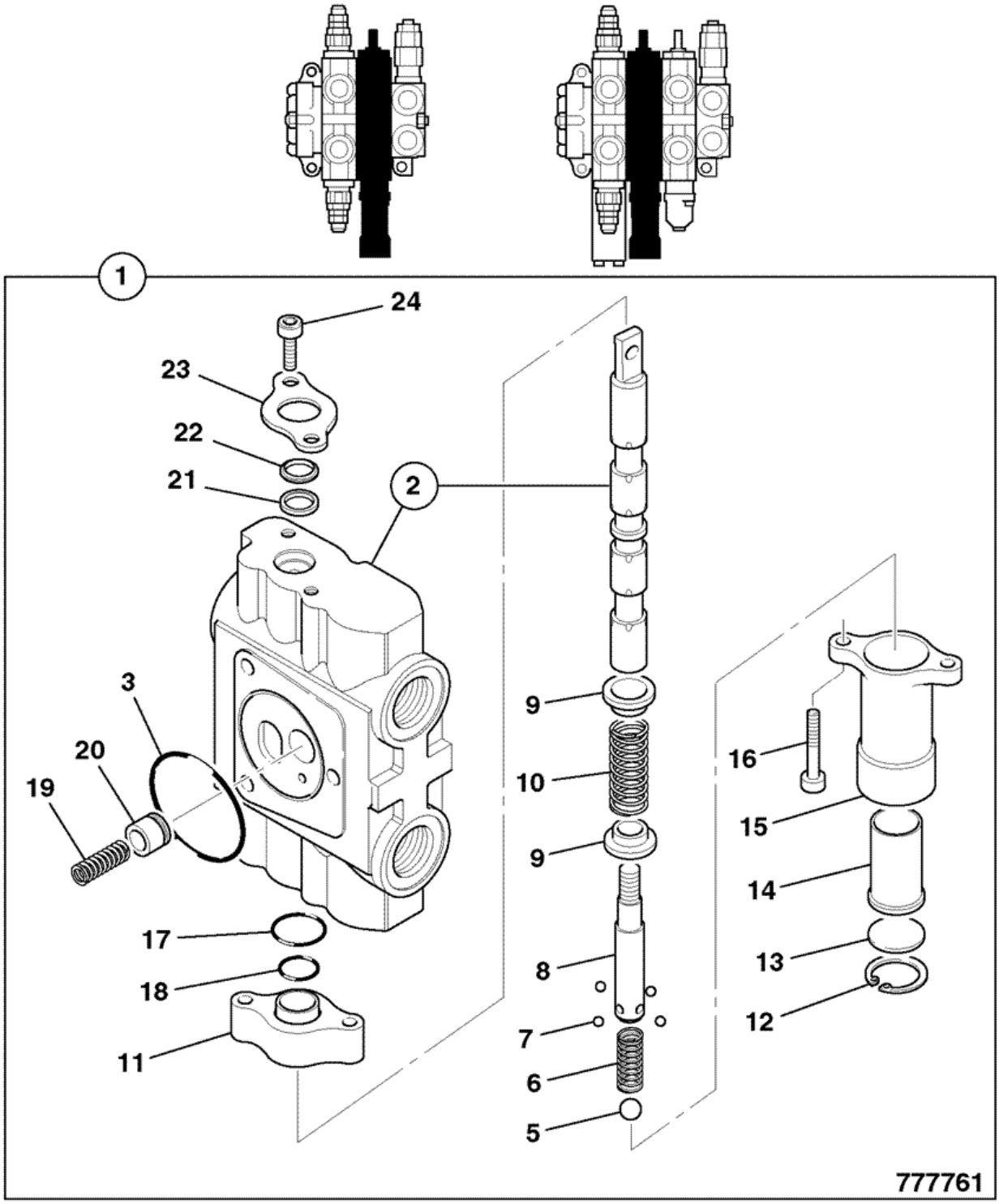

Item	Part #	Change No	Description	Usage Code	QTY
1	25/222714		Valve section		1

2	:NSP		None serviced part *Spool and body*		1
3	::25/606812		O Ring interface valve sections		1
4	:25/607608		Kit-end mechanism		1
5	::25/607609		Ball		1
6	::25/607610		Spring		1
7	::25/607611		Ball		4
8	::25/607612		End spool		1
9	::25/606834		Seat spring		2
10	::25/606833		Spring		1
11	::25/220374		Spacer		1
12	::25/606829		Retainer		1
13	::25/607614		Spacer		1
14	::25/607615		Sleeve		1
15	::25/606825		Cap detent		1
16	::25/607616		Capscrew		2
17	::25/606837		O Ring		1
18	::25/606836		O Ring		1
19	:25/606844		Spring		1
20	:25/606843		Poppet		1
21	:25/221934		Seal		1
22	:25/221933		Seal		1
23	:25/222718		Plate end plate		1
24	:25/606101		Screw		2

Product Catalog \ CONSTRUCTION \ NORTH AMERICA \ CONSTRUCTION / INDUSTRIAL \ BACKHOE LOADER 3CX,4CX,214,215,217 \ 3C PLUS (91HP) , Made in Brazil with Dieselmax/IESA Engine 9812/0080 \ E HYDRAULICS INCLUDING STEERING \ E03 VALVES & HYDRAULIC FILTERS

9812/0080 E3-2-30 VALVE, LOADER, MAIN RELIEF

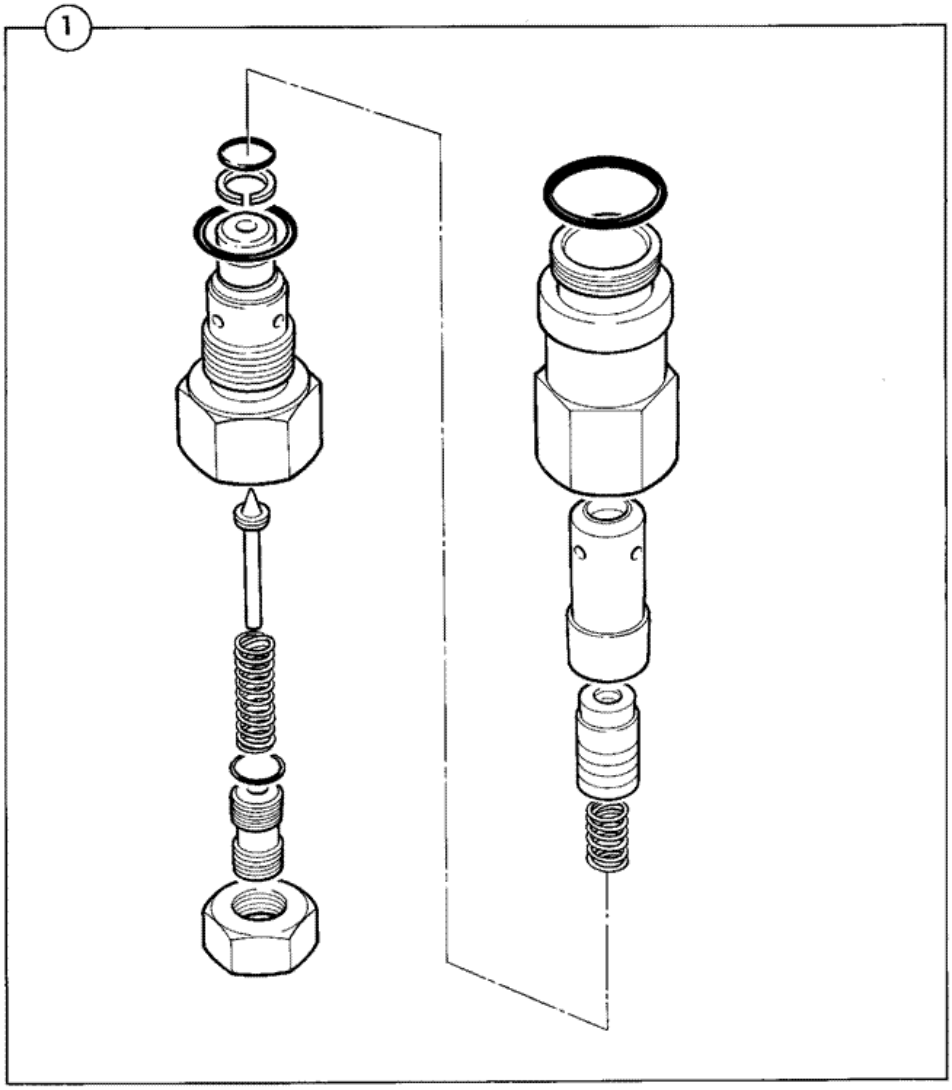

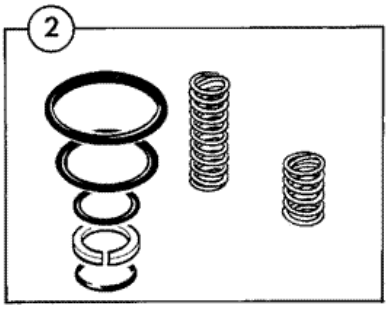

261840

Item	Part #	Change No	Description	Usage Code	QTY
1	25/222659		Valve assembly main relief		1
2	:25/618902		Kit-repair relief valve		1

9812/0080 E3-2-35 VALVE, LOADER, AUXILIARY RELIEF, 2 & 3 SPOOL

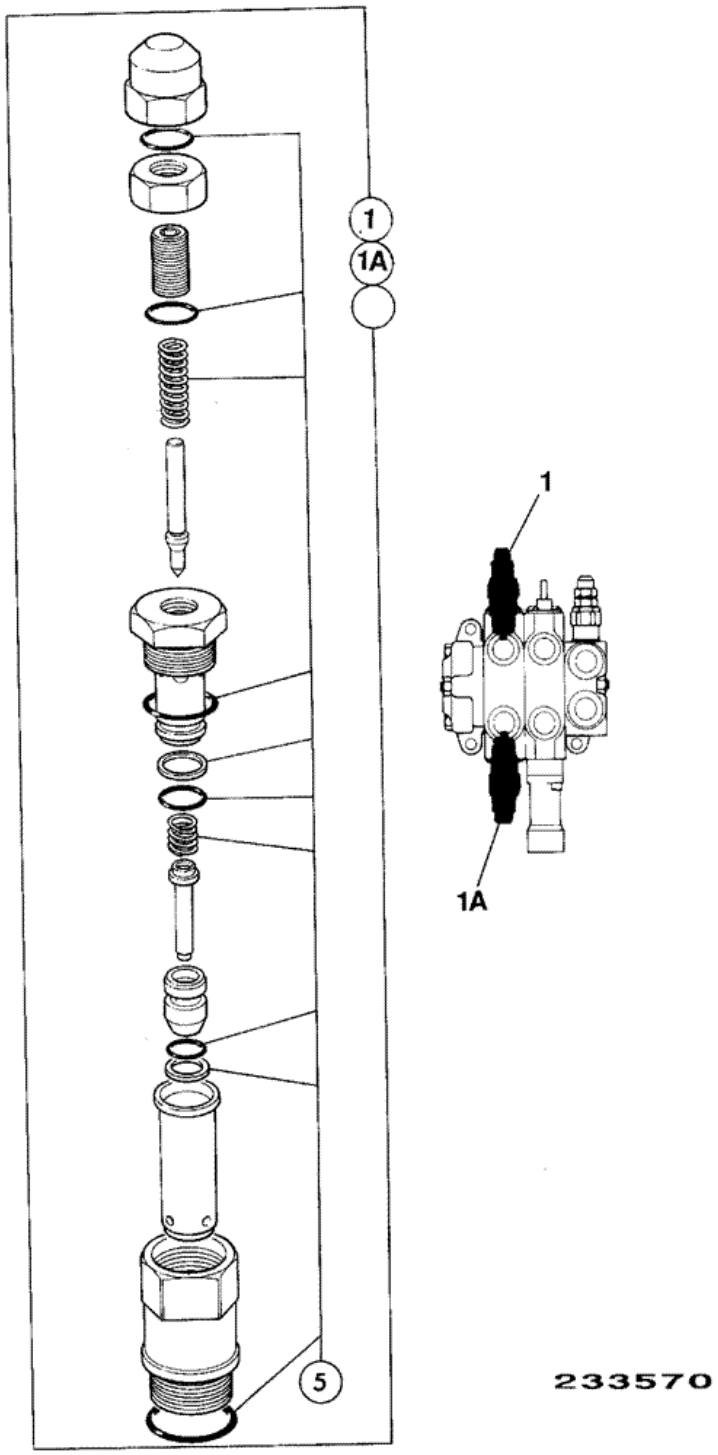

Item	Part #	Change No	Description	Usage Code	QTY
			Valve auxiliary relief		

1	25/223705		*Top port*		1
1A	25/223701		Valve auxiliary relief *Bottom port*		1
5	:25/974632		Kit-repair		1

Product Catalog \ CONSTRUCTION \ NORTH AMERICA \ CONSTRUCTION / INDUSTRIAL \ BACKHOE LOADER 3CX,4CX,214,215,217 \ 3C PLUS (91HP) , Made in Brazil with Dieselmax/IESA Engine 9812/0080 \ E HYDRAULICS INCLUDING STEERING \ E03 VALVES & HYDRAULIC FILTERS

9812/0080 E3-2-40 VALVE, SECTION, SHOVEL, 3 SPOOL, ELECTRICAL DETENT, LOADER VALVE

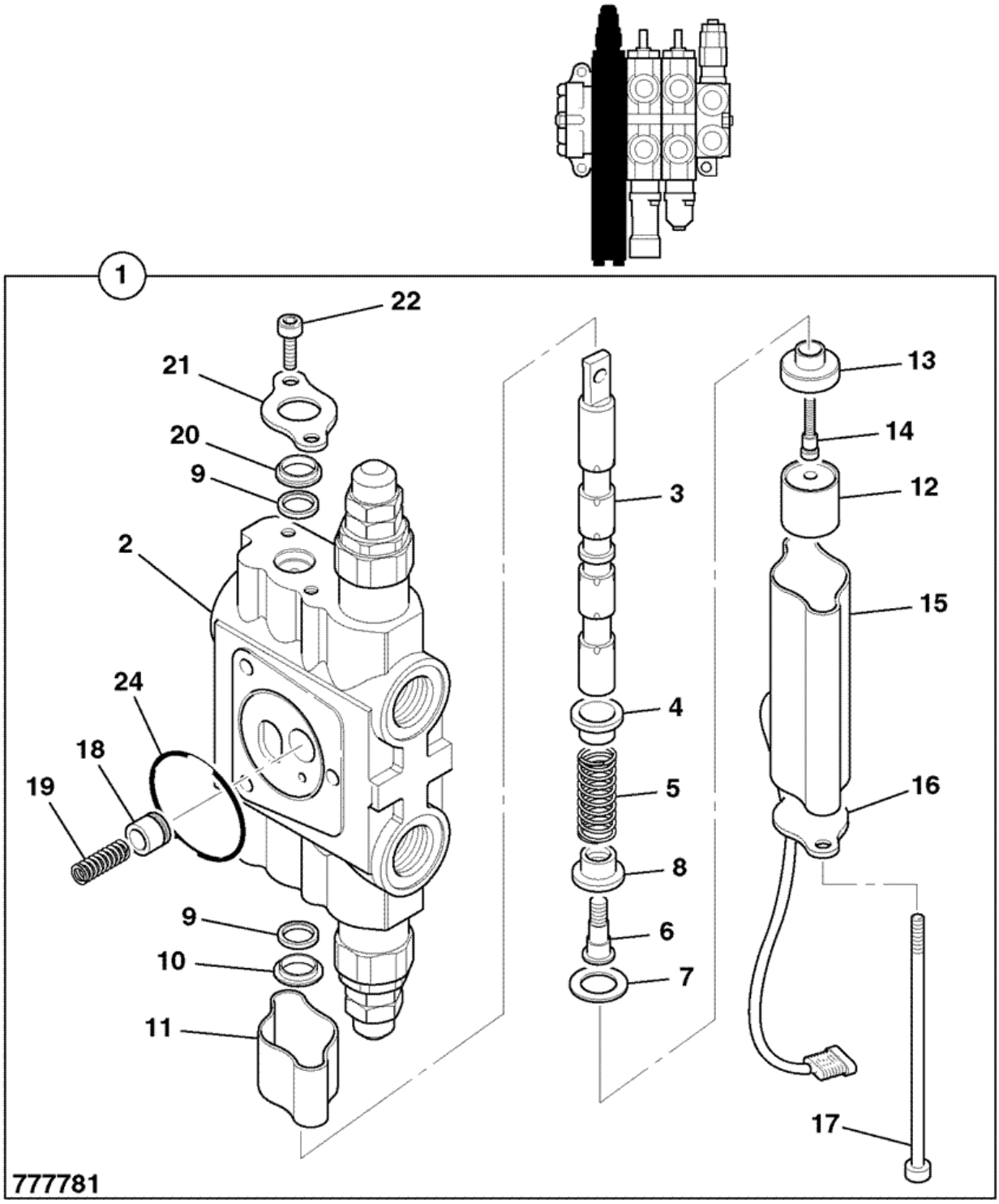

Item	Part #	Change No	Description	Usage Code	QTY
1	25/222713		Valve section		1

2	:NSP		None serviced part *Body*		1
3	:NSP		None serviced part *Spool*		1
4	:25/606834		Seat spring		1
5	:25/606833		Spring		1
6	:25/621809		Screw		1
7	:25/621807		Retainer		1
8	:25/621808		Retainer spring		1
9	:25/221934		Seal		2
10	:25/612211		Retainer		1
11	:25/612206		Cap spool		1
12	:25/621803		Sleeve magnetic		1
13	:25/621805		Housing claper		1
14	:25/621806		Screw clamper housing		1
15	:25/621804		Cap spool		1
16	:25/612209		Plate end cap		1
17	:25/621802		Capscrew		2
18	:25/606843		Poppet		1
19	:25/606844		Spring		1
20	:25/221933		Seal		1
21	:25/222718		Plate end plate		1
22	:25/606101		Screw		2
24	:25/606812		O Ring interface valve sections		1

Product Catalog \ CONSTRUCTION \ NORTH AMERICA \ CONSTRUCTION / INDUSTRIAL \ BACKHOE LOADER 3CX,4CX,214,215,217 \ 3C PLUS (91HP) , Made in Brazil with Dieselmax/IESA Engine 9812/0080 \ E HYDRAULICS INCLUDING STEERING \ E03 VALVES & HYDRAULIC FILTERS

9812/0080 E3-2-50 VALVE, SECTION, AUXILIARY, 3 SPOOL, LOADER VALVE

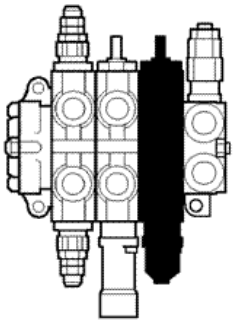

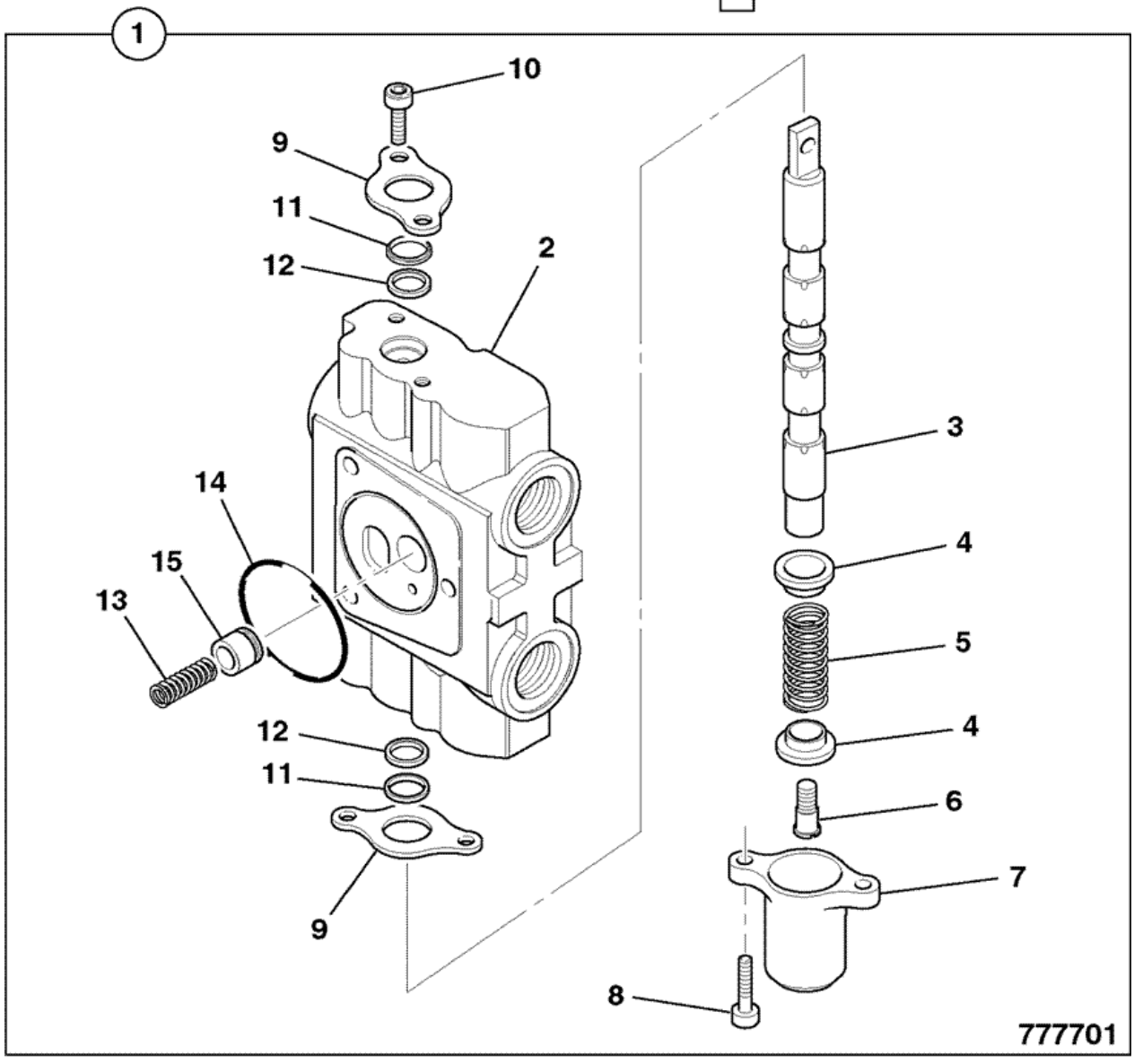

Item	Part #	Change No	Description	Usage Code	QTY
1	25/222715		Valve section		1

2	:NSP		None serviced part		1
3	:NSP		None serviced part		1
4	:25/606834		Seat spring		2
5	:25/606833		Spring		1
6	:25/606828		Spool end		1
7	:25/606846		Cap spool		1
8	:25/606827		Screw		2
9	:25/222718		Plate end plate		2
10	:25/606101		Screw		2
11	:25/221933		Seal		2
12	:25/221934		Seal		2
13	:25/606844		Spring		1
14	:25/606812		O Ring interface valve sections		1
15	:25/606843		Poppet		1

Product Catalog \ CONSTRUCTION \ NORTH AMERICA \ CONSTRUCTION / INDUSTRIAL \ BACKHOE LOADER 3CX,4CX,214,215,217 \ 3C PLUS (91HP) , Made in Brazil with Dieselmax/IESA Engine 9812/0080 \ E HYDRAULICS INCLUDING STEERING \ E03 VALVES & HYDRAULIC FILTERS

9812/0080 E3-2-60 VALVE, LOADER, 3 SPOOL, 3RD PORT BLANKING

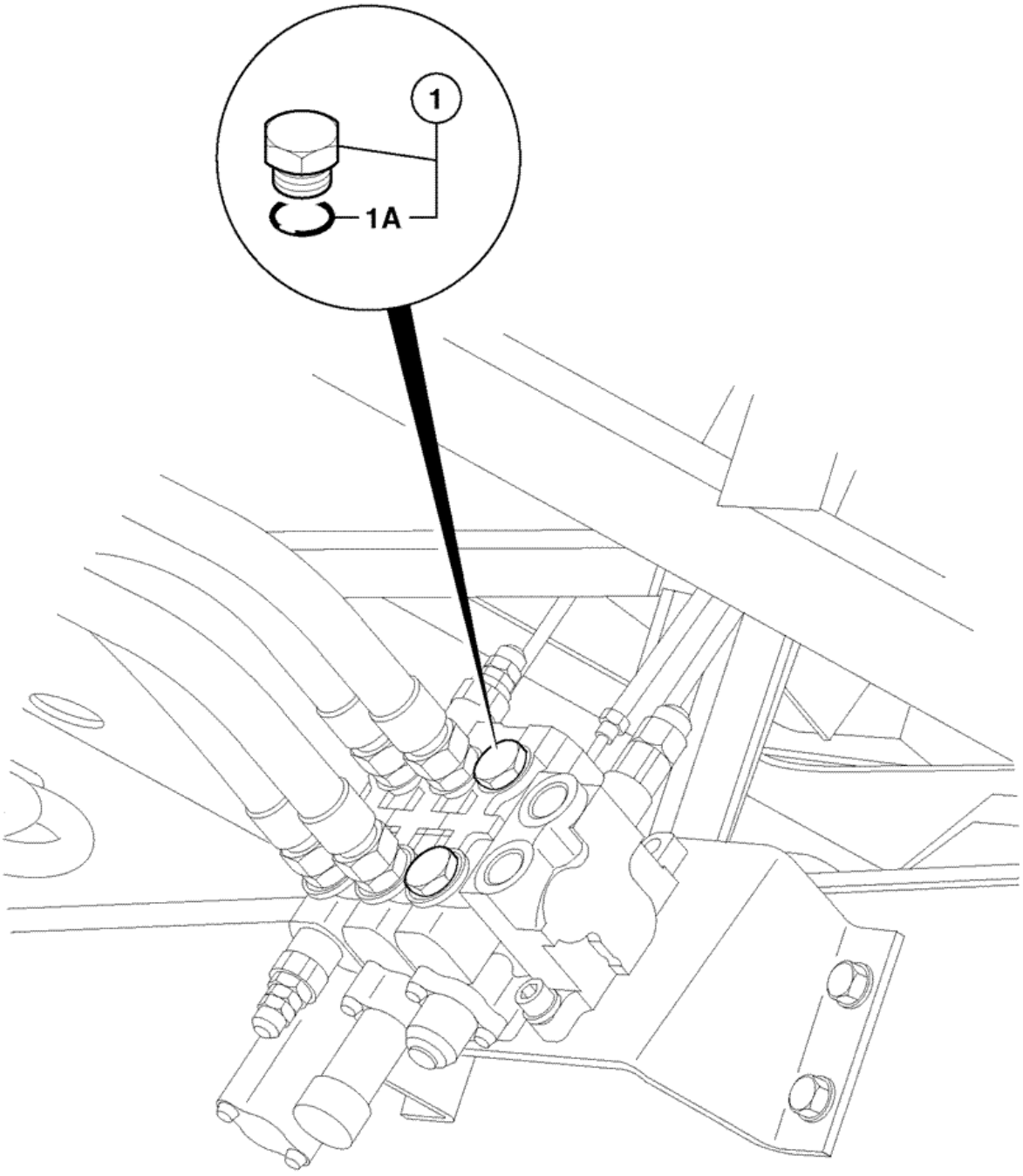

788200

Item	Part #	Change No	Description	Usage Code	QTY
1	1745/0003		Plug blanking		2

1A	:2401/0506		O Ring		1

Product Catalog \ CONSTRUCTION \ NORTH AMERICA \ CONSTRUCTION / INDUSTRIAL \ BACKHOE LOADER 3CX,4CX,214,215,217 \ 3C PLUS (91HP) , Made in Brazil with Dieselmax/IESA Engine 9812/0080 \ E HYDRAULICS INCLUDING STEERING \ E03 VALVES & HYDRAULIC FILTERS

9812/0080 E3-3-11 VALVE, AUXILIARY, BACKHOE, GEAR PUMP, AUXILIARY & EXTRADIG DIPPER BREAKER

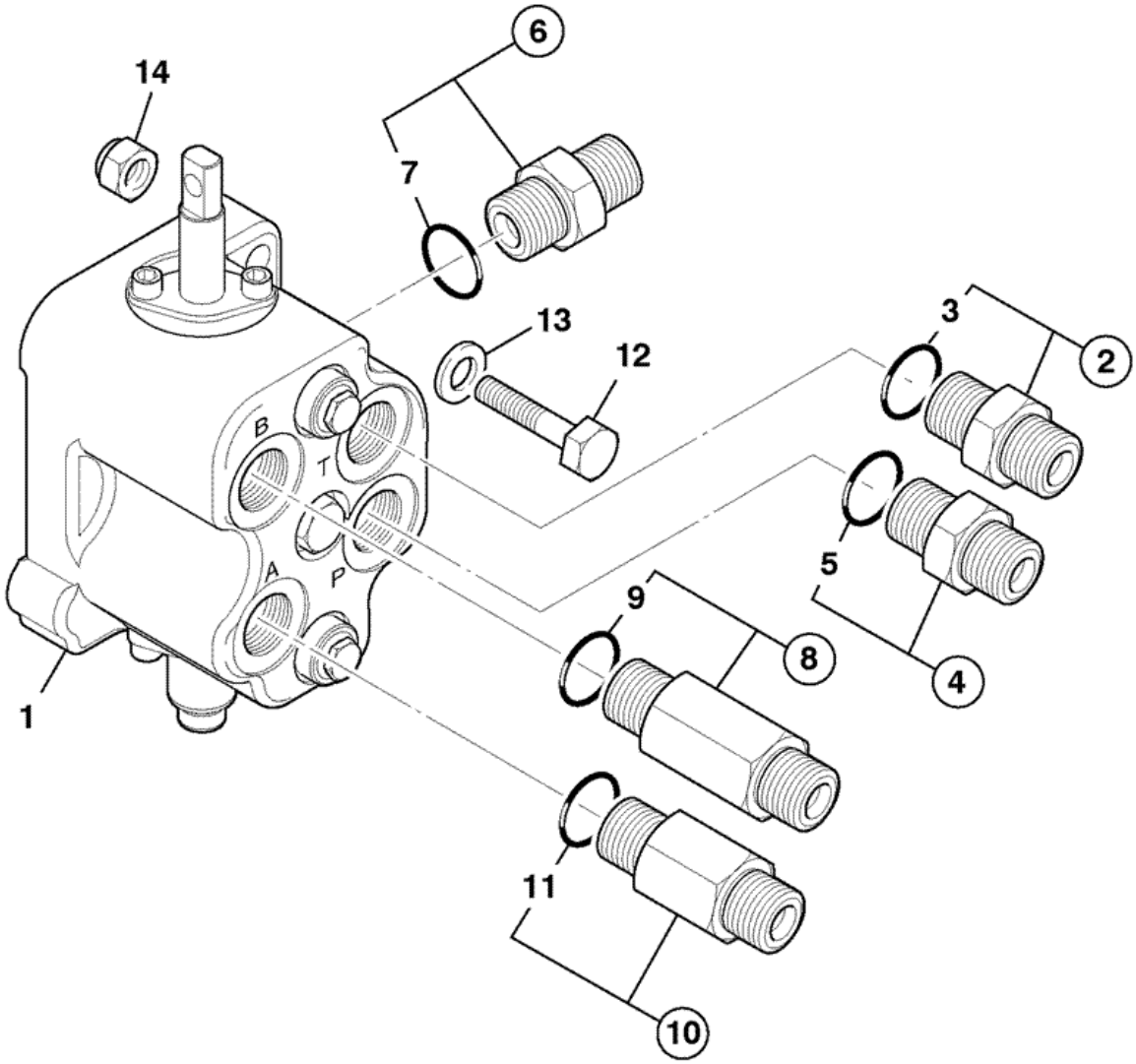

722911

Item	Part #	Change No	Description	Usage Code	QTY
1	25/221919		Valve 1 spool,auxiliary black		1

2	1620/2058		Adaptor M/M includes O-ring 2401/0507 *T port*		1
3	:2401/0507		O Ring		1
4	1620/2058		Adaptor M/M includes O-ring 2401/0507 *P port*		1
5	:2401/0507		O Ring		1
6	1620/2056		Adaptor *HPCO*		1
7	:2401/0507		O Ring		1
8	816/90231		Adapter extended M/M 7/8"SAE x 1/2"BSP		1
9	:2401/0507		O Ring		1
10	1620/2055		Adaptor 39.5mm Long. M/M 1/2" x 7/8" *bottom port A*		1
11	:2401/0507		O Ring		1
12	1315/3412Z		Bolt		2
13	1420/0008Z		Washer Plain M10		2
14	1370/0303Z		Nut lock M10		2

Product Catalog \ CONSTRUCTION \ NORTH AMERICA \ CONSTRUCTION / INDUSTRIAL \ BACKHOE LOADER 3CX,4CX,214,215,217 \ 3C PLUS (91HP) , Made in Brazil with Dieselmax/IESA Engine 9812/0080 \ E HYDRAULICS INCLUDING STEERING \ E03 VALVES & HYDRAULIC FILTERS

9812/0080 E3-3-22 VALVE, AUXILIARY, COMPONENTS, EXCAVATOR, GEAR PUMP

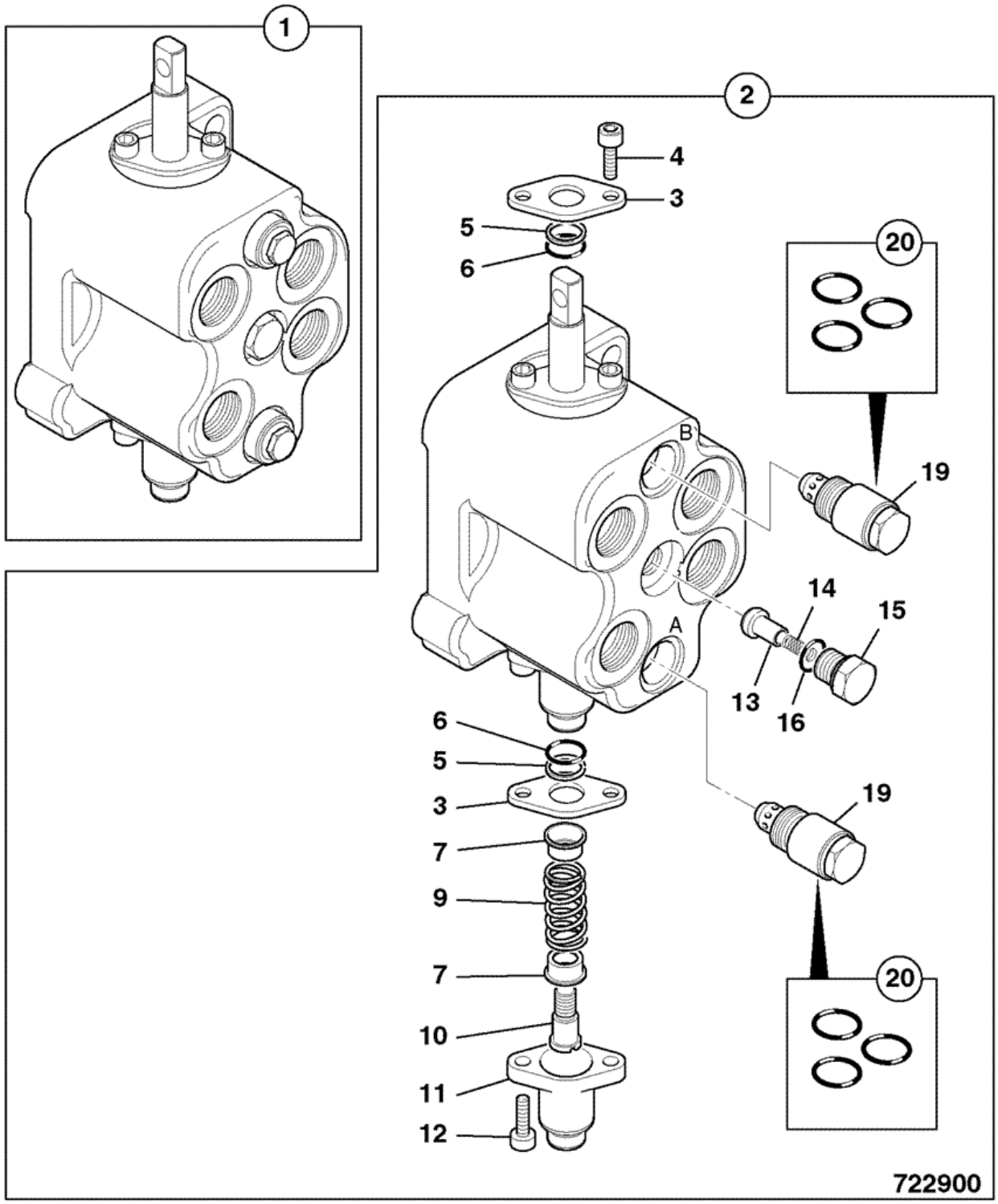

Item	Part #	Change No	Description	Usage Code	QTY
			Valve 1 spool,auxiliary black		

1	25/221919		*Valve adaptors see E3-3-11*		1
2	:N.S.P.		None serviced part *Valve section*		1
3	::25/607612		End spool		2
4	::25/606101		Screw		2
5	::25/606835		Seal wiper		2
6	::25/606836		O Ring		2
7	::25/605124		Seat		2
9	::25/606833		Spring		1
10	::25/606828		Spool end		1
11	::25/606846		Cap spool		1
12	::25/606827		Screw		2
13	::25/220924		Poppet check valve		1
14	::25/220925		Spring		1
15	::25/220926		Plug		1
16	:::25/607219		O Ring		1
19	::25/222372		Valve relief, 138 bar	port B	1
19	::25/222371		Valve relief 207 bar	port A	1
20	:::25/222370		Kit-seal relief valve		1

9812/0080 E3-37-1 VALVE, FLOW REGULATOR, HAMMER CIRCUIT

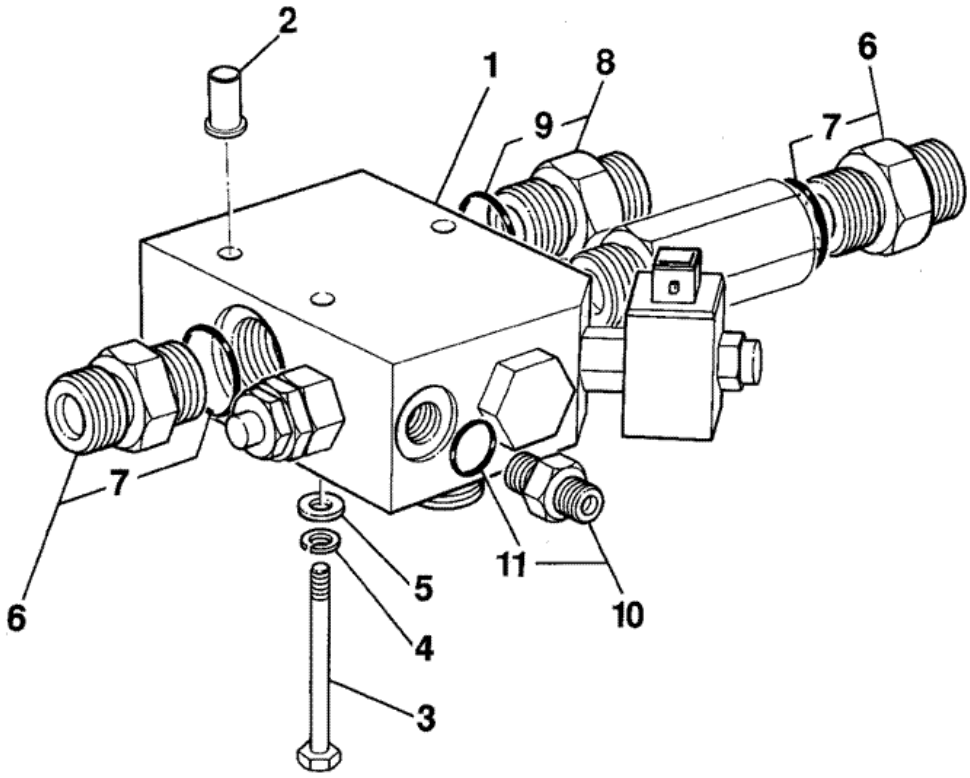

268740

Item	Part #	Change No	Description	Usage Code	QTY
1	25/221197		Valve solenoid p. flow centre mount hammer		1

1A	:717/20137		Coil 12v *coil only*		1
1B	:25/221755		Cartridge *cartridge only*		1
2	826/01106		Nut rivet,M8		3
3	1315/3318Z		Bolt M8x80mm Long		3
4	1425/0007Z		Washer spring		3
5	1420/0007Z		Washer plain M8		3
6	1620/2059		Adaptor 3/4" includes O-ring 1745/0005 *Port CF & P*		2
7	:2401/0508		O Ring		1
8	1620/2059		Adaptor 3/4" includes O-ring 1745/0005 *Port EF*		1
9	:2401/0508		O Ring		1
10	1620/2051		Adaptor 1/4"BSP x 9/16"SAE *Port T*		1
11	:2401/0503		O Ring		1
12	816/00196		Cap blanking 3/4"BSP steel		1

9812/0080 E3-5-10 VALVE ADAPTERS, EXCAVATOR, 14'0"

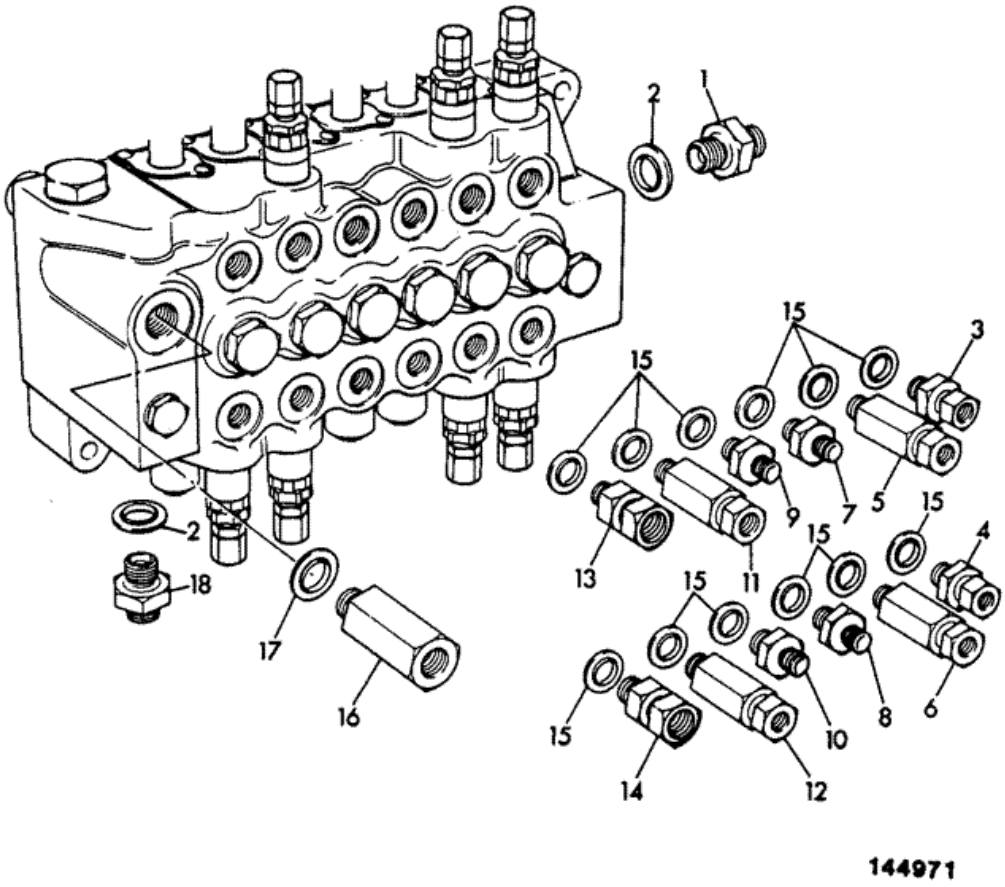

Item	Part #	Change No	Description	Usage Code	QTY
1	1620/2059		Adaptor 3/4" includes O-ring 1745/0005		1
2	:2401/0508		O Ring		1
3	816/90236		Adapter		1
4	816/90237		Restrictor adapter 3.0mm M/M		1
5	1620/2056		Adaptor *JCB controls*		1
6	816/90352		Restrictor adaptr,one way 5.5mm *JCB controls*		1
7	816/90234		Adapter M/M		1
8	816/90365		Adapter male/male		1
9	816/90234		Adapter M/M		1
10	816/90365		Adapter male/male		1
11	816/90283		Adaptor Extended *JCB controls*		1
12	1620/2056		Adaptor *JCB controls*		1
13	816/90231		Adapter extended M/M 7/8"SAE x 1/2"BSP		1
14	1620/2055		Adaptor 39.5mm Long. M/M 1/2" x 7/8"		1
15	2401/0507		O Ring *male end to valve items 3 to 14*		1
15	2401/0508		O Ring *male end to valve item 18*		1
16	1620/2061		Adapter M/M		1
17	2401/0510		O Ring *male end to valve item 16*		1
18	1620/2059		Adaptor 3/4" includes O-ring 1745/0005		1

9812/0080 E3-6-21 VALVE-EXCAVATOR, WITH SPOOL GAITERS, CENTREMOUNT,CONTROLLED LEAK

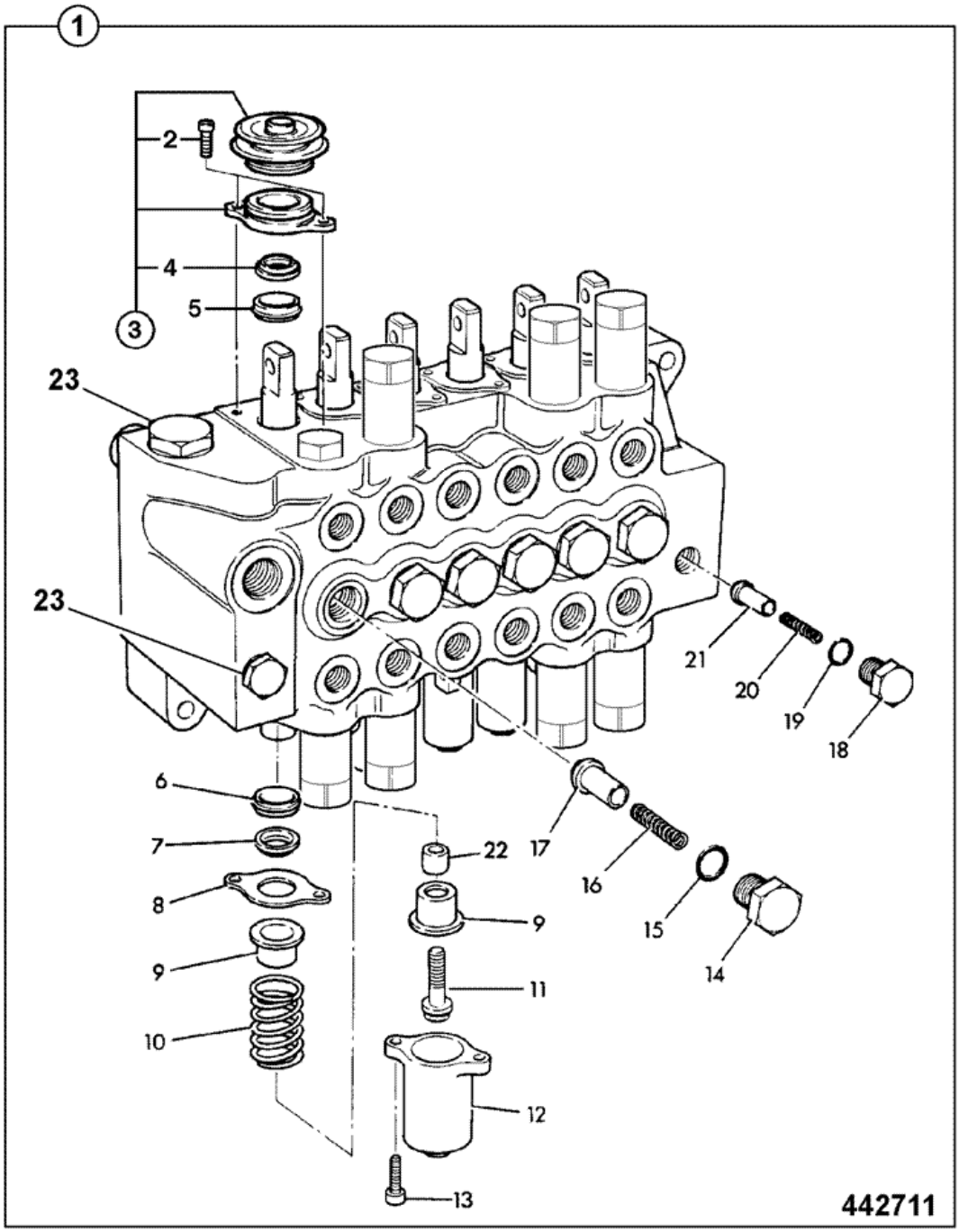

Item	Part #	Change No	Description	Usage Code	QTY
1	25/221622		Valve 6 spool excavator centremount 14'		1

2	:25/975705		Screw cap head		12
3	:25/221745		Kit-spool boot		6
4	:25/975704		Wiper		6
5	:25/221208		Seal		6
6	:25/221208		Seal		6
7	:25/975704		Wiper		6
8	:25/606102		Retainer wiper		6
9	:25/608201		Retainer spring		12
10	:25/608202		Spring *Boom, dipper, slew & bucket*		4
10	:25/608203		Spring *Stabiliser*		2
11	:25/608204		Screw spring retainer		6
12	:25/608205		Cover *With drain hole*		6
13	:25/606110		Screw cap		12
14	:25/606111		Cap		6
15	:25/606112A		O Ring		6
16	:25/606113		Spring		6
17	:25/606114		Seat		6
18	:25/606115		Cap		1
19	:25/606116		O Ring		1
20	:25/606117		Spring		1
21	:25/974645		Seat check valve		1
22	:25/608206		Spacer		6
23	:25/606822		Plug assembly		2

Product Catalog \ CONSTRUCTION \ NORTH AMERICA \ CONSTRUCTION / INDUSTRIAL \ BACKHOE LOADER 3CX,4CX,214,215,217 \ 3C PLUS (91HP) , Made in Brazil with Dieselmax/IESA Engine 9812/0080 \ E HYDRAULICS INCLUDING STEERING \ E03 VALVES & HYDRAULIC FILTERS

9812/0080 E3-6-22 VALVE-EXCAVATOR, WITHOUT SPOOL GAITER, CENTREMOUNT,CONTROLLED LEAK

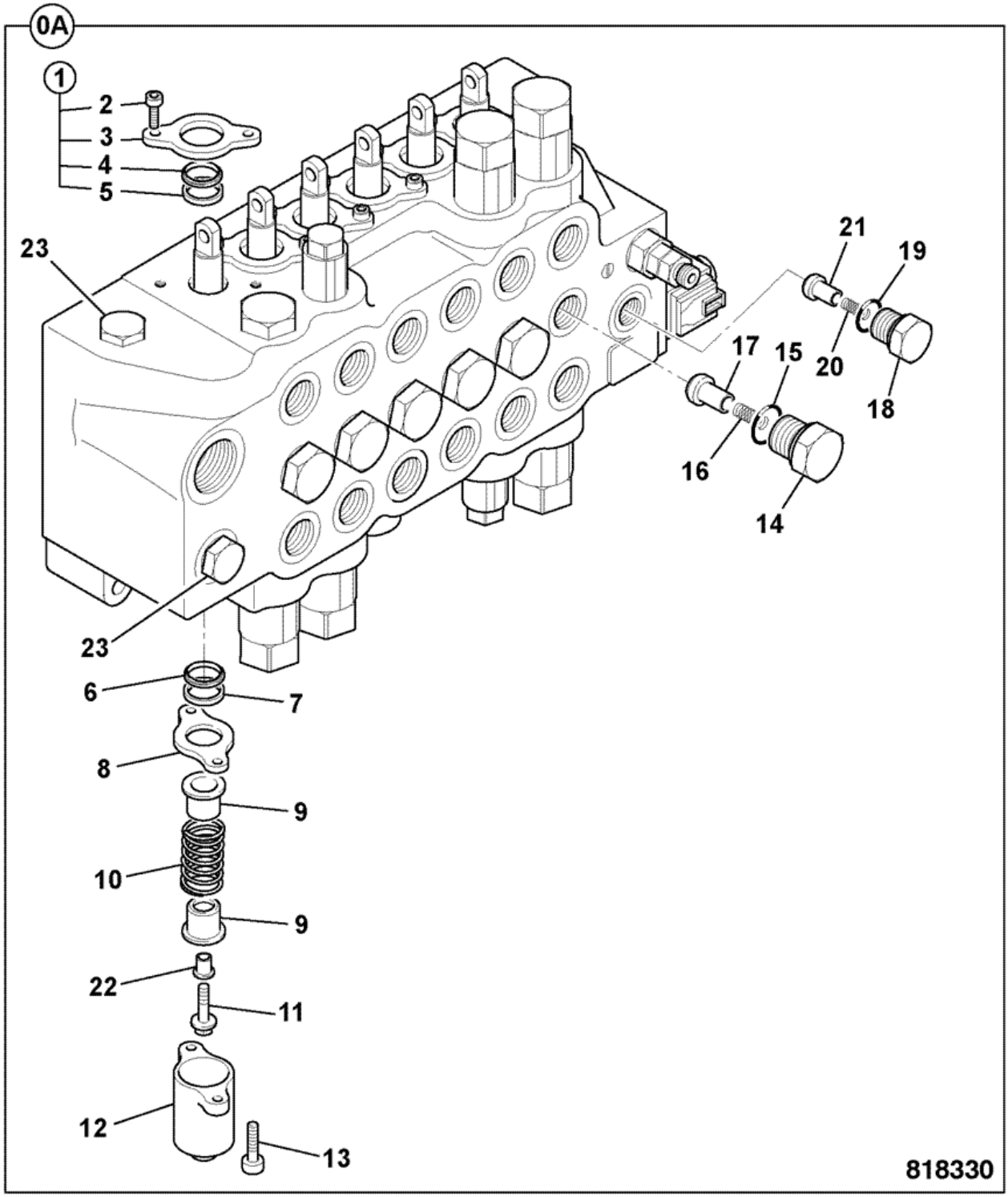

Item	Part #	Change No	Description	Usage Code	QTY
A	25/221622		Valve 6 spool excavator centremount 14'		1

1	:25/222660		Kit std spool gland		6
2	::25/606101		Screw		2
3	::25/222198		Plate seal		1
4	::25/222661		Wiper seal		1
5	::25/221208		Seal		1
6	:25/221208		Seal		6
7	:25/222661		Wiper seal		6
8	:25/606102		Retainer wiper		6
9	:25/608201		Retainer spring		12
10	:25/608202		Spring *Boom, dipper, slew & bucket*		4
10	:25/608203		Spring *Stabiliser*		2
11	:25/608204		Screw spring retainer		6
12	:25/608205		Cover *With drain hole*		6
13	:25/606110		Screw cap		12
14	:25/606111		Cap		6
15	:25/606112A		O Ring		6
16	:25/606113		Spring		6
17	:25/606114		Seat		6
18	:25/606115		Cap		1
19	:25/606116		O Ring		1
20	:25/606117		Spring		1
21	:25/974645		Seat check valve		1
22	:25/608206		Spacer		6
23	:25/606822		Plug assembly		2

Product Catalog \ CONSTRUCTION \ NORTH AMERICA \ CONSTRUCTION / INDUSTRIAL \ BACKHOE LOADER 3CX,4CX,214,215,217 \ 3C PLUS (91HP) , Made in Brazil with Dieselmax/IESA Engine 9812/0080 \ E HYDRAULICS INCLUDING STEERING \ E03 VALVES & HYDRAULIC FILTERS

9812/0080 E3-6-25 VALVE, EXCAVATOR, CENTREMOUNT, RELIEF, CONTROLLED LEAK

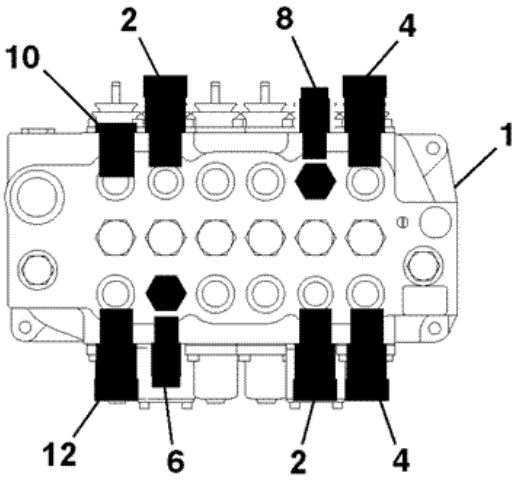

ISO CONTROLS

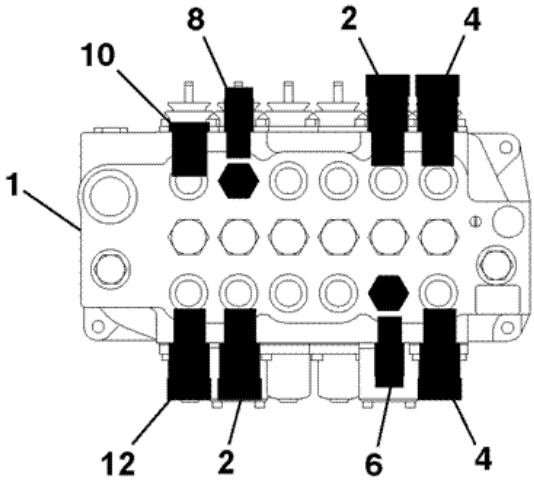

JCB CONTROLS

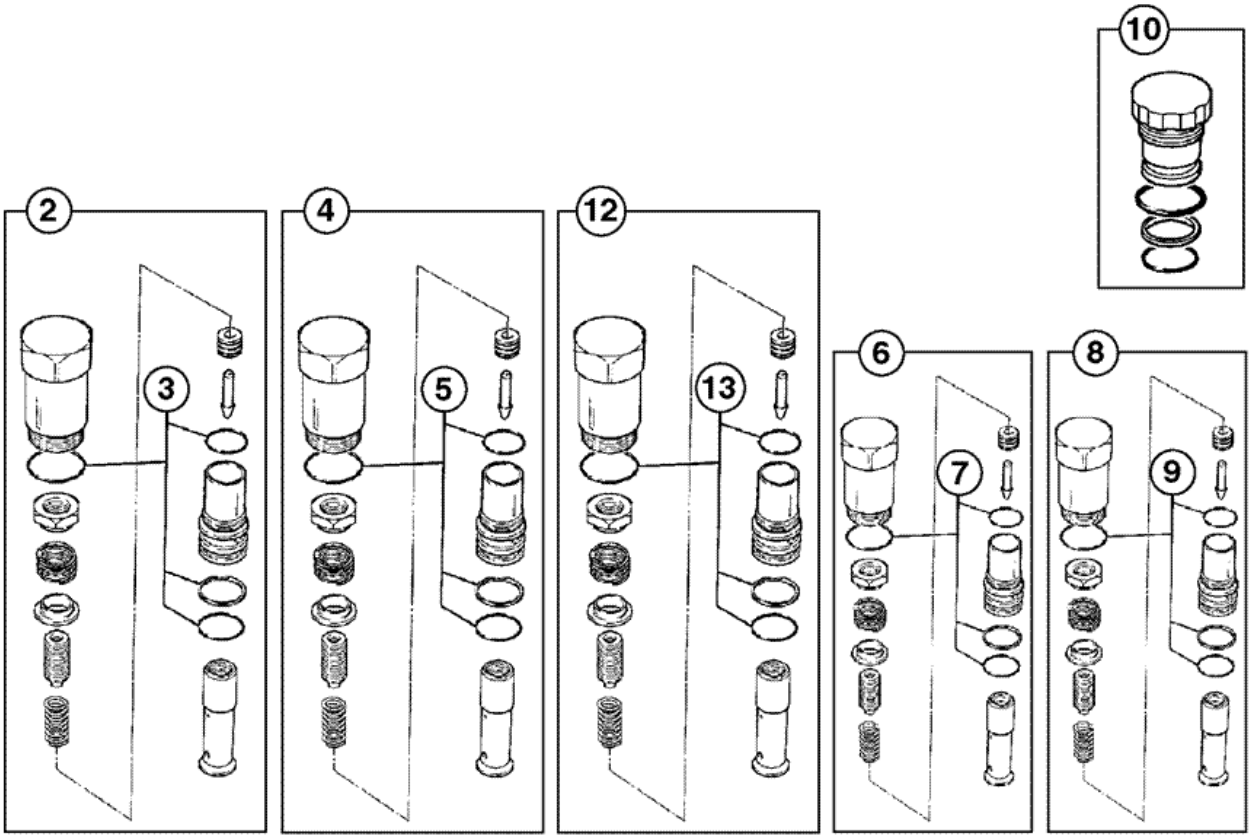

737870

Item	Part #	Change No	Description	Usage Code	QTY
1	25/221622		Valve 6 spool excavator centremount 14'		1

2	:25/222499		Valve relief, 3600/2.5		2
4	:25/222498		Valve relief, 3800/2.5		2
5	::25/222305		Seal ARV service kit		1
6	:25/223082		Valve relief 5000/2.5		1
7	::25/222190		Kit -RV seal and spring		1
8	:25/222191		Valve relief 3600psi		1
9	::25/222192		Kit -RV seal and spring		1
10	:25/609901		Plug		1
12	:25/222499		Valve relief, 3600/2.5		1
13	::25/222305		Seal ARV service kit		1

9812/0080 E4-14-1 RAM, JAW BUCKET

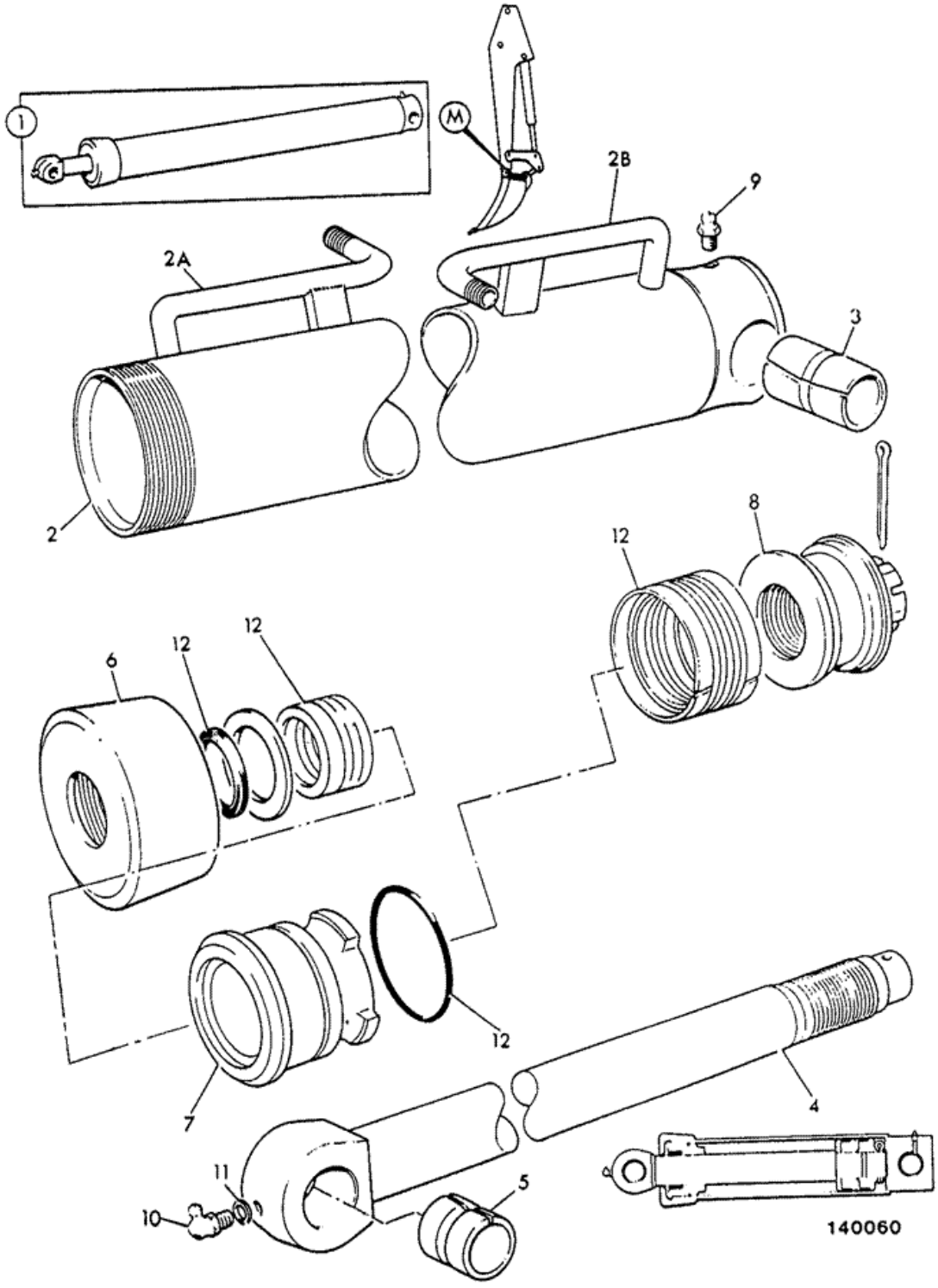

Item	Part #	Change No	Description	Usage Code	QTY
1	560/34300		Ram Bucket jaw	M	1
2	:560/34400		Cylinder		1
2A	::658/00567		Pipe		1
2B	::658/00567		Pipe		1
3	:1208/0022		Bush		1
4	:560/29000		Rod piston		1
5	:1208/0015		Bush		1
6	:560/19903		Cap end		1
7	:560/19902		Gland bearing		1
8	:560/19901		Nut piston head		1
9	:1450/0001		Nipple grease, straight 1/8 BSP		1
10	:1450/1002		Nipple grease 1/4" BSP 90deg.		1
11	:1403/0001		Washer aluminium		1
12	:991/00003		Kit-seal ram 2.0" rod x 4.00" cyl		1

Product Catalog \ CONSTRUCTION \ NORTH AMERICA \ CONSTRUCTION / INDUSTRIAL \ BACKHOE LOADER 3CX,4CX,214,215,217 \ 3C PLUS (91HP) , Made in Brazil with Dieselmax/IESA Engine 9812/0080 \ E HYDRAULICS INCLUDING STEERING \ E04 RAMS

9812/0080 E4-2-21 RAM, SHOVEL, 50MM ROD X 80MM CYL

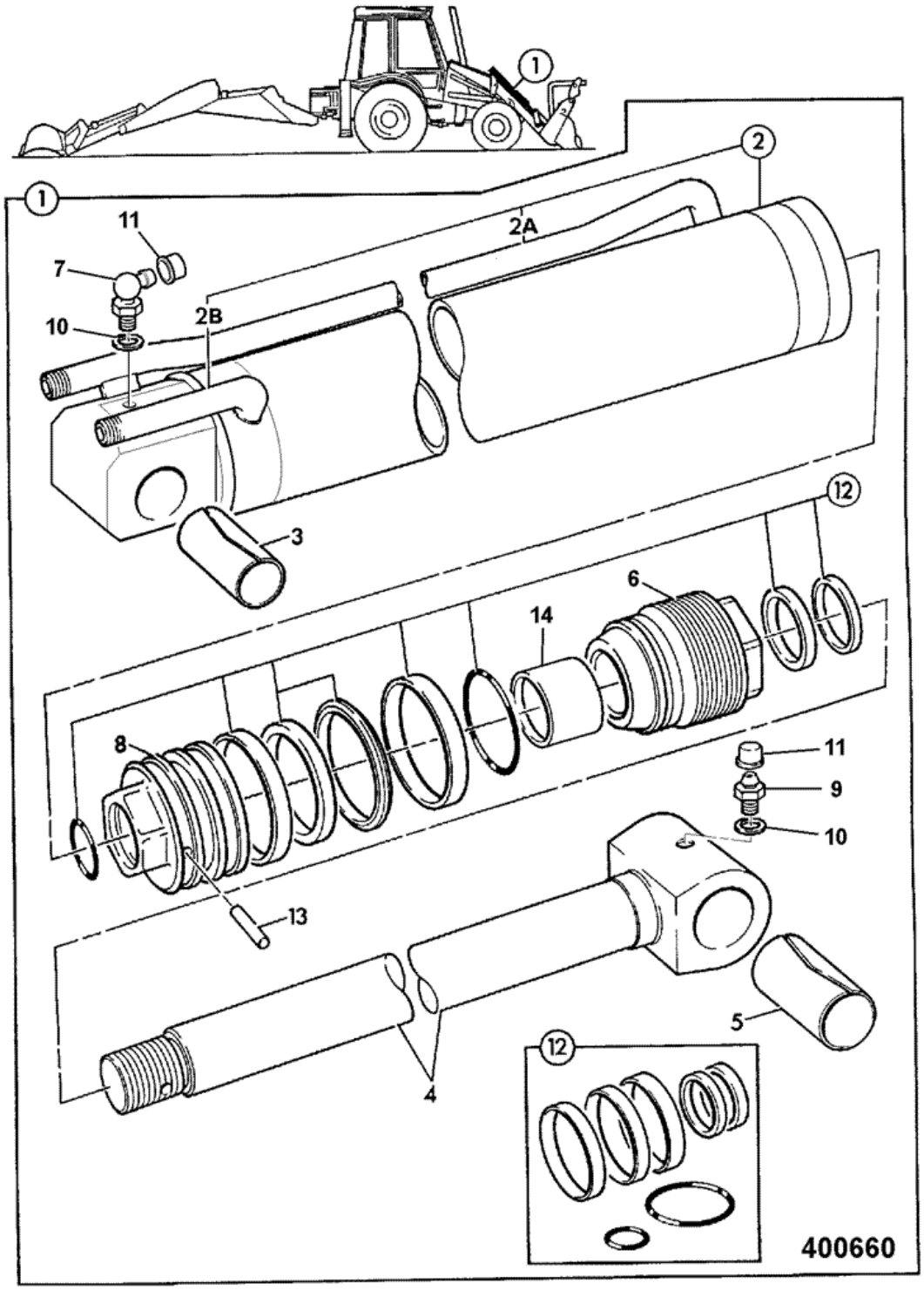

Item	Part #	Change No	Description	Usage Code	QTY
1	556/60236		Ram assembly, shovel *Standard build*		2

2	:556/70087		Cylinder shovel		1
2A	::NSP		None serviced part		1
2B	::NSP		None serviced part		1
3	:1208/0018		Bush		1
4	:590/40260		Rod piston Shovel ram 213		1
4	:590/40307		Rod piston, 40x909 Shovel ram + reset		1
5	:1208/0015		Bush		1
6	:594/00120		Cap end, 70X40		1
7	:1450/1001		Nipple grease 90deg. angle		1
8	:595/10027		Head piston		1
9	:1450/0001		Nipple grease, straight 1/8 BSP		1
10	:1403/0001		Washer aluminium		1
11	:835/00017		Cap grease nipple		2
12	:991/00100		Kit-seal 70x40		1
13	:826/01182		Dowel		1
14	:2411/9004		Bearing		1

9812/0080 E4-7-32 RAM, BUCKET, EXTRADIG DIPPER

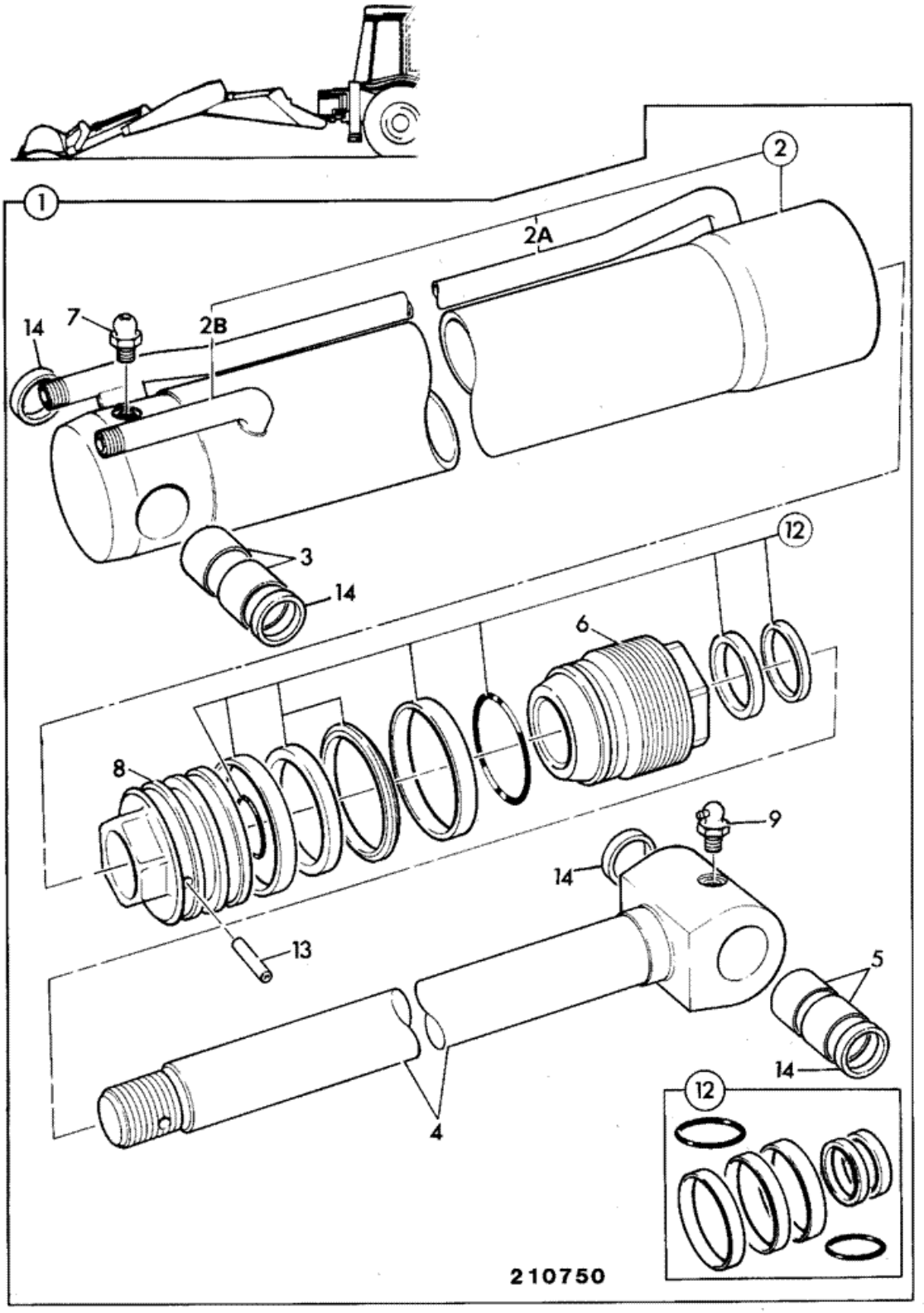

Item	Part #	Change No	Description	Usage Code	QTY
1	557/60154	<M TBA	Ram assembly bucket 90 X 60		1
1	557/60209		Ram assembly, bucket 90X60 *see E4-7-33 for breakdown*		1
2	:557/70136		Cylinder bucket ram 90mm		1
2A	::NSP		None serviced part		1
2B	::NSP		None serviced part		1
3	:809/00125		Bearing liner 45mm pivot bore		2
4	:590/40317		Rod piston 60mm		1
5	:809/00128		Bearing liner 45mm pivot bore		2
6	:594/14287		Cap end, 60mm rod x 90mm cylinder		1
7	:1450/0001		Nipple grease, straight 1/8 BSP		1
8	:595/10061		Head piston		1
9	:1450/1001		Nipple grease 90deg. angle		1
12	:991/00147		Kit-seal 90mm cyl x 60mm rod metric rams		1
13	:826/01179		Dowel		1
14	:813/00425		Seal pivot pin grease		4

9812/0080 E4-7-33 RAM, BUCKET, EXTRADIG DIPPER

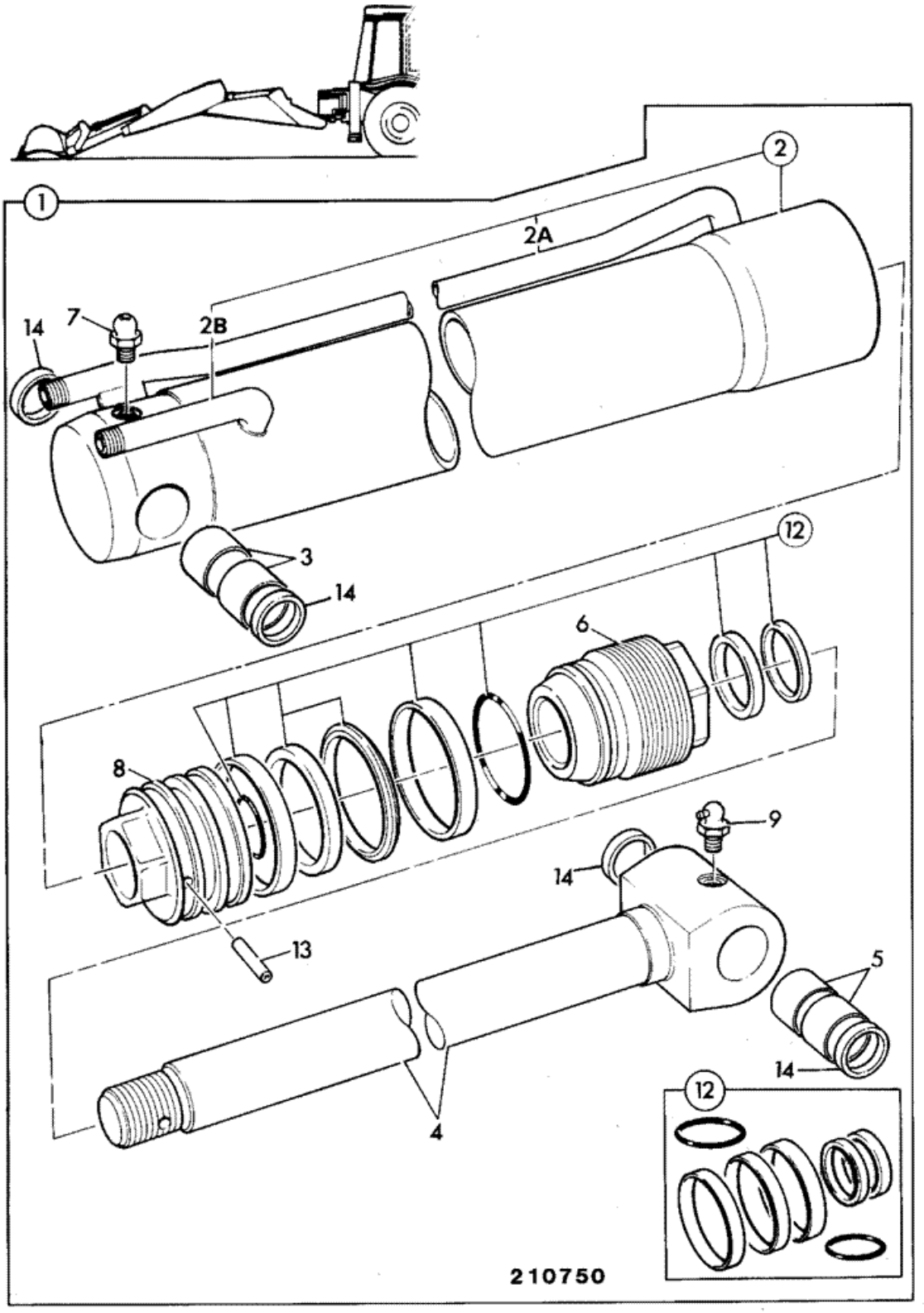

Item	Part #	Change No	Description	Usage Code	QTY
1	557/60210		Ram assembly, bucket 90 x 60		1
2	:557/70136		Cylinder bucket ram 90mm		1
2A	::NSP		None serviced part		1
2B	::NSP		None serviced part		1
3	:809/00125		Bearing liner 45mm pivot bore		2
4	:590/40317		Rod piston 60mm		1
5	:809/00128		Bearing liner 45mm pivot bore		2
6	:332/E8363		Cap end, 60mm rod x 90mm cyl		1
7	:1450/0001		Nipple grease, straight 1/8 BSP		1
8	:595/10061		Head piston		1
9	:1450/1001		Nipple grease 90deg. angle		1
12	:332/E8224		Kit Seal 90x60		1
13	:826/01179		Dowel		1
14	:813/00425		Seal pivot pin grease		4

9812/0080 E4-8-11 RAM, EXTENSION, EXTRADIG DIPPER

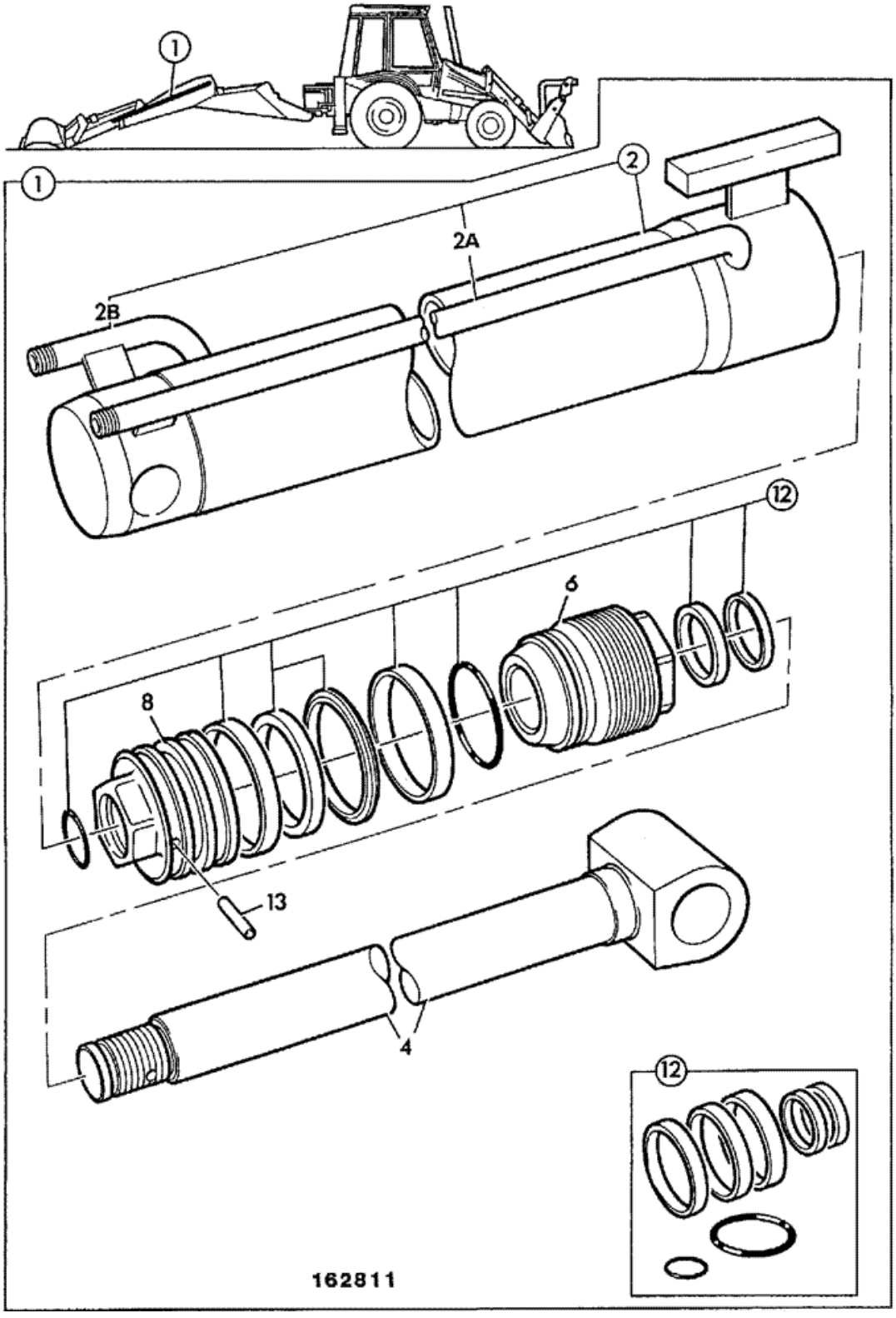

Item	Part #	Change No	Description	Usage Code	QTY
1	556/60259	Superseded	Ram extension extradig dipper		1
1	556/60387		Ram extension extradig dipper *see page E4-8-12 for breakdown*		1
2	556/70258		Cylinder extension ram 1244 hole ctr to end		1
2A	::NSP		None serviced part		1
2B	::NSP		None serviced part		1
4	:590/40118		Rod piston 45mm pivot hole		1
6	:594/14130		Cap end assembly		1
8	:595/10027		Head piston		1
12	:991/00100		Kit-seal 70x40		1
13	:826/01182		Dowel		1

9812/0080 E4-8-12 RAM, EXTENSION, EXTRADIG DIPPER

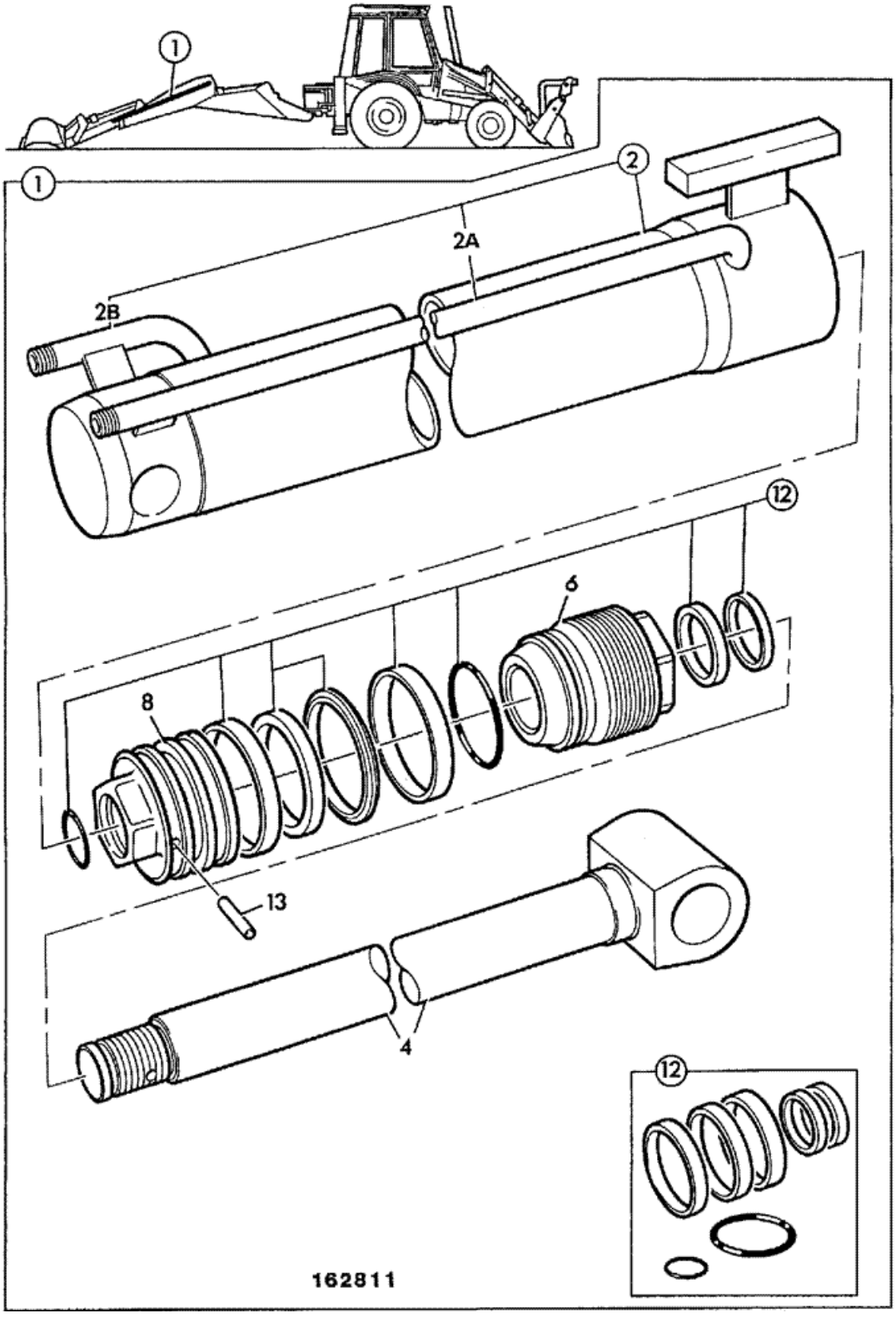

Item	Part #	Change No	Description	Usage Code	QTY
1	556/60387		Ram extension extradig dipper		1
2	:556/70382		Cylinder extensian ram 1129 hole ctr to end		1
2A	NSP		None serviced part		1
2B	NSP		None serviced part		1
4	:590/40118		Rod piston 45mm pivot hole		1
6	:594/14300		Cap end cap assembly 70 X 40		1
8	:595/27600		Head piston		1
12	:991/00100		Kit-seal 70x40		1
13	:826/01182		Dowel		1

Product Catalog \ CONSTRUCTION \ NORTH AMERICA \ CONSTRUCTION / INDUSTRIAL \ BACKHOE LOADER 3CX,4CX,214,215,217 \ 3C PLUS (91HP) , Made in Brazil with Dieselmax/IESA Engine 9812/0080 \ E HYDRAULICS INCLUDING STEERING \ E04 RAMS

9812/0080 E4-8-13 RAM, EXTENSION, EXTRADIG DIPPER,

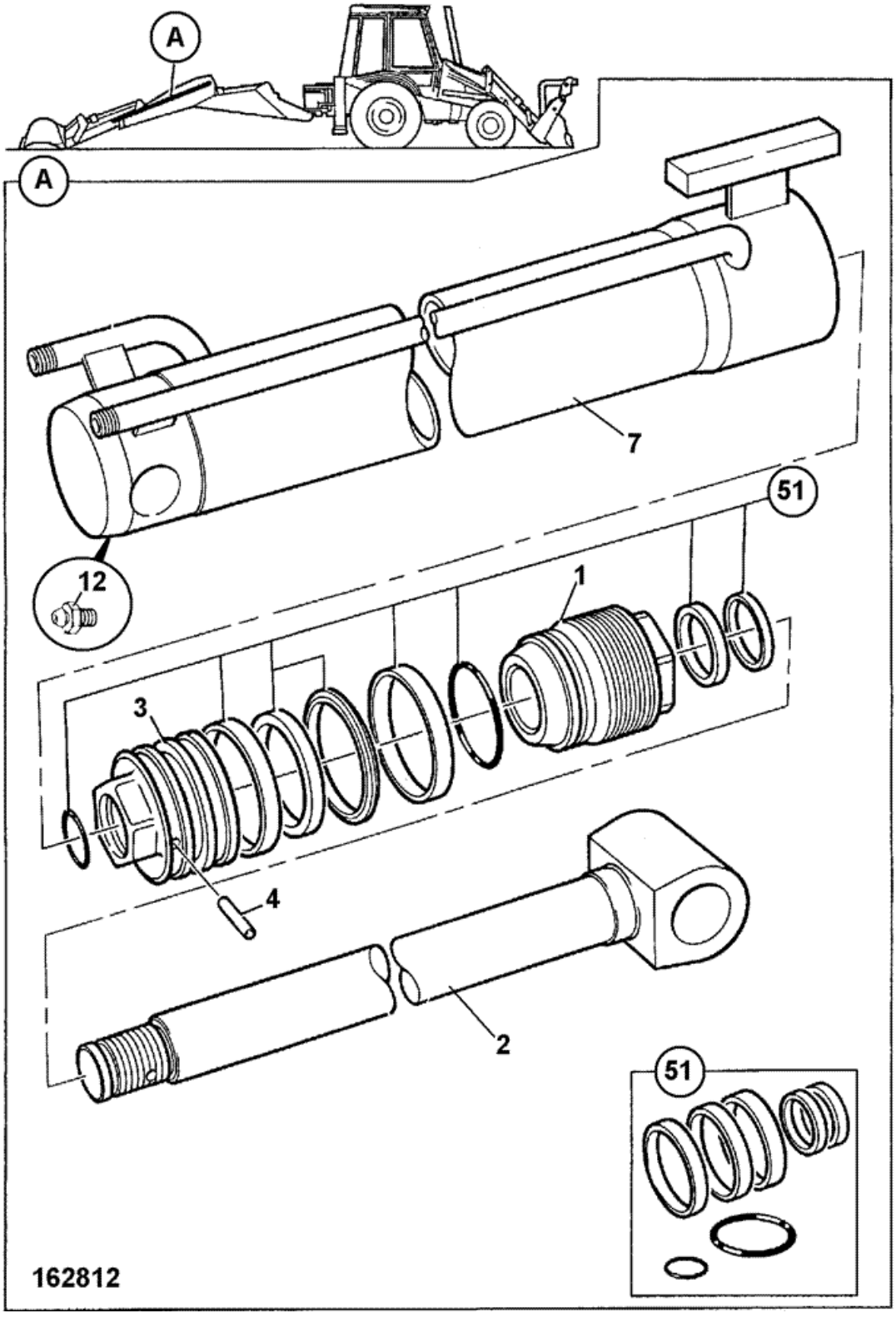

Item	Part #	Change No	Description	Usage Code	QTY
A	556/60435		Ram extension 70 x 40 extradig dipper		1
1	:332/D4842		Cap endcap assembly 70 X 40		1
2	:590/40118		Rod piston 45mm pivot hole		1
3	:595/27600		Head piston		1
4	:826/01182		Dowel		1
7	:556/70382		Cylinder extensian ram 1129 hole ctr to end		1
12	:1450/0001		Nipple grease, straight 1/8 BSP		1
51	:332/D4850		Kit seal kit 70X40		1

9812/0080 E1-10-13 CIRCUIT, BUCKET RAM, EXTRADIG DIPPER

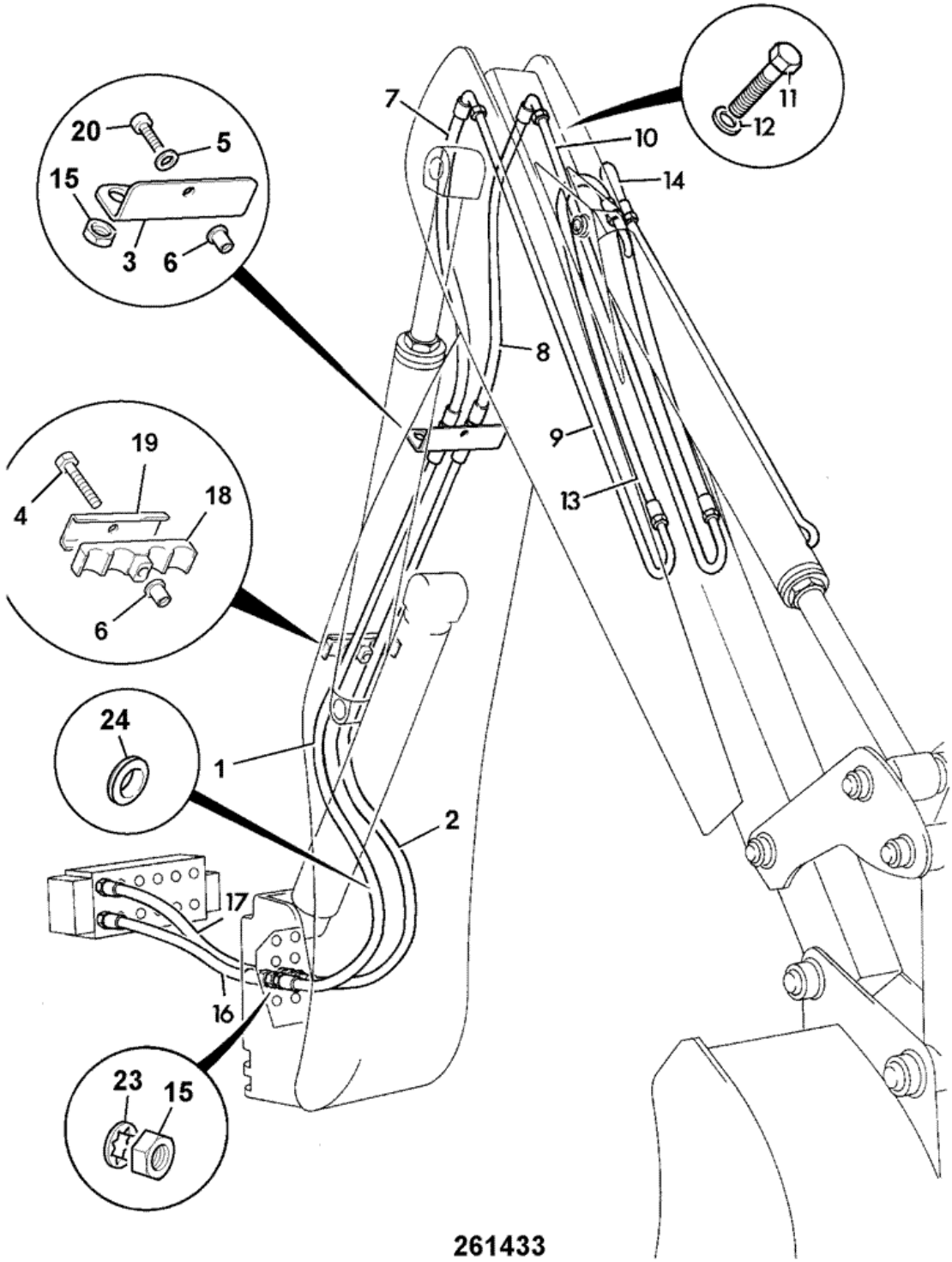

Item	Part #	Change No	Description	Usage Code	QTY
1	629/80005		Hose		1

2	629/80005		Hose		1
3	331/14734		Plate hose support 4 X 1/2BSP		1
4	1315/3414Z		Bolt M10x60		1
5	823/00377		Washer plain M10		1
6	826/01249		Nut rivet M10 open end for 6 to 8.5mm plate		2
7	613/23100		Hose 1/2"BSP x 1015mm		1
8	613/23100		Hose 1/2"BSP x 1015mm		1
9	123/03285	Superseded	Pipe		1
9	128/17337		Pipe assembly R.H.		1
10	123/03286	Superseded	Pipe left hand		1
10	128/17338		Pipe assembly L.H.		1
11	1315/0408Z		Bolt M10 x 30		4
12	1420/0008Z		Washer Plain M10		4
13	613/05400		Hose 1/2BSP x 1100		1
14	613/05400		Hose 1/2BSP x 1100		1
15	1356/0204Z		Nut		4
16	477/00338		Hose 1/2"BSP x 765mm		1
17	613/36012		Hose 1/2BSPx930		1
18	123/05836		Clamp		1
19	331/14805		Plate clamp backing		1
20	1391/3410Z		Capscrew		1
23	1418/0018Z		Washer lock, internal teeth		2
24	830/00314		Ferrule rubber		2

Product Catalog \ CONSTRUCTION \ NORTH AMERICA \ CONSTRUCTION / INDUSTRIAL \ BACKHOE LOADER 3CX,4CX,214,215,217 \ 3C PLUS (91HP) , Made in Brazil with Dieselmax/IESA Engine 9812/0080 \ E HYDRAULICS INCLUDING STEERING \ E01 HOSE & PIPEWORK

9812/0080 E1-11-41 CIRCUIT, AUXILIARY, EXTENTION RAM, EXTRADIG DIPPER

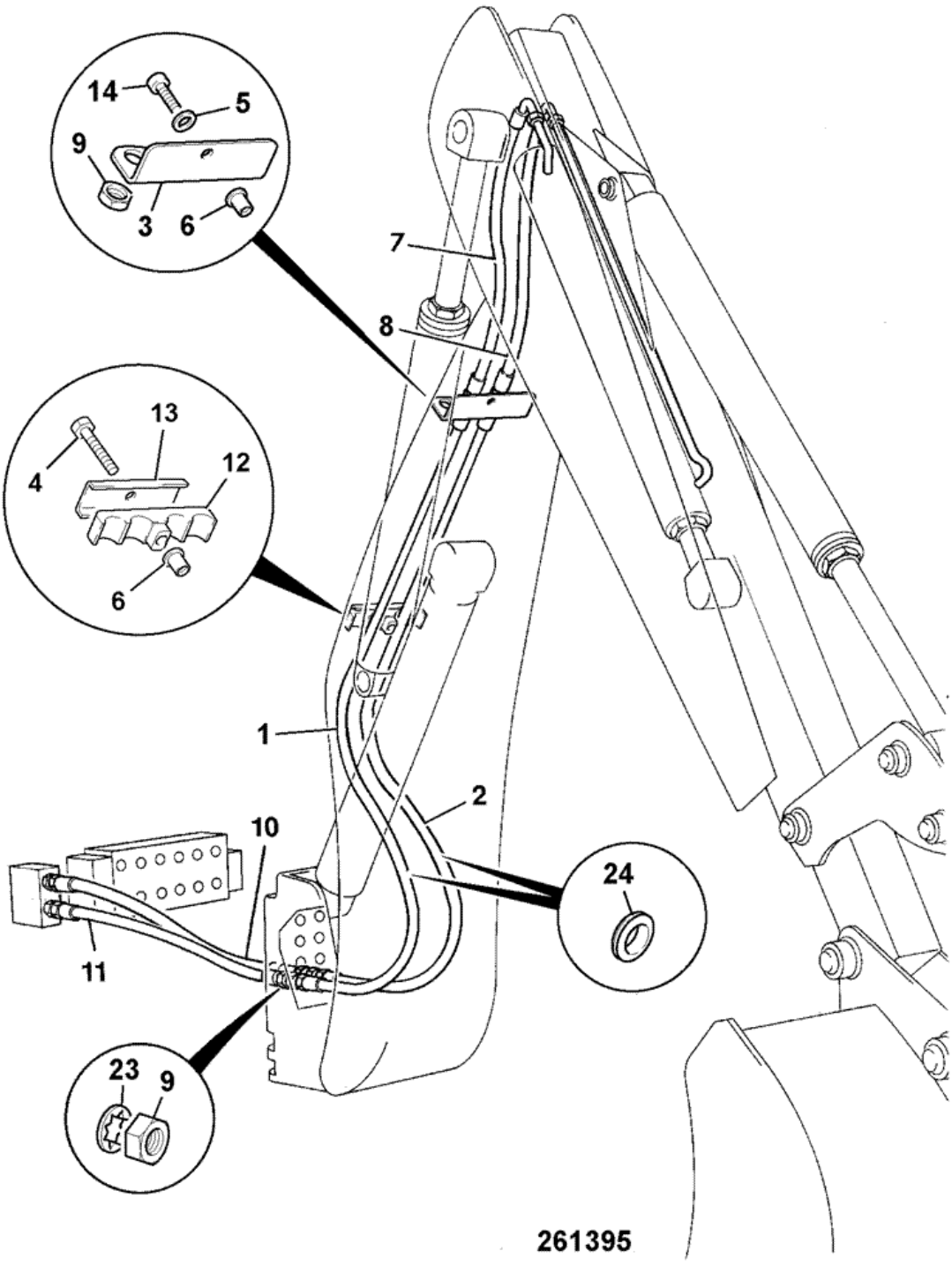

Item	Part #	Change No	Description	Usage Code	QTY
1	629/80005		Hose		1

2	629/80005		Hose		1
3	331/14734		Plate hose support 4 X 1/2BSP		1
4	1315/3414Z		Bolt M10x60		1
5	823/00377		Washer plain M10		1
6	826/01249		Nut rivet M10 open end for 6 to 8.5mm plate		2
7	613/23100		Hose 1/2"BSP x 1015mm		1
8	613/23100		Hose 1/2"BSP x 1015mm		1
9	1356/0204Z		Nut		2
10	613/36009		Hose 1/2"BSP x 850mm *Top port*		1
11	613/09203		Hose 1/2"BSP 1040mm *Bottom port*		1
12	123/05836		Clamp		1
13	331/14805		Plate clamp backing		1
14	1391/3410Z		Capscrew		1
23	1418/0018Z		Washer lock, internal teeth		2
24	830/00314		Ferrule rubber		2

9812/0080 E1-18-51 COOLER, COMBINATION, RADIATOR/HYDRAULIC, & TRANSMISSION, NON CHARGED AIR COOLER

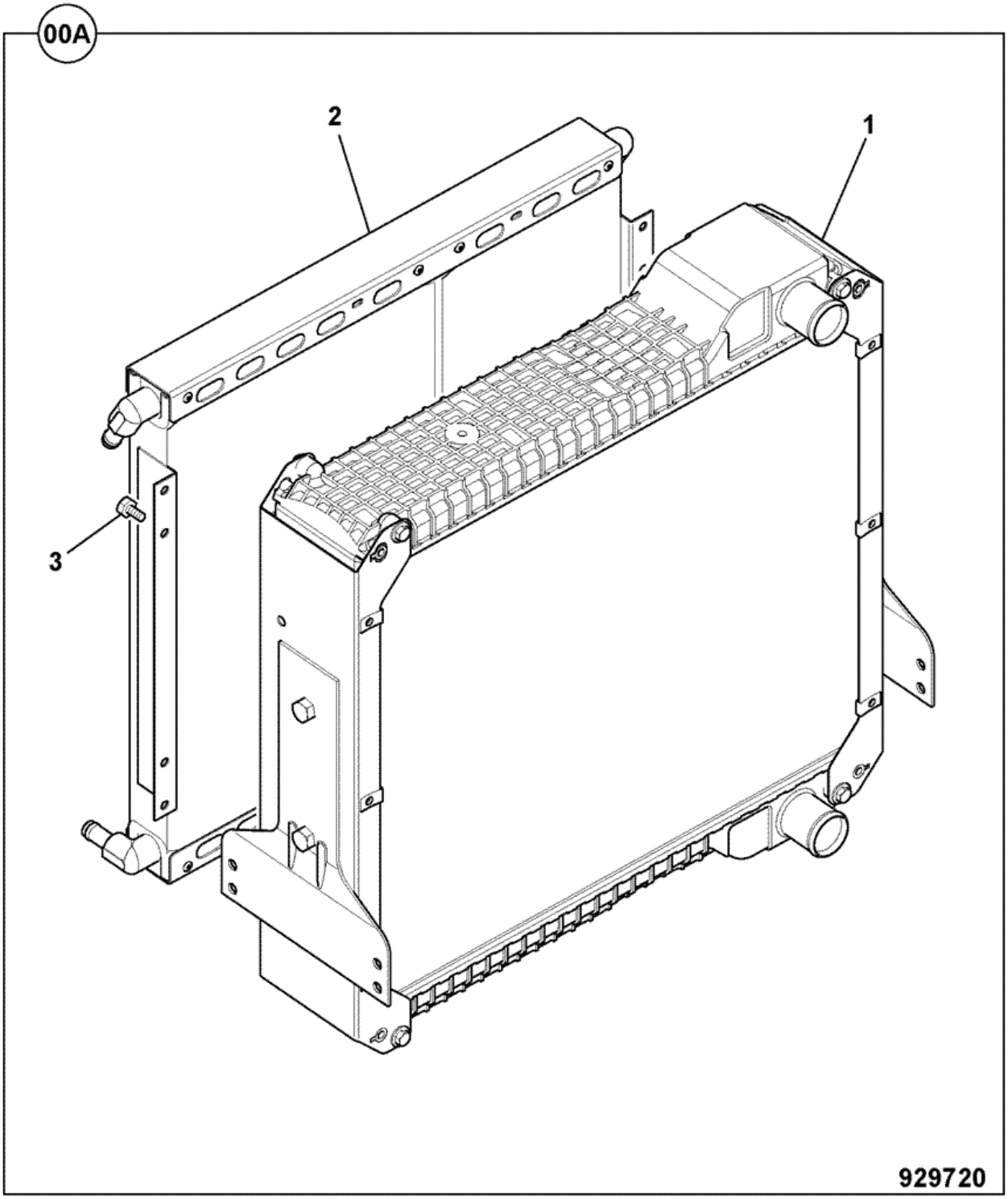

Item	Part #	Change No	Description	Usage Code	QTY
A	128/14326		Cooler assembly 5row 2ws non CAC		1
1	30/926671		Radiator 5row-9fpi		1
2	:30/925615		Cooler oil, double 14plates + 21 plates		1
3	:02/291015		Screw		8

Product Catalog \ CONSTRUCTION \ NORTH AMERICA \ CONSTRUCTION / INDUSTRIAL \ BACKHOE LOADER 3CX,4CX,214,215,217 \ 3C PLUS (91HP) , Made in Brazil with Dieselmax/IESA Engine 9812/0080 \ E HYDRAULICS INCLUDING STEERING \ E01 HOSE & PIPEWORK

9812/0080 E1-23-11 HOSE AND PIPEWORK, HAMMER, FIXED DIPPER, RETURN

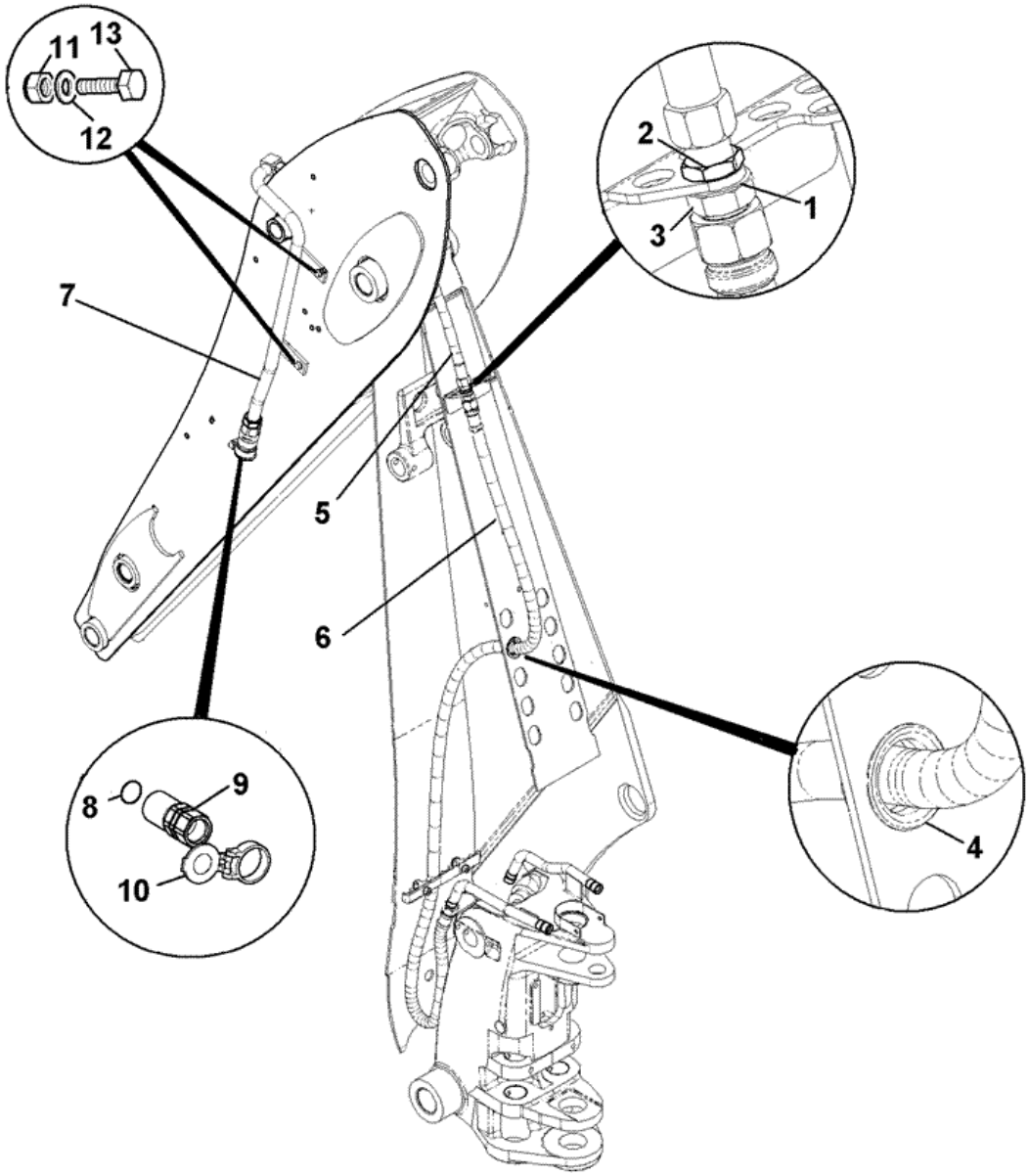

E01-10004-0-A20

Item	Part #	Change No	Description	Usage Code	QTY
1	1418/0018Z		Washer lock, internal teeth		1

2	1356/0205Z		Nut		1
3	816/91044		Adaptor bulkhead G3/4A X G5/8A		1
4	830/00314		Ferrule rubber		1
5	614/00800		Hose		1
6	629/80235		Hose 3/4BSPx2850mm		1
7	332/E4857		PIPE hammer return f		1
8	2401/0508		O Ring		1
9	332/E4161		Coupling female 1-1/16 unf female		1
10	332/E4179		Cap dirt QRC 1" colour blue		1
11	826/01249		Nut rivet M10 open end for 6 to 8.5mm plate		2
12	1420/0008Z		Washer Plain M10		2
13	1315/3409Z		Bolt M10 x 35		2

Product Catalog \ CONSTRUCTION \ NORTH AMERICA \ CONSTRUCTION / INDUSTRIAL \ BACKHOE LOADER 3CX,4CX,214,215,217 \ 3C PLUS (91HP) , Made in Brazil with Dieselmax/IESA Engine 9812/0080 \ E HYDRAULICS INCLUDING STEERING \ E01 HOSE & PIPEWORK

9812/0080 E1-27-20 BOOM RAM PIPEWORK

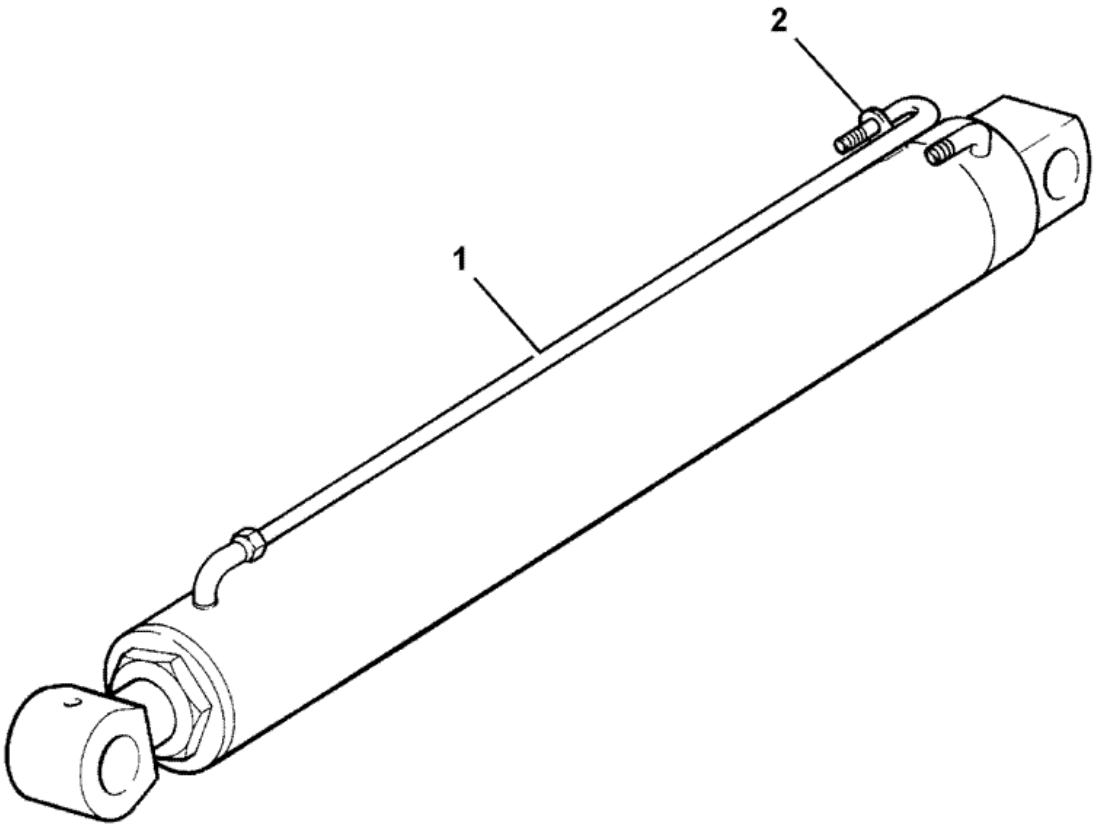

278401

Item	Part #	Change No	Description	Usage Code	QTY
1	658/40188		Pipe boom ram,rodside		1
2	2410/0212		Grommet		1

9812/0080 E3-10-10 VALVE, STEERING, 2WS-USA BUILDS, 250 LOAD SENSING

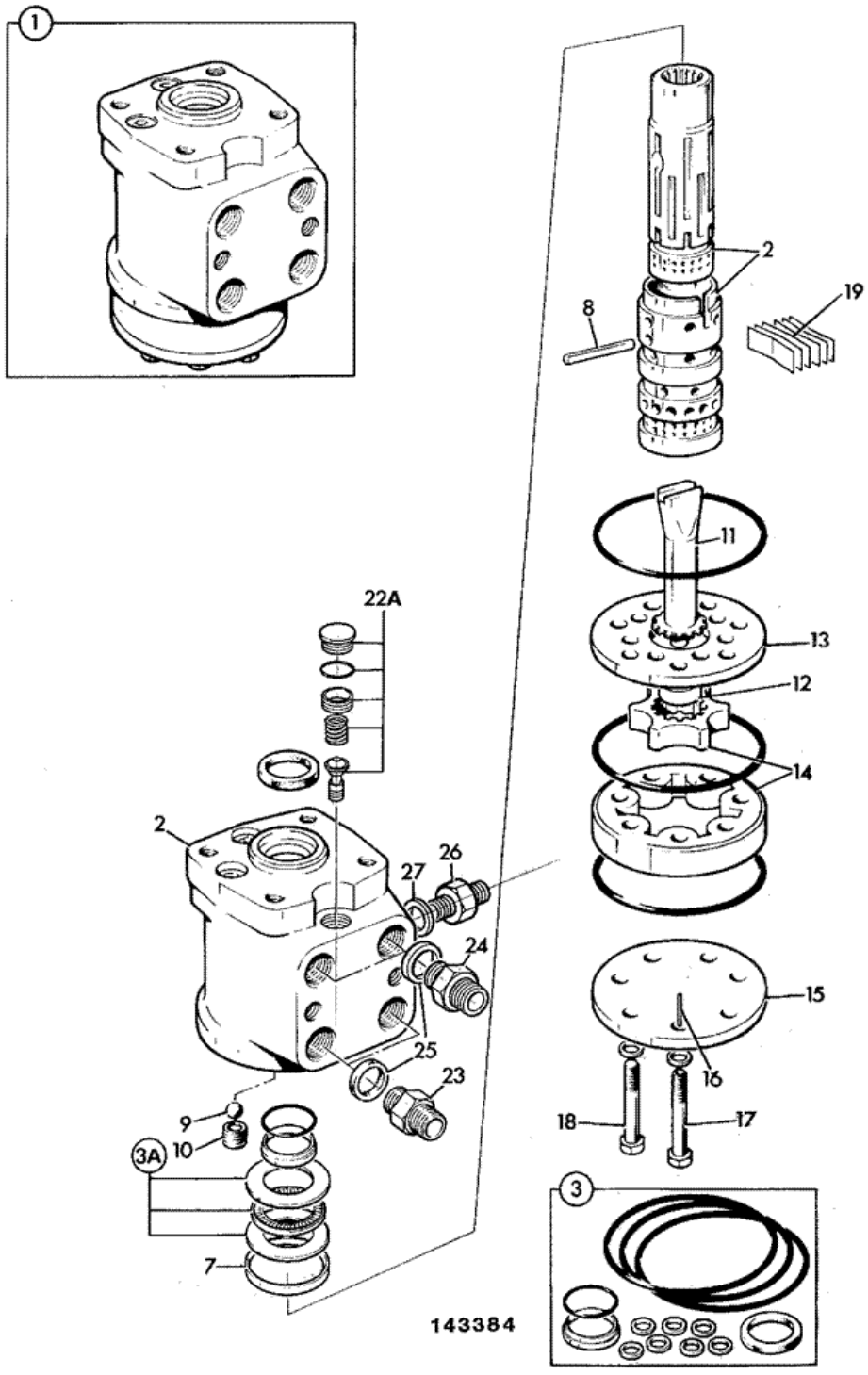

Item	Part #	Change No	Description	Usage Code	QTY
1	35/412300		Valve steer 250 load sens without anti-shock		1

2	:N.S.P.		None serviced part		1
3	:35/404202		Kit-repair		1
3A	:35/404902		Bearing complete		1
7	:35/400502		Ring		1
8	:35/400507		Pin cross		1
9	:35/400508		Ball		1
10	:35/400510		Bush		1
11	:35/412301		Drive		1
12	:.		'See Remark' *Not fitted or required*		1
13	:35/409301		Plate distributor		1
14	:35/412302		Kit-gear		1
15	:35/400511		Plate end		1
16	:NSP		None serviced part *Part of item 17*		1
17	:35/412303		Bolt		1
18	:35/412304		Bolt		6
19	:35/407009		Spring kit		1
22A	:35/409303		Valve relief assembly		1
23	1620/0004		Adapter 3/4"UNF SAE "O" ring 3/8"BSP male		2
24	816/17072		Adapter		2
25	2401/0506		O Ring *Component part of item 23, 24*		1
26	1620/0001		Adapter		1
27	:2401/0503		O Ring *Component part of item 26*		1

Product Catalog \ CONSTRUCTION \ NORTH AMERICA \ CONSTRUCTION / INDUSTRIAL \ BACKHOE LOADER 3CX,4CX,214,215,217 \ 3C PLUS (91HP) , Made in Brazil with Dieselmax/IESA Engine 9812/0080 \ E HYDRAULICS INCLUDING STEERING \ E04 RAMS

9812/0080 E4-10-11 RAM, STABILISER, CENTREMOUNT, 90 X 50

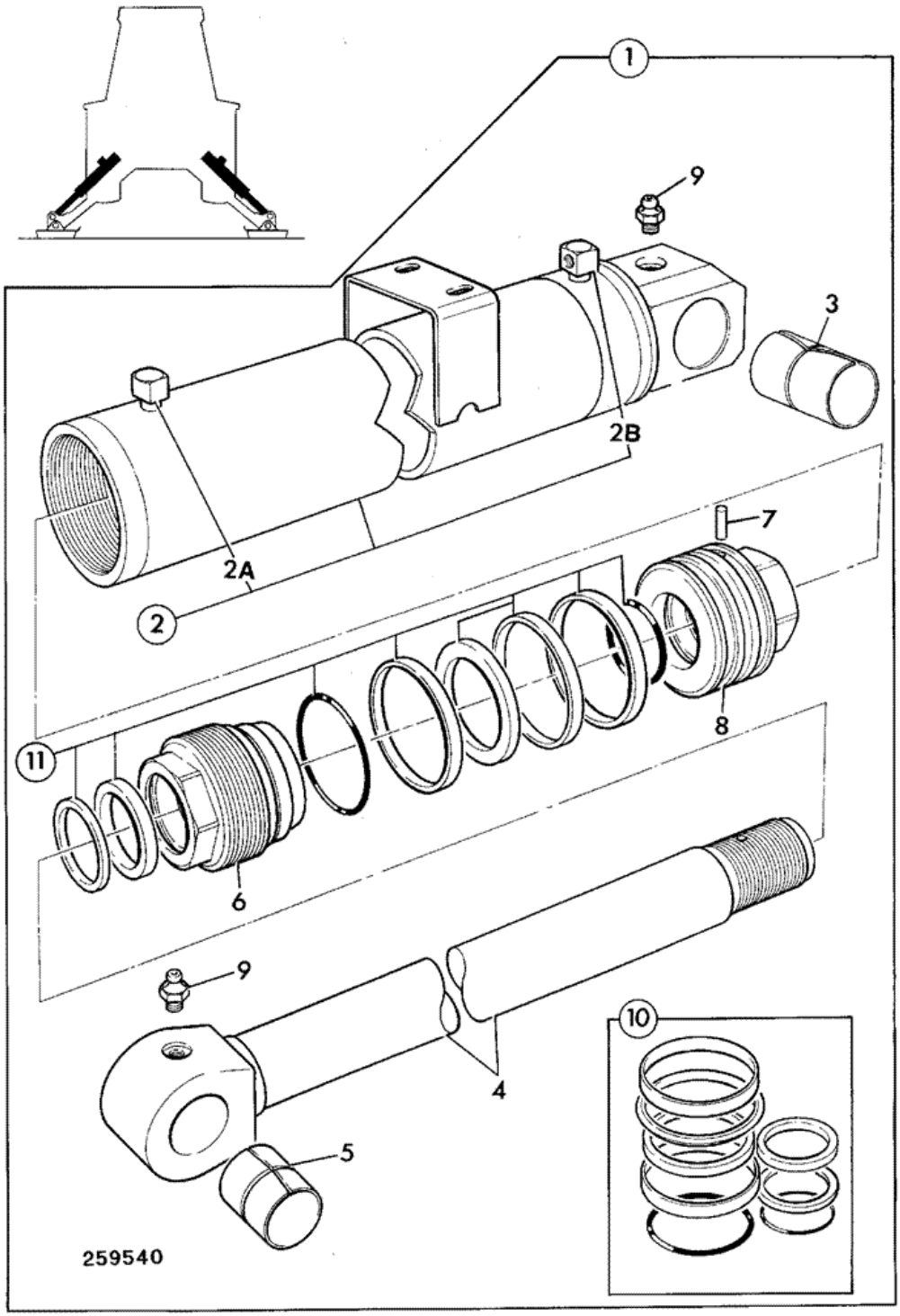

Item	Part #	Change No	Description	Usage Code	QTY
1	557/60073		Ram stabiliser c. mount 90 X 50		2

1	128/10902		Ram stabiliser sunbelt green *Sunbelt green*		2
2	:557/70072		Cylinder stabiliser centremount		1
2A	::NSP		None serviced part		1
2B	::NSP		None serviced part		1
3	:809/10076		Bush 50 x 56 x 98 long		1
4	:590/40259		Rod stabililser 50mm x 782		1
5	:1208/0015		Bush		1
6	:594/14020		Kit-end cap 50mm rod x 90mm cyl		1
7	:826/01179		Dowel		1
8	:595/10037		Head piston		1
9	:1450/0001		Nipple grease, straight 1/8 BSP		2
10	:991/00103		Kit-seal 50mm rod x 90mm cyl *Seal kit components see E4-13-13*		1

Product Catalog \ CONSTRUCTION \ NORTH AMERICA \ CONSTRUCTION / INDUSTRIAL \ BACKHOE LOADER 3CX,4CX,214,215,217 \ 3C PLUS (91HP) , Made in Brazil with Dieselmax/IESA Engine 9812/0080 \ E HYDRAULICS INCLUDING STEERING \ E04 RAMS

9812/0080 E4-10-21 RAM, STABILISER, CENTREMOUNT, 90 X 60, 3C

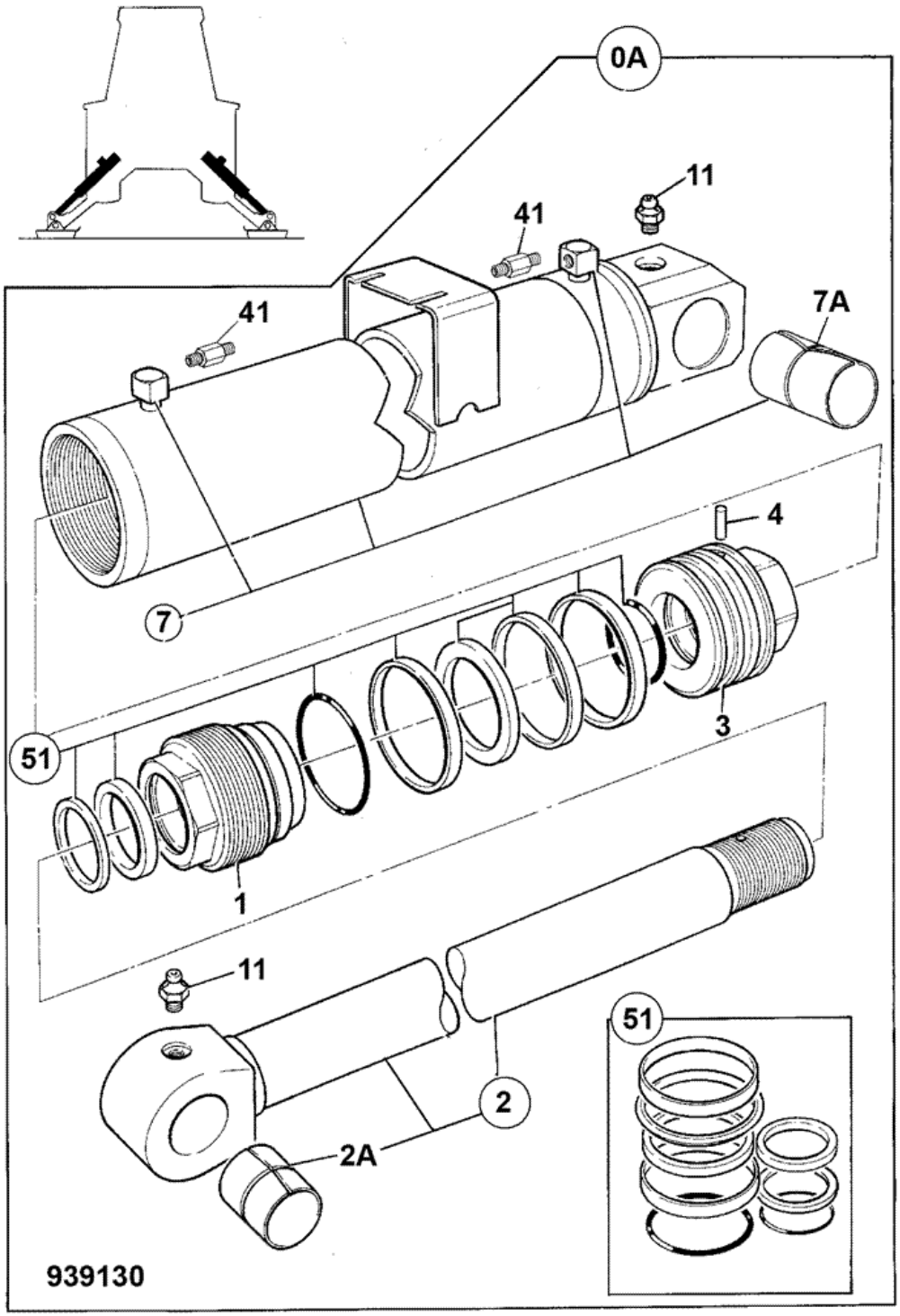

Item	Part #	Change No	Description	Usage Code	QTY
A	557/60198	Superseded	Ram stabiliser, c/mount 90 x 60		2

A	557/60223		Ram Stabiliser c/mount 90 x 60 *see E4-10-22 for breakdown*		2
1	:594/14287		Cap end, 60mm rod x 90mm cylinder		1
2	:590/40746		Rod 60x782		1
2A	::1208/0015		Bush		1
3	:595/10061		Head piston		1
4	:826/01179		Dowel		1
7	:557/70197		Cylinder stabiliser, c/mount		1
7A	:1209/0020		Bush		1
11	:1450/0001		Nipple grease, straight 1/8 BSP		2
41	:816/90009		Adapter M/F		2
51	:991/00147		Kit-seal 90mm cyl x 60mm rod metric rams		1

Product Catalog \ CONSTRUCTION \ NORTH AMERICA \ CONSTRUCTION / INDUSTRIAL \ BACKHOE LOADER 3CX,4CX,214,215,217 \ 3C PLUS (91HP) , Made in Brazil with Dieselmax/IESA Engine 9812/0080 \ E HYDRAULICS INCLUDING STEERING \ E04 RAMS

9812/0080 E4-10-22 RAM, STABILISER, CENTREMOUNT, 90 X 60

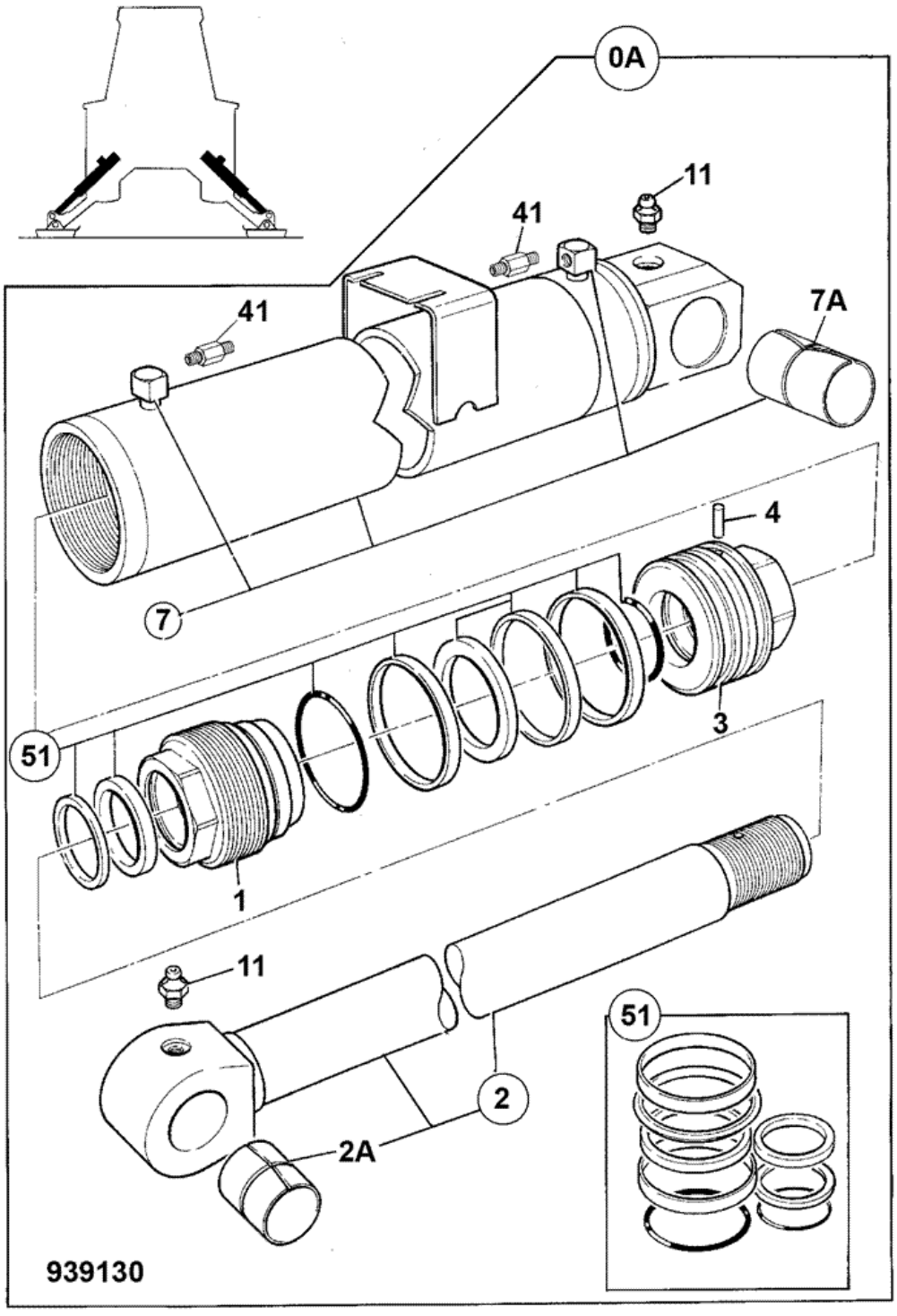

Item	Part #	Change No	Description	Usage Code	QTY
A	557/60223		Ram Stabiliser c/mount 90 x 60		2

1	:332/E8363		Cap end, 60mm rod x 90mm cyl		1
2	:590/40776		Rod 60x782		1
2A	::1208/0015		Bush		1
3	:595/10061		Head piston		1
4	:826/01179		Dowel		1
7	:557/70197		Cylinder stabiliser, c/mount		1
7A	:1209/0020		Bush		1
11	:1450/0001		Nipple grease, straight 1/8 BSP		2
41	:816/90009		Adapter M/F		2
51	:332/E8224		Kit Seal 90x60		1

Product Catalog \ CONSTRUCTION \ NORTH AMERICA \ CONSTRUCTION / INDUSTRIAL \ BACKHOE LOADER 3CX,4CX,214,215,217 \ 3C PLUS (91HP) , Made in Brazil with Dieselmax/IESA Engine 9812/0080 \ E HYDRAULICS INCLUDING STEERING \ E04 RAMS

9812/0080 E4-11-11 RAM, SLEW/SWING

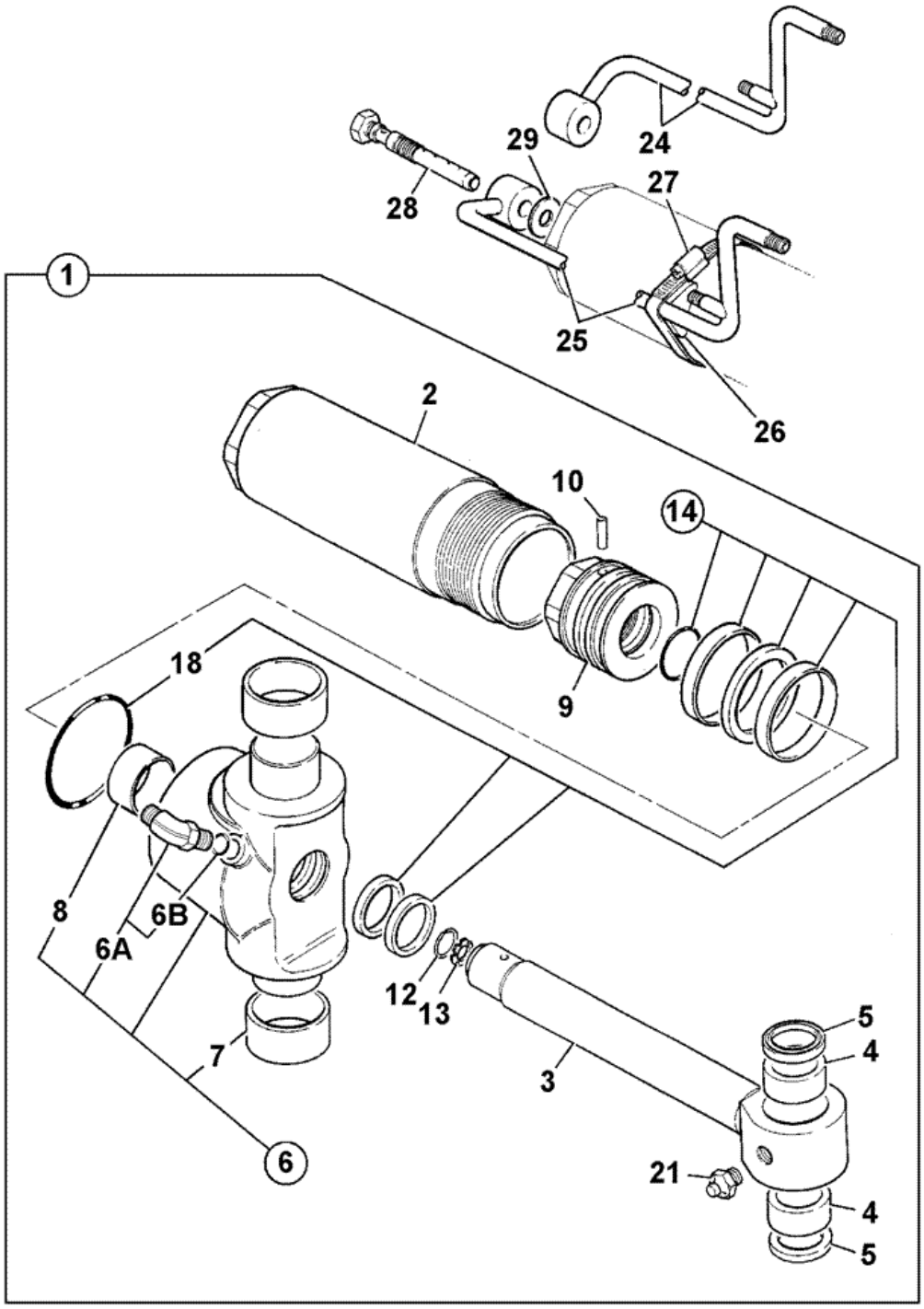

736000

Item	Part #	Change No	Description	Usage Code	QTY
1	557/60127		Ram slew *item 6A screws into item 6*		1

1	128/14671		Ram slew sunbelt green *Sunbelt green*		1
2	:559/70018		Cylinder assembly		1
3	:590/40253		Rod piston 50mm. slew ram		1
4	::809/00177		Bearing 55x65x56		1
5	::813/00460		Seal pivot pin 55x65		2
6	:594/14274		Kit end cap *item 6A screws into item 6*		1
6A	::816/90676		Adapter 90deg elbow 9/16 SAE x G1/4		1
6B	:::2401/0505		O Ring		1
7	::809/00137		Bearing		2
8	::NSP		None serviced part		1
9	:595/10037		Head piston		1
10	:826/01180		Dowel		1
12	:821/00462		Clip 31.1mm		1
13	:551/90107		Plate orifice 27.4 x 15 x 5.8mm		1
14	:991/00163		Kit-seal 50mm rod x 90mm cyl		1
18	::2302/0336		O Ring 115 x 5		1
21	:1450/0001		Nipple grease, straight 1/8 BSP		1
24	335/00771		Pipe left hand slew centremount		1
25	335/00772		Pipe right hand slew centremount		1
26	821/10425		Clamp pipe support		2
27	2201/0017		Clip worm drive		2
28	559/90066		Restrictor banjo bolt		2
29	1406/0015		Washer seal		4

Product Catalog \ CONSTRUCTION \ NORTH AMERICA \ CONSTRUCTION / INDUSTRIAL \ BACKHOE LOADER 3CX,4CX,214,215,217 \ 3C PLUS (91HP) , Made in Brazil with Dieselmax/IESA Engine 9812/0080 \ F AXLES, WHEELS & TRANSMISSION \ F01 AXLES, FRONT

9812/0080 F1-3-1 AXLE PIVOT PIN, & GREASING 2WS, 2WD/4WD

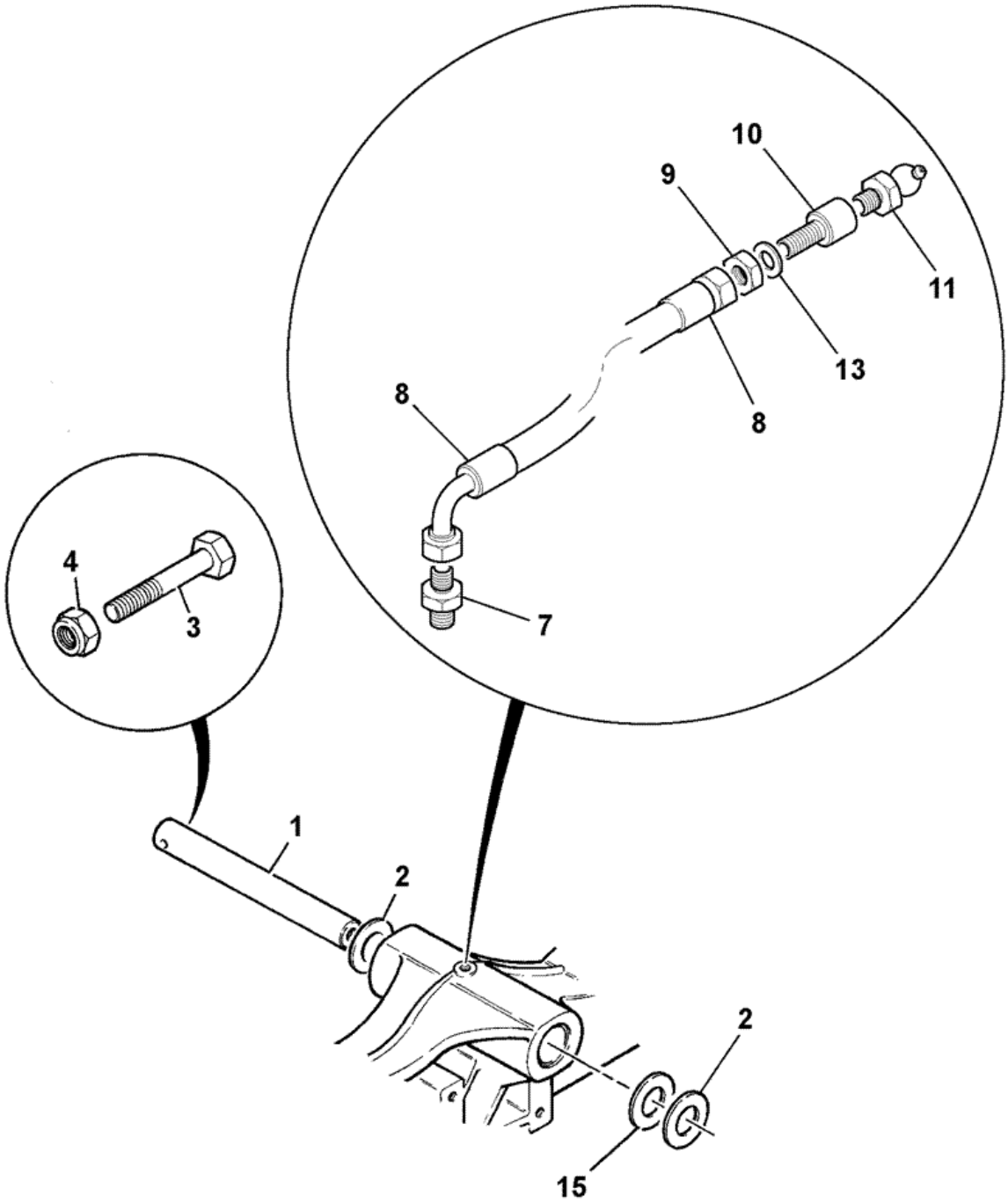

252793

Item	Part #	Change No	Description	Usage Code	QTY
1	811/10091		Pin axle pivot		1

2	819/00132		Spacer grey,50.75 borex3.5mm thick		1
2	819/00133		Spacer cream, 50.75mm borex4.0mm thick		1
2	819/00134		Spacer yellow, 50.75mm borex4.5mm thick		1
2	819/00135		Spacer blue, 50.75mm borex5.0mm thick		1
2	819/00136		Spacer red, 50.75mm borex5.5mm thick		1
2	819/00137		Spacer black, 50.75mm borex6.0mm thick		1
3	1315/3520Z		Bolt M12 x 100mm		1
4	1370/0403Z		Nut M12		1
7	1609/0001		Adapter		1
8	649/52077		Hose 1/8BSPx490mm long		1
9	826/00871		Nut		1
10	816/20049		Adapter *To suit 10.5mm hole in chassis*		1
11	1450/1007		Nipple grease 45 deg. angle		1
12	835/00017		Cap grease nipple		1
13	1420/0008Z		Washer Plain M10		1
15	123/06223		Adhesive washer		1

9812/0080 F1-6-1 AXLE ASSEMBLY, 2WS 4WD STEER AXLE, 15.785:1 RATIO 448/57470

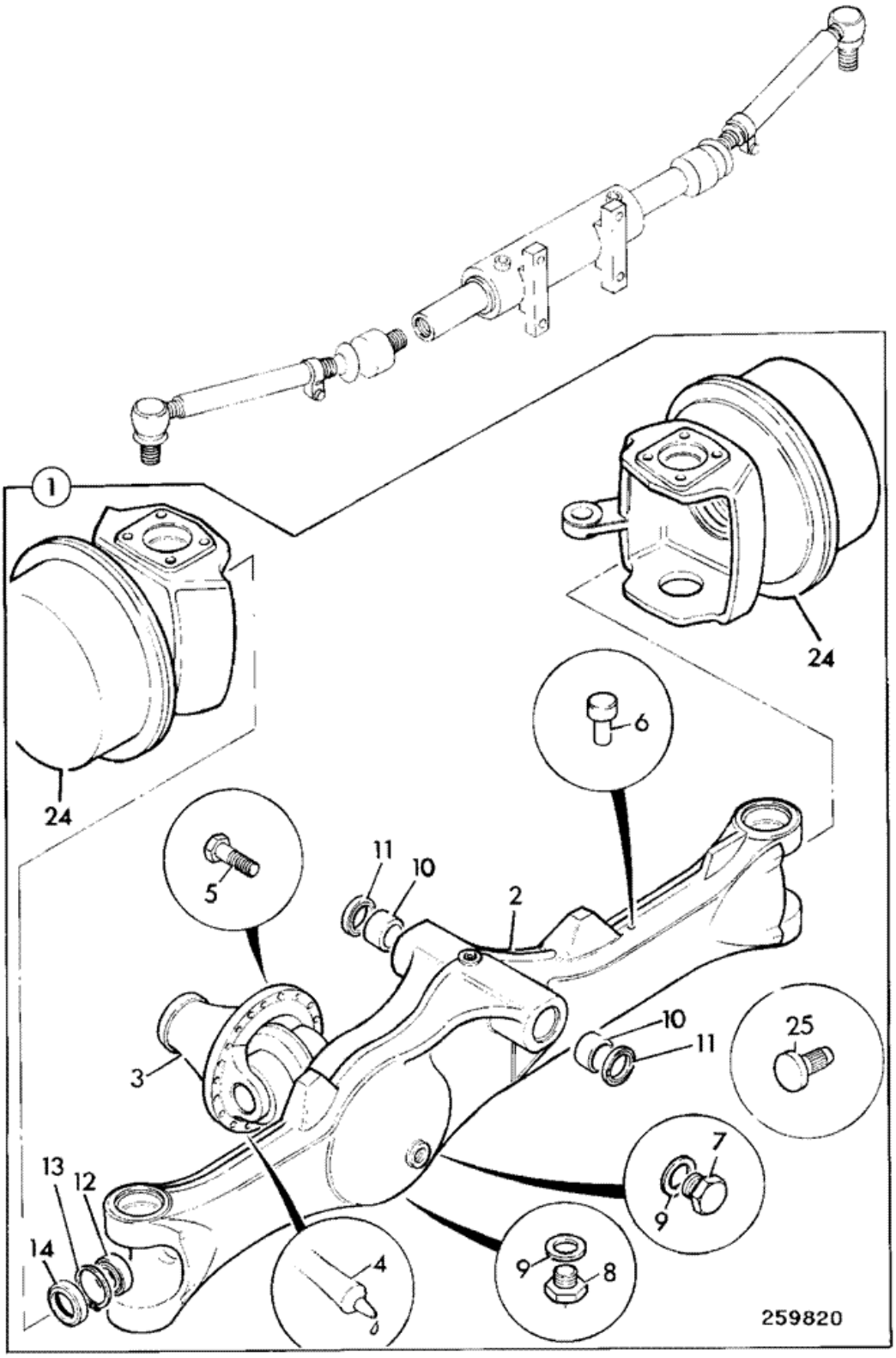

Item	Part #	Change No	Description	Usage Code	QTY
1	448/57470		Axle assembly pivot mount 15.785:1 4wd *Yellow gloss*		1
2	:458/20744		Casing axle SD55		1
3	:.		'See Remark' *Diff assembly see frame F1-6-30*		1
4	:4102/1204		Sealant multi-gasket		0

5	:826/01434		Bolt verbus ripp M10 x 35mm		12
6	:448/56282		Breather spring type M10 x 1.5 thread		1
7	:816/80037		Plug filler		1
8	:816/80012		Plug magnetic 3/4"BSP		1
9	:1406/0021		Seal bonded 3/4" BSP		2
10	:829/00548		Bush		2
11	:904/06500		Seal		2
12	:907/08400		Bearing		2
13	:2203/1082		Circlip		2
14	:904/50040		Seal		2
24	:.		'See Remark' *Wheel hubs see frame F1-6-10, F1-6-20*		2
25	123/06718		Stop lock 45mm long *Use with 20" rims.*		2

Product Catalog \ CONSTRUCTION \ NORTH AMERICA \ CONSTRUCTION / INDUSTRIAL \ BACKHOE LOADER 3CX,4CX,214,215,217 \ 3C PLUS (91HP) , Made in Brazil with Dieselmax/IESA Engine 9812/0080 \ F AXLES, WHEELS & TRANSMISSION \ F02 AXLES, REAR

9812/0080 F2-2-1 458/10978, YELLOW, AXLE ARM & HUB ASSY

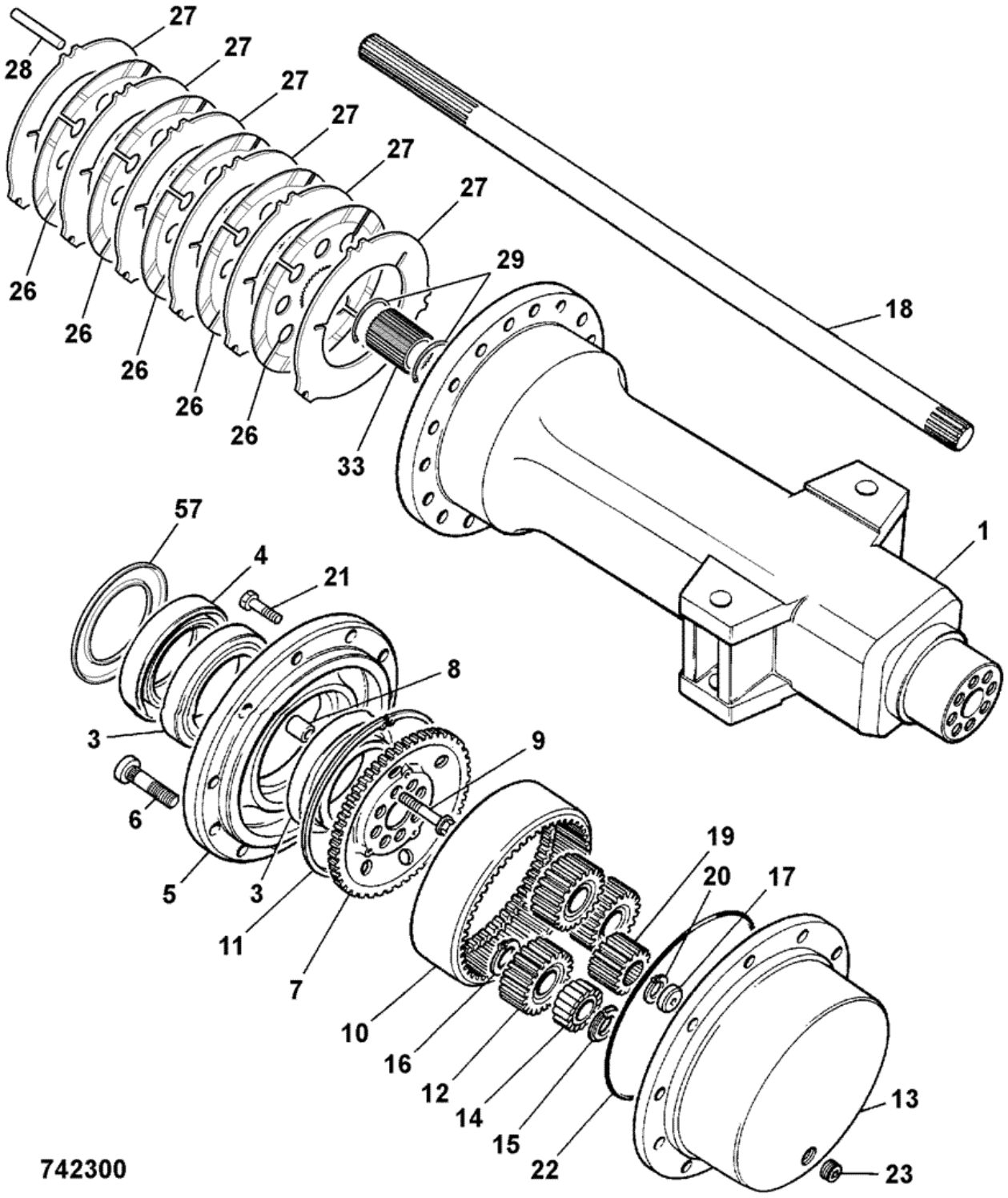

Item	Part #	Change No	Description	Usage Code	QTY
A	458/10978		Arm axle arm and hub assembly		2

1	:458/20618		Casing axle arm pad thickness 139mm		1
3	:907/20043		Bearing taper roller		2
4	:904/50033		Seal oil 127 x 160 x 15.5-17		1
5	:458/20446		Carrier wheel bearing 5 stud		1
6	:826/00923		Stud wheel		5
7	:450/12702		Carrier annulus		1
8	:450/12703		Dowel hollow		8
9	:826/01060		Bolt M14 x 70mm long		8
10	:450/10205		Gear annulus ring		1
11	:821/00210		Circlip internal square section		1
12	:450/10206		Gear planet		3
13	:450/10216		Carrier planetary hub 5 stud		1
14	:907/50200		Bearing roller, double row		3
15	:821/00209		Circlip		6
16	:2203/0054		Circlip		3
17	:450/10208		Pad thrust		1
18	:914/60102		Shaft rigid driveshaft Without shot peening		1
19	:450/12403		Gear sun		1
20	:821/00494		Circlip External		1
21	:1321/0407Z		Bolt coated		2
22	:828/00196		O Ring		1
23	:826/00425		Plug tapered 3/4"-14PTF		1
26	:458/20353		Plate brake friction		5
27	:458/20285		Plate brake counter		6
28	:450/10213		Pin reaction		3
29	:2203/0071		Circlip external		2
33	:450/10215		Carrier brake plate		1
57	:458/20403		Cover plate hub seal		1

Product Catalog \ CONSTRUCTION \ NORTH AMERICA \ CONSTRUCTION / INDUSTRIAL \ BACKHOE LOADER 3CX,4CX,214,215,217 \ 3C PLUS (91HP) , Made in Brazil with Dieselmax/IESA Engine 9812/0080 \ F AXLES, WHEELS & TRANSMISSION \ F02 AXLES, REAR

9812/0080 F2-2-3 458/10980, AXLE ARM & HUB ASSY, 2WS+PS

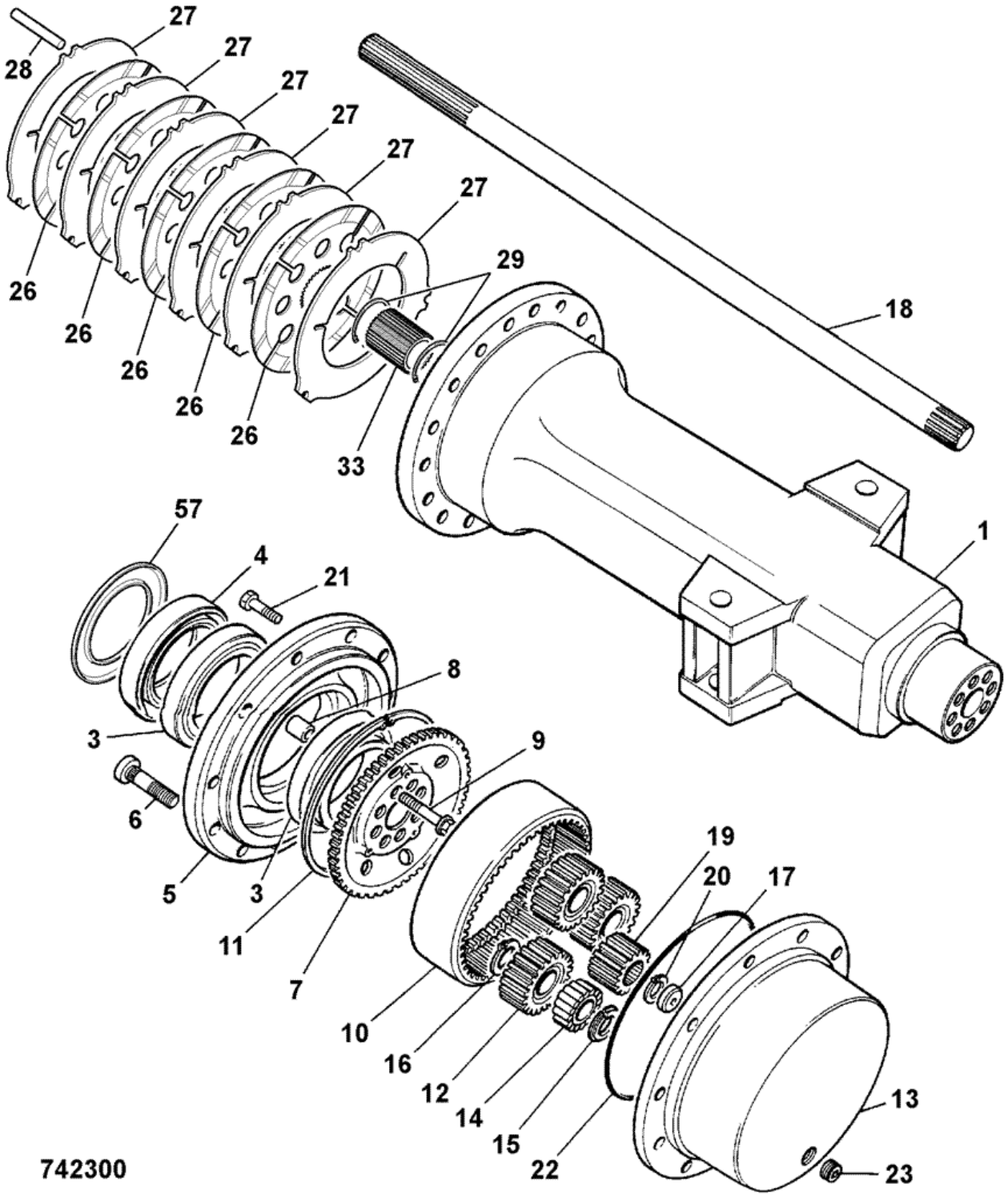

Item	Part #	Change No	Description	Usage Code	QTY
A	458/10980		Arm axle arm and hub assembly		2

1	:458/20618		Casing axle arm pad thickness 139mm		1
3	:907/20043		Bearing taper roller		2
4	:904/50033		Seal oil 127 x 160 x 15.5-17		1
5	:458/20446		Carrier wheel bearing 5 stud		1
6	:826/00923		Stud wheel		5
7	:450/12702		Carrier annulus		1
8	:450/12703		Dowel hollow		8
9	:826/01060		Bolt M14 x 70mm long		8
10	:450/10205		Gear annulus ring		1
11	:821/00210		Circlip internal square section		1
12	:450/10206		Gear planet		3
13	:450/10216		Carrier planetary hub 5 stud		1
14	:907/50200		Bearing roller, double row		3
15	:821/00209		Circlip		6
16	:2203/0054		Circlip		3
17	:450/10208		Pad thrust		1
18	:914/60103		Shaft rigid driveshaft With shot peening		1
19	:450/12403		Gear sun		1
20	:821/00494		Circlip External		1
21	:1321/0407Z		Bolt coated		2
22	:828/00196		O Ring		1
23	:826/00425		Plug tapered 3/4"-14PTF		1
26	:458/20353		Plate brake friction		5
27	:458/20285		Plate brake counter		6
28	:450/10213		Pin reaction		3
29	:2203/0071		Circlip external		2
33	:450/10215		Carrier brake plate		1
57	:458/20403		Cover plate hub seal		1

Product Catalog \ CONSTRUCTION \ NORTH AMERICA \ CONSTRUCTION / INDUSTRIAL \ BACKHOE LOADER 3CX,4CX,214,215,217 \ 3C PLUS (91HP) , Made in Brazil with Dieselmax/IESA Engine 9812/0080 \ F AXLES, WHEELS & TRANSMISSION \ F02 AXLES, REAR

9812/0080 F2-4-1 450/10900, DIFFERENTIAL ASSY

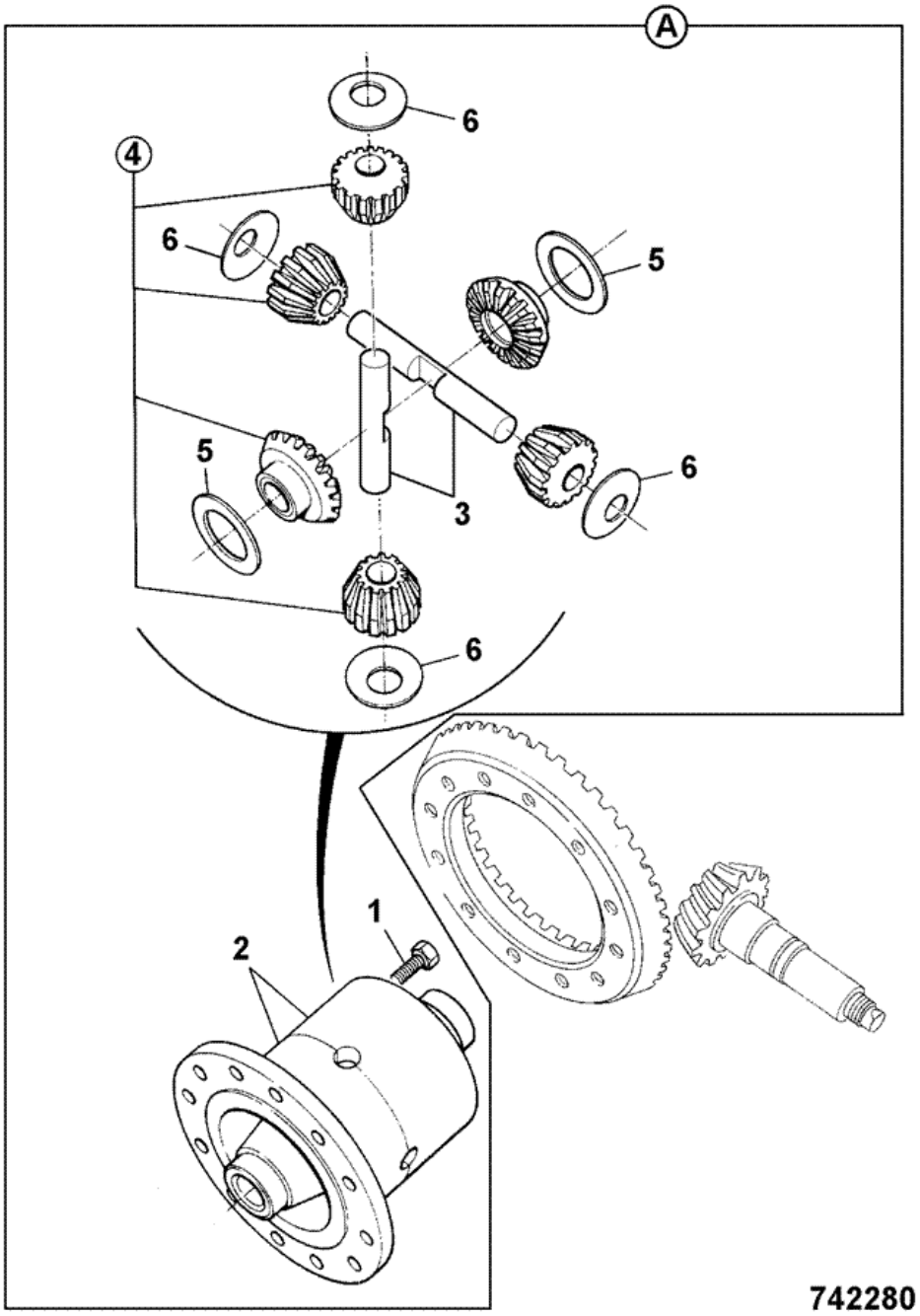

Item	Part #	Change No	Description	Usage Code	QTY
A	450/10900		Differential assembly		1
1	:1315/3418		Bolt		8

2	:450/10800		Casing assembly differential		1
3	:450/10903		Pin trunnion 163mm long		2
4	:450/16900		Kit-gear differential		1
5	:808/00209		Washer thrust side gear		2
6	:808/00210		Washer thrust pinion		4

Product Catalog \ CONSTRUCTION \ NORTH AMERICA \ CONSTRUCTION / INDUSTRIAL \ BACKHOE LOADER 3CX,4CX,214,215,217 \ 3C PLUS (91HP) , Made in Brazil with Dieselmax/IESA Engine 9812/0080 \ F AXLES, WHEELS & TRANSMISSION \ F02 AXLES, REAR

9812/0080 F2-4-2 450/26310, DIFFERENTIAL ASSY

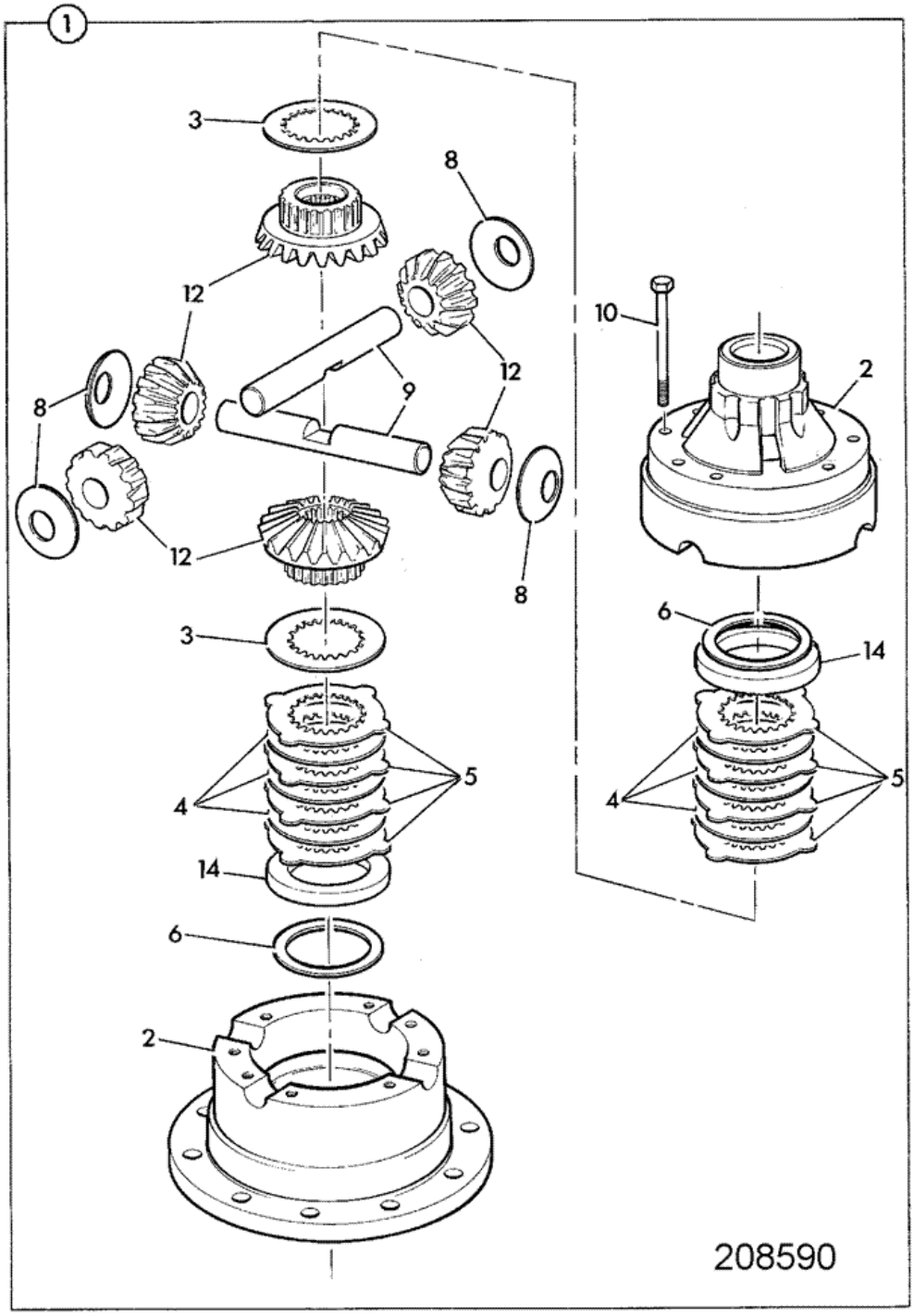

Item	Part #	Change No	Description	Usage Code	QTY
1	450/26310		Differential LSD assembly 3 working faces		1
2	:450/20500		Casing assembly differential		1

3	:450/20401		Plate pressure		2
4	:450/20402		Plate friction		2
5	:450/20403		Plate counter		4
6	:921/52100		Kit shim		2
8	:808/00210		Washer thrust pinion		4
9	:450/10903		Pin trunnion 163mm long		2
10	:1315/3418Z		Bolt M10x80		8
12	:450/20600		Gear set differential		1
14	:450/26201		Spacer		6

Product Catalog \ CONSTRUCTION \ NORTH AMERICA \ CONSTRUCTION / INDUSTRIAL \ BACKHOE LOADER 3CX,4CX,214,215,217 \ 3C PLUS (91HP) , Made in Brazil with Dieselmax/IESA Engine 9812/0080 \ F AXLES, WHEELS & TRANSMISSION \ F02 AXLES, REAR

9812/0080 F2-7-1 AXLE BREATHER, REMOTE

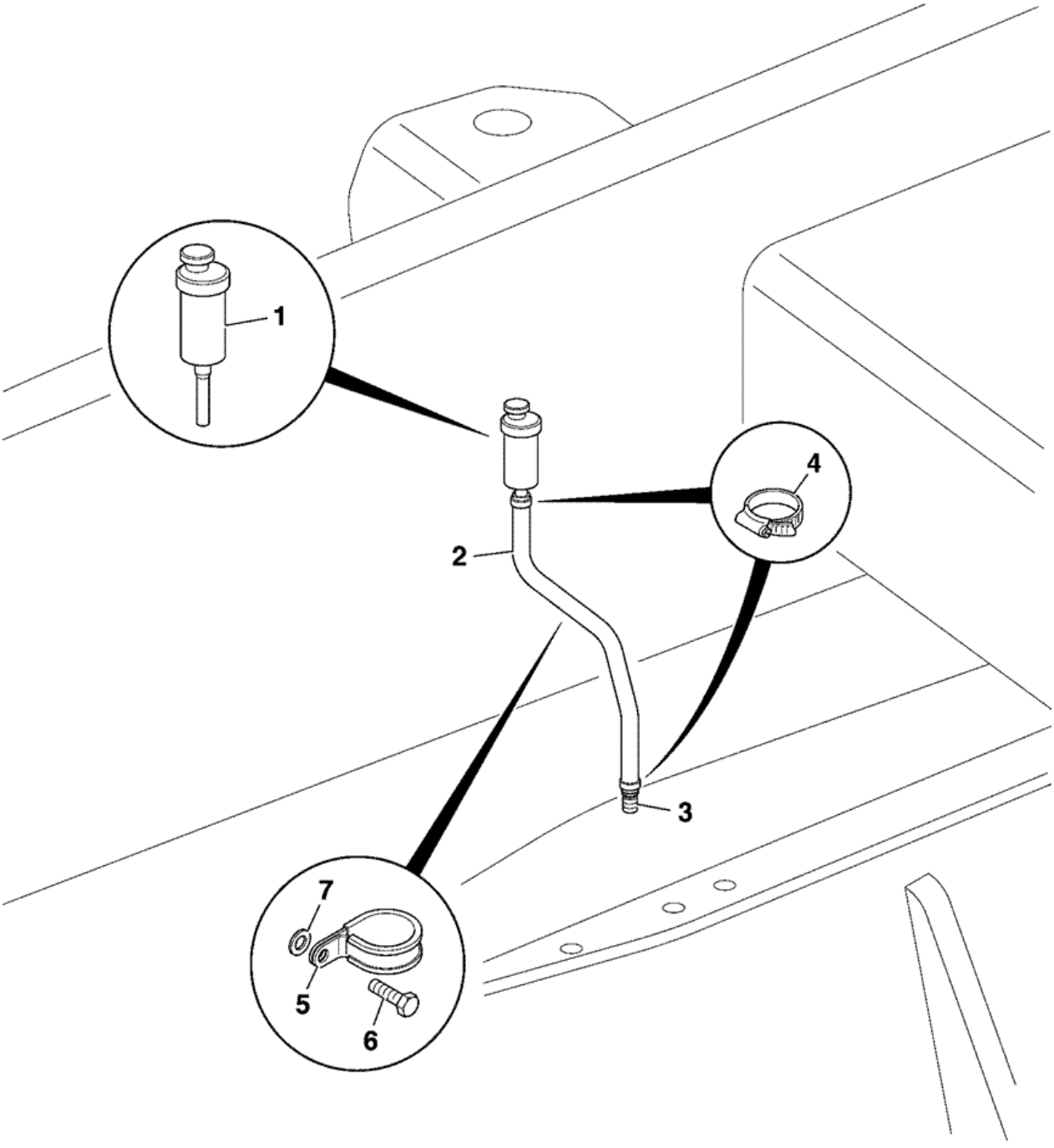

Item	Part #	Change No	Description	Usage Code	QTY
1	32/925678		Breather *Rear axle*		1

2	648/03528		Hose 330mm *was 648/21309*		1
3	458/20611		Adapter		1
4	821/00520		Clip *not used with 648/03528*		2
5	826/01347		Tie cable c/w mounting 4.6mm x 190mm *pushes onto stud welded to chassis*		1
6	.		'See Remark' *no longer fitted*		1
7	.		'See Remark' *no longer fitted*		1

9812/0080 F3-1-1 PROPSHAFT, TRANS. / FRONT AXLE, SYNCHOSHUTTLE TRANSMISSIONS

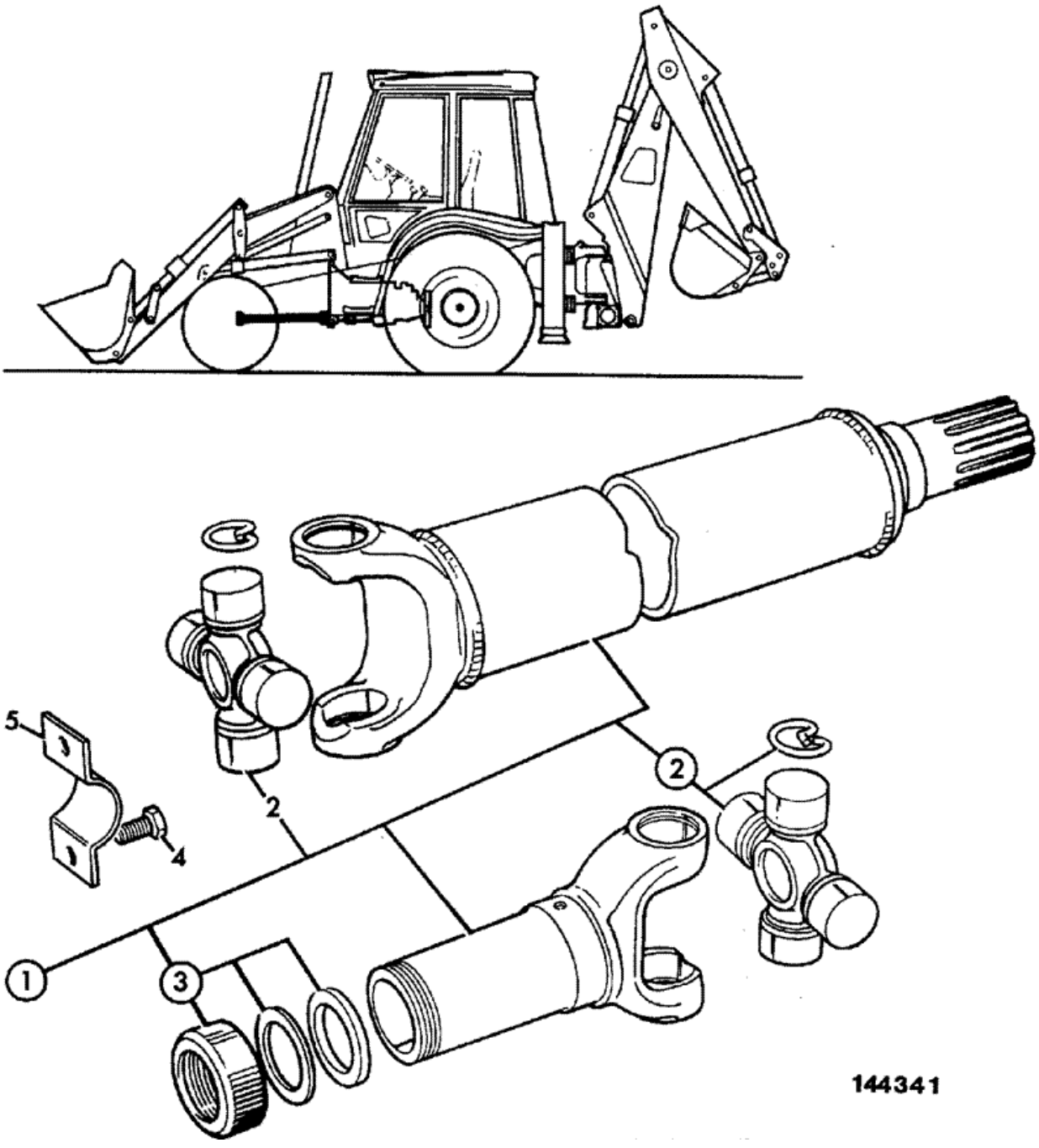

Item	Part #	Change No	Description	Usage Code	QTY
1	914/60181		Propshaft front		1
2	:914/56401		Kit-spider 106.4 X 34.9 Dia		2
2A	::816/13275		Nipple grease		1
3	:914/35403		Kit-end cap		1
4	826/00892		Screw special 3/8UNF X 3/4		8
5	116/00525		Strap		4

Product Catalog \ CONSTRUCTION \ NORTH AMERICA \ CONSTRUCTION / INDUSTRIAL \ BACKHOE LOADER 3CX,4CX,214,215,217 \ 3C PLUS (91HP) , Made in Brazil with Dieselmax/IESA Engine 9812/0080 \ F AXLES, WHEELS & TRANSMISSION \ F03 WHEELS, TYRES & PROPSHAFTS

9812/0080 F3-2-1 PROPSHAFT, TRANS. / REAR AXLE, SYNCROSHUTTLE

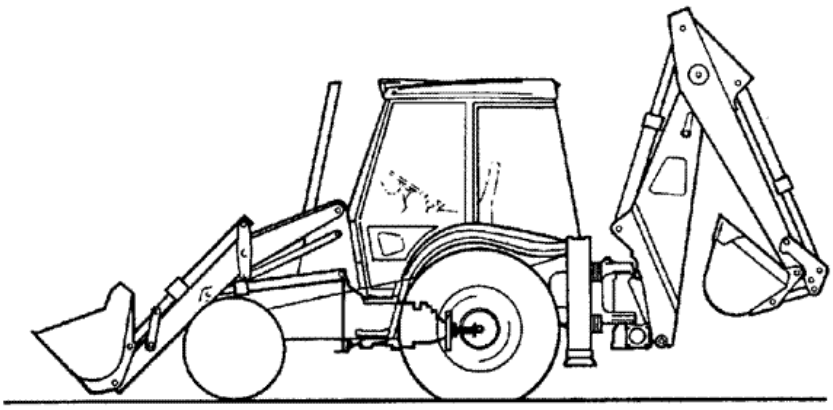

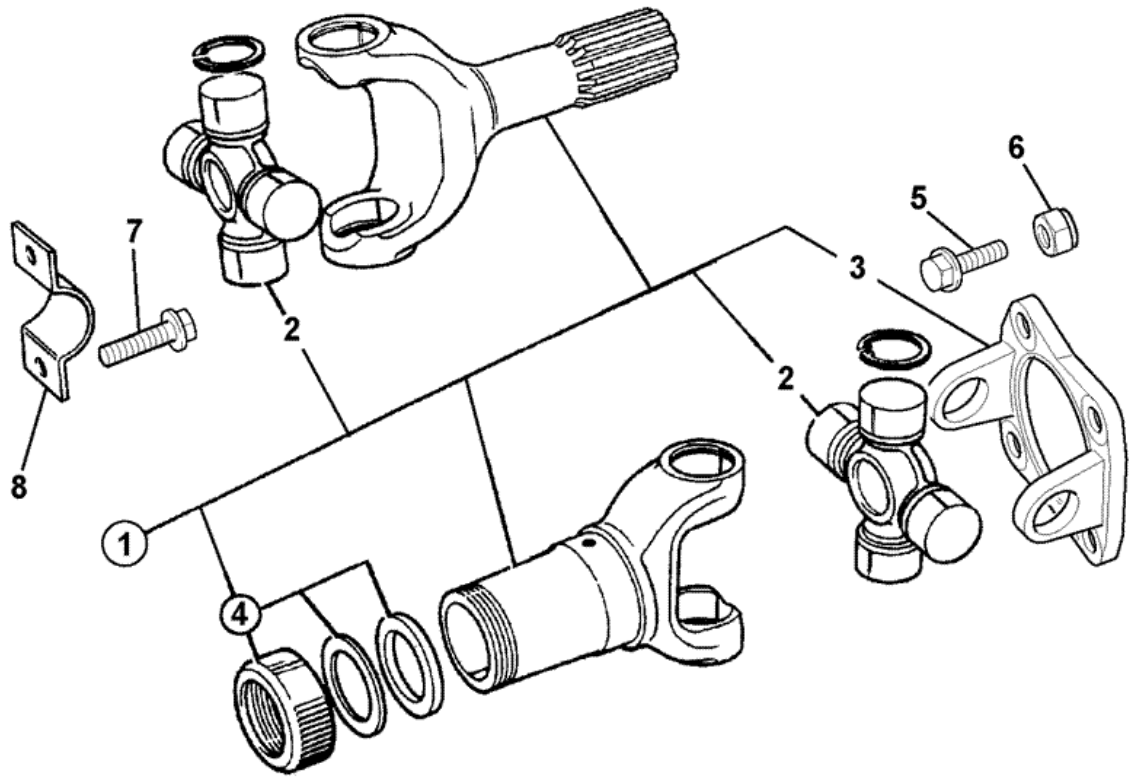

Item	Part #	Change No	Description	Usage Code	QTY
			Propshaft rear		

1	914/60265		*JCB 444 engine*		1
1	914/60187		Propshaft rear see TI 2/422 *International engine*		1
2	:914/56401		Kit-spider 106.4 X 34.9 Dia		2
2A	::816/13275		Nipple grease		1
3	NSP		None serviced part		1
4	:914/39702		Cap dust		1
5	1305/0410Z		Bolt 1/2" x 1.1/2" long		4
6	1340/0403Z		Nut		4
7	826/00892		Screw special 3/8UNF X 3/4		4
8	116/00525		Strap		2

Product Catalog \ CONSTRUCTION \ NORTH AMERICA \ CONSTRUCTION / INDUSTRIAL \ BACKHOE LOADER 3CX,4CX,214,215,217 \ 3C PLUS (91HP) , Made in Brazil with Dieselmax/IESA Engine 9812/0080 \ F AXLES, WHEELS & TRANSMISSION \ F03 WHEELS, TYRES & PROPSHAFTS

9812/0080 F3-4-1 WHEEL & TYRE, FRONT 2WS 4WD, 14X17.5

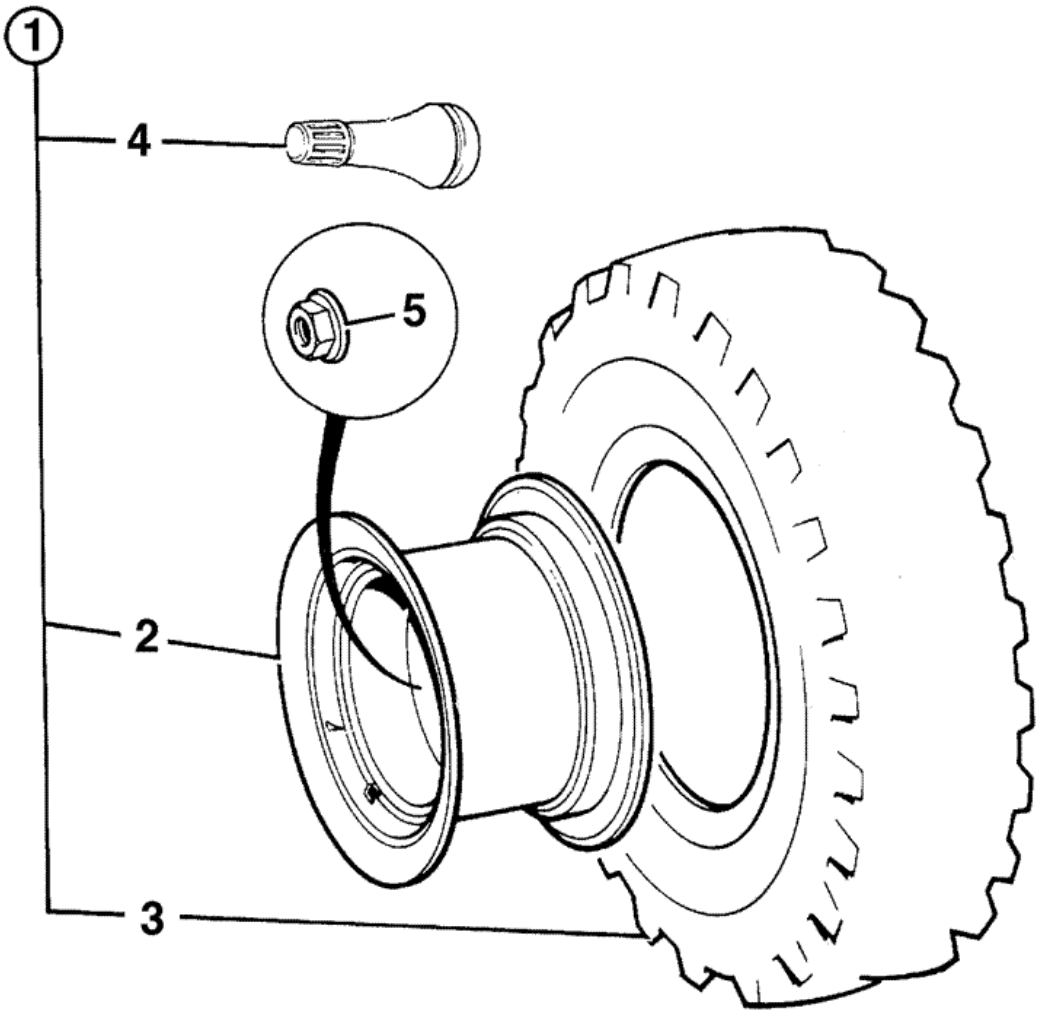

245482

Item	Part #	Change No	Description	Usage Code	QTY
1	126/01306		Wheel & tyre assembly Armstrong 14x17.5x10	A	2

1	126/01688		Wheel & tyre assy Goodyear 14x17.5x10 ply IND	B	2
2	:41/925200		Wheel 10.5x17.5		1
3	:42/914300		Tyre 14x17.5x10pr Armstrong	A	1
3	:42/406100		Tyre Goodyear tubeless	B	1
4	:123/05041		Valve tyre flexible (Tubeless)		1
5	106/40001		Nut		10

Product Catalog \ CONSTRUCTION \ NORTH AMERICA \ CONSTRUCTION / INDUSTRIAL \ BACKHOE LOADER 3CX,4CX,214,215,217 \ 3C PLUS (91HP) , Made in Brazil with Dieselmax/IESA Engine 9812/0080 \ F AXLES, WHEELS & TRANSMISSION \ F03 WHEELS, TYRES & PROPSHAFTS

9812/0080 F3-5-2 WHEEL & TYRE, REAR 2WS 19.5LX24

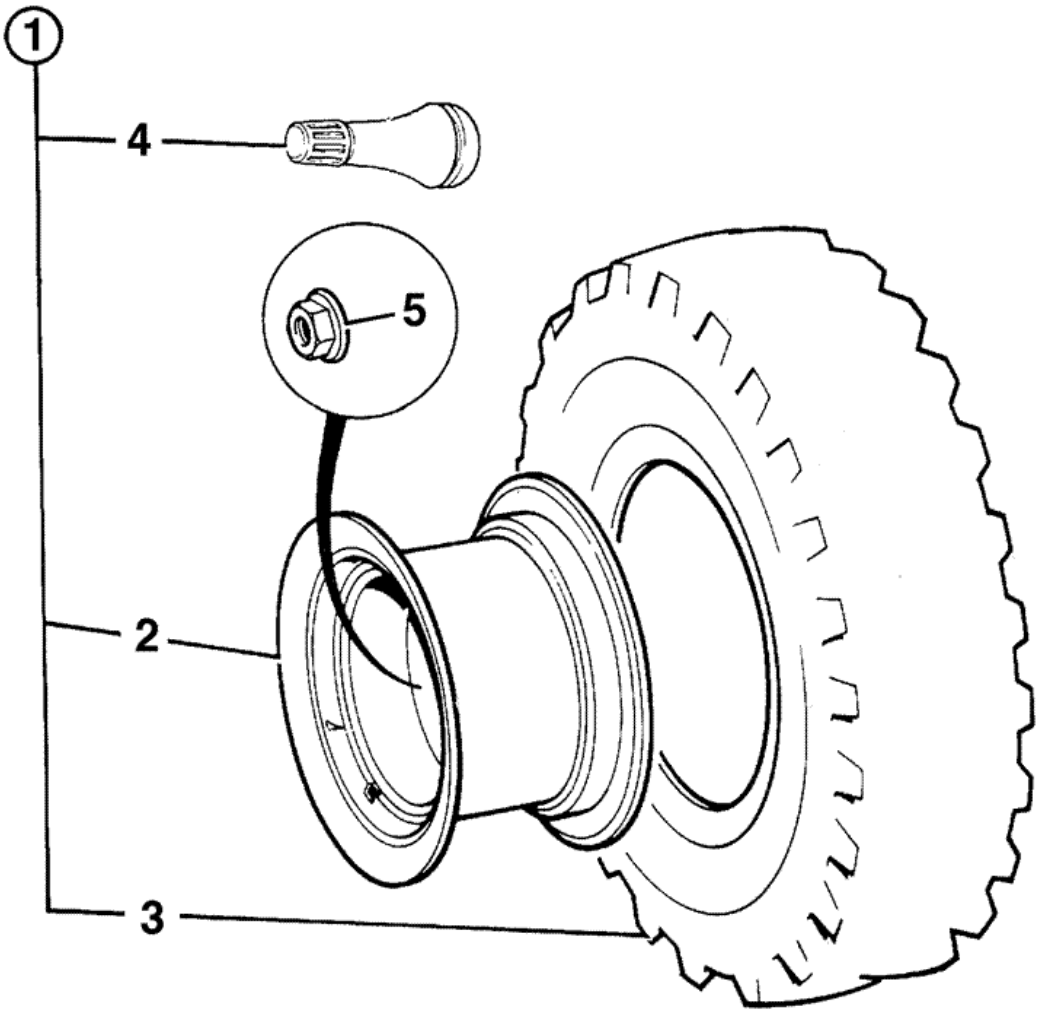

245482

Item	Part #	Change No	Description	Usage Code	QTY
1	126/00146		Wheel & tyre. Armstrong 19.5Lx24x10pr	A	2
1	126/00147		Wheel & tyre. Armstrong 19.5Lx24x12pr	B	2

1	126/02367		Wheel & tyre assembly IND 19.5Lx24x12 Goodyear	C	2
2	:41/910000		Rim wheel 19,5Lx24		1
3	:42/914800		Tyre 19.5Lx24x10pr Armstrong	A	1
3	:42/914900		Tyre 19.5Lx24x12pr Armstrong	B	1
3	:42/413400		Tyre 19.5lX24x12 Goodyear industrial	C	1
4	:151/05201		Valve		1
5	:106/40001		Nut		10

Product Catalog \ CONSTRUCTION \ NORTH AMERICA \ CONSTRUCTION / INDUSTRIAL \ BACKHOE LOADER 3CX,4CX,214,215,217 \ 3C PLUS (91HP) , Made in Brazil with Dieselmax/IESA Engine 9812/0080 \ F AXLES, WHEELS & TRANSMISSION \ F05 TRANSMISSIONS SYNCHROSHUTTLE

9812/0080 F5-0-1 MOUNTING BRACKET, SYNCROSHUTTLE, INTERNATIONAL ENGINE

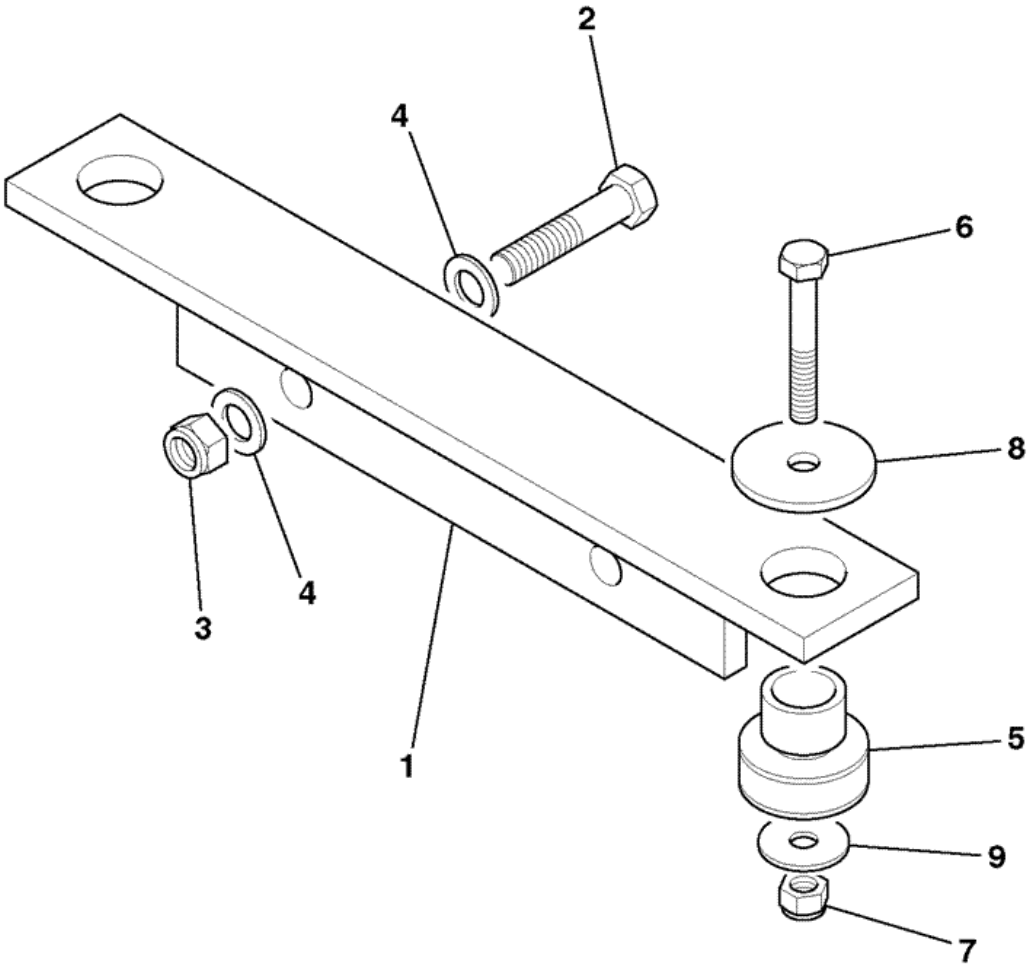

903050

Item	Part #	Change No	Description	Usage Code	QTY
1	335/13944		Bracket gearbox mounting		1

2	1315/3717Z		Bolt M16 x 75mm		2
3	1370/0603Z		Nut M16		2
4	1420/0011Z		Washer M16 plain		2
5	123/03138		Mounting rubber		2
6	1315/3518Z		Bolt M12 x 80mm		2
7	1370/0403Z		Nut M12		2
8	123/02453		Washer rebound		2
9	823/00531		Washer		2

Product Catalog \ CONSTRUCTION \ NORTH AMERICA \ CONSTRUCTION / INDUSTRIAL \ BACKHOE LOADER 3CX,4CX,214,215,217 \ 3C PLUS (91HP) , Made in Brazil with Dieselmax/IESA Engine 9812/0080 \ F AXLES, WHEELS & TRANSMISSION \ F05 TRANSMISSIONS SYNCHROSHUTTLE

9812/0080 F5-0-3 MOUNTING BRACKET, SYNCROSHUTTLE, JCB DIESELMAX ENGINE

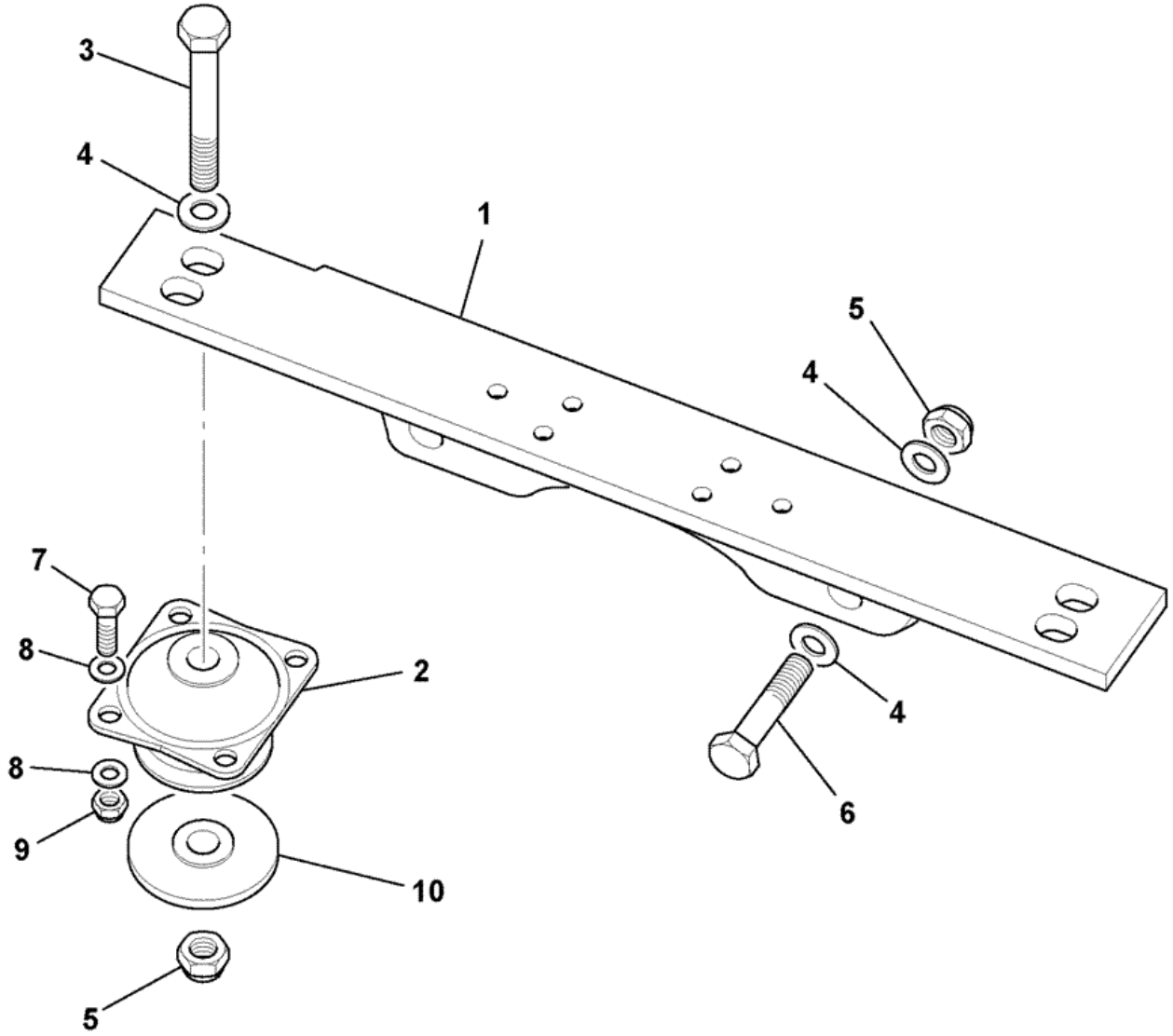

788610

Item	Part #	Change No	Description	Usage Code	QTY
1	335/11254		Bracket gearbox mounting		1

2	331/40347		Mounting resilient		2
3	1315/3722Z		Bolt M16 x 120		2
4	1420/0011Z		Washer M16 plain		6
5	1370/0603Z		Nut M16		4
6	1315/3717Z		Bolt M16 x 75mm		2
7	1315/3409Z		Bolt M10 x 35		8
8	1420/0008Z		Washer Plain M10		16
9	1370/0303Z		Nut lock M10		8
10	829/31272		Washer rebound 16x75x8		2

Product Catalog \ CONSTRUCTION \ NORTH AMERICA \ CONSTRUCTION / INDUSTRIAL \ BACKHOE LOADER 3CX,4CX,214,215,217 \ 3C PLUS (91HP) , Made in Brazil with Dieselmax/IESA Engine 9812/0080 \ F AXLES, WHEELS & TRANSMISSION \ F05 TRANSMISSIONS SYNCHROSHUTTLE

9812/0080 F5-0-5 MOUNTING, TRANSMISSION, TO JCB DIESELMAX ENGINE

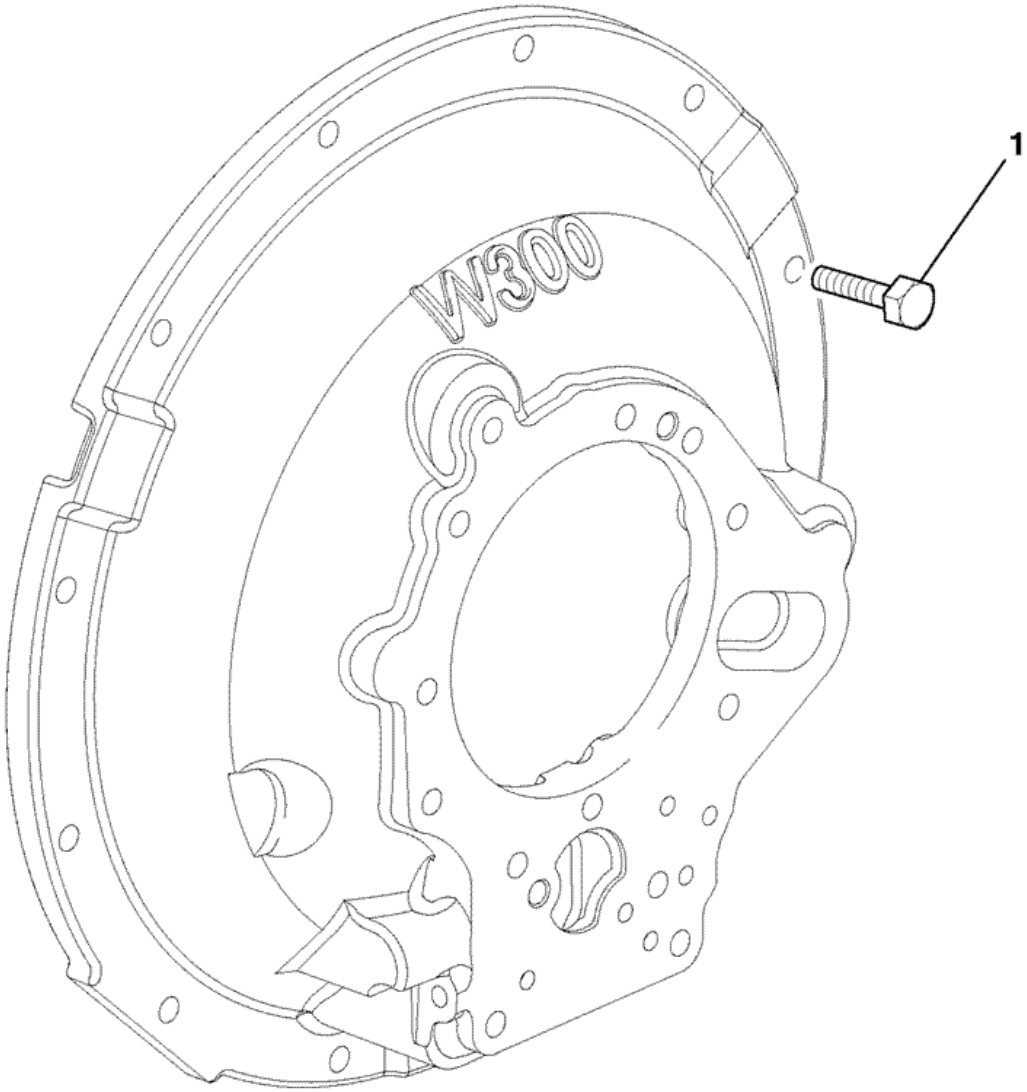

774840

Item	Part #	Change No	Description	Usage Code	QTY
1	1315/0409Z		Screw M10x35mm		12

Product Catalog \ CONSTRUCTION \ NORTH AMERICA \ CONSTRUCTION / INDUSTRIAL \ BACKHOE LOADER 3CX,4CX,214,215,217 \ 3C PLUS (91HP) , Made in Brazil with Dieselmax/IESA Engine 9812/0080 \ F AXLES, WHEELS & TRANSMISSION \ F05 TRANSMISSIONS SYNCHROSHUTTLE

9812/0080 F5-3-1 441/00500 - 4WD, TRANSMISSION ASSY, SYNCROSHUTTLE, INTERNATIONAL ENGINE

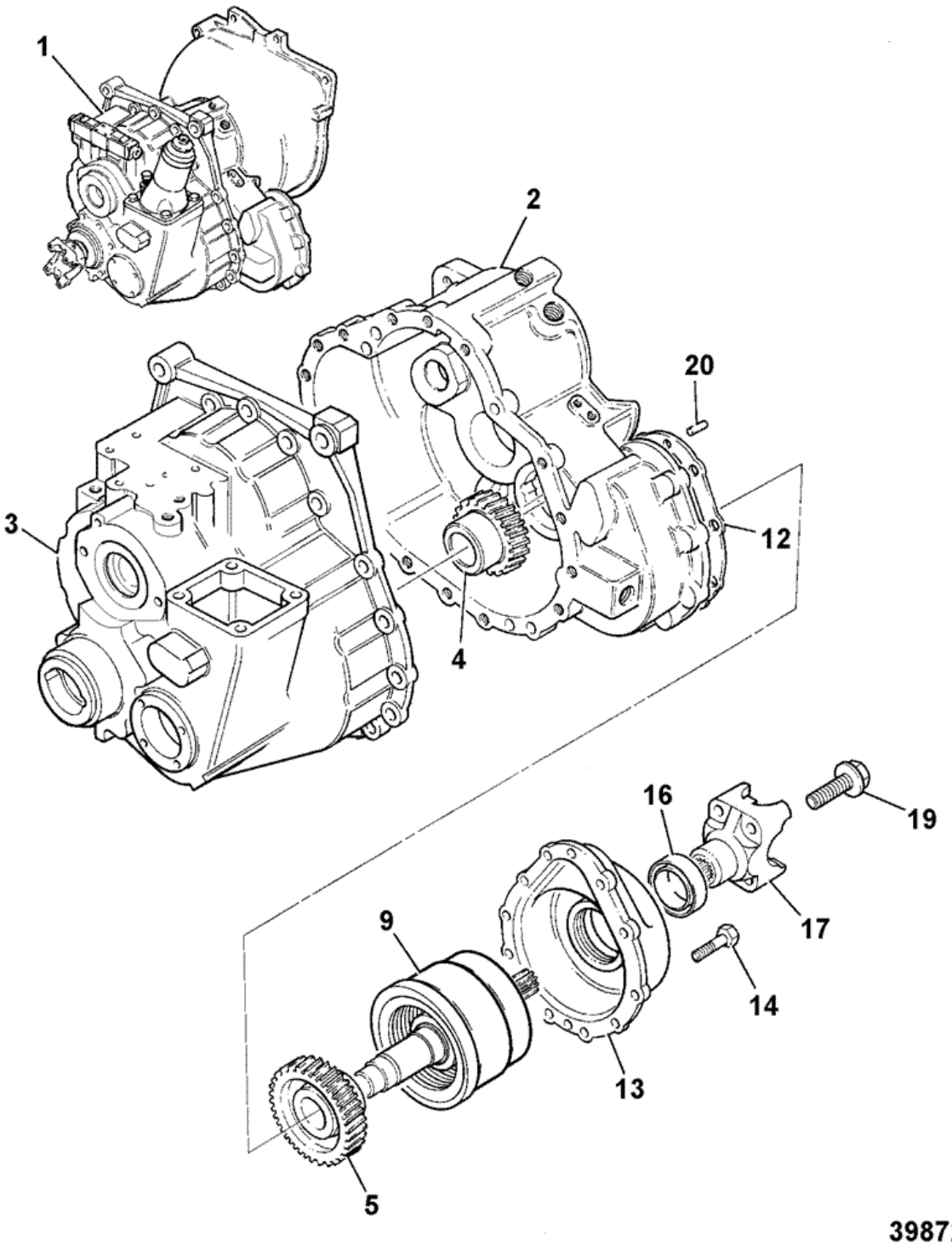

Item	Part #	Change No	Description	Usage Code	QTY
1	441/00500		Gearbox assembly, SS700 4WD, 1:1.446		1

2	:459/30382		Casing front		1
3	:459/30272		Casing rear SS700 4WD		1
3	:459/M2870	>G/00500/8	Casing rear		1
4	:459/50577		Gear input 22 teeth		1
5	:459/50702		Gear output 34 teeth		1
9	:459/10119		Clutch assembly 4WD *For components see frame F5-3-40*		1
12	:813/50048		Gasket		1
13	:459/30284		Cover 4WD		1
14	:826/01417		Bolt		10
16	:904/20172		Seal TRIPLE LIP 53.6 x 80.35 x 12		1
17	:459/70133		Yoke coupling, 1480		1
19	:826/01553		Bolt Setscrew		1
20	:445/14001		Dowel		2

Product Catalog \ CONSTRUCTION \ NORTH AMERICA \ CONSTRUCTION / INDUSTRIAL \ BACKHOE LOADER 3CX,4CX,214,215,217 \ 3C PLUS (91HP) , Made in Brazil with Dieselmax/IESA Engine 9812/0080 \ F AXLES, WHEELS & TRANSMISSION \ F05 TRANSMISSIONS SYNCHROSHUTTLE

9812/0080 F5-4-1 441/00760 - 4WD, TRANSMISSION ASSY, SYNCROSHUTTLE, JCB DIESELMAX ENGINE

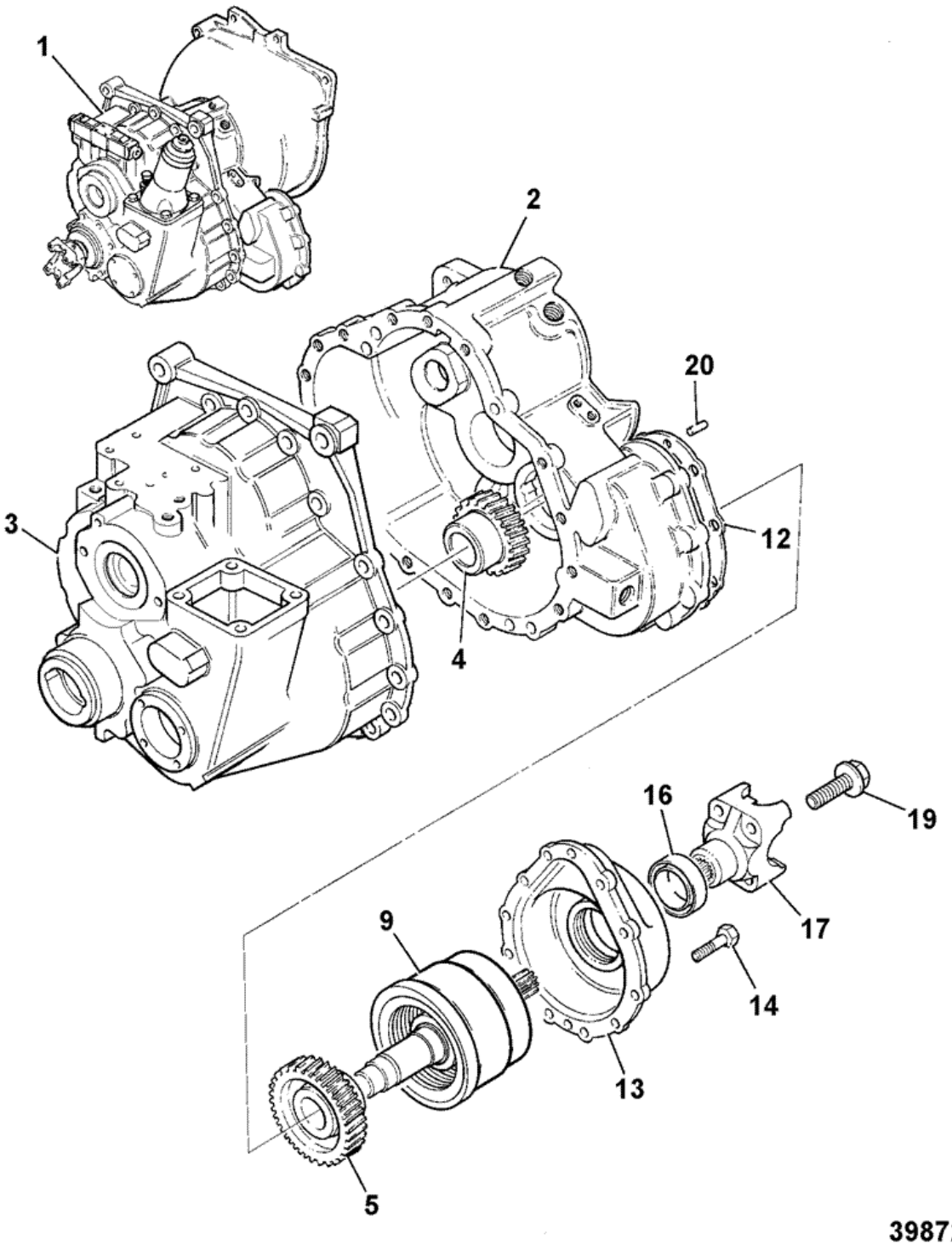

Item	Part #	Change No	Description	Usage Code	QTY
1	441/00760		Gearbox assembly, 4WD 22/34 drop gears		1

2	:459/30382	<G/00760/1	Casing front		1
2	:459/30463	>G/00760/2	Casing front		1
3	:459/30272	<G/00760/1	Casing rear SS700 4WD		1
3	:459/30435	>G/00760/2	Casing rear		1
3	:459/M2870	>G/00760/7	Casing rear		1
4	:459/50577		Gear input 22 teeth		1
5	:459/50702		Gear output 34 teeth		1
9	:459/10119		Clutch assembly 4WD *For components see frame F5-3-40*		1
12	:813/50048		Gasket		1
13	:459/30451		Cover 4WD clutch		1
14	:826/01417		Bolt		10
16	:904/20172		Seal TRIPLE LIP 53.6 x 80.35 x 12		1
17	:459/70133		Yoke coupling, 1480		1
19	:826/01553		Bolt Setscrew		1
20	:445/14001		Dowel		2

Product Catalog \ CONSTRUCTION \ NORTH AMERICA \ CONSTRUCTION / INDUSTRIAL \ BACKHOE LOADER 3CX,4CX,214,215,217 \ 3C PLUS (91HP) , Made in Brazil with Dieselmax/IESA Engine 9812/0080 \ F AXLES, WHEELS & TRANSMISSION \ F05 TRANSMISSIONS SYNCHROSHUTTLE

9812/0080 F5-9-1 441/M1218 - 4WD-2WS, TRANSMISSION ASSY, SYNCROSHUTTLE

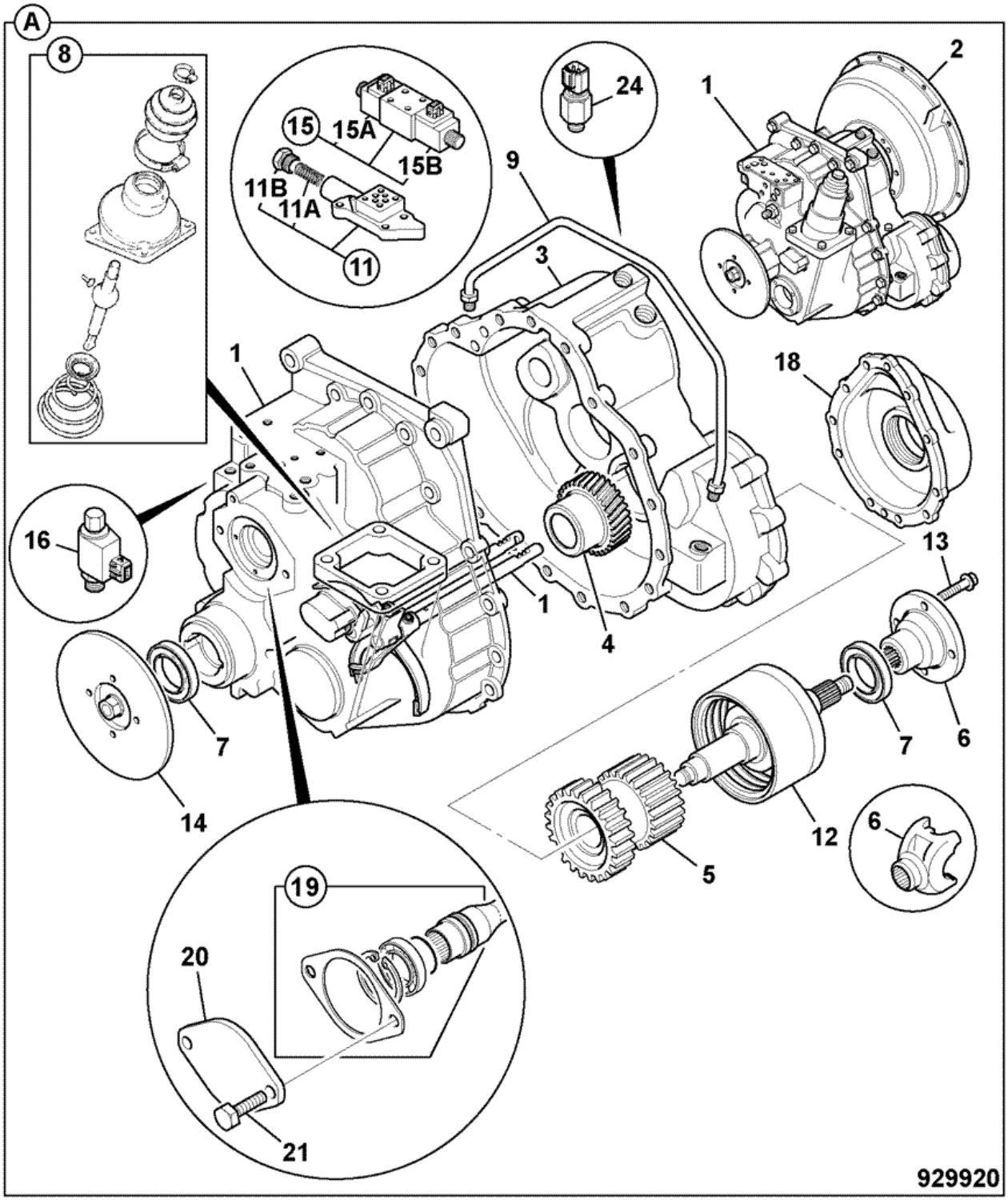

Item	Part #	Change No	Description	Usage Code	QTY
A	441/M1218		Gearbox assembly, 4WD-2WS 22/35 drop gears		1

1	:441/00230		Gearbox common components 4WD *see F5-9-11 for breakdown*		1
2	:459/30464		Housing flywheel		1
3	:459/30463		Casing front		1
4	:459/50567		Gear input, 22 teeth		1
5	:459/50568		Gear output, 35 teeth		1
6	:459/70133		Yoke coupling, 1480		1
7	:904/20172		Seal TRIPLE LIP 53.6 x 80.35 x 12		2
8	:459/10143		Lever assembly gear turret *see F5-9-31 for breakdown*		1
9	:830/11842		Pipe assembly 4WD		1
11	:459/10144		Valve Adapter block assy SS700 low ratio		1
12	:459/10119		Clutch assembly 4WD *see F5-9-41 for breakdown*		1
13	:826/01553		Bolt Setscrew		1
14	:459/70317		Yoke coupling - 1480 35 t		1
15	:25/220998		Valve solenoid assembly		1
16	:25/220804	<G/M1218/4	Valve solenoid assembly		1
16	:25/222913	>G/M1218/5	Valve cartridge 2 screw fixing		1
16A	:459/M2855	<G/M1218/4	Plate hold down 6mm thick *to hold 25/220804*		1
16B	:1391/3303Z	<G/M1218/4	Capscrew M8x16 *to hold 25/220804*		1
16C	:1391/3101Z	>G/M1218/5	Capscrew *to hold 25/222913*		2
18	:459/30451		Cover 4WD clutch		1
19	:459/10151		Assembly pump shaft *see F5-9-51 for breakdown*		1
20	:459/70283		Plate blanking		1
21	:1315/0503Z		Bolt		2
24	:701/80626		Switch oil pressure M12		1

Product Catalog \ CONSTRUCTION \ NORTH AMERICA \ CONSTRUCTION / INDUSTRIAL \ BACKHOE LOADER 3CX,4CX,214,215,217 \ 3C PLUS (91HP) , Made in Brazil with Dieselmax/IESA Engine 9812/0080 \ F AXLES, WHEELS & TRANSMISSION \ F01 AXLES, FRONT

9812/0080 F1-10-1 AXLE ASSEMBLY, 2WS 2WD STEER AXLE

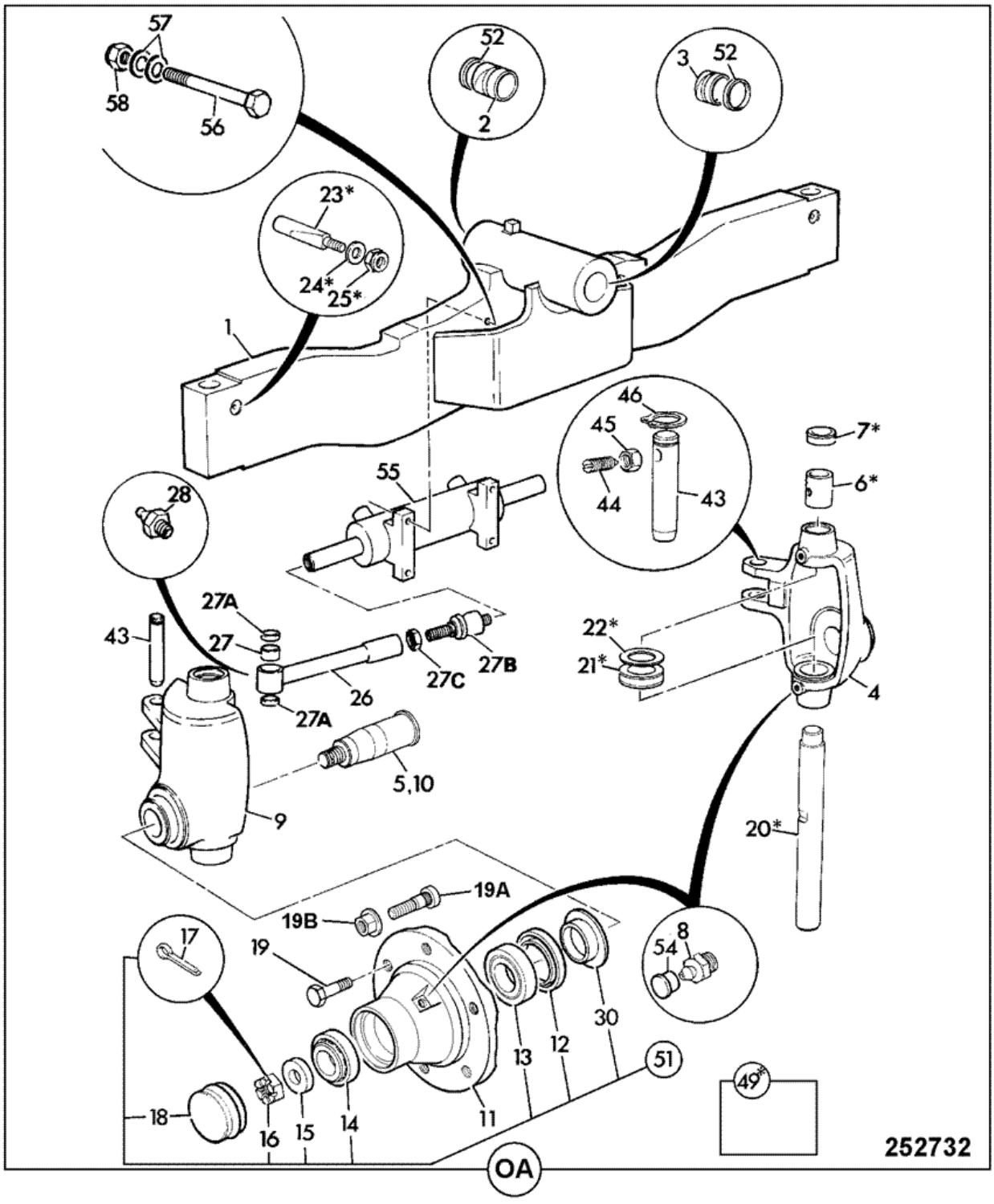

Item	Part #	Change No	Description	Usage Code	QTY
1	:125/89700		Beam 2wd axle		1

2	:829/00548		Bush		1
3	:829/00548		Bush		1
4	:123/05460		Carrier left hand		1
5	:120/30003		Axle stub		1
6	::808/00176		Bush		4
7	::904/07100		Seal		4
8	:816/60056		Nipple grease		6
9	:123/05461		Carrier right hand		1
10	:120/30003		Axle stub		1
11	:458/20501		Hub wheel		2
12	::904/06200		Seal oil		2
13	::907/04100		Bearing		2
14	::907/05700		Bearing		2
15	::458/20541		Washer thrust slab axle		2
16	::1340/0905Z		Nut		1
17	::2103/1112		Pin split		1
18	::120/30009		Cap grease		1
19A	826/00923		Stud wheel		12
19B	826/01008		Nut wheel		12
20	::120/30001		Pin king		2
21	::907/05800		Bearing thrust		2
22	::921/00807		Shim 0.5		0
22	::921/00801		Shim 0.6		0
22	::921/00802		Shim 0.7		0
22	::921/00803		Shim 0.8		0
22	::921/00804		Shim 0.9		0
22	::921/00805		Shim 1.0		0
23	::120/30002		Pin cotter		2
24	::1420/0008Z		Washer Plain M10		2
25	::1370/0303Z		Nut lock M10		2
26	:331/14862		Link steer arm		2
27	:808/00253		Bush 33mm long 30mm OD X 25mm ID		2
27A	:904/09300		Seal oil		4
27B	:331/14861		Joint ball track rod		2
27C	:458/80026		Nut lock nut		2
28	:1450/0001		Nipple grease, straight 1/8 BSP		2
30	::904/06201		Sleeve		2
43	:811/70012		Pin pivot *Track rod*		2
44	:1390/0408		Screw		4
45	:1370/0301Z		Nut		4
46	:2203/0035		Circlip		4
49	:990/99600		Kit-king pin *Includes items 6,7,20 to 25*		2
51	:993/03300		Kit-bearing wheel		2
52	:813/00426		Seal pivot pin grease 60 x 50 x 5		2
54	:835/00017		Cap grease nipple		2
55	:.		'See Remark' *Steer ram see frame E4*		1
56	:1315/3721Z		Bolt M16 x 110		4
57	:1420/0011Z		Washer M16 plain		4
58	:1370/0603Z		Nut M16		4

Product Catalog \ CONSTRUCTION \ NORTH AMERICA \ CONSTRUCTION / INDUSTRIAL \ BACKHOE LOADER 3CX,4CX,214,215,217 \ 3C PLUS (91HP) , Made in Brazil with Dieselmax/IESA Engine 9812/0080 \ F AXLES, WHEELS & TRANSMISSION \ F01 AXLES, FRONT

9812/0080 F1-51-1 448/57990, 2WS, 4WD, STEER AXLE ASSY, 14.123:1

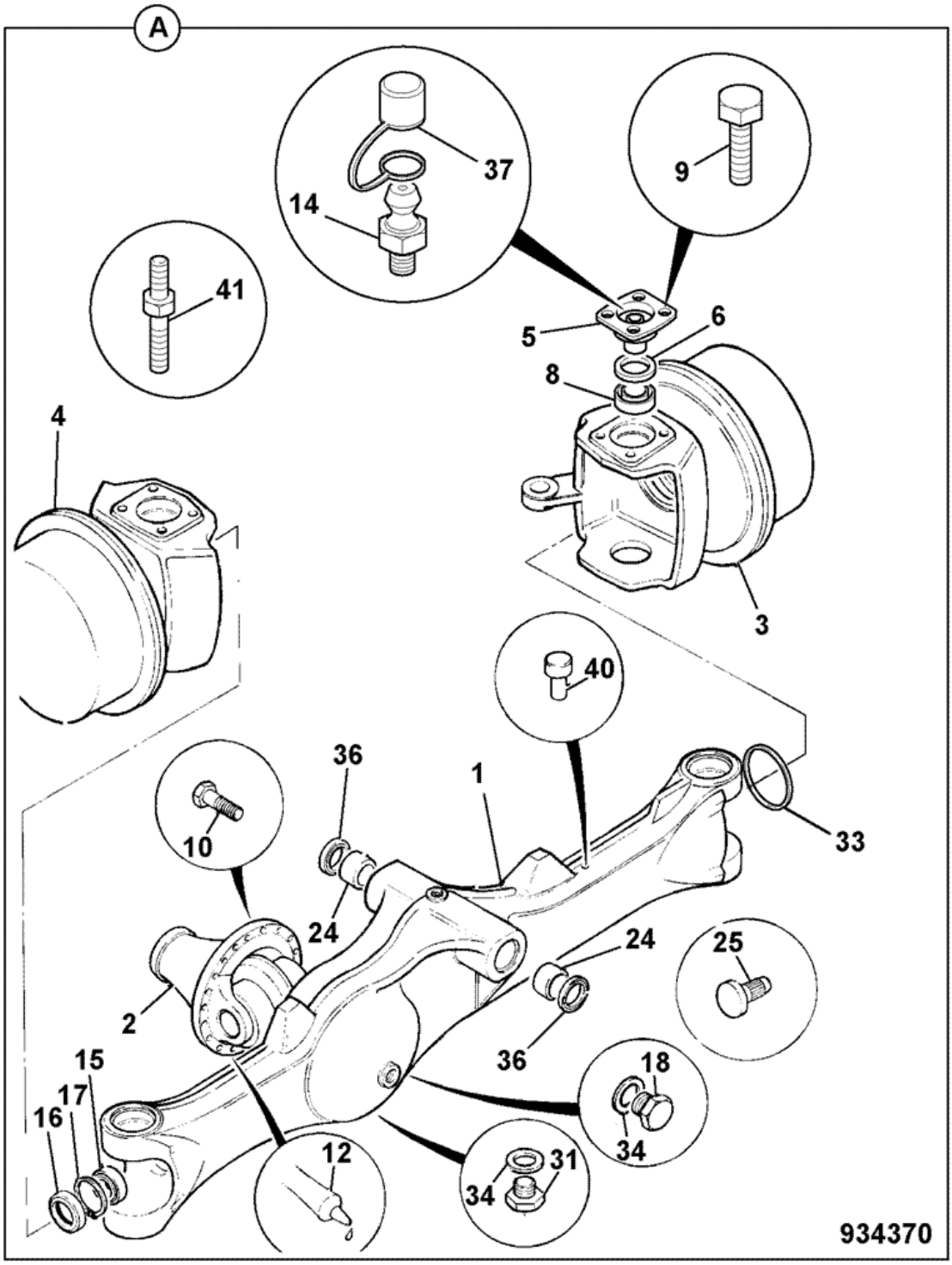

Item	Part #	Change No	Description	Usage Code	QTY
A	448/57990		Axle assembly pivot mount 14.123:1		1

1	:458/20744		Casing axle SD55		1
2	:.		'See Remark' *see F1-51-31 for breakdown*		1
3	:448/42600		Assembly wheel hub *see F1-51-11 for breakdown*		1
4	:448/42700		Assembly wheel hub. *see F1-51-21 for breakdown*		1
5	:458/20061		Trunnion		4
6	:904/06700		Seal		4
8	:907/08300		Bearing taper roller		4
9	:1321/0509		Screw		8
10	:826/01434		Bolt verbus ripp M10 x 35mm		12
12	:4102/1204		Sealant multi-gasket *As required*		1
14	:816/60056		Nipple grease		4
15	:907/08400		Bearing		2
16	:904/50040		Seal		2
17	:2203/1082		Circlip		2
18	:816/80037		Plug filler		1
24	:829/00548		Bush		2
31	:816/80012		Plug magnetic 3/4"BSP		1
33	:448/04802		Ring masking		2
34	:1406/0021		Seal bonded 3/4" BSP		2
36	:904/06500		Seal		2
37	:835/00017		Cap grease nipple		4
40	:448/56282		Breather spring type M10 x 1.5 thread		1
41	.		'See Remark' *not used on this assembly*		1

Product Catalog \ CONSTRUCTION \ NORTH AMERICA \ CONSTRUCTION / INDUSTRIAL \ BACKHOE LOADER 3CX,4CX,214,215,217 \ 3C PLUS (91HP) , Made in Brazil with Dieselmax/IESA Engine 9812/0080 \ F AXLES, WHEELS & TRANSMISSION \ F01 AXLES, FRONT

9812/0080 F1-6-10 KNUCKLE, 2WS 4WD STEER AXLE, 15.785:1 RATIO 448/57470

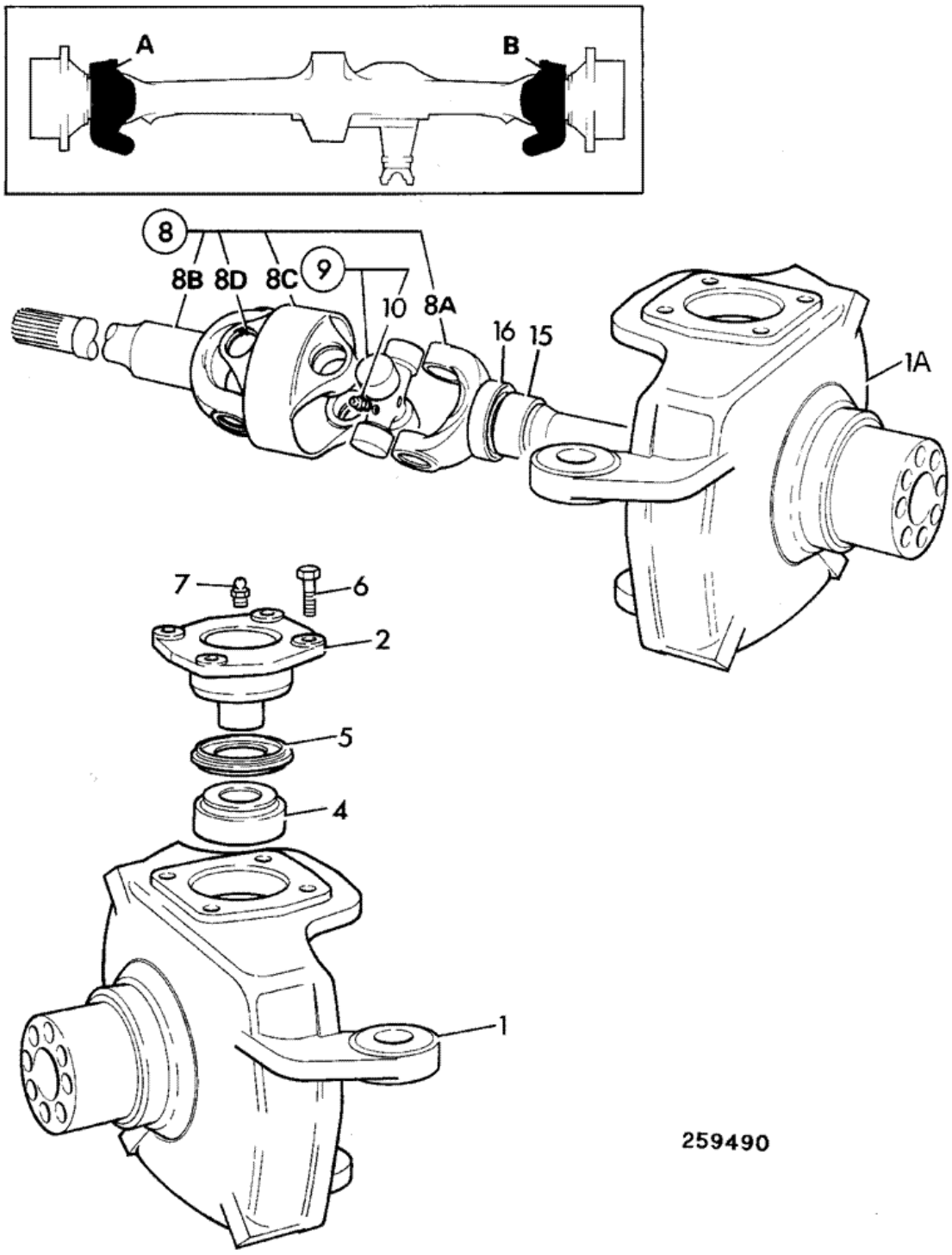

Item	Part #	Change No	Description	Usage Code	QTY
1	458/20404		Joint knuckle swivel 3CX, LOCKSTOP	A	1

1A	458/20405		Joint knuckle swivel 3CX, LOCKSTOP	B	1
2	448/42402		Trunnion		4
4	907/08300		Bearing taper roller		4
5	904/06700		Seal		4
6	1321/0509		Screw		16
7	816/60056		Nipple grease *Self Tapping type*		4
8	914/86200		Shaft drive assembly 1275mm long	A	1
8	914/86300		Shaft drive assembly 825mm long	B	1
8A	:914/86201		Shaft hub side	AB	1
8B	:914/86204		Shaft axle side 960.5mm long	A	1
8B	:914/86301		Shaft axle side 511.5mm long	B	1
8C	:914/86203		Spacer central	AB	1
8D	:914/83303		Circlip	AB	1
9	:914/86202		Kit-spider	AB	2
15	917/50200		Bearing		2
16	904/50047		Seal		2

Product Catalog \ CONSTRUCTION \ NORTH AMERICA \ CONSTRUCTION / INDUSTRIAL \ BACKHOE LOADER 3CX,4CX,214,215,217 \ 3C PLUS (91HP) , Made in Brazil with Dieselmax/IESA Engine 9812/0080 \ F AXLES, WHEELS & TRANSMISSION \ F01 AXLES, FRONT

9812/0080 F1-6-20 HUB & COMPONENTS, 2WS 4WD STEER AXLE, 15.785:1 RATIO 448/57470

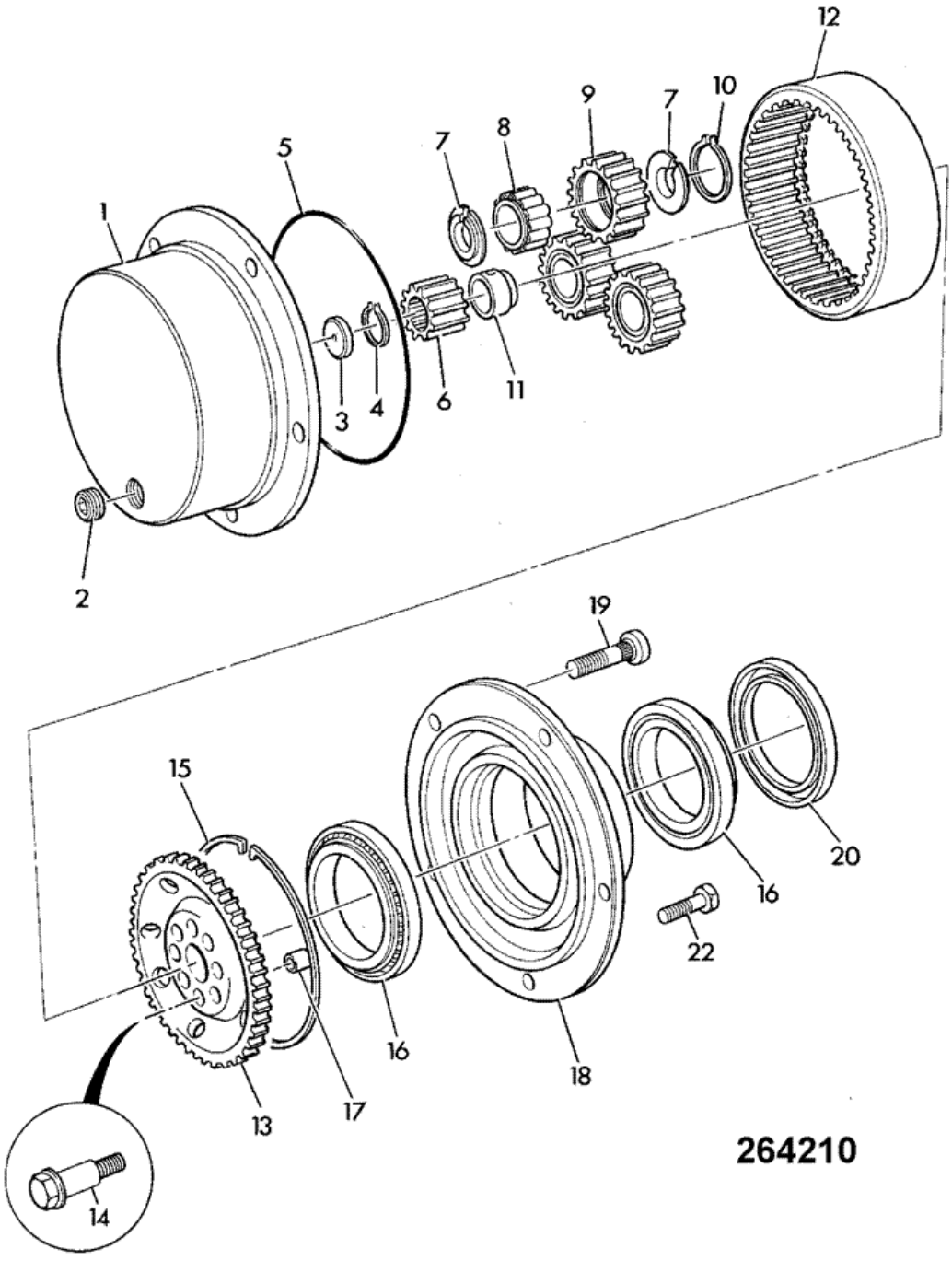

Item	Part #	Change No	Description	Usage Code	QTY
1	450/12401	Superseded	Carrier planetary hub		2

1	450/10216		Carrier planetary hub 5 stud		2
2	826/00425		Plug tapered 3/4"-14PTF		2
3	450/10208		Pad thrust		2
4	821/00216		Circlip external		2
5	828/00196		O Ring		2
6	450/12403		Gear sun		2
7	821/00209		Circlip		12
8	907/50200		Bearing roller, double row		6
9	450/10206		Gear planet		6
10	2203/0054		Circlip		6
11	921/50000		Spacer 32mm long		2
12	450/10205		Gear annulus ring		2
13	450/12702		Carrier annulus		1
14	826/01060		Bolt M14 x 70mm long		16
15	821/00210		Circlip internal square section		2
16	907/52200		Bearing		4
17	450/12703		Dowel hollow		16
18	450/10221		Hub without studs 5 stud		2
19	826/00923		Stud wheel		10
20	904/50033		Seal oil 127 x 160 x 15.5-17		2
22	1321/0407Z		Bolt coated		4

Product Catalog \ CONSTRUCTION \ NORTH AMERICA \ CONSTRUCTION / INDUSTRIAL \ BACKHOE LOADER 3CX,4CX,214,215,217 \ 3C PLUS (91HP) , Made in Brazil with Dieselmax/IESA Engine 9812/0080 \ F AXLES, WHEELS & TRANSMISSION \ F01 AXLES, FRONT

9812/0080 F1-6-30 DIFFERENTIAL, 2WS 4WD STEER AXLE, 15.785:1 RATIO 448/57470

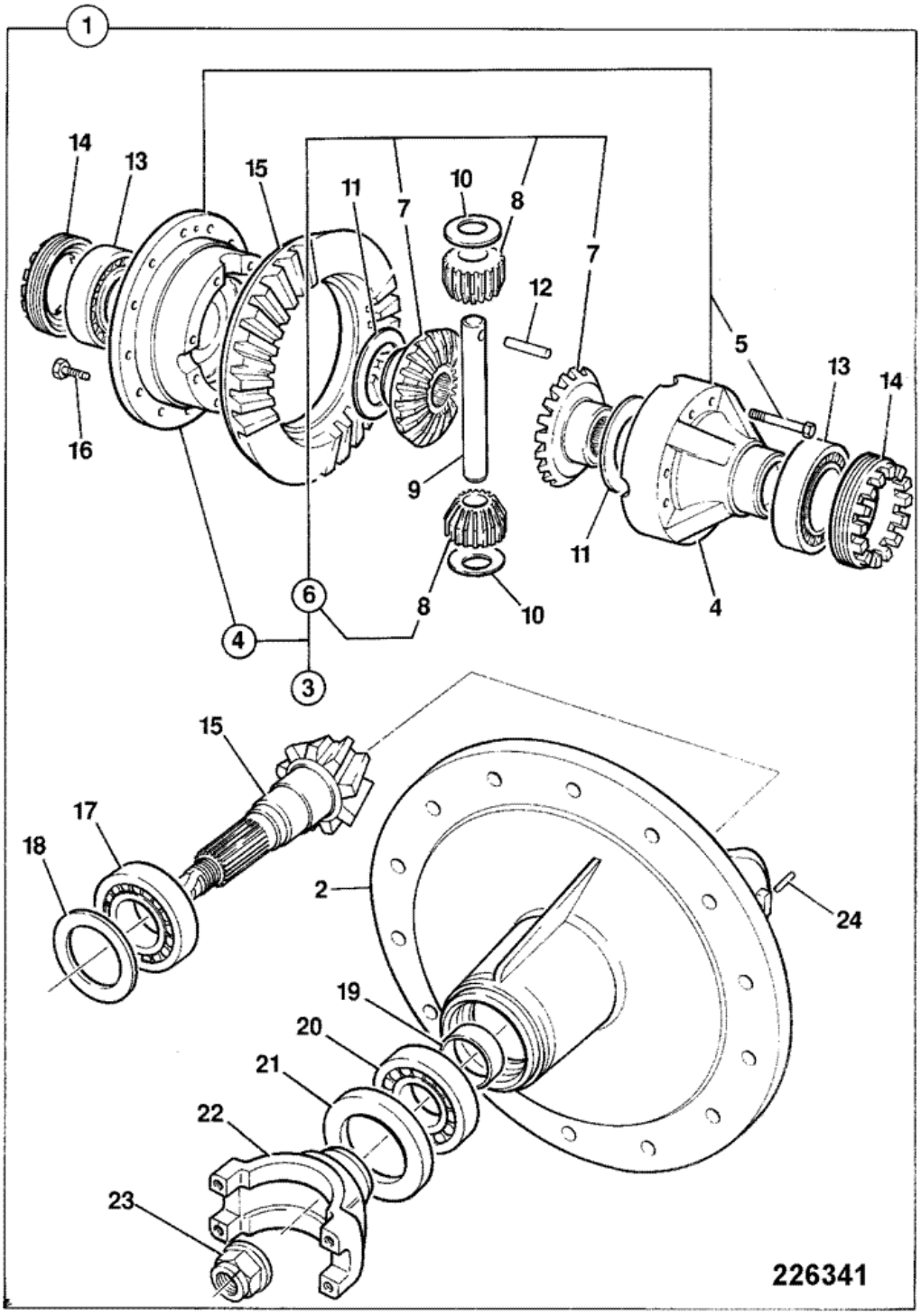

Item	Part #	Change No	Description	Usage Code	QTY
			Differential assembly 2.923:1 ratio		

1	458/10600	<A5747/7	*to axle 448/57470/7*	A	1
1	458/M1873	>A5747/8	Drivehead assembly *from axle 448/57470/8*	B	1
2	:448/15701		Casting drive head yellow		1
3	:448/36300		Differential assembly		1
4	::448/23500		Differential case		1
5	:::826/01585		Bolt		8
6	::448/36400		Kit-gear differential		1
7	:::NSP		None serviced part		2
8	:::NSP		None serviced part		2
9	::448/05408		Pin trunnion		1
10	::808/00210		Washer thrust pinion		2
11	::808/00209		Washer thrust side gear		2
12	::2102/0816		Pin tension		1
13	:907/09200		Bearing		2
14	:448/05405		Nut adjusting		2
15	:458/70189		Kit-gear c/wheel & pinion 38/13T NLA see TI GEN232	A	1
15	:458/M1350		Gear crownwheel & pinion 13/38 teeth	B	1
16	:826/01084		Bolt Verbus ripp M10 x 25mm long		12
17	:907/09000		Bearing		1
18	:921/01900		Kit-shim		0
19	:921/53300		Spacer		1
20	:907/09100		Bearing		1
21	:904/50023		Seal		1
22	:450/27200		Yoke	A	1
22	:458/20813		Yoke Coupling	B	1
23	:826/01483		Nut stake and washer M24	A	1
23	:826/01744		Nut stake M30	B	1
24	:826/00818		Pin tension		2

Product Catalog \ CONSTRUCTION \ NORTH AMERICA \ CONSTRUCTION / INDUSTRIAL \ BACKHOE LOADER 3CX,4CX,214,215,217 \ 3C PLUS (91HP) , Made in Brazil with Dieselmax/IESA Engine 9812/0080 \ F AXLES, WHEELS & TRANSMISSION \ F02 AXLES, REAR

9812/0080 F2-1-15 450/44790, PD70 PAD MOUNT AXLE, 15.78:1 REVERSE MAXTRAC, HAYES

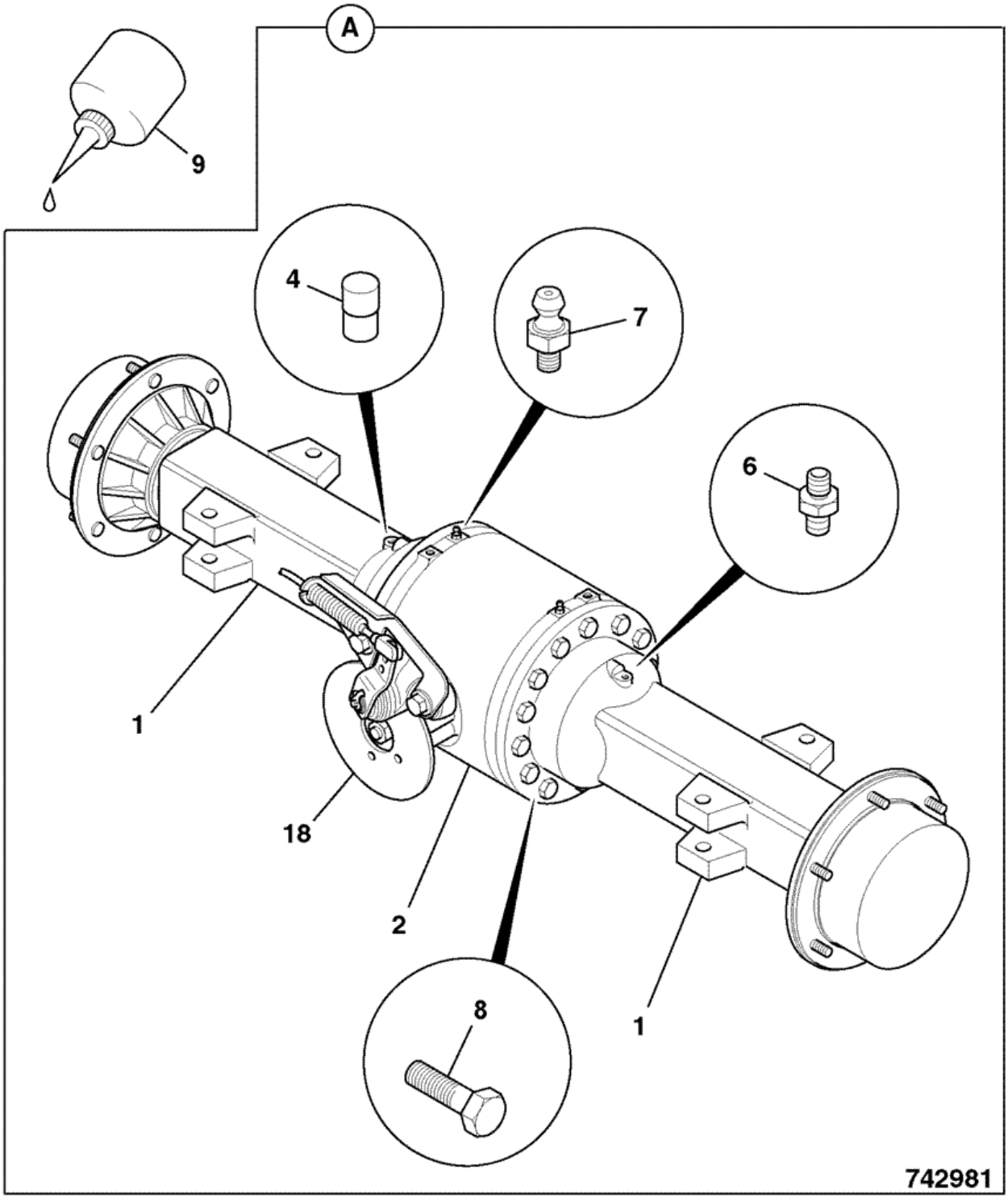

Item	Part #	Change No	Description	Usage Code	QTY
A	450/44790		Axle assy, PD70 pad mount 15.78:1		1

1	:458/10978		Arm axle arm and hub assembly		2
2	:458/11212		Drivehead assembly 2.923:1 *see index F2 for breakdown*		1
4	:450/13302		Plug breather		1
6	:458/20611		Adapter		1
7	:816/60040		Nipple bleed		2
8	:1321/3716		Bolt M16x70L		28
9	:4102/1212		Gasket Multigasket		0
18	.		'See Remark' *See index section G1 & F2*		1

Product Catalog \ CONSTRUCTION \ NORTH AMERICA \ CONSTRUCTION / INDUSTRIAL \ BACKHOE LOADER 3CX,4CX,214,215,217 \ 3C PLUS (91HP) , Made in Brazil with Dieselmax/IESA Engine 9812/0080 \ F AXLES, WHEELS & TRANSMISSION \ F02 AXLES, REAR

9812/0080 F2-1-16 450/44800, PD70 PAD MOUNT AXLE, 15.78:1 REVERSE LSD, HAYES

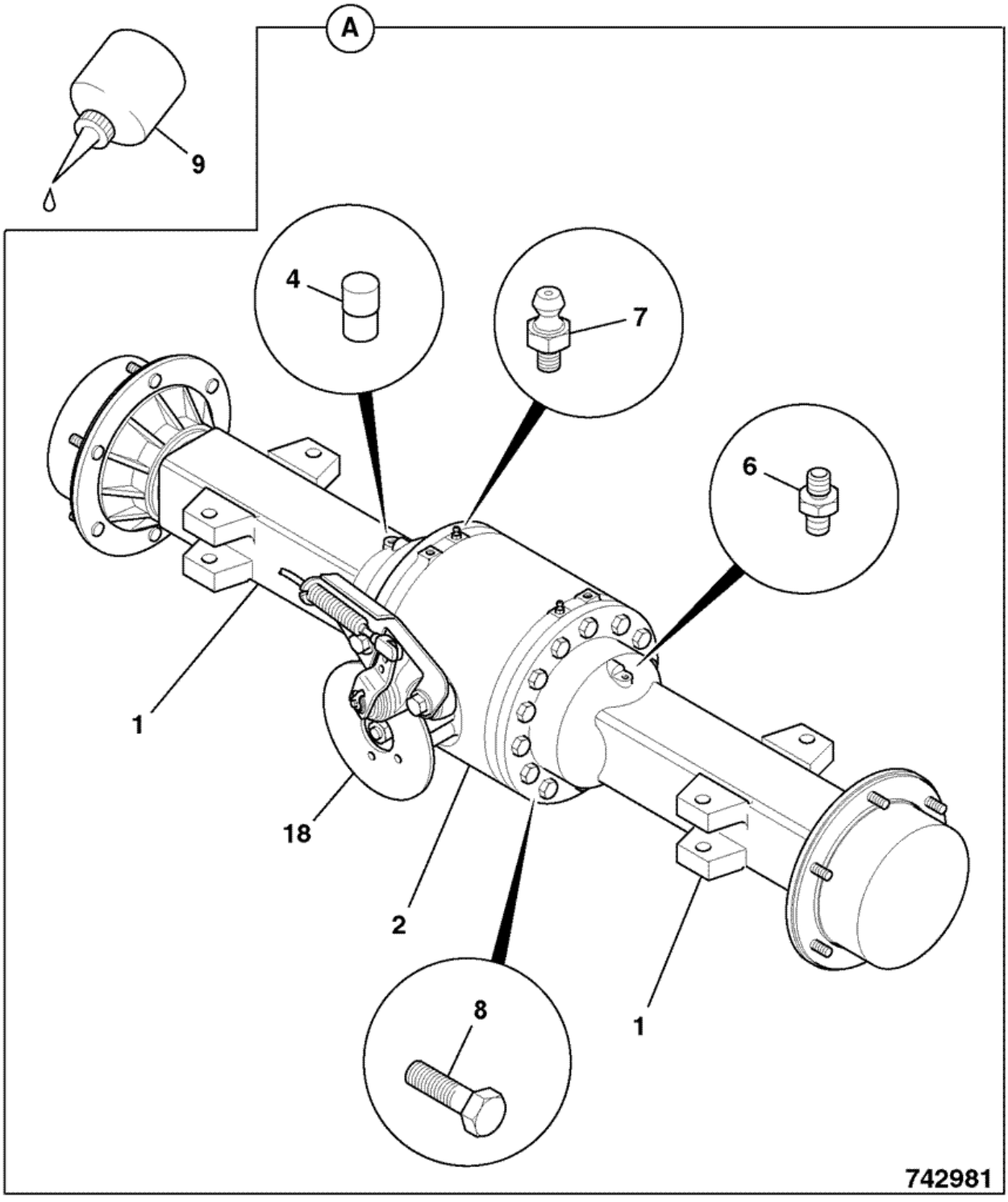

Item	Part #	Change No	Description	Usage Code	QTY
A	450/44800		Axle assy, PD70 pad mount 15.78:1		1

1	:458/10978		Arm axle arm and hub assembly		2
2	:458/11213		Drivehead assembly, pad mount 2.923:1 *see index F2 for breakdown*		1
4	:450/13302		Plug breather		1
6	:458/20611		Adapter		1
7	:816/60040		Nipple bleed		2
8	:1321/3716		Bolt M16x70L		28
9	:4102/1212		Gasket Multigasket		0
18	.		'See Remark' *See index section G1 & F2*		1

Product Catalog \ CONSTRUCTION \ NORTH AMERICA \ CONSTRUCTION / INDUSTRIAL \ BACKHOE LOADER 3CX,4CX,214,215,217 \ 3C PLUS (91HP) , Made in Brazil with Dieselmax/IESA Engine 9812/0080 \ F AXLES, WHEELS & TRANSMISSION \ F02 AXLES, REAR

9812/0080 F2-1-31 450/44840, PD70 PAD MOUNT AXLE, 13.708:1 REVERSE LSD, HAYES

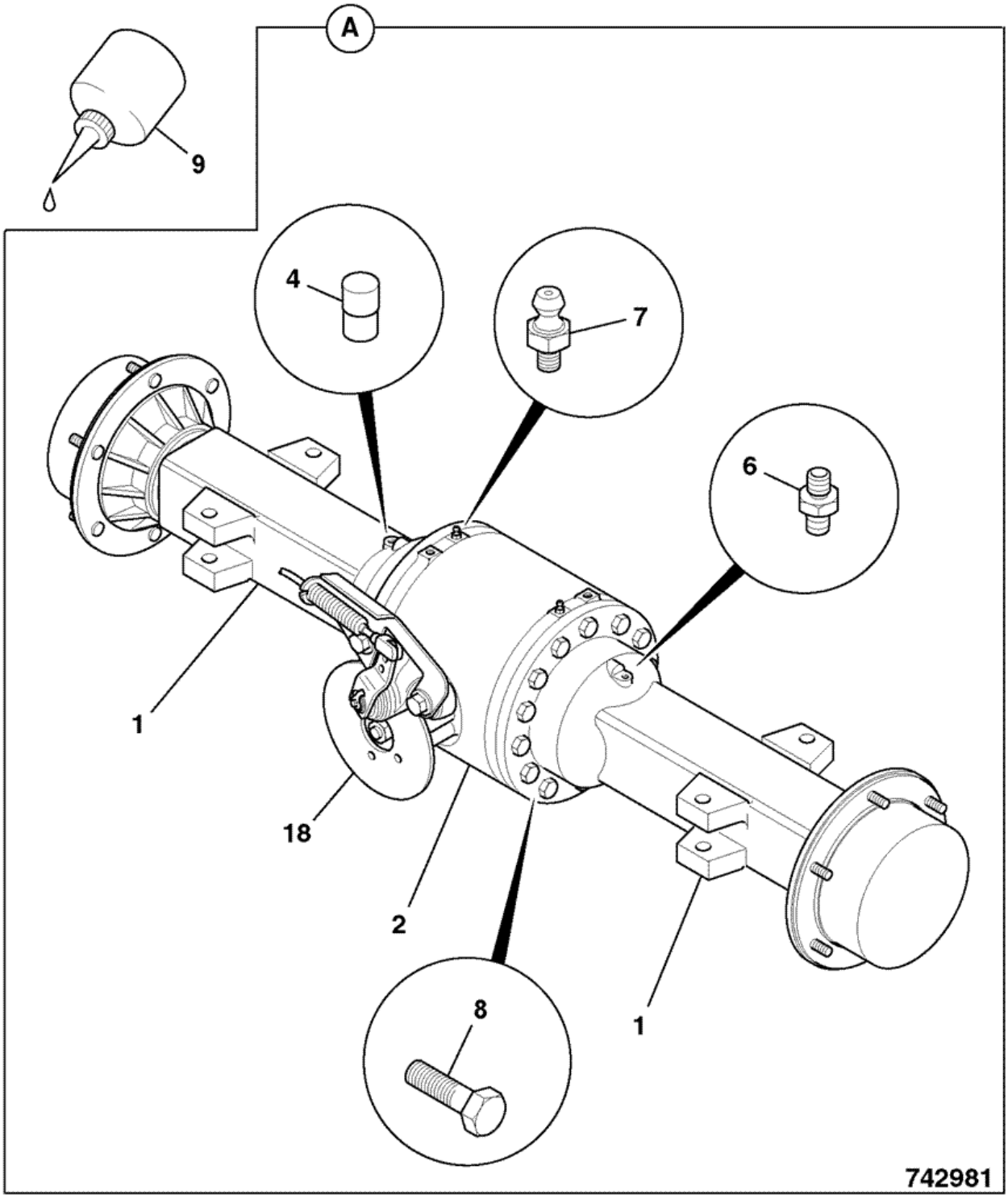

Item	Part #	Change No	Description	Usage Code	QTY
A	450/44840		Axle assy, pd70 pad mount 13.708:1		1

1	:458/10980		Arm axle arm and hub assembly		2
2	:458/11181		Drivehead assy, pad mount 2.538:1 *see index F2 for breakdown*		1
4	:450/13302		Plug breather		1
6	:458/20611		Adapter		1
7	:816/60040		Nipple bleed		2
8	:1321/3716		Bolt M16x70L		28
9	:4102/1212		Gasket Multigasket		0
18	.		'See Remark' *See index section G1 & F2*		1

Product Catalog \ CONSTRUCTION \ NORTH AMERICA \ CONSTRUCTION / INDUSTRIAL \ BACKHOE LOADER 3CX,4CX,214,215,217 \ 3C PLUS (91HP) , Made in Brazil with Dieselmax/IESA Engine 9812/0080 \ F AXLES, WHEELS & TRANSMISSION \ F02 AXLES, REAR

9812/0080 F2-1-32 450/44860, PD70 PAD MOUNT AXLE, 13.7:1 REVERSE MAXTRAC, HAYES

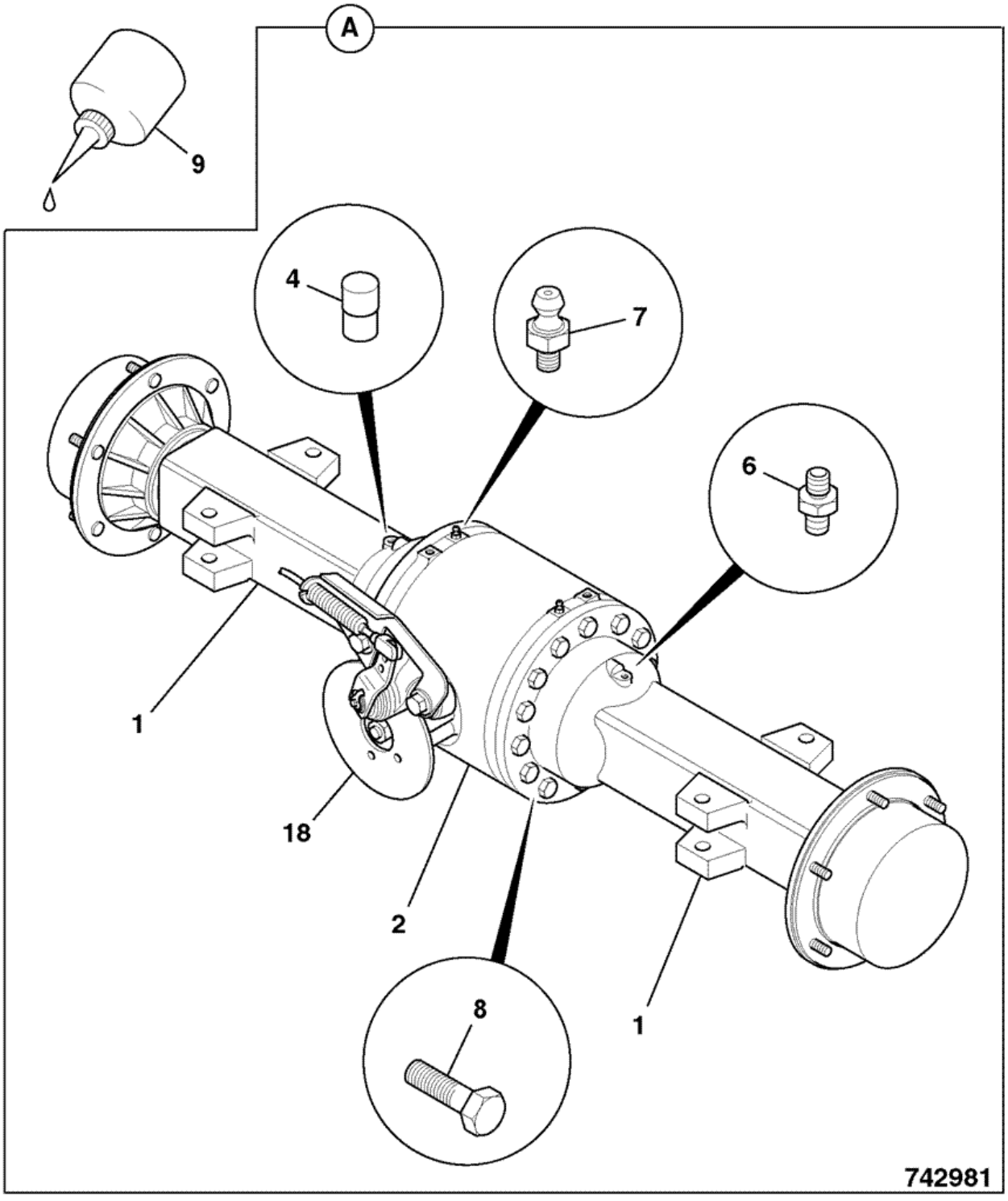

Item	Part #	Change No	Description	Usage Code	QTY
A	450/44860		Axle assy, PD70 pad mount 13.7:1		1

1	:458/10980		Arm axle arm and hub assembly		2
2	:458/11182		Drivehead assy, pad mount 2.538:1 *see index F2 for breakdown*		1
4	:450/13302		Plug breather		1
6	:458/20611		Adapter		1
7	:816/60040		Nipple bleed		2
8	:1321/3716		Bolt M16x70L		28
9	:4102/1212		Gasket Multigasket		0
18	.		'See Remark' *See index section G1 & F2*		1

Product Catalog \ CONSTRUCTION \ NORTH AMERICA \ CONSTRUCTION / INDUSTRIAL \ BACKHOE LOADER 3CX,4CX,214,215,217 \ 3C PLUS (91HP) , Made in Brazil with Dieselmax/IESA Engine 9812/0080 \ F AXLES, WHEELS & TRANSMISSION \ F02 AXLES, REAR

9812/0080 F2-3-29 458/11212, DRIVEHEAD ASSEMBLY

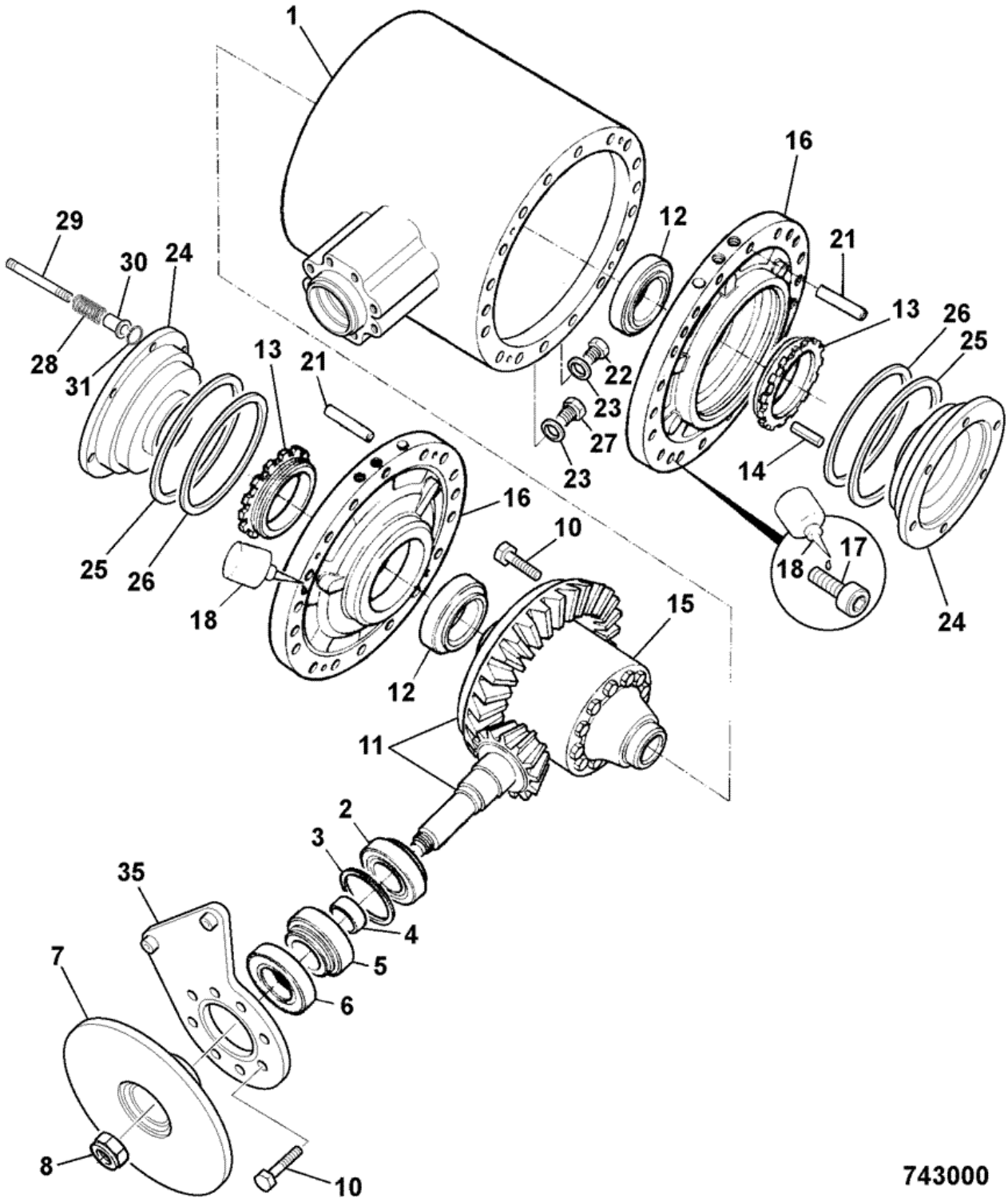

Item	Part #	Change No	Description	Usage Code	QTY
A	458/11212		Drivehead assembly 2.923:1		1
1	:458/20418		Casing drivehead rigid axle		1

2	:907/09000		Bearing		1
3	:921/01900		Kit-shim		1
4	:921/53400		Kit-Spacer		1
5	:907/08300		Bearing taper roller		1
6	:904/50023		Seal		1
7	:458/20693		Disc park brake		1
8	:826/01744		Nut stake M30		1
10	:826/01080		Bolt		20
11	:458/70249		Gear crownwheel/pinion RH spiral, 13T/38T, M30		1
12	:907/50100		Bearing taper roller		2
13	:450/10403		Nut side differential		2
14	:826/00818		Pin tension		2
15	:450/10900		Differential assembly *see index F2 for breakdown*		1
16	:458/20365		Housing Brake Piston Controlled Back-Off		2
17	:1392/3407		Capscrew		8
18	4102/1212		Gasket Multigasket		0
21	:826/00919		Dowel		4
22	:816/80012		Plug magnetic 3/4"BSP		1
23	:1406/0021		Seal bonded 3/4" BSP		2
24	:458/20371		Piston Brake 139.4 bore (was 130mm)		2
25	:813/50012		Seal brake piston		2
26	:813/50026		Seal brake piston (square section)		2
27	:816/80037		Plug filler		1
28	:814/00365		Spring compression		6
29	:450/18204		Pin brake back-off		6
30	:448/16905		Bush tension flanged - external		6
31	:2203/1020		Circlip		6
35	:458/20511		Bracket caliper mount axle		1

Product Catalog \ CONSTRUCTION \ NORTH AMERICA \ CONSTRUCTION / INDUSTRIAL \ BACKHOE LOADER 3CX,4CX,214,215,217 \ 3C PLUS (91HP) , Made in Brazil with Dieselmax/IESA Engine 9812/0080 \ F AXLES, WHEELS & TRANSMISSION \ F02 AXLES, REAR

9812/0080 F2-3-30 458/11213, DRIVEHEAD ASSEMBLY

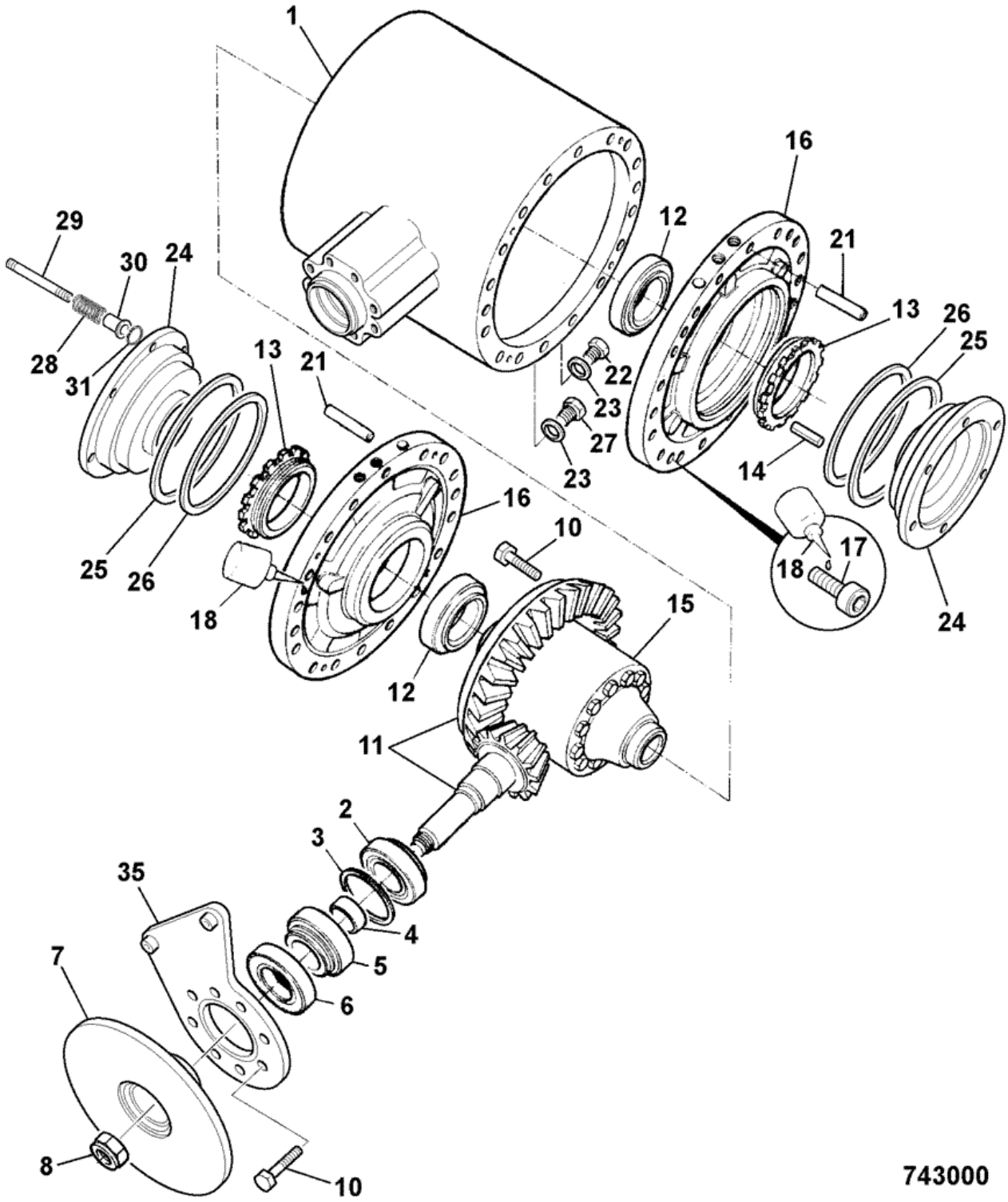

Item	Part #	Change No	Description	Usage Code	QTY
A	458/11213		Drivehead assembly, pad mount 2.923:1		1
1	:458/20418		Casing drivehead rigid axle		1

2	:907/09000		Bearing		1
3	:921/01900		Kit-shim		1
4	:921/53400		Kit-Spacer		1
5	:907/08300		Bearing taper roller		1
6	:904/50023		Seal		1
7	:458/20693		Disc park brake		1
8	:826/01744		Nut stake M30		1
10	:826/01080		Bolt		20
11	:458/70249		Gear crownwheel/pinion RH spiral, 13T/38T, M30		1
12	:907/50100		Bearing taper roller		2
13	:450/10403		Nut side differential		2
14	:826/00818		Pin tension		2
15	:450/26310		Differential LSD assembly 3 working faces		1
16	:458/20365		Housing Brake Piston Controlled Back-Off		2
17	:1392/3407		Capscrew		8
18	4102/1212		Gasket Multigasket		0
21	:826/00919		Dowel		4
22	:816/80012		Plug magnetic 3/4"BSP		1
23	:1406/0021		Seal bonded 3/4" BSP		2
24	:458/20371		Piston Brake 139.4 bore (was 130mm)		2
25	:813/50012		Seal brake piston		2
26	:813/50026		Seal brake piston (square section)		2
27	:816/80037		Plug filler		1
28	:814/00365		Spring compression		6
29	:450/18204		Pin brake back-off		6
30	:448/16905		Bush tension flanged - external		6
31	:2203/1020		Circlip		6
35	:458/20511		Bracket caliper mount axle		1

Product Catalog \ CONSTRUCTION \ NORTH AMERICA \ CONSTRUCTION / INDUSTRIAL \ BACKHOE LOADER 3CX,4CX,214,215,217 \ 3C PLUS (91HP) , Made in Brazil with Dieselmax/IESA Engine 9812/0080 \ F AXLES, WHEELS & TRANSMISSION \ F02 AXLES, REAR

9812/0080 F2-3-37 458/11181, DRIVEHEAD ASSEMBLY,

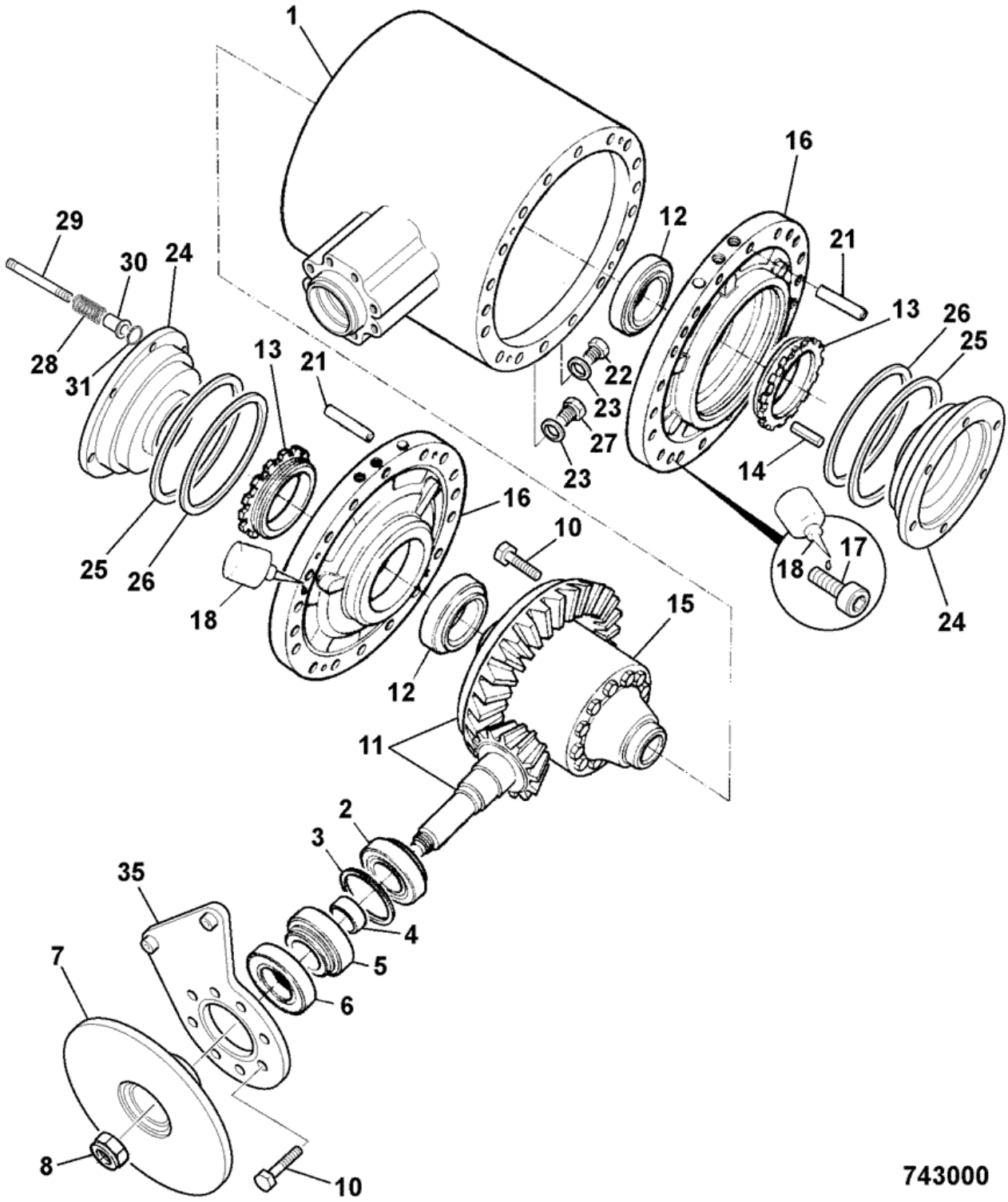

Item	Part #	Change No	Description	Usage Code	QTY
A	458/11181		Drivehead assy, pad mount 2.538:1		1
1	:458/20418		Casing drivehead rigid axle		1

2	:907/09000		Bearing		1
3	:921/01900		Kit-shim		1
4	:921/53400		Kit-Spacer		1
5	:907/08300		Bearing taper roller		1
6	:904/50023		Seal		1
7	:458/20693		Disc park brake		1
8	:826/01744		Nut stake M30		1
10	:826/01080		Bolt		20
11	:458/70246		Gear crown wheel and pinion		1
12	:907/50100		Bearing taper roller		2
13	:450/10403		Nut side differential		2
14	:826/00818		Pin tension		2
15	:450/26310		Differential LSD assembly 3 working faces *see index F2 for breakdown*		1
16	:458/20365		Housing Brake Piston Controlled Back-Off		2
17	:1392/3407		Capscrew		8
18	4102/1212		Gasket Multigasket		0
21	:826/00919		Dowel		4
22	:816/80012		Plug magnetic 3/4"BSP		1
23	:1406/0021		Seal bonded 3/4" BSP		2
24	:458/20371		Piston Brake 139.4 bore (was 130mm)		2
25	:813/50012		Seal brake piston		2
26	:813/50026		Seal brake piston (square section)		2
27	:816/80037		Plug filler		1
28	:814/00365		Spring compression		6
29	:450/18204		Pin brake back-off		6
30	:448/16905		Bush tension flanged - external		6
31	:2203/1020		Circlip		6
35	:458/20511		Bracket caliper mount axle		1

Product Catalog \ CONSTRUCTION \ NORTH AMERICA \ CONSTRUCTION / INDUSTRIAL \ BACKHOE LOADER 3CX,4CX,214,215,217 \ 3C PLUS (91HP) , Made in Brazil with Dieselmax/IESA Engine 9812/0080 \ F AXLES, WHEELS & TRANSMISSION \ F02 AXLES, REAR

9812/0080 F2-3-38 458/11182, DRIVEHEAD ASSEMBLY,

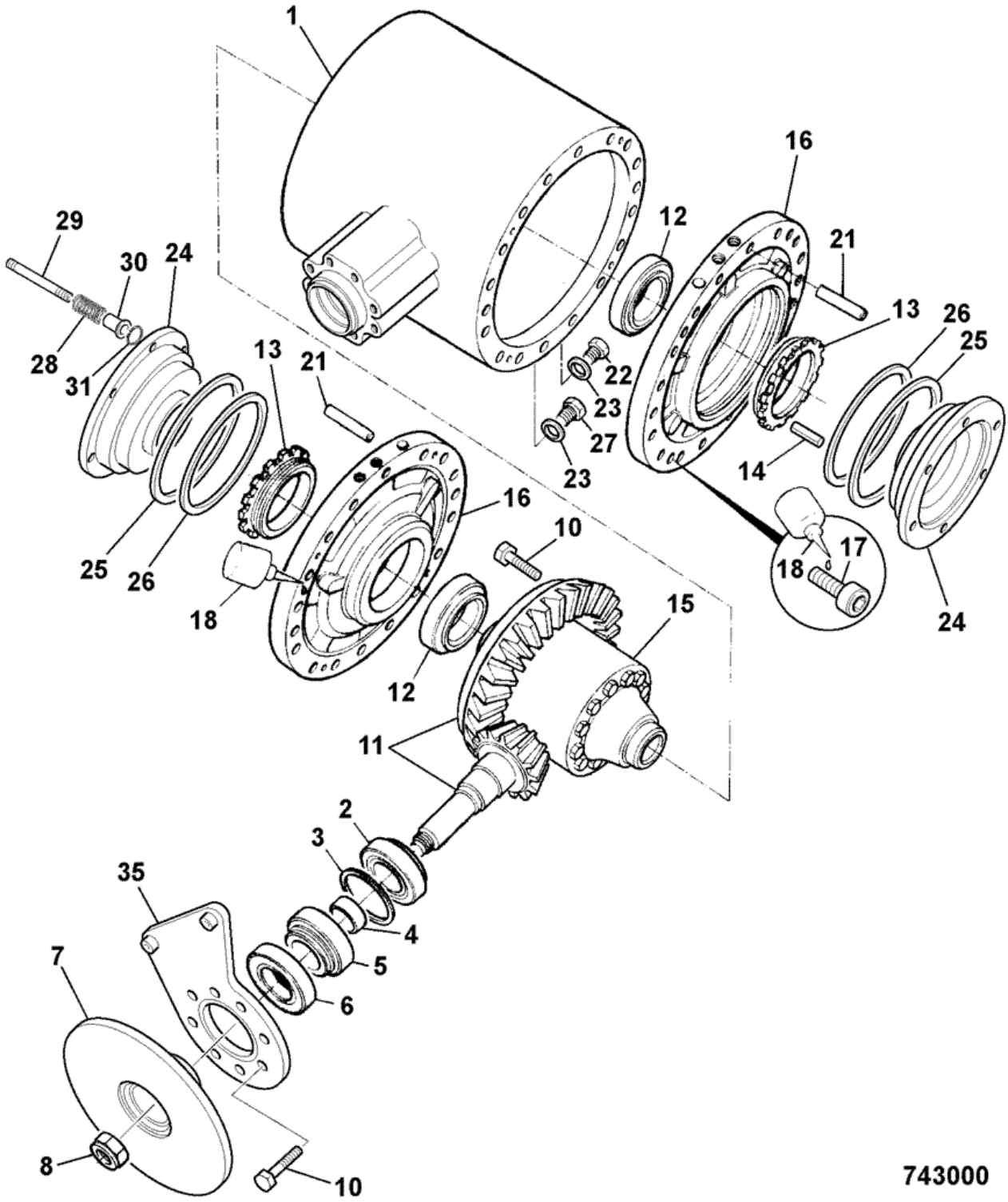

Item	Part #	Change No	Description	Usage Code	QTY
A	458/11182		Drivehead assy, pad mount 2.538:1		1
1	:458/20418		Casing drivehead rigid axle		1

2	:907/09000		Bearing		1
3	:921/01900		Kit-shim		1
4	:921/53400		Kit-Spacer		1
5	:907/08300		Bearing taper roller		1
6	:904/50023		Seal		1
7	:458/20693		Disc park brake		1
8	:826/01744		Nut stake M30		1
10	:826/01080		Bolt		20
11	:458/70246		Gear crown wheel and pinion		1
12	:907/50100		Bearing taper roller		2
13	:450/10403		Nut side differential		2
14	:826/00818		Pin tension		2
15	:450/10900		Differential assembly *see index F2 for breakdown*		1
16	:458/20365		Housing Brake Piston Controlled Back-Off		2
17	:1392/3407		Capscrew		8
18	4102/1212		Gasket Multigasket		0
21	:826/00919		Dowel		4
22	:816/80012		Plug magnetic 3/4"BSP		1
23	:1406/0021		Seal bonded 3/4" BSP		2
24	:458/20371		Piston Brake 139.4 bore (was 130mm)		2
25	:813/50012		Seal brake piston		2
26	:813/50026		Seal brake piston (square section)		2
27	:816/80037		Plug filler		1
28	:814/00365		Spring compression		6
29	:450/18204		Pin brake back-off		6
30	:448/16905		Bush tension flanged - external		6
31	:2203/1020		Circlip		6
35	:458/20511		Bracket caliper mount axle		1

9812/0080 F3-3-11 WHEEL & TYRE, FRONT 2WS 2WD, 11LX16

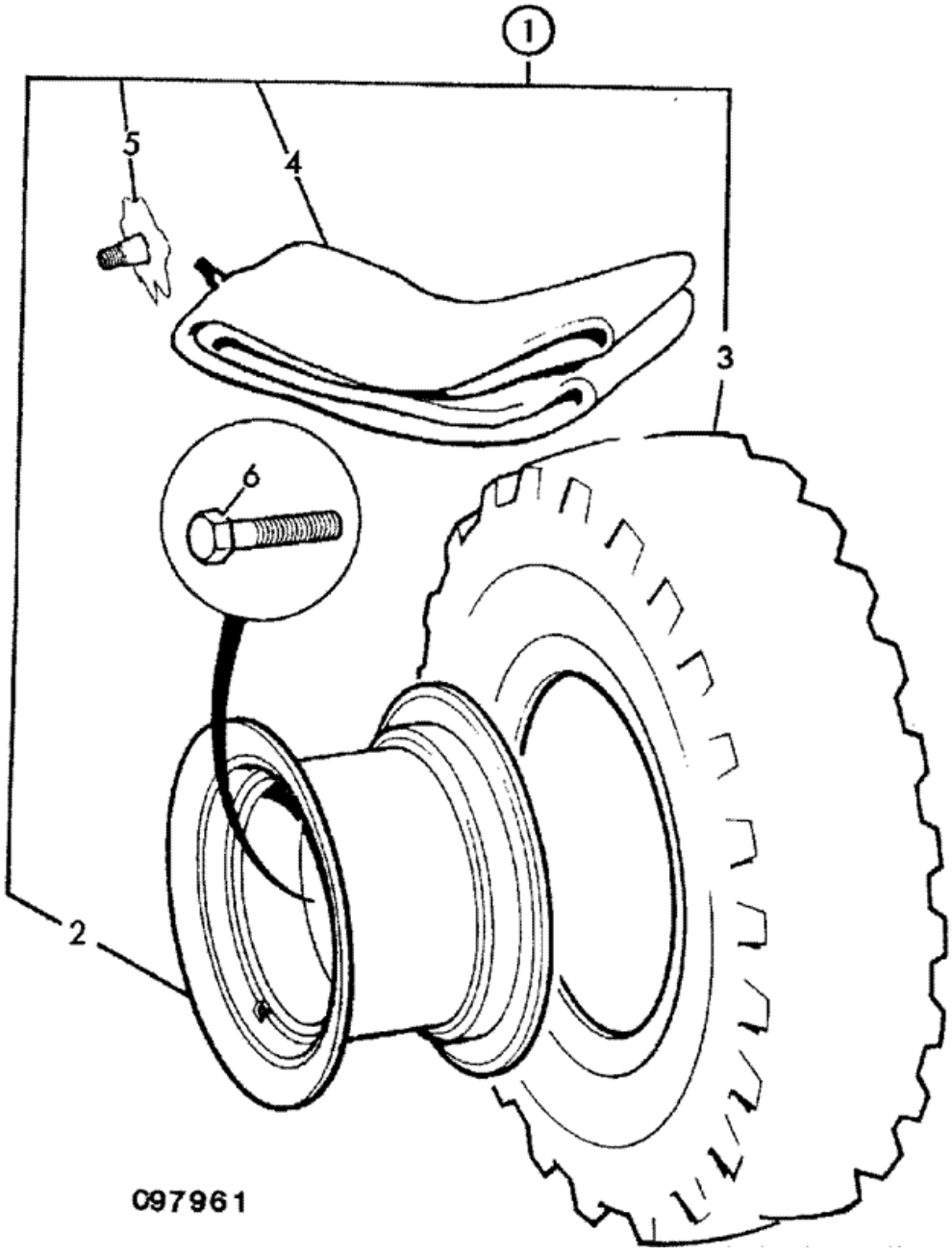

Item	Part #	Change No	Description	Usage Code	QTY
1	126/02919		Wheel & tyre assembly 11x16 12pr Armstrong		2
2	:41/931200		Wheel rim 8x16 (6 stud)		1
3	:42/916200		Tyre 11Lx16x12pr Armstrong		1
4	.		'See Remark' *Tudeless*		1
5	:151/05201		Valve		1

6	826/01008		Nut wheel		12

9812/0080 F3-3-51 WHEEL & TYRE, FRONT 2WS 2WD, LOCAL SOURCED

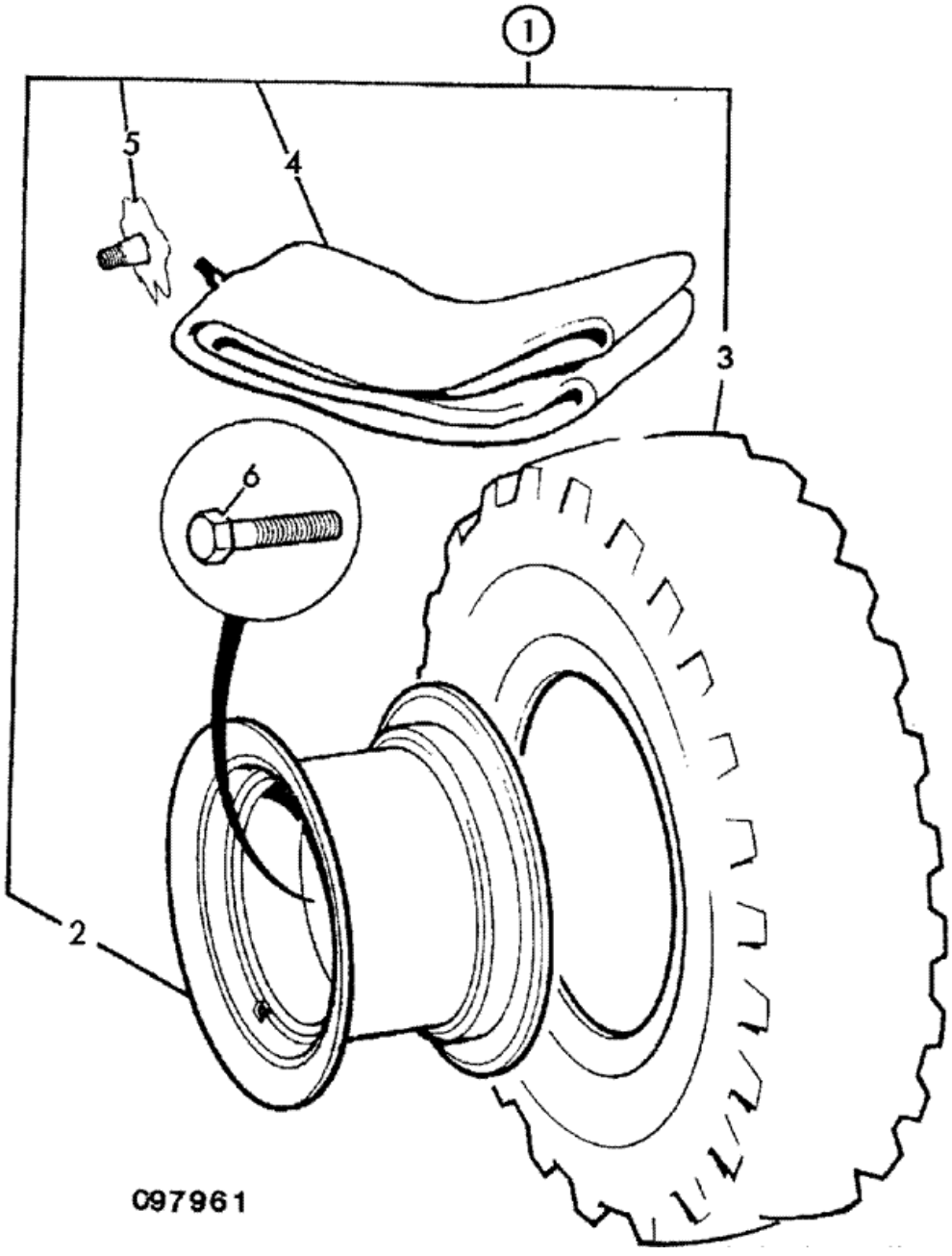

Item	Part #	Change No	Description	Usage Code	QTY
1	339/41250		Wheel and tyre, 10.5/80X18 10 ply Goodyear		2
2	:339/41313		Wheel rim, W9x18		1
3	:339/41401		Tyre 10.5/80 X 18 10PR Goodyear		1
4	:339/41451		Tube 10.5/80-18 TR 15		1
5	.		'See Remark' *not fitted, tubed*		1

6	826/01008		Nut wheel		12

9812/0080 F3-4-51 WHEEL & TYRE, FRONT 2WS 4WD, LOCAL SOURCED

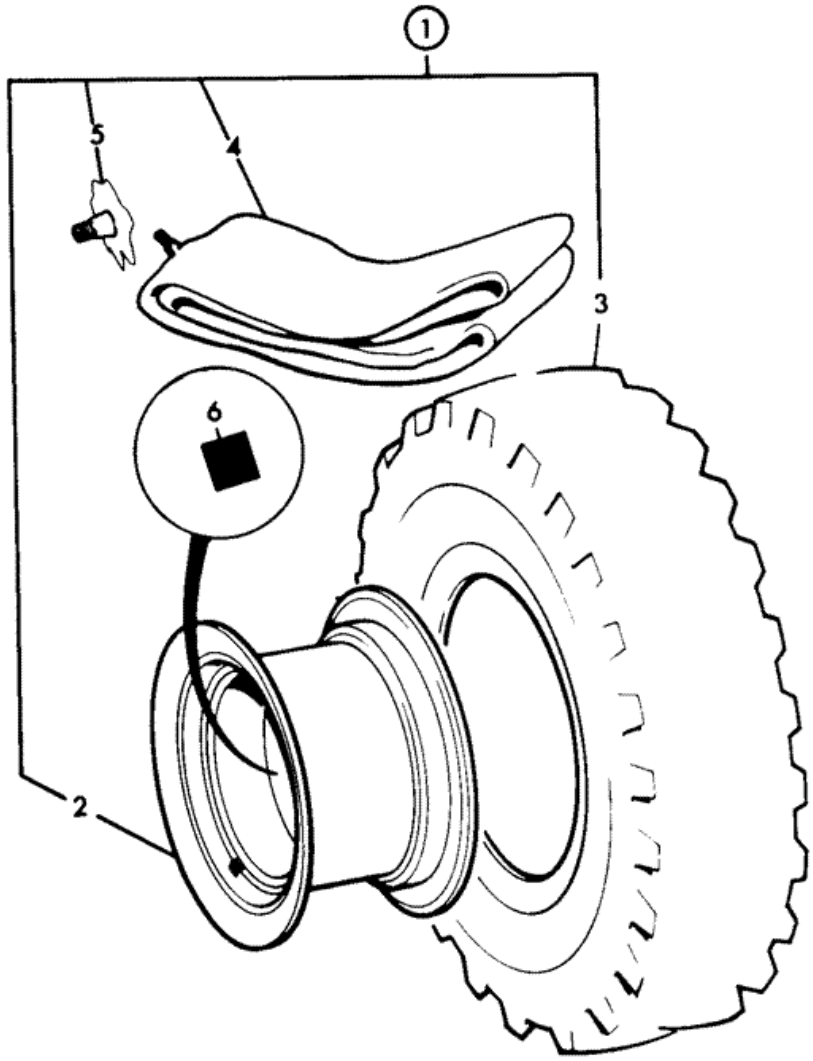

Item	Part #	Change No	Description	Usage Code	QTY
1	339/41042		Wheel and tyre assembly 14x17.5x10 Titan	A	2
1	339/41024		Wheel and tyre assembly 14x17.5x10 Goodyear	B	2
1	339/41235		Wheel and tyre assembly 12.5/80x18x10 G/year	C	1
2	:339/41274		Wheel rim 10.5x17.5L	A B	1
2	:339/41275		Wheel rim W9x18	C	1

3	:42/914300		Tyre 14x17.5x10pr Armstrong	A	1
3	:42/406100		Tyre Goodyear tubeless	B	1
3	:339/41403		Tyre 12.5/80-18 10 PR Goodyear	C	1
4	.		'See Remark' *not fitted tubeless*		1
5	:339/41521		Valve	A B C	1

9812/0080 F3-5-21 WHEEL & TYRE, REAR 2WS 17.7X24, 2WS 2WD

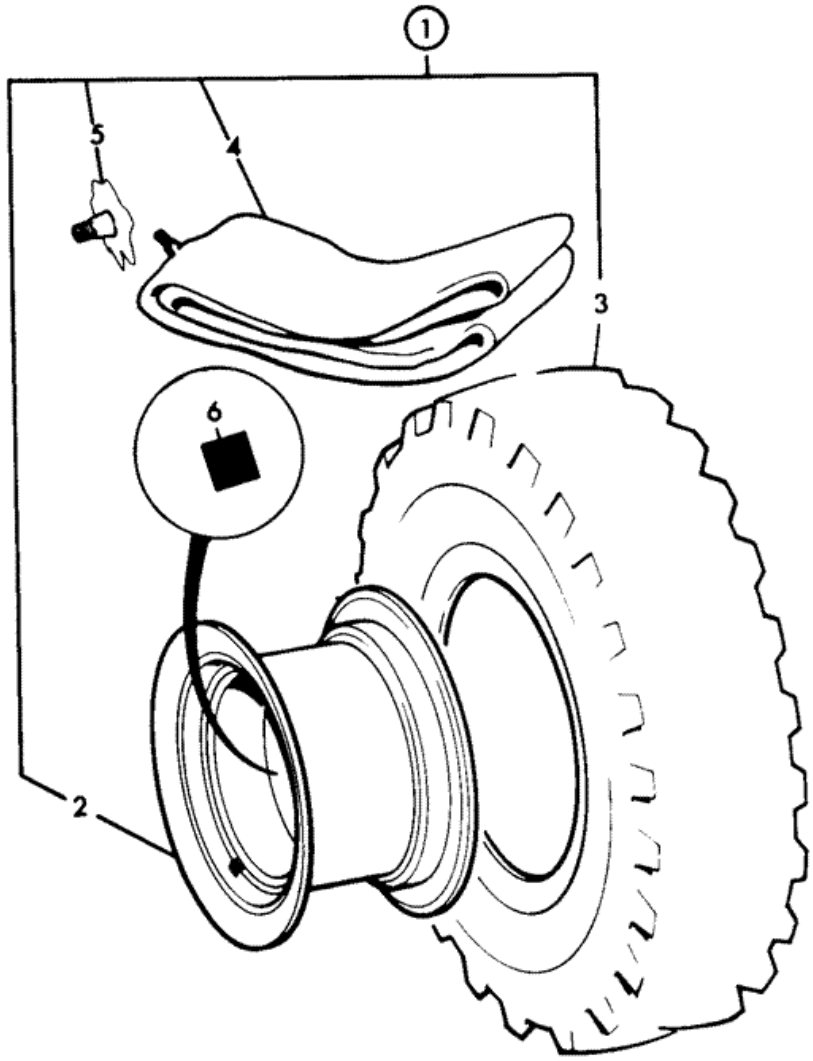

Item	Part #	Change No	Description	Usage Code	QTY
1	126/02769		Wheel & tyre assembly 17.5x24x10pr		2
2	:41/931400		Wheel rim, 15x24 101mm offset, 5 stud		1
3	:42/921300		Tyre 17.5Lx24x10 pr TITAN		1
4	:.		'See Remark' *not fitted*		1
5	:151/05201		Valve		1

6	106/40001		Nut		10

9812/0080 F3-5-51 WHEEL & TYRE, REAR 2WS, LOCAL SOURCED

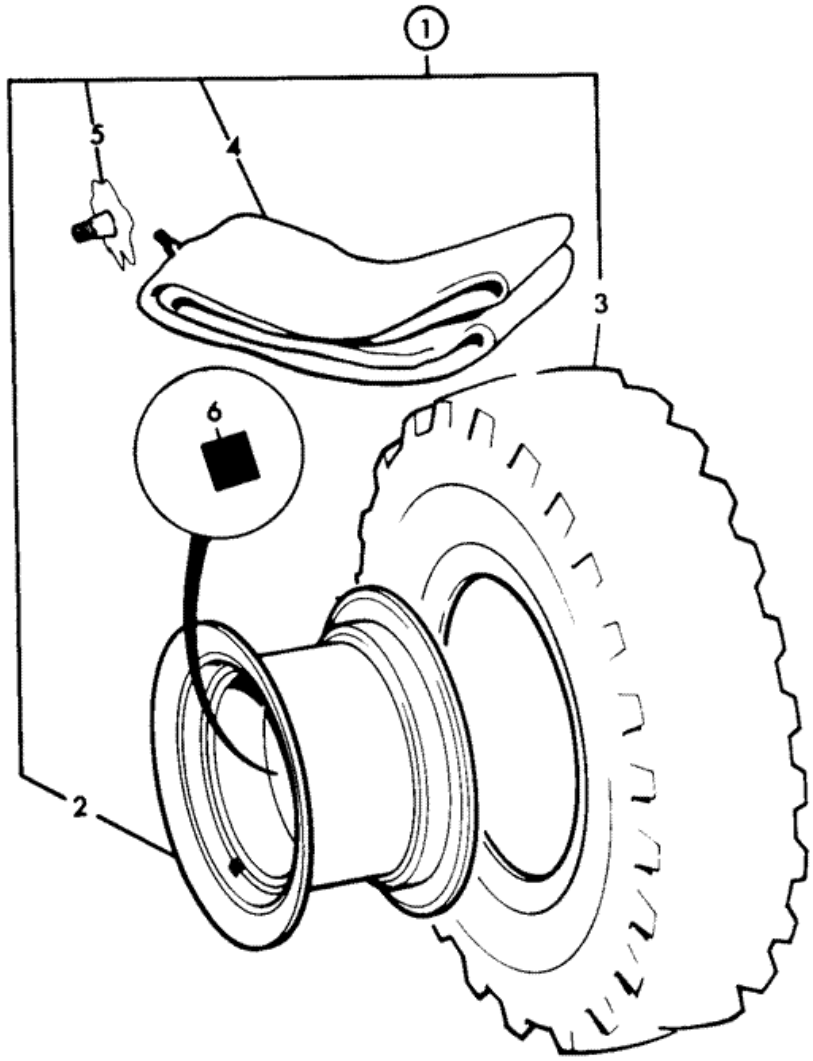

097960

Item	Part #	Change No	Description	Usage Code	QTY
1	::339/41203		Wheel and tyre assembly 19.5x24x12 G/year	A	1
1	339/41236		Wheel and tyre assembly 17.5x25x12 G/year	B	2
1	339/41206		Wheel and tyre assembly 3 piece rim	D	1
1	339/41263		Wheel and tyre assembly 17.5x25x12 Pirelli	C	2
2	:339/41271		Wheel rim DW16x24	A	1

2	:339/41267		Wheel rim 13.00DCx25	B C	1
2	:339/41190		Wheel rim 14.00X25/1.5 3 piece	D	1
3	:42/413400		Tyre 19.5lX24x12 Goodyear industrial	A	1
3	:42/400600		Tyre 17.5-25X12 ply Goodyear SGL	B D	1
3	:339/41410		Tyre 17.5x25x12 PR Pirelli	C	1
4	.		'See Remark' *not fitted tubeless*		1
5	:151/05201		Valve	A B C D	1

Product Catalog \ CONSTRUCTION \ NORTH AMERICA \ CONSTRUCTION / INDUSTRIAL \ BACKHOE LOADER 3CX,4CX,214,215,217 \ 3C PLUS (91HP) , Made in Brazil with Dieselmax/IESA Engine 9812/0080 \ F AXLES, WHEELS & TRANSMISSION \ F05 TRANSMISSIONS SYNCHROSHUTTLE

9812/0080 F5-0-11 MOUNTING, TRANSMISSION, TO INTERNATIONAL ENGINE

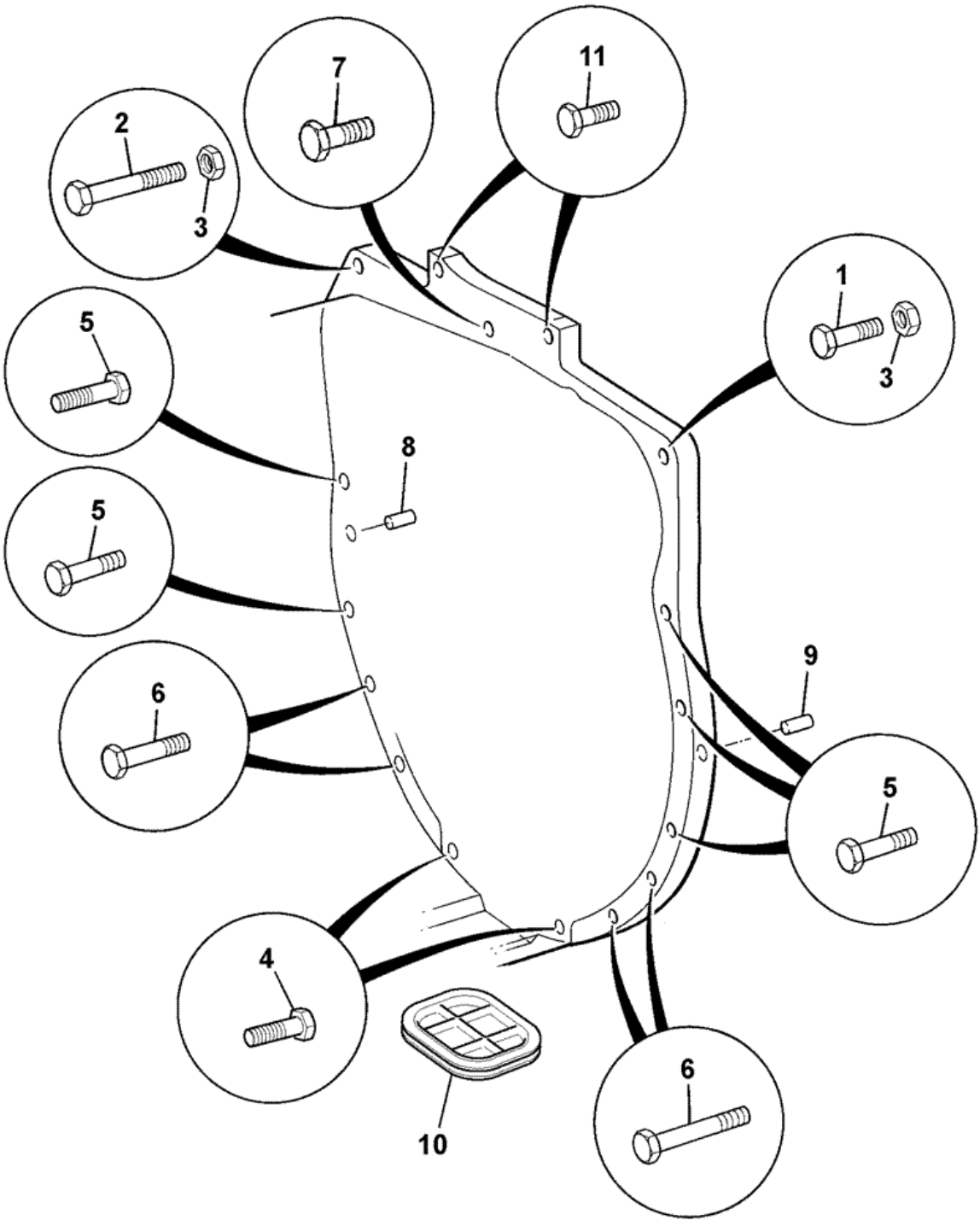

Item	Part #	Change No	Description	Usage Code	QTY
1	1318/3512Z		Bolt M12X50mm long TUF-LOK		1

2	1315/3520Z		Bolt M12 x 100mm		1
3	1370/0403Z		Nut M12		2
4	1315/0511Z		Bolt M12 x 45mm		2
5	1315/3514Z		Bolt M12 x 60mm		5
6	1315/3516Z		Bolt M12 x 70mm		4
7	1315/0509Z		Screw M12 x 35mm		1
9	02/101270		Bolt		2
10	445/13703		Cover flywheel housing 110mm x 79mm x 17mm		1
11	1305/1808Z		Bolt		2

Product Catalog \ CONSTRUCTION \ NORTH AMERICA \ CONSTRUCTION / INDUSTRIAL \ BACKHOE LOADER 3CX,4CX,214,215,217 \ 3C PLUS (91HP) , Made in Brazil with Dieselmax/IESA Engine 9812/0080 \ F AXLES, WHEELS & TRANSMISSION \ F05 TRANSMISSIONS SYNCHROSHUTTLE

9812/0080 F5-0-30 DIPSTICK & FILLER, SYNCROSHUTTLE, JCB DIESELMAX ENGINE

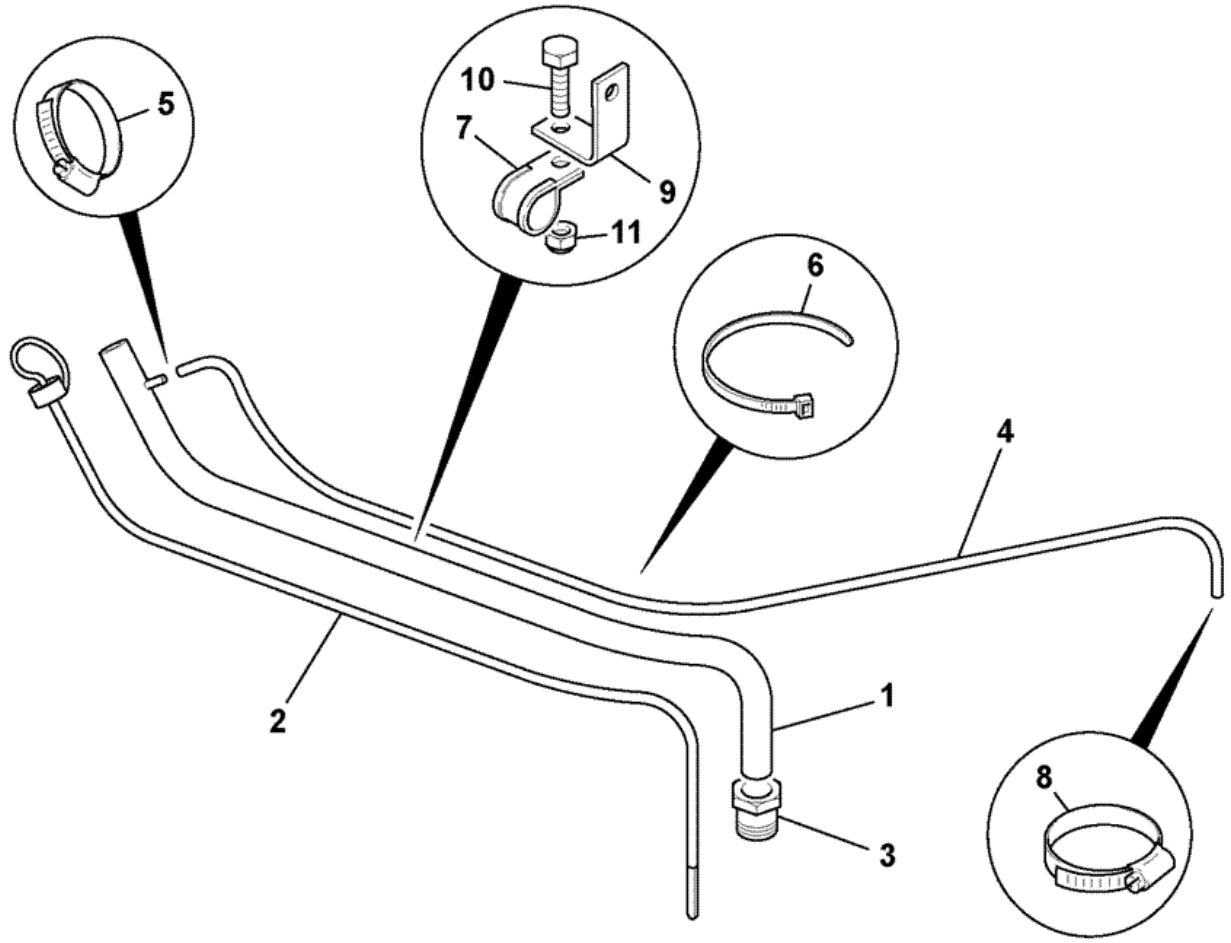

743210

Item	Part #	Change No	Description	Usage Code	QTY
1	830/12343	Superseded	Tube oil filler		1

1	332/D6553		Tube oil filler		1
2	331/46204		Dipstick		1
3	155/10600		Nut sealastic		1
3A	:904/20334		Kit-seal & ferrule		1
4	647/02108		Tube		1
5	821/00433		Clip		1
6	826/01453		Tie cable double head		4
7	821/10297		Clip P-clip,25mm Dia		1
8	821/10319		Clip 9.5mm dia pinch type		1
9	331/46081		Bracket		1
10	1315/0305Z		Screw Hexagon M8 x 20mm long		1
11	826/01099		Nut rivet,M6 open ended		1

Product Catalog \ CONSTRUCTION \ NORTH AMERICA \ CONSTRUCTION / INDUSTRIAL \ BACKHOE LOADER 3CX,4CX,214,215,217 \ 3C PLUS (91HP) , Made in Brazil with Dieselmax/IESA Engine 9812/0080 \ F AXLES, WHEELS & TRANSMISSION \ F05 TRANSMISSIONS SYNCHROSHUTTLE

9812/0080 F5-0-35 DIPSTICK & FILLER, SYNCROSHUTTLE, INTERNATIONAL ENGINE

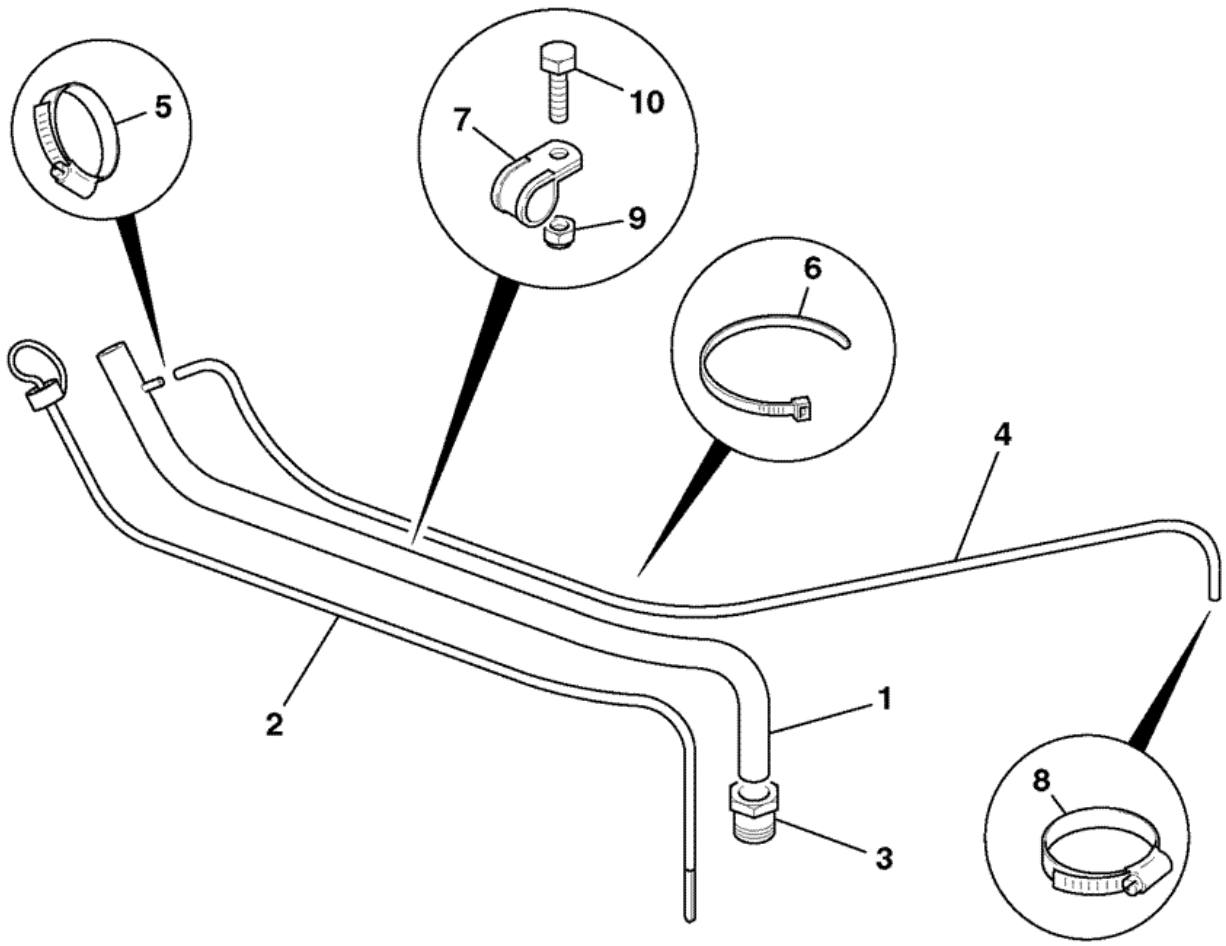

743211

Item	Part #	Change No	Description	Usage Code	QTY
1	123/05942		Tube filler		1

2	123/06299		Dipstick		1
3	155/10600		Nut sealastic		1
3A	:904/20334		Kit-seal & ferrule		1
4	647/02108		Tube		1
5	821/00433		Clip		1
6	826/01453		Tie cable double head		4
7	821/10297		Clip P-clip,25mm Dia		1
8	821/10319		Clip 9.5mm dia pinch type		1
9	1370/0203Z		Nut self lock M8		1
10	1315/0305Z		Screw Hexagon M8 x 20mm long		1

9812/0080 F5-0-40 TORQUE CONVERTER, 84 & 92 HP ENGINES, W300 3.01 RATIO

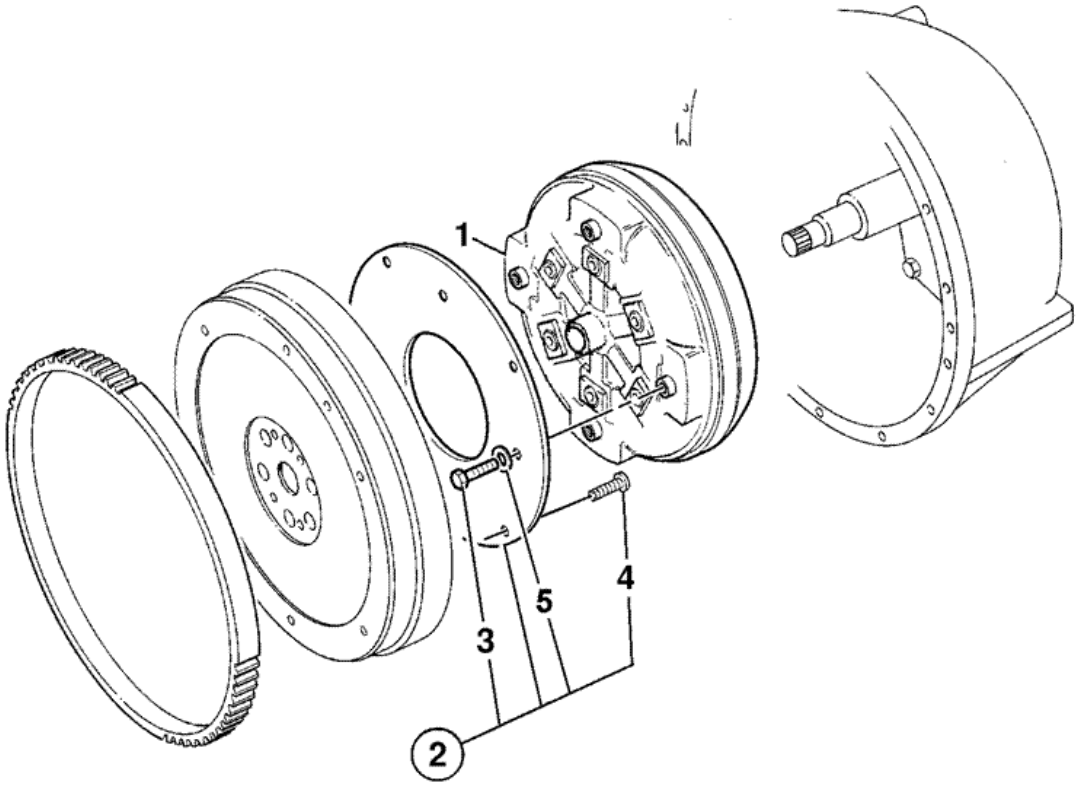

376141

Item	Part #	Change No	Description	Usage Code	QTY
1	04/600786		Converter W300 3.01 ratio		1

2	04/600864		Kit-drive plate torque converter		1
3	:04/500303		Bolt		4
4	:826/11605		Bolt M8 x 30		6
5	:823/10297		Washer hardened		4

9812/0080 F5-1-11 441/00190 - 2WD-2WS, EXTERNAL COMPONENTS, INTERNATIONAL ENGINE

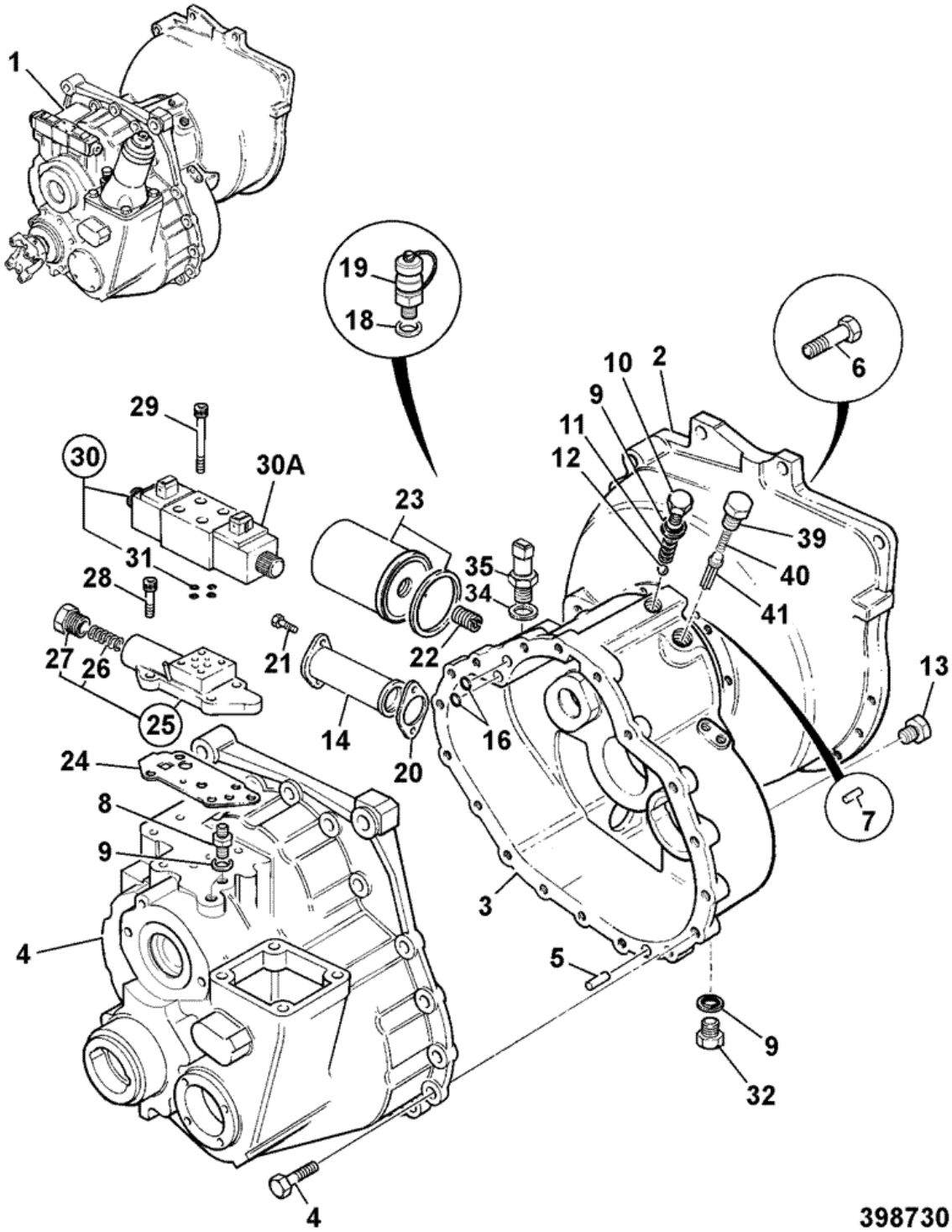

Item	Part #	Change No	Description	Usage Code	QTY
1	441/00190		Gearbox assembly, SS700 2WD, 35kph		1

2	:459/70442		Casing flywheel housing		1
3	:445/76502		Casing front		1
4	:459/30312	Superseded	Casing rear SS700 2WD		1
4	:459/M1383		Casing rear SS700 2WD		1
5	:826/01417		Bolt		18
6	:445/14001		Dowel		2
7	:.		'See Remark' *Gearbox components see index F5*		1
8	:1606/0017		Adapter 5/8" x 1/2" M/M		2
9	:1406/0018		Seal bonded 1/2" BSP		3
10	:816/80041		Plug 1/2"BSP 25.65mm A/F		1
11	:814/00222		Spring		1
12	:916/00008		Bearing 14dia ball		2
13	:816/80051		Plug 1/8" tapered		5
14	:32/902200		Strainer suction		1
15	:445/13703		Cover flywheel housing 110mm x 79mm x 17mm		1
16	:828/10222		O Ring		2
18	:1406/0011		Seal bonded		2
19	:45/905000		Adapter pressure test 1/4BSP male		1
20	:813/50027		Gasket		1
21	:1321/0303Z		Screw M8 x 16		2
22	:816/15184		Adapter 1/2"BSPx1"UNF		1
23	:581/18063		Element transmission filter 94mm long		1
24	:813/10175		Gasket valve block		1
25	:459/10144		Valve Adapter block assy SS700 low ratio		1
26	::814/00412		Spring		1
27	::816/80063		Plug		1
28	:1392/3207		Capscrew		4
29	:1391/3108Z		Capscrew M5 X 30mm		4
30	25/220998		Valve solenoid assembly		1
30A	:25/221054		Coil 12V		2
31	::35/100801		Kit-seal solenoid valve		1
32	:816/50031		Adapter Tee		1
34	:816/80041		Plug 1/2"BSP 25.65mm A/F		1
35	:701/41600		Switch oil pressure M12 red body, AMP		1
38	1315/0409Z		Screw M10x35mm		12
39	816/80061		Plug		1
40	814/10153		Spring compression T/C press.maint		1
41	459/70168		Spool Adapter Solenoid		1

9812/0080 F5-1-21 441/00190 - 2WD-2WS, INTERNAL COMPONENTS, INTERNATIONAL ENGINE

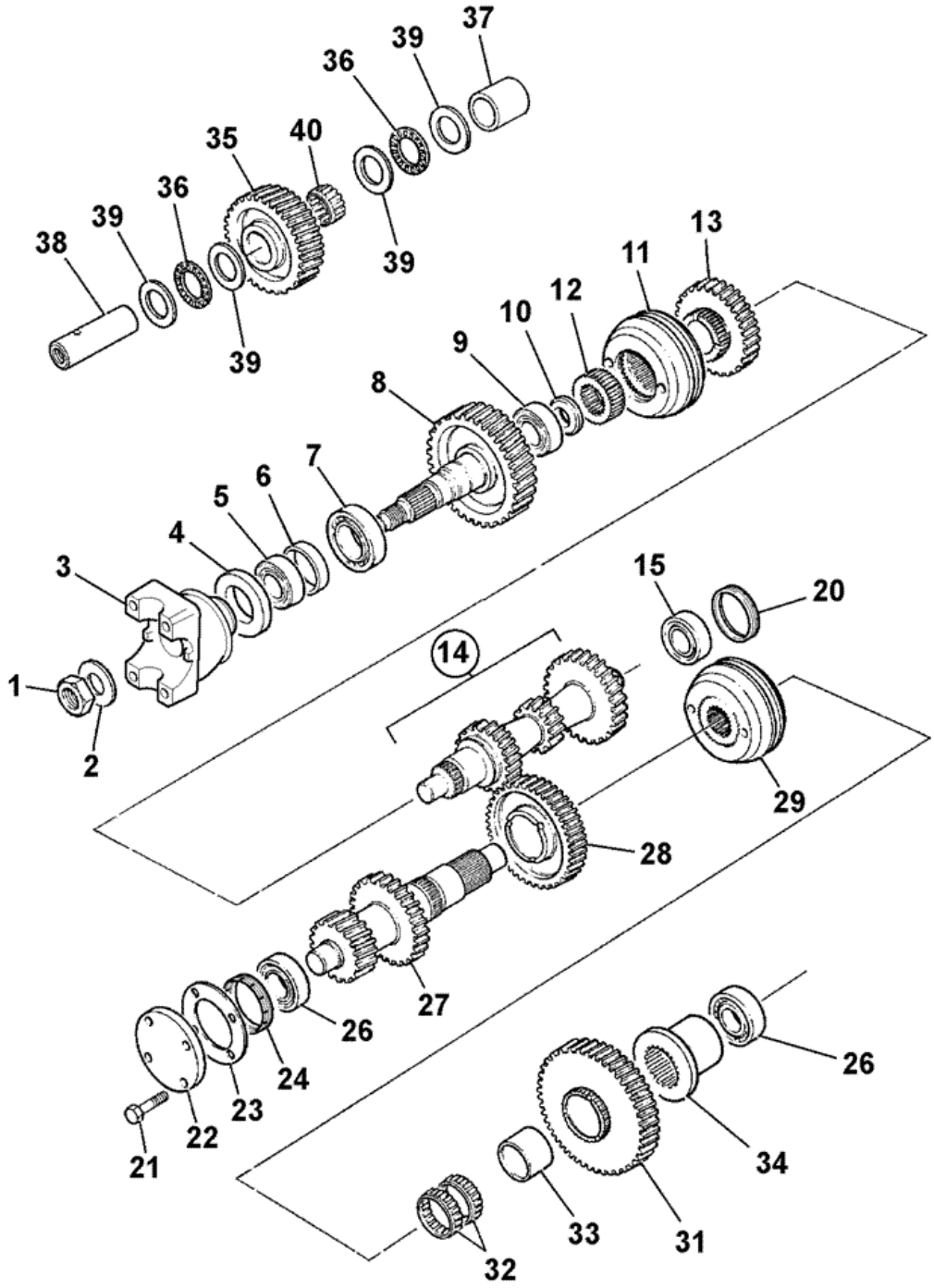

Item	Part #	Change No	Description	Usage Code	QTY
1	826/01551		Nut Stake M30 (46mm Head)		1

2	460/32202		Washer		1
3	459/70317		Yoke coupling - 1480 35 t		1
4	904/20172		Seal TRIPLE LIP 53.6 x 80.35 x 12		1
5	907/51600		Bearing taper roller		1
6	921/53400		Kit-Spacer		1
7	907/53800		Bearing		1
8	459/50208		Gear transfer 38T SS750 low ratio		1
9	907/20005		Bearing taper roller		1
10	445/64302		Spacer mainshaft seal		1
11	445/03300		Synchroniser assembly		1
12	445/03010		Sleeve hub shaft *3rd & 4th speed*		1
13	459/50206		Gear 3rd speed SS750 low ratio		1
14	459/50205		Gear mainshaft, SS750		1
15	907/52800		Bearing 35 x 65 x 18		1
20	459/70275		Nut mainshaft setting		1
21	826/01416		Screw micro-encapsulated		4
22	331/23731		Cover Layshaft		1
23	813/10176		Gasket		1
24	459/70274		Nut layshaft setting		1
26	907/09600		Bearing 35 x 73 x 24		2
27	459/50188		Layshaft low ratio		1
28	459/50511		Gear 2nd 40t SS700 *2nd 40 Teeth*		1
29	459/50520		Synchroniser assembly		1
31	459/50509		Gear 1st 44t SS700 *1st*		1
32	917/02300		Bearing		2
33	917/00008		Bearing inner race		1
34	445/03013		Spacer		1
35	459/50440		Gear idler, 35T *35 Teeth*		1
37	459/70206		Spacer idler gear		1
38	459/70087		Shaft idler		1
39	823/00451		Washer thrust		4
40	917/02400		Bearing needle roller		1

Product Catalog \ CONSTRUCTION \ NORTH AMERICA \ CONSTRUCTION / INDUSTRIAL \ BACKHOE LOADER 3CX,4CX,214,215,217 \ 3C PLUS (91HP) , Made in Brazil with Dieselmax/IESA Engine 9812/0080 \ F AXLES, WHEELS & TRANSMISSION \ F05 TRANSMISSIONS SYNCHROSHUTTLE

9812/0080 F5-1-31 441/00190 - 2WD-2WS, REVERSER UNIT, 459/10097, INTERNATIONAL ENGINE

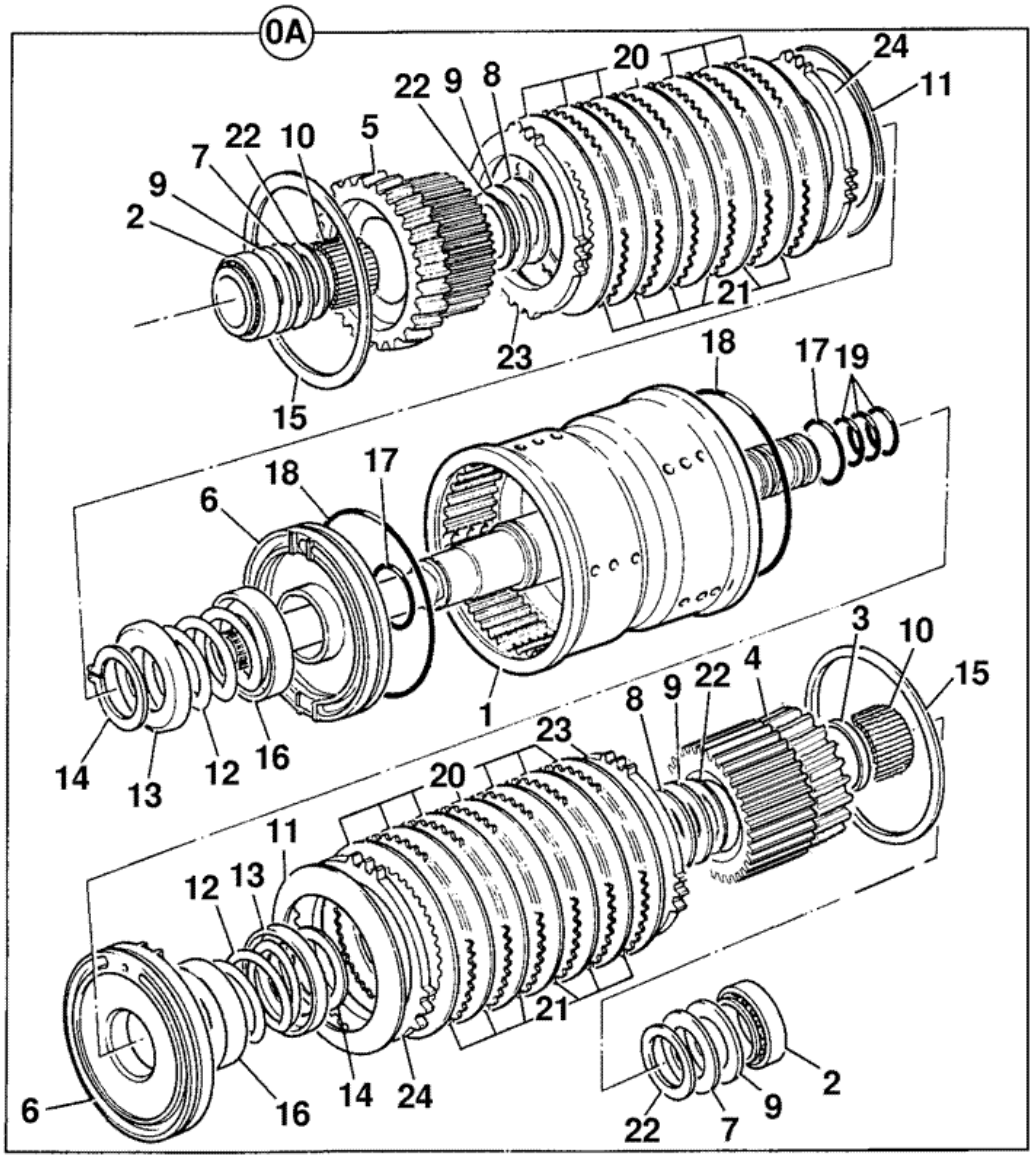

376130

Item	Part #	Change No	Description	Usage Code	QTY
A	459/10097		Clutch assembly input, reverser		1

1	:459/50503		Housing input clutch SS700		1
2	:907/20012		Bearing taper roller		2
3	:823/10355		Spacer		1
4	:459/50428		Gear 31T & plate carrier		1
5	:459/50429		Gear 22T & plate carrier		1
6	:459/10096		Piston		2
7	:823/10264		Washer thrust		2
8	:823/10265		Washer thrust		2
9	:917/10006		Bearing needle thrust		4
10	:917/50600		Bearing needle roller		2
11	:814/10115		Disc spring, spline		2
12	:814/00345		Spring		2
13	:823/10266		Washer spring retainer		2
14	:821/00296		Circlip external		2
15	:821/M2136		Circlip internal *was 826/10467*		2
16	:331/16558		Plate oil baffle		2
17	:828/10180		O Ring		2
18	:828/10181		O Ring 130mm I/D		2
19	:904/50024		Seal ring		4
20	:331/16520		Plate friction, clutch		10
21	:331/16516		Plate counter, clutch		10
22	:823/10316		Washer thrust bevelled		4
23	:331/16517		Plate pressure, clutch 6.0 mm		2
24	:331/16519		Plate shim, clutch 1.2mm		0

Product Catalog \ CONSTRUCTION \ NORTH AMERICA \ CONSTRUCTION / INDUSTRIAL \ BACKHOE LOADER 3CX,4CX,214,215,217 \ 3C PLUS (91HP) , Made in Brazil with Dieselmax/IESA Engine 9812/0080 \ F AXLES, WHEELS & TRANSMISSION \ F05 TRANSMISSIONS SYNCHROSHUTTLE

9812/0080 F5-1-51 441/00190 - 2WD-2WS, GEAR CHANGE, INTERNATIONAL ENGINE

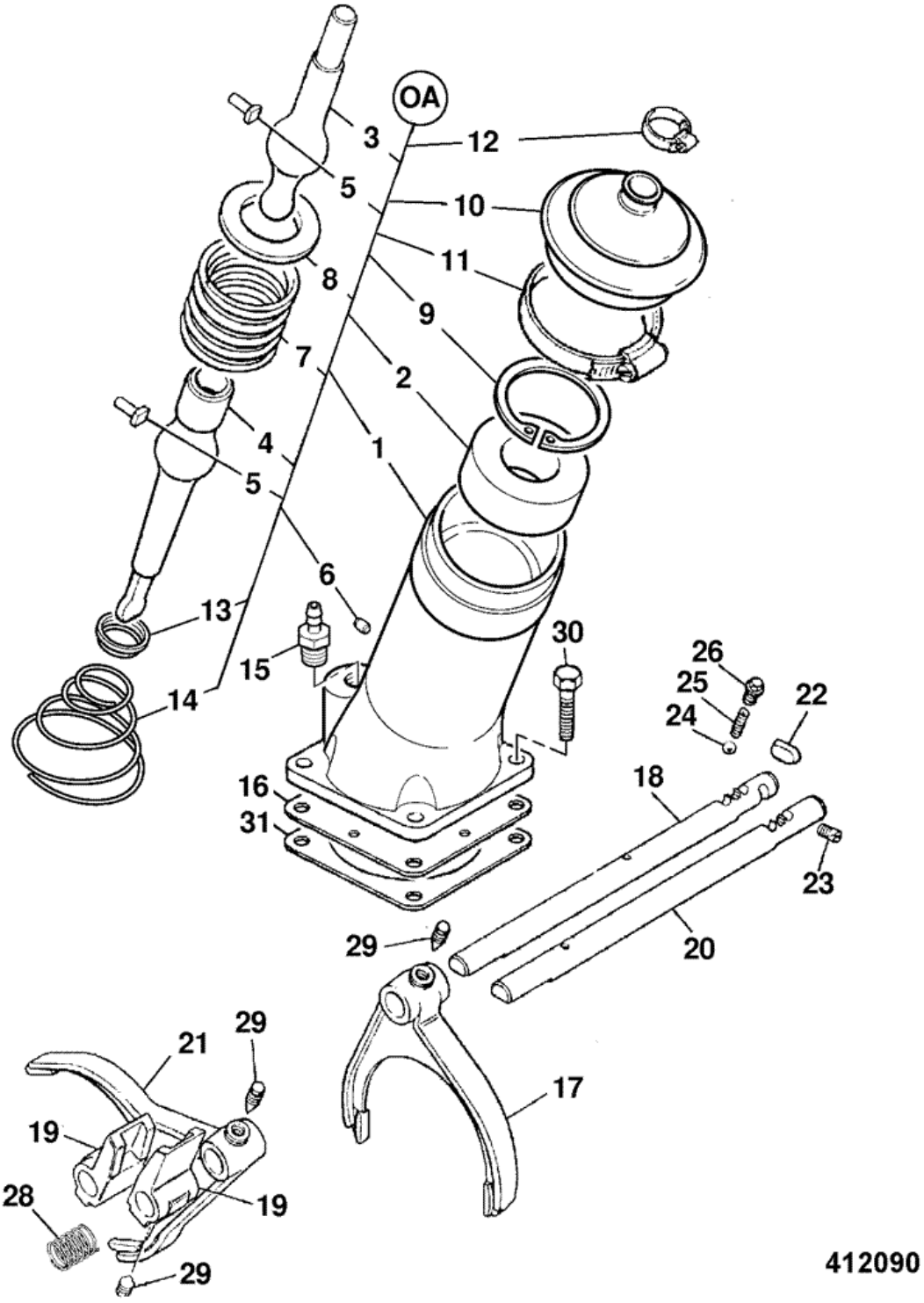

Item	Part #	Change No	Description	Usage Code	QTY
A	459/10143		Lever assembly gear turret		1

1	:459/30295		Housing turret, gear lever		1
2	:445/10802		Seat		1
3	:445/05501		Lever gear		1
4	:459/70271		Lever bottom gearshift		1
5	:445/03023		Pin		2
6	:835/10036		Plug		1
7	:814/00233		Spring		1
8	:445/10803		Washer ball		1
9	:2203/1080		Circlip		1
10	:331/25566		Gaiter gear lever		1
11	:821/10163		Clip worm drive		1
12	:445/05302		Clip		1
13	:445/03020		Retainer spring		1
14	:814/00221		Spring		1
15	:816/13382		Adapter hose		1
16	:460/17603		Baffle		1
17	459/30297		Fork selector 1st		1
18	459/70181		Shaft selector *use 459/M2082*		1
18	459/M2082		Shaft selector		1
19	459/70199		Block selector		2
20	459/70181		Shaft selector *use 459/M2082*		1
20	459/M2082		Shaft selector		1
21	459/30299		Fork selector 3rd		1
22	445/03031		Roller baulk		1
23	816/80027		Plug		1
24	916/00006		Ball 11mm dia		2
25	814/00354		Spring		2
26	816/80057		Plug detent		2
27	445/05302		Clip		2
28	814/00406		Spring		1
29	445/26110		Screw		4
30	826/01416		Screw micro-encapsulated		4
31	813/50042		Gasket		1

9812/0080 F5-2-11 441/00750 - 2WD-2WS, EXTERNAL COMPONENTS, JCB DIESELMAX ENGINE

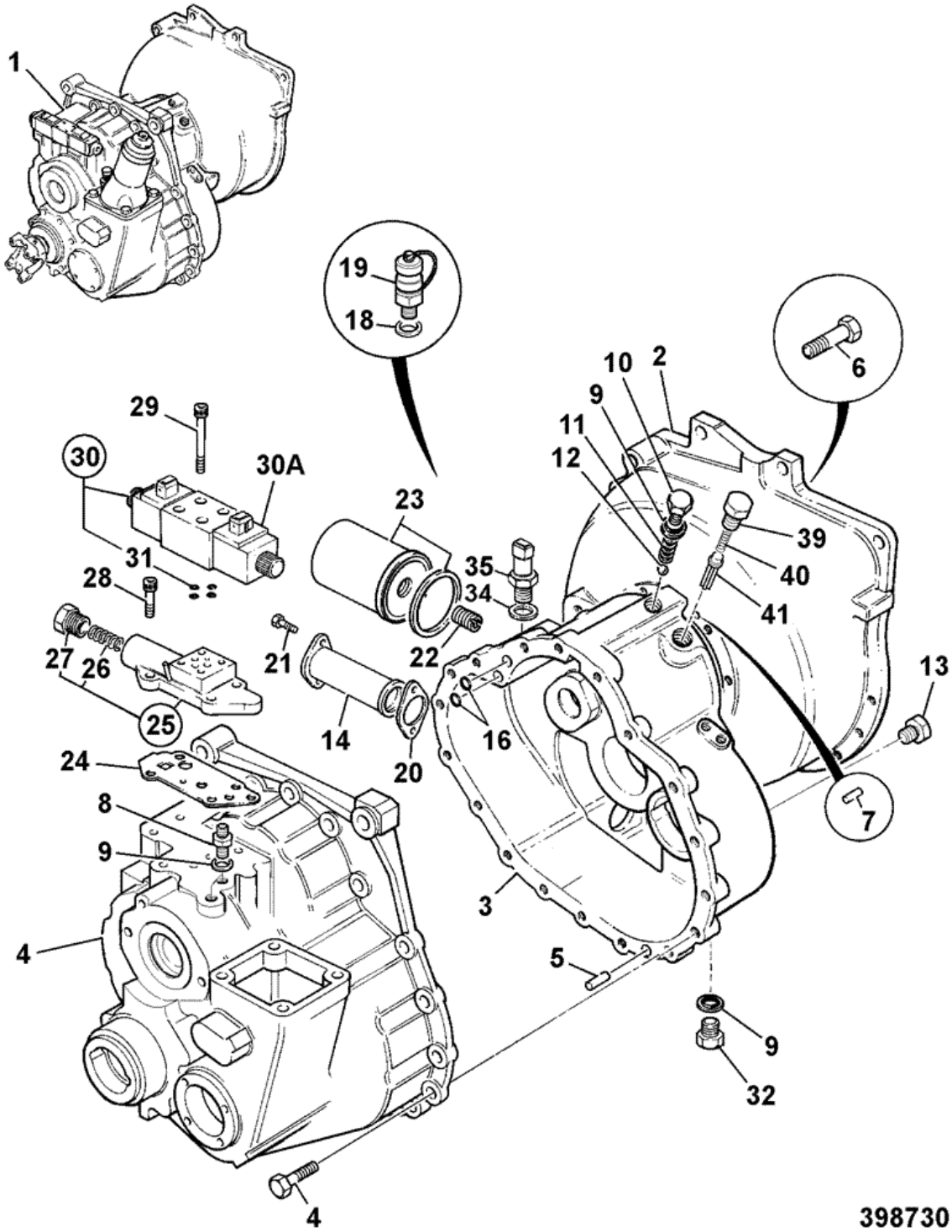

Item	Part #	Change No	Description	Usage Code	QTY
1	441/00750		Gearbox assembly 2WD		1

2	:459/30397		Housing flywheel		1
3	:459/30285		Casing front SS700		1
4	:459/30312	Superseded	Casing rear SS700 2WD		1
4	:459/M1383		Casing rear SS700 2WD		1
5	:826/01417		Bolt		18
6	:445/14001		Dowel		2
7	:.		'See Remark' *Gearbox components see index F5*		1
8	:1606/0017		Adapter 5/8" x 1/2" M/M		2
9	:1406/0018		Seal bonded 1/2" BSP		3
10	:816/80041		Plug 1/2"BSP 25.65mm A/F		1
11	:814/00222		Spring		1
12	:916/00008		Bearing 14dia ball		2
13	:816/80051		Plug 1/8" tapered		5
14	:32/902200		Strainer suction		1
15	:.		'See Remark' *no longer fitted*		1
16	:828/10222		O Ring		2
18	:1406/0011		Seal bonded		2
19	:45/905000		Adapter pressure test 1/4BSP male		1
20	:813/50027		Gasket		1
21	:1321/0303Z		Screw M8 x 16		2
22	:816/15184		Adapter 1/2"BSPx1"UNF		1
23	:581/18076		Element transmission filter 120.7mm long		1
24	:813/10175		Gasket valve block		1
25	:459/10144		Valve Adapter block assy SS700 low ratio		1
26	::814/00412		Spring		1
27	::816/80063		Plug		1
28	:1392/3207		Capscrew		4
29	:1391/3108Z		Capscrew M5 X 30mm		4
30	25/220998		Valve solenoid assembly		1
30A	:25/221054		Coil 12V		2
31	::35/100801		Kit-seal solenoid valve		1
32	:816/50031		Adapter Tee		1
35	701/80319	Superseded	Switch oil pressure,M12 green body,Deutsch *not supplied with transmission*		1
35	701/80626		Switch oil pressure M12 *not supplied with transmission*		1
35A	1406/0011		Seal bonded		1
36	:816/80061		Plug		1
38	1315/0409Z		Screw M10x35mm		12
39	816/80061		Plug		1
40	814/10153		Spring compression T/C press.maint		1
41	459/70168		Spool Adapter Solenoid		1

9812/0080 F5-2-21 441/00750 - 2WD-2WS, INTERNAL COMPONENTS, JCB DIESELMAX ENGINE

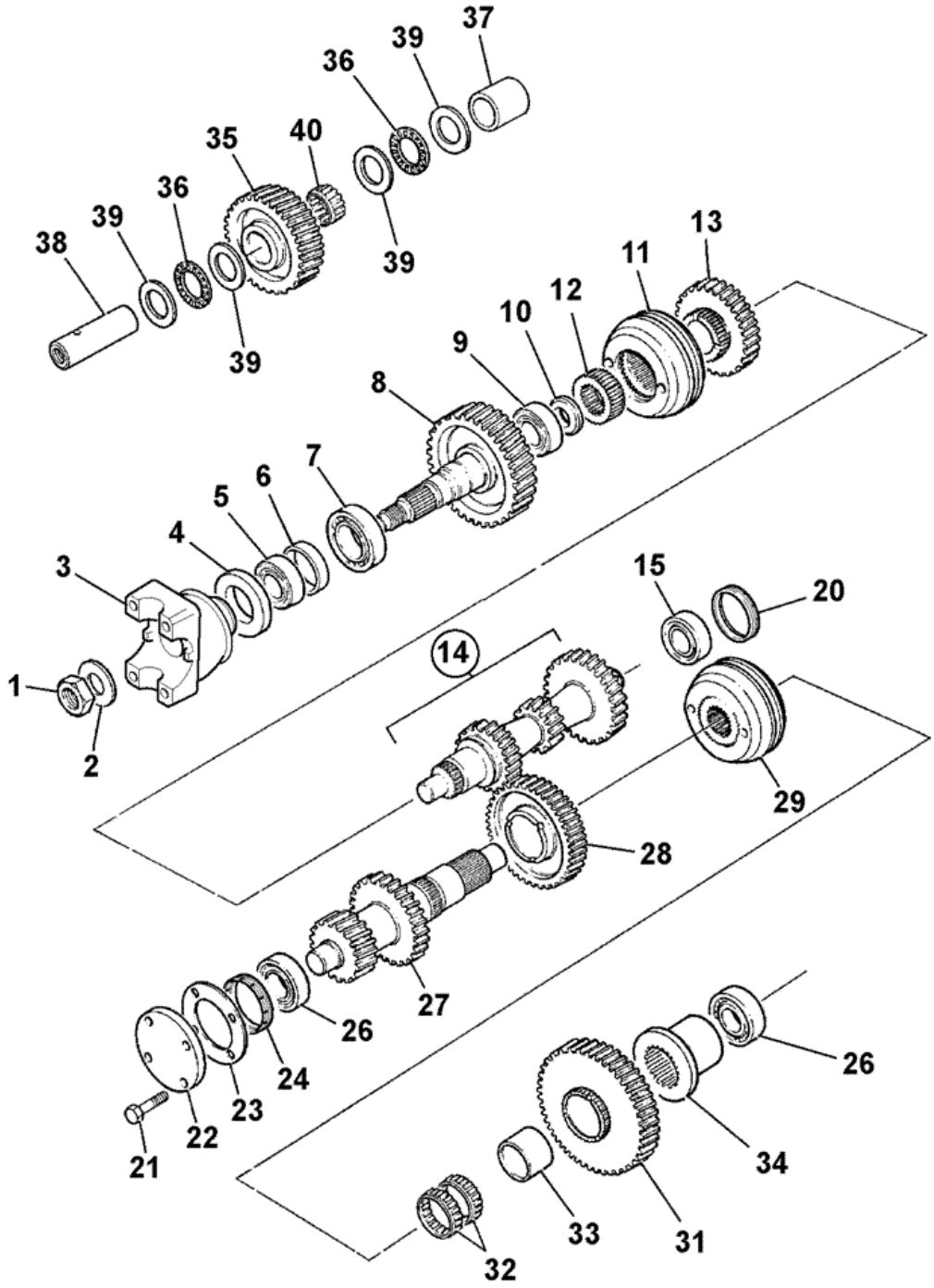

400030

Item	Part #	Change No	Description	Usage Code	QTY
1	826/01551		Nut Stake M30 (46mm Head)		1

2	460/32202		Washer		1
3	459/70317		Yoke coupling - 1480 35 t		1
4	904/20172		Seal TRIPLE LIP 53.6 x 80.35 x 12		1
5	907/51600		Bearing taper roller		1
6	921/53400		Kit-Spacer		1
7	907/20045		Bearing taper roller		1
8	459/50208		Gear transfer 38T SS750 low ratio		1
9	907/20005		Bearing taper roller		1
10	445/64302		Spacer mainshaft seal		1
11	445/03300		Synchroniser assembly		1
12	445/03010		Sleeve hub shaft *3rd & 4th speed*		1
13	459/50206		Gear 3rd speed SS750 low ratio		1
14	459/50205		Gear mainshaft, SS750		1
15	907/52800		Bearing 35 x 65 x 18		1
20	459/70275	<G/00740/1	Nut mainshaft setting		1
20	459/70378	>G/00740/2	Kit graded spacers		1
21	826/01416	<G/00740/1	Screw micro-encapsulated		4
22	331/23731	<G/00740/1	Cover Layshaft		1
23	813/10176	<G/00740/1	Gasket		1
24	459/70274	<G/00740/1	Nut layshaft setting		1
24	459/70379	>G/00740/1	Kit graded spacers		1
26	907/20049		Bearing taper roller		2
27	459/50188		Layshaft low ratio		1
28	459/50511		Gear 2nd 40t SS700 *2nd 40 Teeth*		1
29	459/50520		Synchroniser assembly		1
31	459/50509		Gear 1st 44t SS700 *1st*		1
32	917/02300		Bearing		2
33	917/00008		Bearing inner race		1
34	445/03013		Spacer		1
35	459/50440		Gear idler, 35T *35 Teeth*		1
37	459/70206		Spacer idler gear		1
38	459/70087		Shaft idler		1
39	823/00451		Washer thrust		4
40	917/02400		Bearing needle roller		1

9812/0080 F5-2-31 441/00750 - 2WD-2WS, REVERSER UNIT, 459/10097, JCB DIESELMAX ENGINE

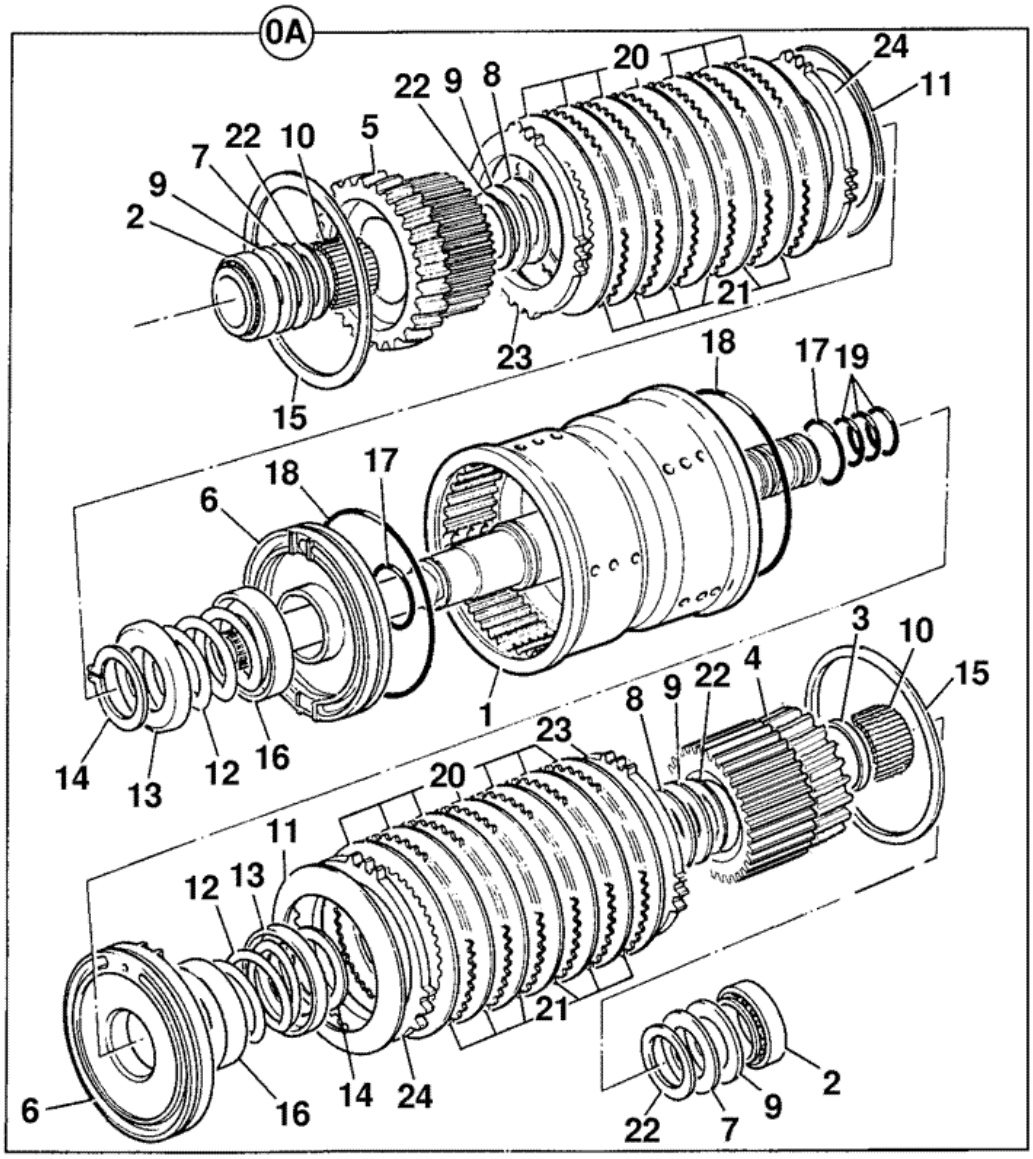

376130

Item	Part #	Change No	Description	Usage Code	QTY
A	459/10097		Clutch assembly input, reverser		1

1	:459/50503		Housing input clutch SS700		1
2	:907/20012		Bearing taper roller		2
3	:823/10355		Spacer		1
4	:459/50428		Gear 31T & plate carrier		1
5	:459/50429		Gear 22T & plate carrier		1
6	:459/10096		Piston		2
7	:823/10264		Washer thrust		2
8	:823/10265		Washer thrust		2
9	:917/10006		Bearing needle thrust		4
10	:917/50600		Bearing needle roller		2
11	:814/10115		Disc spring, spline		2
12	:814/00345		Spring		2
13	:823/10266		Washer spring retainer		2
14	:821/00296		Circlip external		2
15	:821/M2136		Circlip internal *was 826/10467*		2
16	:331/16558		Plate oil baffle		2
17	:828/10180		O Ring		2
18	:828/10181		O Ring 130mm I/D		2
19	:904/50024		Seal ring		4
20	:331/16520		Plate friction, clutch		10
21	:331/16516		Plate counter, clutch		10
22	:823/10316		Washer thrust bevelled		4
23	:331/16517		Plate pressure, clutch 6.0 mm		2
24	:331/16519		Plate shim, clutch 1.2mm		0

Product Catalog \ CONSTRUCTION \ NORTH AMERICA \ CONSTRUCTION / INDUSTRIAL \ BACKHOE LOADER 3CX,4CX,214,215,217 \ 3C PLUS (91HP) , Made in Brazil with Dieselmax/IESA Engine 9812/0080 \ F AXLES, WHEELS & TRANSMISSION \ F05 TRANSMISSIONS SYNCHROSHUTTLE

9812/0080 F5-2-51 441/00750 - 2WD-2WS, GEAR CHANGE, JCB DIESELMAX ENGINE

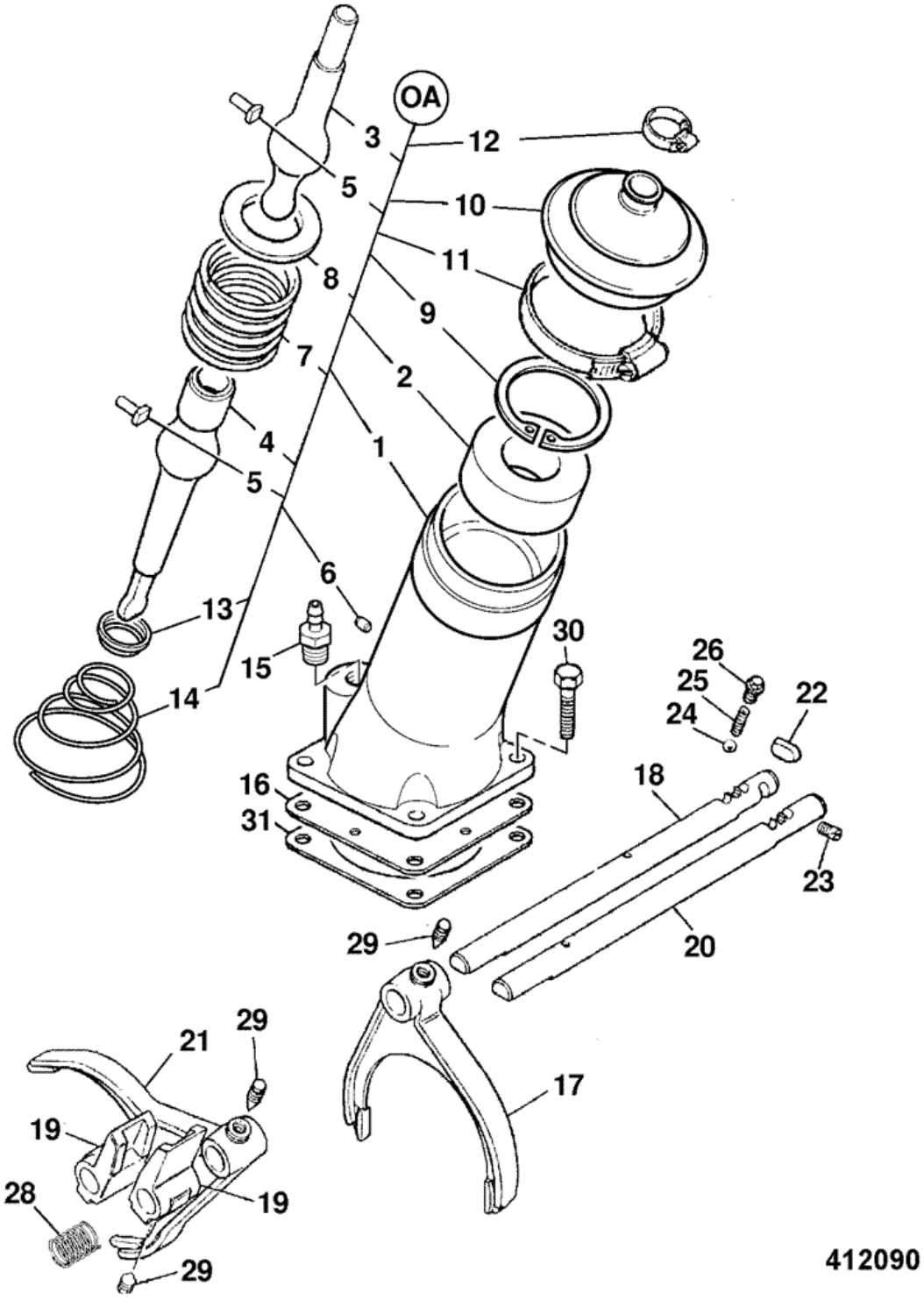

Item	Part #	Change No	Description	Usage Code	QTY
A	459/10143		Lever assembly gear turret		1

1	:459/30295		Housing turret, gear lever		1
2	:445/10802		Seat		1
3	:445/05501		Lever gear		1
4	:459/70271		Lever bottom gearshift		1
5	:445/03023		Pin		2
6	:835/10036		Plug		1
7	:814/00233		Spring		1
8	:445/10803		Washer ball		1
9	:2203/1080		Circlip		1
10	:331/25566		Gaiter gear lever		1
11	:821/10163		Clip worm drive		1
12	:445/05302		Clip		1
13	:445/03020		Retainer spring		1
14	:814/00221		Spring		1
15	:816/13382		Adapter hose		1
16	:460/17603		Baffle		1
17	459/30297		Fork selector 1st		1
18	459/70181		Shaft selector *use 459/M2082*		1
18	459/M2082		Shaft selector		1
19	459/70199		Block selector		2
20	459/70181		Shaft selector *use 459/M2082*		1
20	459/M2082		Shaft selector *use 459/M2082*		1
21	459/30299		Fork selector 3rd		1
22	445/03031		Roller baulk		1
23	816/80027		Plug		1
24	916/00006		Ball 11mm dia		2
25	814/00354		Spring		2
26	816/80057		Plug detent		2
27	445/05302		Clip		2
28	814/00406		Spring		1
29	445/26110		Screw		4
30	826/01416		Screw micro-encapsulated		4
31	813/50042		Gasket		1

Product Catalog \ CONSTRUCTION \ NORTH AMERICA \ CONSTRUCTION / INDUSTRIAL \ BACKHOE LOADER 3CX,4CX,214,215,217 \ 3C PLUS (91HP) , Made in Brazil with Dieselmax/IESA Engine 9812/0080 \ F AXLES, WHEELS & TRANSMISSION \ F05 TRANSMISSIONS SYNCHROSHUTTLE

9812/0080 F5-3-11 441/00500 - 4WD, EXTERNAL COMPONENTS, INTERNATIONAL ENGINE

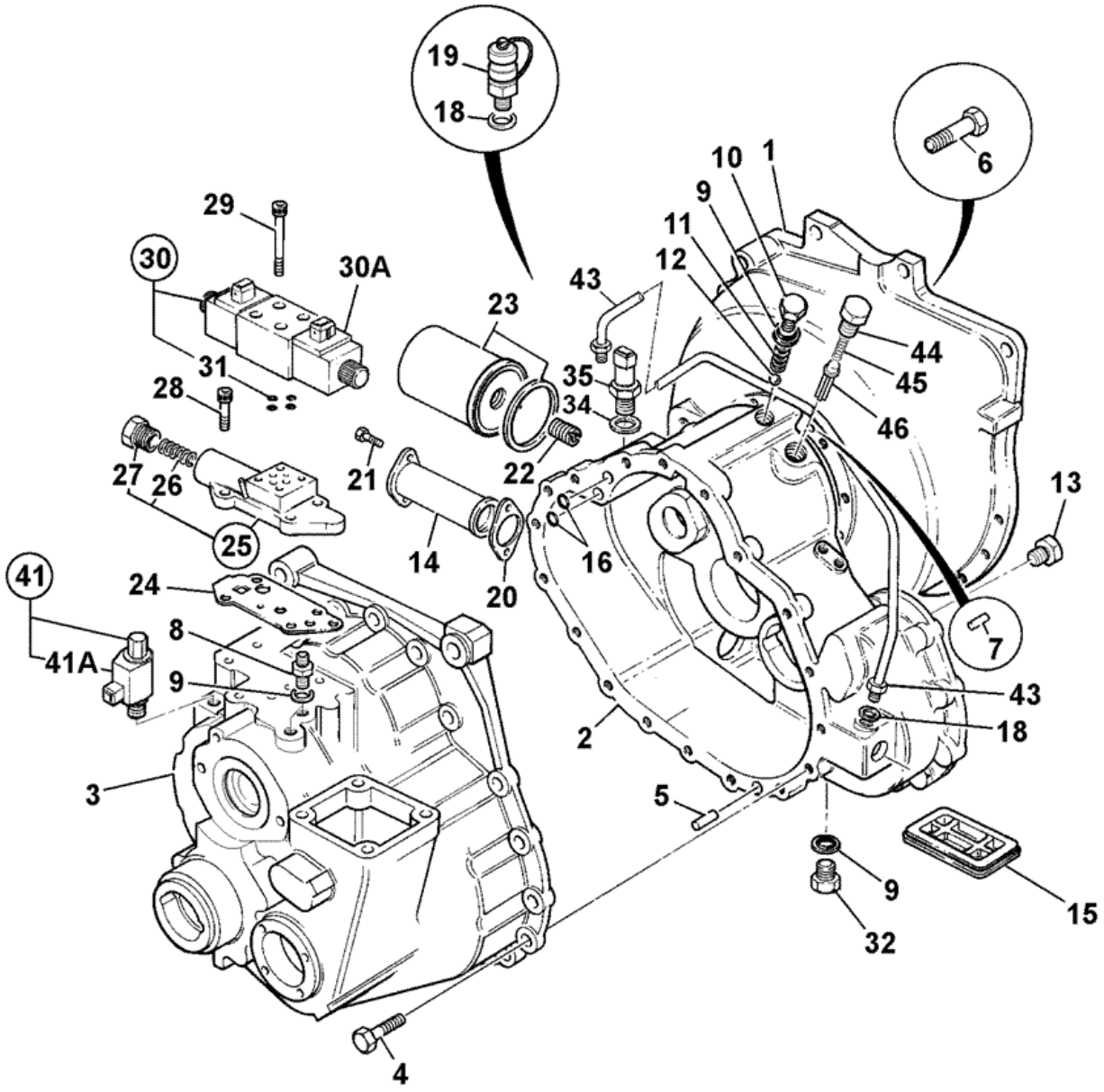

398710

Item	Part #	Change No	Description	Usage Code	QTY
1	:459/70442		Casing flywheel housing		1

2	:459/30271		Casing front SS700		1
3	:459/30272	<G00500/3	Casing rear SS700 4WD	A	1
3	:459/30435	>G00500/4	Casing rear	B	1
3	:459/M2870	>G00500/8	Casing rear	C	1
4	:826/01417		Bolt		18
5	:445/14001		Dowel		2
6	:1315/0409Z		Screw M10x35mm		12
7	:445/14001		Dowel		2
8	:1606/0017		Adapter 5/8" x 1/2" M/M		2
9	:1406/0018		Seal bonded 1/2" BSP		4
10	:816/80041		Plug 1/2"BSP 25.65mm A/F		3
11	:814/00222		Spring		1
12	:916/00008		Bearing 14dia ball		2
13	:816/80051		Plug 1/8" tapered		8
14	:32/902200		Strainer suction		1
15	:445/13703		Cover flywheel housing 110mm x 79mm x 17mm		1
16	:828/10222		O Ring		2
18	:1406/0011		Seal bonded		2
19	45/905000		Adapter pressure test 1/4BSP male		1
20	813/50027		Gasket		1
21	:1321/0303Z		Screw M8 x 16		2
22	:816/15184		Adapter 1/2"BSPx1"UNF		1
23	:581/18063		Element transmission filter 94mm long		1
24	:813/10175		Gasket valve block		1
25	:459/10144		Valve Adapter block assy SS700 low ratio		1
26	::814/00412		Spring		1
27	::816/80063		Plug		1
28	:1392/3207		Capscrew		4
29	:1391/3108Z		Capscrew M5 X 30mm		4
30	25/220998		Valve solenoid assembly		1
30A	:25/221054		Coil 12V		1
31	::35/100801		Kit-seal solenoid valve		1
32	:816/80041		Plug 1/2"BSP 25.65mm A/F		1
35	:701/80319		Switch oil pressure,M12 green body,Deutsch		1
35A	1406/0011		Seal bonded		1
40	:813/50041		Seal rear		1
41	25/220992		Valve solenoid assembly	A	1
41	25/220804		Valve solenoid assembly	B	1
41	25/222913		Valve cartridge 2 screw fixing	C	1
41A	:25/221056		Coil cartridge valve	A	1
41B	:1391/3303Z		Capscrew M8x16 *to hold 25/220804*	B	1
41C	:459/M2855		Plate hold down 6mm thick *to hold 25/220804*	B	1
41D	1391/3101Z		Capscrew *to hold 25/222913*	C	2
43	830/11842		Pipe assembly 4WD *740mm long*		1
44	816/80061		Plug		1
45	814/10153		Spring compression T/C press.maint		1
46	459/70168		Spool Adapter Solenoid		1

Product Catalog \ CONSTRUCTION \ NORTH AMERICA \ CONSTRUCTION / INDUSTRIAL \ BACKHOE LOADER 3CX,4CX,214,215,217 \ 3C PLUS (91HP) , Made in Brazil with Dieselmax/IESA Engine 9812/0080 \ F AXLES, WHEELS & TRANSMISSION \ F05 TRANSMISSIONS SYNCHROSHUTTLE

9812/0080 F5-3-21 441/00500 - 4WD, INTERNAL COMPONENTS, JCB DIESELMAX ENGINE

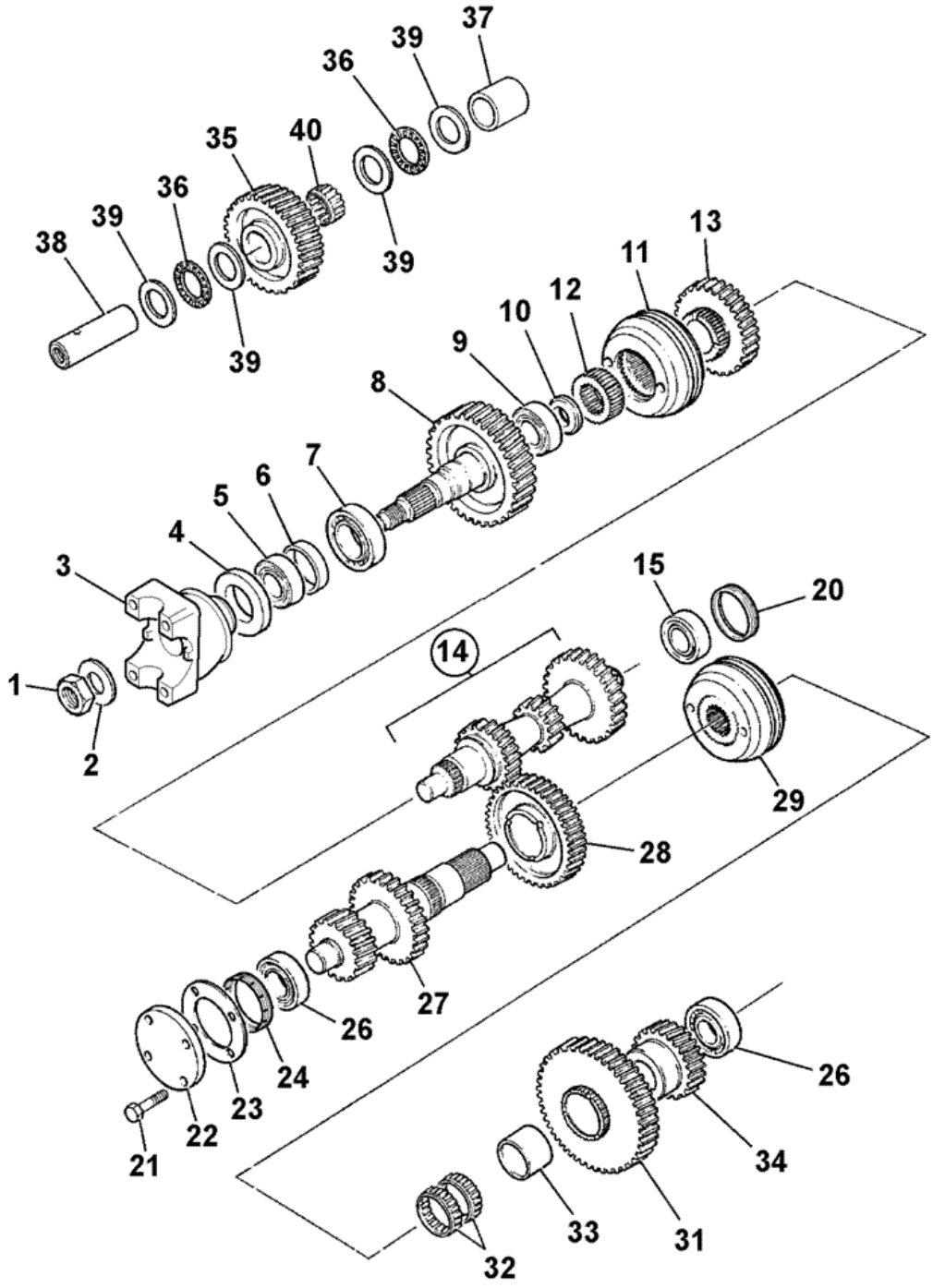

398700

Item	Part #	Change No	Description	Usage Code	QTY
1	826/01551		Nut Stake M30 (46mm Head)		1

2	460/32202		Washer		1
3	459/70317		Yoke coupling - 1480 35 t		1
4	904/20172		Seal TRIPLE LIP 53.6 x 80.35 x 12		1
5	907/51600		Bearing taper roller		1
6	921/53400		Kit-Spacer		1
7	907/53800		Bearing		1
8	459/50208		Gear transfer 38T SS750 low ratio		1
9	907/20005		Bearing taper roller		1
10	445/64302		Spacer mainshaft seal		1
11	445/03300		Synchroniser assembly		1
12	445/03010		Sleeve hub shaft *3rd & 4th speed*		1
13	459/50206		Gear 3rd speed SS750 low ratio		1
14	459/50205		Gear mainshaft, SS750		1
15	907/52800		Bearing 35 x 65 x 18		1
20	459/70275		Nut mainshaft setting		1
21	826/01416		Screw micro-encapsulated		4
22	331/23731		Cover Layshaft		1
23	813/10176		Gasket		1
24	459/70274		Nut layshaft setting		1
26	907/09600		Bearing 35 x 73 x 24		2
27	459/50188		Layshaft low ratio		1
28	459/50511		Gear 2nd 40t SS700 *2nd 40 Teeth*		1
29	459/50520		Synchroniser assembly		1
31	459/50509		Gear 1st 44t SS700 *1st*		1
32	917/02300		Bearing		2
33	917/00008		Bearing inner race		1
34	.		'See Remark' *See frame F5-14-1*		1
35	459/50440		Gear idler, 35T *35 Teeth*		1
37	459/70206		Spacer idler gear		1
38	459/70087		Shaft idler		1
39	823/00451		Washer thrust		4
40	917/02400		Bearing needle roller		1

Product Catalog \ CONSTRUCTION \ NORTH AMERICA \ CONSTRUCTION / INDUSTRIAL \ BACKHOE LOADER 3CX,4CX,214,215,217 \ 3C PLUS (91HP) , Made in Brazil with Dieselmax/IESA Engine 9812/0080 \ F AXLES, WHEELS & TRANSMISSION \ F05 TRANSMISSIONS SYNCHROSHUTTLE

9812/0080 F5-3-31 441/00500 - 4WD, REVERSER UNIT, 459/10097, JCB DIESELMAX ENGINE

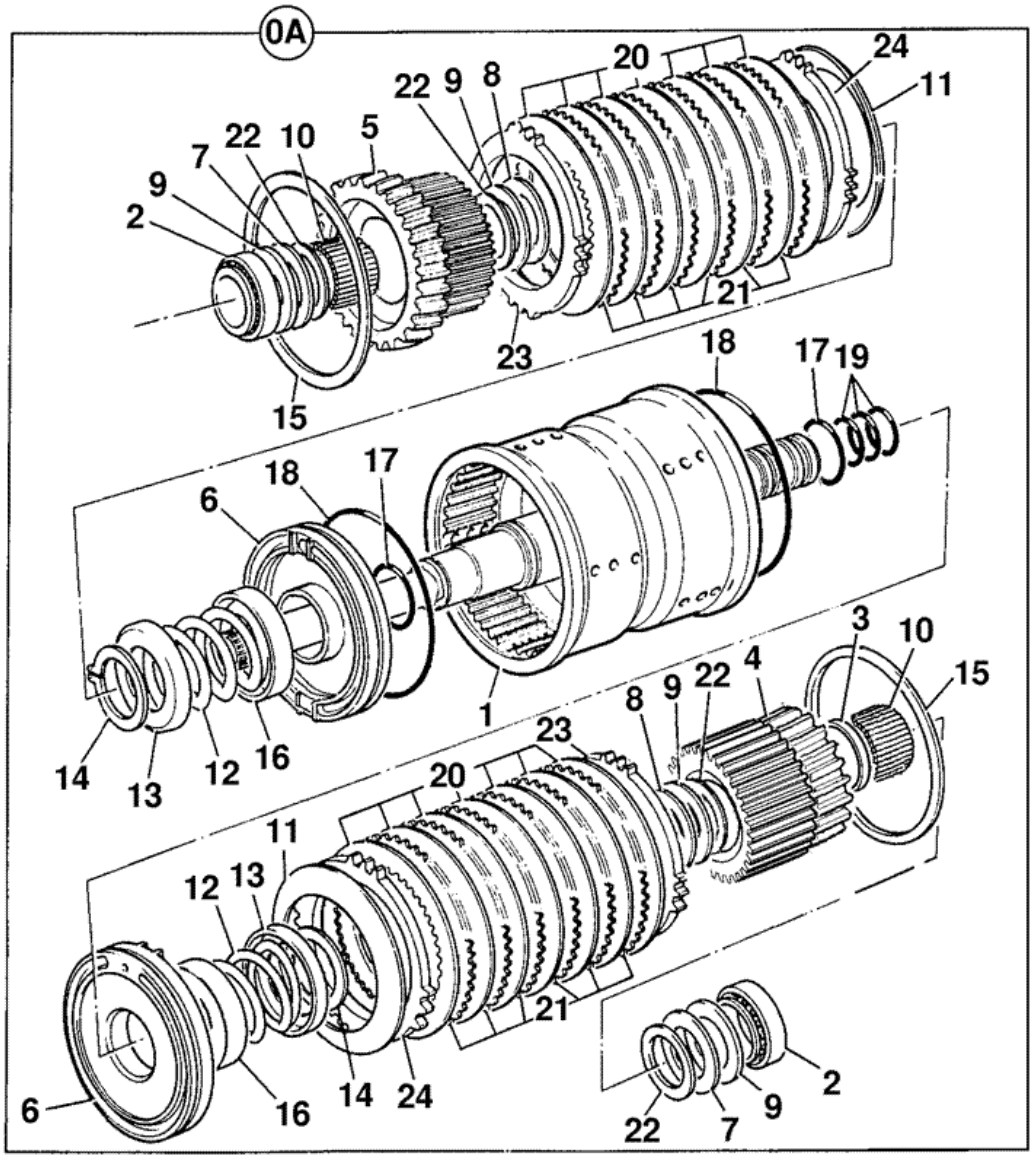

376130

Item	Part #	Change No	Description	Usage Code	QTY
A	459/10097		Clutch assembly input, reverser		1

1	:459/50503		Housing input clutch SS700		1
2	:907/20012		Bearing taper roller		2
3	:823/10355		Spacer		1
4	:459/50428		Gear 31T & plate carrier		1
5	:459/50429		Gear 22T & plate carrier		1
6	:459/10096		Piston		2
7	:823/10264		Washer thrust		2
8	:823/10265		Washer thrust		2
9	:917/10006		Bearing needle thrust		4
10	:917/50600		Bearing needle roller		2
11	:814/10115		Disc spring, spline		2
12	:814/00345		Spring		2
13	:823/10266		Washer spring retainer		2
14	:821/00296		Circlip external		2
15	:821/M2136		Circlip internal *was 826/10467*		2
16	:331/16558		Plate oil baffle		2
17	:828/10180		O Ring		2
18	:828/10181		O Ring 130mm I/D		2
19	:904/50024		Seal ring		4
20	:331/16520		Plate friction, clutch		10
21	:331/16516		Plate counter, clutch		10
22	:823/10316		Washer thrust bevelled		4
23	:331/16517		Plate pressure, clutch 6.0 mm		2
24	:331/16519		Plate shim, clutch 1.2mm		0

Product Catalog \ CONSTRUCTION \ NORTH AMERICA \ CONSTRUCTION / INDUSTRIAL \ BACKHOE LOADER 3CX,4CX,214,215,217 \ 3C PLUS (91HP) , Made in Brazil with Dieselmax/IESA Engine 9812/0080 \ F AXLES, WHEELS & TRANSMISSION \ F05 TRANSMISSIONS SYNCHROSHUTTLE

9812/0080 F5-3-41 441/00500 - 4WD, 4WD CLUTCH ASSEMBLY, 459/10119, JCB DIESELMAX ENGINE

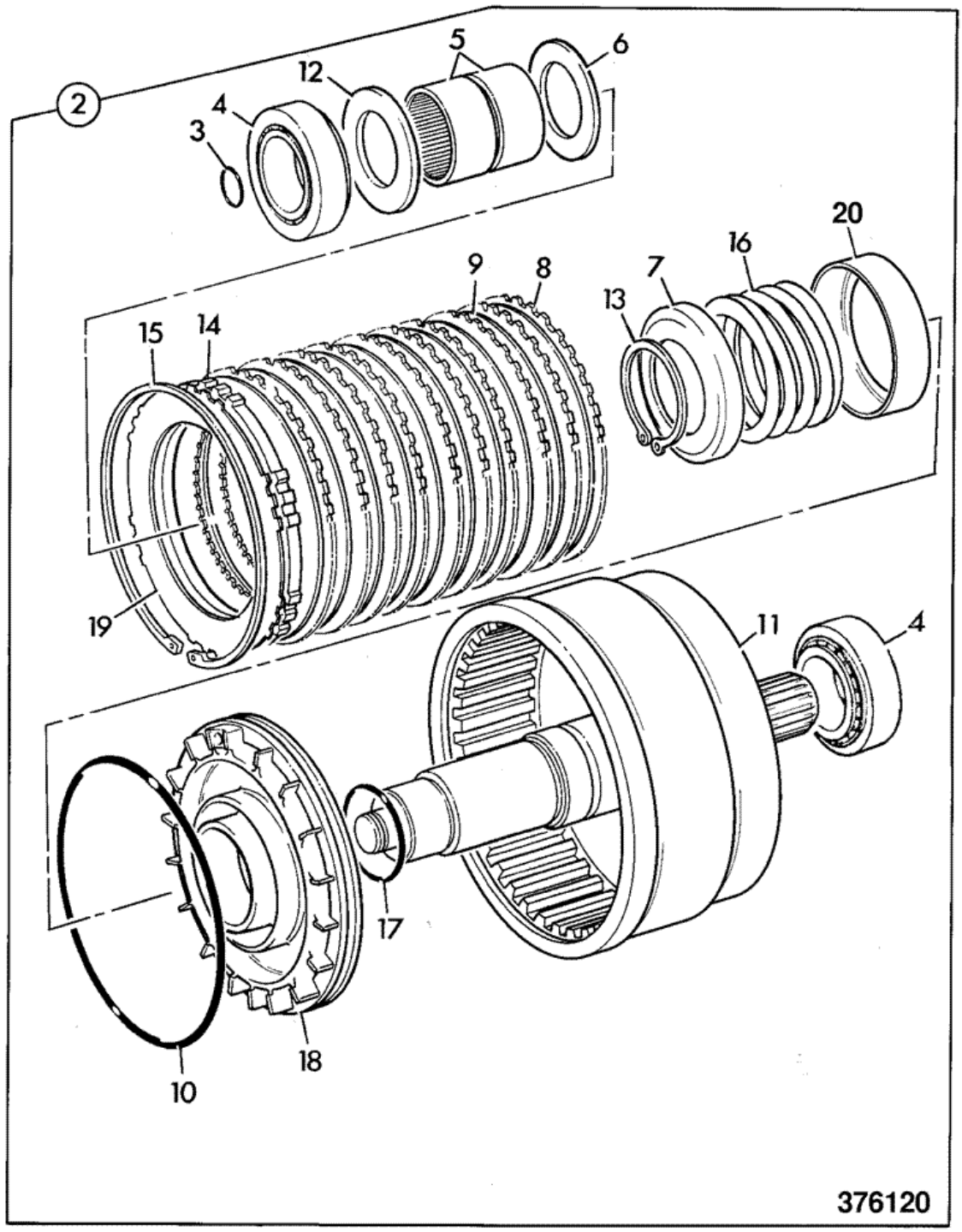

Item	Part #	Change No	Description	Usage Code	QTY
2	459/10119		Clutch assembly 4WD		1

3	:904/14300		Seal ring 'TURQUOISE'		1
4	:907/52800		Bearing 35 x 65 x 18		2
5	:917/02700		Bearing		2
6	:445/19808		Washer thrust, 3.5mm thick phosphated		1
7	:445/12304		Retainer spring		1
8	:445/12307		Plate counter		10
9	:445/03205		Plate friction		10
10	:828/00414		O Ring 123.5mm I/D		1
11	:459/50483		Housing 4wd clutch		1
12	:823/10364		Washer thrust		1
13	:821/00523		Circlip		1
14	:449/10601		Plate pressure 4mm		1
15	:2203/1115		Circlip		1
16	:814/00297		Spring		1
17	:828/00224		O Ring 39.7mm I/D X 3.53mm		1
18	:445/12316		Piston reverser c/w oil baffle		1
19	:445/12314		Shim plate, toothed		0

Product Catalog \ CONSTRUCTION \ NORTH AMERICA \ CONSTRUCTION / INDUSTRIAL \ BACKHOE LOADER 3CX,4CX,214,215,217 \ 3C PLUS (91HP) , Made in Brazil with Dieselmax/IESA Engine 9812/0080 \ F AXLES, WHEELS & TRANSMISSION \ F05 TRANSMISSIONS SYNCHROSHUTTLE

9812/0080 F5-3-51 441/00500 - 4WD, GEAR CHANGE, JCB DIESELMAX ENGINE

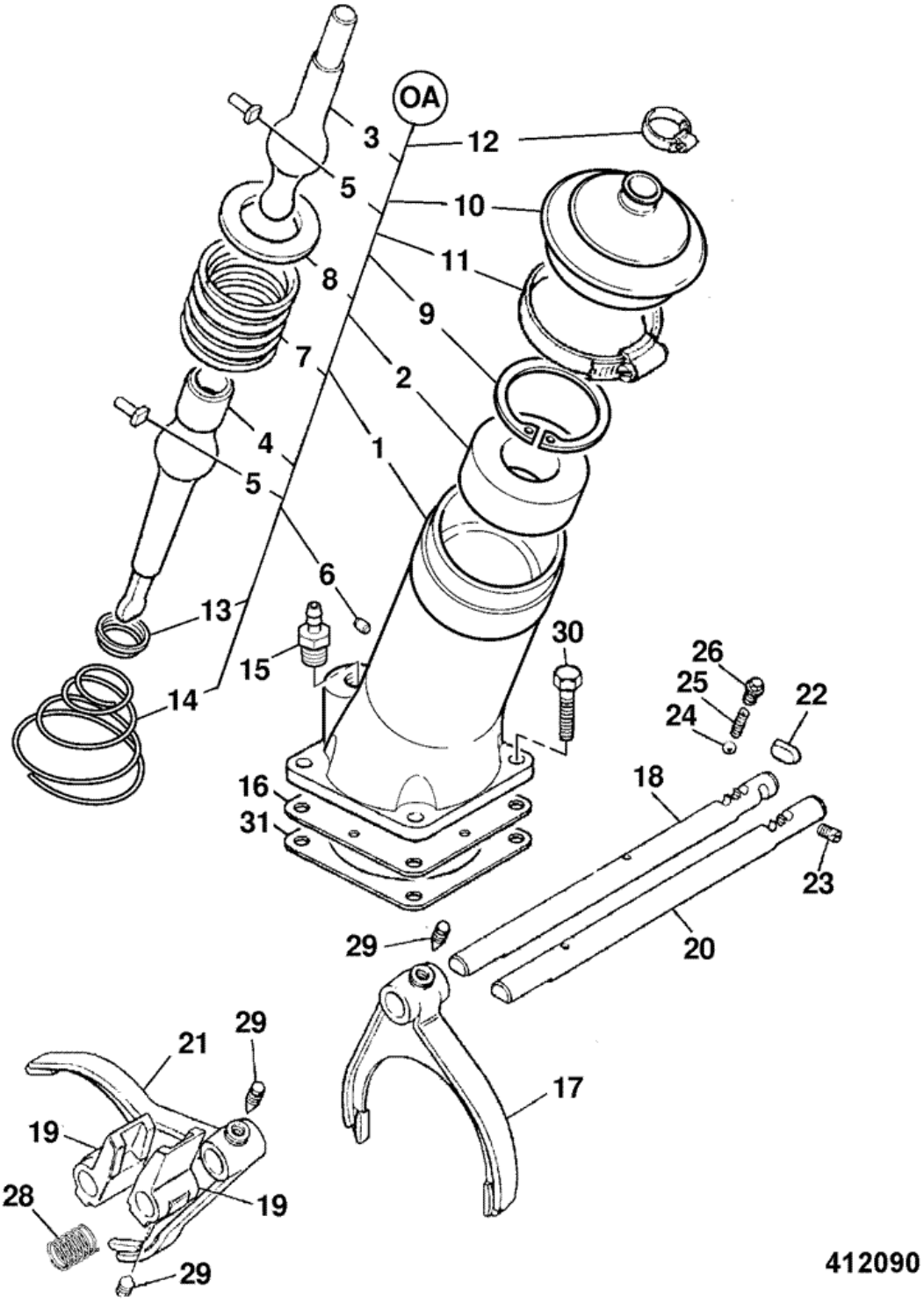

Item	Part #	Change No	Description	Usage Code	QTY
A	459/10143		Lever assembly gear turret		1

1	:459/30295		Housing turret, gear lever		1
2	:445/10802		Seat		1
3	:445/05501		Lever gear		1
4	:459/70271		Lever bottom gearshift		1
5	:445/03023		Pin		2
6	:835/10036		Plug		1
7	:814/00233		Spring		1
8	:445/10803		Washer ball		1
9	:2203/1080		Circlip		1
10	:331/25566		Gaiter gear lever		1
11	:821/10163		Clip worm drive		1
12	:445/05302		Clip		1
13	:445/03020		Retainer spring		1
14	:814/00221		Spring		1
15	:816/13382		Adapter hose		1
16	:460/17603		Baffle		1
17	459/30297		Fork selector 1st		1
18	459/70181		Shaft selector *use 459/M2082*		1
18	459/M2082		Shaft selector		1
19	459/70199		Block selector		2
20	459/70181		Shaft selector *use 459/M2082*		1
20	459/M2082		Shaft selector		1
21	459/30299		Fork selector 3rd		1
22	445/03031		Roller baulk		1
23	816/80027		Plug		1
24	916/00006		Ball 11mm dia		2
25	814/00354		Spring		2
26	816/80057		Plug detent		2
27	445/05302		Clip		2
28	814/00406		Spring		1
29	445/26110		Screw		4
30	826/01416		Screw micro-encapsulated		4
31	813/50042		Gasket		1

9812/0080 F5-4-11 441/00760 - 4WD, EXTERNAL COMPONENTS, JCB DIESELMAX ENGINE

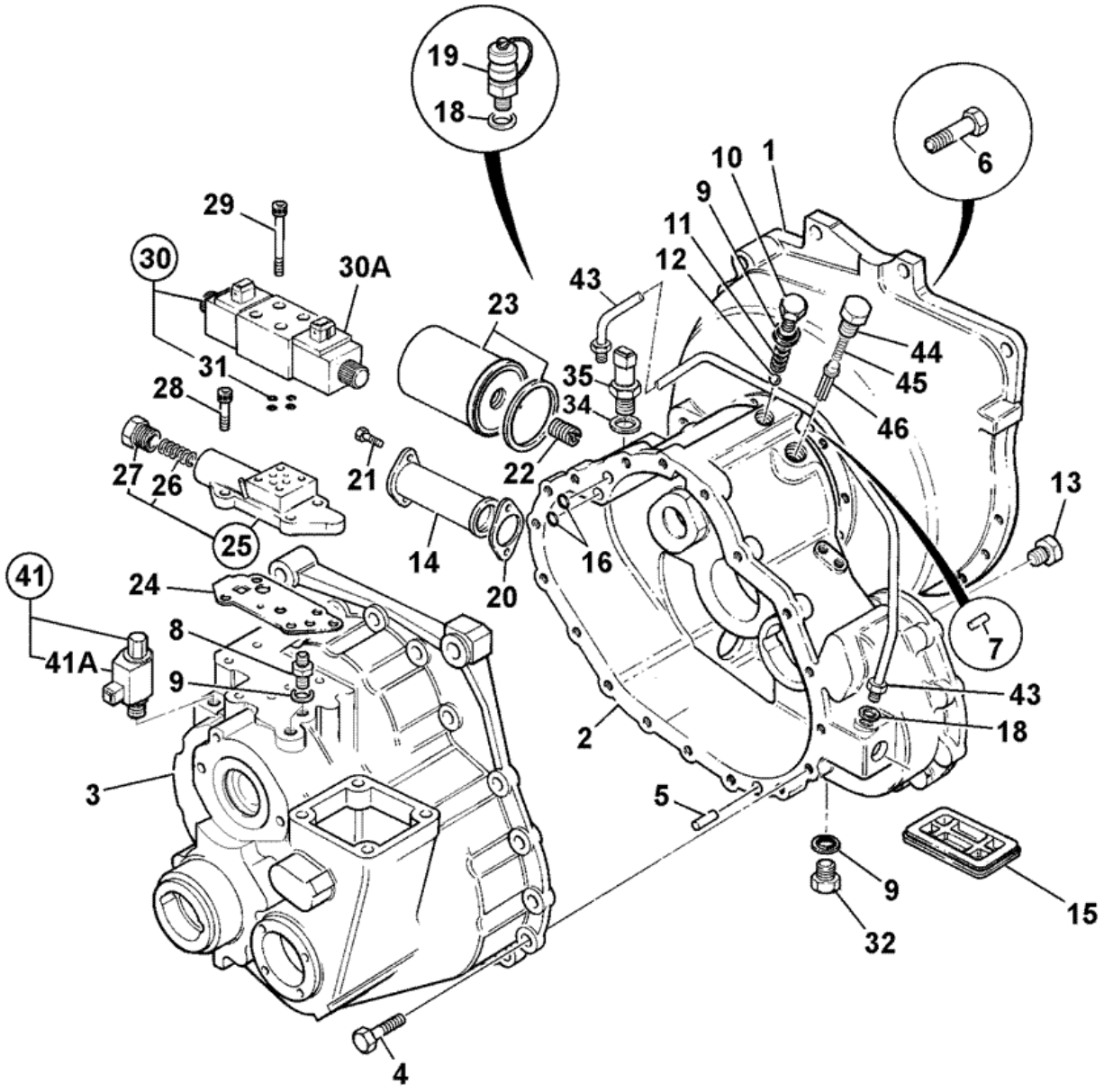

398710

Item	Part #	Change No	Description	Usage Code	QTY
1	:459/30397	<G/00760/1	Housing flywheel		1

1	:459/30464	>G/00760/2	Housing flywheel		1
2	:459/30382	<G/00760/1	Casing front		1
2	:459/30463	>G/00760/2	Casing front		1
3	:459/30272	<G/00760/1	Casing rear SS700 4WD		1
3	:459/30435	>G/00760/2	Casing rear		1
3	:459/M2870	>G/00760/7	Casing rear		1
4	:826/01417		Bolt		18
5	:445/14001		Dowel		2
6	:1315/0409Z		Screw M10x35mm		12
7	:445/14001		Dowel		2
8	:1606/0017		Adapter 5/8" x 1/2" M/M		2
9	:1406/0018		Seal bonded 1/2" BSP		4
10	:816/80041		Plug 1/2"BSP 25.65mm A/F		3
11	:814/00222		Spring		1
12	:916/00008		Bearing 14dia ball		2
13	:816/80051		Plug 1/8" tapered		8
14	:32/902200		Strainer suction		1
15	:.		'See Remark' *no longer fitted*		1
16	:828/10222		O Ring		2
18	:1406/0011		Seal bonded		2
19	45/905000		Adapter pressure test 1/4BSP male		1
20	813/50027		Gasket		1
21	:1321/0303Z		Screw M8 x 16		2
22	:816/15184		Adapter 1/2"BSPx1"UNF		1
23	:581/18076		Element transmission filter 120.7mm long		1
24	:813/10175		Gasket valve block		1
25	:459/10144		Valve Adapter block assy SS700 low ratio		1
26	::814/00412		Spring		1
27	::816/80063		Plug		1
28	:1392/3207		Capscrew		4
29	:1391/3108Z		Capscrew M5 X 30mm		4
30	25/220998		Valve solenoid assembly		1
30A	:25/221054		Coil 12V		1
31	::35/100801		Kit-seal solenoid valve		1
32	:816/80041		Plug 1/2"BSP 25.65mm A/F		1
35	:701/80319	Superseded	Switch oil pressure,M12 green body,Deutsch		1
35	701/80359		Switch 1/4" BSP Pressure *not supplied with transmission*		1
35	701/80626		Switch oil pressure M12		1
35A	1406/0011		Seal bonded		1
40	:813/50041		Seal rear		1
41	25/220992	<G/00760/1	Valve solenoid assembly		1
41	25/220804	>G/00760/2	Valve solenoid assembly		1
41	25/222913	>G/00760/7	Valve cartridge 2 screw fixing		1
41A	:25/221056	<G/00760/1	Coil cartridge valve		1
41B	:459/M2855	>G/00760/2	Plate hold down 6mm thick *to hold 25/220804*		1
41C	:1391/3303Z	>G/00760/2	Capscrew M8x16 *to hold 25/220804*		1
41D	:1391/3101Z	>G/00760/7	Capscrew *to hold 25/222913*		2

43	830/11842		Pipe assembly 4WD *740mm long*		1
44	816/80061		Plug		1
45	814/10153		Spring compression T/C press.maint		1
46	459/70168		Spool Adapter Solenoid		1

9812/0080 F5-4-21 441/00760 - 4WD, INTERNAL COMPONENTS, JCB DIESELMAX ENGINE

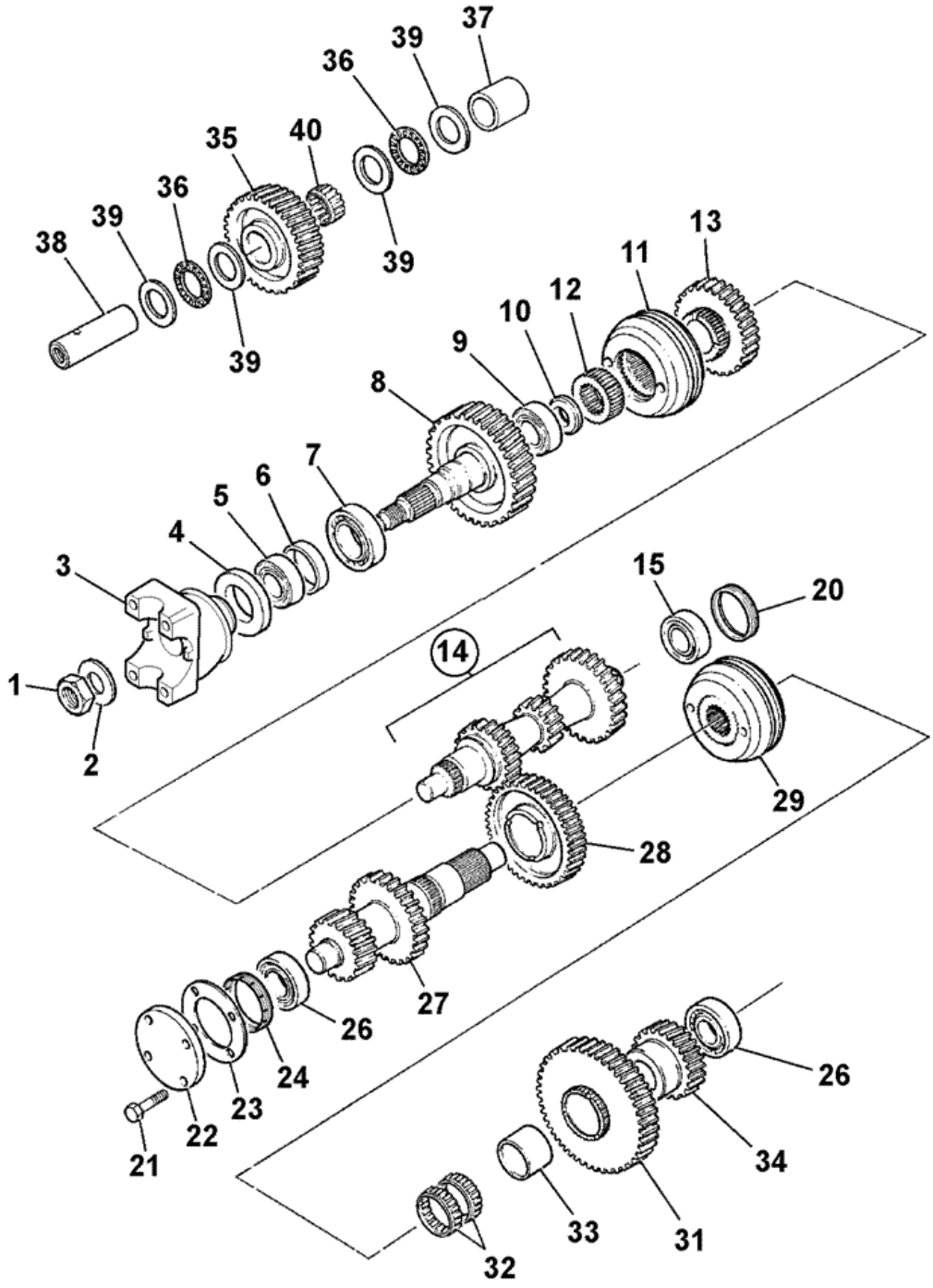

398700

Item	Part #	Change No	Description	Usage Code	QTY
1	826/01551		Nut Stake M30 (46mm Head)		1

2	460/32202		Washer		1
3	459/70317		Yoke coupling - 1480 35 t		1
4	904/20172		Seal TRIPLE LIP 53.6 x 80.35 x 12		1
5	907/51600		Bearing taper roller		1
6	921/53400		Kit-Spacer		1
7	907/20045		Bearing taper roller		1
8	459/50208		Gear transfer 38T SS750 low ratio		1
9	907/20005		Bearing taper roller		1
10	445/64302		Spacer mainshaft seal		1
11	445/03300		Synchroniser assembly		1
12	445/03010		Sleeve hub shaft *3rd & 4th speed*		1
13	459/50206		Gear 3rd speed SS750 low ratio		1
14	459/50205		Gear mainshaft, SS750		1
15	907/52800		Bearing 35 x 65 x 18		1
20	459/70275		Nut mainshaft setting		1
21	826/01416		Screw micro-encapsulated		4
22	331/23731	<G/00680/1	Cover Layshaft		1
23	813/10176	<G/00680/1	Gasket		1
24	459/70274		Nut layshaft setting		1
26	907/20049		Bearing taper roller		2
27	459/50188		Layshaft low ratio		1
28	459/50511		Gear 2nd 40t SS700 *2nd 40 Teeth*		1
29	459/50520		Synchroniser assembly		1
31	459/50509		Gear 1st 44t SS700 *1st*		1
32	917/02300		Bearing		2
33	917/00008		Bearing inner race		1
34	.		'See Remark' *See frame F5-1-1*		1
35	459/50440		Gear idler, 35T		1
36	917/51400		Bearing		2
37	459/70206		Spacer idler gear		1
38	459/70087		Shaft idler		1
39	823/00451		Washer thrust		4
40	917/02400		Bearing needle roller		1

9812/0080 F5-4-31 441/00760 - 4WD, REVERSER UNIT, 459/10097, JCB DIESELMAX ENGINE

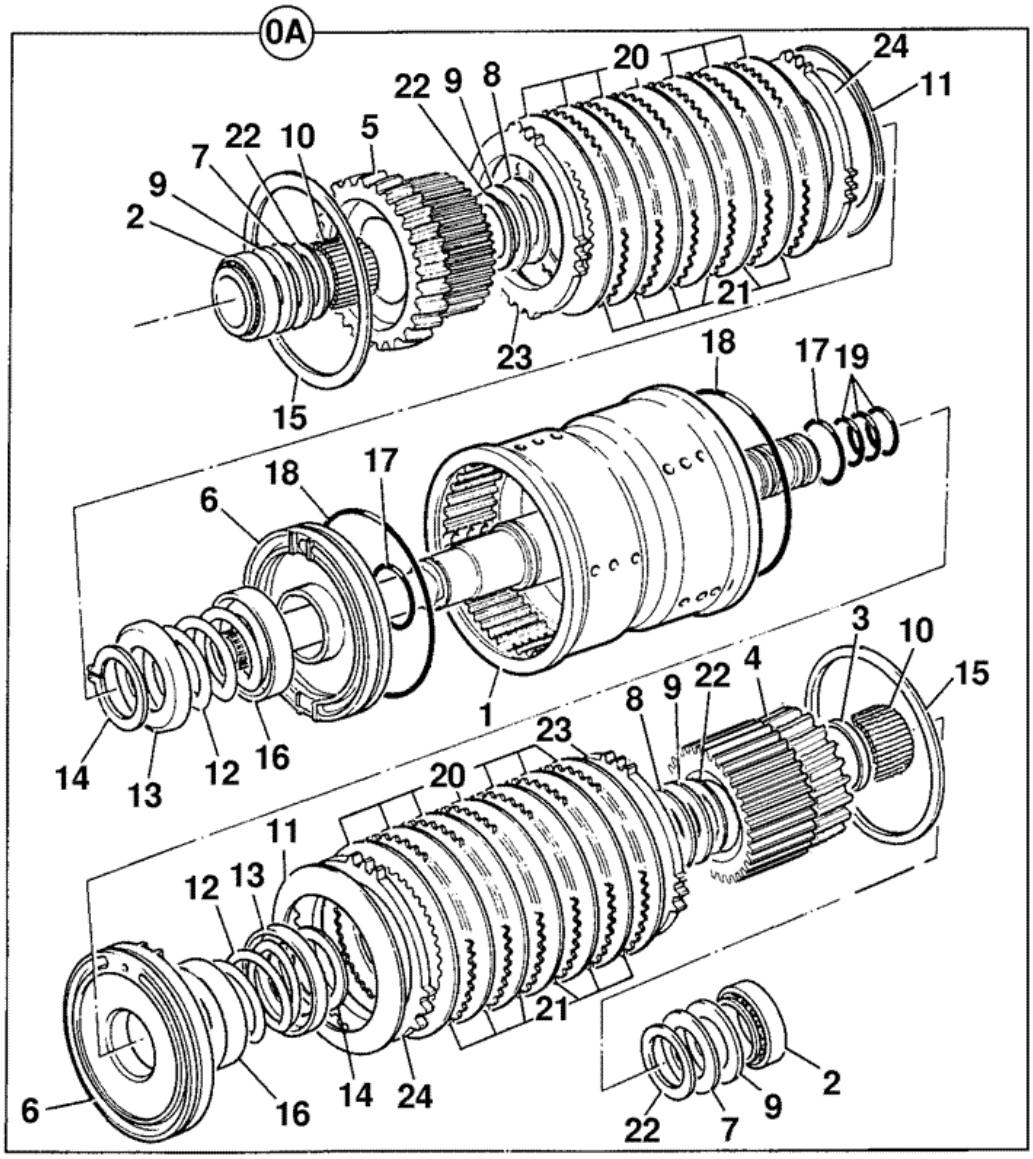

376130

Item	Part #	Change No	Description	Usage Code	QTY
A	459/10097		Clutch assembly input, reverser		1

1	:459/50503		Housing input clutch SS700		1
2	:907/20012		Bearing taper roller		2
3	:823/10355		Spacer		1
4	:459/50428		Gear 31T & plate carrier		1
5	:459/50429		Gear 22T & plate carrier		1
6	:459/10096		Piston		2
7	:823/10264		Washer thrust		2
8	:823/10265		Washer thrust		2
9	:917/10006		Bearing needle thrust		4
10	:917/50600		Bearing needle roller		2
11	:814/10115		Disc spring, spline		2
12	:814/00345		Spring		2
13	:823/10266		Washer spring retainer		2
14	:821/00296		Circlip external		2
15	:821/M2136		Circlip internal *was 826/10467*		2
16	:331/16558		Plate oil baffle		2
17	:828/10180		O Ring		2
18	:828/10181		O Ring 130mm I/D		2
19	:904/50024		Seal ring		4
20	:331/16520		Plate friction, clutch		10
21	:331/16516		Plate counter, clutch		10
22	:823/10316		Washer thrust bevelled		4
23	:331/16517		Plate pressure, clutch 6.0 mm		2
24	:331/16519		Plate shim, clutch 1.2mm		0

Product Catalog \ CONSTRUCTION \ NORTH AMERICA \ CONSTRUCTION / INDUSTRIAL \ BACKHOE LOADER 3CX,4CX,214,215,217 \ 3C PLUS (91HP) , Made in Brazil with Dieselmax/IESA Engine 9812/0080 \ F AXLES, WHEELS & TRANSMISSION \ F05 TRANSMISSIONS SYNCHROSHUTTLE

9812/0080 F5-4-41 441/00760 - 4WD, 4WD CLUTCH ASSEMBLY, 459/10119, JCB DIESELMAX ENGINE

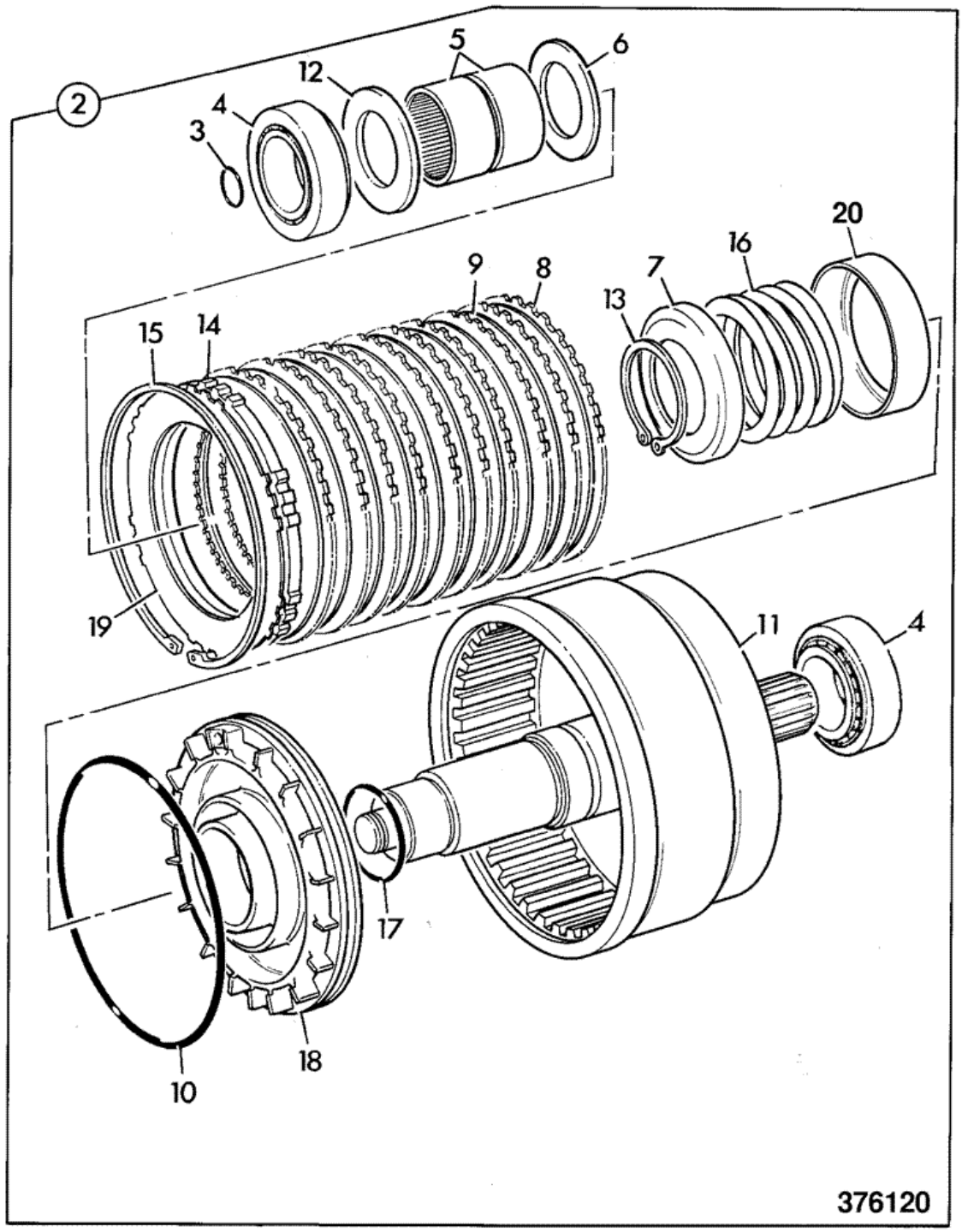

Item	Part #	Change No	Description	Usage Code	QTY
2	459/10119		Clutch assembly 4WD		1

3	:904/14300		Seal ring 'TURQUOISE'		1
4	:907/52800		Bearing 35 x 65 x 18		2
5	:917/02700		Bearing		2
6	:445/19808		Washer thrust, 3.5mm thick phosphated		1
7	:445/12304		Retainer spring		1
8	:445/12307		Plate counter		10
9	:445/03205		Plate friction		10
10	:828/00414		O Ring 123.5mm I/D		1
11	:459/50483		Housing 4wd clutch		1
12	:823/10364		Washer thrust		1
13	:821/00523		Circlip		1
14	:449/10601		Plate pressure 4mm		1
15	:2203/1115		Circlip		1
16	:814/00297		Spring		1
17	:828/00224		O Ring 39.7mm I/D X 3.53mm		1
18	:445/12316		Piston reverser c/w oil baffle		1
19	:445/12314		Shim plate, toothed		0

Product Catalog \ CONSTRUCTION \ NORTH AMERICA \ CONSTRUCTION / INDUSTRIAL \ BACKHOE LOADER 3CX,4CX,214,215,217 \ 3C PLUS (91HP) , Made in Brazil with Dieselmax/IESA Engine 9812/0080 \ F AXLES, WHEELS & TRANSMISSION \ F05 TRANSMISSIONS SYNCHROSHUTTLE

9812/0080 F5-4-51 441/00760 - 4WD, GEAR CHANGE, JCB DIESELMAX ENGINE

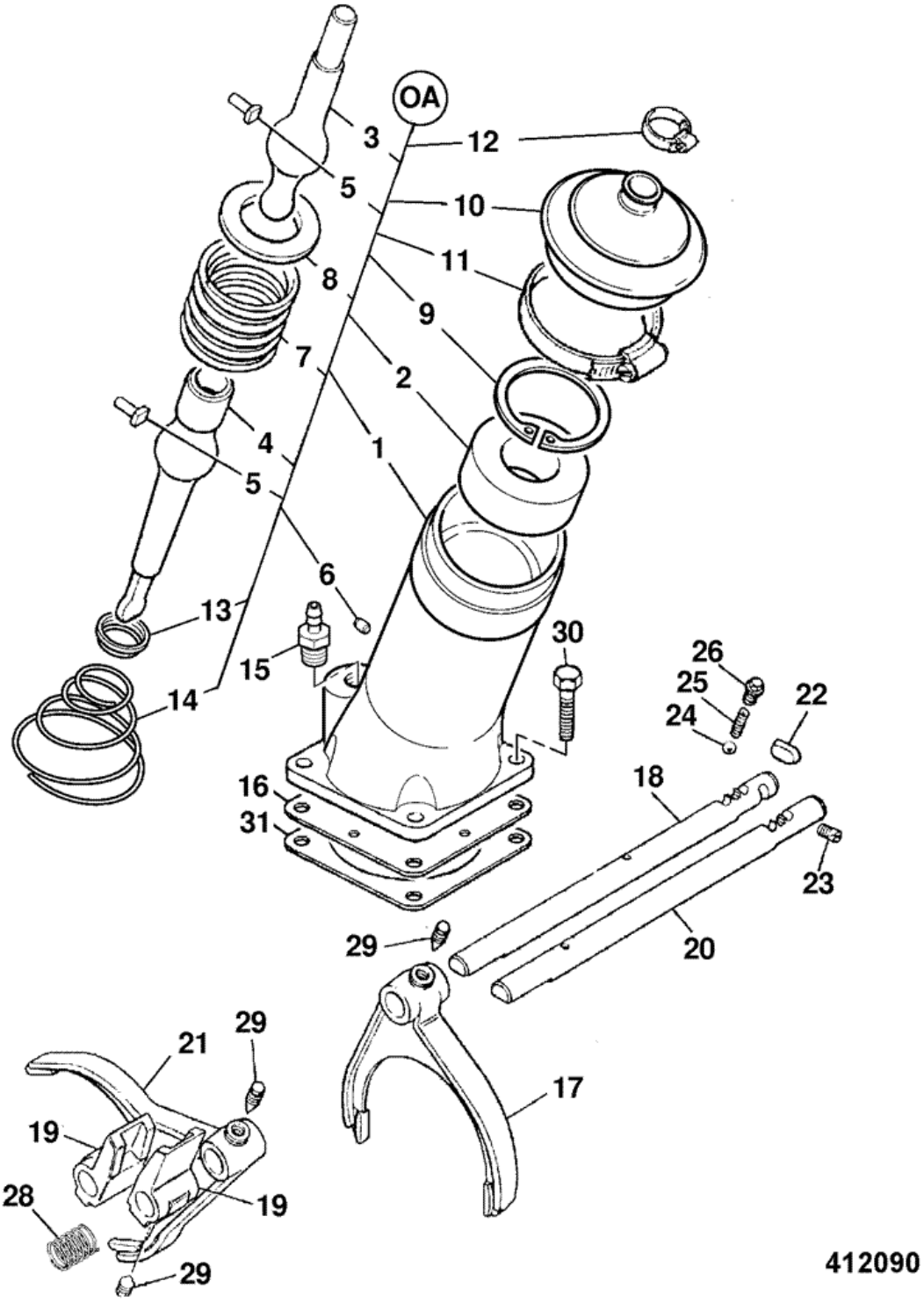

Item	Part #	Change No	Description	Usage Code	QTY
A	459/10143		Lever assembly gear turret		1

1	:459/30295		Housing turret, gear lever		1
2	:445/10802		Seat		1
3	:445/05501		Lever gear		1
4	:459/70271		Lever bottom gearshift		1
5	:445/03023		Pin		2
6	:835/10036		Plug		1
7	:814/00233		Spring		1
8	:445/10803		Washer ball		1
9	:2203/1080		Circlip		1
10	:331/25566		Gaiter gear lever		1
11	:821/10163		Clip worm drive		1
12	:445/05302		Clip		1
13	:445/03020		Retainer spring		1
14	:814/00221		Spring		1
15	:816/13382		Adapter hose		1
16	:460/17603		Baffle		1
17	459/30297		Fork selector 1st		1
18	459/70181		Shaft selector *use 459/M2082*		1
18	459/M2082		Shaft selector		1
19	459/70199		Block selector		2
20	459/70181		Shaft selector *use 459/M2082*		1
20	459/M2082		Shaft selector		1
21	459/30299		Fork selector 3rd		1
22	445/03031		Roller baulk		1
23	816/80027		Plug		1
24	916/00006		Ball 11mm dia		2
25	814/00354		Spring		2
26	816/80057		Plug detent		2
27	445/05302		Clip		2
28	814/00406		Spring		1
29	445/26110		Screw		4
30	826/01416		Screw micro-encapsulated		4
31	813/50042		Gasket		1

Product Catalog \ CONSTRUCTION \ NORTH AMERICA \ CONSTRUCTION / INDUSTRIAL \ BACKHOE LOADER 3CX,4CX,214,215,217 \ 3C PLUS (91HP) , Made in Brazil with Dieselmax/IESA Engine 9812/0080 \ F AXLES, WHEELS & TRANSMISSION \ F05 TRANSMISSIONS SYNCHROSHUTTLE

9812/0080 F5-70-1 PUMP & DRIVESHAFT, SYNCROSHUTTLE, GEARPUMP MACHINES

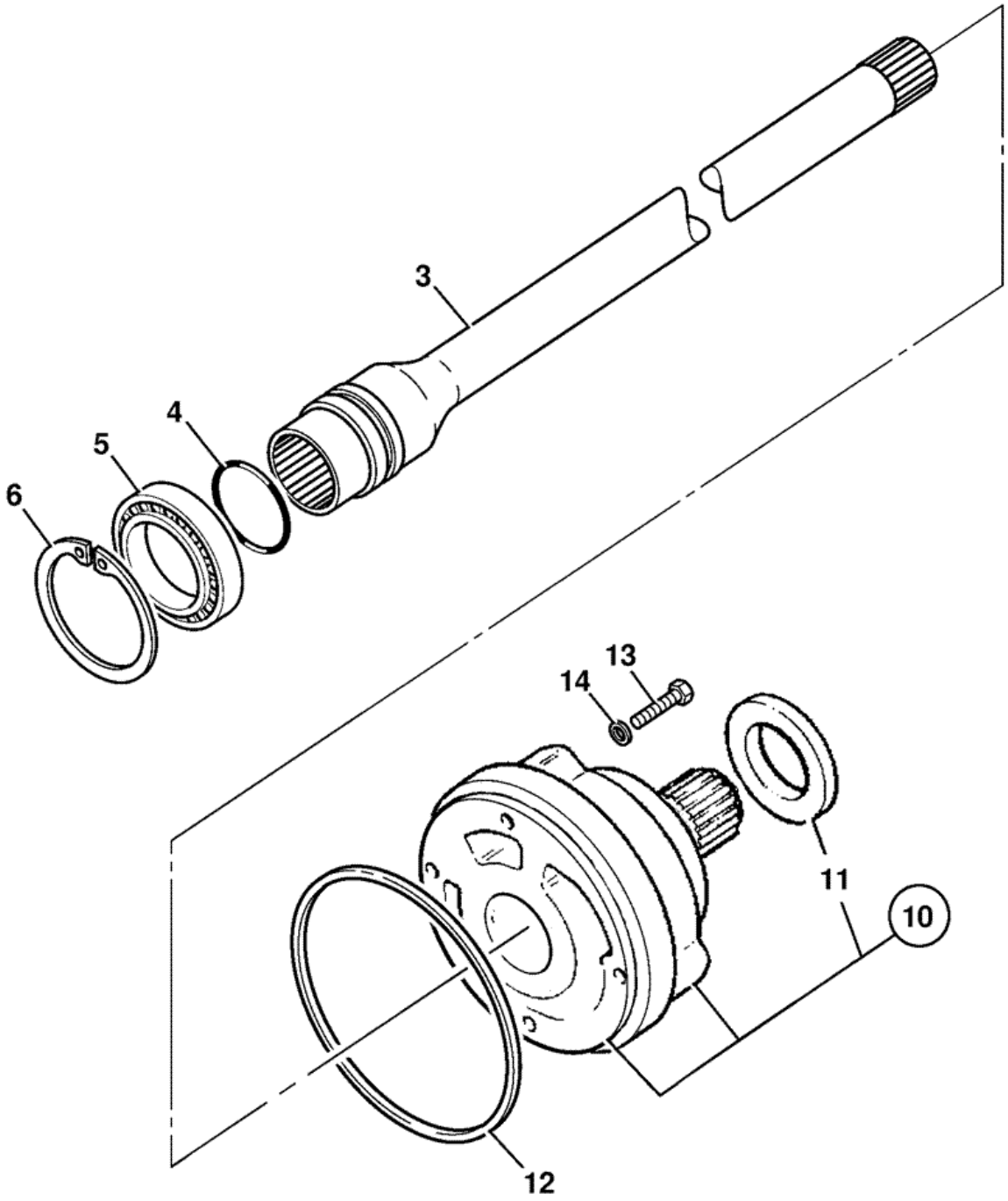

376210

Item	Part #	Change No	Description	Usage Code	QTY
3	459/50431		Shaft pump drive SS700 gearbox		1

4	904/20210		Ring seal		1
5	916/10012		Bearing ball		1
6	2203/1068		Circlip internal		1
10	20/925552		Pump assembly transmission		1
11	:904/20226		Seal transmission pump		1
12	813/50041		Seal rear		1
13	1315/3311Z		Bolt M8 X 45		4
14	823/00291		Washer copper		4

Product Catalog \ CONSTRUCTION \ NORTH AMERICA \ CONSTRUCTION / INDUSTRIAL \ BACKHOE LOADER 3CX,4CX,214,215,217 \ 3C PLUS (91HP) , Made in Brazil with Dieselmax/IESA Engine 9812/0080 \ F AXLES, WHEELS & TRANSMISSION \ F05 TRANSMISSIONS SYNCHROSHUTTLE

9812/0080 F5-9-11 441/M1218 - 4WD-2WS, COMMON COMPONENTS, 460/00230

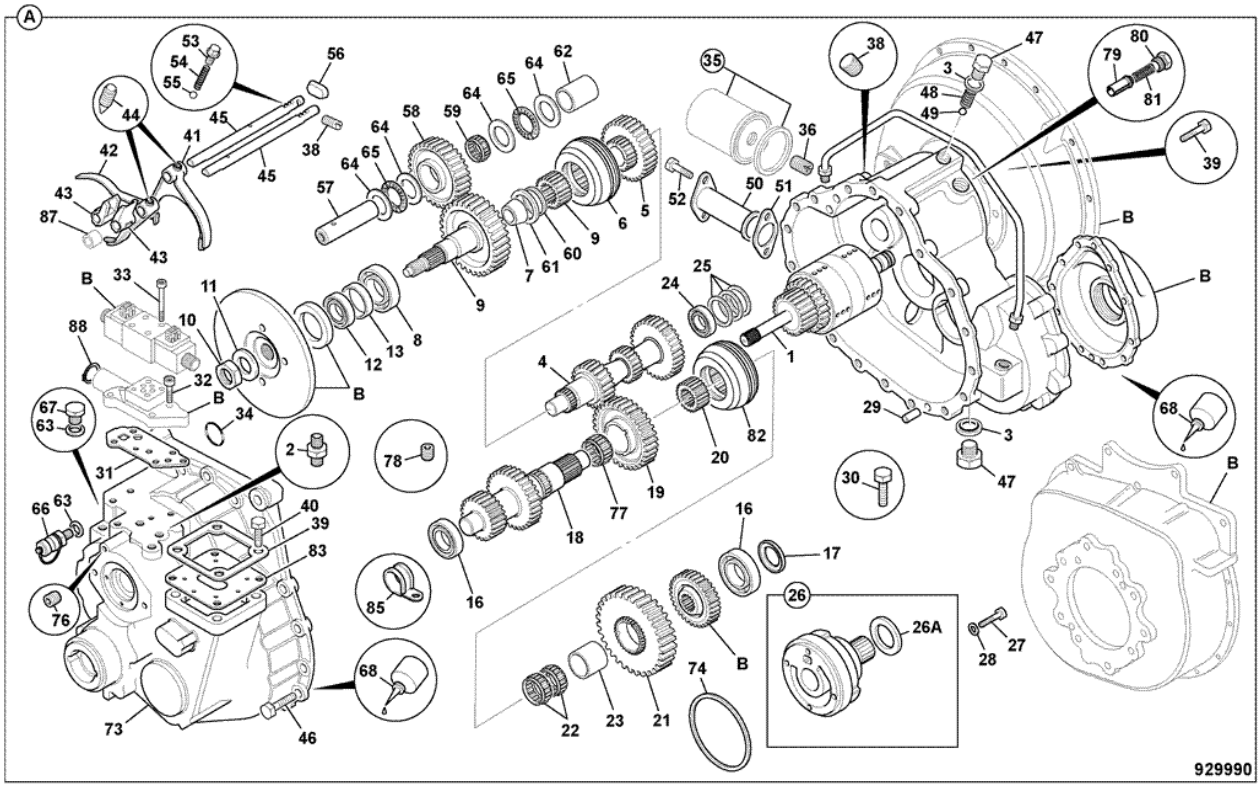

Item	Part #	Change No	Description	Usage Code	QTY
A	441/00230		Gearbox common components 4WD		1
1	:459/10097		Clutch assembly input, reverser *see F5-9-21 for breakdown*		1
2	:1606/0017		Adapter 5/8" x 1/2" M/M		1
3	:1406/0018		Seal bonded 1/2" BSP		5
4	:459/50205		Gear mainshaft, SS750		1
5	:459/50534		Gear 3rd 33T-3.5M		1
6	:459/50520		Synchroniser assembly		1
7	:907/20005		Bearing taper roller		1
8	:907/20045		Bearing taper roller		1
9	:459/50540		Gear Transfere 39T-4M XL_R		1
10	:826/01551		Nut Stake M30 (46mm Head)		1
11	:460/32202		Washer		1
12	:907/51600		Bearing taper roller		1
13	:921/53400		Kit-Spacer		1
16	:907/20049		Bearing taper roller		2
17	:459/70379		Kit graded spacers		1
18	:459/50541		Layshaft 16T 4M & 28T 3.5M -		1
19	:459/50511		Gear 2nd 40t SS700		1
20	:445/03010		Sleeve hub shaft		1

21	:459/50509		Gear 1st 44t SS700		1
22	:917/02300		Bearing		5
23	:917/00008		Bearing inner race		1
24	:907/52800		Bearing 35 x 65 x 18		1
25	:459/70378		Kit graded spacers		1
26	:20/925552		Pump assembly transmission		1
27	:1315/3311Z		Bolt M8 X 45		4
28	:823/00291		Washer copper		4
29	:445/14001		Dowel		6
30	:1315/0409Z		Screw M10x35mm		12
31	:813/10175		Gasket valve block		1
32	:1392/3207		Capscrew		4
33	:1391/3108Z		Capscrew M5 X 30mm		4
34	:828/10222		O Ring		2
35	:581/18076		Element transmission filter 120.7mm long		1
36	:816/15184		Adapter 1/2"BSPx1"UNF		1
38	:816/80052		Plug taper 1/4" BSP		6
39	:813/50042		Gasket		1
40	:826/01361		Bolt		4
41	:459/30297		Fork selector 1st		1
42	:459/30298		Fork Selector 3rd		1
43	:459/70199		Block selector		2
44	:445/26110		Screw		4
45	:459/70181		Shaft selector *use 459/M2082*		2
45	:459/M2082		Shaft selector		2
46	:826/01417		Bolt		28
47	:816/80041		Plug 1/2"BSP 25.65mm A/F		3
48	:814/00222		Spring		1
49	:916/00008		Bearing 14dia ball		1
50	:32/902200		Strainer suction		1
51	:813/50027		Gasket		1
52	:1321/0303Z		Screw M8 x 16		2
53	:816/80057		Plug detent		2
54	:814/00354		Spring		2
55	:916/00006		Ball 11mm dia		2
56	:445/03031		Roller baulk		1
57	:459/70087		Shaft idler		1
58	:459/50440		Gear idler, 35T		1
59	:917/02400		Bearing needle roller		1
60	:445/64302		Spacer mainshaft seal		1
61	:904/50027		Seal oil baffle		1
62	:459/70206		Spacer idler gear		1
63	:1406/0011		Seal bonded		2
64	:823/00451		Washer thrust		4
65	:917/51400		Bearing		2
66	:45/905000		Adapter pressure test 1/4BSP male		1
67	:816/82009		Plug		1
68	:4102/1201		Gasket multi		0
69	:4003/2000		Grease high pressure		1
70	:4101/0302		Sealant 50ml		0

73	:459/30435	<G/M1218/4	Casing rear		1
73	:459/M2870	>G/M1218/5	Casing rear		1
74	:813/50041		Seal rear		1
76	:816/80051		Plug 1/8" tapered		8
77	:917/10000		Bearing needle roller		1
78	:826/10707		Screw bleed		1
79	:459/70168		Spool Adapter Solenoid		1
80	:816/80061		Plug		1
81	:814/10170		Spring compression		1
82	:.		'See Remark' *Not fitted to this assembly*		1
83	:460/17603		Baffle		1
85	:821/10182		Clip P-clip		1
87	:831/10298		Bush Selector Fork		1
88	:821/10223		Circlip interna;		1

Product Catalog \ CONSTRUCTION \ NORTH AMERICA \ CONSTRUCTION / INDUSTRIAL \ BACKHOE LOADER 3CX,4CX,214,215,217 \ 3C PLUS (91HP) , Made in Brazil with Dieselmax/IESA Engine 9812/0080 \ F AXLES, WHEELS & TRANSMISSION \ F05 TRANSMISSIONS SYNCHROSHUTTLE

9812/0080 F5-9-41 441/M1218 - 4WD-2WS, CLUTCH, 4WD, 459/10119

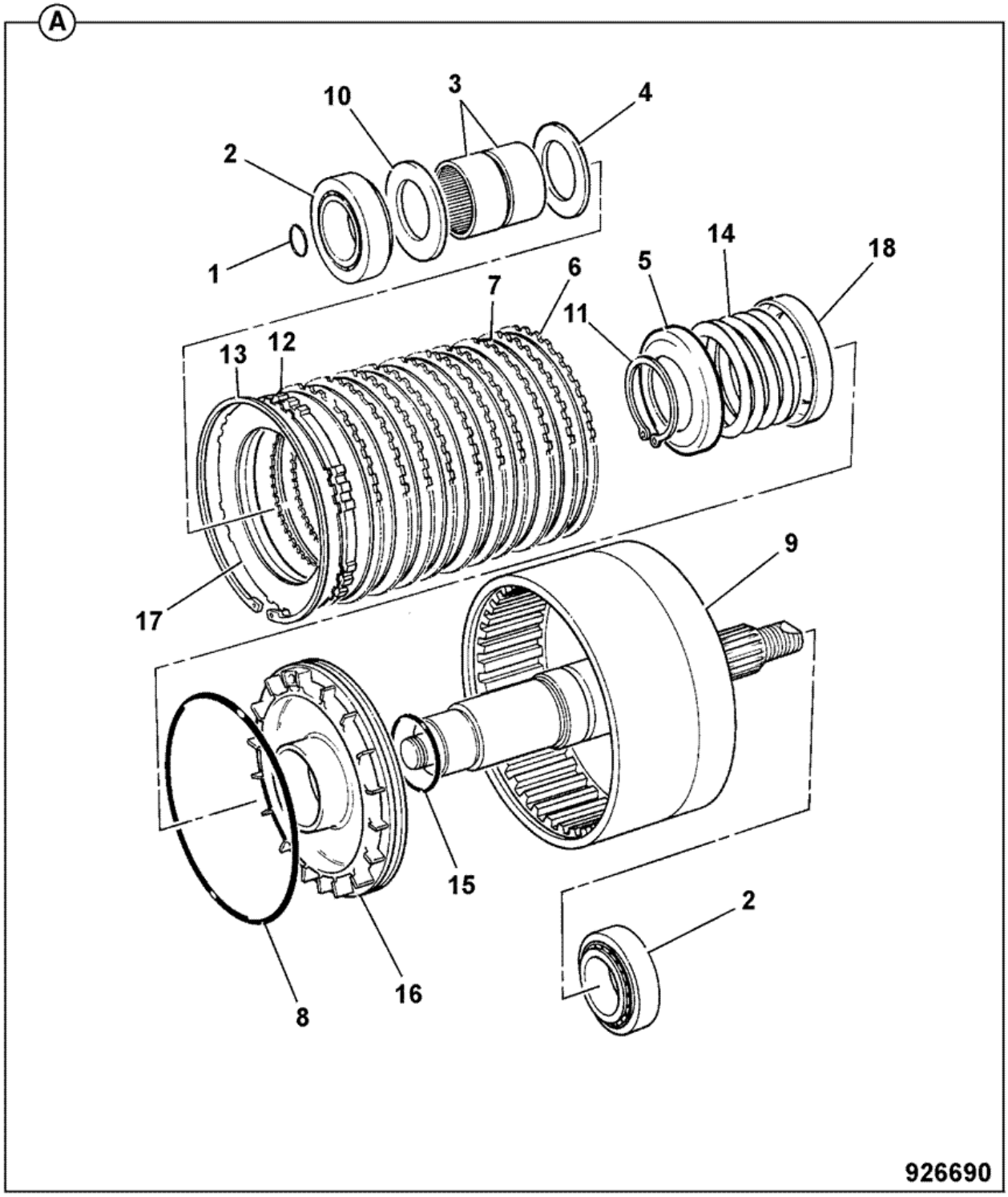

Item	Part #	Change No	Description	Usage Code	QTY
A	:459/10119		Clutch assembly 4WD		1

1	:904/14300		Seal ring 'TURQUOISE'		1
2	:907/52800		Bearing 35 x 65 x 18		2
3	:917/02700		Bearing		2
4	:445/19808		Washer thrust, 3.5mm thick phosphated		1
5	:445/12304		Retainer spring		1
6	:445/12307		Plate counter		10
7	:445/03205		Plate friction		10
8	:828/00414		O Ring 123.5mm I/D		1
9	:459/50483		Housing 4wd clutch		1
10	:823/10364		Washer thrust		1
11	:821/00523		Circlip		1
12	:331/31560		Plate pressure 4mm		1
13	:2203/1115		Circlip		1
14	:814/00297		Spring		1
15	:828/00224		O Ring 39.7mm I/D X 3.53mm		1
16	:445/73503		Piston		1
17	:445/12314		Shim plate, toothed		1
18	:445/12305		Baffle oil		1

Product Catalog \ CONSTRUCTION \ NORTH AMERICA \ CONSTRUCTION / INDUSTRIAL \ BACKHOE LOADER 3CX,4CX,214,215,217 \ 3C PLUS (91HP) , Made in Brazil with Dieselmax/IESA Engine 9812/0080 \ F AXLES, WHEELS & TRANSMISSION \ F05 TRANSMISSIONS SYNCHROSHUTTLE

9812/0080 F5-9-51 441/M1218 - 4WD-2WS, PUMP SHAFT KIT, 459/10151

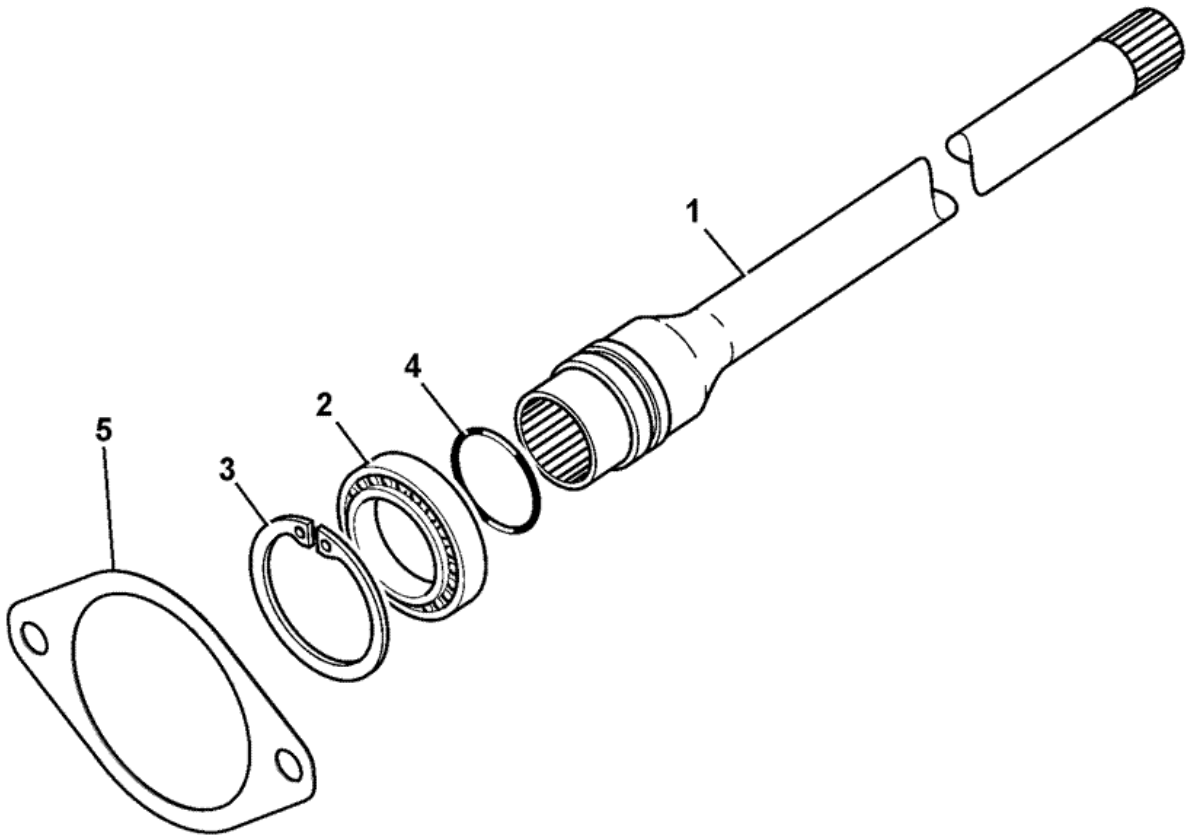

934930

Item	Part #	Change No	Description	Usage Code	QTY
A	459/10151		Assembly pump shaft		1

1	:459/50431		Shaft pump drive SS700 gearbox		1
2	:916/10012		Bearing ball		1
3	:2203/1068		Circlip internal		1
4	:904/20210		Ring seal		1
5	:813/10184		Gasket hyd gear pump PS760		1

9812/0080 F1-30-10 POWER TRACKROD, 2WS 4WD FRONT

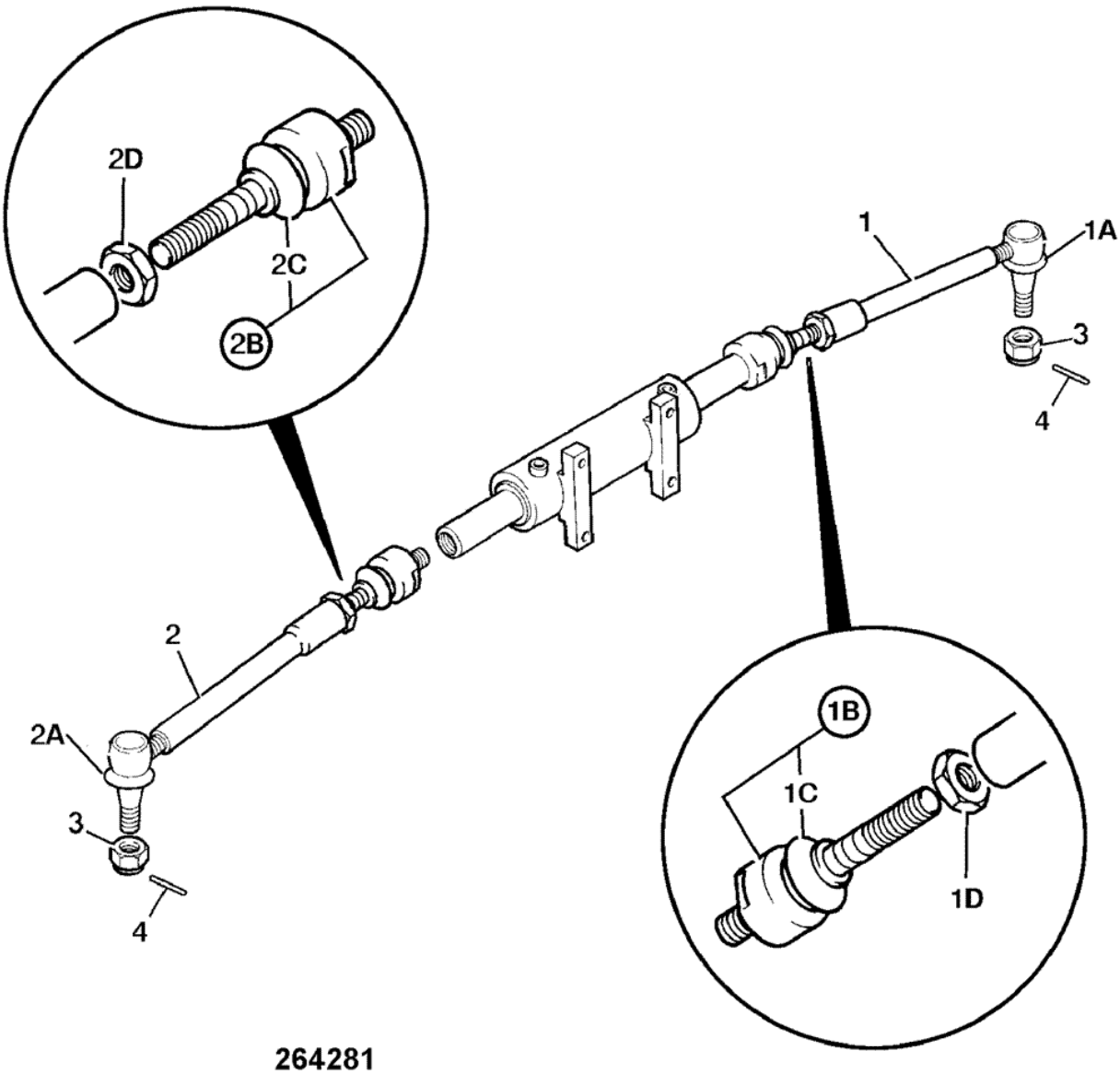

264281

Item	Part #	Change No	Description	Usage Code	QTY
1	126/02253		Link trackrod M24/M22		1
1A	:123/07855		Gaiter *Trackrod end*		1
1B	:331/14861		Joint ball track rod *Ram end*		1
1C	::123/07689		Gaiter		1
1D	:458/80026		Nut lock nut		1
2	126/02253		Link trackrod M24/M22		1
2A	:123/07855		Gaiter *Trackrod end*		1

2B	:331/14861		Joint ball track rod *Ram end*		1
2C	::123/07689		Gaiter		1
2D	:458/80026		Nut lock nut		1
3	826/01372		Nut castle M20 X 1.5		2
4	2103/1112		Pin split		2

Product Catalog \ CONSTRUCTION \ NORTH AMERICA \ CONSTRUCTION / INDUSTRIAL \ BACKHOE LOADER 3CX,4CX,214,215,217 \ 3C PLUS (91HP) , Made in Brazil with Dieselmax/IESA Engine 9812/0080 \ F AXLES, WHEELS & TRANSMISSION \ F01 AXLES, FRONT

9812/0080 F1-51-11 448/57999, WHEEL HUB, 448/42600,

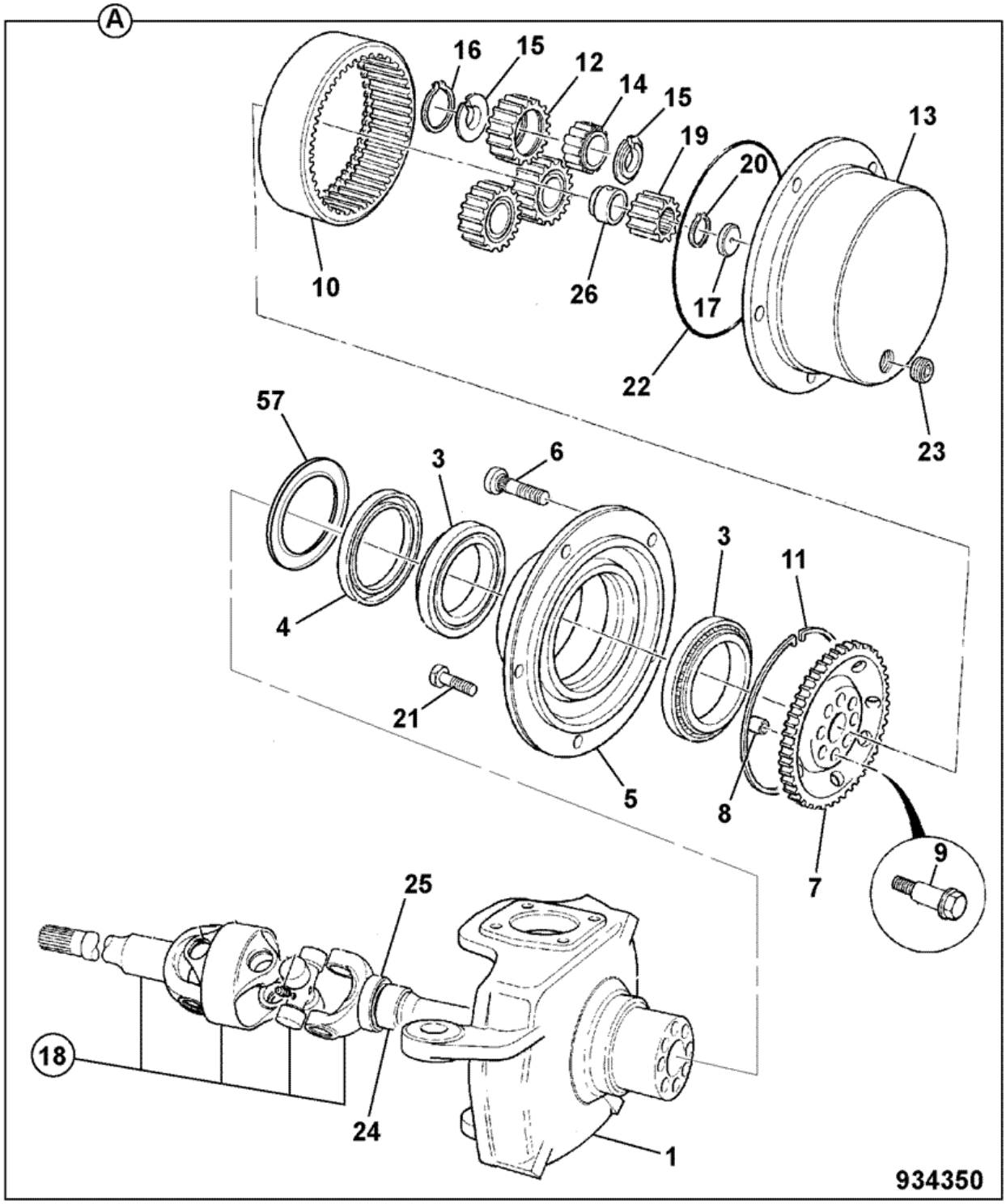

Item	Part #	Change No	Description	Usage Code	QTY
A	448/42600		Assembly wheel hub		1
1	:448/42602		Joint knuckle swivel		1

3	:907/20043		Bearing taper roller		2
4	:904/50033		Seal oil 127 x 160 x 15.5-17		1
5	:458/20446		Carrier wheel bearing 5 stud		1
6	:826/00923		Stud wheel		5
7	:450/12702		Carrier annulus		1
8	:450/12703		Dowel hollow		8
9	:826/01060		Bolt M14 x 70mm long		8
10	:450/10205		Gear annulus ring		1
11	:821/00210		Circlip internal square section		1
12	:450/10206		Gear planet		3
13	:450/10216		Carrier planetary hub 5 stud		1
14	:907/50200		Bearing roller, double row		3
15	:821/00209		Circlip		6
16	:2203/0054		Circlip		3
17	:450/10208		Pad thrust		1
18	:914/88100		Shaft drive assembly 1275mm long *Link*		1
19	:450/10210		Gear sun		1
20	:821/00494		Circlip External		1
21	:1321/0407Z		Bolt coated		2
22	:828/00196		O Ring		1
23	:826/00425		Plug tapered 3/4"-14PTF		1
24	:917/50200		Bearing		1
25	:904/50047		Seal		1
26	:921/50000		Spacer 32mm long		1
57	:458/20403		Cover plate hub seal		1

Product Catalog \ CONSTRUCTION \ NORTH AMERICA \ CONSTRUCTION / INDUSTRIAL \ BACKHOE LOADER 3CX,4CX,214,215,217 \ 3C PLUS (91HP) , Made in Brazil with Dieselmax/IESA Engine 9812/0080 \ F AXLES, WHEELS & TRANSMISSION \ F01 AXLES, FRONT

9812/0080 F1-51-21 448/57999, WHEEL HUB, 448/42700,

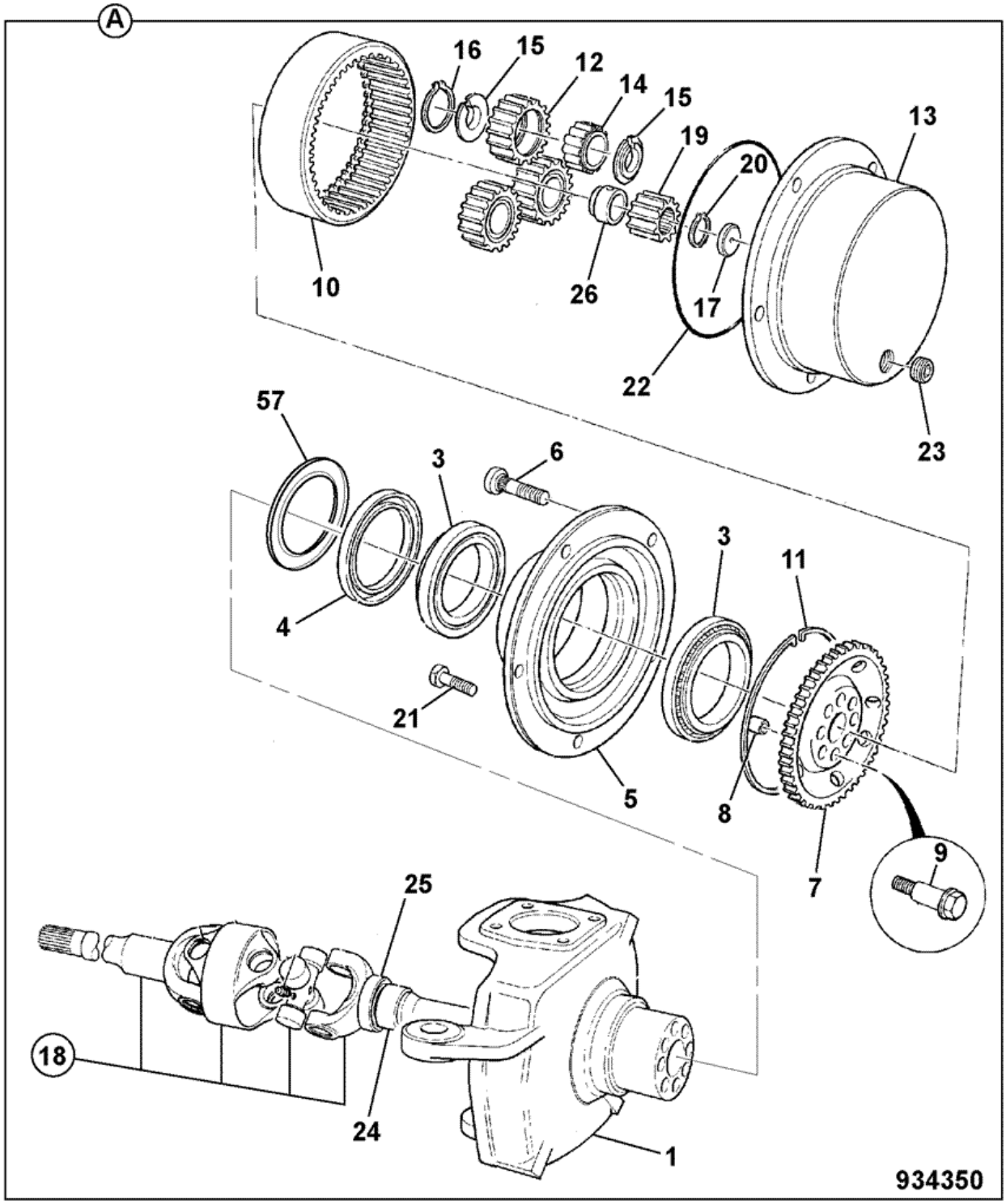

Item	Part #	Change No	Description	Usage Code	QTY
A	448/42700		Assembly wheel hub.		1
1	:448/42703		Joint knuckle swivel		1

3	:907/20043		Bearing taper roller		2
4	:904/50033		Seal oil 127 x 160 x 15.5-17		1
5	:458/20446		Carrier wheel bearing 5 stud		1
6	:826/00923		Stud wheel		5
7	:450/12702		Carrier annulus		1
8	:450/12703		Dowel hollow		8
9	:826/01060		Bolt M14 x 70mm long		8
10	:450/10205		Gear annulus ring		1
11	:821/00210		Circlip internal square section		1
12	:450/10206		Gear planet		3
13	:450/10216		Carrier planetary hub 5 stud		1
14	:907/50200		Bearing roller, double row		3
15	:821/00209		Circlip		6
16	:2203/0054		Circlip		3
17	:450/10208		Pad thrust		1
18	:914/88200		Shaft drive assembly 825mm long *Link*		1
19	:450/10210		Gear sun		1
20	:821/00494		Circlip External		1
21	:1321/0407Z		Bolt coated		2
22	:828/00196		O Ring		1
23	:826/00425		Plug tapered 3/4"-14PTF		1
24	:917/50200		Bearing		1
25	:904/50047		Seal		1
26	:921/50000		Spacer 32mm long		1
57	:458/20403		Cover plate hub seal		1

Product Catalog \ CONSTRUCTION \ NORTH AMERICA \ CONSTRUCTION / INDUSTRIAL \ BACKHOE LOADER 3CX,4CX,214,215,217 \ 3C PLUS (91HP) , Made in Brazil with Dieselmax/IESA Engine 9812/0080 \ F AXLES, WHEELS & TRANSMISSION \ F01 AXLES, FRONT

9812/0080 F1-51-31 448/57999, DRIVEHEAD,

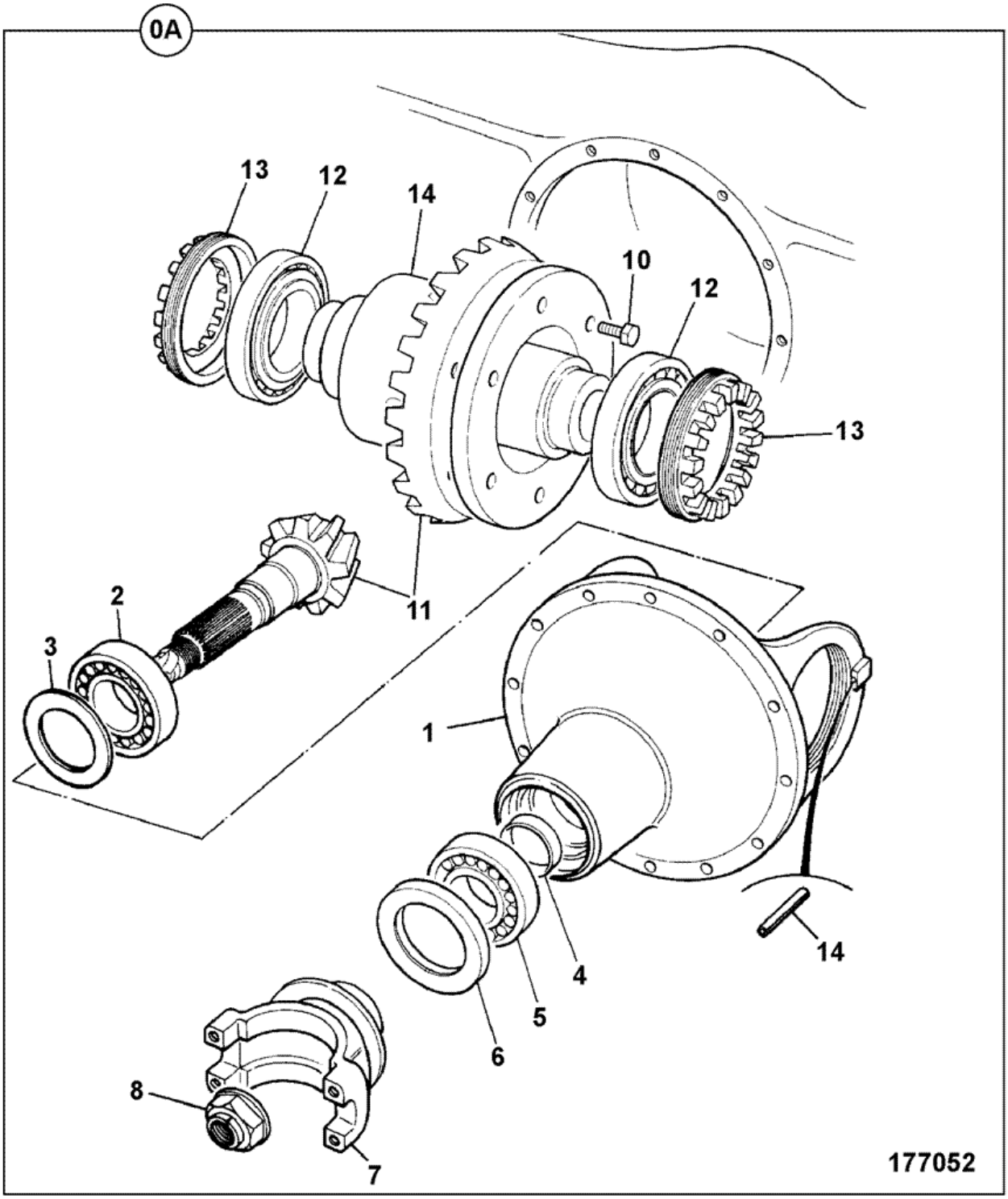

Item	Part #	Change No	Description	Usage Code	QTY
A	458/10728	<A5799/7	Drivehead assembly *to axle 448/57990/7*	A	1

A	458/M1876	>A5799/8	Drivehead assembly *from axle 448/57990/8*	B	1
1	:448/15701		Casting drive head yellow		1
2	:907/09000		Bearing		1
3	:921/01900		Kit-shim		1
4	:921/53300		Spacer		1
5	:907/09100		Bearing		1
6	:904/50023		Seal		1
7	:450/27200		Yoke	A	1
7	:458/20816		Yoke Coupling	B	1
8	:826/01483		Nut stake and washer M24	A	1
8	:826/01744		Nut stake M30	B	1
10	:826/01084		Bolt Verbus ripp M10 x 25mm long		12
11	:458/70167		Gear c/wheel & pinion 13/34T NLA see TI GEN232	A	1
11	:458/M1766		Gear crownwheel & pinion 13/34	B	1
12	:907/09200		Bearing		2
13	:448/05405		Nut adjusting		2
14	:826/00818		Pin tension		2
15	:458/10723		Differential assembly *see F1-51-41 for breakdown*		1

Product Catalog \ CONSTRUCTION \ NORTH AMERICA \ CONSTRUCTION / INDUSTRIAL \ BACKHOE LOADER 3CX,4CX,214,215,217 \ 3C PLUS (91HP) , Made in Brazil with Dieselmax/IESA Engine 9812/0080 \ F AXLES, WHEELS & TRANSMISSION \ F01 AXLES, FRONT

9812/0080 F1-51-41 448/57990, DIFFERENTIAL ASSY, 458/10723

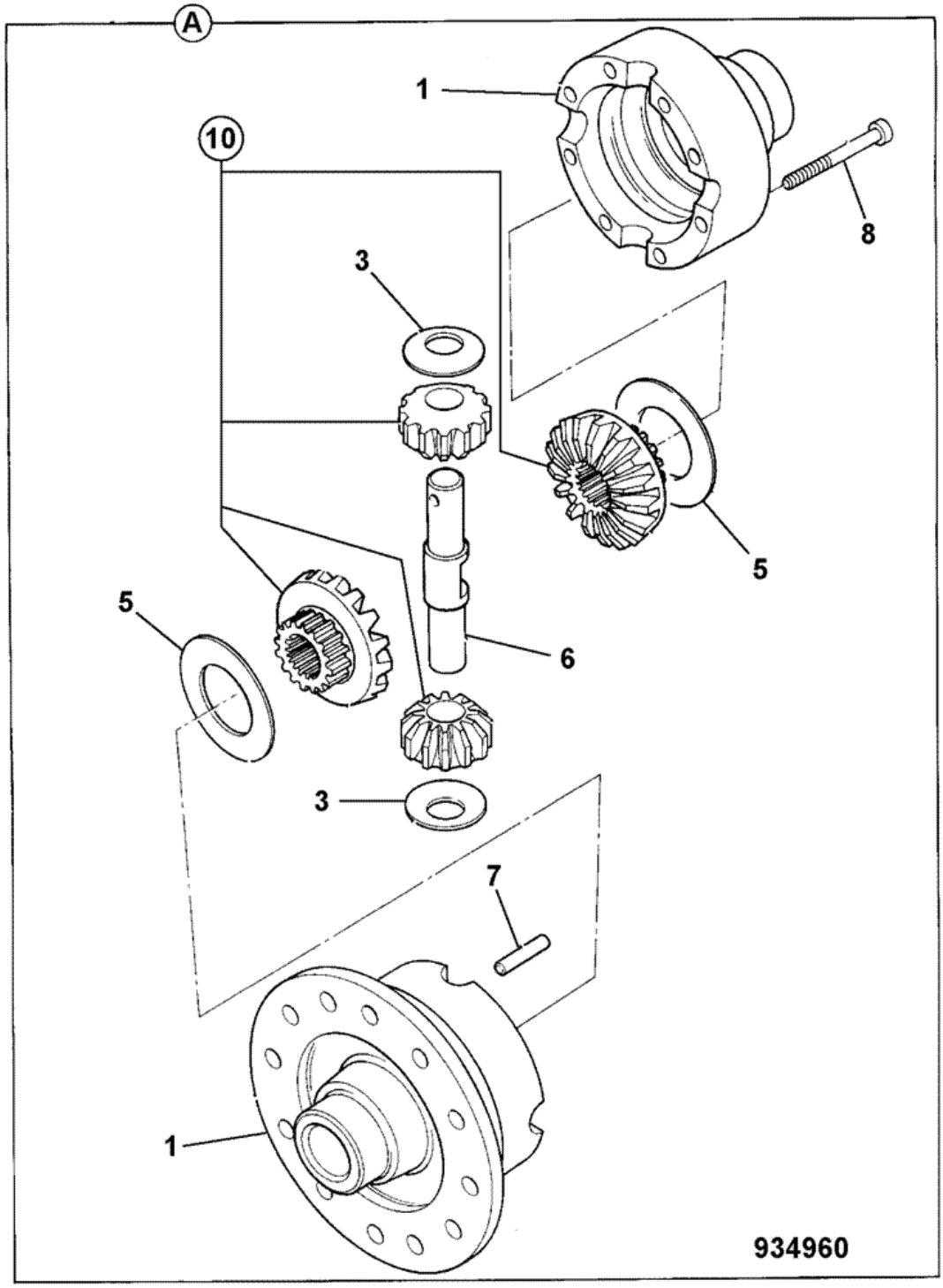

Item	Part #	Change No	Description	Usage Code	QTY
A	458/10723		Differential assembly		1

1	:458/10724		Case differential		1
3	:808/00210		Washer thrust pinion		2
5	:808/00209		Washer thrust side gear		2
6	:448/05408		Pin trunnion		1
7	:2102/0816		Pin tension		1
8	:826/01585		Bolt		8
10	448/36400		Kit-gear differential		1

Product Catalog \ CONSTRUCTION \ NORTH AMERICA \ CONSTRUCTION / INDUSTRIAL \ BACKHOE LOADER 3CX,4CX,214,215,217 \ 3C PLUS (91HP) , Made in Brazil with Dieselmax/IESA Engine 9812/0080 \ G BRAKES \ G01 BRAKES

9812/0080 G1-3-1 BRAKE, PARKING, SYNCROSHUTTLE

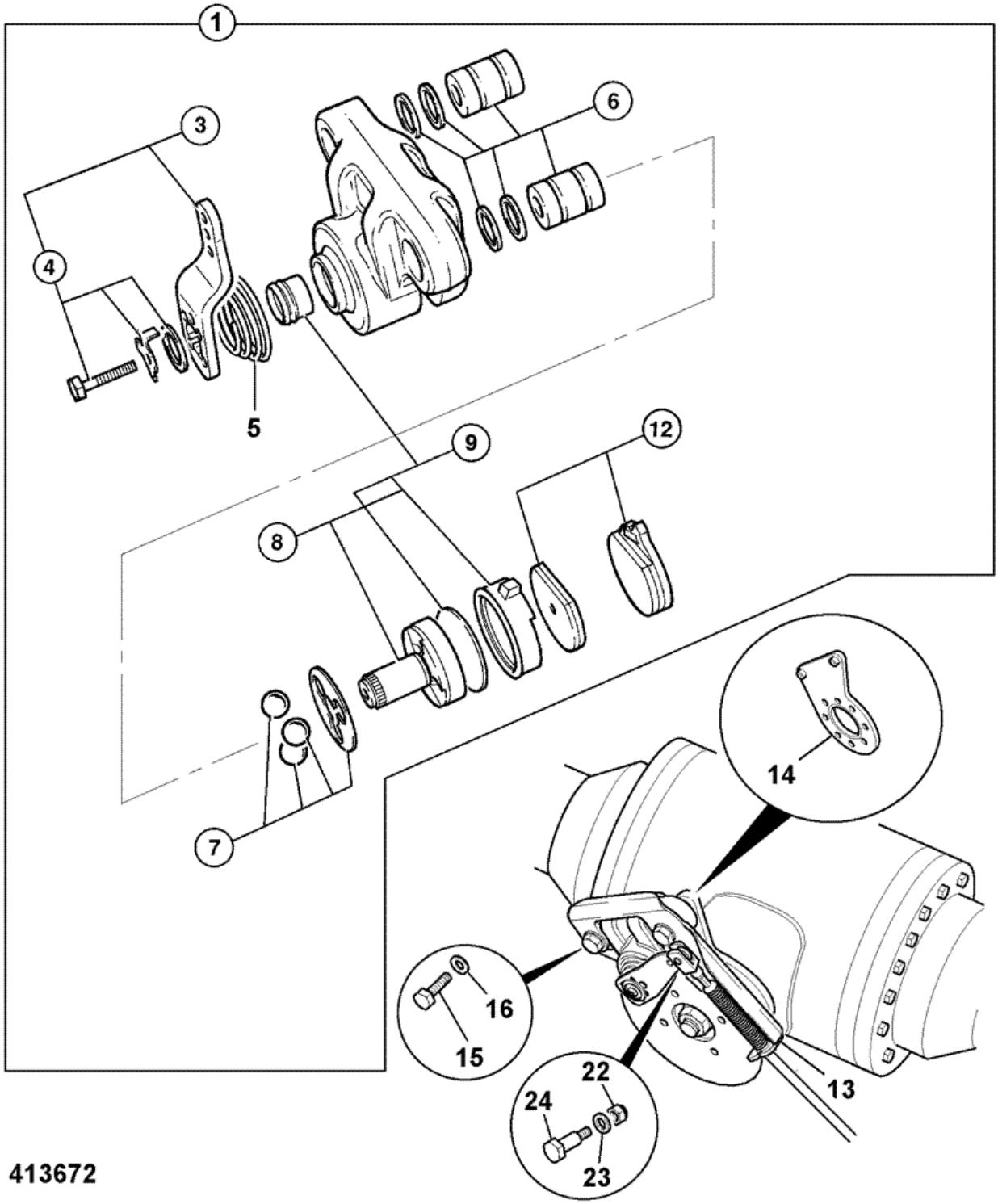

Item	Part #	Change No	Description	Usage Code	QTY
1	15/920269		Brake caliper, parkbrake Hayes, booted		1
3	:15/920290		Kit-lever		1

4	::15/920289		Kit-bolt torx head		1
5	:15/920291		Kit-spring		1
6	:15/920293		Kit-bush		1
7	:478/00844		Kit-bearing		1
8	:15/920294		Kit-rotor assembly		1
9	::15/920292		Kit-seal		1
12	:15/920103		Kit-pad brake pad		1
13	331/24632		Bracket reaction		1
14	458/20511		Bracket caliper mount axle		1
15	826/10526		Bolt		2
16	823/00603		Washer hardened M16		2
22	1370/0103Z		Nut Self lock M6		1
23	1420/0006Z		Washer M6		1
24	826/01597	<M0906213	Screw shoulder 8 x 20 x M6		1
24	826/11378		Screw shoulder 8 x 12 x M6		1

Product Catalog \ CONSTRUCTION \ NORTH AMERICA \ CONSTRUCTION / INDUSTRIAL \ BACKHOE LOADER 3CX,4CX,214,215,217 \ 3C PLUS (91HP) , Made in Brazil with Dieselmax/IESA Engine 9812/0080 \ G BRAKES \ G01 BRAKES

9812/0080 G1-1-11 BRAKE, SYSTEM, STANDARD

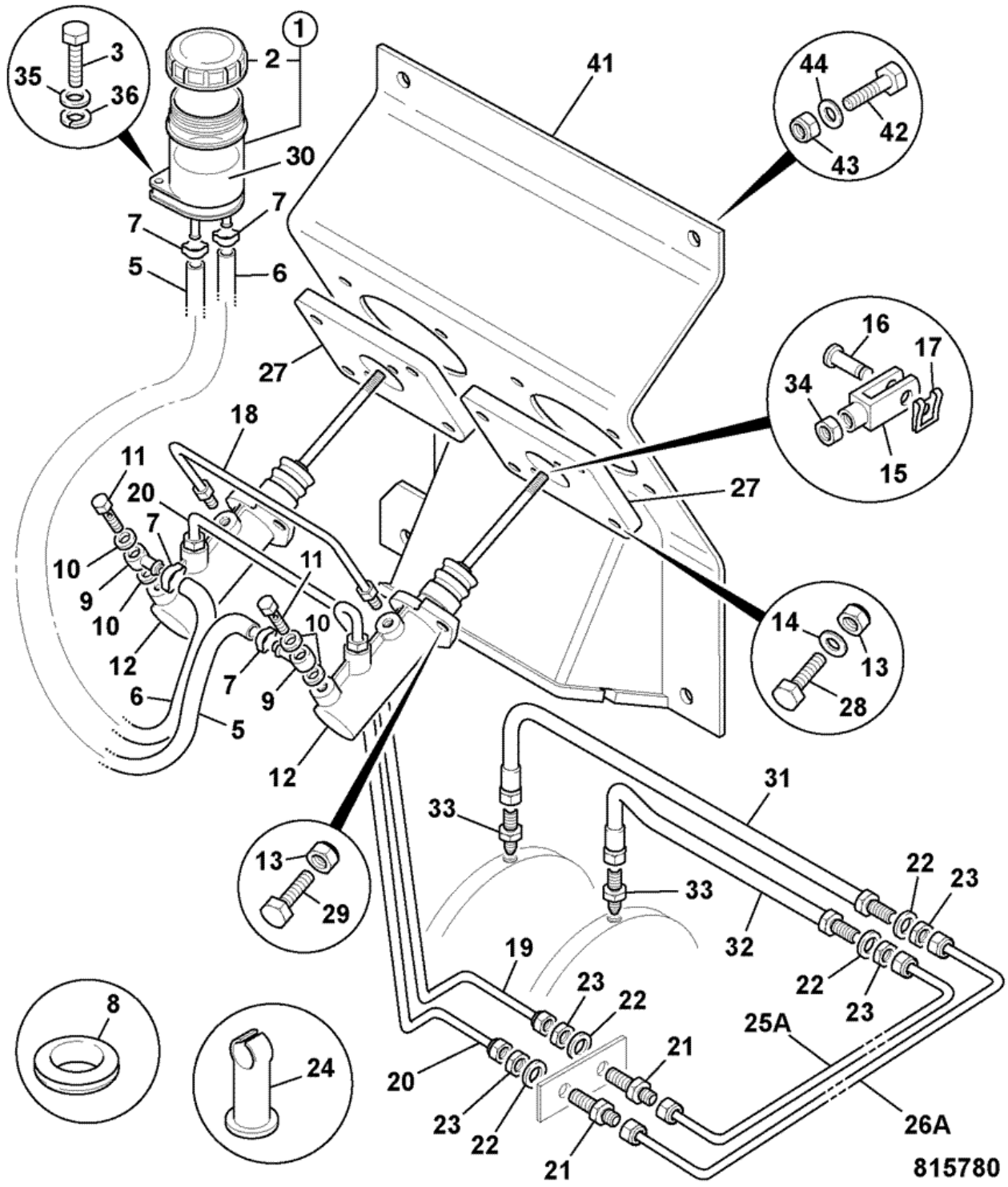

Item	Part #	Change No	Description	Usage Code	QTY
1	126/00200		Reservoir *Brake*		1

1A	:162/03143		Cover reservoir cap		1
1B	::123/02142		Seal splash guard		1
2	123/06356		Cover brake reservoir		1
3	1315/0210Z		Bolt M6 x 40mm long		2
5	332/C1094		Hose 6x12x580 *580mm long right hand side master cylinder*		1
6	332/C1094		Hose 6x12x580 *580mm long left hand master cylinder*		1
7	821/10420		Clip ear clip 11.1-13.1		4
8	828/00367		Grommet		2
9	816/70009		Connector banjo		2
10	823/00372		Washer		4
11	816/75016		Bolt banjo		2
12	15/920111	<M TBA	Cylinder brake master		2
12	15/920402	>M TBA	Cylinder brake master "Carlisle" *For installation see G1-1-12*		2
12A	:15/920152		Kit-repair major		1
13	1370/0203Z		Nut self lock M8		12
14	1420/0007Z		Washer plain M8		8
15	913/00036		Clevis		2
16	913/00014		Pin clevis		2
17	913/00005		Clip clevis		2
18	123/02516		Pipe servo link		1
19	123/07854		Pipe left hand side		1
20	123/07853		Pipe right hand side brake		1
21	816/15125		Connector bulkhead		2
22	1417/0014Z		Washer star		6
23	15/106700		Nut		6
24	821/00069		Clip pipe		2
25A	123/07436		Pipe left hand middle		1
26A	123/07437		Pipe right hand middle		1
27	123/02719		Plate master cyl adapter		1
28	1315/0305Z		Screw Hexagon M8 x 20mm long		8
29	1315/0308Z		Screw M8x30		4
30	4002/0503		Brake fluid, 5 ltr		0
31	649/51320		Hose brake, 760mm		1
32	649/51240		Hose brake, 580mm		1
33	816/15138		Adapter M12 x M12		2
35	1420/0006Z		Washer M6		2
36	1425/0006Z		Washer Spring		2
41	125/00404		Bracket master cylinder mounting		1
42	1315/0407Z		Bolt M10x25		4
43	1420/0008Z		Washer Plain M10		4
44	1370/0303Z		Nut lock M10		4

Product Catalog \ CONSTRUCTION \ NORTH AMERICA \ CONSTRUCTION / INDUSTRIAL \ BACKHOE LOADER 3CX,4CX,214,215,217 \ 3C PLUS (91HP) , Made in Brazil with Dieselmax/IESA Engine 9812/0080 \ G BRAKES \ G01 BRAKES

9812/0080 G1-1-12 BRAKE, SYSTEM, STANDARD

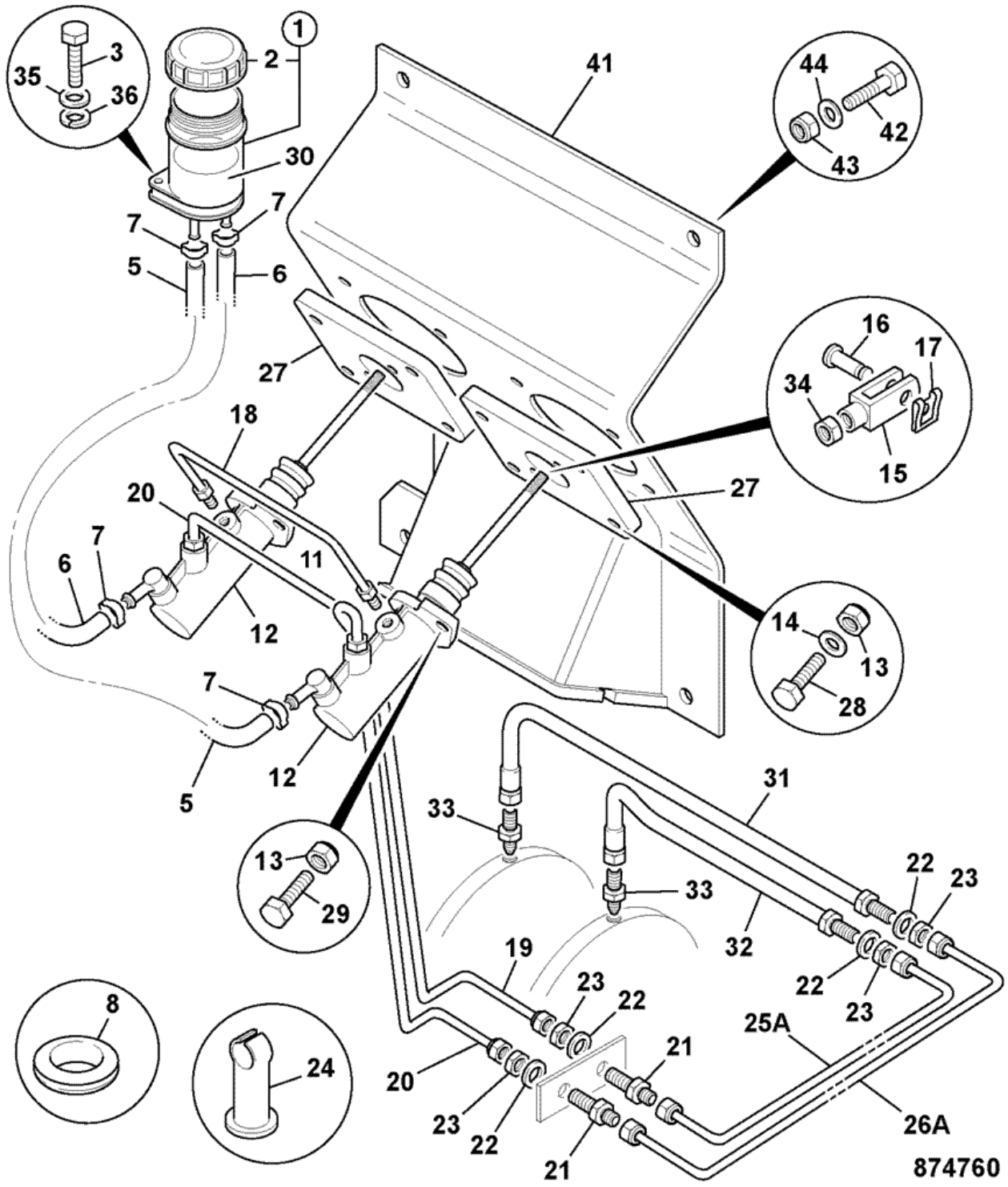

Item	Part #	Change No	Description	Usage Code	QTY
1	126/00200		Reservoir *Brake*		1

1A	:162/03143		Cover reservoir cap		1
1B	::123/02142		Seal splash guard		1
2	123/06356		Cover brake reservoir		1
3	1315/0210Z		Bolt M6 x 40mm long		2
5	332/C1094		Hose 6x12x580 *580mm long right hand side master cylinder*		1
6	332/C1094		Hose 6x12x580 *580mm long left hand master cylinder*		1
7	821/10420		Clip ear clip 11.1-13.1		4
8	828/00367		Grommet		2
12	15/920402		Cylinder brake master "Carlisle"		2
13	1370/0203Z		Nut self lock M8		12
14	1420/0007Z		Washer plain M8		8
15	913/00036		Clevis		2
16	913/00014		Pin clevis		2
17	913/00005		Clip clevis		2
18	123/02516		Pipe servo link		1
19	123/07854		Pipe left hand side		1
20	123/07853		Pipe right hand side brake		1
21	816/15125		Connector bulkhead		2
22	1417/0014Z		Washer star		6
23	15/106700		Nut		6
24	821/00069		Clip pipe		2
25A	123/07436		Pipe left hand middle		1
26A	123/07437		Pipe right hand middle		1
27	123/02719		Plate master cyl adapter		1
28	1315/0305Z		Screw Hexagon M8 x 20mm long		8
29	1315/0308Z		Screw M8x30		4
30	4002/0503		Brake fluid, 5 ltr		0
31	649/51320		Hose brake, 760mm		1
32	649/51240		Hose brake, 580mm		1
33	816/15138		Adapter M12 x M12		2
35	1420/0006Z		Washer M6		2
36	1425/0006Z		Washer Spring		2
41	125/00404		Bracket master cylinder mounting		1
42	1315/0407Z		Bolt M10x25		4
43	1420/0008Z		Washer Plain M10		4
44	1370/0303Z		Nut lock M10		4

Product Catalog \ CONSTRUCTION \ NORTH AMERICA \ CONSTRUCTION / INDUSTRIAL \ BACKHOE LOADER 3CX,4CX,214,215,217 \ 3C PLUS (91HP) , Made in Brazil with Dieselmax/IESA Engine 9812/0080 \ G BRAKES \ G01 BRAKES

9812/0080 G1-1-21 BRAKE, SYSTEM, REMOTE SERVO

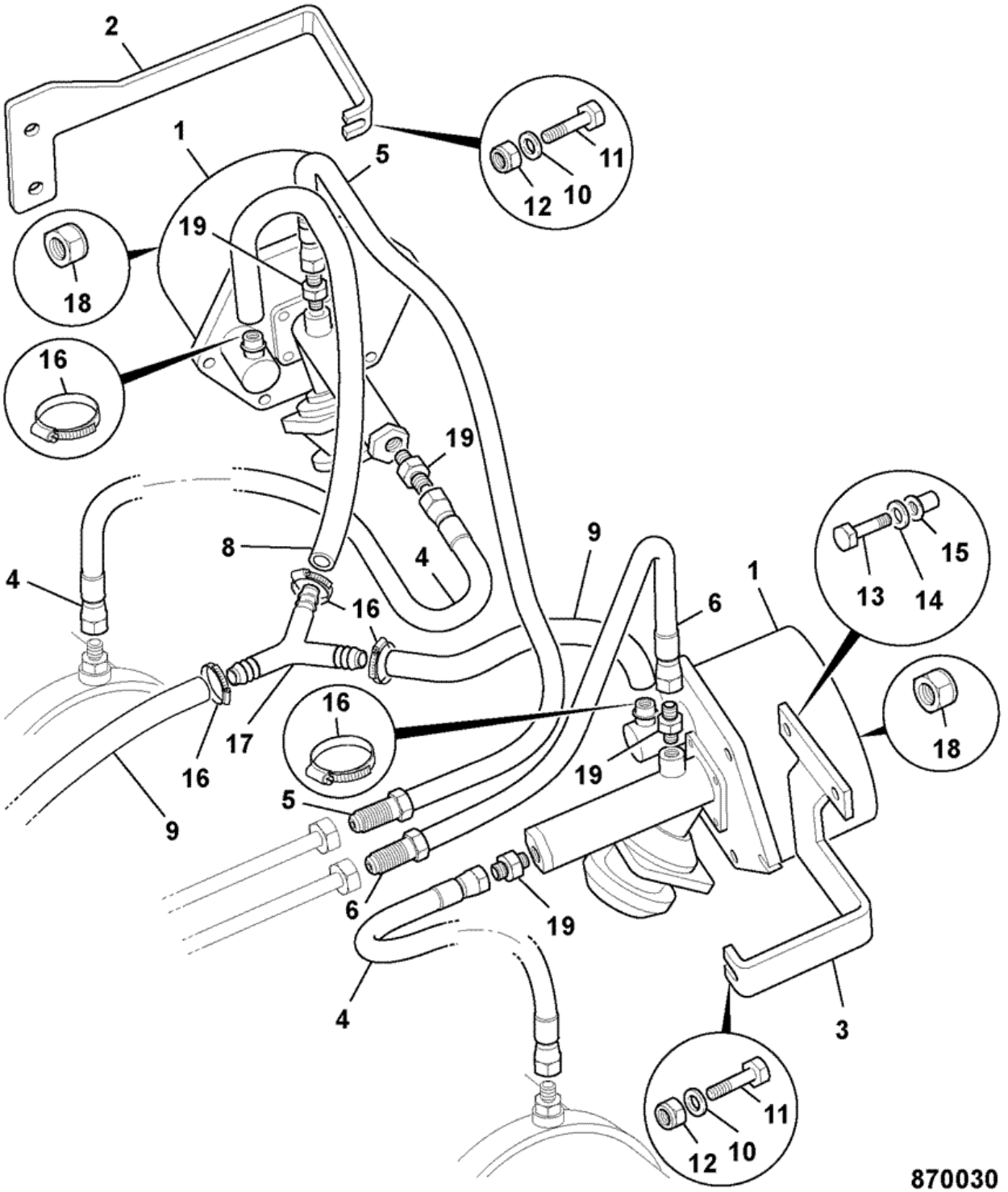

Item	Part #	Change No	Description	Usage Code	QTY
1	15/920255		Brake Remote Servo		2
2	331/59835		Mounting servo		1

3	331/59833		Mounting servo		1
4	649/51240		Hose brake, 580mm		2
5	649/51232		Hose		1
6	649/21000		Hose brake, 350mm		1
7	648/31003		Hose brake vacuum 9.5mm bore x 400mm		1
8	648/31002		Hose Vacuum		1
9	648/31005		Hose vacuum 1350mm long		1
10	1420/0005Z		Washer M5		2
11	1315/0107Z		Bolt		2
12	1370/0003Z		Nut		2
13	1315/0207Z		Screw M6 x 25mm long		2
14	1420/0006Z		Washer M6		2
15	826/01101		Nut rivet,M6 open ended for 3 to 5.5mm plt		2
16	2201/0004		Clip jubilee		5
17	816/60231		Connector 3 way		1
18	1370/0203Z		Nut self lock M8		2
19	816/15138		Adapter M12 x M12		4

Product Catalog \ CONSTRUCTION \ NORTH AMERICA \ CONSTRUCTION / INDUSTRIAL \ BACKHOE LOADER 3CX,4CX,214,215,217 \ 3C PLUS (91HP) , Made in Brazil with Dieselmax/IESA Engine 9812/0080 \ L IESA P4001/P4001T ENGINES FROM S/N 1395000 \ L01 ENGINE BLOCK & SUB-ASSEMBLIES

9812/0080 L1-1-1 ENGINE, COMPLETE, NATURALLY ASPIRATED, P4001, 8C88

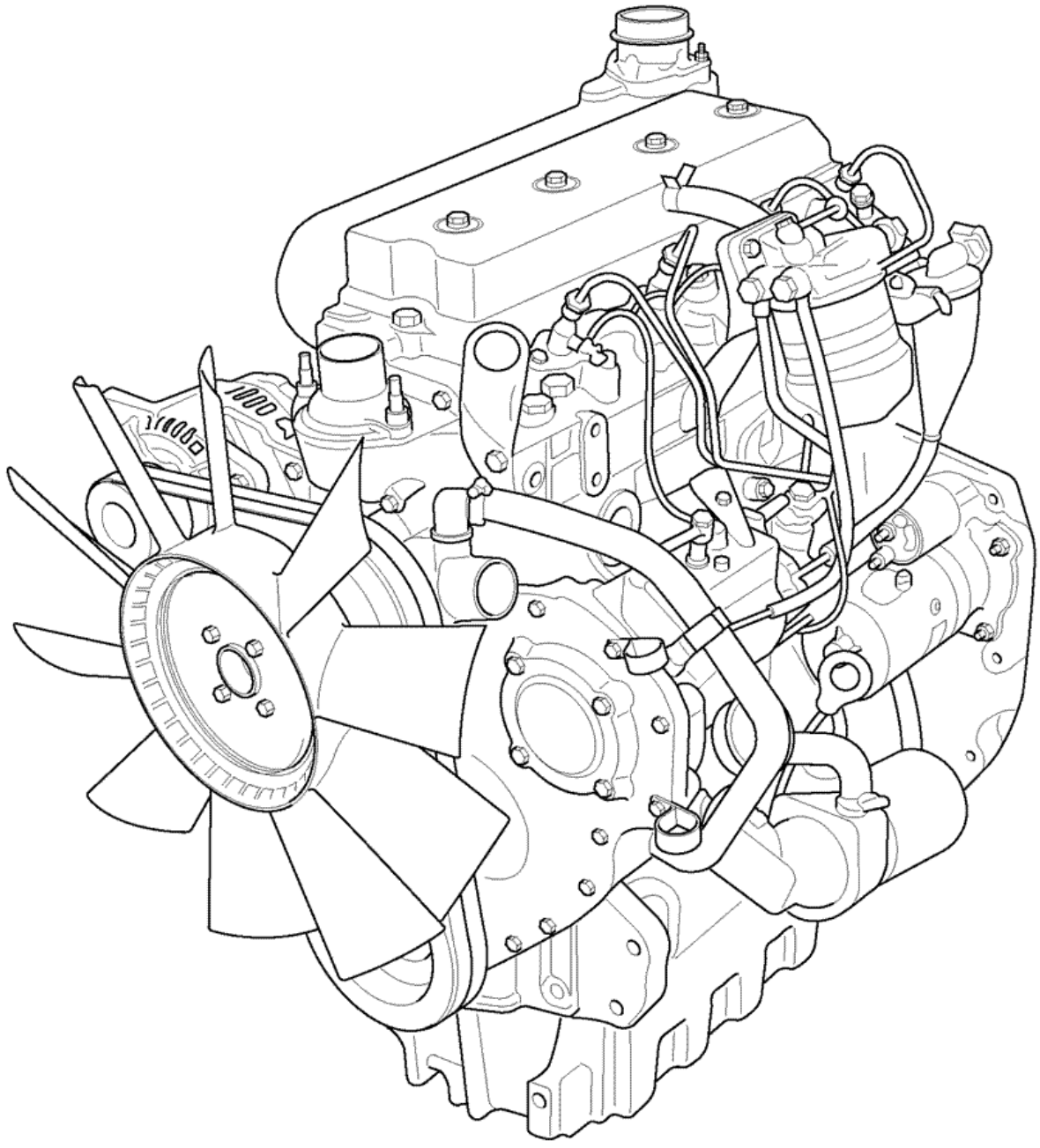

706000

Item	Part #	Change No	Description	Usage Code	QTY
1	339/01024		Engine naturally aspirated INTERNATIONAL, 75bhp		1

9812/0080 L1-1-2 ENGINE, COMPLETE, TURBOCHARGED, P4001T, 8C89

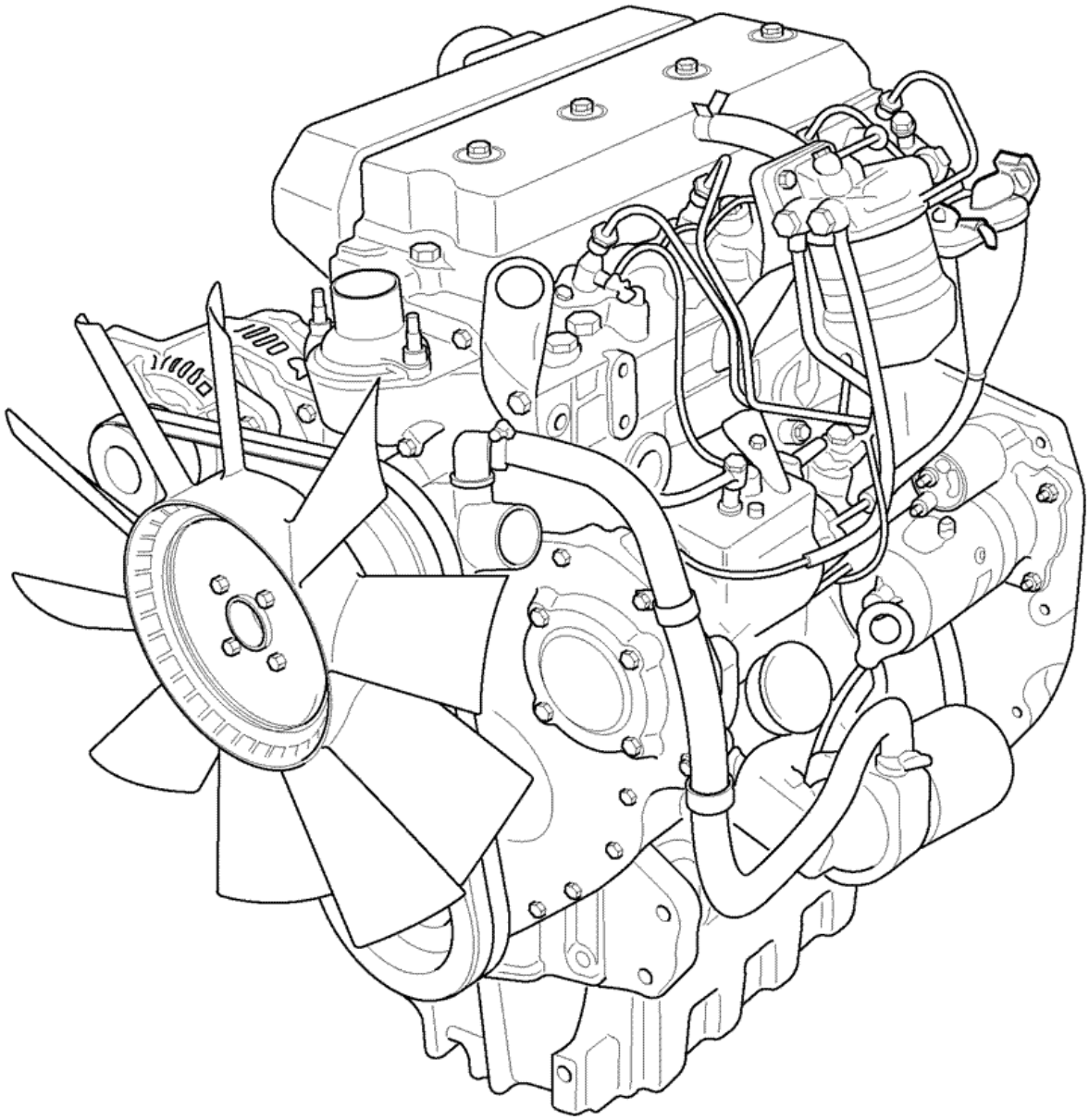

706010

Item	Part #	Change No	Description	Usage Code	QTY
1	339/01023		Engine turbocharged INTERNATIONAL, 92bhp		1

Product Catalog \ CONSTRUCTION \ NORTH AMERICA \ CONSTRUCTION / INDUSTRIAL \ BACKHOE LOADER 3CX,4CX,214,215,217 \ 3C PLUS (91HP) , Made in Brazil with Dieselmax/IESA Engine 9812/0080 \ L IESA P4001/P4001T ENGINES FROM S/N 1395000 \ L01 ENGINE BLOCK & SUB-ASSEMBLIES

9812/0080 L1-2-1 ENGINE, SHORT, , P4001 8C88

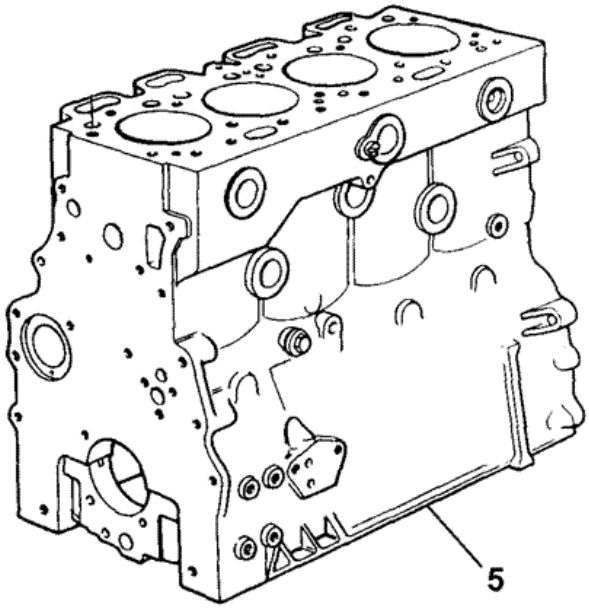

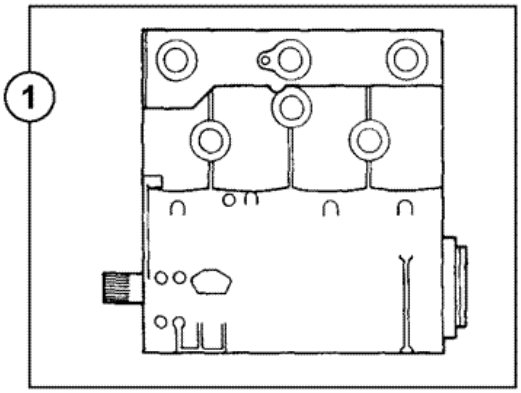

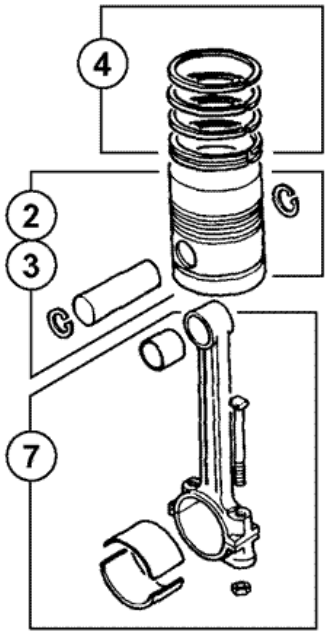

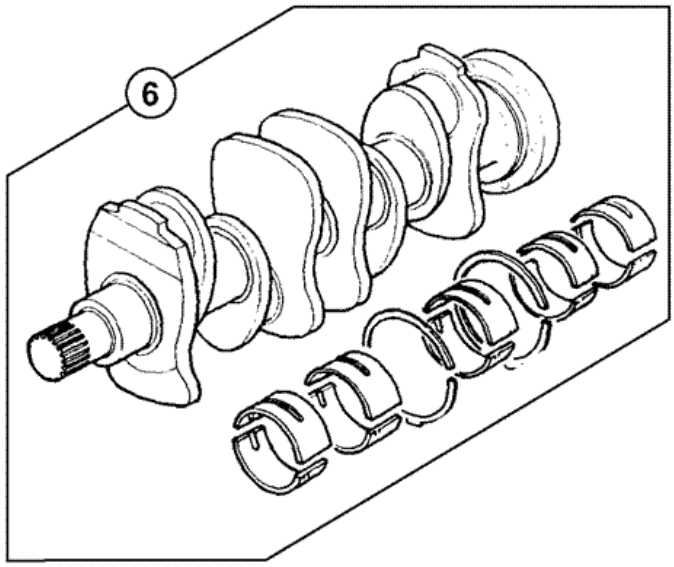

950600

Item	Part #	Change No	Description	Usage Code	QTY
1	02/103773		Engine partial nat asp		1
2	:02/103415		Piston assembly		3

			Cylinders 1,2 & 3		
3	:02/103701		Piston assembly *Cylinder 4 only*		1
4	:02/103702		Kit piston ring		4
5	:02/103690		Block engine 8C30/8C88		1
6	:02/103442		Kit-crankshaft		1
7	:02/103417		Rod connecting		4

Product Catalog \ CONSTRUCTION \ NORTH AMERICA \ CONSTRUCTION / INDUSTRIAL \ BACKHOE LOADER 3CX,4CX,214,215,217 \ 3C PLUS (91HP) , Made in Brazil with Dieselmax/IESA Engine 9812/0080 \ L IESA P4001/P4001T ENGINES FROM S/N 1395000 \ L01 ENGINE BLOCK & SUB-ASSEMBLIES

9812/0080 L1-2-2 ENGINE, SHORT, , P4001T 8C89

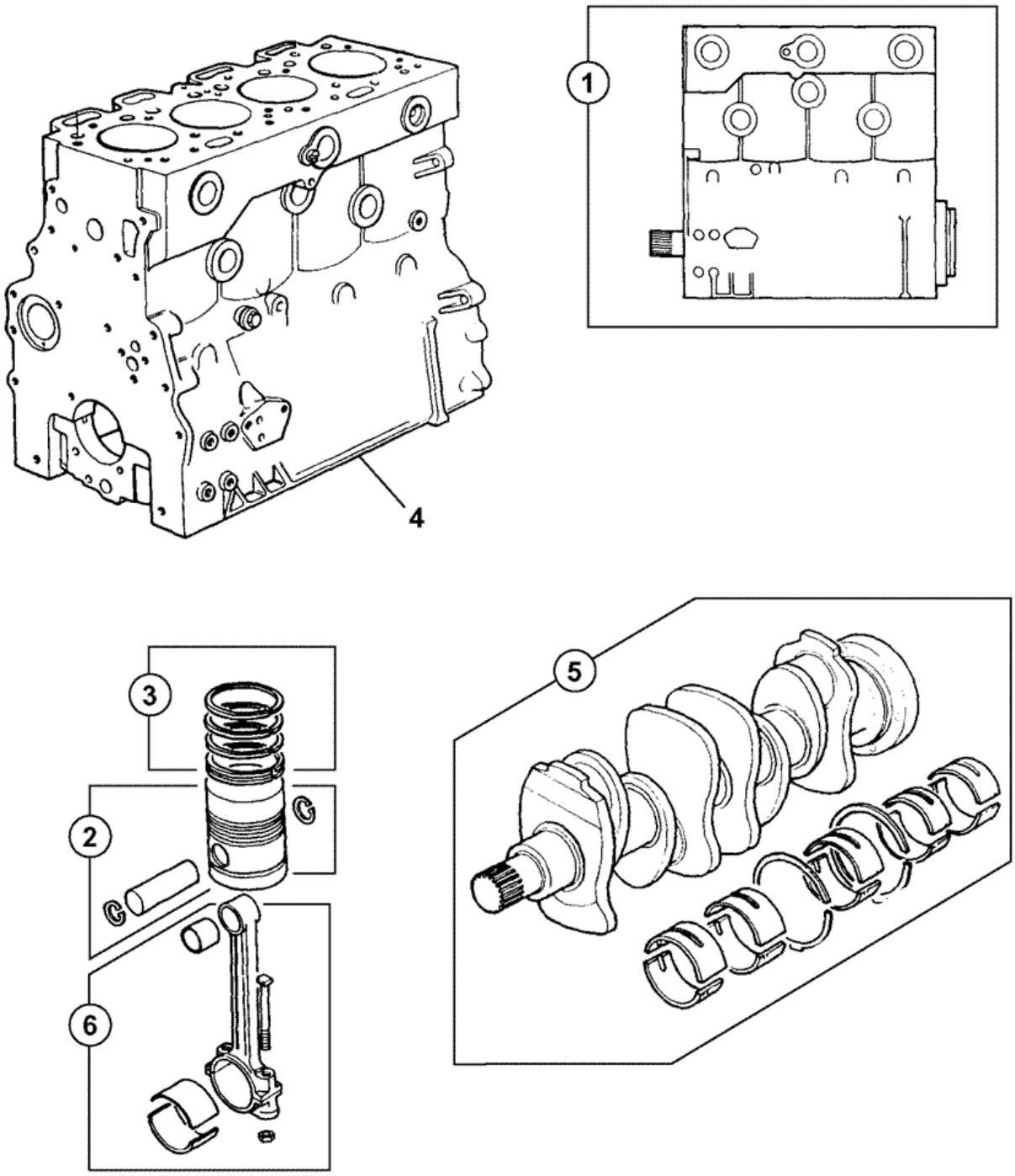

950620

Item	Part #	Change No	Description	Usage Code	QTY
1	02/103774		Engine partial turbo		1
2	:02/103423		Piston assembly		4

3	:02/103702		Kit piston ring		4
4	:02/103691		Block engine 8C31/8C89		1
5	:02/103442		Kit-crankshaft		1
6	:02/103424		Rod connecting		4

9812/0080 L1-3-1 BLOCK ASSEMBLY, NATURALLY ASPIRATED, P4001 8C88

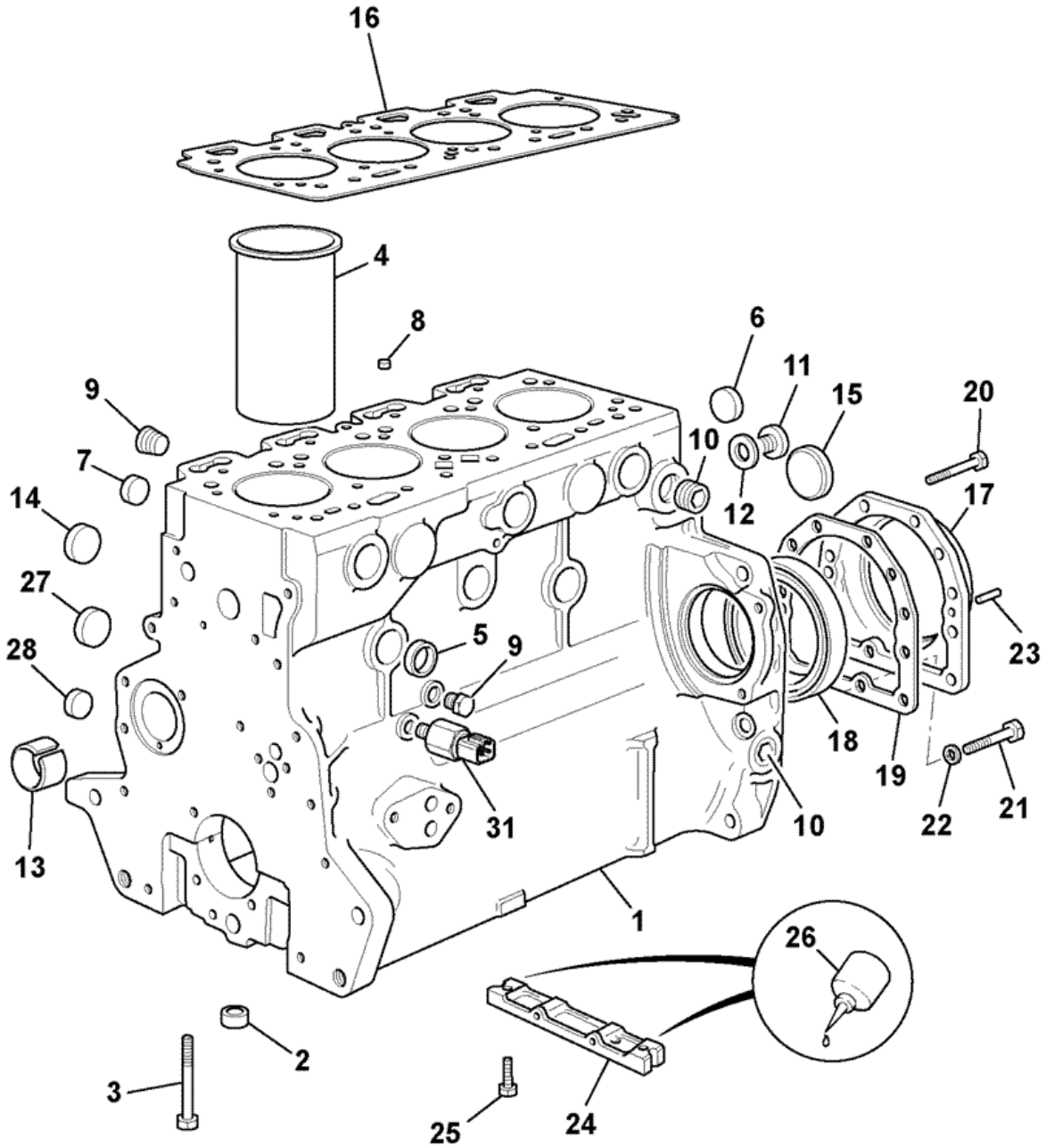

948800

Item	Part #	Change No	Description	Usage Code	QTY
1	02/103690		Block engine 8C30/8C88		1

2	:02/100101		Thimble		10
3	:02/100102		Bolt		10
4	:02/103401		Liner		4
5	:02/103402		Plug		5
6	:02/103402		Plug		2
7	:02/103404		Plug		4
8	:02/103408		Plug		1
9	:02/103405		Plug		2
10	:02/103410		Plug		3
11	02/100111		Plug		1
12	02/103406		Washer		1
13	:02/103409		Bush		1
14	:02/103403		Plug		4
15	02/103407		Plug		1
16	02/103707		Gasket cylinder head		1
17	02/103491		Housing rear seal		1
18	02/103492		Seal		1
19	02/103720		Gasket gasket		1
20	02/103450		Bolt		12
21	1381/3106		Capscrew		2
22	02/100307		Washer		2
23	02/103721		Pin guide		2
24	02/102167		Bridge piece		1
25	826/00759		Bolt		2
26	02/103411		Gasket		2
27	02/103602		Plug		1
28	02/100116		Plug		1
31	701/80327		Switch oil pressure 1/8" NPTF Deutsch		1

9812/0080 L1-3-2 BLOCK ASSEMBLY, TURBOCHARGED, P4001T 8C89

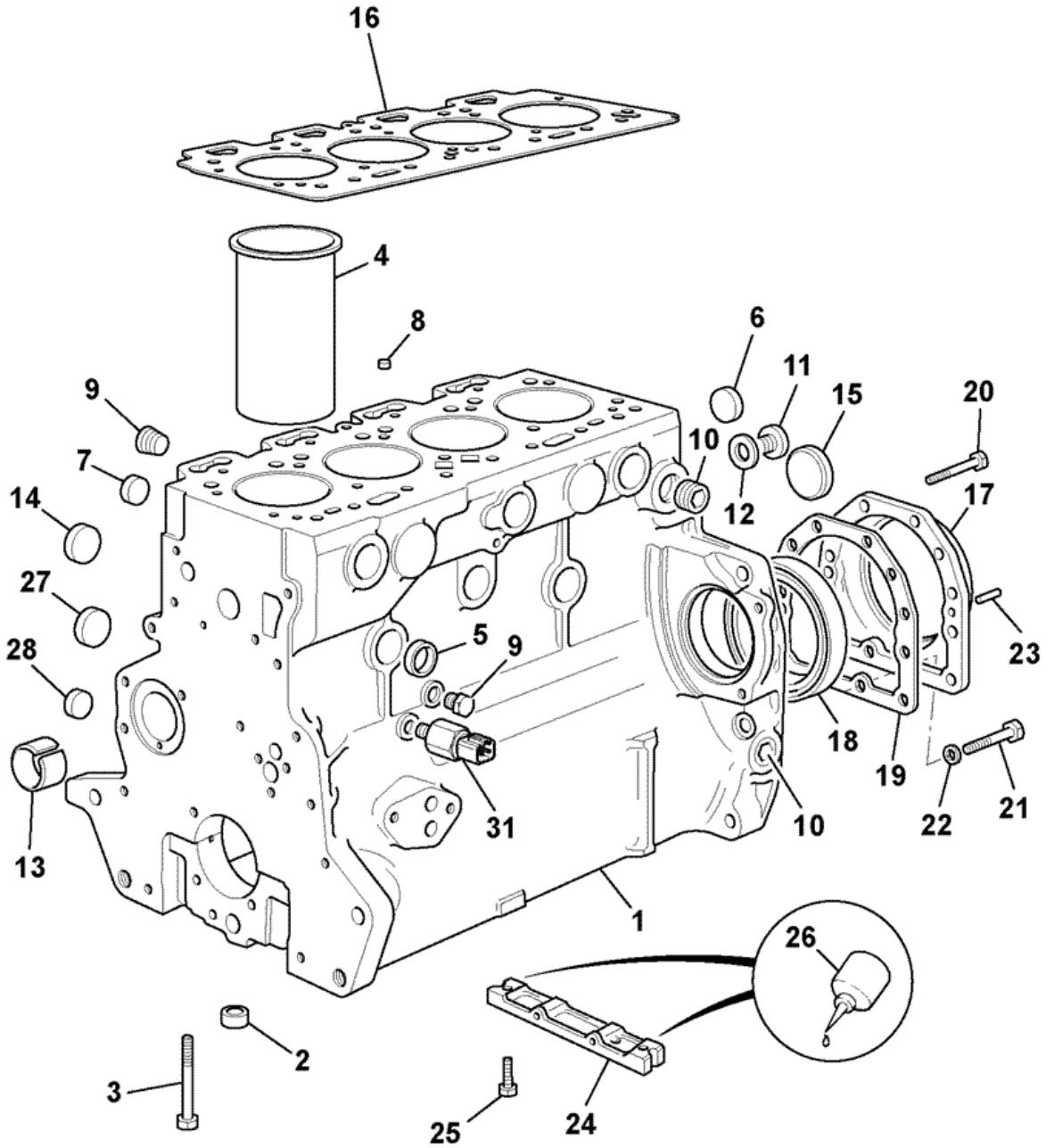

948800

Item	Part #	Change No	Description	Usage Code	QTY
1	02/103691		Block engine 8C31/8C89		1

2	:02/100101		Thimble		10
3	:02/100102		Bolt		10
4	:02/103401		Liner		4
5	:02/103402		Plug		5
6	:02/103402		Plug		2
7	:02/103404		Plug		4
8	:02/103408		Plug		1
9	:02/103405		Plug		2
10	:02/103410		Plug		3
11	02/100111		Plug		1
12	02/103406		Washer		1
13	:02/103409		Bush		1
14	:02/103403		Plug		4
15	02/103407		Plug		1
16	02/102174		Gasket cylinder head		1
17	02/103491		Housing rear seal		1
18	02/103492		Seal		1
19	02/103720		Gasket gasket		1
20	02/103450		Bolt		12
21	1381/3106		Capscrew		2
22	02/100307		Washer		2
23	02/103721		Pin guide		2
24	02/102167		Bridge piece		1
25	826/00759		Bolt		2
26	02/103411		Gasket		2
27	02/103602		Plug		1
28	02/100116		Plug		1
31	701/80327		Switch oil pressure 1/8" NPTF Deutsch		1

Product Catalog \ CONSTRUCTION \ NORTH AMERICA \ CONSTRUCTION / INDUSTRIAL \ BACKHOE LOADER 3CX,4CX,214,215,217 \ 3C PLUS (91HP) , Made in Brazil with Dieselmax/IESA Engine 9812/0080 \ L IESA P4001/P4001T ENGINES FROM S/N 1395000 \ L01 ENGINE BLOCK & SUB-ASSEMBLIES

9812/0080 L1-4-1 CRANKSHAFT, BEARINGS, PISTONS & CON-RODS, P4001 NAT-ASP 8C88

Item	Part #	Change No	Description	Usage Code	QTY
1	02/103442		Kit-crankshaft		1
2	:02/103437		Crankshaft		1
3	:02/103438		Kit-bearing main standard		1
3	:02/103699		Kit-bearing bearing		1
3	:02/103440		Kit-bearing main + .020"		1
3	:02/103441		Kit-bearing main + .030"		1
4	:02/103665		Kit-bearing big-end standard		1
4	:02/103666		Kit-bearing big-end + .010"		1
4	:02/103667		Kit-bearing big-end + .020"		1
4	:02/103668		Kit-bearing big-end + .030"		1
5	:02/103659		Kit-thrust washer standard		1
5	:02/103660		Kit-thrust washer + .0075"		1
6	02/190001		Gear crankshaft		1
7	02/100038		Key		1
8	02/103415		Piston assembly *Cylinders 1,2 & 3*		3
8	02/103701		Piston assembly *Cylinder 4*		1
9	:02/103448		Circlip		8
10	:02/103702		Kit piston ring		4
11	02/103417		Rod connecting		4
12	:02/100127		Bolt		8
13	:02/103446		Nut		8
14	:02/103449		Bush		4

Product Catalog \ CONSTRUCTION \ NORTH AMERICA \ CONSTRUCTION / INDUSTRIAL \ BACKHOE LOADER 3CX,4CX,214,215,217 \ 3C PLUS (91HP) , Made in Brazil with Dieselmax/IESA Engine 9812/0080 \ L IESA P4001/P4001T ENGINES FROM S/N 1395000 \ L01 ENGINE BLOCK & SUB-ASSEMBLIES

9812/0080 L1-4-2 CRANKSHAFT, BEARINGS, PISTONS & CON-RODS, P4001T TURBO 8C89

Item	Part #	Change No	Description	Usage Code	QTY
1	02/103442		Kit-crankshaft		1
2	:02/103437		Crankshaft		1
3	:02/103438		Kit-bearing main standard		1
3	:02/103699		Kit-bearing bearing		1
3	:02/103440		Kit-bearing main + .020"		1
3	:02/103441		Kit-bearing main + .030"		1
4	:02/103661		Kit-bearing big-end standard		1
4	:02/103662		Kit-bearing big-end + .010"		1
4	:02/103663		Kit-bearing big-end + .020"		1
4	:02/103664		Kit-bearing big-end + .030"		1
5	:02/103659		Kit-thrust washer standard		1
5	:02/103660		Kit-thrust washer + .0075"		1
6	02/190001		Gear crankshaft		1
7	02/100038		Key		1
8	02/103423		Piston assembly *Cylinders 1,2,3 & 4*		4
9	:02/100129		Circlip		8
10	:02/103702		Kit piston ring		1
11	02/103424		Rod connecting		4
12	:02/100127		Bolt		8
13	:02/103446		Nut		8
14	:02/103447		Bush		4

9812/0080 L1-5-1 FANS, PULLEYS, & FAN BELT, P4001/P4001T NAT ASP & TURBO 8C88/8C89

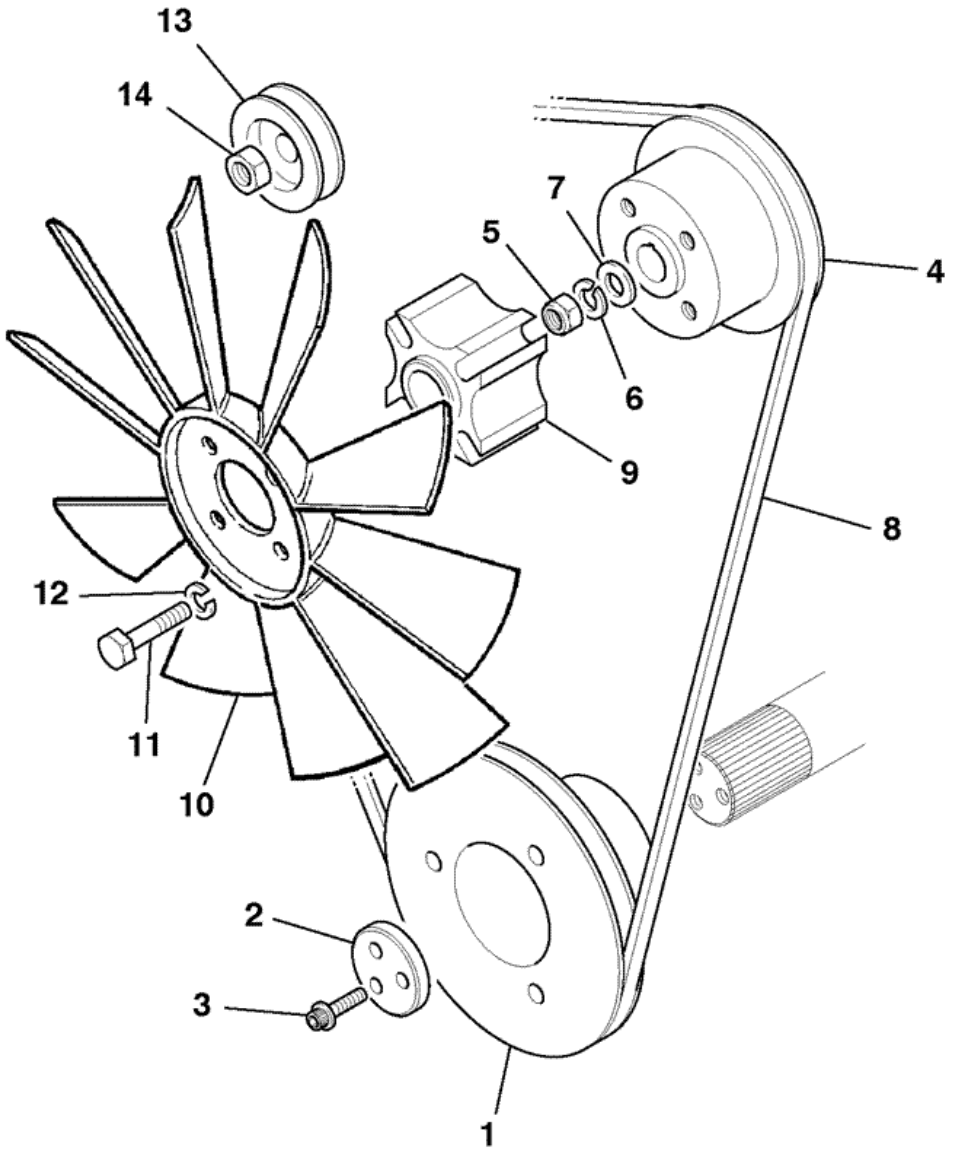

702231

Item	Part #	Change No	Description	Usage Code	QTY
1	02/103652		Pulley		1

2	02/101812		Block Thrust		1
3	02/103508		Bolt		3
4	02/103615		Pulley		1
5	1340/0601		Nut		1
6	823/00270		Washer spring		1
7	1410/0007		Washer		1
8	02/103600		Belt		1
9	339/01030		Spacer fan		1
10	339/01027		Fan 18" cooling		1
11	1315/3317Z		Bolt M8 x75mm long		4
12	1420/0007Z		Washer plain M8		4
13	02/103671		Pulley water pump		1
14	02/103672		Nut M12		1

Product Catalog \ CONSTRUCTION \ NORTH AMERICA \ CONSTRUCTION / INDUSTRIAL \ BACKHOE LOADER 3CX,4CX,214,215,217 \ 3C PLUS (91HP) , Made in Brazil with Dieselmax/IESA Engine 9812/0080 \ L IESA P4001/P4001T ENGINES FROM S/N 1395000 \ L01 ENGINE BLOCK & SUB-ASSEMBLIES

9812/0080 L1-6-1 TIMING CASE, CAMSHAFT & GEARS, P4001 NAT ASP 8C88

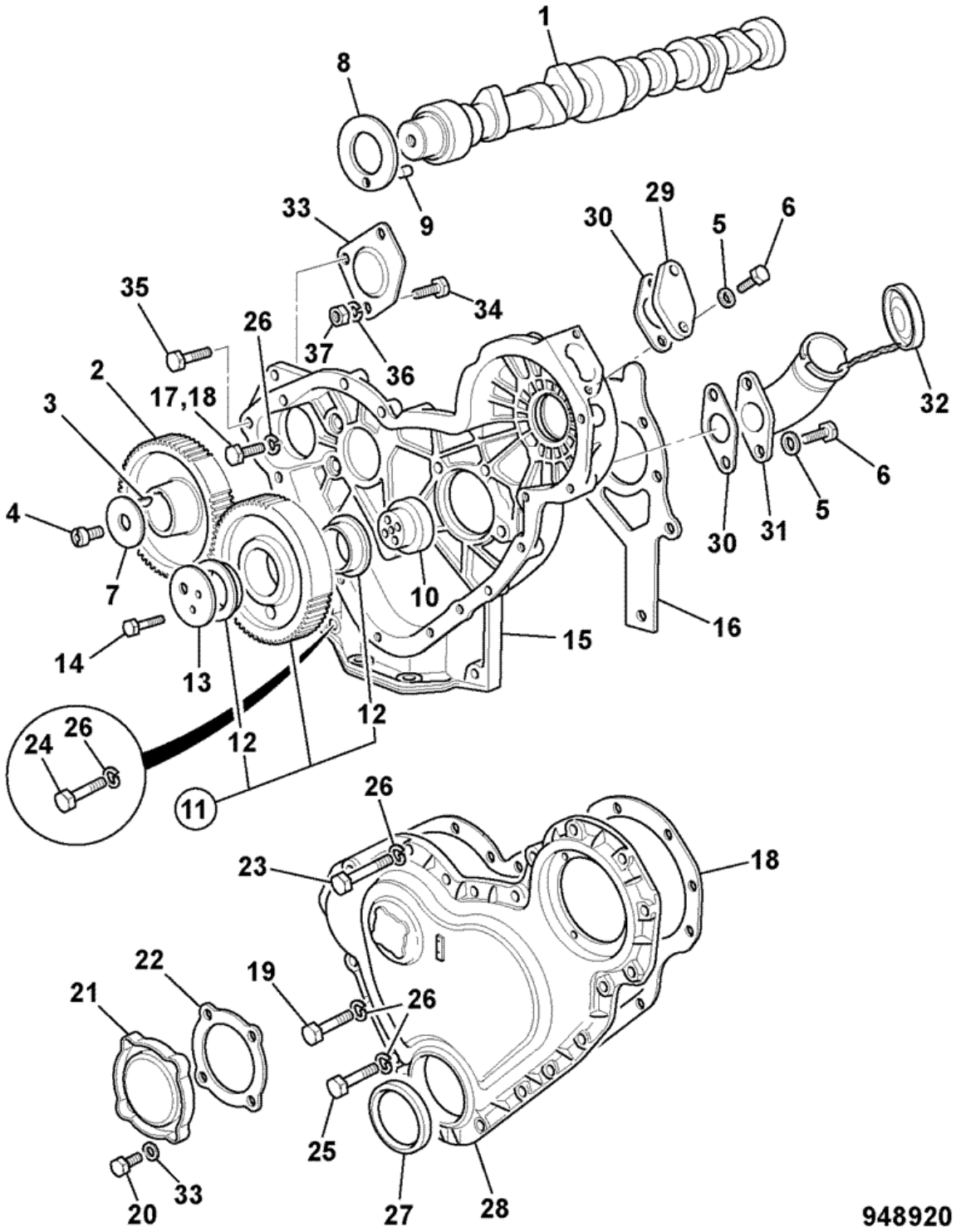

Item	Part #	Change No	Description	Usage Code	QTY
1	02/103722		Camshaft camshaft		1

2	02/190017		Gear camshaft		1
3	02/100038		Key		1
4	02/103493		Bolt		1
5	1416/0005		Washer		2
6	1305/0104		Bolt		2
7	02/103494		Washer		2
8	02/192046		Washer thrust		1
9	02/103724		Pin guide		1
10	02/103725		Hub hub		1
11	02/190033		Gear idler assembly		1
12	:02/192016		Bush		2
13	02/103497		Plate		1
14	02/103498		Bolt		3
15	02/103694		Housing timing case		1
16	02/103509		Gasket		1
17	1305/3106		Bolt		7
18	02/103510		Gasket		1
19	1305/3106		Bolt		14
20	02/103430		Bolt		4
21	02/103696		Cover hole cover		1
22	02/100868		Gasket		1
23	02/103697		Bolt bolt		1
24	1305/0105		Bolt		2
25	1305/3118		Bolt		3
26	1416/0005		Washer		30
27	02/103429		Seal		1
28	02/103765		Cover cover		1
29	02/103434		Plate cover		1
30	02/103511		Gasket		2
31	02/103432		Filler		1
32	02/103698		Cap cover		1
33	02/100142		Plate blanking		1
34	826/00030		Bolt		1
35	1305/3222		Bolt		2
36	1416/0006		Washer		3
37	1340/0201		Nut		3

Product Catalog \ CONSTRUCTION \ NORTH AMERICA \ CONSTRUCTION / INDUSTRIAL \ BACKHOE LOADER 3CX,4CX,214,215,217 \ 3C PLUS (91HP) , Made in Brazil with Dieselmax/IESA Engine 9812/0080 \ L IESA P4001/P4001T ENGINES FROM S/N 1395000 \ L01 ENGINE BLOCK & SUB-ASSEMBLIES

9812/0080 L1-6-2 TIMING CASE, CAMSHAFT & GEARS, TURBOCHARGED 8C89

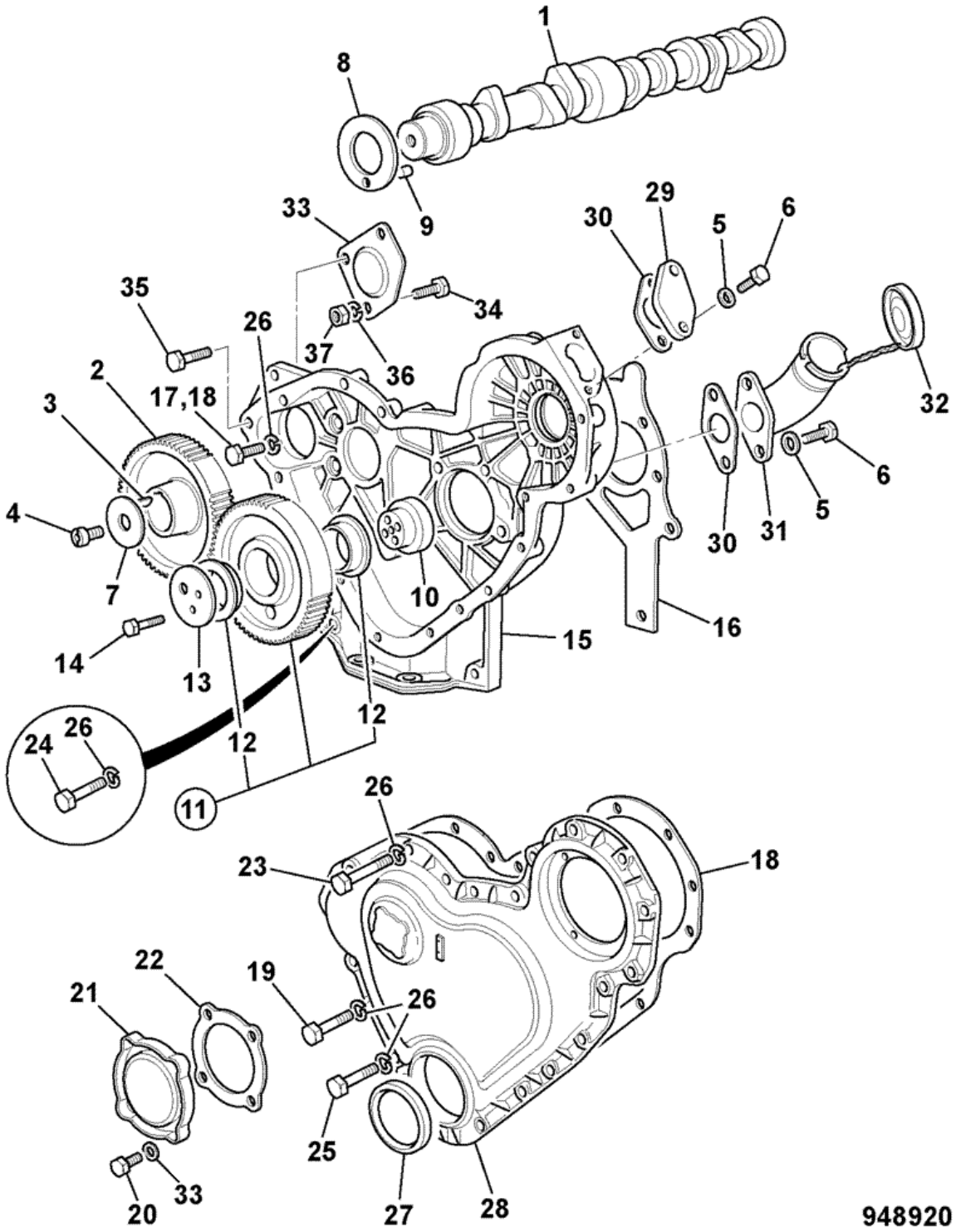

Item	Part #	Change No	Description	Usage Code	QTY
1	02/103723		Camshaft camshaft		1

2	02/190017		Gear camshaft		1
3	02/100038		Key		1
4	02/103493		Bolt		1
5	1416/0005		Washer		2
6	1305/0104		Bolt		2
7	02/103494		Washer		2
8	02/192046		Washer thrust		1
9	02/103724		Pin guide		1
10	02/103725		Hub hub		1
11	02/190033		Gear idler assembly		1
12	:02/192016		Bush		2
13	02/103497		Plate		1
14	02/103498		Bolt		3
15	02/103695		Housing timing case		1
16	02/103509		Gasket		1
17	1305/3106		Bolt		7
18	02/103510		Gasket		1
19	1305/3106		Bolt		14
20	02/103430		Bolt		4
21	02/103696		Cover hole cover		1
22	02/100868		Gasket		1
23	02/103697		Bolt bolt		1
24	1305/0105		Bolt		2
25	1305/3118		Bolt		3
26	1416/0005		Washer		28
27	02/103429		Seal		1
28	02/103765		Cover cover		1
29	02/103434		Plate cover		1
30	02/103511		Gasket		2
31	02/103432		Filler		1
32	02/103698		Cap cover		1
33	02/100142		Plate blanking		1
34	826/00030		Bolt		1
35	1305/3222		Bolt		2
36	1416/0006		Washer		3
37	1340/0201		Nut		3

9812/0080 L1-7-1 FLYWHEEL, & STARTER RING GEAR, P4001/P4001T, 8C88 & 8C89

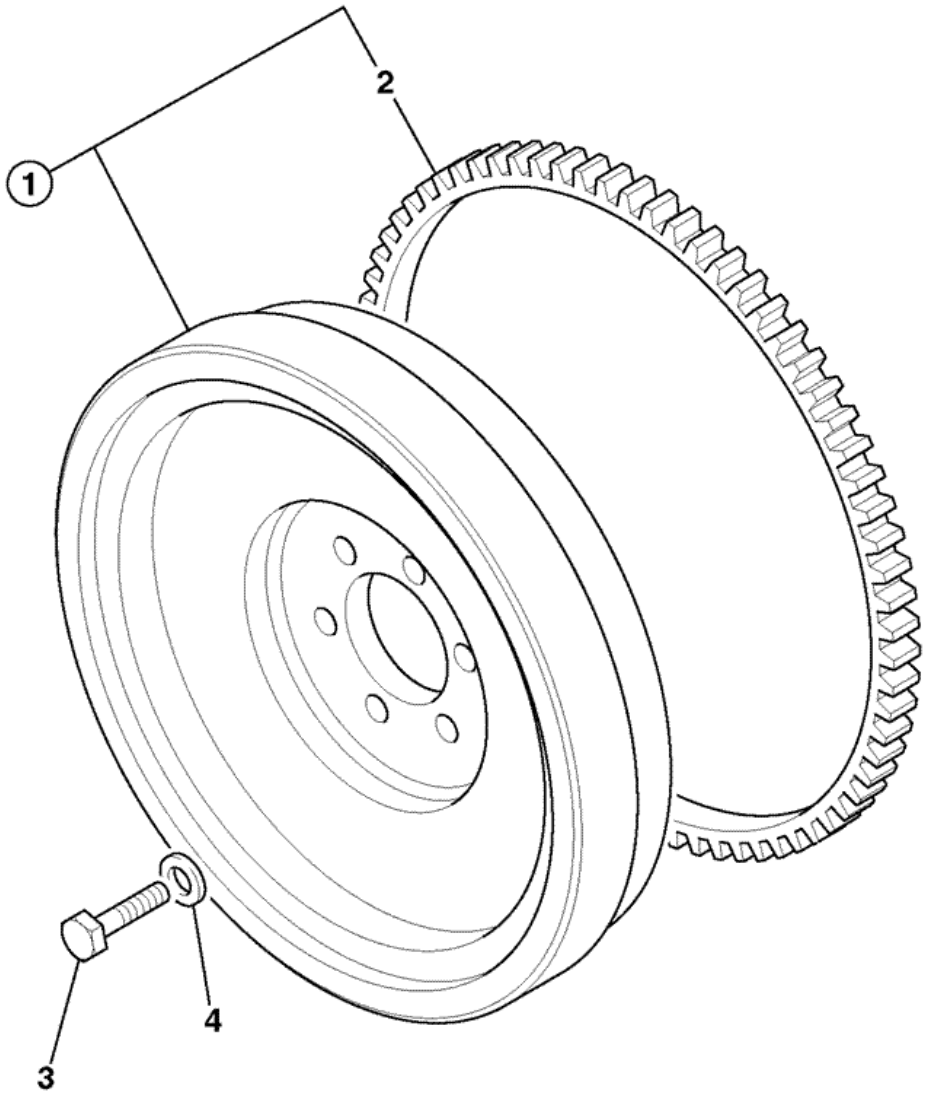

705630

Item	Part #	Change No	Description	Usage Code	QTY
1	02/103607		Flywheel assembly		1

2	:02/100078		Gear starter ring		1
3	02/103609		Bolt		6
4	02/100614		Washer		6

9812/0080 L1-8-1 ENGINE MOUNTINGS, P4001/P400T 8C88 & 8C89

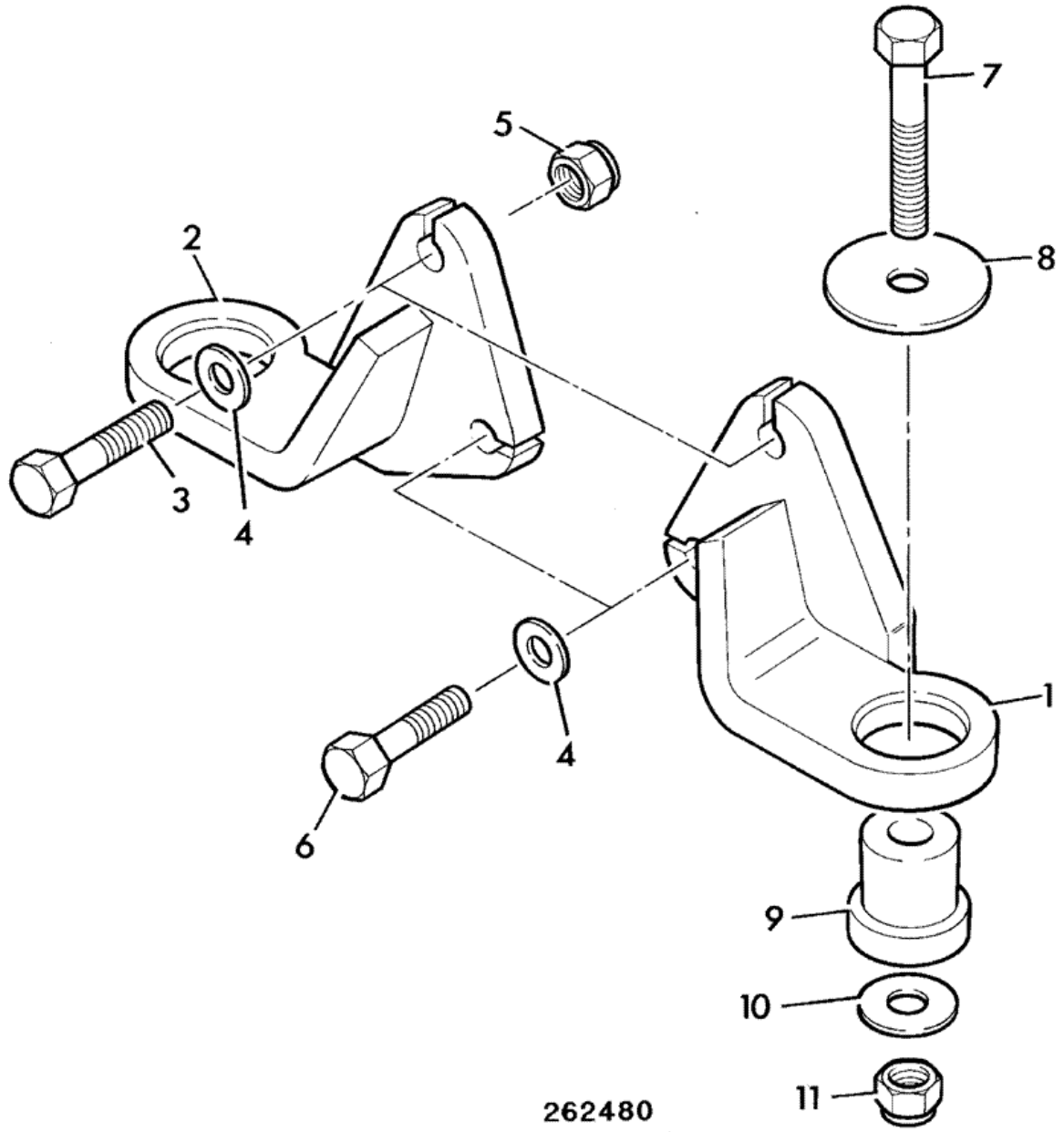

Item	Part #	Change No	Description	Usage Code	QTY
1	125/00201		Bracket engine mounting left hand		1

2	125/00202		Bracket engine mounting right hand		1
3	1315/3717Z		Bolt M16 x 75mm		2
4	1370/0603Z		Nut M16		2
5	1420/0011Z		Washer M16 plain		4
6	1315/0710Z		Bolt M16 x 40mm		2
7	1315/3519Z		Bolt M12x90mm		2
8	123/02453		Washer rebound		2
9	123/03138		Mounting rubber		2
10	823/00531		Washer		2
11	1370/0403Z		Nut M12		2

Product Catalog \ CONSTRUCTION \ NORTH AMERICA \ CONSTRUCTION / INDUSTRIAL \ BACKHOE LOADER 3CX,4CX,214,215,217 \ 3C PLUS (91HP) , Made in Brazil with Dieselmax/IESA Engine 9812/0080 \ L IESA P4001/P4001T ENGINES FROM S/N 1395000 \ L02 CYLINDER HEAD & SUB-ASSEMBLIES

9812/0080 L2-1-1 CYLINDER HEAD, NAT ASP, P4001 8C88

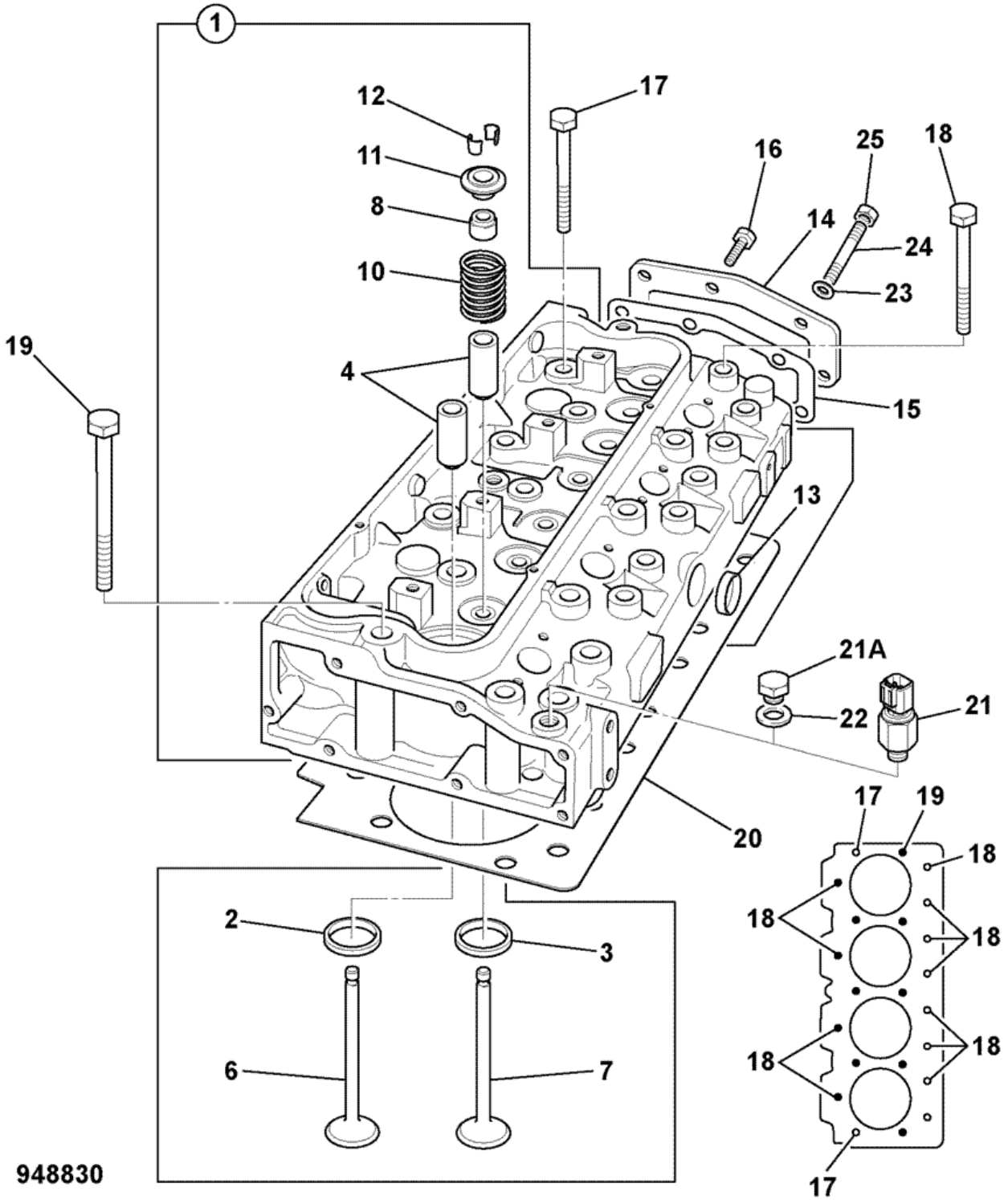

Item	Part #	Change No	Description	Usage Code	QTY
1	02/103705		Head cylinder		1
2	:02/103466		Insert exhaust		4

3	:02/103467		Insert inlet		4
4	:02/130064		Guide valve *EXHAUST*		8
6	:02/103710		Valve exhaust		4
7	:02/103709		Valve inlet		4
8	:02/103471		Seal		8
9	:02/100638		Seat spring		8
10	:02/103472		Spring outer		8
11	:02/103474		Holder Collet		16
12	:02/103473		Collet		16
13	:02/103402		Plug		1
14	:02/103478		Cover rear		1
15	:02/103533		Gasket		1
16	:02/103450		Bolt		4
17	02/103711		Bolt 1/2x140		2
18	02/103712		Bolt 1/2x119		12
19	02/103713		Bolt 1/2x103		8
20	02/103707		Gasket cylinder head		1
21	701/80317		Switch water temperature		1
21A	02/103603		Plug		1
22	02/103604		Washer		1
23	1416/0005		Washer		4
24	822/00119		Stud		2
25	1340/0101		Nut		2

Product Catalog \ CONSTRUCTION \ NORTH AMERICA \ CONSTRUCTION / INDUSTRIAL \ BACKHOE LOADER 3CX,4CX,214,215,217 \ 3C PLUS (91HP) , Made in Brazil with Dieselmax/IESA Engine 9812/0080 \ L IESA P4001/P4001T ENGINES FROM S/N 1395000 \ L02 CYLINDER HEAD & SUB-ASSEMBLIES

9812/0080 L2-1-2 CYLINDER HEAD, TURBO, P4001T 8C89

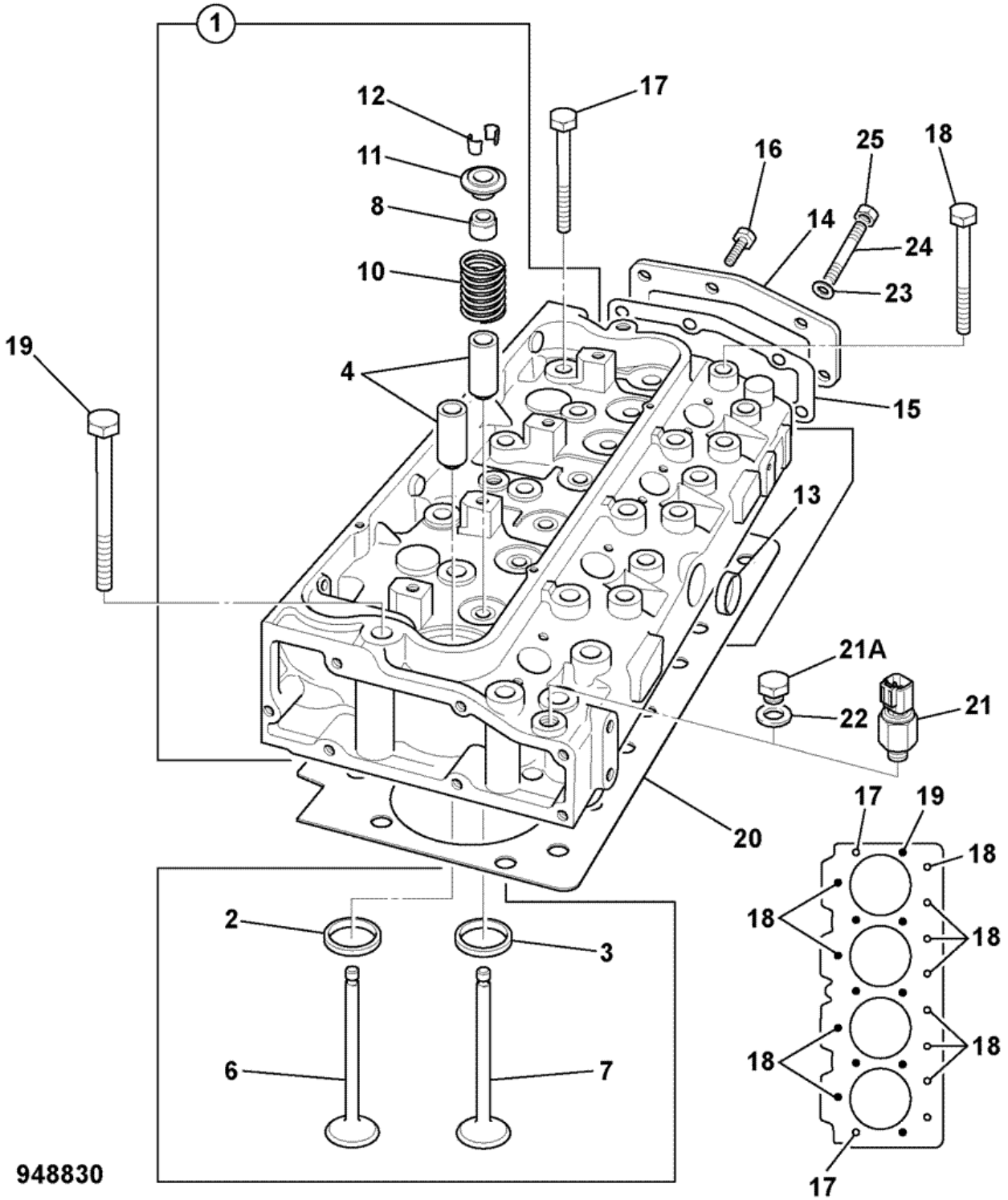

Item	Part #	Change No	Description	Usage Code	QTY
1	02/103706		Head cylinder		1
2	:02/103480		Insert exhaust		4

3	:02/103481		Insert inlet		4
4	:02/130064		Guide valve *EXHAUST*		8
6	:02/103710		Valve exhaust		4
7	:02/103708		Valve inlet		4
8	:02/103471		Seal		8
9	:02/100638		Seat spring		8
10	:02/103472		Spring outer		8
11	:02/103474		Holder Collet		16
12	:02/103473		Collet		16
13	:02/103402		Plug		1
14	:02/103478		Cover rear		1
15	:02/103533		Gasket		1
16	:02/103450		Bolt		4
17	02/103711		Bolt 1/2x140		2
18	02/103712		Bolt 1/2x119		12
19	02/103713		Bolt 1/2x103		8
20	02/103707		Gasket cylinder head		1
21	701/80317		Switch water temperature		1
21A	02/103603		Plug		1
22	02/103604		Washer		1
23	1416/0005		Washer		4
24	822/00119		Stud		2
25	1340/0101		Nut		2

Product Catalog \ CONSTRUCTION \ NORTH AMERICA \ CONSTRUCTION / INDUSTRIAL \ BACKHOE LOADER 3CX,4CX,214,215,217 \ 3C PLUS (91HP) , Made in Brazil with Dieselmax/IESA Engine 9812/0080 \ L IESA P4001/P4001T ENGINES FROM S/N 1395000 \ L02 CYLINDER HEAD & SUB-ASSEMBLIES

9812/0080 L2-2-1 ROCKER ASSEMBLY, PUSH RODS & TAPPETS, P4001/P4001T NAT ASP & TURBO 8C88/8C89

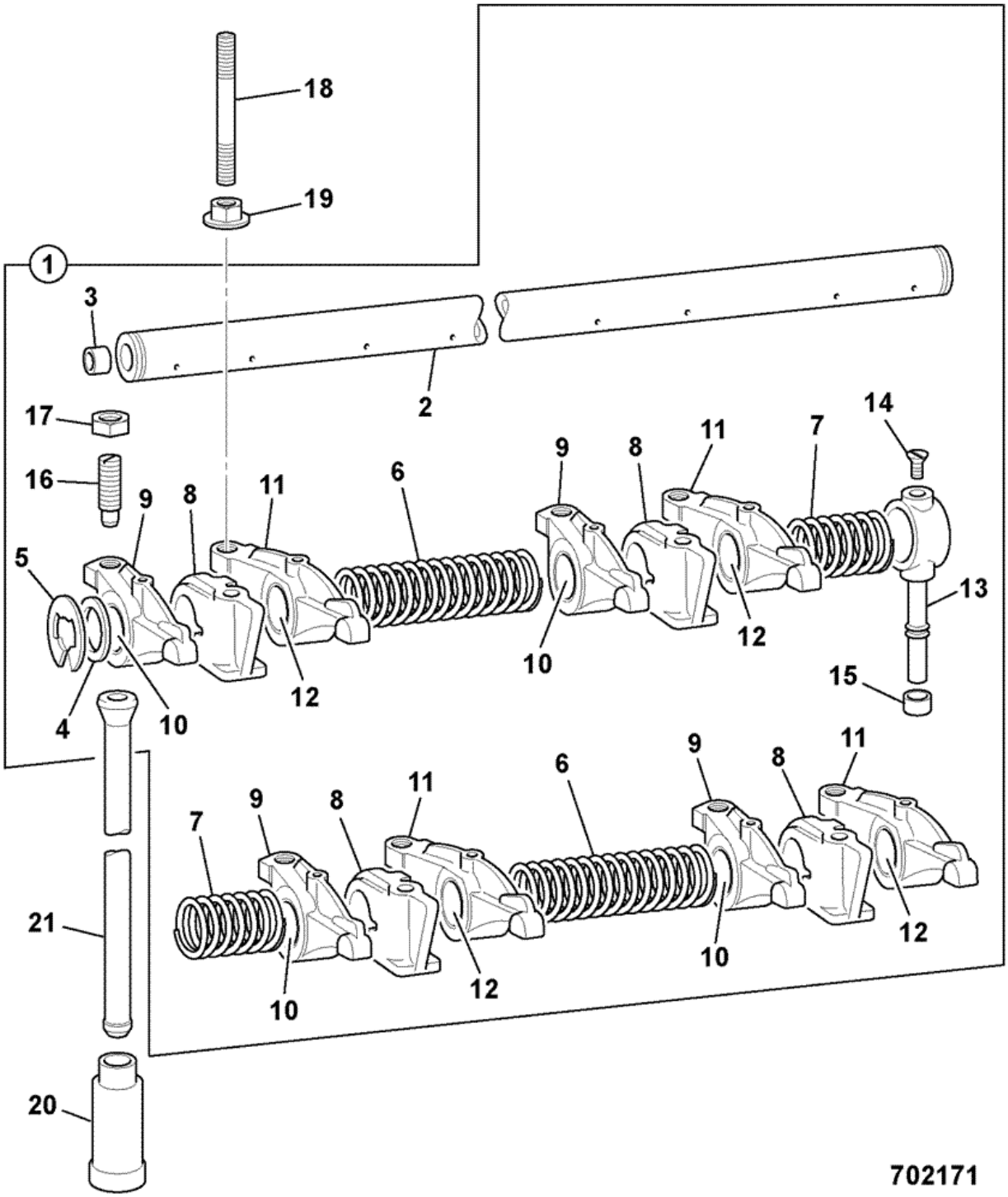

Item	Part #	Change No	Description	Usage Code	QTY
1	02/103483		Assembly rocker shaft		1

2	:02/103484		Shaft		2
3	:02/100152		Plug core D=11mm		2
4	:02/103714		Washer washer		2
5	:02/100287		Circlip		2
6	:02/100028		Spring long		2
7	:02/103717		Spring spring		2
8	:02/103485		Bracket		4
9	:02/103715		Lever rocker		4
10	::02/192050		Bush		4
11	:02/103716		Lever rocker		4
12	::02/192050		Bush		4
13	:02/103718		Pipe pipe		1
14	:826/00124		Screw		1
15	816/60170		Olive		1
16	:02/100032		Screw		8
17	:02/101203		Nut lock		8
18	02/103489		Stud		4
19	02/103490		Nut		4
20	02/103719		Tappet tappets		8
21	02/103487		Rod push		8

9812/0080 L2-3-1 ROCKER COVER, NAT ASP & TURBO, P4001 & P4001T 8C88/8C89

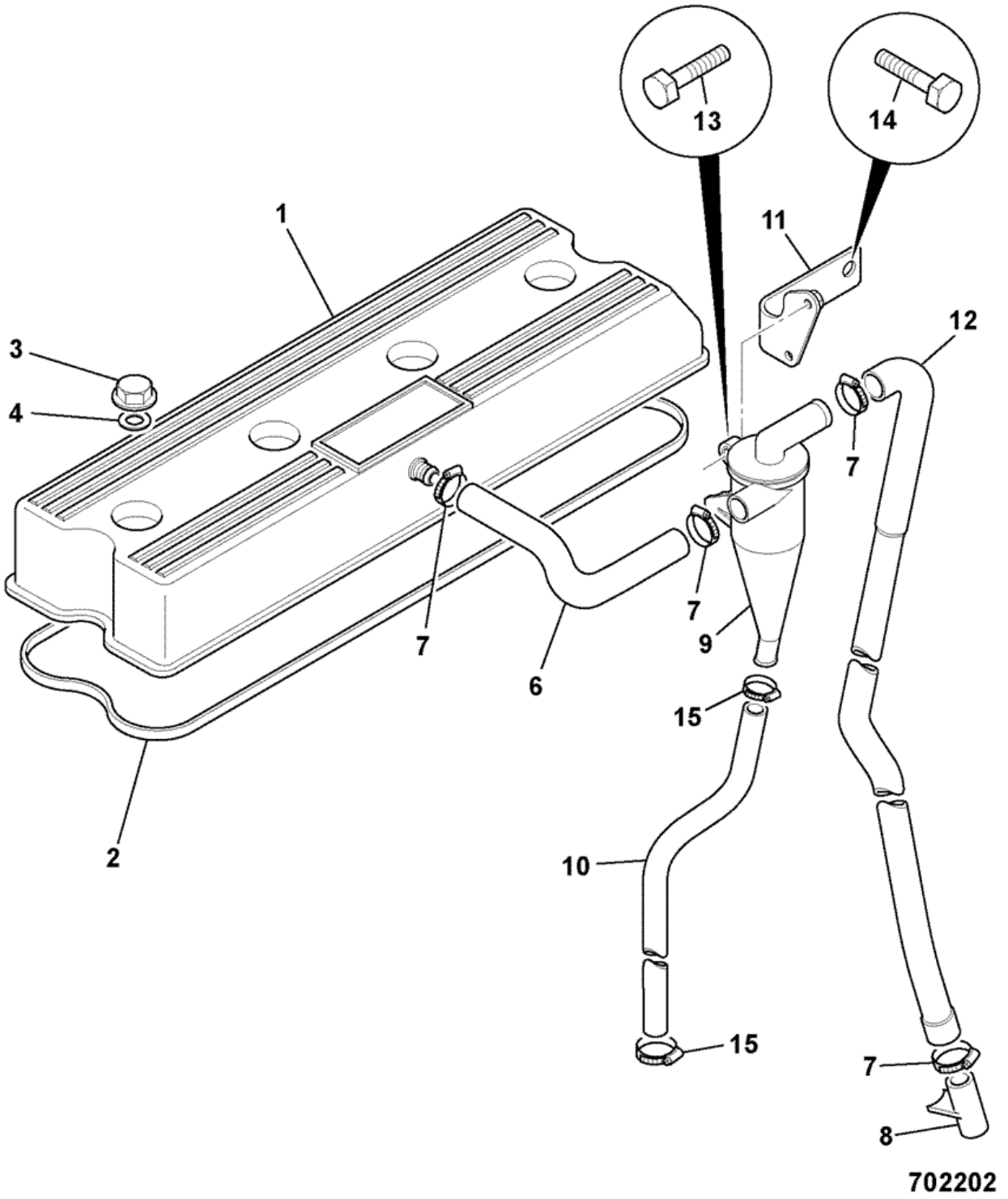

Item	Part #	Change No	Description	Usage Code	QTY
1	02/103733		Cover cover		1

2	02/103526		Gasket		1
3	02/103527		Nut		4
4	02/192069		Bush		4
6	02/103605		Hose		1
7	02/103524		Clamp		4
8	02/100180		Pipe		1
9	02/103673		Valve		1
10	02/103674		Hose		1
11	02/103675		Bracket		1
12	02/103676		Hose		1
13	02/103677		Bolt		2
14	02/103750		Bolt bolt		2
15	02/103606		Clamp		2

9812/0080 L2-4-1 LIFTING PLATES, ENGINE, P4001/P4001T NAT ASP & TURBO 8C88/8C89

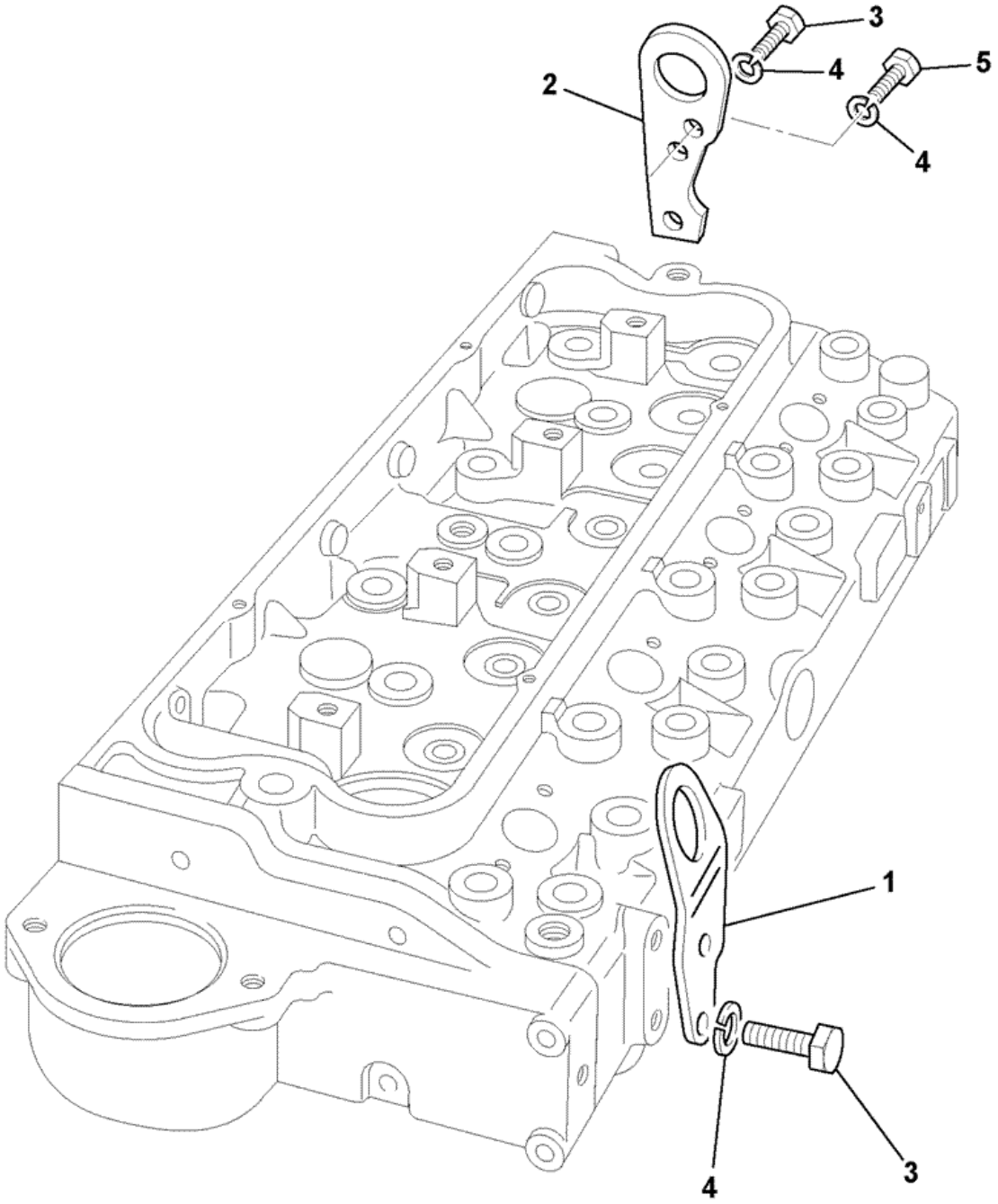

705981

Item	Part #	Change No	Description	Usage Code	QTY
1	02/103532		Plate lifting		1

2	02/100157		Plate lifting		1
3	1305/0205		Bolt		2
4	1416/0006		Washer		4
5	1305/3207		Bolt		1

Product Catalog \ CONSTRUCTION \ NORTH AMERICA \ CONSTRUCTION / INDUSTRIAL \ BACKHOE LOADER 3CX,4CX,214,215,217 \ 3C PLUS (91HP) , Made in Brazil with Dieselmax/IESA Engine 9812/0080 \ L IESA P4001/P4001T ENGINES FROM S/N 1395000 \ L03 INDUCTION & EXHAUST SYSTEM

9812/0080 L3-1-1 MANIFOLD, INDUCTION, NATURALLY ASPIRATED, P4001 8C88

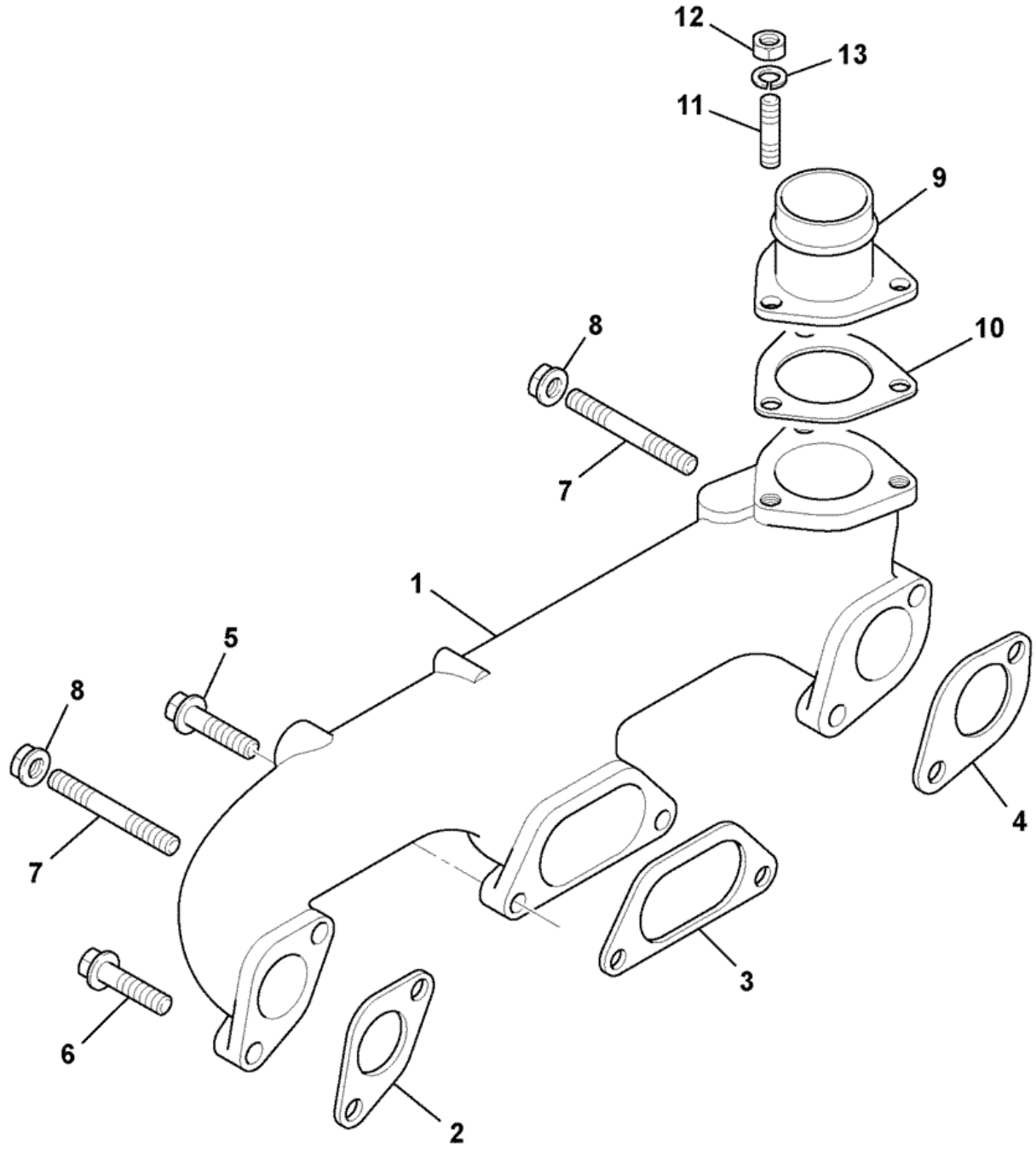

705711

Item	Part #	Change No	Description	Usage Code	QTY
1	02/103540		Manifold		1

2	02/101408		Gasket		1
3	02/101409		Gasket		1
4	02/101407		Gasket		1
5	02/103738		Bolt bolt		2
6	02/103541		Bolt		2
7	02/103542		Stud		2
8	02/103544		Nut		2
9	02/103637		Connector air inlet		1
10	02/103679		Gasket		1
11	822/00126		Stud		3
12	1340/0101		Nut		3
13	1416/0005		Washer		3

Product Catalog \ CONSTRUCTION \ NORTH AMERICA \ CONSTRUCTION / INDUSTRIAL \ BACKHOE LOADER 3CX,4CX,214,215,217 \ 3C PLUS (91HP) , Made in Brazil with Dieselmax/IESA Engine 9812/0080 \ L IESA P4001/P4001T ENGINES FROM S/N 1395000 \ L03 INDUCTION & EXHAUST SYSTEM

9812/0080 L3-1-2 MANIFOLD, INDUCTION, TURBOCHARGED, P4001T 8C89

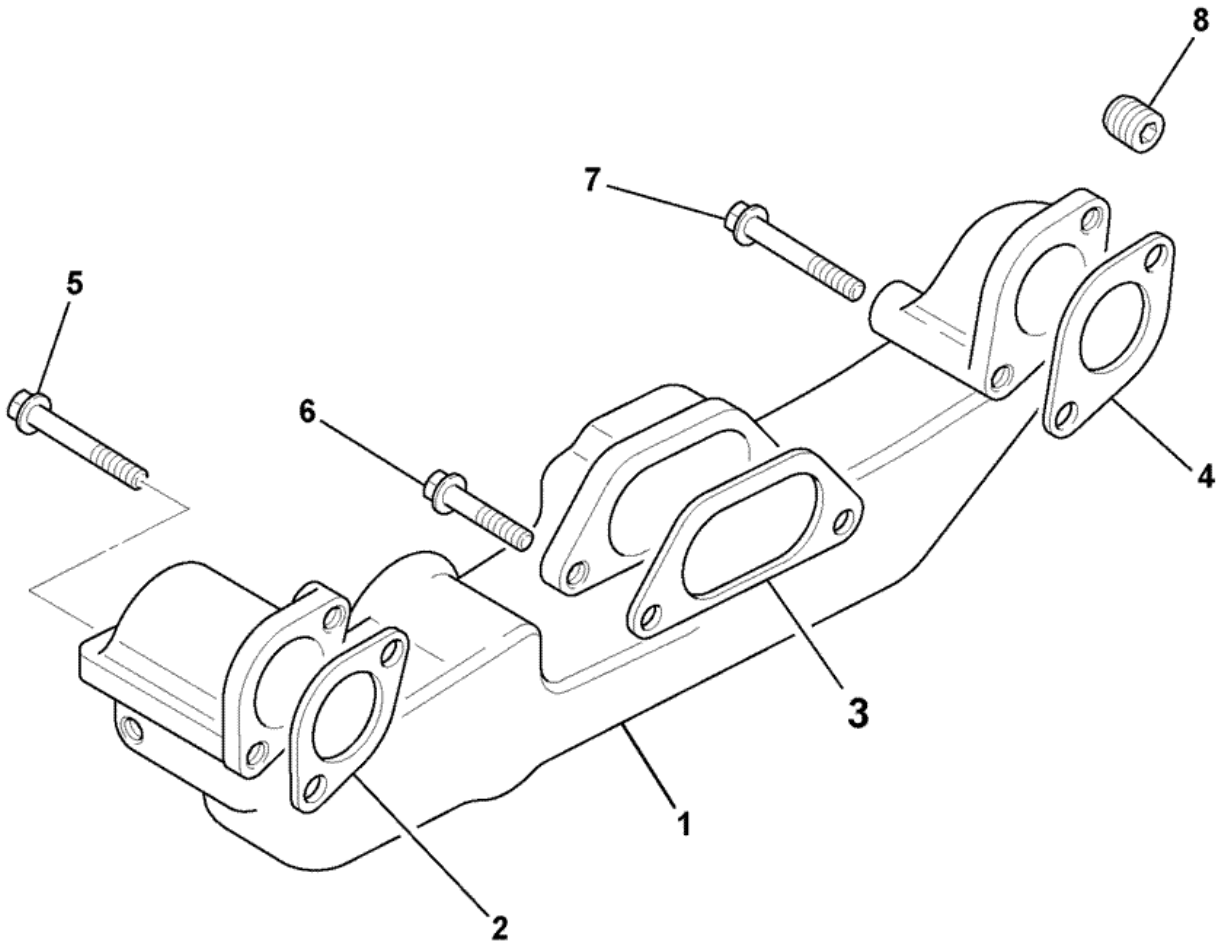

705722

Item	Part #	Change No	Description	Usage Code	QTY
1	02/103545		Manifold induction		1

2	02/101408		Gasket		1
3	02/101409		Gasket		1
4	02/101407		Gasket		1
5	02/103547		Bolt		1
6	02/103548		Bolt		2
7	02/103546		Bolt		1
8	02/103515		Plug		1

9812/0080 L3-2-1 MANIFOLD, EXHAUST, NATURALLY ASPIRATED, P4001 8C88

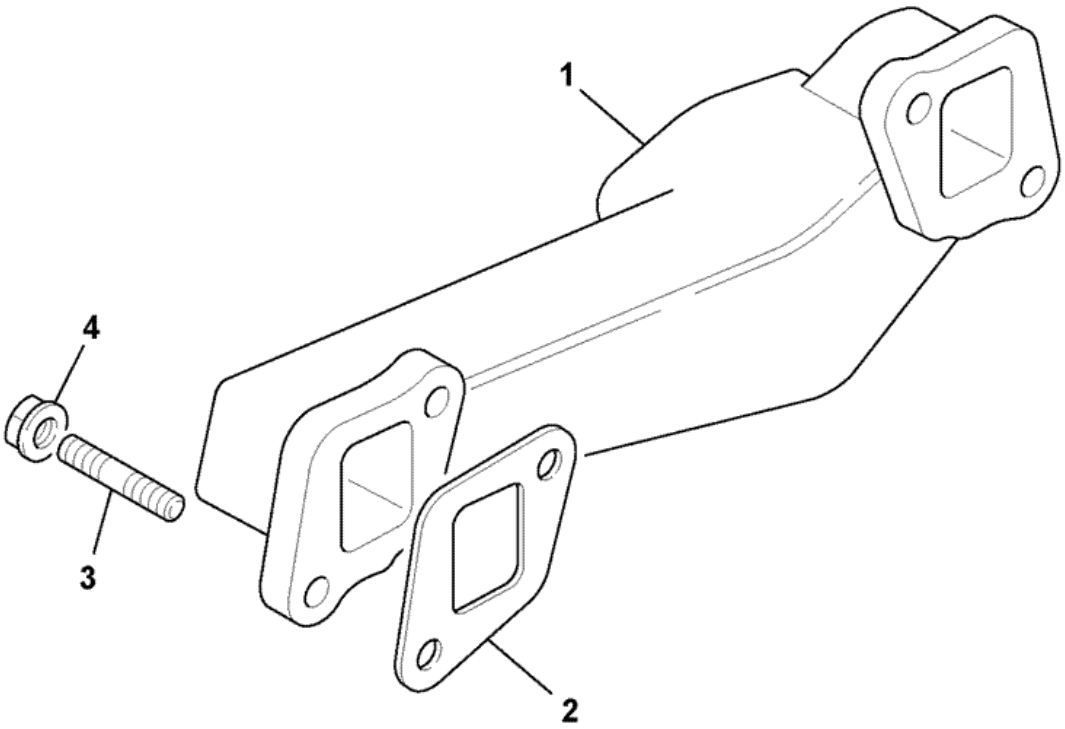

705740

Item	Part #	Change No	Description	Usage Code	QTY
1	02/100049		Manifold Exhaust		1

2	02/200501		Gasket		1
3	822/00142		Stud		4
4	02/103558		Nut		4
5	02/103681		Gasket		1

Product Catalog \ CONSTRUCTION \ NORTH AMERICA \ CONSTRUCTION / INDUSTRIAL \ BACKHOE LOADER 3CX,4CX,214,215,217 \ 3C PLUS (91HP) , Made in Brazil with Dieselmax/IESA Engine 9812/0080 \ L IESA P4001/P4001T ENGINES FROM S/N 1395000 \ L03 INDUCTION & EXHAUST SYSTEM

9812/0080 L3-2-2 MANIFOLD, EXHAUST, TURBOCHARGED, P4001T 8C89

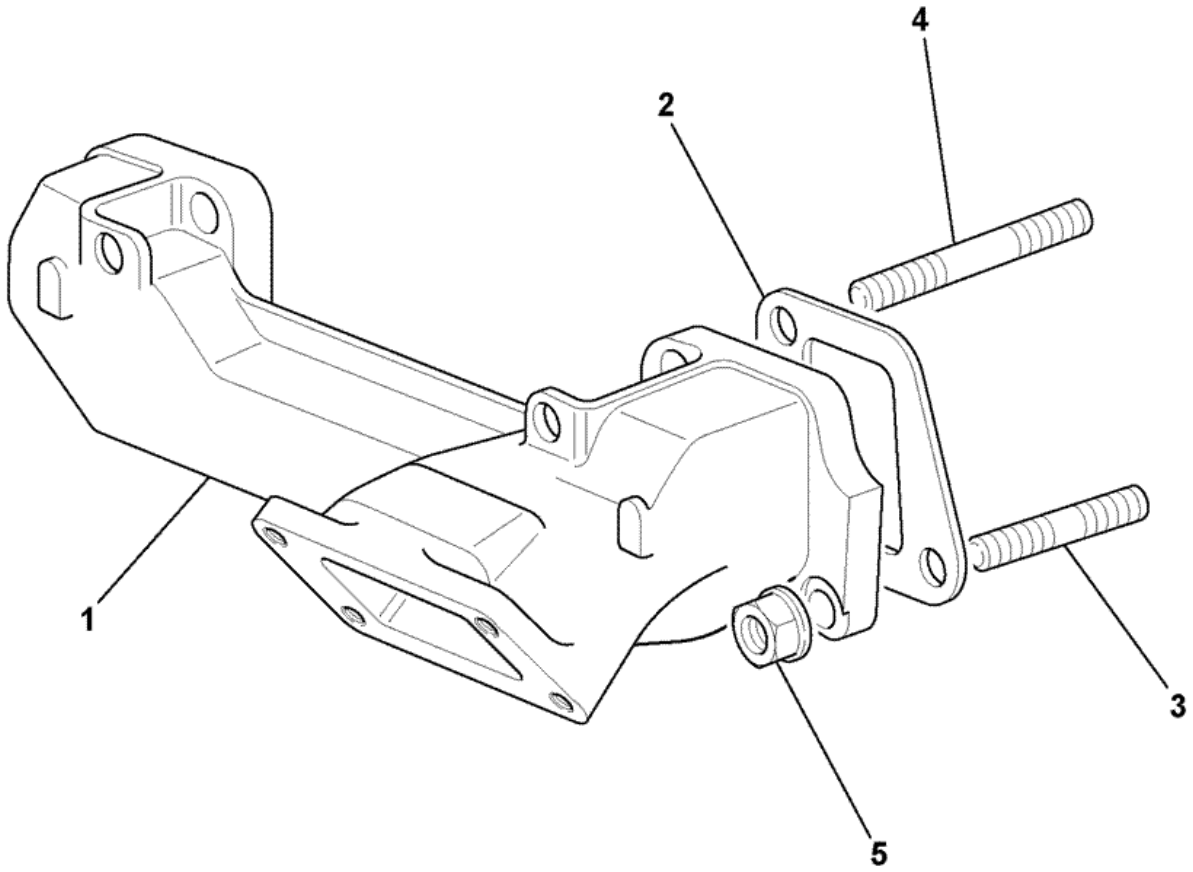

705751

Item	Part #	Change No	Description	Usage Code	QTY
1	02/103559		Manifold exhaust		1

2	02/200501		Gasket		2
3	822/00142		Stud		2
4	02/103542		Stud		2
5	02/103558		Nut		4

Product Catalog \ CONSTRUCTION \ NORTH AMERICA \ CONSTRUCTION / INDUSTRIAL \ BACKHOE LOADER 3CX,4CX,214,215,217 \ 3C PLUS (91HP) , Made in Brazil with Dieselmax/IESA Engine 9812/0080 \ L IESA P4001/P4001T ENGINES FROM S/N 1395000 \ L03 INDUCTION & EXHAUST SYSTEM

9812/0080 L3-3-1 FILTER, AIR, NATURALLY ASPIRATED, P4001, 8C88

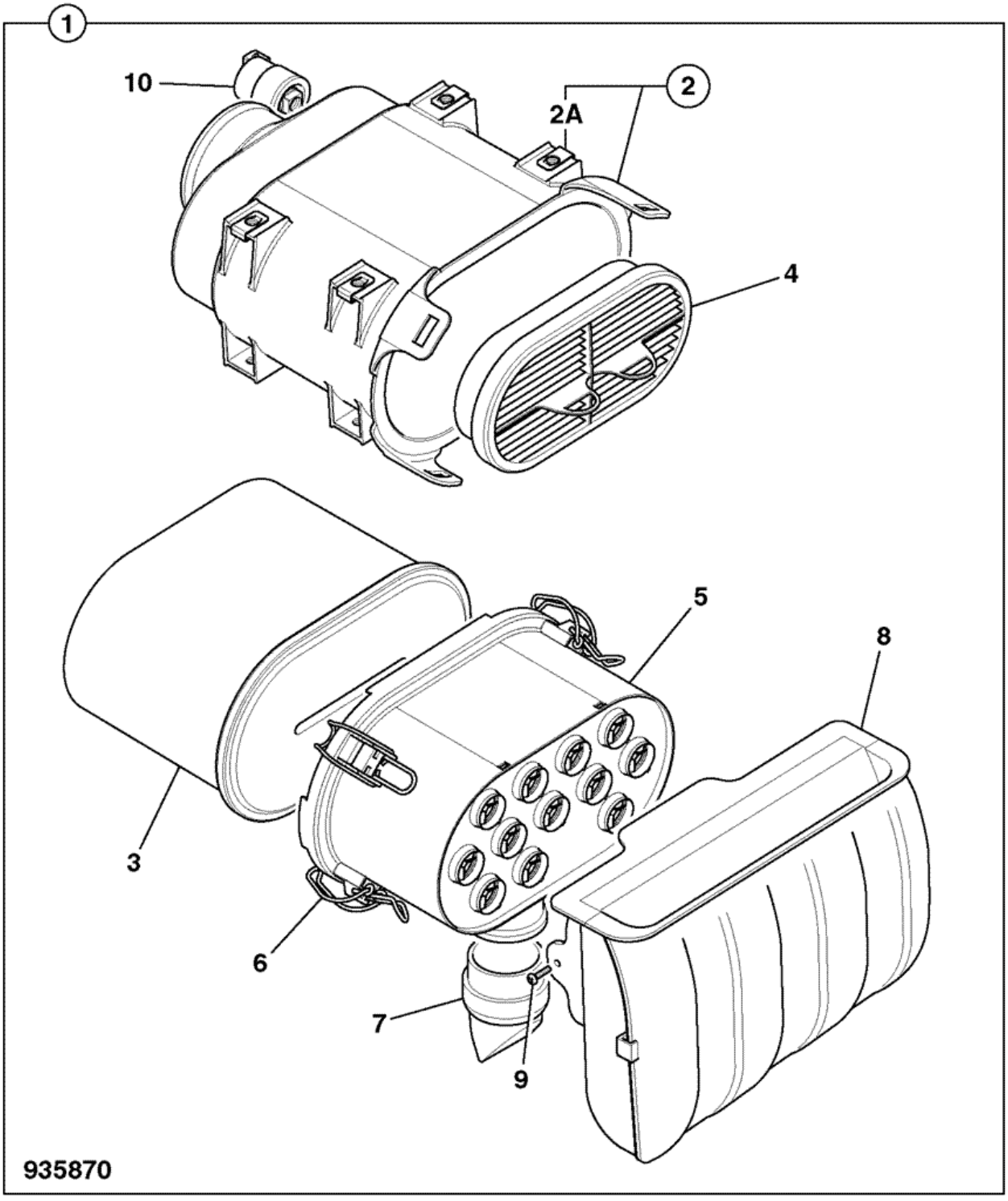

Item	Part #	Change No	Description	Usage Code	QTY
1	32/926084		Filter air assembly		1

2	:N.S.P		None serviced part		1
2A	:32/926114		Nut 'U'		1
3	:32/925682		Element air filter main		1
4	:32/925683		Element air filter safety		1
5	:32/926113		Filter pre-cleaner		1
6	:32/925364		Clip overcentre		2
7	:32/926115	Superseded	Valve vacuator		1
7	:332/D6935		Valve vacuator		1
8	:32/925716		Filter air intake		1
9	:32/925711		Screw		2
10	:32/925686		Switch vacuum sensor		1

Product Catalog \ CONSTRUCTION \ NORTH AMERICA \ CONSTRUCTION / INDUSTRIAL \ BACKHOE LOADER 3CX,4CX,214,215,217 \ 3C PLUS (91HP) , Made in Brazil with Dieselmax/IESA Engine 9812/0080 \ L IESA P4001/P4001T ENGINES FROM S/N 1395000 \ L03 INDUCTION & EXHAUST SYSTEM

9812/0080 L3-3-2 FILTER, AIR, TURBOCHARGED, P4001T, 8C89

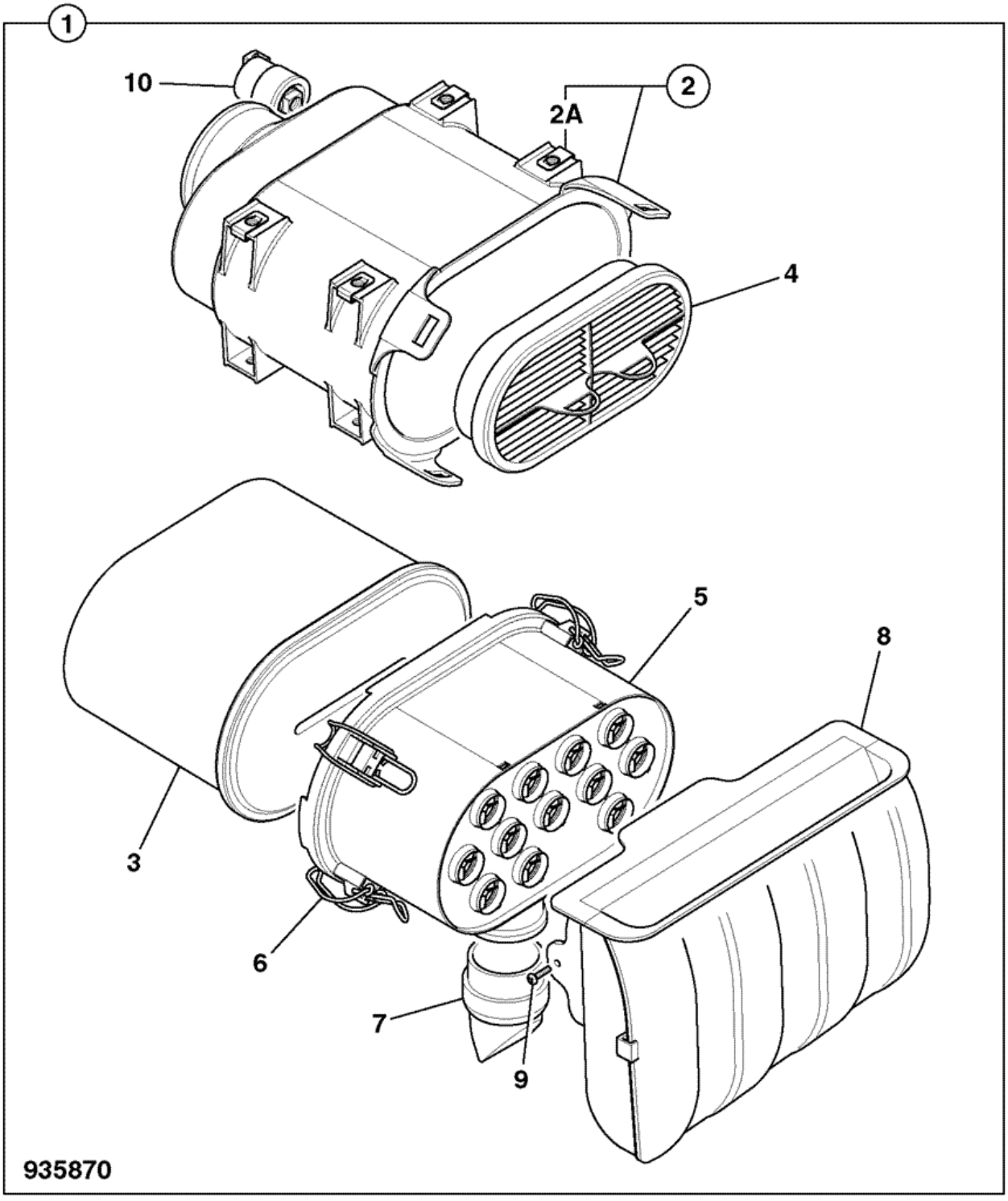

Item	Part #	Change No	Description	Usage Code	QTY
1	32/926084		Filter air assembly		1

2	:N.S.P		None serviced part		1
2A	:32/926114		Nut 'U'		1
3	:32/925682		Element air filter main		1
4	:32/925683		Element air filter safety		1
5	:32/926113		Filter pre-cleaner		1
6	:32/925364		Clip overcentre		2
7	:32/926115	Superseded	Valve vacuator		1
7	:332/D6935		Valve vacuator		1
8	:32/925716		Filter air intake		1
9	:32/925711		Screw		2
10	:32/925686		Switch vacuum sensor		1

Product Catalog \ CONSTRUCTION \ NORTH AMERICA \ CONSTRUCTION / INDUSTRIAL \ BACKHOE LOADER 3CX,4CX,214,215,217 \ 3C PLUS (91HP) , Made in Brazil with Dieselmax/IESA Engine 9812/0080 \ L IESA P4001/P4001T ENGINES FROM S/N 1395000 \ L03 INDUCTION & EXHAUST SYSTEM

9812/0080 L3-4-1 SILENCER & EXTENSION, NATURALLY ASPIRATED, P4001, 8C88

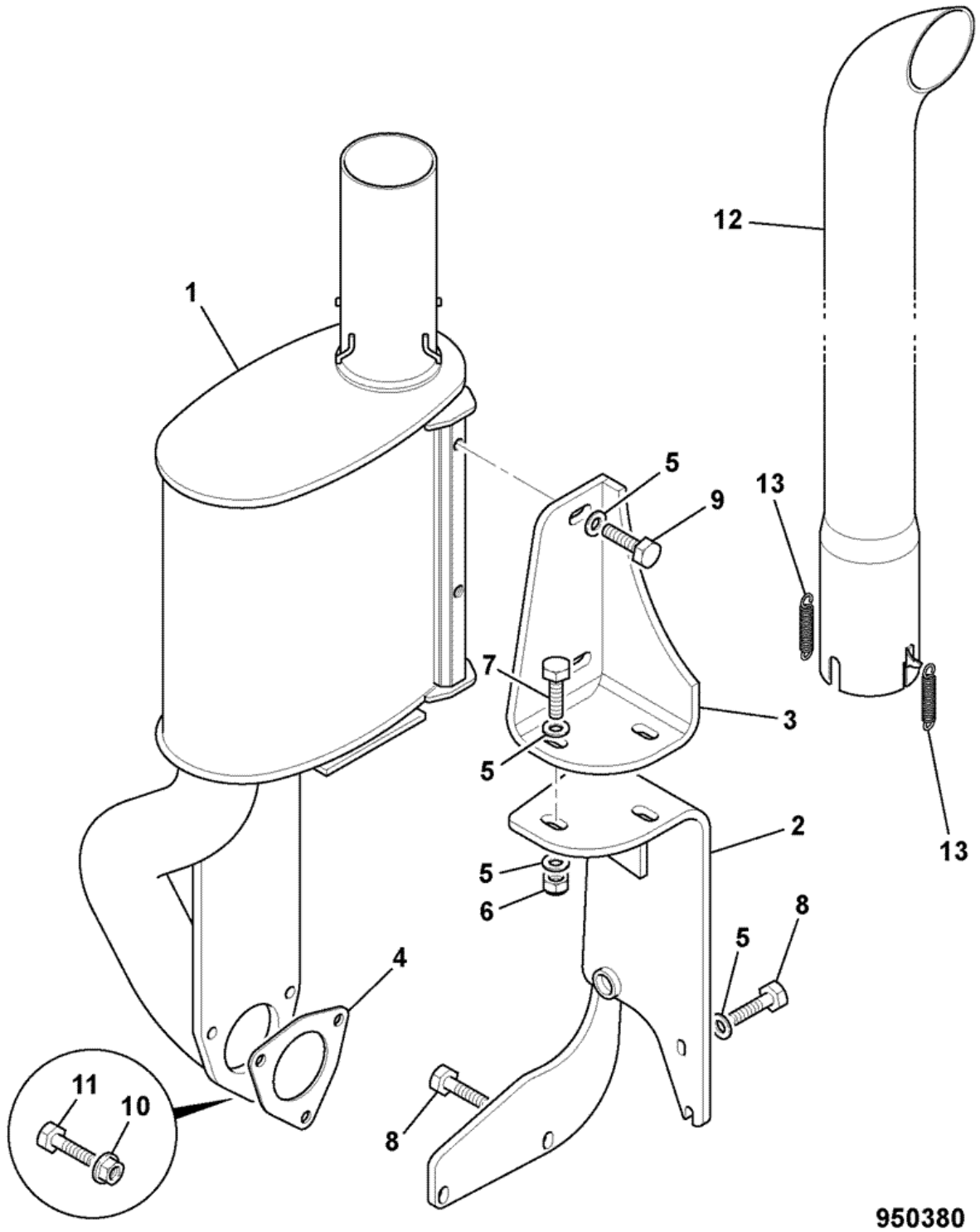

Item	Part #	Change No	Description	Usage Code	QTY
1	332/C2867	Superseded	Silencer nat asp Brazil		1

1	332/P4853	Superseded	Silencer nat asp Brazil		1
1	332/P7709		Silencer nat asp Brazil		1
2	332/D6707	Superseded	Bracket mounting exhaust silencer		1
2	332/P9461		Bracket mounting exhaust silencer		1
3	331/55522		Bracket exhaust mounting		1
4	813/00349		Gasket		1
5	1420/0008Z		Washer Plain M10		8
6	1370/0303Z		Nut lock M10		2
7	1315/0409Z		Screw M10x35mm		2
8	1305/0205Z		Bolt		2
9	1315/0407Z		Bolt M10x25		2
10	1305/0210Z		Bolt		1
11	1305/0108Z		Bolt		2
12	331/53874		Pipe exhaust extension		1
13	814/10177		Spring extension		2

Product Catalog \ CONSTRUCTION \ NORTH AMERICA \ CONSTRUCTION / INDUSTRIAL \ BACKHOE LOADER 3CX,4CX,214,215,217 \ 3C PLUS (91HP) , Made in Brazil with Dieselmax/IESA Engine 9812/0080 \ L IESA P4001/P4001T ENGINES FROM S/N 1395000 \ L03 INDUCTION & EXHAUST SYSTEM

9812/0080 L3-4-2 SILENCER & EXTENSION, TURBOCHARGED, P4001T, 8C89

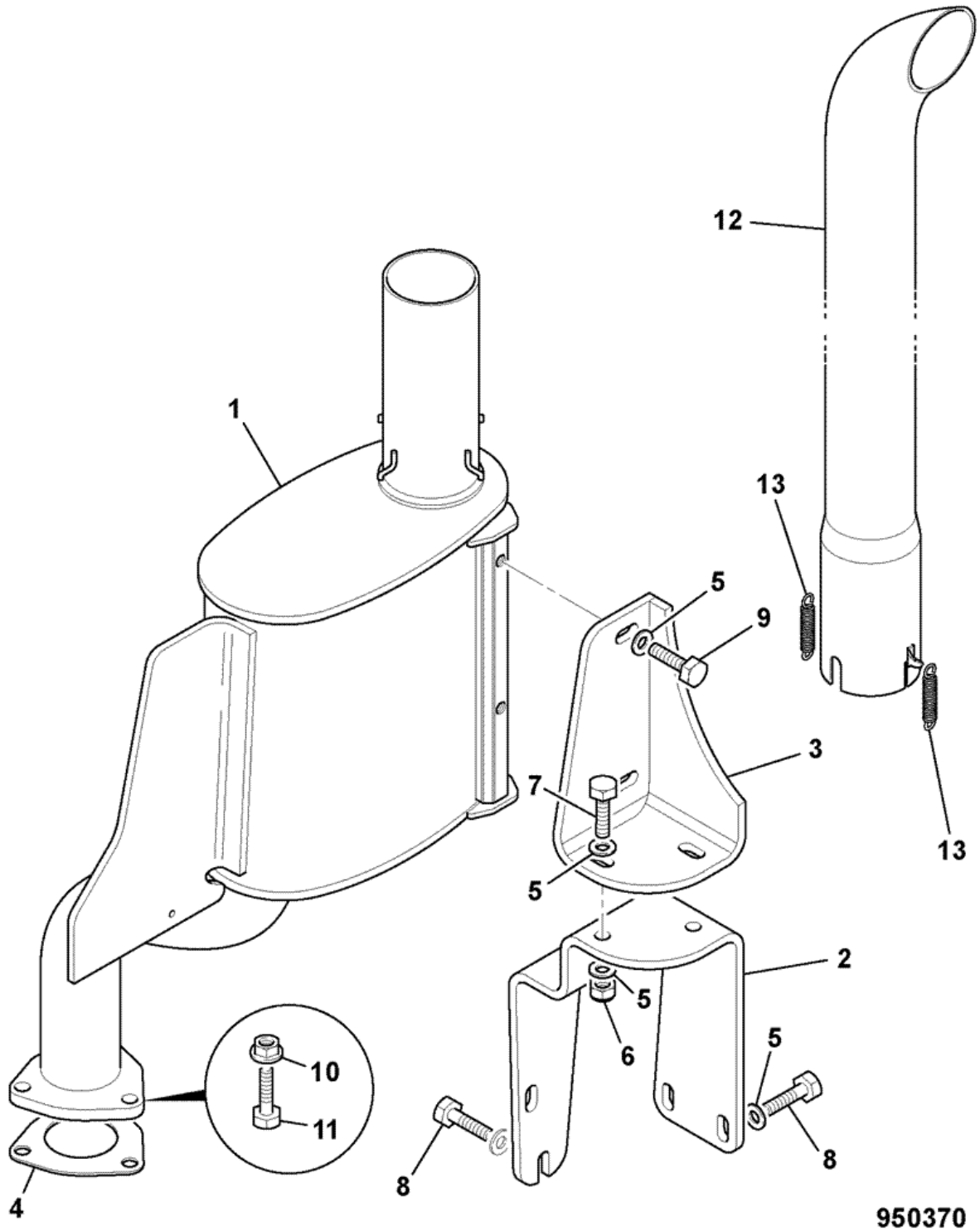

Item	Part #	Change No	Description	Usage Code	QTY
1	332/C2872	Superseded	Silencer exhaust turbo		1

1	332/P5046	Superseded	Silencer exhaust turbo		1
1	332/P9456		Silencer exhaust turbo		1
2	332/D6707	Superseded	Bracket mounting exhaust silencer		1
2	332/P9461		Bracket mounting exhaust silencer		1
3	331/55522		Bracket exhaust mounting		1
4	813/00349		Gasket		1
5	1420/0008Z		Washer Plain M10		8
6	1370/0303Z		Nut lock M10		2
7	1315/0409Z		Screw M10x35mm		2
8	1305/0205Z		Bolt		2
9	1315/0407Z		Bolt M10x25		2
10	1305/0210Z		Bolt		1
11	1305/0108Z		Bolt		2
12	331/53874		Pipe exhaust extension		1
13	814/10177		Spring extension		2

9812/0080 L3-5-1 AIR INDUCTION HOSES, NATURALLY ASPIRATED, P4001, 8C88

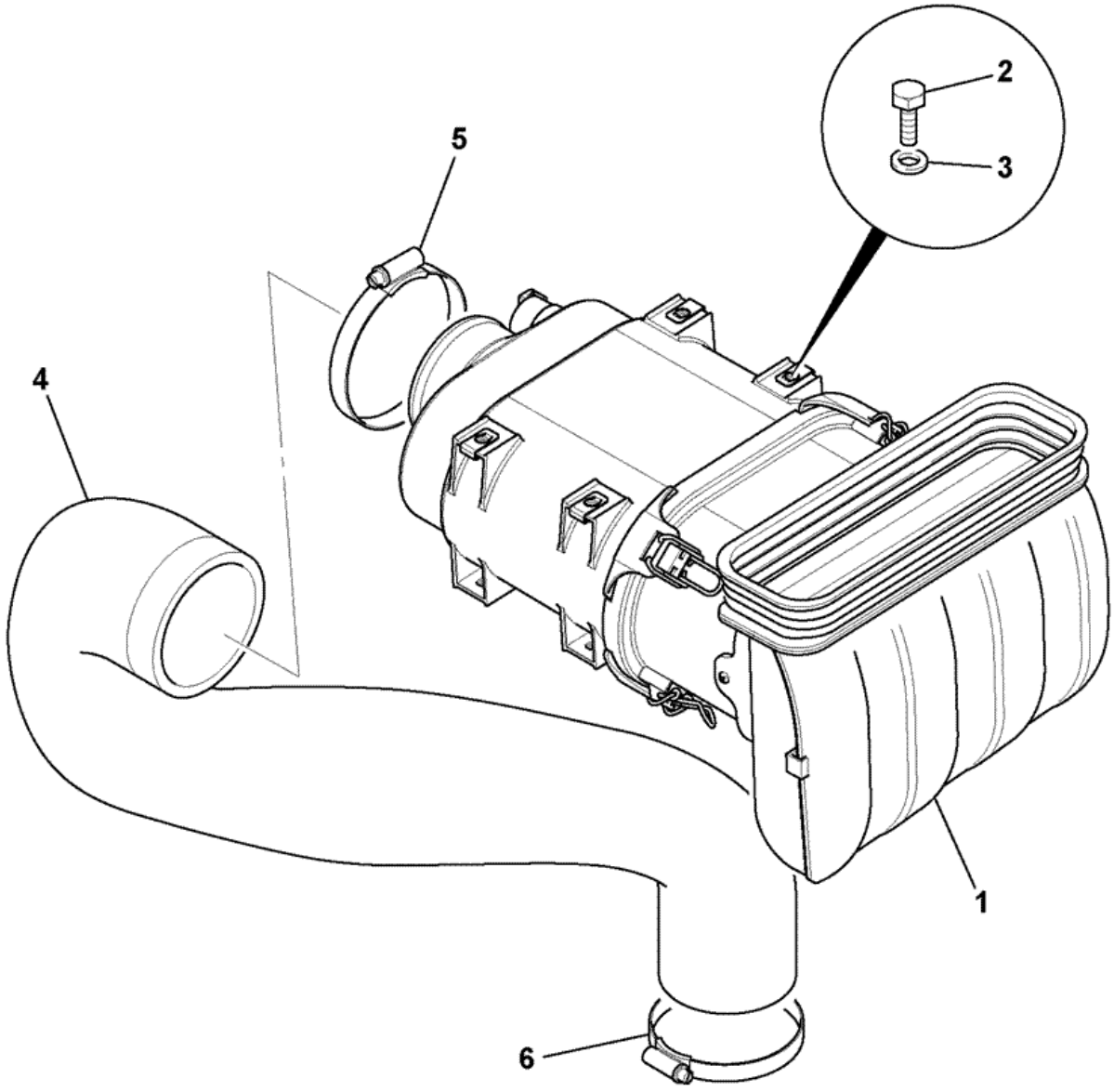

950310

Item	Part #	Change No	Description	Usage Code	QTY
			'See Remark'		

1	.		*Induction filter, see index L3-3-1*		1
2	1315/0205Z		Bolt		4
3	1420/0006Z		Washer M6		4
4	332/C2994	Superseded	Hose induction n/asp international engine		1
4	333/P0728	>M TBA	Hose induction n/asp international engine		1
5	2201/0016		Clip jubilee		1
6	2201/0015		Clip jubilee		1

9812/0080 L3-5-2 AIR INDUCTION HOSES, TURBOCHARGED, P4001T, 8C89

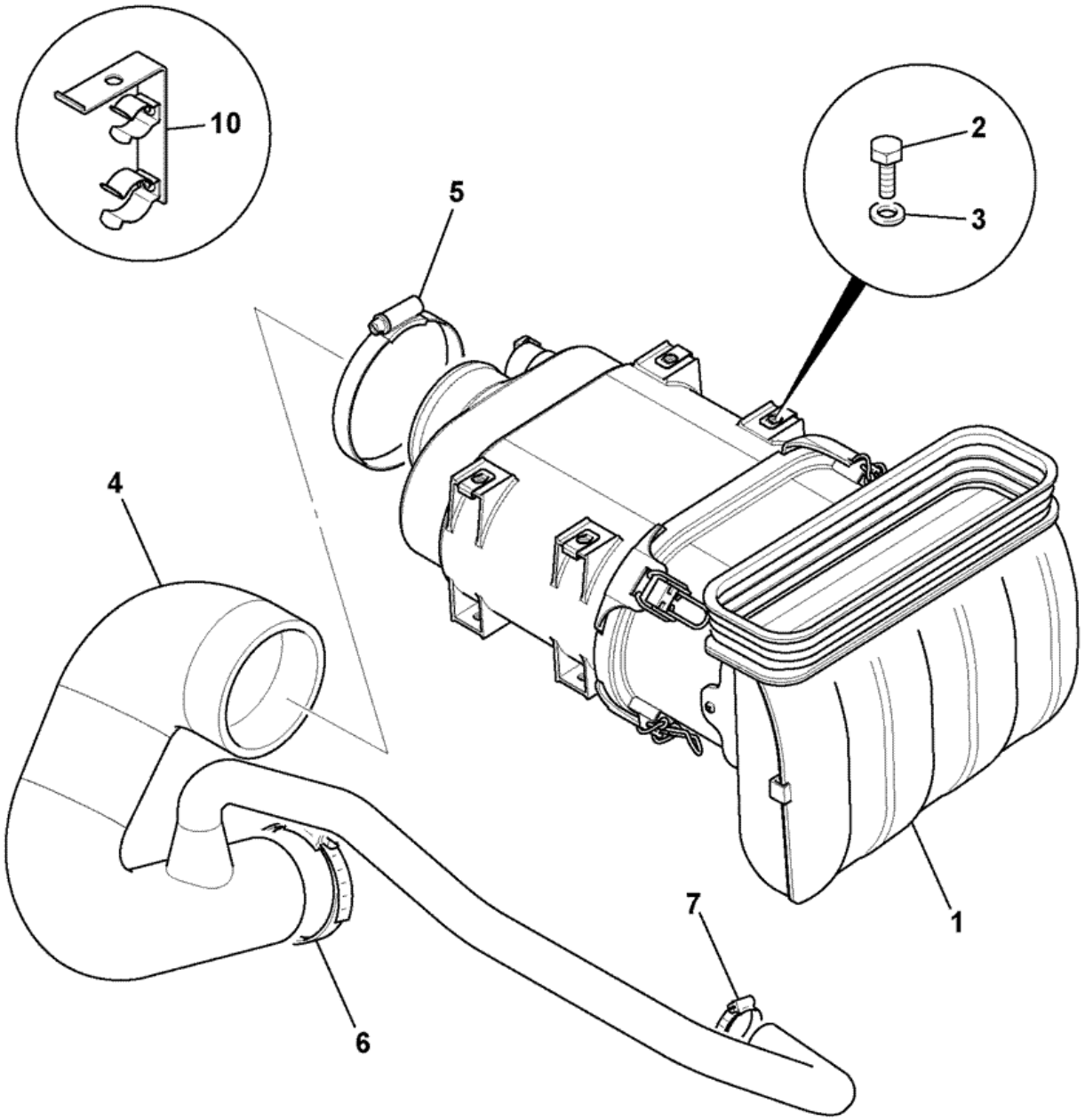

950300

Item	Part #	Change No	Description	Usage Code	QTY
			'See Remark'		

1	.		*Induction filter, see L3-3-2*		1
2	1315/0205Z		Bolt		4
3	1420/0006Z		Washer M6		4
4	332/C2878		Hose induction turbo international engine		1
5	2201/0016		Clip jubilee		1
6	2201/0014		Clip jubilee		1
7	2201/0007		Clip jubilee		1
10	128/15558		Guide hose		1

Product Catalog \ CONSTRUCTION \ NORTH AMERICA \ CONSTRUCTION / INDUSTRIAL \ BACKHOE LOADER 3CX,4CX,214,215,217 \ 3C PLUS (91HP) , Made in Brazil with Dieselmax/IESA Engine 9812/0080 \ L IESA P4001/P4001T ENGINES FROM S/N 1395000 \ L04 COOLING SYSTEM

9812/0080 L4-1-1 PUMP, WATER, NAT ASP & TURB0, P4001/P4001T 8C88/8C89

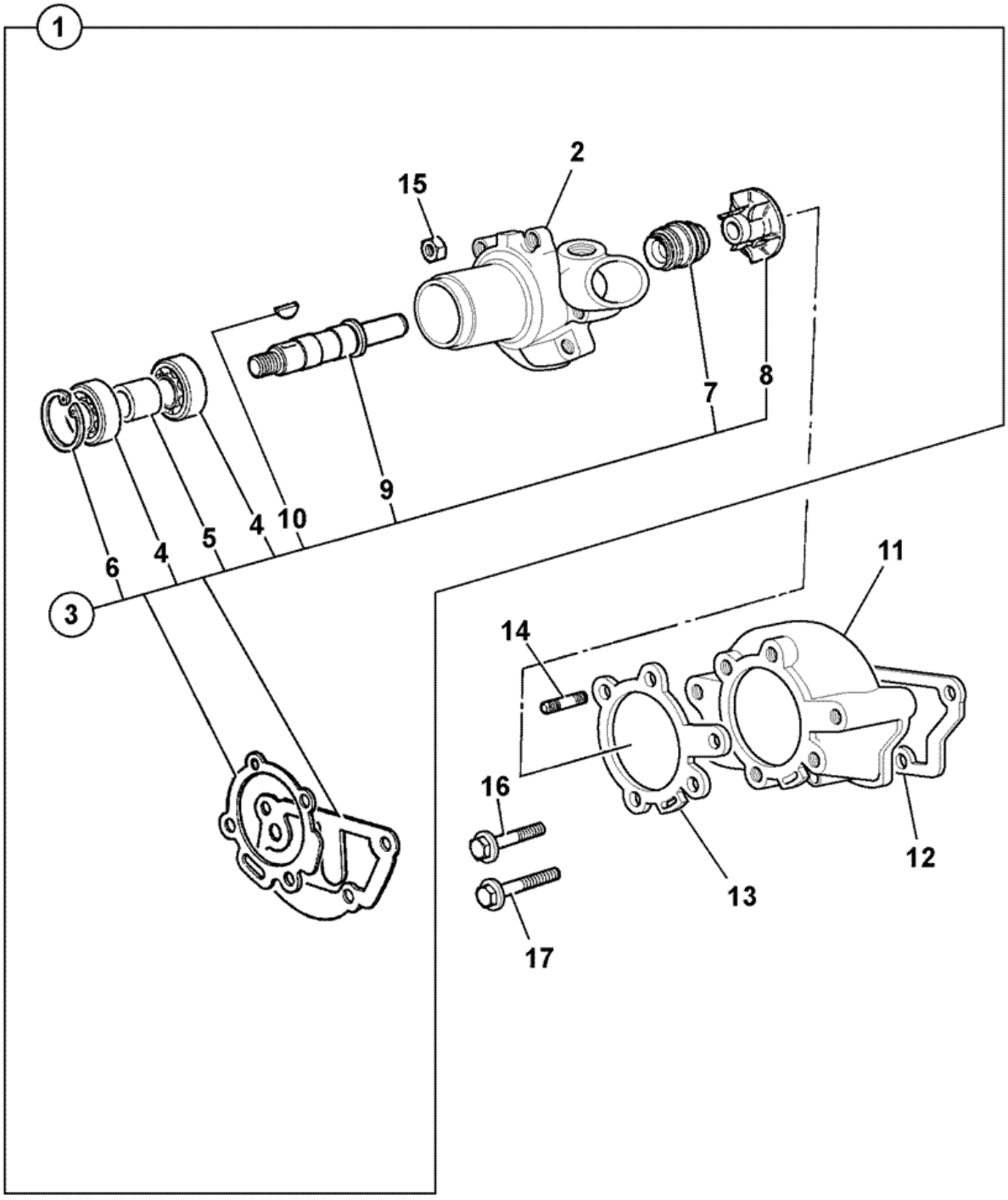

702162

Item	Part #	Change No	Description	Usage Code	QTY
1	02/103611		Pump water		1

2	:NSP		None serviced part *Front body*		1
3	:02/103758		Kit repair		1
4	::NSP		None serviced part *Bearing*		2
5	::NSP		None serviced part *Spacer*		1
6	::2203/1055		Circlip internal		1
7	::NSP		None serviced part *Seal*		1
8	::NSP		None serviced part *Impeller*		1
9	::NSP		None serviced part *Shaft*		1
10	::02/100096		Key		1
11	:02/103613		Body rear		1
12	:02/103751		Gasket water pump		1
13	:02/103752		Gasket water pump		1
14	:02/103614		Stud		4
15	:1340/0101		Nut		4
16	1305/3226		Bolt L=1.3/4"		2
17	1305/3218		Bolt		2

Product Catalog \ CONSTRUCTION \ NORTH AMERICA \ CONSTRUCTION / INDUSTRIAL \ BACKHOE LOADER 3CX,4CX,214,215,217 \ 3C PLUS (91HP) , Made in Brazil with Dieselmax/IESA Engine 9812/0080 \ L IESA P4001/P4001T ENGINES FROM S/N 1395000 \ L04 COOLING SYSTEM

9812/0080 L4-2-1 THERMOSTAT, HOUSING, INLET & OUTLET, P4001/P4001T NAT ASP & TURBO 8C88/8C89

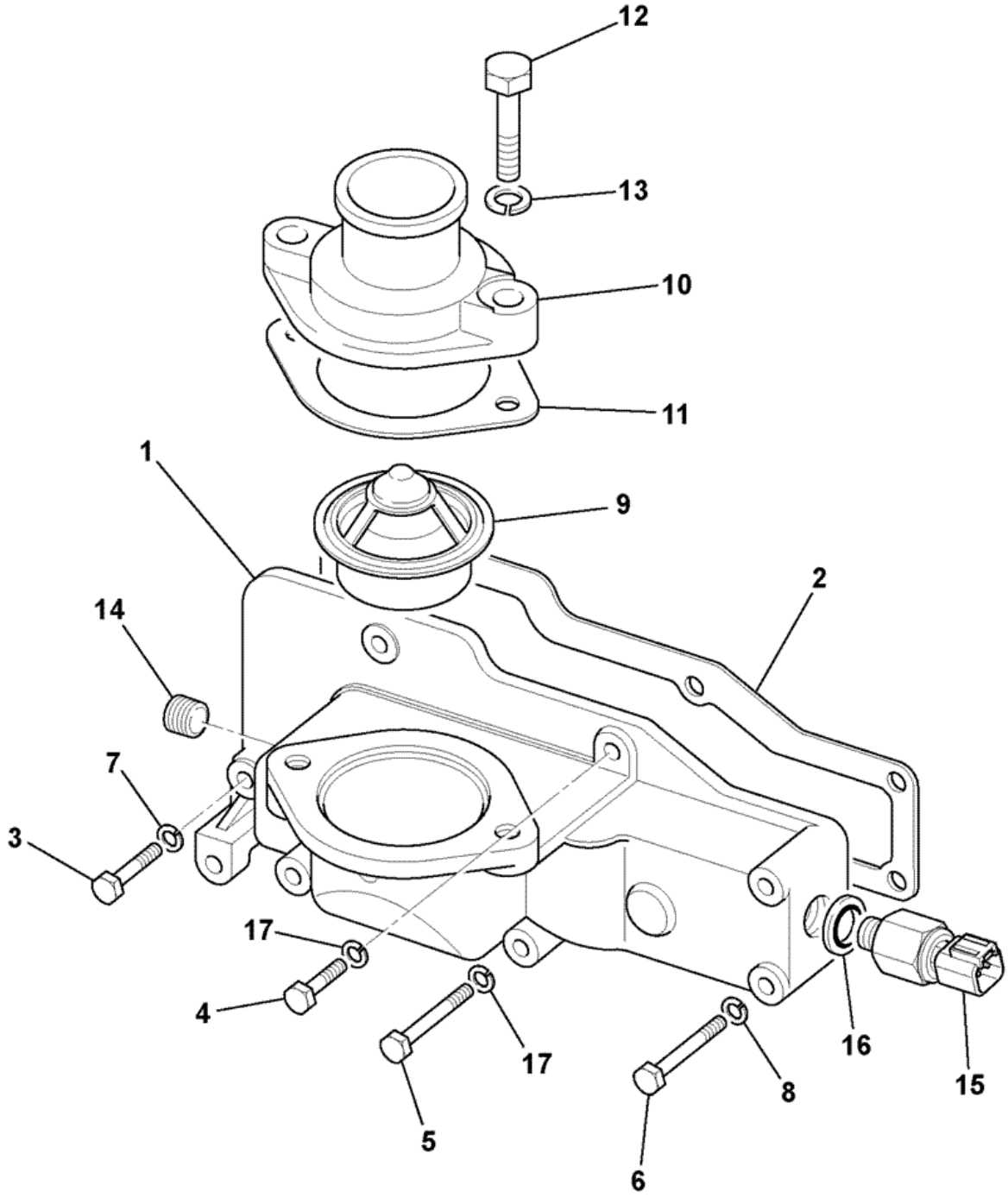

Item	Part #	Change No	Description	Usage Code	QTY
1	02/103535		Housing		1

2	02/103766		Gasket thermostat		1
3	1305/3124		Bolt		2
4	1305/3207		Bolt		2
5	1305/3107		Bolt		1
6	1305/3216		Bolt		2
7	1416/0006		Washer		1
8	1416/0006		Washer		1
9	02/103536		Thermostat		1
10	02/103537		Connector		3
11	02/103538		Gasket		1
12	02/103736		Bolt bolt		2
13	1416/0006		Washer		2
14	02/103602		Plug		1
15	716/30126		Sender water temperature		1
16	02/103604		Washer		1
17	1416/0005		Washer		3

Product Catalog \ CONSTRUCTION \ NORTH AMERICA \ CONSTRUCTION / INDUSTRIAL \ BACKHOE LOADER 3CX,4CX,214,215,217 \ 3C PLUS (91HP) , Made in Brazil with Dieselmax/IESA Engine 9812/0080 \ L IESA P4001/P4001T ENGINES FROM S/N 1395000 \ L04 COOLING SYSTEM

9812/0080 L4-3-1 RADIATOR, FITTINGS & MOUNTINGS, 2WS - 18" FAN

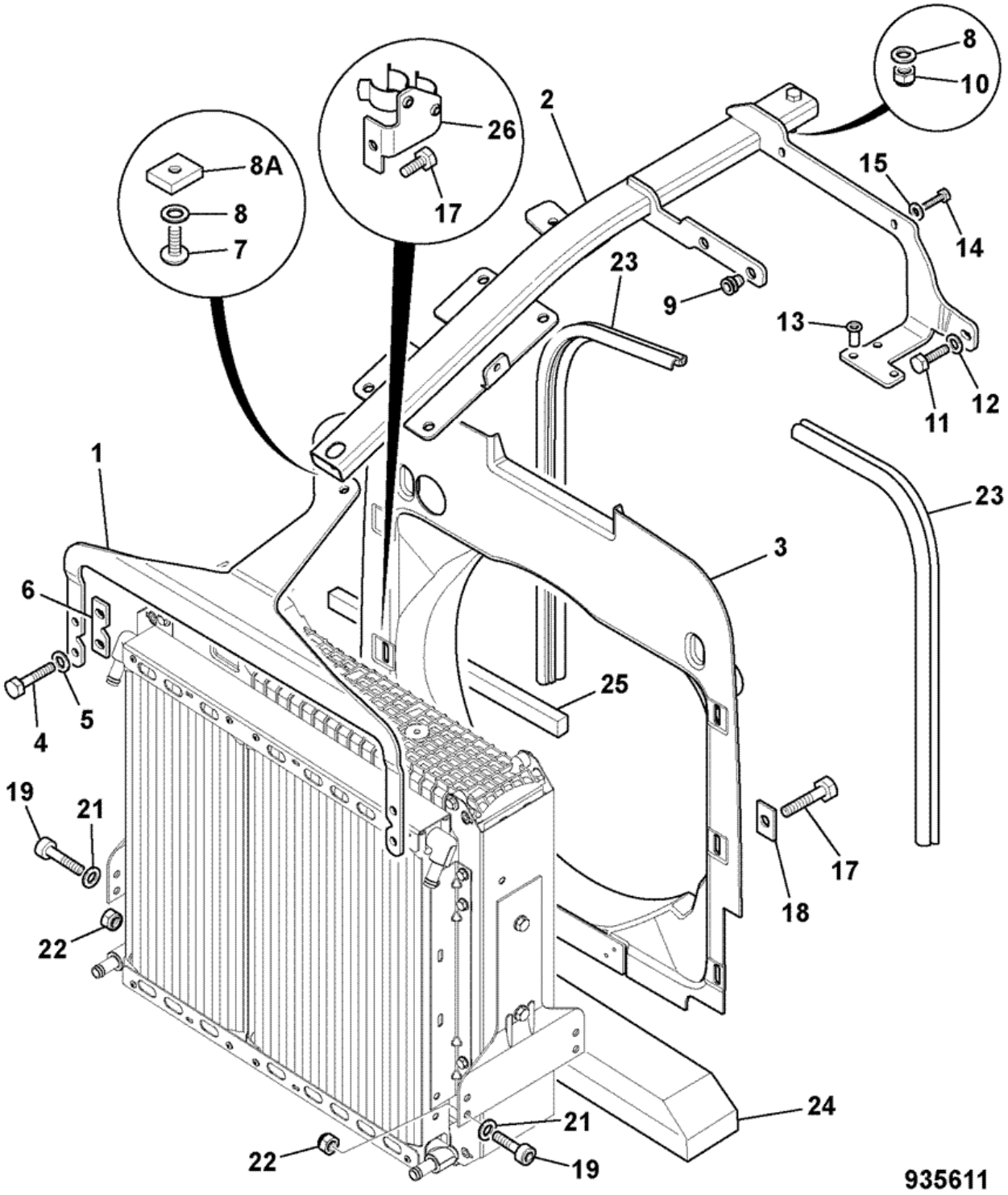

Item	Part #	Change No	Description	Usage Code	QTY
1	332/C8208		Bracket centre beam mounting front 2ws		1

2	128/C1776		Beam centre mounting		1
3	346/90037		Cowling fan cowl 18" brazil		1
4	1315/0307Z		Screw Hexagon M8 X 25		4
5	1420/0007Z		Washer plain M8		4
6	331/48338		Plate spacer		2
7	826/01616		Screw M10 x 25mm hex/skt button head		1
8	1412/0003Z		Washer		1
8A	332/D5851		Block clamping		1
9	826/01105		Nut rivet,M10 open ended		2
10	1370/0303Z		Nut lock M10		1
11	1315/0308Z		Screw M8x30		1
12	1420/0007Z		Washer plain M8		1
13	826/01810		Nut rivet, M6 open end for 5.5 to 8mm plate		3
14	1315/0207Z		Screw M6 x 25mm long		2
15	1411/0001Z		Washer		4
17	1315/0305Z		Screw Hexagon M8 x 20mm long		6
18	123/06362		Washer spreader		5
19	1391/3409Z		Capscrew M10 x 35mm		4
21	1411/0004Z		Washer		8
22	1370/0303Z		Nut lock M10		4
23	926/51301		Strip sealing L=640mm		2
24	331/36060		Seal anti-recirculation		1
25	331/52016		Seal anti-recirculation		2
26	128/15495		Bracket hose clip assembly		1

Product Catalog \ CONSTRUCTION \ NORTH AMERICA \ CONSTRUCTION / INDUSTRIAL \ BACKHOE LOADER 3CX,4CX,214,215,217 \ 3C PLUS (91HP) , Made in Brazil with Dieselmax/IESA Engine 9812/0080 \ L IESA P4001/P4001T ENGINES FROM S/N 1395000 \ L04 COOLING SYSTEM

9812/0080 L4-3-2 RADIATOR, FITTINGS & MOUNTINGS, 2WS - 20" FAN

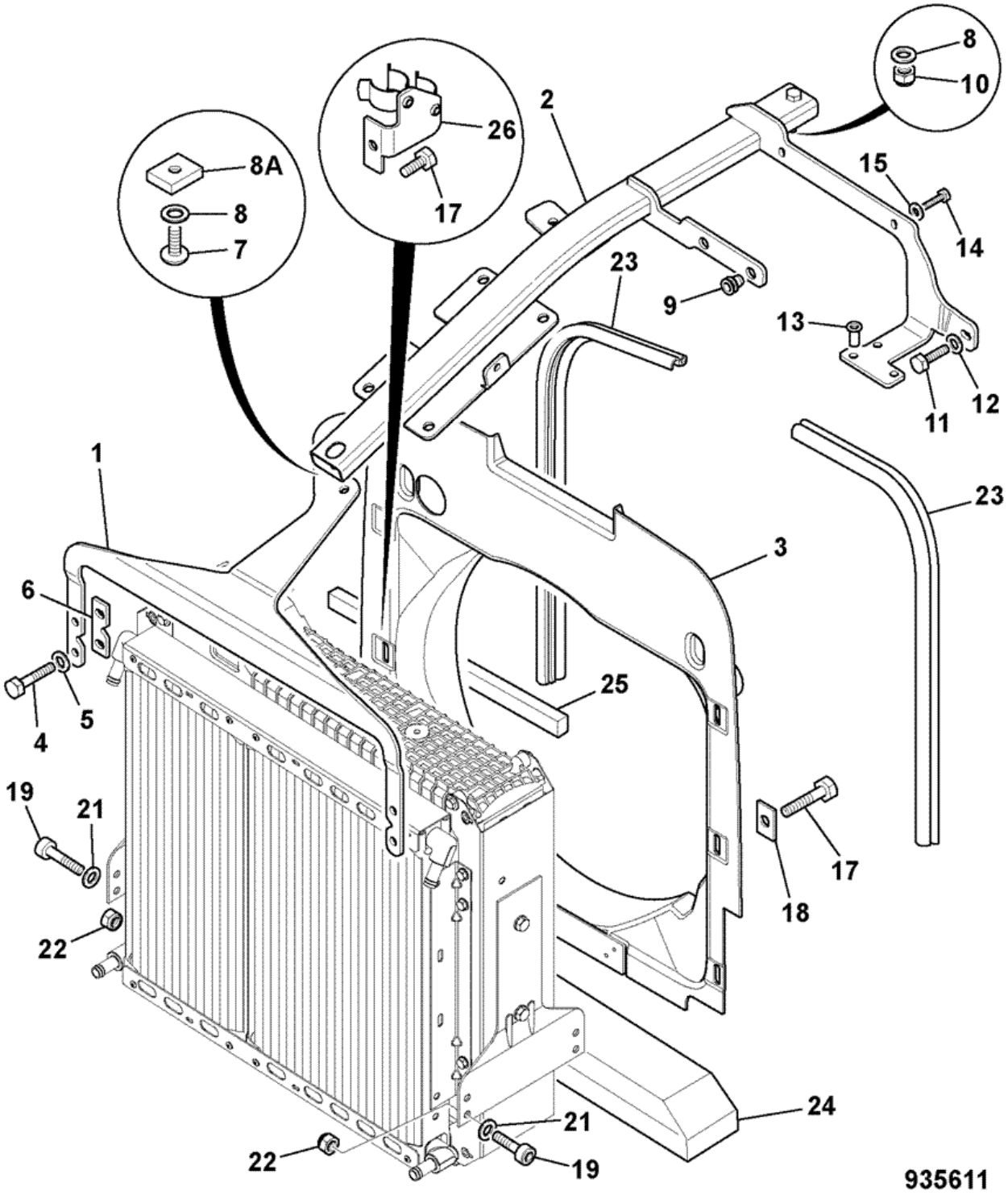

Item	Part #	Change No	Description	Usage Code	QTY
1	332/C8208		Bracket centre beam mounting front 2ws		1

2	128/C1776		Beam centre mounting		1
3	332/C1667		Cowling fan 20inch 2ws		1
4	1315/0307Z		Screw Hexagon M8 X 25		4
5	1420/0007Z		Washer plain M8		4
6	331/48338		Plate spacer		2
7	826/01616		Screw M10 x 25mm hex/skt button head		1
8	1412/0003Z		Washer		1
8A	332/D5851		Block clamping		1
9	826/01105		Nut rivet,M10 open ended		2
10	1370/0303Z		Nut lock M10		1
11	1315/0308Z		Screw M8x30		1
12	1420/0007Z		Washer plain M8		1
13	826/01810		Nut rivet, M6 open end for 5.5 to 8mm plate		3
14	1315/0207Z		Screw M6 x 25mm long		2
15	1411/0001Z		Washer		4
17	1315/0305Z		Screw Hexagon M8 x 20mm long		6
18	123/06362		Washer spreader		5
19	1391/3409Z		Capscrew M10 x 35mm		4
21	1411/0004Z		Washer		8
22	1370/0303Z		Nut lock M10		4
23	926/51301		Strip sealing L=640mm		2
24	331/36060		Seal anti-recirculation		1
25	331/52016		Seal anti-recirculation		2
26	128/D5873		Clip hose		1

Product Catalog \ CONSTRUCTION \ NORTH AMERICA \ CONSTRUCTION / INDUSTRIAL \ BACKHOE LOADER 3CX,4CX,214,215,217 \ 3C PLUS (91HP) , Made in Brazil with Dieselmax/IESA Engine 9812/0080 \ L IESA P4001/P4001T ENGINES FROM S/N 1395000 \ L04 COOLING SYSTEM

9812/0080 L4-4-1 RADIATOR & HOSES, 2WS - 18" FAN

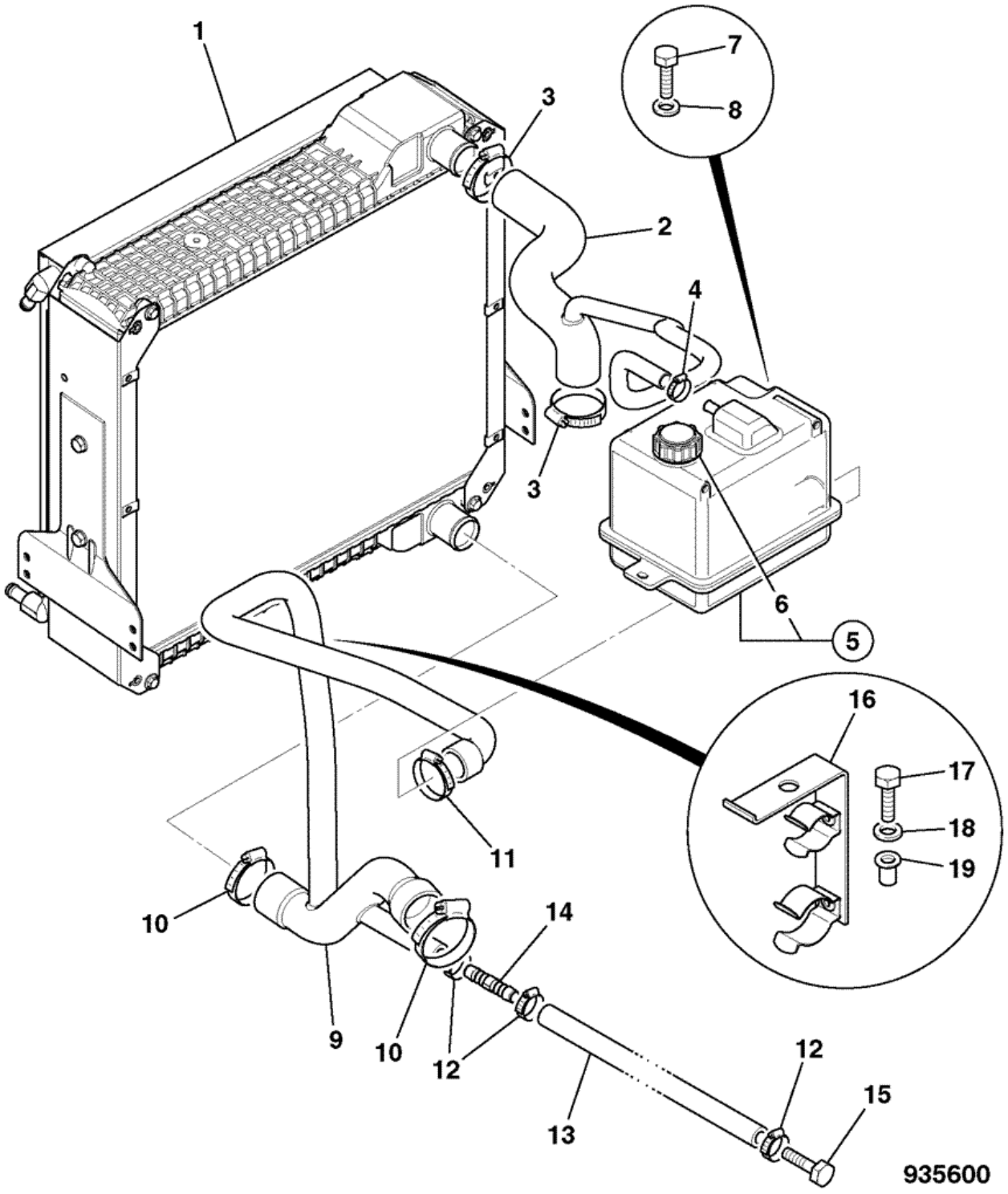

Item	Part #	Change No	Description	Usage Code	QTY
1	128/14326		Cooler assembly 5row 2ws non CAC *For Service Parts, See frame L4-5-1*		1

2	332/C2879		Hose top P600 brazil		1
3	2201/0011		Clip jubilee		2
4	2201/0005		Clip jubilee		1
5	128/15480		Tank expansion no sensor assembly		1
6	:477/00223		Cap Expansion Bottle		1
7	1315/0310Z		Bolt M8x40		2
8	1420/0007Z		Washer plain M8		2
9	332/C2880		Hose bottom P600 brazil		1
10	2201/0012		Clip jubilee		2
11	2201/0010		Clip jubilee		1
12	2201/0006		Clip jubilee		1
13	.		'See Remark' *See cab heater circuit*		1
14	650/10166		Adaptor hose connecter 16mm OD		1
15	1315/3714Z		Bolt M16x60		1
16	128/15558		Guide hose		1
17	1315/0307Z		Screw Hexagon M8 X 25		1
18	1420/0007Z		Washer plain M8		1
19	826/01102		Nut rivet,M8 open ended		1

Product Catalog \ CONSTRUCTION \ NORTH AMERICA \ CONSTRUCTION / INDUSTRIAL \ BACKHOE LOADER 3CX,4CX,214,215,217 \ 3C PLUS (91HP) , Made in Brazil with Dieselmax/IESA Engine 9812/0080 \ L IESA P4001/P4001T ENGINES FROM S/N 1395000 \ L04 COOLING SYSTEM

9812/0080 L4-4-2 RADIATOR & HOSES, 2WS - 20" FAN

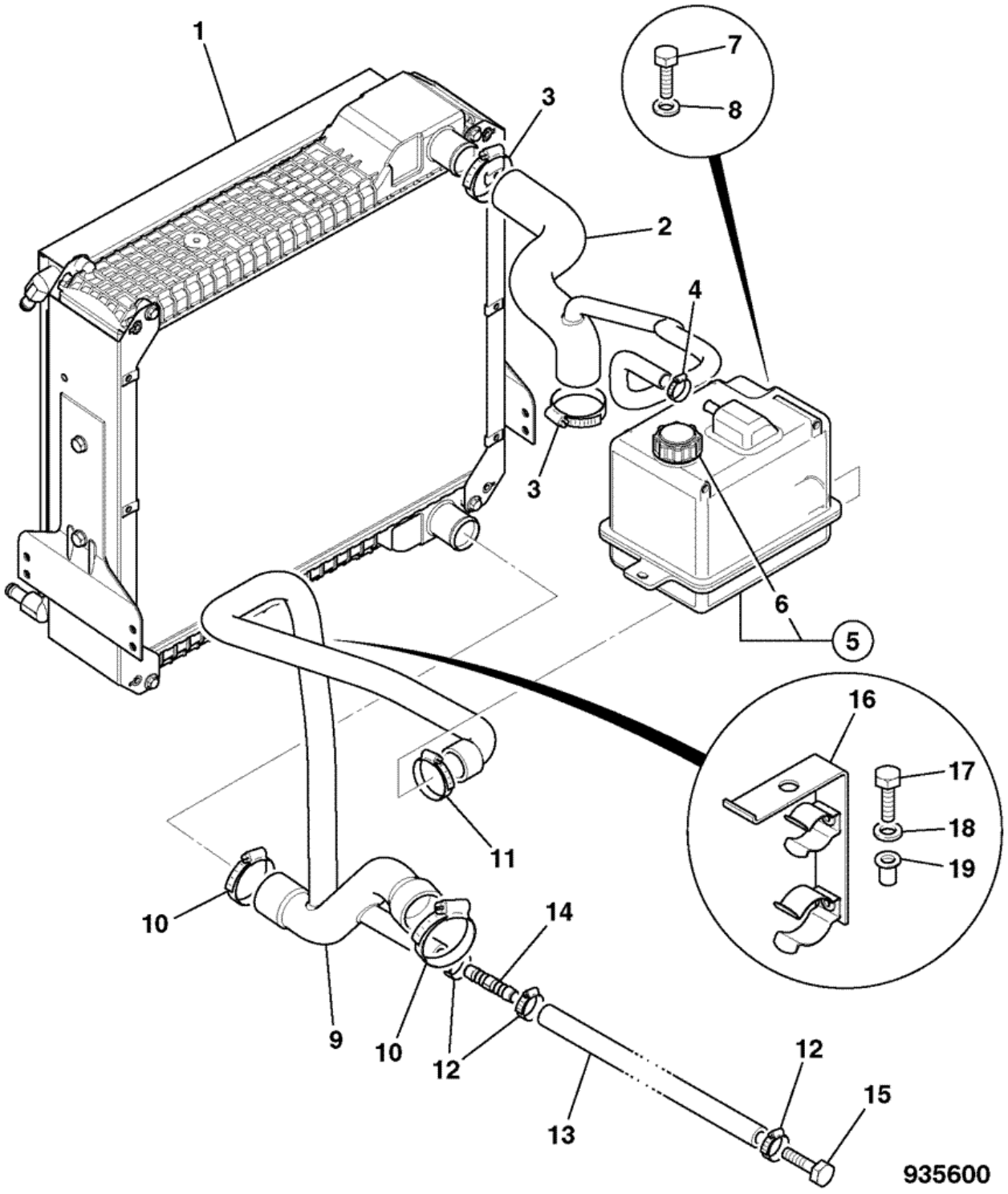

Item	Part #	Change No	Description	Usage Code	QTY
1	128/14326		Cooler assembly 5row 2ws non CAC *For Service Parts, See frame L4-5-1*		1

2	834/11380		Hose radiaor top 2ws		1
3	2201/0011		Clip jubilee		2
4	2201/0005		Clip jubilee		1
5	128/15480		Tank expansion no sensor assembly		1
6	:477/00223		Cap Expansion Bottle		1
7	1315/0310Z		Bolt M8x40		2
8	1420/0007Z		Washer plain M8		2
9	128/C8166		Hose bottom 2ws tier @#		1
10	2201/0012		Clip jubilee		2
11	2201/0010		Clip jubilee		1
12	2201/0006		Clip jubilee		1
13	.		'See Remark' *See cab heater circuit*		1
14	650/10166		Adaptor hose connecter 16mm OD		1
15	1315/3714Z		Bolt M16x60		1
16	128/15558		Guide hose		1
17	1315/0307Z		Screw Hexagon M8 X 25		1
18	1420/0007Z		Washer plain M8		1
19	826/01102		Nut rivet,M8 open ended		1

Product Catalog \ CONSTRUCTION \ NORTH AMERICA \ CONSTRUCTION / INDUSTRIAL \ BACKHOE LOADER 3CX,4CX,214,215,217 \ 3C PLUS (91HP) , Made in Brazil with Dieselmax/IESA Engine 9812/0080 \ L IESA P4001/P4001T ENGINES FROM S/N 1395000 \ L04 COOLING SYSTEM

9812/0080 L4-5-1 COMBINATION COOLER, ,

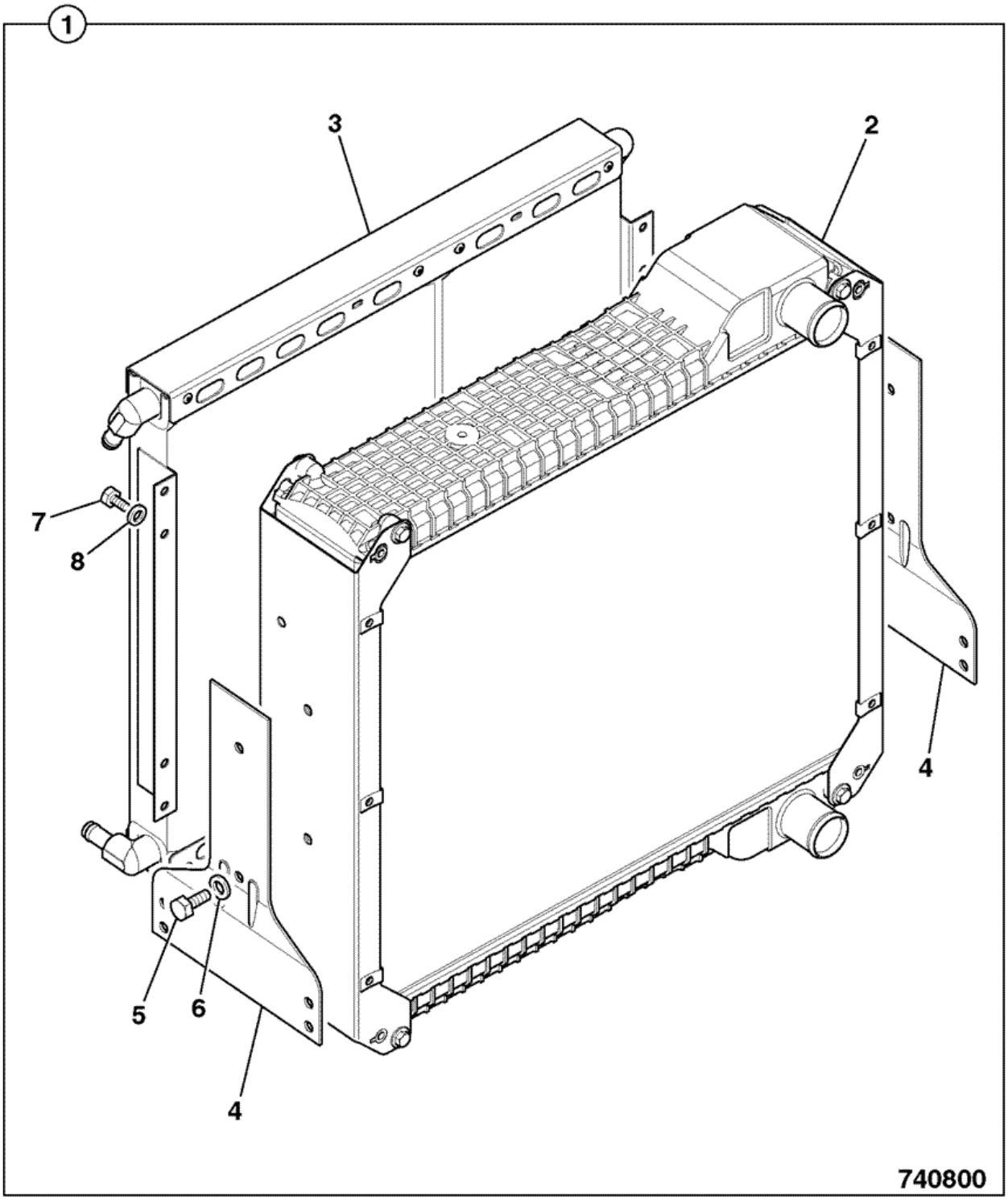

Item	Part #	Change No	Description	Usage Code	QTY
01	128/14326		Cooler assembly 5row 2ws non CAC		1
02	:30/915200		Radiator assembly, 5row-9fpi Blue spot		1

03	:30/925615		Cooler oil, double 14plates + 21 plates		1
04	:30/926257		Bracket radiator mounting		2
05	:30/926035		Bolt		4
06	:30/926036		Washer		4
07	1315/0301Z		Screw hex head M8 X 12		8
08	826/00846		Nut 'u'		8

Product Catalog \ CONSTRUCTION \ NORTH AMERICA \ CONSTRUCTION / INDUSTRIAL \ BACKHOE LOADER 3CX,4CX,214,215,217 \ 3C PLUS (91HP) , Made in Brazil with Dieselmax/IESA Engine 9812/0080 \ L IESA P4001/P4001T ENGINES FROM S/N 1395000 \ L05 LUBRICATION SYSTEM

9812/0080 L5-1-1 SUMP, OIL PUMP, & FITTINGS NAT ASP, P4001 8C88

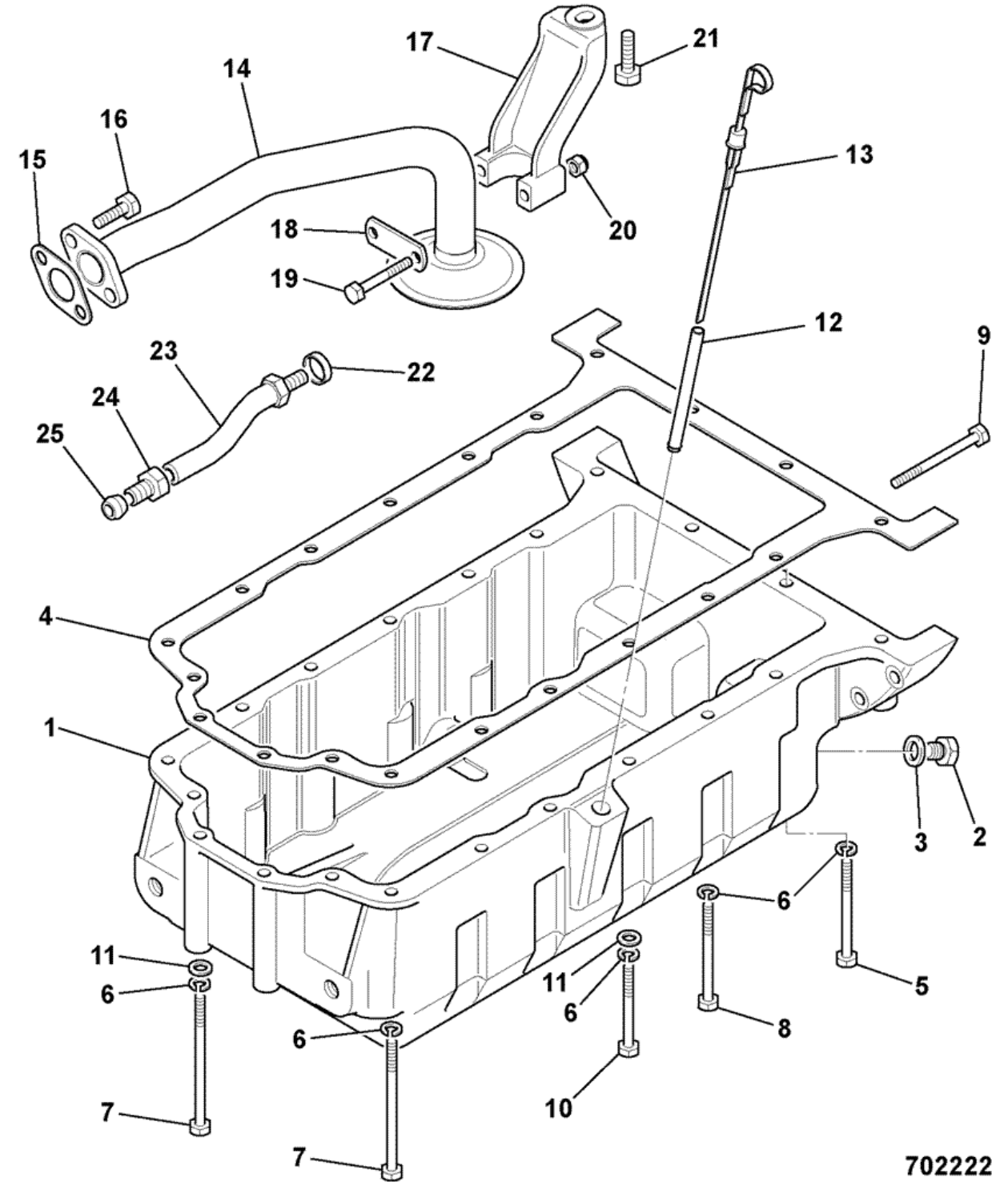

Item	Part #	Change No	Description	Usage Code	QTY
1	02/103504		Sump		1

2	02/103499		Plug		1
3	02/103501		Washer		1
4	02/100060		Gasket oil sump		1
5	1305/3127Z		Bolt		2
6	1416/0005		Washer		20
7	1305/3136		Bolt		6
8	1305/3124		Bolt		11
10	02/103726		Bolt bolt		1
11	1410/0002		Washer		9
12	02/103502		Tube dipstick		1
13	02/103771		Dipstick dipstick		1
14	02/103728		Pipe suction		1
15	02/103507		Gasket		1
16	02/103506		Bolt		2
17	02/103649		Bracket support		1
18	02/103646		Plate		1
19	02/103657		Bolt		2
20	02/103654		Nut		2
21	02/103450		Bolt		1
22	02/103645		O Ring		2
23	02/103647		Pipe oil suction		1
24	02/100316		Nut		1
25	02/103729		Olive olive		1

Product Catalog \ CONSTRUCTION \ NORTH AMERICA \ CONSTRUCTION / INDUSTRIAL \ BACKHOE LOADER 3CX,4CX,214,215,217 \ 3C PLUS (91HP) , Made in Brazil with Dieselmax/IESA Engine 9812/0080 \ L IESA P4001/P4001T ENGINES FROM S/N 1395000 \ L05 LUBRICATION SYSTEM

9812/0080 L5-1-2 SUMP, OIL PUMP, & FITTINGS TURBO, P4001T 8C89

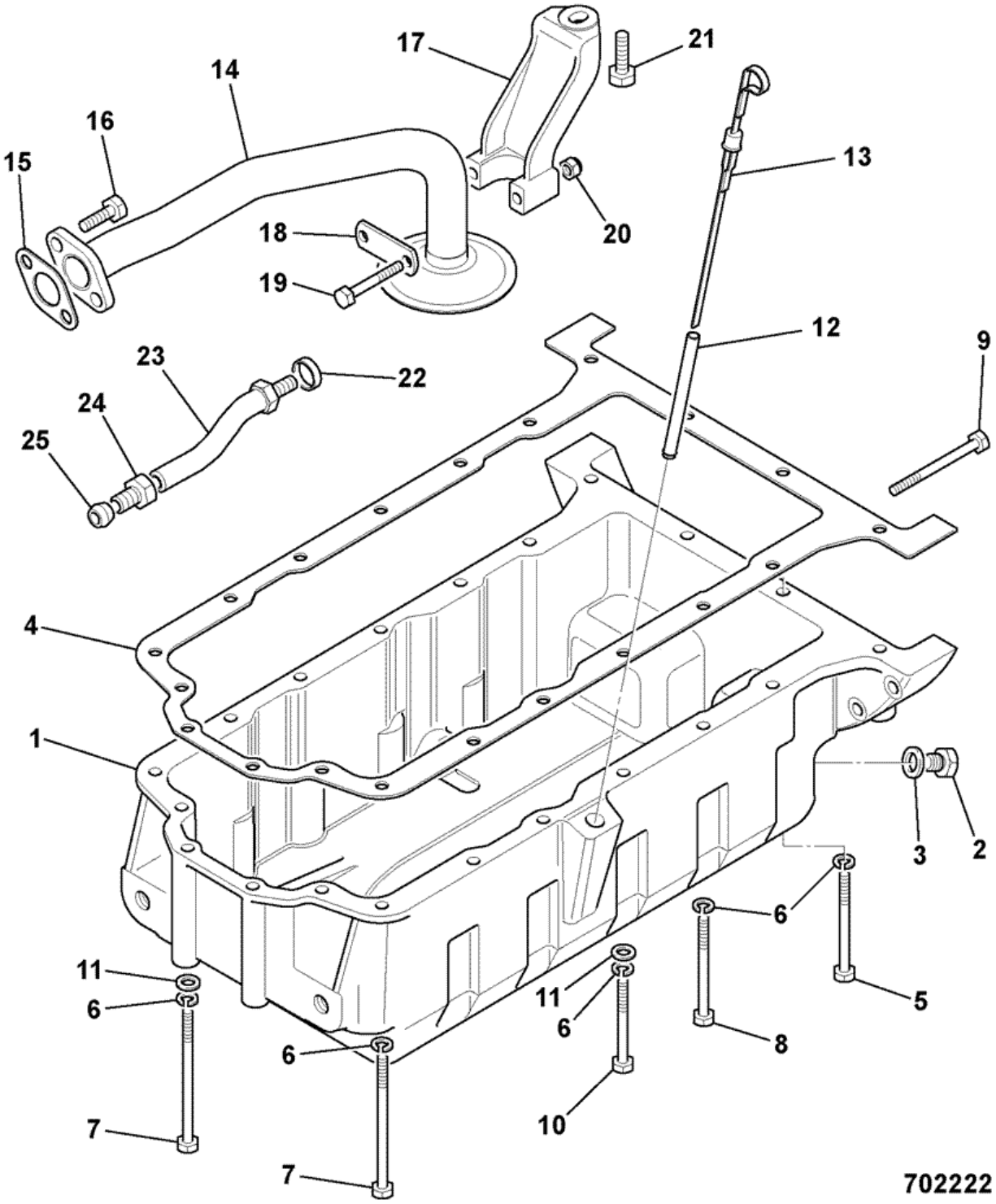

Item	Part #	Change No	Description	Usage Code	QTY
1	02/103504		Sump		1

2	02/103499		Plug		1
3	02/103501		Washer		1
4	02/100060		Gasket oil sump		1
5	1305/3127Z		Bolt		2
6	1416/0005		Washer		20
7	1305/3136		Bolt		6
8	1305/3124		Bolt		11
10	02/103726		Bolt bolt		1
11	1410/0002		Washer		9
12	02/103502		Tube dipstick		1
13	02/103505		Dipstick		1
14	02/103650		Tube oil suction		1
15	02/100873		Gasket		1
16	02/103506		Bolt		2
17	02/103649		Bracket support		1
18	02/103646		Plate		1
19	02/103657		Bolt		2
20	02/103654		Nut		2
21	02/103450		Bolt		1
22	02/103645		O Ring		2
23	02/103644		Tube oil suction		1
24	02/100316		Nut		1
25	02/103729		Olive olive		1

Product Catalog \ CONSTRUCTION \ NORTH AMERICA \ CONSTRUCTION / INDUSTRIAL \ BACKHOE LOADER 3CX,4CX,214,215,217 \ 3C PLUS (91HP) , Made in Brazil with Dieselmax/IESA Engine 9812/0080 \ L IESA P4001/P4001T ENGINES FROM S/N 1395000 \ L05 LUBRICATION SYSTEM

9812/0080 L5-2-1 PUMP, OIL, & RELIEF VALVE, P4001 NAT ASP 8C88

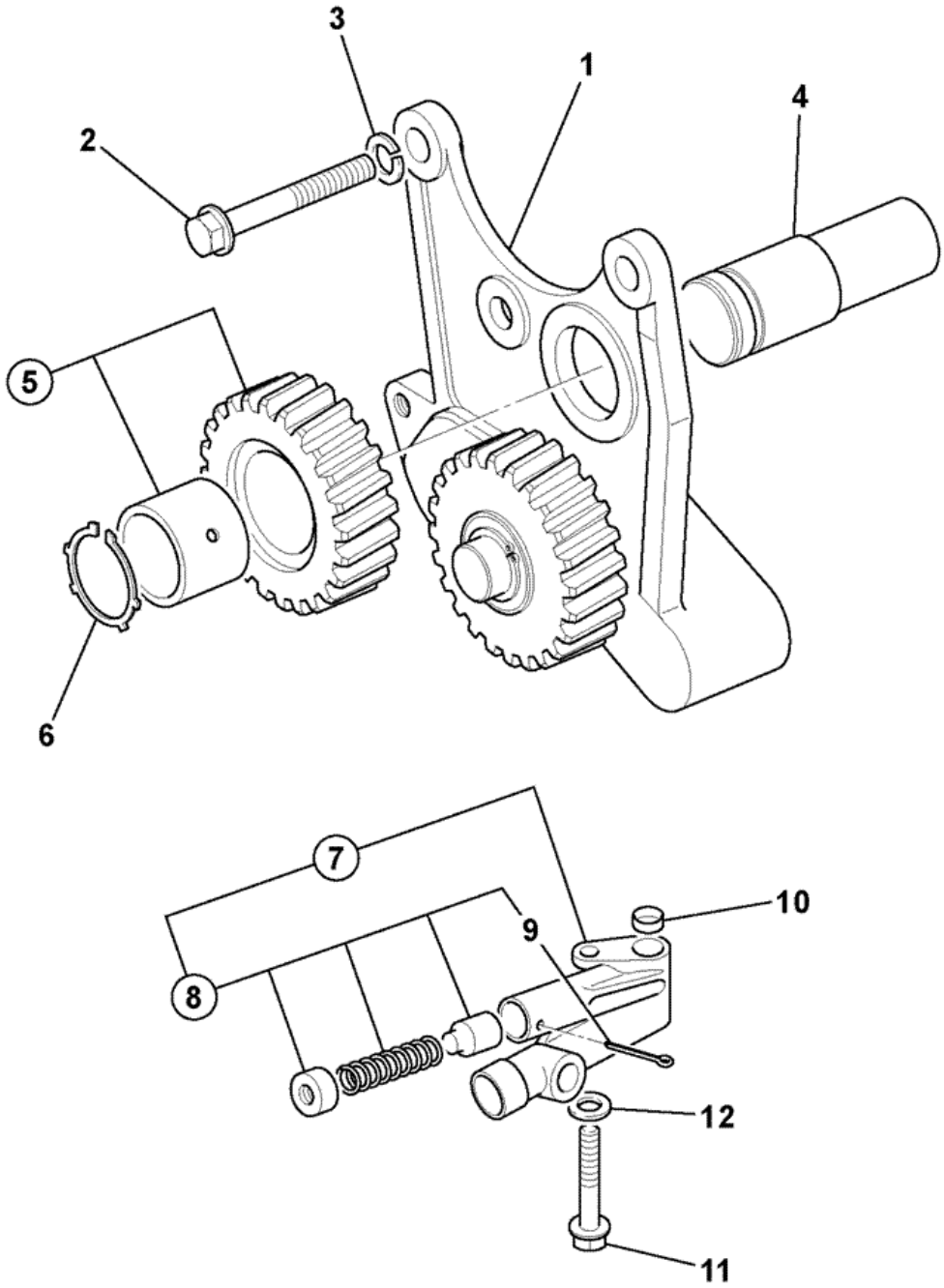

Item	Part #	Change No	Description	Usage Code	QTY
1	02/103703		Pump oil		1

2	02/103450		Bolt		3
3	1416/0005Z		Washer spring - 5/16" Zinc plated		3
4	02/100161		Shaft idler, oil pump		1
5	02/103451		Gear		1
6	02/103452		Circlip		1
7	02/103643		Valve Relief		1
8	:02/103454		Kit repair		1
9	::2103/0710		Pin split		1
10	02/100319		Thimble		1
11	02/103458		Bolt		1
12	1416/0006		Washer		1

Product Catalog \ CONSTRUCTION \ NORTH AMERICA \ CONSTRUCTION / INDUSTRIAL \ BACKHOE LOADER 3CX,4CX,214,215,217 \ 3C PLUS (91HP) , Made in Brazil with Dieselmax/IESA Engine 9812/0080 \ L IESA P4001/P4001T ENGINES FROM S/N 1395000 \ L05 LUBRICATION SYSTEM

9812/0080 L5-2-2 PUMP, OIL, & RELIEF VALVE, P4001T TURBO 8C89

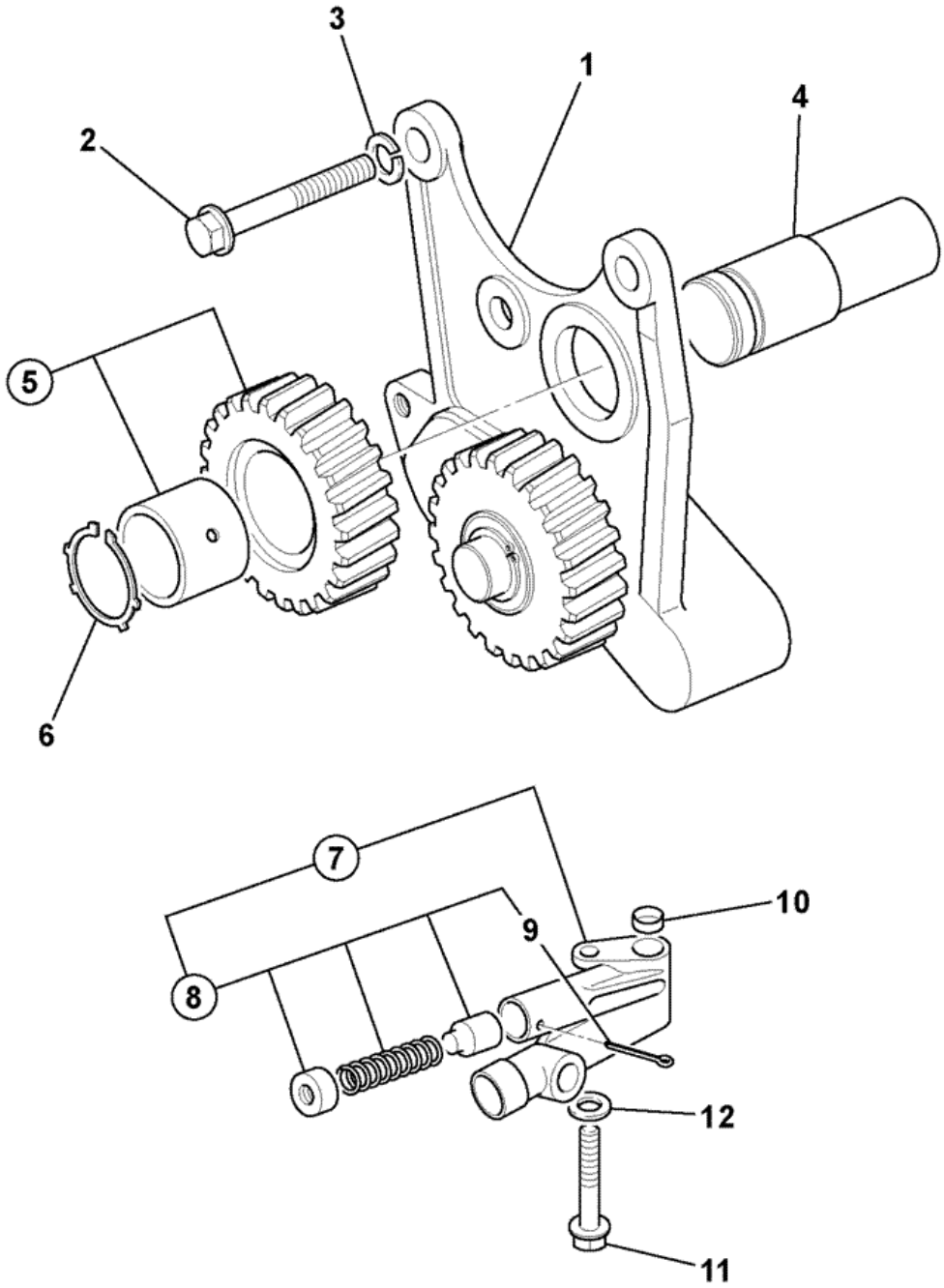

Item	Part #	Change No	Description	Usage Code	QTY
1	02/103704		Pump oil		1

2	02/103450		Bolt		3
3	1416/0005Z		Washer spring - 5/16" Zinc plated		3
4	02/100161		Shaft idler, oil pump		1
5	02/103451		Gear		1
6	02/103452		Circlip		1
7	02/103453		Valve relief		1
8	:02/103454		Kit repair		1
9	::2103/0710		Pin split		1
10	02/100319		Thimble		1
11	02/103458		Bolt		1
12	1416/0006		Washer		1

Product Catalog \ CONSTRUCTION \ NORTH AMERICA \ CONSTRUCTION / INDUSTRIAL \ BACKHOE LOADER 3CX,4CX,214,215,217 \ 3C PLUS (91HP) , Made in Brazil with Dieselmax/IESA Engine 9812/0080 \ L IESA P4001/P4001T ENGINES FROM S/N 1395000 \ L05 LUBRICATION SYSTEM

9812/0080 L5-3-1 PISTON COOLING JETS, TURBO, P4001T 8C89

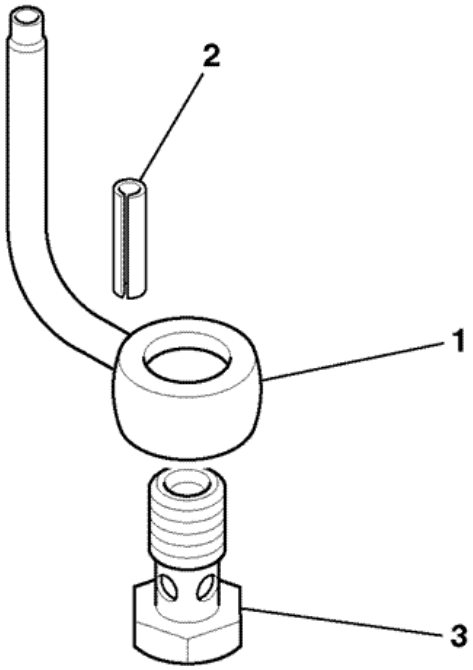

706110

Item	Part #	Change No	Description	Usage Code	QTY
1	02/103459		Pipe piston cooling		1

2	2102/0403		Pin tension		1
3	02/103460		Valve		1

9812/0080 L5-4-1 FILTER, OIL & COOLER, NAT ASP & TURBO, P4001/P4001T 8C88/8C89

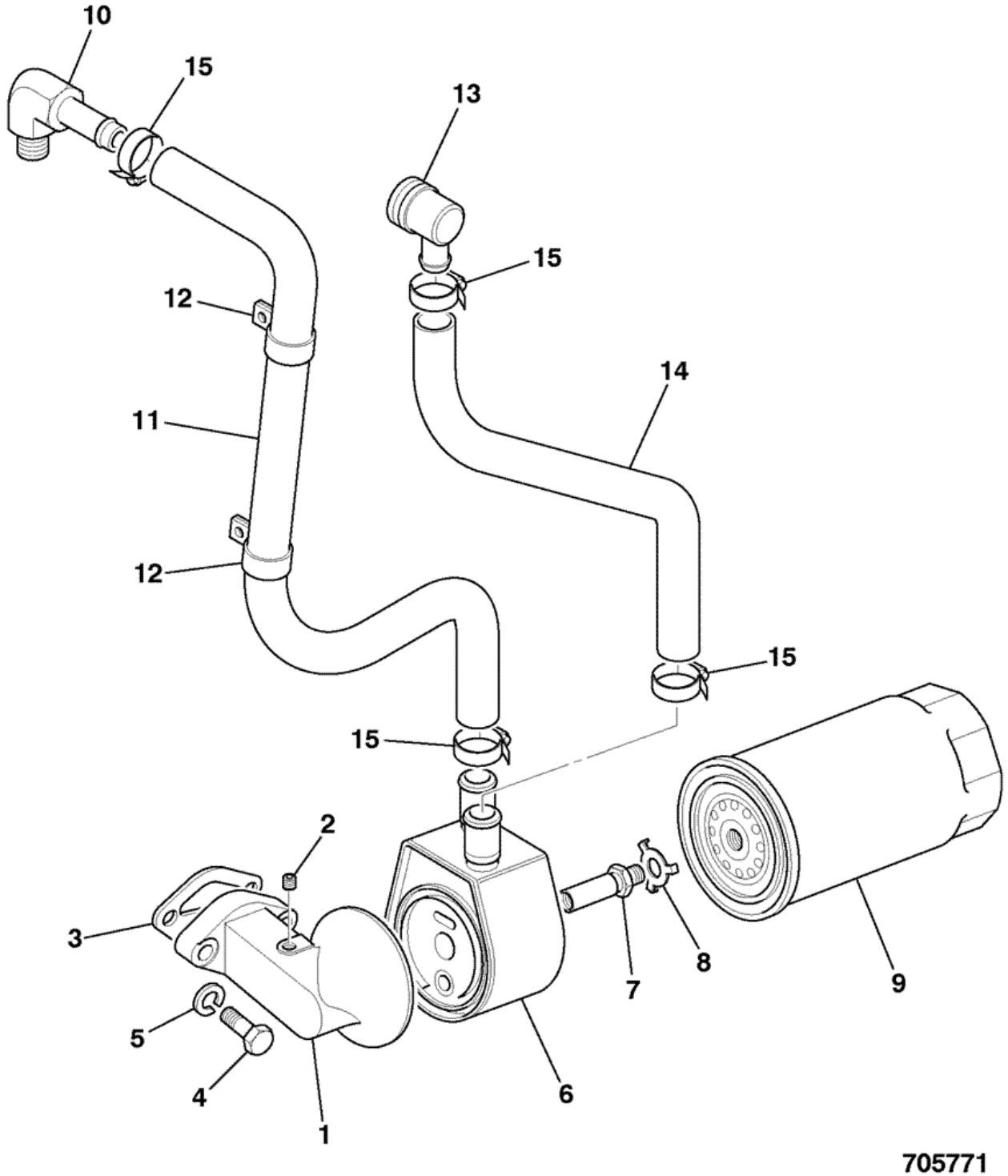

Item	Part #	Change No	Description	Usage Code	QTY
1	02/103730		Head filter		1

2	02/103515		Plug		1
3	02/103514		Gasket		1
4	1305/3308		Bolt		2
5	823/00280		Washer Spring		1
6	02/103516		Cooler oil		1
7	02/103518		Connector		1
8	02/103517		Washer tab washer		1
9	02/103513		Element oil filter		1
10	02/103731		Elbow elbow		1
11	02/103732		Pipe pipe		1
12	02/103521		Clip		2
13	02/103522		Adapter elbow		1
14	02/103520		Hose		1
15	02/103524		Clamp		4

Product Catalog \ CONSTRUCTION \ NORTH AMERICA \ CONSTRUCTION / INDUSTRIAL \ BACKHOE LOADER 3CX,4CX,214,215,217 \ 3C PLUS (91HP) , Made in Brazil with Dieselmax/IESA Engine 9812/0080 \ L IESA P4001/P4001T ENGINES FROM S/N 1395000 \ L06 FUEL SYSTEM

9812/0080 L6-1-1 PUMP, FUEL INJECTION, NAT ASP, P4001 8C88

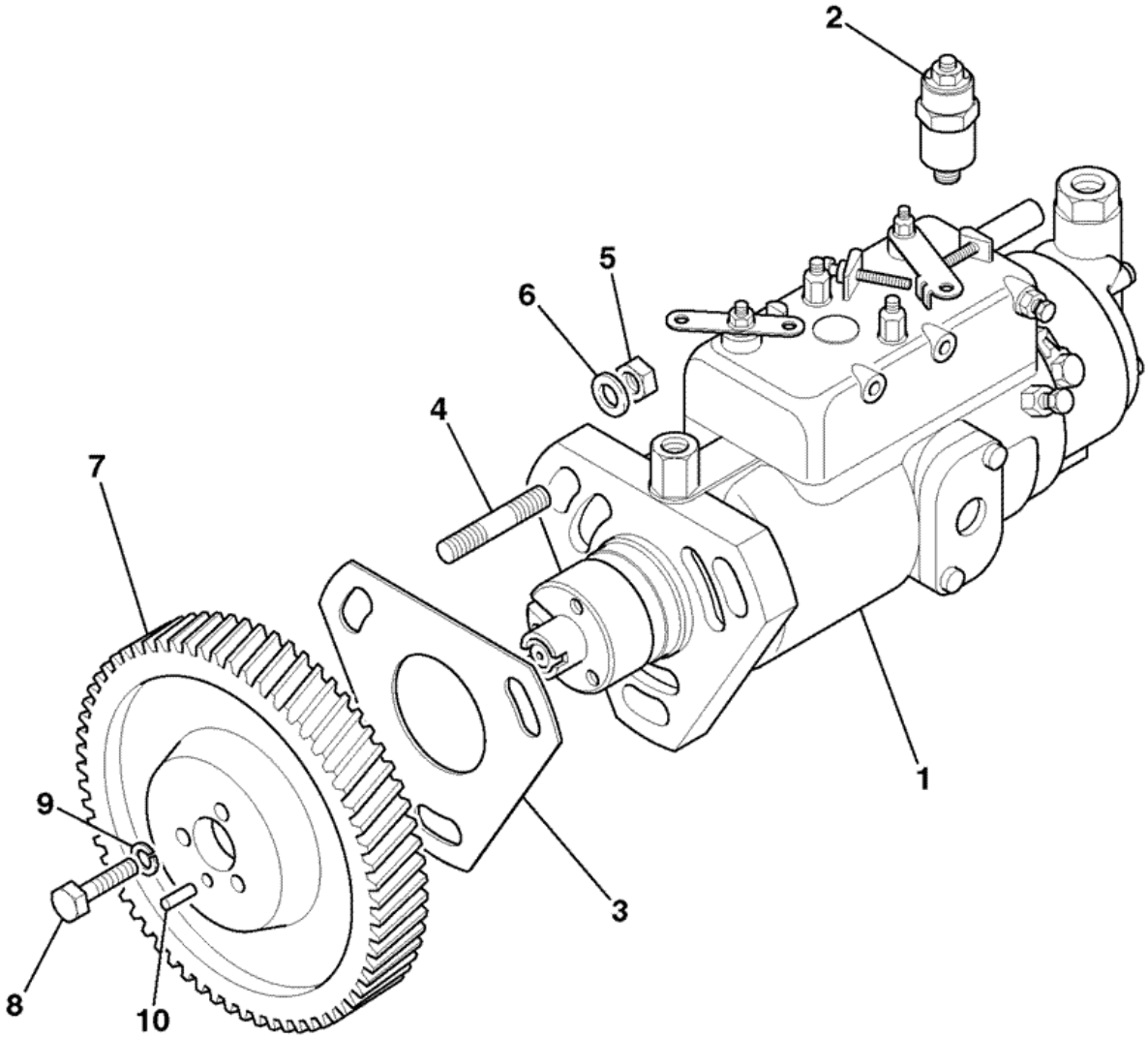

705580

Item	Part #	Change No	Description	Usage Code	QTY
1	17/920600		Pump fuel injection		1

2	:716/30199		Solenoid engine stop		1
3	02/103552		Gasket		1
4	02/103553		Stud		3
5	02/103554		Nut		3
6	02/101686		Washer		3
7	02/103767		Gear injection pump		1
8	1305/0104		Bolt		3
9	1416/0005		Washer		3
10	02/130146		Dowel		1

Product Catalog \ CONSTRUCTION \ NORTH AMERICA \ CONSTRUCTION / INDUSTRIAL \ BACKHOE LOADER 3CX,4CX,214,215,217 \ 3C PLUS (91HP) , Made in Brazil with Dieselmax/IESA Engine 9812/0080 \ L IESA P4001/P4001T ENGINES FROM S/N 1395000 \ L06 FUEL SYSTEM

9812/0080 L6-1-2 PUMP, FUEL INJECTION, TURBO, P4001T 8C89

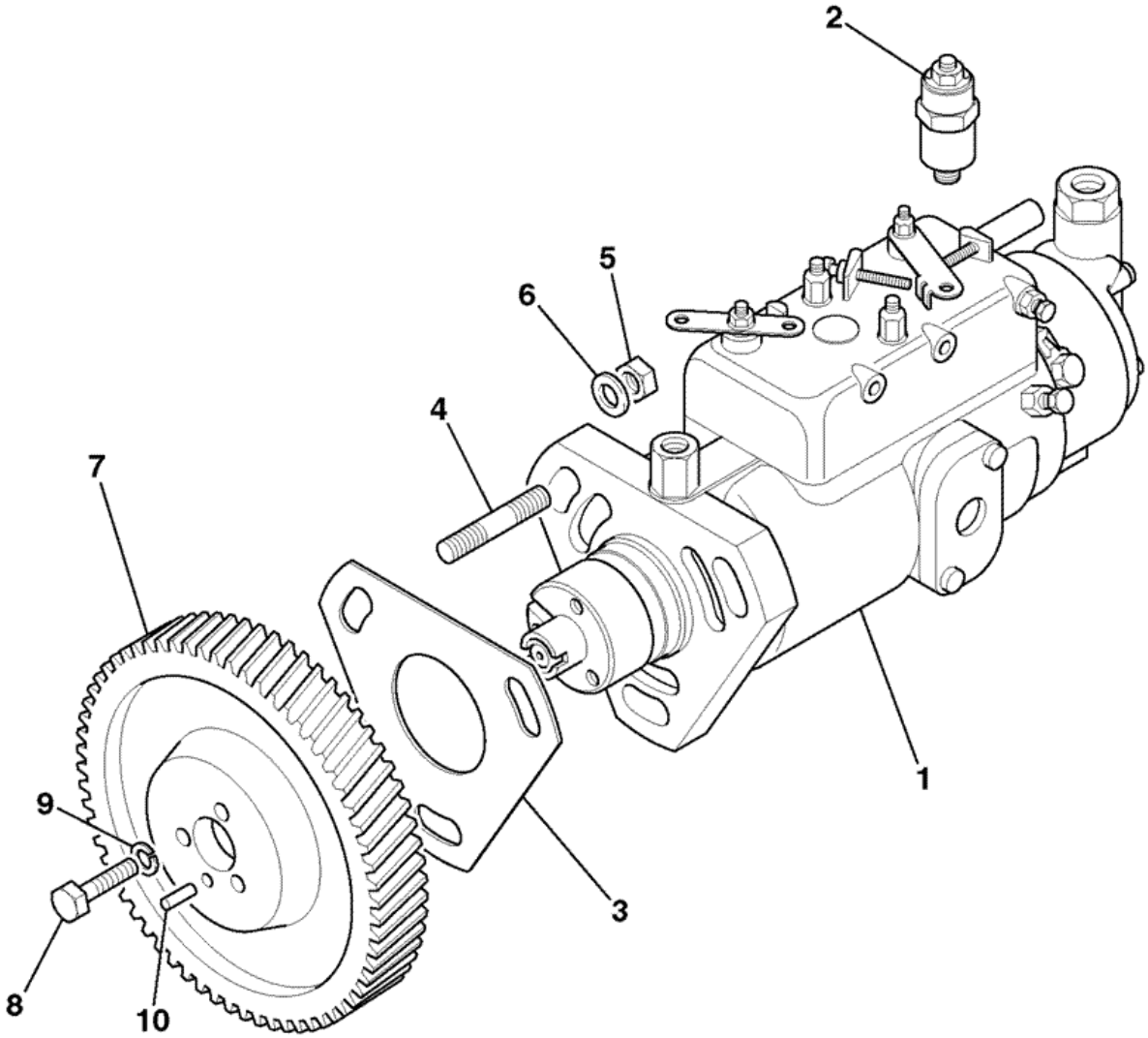

705580

Item	Part #	Change No	Description	Usage Code	QTY
1	17/920700		Pump fuel injection		1

2	:716/30199		Solenoid engine stop		1
3	02/103552		Gasket		1
4	02/103553		Stud		3
5	02/103554		Nut		3
6	02/101686		Washer		3
7	02/103556		Gear		1
8	1305/0104		Bolt		3
9	1416/0005		Washer		3
10	02/130146		Dowel		1

Product Catalog \ CONSTRUCTION \ NORTH AMERICA \ CONSTRUCTION / INDUSTRIAL \ BACKHOE LOADER 3CX,4CX,214,215,217 \ 3C PLUS (91HP) , Made in Brazil with Dieselmax/IESA Engine 9812/0080 \ L IESA P4001/P4001T ENGINES FROM S/N 1395000 \ L06 FUEL SYSTEM

9812/0080 L6-2-1 INJECTORS, FUEL, & INJECTION PIPES, P4001 NAT ASP 8C88

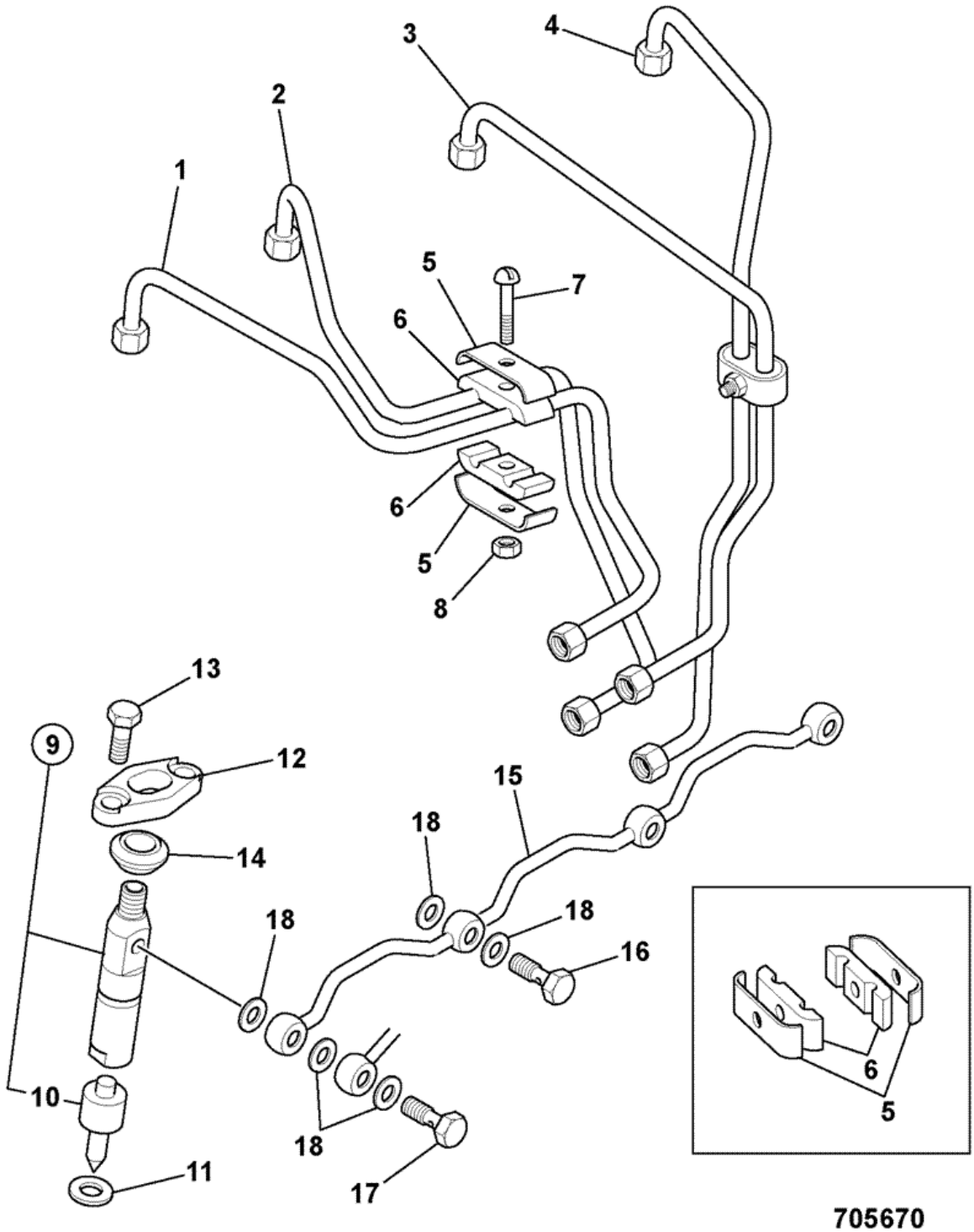

Item	Part #	Change No	Description	Usage Code	QTY
1	02/103584		Pipe 1 cyl		1

2	02/103585		Pipe 2 cyl		1
3	02/103586		Pipe 3 cyl		1
4	02/103587		Pipe 4 cyl		1
5	02/103746		Clip clip		4
6	02/103588		Damper		4
7	02/103747		Bolt bolt		2
8	02/103590		Nut		2
9	17/920900		Atomiser assembly		4
10	:17/920901		Nozzle		1
11	02/103589		Washer		4
12	02/101392		Clamp		4
13	1305/3108		Bolt		8
14	02/103591		Seal		4
15	02/101391		Pipe assembly		1
16	02/100290		Bolt		3
17	02/103576		Bolt		1
18	02/103577		Washer		9

Product Catalog \ CONSTRUCTION \ NORTH AMERICA \ CONSTRUCTION / INDUSTRIAL \ BACKHOE LOADER 3CX,4CX,214,215,217 \ 3C PLUS (91HP) , Made in Brazil with Dieselmax/IESA Engine 9812/0080 \ L IESA P4001/P4001T ENGINES FROM S/N 1395000 \ L06 FUEL SYSTEM

9812/0080 L6-2-2 INJECTORS, FUEL, & INJECTION PIPES, P4001T TURBO 8C89

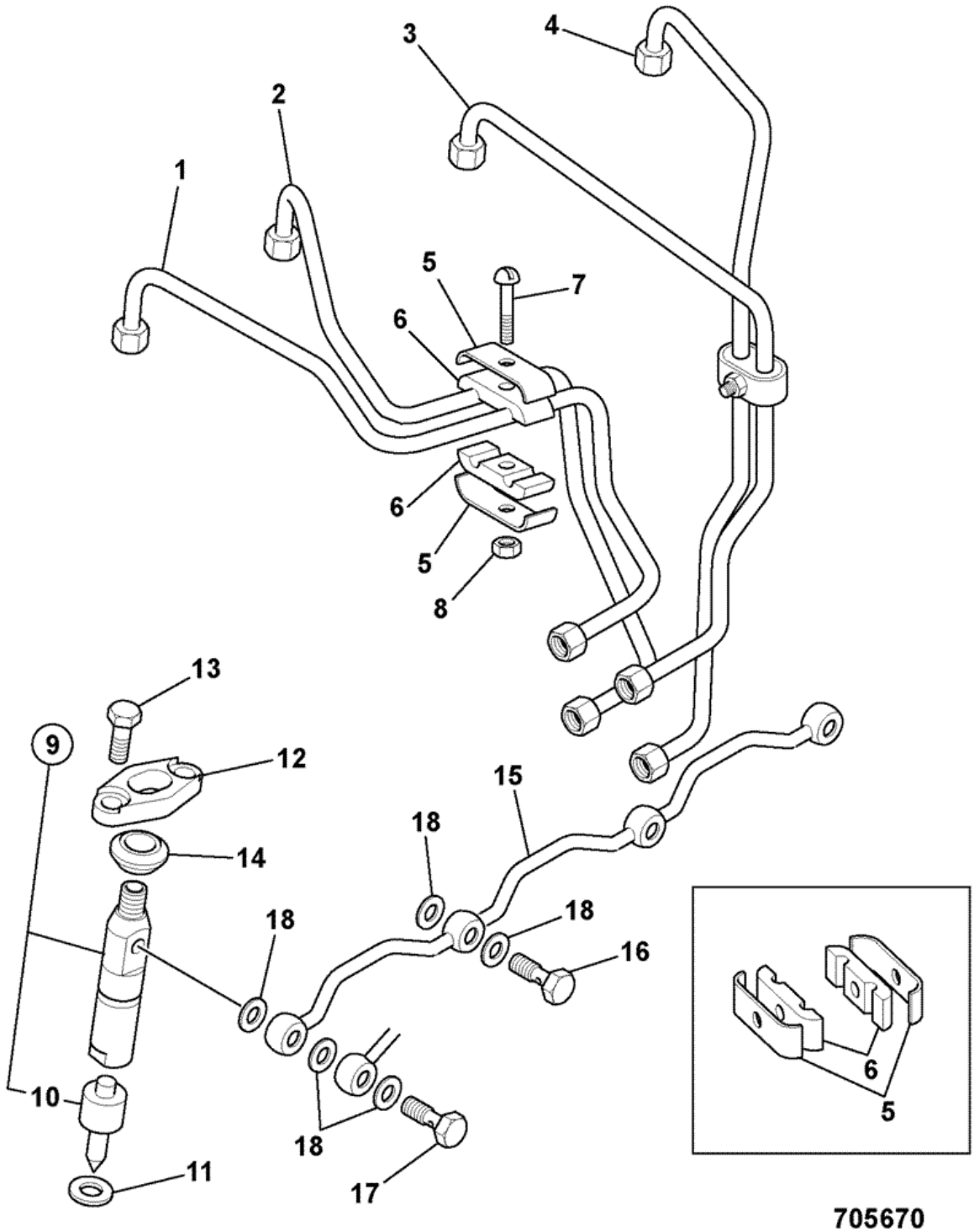

Item	Part #	Change No	Description	Usage Code	QTY
1	02/103592		Pipe 1 cyl		1

2	02/103593		Pipe 2 cyl		1
3	02/103594		Pipe 3 cyl		1
4	02/103745		Pipe fuel injection		1
5	02/103746		Clip clip		4
6	02/103588		Damper		4
7	02/103747		Bolt bolt		2
8	02/103590		Nut		2
9	17/921000		Atomiser assembly		4
10	:17/920901		Nozzle		1
11	02/103589		Washer		4
12	02/101392		Clamp		4
13	1305/3108		Bolt		8
14	02/103591		Seal		4
15	02/101391		Pipe assembly		1
16	02/100290		Bolt		3
17	02/103576		Bolt		1
18	02/103577		Washer		9

Product Catalog \ CONSTRUCTION \ NORTH AMERICA \ CONSTRUCTION / INDUSTRIAL \ BACKHOE LOADER 3CX,4CX,214,215,217 \ 3C PLUS (91HP) , Made in Brazil with Dieselmax/IESA Engine 9812/0080 \ L IESA P4001/P4001T ENGINES FROM S/N 1395000 \ L06 FUEL SYSTEM

9812/0080 L6-3-1 FUEL PIPES, FUEL FEED & RETURN, P4001, NAT/ASPIRATED 8C88

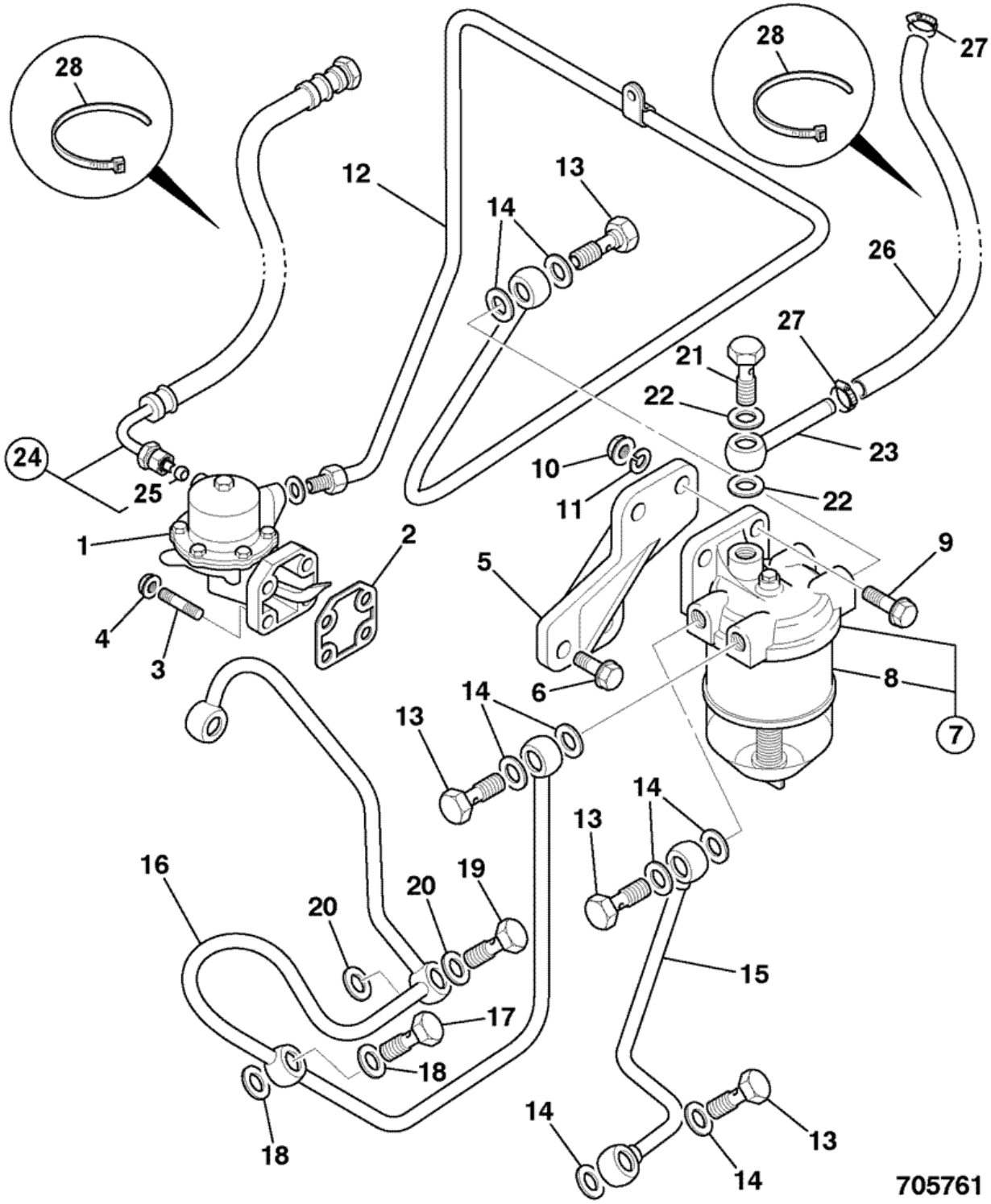

Item	Part #	Change No	Description	Usage Code	QTY
1	17/920800		Pump fuel lift		1

2	02/103740		Gasket gasket		1
3	02/103562		Stud		4
4	02/103554		Nut		4
5	02/103564		Bracket		1
6	02/103578		Bolt		2
7	02/103741		Filter filter		1
8	:32/925587		Element fuel filter		1
9	02/103548		Bolt		2
10	02/103544		Nut		2
11	.		'See Remark' *No longer required*		0
12	02/103571		Pipe fuel l/pump to f/filter		1
13	02/103569		Bolt banjo		4
14	02/103570		Washer		8
15	02/103568		Pipe fuel filter to inj/pump		1
16	02/103572		Pipe fuel inj/pump to f/filter		1
17	02/103573		Bolt Banjo		1
18	02/103575		Washer		2
19	02/103580		Bolt banjo		1
20	02/103575		Washer		2
21	02/103742		Bolt bolt		1
22	02/103570		Washer		2
23	02/103768		Connector outlet		1

Product Catalog \ CONSTRUCTION \ NORTH AMERICA \ CONSTRUCTION / INDUSTRIAL \ BACKHOE LOADER 3CX,4CX,214,215,217 \ 3C PLUS (91HP) , Made in Brazil with Dieselmax/IESA Engine 9812/0080 \ L IESA P4001/P4001T ENGINES FROM S/N 1395000 \ L06 FUEL SYSTEM

9812/0080 L6-3-2 FUEL PIPES, FUEL FEED & RETURN, P4001T, TURBO 8C89

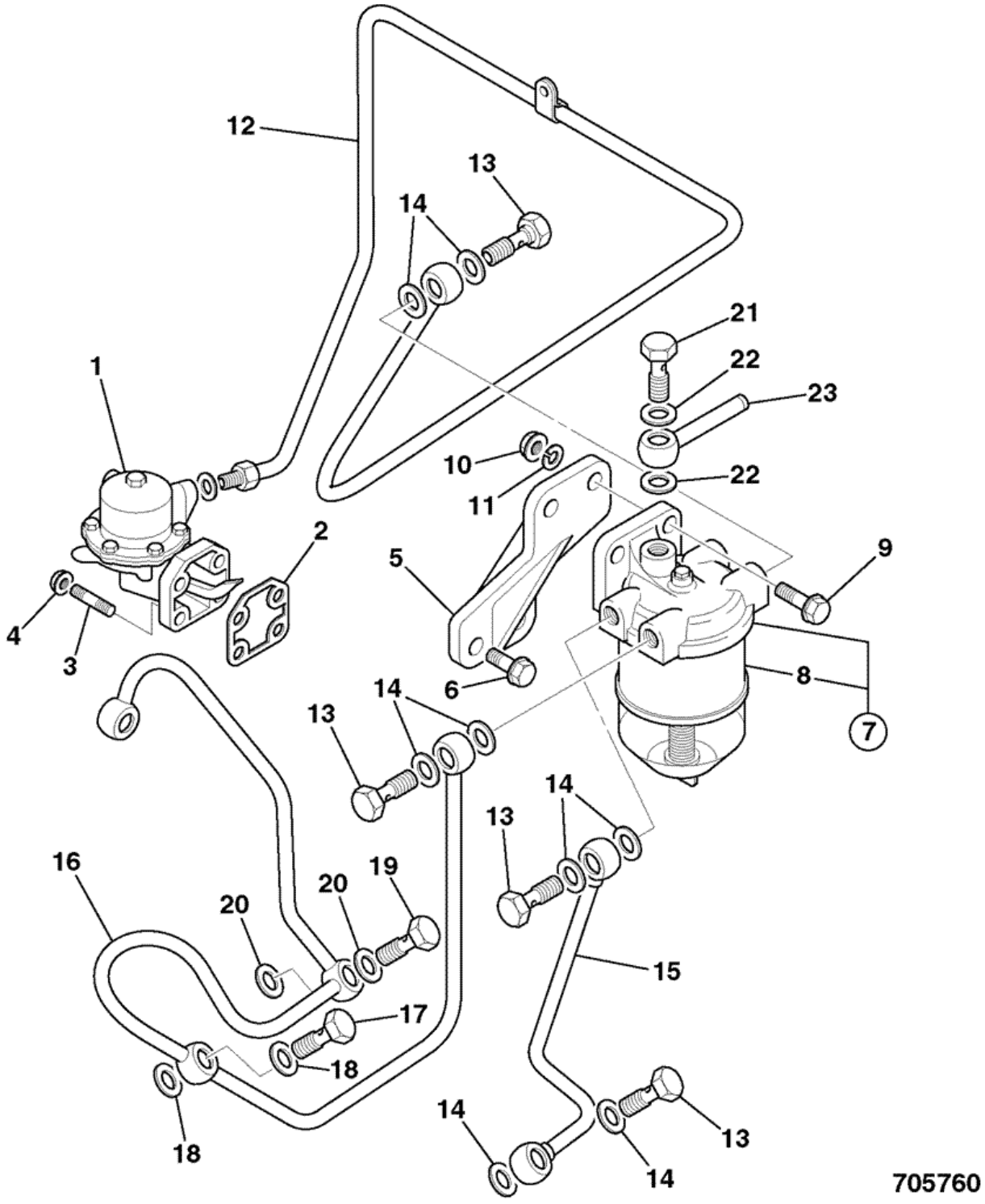

Item	Part #	Change No	Description	Usage Code	QTY
1	17/920800		Pump fuel lift		1

2	02/103740		Gasket gasket		1
3	02/103562		Stud		4
4	02/103554		Nut		4
5	02/103564		Bracket		1
6	02/103578		Bolt		2
7	02/103741		Filter filter		1
8	:32/925587		Element fuel filter		1
9	02/103548		Bolt		2
10	02/103544		Nut		2
11	.		'See Remark' *No longer required*		0
12	02/103571		Pipe fuel l/pump to f/filter		1
13	02/103569		Bolt banjo		4
14	02/103570		Washer		8
15	02/103568		Pipe fuel filter to inj/pump		1
16	02/103572		Pipe fuel inj/pump to f/filter		1
17	02/103573		Bolt Banjo		1
18	02/103575		Washer		2
19	02/103580		Bolt banjo		1
20	02/103575		Washer		2
21	02/103742		Bolt bolt		1
22	02/103570		Washer		2
23	02/103768		Connector outlet		1

Product Catalog \ CONSTRUCTION \ NORTH AMERICA \ CONSTRUCTION / INDUSTRIAL \ BACKHOE LOADER 3CX,4CX,214,215,217 \ 3C PLUS (91HP) , Made in Brazil with Dieselmax/IESA Engine 9812/0080 \ L IESA P4001/P4001T ENGINES FROM S/N 1395000 \ L06 FUEL SYSTEM

9812/0080 L6-4-1 FUEL HEATER & PIPE, NAT ASP & TURBO, P4001 P4001T, 8C88/8C89

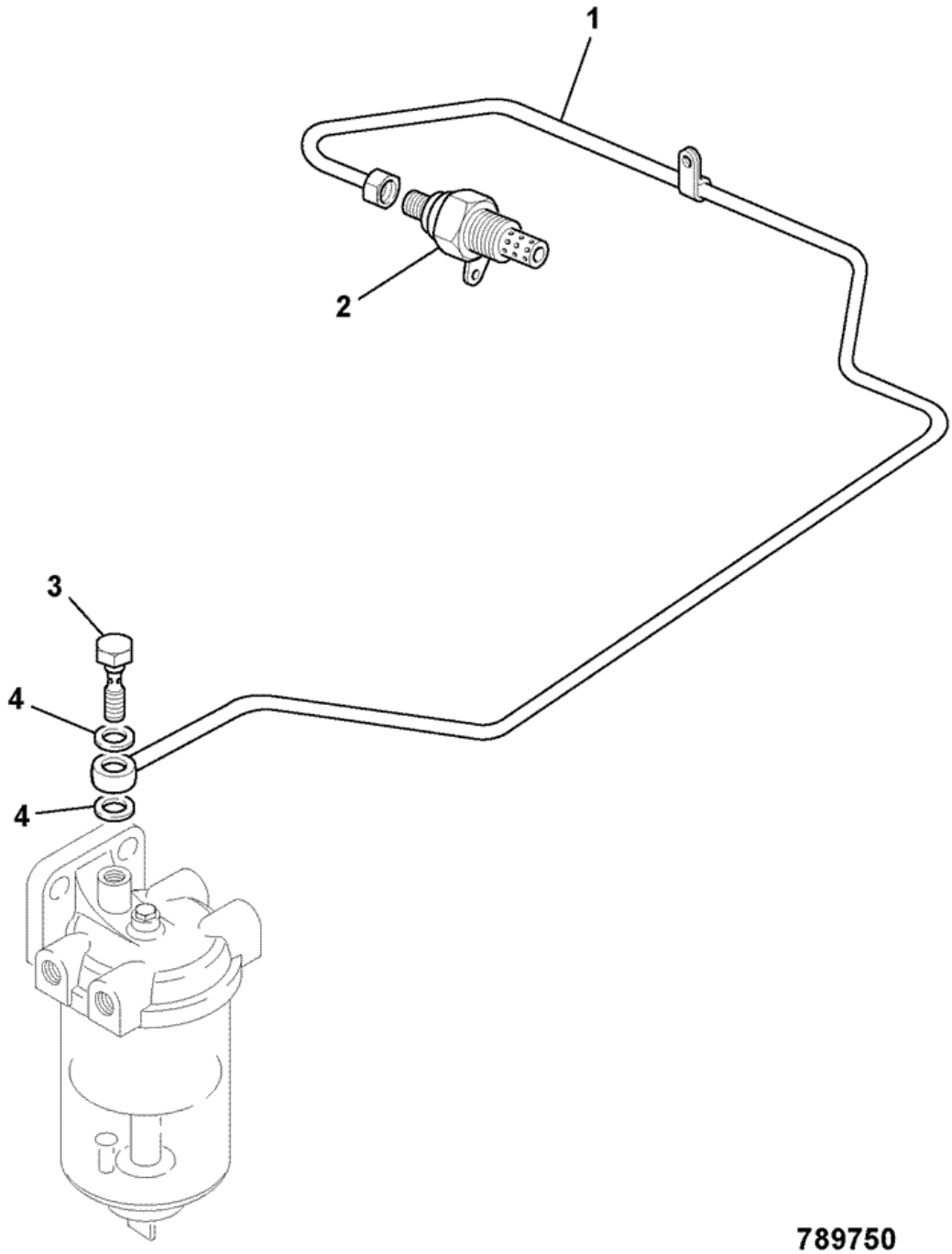

Item	Part #	Change No	Description	Usage Code	QTY
1	02/103686		Pipe fuel heater		1

2	02/103739		Plug glow plug		1
3	02/103569		Bolt banjo		1
4	02/103570		Washer		2

Product Catalog \ CONSTRUCTION \ NORTH AMERICA \ CONSTRUCTION / INDUSTRIAL \ BACKHOE LOADER 3CX,4CX,214,215,217 \ 3C PLUS (91HP) , Made in Brazil with Dieselmax/IESA Engine 9812/0080 \ L IESA P4001/P4001T ENGINES FROM S/N 1395000 \ L06 FUEL SYSTEM

9812/0080 L6-5-1 FUEL PIPES, FUEL TANK TO FILTER, P4001/P4001T NAT ASP & TURBO 8C88/8C89

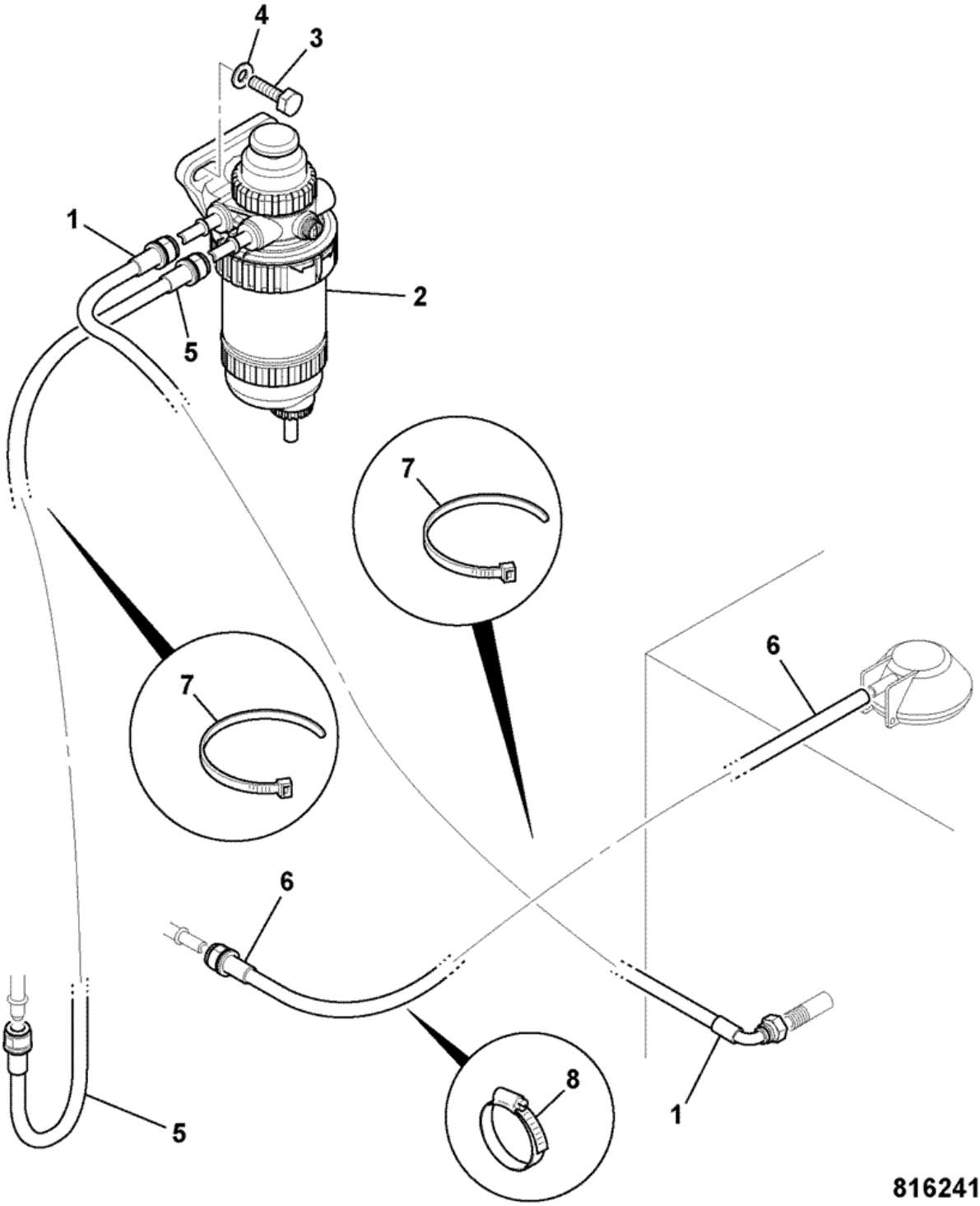

Item	Part #	Change No	Description	Usage Code	QTY
1	649/51784		Hose diesel fuel L=1850		1

2	32/925914		Filter fuel sediment 30m reverse flow *For Service Parts, See Index L6-6-1*		1
3	1315/0410Z		Bolt M10 x 40		2
4	1420/0008Z		Washer Plain M10		2
5	649/52236		Hose fuel hose 1200Lg		1
6	648/03505		Hose 8mm bore x1620mm		1
7	826/01144		Tie cable 200mm long		7
8	821/00520		Clip		2

Product Catalog \ CONSTRUCTION \ NORTH AMERICA \ CONSTRUCTION / INDUSTRIAL \ BACKHOE LOADER 3CX,4CX,214,215,217 \ 3C PLUS (91HP) , Made in Brazil with Dieselmax/IESA Engine 9812/0080 \ L IESA P4001/P4001T ENGINES FROM S/N 1395000 \ L06 FUEL SYSTEM

9812/0080 L6-6-1 FILTER,30 MICRON, FUEL SEDIMENT, WITH HAND PRIMER

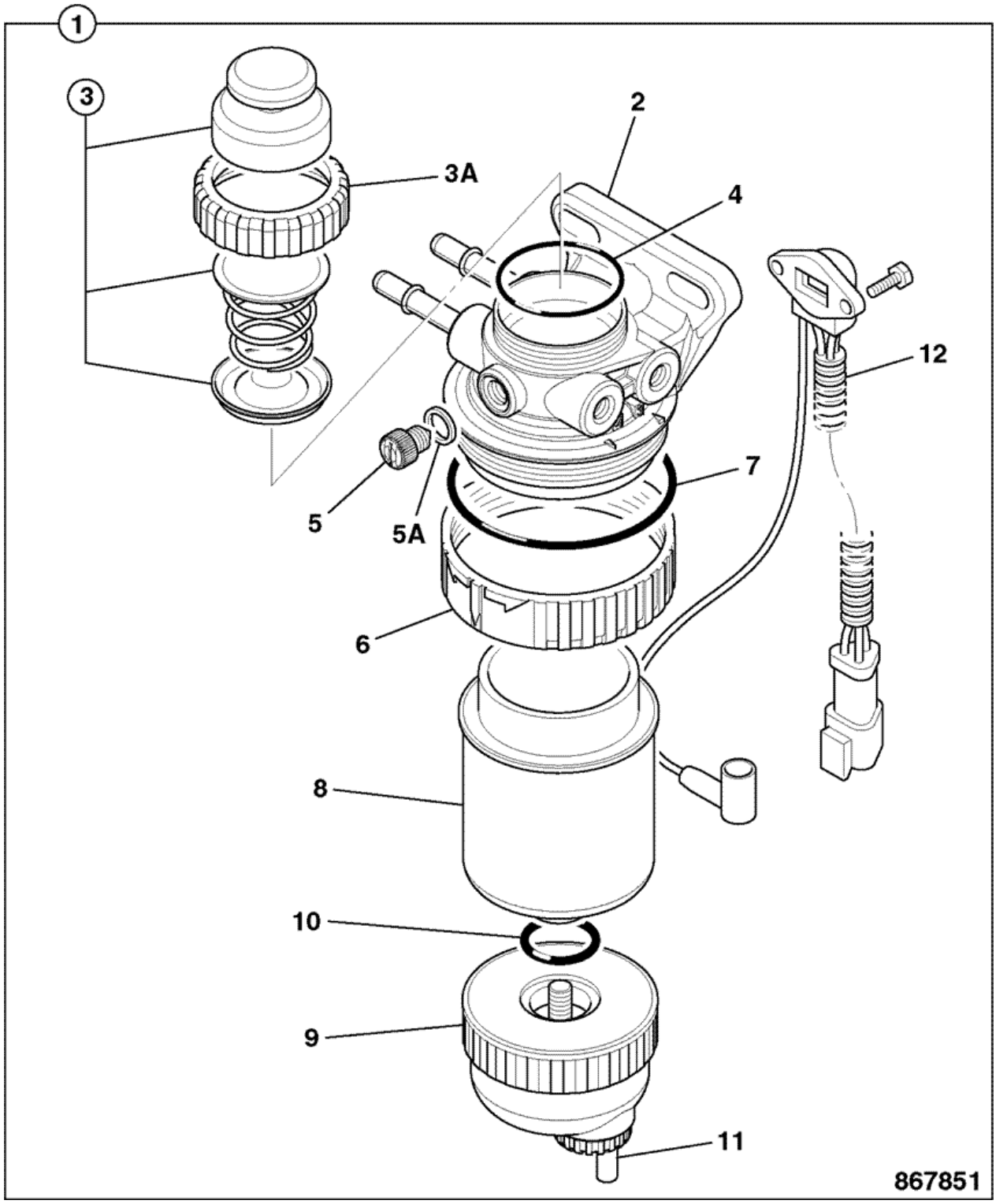

Item	Part #	Change No	Description	Usage Code	QTY

1	32/925914		Filter fuel sediment 30m reverse flow		1
2	:NSP		None serviced part		1
3	:32/926045		Kit-hand primer reverse flow		1
3A	:32/926044		Ring cap locking		1
4	:32/925906		Seal		1
5	:32/926040		Plug air vent		1
5A	:32/925973		O Ring		1
6	:32/921002		Ring retaining		1
7	:32/921003		Seal dust		1
8	:32/925915		Element fuel filter reverse flow *STANDARD*		1
9	:32/925708		Bowl assembly		1
10	:32/925733		Seal o'ring		1
11	:32/925818		Kit-drain valve c/w wif sensor & seal		1
12	:32/925709		Kit-sensor water in fuel		1

Product Catalog \ CONSTRUCTION \ NORTH AMERICA \ CONSTRUCTION / INDUSTRIAL \ BACKHOE LOADER 3CX,4CX,214,215,217 \ 3C PLUS (91HP) , Made in Brazil with Dieselmax/IESA Engine 9812/0080 \ L IESA P4001/P4001T ENGINES FROM S/N 1395000 \ L07 AUXILIARY EQUIPMENT

9812/0080 L7-1-1 TURBOCHARGER, P4001T 8C89

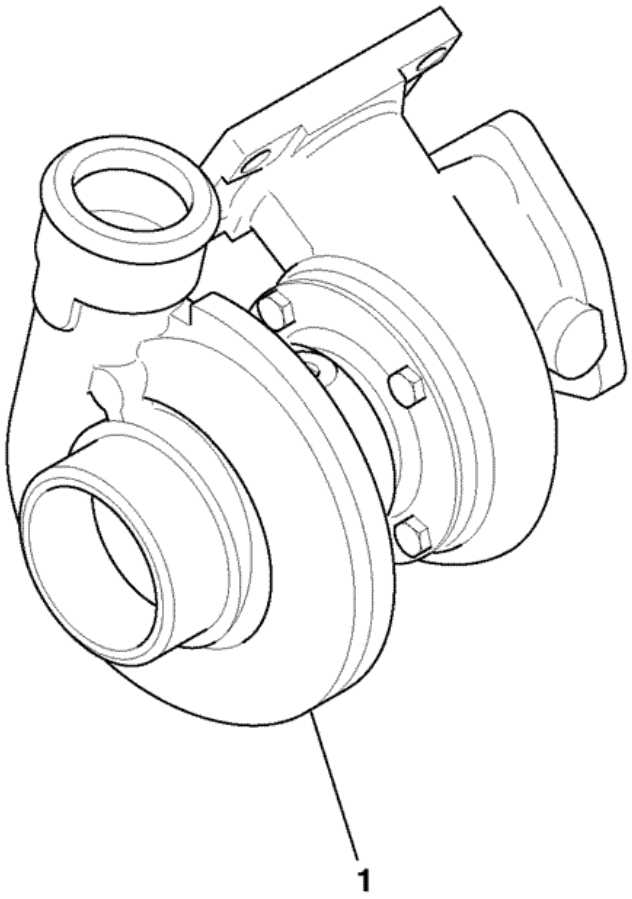

706170

Item	Part #	Change No	Description	Usage Code	QTY
1	02/103618		Turbocharger		1

Product Catalog \ CONSTRUCTION \ NORTH AMERICA \ CONSTRUCTION / INDUSTRIAL \ BACKHOE LOADER 3CX,4CX,214,215,217 \ 3C PLUS (91HP) , Made in Brazil with Dieselmax/IESA Engine 9812/0080 \ L IESA P4001/P4001T ENGINES FROM S/N 1395000 \ L07 AUXILIARY EQUIPMENT

9812/0080 L7-2-1 TURBOCHARGER, PIPEWORK & MOUNTINGS, P4001T, 8C89

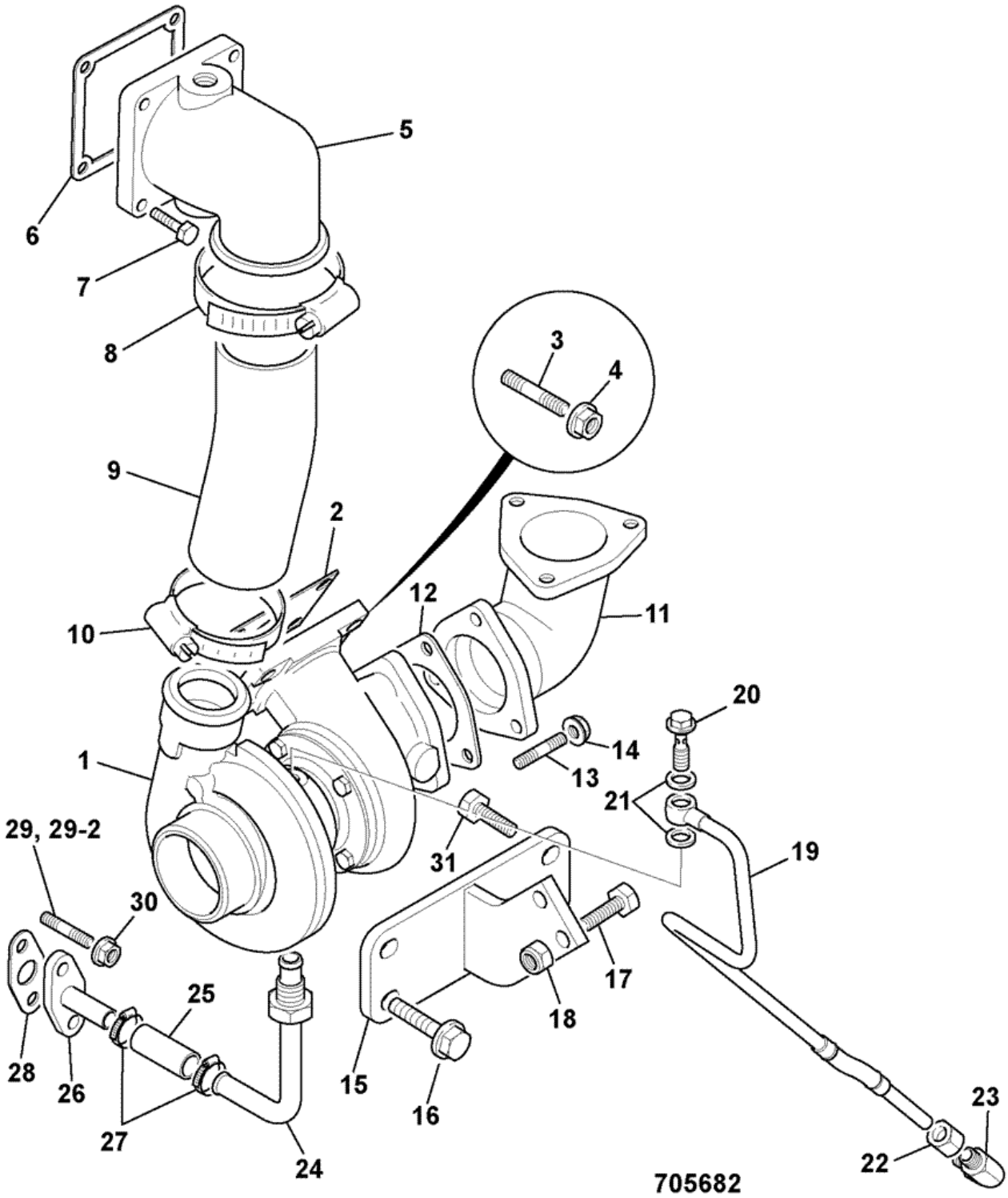

Item	Part #	Change No	Description	Usage Code	QTY
1	02/103618		Turbocharger		1

2	TBA		Part number Not Yet Known		4
3	826/01200		Stud		4
4	02/103619		Nut		4
5	02/103629		Diffuser		1
6	02/103764		Gasket gasket		1
7	02/103450		Bolt		4
8	02/103760		Clamp clamp		1
9	02/103627		Hose		1
10	02/103628		Clamp		2
11	02/103633		Elbow		1
12	02/103631		Gasket		1
13	02/291002		Stud		3
14	02/103759		Nut nut		3
15	02/103634		Bracket support		1
16	02/103450		Bolt		1
17	02/103541		Bolt		2
18	TBA		Part number Not Yet Known		1
19	02/103624		Pipe		1
20	02/103683		Bolt banjo		1
21	02/103761		Washer sealing		2
22	TBA		Part number Not Yet Known		1
23	02/103622		Connector elbow		1
24	02/103623		Pipe		1
25	02/100684		Hose oil drain		1
26	02/103620		Pipe		1
27	02/103524		Clamp		2
28	02/101253		Gasket		1
29	02/103562		Stud		1
29	822/00122		Stud		1
30	02/103554		Nut		2
31	02/103762		Bolt bolt		2

Product Catalog \ CONSTRUCTION \ NORTH AMERICA \ CONSTRUCTION / INDUSTRIAL \ BACKHOE LOADER 3CX,4CX,214,215,217 \ 3C PLUS (91HP) , Made in Brazil with Dieselmax/IESA Engine 9812/0080 \ L IESA P4001/P4001T ENGINES FROM S/N 1395000 \ L08 GASKET SETS

9812/0080 L8-1-1 GASKET SET, TOP, P4001/P400T 8C88/8C89

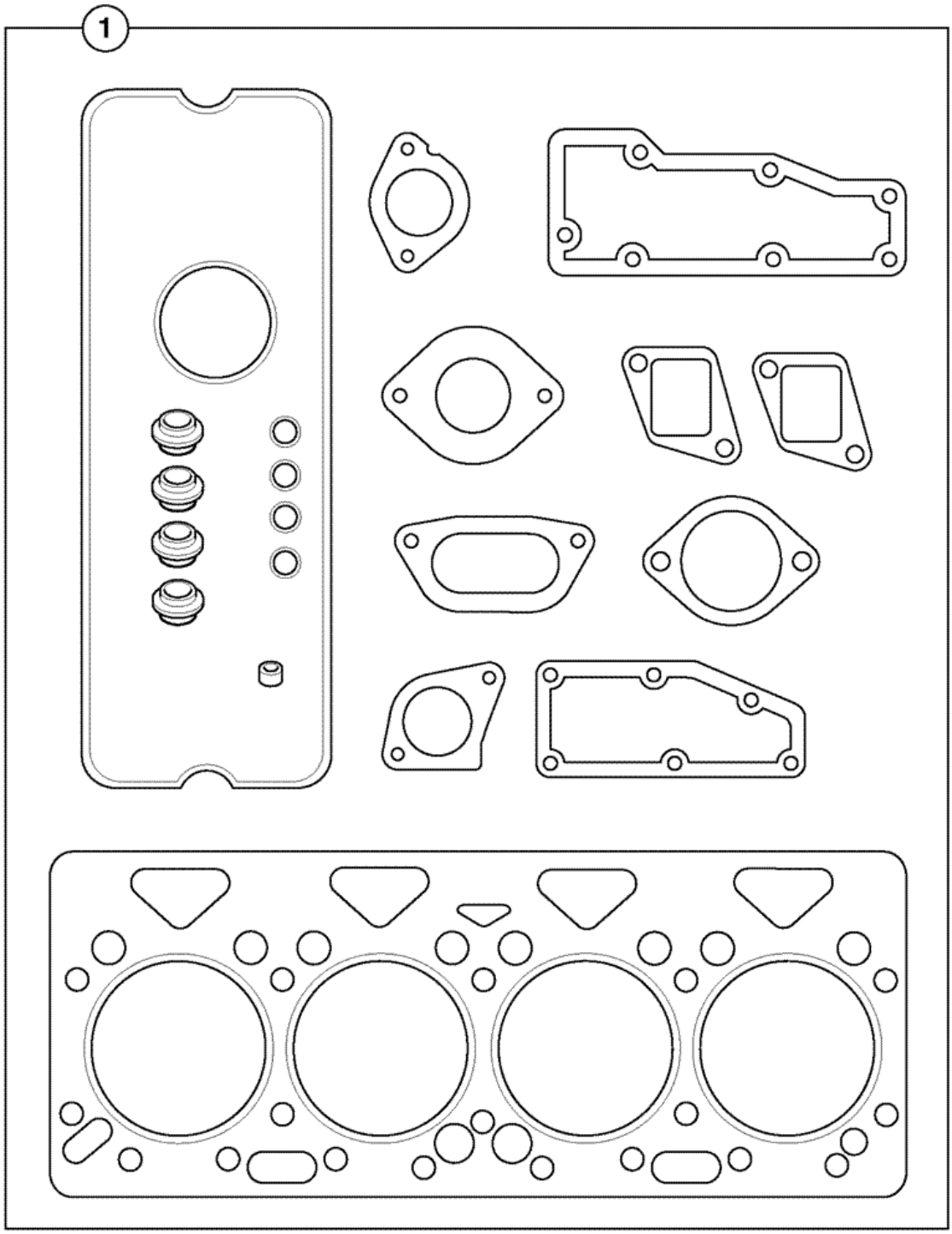

702490

Item	Part #	Change No	Description	Usage Code	QTY
1	02/103688		Gasket set upper		1

Product Catalog \ CONSTRUCTION \ NORTH AMERICA \ CONSTRUCTION / INDUSTRIAL \ BACKHOE LOADER 3CX,4CX,214,215,217 \ 3C PLUS (91HP) , Made in Brazil with Dieselmax/IESA Engine 9812/0080 \ L IESA P4001/P4001T ENGINES FROM S/N 1395000 \ L08 GASKET SETS

9812/0080 L8-2-1 GASKET SET, BOTTOM, P4001/P4001T 8C88/8C89

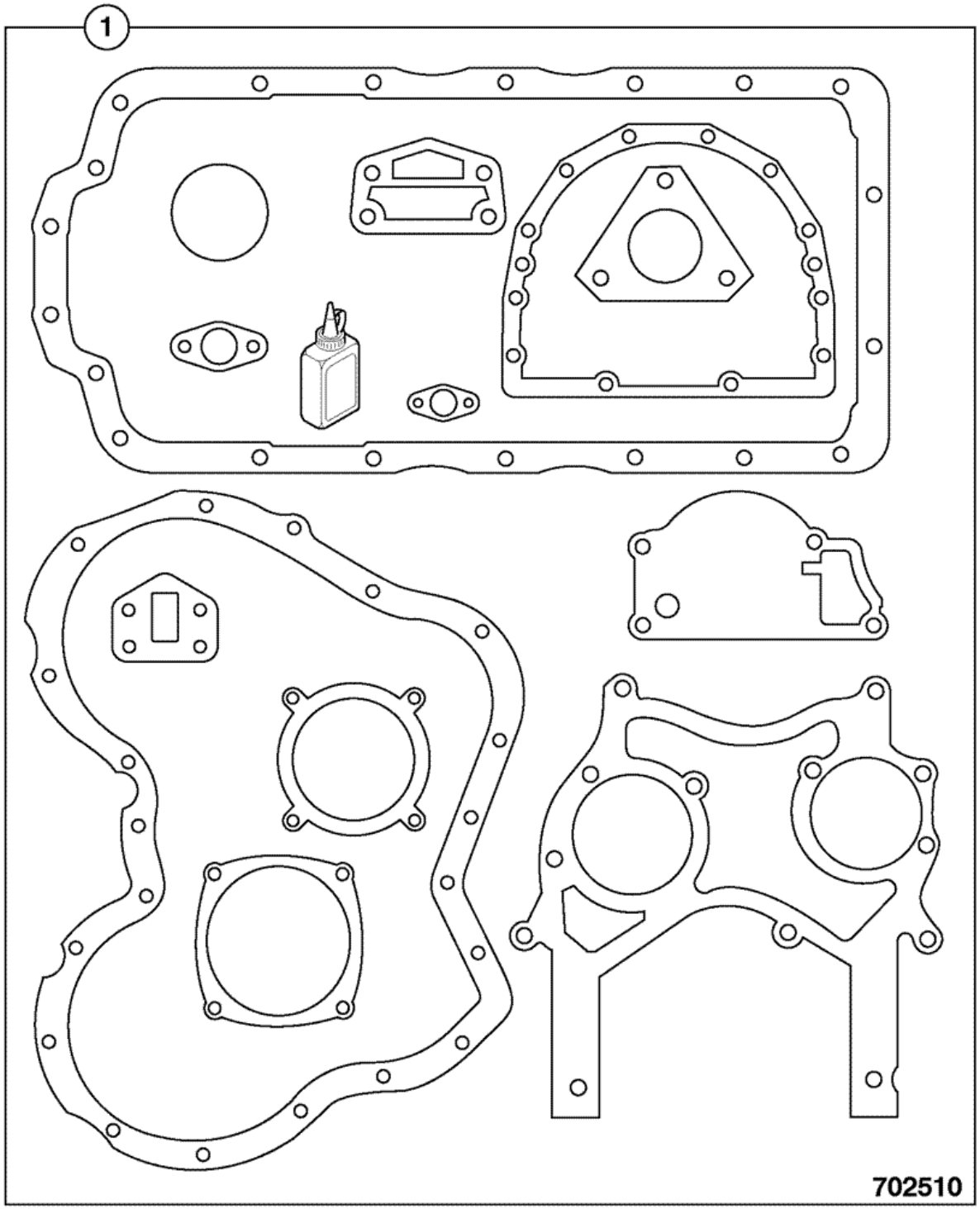

Item	Part #	Change No	Description	Usage Code	QTY
1	02/103689		Gasket set lower		1

Product Catalog \ CONSTRUCTION \ NORTH AMERICA \ CONSTRUCTION / INDUSTRIAL \ BACKHOE LOADER 3CX,4CX,214,215,217 \ 3C 14 (84HP) , Made in Brazil with Dieselmax/IESA Engine 9812/0080 \ V JCB444 ENGINE INSTALLATION COMPONENTS \ V46 RADIATOR FITTINGS & MOUNTINGS

9812/0080 V46-11-1 RADIATOR NON CAC, FITTINGS & MOUNTINGS, 2WS - 20" FAN

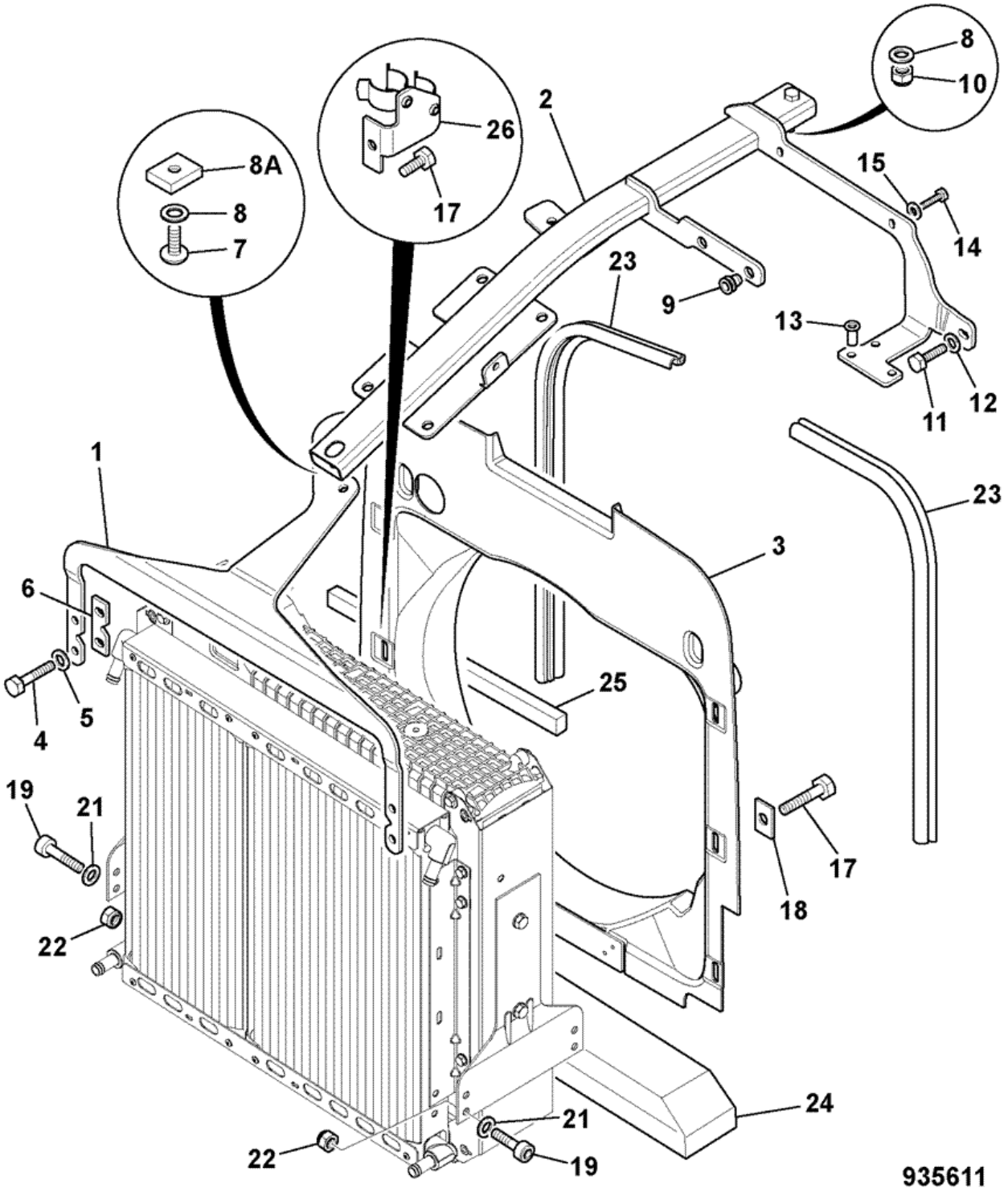

Item	Part #	Change No	Description	Usage Code	QTY
1	332/C8208		Bracket centre beam mounting front 2ws		1

2	128/C1776		Beam centre mounting		1
3	332/C1667		Cowling fan 20inch 2ws		1
4	1315/0307Z		Screw Hexagon M8 X 25		4
5	1420/0007Z		Washer plain M8		4
6	331/48338		Plate spacer		2
7	826/01616		Screw M10 x 25mm hex/skt button head		1
8	1412/0003Z		Washer		1
8A	332/D5851		Block clamping		1
9	826/01105		Nut rivet,M10 open ended		2
10	1370/0303Z		Nut lock M10		1
11	1315/0308Z		Screw M8x30		1
12	1420/0007Z		Washer plain M8		1
13	826/01810		Nut rivet, M6 open end for 5.5 to 8mm plate		3
14	1315/0207Z		Screw M6 x 25mm long		2
15	1411/0001Z		Washer		4
17	1315/0305Z		Screw Hexagon M8 x 20mm long		6
18	123/06362		Washer spreader		5
19	1391/3409Z		Capscrew M10 x 35mm		4
21	1411/0004Z		Washer		8
22	1370/0303Z		Nut lock M10		4
23	926/51301		Strip sealing L=640mm		2
24	331/36060		Seal anti-recirculation		1
25	331/52016		Seal anti-recirculation		2
26	128/D5873		Clip hose		1

Product Catalog \ CONSTRUCTION \ NORTH AMERICA \ CONSTRUCTION / INDUSTRIAL \ BACKHOE LOADER 3CX,4CX,214,215,217 \ 3C 14 (84HP) , Made in Brazil with Dieselmax/IESA Engine 9812/0080 \ V JCB444 ENGINE INSTALLATION COMPONENTS \ V47 COMBINATION COOLERS

9812/0080 V47-1-1 COMBINATION COOLER, 2WS ASSEMBLY

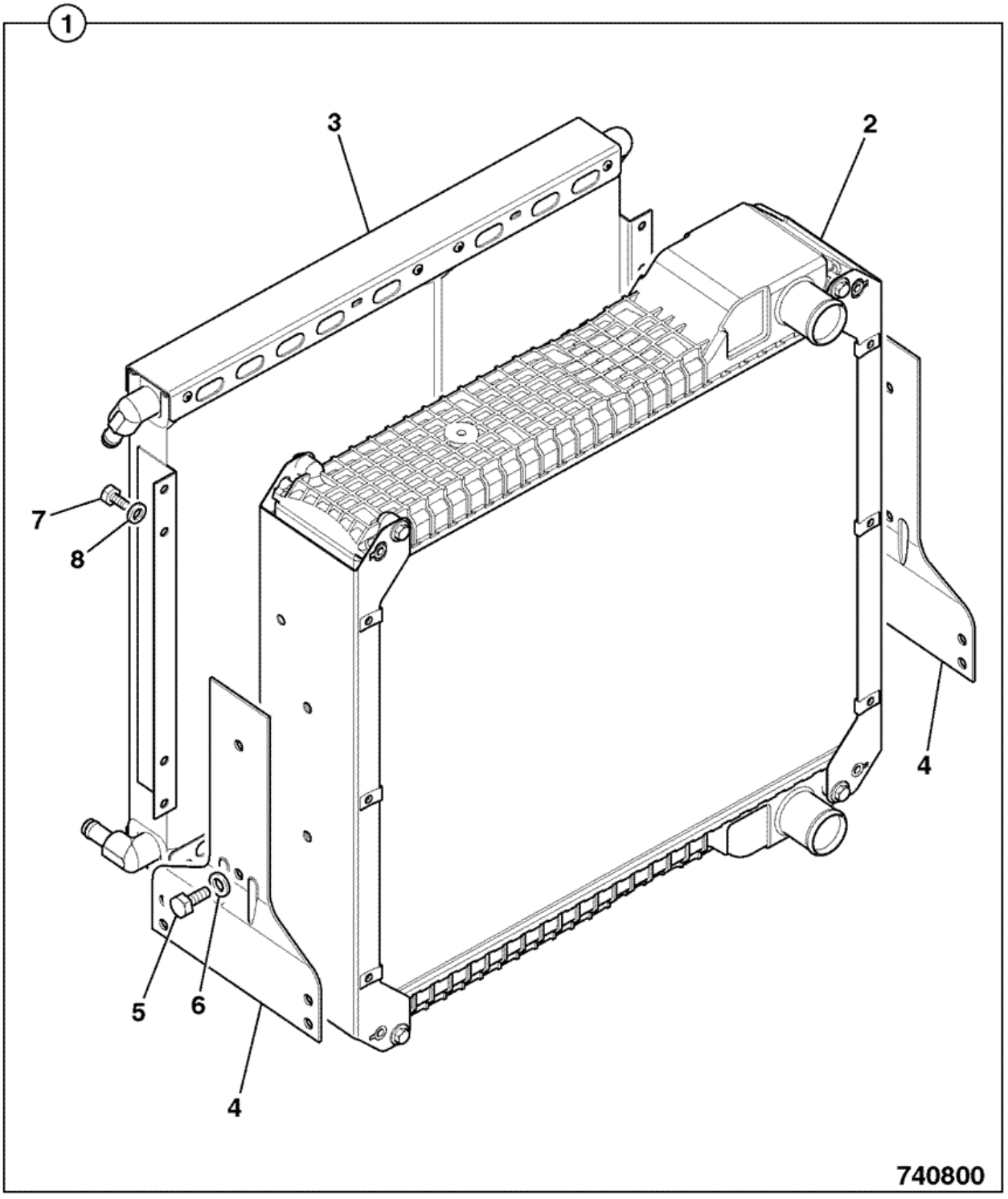

Item	Part #	Change No	Description	Usage Code	QTY
1	128/14326		Cooler assembly 5row 2ws non CAC		1

2	:30/915200		Radiator assembly, 5row-9fpi Blue spot		1
3	:30/925615		Cooler oil, double 14plates + 21 plates		1
4	:30/926257		Bracket radiator mounting		2
5	:30/926035		Bolt		4
6	:30/926036		Washer		4
7	1315/0301Z		Screw hex head M8 X 12		8
8	826/00846		Nut 'u'		8

Product Catalog \ CONSTRUCTION \ NORTH AMERICA \ CONSTRUCTION / INDUSTRIAL \ BACKHOE LOADER 3CX,4CX,214,215,217 \ 3C 14 (84HP) , Made in Brazil with Dieselmax/IESA Engine 9812/0080 \ V JCB444 ENGINE INSTALLATION COMPONENTS \ V49 FRONT END DRIVE

9812/0080 V49-20-1 LOWER IDLER PULLEY, SMALL

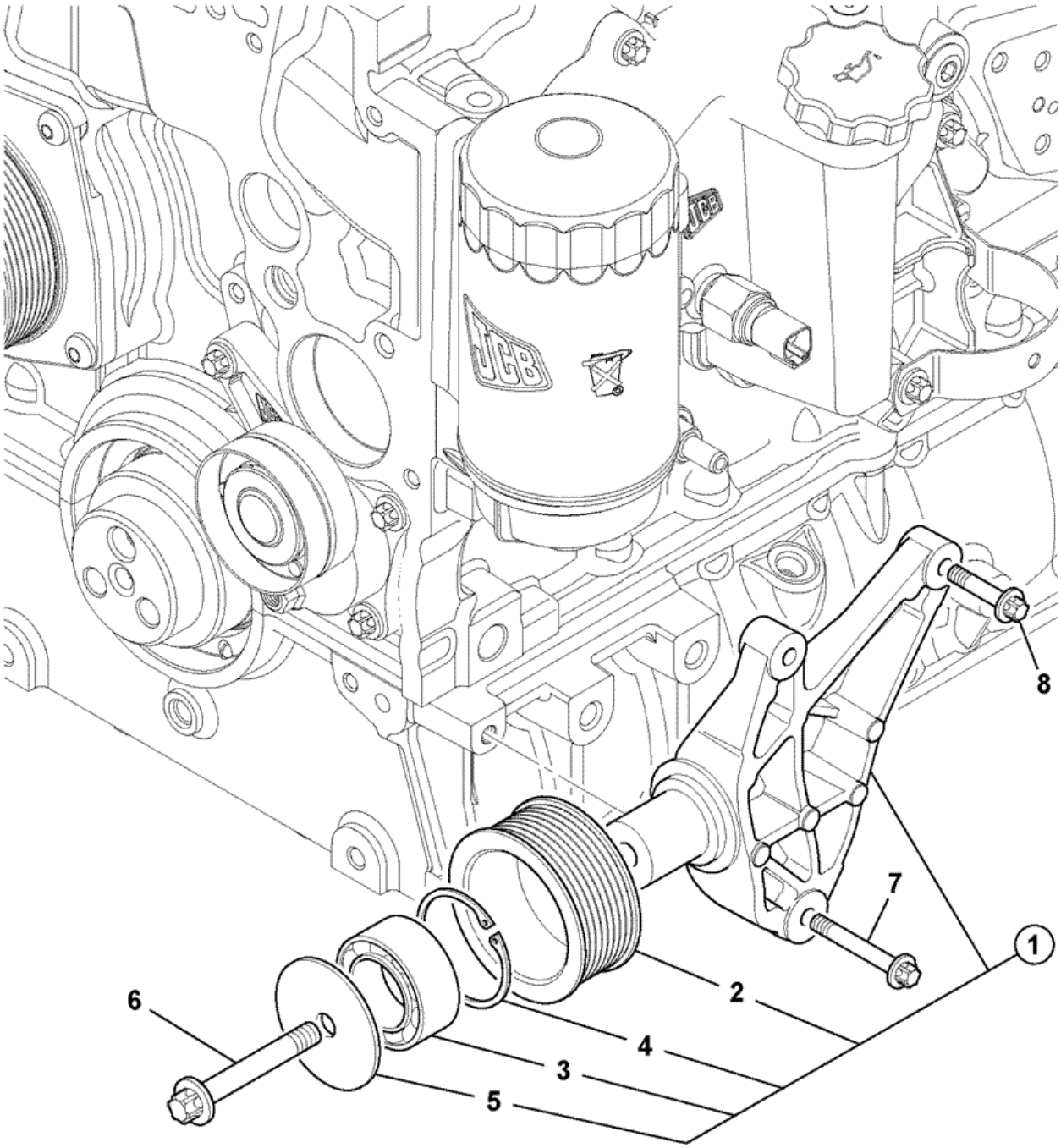

736420

Item	Part #	Change No	Description	Usage Code	QTY
1	320/08586		Pulley lower idler assembly		1
2	:NSP		None serviced part		1

3	:320/08595		Bearing idler pulley		1
4	:320/08594		Circlip		1
5	:320/08593		Washer idler retainer		1
6	826/10613		Screw flanged M10 X 50		1
7	1319/0309Z		Screw star drive M8 x 35		2
8	1319/0311Z		Screw star drive M8 x 45		1

Product Catalog \ CONSTRUCTION \ NORTH AMERICA \ CONSTRUCTION / INDUSTRIAL \ BACKHOE LOADER 3CX,4CX,214,215,217 \ 3C 14 (84HP) , Made in Brazil with Dieselmax/IESA Engine 9812/0080 \ V JCB444 ENGINE INSTALLATION COMPONENTS \ V51 FUEL SEDIMENT FILTERS

9812/0080 V51-5-1 FILTER, FUEL SEDIMENT, 2WS & AWS

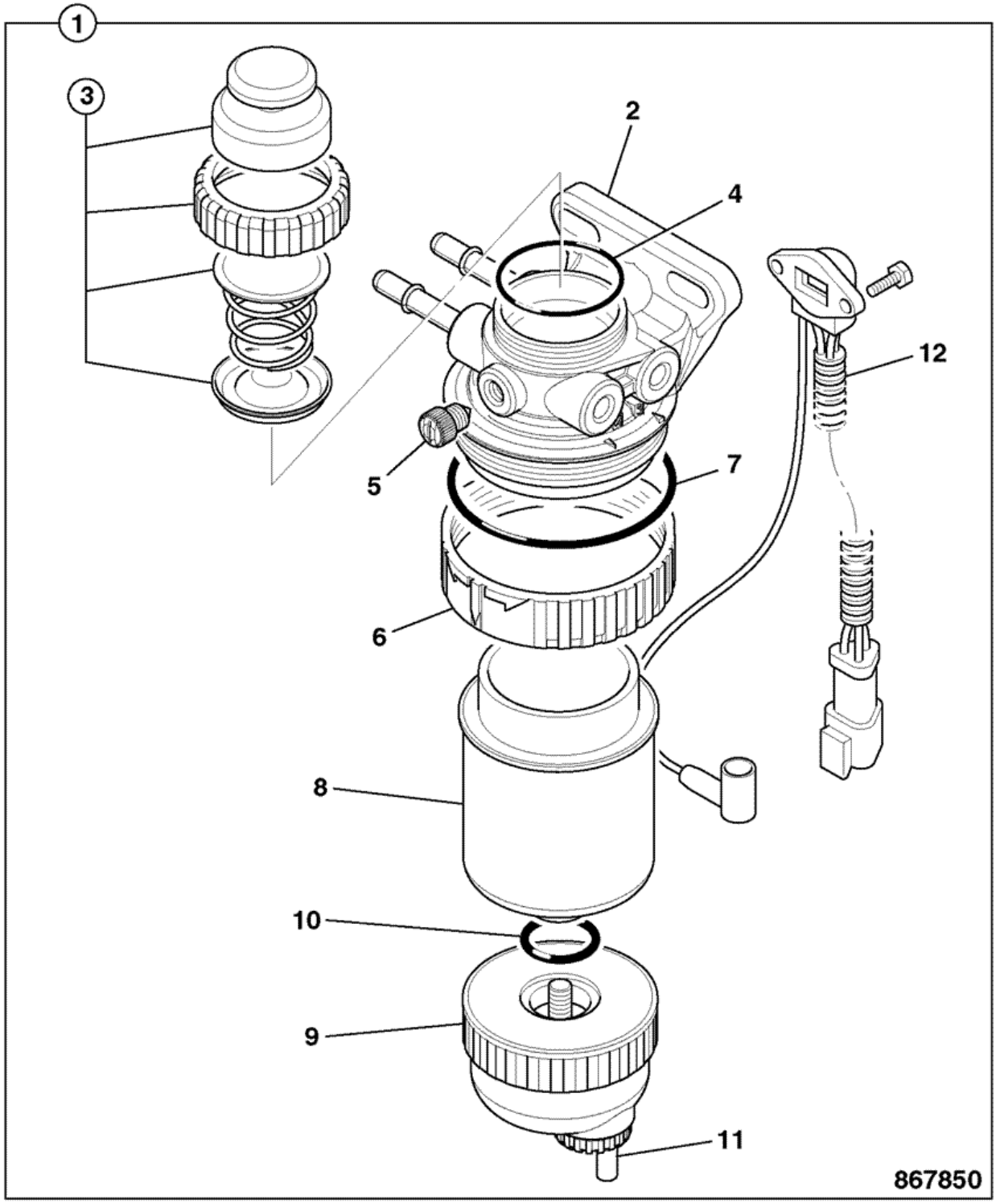

Item	Part #	Change No	Description	Usage Code	QTY
1	32/925914		Filter fuel sediment 30m reverse flow		1
2	:NSP		None serviced part		1

3	:32/926045		Kit-hand primer reverse flow		1
4	:32/925906		Seal		1
5	:32/925973		O Ring		1
6	:32/921002		Ring retaining		1
7	:32/921003		Seal dust		1
8	:32/925915		Element fuel filter reverse flow		1
9	:32/925708		Bowl assembly		1
10	:32/925733		Seal o'ring		1
11	:32/925818		Kit-drain valve c/w wif sensor & seal		1
12	:32/925709		Kit-sensor water in fuel		1

Product Catalog \ CONSTRUCTION \ NORTH AMERICA \ CONSTRUCTION / INDUSTRIAL \ BACKHOE LOADER 3CX,4CX,214,215,217 \ 3C 14 (84HP) , Made in Brazil with Dieselmax/IESA Engine 9812/0080 \ V JCB444 ENGINE INSTALLATION COMPONENTS \ V57 ENGINE OIL DRAIN

9812/0080 V57-1-1 ENGINE OIL DRAIN

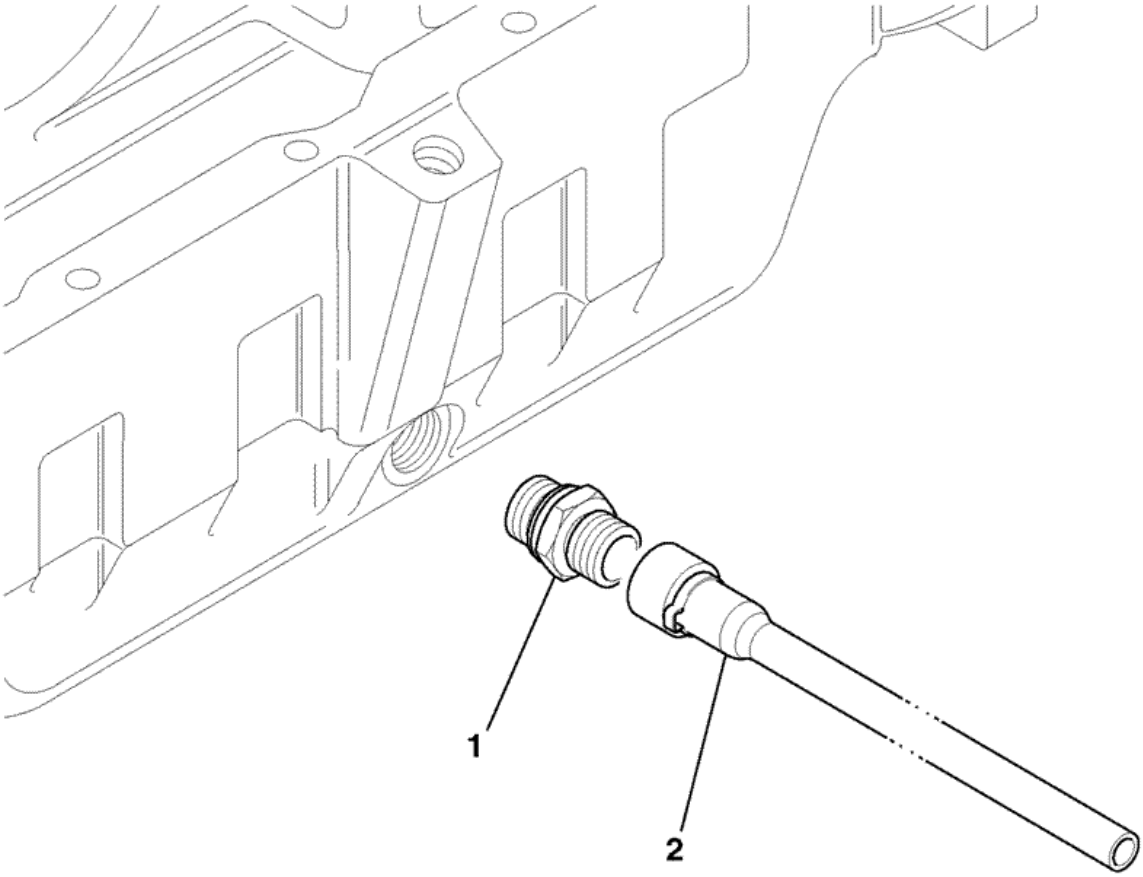

873161

Item	Part #	Change No	Description	Usage Code	QTY
1	25/222662		Plug oil drain		1
2	332/C3428		Tube oil sump drain		1

Product Catalog \ CONSTRUCTION \ NORTH AMERICA \ CONSTRUCTION / INDUSTRIAL \ BACKHOE LOADER 3CX,4CX,214,215,217 \ 3C PLUS (91HP) , Made in Brazil with Dieselmax/IESA Engine 9812/0080 \ V JCB444 ENGINE INSTALLATION COMPONENTS \ V42 ENGINE MOUNTINGS

9812/0080 V42-1-1 ENGINE MOUNTINGS, 2WS

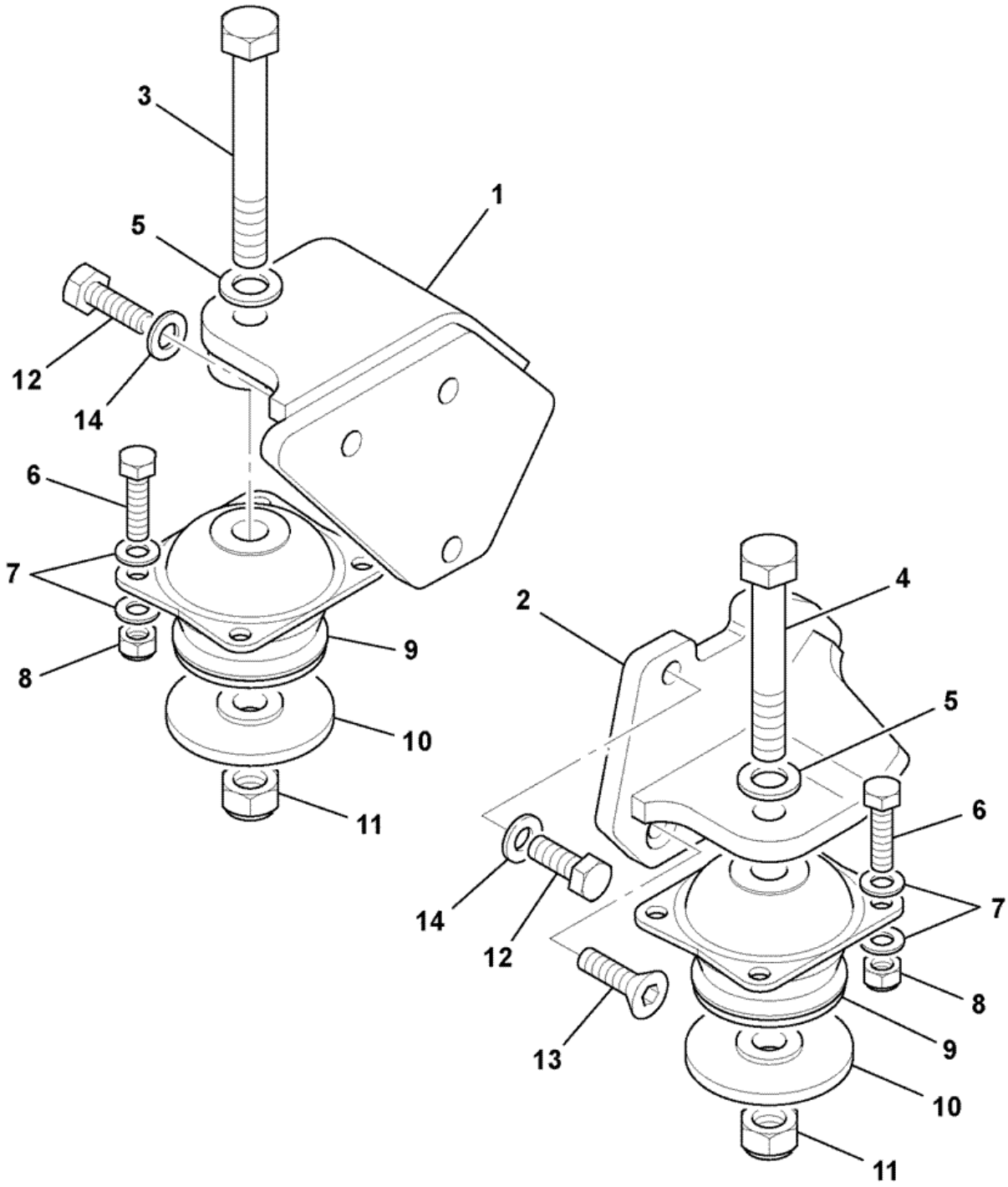

742160

Item	Part #	Change No	Description	Usage Code	QTY
1	335/08918		Bracket engine mounting right hand		1
2	335/08805		Bracket engine mounting left hand		1

3	1315/3724Z		Bolt M16 x 140		1
4	1315/3722Z		Bolt M16 x 120		1
5	1420/0011Z		Washer M16 plain		2
6	1315/3410Z		Bolt M10 x 40		8
7	1420/0008Z		Washer Plain M10		16
8	1370/0303Z		Nut lock M10		8
9	331/40347		Mounting resilient		2
10	829/31165	Superseded	Washer rebound 16x80x9.5		2
10	829/31272		Washer rebound 16x75x8		2
11	1370/0603Z		Nut M16		2
12	1315/0509Z		Screw M12 x 35mm		6
13	1420/0009Z		Washer Plain M12		6
14	826/11274		Screw M12x35 countersunk head		2

Product Catalog \ CONSTRUCTION \ NORTH AMERICA \ CONSTRUCTION / INDUSTRIAL \ BACKHOE LOADER 3CX,4CX,214,215,217 \ 3C PLUS (91HP) , Made in Brazil with Dieselmax/IESA Engine 9812/0080 \ V JCB444 ENGINE INSTALLATION COMPONENTS \ V43 AIR FILTERS

9812/0080 V43-1-1 FILTER, AIR, 2WS

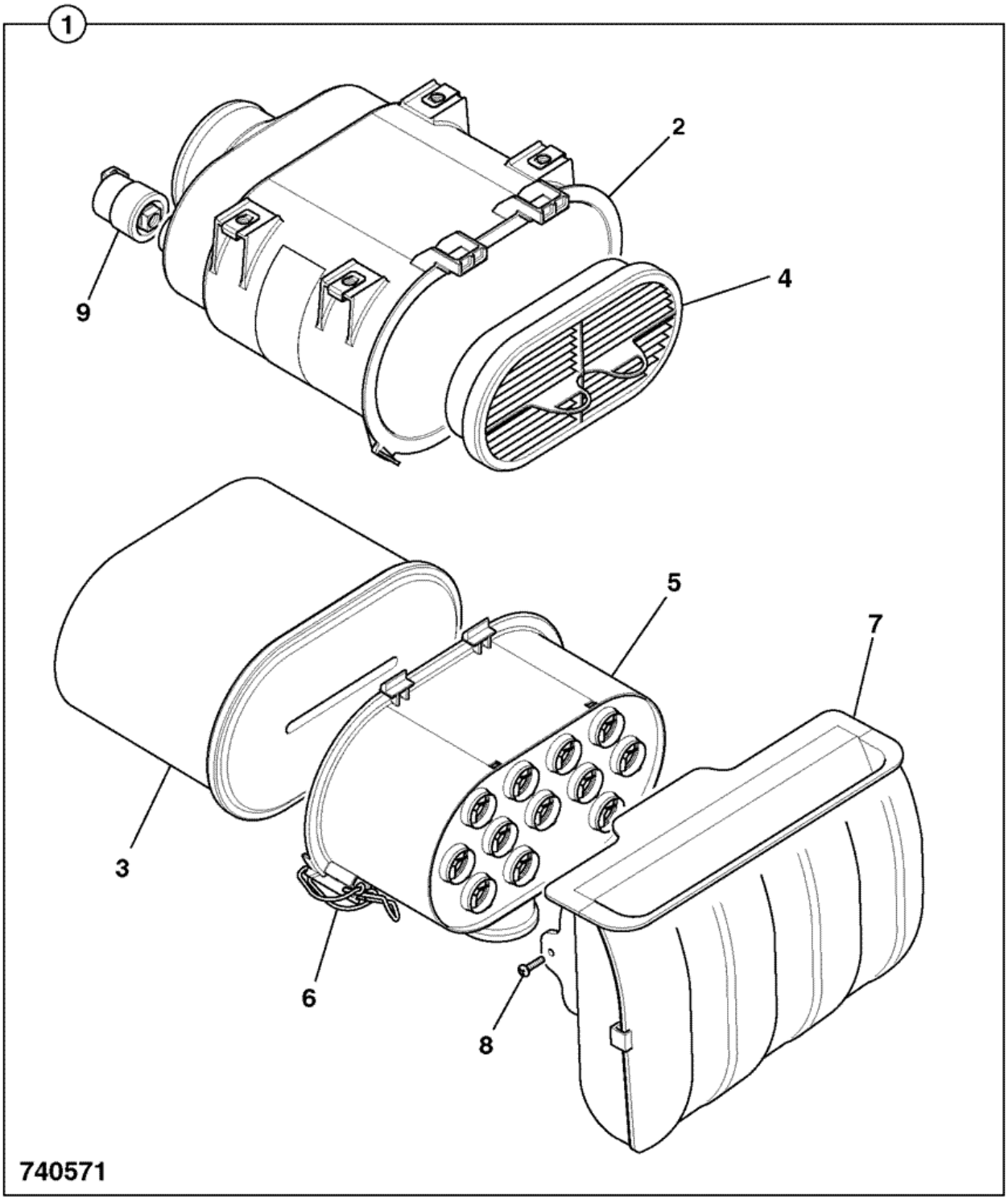

Item	Part #	Change No	Description	Usage Code	QTY
1	32/925684		Filter air assembly		1
2	:N.S.P		None serviced part		1

3	:32/925682		Element air filter main		1
4	:32/925683		Element air filter safety		1
5	:580/12174		Filter pre-cleaner		1
6	:32/925364		Clip overcentre		2
7	:32/925716		Filter air intake		1
8	:32/925711		Screw		2
9	:32/925686		Switch vacuum sensor		1

Product Catalog \ CONSTRUCTION \ NORTH AMERICA \ CONSTRUCTION / INDUSTRIAL \ BACKHOE LOADER 3CX,4CX,214,215,217 \ 3C PLUS (91HP) , Made in Brazil with Dieselmax/IESA Engine 9812/0080 \ V JCB444 ENGINE INSTALLATION COMPONENTS \ V43 AIR FILTERS

9812/0080 V43-2-1 FILTER, AIR, 2WS

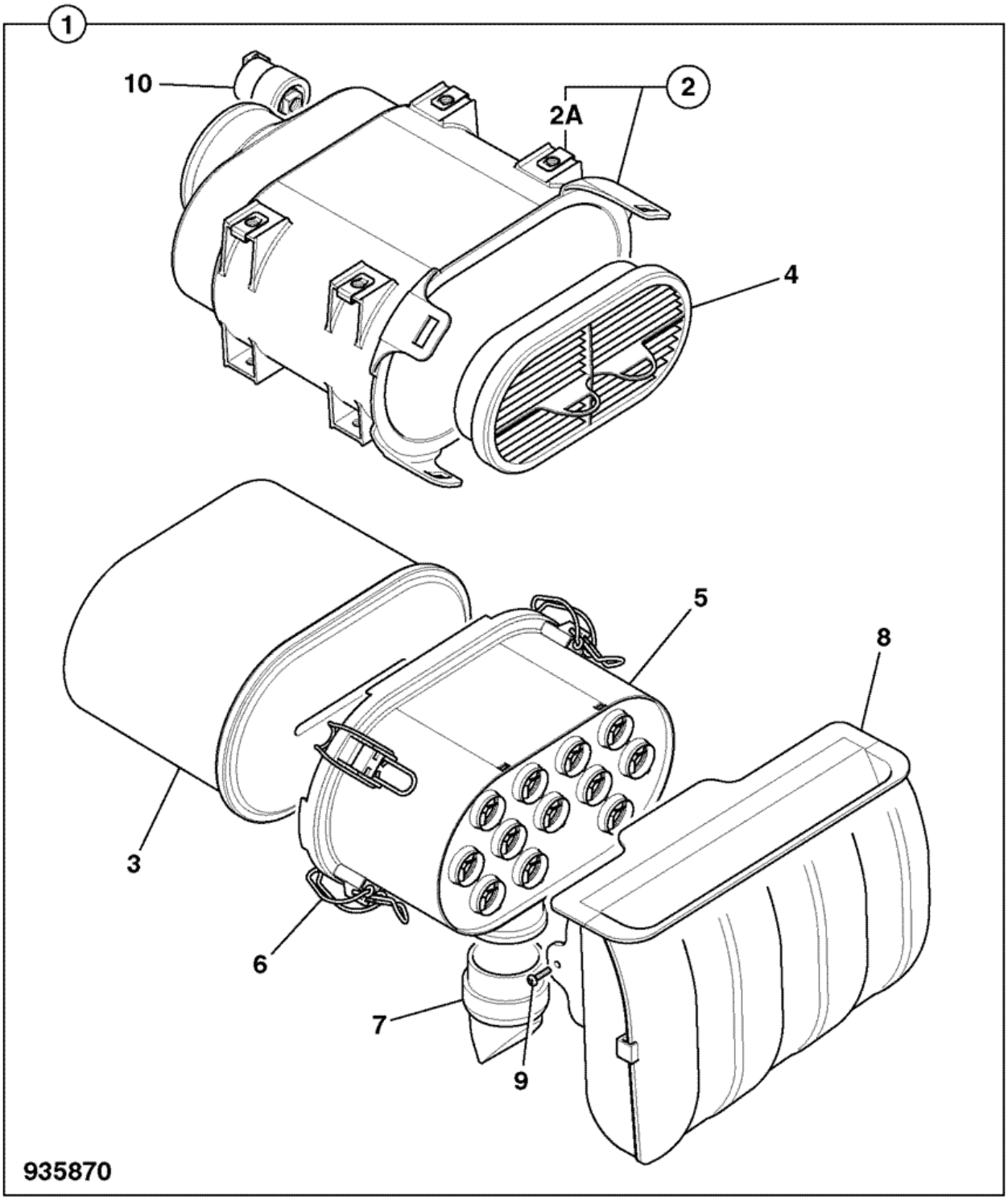

Item	Part #	Change No	Description	Usage Code	QTY
1	32/926084		Filter air assembly		1
2	:N.S.P		None serviced part		1

2A	:32/926114		Nut 'U'		1
3	:32/925682		Element air filter main		1
4	:32/925683		Element air filter safety		1
5	:32/926113		Filter pre-cleaner		1
6	:32/925364		Clip overcentre		2
7	:32/926115	Superseded	Valve vacuator		1
7	:332/D6935		Valve vacuator		1
8	:32/925716		Filter air intake		1
9	:32/925711		Screw		2
10	:32/925686		Switch vacuum sensor		1

Product Catalog \ CONSTRUCTION \ NORTH AMERICA \ CONSTRUCTION / INDUSTRIAL \ BACKHOE LOADER 3CX,4CX,214,215,217 \ 3C PLUS (91HP) , Made in Brazil with Dieselmax/IESA Engine 9812/0080 \ V JCB444 ENGINE INSTALLATION COMPONENTS \ V44 AIR INDUCTION HOSES

9812/0080 V44-4-1 AIR INDUCTION HOSES, 2WS TURBO

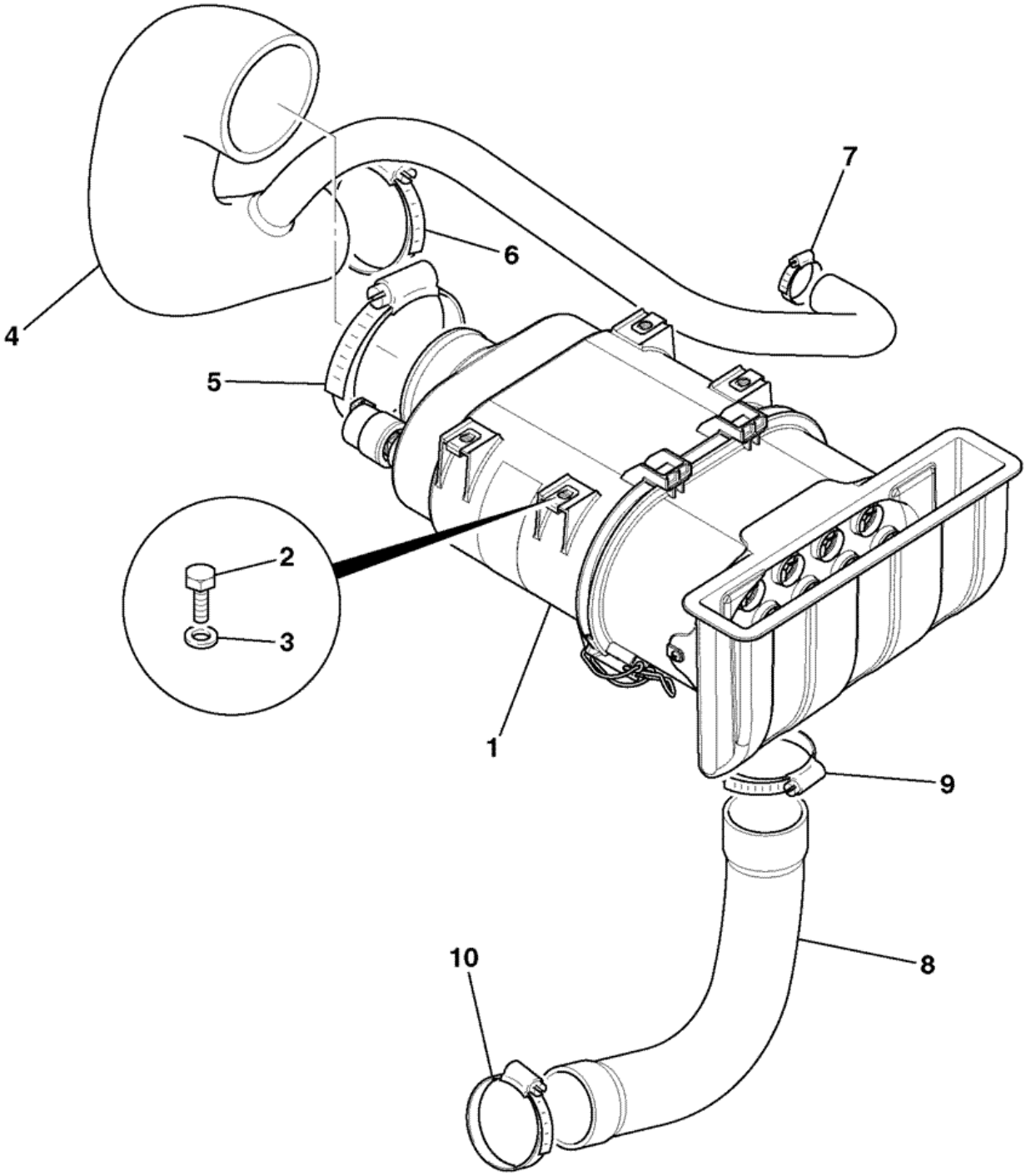

788340

Item	Part #	Change No	Description	Usage Code	QTY
1	.		'See Remark' *See Index*		1

2	1315/0205Z		Bolt		4
3	1420/0006Z		Washer M6		4
4	834/11203		Hose air induction 2ws turbo		1
5	2201/0016		Clip jubilee		1
6	2201/0014		Clip jubilee		1
7	2201/0007		Clip jubilee		1
8	834/11028		Hose air scavenge 2ws		1
9	2201/0012		Clip jubilee		1
10	2201/0013		Clip jubilee		1

Product Catalog \ CONSTRUCTION \ NORTH AMERICA \ CONSTRUCTION / INDUSTRIAL \ BACKHOE LOADER 3CX,4CX,214,215,217 \ 3C PLUS (91HP) , Made in Brazil with Dieselmax/IESA Engine 9812/0080 \ V JCB444 ENGINE INSTALLATION COMPONENTS \ V44 AIR INDUCTION HOSES

9812/0080 V44-6-1 AIR INDUCTION HOSES, 2WS TURBO

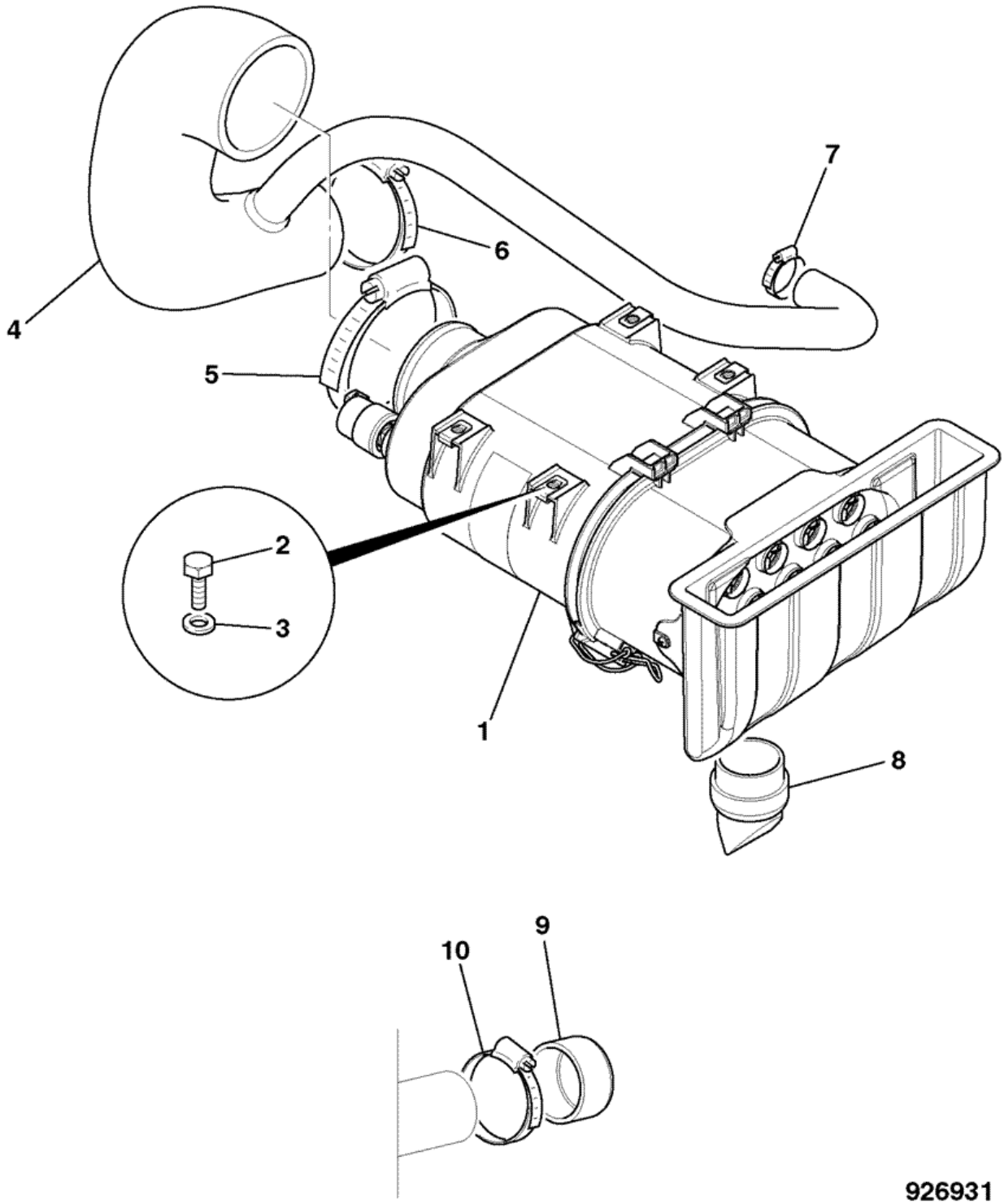

Item	Part #	Change No	Description	Usage Code	QTY
1	.		'See Remark' *See Index*		1

2	1315/0205Z		Bolt		4
3	1420/0006Z		Washer M6		4
4	834/11383		Hose air induction turbo 2WS		1
5	2201/0016		Clip jubilee		1
6	2201/0014		Clip jubilee		1
7	2201/0007		Clip jubilee		1
8	332/C4909		Valve vacuum dump		1
9	835/10114		Cap PVC flexible		1
10	2201/0012		Clip jubilee		2

Product Catalog \ CONSTRUCTION \ NORTH AMERICA \ CONSTRUCTION / INDUSTRIAL \ BACKHOE LOADER 3CX,4CX,214,215,217 \ 3C 14 (84HP) , Made in Brazil with Dieselmax/IESA Engine 9812/0080 \ V JCB444 ENGINE INSTALLATION COMPONENTS \ V45 EXHAUST SYSTEMS

9812/0080 V45-1-2 SILENCER & EXTENSION, 2WS NAT/ASP

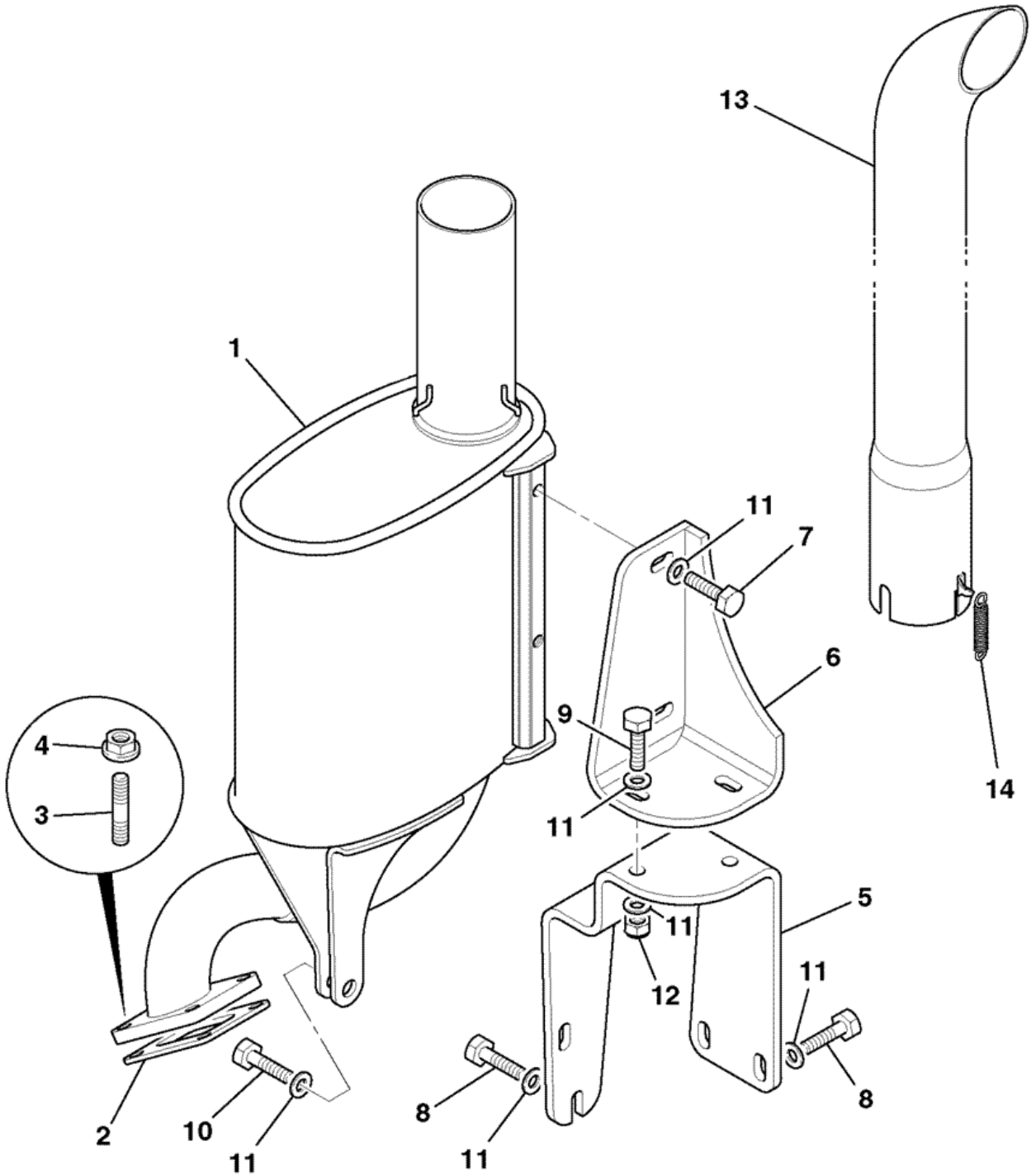

742684

Item	Part #	Change No	Description	Usage Code	QTY
1	331/60549		Silencer exhaust		1

2	320/06006		Gasket		1
3	320/07063		Stud M8 X 1.25		4
4	02/291116		Nut		4
5	331/44900		Bracket exhaust mounting		1
6	331/55522		Bracket exhaust mounting		1
7	1315/0407Z		Bolt M10x25		2
8	1315/0408Z		Bolt M10 x 30		4
9	1315/0409Z		Screw M10x35mm		2
10	1315/0410Z		Bolt M10 x 40		1
11	1420/0008Z		Washer Plain M10		11
12	1370/0303Z		Nut lock M10		2
13	331/53874		Pipe exhaust extension		1
14	814/10177		Spring extension		2

Product Catalog \ CONSTRUCTION \ NORTH AMERICA \ CONSTRUCTION / INDUSTRIAL \ BACKHOE LOADER 3CX,4CX,214,215,217 \ 3C 14 (84HP) , Made in Brazil with Dieselmax/IESA Engine 9812/0080 \ V JCB444 ENGINE INSTALLATION COMPONENTS \ V46 RADIATOR FITTINGS & MOUNTINGS

9812/0080 V46-1-3 RADIATOR, FITTINGS & MOUNTINGS, 2WS

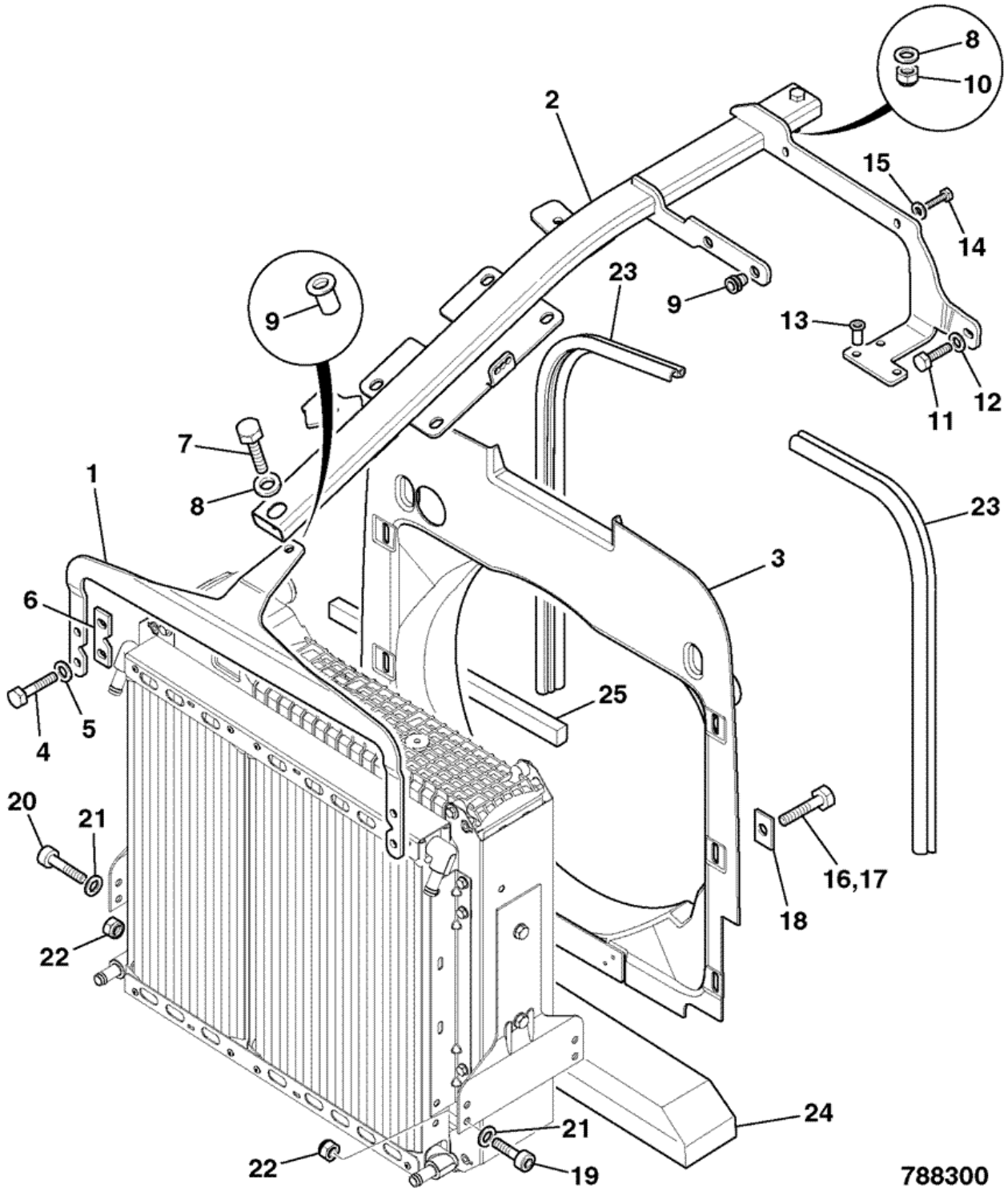

Item	Part #	Change No	Description	Usage Code	QTY
1	331/44276		Bracket centre beam mounting front 2WS		1

2	335/10222		Beam centre mounting		1
3	346/00104	<M.TBA	Cowling fan 20" 2ws		1
3	332/C1667	>M.TBA	Cowling fan 20inch 2ws		1
4	1315/0307Z		Screw Hexagon M8 X 25		4
5	1420/0007Z		Washer plain M8		4
6	331/48338		Plate spacer		2
7	1315/0414Z		Bolt		1
8	1420/0008Z		Washer Plain M10		2
9	826/01105		Nut rivet,M10 open ended		3
10	1370/0303Z		Nut lock M10		1
11	1315/0308Z		Screw M8x30		1
12	1420/0007Z		Washer plain M8		1
13	826/01810		Nut rivet, M6 open end for 5.5 to 8mm plate		1
14	1315/0207Z		Screw M6 x 25mm long		2
15	1411/0001Z		Washer		4
16	1315/0307Z		Screw Hexagon M8 X 25		4
17	1315/0305Z		Screw Hexagon M8 x 20mm long		2
18	123/06362		Washer spreader		6
19	1391/3409Z		Capscrew M10 x 35mm		2
20	1391/3410Z		Capscrew		2
21	1411/0004Z		Washer		8
22	1370/0303Z		Nut lock M10		4
23	926/51301		Strip sealing L=640mm		2
24	331/36060		Seal anti-recirculation		1
25	331/52016		Seal anti-recirculation		2

Product Catalog \ CONSTRUCTION \ NORTH AMERICA \ CONSTRUCTION / INDUSTRIAL \ BACKHOE LOADER 3CX,4CX,214,215,217 \ 3C 14 (84HP) , Made in Brazil with Dieselmax/IESA Engine 9812/0080 \ V JCB444 ENGINE INSTALLATION COMPONENTS \ V47 COMBINATION COOLERS

9812/0080 V47-11-1 COMBINATION COOLER, ASSEMBLY 2WS 20" FAN, NON CAC

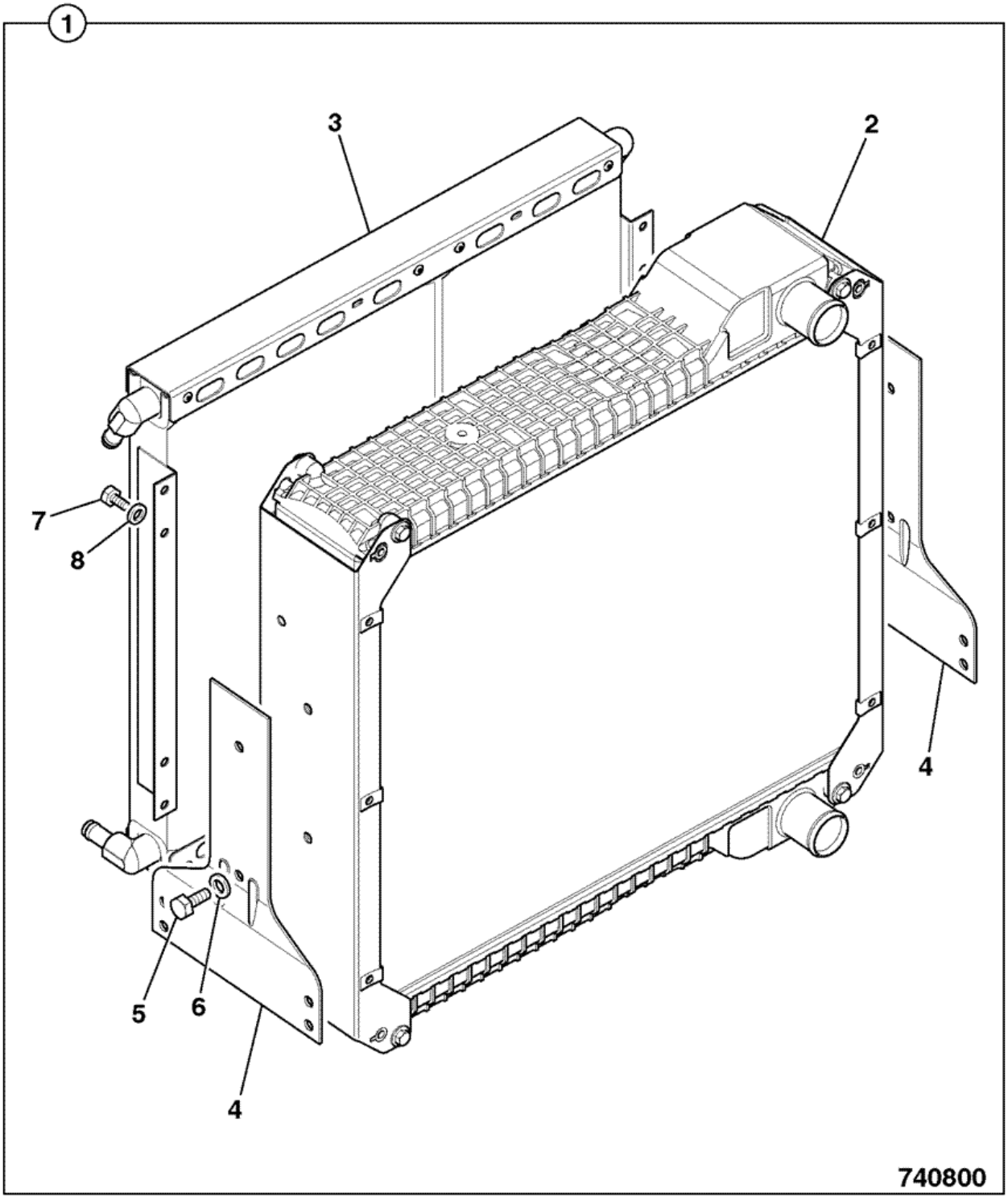

Item	Part #	Change No	Description	Usage Code	QTY
1	128/14326		Cooler assembly 5row 2ws non CAC		1

2	:30/915200		Radiator assembly, 5row-9fpi Blue spot		1
3	:30/925615		Cooler oil, double 14plates + 21 plates		1
4	:30/926257		Bracket radiator mounting		2
5	:30/926035		Bolt		4
6	:30/926036		Washer		4
7	1315/0301Z		Screw hex head M8 X 12		8
8	826/00846		Nut 'u'		8

9812/0080 V48-11-1 RADIATOR & HOSES, 2WS-20" FAN NON CAC, T2/T3

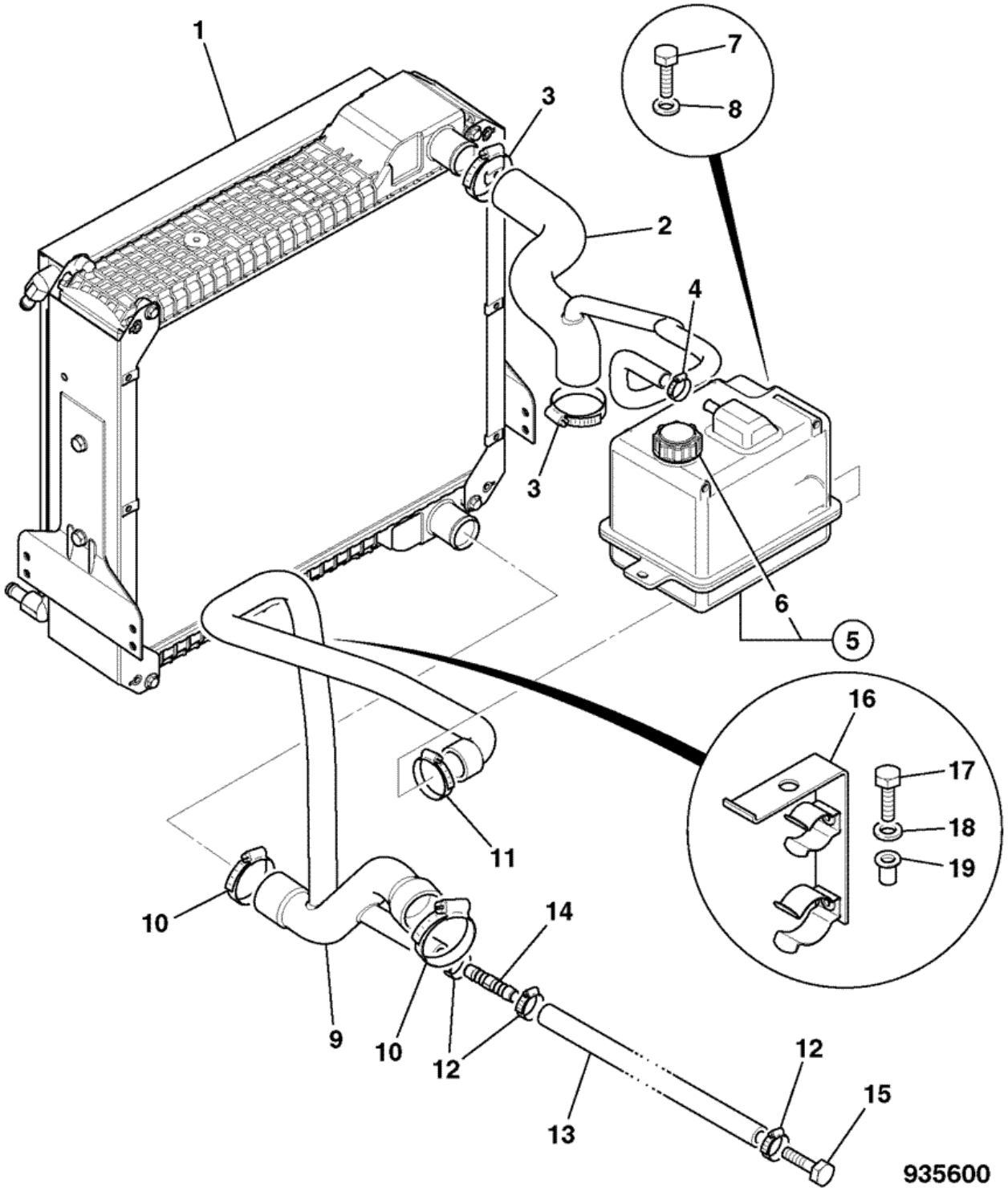

Item	Part #	Change No	Description	Usage Code	QTY
			Cooler assembly 5row 2ws non CAC		

1	128/14326		*For Service Parts, See frame V47-11-1*		1
2	834/11380		Hose radiaor top 2ws		1
3	2201/0011		Clip jubilee		2
4	2201/0005		Clip jubilee		1
5	128/15480		Tank expansion no sensor assembly		1
6	:477/00223		Cap Expansion Bottle		1
7	1315/0310Z		Bolt M8x40		2
8	1420/0007Z		Washer plain M8		2
9	128/C8166		Hose bottom 2ws tier @#		1
10	2201/0012		Clip jubilee		2
11	2201/0010		Clip jubilee		1
12	2201/0006		Clip jubilee		1
13	.		'See Remark' *See Cab Heater Circuit*		1
14	650/10166		Adaptor hose connecter 16mm OD *Heater Builds*		1
15	1315/3714Z		Bolt M16x60 *Heaterless Builds*		1
16	128/15558		Guide hose		1
17	1315/0307Z		Screw Hexagon M8 X 25		1
18	1420/0007Z		Washer plain M8		1
19	826/01102		Nut rivet,M8 open ended		1

Product Catalog \ CONSTRUCTION \ NORTH AMERICA \ CONSTRUCTION / INDUSTRIAL \ BACKHOE LOADER 3CX,4CX,214,215,217 \ 3C 14 (84HP) , Made in Brazil with Dieselmax/IESA Engine 9812/0080 \ V JCB444 ENGINE INSTALLATION COMPONENTS \ V48 RADIATOR & HOSES

9812/0080 V48-5-1 RADIATOR & HOSES, 2WS BUILDS

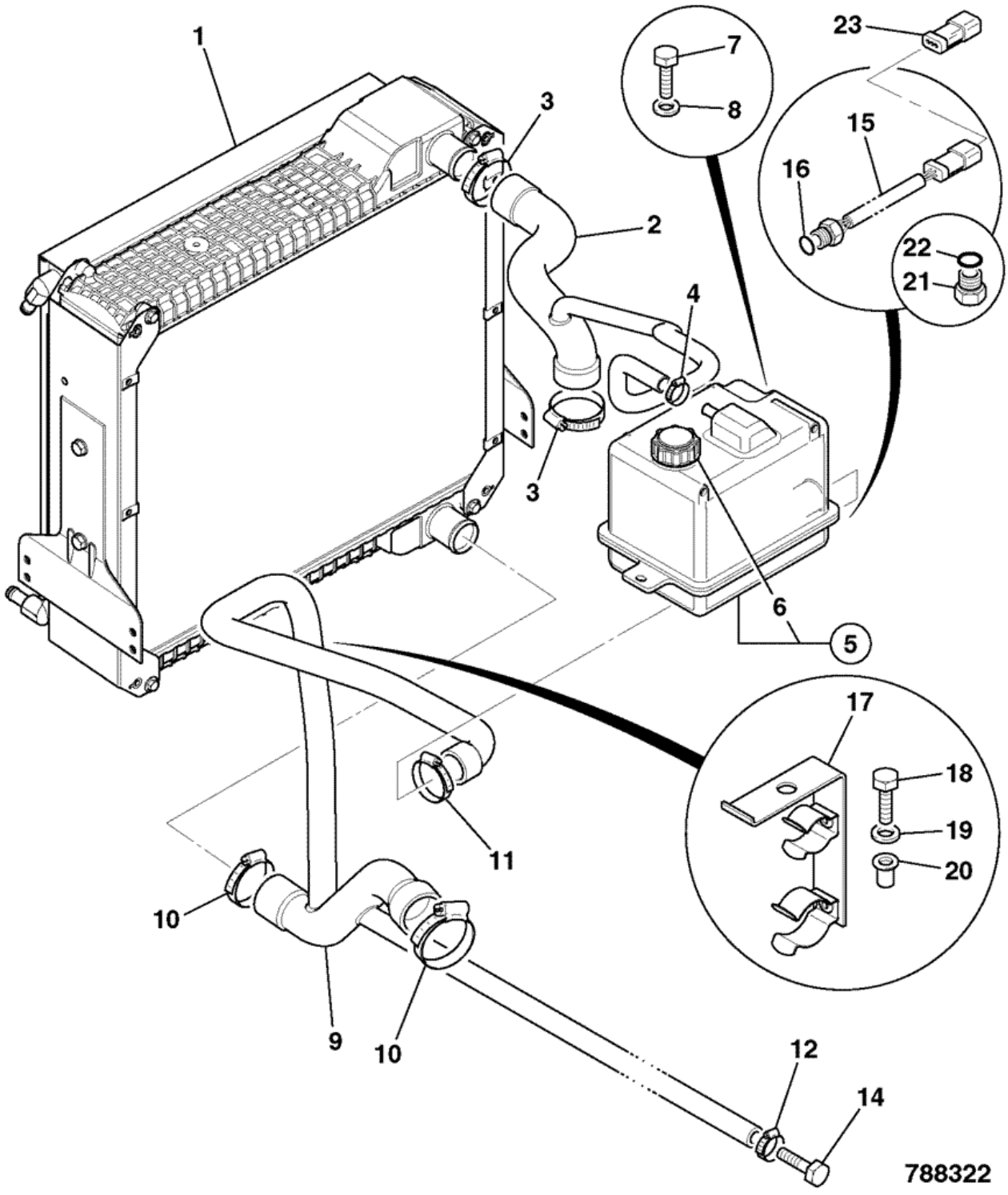

Item	Part #	Change No	Description	Usage Code	QTY
1	128/14326		Cooler assembly 5row 2ws non CAC *For Service Parts, See frame V47-1-1*		1

2	834/11195		Hose radiator top 2ws		1
3	2201/0011		Clip jubilee		2
4	2201/0005		Clip jubilee		1
5	128/15479		Tank expansion for sensor assembly		1
6	:477/00223		Cap Expansion Bottle		1
7	1315/0310Z		Bolt M8x40		2
8	1420/0007Z		Washer plain M8		2
9	834/10991		Hose radiator bottom 2ws		1
10	2201/0012		Clip jubilee		2
11	2201/0010		Clip jubilee		1
12	2201/0006		Clip jubilee		1
13	2201/0005		Clip jubilee		1
14	1315/3714Z		Bolt M16x60		1
15	701/80513	<M.TBA	Sensor water level *see bulletin 2/487*		1
16	:828/10310	<M.TBA	O Ring		1
17	128/15558		Guide hose		1
18	1315/0307Z		Screw Hexagon M8 X 25		1
19	1420/0007Z		Washer plain M8		1
20	826/01102		Nut rivet,M8 open ended		1
21	816/90702	>M.TBA	Plug 1/2"UNF with O-Ring		1
22	:2401/0504	>M.TBA	O Ring		1
23	715/20029	>M.TBA	Plug blanking 3-way deutsch DTM		1

Product Catalog \ CONSTRUCTION \ NORTH AMERICA \ CONSTRUCTION / INDUSTRIAL \ BACKHOE LOADER 3CX,4CX,214,215,217 \ 3C 14 (84HP) , Made in Brazil with Dieselmax/IESA Engine 9812/0080 \ V JCB444 ENGINE INSTALLATION COMPONENTS \ V48 RADIATOR & HOSES

9812/0080 V48-7-1 RADIATOR & HOSES

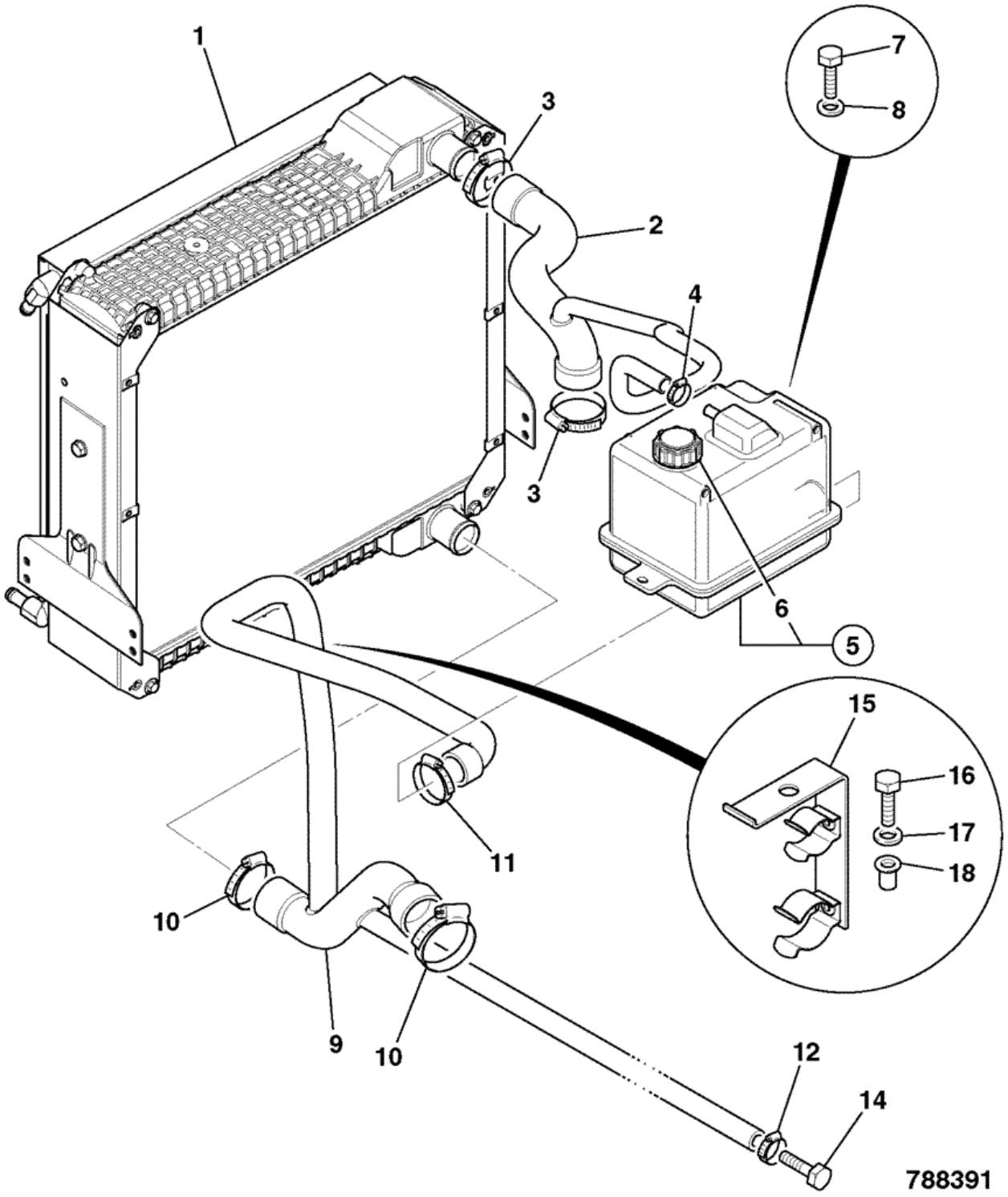

Item	Part #	Change No	Description	Usage Code	QTY
1	128/14326		Cooler assembly 5row 2ws non CAC *For Service Parts, See frame V47-1-1*		1

2	834/11195		Hose radiator top 2ws		1
3	2201/0011		Clip jubilee		2
4	2201/0005		Clip jubilee		1
5	128/15480		Tank expansion no sensor assembly		1
6	:477/00223		Cap Expansion Bottle		1
7	1315/0310Z		Bolt M8x40		2
8	1420/0007Z		Washer plain M8		2
9	834/10991		Hose radiator bottom 2ws		1
10	2201/0012		Clip jubilee		2
11	2201/0010		Clip jubilee		1
12	2201/0006		Clip jubilee		1
13	2201/0005		Clip jubilee		1
14	1315/3714Z		Bolt M16x60		1
15	128/15558		Guide hose		1
16	1315/0307Z		Screw Hexagon M8 X 25		1
17	1420/0007Z		Washer plain M8		1
18	826/01102		Nut rivet,M8 open ended		1

Product Catalog \ CONSTRUCTION \ NORTH AMERICA \ CONSTRUCTION / INDUSTRIAL \ BACKHOE LOADER 3CX,4CX,214,215,217 \ 3C 14 (84HP) , Made in Brazil with Dieselmax/IESA Engine 9812/0080 \ V JCB444 ENGINE INSTALLATION COMPONENTS \ V49 FRONT END DRIVE

9812/0080 V49-1-1 COOLING FAN & SPACER, 2WS BUILDS

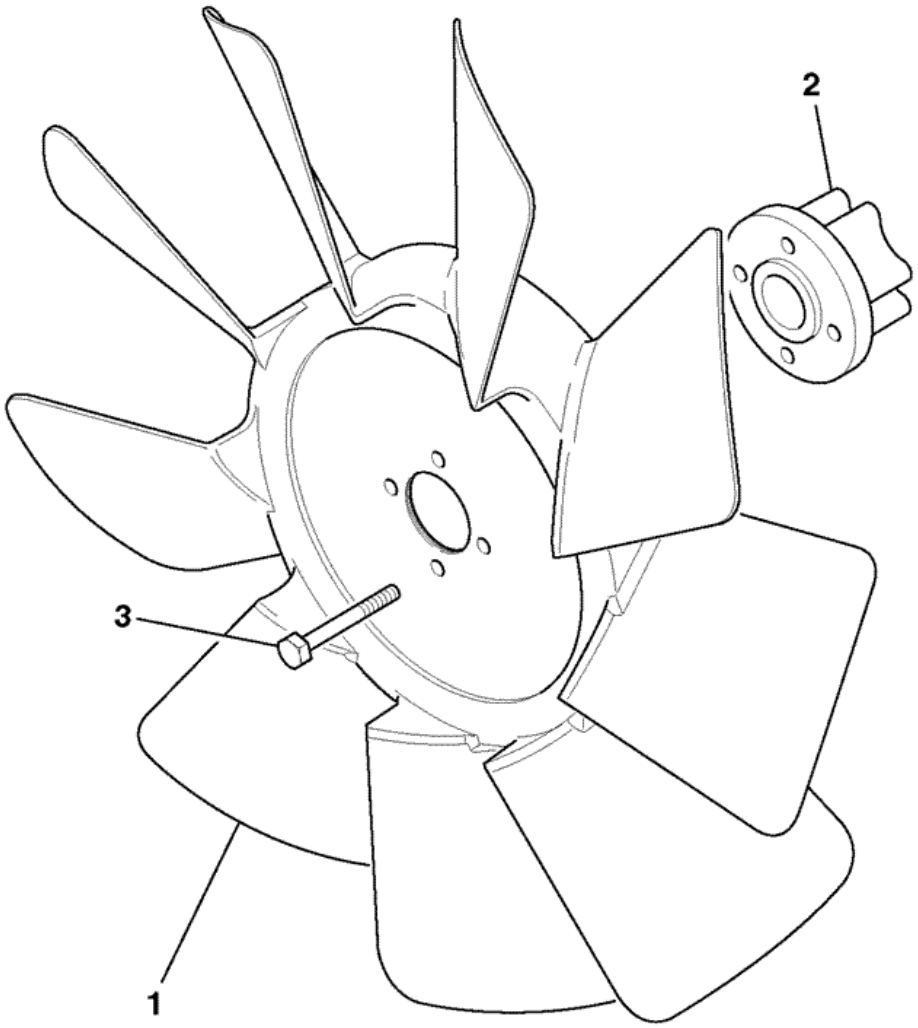

774920

Item	Part #	Change No	Description	Usage Code	QTY
1	30/925526		Fan D=20" puller		1
2	331/47063		Spacer fan T=42.5mm		1

3	1315/3315Z		Bolt star drive M8 x 65mm		4

Product Catalog \ CONSTRUCTION \ NORTH AMERICA \ CONSTRUCTION / INDUSTRIAL \ BACKHOE LOADER 3CX,4CX,214,215,217 \ 3C 14 (84HP) , Made in Brazil with Dieselmax/IESA Engine 9812/0080 \ V JCB444 ENGINE INSTALLATION COMPONENTS \ V49 FRONT END DRIVE

9812/0080 V49-3-1 FRONT END DRIVE, ACCESSORIES, NON AIRCON

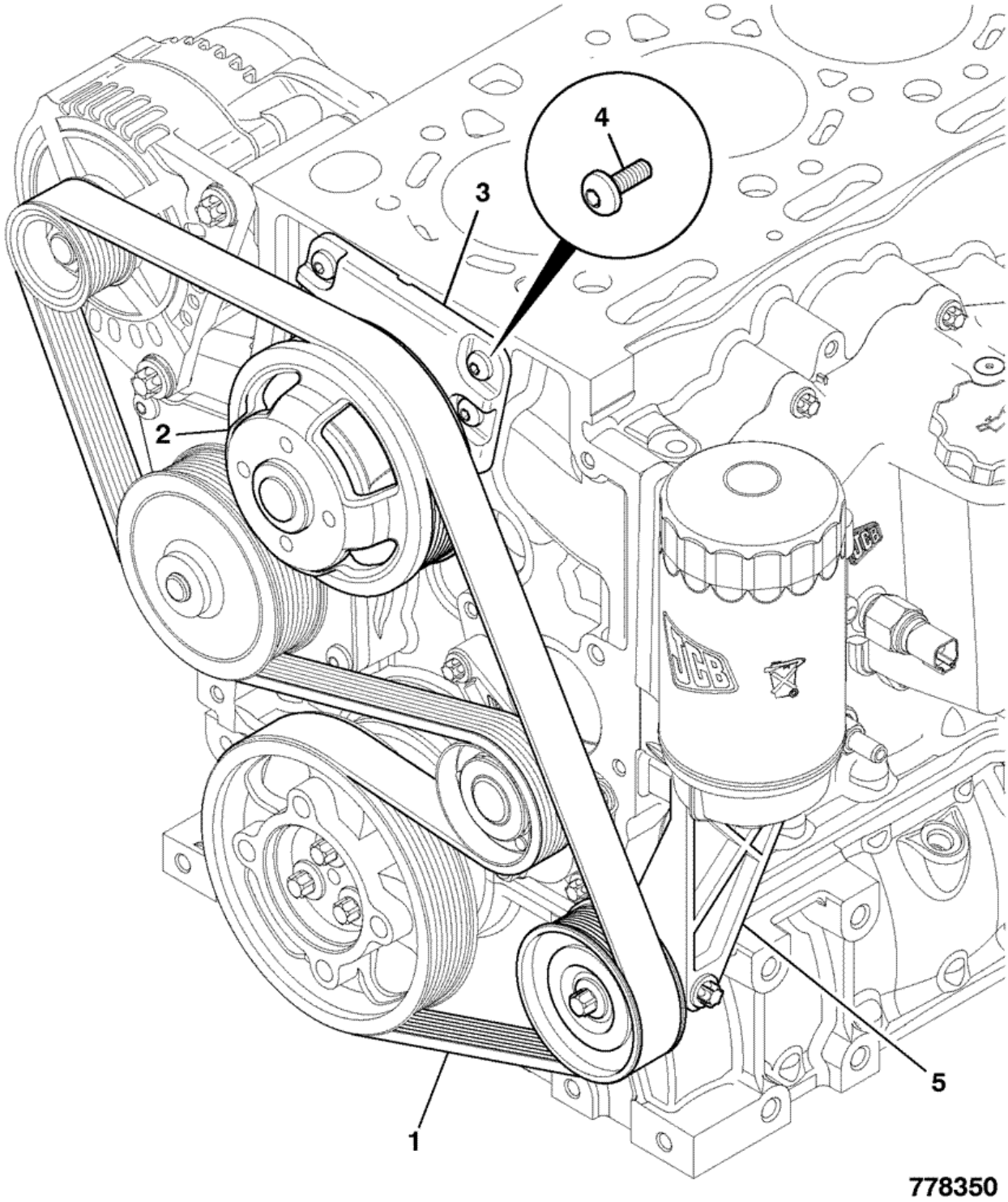

Item	Part #	Change No	Description	Usage Code	QTY
1	320/08598		Belt drive L=1835		1

2	320/08572		Pulley fan, D=166 ratio 1:1		1
3	320/08500		Hub fan drive assembly		1
4	320/08541		Screw pan head M8 x 20		1
5	.		'See Remark' *See frame V49-20-1*		1

Product Catalog \ CONSTRUCTION \ NORTH AMERICA \ CONSTRUCTION / INDUSTRIAL \ BACKHOE LOADER 3CX,4CX,214,215,217 \ 3C 14 (84HP) , Made in Brazil with Dieselmax/IESA Engine 9812/0080 \ V JCB444 ENGINE INSTALLATION COMPONENTS \ V49 FRONT END DRIVE

9812/0080 V49-4-1 FRONT END DRIVE, ACCESSORIES, AIR CONDITIONING

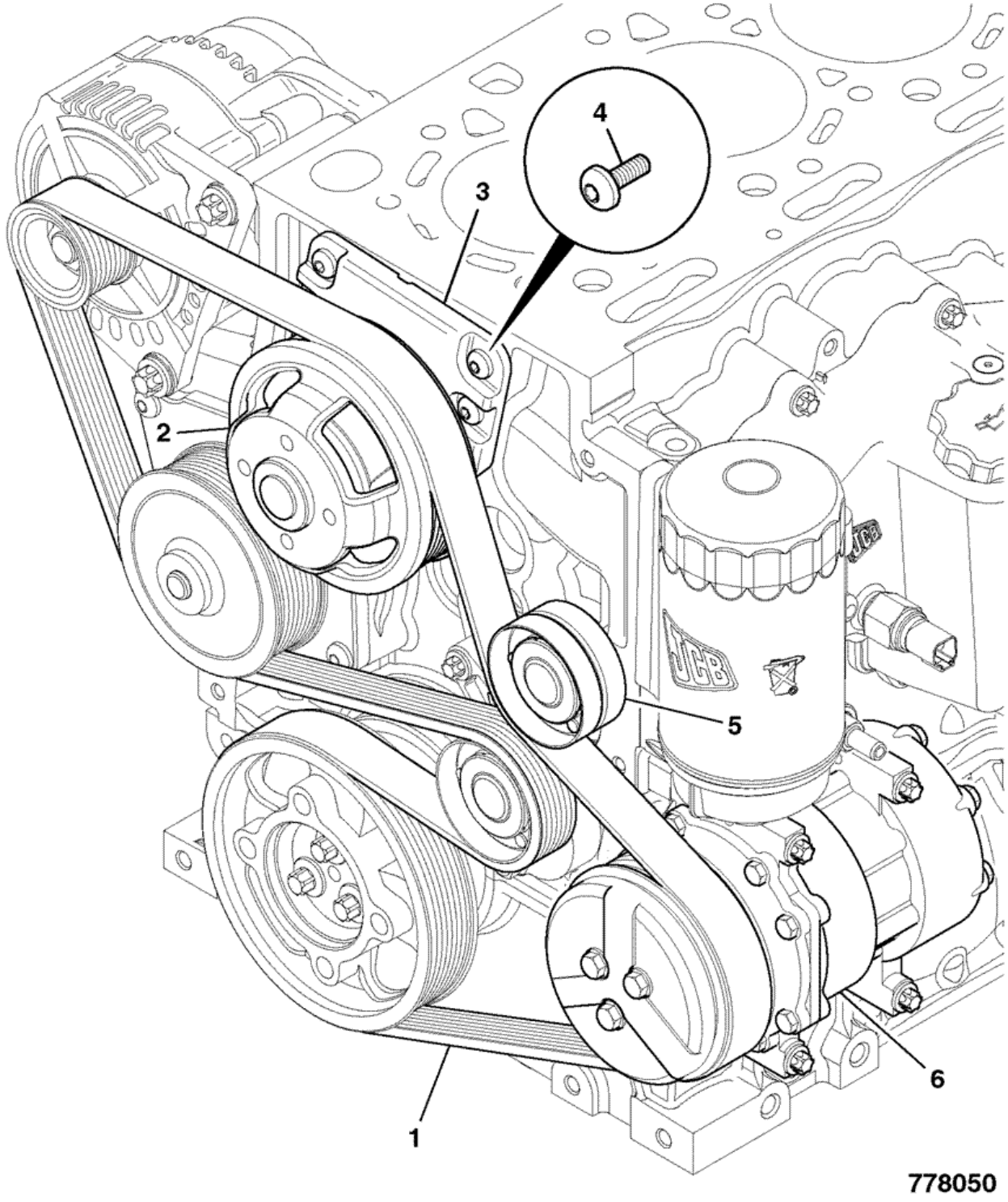

Item	Part #	Change No	Description	Usage Code	QTY
1	320/08603		Belt drive L=1988		1

2	320/08572		Pulley fan, D=166 ratio 1:1		1
3	320/08500		Hub fan drive assembly		1
4	320/08541		Screw pan head M8 x 20		4
5	320/08530		Pulley idler long		1
6	.		'See Remark' *Refer to frame V56-1-1*		1

Product Catalog \ CONSTRUCTION \ NORTH AMERICA \ CONSTRUCTION / INDUSTRIAL \ BACKHOE LOADER 3CX,4CX,214,215,217 \ 3C 14 (84HP) , Made in Brazil with Dieselmax/IESA Engine 9812/0080 \ V JCB444 ENGINE INSTALLATION COMPONENTS \ V49 FRONT END DRIVE

9812/0080 V49-6-2 FRONT END DRIVE, ACCESSORIES, AIR CONDITIONING

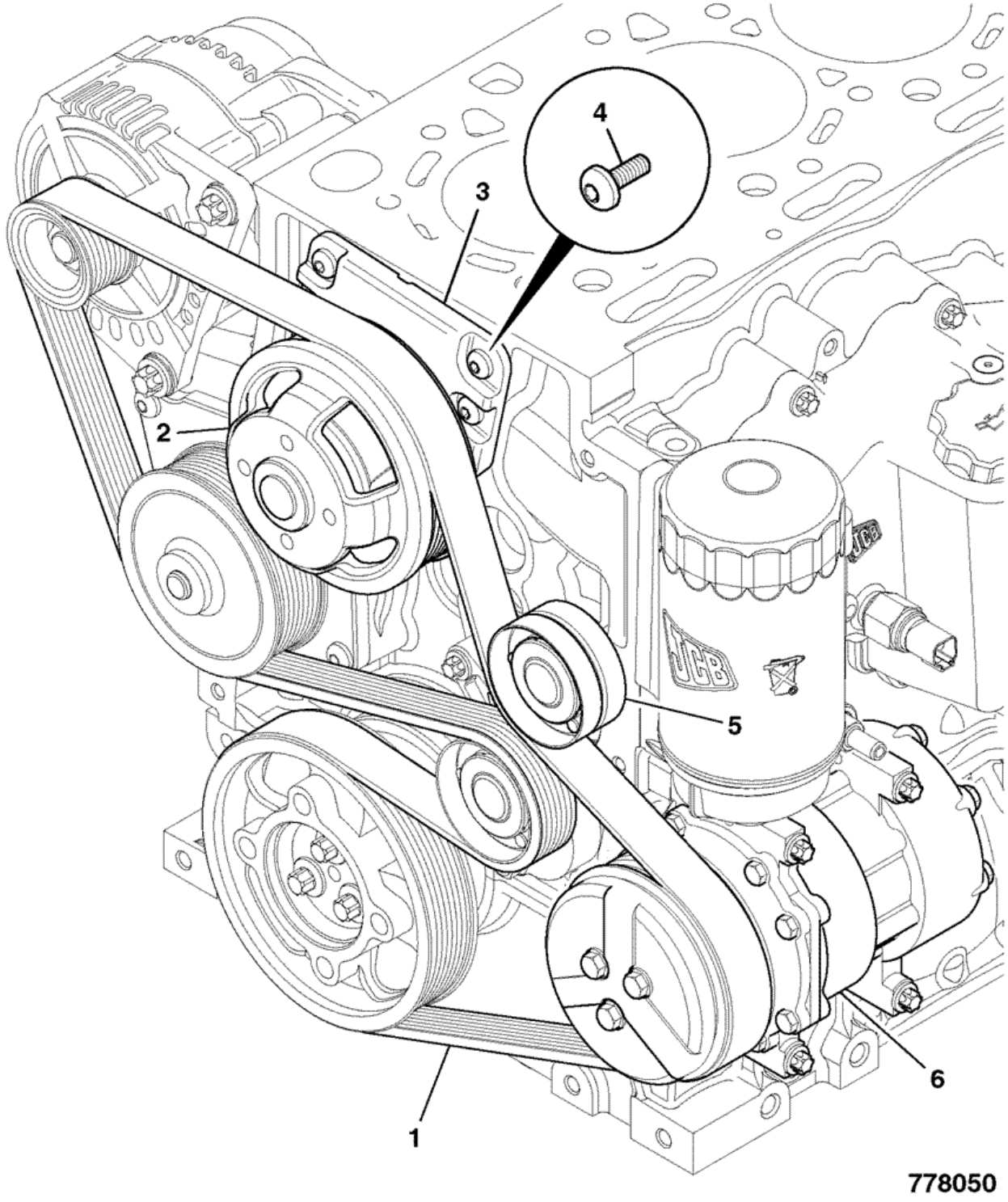

Item	Part #	Change No	Description	Usage Code	QTY
1	320/08608		Belt drive L=2002		1

2	320/08583		Pulley cooling fan 1.16:1 D=143mm		1
3	320/08500		Hub fan drive assembly		1
4	320/08541		Screw pan head M8 x 20		4
5	320/08530		Pulley idler long		1
6	.		'See Remark' *Refer to frame V56-1-1*		1

Product Catalog \ CONSTRUCTION \ NORTH AMERICA \ CONSTRUCTION / INDUSTRIAL \ BACKHOE LOADER 3CX,4CX,214,215,217 \ 3C 14 (84HP) , Made in Brazil with Dieselmax/IESA Engine 9812/0080 \ V JCB444 ENGINE INSTALLATION COMPONENTS \ V50 LOW PRESSURE FUEL SYSTEM

9812/0080 V50-2-1 FUEL PIPES, FUEL TANK TO FILTER

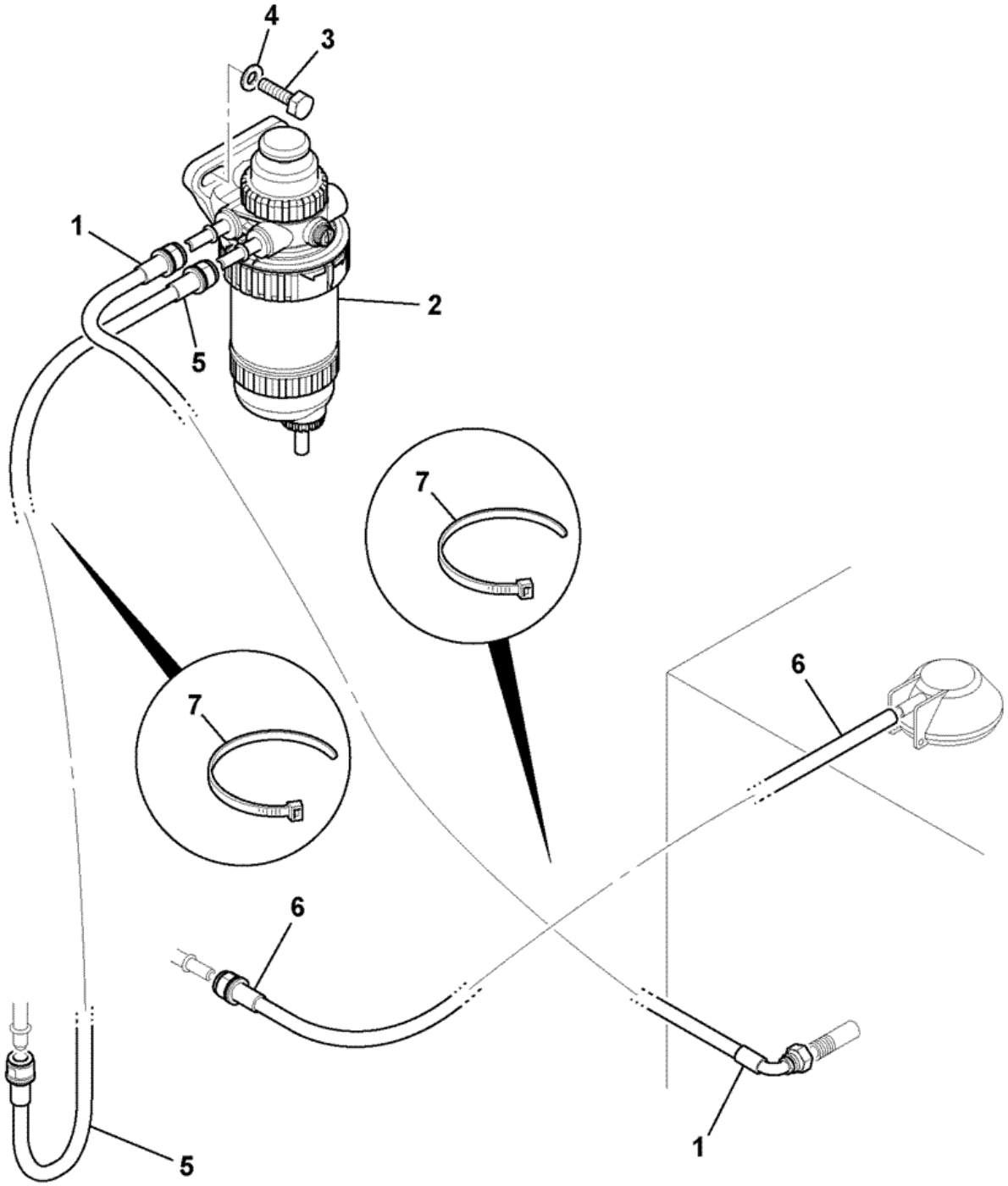

Item	Part #	Change No	Description	Usage Code	QTY
1	649/51784		Hose diesel fuel L=1850		1
2	32/925765		Filter fuel sediment 30 micron		1

			For Service Parts, See Index		
3	1315/0408Z		Bolt M10 x 30		2
4	1420/0008Z		Washer Plain M10		2
5	649/51777		Hose diesel fuel L=1600mm		1
6	649/51854		Hose diesel fuel500mm L=1500mm		1
7	826/01144		Tie cable 200mm long		5

Product Catalog \ CONSTRUCTION \ NORTH AMERICA \ CONSTRUCTION / INDUSTRIAL \ BACKHOE LOADER 3CX,4CX,214,215,217 \ 3C 14 (84HP) , Made in Brazil with Dieselmax/IESA Engine 9812/0080 \ V JCB444 ENGINE INSTALLATION COMPONENTS \ V52 EXHAUSTER SERVO BRAKES

9812/0080 V52-1-1 EXHAUSTER, SERVO BRAKES

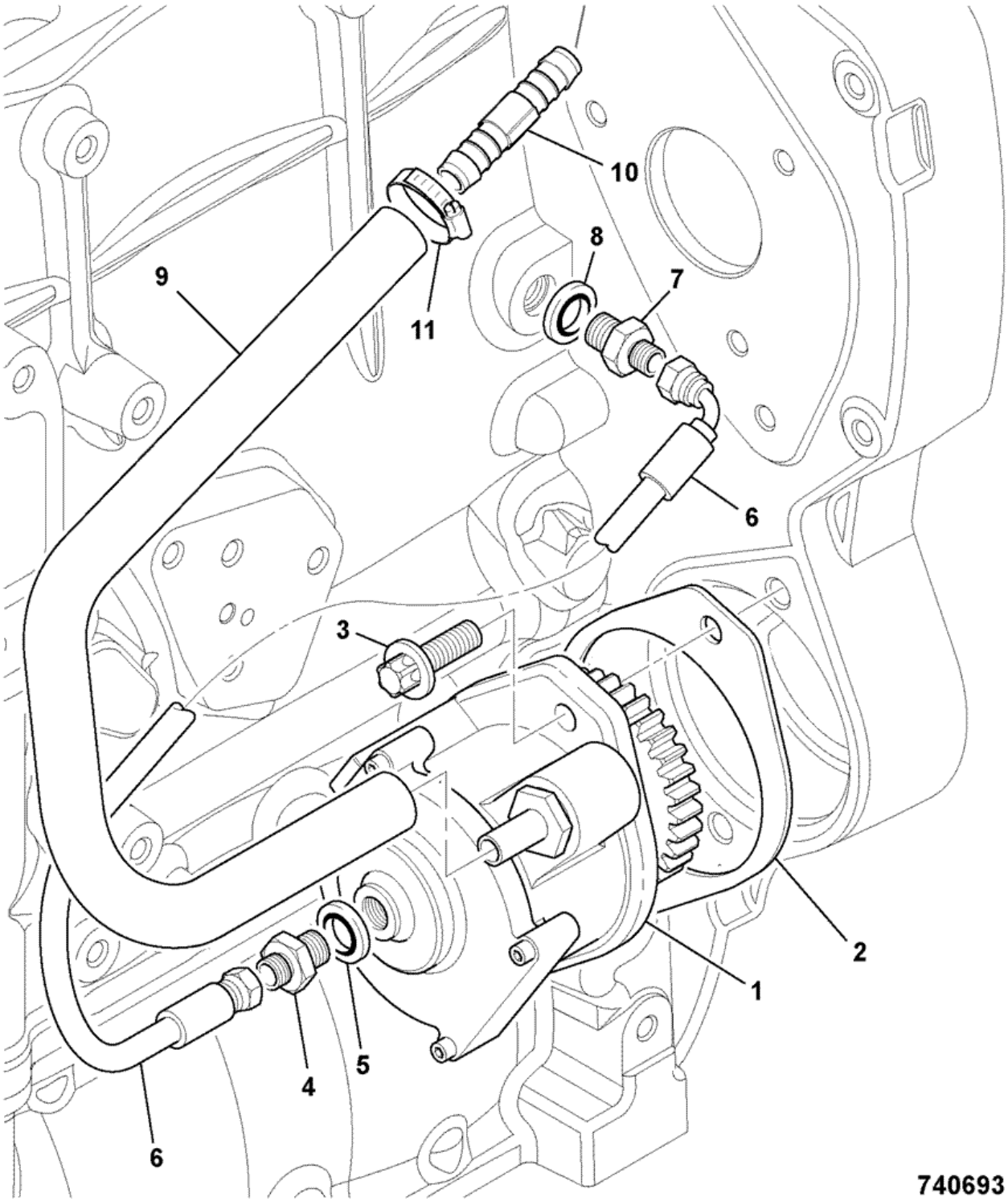

Item	Part #	Change No	Description	Usage Code	QTY
1	160/15137		Exhauster assembly		1
2	813/10143		Gasket		1

3	1319/0408Z		Screw star drive M10 x 30		2
4	816/90727		Adapter 3mm restricting		1
5	823/10633		Washer bonded 1/4"BSP with centering lip		1
6	649/51208		Hose exhauster		1
7	816/90768		Adapter 1/8"BSP-M12		1
8	320/04521		Seal bonded		1
9	648/31003		Hose brake vacuum 9.5mm bore x 400mm		1
10	650/10205		Connector hose		1
11	2201/0004		Clip jubilee		2

Product Catalog \ CONSTRUCTION \ NORTH AMERICA \ CONSTRUCTION / INDUSTRIAL \ BACKHOE LOADER 3CX,4CX,214,215,217 \ 3C 14 (84HP) , Made in Brazil with Dieselmax/IESA Engine 9812/0080 \ V JCB444 ENGINE INSTALLATION COMPONENTS \ V55 OIL LEVEL DIPSTICK & TUBE

9812/0080 V55-1-1 OIL LEVEL DIPSTICK, & TUBE, STANDARD

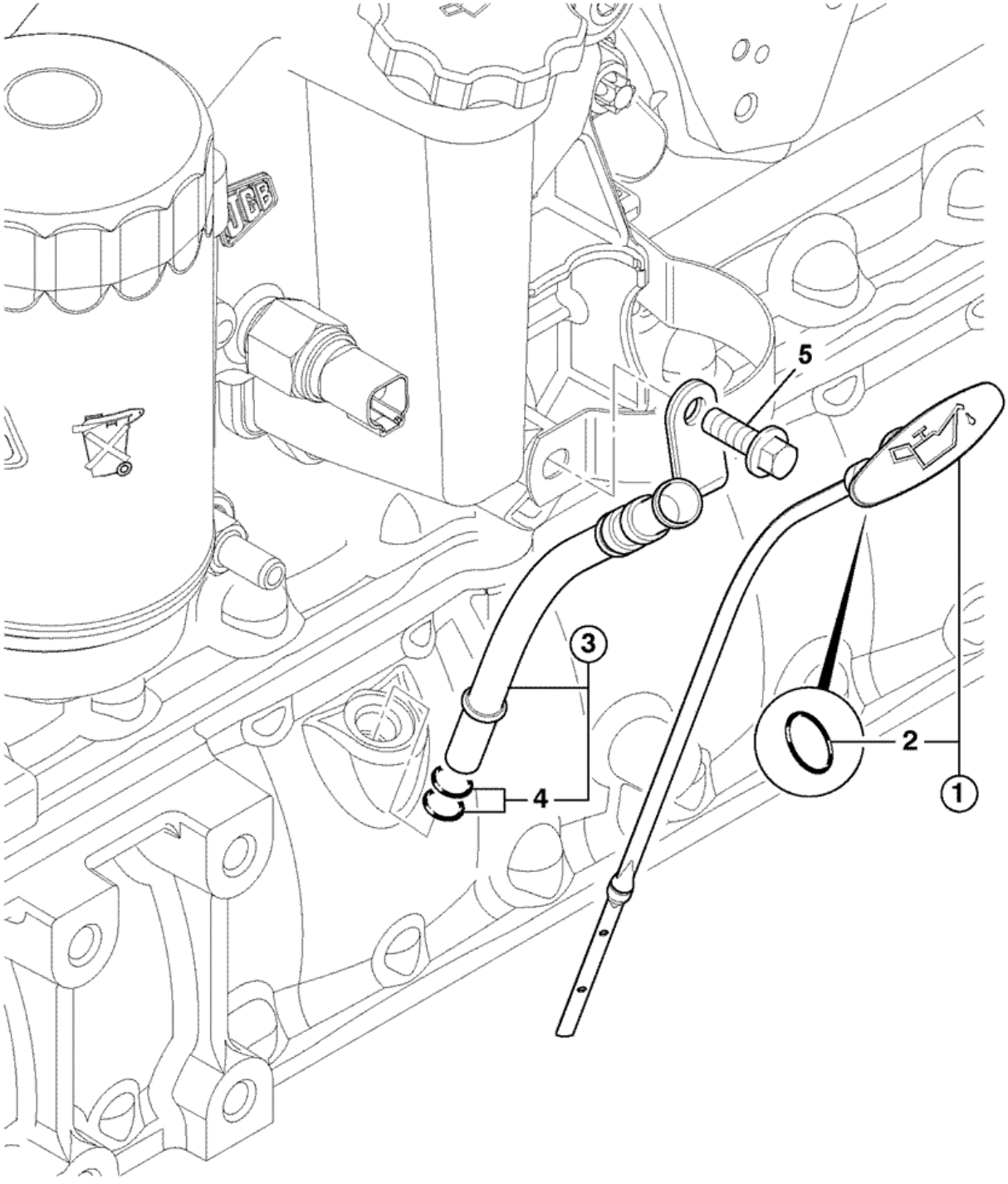

Item	Part #	Change No	Description	Usage Code	QTY
1	320/04196		Dipstick engine oil short		1

2	:320/04129		O Ring		1
3	320/04195		Tube engine oil dipstick short		1
4	:320/04127		O Ring		2
5	1317/3305Z		Bolt flange head M8 x 20 lg		1

Product Catalog \ CONSTRUCTION \ NORTH AMERICA \ CONSTRUCTION / INDUSTRIAL \ BACKHOE LOADER 3CX,4CX,214,215,217 \ 3C 14 (84HP) , Made in Brazil with Dieselmax/IESA Engine 9812/0080 \ V JCB444 ENGINE INSTALLATION COMPONENTS \ V55 OIL LEVEL DIPSTICK & TUBE

9812/0080 V55-1-2 OIL LEVEL DIPSTICK, & TUBE, STANDARD

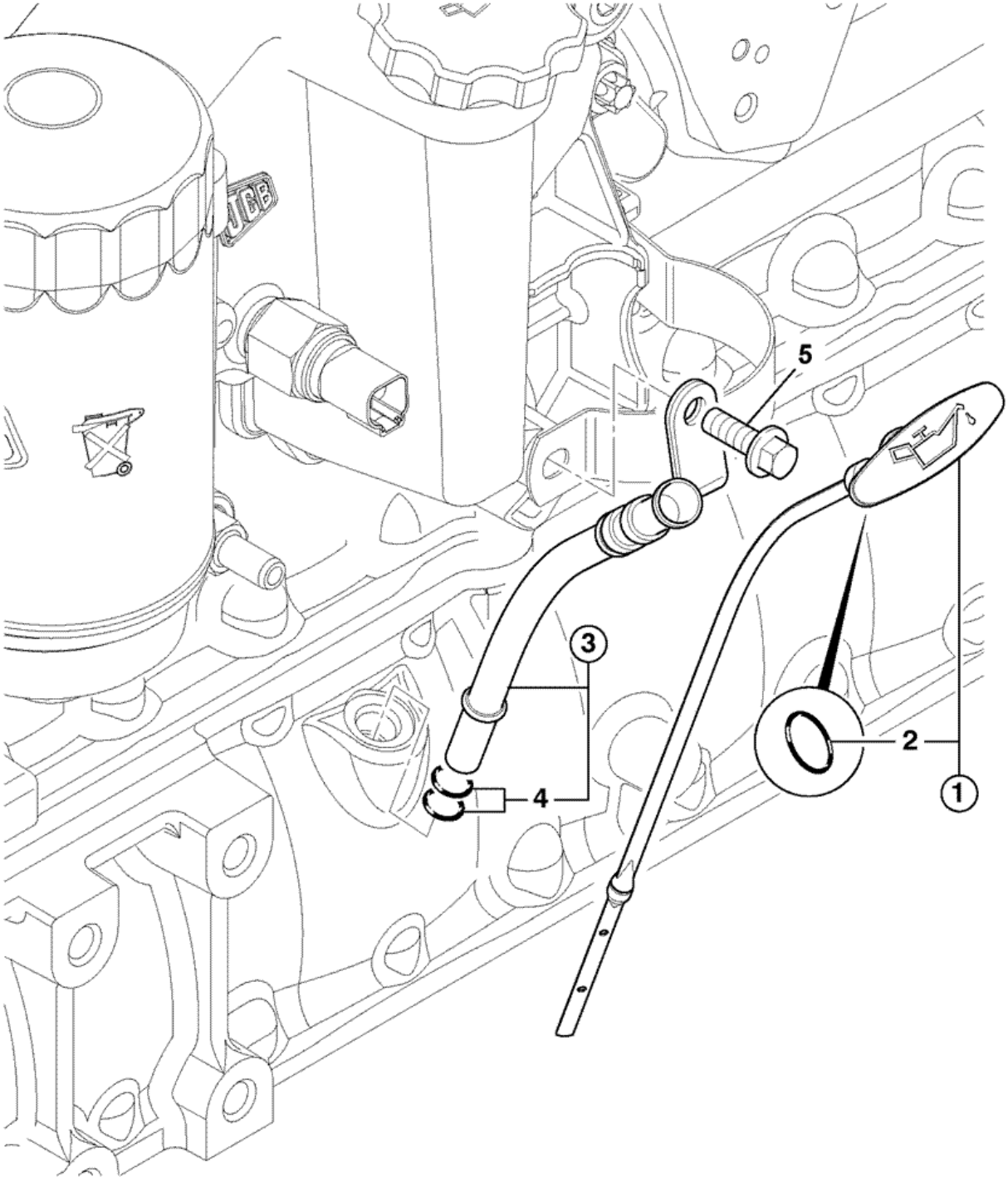

Item	Part #	Change No	Description	Usage Code	QTY
1	320/04249		Dipstick short		1

2	:320/04129		O Ring		1
3	320/04195		Tube engine oil dipstick short		1
4	:320/04127		O Ring		2
5	1317/3305Z		Bolt flange head M8 x 20 lg		1

Product Catalog \ CONSTRUCTION \ NORTH AMERICA \ CONSTRUCTION / INDUSTRIAL \ BACKHOE LOADER 3CX,4CX,214,215,217 \ 3C 14 (84HP) , Made in Brazil with Dieselmax/IESA Engine 9812/0080 \ V JCB444 ENGINE INSTALLATION COMPONENTS \ V56 AIR CONDITIONING COMPRESSOR

9812/0080 V56-1-1 COMPRESSOR, AIR CONDITIONING

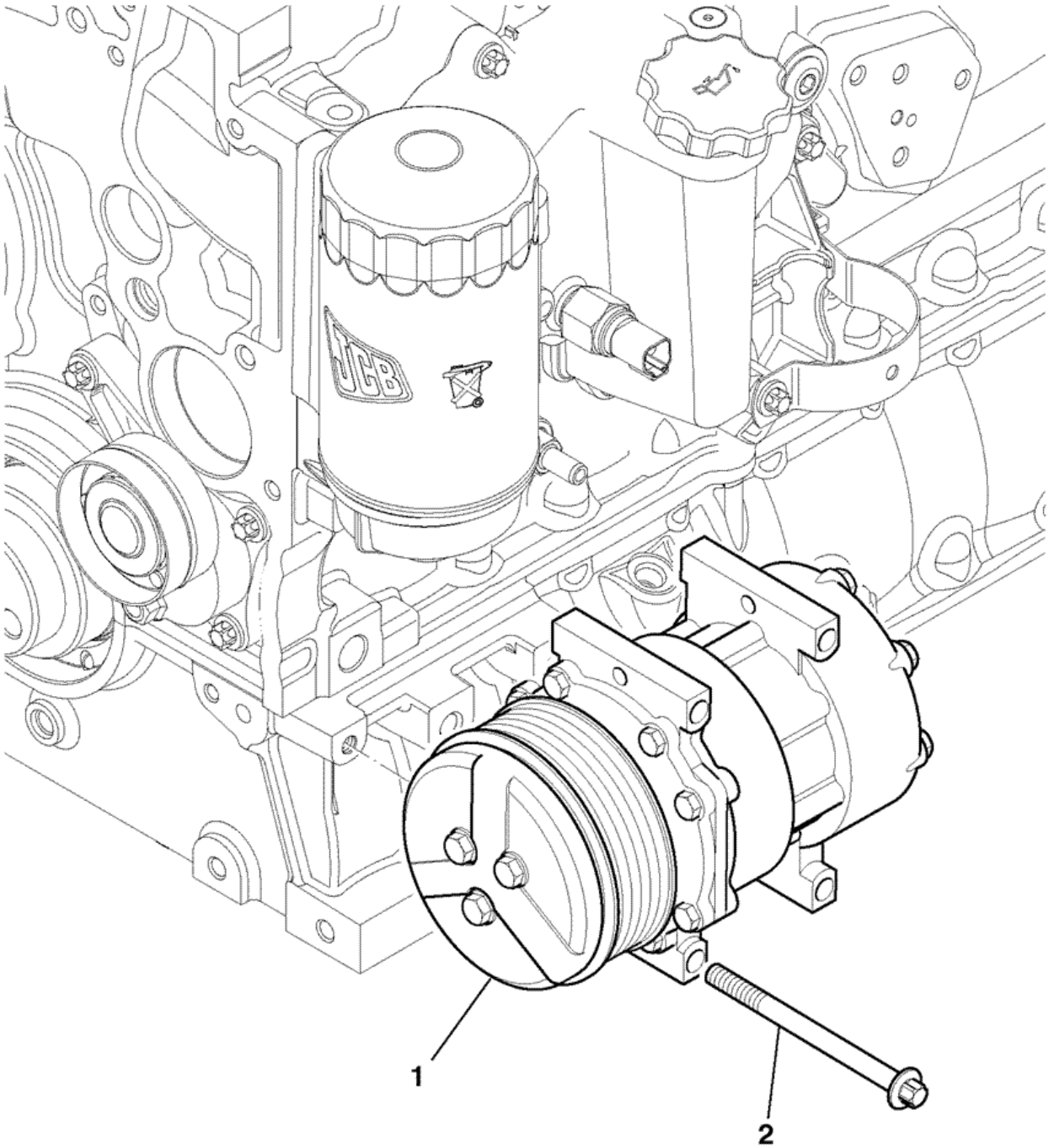

735741

Item	Part #	Change No	Description	Usage Code	QTY
1	320/08562		Compressor air conditioning 12v		1
2	1319/3320Z		Bolt star drive M8 x 100mm		3

Product Catalog \ CONSTRUCTION \ NORTH AMERICA \ CONSTRUCTION / INDUSTRIAL \ BACKHOE LOADER 3CX,4CX,214,215,217 \ 3C PLUS (91HP) , Made in Brazil with Dieselmax/IESA Engine 9812/0080 \ V JCB444 ENGINE INSTALLATION COMPONENTS \ V41 ENGINE ASSEMBLYS

9812/0080 V41-10-1 ENGINE ASSEMBLY, 320/40064, 91BHP, SEE CATALOGUE 9802/2940

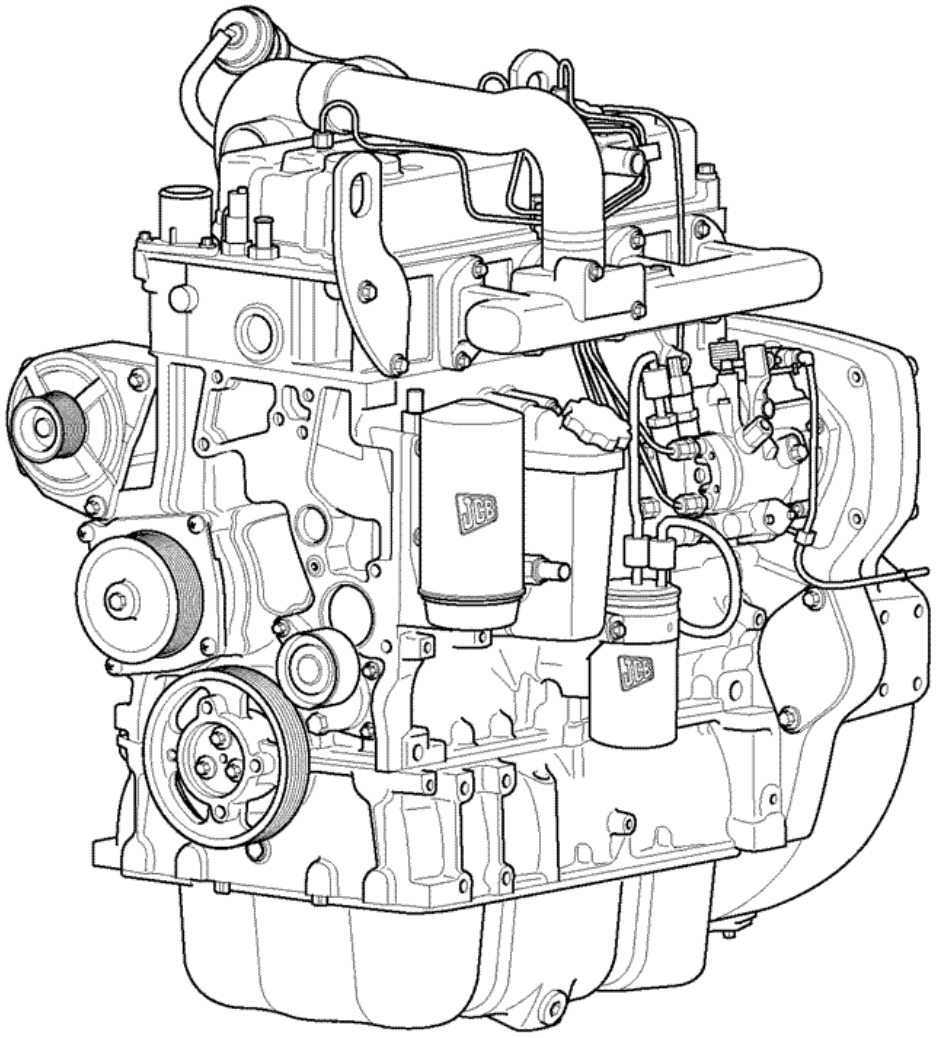

742570

Item	Part #	Change No	Description	Usage Code	QTY
			Engine complete 91bhp-12v turbo W300 T/C		

1	320/40064		*For Service Parts, refer to 9802/2940*		1

Product Catalog \ CONSTRUCTION \ NORTH AMERICA \ CONSTRUCTION / INDUSTRIAL \ BACKHOE LOADER 3CX,4CX,214,215,217 \ 3C PLUS (91HP) , Made in Brazil with Dieselmax/IESA Engine 9812/0080 \ V JCB444 ENGINE INSTALLATION COMPONENTS \ V41 ENGINE ASSEMBLYS

9812/0080 V41-11-1 ENGINE ASSEMBLY, 320/40241, 91BHP, SEE CATALOGUE 9802/2940

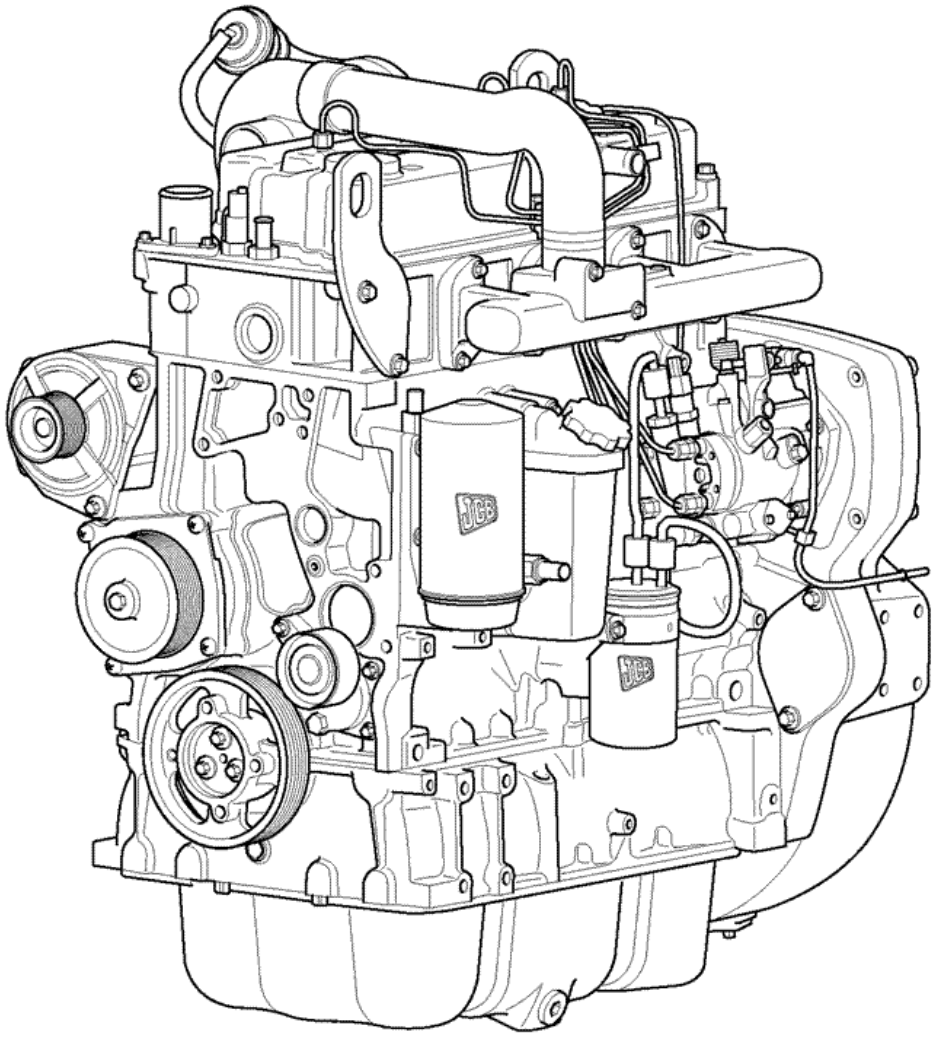

742570

Item	Part #	Change No	Description	Usage Code	QTY
			Engine assembly 68kW 12v		

1	320/40241		*For Service Parts, refer to 9802/2940*		1