FIATALLIS®

MAIO 1989

RUTHZIL TRATOR COMERCIAL DE PEÇAS LTDA 11 97083-6812 ROLANDO CITRANGULO

21-C

Crawler Tractor

PARTS CATALOG

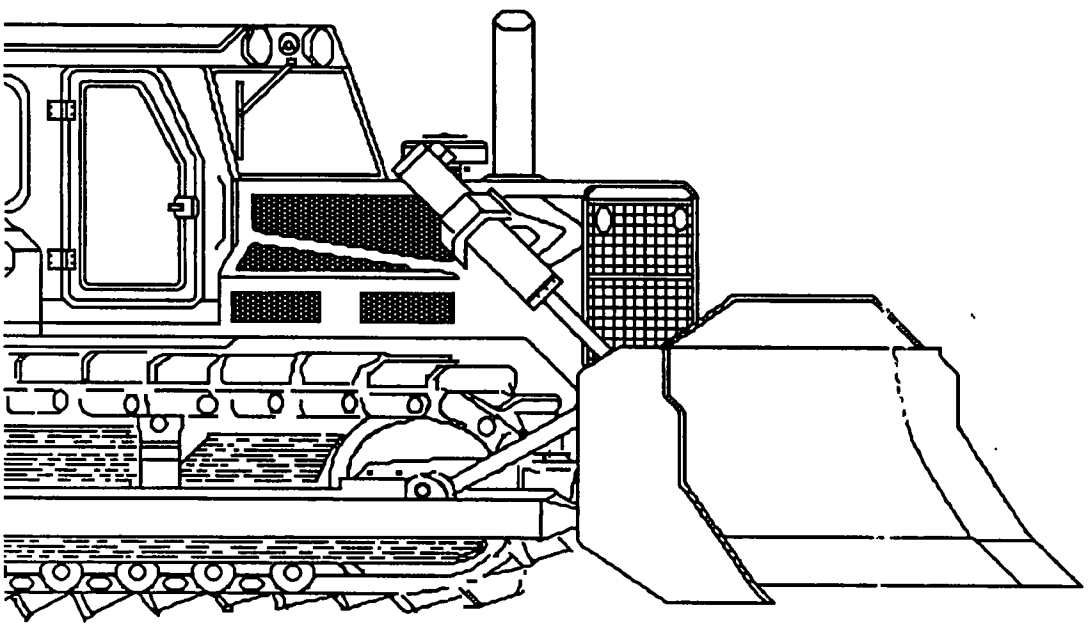

FORM 73126645 ENGLISH
Reprint 5/89

AVOID ACCIDENTS

Most accidents, whether they occur in industry, on the farm, at home or on the highway, are caused by the failure of some individual to follow simple and fundamental safety rules or precautions. For this reason MOST ACCIDENTS CAN BE PREVENTED by recognizing the real cause and doing something about it before the accident occurs.

Regardless of the care used in the design and construction of any type of equipment there are conditions that cannot be completely safeguarded against without interfering with reasonable accessibility and efficient operation.

A careful operator is the best insurance against an accident.
The complete observance of one simple rule would prevent many thousand serious injuries each year.
That rule is:

Never attempt to clean, oil or adjust a machine while it is in motion.

WARNING

On machines having hydraulically, mechanically, and/or cable controlled equipment (such as shovels, loaders, dozers, scrapers, etc.) be certain the equipment is lowered to the ground before servicing, adjusting and/or repairing. If it is necessary to have the hydraulically, mechanically, and/or cable controlled equipment partially or fully raised to gain access to certain items, be sure the equipment is suitably supported by means other than the hydraulic lift cylinders, cable and/or mechanical devices used for controlling the equipment.

CALIFORNIA

Proposition 65 Warning

Diesel engine exhaust and some of its constituents are known to the State of California to cause cancer, birth defects, and other reproductive harm.

COPYRIGHT BY FIATALLIS

All rights reserved. Reproduction of text and illustrations in whole or in part, is strictly prohibited.

IMPORTANT

All parts listed herein, which have no specific usage indicated, are applicable to all models. Those parts which are used only on specific models are so indicated.

Attaching parts such as bolts, nuts, rivets, screws, washers, etc., are indented immediately following the parts which they attach.

Parts indicated with a square (□) are also available in packaged sets. Refer to section titled "PACKAGED PARTS".

The terms "right" and "left" used throughout this parts catalog are determined by facing the direction of forward travel.

INSTRUCTIONS FOR ORDERING PARTS

At the time this parts catalog was published the listed part numbers were current. It is our policy to constantly improve our machines and therefore, part numbers and design may change. When ordering parts, verify part numbers through your dealer's microfiche which is up to date with all latest part numbers.

Order parts from the dealer covering the local territory.

ALWAYS GIVE THE MODEL AND SERIAL NUMBER OF MACHINE. IF PARTS ARE FOR AN ASSEMBLY WHICH HAS A MODEL AND, OR SERIAL NUMBER (SUCH AS ENGINE ASSEMBLY, PUMP ASSEMBLY), ALSO INCLUDE THIS INFORMATION.

To obtain parts promptly, give part name and part number.

Give post office address, town, county and state where parts are to be shipped. Also specify whether material is to be shipped by freight, express or parcel post.

Confirm all telephone or telegraph orders in writing.

Parts for standard motor accessories such as generators and starting motors should be ordered from authorized Service Stations maintained by manufacturers of these units throughout the country.

No credit will be allowed on parts unless they are returned to the dealer from whom they were purchased; from there they will be returned, at the customer's expense, to the factory for inspection.

Unless claims for shortages or errors are made immediately upon receipt of goods, they will not be considered.

When broken goods are received, a full description of the damage should be made by the carrier agent on the freight bill. If this description is insisted upon, full damage can always be collected from the transportation company.

No responsibility is assumed for delay or damage to merchandise while in transit. Our responsibility ceases upon delivery of shipment to the transportation company from whom a receipt is received showing that shipment was in good condition when delivered to them; therefore, claims (if any) should be filed with the transportation company

The right is reserved to change the construction or material of any parts where it seems desirable to do so without incurring the obligation of installing such changes on units already delivered.

(Specifications and design subject to change without notice)

21-C

crawler tractor
(Includes Dozers, 21R Ripper and Hydraulic Systems)

parts catalog

S/N 71A21001-UP

Form 73126645 English
(Replaces 70695061)

⚠ WARNING

STUDY THE OPERATION AND MAINTENANCE INSTRUCTION MANUAL THROUGH BEFORE STARTING, OPERATING, MAINTAINING, FUELING OR SERVICING THIS MACHINE.

MODEL IDENTIFICATION

MODEL	ENGINE MODEL	DESCRIPTION
21-C	21000-MK II (S/N 21-_____)	Diesel engine driven crawler tractor
21-C	6138-T MK II (S/N 14-_____)	Diesel engine driven crawler tractor 71A21812 + UP
21 HSU		Hydraulically-operated; semi-U-type moldboard
21 HSU (Rock)		Hydraulically-operated; semi-U-type moldboard (Extreme service)
21 HU		Hydraulically-operated; full-U-type moldboard
21 HA		Hydraulically-operated; angling moldboard
21 R		Hydraulically-operated Ripper

Cat # 4395278

RECORD YOUR SERIAL NUMBERS BELOW

MODEL SERIAL NUMBER_____ ENGINE SERIAL NUMBER_____

SERIAL NUMBER LOCATIONS

TRACTOR SERIAL NO. On steering clutch housing vertically on right hand side of the rear edge. Also on small plate attached to side of transmission control tower.

ENGINE SERIAL NO. On plate attached to the left hand side of cylinder block near the rear end. Also on small plate attached to side of transmission control tower. Effective approximately January 1979, the engine serial numbering system was changed. The old series of number began with the prefix #21- with the serial number. The new series of numbers begin with the prefix #14-.

Throughout this book, one must keep in mind that the #14- series numbers follow the #21-series numbers.

The first serial number in the new series begins with #14-01260.

MODEL SERIAL NUMBER

Models are identified by an 8-character combination of letters and numerals.

*SERIAL NUMBERS , consisting of all 8 characters, must always be submitted for positive identification of your machine. This Point Cannot Be Over-emphasized.

TRACTOR MODEL	*SERIAL NO.	
	PRODUCT CODE	UNIT NO.
21-C	71A	21001

(Revised February 1980)

ALPHABETICAL INDEX

Accessory Drive..... 27
Air Cleaner..... 66
Air Restriction Indicator..... 65
Alternator..... 215
Aspirator..... 69
Batteries and Cables..... 213
Battery and Tool Boxes..... 193
Battery Box Lock..... 193
Belt, Drive..... 75,84
Belt, Seat..... 189A,189E,191A,191C
Bevel Gear and Shaft..... 141
Bottom Guards..... 173
Brake Control..... 165
Brake Drum..... 142
Brake Lock Valve and Lines..... 171A
Brake Regulator Valve and Lines..... 170
Brakes..... 167
Cab Section..... 268 thru 297
Cab and Canopy Mounting Brackets..... 222
Camshaft..... 24
C-Frame..... 70
Connecting Rod..... 17,17A
Control Valves..... 259,259A
Coolant Filter..... 78
Counter Weight..... 223
Cowl..... 205
Crankshaft..... 14
Crankshaft Pulley and Damper..... 16,16A
Cylinder Block..... 12
Cylinder Head..... 19
Cylinders
  Dozer..... 226
  Ripper..... 105
  Tilt..... 237
Cylinder Piping(Dozer)..... 242,243A
Cylinder Piping(Ripper)..... 251B
Cylinder Sleeve..... 12
Drawbar..... 185,186
Elements
  Air Cleaner..... 66
  Coolant Filter..... 78
  Engine Oil Filter..... 35,39
  Final Drive Lube System..... 148
  Fuel Filter..... 42
  Hydraulic Oil Filter..... 257
  Main Housing Breather..... 139
  Steering Oil Filter..... 159,160
  Transmission Breather..... 116
  Transmission Oil Filter..... 121
Engine Breather..... 22
Engine Clutch Scavenging System..... 97
Engine and Mounting..... 10
Engine Primer..... 68
Engine Shut-off Control..... 57
Equalizing Beam..... 184
Exhaust Manifold..... 59
Exhaust Pipe..... 67
Fan..... 84
Fan Drive..... 83
Fan Guard..... 86
Filters
  Coolant..... 78
  Engine Oil..... 35,39
  Fuel..... 42,43A
Filters(Continued)
  Steering Oil..... 159,160
  Transmission Oil..... 116
  Water Separator(Fuel)..... 41
"FILTER CARE" KIT..... 9C,D
Final Drive
  Housing..... 139
  Intermediate Gears..... 143
  Outboard Bearing and Seal..... 146
  Pinion Shaft..... 142
  Sprocket, Shaft and Gear..... 144
  Lubricating System..... 148
Floor..... 187
Flywheel and Housing..... 20,21
Front Fenders..... 194
Fuel Filter..... 42,43A
Fuel Injection Pump..... 49,49A
Fuel Lines..... 44
Fuel Tank..... 47
Gauges
  Air Restriction Indicator..... 65
  Bevel Gear Comp. Oil Level..... 139
  Engine Oil Level..... 13
  Engine Oil Pressure..... 208
  Engine Temperature..... 207
  Fuel Level..... 47
  Hour Meter..... 207
  Transmission Hydraulic Pressure..... 210
  Transmission Lube Oil Pressure..... 209
  Transmission Oil Level..... 116
  Voltmeter..... 207
Heat Exchangers..... 72
Hood..... 196
Hood Side Plates..... 197
Horn..... 211
Hose Parts..... 6
Hour Meter..... 207
Hydraulic Power Assist Pump and Piping..... 246
Hydraulic Tank..... 257
Hydraulic Tilt..... 238
Hydraulic Tilt Piping..... 240
Injection Nozzles and Lines..... 51,52A
Injection Pump..... 49,49A
Instruments..... 206
Intake Manifold..... 58
Lights
  Cab Front..... 203A,203B
  Dash..... 206
  Head..... 204
  Rear Flood..... 202
Lights and Wiring..... 201
Main Frame..... 173A
Main Housing..... 139
Manifolds
  Exhaust..... 59
  Intake..... 58
  Water Inlet..... 72
  Water Outlet..... 70
Moldboards
  Angling..... 230
  Semi-U..... 228
  U-type..... 229
Moldboard Braces..... 232
Moldboard Struts..... 234

ALPHABETICAL INDEX

Mounting Frame(Ripper)..... 250
Muffler..... 67
Numerical Index..... I thru XVII
Oil Cooler..... 71
Oil Filter(Engine)..... 38,39
Oil Filter Lines..... 36
Oil Pan..... 29
Oil Pump Lines(Dozer)..... 246
Oil Pump Lines(Engine)..... 30
Packages Parts..... 7
Painting and Marking..... 198
Piston and Connecting Rod..... 17,17A
Power Assist Assembly..... 259C
Power Assist Valve Assembly Kit..... 259B
Primer..... 68
Pumps
  Dozer Oil..... 248,248A
  Engine Oil..... 32,33
  Fuel Injection..... 49,49A
  Power Assist..... 248C
  Shift Inhibiting..... 135
  Steering..... 158,158A
  Transmission..... 120,120A
  Water..... 75
  Final Drive Lubricating..... 149
Push Beams..... 232
Quick Fueling..... 217,218
Radiator Guard..... 173A
Radiator and Mounting..... 80,82
Rear Fenders..... 195
Rear Flood Light..... 202
Reverse Alarm..... 201B
Ripper Controls..... 249,249A
Ripper Piping..... 251B,252,253A
Roll Over Protection Frame..... 220
Seat..... 22,24,26
Shift Inhibiting Pump Lines..... 119
Starter..... 216
Steering Clutch & Final Drive Housing..... 139
Steering Clutches..... 154
Steering Control Hydraulics..... 154
Steering Control Valve and Lines..... 162
Steering Levers and Linkage..... 161
Steering Pump and Filters..... 156,157A,158A
Switch
  Light..... 201
  Master..... 213
  Safety..... 128
  Starter..... 201
Thermostat..... 70
Throttle Control..... 54
Timing Gear Housing..... 11,11A
Timing Gears..... 14,27
Tool Bar and Linkage..... 251
Tool Box..... 193
Tools..... 226
Torque Converter..... 87
Track..... 182
Track Carrier Roller..... 177
Track Frame..... 174
Track Idler..... 178
Track Release..... 180
Track Roller..... 176
Track Roller Guards..... 175
Transmission
  Assembly..... 100
  Bevel Pinion Shaft..... 104
  Case and Covers..... 102
  Clutch Shafts..... 107,108,109
  Counter Shaft..... 106
Transmission Control Linkage..... 127
Transmission Control Piping..... 125
Transmission Oil Filler and Breather..... 116
Transmission Oil Pump and Filter..... 118
Transmission Test Panel and Lines..... 123
Travel Control Valves and Lines..... 130
Turbocharger..... 62
Universal Joint..... 98
Valve Operating Mechanism..... 24
Valve Controls..... 267,267B
Valves
  Brake..... 168
  Brake Regulator..... 172
  Dozer Control..... 260,261A
  Dozer Tilt Control..... 262,263A
  Engine Clutch Check..... 91
  Engine Clutch Control..... 95
  Exhaust..... 19
  Fuel Injection Pressure Relief..... 52
  Intake..... 19
  Power Assist Assembly..... 259C
  Power Assist Valve Assembly Kit..... 259B
  Pressure Oil Pump Relief..... 30
  Relief(Hydraulic Control)..... 264,265A
  Ripper Control..... 262,263A
  Shift Inhibiting..... 132
  Shift Inhibiting Pressure Regulating..... 137
  Speed Control..... 129
  Torque Converter Pressure Regulating..... 96
  Track Release Check..... 180
Vandalism Prevention Parts..... 225
Water Inlet Manifold & Heat Exchangers..... 72
Water Outlet Manifold..... 70
Water Pump..... 75

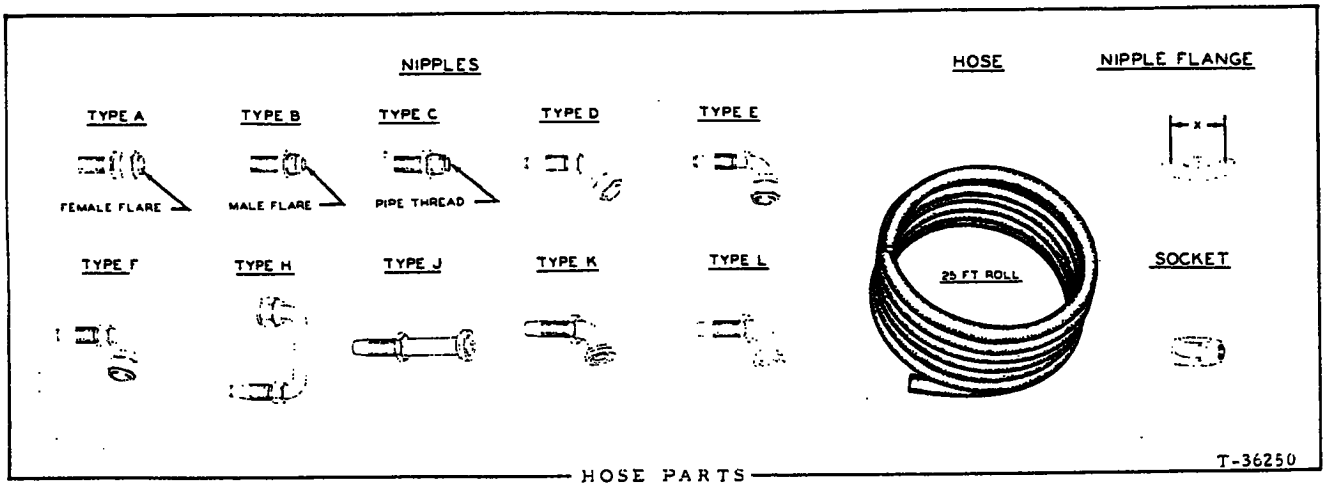

HOSE PARTS

NOTE: Refer to right hand column for identity of interchangeable crimped-type hose (fittings not re-usable). Assembly number shown in left hand column indicates available replacement hose assembly with re-usable components; where no assembly number is listed, hose assembly is not available from factory but may be constructed in the field from data indicated.

HOSE ASSEMBLY NO. (See NOTE)	BULK HOSE (25' roll)	HOSE LENGTH (inches)	NIPPLE (#1 end)			NIPPLE (#2 end)			SOCKET (both ends)	NIPPLE FLANGE		CRIMPED-TYPE HOSE (See NOTE)
			Including SOCKET	NIPPLE only	Type	Including SOCKET	NIPPLE only	Type		Part No.	X Dim	Part No.
	70930444	14-3/8	70920850	70920303	A	70920880	70919254	D	70919076			70645074
	70919218	12	70920850	70920303	A	70920865	70919081	E	70919076			70645236
	70919156	14-5/8	70920858	70919080	B	70920850	70920303	A	70919076			70646353
	70930445	19-5/8	70920867	70919277	E	70920852	70920344	A	70919281			70646915
	70930444	31-13/16	70920850	70920303	A	70920850	70920303	A	70919076			70656849
	70919196	25-3/4	70920862	70919194	E short	70920847	70920301	A	70919143			70658637
	70931158	41-15/16		70923253	J		70922894	L	70920975			70665638
	70919196	13-1/8	70920862	70919194	E short	70920847	70920301	A	70919143			70666557
	70920795	34	70921866	70923254	J	70924408	70923259	K	70920973			70669727
	70920795	36	70921866	70923254	J	70924408	70923259	K	70920973			70670357
	70926244*	18-3/4		70926246	A		70926246	A				70680746
	70930446	29-13/16	70921033	70921034	A		70922505	L	70919282			70683591
	70930446	35-5/8	70921033	70921034	A		70925240	K	70919282			70683592
	70931159	46-1/2	70923486	70929879	J	70921866	70923254	J	70920973			70689305
	70931158	27-3/8	70920957	70928835	E long		70923253	J	70920975			70689801
	70931158	30-1/8	70920952	70923186	E short		70923253	J	70920975			70689802
	70931158	26-1/2		70923253	J		70921513	L	70920975			70689803
	70931158	30-1/4		70923253	J		70921513	L	70920975			70689804
	70930445	32-3/16	70920852	70920344	A	70920852	70920344	A	70919281			70690849
	70930445	25-7/8	70920852	70920344	A	70920882	70919278	D	70919281			70690850
	70930445	11-7/16	70920867	70919277	E	70920852	70920344	A	70919281			70690851
	70930445	9-7/16	70920852	70920344	A	70920874	70921042	E long	70919281			70690852
	70919155	7-3/16	70920864	70919082	E	70920849	70920302	A	70919075			70690915

* Not available in 25 ft. length, bulk only. Specify length required.

HOSE ASSEMBLY NO. (See NOTE)	BULK HOSE (25' roll)	HOSE LENGTH (inches)	NIPPLE (#1 end)			NIPPLE (#2 end)			SOCKET (both ends)	NIPPLE FLANGE		CRIMPED-TYPE HOSE (See NOTE)
			Including SOCKET	NIPPLE only	Type	Including SOCKET	NIPPLE only	Type		Part No.	X Dim	Part No.
	70919155	16-1/16	70920857	70919079	B	70920864	70919082	E	70919075			70690924
	70919156	18-5/8	70920880	70919254	D	70920880	70919254	D	70919076			70690995
	70919156	12-9/16	70920880	70919254	D	70920865	70919081	E	70919076			70690998
	70919156	12-3/4		70919175	F	70920858	70919080	B	70919076			70691007
	70930443	12-1/2	70920849	70920302	A	70920877	70919207	D	70919143			70691009
	70930445	19-11/16	70920852	70920344	A	70920874	70921042	E long	70919281			70691025
	70919217	22-5/8	70920864	70919082	E	70920849	70920302	A	70919075			70691572
	70919196	69-5/8	70920847	70920301	A	70920877	70919207	D	70919143			70692925
	70920794	117-3/4	70920944	70920978	A	70920952	70923186	E	70920972			70693996
	70920794	45	70920933	70922834	B	70924177	70921513	L	70920972			70693997
	70920794	35-3/4	70920933	70922834	B		70930797	K	70920972			70693998
	70919196	30	70920862	70919194	E	70920862	70919194	E	70919143			70694872
	70919196	11-3/4	70920862	70919194	E	70920847	70920301	A	70919143			70694873
	70919156	35-1/2	70920858	70919080	B	70920850	70920303	A	70919076			70696014
	70919196	52	70920862	70919194	E	70920869	70919253	E long	70919143			70697716
	70919217	18-1/4	70920864	70919082	E	70920849	70920302	A	70919075			70697791
	70919196	26	70920877	70919207	D	70920877	70919207	D	70919143			70699862
	70919196	68	70920877	70919207	D	70920862	70919194	E	70919143			70699863
	70919196	53	70920862	70919194	E	70920862	70919194	E	70919143			70699864
	70919196	53	70920862	70919194	E	70920862	70919194	E	70919143			70699865
	70919196	51-1/2	70920862	70919194	E	70920847	70920301	A	70919143			70699866
	70919196	40	70920862	70919194	E	70920847	70920301	A	70919143			70699867
	70919196	44-3/4	70920862	70919194	E	70920847	70920301	A	70919143			70699868
	70919196	60	70920862	70919194	E	70920847	70920301	A	70919143			70699869
	70919196	47	70920862	70919194	E	70920847	70920301	A	70919143			70699870
73111899	70920221	16	70920852	70920344	A		70931124	K	70919281			
	70919156	32-3/4	70920858	70919080	B	70920838	70919074	C	70919076			73109031
	70930444	42-3/4	70920850	70920303	A	70920850	70920303	A	70919076			73110376
	70930444	25-3/4	70920850	70920303	A	70920880	70919254	D	70919076			73113003
	70930445	41-1/4	70920852	70920344	A	70920874	70921042	E	70919281			73113289
	70930444	15-1/2	70920850	70920303	A	70920880	70919254	D	70919076			73113307
	70930445	19-1/4	70920867	70919277	E		70922765	L	70919281			73113290
	70930444	19-1/2	70920850	70920303	A	70920865	70919081	E	70919076			73113265
	70931158	42-1/4	70924177	70921513	L	70923506	70922894	L	70920972			73111427
	70919155	25-1/2	70920857	70919079	B	70920879	70919159	D	70919075			73117378
	70919156	21-3/4	70920858	70919080	B	70920838	70919074	C	70919076			73117379
	70919156	16-1/4	70920858	70919080	B		70919175	F	70919076			73121589
	70920222	21-1/2	70921033	70921034	A	70920868	70920144	E	70919282			73117187
	70930645	16-1/4	70920852	70920344	A	70920852	70920344	A	70919281			73117186
	70930445	18-1/2	70920852	70920344	A	70920867	70919277	E	70919281			73117188
	70930444	17-1/2	70920850	70920303	A	70920880	70919254	D	70919076			73115490
	70931158	117-7/8		70920978	A		70921564	D	70920975			73119001

* Not available in 25 ft. length. bulk only. Specify length required.

(Revised February 1980)

PACKAGED PARTS

PACKAGE NO.			DESCRIPTION
74396408	GASKET KIT, cylinder head		
	1	70928905	O-RING, water outlet manifold (Discard)
	2	74025781	GASKET, turbocharger mounting (Discard)
	1	74029746	GASKET, front cross over (Discard)
	8	74254873	WASHER, rocker cover capscrew
	8	74255956	SLEEVE, fuel line (rubber)
	1	74339532	GASKET, turbocharger oil drain (Discard)
	1	74361551	GASKET, air intake elbow
	1	74376520	GASKET, thermostat housing cover
	6	74378031	GASKET, nozzle
	1	74386137	GASKET, thermostat by-pass tube
	12	74387697	GASKET, intake and exhaust manifold
	2	74389961	GASKET, cylinder head cover (upper)
	1	74391707	GASKET, air inlet
	2	74393989	GASKET, cylinder head cover (lower)
	1	74395425	GASKET, manifold connecting
	2	74396409	GASKET ASSY., cylinder head (Includes instruction sheet)
	6	74395709	GASKET, water outlet manifold (Discard)
	1	74395713	GASKET, cover (Discard)
74396006	GASKET KIT, intermediate, engine cylinder block (Does not include cylinder head or oil pan gaskets)		
	2	70667252	GASKET, drain plug
	8	70923379	O-RING, water tube
	1	70923575	O-RING, idler pin
	3	70923590	O-RING, cover plate (Discard)
	8	70923645	O-RING, injection pump line
	2	70923651	O-RING, bonnet tube
	2	70923810	O-RING, dowel
	1	70923813	O-RING, idler gear pin
	5	70923934	O-RING
	1	70923935	O-RING, water pump flange
	1	70923936	O-RING, cam (Discard)
	1	70923950	O-RING, idler support mounting
	12	70925612	O-RING, water inlet manifold
	1	70924142	O-RING, pump adapter (Discard)
	2	74113897	GASKET, cap nut (Discard)
	4	74119937	GASKET, plugging capscrew
	5	74255511	O-RING, heat exchanger/oil filter (Discard)
	2	74255513	O-RING, oil filter (Discard)
	14	74255631	O-RING, oil cooler
	4	74255665	O-RING, fuel pump bracket
	2	74255781	O-RING, heat exchanger elbow
	1	74255898	O-RING
	1	74255904	O-RING
	1	74255912	O-RING, flywheel
	1	74310257	GASKET, oil filler pipe
	1	74336897	O-RING, flywheel housing
	1	74361740	GASKET, idler support
	1	74367090	GASKET, tachometer hole nut

(Continued)

PACKAGED PARTS

PACKAGE NO.		DESCRIPTION
74396006 (Cont'd)	GASKET KIT, intermediate, engine cylinder block (Does not include cylinder head or oil pan gaskets)	
1	74371027	GASKET, gear housing hole cover
2	74371160	GASKET, heat exchanger
1	74371289	GASKET, oil pan cover (Discard)
3	74371345	GASKET, oil tube (Discard)
1	74371742	GASKET, cover
1	74376398	GASKET, water pump
1	74376603	GASKET, accessory drive
1	74376609	GASKET, gear housing cover
7	74376749	WASHER, push rod cover capscrew
2	74377120	GASKET, push rod cover
2	74378112	GASKET, lower by-pass flange
1	74379070	SEAL, oil pan (Discard)
1	74385317	GASKET, water manifold (Discard)
1	74385320	GASKET, bonnet (Discard)
1	74386223	GASKET, bonnet
1	74386495	GASKET, water and oil manifold, lower
1	74386856	GASKET, heat exchanger (Discard)
1	74387525	GASKET, cover (Discard)
1	74389291	GASKET, water and oil manifold, upper (Discard)
1	74389635	GASKET
1	74389676	GASKET, heat exchanger
1	74389678	GASKET, heat exchanger
3	74389782	GASKET, oil tube (Discard)
1	74390432	GASKET, housing cover
4	74393359	GASKET, oil lines
1	74394673	GASKET, timing hole cover (Discard)
1	74396000	GASKET, timing gear housing cover (Discard)
1	74394678	GASKET, timing gear housing (Discard)
1	74660423	GASKET, oil line (Discard)
1	74660492	GASKET, gear housing

PACKAGED PARTS

PACKAGE NO.		DESCRIPTION	
70696698		GASKET KIT, transmission	
	1	70627346	GASKET
	1	70648619	SEAL
	1	70652389	GASKET
	1	70653798	GASKET
	1	70654104	GASKET
	1	70657582	SEAL
	1	70662633	GASKET
	2	70667252	GASKET
	1	70667563	GASKET
	1	70670673	MINOR KIT
	1	70691449	GASKET
	1	70921235	O-RING
	2	70923561	O-RING
	1	70923578	O-RING
	1	70923587	O-RING
	2	70923664	O-RING
	1	70923819	O-RING
	1	70923821	O-RING
	1	70923823	O-RING
	1	70923828	O-RING
	1	70923834	O-RING
	2	70923947	O-RING
	1	70925241	O-RING
	1	70925652	O-RING
	4	70929881	O-RING
	2	70931695	O-RING
	3	73037676	O-RING
	3	73037684	SEAL
	5	73107685	O-RING
	1	73118975	SEAL
70696699		GASKET KIT, torque converter	
	1	70640636	GASKET
	1	73126342	SEAL
	1	70657980	GASKET
	1	70657982	GASKET
	1	70657983	GASKET
	1	70658008	GASKET
	1	70658009	GASKET
	1	70658010	GASKET
	1	70658026	GASKET
	1	73126336	SEAL
	1	70658931	GASKET
	1	70666039	GASKET
	3	70921885	O-RING
	2	70923561	O-RING
	1	70935011	O-RING
	4	70923664	O-RING
	1	70926288	O-RING
	1	70924828	O-RING

order multiple replacement

1-73122232
1-70627346
2-923561
2-73037684
2-73037676

(Revised July 1980)

PACKAGED PARTS

PACKAGE NO.	DESCRIPTION
73056485	REPAIR KIT, dozer cylinder (See page 244)
73056486	REPAIR KIT, ripper cylinder (See page 255)
73056933	REPAIR KIT, tilt cylinder (See page 237)

73112623 — TRANSMISSION FRONT ROLLER BEARING KIT (For updating transmission front bearing from ball-type to roller type on tractors prior to serial No. 71A21388 excluding unit Nos. listed on page 101)

1	70023633	LOCKWIRE	
2	70035689	CAPSCREW	
1	70921402	ELBOW	
2	70921409	CONNECTOR	
1	70921573	PLUG	
2	70922457	CONNECTOR	Discard. Not applicable
1	70923905	ELBOW	Discard. Not applicable
2	70928460	WASHER	
4	70929881	O-RING	
2	73108564	CONNECTOR	
1	73112617	RING, snap	
8	73112618	SHIM	
8	73112619	SHIM	
4	73112620	BEARING	
8	73112621	SHIM	
8	73112622	SHIM	
1	73112624	RETAINER	
1	73112625	WASHER	
1	73112626	COLLECTOR	
3	73112630	SPACER	

74396647 — PISTON AND SLEEVE KIT (See pages 13, 17 and 17A)

1	74061528	SLEEVE	Replace in sets on all 21000 MKII engines, also all 6138 engs. prior to S/N14-02471
1	74396638	PISTON ASSY.	Replace in sets on all 21000 MKII engines, also all 6138 engs. prior to S/N14-02471

73119476 — LOOSE PARTS KIT (Used to adapt Model 6138-T engine to units prior to unit #21812)

2	70933330	CAPSCREW
1	70158613	LOCKWIRE
1	70080809	HANGER
1	73117381	CABLE ASSY.
2	70929059	CAPSCREW
3	70677008	WASHER
1	73117283	BRACKET
1	73117380	ROD
3	70628738	PIN
1	73116481	ROD
1	73117280	YOKE
1	70910244	WASHER
1	70900806	PIN
3	70900970	PIN
2	70900801	PIN
2	70078810	PIN
1	73117378	HOSE
1	73117379	HOSE

(Continued)

PACKAGED PARTS

PACKAGE NO.	DESCRIPTION
73119476 (Continued)	LOOSE PARTS KIT (Used to adapt Model 6138-T engine to units prior to unit #21812)

1	70927455	CONNECTOR
1	70092727	SHUT-OFF COCK
1	70901490	NIPPLE
1	70901678	ELBOW
1	70931922	UNION
1	70933471	CONNECTOR
1	70927104	CLAMP
2	70920582	CAPSCREW
2	70928460	WASHER
1	70911028	NUT
1	73117197	ELBOW
1	73117185	HOSE
1	70933796	ELBOW
2	70923016	CAPSCREW
2	70930370	WASHER
1	73117198	PUMP ASSY.
1	73117190	TUB
1	73117193	STRAP
1	70930725	O-RING
2	70917388	SCREW
2	70911982	WASHER
2	70926673	NUT
1	70662427	CLAMP ASSY.
1	70654655	CLIP
1	70920582	CAPSCREW
3	70928460	WASHER
1	70911028	NUT
1	70921076	CAPSCREW
1	70911034	NUT
1	70910267	NUT
2	70652011	GASKET
1	70933476	O-RING
1	70674412	GASKET
1	73117186	HOSE
1	73117188	HOSE
1	73117191	TUBE
1	73117192	TUBE
2	70933473	ELBOW
1	73117195	ELBOW
3	70925922	O-RING
1	70925832	CONNECTOR
1	70933715	ELBOW
2	73117187	HOSE
4	70921913	CLAMP
1	70933500	CONNECTOR
2	70930724	O-RING
1	70922300	CAPSCREW
2	70929156	WASHER
1	70911026	NUT
1	73121590	TUBE
1	73121589	HOSE
1	70933476	O-RING

"FILTER CARE" KIT

MODEL: 21C

250 HOUR KIT

PART NUMBER: 75124710

QUANTITY	PART NUMBER	DESCRIPTION
1	70921349	O'RING OIL PAN DRAIN
1	70667252	GASKET OIL PAN DRAIN
1	70923663	O'RING OIL PAN DRAIN
1	74059343	LUBE OIL FILTER
2	74395889	LUBE OIL FILTER

500 HOUR KIT

PART NUMBER: 75124711

QUANTITY	PART NUMBER	DESCRIPTION
1	70921349	O'RING OIL PAN DRAIN
1	70667252	GASKET
1	70923663	O'RING OIL PAN DRAIN
1	74059343	LUBE OIL FILTER BYPASS
2	74395889	LUBE OIL FILTER
1	70663977	GASKET
1	70923950	O'RING HYDRAULIC TANK CAP
1	70923579	O'RING
1	70923594	O'RING HYDRAULIC STRAINER
1	70923951	O'RING
1	70923581	O'RING
1	70924146	O'RING
1	70666423	CONNECTOR
1	75120378	INSTRUCTION SHEET
1	70669434	ELEMENT KIT TRANSMISSION
1	74394407	SEPERATOR FUEL
1	74393504	FILTER ASSEMBLY COOLANT
2	70666421	ELEMENT HYDRAULIC
2	74394335	FILTER ASSEMBLY FUEL

(Added May 1989)

"FILTER CARE" KIT

MODEL: 21C

1000 HOUR KIT

PART NUMBER: 75124712

QUANTITY	PART NUMBER	DESCRIPTION
1	74059343	LUBE OIL FILTER
2	74395889	LUBE OIL FILTER
1	70923950	O'RING HYDRAULIC STRAINER
1	70923594	O'RING HYDRAULIC STRAINER
1	70923581	O'RING HYDRAULIC STRAINER
1	70669434	ELEMENT KIT TRANSMISSION
1	74394407	SEPERATOR FUEL
1	74393504	FILTER ASSEMBLY
2	74394335	FILTER ASSEMBLY FUEL
1	70671838	FILTER PRIMARY AIR
1	70671839	FILTER SAFETY AIR
1	70664000	FILTER KIT HYDRAULIC
1	73128973	FILTER STEEERING
1	70652389	GASKET TRANSMISSION STRAINER
2	70694662	FILTER KIT FINAL DRIVE
1	70923884	FILTER STEERING STRAINER
1	70667252	FILTER TRANSMISSION DRAIN

NOTE: Clean and Reuse;
Filter - 70651532
Transmission filter - 70653873 and
73109807.

(Added May 1989)

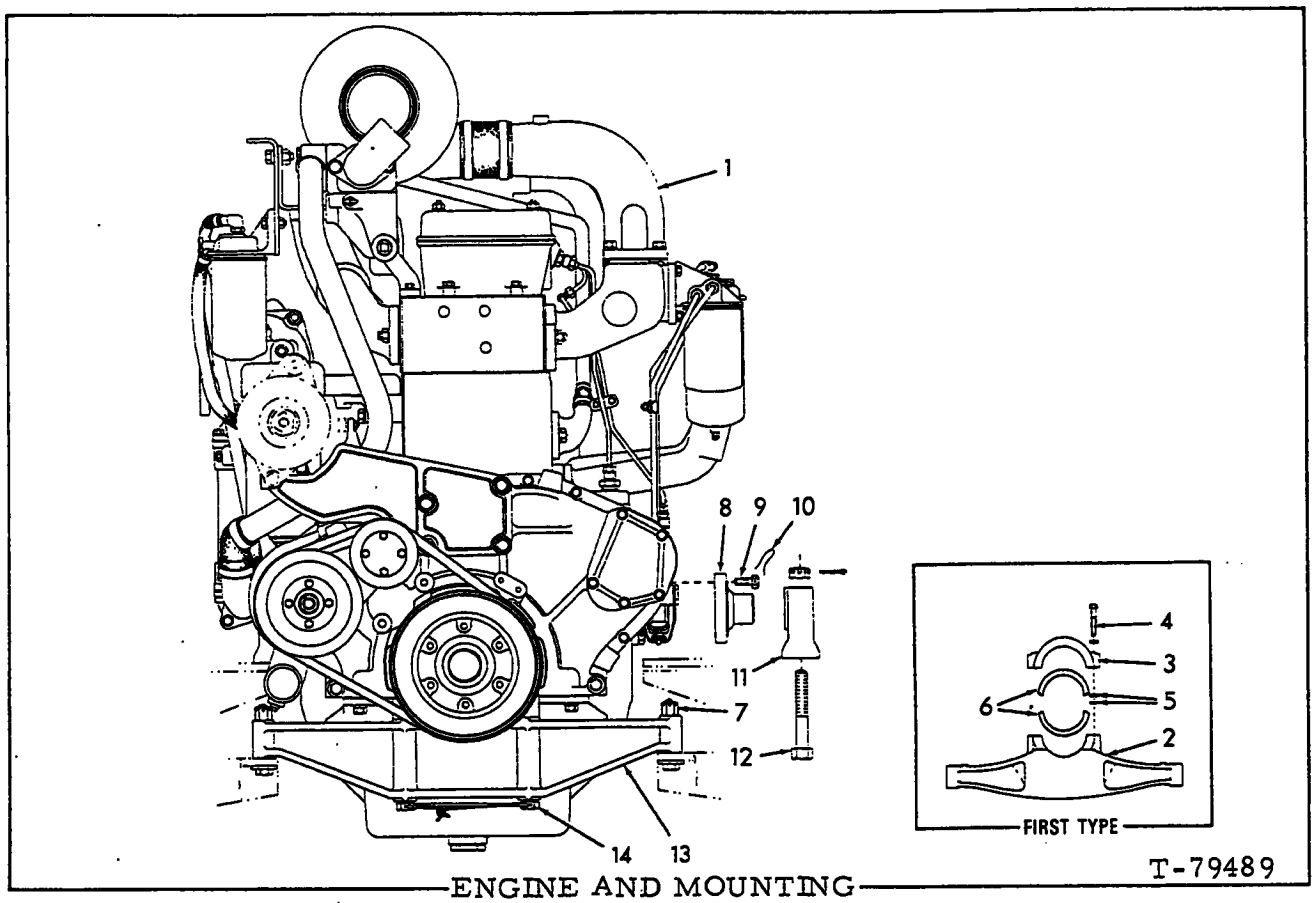

ENGINE AND MOUNTING

* Tractors prior to serial No. 71A21812 excluding #21757, 21761 and 21767
** Tractors serial No 71A21812 and up including #21757, 21761 and 21767

ITEM	PART NO.	QTY. *	QTY. **	DESCRIPTION
1	74394588	1	-	ENGINE ASSY. (21000 MKII) } See NOTE below
	73117230	-	1	ENGINE ASSY. (6138-T) } See NOTE below
		NOTE:		Each engine assy. includes oil filters, oil cooler, fuel filter and turbocharger, but does not include air cleaner, fan, alternator, starter, muffler or crankcase lubricant.
2	70655452	1	-	HANGER (Includes item 3)
3	--------	1	-	CAP (Not serviced separately)
4	70669299	2	-	SCREW, Nylok, flanged, hex-hd., 1/2"NC x 3"
	74372864	2	-	WASHER
5	70916009	14	-	WASHER, shimming (1/32"thk. Use as required)
6	74336491	2	-	LINER
7	70670451	2	2	CAPSCREW, drilled-end, 5/8"NF x 4-1/4"
	70926193	2	2	WASHER
	70913280	2	2	NUT, high, slotted, 5/8"
	70900806	2	2	PIN, cotter, 1/8" x 1"
8	70682555	2	2	TRUNNION
9	70929086	8	8	CAPSCREW, drilled-hd., 5/8"NC x 1-1/4"
10	70023633	4	4	WIRE, locking, 1/16" x 12"
11	70682549	2	2	BRACKET
12	70682224	4	4	CAPSCREW, drilled-end, 3/4"NF x 6-3/4"
	70677012	4	4	WASHER
	70673037	4	4	NUT, slotted, 3/4"NF
	70900808	4	4	PIN, cotter, 1/8" x 1-1/2"
13	70080809	-	1	HANGER
14	70933330	-	2	CAPSCREW, drilled head, 5/8"NC x 5"
	70158613	-	1	LOCKWIRE

(Revised February 1980)

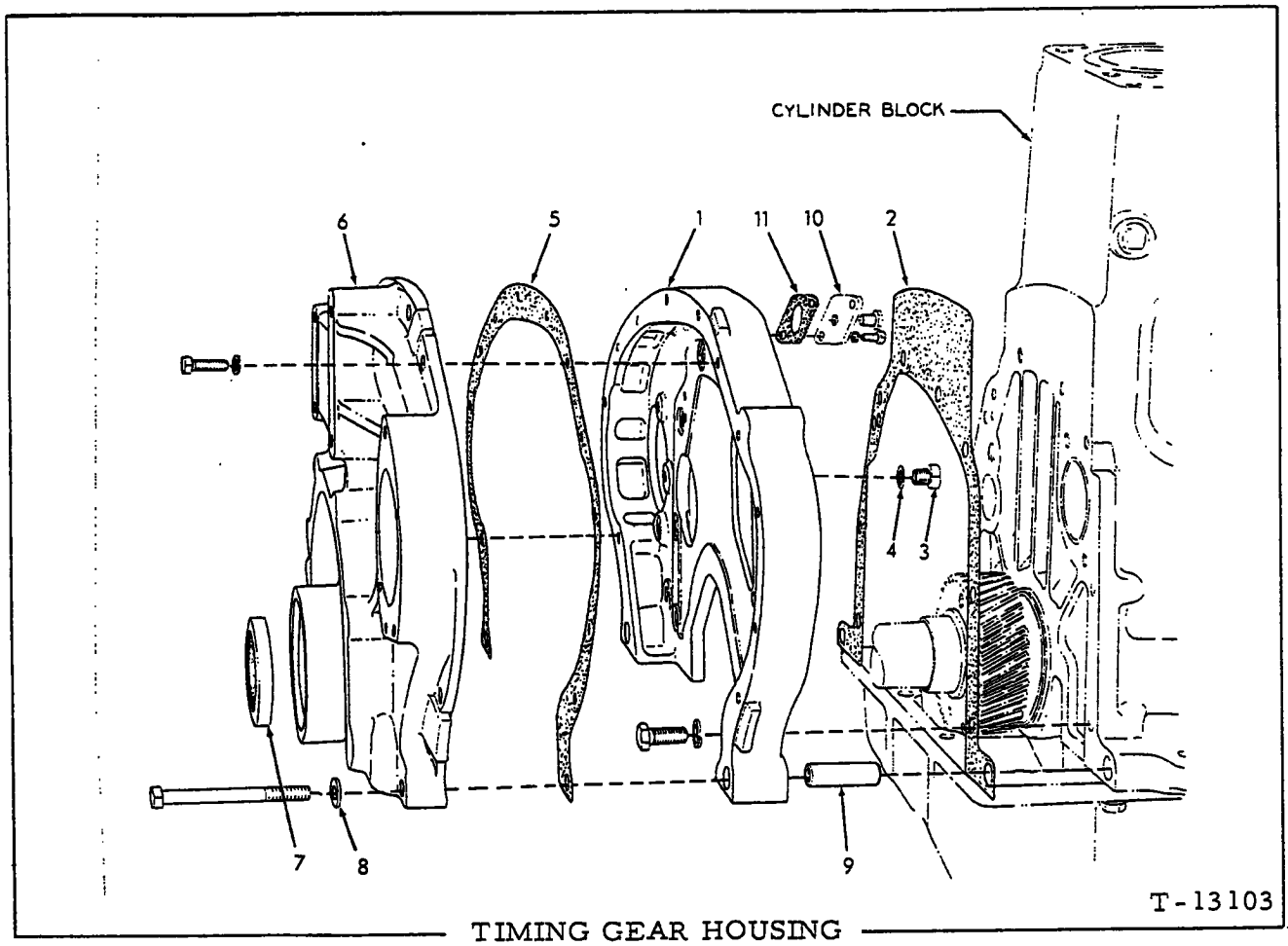

TIMING GEAR HOUSING

USAGE: Engines prior to S/N 14-01260.

ITEM	PART NO.	QTY.	DESCRIPTION
1	74393560	1	HOUSING
	70916311	8	CAPSCREW, 1/2"NC x 1-1/4"
	70904208	8	LOCKWASHER, 1/2"
2	74660492	1	□GASKET
3	70919229	1	CAPSCREW, 1/2"NC x 1/2"
4	74119937	1	GASKET
5	74376609	1	GASKET
6	74395852	1	COVER
	70916321	2	CAPSCREW, 1/2"NC x 4-1/2"
	70919224	7	CAPSCREW, 3/8"NC x 1-1/8"
	70904206	7	LOCKWASHER, 3/8"
7	74036340	1	SEAL
8	74371445	2	WASHER
9	74371444	2	DOWEL
10	74390837	1	COVER
	70915408	2	CAPSCREW, 3/8"NC x 3/4"
	70904206	2	LOCKWASHER, 3/8"
	70918887	1	PLUG, pipe, hex-socket, 3/8"NPT
11	74371027	1	□GASKET

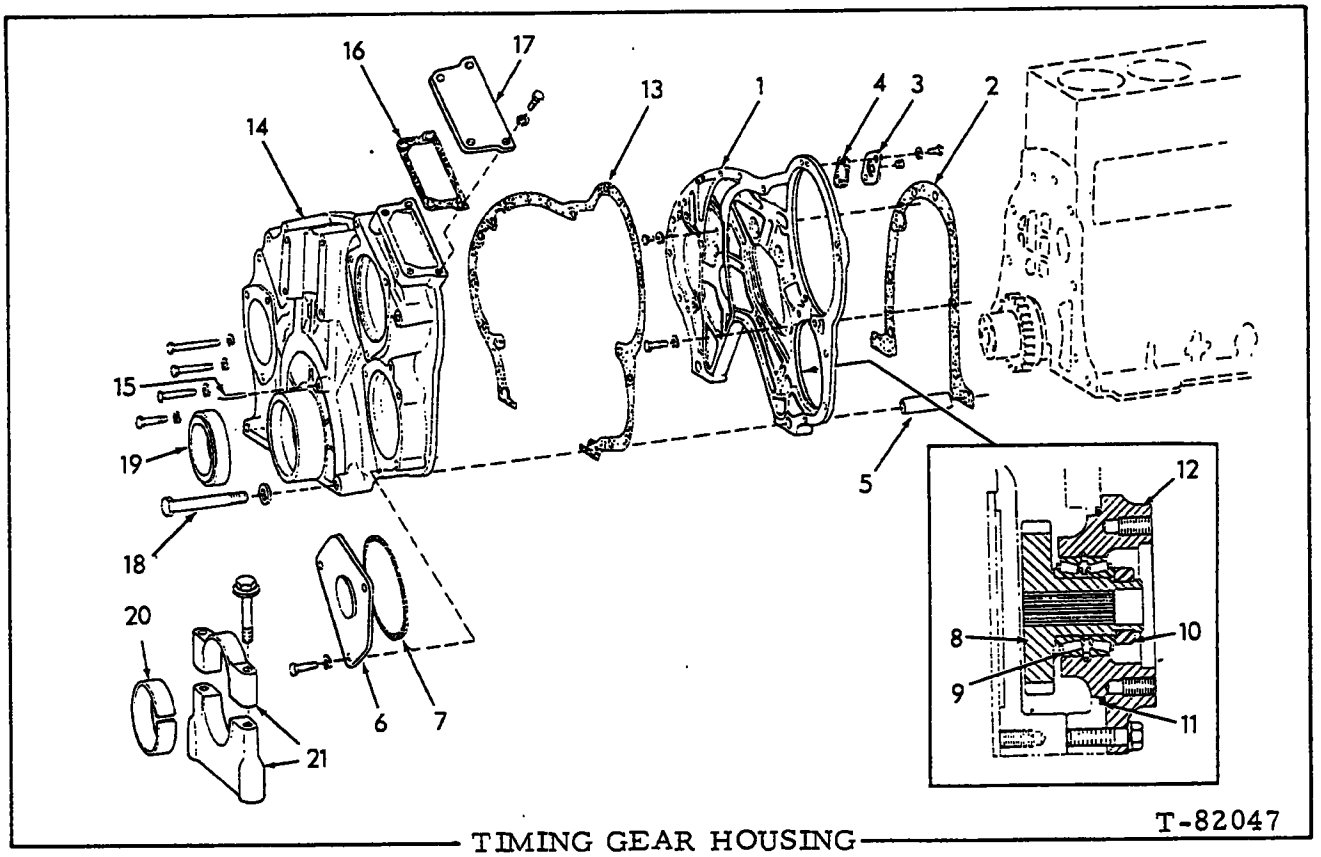

TIMING GEAR HOUSING

USAGE: Tractors engine S/N 14-01260 and up

ITEM	PART NO.	QTY.	DESCRIPTION
1	74394675	1	HOUSING, timing gear
	70916311	8	CAPSCREW, 1/2"NC x 1-1/4"
	70912441	8	LOCKWASHER, 1/2"
	70912069	2	CAPSCREW, 3/8"NC x 2-1/2"
	70910287	2	LOCKWASHER, 3/8"
2	74395999	1	□GASKET
3	74390837	1	COVER
	70918887	1	PLUG, pipe, hex-skt., 3/8"NPT
	70915408	2	CAPSCREW, 3/8"NC x 3/4"
	70910287	2	LOCKWASHER, 3/8"
4	74371027	1	□GASKET
5	74371444	2	DOWEL
6	74394672	2	COVER
	70930358	1	CAPSCREW, Nylok, 3/8"NC x 7/8"
	70922763	5	CAPSCREW, 3/8"NC x 1"
	70910287	6	LOCKWASHER, 3/8"
7	70923590	2	□O-RING
8	74395510	1	GEAR
9	74357289	1	BEARING
10	74023052	1	NUT
11	70923590	1	□O-RING

(Continued)

TIMING GEAR HOUSING (Continued)

ITEM	PART NO.	QTY.	DESCRIPTION
12	74396118	1	HOUSING
	70930796	1	CAPSCREW, Nylok, 3/8"NC x 1-1/4"
	70921076	2	CAPSCREW, 3/8"NC x 1-1/4"
	70910287	3	LOCKWASHER, 3/8"
13	74396000	1	□GASKET
14	74395998	1	COVER
	70919015	5	CAPSCREW, 3/8"NC x 3-1/2"
	70919224	1	CAPSCREW, 3/8"NC x 1-1/8"
	70922287	1	CAPSCREW, 3/8"NC x 1-3/4"
	70919227	2	CAPSCREW, 3/8"NC x 3-1/4"
	70915990	1	CAPSCREW, 3/8"NC x 2-3/4"
	70910287	9	LOCKWASHER, 3/8"
15	74395997	1	POINTER, timing
16	74394673	1	□GASKET
17	74396168	1	COVER
	70921076	4	CAPSCREW, 3/8"NC x 1-1/4"
	70910287	4	LOCKWASHER, 3/8"
18	70916321	2	CAPSCREW (1/2"NC x 4-1/2")
	74371445	2	WASHER
19	74062468	1	SEAL
20	74395453	1	LINER
21	74395454	1	SUPPORT
	70924694	2	CAPSCREW, flanged, 1/2"NC x 3"

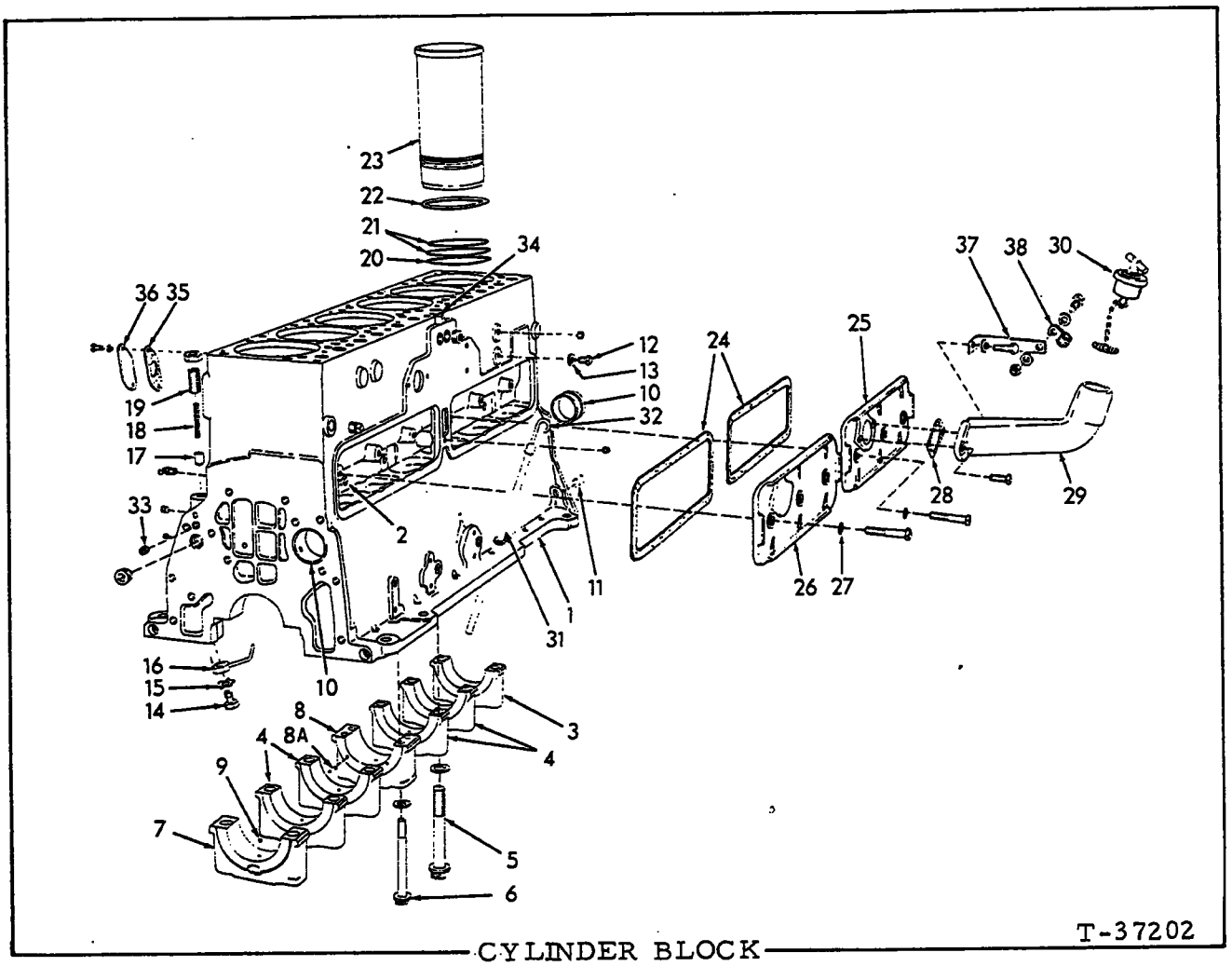

CYLINDER BLOCK

ITEM	PART NO.	QTY.	DESCRIPTION
1	74396091	1	BLOCK ASSY., cylinder (Piston cooled engines with cooling jets in cylinder block wall) (Includes items 2 thru 13, 37, 38 and items indented below)
	74255491	1	PLUG, pipe, (Top deck), 1/4"
	70919134	1	PLUG, pipe, hex-hd., 1/8"NPT
	70919840	3	PLUG, pipe, hex-hd., 1/4"NPT
	70919850	4	PLUG, pipe, hex-skt., 1/4"NPT
	70919887	1	PLUG, pipe, hex-skt., 3/8"NPT
	70920416	1	PLUG, pipe, hex-hd., 1/2"NPT
	70917970	2	PLUG, pipe, hex-skt., 1/2"NPT
	70918851	2	PLUG, pipe, hex-skt., 3/4"NPT
	74255363	1	COCK, water drain
	74362338	1	PLUG, oil gauge hole
2	--------	4	DOWEL (See page 24)
3	74395099	1	*CAP, rear
4	74395103	4	*CAP, intermediate
5	74393397	12	CAPSCREW
6	74391307	4	CAPSCREW
7	74395101	1	*CAP, front
8	74395108	1	*CAP, center

(Continued)

ITEM	PART NO.	QTY.	DESCRIPTION	
8A	--------	4	PIN (See page 14)	
9	74389292	7	PIN (For .250" bearing cap hole and .250" bearing oil hole)(Engines prior to #21-14477)	
	74395109	7	PIN (Adapter for .438" bearing cap hole and .375" bearing oil hole)	
	70919777	7	PIN (For .375" bearing cap hole and .375" bearing oil hole)(Engine #21-14477 and up)	
10	74665306	2	BEARING, front and rear	
	74393373	2	BEARING, intermediate	
11	--------	2	PIN (See page 20)	
12	70919229	3	CAPSCREW, 1/2"NC x 1/2"	
13	74119937	3	□GASKET	
14	74386262	6	SCREW, jet retaining	Used on piston cooled engines with cooling jets in cylinder block wall
15	74255186	6	LOCKWASHER	
16	74390766	3	JET ASSY. (Cylinders 1,2 and 4) — Each includes PIN indented below	
	74390767	3	JET ASSY. (Cylinders 3,5 and 6) — Each includes PIN indented below	
	70917558	6	PIN, dowel	
17	74500230	1	PISTON	
18	74660358	1	SPRING	
19	74389058	1	SCREW	
	70910847	1	NUT, jam, 3/4"NF	
20	74385485	6	O-RING (red)	
21	74393426	12	O-RING (black)	
22	74368204	-	SHIM (.005"thick)	Use as required when machining block
	74368205	-	SHIM (.010"thick)	
	74368206	-	SHIM (.015"thick)	
	74369002	-	SHIM (.020"thick)	
23	74061528	6	□SLEEVE ASSY. (Includes SLEEVE and items 20 and 21)	
24	74377120	2	□GASKET	
25	74393854	1	COVER	
	70916316	3	CAPSCREW, 1/2"NC x 2-1/2"	
26	74393853	1	COVER	
	70916316	2	CAPSCREW, 1/2"NC x 2-1/2"	
	70916317	1	CAPSCREW, 1/2"NC x 2-3/4"	
27	74376749	7	□WASHER	
28	74310257	1	□GASKET	
29	74394952	1	ELBOW, oil filler	
	74379198	2	CAPSCREW, Nylok, 1/2"NC x 1-3/8"	
30	74354492	1	CLOSURE ASSY. (Serviced only as a unit)	
31	74395046	1	ADAPTER	
32	74395045	1	GAUGE, oil level	
33	74389943	1	RESTRICTOR, oil by-pass(Engines prior to #21-14477)	
34	70932799	1	SETSCREW (Engines #21-14477 thru #14-01259)	
35	74025101	2	GASKET	Engine #21-14477 and up
36	74024141	2	PLATE	
	70916253	4	CAPSCREW, 7/16"NC x 3/4"	
	70914678	4	LOCKWASHER, 7/16"	
37	70642413	1	ANGLE	

(Continued)

(Revised May 1982)

ITEM	PART NO.	QTY.	DESCRIPTION
38	70929458	1	CLAMP
	70922300	1	CAPSCREW, 3/8"NC x 3/4"
	70929256	2	WASHER
	70900367	1	NUT, 3/8"NC

*Replacement bearing caps are semi-finished and must be line-bored after installing.

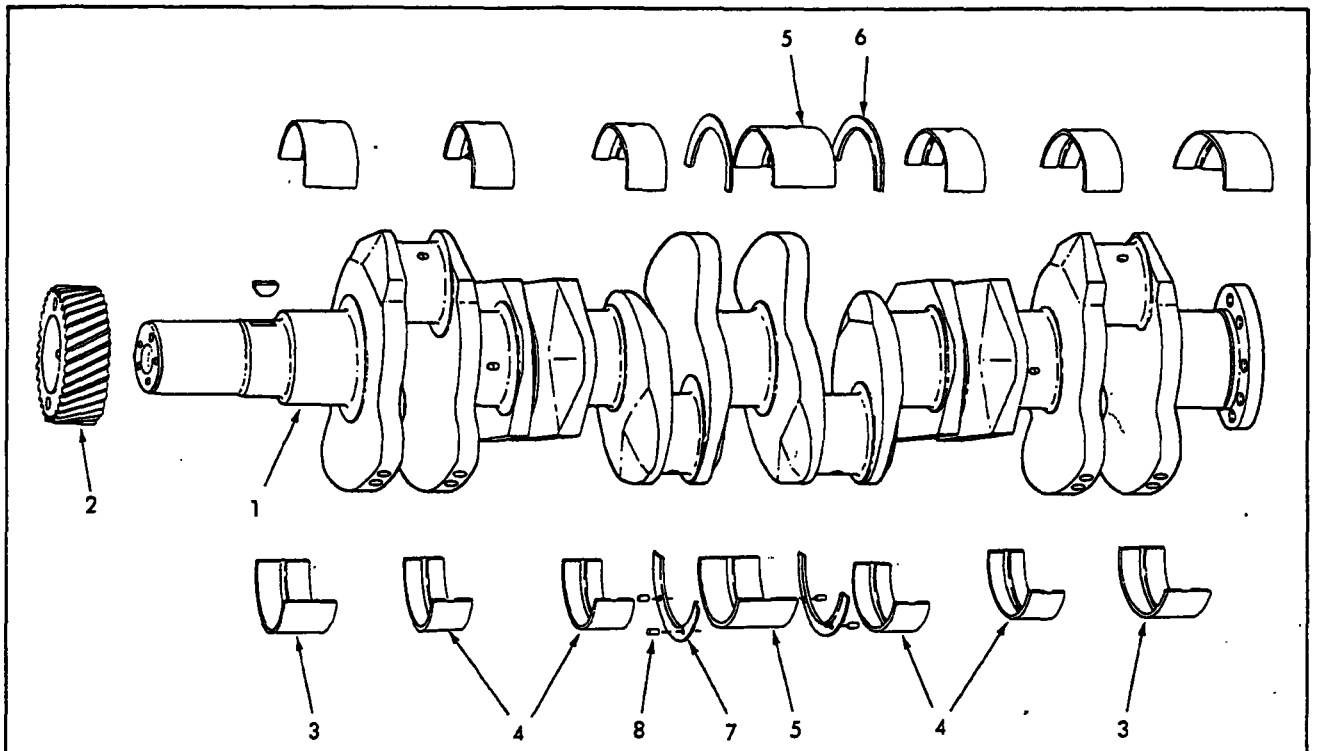

CRANKSHAFT

* Engines prior to S/N 14-01260
** Engines S/N 14-01260 and up

ITEM	PART NO.	QTY. *	QTY. **	DESCRIPTION	
1	74396002	1	-	CRANKSHAFT(For first replacement on engines prior to #21-14546 also order 1GEAR 74395185 and 1 KEY 70905127)	
	74395456 - 74396812	-	1	CRANKSHAFT	
2	74389052	1	-	GEAR	Engine prior to S/N 21-14546
	70905129	1	-	KEY, "D" woodruff, 5/16" x 1-1/4"	
	74395185	1	-	GEAR	Engines S/N 21-14546 and up
	70905127	1	-	KEY, "B" woodruff, 5/16" x 1"	
	74396173	-	1	GEAR	
	70905127	-	1	KEY, "B" woodruff, 5/16" x 1"	
3	74395905	4	4	BEARING (standard size)	
	74395908	4	4	BEARING (.010" undersize)	
	74395909	4	4	BEARING (.020" undersize)	
	74395910	4	4	BEARING (.030" undersize)	
	74395911	4	4	BEARING (.040" undersize)	
4	74395906	8	8	BEARING (standard size)	For first replacement on engines prior to S/N 21-14477 also order 1 PIN 74395109 per CAP
	74395912	8	8	BEARING (.010" undersize)	
	74395913	8	8	BEARING (.020" undersize)	
	74395914	8	8	BEARING (.030" undersize)	
	74395915	8	8	BEARING (.040" undersize)	
5	74395907	2	2	BEARING (standard size)	
	74395916	2	2	BEARING (.010" undersize)	
	74395917	2	2	BEARING (.020" undersize)	
	74395918	2	2	BEARING (.030" undersize)	
	74395919	2	2	BEARING (.040" undersize)	

(Continued)

(Revised May 1982)

ITEM	PART NO.	QTY. *	QTY. **	DESCRIPTION	
6	74386360	2	-	FLANGE (standard size)	
	74386456	2	-	FLANGE (.005" undersize)	
	74386457	2	-	FLANGE (.010" undersize)	
	74386458	2	-	FLANGE (.015" undersize)	
7	74386359	2	4	FLANGE (standard size)	
	74386453	2	4	FLANGE (.005" undersize)	
	74386454	2	4	FLANGE (.010" undersize)	
	74386455	2	4	FLANGE (.015" undersize)	
8	70919347	4	4	PIN	
9	74062039	1	1	KIT, bearing (standard size)	For first replacement on engines prior to S/N 21-14477 also order 1 PIN 74395109 per CAP
	74062040	1	1	KIT, bearing (.010" undersize)	
	74062041	1	1	KIT, bearing (.020" undersize)	
	74062042	1	1	KIT, bearing (.030" undersize)	
	74062043	1	1	KIT, bearing (.040" undersize)	
				NOTE: Each BEARING KIT listed above consists of BEARINGS for complete crankshaft overhaul	
10	74061825	1	1	KIT, flange (standard size)	
	74061826	1	1	KIT, flange (.005" undersize)	
	74061827	1	1	KIT, flange (.010" undersize)	
	74061828	1	1	KIT, flange (.015" undersize)	

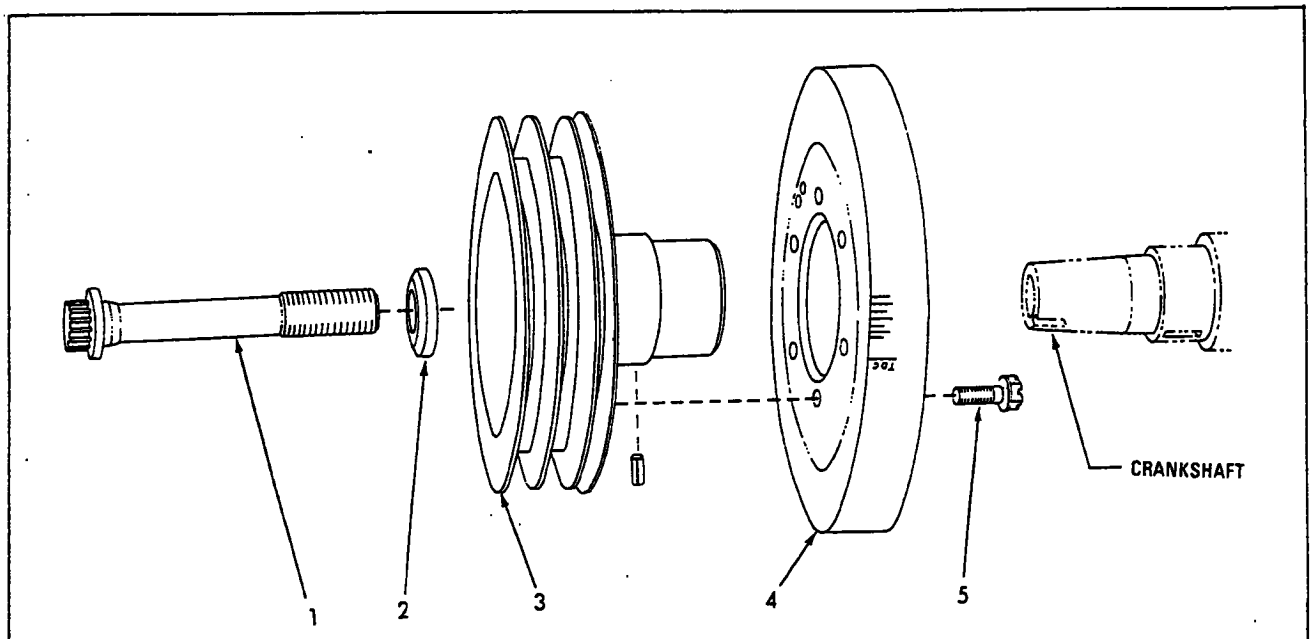

CRANKSHAFT PULLEY

USAGE: Engines prior to S/N 14-01260.

ITEM	PART NO.	QTY.	DESCRIPTION
1	74393435	1	SCREW
2	74393436	1	WASHER
3	74395554	1	PULLEY (Includes pin)
	70921839	1	PIN, spring, 5/16" x 1-3/8"
4	74395767	1	DAMPER
5	74391022	6	BOLT

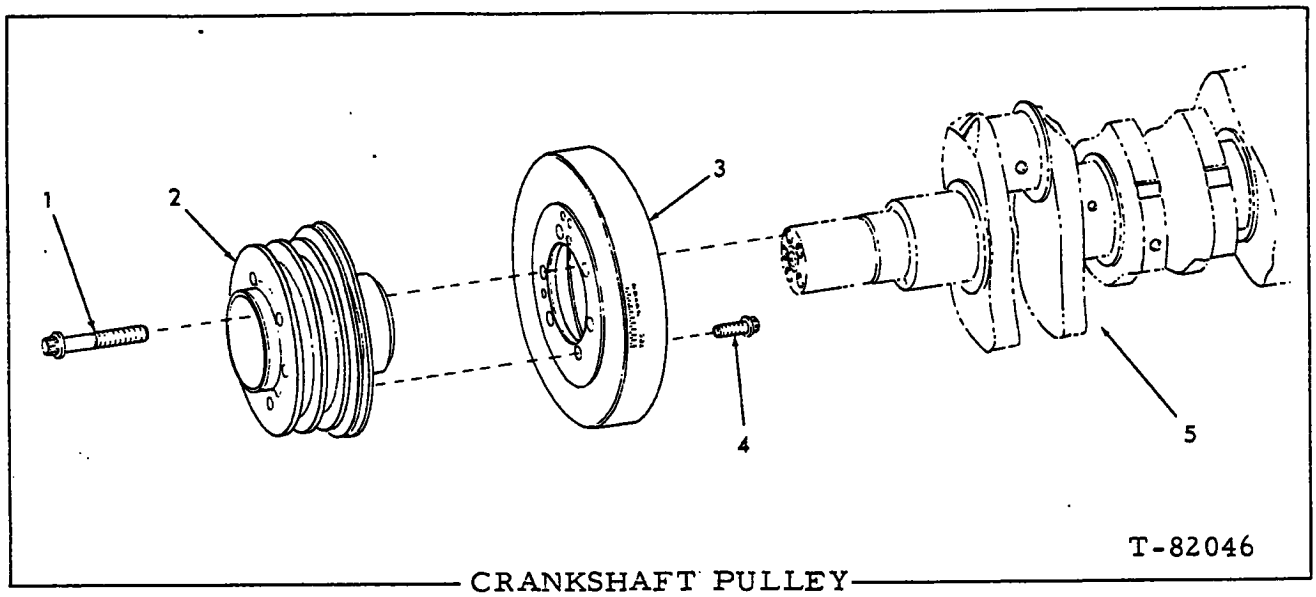

CRANKSHAFT PULLEY

USAGE: Engines S/N 14-01260 and up

ITEM	PART NO.	QTY.	DESCRIPTION
1	74394747	5	CAPSCREW
2	74396448	1	PULLEY
3	74395767	1	DAMPER
4	74391022	6	BOLT
5	74398456	1	CRANKSHAFT (See page 14)

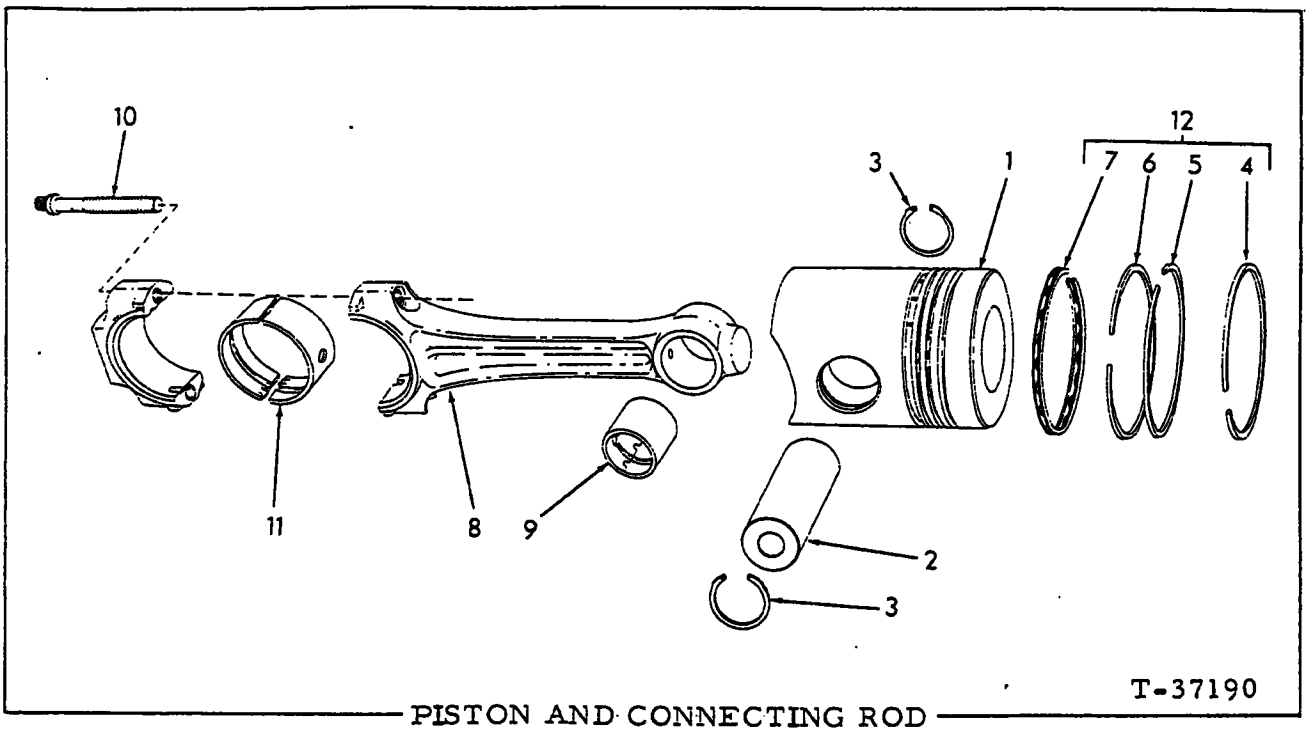

PISTON AND CONNECTING ROD

USAGE: Engines prior to serial No. 21-14953

ITEM	PART NO.	QTY.	DESCRIPTION
1	74396638	6	□ PISTON ASSY. (Includes PISTON and items 2, 3 and 12) (Replace in sets)
2	74394212	6	PIN 2.25
3	74255943	12	RETAINER
4	--------	6	RING (top groove) } Order item 12
5	--------	6	RING (2nd groove)
6	--------	6	RING (3rd groove)
7	--------	6	RING (4th groove)
8	74396085	6	ROD ASSY. (Includes items 9 and 10)(Requires connecting rod Bearing from page 17A)
9	74396367	6	BUSHING KIT (Includes instruction sheet) 74397335
10	74392024	12	CAPSCREW, socket- hd., (Engines prior to #21-14233)
	74394747	12	CAPSCREW, 12 pt. (Engine #21-14233 and up)
11	74394172	12	BEARING (Standard size)
	74394221	12	BEARING (.010" undersize)
	74394222	12	BEARING (.020" undersize)
	74394223	12	BEARING (.030" undersize)
	74394224	12	BEARING (.040" undersize)
12	74062452	6	RING SET (For ONE piston only)(Includes items 4 thru 7)

(Revised June 1981)

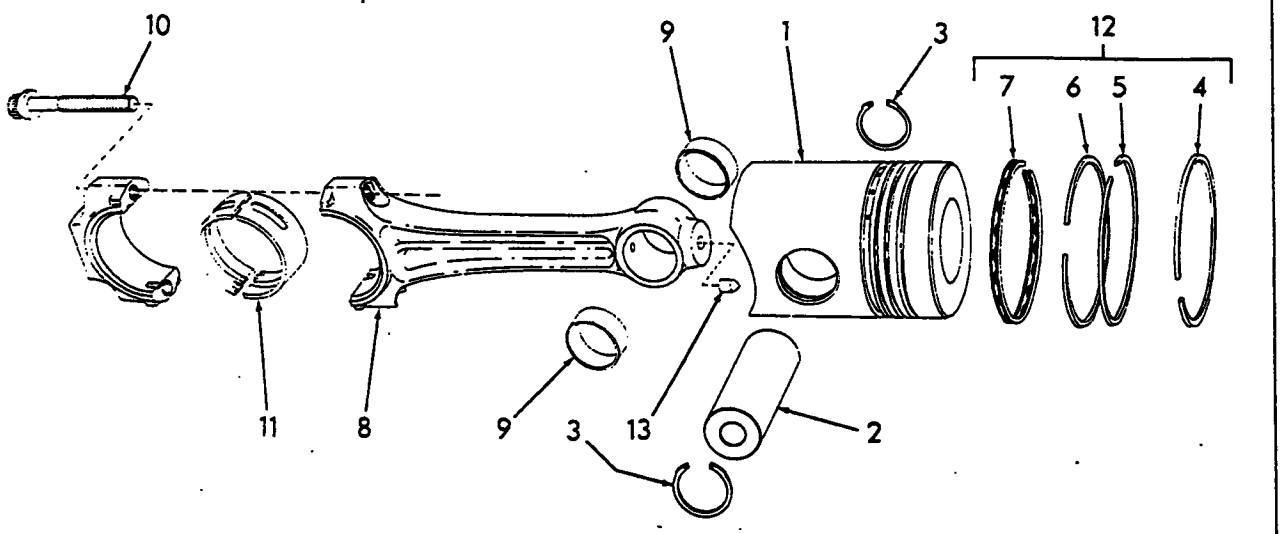

PISTON AND CONNECTING ROD T-37190

USAGE: Engine serial No. 21-14953 and up; also Model 6138 Engine.

ITEM	PART NO.	QTY.	DESCRIPTION
1	74062035 ~~74896638~~	6	□PISTON ASSY. (Includes PISTON and items 2, 3 and 12)(Replace in sets on all 21000 MKII engines,
2	74394212	6	PIN also all 6138 engines prior to S/N14-02471)
3	74255943	12	RETAINER
4	--------	6	RING (top groove) } Order item 12
5	--------	6	RING (2nd groove)
6	--------	6	RING (3rd groove)
7	--------	6	RING (4th groove
8	74396085	6	ROD ASSY. (Includes items 9, 10 and 13)
9	74396367	6	BUSHING KIT (Includes instruction sheet)
10	74394747	12	CAPSCREW, 12 pt.
11	74396048	12	BEARING (Standard size)
	74396049	12	BEARING (.010" undersize)
	74396050	12	BEARING (.020" undersize)
	74396051	12	BEARING (.030" undersize)
	74396052	12	BEARING (.040" undersize)
12	74062452	6	RING SET (For ONE piston only)(Includes items 4 thru 7)
13	74630114	6	TIP, spray (Includes instruction sheet)
14	74062108	1	KIT, bearing (Standard)
	74062109	1	KIT, bearing (.010" undersize) } Kits contain 12 bearings
	74062110	1	KIT, bearing (.020" undersize)
	74062111	1	KIT, bearing (.030" undersize)
	74062112	1	KIT, bearing (.040" undersize)

(Revised June 1981)

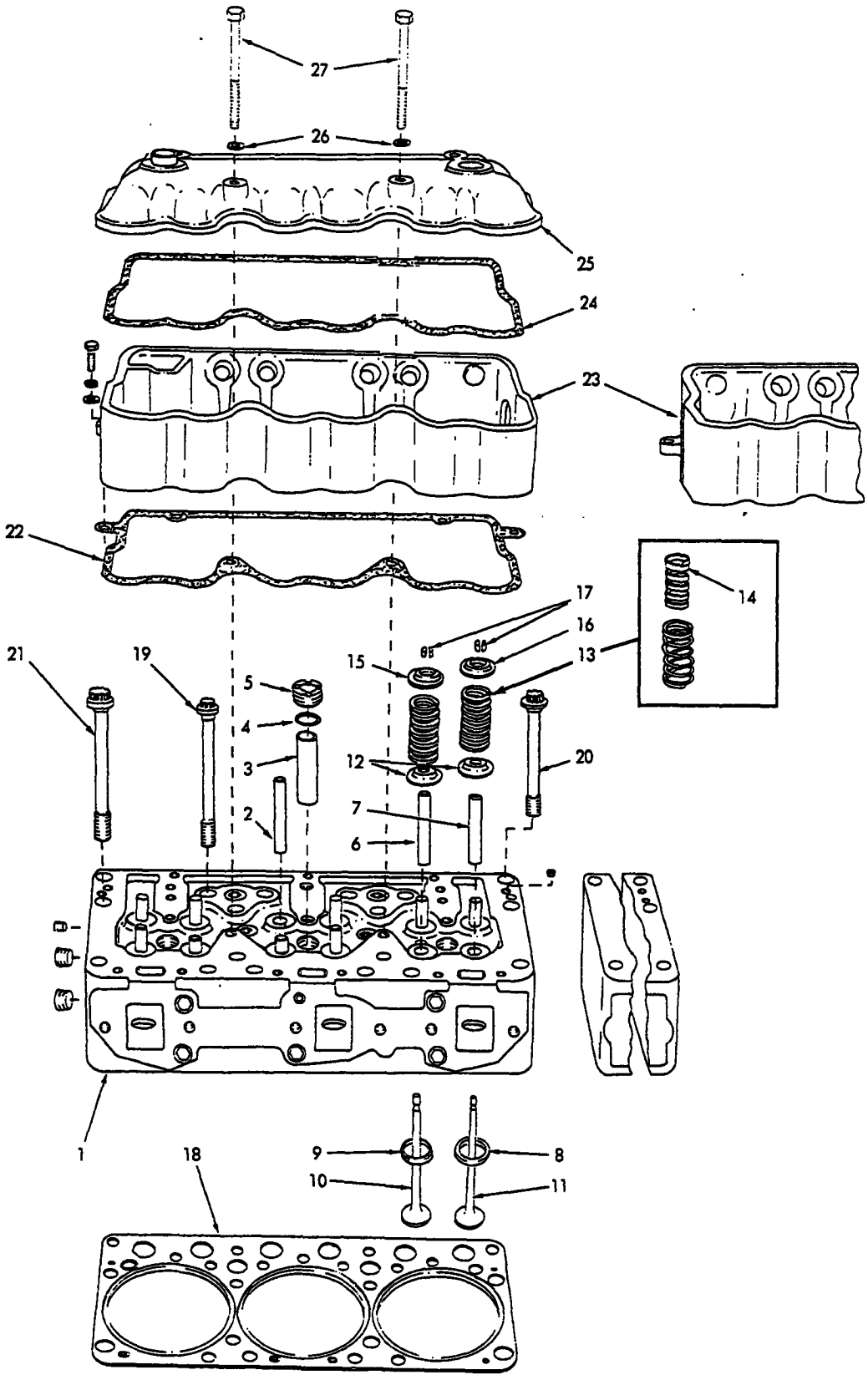

CYLINDER HEAD

I-77915

CYLINDER HEAD

ITEM	PART NO.	QTY.	DESCRIPTION
1	74394445	2	HEAD ASSY., cylinder (Includes items 2 thru 9 and plugs indented below)
	74255490	8	PLUG, pipe, hex-socket, 1/8"NPT
	74255491	2	PLUG, pipe, hex-socket, 1/4"NPT
	74255577	26	PLUG, pipe, hex-socket, 3/4"NPT
2	74386413	12	PIN
3	74392051	6	SLEEVE
4	70926672	6	O-RING
5	74392052	6	NUT
6	74390547	12	GUIDE, intake valve
7	74396560	12	GUIDE, exhaust valve
8	74392053	12	INSERT (standard size)
	74392068	12	INSERT (.005" oversize)
9	74386628	12	INSERT (standard size)
	74386653	12	INSERT (.005" oversize)
10	74386790	12	VALVE, intake
11	74392054	12	VALVE, exhaust
12	74389685	24	SEAT
13	--------	24	SPRING ASSY. (First type)(Includes item 14) (Order 74396664)
	74396664	24	SPRING(Second type with integral damper)
14	--------	24	DAMPER(Used with first type spring)
15	74389397	24	ROTOCOIL ASSY. (Serviced only as a unit)
16	--------	-	RETAINER (Order item 15)
17	74376497	48	LOCK
18	74396409	2	☐GASKET ASSY. (Includes instruction sheet)
19	74391306	26	SCREW (5/8"NC x 7")
20	74391307	2	SCREW (5/8"NC x 6")
21	74393443	8	SCREW (3/4"NC x 7-1/4")
22	74393989	2	☑GASKET
23	74394928	2	COVER,
	70916272	4	CAPSCREW, 3/8"NC x 1-1/4"
	70904206	4	LOCKWASHER, 3/8"
	70913544	4	WASHER
24	74389961	2	☑GASKET
25	74387726	1	COVER, rear
	74386901	1	COVER, front
26	74254873	8	☐WASHER
27	70921405	8	CAPSCREW, 3/8"NC x 6"

(Revised June 1981)

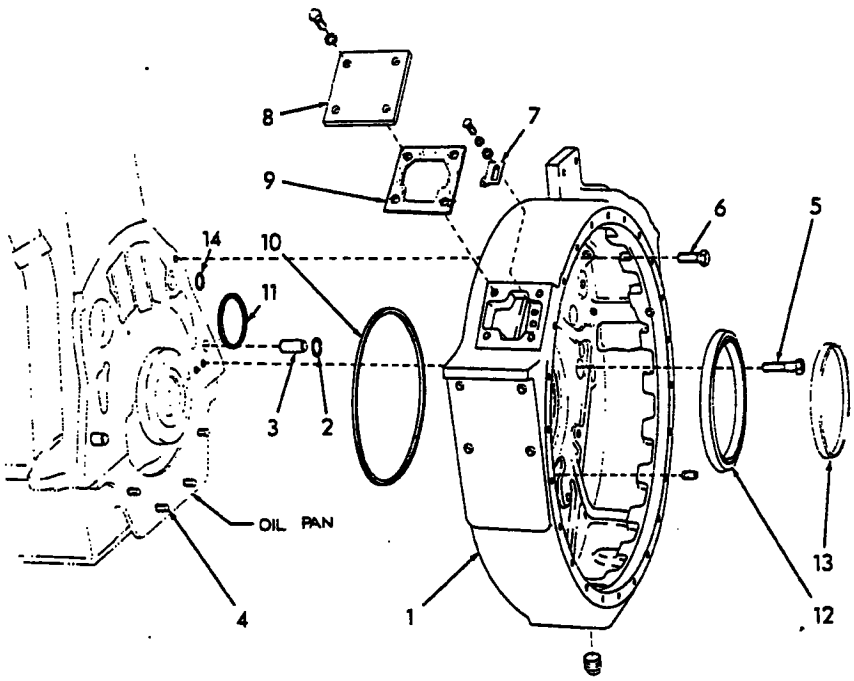

T-41788

FLYWHEEL HOUSING

ITEM	PART NO.	QTY.	DESCRIPTION
1	74395433	1	HOUSING, flywheel
	70922884	1	SETSCREW, hex-socket, cup-pt., Nylok, 7/16"NC x 1/2"
	70920132	1	PLUG, pipe, 1/2"NPT
2	70923810	2	□O-RING
3	74373716	2	DOWEL
4	--------	4	CAPSCREW (See page 29)
5	70921556	2	BOLT, 1/2"NC x 2"
6	70920574	8	BOLT, 1/2"NC x 1-3/8"
7	74386651	1	POINTER
	70916284	2	CAPSCREW, 1/4"NC x 1/2"
	70904204	2	LOCKWASHER, 1/4"
	70911114	2	WASHER
8	74395049	1	COVER
	70915813	4	CAPSCREW, 5/16"NC x 7/8"
	70904205	4	LOCKWASHER, 5/16"
9	74390432	1	□GASKET
10	74336897	1	□RING
11	74255904	1	RING (camshaft hole)
12	74395770	1	SEAL
13	74394036	1	SLEEVE
14	74255898	1	□RING

(Revised May 1982)

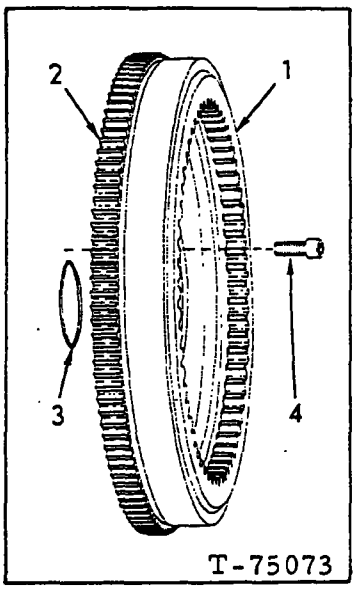

FLYWHEEL

ITEM	PART NO.	QTY.	DESCRIPTION	
1	74395963 DSC	1	FLYWHEEL ASSY. (Engine prior to #21-14645)	Each includes item 2
	74395968 DSC	1	FLYWHEEL ASSY. (Engine #21-14645 and up)	
2	74303694	1	GEAR	
3	74255912	1	□O-RING	
4	74391666	8	CAPSCREW	

ENGINE BREATHER

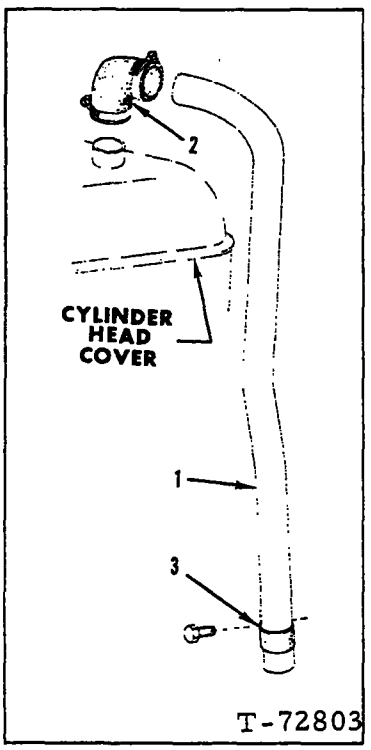

ITEM	PART NO.	QTY.	DESCRIPTION
1	74394764	1	TUBE
2	74255351	1	ELBOW
	70922198	2	CLAMP, 1-9/16" to 2-9/16" diam.
3	74255361	1	CLAMP
	70921865	1	CAPSCREW, Nylok, 1/2"NC x 1"

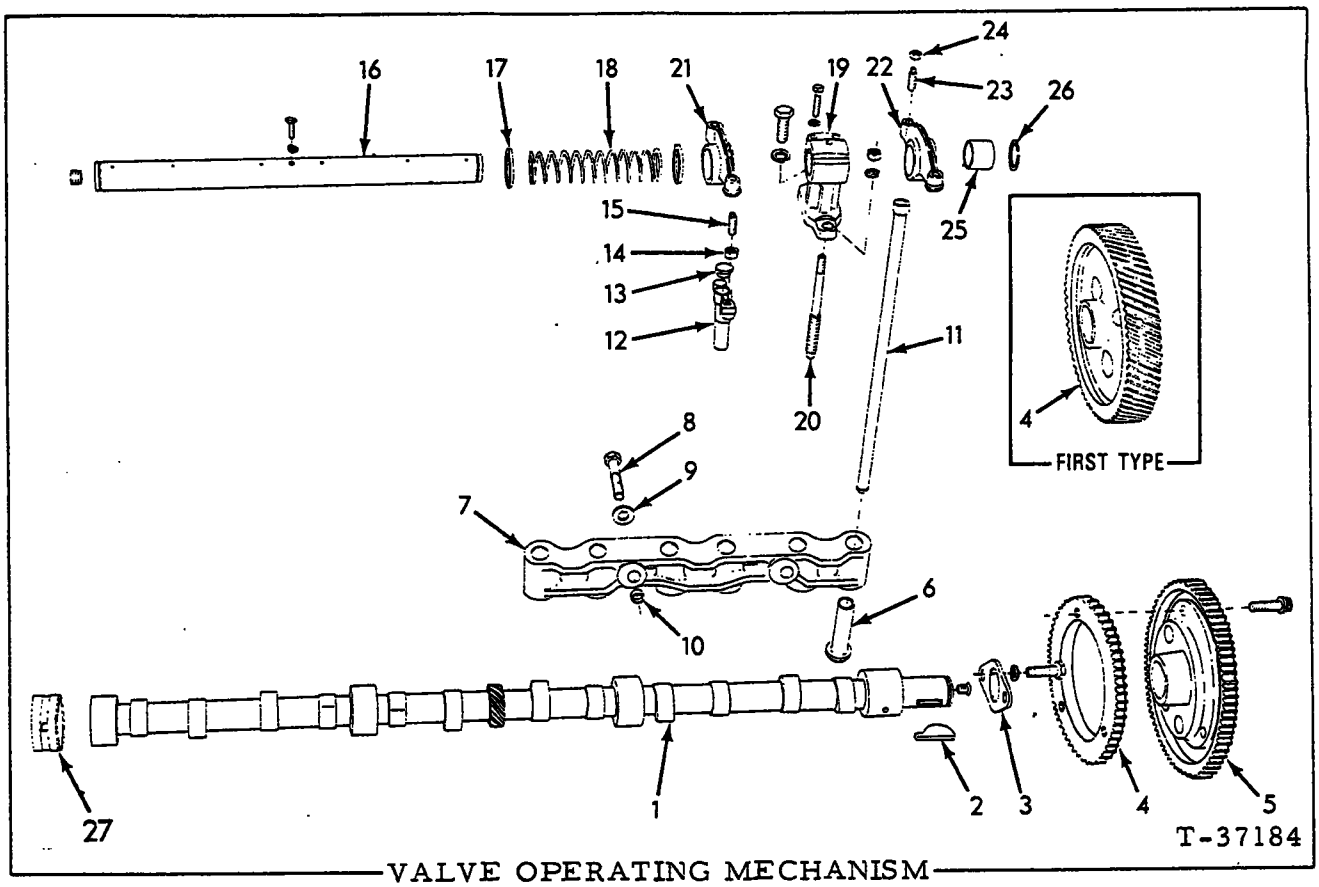

VALVE OPERATING MECHANISM

ITEM	PART NO.	QTY.	DESCRIPTION	
1	74393399	1	CAMSHAFT	
2	70923738	1	KEY	
3	74386776	1	PLATE	
	70916311	2	CAPSCREW, 1/2"NC x 1-1/4"	
	70912441	2	LOCKWASHER, 1/2"	
4	74392183	1	GEAR (Engines prior to # 14-01260)	
	74394662	1	GEAR	Engines # 14-01260 & up
	70922051	3	CAPSCREW, 12-pt., 3/8"NC x 1"	Engines # 14-01260 & up
5	74394666	1	GEAR	
6	74391845	12	LIFTER	
7	74391869	1	BRACKET	
	74391870	1	BRACKET	
8	70915969	4	CAPSCREW, 1/2"NC x 3"	
9	74376277	4	WASHER	
10	74303038	4	DOWEL	
11	74391849	12	ROD	
12	74390270	12	BRIDGE ASSY. (Includes items 13 thru 15)	
13	74376538	12	INSERT	
14	74516821	12	NUT	
15	74390254	12	SCREW	

(Continued)

VALVE OPERATING MECHANISM (Continued)

ITEM	PART NO.	QTY.	DESCRIPTION
16	74390117	2	SHAFT ASSY. (Includes Plugs indented below)
	70918887	4	PLUG, pipe, hex-socket, 3/8"NPT
	70915406	2	CAPSCREW, 1/4"NC x 3/4"
	70904204	2	LOCKWASHER, 1/4"
17	74386406	8	RETAINER
18	74386405	4	SPRING
19	74395085	6	BRACKET
	70916311	6	CAPSCREW, 1/2"NC x 1-1/4" (attaching)
	70912441	6	LOCKWASHER, 1/2"
	70915807	12	CAPSCREW, 5/16"NC x 1-1/4" (clamping) (Engines prior to #21-15294)
	70904205	12	LOCKWASHER, 5/16" (Engines prior to # 21-15294)
20	74377541	6	STUD
	70910325	6	NUT, 1/2"NC
	70912441	6	LOCKWASHER, 1/2"
21	74390296	4	ARM ASSY., intake valve Nos. 1,2,4,5
	74390297	2	ARM ASSY., exhaust valve Nos. 3,6
22	74390294	4	ARM ASSY., exhaust valve Nos. 1,2,4,5
	74390295	2	ARM ASSY., intake valve Nos. 3,6.
			NOTE: Each ARM ASSY. listed above includes items 23 thru 25.
23	74336646	12	SCREW
24	74516821	12	NUT
25	74388428	12	BUSHING
26	74253190	4	RING, snap
27	--------	-	BEARING, camshaft (See page 12)

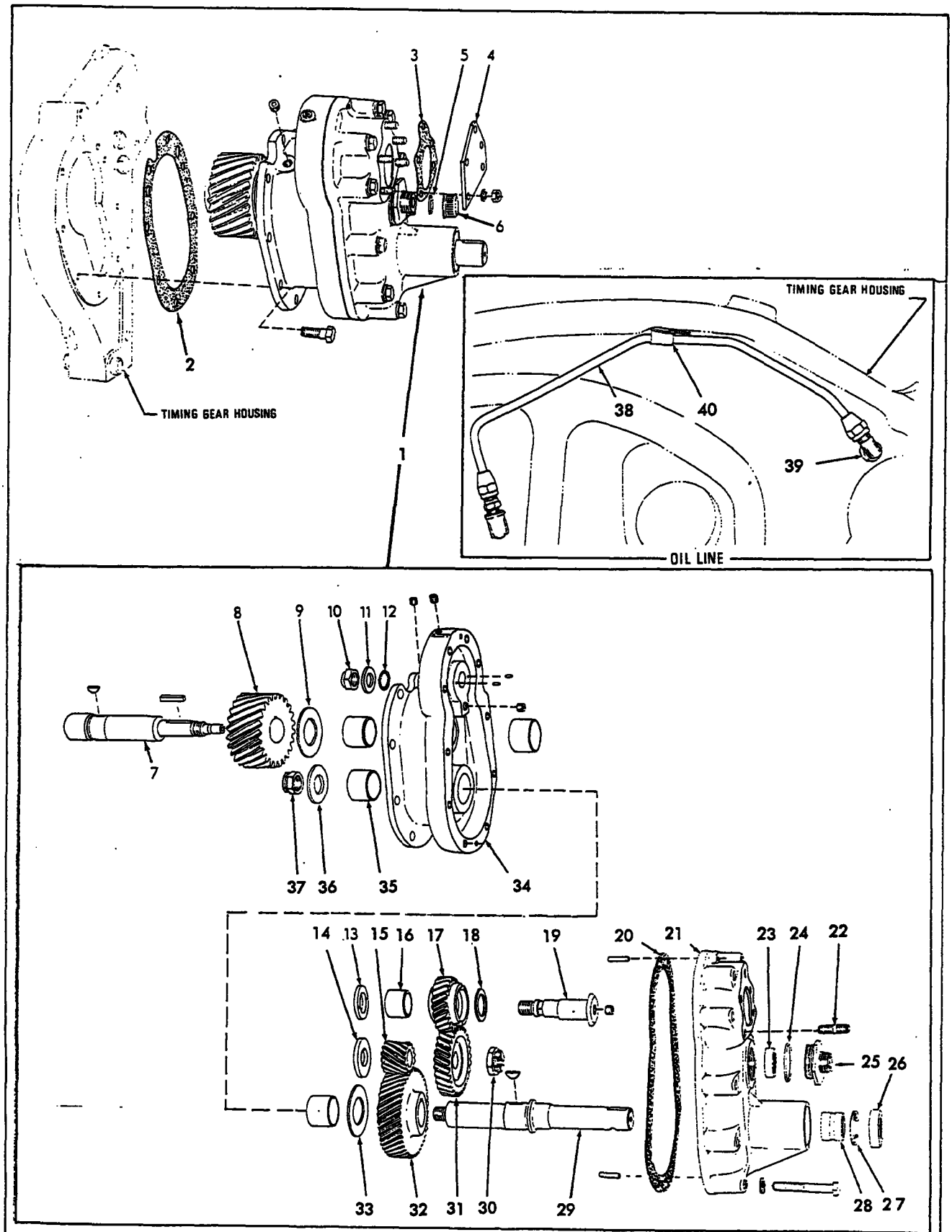

ACCESSORY DRIVE

ACCESSORY DRIVE

USAGE: Engines prior to S/N 14-01260.

ITEM	PART NO.	QTY.	DESCRIPTION
1	74391441	I	DRIVE ASSY. (Includes items 7 thru 37)
	70921520	8	CAPSCREW, Nylok, 3/8"NC x 7/8"
2	74376603	1	□GASKET
3	74386826	1	GASKET
4	74389593	1	PLATE
	70904206	5	LOCKWASHER, 3/8"
	70910123	5	NUT, 3/8"NF
5	74367090	1	□GASKET
6	74371118	1	NUT
7	74391419	1	SHAFT
	70917409	1	KEY, #9 woodruff, 3/16" x 3/4"
	70905850	1	KEY, straight, 3/16" x 1"
8	74391403	1	GEAR
9	74391412	1	WASHER
10	70911044	1	NUT
11	70900703	1	WASHER
12	70923574	1	O-RING
13	74376598	1	WASHER
	70917014	2	PIN dowel, 1/8" x 3/8"
14	74391407	1	WASHER
15	74364404	1	GEAR (14 teeth)
16	74376596	1	BUSHING
17	74320608	1	GEAR ASSY. (Includes item 16)
18	74391411	1	PLATE
19	74376591	1	SHAFT ASSY. (Includes PLUGS indented below)
	70917673	1	PLUG, pipe, hex-socket, 1/8"NPT
20	74376604	1	GASKET
21	74386711	1	COVER ASSY. (Includes item 28)
	70912069	10	CAPSCREW, 3/8"NC x 2-1/2"
	70904206	10	LOCKWASHER, 3/8"
	70917023	2	PIN, dowel, 1/4" x 1"
22	74389599	5	STUD
23	74391019	1	SEAL
24	74251601	1	GASKET
25	74365627	1	ADAPTER
26	74386879	1	SEAL
27	74254742	1	RING
28	74377278	1	BUSHING
29	74391475	1	SHAFT
	70917409	1	KEY, #9 woodruff, 3/16" x 3/4"
30	70930805	1	NUT, thin, 3/4"NF
31	74376590	1	GEAR
32	74391554	1	GEAR (42 teeth)
33	74391412	1	WASHER, thrust
34	74391408	1	HOUSING ASSY. (Includes item 35)
	70917673	4	PLUG, pipe, hex-socket, 1/8"NPT
35	74369746	4	BUSHING
36	74364166	1	WASHER, thrust

(Continued)

ACCESSORY DRIVE (Continued)

ITEM	PART NO.	QTY.	DESCRIPTION
37	70930805	1	NUT, thin, 3/4"NF
38	74376627	1	TUBE ASSY. (Includes nuts)
	70910141	1	CONNECTOR, flare type, 1/4"tube, 1/8"NPT male
	70917013	1	ELBOW, street,, brass, 90°, 1/8"NPT
39	74391885	1	ELBOW
	70917841	1	NIPPLE, pipe, 1/8"NPT x 7/8"
40	74361829	1	CLIP
	74335669	1	CAPSCREW, drilled-hd., 1/4"NC x 1/2"
	70904204	1	LOCKWASHER, 1/4"
	74348691	1	WIRE, locking, #18 x 6"

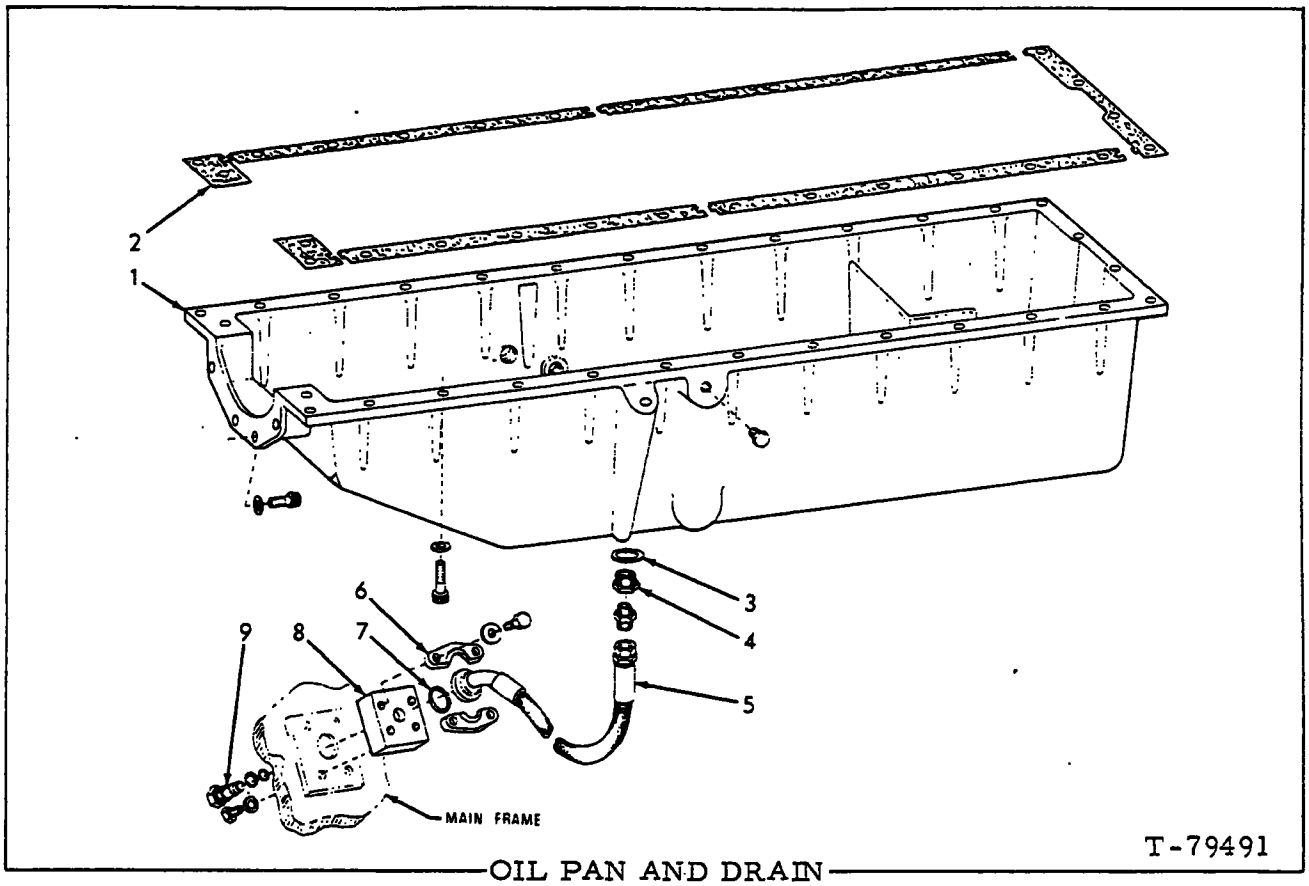

OIL PAN AND DRAIN

ITEM	PART NO.	QTY.	DESCRIPTION
1	74396471	1	PAN
	70922064	4	CAPSCREW, 12-pt., 1/2"NC x 1"
	70922220	30	CAPSCREW, 12-pt., 1/2"NC x 1-1/2"
	70912007	34	WASHER
	70924636	1	PLUG, pipe, 1/2"NPT
2	74395803	1	GASKET SET
3	70667252	1	GASKET
4	70620072	1	ADAPTOR
5	73111899	1	HOSE (See HOSE PARTS)
	70919342	1	CONNECTOR, flare type, 3/4" tube, 3/4PNPT male
6	70921115	2	FLANGE (half only)
	70921076	4	CAPSCREW, 3/8"NC x 1-1/4"
	70930370	4	WASHER, plain
7	70923575	1	O-RING
8	70694727	1	BLOCK
	70922763	4	CAPSCREW, 3/8"NC x 1"
	70910287	4	LOCKWASHER, 3/8"
9	70697812	1	PLUG
	70923663	1	O-RING (small)
	70921349	1	O-RING (large)

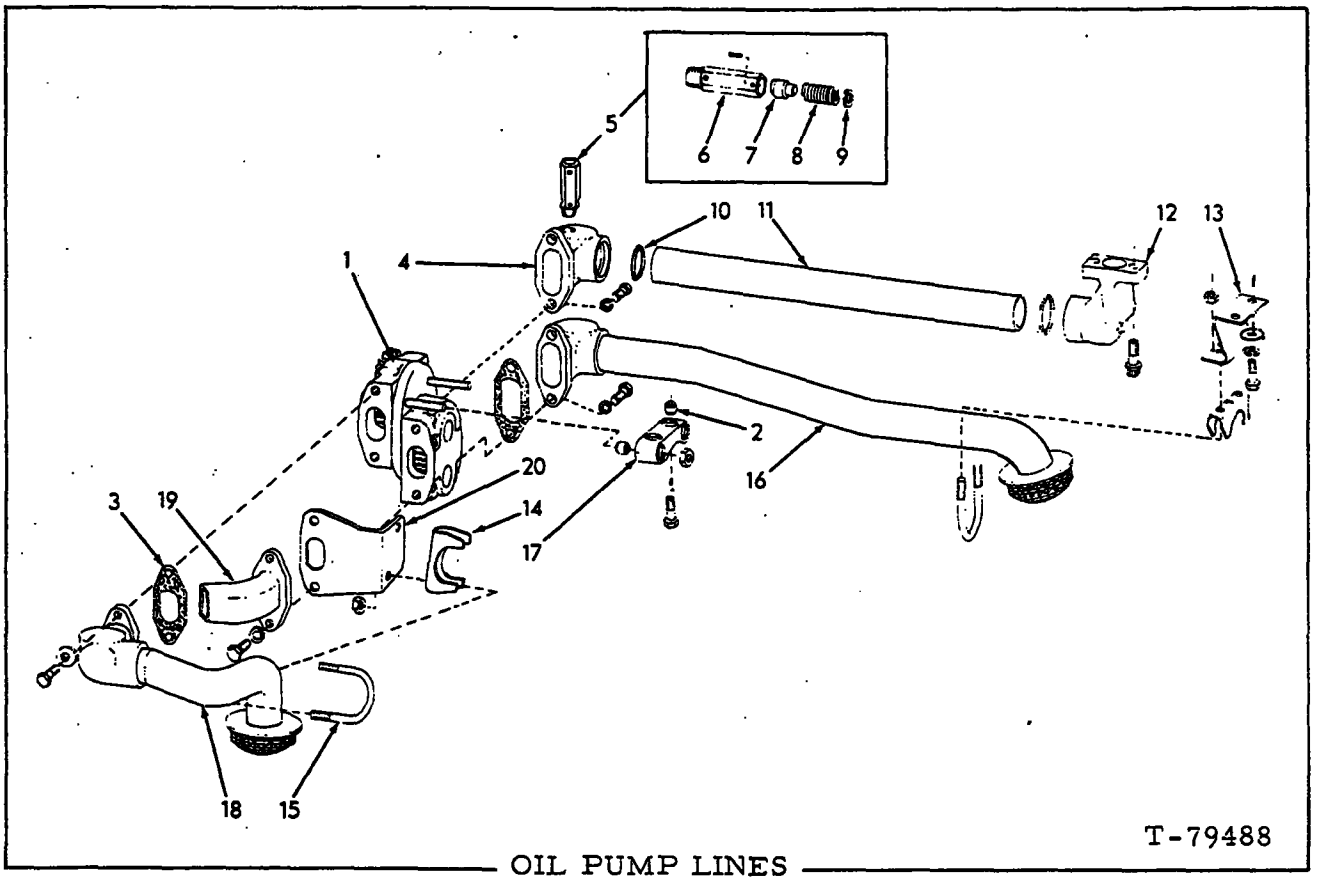

OIL PUMP LINES

ITEM	PART NO.	QTY.	DESCRIPTION
1	--------	1	PUMP ASSY. (See pages 32, 33 and 33A)
	70914678	2	LOCKWASHER, 7/16"
	70928212	2	NUT, 7/16"NC
2	74395024	4	DOWEL
3	74393359	2	□GASKET
4	74393362	1	ELBOW (Engine prior to S/N 21-15505)
	74395971	1	ELBOW (Engine S/N 21-15505 and up)
	70923193	2	CAPSCREW, 3/8"NF x 1-1/4" (Engine prior to S/N 21-15505
	70924228	2	CAPSCREW, 3/8"NF x 1-1/2" (Engine S/N 21-15505 and up)
	70916543	2	LOCKWASHER, internal teeth, 3/8"
5	--------	1	VALVE ASSY. (170 - 180 psi)(Stamped 4320597) (Includes items 6 thru 9)(Order 74036462)
	74036462	1	VALVE ASSY. (120 - 130 psi)(Stamped 4028887) (Includes items 6 thru 9)
6	--------	1	BODY (Not serviced separately)
	70916001	1	PIN, spring, 3/16" x 1"
7	--------	1	PISTON (Not serviced separately)
8	74354568	1	SPRING (170 - 180 psi)(Use 74028888)
	74028888	1	SPRING (120 - 130 psi)
9	74359310	1	WASHER
10	70927044	2	O-RING
11	74393364	1	TUBE

(Continued)

OIL PUMP LINES (Continued)

ITEM	PART NO.	QTY.	DESCRIPTION
12	74395053	1	ELBOW
	70922220	2	CAPSCREW, 12 pt., 1/2"NC x 1-1/2"
13	74393599	1	BRACKET
	70921569	2	CAPSCREW, 7/16"NC x 1-1/4"
	70914678	2	LOCKWASHER, 7/16"
14	74393601	2	SADDLE
15	74393600	2	U-BOLT
	70916871	4	NUT, elastic stop, 5/16"NC
16	74395060	1	TUBE ASSY. (Includes screen)
	70924228	2	CAPSCREW, 3/8"NF x 1-1/2"
	70916543	2	LOCKWASHER, internal teeth, 3/8"
17	74393341	1	BRACKET
	70927583	2	CAPSCREW, 7/16"NC x 1-3/4"
	70911992	2	WASHER
18	74395061	1	TUBE ASSY. (Includes screen)
	70923193	2	CAPSCREW, 3/8"NF x 1-1/4"
	70916543	2	LOCKWASHER, internal teeth, 3/8"
19	74394957	1	ELBOW
	70924228	2	CAPSCREW, 3/8"NF x 1-1/2"
	70916543	2	LOCKWASHER, internal teeth, 3/8"
20	74395062	1	BRACKET

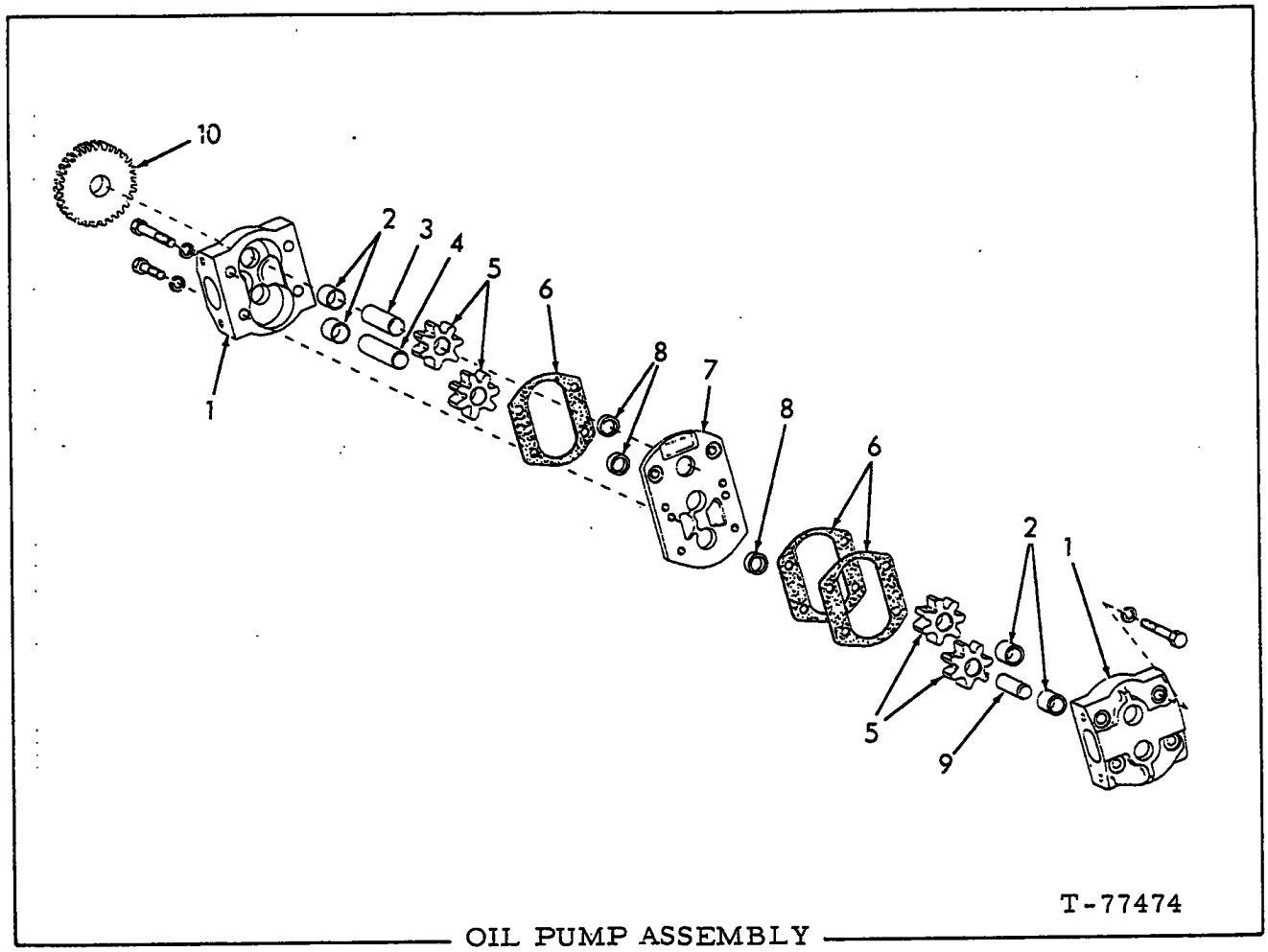

OIL PUMP ASSEMBLY

USAGE: Model 21000 MK II engine (See page 30)

ITEM	PART NO.	QTY.	DESCRIPTION
-	74396859	1	PUMP ASSY. (Includes items 1 thru 10)
1	74396854	2	BODY ASSY. (Includes item 2)
	70920594	6	CAPSCREW, 7/16"NF x 2"
	70928211	2	CAPSCREW, 7/16"NF x 3-3/4"
	70907863	8	LOCKWASHER, 7/16"
2	74396899	4	BUSHING (Includes instruction sheet)
3	74396107	1	SHAFT
4	74396108	1	SHAFT
5	74007877	4	GEAR (Replace in pairs)
6	74393349	3	GASKET
7	74396855	1	PLATE ASSY. (Includes item 8)
8	74396899	3	BUSHING (Includes instruction sheet)
9	74396109	1	SHAFT
10	74393355	1	GEAR, helical

(Revised May 1982)

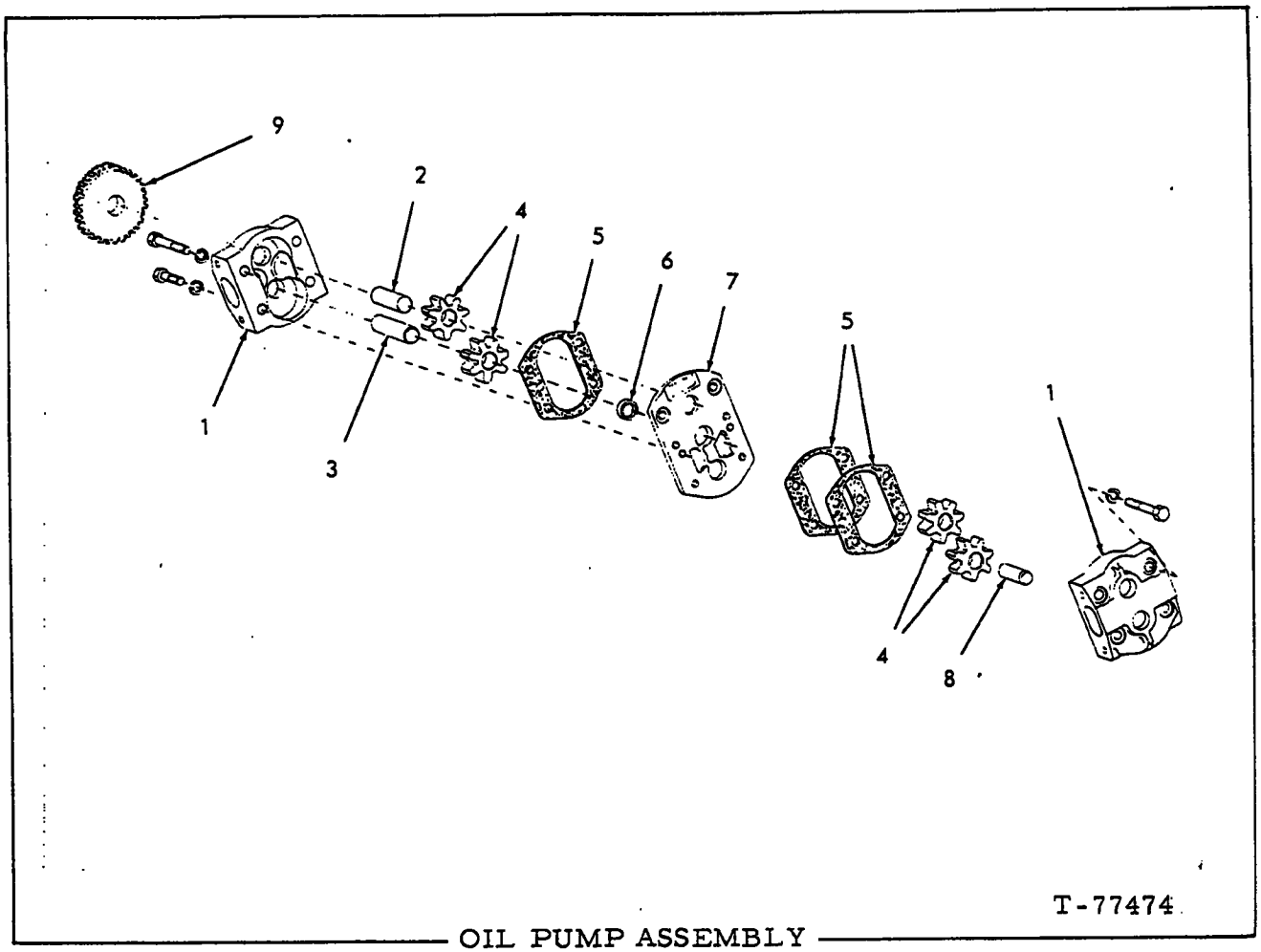

OIL PUMP ASSEMBLY

USAGE: Model 6138T engine (See page 30)

ITEM	PART NO.	QTY.	DESCRIPTION
-	74396860	1	PUMP ASSY. (Includes items 1 thru 10)
1	74396854	2	BODY ASSY. (Includes item 2)
	70920594	6	CAPSCREW, 7/16"NF x 2"
	70928211	2	CAPSCREW, 7/16"NF x 3-3/4"
	70907863	8	LOCKWASHER, 7/16"
2	74396899	4	BUSHING (Includes instruction sheet)
3	74396107	1	SHAFT
4	74396108	1	SHAFT
5	74007877	4	GEAR (Replace in pairs)
6	74393349	3	GASKET
7	74396855	1	PLATE ASSY. (Includes item 8)
8	74396899	3	BUSHING (Includes instruction sheet)
9	74396109	1	SHAFT
10	74394667	1	GEAR, spur

(Revised May 1982)

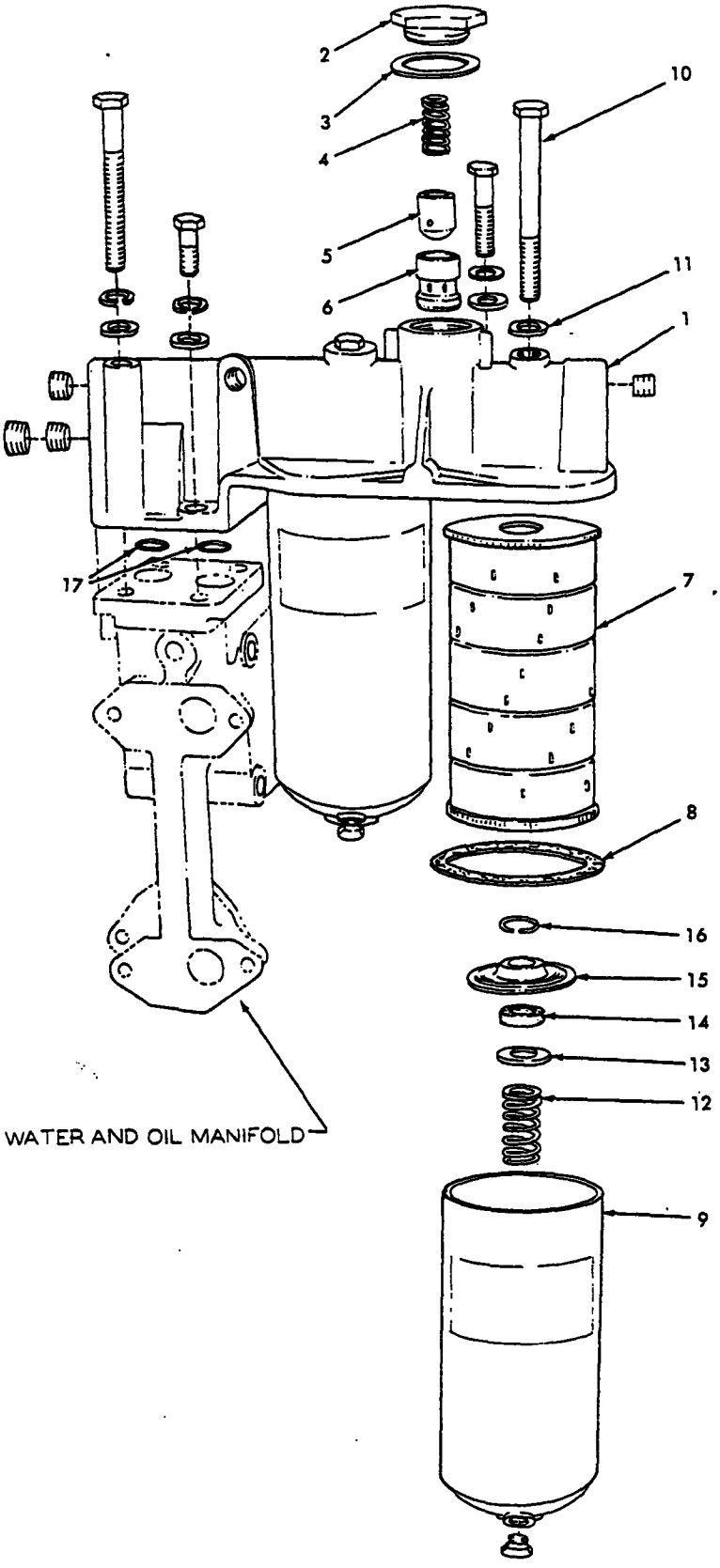

OIL FILTER (Full-flow type) T-70444

OIL FILTER
(Full-flow type)

ITEM	PART NO.	QTY.	DESCRIPTION
1	74395610	1	HEAD ASSY. (Includes PLUGS indented below)
	70918888	3	PLUG, pipe, hex-socket, 1"NPT
	70918697	1	PLUG, pipe, hex-socket, 1-1/4"NPT
	70915987	3	CAPSCREW, 1/2"NC x 1-1/2"
	70916317	2	CAPSCREW, 1/2"NC x 2-3/4"
	70916323	2	CAPSCREW, 1/2"NC x 5-1/2"
	70912333	6	WASHER
	70904208	6	LOCKWASHER, 1/2"
2	74388810	1	CAP
3	74388848	1	GASKET
4	74359656	1	SPRING
5	74373613	1	PISTON
6	74388809	1	SLEEVE
7	74395889	2	ELEMENT KIT (Includes item 8)
8	74396318	2	GASKET
9	74339021	2	BODY
	70918951	2	PLUG, pipe, hex-hd., 3/8" NPT
10	70916324	2	CAPSCREW, 1/2"NC x 6"
11	74376749	2	WASHER
12	74379268	2	SPRING
13	74053410	2	WASHER
14	74053409	2	SEAL
15	74055971	2	ADAPTOR
16	74379269	2	RING
17	74255631	2	O-RING

NOTE: See PAINTING AND MARKING for transfers

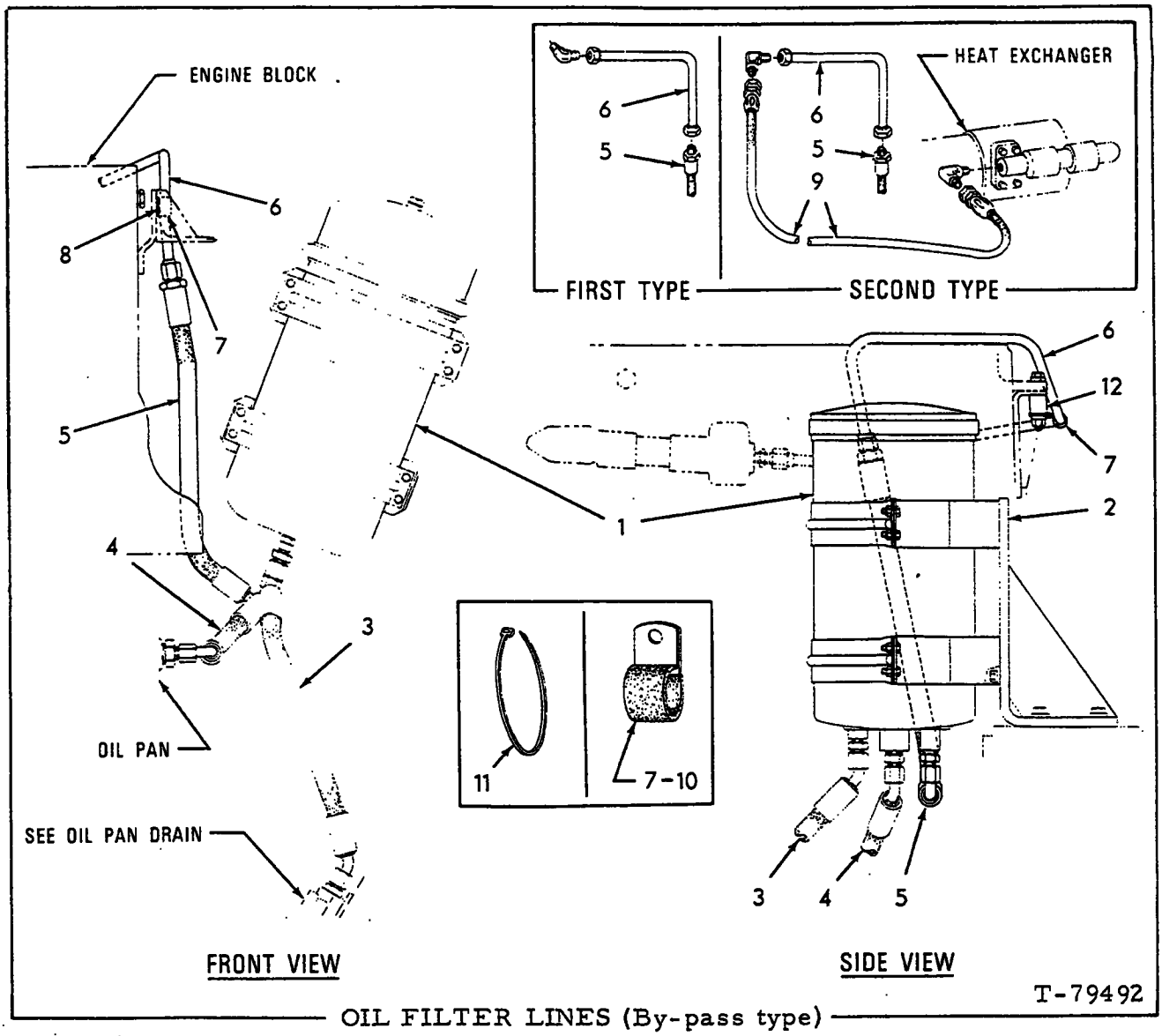

OIL FILTER LINES (By-pass type)

USAGE: Supplements engine mounted full flow filter

ITEM	PART NO.	QTY.	DESCRIPTION
1	--------	1	FILTER ASSY. (See page 39)
	70927612	8	CAPSCREW, 5/16"NC x 5/8"
	70910286	8	LOCKWASHER, 5/16"
2	70690990	1	BRACKET
	70920583	4	CAPSCREW, 1/2"NC x 1-1/2"
	70677008	4	WASHER
3	70690995	1	HOSE (See HOSE PARTS)
	70914376	1	CONNECTOR, flare type, 3/8" tube, 1/4"NPT female (Used only with "Luber-Finer" design filter)
	70919205	1	CONNECTOR, flare type, 1/2" tube, 1/4"NPT male
	70921409	1	CONNECTOR, flare type, 1/2" tube, 3/4"NF male (Includes O-RING)
	70921349	1	O-RING

(Continued)

OIL FILTER LINES (By-pass type)(Continued)

ITEM	PART NO.	QTY.	DESCRIPTION
4	70690998	1	HOSE(See HOSE PARTS)
	70919128	1	CONNECTOR, flare type, 1/2" tube, 1/2"NPT male
	70921466	1	CONNECTOR, flare type, 1/2" tube, 3/4"NPT male
5	70691007	1	HOSE(See HOSE PARTS)(Tractors prior to unit #21812)
	73121589	1	HOSE(See HOSE PARTS)(Tractors unit #21812 and up)
	70919128	1	CONNECTOR, flare type, 1/2" tube, 1/2"NPT male
6	70691024	1	TUBE ASSY. (Tractors prior to unit #21426) } Each
	73110609	1	TUBE ASSY. (Tractors unit #21426 thru #21811) } includes
	73121590	1	TUBE ASSY. (Tractors unit #21812 and up) } nuts
	70919272	1	ELBOW, flare type, 90°, 1/2" tube, 3/4"NPT male(Tractors prior to unit #21238)
	70919195	1	ELBOW, flare type, 90°, 1/2" tube, 1/2"NPT male(Tractor unit #21238 thru 21260)
	70921364	1	ELBOW, flare type, 90°, 1/2" tube, 3/4" str. thrd. (Tractor unit #21261 thru #21425)
	70919063	1	CONNECTOR, flare type, 1/2" tube, 3/8"NPT male(Tractor unit #21426 and up)
7	70926707	2	CLAMP(One less used on tractors prior to unit #21426)
	70927218	1	CAPSCREW, 3/8"NC x 2-3/4" } Tractor unit
	70677006	2	WASHER } #21426 and up
	70911026	1	NUT, 3/8"NC }
8	70690932	1	SPACER(Tractors prior to unit #21812)
	70928460	1	WASHER (Tractors unit #21812 and up)
9	73110376	1	HOSE (See HOSE PARTS) } Tractor unit
	70919206	1	ELBOW, flare type, 90°, 1/2" tube, 3/8"NPT male } #21261 and up
10	70928214	1	CLAMP }
11	70925442	1	TIE }
12	70097413	1	BLOCK (Tractor unit #21426 and up)

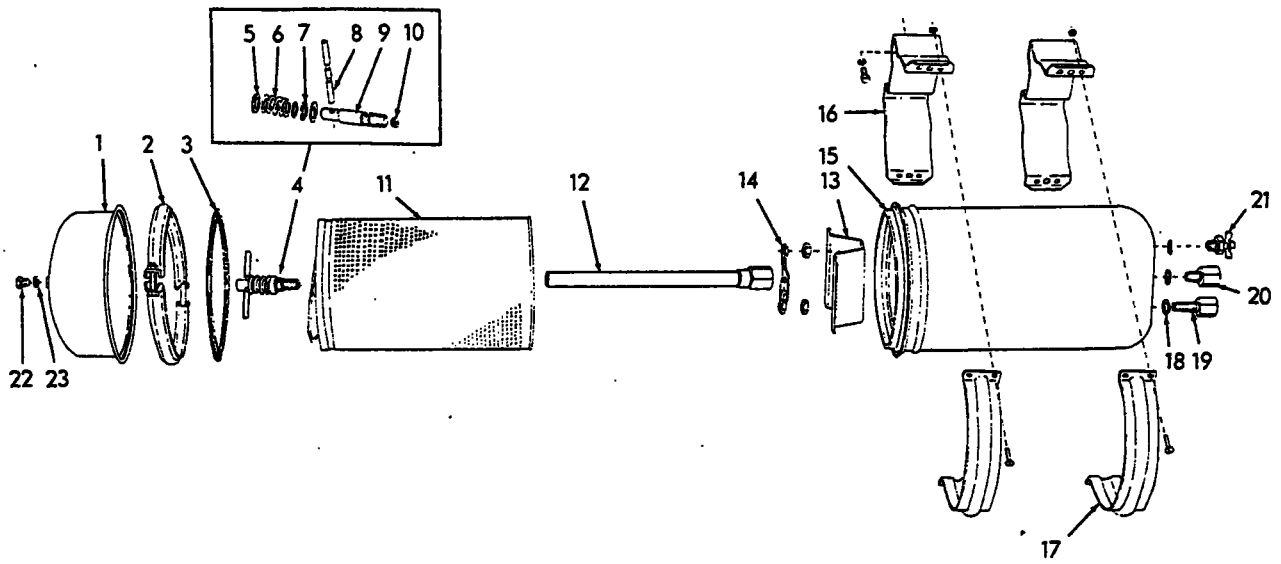

T-74660

LUBER-FINER DESIGN

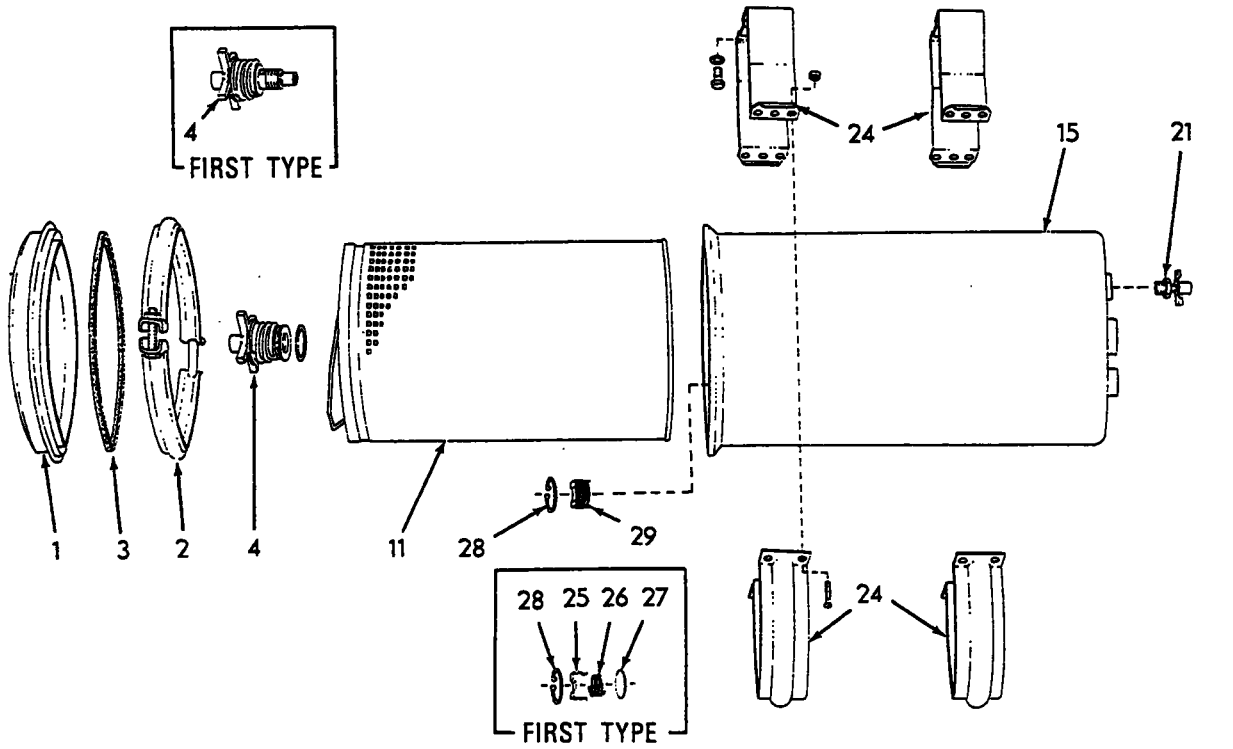

T-76480

FLEETGUARD DESIGN

OIL FILTER (By-pass type)

OIL FILTER (By-pass type)

USAGE: See page 36

NOTE: This Filter Assembly is available in two designs, "Fleetguard" and "Luber-Finer". Check which is applicable to your unit and order service parts accordingly.

*Luber-Finer Design
**Fleetguard Design

ITEM	PART NO.	QTY. *	QTY. **	DESCRIPTION
-	74390593	1	-	FILTER ASSY. (Includes items 1 thru 23)
-	74390593	-	1	FILTER ASSY. (Includes items 1 thru 4, 11, 15, 21, 24 thru 29)
1	74059262	1	-	COVER
	74059813	-	1	COVER
2	70630540	1	-	RING ASSY. (Includes nut and bolt)
	74059814	-	1	COUPLING ASSY. (Includes hardware, Serviced only as a unit)
3	70082449	1	-	GASKET
	73115065	-	1	GASKET
4	74059266	1	-	HOLD-DOWN ASSY. (Includes items 5 thru 10)
	74060691	-	1	SUPPORT ASSY. (Male thread post)(First type)
	74061788	-	1	SUPPORT ASSY. (Female thread post)(Second type)
				NOTE: Item 4 (Each includes O-RING. Serviced only as a unit)
5	70082489	3	-	WASHER
6	70082490	1	-	SPRING
7	70082487	1	-	SEAL
8	70082488	1	-	HANDLE
9	--------	1	-	STUD (Not serviced separately)
10	74059265	1	-	PLUG
11	74059343	1	1	ELEMENT
12	74059264	1	-	TUBE ASSY. (Includes nut)
13	70096816	1	-	SUPPORT
	70911049	2	-	NUT, jam, 3/8"NF
14	70096815	1	-	RETAINER
15	--------	1	-	HOUSING (Not serviced separately)
	--------	-	1	SHELL (Female thread post)(First type)(For initial replacement order Shell 74061785 and Support Assy. 74061788)
	74061785	-	1	SHELL (Male thread post)(Second type)
16	70082444	2	-	BRACKET
17	70082443	2	-	BAND
	70915406	8	-	CAPSCREW, 1/4"NC x 3/4"
	70911024	8	-	NUT, 1/4"NC
18	70063891	3	-	GASKET
19	70063890	1	-	VALVE ASSY. (Includes 1 Spring, 1 Ring, 1 Cup. Serviced only as a unit)
20	70080758	1	-	VALVE ASSY. (Includes 1 Spring, 1 Ring, 1 Cup. Serviced only as a unit)

(Continued)

OIL FILTER (By-pass type)(Continued)

ITEM	PART NO.	QTY. *	QTY. **	DESCRIPTION	
21	74060755	1	-	COCK	
	70229210	-	1	COCK	
22	70084897	1	-	PLUG	
23	70084899	1	-	WASHER	
24	74061786	-	1	BRACKET ASSY. (2-piece, includes hardware. Serviced only as a unit)	
25	74059810	-	1	CAGE	First type. Order item 29
26	74059811	-	1	SPRING	
27	74059812	-	1	DISC	
28	74253555	-	1	RING	
29	74061789	-	1	VALVE, check	

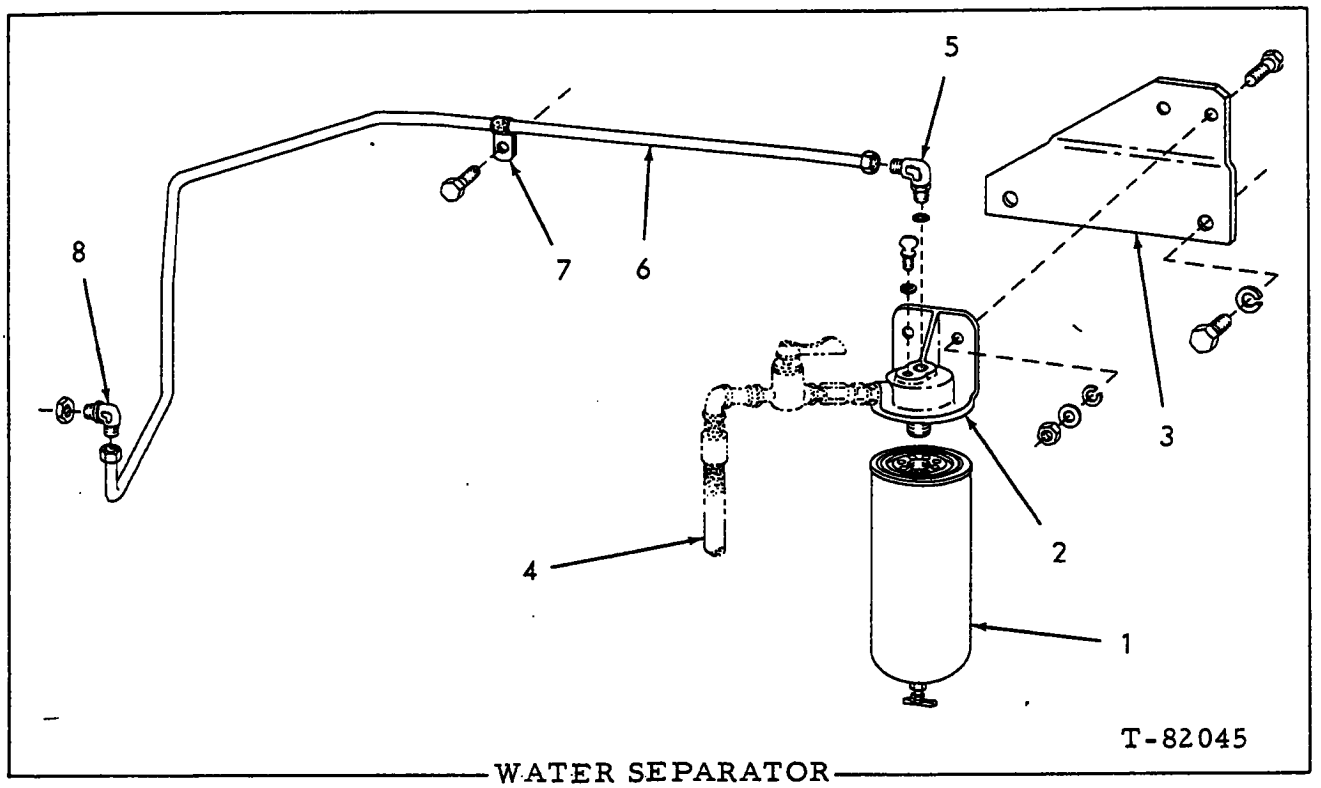

WATER SEPARATOR

*Engines prior to S/N 14-01260
**Engines S/N 14-01260 and up

ITEM	PART NO.	QTY. *	QTY. **	DESCRIPTION
1	74394407	1	1	FILTER ASSY.
2	74395419	1	1	BASE ASSY. (Includes insert)
	74006998	1	1	SCREW, thumb
	74254873	1	1	WASHER
	70916254	2	-	CAPSCREW, 7/16"NC x 1"
	70916191	-	2	CAPSCREW, 7/16"NC x 1-1/2"
	70914678	2	2	LOCKWASHER, 7/16"
	70912298	2	-	WASHER
	70914498	-	2	WASHER
	70912201	-	2	NUT, 7/16"NC
3	74394405	-	1	BRACKET
	70931244	-	2	CAPSCREW, Nylok, 1/2"NC x 1-1/4"
	70912441	-	2	LOCKWASHER, 1/2"
4	--------	1	1	HOSE (See page 44)
5	74023721	1	1	ELBOW (Includes O-Ring)
	70921885	1	1	O-RING
6	74395035	1	-	TUBE
	74395537	-	1	TUBE
	70917807	2	2	SLEEVE, Imperial, 3/8" tube
	70917810	2	2	NUT, Imperial, 3/8" tube
7	70932860	-	1	CLAMP
	70921865	-	1	CAPSCREW, Nylok, 1/2"NC x 1"
8	70920280	1	1	ELBOW, 3/8" tube, 1/4"NPT
	70930349	1	1	NUT, locking, 1/4"

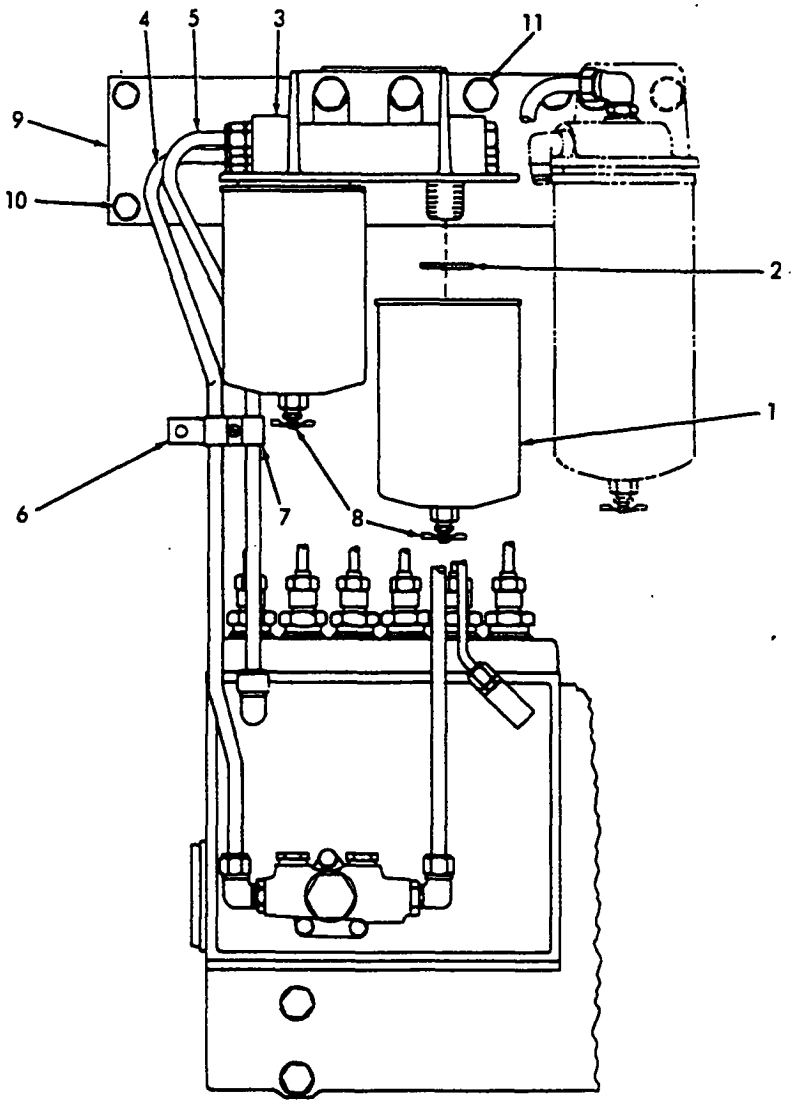

T-79495

FUEL FILTER

USAGE: Engines prior to S/N 14-01260.

ITEM	PART NO.	QTY.	DESCRIPTION
1	74394335	2	ELEMENT, filter (Includes item 2)
2	--------	2	O-RING (Not serviced)
3	74393077	1	BASE ASSY., filter (Includes Inserts not serviced separately)
	70922577	2	PLUG, hex-hd., 3/8" tube, 9/16" str. thd. (Includes O-RING)
	70921885	2	O-RING
	70916311	2	CAPSCREW, 1/2"NC x 1-1/4"
	70912441	2	LOCKWASHER, 1/2"
	70912007	2	WASHER

(Continued)

FUEL FILTER (Continued)

ITEM	PART NO.	QTY.	DESCRIPTION
4	74394755	1	TUBE
	70917810	1	NUT, Imperial, 3/8" tube
	70917807	1	SLEEVE, Imperial, 3/8" tube (rubber)
	70920280	1	ELBOW, Imperial, 3/8" tube, 1/4"NPT (at transfer pump)
	74359776	1	CONNECTOR (Includes O-RING)
	70921885	1	O-RING
5	74394756	1	TUBE
	70917810	2	NUT, Imperial, 3/8" tube
	70917807	2	SLEEVE, Imperial, 3/8" tube (rubber)
	70920280	1	ELBOW, Imperial, 3/8" tube, 1/4"NPT (at fuel pump)
	74359776	1	CONNECTOR (Includes O-RING)
	70921885	1	O-RING
6	74393090	1	SUPPORT
7	74361829	1	CLIP
	70912226	1	SCREW, fil-hd., 1/4"NC x 5/8"
	70904204	1	LOCKWASHER, 1/4"
	70910880	1	NUT, 1/4"NC
8	70915514	2	COCK, drain, 1/8"NPT
9	74395034	1	BRACKET
10	70919224	2	CAPSCREW, 3/8"NC x 1-1/8"
	70910287	2	LOCKWASHER, 3/8"
11	70919230	2	CAPSCREW, 1/2"NC x 1-3/8"
	70912441	2	LOCKWASHER, 1/2"

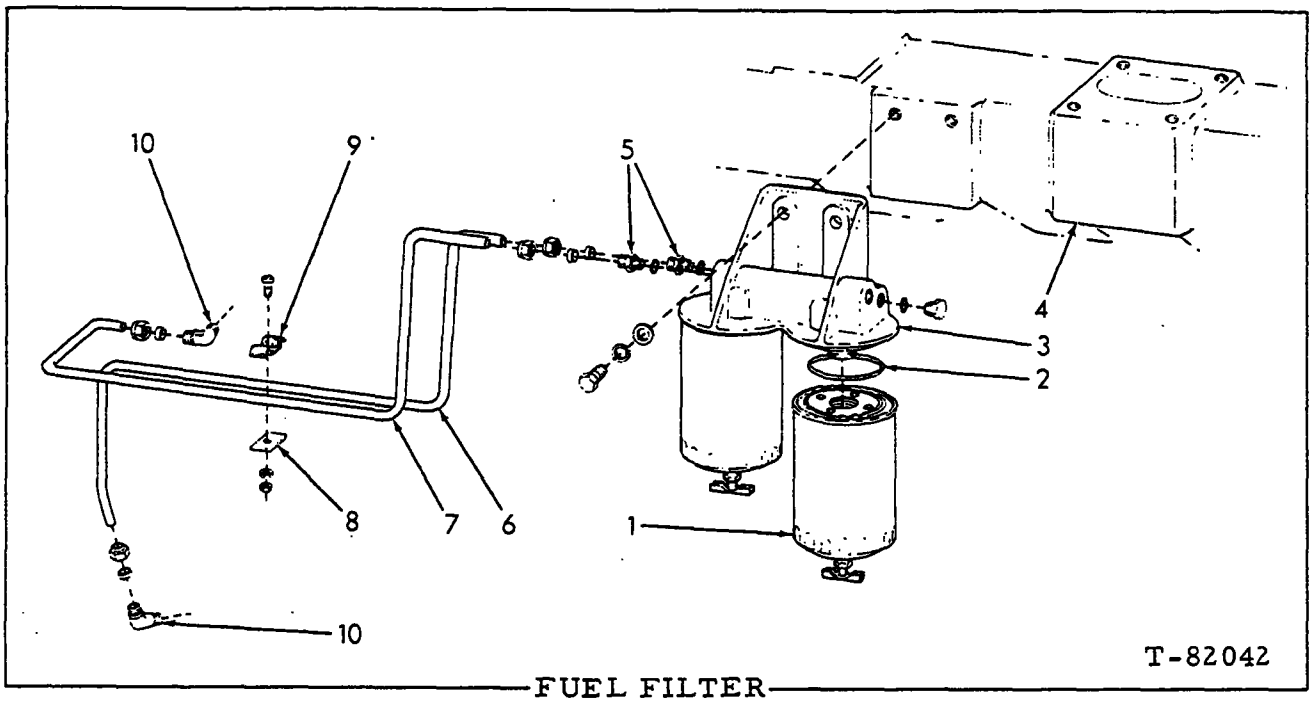

FUEL FILTER

USAGE: Engines S/N 14-01260 and up

ITEM	PART NO.	QTY.	DESCRIPTION
1	74394335	2	ELEMENT (Includes item 2)
2	--------	2	O-RING (Not serviced separately)
3	74393077	1	BASE ASSY. (Includes inserts)
	70922577	2	PLUG, hex-hd., 3/8" tube, 9/16" str.thd. (Includes O-Ring)
	70921885	2	O-RING
	70916311	2	CAPSCREW, 1/2"NC x 1-1/4"
	70912441	2	LOCKWASHER, 1/2"
	70912007	2	WASHER
4	--------	1	MANIFOLD, air intake (See page 58)
5	74359776	2	CONNECTOR (Includes O-Ring)
	70921885	2	O-RING
6	74395549	1	TUBE
	70917807	2	SLEEVE, Imperial, 3/8" tube
	70917810	2	NUT, Imperial, 3/8" tube
7	74396063	1	TUBE
	70917807	2	SLEEVE, Imperial, 3/8" tube
	70917810	2	NUT, Imperial, 3/8" tube
8	74393090	1	PLATE
9	74394178	1	CLIP
	70912226	1	SCREW, machine, 1/4"NC x 5/8"
	70904204	1	LOCKWASHER, 1/4"
	70910880	1	NUT, 1/4"NC
10	70920280	2	ELBOW, Imperial, 3/8" tube, 1/4"NPT

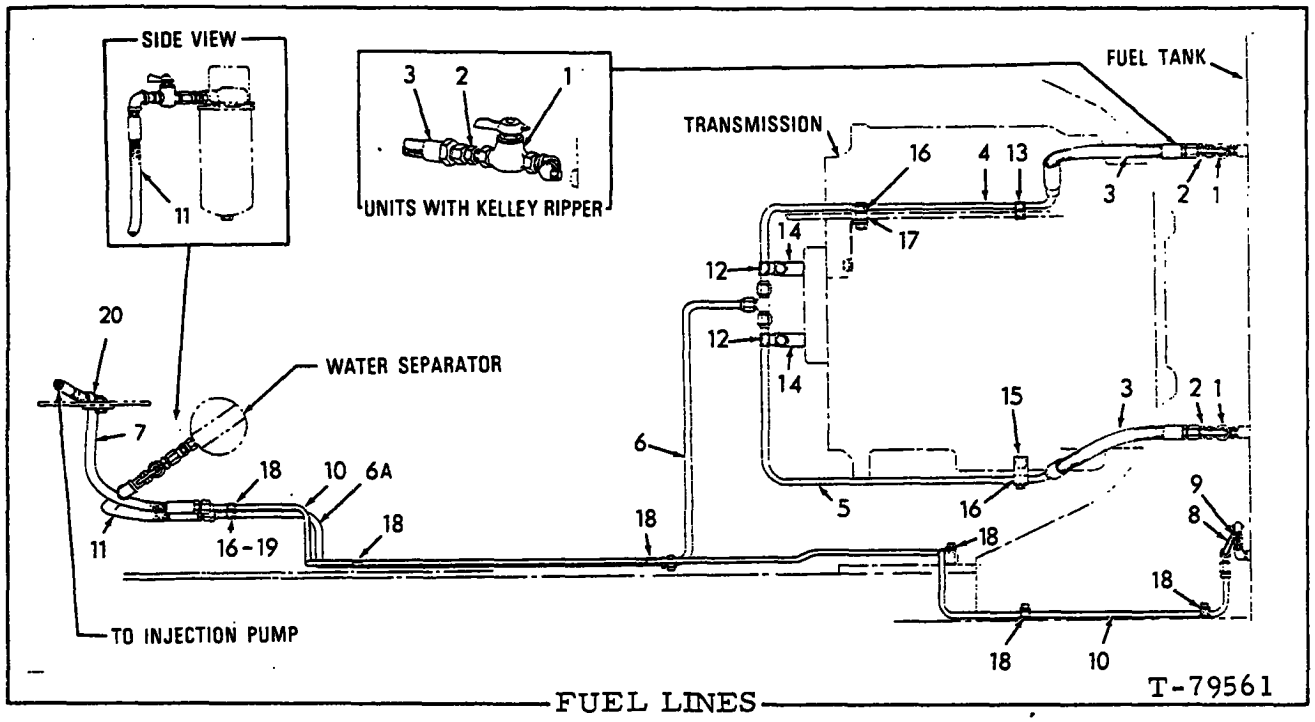

FUEL LINES

ITEM	PART NO.	QTY.	DESCRIPTION
1	70092727	2	COCK, fuel shut-off
	70901723	2	ELBOW, street, 90°, 3/8"NPT (Tractors equipped with "Kelley" Ripper)
2	70919063	2	CONNECTOR, flare type, 1/2" tube, 3/8"NPT male
3	70646353	2	HOSE (See HOSE PARTS)
4	73110833	1	TUBE ASSY. } Each includes nuts
5	70690829	1	TUBE ASSY. } Each includes nuts
6	70690830	1	TUBE ASSY. (Tractors prior to unit#21242) } Each includes nuts
	73108121	1	TUBE ASSY. (Tractors unit #21242 and up) } Each includes nuts
	70921472	1	TEE, union, flare type, 1/2" tube
6A	73108120	1	TUBE ASSY., front(Includes nuts)(Tractors unit#21242 and up)
7	70690924	1	HOSE(See HOSE PARTS) } Tractors prior to unit #21812 excluding #21757, 21761 and 21767
	70919135	1	ELBOW, flare type, 90°, 3/8"tube, 1/4"NPT male } Tractors prior to unit #21812 excluding #21757, 21761 and 21767
	73117378	1	HOSE(See HOSE PARTS) } Tractors unit #21812 and up including #21757, 21761 and 21767
	70927455	1	CONNECTOR, flare type, 3/8"tube, 9/16" str. thd. } Tractors unit #21812 and up including #21757, 21761 and 21767
8	70690915	1	HOSE(See HOSE PARTS)
	70921852	1	ELBOW, flare type, 90°, 3/8"tube, 1/4"NPT female(Tractors prior to unit #21779)
	70919136	1	ELBOW, flare type, 90°, 3/8" tube, 9/16" str. thd.(Tractors unit #21779 and up)

(Continued)

(Revised July 1980)

FUEL LINES (Continued)

ITEM	PART NO.	QTY.	DESCRIPTION	
9	70914378	1	VALVE, shut-off(Tractors prior to unit #21779)	
	70901722	1	ELBOW, street, 90°, 1/4"NPT(Tractors unit #21294 thru #21778)	
	70901723	1	ELBOW, street, 90°, 3/8"NPT(Tractors unit #21779 and up)	
10	70690878	1	TUBE ASSY. (Includes nuts)	
11	70696014	1	HOSE (See HOSE PARTS)	Tractors prior to unit #21326
	70930804	1	ELBOW, adjustable, flare type, 90°, 1/2"tube, 5/8"NPT male	
	73109031	1	HOSE (See HOSE PARTS)	Tractors unit #21326 thru #21811 excluding #21757, 21761 and 21767
	70930804	1	ELBOW, adjustable, flare type, 90°, 1/2"tube, 5/8"NPT male	
	70931922	1	UNION, flare type, 3/4"to 3/8"NPT	
	70092727	1	COCK, shut-off	
	73117379	1	HOSE (See HOSE PARTS)	Tractors unit #21812 and up including #21757, 21761 and 21767
	70901678	1	ELBOW, pipe, 3/8"NPT	
	70901490	1	NIPPLE, pipe, 3/8"NPTx 1-1/2"	
	70092727	1	COCK, shut-off	
	70931922	1	UNION, flare type, 3/4"to 3/8"NPT	
	70933471	1	CONNECTOR, flare type, 1/2" tube, 9/16" str. thd.	
	70933476	1	O-RING	
12	70624508	2	CLIP	
	70921175	2	CAPSCREW, 1/2"NC x 1	
	70910244	4	WASHER	
	70911028	2	NUT, 1/2"NC	
13	70927102	2	CLIP	
	70927612	1	CAPSCREW, 5/16"NC x 5/8"	
	70911421	2	WASHER	
	70911025	1	NUT, 5/16"NC	
14	70664232	2	BRACKET	
15	70690930	1	BRACKET	
16	70927155	5	CLIP	
	70922300	3	CAPSCREW, 3/8"NC x 3/4"	
	70929156	5	WASHER	
	70922287	1	CAPSCREW, 3/8"NC x 1-3/4"	
	70911026	2	NUT, 3/8"NC	
17	70635132	1	SPACER	
18	70929458	6	CLIP	
	70922300	2	CAPSCREW, 3/8"NC x 3/4"	
	70922763	1	CAPSCREW, 3/8"NC x 1"	
	70921565	1	CAPSCREW, 3/8"NC x 1-1/2"	
	70929156	5	WASHER	
	70911026	1	NUT, 3/8"	
19	70690923	1	SPACER	
20	70927104	1	CLAMP	Tractors unit #21812 and up
	70920582	1	CAPSCREW, 1/2"NC x 1-1/4"	
	70928460	1	WASHER	
	70911028	1	NUT, 1/2"NC	

(Revised July 1980)

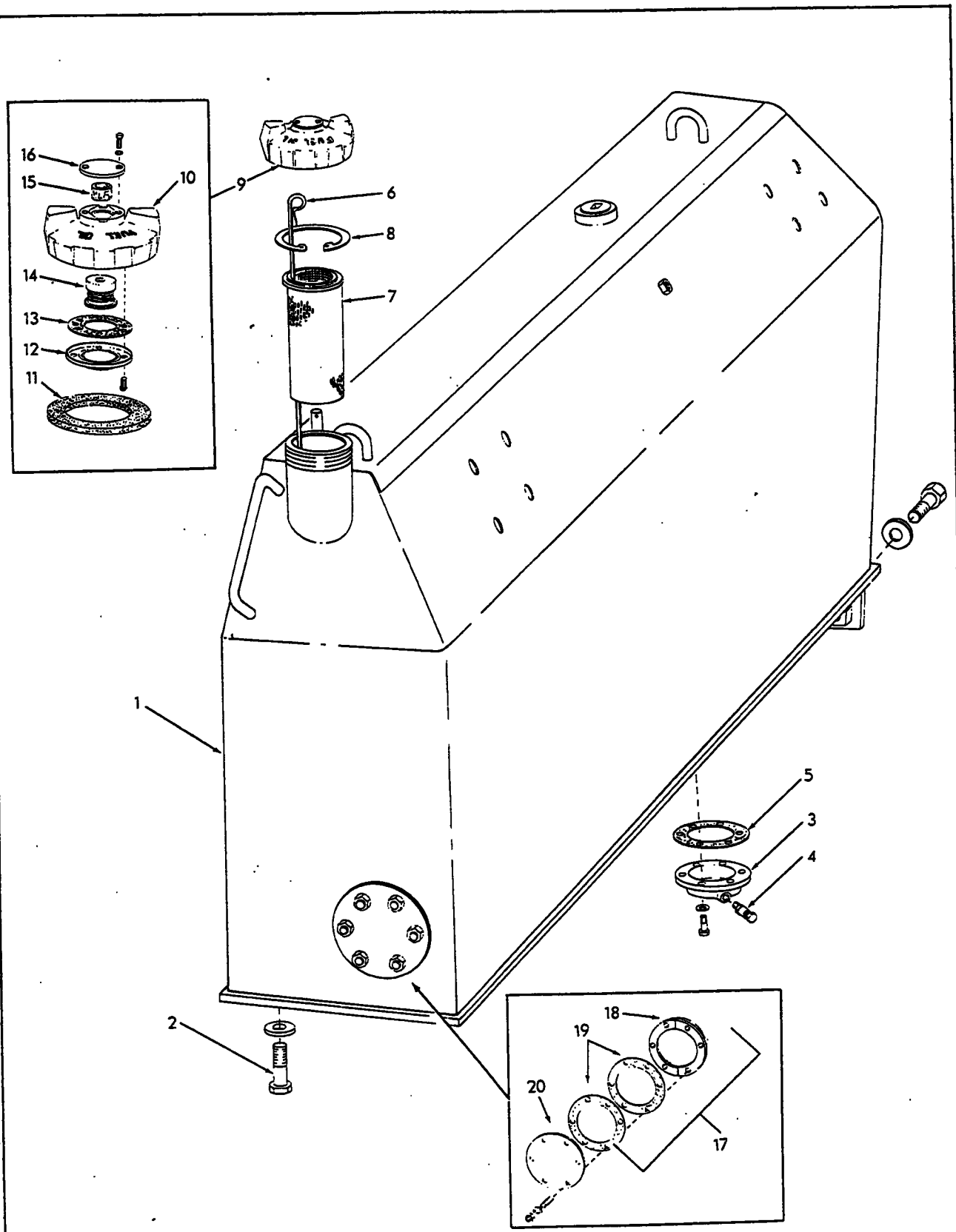

FUEL TANK

FUEL TANK

ITEM	PART NO.	QTY.	DESCRIPTION
1	70689446	1	TANK (Tractor prior to #21779)
	73115535	1	TANK (Tractor unit #21779 and up)
	70901669	1	PLUG, pipe, ctsk-socket, 2"NPT (Not used on units equipped for Quick Fueling)
2	70921068	4	CAPSCREW, 3/4"NC x 2-1/4"
	70677012	4	WASHER
	70922789	4	CAPSCREW, 3/4"NC x 3"
	70677012	4	WASHER
3	70695807	1	COVER
	70922262	6	CAPSCREW, 3/8"NC x 7/8"
	70930370	6	WASHER
4	70633519	1	COCK, drain
5	70656227	1	GASKET, drain cover
6	70099469	1	GAUGE, fuel level
7	70650509	1	STRAINER, fuel filler
8	70654840	1	RING, snap, fuel strainer
9	70668252	1	CAP ASSY., fuel tank (Consists of items 10 thru 16)
10	--------	1	CAP (Not serviced separately)
11	70668263	1	GASKET, cap
12	70668806	1	SEAT, relief valve
	70926699	4	SCREW, fil.-hd., brass, #10-24NC x 3/8"
13	70668804	1	GASKET, valve seat
14	70668805	1	VALVE ASSY., relief (Serviced only as a unit)
15	70664867	1	ELEMENT, air filter
16	70668262	1	COVER, tank cap
	70921181	2	SCREW ASSY., #10-24NC x 1/2" (Includes lockwasher)
17	73100014	1	FLANGE ASSY. (Includes items 18 and 19 and hardware indented below)
	70919350	6	SETSCREW, 1/2"NC x 2"
	70904208	6	LOCKWASHER, 1/2"
	70677008	6	WASHER
	70910325	6	NUT, 1/2"NC
18	--------	2	FLANGE (Order item 17)
19	73100021	2	GASKET
20	70683818	1	COVER (Not used on units equipped with Quick Fueling Adapter)

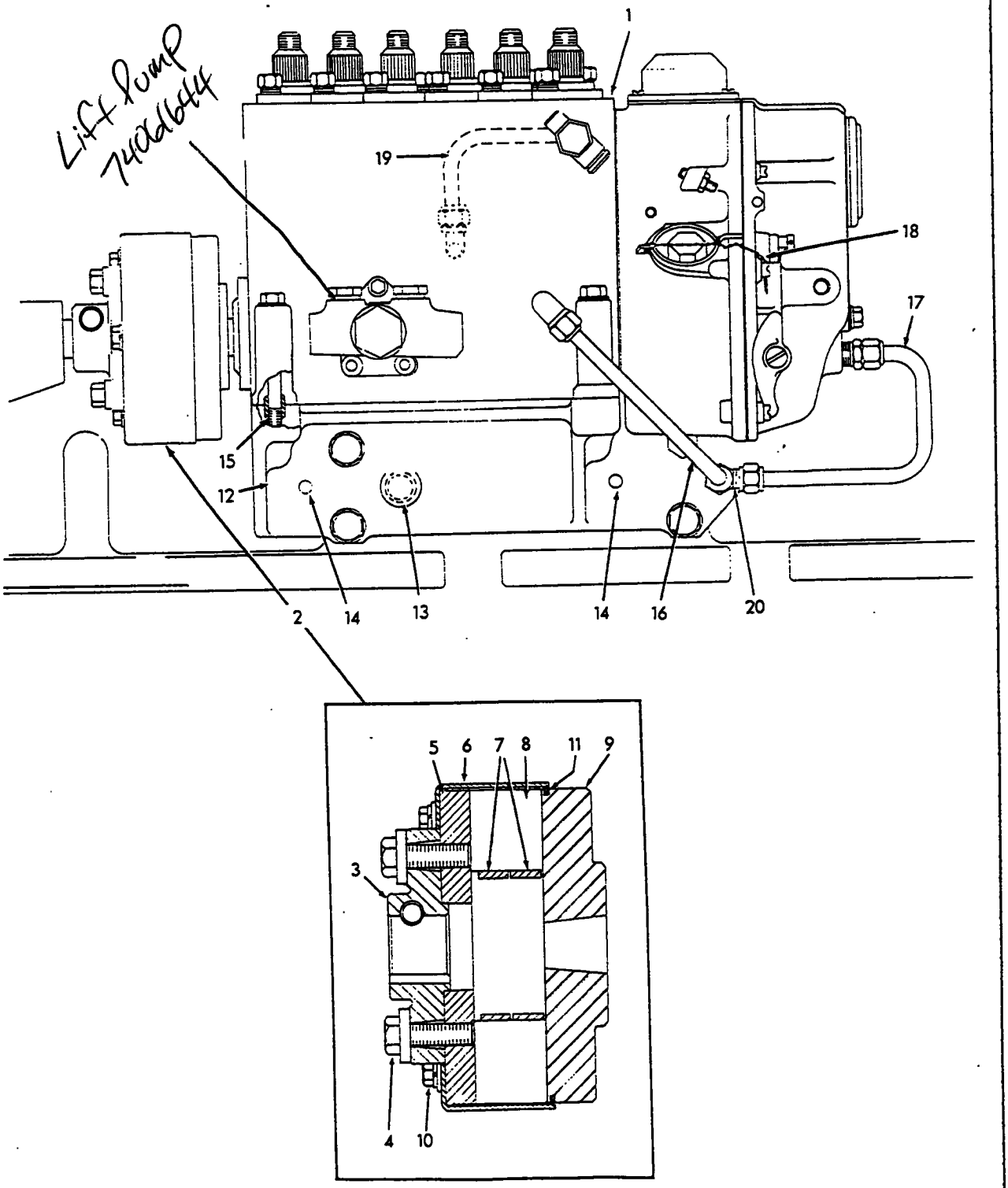

FUEL INJECTION PUMP T-75868

FUEL INJECTION PUMP

USAGE: 21000MKII engines. See page 49A for second type.

ITEM	PART NO.	QTY.	DESCRIPTION
1	74061637	1	PUMP KIT, injection (Includes item 2)(Service replacement for original factory adjusted PUMP ASSY. 74394741)
	70919015	4	CAPSCREW, 3/8"NC x 3-1/2"
	70904206	4	LOCKWASHER, 3/8"
	70913544	4	WASHER
	70905845	1	KEY, woodruff, 1/4" x 7/8"
2	74394009	1	COUPLING (Includes items 3 thru 11)
3	74394318	1	CLAMP
	70927322	1	CAPSCREW, 3/8"NF x 2" } Clamping
	70910287	1	LOCKWASHER, 3/8" } Clamping
4	70921076	2	CAPSCREW, 3/8"NC x 1-1/4"
	70677006	2	WASHER
5	74060643	1	FLANGE
6	74061040	1	COVER
7	74060645	2	INSERT
8	74060646	6	SPIDER (rubber)
9	74061041	1	HUB
10	70915343	3	CAPSCREW, 1/4"NC x 5/8"
	70904204	3	LOCKWASHER, 1/4"
	70911114	3	WASHER
11	74061042	1	SHIELD
12	74394301	1	BRACKET
	70916311	4	CAPSCREW, 1/2"NC x 1-1/4"
	70904208	4	LOCKWASHER, 1/2"
13	74255665	2	O-RING
14	74253286	2	PIN, dowel
15	74394302	2	DOWEL
16	74392402	1	TUBE ASSY. (Includes SLEEVES and NUTS)
	70917810	2	NUT, Imperial, 3/8" tube
	70917807	2	SLEEVE, Imperial, 3/8" tube (rubber)
	70920280	1	ELBOW, Imperial, 3/8"tube, 1/4"NPT (at pump)
17	74392439	1	TUBE ASSY. (Includes SLEEVES and NUTS)
	70917810	2	NUT, Imperial, 3/8" tube
	70917807	2	SLEEVE, Imperial, 3/8" tube (rubber)
	70920279	1	CONNECTOR, Imperial, 3/8" tube 1/4"NPT (at governor)
18	74355843	1	SEAL
19	74394306	1	TUBE ASSY. (Includes SLEEVES) and NUTS)
	70917810	2	NUT, Imperial, 3/8" tube
	70917807	2	SLEEVE, Imperial, 3/8" tube (rubber)
	70920790	1	ELBOW, Imperial, 3/8" tube, 1/8"NPT (at pump)
	70927139	1	ELBOW, Imperial, 3/8"tube, 1/4"NPT female } at block
	70913112	1	NIPPLE, pipe, hex, 1/4" x 1/4" } at block
20	70921841	1	TEE, service, Imperial, 3/8" tube, 1/4"NPT (at bracket)

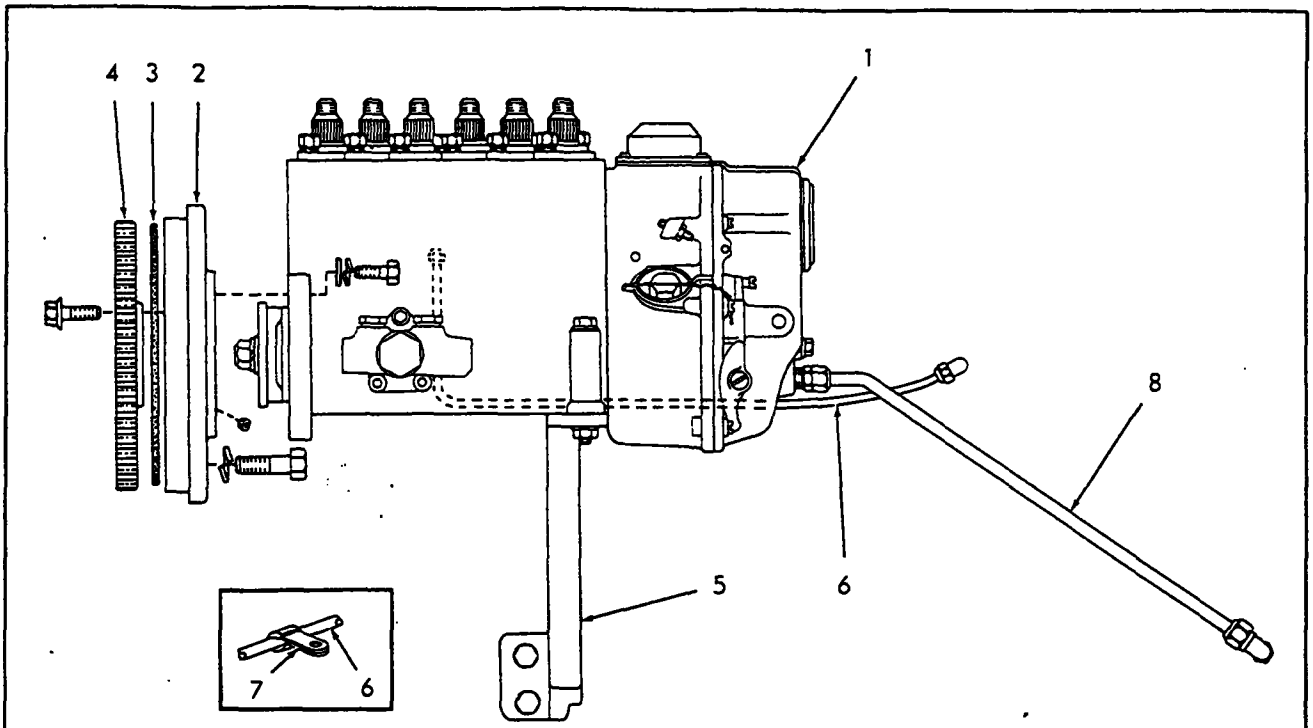

FUEL INJECTION PUMP

USAGE: 6138T engines S/N 14-01260 and up

ITEM	PART NO.	QTY.	DESCRIPTION
1	74396549	1	PUMP KIT, injection (Service replacement for PUMP ASSY. 74396266 and 74396524)
	70914847	4	CAPSCREW, 3/8"NC x 1-1/2"
	70911115	4	WASHER
	70910287	4	LOCKWASHER, 3/8"
2	74396005	1	PLATE, adapter
	70921076	2	CAPSCREW, 3/8"NC x 1-1/4"
	70930796	1	CAPSCREW, Eslok, 3/8"NC x 1-1/4"
	70910287	3	LOCKWASHER, 3/8"
	70908944	1	PLUG, pipe, ctsk, hex-skt., 1/2"NPT
3	70924142	1	O-RING
4	74395460	1	GEAR
	74255060	3	CAPSCREW
5	74394674	1	BRACKET
	70916276	1	CAPSCREW, 3/8"NC x 4-1/2"
	70919801	1	CAPSCREW, 3/8"NC x 4"
	70911115	2	WASHER
	70910287	2	LOCKWASHER, 3/8"
	70910324	2	NUT, 3/8"NC
	70915987	2	CAPSCREW, 1/2"NC x 1-1/2" } at cylinder block
	70912441	2	LOCKWASHER, 1/2" } at cylinder block

(Continued)

(Revised June 1981)

ITEM	PART NO.	QTY.	DESCRIPTION
6	74395976	1	TUBE ASSY. (Oil intake)(Includes SLEEVES and NUTS)
	70917807	2	SLEEVE, Imperial, 3/8" tube
	70917810	2	NUT, Imperial, 3/8" tube
	70921372	1	CONNECTOR, Imperial, 3/8" tube, 1/8" NPT
	70913112	1	NIPPLE, pipe, 1/4" x 1/4"
	70927139	1	ELBOW, Imperial, 3/8" tube, 1/4"NPT
7	70926917	1	CLAMP
8	74395229	1	TUBE (Oil return)
	70917807	2	SLEEVE, Imperial, 3/8" tube
	70917810	2	NUT, Imperial, 3/8" tube
	70920279	1	CONNECTOR, Imperial, 3/8" tube, 1/4"NPT
	70920280	1	ELBOW, Imperial, 3/8" tube, 1/4" NPT

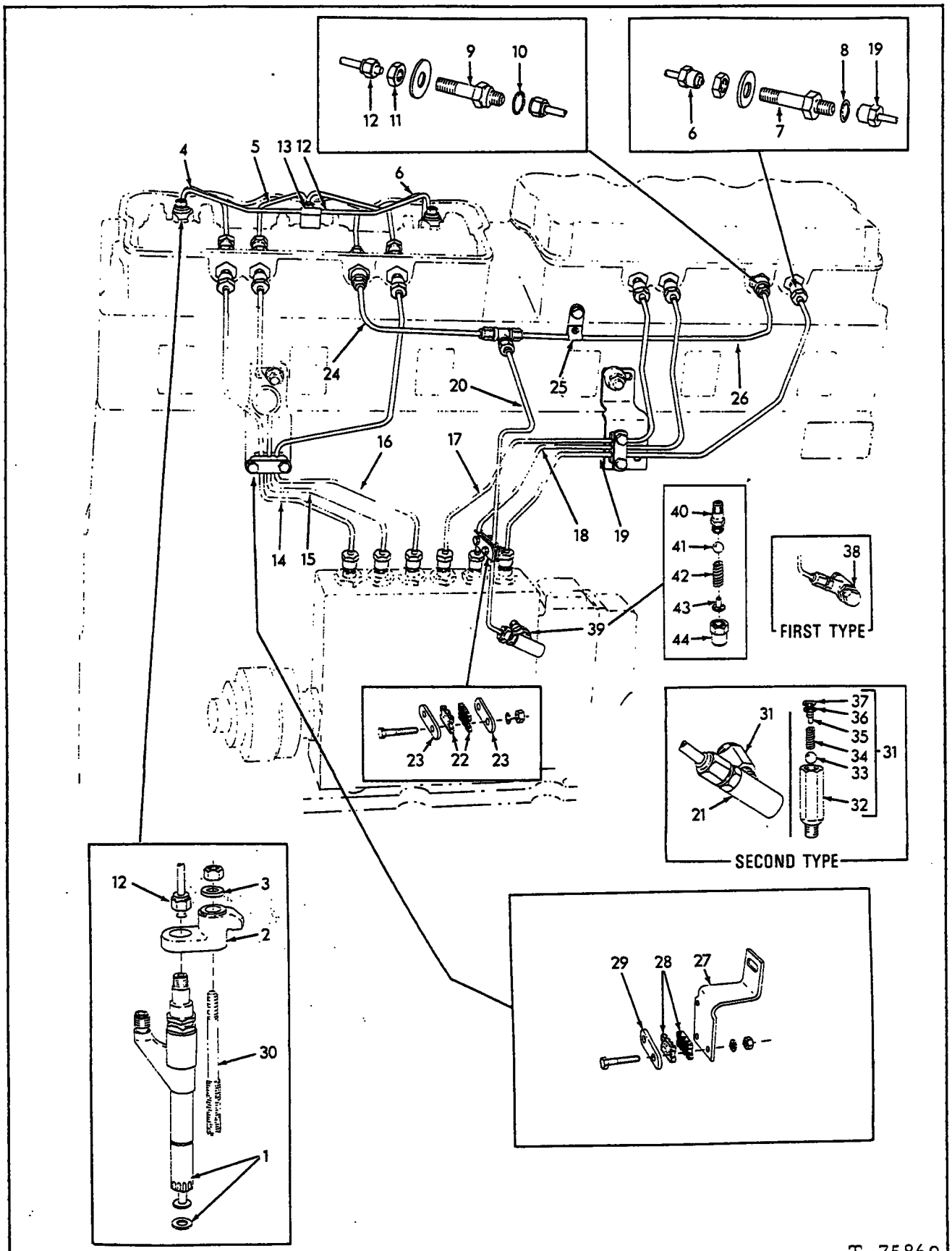

T-75869

INJECTION NOZZLE LINES

INJECTION NOZZLES LINES

USAGE: Engines prior to S/N 14-01260. See page 52A for second type.

ITEM	PART NO.	QTY.	DESCRIPTION	
1	--------	6	HOLDER ASSY., nozzle (See page 53)	
2	74387385	6	CLAMP	
	74115287	6	NUT, 3/8"NF	
3	74379572	6	WASHER	
4	74390093	2	TUBE ASSY. (#1 and #4 cylinder)	Each includes nuts
5	74390094	2	TUBE ASSY. (#2 and #5 cylinder)	
6	74390095	2	TUBE ASSY. (#3 and #6 cylinder)	
	74386601	1	CONNECTOR	
7	70919303	6	NUT, jam, 9/16"NF	
	70914659	6	WASHER	
8	70923645	6	□O-RING	
9	74386602	2	CONNECTOR	
10	70923645	2	□O-RING	
11	74377267	2	NUT	
	70914659	2	WASHER, plain, SAE std., 9/16" (Engine prior to #21-14911)	
	74396053	2	SPACER, 7/32" (Engine #21-14911 and up)	
12	74396020	2	MANIFOLD ASSY. (Includes nuts and sleeves)	Engines prior to #21-15161
	70917809	8	NUT, Imperial, 1/4" tube	
	74255956	8	□SLEEVE, Imperial, 1/4" tube (Viton-high temp.)	
13	74255179	2	CLIP	
14	74392384	1	TUBE ASSY. (#1 cylinder)	Each includes nuts
15	74392385	1	TUBE ASSY. (#2 cylinder)	
16	74392386	1	TUBE ASSY. (#3 cylinder)	
17	74392387	1	TUBE ASSY. (#4 cylinder)	
18	74392388	1	TUBE ASSY. (#5 cylinder)	
19	74392389	1	TUBE ASSY. (#6 cylinder)	
20	74394976	1	TUBE (Used with items 31 and 39)	
	74394177	1	TUBE (Used with item 38)	
	70917809	2	NUT, Imperial, 1/4" tube	
	74255956	2	SLEEVE, Imperial, 1/4" tube (Viton-high temp.)	
	70919797	1	TEE, Imperial, 1/4" tube	
	70920242	1	CONNECTOR, imperial, 1/4"tube, 1/4"NPT male	
21	70931195	1	TEE, pipe, 1/4"NPT (Used with items 31 and 39)	
22	74507358	2	SPACER	
23	74507415	2	PLATE	
	70918794	2	CAPSCREW, 1/4"NC x 1-3/8"	
	70904204	2	LOCKWASHER, 1/4"	
	70910880	2	NUT, 1/4"NC	
24	74392789	1	TUBE	
	70917809	2	NUT, Imperial, 1/4" tube	
	74255956	2	SLEEVE, Imperial, 1/4" tube (Viton-high temp.)	
25	74386617	1	CLIP	
	70901171	1	SCREW, machine, #10-24NC x 3/8"	
	70904203	1	LOCKWASHER, #10	
	70901310	1	NUT, #10-24NC	
	70915408	1	CAPSCREW, 3/8"NC x 3/4"	
	70904206	1	LOCKWASHER, 3/8"	
	70911115	1	WASHER	
26	74392788	1	TUBE	
	70917809	2	NUT, Imperial, 1/4" tube	
	74255956	2	SLEEVE, Imperial, 1/4" tube (Viton-high temp.)	

(Continued)

INJECTION NOZZLE LINES (Continued)

ITEM	PART NO.	QTY.	DESCRIPTION
27	74388148	2	BRACKET
28	74507359	4	SPACER
29	74507415	2	PLATE
	70918794	4	CAPSCREW, 1/4"NC x 1-3/8"
	70904204	4	LOCKWASHER, 1/4"
	70910880	4	NUT, 1/4"NC
30	--------	6	STUD (See page 24)
31	--------	1	VALVE ASSY. (Second type)(Consists of items 32 thru 37)(Order item 39)
32	--------	1	BODY (Not serviced separately)
33	74337022	1	BALL
34	74337023	1	SPRING
35	74337019	1	STOP
36	74255017	1	E-RING
37	74255020	1	RING
38	74060154	1	VALVE (First type)
	70919800	1	CONNECTOR, Imperial, 1/4" tube, 1/8"NPT male
39	74396315	1	VALVE (Third type)(Includes items 40 thru 44)
40	--------	1	BODY (Not serviced separately)
41	74337022	1	BALL
42	--------	1	SPRING (Not serviced)
43	74395855	1	STOP
44	74395935	1	NUT

(Revised April 1980)

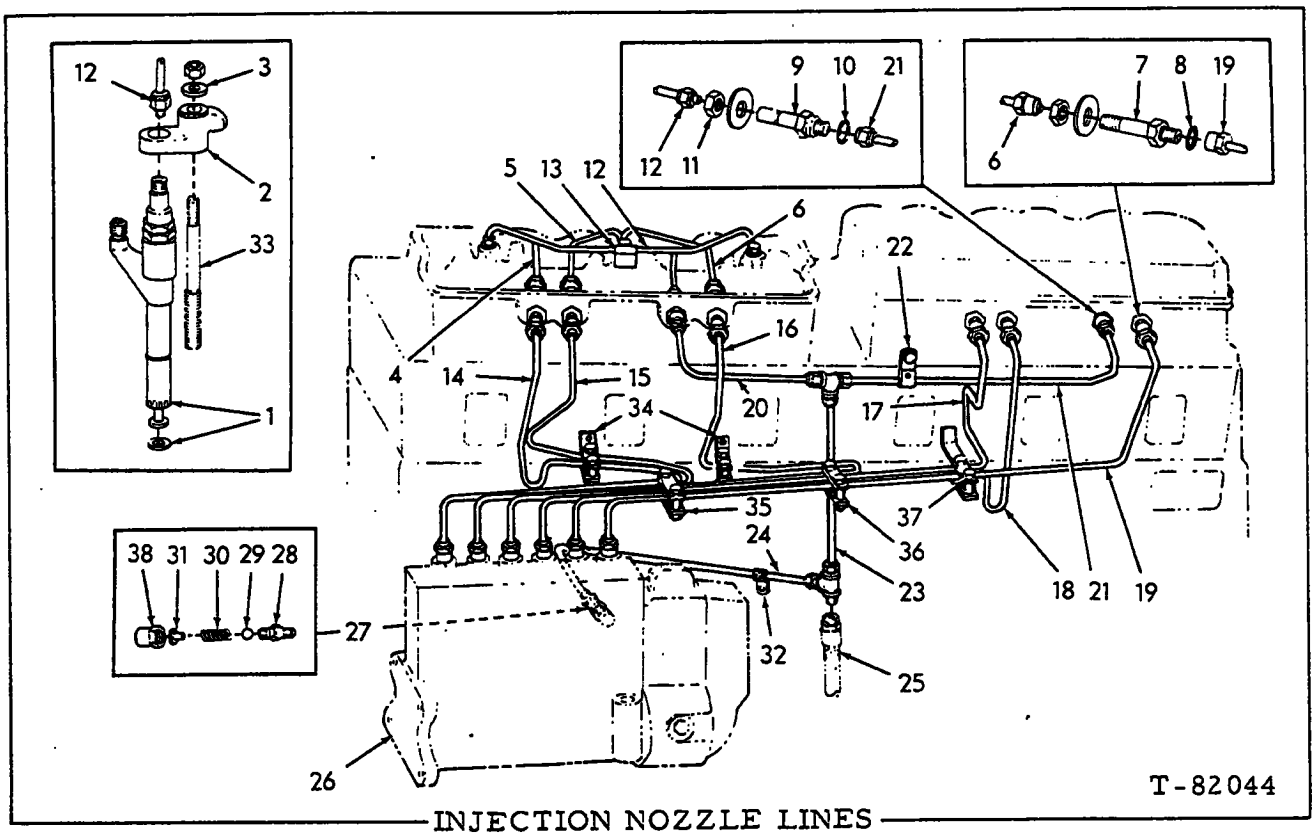

INJECTION NOZZLE LINES

USAGE: Model 6138T engines

ITEM	PART NO.	QTY.	DESCRIPTION	
1	--------	6	HOLDER ASSY., Nozzle (See page 53)	
2	74387385	6	CLAMP	
	74115287	6	NUT, 3/8"NF	
3	74379572	6	WASHER	
4	74390093	2	TUBE ASSY. (#1 and #4 cylinder)	Each includes nuts
5	74390094	2	TUBE ASSY. (#2 and #5 cylinder)	
6	74390095	2	TUBE ASSY. (#3 and #6 cylinder)	
7	74386601	6	CONNECTOR	
	70919303	6	NUT, jam, 9/16"NF	
	70914659	6	WASHER	
8	70923645	6	□O-RING	
9	74386602	2	CONNECTOR	
10	70923645	2	□O-RING	
11	74377267	2	NUT	
	74396053	2	SPACER	
12	74396020	2	MANIFOLD ASSY. (Includes nuts and sleeves)	
	70917809	8	NUT, Imperial, 1/4" tube	
	74255956	8	□SLEEVE, Imperial, 1/4" tube	
13	74255179	2	CLIP	
14	74395541	1	TUBE ASSY. (#1 cylinder)	Each includes nuts
15	74395542	1	TUBE ASSY. (#2 cylinder)	
16	74395543	1	TUBE ASSY. (#3 cylinder)	
17	74396479	1	TUBE ASSY. (#4 cylinder)	
18	74395545	1	TUBE ASSY. (#5 cylinder)	
19	74395546	1	TUBE ASSY. (#6 cylinder)	

(Continued)

(Revised June 1981)

INJECTION NOZZLE LINES (Continued)

ITEM	PART NO.	QTY.	DESCRIPTION
20	74392789	1	TUBE (fuel return, front)
	70917809	2	NUT, Imperial, 1/4" tube
	74255956	2	SLEEVE, Imperial, 1/4" tube
21	74392788	1	TUBE (fuel return, rear)
	70917809	2	NUT, Imperial, 1/4" tube
	74255956	2	SLEEVE, Imperial, 1/4" tube
22	74386617	1	CLIP
	70901171	1	SCREW, machine, #10-24NC x 3/8"
	70904203	1	LOCKWASHER, #10
	70901310	1	NUT, #10-24NC
	70915408	1	CAPSCREW, 3/8"NC x 3/4"
	70910287	1	LOCKWASHER, 3/8"
23	74395227	1	TUBE (fuel return, lower)
	70917809	2	NUT, Imperial, 1/4" tube
	74255956	2	SLEEVE, Imperial, 1/4" tube
	70919797	1	TEE
24	74395690	1	TUBE (pump overflow)
	70917809	2	NUT, Imperial, 1/4" tube
	74255956	2	SLEEVE, Imperial, 1/4" tube
	70921378	1	TEE, Imperial, 1/4" tube, 1/4"NPT
	70920242	1	CONNECTOR, Imperial, 1/4" tube, 1/4"NPT male
25	--------	1	HOSE (See page 44)
26	--------	1	PUMP ASSY., fuel injection (See page 49A)
27	74396752	1	VALVE ASSY., return relief (Includes items 28, 29, 30, 31, and 38)
28	--------	1	BODY (Not serviced separately)
29	74337022	1	BALL
30	74396317	1	SPRING
31	74396754	1	RETAINER
32	74003510	1	CLAMP
33	--------	6	STUD (See page 24)
34	74395878	2	BRACKET
	74507414	2	CLAMP
	74507358	4	SPACER
	70918237	4	CAPSCREW, 1/4"NC x 1-1/4"
	70904204	4	LOCKWASHER, 1/4"
	70910880	4	NUT, 1/4"NC
35	74020725	2	CLAMP
	74020724	2	SPACER
	70918237	2	CAPSCREW, 1/4"NC x 1-1/4"
	70904204	2	LOCKWASHER, 1/4"
	70910880	2	NUT, 1/4"NC
36	74507416	2	CLAMP
	74507360	2	SPACER
	70918237	2	CAPSCREW, 1/4"NC x 1-1/4"
	70904204	2	LOCKWASHER, 1/4"
	70910880	2	NUT, 1/4"NC
37	74396083	1	BRACKET
	74507415	1	CLAMP
	74507359	2	SPACER
	70918237	2	CAPSCREW, 1/4"NC x 1-1/4"
	70904204	2	LOCKWASHER, 1/4"
	70910880	2	NUT, 1/4"NC
38	74395935	1	NUT

(Revised June 1981)

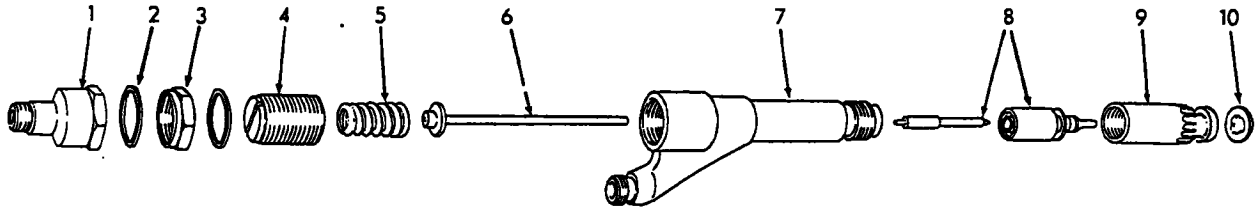

NOZZLE HOLDER ASSEMBLY T-27378

USAGE: See page 51

ITEM	PART NO.	QTY.	DESCRIPTION
			NOTE: Quantities are for one (1) Holder assy. only
-	74392121	1	HOLDER ASSY. (Not serviced. Order HOLDER ASSY. 74062107 and item 8)(Engines prior to #21-14911)
-	74062107	1	HOLDER ASSY. (Includes items 1 thru 7 and 9)
-	74396059	1	HOLDER ASSY. (Not serviced. Order HOLDER ASSY. 74062107 and item 8)(Engine #21-14911 and up)
1	74396054	1	CAP
2	74511243	2	GASKET
3	74517266	1	NUT, locking
4	74378033	1	SCREW
5	74380652	1	SPRING
6	74391240	1	SPINDLE
7	--------	1	BODY (Not serviced separately)
8	74390006	1	NOZZLE ASSY. (Includes item 10)
9	74392057	1	NUT
10	74378031	1	□GASKET

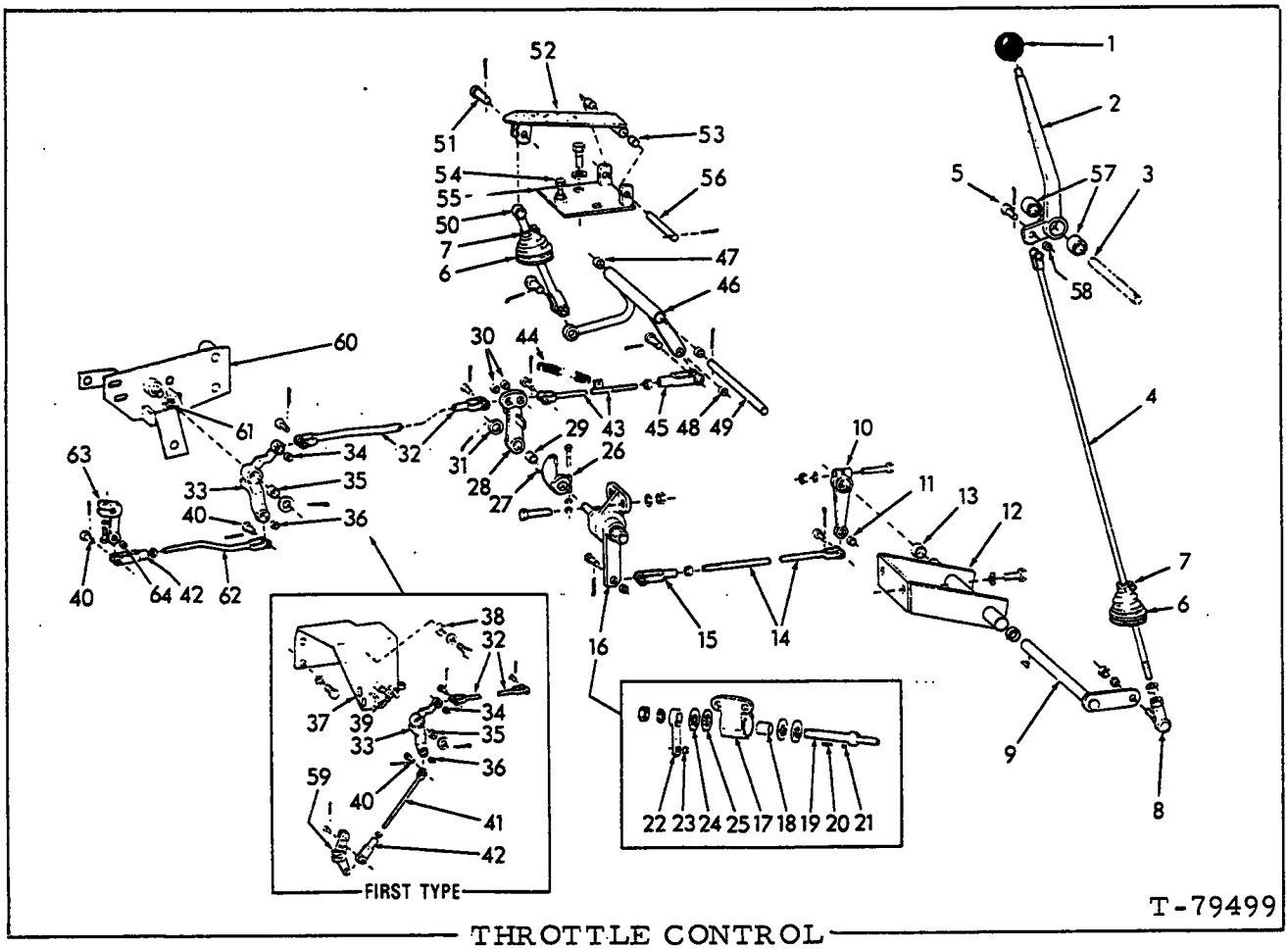

THROTTLE CONTROL

ITEM	PART NO.	QTY.	DESCRIPTION
1	70090020	1	KNOB
2	70664237	1	LEVER ASSY. (Includes item 57 and 58)
3	--------	1	SHAFT (See page 161)
4	70690701	1	ROD
	70911048	1	NUT, jam. 3/8"NF
5	70078810	7	PIN
	70900942	7	PIN, cotter. 3/32" x 5/8"
6	70078908	2	BOOT
7	70921910	2	CLAMP
8	70653570	1	END, rod
	70910287	1	LOCKWASHER, 3/8"
	70911041	1	NUT 3/8"NC
9	70690552	1	SHAFT
	70905123	1	KEY, #9 woodruff, 3/16" x 3/4"
10	73108263	1	LEVER ASSY. (Includes item 11)
	70922286	1	CAPSCREW, 5/16"NC x 1-3/4"
	70910286	1	LOCKWASHER, 5/16"
	70911025	1	NUT, 5/16"NC
11	70624584	1	BUSHING

(Continued)

ITEM	PART NO.	QTY.	DESCRIPTION	
12	70690560	1	TUBE ASSY. (Tractors prior to unit #21252) (Includes item 13)	
	73109377	1	TUBE ASSY. (Tractors unit #21252 and up)(Includes item 13)	
	70922763	2	CAPSCREW, 3/8"NC x 1"	
	70677006	2	WASHER	
13	70697326	2	BUSHING	
14	70690681	1	ROD	
	70911048	1	NUT, jam, 3/8"NF	
15	70628736	1	YOKE	
16	70690555	1	FRICTION ASSY. (Includes items 17 thru 25)	
17	70632766	1	HOUSING ASSY. (Includes item 18)	
	70920585	2	CAPSCREW, 1/2"NC x 1-3/4"	
	70677008	2	WASHER	
	70911028	2	NUT, 1/2"NC	
18	70632752	1	BUSHING	
19	70690556	1	SHAFT	
	70687222	1	LOCKWASHER	
	70916591	1	NUT, elastic stop, 3/4"NF	
20	70916024	1	KEY, straight, 3/16" x 3/16" x 1-1/4"	
21	70632716	1	KEY	
22	70652350	1	LEVER ASSY. (Includes item 23)	
23	70624584	1	BUSHING	
24	70632710	2	WASHER	
25	70632747	2	DISC	
26	70633123	1	LEVER	
	70920660	1	CAPSCREW, 5/16"NC x 1-1/2"	
	70910286	1	LOCKWASHER, 5/16"	
	70910323	1	NUT, 5/16"NC	
27	70632716	1	KEY	
28	70666795	1	LEVER ASSY. (Includes items 29 and 30)	
29	70631476	1	BUSHING (large)	
30	70624584	2	BUSHING (small)	
31	70910244	2	WASHER, plain, SAE std., 1/2"	
	70900806	2	PIN, cotter, 1/8" x 1"	
32	70690559	1	ROD (Tractors prior to unit #21812 excluding #21757, 21761 and 21767)	
	73117380	1	ROD (Tractors unit #21812 and up including #21757, 21761 and 21767)	
33	70674774	1	BELLCRANK ASSY. (Includes items 34, 35 and 36)	
34	70624584	1	BUSHING, 3/8" long	
35	70631476	1	BUSHING, 7/8" long	
36	70624585	1	BUSHING, 1/4" long	
37	70680894	1	BRACKET	Tractors prior to unit #21812 excluding #21757, 21761 and 21767
	70928873	2	CAPSCREW, Nylok, 1/2"NC x 1"	
	70912441	2	LOCKWASHER, 1/2"	
38	70690932	1	SPACER	
	70922508	1	CAPSCREW, Nylok, 1/2"NC x 1-1/2"	
	70928460	1	WASHER, plain, 1/2"	
39	70921565	1	CAPSCREW, throttle stop, 3/8"NC x 1-1/2"	
	70911034	1	NUT, jam, 3/8"NC	

(Continued)

THROTTLE CONTROL (Continued)

ITEM	PART NO.	QTY.	DESCRIPTION	
40	70628738	2	PIN, yoke	
	70900970	2	PIN, cotter, 1/16" x 1/2"	
41	70674755	1	ROD (Tractor prior to unit #21812 excluding #21757, 21761 and 21767)	
	70910267	1	NUT, jam, 1/4"NF	
42	70628737	1	YOKE	
43	70690557	1	ROD	
	70911048	1	NUT, jam, 3/8"NF	
44	70072438	1	SPRING	
45	70628736	1	YOKE	
46	70690638	1	BELLCRANK ASSY. (Includes items 47 and 48)	
47	70063222	2	BUSHING	
48	70624584	1	BUSHING	
49	70690643	1	SHAFT	
	70900808	1	PIN, cotter, 1/8" x 1-1/2"	
50	70690680	1	ROD (Units not equipped with a Cab)	
	73107980	1	ROD (Units equipped with a Cab)	
	70049993	1	PIN	
	70900801	1	PIN, cotter, 3/32" x 3/4"	
51	70623765	1	PIN	
	70900808	1	PIN, cotter, 1/8" x 1-1/2"	
52	70690594	1	PEDAL ASSY. (Includes item 53)	
53	70063222	2	BUSHING	
54	70921556	1	CAPSCREW (Pedal stop) 1/2"NC x 1-3/4"	
	70910510	1	NUT, jam, 1/2"NC	
55	70690682	1	PLATE	
	70921175	2	CAPSCREW, 1/2"NC x 1"	
	70677008	2	WASHER	
56	70690644	1	SHAFT	
	70900808	1	PIN, cotter, 1/8" x 1-1/2"	
57	70653319	2	BEARING	
58	70624584	1	BEARING	
59	74393281	1	LEVER ASSY. (Includes hardware indented below)	Tractors prior to unit #21812
	70916277	1	CAPSCREW, 5/16"NC x 5/8"	Tractors prior to unit #21812
	70904205	1	LOCKWASHER, 5/16"	Tractors prior to unit #21812
60	73117283	1	BRACKET	
	70929060	2	CAPSCREW, Nylok, 1/2"NC x 3"	
	70920582	1	CAPSCREW, 1/2"NC x 1-1/4"	
	70677008	3	WASHER	
61	70921076	1	CAPSCREW, throttle stop (3/8"NC x 1-1/4")	
	70911034	1	NUT, jam, 3/8"NC	
62	73116481	1	ROD	
	70910267	1	NUT, jam, 1/4"NF	
63	73117281	1	LEVER ASSY. (Includes item 64)	
	70922925	1	CAPSCREW, 5/16"NC x 3/4"	
	70929662	1	WASHER	
64	70624585	1	BUSHING	

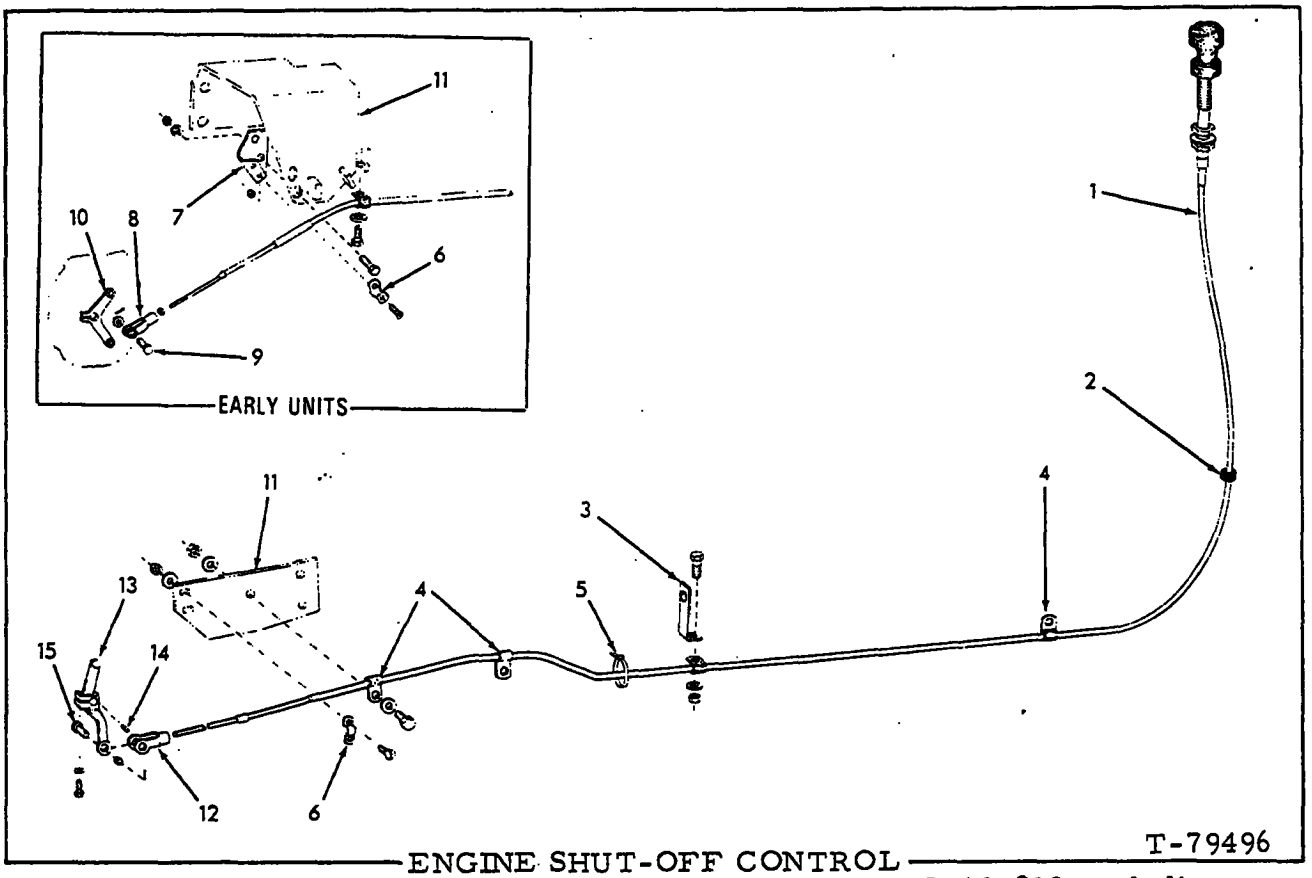

ENGINE SHUT-OFF CONTROL

*Tractors prior to serial No. 71A21812 excluding #21757, 21761 and 21767

**Tractors serial No. 71A21812 and up including #21757, 21761 and 21767

ITEM	PART NO.	QTY. *	QTY. **	DESCRIPTION	
1	70680865	1	-	CABLE ASSY. (Tractors prior to unit #21280)	Each includes mounting washer and nut
	73110103	1	-	CABLE ASSY. (Tractors unit #21280 and up)	
	73117381	-	1	CABLE ASSY.	
2	70087855	1	1	GROMMET	
3	70690678	1	1	BRACKET	
4	70654655	3	4	CLIP	
	70922300	2	1	CAPSCREW, 3/8"NC x 3/4"	
	70920582	-	1	CAPSCREW, 1/2"NC x 1 1/4"	
	70911115	1	1	WASHER	
	70900367	1	1	NUT, 3/8"NC	
	70928460	-	2	WASHER	
	70900369	-	1	NUT, 1/2"NC	
5	70239726	1	1	TIE	
6	70662427	1	1	CLAMP	
	70917388	2	2	SCREW, #10-24NC x 3/4"	
	70911982	2	2	WASHER	
	70926673	2	2	NUT, #10-24NC	
7	70690679	1	-	BRACKET	
	70927401	2	-	CAPSCREW, 1/4"NC x 1"	
	70677004	2	-	WASHER	
	70920329	2	-	NUT, lock, 1/4"NC	

(Continued)

ENGINE SHUT-OFF CONTROL (Continued)

ITEM	PART NO.	QTY. *	QTY. **	DESCRIPTION
8	70196606	1	-	CLEVIS
9	70628738	1	-	PIN
	70900970	1	-	PIN, cotter 1/16" x 1/2"
	70911114	1	-	WASHER
10	74393280	1	-	LEVER ASSY. (Includes hardware indented below)
	70916277	1	-	CAPSCREW, 5/16"NC x 5/8"
	70904205	1	-	LOCKWASHER, 5/16"
11	--------	1	1	BRACKET (See page 54)
12	73117280	-	1	YOKE
13	73117282	-	1	LEVER (Includes BUSHING indented below)
	70624585	-	1	BUSHING
	70922925	-	1	CAPSCREW, 5/16"NC x 3/4"
	70929662	-	1	WASHER
14	73118261	-	1	KEY
15	70628738	-	1	PIN
	70918445	-	1	PIN, cotter, 1/16" x 1/2"

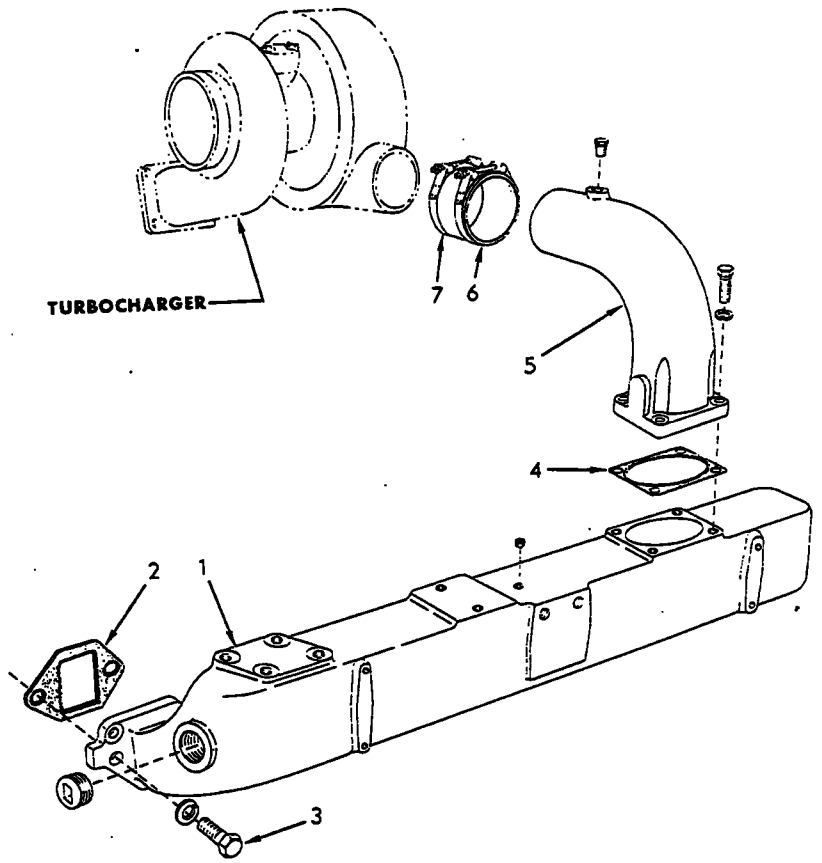

INTAKE MANIFOLD

ITEM	PART NO.	QTY.	DESCRIPTION
1	74393778	1	MANIFOLD, intake
	70901667	1	PLUG, pipe, ctsk-hd., 1-1/4"NPT
	70917673	1	PLUG, pipe, ctsk-hd., 1/8"NPT (Not used when engine primer is installed)
	70919840	1	PLUG, pipe, 1/4"NPT
2	74387697	6	□GASKET
3	74255895	8	CAPSCREW, 1-1/4" long (Used prior to engine #21-14911)
	74255914	8	CAPSCREW, 1-1/2" long (4 less used prior to engine #21-14911)
	74255995	4	CAPSCREW, 1-3/4" long (Engine #21-14911 and up)
	70912441	12	LOCKWASHER, 1/2"
4	74391707	1	□GASKET
5	74393592	1	ELBOW
	70919840	1	PLUG, pipe, hex-hd., 1/4" NPT
	70919230	4	CAPSCREW, 1/2"NC x 1-3/8"
	70912441	4	LOCKWASHER, 1/2"
6	74391131	1	HOSE
7	70929417	2	CLAMP

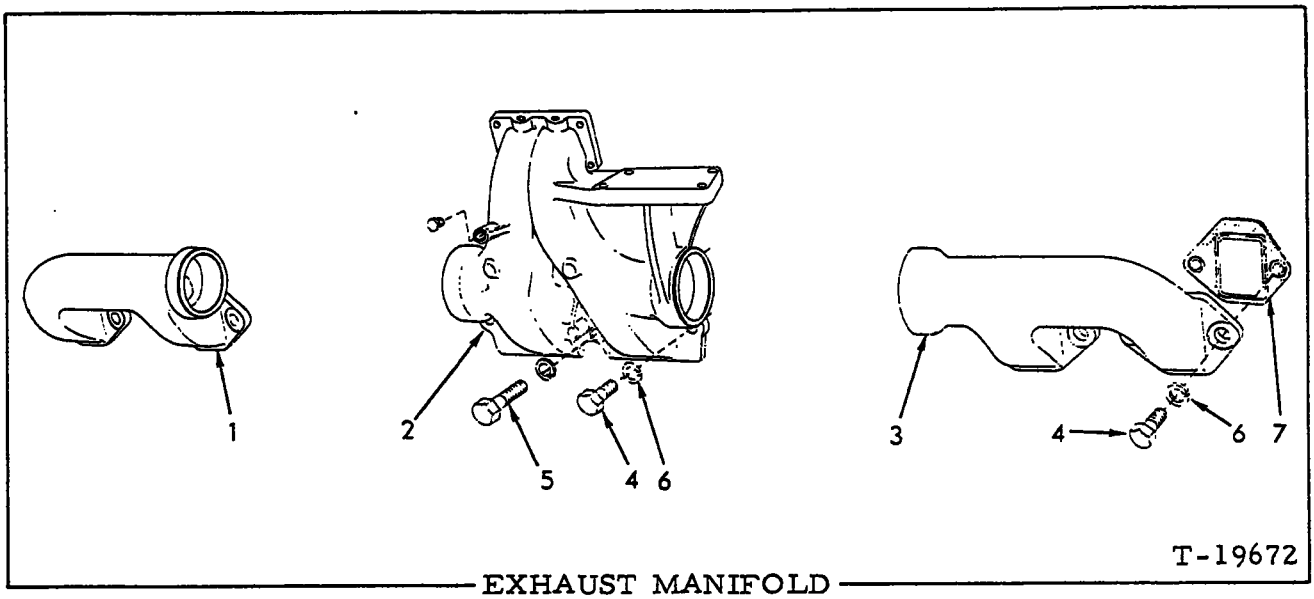

EXHAUST MANIFOLD

ITEM	PART NO.	QTY.	DESCRIPTION
1	74395012	1	MANIFOLD
2	74393548	1	MANIFOLD
	70917425	2	PLUG, pipe, hex-hd., brass, 1/4"NPT
3	74395011	1	MANIFOLD
4	70915987	10	CAPSCREW (1-1/2" long)
5	70916317	2	CAPSCREW (2-3/4" long)
6	70912441	12	LOCKWASHER, 1/2"
7	74387697	6	□GASKET

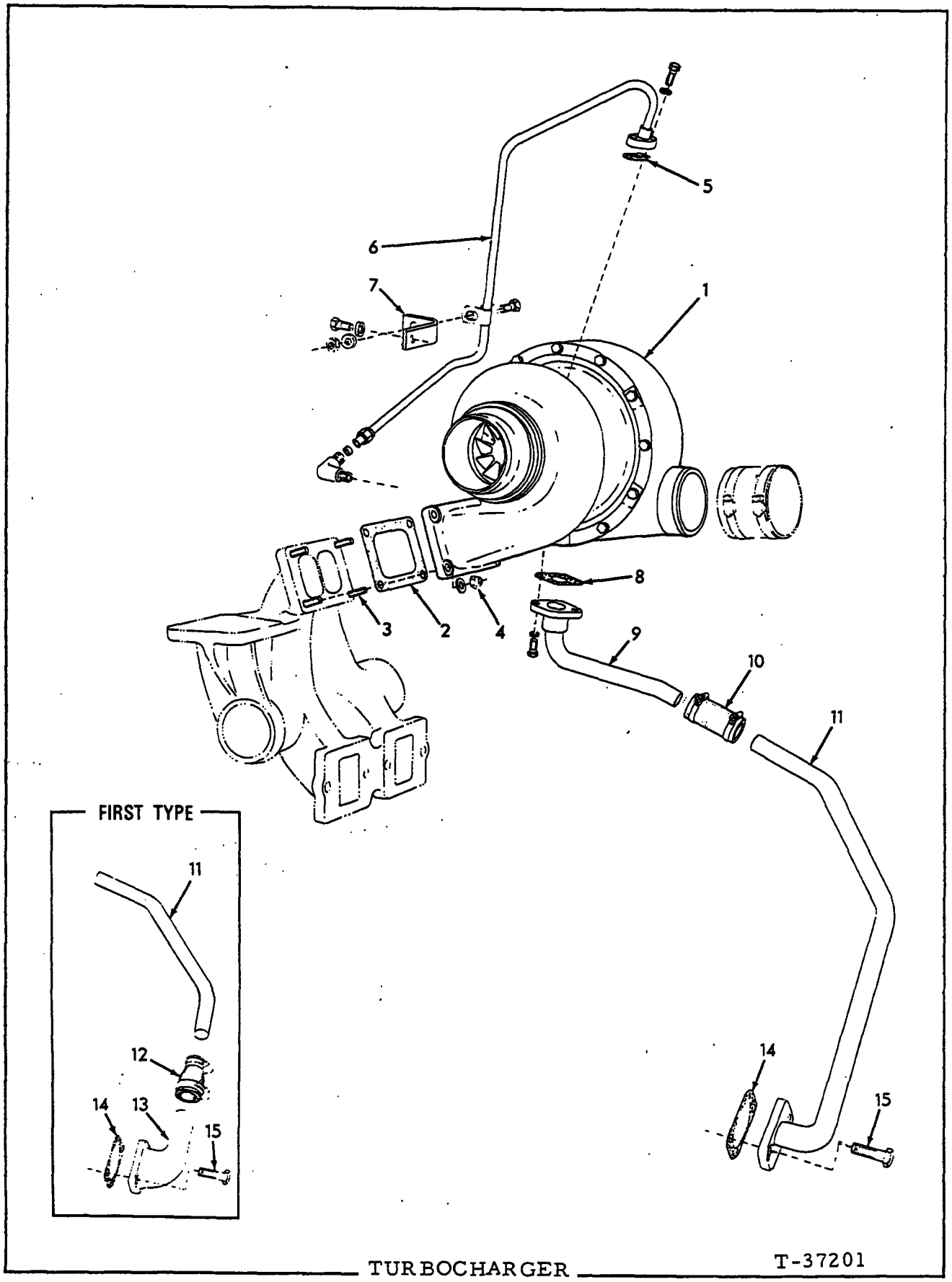

TURBOCHARGER

TURBOCHARGER

ITEM	PART NO.	QTY.	DESCRIPTION
1	--------	1	TURBOCHARGER ASSY. (See page 62)
2	74336558	1	GASKET
3	74339535	4	STUD
4	74255977	4	NUT
	70913544	4	WASHER
5	74335647	1	GASKET
6	74391996	1	TUBE ASSY. (Includes Nut and Sleeve indented below)
	70917810	1	NUT, Imperial, 3/8" tube
	70917807	1	SLEEVE, Imperial, 3/8" tube
	70919005	1	ELBOW, Imperial, 90°, 3/8" tube, 3/8"NPT male
	70916269	2	CAPSCREW, 3/8"NC x 7/8"
	70911115	2	WASHER
7	74395193	1	BRACKET
	70930609	1	CLAMP
	70915408	2	CAPSCREW, 3/8"NC x 3/4"
	70911115	2	WASHER
	70677006	1	WASHER
	70910324	1	NUT, 3/8"NC
8	74335649	1	□GASKET
9	74395640	1	TUBE
	70916269	2	CAPSCREW, 3/8"NC x 7/8"
	70904206	2	LOCKWASHER, 3/8"
10	74390773	1	HOSE
	70921911	2	CLAMP, 11/16" to 1-1/4" diam.
11	--------	1	TUBE (First type)(Engines prior to S/N 21-14622) (Order TUBE 74394990)
	74394990	1	TUBE (Second type)(Engines S/N 21-14622 and up)
			NOTE: Items 12 and 13, First type Engines prior to S/N 21-14622)
12	74379723	1	ADAPTER, oil drain line
	70921911	1	CLAMP, hose, (11/16" to 1-1/4" diam.) } See NOTE
	70921912	1	CLAMP, hose, (1-1/16" to 2" diam.) } See NOTE
13	--------	1	ELBOW, oil drain line (Order item 11)
14	74310257	1	GASKET, oil drain line elbow
15	70921865	2	CAPSCREW, Nylok, 1/2"NC x 1"
16	74387007	1	GASKET KIT (Consists of items 2, 5, 8 and 14) (Not illustrated)

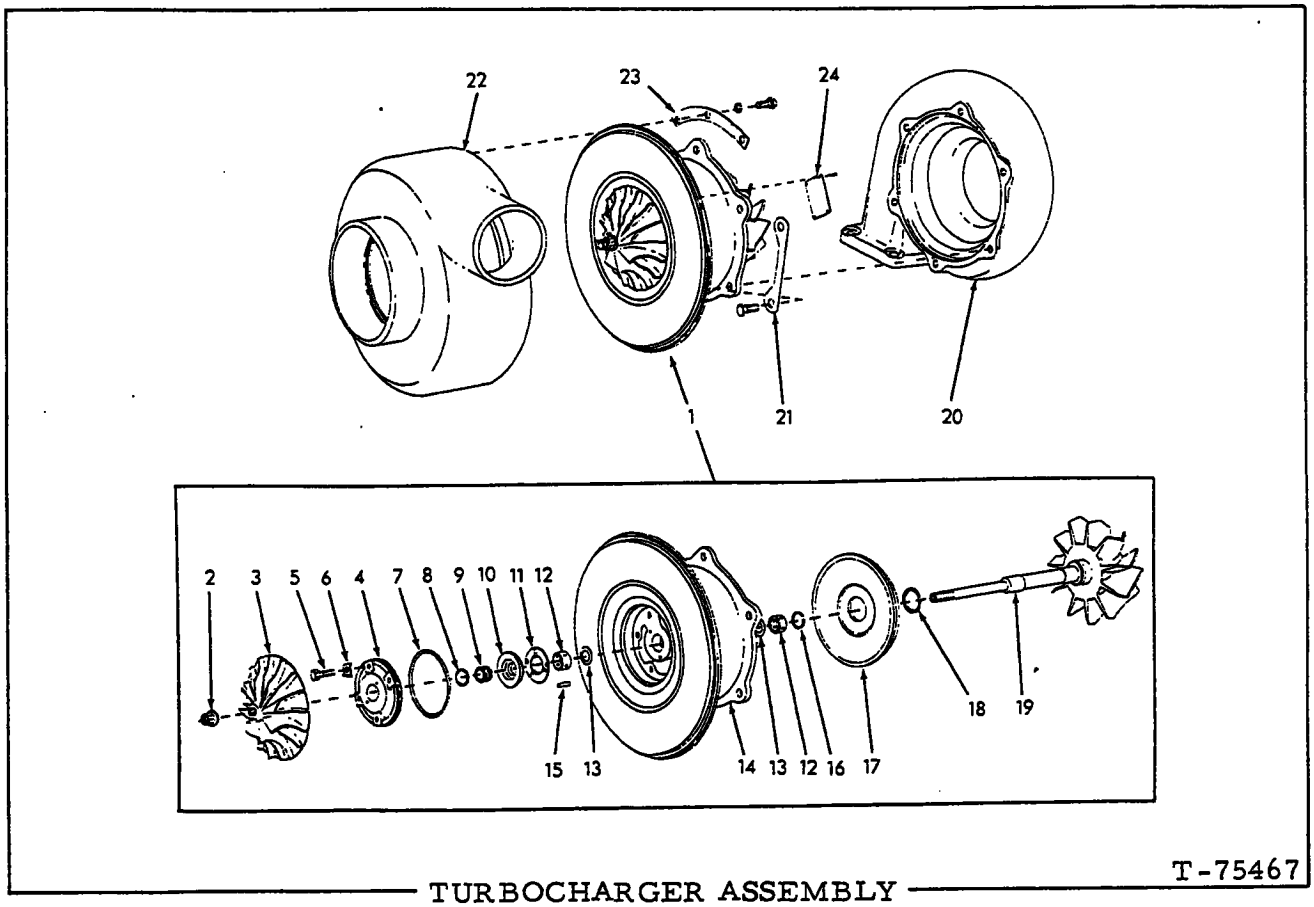

T-75467

TURBOCHARGER ASSEMBLY

USAGE: See page 61

ITEM	PART NO.	QTY.	DESCRIPTION
-	74394366	1	TURBOCHARGER ASSY. (Includes items 1 thru 24)
1	74061217	1	HOUSING AND ROTATING ASSY. (Includes items 2 thru 19)
2	74055201	1	NUT
3	74061218	1	IMPELLER
4	74055193	1	PLATE ASSY. (Includes riveted washer)
5	74055196	4	CAPSCREW, #10-24NC x 7/8"
6	74055194	4	PLATE, locking
7	74053336	1	O-RING
8	74055195	1	RING
9	74060984	1	SPACER
10	74056494	1	RING
11	74061659	1	BEARING
12	74061213	2	BEARING
13	74061214	2	WASHER
14	74061210	1	HOUSING ASSY. (Includes item 4)
15	74055187	2	PIN, dowel
16	70927771	3	RING, snap
17	74059748	1	SHROUD
18	74061212	1	RING
19	74059744	1	SHAFT AND WHEEL

(Continued)

TURBOCHARGER ASSEMBLY (Continued)

ITEM	PART NO.	QTY.	DESCRIPTION
20	74059747	1	HOUSING
	74056026	6	CAPSCREW, 3/8"NC x 3/4"
21	74055981	3	PLATE, capscrew locking
22	74059018	1	HOUSING ASSY. (Includes venturi)
23	74055203	6	CLAMP
	70903626	12	CAPSCREW, 5/16"NC x 3/4"
	70917356	12	LOCKWASHER, plated, 5/16"
24	74055206	1	PLATE, name
	74049009	4	SCREW, drive

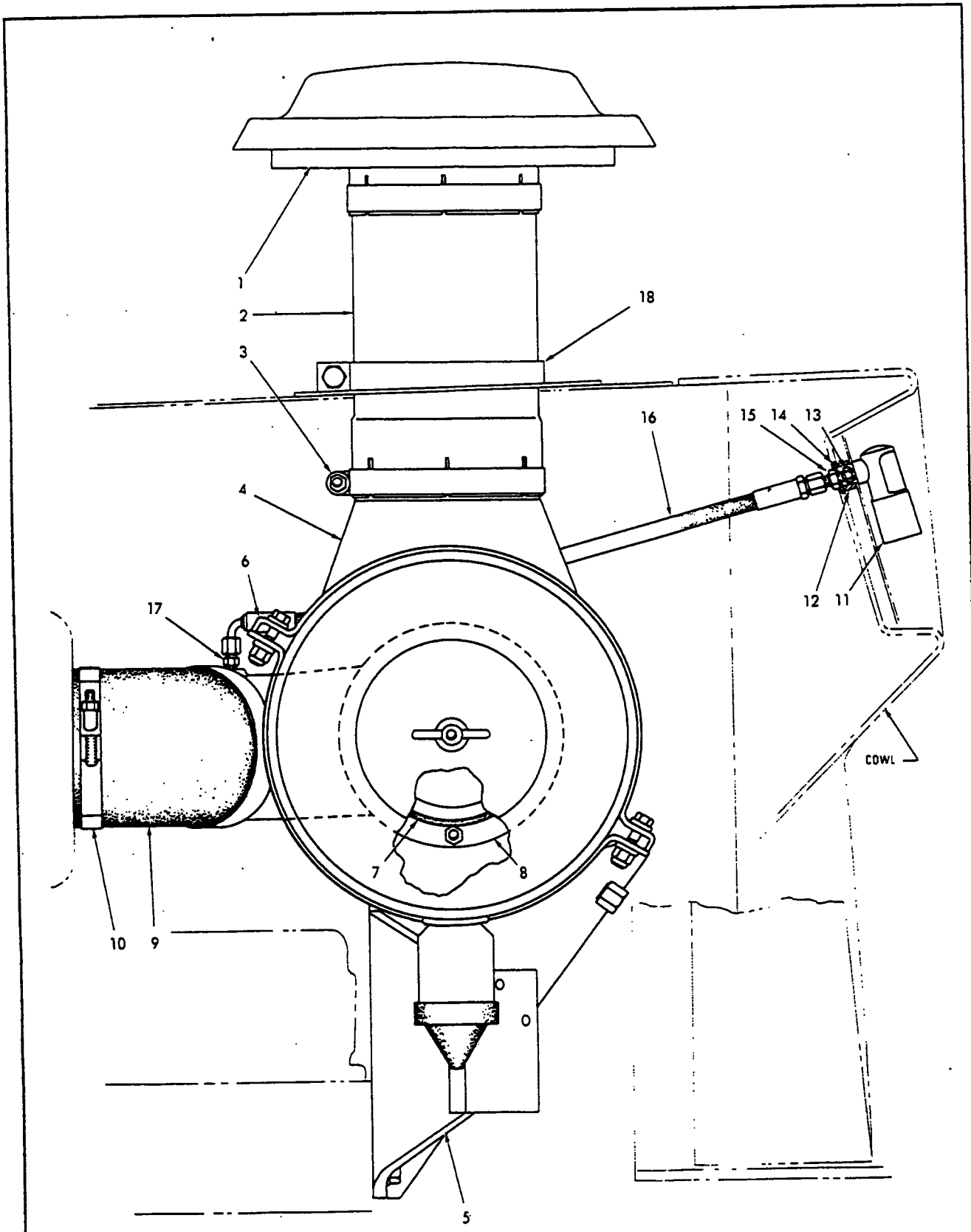

AIR CLEANER T-79364

AIR CLEANER

ITEM	PART NO.	QTY.	DESCRIPTION	
1	70197576	1	CAP (Includes mounting clamp)	Not used on units equipped with special Aspirator See page 69
2	70658509	1	TUBE	
3	70658633	1	CLAMP	
	70927339	1	CAPSCREW, 3/8"NF x 3-1/4"	
	70677006	2	WASHER	
	70911041	1	NUT, 3/8"NF	
4	--------	1	CLEANER ASSY. air (See page 66)	
5	70681105	1	BRACKET	
	70920582	3	CAPSCREW, 1/2"NC x 1-1/4"	
	70928178	3	WASHER	
6	70667123	2	BAND	
	70922287	4	CAPSCREW, 3/8"NC x 1-3/4"	
	70677006	8	WASHER	
	70918308	4	NUT, elastic stop, 3/8"NC	
7	70927224	1	O-RING	
8	70681150	1	ELBOW	
	70921076	6	CAPSCREW, 3/8"NC x 1-1/4"	
	70930370	6	WASHER	
	70911026	6	NUT, 3/8"NC	
9	70681152	1	HOSE	
10	70929420	2	CLAMP	
11	70697589	1	INDICATOR (Serviced only as a unit)	
12	70694000	1	SPACER	
13	70676586	1	UNION	
14	70906985	1	WASHER	
15	70922471	1	NUT, 7/16"NF	
16	70646931	1	HOSE (See HOSE PARTS)	
17	70631769	1	FITTING	
18	70692340	1	COLLAR ASSY. (Includes clamping hardware)(Not used on units equipped with special aspirator. See page 69)	

NOTE: See PAINTING AND MARKING for transfer

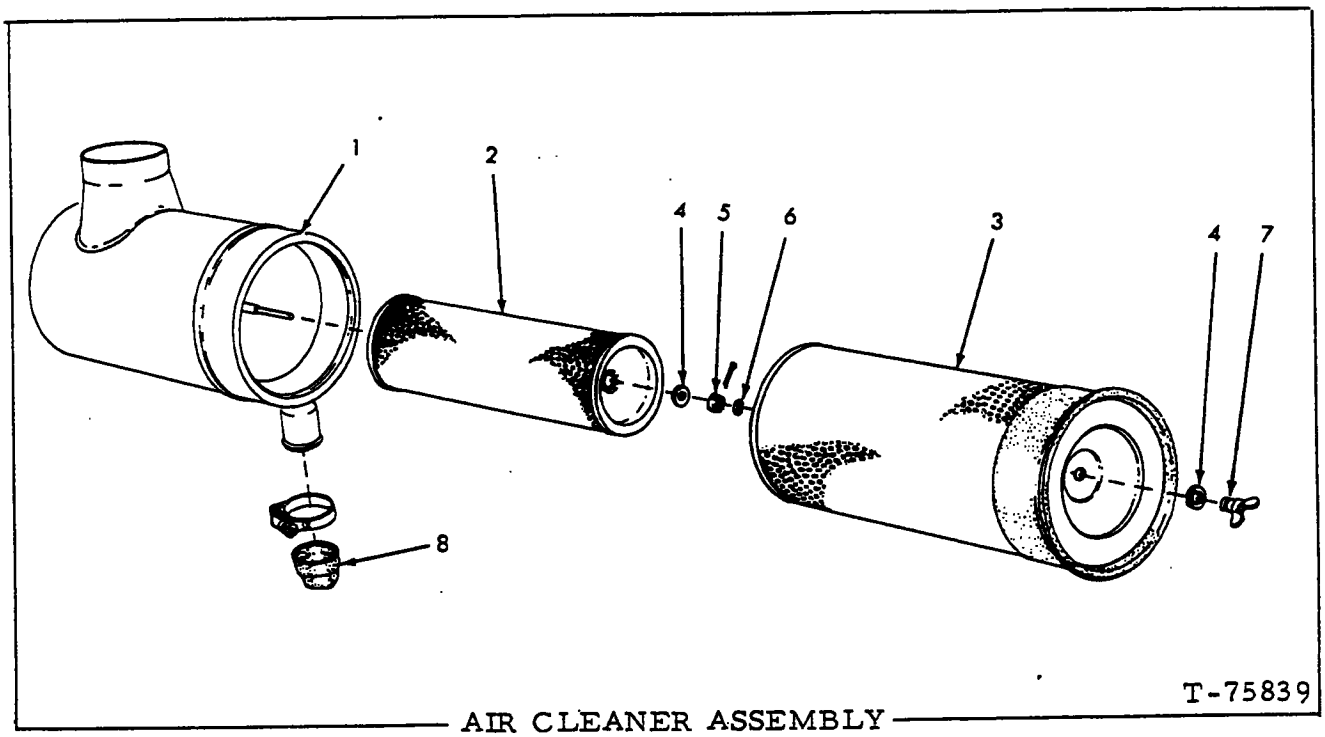

AIR CLEANER ASSEMBLY

USAGE: See page 65

ITEM	PART NO.	QTY.	DESCRIPTION
-	70671809	1	CLEANER ASSY. (Includes items 1 thru 8)
1	--------	1	BODY (Not serviced separately)
2	70671839	1	ELEMENT ASSY. (inner)
3	70671838	1	ELEMENT ASSY. (outer)
4	70667684	2	GASKET
5	70667683	1	NUT
	70900808	1	PIN, cotter, 1/8" x 1-1/2"
6	70671433	1	CLIP
7	70691775	1	NUT, wing
8	73042943	1	UNLOADER
	70926011	1	CLAMP, 2-3/4" to 3-1/16"

(Revised June 1980)

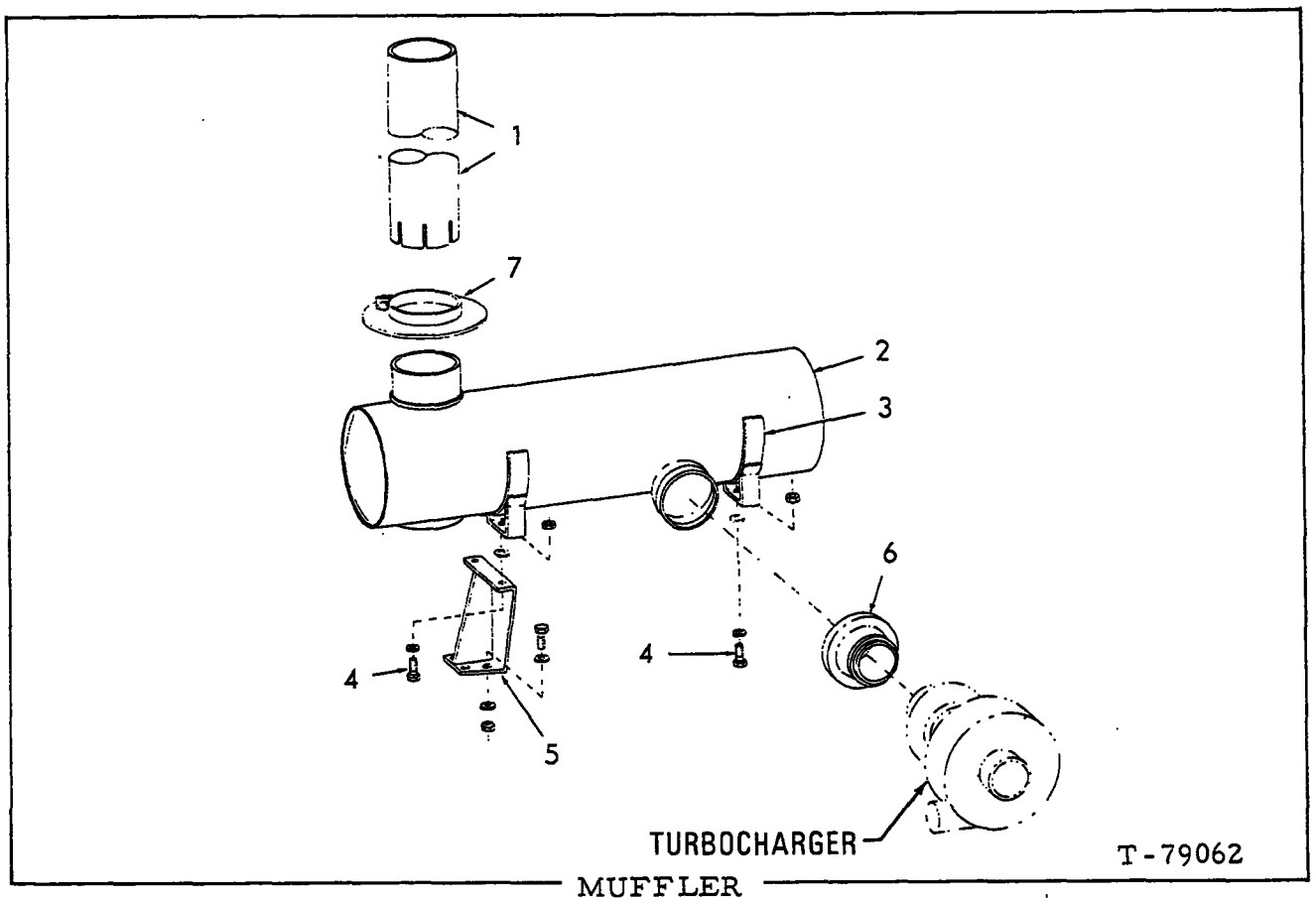

MUFFLER

ITEM	PART NO.	QTY.	DESCRIPTION
1	70683739	1	EXHAUST PIPE (See page 69 for units equipped with special aspirator)
2	70689476	1	MUFFLER(Tractors prior to unit #21812)
	73115656	1	MUFFLER(Tractor unit #21812 and up)
3	73109672	2	CLAMP ASSY. (Includes bolt)(Tractors prior to unit #21812)
4	70923192	4	CAPSCREW, 7/16"NC x 1-1/2"
	70677007	8	WASHER
	70911027	4	NUT, 7/16"NC
5	70697588	1	BRACKET
	70920582	4	CAPSCREW, 1/2"NC x 1-1/4"
	70677008	8	WASHER
6	70683678	1	DIFFUSER
7	70684695	1	COLLAR ASSY. (Includes clamping hardware)

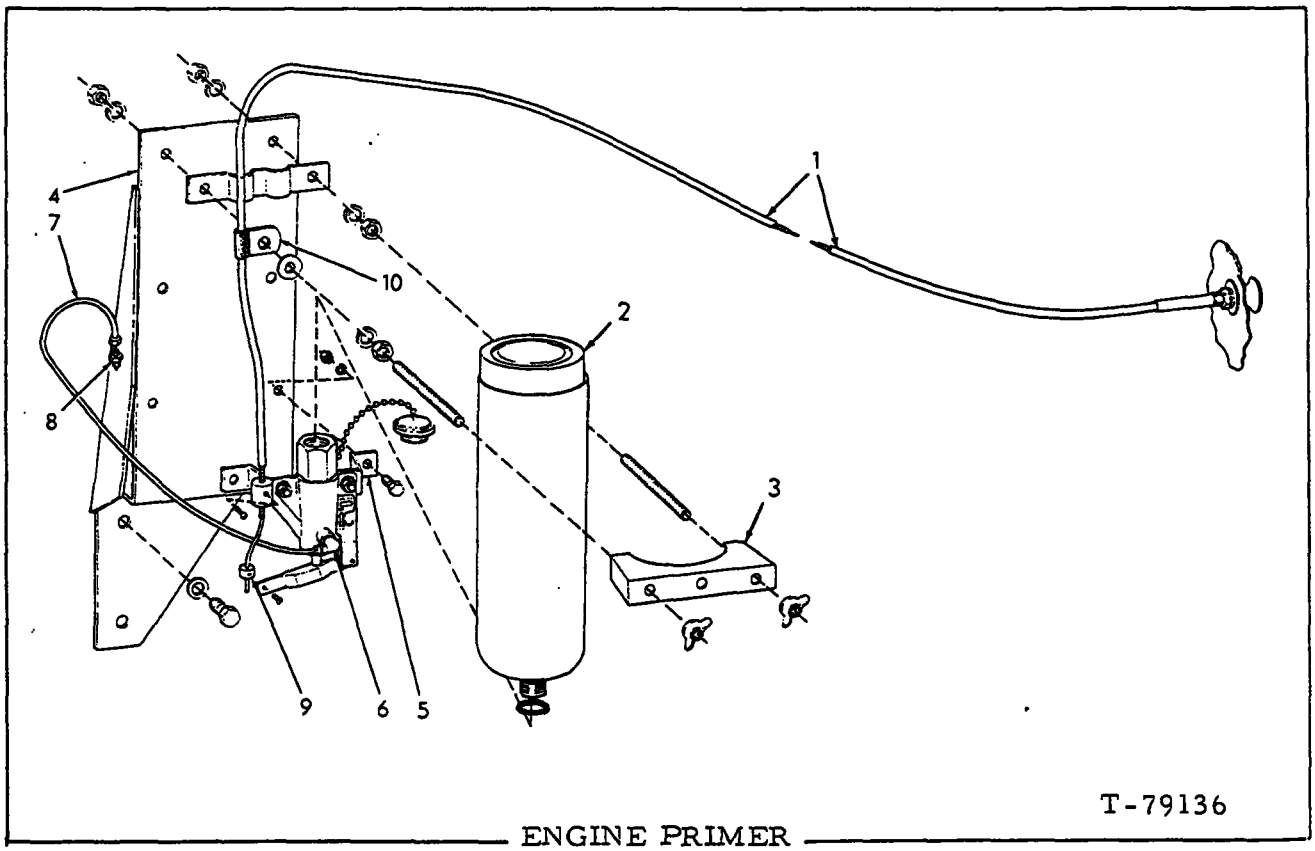

ENGINE PRIMER

USAGE: Special equipment

ITEM	PART NO.	QTY.	DESCRIPTION
1	70684988	1	CABLE ASSY. (Includes lockwasher and mounting nut)
	70917378	2	WASHER, plain, U.S. std., 3/8"
2	73132158	1	KIT, cylinder and gasket
	73070169	1	GASKET
3	70669359	1	CLAMP ASSY.
4	70694711	1	BRACKET
	70922763	2	CAPSCREW, 3/8"NC x 1"
	70677006	2	WASHER
5	70669526	1	BRACKET ASSY.
	70917384	1	SCREW, machine, #10-32NF x 5/16", cadmium plated
	70927541	2	CAPSCREW, 1/4"NC x 3/4"
	70910285	2	LOCKWASHER, 1/4"
	70911024	2	NUT, 1/4"NC
6	73052086	1	ELBOW
7	70669053	1	TUBE
	70911841	1	SLEEVE, compression fitting, 1/8" tube
	70912589	1	NUT, compression fitting, 1/8" tube
8	74024482	1	JET
9	70253308	1	STOP, cable
	70917384	1	SCREW, machine, #10-32NF x 5/16", cadmium plated
10	70639388	1	CLIP
	70910335	1	WASHER, plain, SAE std., 5/16"

(Revised May 1982)

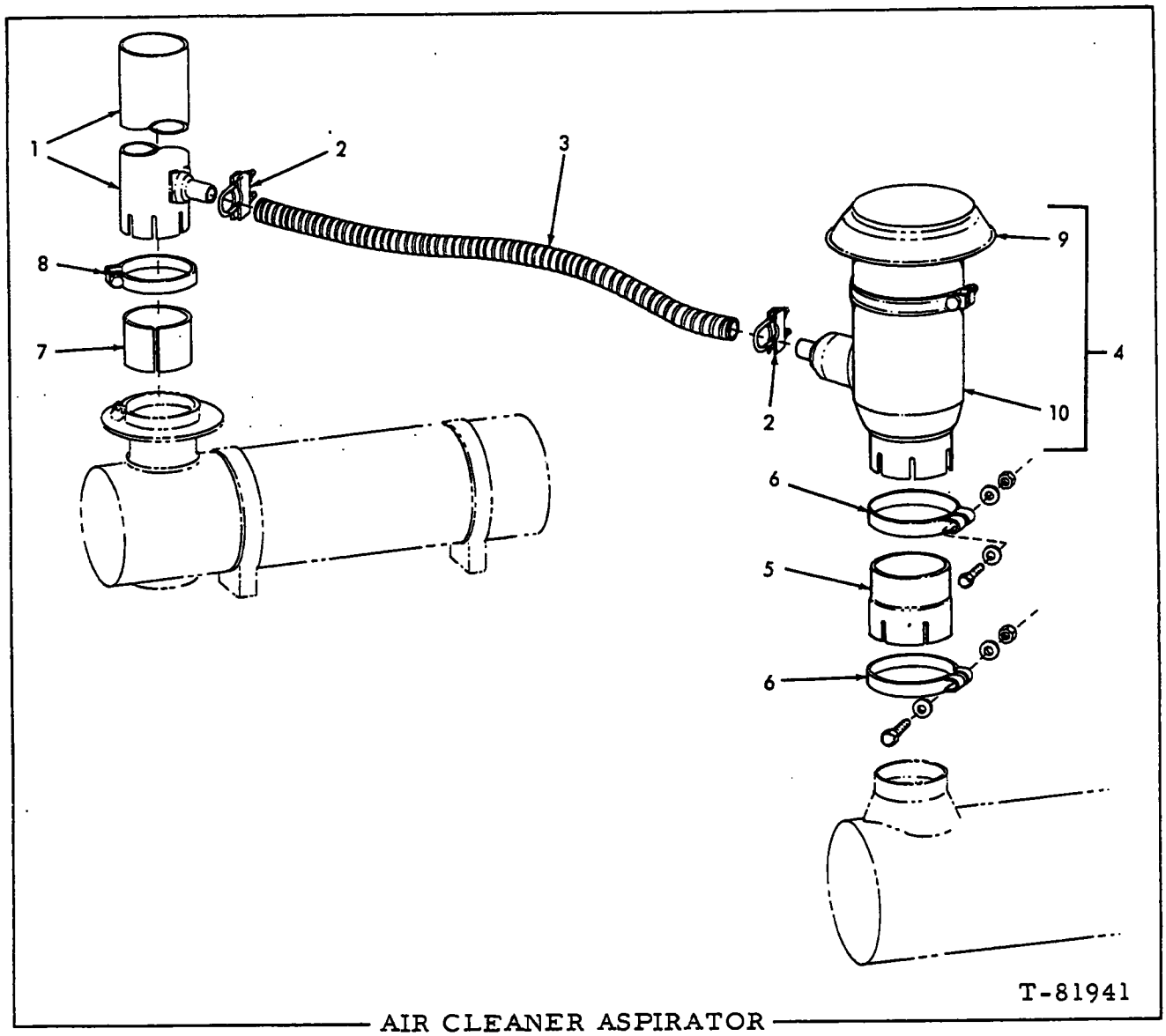

AIR CLEANER ASPIRATOR

USAGE: Special equipment.

ITEM	PART NO.	QTY.	DESCRIPTION
1	73117360	1	EJECTOR ASSY.
2	70929808	2	CLAMP
3	73117359	1	HOSE, metal, flexible
4	73107581	1	PRE-CLEANER ASSY. (Includes items 9 and 10)
5	70695134	1	TUBE
6	70658633	2	CLAMP
	70927339	2	CAPSCREW, 3/8"NF x 3-1/4"
	70677006	4	WASHER
	70911041	2	NUT, 3/8"NF
7	73113804	1	SLEEVE
8	70629755	1	CLAMP ASSY. (Includes hardware)
9	79027839	1	HOOD
10	73129589	1	BODY

(Revised May 1982)

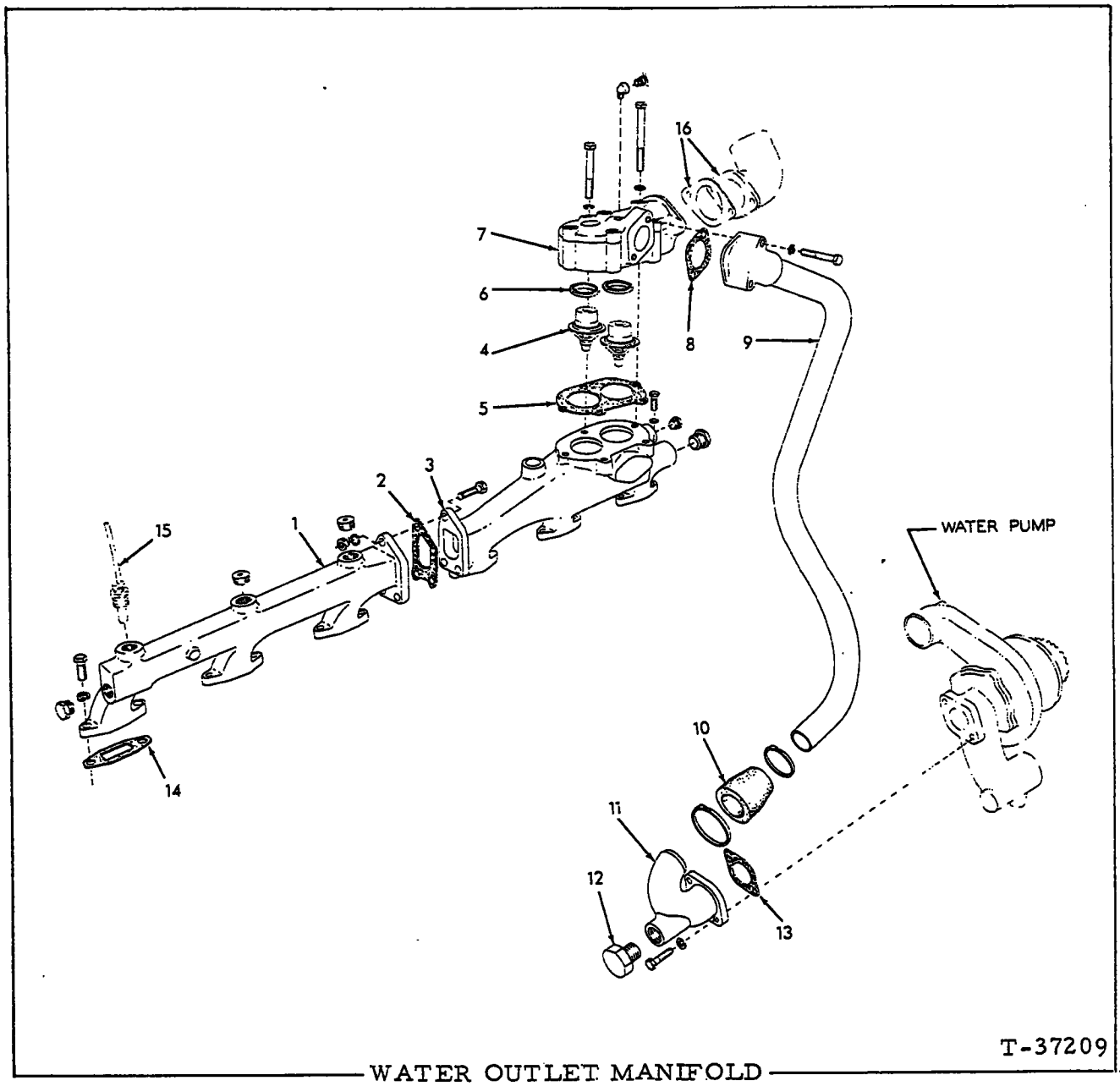

WATER OUTLET MANIFOLD

ITEM	PART NO.	QTY.	DESCRIPTION
1	74394959	1	MANIFOLD
	70919224	6	CAPSCREW, 3/8"NC x 1-1/8"
	70919226	3	CAPSCREW, 3/8"NC x 1-5/8"
	70904206	9	LOCKWASHER, 3/8"
	70910324	3	NUT, 3/8"NC
	70917970	2	PLUG, socket-hd., 1/2"NPT
2	74395425	1	□GASKET
	70920416	1	PLUG, pipe, hex-hd., 1/2"NPT

(Continued)

WATER OUTLET MANIFOLD (Continued)

ITEM	PART NO.	QTY.	DESCRIPTION
3	74394627	1	MANIFOLD
	70918888	1	PLUG, pipe, hex-socket, 1" NPT
	70918887	1	PLUG, pipe, hex-hd., 3/8"NPT
	70919224	6	CAPSCREW, 3/8"NC x 1-1/8"
	70904206	6	LOCKWASHER, 3/8"
4	74354537	2	THERMOSTAT
5	74376520	1	☐GASKET
6	74317554	2	SEAL
7	74389036	1	COVER ASSY. (Includes item 6)
	70918374	1	ELBOW, street, brass, 90°, 1/4"NPT
	70912415	1	COCK, T-handle, 1/4"NPT (For venting air)
	70918395	4	CAPSCREW, 7/16"NC x 3-1/4"
	70918740	1	CAPSCREW, 7/16"NC x 4"
	70904207	5	LOCKWASHER, 7/16"
8	74386137	1	☐GASKET
9	74394615	1	TUBE
	70916274	2	CAPSCREW, 3/8"NC x 2-1/4"
	70910287	2	LOCKWASHER, 3/8"
10	74396370	1	HOSE
	70922198	2	CLAMP, hose, 1-9/16" to 2-9/16" diam.
11	74396115	1	ELBOW
	70916271	2	CAPSCREW, 3/8"NC x 1"
	70910287	2	LOCKWASHER, 3/8"
12	70920525	1	PLUG
13	74378112	1	☐GASKET
14	74395709	6	☐GASKET
15	--------	-	GAUGE (See page 207)
16	--------	-	ELBOW AND GASKET (See page 82)

(Revised July 1980)

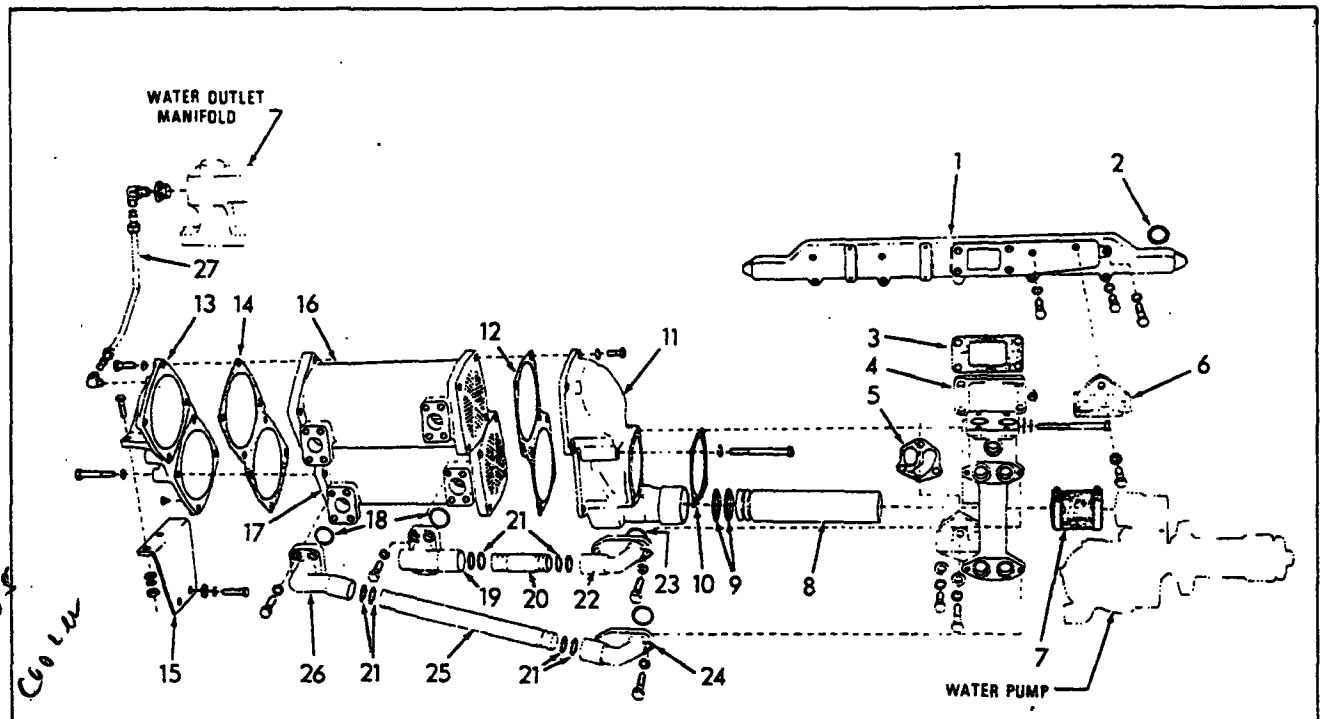

WATER INLET MANIFOLD AND HEAT EXCHANGERS

ITEM	PART NO.	QTY.	DESCRIPTION	
1	74395002	1	MANIFOLD (Also order 2 PLUG 70931239	Engines prior to #21-14477
	70919231	4	CAPSCREW, 1/2"NC x 1-7/8"	
	70916317	3	CAPSCREW, 1/2"NC x 2-3/4"	
	70915969	1	CAPSCREW, 1/2"NC x 3" (Also attaches water filter hose bracket)	
	70904208	8	LOCKWASHER, 1/2"	
	70931239	2	PLUG, core	
2	70925612	12	□O-RING	
3	74389635	1	GASKET	
4	74394922	1	MANIFOLD	
	70916311	4	CAPSCREW, 1/2"NC x 1-1/4"	
	70915987	2	CAPSCREW, 1/2"NC x 1-1/2"	
	70916320	2	CAPSCREW, 1/2"NC x 4"	
	70904208	7	LOCKWASHER, 1/2"	
	70912333	7	WASHER	
	70920525	1	PLUG, pipe, hex-hd., 3/4"NPT	
5	74386495	1	□GASKET	
6	74393708	1	BRACKET	
	70915987	1	CAPSCREW, 1/2"NC x 1-1/2"	
	70904208	1	LOCKWASHER, 1/2"	
	70918683	1	CAPSCREW, 1/2"NC X 1-1/8 (Engine #21-14477 and up)	
7	74662263	1	HOSE	
	70922199	2	CLAMP, 2-9/16" to 3-9/16" diam.	
8	74388185	1	TUBE	
9	70923651	2	O-RING	
10	74371160	1	GASKET	

(Continued)

WATER INLET MANIFOLD AND HEAT EXCHANGERS (Continued)

ITEM	PART NO.	QTY.	DESCRIPTION
11	74395447	1	ADAPTER
	70919294	2	CAPSCREW, 1/2"NC x 4-1/4" } To Exchanger
	70915987	6	CAPSCREW, 1/2"NC x 1-1/2" } To Exchanger
	70916320	1	CAPSCREW, 1/2"NC x 4" } To Manifold
	70916322	2	CAPSCREW, 1/2"NC x 5" } To Manifold
	70904208	12	LOCKWASHER, 1/2"
	70916009	4	WASHER
12	74389678	1	□GASKET
13	74388465	1	BONNET (Cast iron)(First type)
	74394949	1	BONNET (Aluminum)(Second type)
	70919840	1	PLUG, pipe, hex-hd., 1/4"NPT
	70915987	4	CAPSCREW, 1/2"NC x 1-1/2" (For cast iron Bonnet)
	70916313	4	CAPSCREW, 1/2"NC x 1-3/4" (For aluminum Bonnet)
	70915969	4	CAPSCREW, 1/2"NC x 3"
	70904208	8	LOCKWASHER, 1/2"
	70916272	2	CAPSCREW, 3/8"NC x 1-1/4" (Cast iron bonnet)
	70914847	2	CAPSCREW, 3/8"NC x 1-1/2" (Aluminum bonnet)
	70911115	4	WASHER
	70904206	2	LOCKWASHER, 3/8"
	70910324	2	NUT, 3/8"NC
14	74389676	1	□GASKET
15	74387453	1	BRACKET
	70922290	2	CAPSCREW, 1/2"NC x 2"
	70910244	2	WASHER, plain, SAE std., 1/2"
	70904208	2	LOCKWASHER, 1/2"
16	74394014	1	EXCHANGER, heat, torque converter - 74396500 - N/A
17	74394188	1	EXCHANGER, heat, engine oil
74396500			
18	74255781	2	□O-RING
19	74394953	1	ELBOW
	70920333	1	PLUG, pipe, hex-hd., 3/8"NPT (Tractors prior to unit #21261)
	70916191	4	CAPSCREW, 7/16"NC x 1-1/2"
	70904207	4	LOCKWASHER, 7/16"
20	74390595	1	TUBE
21	74255631	8	O-RING
22	74390592	1	ELBOW
	70919225	1	CAPSCREW, 3/8"NC x 1-3/8"
	70912069	1	CAPSCREW, 3/8"NC x 2-1/2"
	70904206	2	LOCKWASHER, 3/8"
23	74255631	2	□O-RING
24	74390589	1	ELBOW
	70919225	1	CAPSCREW, 3/8"NC x 1-3/8"
	70912069	1	CAPSCREW, 3/8"NC x 2-1/2"
	70904206	2	LOCKWASHER, 3/8"
25	74390594	1	TUBE
26	74390590	1	ELBOW
	70916191	4	CAPSCREW, 7/16"NC x 1-1/2"
	70904207	4	LOCKWASHER, 7/16"
27	74390583	1	TUBE
	70917809	2	NUT, Imperial, 1/4" tube
	74255956	2	SLEEVE, Imperial, 1/4" tube
	70919481	2	ELBOW, Imperial, 1/4" tube, 1/4"NPT male
	70901839	1	BUSHING, pipe, hex-hd., 3/8"NPT

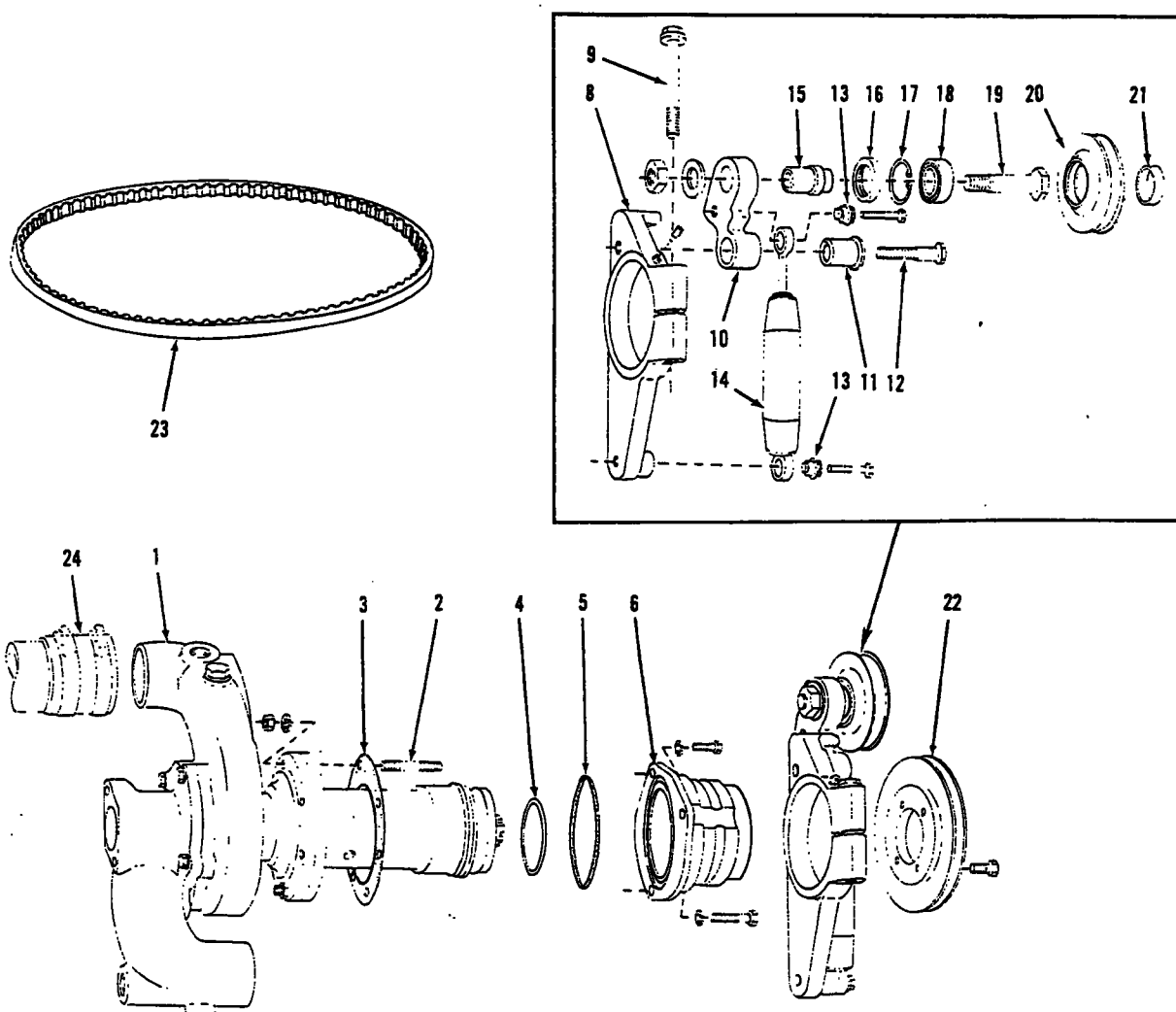

T-75043

WATER PUMP

(Revised July 1980)

WATER PUMP

ITEM	PART NO.	QTY.	DESCRIPTION
1	--------	1	PUMP ASSY., water (See page 76)
	70918888	1	PLUG, pipe, hex-skt., 1"NPT
2	74513810	5	STUD } Early units
	70910123	5	NUT, 3/8"NF } Early units
	70910287	5	LOCKWASHER, 3/8"
	70922211	5	CAPSCREW, Nylok, 3/8"NC x 1-1/4"(Late units)
3	74376398	1	□GASKET
4	70923935	1	□O-RING
5	74361740	1	□GASKET (21000 engines)
	70923950	1	□O-RING (6138T engines)
6	74391003	1	SUPPORT (21000 engines)
	74395112	1	SUPPORT (6138T engines)
	70919224	1	CAPSCREW, 3/8"NC x 1-1/8"
	70912069	2	CAPSCREW, 3/8"NC x 2-1/2" (21000 engines)
	70919227	2	CAPSCREW, 3/8"NC x 3-1/4" (6138T engines)
	70904206	3	LOCKWASHER, 3/8"
8	74391950	1	BRACKET
	70913683	1	SETSCREW, hex-socket, dog-pt., 3/8"NC x 1"
9	70924863	1	SCREW
10	74391949	1	ARM ASSY. (Includes item 11)
11	74391933	1	BUSHING
12	74391955	1	CAPSCREW
13	74391934	2	BUSHING
14	74391938	1	DAMPER ASSY. (Includes item 13)
	70919225	2	CAPSCREW, 3/8"NC x 1-3/8"
15	74390992	1	SHAFT
16	74255839	1	SEAL
17	70927801	1	RING
18	74391154	1	BEARING
19	74390655	1	BOLT
	70910175	1	NUT, jam, 3/4"NF
	70927382	1	WASHER
20	74390995	1	PULLEY
21	74255110	1	CAP
22	74391593	1	PULLEY
	74752002	4	BOLT, self-locking, 3/8"NF x 1/2"
23	74391351	1	BELT
24	--------	1	HOSE (See page 72)

(Revised July 1980)

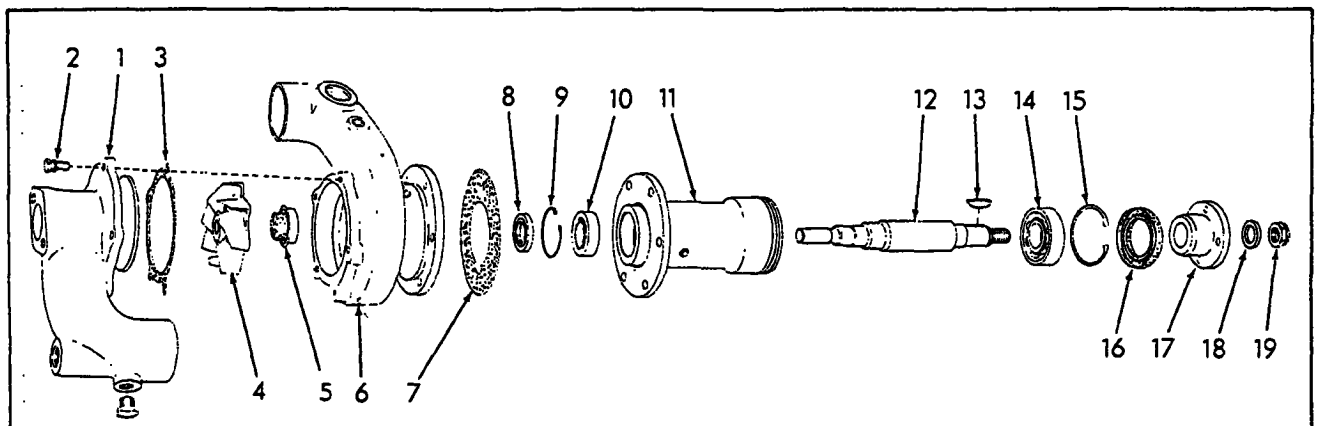

WATER PUMP ASSEMBLY

USAGE: See page 75

ITEM	PART NO.	QTY.	DESCRIPTION
-	74396371	1	PUMP ASSY. (Includes items 1 thru 19)
1	74375682	1	COVER
	70920333	1	PLUG, pipe, hex-hd., 3/8"NPT
2	70923325	4	CAPSCREW, 5/16"NC x 7/8"
	70917356	4	LOCKWASHER, 5/16"
3	74372421	1	GASKET
4	--------	1	IMPELLER ASSY. (Includes ceramic insert)(Order item 20)
5	--------	1	SEAL ASSY. (Engine prior to S/N 21-15405)(Order item 20)
	74396349	1	SEAL ASSY. (Engine S/N 21-15405 and up) (Component of item 20)
6	74387609	1	BODY
7	74387051	1	GASKET
8	74387605	1	SEAL
9	70927801	1	RING
10	74255338	1	BEARING
11	74387050	1	SLEEVE
12	74393325	1	SHAFT
13	74660677	1	KEY
14	73007474	1	BEARING
15	70927803	1	RING
16	74256022	1	SEAL
17	74386924	1	HUB
18	74375691	1	WASHER
19	70918182	1	NUT, self-locking, 3/4"NF (plated)
20	74396372	1	IMPELLER AND SEAL KIT (Includes items 4, 5 and Instruction Sheet)

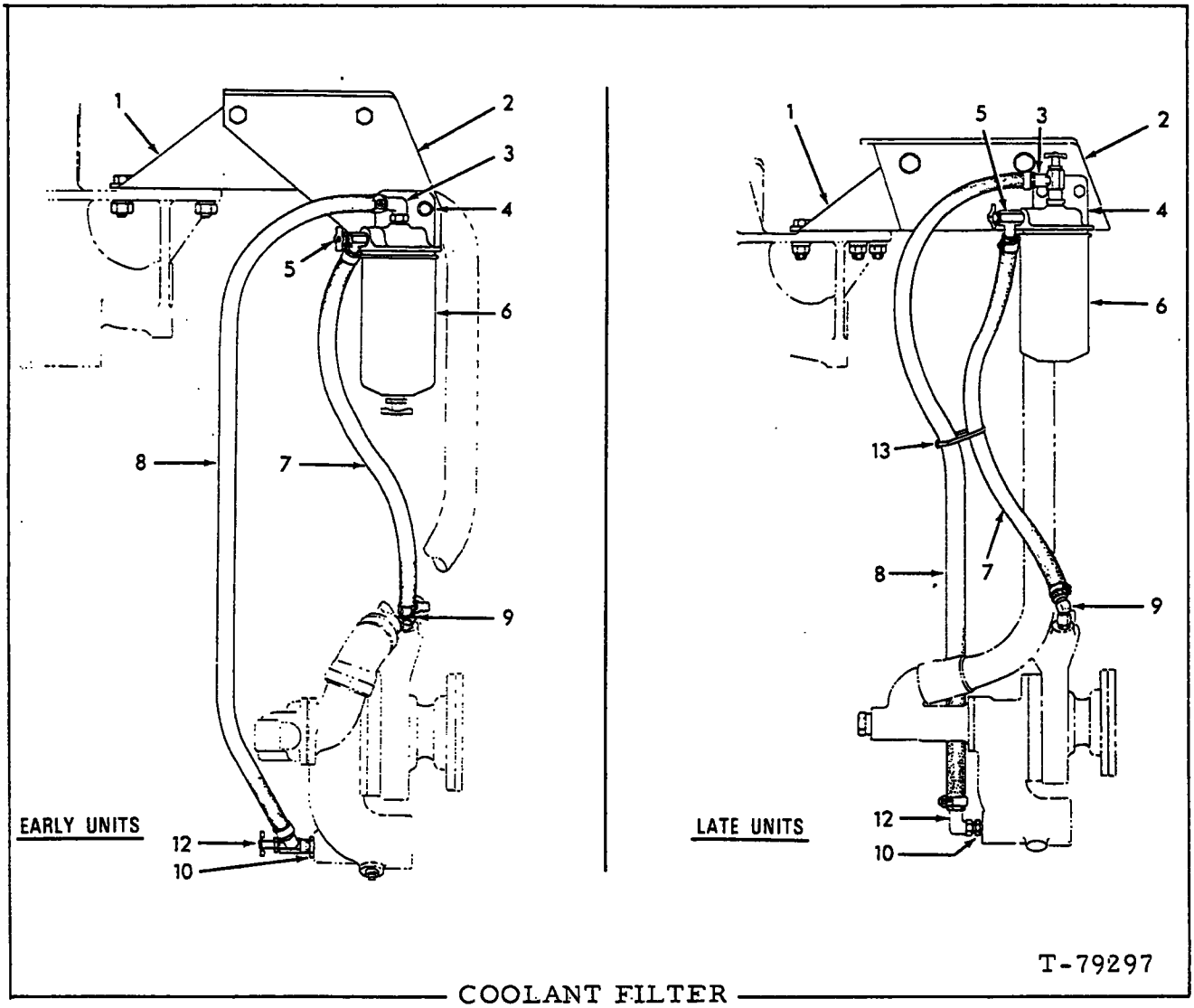

COOLANT FILTER

ITEM	PART NO.	QTY.	DESCRIPTION
1	74396430	1	BRACKET (Includes item 2)
	70916313	4	CAPSCREW, 1/2"NC x 1-3/4"
	70912441	4	LOCKWASHER, 1/2"
	70910325	4	NUT, 1/2"NC
2	--------	1	BRACKET (Order item 1)
	70916311	2	CAPSCREW, 1/2"NC x 1-1/4"
	70911414	2	WASHER (Engine #21-14673 and up)
	70912441	2	LOCKWASHER, 1/2"
	70910325	2	NUT, 1/2"NC
3	74255286	1	ELBOW, 3/8"NPT (Engine prior to #21-14835)
4	74393427	1	BASE
	70916191	2	CAPSCREW, 7/16"NC x 1-1/2"
	70912298	2	WASHER
	70914678	2	LOCKWASHER, 7/16"
	70912201	2	NUT, 7/16"NC

Early models

(Continued)

(Revised June 1981)

COOLANT FILTER (Continued)

ITEM	PART NO.	QTY.	DESCRIPTION
5	74255772	1	VALVE (90°)(Engine #21-14835 and up)
	74255287	1	VALVE(45°) 5/8" Nipple, 3/8"NPT
6	74393504	1	FILTER (Original equipment. All purpose, recommended for use with plain water as well as most types of permanent and non-permanent anti-freeze except "Dowtherm" 209)
	74393505	1	FILTER (Chromate type, for use with "Dowtherm" 209)
7	--------	1	HOSE (23-1/2" long. Order item 11)
	70921911	2	CLAMP, 11/16" to 1-1/4" diam.
8	--------	1	HOSE (37" long. Order item 11)
	70921911	2	CLAMP, 11/16" to 1-1/4" diam.
9	70925238	1	NIPPLE, hose, 3/8"NPT (Engine prior to #21-14835)
	74255612	1	ELBOW, 45° } Engine #21-14835 and up
	70928867	1	ADAPTER }
10	70904271	1	BUSHING, pipe reducing, 1/2"NPT to 3/8"NPT
11	70920722	-	HOSE, 5/8" I. D., 25 ft. roll (Use as required)
12	74255287	1	VALVE, 45° (Engine prior to #21-14835)
	74255286	1	ELBOW, 90° (Engine #21-14835 and up)
13	70925094	1	TIE, self-locking

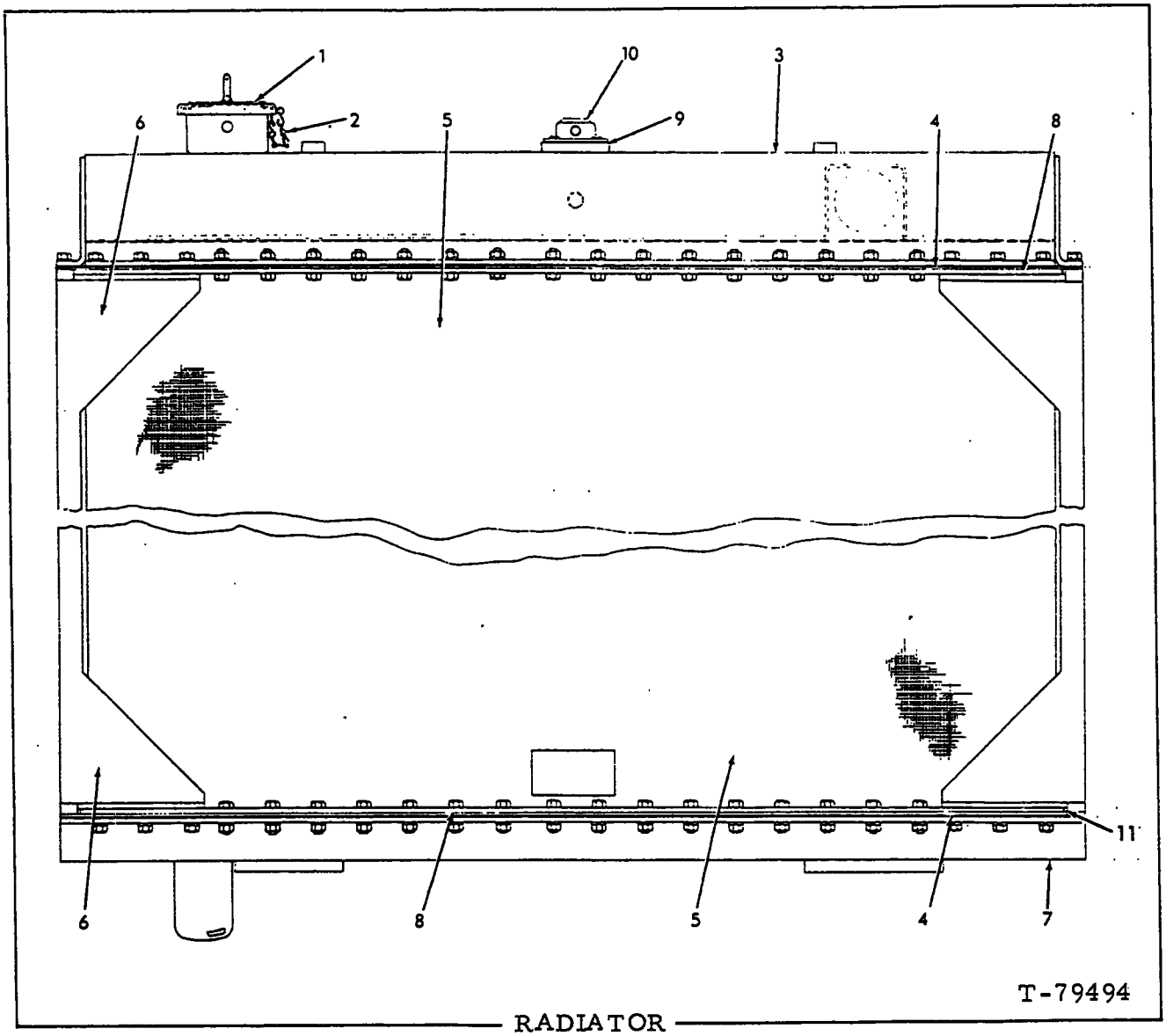

RADIATOR

USAGE: See page 82

* Tractors prior to serial No. 71A21245 including #21256, 21257 and 21289.

** Tractor serial No. 71A21245 and up excluding #21256, 21257 and 21289.

ITEM	PART NO.	QTY. *	QTY. **	DESCRIPTION	
-	70687292	1	-	RADIATOR ASSY. (Includes items 1 thru 10)	Canted tubes. Copper finned
-	73110150	-	1	RADIATOR ASSY. (Includes items 1 thru 12)(Tractors prior to unit #21411)	
-	73113256	-	1	RADIATOR ASSY. (Includes items 1 thru 11)(Tractor unit #21411 thru #21482)	
-	73111631	-	1	RADIATOR ASSY. (Includes items 1 thru 11)(Tractor unit #21483 and up)	

(Continued)

RADIATOR (Continued)

ITEM	PART NO.	QTY. *	QTY. **	DESCRIPTION	
-	70692512	1	-	RADIATOR ASSY. (Includes items 1 thru 10)	Straight tubes. Steel finned Special equipment
-	73110151	-	1	RADIATOR ASSY. (Includes items 1 thru 11)(Tractors prior to unit #21411)	
-	73113261	-	1	RADIATOR ASSY. (Includes items 1 thru 11)(Tractor unit #21411 thru #21482)	
-	73111632	-	1	RADIATOR ASSY. (Includes items 1 thru 11)(Tractor unit #21483 and up)	
1	70671075	1	1	CAP	
2	70654098	1	1	CHAIN	
3	70694701	1	1	TANK (Tractors prior to unit #21411)	
	73113248	-	1	TANK (Right side fill)(Tractor unit #21411 thru #21482)	
	73111633	-	1	TANK (Left side fill)(Tractor unit #21483 and up)	
	70922843	54	54	CAPSCREW, 5/16"NC x 1-1/4"	
	70910286	54	54	LOCKWASHER, 5/16"	
	70911025	54	54	NUT, 5/16"NC	
4	70694704	2	2	GASKET	
5	70694331	1	-	CORE ASSY.	Copper finned
	73110247	-	1	CORE ASSY.	
	70692511	1	1	CORE ASSY. (Steel finned)	
6	70694702	2	-	SIDE	
	73110248	-	2	SIDE	
7	70694705	1	-	TANK	
	73110246	-	1	TANK	
	70922843	54	54	CAPSCREW, 5/16"NC x 1-1/4"	
	70910286	54	54	LOCKWASHER, 5/16"	
	70911025	54	54	NUT, 5/16"NC	
8	70694703	4	4	CLAMP	
9	70675487	1	1	GASKET	
10	70675488	1	1	VALVE	
	70922707	4	4	SCREW, #10-32NF x 3/8"	
	70910284	4	4	LOCKWASHER, #10	
11	73110249	-	4	BAR	
12	73112812	-	1	BRACKET (T-BOLT mounting. Requires welding to install)(Tractors prior to unit #21411)(Not illustrated)	

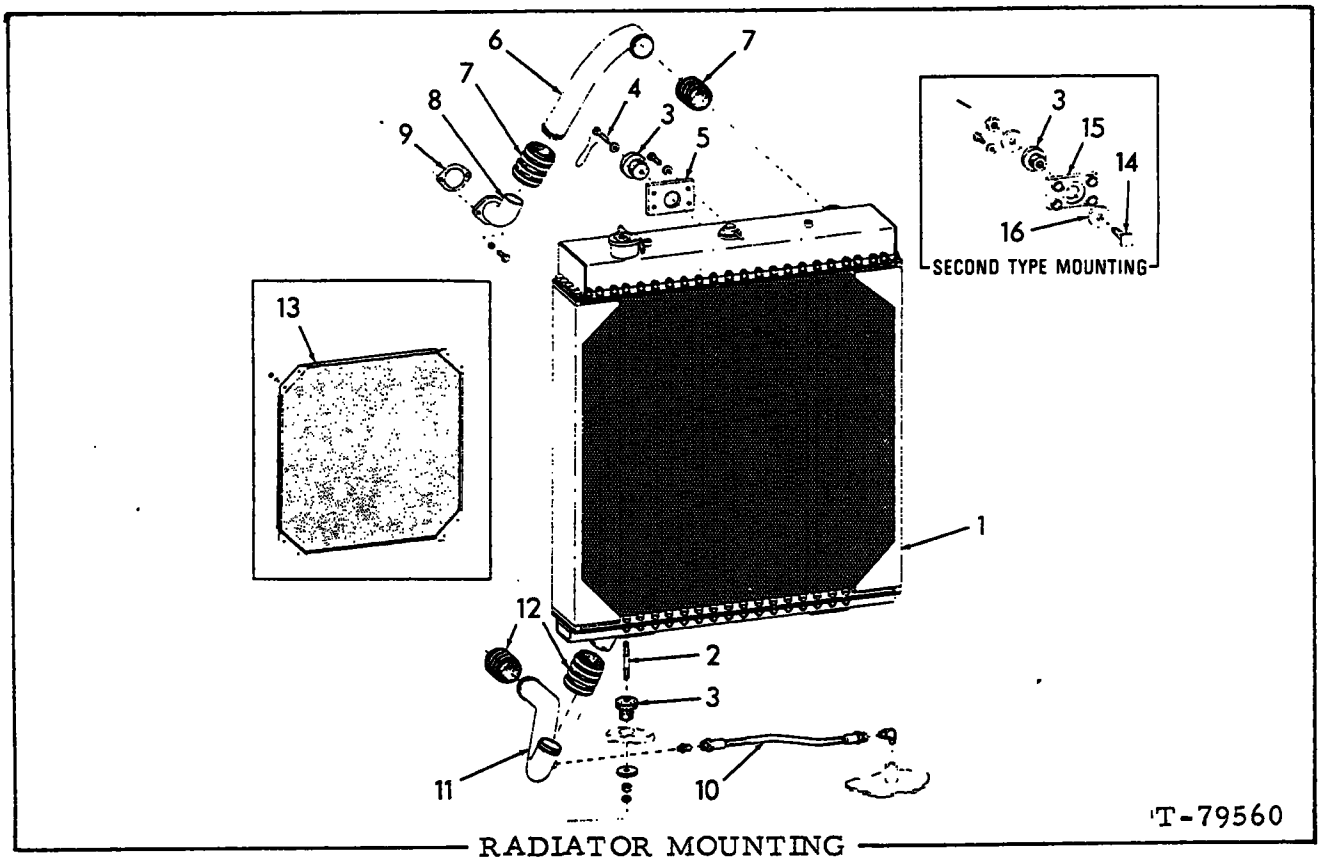

RADIATOR MOUNTING

ITEM	PART NO.	QTY.	DESCRIPTION	
1	--------	1	RADIATOR ASSY. (See page 80)	
2	70689504	2	STUD	
	70087463	2	WASHER	
	70900370	2	NUT, 5/8"NC	
	70910511	2	NUT, jam, 5/8"NC	
3	70680769	3	SNUBBER	
4	70928882	1	CAPSCREW, drilled-hd., 5/8"NC x 3-1/2"	Tractors prior to unit #21411
	70087463	1	WASHER	
	70023633	1	WIRE, 1/16" x 12"	
5	70680767	1	PLATE	
	70929074	4	CAPSCREW, drilled-hd., 1/2"NC x 2"	
	70930850	4	WASHER	
6	70689229	1	TUBE	
7	73121205	2	HOSE	
	70921914	8	CLAMP, hose, 2-5/16" to 3-1/4"	
8	70660557	1	ELBOW	
	70927485	2	CAPSCREW, 7/16"NC x 1"	
	70914678	2	LOCKWASHER, 7/16"	
9	74310257	1	GASKET	
10	70680746	1	HOSE (See HOSE PARTS)	
	70919206	1	ELBOW, flare type, 90°, 1/2"tube, 3/8"NPT male	
	70919063	1	CONNECTOR, flare type, 1/2"tube, 3/8"NPT male	
11	70680747	1	TUBE	

(Continued)

(Revised July 1980)

ITEM	PART NO.	QTY.	DESCRIPTION	
12	73121206	2	HOSE	
	70921914	8	CLAMP, hose, 2-5/16" to 3-1/4"	
13	70694638	1	RADIATOR GRID (Special equipment)(Tractors prior to unit #21245 including #21256 and #21257)	
	73110149	1	RADIATOR GRID (Special equipment)(Tractor unit #21245 and up, excluding #21256 and #21257)	
	73113110	1	RADIATOR GRID (Special equipment)(Units equipped for Sand Operations)	
	70922262	8	CAPSCREW, 3/8"NC x 7/8"	
	70677006	8	WASHER	
14	73111372	1	T-BOLT	Tractor unit #21411 and up
	70902274	1	NUT, slotted, 5/8"NC	
	70900808	1	PIN, cotter, 1/8" x 1-1/2"	
15	73111291	1	PLATE	
	70922510	4	CAPSCREW, 1/2"NC x 2-3/4"	
	70930850	4	WASHER	
16	70087463	2	WASHER	

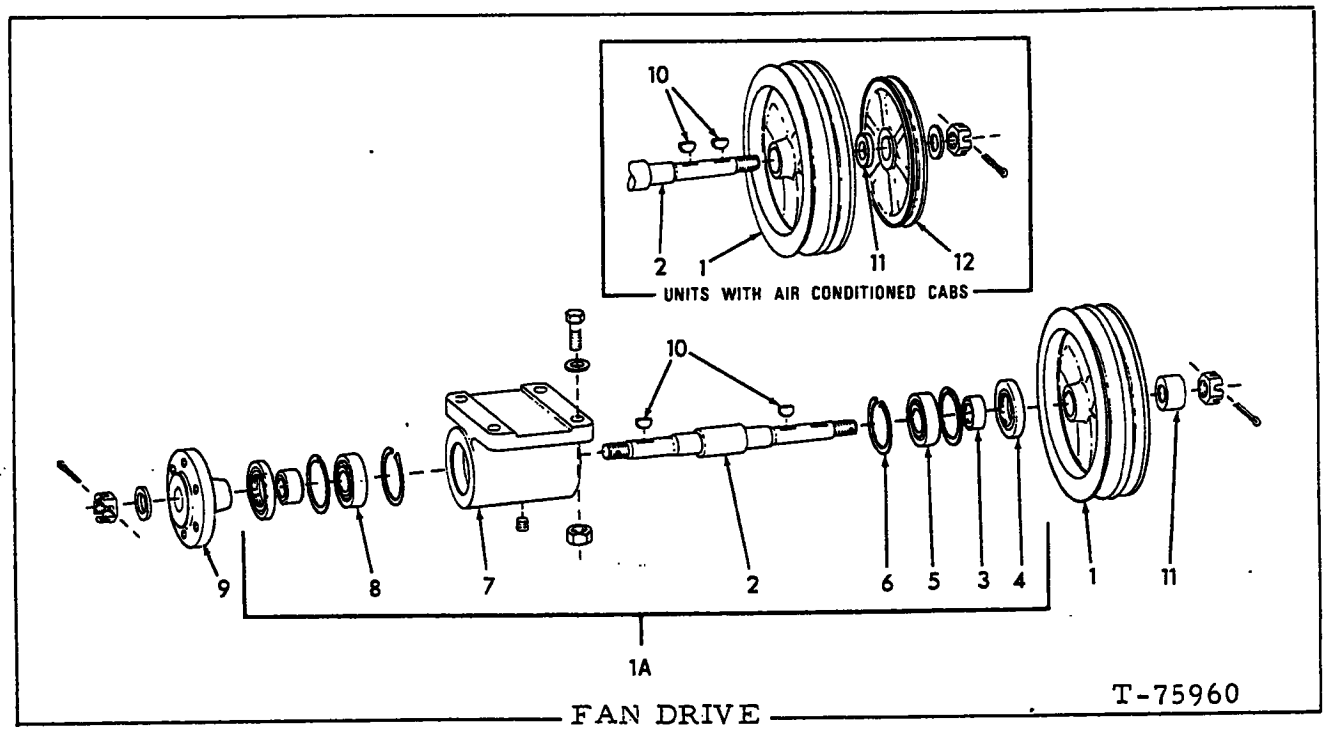

FAN DRIVE

USAGE: See page 84

ITEM	PART NO.	QTY.	DESCRIPTION
1	73110660	1	PULLEY
1A	73114483	1	HOUSING ASSY. (Includes items 2 thru 8 and 1 Plug 70910231)(Tractors prior to unit #21999)
	73122927	1	HOUSING ASSY. (Includes items 2 thru 8 and 1 Plug 70910231)(Tractor unit #21999 and up)
2	70696200	1	SHAFT (Tractors prior to unit #21999)
	73122630	1	SHAFT (Tractor unit #21999 and up)
	70067962	2	WASHER (One less used on units with Air Conditioned Cab)
	70922735	2	NUT, slotted, 1-1/4"NF (1 less used on Hub end on tractors prior to unit #21886 including #21891)
	70913798	1	NUT, slotted, jam, 1-1/4"NF (Hub end)(Tractors unit #21886 and up excluding #21891)
	70915692	2	PIN, 1/4" x 1-7/8"
3	70689344	2	SPACER
4	70680622	2	SEAL
5	70689345	1	BEARING
6	70927708	4	RING
7	70689341	1	HOUSING
	70910231	1	PLUG, pipe, hex-socket, 1/8"NPT (Tractor unit #21373 and up)
	70922510	3	CAPSCREW, 1/2"NC x 2-3/4"
	70921539	1	CAPSCREW, 1/2"NC x 3-1/2"
	70677008	6	WASHER
	70928188	1	WASHER
	70918309	3	NUT, 1/2"NC
	70911028	2	NUT, 1/2"NC
8	70694992	1	BEARING

(Continued)

(Revised May 1982)

FAN DRIVE (Continued)

ITEM	PART NO.	QTY.	DESCRIPTION
9	--------	1	HUB (1-1/2" thick)(Tractors prior to unit #21886 including #21891, order 1 each Hub 73122553, Nut 70913798)
	73122553	1	HUB (2" thick)(Tractor unit #21886 and up excluding #21891)
10	70932932	3	KEY, #13 woodruff, 3/16" x 1" (One less used on units without Air Conditioned Cab)
11	70696128	1	SPACER (Not used with Air Conditioned Cab)
	70695779	1	SPACER } Units with Air Conditioned Cab only
12	70696325	1	PULLEY }

(Revised May 1982)

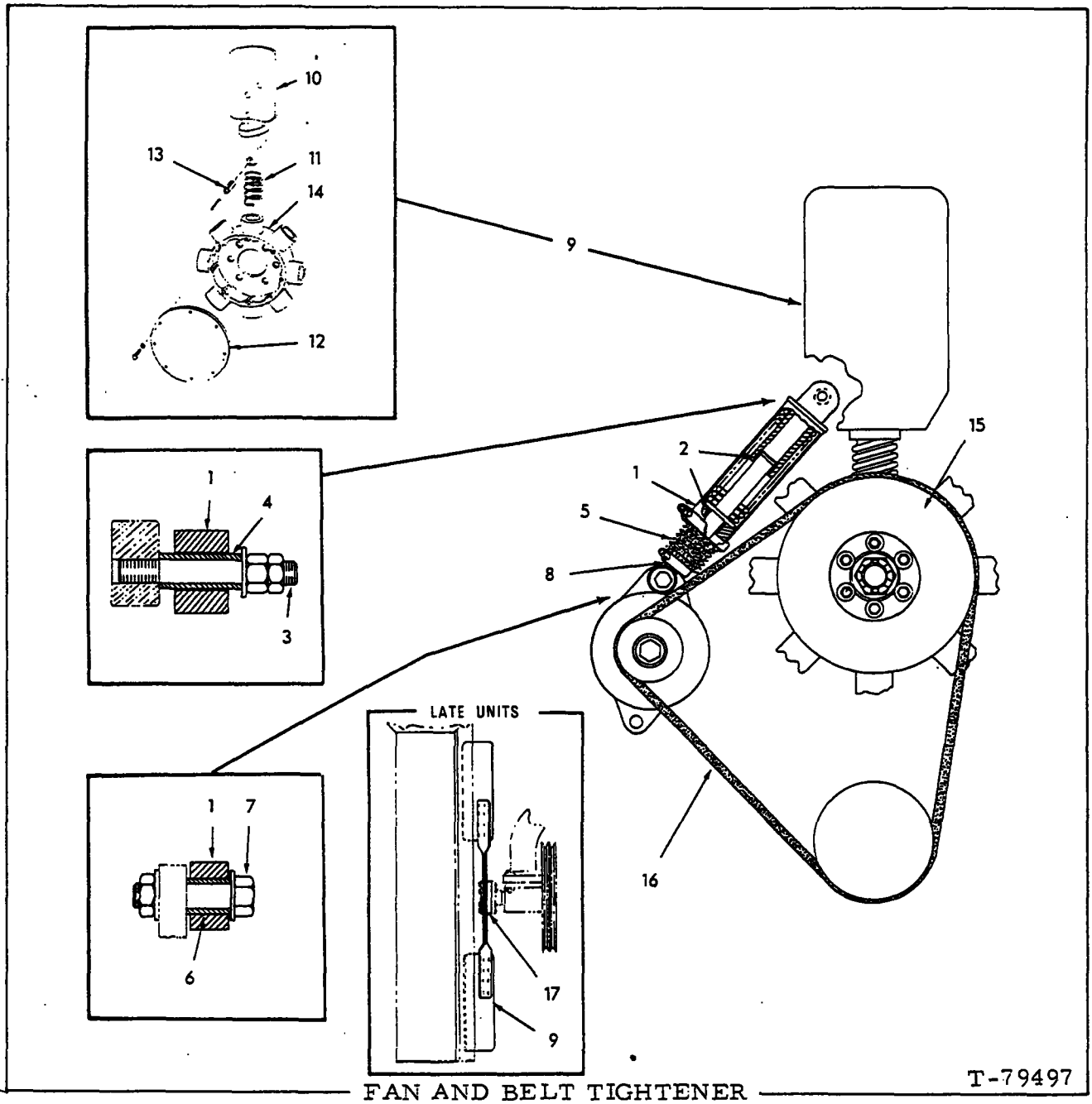

FAN AND BELT TIGHTENER

* Tractors prior to serial No. 71A21593
** Tractors serial No. 71A21593 and up

ITEM	PART NO.	QTY. *	QTY. ***	DESCRIPTION
1	70689599	1	-	TIGHTENER, belt
	73112703	-	1	TIGHTENER ASSY., belt (Includes item 2)
2	70067720	-	2	BUSHING
3	70684564	1	1	STUD
	70928188	1	1	WASHER
	70911043	1	1	NUT, 1/2" NF
	70913830	1	1	NUT, jam, 1/2" NF
4	70680714	1	1	TUBE

(Continued)

FAN AND BELT TIGHTENER (Continued)

ITEM	PART NO.	QTY.		DESCRIPTION	
5	70652241	1	-	BOOT	
	70922660	1	-	CLAMP, hose, 3/16" to 1-1/2"	
	70921913	1	-	CLAMP, hose, 1-13/16" to 2-3/4"	
	70623195	-	1	BOOT	
	70921912	-	1	CLAMP, hose, 1-1/16" to 2"	
	70921914	-	1	CLAMP, hose, 2-5/16" to 3-1/4"	
6	74630804	1	-	TUBE	
	73112744	-	1	BUSHING	
7	70921556	1	1	CAPSCREW, 1/2" NC x 2"	
	70910244	2	2	WASHER	
	70910510	1	1	NUT, 1/2" NC	
8	70682188	1	-	BLOCK (rubber)(Requires cementing to Tightener)	
9	73110678	1	-	FAN, push-type (Standard on tractors unit #21355 thru #21436)	
	70927157	6	-	CAPSCREW, 3/8" NC x 1-3/8"	
	70677006	6	-	WASHER	
	73112607	1	1	FAN, push-type (Tractors unit #21437 and up)	
	70927573	6	6	CAPSCREW, 3/8" NC x 1-7/8"	
	70677006	6	6	WASHER	
	73107445	1	-	FAN ASSY., reversible (Includes items 10 thru 14)	Standard on tractors prior to unit #21355. Special thereafter.
	70921076	6	-	CAPSCREW, 3/8" NC x 1-1/4"	
	70677006	6	-	WASHER	
10	--------	8	-	BLADE (See NOTE below)	
11	70673599	8	-	SPRING	
12	70673598	1	-	COVER	
	70926339	6	-	CAPSCREW, #10 NC x 5/16"	
13	70919597	8	-	PIN, spring, 7/16" x 2"	
14	--------	1	-	HUB (See NOTE below)	
15	--------	1	-	FAN DRIVE (See page 83)	
16	70684399	1	1	BELT SET (Consists of 2 matched belts)	
17	70669548	1	1	SPACER (Tractors unit #21437 and up)	

NOTE: Blade and Hub replacements require precision balancing. Return complete fan to Huber Reversible Fan Co., 2103 Hershey Road, Erie, Pa. 16509

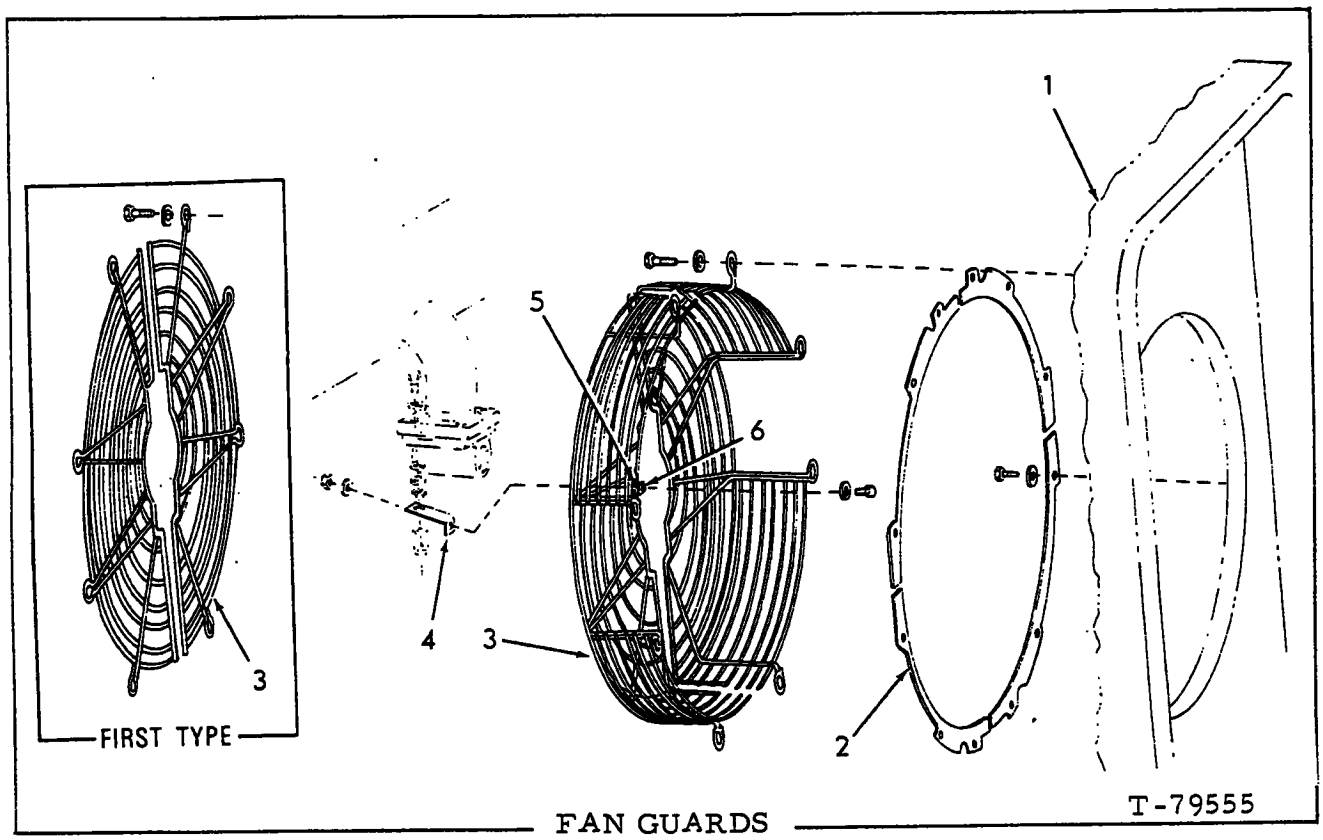

FAN GUARDS

ITEM	PART NO.	QTY.	DESCRIPTION
1	--------	1	RADIATOR GUARD (See page 173A)
2	70690214	4	SHROUD
	70925625	12	CAPSCREW, 3/8"NC x 7/8"
	70290743	12	WASHER
3	70689169	2	GUARD (Tractors prior to unit #21880)
	73117382	2	GUARD (Tractors unit #21880 and up)
	70922763	10	CAPSCREW, 3/8"NC x 1"
	70677006	10	WASHER
4	70659175	1	ANGLE
5	70093972	1	BOOT
6	70927599	1	CLAMP
	70922763	1	CAPSCREW, 3/8"NC x 1"
	70929156	2	WASHER
	70915891	1	NUT, 3/8"NC

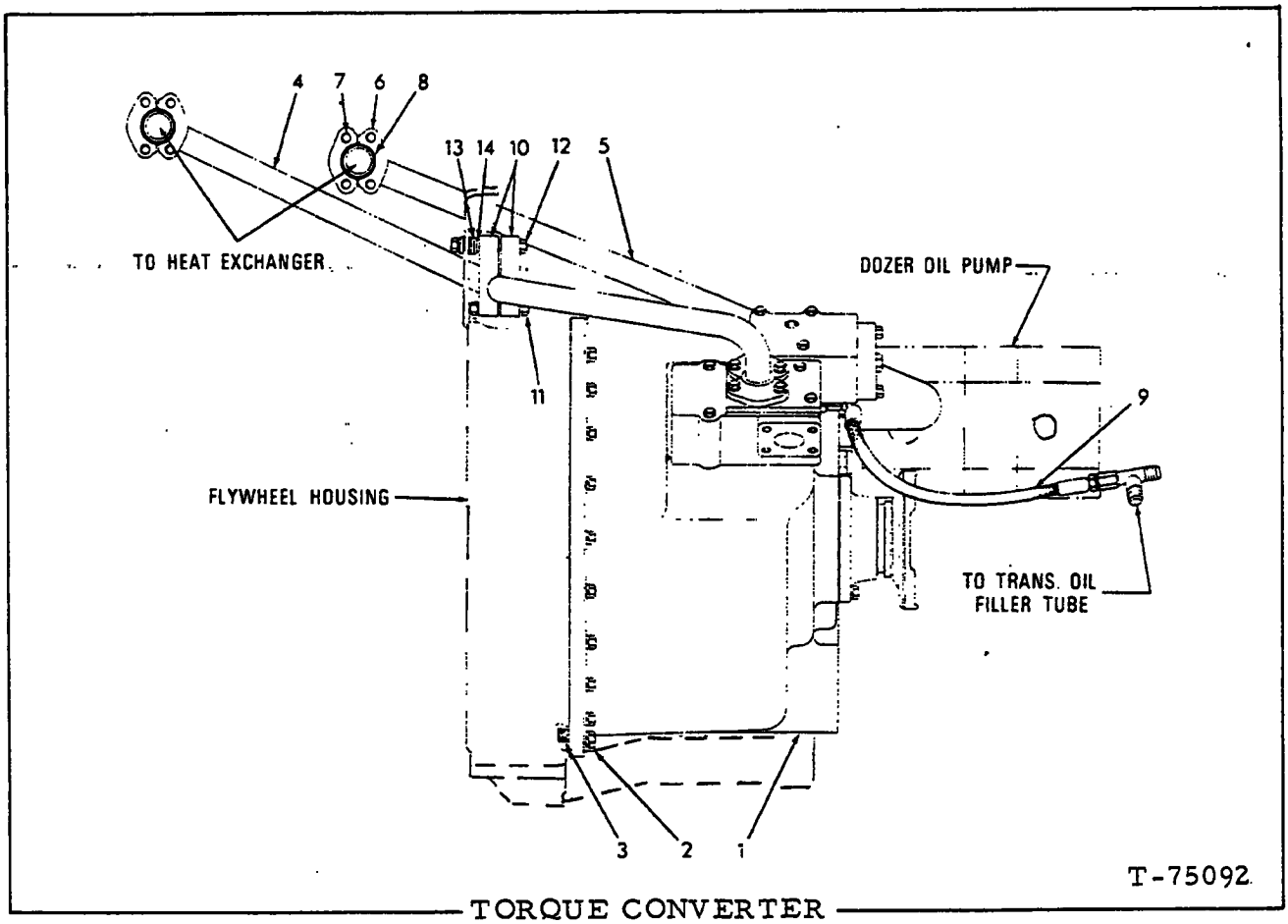

TORQUE CONVERTER

ITEM	PART NO.	QTY.	DESCRIPTION
1	73113159	1	CONVERTER ASSY., torque (See page 89)(Includes ENGINE CLUTCH)
2	70927583	19	CAPSCREW, 7/16"NC x 1-3/4"
	70914678	19	LOCKWASHER, 7/16"
	70931313	1	CAPSCREW, Nylok, 7/16"NC x 1-3/4"
3	70933494	1	□O-RING
4	70666791	1	TUBE
5	70666790	1	TUBE (Tractors prior to unit #21119)
	70698859	1	TUBE } Tractor unit
	70921467	1	CAP, flare type, 1/4" tube } #21119 and up
6	70921117	8	FLANGE (half only)
7	70921569	16	CAPSCREW, 7/16"NC x 1-1/4"
	70929154	16	LOCKWASHER, 7/16"
8	70925919	4	□O-RING
9	70697791	1	HOSE (See HOSE PARTS)
	70919127	1	CONNECTOR, flare type, 3/8" tube, 1/2"NPT male
10	70658514	2	BLOCK
11	70927174	1	CAPSCREW, 3/8"NC x 2-1/2"
12	70924843	1	CAPSCREW, 3/8"NC x 3-1/2"
	70677006	2	WASHER
	70911026	2	NUT, 3/8"NC
13	70677006	3	WASHER } Use as required
14	70055914	2	WASHER }

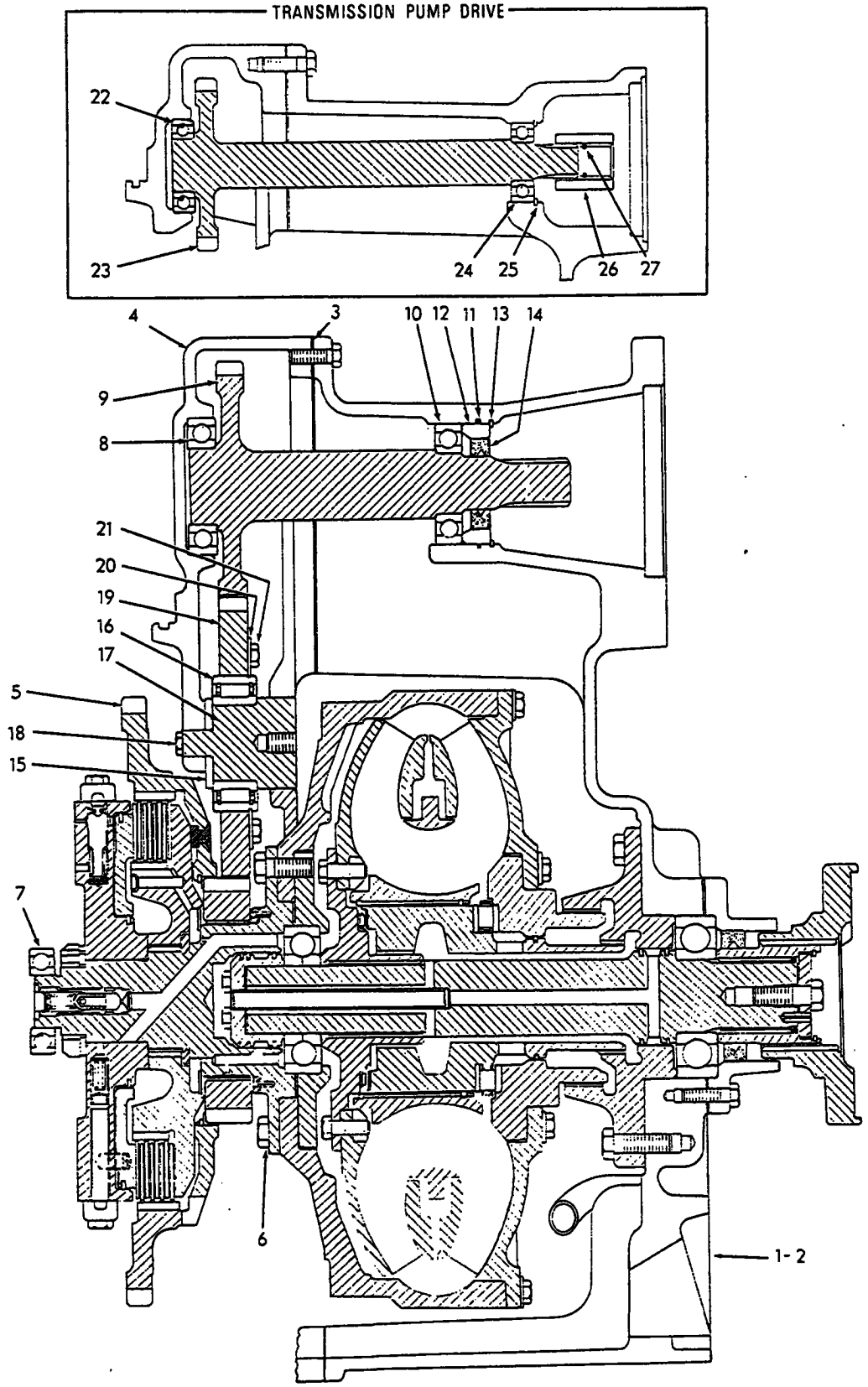

TORQUE CONVERTER ASSEMBLY 73113159

TORQUE CONVERTER ASSEMBLY 73113159

USAGE: See page 87

ITEM	PART NO.	QTY.	DESCRIPTION
1	---------	1	TORQUE CONVERTER SUB-ASSY. (See page 93)
2	70921076	14	CAPSCREW, 3/8"NC x 1-1/4"
3	70657982	1	□GASKET
4	70657977	1	HOUSING (Torque Converters prior to S/N 261731)
	73110162	1	HOUSING (Torque Converter S/N 261731 and up)
	70917673	1	PLUG, pipe, hex-socket, 1/8"NPT (Late units)
5	---------	1	ENGINE CLUTCH SUB-ASSY. (See page 91)
6	73043771	12	CAPSCREW
7	70058974	1	BEARING
8	70054073	1	BEARING
9	70657981	1	GEAR
10	73007501	1	BEARING
11	70935011	1	□O-RING
12	70657978	1	CARRIER
13	70931463	1	RING
14	73126342	1	SEAL
15	70666071	1	SPACER
16	70670411	1	BEARING
17	70657991	1	SHAFT
18	73043929	2	CAPSCREW
19	70657958	1	GEAR
20	70657989	2	WASHER (half only)
21	70639534	4	CAPSCREW, self-locking, 3/8"NF x 5/8"
22	70067766	1	BEARING
23	70666042	1	GEAR
24	70656774	1	BEARING
25	70056362	1	RING
26	70657986	1	ADAPTER
27	70188476	1	RING
28	73110164	1	FITTING ASSY. (Tractor unit #21221 and up, excluding #21247 thru #21249 and #21259)

(Revised April 1980)

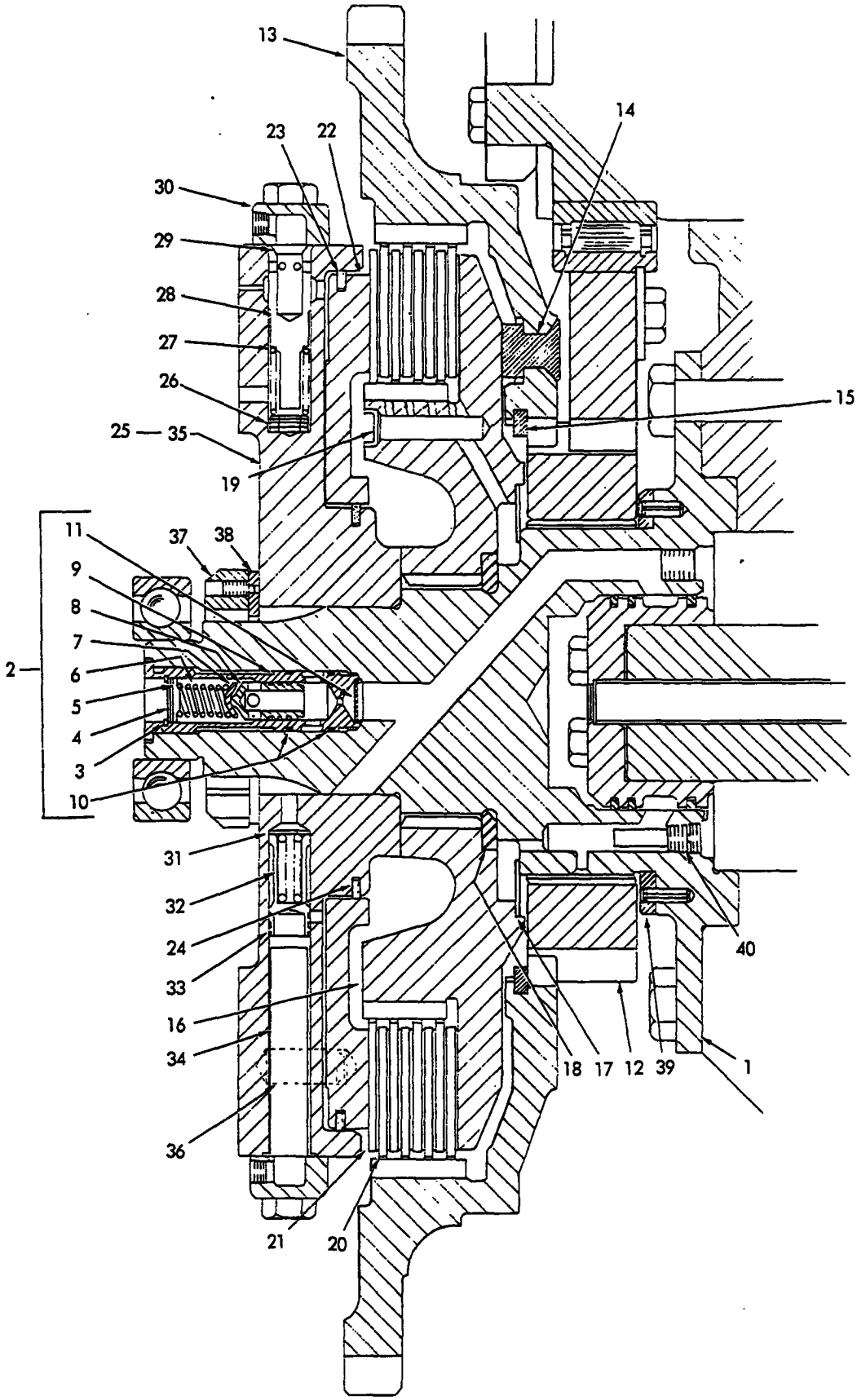

ENGINE CLUTCH SUB-ASSEMBLY T-77665

ENGINE CLUTCH SUB-ASSEMBLY

USAGE: See page 89

ITEM	PART NO.	QTY.	DESCRIPTION
1	70689381	1	FLANGE ASSY. (Torque Converters prior to S/N 261731) } Each includes Plug indented below
	73110161	1	FLANGE ASSY. (Torque Converter S/N 261731 and up) } Each includes Plug indented below
	70676130	2	PLUG, pipe, hex-socket, 1/8"NPT
	70911201	1	KEY, woodruff #E, 3/8" x 1-1/4"
2	70668837	1	VALVE ASSY., check (Includes items 3 thru 11)
3	70662919	1	RING
4	70662920	-	WASHER (.010" thick) } Use as required
	70656704	-	WASHER (.024" thick) } Use as required
	70925966	-	WASHER (.049" thick) } Use as required
5	70662918	1	GUIDE
6	70670631	1	SPRING
7	70662917	1	SEAT
8	70662916	1	PISTON
9	--------	-	SLEEVE (Not serviced separately)
10	70186451	2	O-RING
11	70639939	1	SCREEN
12	70698911	1	GEAR ASSY. (Includes bushing which is not serviced separately)
13	70698909	1	SPIDER ASSY. (Includes item 14)
14	70698912	6	BUTTON
15	70698913	1	RING
16	70698910	1	HUB ASSY. (Includes items 17 and 19)(Torque Converter prior to S/N 277247)
	73133474	1	HUB ASSY. (Includes items 17 and 19)(Torque Converter S/N 277247 and up)
17	70658023	1	PLATE
18	70670386	2	WASHER
19	70638767	12	PLUG, 7/16" diam.
20	70676092	4	PLATE
21	70657967	4	PLATE
22	70657970	1	PISTON
23	70658931	1	□GASKET
24	70666039	1	□GASKET
25	70684749	1	CARRIER ASSY. (Includes items 26 thru 35)
26	70656704	-	WASHER (.024" thick) } Use as required
	70925966	-	WASHER (.049" thick) } Use as required
27	70665851	1	SPRING
28	70667055	1	PISTON
29	70639939	1	FILTER
30	70675282	2	CAP ASSY. (Includes plug indented below)
	70927473	2	PLUG, pipe, hex-socket, 1/16"NPT
	70916271	4	CAPSCREW, 3/8"NC x 1"
31	70656704	1	WASHER
32	70665852	1	SPRING
33	70661583	1	PISTON
34	70666036	1	SLEEVE
35	70684748	1	CARRIER (Includes item 36)
36	--------	2	PIN (Not serviced separately. Order item 35)
37	73127829	1	NUT
	70930207	1	SETSCREW

(Continued)

(Revised May 1982)

ENGINE CLUTCH SUB-ASSEMBLY (Continued)

ITEM	PART NO.	QTY.	DESCRIPTION
38	73127828	1	WASHER
39	70689378	1	WASHER
	70917947	2	PIN, spring
40	73110979	1	PLUG (Torque Converter prior to S/N 261731, use with first type Flange only)

(Added May 1982)

TORQUE CONVERTER SUB-ASSEMBLY

USAGE: See page 89

ITEM	PART NO.	QTY.	DESCRIPTION
1	70657949	1	HOUSING
2	70668281	1	CARRIER
3	70921566	4	CAPSCREW, 5/16"NC x 1"
4	70681070	5	RING, sealing
5	70696850	1	BEARING
6	70657944	1	CARRIER
7	70186531	1	RING
8	70657947	1	HUB
	70923276	20	CAPSCREW, 3/8"NF x 1"
9	70657941	1	WHEEL
10	70657955	1	RING, clamping
11	70657951	1	RACE
12	70658116	1	BEARING
13	70657953	1	RACE
14	70657954	2	RING
15	70657943	1	WHEEL
16	70657945	1	CARRIER ASSY. (Includes item 17)
17	70689368	1	BUSHING
18	70657952	2	RACE
19	70658115	1	BEARING
20	70665771	1	RING, sealing
21	70657948	1	HUB
22	70657942	1	WHEEL
	70927173	36	CAPSCREW, 3/8"NC x 1-1/8"
	70657956	36	WASHER
23	70657950	1	PLATE
	70922763	12	CAPSCREW, 3/8"NC x 1"
24	70657988	1	SUPPORT ASSY. (Includes bushing which is not serviced separately)
	70920582	7	CAPSCREW, 1/2"NC x 1-1/4"
25	70657985	1	HOUSING ASSY., (Includes items 26 and 27)
	70926292	1	CONNECTOR, flare type, 1/4" tube, 9/16"NF male end (Includes O-RING)
	70921467	1	CAP, flare type, 1/4" tube
	70921885	1	O-RING
26	70669020	1	TUBE
27	70669021	1	CLAMP
	70903628	1	CAPSCREW, 3/8"NC x 5/8"
	70657956	1	WASHER
28	70188309	2	PIN
29	70657999	1	TUBE
30	70657998	1	SHAFT
31	73134163	1	BEARING
32	73126336	1	□ SEAL
33	70658026	1	□ GASKET
34	70657994	1	CARRIER
	70921076	6	CAPSCREW, 3/8"NC x 1-1/4"
35	70657993	1	ADAPTER

(Continued)

(Revised May 1982)

TORQUE CONVERTER SUB-ASSEMBLY (Continued)

ITEM	PART NO.	QTY.	DESCRIPTION	
36	70926288	1	□O-RING	
37	70658001	1	WASHER	
	70915513	1	PIN, spring, 1/4" x 3/4"	
38	70927475	1	CAPSCREW, drilled-hd., 1/2"NC x 1-1/2"	
39	70670630	1	RING	
40	70658002	1	YOKE ASSY. (Includes item 41 and FITTING indented below)	
	70914465	1	FITTING, lubricating, straight, 1/8"NPT	
41	70665761	1	PLUG	
42	70657980	1	□GASKET	
43	70657976	1	BODY	
	70927446	4	CAPSCREW, 3/8"NC x 3"	
	70923163	1	CONNECTOR, flare type, 1/4" tube, 7/16"NF male end (Includes O-RING)(Tractors prior to unit #21221 including #21247 thru #21249 and #21259)	
	70921467	1	CAP, flare type, 1/4" tube	
	70921883	1	O-RING	
44	70676091	1	PISTON	
45	70657990	1	SPRING	
46	73035090	1	WASHER	
47	73035073	1	PLUG	
48	73107757	1	VALVE ASSY. (See page 96)	
	70927446	4	CAPSCREW, 3/8"NC x 3"	
49	70657983	1	□GASKET	
50	70666074	1	VALVE ASSY. (See page 95)	
	70924843	4	CAPSCREW, 3/8"NC x 3-1/2"	
51	70658008	1	□GASKET	
52	70657992	1	TUBE	
53	70923561	2	□O-RING	
54	70657987	1	TUBE ASSY. (Includes nuts)	
	70925983	2	ELBOW, adjustable, 90°, flare type, 3/8" tube, 9/16" male thread	
	70929457	2	O-RING	
55	70695518	1	FILTER	
56	73110165	1	TUBE ASSY. (Includes nuts and sleeves)	Tractor unit #21221 and up excluding #21247 thru #21249 and #21259
	70924783	1	TEE, adjustable, flare type, 1/4" tube, 7/16" str. thd.	
	70921883	1	O-RING	
57	73110163	1	BRACKET	
	70933976	1	WASHER	
58	70925604	1	CLAMP	
	70927373	1	CAPSCREW, 5/16"NC x 7/8"	
	70910286	1	LOCKWASHER, 5/16"	
	73046938	1	WASHER	
	70910323	1	NUT, 5/16"NC	

(Revised June 1981)

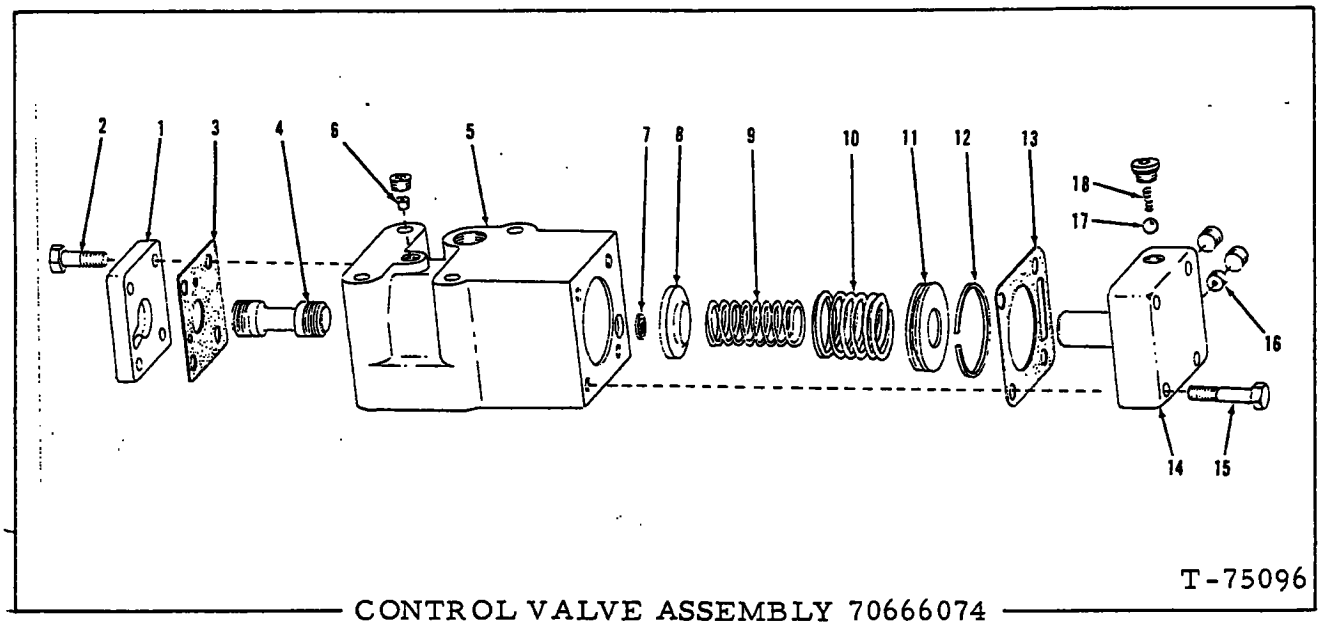

CONTROL VALVE ASSEMBLY 70666074

USAGE: See page 94

ITEM	PART NO.	QTY.	DESCRIPTION
1	70659129	1	CAP
2	70921566	4	CAPSCREW, 5/16"NC x 1"
3	70658010	1	□GASKET
4	70682371	1	SPOOL
5	70658004	1	BODY
	70917673	1	PLUG, pipe, hex-socket, 1/8"NPT
6	70188168	1	PLUG
7	70639939	1	FILTER
8	70658019	1	SEAT
9	70659135	1	SPRING
10	70658017	1	SPRING
11	70658011	1	PISTON
12	73034905	1	RING
13	70658009	1	□GASKET
14	70687659	1	COVER ASSY. (Includes pin)
	70917673	2	PLUG, pipe, hex-socket, 1/8"NPT
	70929792	1	PLUG, hex-socket, 3/8"NF straight thd.
	70927555	1	O-RING
15	70920660	4	CAPSCREW, 5/16"NC x 1-1/2"
16	70661237	1	PLUG
17	70915904	1	BALL
18	70658005	1	SPRING

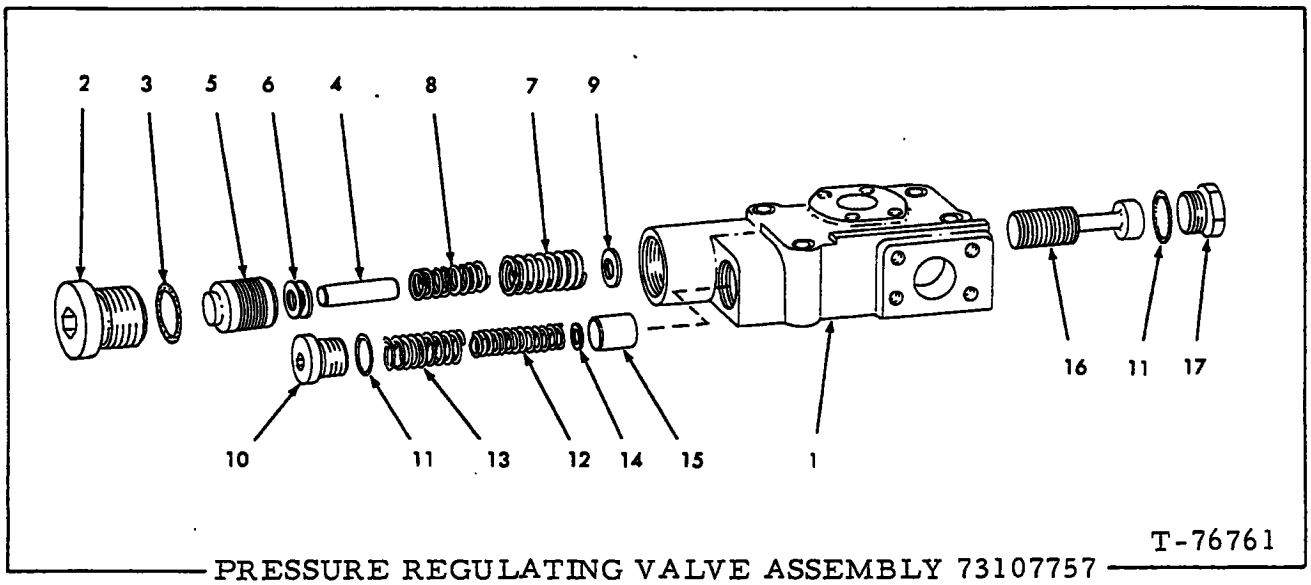

PRESSURE REGULATING VALVE ASSEMBLY 73107757

USAGE: See page 94

ITEM	PART NO.	QTY.	DESCRIPTION
1	--------	1	BODY (Not serviced separately)
2	70931725	1	PLUG (Ctsk.-hd., 1-5/8"NF straight thread)
3	70921235	1	O-RING
4	73107758	1	PIN
5	73107759	1	PISTON, short
6	70680899	-	WASHER (.065" thick) } Use as required
	70689371	-	WASHER (.030" thick) } Use as required
7	70666081	1	SPRING, outer
8	70666082	1	SPRING, inner
9	73037730	1	WASHER
10	70931724	1	PLUG (Ctsk.-hd., 1-1/16"NF straight thread)
11	73041475	2	O-RING
12	70659615	1	SPRING, inner
13	70658025	1	SPRING, outer
14	70644266	-	WASHER (Use as required)
15	73035074	1	PISTON
16	70681223	1	PISTON, long
17	70669423	1	PLUG (1-1/16"NF thread)

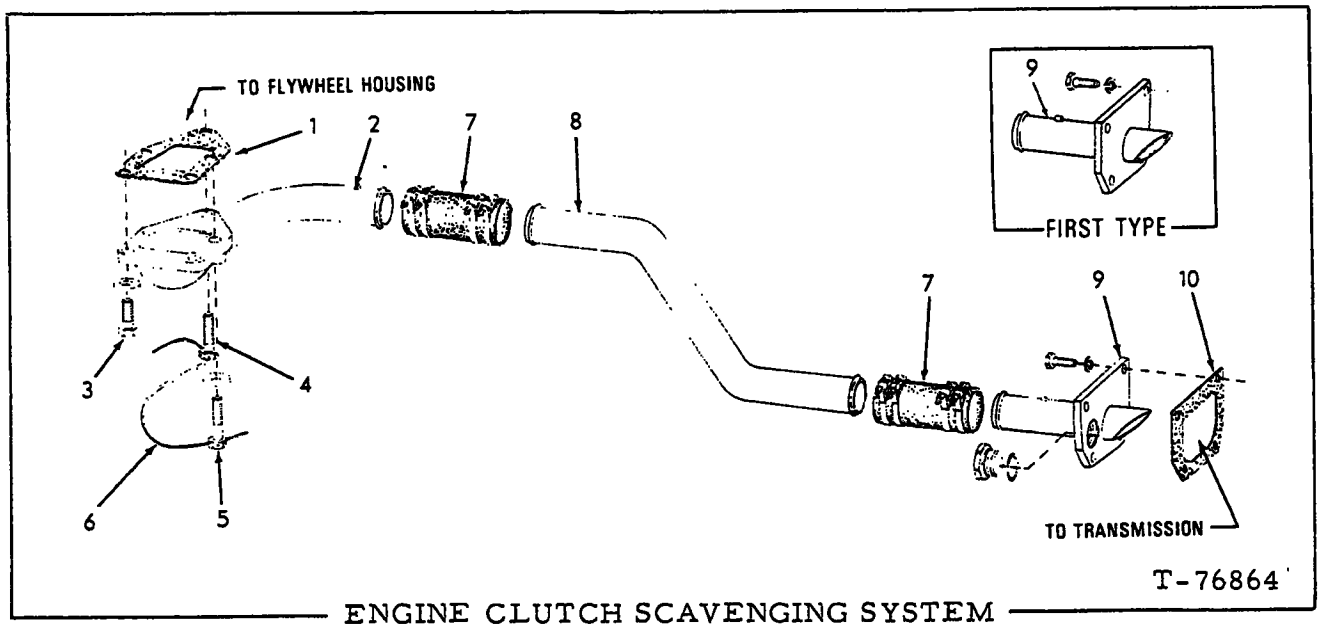

ENGINE CLUTCH SCAVENGING SYSTEM

ITEM	PART NO.	QTY.	DESCRIPTION
1	70640636	1	□GASKET
2	70670634	1	ELBOW
3	70920574	3	CAPSCREW, 1/2"NC x 1-3/8"
4	70929074	1	CAPSCREW, drilled-hd., 1/2"NC x 2"
5	70929075	1	CAPSCREW, drilled-hd., 1/2"NC x 2-1/4"
	70677008	4	WASHER
6	70023633	1	WIRE, locking, 1/16"
7	73108442	2	HOSE
	70927249	8	CLAMP
8	70670708	1	TUBE (Tractors prior to unit #21444)
	73111750	1	TUBE (Tractors unit #21244 and up)
9	70695256	1	TUBE (Tractors prior to unit #21444)
	73111761	1	TUBE (Tractors unit #21244 and up)(Early units)
	73119164	1	TUBE }
	70924102	1	PLUG } Late units
	70930725	1	O-RING }
	70927173	4	CAPSCREW, 3/8"NC x 1-1/8" (Early units)
	70921565	4	CAPSCREW, 3/8"NC x 1-1/2" (Late units)
	70910287	4	LOCKWASHER, 3/8"
10	70662633	1	GASKET

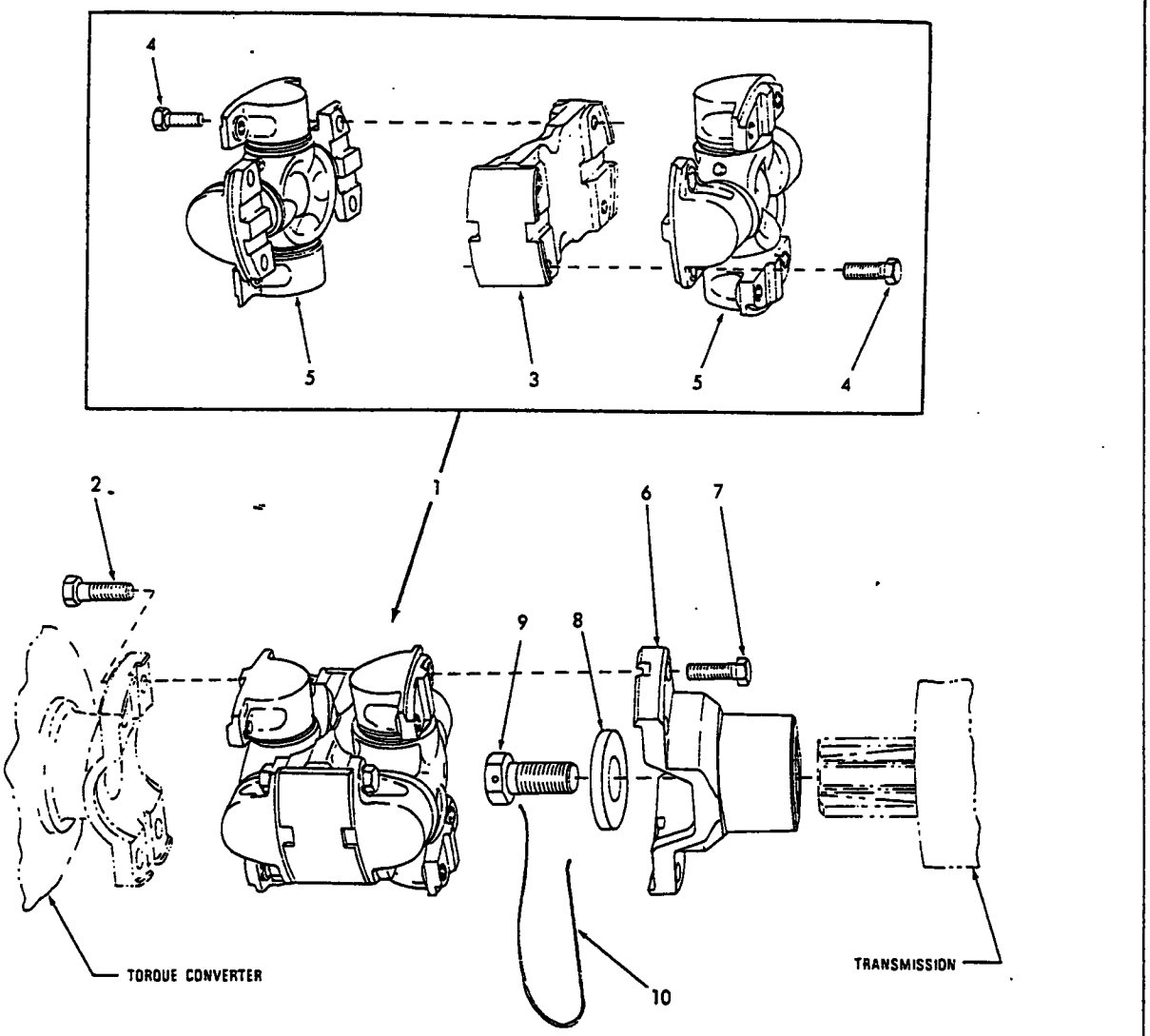

UNIVERSAL JOINT

ITEM	PART NO.	QTY.	DESCRIPTION
1	70681050	1	JOINT ASSY. (Includes items 3 thru 5)
2	70927574	4	CAPSCREW, 1/2"NF x 1-3/8"
3	70667192	1	PLATE
4	70682649	8	CAPSCREW
5	70681049	2	SPIDER ASSY. (Includes Spider and Bearing)(Serviced only as a unit)
	70912808	2	FITTING, lubricating, straight, 1/4"NF (Not original equipment)
6	70628794	1	YOKE
7	70927574	4	CAPSCREW, 1/2"NF x 1-3/8"
8	70075420	1	WASHER
9	70663468	1	CAPSCREW, drilled-hd., 1-1/8"NF x 2-1/8"
10	70023633	1	WIRE, locking, 1/16" x 12"

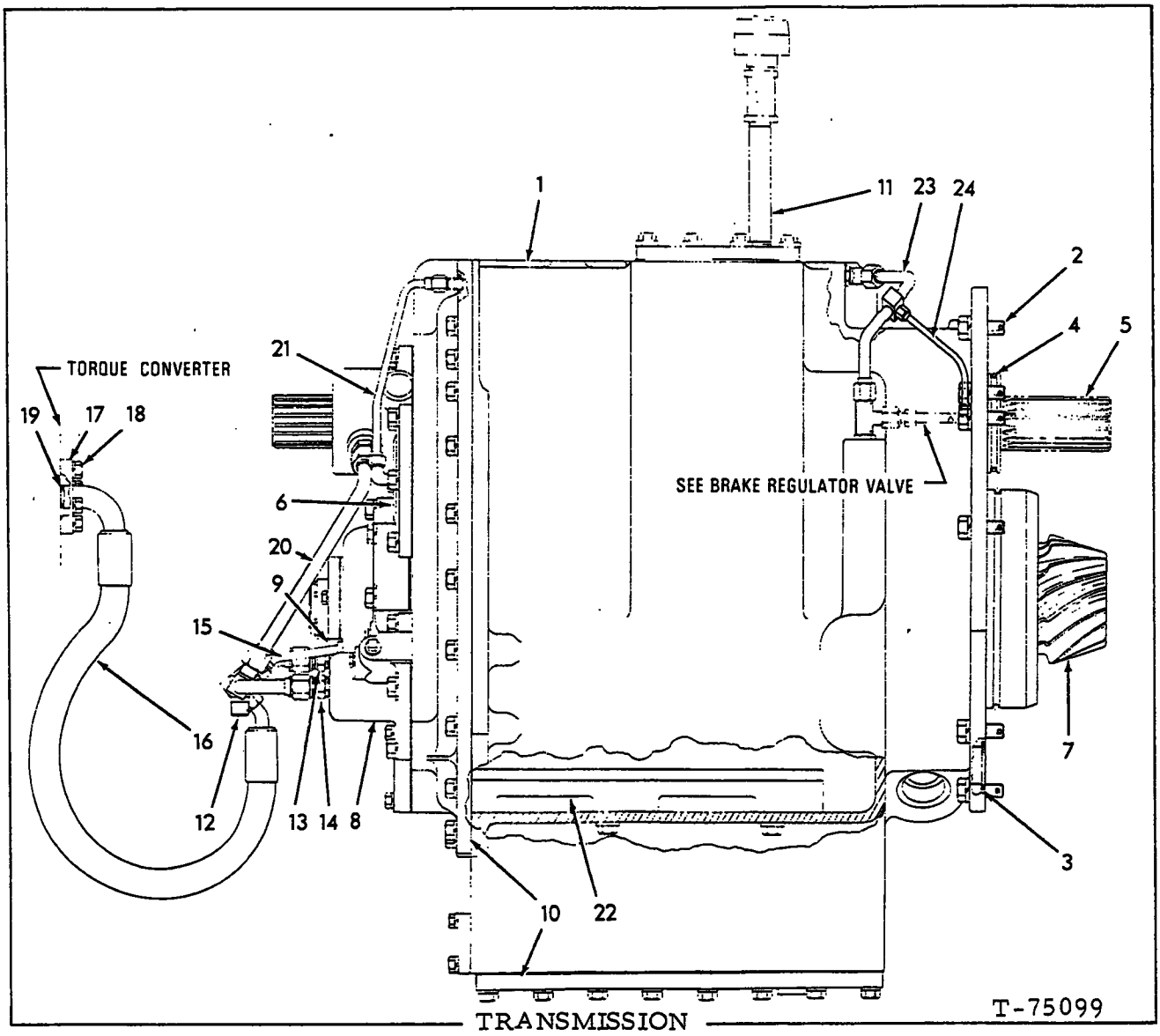

TRANSMISSION

ITEM	PART NO.	QTY.	DESCRIPTION
1	73110836	1	TRANSMISSION ASSY. (Includes items 5 thru 10)(Tractors prior to unit #21927)(If for first replacement on tractors prior to unit #21388, excluding EXCEPTIONS listed below, also order 1 ELBOW 70921402, 2 CONNECTORS 70921409 and 1 PLUG 70921573)
	73119316	1	TRANSMISSION ASSY. (Includes items 5 thru 10)(Tractor unit #21927 and up)
2	70930894	1	SCREW, 12 pt-hd., Nylok, 5/8"NF x 1-3/4"
	70926774	11	CAPSCREW, Nylok, 5/8"NC x 1-3/4"
	70912942	12	LOCKWASHER, 5/8"
3	70933492	1	□ O-RING, lower
4	70933493	1	□ O-RING, upper
5	--------	-	CLUTCH SHAFT (Fwd. and Reverse)(See page 107)
6	--------	-	COUNTER SHAFT (See page 106)
7	--------	-	SHAFT, bevel pinion (See page 104)
8	--------	-	CLUTCH SHAFT (First speed)(See page 108)

(Continued)

(Revised February 1980)

ITEM	PART NO.	QTY.	DESCRIPTION
9	--------	-	CLUTCH SHAFT (2nd and 3rd speeds)(See page 109)
10	--------	-	CASE AND COVERS (See page 102)
11	--------	-	OIL FILLER AND BREATHER (See page 116)
12	73107528	1	TUBE ASSY. (Includes nuts)
13	70665687	1	CONNECTOR, right side (restricted)
14	70665688	1	CONNECTOR, left side (restricted)
15	70654002	1	TUBE ASSY. (Includes nuts)
	70919062	1	CONNECTOR, flare type, 3/8" tube, 1/4"NPT male
16	70670706	1	HOSE
17	70921117	2	FLANGE (half only)
18	70921569	4	CAPSCREW, 7/16"NC x 1-1/4"
	70914678	4	LOCKWASHER, 7/16"
19	70925919	1	O-RING
20	70654277	1	TUBE ASSY. (Includes nuts)
	70933479	1	CONNECTOR, flare type, 5/8" tube, 7/8"NF straight male thread
	70930724	1	O-RING
21	70654061	1	TUBE ASSY. (Includes nuts)
	70933470	1	CONNECTOR, flare type, 3/8" tube, 9/16"NF male end
	70919135	1	ELBOW, flare type, 90°, 3/8" tube, 1/4"NPT male
	70933476	1	O-RING
22	70663343	1	BAFFLE
	70921076	4	CAPSCREW, 3/8"NC x 1-1/4"
	70926180	4	WASHER
23	70662549	1	TUBE ASSY. (Includes nuts)(Not used on units equipped with special Brake Lock)(Tractors prior to unit #21927)
	73115354	1	TUBE ASSY. (Includes nut)(Not used on units equipped with special Brake Lock)(Tractors unit #21927 and up)
	70933503	1	ELBOW, adjustable, 45°, flare type, 1/2" tube, 3/4"NF (Includes washer and nut)
	70933506	1	TEE, adjustable, flare type, 1/2" tube, 3/4" straight-thd. (Includes washer and nut)
	70933466	2	O-RING
24	73114823	1	TUBE ASSY. (Includes nuts)(Not used on units equipped with special Brake Lock) — Tractors unit #21927 and up
	70927424	1	CONNECTOR, flare type, 1/4" tube 7/16" str. thd. — Tractors unit #21927 and up
	70933475	1	O-RING — Tractors unit #21927 and up

EXCEPTIONS: Tractors Serial No. 71A

21137	21289	21325	21339	21353	21362	21372	21381
21201	21305	21327	21341	21354	21363	21373	21383
21205	21306	21328	21342	21355	21364	21374	21384
21212	21312	21329	21344	21356	21366	21376	21385
21262	21315	21333	21345	21358	21368	21377	21386
21264	21318	21334	21347	21359	21369	21378	21387
21274	21319	21335	21350	21360	21370	21379	
21286	21322	21338	21352	21361	21371	21380	

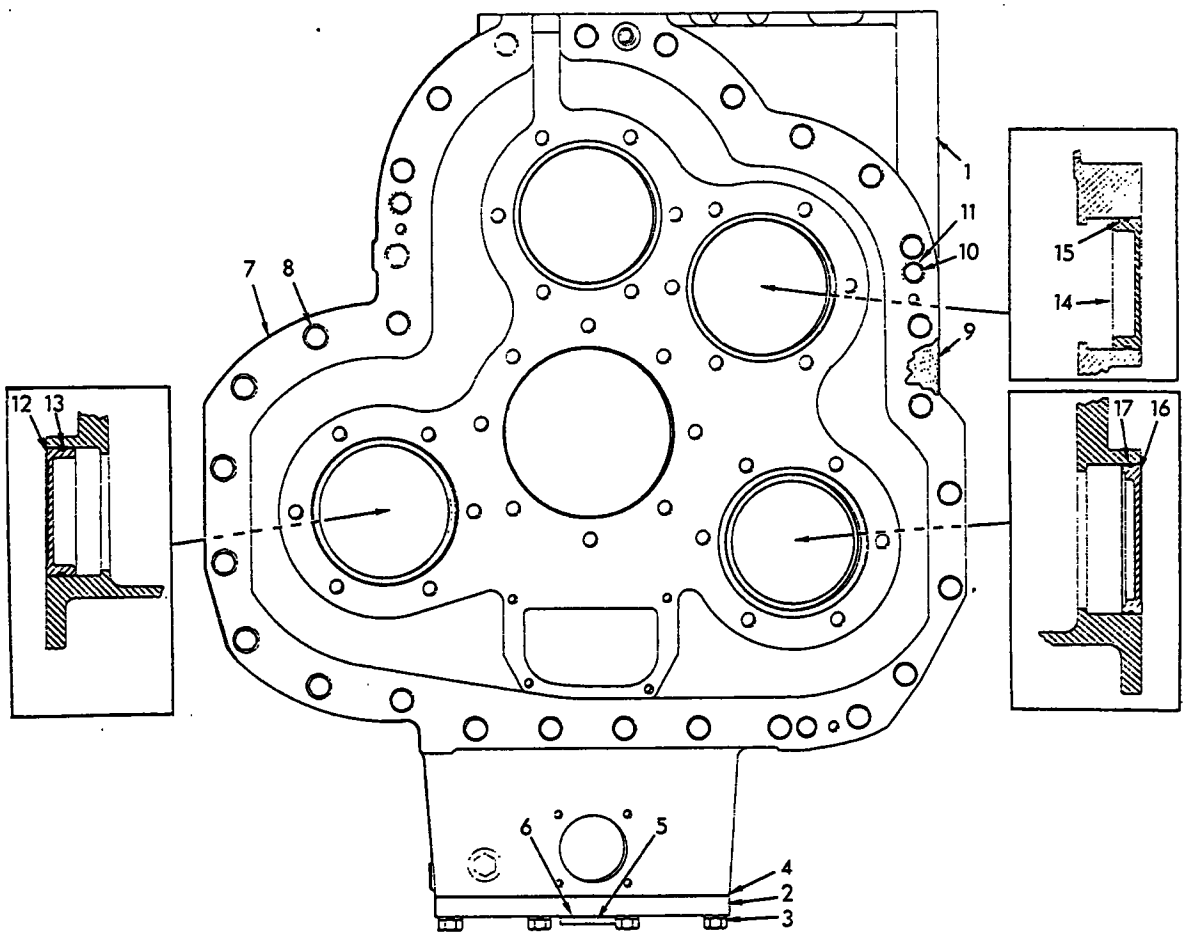

T-75100

TRANSMISSION CASE AND COVERS

ITEM	PART NO.	QTY.	DESCRIPTION
1	70691578	1	CASE(Tractors prior to unit #21927)
	73118257	1	CASE(Tractors unit #21927 and up)
	70927547	1	PLUG, 1/2" tube, 3/4" straight thd.
	70933466	1	O-RING
2	70654105	1	COVER
3	70920585	21	CAPSCREW, 1/2"NC x 1-3/4"
	70912441	21	LOCKWASHER, 1/2"
4	70654104	1	□GASKET
5	70035250	1	PLUG
6	70667252	1	□GASKET

(Continued)

TRANSMISSION CASE AND COVERS (Continued)

ITEM	PART NO.	QTY.	DESCRIPTION
7	70656681	1	COVER (Tractor prior to unit #21388 excluding EXCEPTIONS listed on page 101)
	73112627	1	COVER (Tractor unit #21388 and up including EXCEPTIONS listed on page 101)
8	70920583	29	CAPSCREW, 1/2"NC x 1-1/2"
	70058614	2	WASHER
	70912441	29	LOCKWASHER, 1/2"
9	70653798	1	□GASKET
10	70624695	3	PIN
11	70623804	3	RING
12	70656756	1	PLUG (4-23/32" diam.)
13	70923819	1	□O-RING (4-5/8" O.D.)
14	70656746	1	PLUG(4-29/32" diam.)(Tractors prior to unit #21927)
	73118287	1	PLUG(4-29/32" diam.)(Tractors unit #21927 and up)
15	70923821	1	O-RING(4-7/8" O.D.)
16	70656766	1	PLUG (5-1/2" diam.)
17	70923823	1	O-RING (5-3/8" O.D.)

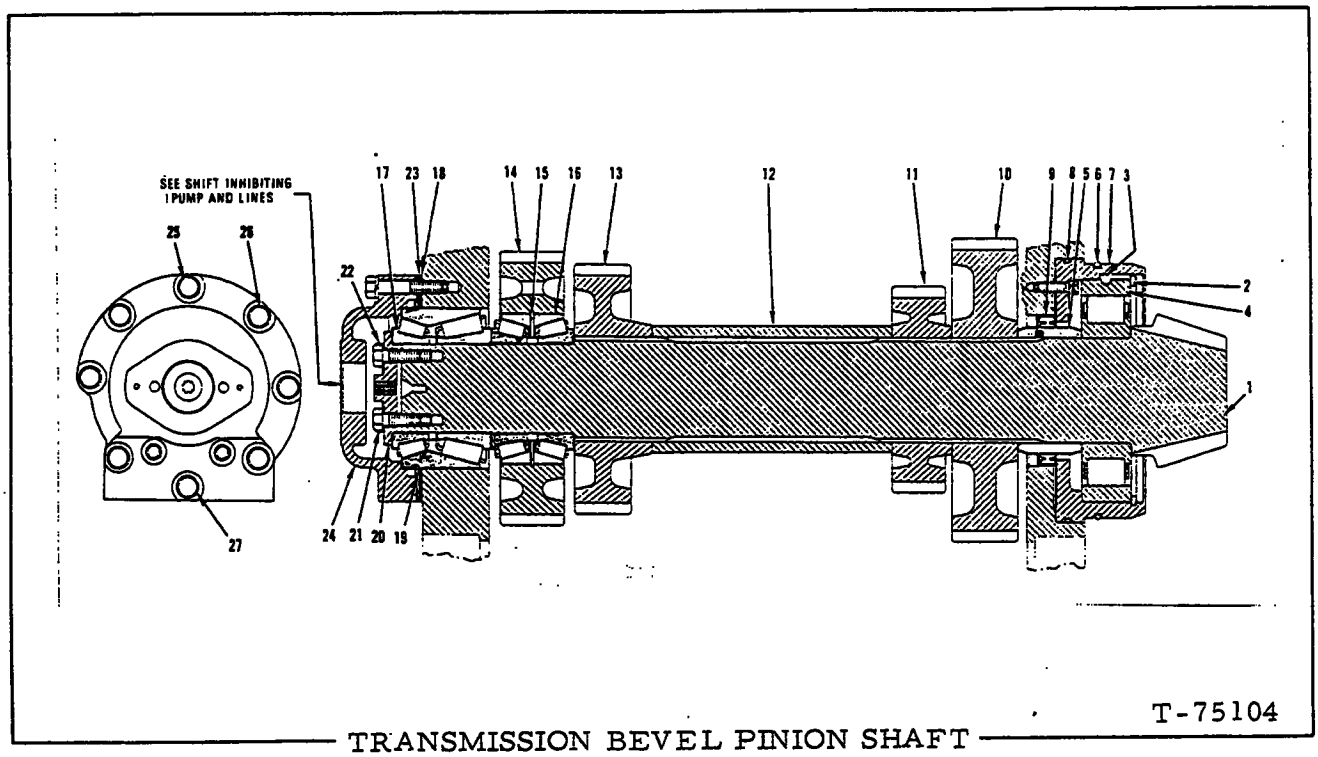

T-75104

TRANSMISSION BEVEL PINION SHAFT

ITEM	PART NO.	QTY.	DESCRIPTION
1	70656790	1	PINION (12 teeth)(Tractors prior to unit #21869)
	73116296	1	PINION (12 teeth)(Tractor unit #21869 and up)
2	70629355	1	RING
3	70905360	1	BALL (3/8" diam.)
4	70644337	1	BEARING, roller
5	70657313	1	SPACER
6	70925241	1	O-RING
7	70653740	1	RETAINER
	70917733	6	CAPSCREW, socket-hd., 3/8"NC x 1-1/4"
8	70925652	1	O-RING
9	70648619	1	SEAL
10	70656594	1	GEAR, first speed (59) teeth)
11	70656593	1	GEAR, third speed (39 teeth)
12	73110705	1	SLEEVE ASSY. (Includes PIN indented below)
	70681103	1	PIN
13	70656597	1	GEAR, second speed (48 teeth)
14	73126237	1	GEAR, idling (53 teeth)
15	70629138	1	RING
16	70657324	1	BEARING, roller (Includes 2 roller assemblies, 2 cups, and 1 spacer. Serviced only as a unit.)
17	70657318	1	BEARING, roller (Includes 2 roller assemblies, 1 cup and 1 spacer. Serviced only as a unit)
18	70657315	7	SHIM (.005" thick) } Use as required
	70657316	5	SHIM (.007" thick) } Use as required
	70657317	7	SHIM (.010" thick) } Use as required
19	70657302	1	RING
20	70662411	1	RETAINER, inner
21	70922726	3	CAPSCREW, 1/2"NF x 1-1/2"
22	70629358	1	PLATE, capscrew, locking

(Continued)

(Revised June 1980)

TRANSMISSION BEVEL PINION SHAFT (Continued)

ITEM	PART NO.	QTY.	DESCRIPTION
23	70657312	5	SHIM (.005" thick) } Use as required
	70657314	5	SHIM (.007" thick) }
24	70653819	1	RETAINER, outer
25	70922526	3	CAPSCREW, 1/2"NC x 2-1/2"
26	70922510	2	CAPSCREW, 1/2"NC x 2-3/4"
27	70925889	3	CAPSCREW, 1/2"NC x 4-1/2"
	70912441	8	LOCKWASHER, 1/2"
	70910244	2	WASHER

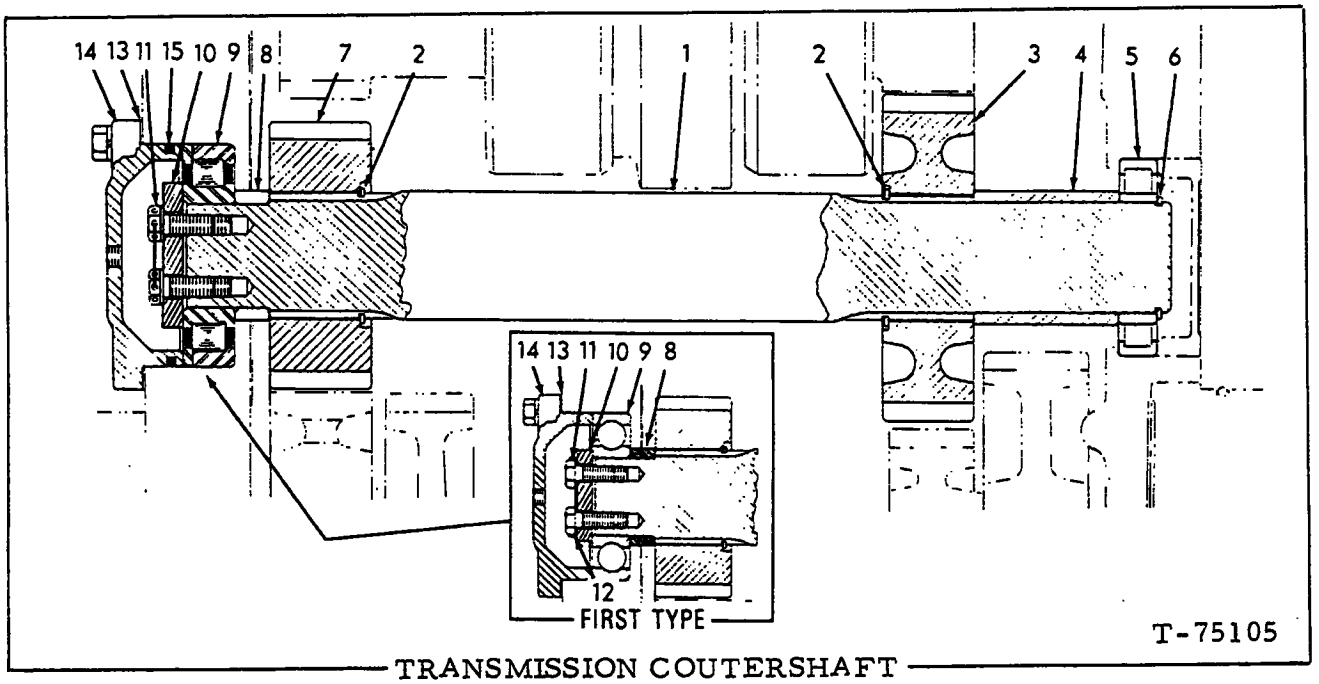

TRANSMISSION COUTERSHAFT

* Tractors prior to serial No. 71A21388 excluding EXCEPTIONS listed on page 101

** Tractor serial No. 71A21388 and up, including EXCEPTIONS listed on page 101

ITEM	PART NO.	QTY. *	QTY. **	DESCRIPTION
1	70657328	1	1	SHAFT
2	70657299	2	2	RING
3	70656601	1	1	GEAR (39 teeth)
4	70657322	1	1	SPACER
5	73119394	1	1	BEARING, roller
6	70624688	1	1	RING
7	70656602	1	1	GEAR (31 teeth)
8	70657305	1	-	*SPACER
	73112630	-	1	SPACER
9	70647996	1	-	*BEARING, ball
	73112620	-	1	BEARING, roller
10	70629350	1	-	*WASHER
	73112625	-	1	WASHER
11	70927574	2	-	CAPSCREW, 1/2"NF x 1-3/8"
	70035689	-	2	CAPSCREW, drilled-hd., 1/2"NF x 1-3/8"
	70928460	-	2	WASHER
	70023633	-	1	LOCKWIRE
12	70629349	1	-	*PLATE
13	70657319	1	-	GASKET
	73112619	-	4	SHIM (.005" thick) } Use as required
	73112618	-	4	SHIM (.007" thick) } Use as required
14	70657329	1	-	*RETAINER
	73112624	-	1	RETAINER
	70920583	6	6	CAPSCREW, 1/2"NC x 1-1/2"
	70912441	6	6	LOCKWASHER, 1/2"
15	70929881	-	1	O-RING

NOTE: For initial replacement on items indicated by asterisk (*) order TRANSMISSION FRONT ROLLER BEARING KIT 73112623 (See page 9A). Once KIT has been installed, service with items listed in second column.

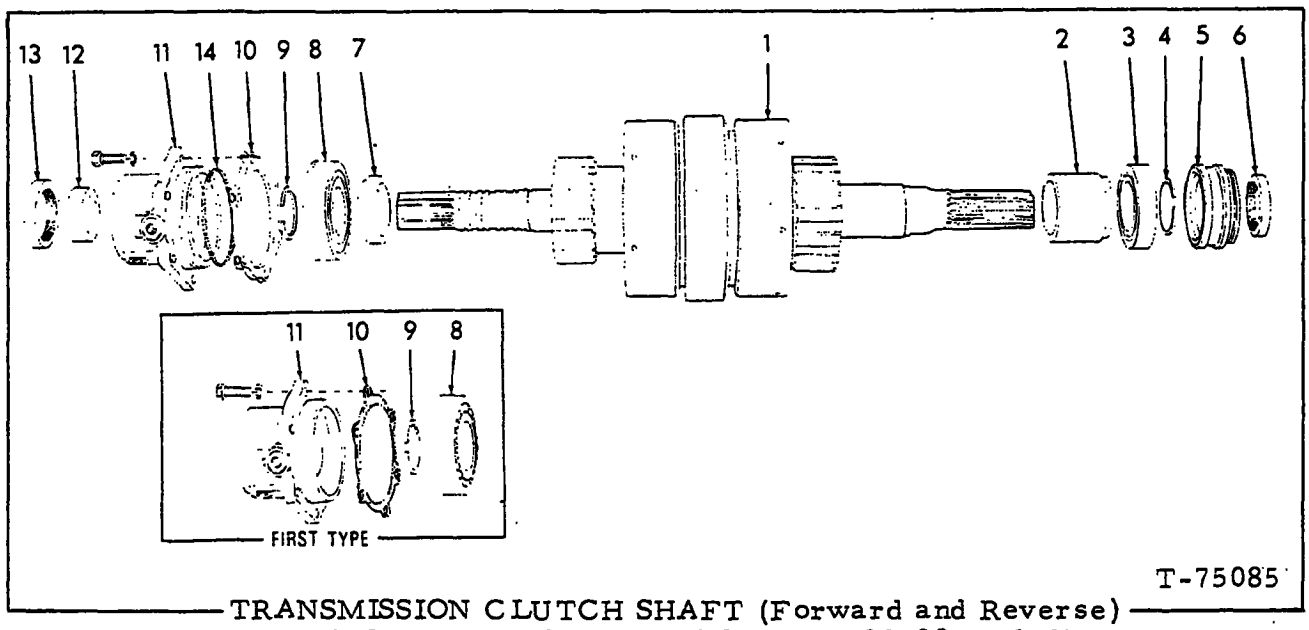

TRANSMISSION CLUTCH SHAFT (Forward and Reverse)

* Tractors prior to serial No. 71A21388 excluding EXCEPTIONS listed on page 101

** Tractor serial No. 71A21388 and up, including EXCEPTIONS listed on page 101

ITEM	PART NO.	QTY. *	QTY. **	DESCRIPTION
1	73117780	1	1	CLUTCH AND SHAFT ASSY. (See page 114)
2	70657323	1	1	SPACER
3	73119394	1	1	BEARING, roller
4	70624688	1	1	RING
5	70663442	1	1	RETAINER
6	73118975	1	1	SEAL
7	70656612	1	1	□SPACER
8	70647996	1	-	*BEARING, ball
	73112620	-	1	BEARING, roller
9	70624783	1	-	RING
	73112617	-	1	RING
10	70657319	1	-	□GASKET
	73112619	-	4	SHIM (.005" thick) } Use as required
	73112618	-	4	SHIM (.007" thick) } Use as required
11	70670397	1	-	*COLLECTOR
	73112626	-	1	COLLECTOR
	70920583	6	6	CAPSCREW, 1/2"NC x 1-1/2"
	70912441	6	6	LOCKWASHER, 1/2"
12	70657581	1	1	SPACER
13	70657582	1	1	□SEAL
14	70929881	-	1	O-RING

NOTE: For initial replacement on items indicated by asterisk (*) order TRANSMISSION FRONT ROLLER BEARING KIT 73112623. (See packaged parts) Once KIT has been installed, service with items listed in second column.

(Revised July 1980)

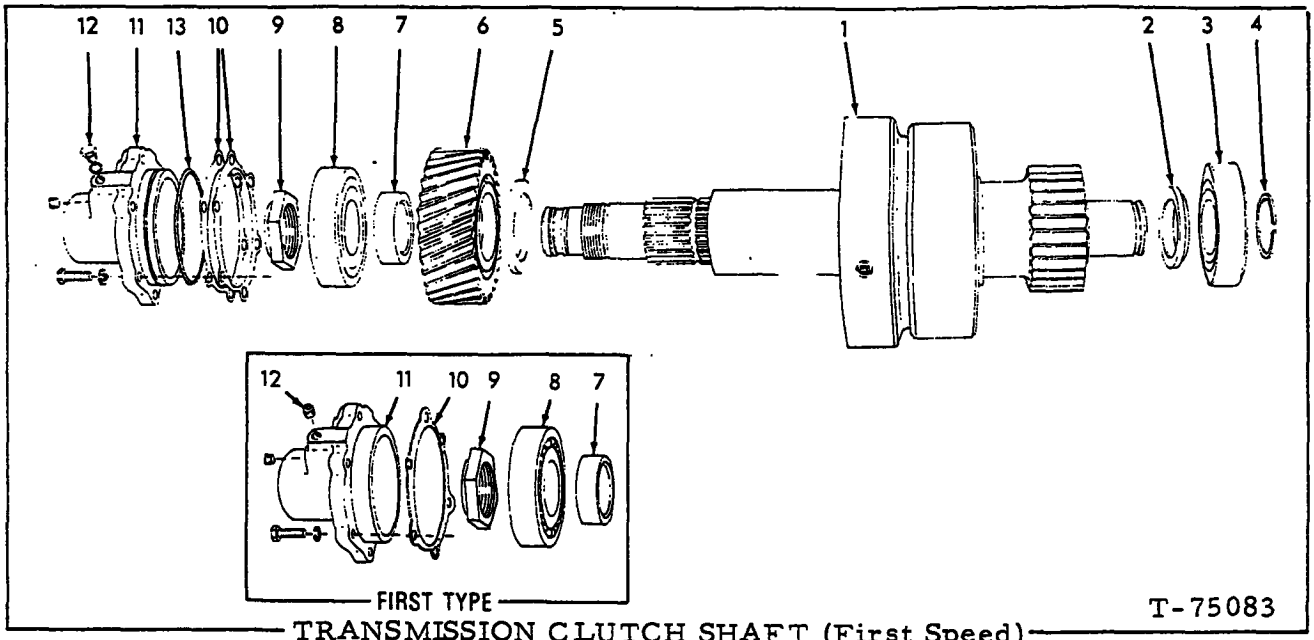

TRANSMISSION CLUTCH SHAFT (First Speed)

* Tractors prior to serial No. 71A21388 excluding EXCEPTIONS listed on page 101

**Tractor serial No. 71A21388 and up including EXCEPTIONS listed on page 101.

ITEM	PART NO.	QTY. *	QTY. **	DESCRIPTION
1	73117782	1	1	CLUTCH AND SHAFT ASSY. (See page 110)
2	70657303	1	1	SPACER
3	73119395	1	1	BEARING, roller
4	70624783	1	-	RING
	73112617	-	1	RING
5	70697802	1	1	SPACER
6	70656599	1	1	GEAR (33 teeth)
7	70657305	1	-	*SPACER
	73112630	-	1	SPACER
8	70647996	1	-	*BEARING, ball
	73112620	-	1	BEARING, roller
9	70639759	1	1	NUT
10	70628784	1	-	□GASKET
	73112621	-	4	SHIM (.005" thick) } Use as required
	73112622	-	4	SHIM (.007" thick) } Use as required
11	70639501	1	-	*COLLECTOR
	73108564	-	1	COLLECTOR
	70901652	1	1	PLUG, pipe, 1/4"NPT
	70920583	6	6	CAPSCREW, 1/2"NC x 1-1/2"
	70912441	6	6	LOCKWASHER, 1/2"
12	70901653	1	-	PLUG, pipe, 3/8"NPT
	70921573	-	1	PLUG, hex-hd., 3/4"NF (Includes O-RING)
	70921349	-	1	O-RING
13	70929881	-	1	O-RING

NOTE: For initial replacement on items indicated by asterisk (*) order TRANSMISSION FRONT ROLLER BEARING KIT 73112623 (See page 9A). Once KIT has been installed, service with items listed in second column.

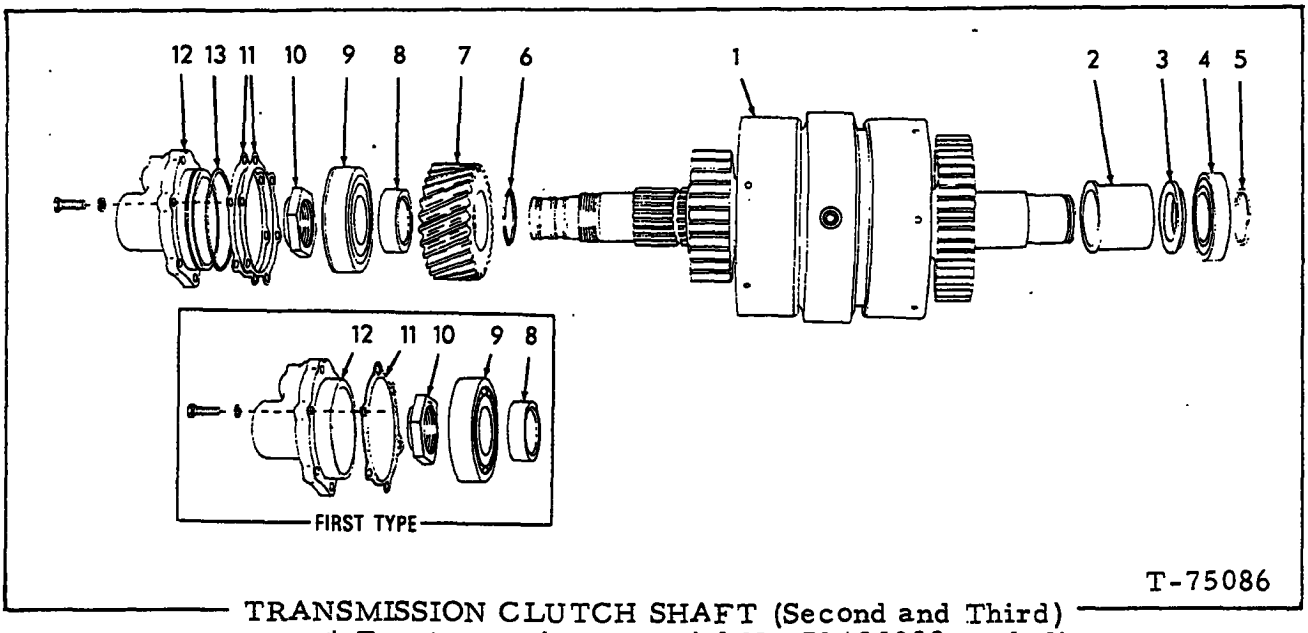

TRANSMISSION CLUTCH SHAFT (Second and Third)

* Tractors prior to serial No. 71A21388 excluding EXCEPTIONS listed on page 101

** Tractor serial No. 71A21388 and up, including EXCEPTIONS listed on page 101.

ITEM	PART NO.	QTY. *	QTY. **	DESCRIPTION
1	73117781	1	1	CLUTCH AND SHAFT ASSY. (See page 112)
2	70657321	1	1	SPACER
3	70657303	1	1	SPACER
4	70042951	1	1	BEARING
5	70624783	1	-	RING
	73112617	-	1	RING
6	70629346	1	1	RING
7	70656596	1	1	GEAR (28 teeth)
8	70657305	1	-	*SPACER
	73112630	-	1	SPACER
9	70647996	1	-	*BEARING, ball
	73112620	-	1	BEARING, roller
10	70639759	1	1	NUT
11	70628784	1	-	GASKET
	73112621	-	4	SHIM (.005" thick) Use as required
	73112622	-	4	SHIM (.007" thick) Use as required
12	70639501	1	-	*COLLECTOR
	73108564	-	1	COLLECTOR
	70920583	6	6	CAPSCREW, 1/2"NC x 1-1/2"
	70912441	6	6	LOCKWASHER, 1/2"
13	70929881	-	1	O-RING

NOTE: For initial replacement on items indicated by asterisk (*) order TRANSMISSION FRONT ROLLER BEARING KIT 73112623 (See page 9A). Once KIT has been installed service with items listed in second column.

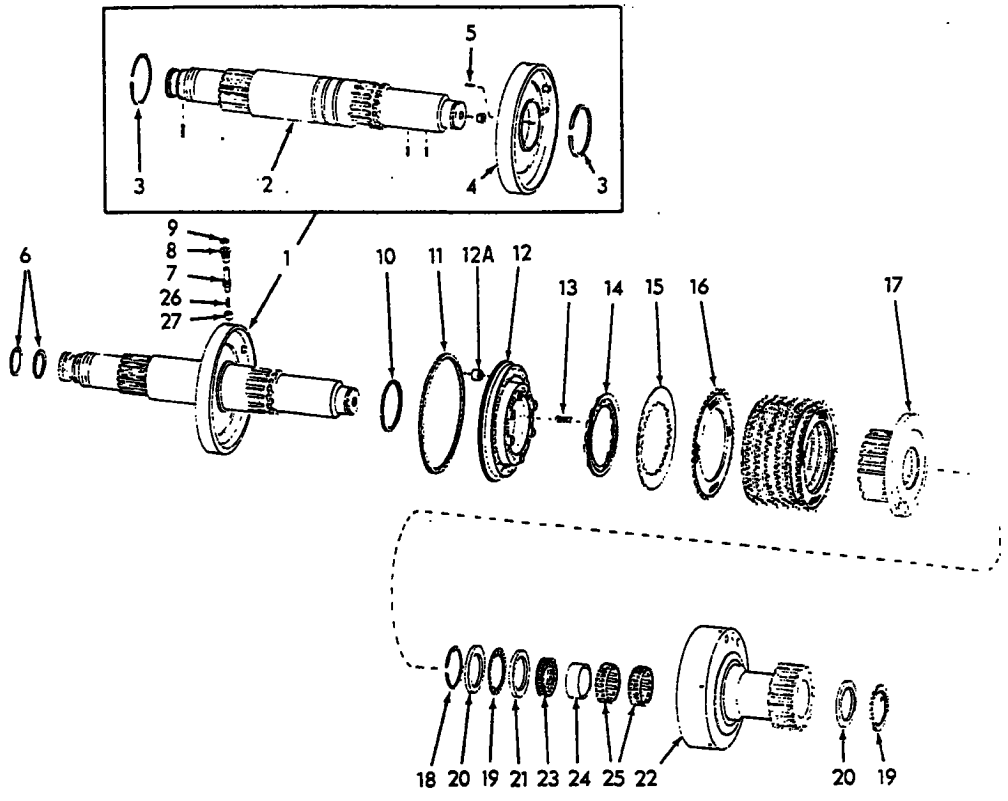

T-79406

CLUTCH AND SHAFT ASSEMBLY 73117782

ITEM	PART NO.	QTY.	DESCRIPTION
1	73107750	1	SHAFT AND HOUSING ASSY. (Includes items 2 thru 5)
2	--------	1	SHAFT (Not serviced separately)
	70919242	3	PIN, spring, 1/8" x 3/8"
	70186648	1	PLUG, pipe, hex-socket, 1/4"NPT
3	70688799	2	RING
4	73107073	1	HOUSING ASSY. (Serviced only as a unit)
5	70695625	1	PIN
6	70692429	2	RING
7	70688737	1	VALVE
8	70672487	1	SLEEVE
9	74254663	1	RING
10	73128812	1	RING
11	79017823	1	RING, seal
12	70695756	1	PISTON (First type)
	73116320	1	PISTON ASSY. (Second type)(Includes 3/4" O.D. SLEEVE, item 12A)
	73122543	1	PISTON ASSY. (Third type)(Includes 13/16" O.D. SLEEVE, item 12A)
12A	73114227	2	SLEEVE, clutch piston (3/4" O.D.)(First type)
	73122544	2	SLEEVE, clutch piston (13/16" O.D.)(Second type)
13	70695755	6	SPRING
14	70688801	1	RETAINER (Early design)
	73109091	1	RETAINER ASSY. (Includes RETAINER which is not serviced separately and item 13)(Late design)

(Continued)

(Revised July 1980)

ITEM	PART NO.	QTY.	DESCRIPTION
15	70688802	8	PLATE (flat)
16	--------	8	PLATE (bi-metal)(Diamond grooved pattern)(Tractors prior to unit #21927)(Order 8 PLATE 79019030)
	79019030	8	PLATE (bi-metal)(Square grooved pattern)(Tractor unit #21927 and up)
17	70695751	1	HUB
18	70688799	1	RING
19	73037597	2	BEARING
20	73037598	2	WASHER
21	70699049	1	WASHER
22	70699203	1	GEAR AND DRUM
23	70639547	1	BEARING, roller (1" wide)
24	70656981	1	SPACER
25	73037656	2	BEARING, roller (1-1/2" wide)
26	70693569	1	SPRING
27	70688804	1	VALVE, feedback

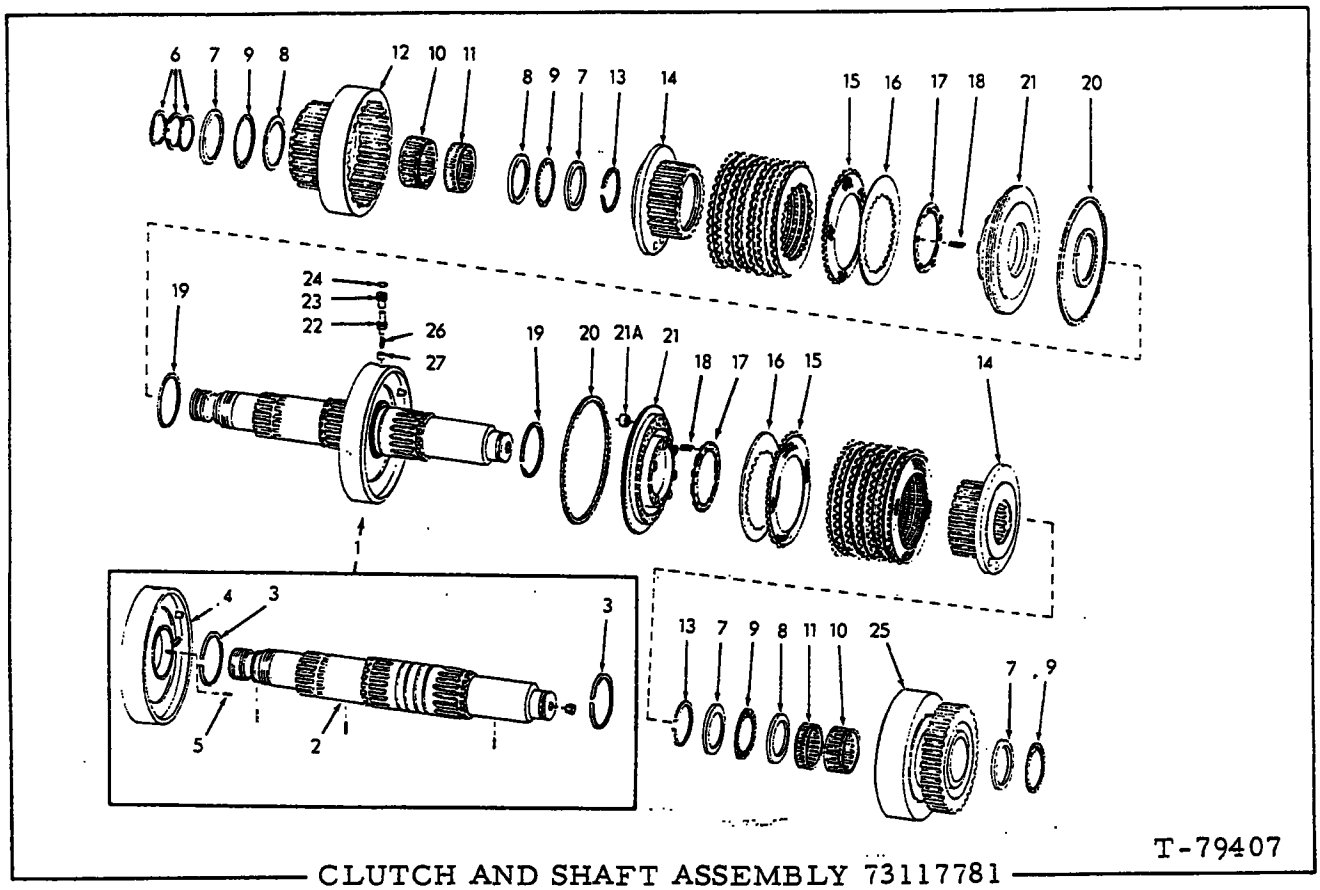

CLUTCH AND SHAFT ASSEMBLY 73117781

ITEM	PART NO.	QTY.	DESCRIPTION
1	73107692	1	SHAFT AND HOUSING ASSY. (Includes items 2 thru 5)
2	--------	1	SHAFT (Not serviced separately)
	70919242	3	PIN, spring, 1/8" x 3/8"
	70186648	1	PLUG, pipe, hex-socket, 1/4" NPT
3	70688799	2	RING
4	73107822	1	HOUSING ASSY. (Serviced only as a unit)
5	70695625	1	PIN
6	70692429	3	RING
7	73037598	4	WASHER
8	70699049	3	WASHER
9	73037597	4	BEARING
10	73037656	2	BEARING, roller (1-1/2" wide)
11	70639547	2	BEARING, roller (1" wide)
12	70699204	1	GEAR AND DRUM, second speed
13	70688799	2	RING
14	70695751	2	HUB
15	--------	16	PLATE(bi-metal)(Diamond grooved pattern)Order 8 PLATE 79019030 for each clutch serviced(Tractors prior to unit #21927).
	79019030	16	PLATE(bi-metal)(Square grooved pattern)(Tractors unit #21927 and up)
16	70688802	16	PLATE (flat)
17	70688801	2	RETAINER (Early design)
	73109091	1	RETAINER ASSY. (Includes RETAINER which is not serviced separately and item 18)(Late design)

(Continued)

(Revised July 1980)

CLUTCH AND SHAFT ASSEMBLY 73117781 (Continued)

ITEM	PART NO.	QTY.	DESCRIPTION
18	70695755	12	SPRING
19	73128812	2	RING
20	79017823	2	RING, seal
21	70695756	2	PISTON (First type)
	73116320	2	PISTON ASSY. (Second type)(Includes 3/4" O.D. SLEEVE, item 21A)
	73122543	2	PISTON ASSY. (Third type)(Includes 13/16" O.D. SLEEVE, item 21A)
21A	73114227	4	SLEEVE, clutch piston (3/4" O.D.)(First type)
	73122544	4	SLEEVE, clutch piston (13/16" O.D.)(Second type)
22	70688737	2	VALVE
23	70672487	2	SLEEVE
24	74254663	2	RING
25	70699205	1	GEAR AND DRUM, third speed
26	70693569	2	SPRING
27	70688804	2	VALVE

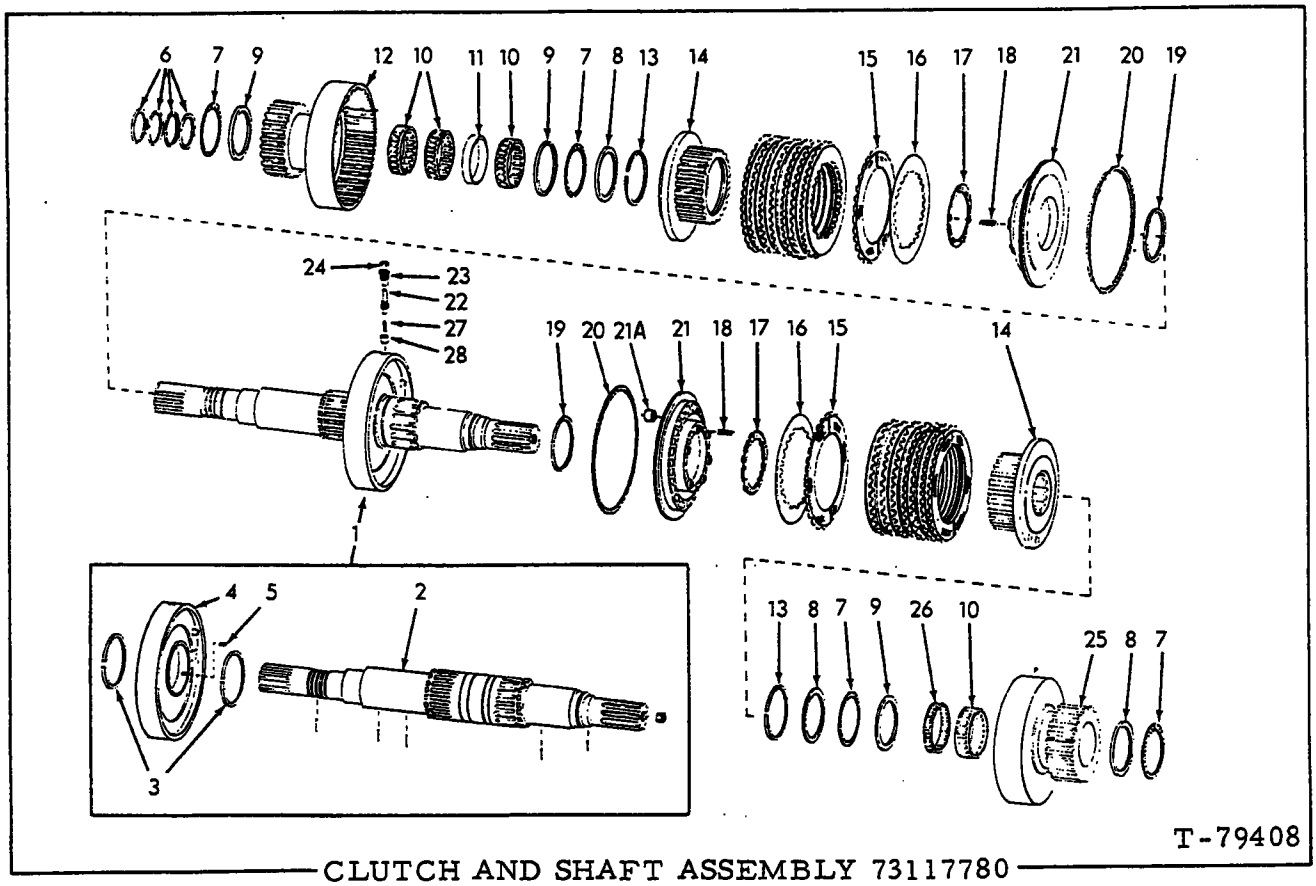

CLUTCH AND SHAFT ASSEMBLY 73117780

ITEM	PART NO.	QTY.	DESCRIPTION
1	73107693	1	SHAFT AND HOUSING ASSY. (Includes items 2 thru 5)
2	--------	1	SHAFT (Not serviced separately)
	70919242	4	PIN, spring, 1/8" x 3/8"
	70918547	1	PIN, spring, 1/8" x 1/2"
	70907859	1	PLUG, pipe, hex-socket, 1/4"NPT
3	70688799	2	RING
4	73107822	1	HOUSING ASSY. (Serviced only as a unit)
5	70695625	1	PIN
6	70681070	4	RING
7	73037597	4	BEARING
8	73037598	3	WASHER
9	70699049	3	WASHER
10	73037656	4	BEARING, roller (1-1/2" wide)
11	70656980	1	SPACER
12	70699206	1	GEAR AND DRUM, reverse
13	70688799	2	RING
14	70695751	2	HUB
15	--------	16	PLATE (bi-metal)(Diamond grooved pattern)(Tractors prior to unit #21927, Order 8 PLATE 79017821 for each clutch serviced)
	79017821	16	PLATE (bi-metal)(Square grooved pattern)(Tractor unit #21927 and up)
16	70688802	16	PLATE (flat)

(Continued)

(Revised July 1980)

CLUTCH AND SHAFT ASSEMBLY 73117780 (Continued)

ITEM	PART NO.	QTY.	DESCRIPTION
17	70688801	2	RETAINER (Early design)
	73109091	2	RETAINER ASSY. (Includes RETAINER which is not serviced separately and item 18)(Late design)
18	70695755	12	SPRING
19	73128812	2	RING
20	79017823	2	RING, seal
21	70695756	2	PISTON (First type)
	73116320	2	PISTON ASSY. (Second type)(Includes 3/4" O.D. SLEEVE, item 21A)
	73122543	2	PISTON ASSY. (Third type)(Includes 13/16" O.D. SLEEVE, item 21A)
21A	73114227	4	SLEEVE, clutch piston (3/4" O.D.)(First type)
	73122544	4	SLEEVE, clutch piston (13/16" O.D.)(Second type)
22	70688737	2	VALVE
23	70672487	2	SLEEVE
24	74254663	2	RING
25	70699207	1	GEAR AND DRUM, forward
26	70639547	1	BEARING, roller (1" wide)
27	70693569	2	SPRING
28	70688804	2	VALVE

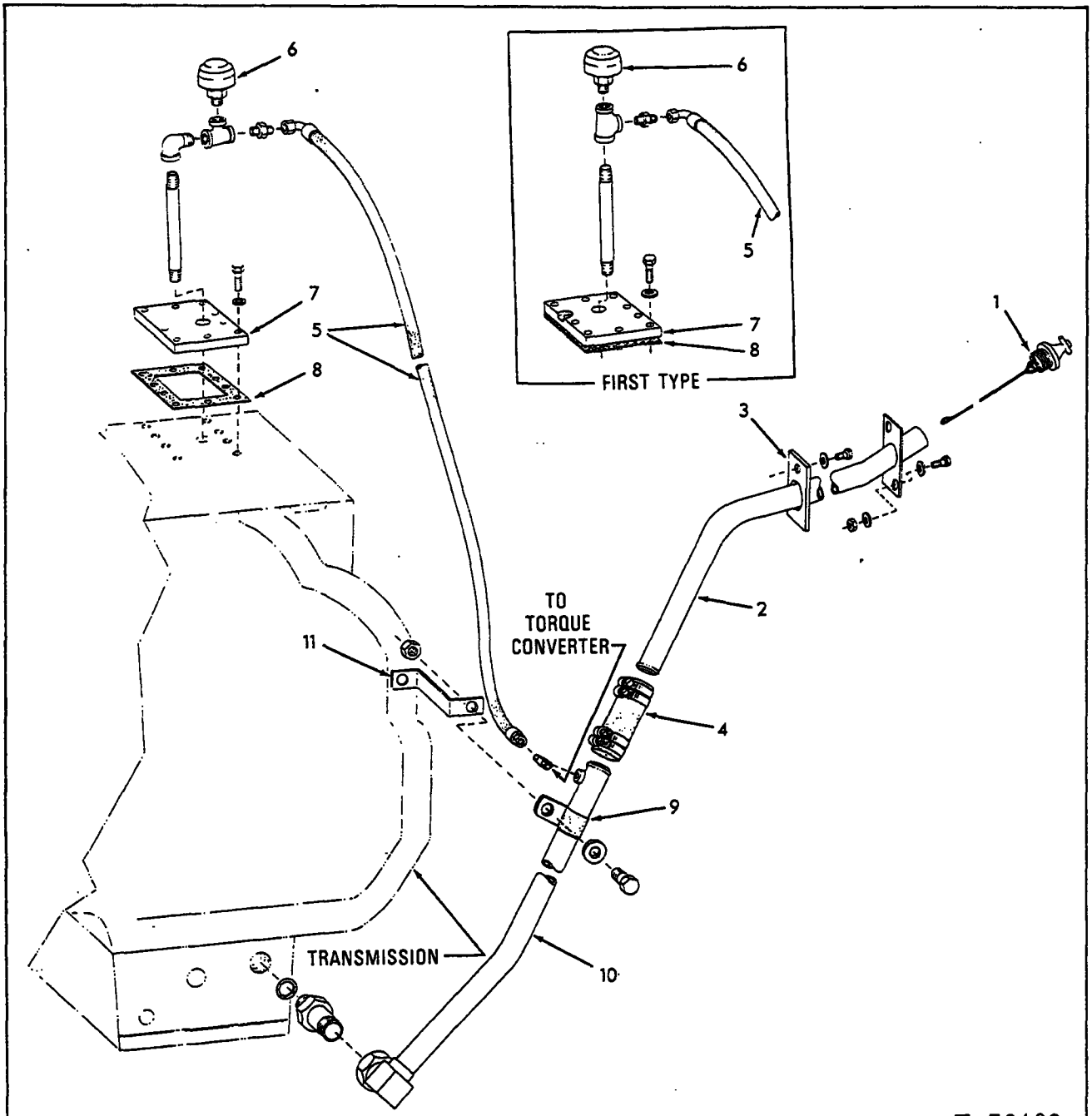

TRANSMISSION OIL FILLER AND BREATHER

ITEM	PART NO.	QTY.	DESCRIPTION
1	70691462	1	GAUGE, dipstick (Tractors prior to unit #21905)
	73121554	1	GAUGE, dipstick (Tractors unit #21905 and up)
2	70691483	1	TUBE
	70921566	2	CAPSCREW, 5/16"NC x 1"
	70677005	4	WASHER
	70911025	2	NUT, 5/16"NC
3	70697400	1	BAFFLE
	70921076	1	CAPSCREW, 3/8"NC x 1-1/4"
	70677006	1	WASHER

(Continued)

TRANSMISSION OIL FILLER AND BREATHER (Continued)

ITEM	PART NO.	QTY.	DESCRIPTION
4	70680715	1	HOSE
	70925881	4	CLAMP, 1-5/16" to 2-1/4" diam.
5	70691572	1	HOSE (See HOSE PARTS)
	70919137	1	TEE, flare type, 3/8" tube, 1/4"NPT male
	70919127	1	CONNECTOR, flare type, 3/8" tube, 1/2"NPT male
6	70679375	1	BREATHER ASSY. (Serviced only as a unit)
	70921730	1	TEE, pipe, reducing, 3/4" x 3/4" x 1/2"(Tractors prior to unit #21182)
	70901725	1	ELBOW, pipe street, 90°, 3/4"NPT } Tractor unit
	70921992	1	TEE, pipe reducing, 3/4" x 1/2" x 3/4" } #21182 and up
	70912085	1	NIPPLE, pipe, 3/4"NPT x 7"
7	70691450	1	PLATE (Tractors prior to unit #21182)
	73109640	1	PLATE (Tractor unit #21182 and up)
	70921076	1	CAPSCREW, 3/8"NC x 1-1/4"
	70921565	9	CAPSCREW, 3/8"NC x 1-1/2"
8	70691449	1	GASKET
9	70927312	1	CLAMP, insulated
	70921175	1	CAPSCREW, 1/2"NC x 1"
	70677008	1	WASHER
	70911028	1	NUT, 1/2"NC
10	70691485	1	TUBE
	70933499	1	CONNECTOR, flared type, 1-1/2" tube, straight thd.
	70933497	1	O-RING
11	70691551	1	ANGLE

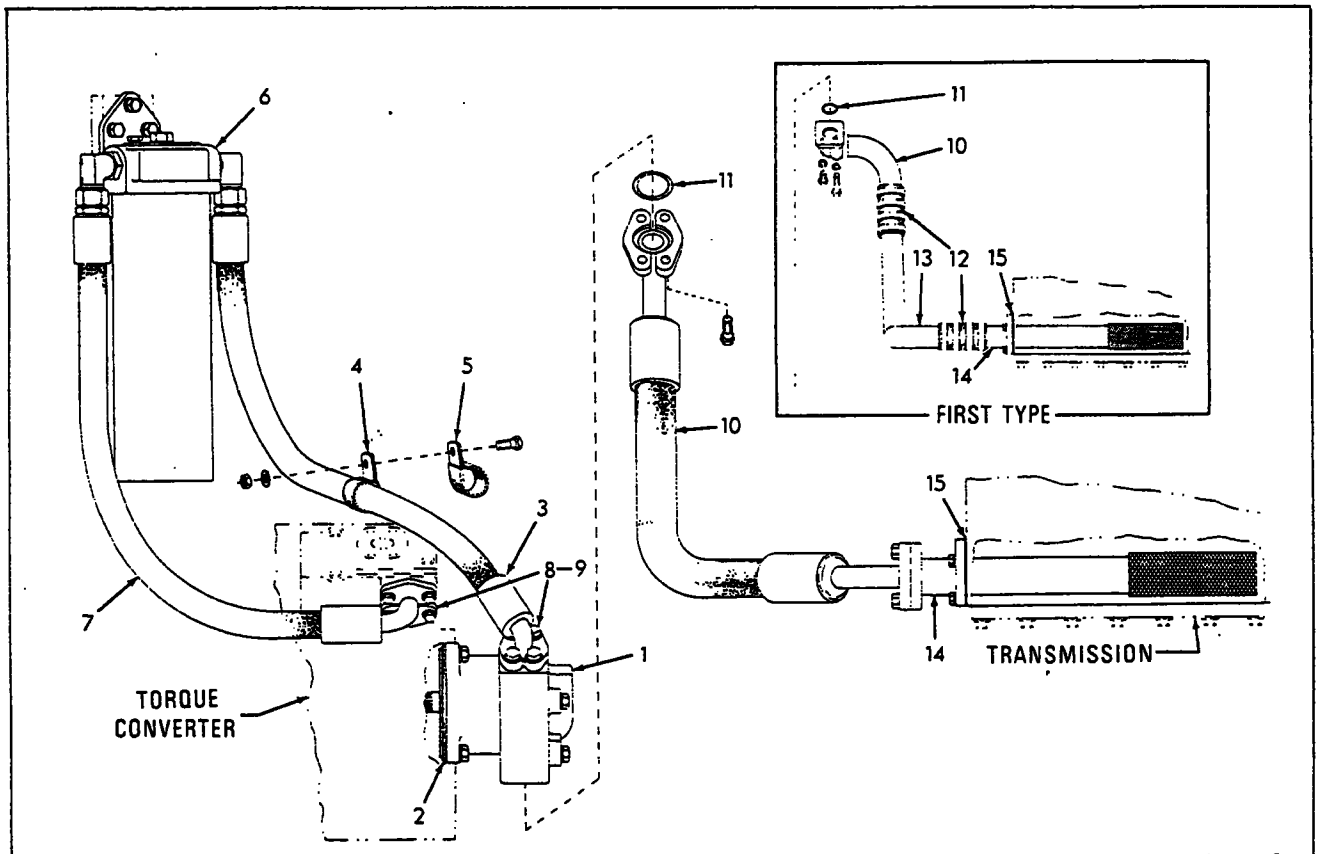

TRANSMISSION OIL PUMP AND FILTER LINES

ITEM	PART NO.	QTY.	DESCRIPTION
1	--------	1	PUMP ASSY., oil (See page 120)
	70920582	2	CAPSCREW, 1/2"NC x 1-1/4"
	70912441	2	LOCKWASHER, 1/2"
2	70925920	1	□O-RING
3	70683592	1	HOSE (See HOSE PARTS)
	70933473	1	ELBOW, adjustable, 90°, flare type, 1" tube, 1-5/16" straight male thread (Includes washer and nut)
	70925922	1	O-RING
4	70927312	1	CLIP
5	70927311	1	CLIP
	70920582	1	CAPSCREW, 1/2"NC x 1-1/4"
	70677008	1	WASHER
	70911028	1	NUT, 1/2"NC
6	--------	1	FILTER ASSY., oil (See page 121)
	70919840	1	PLUG, pipe, hex-hd., 1/4"NPT
	70920583	3	CAPSCREW, 1/2"NC x 1-1/2"
	70912441	3	LOCKWASHER, 1/2"
7	70683591	1	HOSE (See HOSE PARTS)
	70933473	1	ELBOW, adjustable, 90°, flare type, 1" tube, 1-5/16" straight male thread (Includes washer and nut)
	70925922	1	O-RING

(Continued)

TRANSMISSION OIL PUMP AND FILTER LINES (Continued)

ITEM	PART NO.	QTY.	DESCRIPTION	
8	70921117	4	FLANGE (half only)	
	70921569	8	CAPSCREW, 7/16"NC x 1-1/4"	
	70914678	8	LOCKWASHER, 7/16"	
9	70925919	2	□O-RING	
10	70670668	1	TUBE	Tractors prior to unit #21389
	70920582	2	CAPSCREW, 1/2"NC x 1-1/4"	
	70924864	2	CAPSCREW, 1/2"NC x 2-1/4"	
	70912441	4	LOCKWASHER, 1/2"	
	73109808	1	HOSE	Tractor unit #21389 and up
	70921118	2	FLANGE, split (At pump end)	
	70921558	2	FLANGE, split (At transmission end)	
	70931858	1	O-RING (At transmission end)	
	70920574	8	CAPSCREW, 1/2"NC x 1-3/8"	
11	70931714	1	□O-RING	
12	73107726	2	HOSE (Tractors prior to unit # 21389)	
	70925280	8	CLAMP, 2-1/4" to 2-9/16" diam.	
13	70670666	1	TUBE (Tractors prior to unit #21389)	
14	70653873	1	SCREEN (Tractors prior to unit #21389)	
	73109807	1	SCREEN (Tractor unit #21389 and up)	
	70927173	4	CAPSCREW, 3/8"NC x 1-1/8"	
	70910287	4	LOCKWASHER, 3/8"	
15	70652389	1	GASKET	

NOTE: See PAINTING AND MARKING for transfer

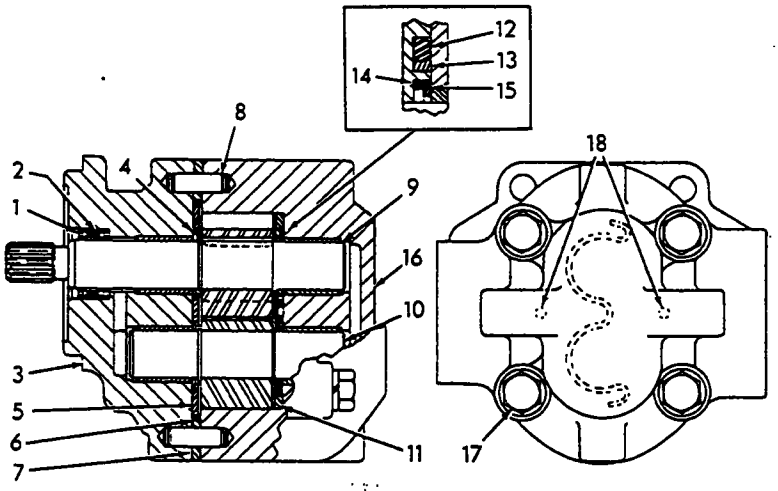

T-76868

TRANSMISSION OIL PUMP PARTS

USAGE: See page 118. Tractors prior to serial No. 71A21208, excluding No. 71A21140 and including No. 71A21234.

ITEM	PART NO.	QTY.	DESCRIPTION
-	70670675	1	PUMP ASSY., oil (Includes items 1 thru 18)
1	--------	1	SEAL, dust } See items 19, 20 and 21
2	--------	1	SEAL, oil }
3	--------	1	ADAPTER (Not serviced)
4	--------	2	O-RING (See items 20 and 21)
5	--------	1	PLATE (See item 21)
6	--------	1	RING, seal (See items 20 and 21)
7	--------	1	PLATE } Not serviced
8	--------	2	PIN }
9	--------	1	SHAFT ASSY. (Includes gears) }
10	--------	1	SHAFT ASSY. (Includes gears }
11	--------	1	PLATE (See item 21)
12	--------	1	SEAL, rear cover }
13	--------	1	SEAL, back-up } See items
14	--------	2	O-RING } 20 and 21
15	--------	2	SEAL }
16	--------	1	COVER }
17	--------	4	CAPSCREW } Not serviced
	--------	4	LOCKWASHER }
18	---------	2	PIN, roll
19	70670672	1	KIT, seal (Includes items 1 and 2)
20	70670673	1	□KIT, minor service (Includes items 1, 2, 4, 6, 12 thru 15)
21	70670674	1	KIT, intermediate service (Includes items 1, 2, 4 thru 6 and 11 thru 15)

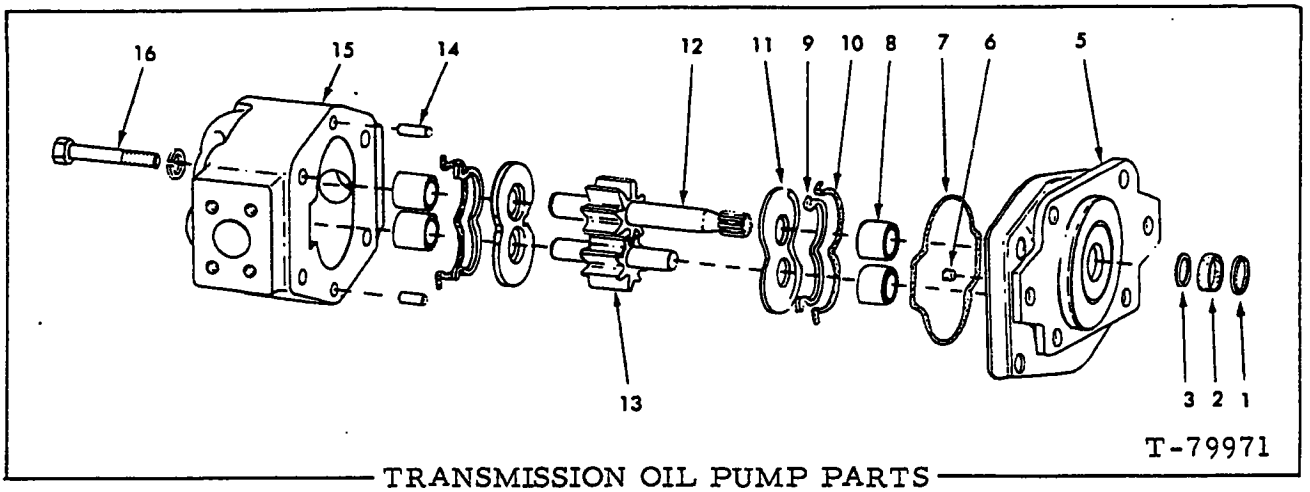

TRANSMISSION OIL PUMP PARTS

USAGE: Tractor serial No. 71A21208 and up, including No. 71A21140 and excluding No. 71A21234. See page 118

ITEM	PART NO.	QTY.	DESCRIPTION	
-	73119191	1	PUMP, oil (Includes items 1 thru 16)	
1	--------	1	SEAL, dust	Refer to items 17, 18 and 19
2	--------	1	SEAL	
3	--------	1	SPACER	
5	--------	1	ADAPTER	Not serviced
6	--------	1	PLUG	
7	--------	1	RING, seal (Refer to items 18 and 19)	
8	--------	4	BEARING (Not serviced)	
9	--------	2	RING, back up	Refer to items 18 and 19
10	--------	2	SEAL	
11	--------	2	PLATE (Refer to item 19)	
12	--------	1	SHAFT ASSY. (Includes gears)	Not serviced
13	--------	1	SHAFT ASSY. (Includes gears)	
14	--------	2	DOWEL	
15	--------	1	HOUSING	
16	--------	4	CAPSCREW	
	--------	4	LOCKWASHER	
17	73109067	1	KIT, seal (Includes items 1 thru 4)	
18	73109068	1	KIT, minor (Includes items 1 thru 4, 7, 9 and 10)	
19	73109069	1	KIT, intermediate (Includes items 1 thru 4, 7 and 9 thru 11)	

(Revised June 1981)

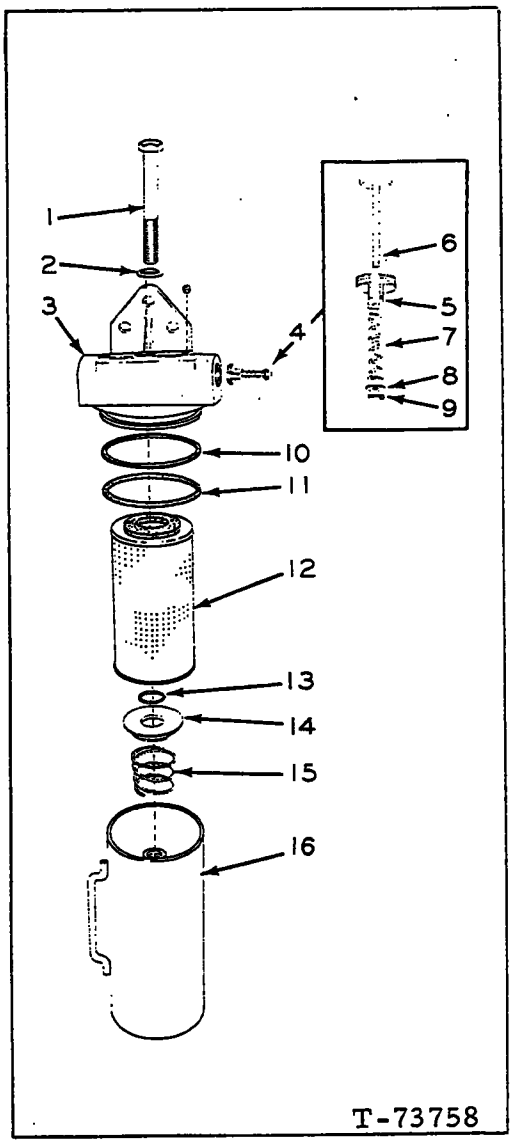

TRANSMISSION OIL FILTER PARTS

USAGE: See page 118

ITEM	PART NO.	QTY.	DESCRIPTION
-	70676660	1	FILTER ASSY., oil (Includes items 1 thru 16)
1	70923438	1	CAPSCREW, tank retaining (3/4"NF x 5-1/2")
2	74254971	1	WASHER, tank retaining capscrew
3	70677289	1	HEAD ASSY. (Includes item 4 and plug indented below)
	70901652	2	PLUG, pipe, 1/4"NPT
4	70661534	1	VALVE ASSY., by-pass (Includes items 5 thru 9)
5	--------	1	HOUSING, by-pass valve (Not serviced separately)
6	--------	1	VALVE, by-pass (Not serviced separately)
7	70661268	1	SPRING, by-pass valve
8	70632060	1	WASHER, by-pass valve spring
9	70900970	1	PIN, cotter, 1/16" x 1/2"
10	70646532	1	RING, back-up
11	70923836	1	O-RING, filter head
12	70669434	1	ELEMENT KIT (Element is 12-1/2" long) (Includes items 2, 10 and 11)
13	70671616	1	O-RING, element seating plate
14	70641031	1	PLATE, element seating
15	70674798	1	SPRING, element seating plate
16	70671497	1	TANK (16-1/4" long)

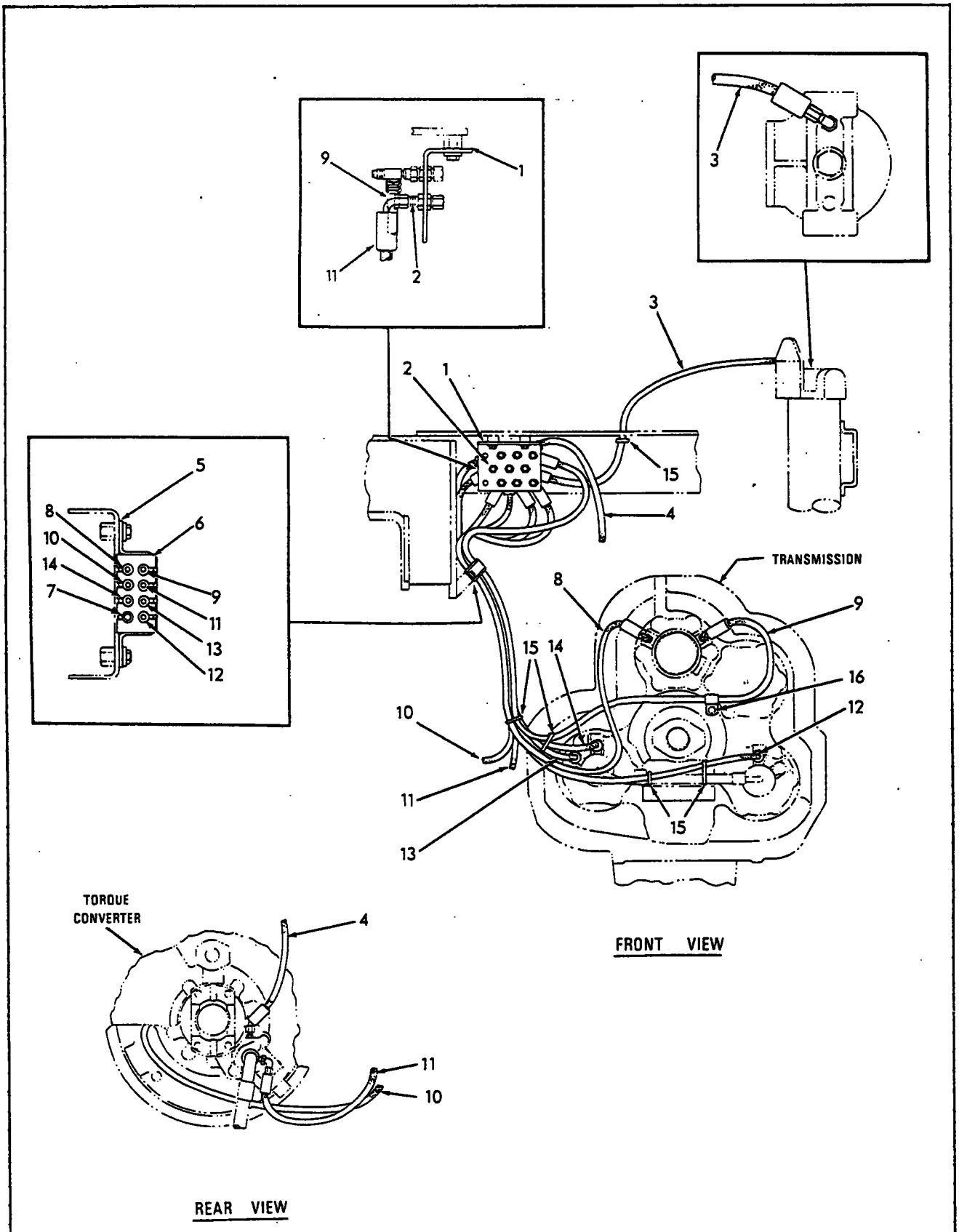

T-79556

TRANSMISSION TEST PANEL

TRANSMISSION TEST PANEL AND LINES

ITEM	PART NO.	QTY.	DESCRIPTION
1	70699871	1	ANGLE
	70922763	2	CAPSCREW, 3/8" NC x 1"
	70677006	2	WASHER
2	70659365	9	UNION
	70910876	9	NUT, jam, 7/16" NF
	70921467	9	CAP, flare type, 1/4" tube
3	70699866	1	HOSE, transmission pump (See HOSE PARTS)
4	70699862	1	HOSE, converter (See HOSE PARTS)
5	70673083	1	BRACKET
	70921076	2	CAPSCREW, 3/8" NC x 1-1/4"
	70677006	2	WASHER
6	70673071	1	BLOCK
7	70673085	1	TUBE
8	70699864	1	HOSE, forward (See HOSE PARTS)
	70919140	1	CONNECTOR, flare type, 1/4" tube, 1/4" NPT male
9	70699863	1	HOSE, reverse (See HOSE PARTS)(Tractors prior to unit #21286)
	70919140	1	CONNECTOR, flare type, 1/4" tube, 1/4" NPT male
	70692925	1	HOSE, reverse (See HOSE PARTS) (Tractors unit #21286 and up)
	70926975	1	TEE, swivel, flare type, 1/4" tube, 7/16" str. thd. (Includes nut)
	70919140	1	CONNECTOR, flare type, 1/4" tube, 1/4" NPT male
10	70699865	1	HOSE, modulating clutch (See HOSE PARTS)
11	70699868	1	HOSE, lube (See HOSE PARTS)
	70924044	1	ELBOW, swivel, 90°, flare type, 1/4" tube,, 7/16" str. thd. (Tractors unit #21286 and up)
12	70699869	1	HOSE, 1st speed (See HOSE PARTS)
	70919140	1	CONNECTOR, flare type, 1/4" tube, 1/4" NPT male
13	70699870	1	HOSE, 2nd speed (See HOSE PARTS)
	70919140	1	CONNECTOR, flare type, 1/4" tube, 1/4" NPT male
14	70699867	1	HOSE, 3rd speed (See HOSE PARTS)
	70919140	1	CONNECTOR, flare type, 1/4" tube, 1/4" NPT male
15	70925442	5	TIE
16	70926707	1	CLAMP

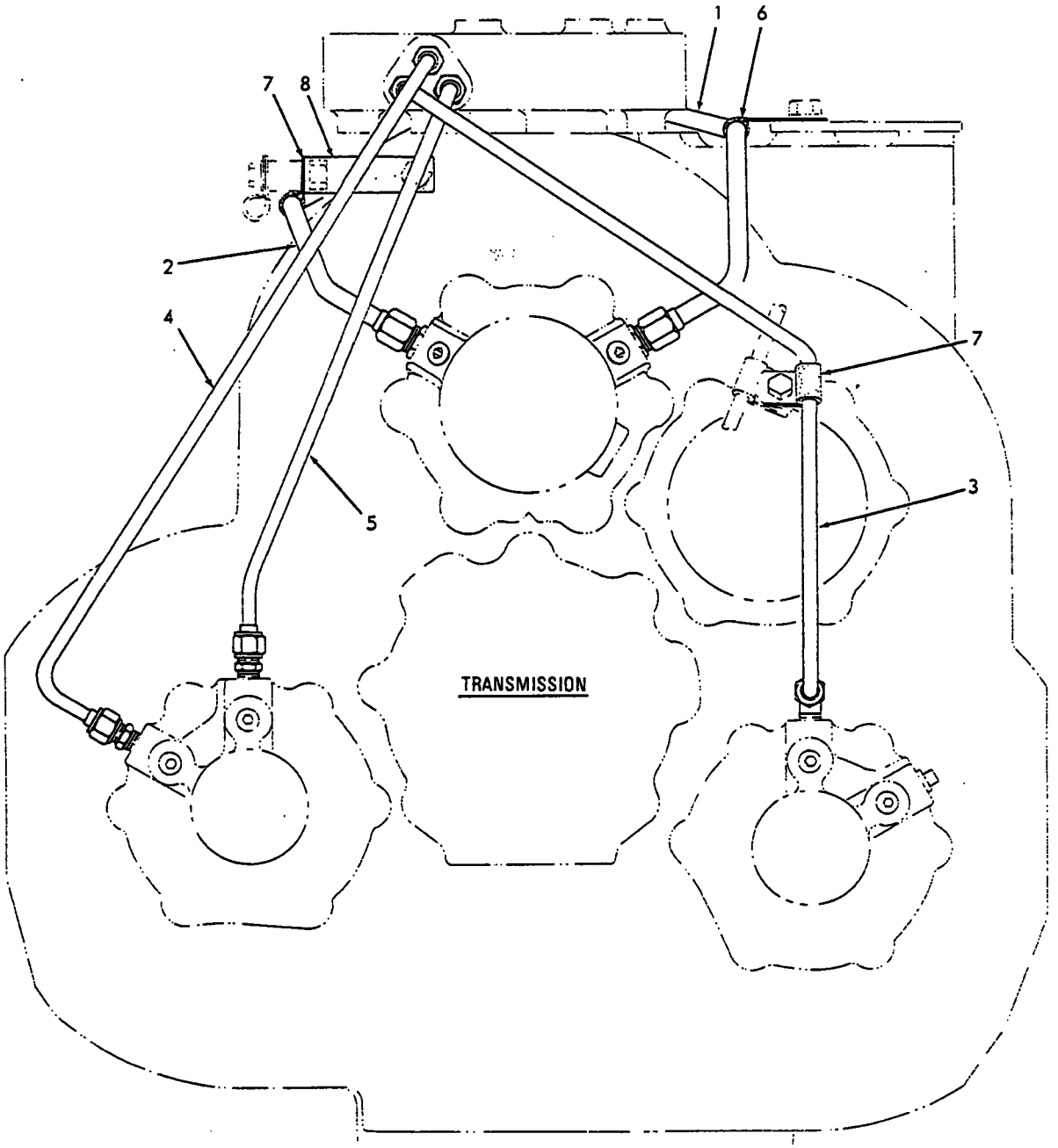

T-74952

TRANSMISSION CONTROL PIPING

TRANSMISSION CONTROL PIPING

ITEM	PART NO.	QTY.	DESCRIPTION	
1	70663472	1	TUBE ASSY., inhibitor valve to forward and reverse shaft collector, left side (Tractors prior to unit #21538)	Each includes nuts
	73109010	1	TUBE ASSY., inhibitor valve to forward and reverse shaft collector, left side (Tractor unit #21538 and up)	
	70933469	1	CONNECTOR, flare type, 1/2" tube, 3/4"NF male end	
	70922507	1	ELBOW, adjustable, 45°, flare type, 1/2" tube, 3/4"NF (Tractors prior to unit #21538)	Each includes washer and nut
	70933502	1	ELBOW, adjustable, 90°, flare type, 1/2" tube, 3/4"NF (Tractor unit #21538 and up)	
	70933466	2	O-RING	
2	70658640	1	TUBE ASSY., Inhibitor valve to forward and reverse shaft collector, right side (Includes nuts)	
	70933469	1	CONNECTOR, flare type, 1/2" tube, 3/4"NF male end	
	70933474	1	ELBOW, adjustable, 90°, flare type, 1/2" tube 3/4"NF (Includes washer and nut)	
	70933466	2	O-RING	
3	70690400	1	TUBE ASSY., control valve to clutch shaft collector (1st speed)	
	70933471	1	CONNECTOR, reducing, flare type, 1/2" tube, 9/16" male end	
	70933476	1	O-RING	
	70919206	1	ELBOW, flare type, 1/2" tube, 3/8"NPT male (Tractors prior to unit #21388 excluding EXCEPTIONS listed on page 101)	
	70933474	1	ELBOW, adjustable, 90°, flare type, 1/2" tube, 3/4"NF (Includes washer and nut)	Tractor unit #21388 and up including EXCEPTIONS listed on page 101
	70933466	1	O-RING	
4	70690221	1	TUBE ASSY., control valve to clutch shaft collector (2nd speed)	
	70919063	1	CONNECTOR, flare type, 1/2" tube, 3/8"NPT male (Tractors prior to unit #21388 excluding EXCEPTIONS listed on page 101)	
	70933469	1	CONNECTOR, flare type, 1/2" tube, 3/4"NF male end	Tractor unit #21388 and up including EXCEPTIONS listed on page 101
	70933466	1	O-RING	
	70933471	1	CONNECTOR, reducing, flare type, 1/2" tube, 9/16" male end	
	70933476	1	O-RING	

(Continued)

TRANSMISSION CONTROL PIPING (Continued)

ITEM	PART NO.	QTY.	DESCRIPTION
5	70690415	1	TUBE ASSY., control valve to clutch shaft collector (3rd speed)
	70919063	1	CONNECTOR, flare type, 1/2" tube, 3/8" NPT male (Tractors prior to unit #21388 excluding EXCEPTIONS listed on page 101)
	70933469	1	CONNECTOR, flare type, 1/2" tube, 3/4" NF male end — Tractor unit #21388 and up including EXCEPTIONS listed on page 101
	70933466	1	O-RING
	70933471	1	CONNECTOR, reducing flare type, 1/2" tube, 9/16" male end
	70933476	1	O-RING
6	70641504	1	CLIP
7	70620063	2	CLIP
	70922300	1	CAPSCREW, 3/8" NC x 3/4"
	70929156	1	WASHER
	70911026	1	NUT, 3/8" NC
8	70642533	1	ANGLE

(Revised April 1980)

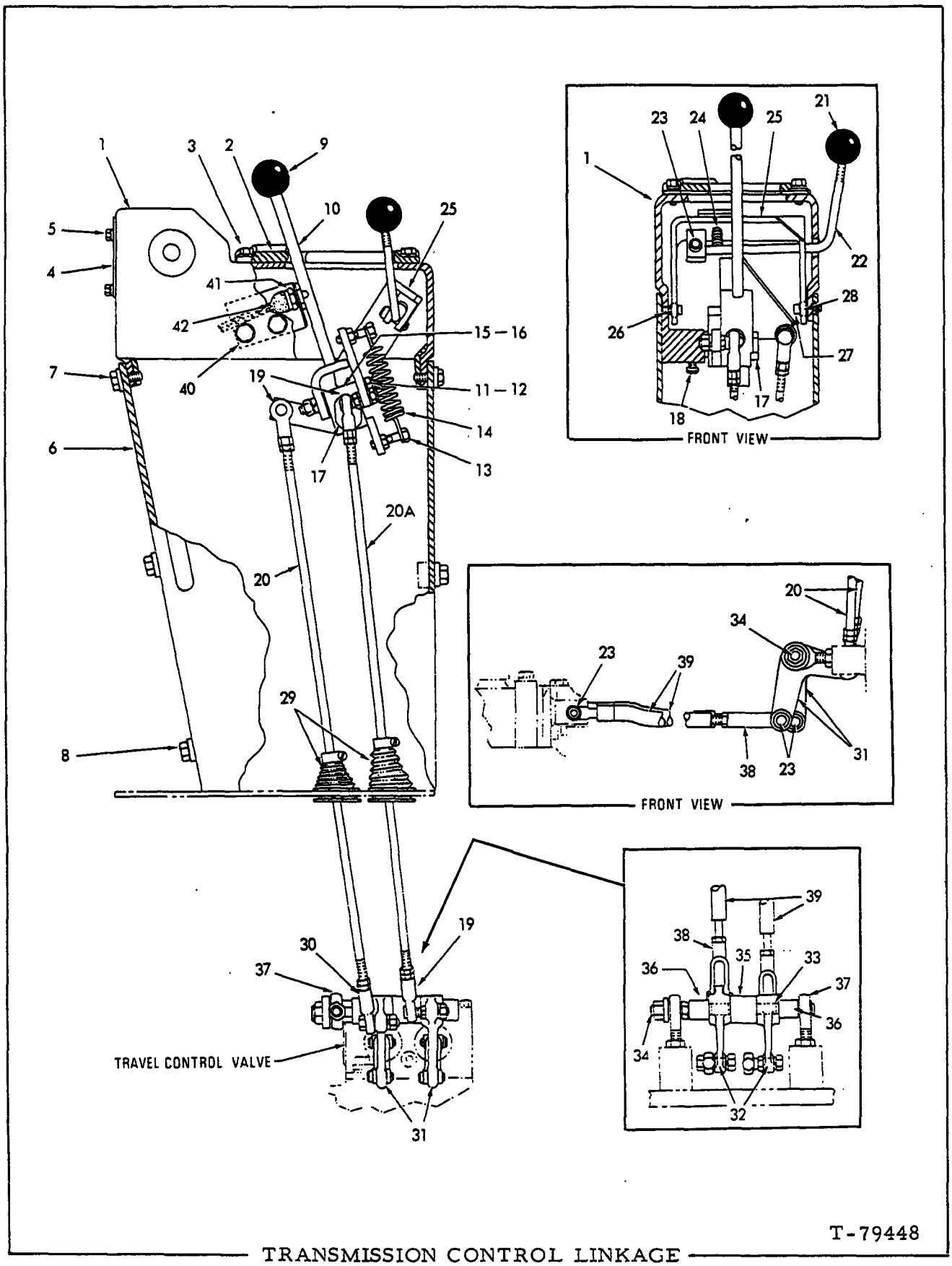

T-79448

TRANSMISSION CONTROL LINKAGE

TRANSMISSION CONTROL LINKAGE

ITEM	PART NO.	QTY.	DESCRIPTION
1	70653000	1	GUIDE (Tractors prior to unit #21574)
	73111527	1	GUIDE (Tractors unit #21574 and up)
2	70664074	1	GUIDE
3	70922300	4	CAPSCREW, 3/8"NC x 3/4"
	70910287	4	LOCKWASHER, 3/8"
4	70671451	1	PLATE
5	70928138	4	CAPSCREW, 1/4"NC x 5/8"
	70910285	4	LOCKWASHER, 1/4"
6	70690482	1	COVER (Not used on units equipped with CAB)
7	70922763	6	CAPSCREW, 3/8"NC x 1" } 3 less used on units
	70677006	6	WASHER } equipped with CAB
	70921565	2	CAPSCREW, 3/8"NC x 1-1/2" (Units equipped with a CAB)
8	70920582	3	CAPSCREW, 1/2"NC x 1-1/2" (Not used on units equipped with CAB)
	70677008	3	WASHER (Not used on units equipped with CAB)
9	70629709	1	KNOB
10	70664125	1	LEVER ASSY. (Early units)(Use with long rod item 20A)(Includes item 12)
	73119563	1	LEVER ASSY. (Late units)(Use with short rod item 20A)(Includes item 12)
11	70922848	1	CAPSCREW, 3/8"NC x 3-1/4"
	70910287	1	LOCKWASHER, 3/8"
	70911026	1	NUT, 3/8"NC
12	70650712	2	BEARING
13	70921565	2	CAPSCREW, 3/8"NC x 1-1/2"
	70911034	2	NUT, jam, 3/8"NC
14	70640637	1	SPRING
15	70663600	1	LEVER ASSY. (Includes item 16)
	70928188	1	WASHER, shimming (Use as required)
16	70653319	2	BEARING
17	70664099	1	BOLT
18	70913679	1	SCREW, machine, 3/8"NC x 3/4"
19	70653570	3	ROD, end
	70910287	3	LOCKWASHER, 3/8"
	70911041	3	NUT, 3/8"NF
20	70690498	1	ROD (26" long)
	70911048	2	NUT, jam, 3/8"NF
20A	70690498	1	ROD (26" long)(Early units)
	73119564	1	ROD (25" long)(Late units)
	70911048	2	NUT, jam, 3/8"NF
21	70632038	1	KNOB
22	70697258	1	LEVER
23	70078810	5	PIN
	70900801	5	PIN, cotter, 3/32" x 3/4"
24	70042911	1	SPRING
25	70653030	1	BRACKET ASSY. (Includes item 28)
26	70652995	1	CAPSCREW
27	70652996	1	CAPSCREW
	70911024	1	NUT, 1/4"NC
28	70653031	2	BEARING
29	70078908	2	BOOT
	70921910	2	CLAMP, 7/16" to 3/4" diam.

(Continued)

TRANSMISSION CONTROL LINKAGE (Continued)

ITEM	PART NO.	QTY.	DESCRIPTION
30	70617932	1	ROD, end
	70927225	1	CAPSCREW, 3/8"NC x 1-5/8"
	70926189	1	WASHER
	70910287	1	LOCKWASHER, 3/8"NC
	70911026	1	NUT, 3/8"NC
31	70655746	2	BELLCRANK ASSY. (Includes items 32 and 33)
32	70624584	2	BUSHING (3/8" long)
33	70631476	2	BUSHING (7/8" long)
34	70690499	1	ROD
	70677008	1	WASHER
	70911043	1	NUT, 1/2"NF
	70913830	1	NUT, jam, 1/2"NF
35	70064961	1	BLOCK
36	70635132	2	SPACER
37	70609749	2	ROD, end
	70913830	2	NUT, jam, 1/2"NF
38	70628736	2	YOKE
39	70680912	2	ROD
	70911048	2	NUT, jam, 3/8"NC
40	70694883	1	ANGLE
	70921076	2	CAPSCREW, 3/8"NC x 1-1/4"
	70677006	2	WASHER
41	73057506	1	SWITCH
42	73061193	1	BOOT

NOTE: See PAINTING AND MARKING for transfer

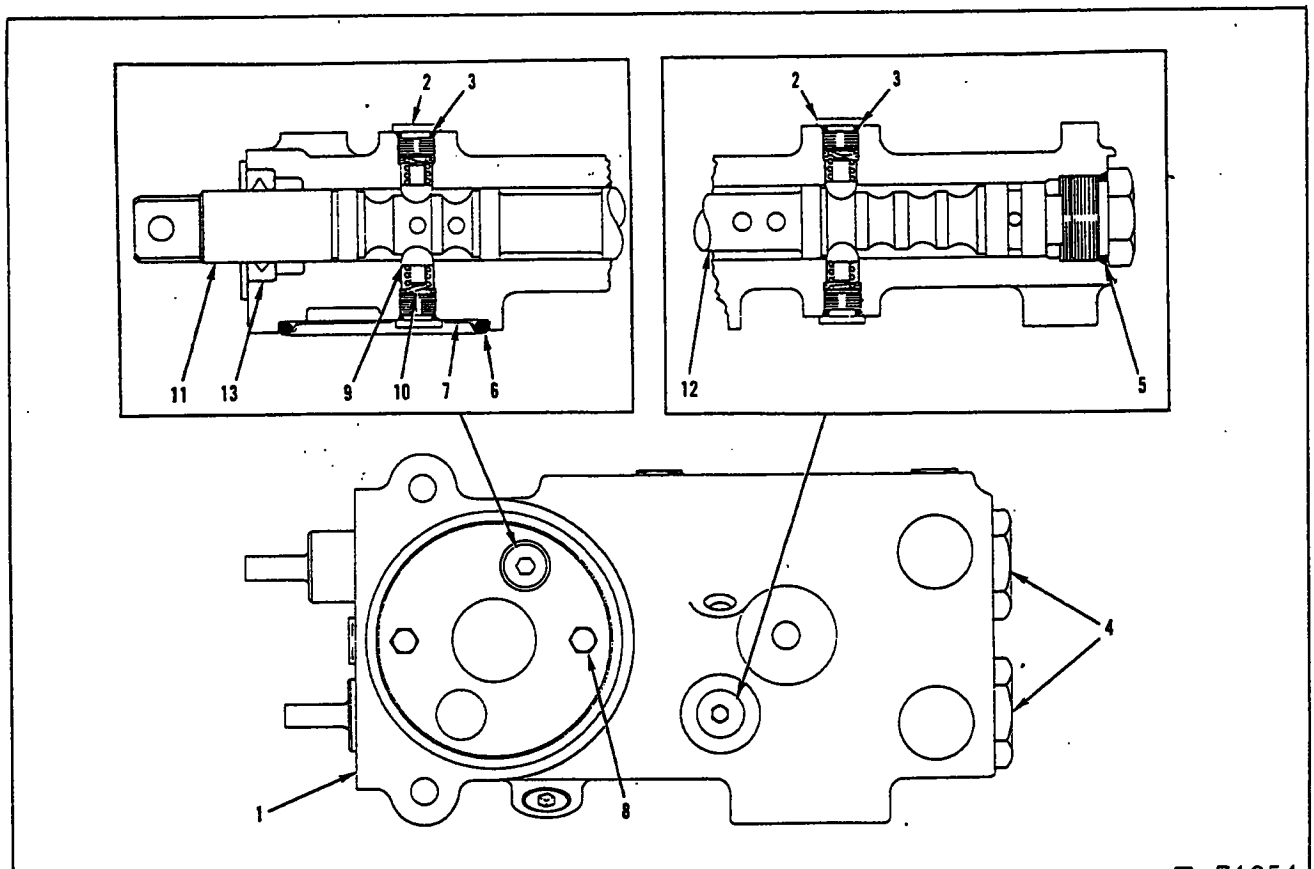

T-74954

TRANSMISSION CONTROL VALVE ASSEMBLY 70654304

USAGE: See page 131

ITEM	PART NO.	QTY.	DESCRIPTION	
1	--------	1	BODY (Not serviced separately)	
2	70935167	9	PLUG	
3	70933476	9	O-RING (small)	
4	70933668	2	PLUG	
5	70925922	2	O-RING (large)	
6	70926289	1	O-RING	
7	70664651	1	RETAINER	
8	70664650	2	CAPSCREW, #10-24NC x 3/8"	
9	73108386	4	DETENT	
10	73108385	4	SPRING	
11	--------	1	PLUNGER, forward and reverse	Not serviced separately
12	--------	1	PLUNGER, speed selection	
13	73128888	2	SEAL	

(Revised May 1982)

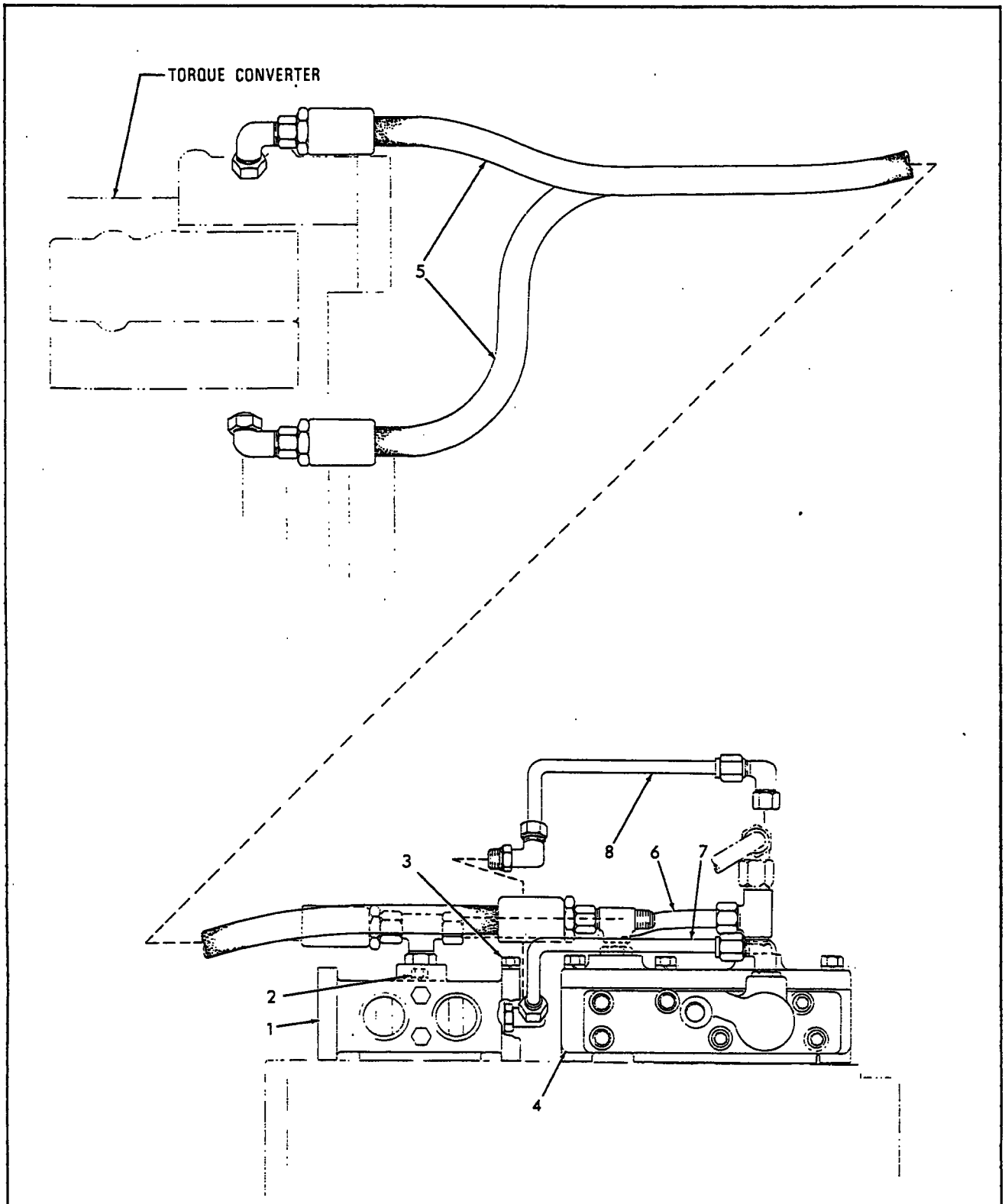

T-75088

TRANSMISSION CONTROL VALVES AND LINES

TRANSMISSION CONTROL VALVES AND LINES

ITEM	PART NO.	QTY.	DESCRIPTION
1	70654304	1	VALVE ASSY. (See page 129)
2	70924843	1	CAPSCREW, 3/8"NC x 3-1/2"
3	70927536	1	CAPSCREW, 3/8"NC x 3-3/4"
	70910287	2	LOCKWASHER, 3/8"
4	73107217	1	VALVE ASSY. (See page 132)
	70927536	3	CAPSCREW, 3/8"NC x 3-3/4"
	70910287	3	LOCKWASHER, 3/8"
5	70656849	2	HOSE (See HOSE PARTS)
	70933474	2	ELBOW, adjustable, 90°, flare type, 1/2" tube, 3/4"NF (Includes washer and nut)
	70933505	2	TEE, adjustable, flare type, 1/2" tube, 3/4"NF male (Includes washer and nut)
	70933466	4	O-RING
6	70662368	1	TUBE ASSY. (Includes nuts)
	70933506	1	TEE, adjustable, flare type, 1/2" tube, 3/4"NF (Includes washer and nut)
	70933466	1	O-RING
7	70662315	1	TUBE ASSY., left (Includes nuts)
	70925983	2	ELBOW, adjustable, 90°, flare type, 3/8" tube, 9/16"NF (Includes washer and nut)
	70933476	2	O-RING
8	70662367	1	TUBE ASSY., right (Includes nuts)
	70925983	1	ELBOW, adjustable, 90°, flare type, 3/8" tube 9/16"NF (Includes washer and nut) (short type)
	70933501	1	ELBOW, adjustable, 90°, flare type, 3/8" tube 9/16"NF (Includes washer and nut) (long type)
	70933476	2	O-RING

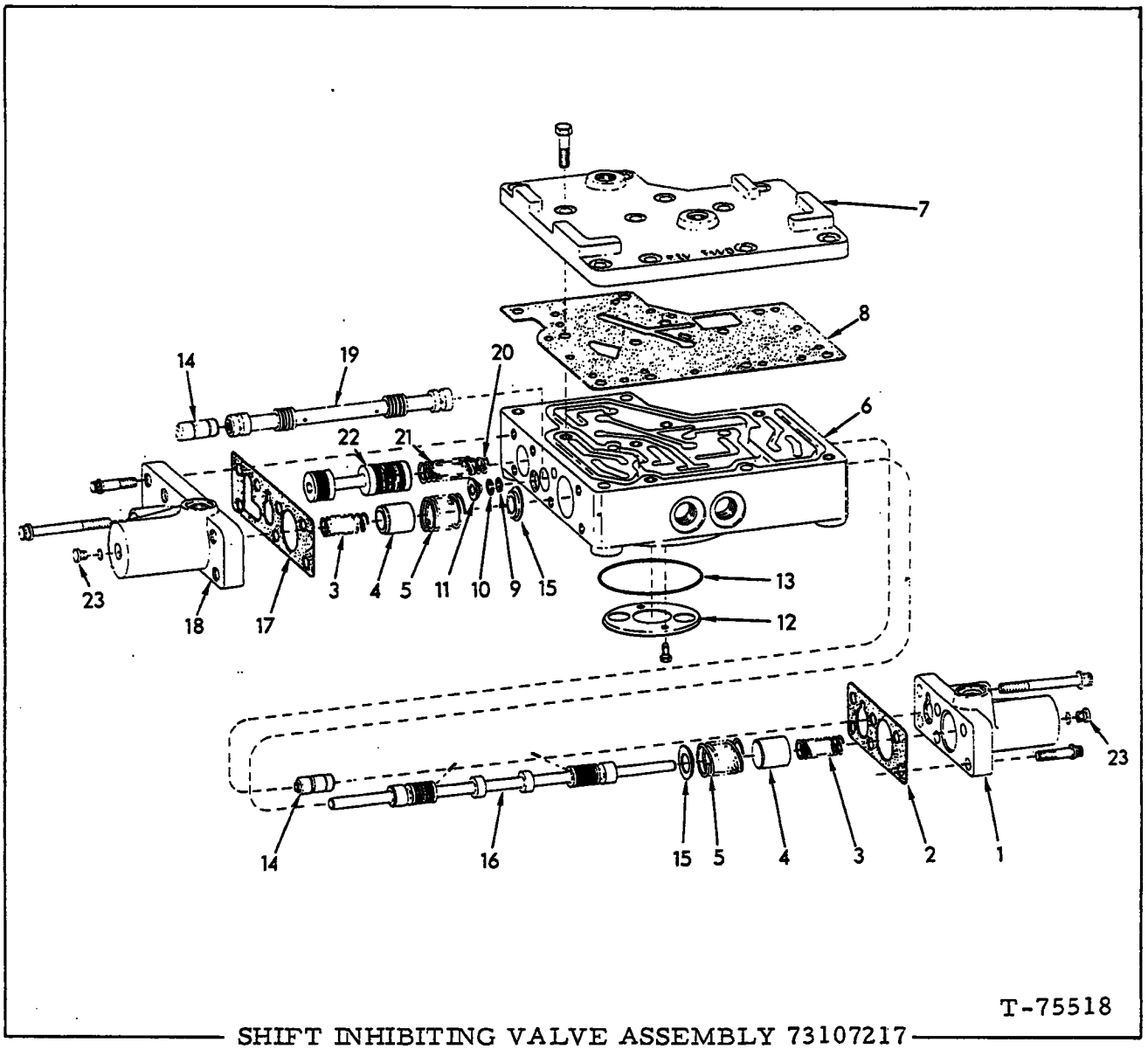

SHIFT INHIBITING VALVE ASSEMBLY 73107217

USAGE: See page 131

ITEM	PART NO.	QTY.	DESCRIPTION
1	70677439	1	COVER
	70922820	4	CAPSCREW, 12-pt., 3/8"NC x 1-1/4"
	70927652	1	CAPSCREW, 12-pt., 3/8"NC x 3-3/4"
2	70677438	1	GASKET
3	70189269	2	SPRING
4	70664655	2	PISTON
5	70669454	2	SPRING
6	--------	1	BODY (Not serviced separately)
7	70667634	1	COVER
	70927173	8	CAPSCREW, 3/8"NC x 1-1/8"

(Continued)

SHIFT INHIBITING VALVE ASSEMBLY 73107217 (Continued)

ITEM	PART NO.	QTY.	DESCRIPTION
8	70672486	1	GASKET
9	70639939	1	FILTER
10	70662919	1	RING
11	73107905	1	VALVE
12	70664651	1	RETAINER
	70664650	2	CAPSCREW, #10-24 NC x 3/8"
13	70923831	1	O-RING
14	73107904	2	PISTON
15	70690873	2	RETAINER
16	70664664	1	PISTON
	70918547	2	PIN, spring
17	70677437	1	GASKET
18	70677440	1	COVER
	70922820	5	CAPSCREW, 12-pt., 3/8"NC x 1-1/4"
	70927652	1	CAPSCREW, 12-pt., 3/8"NC x 3-3/4"
19	70680376	1	PISTON ASSY. (Includes plug)
20	70664652	1	SPRING, inner
21	70667637	1	SPRING, outer
22	70667640	1	PISTON
23	70930840	2	PLUG, flare type, 1/4" tube, 7/16" straight thd.
	70929450	2	O-RING

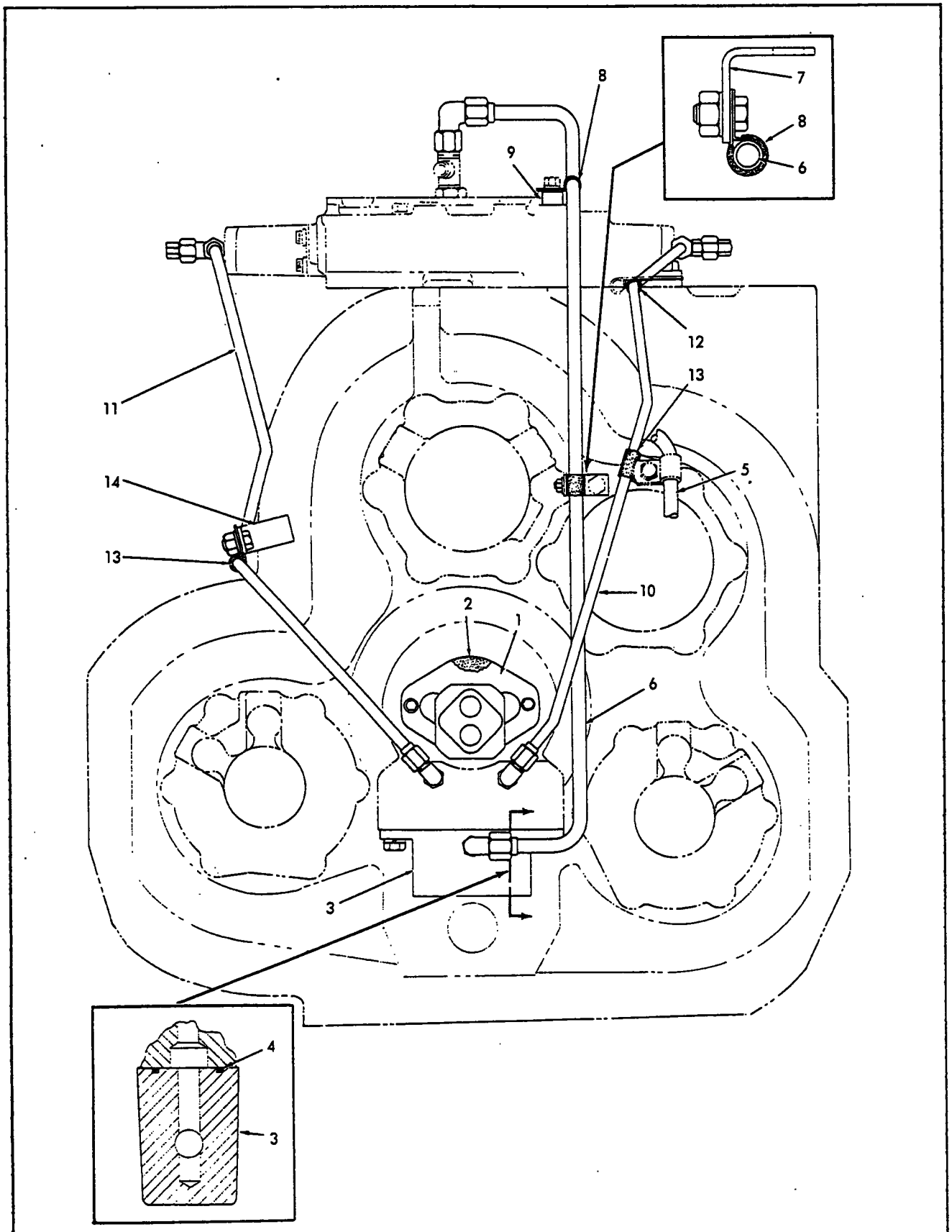

T-79566

SHIFT INHIBITING PUMP LINES

(Revised June 1981)

SHIFT INHIBITING PUMP AND LINES

ITEM	PART NO.	QTY.	DESCRIPTION
1	--------	1	PUMP ASSY. (See page136)
	70921566	2	CAPSCREW, 5/16"NC x 1"
	70910286	2	LOCKWASHER, 5/16"
2	70667563	1	□GASKET
3	--------	1	VALVE, regulator (See page 137) } Components of Transmission Assembly
	70921076	2	CAPSCREW, 3/8"NC x 1-1/4" } Components of Transmission Assembly
	70910287	2	LOCKWASHER, 3/8" } Components of Transmission Assembly
4	70931695	2	O-RING
5	--------	-	TUBE ASSY. (See page 125)
6	73107381	1	TUBE ASSY. (Includes nuts)
	70921279	1	ELBOW, adjustable, flare type, 90°, 1/2" tube, 3/4" straight thread (Includes nut)
7	73107382	1	ANGLE
8	70925617	2	CLIP
	70922300	1	CAPSCREW, 3/8"NC x 3/4"
	70924842	1	CAPSCREW, 3/8"NC x 4-1/4"
	70910287	1	LOCKWASHER, 3/8"
	70929156	1	WASHER
	70911026	1	NUT, 3/8"NC
9	70638039	1	BLOCK
10	73107358	1	TUBE ASSY. (Includes nuts)
	70933504	1	TEE, adjustable, flare type, 3/8" tube, 9/16" male (Includes washer and nut)
	70933476	1	O-RING
	70926786	1	REDUCER, flare type, 3/8" tube to 1/4" tube
	70921467	1	CAP, flare type, 1/4" tube
	70925983	1	ELBOW, adjustable, 90°, flare type, 3/8" tube, 9/16"NF (Includes washer and nut)
	70933476	1	O-RING
11	73107357	1	TUBE ASSY. (Includes nuts)
	70933504	1	TEE, adjustable, flare type, 3/8"tube, 9/16" male (Includes washer and nut)
	70933476	1	O-RING
	70926786	1	REDUCER, flare type, 3/8" tube to 1/4" tube
	70921467	1	CAP, flare type, 1/4" tube
	70925983	1	ELBOW, adjustable, 90°, flare type, 3/8" tube, 9/16"NF (Includes washer and nut)
	70933476	1	O-RING
12	70659422	1	CLIP
	70920582	1	CAPSCREW, 1/2"NC x 1-1/4"
	70677008	2	WASHER
13	70640675	2	CLIP
	70922300	1	CAPSCREW, 3/8"NC x 1"
	70929156	1	WASHER
	70911026	1	NUT, 3/8"NC
14	70662578	1	ANGLE (Tractors prior to unit #21388 excluding EXCEPTIONS listed on page 101)
	70633497	1	ANGLE (Tractor unit #21388 and up including EXCEPTIONS listed on page 101)

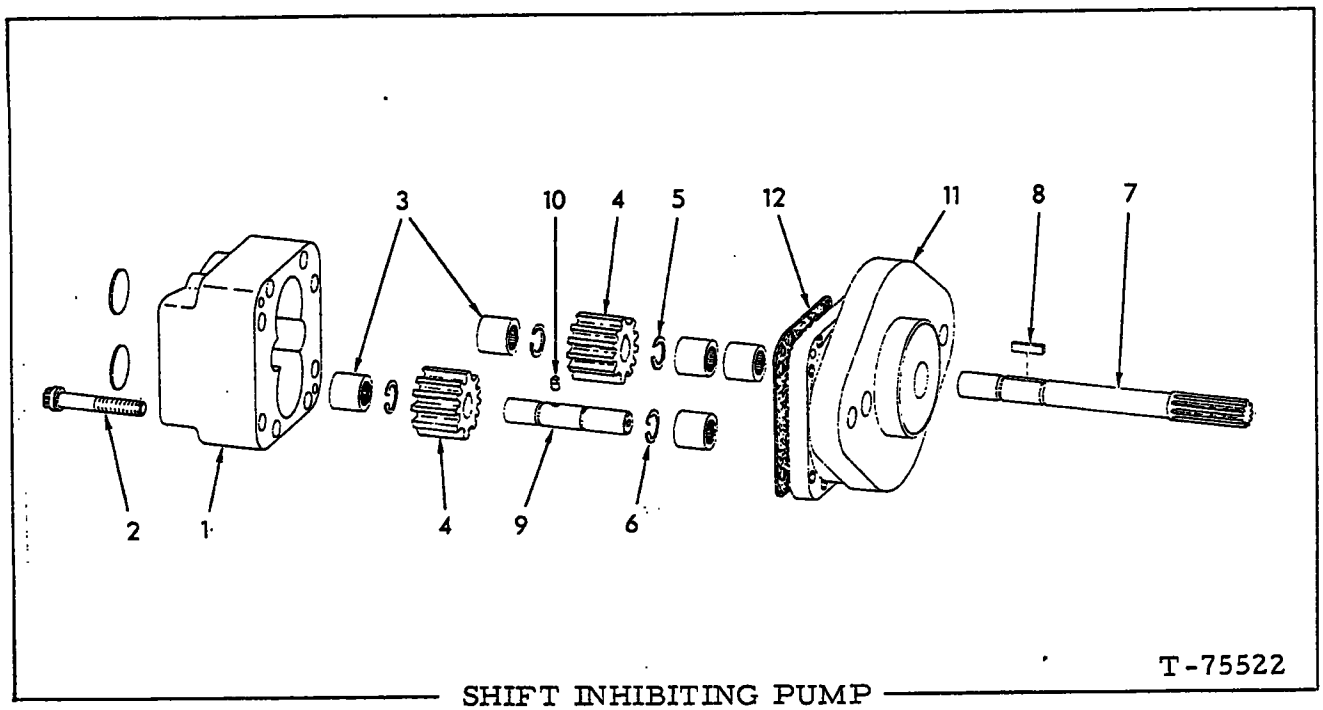

SHIFT INHIBITING PUMP

USAGE: See page 135

ITEM	PART NO.	QTY.	DESCRIPTION
-	70669932	1	PUMP ASSY. (Includes items 1 thru 12)
1	--------	1	HOUSING (Not serviced separately)
	70914590	2	PLUG, expansion, 11/16" diam.
2	70923448	8	CAPSCREW, 12 point, 1/4"NC x 1-3/4"
	70904204	8	LOCKWASHER, 1/4"
3	74980021	5	BEARING
4	70670157	2	GEAR
5	73015050	2	RING
6	70099949	2	RING
7	70670159	1	SHAFT, drive
8	70668482	1	KEY (1/8" x 1/2")
9	70670158	1	SHAFT, idler
10	70244554	1	PIN
11	--------	1	STATOR (Not serviced separately)
12	70621363	1	GASKET, shimming (Use as required)

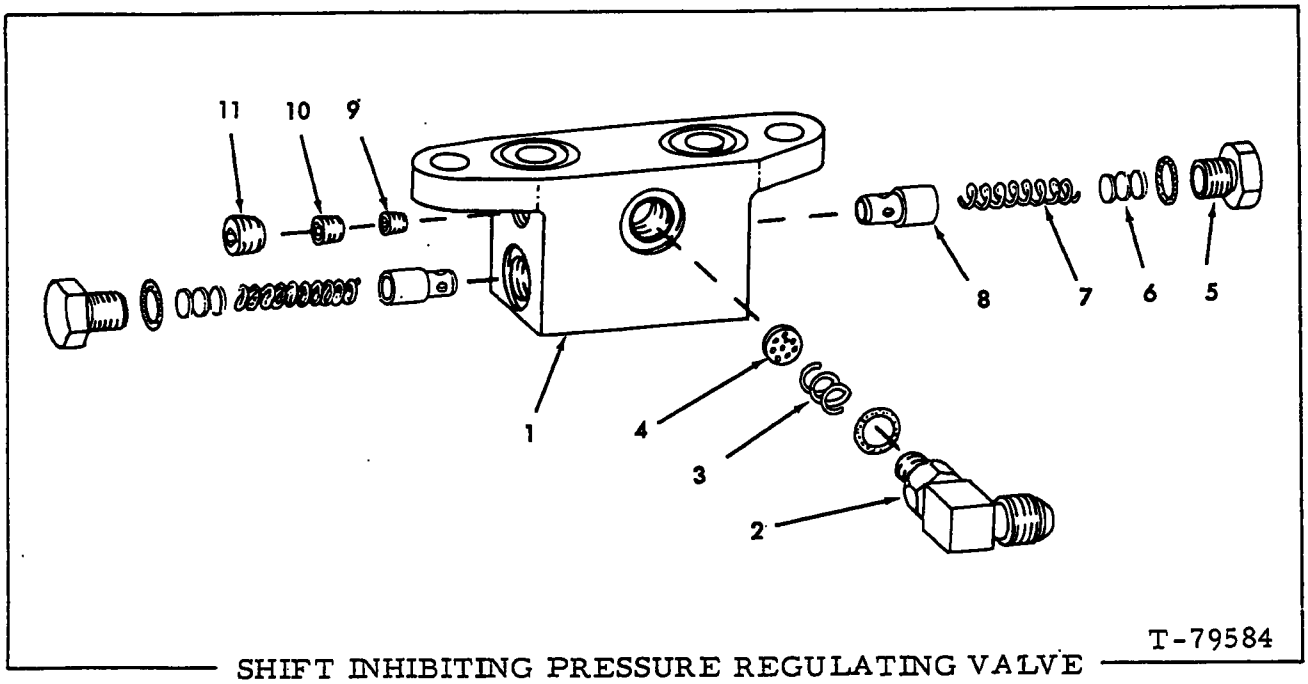

SHIFT INHIBITING PRESSURE REGULATING VALVE

USAGE: See page 135

ITEM	PART NO.	QTY.	DESCRIPTION
-	73107218	1	VALVE ASSY. (Includes items 1 thru 11)
1	--------	1	BODY (Not serviced separately)
2	70930804	1	ELBOW (Adjustable, 90°, flare type, 1/2" tube, 9/16" straight thread (Includes O-RING)
	70921885	1	O-RING
3	70680404	1	SPRING
4	70639939	1	SCREEN
5	70677474	2	PLUG
	70929457	2	O-RING
6	70680403	-	SHIM (Use as required)
7	70638887	2	SPRING
8	73107926	2	PISTON
9	73107857	1	PLUG, orifice (1/16"NPT)
10	73107583	1	PLUG, orifice (1/8"NPT)
11	70907859	1	PLUG, pipe (ctsk-hd., 1/4"NPT)

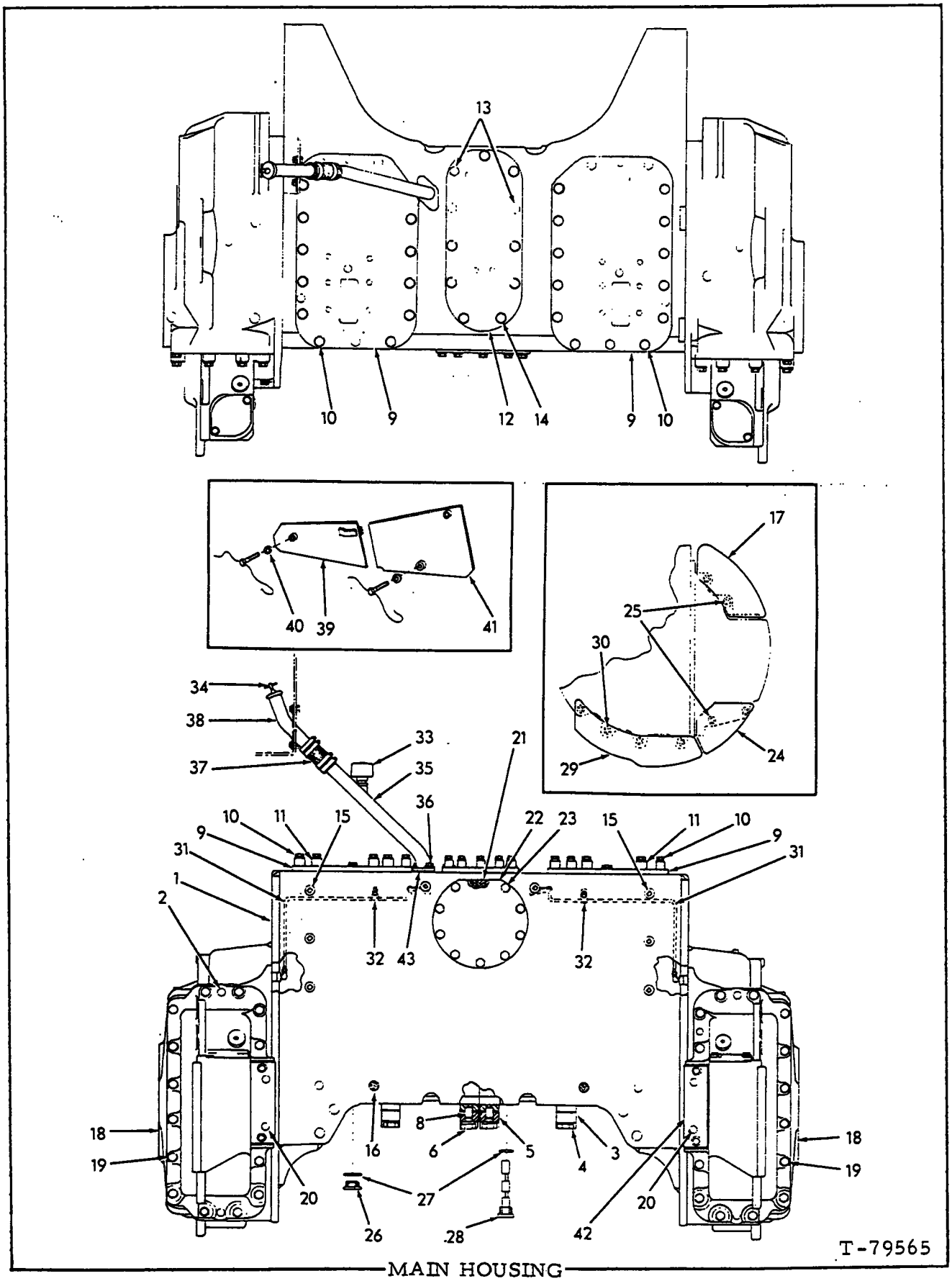

MAIN HOUSING

MAIN HOUSING

ITEM	PART NO.	QTY.	DESCRIPTION
1	73111687	1	HOUSING ASSY. (Tractors prior to unit #21474)(If first replacement on tractors prior to unit #21403 also order 5 PLUGS 70697814 and 5 O-RINGS 70933496) — Each includes items 3 thru 6
	73111246	1	HOUSING ASSY. (Tractors S/N 71A 21474 thru 22073) — Each includes items 3 thru 6
	73117357	1	HOUSING ASSY.(Tractor S/N 71A 22074 and up) — Each includes items 3 thru 6
	70907859	8	PLUG, pipe, ctsk-hd., 1/4"NPT — Each includes items 3 thru 6
2	70643740	8	PIN
3	70694417	2	CAP, outer
4	70922175	4	CAPSCREW, 1"NF x 4"
	70694356	4	WASHER
5	70694419	2	CAP, inner
6	70922175	4	CAPSCREW, 1"NF x 4"
	70694356	4	WASHER
8	70664270	2	PIN
9	70687486	2	PLATE
10	70922526	24	CAPSCREW, 1/2"NC x 2-1/2" (One less on units with Ripper)(Two less used on units #21286 and up)
	70922510	2	CAPSCREW, 1/2"NC x 2-3/4" (Tractor unit #21286 and up)
	70928460	24	WASHER
	70920585	2	CAPSCREW, 1/2"NC x 1-3/4"
	70677008	2	WASHER
11	70097413	37	BLOCK (One less used on units equipped with Kelley Ripper)
12	70690395	1	COVER(Prior to Tractor S/N 71A 22074)
	73119848	1	COVER(Tractor S/N 71A 22074 and up)
13	70920585	3	CAPSCREW, 1/2"NC x 1-3/4" (One less used on units equipped with Kelley Ripper)
	70677008	3	WASHER
14	70922526	9	CAPSCREW, 1/2"NC x 2-1/2" (One less used with Ripper)
	70928460	9	WASHER
15	70052979	8	PLUG, thread protecting (1-1/4"NF, socket-hd.)
16	70664852	4	CORK, thread protecting (1-1/4" diam.)
17	70687769	2	GUARD, track sprocket, upper (Special equipment)
18	70686409	1	COVER, left — Tractors prior to unit #21043
	70686410	1	COVER, right — Tractors prior to unit #21043
	70698437	1	COVER, left — Tractors S/N 71A 21043 thru 22073
	70698438	1	COVER, right — Tractors S/N 71A 21043 thru 22073
	73116809	1	COVER, left — Tractor S/N 71A 22074 and up
	73116810	1	COVER, right — Tractor S/N 71A 22074 and up
	70923810	2	O-RING
	70904260	2	PLUG, pipe, ctsk-hd., 3/8"NPT
	70904224	2	PLUG, pipe, ctsk-hd., 3/4"NPT
19	70927173	32	CAPSCREW, 5/8"NC x 2-3/4"
	70927381	36	WASHER
	70921535	4	CAPSCREW, 5/8"NC x 1-3/4"
20	70067112	4	BLOCK
21	70052976	2	GASKET

(Continued)

(Revised June 1981)

MAIN HOUSING (Continued)

ITEM	PART NO.	QTY.	DESCRIPTION
22	70052977	1	COVER
23	70927205	9	CAPSCREW, Nylok, 5/8"NC x 1-1/4" } See NOTE
	70926196	9	WASHER } See NOTE
			NOTE: Item 23 is two less used on units equipped with "Kelley" Ripper
24	70687762	2	GUARD, center(Special equipment)(See page 140A for optional severe service guards)
25	70922743	8	CAPSCREW, 3/4"NC x 2"
	70927382	8	WASHER
26	70696918	6	PLUG } Tractors prior to unit #21043
27	70667252	7	GASKET } Tractors prior to unit #21043
28	70067543	1	PLUG (magnetic)(Tractors prior to unit #21474)
	73116418	7	PLUG (magnetic)(Tractor unit #21043 and up)
	70933496	7	O-RING
29	70687753	2	GUARD, lower (Tractors prior to unit #21474) } Special equipment. See page 140A for optional severe service guard
	73110493	1	GUARD, lower, left } Tractor unit #21474 and up
	73110494	1	GUARD, lower, right } Tractor unit #21474 and up
30	70923901	8	CAPSCREW, 3/4"NC x 2-3/4" } Tractors prior to unit #21474
	70930912	8	NUT, high, 3/4"NC } Tractors prior to unit #21474
	70922743	8	CAPSCREW, 3/4"NF x 2-3/4" } Tractor unit #21474 and up
	70927382	8	WASHER } Tractor unit #21474 and up
31	70687057	1	TUBE ASSY., left (Includes nut)
	70687058	1	TUBE ASSY., right (Includes nut)
	70919173	2	ELBOW, flare type, 1/4" tube, 1/8"NPT male
32	70640677	4	CLIP
	70927400	4	CAPSCREW, 3/8"NC x 5/8"
	70929156	4	WASHER
33	70679375	1	BREATHER ASSY. (Serviced only as a unit)
	70919824	1	ELBOW, street, 90°, 3/4"NPT
34	70691463	1	GAUGE
35	73110317	1	TUBE
36	70920583	2	CAPSCREW, 1/2"NC x 1-1/2"
	70677008	2	WASHER
37	70680715	1	HOSE
	70925881	4	CLAMP, 1-5/16" to 2-1/4" diam.
38	70691537	1	TUBE
	70922763	4	CAPSCREW, 3/8"NC x 1"
	70677006	4	WASHER
39	70687020	1	BAFFLE
	70927483	1	CAPSCREW, drilled-hd., 3/8"NC x 2"
	70023633	1	WIRE, locking, 1/16" x 12"
40	70677006	1	WASHER
41	70667670	1	BAFFLE
	70927483	2	CAPSCREW, drilled-hd., 3/8"NC x 2"
	70023756	1	WIRE, locking, 1/16" x 26"
	70677006	2	WASHER
42	70687742	2	ANGLE
	70920583	4	CAPSCREW, 1/2"NC x 1-1/2"
	70677008	4	WASHER
43	70632368	1	GASKET
44	70069137	8	SHIM (.007")

(Revised June 1981)

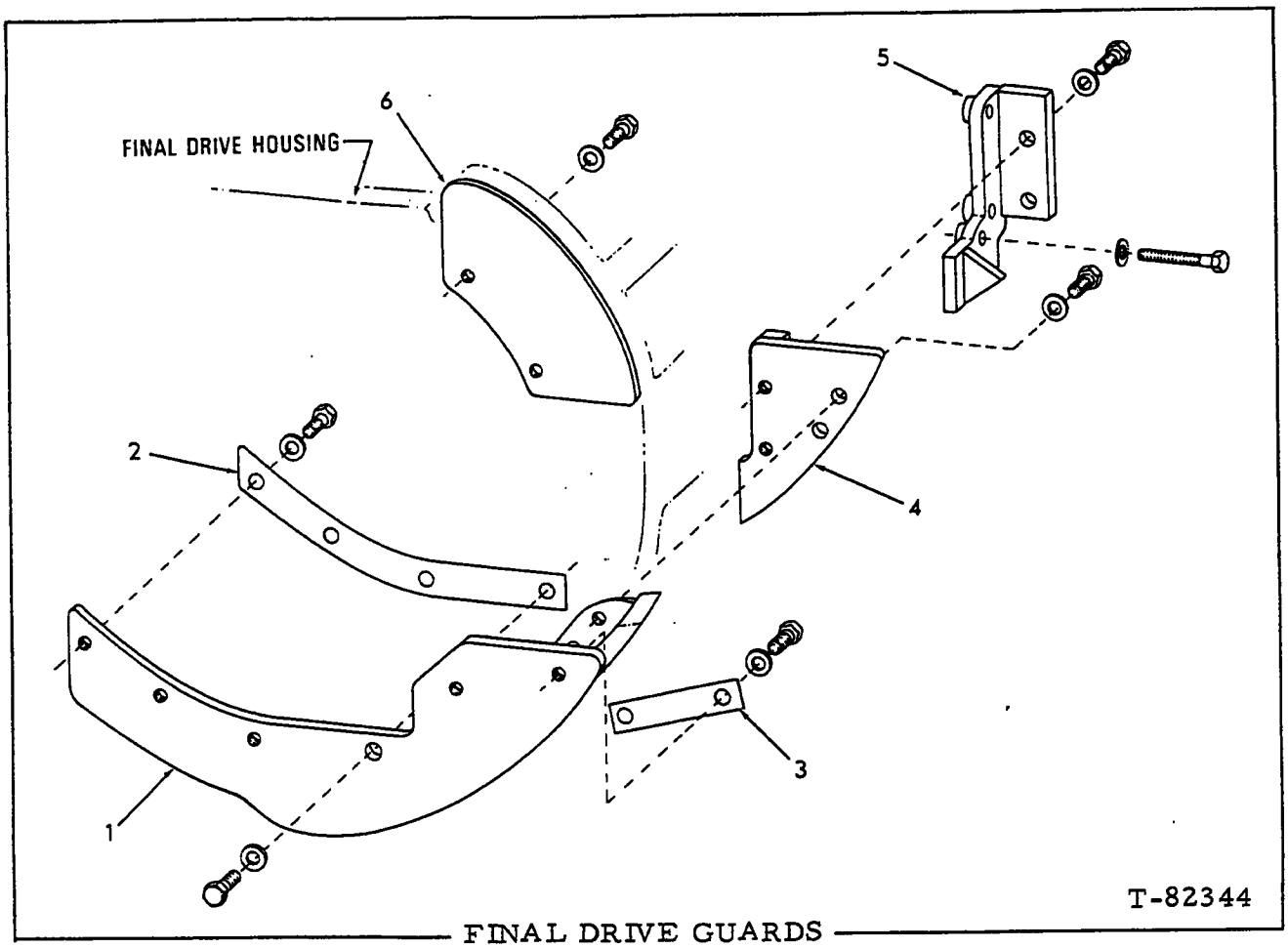

FINAL DRIVE GUARDS

USAGE: Special equipment. For use when operating in severe rock terrain. Also see page 139 for optional guards.

ITEM	PART NO.	QTY.	DESCRIPTION
1	73112763	1	PLATE, left hand
	73112764	1	PLATE, right hand
	70921068	12	CAPSCREW, 3/4" NC x 2-1/4"
	70929188	12	WASHER
2	73112724	8	SHIM Use as required
3	73112723	8	SHIM
4	73112805	1	PLATE, left hand
	73112806	1	PLATE, right hand
	70921068	4	CAPSCREW, 3/4" NC x 2-1/4"
	70929188	4	WASHER
5	73112817	1	PLATE, left hand
	73112818	1	PLATE, right hand
	70922475	4	CAPSCREW, 3/4" NC x 1-1/2"
	70929188	4	WASHER
	70921455	6	CAPSCREW, 5/8" NC x 4-1/2"
	70677010	6	WASHER
6	70687769	2	GUARD, track sprocket, upper
	70921068	4	CAPSCREW, 3/4" NC x 2-1/4"
	70929188	4	WASHER

(Revised February 1980)

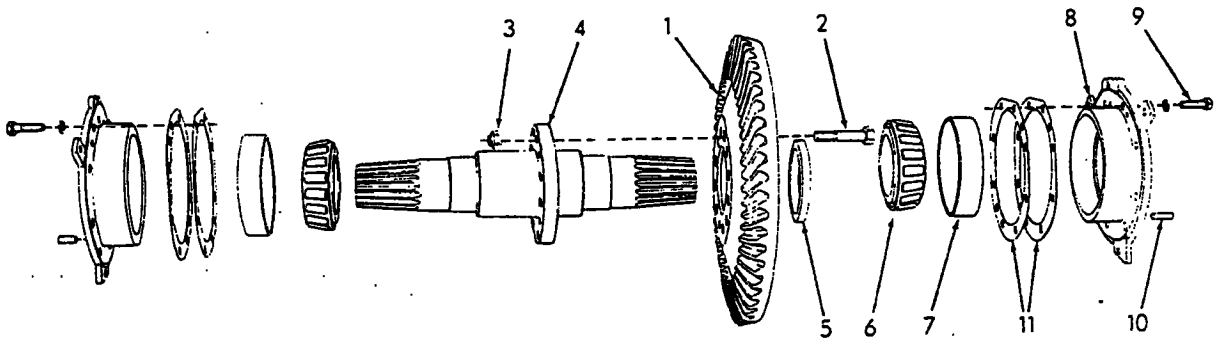

FRONT VIEW

T-30887

BEVEL GEAR AND SHAFT

ITEM	PART NO.	QTY.	DESCRIPTION	
1	70682606	1	GEAR, bevel (45 teeth)(Tractors prior to unit #21851)	
	73116311	1	GEAR, bevel (45 teeth)(Tractor unit #21851 and up)	
2	70696121	12	CAPSCREW	
3	70645319	12	NUT, elastic stop, 3/4"NF	
4	70686437	1	SHAFT	
5	70682595	1	RING	
6	70051989	2	CONE ASSY.	
7	70051988	2	CUP	
8	70682602	-	CAGE ASSY. (Includes item 10)	
9	70921556	16	CAPSCREW, 1/2"NC x 2"	
	70912441	16	LOCKWASHER, 1/2"	
10	70682598	4	PIN	
11	70067483	12	SHIM (.005" thick)	Use as required
	70067484	10	SHIM (.007" thick)	
	70067485	4	SHIM (.030" thick)	

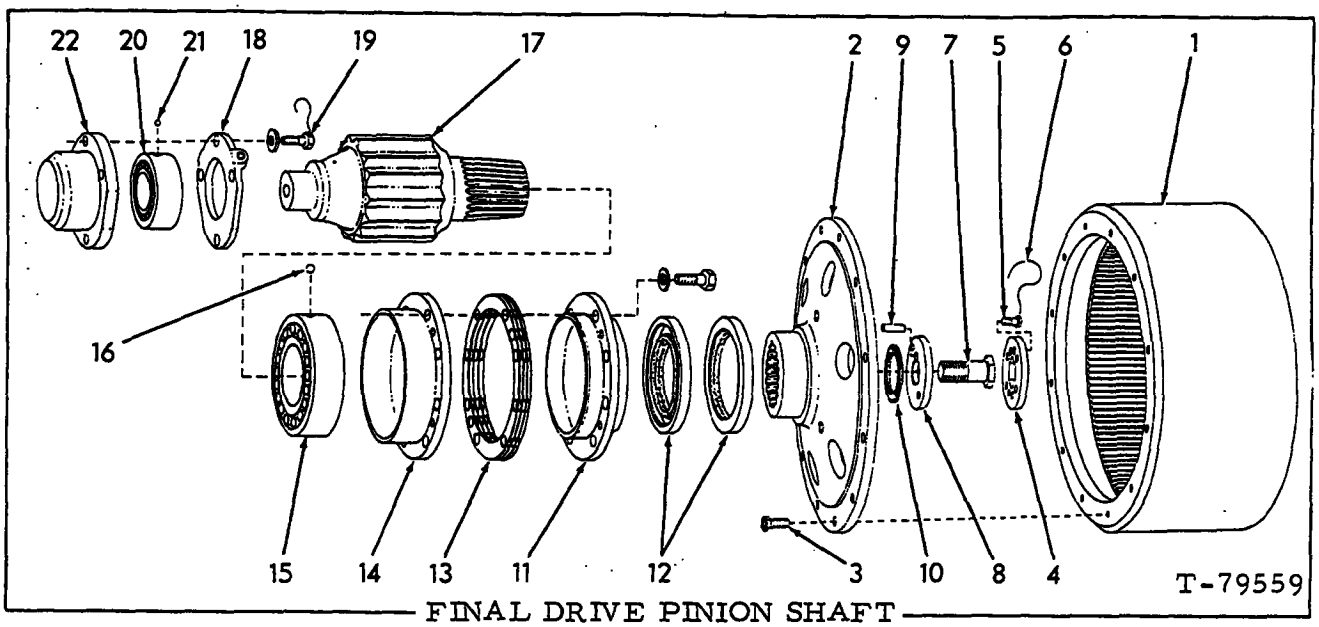

FINAL DRIVE PINION SHAFT

ITEM	PART NO.	QTY.	DESCRIPTION
1	70093953	2	DRUM
2	70623344	2	HUB
3	70650811	24	BOLT, 5/8"NC x 1-1/2"
4	70681558	2	LOCK
5	70928506	4	CAPSCREW, 3/8"NC x 5/8"
6	70023633	2	WIRE, locking, 1/16" x 12"
7	70684726	2	CAPSCREW
8	70681560	2	WASHER ASSY. (Includes item 9)
9	70052066	2	PIN
10	70623346	2	SEAL (rubber)
11	70686841	2	CAGE ASSY. (Includes item 12)
	70920585	8	CAPSCREW, 1/2"NC x 1-3/4"
	70928178	8	WASHER
12	70695225	4	SEAL
13	70067484	18	SHIM (.007" thick) (Use as required)
14	70686503	2	CAGE
15	70695236	2	BEARING
16	70905358	2	BALL, steel, 1/4" diam.
17	70686352	2	PINION (14 teeth)(Tractors prior to unit #21758)
	73115074	2	PINION (14 teeth)(Tractors unit #21758 thru #21850)
	73117339	2	PINION (14 teeth)(Tractor unit #21851 and up)
18	70686615	1	ADAPTER, left side
	70686616	1	ADAPTER, right side
19	70665895	8	CAPSCREW, 3/8"NC x 1-1/4"
	70927453	8	WASHER
20	70695235	2	BEARING
21	70905357	2	BALL, steel, 3/16" diam.
22	70686679	2	CAGE

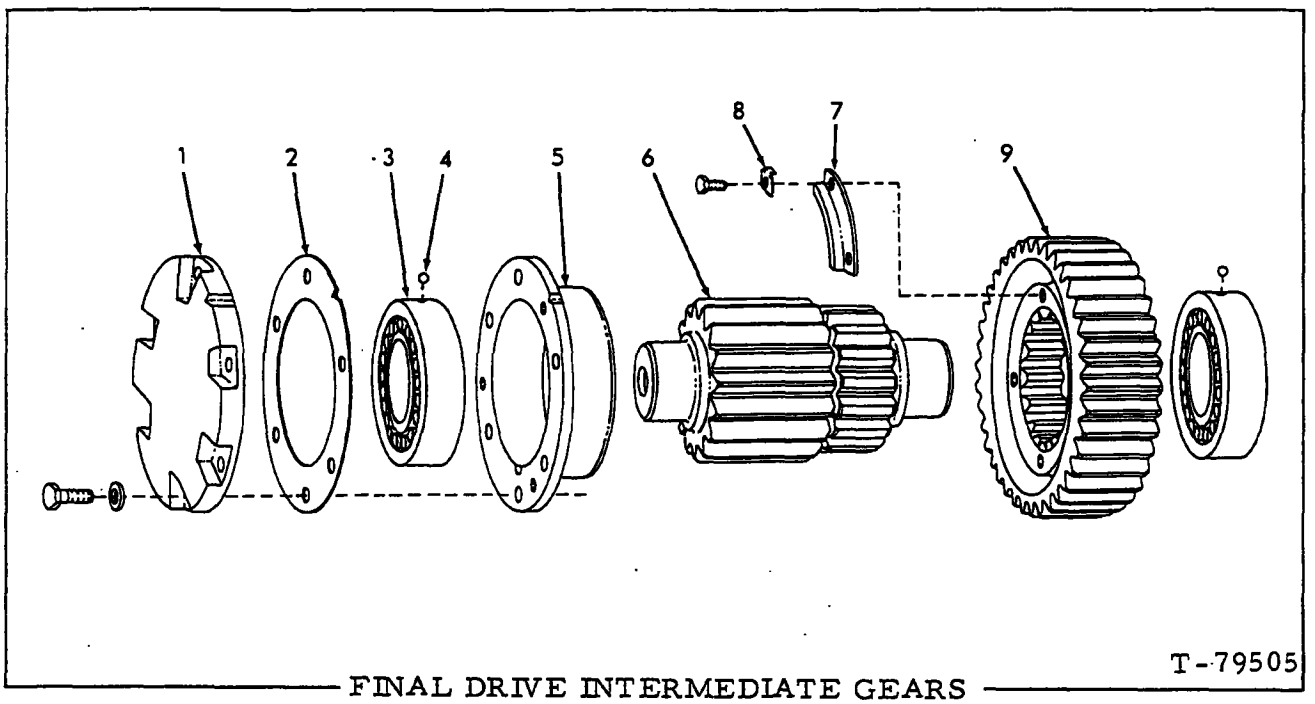

FINAL DRIVE INTERMEDIATE GEARS

ITEM	PART NO.	QTY.	DESCRIPTION
1	70686476	2	RETAINER
	70926774	12	CAPSCREW, Nylok, 5/8"NC x 1-3/4"
	70927381	12	WASHER
2	70686896	24	SHIM, (.010" thick) (Use as required)
3	70695238	4	BEARING
4	70905360	4	BALL (steel, 3/8" diam.)
5	70686515	2	CAGE (Tractors prior to unit #22074)
	73116623	2	CAGE (Tractor unit # 22074 and up)
6	70686355	2	PINION (Tractors prior to unit #22074) 73132691
	73116636	2	PINION (Tractor unit # 22074 and up) 73123204
7	70686546	4	LOCK (Tractors prior to unit #22074)
	73116621	4	LOCK (Tractor unit # 22074 and up)
	70922763	8	CAPSCREW, 3/8"NC x 1"
8	70052444	8	LOCK
9	73117194	2	GEAR (38 teeth)(Tractors prior to unit #22074)
	73115069	2	GEAR (38 teeth)(Tractor unit # 22074 and up)

(Revised June 1981)

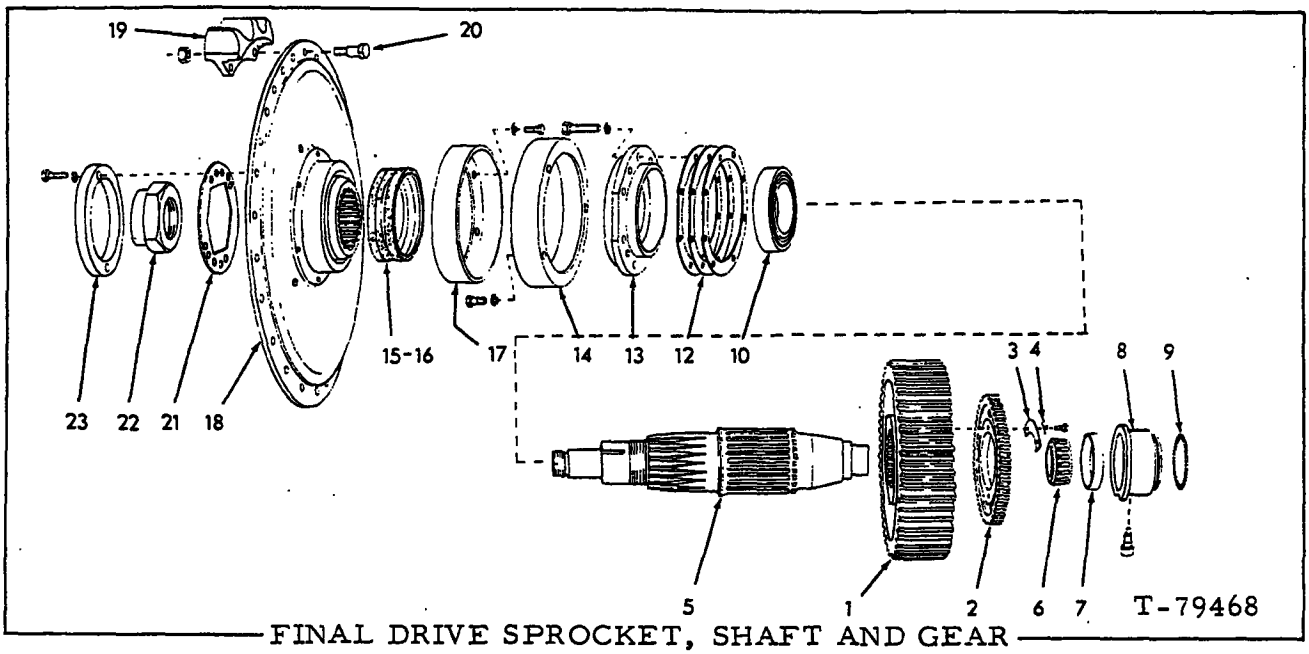

FINAL DRIVE SPROCKET, SHAFT AND GEAR

ITEM	PART NO.	QTY.	DESCRIPTION
1	73117257	2	GEAR (Tractors prior to unit #22074)
	73116633	2	GEAR (Tractor unit #22074 and up)
2	70686680	2	GEAR
3	70686943	4	LOCK
	70923470	8	CAPSCREW, 3/8"NC x 1-1/2" (plated)
4	70052444	8	LOCK
5	70686096	2	SHAFT (Tractors prior to unit # 22074)
	73116720	2	SHAFT
6	73119965	2	CUP AND CONE ASSY. (Consists of matched CUP and CONE)
8	70690823	2	CAGE
	70690821	2	SETSCREW
9	70924140	2	O-RING
10	73116012	2	BEARING (Tractors prior to unit # 22074)
	73117016	2	BEARING (Tractor unit # 22074 and up)
12	70686965	4	SHIM (.005" thick) } Use as required. (Tractors
	70686966	4	SHIM (.007" thick) } prior to unit # 22074)
	70686967	12	SHIM (.010" thick) }
	73116627	4	SHIM (.005" thick) } Use as required. (Tractor unit
	73116628	4	SHIM (.007" thick) } #22074 and up)
	73116629	12	SHIM (.010" thick) }
13	70686669	2	CAGE (3" wide)(Tractor prior to unit #21474)
	73109651	2	CAGE (3-3/8" wide)(Tractor unit #21484 thru 22073)
	73116626	2	CAGE (3-1/2" wide)(Tractor unit # 22074 and up)
	70921172	16	CAPSCREW, 5/8"NC x 2-1/4"
	70930364	16	WASHER
14	70686976	2	GUARD
	70924277	6	CAPSCREW, 5/8"NC x 1"
	70927381	6	WASHER
15	70684244	2	SEAL ASSY. (Includes item 16 Ring Set 70699040) (First type)
	73115348	2	SEAL ASSY. (Includes item 16 Ring Set 73115349) (Second type)

(Continued)

(Revised June 1981)

FINAL DRIVE SPROCKET, SHAFT AND GEAR (Continued)

ITEM	PART NO.	QTY.	DESCRIPTION
16	70699040	2	RING SET (Includes 2 sealing washers I.D. 8.952", sufficient to service 1 Seal Assy. 70684244) (First type)
	73115349	2	RING SET (Includes 2 sealing washers I.D. 9.142", sufficient to service 1 Seal Assy. 73115348) (Second type)
17	70686782	2	GUARD
	70921175	12	CAPSCREW, 1/2"NC x 1"
	70928178	12	WASHER
18	70686356	2	HUB (15/16" diam. segment bolt flange)(Tractors prior to unit #21428 including unit #21430)
	73111174	2	HUB (1" diam. segment bolt flange)(Tractor unit #21428 and up excluding unit #21430)
19	70679509 NLA	18	SEGMENT (3/4" wide bolt flange) (Standard) — Tractors prior to unit #21428 including unit #21430
	73111948 NLA	18	SEGMENT (1" wide bolt flange) (Special service) — Tractors prior to unit #21428 including unit #21430
	73110397	18	SEGMENT (1" wide bolt flange)(Tractor unit #21428 and up excluding unit #21430)
20	70693689	54	BOLT, 7/8"NF x 2-5/8" (Standard) — Tractors prior to unit #21428 including unit #21430
	73111949	54	BOLT, 7/8"NF x 2-7/8" (Special service) — Tractors prior to unit #21428 including unit #21430
	70679507	54	NUT, 7/8"NF — Tractors prior to unit #21428 including unit #21430
	73110399	54	BOLT, 1"NF x 3" — Tractor unit #21428 and up excluding unit #21430
	73111176	54	NUT, 1"NF — Tractor unit #21428 and up excluding unit #21430
21	70082315	2	LOCK
22	70686571	2	NUT
23	70630056	2	RING
	70920585	4	CAPSCREW, 1/2"NC x 1-3/4"
	70912441	4	LOCKWASHER, 1/2"

CRANE & Motor.

800-322-7344

Julie

Joe-

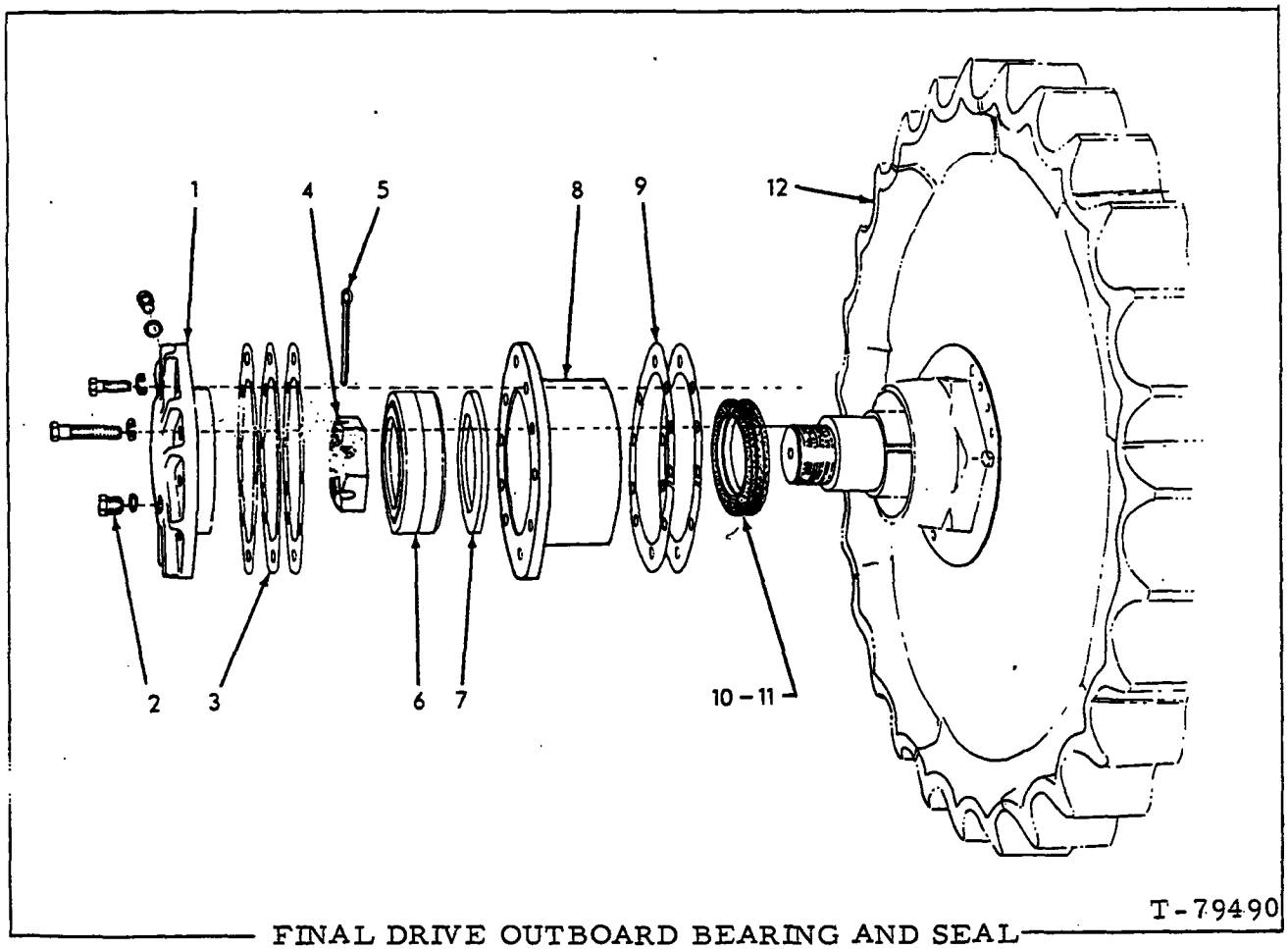

FINAL DRIVE OUTBOARD BEARING AND SEAL

ITEM	PART NO.	QTY.	DESCRIPTION
1	70686537	2	CAP
	70927999	2	PLUG, 1/2" tube, hex-socket-hd., (Includes O-RING)
	70921349	2	O-RING
	70921174	12	CAPSCREW, 5/8"NC x 2-1/2"
	70927381	12	WASHER
	70920582	8	CAPSCREW, 1/2"NC x 1-1/4"
	70928460	8	WASHER
2	70695506	2	PLUG
	70695505	2	GASKET
3	70687002	4	SHIM (.005" thick) } Use as required
	70687003	4	SHIM (.007" thick) } Use as required
	70687004	8	SHIM (.010" thick) } Use as required
4	70690869	2	NUT
5	70904016	2	PIN, cotter, 3/8" x 4
6	70686337	2	BEARING
7	70686811	2	SPACER (.625" thick) } Use as required
	70686812	2	SPACER (.594" thick) } Use as required
	70686813	2	SPACER (.656" thick) } Use as required
8	70686844	2	CAGE

(Continued)

FINAL DRIVE OUTBOARD BEARING AND SEAL (Continued)

ITEM	PART NO.	QTY.	DESCRIPTION
9	70686897	12	SHIM (.015" thick) (Use as required)
10	70686949	2	SEAL ASSY. (Includes item 11)
11	70699039	2	RING SET (Includes 2 sealing washers sufficient to service 1 SEAL ASSY.)
12	--------	-	SPROCKET (See page 145)

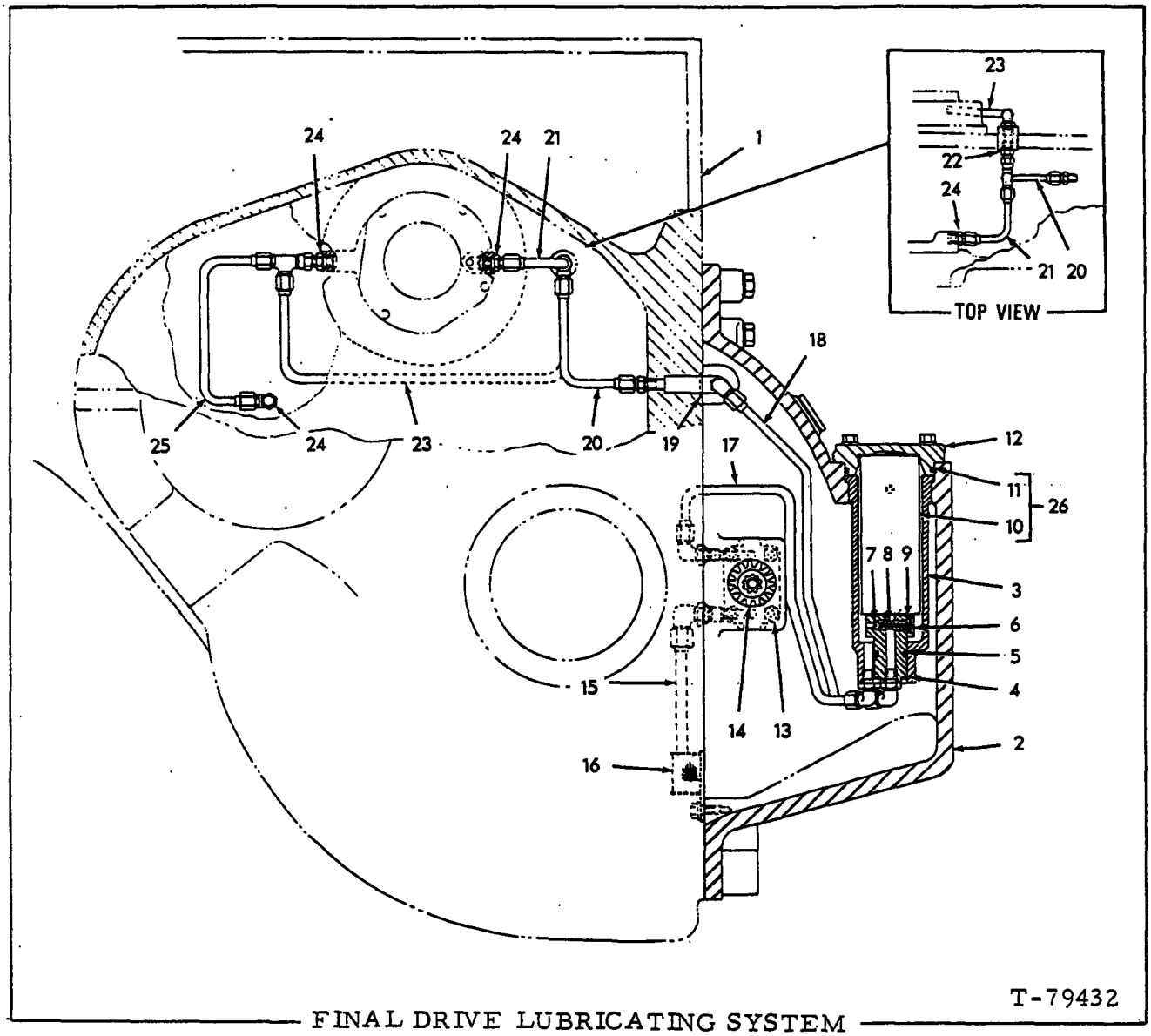

FINAL DRIVE LUBRICATING SYSTEM

ITEM	PART NO.	QTY.	DESCRIPTION
1	---------	1	FINAL DRIVE HOUSING
2	--------	1	COVER, left
	--------	1	COVER, right
3	70687049	2	HOUSING (Tractors prior to S/N 71A 22074)
	73116719	2	HOUSING(Tractor S/N 71A 22074 and up)
	70922747	2	SETSCREW, 3/8"NC x 1/2"
	70927484	2	CAPSCREW, 3/8"NC x 1/2"
4	70930893	2	RING(Tractors prior to S/N 71A 22074)
	70927776	2	RING (Tractor S/N 71A 22074 and up)
5	70933618	2	O-RING
6	70694328	2	VALVE ASSY. (Includes items 7 thru 9) (Tractors prior to S/N 71A 22074)
	73116716	2	VALVE ASSY. (Includes items 7 thru 9) (Tractor S/N 71A 22074 and up)

See page 139

(Continued)

(Revised June 1981)

7	70905361	2	BALL, 7/16"	
8	70695157	2	SPRING	
9	70910002	2	PLUG, expansion, 3/4"	
10	--------	2	□ELEMENT (Order item 26)	
11	70925920	2	□O-RING	
12	70676421	2	COVER	
	70920582	4	CAPSCREW, 1/2"NC x 1-1/4"	
	70928460	4	WASHER	
13	70687014	2	PUMP (Serviced only as a unit)	
	70922286	8	CAPSCREW, 5/16"NC x 1-3/4"	
	70919311	8	LOCKWASHER, 5/16"	
14	70686037	2	GEAR	
15	70687133	2	TUBE (Includes nuts)	
	70933474	2	ELBOW, adjustable, 90°, flare type, 1/2" tube, 3/4"NF male	
	70933466	2	O-RING	
16	70687113	2	SCREEN	
	70922300	2	CAPSCREW, 3/8"NC x 3/4"	
	70922465	2	WASHER	
17	70687177	1	TUBE, left hand (Includes nuts) } Tractors prior to	
	70687178	1	TUBE, right hand (Includes nuts) } S/N 71A 22074	
	73116711	1	TUBE, left hand (Includes nuts) } Tractor S/N	
	73116712	1	TUBE, right hand (Includes nuts) } 22074 and up	
	70925983	4	ELBOW, adjustable, 90°, flare type, 3/8" tube, 9/16"NF	
	70933476	4	O-RING	
18	70687179	1	TUBE, left hand (Includes nuts) } Tractors prior to	
	70687180	1	TUBE, right hand (Includes nuts) } S/N 71A 22074	
	73112381	1	TUBE, left hand (Includes nuts) } Tractor S/N	
	73112382	1	TUBE, right hand (Includes nuts) } 22074 and up	
	70925983	2	ELBOW, adjustable, 90°, flare type, 3/8" tube, 9/16"NF	
	70928385	2	ELBOW, swivel, 90°, flare type, 3/8" tube, 1/4"NPT, male	
	70933476	2	O-RING	
19	70933491	2	O-RING	
20	70687175	2	TUBE (Includes nuts)	
	70919062	2	CONNECTOR, flare type, 3/8" tube, 1/4"NPT male	
	70921297	2	TEE, flare type, swivel nut, 3/8" tube	
21	70687150	2	TUBE (Includes nuts)	
22	70933470	2	CONNECTOR, flare type, 3/8" tube, 9/16"NF male end	
	70933476	2	O-RING	
23	70687172	2	TUBE (Includes nuts)	
	70925983	2	ELBOW, adjustable, 90°, flare type, 3/8" tube 9/16"NF	
	70921297	2	TEE, flare type, swivel nut, 3/8" tube	
	70933476	2	O-RING	

(Continued)

FINAL DRIVE LUBRICATING SYSTEM (Continued)

ITEM	PART NO.	QTY.	DESCRIPTION
24	70687156	6	CONNECTOR
	70933476	6	O-RING
25	70687167	2	TUBE (Includes nuts)
	70921013	2	ELBOW, swivel, 90°, flare type, 3/8" tube, 9/16" str., thd.
26	70694662	2	ELEMENT KIT (Includes items 10 and 11)

□Components of item 26

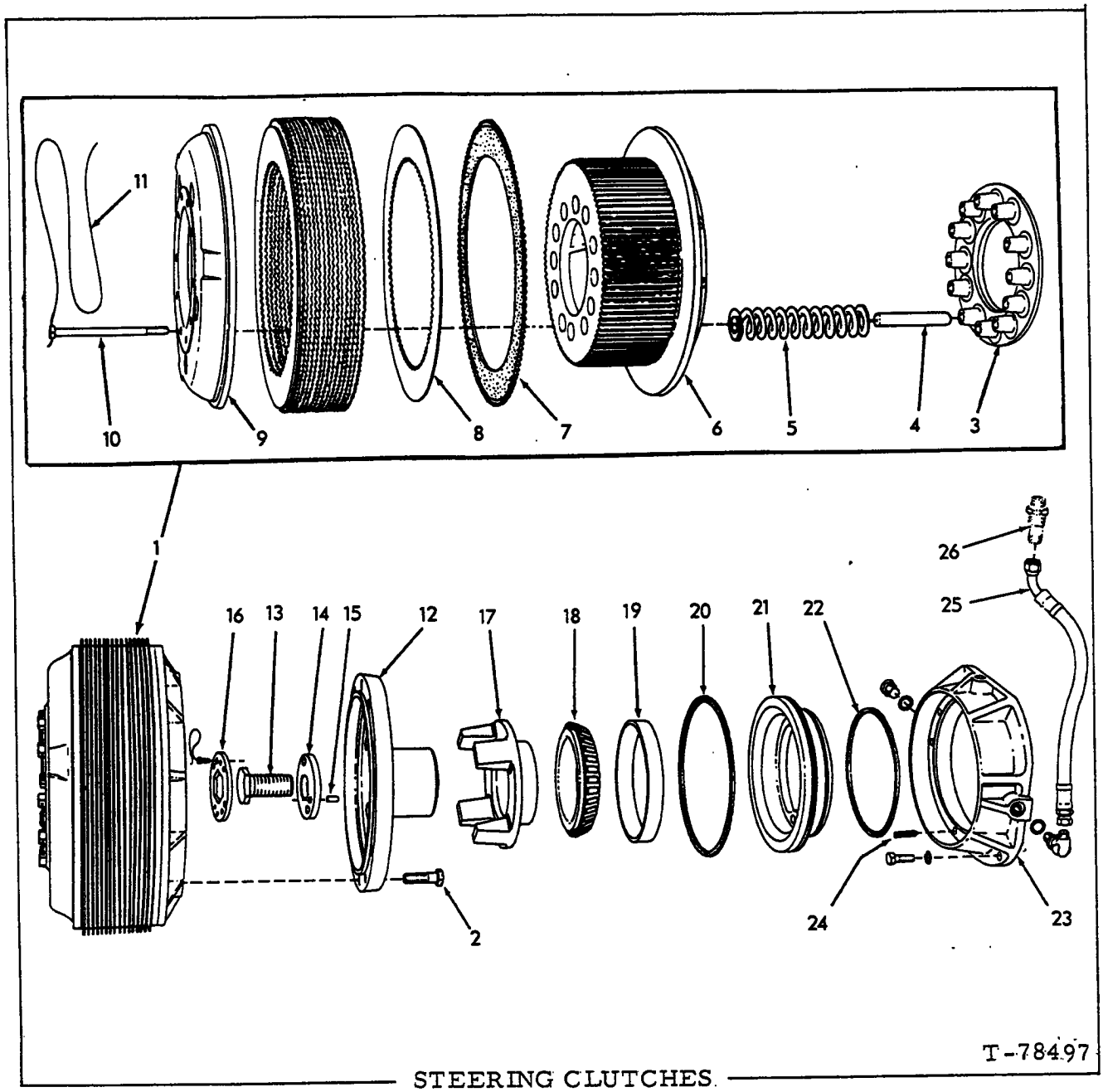

STEERING CLUTCHES

ITEM	PART NO.	QTY.	DESCRIPTION
1	70623010	2	CLUTCH ASSY. (Consists of items 3 thru 11)
2	70650812	24	BOLT, 5/8"NC x 2"
3	70051836	2	PLATE
4	70052118	20	SPACER
5	70623016	20	SPRING
6	70650691	2	HUB
7	70623017	32	DISC

(Continued)

STEERING CLUTCHES (Continued)

ITEM	PART NO.	QTY.	DESCRIPTION
8	70623018	36	DISC (Use as required)
9	70054809	2	PLATE
10	70929079	20	CAPSCREW, drilled-hd., 1/2"NC x 6-1/2"
11	70052519	4	WIRE, locking, 1/16" x 39"
12	70686435	2	HUB
13	70684726	2	CAPSCREW
14	70681560	2	WASHER ASSY., (Includes item 15)
15	--------	2	PIN
16	70681558	2	LOCK
	70928506	4	CAPSCREW, drilled-hd., 3/8"NC x 5/8"
	70023633	2	WIRE, locking, 1/16" x 12"
17	70686436	2	SLEEVE
18	70623007	2	CONE ASSY.
19	70623008	2	CUP
20	70623003	2	RING
21	70682601	2	PISTON
22	70623004	2	RING
23	70642448	2	RING
	70927547	2	PLUG, hex-hd., 3/4" straight thread
	70933466	2	O-RING
	70920574	6	CAPSCREW, 1/2"NC x 1-3/8"
	70912441	6	LOCKWASHER, 1/2"
24	70040475	6	SPRING
25	70645074	2	HOSE, (See HOSE PARTS)
	70933474	2	ELBOW, adjustable, 90°, flare type, 1/2" tube, 3/4" straight thread (Includes washer and nut)
	70933466	2	O-RING
26	--------	2	UNION (See page 162)

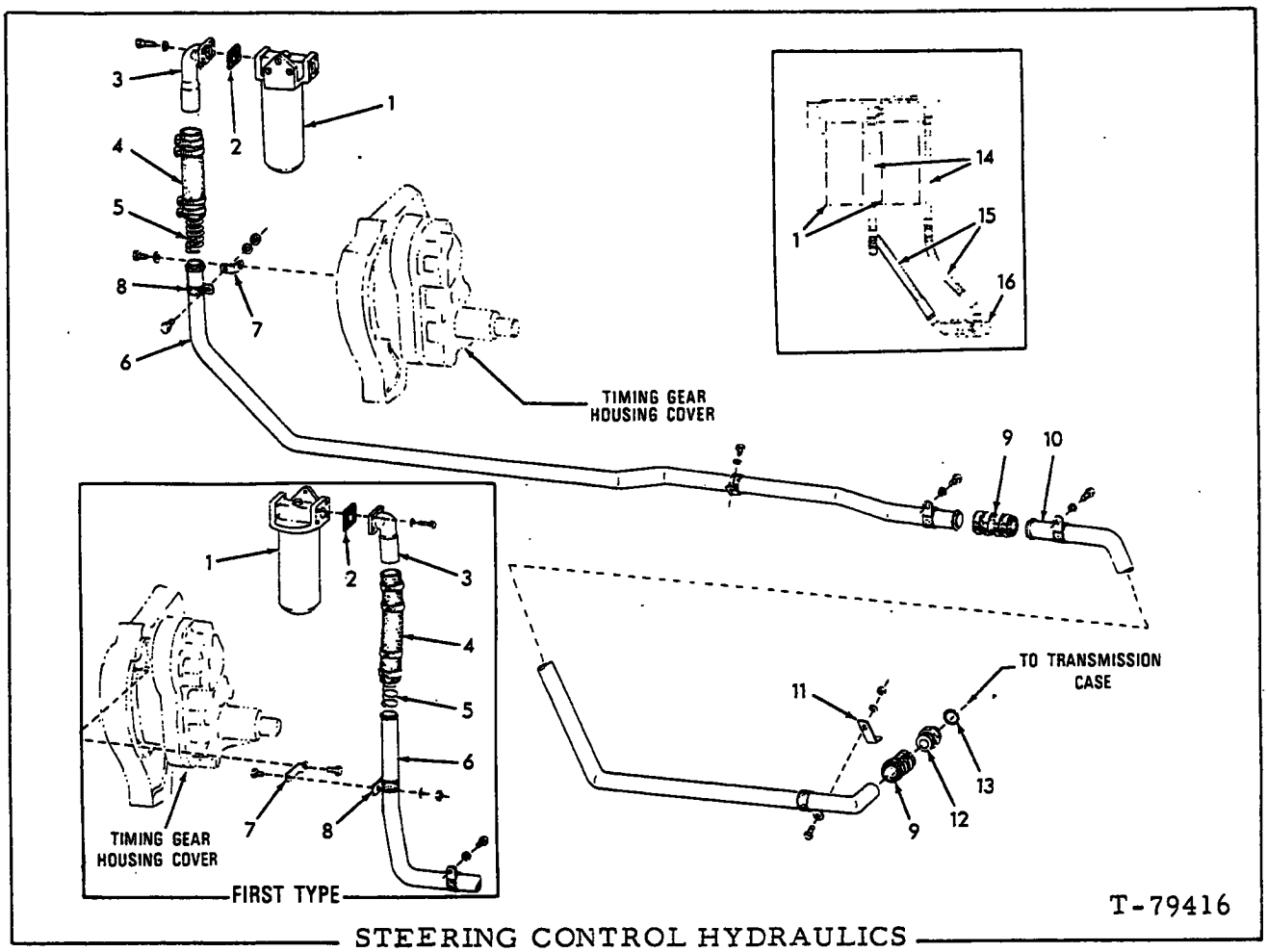

STEERING CONTROL HYDRAULICS

ITEM	PART NO.	QTY.	DESCRIPTION
1	--------	-	STEERING PUMP AND FILTERS (See page 156)
2	70652011	1	GASKET
3	70667162	1	ELBOW (Tractors prior to unit #21812 excluding #21757, 21761 and 21767)
	73117197	1	ELBOW (Tractors unit #21812 and up including #21757, 21761 and 21767)
	70920582	4	CAPSCREW, 1/2"NC x 1-1/4"
	70928460	4	WASHER
4	70690863	1	HOSE (Tractors prior to unit #21812 excluding #21757, 21761, and 21767)
	73117185	1	HOSE (Tractors unit #21812 and up including #21757, 21761 and 21767)
	70921913	4	CLAMP, 1-13/16" to 2-3/4" diam.
5	70930970	1	GUARD
6	70690943	1	TUBE (Tractors prior to unit #21812 excluding #21757, 21761 and 21767)
	73117190	1	TUBE (Tractors unit #21812 and up including #21757, 21761 and 21767)

(Continued)

STEERING CONTROL HYDRAULICS (Continued)

ITEM	PART NO.	QTY.	DESCRIPTION
7	70690947	1	STRAP (Tractors prior to unit #21812 excluding #21757, 21761 and 21767)
	73117193	1	STRAP (Tractors unit #21812 and up including #21757, 21761 and 21767)
	70927212	1	CAPSCREW, nylok, 3/8"NC x 1"
8	70927313	6	CLIP
	70922300	3	CAPSCREW, 3/8"NC x 3/4"
	70922763	2	CAPSCREW, 3/8"NC x 1"
	70929156	4	WASHER
	70911026	2	NUT, 3/8"NC
	70677006	1	WASHER
9	70623234	2	HOSE
	70921913	8	CLAMP, 1-13/16" to 2-3/4" diam.
10	70683211	1	TUBE
11	70683491	1	ANGLE
12	70683485	1	ADAPTER
13	70933497	1	O-RING
14	70690847	2	TUBE ASSY. (Includes Nuts)
	70933463	2	ELBOW, adjustable, 90°, flare type, 3/4" tube, 1-5/16"NF male end (Includes Washer and Nut)
	70925922	2	O-RING
	70925031	2	ELBOW, bulkhead, 90°, 3/4" tube, 1-1/16" straight thread (Includes Nut)
15	70690850	1	HOSE ASSY., left } See HOSE PARTS
	70690849	1	HOSE ASSY., right } See HOSE PARTS
	70933462	2	ELBOW, adjustable, 90°, flare type, 3/4" tube 3/4"NF male end (Includes Washer and Nut)
	70933466	2	O-RING
16	--------	-	VALVE, control (See page 162)

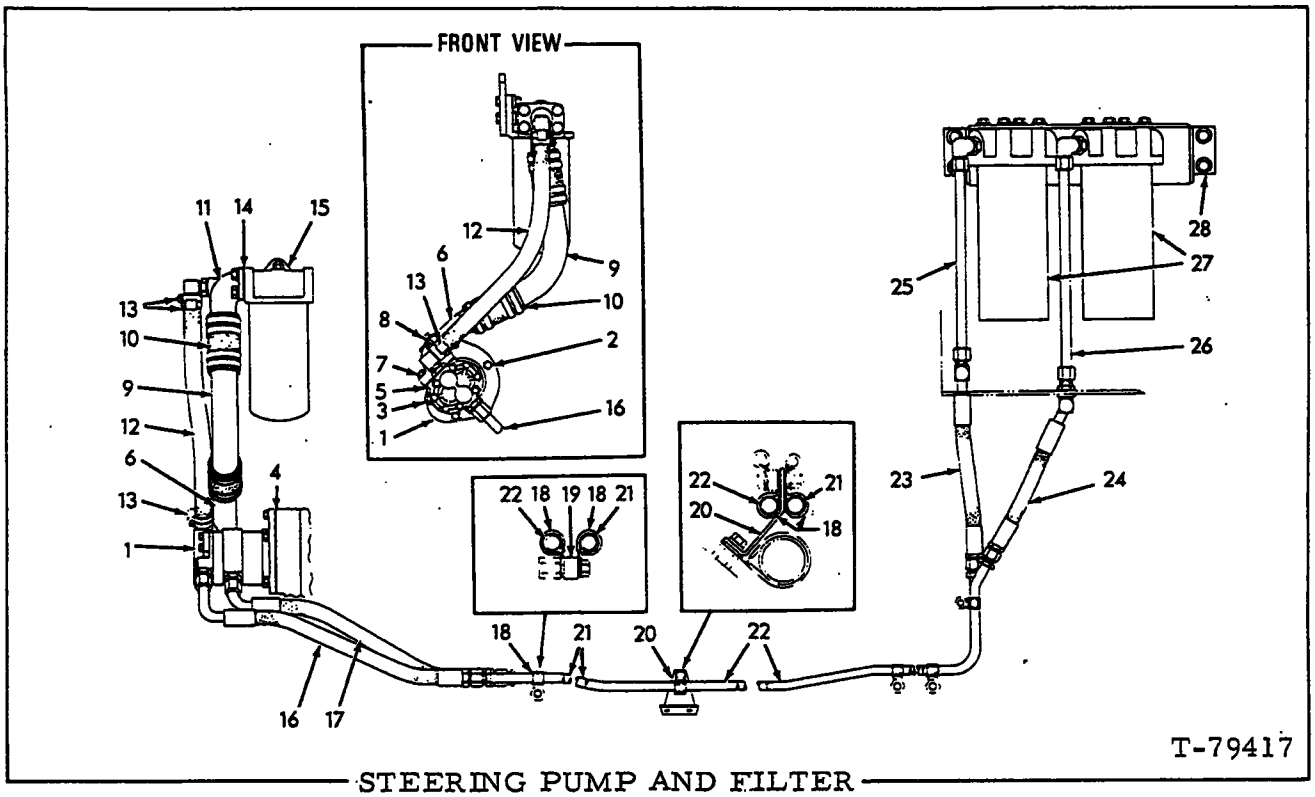

STEERING PUMP AND FILTER

USAGE: Tractors prior to serial No. 71A21812 excluding #21757, 21761 & 21767

ITEM	PART NO.	QTY.	DESCRIPTION
1	--------	1	PUMP ASSY. (See page 158)
2	70922848	3	CAPSCREW, 3/8"NC x 3-1/4"
	70910287	3	LOCKWASHER, 3/8"
3	70921569	2	CAPSCREW, 7/16"NC x 1-1/4"
	70929247	2	WASHER
4	74371742	1	GASKET
5	70655999	1	GASKET
6	70696691	1	ELBOW
7	70921076	1	CAPSCREW, 3/8"NC x 1"
8	70922848	1	CAPSCREW, 3/8"NC x 3-1/4"
	70910287	2	LOCKWASHER, 3/8"
9	70696695	1	TUBE
10	70623234	2	HOSE
	70921913	8	CLAMP, 1-13/16" to 2-3/4" diam.
11	70699856	1	ELBOW
	70920582	4	CAPSCREW, 1/2"NC x 1-1/4"
	70928460	4	WASHER
12	70699857	1	HOSE
	70928888	2	FITTING, stem, 90°, 3/4" tube, 1-1/16" straight thread (Includes nut)
13	70922660	4	CLAMP, 13/16" to 1-1/2" diam.
14	70652011	1	GASKET
15	--------	1	FILTER ASSY. (See page 159)
	70920585	3	CAPSCREW, 1/2"NC x 1-3/4"
	70677008	3	WASHER
	70911028	3	NUT, 1/2"NC

(Continued)

STEERING PUMP AND FILTER (Continued)

ITEM	PART NO.	QTY.	DESCRIPTION
16	70691025	1	HOSE (See HOSE PARTS)
	70933500	1	CONNECTOR, flare type, 3/4" tube, 1-1/16" straight male thread
	70930724	1	O-RING
17	70646915	1	HOSE (See HOSE PARTS)
	70933500	1	CONNECTOR, flare type, 3/4" tube, 1-1/16" straight male thread
	70930724	1	O-RING
18	70927310	10	CLAMP, insulated
	70923470	1	CAPSCREW, 3/8"NC x 1-1/2"
	70922300	1	CAPSCREW, 3/8"NC x 3/4"
	70929156	2	WASHER
19	70690932	1	SPACER
20	70690931	1	BRACKET
	70922763	2	CAPSCREW, 3/8"NC x 1"
	70930370	3	WASHER
21	70690921	1	TUBE ASSY. } Each includes nuts
22	70690922	1	TUBE ASSY. } Each includes nuts
23	70690851	1	HOSE } See HOSE PARTS
24	70690852	1	HOSE } See HOSE PARTS
25	70690846	1	TUBE ASSY. (Includes nuts)
	70933463	1	ELBOW, adjustable, 90°, flare type, 3/4" tube, 1-5/16"NF male end (Includes washer and nut)
	70925922	1	O-RING
	70925031	1	ELBOW, bulkhead, 90°, 3/4" tube, 1-1/16" straight thread (Includes nut)
26	70690848	1	TUBE ASSY. (Includes nuts)
	70933463	1	ELBOW, adjustable, 90°, flare type, 3/4" tube 1-5/16"NF male end (Includes washer and nut)
	70925922	1	O-RING
	70925031	1	ELBOW, bulkhead, 90°, 3/4" tube, 1-1/16" straight thread (Includes nut)
27	--------	2	FILTER ASSY. (See page 160)
	70927204	8	CAPSCREW, 1/2"NF x 1-1/8"
	70928188	8	WASHER
28	70690958	1	BRACKET
	70920582	4	CAPSCREW, 1/2"NC x 1-1/4"
	70677008	4	WASHER

(Revised February 1980)

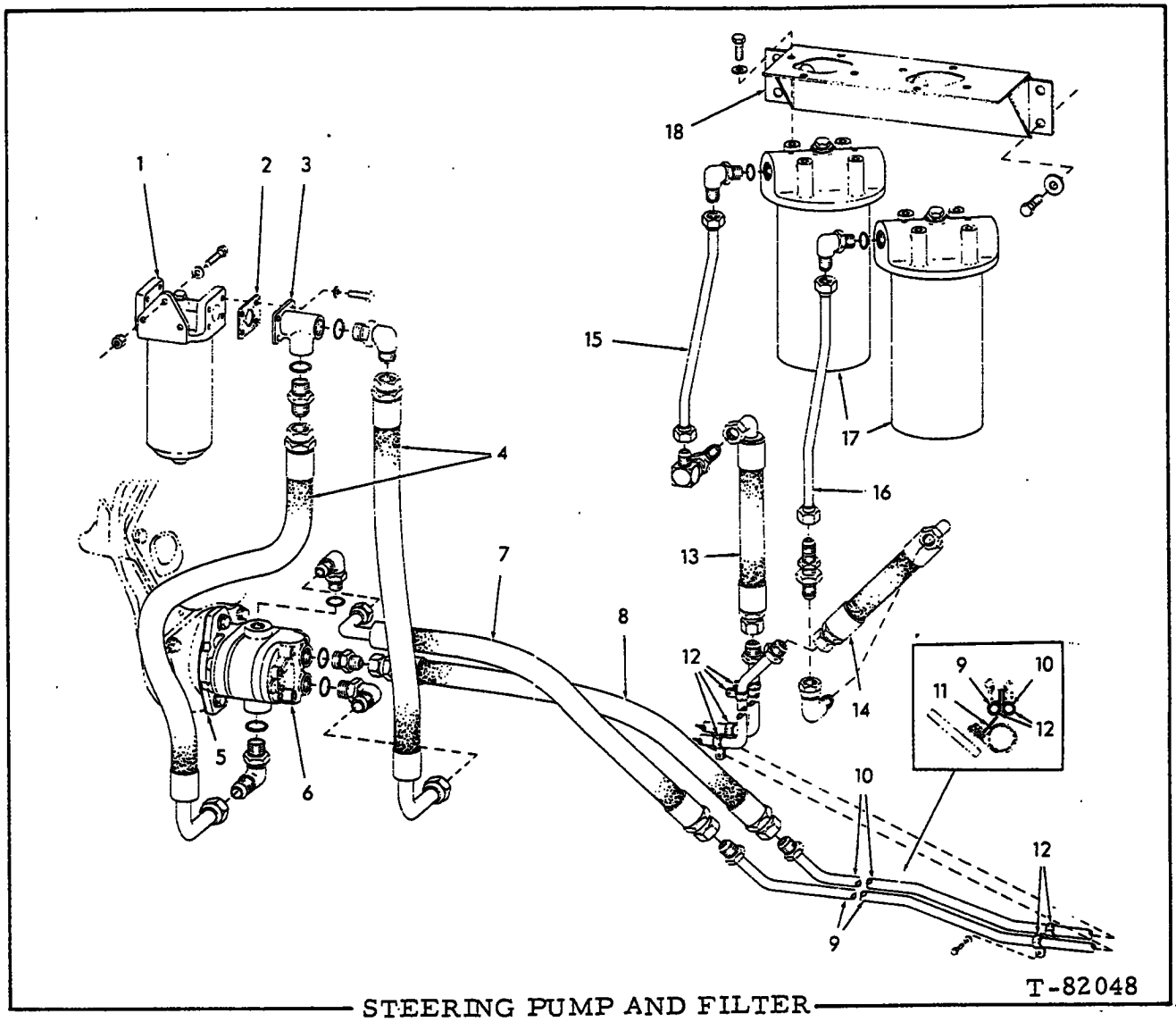

STEERING PUMP AND FILTER

USAGE: Tractors serial No. 71A21812 and up including #21757, 21761 and 21767

ITEM	PART NO.	QTY.	DESCRIPTION
1	--------	1	FILTER ASSY. (See page 159)
	70920585	3	CAPSCREW, 1/2"NC x 1-3/4"
	70677008	3	WASHER
	70911028	3	NUT, 1/2"NC
2	70652011	1	GASKET
3	73117195	1	ELBOW
	70920582	4	CAPSCREW, 1/2"NC x 1-1/4"
	70928460	4	WASHER
4	73117187	2	HOSE (See HOSE PARTS)
	70933473	2	ELBOW, adjustable, 90°, flare type, 1" tube, 1-5/16" str. thd.
	70925922	2	O-RING
	70933796	1	ELBOW, adjustable, 90°, flare type, 1" tube, 1-1/16" boss end thd.
	70930725	1	O-RING
	70925832	1	CONNECTOR, flare type, 1" tube, 1-5/16" str. thd.
	70925922	1	O-RING

(Continued)

(Revised July 1980)

STEERING PUMP AND FILTER (Continued)

ITEM	PART NO.	QTY.	DESCRIPTION
5	70674412	1	GASKET
6	--------	1	PUMP ASSY., steering(See page 158A)
	70923016	2	CAPSCREW, 12-pt., 7/16"NC x 1-1/4"
	70930370	2	WASHER
7	73117188	1	HOSE (See HOSE PARTS)
	70933715	1	ELBOW, adjustable, 90°, flare type, 3/4" tube, 1-1/16" boss end thd.
	70930724	1	O-RING
8	73117186	1	HOSE (See HOSE PARTS)
	70933500	1	CONNECTOR, flare type, 3/4" tube, 1-1/16" str.thd.
	70930724	1	O-RING
9	73117192	1	TUBE ASSY. } Each includes nuts
10	73117191	1	TUBE ASSY. }
11	70690931	1	BRACKET
	70922763	2	CAPSCREW, 3/8"NC x 1"
	70930370	3	WASHER
12	70927310	8	CLAMP
	70922300	1	CAPSCREW, 3/8"NC x 3/4"
	70929156	1	WASHER
13	70690851	1	HOSE } See HOSE PARTS
14	70690852	1	HOSE }
15	70690846	1	TUBE ASSY. (Includes nuts)
	70922632	1	ELBOW, adjustable, 90°, flare type, 3/4" tube, 1-5/16"NF male(Includes washer, nut and O-RING)
	70921214	1	O-RING
	70925031	1	ELBOW, bulkhead, 90°,3/4" tube, 1-1/16" str.thd. (Includes nut)
16	70690848	1	TUBE ASSY. (Includes nuts)
	70922632	1	ELBOW, adjustable, 90°, flare type, 3/4" tube, 1-5/16"NF male(Includes washer, nut and O-RING)
	70921214	1	O-RING
	70927063	1	FITTING, bulkhead, 3/4" tube, 1-1/16" str. thd. (Includes nuts)
	70919624	1	ELBOW, 90°, flare type, swivel nut, 3/4" tube
17	--------	2	FILTER ASSY. (See page 160)
	70927204	8	CAPSCREW, 1/2"NF x 1-1/8"
	70928188	8	WASHER
18	70690958	1	BRACKET
	70920582	4	CAPSCREW, 1/2"NC x 1-1/4"
	70677008	4	WASHER

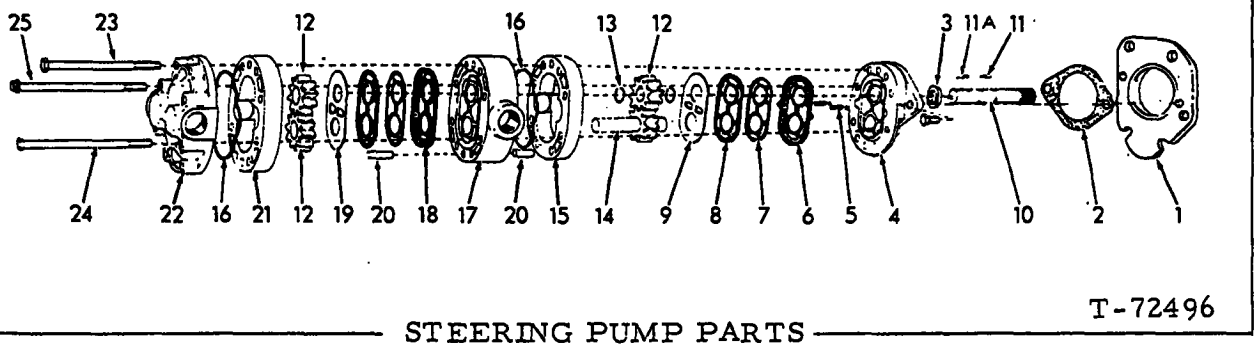

STEERING PUMP PARTS

USAGE: Tractors prior to S/N 71A21812 excluding #21757, 21761 and 21767. See page 156.

ITEM	PART NO.	QTY.	DESCRIPTION
-	70699888	1	PUMP ASSY. (Includes items 3 thru 25)
1	70684432	1	PLATE
	70922063	2	CAPSCREW, 12 pt. 7/16"NC x 1"
	70914678	2	LOCKWASHER, 7/16"
2	70674412	1	GASKET
3	73119464	1	SEAL
4	71126490	1	PLATE ASSY. (Includes bushings)
5	70650679	2	SPRING
	70915903	2	BALL, steel, 7/32" diam.
6	71178407	1	SEAL
7	71178408	2	GASKET (thin)
8	70650675	2	GASKET (thick)
9	73108944	1	DIAPHRAGM
10	70653933	1	SHAFT
11	70673454	2	KEY (short)
11A	70691549	1	KEY (long)
12	70669351	3	GEAR
13	70653936	2	RING
14	70669352	1	GEAR ASSY., idler (Includes shaft)
15	70669345	1	BODY
16	70933855	2	O-RING
17	70669350	1	BODY (Includes bushings)
18	70690291	1	SEAL
19	73108945	1	DIAPHRAGM
20	74905870	4	PIN
21	70681695	1	BODY
22	70699889	1	PLATE
23	70930288	4	CAPSCREW, 5/16"NC x 4-1/2"
24	70928309	2	CAPSCREW, 5/16"NC x 5"
25	70924227	2	SCREW, 12 pt-hd., 5/16"NC x 5"

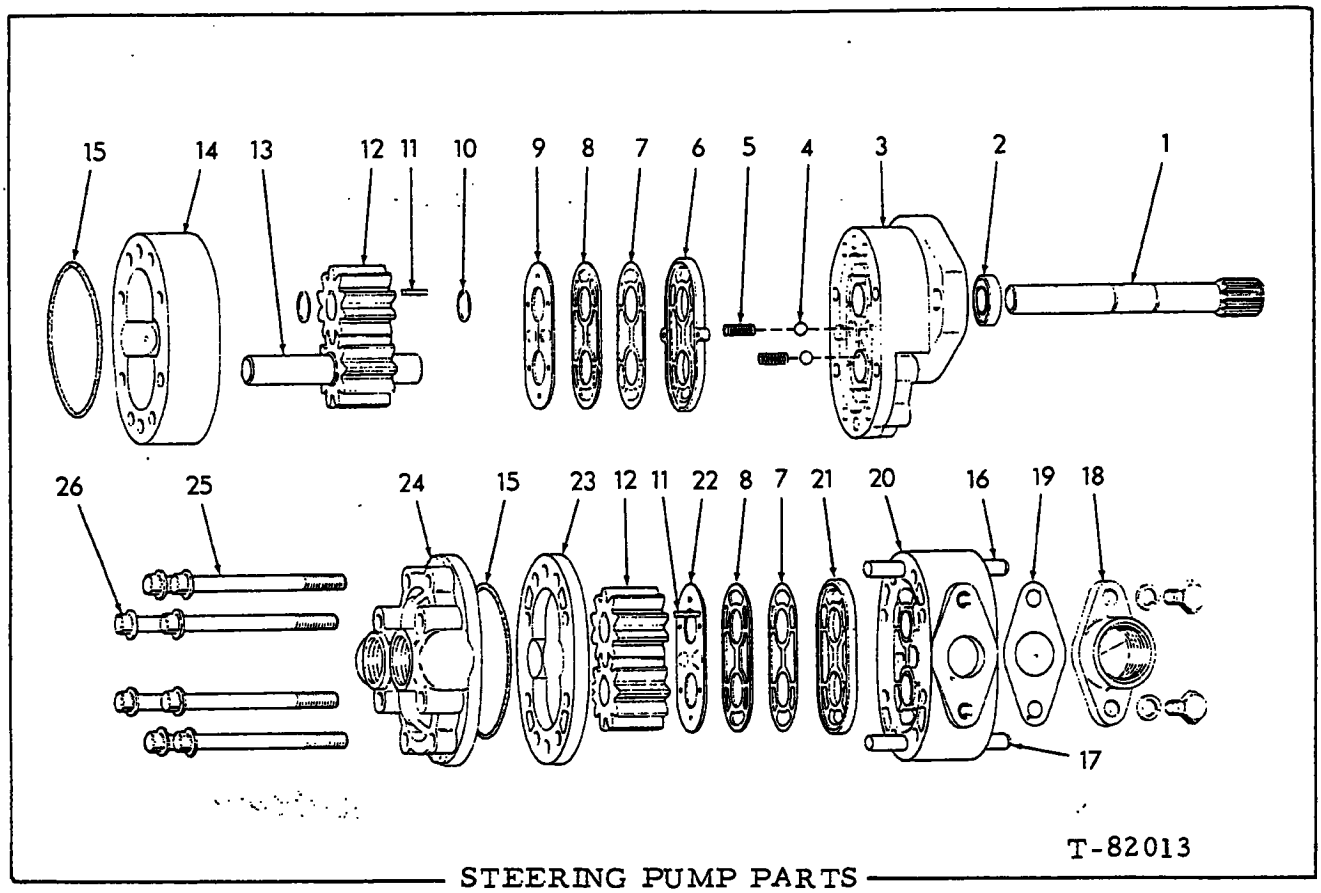

STEERING PUMP PARTS

USAGE: Tractors S/N 71A 21812 and up including #21757, 21761, and 21767. See page 157A.

ITEM	PART NO.	QTY.	DESCRIPTION
-	73117198	1	PUMP ASSY., steering (Includes items 1 thru 26)
1	73122085	1	SHAFT
2	73119464	1	SEAL
3	70677550	1	PLATE ASSY. (Includes bushings)
4	70915903	2	BALL
5	70650679	2	SPRING
6	71178407	1	SEAL
7	71178408	2	GASKET
8	70650675	2	GASKET
9	73111871	1	DIAPHRAGM
10	70653936	2	RING, snap
11	73118003	2	KEY
12	73122082	3	GEAR
13	73122081	1	GEAR ASSY., idler (Includes shaft)
14	74905520	1	BODY
15	70933855	2	O-RING
16	70930513	2	DOWEL, upper
17	70930512	2	DOWEL, lower
18	74999846	1	ADAPTOR
	70922763	2	CAPSCREW, 3/8"NC x 1"
	70910287	2	LOCKWASHER, 3/8"
19	74999844	1	GASKET
20	70669350	1	BODY ASSY., adaptor (Includes bushings)
21	70690291	1	SEAL

(Continued) (Added July, 1980)

STEERING PUMP PARTS (Continued)

ITEM	PART NO.	QTY.	DESCRIPTION
22	73108945	1	DIAPHRAGM
23	73122115	1	BODY
24	70678820	1	PLATE
25	70928894	4	CAPSCREW
26	70932572	4	CAPSCREW

(Added July, 1980)

STEERING FILTER (Suction Line)

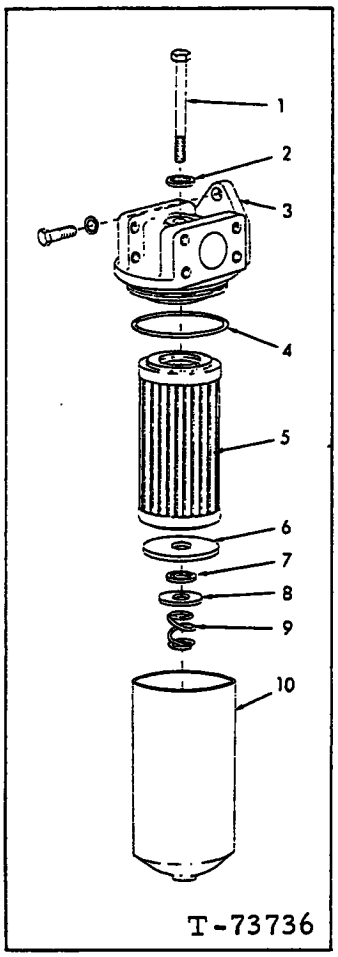

USAGE: See page 156

ITEM	PART NO.	QTY.	DESCRIPTION
-	70651113	1	FILTER ASSY. (Includes items 1 thru 10)
1	70918553	1	CAPSCREW, 7/16" x 4-1/2"
2	70651533	1	WASHER
3	70651529	1	HEAD
4	70923834	1	O-RING
5	70651532	1	ELEMENT
6	70656574	1	PLATE
7	70641029	1	WASHER
8	70656573	1	WASHER
9	70656572	1	SPRING
10	70651531	1	TANK

STEERING FILTERS (Pressure Line)

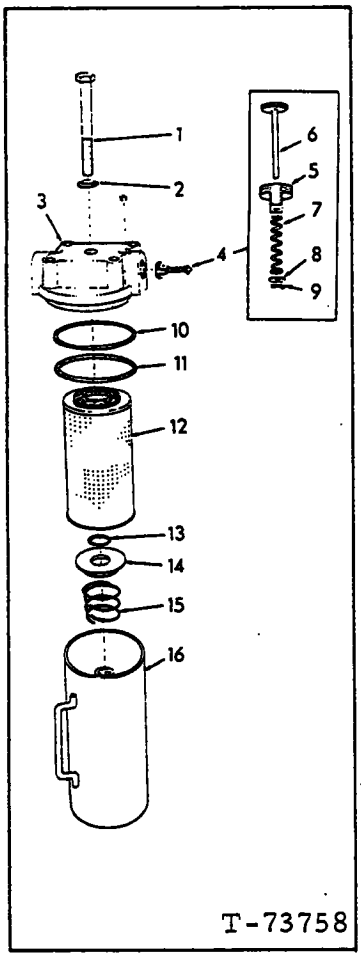

USAGE: See page 157

ITEM	PART NO.	QTY.	DESCRIPTION
-	73128974	2	FILTER ASSY. (Includes items 1 thru 16)
			NOTE: Quantities listed below are for one (1) Filter Assy. only)
1	70923438	1	CAPSCREW, 3/4"NF x 5-1/2"
2	74254971	1	WASHER
3	70678856	1	HEAD ASSY. (Includes item 4 and plugs indented below)
	70918850	2	PLUG, pipe, hex-socket, 1/4"NPT
4	70661534	1	VALVE ASSY. (Includes items 6 thru 10)
5	--------	1	HOUSING } Not serviced
6	--------	1	VALVE } separately
7	70661268	1	SPRING
8	70632060	1	WASHER
9	70900970	1	PIN, cotter, 1/16"x 1/2"
10	70646532	1	RING
11	70923836	1	O-RING
12	73128973	1	ELEMENT KIT (Includes items 2, 10 and 11)
13	70671616	1	O-RING
14	70641031	1	PLATE
15	70674798	1	SPRING
16	70650428	1	TANK

(Revised June 1981)

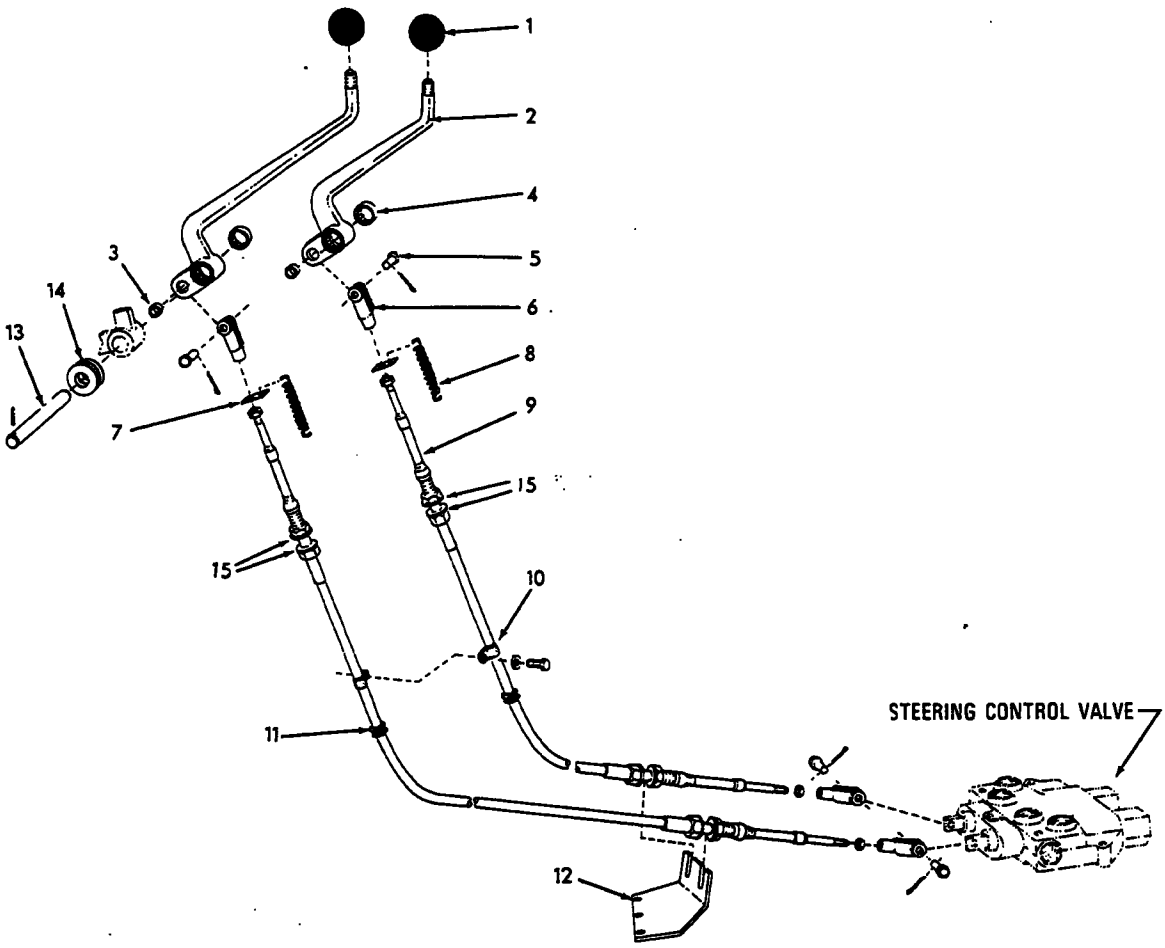

STEERING LEVERS AND LINKAGE

ITEM	PART NO.	QTY.	DESCRIPTION
1	70090020	2	KNOB
2	70680784	1	LEVER ASSY., right } Each includes items 3 and 4
	70680786	1	LEVER ASSY., left }
3	70652689	2	BUSHING
4	70653319	4	BEARING
5	70627451	4	PIN
	70900801	4	PIN, cotter, 3/32" x 3/4"
6	70637541	4	YOKE
	70910980	4	NUT, jam, 5/16"NF
7	70680788	2	CLIP
8	70072438	2	SPRING
9	70690378	2	CABLE
10	70927599	2	CLAMP, insulated
	70922262	1	CAPSCREW, 3/8"NC x 7/8"
	70929156	1	WASHER
11	70930845	2	GROMMET
12	70690377	1	BRACKET
13	70653279	1	SHAFT
	70916004	1	PIN, spring, 3/16" x 2"
14	70922089	5	WASHER, shimming (Use as required)
15	70927382	8	WASHER

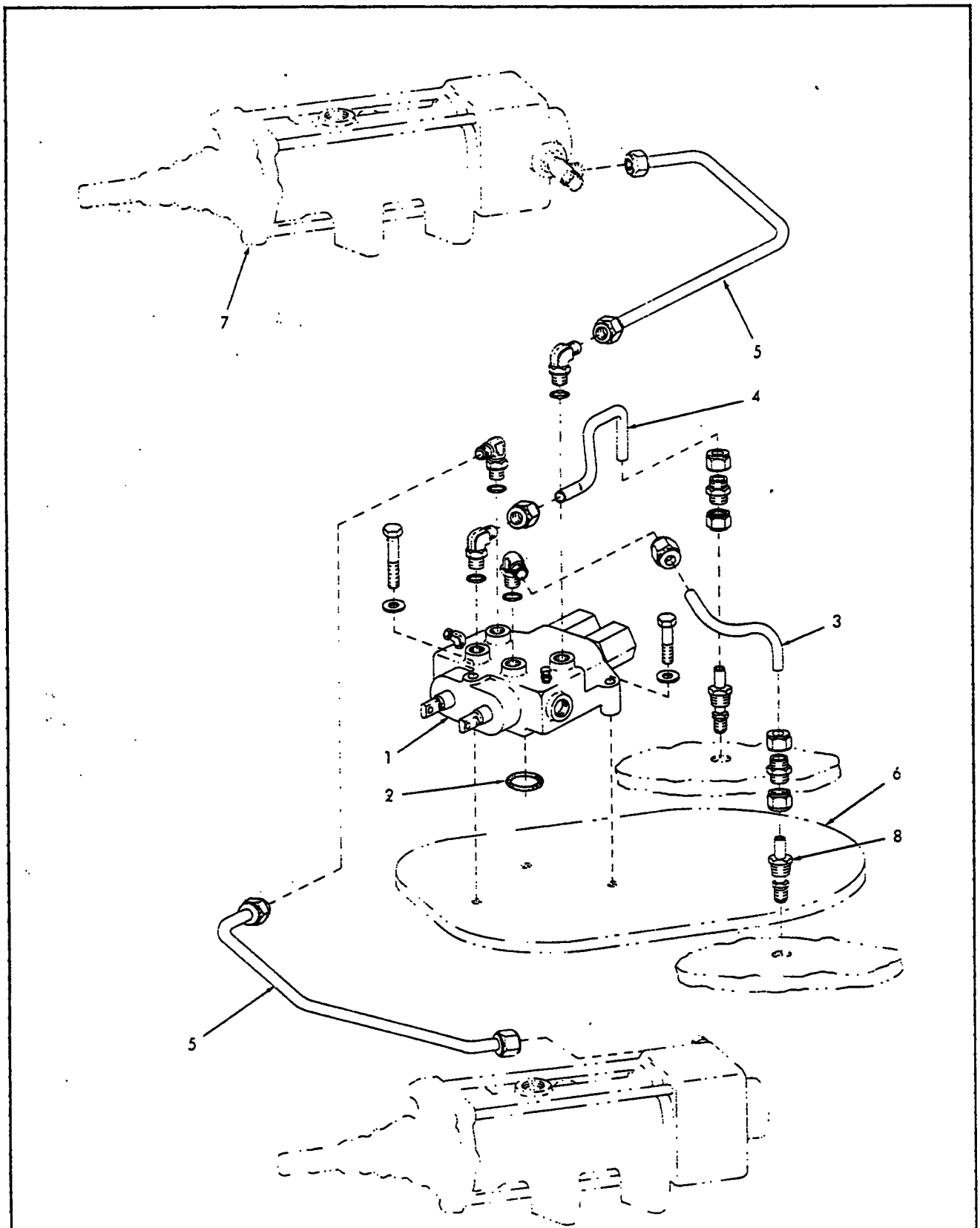

STEERING CONTROL VALVE AND LINES T-79418

STEERING CONTROL VALVE AND LINES

ITEM	PART NO.	QTY.	DESCRIPTION
1	--------	1	VALVE ASSY., control ("Cessna" See page 164)
	70919173	1	ELBOW, flare type, 1/4" tube, 1/8"NPT male — Tractors prior to unit #21152
	70919171	1	CONNECTOR, flare type, 1/4" tube, 1/8"NPT male — Tractors prior to unit #21152
	70919464	2	ELBOW, flare type, 45°, 1/4" tube, 1/8"NPT male (Tractor unit #21152 thru #21462)
	70922990	2	ELBOW, flare type, 45°, 1/4" tube, 1/4"NPT (Tractor unit #21463 and up)
	70921467	2	CAP, flare type, 1/4" tube
	70920995	2	CAPSCREW, 3/8"NC x 2"
	70927218	1	CAPSCREW, 3/8"NC x 2-3/4"
	70927453	3	WASHER
2	70933490	1	O-RING
3	70690734	1	TUBE
	70933507	1	ELBOW, 90°, 1/2" tube, 3/4" straight thread (Includes washer and nuts)
	70933466	1	O-RING
	70930852	1	UNION (Includes nuts)
4	70690735	1	TUBE
	70933507	1	ELBOW, 90°, 1/2" tube, 3/4" straight thread (Includes washer and nuts)
	70933466	1	O-RING
	70930852	1	UNION (Includes nuts)
5	70690664	1	TUBE ASSY., left — Each includes nuts
	70690704	1	TUBE ASSY., right — Each includes nuts
	70933482	2	ELBOW, adjustable, 90°, flare type, 5/8" tube, 3/4"NF male end
	70933466	2	O-RING
6	--------	-	COVER (See page 139)
7	--------	-	VALVE ASSY. page 167)
8	70690658	2	FITTING

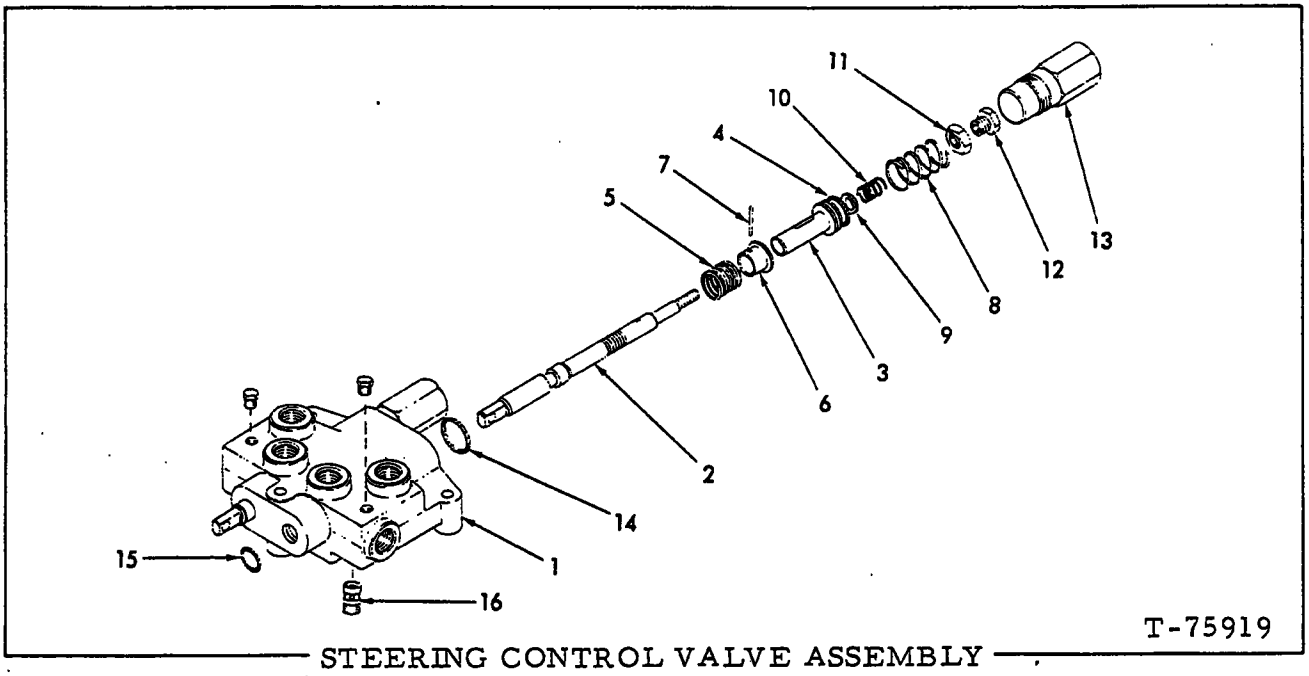

STEERING CONTROL VALVE ASSEMBLY

USAGE: See page 162

ITEM	PART NO.	QTY.	DESCRIPTION
-	73107592	1	VALVE ASSY. (Includes items 1 thru 16)
1	--------	1	BODY (Not serviced separately)
	70919134	2	PLUG, pipe, hex-hd., 1/8"NPT
2	--------	2	PLUNGER (Not serviced separately)
3	73108259	2	SLEEVE
4	70923562	2	O-RING
5	70677643	2	SPRING
6	70677637	2	BUSHING
7	70916168	2	PIN, spring, 1/8" x 3/4"
8	73108258	2	SPRING
9	70677641	2	WASHER
10	70677642	2	SPRING
11	70677639	2	NUT
12	70677638	2	RETAINER
13	70677634	2	CAP
14	70924416	2	O-RING
15	73108260	2	O-RING
16	70695996	1	CHECK ASSY., lift (Serviced only as a unit)

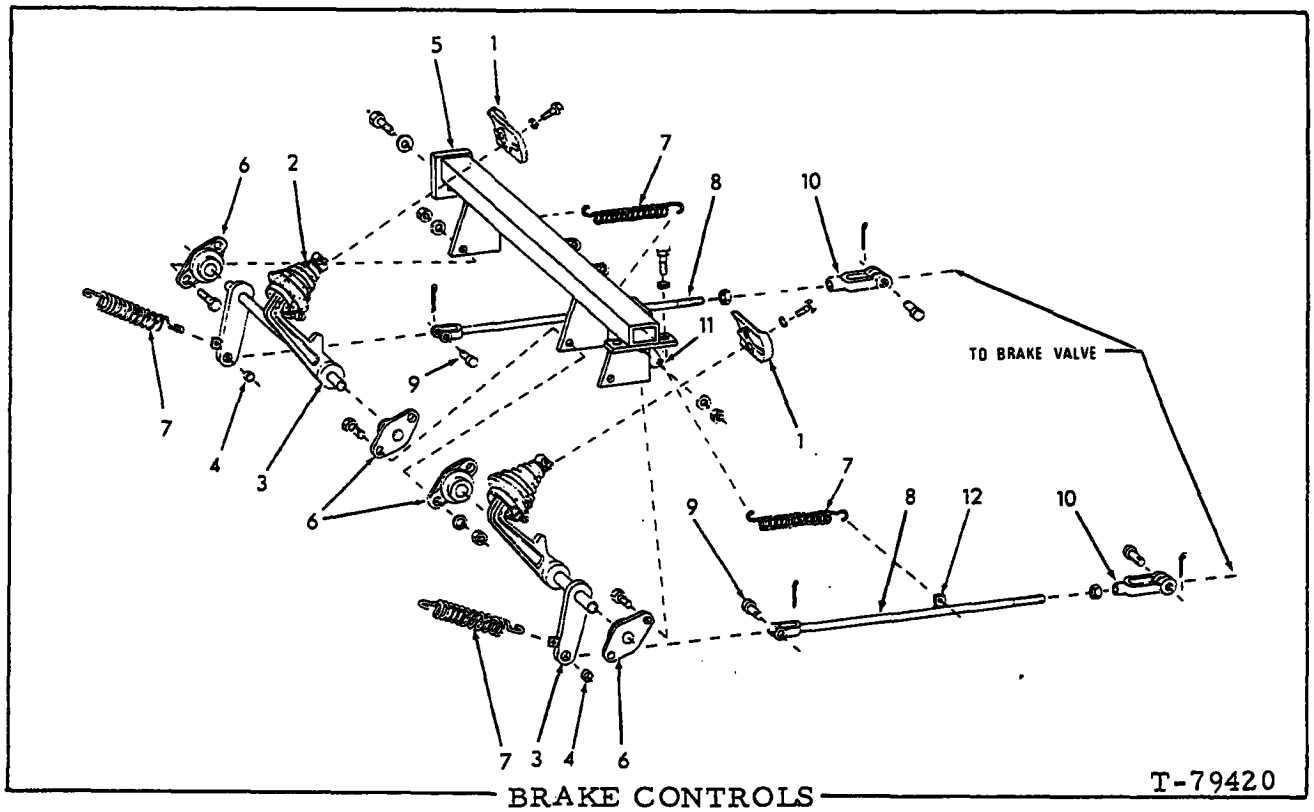

BRAKE CONTROLS

ITEM	PART NO.	QTY.	DESCRIPTION
1	70690187	2	PAD
	70921076	4	CAPSCREW, 3/8"NC x 1-1/4"
	70910287	4	LOCKWASHER, 3/8"
2	70690353	2	BOOT
	70921912	2	CLAMP, 1-1/16" to 2" diam.
	70921915	2	CLAMP, 2-13/16" to 3-3/4" diam.
3	70690310	1	LEVER ASSY., left } Each includes
	70690313	1	LEVER ASSY., right } item 4
4	70052669	2	BUSHING
5	70690317	1	TUBE (Tractors prior to unit #21252) } If for first replacement also order item 13
	73109361	1	TUBE (Tractor unit #21252 thru #21482) }
	73113283	1	TUBE (Tractor unit #21483 and up)
	70920583	4	CAPSCREW, 1/2"NC x 1-1/2"
	70677008	4	WASHER
6	70680917	4	BEARING
	70922287	4	CAPSCREW, 3/8"NC x 1-3/4"
	70920996	2	CAPSCREW, 3/8"NC x 2-1/4"
	70677006	6	WASHER
	70911026	6	NUT, 3/8"NC
7	--------	2	SPRING (Tractors prior to unit #21483)(Order item 13)
	70035942	2	SPRING (Tractor unit #21482 and up)

(Continued)

BRAKE CONTROLS (Continued)

ITEM	PART NO.	QTY.	DESCRIPTION	
8	70690316	2	ROD (Tractors prior to unit #21483)	If for first replacement also order item 13
	73113286	2	ROD (Tractor unit #21483 and up)	
9	70052671	4	PIN	
	70900806	4	PIN, cotter, 1/8" x 1"	
10	70628730	2	YOKE	
	70911049	2	NUT, jam, 5/8"NF	
11	--------	2	STRAP	Not serviced separately order item 13
12	--------	2	CLIP	
13	73113319	1	KIT, brake spring (Includes items 7,11 and 12)	

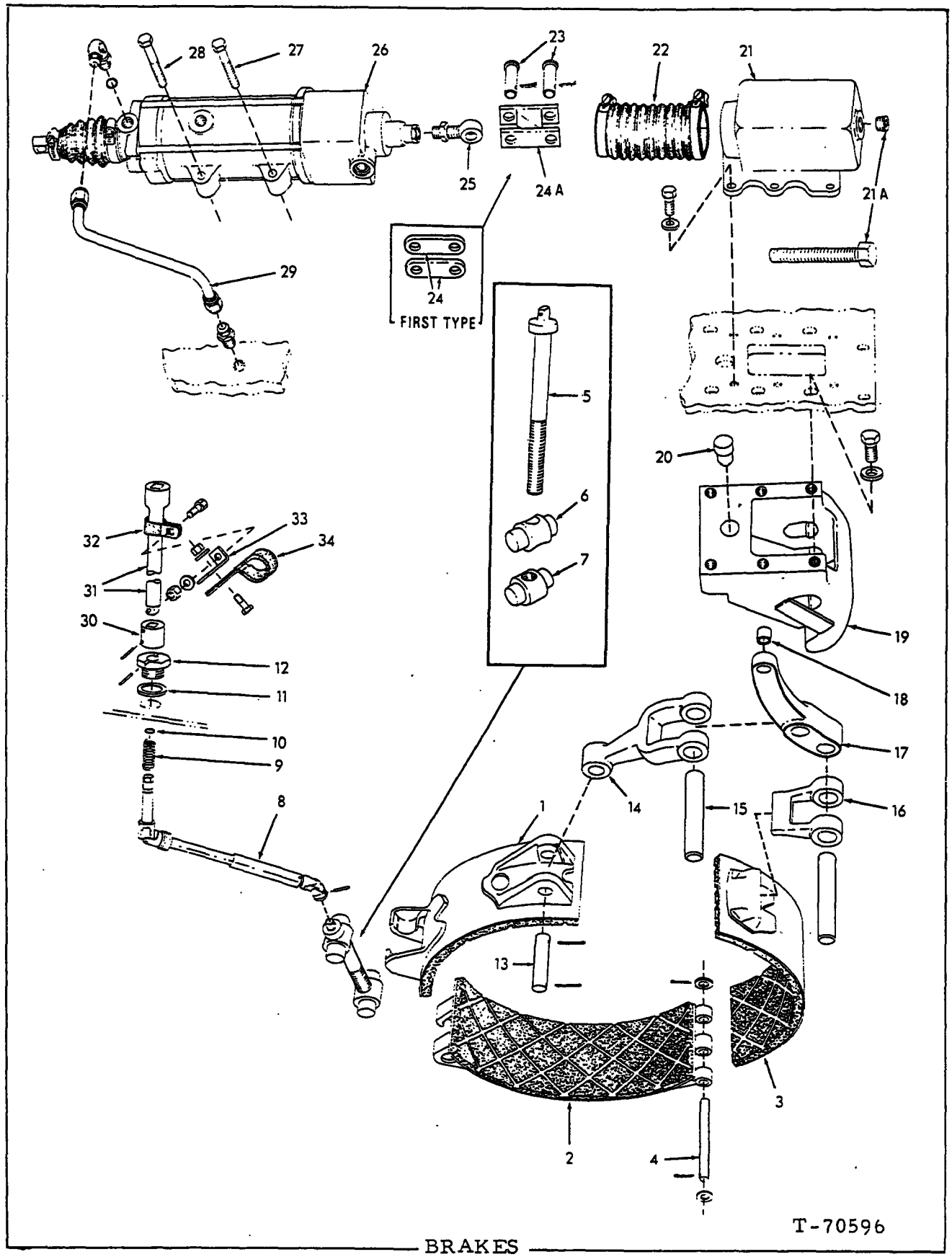

BRAKES

(Revised May 1982)

BRAKES

ITEM	PART NO.	QTY.	DESCRIPTION
1	73121283	2	BAND ASSY. } Each includes bonded
2	73121281	2	BAND ASSY. (Also order item 7) } linings. Refer to item 35
3	70637997	2	BAND ASSY. }
4	70623130	2	PIN
	70912900	4	WASHER
	70900806	4	PIN, cotter, 1/8" x 1"
5	73131138	2	SCREW
6	73121557	2	PIN
7	70653494	2	PIN
8	70687021	2	DRIVE ASSY. (Serviced only as a unit)
	70921330	2	PIN, spring, 7/32" x 1-1/8"
	70921452	2	PIN, spring, 7/32" x 1-1/2"
9	70672003	2	SPRING
10	70933459	2	O-RING
11	70623144	2	GASKET
12	70672002	2	SLEEVE
13	70623132	2	PIN
	70900808	4	PIN, cotter, 1/8" x 1-1/2"
14	70623133	2	YOKE
15	70623131	4	PIN
16	70623158	2	YOKE
17	70679312	2	LEVER ASSY. (Includes item 18)
18	70623164	2	BUSHING
19	70623182	2	BRACKET ASSY. (Includes item 20)
	70927529	12	CAPSCREW, 5/8"NF x 1-3/4"
	70930364	12	WASHER
20	70643740	2	PIN
21	70686754	2	COVER
	70927172	12	CAPSCREW, 1/2"NC x 1-1/8"
	70928460	12	WASHER
21A	70038454	2	PLUG (standard)
	70929032	2	CAPSCREW (1"NC x 6", full thread)(Special. Used only to release brakes. Refer to 21-C Operations and Maintenance Instruction Manual)
22	70672000	2	BOOT
	70921914	4	CLAMP, 2-5/16" to 3-1/4" diam.
23	70623139	4	PIN
	70910302	4	PIN, cotter, 5/32" x 1-1/4"
24	70687043	4	LINK (Two-piece)(Tractors prior to S/N 71A 22070)
24A	73128447	2	LINK (One-piece)(Tractor S/N 71A 22070 and up)
25	70638818	2	EYE
	70910847	2	NUT, jam, 3/4"NF
26	--------	2	VALVE ASSY. (See page 168)
27	70922510	4	CAPSCREW, 1/2"NC x 2-3/4"
28	70921539	4	CAPSCREW, 1/2"NC x 3-1/2"
29	70690731	1	TUBE ASSY., left
	73111525	1	TUBE ASSY., right (Also used on units equipped with "Kelley" Ripper)(Includes nuts and sleeves)
	70933481	2	ELBOW, adjustable, 90°, flare type, 5/8" tube, 7/8"NF (Includes washer and nut)
	70930724	2	O-RING
	70919472	2	CONNECTOR, flare type, 5/8" tube, 1/2"NPT male

(Continued)

BRAKES (Continued)

ITEM	PART NO.	QTY.	DESCRIPTION	
30	70698729	1	SOCKET	Units equipped with CAB Right side only
	70921452	1	PIN, spring, 7/32" x 1-1/2"	
31	70698728	1	EXTENSION	
32	70926049	1	CLAMP	
33	70698727	1	ANGLE	
	70922262	1	CAPSCREW, 3/8"NC x 7/8"	
	70677006	1	WASHER	
	70911026	1	NUT, 3/8"NC	
34	70926874	1	CLAMP	
	70922262	1	CAPSCREW, 3/8"NC x 7/8"	
	70677006	1	WASHER	
	70911026	1	NUT, 3/8"NC	
35	73117505	2	LINING KIT, brake (Each includes linings and instruction sheet sufficient to service one side only)	

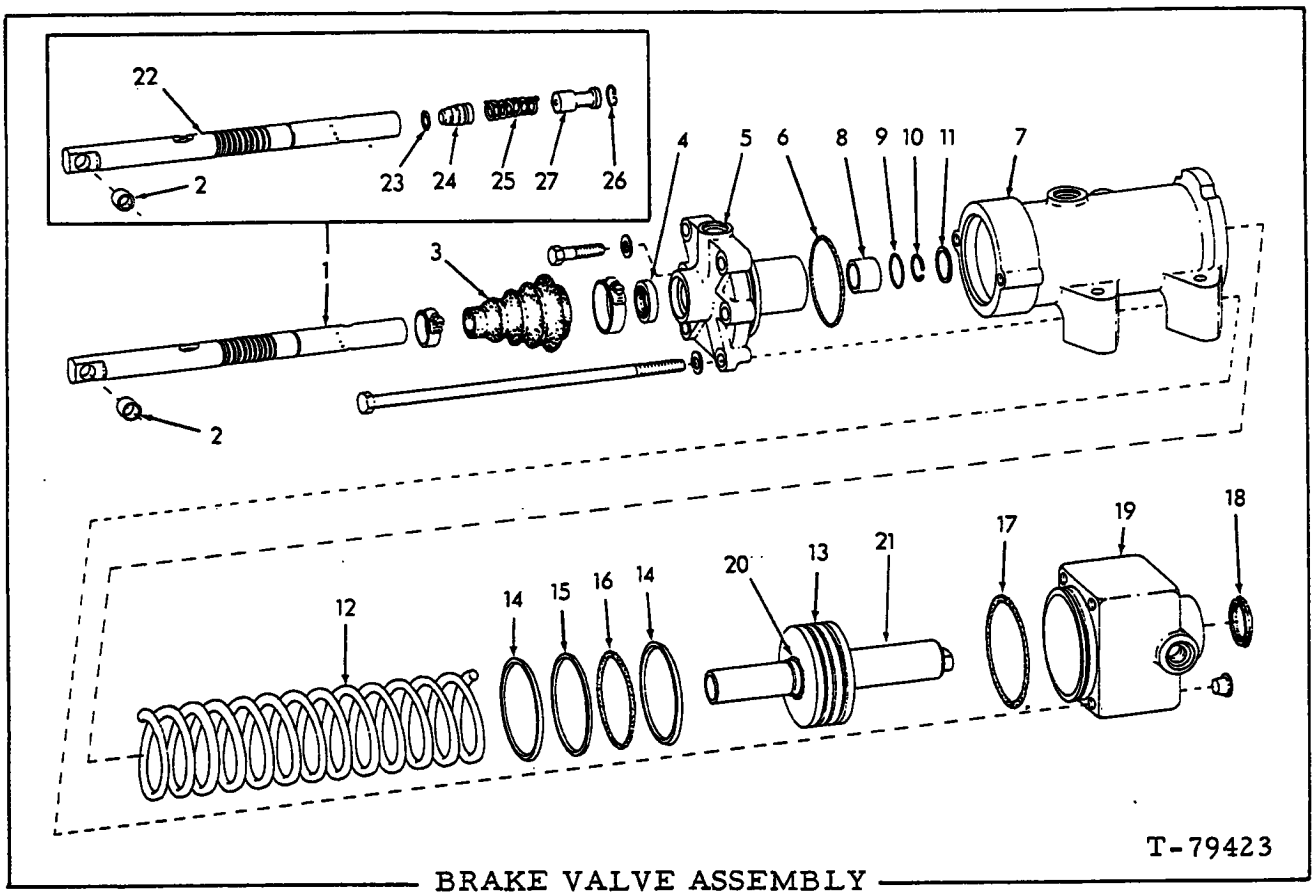

BRAKE VALVE ASSEMBLY

USAGE: See page 167

ITEM	PART NO.	QTY.	DESCRIPTION
-	73113162	1	VALVE ASSY. left } First type. Each includes
-	73113163	1	VALVE ASSY., right } items 1 thru 21 and item 28
-	73114793	1	VALVE ASSY., left } Second type. Each includes
-	73114794	1	VALVE ASSY., right } item 1 thru 28.
			NOTE: Quantities listed below are for one (1) Valve Assembly only.
1	--------	1	ROD ASSY. (Includes item 2)(First type. Order Spool Assy. 73118865)
	73118865	1	SPOOL ASSY. (Includes items 2, 22 thru 27) (Second type)
2	70052669	1	BUSHING
3	70685872	1	BOOT
	70921912	1	CLAMP, 1-1/16" to 2" diam.
	70921914	1	CLAMP, 2-5/16" to 3-1/4" diam.
4	70690202	1	SEAL
5	70685812	1	COVER
	70924868	2	CAPSCREW, 1/2"NC x 2"
	70685875	4	CAPSCREW, 1/2"NC x 14-3/4"
	70677008	8	WASHER
6	70923818	1	O-RING
7	70685828	1	HOUSING
8	70693882	1	RING

(Continued)

BRAKE VALVE ASSEMBLY (Continued)

ITEM	PART NO.	QTY.	DESCRIPTION	
9	70923664	1	O-RING	
10	70929265	1	RING	
11	70927024	1	RING	
12	70694352	1	SPRING	
13	70685842	1	PISTON	
14	70671593	2	RING, guide	
15	70659776	1	RING, seal	
16	70923659	1	O-RING	
17	70923822	1	O-RING	
18	70671598	1	SEAL	
19	70685809	1	COVER	
	70917958	4	CAP (plastic)	
20	70926574	1	RING	
21	70685854	1	SPOOL	
22	73114848	1	ROD ASSY. (Includes item 2.)	
23	73118902	1	POPPET ASSY.	
24	70923379	1	O-RING	
25	73115305	1	SPRING	Second type
26	70926800	1	RING, snap	
27	73114740	1	PLUNGER	
28	--------	1	DECAL (See page 199)	

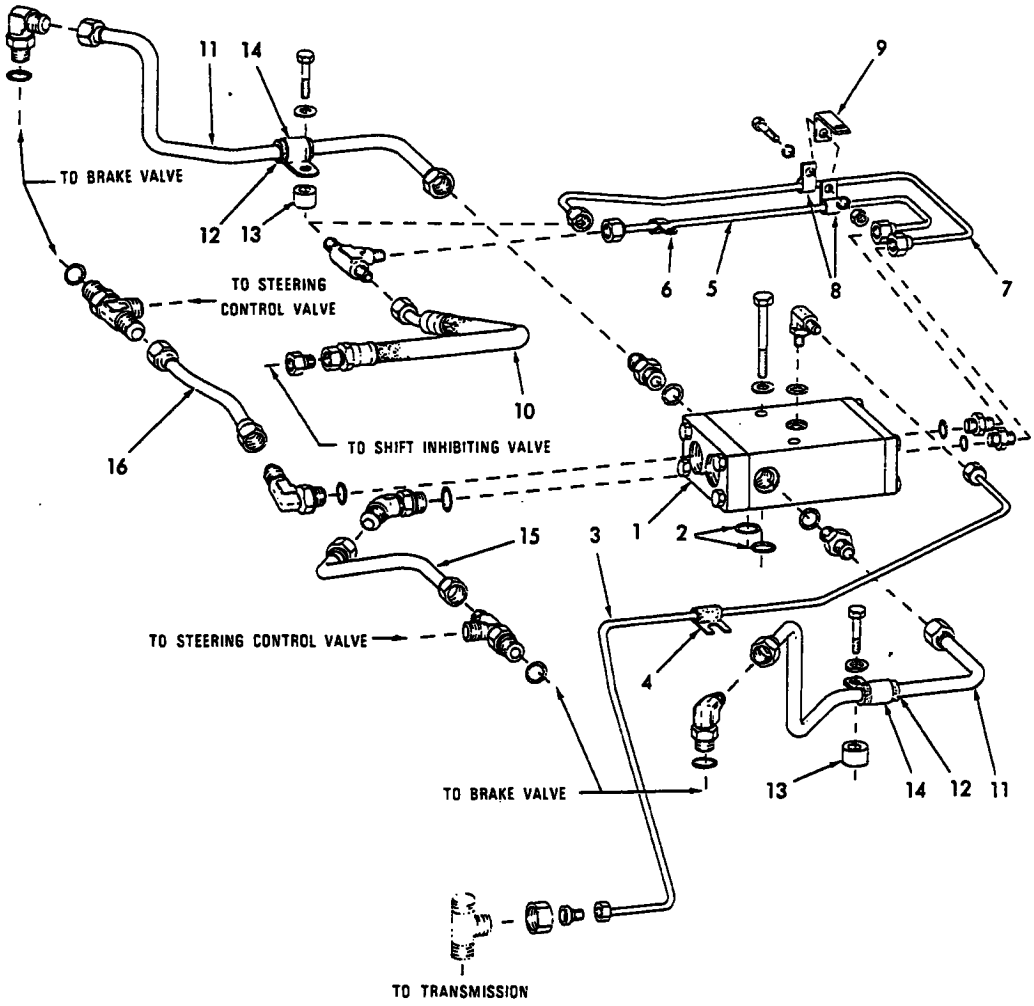

BRAKE REGULATOR VALVE AND LINES.

ITEM	PART NO.	QTY.	DESCRIPTION
1	---------	1	VALVE ASSY. (See page 172)
	70922848	2	CAPSCREW, 3/8"NC x 3-1/4"
	70927453	2	WASHER
2	70930732	2	O-RING
3	70690730	1	TUBE ASSY. (Includes nuts and sleeves)
	70923540	1	ELBOW, adjustable, 90°, flare type, 1/4" tube, 7/16"NF male (Includes washer and nut)
	70933475	1	O-RING
	70921277	1	REDUCER, flare type, 1/2" to 1/4" tube
	70919068	1	NUT, flare type, 1/2" tube
4	70641563	1	CLIP
5	70697717	1	TUBE ASSY. (Includes nuts and sleeves)(Not used on units equipped with special Brake Lock)
	70933470	1	CONNECTOR, flare type, 3/8" tube, 9/16"NF male
	70933476	1	O-RING

(Continued)

BRAKE REGULATOR VALVE AND LINES (Continued)

ITEM	PART NO.	QTY.	DESCRIPTION
6	70697788	1	CLIP
7	70697718	1	TUBE ASSY. (Includes nuts and sleeves)(Not used on units equipped with special Brake Lock)
	70933470	1	CONNECTOR, flare type, 3/8" tube, 9/16"NF male
	70933476	1	O-RING
	70919087	1	TEE, union, flare type, 3/8" tube, 9/16" straight thread
8	70929458	2	CLAMP
	70922300	1	CAPSCREW, 3/8"NC x 3/4"
	70910287	2	LOCKWASHER, 3/8"
	70911026	1	NUT, 3/8"NC
9	70657549	1	ANGLE
10	70691009	1	HOSE (See HOSEPARTS)(Not used on units equipped with special Brake Lock)
	70926768	1	REDUCER, flare type, 1/2" to 3/8" tube
11	70690685	1	TUBE ASSY., left } Each includes nuts and sleeves
	70690686	1	TUBE ASSY., right }
	70933479	2	CONNECTOR, flare type, 5/8" tube, 7/8"NF male
	70933481	2	ELBOW, adjustable, 90°, flare type, 5/8" tube, 7/8"NF (Includes washer and nut)
	70930724	4	O-RING
12	70097611	2	BOOT
13	70605923	2	BOSS
14	70929627	2	CLAMP
	70921565	2	CAPSCREW, 3/8"NC x 1-1/2"
	70677006	2	WASHER
15	70690736	1	TUBE ASSY. (Includes nuts and sleeves)
	70933477	1	ELBOW, adjustable, 45°, flare type, 5/8" tube, 7/8"NF male (Includes washer and nut)
	70933478	1	TEE, adjustable, flare type, 5/8" tube, 7/8"NF male (Includes washer and nut)
	70930724	2	O-RING
16	70690733	1	TUBE ASSY. (Includes nuts and sleeves)
	70933481	1	ELBOW, adjustable, 90°, flare type, 5/8" tube, 7/8"NF (Includes washer and nut)
	70933478	1	TEE, adjustable, flare type, 5/8"tube, 7/8"NF male (Includes washer and nut)
	70930724	2	O-RING

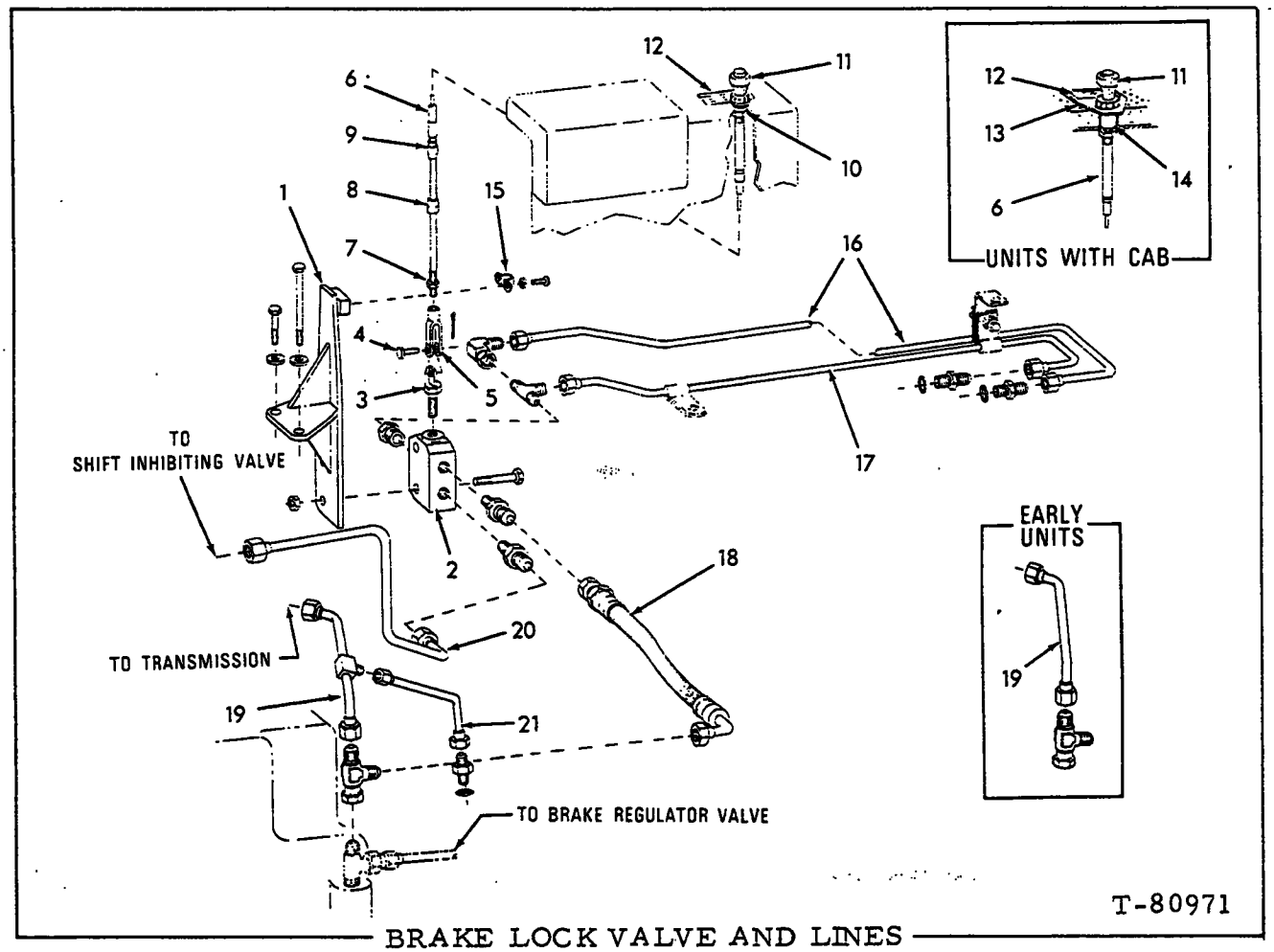

BRAKE LOCK VALVE AND LINES

USAGE: Special equipment. Used when auxiliary equipment is operated through Power Take-Off.

ITEM	PART NO.	QTY.	DESCRIPTION
1	73110997	1	BRACKET
	70922287	1	CAPSCREW, 3/8"NC x 1-3/4"
	70924842	1	CAPSCREW, 3/8"NC x 4-1/4"
	70677006	2	WASHER
2	70696319	1	VALVE ASSY. (Serviced only as a unit)
	70930583	2	CAPSCREW, 3/8"NC x 2-1/4"
	70900367	2	NUT, 3/8"NC
3	73111004	1	ADAPTER
4	70628738	1	PIN
	70900970	1	PIN, cotter, 1/16" x 1/2"
5	73117280	1	YOKE
6	73111005	1	CABLE ASSY. (Includes items 7 thru 11)
7	70917415	1	NUT, #10-32NF
8	70680580	1	SEAL, rod
9	70680581	1	SEAL, sleeve
10	70680582	1	NUT
	70928455	1	WASHER

(Continued)

(Revised May 1982)

BRAKE LOCK VALVE AND LINES (Continued)

ITEM	PART NO.	QTY.	DESCRIPTION
11	70680931	1	BOOT
12	--------	1	DECAL (See page 198)
13	73111341	1	PLATE } Units equipped with CAB
14	70679335	1	SPACER }
15	70680023	1	CLAMP
	70916080	2	SCREW, rd-hd., #10-24 NC x 1/2"
	70910284	2	LOCKWASHER, #10
16	73110998	1	TUBE
	70921013	1	ELBOW, flare type, swivel, 3/8"tube, 9/16" str.-thd (Includes nut)
17	73110991	1	TUBE
	70919483	1	TEE, flare type, 3/8" tube, 9/16" str. thd.
	70917503	1	BUSHING, pipe, reducing, 1/2" to 1/4" NPT
18	70645236	1	HOSE (See HOSE PARTS)
	70919128	1	CONNECTOR, flare type, 1/2" tube, 1/2"NPT
19	73110993	1	TUBE(Tractors prior to unit #21927)
	73127645	1	TUBE(Tractor unit #21927 and up)
	70921298	1	TEE, flare type, swivel, 1/2" tube, 3/4" str. thd. (Includes nut)
20	73110992	1	TUBE
	70919128	1	CONNECTOR, flare type, 1/2" tube, 1/2"NPT
21	73127646	1	TUBE(Tractors unit #21927 and up)
	70927424	1	CONNECTOR, flare type, 1/4" tube, 7/16" str.thd.
	70933745	1	O-RING

(Revised February 1980)

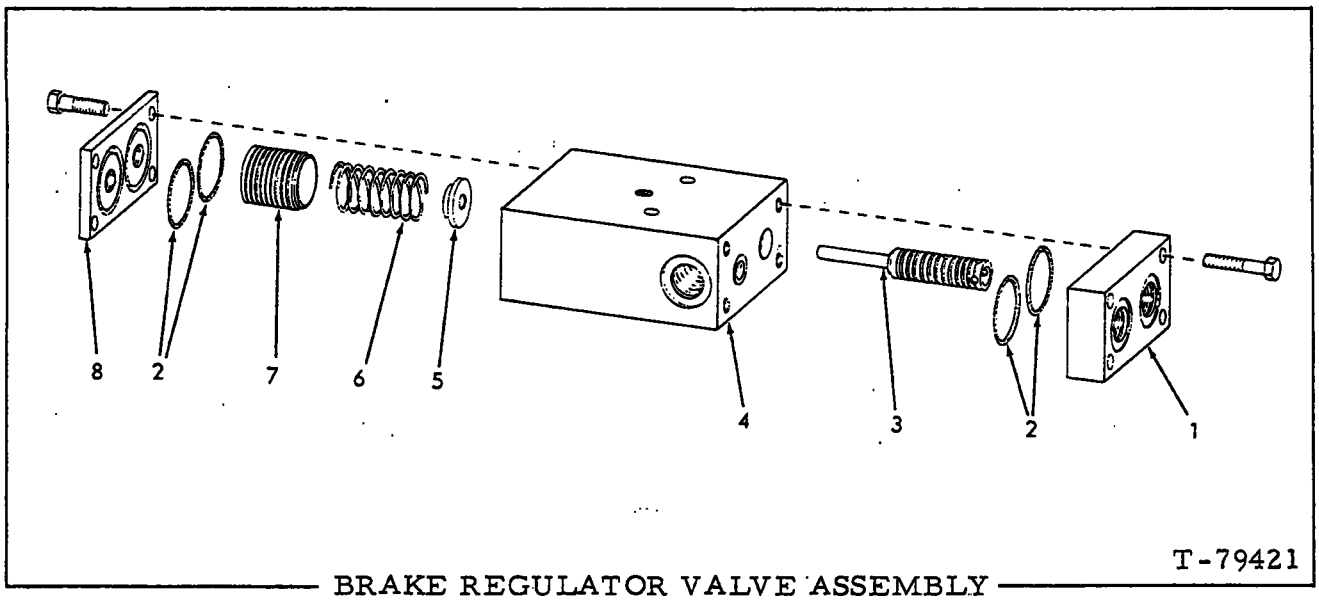

BRAKE REGULATOR VALVE ASSEMBLY

USAGE: See page 170

ITEM	PART NO.	QTY.	DESCRIPTION
-	70695411	1	VALVE ASSY. (Includes items 1 thru 8)
1	70695409	1	COVER
	70922287	4	CAPSCREW, 3/8"NC x 1-3/4"
2	70923576	4	O-RING
3	70695410	2	SPOOL
4	--------	1	HOUSING (Not serviced separately)
5	70697599	2	GUIDE
6	70622102	2	SPRING
7	70697532	2	VALVE
8	70695408	1	COVER
	70921076	4	CAPSCREW, 3/8"NC x 1-1/4"

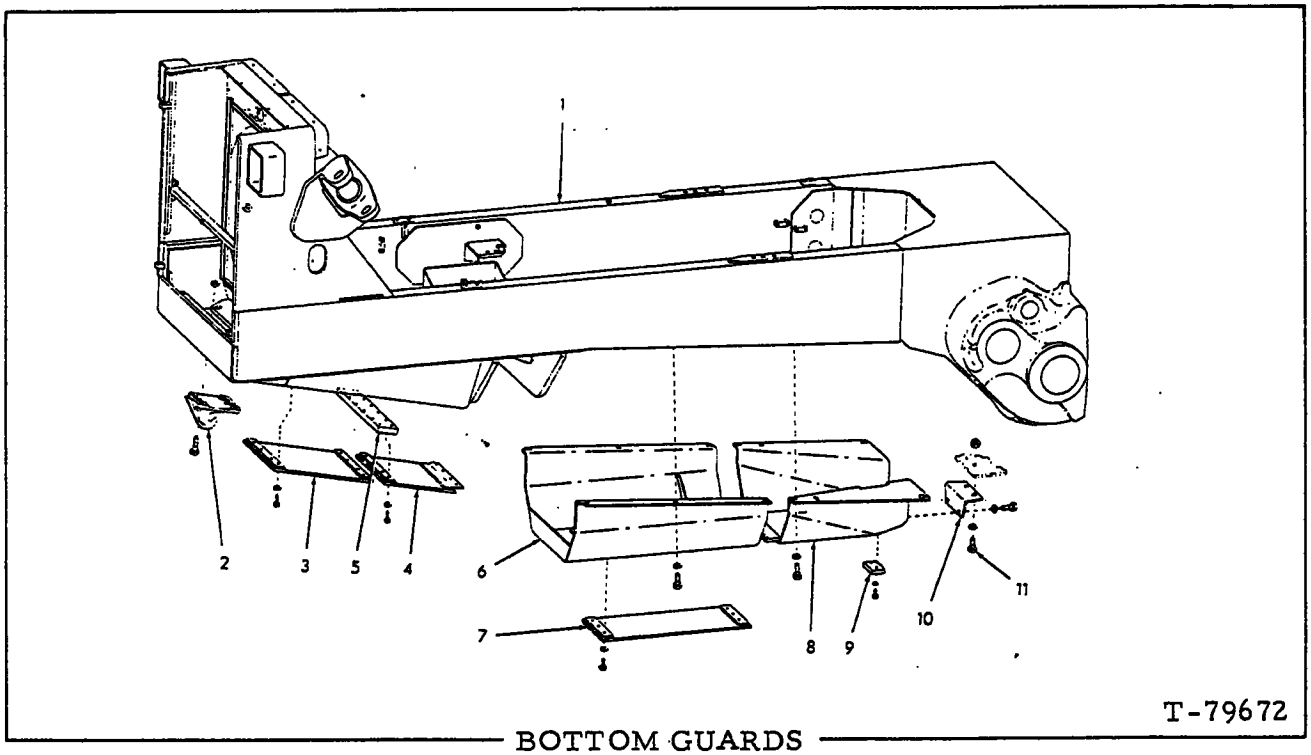

T-79672

BOTTOM GUARDS

ITEM	PART NO.	QTY.	DESCRIPTION
1	--------	1	MAIN FRAME (See page 173A)
2	70040503	1	HOOK, front pull
	70013006	4	CAPSCREW, 7/8"NF x 3-3/4"
	70070400	4	NUT, high, 7/8"NF
3	70681504	1	PLATE
	70921403	8	CAPSCREW, 5/8"NC x 2"
	70677010	8	WASHER
4	70681507	1	PLATE
	70921403	8	CAPSCREW, 5/8"NC x 2"
	70677010	8	WASHER
5	70681503	1	PLATE
6	70687658	1	GUARD
	70925381	6	CAPSCREW, 1"NC x 2-1/2"
	70678072	6	WASHER
7	70681516	1	PLATE
	70928166	3	CAPSCREW, 5/8"NC x 1-1/2"
	70921535	5	CAPSCREW, 5/8"NC x 1-3/4"
	70928169	8	WASHER
8	70687681	1	GUARD
	70925381	6	CAPSCREW, 1"NC x 2-1/2"
	70678072	6	WASHER
9	70642633	1	COVER, oil drain
	70920582	2	CAPSCREW, 1/2"NC x 1-1/4"
	70928460	2	WASHER
10	70681526	1	ANGLE
	70921170	2	CAPSCREW, 3/4"NF x 2-1/2"
	70677012	2	WASHER
11	70923453	2	CAPSCREW, 3/4"NF x 2"
	70677012	2	WASHER
	70911045	2	NUT, 3/4"NF

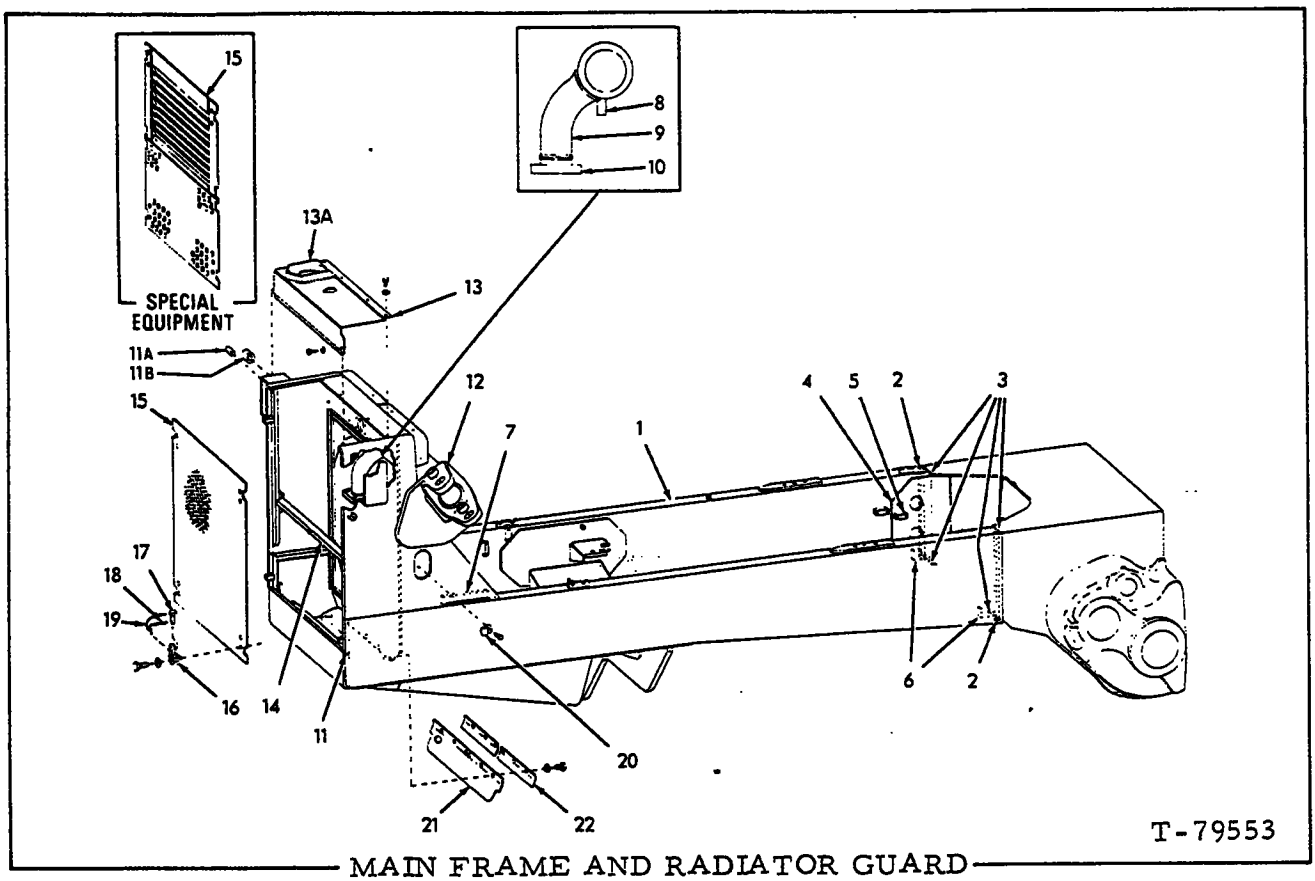

MAIN FRAME AND RADIATOR GUARD

ITEM	PART NO.	QTY.	DESCRIPTION
1	70688114	1	FRAME
2	70686666	2	BAR
3	70694321	4	BLOCK
4	70686663	1	ANGLE, left
	70686664	1	ANGLE, right
5	70689854	1	BLOCK
6	70681189	2	BAR
7	70681094	2	BLOCK
8	70689172	1	BLOCK
9	70695381	1	SUPPORT
10	70689171	1	PLATE
11	70687813	2	BAR
11A	73119012	1	BLOCK } Also order sketch print S-6510
11B	73119013	1	BLOCK } Tractors unit #21876 and up
			NOTE: All items listed above require welding to install.
12	73117321	1	GUARD, radiator (Includes bushing indented below) (If first replacement prior to unit #21207 excluding #21204 also order 4 Capscrews 70926124 and 4 Nuts 70911029)
	70084581	4	BUSHING
13	70687087	1	PLATE (Tractors prior to unit #21483)
	73111209	1	PLATE (Tractor unit #21483 and up)
	70928166	4	CAPSCREW, 5/8"NC x 1-1/4"
	70921411	2	CAPSCREW, 5/8"NC x 1-1/2"
	70677010	6	WASHER
13A	70669367	1	GUARD (Requires welding to install)

MAIN FRAME AND RADIATOR GUARD (Continued)

ITEM	PART NO.	QTY.	DESCRIPTION	
14	70687089	1	BAR	
	70921403	4	CAPSCREW, 5/8"NC x 2" (Tractors prior to #21207 excluding #21204)	
	70926164	4	CAPSCREW, 5/8"NC x 2-3/4" (Tractor unit #21207 and up including #21204)	
	70677010	4	WASHER	
	70911029	4	NUT, 5/8"NC (Tractor unit #21207 and up including #21204)	
15	70689619	1	PLATE (Tractors prior to unit #21207 excluding #21204)	Standard equipment
	73108746	1	PLATE (Tractor unit #21207 and up including #21204)	
	70695298	1	PLATE (Tractors prior to unit #21207 excluding #21204)(Land clearing operation	Special equipment
	73108761	1	PLATE (Tractor unit #21207 and up including #21204)(Land cleaning operation)	
	73108272	1	PLATE (Fan blast deflection)	
16	70667159	4	BRACKET	
	70920585	8	CAPSCREW, 1/2"NC x 1-3/4"	
	70677008	8	WASHER	
17	70643124	4	PIN	
18	70920570	4	PIN	
19	70643229	4	CHAIN ASSY. (Serviced only as a unit)	
20	70672054	1	ANGLE	
	70648238	1	CAPSCREW, 1/2"NC x 3/4"	
21	70689167	1	BAFFLE	
	70927361	6	CAPSCREW, 3/8"NC x 1-1/4"	
	70677006	6	WASHER	
22	70689165	1	ANGLE, left	
	70689166	1	ANGLE, right	

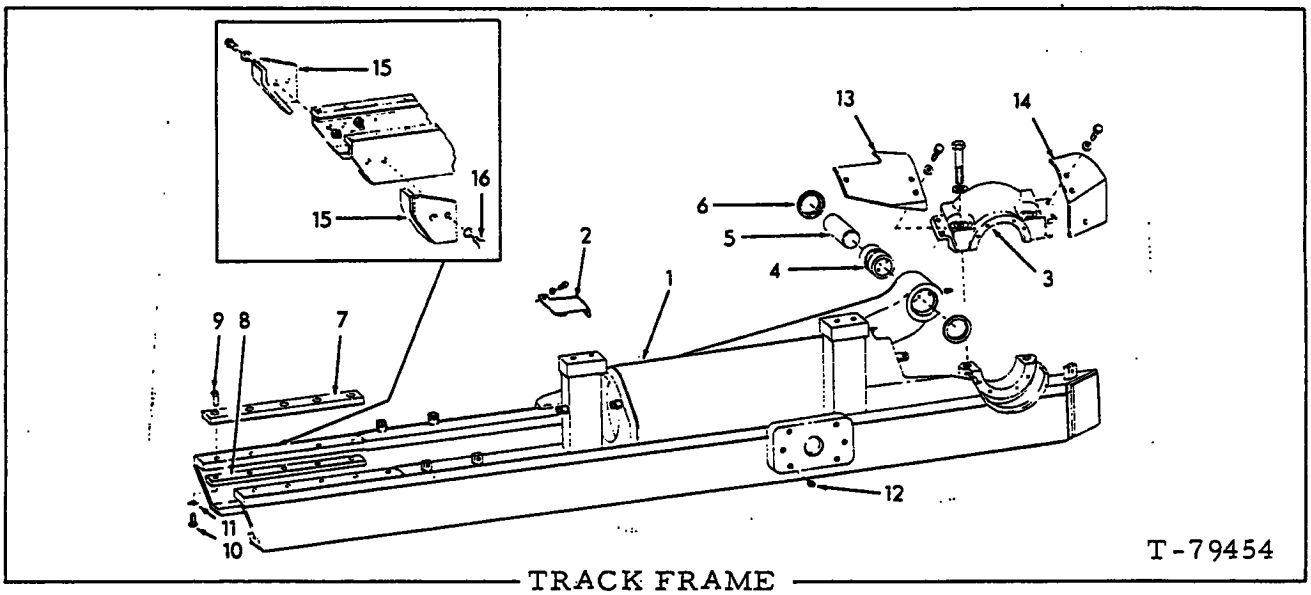

TRACK FRAME

ITEM	PART NO.	QTY.	DESCRIPTION	
1	70694597	1	FRAME ASSY., left	Each includes items 2 thru 4
	70694598	1	FRAME ASSY., right	
	70914465	2	FITTING, 1/8"NPT straight(Units without counterweight)	
	70917192	2	FITTING, 1/8"NPT, 90°(Units with counterweight)	
	70662788	50	CORK (Not used when special guarding is installed)	
2	70696921	2	PLATE	
	70920574	4	CAPSCREW, 1/2"NC x 1-3/8"	
	70926192	12	WASHER	
3	70694560	2	CAP	
	70929873	4	CAPSCREW, 1-1/4"NC x 6"	
	70929276	4	WASHER	
4	70664268	2	BUSHING	
5	70664280	2	SHAFT	
6	70664281	4	SEAL	
7	70630624	4	BAR	
8	70631704	4	BAR	
9	70631690	20	DOWEL	
10	70923276	20	CAPSCREW, 3/8"NF x 1"	
11	70647080	20	WASHER	
12	70630097	12	CORK (1" diam.)(For protecting Dozer mounting holes)	
13	70693673	1	GUARD, left	Special Equipment
	70693674	1	GUARD, right	
	70925415	2	CAPSCREW, 3/4"NC x 1-3/4"	
	70922744	1	CAPSCREW, 3/4"NC x 2-1/2"	
	70928063	3	WASHER	
14	70693677	1	GUARD, left	
	70693678	1	GUARD, right	
	70925415	2	CAPSCREW, 3/4"NC x 1-3/4"	
	70922744	1	CAPSCREW, 3/4"NC x 2-1/2"	
	70928063	3	WASHER	
15	70656795	2	GUARD, left	
	70656796	2	GUARD, right	
16	70921068	8	CAPSCREW, 3/4"NC	
	70929188	16	WASHER	
	70911030	8	NUT, 3/4"NC	

(Revised May 1982)

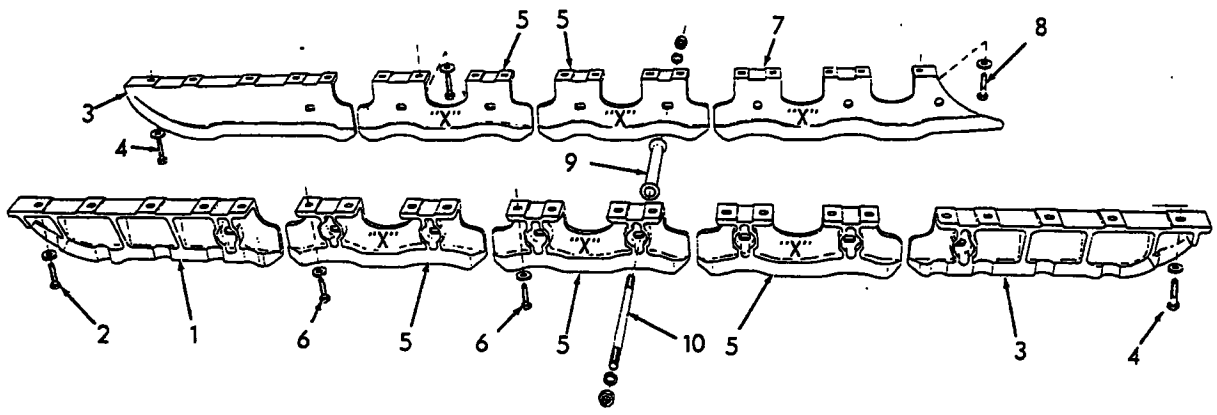

GUARDS MARKED "X" ARE SPECIAL EQUIPMENT

T-36228

TRACK ROLLER GUARDS

* Standard guarding.
** Special equipment guarding (Supplement standard guarding).

ITEM	PART NO.	QTY. *	QTY. **	DESCRIPTION
1	70694563	3	-	GUARD, end section, left side
2	70923454	15	-	CAPSCREW, 7/8"NC x 2-1/4"
	70676122	15	-	WASHER
3	70694564	3	-	GUARD, end section, right side
4	70923454	15	-	CAPSCREW, 7/8"NC x 2-1/4"
	70676122	15	-	WASHER
5	70694541	-	10	GUARD
6	70923454	-	40	CAPSCREW, 7/8"NC x 2-1/4"
	70676122	-	40	WASHER
7	70694547	-	1	GUARD, rear inner section, left side
	70694548	-	1	GUARD, rear inner section, right hand
8	70923454	-	10	CAPSCREW, 7/8"NC x 2-1/4"
	70676122	-	10	WASHER
9	70632361	2	14	SPACER, guard bracing
10	70650847	2	14	ROD, guard bracing (Units with cast guards)
	70696786	2	14	ROD, guard bracing (Units with fabricated guards)
	70928452	4	28	WASHER (Units with cast guards)
	70914728	4	28	LOCKWASHER, 1" (Units with fabricated guards)
	70911047	4	28	NUT, 1"NF

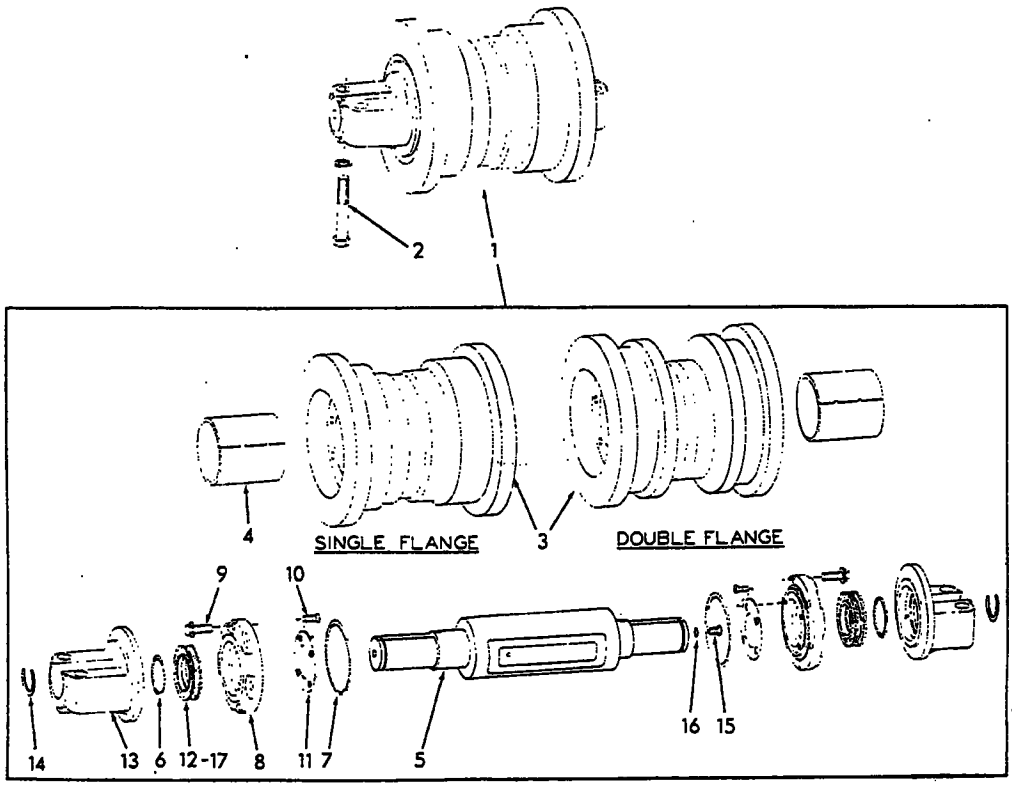

T-75942

TRACK ROLLERS

ITEM	PART NO.	QTY.	DESCRIPTION
1	70688004	6	ROLLER ASSY., single-flange } Each includes
	70691305	8	ROLLER ASSY., double-flange } items 3 thru 16
2	70923456	56	CAPSCREW, 7/8"NC x 3-1/2"
	70676122	56	WASHER
3	70671143	6	ROLLER ASSY., single-flange } Each includes item 4
	70691372	8	ROLLER ASSY., double-flange }
			NOTE: Quantities listed below are for one (1) roller only
4	70671145	2	BUSHING, roller
5	70688006	1	SHAFT
6	70923581	2	O-RING, shaft
7	70923591	2	O-RING, retainer
8	70690667	2	RETAINER ASSY.(Includes items 10 and 11)
9	70670849	12	CAPSCREW, retainer attaching
10	70930307	8	SCREW, flat-hd., hex-socket, 1/4"NC x 3/8"
11	70690665	2	WASHER, thrust
12	70671177	2	SEAL ASSY. (Includes item 17)
13	70688007	2	CAP, seal retaining
14	70688012	2	RING, snap, cap retaining
15	70689291	1	PLUG, shaft (sq.-socket, 3/4"NF thread)
16	70923847	1	O-RING, plug
17	70690650	-	RING SET, seal (Includes 2 sealing washer, sufficient to service 1 SEAL ASSY.)

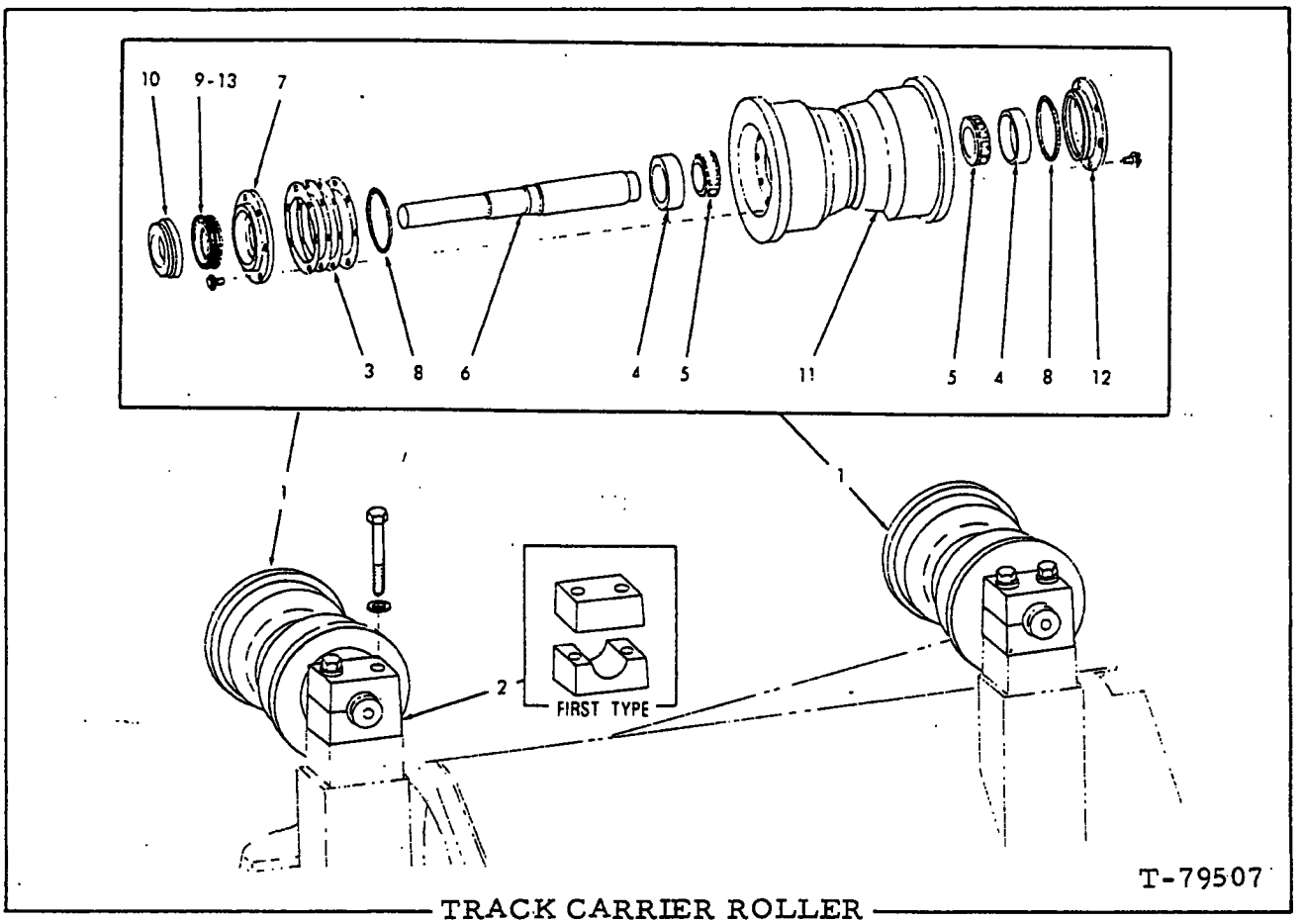

TRACK CARRIER ROLLER

ITEM	PART NO.	QTY.	DESCRIPTION
			NOTE: Quantities shown are for One Roller only (4 required)
1	70682559	1	ROLLER ASSY. (Includes items 3 thru 13)
2	70682534	2	BRACKET, aluminum (Tractors prior to unit #21378)
	73107777	1	BRACKET, steel (Tractor unit #21378 and up)
	70921241	2	CAPSCREW, 1" NC x 6"
	70928452	2	WASHER
3	70677159	-	SHIM (.032" thick) }
	70677164	-	SHIM (.007" thick) } Use as required
	70677167	-	SHIM (.010" thick) }
	70677218	-	SHIM (.003" thick) }
4	70677160	2	CUP
5	70677163	2	CONE ASSY.
6	70682556	1	SHAFT
7	70682554	1	RETAINER
	70930909	6	CAPSCREW, 3/8" NC x 1-1/8" (Tractors prior to unit #21445)
	70923193	6	CAPSCREW, 3/8" NF x 1-1/4" } Tractor unit
	70929156	6	WASHER } #21445 and up
8	70923818	2	O-RING
9	70670071	1	SEAL ASSY. (Includes item 13)

(Continued)

TRACK CARRIER ROLLER (Continued)

ITEM	PART NO.	QTY.	DESCRIPTION
10	70677696	1	RETAINER
11	70682551	1	ROLLER ("NC" tapped holes)(Tractors prior to unit #21445)
	73110498	1	ROLLER ("NF" tapped holes)(Tractor unit #21445 and up)
12	70682540	1	PLATE
	70930909	6	CAPSCREW, 3/8" NC x 1-1/8" (Tractors prior to unit #21445)
	70923193	6	CAPSCREW, 3/8" NF x 1-1/4" } Tractor unit
	70929156	6	WASHER } #21445 and up
13	70690649	1	RING SET (Includes 2 sealing washers sufficient to service 1 Seal Assy.)

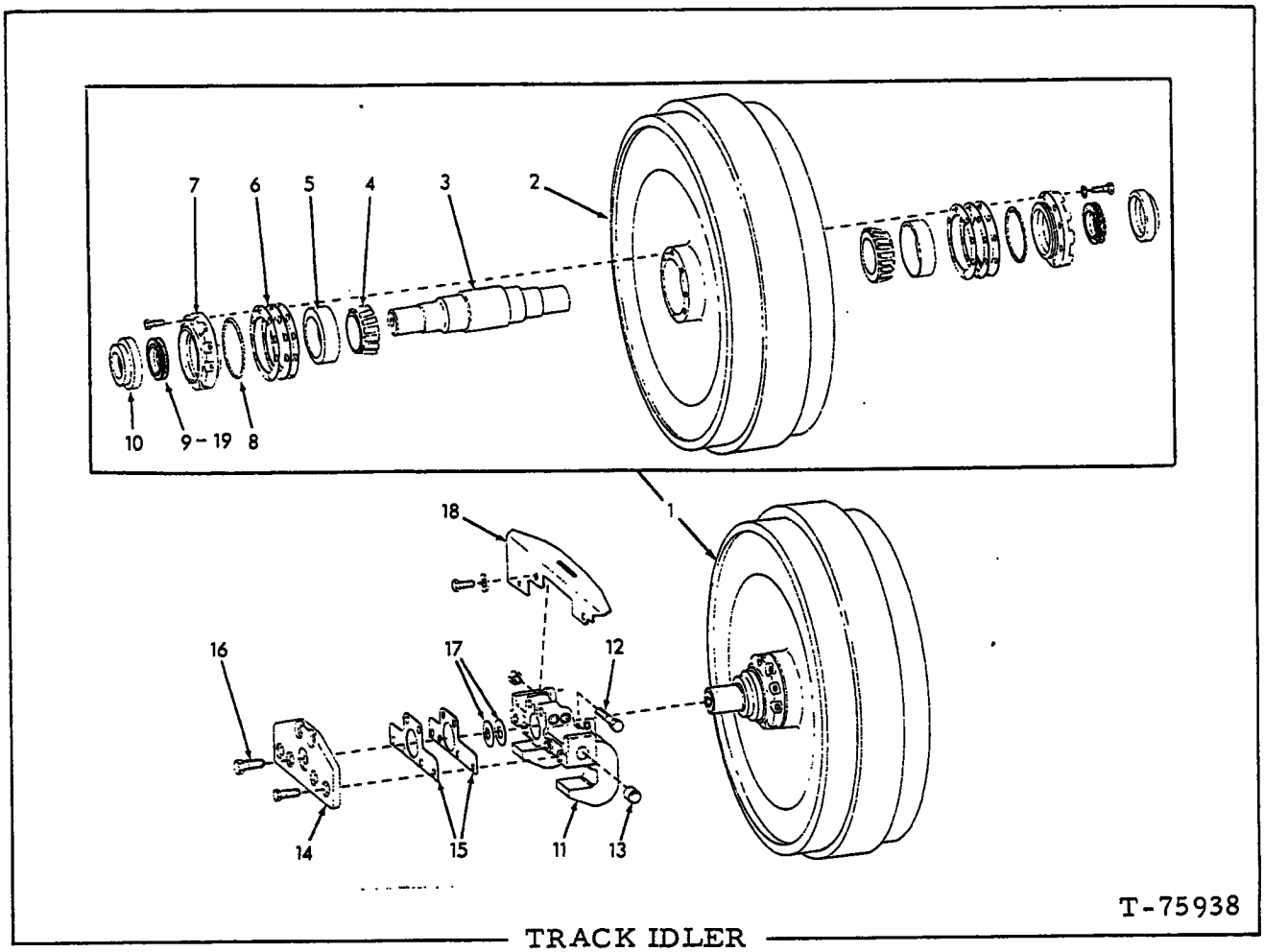

TRACK IDLER

ITEM	PART NO.	QTY.	DESCRIPTION	
1	70691607	2	IDLER ASSY. (Includes items 2 thru 10)	
2	70691604	2	IDLER	
3	70670064	2	SHAFT	
4	70051989	4	CONE ASSY.	
5	70051988	4	CUP	
6	70671629	6	SHIM (.032" thick)	Use as required
	70671628	6	SHIM (.010" thick)	
	70671627	6	SHIM (.007" thick)	
	70671626	8	SHIM (.003" thick)	
7	70670068	4	RETAINER	
	70921535	24	CAPSCREW, 5/8"NC x 1-3/4"	
	70912942	24	LOCKWASHER, 5/8"	
8	70923594	4	O-RING	
9	70653113	4	SEAL ASSY. (Includes item 19)	
10	70670066	4	RETAINER	

(Continued)

TRACK IDLER (Continued)

ITEM	PART NO.	QTY.	DESCRIPTION
11	70682823	4	BRACKET ASSY. (Includes item 13)
12	70921241	4	CAPSCREW, 1"NC x 6"
	70923243	4	Nut, Hex, 1"NC
13	70051647	8	PIN
14	70667236	4	PLATE
	70921535	24	CAPSCREW, 5/8"NC x 1-3/4"
15	70667378	8	SHIM (.062" thick) } Use as required
	70667377	8	SHIM (.031" thick) }
16	70926566	4	CAPSCREW (1"NF x 2")
17	70667367	4	SHIM (.03" thick) } Use as required
	70667366	16	SHIM (.06" thick) }
18	70694113	2	GUARD, left
	70694114	2	GUARD, right
	70921535	8	CAPSCREW, 5/8"NC x 1-3/4"
	70677010	8	WASHER
19	70699061	4	RING SET (Includes 2 Sealing Washers sufficient to service 1 SEAL ASSY.)

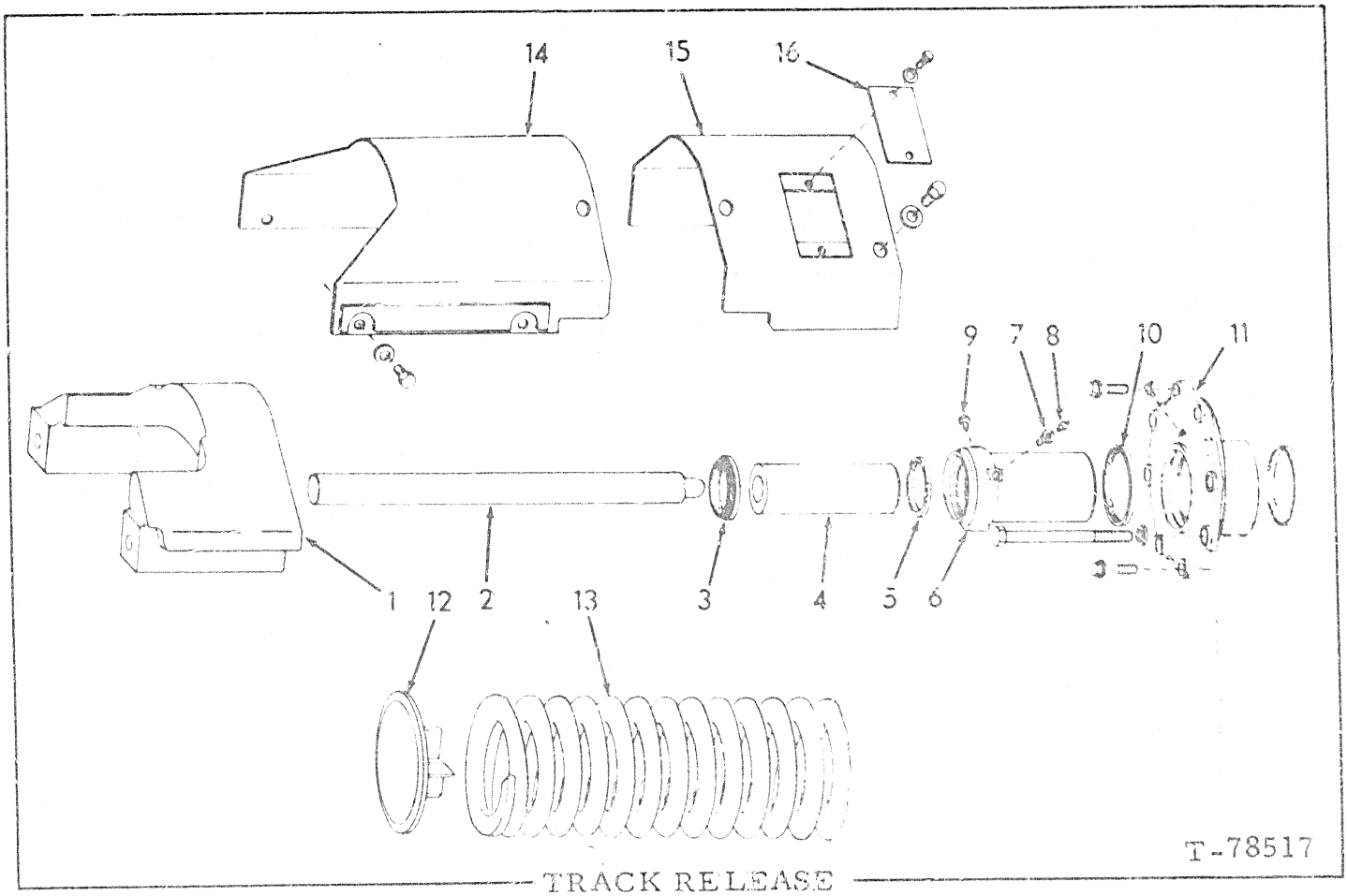

TRACK RELEASE

ITEM	PART NO.	QTY.	DESCRIPTION
1	70686891	2	YOKE
2	70686900	2	BAR
3	70678438	2	SEAL
4	70678436	2	PISTON
5	70686912	2	SEAL
6	70694031	2	CYLINDER
7	70676455	2	CHECK BALL ASSY., pressurizing (Includes ball)
8	70676456	2	FITTING, check ball assy.
9	70693719	2	VALVE ASSY., relief
10	70678437	4	SEAL
11	70686876	2	HOUSING
	70915276	2	FITTING, lubricating, straight, 1/8" NPT
	70694057	8	CAPSCREW, 3/4"NC x 2-1/2"
	70694098	8	CAPSCREW, 1"NC x 12"
	70928452	8	WASHER
12	70697496	2	PLATE
13	70694397	2	SPRING
14	70696976	2	GUARD, front section
	70922475	4	CAPSCREW, 3/4"NC x 1-1/2"
	70928063	4	WASHER

(Continued)

ITEM	PART NO.	QTY.	DESCRIPTION
15	70694569	1	GUARD, rear section, left side
	70694570	1	GUARD, rear section, right side
	70925415	4	CAPSCREW, 3/4"NC x 1-3/4"
	70928063	4	WASHER
16	70694109	2	COVER
	70920582	4	CAPSCREW, 1/2"NC x 1-1/4"
	70677008	4	WASHER

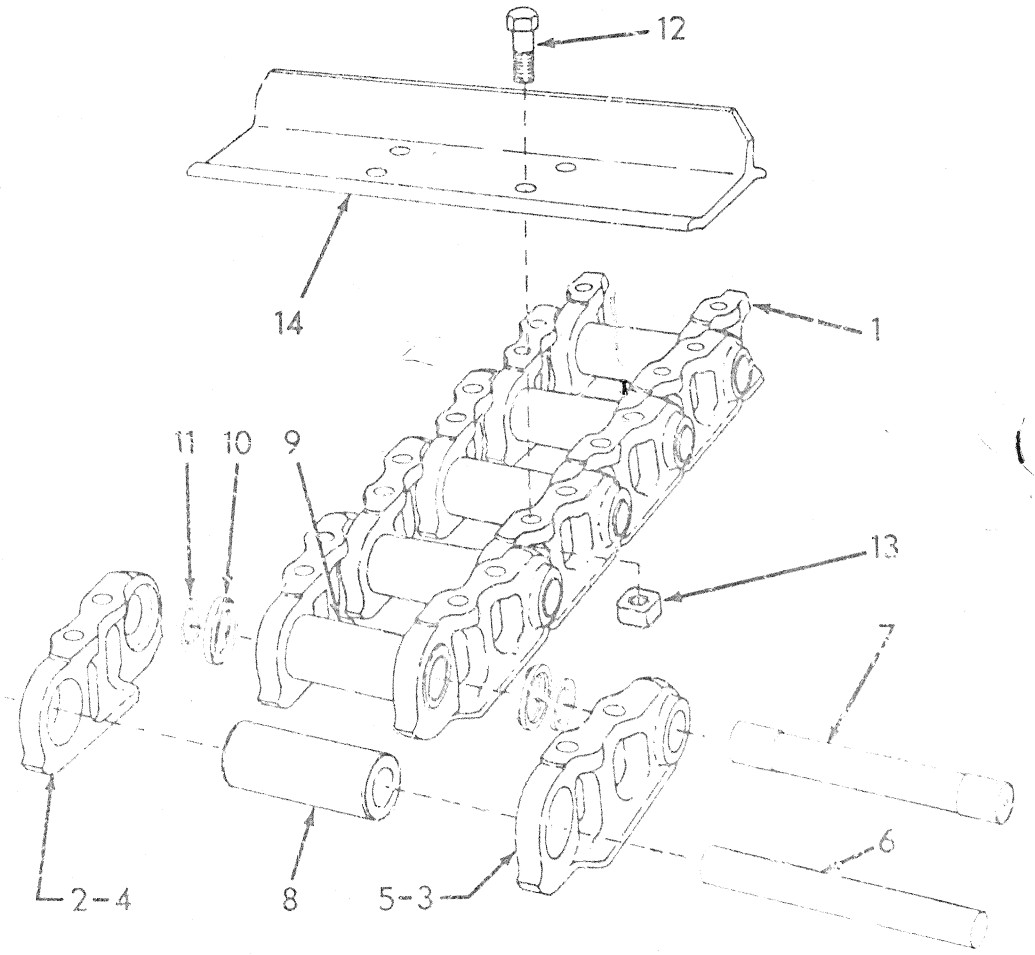

TRACK

ITEM	PART NO.	QTY.	DESCRIPTION
-	70694319	2	TRACK ASSY. (Includes items 1 thru 14)(Standard 24" shoes. All other sizes are not available in complete assemblies with shoes)
1	70694874	2	CHAIN ASSY. (41 links)(Consists of items 2 thru 11) (Basic to all standard and special track assemblies)
2	70691619	80	LINK, left
3	70691620	80	LINK, right
4	70691621	2	LINK, master, left
5	70691622	2	LINK, master, right
6	70691056	80	PIN
7	70691033	2	PIN, master
8	70691071	80	BUSHING
9	70691074	2	BUSHING, master
10	70691010	4	SEAL, master (Tractors prior to unit #21224)
11	70691023	4	SPACER, master (Tractors prior to unit #21224)
	73108992	4	SPACER, master (Tractor unit #21224 and up)

(Continued)

ITEM	PART NO.	QTY.	DESCRIPTION
12	70097056	328	BOLT (2-5/8" long)
	70655838	328	BOLT (2-3/4" long)
13	70663466	328	NUT

TRACK SHOES

14	70663563	82	SHOE, grouser, 22"	Special equipment
	70671682	82	SHOE, grouser, 22" (Severe-service)	
	70663370	82	SHOE, grouser, 24"	
	70671683	82	SHOE, grouser, 24" (Severe-service)(Standard)	
	70663552	82	SHOE, grouser, 26"	Special equipment
	70671685	82	SHOE, grouser, 26"(Severe-service)	
	73108069	82	SHOE, grouser, 28" (Special severe-service)(Not used on units equipped with servere-service C-Frame)	
15	75000528	--	UNDERCARRIAGE MEASURING KIT (Includes all tools required to determine remaining life of undercarriage compounents)(Not illustrated)	

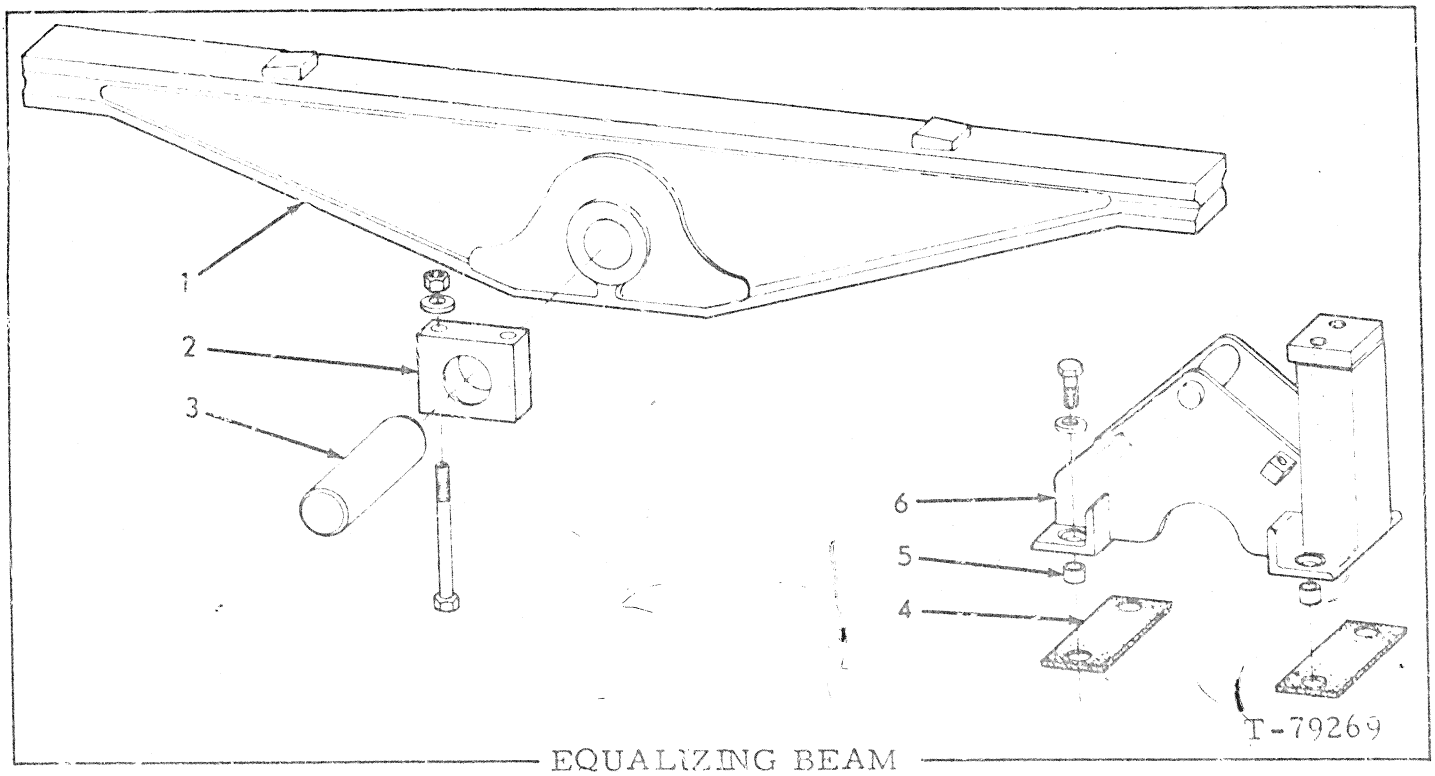

EQUALIZING BEAM

ITEM	PART NO.	QTY.	DESCRIPTION
1	70687254	1	BEAM ASSY. (Includes item 3)
2	70687261	2	BLOCK (Attaches to Main Frame)
	70930865	4	CAPSCREW, 1"NC x 10-1/4"
	70678072	4	LOCKWASHER, 1"
	70912845	4	NUT, 1"NC
3	70687253	1	SHAFT
4	70694317	4	PAD
5	70694320	8	BUSHING
6	70694522	2	BRACKET
	70927015	8	CAPSCREW, 1"NC x 3"
	70928370	8	WASHER

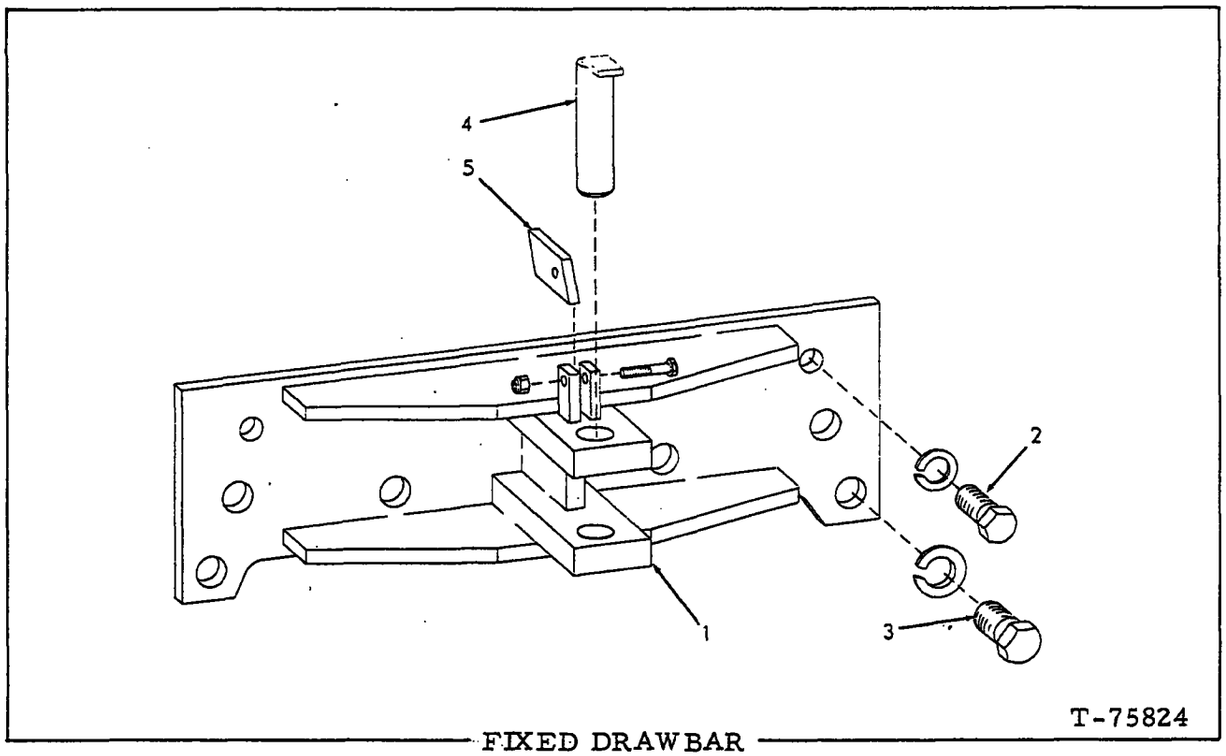

FIXED DRAWBAR

USAGE: Standard equipment. Not used on units equipped with Ripper.

ITEM	PART NO.	QTY.	DESCRIPTION	
1	70674318	1	DRAWBAR	
2	70926856	2	CAPSCREW, 1-1/4"NF x 4"	Not used when equipped with counterweight
	70914730	2	LOCKWASHER, 1-1/4"	
3	70926857	4	CAPSCREW, 1-1/2"NF x 4"	
	70912603	4	LOCKWASHER, 1-1/2"	
4	70674320	1	PIN	
5	70674321	1	PLATE	
	70922526	1	CAPSCREW, 1/2"NC x 2-1/2"	
	70915972	1	NUT, elastic stop, 1/2"NC	

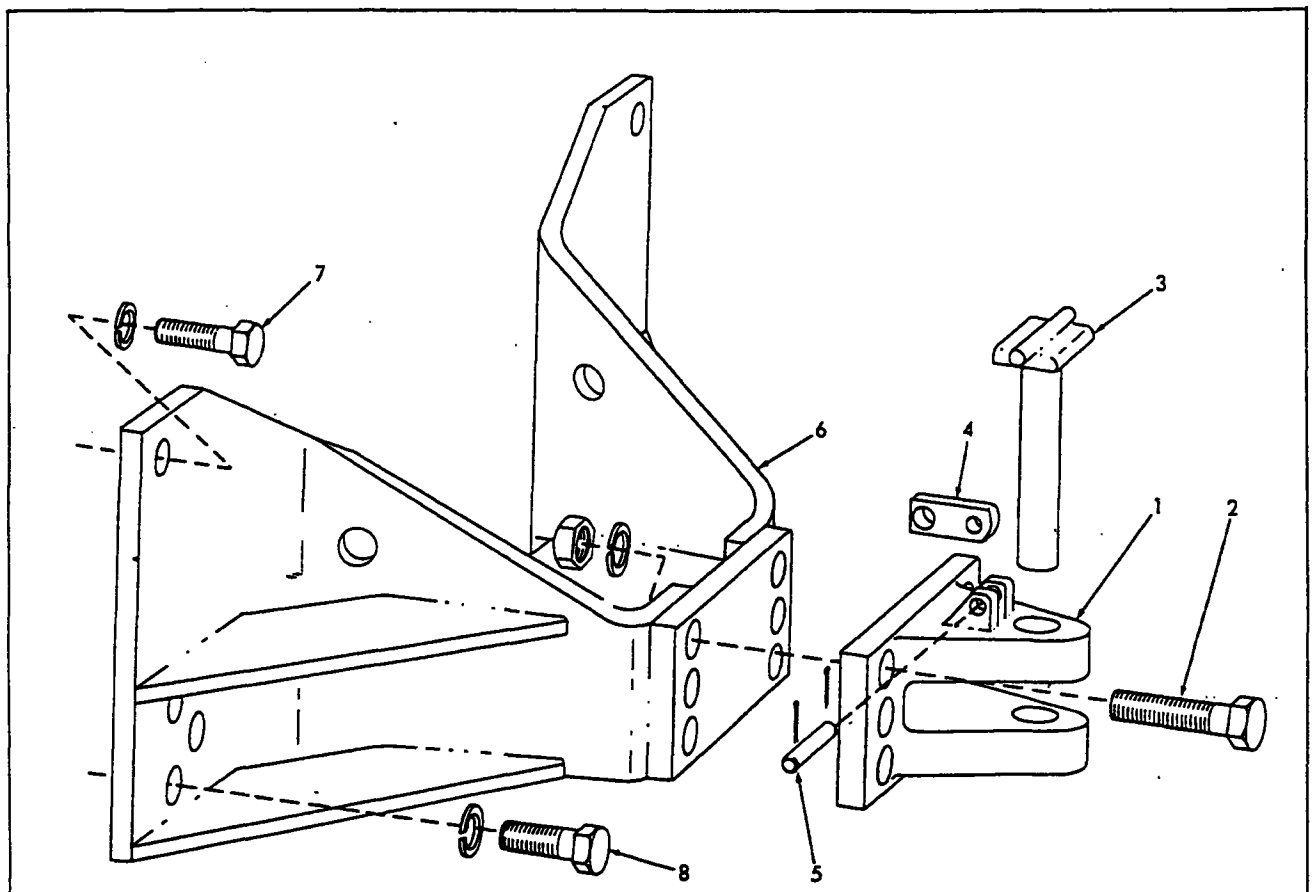

FIXED DRAWBAR

USAGE: Special equipment. Not used on units equipped with Ripper

ITEM	PART NO.	QTY.	DESCRIPTION
1	70098837	1	BRACKET
2	70648331	6	CAPSCREW, 1-1/2"NF x 6-1/4"
	70913077	6	LOCKWASHER, 1-1/2"
	70916555	6	NUT, 1-1/2"NF
3	70633674	1	PIN
4	70629697	1	BLOCK
5	70629698	1	PIN
	70900806	2	PIN, cotter, 1/8" x 1"
6	70633675	1	BRACKET
7	70926856	4	CAPSCREW, 1-1/4"NF x 4"
	70904210	4	LOCKWASHER, 1-1/4"
8	70625383	4	CAPSCREW, 1-1/2"NF x 4"
	70913077	4	LOCKWASHER, 1-1/2"

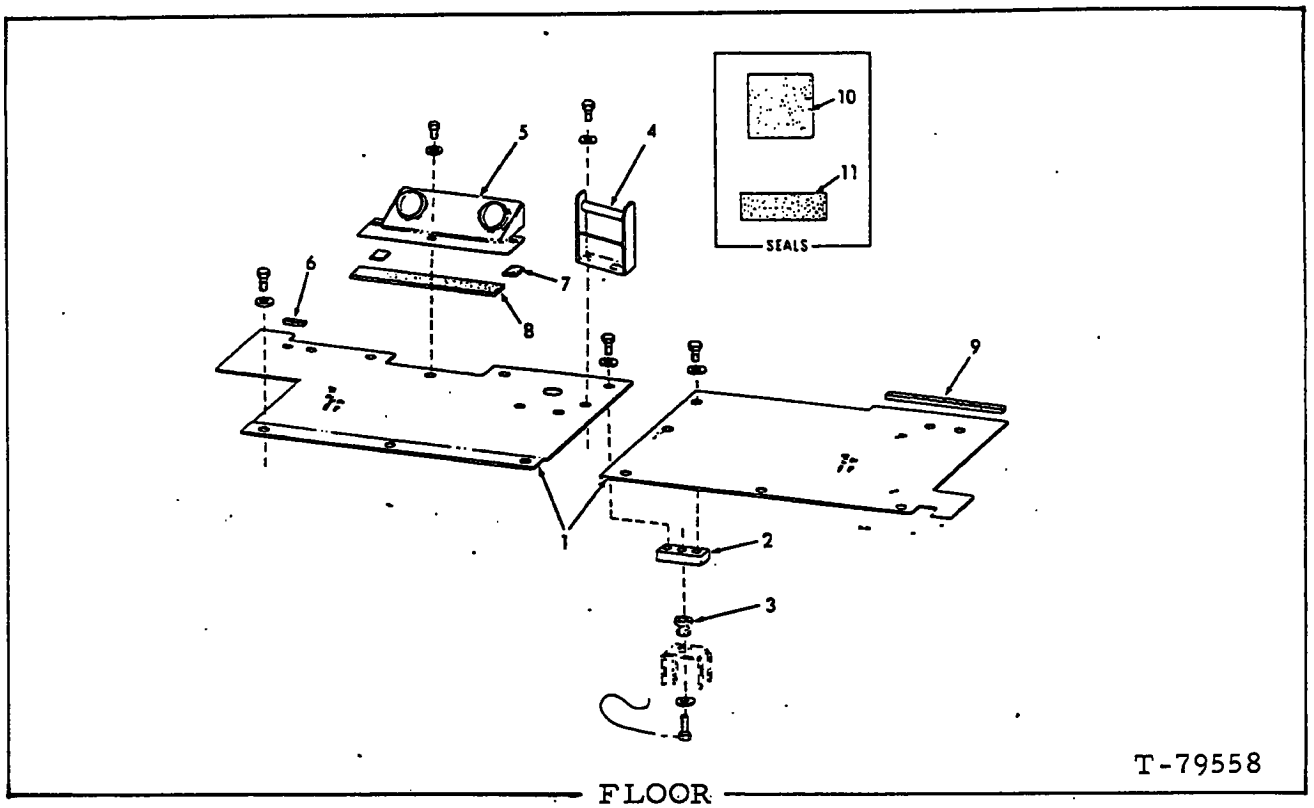

FLOOR

USAGE: Not used on units with CAB

ITEM	PART NO.	QTY.	DESCRIPTION
1	70689403	1	PLATE, left
	70694401	1	PLATE, right
	70920583	6	CAPSCREW, 1/2"NC x 1-1/2"
	70677008	6	WASHER
2	70689382	3	BLOCK
	70920582	6	CAPSCREW, 1/2"NC x 1-1/4"
	70677008	6	WASHER
3	70689383	3	SNUBBER
	70929074	3	CAPSCREW, drilled-hd., 1/2"NC x 2"
	70092163	3	WASHER
	70037000	3	WIRE, locking, 1/16" x 16"
4	70665338	1	BRACKET
	70920582	2	CAPSCREW, 1/2"NC x 1-1/4"
	70677008	2	WASHER
5	70689705	1	COVER (Tractors prior to unit #21527)
	73112879	1	COVER (Tractors unit #21527 and up)
	70927157	3	CAPSCREW, 3/8"NC x 1-3/8"
	70677006	3	WASHER
6	--------	1	SEAL (2.20" long)(Order item 10)
7	--------	2	SEAL (3.70" long)(Order item 11)
8	--------	1	SEAL (14.00" long) (Order item 11)
9	--------	1	SEAL (12.00" long)(Order item 10)
10	73134825	-	SEAL (25' roll) } Use as required
11	73133939	-	SEAL (25' roll) }

(Revised May 1982)

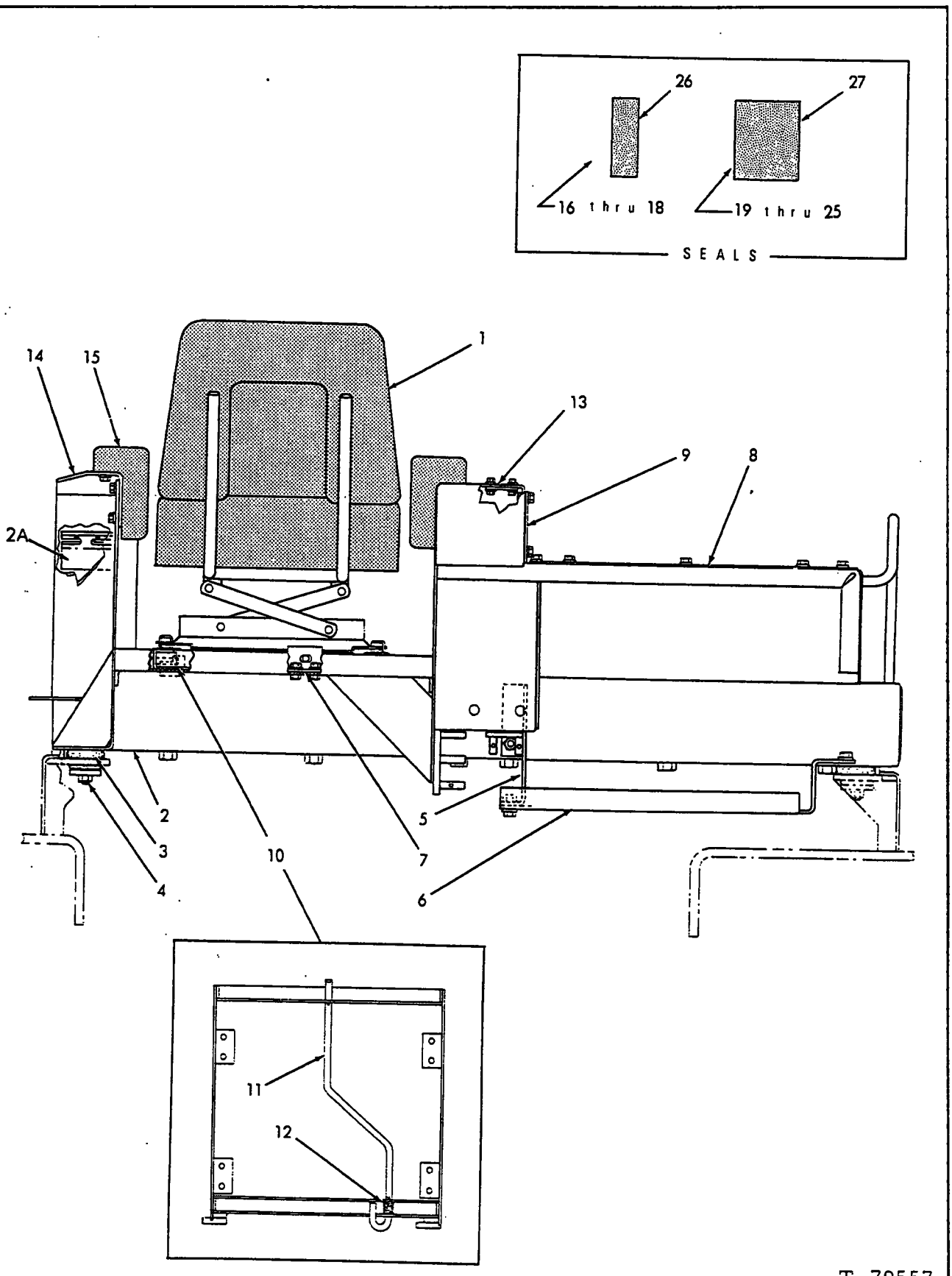

SEAT MOUNTING

(Revised April 1980)

SEAT MOUNTING

USAGE: Tractors prior to S/N 71A21303.

* Units without CAB
** Units with CAB (Not illustrated)

ITEM	PART NO.	QTY. *	QTY. **	DESCRIPTION
1	--------	1	1	SEAT ASSY. (See pages 190 and 191A)
	70921566	4	4	CAPSCREW, 5/16"NC x 1"
	70677005	4	4	WASHER
	70911025	4	4	NUT, 5/16"NC
2	70688864	1	-	SUPPORT (Includes item 2A)
2A	70680789	1	-	ANGLE
3	70689775	4	-	SNUBBER
4	70931061	4	-	CAPSCREW, drilled-end, 5/8"NC x 3-1/4" (Tractors prior to unit #21144)
	70921266	4	-	CAPSCREW, 5/8"NC x 3-1/4" (Tractor unit #21144 and up)
	70677010	4	-	WASHER
	70087463	4	-	WASHER
	70902274	4	-	NUT, slotted, 5/8"NC } Tractors prior
	70920117	4	-	PIN, cotter, 5/32" x 1" } to unit #21144
	70914501	4	-	NUT, 5/8"NC (Tractor unit #21144 and up)
5	70689367	1	-	BRACKET
	70920583	2	-	CAPSCREW, 1/2"NC x 1-1/2"
	70677008	2	-	WASHER
6	70689374	1	-	BRACKET
	70920583	4	-	CAPSCREW, 1/2"NC x 1-1/2"
	70677008	4	-	WASHER
7	70697294	1	1	ANGLE
	70921076	2	2	CAPSCREW, 3/8"NC x 1-1/4"
	70677006	2	2	WASHER
8	70688907	1	-	COVER
	70921076	8	-	CAPSCREW, 3/8"NC x 1-1/4"
	70677006	8	-	WASHER
9	70689298	1	-	COVER
	70922763	6	-	CAPSCREW, 3/8"NC x 1"
	70677006	6	-	WASHER
10	70697235	1	1	FRAME ASSY. (Used with standard SEAT ASSY.) (Includes items 11 and 12)
	73118379	1	1	FRAME ASSY. (Used with optional SEAT ASSY.) (Includes items 11 and 12)
11	70696800	1	1	ROD (Used with standard SEAT ASSY.)
	73118382	1	1	ROD (Used with optional SEAT ASSY.)
	70188436	1	1	WASHER
	70924169	2	2	PIN, grooved, 1/8" x 1"
12	70650134	1	1	SPRING
13	70690621	1	1	PLATE (Not used on units equipped with Ripper)
	70927373	2	2	CAPSCREW, 5/16"NC x 7/8"
	70929292	2	2	WASHER
	70911025	2	2	NUT, 5/16"NC
14	70694385	1	-	ANGLE
	70921076	4	-	CAPSCREW, 3/8"NC x 1-1/4"
	70677006	4	-	WASHER

(Continued)

SEAT MOUNTING (Continued)

ITEM	PART NO.	QTY. *	QTY. **	DESCRIPTION	
15	70632188	2	2	CUSHION	
	70923276	8	8	CAPSCREW, 3/8"NF x 1"	
	70677006	8	8	WASHER	
16	--------	2	-	SEAL (18.00" long)	Order item 26
17	--------	1	-	SEAL (19.00" long)	
18	--------	1	-	SEAL (15.00" long)	
19	--------	1	-	SEAL (11.00" long)	Order item 27
20	--------	1	-	SEAL (27.25" long)	
21	--------	1	-	SEAL (6.38" long)	
22	--------	1	-	SEAL (34.62" long)	
23	--------	1	-	SEAL (9.50" long)	
24	--------	1	-	SEAL (3.00" long)	
25	--------	1	-	SEAL (5.38" long)	
26	70697960	1	-	SEAL (165" long)	Use as required
27	73134825	1	-	SEAL (25" roll)	
28	70680080	1	1	BELT, safety (Special equipment prior to January 1977; standard thereafter)(Not illustrated)	

(Revised May 1982)

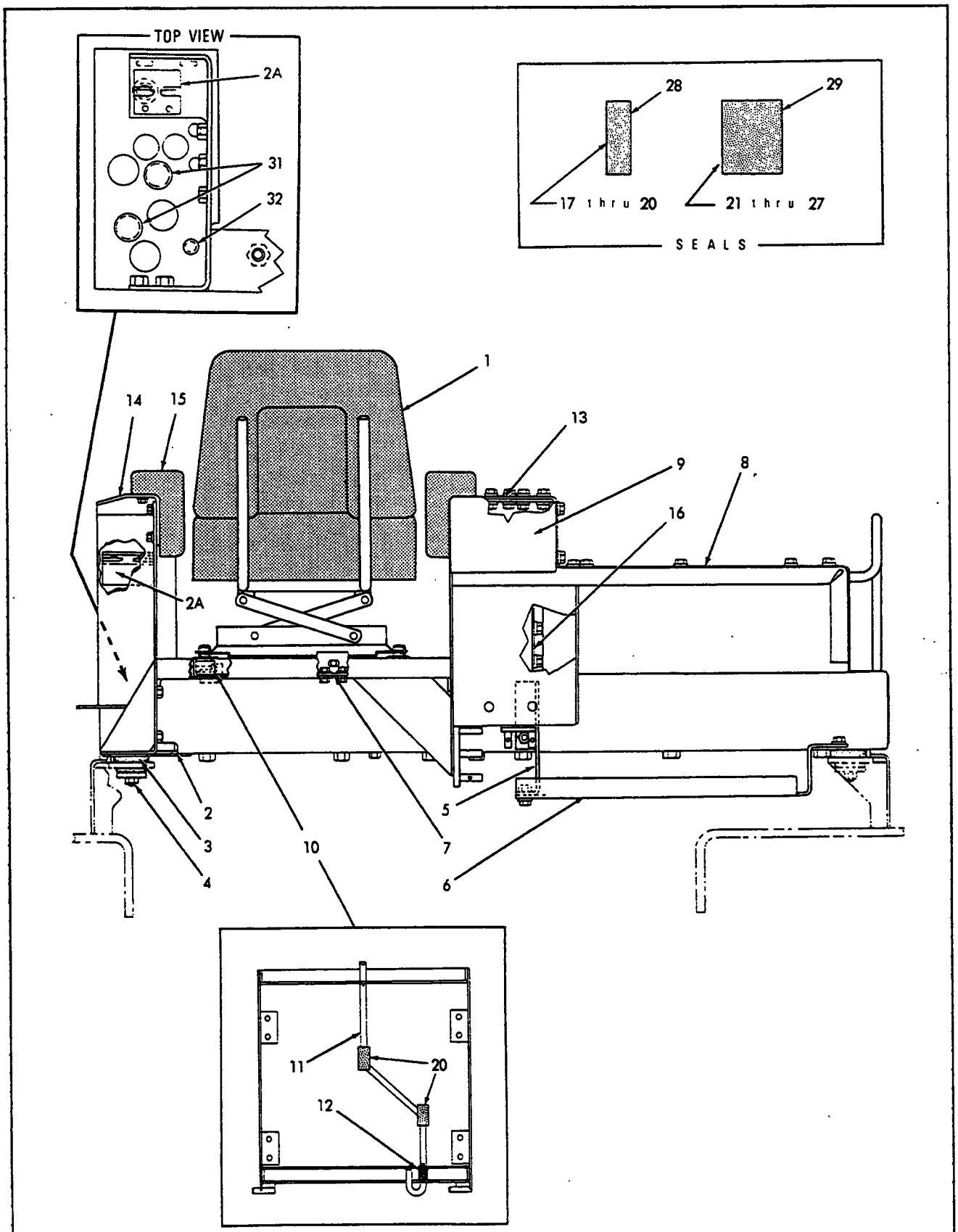

SEAT MOUNTING

T-79557

(Revised April 1980)

SEAT MOUNTING

USAGE: Tractors serial No. 71A21303 and up.
* Units without CAB
** Units with CAB (Not illustrated)

ITEM	PART NO.	QTY. *	QTY. **	DESCRIPTION
1	--------	1	1	SEAT ASSY. (See pages 190, 191A and 191B)
	70931283	4	4	BOLT, 5/16"NC x 1" (Early units)
	70921566	4	4	CAPSCREW, 5/16"NC x 1" (Late units)
	70677005	4	4	WASHER
	70911025	4	4	NUT, 5/16"NC
2	70697569	1	-	SUPPORT (Tractors prior to unit #21617) Each includes
	73113158	1	-	SUPPORT (Tractors unit #21617 and up) item 2A
	70680789	1	-	ANGLE
3	70689775	4	-	SNUBBER
4	70921266	4	-	CAPSCREW, 5/8"NC x 3-1/4"
	70677010	4	-	WASHER
	70087463	4	-	WASHER
	70914501	4	-	NUT, 5/8"NC
5	70689367	1	-	BRACKET
	70920583	2	-	CAPSCREW, 1/2"NC x 1-1/2"
	70677008	2	-	WASHER
6	70689374	1	-	BRACKET
	70920583	4	-	CAPSCREW, 1/2"NC x 1-1/2"
	70677008	4	-	WASHER
7	70697294	1	1	ANGLE
	70921076	2	2	CAPSCREW, 3/8"NC x 1-1/4"
	70677006	2	2	WASHER
8	73107689	1	-	COVER
	70921076	8	-	CAPSCREW, 3/8"NC x 1-1/4"
	70677006	8	-	WASHER
9	73107691	1	-	COVER
	70921076	4	-	CAPSCREW, 3/8"NC x 1-1/4"
	70677006	4	-	WASHER
10	70697235	1	1	FRAME ASSY. (Used with standard SEAT ASSY.) (Includes items 11 and 12)
	73118379	1	1	FRAME ASSY. (Used with optional SEAT ASSY.) (Includes items 11 and 12)
11	70696800	1	1	ROD (Used with standard SEAT ASSY.)
	73118382	1	1	ROD (Used with optional SEAT ASSY.)
	70188436	1	1	WASHER
	70924169	2	2	PIN, grooved, 1/8" x 1"
12	70650134	1	1	SPRING
13	70690621	2	2	PLATE (Not used on units equipped with Ripper)
	70927373	4	4	CAPSCREW, 5/16"NC x 7/8"
	70929292	4	4	WASHER
	70900366	4	4	NUT, 5/16"NC
14	70694385	1	-	ANGLE (Tractor prior to unit #21462)
	73110489	1	-	ANGLE (Tractor unit #21462 and up)
	70921076	4	-	CAPSCREW, 3/8"NC x 1-1/4"
	70677006	4	-	WASHER
15	70632188	2	2	CUSHION
	70923276	8	8	CAPSCREW, 3/8"NF x 1"
	70677006	8	8	WASHER

(Continued)

SEAT MOUNTING (Continued)

ITEM	PART NO.	QTY. *	QTY. **	DESCRIPTION	
16	73107712	1	-	COVER	
	70921076	4	-	CAPSCREW, 3/8"NC x 1-1/4"	
	70677006	4	-	WASHER	
17	--------	2	-	SEAL (18.00" long)	Refer to item 28
18	--------	1	-	SEAL (19.00" long)	
19	--------	1	-	SEAL (15.00" long)	
20	--------	2	-	SEAL (2.00" long)	
21	--------	1	-	SEAL (11.00" long)	Refer to item 29
22	--------	1	-	SEAL (27.25" long)	
23	--------	1	-	SEAL (6.38" long)	
24	--------	1	-	SEAL (34.62" long)	
25	--------	1	-	SEAL (9.50" long)	
26	--------	1	-	SEAL (3.00" long)	
27	--------	1	-	SEAL (5.38" long)	
28	70697960	1	-	SEAL (165" long)	Use as required
29	73134825	1	-	SEAL (25' roll)	
30	70680080	1	1	BELT, safety (Special equipment)(Not illustrated) (Used on units prior to approx. September 1979. See page 191B for later units)	
31	70920294	2	-	PLUG, 1-1/2" diam.	
32	70924619	1	-	PLUG, 7/8" diam.	

(Revised May 1982)

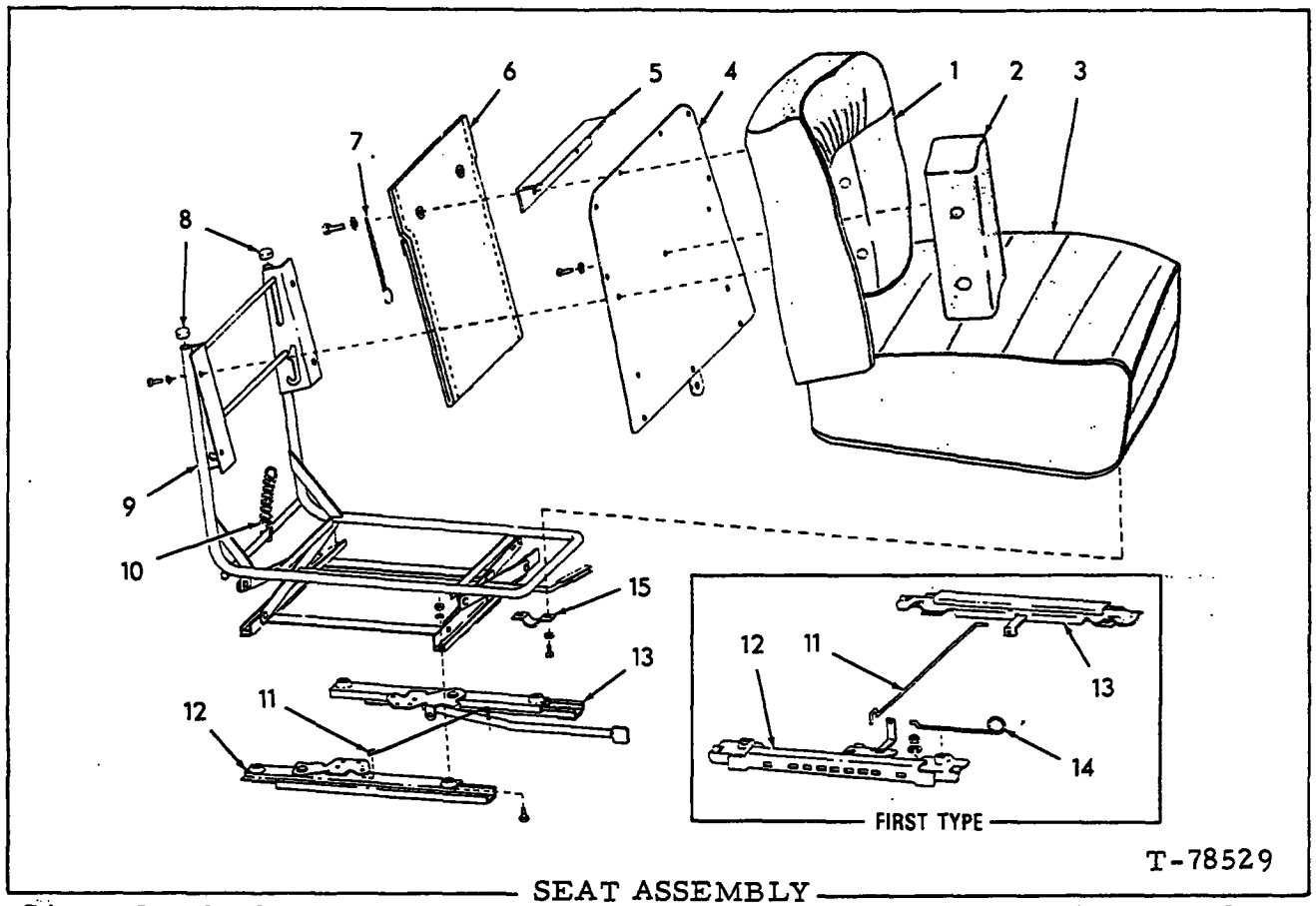

SEAT ASSEMBLY

USAGE: Standard. Used prior to approx. Sept. 1979; see page 191B for later design. See pages 189 and 189D for Seat Mounting. Also see page 191A for optional design.

* Tractors prior to S/N 71A21604 excluding exceptions listed below

** Tractors S/N 71A21604 and up including exceptions listed below

ITEM	PART NO.	QTY. *	QTY. **	DESCRIPTION
-	73108384	1	-	SEAT ASSY. (Includes items 1 thru 15)
-	73113527	-	1	SEAT ASSY. (Includes items 1 thru 13 and 15)
1	70694306	1	1	CUSHION
	70916532	6	-	SCREW, machine, rd.-hd., 1/4"NC x 3/4"
	70921615	-	6	SCREW, button-hd., hex-skt., 1/4"NC x 3/4"
	70914105	8	8	LOCKWASHER, ext.-tooth, 1/4"
2	70694303	1	1	CUSHION
	70916532	2	-	SCREW, machine, rd.-hd., 1/4"NC x 3/4"
	70921615	-	2	SCREW, button-hd., hex-skt., 1/4"NC x 3/4"
	70914105	2	2	LOCKWASHER, ext.-tooth, 1/4"
3	70694307	1	1	CUSHION
4	73108830	1	1	PLATE
	70916532	4	-	SCREW, machine, rd.-hd., 1/4"NC x 3/4"
	70921615	-	4	SCREW, button-hd., hex-skt., 1/4"NC x 3/4"
	70914105	4	4	LOCKWASHER, ext.-tooth, 1/4"

(Continued)

(Revised February 1980)

SEAT ASSEMBLY (Continued)

ITEM	PART NO.	QTY. *	QTY. **	DESCRIPTION
5	--------	1	1	ANGLE }
6	--------	1	1	POUCH } See item 17
	--------	2	2	CAPSCREW }
7	--------	1	1	CHAIN ASSY. }
8	70694784	2	2	CAP
9	70694305	1	-	FRAME ASSY. (Serviced only as a unit)
	70924433	4	-	NUT , lock, 5/16"NC
	73113740	-	1	FRAME ASSY. (Serviced only as a unit)
	70921566	-	4	CAPSCREW, 5/16"NC x 1"
	70900366	-	4	NUT, 5/16"NC
10	--------	1	1	SPRING (Not serviced separately)
11	70694781	1	-	ROD
	73113741	-	1	ROD
12	--------	1	1	SLIDE } Order item 16
13	--------	1	1	SLIDE }
14	70694782	1	-	WIRE
15	70694783	4	4	BRACKET
	70916532	8	-	SCREW, machine, rd.-hd., 1/4"NC x 3/4"
	70921615	-	8	SCREW, button-hd., hex-skt., 1/4"NC x 3/4"
	70914105	8	8	LOCKWASHER, ext.-tooth, 1/4"
16	70695868	1	-	SLIDE KIT } (Includes items 12 and 13)
	73113745	-	1	SLIDE KIT }
17	73109343	1	1	POUCH KIT (Includes items 5, 6 and 7)

Exceptions: 21549, 21550, 21552, 21556, 21559, 21563, 21564, 21566, 21568, 21572, 21579 thru 21581, 21583, 21585 thru 21588, 21590, 21593, 21596, 21597, 21600 and 21602.

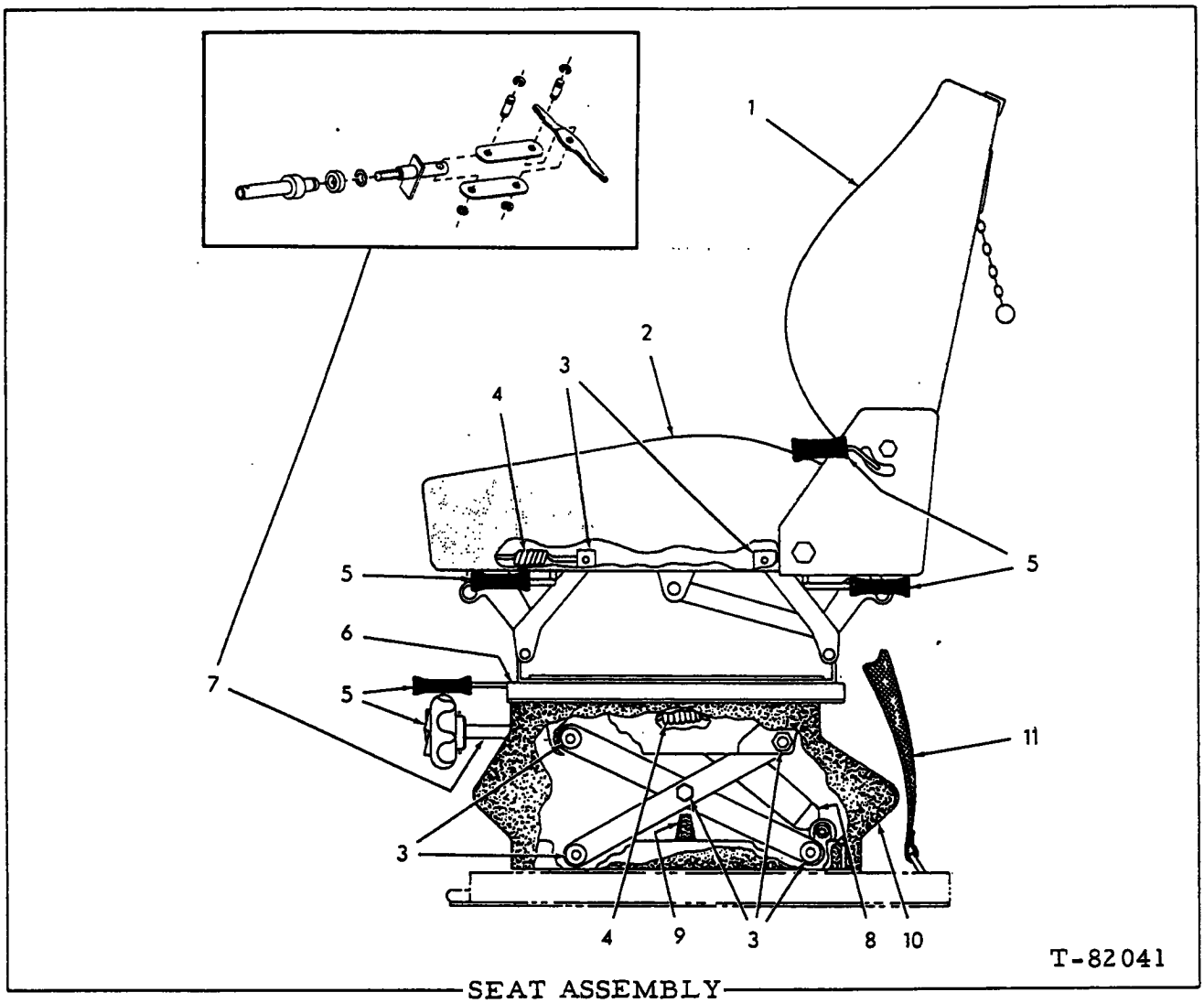

SEAT ASSEMBLY

USAGE: Optional equipment. See pages 189 and 189D.

ITEM	PART NO.	QTY.	DESCRIPTION
-	73116939	1	SEAT ASSY. (Includes items 1 thru 11)
1	73116929	1	BACK CUSHION
2	73116930	1	SEAT CUSHION
3	73116931	1	ROLLER AND BEARING SET (Includes rollers bushings and shafts)
4	73116932	1	SPRING SET (Includes all required springs)
5	73116933	1	KNOB SET (Includes 5 knobs)
6	73116934	1	ADJUSTERS
7	73116938	1	WEIGHT ADJUSTMENT ASSY. (Serviced only as a unit)
8	73116936	1	SHOCK ABSORBER (Includes attaching hardware)
9	73116937	1	BUMPER SET (Includes 2 bumpers and attaching hardware)
10	73116935	1	BOOT, dust (Includes attaching hardware)
11	73117148	1	BELT, safety (Includes attaching hardware)

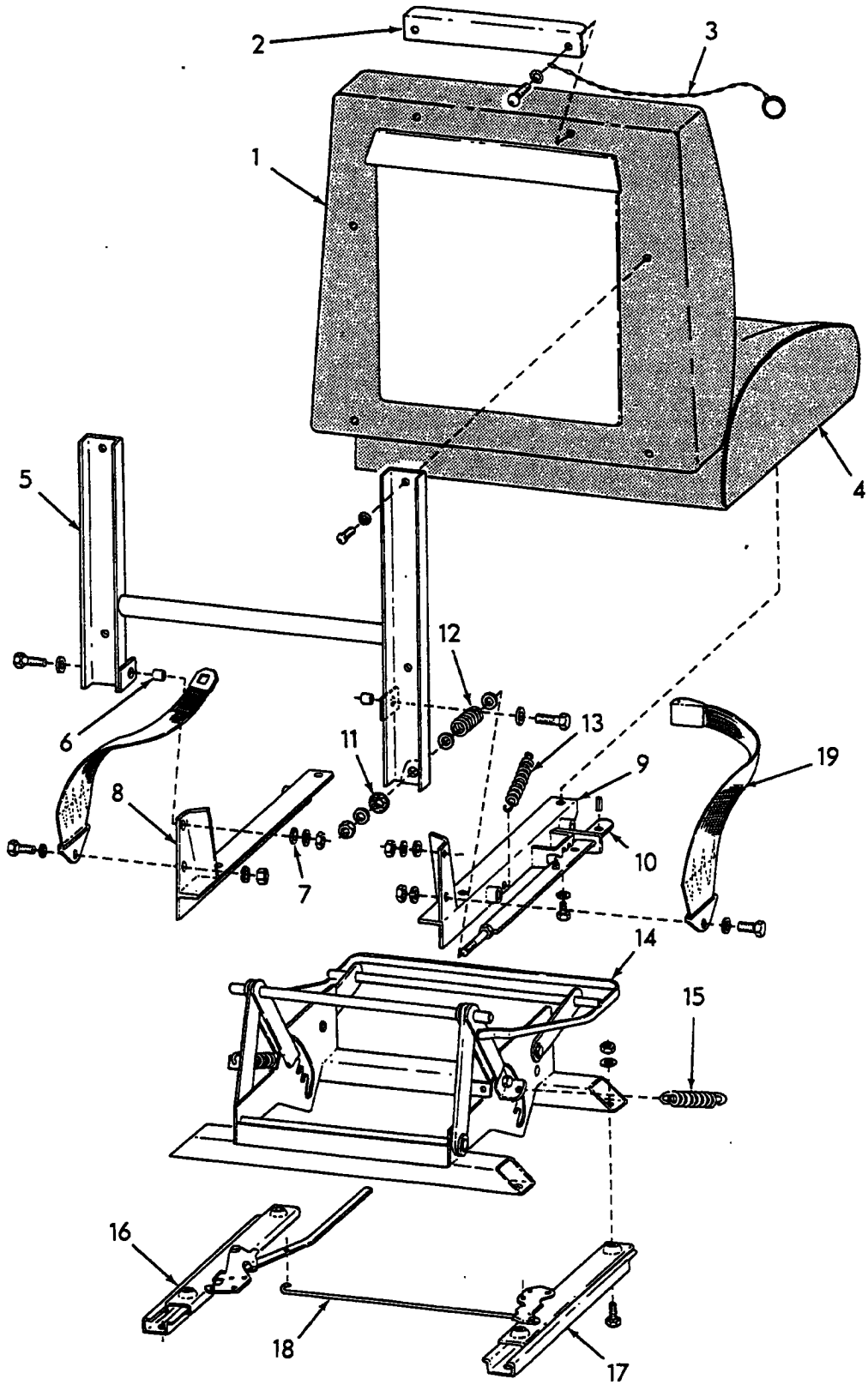

T-82491

SEAT ASSEMBLY
191B

(Added February 1980)

SEAT ASSEMBLY

USAGE: Standard, Effective approx. September 1979; see page 190 for early design. See page 189D for Seat Mounting. Also see page 191A for optional design.

ITEM	PART NO.	QTY.	DESCRIPTION
-	73115577	1	SEAT ASSY. (Includes items 1 thru 19)
1	73118952	1	BACK CUSHION
	70927541	4	CAPSCREW, 1/4"NC x 3/4"
	70914105	4	LOCKWASHER, ext. -tooth, 1/4"
2	73118966	1	BRACKET
	70927541	2	CAPSCREW, 1/4"NC x 3/4"
	70914105	2	LOCKWASHER, ext. -tooth, 1/4"
3	73108440	1	CHAIN
4	73118951	1	SEAT CUSHION
	70927541	4	CAPSCREW, 1/4"NC x 3/4"
	70914105	4	LOCKWASHER, ext.tooth, 1/4"
5	73118965	1	FRAME
	70921076	2	CAPSCREW, 3/8"NC x 1-1/4"
	70914900	2	WASHER
	70915891	2	NUT, elastic stop, 3/8"NC
6	73118963	2	BUSHING
7	73118964	2	WASHER, nylon
8	73118955	1	FRAME, left
9	73118956	1	FRAME, right
10	73118958	1	STRAP, back tilt latch
	70919347	2	PIN, spring, 1/4" x 5/8"
11	73118961	1	BUMPER
	70914903	2	WASHER
	70915633	1	NUT
12	73118960	1	SPRING, back cushioning
13	73118959	1	SPRING, back return
14	73118953	1	BASE ASSY. (Serviced only as a unit)
	70921566	4	CAPSCREW, 5/16"NC x 1"
	70904205	4	LOCKWASHER, 5/16"
	70910323	4	NUT, 5/16"
15	73118962	2	SPRING, height adjustment
16	--------	1	SLIDE } Order item 20
17	--------	1	SLIDE }
18	73118957	1	ROD
19	73118967	1	BELT, safety
	70927158	2	CAPSCREW, 1/2"NF x 1"
	70911414	2	WASHER
	70912441	2	LOCKWASHER, 1/2"
	70910195	2	NUT, 1/2"NF
20	73118954	1	SLIDE KIT (Includes items 16 and 17)

(Added February 1980)

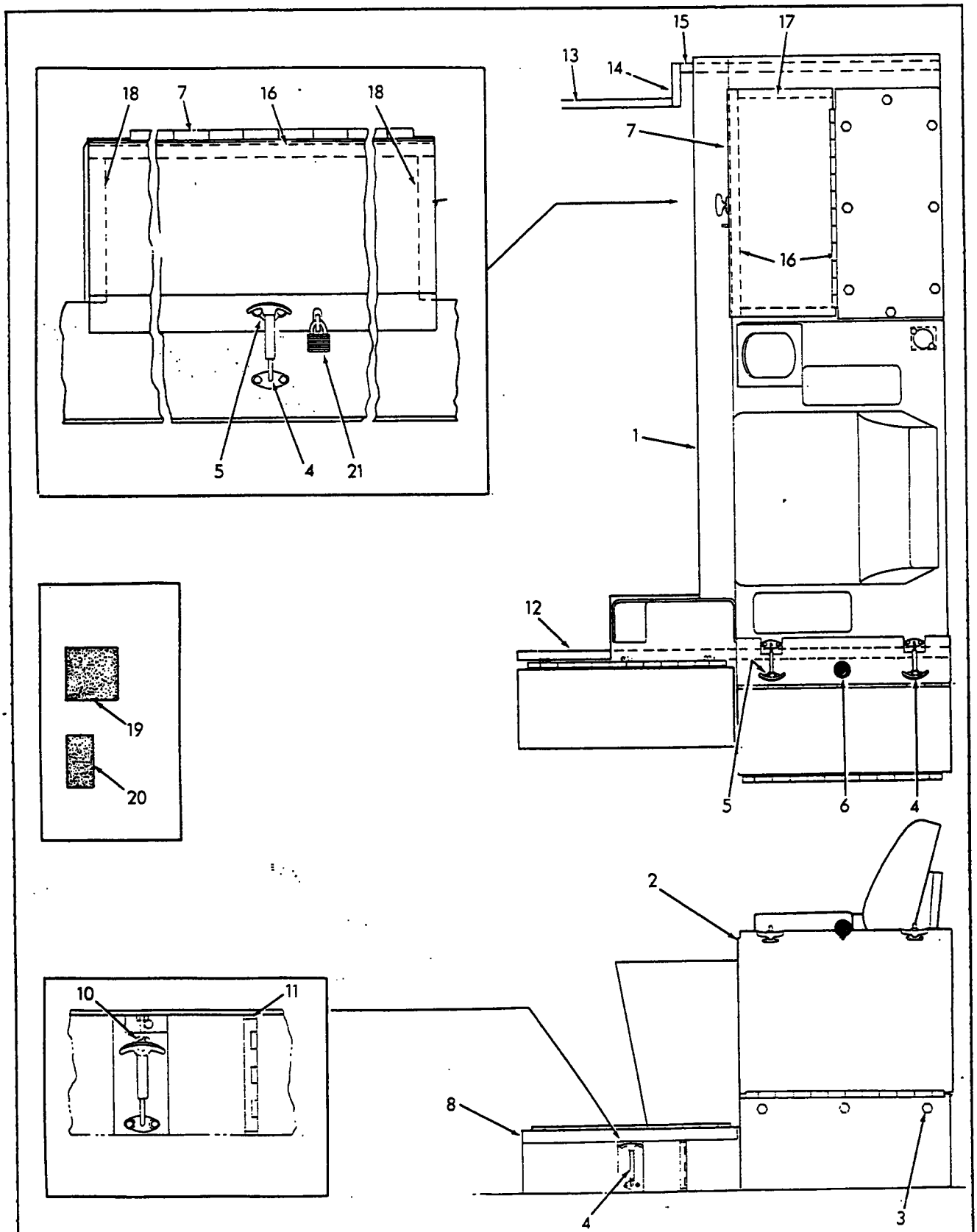

T-79562

BATTERY AND TOOL BOXES

(Revised June 1980)

BATTERY AND TOOL BOXES

USAGE: Not used on units equipped with Cab

ITEM	PART NO.	QTY.	DESCRIPTION	
1	--------	1	SUPPORT, seat (See page 189	
2	70688775	1	COVER (Tractors prior to unit #21462)	
	73112560	1	COVER (Tractor unit #21462 and up)	
3	70922763	3	CAPSCREW, 3/8"NC x 1"	
	70677006	3	WASHER	
	70911026	3	NUT, 3/8"NC	
4	70098029	4	CATCH	
	70927541	8	CAPSCREW, 1/4"NC x 3/4"	
	70677004	8	WASHER	
	70911024	8	NUT, 1/4"NC	
5	70694386	3	BRACKET	
	70918147	6	SCREW, truss head, #10 NF x 1/2"	
	70910243	6	WASHER	
	70910251	6	NUT, #10 NF	
6	70090020	1	KNOB	
	70927353	1	CAPSCREW, 1/2"NF x 1-1/4"	
	70911043	1	NUT, 1/2"NF	
7	70688906	1	COVER (Tractors prior to unit #21303)	
	70692518	1	COVER	Tractor unit #21303 and up
	70921076	5	CAPSCREW, 3/8"NC x 1-1/4"	Tractor unit #21303 and up
	70677006	5	WASHER	Tractor unit #21303 and up
8	70688151	1	COVER	
	70921076	3	CAPSCREW, 3/8"NC x 1-1/4"	
	70677006	3	WASHER	
10	70694802	1	ROD	
	70911325	1	NUT, 1/4"NC	
11	--------	1	COVER (See page 195)	
12	--------	1	SEAL (49.62" long)	Order item 19
13	--------	1	SEAL (18.69" long)	Order item 19
14	--------	1	SEAL (5.00" long)	Order item 19
15	--------	1	SEAL (29.87" long)	Order item 19
16	--------	2	SEAL (26.50" long)	Order item 20
17	--------	2	SEAL (11.25" long)	Order item 20
18	--------	2	SEAL (8.00" long)	Order item 20
19	73134825	1	SEAL (25' roll)	Use as required
20	70697960	1	SEAL (165" long)	Use as required
21	70928052	1	PADLOCK	

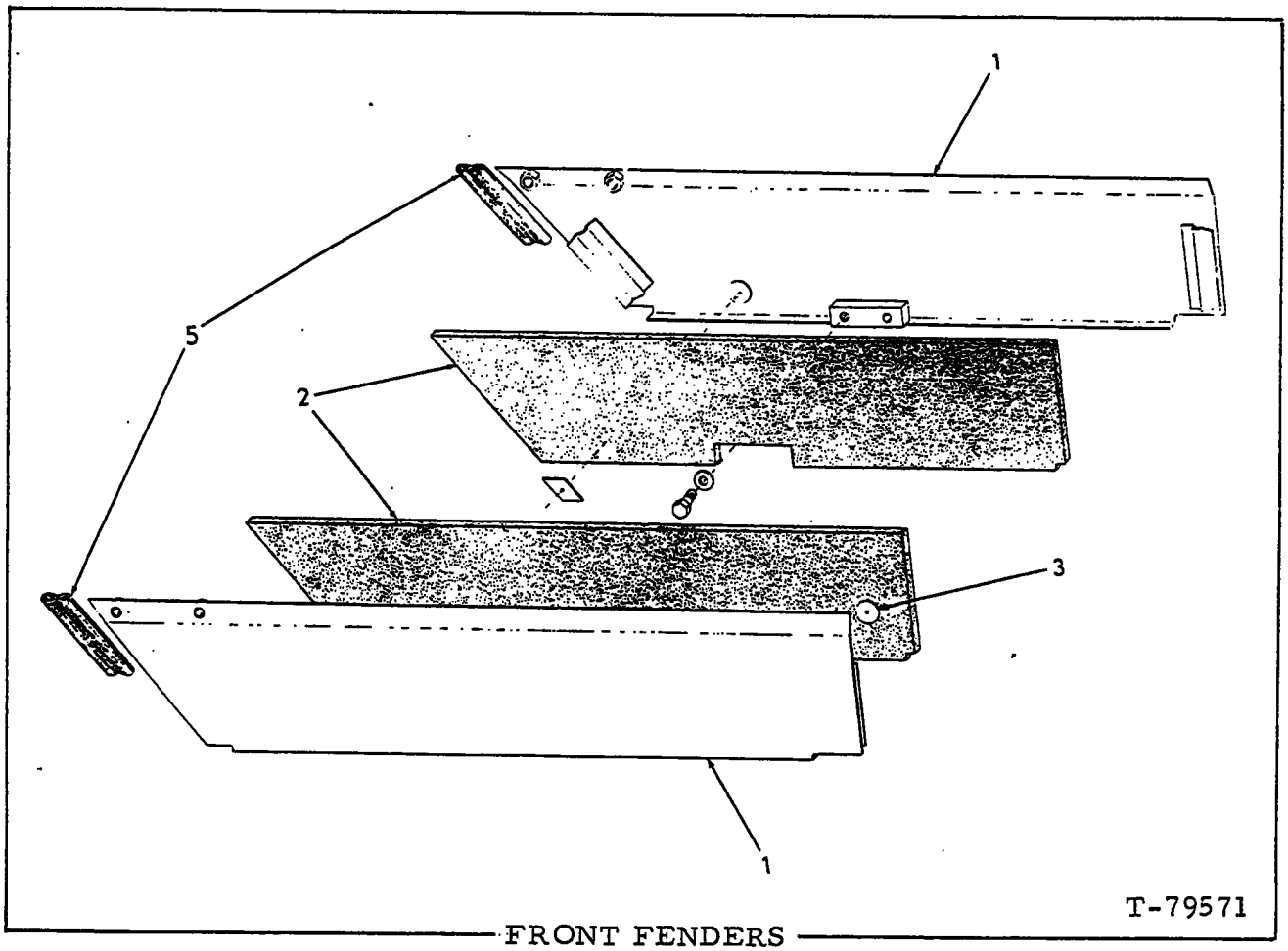

FRONT FENDERS

ITEM	PART NO.	QTY.	DESCRIPTION
1	70687439	1	FENDER ASSY., left
	70687440	1	FENDER ASSY., right
	70927491	4	CAPSCREW, nylok, 1/2" NC x 1-1/4"
	70677008	4	WASHER
2	70692343	1	INSULATION, left
	70692344	1	INSULATION, right
3	70690636	10	FASTENER (adhesive backing. Includes retainer) (See item 4)
4	70694907	-	HANGER PACKAGE (Includes 100 fasteners)
5	73110197	1	SEAL (56" long. Cut to required length)(Units equipped for Sand Operations)

(Revised May 1982)

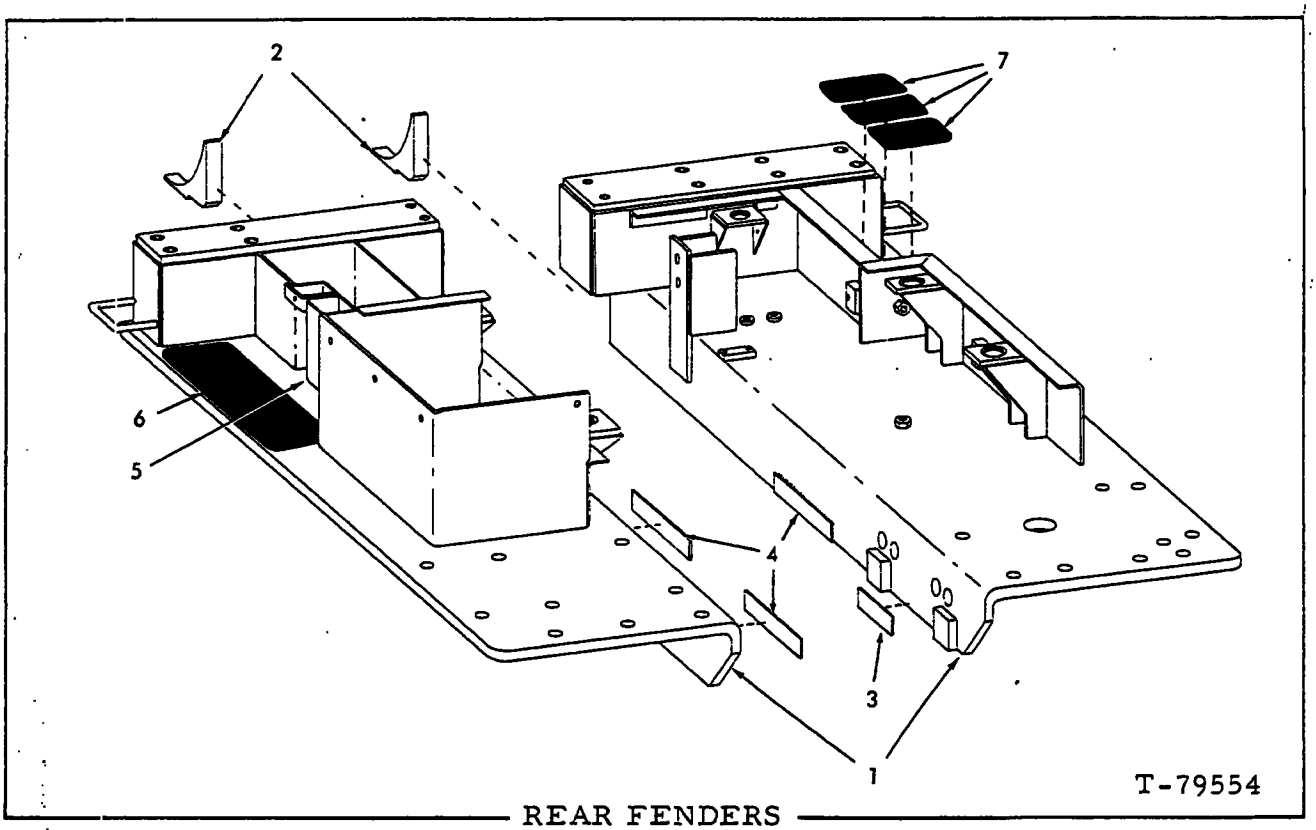

REAR FENDERS

ITEM	PART NO.	QTY.	DESCRIPTION
1	70687851	1	FENDER, left
	73113266	1	FENDER, right
2	70694099	2	GUSSET
3	73107681	1	BAR (7-1/4" long)
4	73107680	1	BAR (12" long)
			NOTE: All items listed above require welding to install.
5	70697404	1	COVER
	70922763	2	CAPSCREW, 3/8"NC x 1"
	70677006	2	WASHER
6	73115345	1	STEP TREAD, left fender
7	73116394	3	STEP TREAD, right fender

(Revised February 1980)

HOOD SIDE PLATES (Continued)

ITEM	PART NO.	QTY. *	QTY. **	DESCRIPTION	
4	70692320	1	1	PLATE, left	
	70692327	1	1	PLATE, right	
	70921175	8	8	CAPSCREW, 1/4" NC x 1/2"	
	70929379	8	8	WASHER	
5	70692323	1	1	PLATE, left	
	70692324	1	1	PLATE, right	
	70921175	6	6	CAPSCREW, 1/2" NC x 1"	
	70929379	6	6	WASHER	
6	70694991	2	2	PLATE	
	70927361	4	4	CAPSCREW, Nylok, 3/8" NC x 1-1/4"	
	70677006	4	4	WASHER	
7	70694993	1	1	ANGLE, left	
	70694994	1	1	ANGLE, right	
	70928873	2	2	CAPSCREW, Nylok, 1/2" NC x 1"	
	70677008	2	2	WASHER	
8	73113288	1	-	SPACER	
9	73113287	2	-	PLATE	
	70927491	2	-	CAPSCREW, Nylok, 1/2" NC x 1- /4"	
	70930850	2	-	WASHER	
10	73113171	-	1	ANGLE, left	
	73113172	-	1	ANGLE, right	
	70927491	-	4	CAPSCREW, Nylok, 1/2" NC x 1-1/4"	
	70930850	-	4	WASHER	
11	73113139	-	2	PLATE	
	70921566	-	8	CAPSCREW, 5/16" NC x 1"	
	70677005	-	8	WASHER	
12	73113132	-	1	STRIP (left only)	
	70921566	-	2	CAPSCREW, 5/16" NC x 1"	
	70677005	-	2	WASHER	
13	73113137	-	1	SEAL	} Left side only
14	--------	-	1	SEAL (9-1/2")(Refer to item 22)	
15	73113126	-	2	COVER	
16	73113138	-	2	PLATE	} Requires welding to install
17	73113131	-	2	BRACKET	
18	73113127	-	1	ANGLE (Right side only)	
	70922924	-	1	CAPSCREW, 5/16" NC x 1/2"	
	70677005	-	1	WASHER	
19	70659490	-	1	BLOCK, tapped (Requires welding to install)	
20	--------	-	3	SEAL (6-1/2" long)	} Refer to item 23
21	--------	-	1	SEAL (5-1/4"long)	
22	70697960	-	-	SEAL (165" long)	} Use as required
23	73134825	-	-	SEAL (25' roll)	

(Revised May 1982)

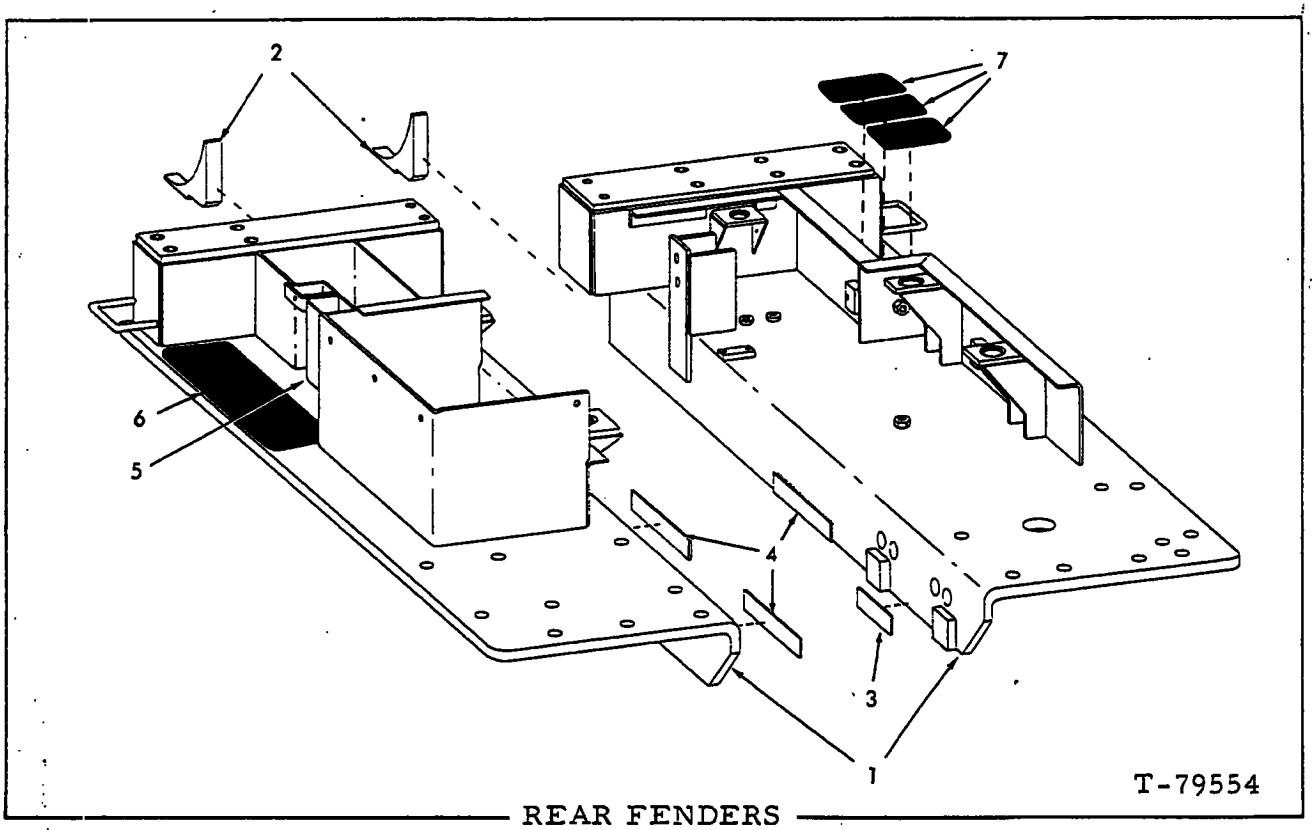

REAR FENDERS

ITEM	PART NO.	QTY.	DESCRIPTION
1	70687851	1	FENDER, left
	73113266	1	FENDER, right
2	70694099	2	GUSSET
3	73107681	1	BAR (7-1/4" long)
4	73107680	1	BAR (12" long)
			NOTE: All items listed above require welding to install.
5	70697404	1	COVER
	70922763	2	CAPSCREW, 3/8"NC x 1"
	70677006	2	WASHER
6	73115345	1	STEP TREAD, left fender
7	73116394	3	STEP TREAD, right fender

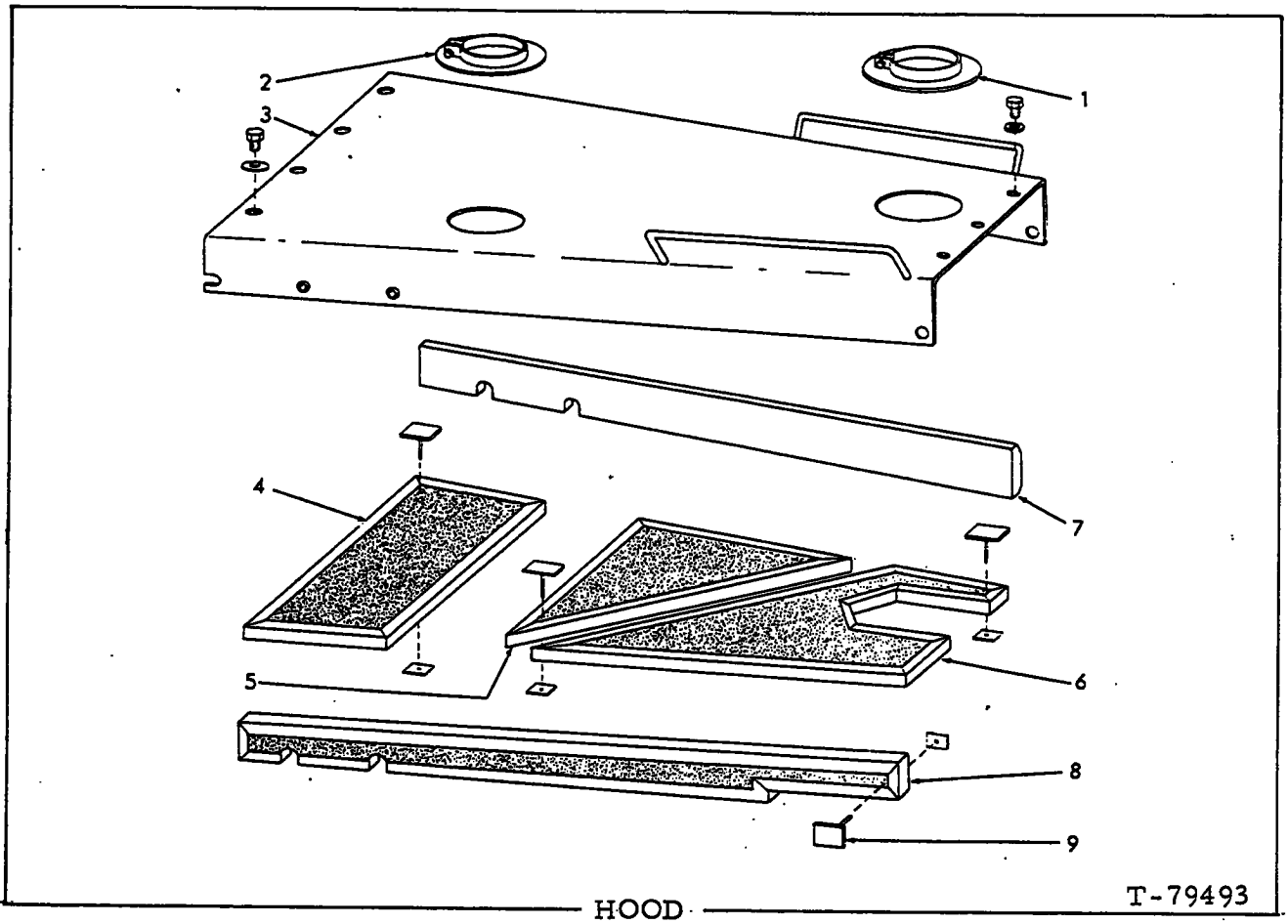

HOOD

*Standard equipment
**Special equipment. Units equipped for Sand Operations

ITEM	PART NO.	QTY. *	QTY. **	DESCRIPTION
1	--------	1	1	COLLAR ASSY. (See page 64)
2	--------	1	1	COLLAR ASSY. (See page 67)
3	70695220	1	-	HOOD ASSY. (Includes items 4 thru 9)
	73113141	-	1	HOOD ASSY. (Serviced only as a unit)
	70928873	4	4	CAPSCREW, Nylok, 1/2" NC x 1"
	70929379	4	4	WASHER
	70920582	5	5	CAPSCREW, 1/2" NC x 1-1/4"
	70677008	5	5	WASHER
4	70692354	1	1	INSULATION
5	70692353	1	-	INSULATION
6	70692350	1	-	INSULATION
7	70692347	1	-	INSULATION
	73113149	-	1	INSULATION
8	70692346	1	-	INSULATION
	73113148	-	1	INSULATION
9	70690636	44	23	FASTENER (Adhesive backing. Includes retainer)(See item 10)
10	70694907	-	-	HANGER PACKAGE (Includes 100 fasteners)

NOTE: See PAINTING AND MARKING for transfers

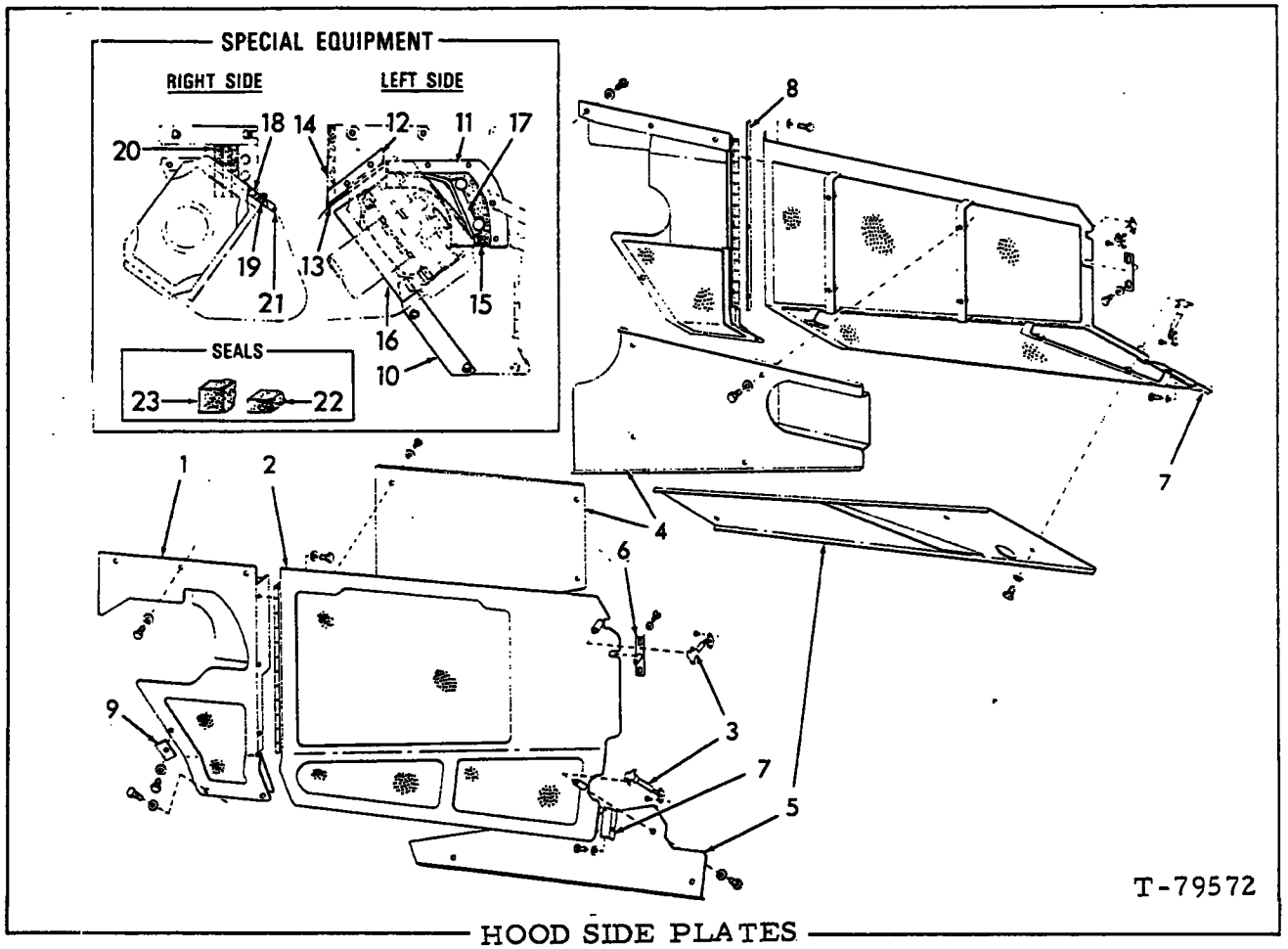

HOOD SIDE PLATES

* Standard equipment

** Special equipment. Units equipped for Sand Operations.

ITEM	PART NO.	QTY. *	QTY. **	DESCRIPTION
1	70685028	1	-	SIDE PLATE, left
	73113123	-	1	SIDE PLATE, left
	70685171	1	-	SIDE PLATE, right
	73113125	-	1	SIDE PLATE, right
	70928873	2	2	CAPSCREW, Nylok, 1/2" NC x 1"
	70929379	2	2	WASHER
	70927491	8	6	CAPSCREW, Nylok, 1/2" NC x 1-1/4"
	70930850	8	6	WASHER
2	70684966	1	-	SIDE PLATE, left
	73113154	-	1	SIDE PLATE, left
	70685301	1	-	SIDE PLATE, right
	73113161	-	1	SIDE PLATE, right
	70928873	6	6	CAPSCREW, Nylok, 1/2" NC x 1"
	70928178	6	-	WASHER
3	70098029	4	4	LATCH ASSY. (Serviced only as a unit)
	70928182	8	8	CAPSCREW, 1/4" NC x 1/2"

(Continued)

HOOD SIDE PLATES (Continued)

ITEM	PART NO.	QTY. *	QTY. **	DESCRIPTION
4	70692320	1	1	PLATE, left
	70692327	1	1	PLATE, right
	70921175	8	8	CAPSCREW, 1/4" NC x 1/2"
	70929379	8	8	WASHER
5	70692323	1	1	PLATE, left
	70692324	1	1	PLATE, right
	70921175	6	6	CAPSCREW, 1/2" NC x 1"
	70929379	6	6	WASHER
6	70694991	2	2	PLATE
	70927361	4	4	CAPSCREW, Nylok, 3/8" NC x 1-1/4"
	70677006	4	4	WASHER
7	70694993	1	1	ANGLE, left
	70694994	1	1	ANGLE, right
	70928873	2	2	CAPSCREW, Nylok, 1/2" NC x 1"
	70677008	2	2	WASHER
8	73113288	1	-	SPACER
9	73113287	2	-	PLATE
	70927491	2	-	CAPSCREW, Nylok, 1/2" NC x 1- /4"
	70930850	2	-	WASHER
10	73113171	-	1	ANGLE, left
	73113172	-	1	ANGLE, right
	70927491	-	4	CAPSCREW, Nylok, 1/2" NC x 1-1/4"
	70930850	-	4	WASHER
11	73113139	-	2	PLATE
	70921566	-	8	CAPSCREW, 5/16" NC x 1"
	70677005	-	8	WASHER
12	73113132	-	1	STRIP (left only)
	70921566	-	2	CAPSCREW, 5/16" NC x 1"
	70677005	-	2	WASHER
13	73113137	-	1	SEAL } Left side only
14	--------	-	1	SEAL (9-1/2")(Refer to item 22) } Left side only
15	73113126	-	2	COVER
16	73113138	-	2	PLATE } Requires welding to install
17	73113131	-	2	BRACKET } Requires welding to install
18	73113127	-	1	ANGLE (Right side only)
	70922924	-	1	CAPSCREW, 5/16" NC x 1/2"
	70677005	-	1	WASHER
19	70659490	-	1	BLOCK, tapped (Requires welding to install)
20	--------	-	3	SEAL (6-1/2" long) } Refer to item 23
21	--------	-	1	SEAL (5-1/4"long) } Refer to item 23
22	70697960	-	-	SEAL (165" long) } Use as required
23	73134825	-	-	SEAL (25' roll) } Use as required

(Revised May 1982)

PAINTING AND MARKING
(Not Illustrated)

ITEM	PART NO.	QTY.	DESCRIPTION
			NOTE: Approximately 18-1/2 gallons of paint required for spraying
1	70698037	-	ENAMEL, yellow orange, 12 oz. aerosol spray can
2	70698038	-	ENAMEL, yellow orange, gallon can
			NOTE: All plates and decals listed below are English language printings unless otherwise indicated.
3	73114058	1	PLATE, lubrication and service guide (7-3/4" x 12")
	70698742	1	PLATE, lubrication and service guide (Spanish)(7-3/4" x 12")
	70698743	1	PLATE, lubrication and service guide (Portuguese)(7-3/4" x 12")
	70698744	1	PLATE, lubrication and service guide (French)(7-3/4" x 12")
	70698944	1	PLATE, lubrication and service guide (Italian)(7-3/4" x 12")
	70698993	1	PLATE, lubrication and service guide (German)(7-3/4" x 12")
	70034076	4	SCREW, thd-cutting, cross-recessed head, #8 x 1/2"
			(Attaches to left side of Transmission control Tower)
4	70672642	1	□DECAL, instruction, air cleaner (3" x 5")(Applied to air cleaner inlet tube)
5	73107879	1	□DECAL, instruction, engine starting (4-7/16" x 4-7/8") (Applied to cowl)
6	70664837	1	PLATE, instruction, engine and steering (1-1/2" x 4-7/8")(Attaches to top of transmission control tower)
	70034076	1	SCREW
7	74029499	1	□DECAL, instruction, engine primer (3" x 3-1/4") (Applied to Cowl)
8	70677914	2	□DECAL, instruction, fuel filter (2-1/4" x 3-3/4") (Applied to filters)
9	70695034	2	□DECAL, instruction, steering oil filter (1-3/4" x 2-1/4")(Applied to Steering Filters)
10	73109131	1	□DECAL, instruction manual location (6-5/8" x 1-1/8") (Applied to top of seat back)
11	70658630	1	□DECAL, instruction, transmission filters)(1-3/4" x 2-1/4")(Applied to transmission filters)
12	73107880	1	□DECAL, important, engine oil filter (6-7/16" x 2-1/2")
	73109141	1	DECAL, important, engine oil filter (Italian)(6-1/2" x 2-1/2")
	73109142	1	DECAL, important, engine oil filter (Spanish)(6-1/2" x 2-1/2")
	73109143	1	DECAL, important, engine oil filter (German) (6-1/2" x 2-1/2")
	73109144	1	DECAL, important, engine oil filter (French) (6-1/2" x 2-1/2")
	73109145	1	DECAL, important. engine oil filter (Portuguese) (6-1/2" x 2-1/2")
			NOTE: Item 12 listed above applies to engine oil by-pass filter.
12A	73111469	1	DECAL, instruction, brake lock control (3-1/2" x 1-1/4") (Applied to right side arm rest on seat support)

(Continued)

PAINTING AND MARKING (Continued)
(Not Illustrated)

ITEM	PART NO.	QTY.	DESCRIPTION
13	73109147	1	DECAL, important, fueling rate (4" x 1-1/2")(Applied to left side of fuel tank)
14	73108728	2	□DECAL, important, lube oil (3-7/16" x 2-1/4")(Applied to lube oil filter)
15	73107892	2	□DECAL, danger, brake valves (4-7/16" x 2-1/2") (Applied to top of brake valves)
16	73107882	2	□DECAL, danger, flammable vapors (4-9/16" x 2-1/8") (Applied to both sides of fuel tank)
17	73107884	2	□DECAL, danger, fluid pressure (5-7/16" x 1-15/16" (Applied to radiator filler cap guard)
18	73108074	1	□DECAL, horn (2" x 3")(Applied to right side of transmission control tower)
19	73108774	1	□DECAL, danger, hydraulic system service (6" x 8-7/8") (Applied to right side of hydraulic tank)
20	73108929	2	□DECAL, danger, track tension (6" x 2-5/16")(Applied to track release spring cover)
21	73107893	4	□DECAL, danger, track release spring (4-7/16" x 2-1/8")(Applied to track release spring cover and spring retaining housing)
22	73107881	2	□DECAL, warning, blades and belts)(4-7/16" x 1-7/8") (Applied to sides of radiator guard)
23	73107895	1	□DECAL, warning, do not start (4-1/2" x 2-1/2")
	73109135	1	DECAL, warning, do not start (Italian)(4-1/2" x 2-1/2")
	73109136	1	DECAL, warning, do not start (Spanish)(4-1/2" x 2-1/2")
	73109137	1	DECAL, warning, do not start (German)(4-1/2" x 2-1/2")
	73109138	1	DECAL, warning, do not start (French)(4-1/2" x 2-1/2")
	73109139	1	DECAL, warning, do not start (Portuguese)(4-1/2" x 2-1/2")
			NOTE: Item 23 listed above applied to the Cowl
24	73107894	1	□DECAL, warning, element cleaning (4-7/16" x 1-15/16") (Applied to side of air cleaner)
25	73107897	4	□DECAL, warning, inoperative brakes (4-9/16" x 2-1/8") (Applied to rear of main housing)
26	73107891	1	□DECAL, warning, master switch (4-7/16" x 2-1/8") (Applied to left side of fuel tank)
27	73107883	1	□DECAL, warning, operation (5-5/16" x 9-9/16") (Applied to right side of Transmission Control Tower)
28	73107889	1	□DECAL, warning, pressure leaks (7-7/16" x 1-15/16") (Applied to left side of Control Tower)
29	73107890	4	□DECAL, warning, scissors point (6-1/2" x 2-1/4") (Applied to ripper tool bar linkage)
30	73108722	2	□DECAL, warning, starting fluid (4-7/16" x 2-1/4") (Applied to air intake pipe)
31	73107888	1	□DECAL, warning, start up, shut-down (5" x 6-11/16") (Applied to cowl)
32	73107885	2	□DECAL, warning, towing (4-7/16" x 1-15/16")(Applied to front of main frame and rear of main housing)
33	73108938	1	□DECAL, warning, cab tilt (3" x 6")(Applied to left side of cab)

(Continued)

PAINTING AND MARKING (Continued)
(Not Illustrated)

ITEM	PART NO.	QTY.	DESCRIPTION
34	---------	1	DECAL, "ROPS" (6" x 2-1/2")(Applied to top rear of ROPS frame)(Order from local Fiat-Allis dealer)
35	70695144	1	□DECAL, "Steering Oil Sump" (1-3/4" diam.)(Applied to top of Main Housing oil level gauge)
36	70695137	1	□DECAL, "Transmission Oil Sump" (1-3/4" diam.) (Applied to top of transmission oil level gauge)
37	70694424	2	□DECAL, "F-A" trademark) (8" x 9") (Applied to sides of radiator guard)
38	70694425	1	□DECAL, "F-A" trademark (9-1/2" x 10-3/4")(Applied to rear of fuel tank guard on units equipped with Ripper)
39	70694436	1	□DECAL, "FIAT-ALLIS" trademark (3" x 20") (Applied to front of Radiator Guard)
40	70694437	2	□DECAL, "FIAT-ALLIS" trademark (22-1/2" x 3-1/2") (Applied to sides of hood)
41	70697242	1	□DECAL, "FIAT-ALLIS" trademark (16" x 29-1/2") (Applied to back of Fuel Tank)(Not used with Ripper)
42	70694452	2	□DECAL , "21-C" (6" x 16-5/8")(Applied to both sides of battery boxes)
43	73110432	1	KIT, decal (Includes items 4, 5, 9 thru 12, 15 thru 28, 30 thru 33, 35 thru 37, and 39 thru 42)

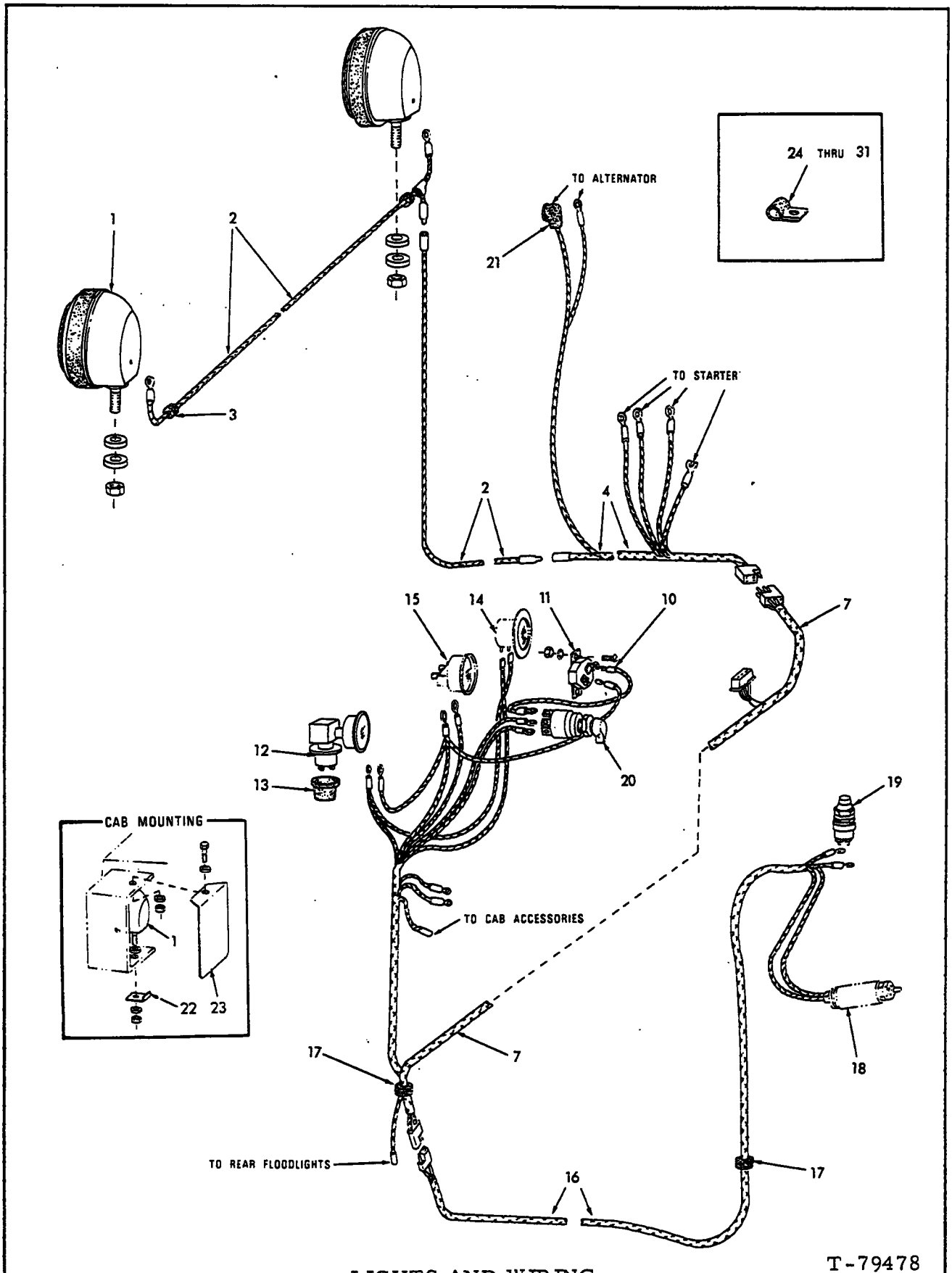
24 THRU 31
TO ALTERNATOR
TO STARTER
TO CAB ACCESSORIES
TO REAR FLOODLIGHTS
CAB MOUNTING
1
2
3
4
7
10
11
12
13
14
15
16
17
18
19
20
21
22
23

T-79478

LIGHTS AND WIRING

* Units with standard 20 amp. alternator
** Units with standard 45 amp. alternator, or optional 150 amp. alternator.

See page 215

ITEM	PART NO.	QTY. *	QTY. **	DESCRIPTION
1	--------	2	2	LIGHT ASSY. (See page 204)
	70677008	4	4	WASHER
	70910195	2	2	NUT, 1/2"NF
2	70683796	1	1	CABLE (Tractors prior to unit #21394)
	73108744	1	1	CABLE ASSY. (2 piece)(Tractor unit #21394 and up)
3	70696335	2	2	GROMMET
4	73121989	1	-	HARNESS, front section(If first replacement on tractors prior to unit #21849, also order 1 HARNESS 73121990)
	70697088	-	1	CABLE, alternator to starter (Prior S/N 71A21967)
	73123442	-	1	CABLE, alternator - to starter (Includes item 21) (Tractor S/N 71A21967 and up)
	70917376	1	1	NUT, #12NC
5	70695239	-	1	HARNESS, front section
6	70697087	-	1	CABLE, starter to voltmeter
7	73121990	1	-	HARNESS, rear section(If first replacement on tractors prior to unit #21849, also order 1 HARNESS 73121989)
	70696863	-	1	HARNESS, rear section
8	70696864	-	1	CABLE, starter to voltmeter, rear
9	70630738	-	1	CABLE, hour meter to pressure switch
10	70689809	1	1	CABLE
11	70161824	1	1	BREAKER, circuit
	70910968	2	2	SCREW, #10-24NC x 1"
	70910284	2	2	LOCKWASHER, #10
	70916621	2	2	NUT, #10-24NC
12	70660694	1	1	SWITCH, pressure
13	70632706	1	1	BOOT
14	--------	1	1	METER, hour } See page 207
15	--------	1	1	VOLTMETER } See page 207
16	70691338	1	1	HARNESS
17	70924292	2	2	GROMMET
18	--------	1	1	SWITCH, safety (See page 128)
19	70240962	1	1	SWITCH ASSY., starter (Serviced only as a unit)
20	70661345	1	1	SWITCH ASSY., light (Includes nut)
21	70667579	1	-	BOOT
22	70699872	-	2	ANGLE (Early units)
23	70699873	-	2	COVER
	70920585	-	2	CAPSCREW, 1/2"NC x 1-3/4" } Early units
	70677008	-	4	WASHER } Early units
	70911028	-	2	NUT, 1/2"NC } Early units
	70922300	-	2	CAPSCREW, 3/8"NC x 3/4" } Late units
	70677006	-	2	WASHER } Late units
24	70640676	1	1	CLIP, insulated, 5/16"I.D.
	70677006	1	1	WASHER

(Continued)

ITEM	PART NO.	QTY. *	QTY. **	DESCRIPTION
25	70927384	3	-	CLAMP, insulated, 3/8" I.D. x 7/8" width (2 less used on tractors prior to unit #21041)
	70926707	-	1	CLAMP, insulated, 1/2" I.D. x 1" width
	70923470	1	-	CAPSCREW, 3/8" NC x 1-1/2"
	70921175	-	1	CAPSCREW, 1/2" NC x 1"
	70921556	1	-	CAPSCREW, 1/2" NC x 2"
	70677008	-	1	WASHER
	70930370	2	-	WASHER, 11/16" O.D.
	70929154	2	-	WASHER, 3/4" O.D.
	70928844	3	-	WASHER, 1-1/2" O.D.
	70900369	1	-	NUT, 1/2" NC
26	70624508	1	1	CLIP, insulated, 3/8" I.D. hole } Tractors prior to unit #21041 with std. 20 amp alternater
	70921175	1	1	CAPSCREW, 1/2" NC x 1"
	70677008	1	1	WASHER
27	70927155	3	3	CLAMP, insulated, 1/2" I.D. hole (Two additional required effective with tractor S/N 71A21947)
28	70654655	-	1	CLIP } Tractors prior to unit #21041
	70921175	-	1	CAPSCREW, 1/2" NC x 1"
	70677008	-	1	WASHER
29	70929458	3	3	CLAMP, insulated, 3/8" I.D. hole
	70922300	3	3	CAPSCREW, 3/8" NC x 3/4"
	70929156	3	3	WASHER
30	70928176	8	8	CLAMP, insulated, 1/8" I.D. hole
	70922300	5	5	CAPSCREW, 3/8" NC x 3/4"
	70929156	5	5	WASHER
31	70927599	1	-	CLAMP, insulated, 9/16" I.D. hole

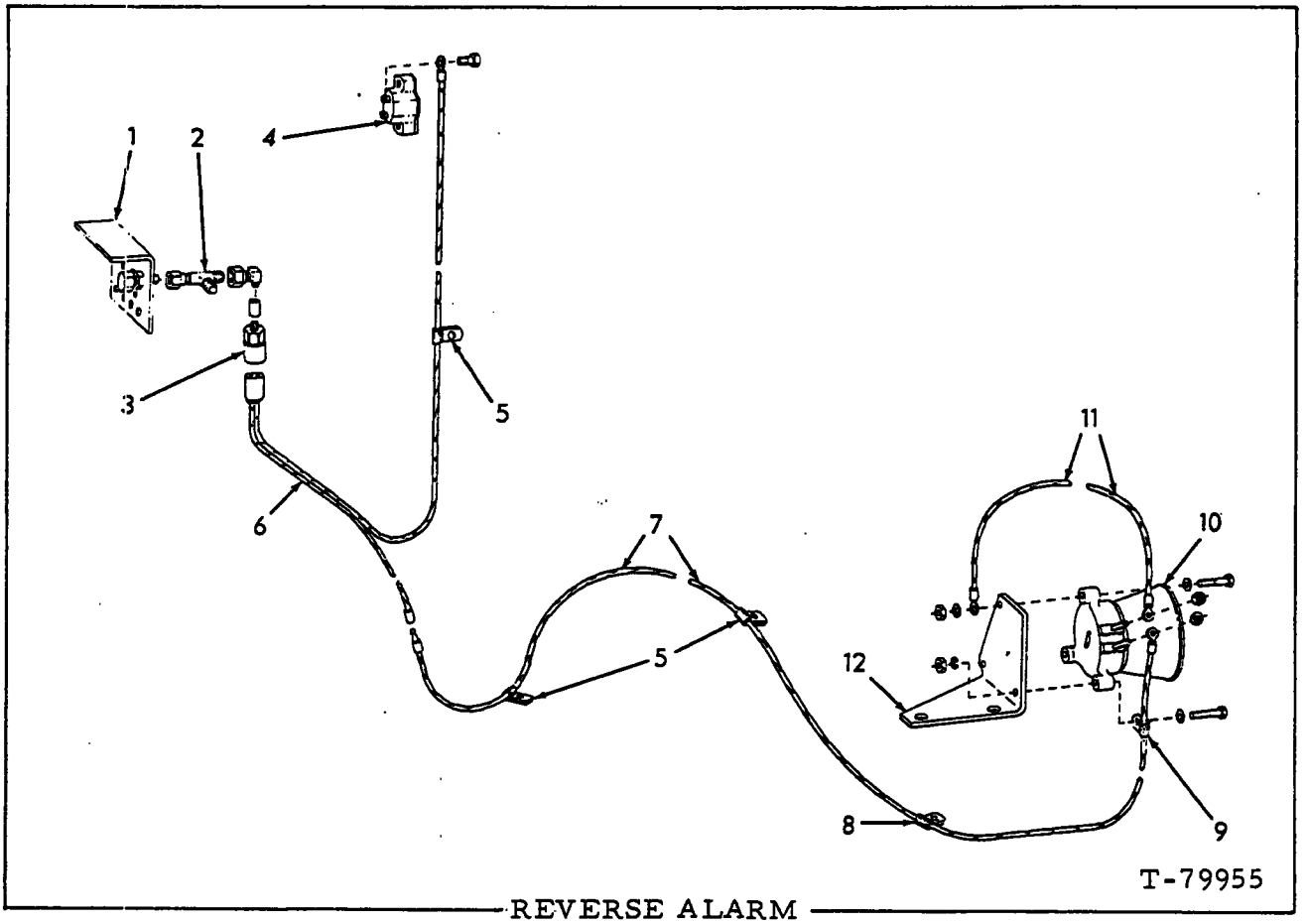

REVERSE ALARM

USAGE: Special equipment on units prior to unit #21286 and standard equipment thereafter.

ITEM	PART NO.	QTY.	DESCRIPTION
1	--------	1	PANEL, pressure test (See page 123)
2	--------	1	TEE (See page 123)
	70932613	1	ELBOW, flare type, 1/4" tube, 1/8"NPT
	70901763	1	COUPLING, 13/16", 1/8"NPT
3	73066429	1	SWITCH, pressure
4	--------	1	BREAKER, circuit (See page 201)
5	70639388	3	CLIP
6	73109722	1	HARNESS
7	73109723	1	CABLE
8	70640704	1	CLIP
9	70640707	1	CLIP
10	73122739	1	HORN
	70921382	3	CAPSCREW, 1/4"NC x 1-1/4")
	70677004	6	WASHER
	70920187	1	LOCKWASHER, 1/4"
	70917730	3	NUT, 1/4"NC
11	70671763	1	CABLE
12	73109705	1	ANGLE

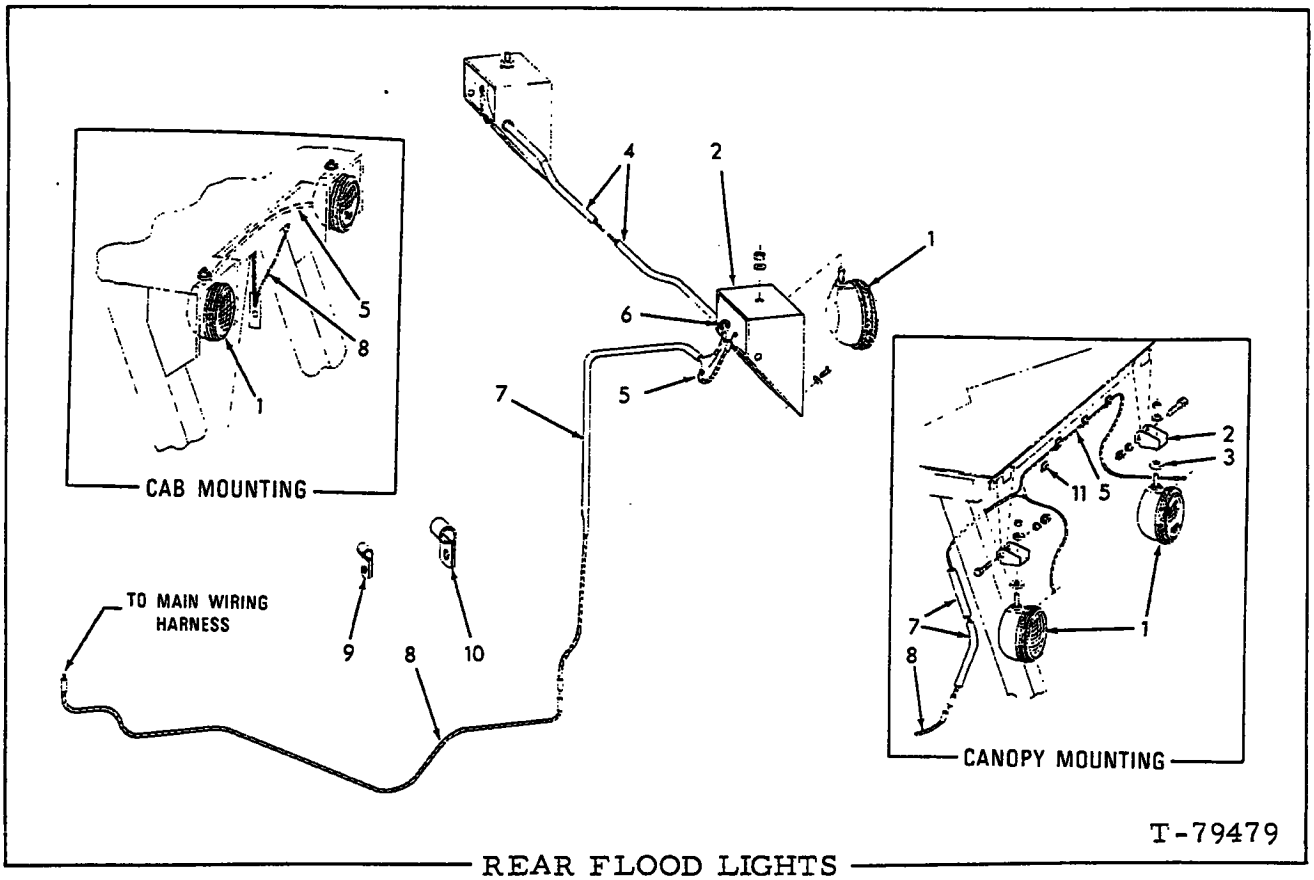

REAR FLOOD LIGHTS

* Units without CAB or CANOPY (Standard)
** Units with CANOPY (Special)
*** Units with CAB (Special)

ITEM	PART NO.	QUANTITY *	**	***	DESCRIPTION
1	--------	2	2	2	LIGHT ASSY. (See page 204)
	70677008	4	2	4	WASHER
	70910195	2	2	2	NUT, 1/2"NF
2	70691319	2	-	-	BRACKET
	70922763	8	-	-	CAPSCREW, 3/8"NC x 1"
	70677006	8	-	-	WASHER
	70076140	-	2	-	BRACKET
	70928043	-	2	-	CAPSCREW, 5/8"NC x 3-1/2"
	70912942	-	2	-	LOCKWASHER, 5/8"
	70911029	-	2	-	NUT, 5/8"NC
3	70061528	-	2	-	BOSS
4	70694482	1	-	-	TUBE
5	70676647	1	-	-	CABLE (90" long)
	70692500	-	1	-	CABLE (175" long)
	73107460	-	-	1	CABLE (60" long) (Not serviced)
6	70930860	2	-	-	GROMMET
7	70696016	1	-	-	TUBE
	70696331	-	1	-	TUBE

(Continued)

REAR FLOOD LIGHTS (Continued)

ITEM	PART NO.	QUANTITY *	**	***	DESCRIPTION
8	70691328	1	1	-	HARNESS (66" long)
	--------	-	-	1	HARNESS (See page 201)
9	70928176	4	3	-	CLAMP, insulated (1/8" I. D. x 3/4")
	70927484	1	-	-	CAPSCREW, 3/8"NC x 1/2"
	70922300	3	3	-	CAPSCREW, 3/8"NC x 3/4"
	70929156	4	3	-	WASHER
10	70927155	4	2	-	CLAMP, insulated (1/2" I. D. x 3/4")
	70927484	4	-	-	CAPSCREW, 3/8"NC x 1/2"
	70922300	-	1	-	CAPSCREW, 3/8"NC x 3/4"
	70929156	4	-	-	WASHER
11	73059884	-	12	-	CLIP (adhesive backing)

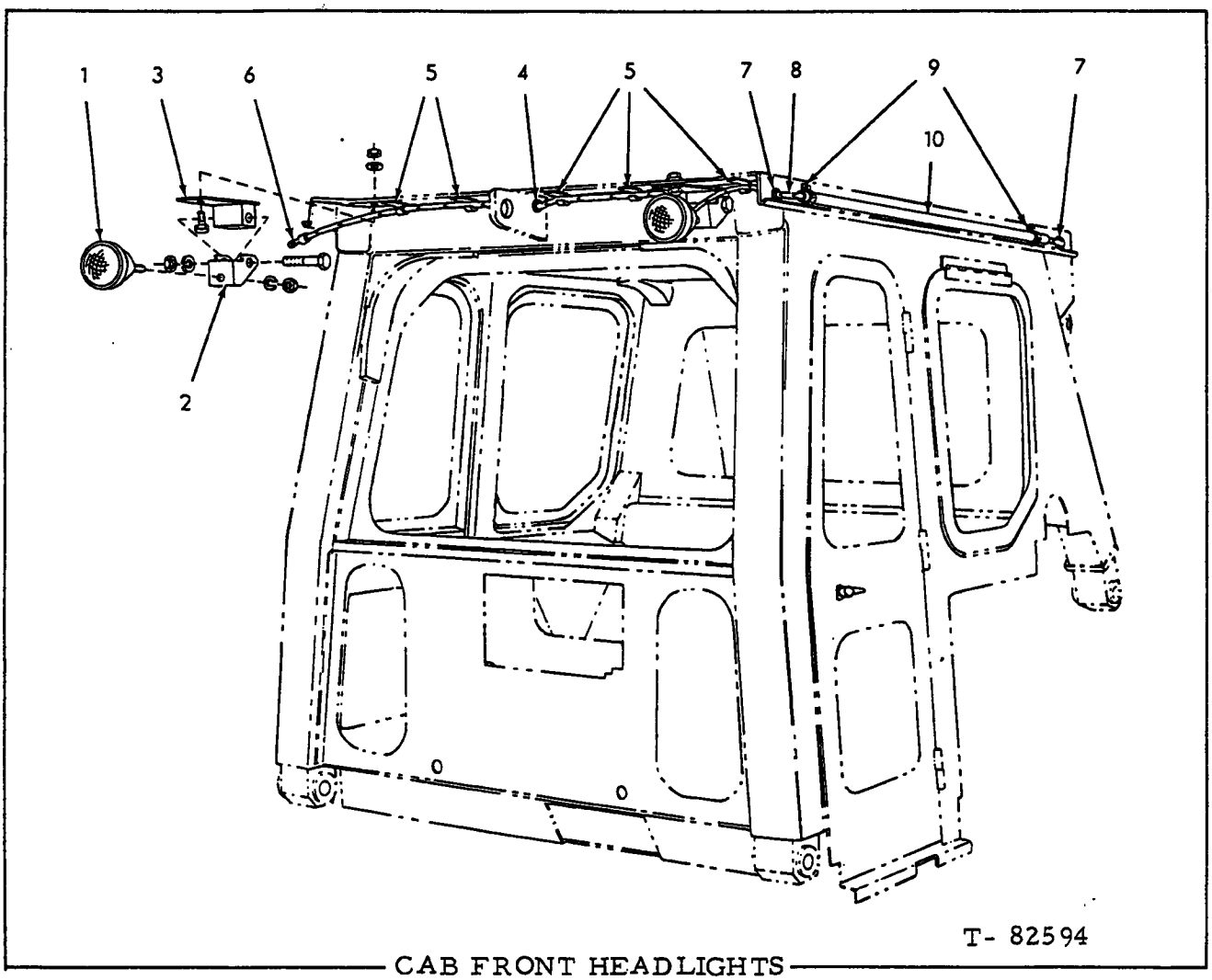

CAB FRONT HEADLIGHTS

USAGE: Special equipment

ITEM	PART NO.	QTY.	DESCRIPTION
1	--------	2	LIGHT ASSY., front head (See page 203C)
	70912441	2	LOCKWASHER, 1/2"
	70900369	2	NUT, 1/2"NC
2	70076140	2	BRACKET
	70928043	2	CAPSCREW, 5/8"NC x 3 1/2"
	70912942	2	LOCKWASHER, 5/8"
	70900370	2	NUT, 5/8"NC
3	73125581	2	BRACKET
	70920583	2	CAPSCREW, 1/2"NC x 1-1/2"
	70677008	2	WASHER
	70900369	2	NUT, 1/2"NC
4	73125577	2	GROMMET (Requires cementing together)
5	73059884	5	CLIP (adhesive backing)
6	73107460	1	WIRE (60" long)
7	70044810	2	GROMMET
8	70695440	1	WIRE

(Continued)

(Added July 1980)

CAB FRONT HEADLIGHTS (Continued)

ITEM	PART NO.	QTY.	DESCRIPTION
9	70927155	2	CLAMP
	70922763	2	CAPSCREW, 3/8"NC x 1"
	70929156	2	WASHER
	70910287	2	LOCKWASHER, 3/8"
	70900267	2	NUT, 3/8"NC
10	73125579	1	TUBE

(Added July 1980)

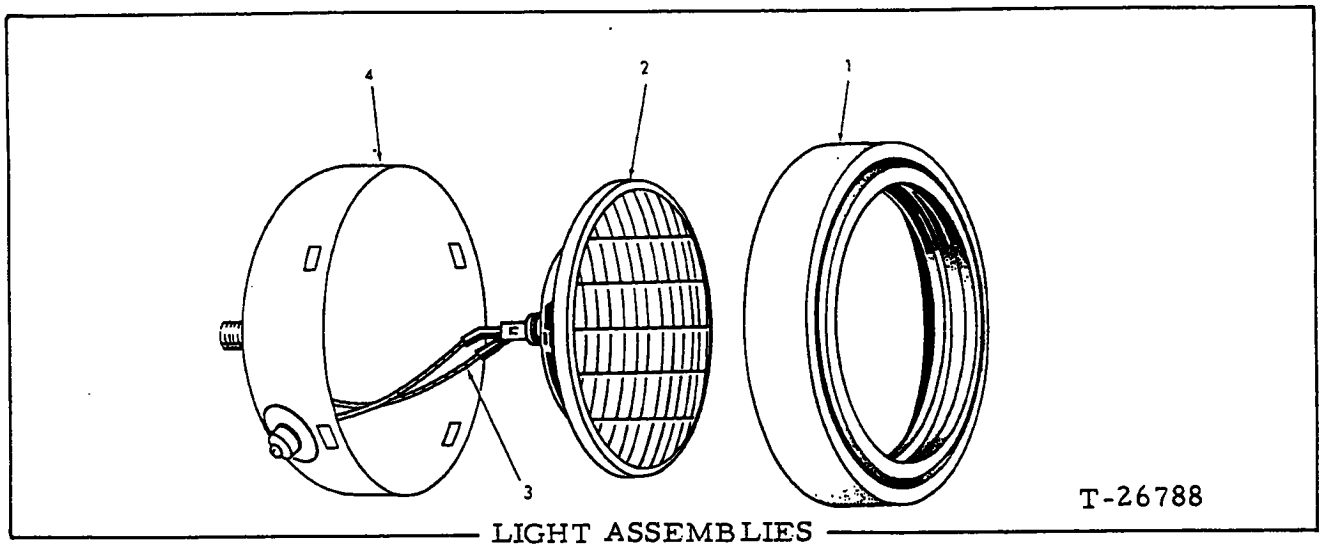

LIGHT ASSEMBLIES

USAGE: See page 203A

ITEM	PART NO.	QTY.	DESCRIPTION
-	70184716	1	HEAD LAMP ASSY., (includes items 1 thru 4)
1	70621821	1	RING, mounting (rubber)
2	70184768	1	SEALED BEAM, headlamp
3	70184771	1	WIRE ASSY.
	70912731	1	SCREW, mach., cd. pltd., #8 NC x 5/16"
	--------	1	SHELL (Not serviced separately)

(Added July 1980)

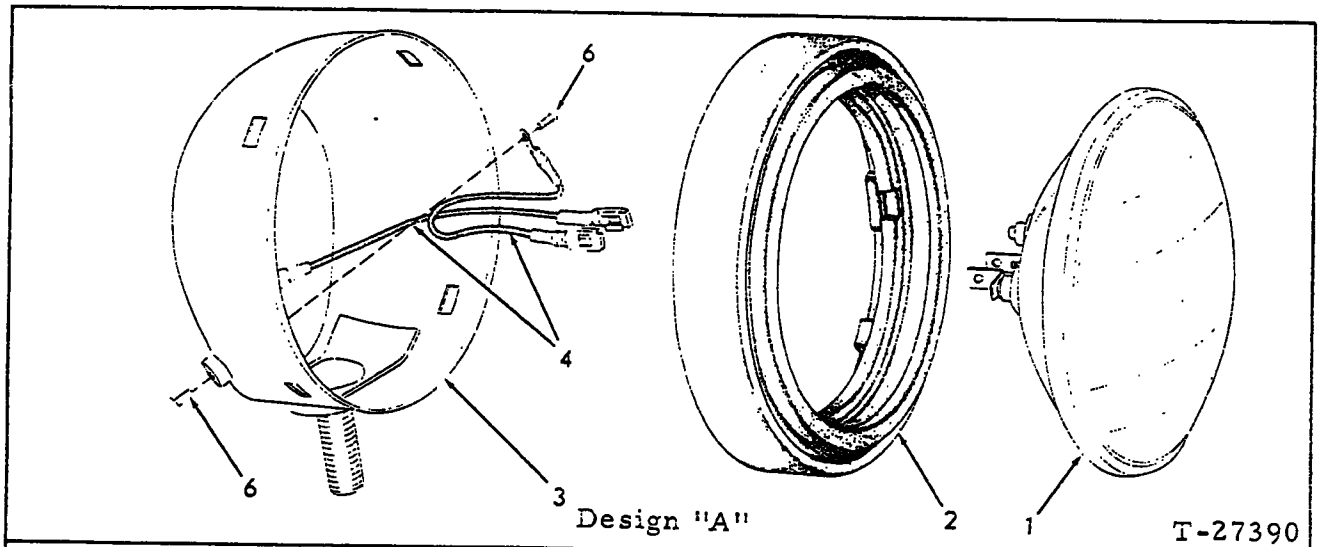

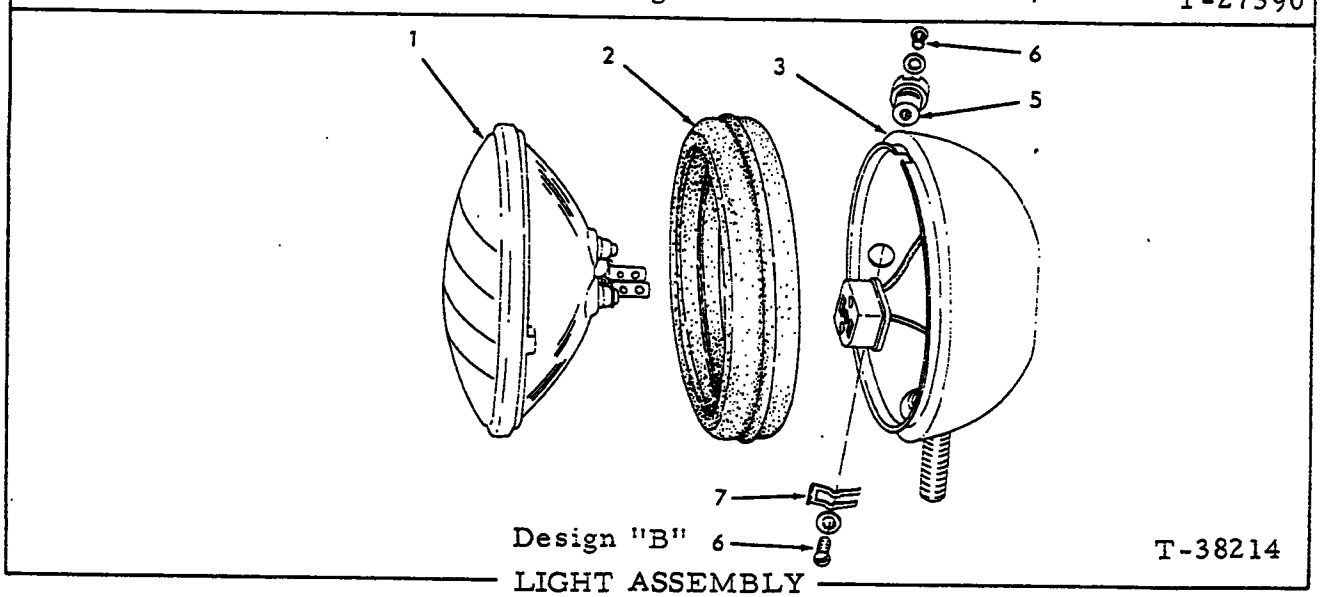

LIGHT ASSEMBLY

USAGE: See pages 201 and 202

* Design "A"

** Design "B"

ITEM	PART NO.	QTY. *	QTY. **	DESCRIPTION
				NOTE: This Light Assembly is available in two designs. Check illustration to determine which is applicable to your unit and order service parts accordingly.
-	70621429	2	2	LIGHT ASSY. (Includes items 1 thru 7)
1	70182763	1	1	SEALED BEAM (24 volt)
2	70621428	1	-	RETAINER
	70638282	-	1	RETAINER
3	--------	1	-	BODY } Not serviced
	--------	-	1	BODY (Includes receptacle) } separately
4	70621724	2	-	CABLE
5	70695694	-	1	INSULATOR PACKAGE
6	70912731	2	2	SCREW, machined, rd-hd., #8NC x 5/16"
	70912739	-	2	LOCKWASHER, #8
7	70048922	-	1	SPRING

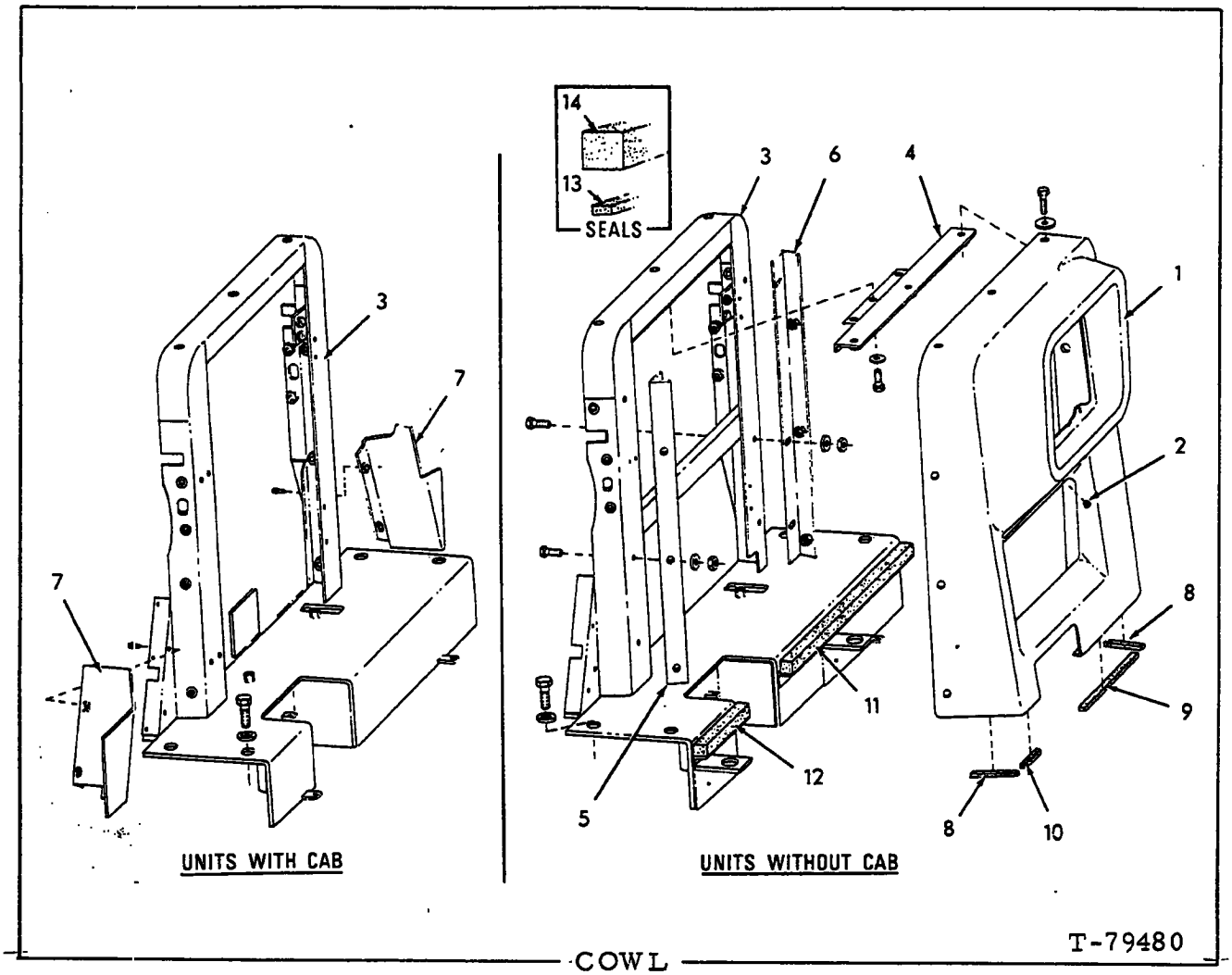

COWL

* Units without CAB
** Units with CAB
Δ Units without CAB
ΔΔ Units with CAB

} Tractors prior to serial No. 71A21579 excluding 21491.
} Tractors serial No. 71A21579 and up including 21491.

ITEM	PART NO.	QUANTITY *	**	Δ	ΔΔ	DESCRIPTION
1	70689597	1	-	-	-	COWL
	73112983	-	-	1	-	COWL
	70920574	9	-	-	-	CAPSCREW, 1/2" NC x 1-3/8"
	70920582	-	-	9	-	CAPSCREW, 1/2" NC x 1-1/4"
	70092163	9	-	9	-	WASHER
	70927294	-	-	12	-	WASHER, shimming (Use as required)
2	70917676	6	-	6	-	PLUG (Not used on units equipped with VANDALISM PREVENTION PARTS)
3	70689644	1	-	-	-	SUPPORT
	70698506	-	1	-	1	SUPPORT
	73112770	-	-	1	-	SUPPORT
	70922743	4	3	4	3	CAPSCREW, 3/4" NC x 2"
	70677012	4	3	4	3	WASHER

(Continued)

(Revised May 1982)

ITEM	PART NO.	QUANTITY *	**	Δ	ΔΔ	DESCRIPTION	
4	73112897	-	-	1	-	ZEE	
	70920582	-	-	3	-	CAPSCREW, 1/2" NC x 1-1/4"	
	70677008	-	-	3	-	WASHER	
5	73112899	-	-	1	-	ANGLE, left	
6	73112902	-	-	1	-	ANGLE, right	
	70920582	-	-	6	-	CAPSCREW, 1/2" NC x 1-1/4"	
	70677008	-	-	6	-	WASHER	
	70911028	-	-	6	-	NUT, 1/2" NC	
7	73107475	-	1	-	1	PLATE, left	
	73107476	-	1	-	1	PLATE, right	
	70931646	-	4	-	4	CAPSCREW, self-locking, 1/4" NC x 1/2"	
8	--------	2	-	2	-	SEAL (5-3/4" long)	} Order item 13
9	--------	1	-	1	-	SEAL (14-1/2" long)	
10	--------	1	-	1	-	SEAL (3-5/8" long)	
11	--------	1	-	1	-	SEAL (29-1/8" long)	} Order item 14
12	--------	1	-	1	-	SEAL (9-13/16" long)	
13	--------	-	-	-	-	SEAL (28" long)	} Use as required. Cut to proper length.
14	--------	-	-	-	-	SEAL (335" long)	

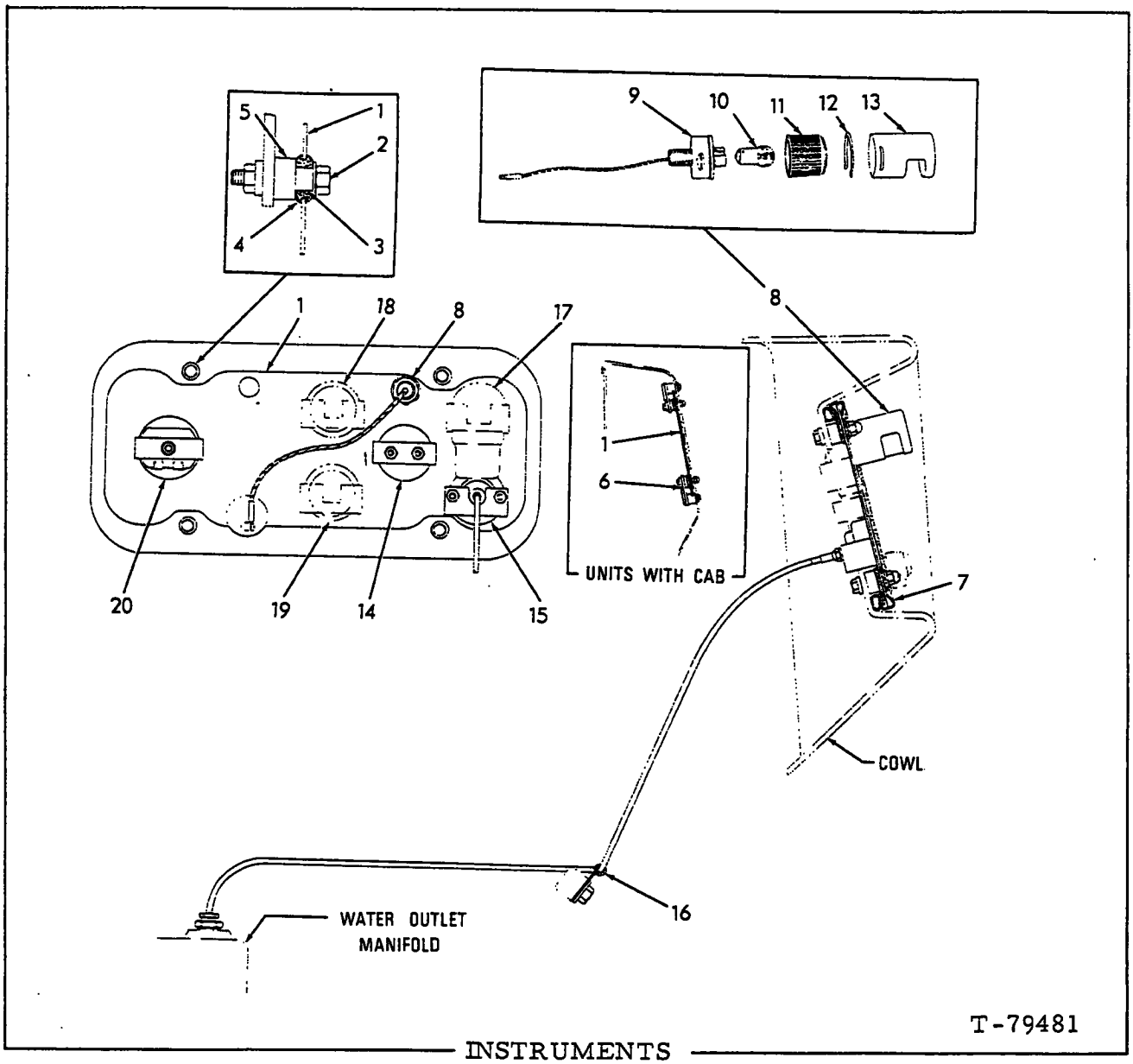

INSTRUMENTS

ITEM	PART NO.	QTY.	DESCRIPTION
1	70689623	1	PLATE
2	70931787	4	CAPSCREW, 1/4"NC x 1-1/2"
	70911114	4	WASHER
	70930735	4	WASHER
	70911024	4	NUT, 1/4"NC
3	70698697	4	SLEEVE
4	70913233	4	GROMMET
5	70696515	4	SPACER
6	73107479	2	PLATE (Units equipped with a cab)
	70931787	4	CAPSCREW, 1/4"NC x 1-1/4"
	70930735	4	WASHER

(Continued)

ITEM	PART NO.	QTY.	DESCRIPTION
7	70691986	1	SEAL (75" long)(Cut to length)(Not used on units with CAB)
8	70693634	1	LIGHT ASSY. (Includes items 9 thru 13)
	70910334	1	LOCKWASHER, int-tooth, 5/8"
	70911049	1	NUT, jam, 5/8"NF
9	--------	1	BASE ASSY. (Not serviced separately)
10	70074452	1	BULB, 6 candle power
	73115057	1	BULB, 3 candle power
11	70095267	1	LENS, clear
	73115058	1	LENS, blue
12	70095265	1	SPRING
13	70693636	1	COVER
14	70696656	1	VOLTMETER
15	70695982	1	THERMO GAUGE
16	70639312	1	CLIP
	70922763	1	CAPSCREW, 3/8"NC x 1"
	70929156	1	WASHER
17	--------	1	GAUGE (See page 208)
18	--------	1	GAUGE (Tractors prior to unit #21286)(See page 209)
	70921193	1	PLUG (Tractors unit #21286 and up)
19	--------	1	GAUGE (See page 210)
20	70699126	1	HOUR METER (Includes mounting clamp)

NOTE: Meter carries manufacturer's warranty and in case of failure should not be returned to Fiat-Allis. Return to nearest "Stewart Warner" agency.

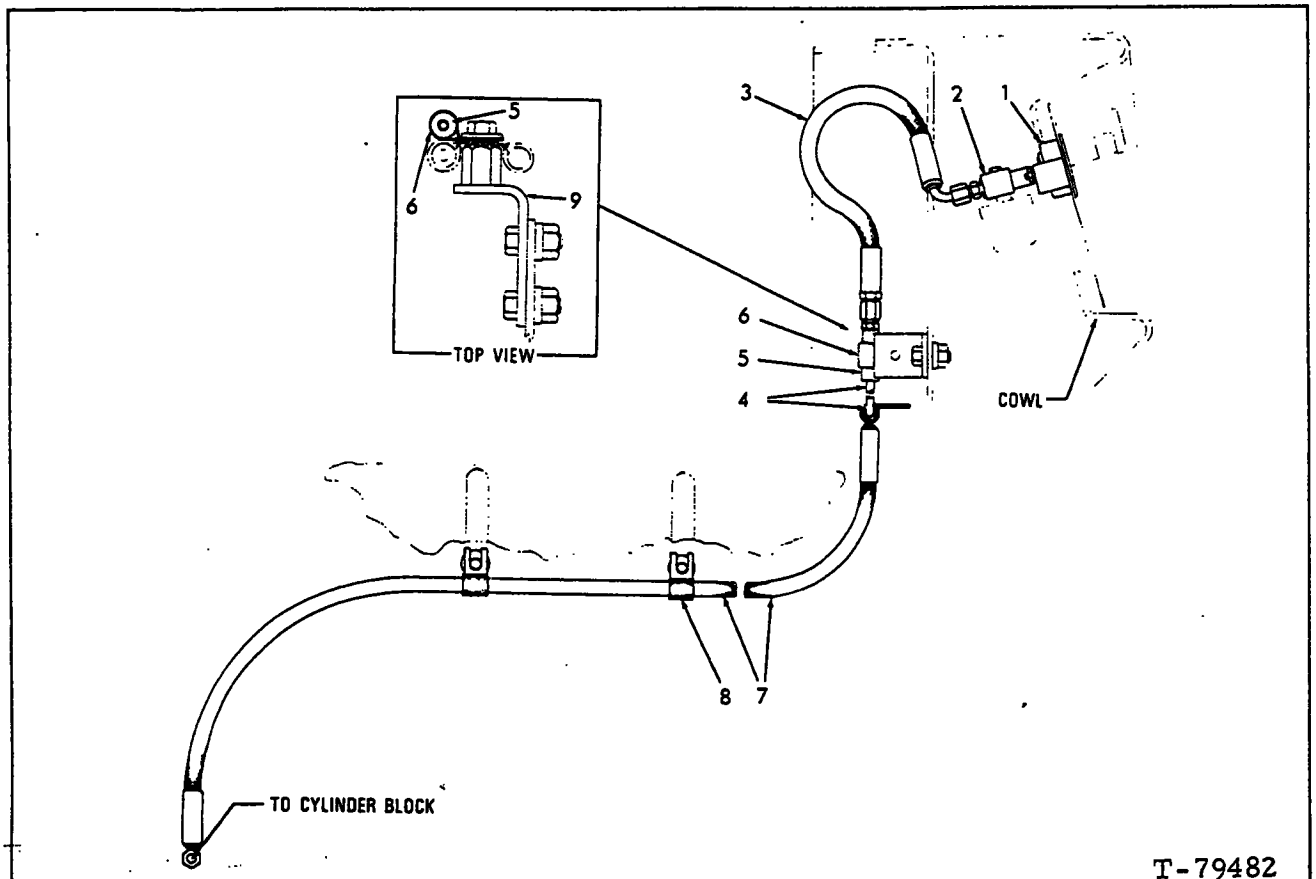

ENGINE OIL PRESSURE GAUGE

ITEM	PART NO.	QTY.	DESCRIPTION
1	70691745	1	GAUGE
2	70094450	1	TEE
	70917673	1	PLUG, pipe, hex-socket, 1/8"NPT
3	70694873	1	HOSE (See HOSE PARTS)
	70919171	1	CONNECTOR, flare type, 1/4"tube, 1/8"NPT male
4	70684595	1	TUBE ASSY. (Includes nuts)(Tractors prior to unit #21579 excluding #21491)
	73112900	1	TUBE ASSY. (Includes nuts)(Tractors unit #21579 and up including #21491)
5	70093972	3	BOOT
6	70047381	3	CLIP
	70922763	3	CAPSCREW, 3/8"NC x 1"
	70929156	3	WASHER
7	70697716	1	HOSE (See HOSE PARTS)
	70919140	1	CONNECTOR, flare type, 1/4"tube, 1/4"NPT male
8	70620035	2	CLIP
	70922262	2	CAPSCREW, 3/8"NC x 7/8"
	70677006	2	WASHER
9	70678236	1	ANGLE
	70922763	2	CAPSCREW, 3/8"NC x 1"
	70677006	2	WASHER
	70911026	2	NUT, 3/8"NC

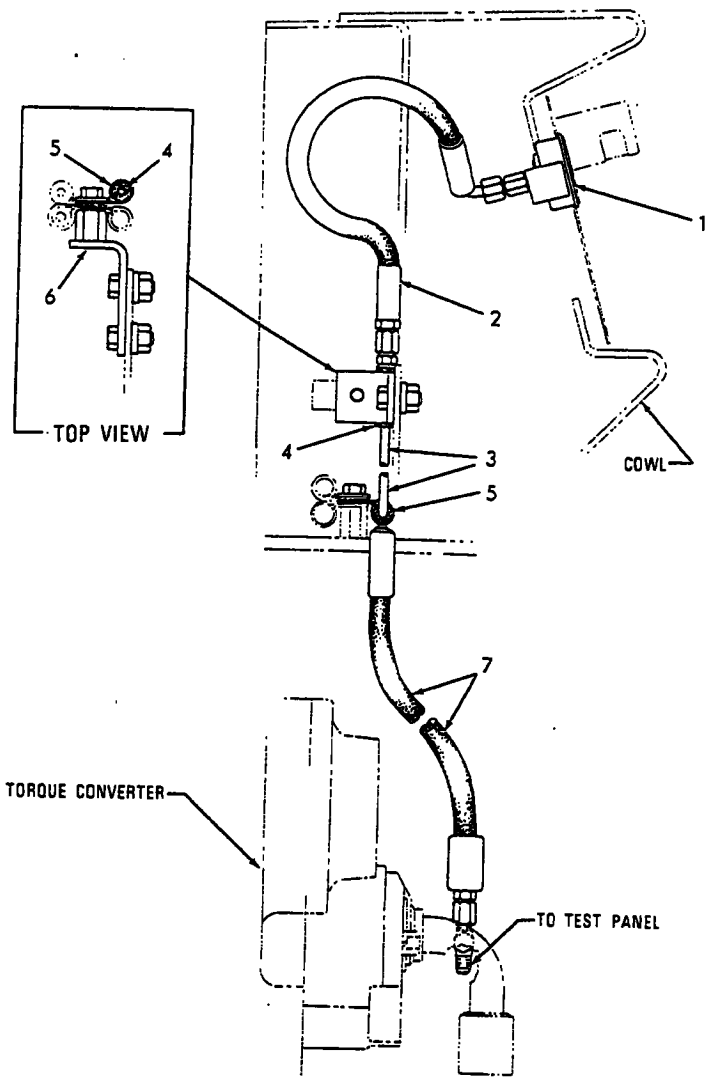

T-79483

TRANSMISSION LUBRICATING PRESSURE GAUGE

USAGE: Tractors prior to serial No. 71A21286

ITEM	PART NO.	QTY.	DESCRIPTION
1	70695985	1	GAUGE
2	70666557	1	HOSE (See HOSE PARTS)
	70919174	1	CONNECTOR, flare type, 1/4"tube, 1/8"NPT female
3	70684595	1	TUBE ASSY. (Includes nuts)
4	70093972	3	BOOT
5	70047381	3	CLIP
	70922763	3	CAPSCREW, 3/8"NC x 1"
	70929156	3	WASHER
6	70687236	1	ANGLE
	70922763	2	CAPSCREW, 3/8"NC x 1"
	70677006	2	WASHER
	70911026	2	NUT, 3/8"NC
7	70658637	1	HOSE (See HOSE PARTS)
	70922521	1	TEE, swivel, flare type, 1/4" tube, 7/16" straight thread (Includes nut)

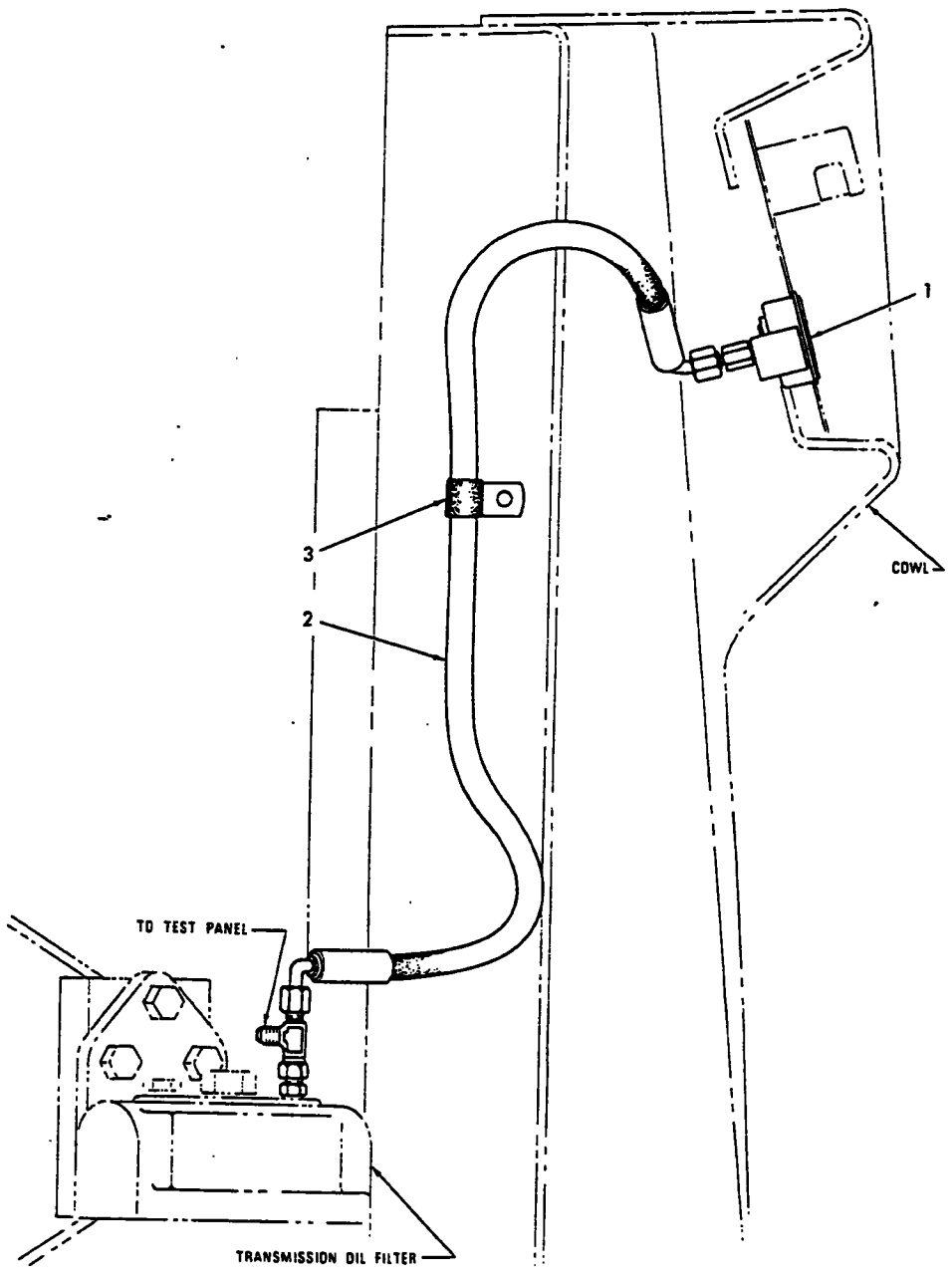

TRANSMISSION OIL PRESSURE GAUGE

ITEM	PART NO.	QTY.	DESCRIPTION
1	70695987	1	GAUGE
2	70694872	1	HOSE (See HOSE PARTS)
	70919174	1	CONNECTOR, flare type, 1/4" tube, 1/8" NPT female
	70926975	1	TEE, swivel, flare type, 1/4" tube, 7/16" straight thread (Includes nut)
	70919140	1	CONNECTOR, flare type, 1/4" tube, 1/4" NPT male
3	70927599	1	CLIP

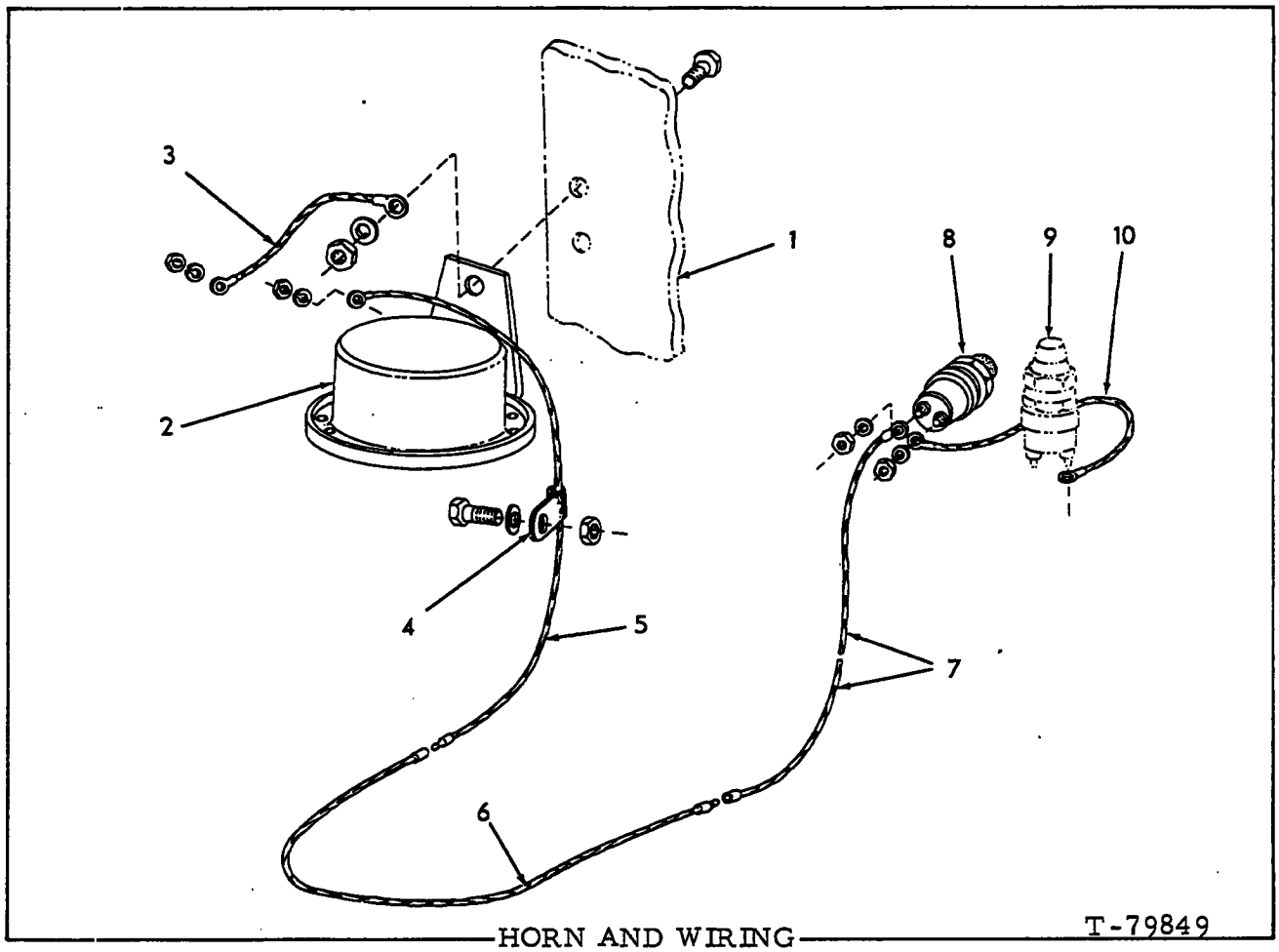

HORN AND WIRING T-79849

ITEM	PART NO.	QTY.	DESCRIPTION	
1	--------	1	COWL (See page 205)	
2	73107839	1	HORN	
	70927401	2	CAPSCREW, 1/4"NC x 1"	
	70928138	2	CAPSCREW, 1/4"NC x 5/8" (Units with CAB only)	
	70677004	2	WASHER, plain	
	70900365	2	NUT, 1/4"NC	
3	70697529	1	CABLE	
	70909055	1	LOCKWASHER, #10	
	70917415	1	NUT, #10-32 NF	
4	70928176	1	CLIP	
	70922763	1	CAPSCREW, 3/8"NC x 1"	Units with CAB only
	70929156	1	WASHER	
	70900367	1	NUT, 3/8"NC	
5	73108455	1	CABLE	
	70909055	1	LOCKWASHER, #10	
	70917415	1	NUT, #10-32NF	
6	70671709	1	CABLE	
7	70688282	1	CABLE	
8	70253322	1	SWITCH ASSY., horn (Serviced only as a unit)	
9	--------	1	SWITCH ASSY., starter (See page 201)	
10	70095860	1	CABLE	

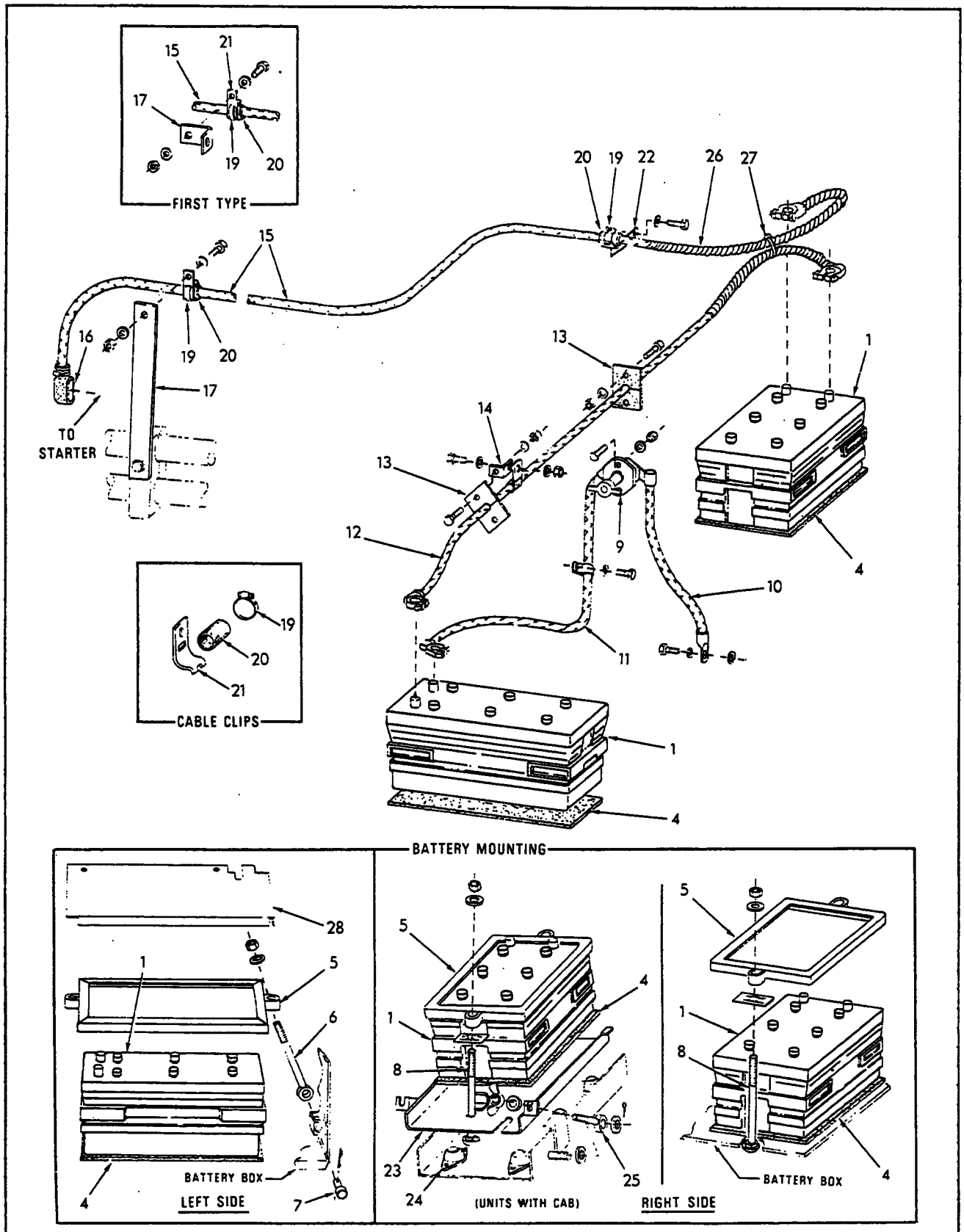
FIRST TYPE
TO STARTER
CABLE CLIPS
BATTERY MOUNTING
BATTERY BOX
LEFT SIDE
(UNITS WITH CAB)
RIGHT SIDE
BATTERY BOX

T-79485

BATTERIES AND CABLES

ITEM	PART NO.	QTY.	DESCRIPTION
1	70695472	2	BATTERY, 12 volts, dry charged (Each requires 16.2 qts. electrolyte)
2	70243526	1	ELECTROLYTE (One 6-qt. container with self-contained dispensing hose)
	70243527	1	ELECTROLYTE (One 5-gal. container less dispensing hose)
3	70243528	1	HOSE (For use with 5-gal. container)(Reusable)
4	70085680	2	PAD
5	70663727	2	HOLD-DOWN
6	70605801	2	ROD
	70677008	2	WASHER
	70911043	2	NUT, 1/2"NF
7	70049993	2	PIN
	70900806	2	PIN, cotter, 1/8" x 1"
8	70930892	2	BOLT, carriage, 1/2"NC x 10"
	70677008	2	WASHER
	70911028	2	NUT, 1/2"NC
	70922476	2	NUT, speed, 1/2"
9	70096908	1	SWITCH ASSY. (Serviced only as a unit)
	70927541	2	CAPSCREW, 1/4"NC x 3/4"
	70910285	2	WASHER
	70911024	2	NUT, 1/4"NC
10	70691337	1	CABLE (13" long)
	70922300	1	CAPSCREW, 3/8"NC x 3/4"
	70929156	1	WASHER
	70906960	1	LOCKWASHER, 3/8"
11	70691331	1	CABLE (29" long)
12	70691321	1	CABLE
13	70691317	2	BAFFLE
	70921076	4	CAPSCREW, 3/8"NC x 1-1/4"
	70683421	4	WASHER
	70915891	4	NUT, elastic stop, 3/8"NC
14	70638397	1	ANGLE
15	70691326	1	CABLE (91-1/2" long)
16	70076572	1	BOOT
	70922660	1	CLAMP, 13/16" to 1-1/2" diam.
17	70654811	1	ANGLE (Tractors prior to unit #21662)
	70659828	1	STRIP (Tractor unit #21662 and up)
18	70927154	3	CLAMP, insulated (One less used on units equipped with CABS)
	70922300	2	CAPSCREW, 3/8"NC x 3/4" (One less used on units equipped with CABS)
	70922763	1	CAPSCREW, 3/8"NC x 1"
	70929156	4	WASHER (One less used on units equipped with CABS)
	70911026	1	NUT, 3/8"NC
19	70921911	5	CLAMP (11/16" to 1-1/4" diam.)(One less used on units equipped with CABS)
20	70076469	5	BOOT (One less used on units equipped with CABS)

(Continued)

BATTERIES AND CABLES (Continued)

ITEM	PART NO.	QTY.	DESCRIPTION	
21	70633653	4	CLIP	
	70922300	1	CAPSCREW, 3/8"NC x 3/4"	
	70922763	1	CAPSCREW, 3/8"NC x 1"	
	70929156	2	WASHER	
	70911026	1	NUT, 3/8"NC	
22	70694861	1	CLIP	Not used on units equipped with CAB
	70922300	1	CAPSCREW, 3/8"NC x 3/4"	
	70929156	1	WASHER	
23	73107042	1	TRAY	Components of Cab Control Tower Assy; Units equipped with CAB
24	73107045	6	ROLLER	
	70930594	12	CAPSCREW, self-locking, 1/4"NC x 3/4"	
25	70065935	2	BOLT, eye	
	70677008	2	WASHER	
	70928178	4	WASHER	
	70915018	2	NUT, wing	
	70900805	2	PIN, cotter	
26	70931458	-	COIL, plastic (Use as required)	
27	70196765	1	STRAP	
28	70698730	1	COVER	

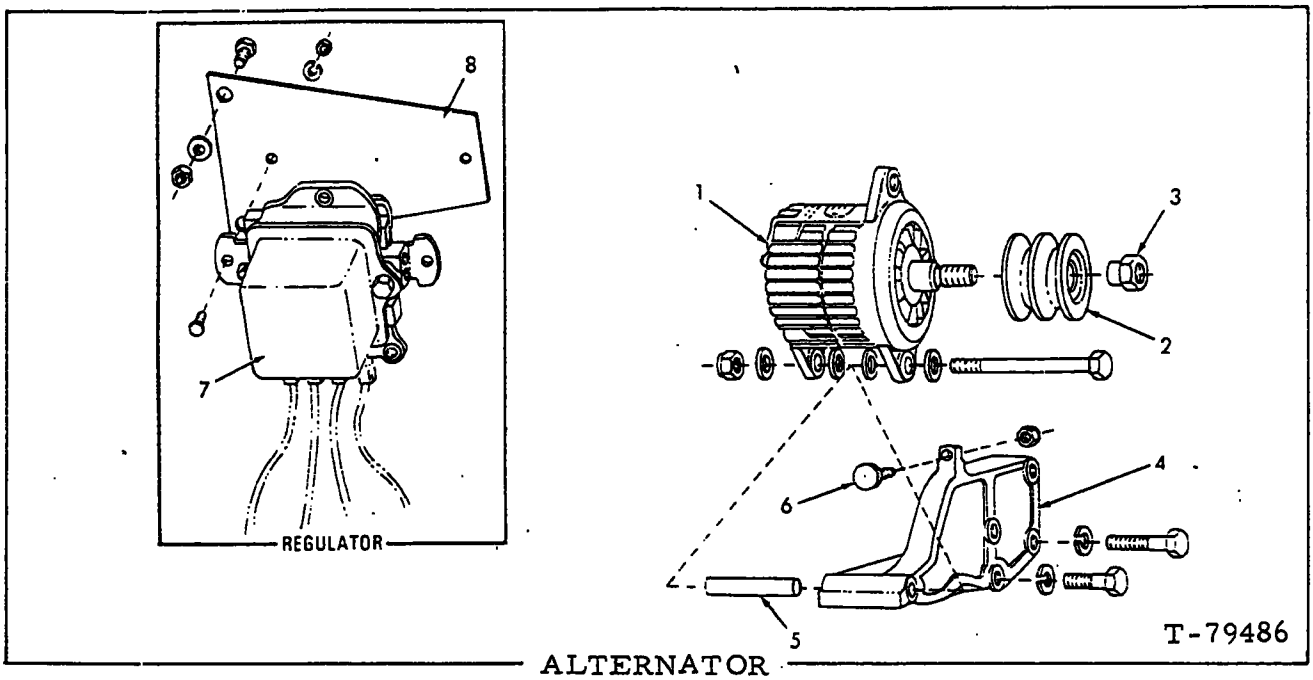

ALTERNATOR

* Standard (20 amp.)(Prior to S/N71A21947)
** Standard (45 amp.)(S/N 71A21947 and up)
*** Optional (50 amp.)

ITEM	PART NO.	QUANTITY *	**	***	DESCRIPTION	
1	70660144	1	-	-	ALTERNATOR (Delco-Remy 1100062)	See NOTE below
	73119134	-	1	-	ALTERNATOR (Delco-Remy 1117645)	
	70699268	-	-	1	ALTERNATOR (Delco-Remy 1117248) (Prior to S/N 71A21967)	
	73119995	-	-	1	ALTERNATOR (Delco-Remy 1117254) (S/N 71A21967 and up)	
	70925661	1	1	1	CAPSCREW, nylok, 1/2"NC x 6-1/4"	
	70928844	4	4	4	WASHER	
	70915972	4	4	4	NUT, elastic stop, 1/2"NC	
2	70667234	1	1	1	PULLEY (See page 84 for driving belts)	
3	70667188	1	1	1	NUT	
4	70684418	1	1	1	BRACKET	
	70924864	1	1	1	CAPSCREW, 1/2"NC x 2-1/4"	
	70921598	3	3	3	CAPSCREW, 1/2"NC x 3"	
	70912441	4	4	4	LOCKWASHER, 1/2"	
5	70695143	1	1	1	BUSHING	
6	70677885	1	1	1	BUTTON	
	70911327	1	1	1	NUT, jam, 1/4"NC	
7	70650944	1	-	-	REGULATOR ("Delco-Remy #1119518)(See note below)	
	70928138	2	-	-	CAPSCREW, 1/4"NC x 5/8"	
	70910235	2	-	-	LOCKWASHER, 1/4"	
	70911024	2	-	-	NUT, 1/4"NC	
8	70683152	1	-	-	PLATE	
	70922763	2	-	-	CAPSCREW, 3/8"NC x 1"	
	70677006	2	-	-	WASHER	
	70900367	2	-	-	NUT, 3/8"NC	

NOTE: See Electrical Components Parts Catalog for service breakdown.

(Revised April 1980)

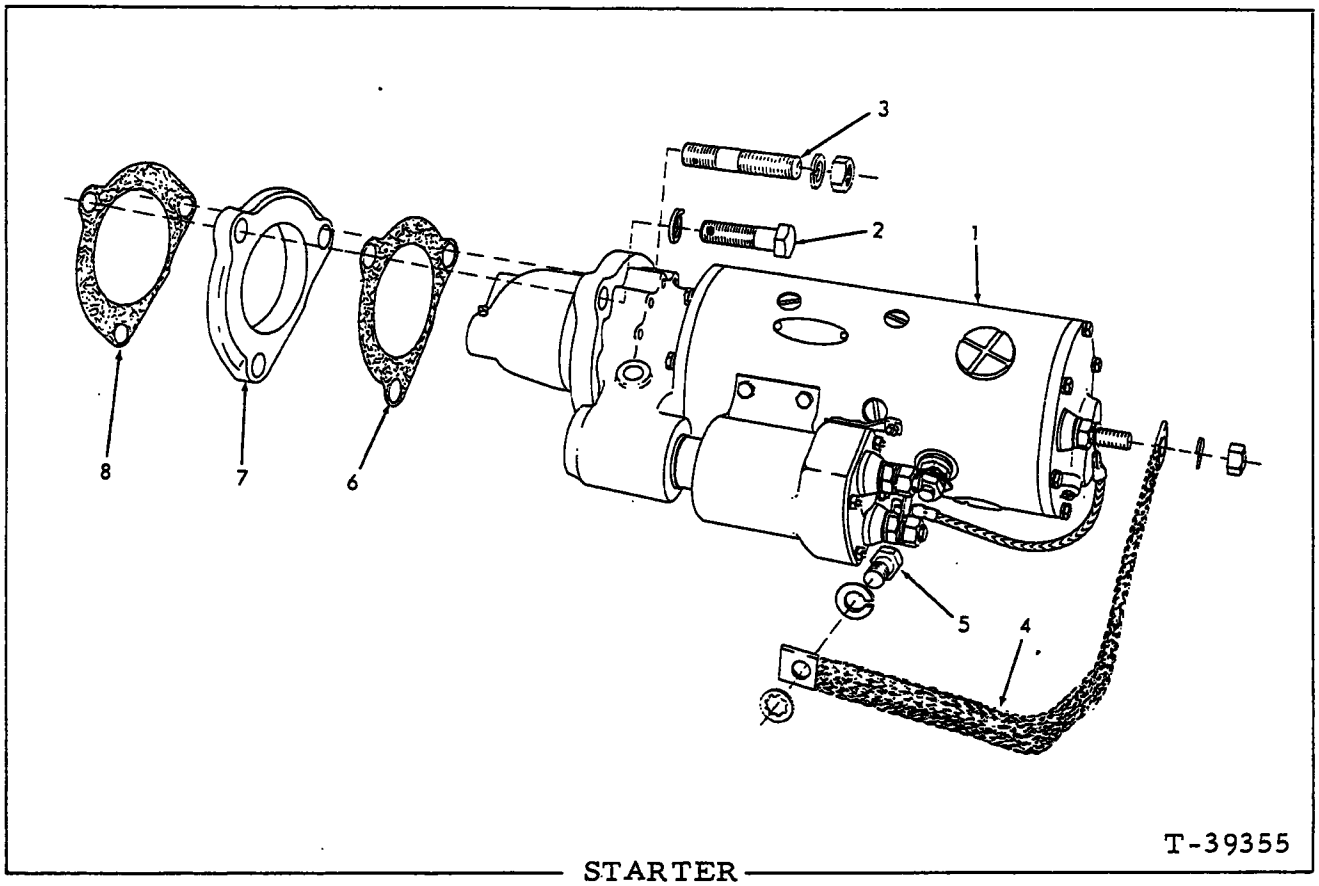

STARTER

ITEM	PART NO.	QTY.	DESCRIPTION
1	73117237	1	MOTOR ("Delco-Remy" #1113898) (Standard)
	70620350	1	MOTOR ("Delco-Remy" #1109986) (Heavy-duty)
2	70928839	2	CAPSCREW, Nylok, 5/8"NC x 2-1/4"
3	70648262	1	STUD, Nylok, 5/8"NC x 5/8"NF x 3-1/8"
	70912942	3	LOCKWASHER, 5/8"
	70911044	1	NUT, 5/8"NF
			NOTE: See Electrical Components Parts Catalog for service breakdown
4	70653648	1	CABLE
5	70921175	1	CAPSCREW, 1/2"NC x 1"
	70677008	1	WASHER
	70906961	1	LOCKWASHER, int-tooth, 1/2"
6	70631573	1	GASKET
7	70631574	1	ADAPTER
8	70631572	1	GASKET

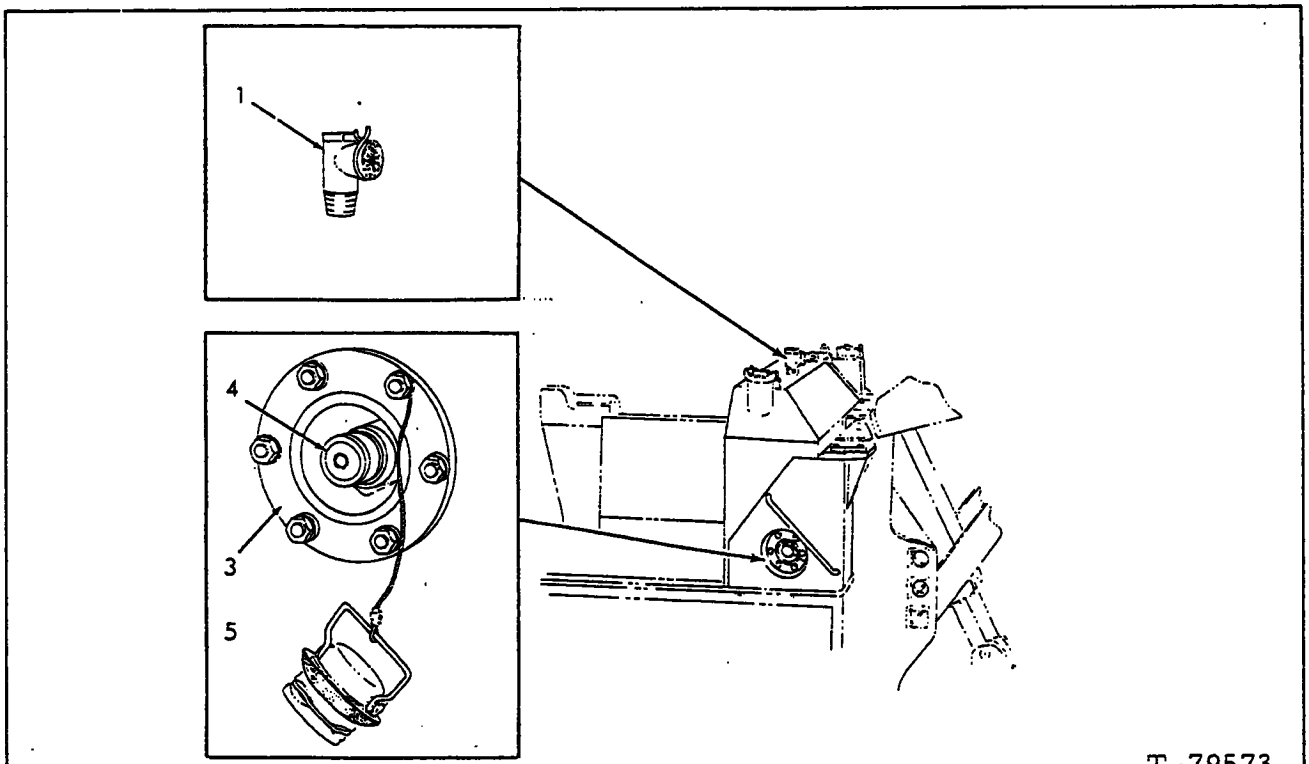

QUICK FUELING

USAGE: Special equipment. See page 218 for optional design.

ITEM	PART NO.	QTY.	DESCRIPTION
1	70697463	1	VENT ASSY. (Serviced only as a unit)
2	70697464	1	NIPPLE AND FLANGE ASSY. (Includes CAP and items 3 thru 5)
3	70697465	1	FLANGE
4	70697466	1	NIPPLE ASSY. } Each serviced only as a unit
5	70697467	1	CAP ASSY. }

NOTE: See PAINTING AND MARKING for transfer

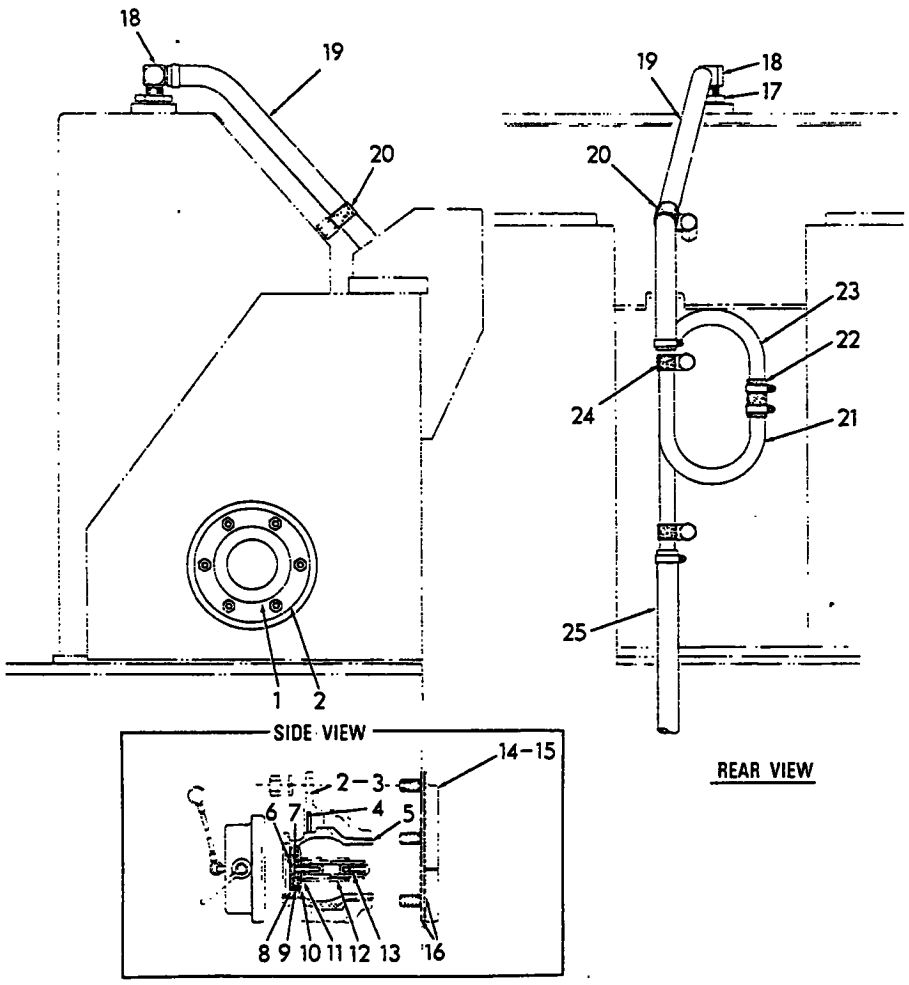

QUICK FUELING

USAGE: Special equipment. See page 217 for optional design.

ITEM	PART NO.	QTY.	DESCRIPTION
1	73100012	1	CAP
2	73100013	1	ADAPTER ASSY. (Includes items 3 thru 13)
3	--------	1	HOUSING (Order item 2)
4	73100017	1	O-RING
5	--------	1	ADAPTER (Order item 2)
6	73100024	2	SCREW
7	73100025	1	GASKET
8	73100023	1	PLATE
9	73100026	1	SEAL
10	73100027	1	PLATE
11	73100029	2	WASHER
12	73100028	1	SPRING
13	73100030	1	STEM

(Continued)

ITEM	PART NO.	QTY.	DESCRIPTION
14	73100014	1	FLANGE ASSY. (Includes items 15, 16 and hardware indented below)
	70919350	6	SETSCREW, 1/2"NC x 2"
	70904208	6	LOCKWASHER, 1/2"
	70910325	6	NUT, 1/2"NC
15	--------	2	FLANGE (Order item 14)
16	73100021	2	GASKET
17	70901850	1	BUSHING, pipe, 2" x 1"
18	70925058	1	ELBOW
19	70695286	1	HOSE
	70922660	2	CLAMP, 13/16" to 1-1/2" diam.
20	70927265	1	CLAMP
	70921175	1	CAPSCREW, 1/2"NC x 1"
	70677008	1	WASHER
21	70685557	1	TUBE
22	70671990	1	HOSE
	70922660	2	CLAMP, 13/16" to 1-1/2" diam.
23	70671126	1	TUBE
24	70927264	2	CLAMP
	70921175	2	CAPSCREW, 1/2"NC x 1"
	70677008	2	WASHER
25	70695287	1	HOSE
	70922660	1	CLAMP, 13/16" to 1-1/2" diam.

NOTE: See PAINTING AND MARKING for transfer

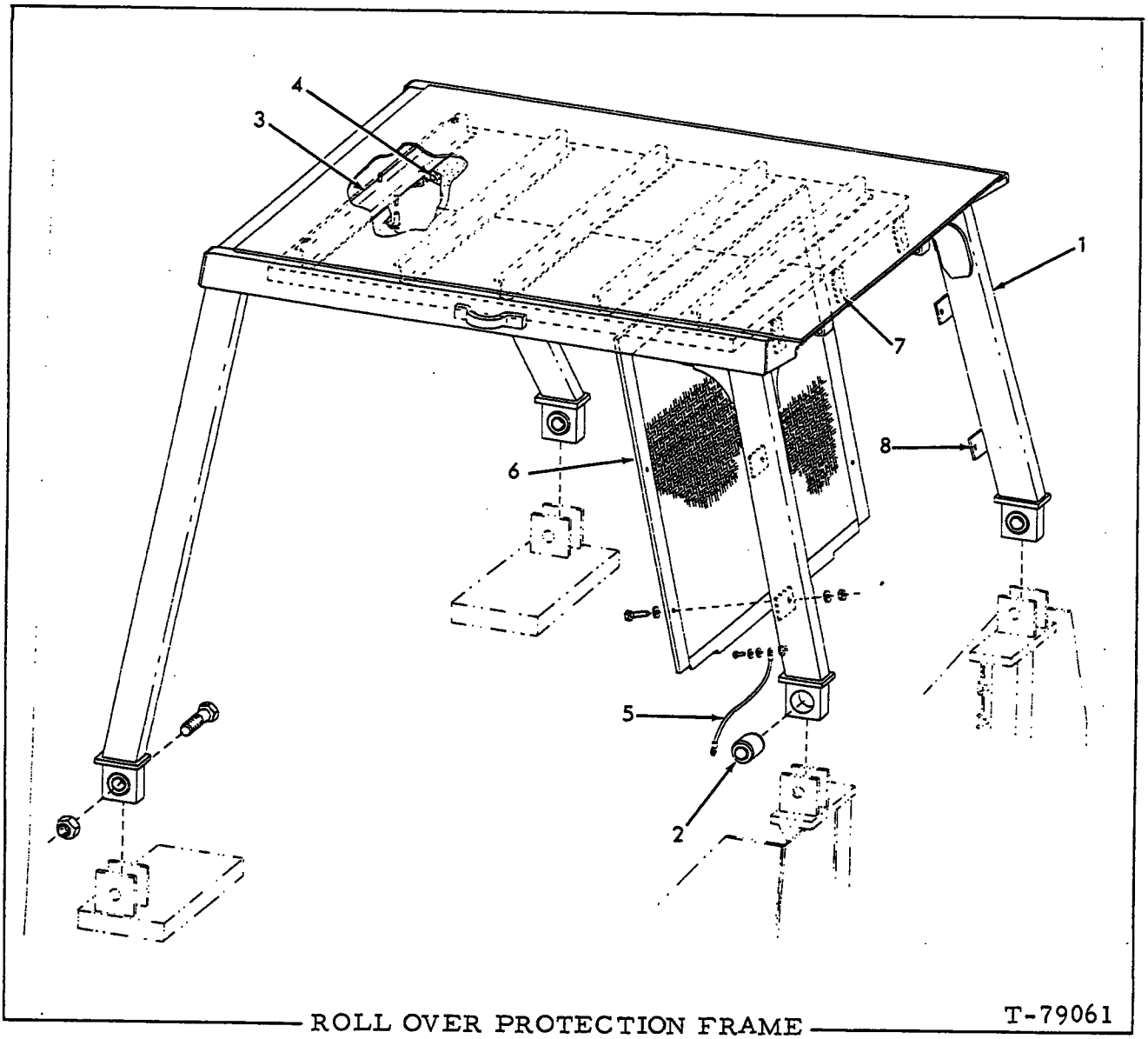

ROLL OVER PROTECTION FRAME T-79061

USAGE: Sepical equipment prior to January 1977; standard equipment thereafter.

ITEM	PART NO.	QTY.	DESCRIPTION
1	70691906	1	FRAME (Includes item 2)
	70688849	4	CAPSCREW, 1-1/4"NC x 7"
	70917792	4	NUT, elastic stop, 1-1/4"NC
2	70684837	4	BUSHING
3	70698363	5	CHANNEL
	70928532	10	CAPSCREW, drilled hd., 3/8"NC x 3/4"
	70677006	10	WASHER
	70023633	10	LOCKWIRE
4	70698365	1	INSULATION, rear
	70698364	1	INSULATION, front
	73064776	25	FASTENER

(Continued)

(Revised May 1982)

ROLL OVER PROTECTION FRAME (Continued)

ITEM	PART NO.	QTY.	DESCRIPTION
5	70093176	1	CABLE
	70922300	2	CAPSCREW, 3/8"NC x 3/4"
	70906960	2	LOCKWASHER, int-tooth, 3/8"
	70677006	2	WASHER
6	70692042	1	SCREEN (Units without RIPPER)
	70692055	1	SCREEN (Unite with RIPPER)
	70921556	7	CAPSCREW, 1/2"NC x 2"
	70677008	14	WASHER
	70911028	7	NUT, 1/2"NC
7	70685768	3	BAR } Requires welding to install
8	70686446	4	BAR }

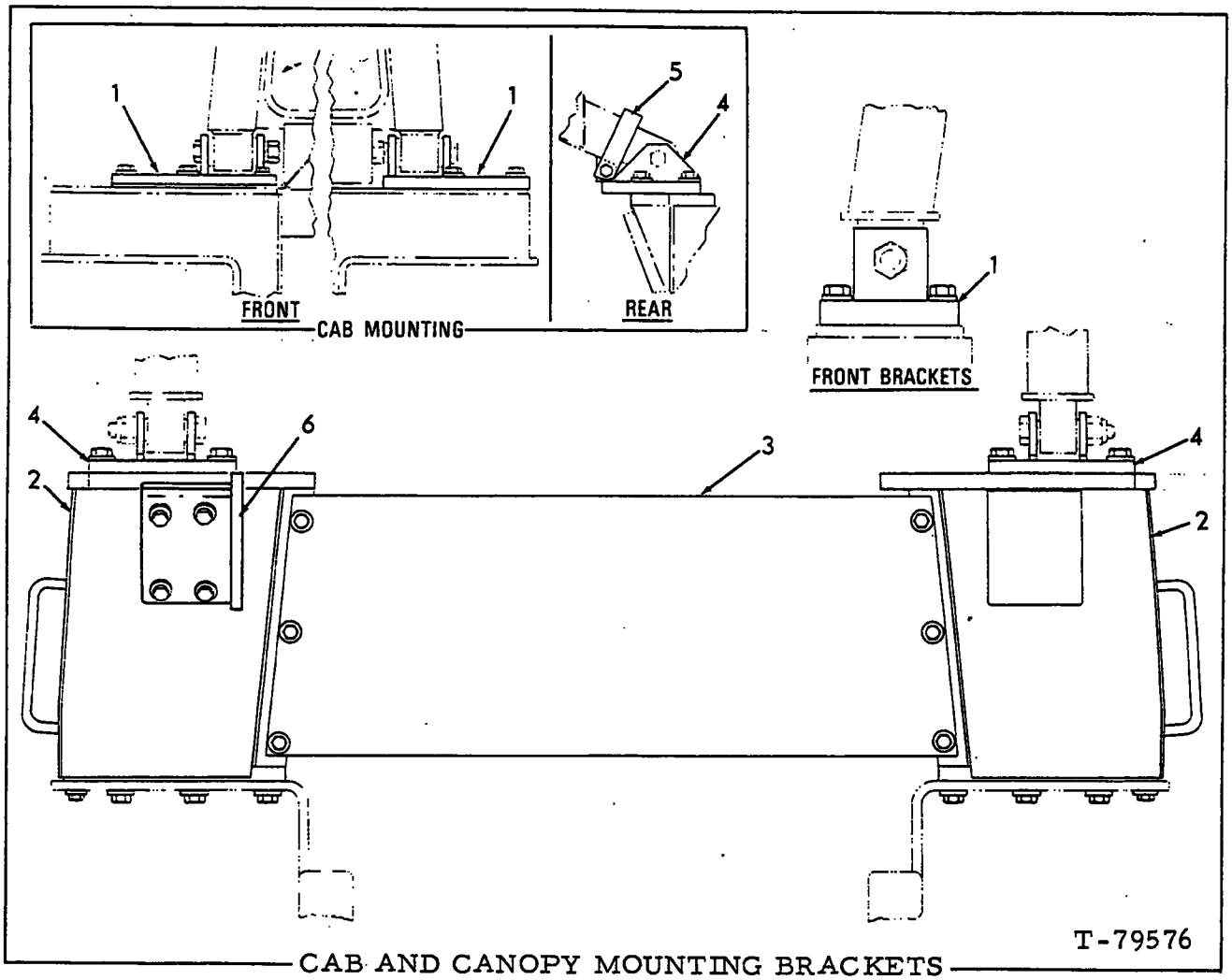

CAB AND CANOPY MOUNTING BRACKETS

USAGE: Special equipment

* Units equipped with Canopy or non-ROPS Cab.
** Units equipped with ROPS Cab.

ITEM	PART NO.	QTY. *	QTY. **	DESCRIPTION
1	70692028	2	-	BRACKET
	70927314	8	-	CAPSCREW, 1"NC x 3-1/2"
	70083318	8	-	WASHER
	73107365	-	1	BRACKET, left
	73107366	-	1	BRACKET, right
	70922789	-	1	CAPSCREW, 3/4"NC x 3"
	70927015	-	8	CAPSCREW, 1" NC x 3"
	70678072	-	8	WASHER
2	70697225	1	1	GUARD, left
	70697226	1	1	GUARD, right
	70922744	4	4	CAPSCREW, 3/4"NC x 2-1/2"
	70925381	6	6	CAPSCREW, 1"NC x 2-1/2"
	70677012	4	4	WASHER
	70678072	6	6	WASHER

(Continued)

CAB AND CANOPY MOUNTING BRACKETS (Continued)

ITEM	PART NO.	QTY. *	QTY. **	DESCRIPTION
3	70692019	1	1	PLATE
	70925415	6	6	CAPSCREW, 3/4"NC x 1-3/4"
	70677012	6	6	WASHER
4	70697209	1	-	BRACKET, left
	70697210	1	-	BRACKET, right
	73107363	-	1	BRACKET, left
	73107364	-	1	BRACKET, right
	70927015	8	8	CAPSCREW, 1"NC x 3"
	70678072	8	8	WASHER
5	70699247	-	1	STRAP, cab hold-down
	70927879	-	1	CAPSCREW, 3/4"NC x 7-1/2"
	70911030	-	1	NUT, 3/4"NC
6	73109740	-	1	BRACKET
	70921068	-	4	CAPSCREW, 3/4"NC x 2-1/4"
	70677012	-	4	WASHER

NOTE: See PAINTING AND MARKING for transfer.

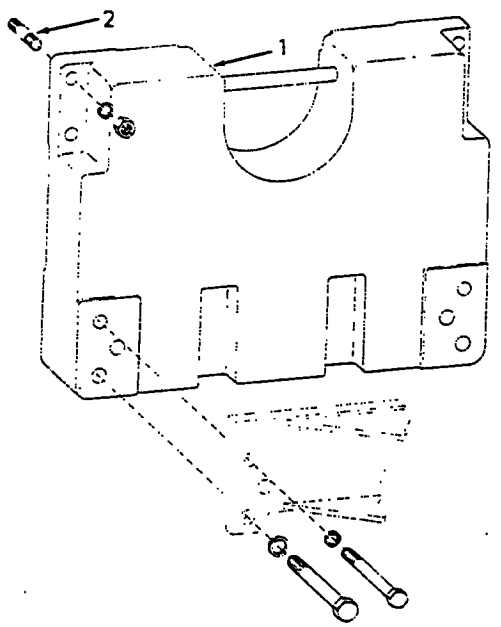

T-76867

COUNTERWEIGHT

USAGE: Special equipment

ITEM	PART NO.	QTY.	DESCRIPTION
1	70678188	1	COUNTERWEIGHT
	70927286	1	CAPSCREW, 1-1/4"NF x 14-1/2"
	70928453	1	WASHER
	70927287	4	CAPSCREW, 1/2"NC x 14-1/2"
	70931652	4	WASHER
2	70671727	4	STUD (6-3/4" long)
	70928453	4	WASHER
	70913097	4	NUT, 1-1/4"NF

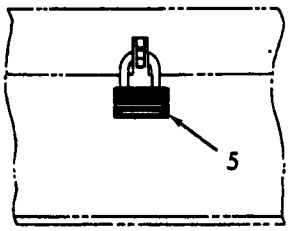

BATTERY BOX

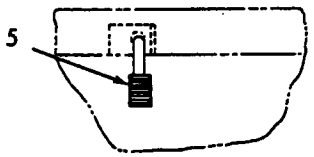

TRANSMISSION FILLER

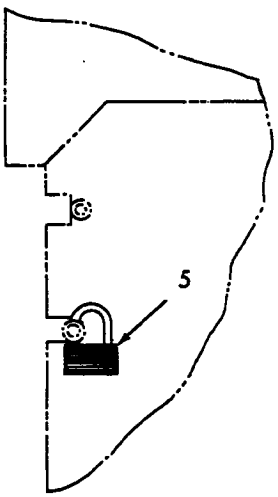

RIGHT HAND SIDE PLATE

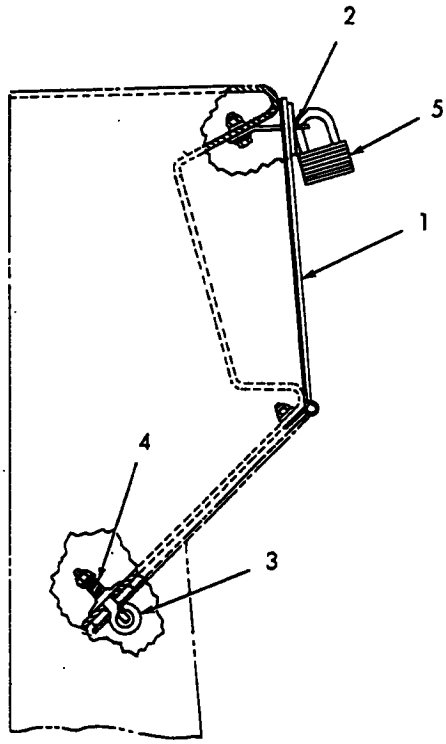

INSTRUMENT PANEL

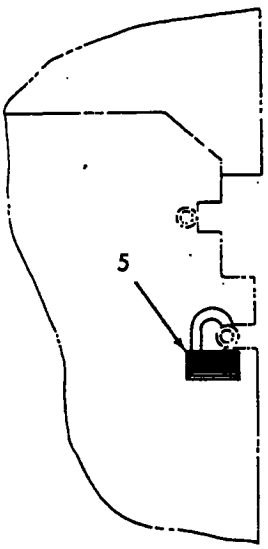

LEFT HAND SIDE PLATE

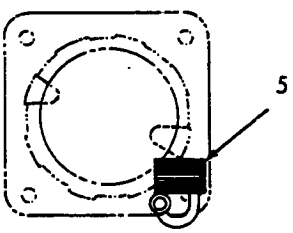

HYDRAULIC TANK

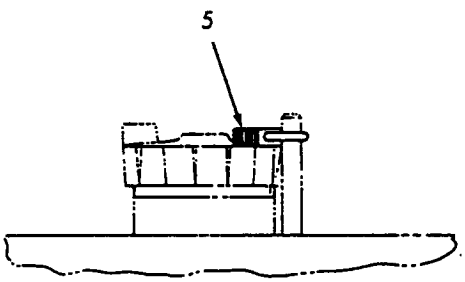

FUEL TANK

T-79575

VANDALISM PREVENTION PARTS

USAGE: Special equipment

ITEM	PART NO.	QTY.	DESCRIPTION
			NOTE: Items 1 thru 4 are for units not equipped with a CAB
1	70694966	1	COVER
	70677004	4	WASHER
	70917730	4	NUT, elastic stop, 1/4"NC
2	70694962	1	ANGLE
	70927401	1	CAPSCREW, 1/4"NC x 1"
	70677004	2	WASHER
	70917730	1	NUT, elastic stop, 1/4"NC
3	70694987	1	EYE-BOLT
	70677004	2	WASHER
	70917730	1	NUT, elastic stop, 1/4"NC
4	70035916	1	SPRING
5	70928052	10	PADLOCK (2 less used on units equipped with a CAB)

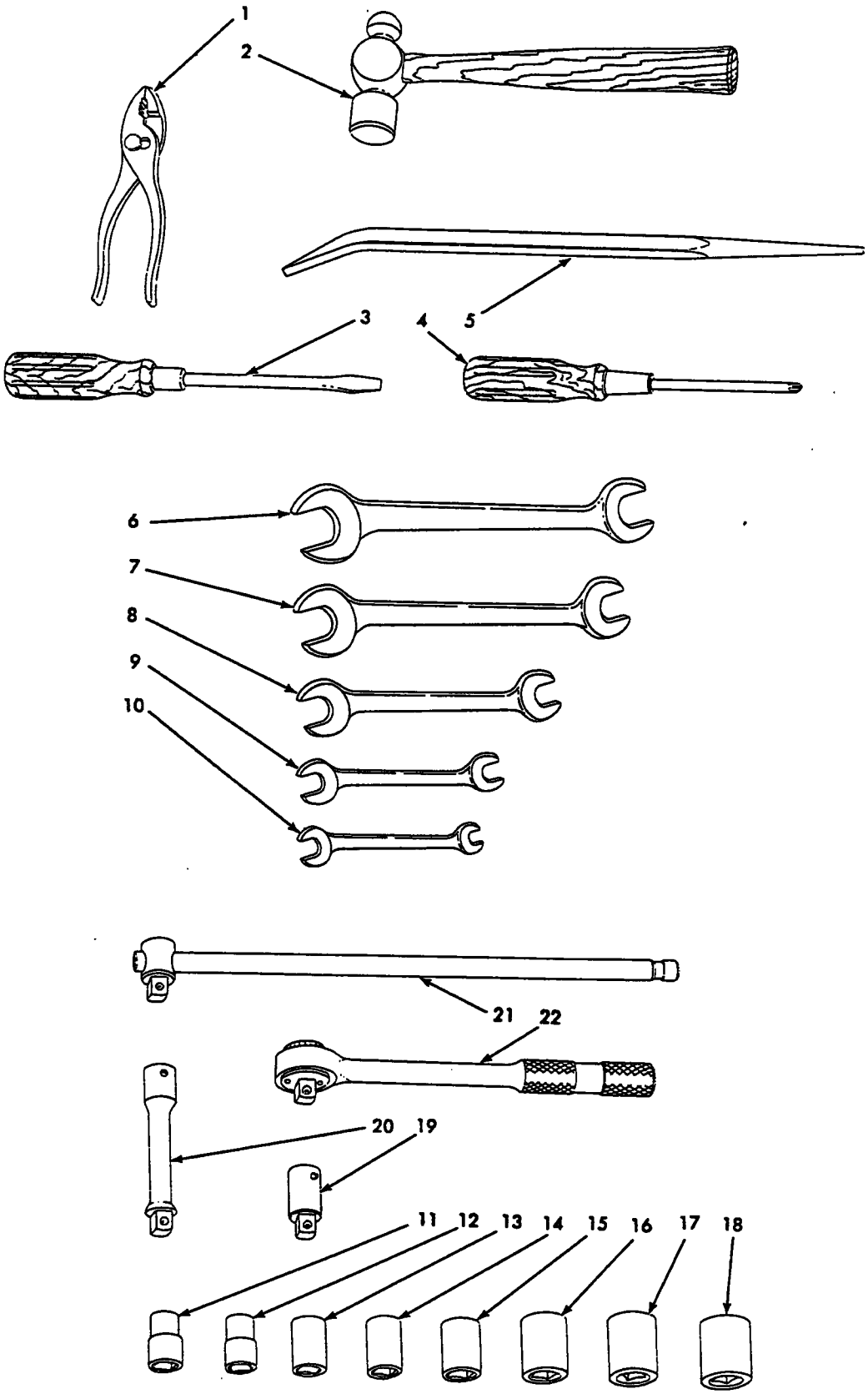
1
2
3
4
5
6
7
8
9
10
21
22
20
19
11
12
13
14
15
16
17
18
T-79183

TOOLS

USAGE: Special equipment

ITEM	PART NO.	QTY.	DESCRIPTION
1	70012389	1	PLIERS, slip joint, 6"
2	70012387	1	HAMMER, ball peen, 1 lb.
3	70036268	1	SCREWDRIVER, 9-3/4" long
4	70914732	1	SCREWDRIVER, Phillips #2
5	70052371	1	BAR, pinch, 16" long
6	70050611	1	WRENCH, open end, double head, 15°, 15/16" and 1-1/16"
7	70050610	1	WRENCH, open end, double head, 15°, 3/4" and 7/8"
8	70050609	1	WRENCH, open end, double head, 15°, 5/8" and 3/4"
9	70050608	1	WRENCH, open end, double head, 15°, 1/2" x 9/16"
10	70050607	1	WRENCH, open end, double head, 15°, 5/16" x 3/8"
11	70914709	1	SOCKET, 1/2" square drive, 1/2" hex
12	70914710	1	SOCKET, 1/2" square drive, 9/16" hex
13	70914711	1	SOCKET, 1/2" square drive, 5/8" hex
14	70914712	1	SOCKET, 1/2" square drive, 11/16" hex
15	70914713	1	SOCKET, 1/2" square drive, 3/4" hex
16	70914714	1	SOCKET, 1/2" square drive, 7/8" hex
17	70914715	1	SOCKET, 1/2" square drive, 15/16" hex
18	70914716	1	SOCKET, 1/2" square drive, 1" hex
19	70914717	1	BAR, extension, socket, 1/2" drive, 2" long
20	70914718	1	BAR, extension, socket, 1/2" drive, 5" long
21	70050612	1	HANDLE, socket, sliding T, 1/2" square drive, 15" long
22	70914719	1	HANDLE, socket, ratchet, 1/2" square drive

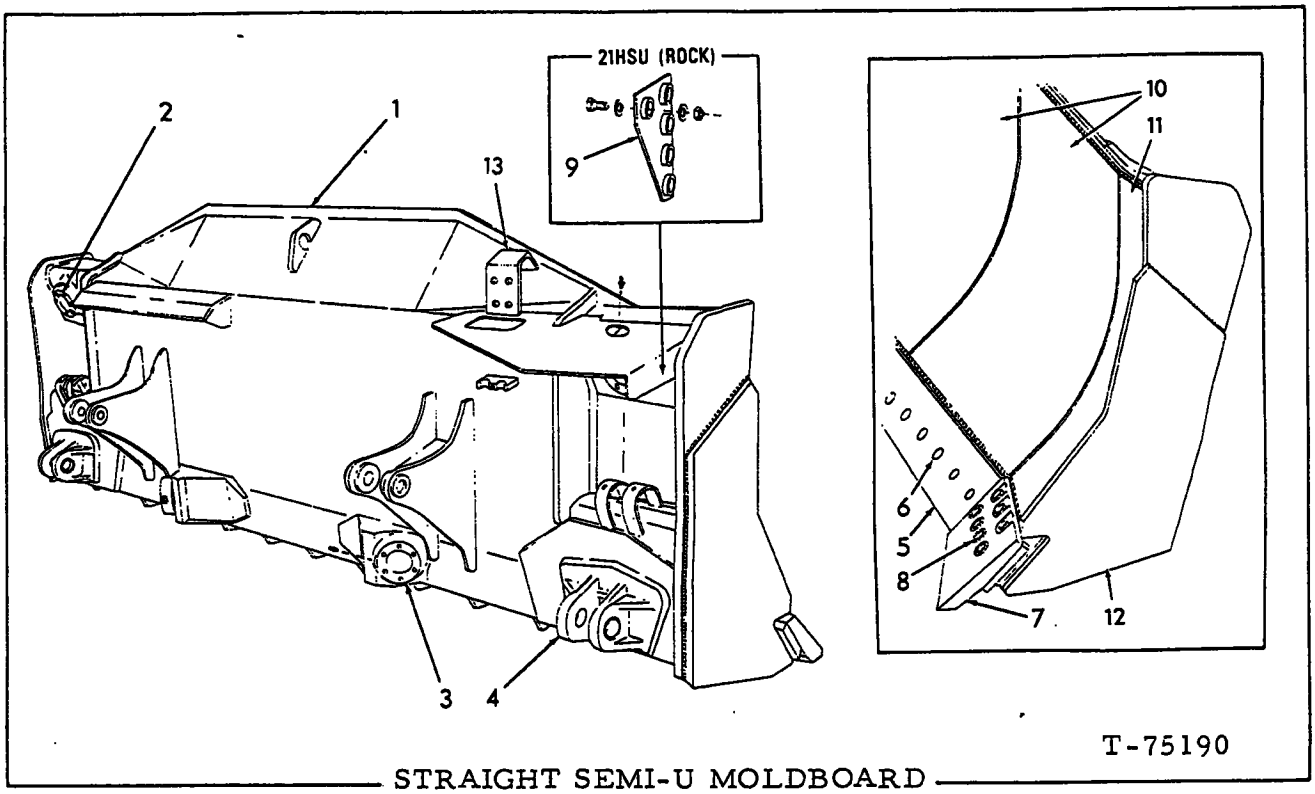

STRAIGHT SEMI-U MOLDBOARD

USAGE: Model 21HSU, 21HSU (Rock)

ITEM	PART NO.	QTY.	DESCRIPTION
1	73116372	1	MOLDBOARD ASSY. (21HSU)(Includes items 2 thru 8) (Tractors prior to unit #21876)
	73119010	1	MOLDBOARD ASSY. (21HSU)(Includes items 2 thru 8 and 13)(Tractors unit #21876 and up)
	73116373	1	MOLDBOARD ASSY. (21HSU)(Rock)(Includes items 2 thru 12)(Tractors prior to unit #21876)
	73119011	1	MOLDBOARD ASSY. (21HSU)(Rock)(Includes items 2 thru 13)(Tractors unit #21876 and up)
2	70667493	2	*SOCKET (First type with six 7/8"NC holes)
	73122380	2	*SOCKET (Second type with four 1"NC holes)
	70914465	2	FITTING, lubricating, 1/8"NPT
3	70667496	2	*SOCKET WELDMENT, diagonal brace (First type with six 7/8"NC holes)
	73123612	2	*SOCKET WELDMENT, diagonal brace (Second type with four 1"NC holes)
	70914465	2	FITTING, 1/8"NPT
4	70667482	2	*LUG
5	70670252	2	EDGE, cutting (5 ft.)
6	70661209	20	BOLT, plow, 1"NC x 3-1/4"
	70911032	20	NUT, 1"NC
7	70673081	1	BIT, left end } 1-3/8" thick
	70673082	1	BIT, right end }
8	70661209	14	BOLT, plow, 1"NC x 3-1/4"
	70911032	14	NUT, 1"NC

(Continued)

(Revised May 1982)

STRAIGHT SEMI-U MOLDBOARD (Continued)

ITEM	PART NO.	QTY.	DESCRIPTION	
9	70694602	1	PLATE	For Model 21HSU(Rock) only
	70926785	5	CAPSCREW, 1"NC x 2-3/4"	
	70928370	10	WASHER	
	70911032	5	NUT, 1"NC	
10	70694447	2	*PLATE	
11	70694445	1	*PLATE, left end	
	70694446	1	*PLATE, right end	
12	70694466	2	*PLATE	
13	73119007	1	*ANGLE (Tractors unit #21876 and up)	

*Requires welding to install

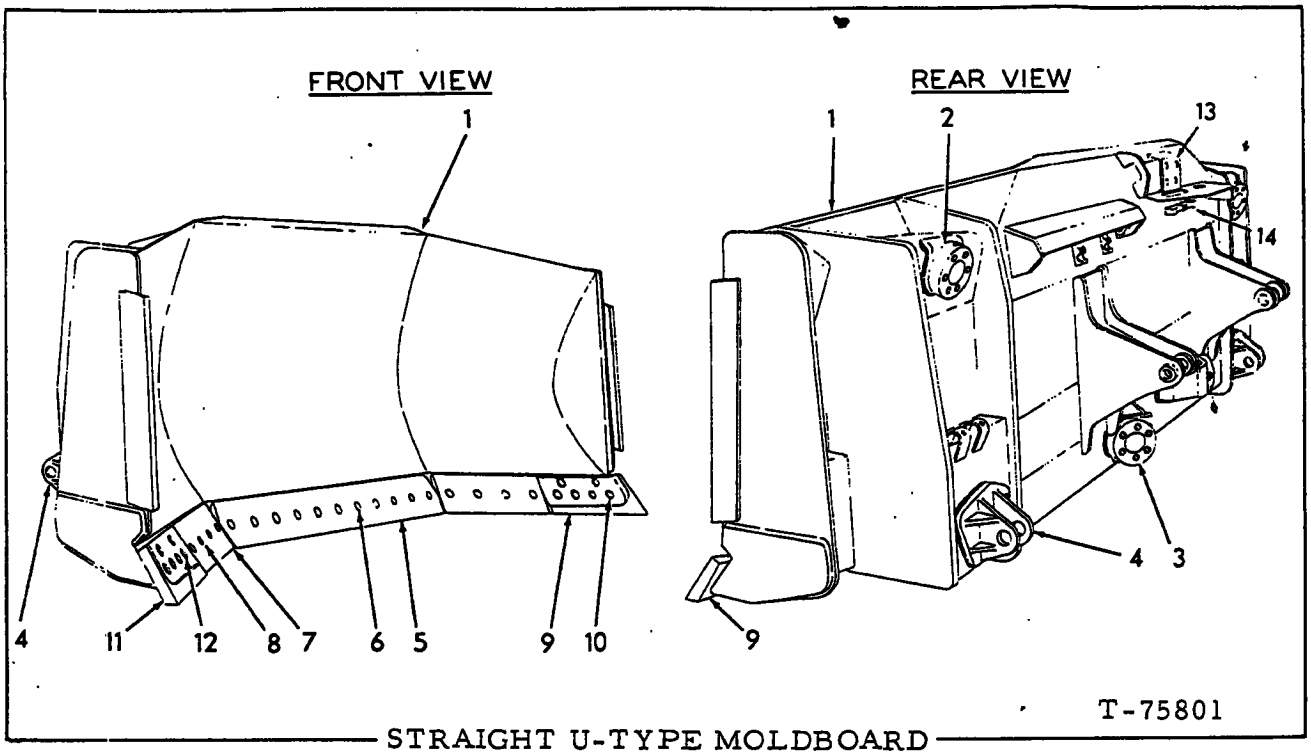

STRAIGHT U-TYPE MOLDBOARD

USAGE: Model 21HU

ITEM	PART NO.	QTY.	DESCRIPTION
1	73119006	1	MOLDBOARD ASSY. (Includes items 2 thru 14)
2	70667493	2	*SOCKET (First type with six, 7/8"NC holes)
	73122380	2	*SOCKET (Second type with four, 1"NC holes)
	70914465	2	FITTING, lubricating, 1/8"NPT
3	70667496	2	*SOCKET WELDMENT (First type with six 7/8"NC holes)
	73123612	2	*SOCKET (Second type with four, 1"NC holes)
	70914465	2	FITTING, lubricating, 1/8"NPT
4	70667482	2	*LUG
5	70669676	1	EDGE, cutting, center section (77-3/4" long)
6	70661593	13	BOLT, plow, 1"NC x 3"
	70911032	13	NUT, 1"NC
7	70669675	2	EDGE, cutting, outer section (29-3/4" long)
8	70661593	10	BOLT, plow, 1"NC x 3"
	70911032	10	NUT, 1"NC
9	70691721	1	BIT
10	70661593	6	BOLT, plow, 1"NC x 3"
	70911032	6	NUT, 1"NC
11	70691722	1	BIT
12	70661593	6	BOLT, plow, 1"NC x 3"
	70911032	6	NUT, 1"NC
13	73119004	1	*ANGLE
14	70682657	1	*CLAMP

*Requires welding to install

(Revised May 1982)

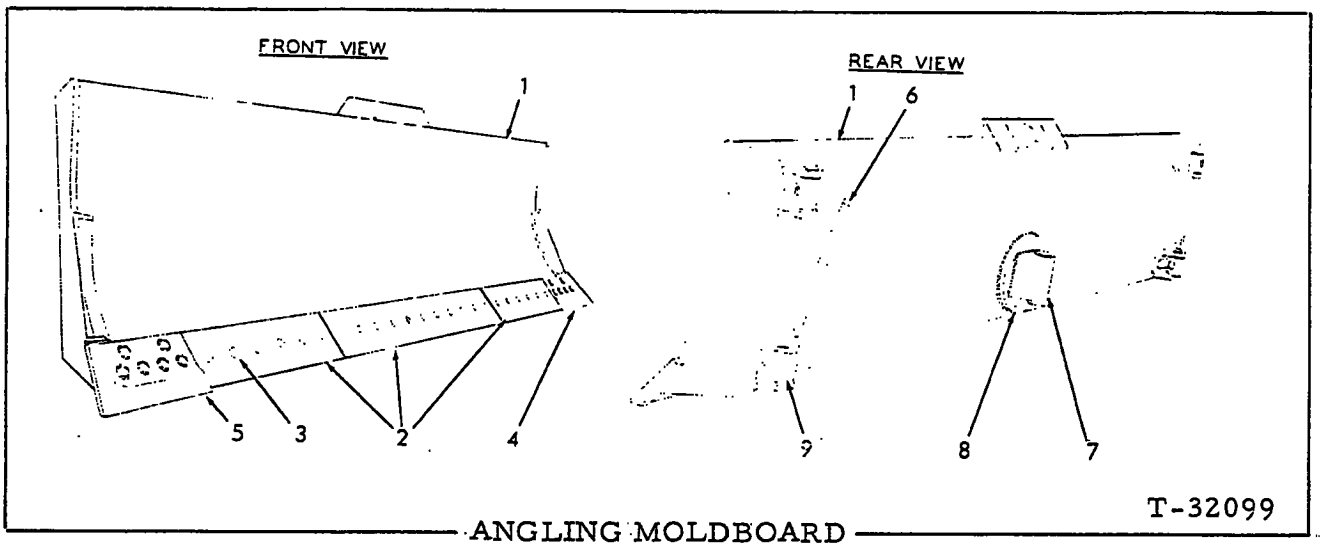

ANGLING MOLDBOARD

USAGE: Model 21HA

ITEM	PART NO.	QTY.	DESCRIPTION
1	70619654	1	MOLDBOARD ASSY. (Includes items 2 thru 9)
2	70670247	2	EDGE, cutting (standard, 1" thick, 36-1/2" long)
	70675496	1	EDGE, cutting (standard, 1" thick, 65-1/4" long)
	70619404	1	EDGE, cutting, center section (heavy-duty, 1-1/4" thick, 41" long)
	70619720	2	EDGE, cutting, outer section (heavy-duty, 1-1/4" thick, 48-1/2" long)
3	70661209	23	BOLT, plow, 1" NC x 3-1/4"
	70911032	23	NUT, 1" NC
4	70691721	1	BIT, left end (Standard)
	70661209	6	BOLT, plow, 1" NC x 3-1/4"
	70911032	6	NUT, 1" NC
	70691743	1	BIT, left end (heavy-duty type for use with 1-1/4" thick cutting edges)
	70661209	6	CAPSCREW, 1" NC x 3-1/4"
	70911032	6	NUT, 1" NC
5	70691722	1	BIT, right end (Standard)
	70661209	6	BOLT, plow, 1" NC x 3-1/4"
	70911032	6	NUT, 1" NC
	70691744	1	BIT, right end (heavy-duty type for use with 1-1/4" thick cutting edges)
	70661209	6	CAPSCREW, 1" NC x 3-1/4"
	70911032	6	NUT, 1" NC
6	70609368	1	BAR
7	70676838	1	*PIVOT
8	70676839	1	*RING
9	70619648	4	*SWIVEL

*Requires welding to install

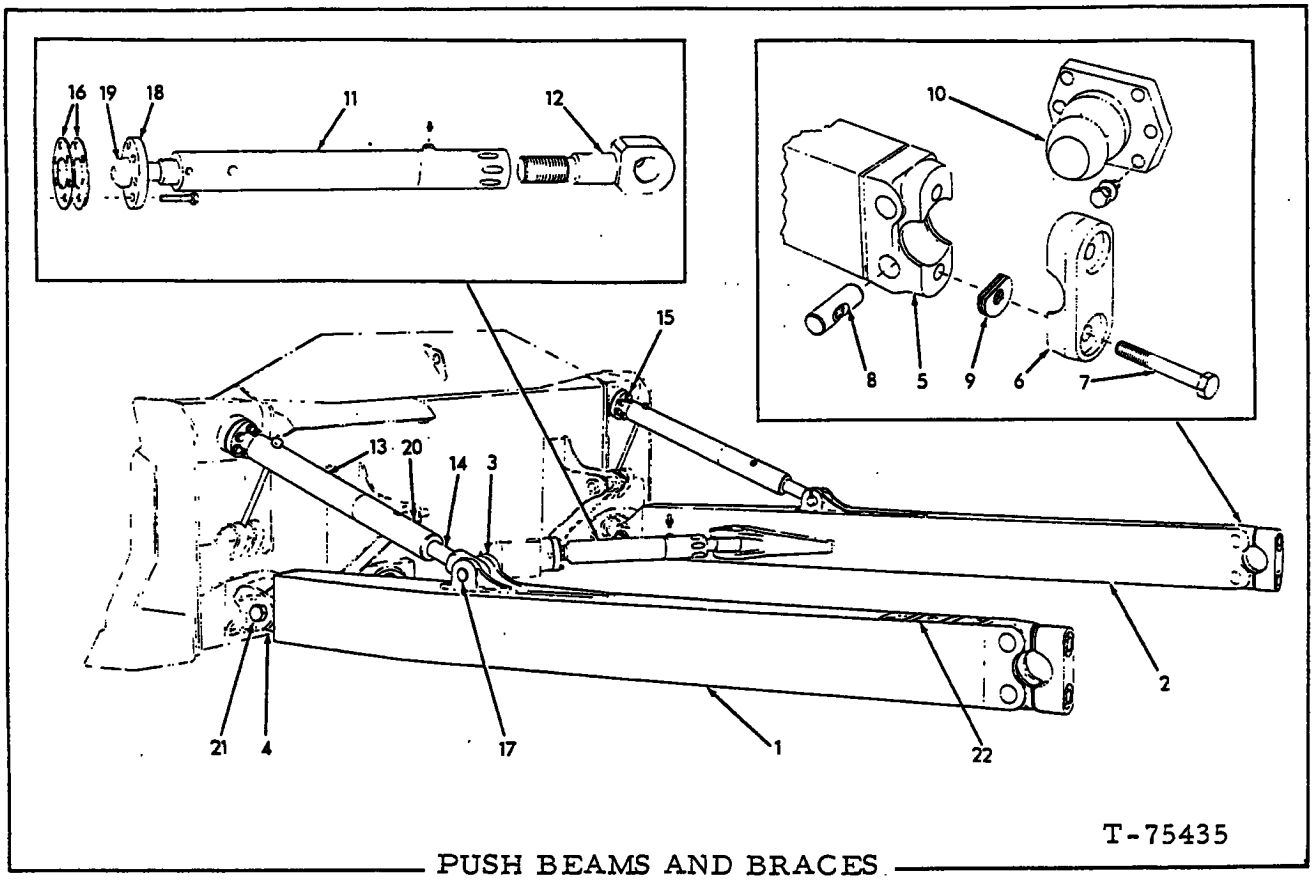

T-75435

PUSH BEAMS AND BRACES

USAGE: Models 21HU, 21HSU, 21HSU (Rock)

ITEM	PART NO.	QTY.	DESCRIPTION	
1	70696035	1	BEAM, push (21 HU, 21HSU)	Each includes items 3 thru 5
	70696329	1	BEAM, push (21 HSU (Rock)	
2	70696036	1	BEAM, push (21 HU, 21HSU)	
	70696330	1	BEAM, push (21 HSU (Rock)	
3	70665208	4	*LUG	
4	73113451	1	*HINGE, left	
	73113452	1	*HINGE, right	
5	70665094	2	*PIVOT	
6	70665167	2	CAP	
7	70665160	4	CAPSCREW, 1-1/4"NC x 8"	
8	70665157	4	PIN	
9	70665156	40	SHIM, push beam cap (.032" thick)	Use as required
	70689324	4	SHIM, push beam cap (.125" thick)	
10	70687732	2	TRUNNION	
	70925671	12	CAPSCREW, 7/8"NC x 2-1/2"	
	70676122	12	WASHER	
11	70696005	2	BRACE ASSY., diagonal (Includes items 18 and 19) (First type with six hole collar)	
	73123382	2	BRACE ASSY., diagonal (Includes items 18 and 19) (Second type with four hole collar)	
	70914465	2	FITTING, lubricating, 1/8"NPT	
12	70686974	2	SCREW	
	70667156	2	PIN, locking	

(Continued)

(Revised May 1982)

PUSH BEAMS AND BRACES (Continued)

ITEM	PART NO.	QTY.	DESCRIPTION
13	70671078	2	BRACE, moldboard tilt (First type with six hole collar)(Includes items 18 thru 20 (One less used with hydraulic tilt)
	73123346	2	BRACE, moldboard tilt (Second type with four hole collar)(Include items 18 thru 20 (One less used with hydraulic tilt)
	70914465	2	FITTING, lubricating, 1/8"NPT
14	70619952	2	SCREW
15	70925806	24	CAPSCREW (7/8"NC x 3")(Use with six hole collar)
	70927314	16	CAPSCREW (1"NC x 3-1/2")((Use with four hole collar)
16	70609389	56	SHIM (Six hole) } Use as required
	73122377	56	SHIM (Four hole) }
17	70609122	4	PIN
	70918245	4	PIN, spring, 1/2" x 2-1/2"
18	70651704	4	*COLLAR (Six hole)
	73122379	4	*COLLAR (Four hole)
19	70671076	2	*BALL (Use with item 11)
	70672959	2	*BALL (Use with item 13)
20	70615229	2	*NUT
21	70609120	2	BOLT
	70606702	2	NUT
	70901349	2	PIN, cotter, 3/8" x 3"
22	73116394	6	STEP TREAD

*Requires welding to install

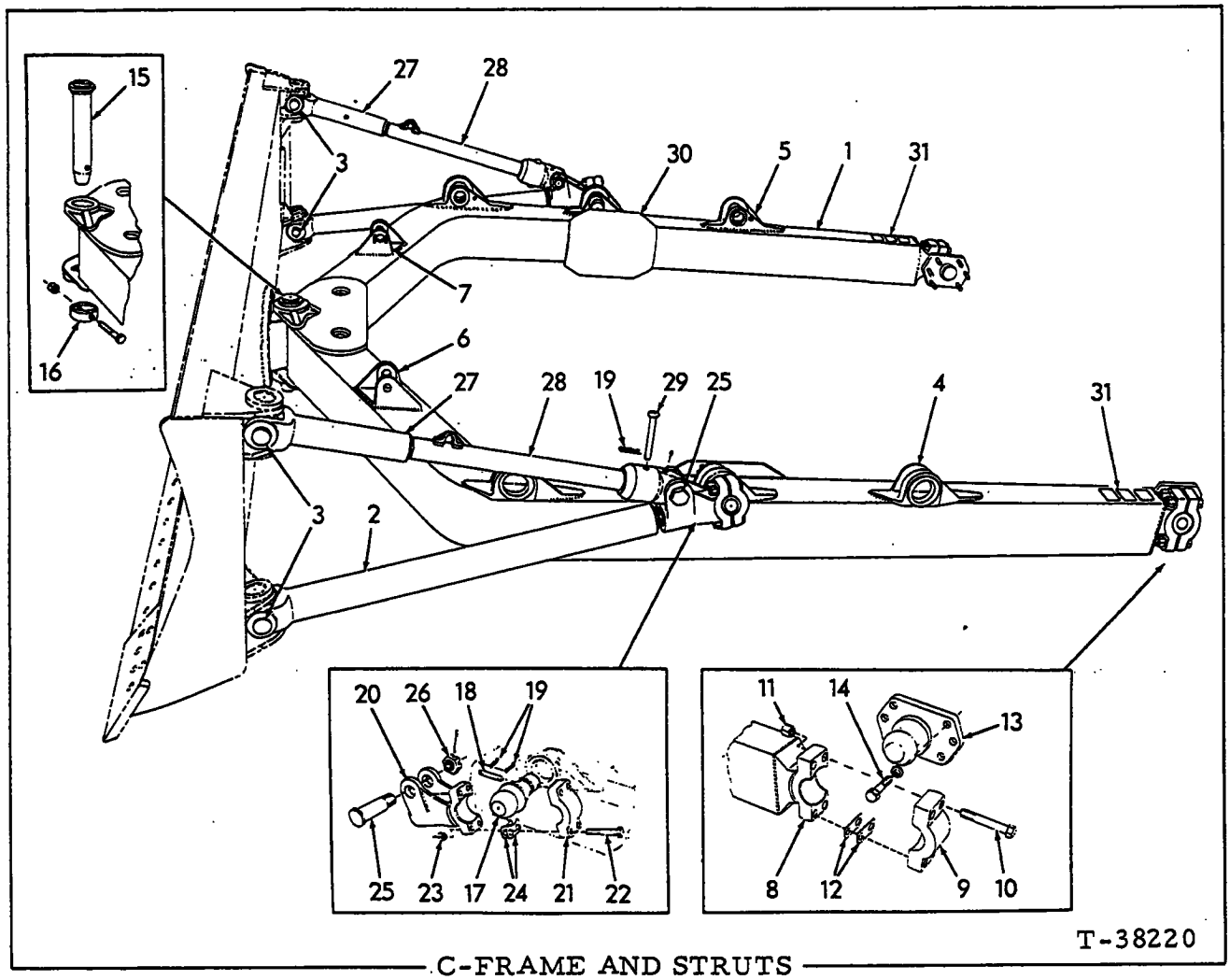

C-FRAME AND STRUTS

USAGE: Model 21HA

ITEM	PART NO.	QTY.	DESCRIPTION
1	70695100	1	C-FRAME (Includes items 4 thru 8) (Standard)
	70695139	1	C-FRAME (Includes items 4 thru 8) (Severe-service)
2	70619840	2	STRUT, lower
3	70609122	4	PIN, moldboard strut
	70918245	4	PIN, spring, 1/2" x 2-1/2"
4	70618083	3	*BRACKET, ball pin, left side
5	70618084	3	*BRACKET, ball pin, right side
6	70679349	1	*LUG, lifting, left side
7	70679350	1	*LUG, lifting, right side
8	70615750	2	*PIVOT, C-frame
9	70617069	2	CAP, C-frame
10	70926283	8	CAPSCREW, 1"NF x 5-3/4"
11	70600236	8	NUT, high, 1"NF
12	70615912	32	SHIM, C-frame cap (.037" thick) (Use as required)

(Continued)

C-FRAME AND STRUTS (Continued)

ITEM	PART NO.	QTY.	DESCRIPTION
13	70687732	2.	TRUNNION
14	70925671	12	CAPSCREW, 7/8"NC x 2-1/2"
	70676122	12	WASHER
15	70615696	1	PIN
16	70615338	1	COLLAR
	70928059	1	CAPSCREW, 5/8"NC x 5-1/2"
	70914501	1	NUT, elastic stop, 5/8"NC
17	70615581	2	PIN
18	70615619	2	PIN
19	70617855	6	CLIP
20	70618840	2	BRACKET
21	70618173	2	CAP
22	70925954	8	CAPSCREW, 3/4"NF x 4-1/2"
23	70012767	8	NUT, high, 3/4"NF
24	70614721	40	SHIM, strut bracket cap (Use as required)
25	70609361	2	BOLT
26	70606702	2	NUT, upper strut bolt (slotted, 1-3/4"NF
	70911069	2	PIN, cotter, 5/16" x 3"
27	70619841	2	CLEVIS, upper strut (Standard. 2-1/2"NC thread)
	70619275	2	CLEVIS, upper strut (Heavy-duty. 3-1/2"NC thread)
	70914465	2	FITTING, lubricating, 1/8"NPT
28	70609355	2	STRUT, upper (Standard. 2-1/2"NC thread)
	70619274	2	STRUT, upper (Heavy-duty. 3-1/2"NC thread)
	70914465	2	FITTING, lubricating, 1/8"NPT
29	70618692	2	PIN
30	70617171	2	*PLATE (Special. Not used on units with Severe-service Frame)
31	73116394	6	STEP TREAD

*Requires welding to install

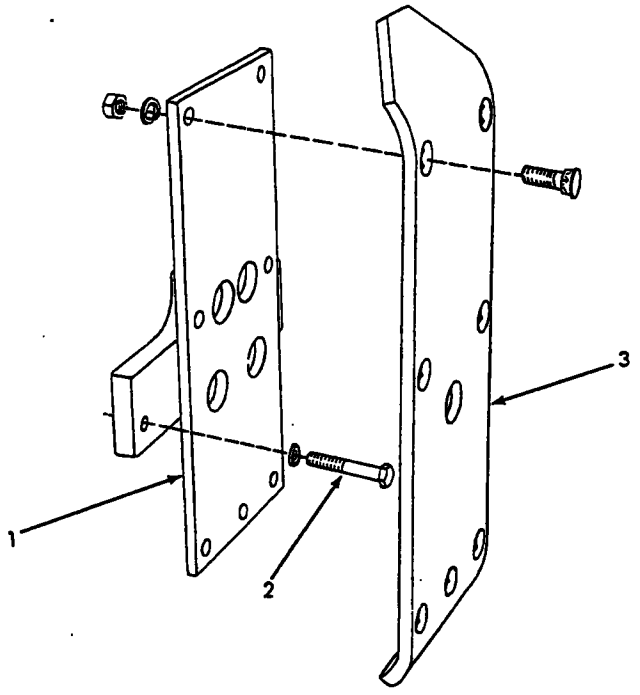

T-15164

GUIDE BRACKETS

USAGE: Special Equipment on Model 21HA only. Not used on units with Severe-service C-Frame. Requires addition of welded wear plate to C-Frame.

ITEM	PART NO.	QTY.	DESCRIPTION
1	70609142	2	BRACKET
2	70928043	12	CAPSCREW, 5/8"NC x 3-1/2"
	70930364	12	WASHER
3	70609136	2	PLATE, wear
	70916441	14	BOLT, 3/4"NC x 2-1/4"
	70928914	14	WASHER
	70911030	14	NUT, 3/4"NC

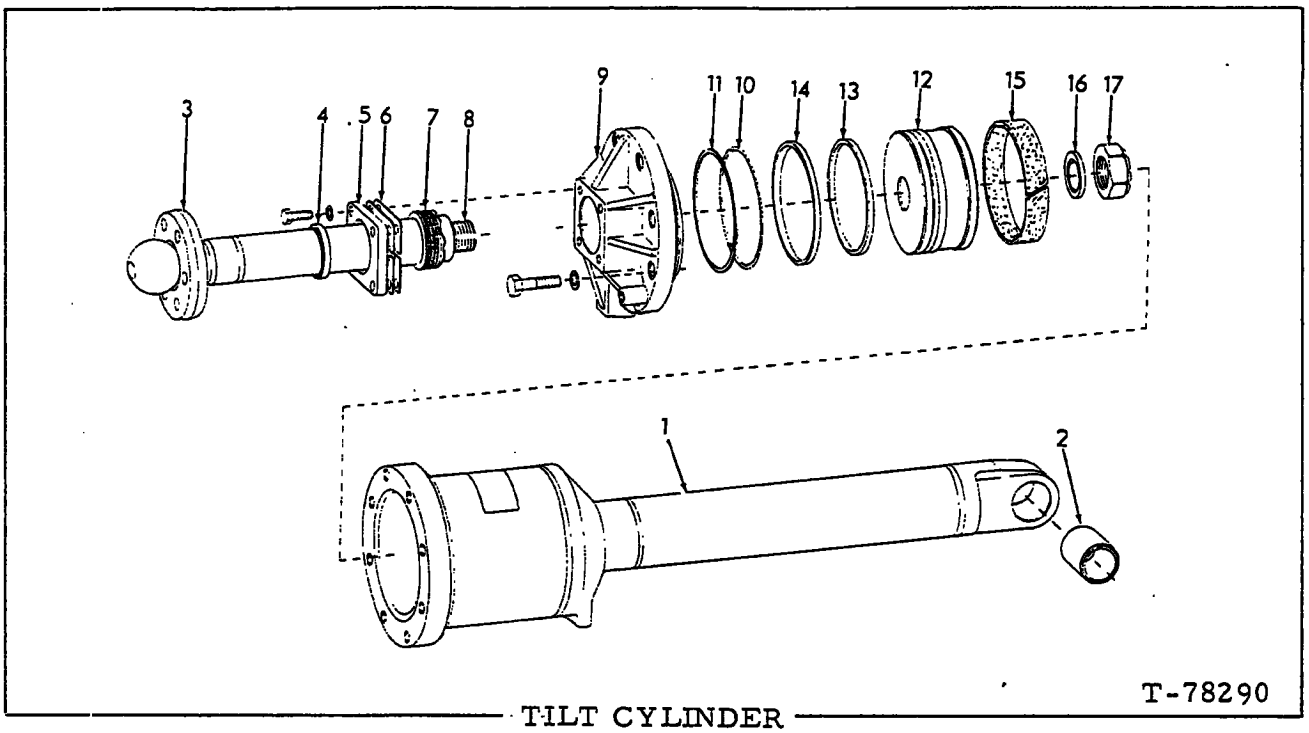

TILT CYLINDER

USAGE: See page 238

ITEM	PART NO.	QTY.	DESCRIPTION
-	73061762	1	CYLINDER ASSY. (Includes items 1 thru 17)
1	73061081	1	CYLINDER ASSY. (Includes item 2)
2	73057408	1	BUSHING
3	70651704	1	COLLAR
4	73052942	1	☐WIPER
5	73059354	1	PLATE
	70915987	4	CAPSCREW, 1/2"NC x 1-1/2"
	70912441	4	LOCKWASHER, 1/2"
6	73054488	4	☐SHIM (.029" thick)
7	73054073	1	☐PACKING SET
8	73055463	1	ROD
9	73062228	1	HEAD
	70921170	6	CAPSCREW, 3/4"NF x 2-1/2"
	70924815	2	CAPSCREW, 3/4"NF x 4"
	70904369	8	LOCKWASHER, 3/4"
10	70927171	1	☐RING
11	73063372	1	☐RING
12	73059271	1	PISTON
13	70926822	1	☐RING, piston, inner
14	73053715	1	☐RING, piston, outer
15	73053716	1	☐RING
16	73054108	1	SPACER
17	73073214	1	NUT, piston rod (self-locking)
18	73056933	1	REPAIR KIT (Includes items 4, 6, 7, 10, 11, 13, 14 and 15)

☐Components of item 18

NOTE: See PAINTING AND MARKING for Transfers

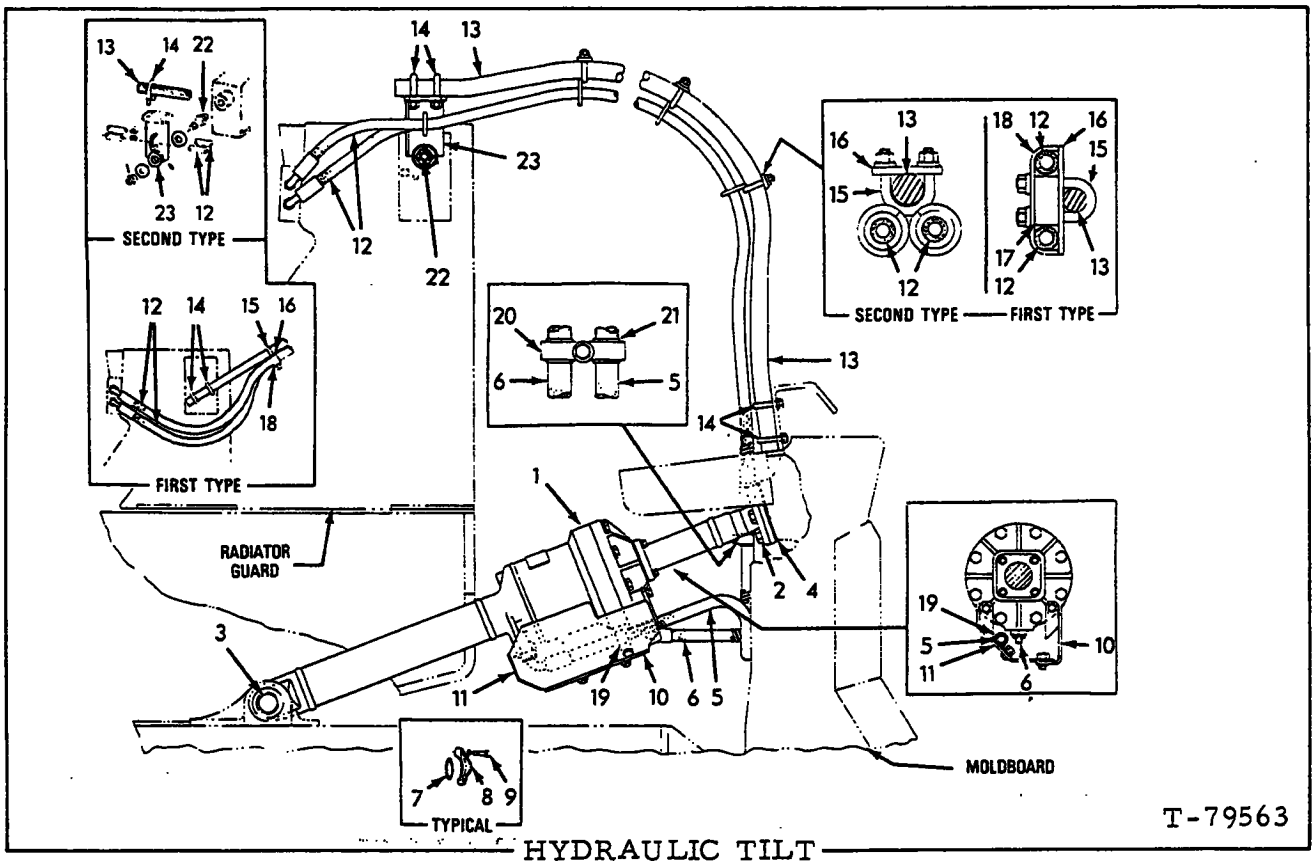

HYDRAULIC TILT

*Tractors prior to S/N 71A21876
**Tractors S/N 71A21876 and up

ITEM	PART NO.	QTY. *	QTY. **	DESCRIPTION
1	--------	1	1	CYLINDER, tilt (See page 237)
2	70925806	6	6	CAPSCREW, 7/8"NC x 3"
3	70609122	1	1	PIN, tilt cylinder
	70918245	1	1	PIN, spring, 1/2" x 2-1/2"
4	70609389	8	8	SHIM (Use as required)
5	70693997	1	1	HOSE (See HOSE PARTS)
6	70693998	1	1	HOSE (See HOSE PARTS)
7	70931857	2	2	O-RING
8	70921115	4	4	FLANGE
9	70921076	8	8	CAPSCREW, 3/8"NC x 1-1/4"
	70930370	8	8	WASHER, 7/16"
10	70683549	1	1	GUARD
	70921411	1	1	CAPSCREW, 5/8"NC x 1-1/2"
	70912942	1	1	LOCKWASHER, 5/8"
	70920583	2	2	CAPSCREW, 1/2"NC x 1-1/2"
	70677008	2	2	WASHER
11	70683563	1	1	GUARD
	70922726	2	2	CAPSCREW, 1/2"NF x 1-1/2"
	70677008	2	2	WASHER
	70921411	1	1	CAPSCREW, 5/8"NC x 1-1/2"
	70912942	1	1	LOCKWASHER, 5/8"
12	70693996	2	-	HOSE (See HOSE PARTS)
	73119001	-	2	HOSE (See HOSE PARTS)

(Continued)

ITEM	PART NO.	QTY. *	QTY. **	DESCRIPTION
13	70683704	1	-	CABLE
	73119000	-	1	CABLE
14	70696086	4	-	U-BOLT
	70677008	8	-	WASHER
	70900369	8	-	NUT, 1/2"NC
	73119223	-	4	U-BOLT
	70927381	-	8	WASHER
	70900370	-	8	NUT, 5/8"NC
15	70696124	3	-	U-BOLT
	73119226	-	3	U-BOLT ASSY. (Serviced only as a unit)
	70677008	6	6	WASHER
	70900369	6	6	NUT, 1/2"NC
16	70696090	3	-	PLATE
	73119227	-	3	PLATE
17	73112401	3	-	BLOCK
18	73112403	3	-	CLAMP
19	70927311	1	1	CLAMP
	70920582	1	1	CAPSCREW, 1/2"NC x 1-1/4"
	70677008	1	1	WASHER
	70900369	1	1	NUT, 1/2"NC
20	70698399	1	1	CLAMP
	70921556	1	1	CAPSCREW, 1/2" x 2"NC
	70677008	1	1	WASHER
21	70682286	4	4	CHANNEL
22	73118995	-	1	SHAFT
	70912299	-	1	WASHER
	70678072	-	1	WASHER
	70902277	-	1	NUT, slotted, 1"NC
	70922002	-	1	PIN, cotter, 3/16" x 2"
23	73119222	-	1	SWIVEL ASSY. (Includes BUSHINGS indented below)
	73119221	-	2	BUSHING
	70914465	-	1	FITTING, lubricating, straight, 1/8"NPT

(Revised April 1980)

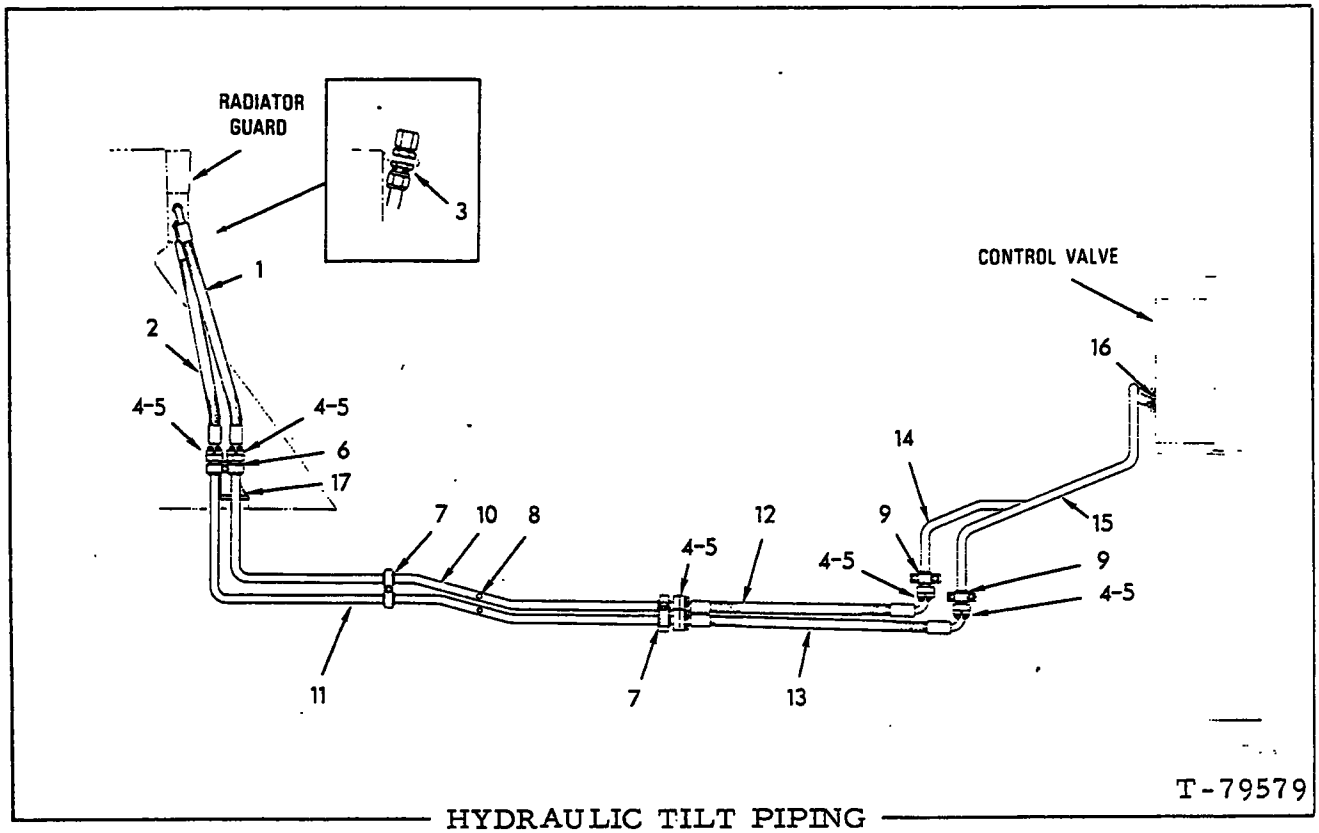

HYDRAULIC TILT PIPING

ITEM	PART NO.	QTY.	DESCRIPTION
1	70689801	1	HOSE } See HOSE PARTS
2	70689802	1	HOSE }
3	70927063	2	FITTING, straight, 3/4" tube, 1-1/16"NPT
	70921244	2	CAP, flare type, 3/4" tube
4	70921115	12	FLANGE
	70921076	24	CAPSCREW, 3/8"NC x 1-1/4"
	70930370	24	WASHER
5	70931857	6	O-RING
6	70199904	2	BUSHING
	70196612	2	CLAMP
	70927536	1	CAPSCREW, 3/8"NC x 3-3/4"
	70677006	1	WASHER
	70918308	1	NUT, elastic stop, 3/8"NC
7	70199904	4	BUSHING
	70196612	4	CLAMP
	70927218	2	CAPSCREW, 3/8"NC x 2-3/4"
	70677006	2	WASHER
8	70921467	2	CAP, flare type, 1/4" tube
9	70199904	2	BUSHING
	70196531	4	CLAMP
	70927218	4	CAPSCREW, 3/8"NC x 2-3/4"
	70677006	4	WASHER
10	70689927	1	TUBE

(Continued)

HYDRAULIC TILT PIPING (Continued)

ITEM	PART NO.	QTY.	DESCRIPTION
11	70689928	1	TUBE
12	70689803	1	HOSE } See HOSE PARTS
13	70689804	1	HOSE }
14	70689781	1	TUBE
15	70689930	1	TUBE
16	70931753	2	O-RING
17	70689916	1	ANGLE
	70921076	2	CAPSCREW, 3/8"NC x 1-1/4"
	70677006	2	WASHER

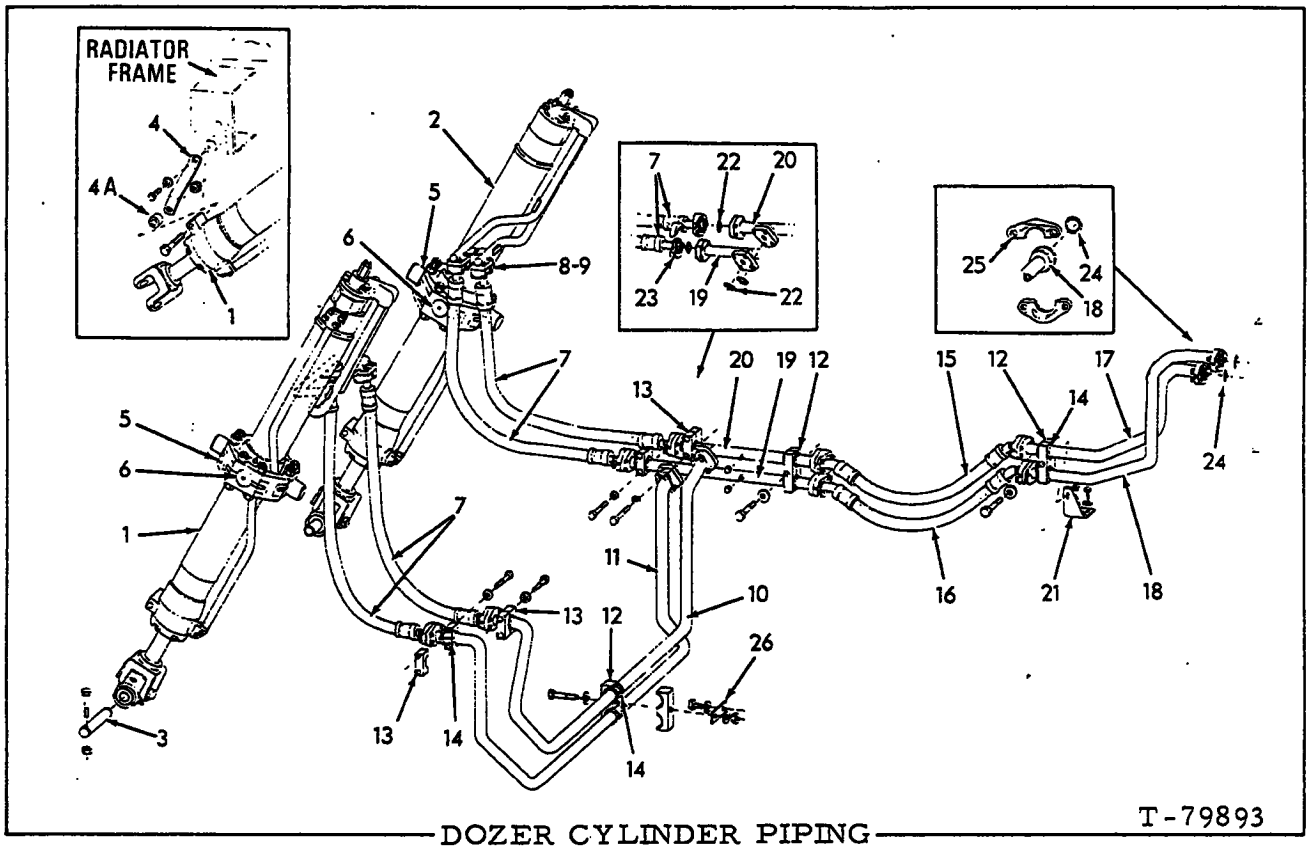

DOZER CYLINDER PIPING

ITEM	PART NO.	QTY.	DESCRIPTION
1	--------	1	CYLINDER ASSY., left side } See page 244
2	--------	1	CYLINDER ASSY., right side } See page 244
3	70649611	2	PIN
	70923509	2	CAPSCREW, 1/2"NC x 3-3/4"
	70918309	2	NUT, elastic stop, 1/2"NC
4	70660513	2	STRAP (Tractors prior to unit #21284)
	73108116	2	STRAP (Tractor unit #21284 and up)
	70920582	2	CAPSCREW, 1/2"NC x 1-1/4"
	70921455	2	CAPSCREW, 5/8"NC x 4-1/2" (Tractors unit #21284 and up)
	70928060	2	CAPSCREW, 5/8"NC x 6" Tractors prior to unit #21284)
	70677008	2	WASHER
4A	70662189	2	SPACER (Tractors prior to unit #21284)
5	70689934	2	YOKE
	70929106	16	CAPSCREW, 7/8"NF x 5-1/2"
	70924881	16	NUT, 7/8"NF
6	70689935	8	PIN
	70921175	4	CAPSCREW, 1/2"NC x 1"
	70683381	4	WASHER
7	70689305	4	HOSE (See HOSE PARTS)
8	70931753	4	O-RING
9	70921116	8	FLANGE, hose upper connection (half only)
	70921076	16	CAPSCREW, 3/8NC x1-1/4"
	70930370	16	WASHER

(Continued)

DOZER CYLINDER PIPING (Continued)

ITEM	PART NO.	QTY.	DESCRIPTION
10	70689865	1	TUBE, cross, raise line
11	70689864	1	TUBE, cross, drop line
12	70689813	6	CLAMP
	70924843	2	CAPSCREW, 3/8"NC x 3-1/2"
	70927536	1	CAPSCREW, 3/8"NC x 3-3/4"
	70677006	5	WASHER } One less used on
	70911026	2	NUT, 3/8"NC } units prior to #21084
13	70196645	8	CLAMP
	70924843	8	CAPSCREW, 3/8"NC x 3-1/2"
	70677006	8	WASHER
14	70689863	10	BUSHING
15	70689766	1	HOSE, upper
16	70689807	1	HOSE, lower
17	70689866	1	TUBE
18	70689852	1	TUBE
19	70689840	1	TUBE, lower
	70921467	1	CAP, flare fitting, 1/4" tube
20	70689841	1	TUBE, upper
	70921467	1	CAP, flare fitting, 1/4" tube
21	70689916	1	ANGLE
	70921076	2	CAPSCREW, 3/8"NC x 1-1/4"
	70677006	2	WASHER
22	70925919	10	O-RING
23	70921117	20	FLANGE, tube connecting, front end (half only)
	70921569	40	CAPSCREW, 7/16"NC x 1-1/4"
	70929154	40	WASHER
24	70931714	2	O-RING
25	70921118	4	FLANGE, tube connecting, rear end (half only)
	70920583	8	CAPSCREW, 1/2"NC x 1-1/2"
	70928460	8	WASHER
26	70646245	1	STRIP
	70922763	1	CAPSCREW, 3/8"NC x 1" } Tractors unit
	70677006	1	WASHER } #21084 and up

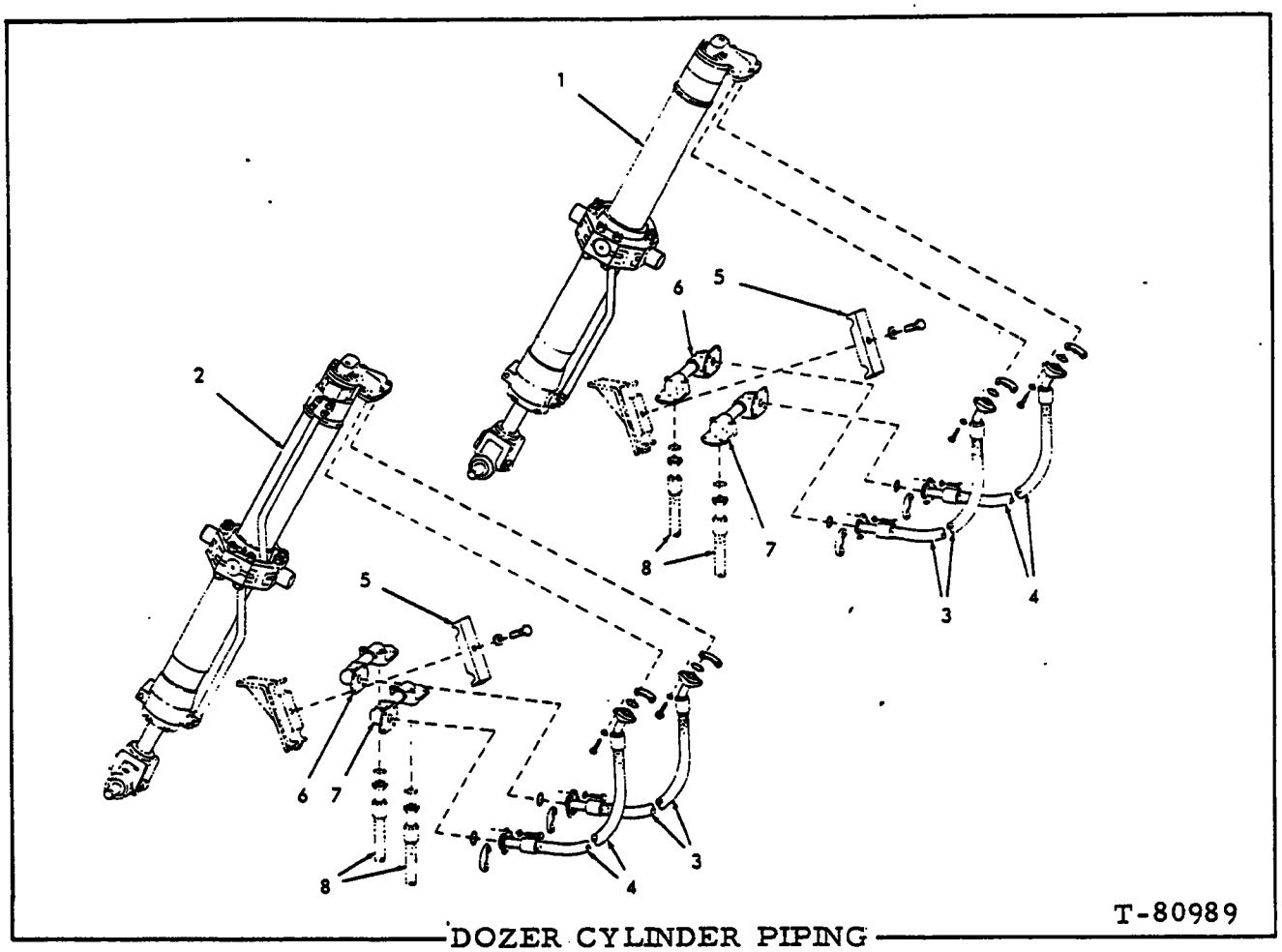

DOZER CYLINDER PIPING

USAGE: Special equipment. Units equipped for Sand Operations.

ITEM	PART NO.	QTY.	DESCRIPTION
1	--------	1	CYLINDER ASSY., right } See page 244
2	--------	1	CYLINDER ASSY., left } See page 244
3	70669727	2	HOSE (See HOSE PARTS)
	70931753	4	O-RING
	70921116	8	FLANGE, split
	70923470	16	CAPSCREW, 3/8" NC x 1-1/2"
	70930370	16	WASHER
4	70670357	2	HOSE (See HOSE PARTS)
	70931753	4	O-RING
	70921116	8	FLANGE, split
	70923470	16	CAPSCREW, 3/8" NC x 1-1/2"
	70930370	16	WASHER
5	70670354	2	CLAMP
	70920585	2	CAPSCREW, 1/2" NC x 1-3/4"
	70928188	2	WASHER
6	73113135	1	TUBE, left } drop line
	73113136	1	TUBE, right } drop line
7	73113133	1	TUBE, left } raise line
	73113134	1	TUBE, right } raise line
8	--------	4	HOSE (See page 242)

(Revised May 1982)

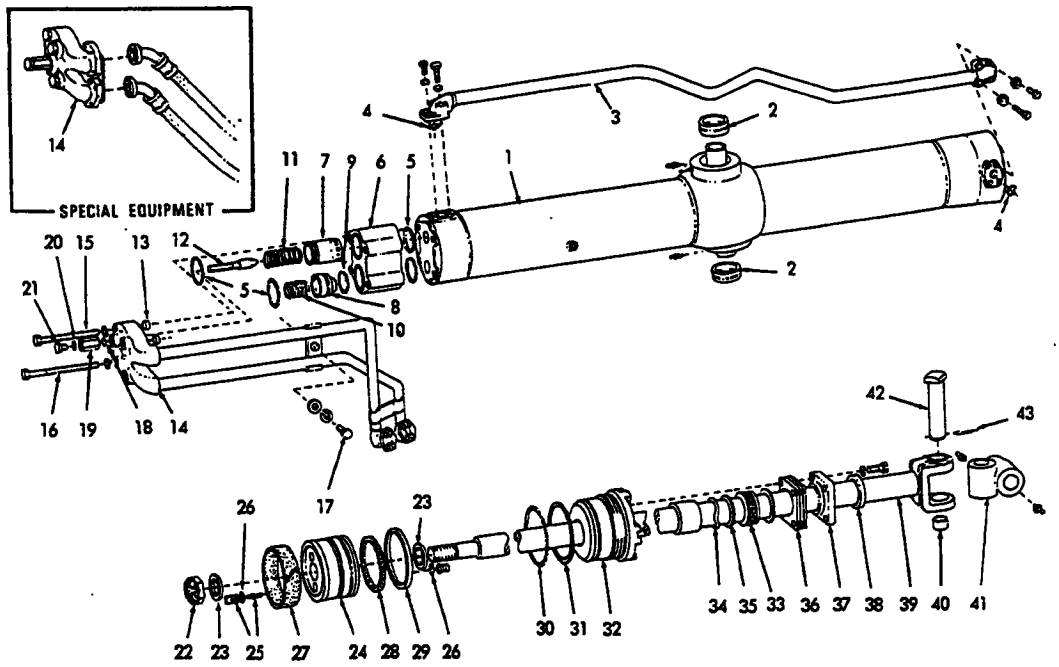

DOZER CYLINDER PARTS

USAGE: See pages 242 and 243A

* Left Hand Cylinder
** Right Hand Cylinder

ITEM	PART NO.	QTY. *	QTY. **	DESCRIPTION	
-	70689957	1	-	CYLINDER ASSY. 1st type 5/8" adjustment screw	Standard equipment
	70689958	-	1	CYLINDER ASSY. 1st type 5/8" adjustment screw	Standard equipment
	73116609	1	-	CYLINDER ASSY. 2nd type 7/8" adjustment screw	Standard equipment
	73116610	-	1	CYLINDER ASSY. 2nd type 7/8" adjustment screw	Standard equipment
	73113129	1	-	CYLINDER ASSY. 1st type 5/8" adjustment screw	Special equipment Units for Sand Operations
	73113130	-	1	CYLINDER ASSY. 1st type 5/8" adjustment screw	Special equipment Units for Sand Operations
	73116603	1	-	CYLINDER ASSY. 2nd type 7/8" adjustment screw	Special equipment Units for Sand Operations
	73116604	-	1	CYLINDER ASSY. 2nd type 7/8" adjustment screw	Special equipment Units for Sand Operations
		NOTE:		Each CYLINDER ASSY. above includes items 1 thru 40.	
1	73061423	1	-	CYLINDER ASSY., left	Each includes item 2
	73061424	-	1	CYLINDER ASSY., right	Each includes item 2
	70915274	2	2	FITTING, lubricating 45°, 1/8"NPT	
2	73065986	2	2	BUSHING, cylinder pivot	
3	70689657	1	-	TUBE, jumper	
	70689658	-	1	TUBE, jumper	
	70921076	4	4	CAPSCREW, 3/8"NC x 1-1/4"	
	70920996	4	4	CAPSCREW, 3/8"NC x 2-1/4"	
	70910287	8	8	LOCKWASHER, 3/8"	
4	70924200	2	2	O-RING, jumper tube	
5	70924274	4	4	O-RING, valve housing	
6	70669002	1	1	VALVE AND HOUSING ASSY. (Includes items 7 thru 9)	
7	--------	1	1	VALVE, by-pass, raise line(Not serviced separately)	
8	70650560	1	1	VALVE, by-pass, drop line	
9	70923578	1	1	O-RING, drop line by-pass valve	
10	70635447	1	1	SPRING, drop line valve	
11	70657207	1	1	SPRING, raise line valve	

(Continued)

DOZER CYLINDER PARTS (Continued)

ITEM	PART NO.	QTY. *	QTY. **	DESCRIPTION
12	73110369	1	1	SCREW, orifice adjustment (5/8"NC diam.)
	73116504	1	1	SCREW, orifice adjustment (7/8"NC diam.)
13	70050227	2	2	BUSHING, dowel
14	70690841	1	-	TUBE, connecting (1st type 5/8" adjustment screw) — Standard equipment
	70690842	-	1	TUBE, connecting (1st type 5/8" adjustment screw) — Standard equipment
	73116613	1	-	TUBE, connecting (2nd type 7/8" adjustment screw) — Standard equipment
	73116614	-	1	TUBE, connecting (2nd type 7/8" adjustment screw) — Standard equipment
	70697003	1	-	HEAD (1st type 5/8" adjustment screw) — Special equipment, units for Sand Operations
	70697004	-	1	HEAD (1st type 5/8" adjustment screw) — Special equipment, units for Sand Operations
	73116501	1	-	HEAD (2nd type 7/8" adjustment screw) — Special equipment, units for Sand Operations
	73116502	-	1	HEAD (2nd type 7/8" adjustment screw) — Special equipment, units for Sand Operations
15	70927335	2	2	CAPSCREW, 5/8"NF x 6"
16	70927336	2	2	CAPSCREW, 5/8"NF x 7"
	70912942	4	4	LOCKWASHER, 5/8"
17	70920582	1	1	CAPSCREW, 1/2"NC x 1-1/2"
	70677008	1	1	WASHER
18	70668394	1	1	SEAL (1st type, 5/8" diam. adjustment screw)
	73116457	1	1	SEAL (2nd type, 7/8" diam. adjustment screw)
19	70668387	1	1	NUT (5/8"NC) — Tractors prior to unit #22078
	73116456	1	1	NUT (7/8"NC) — Tractors prior to unit #22078
	73121650	1	1	NUT (7/8"NC) — Tractors unit #22078 and up
	70931753	1	1	O-RING — Tractors unit #22078 and up
20	70921206	1	1	O-RING, valve access plug
21	70921204	1	1	PLUG, valve access (Includes item 20)
22	73073212	1	1	NUT, piston rod (self-locking)
23	73053977	2	2	SPACER, piston rod
24	73059680	1	1	PISTON ASSY. (Includes item 25)
25	73058925	2	2	PLUNGER-GUIDE ASSY. (Includes 1 plunger (.340" diam.) 2 guides and item 26)
26	70923843	4	4	O-RING
27	73052996	1	1	□RING, piston wear
28	70926819	1	1	□RING, piston, inner (rubber)
29	73052998	1	1	□RING, piston, outer (teflon)
30	70924925	1	1	□O-RING, cylinder head
31	73063368	1	1	□RING, back-up, head O-Ring
32	73062214	1	1	HEAD, cylinder
33	73053886	1	1	□PACKING SET, piston rod (Includes item 34 and 35)
34	--------	1	1	SPRING, wave, rod packing
35	--------	1	1	WASHER, rod packing, inner
36	73054486	4	4	□SHIM, packing plate (Use as required)
37	73059335	1	1	PLATE, packing adjustment
	70914847	4	4	CAPSCREW, 3/8"NC x 1-1/2"
	70904206	4	4	LOCKWASHER, 3/8"
38	73052879	1	1	□WIPER, piston rod
39	73063089	1	1	ROD, piston (Includes item 40)
40	70930916	2	2	BUSHING
41	70695869	1	1	UNIVERSAL, piston rod
	70914465	1	1	FITTING, lubricating, straight, 1/8"NPT
	70915274	1	1	FITTING, lubricating, 45°, 1/8"NPT
42	70637056	1	1	PIN, piston rod
43	70637051	1	1	PIN, Spirol, 3/8" x 2"
44	73056485	1	1	REPAIR KIT (Consists of items 27 thru 31, 33, 36 and 38)

□Components of item 44

(Revised May 1982)

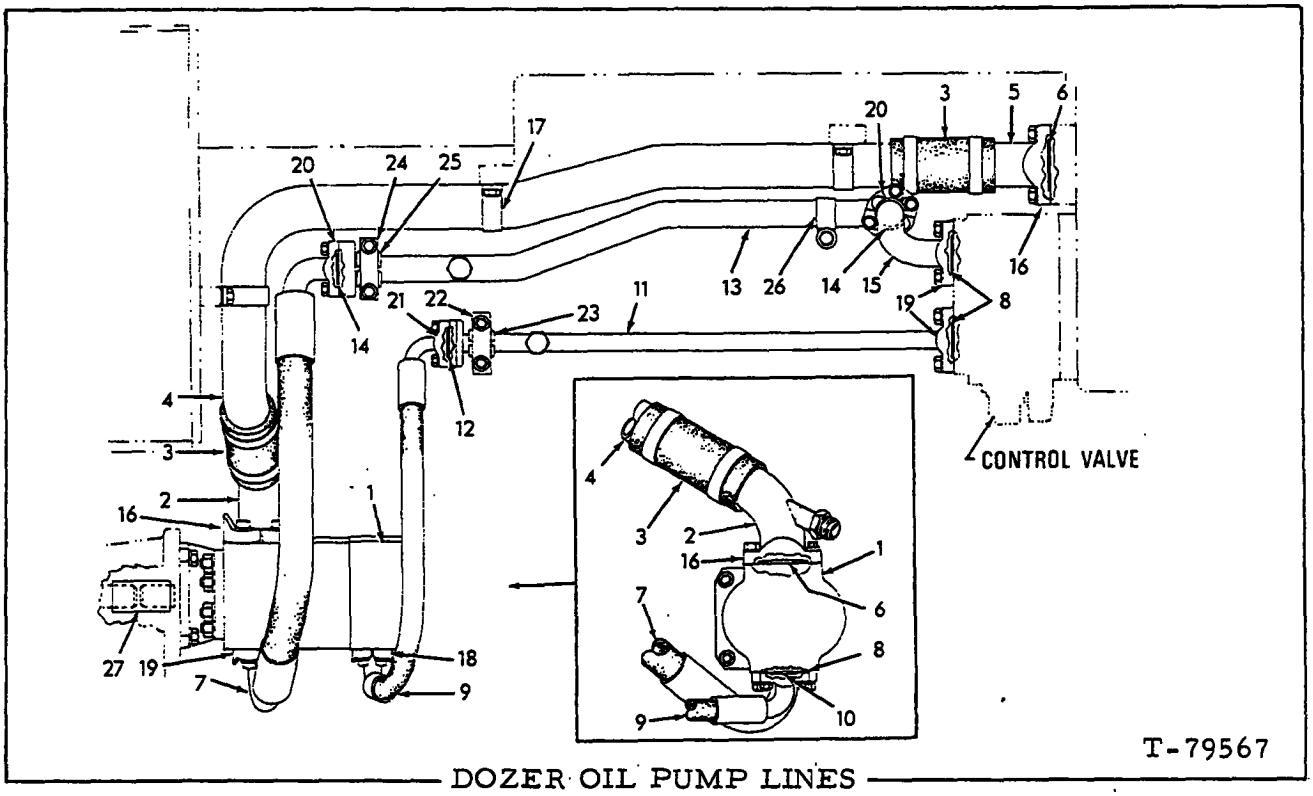

DOZER OIL PUMP LINES

ITEM	PART NO.	QTY.	DESCRIPTION
1	--------	1	PUMP ASSY. (See page 248 and 248A)
	70604241	4	STUD
	70912441	4	LOCKWASHER, 1/2"
	70914012	4	NUT, 1/2"NC
2	70689759	1	TUBE (Tractors prior to unit No. 21617)
	73113305	1	TUBE (Tractors unit No. 21617 and up)
3	70665278	2	HOSE
	70927141	4	CLAMP, adjustable, 2-7/8" to 3-1/16" diam.
4	70689763	1	TUBE
5	70689849	1	TUBE
6	70933465	2	O-RING
7	70689760	1	HOSE
8	70931714	3	O-RING
9	70689844	1	HOSE
10	70931753	1	O-RING
11	70698857	1	TUBE
	70921244	1	CAP, flare fitting, 3/4" tube
12	70931857	1	O-RING
13	70689842	1	TUBE
	70921244	1	CAP, flare fitting, 3/4" tube
14	70931714	2	O-RING
15	70689843	1	TUBE (Not used on units equipped with "Kelly" Ripper)
	73108947	1	TUBE (Units equipped with "Kelley" Ripper)
16	70921599	4	FLANGE
	70920583	7	CAPSCREW, 1/2"NC x 1-1/2"
	70928460	7	WASHER
	70922220	1	CAPSCREW, 12 pt. 1/2"NC x 1-1/2"

DOZER OIL PUMP LINES (Continued)

ITEM	PART NO.	QTY.	DESCRIPTION
17	70638826	3	CLIP
	70921175	3	CAPSCREW, 1/2"NC x 1"
	70677008	3	WASHER
18	70921116	2	FLANGE
	70921076	4	CAPSCREW, 3/8"NC x 1-1/4"
	70930370	4	WASHER
19	70921118	6	FLANGE
	70920583	12	CAPSCREW, 1/2"NC x 1-1/2"
	70928460	12	WASHER
20	70921117	4	FLANGE
	70921569	8	CAPSCREW, 7/16"NC x 1-1/4"
	70929154	8	WASHER
21	70921115	2	FLANGE
	70921076	4	CAPSCREW, 3/8"NC x 1-1/4"
	70930370	4	WASHER
22	70196531	2	CLAMP
	70927218	2	CAPSCREW, 3/8"NC x 2-3/4"
	70677006	2	WASHER
23	70199904	1	BUSHING
24	70196645	2	CLAMP
	70922848	2	CAPSCREW, 3/8"NC x 3-1/4"
	70677006	2	WASHER
25	70689863	1	BUSHING
26	70925622	1	CLAMP
	70921175	1	CAPSCREW, 1/2"NC x 1"
	70677008	1	WASHER
27	70657963	1	COUPLING, splined

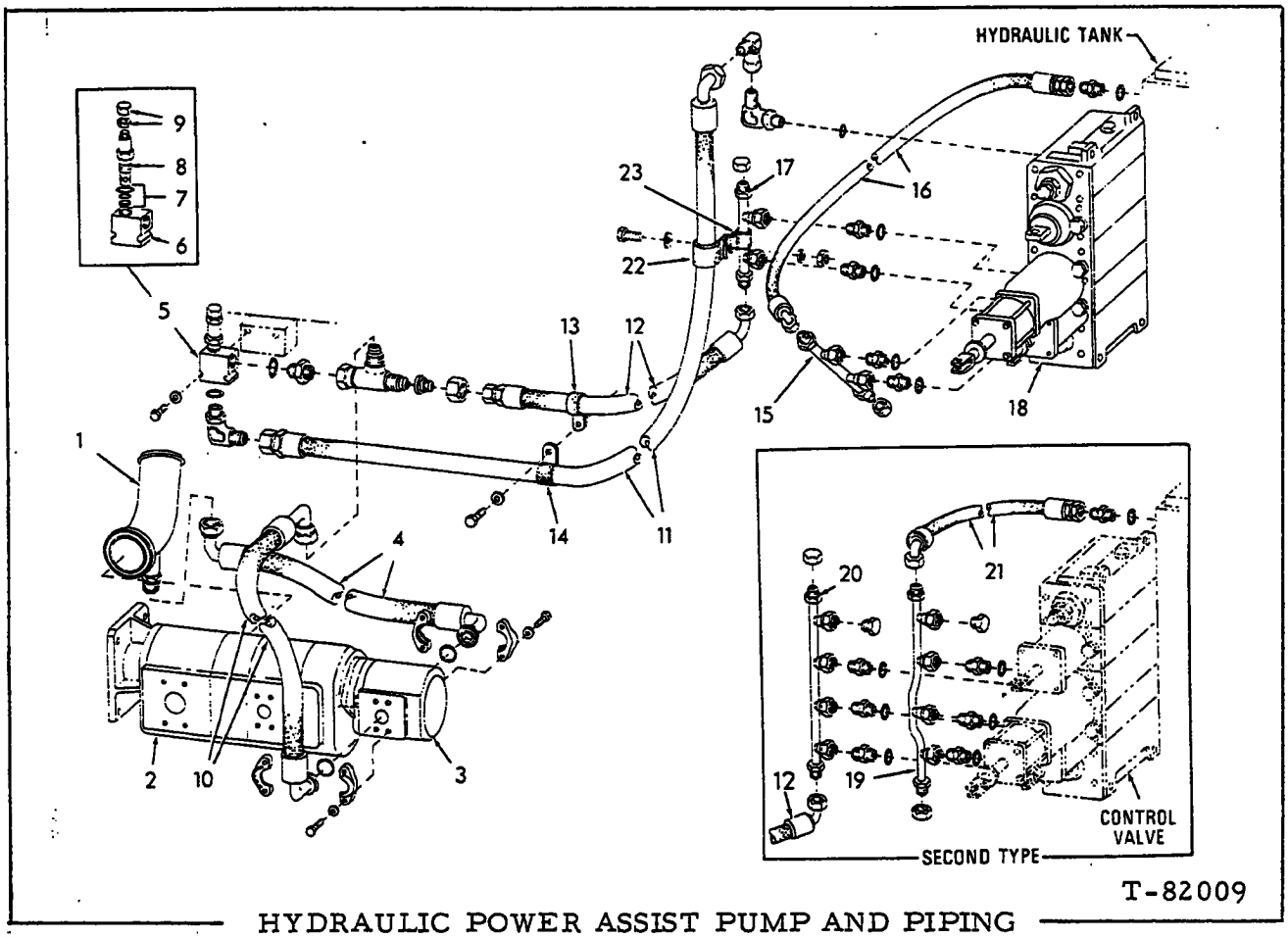

HYDRAULIC POWER ASSIST PUMP AND PIPING

USAGE: Tractors S/N 71A21617 and up.

ITEM	PART NO.	QTY.	DESCRIPTION
1	--------	1	TUBE (See page 246)
2	--------	1	PUMP ASSY., dozer oil (See page 248A)
3	--------	1	PUMP ASSY., power assist (See page 248C)
4	73113306	1	HOSE
	70931857	1	O-RING
	70921115	2	FLANGE
	70921076	4	CAPSCREW, 3/8"NC x 1-1/4"
	70930370	4	WASHER
5	73113006	1	VALVE ASSY., relief (Includes items 6 thru 9)
	70930238	2	CAPSCREW, 1/4"NC x 2"
	70928190	2	WASHER
6	73113454	1	BODY
7	73113453	1	SEAL KIT (3 pieces)
8	73113455	1	VALVE, relief
9	73113424	1	CAP
	73113425	1	NUT, jam
10	73113290	1	HOSE (See HOSE PARTS)
	70931857	1	O-RING
	70921115	2	FLANGE
	70921076	4	CAPSCREW, 3/8"NC x 1-1/4"
	70930370	4	WASHER

(Continued)

(Revised April 1980)

HYDRAULIC POWER ASSIST PUMP AND PIPING (Continued)

ITEM	PART NO.	QTY.	DESCRIPTION
11	73113289	1	HOSE (See HOSE PARTS)
	70933463	1	ELBOW, flare type, adjustable, 3/4"tube, 1-5/16" str. thd.
	70925922	1	O-RING
	70919624	-	ELBOW, flare type, 3/4" tube, 1-1/16" str.thd. (Tractors unit #21940 and up)
	70933462	1	ELBOW, flare type, adjustable, 3/4" tube, 3/4"NF male end
	70933466	1	O-RING
12	73113307	1	HOSE (See HOSE PARTS)(Tractors prior to unit #21660)
	73115490	1	HOSE (See HOSE PARTS)(Tractors unit #21660 and up)
	70919197	1	NUT, flare type, 3/4" tube, 1-1/16" str. thd.
	70925853	1	REDUCER, tube end, flare type, 3/4" to 1/2"tube
	70921691	1	TEE, flare type, swivel, 3/4" tube, 1-1/16"str.thd.
	70933464	1	CONNECTOR, flare type, 3/4" tube, 3/4" str. thd.
	70933466	1	O-RING
13	70925620	1	CLAMP
14	70928927	1	CLAMP
	70922763	1	CAPSCREW, 3/8"NC x 1"
	70930370	1	WASHER
15	73113007	1	TUBE (Tractors prior to unit #21940)
	70923737	1	CAP, flare type, 1/2" tube
	70933471	2	CONNECTOR, flare type, 1/2" tube,9/16" str. thd.
	70933476	2	O-RING
16	73113003	1	HOSE(See HOSE PARTS)(Tractors prior to unit #21940)
	70933498	1	CONNECTOR, flare type, 1/2" tube, 3/4" str. thd.
	70933466	1	O-RING
17	73113000	1	TUBE (Tractors prior to unit #21940)
	70923737	1	CAP, flare type, 1/2" tube
	70933471	2	CONNECTOR, flare type, 1/2" tube,9/16" str. thd.
	70933476	2	O-RING
18	--------	1	VALVE ASSY. (See page 259A)
19	73113002	1	TUBE (Tractors unit #21940 and up)
	70925856	1	PLUG, flare type, 1/2" tube, 3/4" str. thd. (Not used with "Kelley" Ripper)
	70923737	1	CAP, flare type, 1/2" tube
	70933471	3	CONNECTOR, flare type, 1/2" tube,9/16" str. thd. (One additional used with "Kelley" Ripper)
	70933476	3	O-RING (One additional used with "Kelley" Ripper)
20	73113001	1	TUBE (Tractors unit #21940 and up)
	70925856	1	PLUG, flare type, 1/2" tube, 3/4" str. thd. (Not used with "Kelley" Ripper)
	70923737	1	CAP, flare type, 1/2" tube
	70933471	3	CONNECTOR, flare type, 1/2" tube,9/16" str. thd. (One additional used with "Kelley"Ripper)
	70933476	3	O-RING (One additional used with"Kelley" Ripper)
21	73113265	1	HOSE (See HOSE PARTS)(Tractors unit #21940 and up)
	70933498	1	CONNECTOR, flare type, 1/2" tube, 3/4" str. thd.
	70933466	1	O-RING
22	70928927	1	CLAMP
23	70925617	1	CLAMP
	70922300	1	CAPSCREW, 3/8"NC x 3/4"
	70930370	2	WASHER
	70910324	1	NUT, 3/8"NC

} Tractors prior to unit #21617 that have been equipped with special Power Assist Kit

(Revised April 1980)

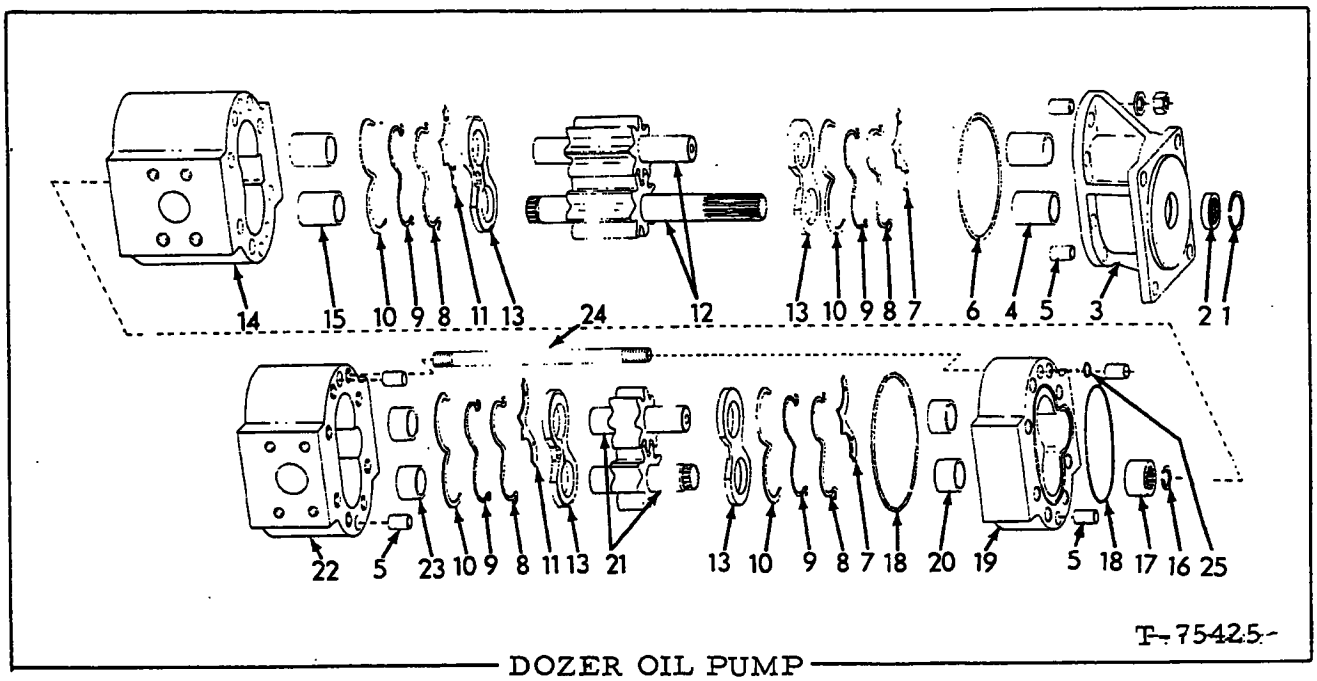

DOZER OIL PUMP

USAGE: Tractors prior to S/N 71A21617. See pages 246 and 247A.

ITEM	PART NO.	QTY.	DESCRIPTION
			NOTE: The term "front" as used herein refers to the drive end of the pump.
-	73111690	1	PUMP ASSY. (Includes items 1 thru 24)
1	70194166	1	RING
2	70194165	1	SEAL
3	73112849	1	FLANGE ASSY., mounting (Includes item 4 and 6)
4	--------	2	BUSHING (Not serviced separately)
5	70194132	6	DOWEL
6	70925743	1	O-RING
7	70665098	2	PLATE
8	70665096	4	RING (teflon)
9	70665097	4	RING (rubber)
10	70665099	4	RETAINER (nylon)
11	70665095	2	PLATE
12	70663364	1	GEAR KIT, front pump (Consists of 2 matched gears. Includes shafts)
13	70658241	4	PLATE
14	70663322	1	BODY ASSY., front pump (Includes item 15)
15	--------	2	BUSHING (Not serviced separately)
16	70927691	1	RING
17	70667594	1	COUPLING
18	70924920	2	O-RING
19	70697411	1	BODY ASSY., (Includes items 20)(If for early pumps also order 8 O-ring item 25)
20	--------	2	BUSHING (Not serviced separately)
21	70686006	1	GEAR KIT, rear pump (Consists of 2 matched gears. Includes shafts)
22	70685833	1	BODY ASSY. (Includes item 23)
23	--------	2	BUSHING (Not serviced separately)
24	70694574	8	STUD
	70665930	8	NUT, 1/2"NF
	70651109	8	WASHER
25	70921885	8	O-RING (Late pumps)

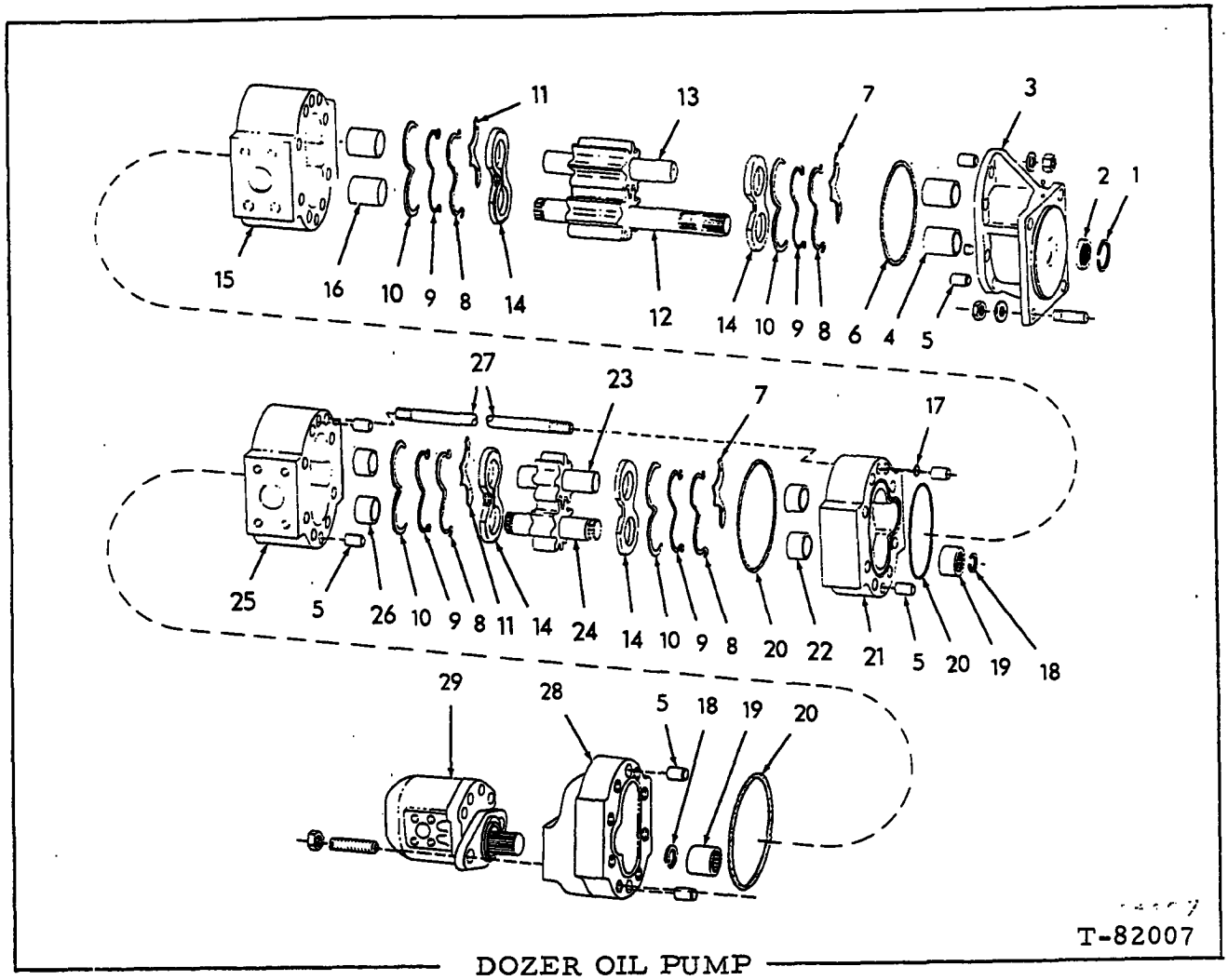

DOZER OIL PUMP

USAGE: Tractors S/N 71A21617 and up. See pages 246 and 247A. Also on tractors prior to #21617 that have been equipped with the special Power Assist Kit.

ITEM	PART NO.	QTY.	DESCRIPTION
-	73113428	1	PUMP ASSY., dozer (Includes items 1 thru 28)
	70604241	4	STUD
	70912441	4	LOCKWASHER, 1/2"
	70910325	4	NUT, 1/2"NC
1	--------	1	*RING, snap
2	--------	1	△*SEAL
3	--------	1	*FLANGE
	--------	1	*PLUG
	--------	1	*BALL
4	--------	2	BUSHING
5	--------	8	□*DOWEL
6	--------	1	△*O-RING
7	--------	2	□*PLATE, isolation
8	--------	4	△□*RING, back-up
9	--------	4	△□*O-RING
10	--------	4	□*RETAINER
11	--------	2	□*PLATE, isolation
12	--------	1	*GEAR, drive

(Continued)

ITEM	PART NO.	QTY.	DESCRIPTION
13	---------	1	*GEAR, idler
14	---------	4	□*PLATE, pressure
15	---------	1	*BODY
16	---------	2	BUSHING
17	---------	8	△□O-RING
18	70927691	2	□*RING, snap
19	70667594	2	□*COUPLING
20	---------	3	△□*O-RING
21	---------	1	□PLATE
22	---------	2	BUSHING
23	---------	1	□GEAR, idler
24	---------	1	□GEAR, drive
25	---------	1	□BODY
26	---------	2	BUSHING
27	73116699	8	STUD
	---------	8	□ WASHER
	---------	8	□ NUT
28	---------	1	□PLATE
29	---------	1	PUMP ASSY., power assist (See page 248C)
	73121034	2	STUD
	---------	2	□*NUT
30	73113430	1	PUMP KIT, front section (Includes items 1,2,3,5 thru 15, 18, 19 and 20)
31	73113431	1	PUMP KIT, rear section (Includes items 5, 7 thru 11, 14, 17 thru 25 and 28)
32	73113432	1	SEAL KIT (Includes items 2, 6, 8, 9, 17 and 20)

*Components of item 30
□Components of item 31
△Components of item 32

(Revised June 1981)

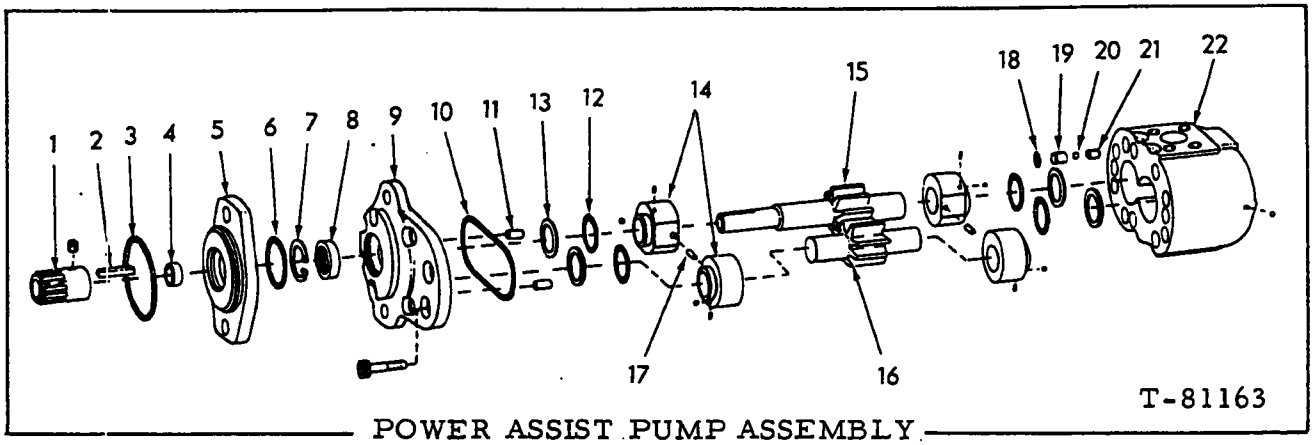

POWER ASSIST PUMP ASSEMBLY

USAGE: Tractors S/N 71A21617 and up. See page 247A. Also used on tractors prior to #21617 that have been equipped with the special Power Assist Kit.

ITEM	PART NO.	QTY.	DESCRIPTION
-	73113429	1	PUMP ASSY., hydraulic power assist (Includes items 1 thru 22)
1	73131056	1	COUPLING, adapter
	70917569	1	SETSCREW
2	70916024	1	KEY
3	70935479	1	□O-RING
4	73131055	1	SPACER
5	73131057	1	PLATE, adapter
6	70935478	1	□O-RING
7	--------	1	RING, snap
8	--------	1	□SEAL
9	--------	1	FLANGE
	--------	8	CAPSCREW, hex-skt-hd.
10	--------	1	□O-RING
11	--------	2	DOWEL
12	--------	4	□O-RING
13	--------	4	□RING, back-up
14	--------	4	BUSHING ASSY.
	--------	4	BALL
	--------	4	PIN, roll
15	--------	1	GEAR ASSY., drive } Each includes SHAFT
16	--------	1	GEAR ASSY., idler } Each includes SHAFT
17	--------	2	DOWEL
18	--------	2	□O-RING
19	--------	2	SEAT
20	--------	2	BALL
21	--------	2	RETAINER
22	--------	1	BODY
	--------	1	BALL
23	73113427	1	SEAL KIT (Includes items 3, 6, 8, 10, 12, 13 and 18)

□Components of item 23

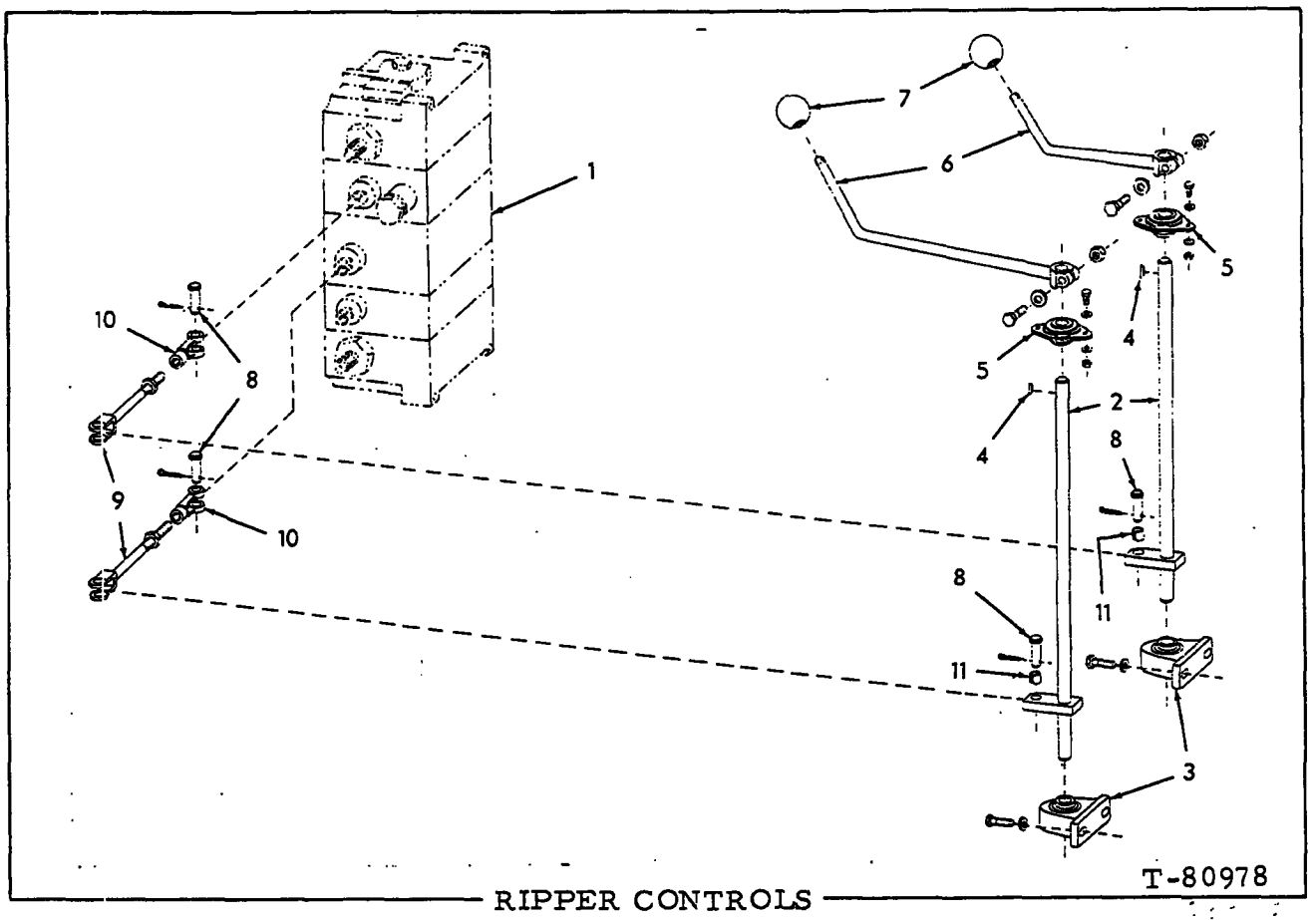

RIPPER CONTROLS

USAGE: Special equipment

* Lift Control
** Pitch Control (Units with "Kelley" Ripper)

ITEM	PART NO.	QTY. *	QTY. **	DESCRIPTION
1	--------	1	1	VALVE ASSY. (See page 259)
2	70690613	1	-	LEVER } Each includes item 11
	73108003	-	1	LEVER } Each includes item 11
3	70690590	1	1	BEARING
	70921076	2	2	CAPSCREW, 3/8"NC x 1-1/4"
	70927453	2	2	WASHER
4	70905122	1	1	KEY
5	70666630	1	1	BEARING
6	70690174	1	-	LEVER
	70690580	-	1	LEVER
	70920995	1	1	CAPSCREW, 3/8"NC x 2"
	70927453	1	1	WASHER
	70910324	1	1	NUT, 3/8"NC
7	70090020	1	1	KNOB
8	70049993	2	2	PIN
	70900806	2	2	PIN, cotter, 1/8" x 1"
9	70690612	1	-	ROD
	73108954	-	1	ROD
	70913830	1	1	NUT, 1/2"NC
10	70068389	1	1	YOKE
11	70049988	1	1	BUSHING

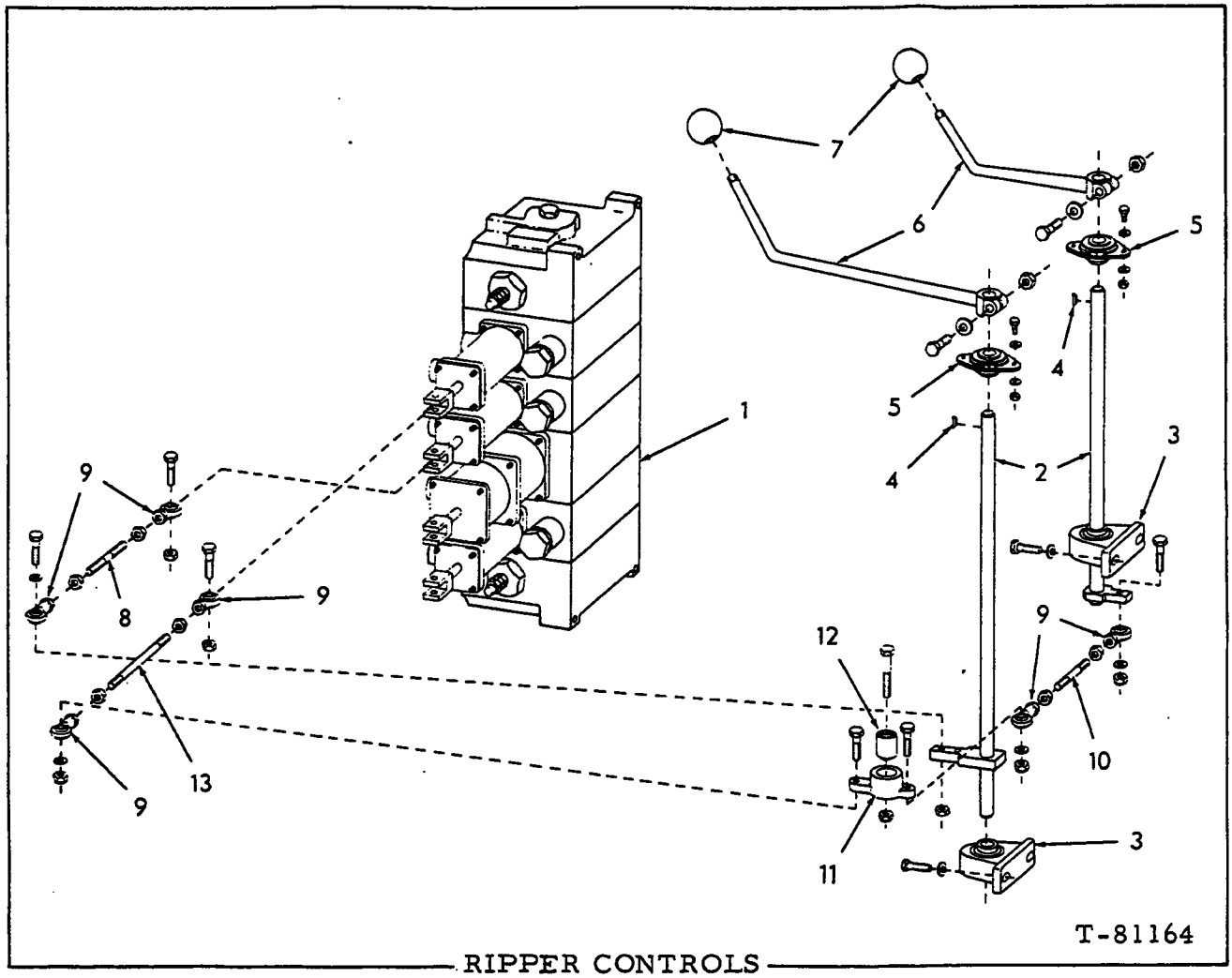

RIPPER CONTROLS

USAGE: Special equipment. Tractors equipped with Power Assist Hydraulics.

*Lift Control
**Pitch Control

ITEM	PART NO.	QTY. *	QTY. **	DESCRIPTION
1	--------	1	1	VALVE ASSY. (See page 259A)
2	73113096	1	-	LEVER
	73113098	-	1	LEVER
3	70690590	1	1	BEARING
	70921076	2	2	CAPSCREW, 3/8"NC x 1-1/4"
	70927453	2	2	WASHER
4	70905122	1	1	KEY
5	70666630	1	1	BEARING
6	70690174	1	-	LEVER
	70690580	-	1	LEVER
	70920995	1	1	CAPSCREW, 3/8"NC x 2"
	70927453	1	1	WASHER
	70910324	1	1	NUT, 3/8"NC
7	70090020	1	1	KNOB

(Continued)

RIPPER CONTROLS (Continued)

ITEM	PART NO.	QTY. *	QTY. **	DESCRIPTION
8	70633955	1	-	ROD
	70911048	2	-	NUT, 3/8"NF
9	70617932	2	4	END, rod
	70927225	2	4	CAPSCREW, 3/8"NC x 1-5/8"
	70922465	1	3	WASHER
	70915891	2	4	NUT, 3/8"NC
10	70642130	-	1	ROD
	70911048	-	2	NUT, 3/8"NF
11	73113100	-	1	LEVER
12	70606392	-	1	BEARING
	70927174	-	1	CAPSCREW, 3/8"NC x 2-1/2"
	70915891	-	1	NUT, 3/8"NC
	70641968	-	1	ROD
	70911048	-	2	NUT, 3/8"NF

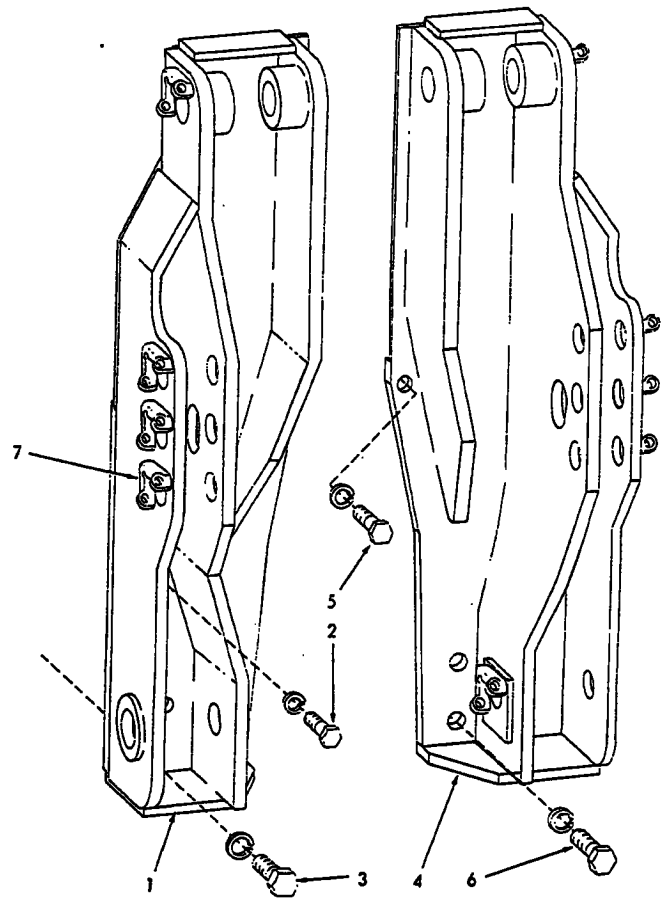

T-71215

RIPPER MOUNTING FRAME

USAGE: Special Equipment

ITEM	PART NO.	QTY.	DESCRIPTION
1	70647621	1	FRAME, cylinder and ripper mounting, left (Includes item 7)
2	70926856	6	CAPSCREW, 1-1/4"NF x 4"
	70928453	6	WASHER
3	70926857	2	CAPSCREW, 1-1/2"NF x 4"
	70931652	2	WASHER
4	70647622	1	FRAME, cylinder and ripper mounting, right (Includes item 7)
5	70926856	6	CAPSCREW, 1-1/4"NF x 4"
	70928453	6	WASHER
6	70926857	2	CAPSCREW, 1-1/2"NF x 4"
	70931652	2	WASHER
7	70647808	10	STOP

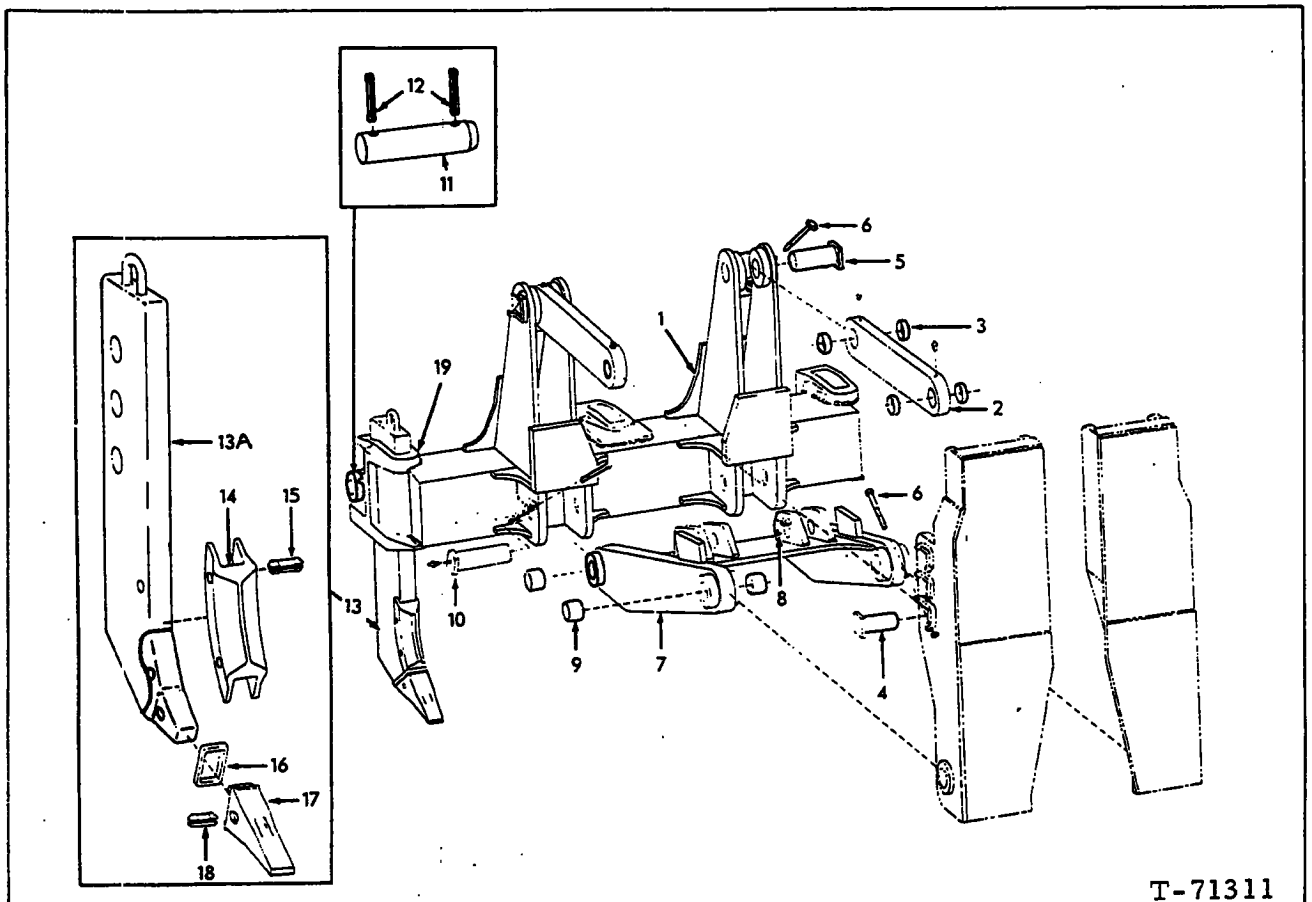

RIPPER TOOL BAR AND LINKAGE

USAGE: Special equipment

ITEM	PART NO.	QTY.	DESCRIPTION
1	70647640	1	BAR ASSY. (Includes items 8 and 19)
2	70647666	2	STRUT ASSY., upper (Includes item 3)
	70914465	4	FITTING, lubricating, straight, 1/8"NPT
3	70647665	8	BUSHING
4	70648173	2	PIN
5	70648174	2	PIN
6	70927181	8	CAPSCREW, 5/8"NC x 7"
	70914501	8	NUT, elastic stop, 5/8"NC
7	70647655	1	BEAM ASSY., lower (Includes items 8 and 9)
8	70647808	6	STOP
9	70647656	8	BUSHING
10	70648175	4	PIN
	70912497	4	FITTING, lubricating, straight, 1/4"NPT
11	70667157	3	PIN
12	70667156	6	PIN
13	70657731	3	SHANK ASSY. (Includes items 13A thru 18)
13A	73127461	3	SHANK
14	70657733	3	PLATE
15	70657736	6	PIN, flex, 1" x 4-7/8"
16	70657735	3	COLLAR

(Continued)

RIPPER TOOL BAR AND LINKAGE (Continued)

ITEM	PART NO.	QTY.	DESCRIPTION
17	70657734	3	TOOTH, standard, 13-7/16" long (For general purpose, medium impact and wear resistance applications)
	73115402	3	TOOTH, optional, 12-5/8" long(For heavy duty, medium impact and wear resistance applications)
	70685542	3	TOOTH, optional, 12-5/8" long(For high impact applications)
	73109917	3	TOOTH, optional, 13-7/16" long(For extreme abrasive applications)
18	70657737	3	PIN (Flex, 7/8" x 4-1/4")
19	70647638	3	BRACKET (Requires welding to install)

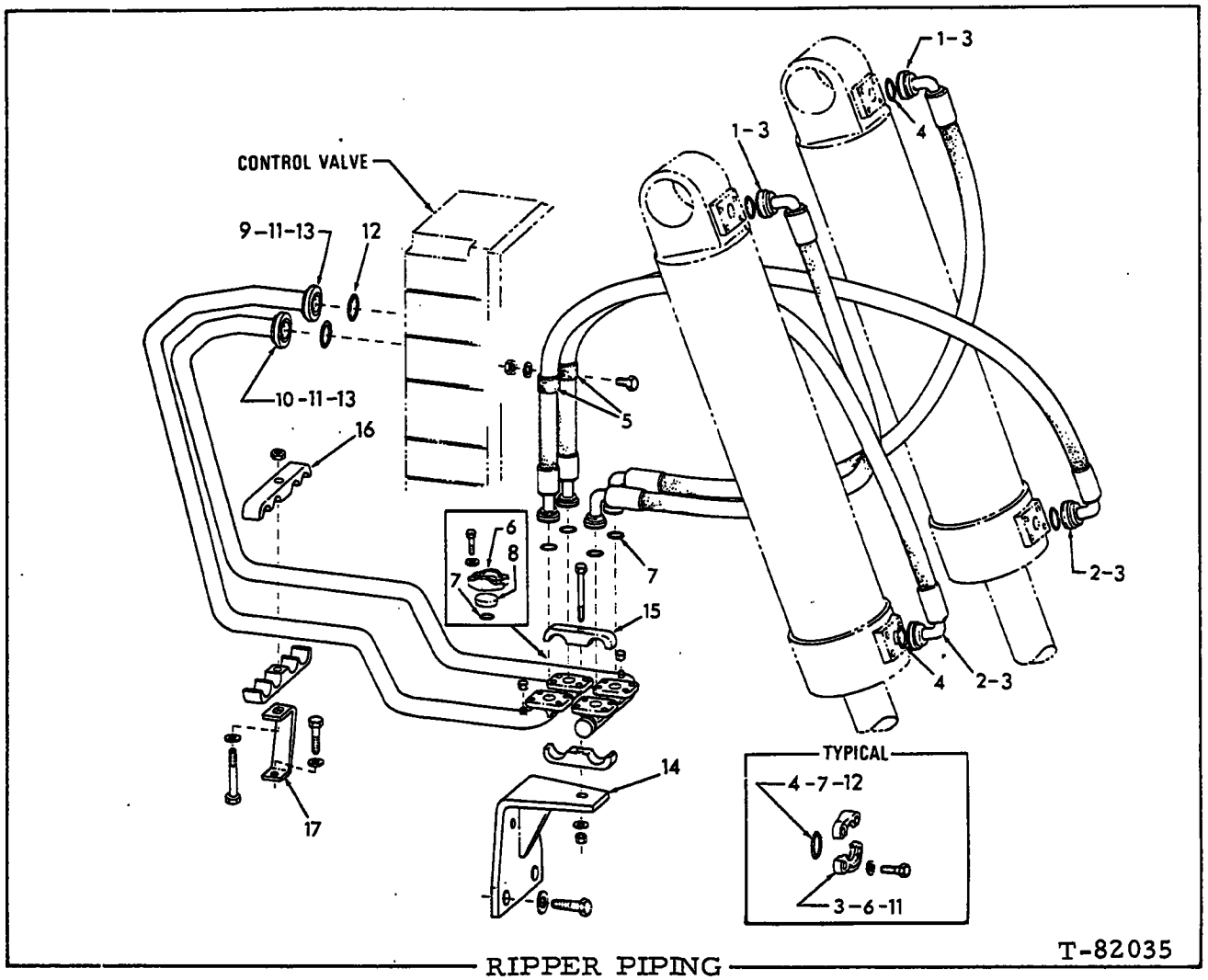

RIPPER PIPING

USAGE: Special Equipment. 21R ripper only. Effective approximately June 1978.

ITEM	PART NO.	QTY.	DESCRIPTION
1	73111427	2	HOSE ASSY. (See HOSE PARTS)
2	70665638	2	HOSE ASSY. (See HOSE PARTS)
3	70921116	8	FLANGE (half only)
	70921076	16	CAPSCREW, 3/8"NC x 1-1/4"
	70910287	16	LOCKWASHER, 3/8"
4	70931753	4	O-RING
5	70095869	2	CLIP
	70927219	1	CAPSCREW, 1/2"NC x 3/4"
	70912441	1	LOCKWASHER, 1/2"
	70911028	1	NUT, 1/2"NC
6	70921115	8	FLANGE (half only)
	70921076	16	CAPSCREW, 3/8"NC x 1-1/4"
	70930370	16	WASHER
7	70931857	4	O-RING
8	70666575	4	PLUG(Used only when cylinder lines are disconnected)
9	73108952	1	TUBE
	70921467	1	CAP, flare fitting, 1/4" tube

(Continued)

ITEM	PART NO.	QTY.	DESCRIPTION
10	73108953	1	TUBE
	70921467	1	CAP, flare fitting, 1/4" tube
11	70921117	4	FLANGE
	70921569	8	CAPSCREW, 7/16"NC x 1-1/4"
	70929154	8	WASHER
12	70925919	2	O-RING
13	70643228	2	PLUG (Used only when ripper piping is disconnected)
14	73108987	1	BRACKET
	70924676	2	CAPSCREW, 5/8"NC x2"
	70677010	2	WASHER
15	70698397	2	CLAMP
	70924843	1	CAPSCREW, 3/8"NC x 3-1/2"
	70677006	1	WASHER
	70900367	1	NUT, 3/8"NC
16	73108850	2	CLAMP
	70926156	1	CAPSCREW, 1/2"NC x 3-1/4"
	70677008	1	WASHER
	70900369	1	NUT, 1/2"NC
17	73108958	1	BRACKET
	70921556	1	CAPSCREW, 1/2"NC x 2"
	70677008	1	WASHER

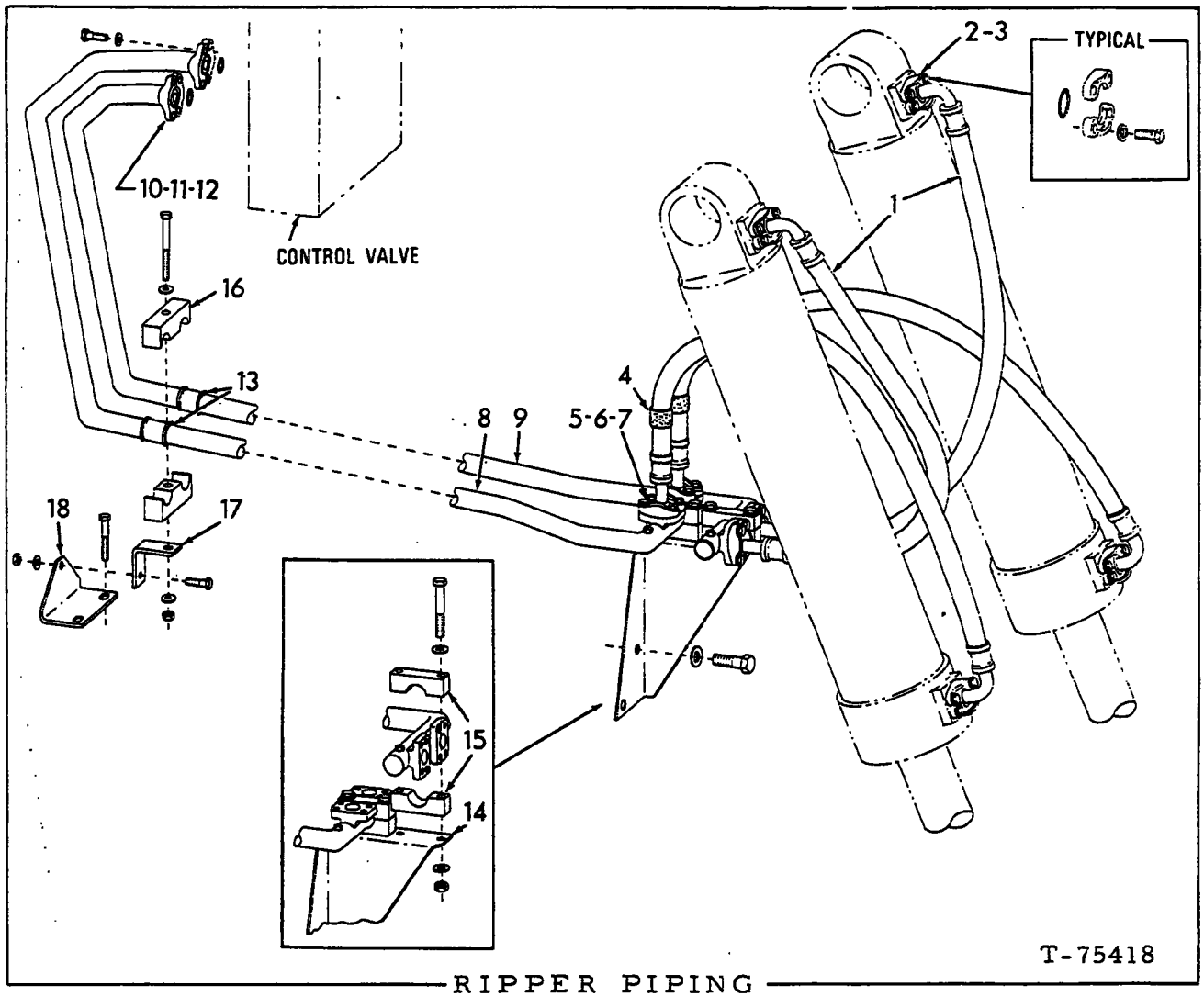

RIPPER PIPING

USAGE: Special equipment. 21R ripper only. Prior to approximately June 1978. See page 251B for latest type.

ITEM	PART NO.	QTY.	DESCRIPTION
1	70665638	4	HOSE (See HOSE PARTS)
2	70921116	8	FLANGE (half only)
	70921076	16	CAPSCREW, 3/8"NC x 1-1/4"
	70910287	16	LOCKWASHER, 3/8"
3	70931753	4	O-RING
4	70095869	2	CLIP
	70927219	1	CAPSCREW, 1/2"NC x 3/4"
	70912441	1	LOCKWASHER, 1/2"
	70911028	1	NUT, 1/2"NC
5	70921115	8	FLANGE (half only)
	70921076	16	CAPSCREW, 3/8"NC x 1-1/4"
	70930370	16	WASHER

(Continued)

RIPPER PIPING (Continued)

ITEM	PART NO.	QTY.	DESCRIPTION
6	70931857	4	O-RING
7	70666575	4	PLUG (Used only when cylinder lines are disconnected)
8	70690803	1	TUBE
	70921467	1	CAP, flare fitting, 1/4" tube
9	70690791	1	TUBE
	70921467	1	CAP, flare fitting, 1/4" tube
10	70921117	4	FLANGE
	70921569	8	CAPSCREW, 7/16"NC x 1-1/4"
	70929154	8	WASHER
11	70925919	2	O-RING
12	70643228	2	PLUG (Used only when ripper piping is disconnected)
13	70689863	4	BUSHING
14	70690774	1	ANGLE
	70926774	2	CAPSCREW, Nylok, 5/8"NC x 1-3/4"
	70677010	2	WASHER
15	70196645	4	CLAMP
	70922849	4	CAPSCREW, 3/8"NC x 4"
	70677006	8	WASHER
	70910324	4	NUT, 3/8"NC
16	70689813	2	CLAMP
	70922849	1	CAPSCREW, 3/8"NC x 4"
	70677006	2	WASHER
	70910324	1	NUT, 3/8"NC
17	70098369	1	ANGLE
	70920582	1	CAPSCREW, 1/2"NC x 1-1/4"
	70677008	1	WASHER
	70910325	1	NUT, 1/2"NC
18	70690773	1	BRACKET
	70922510	2	CAPSCREW, 1/2"NC x 2-3/4"

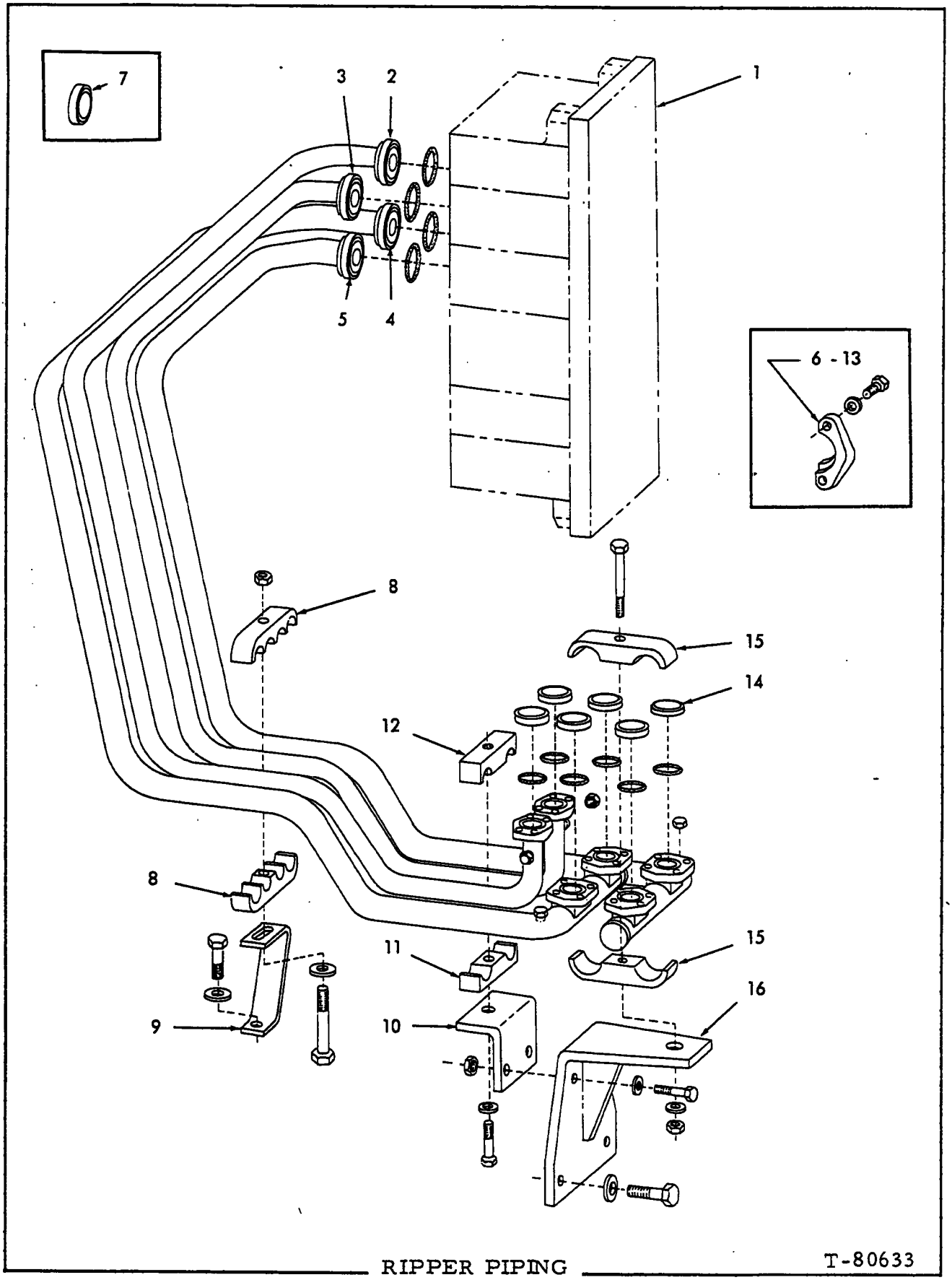

RIPPER PIPING

T-80633

RIPPER PIPING

USAGE: "Kelley" Ripper

ITEM	PART NO.	QTY.	DESCRIPTION
1	--------	1	VALVE, control (See page 259)
2	73108233	1	TUBE
	70921467	1	CAP, flare type, 1/4" tube
3	73108951	1	TUBE
	70921467	1	CAP, flare type, 1/4" tube
4	73108952	1	TUBE
	70921467	1	CAP, flare type, 1/4" tube
5	73108953	1	TUBE
	70921467	1	CAP, flare type, 1/4" tube
6	70921117	8	FLANGE
	70925919	4	O-RING
	70923192	16	CAPSCREW, 7/16"NC x 1-1/2"
	70929154	16	WASHER
7	70643228	4	PLUG (Used only when piping is disconnected)
8	73108850	2	CLAMP
	70926156	1	CAPSCREW, 1/2"NC x 3-1/4"
	70677008	1	WASHER
	70900369	1	NUT, 1/2"NC
9	73108958	1	BRACKET
	70921556	1	CAPSCREW, 1/2"NC x 2"
	70677008	1	WASHER
10	73108956	1	BRACKET
	70922287	2	CAPSCREW, 3/8"NC x 1-3/4"
	70677006	2	WASHER
11	70680381	1	BLOCK
12	70680382	1	BLOCK
	70921556	1	CAPSCREW, 1/2"NC x 2"
13	70921115	12	FLANGE
	70931857	6	O-RING
	70921076	24	CAPSCREW, 3/8"NC x 1-1/4"
	70930370	24	WASHER
14	70666575	6	PLUG (Used only when ripper is disconnected)
15	70698397	2	CLAMP
	70924843	1	CAPSCREW, 3/8"NC x 3-1/2"
	70677006	1	WASHER
	70900367	1	NUT, 3/8"NC
16	73108987	1	BRACKET
	70924676	2	CAPSCREW, 5/8"NC x 2"
	70677010	2	WASHER

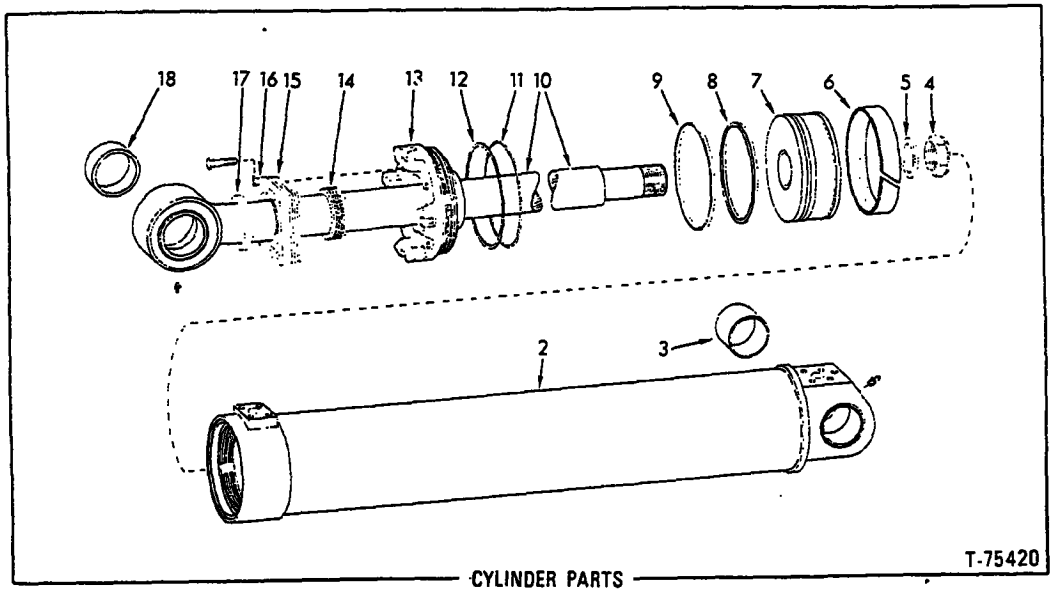

CYLINDER PARTS

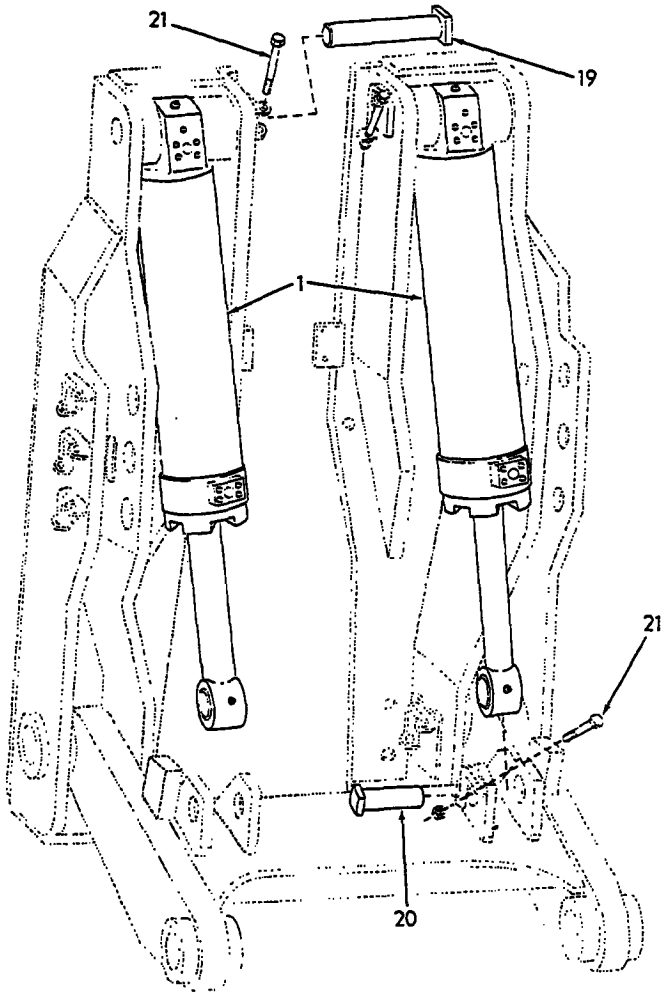

RIPPER CYLINDERS

RIPPER CYLINDERS

USAGE: Special equipment

ITEM	PART NO.	QTY.	DESCRIPTION
1	73058692	2	CYLINDER ASSY. (Consists of items 2 thru 18)
2	73052959	2	CYLINDER ASSY. (Includes item 3)
	70914465	4	FITTING, lubricating, 1/8"NPT
3	73008156	4	BUSHING
4	73073214	2	NUT
5	73054108	2	SPACER
6	73052992	2	□RING
7	73059240	2	PISTON
8	70926820	2	□RING (inner)
9	73052994	2	□RING (outer)
10	73064314	2	ROD ASSY. (Includes item 18)
	70914465	2	FITTING, lubricating, 1/8"NPT
11	70931185	2	□O-RING
12	73063371	2	□RING
13	73062199	2	HEAD
14	73054073	2	□PACKING SET
15	73054488	4	SHIM (Use as required)
16	73059354	1	PLATE
	70915987	8	CAPSCREW, 1/2"NC x 1-1/2"
	70904208	8	LOCKWASHER, 1/2"
17	73052942	2	□WIPER
18	73050797	4	BUSHING
19	70681545	2	PIN
20	70648173	2	PIN
21	70927181	4	CAPSCREW 5/8"NC x 7"
	70914501	4	NUT, elastic stop, 5/8"NC
22	73056486	2	REPAIR KIT, cylinder (Includes parts for one (1) cylinder)(Not illustrated)

□Components of item 22

(Revised April 1980)

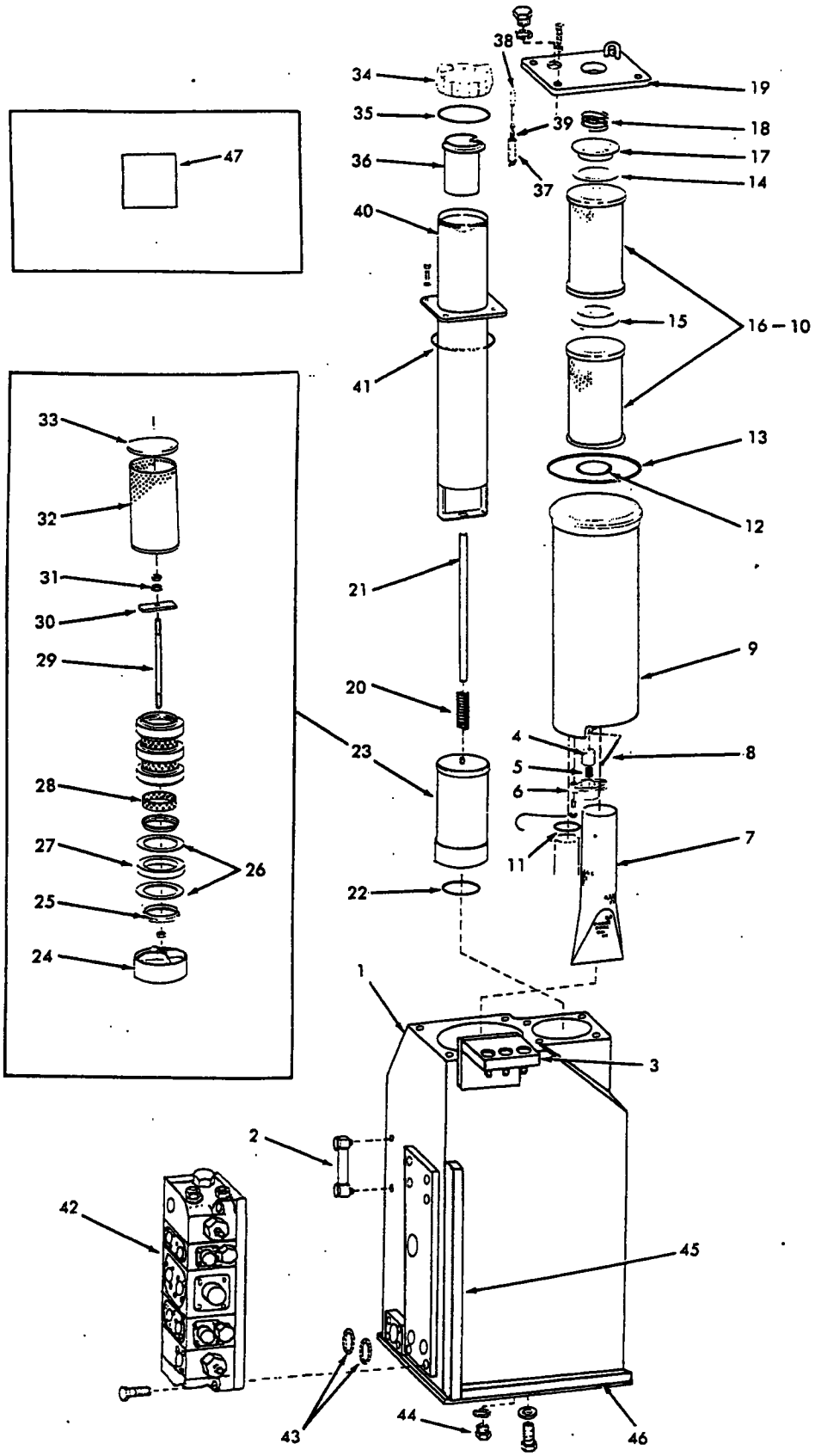

T-76016

HYDRAULIC TANK

HYDRAULIC TANK

ITEM	PART NO.	QTY.	DESCRIPTION
1	70687784	1	TANK (Tractors prior to unit #21617)
	73111279	1	TANK (Tractor unit #21617 and up)
	70922744	3	CAPSCREW, 3/4"NC x 2-1/2"
	70677012	3	WASHER
2	70678984	1	GAUGE (Includes capscrews and gaskets)
	70915746	2	NUT, 1/2"NF
3	70698346	1	PLATE
	70920585	6	CAPSCREW, 1/2"NC x 1-3/4"
	70677008	6	WASHER
4	70647151	1	VALVE
5	70647108	1	SPRING
6	70647122	1	CAP
	70927597	2	CAPSCREW, drilled-hd., 3/8"NC x 1-1/2"
	70023633	1	WIRE, locking, 1/16" x 12"
7	70663940	1	TUBE
8	70919271	1	PIN, cotter
9	70662468	1	HOUSING
	70928798	1	CAPSCREW, Nylok, 3/8"NC x 3/4"
	70910287	1	LOCKWASHER, 3/8"
10	70664000	1	ELEMENT KIT (Consists of 2 elements and items 11 thru 15)
11	70923579	1	O-RING
12	70924146	1	O-RING
13	70923951	1	O-RING
14	70663977	1	GASKET
15	70666423	1	CONNECTOR
16	--------	2	ELEMENT (Order item 10)
17	70666422	1	CAP
18	70641027	1	SPRING
19	70687868	1	COVER (Tractors prior to unit #21419)
	73109414	1	COVER
	70921216	1	PLUG, hex-hd., 1-5/16" straight thd. (Includes O-RING) — Tractor unit #21419 and up
	70921214	1	O-RING — Tractor unit #21419 and up
	70921076	4	CAPSCREW, 3/8"NC x 1-1/4"
	70677006	4	WASHER
20	70629407	1	SPRING
21	73107643	1	ROD
22	70923581	1	O-RING (Tractors prior to unit # 21985)
23	70670698	1	SEPARATOR ASSY. (Consists of items 24 thru 33)
24	70670741	1	HEAD
25	70666388	2	SPACER
26	70666387	8	PLATE
27	70666385	4	MAGNET
28	70666383	3	SPACER
29	70670699	1	TIE-ROD
30	70666382	1	BRIDGE
31	70666565	4	NUT
32	70666384	1	SLEEVE
33	70670735	1	PLATE
34	70665726	1	CAP
35	70923950	1	O-RING
36	70671325	1	STRAINER
37	70666634	1	GUIDE
38	70665767	1	PLUNGER

(Continued)

(Revised May 1982)

HYDRAULIC TANK (Continued)

ITEM	PART NO.	QTY.	DESCRIPTION
39	70666654	1	SPRING
40	70687875	1	TUBE
	70921076	4	CAPSCREW, 3/8"NC x 1-1/4"
	70677006	4	WASHER
41	70923594	1	O-RING
42	--------	1	VALVE ASSY., control (See page 259)
	70924864	4	CAPSCREW, 1/2"NC x 2-1/4"
43	70933687	2	O-RING
44	70921204	1	PLUG, hex-hd., 1-1/16" straight thd. (Includes O-RING)
	70921206	1	O-RING
45	--------	1	SEAL (21.62" long) } Order item 47
46	--------	1	SEAL (16.25" long) }
47	73134825	1	SEAL (25' roll) (Use as required)

NOTE: See PAINTING AND MARKING for transfer

(Revised May 1982)

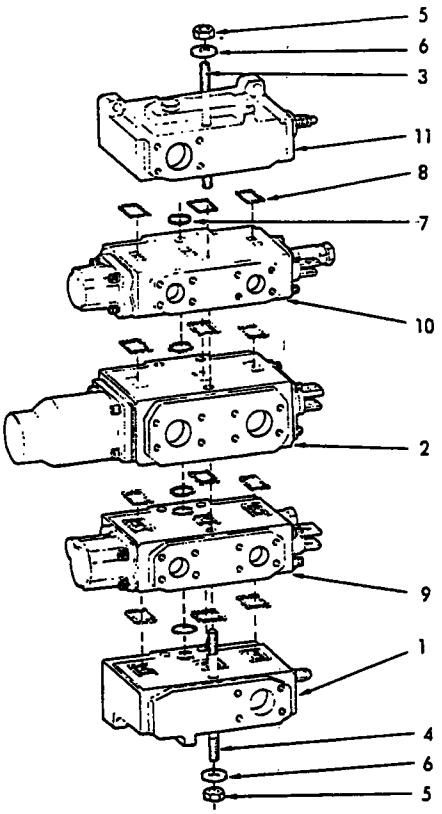

70689435

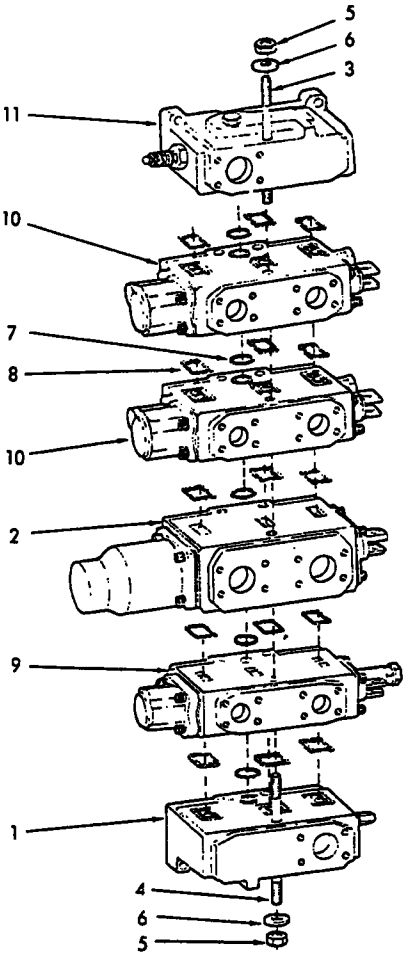

70692900

T-79864

CONTROL VALVE

USAGE: Tractors prior to unit #71A21617. See page 258.

* Units not equipped with "Kelley" Ripper

** Units equipped with "Kelley" Ripper

ITEM	PART NO.	QTY. *	QTY. **	DESCRIPTION
-	70689435	1	-	VALVE ASSY. (3-spool) } Each includes
-	70692900	-	1	VALVE ASSY. (4-spool) } items 1 thru 11
1	70680513	1	1	VALVE ASSY. (See page 264)
2	73107368	1	1	VALVE ASSY. (First type) } See page 260
	73109998	1	1	VALVE ASSY. (Second type) } See page 260
3	70664747	2	-	STUD (7-7/8" long
	73110600	1	-	STUD (8-3/4" long)
	70698423	-	3	STUD
4	70664748	3	3	STUD (7-1/2" long)
5	70668231	6	6	NUT, 5/8"NC
6	70659494	6	6	WASHER
7	70659496	4	5	RING
8	70659497	12	15	RING
9	70660869	1	1	VALVE ASSY. } See page 262 and 259B
10	70698577	1	2	VALVE ASSY. } See page 262 and 259B
11	70698574	1	1	VALVE ASSY. (See page 264)

(Revised June 1980)

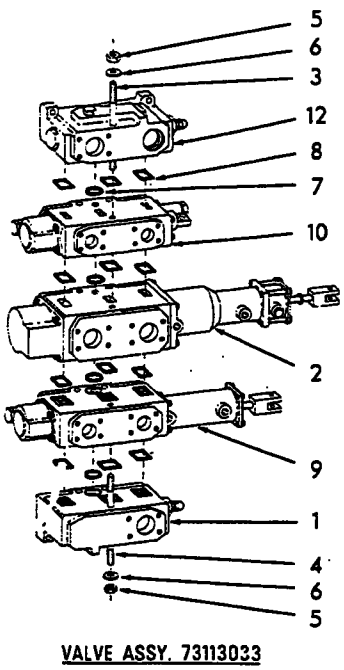

VALVE ASSY. 73113033

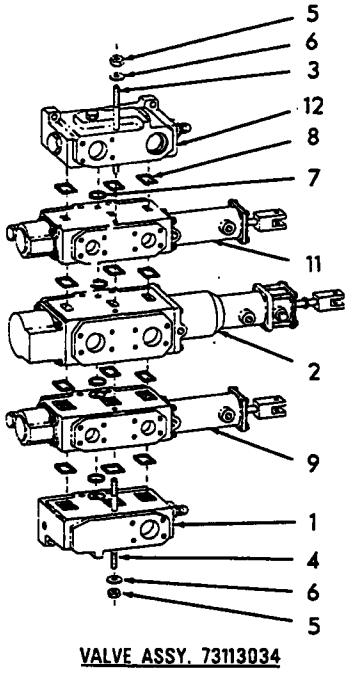

VALVE ASSY. 73113034

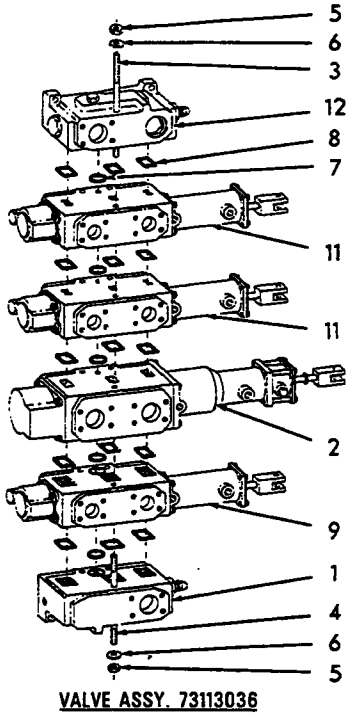

VALVE ASSY. 73113036

T-81193

CONTROL VALVE

USAGE: Tractors S/N 71A21617 and up. See page 258.

*Units not equipped with Power Assisted Ripper
**Units equipped with Power Assisted Ripper
***Units equipped with Power Assisted "Kelley" Ripper

ITEM	PART NO.	QUANTITY *	**	***	DESCRIPTION	
-	73113033	1	-	-	VALVE ASSY. (3 spool)	Each includes items 1 thru 12
-	73113034	-	1	-	VALVE ASSY. (3 spool)	
-	73113036	-	-	1	VALVE ASSY. (4 spool)	
1	73115957	1	1	1	VALVE ASSY., relief (See page 265A)	
2	73113037	1	1	1	VALVE ASSY., dozer (See page 261A)	
3	70664747	2	2	-	STUD (7-7/8" long)	
	73110600	1	1	-	STUD (8-3/4" long)	
	70698423	-	-	3	STUD (11" long)	
4	70664748	3	3	3	STUD (7-1/2" long)	
5	70668231	6	6	6	NUT, 5/8"NC	
6	70659494	6	6	6	WASHER	
7	70925937	4	4	5	RING	
8	70925938	12	12	15	RING	
9	73113038	1	1	1	VALVE ASSY., tilt (See page 263A)	
10	73113041	1	-	-	VALVE ASSY., (See page 262)	
11	73113039	-	1	2	VALVE ASSY., ripper control (See page 263A)	
12	73113040	1	1	1	VALVE ASSY., relief (See page 265A)	

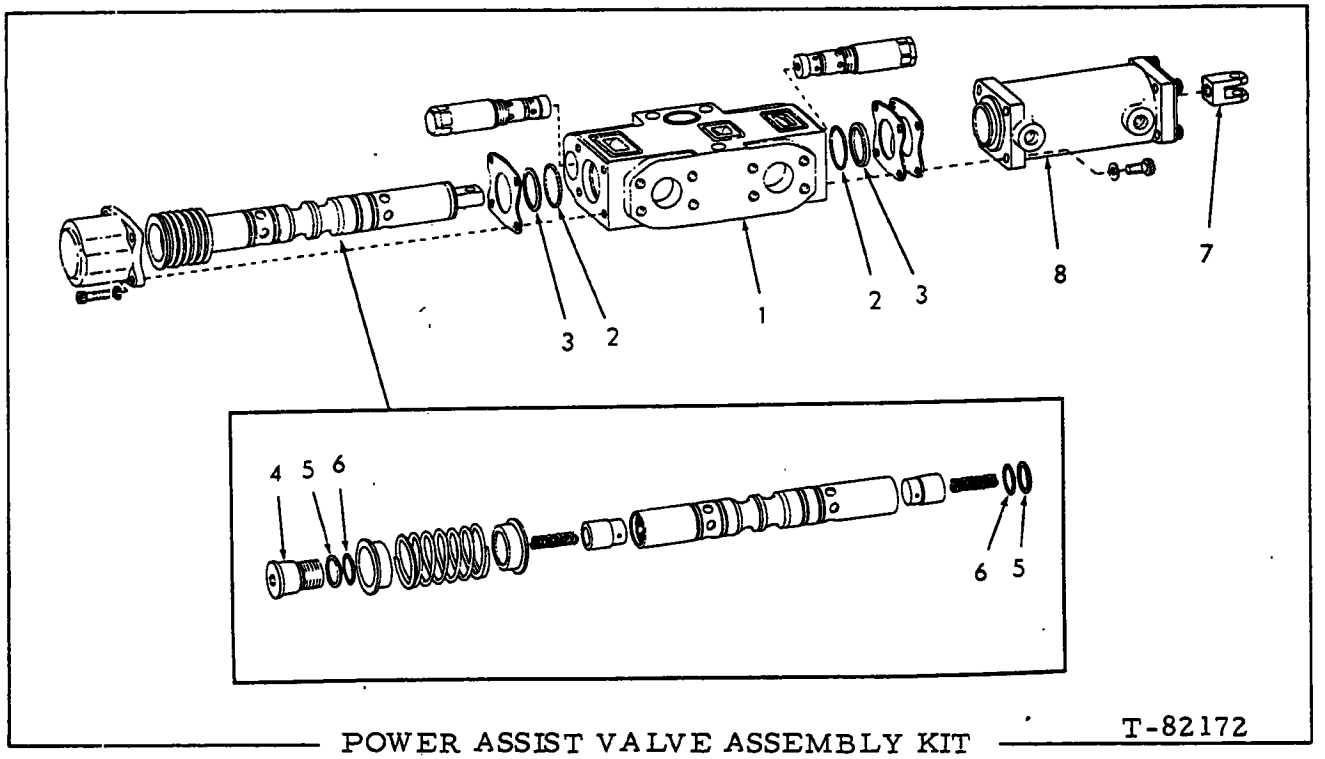

POWER ASSIST VALVE ASSEMBLY KIT T-82172

USAGE: Tractors prior to S/N 71A21617 that have been equipped with special Power Assist Kit.

NOTE: Items listed below are parts needed to modify VALVE ASSY. 70660869 for use in Power Assist Hydraulics

ITEM	PART NO.	QTY.	DESCRIPTION
1	--------	1	HOUSING (See page 262)
2	70925934	2	O-RING
3	73115266	2	RING, back-up
4	73115264	1	BOLT, stripper
5	73115265	2	RING
6	70933491	2	O-RING
7	73112934	1	YOKE
8	73115272	1	POWER ASSIST (See page 259C)
	70926269	4	CAPSCREW, skt-hd., 5/16"NC x 1-1/4"

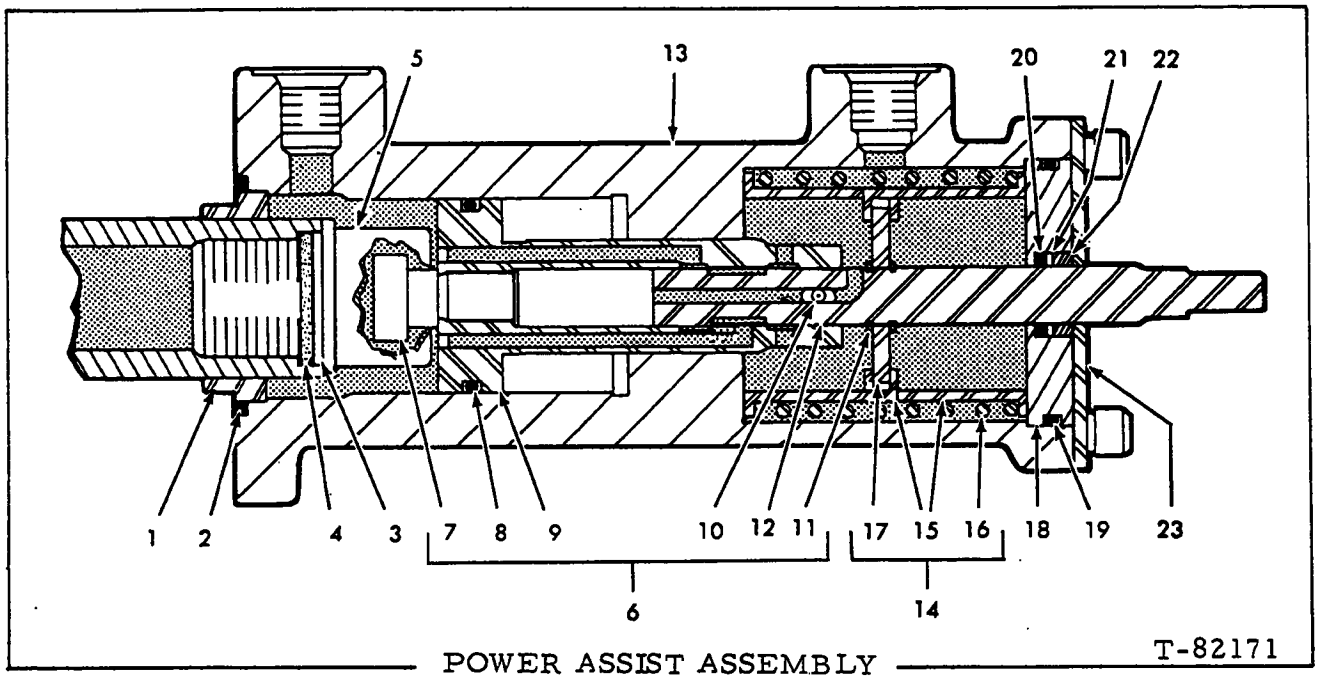

POWER ASSIST ASSEMBLY

USAGE: Tractors prior to serial No. 71A21617 that have been equipped with the special Power Assist Kit. (See page 259B)

ITEM	PART NO.	QTY.	DESCRIPTION
-	73115272	1	VALVE ASSY., Power Assist (includes items 1 thru 23)
1	73118764	1	SLEEVE
2	--------	1	O-RING
3	--------	1	RING } See page 259B
4	--------	1	O-RING }
5	--------	1	LUG, spool
6	73118768	1	PISTON ASSY. (Includes item 7 thru 12)
7	--------	1	LUG, piston
8	--------	1	O-RING
9	--------	1	PISTON
10	73118767	1	PIN, retaining
11	73117208	2	RING, snap
12	--------	1	SPOOL, master
13	--------	1	HOUSING
14	73118772	1	SPRING ASSY. (Includes items 15 thru 17)
15	--------	2	RETAINER
16	--------	1	SPRING
17	--------	1	WASHER
18	73118765	1	CAP
19	--------	1	O-RING
20	70923565	1	O-RING
21	--------	1	RING, back-up (steel)
22	73118763	1	SEAL, wiper
23	73118762	1	PLATE, retainer
	70925640	4	CAPSCREW, 5/16"NC x 3/4"
	70910286	4	LOCKWASHER, 5/16"
24	73118771	1	SEAL AND REPAIR KIT (Includes items 2, 8, 11 and 19 thru 22)

Components of item 24

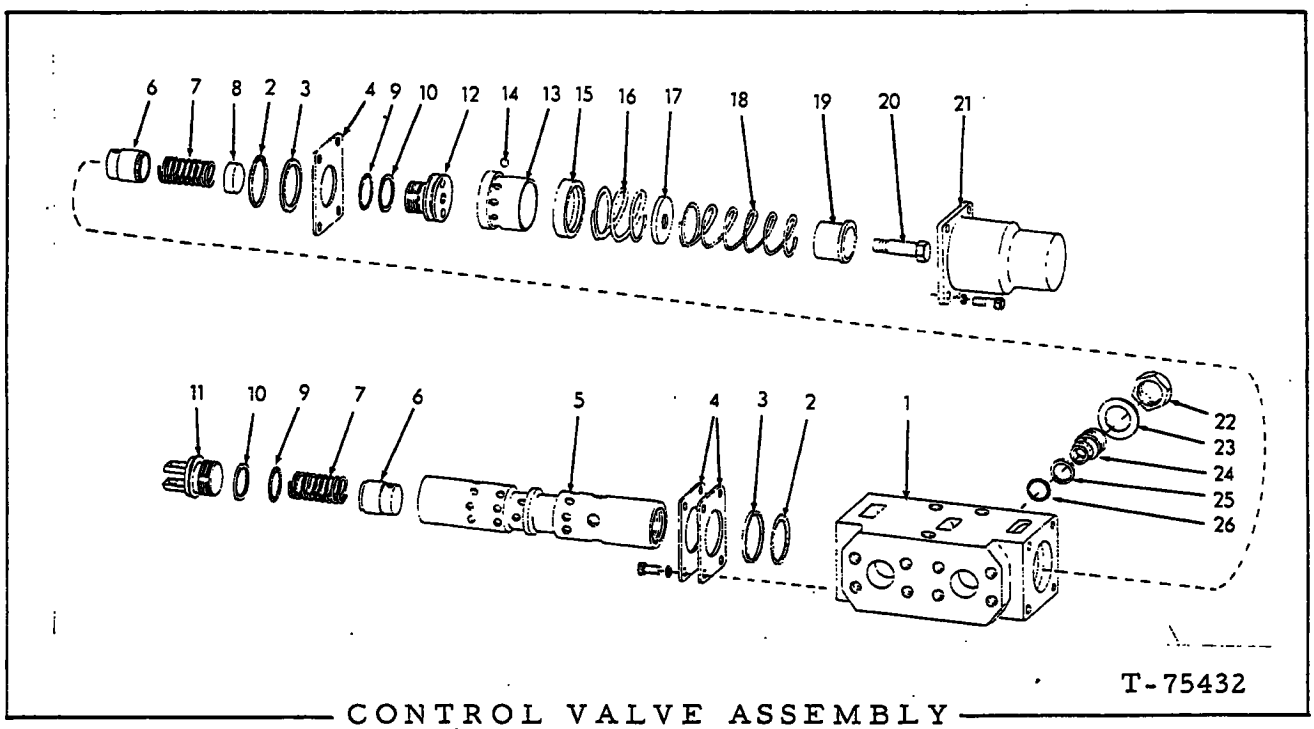

CONTROL VALVE ASSEMBLY

USAGE: Tractors prior to S/N 71A21617. See page 259.

ITEM	PART NO.	QTY.	DESCRIPTION
-	73107368	1	VALVE ASSY. (First type)(Includes items 1 thru 26)
-	73109998	1	VALVE ASSY. (Second type)(Includes items 1 thru 21)
1	--------	1	HOUSING (Not serviced separately)
2	70923580	2	O-RING
3	70664577	2	RING
4	70664575	3	PLATE
	70925640	4	CAPSCREW, socket-hd., 5/16"NC x 3/4"
	70910286	4	LOCKWASHER, 5/16"
5	--------	1	PLUNGER (Not serviced separately)
6	70680246	2	VALVE
7	70680244	2	SPRING
8	70680511	1	SPACER
9	70927101	2	O-RING
10	70664587	2	RING
11	70680245	1	CLEVIS
12	70680241	1	DETENT
13	70664571	1	RETAINER
14	70924855	6	BALL, steel, 3/8" diam.
15	70664572	1	SLEEVE
16	70664582	1	SPRING
17	70664573	1	WASHER
18	70664581	1	SPRING
19	70664569	1	GUIDE
20	70664574	1	BOLT

(Continued)

CONTROL VALVE ASSEMBLY (Continued)

ITEM	PART NO.	QTY.	DESCRIPTION
21	70664586	1	CAP
	70926269	4	CAPSCREW, socket-hd., 5/16"NC x 1-1/4"
	70910286	4	LOCKWASHER, 5/16"
22	70664588	1	CAP
23	70664584	1	GASKET } First type
24	73107825	1	PLUG
25	70668840	1	RING
26	70925638	1	O-RING

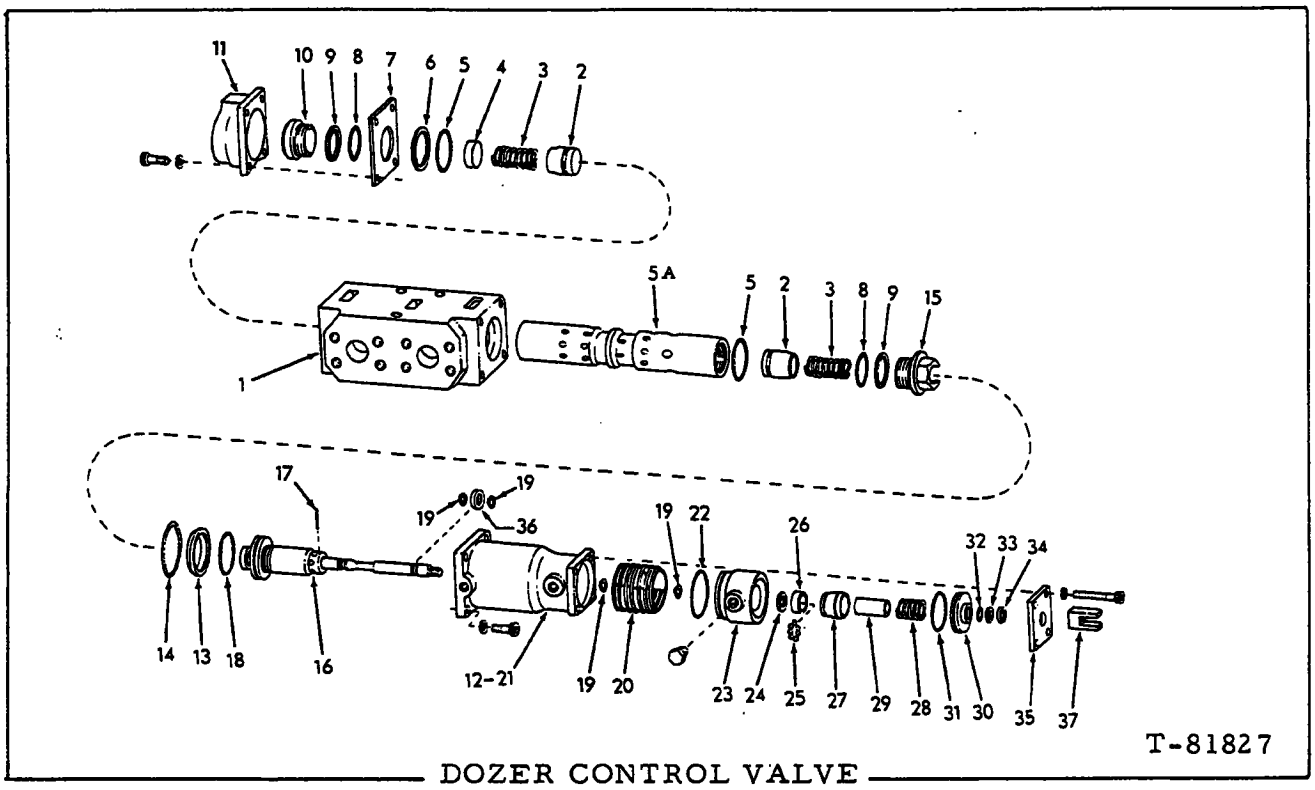

DOZER CONTROL VALVE

USAGE: Tractors S/N71A21617 and up. See page 259A.

ITEM	PART NO.	QTY.	DESCRIPTION
-	73113037	1	VALVE ASSY. (Includes items 1 thru 37)
1	--------	1	HOUSING (Not serviced separately)
2	70680246	2	VALVE
3	70680244	2	SPRING
4	70680511	1	SPACER
5	70923580	2	O-RING
5A	--------	1	PLUNGER (Not serviced separately)
6	70664577	1	RING
7	70664575	1	PLATE
8	70933912	2	O-RING
9	73122982	2	RING
10	73118781	1	BOLT
11	73118780	1	CAP
	70926269	4	CAPSCREW, socket-hd., 5/16"NC x 1-1/4"
	70910286	4	LOCKWASHER, 5/16"
12	73113043	1	VALVE ASSY., power assist (Includes items 13 thru 36)
	70926269	4	CAPSCREW, socket-hd., 5/16"NC x 1-1/4"
	70910286	4	LOCKWASHER, 5/16"
13	73118812	1	SLEEVE, pilot
14	--------	1	*O-RING
15	73118806	1	LUG
16	73118807	1	PISTON ASSY. (Includes detent bolt, piston lug and piston which are not serviced separately, also item 17)
17	73118814	1	PIN, retaining
18	--------	1	*O-RING

(Continued)

(Revised May 1982)

DOZER CONTROL VALVE (Continued)

ITEM	PART NO.	QTY.	DESCRIPTION
19	--------	4	*RING, snap
20	73118809	1	SPRING ASSY. (Serviced only as a unit)
21	--------	1	HOUSING (Not serviced separately)
22	--------	1	*O-RING
23	73134317	1	HOUSING, automatic kickout
	70922577	1	PLUG
24	--------	1	□PLATE, ball retainer
25	70921874	7	□BALL, detent
26	--------	1	□SLEEVE, ball retainer
27	--------	1	□PISTON, automatic kickout
28	--------	1	□SPRING
29	--------	1	□RING, ball retainer
30	73118810	1	CAP
31	--------	1	*O-RING
32	70923565	1	*O-RING
33	--------	1	*RING, back-up
34	73118763	1	*SEAL
35	73118811	1	PLATE, retainer
	70925610	4	CAPSCREW, 5/16"NC x 3"
	70910286	4	LOCKWASHER, 5/16"
36	73118813	1	SPACER, stroke limiting
37	73112934	1	YOKE
38	73118771	1	SEAL AND REPAIR KIT
39	73113689	1	DETENT KIT

*Components of item 38
□Components of item 39

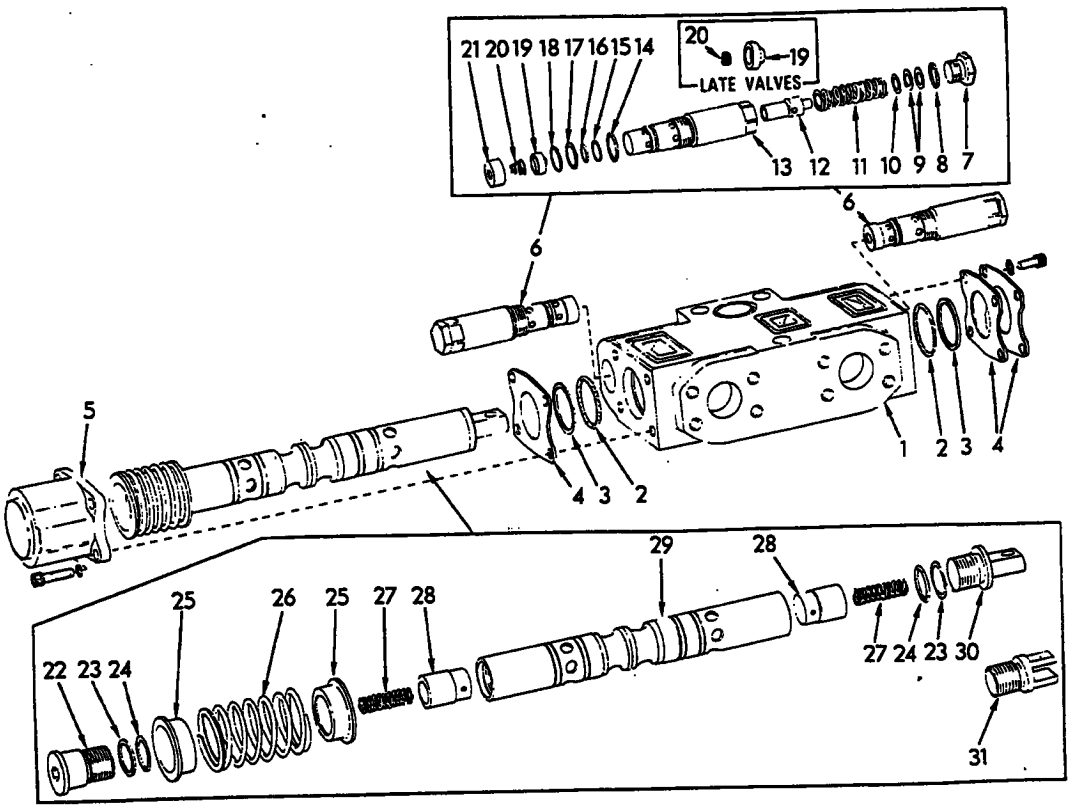

CONTROL VALVES

USAGE: See pages 259 and 259A.

*70660869 VALVE ASSY. } Tractors prior to S/N71A21617
**70698577 VALVE ASSY. }
***73113041 VALVE ASSY. (Tractors S/N 71A21617 and up)

ITEM	PART NO.	QUANTITY *	**	***	DESCRIPTION
1	--------	1	1	1	HOUSING (Not serviced separately)
2	70923813	2	-	-	O-RING
	70923576	-	2	2	O-RING
3	70664462	2	-	-	RING
	70658284	-	2	2	RING
4	70664464	3	-	-	PLATE
	70658286	-	3	3	PLATE
	70925192	4	4	4	CAPSCREW, socket-hd., 5/16"NC x 5/8"
	70904205	4	4	4	LOCKWASHER, 5/16"
5	70664456	1	-	-	CAP
	70658282	-	1	1	CAP
	70926269	4	4	4	CAPSCREW, socket-hd., 5/16"NC x 1-1/4"
	70904205	4	4	4	LOCKWASHER, 5/16"
6	70658466	2	2	-	VALVE ASSY., 2300 psi)(Valve Assy. 70698577 and 70660869)(Consists of items 7 thru 21)
	73118773	-	-	2	VALVE ASSY. (2600 psi)(Valve Assy. 73113041)(Consists of items 7 thru 21)

(Continued)

CONTROL VALVES (Continued)

ITEM	PART NO.	QUANTITY *	**	***	DESCRIPTION
7	70658363	2	2	2	CAP
8	70923379	2	2	-	O-RING (11/16" I.D.)
	70925929	-	-	2	O-RING (11/16" I.D.)
9	70658360	1	1	1	WASHER (1/64" thick) } Use as required
	70911992	1	1	1	WASHER (1/16" thick) } Use as required
10	70660792	1	1	1	SHIM (.005" thick)
11	70659555	2	2	2	SPRING
12	70658364	2	2	2	SEAT
13	--------	2	2	2	CARTRIDGE (Not serviced separately)
14	70924775	2	2	-	O-RING
	70925931	-	-	2	O-RING, outer (15/16" I.D.)
15	70660793	2	2	2	RING
16	70925081	2	2	-	O-RING, inner (9/16" I.D.)
	70925928	-	-	2	O-RING, inner (9/16" I.D.)
17	70665250	2	2	2	RING
18	70924854	2	2	-	O-RING, outer (13/16" I.D.)
	70925930	-	-	2	O-RING, outer (13/16" I.D.)
19	70658365	2	2	-	BALL ASSY. (Serviced only as a unit) (Early valves)
	73109599	2	2	2	POPPET (Late valves)
20	70658361	2	2	-	SPRING (conical)(Early valves)
	73109602	2	2	2	SPRING (straight)(Late valves)
21	70665174	2	2	2	CAP
22	70664458	1	-	-	BOLT
	70658279	-	1	1	BOLT
23	70664466	2	-	-	RING
	70660780	-	2	-	RING
	70925932	-	-	2	O-RING
24	70924922	2	-	-	O-RING
	70925069	-	2	-	O-RING
	73122982	-	-	2	RING
25	70664460	2	-	-	GUIDE
	70658280	-	2	2	GUIDE
26	70664461	1	-	-	SPRING
	70659506	-	1	1	SPRING
27	70665814	2	-	-	SPRING
	70659504	-	2	2	SPRING
28	70664459	2	-	-	VALVE
	70658278	-	2	2	VALVE
29	--------	1	1	1	PLUNGER (Not serviced separately)
30	70658281	-	1	1	CLEVIS
31	70665718	1	-	-	CLEVIS

(Revised May 1982)

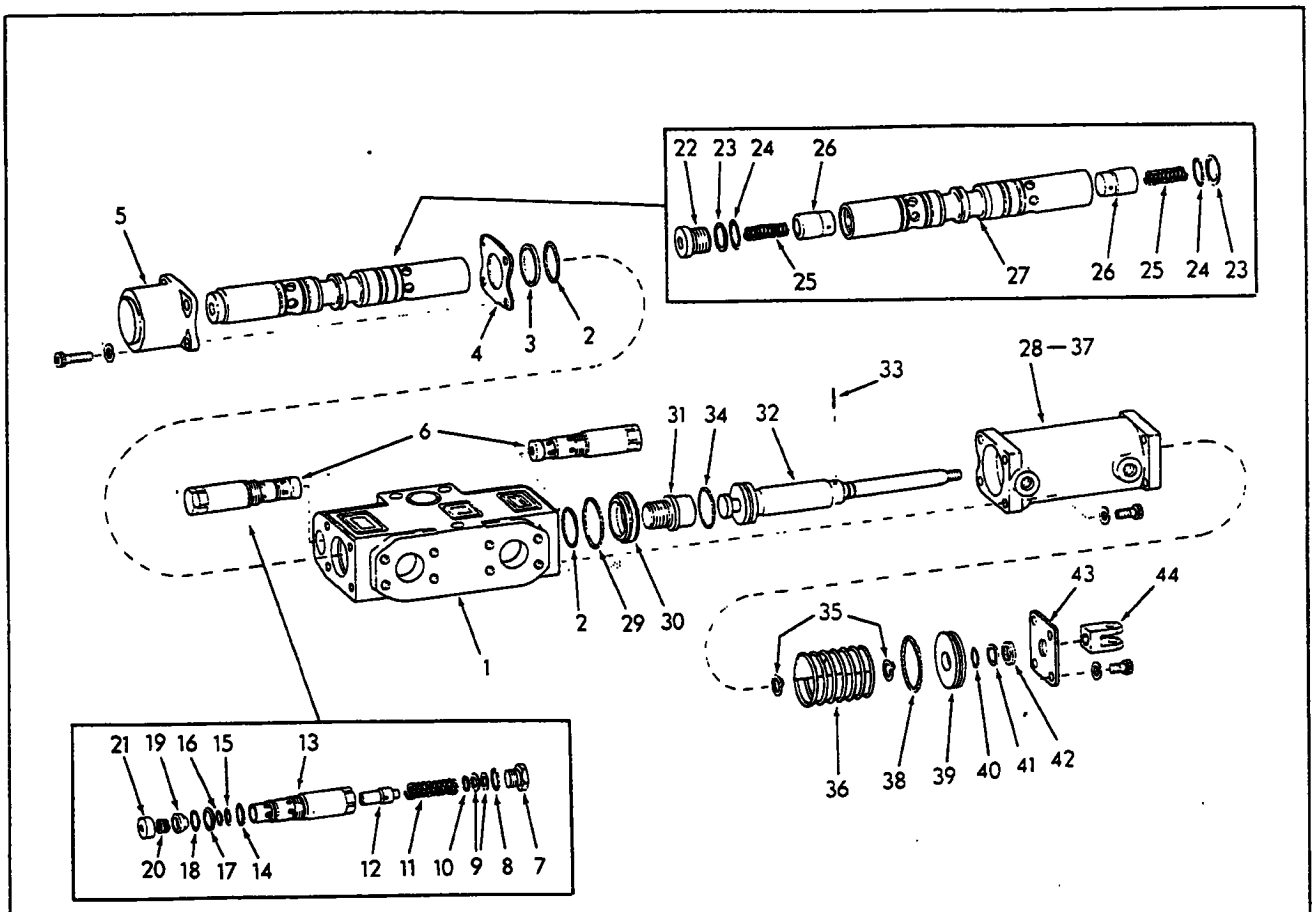

CONTROL VALVES

USAGE: Tractors S/N 71A21617 and up. See page 259A.

*73113038 VALVE ASSEMBLY (Dozer Tilt Controls)
**73113039 VALVE ASSEMBLY (Ripper Controls)

ITEM	PART NO.	QTY. *	QTY. **	DESCRIPTION
1	--------	1	1	HOUSING Not serviced separately)
2	70923813	2	-	O-RING
	70923576	-	2	O-RING
3	70664462	1	-	RING
	70658284	-	1	RING
4	70664464	1	-	PLATE
	70658286	-	1	PLATE
5	70664456	1	-	CAP
	70658282	-	1	CAP
	70926269	4	4	CAPSCREW, 5/16"NC x 1-1/4"
	70910286	4	4	LOCKWASHER, 5/16"
6	73118773	2	-	VALVE ASSY. (2600 psi)(Includes items 7 thru 21)
	70665714	-	2	VALVE ASSY. (3000 psi)(Includes items 7 thru 21)

(Continued)

CONTROL VALVES (Continued)

ITEM	PART NO.	QTY. *	QTY. **	DESCRIPTION
7	70658363	2	2	CAP
8	70925929	2	2	O-RING
9	70658360	1	1	WASHER (1/64" thick) } Use as required
	70911992	1	1	WASHER (1/16" thick) } Use as required
10	70660792	1	1	WASHER (.005" thick) } Use as required
11	70659555	2	2	SPRING
12	70658364	2	2	SEAT
13	--------	2	2	CARTRIDGE (Not serviced separately)
14	70925931	2	2	O-RING, outer (1-1/8" O.D.)
15	70660793	2	2	RING
16	70925928	2	2	O-RING, inner (3/4" O.D.)
17	70665250	2	2	RING
18	70925930	2	2	O-RING, outer 1" O.D.)
19	73109599	2	2	POPPET
20	73109602	2	2	SPRING
21	70665174	2	2	CAP
22	73115264	1	-	BOLT
	73113709	-	1	BOLT
23	73115265	2	-	RING
	73118779	-	2	RING
24	70933491	2	-	O-RING
	70925932	-	2	O-RING
25	70665814	2	-	SPRING
	70659504	-	2	SPRING
26	70664459	2	-	VALVE
	70658278	-	2	VALVE
27	--------	1	1	PLUNGER (Not serviced separately)
28	73115272	1	-	VALVE ASSY., power assist } Each includes items 29 thru 43
	73113035	-	1	VALVE ASSY., power assist } Each includes items 29 thru 43
	70926269	4	4	CAPSCREW, 5/16"NC x 1-1/4"
	70910286	4	4	LOCKWASHER, 5/16"
29	--------	1	1	*O-RING
30	73118764	1	-	SLEEVE, pilot
	73118829	-	1	SLEEVE, pilot
31	73118738	1	-	LUG
	73118827	-	1	LUG
32	73118768	1	-	PISTON ASSY. } See NOTE
	73118819	-	1	PISTON ASSY. } See NOTE
				NOTE: Item 32, each includes spool, piston lug and piston which are not serviced separately, also items 33 thru 35.
33	73118767	1	-	PIN, retaining
	73118828	-	1	PIN, retaining
34	--------	1	1	*O-RING
35	--------	4	4	*RING, snap
36	73118772	1	-	SPRING ASSY. } Serviced only as a unit
	73118826	-	1	SPRING ASSY. } Serviced only as a unit
37	--------	1	1	HOUSING (Not serviced separately)
38	--------	1	1	*O-RING
39	73118765	1	1	CAP, back
40	70923565	1	1	*O-RING

(Continued)

CONTROL VALVES (Continued)

ITEM	PART NO.	QTY. *	QTY. **	DESCRIPTION
41	--------	1	1	*RING, back-up
42	73118763	1	1	*SEAL
43	73118762	1	1	PLATE, retainer
	70925640	4	4	CAPSCREW, 5/16"NC x 3/4"
	70910286	4	4	LOCKWASHER, 5/16"
44	73112934	1	1	YOKE
45	73118771	1	1	SEAL AND REPAIR KIT

*Components of item 45

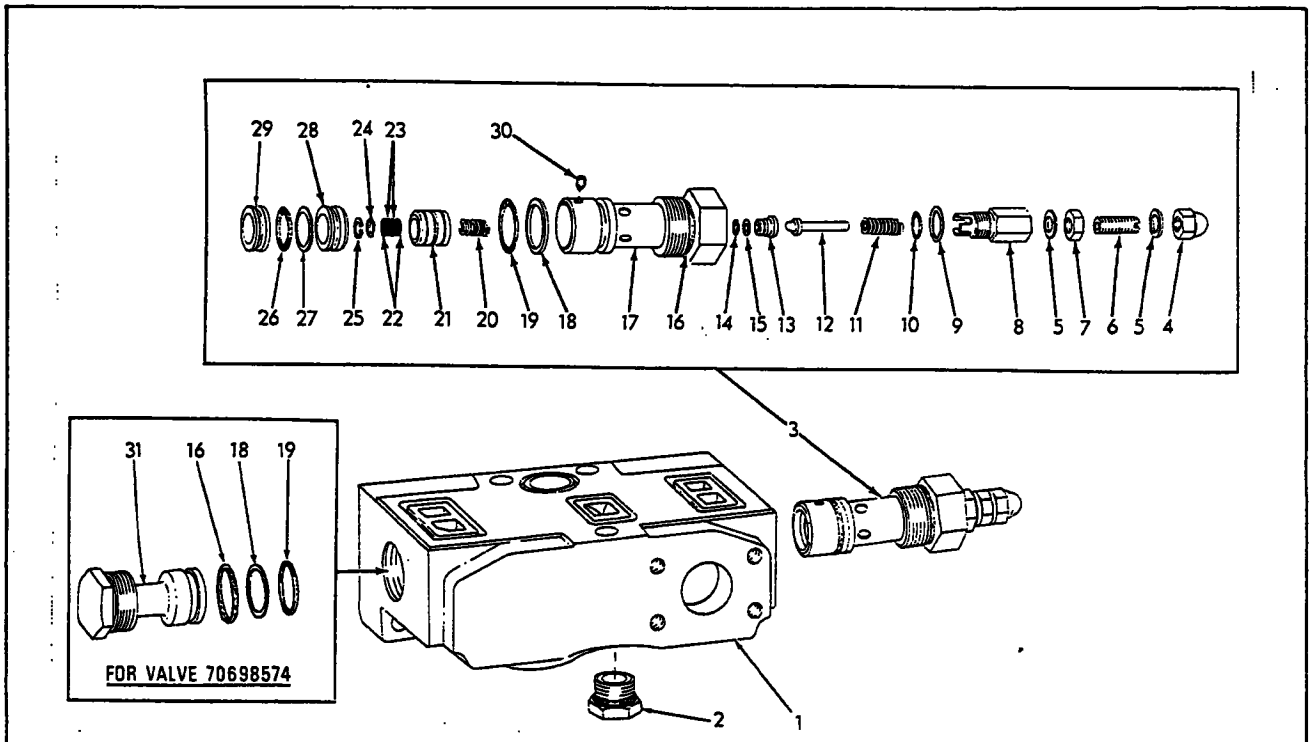

RELIEF VALVE ASSEMBLY

USAGE: Tractors prior to S/N 71A21617. See page 259.

ITEM	PART NO.	QTY.	DESCRIPTION
-	70680513	1	VALVE ASSY. (Includes item 1 thru 30)
-	70698574	1	VALVE ASSY. (Includes items 1 thru 31)
1	--------	1	HOUSING (Not serviced separately)
2	70921204	1	PLUG (Includes O-ring)
	70921206	1	O-RING
3	70683795	1	VALVE ASSY. (Consists of items 4 thru 30)
4	70916559	1	NUT (3/8"NF acorn)
5	70668552	2	GASKET
6	70668550	1	SCREW
7	70910329	1	NUT, jam, 3/8"NF
8	70668551	1	RETAINER
9	70668548	1	GASKET
10	70923846	1	O-RING
11	70684439	1	SPRING
12	70669188	1	POPPET
13	70684438	1	SEAT
14	70926356	1	O-RING
15	70684416	1	RING
16	70924270	1	O-RING (1 additional used on VALVE 70698574)
17	--------	1	CARTRIDGE ASSY. (Not serviced separately)

(Continued)

RELIEF VALVE ASSEMBLY (Continued)

ITEM	PART NO.	QTY.	DESCRIPTION
18	70658245	1	RING (1 additional used on VALVE 70698574)
19	70924696	1	O-RING (1 additional used on VALVE 70698574)
20	70684435	1	SPRING
21	--------	1	POPPET (Not serviced separately)
22	70684408	2	SCREEN (30 mesh)
23	70684409	2	SCREEN (100 mesh)
24	70684410	1	SPACER
25	70927685	1	SNAP RING
26	70924774	1	O-RING
27	70684411	1	RING
28	70684436	1	SEAT
29	70684437	1	RETAINER
30	70684413	2	SETSCREW
31	70658246	1	PLUG

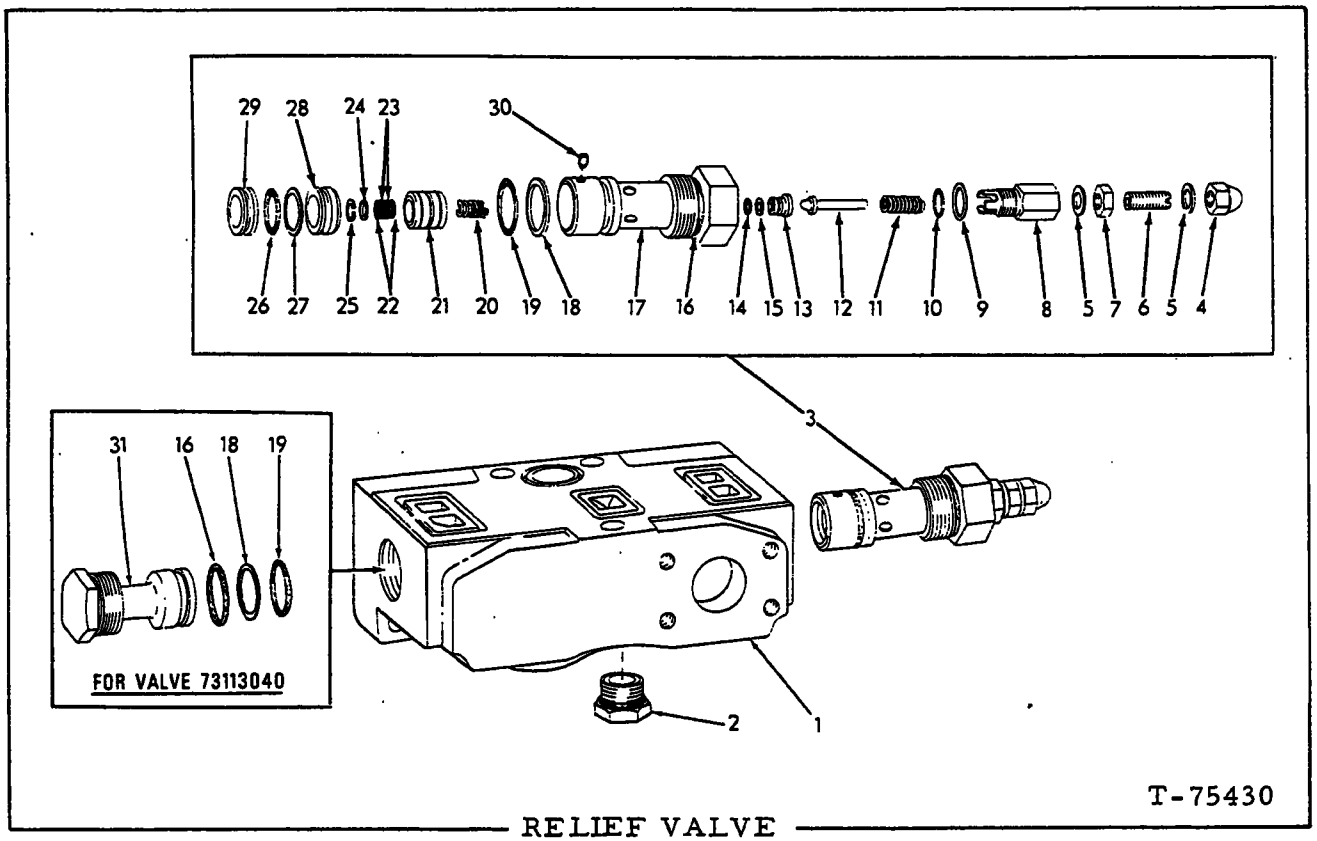

RELIEF VALVE

USAGE: Tractors S/N 71A21617 and up. See page 259A.

ITEM	PART NO.	QTY.	DESCRIPTION
-	73115957	1	VALVE ASSY. (Includes items 1 thru 30)
-	73113040	1	VALVE ASSY. (Includes items 1 thru 31)
1	--------	1	HOUSING (Not serviced separately)
2	70924102	1	PLUG
	73114441	1	O-RING
3	73118452	1	VALVE ASSY. (Includes items 4 thru 30)
4	70916559	1	NUT
5	70668552	2	GASKET
6	70668550	1	SCREW
7	70910329	1	NUT, jam, 3/8"NF
8	70668551	1	RETAINER
9	70668548	1	GASKET
10	70926842	1	O-RING
11	70684439	1	SPRING
12	70669188	1	SEAT
13	70684438	1	POPPET
14	70926841	1	O-RING
15	73118732	1	RING
16	70925934	1	O-RING (1 additional used on Valve 73113040)
17	--------	1	CARTRIDGE ASSY. (Not serviced separately)
18	73118731	1	RING } 1 additional used on Valve 73113040
19	70925933	1	O-RING }
20	70684435	1	SPRING

(Continued)

RELIEF VALVE (Continued)

ITEM	PART NO.	QTY.	DESCRIPTION
21	--------	1	POPPET (Not serviced separately)
22	70684408	2	SCREEN (30 mesh)
23	73118453	2	SCREEN (325 mesh)
24	70684410	1	SPACER
25	70927685	1	SNAP RING
26	70925931	1	O-RING
27	73115265	1	RING
28	70684436	1	SEAT
29	70684437	1	RETAINER
30	70684413	2	SETSCREW
31	70658246	1	PLUG

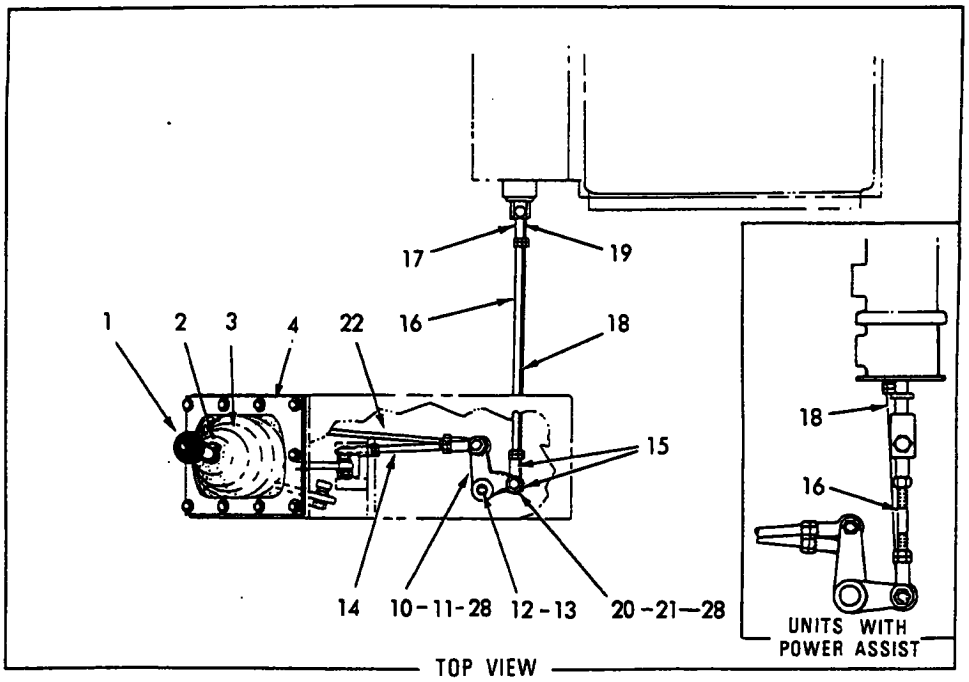

TOP VIEW

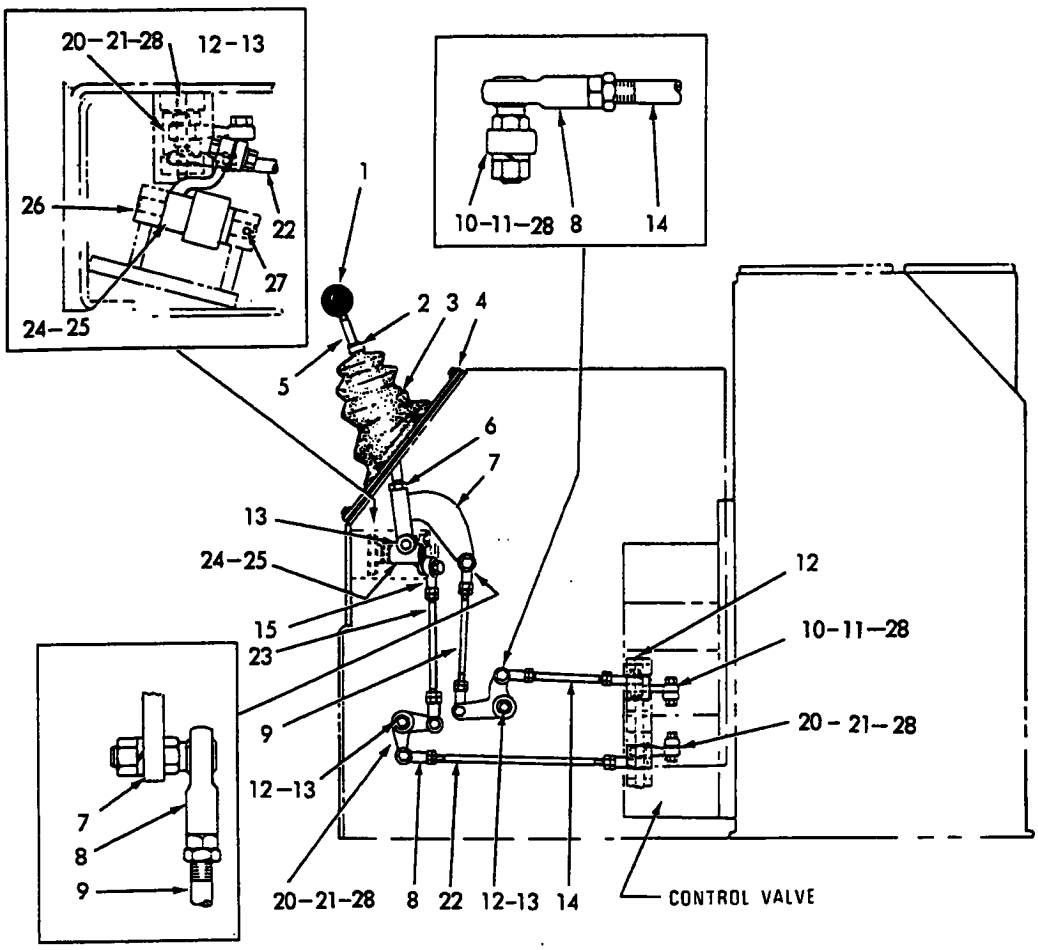

T-79569

VALVE CONTROLS

VALVE CONTROLS

USAGE: Tractors prior to S/N71A21617

* Units without hydraulic tilt
** Units with hydraulic tilt

ITEM	PART NO.	QTY. *	QTY. **	DESCRIPTION
1	70090020	1	1	KNOB
2	70921910	1	1	CLAMP, worm drive, 7/16" to 3/4" diam.
3	70690172	1	1	BOOT
4	70688971	1	1	PLATE
	70933578	10	10	SCREW, hex. skt-hd., 1/4"NC x 3/4"
	70900816	10	10	WASHER
5	70690583	1	1	ROD
6	70903574	1	1	NUT, 5/8"NC
7	70690591	1	1	LEVER
8	70653570	3	4	ROD, end
	70913528	3	4	NUT, 3/8"NF
9	70617931	1	1	ROD
	70911048	1	1	NUT, 3/8"NF
10	70696304	2	2	LEVER (Includes item 11 and 28)
11	70655215	4	4	BEARING
12	70672044	3	5	SHAFT
13	70915797	3	5	PIN, 3/16" x 1-1/4"
14	70655420	1	1	ROD
	70911048	2	2	NUT, 3/8"NF
15	70617932	2	6	ROD, end
	70921565	1	6	CAPSCREW, 3/8"NC x 1-1/2"
	70922287	1	1	CAPSCREW, 3/8"NC x 1-3/4"
	70922465	2	6	WASHER
	70915891	2	6	NUT, elastic stop, 3/8"NC
16	70690625	1	1	ROD (Tractors not equipped with Power Assist Kit)
	70666823	1	1	ROD (Tractors equipped with special Power Assist Kit)
	70911048	2	2	NUT, 3/8"NF
17	70617932	1	1	ROD, end
	70927225	1	1	CAPSCREW, 3/8"NC x 1-5/8"
	70915891	1	1	NUT, elastic stop, 3/8"NC
18	70656919	-	1	ROD (Tractors not equipped with Power Assist Kit)
	70655212	-	1	ROD (Tractors equipped with special Power Assist Kit)
	70911048	-	2	NUT, 3/8"NF
19	70617932	-	1	ROD, end
	70921565	-	1	CAPSCREW, 3/8"NC x 1-1/2"
	70910287	-	1	LOCKWASHER, 3/8"
	70910324	-	1	NUT, 3/8"NC
20	70659340	-	2	LEVER (Includes item 21)
21	70655215	-	4	BEARING
22	73107846	-	1	ROD
	70911048	-	2	NUT, 3/8"NF
23	70641968	-	1	ROD
	70911048	-	2	NUT, 3/8"NF
24	70696305	1	1	LEVER (Includes item 25)
25	70655215	4	4	BEARING
26	70656614	1	1	SHAFT
27	70915797	1	1	PIN, 3/16" x 1-1/4"
28	70096921	4	8	SEAL (Tractor unit #21464 and up)

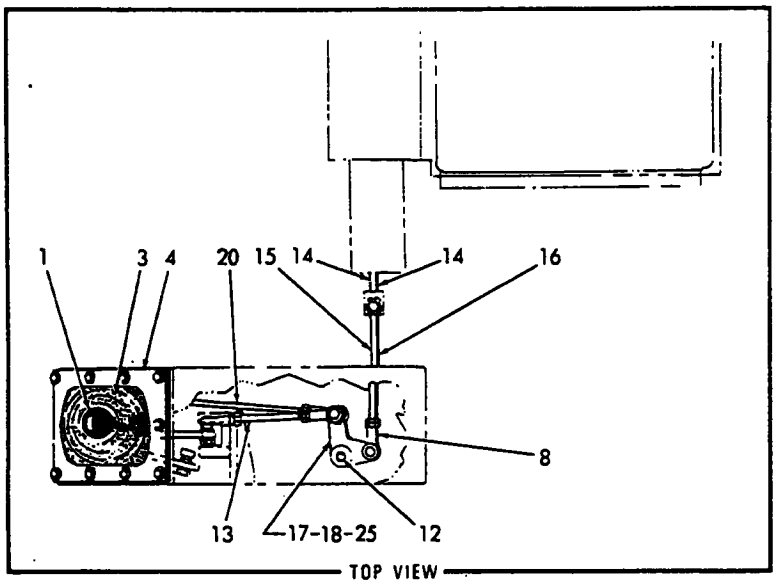
1
3
4
20
15
14
14
16
8
13
17-18-25
12
TOP VIEW

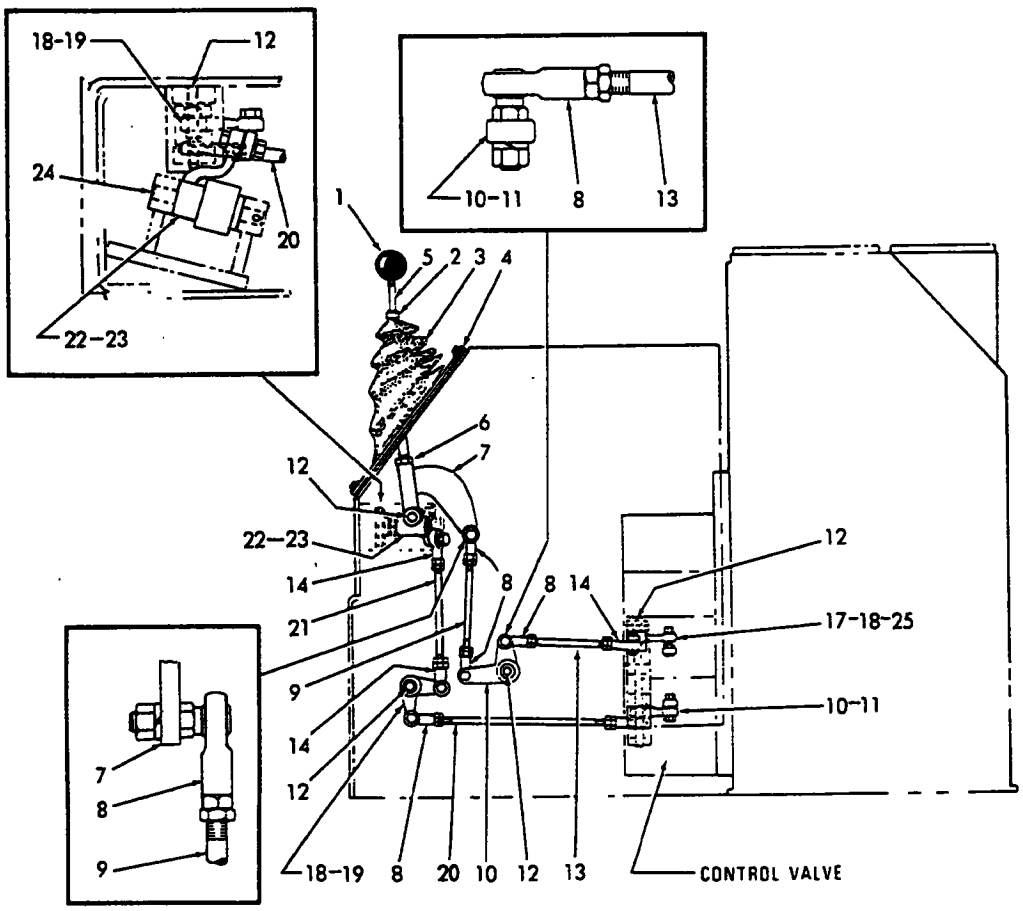
18-19
12
24
20
22-23
10-11
8
13
1
5
2
3
4
6
7
12
22-23
14
21
9
14
12
8
8
14
12
17-18-25
10-11
7
8
9
18-19
8
20
10
12
13
CONTROL VALVE

T-79569

VALVE CONTROLS

USAGE: Tractors S/N 17A21617 and up

* Units without hydraulic tilt

** Units with hydraulic tilt

ITEM	PART NO.	QTY. *	QTY. **	DESCRIPTION
1	70090020	1	1	KNOB
2	70921910	1	1	CLAMP (7/16" to 25/32")(First type)
	70925755	1	1	CLAMP (1/2" to 1")(Second type)
3	70690172	1	1	BOOT (First type)
	73122609	1	1	BOOT (Second type)
4	70688971	1	1	PLATE
	70933578	10	10	SCREW, hex skt.-hd., 1/4"NC x 3/4"
	70900816	10	10	WASHER
5	73112976	1	1	ROD (5/8" diam.)(First type)
	73116423	1	1	ROD (3/4" diam.)(Second type)
6	70903574	1	1	NUT, 5/8"NC (First type)
	70901431	1	1	NUT, 3/4"NC (Second type)
7	70690591	1	1	LEVER (5/8"NC thread)(First type)
	73116417	1	1	LEVER (3/4"NC thread)(Second type)
8	70653570	4	5	END, rod
	70913528	4	5	NUT, 3/8"NF
9	70635286	1	1	ROD
	70911048	1	1	NUT, 3/8"NF
10	70659340	1	2	LEVER (Includes item 11)
11	70655215	2	4	BEARING
12	70672044	3	5	SHAFT
	70915797	3	5	PIN, spring, 3/16" x 1-1/4"
13	70655420	1	1	ROD
	70911048	2	2	NUT, 3/8"NF
14	70617932	4	7	END, rod
	70927225	4	7	CAPSCREW, 3/8"NC x 1-5/8"
	70922465	5	7	WASHER
	70915891	4	7	NUT, 3/8"NC
15	70666823	1	1	ROD
	70911048	2	2	NUT, 3/8"NF
16	70655212	-	1	ROD
	70911048	-	2	NUT, 3/8"NF
17	73114606	1	1	LEVER (Includes items 18 and 26)
18	70655215	2	4	BEARING
19	70696304	-	1	LEVER (Includes item 18)
20	73107846	-	1	ROD
	70911048	-	2	NUT, 3/8"NF
21	70626462	1	1	ROD
	70911048	2	2	NUT, 3/8"NF
22	70696305	1	1	LEVER (Includes item 23)
23	70655215	2	2	BEARING
24	70656614	1	1	SHAFT
	70915797	1	1	PIN, spring, 3/16" x 1-1/4"
25	70096921	2	2	SEAL

(Revised April 1980)

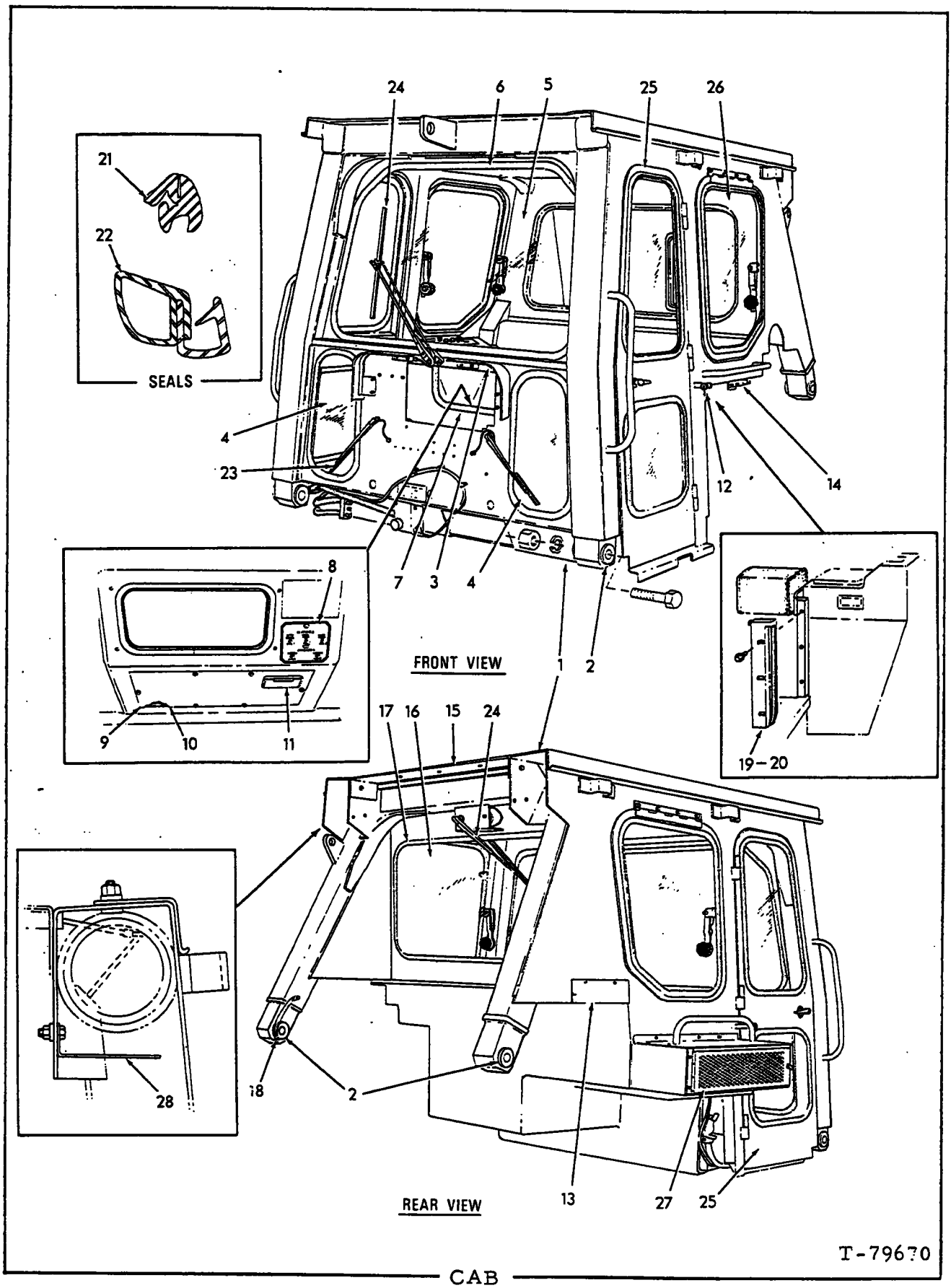
SEALS
21
22
24
6
5
25
26
4
23
7
3
4
12
14
8
9
10
11
FRONT VIEW
1
2
19–20
17
16
15
24
28
18
2
REAR VIEW
13
27
25
T-79670

CAB (ROPS)

USAGE: Special equipment. (See page 297 for NON-ROPS Cab.)

ITEM	PART NO.	QTY.	DESCRIPTION
-	--------	1	CAB ASSY. (Not serviced as an assembly. Service components only)
1	--------	1	CAB (Not serviced)
	70665160	4	CAPSCREW, 1-1/4"NC x 8"
	70914730	4	LOCKWASHER, 1-1/4"
	70913974	4	NUT, 1-1/4"NC
2	73107380	8	BUSHING
3	73107361	1	TRIM, left
	73107362	1	TRIM, right
	70931646	8	CAPSCREW, self-locking, 1/4"NC x 1/2"
4	--------	2	GLASS (Part No. 73107187) } See NOTE below
5	--------	1	GLASS (Part No. 73107186) } See NOTE below
6	--------	3	SEAL (Order item 21) } Requires cutting to
7	--------	1	SEAL (Order item 22) } proper length
8	73107197	1	DECAL, wiper and washer
9	73107439	1	PLATE ASSY. (Includes items 10 and 11)
	70930594	6	CAPSCREW, self-locking, 1/4"NC x 3/4"
10	73107311	1	INSULATION
11	73107438	1	TRAY, ash
	70912731	2	SCREW, machine, #8-32NC x 5/16"
	70917257	2	LOCKWASHER, external tooth, #10
	70907154	2	NUT, #8-32NC
12	73107266	2	LEVELER, door
13	--------	1	PLATE (Not serviced)
	70930594	3	CAPSCREW, self-locking, 1/4"NC x 3/4"
14	--------	1	PLATE (Not serviced)
	70930594	2	CAPSCREW, self-locking, 1/4"NC x 3/4"
15	--------	1	PLATE (Not serviced) (Units without Air Conditioning)
	70921569	5	CAPSCREW, 7/16"NC x 1-1/4"
	70914678	5	LOCKWASHER, 7/16"
	70912201	5	NUT, 7/16"NC
16	--------	1	GLASS (Part No. 73107252) (See NOTE below)
17	73107262	1	SEAL, 1-1/2" x 126"
18	73107390	1	STRAP, ground
	70919311	2	LOCKWASHER, 5/16"
	70910335	2	WASHER
	70910323	2	NUT, 5/16"NC
19	73107478	1	TRIM ASSY. (Includes item 20)
	70931646	3	CAPSCREW, self-locking, 1/4"NC x 1/2"
20	73107477	1	TRIM
21	73107156	-	SEAL, 1-1/16" x 139" } Use as required
22	73107268	-	SEAL, 7/8" x 120-1/2" } Use as required
23	--------	2	WIPER (See page 270)
24	--------	2	WIPER (See page 274)
25	--------	2	DOOR (See page 272)
26	--------	2	WINDOW (See page 275)
27	--------	1	PRESSURIZER (See page 276)
28	73111300	2	SHIELD
	70921175	4	CAPSCREW, 1/2"NC x 1" } Effective on late Cabs
	70912333	4	WASHER } Effective on late Cabs
	70910325	4	NUT, 1/2"NC } Effective on late Cabs

NOTE: Glass must be procured locally. Refer to CAB GLASS DATA Catalog for pattern.

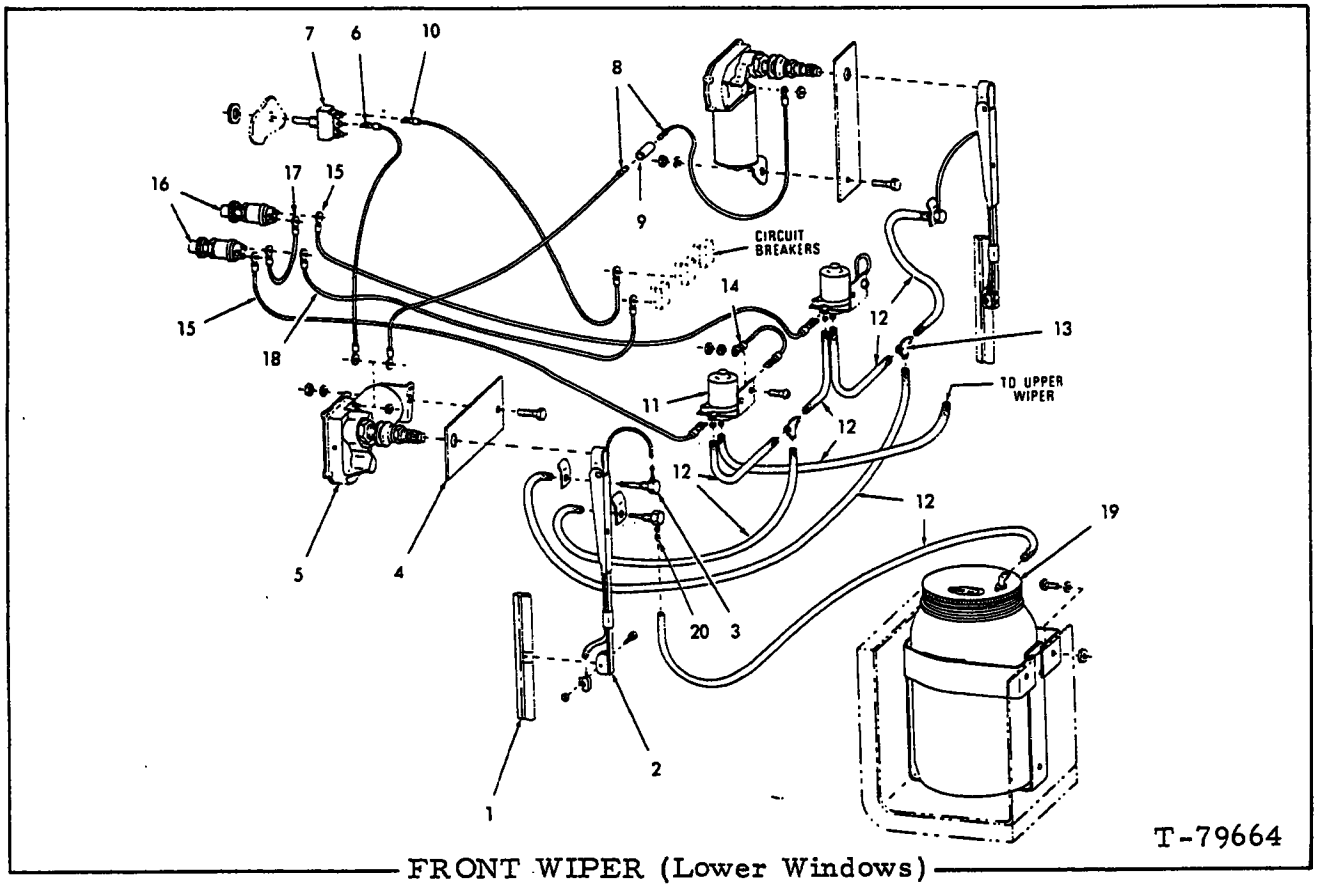

FRONT WIPER (Lower Windows)

ITEM	PART NO.	QTY.	DESCRIPTION
1	73107182	2	BLADE, wiper
2	73107181	2	ARM
3	73107159	2	CONNECTOR
4	--------	2	PLATE (Not serviced)
	70927401	2	CAPSCREW, 1/4"NC x 1"
	70910285	2	LOCKWASHER, 1/4"
	70910880	2	NUT, 1/4"NC
5	73107189	2	MOTOR, wiper, 24 volt
6	--------	1	WIRE, motor to switch (Not serviced)
7	73110396	1	SWITCH, toggle
8	--------	2	WIRE, motor connecting (Not serviced)
9	73107389	1	CONNECTOR
10	--------	1	WIRE, switch to circuit breaker
11	73107188	2	PUMP, washer
	70917388	4	SCREW, machine, rd-hd., #10NC -24 x 3/4"
	70917257	4	LOCKWASHER, ext-tooth #10
	70901310	4	NUT, #10NC -24
12	--------	8	HOSE (5/32"I.D. x 31" long)(Cut to proper length)
13	73107447	2	CONNECTION
14	--------	2	WIRE, ground (Not serviced)
15	--------	2	WIRE, pump to switch (Not serviced)
16	70183714	2	SWITCH
17	--------	1	WIRE, switch connecting (Not serviced)

(Continued)

FRONT WIPER (Lower Windows)(Continued)

ITEM	PART NO.	QTY.	DESCRIPTION
18	--------	1	WIRE, switch to circuit breaker (Not serviced)
19	73107495	1	WASHER ASSY. (Serviced only as a unit)
	70931698	3	SCREW, machine
	70909055	3	LOCKWASHER, #10
	70901310	3	NUT, #10NC-24
20	73110401	1	CONNECTOR

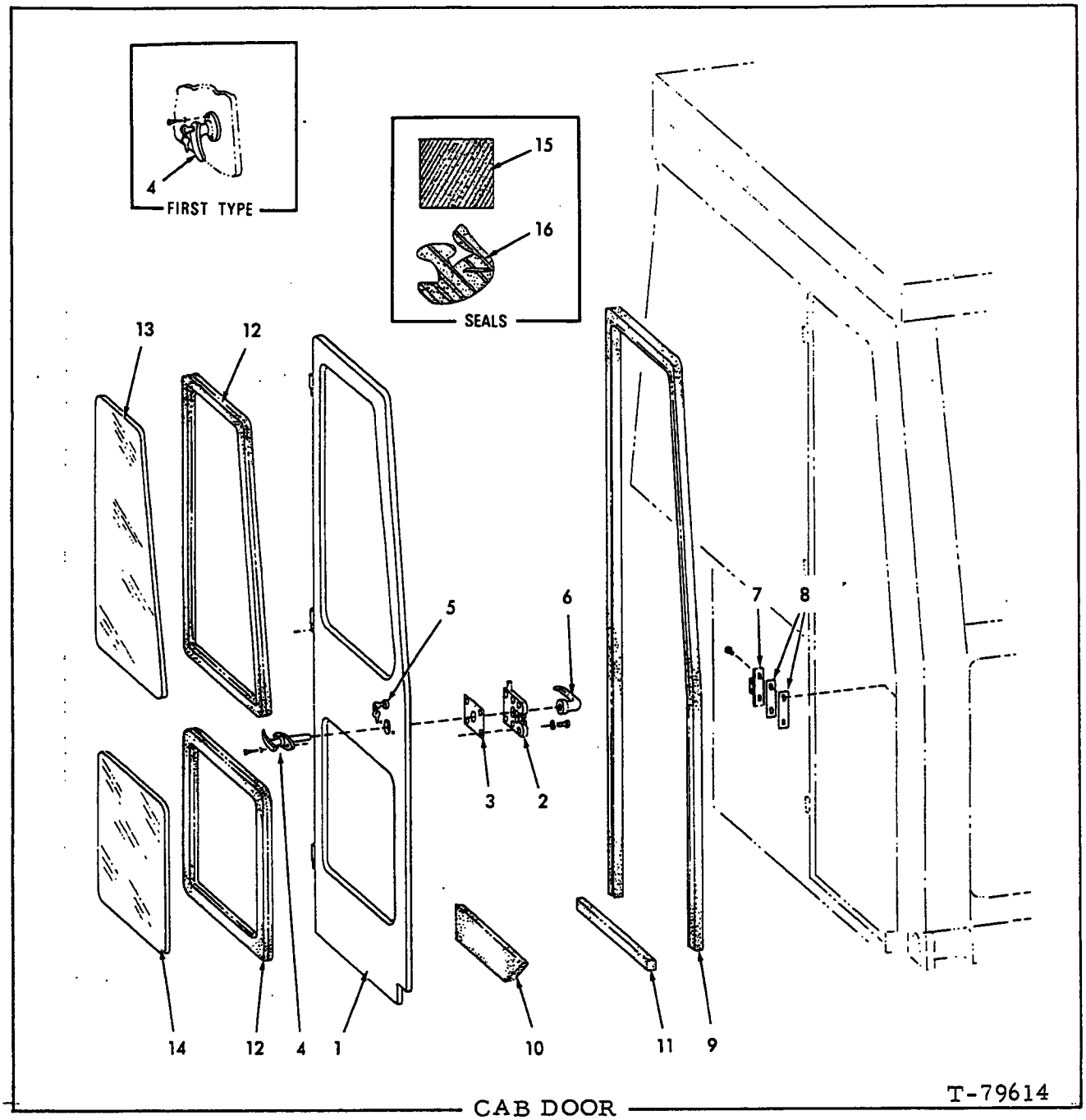

CAB DOOR

ITEM	PART NO.	QTY.	DESCRIPTION	
1	73107133	1	DOOR, left	
	73107134	1	DOOR, right	
	70923132	2	PIN, spring, 1/8" x 11/16"	
2	73107149	1	LOCK ASSY., left — Not used on CAB S/N 28180 thru 28610	Each includes item 7
	73107150	1	LOCK ASSY., right — Not used on CAB S/N 28180 thru 28610	
	73111855	1	LOCK ASSY., left — Used on CAB S/N 28180 thru 28610	
	73111856	1	LOCK ASSY., right — Used on CAB S/N 28180 thru 28610	
	70921382	8	CAPSCREW, 1/4" NC x 1-1/4"	
	70910285	8	LOCKWASHER, 1/4"	

(Continued)

CAB DOOR (Continued)

ITEM	PART NO.	QTY.	DESCRIPTION
3	73107143	2	SHIM
4	73107147	2	HANDLE (Includes keys)(Cabs prior to S/N 28371)
	73110615	2	HANDLE (Cab S/N 28371 and up)
	--------	4	SCREW, self-tapping, slotted oval head (5/8"-10)
	70912611	4	LOCKWASHER, external tooth, #10
5	73110616	2	LOCK (Includes key and nut)(Cab S/N 28371 and up)
6	73107144	2	HANDLE
7	--------	2	LATCH (Not serviced. Order item 2)
	70927401	4	SCREW, self-locking, 1/4"NC x 1"
	70910285	4	LOCKWASHER, 1/4"
	70911114	4	WASHER
	70910880	4	NUT, 1/4"NC
8	73107378	-	SHIM (.1046" thick) } Use as required.
	73110655	-	SHIM (.0747" thick) } Use as required.
9	73107268	2	SEAL, 13/16" x 120-1/2"
10	73107145	1	PAD, left
	73107146	1	PAD, right
11	--------	2	SEAL (Order item 15) } Requires cutting to
12	--------	4	SEAL (Order item 16) } proper length
13	--------	2	GLASS (Part No. 73107148) } See NOTE below
14	--------	2	GLASS (Part No. 73107151) } See NOTE below
15	73107061	-	SEAL, 1" x 37" } Use as required
16	73107156	-	SEAL, 1-1/16" x 139" } Use as required

NOTE: Glass must be procured locally. Refer to CAB GLASS DATA Catalog for pattern.

(Revised June 1981)

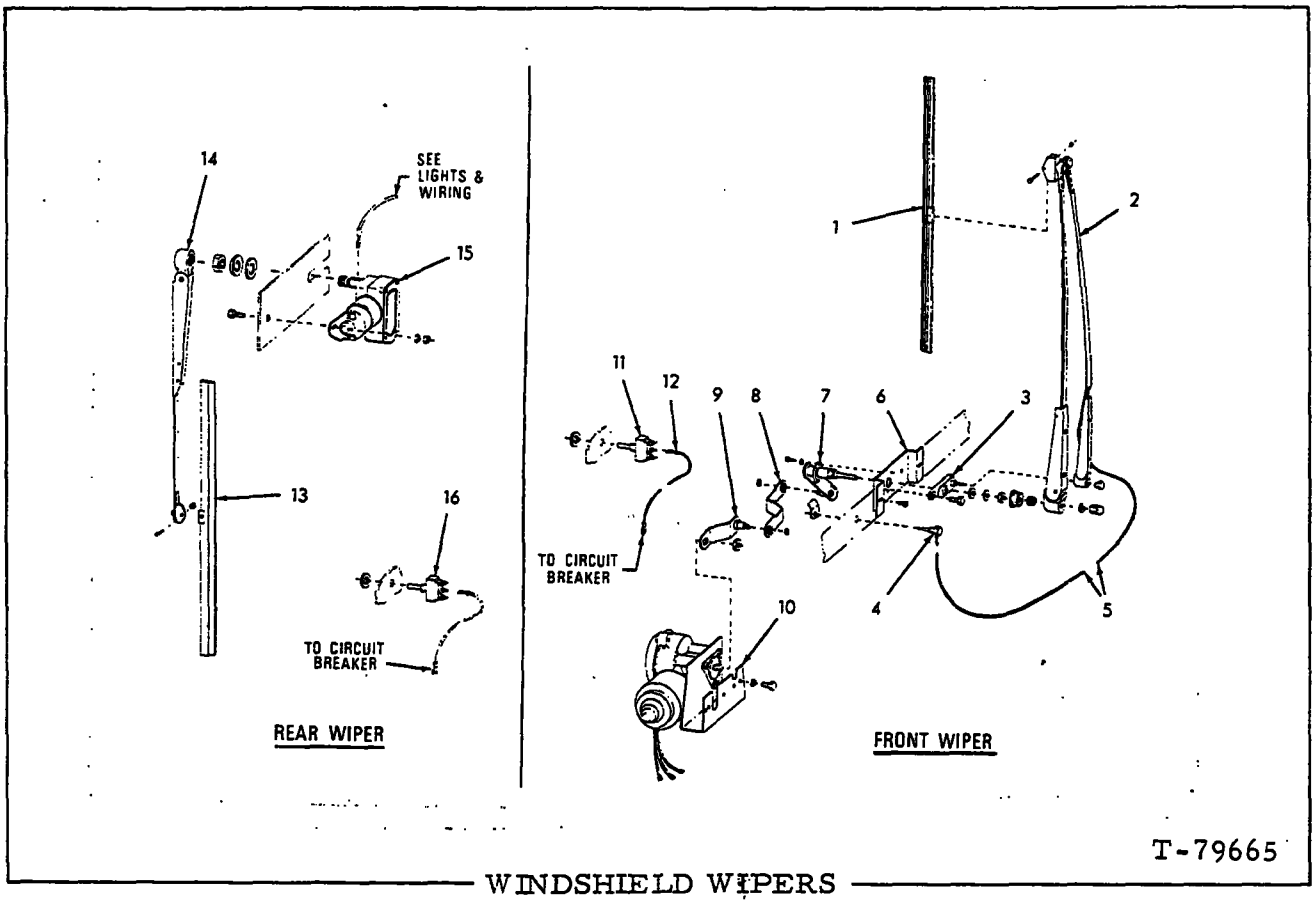

WINDSHIELD WIPERS

ITEM	PART NO.	QTY.	DESCRIPTION
1	73059930	1	BLADE, wiper
2	73110394	1	ARM (Refer to item 17) Disc.
3	73107183	1	BRACKET, pivot
	70927541	2	CAPSCREW, 1/4"NC x 3/4"
4	73110401	1	CONNECTOR
5	73107504	1	HOSE (Not serviced)
6	73107978	1	BRACKET
	70930594	2	SCREW, self-locking, 1/4"NC x 3/4"
7	73117383	1	SHAFT ASSY., pivot (Serviced only as a unit)
	70931699	2	SCREW, machine, #10-24NC x 3/8"
	70917257	2	LOCKWASHER, external tooth, #10
8	73107283	1	ARM
9	73061046	1	ARM, crank
10	73107209	1	MOTOR, wiper, 24 volt
	70928575	3	CAPSCREW, 1/4"NF x 1/2"
	70910285	3	LOCKWASHER, 1/4"
11	73059893	1	SWITCH, toggle
12	--------	2	WIRE, switch to circuit breaker (Not serviced)
13	73107979	1	BLADE
14	73107260	1	ARM
15	70699281	1	MOTOR, wiper, 24 volt
	70927401	1	CAPSCREW, 1/4"NC x 1"
	70910285	1	LOCKWASHER, 1/4"
	70910880	1	NUT, 1/4"NC
16	73110396	1	SWITCH, toggle
17	73110821	1	KIT, repair (Includes nozzle, retainer and tubing sufficient to repair one ARM)

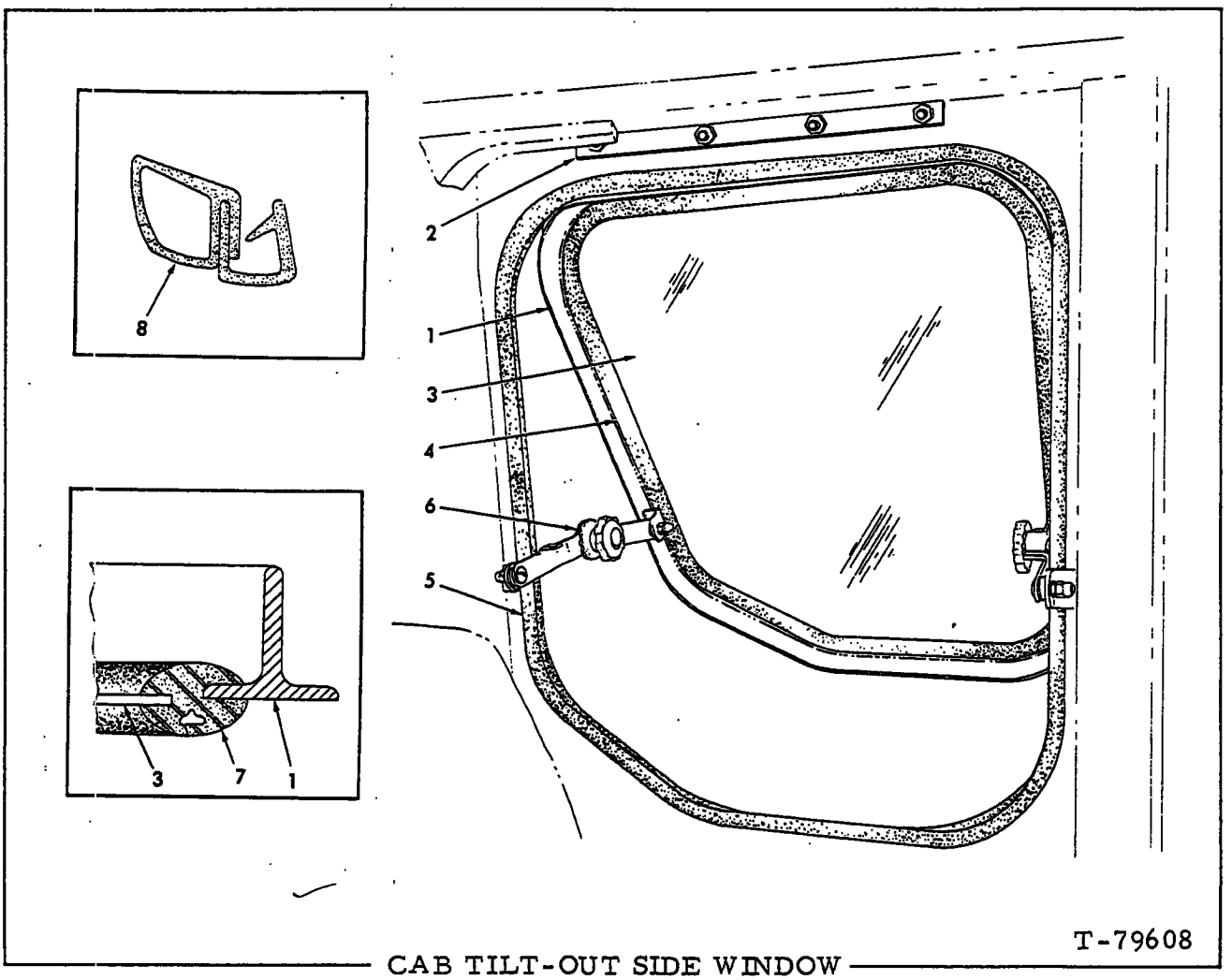

CAB TILT-OUT SIDE WINDOW

ITEM	PART NO.	QTY.	DESCRIPTION
1	73107205	1	WINDOW, left
	73107206	1	WINDOW, right
	70922300	8	CAPSCREW, 3/8"x 3/4"
	70910287	8	LOCKWASHER, 3/8"
2	--------	2	PLATE (Not serviced)
3	--------	2	GLASS (Part No. 73107207) (See NOTE below)
4	--------	2	SEAL (Order item 7) } Each requires cutting
5	--------	2	SEAL (Order item 8) } to proper length
6	73107255	2	ARM, left
	73107256	2	ARM, right
	70927073	8	SCREW, machine, 3/8"NC x 1-1/4"
	70912772	12	NUT, jam, 3/8"NC
	70918471	4	NUT, acorn, 3/8"NC
7	73107156	-	SEAL, 1-1/16" x 139" } Use as required
8	73107268	-	SEAL, 13/16" x 120-1/2" } Use as required

NOTE: Glass must be procured locally. Refer to CAB GLASS DATA catalog for pattern

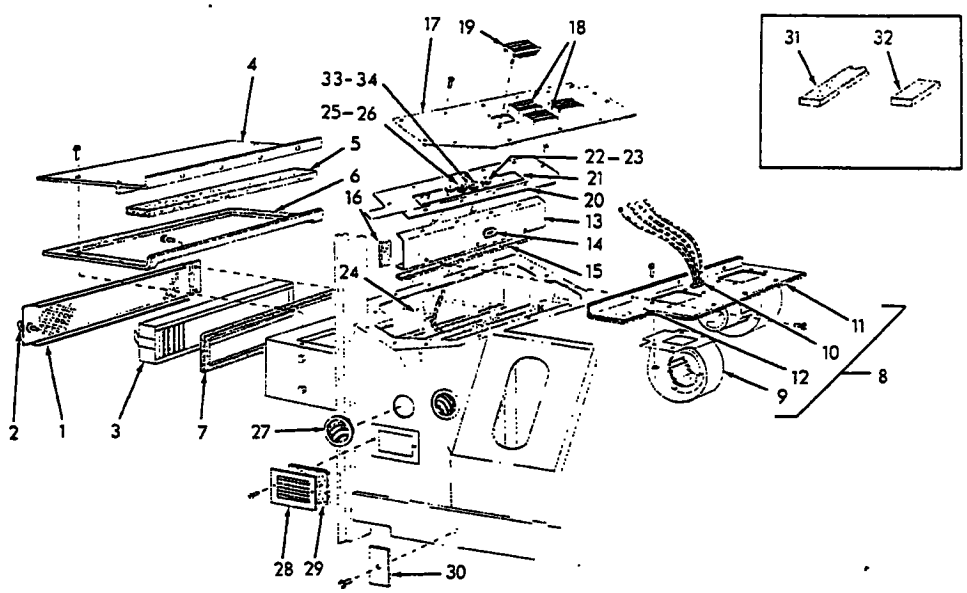

CAB PRESSURIZER

ITEM	PART NO.	QTY.	DESCRIPTION
1	73107121	1	DOOR ASSY., filter (Includes item 2)
	70930594	2	SCREW, self-locking, 1/4"NC x 3/4"
2	73107122	1	SCREW, wing
	70928228	1	WASHER
3	73107280	1	FILTER
4	73107278	1	COVER ASSY. (Includes items 5 and 6)
	70930594	8	SCREW, self-locking, 1/4"NC x 3/4"
5	73107285	1	INSULATION
6	--------	-	SEAL (Order item 31) } Requires cutting to
7	73107070	-	SEAL } proper length
8	--------	1	PRESSURIZER ASSY. (Incl. items 9 thru 12)(Not serviced)
	70931698	6	SCREW, self-locking, #10-24 NC x 3/8"
9	73119413	1	BLOWER (24 volt)
	70931646	8	SCREW, self-locking, 1/4"NC x 1/2"
	70910880	8	NUT, 1/4"NC
10	73107131	1	GROMMET
11	--------	-	SEAL (Order item 31) } Requires cutting to
12	--------	-	SEAL (Order item 32) } proper length
13	73107272	1	BULKHEAD ASSY. (Includes items 14 thru 16)
14	73107131	1	GROMMET
15	--------	-	SEAL (Order item 35) } Requires cutting to
16	--------	-	SEAL (Order item 32) } proper length
17	--------	1	PANEL ASSY. (Includes items 18 and 19)(Not serviced)
	70931700	13	SCREW, machine, #10-24NC x 5/8"
18	73107108	2	LOUVER
	73107114	8	FASTENER
19	73107213	2	LOUVER
	73107114	8	FASTENER

(Continued)

(Revised June 1981)

CAB PRESSURIZER (Continued)

ITEM	PART NO.	QTY.	DESCRIPTION
20	73107239	1	PANEL
	70931700	6	SCREW, machine, #10-24NC x 5/8"
21	73107238	1	DECAL
22	73107240	1	CABLE ASSY. (Includes mounting hardware and item 23)
	70931697	1	SCREW, self-locking, #10-12NC x 3/8"
23	73107241	1	DECAL
24	73107303	1	CLAMP
	70931697	1	SCREW, self-locking, #10-12 NC x 3/8"
25	73107112	1	KNOB
26	73107110	1	SWITCH, blower
27	73107267	2	DEFLECTOR (Includes mounting hardware)
28	73107300	1	PLATE
	70931700	2	SCREW, machine, #10-24 NC x 5/8"
29	73107302	1	FILTER
30	--------	1	PLATE (Not serviced)
	70930594	1	CAPSCREW, self-locking, 1/4"NC x 3/4"
31	73107129	-	SEAL, 1/4" x 3/4" x 75-1/4" } Use as required
32	73107130	-	SEAL, 1/4" x 3/4" x 4-1/4" } Use as required
33	73107635	1	SWITCH } For units equipped with air-conditioned CAB
34	73107623	1	KNOB } For units equipped with air-conditioned CAB
35	73115446	-	SEAL, 3/8" x 1" x 24" (Use as required)

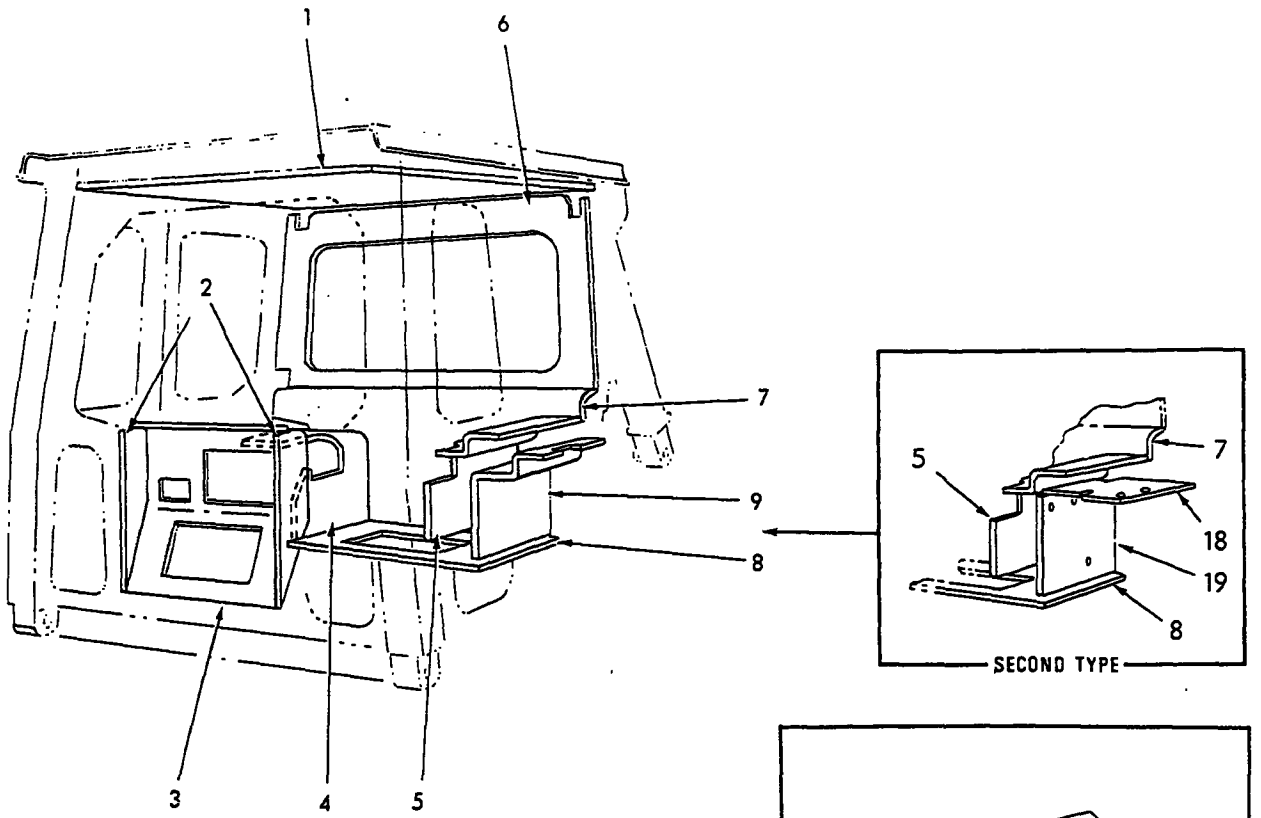

FRONT VIEW

SECOND TYPE

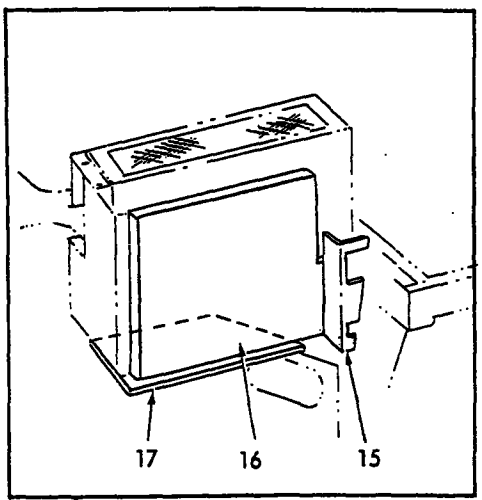

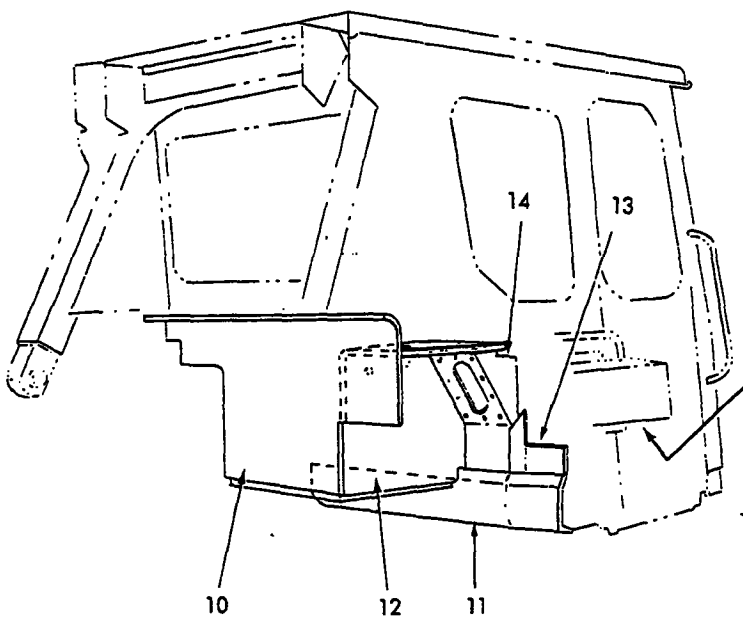

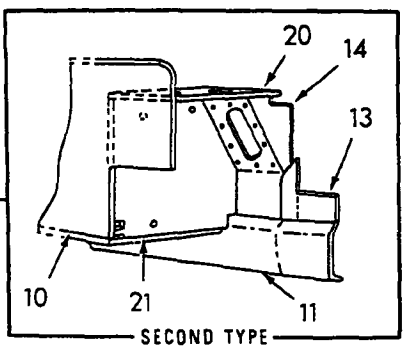

SECOND TYPE

REAR VIEW

T-79667

CAB INSULATION

(Revised June 1981)

CAB INSULATION

ITEM	PART NO.	QTY.	DESCRIPTION	
1	73107071	1	INSULATION, 44-3/8" x 44-9/16"	Applied to inside of CAB
2	73107190	2	INSULATION, 22" x 6-1/4"	
3	73107191	1	INSULATION, 23-3/4" x 26-3/8"	
4	73107270	1	INSULATION, 23-3/4" x 28-1/2"	
5	73107347	1	INSULATION, 23-1/16" x 34-1/8"	
6	73107253	1	INSULATION, 60-1/4" x 28-1/2"	
7	73107254	1	INSULATION, 57-15/16" x 28-1/4"	
8	73107348	1	INSULATION, 26" x 23-1/4"	
9	--------	1	INSULATION, (Order items 18 and 19)	Applied to outside of CAB
10	73107312	1	INSULATION, 60-3/16" x 26"	
11	73107349	1	INSULATION, 42-7/8" x 10-3/4"	
12	--------	1	INSULATION, (Order items 20 and 21)	
13	73107351	1	INSULATION, 13-1/2" x 8-3/4"	
14	73107313	1	INSULATION, 18-5/16" x 11-1/8"	
15	73107352	1	INSULATION, 11-1/8" x 8-1/8"	
16	73107316	1	INSULATION, 23-9/16" x 18-7/16"	
17	73107350	1	INSULATION, 22" x 7"	
18	73127236	1	INSULATION	Second type. Service replacement for item 9
19	73127238	1	INSULATION	
20	73127237	1	INSULATION	Second type. Service replacement for item 12
21	73127239	1	INSULATION	

(Revised June 1981)

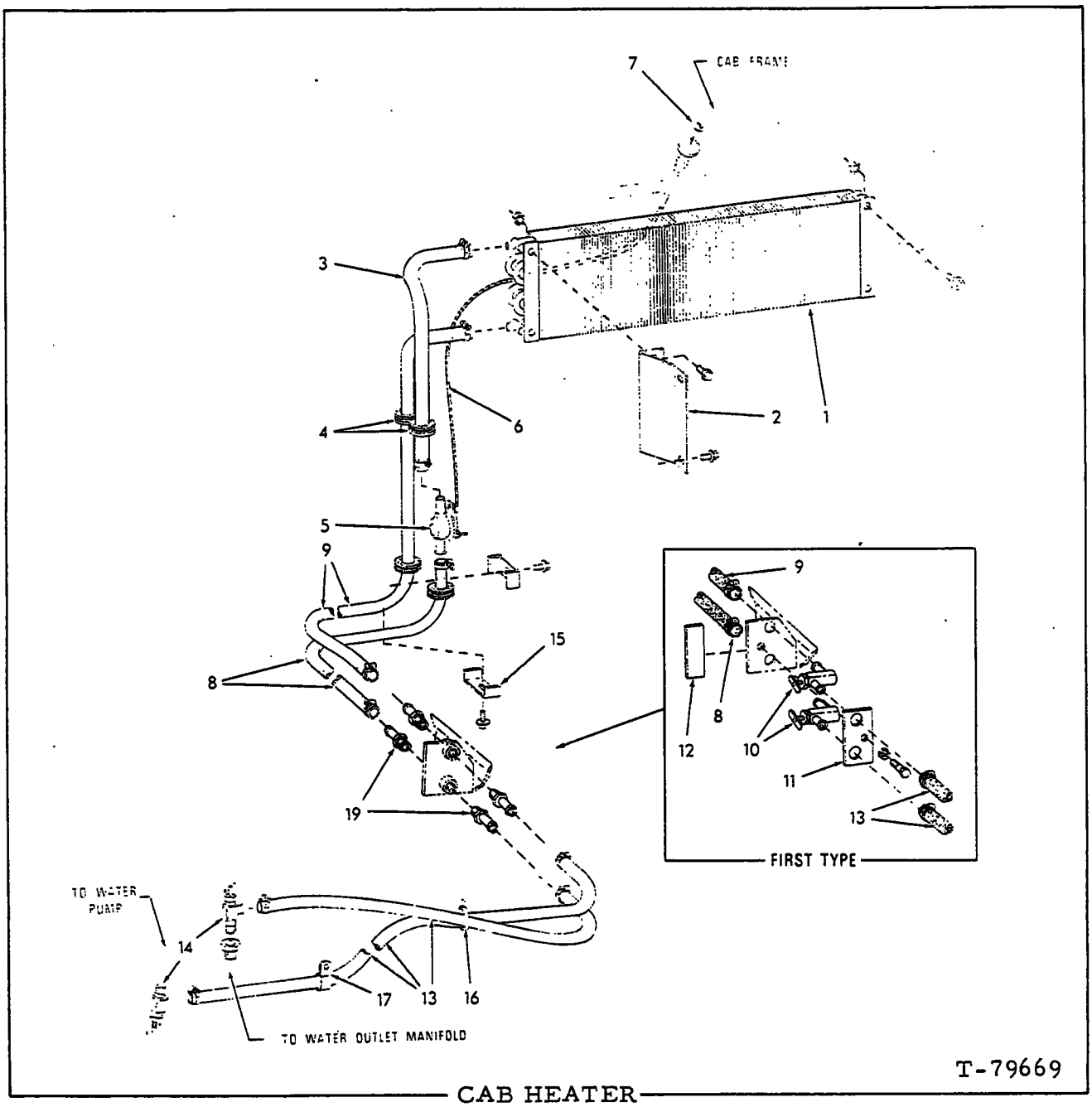

CAB HEATER

ITEM	PART NO.	QTY.	DESCRIPTION
1	73107269	1	COIL
	70930594	4	SCREW, self-locking, 1/4"NC x 3/4"
	70931702	4	NUT, 1/4"NC
2	--------	1	BULKHEAD (Not serviced)
	70930594	2	SCREW, self-locking, 1/4"NC x 3/4"
3	--------	1	HOSE (17" long) (Not serviced)
	70921911	2	CLAMP, 11/16" to 1-1/4" diam.
4	73107282	4	GROMMET
5	73107263	1	VALVE, inlet

(Continued)

Revised June 1981)

CAB HEATER (Continued)

ITEM	PART NO.	QTY.	DESCRIPTION
6	73107214	1	CABLE ASSY. (Includes mounting hardware and item 7)
7	73107215	1	DECAL
8	--------	1	HOSE (Order item 18)(Requires cutting to proper length)
	70921911	2	CLAMP, 11/16" to 1-1/4" diam.
9	--------	1	HOSE (51-1/2" long) (Not serviced)
	70921911	2	CLAMP, 11/16" to 1-1/4" diam.
10	73107449	2	VALVE, shut-off
11	--------	1	BRACKET (Not serviced) } Cabs prior to S/N 30487
	70921382	1	CAPSCREW, 1/4"NC x 1-1/4" } Cabs prior to S/N 30487
	70910285	1	LOCKWASHER, 1/4" } Cabs prior to S/N 30487
12	73107195	1	DECAL
13	--------	2	HOSE (Order item 18)(Requires cutting to proper length)
	70921911	4	CLAMP, 11/16" to 1-1/4" diam.
14	73107448	2	VALVE, shut-off
	70904271	1	BUSHING, pipe reducing, 1/2"NPT to 3/8"NPT
15	--------	3	CLAMP (Not serviced)
	70930594	2	SCREW, self-locking, 1/4"NC x 3/4"
16	70196766	3	STRAP
17	70929665	1	CLAMP, insulated
18	70078547	-	HOSE, 5/8"I.D. x 83" (Use as required)
19	70925053	4	NIPPLE, hose, str. barb, 5/8" hose, 1/2"NPTF (Cabs S/N 30487 and up)

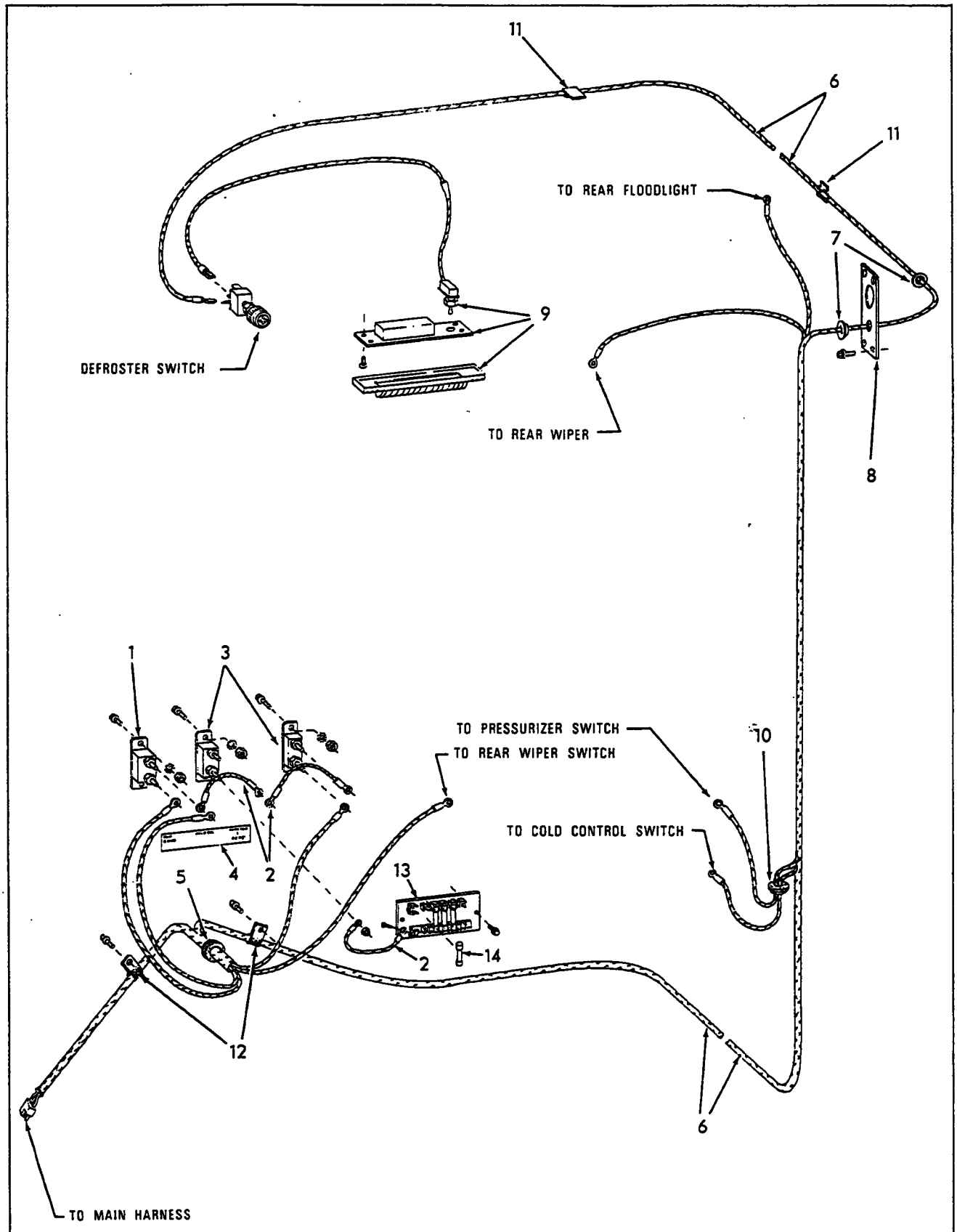

CAB LIGHT AND WIRING

CAB LIGHT AND WIRING

ITEM	PART NO.	QTY.	DESCRIPTION	
1	73107446	1	BREAKER, circuit	
	70917388	2	SCREW, machine, #10-24 NC x 3/4"	
	70917257	2	LOCKWASHER, external tooth, #10	
	70901310	2	NUT, #10-24 NC	
2	--------	3	WIRE (Not serviced)(1 less used on CABS prior to S/N 28675)	
3	73107193	2	BREAKER, circuit	
	70917388	4	SCREW, machine, #10-24 NC x 3/4"	
	70917257	4	LOCKWASHER, external tooth, #10	
	70901310	4	NUT, #10-24 NC	
4	73107196	1	DECAL, circuit breaker identification	
5	70928310	1	GROMMET	
6	73121873	1	HARNESS	
7	73107157	2	PLUG	
8	--------	1	PLATE (Not serviced)	
	70930594	4	CAPSCREW, self-locking, 1/4" NC x 3/4"	
9	73107109	1	LIGHT, dome	
	70931701	4	SCREW, machine, thrd.-cutting, #6 x 1/2"	
10	70925737	1	GROMMET	
11	73107100	6	CLIP, 1/4" I.D. (adhesive backing)	
12	70926921	8	CLAMP, insulated	
	70930594	8	CAPSCREW, self-locking, 1/4" NC x 3/4"	
13	73115671	1	BLOCK, fuse	CAB S/N 28765 and up
	70917388	2	SCREW, machine, #10-24 NC x 3/4"	
	70917257	2	LOCKWASHER, external tooth, #10	
	70901310	2	NUT, #10-24 NC	
14	73115670	4	FUSE	

(Revised June 1981)

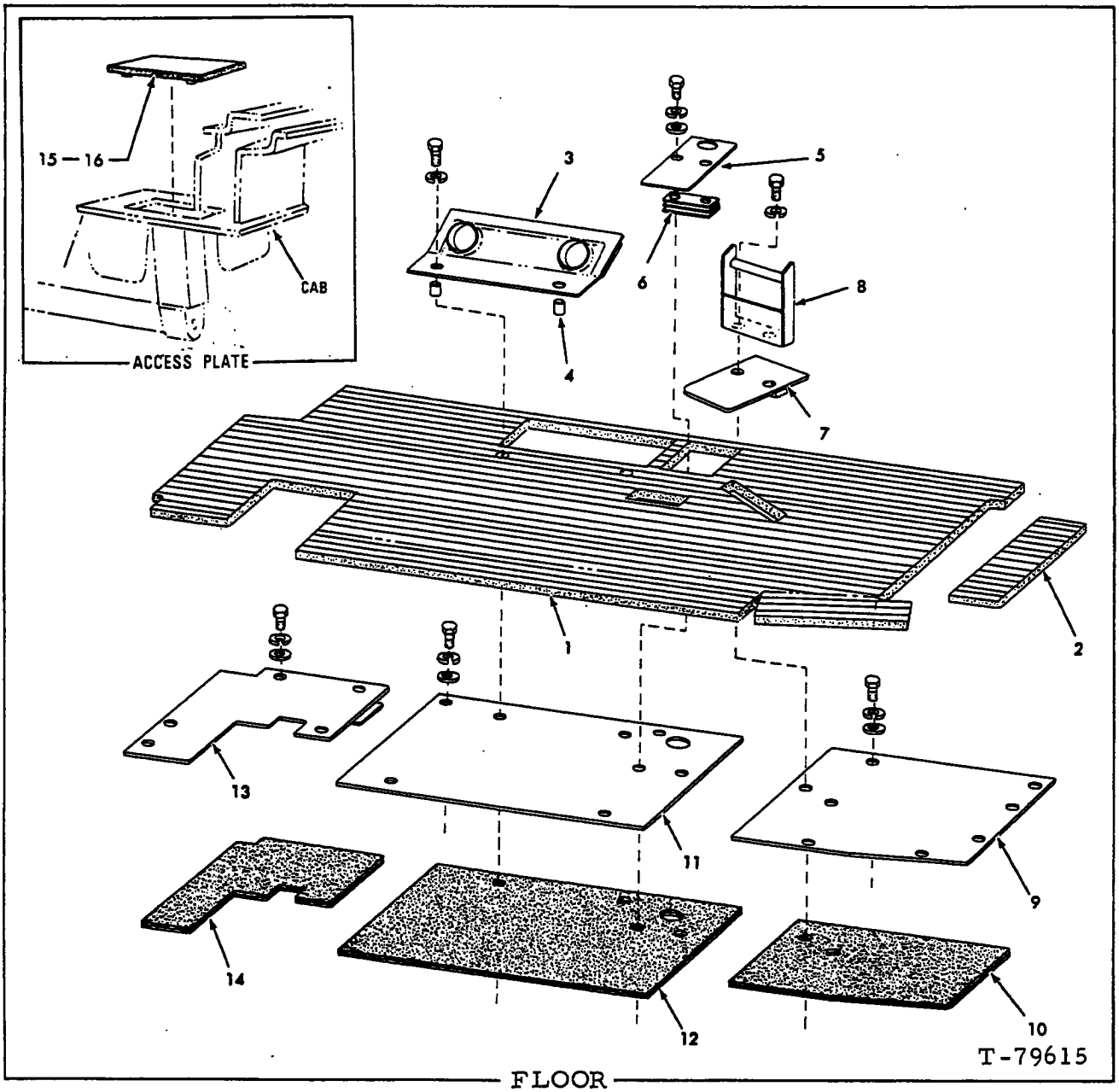

FLOOR

USAGE: For units equipped with CAB

ITEM	PART NO.	QTY.	DESCRIPTION
1	73107317	1	MAT, floor
2	73107379	1	MAT, floor
3	73107391	1	PLATE
	70920995	2	CAPSCREW, 3/8"NC x 2"
	70910287	2	LOCKWASHER, 3/8"
4	--------	2	SPACER (Not serviced)
5	73115643	1	PLATE
	70920995	2	CAPSCREW, 3/8"NC x 2"
	70910287	2	LOCKWASHER, 3/8"
	70911115	2	WASHER

(Continued)

FLOOR (Continued)

ITEM	PART NO.	QTY.	DESCRIPTION
6	--------	3	SPACER (Not serviced)(Cabs prior to S/N 28685)
7	--------	1	PLATE (Not serviced)
8	70665338	1	BRACKET
	70920995	2	CAPSCREW, 3/8"NC x 2"
	70910287	2	LOCKWASHER, 3/8"
9	--------	1	PLATE ASSY. (Includes item 10) (Not serviced)
	70921076	6	CAPSCREW, 3/8"NC x 1-1/4"
	70910287	6	LOCKWASHER, 3/8"
	70911115	6	WASHER
10	73107257	1	INSULATION
11	--------	1	PLATE ASSY. (Includes item 12)(Not serviced)
	70921076	4	CAPSCREW, 3/8"NC x 1-1/4"
	70910287	4	LOCKWASHER, 3/8"
	70911115	4	WASHER
12	73107409	1	INSULATION
13	--------	1	PLATE ASSY. (Includes item 14)(Not serviced)
	70921076	4	CAPSCREW, 3/8"NC x 1-1/4"
	70910287	4	LOCKWASHER, 3/8"
	70911115	4	WASHER
14	73107408	1	INSULATION
15	73107359	1	PLATE ASSY. (Includes item 16)
16	73107360	1	INSULATION

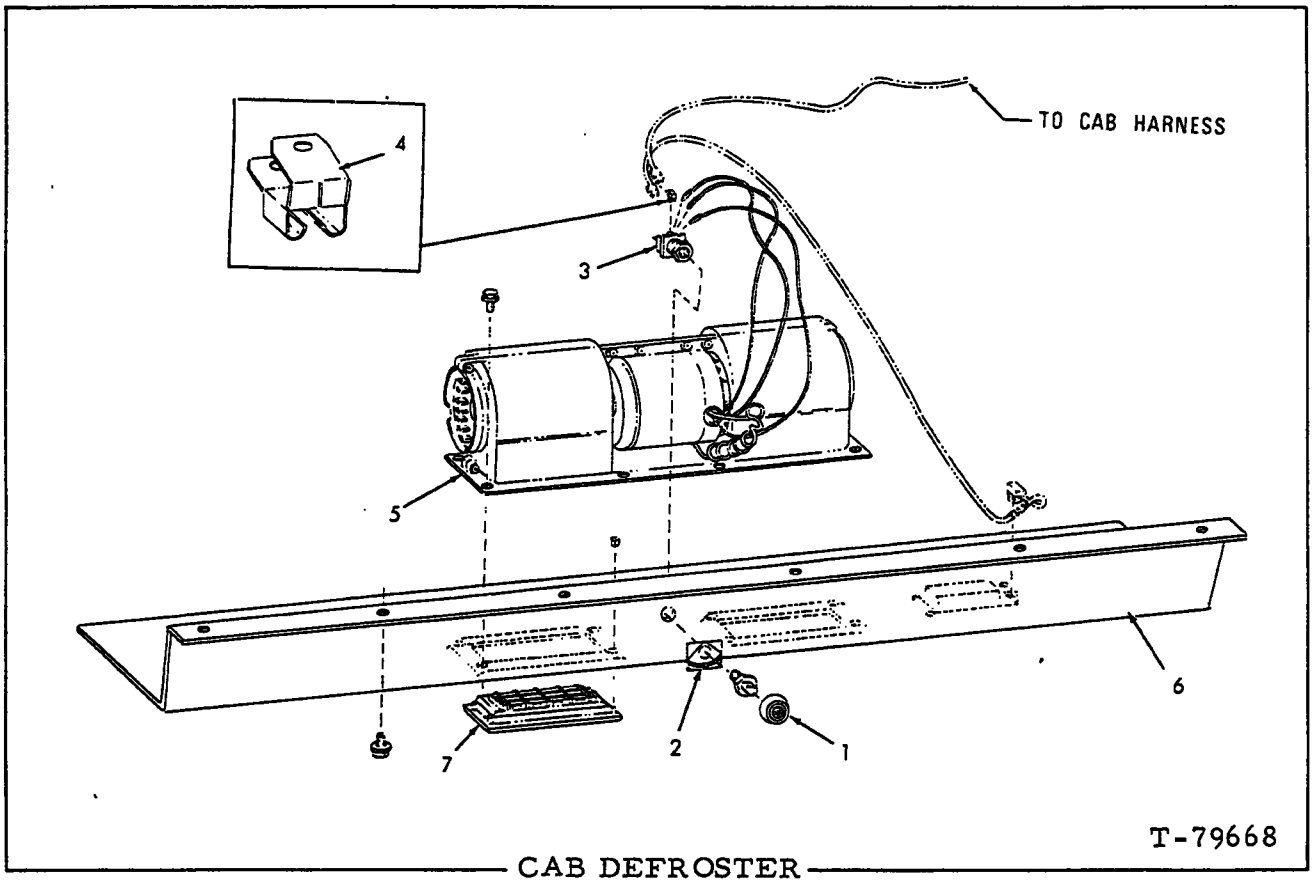

CAB DEFROSTER

ITEM	PART NO.	QTY.	DESCRIPTION
1	73107112	1	KNOB
2	73107111	1	DECAL
3	73107110	1	SWITCH
4	73107113	1	CONNECTOR
5	73107107	1	BLOWER (24 volt)
	70931697	8	SCREW, self-locking, #10-12NC x 3/8"
6	--------	1	PANEL ASSY. (Not serviced separately)
	70931698	12	SCREW, self-locking, #10-24NC x 3/8"
7	73107108	2	LOUVER
	73107114	8	FASTENER

CAB TILT-BACK CYLINDER
(Not illustrated)

ITEM	PART NO.	QTY.	DESCRIPTION
1	--------	1	CYLINDER ASSY. (See "Special Tool Instrument and Equipment Catalog" for procurement and service)

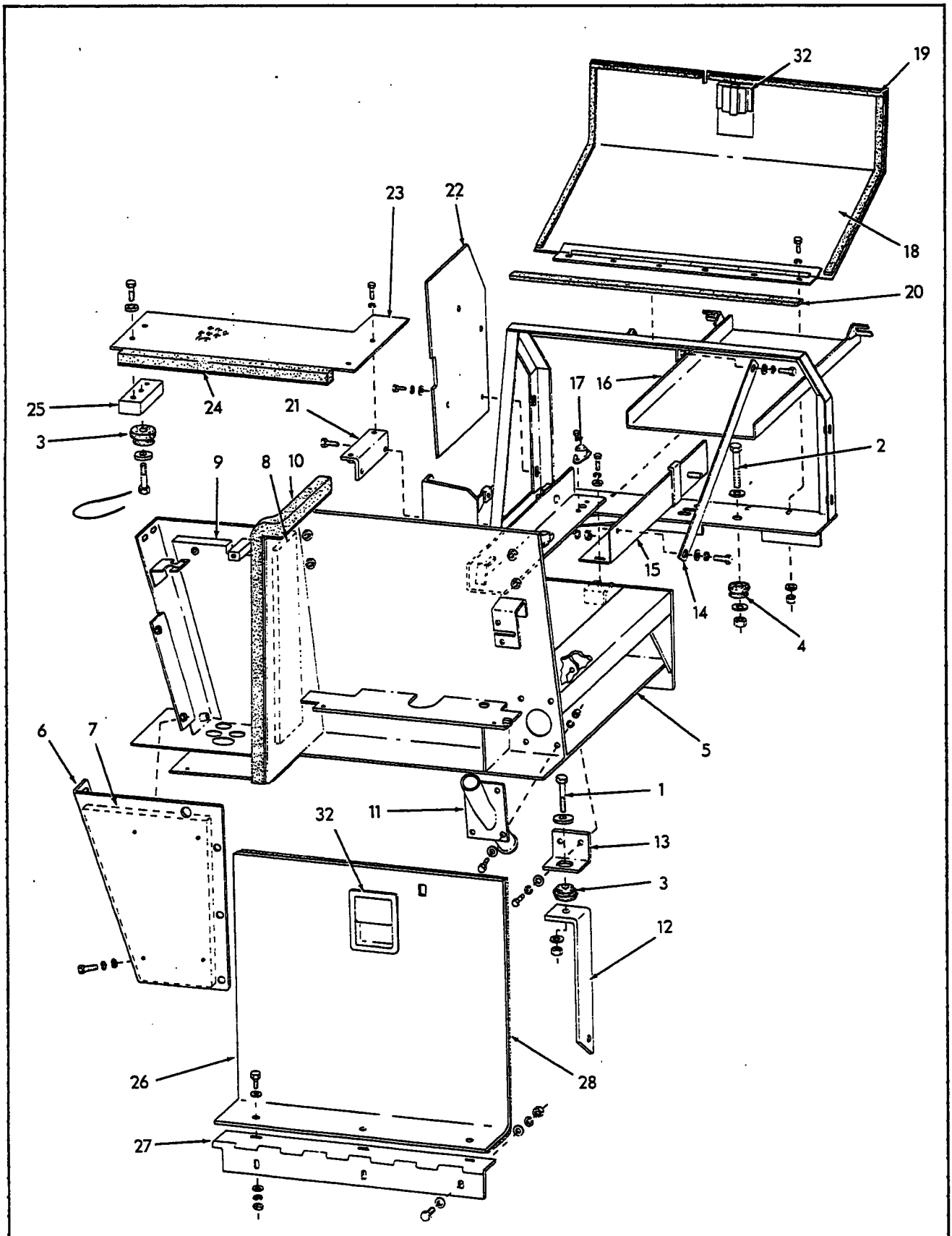

T-79663

CONTROL CONSOLE

(Revised June 1980)

CONTROL CONSOLE

USAGE: For units equipped with Cab

ITEM	PART NO.	QTY.	DESCRIPTION
-	70698507	1	TOWER ASSY., control (Includes items 5 thru 24)
	70924619	1	PLUG, button, 3/4"I.D.
	70920294	2	PLUG, button, 1-5/16"I.D.
	70921076	1	CAPSCREW, 3/8"NC x 1-1/4"
	70910287	1	LOCKWASHER, 3/8"
	70911115	1	WASHER
1	70922526	1	CAPSCREW, 1/2"NC x 2-1/2"
	70092163	1	WASHER
	70677008	1	WASHER
	70915972	1	NUT, elastic stop, 1/2"NC
2	70921266	4	CAPSCREW, 5/8"NC x 3-1/4"
	70087463	4	WASHER
	70677010	4	WASHER
	70914501	4	NUT, elastic stop, 5/8"NC
3	70689383	2	SNUBBER
4	70689775	4	SNUBBER
5	73107038	1	TOWER
6	73107039	1	COVER ASSY. (Includes item 7)
	70922763	5	CAPSCREW, 3/8"NC x 1"
	70910287	5	LOCKWASHER, 3/8"
	70911115	5	WASHER
7	73107081	1	INSULATION
8	73107075	1	INSULATION
9	73107076	1	INSULATION
10	--------	1	SEAL (Order item 30)(Requires cutting to proper length)
11	73111457	1	TUBE
	70922763	4	CAPSCREW, 3/8"NC x 1"
	70910287	4	LOCKWASHER, 3/8"
	70911115	4	WASHER
	70910324	4	NUT, 3/8"NC
12	--------	1	STRAP (Not serviced)
13	73107050	1	ANGLE
	70922763	2	CAPSCREW, 3/8"NC x 1"
	70910287	2	LOCKWASHER, 3/8"
	70911115	2	WASHER
14	73107040	1	STRAP
	70922763	2	CAPSCREW, 3/8"NC x 1"
	70910287	2	LOCKWASHER, 3/8"
	70911115	2	WASHER
15	73107041	1	SUPPORT
	70922763	2	CAPSCREW, 3/8"NC x 1"
	70910287	2	LOCKWASHER, 3/8"
	70911115	2	WASHER
16	--------	1	TRAY } See page 212
17	--------	6	ROLLER }
18	73107043	1	COVER ASSY., right (Includes items 19 and 32)
	70930594	6	CAPSCREW, self-locking, 1/4"NC x 3/4"
	70910285	6	LOCKWASHER, 1/4"
	70911114	6	WASHER
	70910880	6	NUT, 1/4"NC

(Continued)

ITEM	PART NO.	QTY.	DESCRIPTION
19	--------	3	SEAL (Order item 29)
20	--------	1	SEAL (Order item 31)
21	--------	1	ANGLE (Not serviced)
	70922763	2	CAPSCREW, 3/8"NC x 1"
	70910287	2	LOCKWASHER, 3/8"
	70910324	2	NUT, 3/8"NC
22	73107048	1	COVER
	70930594	4	CAPSCREW, self-locking, 1/4"NC x 3/4"
	70911114	4	WASHER
23	73107051	1	PLATE ASSY. (Includes item 24)
	70922763	2	CAPSCREW, 3/8"NC x 1"
	70910287	2	LOCKWASHER, 3/8"
	70920582	2	CAPSCREW, 1/2"NC x 1-1/4" } Not components of
	70677006	2	WASHER } Control Tower Assy.
24	--------	1	SEAL (Order item 30)(Requires cutting to proper length)
25	70689382	1	BLOCK
	70929074	1	CAPSCREW, drilled-hd., 1/2"NC x 2"
	70092163	1	WASHER
	70037000	1	LOCKWIRE
26	73107393	1	COVER ASSY., left (Includes item 32)
	70922300	3	CAPSCREW, 3/8"NC x 3/4"
	70910287	3	LOCKWASHER, 3/8"
	70911115	6	WASHER
	70912772	3	NUT, 3/8"NC
27	73107490	1	HINGE
	70922300	3	CAPSCREW, 3/8"NC x 3/4"
	70910287	3	LOCKWASHER, 3/8"
	70911115	6	WASHER
	70912772	3	NUT, 3/8"NC
28	73107489	3	SEAL
29	73107060	-	SEAL, 3/8"x 25-3/4" } Use as
30	73107061	-	SEAL, 1"x 37" } required
31	73107070	-	SEAL, 1/2"x 58-3/4" }
32	70693463	2	PADDLE LOCK (Requires welding to install)

(Revised June 1980)

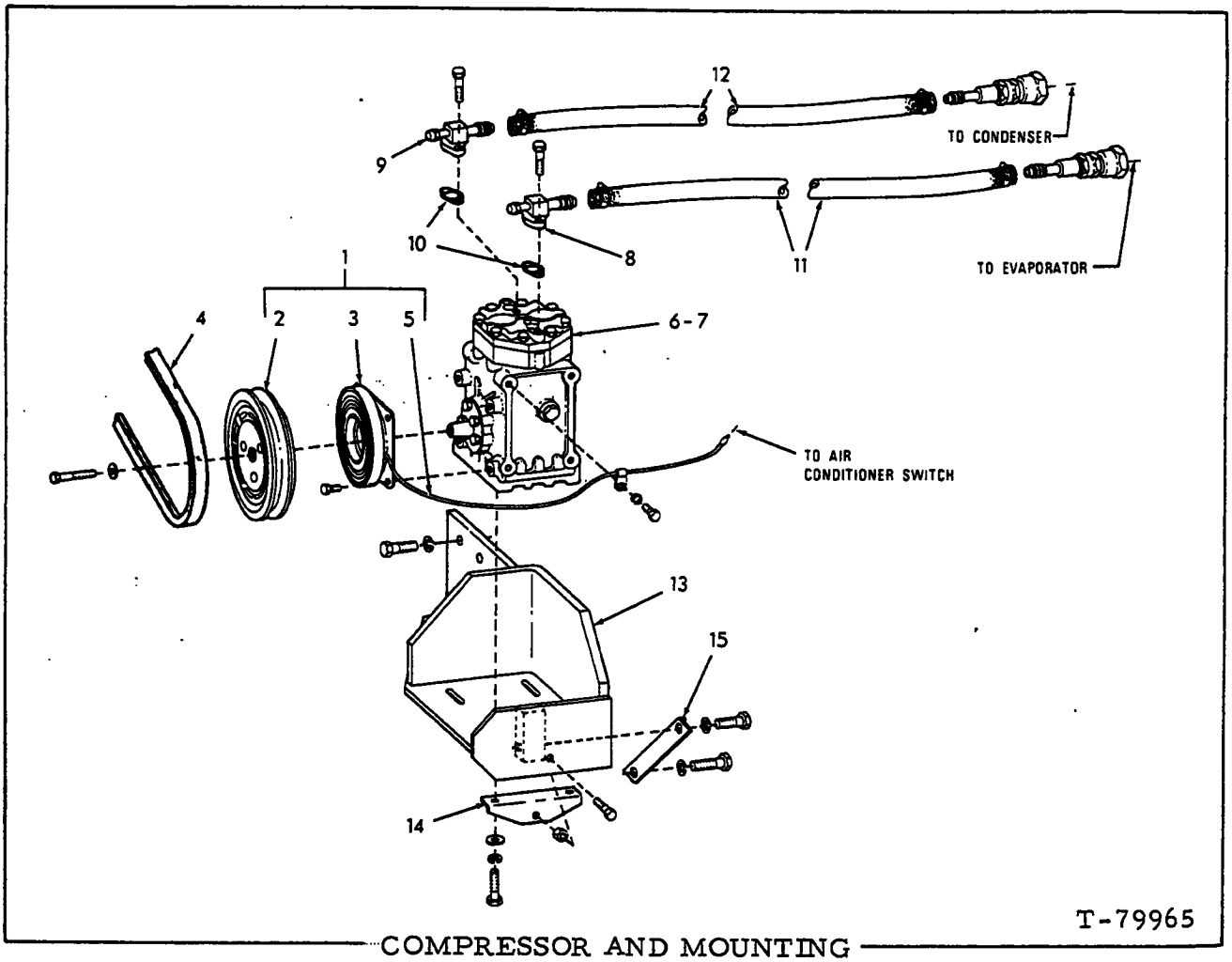

COMPRESSOR AND MOUNTING

USAGE: Special equipment. For units equipped with Air Conditioning.

ITEM	PART NO.	QTY.	DESCRIPTION
1	73115308	1	CLUTCH ASSY. (Includes items 2, 3 and 5 and mounting hardware)
2	73115307	1	PULLEY
3	73107662	1	COIL
4	73108026	1	BELT
5	--------	1	WIRE ASSY. (Includes clip. Not serviced separately)
	70927484	1	CAPSCREW, 3/8"NC x 1/2"
	70910287	1	LOCKWASHER, 3/8"
6	73108408	1	COMPRESSOR ASSY. (Includes items 7 thru 12)
	70921565	4	CAPSCREW, 3/8"NC x 1-1/2"
	70910287	4	LOCKWASHER, 3/8"
	70911115	2	WASHER
7	73108413	1	COMPRESSOR ASSY. (Includes items 8, 9 and 10) (Vender No. 488-20038, Model 209 Heavy Duty. See NOTE below)

(Continued)

'Revised June 1981)

COMPRESSOR AND MOUNTING (Continued)

ITEM	PART NO.	QTY.	DESCRIPTION
8	73108405	1	FITTING
9	73107659	1	FITTING
10	73107627	2	GASKET
11	--------	1	HOSE (Refer to item 17)
	73108410	1	FITTING, disconnect
	73107640	2	CLAMP
12	--------	1	HOSE (Refer to item 16)
	73108409	1	FITTING, disconnect
	73107640	2	CLAMP
13	73108030	1	BRACKET (Tractors prior to unit #21814)
	73121609	1	BRACKET (Tractors unit #21814 and up)
	70920582	3	CAPSCREW, 1/2"NC x 1-1/4"
	70912441	3	LOCKWASHER, 1/2"
14	73108027	1	ANGLE
	70929883	1	CAPSCREW, 3/8"NC x 2"
	70912772	1	NUT, 3/8"NC
15	73108031	1	ANGLE (Tractors prior to unit #21814)
	73121608	1	STRAP (Tractors unit #21814 and up)
	70920582	1	CAPSCREW, 1/2"NC x 1-1/4"
	70920583	1	CAPSCREW, 1/2"NC x 1-1/2"
	70912441	2	LOCKWASHER, 1/2"
16	70932509	-	HOSE, 13/32"I.D. x 25 ft. } Use as required and
17	70932510	-	HOSE, 1/2"I.D. x 25 ft. } cut to proper length

NOTE: Service of Compressor Assy. component parts must be obtained from nearest Automotive Air Conditioning Service Agency or York Automotive Division, Borg-Warner Corp. P.O. Box 442, 625 Southside Drive, Decatur, Ill. 62525

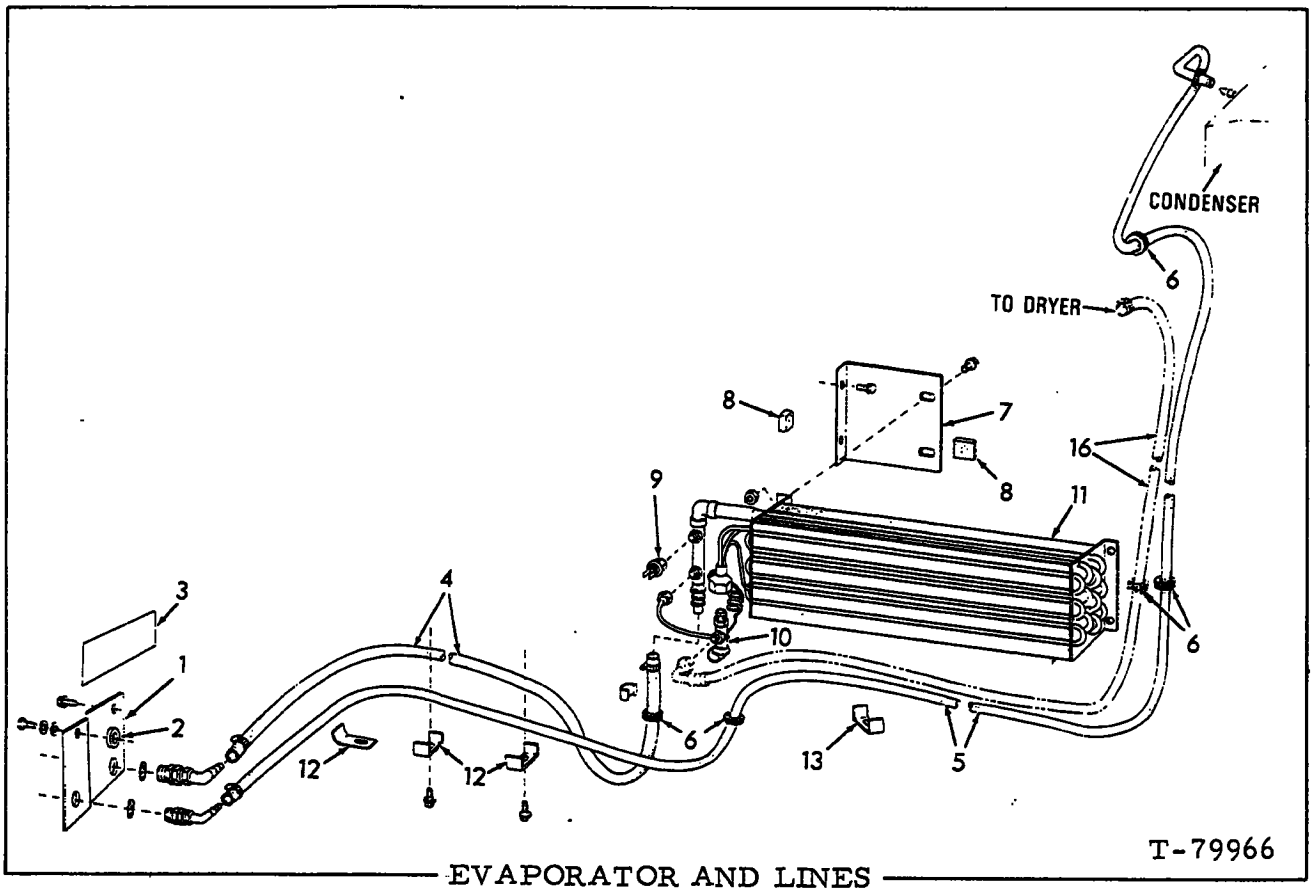

EVAPORATOR AND LINES

USAGE: Special equipment. For units equipped with Air Conditioning

ITEM	PART NO.	QTY.	DESCRIPTION
1	----------	1	PLATE (Not serviced. Fabricate locally)
	70931646	1	SCREW, self-locking, 1/4"NC x 1/2"
	70927401	1	CAPSCREW, 1/4"NC x 1"
	70910285	1	LOCKWASHER, 1/4"
	70911114	1	WASHER
2	--------	1	SPACER (Not serviced. Fabricated locally)
3	73108402	1	DECAL
4	--------	1	HOSE (Refer to item 14)
	73108404	1	FITTING, disconnect
	70918464	1	LOCKWASHER, internal tooth, 1-1/2"
	73107640	2	CLAMP
5	--------	1	HOSE (Refer to item 15)
	73108403	1	FITTING, disconnect
	70912302	1	LOCKWASHER, internal tooth, 1"
	73107640	2	CLAMP
6	73107282	4	GROMMET
7	--------	1	BRACKET
	70931646	2	SCREW, self-locking, 1/4"NC x 1/2"
8	70682557	2	SEAL
9	73107631	1	CONTROL
10	73107633	1	VALVE, expansion

(Continued)

EVAPORATOR AND LINES (Continued)

ITEM	PART NO.	QTY.	DESCRIPTION
11	73107636	1	COIL
	70931646	4	SCREW, self-locking, 1/4"NC x 1/2"
	70931702	4	NUT, 1/4"NC
12	73108467	3	CLAMP
13	73107301	1	CLAMP
	70931646	2	SCREW, self-locking, 1/4"NC x 1/2"
14	70932510	-	HOSE, 1/2"I.D. x 25' } Use as required and
15	70932509	-	HOSE, 13/32"I.D. x 25' } cut to proper length
X 16	--------	1	HOSE (See page 296)

(Revised June 1981)

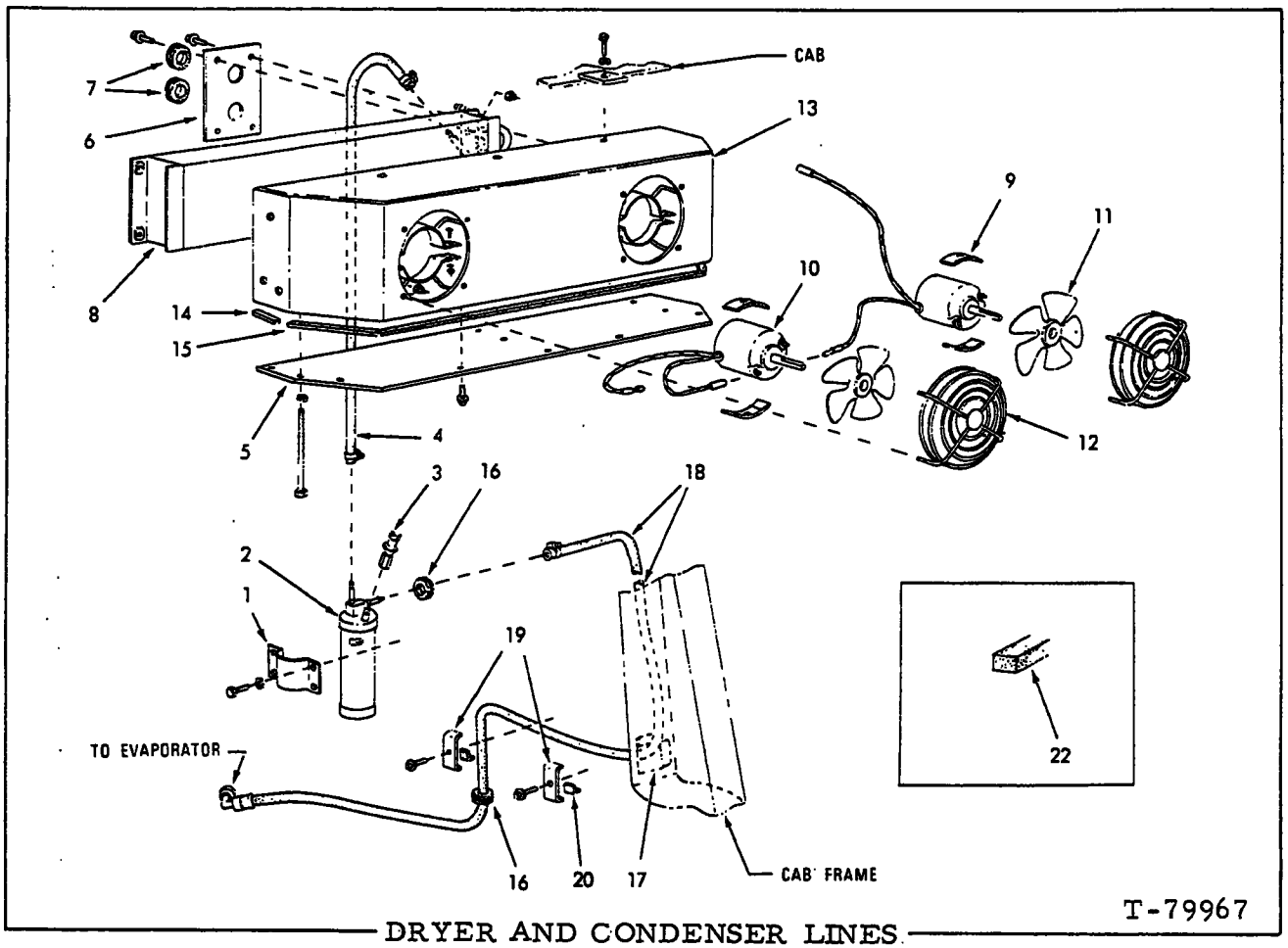

DRYER AND CONDENSER LINES

USAGE: Special equipment. For units equipped with Air Conditioning

ITEM	PART NO.	QTY.	DESCRIPTION
1	73107628	1	BRACKET
	70927401	4	CAPSCREW, 1/4"NC x 1"
	70910285	4	LOCKWASHER, 1/4"
2	73107637	1	DRYER ASSY. (Includes item 3)
3	73107652	1	CONTROL
4	--------	1	HOSE (Refer to item 21)
	73107640	2	CLAMP
5	--------	1	COVER (Not serviced. Fabricate locally)
	70930594	5	SCREW, self-locking, 1/4"NC x 3/4"
	70931844	6	CAPSCREW, 5/16"NC x 7"
	70910286	6	LOCKWASHER, 5/16"
6	--------	1	BRACKET (Not serviced. Fabricate locally)
	70931646	4	SCREW, self locking, 1/4"NC x 1/2"
	70931702	4	NUT, 1/4"NC
7	73107666	2	GROMMET
8	73107660	1	CONDENSER
	70931646	4	SCREW, self-locking, 1/4"NC x 1/2"
	70931702	4	NUT, 1/4"NC

(Continued)

DRYER AND CONDENSER LINES (Continued)

ITEM	PART NO.	QTY.	DESCRIPTION
9	73107667	4	PAD
	70931698	8	SCREW, self-locking, #10-24NC x 3/8"
	70917257	8	LOCKWASHER, #10
	70901310	8	NUT, #10-24NC
10	73107663	2	MOTOR KIT (Includes MOTOR and 4 terminals)
11	73107665	2	BLADE
12	--------	2	GUARD (First type. Order 73114683 Guard Assy.)
	70917479	16	NUT, #6-32NC
	73114683	2	GUARD (Second type. Service replacement)(Includes 8 Nuts #8-32NC)
13	73107651	1	HOUSING
	70921569	9	CAPSCREW, 7/16"NC x 1-1/4"
	70914678	9	LOCKWASHER, 7/16"
14	--------	2	SEAL (Refer to item 22)
15	73108447	1	SEAL, 1/4" x 39-3/4"
16	73107282	2	GROMMET
17	73108406	1	WINDLACE
18	73107642	1	HOSE
	73107640	1	CLAMP
19	73108400	2	CLAMP ASSY. (Includes item 20)
20	70682557	2	SEAL, 1" x 1-1/4"
21	70932508	-	HOSE, 5/16" I.D. x 25' (Use as required and cut to proper length)
22	73107060	-	SEAL, 3/8" x 25-3/4"

CAB (NON-ROPS)
(Not illustrated)

USAGE: Special equipment

ITEM	PART NO.	QTY.	DESCRIPTION
1	73118708	1	CAB ASSY. (vendor part no. 2386)(Includes HEATER, WIPERS, DEFROSTER FAN, DOME LIGHT, SOUND INSULATION and FLOOR MAT)(Service must be obtained from Industrial Cab Company Route 22, Western Ave. Essex, MA 01929)

PART NO.	PAGE	PART NO	PAGE	PART NO	PAGE	PART NO.	PAGE	PART NO	PAGE
60400049	2	70061528	202	70095265	207	70609122	234	70623344	142
70012387	227	70063222	56	70095267	207	70609122	238	70623346	142
70012389	227	70063890	39	70095860	211	70609136	236	70623765	56
70012767	235	70063891	39	70095869	251B	70609142	236	70623804	103
70013006	173	70064961	128	70095869	252	70609355	235	70624508	201A
70023633	10	70065935	214	70096815	39	70609361	235	70624508	45
70023633	106	70067112	139	70096816	39	70609368	230	70624584	127
70023633	140	70067483	141	70096908	213	70609389	233	70624584	54
70023633	142	70067484	141	70096921	267	70609389	238	70624584	55
70023633	153	70067484	142	70096921	267B	70609749	128	70624584	56
70023633	220	70067485	141	70097056	183	70614721	235	70624585	55
70023633	257	70067543	140	70097413	139	70615229	233	70624585	56
70023633	82	70067720	84	70097413	37	70615338	235	70624585	57A
70023633	9A	70067766	89	70097611	171	70615581	235	70624688	106
70023633	97	70067884	82	70098029	193	70615619	235	70624688	107
70023633	98	70067962	83	70098029	197	70615696	235	70624695	103
70023756	140	70068389	249	70098369	253	70615750	234	70624783	107
70034076	198	70070400	173	70098837	186	70615912	234	70624783	108
70035250	102	70072438	161	70099469	47	70617069	234	70624783	109
70035689	106	70072438	56	70099949	136	70617171	235	70625383	186
70035689	9A	70074452	207	70158613	10	70617855	235	70626462	267B
70035916	225	70075420	98	70161824	201	70617931	267	70627346	9
70035942	165	70076148	202	70182763	204	70617932	127	70627451	161
70036268	227	70076469	213	70183714	270	70617932	249B	70628730	165A
70037000	187	70076572	213	70186451	91	70617932	267	70628736	128
70037000	290	70078547	281	70186531	93	70617932	267B	70628736	55
70038454	167	70078810	127	70186648	110	70618083	234	70628736	56
70040475	153	70078810	54	70186648	112	70618084	234	70628737	55
70040503	173	70078908	127	70188168	95	70618173	235	70628738	171A
70042911	127	70078908	54	70188309	93	70618692	235	70628738	55
70042951	109	70080758	39	70188436	189	70618840	235	70628738	57A
70047381	208	70080809	10	70188436	189D	70619274	235	70628784	108
70047381	209	70082315	145	70188476	89	70619275	235	70628784	109
70048922	204	70082443	39	70189269	132	70619404	230	70628794	98
70049988	249	70082444	39	70194132	248	70619648	230	70629138	104
70049993	213	70082449	39	70194165	248	70619654	230	70629346	109
70049993	249	70082487	39	70194166	248	70619720	230	70629349	106
70049993	56	70082488	39	70196531	240	70619840	234	70629350	106
70050227	245	70082489	39	70196531	247	70619841	235	70629355	104
70050507	227	70082490	39	70196606	171A	70619952	233	70629358	104
70050608	227	70083318	222	70196606	57A	70620035	208	70629407	257
70050609	227	70084581	173A	70196612	240	70620063	125A	70629697	186
70050610	227	70084897	40	70196645	243	70620072	29	70629698	186
70050611	227	70084899	40	70196645	247	70620350	216	70629709	127
70050612	227	70085680	213	70196645	253	70621363	136	70629755	69
70051647	179	70087463	189	70196765	214	70621428	204	70630056	145
70051836	152	70087463	189D	70196766	281	70621429	204	70630097	174
70051988	141	70087463	289	70197576	65	70621724	204	70630540	39
70051988	178	70087463	82	70199904	240	70622102	172	70630624	174
70051989	141	70087463	82A	70199904	247	70623003	153	70630738	201
70051989	178	70087855	57	70229210	40	70623004	153	70631476	127
70052066	142	70090020	161	70239726	57	70623007	153	70631476	55
70052066	153	70090020	193	70240962	201	70623008	153	70631572	216
70052118	152	70090020	249	70243526	213	70623010	152	70631573	216
70052371	227	70090020	249A	70243527	213	70623016	152	70631574	216
70052444	143	70090020	267	70243528	213	70623017	152	70631690	174
70052444	144	70090020	267B	70244554	136	70623018	153	70631704	174
70052519	153	70090020	54	70253308	68	70623130	167	70631769	65
70052669	165	70092163	187	70253322	211	70623131	167	70632038	127
70052669	168	70092163	205	70290743	86	70623132	167	70632060	121
70052671	165A	70092163	289	70600236	234	70623133	167	70632060	160
70052976	139	70092163	290	70604241	246	70623139	167	70632188	189A
70052977	140	70092727	44	70604241	248A	70623144	167	70632188	189D
70052979	139	70092727	45	70605801	213	70623153	167	70632361	175
70054073	89	70093176	221	70605923	171	70623158	167	70632368	140
70054809	153	70093953	142	70606392	249B	70623164	167	70632706	201
70055914	87	70093972	208	70606702	233	70623182	167	70632710	55
70056362	89	70093972	209	70606702	235	70623195	85	70632716	55
70058614	103	70093972	86	70609120	233	70623234	155	70632747	55
70058974	89	70094450	208	70609122	233	70623234	156	70632752	55

PART NO	PAGE	PART NO	PAGE	PART NO	PAGE	PART NO	PAGE	PART NO	PAGE
70632766	55	70643740	139	70652011	157A	70656746	103	70657982	89
70633123	55	70643740	167	70652241	85	70656756	103	70657982	9
70633497	135	70644266	96	70652350	55	70656766	103	70657983	9
70633519	47	70644337	104	70652389	119	70656774	89	70657983	94
70633653	214	70645074	153	70652389	9	70656790	104	70657985	93
70633674	186	70645074	6	70652689	161	70656795	174	70657986	89
70633675	186	70645236	171B	70652995	127	70656796	174	70657987	94
70633955	249B	70645236	6	70652996	127	70656849	131	70657988	93
70635132	128	70645319	141	70653000	127	70656849	6	70657989	89
70635132	45	70646245	243	70653030	127	70656919	267	70657990	94
70635286	267B	70646353	44	70653031	127	70656980	114	70657991	89
70635447	244	70646353	6	70653113	178	70656981	111	70657992	94
70637051	245	70646532	121	70653279	161	70657207	244	70657993	93
70637056	245	70646532	160	70653319	127	70657299	106	70657994	93
70637541	161	70646915	157	70653319	161	70657302	104	70657998	93
70637993	167	70646915	6	70653319	56	70657303	108	70657999	93
70637997	167	70646931	65	70653570	127	70657303	109	70658001	94
70638002	167	70647080	174	70653570	267	70657305	106	70658002	94
70638039	135	70647108	257	70653570	267B	70657305	108	70658004	95
70638282	204	70647122	257	70653570	54	70657305	109	70658005	95
70638397	213	70647151	257	70653648	216	70657312	105	70658008	9
70638767	91	70647621	250	70653740	104	70657313	104	70658008	94
70638818	167	70647622	250	70653798	103	70657314	105	70658009	9
70638826	247	70647638	251A	70653798	9	70657315	104	70658009	95
70638887	137	70647640	251	70653819	105	70657316	104	70658010	9
70639312	207	70647655	251	70653873	119	70657317	104	70658010	95
70639388	201B	70647656	251	70653933	158	70657318	104	70658011	95
70639388	68	70647665	251	70653936	158	70657319	106	70658017	95
70639501	108	70647666	251	70654002	101	70657319	107	70658019	95
70639501	109	70647808	250	70654061	101	70657321	109	70658023	91
70639534	89	70647808	251	70654098	81	70657322	106	70658025	96
70639547	111	70647996	106	70654104	102	70657323	107	70658026	9
70639547	112	70647996	107	70654104	9	70657324	104	70658026	93
70639547	115	70647996	108	70654105	102	70657328	106	70658114	9
70639759	108	70647996	109	70654277	101	70657329	106	70658114	93
70639759	109	70648173	251	70654304	131	70657549	171	70658115	93
70639939	133	70648173	255	70654565	82A	70657581	107	70658116	93
70639939	137	70648174	251	70654655	201A	70657582	107	70658241	248
70639939	91	70648175	251	70654655	57	70657582	9	70658245	265
70639939	95	70648238	173B	70654811	213	70657731	251	70658246	265
70640636	9	70648262	216	70654840	47	70657733	251	70658246	265B
70640636	97	70648331	186	70655212	267	70657734	251A	70658278	263
70640637	127	70648619	104	70655212	267B	70657735	251	70658278	263B
70640675	135	70648619	9	70655215	267	70657736	251	70658279	263
70640676	201	70649611	242	70655215	267B	70657737	251A	70658280	263
70640677	140	70650134	189	70655420	267	70657941	93	70658281	263
70640704	201B	70650134	189D	70655420	267B	70657942	93	70658282	262
70640707	201B	70650275	167	70655452	10	70657943	93	70658282	263A
70640780	160	70650276	167	70655619	89	70657944	93	70658284	262
70641027	257	70650428	160	70655619	9	70657945	93	70658284	263A
70641029	159	70650509	47	70655746	127	70657947	93	70658286	262
70641031	121	70650560	244	70655838	183	70657948	93	70658286	263A
70641031	160	70650675	158	70655999	156	70657949	93	70658360	263
70641504	125A	70650679	158	70656227	47	70657950	93	70658360	263B
70641563	170	70650691	152	70656572	159	70657951	93	70658361	263
70641968	249B	70650712	127	70656573	159	70657952	93	70658363	263
70641968	267	70650811	142	70656574	159	70657953	93	70658363	263B
70642130	249B	70650812	152	70656593	104	70657954	93	70658364	263
70642147	111	70650847	175	70656594	104	70657955	93	70658364	263B
70642147	112	70650944	215	70656596	109	70657956	93	70658365	263
70642147	114	70651109	248	70656597	104	70657958	89	70658466	262
70642413	13	70651113	159	70656598	104	70657963	247	70658509	65
70642448	153	70651529	159	70656599	108	70657967	91	70658514	87
70642533	125A	70651531	159	70656601	106	70657970	91	70658630	198
70642633	173	70651532	159	70656602	106	70657976	94	70658633	65
70643124	173B	70651533	159	70656612	107	70657977	89	70658633	69
70643228	251C	70651704	233	70656614	267	70657978	89	70658637	209
70643228	253	70651704	237	70656614	267B	70657980	9	70658637	6
70643228	253B	70652011	154	70656681	103	70657980	94	70658640	125
70643229	173B	70652011	156	70656704	91	70657981	89	70658931	9

PART NO	PAGE	PART NO	PAGE	PART NO	PAGE	PART NO	PAGE	PART NO	PAGE
70658931	91	70663563	183	70665250	263	70667367	179	70670158	136
70659129	95	70663600	127	70665250	263B	70667377	179	70670159	136
70659135	95	70663727	213	70665278	246	70667378	179	70670247	230
70659175	86	70663940	257	70665338	187	70667482	228	70670252	228
70659340	267	70663977	257	70665338	285	70667482	229	70670354	243A
70659340	267B	70664000	257	70665638	251B	70667493	228	70670357	243A
70659365	123	70664074	127	70665638	252	70667493	229	70670357	6
70659422	135	70664099	127	70665638	6	70667496	228	70670386	91
70659490	197A	70664125	127	70665687	101	70667563	135	70670397	107
70659494	259	70664232	45	70665688	101	70667563	9	70670411	89
70659494	259A	70664237	54	70665714	263A	70667579	201	70670451	10
70659496	259	70664268	174	70665718	263	70667594	248	70670630	94
70659497	259	70664270	139	70665726	257	70667634	132	70670631	91
70659504	263	70664280	174	70665761	94	70667637	133	70670634	97
70659504	263B	70664281	174	70665767	257	70667640	133	70670666	119
70659506	263	70664456	262	70665771	93	70667670	140	70670668	119
70659555	263	70664456	263A	70665814	263	70667683	66	70670672	120
70659555	263B	70664458	263	70665814	263B	70667684	66	70670673	120
70659615	96	70664459	263	70665851	91	70668231	259	70670673	9
70659776	169	70664459	263B	70665852	91	70668231	259A	70670674	120
70659828	213	70664460	263	70665895	142	70668252	47	70670675	120
70660144	215	70664461	263	70665930	248	70668262	47	70670698	257
70660513	242	70664462	262	70666036	91	70668263	47	70670699	257
70660557	82	70664462	263A	70666039	9	70668281	93	70670706	101
70660694	201	70664464	262	70666039	91	70668373	2	70670708	97
70660780	263	70664464	263A	70666042	89	70668375	2	70670735	257
70660792	263	70664466	263	70666071	89	70668387	245	70670741	257
70660792	263B	70664569	260	70666074	94	70668394	245	70670849	176
70660793	263	70664571	260	70666081	96	70668482	136	70671075	81
70660793	263B	70664572	260	70666082	96	70668548	264	70671076	233
70660869	259	70664573	260	70666382	257	70668548	265A	70671078	233
70661209	228	70664574	260	70666383	257	70668550	264	70671126	219
70661209	230	70664575	260	70666384	257	70668550	265A	70671143	176
70661237	95	70664575	261A	70666385	257	70668551	264	70671145	176
70661268	121	70664577	260	70666387	257	70668551	265A	70671177	176
70661268	160	70664577	261A	70666388	257	70668552	264	70671325	257
70661345	201	70664581	260	70666422	257	70668552	265A	70671433	66
70661534	121	70664582	260	70666423	257	70668804	47	70671451	127
70661534	160	70664584	261	70666557	209	70668805	47	70671497	121
70661583	91	70664586	261	70666557	6	70668806	47	70671593	169
70661593	229	70664587	260	70666565	257	70668837	91	70671598	169
70662189	242	70664588	261	70666575	251B	70668840	261	70671616	121
70662315	131	70664650	129	70666575	253	70669002	244	70671616	160
70662367	131	70664650	133	70666575	253B	70669020	93	70671617	121
70662368	131	70664651	129	70666630	249	70669021	93	70671617	160
70662411	104	70664651	133	70666630	249A	70669053	68	70671626	178
70662427	57	70664652	133	70666634	257	70669188	264	70671627	178
70662468	257	70664655	132	70666654	258	70669188	265A	70671628	178
70662549	101	70664664	133	70666790	87	70669299	10	70671629	178
70662578	135	70664747	259	70666791	87	70669345	158	70671682	183
70662633	9	70664747	259A	70666795	55	70669350	158	70671683	183
70662633	97	70664748	259	70666823	267	70669351	158	70671685	183
70662786	174	70664748	259A	70666823	267B	70669352	158	70671709	211
70662916	91	70664837	198	70667055	91	70669359	68	70671727	223
70662917	91	70664852	139	70667123	65	70669367	173A	70671763	201B
70662918	91	70664867	47	70667156	232	70669423	96	70671809	66
70662919	133	70665094	232	70667156	251	70669434	121	70671838	66
70662919	91	70665095	248	70667157	251	70669454	132	70671839	66
70662920	91	70665096	248	70667159	173B	70669526	68	70671990	219
70663322	248	70665097	248	70667162	154	70669548	85	70672000	167
70663343	101	70665098	248	70667188	215	70669675	229	70672002	167
70663364	248	70665099	248	70667192	98	70669676	229	70672003	167
70663370	183	70665156	232	70667234	215	70669727	243A	70672044	267
70663442	107	70665157	232	70667236	179	70669727	6	70672044	267B
70663466	183	70665160	232	70667252	102	70669932	136	70672054	173B
70663468	98	70665160	269	70667252	140	70670064	178	70672486	133
70663472	125	70665167	232	70667252	29	70670066	178	70672487	110
70663482	107	70665174	263	70667252	7	70670068	178	70672487	113
70663482	9	70665174	263B	70667252	9	70670071	177	70672487	115
70663552	183	70665208	232	70667366	179	70670157	136	70672642	198

PART NO	PAGE	PART NO	PAGE	PART NO	PAGE	PART NO	PAGE	PART NO	PAGE
70672959	233	70677006	215	70677008	83	70680246	261A	70682595	141
70673037	10	70677006	220	70677008	97	70680376	133	70682598	141
70673071	123	70677006	221	70677010	140A	70680381	253B	70682601	153
70673081	228	70677006	240	70677010	173	70680382	253B	70682602	141
70673082	228	70677006	241	70677010	173A	70680403	137	70682606	141
70673083	123	70677006	243	70677010	173B	70680404	137	70682649	98
70673085	123	70677006	247	70677010	179	70680511	260	70682657	229
70673454	158	70677006	251C	70677010	189	70680511	261A	70682797	2
70673598	85	70677006	253	70677010	189D	70680513	259	70682823	179
70673599	85	70677006	253B	70677010	251C	70680513	264	70683152	215
70674318	185	70677006	257	70677010	253	70680580	171A	70683211	155
70674320	185	70677006	258	70677010	253B	70680581	171A	70683381	242
70674321	185	70677006	290	70677010	289	70680582	171A	70683421	213
70674412	157B	70677006	37	70677012	10	70680622	83	70683485	155
70674412	158	70677006	49	70677012	173	70680714	84	70683491	155
70674755	55	70677006	55	70677012	205	70680715	117	70683549	238
70674774	55	70677006	61	70677012	222	70680715	140	70683563	238
70674798	121	70677006	65	70677012	222A	70680746	6	70683591	118
70674798	160	70677006	68	70677012	257	70680746	82	70683591	6
70675282	91	70677006	69	70677012	47	70680747	82	70683592	118
70675487	81	70677006	82A	70677159	177	70680767	82	70683592	6
70675488	81	70677006	85	70677160	177	70680769	82	70683678	67
70675496	230	70677006	86	70677163	177	70680784	161	70683704	239
70676091	94	70677006	87	70677164	177	70680786	161	70683739	67
70676092	91	70677007	67	70677167	177	70680788	161	70683795	264
70676122	175	70677008	117	70677218	177	70680865	57	70683796	201
70676122	176	70677008	118	70677289	121	70680894	55	70683818	47
70676122	232	70677008	127	70677437	133	70680899	96	70684244	144
70676122	235	70677008	128	70677438	132	70680912	128	70684399	85
70676130	91	70677008	135	70677439	132	70680917	165	70684408	265
70676421	149	70677008	139	70677440	133	70680931	171B	70684408	265B
70676455	180	70677008	140	70677474	137	70681049	98	70684409	265
70676456	180	70677008	156	70677634	164	70681050	98	70684410	265
70676586	65	70677008	157	70677637	164	70681070	114	70684410	265B
70676647	202	70677008	157A	70677638	164	70681070	93	70684411	265
70676660	121	70677008	157B	70677639	164	70681094	173A	70684413	265
70676838	230	70677008	165	70677641	164	70681103	104	70684413	265B
70676839	230	70677008	168	70677642	164	70681105	65	70684416	264
70677004	193	70677008	173B	70677643	164	70681150	65	70684418	215
70677004	201B	70677008	181	70677696	177A	70681152	65	70684432	158
70677004	211	70677008	187	70677885	215	70681189	173A	70684435	265
70677004	225	70677008	189	70677914	198	70681223	96	70684435	265A
70677004	57	70677008	189D	70678072	173	70681503	173	70684436	265
70677005	116	70677008	194	70678072	184	70681504	173	70684436	265B
70677005	189	70677008	196	70678072	222	70681507	173	70684437	265
70677005	189D	70677008	197A	70678072	222A	70681516	173	70684437	265B
70677005	197A	70677008	201	70678072	239	70681526	173	70684438	264
70677006	116	70677008	201A	70678188	223	70681545	255	70684438	265A
70677006	123	70677008	202	70678236	208	70681558	142	70684439	264
70677006	127	70677008	205A	70678436	180	70681558	153	70684439	265A
70677006	128	70677008	213	70678437	180	70681559	153	70684564	84
70677006	140	70677008	214	70678438	180	70681560	142	70684595	208
70677006	154	70677008	216	70678856	160	70681649	2	70684595	209
70677006	165	70677008	219	70678984	257	70681695	158	70684695	67
70677006	167A	70677008	221	70679312	167	70681718	2	70684726	142
70677006	171	70677008	238	70679335	171B	70682188	85	70684726	153
70677006	171A	70677008	239	70679349	234	70682194	143	70684748	91
70677006	173B	70677008	242	70679350	234	70682224	10	70684749	91
70677006	187	70677008	245	70679375	117	70682286	239	70684837	220
70677006	189	70677008	247	70679375	140	70682371	95	70684966	197
70677006	189A	70677008	251C	70679507	145	70682534	177	70684988	68
70677006	189D	70677008	253	70679509	145	70682540	177A	70685028	197
70677006	189E	70677008	253B	70680023	171B	70682549	10	70685171	197
70677006	193	70677008	257	70680080	189A	70682551	177A	70685301	197
70677006	195	70677008	289	70680080	189E	70682554	177	70685542	251A
70677006	197A	70677008	36	70680241	260	70682555	10	70685557	219
70677006	201	70677008	47	70680244	260	70682556	177	70685768	221
70677006	202	70677008	55	70680244	261A	70682557	294	70685809	169
70677006	208	70677008	56	70680245	260	70682557	297	70685812	168
70677006	209	70677008	67	70680246	260	70682559	177	70685828	168

PART NO.	PAGE
70685833	248
70685842	169
70685854	169
70685868	169
70685872	168
70685875	168
70686006	248
70686037	149
70686096	144
70686337	146
70686352	142
70686355	143
70686356	145
70686409	139
70686410	139
70686435	153
70686436	153
70686437	141
70686446	221
70686476	143
70686503	142
70686515	143
70686537	146
70686546	143
70686571	145
70686615	142
70686616	142
70686663	173A
70686664	173A
70686666	173A
70686669	144
70686679	142
70686680	144
70686754	167
70686782	145
70686811	146
70686812	146
70686813	146
70686841	142
70686844	146
70686876	180
70686891	180
70686896	143
70686897	147
70686900	180
70686912	180
70686943	144
70686949	147
70686965	144
70686966	144
70686967	144
70686974	232
70686976	144
70687002	146
70687003	146
70687004	146
70687014	149
70687020	140
70687021	167
70687043	167
70687049	148
70687057	140
70687058	140
70687087	173A
70687089	173B
70687113	149
70687133	149
70687150	149
70687156	150
70687167	150
70687172	149
70687175	149
70687177	149
70687178	149
70687179	149
70687180	149
70687222	55
70687236	209
70687253	184
70687254	184
70687261	184
70687292	80
70687486	139
70687658	173
70687659	95
70687681	173
70687732	232
70687732	235
70687742	140
70687753	140
70687762	140
70687769	139
70687769	140A
70687784	257
70687813	173A
70687851	195
70687868	257
70687875	258
70688004	176
70688006	176
70688007	176
70688012	176
70688114	173A
70688151	193
70688282	211
70688737	110
70688737	113
70688737	115
70688775	193
70688799	110
70688799	111
70688799	112
70688799	114
70688801	110
70688801	112
70688801	115
70688802	111
70688802	112
70688802	114
70688804	111
70688804	113
70688804	115
70688844	2
70688849	220
70688864	189
70688906	193
70688907	189
70688971	267
70688971	267B
70689165	173B
70689166	173B
70689167	173B
70689169	86
70689171	173A
70689172	173A
70689229	82
70689291	176
70689298	189
70689305	242
70689305	6
70689324	232
70689341	83
70689344	83
70689345	83
70689367	189
70689367	189D
70689368	93
70689371	96
70689374	189
70689374	189D
70689378	91
70689380	91
70689381	91
70689382	187
70689382	290
70689383	187
70689383	289
70689403	187
70689435	259
70689446	47
70689476	67
70689504	82
70689597	205
70689599	84
70689619	173B
70689623	206
70689644	205
70689657	244
70689658	244
70689705	187
70689759	246
70689760	246
70689763	246
70689766	243
70689775	189
70689775	189D
70689775	289
70689781	241
70689801	240
70689801	6
70689802	240
70689802	6
70689803	241
70689803	6
70689804	241
70689804	6
70689807	243
70689809	201
70689813	243
70689813	253
70689840	243
70689841	243
70689842	246
70689843	246
70689844	246
70689849	246
70689852	243
70689854	173A
70689863	243
70689863	247
70689863	253
70689864	243
70689865	243
70689866	243
70689916	241
70689916	243
70689927	240
70689928	241
70689930	241
70689934	242
70689935	242
70689957	244
70689958	244
70690172	267
70690172	267B
70690174	249
70690174	249A
70690187	165
70690202	168
70690214	86
70690221	125
70690291	158
70690310	165
70690313	165
70690316	165A
70690317	165
70690353	165
70690377	161
70690378	161
70690395	139
70690400	125
70690415	125A
70690482	127
70690498	127
70690499	128
70690552	54
70690555	55
70690556	55
70690557	56
70690559	55
70690560	55
70690580	249
70690580	249A
70690583	267
70690590	249
70690590	249A
70690591	267
70690591	267B
70690594	56
70690612	249
70690613	249
70690621	189
70690621	189D
70690625	267
70690636	194
70690636	196
70690638	56
70690643	56
70690644	56
70690649	177A
70690650	176
70690658	163
70690664	163
70690665	176
70690667	176
70690678	57
70690679	57
70690680	56
70690681	55
70690682	56
70690685	171
70690686	171
70690701	54
70690704	163
70690730	170
70690731	167
70690732	167
70690733	171
70690734	163
70690735	163
70690736	171
70690773	253
70690774	253
70690791	253
70690803	253
70690821	144
70690823	144
70690825	144
70690829	44
70690830	44
70690841	245
70690842	245
70690845	160
70690846	157
70690846	157B
70690847	155
70690848	157
70690848	157B
70690849	155
70690849	6
70690850	155
70690850	6
70690851	157
70690851	157B
70690851	6
70690852	157
70690852	157B
70690852	6
70690863	156
70690869	146
70690873	133
70690878	44
70690915	44
70690915	6
70690921	157
70690922	157
70690923	45
70690924	44
70690924	6A
70690930	45
70690931	157
70690931	157B
70690932	157
70690932	37
70690932	55
70690943	154
70690947	154
70690958	157
70690958	157B
70690990	36
70690995	36
70690995	6A
70690998	37
70690998	6A
70691007	37
70691007	6A
70691009	171
70691009	6A
70691010	182
70691023	182
70691024	37
70691025	157
70691025	6A
70691033	182
70691056	182
70691071	182
70691074	182
70691305	176
70691317	213
70691319	202

PART NO.	PAGE
70691321	213
70691326	213
70691328	203
70691331	213
70691337	213
70691338	201
70691372	176
70691449	117
70691449	9
70691450	117
70691462	116
70691463	140
70691483	116
70691485	117
70691537	140
70691541	140
70691549	158
70691551	117
70691572	117
70691572	6A
70691578	102
70691604	178
70691607	178
70691619	182
70691620	182
70691621	182
70691622	182
70691721	229
70691721	230
70691722	229
70691722	230
70691743	230
70691744	230
70691745	208
70691775	66
70691906	220
70691986	207
70692019	222A
70692028	222
70692042	221
70692055	221
70692320	197A
70692323	197A
70692324	197A
70692327	197A
70692340	65
70692343	194
70692344	194
70692346	196
70692347	196
70692350	196
70692353	196
70692354	196
70692429	110
70692429	112
70692500	202
70692511	81
70692512	81
70692518	193
70692900	259
70692925	123
70692925	6A
70693463	290
70693569	111
70693569	113
70693569	115
70693634	207
70693636	207
70693673	174
70693674	174
70693677	174
70693678	174
70693689	145
70693719	180
70693882	168
70693996	238
70693996	6A
70693997	238
70693997	6A
70693998	238
70693998	6A
70694000	65
70694031	180
70694057	180
70694098	180
70694099	195
70694109	181
70694113	179
70694114	179
70694303	190
70694305	191
70694306	190
70694307	190
70694317	184
70694319	182
70694320	184
70694321	173A
70694328	149
70694331	81
70694352	169
70694356	139
70694385	189
70694385	189D
70694386	193
70694397	180
70694401	187
70694417	139
70694419	139
70694424	199A
70694425	199A
70694436	199A
70694437	199A
70694445	228
70694446	228
70694447	228
70694452	199A
70694466	228
70694482	202
70694522	184
70694541	175
70694547	175
70694548	175
70694560	174
70694563	175
70694564	175
70694569	181
70694570	181
70694574	248
70694597	174
70694598	174
70694602	228
70694638	82A
70694662	150
70694701	81
70694702	81
70694703	81
70694704	81
70694705	81
70694711	68
70694781	191
70694782	191
70694783	191
70694784	191
70694802	193
70694861	214
70694872	210
70694872	6A
70694873	208
70694873	6A
70694874	182
70694883	128
70694907	194
70694907	196
70694947	187
70694947	189A
70694947	189E
70694947	193
70694947	197A
70694947	258
70694948	187
70694962	225
70694966	225
70694987	225
70694991	197A
70694992	83
70694993	197A
70694994	197A
70695034	198
70695061	2
70695062	2
70695100	234
70695134	69
70695137	199A
70695139	234
70695143	215
70695144	199A
70695157	149
70695205	194
70695216	194
70695220	196
70695225	142
70695235	142
70695236	142
70695238	143
70695239	201
70695256	97
70695286	219
70695287	219
70695298	1738
70695381	173A
70695408	172
70695409	172
70695410	172
70695411	172
70695472	213
70695505	146
70695506	146
70695518	94
70695625	110
70695625	112
70695625	114
70695694	204
70695751	111
70695751	112
70695751	114
70695755	110
70695755	113
70695755	115
70695756	110
70695756	113
70695756	115
70695779	83A
70695807	47
70695868	191
70695869	245
70695982	207
70695985	209
70695987	210
70695996	164
70696005	232
70696014	45
70696014	6A
70696016	202
70696035	232
70696036	232
70696086	239
70696090	239
70696121	141
70696124	239
70696128	83A
70696200	83
70696304	267
70696304	267B
70696305	267
70696305	267B
70696319	171A
70696325	83A
70696329	232
70696330	232
70696331	202
70696335	201
70696450	2
70696451	2
70696452	2
70696453	2
70696454	2
70696455	2
70696456	2
70696474	2
70696475	2
70696476	2
70696477	2
70696478	2
70696515	206
70696656	207
70696657	2
70696691	156
70696695	156
70696698	9
70696699	9
70696786	175
70696800	189
70696800	189D
70696850	93
70696863	201
70696864	201
70696918	140
70696921	174
70696976	180
70697003	245
70697004	245
70697087	201
70697088	201
70697209	222A
70697210	222A
70697225	222
70697226	222
70697235	189
70697235	189D
70697242	199A
70697258	127
70697294	189
70697294	189D
70697326	55
70697400	116
70697404	195
70697411	248
70697463	217
70697464	217
70697465	217
70697466	217
70697467	217
70697496	180
70697529	211
70697532	172
70697569	189D
70697588	67
70697589	65
70697599	172
70697716	208
70697716	6A
70697717	170
70697718	171
70697788	171
70697791	6A
70697791	87
70697802	108
70697812	29
70697814	140
70697960	189A
70697960	189E
70697960	193
70697960	197A
70698037	198
70698038	198
70698293	2
70698346	257
70698363	220
70698364	220
70698365	220
70698397	251C
70698397	253B
70698399	239
70698423	259
70698423	259A
70698437	139
70698438	139
70698502	2
70698506	205
70698507	289
70698554	2
70698555	2
70698574	259
70698574	264
70698576	2
70698577	259
70698697	206
70698727	167A
70698728	167A
70698729	167A
70698730	214
70698742	198
70698743	198
70698744	198
70698857	246
70698859	87
70698909	91
70698910	91
70698911	91
70698912	91

PART NO.	PAGE
70698913	91
70698944	198
70698975	2
70698993	198
70699039	147
70699040	145
70699049	111
70699049	112
70699049	114
70699061	179
70699103	2
70699126	207
70699203	111
70699204	112
70699205	113
70699206	114
70699207	115
70699247	222A
70699259	120A
70699268	215
70699281	274
70699320	2
70699853	2
70699856	156
70699857	156
70699862	123
70699862	6A
70699863	123
70699863	6A
70699864	123
70699864	6A
70699865	123
70699865	6A
70699866	123
70699866	6A
70699867	123
70699867	6A
70699868	123
70699868	6A
70699869	123
70699869	6A
70699870	123
70699870	6A
70699871	123
70699872	201
70699873	201
70699888	158
70699889	158
70900365	211
70900366	189D
70900366	191
70900367	13A
70900367	171A
70900367	211
70900367	215
70900367	251C
70900367	253B
70900367	57
70900369	201
70900369	239
70900369	251C
70900369	253B
70900369	57
70900370	239
70900370	82
70900703	27
70900801	127
70900801	161
70900801	56
70900805	214
70900806	10
70900806	165A
70900806	167
70900806	186
70900806	213
70900806	249
70900806	55
70900808	10
70900808	167
70900808	56
70900808	66
70900808	82A
70900816	267
70900816	267B
70900942	54
70900970	121
70900970	160
70900970	55
70900970	57A
70901171	51
70901171	52B
70901310	270
70901310	271
70901310	283
70901310	297
70901310	51
70901310	52B
70901349	233
70901490	45
70901652	108
70901652	121
70901653	108
70901667	58
70901669	47
70901678	45
70901722	44
70901723	44
70901725	117
70901763	201B
70901839	73
70901850	219
70902274	189
70902274	82A
70902277	239
70903574	267
70903574	267B
70903626	63
70903628	93
70904016	146
70904203	51
70904203	52B
70904204	136
70904204	20
70904204	25
70904204	28
70904204	43
70904204	43A
70904204	49
70904204	51
70904204	52
70904204	52B
70904205	20
70904205	25
70904205	262
70904205	56
70904205	57A
70904206	11
70904206	19
70904206	245
70904206	27
70904206	49
70904206	51
70904206	61
70904206	70
70904206	71
70904206	73
70904206	75
70904207	71
70904207	73
70904208	11
70904208	219
70904208	255
70904208	35
70904208	47
70904208	49
70904208	72
70904208	73
70904210	186
70904224	139
70904260	139
70904271	281
70904271	79
70904369	237
70905122	249
70905122	249A
70905123	54
70905127	14
70905129	14
70905357	142
70905358	142
70905360	104
70905360	143
70905361	149
70905845	49
70905850	27
70906960	213
70906960	221
70906961	216
70906985	65
70907154	269
70907859	114
70907859	137
70907859	139
70907863	32
70907863	33
70907863	33A
70908944	49A
70909055	211
70909055	271
70910002	149
70910123	27
70910123	75
70910141	28
70910175	75
70910195	201
70910195	202
70910231	83
70910235	215
70910243	193
70910244	105
70910244	45
70910244	55
70910244	73
70910244	85
70910251	193
70910267	55
70910267	56
70910284	171B
70910284	201
70910284	81
70910285	127
70910285	213
70910285	270
70910285	272
70910285	273
70910285	274
70910285	281
70910285	289
70910285	294
70910285	296
70910285	68
70910286	135
70910286	259C
70910286	260
70910286	261
70910286	261A
70910286	261B
70910286	263A
70910286	263B
70910286	263C
70910286	296
70910286	36
70910286	54
70910286	55
70910286	81
70910286	94
70910287	11A
70910287	118
70910287	119
70910287	127
70910287	131
70910287	135
70910287	156
70910287	165
70910287	171
70910287	244
70910287	251B
70910287	252
70910287	257
70910287	267
70910287	275
70910287	284
70910287	285
70910287	289
70910287	29
70910287	290
70910287	292
70910287	43
70910287	49
70910287	49A
70910287	52B
70910287	54
70910287	71
70910287	75
70910287	97
70910302	167
70910323	269
70910323	55
70910323	94
70910324	247B
70910324	249
70910324	249A
70910324	253
70910324	267
70910324	289
70910324	290
70910324	49A
70910324	61
70910324	70
70910324	73
70910325	219
70910325	248A
70910325	25
70910325	253
70910325	269
70910325	47
70910325	78
70910329	264
70910329	265A
70910334	207
70910335	269
70910335	68
70910510	56
70910510	85
70910511	82
70910847	13
70910847	167
70910876	123
70910880	270
70910880	273
70910880	274
70910880	276
70910880	289
70910880	43
70910880	43A
70910880	51
70910880	52
70910880	52B
70910968	201
70910980	161
70911024	127
70911024	193
70911024	206
70911024	213
70911024	215
70911024	39
70911024	68
70911025	116
70911025	189
70911025	189D
70911025	45
70911025	54
70911025	81
70911026	125A
70911026	127
70911026	135
70911026	154
70911026	165
70911026	167A
70911026	171
70911026	193
70911026	208
70911026	209
70911026	213
70911026	214
70911026	243
70911026	37
70911026	45
70911026	65
70911026	87
70911027	67
70911028	117
70911028	118
70911028	156
70911028	157A
70911028	201
70911028	205A
70911028	213
70911028	221
70911028	251B

PART NO	PAGE	PART NO	PAGE	PART NO	PAGE	PART NO	PAGE	PART NO	PAGE
70911028	252	70912069	11A	70913112	49	70914847	73	70916311	49
70911028	45	70912069	27	70913112	49B	70915018	214	70916311	72
70911028	55	70912069	73	70913233	206	70915274	244	70916311	78
70911028	83	70912069	75	70913280	10	70915274	245	70916313	73
70911029	173B	70912085	117	70913528	267	70915276	180	70916313	78
70911029	202	70912201	269	70913528	267B	70915343	49	70916316	13
70911030	174	70912201	41	70913544	19	70915406	25	70916317	13
70911030	222A	70912201	78	70913544	49	70915406	39	70916317	35
70911030	236	70912226	43	70913544	61	70915408	11	70916317	59
70911032	228	70912226	43A	70913679	127	70915408	11A	70916317	72
70911032	229	70912298	41	70913683	75	70915408	51	70916320	72
70911032	230	70912298	78	70913798	83	70915408	52B	70916320	73
70911034	127	70912299	239	70913830	128	70915408	61	70916321	11
70911034	55	70912302	294	70913830	249	70915513	94	70916321	118
70911034	56	70912333	269	70913830	84	70915514	43	70916322	73
70911041	127	70912333	35	70913974	269	70915692	83	70916323	35
70911041	54	70912333	72	70914012	246	70915746	257	70916324	35
70911041	65	70912415	71	70914105	190	70915797	267	70916441	236
70911041	69	70912441	102	70914105	191	70915797	267B	70916532	190
70911043	128	70912441	103	70914376	36	70915807	25	70916532	191
70911043	193	70912441	105	70914378	44	70915813	20	70916543	30
70911043	213	70912441	106	70914465	174	70915891	213	70916543	31
70911043	84	70912441	107	70914465	228	70915891	249B	70916555	186
70911044	216	70912441	108	70914465	229	70915891	267	70916559	264
70911044	27	70912441	109	70914465	232	70915891	267B	70916559	265A
70911045	173	70912441	11A	70914465	233	70915891	86	70916591	55
70911047	175	70912441	118	70914465	235	70915903	158	70916621	201
70911048	127	70912441	119	70914465	239	70915904	95	70916871	31
70911048	128	70912441	141	70914465	245	70915969	24	70917013	28
70911048	249B	70912441	145	70914465	251	70915969	72	70917014	27
70911048	267	70912441	153	70914465	255	70915969	73	70917023	27
70911048	267B	70912441	215	70914465	94	70915972	185	70917192	174
70911048	54	70912441	237	70914498	41	70915972	215	70917257	269
70911048	55	70912441	24	70914501	189	70915972	289	70917257	270
70911048	56	70912441	246	70914501	189D	70915987	237	70917257	274
70911049	165A	70912441	248A	70914501	235	70915987	255	70917257	283
70911049	207	70912441	25	70914501	251	70915987	35	70917257	297
70911049	39	70912441	251B	70914501	255	70915987	49A	70917356	63
70911069	235	70912441	252	70914501	289	70915987	59	70917356	76
70911114	20	70912441	293	70914590	136	70915987	72	70917376	201
70911114	206	70912441	41	70914659	51	70915987	73	70917378	68
70911114	273	70912441	42	70914659	52A	70915990	11B	70917384	68
70911114	289	70912441	43	70914678	101	70916001	30	70917388	270
70911114	290	70912441	43A	70914678	119	70916004	161	70917388	283
70911114	294	70912441	49A	70914678	13	70916009	10	70917388	57
70911114	49	70912441	55	70914678	158	70916009	73	70917409	27
70911114	57A	70912441	58	70914678	269	70916024	55	70917415	171A
70911115	284	70912441	59	70914678	297	70916080	171B	70917415	211
70911115	285	70912441	78	70914678	30	70916168	164	70917425	59
70911115	289	70912497	251	70914678	41	70916191	41	70917448	13
70911115	290	70912589	68	70914678	78	70916191	73	70917479	297
70911115	292	70912603	185	70914678	82	70916191	78	70917503	171B
70911115	49A	70912611	273	70914678	87	70916253	13	70917673	208
70911115	51	70912731	204	70914709	227	70916254	41	70917673	27
70911115	57	70912731	269	70914710	227	70916269	61	70917673	58
70911115	61	70912739	204	70914711	227	70916271	71	70917673	89
70911115	73	70912772	275	70914712	227	70916271	91	70917673	95
70911201	91	70912772	290	70914713	227	70916272	19	70917676	205
70911325	193	70912772	293	70914714	227	70916272	73	70917730	201B
70911327	215	70912808	98	70914715	227	70916274	71	70917730	225
70911414	78	70912845	184	70914716	227	70916276	49A	70917733	104
70911421	45	70912900	167	70914717	227	70916277	56	70917792	220
70911841	68	70912942	100	70914718	227	70916277	57A	70917807	41
70911982	57	70912942	178	70914719	227	70916284	20	70917807	43
70911992	263	70912942	202	70914728	175	70916311	11	70917807	43A
70911992	263B	70912942	216	70914730	185	70916311	11A	70917807	49
70911992	31	70912942	238	70914730	269	70916311	24	70917807	49B
70912007	29	70912942	245	70914732	227	70916311	25	70917807	61
70912007	42	70913077	186	70914847	245	70916311	42	70917809	51
70912007	43A	70913097	223	70914847	49A	70916311	43A	70917809	52A

PART NO.	PAGE	PART NO	PAGE	PART NO	PAGE	PART NO	PAGE	PART NO	PAGE
70917809	52B	70919087	171	70919282	6A	70920582	135	70920852	6A
70917809	73	70919127	117	70919294	73	70920582	146	70920857	6A
70917810	41	70919127	87	70919303	51	70920582	149	70920858	6
70917810	43	70919128	171B	70919303	52A	70920582	154	70920858	6A
70917810	43A	70919128	37	70919311	149	70920582	156	70920862	6
70917810	49	70919134	12	70919311	269	70920582	157	70920862	6A
70917810	498	70919134	164	70919342	29	70920582	157A	70920864	6
70917810	61	70919135	101	70919347	15	70920582	157B	70920864	6A
70917841	28	70919135	44	70919350	219	70920582	173	70920865	6
70917947	91	70919136	44	70919350	47	70920582	181	70920865	6A
70917958	169	70919137	117	70919464	163	70920582	187	70920867	6
70917970	12	70919140	123	70919472	167	70920582	196	70920867	6A
70917970	70	70919140	208	70919481	73	70920582	205	70920868	6A
70918147	193	70919140	210	70919483	171B	70920582	205A	70920869	6A
70918182	76	70919143	6	70919597	85	70920582	239	70920874	6
70918237	52B	70919143	6A	70919624	157B	70920582	242	70920874	6A
70918245	233	70919155	6	70919777	13	70920582	245	70920877	6A
70918245	234	70919155	6A	70919797	51	70920582	253	70920879	6A
70918245	238	70919156	6	70919797	52B	70920582	290	70920880	6
70918308	240	70919156	6A	70919800	52	70920582	293	70920880	6A
70918308	65	70919159	6A	70919801	49A	70920582	45	70920882	6
70918309	242	70919171	163	70919824	140	70920582	57	70920933	6A
70918309	83	70919171	208	70919840	118	70920582	65	70920944	6A
70918374	71	70919173	140	70919840	12	70920582	67	70920952	6
70918395	71	70919173	163	70919840	58	70920582	93	70920952	6A
70918445	171A	70919174	209	70919840	73	70920583	103	70920957	6
70918445	57A	70919174	210	70919850	12	70920583	106	70920972	6A
70918464	294	70919175	6A	70919887	12	70920583	107	70920973	6
70918471	275	70919194	6	70920117	189	70920583	108	70920975	6
70918547	114	70919194	6A	70920132	20	70920583	109	70920975	6A
70918547	133	70919195	37	70920144	6A	70920583	118	70920978	6A
70918553	159	70919196	6	70920187	201B	70920583	140	70920995	163
70918683	72	70919196	6A	70920221	6A	70920583	165	70920995	249
70918697	35	70919197	247B	70920222	6A	70920583	187	70920995	249A
70918740	71	70919205	36	70920242	51	70920583	189	70920995	284
70918794	51	70919206	125	70920242	528	70920583	189D	70920995	285
70918794	52	70919206	37	70920279	49	70920583	238	70920996	165
70918850	160	70919206	82	70920279	498	70920583	243	70920996	244
70918851	12	70919207	6A	70920280	41	70920583	246	70921013	150
70918887	11	70919217	6A	70920280	43	70920583	247	70921013	171B
70918887	11A	70919218	6	70920280	43A	70920583	293	70921033	6
70918887	25	70919224	11	70920280	49	70920583	36	70921033	6A
70918887	71	70919224	11B	70920280	498	70920585	102	70921034	6
70918888	35	70919224	43	70920294	189E	70920585	139	70921034	6A
70918888	71	70919224	70	70920294	289	70920585	142	70921042	6
70918888	75	70919224	71	70920301	6	70920585	145	70921042	6A
70918951	35	70919224	75	70920301	6A	70920585	156	70921068	174
70919005	61	70919225	73	70920302	6	70920585	157A	70921068	222A
70919015	11B	70919225	75	70920302	6A	70920585	173B	70921068	47
70919015	49	70919226	70	70920303	6	70920585	201	70921076	101
70919062	101	70919227	11B	70920303	6A	70920585	243A	70921076	11B
70919062	149	70919229	11	70920329	57	70920585	257	70921076	116
70919063	125	70919229	13	70920333	73	70920585	55	70921076	117
70919063	125A	70919230	43	70920333	76	70920594	32	70921076	123
70919063	37	70919230	58	70920344	6	70920594	33	70921076	128
70919063	44	70919231	72	70920344	6A	70920594	33A	70921076	135
70919063	82	70919242	110	70920416	12	70920660	55	70921076	156
70919063	170	70919242	112	70920416	70	70920660	95	70921076	165
70919074	6A	70919242	114	70920525	71	70920722	79	70921076	172
70919075	6	70919253	6A	70920525	72	70920790	49	70921076	189
70919075	6A	70919254	6	70920570	173B	70920794	6A	70921076	189D
70919076	6	70919254	6A	70920574	119	70920795	6	70921076	189E
70919076	6A	70919271	257	70920574	153	70920838	6A	70921076	193
70919079	6A	70919272	37	70920574	174	70920847	6	70921076	213
70919080	6	70919277	6	70920574	20	70920847	6A	70921076	238
70919080	6A	70919277	6A	70920574	205	70920849	6	70921076	240
70919081	6	70919278	6	70920574	97	70920849	6A	70921076	241
70919081	6A	70919281	6	70920582	118	70920850	6	70921076	242
70919082	6	70919281	6A	70920582	119	70920850	6A	70921076	243
70919082	6A	70919282	6	70920582	127	70920852	6	70921076	244

PART NO	PAGE
70921076	247
70921076	247A
70921076	249
70921076	249A
70921076	251B
70921076	252
70921076	253B
70921076	257
70921076	258
70921076	285
70921076	289
70921076	29
70921076	49
70921076	49A
70921076	56
70921076	65
70921076	85
70921076	89
70921076	93
70921115	238
70921115	240
70921115	247
70921115	247A
70921115	251B
70921115	252
70921115	253B
70921115	29
70921116	242
70921116	243A
70921116	247
70921116	251B
70921116	252
70921117	101
70921117	119
70921117	243
70921117	247
70921117	251C
70921117	253
70921117	253B
70921117	87
70921118	119
70921118	243
70921118	247
70921170	173
70921170	237
70921172	144
70921174	146
70921175	117
70921175	145
70921175	197A
70921175	201
70921175	201A
70921175	216
70921175	219
70921175	242
70921175	247
70921175	269
70921175	45
70921175	56
70921181	47
70921193	207
70921204	245
70921204	258
70921204	264
70921206	245
70921206	258
70921206	264
70921214	129
70921214	157B
70921214	257
70921216	129
70921216	257
70921235	9
70921235	96
70921241	177
70921241	179
70921244	240
70921244	246
70921266	189
70921266	189D
70921266	289
70921277	170
70921279	135
70921297	149
70921298	171B
70921330	167
70921349	108
70921349	146
70921349	29
70921349	36
70921364	37
70921372	498
70921378	52B
70921382	201B
70921382	272
70921382	281
70921402	9A
70921403	173
70921403	173B
70921405	19
70921409	36
70921409	9A
70921411	173A
70921411	238
70921452	167
70921452	167A
70921455	140A
70921455	242
70921466	37
70921467	123
70921467	135
70921467	163
70921467	240
70921467	243
70921467	251B
70921467	251C
70921467	253
70921467	253B
70921467	87
70921467	93
70921467	94
70921472	44
70921513	6
70921513	6A
70921520	27
70921535	139
70921535	173
70921535	178
70921535	179
70921539	167
70921539	83
70921556	141
70921556	20
70921556	201
70921556	221
70921556	239
70921556	251C
70921556	253B
70921556	56
70921556	85
70921558	119
70921564	6A
70921565	117
70921565	127
70921565	171
70921565	267
70921565	292
70921565	45
70921565	55
70921566	116
70921566	135
70921566	189
70921566	189D
70921566	191
70921566	197A
70921566	93
70921566	95
70921569	101
70921569	119
70921569	156
70921569	243
70921569	247
70921569	251C
70921569	253
70921569	269
70921569	297
70921569	30
70921569	87
70921573	108
70921573	9A
70921598	215
70921599	246
70921615	190
70921615	191
70921691	247B
70921730	117
70921839	16
70921841	49
70921852	44
70921865	22
70921865	41
70921865	61
70921866	6
70921874	2618
70921883	94
70921885	129
70921885	137
70921885	248
70921885	41
70921885	42
70921885	43
70921885	43A
70921885	9
70921885	93
70921885	94
70921910	127
70921910	267
70921910	267B
70921910	54
70921911	213
70921911	280
70921911	281
70921911	61
70921911	79
70921912	165
70921912	168
70921912	61
70921912	85
70921913	154
70921913	155
70921913	156
70921913	85
70921914	167
70921914	168
70921914	82
70921914	82A
70921914	85
70921915	165
70921992	117
70922002	239
70922051	24
70922063	158
70922064	29
70922089	161
70922175	139
70922198	22
70922198	71
70922199	72
70922211	75
70922220	246
70922220	29
70922220	30
70922262	161
70922262	167A
70922262	208
70922262	47
70922262	82A
70922286	149
70922286	54
70922287	118
70922287	165
70922287	171A
70922287	172
70922287	253B
70922287	267
70922287	45
70922287	65
70922290	73
70922300	125A
70922300	127
70922300	13A
70922300	135
70922300	149
70922300	154
70922300	157
70922300	157B
70922300	171
70922300	201
70922300	201A
70922300	203
70922300	213
70922300	214
70922300	221
70922300	247B
70922300	275
70922300	290
70922300	45
70922300	57
70922457	9A
70922465	149
70922465	249B
70922465	267
70922465	267B
70922471	65
70922475	140A
70922475	180
70922476	213
70922505	6
70922507	125
70922508	55
70922510	105
70922510	139
70922510	167
70922510	253
70922510	82A
70922510	83
70922521	209
70922526	105
70922526	139
70922526	185
70922526	289
70922577	2618
70922577	42
70922577	43A
70922632	157B
70922660	156
70922660	213
70922660	219
70922660	85
70922707	81
70922726	104
70922726	238
70922735	83
70922743	140
70922743	140A
70922743	174
70922743	205
70922744	222
70922744	257
70922747	148
70922763	11A
70922763	123
70922763	127
70922763	140
70922763	143
70922763	154
70922763	157
70922763	157B
70922763	189
70922763	193
70922763	195
70922763	202
70922763	207
70922763	208
70922763	209
70922763	211
70922763	213
70922763	214
70922763	215
70922763	243
70922763	247B
70922763	289
70922763	29
70922763	290
70922763	45
70922763	55
70922763	68
70922763	86
70922763	93
70922765	6A
70922789	222
70922789	47
70922820	132
70922820	133
70922834	6A
70922843	81
70922848	127
70922848	156
70922848	170
70922848	247

PART NO.	PAGE
70922849	253
70922886	20
70922896	6
70922894	6A
70922926	197A
70922925	56
70922925	57A
70922990	163
70923016	157B
70923132	272
70923163	94
70923186	6
70923186	6A
70923192	253B
70923192	67
70923193	177
70923193	177A
70923193	30
70923193	31
70923243	179
70923253	6
70923254	6
70923259	6
70923276	174
70923276	189A
70923276	189D
70923276	93
70923325	76
70923379	169
70923379	263
70923379	7
70923438	121
70923438	160
70923448	136
70923453	173
70923454	175
70923456	176
70923470	144
70923470	157
70923470	201
70923470	243A
70923486	6
70923506	6A
70923509	242
70923540	170
70923561	9
70923561	94
70923562	164
70923565	259C
70923565	261B
70923565	263B
70923574	27
70923575	29
70923575	7
70923576	172
70923576	262
70923576	263A
70923578	244
70923578	9
70923579	257
70923580	260
70923580	261A
70923581	176
70923581	257
70923585	89
70923585	9
70923587	9
70923590	11A
70923590	7
70923591	176
70923594	178
70923594	258
70923645	51
70923645	52A
70923645	7
70923651	7
70923651	72
70923659	169
70923663	29
70923664	169
70923664	9
70923737	247B
70923738	24
70923810	139
70923810	20
70923810	7
70923813	262
70923813	263A
70923813	7
70923818	168
70923818	177
70923819	103
70923819	9
70923821	103
70923821	9
70923822	169
70923823	103
70923823	9
70923826	9
70923826	94
70923828	9
70923831	129
70923831	133
70923834	159
70923834	9
70923843	245
70923846	264
70923847	176
70923901	140
70923905	9A
70923934	7
70923935	7
70923935	75
70923936	7
70923947	9
70923950	257
70923950	7
70923951	257
70924044	123
70924102	265A
70924140	144
70924142	49A
70924142	7
70924146	257
70924169	189
70924169	189D
70924177	6A
70924200	243A
70924200	244
70924227	158
70924228	31
70924270	264
70924274	244
70924277	144
70924292	201
70924408	6
70924416	164
70924433	191
70924619	189E
70924619	289
70924636	29
70924676	251C
70924676	253B
70924694	118
70924696	265
70924774	265
70924775	263
70924783	94
70924815	237
70924828	9
70924842	135
70924842	171A
70924843	131
70924843	243
70924843	251C
70924843	253B
70924843	87
70924843	94
70924854	263
70924855	260
70924863	75
70924864	119
70924864	215
70924864	258
70924868	168
70924881	242
70924920	248
70924922	263
70924925	245
70925031	155
70925031	157
70925031	157B
70925058	219
70925069	263
70925081	263
70925094	79
70925192	262
70925238	79
70925240	6
70925241	104
70925241	9
70925280	119
70925381	173
70925381	222
70925415	174
70925415	181
70925415	222A
70925442	123
70925442	37
70925604	94
70925610	261B
70925612	7
70925612	72
70925617	135
70925617	247B
70925620	247B
70925622	247
70925625	86
70925638	261
70925640	259C
70925640	260
70925640	263C
70925652	104
70925652	9
70925661	215
70925671	232
70925671	235
70925737	283
70925743	248
70925806	233
70925806	238
70925832	157A
70925853	247B
70925856	247B
70925881	117
70925881	140
70925889	105
70925919	101
70925919	119
70925919	243
70925919	251C
70925919	253
70925919	253B
70925919	87
70925920	118
70925920	149
70925922	118
70925922	155
70925922	157
70925922	157A
70925922	247B
70925928	263
70925928	263B
70925929	263
70925929	263B
70925930	263
70925930	263B
70925931	263
70925931	263B
70925931	265B
70925932	263
70925932	263B
70925933	265A
70925934	259B
70925934	265A
70925937	259A
70925938	259A
70925954	235
70925966	91
70925983	131
70925983	135
70925983	149
70925983	94
70926011	66
70926049	167A
70926156	251C
70926156	253B
70926164	139
70926164	173B
70926180	101
70926189	127
70926192	174
70926193	10
70926196	140
70926244	6
70926246	6
70926269	259B
70926269	261
70926269	261A
70926269	262
70926269	263A
70926269	263B
70926283	234
70926292	93
70926339	85
70926356	264
70926566	179
70926574	169
70926672	19
70926673	57
70926697	129
70926699	47
70926707	123
70926707	201
70926707	37
70926768	171
70926774	100
70926774	143
70926774	253
70926785	228
70926786	135
70926800	169
70926819	245
70926820	255
70926822	237
70926841	265A
70926842	265A
70926856	185
70926856	186
70926856	250
70926857	185
70926857	250
70926874	167A
70926917	49B
70926921	283
70926975	123
70926975	210
70927015	184
70927015	222
70927015	222A
70927024	169
70927044	30
70927063	157B
70927063	240
70927073	275
70927101	260
70927102	45
70927104	45
70927139	49
70927139	49B
70927141	246
70927154	213
70927155	201A
70927155	203
70927155	45
70927157	187
70927157	85
70927171	237
70927172	167
70927173	119
70927173	132
70927173	93
70927173	97
70927174	249B
70927174	87
70927181	251
70927181	255
70927204	157
70927204	157B
70927205	140
70927212	154
70927218	163
70927218	240
70927218	247
70927218	37
70927219	251B
70927219	252
70927224	65
70927225	127
70927225	249B

PART NO.	PAGE
70927225	267
70927225	267B
70927249	97
70927264	219
70927265	219
70927286	223
70927287	223
70927310	157
70927310	157B
70927311	118
70927311	239
70927312	117
70927312	118
70927313	154
70927314	222
70927322	49
70927335	245
70927336	245
70927339	65
70927339	69
70927353	193
70927361	173B
70927361	197A
70927373	189
70927373	189D
70927373	94
70927381	139
70927381	143
70927381	144
70927381	146
70927381	239
70927382	140
70927382	161
70927382	75
70927384	201
70927400	140
70927401	211
70927401	225
70927401	270
70927401	273
70927401	274
70927401	294
70927401	296
70927401	57
70927424	101
70927446	94
70927453	142
70927453	163
70927453	170
70927453	249
70927453	249A
70927455	44
70927473	91
70927475	94
70927483	140
70927484	148
70927484	203
70927484	292
70927485	82
70927491	194
70927491	197
70927491	197A
70927529	167
70927536	131
70927536	240
70927536	243
70927541	193
70927541	213
70927541	274
70927541	68
70927547	102
70927547	153
70927555	95
70927573	85
70927574	106
70927574	98
70927583	31
70927583	87
70927597	257
70927599	161
70927599	201A
70927599	210
70927599	86
70927612	36
70927612	45
70927652	132
70927652	133
70927685	265
70927685	265B
70927691	248
70927708	83
70927771	62
70927801	75
70927801	76
70927803	76
70927879	222A
70927999	146
70928043	202
70928043	236
70928052	193
70928052	225
70928059	235
70928060	242
70928063	174
70928063	180
70928063	181
70928138	127
70928138	211
70928138	215
70928166	173
70928166	173A
70928169	173
70928176	201A
70928176	203
70928176	211
70928178	142
70928178	145
70928178	197
70928178	214
70928178	65
70928182	197
70928188	127
70928188	157
70928188	157B
70928188	243A
70928188	83
70928188	84
70928190	247A
70928211	32
70928211	33
70928211	33A
70928212	30
70928214	37
70928228	276
70928309	158
70928310	283
70928370	184
70928370	228
70928385	149
70928452	175
70928452	177
70928452	180
70928453	223
70928453	250
70928455	171A
70928460	106
70928460	139
70928460	146
70928460	149
70928460	154
70928460	156
70928460	157A
70928460	167
70928460	173
70928460	243
70928460	246
70928460	247
70928460	37
70928460	45
70928460	55
70928460	57
70928460	9A
70928506	142
70928506	153
70928532	220
70928575	274
70928798	257
70928835	6
70928839	216
70928844	201
70928844	215
70928867	79
70928873	196
70928873	197
70928873	197A
70928873	55
70928882	82
70928888	156
70928905	7
70928914	236
70928927	247B
70929032	167
70929060	56
70929074	187
70929074	290
70929074	82
70929074	97
70929075	97
70929079	153
70929086	10
70929106	242
70929154	201
70929154	243
70929154	247
70929154	251C
70929154	253
70929154	253B
70929154	87
70929156	125A
70929156	135
70929156	140
70929156	154
70929156	157
70929156	157B
70929156	161
70929156	177
70929156	177A
70929156	201A
70929156	203
70929156	207
70929156	208
70929156	209
70929156	211
70929156	213
70929156	214
70929156	45
70929156	86
70929156	94
70929188	140A
70929188	174
70929247	156
70929256	13A
70929265	169
70929276	174
70929292	189
70929292	189D
70929292	94
70929379	196
70929379	197
70929379	197A
70929417	58
70929420	65
70929450	133
70929457	137
70929458	13A
70929458	171
70929458	201A
70929458	45
70929627	171
70929662	56
70929662	57A
70929665	281
70929792	95
70929808	69
70929873	174
70929879	6
70929881	106
70929881	107
70929881	108
70929881	109
70929881	9
70929881	9A
70929883	293
70930207	91
70930238	247A
70930288	158
70930307	176
70930349	41
70930358	11A
70930364	144
70930364	167
70930364	236
70930370	157
70930370	157B
70930370	201
70930370	238
70930370	240
70930370	242
70930370	243A
70930370	247
70930370	247A
70930370	247B
70930370	251B
70930370	252
70930370	253B
70930370	29
70930370	47
70930370	65
70930443	6A
70930444	6
70930444	6A
70930445	6
70930445	6A
70930446	6
70930583	171A
70930594	214
70930594	269
70930594	274
70930594	276
70930594	277
70930594	280
70930594	281
70930594	283
70930594	289
70930594	290
70930594	296
70930609	61
70930645	6A
70930724	101
70930724	157
70930724	157B
70930724	167
70930724	171
70930725	157A
70930732	170
70930735	206
70930796	118
70930796	49A
70930797	6A
70930804	137
70930804	45
70930805	27
70930805	28
70930840	133
70930845	161
70930850	197
70930850	197A
70930850	82
70930850	82A
70930852	163
70930860	202
70930865	184
70930892	213
70930893	148
70930894	100
70930909	177
70930909	177A
70930912	140
70930916	245
70930970	154
70931061	189
70931124	6A
70931158	6
70931158	6A
70931159	6
70931185	255
70931195	51
70931239	72
70931244	41
70931283	189D
70931313	87
70931458	214
70931463	89
70931646	205A
70931646	269
70931646	276
70931646	294
70931646	295
70931646	296
70931652	223

PART NO.	PAGE
70931652	250
70931695	135
70931695	9
70931697	277
70931697	286
70931698	271
70931698	276
70931698	286
70931698	297
70931699	274
70931700	276
70931700	277
70931701	283
70931702	280
70931702	295
70931702	296
70931714	119
70931714	243
70931714	246
70931724	96
70931725	96
70931753	241
70931753	242
70931753	246
70931753	251B
70931753	252
70931787	206
70931844	296
70931857	238
70931857	240
70931857	246
70931857	247A
70931857	251B
70931857	253
70931857	253B
70931858	119
70931922	45
70932508	297
70932509	293
70932509	295
70932510	293
70932510	295
70932613	201B
70932799	13
70932860	41
70932932	83A
70933330	10
70933459	167
70933462	155
70933462	247B
70933463	155
70933463	157
70933463	247B
70933464	247B
70933465	246
70933466	101
70933466	102
70933466	125
70933466	125A
70933466	131
70933466	149
70933466	153
70933466	155
70933466	163
70933466	247B
70933469	125
70933469	125A
70933470	101
70933470	149
70933470	170
70933470	171
70933471	125
70933471	125A
70933471	247B
70933471	45
70933473	118
70933473	157A
70933474	125
70933474	131
70933474	149
70933474	153
70933475	101
70933475	170
70933476	101
70933476	125
70933476	125A
70933476	131
70933476	135
70933476	149
70933476	150
70933476	170
70933476	171
70933476	247B
70933477	171
70933478	171
70933479	101
70933479	171
70933481	167
70933481	171
70933482	163
70933490	163
70933491	149
70933491	259B
70933491	263B
70933492	100
70933493	100
70933494	87
70933496	140
70933497	117
70933497	155
70933498	247B
70933499	117
70933500	157
70933500	157B
70933501	131
70933502	125
70933503	101
70933504	135
70933505	131
70933506	101
70933506	131
70933507	163
70933578	267
70933578	267B
70933618	149
70933687	258
70933715	157B
70933796	157A
70933855	158
70933912	261A
71126490	158
71178407	158
71178408	158
73007389	93
73007474	76
73007501	89
73008150	255
73015050	136
73034905	95
73035073	94
73035074	96
73035090	94
73037597	111
73037597	112
73037597	114
73037598	111
73037598	112
73037598	114
73037656	111
73037656	112
73037656	114
73037674	110
73037674	113
73037674	115
73037676	9
73037684	9
73037730	96
73037744	129
73041475	96
73042943	66
73043771	89
73043929	89
73050797	255
73052086	68
73052879	245
73052942	237
73052942	255
73052959	255
73052992	255
73052994	255
73052996	245
73052998	245
73053715	237
73053716	237
73053886	245
73053977	245
73054073	237
73054073	255
73054108	237
73054108	255
73054486	245
73054488	237
73054488	255
73055463	237
73056485	245
73056485	9A
73056486	255
73056486	9A
73056933	237
73056933	9A
73057408	237
73057506	128
73058692	255
73058925	245
73059240	255
73059271	237
73059335	245
73059354	237
73059354	255
73059680	245
73059884	203
73059893	274
73059930	274
73061046	274
73061081	237
73061193	128
73061423	244
73061424	244
73061762	237
73062199	255
73062214	245
73062228	237
73063089	245
73063368	245
73063371	255
73063372	237
73064314	255
73064776	220
73065986	244
73066429	201B
73073212	245
73073214	237
73073214	255
73100012	218
73100013	218
73100014	219
73100014	47
73100017	218
73100021	219
73100021	47
73100023	218
73100024	218
73100025	218
73100026	218
73100027	218
73100028	218
73100029	218
73100030	218
73100082	68
73107038	289
73107039	289
73107040	289
73107041	289
73107042	214
73107043	289
73107045	214
73107048	290
73107050	289
73107051	290
73107059	2
73107060	290
73107060	297
73107061	273
73107061	290
73107070	276
73107070	290
73107071	279
73107073	110
73107075	289
73107076	289
73107081	289
73107100	283
73107107	286
73107108	276
73107108	286
73107109	283
73107110	277
73107110	286
73107111	286
73107112	277
73107112	286
73107113	286
73107114	276
73107114	286
73107121	276
73107122	276
73107129	277
73107130	277
73107131	276
73107133	272
73107134	272
73107143	273
73107144	273
73107145	273
73107146	273
73107147	273
73107149	272
73107150	272
73107156	269
73107156	273
73107156	275
73107157	283
73107159	270
73107181	270
73107182	270
73107183	274
73107188	270
73107189	270
73107190	279
73107191	279
73107193	283
73107195	281
73107196	283
73107197	269
73107205	275
73107206	275
73107209	274
73107213	276
73107214	281
73107215	281
73107217	131
73107218	137
73107238	277
73107239	277
73107240	277
73107241	277
73107253	279
73107254	279
73107255	275
73107256	275
73107257	285
73107260	274
73107262	269
73107263	280
73107266	269
73107267	277
73107268	269
73107268	273
73107268	275
73107269	280
73107270	279
73107272	276
73107278	276
73107280	276
73107282	280
73107282	294
73107282	297
73107283	274
73107285	276
73107300	277
73107301	295
73107302	277
73107303	277
73107311	269
73107312	279
73107313	279
73107314	279
73107315	279
73107316	279
73107317	284

PART NO.	PAGE	PART NO.	PAGE	PART NO	PAGE	PART NO	PAGE	PART NO.	PAGE
73107347	279	73107661	297	73108402	294	73109602	263B	73111291	82A
73107348	279	73107662	292	73108403	294	73109640	117	73111300	269
73107349	279	73107663	297	73108404	294	73109651	144	73111341	171B
73107350	279	73107665	297	73108405	293	73109672	67	73111372	82A
73107351	279	73107666	296	73108406	297	73109705	201B	73111427	251B
73107352	279	73107667	297	73108408	292	73109722	201B	73111427	6A
73107357	135	73107680	195	73108409	293	73109723	201B	73111457	289
73107358	135	73107681	195	73108410	293	73109735	2	73111469	198
73107359	285	73107685	9	73108413	292	73109740	222A	73111525	167
73107360	285	73107689	189D	73108442	97	73109807	119	73111527	127
73107361	269	73107691	189D	73108447	297	73109808	119	73111631	80
73107362	269	73107692	112	73108455	211	73109917	251A	73111632	81
73107363	222A	73107693	114	73108467	295	73109998	259	73111633	81
73107364	222A	73107712	189E	73108564	108	73109998	260	73111687	139
73107365	222	73107726	119	73108564	109	73110068	2	73111690	248
73107366	222	73107750	110	73108564	9A	73110103	57	73111750	97
73107368	259	73107757	94	73108722	199	73110149	82A	73111761	97
73107368	260	73107758	96	73108728	199	73110150	80	73111855	272
73107378	273	73107759	96	73108744	201	73110151	81	73111856	272
73107379	284	73107777	177	73108746	173B	73110161	91	73111899	29
73107380	269	73107822	112	73108761	173B	73110162	89	73111899	6A
73107381	135	73107822	114	73108774	199	73110163	94	73111948	145
73107382	135	73107825	261	73108830	190	73110164	89	73111949	145
73107389	270	73107839	211	73108850	251C	73110165	94	73112401	239
73107390	269	73107846	267	73108850	253B	73110197	194	73112403	239
73107391	284	73107846	267B	73108929	199	73110246	81	73112560	193
73107393	290	73107857	137	73108938	199	73110247	81	73112607	85
73107408	285	73107879	198	73108944	158	73110248	81	73112617	107
73107409	285	73107880	198	73108945	158	73110249	81	73112617	108
73107438	269	73107881	199	73108947	246	73110317	140	73112617	109
73107439	269	73107882	199	73108951	253B	73110369	245	73112617	9A
73107445	85	73107883	199	73108952	251B	73110376	37	73112618	106
73107446	283	73107884	199	73108952	253B	73110376	6A	73112618	107
73107447	270	73107885	199	73108953	251C	73110394	274	73112618	9A
73107448	281	73107888	199	73108953	253B	73110396	270	73112619	106
73107449	281	73107889	199	73108954	249	73110396	274	73112619	107
73107450	283	73107890	199	73108956	253B	73110397	145	73112619	9A
73107460	202	73107891	199	73108958	251C	73110399	145	73112620	106
73107475	205A	73107892	199	73108958	253B	73110401	271	73112620	107
73107476	205A	73107893	199	73108987	251C	73110401	274	73112620	108
73107477	269	73107894	199	73108987	253B	73110432	199A	73112620	109
73107479	206	73107895	199	73108992	182	73110489	189D	73112620	9A
73107489	290	73107897	199	73109010	125	73110493	140	73112621	108
73107490	290	73107904	133	73109031	45	73110494	140	73112621	109
73107495	271	73107905	133	73109031	6A	73110498	177A	73112621	9A
73107504	274	73107926	137	73109067	120A	73110600	259	73112622	108
73107528	101	73107978	274	73109068	120A	73110600	259A	73112622	109
73107558	273	73107979	274	73109069	120A	73110609	37	73112622	9A
73107581	69	73107980	56	73109091	110	73110615	273	73112623	9A
73107583	137	73108003	249	73109091	112	73110616	273	73112624	106
73107592	164	73108026	292	73109091	115	73110655	273	73112624	9A
73107623	277	73108027	293	73109131	198	73110660	83	73112625	106
73107627	293	73108030	293	73109135	199	73110678	85	73112625	9A
73107628	296	73108031	293	73109136	199	73110705	104	73112626	107
73107631	294	73108069	183	73109137	199	73110821	274	73112626	9A
73107633	294	73108074	199	73109138	199	73110833	44	73112627	103
73107635	277	73108116	242	73109139	199	73110836	100	73112630	106
73107636	295	73108120	44	73109141	198	73110979	91	73112630	108
73107637	296	73108121	44	73109142	198	73110991	171B	73112630	109
73107640	293	73108128	292	73109143	198	73110992	171B	73112630	9A
73107640	294	73108233	253B	73109144	198	73110993	171B	73112703	84
73107640	296	73108258	164	73109145	198	73110997	171A	73112723	140A
73107640	297	73108259	164	73109147	199	73110998	171B	73112724	140A
73107642	297	73108260	164	73109343	191	73111004	171A	73112744	85
73107643	257	73108263	54	73109361	165	73111005	171A	73112763	140A
73107645	292	73108272	173B	73109377	55	73111174	145	73112764	140A
73107651	297	73108384	190	73109414	257	73111176	145	73112770	205
73107652	296	73108385	129	73109599	263	73111209	173A	73112805	140A
73107659	293	73108386	129	73109599	263B	73111246	139	73112806	140A
73107660	296	73108400	297	73109602	263	73111279	257	73112812	81

PART NO.	PAGE	PART NO	PAGE	PART NO.	PAGE	PART NO	PAGE	PART NO	PAGE
73112817	140A	73113283	165	73115643	284	73117379	6A	73119010	228
73112818	140A	73113286	165A	73115656	67	73117380	55	73119011	228
73112849	248	73113287	197A	73115670	283	73117381	57	73119012	173A
73112879	187	73113288	197A	73115671	283	73117382	86	73119013	173A
73112897	205A	73113289	247B	73115957	259A	73117383	274	73119221	239
73112899	205A	73113289	6A	73115957	265A	73117505	167A	73119222	239
73112900	208	73113290	247A	73116012	144	73117534	143	73119223	239
73112902	205A	73113290	6A	73116296	104	73117780	107	73119226	239
73112934	259B	73113305	246	73116311	141	73117781	109	73119227	239
73112934	261B	73113306	247A	73116320	110	73117782	108	73119394	106
73112934	263C	73113307	247B	73116320	113	73118257	102	73119394	107
73112976	267B	73113307	6A	73116320	115	73118261	57A	73119395	108
73112983	205	73113319	165A	73116372	228	73118287	103	73119413	276
73113000	247B	73113424	247A	73116373	228	73118379	189	73119464	158
73113001	247B	73113425	247A	73116394	233	73118379	189D	73121554	116
73113002	247B	73113427	248C	73116394	235	73118382	189	73121589	37
73113003	247B	73113428	248A	73116456	245	73118382	189D	73121589	6A
73113003	6A	73113429	248C	73116457	245	73118452	265A	73121590	37
73113006	247A	73113430	248B	73116481	56	73118453	265B	73121608	293
73113007	247B	73113431	248B	73116501	245	73118708	297	73121609	293
73113033	259A	73113432	248B	73116502	245	73118731	265A	73121989	201
73113034	259A	73113451	232	73116504	245	73118732	265A	73121990	201
73113035	263B	73113452	232	73116603	244	73118738	263B	73122543	110
73113036	259A	73113453	247A	73116604	244	73118762	259C	73122543	113
73113037	259A	73113454	247A	73116609	244	73118762	263C	73122543	115
73113037	261A	73113455	247A	73116610	244	73118763	259C	73122544	110
73113038	259A	73113527	190	73116613	245	73118763	261B	73122544	113
73113038	263A	73113689	261B	73116614	245	73118763	263C	73122544	115
73113039	259A	73113709	263B	73116699	248B	73118764	259C	73122553	83
73113039	263A	73113740	191	73116929	191A	73118764	263B	73122739	201B
73113040	259A	73113741	191	73116930	191A	73118765	259C	74003510	528
73113040	265A	73113745	191	73116931	191A	73118765	263B	74006998	41
73113041	259A	73113804	69	73116932	191A	73118767	259C	74020724	528
73113043	261A	73113916	100	73116933	191A	73118767	263B	74020725	528
73113096	249A	73114058	198	73116934	191A	73118768	259C	74023052	11A
73113098	249A	73114227	110	73116935	191A	73118768	263B	74023721	41
73113100	249B	73114227	113	73116936	191A	73118771	259C	74024141	13
73113110	82A	73114227	115	73116937	191A	73118771	261B	74024482	68
73113123	197	73114441	265A	73116938	191A	73118771	263C	74025101	13
73113125	197	73114483	83	73116939	191A	73118772	259C	74025781	7
73113126	197A	73114606	267B	73117148	191A	73118772	263B	74026614	32
73113127	197A	73114740	169	73117185	154	73118773	262	74026614	33
73113129	244	73114791	91	73117186	157B	73118773	263A	74028077	32
73113130	244	73114793	168	73117186	6A	73118779	261A	74029499	198
73113131	197A	73114794	168	73117187	157A	73118779	263	74029746	7
73113132	197A	73114823	101	73117187	6A	73118779	263B	74036340	11
73113133	243A	73114848	169	73117188	157B	73118780	261A	74049009	63
73113134	243A	73115057	207	73117188	6A	73118781	261A	74053336	62
73113135	243A	73115058	207	73117190	154	73118806	261A	74053409	35
73113136	243A	73115065	39	73117191	157B	73118807	261A	74053410	35
73113137	197A	73115069	143	73117192	157B	73118809	261B	74055187	62
73113138	197A	73115074	142	73117193	154	73118810	261B	74055193	62
73113139	197A	73115075	144	73117195	157A	73118811	261B	74055194	62
73113141	196	73115264	259B	73117197	154	73118812	261A	74055195	62
73113148	196	73115264	263B	73117198	157B	73118813	261B	74055196	62
73113149	196	73115265	259B	73117208	259C	73118814	261A	74055201	62
73113154	197	73115265	263B	73117230	10	73118819	263B	74055203	63
73113158	189D	73115265	265B	73117237	216	73118826	263B	74055206	63
73113159	87	73115266	259B	73117257	144	73118827	263B	74055971	35
73113161	197	73115272	259B	73117280	57A	73118828	263B	74055981	63
73113162	168	73115272	259C	73117281	56	73118829	263B	74056026	63
73113163	168	73115272	263B	73117282	57A	73118865	168	74056494	62
73113171	197A	73115305	169	73117283	56	73118902	169	74059018	63
73113172	197A	73115348	144	73117321	173A	73118995	239	74059262	39
73113248	81	73115349	145	73117339	142	73119000	239	74059264	39
73113256	80	73115354	101	73117359	69	73119001	238	74059265	39
73113261	81	73115402	251A	73117360	69	73119001	6A	74059266	39
73113265	247B	73115490	247B	73117378	44	73119004	229	74059343	39
73113265	6A	73115490	6A	73117378	6A	73119006	229	74059744	62
73113266	195	73115535	47	73117379	45	73119007	228	74059747	63

PART NO.	PAGE
74059748	62
74059810	40
74059811	40
74059812	40
74059813	39
74059814	39
74060154	52
74060643	49
74060645	49
74060646	49
74060691	39
74060755	40
74060984	62
74061040	49
74061041	49
74061042	49
74061210	62
74061212	62
74061213	62
74061214	62
74061217	62
74061218	62
74061528	13
74061528	9A
74061637	49
74061659	62
74061785	39
74061786	40
74061788	39
74061789	40
74061825	15
74061826	15
74061827	15
74061828	15
74061967	17
74061967	17A
74062035	17
74062035	17A
74062035	9A
74062039	15
74062040	15
74062041	15
74062042	15
74062043	15
74062107	53
74062108	17A
74062109	17A
74062110	17A
74062111	17A
74062112	17A
74062298	9A
74062468	118
74113897	7
74115287	51
74115287	52A
74119937	11
74119937	13
74119937	7
74251601	27
74253190	25
74253286	49
74253555	40
74254663	110
74254663	113
74254663	115
74254742	27
74254873	19
74254873	41
74254873	7
74254971	121
74254971	160
74255017	52
74255020	52
74255060	49A
74255110	75
74255179	51
74255179	52A
74255186	13
74255286	78
74255286	79
74255287	79
74255338	76
74255351	22
74255361	22
74255363	12
74255490	19
74255491	12
74255491	19
74255511	7
74255513	7
74255577	19
74255612	79
74255631	35
74255631	7
74255631	73
74255665	49
74255665	7
74255772	79
74255781	7
74255781	73
74255839	75
74255895	58
74255898	20
74255898	7
74255904	20
74255904	7
74255912	21
74255912	7
74255914	58
74255943	17
74255943	17A
74255956	51
74255956	52A
74255956	52B
74255956	7
74255956	73
74255977	61
74255995	58
74256022	76
74303038	24
74303694	21
74310257	13
74310257	61
74310257	7
74310257	82
74317554	71
74320597	30
74320608	27
74335647	61
74335649	61
74335669	28
74336491	10
74336558	61
74336646	25
74336897	20
74336897	7
74337019	52
74337022	52
74337022	52B
74337023	52
74339021	35
74339532	7
74339535	61
74348691	28
74354492	13
74354537	71
74354568	30
74355843	49
74357289	11A
74359310	30
74359656	35
74359776	43
74359776	43A
74361551	7
74361740	7
74361740	75
74361829	28
74361829	43
74362338	12
74364166	27
74364404	27
74365627	27
74367090	27
74367090	7
74368204	13
74368205	13
74368206	13
74369002	13
74369746	27
74371027	11
74371027	11A
74371027	8
74371118	27
74371160	72
74371160	8
74371289	8
74371345	8
74371444	11
74371444	11A
74371445	11
74371445	118
74371742	156
74371742	8
74372421	76
74372864	10
74373613	35
74373716	20
74375682	76
74375691	76
74376277	24
74376398	75
74376398	8
74376497	19
74376520	7
74376520	71
74376538	24
74376590	27
74376591	27
74376596	27
74376598	27
74376603	27
74376603	8
74376604	27
74376609	11
74376609	8
74376627	28
74376749	13
74376749	35
74376749	8
74377120	13
74377120	8
74377267	51
74377267	52A
74377278	27
74377561	25
74378031	53
74378031	7
74378033	53
74378112	71
74378112	8
74379070	8
74379198	13
74379268	35
74379269	35
74379572	51
74379572	52A
74379723	61
74380652	53
74385317	8
74385320	8
74385485	13
74386137	7
74386137	71
74386223	8
74386262	13
74386359	15
74386360	15
74386405	25
74386406	25
74386413	19
74386453	15
74386454	15
74386455	15
74386456	15
74386457	15
74386458	15
74386495	72
74386495	8
74386601	51
74386601	52A
74386602	51
74386602	52A
74386617	51
74386617	52B
74386628	19
74386651	20
74386653	19
74386711	27
74386776	24
74386790	19
74386826	27
74386856	8
74386879	27
74386901	19
74386924	76
74387007	61
74387050	76
74387051	76
74387227	71
74387385	51
74387385	52A
74387453	73
74387525	8
74387605	76
74387609	76
74387697	58
74387697	59
74387697	7
74387726	19
74388148	52
74388185	72
74388428	25
74388465	73
74388809	35
74388810	35
74388848	35
74389036	71
74389052	14
74389058	13
74389291	8
74389292	13
74389294	19
74389397	19
74389593	27
74389599	27
74389635	72
74389635	8
74389676	73
74389676	8
74389678	73
74389678	8
74389685	19
74389782	8
74389943	13
74389961	19
74389961	7
74390006	53
74390093	51
74390093	52A
74390094	51
74390094	52A
74390095	51
74390095	52A
74390117	25
74390254	24
74390270	24
74390294	25
74390295	25
74390296	25
74390297	25
74390432	20
74390432	8
74390547	19
74390548	19
74390583	73
74390589	73
74390590	73
74390592	73
74390593	39
74390594	73
74390595	73
74390655	75
74390766	13
74390767	13
74390773	61
74390837	11
74390837	11A
74390992	75
74390995	75
74391003	75
74391019	27
74391022	16
74391022	16A
74391131	58
74391154	75
74391240	53
74391306	19
74391307	12
74391307	19
74391351	75

PART NO.	PAGE
74391403	27
74391407	27
74391408	27
74391411	27
74391412	27
74391419	27
74391441	27
74391475	27
74391554	27
74391593	75
74391666	21
74391707	58
74391707	7
74391845	24
74391849	24
74391869	24
74391870	24
74391885	28
74391933	75
74391934	75
74391938	75
74391949	75
74391950	75
74391955	75
74391996	61
74392024	17
74392051	19
74392052	19
74392053	19
74392054	19
74392057	53
74392068	19
74392121	53
74392183	24
74392384	51
74392385	51
74392386	51
74392387	51
74392388	51
74392389	51
74392402	49
74392439	49
74392788	51
74392788	528
74392789	51
74392789	528
74393077	42
74393077	43A
74393090	43
74393090	43A
74393280	57A
74393281	56
74393325	76
74393341	31
74393346	32
74393346	33
74393346	33A
74393349	32
74393349	33
74393349	33A
74393351	32
74393351	33
74393354	32
74393354	33
74393355	32
74393355	33
74393359	30
74393359	8
74393362	30
74393364	30
74393373	13
74393397	12
74393399	24
74393426	13
74393427	78
74393435	16
74393436	16
74393443	19
74393504	79
74393505	79
74393548	59
74393560	11
74393592	58
74393599	30
74393600	31
74393601	31
74393708	72
74393778	58
74393853	13
74393854	13
74393989	19
74393989	7
74394009	49
74394014	73
74394036	20
74394172	17
74394177	51
74394178	43A
74394188	73
74394212	17
74394221	17
74394222	17
74394223	17
74394224	17
74394301	49
74394302	49
74394306	49
74394318	49
74394335	42
74394335	43A
74394366	62
74394405	41
74394407	41
74394445	19
74394588	10
74394615	71
74394627	71
74394662	24
74394666	24
74394667	33A
74394672	11A
74394673	11B
74394673	8
74394674	49A
74394675	11A
74394678	8
74394747	16A
74394747	17
74394747	17A
74394751	78
74394755	43
74394756	43
74394764	22
74394767	29
74394922	72
74394928	19
74394949	73
74394952	13
74394953	73
74394957	31
74394959	70
74394976	51
74394990	61
74395002	72
74395011	59
74395012	59
74395024	30
74395034	43
74395035	41
74395045	13
74395046	13
74395049	20
74395053	30
74395060	31
74395061	31
74395062	31
74395085	25
74395087	32
74395087	33
74395087	33A
74395089	32
74395092	32
74395099	12
74395101	12
74395103	12
74395108	12
74395109	13
74395185	14
74395193	61
74395227	52B
74395229	49B
74395235	29
74395238	78
74395419	41
74395425	7
74395425	70
74395433	20
74395447	73
74395453	11B
74395454	11B
74395456	14
74395460	49A
74395463	33A
74395487	19
74395487	7
74395510	11A
74395537	41
74395541	52A
74395542	52A
74395543	52A
74395545	52A
74395546	52A
74395549	43A
74395554	16
74395610	35
74395640	61
74395690	52B
74395709	7
74395709	71
74395713	7
74395767	16
74395767	16A
74395770	20
74395803	29
74395852	11
74395855	52
74395855	52B
74395878	52B
74395889	35
74395905	14
74395906	14
74395907	14
74395908	14
74395909	14
74395910	14
74395911	14
74395912	14
74395913	14
74395914	14
74395915	14
74395916	14
74395917	14
74395918	14
74395919	14
74395935	52
74395936	52
74395963	21
74395968	21
74395976	49B
74395997	11B
74395998	11B
74395999	11A
74396000	11B
74396000	8
74396002	14
74396005	49A
74396006	7
74396006	8
74396020	51
74396020	52A
74396037	33
74396037	33A
74396039	33
74396039	33A
74396041	33
74396042	33A
74396043	33A
74396044	33A
74396046	7
74396048	17A
74396049	17A
74396050	17A
74396051	17A
74396052	17A
74396053	51
74396053	52A
74396054	53
74396059	53
74396063	43A
74396083	52B
74396085	17
74396085	17A
74396091	12
74396115	71
74396118	11B
74396168	11B
74396173	14
74396283	49A
74396316	52B
74396317	52B
74396318	35
74396349	76
74396367	17
74396367	17A
74396371	76
74396372	76
74396448	16A
74396479	52A
74398456	16A
74500230	13
74507358	51
74507358	52B
74507359	52
74507359	52B
74507360	52B
74507414	52B
74507415	51
74507415	52
74507415	52B
74507416	52B
74511243	53
74513810	75
74516821	24
74516821	25
74517266	53
74630114	17A
74630804	85
74660358	13
74660423	8
74660492	11
74660492	8
74660677	76
74662263	72
74665306	13
74752002	75
74905870	158
74980021	136
75000528	183
79017821	114
79017823	110
79017823	113
79017823	115
79019030	111
79019030	112