CATERPILLAR®

SEBP4630-02
November 2007

RUTHZIL TRATOR COMERCIAL DE PEÇAS LTDA 11 97083-6812 ROLANDO

Parts Manual

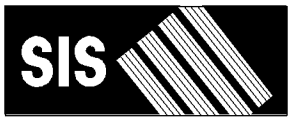

See "General Information" for New Parts Manual Features.

226B2 Skid Steer Loader

MJH10575-Up (Machine)
CSD1-11322 (Engine)
CYP1-Up (Engine)
CYS1-Up (Engine)

Powered By 3024C Engine
This Parts Manual is also Available in .PDF Format on Compact Disc (CD-ROM)-Caterpillar Form No. SERP4630.

Product and Dealer Information

Note: For product identification plate locations, see the section “Product Identification Information” in the Operation and Maintenance Manual.

Delivery Date: _____

Product Information

Model: _____

Product Identification Number: _____

Engine Serial Number: _____

Transmission Serial Number: _____

Generator Serial Number: _____

Attachment Serial Numbers: _____

Attachment Information: _____

Customer Equipment Number: _____

Dealer Equipment Number: _____

Dealer Information

Name: _____ Branch: _____

Address: _____

_____

_____

	Dealer Contact	Phone Number	Hours
Sales:	_____	_____	_____
Parts:	_____	_____	_____
Service:	_____	_____	_____

Informations produit et concessionnaire

Nota: Voir l'emplacement de la plaque signalétique du produit au chapitre "Informations produit" du guide d'utilisation et d'entretien.

Date de livraison: _____

Informations produit

Modèle: _____

Numéro d'identification produit: _____

Numéro de série du moteur: _____

Numéro de série de la boîte de vitesses: _____

Numéro de série de l'alternateur: _____

Numéros de série d'équipement: _____

Informations sur l'équipement: _____

Numéro matériel client: _____

Numéro matériel concessionnaire: _____

Informations concessionnaire

Nom: _____ Agence: _____

Adresse: _____

_____

_____

	Contact concessionnaire	Numéro de téléphone	Heures
Ventes:			
Pièces:			
Service:			

Información del Producto/Distribuidor

Nota: Para saber la ubicación de las placas de identificación del producto, ver la sección “Información sobre identificación del producto” en el Manual de Operación y Mantenimiento.

Fecha de entrega: _____

Información del producto

Modelo: _____

Número de identificación del producto: _____

Número de serie del motor: _____

Número de serie de la transmisión: _____

Número de serie del generador: _____

Números de serie de los accesorios: _____

Información sobre los accesorios: _____

Número del equipo del cliente: _____

Número del equipo del distribuidor: _____

Información del distribuidor

Nombre: _____ Sucursal: _____

Dirección: _____

_____

_____

Comunicación con el distribuidor	Número de teléfono	Horas
Ventas: _____	_____	_____
Piezas: _____	_____	_____
Servicio: _____	_____	_____

Informações Sobre Produto e Revendedor

Nota: Para localizações da placa de identificação do produto, consulte a seção, “Informações Sobre Identificação do Produto” no Manual de Operação e Manutenção.

Data de Entrega: _____

Informações Sobre o Produto

Modelo: _____

Número de Identificação do Produto: _____

Número de Série do Motor: _____

Número de Série da Transmissão: _____

Número de Série do Gerador: _____

Números de Série de Acessórios: _____

Informações Sobre Acessórios: _____

Número do Equipamento do Cliente: _____

Número do Equipamento do Revendedor: _____

Informações Sobre o Revendedor

Nome: _____ Filial: _____

Endereço: _____

_____

_____

	Contato do Revendedor	Telefone	Horas
Vendas:	_____	_____	_____
Peças:	_____	_____	_____
Serviço:	_____	_____	_____

Produkt- und Händlerinformation

Anmerkung: Für die Lage der Produkt-Identnummer und Seriennummern siehe Abschnitt “Produkt-Identinformation” im Betriebs- und Wartungshandbuch.

Lieferdatum: _____

Produkt-Identinformation

Modell: _____

Produkt-Identnummer: _____

Seriennummer des Motors: _____

Seriennummer des Getriebes: _____

Seriennummer des Generators: _____

Seriennummern der Arbeitsgeräte: _____

Arbeitsgeräteinformation: _____

Kundennummer: _____

Händlernummer: _____

Händlerinformation

Name: _____ Niederlassung: _____

Adresse: _____

_____

_____

	Kontaktperson beim Händler	Telefon	Dienststunden
Verkauf:	_____	_____	_____
Ersatzteile:	_____	_____	_____
Service:	_____	_____	_____

MEMORANDA

TABLE OF CONTENTS

Name	Page
GENERAL INFORMATION	A20
REPAIR ALTERNATIVES	A39
SUPPLEMENTAL COOLANT ADDITIVES	A44
MAINTENANCE PARTS	A49
INDEX	A74
MACHINE ARRANGEMENT	1
CHASSIS AR	1
COMMON AR	1
CONTROL AR-MACHINE	2
CONVERSION AR-MACHINE	3
ENGINE ARRANGEMENT	14
ENGINE AR	14
ENGINE AR-PRIMARY	15
INSTALLATION AR-ENGINE	18
BASIC ENGINE	20
CAMSHAFT GP	20
COVER GP-FRONT HOUSING	22
COVER GP-VALVE MECHANISM	23
CRANKSHAFT GP	25
CYLINDER BLOCK GP	30
CYLINDER HEAD AS	34
CYLINDER HEAD GP	36
DRAIN GP-ENGINE OIL	41
FLYWHEEL GP	42
GUARD GP-BELT	44
HOUSING GP-FLYWHEEL	45
HOUSING GP-FRONT	47
LIFTING GP-ENGINE	51
MOUNTING GP-ENGINE	53
MOUNTING GP-FAN	55
PAN GP-OIL	57
PISTON & ROD GP	67
PLUG GP-ENGINE	69
PULLEY GP-CRANKSHAFT	70
PULLEY GP-WATER PUMP	72
V-BELT GP	74
VALVE MECHANISM GP	75
LUBRICATION SYSTEM	78
FILLER GP-ENGINE OIL	78
PUMP GP-ENGINE OIL	80
COOLING SYSTEM	83
HOUSING GP-WATER REGULATOR	83
MOUNTING GP-RAD & OIL COOLER	84
PUMP GP-WATER	86
RADIATOR & HYD OIL COOLER GP	91
RADIATOR & OIL COOLER MTG GP	93
AIR INLET AND EXHAUST SYSTEM	97
AIR CLEANER GP	97
LINES GP-AIR	99
MANIFOLD GP-EXHAUST	100
MUFFLER GP	101
TURBOCHARGER GP	104
FUEL SYSTEM	110
CABLE GP-GOVERNOR CONTROL	110
CONTROL GP-GOVERNOR	111
FILTER GP-WATER SEP & FUEL	112
GOVERNOR GP	113
LINES GP-FUEL PRM & FILTER	118
PUMP & MTG GP-FUEL TRANSFER	120
PUMP GP-FUEL INJECTION	122
PUMP GP-FUEL PRM & PRIM FILTER	128
ELECTRICAL AND STARTING SYSTEM	129
ALTERNATOR GP-CHARGING	129
BATTERY GP	132
CONNECTION GP-ELECTRICAL	134
CONTROL GP-INTERLOCK	136
CONTROL GP-MANUAL START/STOP	137
CONVERSION AR-NON-ROADING	138
COVER GP-FUSE PANEL	139
ELECTRONICS GP-IMPLEMENT	140
ELECTRONICS GP-MACHINE	141
FASTENER GP-WIRING HARNESS	142
GLOW PLUG GP	143
HEATER GP-JACKET WATER	145
INSTALLATION GP-SECURITY	147
KIT-WORK TOOL CONTROL & WIRING	149
KIT-WORK TOOL WIRING	150
LAMP GP-FLOOD	151
LAMP GP-HEAD & SIGNAL	153
LAMP GP-STOP & TAIL	155
LAMP GP-WARNING BEACON	157
LIGHTING GP-FLOOD	158
LIGHTING GP-ROADING	160
LIGHTING GP-STOP & TAIL	162
LIGHTING GP-WARNING BEACON	163
SENSOR GP-TEMP & PRESS	164
STARTING MOTOR GP-ELECTRIC	165
SWITCH GP-PRESSURE	169
SWITCH GP-TEMPERATURE	171
WARNING GP-BACKUP	172
WIRING GP-AIR CONDITIONER	173
WIRING GP-CHASSIS	174
WIRING GP-ENGINE	178
WIRING GP-HORN	183
WIRING GP-MACHINE	184
WIRING GP-REAR LIGHTING	186
WIRING GP-WORK TOOL	187

TABLE OF CONTENTS

Name	Page
POWER TRAIN	189
AXLE GP	189
DRIVE GP-TANDEM	192
FILTER & LINES GP-HYDRAULIC	193
FILTER GP-OIL	195
LINES GP-HYDROSTATIC	199
MANIFOLD GP-RETURN	201
MOTOR & MTG GP-HYDROSTATIC	203
MOTOR GP-PISTON	204
MOUNTING GP-PUMP	206
POWER TRAIN AR	207
PUMP & MTG GP-HYDROSTATIC	208
PUMP GP-PISTON	209
TIRE & RIM GP	211
WHEEL & TIRE AR	221
WHEEL & TIRE GP	226
FRAME AND BODY	227
BUMPER GP	227
CONVERSION AR-ROADING	228
CONVERSION GP-ROADING	235
COUNTERWEIGHT GP	239
ENCLOSURE GP-ENGINE	242
FRAME GP-LOADER	244
FRAME GP-MACHINE	246
GUIDE GP-LINES	247
KIT-ROADING CONVERSION	248
LIFTING GP-MACHINE	255
MIRROR & MTG GP-REAR VIEW	257
MOUNTING GP-REGISTRATION	259
MOUNTING GP-ROADING LIGHTS	261
SUPPRESSION GP-SOUND	263
HYDRAULIC SYSTEM	264
ACCUMULATOR & MTG GP-HYDRAULIC	264
ADAPTER GP-OIL LINE	265
CYLINDER & MTG GP-ANGLE BLADE	266
CYLINDER & MTG GP-BUCKET	268
CYLINDER & MTG GP-LIFT ARM	269
CYLINDER GP-BUCKET	272
CYLINDER GP-GRAPPLE	274
CYLINDER GP-HYDRAULIC	275
CYLINDER GP-LIFT	282
CYLINDER GP-TILT	284
FITTING GP-HYDRAULIC	286
HYDRAULIC AR	289
KIT-HIGH FLOW CONVERSION	292
KIT-QUICK COUPLER CONVERSION	295
LINES GP-BUCKET	298
LINES GP-CONNECTING	311
LINES GP-GRAPPLE	315
LINES GP-HYDRAULIC FAN	321
LINES GP-HYDRAULIC OIL COOLER	325
LINES GP-LIFT CYLINDER	327
LINES GP-LOWERING CONTROL	331
LINES GP-PILOT	335
LINES GP-PUMP	339
LINES GP-TILT CYLINDER	343
LINES GP-WORK TOOL	347
MANIFOLD & LINES GP-CONTROL	352
MANIFOLD & MTG GP-CONTROL	356
MANIFOLD & SOLENOID GP-CONTROL	359
MANIFOLD GP-CONTROL	362
MOTOR & MTG GP-HYDRAULIC FAN	365
MOTOR GP-GEAR	368
MOUNTING GP-CYLINDER	374
PLUG GP-PILOT VALVE	377
PUMP & MTG GP-WORK TOOL	378
PUMP GP-GEAR	382
TANK & MTG GP-HYDRAULIC	384
TANK GP-HYDRAULIC	385
VALVE & LINES GP-COUPLER	386
VALVE & MTG GP-CONTROL	392
VALVE GP-CONTROL	393
VALVE GP-MANUAL	395
VALVE GP-PILOT	396
VALVE GP-RELIEF	403
VALVE GP-SOLENOID	404
WORK TOOLS	408
ARM GP-MATERIAL HANDLING	408
BLADE AR	409
BLADE GP-ANGLING	411
BLADE GP-MULTIPURPOSE BUCKET	414
BUCKET AR-DIRT	418
BUCKET AR-GENERAL PURPOSE	419
BUCKET AR-GRAPPLE	421
BUCKET AR-LIGHT MATERIAL	425
BUCKET AR-MULTIPURPOSE	425
BUCKET AR-UTILITY	428
BUCKET AS-DIRT	430
BUCKET AS-GENERAL PURPOSE	434
BUCKET AS-LIGHT MATERIAL	438
BUCKET GP-GRAPPLE	441
BUCKET GP-MULTIPURPOSE	445
BUCKET GP-UTILITY	450
CARRIAGE & FORK AR	453
CARRIAGE GP-FORK	454
CONVERSION GP-WORK TOOL	456
COUPLER AR-QUICK	457
COUPLER GP-QUICK	458
COVER GP-LINES	461
CYLINDER & LINK GP-COUPLER	462
EDGE GP-BIT & CUTTING	464
EDGE GP-CUTTING	464
FORK AR-GRAPPLE	470
FORK GP-GRAPPLE	472
FORK GP-PALLET	475

TABLE OF CONTENTS

Name	Page
FORK GP-UTILITY	477
FRAME GP-BLADE	479
FRAME GP-FORK	480
FRAME GP-GRAPPLE	482
GRAPPLE GP-UTILITY	483
HANDLE & PIN GP-COUPLER	486
HANDLE GP-COUPLER	488
KIT-ROADING PLATE & MOUNTING	490
LINK GP-COUPLER	491
LOCK GP-QUICK COUPLER	492
PLATE GP-ROADING	493
SPRING GP-BLADE	495
STEP GP-MATERIAL HANDLING ARM	496
STOP GP-GRAPPLE	497
STRAINER GP-WATER	498
TANK & MTG GP-WATER	499
TANK GP-WATER	502
TOOTH GP-UNI	503
OPERATOR STATION	504
ACCUMULATOR GP-REFRIGERANT	504
AIR CONDITIONER & MOUNTING GP	506
AIR CONDITIONER AR	507
AIR CONDITIONER GP	508
ARMREST & MOUNTING GP	512
ARMREST GP	513
BOX GP-STORAGE	515
CAB AR-ENCLOSED ROPS	516
CAB GP-ENCLOSED ROPS	517
CABLE GP-CONTROL	518
COMPRESSOR & MOTOR GP-REFRIG	519
COMPRESSOR & MTG GP-REFRIG	522
CONDENSER & MTG GP-REFRIGERANT	523
CONTROL GP-HANDLE	524
CONTROL GP-PILOT OPERATED HYD	532
COUPLING GP-DRIVE	557
COVER GP-CONSOLE	559
COVER GP-INSTRUMENT PANEL	561
DOOR & MTG GP-CAB	562
DOOR GP-CAB	567
DUCT & CONTROL GP	573
FRAME GP-WINDOW	575
GAUGE & WARNING GP	577
GUARD GP-ROPS/FOPS	579
HANDHOLD GP	580
HANDLE GP-MODULAR	581
HEATER & MTG GP-CAB	583
HEATER AR-CAB	584
HEATER GP-CAB	585
HOLDER-CUP	590
HOUSING AS-SIDE	591
INSTALLATION GP	592
KIT-AIR COND & HEATER INSTL	592
KIT-CAB DOOR & MOUNTING	597
KIT-CAB SEAL	599
LEVER GP-GOVERNOR	600
LINER GP-CAB	601
LINER-CAB	602
LINES GP-AIR CONDITIONER	603
LINES GP-HEATER	605
LITERATURE GP	606
MIRROR GP-REAR VIEW	607
MODULE GP-WARNING INDICATOR	608
MOUNTING GP-ROPS	610
OPTION AR-CAB	611
PANEL AR-INSTRUMENT	612
PANEL GP-INSTRUMENT	613
PANEL GP-SIDE	617
PEDAL GP-GOVERNOR	618
PLATFORM GP-OPERATOR	620
SEAL GP-CAB	622
SEAT BELT GP	624
SEAT GP	628
SEAT GP-ADJUSTABLE	630
SPRING GP-GAS	631
VISOR GP-CAB	632
WINDOW GP-CAB	634
SERVICE EQUIPMENT AND SUPPLIES	641
BRACKET GP-MOUNTING	641
FILM GP	642
PARTS GP-MISCELLANEOUS	648
PLATE & FILM GP	650
PART NUMBER INDEX	B1

TABLE DES MATIÈRES

Désignation	Page
GÉNÉRALITÉS	A23
OPTIONS DE RÉPARATION	A40
ADDITIFS POUR LIQUIDE DE REFROIDISSEMENT	A45
PIÈCES DE RECHANGE	A53
INDEX	A85
MACHINE COMPLÈTE	1
VERSION DE CHASSIS	1
VERSION NORMALE	1
VERSION DE COMMANDE DE MACHINE	2
VERSION DE TRANSFORMATION MACHINE	3
MOTEUR COMPLET	14
MOTEUR (VERSION)	14
MOTEUR (VERSION PRINCIPALE)	15
MONTAGE DE MOTEUR (VERSION)	18
MOTEUR DE BASE	20
ARBRE A CAMES (ASS)	20
COUVERCLE DE CARTER AV (ASS)	22
CACHE-SOUPAPES (ASS)	23
VILEBREQUIN (ASS)	25
BLOC-CYLINDRES (ASS)	30
CULASSE (ENS)	34
CULASSE (ASS)	36
VIDANGE-HUILE DE MOTEUR (ASS)	41
VOLANT MOTEUR (ASS)	42
PROTEGE-COURROIE (ASS)	44
CARTER DE VOLANT (ASS)	45
CARTER AV (ASS)	47
OEILLETONS DE LEVAGE MOTEUR (ASS)	51
MONTAGE DE MOTEUR (ASS)	53
MONTAGE DE VENTILATEUR (ASS)	55
HUILE MOTEUR - CARTER (ASS)	57
PISTON ET BIELLE (ASS)	67
BOUCHON DE MOTEUR (ASS)	69
VILEBREQUIN - POULIE (ASS)	70
POULIE DE POMPE À EAU (ASS)	72
*V-BELT GP	74
CULBUTERIE (ASS)	75
CIRCUIT DE GRAISSAGE	78
BOUCHON DE REMPLISSAGE D'HUILE MOTEUR (ASS)	78
POMPE A HUILE MOTEUR (ASS)	80
CIRCUIT DE REFROIDISSEMENT	83
LOGEMENT DE RÉGULATEUR D'EAU (ASS)	83
MONTAGE DE RADIATEUR ET REFROIDISSEUR D'HUILE (ASS)	84
POMPE A EAU (ASS)	86
RADIATEUR ET REFROIDISSEUR D'HUILE HYDRAULIQUE (ASS)	91
RADIATEUR ET REFROIDISSEUR D'HUILE-MONTAGE (ASS)	93
CIRCUIT D'ADMISSION D'AIR ET D'ÉCHAPPEMENT	97
FILTRE A AIR (ASS)	97
CANALISATIONS D'AIR (ASS)	99
COLLECTEUR D'ÉCHAPPEMENT (ASS)	100
SILENCIEUX (ASS)	101
TURBOCOMPRESSEUR (ASS)	104
CIRCUIT DE CARBURANT	110
CÂBLE DE COMMANDE DU RÉGULATEUR (ASS)	110
COMMANDE DE RÉGULATEUR (ASS)	111
FILTRE DE SÉPARATEUR D'EAU ET DE CARBURANT (ASS)	112
REGULATEUR (ASS)	113
CANALISATIONS DE FILTRE ET D'AMORÇAGE DE CARBURANT (ASS)	118
POMPE D'ALIMENTATION ET MONTAGE (ASS)	120
POMPE D'INJECTION DE CARBURANT (ASS)	122
POMPE D'AMORÇAGE DE CARBURANT ET FILTRE PRINCIPAL	128
CIRCUIT ÉLECTRIQUE ET DE DÉMARRAGE	129
ALTERNATEUR DE CHARGE (ASS)	129
BATTERIE (ASS)	132
BRANCHEMENT ÉLECTRIQUE (ASS)	134
COMMANDE D'INTERVERROUILLAGE (ASS)	136
COMMANDE MANUELLE DÉMARRAGE/ ARRÊT (ASS)	137
VERSION DE TRANSFORMATION - DÉPLACEMENT NON ROUTIER	138
COUVERCLE - PANNEAU DE FUSIBLES (ASS)	139
COMMANDE ÉLECTRONIQUE D'ÉQUIPEMENT (ASS)	140
ÉLECTRONIQUE - MACHINE (ENS)	141

* TRADUCTION NON DISPONIBLE AU MOMENT DE LA PUBLICATION

TABLE DES MATIÈRES

Désignation	Page
BOULONNERIE DE FAISCEAU DE CABLES	142
BOUGIE DE PRÉCHAUFFAGE (ASS)	143
EAU DES CHEMISES - RECHAUFFEUR (ASS)	145
MONTAGE-SÉCURITÉ (ASS)	147
KIT DE COMMANDE D'OUTIL DE TRAVAIL ET CÂBLAGE	149
KIT DE CÂBLAGE D'OUTIL DE TRAVAIL	150
LAMPE - PHARE (ASS)	151
LAMPE - PHARE ET CLIGNOTANT	153
FEUX ARRIÈRE ET FEUX D'ARRÊT	155
LAMPE - GYROPHARE (ASS)	157
ÉCLAIRAGE - PROJECTEURS (ASS)	158
ÉCLAIRAGE - FEUX DE ROUTE (ASS)	160
ÉCLAIRAGE-FEUX DE STOP ET ARRIÈRE (ASS)	162
ÉCLAIRAGE - GYROPHARE (ASS)	163
CAPTEUR - TEMP. ET PRESSION (ASS)	164
DÉMARREUR ÉLECTRIQUE (ASS)	165
MANOCONTACT	169
BOUTON DE TEMPÉRATURE	171
AVERTISSEUR DE RECUL (ASS)	172
CABLAGE - CLIMATISEUR (ASS)	173
CABLAGE DE CHASSIS (ASS)	174
CABLAGE DE MOTEUR (ASS)	178
CÂBLAGE DE KLAXON (ASS)	183
CABLAGE DE LA MACHINE (ASS)	184
CABLAGE D'ECLAIRAGE ARRIERE (ASS)	186
CÂBLAGE - OUTIL DE TRAVAIL (ASS)	187
TRANSMISSION	189
ESSIEU (ASS)	189
ENTRAINEMENT EN TANDEM (ASS)	192
FILTRE ET CANALISATIONS HYRAULIQUES (ASS)	193
FILTRE A HUILE (ASS)	195
CANALISATIONS HYDROSTATIQUES (ASS)	199
COLLECTEUR-RETOUR (ASS)	201
MOTEUR ET MONTAGE - HYDROSTATIQUE (ASS)	203
GROUPE DE MOTEUR A PISTONS	204
MONTAGE DE POMPE (ASS)	206
TRANSMISSION (VERSION)	207
POMPE HYDROSTATIQUE ET MONTAGE (ASS)	208
POMPE A PISTONS (ASS)	209
PNEU ET JANTE (ASS)	211
ROUE ET PNEU (VERSION)	221
ROUE ET PNEU (ASS)	226
CHÂSSIS ET BENNE	227
PARE-CHOCS (ASS)	227
VERSION DE TRANSFORMATION POUR DÉPLACEMENT ROUTIER	228
GROUPE DE TRANSFORMATION - DÉPLACEMENT ROUTIER	235
CONTREPOIDS (ASS)	239
CARENAGE DE MOTEUR (ASS)	242
BATI - CHARGEUSE (ASS)	244
BÂTI DE MACHINE (ASS)	246
GUIDE - CANALISATIONS (ASS)	247
KIT DE TRANSFORMATION POUR DÉPLACEMENTS SUR ROUTE	248
MACHINE DE LEVAGE	255
RÉTROVISEUR ET MONTAGE (ASS)	257
MONTAGE - IMMATRICULATION (ASS)	259
MONTAGE DE FEUX DE DÉPLACEMENT SUR ROUTE (ASS)	261
INSONORISATION (ASS)	263
CIRCUIT HYDRAULIQUE	264
ACCUMULATEUR ET MONTAGE - HYDRAULIQUE (ASS)	264
RACCORD DE CANALISATION D'HUILE (ASS)	265
VÉRIN DE LAME D'ORIENTATION ET MONTAGE (ASS)	266
VÉRIN ET MONTAGE - GODET (ASS)	268
VÉRIN DE BRAS DE LEVAGE ET MONTAGE (ASS)	269
VERIN DE GODET (ASS)	272
PINCE - VÉRIN (ASS)	274
VÉRIN HYDRAULIQUE (ASS)	275
VÉRIN DE LEVAGE (ASS)	282
VÉRIN D'INCLINAISON (ASS)	284
GRAISSEUR HYDRAULIQUE (ASS)	286
VERSION HYDRAULIQUE	289
KIT DE TRANSFORMATION DE DÉBIT ÉLEVÉ	292
KIT DE TRANSFORMATION DU COUPLEUR EXPRESS	295
ECLAIRAGE DE GODET (ASS)	298
CANALISATIONS - BRANCHEMENT (ASS)	311
PINCE - CANALISATIONS (ASS)	315
CANALISATIONS HYDRAULIQUES DE VENTILATEUR (ASS)	321
CANALISATIONS DE REFROIDISSEUR D'HUILE HYDR. (ASS)	325

* TRADUCTION NON DISPONIBLE AU MOMENT DE LA PUBLICATION

TABLE DES MATIÈRES

Désignation	Page
CANALISATIONS DE VÉRIN DE LEVAGE (ASS)	327
CANALISATIONS-COMMANDE D'ABAISSEMENT (ASS)	331
CANALISATIONS A COMMANDE PILOTE (ASS)	335
CANALISATIONS DE POMPE (ASS)	339
CANALISATIONS DU VÉRIN D'INCLINAISON (ASS)	343
CANALISATIONS - OUTIL DE TRAVAIL (ASS)	347
COLLECTEUR ET CANALISATIONS (ASS) - COMMANDE	352
COMMANDE DE COLLECTEUR ET MONTAGE (ASS)	356
COLLECTEUR ET SOLÉNOÏDE (ASS)-COMMANDE	359
COLLECTEUR - COMMANDE (ASS)	362
MOTEUR ET MONTAGE DE VENTILATEUR HYDRAULIQUE (ASS)	365
MOTEUR À ENGRENAGES (ASS)	368
MONTAGE DE VÉRIN (ASS)	374
BOUCHON DE SOUPAPE PILOTE (ASS)	377
POMPE ET MONTAGE - OUTIL DE TRAVAIL (ASS)	378
POMPE A ENGRENAGES (ASS)	382
RÉSERVOIR HYDRAULIQUE ET MONTAGE (ASS)	384
RÉSERVOIR HYDRAULIQUE (ASS)	385
SOUPAPE ET CANALISATIONS DE COUPLEUR (ASS)	386
DISTRIBUTEUR ET MONTAGE (ASS)	392
DISTRIBUTEUR (ASS)	393
SOUPAPE A COMMANDE MANUELLE (ASS)	395
SOUPAPE PILOTE (ASS)	396
CLAPET DE DECHARGE (ASS)	403
SOUPAPE - SOLÉNOÏDE (ASS)	404
OUTILS DE TRAVAIL	408
BRAS DE MANUTENTION (ASS)	408
LAME (VERSION)	409
LAME À ORIENTATION (ASS)	411
LAME DE GODET TOUS-TRAVAUX	414
GODET - SALETÉ (VERSION)	418
GODET NORMAL (VERSION)	419
GODET - PINCE (VERSION)	421
GODET - MATÉRIAUX MEUBLES (VERSION)	425
GODET TOUS-TRAVAUX (VERSION)	425
VERSION DE GODET POUR TRAVAUX DE SERVITUDE	428
GODET - SALETÉ (ENS)	430
GODET NORMAL (ENS)	434
GODET POUR MATERIAUX MEUBLES (ENS)	438
GODET - PINCE (ASS)	441
GODET TOUS-TRAVAUX (ASS)	445
GODET POUR TRAVAUX DE SERVITUDE (ASS)	450
VERSION DE TABLIER ET DE FOURCHE	453
TABLIER - FOURCHE (ASS)	454
TRANSFORMATION D'OUTIL DE TRAVAIL (ASS)	456
COUPLEUR EXPRESS (VERSION)	457
COUPLEUR EXPRESS (ASS)	458
COUVERCLE-CANALISATIONS (ASS)	461
VÉRIN ET BIELLE DE COUPLEUR (ASS)	462
EMBOUT ET LAME DE COUPE (ASS)	464
LAME DE COUPE (ASS)	464
FOURCHE - PINCE (VERSION)	470
FOURCHE - PINCE (ASS)	472
FOURCHE PALLETTE (ASS)	475
FOURCHE-RÉSEAU PUBLIC (ASS)	477
BÂTI DE LAME (ASS)	479
BÂTI DE FOURCHE (ASS)	480
PINCE - BÂTI (ASS)	482
PINCE-RÉSEAU PUBLIC (ASS)	483
POIGNÉE ET AXE DE COUPLEUR (ASS)	486
POIGNÉE DE COUPLEUR (ASS)	488
KIT DE PLAQUE DE DÉPLACEMENT ROUTIER ET MONTAGE	490
BIELLE DE COUPLEUR (ASS)	491
VERROUILLAGE DE COUPLEUR EXPRESS (ASS)	492
PLAQUE-DÉPLACEMENT ROUTIER (ASS)	493
RESSORT DE LAME (ASS)	495
MARCHEPIED-BRAS DE MANUTENTION (ASS)	496
ARRÊT-PINCE (ASS)	497
TAMIS D'EAU (ASS)	498
RÉSERVOIR D'EAU ET MONTAGE (ASS)	499
RÉSERVOIR D'EAU (ASS)	502
DENT MONOBLOC (ASS)	503
POSTE DE CONDUITE	504
ACCUMULATEUR - CLIMATISEUR (ASS)	504
CLIMATISEUR ET MONTAGE (ASS)	506
CLIMATISEUR (VERSION)	507

* TRADUCTION NON DISPONIBLE AU MOMENT DE LA PUBLICATION

TABLE DES MATIÈRES

Désignation	Page
CLIMATISEUR (ASS)	508
ACCOUDOIR ET MONTAGE (ASS)	512
ACCOUDOIR (ASS)	513
COFFRE DE RANGEMENT (ASS)	515
CABINE ROPS FERMÉE (VERSION)	516
*CAB GP-ENCLOSED ROPS	517
CABLAGE - COMMANDE MANUELLE ELECTRIQUE	518
COMPRESSEUR ET MOTEUR DE RÉFRIGÉRATION (ASS)	519
COMPRESSEUR ET MONTAGE - RÉFRIGÉRANT (ASS)	522
CONDENSATEUR ET MONTAGE (RÉFRIGÉRANT)	523
COMMANDE DE POIGNÉE (ASS)	524
COMMANDE HYDRAULIQUE PILOTE (ASS)	532
ACCOUPLEMENT D'ENTRAINEMENT (ASS)	557
COUVERCLE DE LA CONSOLE (ASS)	559
COUVERCLE DU TABLEAU DE BORD (ASS)	561
PORTE DE CABINE ET MONTAGE (ASS)	562
PORTIÈRE DE CABINE (ASS)	567
CONDUIT ET COMMANDE (ASS)	573
CADRE DE VITRE (ASS)	575
INDICATEURS ET TÉMOINS LUMINEUX (ASS)	577
PROTECTION DE ROPS/FOPS (ASS)	579
POIGNÉE	580
POIGNÉE MODULAIRE (ASS)	581
CHAUFFAGE ET MONTAGE - CABINE (ASS)	583
CHAUFFAGE DE CABINE (VERSION)	584
CHAUFFAGE DE CABINE (ASS)	585
*HOLDER-CUP	590
CÔTÉ CARTER (ENS)	591
GROUPE DE MONTAGE	592
KIT DE MONTAGE DE CLIMATISEUR ET CHAUFFAGE	592
KIT DE PORTE DE CABINE ET MONTAGE	597
KIT DE JOINT DE CABINE	599
LEVIER DE RÉGULATEUR (ASS)	600
CABINE - REVÊTEMENT (ASS)	601
CAPITONNAGE	602
CANALISATIONS DE CLIMATISEUR (ASS)	603
CANALISATIONS DE CHAUFFAGE (ASS)	605
LITTÉRATURE (ASS)	606
RÉTROVISEUR (ASS)	607
MODULE - TÉMOIN (ASS)	608
MONTAGE DU TOIT ROPS (ASS)	610
VERSION D'OPTION DE CABINE	611
VERSION DE TABLEAU DE BORD	612
TABLEAU DE BORD (ASS)	613
PANNEAU LATERAL (ASS)	617
RÉGULATEUR - PÉDALE (ASS)	618
PLATE-FORME DE CABINE	620
JOINT DE CABINE (ASS)	622
CEINTURE DE SECURITE (ASS)	624
SIÈGE (ASS)	628
SIÈGE RÉGLABLE (ASS)	630
RESSORT-GAZ (ASS)	631
RETROVISEUR - CABINE (ASS)	632
VITRE DE CABINE (ASS)	634
MATÉRIEL ET FOURNITURES D'ENTRETIEN	641
SUPPORT - MONTAGE (ASS)	641
PLAQUE SIGNALÉTIQUE (ASS)	642
GROUPE DE PIECES DIVERSES	648
PLAQUES SIGNALETIQUES ET AUTOCOLLANTS (ASS)	650
INDEX DE NUMÉROS DE PIÈCES	B1

* TRADUCTION NON DISPONIBLE AU MOMENT DE LA PUBLICATION

CONTENIDO

Nombre	Página
INFORMACIÓN GENERAL	A27
ALTERNATIVAS DE REPARACIÓN	A41
ADITIVOS DE REFRIGERANTE SUPLEMENTARIOS	A46
PIEZAS DE MANTENIMIENTO	A58
INDICE	A97
CONFIGURACION DE LA MAQUINA	1
CHASIS (CONFIG)	1
CONFIGURACIÓN COMÚN	1
*CONTROL AR-MACHINE	2
CONVERSION DE LA MAQUINA (CONFIG)	3
CONFIGURACION DE MOTOR	14
CONFIGURACIÓN DE MOTORES	14
MOTOR PRIMARIO (CONFIG)	15
CONFIGURACIÓN DE INSTALACIÓN DEL MOTOR	18
MOTOR BASICO	20
ÁRBOL DE LEVAS (GR)	20
TAPA DE LA CAJA DELANTERA (GR)	22
TAPA DEL MECANISMO DE VÁLVULAS (GR)	23
CIGÜEÑAL (GR)	25
BLOQUE MOTOR (GR)	30
CULATA DE CILINDROS (CONJ)	34
CULATA DE CILINDROS (GR)	36
DRENAJE DEL ACEITE DE MOTOR	41
VOLANTE (GR)	42
PROTECTOR DE CORREA (GR)	44
VOLANTE - CAJA DE (GR)	45
CAJA DELANTERA (GR)	47
CÁNCAMOS DE LEVANTAMIENTO DEL MOTOR (GR)	51
MONTAJE DEL MOTOR (GR)	53
MONTAJE DEL VENTILADOR (GR)	55
CÁRTER - COLECTOR DEL (GR)	57
PISTÓN Y BIELA (GR)	67
TAPÓN DEL MOTOR (GR)	69
CIGÜEÑAL - POLEA DE (GR)	70
GRUPO, MANIJA, BOMBA DE AGUA	72
*V-BELT GP	74
MECANISMO DE VÁLVULAS (GR)	75
SISTEMA DE LUBRICACION	78
TUBO DE LLENADO DE ACEITE (GR)	78
BOMBA DE ACEITE DEL MOTOR (GR)	80
SISTEMA DE ENFRIAMIENTO	83
*HOUSING GP-WATER REGULATOR	83
GRUPO DEMONTAJE DE RADIADOR Y ENFRIAMIENTO DE ACEITE	84
BOMBA DE AGUA (GR)	86
RADIADOR Y ENFRIADOR DE ACEITE HIDRÁULICO (GR)	91
MONTAJE DE RADIADOR Y ENFRIAMIENTO DE ACEITE (GR)	93
SISTEMA DE ESCAPE Y ADMISION DE AIRE	97
FILTRO DE AIRE (GR)	97
AIRE - TUBERÍAS DE (GR)	99
MÚLTIPLE DE ESCAPE (GR)	100
SILENCIADOR (GR)	101
TURBOCOMPRESOR (GR)	104
SISTEMA DE COMBUSTIBLE	110
CABLE GR-CONTROL DE MANDO	110
CONTROL DE REGULADOR (GR)	111
FILTRO DE COMBUSTIBLE Y SEPARADOR DE AGUA (GR)	112
REGULADOR (GR)	113
TUBERIAS (GR) -COMBUSTIBLE PRIMARIO Y FILTRO	118
BOMBA DE TRANSFERENCIA DE COMBUSTIBLE Y MONTAJE (GR)	120
BOMBA DE INYECCIÓN DE COMBUSTIBLE (GR)	122
BOMBA DE CEBADO Y FILTRO PRIMARIO DE COMBUSTIBLE (GR)	128
SISTEMA DE ARRANQUE ELECTRICO	129
CARGA - ALTERNADOR DE (GR)	129
BATERÍA (GR)	132
CONEXIÓN ELÉCTRICA (GR)	134
CONTROL DE TRABA (GR)	136
CONTROL MANUAL DE ARRANQUE/ PARADA (GR)	137
CONFIGURACIÓN DE TRANSFORMACIÓN PARA OBRAS	138
CUBIERTO DEL PANEL DE FUSIBLES (GR)	139
IMPLEMENTOS (GR ELECTRÓNICO)	140
ELECTRÓNICA DE LA MÁQUINA (GR)	141
TORNILLERIA DE MAZO DE CABLES (GR)	142
BUJÍA INCANDESCENTE (GR)	143
AGUA DE LAS CAMISAS - CALENTADOR DEL (GR)	145
INSTALACION DE SEGURIDAD (GR)	147

* NO HAY TRADUCCION DISPONIBLE EN EL MOMENTO DE LA IMPRESION

CONTENIDO

Nombre	Página
*KIT-WORK TOOL CONTROL & WIRING	149
*KIT-WORK TOOL WIRING	150
REFLECTOR (GR)	151
LÁMPARA DE LUZ DELANTERA Y DE SEÑAL (GR)	153
LUCES DE PARADA Y COLA (GR)	155
LÁMPARA DE BALIZA DE ADVERTENCIA (GR)	157
LUCES DE REFLECTOR (GR)	158
LUCES DE DESPLAZAMIENTO (GR)	160
LUCES DE PARADA Y DE COLA (GR)	162
LUZ DE BALIZA (GR)	163
GRUPO DE SENSORES DE TEMPERATURA Y PRESIÓN	164
MOTOR DE ARRANQUE ELÉCTRICO (GR)	165
INTERRUPTOR DE PRESIÓN (GR)	169
INTERRUPTOR PARA LA TEMPERATURA (GR)	171
RETROCESO - ALARMA DE (GR)	172
CABLES DEL ACONDICIONADOR DE AIRE (GR)	173
CABLES DEL CHASIS (GR)	174
CABLES DEL MOTOR (GR)	178
CABLE GR-BOCINA	183
CABLES DE LA MÁQUINA (GR)	184
ALAMBRADO DE LUCES TRASERAS (GR)	186
CABLES DE LA HERRAMIENTA DE TRABAJO (GR)	187
TREN DE FUERZA	189
EJE (GR)	189
MANDO TANDEM (GR)	192
FILTROS Y TUBERÍAS HIDRÁULICAS (GR)	193
FILTRO DE ACEITE (GR)	195
TUBERÍAS HIDROSTÁTICAS (GR)	199
RETORNO EN EL MULTIPLE(GR)	201
MOTOR HIDROSTATICO Y MONTAJE (GR)	203
PISTONES DEL MOTOR (GR)	204
MONTAJE DE LA BOMBA (GR)	206
TREN DE FUERZA (CONFIG)	207
HIDROSTATICO, BOMBA Y GRUPO DE MONTAJE	208
BOMBA DE PISTONES (GR)	209
ARO Y LLANTA (GR)	211
RUEDA Y LLANTA (CONFIG)	221
RUEDA Y NEUMÁTICO (GR)	226
BASTIDOR Y CAJA	227
PARACHOQUES (GR)	227
CONFIGURACIÓN DE TRANSFORMACIÓN PARA CARRETERA	228
CONVERSION PARA DESPLAZAMIENTO POR CARRETERA (GR)	235
CONTRAPESO (GR)	239
COMPARTIMIENTO DEL MOTOR (GR)	242
BASTIDOR DEL CARGADOR (GR)	244
GRUPO DE BASTIDOR, MAQUINARIA	246
TUBERIAS DE LA GUIA (GR)	247
*KIT-ROADING CONVERSION	248
LEVANTAMIENTO DE LA MÁQUINA (GR)	255
RETROVISOR Y MONTAJE (GR)	257
MONTAJE-REGISTRO (GR)	259
MONTAJE DE LUCES DE DESPLAZAMIENTO POR CARRETERA (GR)	261
INSONORIZADOR (GR)	263
SISTEMA HIDRAULICO	264
ACUMULADOR HIDRAULICO Y MONTAJE (GR)	264
GRUPO ADAPTADOR-TUBERIA DE ACEITE	265
CILINDRO Y MONTAJE (GR)- INCLINACIÓN DE LA HOJA	266
MONTAJE DEL CILINDRO DEL CUCHARÓN (GR)	268
GRUPO DE MONTAJE Y CILINDRO, LEVANTAMIENTO DEL BRAZO	269
CILINDRO DE CUCHARÓN (GR)	272
CILINDRO DE GARFIO (GR)	274
CILINDRO HIDRÁULICO (GRUPO)	275
CILINDRO DE LEVANTAMIENTO (GR)	282
INCLINACIÓN HORIZONTAL - CILINDRO DE (GR)	284
CONEXION HIDRAULICA (GR)	286
HIDRÁULICA (CONFIG)	289
*KIT-HIGH FLOW CONVERSION	292
*KIT-QUICK COUPLER CONVERSION	295
TUBERÍAS DEL CUCHARÓN (GR)	298
TUBERIAS DE CONEXION (GR)	311
TUBERÍAS DEL GARFIO (GR)	315
TUBERÍAS HIDRÁULICAS DEL VENTILADOR (GR)	321
TUBERÍAS DEL ENFRIADOR DE ACEITE HIDRÁULICO (GR)	325
CILINDRO DE LEVANTAMIENTO - TUBERÍAS DEL (GR)	327
*LINES GP-LOWERING CONTROL	331
TUBERÍAS CON SERVOMANDO (GR)	335
BOMBA - TUBERÍAS DE (GR)	339

* NO HAY TRADUCCION DISPONIBLE EN EL MOMENTO DE LA IMPRESION

CONTENIDO

Nombre	Página
TUBERÍAS DEL CILINDRO DE INCLINACIÓN (GR)	343
TUBERIAS DE LA HERRAMIENTA DE TRABAJO	347
*MANIFOLD & LINES GP-CONTROL	352
MULTIPLE Y MONTAJE (GR) - CONTROL	356
*MANIFOLD & SOLENOID GP-CONTROL	359
CONTROL DEL MULTIPLE (GR)	362
MOTOR Y MONTAJE DE VENTILADOR HIDRAULICO (GR)	365
MOTOR DE ENGRANAJES (GR)	368
MONTAJE DE CILINDRO (GR)	374
TAPON DE LA VALVULA PILOTO (GR)	377
BOMBA Y MONTAJE DE LA HERRAMIENTA DE TRABAJO (GR)	378
BOMBA DE ENGRANAJES (GR)	382
TANQUE HIDRÁULICO Y MONTAJE (GR)	384
TANQUE HIDRÁULICO (GR)	385
GR. VÁLVULA Y TUBERIAS-ACOPLADOR	386
VÁLVULA DE CONTROL Y MONTAJE (GR)	392
VÁLVULA DE CONTROL (GR)	393
VÁLVULA DE CONTROL MANUAL (GR)	395
VÁLVULA PILOTO (GR)	396
VÁLVULA DE ALIVIO (GR)	403
VÁLVULA DE SOLENOIDE (GR)	404
HERRAMIENTAS	408
AGUILÓN TELESCÓPICO (GR)	408
HOJA (CONFIG)	409
HOJA ORIENTABLE (GR)	411
GRUPO DE HOJA DE CUCHARÓN DE USO MÚLTIPLE	414
CUCHARON PARA TIERRA (CONF)	418
CUCHARÓN DE USO GENERAL (CONFIG)	419
CUCHARON DE GARFIO (CONF)	421
CUCHARÓN PARA MATERIALES LIVIANOS (CONFIG)	425
CUCHARÓN DE USO MÚLTIPLE (CONFIG)	425
CUCHARON UTILITARIO (CONFIG)	428
CUCHARON PARA TIERRA (CONJ)	430
CUCHARÓN DE USO GENERAL (CONJ)	434
CUCHARÓN PARA MATERIALES LIVIANOS	438
CUCHARON DE GARFIO (GR)	441
CUCHARÓN DE USO MÚLTIPLE (GR)	445
CUCHARÓN UTILITARIO (GR)	450
CARGADOR Y HORQUILLA (CONF)	453
PORTAHORQUILLAS (GR)	454
GRUPO DE CONVERSIÓN DE LA HERRAMIENTA	456
ACOPLADOR RÁPIDO (CONFIG)	457
ACOPLADOR RÁPIDO (GR)	458
TAPA DE TUBERIAS (GR)	461
GRUPO DE CILINDRO Y ESLABON, ACOPLADOR	462
GRUPO DE CANTONERA Y CUCHILLA	464
CUCHILLA (GR)	464
HORQUILLA DE GARFIO (CONF)	470
HORQUILLA DE GARFIO (GR)	472
HORQUILLA PARA TARIMAS (GR)	475
HORQUILLA DE UTILIDAD (GR)	477
BASTIDOR DE HOJA (GR)	479
GRUPO DE BASTIDOR DE HORQUILLA	480
BASTIDOR DE GARFIO (GR)	482
GARFIO DE UTILIDAD (GR)	483
GRUPO DE MANIJA Y PIN-ACOPLADOR	486
ACOPLADOR DE MANIJA	488
JUEGO-PLACA DE DESPLAZAMIENTO Y MONTAJE	490
GRUPO DE ESLABON, ACOPLADOR	491
TRABA-ACOPLADOR RAPIDO (GR)	492
PLACA DE DESPLAZAMIENTO POR CARRETERA (GR)	493
RESORTE DE HOJA (GR)	495
ESCALON DE BRAZO DE MANEJO DE MATERIALES (GR)	496
TOPE DEL GARFIO(GR)	497
COLADOR DEL AGUA (GR)	498
MONTAJE DEL TANQUE DE AGUA (GR)	499
TANQUE DEL AGUA (GR)	502
DIENTE DE UNA PIEZA (UNI-TOOTH) (GR)	503
ESTACION DEL OPERADOR	504
ACUMULADOR DEL ACONDICIONADOR DE AIRE (GR)	504
ACONDICIONADOR DE AIRE Y MONTAJE (GR)	506
ACONDICIONADOR DE AIRE (CONFIG)	507
ACONDICIONADOR DE AIRE (GR)	508
POSABRAZOS Y MONTAJE (GR)	512
POSABRAZOS (GR)	513

* NO HAY TRADUCCION DISPONIBLE EN EL MOMENTO DE LA IMPRESION

CONTENIDO

Nombre	Página
CAJA DE ALMACENAMIENTO	515
SISTEMA ROPS DE CABINA CERRADA (CONFIG)	516
CABINA INCLUYE ROPS (GR)	517
CABLE DE CONTROL (GR)	518
COMPRESOR Y MOTOR GR-REFRIGERANTE	519
COMPRESOR DE REFRIGERANTE Y GRUPO DE MONTAJE	522
CONDENSADOR DEL REFRIGERANTE Y MONTAJE (GR)	523
CONTROL DE MANIJA (GR)	524
CONTROL HIDRÁULICO DE OPERACIÓN PILOTO (GR)	532
*COUPLING GP-DRIVE	557
TAPA DE LA CONSOLA (GR)	559
TAPA DEL TABLERO DE INSTRUMENTOS (GR)	561
PUERTA Y MONTAJE DE CABINA (GR)	562
PUERTA DE CABINA	567
CONDUCTO Y CONTROL (GR)	573
BASTIDOR DE LA VENTANA (GR)	575
INDICADORES Y ADVERTENCIA (GR)	577
PROTECTOR DE ROPS/FOPS	579
PASAMANOS (GR)	580
MANIJA MODULAR (GR)	581
CALEFACCIÓN Y MONTAJE DE LA CABINA (GR)	583
CALEFACCIÓN DE LA CABINA (CONFIG)	584
CALEFACCIÓN DE LA CABINA (GR)	585
*HOLDER-CUP	590
COMPARTIMENTO CONJ-LATERAL	591
GRUPO DE INSTALACIÓN	592
JUEGO DE INSTALACIÓN DEL ACONDICIONADOR DE AIRE Y CALENTADOR	592
JUEGO, PUERTA DE CABINA Y MONTAJE	597
*KIT-CAB SEAL	599
GRUPO DE PALANCA-REGULADOR	600
REVESTIMIENTO DE LA CABINA (GR)	601
REVESTIMIENTO-TECHO	602
TUBERÍAS DE ACONDICIONADOR DE AIRE (GR)	603
TUBERÍAS DE LA CALEFACCIÓN (GR)	605
PUBLICACIONES (GR)	606
RETROVISOR (GR)	607
MÓDULO INDICADOR DE ADVERTENCIA (GR)	608
MONTAJE DE LA ESTRUCTURA ROPS (GR)	610
*OPTION AR-CAB	611
TABLERO DE INSTRUMENTOS (CONFIG)	612
TABLERO DE INSTRUMENTOS (GR)	613
PANEL LATERAL (GR)	617
REGULADOR - PEDAL DEL (GR)	618
PLATAFORMA DE LA CABINA	620
SELLO DE CABINA (GR)	622
CINTURÓN DE SEGURIDAD (GR)	624
ASIENTO (GR)	628
ASIENTO AJUSTABLE (GR)	630
RESORTE DE GAS (GR)	631
VISERA (GR)	632
VENTANA DE LA CABINA (GR)	634
EQUIPO DE SERVICIO Y SUMINISTROS	641
SOPORTE DE MONTAJE (GR)	641
ETIQUETA DE ADVERTENCIA (GR)	642
PIEZAS DIVERSAS (GR)	648
CALCOMANÍAS Y PLACAS DE IDENTIFICACIÓN (GR)	650
INDICE DE NUMEROS DE PIEZA	B1

* NO HAY TRADUCCION DISPONIBLE EN EL MOMENTO DE LA IMPRESION

ÍNDICE

Designação	Página
INFORMAÇÃO GERAL	A31
ALTERNATIVAS DE REPARO	A42
ADITIVOS SUPLEMENTARES DO LÍQUIDO ARREFECEDOR	A47
PEÇAS DE MANUTENÇÃO	A64
ÍNDICE	A109
ARRANJO DA MÁQUINA	1
CHASSI	1
ARRANJO BÁSICO	1
MÁQUINA AR DE CONTROLE	2
MÁQUINA - CONVERSÃO	3
ARRANJO DO MOTOR	14
MOTOR	14
MOTOR PRIMÁRIO	15
GRUPO DE INSTALAÇÃO - MOTOR	18
MOTOR BÁSICO	20
EIXO-COMANDO DE VÁLVULA	20
TAMPA - CAIXA DIANTEIRA	22
TAMPA - MECANISMO DAS VÁLVULAS	23
VIRABREQUIM	25
BLOCO DO MOTOR	30
CABEÇOTE DO MOTOR	34
DRENO - ÓLEO DO MOTOR	41
VOLANTE DO MOTOR	42
PROTETOR - CORREIAS	44
CAIXA DO VOLANTE DO MOTOR	45
CAIXA DIANTEIRA	47
LEVANTAMENTO DO MOTOR	51
MONTAGEM - MOTOR	53
MONTAGEM - VENTILADOR	55
CÁRTER DO ÓLEO DO MOTOR	57
PISTÃO E BIELA	67
BUJÃO DO MOTOR	69
POLIA DO VIRABREQUIM	70
GRUPO DE POLIA - BOMBA DE ÁGUA	72
*V-BELT GP	74
MECANISMO DAS VÁLVULAS	75
SISTEMA DE LUBRIFICAÇÃO	78
BOCAL DE ENCHIMENTO DE ÓLEO DO MOTOR	78
BOMBA DE ÓLEO - MOTOR	80
SISTEMA DE ARREFECIMENTO	83
ALOJAMENTO-TERMOSTATO DE ÁGUA	83
SUPORTE - ARREFECEDR DE ÓLEO E RADIADOR	84
BOMBA DE ÁGUA	86
RADIADOR E ARREFECEDOR DO ÓLEO HIDRÁULICO	91
RADIADOR E ARREFECEDOR DE ÓLEO - MONTAGEM	93
SISTEMA DE ADMISSÃO DE AR E DE ESCAPE	97
PURIFICADOR DE AR	97
TUBOS - AR	99
COLETOR DE ESCAPE	100
SILENCIADOR	101
TURBOALIMENTADOR	104
SISTEMA DE COMBUSTÍVEL	110
CABO - CONTROLE DO GOVERNADOR	110
CONTROLE DO GOVERNADOR	111
FILTRO DE COMBUSTÍVEL E SEPARADOR DE ÁGUA	112
GOVERNADOR	113
TUBULAÇÕES - FILTRO E ESCORVA DO COMBUSTÍVEL	118
BOMBA E MONTAGEM - TRANSFERÊNCIA DE COMBUSTÍVEL	120
BOMBA DE INJEÇÃO DO COMBUSTÍVEL	122
BOMBA DE ESCORVA DO COMBUSTÍVEL E DO FILTRO PRIMÁRIO	128
SISTEMA ELÉTRICO E DE PARTIDA	129
ALTERNADOR DE CORRENTE	129
BATERIA	132
CONEXÃO - ELÉTRICA	134
CONTROLE DE TRAVAMENTO	136
CONTROLE MANUAL DE PARTIDA E PARADA	137
GR. DE CONVERSÃO - ARRANJO NÃO RODOVIÁRIO	138
TAMPA DO PAINEL DO FUSÍVEL	139
SIST. ELETRÔNICO - ACESSÓRIO	140
SISTEMA ELETRÔNICO - MÁQUINA	141
FIXADORES - CHICOTE	142
VELA DE AQUECIMENTO; VELA INCANDESCENTE	143
AQUECEDOR DA ÁGUA DO MOTOR	145
INSTALAÇÃO-SEGURANÇA	147

* TRADUÇÃO NÃO DISPONÍVEL NO MOMENTO DA IMPRESSÃO

ÍNDICE

Designação	Página
KIT-CONTROLE E FIAÇÃO DA FERRAMENTA DE TRABALHO	149
KIT-FIAÇÃO DA FERRAMENTA DE TRABALHO	150
LÂMPADA - FAROL	151
LÂMPADA DIANTEIRA E DE SINAL	153
LUZ TRASEIRA E DE FREIO	155
LUZ GIRATÓRIA DE ALARME	157
SISTEMA DE ILUMINAÇÃO - FARÓIS	158
ILUMINAÇÃO - RODOVIÁRIA	160
ILUMINAÇÃO - FREIO E MARCHA À RÉ	162
SIST. DE ILUMINAÇÃO - PISCA-PISCA GIRATÓRIO DE ADVERTÊNCIA	163
SENSOR DE PRESSÃO E TEMPERATURA	164
MOTOR ELÉTRICO DE PARTIDA	165
INTERRUPTOR - PRESSÃO	169
INTERRUPTOR - TEMPERATURA	171
ALARME DE MARCHA À RÉ	172
CABOS/FIOS ELÉTRICOS - AR CONDICIONADO	173
CABOS/FIOS ELÉTRICOS - CHASSI	174
CABOS/FIOS ELÉTRICOS - MOTOR	178
FIAÇÃO - BUZINA	183
CABOS/FIOS ELÉTRICOS - MÁQUINA	184
CABOS E FIOS ELÉTRICOS-LUZES TRASEIRAS	186
CABOS/FIOS ELÉTRICOS - FERRAMENTAS DE TRABALHO	187
TREM DE FORÇA	189
EIXO	189
COMANDO DO TANDEM	192
FILTRO HIDRÁULICO E TUBOS	193
FILTRO - ÓLEO	195
TUBOS - SISTEMA HIDROSTÁTICO	199
COLETOR - RETORNO	201
MOTOR HIDROSTÁTICO E MONTAGEM	203
MOTOR - PISTÃO	204
MONTAGEM - BOMBA	206
TREM DE FORÇA	207
BOMBA E MONTAGEM - HIDROSTÁTICA	208
BOMBA DE PISTÃO	209
PNEU E ARO	211
RODA E PNEU	221
CHASSI E CARROCERIA	227
PÁRA-CHOQUE	227
GRUPO DE CONVERSÃO - ARRANJO RODOVIÁRIO	228
GR. DE CONVERSÃO - OPERAÇÃO RODOVIÁRIA	235
CONTRAPESO	239
COBERTURA DO MOTOR	242
CHASSI DIANTEIRO	244
CHASSI - MÁQUINA	246
GUIA - TUBOS	247
KIT-CONVERSÃO DE RODAGEM	248
LEVANTAMENTO DA MÁQUINA	255
ESPELHO RETROVISOR E MONTAGEM	257
MONTAGEM DA PLACA DE REGISTRO	259
MONTAGEM - LUZES PARA ILUMINAÇÃO RODOVIÁRIA	261
REDUÇÃO DE RUÍDO	263
SISTEMA HIDRÁULICO	264
ACUMULADOR HIDRÁULICO E MONTAGEM	264
ADAPTADOR-TUBULAÇÃO DE ÓLEO	265
CILINDRO E MONTAGEM - LÂMINA ANGULÁVEL	266
CILINDRO E MONTAGEM - CAÇAMBA	268
CILINDRO E MONTAGEM - BRAÇO DE LEVANTAMENTO	269
CILINDRO DA CAÇAMBA	272
CILINDRO DA GARRA	274
CILINDRO HIDRÁULICO	275
CILINDRO DE LEVANTAMENTO	282
CILINDRO DE INCLINAÇÃO	284
CONEXÃO - HIDRÁULICA	286
COMANDO HIDRÁULICO	289
KIT-CONVERSÃO DE FLUXO ALTO	292
KIT-CONVERSÃO DO ACOPLADOR RÁPIDO	295
TUBOS - CAÇAMBA	298
TUBOS DE CONEXÃO	311
TUBOS - GARRA	315
TUBOS - VENTILADOR HIDRÁULICOS	321
TUBOS - ARREFECEDOR DE ÓLEO HIDRÁULICO	325
TUBOS - CILINDRO DE LEVANTAMENTO	327
TUBULAÇÕES-CONTROLE DE ABAIXAMENTO	331
TUBOS - CIRCUITO PILOTO	335
TUBOS - BOMBA	339
TUBOS - CILINDRO DE INCLINAÇÃO	343
TUBOS - FERRAMENTA DE TRABALHO	347
COLETOR E TUBULAÇÕES -CONTROLE	352

* TRADUÇÃO NÃO DISPONÍVEL NO MOMENTO DA IMPRESSÃO

ÍNDICE

Designação	Página
COLETOR E MONTAGEM - CONTROLE	356
COLETOR E SOLENÓIDE-CONTROLE	359
COLETOR - CONTROLE	362
MOTOR E MONTAGEM - VENTILADOR HIDRÁULICO	365
MOTOR - ENGRENAGENS	368
MONTAGEM - CILINDRO	374
BUJÃO DA VÁLVULA PILOTO	377
BOMBA DA FERRAMENTA DE TRABALHO E MONTAGEM	378
BOMBA DE ENGRENAGENS	382
TANQUE DE ÓLEO HIDRÁULICO E MONTAGEM	384
TANQUE HIDRÁULICO	385
VÁLVULA E TUBULAÇÕES - ACOPLADOR	386
VÁLVULA DE CONTROLE E MONTAGEM	392
VÁLVULA DE CONTROLE	393
VÁLVULA MANUAL	395
VÁLVULA DE CONTROLE PILOTO	396
VÁLVULA DE ALÍVIO	403
VÁLVULA SOLENÓIDE	404
FERRAMENTAS DE TRABALHO	408
BRAÇO - MANIPULADOR DE MATERIAIS	408
LÂMINA	409
LÂMINA ANGULÁVEL	411
LÂMINA-CAÇAMBA DE APLICAÇÕES MÚLTIPLAS	414
CAÇAMBA PARA TERRA	418
CAÇAMBA - PARA APLICAÇAO GERAL	419
CAÇAMBA - GARRA	421
CAÇAMBA PARA MATERIAL LEVE	425
CAÇAMBA DE MÚLTIPLAS APLICAÇÕES	425
CAÇAMBA - SERVIÇOS GERAIS	428
CAÇAMBA PARA TERRA	430
CAÇAMBA PARA APLICAÇÃO GERAL	434
CACAMBA PARA MATERIAL LEVE	438
CAÇAMBA - GARRA	441
CAÇAMBA DE MÚLTIPLAS APLICAÇÕES	445
CAÇAMBA PARA SERVIÇOS GERAIS	450
CACAMBA E GARFO	453
SUPORTE - GARFO	454
CONVERSÃO-FERRAMENTA DE TRABALHO	456
ACOPLADOR RÁPIDO	457
TAMPA - TUBULAÇÕES	461
CILINDRO E ARTICULAÇÃO - ACOPLADOR	462
BEIRA - PONTA CORTANTE	464
BORDA CORTANTE	464
GARFO DA GARRA	470
GARFO DE PALETAS	475
GARFO - SERVIÇOS PÚBLICOS	477
ARMAÇÃO - LÂMINA	479
ARMAÇÃO-GARFO	480
ARMAÇÃO DA GARRA	482
GARRA - SERVIÇOS PÚBLICOS	483
ALÇA E PINO - ACOPLADOR	486
ALÇA - ACOPLADOR	488
JOGO-PLACA DE RODAGEM E MONTAGEM	490
ARTICULAÇÃO - ACOPLADOR	491
TRAVA - ACOPLADOR RÁPIDO	492
PLACA-RODOVIÁRIO	493
MOLA - LÂMINA	495
DEGRAU - BRAÇO DE MANIPULAÇÃO DE MATERIAIS	496
BATENTE - GARRA	497
TELA FILTRANTE - ÁGUA	498
TANQUE DE ÁGUA E MONTAGEM	499
TANQUE DE ÁGUA	502
UNI-DENTE	503
POSTO DO OPERADOR	504
ACUMULADOR - AR CONDICIONADO	504
CONDICIONADOR DE AR E MONTAGEM	506
CONDICIONADOR DE AR	507
ENCOSTO DO BRAÇO E MONTAGEM	512
BRAÇO DO ASSENTO	513
CAIXA DE ARMAZENAMENTO	515
CABINE - ESTRUTURA ROPS COBERTA	516
CABINE - ESTRUTURA DE PROTEÇÃO CONTRA CAPOTAMENTO	517
CABO DE CONTROLE	518
COMPRESSOR E MOTOR - REFRIGERADO	519
COMPRESSOR DE REFRIGERANTE E MONTAGEM	522
CONDENSADOR DO REFRIGERANTE E MONTAGEM	523
CONTROLE-CABO	524
CONTROLE HIDRÁULICO DE OPERAÇÃO PILOTO	532
ACOPLAMENTO DE COMANDO	557
TAMPA - CONSOLO	559
TAMPA - PAINEL DE INSTRUMENTOS	561
PORTA E MONTAGEM-CABINA	562

* TRADUÇÃO NÃO DISPONÍVEL NO MOMENTO DA IMPRESSÃO

ÍNDICE

Designação	Página
PORTA DA CABINE	567
DUCTO E CONTROLE	573
ARMAÇÃO DO VIDRO	575
INDICADOR E ALARME	577
PROTETOR - ROPS/FOPS	579
PEGA-MÃO	580
ALAVANCA DE CONTROLE - MODULAR	581
AQUECEDOR DA CABINE E MONTAGEM	583
AQUECEDOR DA CABINE	584
*HOLDER-CUP	590
ALOJAMENTO - LATERAL	591
INSTALAÇÃO	592
JOGO-INSTALAÇÃO DO CONDICIONADOR DE AR E AQUECEDOR	592
JOGO - PORTA DA CABINE E MONTAGEM	597
KIT-RETENTOR DA CABINE	599
ALAVANCA - GOVERNADOR	600
REVESTIMENTO DA CABINE	601
REVESTIMENTO - CABINE	602
TUBOS - AR CONDICIONADO	603
TUBOS - AQUECEDOR	605
PUBLICAÇÃO	606
ESPELHO RETROVISOR	607
MÓDULO - INDICADOR DE ALARME	608
MONTAGEM - ESTRUTURA ROPS	610
OPÇÃO-CABINE	611
PAINEL DE INSTRUMENTOS	612
PAINEL LATERAL	617
PEDAL DO GOVERNADOR	618
PLATAFORMA DO OPERADOR	620
RETENTOR-CABINE	622
CINTO DE SEGURANÇA	624
ASSENTO	628
ASSENTO AJUSTÁVEL	630
MOLA A GÁS	631
PÁRA-SOL DA CABINE	632
JANELA DA CABINE	634
EQUIPAMENTO DE SERVIÇO E SUPRIMENTOS	641
SUPORTE - MONTAGEM	641
DECALQUE	642
PEÇAS DIVERSAS	648
PLACA E DECALQUE	650
ÍNDICE DE NÚMERO DE PEÇA	B1

* TRADUÇÃO NÃO DISPONÍVEL NO MOMENTO DA IMPRESSÃO

INHALTSVERZEICHNIS

Bezeichnung	Seite
ALLGEMEINE HINWEISE	A35
REPARATURALTERNATIVEN	A43
KÜHLMITTELZUSATZ	A48
WARTUNGSTEILE	A69
STICHWORTVERZEICHNIS	A120
MASCHINE	1
FAHRWERK	1
GRUNDAUSFÜHRUNG	1
MASCHINENSTEUERUNG	2
MASCHINEN-UMBAUSATZ	3
MOTOR	14
MOTORAUSFÜHRUNG	14
MOTOR-EINBAUSATZ	18
MOTOR - GRUNDAUSFÜHRUNG	20
NOCKENWELLE	20
STIRNRADGEHÄUSEDECKEL	22
VENTILDECKEL	23
KURBELWELLE	25
MOTORBLOCK	30
ZYLINDERKOPF	34
MOTORÖLABLASS	41
SCHWUNGRAD	42
RIEMENSCHUTZ	44
SCHWUNGRADGEHÄUSE	45
STIRNRADGEHÄUSE	47
MOTORHUBÖSE	51
MOTORAUFLAGER	53
LÜFTERBEFESTIGUNG	55
ÖLWANNE	57
PLEUELSTANGE UND KOLBEN	67
MOTORSTOPFEN	69
KURBELWELLEN-RIEMENSCHEIBE	70
WASSERPUMPE - RIEMENSCHEIBE	72
*V-BELT GP	74
VENTILSTEUERUNG	75
SCHMIERSYSTEM	78
MOTORÖLEINFÜLLSTUTZEN	78
SCHMIERPUMPE	80
KÜHLSYSTEM	83
THERMOSTATGEHÄUSE	83
KÜHLER U. ÖLKÜHLER - BEFESTIGUNG	84
KÜHLWASSERPUMPE	86
KÜHLER UND HYDRAULIKÖLKÜHLER	91
KÜHLER U. ÖLKÜHLERBEFESTIGUNG	93
LUFTANSAUG- UND ABGASSYSTEM	97
LUFTREINIGER	97
DRUCKLUFTLEITUNGEN	99
AUSPUFFKRÜMMER	100
SCHALLDÄMPFER	101
TURBOLADER	104
KRAFTSTOFFSYSTEM	110
DREHZAHLREGLERKABEL	110
REGLERSTEUERUNG	111
WASSERABSCHEIDER- U. KRAFTSTOFFILTER	112
REGLER	113
KRAFTSTOFFENTLÜFTUNGS- U. FILTERLEITUNGEN	118
KRAFTSTOFFÖRDERPUMPE UND BEFESTIGUNGSTEILE	120
KRAFTSTOFFEINSPRITZPUMPE	122
KRAFTSTOFFENTLÜFTUNGSPUMPE UND -HAUPTFILTER	128
ELEKTRISCHE ANLAGE UND STARTSYSTEM	129
DREHSTROMGENERATOR	129
BATTERIE	132
ANSCHLUSS, ELEKTR.	134
VERRIEGELUNGSSTEUERUNG	136
STEUERUNG - MANUELLES STARTEN/ABSTELLEN	137
UMBAUSATZ - NICHT FÜR STRASSENVERKEHR	138
SICHERUNGSTAFEL - ABDECKUNG	139
ARBEITSGERÄTEELEKTRONIK	140
ELEKTRONIK - MASCHINE	141
VERDRAHTUNGSKABELBAUMHALTETEILE	142
GLÜHKERZE	143
UMLAUFKÜHLWASSERHEIZUNG	145
SICHERHEITSEINBAUSATZ	147
SATZ - ARBEITSGERÄTE U. VERDRAHTUNG	149
ARBEITSGERÄTEVERDRAHTUNGSSATZ	150
ARBEITSLEUCHTEN	151
SCHEINWERFER U. RICHTUNGSLEUCHTE	153
BREMS- UND RÜCKLEUCHTE	155
RUNDUM-KENNLEUCHTE	157

* ÜBERSETZUNG ZUM ZEITPUNKT DER DRUCKLEGUNG NICHT VORHANDEN

INHALTSVERZEICHNIS

Bezeichnung	Seite
ARBEITSLEUCHTEN	158
BELEUCHTUNGSANLAGE (STRASSENAUSRÜSTUNG)	160
BREMS- UND RÜCKLEUCHTEN	162
RUNDUM-KENNLEUCHTE	163
TEMPERATUR- U. DRUCKSENSOR	164
STARTERMOTOR	165
DRUCKSCHALTER	169
TEMPERATURSCHALTER	171
RÜCKFAHRWARNHORN	172
KLIMAANLAGENVERDRAHTUNG	173
FAHRGESTELLVERDRAHTUNG	174
MOTORVERDRAHTUNG	178
WARNHORNVERDRAHTUNG	183
MASCHINENVERDRAHTUNG	184
HECKBELEUCHTUNGSVERDRAHTUNG	186
ARBEITSGERÄT - VERDRAHTUNG	187
KRAFTSÜBERTRAGUNG	189
ACHSE	189
TANDEMANTRIEB	192
HYDRAULIKFILTER U. LEITUNGEN	193
ÖLFILTER	195
HYDROSTATIKLEITUNGEN	199
RÜCKLAUFVENTIL - VERTEILER	201
HYDROSTATIKMOTOR U. BEFESTIGUNG	203
KOLBENMOTOR	204
PUMPENAUFHÄNGUNG	206
KRAFTÜBERTRAGUNG	207
HYDROSTATIKPUMPE U. BEFESTIGUNG	208
KOLBENPUMPE	209
REIFEN UND FELGE	211
RAD UND REIFEN	221
RAHMEN UND FAHRGESTELL	227
STOSSSTANGE	227
UMBAUSATZ - FÜR STRASSENVERKEHR	228
STRASSENFAHRT - UMRÜSTSATZ	235
GEGENGEWICHT	239
MOTORVERKLEIDUNG	242
LADERRAHMEN	244
MASCHINENRAHMEN	246
LEITUNGSFÜHRUNG	247
UMRÜSTSATZ FÜR STRASSENFAHRT	248
MASCHINENHUBÖSE	255
RÜCKSPIEGEL U. BEFESTIGUNG	257
TYPENSCHILDBEFESTIGUNG	259
BELEUCHTUNG FÜR STRASSENFAHRT - BEFESTIGUNG	261
SCHALLDÄMPFUNG	263
HYDRAULIKSYSTEM	264
HYDRAULIKDRUCKSPEICHER U. BEFESTIGUNG	264
ADAPTER - ÖLLEITUNG	265
ZYLINDER U. BEFESTIGUNG - WINKELSCHLID	266
*CYLINDER & MTG GP-BUCKET	268
HUBARMZYLINDER U. BEFESTIGUNGSSATZ	269
SCHAUFELZYLINDER	272
GREIFERZYLINDER	274
HYDRAULIKZYLINDER	275
HUBZYLINDER	282
KIPPZYLINDER	284
HYDRAULIKFITTING	286
HYDRAULIKSYSTEM	289
UMRÜSTUNGSSATZ - HOCHFLUSS	292
*KIT-QUICK COUPLER CONVERSION	295
SCHAUFELLEITUNGEN	298
ANSCHLUSSLEITUNGEN	311
GREIFERLEITUNGEN	315
HYDRAULIKLÜFTERLEITUNGEN	321
HYDRAULIKÖLKÜHLERLEITUNGEN	325
HUBZYLINDERLEITUNGEN	327
LEITUNGEN, ABSENKSTEUERUNG	331
VORSTEUERLEITUNGEN	335
HYDRAULIKPUMPE UND LEITUNGEN	339
NEIGEZYLINDERLEITUNGEN	343
ARBEITSGERÄT - LEITUNGEN	347
KRÜMMER U. LEITUNGEN - STEUERUNG	352
KRÜMMERSTEUERUNG U. BEFESTIGUNG	356
*MANIFOLD & SOLENOID GP-CONTROL	359
STEUERKRÜMMER	362
HYDRAULIKKÜHLERMOTOR U. BEFESTIGUNG	365
MOTORANTRIEB	368
ZYLINDERAUFHÄNGUNG	374
VORSTEUERVENTILSTOPFEN	377
ARBEITSGERÄTEPUMPE U. BEFESTIGUNG	378
ZAHNRADPUMPE	382
HYDRAULIKTANK UND BEFESTIGUNGSTEILE	384
HYDRAULIKTANK	385
KUPPLUNGSVENTIL U. LEITUNGEN	386

* ÜBERSETZUNG ZUM ZEITPUNKT DER DRUCKLEGUNG NICHT VORHANDEN

INHALTSVERZEICHNIS

Bezeichnung	Seite
STEUERVENTIL UND BEFESTIGUNGSTEILE	392
STEUERVENTIL	393
VENTIL, MECH.	395
VORSTEUERVENTIL	396
ÜBERDRUCKVENTIL	403
MAGNETVENTIL	404
ARBEITSGERÄTE	408
TRAGARM	408
SCHILD	409
SCHWENKSCHILD	411
SCHNEIDMESSER - KOMBISCHAUFEL	414
ERDSCHAUFEL	418
UNIVERSALSCHAUFEL	419
GREIFERSCHAUFEL	421
LEICHTGUTSCHAUFEL	425
KOMBISCHAUFEL	425
*BUCKET AR-UTILITY	428
ERDSCHAUFEL	430
UNIVERSALSCHAUFEL	434
LEICHTGUTSCHAUFEL	438
GREIEFERSCHAUFEL	441
KOMBISCHAUFEL	445
MEHRZWECKSCHAUFEL	450
TRÄGER U. GABEL	453
GABELTRÄGER	454
UMRÜSTSATZ - ARBEITSGERÄT	456
SCHNELLWECHSELVORRICHTUNG	457
SCHNELLWECHSELEINRICHTUNG	458
LEITUNGSABDECKUNG	461
SCHNELLWECHSELEINRICHTUNG - ZYLINDER U. VERBINDUNG	462
SCHNEIDMESSER UND EINSATZSTÜCK	464
SCHNEIDMESSER	464
GREIFERGABEL	470
PALETTENGABEL	475
MEHRZWECKGABEL	477
SCHILDRAHMEN	479
*FRAME GP-FORK	480
GREIFERRAHMEN	482
MEHRZWECKGREIFER	483
GRIFF U. BOLZEN - ANSCHLUSS	486
ANSCHLUSSGRIFF	488
STRASSENFAHRTSCHILD UND BEFESTIGUNG	490
VERBINDUNG - SCHNELLWECHSELEINRICHTUNG	491
SCHNELLWECHSELEINRICHTUNGSSPERRE	492
SCHILD - STRASSENFAHRT	493
SCHILDFEDER	495
TRAGARMSTUFE	496
GREIFERANSCHLAG	497
WASSERSIEBEINSATZ	498
WASSERTANK U. BEFESTIGUNGSTEILE	499
WASSERTANK	502
UNIVERSAL-ZAHNSPITZE	503
FAHRERHAUS	504
KLIMAANLAGENDRUCKSPEICHER	504
KLIMAANLAGE UND AUFHÄNGUNG	506
KLIMAANLAGE	507
ARNLEHNE U. BEFESTIGUNG	512
ARMLEHNE	513
VERSTAUKASTEN	515
FAHRERHAUS MIT ÜBERROLLSCHUTZ	516
STEUERKABEL	518
KÜHLKOMPRESSOR U. MOTOR	519
KÄLTEMITTELKOMPRESSOR U. BEFESTIGUNG	522
KÄLTEMITTELKONDENSATOR U. BEFESTIGUNGSTEILE	523
STEUERHEBEL	524
HYDRAULIKBEDIENUNG (MIT VORSTEUERUNG)	532
ANTRIEBSKUPPLUNG	557
STEUERKONSOLENABDECKUNG	559
INSTRUMENTENTAFELABDECKUNG	561
FAHRERHAUSTÜR U. BEFESTIGUNG	562
FAHRERHAUSTÜR	567
LUFTKANAL UND REGULIERUNG	573
FENSTERRAHMEN	575
WARNANZEIGENSATZ	577
VERKLEIDUNG - ÜBERROLLSCHUTZ/ STEINSCHLAGSCHUTZ	579
HALTEGRIFF	580
MODULARHEBEL	581
FAHRERHAUSHEIZUNG U. BEFESTIGUNGSTEILE	583
FAHRERHAUSHEIZUNG	584
*HOLDER-CUP	590
SEITENGEHÄUSE	591
EINBAUSATZ	592
EINBAUSATZ - KLIMAANLAGE U. HEIZUNG	592
FAHRERHAUSTÜR U. BEFESTIGUNG	597
FAHRERHAUSDICHTUNGSSATZ	599
REGELERHEBEL	600
FAHRERHAUSAUSKLEIDUNG	601
FAHRERHAUS - LINER	602
KLIMAANLAGENLEITUNGEN	603

* ÜBERSETZUNG ZUM ZEITPUNKT DER DRUCKLEGUNG NICHT VORHANDEN

INHALTSVERZEICHNIS

Bezeichnung	Seite
HEIZUNGSLEITUNGEN	605
DOKUMENTATION	606
RÜCKSPIEGEL	607
WARNANZEIGEMODUL	608
ÜBERROLLSCHUTZAUFLAGER	610
OPTION - FAHRERHAUS	611
INSTRUMENTENTAFEL	612
SEITENVERKLEIDUNG	617
GASPEDAL	618
FAHRERPLATTFORM	620
FAHERHAUSDICHTUNG	622
SICHERHEITSGURT	624
FAHRERSITZ	628
FAHRERSITZ, VERSTELLBAR	630
GASFEDERGRUPPE	631
FAHRERHAUS, SONNENBLENDE	632
FAHRERHAUSFENSTER	634
WARTUNGSAUSRÜSTUNG UND -ZUBEHÖR	641
BEFESTIGUNGSHALTERUNG	641
AUFKLEBER	642
SORTIMENTSATZ	648
SCHILD UND AUFKLEBER	650
ERSATZTEILNUMMERNINDEX	B1

* ÜBERSETZUNG ZUM ZEITPUNKT DER DRUCKLEGUNG NICHT VORHANDEN

GENERAL INFORMATION

1. MACHINE IDENTIFICATION

Caterpillar machines are identified by Product Identification Numbers (PIN). Some components included in a machine may be identified by Serial Numbers (S/N). Typical components that will be serialized include engines, transmissions, bulldozers, and rippers. The machine and engine are further identified by arrangement numbers and in some cases modification numbers. These numbers are shown on the product identification plate(s) and on the master plate in the operator's compartment.

Caterpillar dealers need all of these numbers to determine accurate parts identification.

SIS *New Feature*

Effective First Quarter 2001 the Caterpillar Product Identification Number (PIN) changed from 8 to 17 characters. In an effort to provide uniform equipment identification, Caterpillar and other construction equipment manufacturers are moving to comply with the latest version of the product identification numbering standard. Non-road machine PINs are defined by ISO 10261. The new PIN format will apply to all Caterpillar machines and generator sets. The PIN plates and frame marking will display the 17 character PIN. The new format will look like the following:

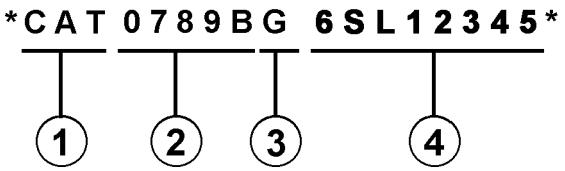

Where:

1. Caterpillar's World Manufacturing Code (characters 1-3)

2. Machine Descriptor (characters 4-8)

3. Check Character (character 9)

4. Machine Indicator Section (MIS) or Product Sequence Number (characters 10-17). These were previously referred to as the Serial Number.

Machines and generator sets produced before First Quarter 2001 will maintain their 8 character PIN format.

Components such as engines, transmissions, axles, etc. and work tools will continue to use an 8 character Serial Number (S/N).

2. ORDERING PARTS

⚠ WARNING

When replacement parts are required for this product Caterpillar recommends using Caterpillar replacement parts or parts with equivalent specifications including, but not limited to, physical dimensions, type, strength and material.

Failure to heed this warning can lead to premature failures, product damage, personal injury or death.

Quality Caterpillar replacement parts are available from Caterpillar dealers throughout the world. Their parts inventories are up to date and include all parts normally required to protect your investment in Caterpillar machines. Dealers may offer repair kits or remanufactured parts to allow selection of the most effective repair alternative for a particular situation. When ordering parts, your order should specify the quantity, part number, part name, and the serial number/product identification number of the machine for which the parts are needed.

3. PARTS MANUAL ORGANIZATION

Product information in this manual is presented as "information elements" that represent all of the components for the specific model. Engine Arrangement and Seat Group are examples of information elements. The information elements are organized alphabetically by part name and secondarily by part number within each major section of the manual.

4. TABLE OF CONTENTS

A table of contents (TOC) is found at the beginning of the manual. The TOC lists each section of the manual with a complete list of all information elements organized as they appear in the manual. Page numbers are provided for quick reference to detailed parts identification illustrations and serviceable consist lists.

5. MAINTENANCE PARTS INDEX

The Maintenance Parts Index, located near the beginning of the manual, references most frequently used maintenance part numbers, providing description, quantity, usage and page number. This information is organized alphabetically by part description.

6. INDEX

The index located near the front of the manual is an alphabetical listing of all information elements included in the manual. Page numbers are provided for quick reference to detailed parts identification illustrations and serviceable consist lists.

7. PART NUMBER INDEX

A numerical index listing all part numbers and the corresponding page number(s) appears at the back of the manual.

8. CAPTIONS

Captions located at the beginning of each information element identify the part number and part name along with additional descriptive information. PIN and S/N information found in each caption should be used to select correct information for a specific machine. Field replacement options, identification of optional attachment components, and where used ("part of") information is also provided.

The first line of a caption is shown in larger type font to indicate the beginning of an information element. Captions for additional pages that may be required to illustrate an information element will be shown in standard type font and will include the term *(contd.)* .

9. NON-SERVICED PARTS

In some instances it is necessary to display non-serviced parts that are a link to a lower level serviceable consist lists. These non-serviced part numbers are shown in *italic* type indicating that they are not available.

10. PARTS LIST REFERENCE NUMBERS

Numbers shown in the Ref No column correspond to numbers used in the associated graphic(s). An alphabetic suffix may be added to a reference number to identify lower level consist items. Numbers shown in the Graphic Ref column refer to the graphic number identifier displayed in the lower left corner of each illustration. The Graphic Ref number may be used in combination with the item Ref No to determine the correct part number. There may be intentional omission of a Ref No in a consist list as information is updated to reflect the latest serviceable part numbers.

11. INDENTED PART NAMES

When a part name is indented in a parts list, it is part of (included in) the group or assembly under which it is indented.

12. ILLUSTRATION REFERENCE LETTERS

When necessary, illustrations contain reference letters (A, B, C etc.) that are intended to track lines and harnesses from one point to another. They are also used to show where to reconnect illustrations that have been separated.

13. ABBREVIATIONS AND SYMBOLS

O.D. – Outside Diameter
I.D. – Inside Diameter
A – Not Part Of This Group
B – Use As Required
C – Change From Previous Type
D – Order By The Meter
E – Order By The Centimeter
F – Not Shown
G – Order By The Inch
I – Refer To Hydraulic Information System
M – Metric Part
R – Remfg Part May Be Available
Y – Separate Illustration
Z – Not Serviced Separately

SIS *New Feature*

14. DESCRIPTION OF TYPE CHANGES

Type - A type is defined as any configuration change that requires an additional Information Element for an Arrangement, Group, or Assembly. If serial number breaks for types are not available, a type # (Type 1, Type 2, etc.) will be displayed in the caption. These "type" changes are identified with a "C" note (change from previous type) in the Parts List. Only the "types" that apply to this Parts Manual will be included. Additional types may exist causing "C" notes to appear on an Information Element when no other types are shown.

15.<END>

This symbol indicates the end of an information element.

NOTE:

Continuing improvement and advancement of product design may cause changes to your machine which may not be included in this publication. Whenever a question arises regarding your caterpillar product or this publication, please consult your caterpillar dealer for the latest available information.

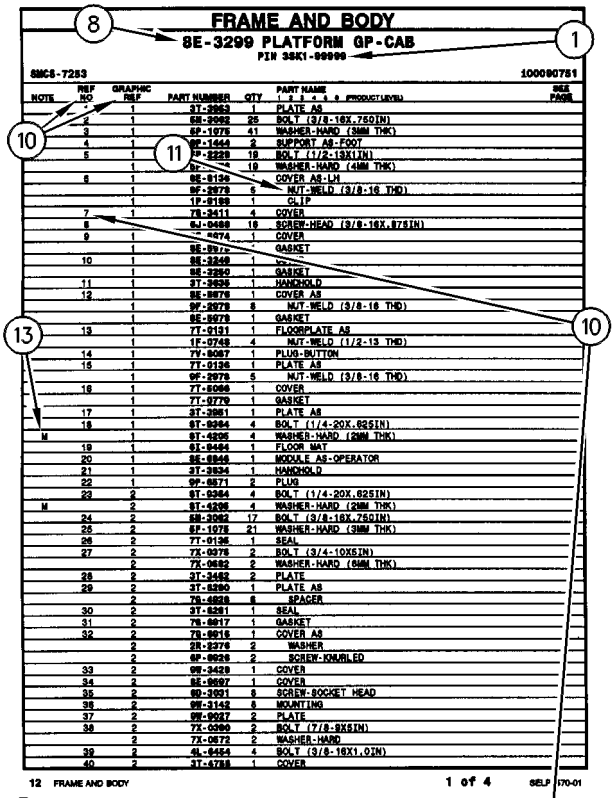

FRAME AND BODY

8E-3299 PLATFORM GP-CAB

PIN 3SK1-99999

SMCS-7283 100090751

NOTE	REF NO	GRAPHIC REF	PART NUMBER	QTY	PART NAME 1 2 3 4 5 6 (PRODUCT LEVEL)	SEE PAGE
	*	1	3T-3963	1	PLATE AS	
	2	1	6M-2062	25	BOLT (3/8-16X.750IN)	
	3	1	6P-1075	41	WASHER-HARD (3MM THK)	
	4	1	9E-1444	2	SUPPORT AS-FOOT	
	5	1	9P-2229	19	BOLT (1/2-13X1IN)	
		1	6P-[illegible]	19	WASHER-HARD (4MM THK)	
	6	1	9E-9139	*	COVER AS-LH	
		1	9F-2979	6	NUT-WELD (3/8-16 THD)	
		1	1P-0189	1	CLIP	
	7	1	7X-3411	4	COVER	
	8	1	6J-0468	18	SCREW-HEAD (3/8-16X.87SIN)	
	9	1	[illegible]-8974	1	COVER	
		1	9E-[illegible]	*	GASKET	
	10	1	9E-3249	1	[illegible]	
		1	9E-2260	1	GASKET	
	11	1	3T-3636	1	HANDHOLD	
	12	1	9E-9976	1	COVER AS	
		1	9F-2979	8	NUT-WELD (3/8-16 THD)	
		1	9E-9978	1	GASKET	
	13	1	7T-9131	1	FLOORPLATE AS	
		1	1F-0748	4	NUT-WELD (1/2-13 THD)	
	14	1	7Y-8067	1	PLUG-BUTTON	
	15	1	7T-0126	1	PLATE AS	
		1	9F-2979	5	NUT-WELD (3/8-16 THD)	
	16	1	7T-5066	1	COVER	
		1	7T-9779	1	GASKET	
	17	1	3T-3961	1	PLATE AS	
	18	1	9T-0264	4	BOLT (1/4-20X.62SIN)	
M		1	9T-4295	4	WASHER-HARD (2MM THK)	
	19	1	9X-9464	1	FLOOR MAT	
	20	1	9E-6946	1	MODULE AS-OPERATOR	
	21	1	3T-3934	1	HANDHOLD	
	22	1	9F-0671	2	PLUG	
	23	2	9T-0364	4	BOLT (1/4-20X.62SIN)	
M		2	9T-4295	4	WASHER-HARD (2MM THK)	
	24	2	6M-2062	17	BOLT (3/8-16X.750IN)	
	25	2	6P-1075	21	WASHER-HARD (3MM THK)	
	26	2	7T-0136	1	SEAL	
	27	2	7X-0078	2	BOLT (3/4-10X5IN)	
		2	7X-0682	2	WASHER-HARD (6MM THK)	
	28	2	3T-3482	2	PLATE	
	29	2	3T-5290	1	PLATE AS	
		2	7X-4828	6	SPACER	
	30	2	3T-5291	1	SEAL	
	31	2	7X-0817	1	GASKET	
	32	2	7X-0816	1	COVER AS	
		2	2R-2276	2	WASHER	
		2	9F-0626	2	SCREW-KNURLED	
	33	2	9M-3429	1	COVER	
	34	2	8E-9697	1	COVER	
	35	2	9D-3091	8	SCREW-SOCKET HEAD	
	36	2	9M-3142	8	MOUNTING	
	37	2	9M-9017	2	PLATE	
	38	2	7X-0360	2	BOLT (7/8-9X5IN)	
		2	7X-0672	2	WASHER-HARD	
	39	2	4L-6454	4	BOLT (3/8-16X1.0IN)	
	40	2	3T-4788	1	COVER	

12 FRAME AND BODY 1 of 4 SELP4570-01

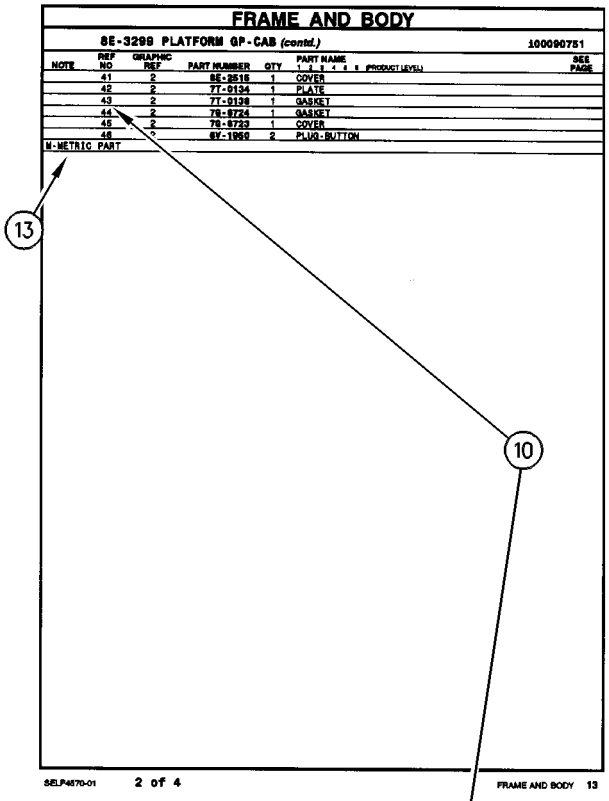

FRAME AND BODY

8E-3299 PLATFORM GP-CAB (contd.) 100090751

NOTE	REF NO	GRAPHIC REF	PART NUMBER	QTY	PART NAME 1 2 3 4 5 6 (PRODUCT LEVEL)	SEE PAGE
	41	2	6E-2515	1	COVER	
	42	2	7T-0134	1	PLATE	
	43	2	7T-0138	1	GASKET	
	44	2	7G-8724	1	GASKET	
	45	2	7G-8723	1	COVER	
	46	*	8Y-1950	2	PLUG-BUTTON	

M-METRIC PART

SELP4570-01 2 of 4 FRAME AND BODY 13

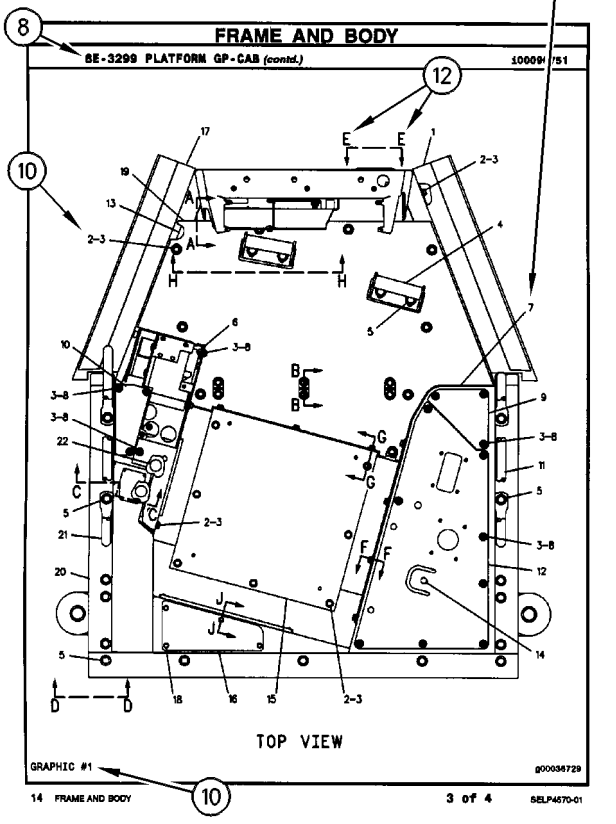

FRAME AND BODY

8E-3299 PLATFORM GP-CAB (contd.) 100090751

TOP VIEW

GRAPHIC #1 g00036729

14 FRAME AND BODY 3 of 4 SELP4570-01

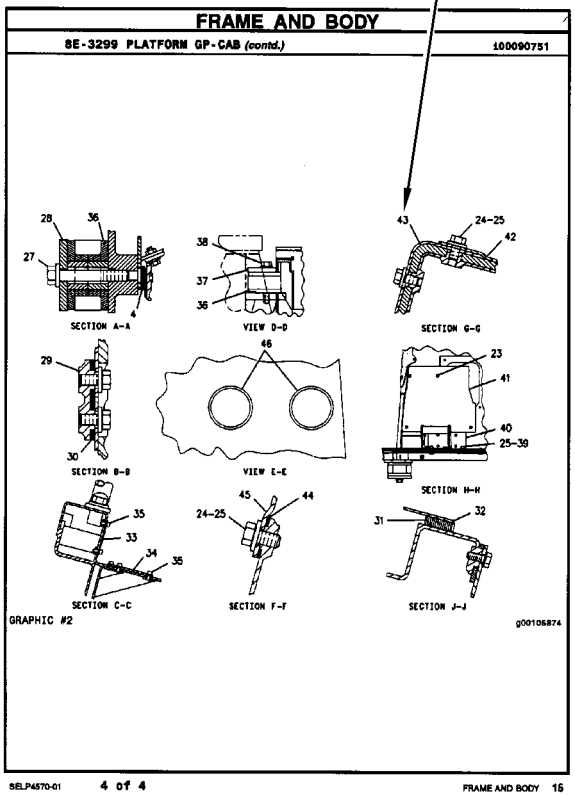

FRAME AND BODY

8E-3299 PLATFORM GP-CAB (contd.) 100090751

SECTION A-A

VIEW D-D

SECTION G-G

SECTION B-B

VIEW E-E

SECTION H-H

SECTION C-C

SECTION F-F

SECTION J-J

GRAPHIC #2 g00105874

SELP4570-01 4 of 4 FRAME AND BODY 15

1. IDENTIFICATION DE LA MACHINE

Toutes les machines Caterpillar portent un numéro d'identification (PIN). Certains composants des machines peuvent porter des numéros de série (S/N). En général, parmi les composants qui portent des numéros de série il y a les moteurs, les transmissions, les bulldozers et les rippers. En plus, la machine et le moteur peuvent recevoir des numéros de version, et dans certains cas, de modification. Ces numéros figurent sur les plaques de numéro de série et sur la plaque signalétique principale qui se trouve dans le poste de conduite.

Les concessionnaires Caterpillar doivent connaître tous ces numéros pour identifier correctement les pièces.

SIS *Nouvelle Caractéristique*

À partir du premier trimestre 2001, le numéro d'identification produit (PIN) Caterpillar passe de 8 à 17 caractères. Afin de permettre une identification uniforme des matériels, Caterpillar et d'autres constructeurs de machines de travaux publics s'efforcent de se conformer à la norme la plus récente portant sur les numéros d'identification des produits. Les numéros d'identification (PIN) de machines de chantier sont définis par la norme ISO 10261. Le nouveau format du numéro d'identification est valable pour toutes les machines et tous les groupes électrogènes Caterpillar. Le numéro d'identification produit (PIN) figurant sur la plaque et sur le châssis se composera de 17 caractères. Le nouveau format ressemblera à ceci:

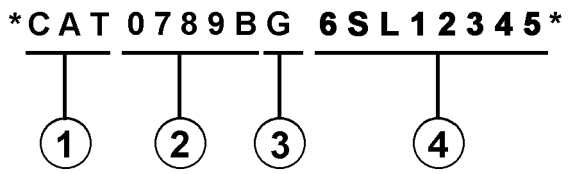

Il se décomposera de la façon suivante:

1. Code international de fabrication de Caterpillar (caractères 1 à 3)

2. Descriptif de la machine (caractères 4 à 8)

3. Contrôle (caractère 9)

4. Indicateur machine (MIS) ou numéro de séquence produit (caractères 10 à 17). Ceux-ci étaient auparavant désignés sous le terme de numéro de série.

Les machines et les groupes électrogènes construits avant le premier trimestre 2001 garderont le format à 8 caractères du numéro d'identification produit (PIN).

Les organes tels que les moteurs, les boîtes de vitesses, les essieux, etc., continueront d'être désignés par un numéro de série (S/N) à 8 caractères.

2. COMMANDE DE PIÈCES

⚠ DANGER

Lorsqu'il faut remplacer des pièces de rechange pour ce produit Caterpillar recommande d'utiliser les pièces de rechange Caterpillar ou les pièces qui ont des spécifications équivalentes dont les dimensions physiques, le type, la force et le matériau. Ces équivalences ne se limitent pas à l'énoncé précédent.

L'inobservation de cette mise en garde peut entraîner des défaillances prématurées, des dommages au produit, des blessures ou même la mort.

Les concessionnaires Caterpillar fournissent dans le monde entier des pièces de rechange de qualité Caterpillar. Leurs stocks de pièces sont constamment réapprovisionnés et comptent toutes les pièces nécessaires pour assurer la bonne marche de vos machines Caterpillar. Certains concessionnaires proposent également des kits de réparation ou des pièces rénovées, ce qui permet de choisir la solution la plus économique dans une situation donnée. Lors des commandes de pièces, mentionner la quantité, le numéro et la désignation des pièces ainsi que le numéro de série ou le numéro d'identification (PIN) de la machine pour laquelle ces pièces sont requises.

3. ORGANISATION DU CATALOGUE DE PIÈCES

Les renseignements sur les produits sont présentés sous forme de "Information element" (élément d'information) représentant tous les composants d'un modèle donné. "Engine Arrangement" (version de moteur) et "Seat Group" (assemblage de siège)" sont des exemples d'éléments d'information. Les éléments d'information sont classés par ordre alphabétique par la désignation standard des pièces et par numéros de pièces dans chaque partie importante du manuel.

4. TABLE DES MATIÈRES

Nouvelle Caractéristique

La table des matières se trouve au début du manuel. La table des matières fournit la liste de tous les chapitres du manuel avec une liste complète de tous les éléments d'information classés par ordre d'apparition dans le manuel. Les numéros de page sont fournis afin que l'utilisateur puisse trouver rapidement les illustrations détaillées concernant l'identification des pièces et les listes des pièces d'entretien.

5. INDEX DES PIÈCES D'ENTRETIEN

La rubrique "Index des pièces d'entretien" qui se trouve au début du manuel renvoie aux pièces d'entretien les plus fréquemment utilisées en précisant la désignation, la quantité, là où la pièce est utilisée et le numéro de page. Ces pièces sont classés par ordre alphabétique.

6. INDEX

L'index qui se trouve vers le début du manuel est une liste alphabétique de tous les éléments d'information du manuel. Les numéros de page sont fournis afin que l'utilisateur puisse trouver rapidement les illustrations détaillées concernant l'identification des pièces et les listes des pièces d'entretien.

7. INDEX DES NUMÉROS DE PIÈCES

Une liste numérique de tous les numéros de pièces et des pages correspondantes se trouve à la fin du manuel.

8. LÉGENDES

Les légendes qui se trouvent en haut de chaque page de chaque élément d'information fournissent le numéro de pièce, la désignation ainsi que des renseignements supplémentaires sur les pièces. Les renseignements concernant les numéros de série (S/N) qui se trouvent dans chaque légende doivent être utilisés pour sélectionner les informations correctes pour un moteur donné. Les informations concernant les options de remplacement sur le chantier, l'identification des composants des équipements offerts en option et les lieux d'application sont aussi fournies.

Nouvelle Caractéristique

Les lettres de la première ligne d'une légende sont présentées en police plus grande afin d'indiquer le début d'une unité d'information. Les légendes qui pourraient être requises pour des pages supplémentaires afin d'illustrer une unité d'information seront présentées en police standard et comprendront le terme (à suivre).

9. PIÈCES NON FOURNIES

Nouvelle Caractéristique

Dans certains cas, il est nécessaire d'indiquer les pièces non fournies qui sont en aval de la liste des pièces d'entretien. Les numéros des pièces non fournies dans la liste des pièces et les légendes seront en italique pour signaler qu'ils ne sont pas disponibles.

10. NUMÉROS DE RÉFÉRENCE DE LA LISTE DES PIÈCES

Nouvelle Caractéristique

Les numéros indiqués dans la colonne des numéros de références correspondent aux numéros utilisés dans les illustrations auxquelles ils sont associés. Un suffixe alphabétique peut être ajouté à un numéro de référence pour identifier la liste des articles en aval. Les numéros indiqués dans la colonne de référence de l'illustration renvoient à l'identification du numéro affiché dans le coin inférieur gauche de chaque illustration. Le numéro de référence de l'illustration pourrait être utilisé avec le numéro de référence de l'article pour déterminer le numéro de pièce correct. Il peut y avoir une omission intentionnelle d'un numéro de référence dans une liste de pièces suite à la mise à jour des informations en vue de refléter les numéros de pièces les plus récentes.

11. DÉSIGNATIONS DE PIÈCES EN RETRAIT

Lorsqu'une désignation de pièce est en retrait, cela veut dire que l'article en regard fait partie de l'ensemble sous lequel il figure.

12. LETTRES DE RÉFÉRENCE DES ILLUSTRATIONS

Quand cela est nécessaire, les illustrations comportent des lettres de référence (A, B, C, etc.) pour montrer le trajet des canalisations et faisceaux de câbles d'un point à l'autre. Elles sont utilisées également pour indiquer où relier les illustrations séparées auparavant.

13. ABRÉVIATIONS ET SYMBOLES

O.D. – Diamètre extérieur
I.D. – Diamètre intérieur
A – Ne fait pas partie de ce groupe
B – Utiliser selon besoin
C – Modification
D – Commander par mètre
E – Commander par centimètre
F – Non représenté
G – Commander par pouce
I – Voir "Hydraulic Information System"
M – Pièce métrique
R – Pièce rénovée éventuellement disponible
Y – Illustration séparée
Z – Non fourni séparément

NOTA:

En raison du progrès technique et des améliorations continuelles apportées au matériel, votre machine comporte peut-être des modifications qui n'apparaissent pas dans la présente publication. En cas de doute sur un détail de votre machine Caterpillar ou sur le texte de la présente publication, adressez-vous à votre concessionnaire Caterpillar.

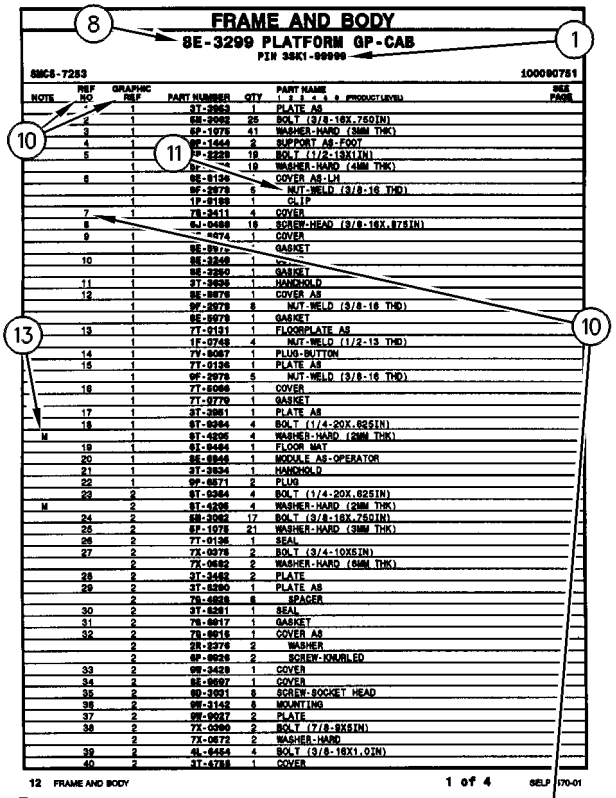

FRAME AND BODY

8E-3299 PLATFORM GP-CAB

PIN 3SK1-99999

SMCS-7283 100090751

NOTE	REF NO	GRAPHIC REF	PART NUMBER	QTY	PART NAME 1 2 3 4 5 6 (PRODUCT LEVEL)	SEE PAGE
	*	1	3T-3963	1	PLATE AS	
	2	1	6M-2062	25	BOLT (3/8-16X.750IN)	
	3	1	6P-1075	41	WASHER-HARD (3MM THK)	
	4	1	9F-1444	2	SUPPORT AS-FOOT	
	5	1	9P-2229	19	BOLT (1/2-13X1IN)	
		1	6P-[illegible]	19	WASHER-HARD (4MM THK)	
	6	1	8E-8136	*	COVER AS-LH	
		1	9F-2979	6	NUT-WELD (3/8-16 THD)	
		1	1P-8189	1	CLIP	
	7	1	7X-3411	4	COVER	
	8	1	6J-0468	18	SCREW-HEAD (3/8-16X.87SIN)	
	9	1	[illegible]-4074	1	COVER	
		1	8E-8976	*	GASKET	
	10	1	8E-3248	1	[illegible]	
		1	8E-2260	1	GASKET	
	11	1	3T-3636	1	HANDHOLD	
	12	1	8E-8976	1	COVER AS	
		1	9F-2979	8	NUT-WELD (3/8-16 THD)	
		1	8E-8978	1	GASKET	
	13	1	7T-0131	1	FLOORPLATE AS	
		1	1F-0748	4	NUT-WELD (1/2-13 THD)	
	14	1	7Y-8067	1	PLUG-BUTTON	
	15	1	7T-0126	1	PLATE AS	
		1	9F-2978	5	NUT-WELD (3/8-16 THD)	
	16	1	7T-8066	1	COVER	
		1	7T-0779	1	GASKET	
	17	1	3T-3961	1	PLATE AS	
	18	1	9T-0264	4	BOLT (1/4-20X.62SIN)	
M		1	9T-4295	4	WASHER-HARD (2MM THK)	
	19	1	9X-8464	1	FLOOR MAT	
	20	1	8E-8946	1	MODULE AS-OPERATOR	
	21	1	3T-3934	1	HANDHOLD	
	22	1	9F-8871	2	PLUG	
	23	2	9T-0264	4	BOLT (1/4-20X.62SIN)	
M		2	9T-4295	4	WASHER-HARD (2MM THK)	
	24	2	6M-2062	17	BOLT (3/8-16X.750IN)	
	25	2	6P-1075	21	WASHER-HARD (3MM THK)	
	26	2	7T-0136	1	SEAL	
	27	2	7X-0078	2	BOLT (3/4-10X5IN)	
		2	7X-0682	2	WASHER-HARD (6MM THK)	
	28	2	3T-3482	2	PLATE	
	29	2	3T-8290	1	PLATE AS	
		2	7G-4828	6	SPACER	
	30	2	3T-8281	1	SEAL	
	31	2	7G-8817	1	GASKET	
	32	2	7G-8816	1	COVER AS	
		2	2R-2276	2	WASHER	
		2	9F-8826	2	SCREW-KNURLED	
	33	2	9M-3429	1	COVER	
	34	2	8E-8697	1	COVER	
	35	2	9D-3931	8	SCREW-SOCKET HEAD	
	36	2	9M-3142	8	MOUNTING	
	37	2	9M-9017	2	PLATE	
	38	2	7X-0360	2	BOLT (7/8-9X5IN)	
		2	7X-0672	2	WASHER-HARD	
	39	2	4L-8454	4	BOLT (3/8-16X1.0IN)	
	40	2	3T-4788	1	COVER	

12 FRAME AND BODY 1 of 4 SELP4570-01

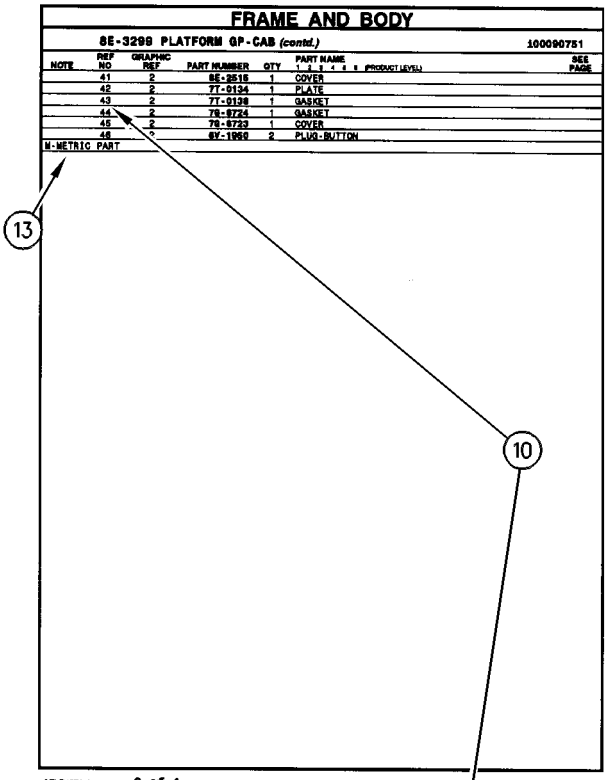

FRAME AND BODY

8E-3299 PLATFORM GP-CAB (contd.) 100090751

NOTE	REF NO	GRAPHIC REF	PART NUMBER	QTY	PART NAME 1 2 3 4 5 6 (PRODUCT LEVEL)	SEE PAGE
	41	2	8E-2516	1	COVER	
	42	2	7T-0134	1	PLATE	
	43	2	7T-0136	1	GASKET	
	44	2	7G-8724	1	GASKET	
	45	2	7G-8723	1	COVER	
	46	*	8Y-1950	2	PLUG-BUTTON	

M-METRIC PART

SELP4570-01 2 of 4 FRAME AND BODY 13

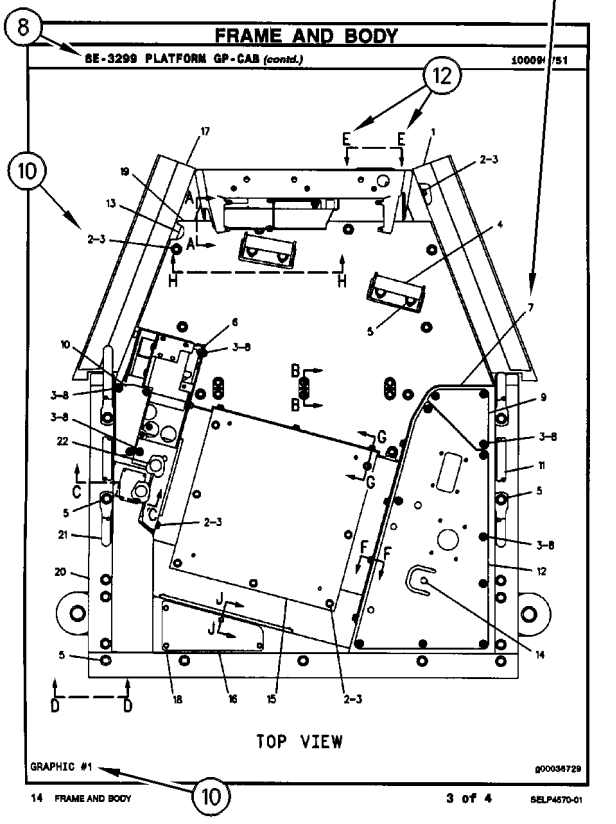

FRAME AND BODY

8E-3299 PLATFORM GP-CAB (contd.) 100090751

TOP VIEW

GRAPHIC #1 g00036729

14 FRAME AND BODY 3 of 4 SELP4570-01

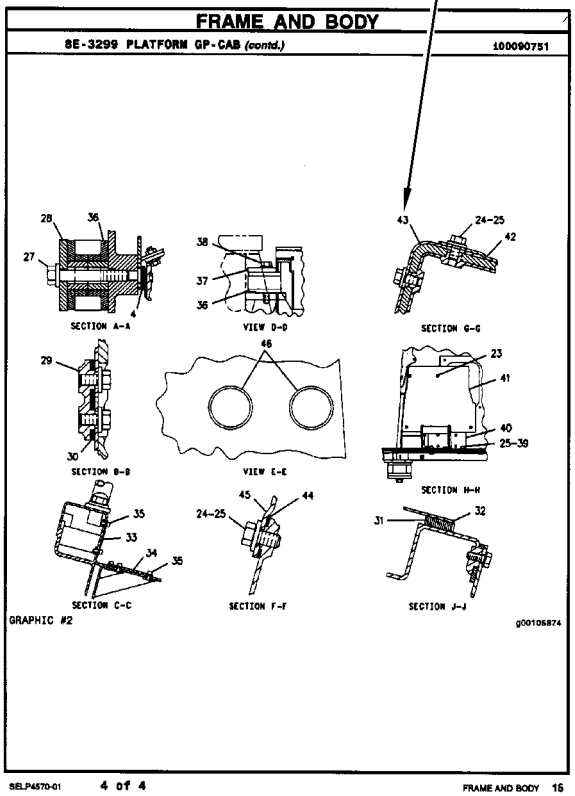

FRAME AND BODY

8E-3299 PLATFORM GP-CAB (contd.) 100090751

SECTION A-A

VIEW D-D

SECTION G-G

SECTION B-B

VIEW E-E

SECTION H-H

SECTION C-C

SECTION F-F

SECTION J-J

GRAPHIC #2 g00105874

SELP4570-01 4 of 4 FRAME AND BODY 15

INFORMACIÓN GENERAL

1. MÁQUINAS

Las máquinas Caterpillar se identifican con Números de Identificación del Producto (PIN). Algunos componentes incluídos en la máquina pueden estar identificados con Números de Serie (N/S). Los componentes que tienen típicamente esta identificación incluyen motores, transmisiones, hojas topadoras y desgarradores. La máquina y el motor se identifican además con Números de Configuración y en algunos casos, Números de Modificación. Estos números están en las placas de identificación del producto o en la placa principal en la cabina del operador.

Los distribuidores Caterpillar necesitan estos números para identificar con exactitud los números de piezas de repuesto.

SIS *Nueva Característica*

A partir del primer trimestre del 2001, el Número de Identificación de Producto (PIN) de Caterpillar cambió de 8 a 17 caracteres. Para hacer más uniforme el método de identificación de equipos, Caterpillar y otros fabricantes de equipo de construcción han tomado medidas para cumplir con la versión más reciente de la norma de numeración de identificación de productos. Los Números de Identificación de Producto para máquinas que no se operan en carreteras son definidos por la norma ISO 10261. El nuevo formato PIN corresponderá a todas las máquinas y grupos electrógenos Caterpillar. Las placas y los caracteres PIN estampados en el bastidor mostrarán el PIN de 17 caracteres. El nuevo formato tendrá la apariencia siguiente:

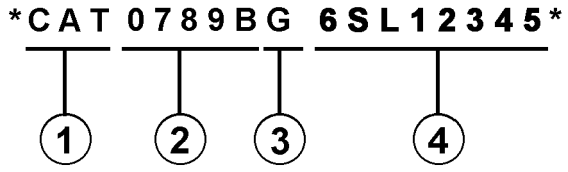

Significado de los caracteres:

1. Código de Fabricación Mundial de Caterpillar (caracteres 1-3)

2. Sección Descriptor de la Máquina (caracteres 4-8)

3. Carácter de Verificación (carácter 9)

4. Sección Indicador de la Máquina (MIS) o Número de Secuencia de Producto (caracteres 10-17). Anteriormente, estos caracteres constituían el Número de Serie.

Las máquinas y grupos electrógenos producidos antes del primer semestre del 2001 mantendrán su formato PIN de 8 caracteres.

Los componentes como motores, transmisiones, ejes, herramientas de trabajo, etc., continuarán usando un Número de Serie (S/N) de 8 caracteres.

2. COMO PEDIR REPUESTOS

⚠ ADVERTENCIA

Cuando se necesiten piezas de repuesto para este producto, Caterpillar recomienda usar piezas de repuesto Caterpillar o piezas que tengan especificaciones equivalentes incluyendo, pero sin estar limitadas a, dimensiones físicas, tipo, fortaleza y material.

El no hacer caso de esta advertencia puede llevar a fallas prematuras, daños al producto y lesiones graves o mortales.

Las piezas de repuesto Caterpillar de calidad están a la disposición de los distribuidores Caterpillar en todo el mundo. Sus existencias actualizadas incluyen todas las piezas normalmente requeridas para proteger su inversión en máquinas Caterpillar. Los distribuidores pueden tener juegos de reparación o piezas remanufacturadas para permitir la selección de la mejor alternativa de reparación en un caso en particular. Al pedir piezas de repuesto, especifique en su pedido la cantidad, el número de pieza, el nombre de la pieza y el número de serie/número de identificación del producto, de la máquina para la cual se necesitan estas piezas.

3. ORGANIZACION DEL MANUAL DE PIEZAS

La información sobre el producto, se presenta en este manual, como "elementos de información" que representan todos los componentes de un modelo específico. Las configuraciones de motores y los grupos de asientos son ejemplos de elementos de información. Los elementos de información están organizados primeramente por nombres de piezas en orden alfabético y en segundo lugar, por el número de pieza dentro de cada sección principal del manual.

4. CONTENIDO

La página de Contenido se encuentra al principio del manual. El Contenido indica cada sección del manual con una lista completa de todos los elementos de información organizados en el orden que aparecen en el manual. Los números de página proporcionan una referencia rápida a las ilustraciones detalladas de identificación de piezas y a las listas de componentes de repuesto de dichas piezas.

5. ÍNDICE DE PIEZAS DE MANTENIMIENTO

Al principio de este catálogo se encuentra un índice de los números de piezas utilizadas más frecuentemente para el mantenimiento, que incluye descripción, cantidad necesaria, lugar de utilización y número de página. Esta información está organizada alfabéticamente, por descripción de la pieza.

6. ÍNDICE

El Índice, ubicado cerca del principio del manual, es una lista en orden alfabético de todos los elementos de información incluídos en el manual. Los números de página proporcionan una referencia rápida a las ilustraciones detalladas de identificación de piezas y a las listas de componentes de repuesto de dichas piezas.

7. INDICE NUMÉRICO DE PIEZAS

Un índice numérico de piezas con el correspondiente número de página aparece al final de este catálogo.

8. TÍTULOS

Los títulos ubicados al principio de cada elemento de información identifican el número y el nombre de la pieza junto con información descriptiva. Se debe usar información sobre los Números de Identificación de Pieza (PIN) y los números de serie (S/N) para seleccionar la información que corresponda a una máquina en particular. También se suministra información sobre las opciones de reparación en el campo, la identificación de componentes de accesorios optativos y el lugar de ubicación de la pieza ("es parte de").

La primera línea del título se muestra con un tipo de letra más grande para indicar el comienzo de un elemento de información. Si se requieren páginas adicionales para ilustrar un elemento de información, los títulos se muestran con un tipo de letra normal y la continuación se indica entre paréntesis.

9. PIEZAS QUE NO SE SUMINISTRAN COMO REPUESTO

En algunos casos es necesario indicar piezas que no se suministran como repuesto pero que pueden estar conectadas a listas de componentes de otras piezas de repuesto. En tal caso, dichas piezas se muestran en cursiva para indicar que no son piezas disponibles.

10. NÚMEROS DE REFERENCIA

Los números en la columna de No. de Referencia corresponden a los números indicados en la ilustración que pertenece a ese número de pieza. Los números que tienen un sufijo alfabético identifican artículos de las listas de componentes de piezas. Los números en la columna de Referencia de la ilustración se identifican en la esquina inferior izquierda de cada ilustración. Para determinar el número de pieza correcto se puede utilizar tanto el No. de Referencia de la ilustración como el No. de Referencia del artículo. A medida que se actualiza la información para indicar los más recientes números de piezas de repuesto, puede omitirse intencionalmente un No. de Referencia en una lista de componentes de piezas.

11. NOMBRES DE PIEZA SANGRADOS

Cuando el nombre de una pieza está sangrado en una lista, significa que esta pieza forma parte del grupo o conjunto del renglón inmediatamente superior.

12. LETRAS DE REFERENCIA DE ILUSTRACIONES

Las ilustraciones contienen algunas veces letras de referencia (A, B, C etc.) cuyo propósito es seguir el trayecto de líneas y mazos de cables de un punto a otro. También se utilizan para mostrar dónde volver a unir ilustraciones que se habían separado.

13. ABREVIATURAS Y SIMBOLOS

O.D. – Diámetro exterior
I.D. – Diámetro interior
A – No es pieza de este grupo
B – Utilizado según la demanda
C – Indica cambio
D – Se pide por metro
E – Se pide por centímetro
F – No se muestra
G – Se pide por pulgada
I – Consulte el sistema de información hidráulica
M – Pieza métrica
R – Puede estar disponible como pieza remanufacturada
Y – Ilustración separada
Z – No se suministra por separado

SIS *Nueva Característica*

14. DESCRIPCIÓN DE LOS CAMBIOS DE TIPO

Tipo – Un tipo se define como cualquier cambio de configuración que requiere un Elemento de información adicional de una Configuración, Grupo o Conjunto. Si el número de serie se clasifica por tipos que no están disponibles, se mostrará un número de tipo (Tipo 1,Tipo 2,etc.) en el comentario de la fotografía. Estos cambios de "tipo" se identifican con una nota "C" (cambio con respecto al tipo anterior) en la Lista de Piezas. Se incluirían sólo los "tipos" que aplican a este Manual de Piezas. Es posible que haya tipos adicionales que causen la aparición de notas "C" en el Elemento de Información cuando no se muestran otros tipos."

15.<END>

Este símbolo indica el final de un elemento de información.

NOTA:

Las contínuas mejoras y adelantos en diseño podrían originar cambios a su máquina que no se incluyen en esta publicación. Cuando tenga alguna pregunta acerca de su producto Caterpillar o de esta publicación, consulte al distribuidor Caterpillar para obtener la información más reciente.

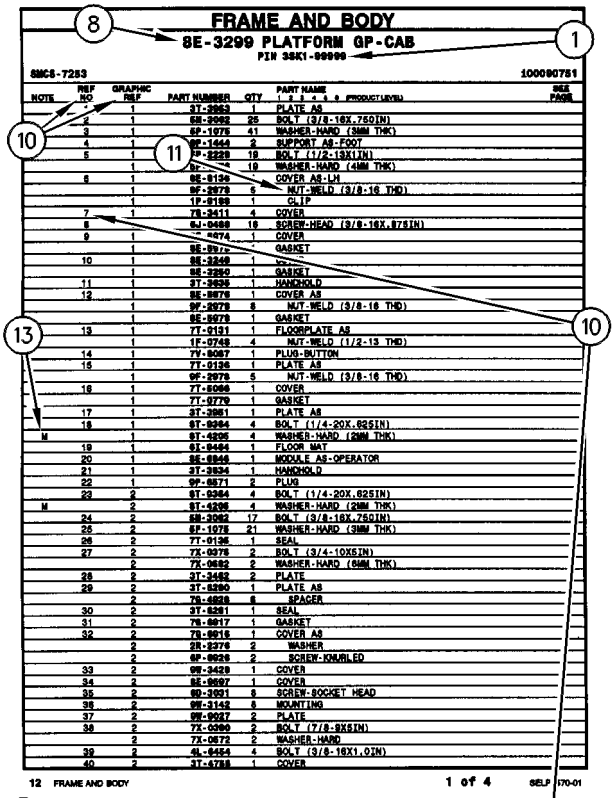

NOTE	REF NO	GRAPHIC REF	PART NUMBER	QTY	PART NAME 1 2 3 4 5 6 (PRODUCT LEVEL)	SEE PAGE
	*	1	3T-3963	1	PLATE AS	
	2	1	6M-2062	25	BOLT (3/8-16X.750IN)	
	3	1	6P-1075	41	WASHER-HARD (3MM THK)	
	4	1	9E-1444	2	SUPPORT AS-FOOT	
	5	1	9P-2229	19	BOLT (1/2-13X1IN)	
		1	6P-[illegible]	19	WASHER-HARD (4MM THK)	
	6	1	9E-9136	*	COVER AS-LH	
		1	9F-2979	6	NUT-WELD (3/8-16 THD)	
		1	1P-0189	1	CLIP	
	7	1	7X-3411	4	COVER	
	8	1	6J-0468	18	SCREW-HEAD (3/8-16X.875IN)	
	9	1	[illegible]-4074	1	COVER	
		1	9E-[illegible]	*	GASKET	
	10	1	9E-3249	1	[illegible]	
		1	9E-2260	1	GASKET	
	11	1	3T-3636	1	HANDHOLD	
	12	1	9E-9076	1	COVER AS	
		1	9F-2979	8	NUT-WELD (3/8-16 THD)	
		1	9E-9078	1	GASKET	
	13	1	7T-9131	1	FLOORPLATE AS	
		1	1F-0749	4	NUT-WELD (1/2-13 THD)	
	14	1	7Y-8067	1	PLUG-BUTTON	
	15	1	7T-0136	1	PLATE AS	
		1	9F-2979	5	NUT-WELD (3/8-16 THD)	
	16	1	7T-5066	1	COVER	
		1	7T-9779	1	GASKET	
	17	1	3T-3961	1	PLATE AS	
	18	1	9T-0264	4	BOLT (1/4-20X.625IN)	
M		1	9T-4295	4	WASHER-HARD (2MM THK)	
	19	1	9X-9464	1	FLOOR MAT	
	20	1	9E-6946	1	MODULE AS-OPERATOR	
	21	1	3T-3934	1	HANDHOLD	
	22	1	9P-0671	2	PLUG	
	23	2	9T-0264	4	BOLT (1/4-20X.625IN)	
M		2	9T-4295	4	WASHER-HARD (2MM THK)	
	24	2	6M-2062	17	BOLT (3/8-16X.750IN)	
	25	2	6P-1075	21	WASHER-HARD (3MM THK)	
	26	2	7T-0136	1	SEAL	
	27	2	7X-0078	2	BOLT (3/4-10X5IN)	
		2	7X-0682	2	WASHER-HARD (6MM THK)	
	28	2	3T-3482	2	PLATE	
	29	2	3T-5290	1	PLATE AS	
		2	7G-4828	6	SPACER	
	30	2	3T-5291	1	SEAL	
	31	2	7G-0017	1	GASKET	
	32	2	7G-0016	1	COVER AS	
		2	2R-2276	2	WASHER	
		2	9F-0026	2	SCREW-KNURLED	
	33	2	9M-3429	1	COVER	
	34	2	8E-9697	1	COVER	
	35	2	9D-3091	8	SCREW-SOCKET HEAD	
	36	2	9M-3142	8	MOUNTING	
	37	2	9M-9017	2	PLATE	
	38	2	7X-0360	2	BOLT (7/8-9X5IN)	
		2	7X-0672	2	WASHER-HARD	
	39	2	4L-6454	4	BOLT (3/8-16X1.0IN)	
	40	2	3T-4788	1	COVER	

12 FRAME AND BODY 1 of 4 SELP4570-01

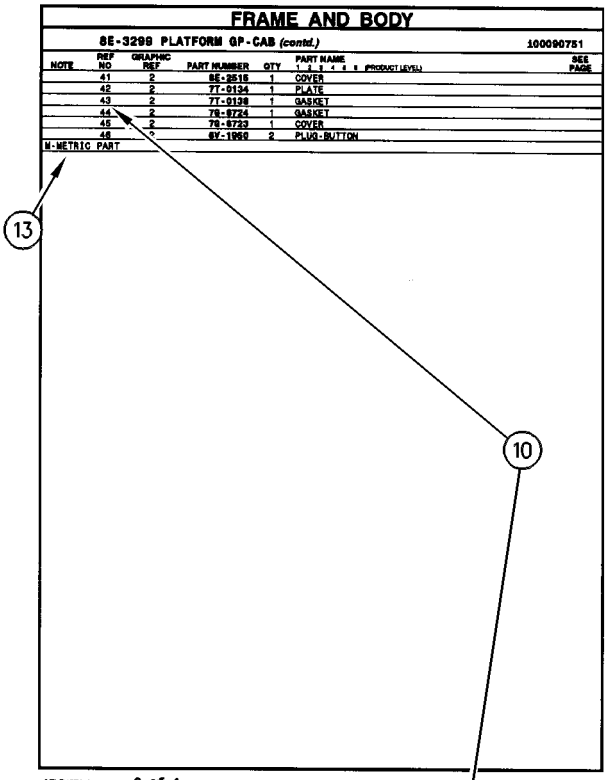

NOTE	REF NO	GRAPHIC REF	PART NUMBER	QTY	PART NAME 1 2 3 4 5 6 (PRODUCT LEVEL)	SEE PAGE
	41	2	8E-2515	1	COVER	
	42	2	7T-0134	1	PLATE	
	43	2	7T-0138	1	GASKET	
	44	2	7G-8724	1	GASKET	
	45	2	7G-8723	1	COVER	
	46	*	8Y-1950	2	PLUG-BUTTON	

M-METRIC PART

SELP4570-01 2 of 4 FRAME AND BODY 13

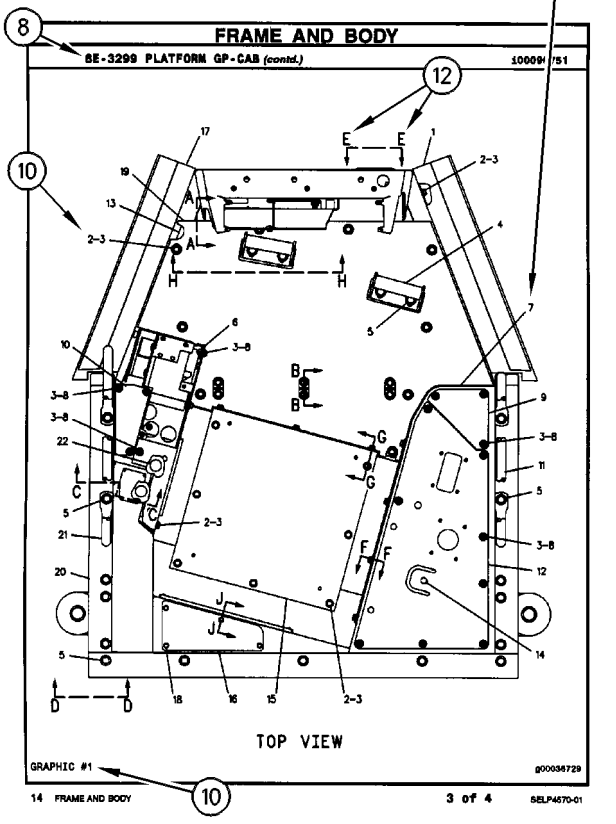

14 FRAME AND BODY 3 of 4 SELP4570-01

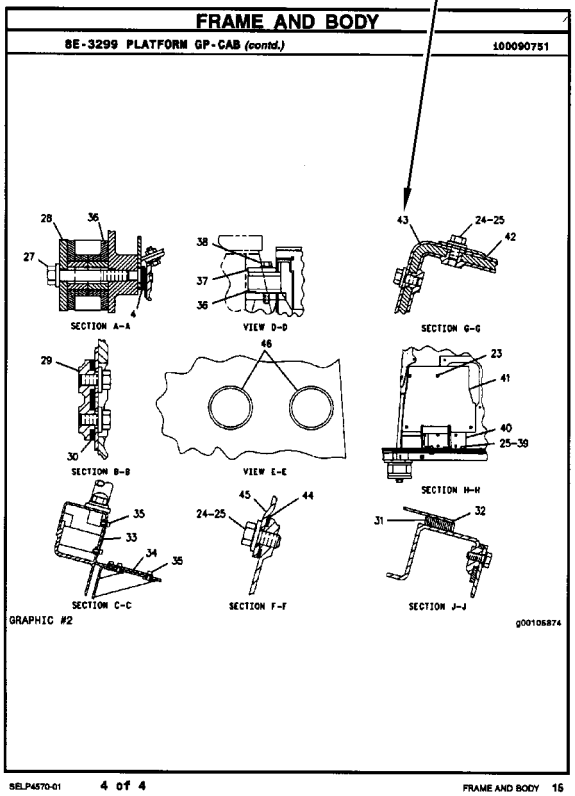

SELP4570-01 4 of 4 FRAME AND BODY 15

INFORMAÇÃO GERAL

1. IDENTIFICAÇÃO DA MÁQUINA

As máquinas Caterpillar são identificadas pelos Números de Informação do Produto (PIN). Alguns componentes incluídos numa máquina podem ser identificados por Números de Série (S/N). Componentes típicos que serão enumerados com números de série incluem motores, transmissões, lâminas e ríperes. Além do número de série, a máquina e o motor são ainda identificados por números de arranjo e, em alguns casos, números de modificações. Tais números encontram-se na(s) placa(s) de identificação do produto e na placa mestre no compartimento do operador.

SIS *Novidades*

A partir do primeiro trimestre de 2001 o Número de Identificação de Produto da Caterpillar (PIN) precisa ser mudado de 8 para 17 caracteres. Esforçando-se para fornecer uma identificação uniforme de equipamentos, a Caterpillar e outros fabricantes de equipamento de construção estão mudando para atender a versão mais atualizada do padrão de identificação de produtos. Os números de PIN para produtos de aplicações não rodoviárias são definidos pela ISO 10261. O novo formato de número PIN será adotado em todas as máquinas e grupos geradores Caterpillar. As placas e as marcações do chassi mostrarão os 17 dígitos de PIN. O novo formato terá a seguinte disposição:

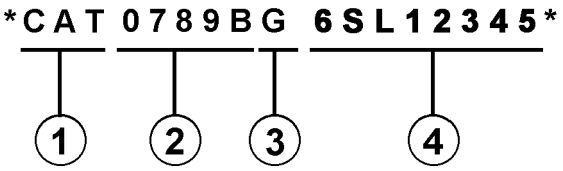

Onde:

1. Código de Fabricação Mundial da Caterpillar (dígitos 1-3)

2. Descrição da Máquina (dígitos 4-8)

3. Dígito de Verificação (dígito 9)

4. Seção de Indicador da Máquina (MIS) ou Número de Seqüência de Produto (dígitos 10-17). Estes eram anteriormente chamados de Número de Série.

Máquinas e grupos geradores produzidos antes do primeiro trimestre de 2001 manterão o formato de 8 caracteres de PIN.

Componentes como motores, transmissões, eixos, ferramentas de trabalho, etc. continuarão a usar Número de Série (S/N) com oito caracteres.

2. COMO OBTER PEÇAS

⚠ CUIDADO

Quando peças de substituição são exigidas para este produto, a Caterpillar recomenda a utilização de peças de substituição Caterpillar ou peças com as especificações equivalentes incluindo, mas não limitadas, à dimensões físicas, tipos, resistência e materiais.

A inobservância desta advertência poderá resultar em falhas prematuras, danos ao produto, ferimentos ou morte.

As Peças de Reposição de Qualidade Caterpillar encontram-se disponíveis nos revendedores Caterpillar no mundo inteiro. Seus estoques de peças são atualizados e incluem todas as peças normalmente necessárias para proteger seu investimento em máquinas Caterpillar. Alguns revendedores podem oferecer jogos de reparo ou peças de troca/remanufaturadas disponíveis como uma opção da alternativa de reparo mais eficaz para uma situação específica. Ao encomendar peças, seu pedido deve especificar a quantidade, o número e o nome da peça e o número de série/número de identificação do produto referentes à máquina para a qual as peças se destinam.

3. ORGANIZAÇÃO DO MANUAL DE PEÇAS

A informação do produto neste manual é apresentada em forma de "elementos de informação" que representam todos os componentes para o modelo específico. Arranjo de Motor e Grupo de Assento são exemplos de elementos de informação. Os elementos de informação são organizados em ordem alfabética por nome de peça ou secundariamente, por número de peça incluído em cada seção principal do manual.

4. LISTA DE CONTEÚDOS

A Lista de Conteúdos (TOC) se encontra no princípio do manual. A Lista de Conteúdos (TOC) relaciona em cada seção do manual uma lista completa com todos os elementos de informação organizados conforme aparecem no manual. Números de página são fornecidos para que se tenha referência rápida de ilustrações de peças detalhadas e listas de conteúdos que podem receber serviço de manutenção.

5. ÍNDICE DE PEÇAS DE MANUTENÇÃO

O Índice de Peças de Manutenção, localizado perto do princípio do manual, faz referência aos números de peça de manutenção usados com maior frequência, fornecendo uma descrição, a quantidade, o uso e o número de página. Esta informação é organizada com a descrição da peça em ordem alfabética.

6. ÍNDICE

O Índice localizado perto do princípio do manual, consiste de uma lista em ordem alfabética de todos os elementos de informação incluídos no manual. Números de página são fornecidos para que se tenha referência rápida de ilustrações de peças detalhadas e listas de conteúdos que podem receber serviço de manutenção.

7. ÍNDICE DE NÚMERO DE PEÇA

Um índice numérico relacionando todos os números de peça e a(s) página(s) correspondentes, aparece no final do manual.

8. LEGENDAS

As legendas localizadas no início de cada elemento de informação identificam o número e o nome de peça, juntamente com informação descritiva adicional. Informações sobre o Número de Informação do Produto (PIN) e o Número de Série (S/N) encontradas em cada legenda devem ser usadas para selecionar a informação correta sobre uma máquina específica. Opções de substituição no campo, identificação de componentes de acessórios opcionais e informações sobre onde são utilizados ("parte de") são também fornecidas.

A primeira linha de uma legenda é indicada em tipo maior para indicar o princípio de um elemento de informação. Legendas para páginas adicionais que podem ser necessárias para ilustrar um elemento de informação serão apresentadas em tipo padrão e incluirão o termo *(continua)* .

9. NÃO DISPONÍVEL SEPARADAMENTE

Em alguns casos, é necessário mostrar peças não disponíveis separadamente que têm uma ligação com listas de conteúdos de nível inferior que podem receber serviço de manutenção. Os números de peça destes componentes não disponíveis aparecerão em *itálico* , a fim de indicar que não estão disponíveis.

10. NÙMEROS DE REFERÊNCIA À LISTA DE PEÇAS

Os números indicados na coluna Ref No (No. de Referência) correspondem-se aos números usados no(s) gráfico(s) correspondente(s). Um sufixo com letras pode ser acrescentado a um número de referência para identificar itens de conteúdo de nível inferior. Os números indicados na coluna Graphic Ref (Referência de Gráfico) referem-se ao identificador de número de gráfico presente no canto esquerdo inferior de cada ilustração. O número de Referência de Gráfico pode ser usado em combinação com o item Ref No para determinar-se o número de peça correto. Poderá haver omissão intencional de um número de referência (Ref No) de uma lista de conteúdos uma vez que as informações são atualizadas para refletir os números de peça mais recentes que podem receber serviço de manutenção.

11. NOMES DE PEÇAS DESALINHADOS

Quando um nome de peça encontra-se desalinhado numa lista de peças, significa que tal item faz parte do (está incluído no) grupo ou conjunto sob o qual está relacionado.

12. LETRAS DE REFERÊNCIA NAS ILUSTRAÇÕES

Quando necessário, as ilustrações contêm letras de referência (A, B, C, etc.) que são utilizadas para seguir tubulações e cabos elétricos de um ponto a outro. Também foram utilizadas para indicar onde se pode reconectar as ilustrações que foram separadas.

13. ABREVIAÇÕES E SÍMBOLOS

O.D. – "Outside Diameter" (Diâmetro Externo)
I.D. – "Inside Diameter" (Diâmetro Interno)
A – Não faz parte deste grupo
B – Use conforme necessário
C – Indica modificação
D – Vendido por metro
E – Vendido por centímetro
F – Não ilustrado
G – Vendido por polegada
I – Consultar o Sistema de Informações Hidráulicas
M – Peça métrica
R – Peça remanufaturada pode estar disponível; consulte o seu revendedor Cat
Y – Ilustração separada
Z – Não disponível separadamente

SIS *Novidades*

14. <END>

Este símbolo indica o final de um elemento de informação.

NOTA:

Os contínuos aperfeiçoamentos e avanços no projeto do produto podem ocasionar modificações em sua máquina que talvez ainda não estejam incluídas nesta publicação. Sempre que surgirem dúvidas quanto a um produto Caterpillar ou quanto à presente publicação, consulte o seu revendedor Caterpillar para obter as informações mais recentes disponíveis.

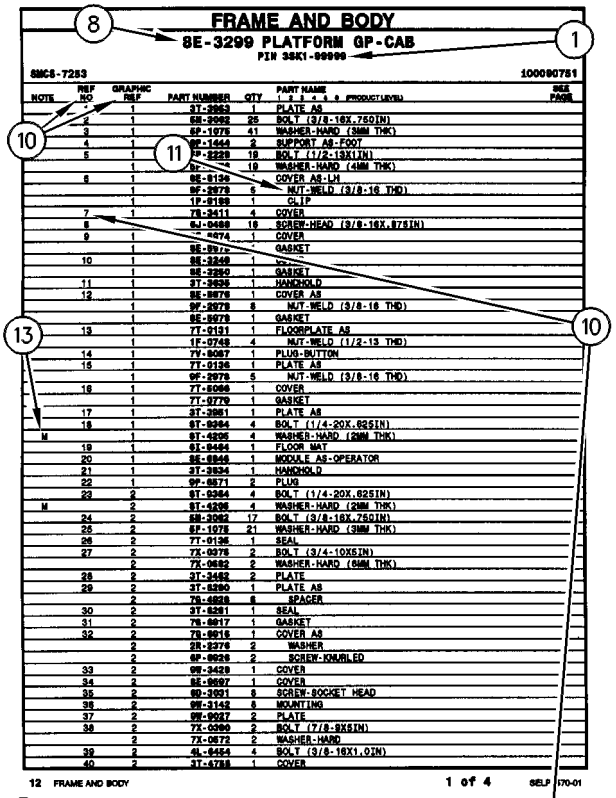

FRAME AND BODY

8E-3299 PLATFORM GP-CAB

PIN 3SK1-99999

SMCS-7283 100090751

NOTE	REF NO	GRAPHIC REF	PART NUMBER	QTY	PART NAME 1 2 3 4 5 6 (PRODUCT LEVEL)	SEE PAGE
	*	1	3T-3963	1	PLATE AS	
	2	1	6M-2062	25	BOLT (3/8-16X.750IN)	
	3	1	6P-1075	41	WASHER-HARD (3MM THK)	
	4	1	9F-1443	2	SUPPORT AS-FOOT	
	5	1	9P-2229	19	BOLT (1/2-13X1IN)	
		1	6P-[illegible]	19	WASHER-HARD (4MM THK)	
	6	1	9E-9136	*	COVER AS-LH	
		1	9F-2979	6	NUT-WELD (3/8-16 THD)	
		1	1P-0189	1	CLIP	
	7	1	7X-3411	4	COVER	
	8	1	6J-0468	18	SCREW-HEAD (3/8-16X.87SIN)	
	9	1	[illegible]-0074	1	COVER	
		1	9E-99[illegible]	*	GASKET	
	10	1	9E-3249	1	[illegible]	
		1	9E-2260	1	GASKET	
	11	1	3T-3636	1	HANDHOLD	
	12	1	9E-9076	1	COVER AS	
		1	9F-2979	8	NUT-WELD (3/8-16 THD)	
		1	9E-9078	1	GASKET	
	13	1	7T-0131	1	FLOORPLATE AS	
		1	1F-0748	4	NUT-WELD (1/2-13 THD)	
	14	1	7Y-8067	1	PLUG-BUTTON	
	15	1	7T-0126	1	PLATE AS	
		1	9F-2979	5	NUT-WELD (3/8-16 THD)	
	16	1	7T-8066	1	COVER	
		1	7T-0779	1	GASKET	
	17	1	3T-3961	1	PLATE AS	
	18	1	9T-0264	4	BOLT (1/4-20X.62SIN)	
M		1	9T-4295	4	WASHER-HARD (2MM THK)	
	19	1	9X-8464	1	FLOOR MAT	
	20	1	9E-8946	1	MODULE AS-OPERATOR	
	21	1	3T-3934	1	HANDHOLD	
	22	1	9F-8671	2	PLUG	
	23	2	9T-0264	4	BOLT (1/4-20X.62SIN)	
M		2	9T-4295	4	WASHER-HARD (2MM THK)	
	24	2	6M-2062	17	BOLT (3/8-16X.750IN)	
	25	2	6P-1075	21	WASHER-HARD (3MM THK)	
	26	2	7T-0136	1	SEAL	
	27	2	7X-0078	2	BOLT (3/4-10X5IN)	
		2	7X-0682	2	WASHER-HARD (6MM THK)	
	28	2	3T-3482	2	PLATE	
	29	2	3T-8290	1	PLATE AS	
		2	7G-4828	6	SPACER	
	30	2	3T-8281	1	SEAL	
	31	2	7G-8017	1	GASKET	
	32	2	7G-8016	1	COVER AS	
		2	2R-2276	2	WASHER	
		2	9F-8026	2	SCREW-KNURLED	
	33	2	9M-3429	1	COVER	
	34	2	8E-9697	1	COVER	
	35	2	9D-3091	8	SCREW-SOCKET HEAD	
	36	2	9M-3142	8	MOUNTING	
	37	2	9M-9017	2	PLATE	
	38	2	7X-0360	2	BOLT (7/8-9X5IN)	
		2	7X-0672	2	WASHER-HARD	
	39	2	4L-6454	4	BOLT (3/8-16X1.0IN)	
	40	2	3T-4788	1	COVER	

12 FRAME AND BODY 1 of 4 SELP4570-01

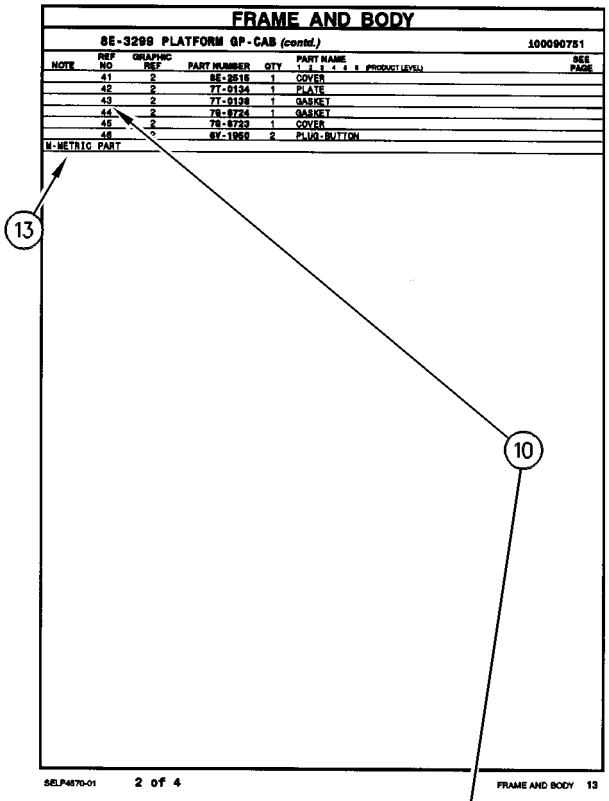

FRAME AND BODY

8E-3299 PLATFORM GP-CAB (contd.) 100090751

NOTE	REF NO	GRAPHIC REF	PART NUMBER	QTY	PART NAME 1 2 3 4 5 6 (PRODUCT LEVEL)	SEE PAGE
	41	2	6E-2515	1	COVER	
	42	2	7T-0134	1	PLATE	
	43	2	7T-0138	1	GASKET	
	44	2	7G-8724	1	GASKET	
	45	2	7G-8723	1	COVER	
	46	*	8Y-1950	2	PLUG-BUTTON	

M-METRIC PART

SELP4570-01 2 of 4 FRAME AND BODY 13

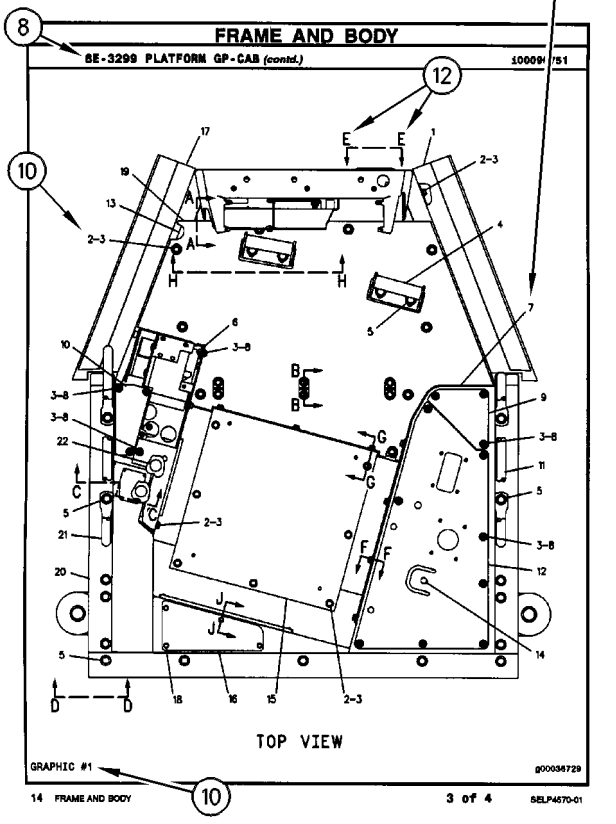

FRAME AND BODY

8E-3299 PLATFORM GP-CAB (contd.) 100090751

TOP VIEW

GRAPHIC #1 g00036729

14 FRAME AND BODY 3 of 4 SELP4570-01

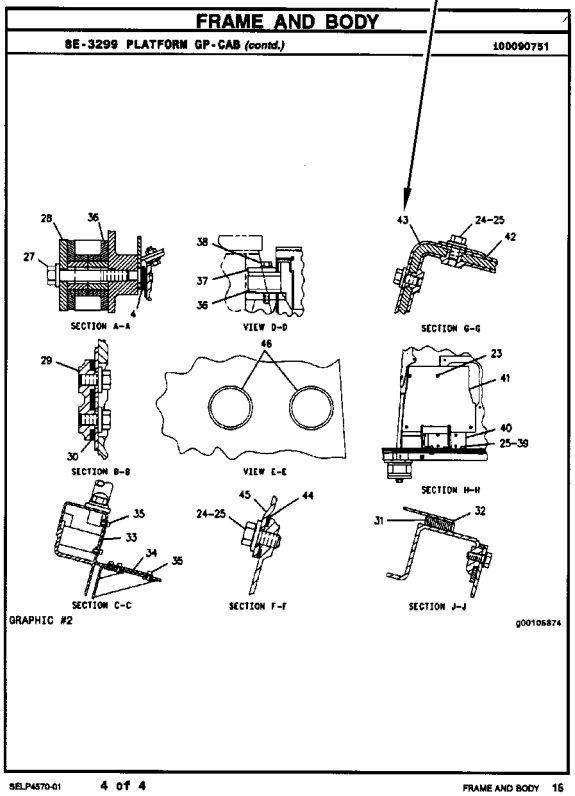

FRAME AND BODY

8E-3299 PLATFORM GP-CAB (contd.) 100090751

SECTION A-A

VIEW D-D

SECTION G-G

SECTION B-B

VIEW E-E

SECTION H-H

SECTION C-C

SECTION F-F

SECTION J-J

GRAPHIC #2 g00105874

SELP4570-01 4 of 4 FRAME AND BODY 15

ALLGEMEINE HINWEISE

1. MASCHINENKENNZEICHNUNG

Caterpillar-Maschinen sind mit PRODUCT IDENTIFICATION NUMBERS (PIN) (Produkt-Identnummern) gekennzeichnet. Einige Baugruppen, z.B. Motoren, Getriebe, Planierschilde und Aufreißer, sind mit SERIAL NUMBERS (S/N) (Seriennummern) gekennzeichnet. An der Maschine und am Motor befinden sich außerdem ARRANGEMENT NUMBERS (Ausrüstungsnummern) sowie in einigen Fällen MODIFICATION NUMBERS (Änderungsnummern). Sie befinden sich auf den PIN-Schildern und auf dem Typenschild im Fahrerhaus.

Bei Ersatzteilbestellungen müssen dem Händler alle diese Nummern zur Verfügung gestellt werden.

SIS *Neu im Parts Manual*

Vom ersten Quartal 2001 ab wurde die Caterpillar Produkt-Identnummer (PIN) von 8 auf 17 Zeichen geändert. Um zur Standardisierung der Produkt-Identnummer beizutragen, sind Caterpillar und andere Baumaschinenhersteller bestrebt, die aktuellste Norm zur Produkt-Identnummerierung einzuführen. Produkt-Identnummern für Baumaschinen sind durch ISO 10261 definiert. Das neue Format der Produkt-Identnummern gilt für alle Caterpillar-Maschinen und -Stromaggregate. Die Produkt-Identschilder und -Identrahmenmarkierung enthalten die aus 17 Zeichen bestehende Identnummer. Das neue Format hat folgende Abschnitte:

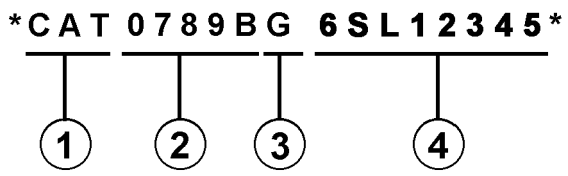

Abschnitte:

1. Caterpillars weltweiter Herstellungscode (Zeichen 1-3)

2. Modell (Zeichen 4-8)

3. Kontrollzeichen (Zeichen 9)

4. Maschinenspezifische Kennung (MIS) oder Produktsequenznummer (Zeichen 10-17). Diese wurde früher als Seriennummer bezeichnet.

Für vor dem ersten Quartal 2001 hergestellte Maschinen und Stromaggregate wird das aus 8 Zeichen bestehende PIN-Format beibehalten.

Bauteile wie z.B. Motoren, Getriebe, Achsen sowie Arbeitsgeräte werden weiterhin eine aus 8 Zeichen bestehende Seriennummer (S/N) aufweisen.

2. BESTELLEN VON ERSATZTEILEN

⚠ WARNUNG

Wenn für diese Maschine Ersatzteile benötigt werden, empfiehlt Caterpillar, ausschließlich Caterpillar-Ersatzteile oder solche zu verwenden, die die gleichen technischen Merkmale hinsichtlich Typ, Festigkeit, Werkzeugeigenschaften und die gleichen Maße aufweisen.

Bei Nichtbeachtung dieser Warnung besteht Verletzungs- oder sogar Lebensgefahr! Ferner kann Nichtbeachtung vorzeitige Ausfälle der Teile und Beschädigung der Maschine zur Folge haben.

Original Caterpillar-Ersatzteile können weltweit bei jedem Caterpillar-Händlern bestellt werden. Die umfangreichen Händlerlager enthalten normalerweise alle Teile, die Sie für Ihre Caterpillar-Maschine benötigen. Einige Händler bieten Reparatursätze, Austausch- oder werküberholte Teile an, so daß Sie eine Auswahl unter verschiedenen Reparaturmöglichkeiten treffen können. Ihre Bestellung muß folgende Angaben enthalten: Anzahl der benötigten Teile, Bestellnummer, Bezeichnung des Teils, Serien-Nr./Produkt-Ident-Nr., Ausrüstungs-Nr. und Änderungs-Nr. der Maschine, für die diese Teile benötigt werden.

3. AUFBAU DES PARTS MANUAL

Die Produktinformationen für alle Komponenten eines bestimmten Modells sind in INFORMATION ELEMENTS (Informationseinheiten) gegliedert. ENGINE ARRANGEMENT (Motorausführung) und SEAT GROUP (Fahrersitz) sind Beispiele für solche Informationseinheiten. Sie sind innerhalb jeder Gruppe alphabetisch, entsprechend der Ersatzteilbezeichnung, und zusätzlich numerisch, entsprechend der Ersatzteilnummer, geordnet.

4. INHALTSVERZEICHNIS

Das Inhaltsverzeichnis befindet sich am Anfang des Buches. Im Inhaltsverzeichnis werden die einzelnen Abschnitte des Buches aufgeführt. Die Abschnitte enthalten eine vollständige Aufstellung aller Informationseinheiten. Diese sind entsprechend ihrem Erscheinen im Buch geordnet. Das Inhaltsverzeichnis enthält Seitenangaben für Schnellverweise auf detaillierte Abbildungen und Teillisten.

ALLGEMEINE HINWEISE

5. INDEX FÜR WARTUNGSTEILE

Der Index für Wartungsteile vorn im Buch enthält die Bestellnummern, Seitenangaben, Mengenangaben und Informationen über den Einsatzbereich für die am häufigsten benötigten Ersatzteile. Die Angaben sind alphabetisch entsprechend der Teilebezeichnung geordnet.

6. INDEX

Der Index vorn im Buch enthält eine alphabetische Liste aller Informationseinheiten. Er enthält Seitenangaben für Schnellverweise auf detaillierte Abbildungen und Teillisten.

7. INDEX FÜR BESTELLNUMMERN

Hinten im Buch befindet sich ein numerischer Index, mit allen Bestellnummern und dem Hinweis auf die Seite, auf der sich die betreffende Abbildung befindet.

8. ÜBERSCHRIFTEN

Die Überschriften, die sich am Anfang jeder der Informationseinheiten befinden, enthalten Bestellnummern, Ersatzteilbezeichnungen und zusätzliche beschreibende Informationen. Produkt-Ident- und Seriennummern in den Überschriften sollten zur Auswahl der richtigen Informationen für die betreffende Maschine verwendet werden. Die Überschriften enthalten außerdem Informationen über möglichen Außendienstersatz, mögliche Baugerätekomponenten und die Baugruppe, zu der das Teil gehört.

Die erste Zeile einer Überschrift erscheint in einer größeren Schriftart, um den Anfang einer Informationseinheit zu kennzeichnen. Überschriften für zusätzliche Seiten, die zur Erläuterung einer Informationseinheit notwendig sind, erscheinen in normaler Schriftart und enthalten den Begriff "(contd.)".

9. NICHT EINZELN LIEFERBARE TEILE

In einigen Fällen ist es notwendig nicht lieferbare Teile, die selbst mit einer eigenen Teilliste im Buch vertreten sind, aufzuführen. Die Bestellnummern dieser nicht einzeln lieferbaren Teile erscheinen kursiv, wodurch angezeigt wird, daß sie nur in Verbindung mit anderen Teilen lieferbar sind.

10. REFERENZNUMMER FÜR ERSATZTEILE

Die Zahlen, die in der Spalte "Ref No" aufgeführt sind, stimmen mit den Zahlen in den beigefügten Abbildungen überein. Ein Buchstaben-Suffix kann zu einer Referenznummer hinzugefügt werden, um zu kennzeichnen, daß das Teil mit einer eigenen Teilliste im Buch aufgeführt ist. Die in der Spalte "Graphic Ref" angeführten Zahlen verweisen auf die Identifikationsnummer der Abbildung, die sich in der linken unteren Ecke der Abbildung befindet. Diese Nummer kann zusammen mit der Referenznummer des Teils angegeben werden, um die richtige Ersatzteilnummer zu ermitteln. Referenznummern können absichtlich weggelassen werden, da die Nummern der lieferbaren Ersatzteile ständig aktualisiert werden.

11. EINGERÜCKTE BEZEICHNUNGEN

Wenn eine Bezeichnung eingerückt ist, wird dadurch angezeigt, daß das Teil zu einer Baugruppe gehört, unter deren Bezeichnung es eingerückt ist.

12. REFERENZBUCHSTABEN

Falls erforderlich sind in den Abbildungen Referenzbuchstaben enthalten (z.B. A, B, C, usw.), die Leitungen und Kabelbäume von einem Punkt zum anderen verfolgen. Außerdem geben sie die Stelle an, an der getrennte Abbildungen fortgesetzt werden.

13. ABKÜRZUNGEN UND SYMBOLE

O.D. – Außendurchmesser
I.D. – Innendurchmesser
A – kein Teil dieser Gruppe
B – nach Bedarf verwenden
C – Hinweis auf eine Änderung
D – in Meter-Länge bestellen
E – in Zentimeter-Länge bestellen
F – nicht gezeigt
G – in Zoll-Länge bestellen
I – siehe Hydraulikinformationssystem
M – metrisches Teil
R – werküberholtes Teil unter Umständen lieferbar
Y – separate Abbildung
Z – nicht einzeln lieferbar

Neu im Parts Manual

14. BESCHREIBUNG DER TYPENÄNDERUNGEN

Typ-A bezieht sich auf alle Konfigurationsänderungen, die ein zusätzliches Informationselement für Ausführung, Gruppe oder Einheit benötigen. Wenn kein Seriennummernumbruch für Typen erhältlich ist, wird in der Überschrift eine Typennummer (Typ 1, Typ 2, etc.) angegeben. Diese "Typenänderungen" sind in der Teileliste mit der Anmerkung "C" (Änderung des vorherigen Typs) versehen. Es werden nur die für dieses Ersatzteilhandbuch relevanten "Typen" angegeben. Es können zusätzliche Typen vorhanden sein, was zu "C" Anmerkungen zu einem Informationselement führen kann, wenn keine anderen Typen angegeben werden.

15. <END>

Dieses Symbol zeigt das Ende eines Informationselements an.

ANMERKUNG:

Ständig vorgenommene Verbesserungen und Weiterentwicklungen an Ihrer Maschine können Änderungen verursachen, die in der vorliegenden Ausgabe noch nicht berücksichtigt sind. Fragen zu Ihrer Caterpillar-Maschine oder diesem Ersatzteilbuch beantwortet Ihr Caterpillar-Händler.

ALLGEMEINE HINWEISE

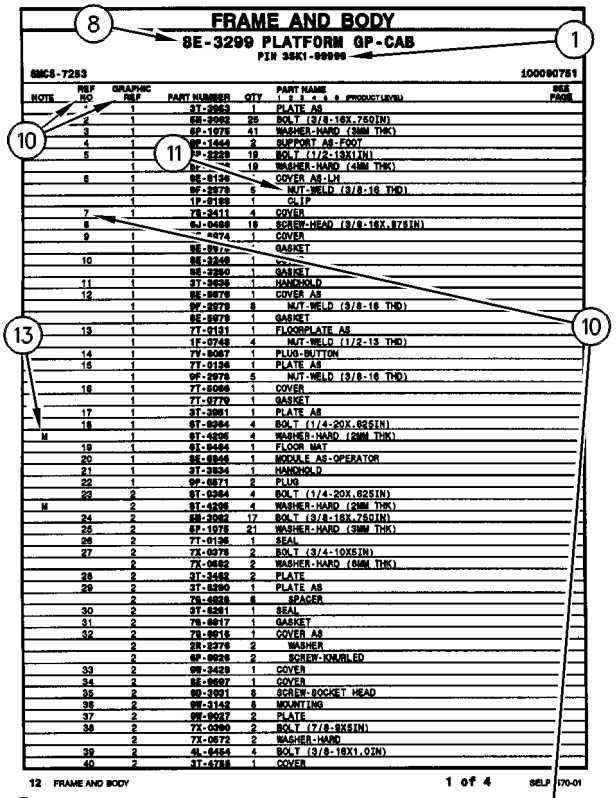

NOTE	REF NO	GRAPHIC REF	PART NUMBER	QTY	PART NAME 1 2 3 4 5 6 (PRODUCT LEVEL)	SEE PAGE
	*	1	3T-3963	1	PLATE AS	
	2	1	6M-2062	25	BOLT (3/8-16X.750IN)	
	3	1	6P-1075	41	WASHER-HARD (3MM THK)	
	4	1	9F-1444	2	SUPPORT AS-FOOT	
	5	1	9P-2229	19	BOLT (1/2-13X1IN)	
		1	6P-[illegible]	19	WASHER-HARD (4MM THK)	
	6	1	8E-8136	*	COVER AS-LH	
		1	9F-2979	6	NUT-WELD (3/8-16 THD)	
		1	1P-8189	1	CLIP	
	7	1	7X-3411	4	COVER	
	8	1	6J-0468	18	SCREW-HEAD (3/8-16X.87SIN)	
	9	1	[illegible]-4074	1	COVER	
		1	8E-8976	*	GASKET	
	10	1	8E-3249	1	[illegible]	
		1	8E-2260	1	GASKET	
	11	1	3T-3636	1	HANDHOLD	
	12	1	8E-8976	1	COVER AS	
		1	9F-2979	8	NUT-WELD (3/8-16 THD)	
		1	8E-8978	1	GASKET	
	13	1	7T-9131	1	FLOORPLATE AS	
		1	1F-0749	4	NUT-WELD (1/2-13 THD)	
	14	1	7Y-8067	1	PLUG-BUTTON	
	15	1	7T-0136	1	PLATE AS	
		1	9F-2979	5	NUT-WELD (3/8-16 THD)	
	16	1	7T-8066	1	COVER	
		1	7T-9779	1	GASKET	
	17	1	3T-3961	1	PLATE AS	
	18	1	9T-0264	4	BOLT (1/4-20X.62SIN)	
M		1	9T-4295	4	WASHER-HARD (2MM THK)	
	19	1	9X-8464	1	FLOOR MAT	
	20	1	8E-8848	1	MODULE AS-OPERATOR	
	21	1	3T-3834	1	HANDHOLD	
	22	1	9F-8871	2	PLUG	
	23	2	9T-0264	4	BOLT (1/4-20X.62SIN)	
M		2	9T-4295	4	WASHER-HARD (2MM THK)	
	24	2	6M-2062	17	BOLT (3/8-16X.750IN)	
	25	2	6P-1075	21	WASHER-HARD (3MM THK)	
	26	2	7T-0136	1	SEAL	
	27	2	7X-0078	2	BOLT (3/4-10X5IN)	
		2	7X-0682	2	WASHER-HARD (6MM THK)	
	28	2	3T-3482	2	PLATE	
	29	2	3T-8290	1	PLATE AS	
		2	7G-4828	8	SPACER	
	30	2	3T-8281	1	SEAL	
	31	2	7G-8817	1	GASKET	
	32	2	7G-8816	1	COVER AS	
		2	2R-2276	2	WASHER	
		2	9F-8826	2	SCREW-KNURLED	
	33	2	9M-3429	1	COVER	
	34	2	8E-8697	1	COVER	
	35	2	9D-3931	8	SCREW-SOCKET HEAD	
	36	2	9M-3142	8	MOUNTING	
	37	2	9M-9017	2	PLATE	
	38	2	7X-0360	2	BOLT (7/8-9X5IN)	
		2	7X-0672	2	WASHER-HARD	
	39	2	4L-8454	4	BOLT (3/8-16X1.0IN)	
	40	2	3T-4788	1	COVER	

12 FRAME AND BODY 1 of 4 SELP4570-01

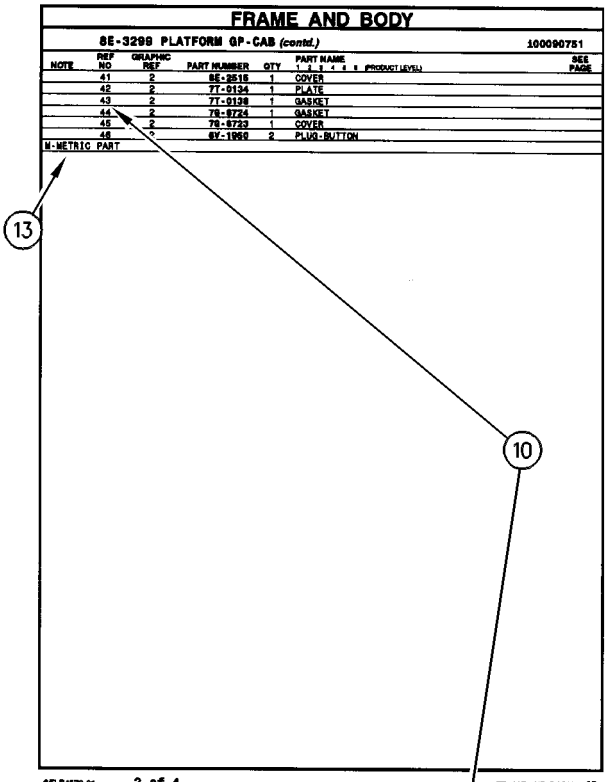

NOTE	REF NO	GRAPHIC REF	PART NUMBER	QTY	PART NAME 1 2 3 4 5 6 (PRODUCT LEVEL)	SEE PAGE
	41	2	8E-2515	1	COVER	
	42	2	7T-0134	1	PLATE	
	43	2	7T-0138	1	GASKET	
	44	2	7G-8724	1	GASKET	
	45	2	7G-8723	1	COVER	
	46	*	8Y-1950	2	PLUG-BUTTON	

M-METRIC PART

SELP4570-01 2 of 4 FRAME AND BODY 13

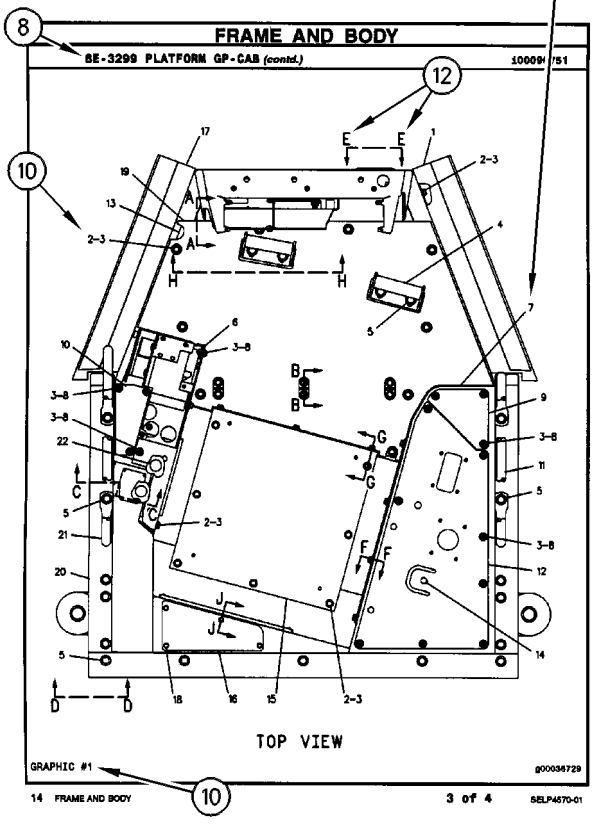

14 FRAME AND BODY 3 of 4 SELP4570-01

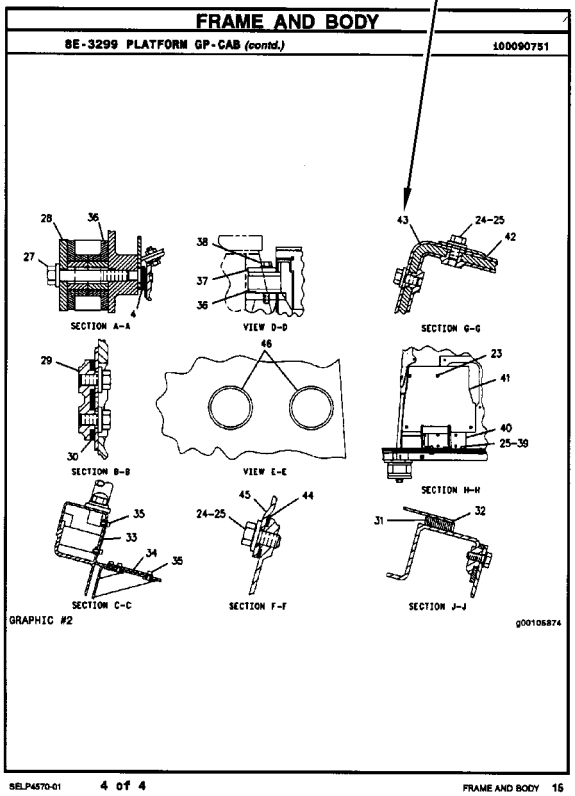

SELP4570-01 4 of 4 FRAME AND BODY 15

REMANUFACTURED COMPONENTS

As an option when making repairs consider Caterpillar Remanufactured Components. Components that are available through the Caterpillar Remanufactured Program are identified three ways in the parts book:

- with the letter R in the note field of the parts list
- with an R* at the beginning of the first line of the caption
- with an *R at the end of the first line of the caption

Typical components included in the Remanufacturing Program include:

ALTERNATORS
CONNECTING RODS
CRANKSHAFTS - UNDERSIZE
CRANKSHAFTS - UPGRADE TO NEW
CYLINDER HEADS
ELECTRONIC CONTROL MODULES (ECM)
ELECTRONIC SENSORS
FUEL INJECTORS
FUEL NOZZLES
FUEL PUMPS
GOVERNORS
OIL PUMPS
PISTONS
SHORT BLOCKS
STARTERS
TURBOCHARGERS - COMPLETE
TURBOCHARGER CARTRIDGES
WATER PUMPS

Caterpillar Remanufactured engines for many engine arrangements are also available.

OPTIONS DE RÉPARATION

COMPOSANTS RÉNOVÉS

Comme option de réparation, considérer les composants rénovés Caterpillar. Les composants disponibles dans le cadre du programme Caterpillar de composants rénovés sont identifiés de trois façons dans le catalogue de pièces:

- avec la lettre "R" dans l'espace note de la liste des pièces
- avec R* au début de la première ligne des légendes
- avec *R à la fin de la première ligne des légendes

Les composants suivants figurent parmi les composants typiques du programme de rénovation:

ALTERNATEURS
BIELLES
VILEBREQUINS - SOUS-DIMENSIONNÉS
VILEBREQUINS - REMIS À NEUF
CULASSES
MODULES DE COMMANDE ÉLECTRONIQUE (ECM)
CAPTEURS ÉLECTRONIQUES
INJECTEURS
TÊTES D'INJECTEURS
POMPES À CARBURANT
RÉGULATEURS
POMPES À HUILE
PISTONS
BLOCS EMBIELLÉS
DÉMARREURS
TURBOCOMPRESSEURS - COMPLETS
CARTOUCHES DE TURBOCOMPRESSEUR
POMPES À EAU

Des moteurs rénovés sont aussi disponibles pour plusieurs versions de moteur.

ALTERNATIVAS DE REPARACIÓN

COMPONENTES REMANUFACTURADOS

Al hacer reparaciones, tenga en cuenta la opción de Componentes Remanufacturados Caterpillar. Los componentes que están disponibles por medio del programa de Productos Remanufacturados Caterpillar se identifican de tres maneras en el manual de piezas:

- con la letra R en el espacio de Nota de la lista de piezas
- con una R* al comienzo de la primera línea de la leyenda
- con una *R al final de la primera línea de la leyenda

Los componentes que se incluyen típicamente en el Programa de Productos Remanufacturados son:

ALTERNADORES
BIELAS
CIGÜEÑALES - BAJOMEDIDA
CIGÜEÑALES - REMANUFACTURADOS A NUEVO
CULATAS
MÓDULOS DE CONTROL ELECTRÓNICO (ECM)
SENSORES ELECTRONICOS
INYECTORES
BOQUILLAS
BOMBAS DE COMBUSTIBLE
REGULADORES
BOMBAS DE ACEITE
PISTONES
MONOBLOQUES
MOTORES DE ARRANQUE
TURBOCOMPRESORES - COMPLETOS
NÚCLEOS DE TURBOCOMPRESOR
BOMBAS DE AGUA

También hay disponibles motores Remanufacturados Caterpillar para muchas de las configuraciones de motores.

ALTERNATIVAS DE REPARO

COMPONENTES REMANUFATURADOS

Considere o uso de Componentes Remanufaturados Caterpillar ao efetuar reparos. Os componentes disponíveis através do Programa de Remanufatura Caterpillar são identificados de três formas no manual de peças:

- com um R na área da nota da lista de peças
- com um R* no princípio da primeira linha da legenda
- com um *R no final da primeira linha da legenda

Os componentes típicos que constam no Programa de Remanufatura incluem:

ALTERNADORES
BIELAS
VIRABREQUINS - SUBMEDIDAS
VIRABREQUINS - ATUALIZAÇÃO
CABEÇOTES
MÓDULOS DE CONTROLE ELETRÔNICO (ECM)
SENSORES ELETRÔNICOS
INJETORES DE COMBUSTÍVEL
BICOS DE ABASTECIMENTO DE COMBUSTÍVEL
BOMBAS DE COMBUSTÍVEL
GOVERNADORES
BOMBAS DE ÓLEO
PISTÕES
BLOCOS BÁSICOS DO MOTOR
MOTORES DE PARTIDA
TURBOALIMENTADORES - COMPLETOS
CARTUCHOS DE TURBOALIMENTADORES
BOMBAS D'ÁGUA

Motores Remanufaturados Caterpillar também encontram-se disponíveis para diversos arranjos de motor.

WERKÜBERHOLTE AT-PRODUKTE

Bei Reparaturen sollten werküberholte AT-Produkte von Caterpillar in Betracht gezogen werden. Die durch das AT-Programm von Caterpillar erhältlichen Teile sind im Parts Book auf drei verschiedene Arten gekennzeichnet:

- mit dem Buchstaben R in der Spalte NOTE der Ersatzteilliste
- mit einem R* am Anfang der ersten Zeile der Überschrift
- mit einem *R am Ende der ersten Zeile der Überschrift

Das AT-Programm umfaßt u.a. folgende Produkte:

DREHSTROMGENERATOREN
PLEUELSTANGEN
KURBELWELLEN - MIT UNTERMASS
KURBELWELLEN - MIT ORIGINALMASS
ZYLINDERKÖPFE
ELEKTRONISCHE STEUEREINHEITEN (EMC)
ELEKTRONISCHE SENSOREN
PUMPENDÜSEN
EINSPRITZDÜSEN
KRAFTSTOFFPUMPEN
DREHZAHLREGLER
ÖLPUMPEN
KOLBEN
TEILMOTOREN
ANLASSER
TURBOLADER - KOMPLETT
TURBOLADERLAUFZEUGE
KÜHLWASSERPUMPEN

Viele Motoren können durch werküberholte AT-Motoren von Caterpillar ersetzt werden.

SUPPLEMENTAL COOLANT ADDITIVES

CUSTOMER BENEFITS:

Protects against cavitation, foam, erosion, corrosion, and scale buildup in cooling systems.

- Provides measured coolant conditioner.

DESCRIPTION:

Additives deplete from the coolant with normal operation. For this reason, Supplemental Coolant Additives (SCA) must be added to all heavy duty coolants at regular intervals. In addition, when not using a fully formulated, pre-charged antifreeze, like Caterpillar's DEAC, an initial charge of SCA must be added to the cooling system. The amount of SCA added to the system is dependent on the capacity of the system.

The SCA for initial fill is provided as a liquid. SCA's for maintenance intervals are available in liquid form and as a spin-on element. (No Spin-on available for 3600 Family of Engines)

NOTE:

The amount of SCA added at initial fill is not the same as the amount added at maintenance intervals.

The coolant additive elements can be used with any ethylene or propylene glycol type antifreeze which meets ASTM D4985 or ASTM D5345 Specifications.

NOTE:

For use with standard heavy duty coolant only, not for use with Extended Life Coolant.

PARTS NEEDED:

Cooling System Capacity		Liquid SCA at Initial Fill	Liquid SCA at Maintenance*	Spin-on SCA Maintenance Element*
Liters	Gallons			
22-30	(6-8)	3P-2044 (1)	6V-3542 (1)	111-2370 (1)
30-38	(8-10)	3P-2044 (1) 6V-3542 (1)	111-2372 (1)	111-2369 (1)
38-49	(10-13)	3P-2044 (1) 8T-1589 (1)	111-2372 (1)	111-2369 (1)
49-64	(13-17)	3P-2044 (2)	8T-1589 (1)	9N-3368 (1)
64-83	(17-22)	3P-2044 (2) 8T-1589 (1)	111-2372 (1) 6V-3542 (1)	111-2371 (1)
83-114	(22-30)	3P-2044 (3) 8T-1589 (1)	3P-2044 (1)	9N-3718 (1)
114-163	(30-43)	3P-2044 (5)	3P-2044 (1) 6V-3542 (1)	111-2371 (2)
163-242	(43-64)	3P-2044 (8)	3P-2044 (2)	9N-3718 (2)

** Normal maintenance period is 250 hrs. See your Operation and Maintenance Manual for complete coolant maintenance instructions.*

( ) Indicates quantity required.

ADDITIFS POUR LIQUIDE DE REFROIDISSEMENT

AVANTAGES POUR LE CLIENT

L'additif protège contre la cavitation, la mousse, l'érosion, la corrosion et l'accumulation de dépôts dans le circuit de refroidissement.

- L'additif complémentaire fournit une quantité mesurée d'additif.

DESCRIPTION:

Les additifs s'épuisent pendant l'utilisation du moteur. C'est pourquoi l'on doit ajouter de l'additif au liquide de refroidissement/antigel pour moteurs diesel à intervalles réguliers. En plus, si l'on n'utilise pas de l'antigel entièrement formulé et pré-chargé comme le liquide de refroidissement/antigel Caterpillar pour moteurs diesel, une quantité initiale d'additif doit être ajoutée au circuit de refroidissement. La quantité d'additif à ajouter au circuit dépend de la contenance du circuit.

L'additif pour le remplissage initial est fourni sous forme liquide. L'additif pour l'entretien ultérieur est disponible sous forme liquide et sous forme d'élément à visser. (Il n'y a pas d'élément à visser pour les moteurs de la famille 3600).

NOTA:

La quantité d'additif à ajouter au remplissage initial diffère de la quantité à ajouter aux intervalles d'entretien.

Les éléments d'additif peuvent être utilisés avec tout antigel de type éthylène ou propylène-glycol conforme à la norme ASTM D4985 ou ASTM D5345.

NOTA:

A utiliser uniquement avec du liquide de refroidissement pour moteurs diesel et non avec le liquide de refroidissement longue durée.

PIÈCES NÉCESSAIRES:

Contenance du circuit de refroidissement		Additif liquide au remplissage initial	Additif liquide aux intervalles d'entretien*	Elément d'additif à visser aux intervalles d'entretien*
Litres	Gallons U.S.			
22-30	(6-8)	3P-2044 (1)	6V-3542 (1)	111-2370 (1)
30-38	(8-10)	3P-2044 (1) 6V-3542 (1)	111-2372 (1)	111-2369 (1)
38-49	(10-13)	3P-2044 (1) 8T-1589 (1)	111-2372 (1)	111-2369 (1)
49-64	(13-17)	3P-2044 (2)	8T-1589 (1)	9N-3368 (1)
64-83	(17-22)	3P-2044 (2) 8T-1589 (1)	111-2372 (1) 6V-3542 (1)	111-2371 (1)
83-114	(22-30)	3P-2044 (3) 8T-1589 (1)	3P-2044 (1)	9N-3718 (1)
114-163	(30-43)	3P-2044 (5)	3P-2044 (1) 6V-3542 (1)	111-2371 (2)
163-242	(43-64)	3P-2044 (8)	3P-2044 (2)	9N-3718 (2)

** L'intervalle d'entretien normal est de 250 heures-service. Voir le Guide d'utilisation et d'entretien pour de plus amples renseignements concernant l'entretien du circuit de refroidissement.*

( ) Indique la quantité exigée.

ADITIVOS DE REFRIGERANTE SUPLEMENTARIOS

VENTAJAS PARA EL USUARIO:

Protegen contra la cavitación, la formación de espuma, la corrosión y la acumulación de escamas en los sistemas de enfriamiento.

- Suministra un acondicionador dosificado de refrigerante.

DESCRIPCIÓN:

Los aditivos en el refrigerante se agotan con la operación normal. Por esta razón, se debe agregar Aditivo de refrigerante suplementario (SCA) a todos los refrigerantes para servicio pesado, a intervalos regulares. Además, cuando no se usa un anticongelante de precarga completo, tal como el DEAC de Caterpillar, es necesario agregar una cantidad de aditivo de refrigerante suplementario inicial al sistema de enfriamiento. La cantidad de aditivo que se debe agregar depende de la capacidad del sistema.

El SCA de llenado inicial es líquido. El que se usa para el mantenimiento está disponible tanto en líquido como en un elemento enroscable. (No hay elemento enroscable disponible para la Familia de Motores 3600).

NOTA:

La cantidad de aditivo de llenado inicial no es la misma que se agrega en los intervalos de mantenimiento.

Los elementos de aditivo de refrigerante se pueden usar con cualquier anticongelante de tipo glicol etilénico o propílico que esté de acuerdo con las especificaciones de las normas ASTM D4985 o ASTM D5345.

NOTA:

Se debe utilizar únicamente con refrigerante estándar para servicio pesado; no se debe usar con Refrigerante de Larga Duración.

PIEZAS NECESARIAS:

Capacidad del Sistema de Enfriamiento		SCA líquido de llenado inicial	SCA líquido de mantenimiento*	Elemento de mantenimiento enroscable*
litros	gal EE.UU.			
22-30	6-8	3P-2044 (1)	6V-3542 (1)	111-2370 (1)
30-38	8-10	3P-2044 (1) 6V-3542 (1)	111-2372 (1)	111-2369 (1)
38-49	10-13	3P-2044 (1) 8T-1589 (1)	111-2372 (1)	111-2369 (1)
49-64	13-17	3P-2044 (2)	8T-1589 (1)	9N-3368 (1)
64-83	17-22	3P-2044 (2) 8T-1589 (1)	111-2372 (1) 6V-3542 (1)	111-2371 (1)
83-114	22-30	3P-2044 (3) 8T-1589 (1)	3P-2044 (1)	9N-3718 (1)
114-163	30-43	3P-2044 (5)	3P-2044 (1) 6V-3542 (1)	111-2371 (2)
163-242	43-64	3P-2044 (8)	3P-2044 (2)	9N-3718 (2)

** El período normal de mantenimiento es de 250 horas. Para ver las instrucciones completas sobre el mantenimiento del refrigerante, consulte el Manual de Operación y Mantenimiento.*

( ) Indica la cantidad necesaria.

ADITIVOS SUPLEMENTARES DO LÍQUIDO ARREFECEDOR

BENEFÍCIOS PARA O CLIENTE:

Protege contra cavitação, espuma, erosão, corrosão e acúmulo de crostas nos sistemas de arrefecimento.

- Fornece uma quantidade pré-determinada de condicionador de arrefecimento.

DESCRIÇÃO:

Com a operação normal, os aditivos se esgotam do líquido arrefecedor. Por isso, Aditivos Suplementares do Líquido Arrefecedor (SCA) devem ser acrescentados a todos os líquidos arrefecedores para serviço pesado em intervalos regulares. Além disso, quando um anticongelante pré-carregado, totalmente formulado não for usado, como o DEAC Caterpillar, uma carga inicial de SCA deve ser acrescentada ao sistema de arrefecimento. A quantidade de SCA acrescentada ao sistema depende da capacidade do sistema.

O SCA para abastecimento inicial é fornecido em forma de líquido. Os aditivos suplementares (SCA) para intervalos de manutenção estão à disposição em forma líquida e como um elemento com roscas. (Exceto os Motores da Família 3600)

NOTA:

A quantidade de SCA adicionada no abastecimento inicial não é a mesma que a acrescentada nos intervalos de manutenção.

Os elementos do aditivo do líquido arrefecedor podem ser usados com qualquer tipo de anticongelante etileno ou propileno que satisfaz as Especificações ASTM D4985 ou ASTM D5345.

NOTA:

Para uso apenas com líquido arrefecedor para serviço pesado padrão, não deve ser usado com Líquido Arrefecedor de Vida Longa.

PEÇAS NECESSÁRIAS:

Capacidade do Sistema de Arrefecimento		Líquido SCA Durante Abastecimento Inicial	Líquido SCA Durante Manutenção*	Elemento de Manutenção de SCA com Roscas*
Litros	Galões			
22-30	6-8	3P-2044 (1)	6V-3542 (1)	111-2370 (1)
30-38	8-10	3P-2044 (1) 6V-3542 (1)	111-2372 (1)	111-2369 (1)
38-49	10-13	3P-2044 (1) 8T-1589 (1)	111-2372 (1)	111-2369 (1)
49-64	13-17	3P-2044 (2)	8T-1589 (1)	9N-3368 (1)
64-83	17-22	3P-2044 (2) 8T-1589 (1)	111-2372 (1) 6V-3542 (1)	111-2371 (1)
83-114	22-30	3P-2044 (3) 8T-1589 (1)	3P-2044 (1)	9N-3718 (1)
114-163	30-43	3P-2044 (5)	3P-2044 (1) 6V-3542 (1)	111-2371 (2)
163-242	43-64	3P-2044 (8)	3P-2044 (2)	9N-3718 (2)

** O período normal de manutenção é de 250 horas. Consulte o Manual de Operação e Manutenção para obter instruções completas quanto à manutenção do líquido arrefecedor.*

( ) Indica a quantidade exigida.

KÜHLMITTELZUSATZ

VORTEILE FÜR DEN KUNDEN:

Schutz gegen Kavitation, Schaumbildung, Erosion, Korrosion und Kesselsteinbildung in Kühlsystemen.

- Richtig dosierter Kühlmittelzusatz

BESCHREIBUNG:

Additive erschöpfen sich während des Motorbetriebs. Deshalb muß allen HD-Kühlmitteln regelmäßig Kühlmittelzusatz beigefügt werden. Wenn bei Erstfüllung kein vollwertiges Fertigkühlmittel, wie das Frostschutz- und Kühlmittel für Dieselmotoren von Caterpiller (DEAC), verwendet wird, muß bei Erstfüllung Kühlmittelzusatz beigefügt werden. Wieviel Kühlmittelzusatz beigefügt werden muß, hängt vom Inhalt des Kühlsystems ab.

Für Erstfüllung ist Kühlmittelzusatz nur in flüssiger Form erhältlich. Für Wartungsintervalle ist Kühlmittelzusatz in flüssiger Form und als Zusatzelement erhältlich. (Für die Motorbaureihe 3600 sind keine Zusatzelemente erhältlich.)

ANMERKUNG:

Die Kühlmittelmenge bei Erstfüllung ist nicht die gleiche Menge, die bei Wartungsintervallen beigefügt werden muß.

Die Kühlmittelzusatzelemente können mit allen Frostschutzmitteln auf Ethylen- oder Propylenglykolbasis verwendet werden, die den Standards nach ASTM D4985 oder ASTM D5345 entsprechen.

ANMERKUNG:

Den Kühlmittelzusatz nicht mit Langzeitkühlmittel (ELC) von Caterpillar verwenden. Der Kühlmittelzusatz ist nur für HD-Kühlmittel bestimmt.

TEILEBEZEICHNUNG:

Kühlsysteminhalt		Kühlmittelzusatz bei Erstfüllung	Flüssiger Kühlmittelzusatz bei Wartung*	Kühlmittelzusatzelement bei Wartung*
Liter	US-Gall.			
22-30	(6-8)	3P-2044 (1)	6V-3542 (1)	111-2370 (1)
30-38	(8-10)	3P-2044 (1) 6V-3542 (1)	111-2372 (1)	111-2369 (1)
38-49	(10-13)	3P-2044 (1) 8T-1589 (1)	111-2372 (1)	111-2369 (1)
49-64	(13-17)	3P-2044 (2)	8T-1589 (1)	9N-3368 (1)
64-83	(17-22)	3P-2044 (2) 8T-1589 (1)	111-2372 (1) 6V-3542 (1)	111-2371 (1)
83-114	(22-30)	3P-2044 (3) 8T-1589 (1)	3P-2044 (1)	9N-3718 (1)
114-163	(30-43)	3P-2044 (5)	3P-2044 (1) 6V-3542 (1)	111-2371 (2)
163-242	(43-64)	3P-2044 (8)	3P-2044 (2)	9N-3718 (2)

** Der normale Wartungsintervall beträgt 250 Betriebsstunden. Für vollständige Anweisungen zur Wartung des Kühlsystems, siehe Betriebs- und Wartungshandbuch.*

( ) Erforderliche Anzahl

MAINTENANCE PARTS

DESCRIPTION	PART NUMBER	QTY	WHERE USED	PAGE
AIR INLET AND EXHAUST SYSTEM				
FILTER ELEMENT AS-AIR (PRIMARY)	231-0167	1	AIR CLEANER GP	98
FILTER ELEMENT AS-AIR (SECONDARY)	231-0168	1	AIR CLEANER GP	98
GAUZE (CRANKCASE BREATHER)	153-5939	1	TURBOCHARGER GP	106
SEAL-VALVE COVER	233-0695	1	TURBOCHARGER GP	106
BASIC ENGINE				
CAP (ENGINE OIL FILLER)	217-7358	1	PAN GP-OIL	57
		1	PAN GP-OIL	61
FILTER ELEMENT AS-ENGINE OIL	220-1523	1	PAN GP-OIL	57
		1	PAN GP-OIL	61
GAUZE (CRANKCASE BREATHER)	153-5939	1	COVER GP-VALVE MECHANISM	23
PLUG-DRAIN (ENGINE OIL)	218-2334	1	PAN GP-OIL	57
		1	PAN GP-OIL	61
PLUG-DRAIN (ENGINE OIL PAN)	218-2334	1	PLUG GP-ENGINE	69
SEAL-VALVE COVER	233-0695	1	COVER GP-VALVE MECHANISM	23
V-BELT (WATER PUMP)	211-5172	1	V-BELT GP	74
	251-6789	1	PULLEY GP-WATER PUMP	72
COOLING SYSTEM				
CAP AS-RADIATOR (SEA WATER HEAT EXCHANGER)	036-1865	1	RADIATOR & HYD OIL COOLER GP	91
		1	RADIATOR & HYD OIL COOLER GP	92
CAP-VENTED (COOLANT RECOVERY)	169-6715	1	RADIATOR & OIL COOLER MTG GP	93
		1	RADIATOR & OIL COOLER MTG GP	95
GASKET-COVER	154-1828	1	PUMP GP-WATER	86
GASKET-COVER (TEMPERATURE REGULATOR)	154-1828	1	HOUSING GP-WATER REGULATOR	83
HOSE (LOWER)	231-3579	1	RADIATOR & OIL COOLER MTG GP	93
		1	RADIATOR & OIL COOLER MTG GP	95
HOSE (UPPER)	231-3578	1	RADIATOR & OIL COOLER MTG GP	93
		1	RADIATOR & OIL COOLER MTG GP	95
REGULATOR-WATER TEMPERATURE	249-5541	1	PUMP GP-WATER	86
		1	PUMP GP-WATER	88

MAINTENANCE PARTS

DESCRIPTION	PART NUMBER	QTY	WHERE USED	PAGE
ELECTRICAL AND STARTING SYSTEM				
BATTERY (12-VOLT, MAINTENANCE FREE)	230-6368	1	BATTERY GP	133
BATTERY (12 VOLT, STANDARD)	153-5656	1	BATTERY GP	132
BELT-DRIVE (WARNING BEACON)	9X-8139	1	LAMP GP-WARNING BEACON	157
CIRCUIT BREAKER AS (105-AMPERE)	171-2212	1	WIRING GP-ENGINE	178
		1	WIRING GP-ENGINE	181
CIRCUIT BREAKER AS (30-AMPERE) (LIGHTING)	147-1773	1	LIGHTING GP-ROADING	160
ELEMENT AS-JACKET WATER HEATER (ENGINE)	149-3499	1	HEATER GP-JACKET WATER	145
	151-1394	11	HEATER GP-JACKET WATER	146
FLASHER AS (12-VOLT)	242-9000	1	LIGHTING GP-ROADING	160
FUSE (10-AMPERE)	113-8490	4	KIT-WORK TOOL CONTROL & WIRING	149
		4	KIT-WORK TOOL WIRING	150
		1	WARNING GP-BACKUP	172
		16	WIRING GP-CHASSIS	174
		4	WIRING GP-WORK TOOL	187
FUSE (15-AMPERE)	113-8491	2	KIT-WORK TOOL CONTROL & WIRING	149
		1	WIRING GP-AIR CONDITIONER	173
		5	WIRING GP-CHASSIS	174
		2	WIRING GP-WORK TOOL	187
FUSE (20-AMPERE)	113-8492	2	WIRING GP-CHASSIS	174
FUSE (30-AMPERE)	124-3548	1	WIRING GP-AIR CONDITIONER	173
		1	WIRING GP-CHASSIS	174
GLOW PLUG	172-4585	4	GLOW PLUG GP	143
		4	GLOW PLUG GP	144
KEY AS-ELECTRONIC (SECURITY)	206-5162	2	ELECTRONICS GP-MACHINE	141
		2	INSTALLATION GP-SECURITY	147
	206-5165	2	ELECTRONICS GP-MACHINE	141
		1	INSTALLATION GP-SECURITY	147
LAMP AS (RED, GREEN, LED, 12-VOLT)	165-5655	1	INSTALLATION GP-SECURITY	148
LAMP-HEAD	9W-3324	1	LAMP GP-HEAD & SIGNAL	153
LAMP (12-VOLT, 21-WATT)	5G-3244	1	LAMP GP-HEAD & SIGNAL	153
	9W-3326	1	LAMP GP-STOP & TAIL	156
LAMP (12-VOLT, 4-WATT)	100-3246	1	LAMP GP-HEAD & SIGNAL	153
LAMP (12-VOLT, 5-WATT)	084-4348	1	LAMP GP-STOP & TAIL	155
		1	LAMP GP-STOP & TAIL	156
LAMP (12-VOLT, 55-WATT)	9W-0607	1	LAMP GP-FLOOD	151
		1	LAMP GP-FLOOD	152
	9X-8118	1	LAMP GP-WARNING BEACON	157
FRAME AND BODY				
BREATHER (TANDEM HOUSING)	9G-5127	2	FRAME GP-LOADER	244
CIRCUIT BREAKER AS (30-AMPERE)	147-1773	1	KIT-ROADING CONVERSION	249
		1	KIT-ROADING CONVERSION	252
FLASHER AS (12-VOLT)	242-9000	1	KIT-ROADING CONVERSION	249
		1	KIT-ROADING CONVERSION	252
LAMP GP-REGISTRATION PLATE	190-8962	1	CONVERSION AR-ROADING	233
LAMP (12-VOLT) (REGISTRATION PLATE)	7M-9957	1	MOUNTING GP-REGISTRATION	259
LAMP (12-VOLT, 10-WATT)	195-9712	1	CONVERSION AR-ROADING	233
PLUG-MAGNETIC (FRAME)	3S-9182	5	FRAME GP-LOADER	244

MAINTENANCE PARTS

DESCRIPTION	PART NUMBER	QTY	WHERE USED	PAGE
FUEL SYSTEM				
CAP AS-FILLER (FUEL)	142-8828	1	LINES GP-FUEL PRM & FILTER	118
FILTER ELEMENT-FUEL (WATER SEPARATOR)	156-1200	1	FILTER GP-WATER SEP & FUEL	112
HYDRAULIC SYSTEM				
BREATHER AS (INLINE) (HYDRAULIC OIL)	207-9729	1	TANK & MTG GP-HYDRAULIC	384
CAP AS-FILLER (HYDRAULIC TANK)	142-8937	1	TANK GP-HYDRAULIC	385
FUSE (10-AMPERE)	113-8490	1	KIT-QUICK COUPLER CONVERSION	295
SCREEN (HYDRAULIC)	195-6768	1	LINES GP-PILOT	337
SCREEN-SUCTION (HYDRAULIC TANK)	142-8929	1	TANK GP-HYDRAULIC	385
LUBRICATION SYSTEM				
CAP (ENGINE OIL FILLER)	217-7358	1	FILLER GP-ENGINE OIL	78
CAP-OIL FILLER (ENGINE)	289-6120	1	FILLER GP-ENGINE OIL	78
OPERATOR STATION				
ACCUMULATOR GP-REFRIGERANT (WITH DESICCANT)	176-3900	1	KIT-AIR COND & HEATER INSTL	592
BLADE AS-WIPER (558-MM) (CAB DOOR)	6W-3924	1	DOOR GP-CAB	570
BLADE AS-WIPER (558-MM) (FRONT, REAR)	6W-3924	1	DOOR GP-CAB	568
BREATHER (AIR CONDITIONER)	9G-5127	1	COMPRESSOR & MOTOR GP-REFRIG	519
		1	COMPRESSOR & MOTOR GP-REFRIG	520
BREATHER (AIR CONDITIONER COMPRESSOR)	9G-5127	1	KIT-AIR COND & HEATER INSTL	592
		1	KIT-AIR COND & HEATER INSTL	594
FILTER ELEMENT-CAB AIR	231-8130	1	AIR CONDITIONER GP	508
		1	HEATER GP-CAB	585
	231-8132	1	AIR CONDITIONER GP	508
		1	AIR CONDITIONER GP	510
		1	HEATER GP-CAB	585
		1	HEATER GP-CAB	587
FILTER ELEMENT-CAB AIR (AIR)	303-6658	1	AIR CONDITIONER GP	510
		1	HEATER GP-CAB	587
FUSE (10-AMPERE)	113-8490	1	CONTROL GP-PILOT OPERATED HYD	548
FUSE (30-AMPERE)	124-3548	1	KIT-AIR COND & HEATER INSTL	593
		1	KIT-AIR COND & HEATER INSTL	595
LAMP (12-VOLT)	7X-9065	1	GAUGE & WARNING GP	578
LAMP (12-VOLT, 10-WATT)	6R-7490	1	GAUGE & WARNING GP	578
VALVE AS-SHUTOFF	8F-8151	1	KIT-AIR COND & HEATER INSTL	595
		1	LINES GP-HEATER	605
VALVE AS-SHUTOFF (WATER)	8F-8151	1	HEATER GP-CAB	589
POWER TRAIN				
FILTER AS-OIL (ADVANCED EFFICIENCY) (HYDRAULIC)	1G-8878	1	FILTER GP-OIL	195
FILTER ELEMENT AS-ENGINE OIL	220-1523	1	FILTER GP-OIL	196

MAINTENANCE PARTS

DESCRIPTION	PART NUMBER	QTY	WHERE USED	PAGE
WORK TOOLS				
CAP AS (WATER TANK)	192-2606	1	TANK GP-WATER	502
FUSE (10-AMPERE)	113-8490		COUPLER AR-QUICK	457
SCREEN (WATER TANK)	119-1414	1	STRAINER GP-WATER	498

PIÈCES DE RECHANGE

DESCRIPTION	NUMÉRO DE PIECÈS	QTÉ	DOMAINE D'APPLICATION	PAGE
CHÂSSIS ET BENNE				
AMPOULE (12 VOLTS) (PLAQUE D'IMMATRICULATION)	7M-9957	1	MONTAGE - IMMATRICULATION (ASS)	259
AMPOULE (12V, 10W)	195-9712	1	VERSION DE TRANSFORMATION POUR DÉPLACEMENT ROUTIER	233
BOUCHON AIMANTÉ (CHÂSSIS)	3S-9182	5	BATI - CHARGEUSE (ASS)	244
CLIGNOTANT (ENS) (12 VOLTS)	242-9000	1	KIT DE TRANSFORMATION POUR DÉPLACEMENTS SUR ROUTE	249
		1	KIT DE TRANSFORMATION POUR DÉPLACEMENTS SUR ROUTE	252
DISJONCTEUR (ENS) (30A)	147-1773	1	KIT DE TRANSFORMATION POUR DÉPLACEMENTS SUR ROUTE	249
		1	KIT DE TRANSFORMATION POUR DÉPLACEMENTS SUR ROUTE	252
LAMPE-PLAQUE D'IMMATRICULATION (ASS)	190-8962	1	VERSION DE TRANSFORMATION POUR DÉPLACEMENT ROUTIER	233
RENIFLARD (CARTER DE TANDEM)	9G-5127	2	BATI - CHARGEUSE (ASS)	244
CIRCUIT D'ADMISSION D'AIR ET D'ÉCHAPPEMENT				
ÉLÉMENT DE FILTRE À AIR (ENS) (PRINCIPAL)	231-0167	1	FILTRE A AIR (ASS)	98
ÉLÉMENT DE FILTRE À AIR (ENS) (SECONDAIRE)	231-0168	1	FILTRE A AIR (ASS)	98
JOINT DE CACHE-SOUPAPES	233-0695	1	TURBOCOMPRESSEUR (ASS)	106
TOILE (RENIFLARD DE CARTER MOTEUR)	153-5939	1	TURBOCOMPRESSEUR (ASS)	106
CIRCUIT DE CARBURANT				
BOUCHON DE GOULOTTE DE REMPLISSAGE (ENS) (CARBURANT)	142-8828	1	CANALISATIONS DE FILTRE ET D'AMORÇAGE DE CARBURANT (ASS)	118
ÉLÉMENT DE FILTRE À CARBURANT (SÉPARATEUR D'EAU)	156-1200	1	FILTRE DE SÉPARATEUR D'EAU ET DE CARBURANT (ASS)	112
CIRCUIT DE GRAISSAGE				
BOUCHON DE GOULOTTE DE REMPLISSAGE D'HUILE (MOTEUR)	289-6120	1	BOUCHON DE REMPLISSAGE D'HUILE MOTEUR (ASS)	78
CHAPEAU (GOULOTTE D'HUILE MOTEUR)	217-7358	1	BOUCHON DE REMPLISSAGE D'HUILE MOTEUR (ASS)	78

* TRADUCTION NON DISPONIBLE AU MOMENT DE LA PUBLICATION

PIÈCES DE RECHANGE

DESCRIPTION	NUMÉRO DE PIECÈS	QTÉ	DOMAINE D'APPLICATION	PAGE
CIRCUIT DE REFROIDISSEMENT				
BOUCHON À ÉVENT (RÉSERVOIR D'EXPANSION DU LIQUIDE DE REFROIDISSEMENT)	169-6715	1	RADIATEUR ET REFROIDISSEUR D'HUILE-MONTAGE (ASS)	93
		1	RADIATEUR ET REFROIDISSEUR D'HUILE-MONTAGE (ASS)	95
BOUCHON DE RADIATEUR (ENS) (ÉCHANGEUR THERMIQUE D'EAU DE MER)	036-1865	1	RADIATEUR ET REFROIDISSEUR D'HUILE HYDRAULIQUE (ASS)	91
		1	RADIATEUR ET REFROIDISSEUR D'HUILE HYDRAULIQUE (ASS)	92
FLEXIBLE (INFÉRIEUR)	231-3579	1	RADIATEUR ET REFROIDISSEUR D'HUILE-MONTAGE (ASS)	93
		1	RADIATEUR ET REFROIDISSEUR D'HUILE-MONTAGE (ASS)	95
FLEXIBLE (SUPERIEUR)	231-3578	1	RADIATEUR ET REFROIDISSEUR D'HUILE-MONTAGE (ASS)	93
		1	RADIATEUR ET REFROIDISSEUR D'HUILE-MONTAGE (ASS)	95
JOINT DE COUVERCLE	154-1828	1	POMPE A EAU (ASS)	86
JOINT DE COUVERCLE (THERMOSTAT)	154-1828	1	LOGEMENT DE RÉGULATEUR D'EAU (ASS)	83
THERMOSTAT-TEMPÉRATURE D'EAU	249-5541	1	POMPE A EAU (ASS)	86
		1	POMPE A EAU (ASS)	88

* TRADUCTION NON DISPONIBLE AU MOMENT DE LA PUBLICATION

PIÈCES DE RECHANGE

DESCRIPTION	NUMÉRO DE PIECÈS	QTÉ	DOMAINE D'APPLICATION	PAGE
CIRCUIT ÉLECTRIQUE ET DE DÉMARRAGE				
AMPOULE (12-V, 5-W)	084-4348	1	FEUX ARRIÈRE ET FEUX D'ARRÊT	155
		1	FEUX ARRIÈRE ET FEUX D'ARRÊT	156
AMPOULE (12V, 21W)	5G-3244	1	LAMPE - PHARE ET CLIGNOTANT	153
	9W-3326	1	FEUX ARRIÈRE ET FEUX D'ARRÊT	156
AMPOULE (12V, 4W)	100-3246	1	LAMPE - PHARE ET CLIGNOTANT	153
AMPOULE (12V, 55W)	9W-0607	1	LAMPE - PHARE (ASS)	151
		1	LAMPE - PHARE (ASS)	152
	9X-8118	1	LAMPE - GYROPHARE (ASS)	157
BATTERIE (12V, SANS ENTRETIEN)	230-6368	1	BATTERIE (ASS)	133
BATTERIE (12V, STANDARD)	153-5656	1	BATTERIE (ASS)	132
BOUGIE DE PRECHAUFFAGE	172-4585	4	BOUGIE DE PRÉCHAUFFAGE (ASS)	143
		4	BOUGIE DE PRÉCHAUFFAGE (ASS)	144
CLÉ ÉLECTRONIQUE (ENS) (SÉCURITÉ)	206-5162	2	ÉLECTRONIQUE - MACHINE (ENS)	141
		2	MONTAGE-SÉCURITÉ (ASS)	147
	206-5165	2	ÉLECTRONIQUE - MACHINE (ENS)	141
		1	MONTAGE-SÉCURITÉ (ASS)	147
CLIGNOTANT (ENS) (12 VOLTS)	242-9000	1	ÉCLAIRAGE - FEUX DE ROUTE (ASS)	160
DISJONCTEUR (ENS) (105A)	171-2212	1	CABLAGE DE MOTEUR (ASS)	178
		1	CABLAGE DE MOTEUR (ASS)	181
DISJONCTEUR (ENS) (30A) (ÉCLAIRAGE)	147-1773	1	ÉCLAIRAGE - FEUX DE ROUTE (ASS)	160
ÉLÉMENT DU RÉCHAUFFEUR D'EAU DES CHEMISES (ENS) (MOTEUR)	149-3499	1	EAU DES CHEMISES - RECHAUFFEUR (ASS)	145
	151-1394	11	EAU DES CHEMISES - RECHAUFFEUR (ASS)	146
ENTRAÎNEMENT POUR COURROIE (GYROPHARE)	9X-8139	1	LAMPE - GYROPHARE (ASS)	157
FUSIBLE (10A)	113-8490	1	AVERTISSEUR DE RECUL (ASS)	172
		4	CÂBLAGE - OUTIL DE TRAVAIL (ASS)	187
		16	CABLAGE DE CHASSIS (ASS)	174
		4	KIT DE CÂBLAGE D'OUTIL DE TRAVAIL	150
		4	KIT DE COMMANDE D'OUTIL DE TRAVAIL ET CÂBLAGE	149
FUSIBLE (15A)	113-8491	1	CABLAGE - CLIMATISEUR (ASS)	173
		2	CÂBLAGE - OUTIL DE TRAVAIL (ASS)	187
		5	CABLAGE DE CHASSIS (ASS)	174
		2	KIT DE COMMANDE D'OUTIL DE TRAVAIL ET CÂBLAGE	149
FUSIBLE (20A)	113-8492	2	CABLAGE DE CHASSIS (ASS)	174
FUSIBLE (30A)	124-3548	1	CABLAGE - CLIMATISEUR (ASS)	173
		1	CABLAGE DE CHASSIS (ASS)	174
LAMPE - FEUX AV	9W-3324	1	LAMPE - PHARE ET CLIGNOTANT	153
LAMPE (ENS) (ROUGE, VERT, TÉMOIN LUMINEUX, 12V)	165-5655	1	MONTAGE-SÉCURITÉ (ASS)	148

* TRADUCTION NON DISPONIBLE AU MOMENT DE LA PUBLICATION

PIÈCES DE RECHANGE

DESCRIPTION	NUMÉRO DE PIECÈS	QTÉ	DOMAINE D'APPLICATION	PAGE
CIRCUIT HYDRAULIQUE				
BOUCHON DE GOULOTTE DE REMPLISSAGE (ENS) (RÉSERVOIR HYDRAULIQUE)	142-8937	1	RÉSERVOIR HYDRAULIQUE (ASS)	385
ÉCRAN (HYDRAULIQUE)	195-6768	1	CANALISATIONS A COMMANDE PILOTE (ASS)	337
FUSIBLE (10A)	113-8490	1	KIT DE TRANSFORMATION DU COUPLEUR EXPRESS	295
RENIFLARD (ENS) (*INLINE) (HUILE HYDRAULIQUE)	207-9729	1	RÉSERVOIR HYDRAULIQUE ET MONTAGE (ASS)	384
TAMIS D'ASPIRATION (RÉSERVOIR HYDRAULIQUE)	142-8929	1	RÉSERVOIR HYDRAULIQUE (ASS)	385
MOTEUR DE BASE				
BOUCHON DE VIDANGE (CARTER D'HUILE MOTEUR)	218-2334	1	BOUCHON DE MOTEUR (ASS)	69
BOUCHON DE VIDANGE (HUILE MOTEUR)	218-2334	1	HUILE MOTEUR - CARTER (ASS)	57
		1	HUILE MOTEUR - CARTER (ASS)	61
CHAPEAU (GOULOTTE D'HUILE MOTEUR)	217-7358	1	HUILE MOTEUR - CARTER (ASS)	57
		1	HUILE MOTEUR - CARTER (ASS)	61
COURROIE TRAPEZOIDALE (POMPE À EAU)	211-5172	1	*V-BELT GP	74
	251-6789	1	POULIE DE POMPE À EAU (ASS)	72
ÉLÉMENT DE FILTRE (ENS)-HUILE MOTEUR	220-1523	1	HUILE MOTEUR - CARTER (ASS)	57
		1	HUILE MOTEUR - CARTER (ASS)	61
JOINT DE CACHE-SOUPAPES	233-0695	1	CACHE-SOUPAPES (ASS)	23
TOILE (RENIFLARD DE CARTER MOTEUR)	153-5939	1	CACHE-SOUPAPES (ASS)	23
OUTILS DE TRAVAIL				
CHAPEAU (ENS) (RÉSERVOIR D'EAU)	192-2606	1	RÉSERVOIR D'EAU (ASS)	502
ÉCRAN (RÉSERVOIR D'EAU)	119-1414	1	TAMIS D'EAU (ASS)	498
FUSIBLE (10A)	113-8490		COUPLEUR EXPRESS (VERSION)	457

* TRADUCTION NON DISPONIBLE AU MOMENT DE LA PUBLICATION

PIÈCES DE RECHANGE

DESCRIPTION	NUMÉRO DE PIECÈS	QTÉ	DOMAINE D'APPLICATION	PAGE
POSTE DE CONDUITE				
ACCUMULATEUR - CLIMATISEUR (ASS) (AVEC SICCATIF)	176-3900	1	KIT DE MONTAGE DE CLIMATISEUR ET CHAUFFAGE	592
AMPOULE (12 VOLTS)	7X-9065	1	INDICATEURS ET TÉMOINS LUMINEUX (ASS)	578
AMPOULE (12V, 10W)	6R-7490	1	INDICATEURS ET TÉMOINS LUMINEUX (ASS)	578
BALAI D'ESSUIE-GLACE (ENS) (*558-MM) (AVANT, ARRIÈRE)	6W-3924	1	PORTIÈRE DE CABINE (ASS)	568
BALAI D'ESSUIE-GLACE (ENS) (*558-MM) (PORTE DE CABINE)	6W-3924	1	PORTIÈRE DE CABINE (ASS)	570
ÉLÉMENT DE FILTRE À AIR DE CABINE	231-8130	1	CHAUFFAGE DE CABINE (ASS)	585
		1	CLIMATISEUR (ASS)	508
	231-8132	1	CHAUFFAGE DE CABINE (ASS)	585
		1	CHAUFFAGE DE CABINE (ASS)	587
		1	CLIMATISEUR (ASS)	508
		1	CLIMATISEUR (ASS)	510
ÉLÉMENT DE FILTRE À AIR DE CABINE (AIR)	303-6658	1	CHAUFFAGE DE CABINE (ASS)	587
		1	CLIMATISEUR (ASS)	510
FUSIBLE (10A)	113-8490	1	COMMANDE HYDRAULIQUE PILOTE (ASS)	548
FUSIBLE (30A)	124-3548	1	KIT DE MONTAGE DE CLIMATISEUR ET CHAUFFAGE	593
		1	KIT DE MONTAGE DE CLIMATISEUR ET CHAUFFAGE	595
RENIFLARD (CLIMATISEUR)	9G-5127	1	COMPRESSEUR ET MOTEUR DE RÉFRIGÉRATION (ASS)	519
		1	COMPRESSEUR ET MOTEUR DE RÉFRIGÉRATION (ASS)	520
RENIFLARD (COMPRESSEUR DE CLIMATISEUR)	9G-5127	1	KIT DE MONTAGE DE CLIMATISEUR ET CHAUFFAGE	592
		1	KIT DE MONTAGE DE CLIMATISEUR ET CHAUFFAGE	594
SOUPAPE D'ARRET	8F-8151	1	CANALISATIONS DE CHAUFFAGE (ASS)	605
		1	KIT DE MONTAGE DE CLIMATISEUR ET CHAUFFAGE	595
SOUPAPE D'ARRET (EAU)	8F-8151	1	CHAUFFAGE DE CABINE (ASS)	589
TRANSMISSION				
ÉLÉMENT DE FILTRE (ENS)-HUILE MOTEUR	220-1523	1	FILTRE A HUILE (ASS)	196
FILTRE À HUILE (ENS) (EFFICACITÉ AVANCÉE) (HYDRAULIQUE)	1G-8878	1	FILTRE A HUILE (ASS)	195

* TRADUCTION NON DISPONIBLE AU MOMENT DE LA PUBLICATION

PIEZAS DE MANTENIMIENTO

DESCRIPCION	NUMERO DE PIEZA	CANT	SE UTILIZA EN	PAGINA
BASTIDOR Y CAJA				
CONJUNTO DE DESTELLADOR (12 VOLTIOS)	242-9000	1	*KIT-ROADING CONVERSION	249
		1	*KIT-ROADING CONVERSION	252
DISYUNTOR (CONJ) (30-AMPERIOS)	147-1773	1	*KIT-ROADING CONVERSION	249
		1	*KIT-ROADING CONVERSION	252
LAMPARA DE PLACA DE REGISTRO (GR)	190-8962	1	CONFIGURACIÓN DE TRANSFORMACIÓN PARA CARRETERA	233
LÁMPARA (12 VOLTIOS) (PLACA DE REGISTRACIÓN)	7M-9957	1	MONTAJE-REGISTRO (GR)	259
LÁMPARA (12 VOLTIOS, 10 VATIOS)	195-9712	1	CONFIGURACIÓN DE TRANSFORMACIÓN PARA CARRETERA	233
RESPIRADERO (COMPARTIMENTO DE TANDEM)	9G-5127	2	BASTIDOR DEL CARGADOR (GR)	244
TAPÓN MAGNÉTICO (BASTIDOR)	3S-9182	5	BASTIDOR DEL CARGADOR (GR)	244

* NO HAY TRADUCCION DISPONIBLE EN EL MOMENTO DE LA IMPRESION

PIEZAS DE MANTENIMIENTO

DESCRIPCION	NUMERO DE PIEZA	CANT	SE UTILIZA EN	PAGINA
ESTACION DEL OPERADOR				
ACUMULADOR DEL ACONDICIONADOR DE AIRE (GR) (CON DESECANTE)	176-3900	1	JUEGO DE INSTALACIÓN DEL ACONDICIONADOR DE AIRE Y CALENTADOR	592
*FILTER ELEMENT-CAB AIR	231-8130	1	ACONDICIONADOR DE AIRE (GR)	508
		1	CALEFACCIÓN DE LA CABINA (GR)	585
	231-8132	1	ACONDICIONADOR DE AIRE (GR)	508
		1	ACONDICIONADOR DE AIRE (GR)	510
		1	CALEFACCIÓN DE LA CABINA (GR)	585
		1	CALEFACCIÓN DE LA CABINA (GR)	587
*FILTER ELEMENT-CAB AIR (AIRE)	303-6658	1	ACONDICIONADOR DE AIRE (GR)	510
		1	CALEFACCIÓN DE LA CABINA (GR)	587
FUSIBLE (10-AMPERIOS)	113-8490	1	CONTROL HIDRÁULICO DE OPERACIÓN PILOTO (GR)	548
FUSIBLE (30-AMPERIOS)	124-3548	1	JUEGO DE INSTALACIÓN DEL ACONDICIONADOR DE AIRE Y CALENTADOR	593
		1	JUEGO DE INSTALACIÓN DEL ACONDICIONADOR DE AIRE Y CALENTADOR	595
HOJA DE LIMPIAPARABRISAS (CONJ) (*558-MM) (DELANTERO, TRASERO)	6W-3924	1	PUERTA DE CABINA	568
HOJA DE LIMPIAPARABRISAS (CONJ) (*558-MM) (PUERTA, CABINA)	6W-3924	1	PUERTA DE CABINA	570
LÁMPARA (12 VOLTIOS)	7X-9065	1	INDICADORES Y ADVERTENCIA (GR)	578
LÁMPARA (12 VOLTIOS, 10 VATIOS)	6R-7490	1	INDICADORES Y ADVERTENCIA (GR)	578
RESPIRADERO (AIRE ACONDICIONADO)	9G-5127	1	COMPRESOR Y MOTOR GR-REFRIGERANTE	519
		1	COMPRESOR Y MOTOR GR-REFRIGERANTE	520
RESPIRADERO (COMPRESOR DE AIRE ACONDICIONADO)	9G-5127	1	JUEGO DE INSTALACIÓN DEL ACONDICIONADOR DE AIRE Y CALENTADOR	592
		1	JUEGO DE INSTALACIÓN DEL ACONDICIONADOR DE AIRE Y CALENTADOR	594
VALVULA DE CORTE (CONJ)	8F-8151	1	JUEGO DE INSTALACIÓN DEL ACONDICIONADOR DE AIRE Y CALENTADOR	595
		1	TUBERÍAS DE LA CALEFACCIÓN (GR)	605
VALVULA DE CORTE (CONJ) (AGUA)	8F-8151	1	CALEFACCIÓN DE LA CABINA (GR)	589
HERRAMIENTAS				
FUSIBLE (10-AMPERIOS)	113-8490		ACOPLADOR RÁPIDO (CONFIG)	457
REJILLA (TANQUE DE AGUA)	119-1414	1	COLADOR DEL AGUA (GR)	498
TAPÓN (CONJ) (TANQUE DE AGUA)	192-2606	1	TANQUE DEL AGUA (GR)	502

* NO HAY TRADUCCION DISPONIBLE EN EL MOMENTO DE LA IMPRESION

PIEZAS DE MANTENIMIENTO

DESCRIPCION	NUMERO DE PIEZA	CANT	SE UTILIZA EN	PAGINA
MOTOR BASICO				
CORREA TRAPEZOIDAL (BOMBA DE AGUA)	211-5172	1	*V-BELT GP	74
	251-6789	1	GRUPO, MANIJA, BOMBA DE AGUA	72
ELEMENTO DE FILTRO DE ACEITE DE MOTOR (CONJ)	220-1523	1	CÁRTER - COLECTOR DEL (GR)	57
		1	CÁRTER - COLECTOR DEL (GR)	61
GASA (RESPIRADERO DE CARTER)	153-5939	1	TAPA DEL MECANISMO DE VÁLVULAS (GR)	23
SELLO - TAPA DE VÁLVULA	233-0695	1	TAPA DEL MECANISMO DE VÁLVULAS (GR)	23
TAPA (LLENADO DE ACEITE DEL MOTOR)	217-7358	1	CÁRTER - COLECTOR DEL (GR)	57
		1	CÁRTER - COLECTOR DEL (GR)	61
TAPÓN DE DRENAJE (ACEITE DEL MOTOR)	218-2334	1	CÁRTER - COLECTOR DEL (GR)	57
		1	CÁRTER - COLECTOR DEL (GR)	61
TAPÓN DE DRENAJE (COLECTOR DE ACEITE DEL MOTOR)	218-2334	1	TAPÓN DEL MOTOR (GR)	69
SISTEMA DE ARRANQUE ELECTRICO				
BATERÍA (12 VOLTIOS, ESTANDAR)	153-5656	1	BATERÍA (GR)	132
BATERÍA (12-VOLTIOS, LIBRE DE MANTENIMIENTO)	230-6368	1	BATERÍA (GR)	133
BUJÍA INCANDESCENTE	172-4585	4	BUJÍA INCANDESCENTE (GR)	143
		4	BUJÍA INCANDESCENTE (GR)	144
CONJUNTO DE DESTELLADOR (12 VOLTIOS)	242-9000	1	LUCES DE DESPLAZAMIENTO (GR)	160
CONJUNTO DE LLAVE, ELECTRONICA (SEGURIDAD)	206-5162	2	ELECTRÓNICA DE LA MÁQUINA (GR)	141
		2	INSTALACION DE SEGURIDAD (GR)	147
	206-5165	2	ELECTRÓNICA DE LA MÁQUINA (GR)	141
		1	INSTALACION DE SEGURIDAD (GR)	147
DISYUNTOR (CONJ) (105 AMPERIOS)	171-2212	1	CABLES DEL MOTOR (GR)	178
		1	CABLES DEL MOTOR (GR)	181
DISYUNTOR (CONJ) (30-AMPERIOS) (LUCES)	147-1773	1	LUCES DE DESPLAZAMIENTO (GR)	160
ELEMENTO DEL CALENTADOR DEL AGUA DE LAS CAMISAS (MOTOR)	149-3499	1	AGUA DE LAS CAMISAS - CALENTADOR DEL (GR)	145
	151-1394	11	AGUA DE LAS CAMISAS - CALENTADOR DEL (GR)	146
FUSIBLE (10-AMPERIOS)	113-8490	4	CABLES DE LA HERRAMIENTA DE TRABAJO (GR)	187
		16	CABLES DEL CHASIS (GR)	174
		4	*KIT-WORK TOOL CONTROL & WIRING	149
		4	*KIT-WORK TOOL WIRING	150
		1	RETROCESO - ALARMA DE (GR)	172
FUSIBLE (15 AMPERIOS)	113-8491	2	CABLES DE LA HERRAMIENTA DE TRABAJO (GR)	187
		1	CABLES DEL ACONDICIONADOR DE AIRE (GR)	173

* NO HAY TRADUCCION DISPONIBLE EN EL MOMENTO DE LA IMPRESION

PIEZAS DE MANTENIMIENTO

DESCRIPCION	NUMERO DE PIEZA	CANT	SE UTILIZA EN	PAGINA
		5	CABLES DEL CHASIS (GR)	174
		2	*KIT-WORK TOOL CONTROL & WIRING	149
FUSIBLE (20-AMPERIOS)	113-8492	2	CABLES DEL CHASIS (GR)	174
FUSIBLE (30-AMPERIOS)	124-3548	1	CABLES DEL ACONDICIONADOR DE AIRE (GR)	173
		1	CABLES DEL CHASIS (GR)	174
LÁMPARA (CONJ) (ROJO, VERDE, DIODO, 12 VOLTIOS)	165-5655	1	INSTALACION DE SEGURIDAD (GR)	148
LÁMPARA DE FARO DELANTERO	9W-3324	1	LÁMPARA DE LUZ DELANTERA Y DE SEÑAL (GR)	153
LÁMPARA (12 VLOTIOS, 5 VATIOS)	084-4348	1	LUCES DE PARADA Y COLA (GR)	155
		1	LUCES DE PARADA Y COLA (GR)	156
LÁMPARA (12 VOLTIOS, 21 VATIOS)	5G-3244	1	LÁMPARA DE LUZ DELANTERA Y DE SEÑAL (GR)	153
	9W-3326	1	LUCES DE PARADA Y COLA (GR)	156
LÁMPARA (12 VOLTIOS, 4 VATIOS)	100-3246	1	LÁMPARA DE LUZ DELANTERA Y DE SEÑAL (GR)	153
LÁMPARA (12 VOLTIOS, 55 VATIOS)	9X-8118	1	LÁMPARA DE BALIZA DE ADVERTENCIA (GR)	157
	9W-0607	1	REFLECTOR (GR)	151
		1	REFLECTOR (GR)	152
MANDO DE CORREA (BALIZA DE ADVERTENCIA)	9X-8139	1	LÁMPARA DE BALIZA DE ADVERTENCIA (GR)	157
SISTEMA DE COMBUSTIBLE				
ELEMENTO DE FILTRO DE COMBUSTIBLE (SEPARADOR DE AGUA)	156-1200	1	FILTRO DE COMBUSTIBLE Y SEPARADOR DE AGUA (GR)	112
TAPA DE LLENADO (CONJ) (COMBUSTIBLE)	142-8828	1	TUBERIAS (GR) -COMBUSTIBLE PRIMARIO Y FILTRO	118

* NO HAY TRADUCCION DISPONIBLE EN EL MOMENTO DE LA IMPRESION

PIEZAS DE MANTENIMIENTO

DESCRIPCION	NUMERO DE PIEZA	CANT	SE UTILIZA EN	PAGINA
SISTEMA DE ENFRIAMIENTO				
JUNTA DE LA TAPA DE VÁLVULAS	154-1828	1	BOMBA DE AGUA (GR)	86
JUNTA DE LA TAPA DE VÁLVULAS (REGULADOR DE TEMPERATURA)	154-1828	1	*HOUSING GP-WATER REGULATOR	83
MANGUERA (INFERIOR)	231-3579	1	MONTAJE DE RADIADOR Y ENFRIAMIENTO DE ACEITE (GR)	93
		1	MONTAJE DE RADIADOR Y ENFRIAMIENTO DE ACEITE (GR)	95
MANGUERA (SUPERIOR)	231-3578	1	MONTAJE DE RADIADOR Y ENFRIAMIENTO DE ACEITE (GR)	93
		1	MONTAJE DE RADIADOR Y ENFRIAMIENTO DE ACEITE (GR)	95
REGULADOR DE TEMPERATURA DEL AGUA	249-5541	1	BOMBA DE AGUA (GR)	86
		1	BOMBA DE AGUA (GR)	88
TAPA CON RESPIRADERO (RECUPERACIÓN DE REFRIGERANTE)	169-6715	1	MONTAJE DE RADIADOR Y ENFRIAMIENTO DE ACEITE (GR)	93
		1	MONTAJE DE RADIADOR Y ENFRIAMIENTO DE ACEITE (GR)	95
TAPA DE RADIADOR (CONJ) (INTERCAMBIADOR DE CALOR PARA AGUA DE MAR)	036-1865	1	RADIADOR Y ENFRIADOR DE ACEITE HIDRÁULICO (GR)	91
		1	RADIADOR Y ENFRIADOR DE ACEITE HIDRÁULICO (GR)	92
SISTEMA DE ESCAPE Y ADMISION DE AIRE				
ELEMENTO DEL FILTRO DE AIRE (CONJ) (PRIMARIO)	231-0167	1	FILTRO DE AIRE (GR)	98
ELEMENTO DEL FILTRO DE AIRE (CONJ) (SECUNDARIO)	231-0168	1	FILTRO DE AIRE (GR)	98
GASA (RESPIRADERO DE CARTER)	153-5939	1	TURBOCOMPRESOR (GR)	106
*SEAL-VALVE COVER	233-0695	1	TURBOCOMPRESOR (GR)	106
SISTEMA DE LUBRICACION				
TAPA DEL TUBO DE LLENADO DE ACEITE (MOTOR)	289-6120	1	TUBO DE LLENADO DE ACEITE (GR)	78
TAPA (LLENADO DE ACEITE DEL MOTOR)	217-7358	1	TUBO DE LLENADO DE ACEITE (GR)	78
SISTEMA HIDRAULICO				
FUSIBLE (10-AMPERIOS)	113-8490	1	*KIT-QUICK COUPLER CONVERSION	295
REJILLA DE SUCCIÓN (TANQUE HIDRÁULICO)	142-8929	1	TANQUE HIDRÁULICO (GR)	385
REJILLA (HIDRÁULICO)	195-6768	1	TUBERÍAS CON SERVOMANDO (GR)	337
RESPIRADERO (CONJ) (*INLINE) (ACEITE HIDRÁULICO)	207-9729	1	TANQUE HIDRÁULICO Y MONTAJE (GR)	384
TAPA DE LLENADO (CONJ) (TANQUE HIDRAULICO)	142-8937	1	TANQUE HIDRÁULICO (GR)	385

* NO HAY TRADUCCION DISPONIBLE EN EL MOMENTO DE LA IMPRESION

PIEZAS DE MANTENIMIENTO

DESCRIPCION	NUMERO DE PIEZA	CANT	SE UTILIZA EN	PAGINA
TREN DE FUERZA				
ELEMENTO DE FILTRO DE ACEITE DE MOTOR (CONJ)	220-1523	1	FILTRO DE ACEITE (GR)	196
FILTRO DE ACEITE (CONJ) (EFICIENCIA AVANZADA) (HIDRÁULICO)	1G-8878	1	FILTRO DE ACEITE (GR)	195

* NO HAY TRADUCCION DISPONIBLE EN EL MOMENTO DE LA IMPRESION

PEÇAS DE MANUTENÇÃO

DESCRIÇÃO	NÚMERO DE PEÇA	QUANT	UTILIZADA EM	PÁGINA
CHASSI E CARROCERIA				
BUJÃO MAGNÉTICO (ARMAÇÃO)	3S-9182	5	CHASSI DIANTEIRO	244
DISJUNTOR AUTOMÁTICO DE CIRCUITO (30 AMPERES)	147-1773	1	KIT-CONVERSÃO DE RODAGEM	249
		1	KIT-CONVERSÃO DE RODAGEM	252
LAMPADA-PLACA DE REGISTRO	190-8962	1	GRUPO DE CONVERSÃO - ARRANJO RODOVIÁRIO	233
LÂMPADA (12-VOLTS) (PLACA DE REGISTRO)	7M-9957	1	MONTAGEM DA PLACA DE REGISTRO	259
LÂMPADA (12-VOLTS, 10-WATTS)	195-9712	1	GRUPO DE CONVERSÃO - ARRANJO RODOVIÁRIO	233
LUZ INTERMITENTE (12-VOLTS)	242-9000	1	KIT-CONVERSÃO DE RODAGEM	249
		1	KIT-CONVERSÃO DE RODAGEM	252
RESPIRO (ALOJAMENTO DO TANDEM)	9G-5127	2	CHASSI DIANTEIRO	244
FERRAMENTAS DE TRABALHO				
FUSÍVEL (10 AMPERES)	113-8490		ACOPLADOR RÁPIDO	457
TAMPA (TANQUE DE ÁGUA)	192-2606	1	TANQUE DE ÁGUA	502
TELA FILTRANTE (TANQUE DE ÁGUA)	119-1414	1	TELA FILTRANTE - ÁGUA	498
MOTOR BÁSICO				
BUJÃO DO DRENO (CÁRTER DE ÓLEO DO MOTOR)	218-2334	1	BUJÃO DO MOTOR	69
BUJÃO DO DRENO (ÓLEO DO MOTOR)	218-2334	1	CÁRTER DO ÓLEO DO MOTOR	57
		1	CÁRTER DO ÓLEO DO MOTOR	61
CORREIA EM V (BOMBA D'ÁGUA)	211-5172	1	*V-BELT GP	74
	251-6789	1	GRUPO DE POLIA - BOMBA DE ÁGUA	72
ELEMENTO FILTRANTE - ÓLEO DO MOTOR	220-1523	1	CÁRTER DO ÓLEO DO MOTOR	57
		1	CÁRTER DO ÓLEO DO MOTOR	61
FILTRO (RESPIRO DO CÁRTER)	153-5939	1	TAMPA - MECANISMO DAS VÁLVULAS	23
RETENTOR - TAMPA DA VÁLVULA	233-0695	1	TAMPA - MECANISMO DAS VÁLVULAS	23
TAMPA (BOCAL DE ENCHIMENTO DO ÓLEO DO MOTOR)	217-7358	1	CÁRTER DO ÓLEO DO MOTOR	57
		1	CÁRTER DO ÓLEO DO MOTOR	61

* TRADUÇÃO NÃO DISPONÍVEL NO MOMENTO DA IMPRESSÃO

PEÇAS DE MANUTENÇÃO

DESCRIÇÃO	NÚMERO DE PEÇA	QUANT	UTILIZADA EM	PÁGINA
POSTO DO OPERADOR				
ACUMULADOR - AR CONDICIONADO (COM DESSECANTE)	176-3900	1	JOGO-INSTALAÇÃO DO CONDICIONADOR DE AR E AQUECEDOR	592
ELEMENTO FILTRANE-AR DA CABINE	231-8130	1	AQUECEDOR DA CABINE	585
		1	CONDICIONADOR DE AR	508
	231-8132	1	AQUECEDOR DA CABINE	585
		1	AQUECEDOR DA CABINE	587
		1	CONDICIONADOR DE AR	508
		1	CONDICIONADOR DE AR	510
ELEMENTO FILTRANE-AR DA CABINE (AR)	303-6658	1	AQUECEDOR DA CABINE	587
		1	CONDICIONADOR DE AR	510
FUSÍVEL (10 AMPERES)	113-8490	1	CONTROLE HIDRÁULICO DE OPERAÇÃO PILOTO	548
FUSÍVEL (30 AMPERES)	124-3548	1	JOGO-INSTALAÇÃO DO CONDICIONADOR DE AR E AQUECEDOR	593
		1	JOGO-INSTALAÇÃO DO CONDICIONADOR DE AR E AQUECEDOR	595
LÂMINA DO LIMPADOR DE PÁRA-BRISA (*558-MM) (DIANTEIRO, TRASEIRO)	6W-3924	1	PORTA DA CABINE	568
LÂMINA DO LIMPADOR DE PÁRA-BRISA (*558-MM) (PORTA DA CABINE)	6W-3924	1	PORTA DA CABINE	570
LÂMPADA (12-VOLTS)	7X-9065	1	INDICADOR E ALARME	578
LÂMPADA (12-VOLTS, 10-WATTS)	6R-7490	1	INDICADOR E ALARME	578
RESPIRO (AR CONDICIONADO)	9G-5127	1	COMPRESSOR E MOTOR - REFRIGERADO	519
		1	COMPRESSOR E MOTOR - REFRIGERADO	520
RESPIRO (COMPRESSOR DO AR CONDICIONADO)	9G-5127	1	JOGO-INSTALAÇÃO DO CONDICIONADOR DE AR E AQUECEDOR	592
		1	JOGO-INSTALAÇÃO DO CONDICIONADOR DE AR E AQUECEDOR	594
VÁLVULA DE FECHAMENTO	8F-8151	1	JOGO-INSTALAÇÃO DO CONDICIONADOR DE AR E AQUECEDOR	595
		1	TUBOS - AQUECEDOR	605
VÁLVULA DE FECHAMENTO (ÁGUA)	8F-8151	1	AQUECEDOR DA CABINE	589
SISTEMA DE ADMISSÃO DE AR E DE ESCAPE				
ELEMENTO DO FILTRO DE AR (PRIMÁRIO)	231-0167	1	PURIFICADOR DE AR	98
ELEMENTO DO FILTRO DE AR (SECUNDÁRIO)	231-0168	1	PURIFICADOR DE AR	98
FILTRO (RESPIRO DO CÁRTER)	153-5939	1	TURBOALIMENTADOR	106
RETENTOR - TAMPA DA VÁLVULA	233-0695	1	TURBOALIMENTADOR	106

* TRADUÇÃO NÃO DISPONÍVEL NO MOMENTO DA IMPRESSÃO

PEÇAS DE MANUTENÇÃO

DESCRIÇÃO	NÚMERO DE PEÇA	QUANT	UTILIZADA EM	PÁGINA
SISTEMA DE ARREFECIMENTO				
JUNTA - TAMPA	154-1828	1	BOMBA DE ÁGUA	86
JUNTA - TAMPA (TERMOSTATO)	154-1828	1	ALOJAMENTO-TERMOSTATO DE ÁGUA	83
MANGUEIRA (INFERIOR)	231-3579	1	RADIADOR E ARREFECEDOR DE ÓLEO - MONTAGEM	93
		1	RADIADOR E ARREFECEDOR DE ÓLEO - MONTAGEM	95
MANGUEIRA (SUPERIOR)	231-3578	1	RADIADOR E ARREFECEDOR DE ÓLEO - MONTAGEM	93
		1	RADIADOR E ARREFECEDOR DE ÓLEO - MONTAGEM	95
REGULADOR DE TEMPERATURA DA ÁGUA	249-5541	1	BOMBA DE ÁGUA	86
		1	BOMBA DE ÁGUA	88
TAMPA - RADIADOR (PERMUTADOR DE CALOR DE AGUA SALGADA)	036-1865	1	RADIADOR E ARREFECEDOR DO ÓLEO HIDRÁULICO	91
		1	RADIADOR E ARREFECEDOR DO ÓLEO HIDRÁULICO	92
TAMPA COM RESPIRO (RECUPERAÇÃO DO LÍQUIDO ARREFECEDOR)	169-6715	1	RADIADOR E ARREFECEDOR DE ÓLEO - MONTAGEM	93
		1	RADIADOR E ARREFECEDOR DE ÓLEO - MONTAGEM	95
SISTEMA DE COMBUSTÍVEL				
ELEMENTO DO FILTRO DE COMBUSTÍVEL (SEPARADOR DE ÁGUA)	156-1200	1	FILTRO DE COMBUSTÍVEL E SEPARADOR DE ÁGUA	112
TAMPA - BOCAL DE ENCHIMENTO (COMBUSTÍVEL)	142-8828	1	TUBULAÇÕES - FILTRO E ESCORVA DO COMBUSTÍVEL	118
SISTEMA DE LUBRIFICAÇÃO				
TAMPA - BOCAL DE ENCHIMENTO DE ÓLEO (MOTOR)	289-6120	1	BOCAL DE ENCHIMENTO DE ÓLEO DO MOTOR	78
TAMPA (BOCAL DE ENCHIMENTO DO ÓLEO DO MOTOR)	217-7358	1	BOCAL DE ENCHIMENTO DE ÓLEO DO MOTOR	78
SISTEMA ELÉTRICO E DE PARTIDA				
BATERIA (12 VOLTS, ISENTO DE MANUTENÇÃO)	230-6368	1	BATERIA	133
BATERIA (12 VOLTS, PADRÃO)	153-5656	1	BATERIA	132
CHAVE - ELETRÔNICO (SEGURANÇA)	206-5162	2	INSTALAÇÃO-SEGURANÇA	147
		2	SISTEMA ELETRÔNICO - MÁQUINA	141
	206-5165	1	INSTALAÇÃO-SEGURANÇA	147
		2	SISTEMA ELETRÔNICO - MÁQUINA	141
CORREIA DE COMANDO (PISCA-ALERTA)	9X-8139	1	LUZ GIRATÓRIA DE ALARME	157
DISJUNTOR AUTOMÁTICO DE CIRCUITO (105 AMPERES)	171-2212	1	CABOS/FIOS ELÉTRICOS - MOTOR	178
		1	CABOS/FIOS ELÉTRICOS - MOTOR	181

* TRADUÇÃO NÃO DISPONÍVEL NO MOMENTO DA IMPRESSÃO

PEÇAS DE MANUTENÇÃO

DESCRIÇÃO	NÚMERO DE PEÇA	QUANT	UTILIZADA EM	PÁGINA
DISJUNTOR AUTOMÁTICO DE CIRCUITO (30 AMPERES) (ILUMINAÇÃO)	147-1773	1	ILUMINAÇÃO - RODOVIÁRIA	160
ELEMENTO - AQUECEDOR DE ÁGUA DA CAMISA (MOTOR)	149-3499	1	AQUECEDOR DA ÁGUA DO MOTOR	145
	151-1394	11	AQUECEDOR DA ÁGUA DO MOTOR	146
FAROL DIANTEIRO	9W-3324	1	LÂMPADA DIANTEIRA E DE SINAL	153
FUSÍVEL (10 AMPERES)	113-8490	1	ALARME DE MARCHA À RÉ	172
		16	CABOS/FIOS ELÉTRICOS - CHASSI	174
		4	CABOS/FIOS ELÉTRICOS - FERRAMENTAS DE TRABALHO	187
		4	KIT-CONTROLE E FIAÇÃO DA FERRAMENTA DE TRABALHO	149
		4	KIT-FIAÇÃO DA FERRAMENTA DE TRABALHO	150
FUSÍVEL (15 AMPERES)	113-8491	1	CABOS/FIOS ELÉTRICOS - AR CONDICIONADO	173
		5	CABOS/FIOS ELÉTRICOS - CHASSI	174
		2	CABOS/FIOS ELÉTRICOS - FERRAMENTAS DE TRABALHO	187
		2	KIT-CONTROLE E FIAÇÃO DA FERRAMENTA DE TRABALHO	149
FUSÍVEL (20-AMPERES)	113-8492	2	CABOS/FIOS ELÉTRICOS - CHASSI	174
FUSÍVEL (30 AMPERES)	124-3548	1	CABOS/FIOS ELÉTRICOS - AR CONDICIONADO	173
		1	CABOS/FIOS ELÉTRICOS - CHASSI	174
LÂMPADA (VERMELHA, VERDE, LED, 12 VOLTS)	165-5655	1	INSTALAÇÃO-SEGURANÇA	148
LÂMPADA (12-VOLTS, 21-WATTS)	5G-3244	1	LÂMPADA DIANTEIRA E DE SINAL	153
	9W-3326	1	LUZ TRASEIRA E DE FREIO	156
LÂMPADA (12-VOLTS, 4-WATTS)	100-3246	1	LÂMPADA DIANTEIRA E DE SINAL	153
LÂMPADA (12 VOLTS, 5 WATTS)	084-4348	1	LUZ TRASEIRA E DE FREIO	155
		1	LUZ TRASEIRA E DE FREIO	156
LÂMPADA (12-VOLTS, 55-WATTS)	9W-0607	1	LÂMPADA - FAROL	151
		1	LÂMPADA - FAROL	152
	9X-8118	1	LUZ GIRATÓRIA DE ALARME	157
LUZ INTERMITENTE (12-VOLTS)	242-9000	1	ILUMINAÇÃO - RODOVIÁRIA	160
VELA DE AQUECIMENTO; VELA INCANDESCENTE	172-4585	4	VELA DE AQUECIMENTO; VELA INCANDESCENTE	143
		4	VELA DE AQUECIMENTO; VELA INCANDESCENTE	144
SISTEMA HIDRÁULICO				
FUSÍVEL (10 AMPERES)	113-8490	1	KIT-CONVERSÃO DO ACOPLADOR RÁPIDO	295
RESPIRO (EM LINHA) (ÓLEO HIDRÁULICO)	207-9729	1	TANQUE DE ÓLEO HIDRÁULICO E MONTAGEM	384
TAMPA - BOCAL DE ENCHIMENTO (TANQUE HIDRÁULICO)	142-8937	1	TANQUE HIDRÁULICO	385
TELA DE SUCÇÃO (TANQUE HIDRÁULICO)	142-8929	1	TANQUE HIDRÁULICO	385
TELA FILTRANTE (HIDRÁULICO)	195-6768	1	TUBOS - CIRCUITO PILOTO	337

* TRADUÇÃO NÃO DISPONÍVEL NO MOMENTO DA IMPRESSÃO

PEÇAS DE MANUTENÇÃO

DESCRIÇÃO	NÚMERO DE PEÇA	QUANT	UTILIZADA EM	PÁGINA
TREM DE FORÇA				
ELEMENTO FILTRANTE - ÓLEO DO MOTOR	220-1523	1	FILTRO - ÓLEO	196
FILTRO - ÓLEO (EFICIÊNCIA AVANÇADA) (HIDRÁULICO)	1G-8878	1	FILTRO - ÓLEO	195

* TRADUÇÃO NÃO DISPONÍVEL NO MOMENTO DA IMPRESSÃO

WARTUNGSTEILE

BESCHREIBUNG	ERSATZTEIL-NUMMER	MENGE	VERWENDET IN	SEITE
ARBEITSGERÄTE				
KAPPE (WASSERTANK)	192-2606	1	WASSERTANK	502
SCREEN (WASSERTANK)	119-1414	1	WASSERSIEBEINSATZ	498
SICHERUNG (10 A)	113-8490		SCHNELLWECHSELVORRICHTUNG	457

* ÜBERSETZUNG ZUM ZEITPUNKT DER DRUCKLEGUNG NICHT VORHANDEN

WARTUNGSTEILE

BESCHREIBUNG	ERSATZTEIL-NUMMER	MENGE	VERWENDET IN	SEITE
ELEKTRISCHE ANLAGE UND STARTSYSTEM				
BATTERIE (12 V, STANDARD)	153-5656	1	BATTERIE	132
BATTERIE (12 V, WARTUNGSFREI)	230-6368	1	BATTERIE	133
BELEUCHTUNGSANLAGE (ROT, GRÜN, LED, 12 V)	165-5655	1	SICHERHEITSEINBAUSATZ	148
BLINKER (12 V)	242-9000	1	BELEUCHTUNGSANLAGE (STRASSENAUSRÜSTUNG)	160
ELEKTRONISCHER SCHLÜSSEL (SICHERHEIT)	206-5162	2	ELEKTRONIK - MASCHINE	141
		2	SICHERHEITSEINBAUSATZ	147
	206-5165	2	ELEKTRONIK - MASCHINE	141
		1	SICHERHEITSEINBAUSATZ	147
GLÜHKERZE	172-4585	4	GLÜHKERZE	143
		4	GLÜHKERZE	144
LAUFBAND UND ANTRIEB (RUNDUM-KENNLEUCHTE)	9X-8139	1	RUNDUM-KENNLEUCHTE	157
LEUCHTE (12 V, 21 W)	5G-3244	1	SCHEINWERFER U. RICHTUNGS-LEUCHTE	153
	9W-3326	1	BREMS- UND RÜCKLEUCHTE	156
LEUCHTE (12 V, 4 W)	100-3246	1	SCHEINWERFER U. RICHTUNGS-LEUCHTE	153
LEUCHTE (12 V, 5 W)	084-4348	1	BREMS- UND RÜCKLEUCHTE	155
		1	BREMS- UND RÜCKLEUCHTE	156
LEUCHTE (12 V, 55 W)	9W-0607	1	ARBEITSLEUCHTEN	151
		1	ARBEITSLEUCHTEN	152
	9X-8118	1	RUNDUM-KENNLEUCHTE	157
SCHEINWERFER	9W-3324	1	SCHEINWERFER U. RICHTUNGS-LEUCHTE	153
SICHERUNG (10 A)	113-8490	4	ARBEITSGERÄT - VERDRAHTUNG	187
		4	ARBEITSGERÄTEVERDRAHTUNGS-SATZ	150
		16	FAHRGESTELLVERDRAHTUNG	174
		1	RÜCKFAHRWARNHORN	172
		4	SATZ - ARBEITSGERÄTE U. VERDRAHTUNG	149
SICHERUNG (15 A)	113-8491	2	ARBEITSGERÄT - VERDRAHTUNG	187
		5	FAHRGESTELLVERDRAHTUNG	174
		1	KLIMAANLAGENVERDRAHTUNG	173
		2	SATZ - ARBEITSGERÄTE U. VERDRAHTUNG	149
SICHERUNG (20 A)	113-8492	2	FAHRGESTELLVERDRAHTUNG	174
SICHERUNG (30 A)	124-3548	1	FAHRGESTELLVERDRAHTUNG	174
		1	KLIMAANLAGENVERDRAHTUNG	173
UMLAUFKÜHLWASSERHEIZUNGS-ELEMENT (MOTOR)	149-3499	1	UMLAUFKÜHLWASSERHEIZUNG	145
	151-1394	11	UMLAUFKÜHLWASSERHEIZUNG	146
UNTERBRECHER (105 A)	171-2212	1	MOTORVERDRAHTUNG	178
		1	MOTORVERDRAHTUNG	181
UNTERBRECHER (30 A) (BELEUCHTUNG)	147-1773	1	BELEUCHTUNGSANLAGE (STRASSENAUSRÜSTUNG)	160

* ÜBERSETZUNG ZUM ZEITPUNKT DER DRUCKLEGUNG NICHT VORHANDEN

WARTUNGSTEILE

BESCHREIBUNG	ERSATZTEIL-NUMMER	MENGE	VERWENDET IN	SEITE
FAHRERHAUS				
ABSPERRVENTIL	8F-8151	1	EINBAUSATZ - KLIMAANLAGE U. HEIZUNG	595
		1	HEIZUNGSLEITUNGEN	605
ABSPERRVENTIL (WASSER)	8F-8151	1	FAHRERHAUSHEIZUNG	589
ENTLÜFTER (KLIMAANLAGE)	9G-5127	1	KÜHLKOMPRESSOR U. MOTOR	519
		1	KÜHLKOMPRESSOR U. MOTOR	520
ENTLÜFTER (KLIMAANLAGEN-KOMRESSOR)	9G-5127	1	EINBAUSATZ - KLIMAANLAGE U. HEIZUNG	592
		1	EINBAUSATZ - KLIMAANLAGE U. HEIZUNG	594
*FILTER ELEMENT-CAB AIR	231-8130	1	FAHRERHAUSHEIZUNG	585
		1	KLIMAANLAGE	508
	231-8132	1	FAHRERHAUSHEIZUNG	585
		1	FAHRERHAUSHEIZUNG	587
		1	KLIMAANLAGE	508
		1	KLIMAANLAGE	510
*FILTER ELEMENT-CAB AIR (DRUCKLUFT)	303-6658	1	FAHRERHAUSHEIZUNG	587
		1	KLIMAANLAGE	510
KLIMAANLAGENDRUCKSPEICHER (MIT TROCKENMITTEL)	176-3900	1	EINBAUSATZ - KLIMAANLAGE U. HEIZUNG	592
LEUCHTE (12 V)	7X-9065	1	WARNANZEIGENSATZ	578
LEUCHTE (12 V, 10 W)	6R-7490	1	WARNANZEIGENSATZ	578
SCHEIBENWISCHERBLATT (*558-MM) (FAHRERHAUSTÜR)	6W-3924	1	FAHRERHAUSTÜR	570
SCHEIBENWISCHERBLATT (*558-MM) (VORN, HINTEN)	6W-3924	1	FAHRERHAUSTÜR	568
SICHERUNG (10 A)	113-8490	1	HYDRAULIKBEDIENUNG (MIT VORSTEUERUNG)	548
SICHERUNG (30 A)	124-3548	1	EINBAUSATZ - KLIMAANLAGE U. HEIZUNG	593
		1	EINBAUSATZ - KLIMAANLAGE U. HEIZUNG	595
HYDRAULIKSYSTEM				
ANSAUGSIEB (HYDRAULIKTANK)	142-8929	1	HYDRAULIKTANK	385
EINFÜLLKAPPE (HYDRAULIKTANK)	142-8937	1	HYDRAULIKTANK	385
ENTLÜFTER (*INLINE) (HYDRAULIKÖL)	207-9729	1	HYDRAULIKTANK UND BEFESTIGUNGSTEILE	384
SCREEN (HYDRAULIK)	195-6768	1	VORSTEUERLEITUNGEN	337
SICHERUNG (10 A)	113-8490	1	*KIT-QUICK COUPLER CONVERSION	295
KRAFTSTOFFSYSTEM				
EINFÜLLKAPPE (KRAFTSTOFF)	142-8828	1	KRAFTSTOFFENTLÜFTUNGS- U. FILTERLEITUNGEN	118
KRAFTSTOFFILTERELEMENT (WASSERABSCHEIDER)	156-1200	1	WASSERABSCHEIDER- U. KRAFTSTOFFILTER	112

* ÜBERSETZUNG ZUM ZEITPUNKT DER DRUCKLEGUNG NICHT VORHANDEN

WARTUNGSTEILE

BESCHREIBUNG	ERSATZTEIL-NUMMER	MENGE	VERWENDET IN	SEITE
KRAFTSÜBERTRAGUNG				
MOTORÖLFILTERELEMENT	220-1523	1	ÖLFILTER	196
ÖLFILTER (HOCHLEISTUNG) (HYDRAULIK)	1G-8878	1	ÖLFILTER	195
KÜHLSYSTEM				
KAPPE MIT ENTLÜFTER (KÄLTEMITTELRÜCKGEWINNUNG)	169-6715	1	KÜHLER U. ÖLKÜHLERBEFESTIGUNG	93
		1	KÜHLER U. ÖLKÜHLERBEFESTIGUNG	95
KÜHLERKAPPE (ROHWASSERHEIZUNGSAUSTAUSCHER)	036-1865	1	KÜHLER UND HYDRAULIKÖLKÜHLER	91
		1	KÜHLER UND HYDRAULIKÖLKÜHLER	92
SCHLAUCHLEITUNG (OBEN)	231-3578	1	KÜHLER U. ÖLKÜHLERBEFESTIGUNG	93
		1	KÜHLER U. ÖLKÜHLERBEFESTIGUNG	95
SCHLAUCHLEITUNG (UNTEN)	231-3579	1	KÜHLER U. ÖLKÜHLERBEFESTIGUNG	93
		1	KÜHLER U. ÖLKÜHLERBEFESTIGUNG	95
VENTILDECKELDICHTUNG	154-1828	1	KÜHLWASSERPUMPE	86
VENTILDECKELDICHTUNG (THERMOSTAT)	154-1828	1	THERMOSTATGEHÄUSE	83
WASSERTEMPERATURREGLER	249-5541	1	KÜHLWASSERPUMPE	86
		1	KÜHLWASSERPUMPE	88
LUFTANSAUG- UND ABGASSYSTEM				
GAZE (KURBELGEHÄUSEENTLÜFTER)	153-5939	1	TURBOLADER	106
LUFTFILTER (HAUPTELEMENT)	231-0167	1	LUFTREINIGER	98
LUFTFILTER (HILFSELEMENT)	231-0168	1	LUFTREINIGER	98
VENTILDECKELDICHTUNG	233-0695	1	TURBOLADER	106
MOTOR - GRUNDAUSFÜHRUNG				
ABLASSSTOPFEN (MOTORÖL)	218-2334	1	ÖLWANNE	57
		1	ÖLWANNE	61
ABLASSSTOPFEN (MOTORÖLWANNE)	218-2334	1	MOTORSTOPFEN	69
GAZE (KURBELGEHÄUSEENTLÜFTER)	153-5939	1	VENTILDECKEL	23
KAPPE (MOTORÖLFÜLLUNG)	217-7358	1	ÖLWANNE	57
		1	ÖLWANNE	61
KEILRIEMEN (WASSERPUMPE)	211-5172	1	*V-BELT GP	74
	251-6789	1	WASSERPUMPE - RIEMENSCHEIBE	72
MOTORÖLFILTERELEMENT	220-1523	1	ÖLWANNE	57
		1	ÖLWANNE	61
VENTILDECKELDICHTUNG	233-0695	1	VENTILDECKEL	23

* ÜBERSETZUNG ZUM ZEITPUNKT DER DRUCKLEGUNG NICHT VORHANDEN

WARTUNGSTEILE

BESCHREIBUNG	ERSATZTEIL-NUMMER	MENGE	VERWENDET IN	SEITE
RAHMEN UND FAHRGESTELL				
BLINKER (12 V)	242-9000	1	UMRÜSTSATZ FÜR STRASSENFAHRT	249
		1	UMRÜSTSATZ FÜR STRASSENFAHRT	252
ENTLÜFTER (TANDEMGEHÄUSE)	9G-5127	2	LADERRAHMEN	244
LEUCHTE (12 V) (KENNZEICHEN)	7M-9957	1	TYPENSCHILDBEFESTIGUNG	259
LEUCHTE (12 V, 10 W)	195-9712	1	UMBAUSATZ - FÜR STRASSENVERKEHR	233
MAGNETSTOPFEN (RAHMEN)	3S-9182	5	LADERRAHMEN	244
UNTERBRECHER (30 A)	147-1773	1	UMRÜSTSATZ FÜR STRASSENFAHRT	249
		1	UMRÜSTSATZ FÜR STRASSENFAHRT	252
ZULASSUNGSSCHILDLEUCHTE	190-8962	1	UMBAUSATZ - FÜR STRASSENVERKEHR	233
SCHMIERSYSTEM				
KAPPE (MOTORÖLFÜLLUNG)	217-7358	1	MOTORÖLEINFÜLLSTUTZEN	78
ÖLEINFÜLLKAPPE (MOTOR)	289-6120	1	MOTORÖLEINFÜLLSTUTZEN	78

* ÜBERSETZUNG ZUM ZEITPUNKT DER DRUCKLEGUNG NICHT VORHANDEN

INDEX

Name	Page
A	
ACCUMULATOR & MTG GP-HYDRAULIC	264
ACCUMULATOR GP-REFRIGERANT–WITH DESICCANT	504, 505
ACCUMULATOR GP-REFRIGERANT (WITH DESICCANT)	592
ADAPTER GP-OIL LINE	265
AIR CLEANER GP	97, 98
AIR CONDITIONER & MOUNTING GP	506
AIR CONDITIONER AR	507
AIR CONDITIONER GP	508, 510
ALTERNATOR GP-CHARGING	129, 131
ARM GP-MATERIAL HANDLING	408
ARM GP-WINDOW WIPER	568
ARM GP-WINDOW WIPER (FRONT)	570
ARMREST & MOUNTING GP	512
ARMREST GP	513
AXLE GP	189, 190, 191
B	
BATTERY GP–HEAVY DUTY	133
BATTERY GP–STANDARD	132
BATTERY (12-VOLT, MAINTENANCE FREE)	133
BATTERY (12 VOLT, STANDARD)	132
BELT-DRIVE (WARNING BEACON)	157
BLADE AR–ANGLING	409, 410
BLADE AS-WIPER (558-MM) (CAB DOOR)	570
BLADE AS-WIPER (558-MM) (FRONT, REAR)	568
BLADE GP-ANGLING	411, 412, 413
BLADE GP-MULTIPURPOSE BUCKET	414, 415, 416, 417
BOX GP-STORAGE	515
BRACKET GP-MOUNTING	641
BREATHER (AIR CONDITIONER)	519, 520
BREATHER (AIR CONDITIONER COMPRESSOR)	592, 594
BREATHER AS (INLINE) (HYDRAULIC OIL)	384
BREATHER (TANDEM HOUSING)	244
BUCKET AR-DIRT	418
BUCKET AR-GENERAL PURPOSE	419, 420
BUCKET AR-GRAPPLE	421, 422, 423, 424
BUCKET AR-GRAPPLE–INDUSTRIAL	421
BUCKET AR-LIGHT MATERIAL	425
BUCKET AR-MULTIPURPOSE	425, 426, 427, 428
BUCKET AR-UTILITY	428, 429
BUCKET AS-DIRT	430, 431, 432, 433
BUCKET AS-GENERAL PURPOSE	434, 435, 436, 437
BUCKET AS-LIGHT MATERIAL	438, 439, 440
BUCKET GP-GRAPPLE	441, 442, 443, 444
BUCKET GP-MULTIPURPOSE	445, 446, 447, 448, 449
BUCKET GP-UTILITY	450, 451, 452
BUMPER GP–REAR	227
C	
CAB AR-ENCLOSED ROPS	516
CAB GP-ENCLOSED ROPS	517
CABLE GP-CONTROL–MANUAL LOWERING	518
CABLE GP-GOVERNOR CONTROL	110
CAMSHAFT GP	20, 21
CAP AS-FILLER (FUEL)	118
CAP AS-FILLER (HYDRAULIC TANK)	385
CAP AS-RADIATOR (SEA WATER HEAT EXCHANGER)	91, 92
CAP AS (WATER TANK)	502
CAP (ENGINE OIL FILLER)	57, 61, 78

INDEX

Name	Page
CAP-OIL FILLER (ENGINE)	78
CAP-VENTED (COOLANT RECOVERY)	93
	95
CARRIAGE & FORK AR	453
CARRIAGE GP-FORK	454
	455
CHASSIS AR	1
CIRCUIT BREAKER AS (105-AMPERE)	178
	181
CIRCUIT BREAKER AS (30-AMPERE)	249
	252
CIRCUIT BREAKER AS (30-AMPERE) (LIGHTING)	160
COIL AS-SOLENOID (12-VOLT)	404
COMMON AR	1
	2
COMPRESSOR & MOTOR GP-REFRIG	519
	520
COMPRESSOR & MTG GP-REFRIG	522
COMPRESSOR GP-REFRIGERANT	519
	520
	592
	594
CONDENSER & MTG GP-REFRIGERANT	523
CONNECTION GP-ELECTRICAL	134
	135
CONNECTOR GP	292
	341
CONTROL AR-MACHINE–AUX PROPORTIONAL FLOW	2
CONTROL AR-MACHINE–ON, OFF AUXILIARY CONTROL	2
CONTROL GP-FAN	184
CONTROL GP-GOVERNOR	111
CONTROL GP-HANDLE	531
CONTROL GP-HANDLE–DIRECTION, SPEED	524
	525
CONTROL GP-HANDLE–LH	527
	529
CONTROL GP-HANDLE–RH	528
	531
CONTROL GP-HANDLE–WORK TOOL	526
	530
CONTROL GP-INTERLOCK	136
CONTROL GP-MANUAL START/STOP	137
CONTROL GP-PILOT OPERATED HYD	532
	535
	536
	538
	539
	541
	542
	544
	545
	546
	548
	551
	554
CONTROL GP-UNPROGRAMMED	140
CONTROL GP-UNPROGRAMMED (SECURITY)	141
CONVERSION AR-MACHINE–GERMANY	6
	12
	13
CONVERSION AR-MACHINE–GERMANY, HIGH FLOW	8
CONVERSION AR-MACHINE–GERMANY, ITALY	4
	9
CONVERSION AR-MACHINE–ITALY	5
CONVERSION AR-MACHINE–ITALY, HIGH FLOW	7
CONVERSION AR-MACHINE–NACD	3
CONVERSION AR-MACHINE–OUTSIDE NACD	3
	4
	5
	9
	10
CONVERSION AR-MACHINE–ROADING (ITALY)	11
CONVERSION AR-NON-ROADING–NACD	138
CONVERSION AR-ROADING–GERMANY	228
	230
	232
CONVERSION AR-ROADING–GERMANY, ITALY	231
CONVERSION AR-ROADING–GERMANY, ITALY, HIGH FLOW	234
CONVERSION AR-ROADING–ITALY	229
	230
	233
CONVERSION AR-ROADING–OUTSIDE NACD	228
	229
CONVERSION GP-ROADING–GERMANY	235
	237
CONVERSION GP-ROADING–ITALY	236
	238
CONVERSION GP-WORK TOOL–KIT, HIGH FLOW	456
COOLANT HEATER LINES	605
COUNTERWEIGHT GP	239
	240
COUNTERWEIGHT GP–KIT	241
COUPLER AR-QUICK–HYDRAULIC	457
COUPLER AR-QUICK–MANUAL	457
COUPLER GP-QUICK	458
	459

INDEX

Name	Page
COUPLING GP-DRIVE	557
	592
	594
COVER GP-CONSOLE	559
	560
COVER GP-FRONT HOUSING	22
COVER GP-FUSE PANEL	139
COVER GP-INSTRUMENT PANEL	561
COVER GP-LINES	461
COVER GP-VALVE MECHANISM	23
CRANKSHAFT GP	25
	26
	28
CYLINDER & LINK GP-COUPLER–LH	462
CYLINDER & LINK GP-COUPLER–RH	463
CYLINDER & MTG GP-ANGLE BLADE	266
	267
CYLINDER & MTG GP-BUCKET	268
CYLINDER & MTG GP-LIFT ARM	269
CYLINDER BLOCK GP	30
	32
CYLINDER GP-BUCKET	272
	273
CYLINDER GP-GRAPPLE	274
CYLINDER GP-HYDRAULIC	277
	278
	279
	280
	281
	295
CYLINDER GP-HYDRAULIC–ANGLE BLADE	276
CYLINDER GP-HYDRAULIC–COUPLER	275
CYLINDER GP-LIFT–LH	282
CYLINDER GP-LIFT–RH	283
CYLINDER GP-TILT–BUCKET EJECTOR, LH	284
CYLINDER GP-TILT–BUCKET EJECTOR, RH	285
CYLINDER HEAD AS	34
CYLINDER HEAD GP	36
	37
	39

D

DOOR & MTG GP-CAB–GLASS	565
DOOR & MTG GP-CAB–POLYCARBONATE	562
DOOR GP-CAB	572
DOOR GP-CAB–GLASS	567
	568
DOOR GP-CAB–POLYCARBONATE	570
DOOR GP-CAB (POLYCARBONATE)	562
	597
DRAIN GP-ENGINE OIL	41
DRIVE GP-TANDEM	192
DUCT & CONTROL GP	573

E

EDGE GP-BIT & CUTTING	464
EDGE GP-CUTTING	464
	465
	466
	467
	468
	469
	470
ELECTRONICS GP-IMPLEMENT–WORK TOOL	140
ELECTRONICS GP-MACHINE–SECURITY	141
ELEMENT AS-JACKET WATER HEATER (ENGINE)	145
	146
ENCLOSURE GP-ENGINE	242
ENGINE AR	14
ENGINE AR-PRIMARY	15
	16
	17

F

FAN GP-BLOWER	91
	92
FASTENER GP-WIRING HARNESS	142
FILLER GP-ENGINE OIL–ENGINE	78
FILM (FOPS)	579
FILM-FUSE/RELAY	139
FILM GP	289
	290
	291
	647
FILM GP–CLEARANCE	642
FILM GP–KIT	643
FILM GP–UN	645
FILM (HIGH FLOW)	289
	290
	293
FILM-IDENTIFICATION (IGNITION SWITCH)	147
	148
FILM-IDENTIFICATION (POWER RECEPTACLE, 12-VOLT)	667
	670
FILM-IDENTIFICATION (POWER RECEPTACLE, 12-VOLT)	661
FILM-IDENTIFICATION (POWER RECEPTACLE, 12-VOLT)	654
FILM-IDENTIFICATION (POWER RECEPTACLE, 12-VOLT)	651
FILM-IDENTIFICATION (POWER RECEPTACLE, 12-VOLT)	664
FILM-IDENTIFICATION (13-KM/H)	6
	12

INDEX

Name	Page
	13
	228
FILM-IDENTIFICATION (13-KM/H)	8
	232
FILM-INFORMATION (TIE-DOWN LOCATION)	643
FILM-INFORMATION (TIE-DOWN LOCATION)	408
FILM-INSTRUCTION (ALTERNATE EXIT)	572
	634
FILM-INSTRUCTION (DASH)	578
FILM-INSTRUCTION (INSTRUMENT PANEL)	577
FILM-INSTRUCTION (MACHINE CONTROL, READ OMM)	538
FILM-INSTRUCTION (MACHINE CONTROL, READ OMM)	536
	542
	544
	546
	548
FILM-INSTRUCTION (MACHINE CONTROL, READ OMM)	545
FILM-INSTRUCTION (MACHINE CONTROLS)	532
	535
	539
	541
	551
	554
FILM-INSTRUCTION (MACHINE CONTROLS)	294
FILM-INSTRUCTION (MACHINE SECURITY, INTL)	147
	148
FILM-INSTRUCTION (NO STEP)	295
	386
	389
FILM-INSTRUCTION (NO STEP)	657
FILM (REFLECTIVE)	493
	494
FILM-STRIPE (REFLECTIVE, RED, WHITE)	493
	494
FILM (TEMPERATURE CONTROL)	508
	510
	585
	587
FILM-WARNING (CLEARANCE)	248
	642
FILM-WARNING (CRUSH HAZARD)	445
	446
	447
	449
FILM-WARNING (CRUSH HAZARD, STAY BACK)	657
FILM-WARNING (CRUSH HAZARD, STAY BACK, U.S.)	657
FILM-WARNING (HIGH PRESSURE, READ MANUAL)	651
	667
	670
FILM-WARNING (HIGH PRESSURE, READ OMM, U.S.)	654
	661
	664
FILM-WARNING (IMPALED POINT)	473
	474
	478
	482
FILM-WARNING (JUMP START, READ OMM, U.S.)	664
FILM-WARNING (NO ACCESS)	651
	667
FILM-WARNING (NO CLEARANCE, STAY BACK)	411
	412
FILM-WARNING (STEERING)	232
	237
FILM-WARNING (UNIVERSAL, READ OMM, U.S.)	664
FILTER & LINES GP-HYDRAULIC	193
FILTER AS-OIL (ADVANCED EFFICIENCY) (HYDRAULIC)	195
FILTER ELEMENT AS-AIR (PRIMARY)	98
FILTER ELEMENT AS-AIR (SECONDARY)	98
FILTER ELEMENT AS-ENGINE OIL	57
	61
	196
FILTER ELEMENT-CAB AIR	508
	510
	585
	587
FILTER ELEMENT-CAB AIR (AIR)	510
FILTER ELEMENT-CAB AIR (AIR)	587
FILTER ELEMENT-FUEL (WATER SEPARATOR)	112
FILTER GP-OIL	197
FILTER GP-OIL–ENGINE	196
FILTER GP-OIL–HYDRAULIC	195
FILTER GP-WATER SEP & FUEL	112
FITTING GP	292
	339
	341
	347
FITTING GP-HYDRAULIC	286
	339
FITTING GP-HYDRAULIC–QUICK DISCONNECT, FEMALE, HIGH FLOW	288
FITTING GP-HYDRAULIC–QUICK DISCONNECT, MALE, HIGH FLOW	287
FLASHER AS (12-VOLT)	160
	249
	252
FLOOR MAT	1
	2

INDEX

Name	Page
	3
	4
	5
	6
	7
	8
	228
	229
	230
	231
FLYWHEEL GP	42
	43
FORK AR-GRAPPLE–INDUSTRIAL	470
FORK AR-GRAPPLE–UTILITY	471
FORK GP-GRAPPLE	472
	474
FORK GP-GRAPPLE–INDUSTRIAL	473
FORK GP-PALLET	475
FORK GP-PALLET–KIT	475
	476
FORK GP-UTILITY	477
	478
FRAME GP-BLADE	479
FRAME GP-FORK–INDUSTRIAL	480
	481
FRAME GP-GRAPPLE–INDUSTRIAL	482
FRAME GP-LOADER	244
FRAME GP-MACHINE	246
FRAME GP-WINDOW–LH	576
FRAME GP-WINDOW–RH	575
FUSE (10-AMPERE)	149
	150
	172
	174
	187
	295
	457
FUSE (10-AMPERE)	548
FUSE (15-AMPERE)	149
	173
	174
	187
FUSE (20-AMPERE)	174
FUSE (30-AMPERE)	173
	174
	593
	595

G

GASKET-COVER	86
GASKET-COVER (TEMPERATURE REGULATOR)	83
GAUGE & WARNING GP–LH	577
GAUGE & WARNING GP–RH	578
GAUGE GP-FUEL LEVEL	578
GAUGE-SIGHT (COOLANT LEVEL)	92
GAUGE-SIGHT (HYDRAULIC TANK)	385
GAUGE-SIGHT (RADIATOR)	91
GAUZE (CRANKCASE BREATHER)	106
GAUZE (CRANKCASE BREATHER)	23
GEAR GP-IDLER	80
GLOW PLUG	143
	144
GLOW PLUG GP	143
	144
GOVERNOR GP	113
	116
GRAPPLE GP-UTILITY	483
	484
	485
GUARD GP-BELT	44
GUARD GP-ROPS/FOPS	579
GUIDE GP-LINES	247

H

HANDHOLD GP	580
HANDLE & PIN GP-COUPLER–LH	486
HANDLE & PIN GP-COUPLER–RH	487
HANDLE GP	518
HANDLE GP-COUPLER–LH	488
HANDLE GP-COUPLER–RH	489
HANDLE GP-MODULAR	527
	528
	529
	581
	582
HARNESS AS-CHASSIS (HORN)	183
HARNESS AS-CHASSIS (TRANSMISSION)	593
	595
HARNESS AS-CONTROL (SECURITY)	148
HARNESS AS-CONTROL (SECURITY)	147
HARNESS AS-ENGINE	178
	181
HARNESS AS-FRONT LIGHTING	160
	249
	252
HARNESS AS-FUEL TANK	173
	593
	595
HARNESS AS-HEATER & AIR COND	173
	585
	587
	593
	595
HARNESS AS-OPERATOR CONTROLS (HIGH FLOW)	292
	554

INDEX

Name	Page
HARNESS AS-OPERATOR CONTROLS (JOYSTICK)	535
	538
	541
	551
HARNESS AS-OPERATOR CONTROLS (JOYSTICK)	292
	554
HARNESS AS-PLATFORM	175
HARNESS AS-PLATFORM (LOWER)	174
HARNESS AS-REAR LIGHTING	160
	174
	233
	249
	252
	261
HARNESS AS-REAR LIGHTING (BRAKE)	186
	233
	249
	252
HARNESS AS-SWITCH	184
HARNESS AS-WINDOW WIPER	562
	565
	568
	570
	597
	598
HARNESS AS-WIRING (GLOW PLUG)	181
HARNESS AS-WIRING (SERVICE METER)	561
HARNESS AS-WORK TOOL	499
HARNESS AS-WORK TOOL (CONNECTING)	410
HARNESS AS-WORK TOOL (LIFT ARM)	149
HARNESS AS-WORK TOOL (LIFT ARM)	187
HARNESS AS-WORK TOOL (PLATFORM)	149
HARNESS AS-WORK TOOL (PLATFORM)	187
HEATER & MTG GP-CAB	583
HEATER AR-CAB	584
HEATER GP-CAB	585
	587
HEATER GP-CAB–KIT	589
HEATER GP-JACKET WATER	145
	146
HOLDER-CUP	590
HORN AS (LOW TONE)	545
	546
HORN AS (24-VOLT, LOW TONE)	548
HOSE (LOWER)	93
	95
HOSE (UPPER)	93
	95
HOUSING AS-SIDE–A/C, HEATER	591
HOUSING GP-FLYWHEEL	45
	46
HOUSING GP-FRONT	47
	49
HOUSING GP-WATER REGULATOR	83
HYDRAULIC AR	289
	290
	291
HYDRAULIC AR–HIGH FLOW	291
HYDRAULIC AR–HIGH FLOW, SOUND SUPPRESSION	290
HYDRAULIC AR–SOUND SUPPRESSION	290

I

INSTALLATION AR-ENGINE	18
	19
INSTALLATION GP–WITHOUT HEATER OR A/C	592
INSTALLATION GP-SECURITY	147
INSTALLATION GP-SECURITY–KIT	148

K

KEY	235
KEY AS-ELECTRONIC (SECURITY)	141
KEY AS-ELECTRONIC (SECURITY)	147
KIT-AIR COND & HEATER INSTL	592
KIT-AIR COND & HEATER INSTL–A/C, HEATER	594
KIT-CAB DOOR & MOUNTING–GLASS	598
KIT-CAB DOOR & MOUNTING–POLYCARBONATE	597
KIT-CAB SEAL–DEBRIS BARRIER	599
KIT-HIGH FLOW CONVERSION–KIT	292
KIT-PILOT VALVE (SPRING)	398
KIT-QUICK COUPLER CONVERSION–HYDRAULIC	295
KIT-ROADING CONVERSION	252
KIT-ROADING CONVERSION–LIGHTS, MIRRORS	249
KIT-ROADING CONVERSION–OUTSIDE NACD	248
KIT-ROADING PLATE & MOUNTING–BUCKET	490
KIT-SEAL	398
KIT-SEAL (GEAR PUMP)	369
KIT-WORK TOOL CONTROL & WIRING–RADIAL LIFT	149
KIT-WORK TOOL WIRING–RADIAL LIFT	150

L

LAMP AS (RED, GREEN, LED, 12-VOLT)	148
LAMP GP-DOME (12-VOLT)	578
LAMP GP-FLOOD	151
LAMP GP-FLOOD–12-VOLT, VERTICAL MOUNT	152
LAMP GP-HEAD & SIGNAL	153

INDEX

Name	Page
LAMP GP-REGISTRATION PLATE	233, 259
LAMP GP-STOP & TAIL	155, 156
LAMP GP-WARNING BEACON–12-VOLT, AMBER	157
LAMP-HEAD	153
LAMP (12-VOLT)	578
LAMP (12-VOLT) (REGISTRATION PLATE)	259
LAMP (12-VOLT, 10-WATT)	233, 578
LAMP (12-VOLT, 21-WATT)	153, 156
LAMP (12-VOLT, 4-WATT)	153
LAMP (12-VOLT, 5-WATT)	155, 156
LAMP (12-VOLT, 55-WATT)	151, 152, 157
LEVER GP-GOVERNOR	600
LIFTING GP-ENGINE	51, 52
LIFTING GP-MACHINE	255, 256
LIGHTING GP-FLOOD–FRONT	159
LIGHTING GP-FLOOD–REAR	158
LIGHTING GP-ROADING	160
LIGHTING GP-STOP & TAIL	162
LIGHTING GP-WARNING BEACON–12-VOLT	163
LINER-CAB	602
LINER GP-CAB	601
LINES GP-AIR	99
LINES GP-AIR CONDITIONER	603
LINES GP-BUCKET	300, 302, 304, 306, 308, 310
LINES GP-BUCKET–INDUSTRIAL	298
LINES GP-CONNECTING	311, 313
LINES GP-FUEL PRM & FILTER	118
LINES GP-GRAPPLE	315, 317, 319
LINES GP-HEATER	605
LINES GP-HYDRAULIC FAN	321, 323
LINES GP-HYDRAULIC OIL COOLER	325
LINES GP-HYDROSTATIC	199
LINES GP-LIFT CYLINDER	327, 329
LINES GP-LOWERING CONTROL–MANUAL	331, 333
LINES GP-PILOT–DIRECTION, SPEED	335
LINES GP-PILOT–WORK TOOL	337
LINES GP-PUMP	339
LINES GP-PUMP–HIGH FLOW	341
LINES GP-TILT CYLINDER	343, 345
LINES GP-WORK TOOL	347, 350
LINK GP-COUPLER	491
LITERATURE GP	606
LOCK GP-CYLINDER	515
LOCK GP-QUICK COUPLER–MECHANICAL	492

M

Name	Page
MANIFOLD & LINES GP-CONTROL–PARKING BRAKE	352, 354
MANIFOLD & MTG GP-CONTROL	356, 357
MANIFOLD & MTG GP-CONTROL–ANGLING BLADE	358
MANIFOLD & SOLENOID GP-CONTROL	359
MANIFOLD & SOLENOID GP-CONTROL–PARKING BRAKE	360, 361
MANIFOLD GP-CONTROL	363
MANIFOLD GP-CONTROL–ANGLING BLADE	364
MANIFOLD GP-CONTROL–QUICK COUPLER	362
MANIFOLD GP-CONTROL (BOOSTED AUXILIARY HYD FLOW)	292, 357
MANIFOLD GP-EXHAUST	100
MANIFOLD GP-RETURN	201
METER GP-SERVICE	561
MIRROR & MTG GP-REAR VIEW	258
MIRROR & MTG GP-REAR VIEW–WITH ROADING LIGHT MOUNT	257
MIRROR GP-REAR VIEW	607
MODULE GP-WARNING INDICATOR	608, 609
MOTOR & MTG GP-HYDRAULIC FAN	365, 366, 367
MOTOR & MTG GP-HYDROSTATIC	203
MOTOR GP-GEAR	370, 371, 372, 373
MOTOR GP-GEAR–A/C COMPRESSOR	368
MOTOR GP-GEAR–HYDRAULIC FAN	369
MOTOR GP-PISTON	204
MOTOR GP-WINDOW WIPER	568, 570

INDEX

Name	Page
MOUNTING GP-CYLINDER	374, 375, 376
MOUNTING GP-ENGINE–HARDWARE	54
MOUNTING GP-ENGINE–SUPPORTS	53
MOUNTING GP-FAN	55, 56
MOUNTING GP-PUMP	206
MOUNTING GP-RAD & OIL COOLER	84
MOUNTING GP-REGISTRATION	259, 260
MOUNTING GP-ROADING LIGHTS–REAR	261
MOUNTING GP-ROPS	610
MUFFLER GP	101, 102, 103

O

OPTION AR-CAB	611, 612

P

PADLOCK GP	232, 235, 237, 641
PAN GP-OIL	57, 61, 65
PANEL AR-INSTRUMENT	612
PANEL GP-FUSE	149, 150, 174, 187
PANEL GP-INSTRUMENT	613, 615
PANEL GP-SIDE	617
PARTS GP-MISCELLANEOUS	648
PEDAL GP-GOVERNOR	619
PEDAL GP-GOVERNOR–INCLUDES LEVER	618
PISTON & ROD GP	67, 68
PLATE & FILM GP	650, 651, 654, 657, 659, 661, 664, 667, 670, 673
PLATE GP-ROADING–LH	493
PLATE GP-ROADING–RH	494
PLATE-IDENTIFICATION (ENGLISH, GERMAN, SPANISH)	237, 238
PLATE-IDENTIFICATION (MACHINE)	651, 654, 661, 667, 670
PLATE-INFORMATION (MAXIMUM WEIGHT)	235
PLATFORM GP-OPERATOR	620
PLUG-DRAIN (ENGINE OIL)	57, 61
PLUG-DRAIN (ENGINE OIL PAN)	69
PLUG GP-ENGINE	69
PLUG GP-PILOT VALVE	377
PLUG KIT-CONN	513
PLUG-MAGNETIC (FRAME)	244
POSITIONER GP-FORK	475
POWER TRAIN AR	207
PULLEY GP-CRANKSHAFT	70, 71
PULLEY GP-WATER PUMP	72, 73
PUMP & MTG GP-FUEL TRANSFER	120, 121
PUMP & MTG GP-HYDROSTATIC	208
PUMP & MTG GP-WORK TOOL	378, 379, 380, 381
PUMP GP-DIAPHRAGM	499
PUMP GP-ENGINE OIL	80
PUMP GP-FUEL INJECTION	122, 125, 126
PUMP GP-FUEL PRIMING	128
PUMP GP-FUEL PRM & PRIM FILTER–WATER SEPARATOR	128
PUMP GP-GEAR	380, 381, 383
PUMP GP-GEAR–WORK TOOL	382
PUMP GP-PISTON	209
PUMP GP-WATER	86, 88

R

RADIATOR & HYD OIL COOLER GP	91, 92
RADIATOR & OIL COOLER MTG GP	93, 95
RECOVERY GP-COOLANT	93, 95

INDEX

Name	Page
REGULATOR-WATER TEMPERATURE	86
	88
RELAY AS (SHELL)	175
RELAY AS (12-VOLT)	149
	150
	187
	233
	249
	252
	293
	508
	510
	551
	554
RELAY AS (12-VOLT) (BRAKE LIGHT)	186
RELAY AS (12-VOLT) (COLD START)	178
RELAY AS (12-VOLT) (COLD START)	181
RELAY AS (12-VOLT) (HEATER)	585
	587
RELAY AS (12-VOLT) (MAIN POWER)	174
RELAY AS (12-VOLT) (MAIN POWER)	187
RELAY AS (12-VOLT) (START)	178
RELAY AS (12-VOLT) (START)	181
RELAY AS (12-VOLT) (WORK TOOL)	187
ROTATING GP-PUMP (LH)	209
ROTATING GP-PUMP (RH)	209

S

Name	Page
SCREEN (HYDRAULIC)	337
SCREEN-SUCTION (HYDRAULIC TANK)	385
SCREEN (WATER TANK)	498
SEAL GP-CAB–DEBRIS BARRIER	622
SEAL-VALVE COVER	23
	106
SEAT BELT GP	624
	625
	626
	627
SEAT GP	629
SEAT GP–SUSPENSION	628
SEAT GP-ADJUSTABLE	630
SENSOR GP-TEMP & PRESS	164
SENSOR GP-TEMPERATURE (ENGINE COOLANT)	92
SENSOR GP-TEMPERATURE (HYDRAULIC OIL)	367
SENSOR-SPEED (ENGINE TIMING)	116
SENSOR-SPEED (FAN MOTOR)	372
SOFTWARE GP-MACHINE (SECURITY)	141
SOFTWARE GP-MACHINE (SECURITY)	147
SOLENOID (FUEL SHUTOFF)	122
	137
SOLENOID (STARTING MOTOR)	165
SPRING AS-GAS	84
	256
	579
SPRING AS-GAS (CAB)	631
SPRING AS-GAS (LOCKING)	562
	565
	597
	598
SPRING GP-BLADE	495
SPRING GP-GAS	631
STARTING MOTOR GP-ELECTRIC	165
	167
	168
STEP GP-MATERIAL HANDLING ARM	496
STOP GP-GRAPPLE	484
	485
STOP GP-GRAPPLE–UTILITY	497
STRAINER GP-WATER	498
SUN VISOR	632
	633
SUPPORT GP-STORAGE BOX	6
	8
	12
	13
	228
	230
SUPPRESSION GP-SOUND	263
SWITCH AS-KEY START	577
SWITCH AS-LIMIT (WIPER)	568
	570
SWITCH AS-PRESSURE (AIR CONDITIONER)	603
SWITCH AS-PRESSURE (HYDRAULIC OIL)	195
SWITCH AS-PRESSURE (REFRIGERANT)	593
	595
SWITCH AS-ROCKER (AIR CONDITIONER)	508
SWITCH AS-ROCKER (AIR CONDITIONER)	510
SWITCH AS-ROCKER (COLD START)	613
	615
SWITCH AS-ROCKER (ELECTRIC POWER, WORK TOOL)	149
	150
SWITCH AS-ROCKER (ELECTRIC POWER, WORK TOOL)	187
SWITCH AS-ROCKER (FRONT WORK LIGHT)	613
	615
SWITCH AS-ROCKER (HAZARD WARNING LIGHTS)	160
	249
	252
SWITCH AS-ROCKER (PARKING BRAKE)	613
	615
SWITCH AS-ROCKER (QUICK COUPLER)	295
	457
SWITCH AS-ROCKER (REAR WIPER)	568

INDEX

Name	Page
	570
SWITCH AS-ROCKER (REAR WORK LAMPS)	158
SWITCH AS-ROCKER (ROADING LIGHTS)	249
	252
SWITCH AS-ROCKER (ROADING LIGHTS)	160
SWITCH AS-ROCKER (TURN SIGNAL)	160
	249
	252
SWITCH AS-ROCKER (WARNING BEACON)	163
SWITCH AS (SEAT)	630
SWITCH AS-TEMPERATURE (HYDRAULIC OIL)	385
SWITCH GP-PRESSURE	170
SWITCH GP-PRESSURE–BRAKE LIGHT	169
SWITCH GP-PRESSURE (BACKUP ALARM)	172
SWITCH GP-ROCKER (HIGH FLOW)	292
SWITCH GP-ROCKER (HIGH FLOW)	551
	554
SWITCH GP-ROCKER (WORK TOOL POSITIONER)	290
SWITCH GP-TEMPERATURE–COOLANT	171
SWITCH-PRESSURE (ENGINE OIL)	164
	170
SWITCH-ROCKER (HEATER)	508
	510
	585
	587
SWITCH (SEAT)	629
SWITCH-TEMPERATURE (AIR CONDITIONER)	508
	510
SWITCH-TEMPERATURE (ENGINE COOLANT)	164
	171

T

TANK & MTG GP-HYDRAULIC	384
TANK & MTG GP-WATER	499
TANK GP-HYDRAULIC	385
TANK GP-WATER	502
TIRE & RIM GP	217
	218
	219
	220
TIRE & RIM GP–LH	211
	212
	213
	214
	215
	216
	217
	219
	220
	221
TIRE & RIM GP–LOW SIDE WALL	218
TIRE & RIM GP–RH	212
	213
	214
	215
	216
	217
	219
	221
TOOTH GP-UNI	503
TURBOCHARGER GP	104
	106

V

V-BELT GP–FAN DRIVE	74
V-BELT (WATER PUMP)	72
	74
VALVE & LINES GP-COUPLER	386
	389
VALVE & MTG GP-CONTROL	392
VALVE AS-SHUTOFF	595
	605
VALVE AS-SHUTOFF (WATER)	589
VALVE-BREATHER (CRANKCASE)	106
VALVE-BREATHER (CRANKCASE)	23
VALVE GP-CHECK	363
VALVE GP-CONTROL	393
VALVE GP-MANUAL	395
VALVE GP-PILOT	396
	400
	401
VALVE GP-PILOT–WORK TOOL	398
VALVE GP-PUMP CONTROL (PISTON PUMP)	209
VALVE GP-RELIEF	363
	371
	403
VALVE GP-RELIEF (CHARGE)	209
VALVE GP-RELIEF (FAN SPEED)	369
VALVE GP-RELIEF (LIFT)	393
VALVE GP-RELIEF (TILT, AUXILIARY)	393
VALVE GP-SOLENOID	367
	405
	407
VALVE GP-SOLENOID–A/C COMPRESSOR	406
VALVE GP-SOLENOID–AUXILIARY	404
VALVE GP-SOLENOID (HIGH FLOW)	363
VALVE GP-SOLENOID (HIGH FLOW BOOST)	363
VALVE GP-SOLENOID (QUICK COUPLER)	362
VALVE GP-SOLENOID (12 VDC)	594
VALVE GP-SOLENOID (12 VDC)	592
VALVE GP-SOLENOID (12 VDC)	373
VALVE MECHANISM GP	75
	76
VALVE-RELIEF (CROSSOVER)	209

INDEX

Name	Page	Name	Page
VISOR GP-CAB	632 633		

W

WARNING GP-BACKUP	172		
WHEEL & TIRE AR	222 224 225		
WHEEL & TIRE AR–HEAVY DUTY	221 222 223 224		
WHEEL & TIRE AR–HIGH FLOTATION	222		
WHEEL & TIRE AR–LOW SIDE WALL	223		
WHEEL & TIRE AR–SOLID	225		
WHEEL & TIRE GP	226		
WINDOW GP-CAB	634 635		
WINDOW GP-CAB–KIT	636		
WINDOW GP-CAB–RH,UPPER	639		
WINDOW GP-CAB–UPPER,LH	637		
WIRING GP-AIR CONDITIONER	173		
WIRING GP-CHASSIS	174		
WIRING GP-ENGINE	178 181		
WIRING GP-HORN	183		
WIRING GP-MACHINE–DEMAND FAN	184		
WIRING GP-REAR LIGHTING	186		
WIRING GP-WORK TOOL	187		

INDEX

Désignation	Page
A	
ACCOUDOIR (ASS)	513
ACCOUDOIR ET MONTAGE (ASS)	512
ACCOUPLEMENT D'ENTRAINEMENT (ASS)	557, 594
ACCOUPLEMENT D'ENTRAINEMENT (ASS)	592
ACCUMULATEUR - CLIMATISEUR (ASS)	504, 505
ACCUMULATEUR - CLIMATISEUR (ASS) (AVEC SICCATIF)	592
ACCUMULATEUR ET MONTAGE - HYDRAULIQUE (ASS)	264
ALTERNATEUR DE CHARGE (ASS)	129, 131
AMPOULE (12-V, 5-W)	155, 156
AMPOULE (12 VOLTS)	578
AMPOULE (12 VOLTS) (PLAQUE D'IMMATRICULATION)	259
AMPOULE (12V, 10W)	578
AMPOULE (12V, 10W)	233
AMPOULE (12V, 21W)	153, 156
AMPOULE (12V, 4W)	153
AMPOULE (12V, 55W)	157
AMPOULE (12V, 55W)	151, 152
ARBRE A CAMES (ASS)	20, 21
ARRÊT-PINCE (ASS)	484, 485, 497
AUTOCOLLANT (COMMANDE DE TEMPÉRATURE)	508, 510, 585, 587
AUTOCOLLANT DE FUSIBLE/ RELAIS	139
AUTOCOLLANT DE MISE EN GARDE (AUCUN ACCÈS)	667
AUTOCOLLANT DE MISE EN GARDE (AUCUN ACCÈS)	651
AUTOCOLLANT DE MISE EN GARDE (DÉGAGEMENT)	248, 642
AUTOCOLLANT DE MISE EN GARDE (DÉMARRAGE CABLE VOLANT, LIRE LE GUIDE D'UTILISATION ET D'ENTRETIEN, ÉTATS-UNIS)	664
AUTOCOLLANT DE MISE EN GARDE (DIRECTION)	237
AUTOCOLLANT DE MISE EN GARDE (DIRECTION)	232
AUTOCOLLANT DE MISE EN GARDE (HAUTE PRESSION, LIRE LE MANUEL)	667, 670
AUTOCOLLANT DE MISE EN GARDE (HAUTE PRESSION, LIRE LE MANUEL)	651
AUTOCOLLANT DE MISE EN GARDE (PAS DE DÉGAGEMENT, RESTER À L'ÉCART)	411, 412
AUTOCOLLANT DE MISE EN GARDE (POINT PERCÉ)	473, 474, 478, 482
AUTOCOLLANT DE MISE EN GARDE (PRESSION ÉLEVÉE, LIRE LE GUIDE D'UTILISATION ET D'ENTRETIEN, ÉTATS-UNIS)	654
AUTOCOLLANT DE MISE EN GARDE (PRESSION ÉLEVÉE, LIRE LE GUIDE D'UTILISATION ET D'ENTRETIEN, ÉTATS-UNIS)	661, 664
AUTOCOLLANT DE MISE EN GARDE (RISQUE D'ÉCRASEMENT)	445, 446, 447, 449
AUTOCOLLANT DE MISE EN GARDE (RISQUE D'ÉCRASEMENT, RESTER À L'ÉCART)	657
AUTOCOLLANT DE MISE EN GARDE (RISQUE D'ÉCRASEMENT, RESTER À L'ÉCART, ÉTATS-UNIS)	657
AUTOCOLLANT DE MISE EN GARDE (*UNIVERSAL, READ OMM, U.S.)	664
AUTOCOLLANT (DÉBIT ÉLEVÉ)	289, 290, 293
AUTOCOLLANT D'IDENTIFICATION (CONTACTEUR D'ALLUMAGE)	147
AUTOCOLLANT D'IDENTIFICATION (CONTACTEUR D'ALLUMAGE)	148
AUTOCOLLANT D'IDENTIFICATION (PRISE DE COURANT, 12V)	651, 654, 661, 664, 667, 670
AUTOCOLLANT D'IDENTIFICATION (13-KM/H)	6, 8, 12, 13

* TRADUCTION NON DISPONIBLE AU MOMENT DE LA PUBLICATION

INDEX

Désignation	Page
	228
	232
AUTOCOLLANT (FOPS)	579
AUTOCOLLANT-INFORMATION (EMPLACEMENT DU TIRANT)	408
	643
AUTOCOLLANT (RÉFLECTEUR)	493
	494
AVERTISSEUR DE RECUL (ASS)	172

B

BAÏONNETTE- NIVEAU DE CARBURANT (ASS)	578
BALAI D'ESSUIE-GLACE (ENS) (*558-MM) (AVANT, ARRIÈRE)	568
BALAI D'ESSUIE-GLACE (ENS) (*558-MM) (PORTE DE CABINE)	570
BANDE AUTOCOLLANTE (RÉFLECTEUR, ROUGE, BLANC)	493
	494
BATI - CHARGEUSE (ASS)	244
BÂTI DE FOURCHE (ASS)	480
	481
BÂTI DE LAME (ASS)	479
BÂTI DE MACHINE (ASS)	246
BATTERIE (ASS)	132
	133
BATTERIE (12V, SANS ENTRETIEN)	133
BATTERIE (12V, STANDARD)	132
BIELLE DE COUPLEUR (ASS)	491
BLOC-CYLINDRES (ASS)	30
	32
BOBINE DE SOLÉNOÏDE (ENS) (12 VOLTS)	404
BOUCHON À ÉVENT (RÉSERVOIR D'EXPANSION DU LIQUIDE DE REFROIDISSEMENT)	93
	95
BOUCHON AIMANTÉ (CHÂSSIS)	244
BOUCHON DE GOULOTTE DE REMPLISSAGE D'HUILE (MOTEUR)	78
BOUCHON DE GOULOTTE DE REMPLISSAGE (ENS) (CARBURANT)	118
BOUCHON DE GOULOTTE DE REMPLISSAGE (ENS) (RÉSERVOIR HYDRAULIQUE)	385
BOUCHON DE MOTEUR (ASS)	69
BOUCHON DE RADIATEUR (ENS) (ÉCHANGEUR THERMIQUE D'EAU DE MER)	91
	92
BOUCHON DE REMPLISSAGE D'HUILE MOTEUR (ASS)	78
BOUCHON DE SOUPAPE PILOTE (ASS)	377
BOUCHON DE VIDANGE (CARTER D'HUILE MOTEUR)	69
BOUCHON DE VIDANGE (HUILE MOTEUR)	57
	61
BOUGIE DE PRECHAUFFAGE	143
	144
BOUGIE DE PRÉCHAUFFAGE (ASS)	143
	144
BOULONNERIE DE FAISCEAU DE CABLES	142
BOUTON DE TEMPÉRATURE	171
BRANCHEMENT ÉLECTRIQUE (ASS)	134
	135
BRAS DE MANUTENTION (ASS)	408
BRAS D'ESSUIE-GLACE (ASS)	568
BRAS D'ESSUIE-GLACE (ASS) (AVANT)	570

C

*CAB GP-ENCLOSED ROPS	517
CABINE - REVÊTEMENT (ASS)	601
CABINE ROPS FERMÉE (VERSION)	516
CABLAGE - CLIMATISEUR (ASS)	173
CABLAGE - COMMANDE MANUELLE ELECTRIQUE	518
CÂBLAGE - OUTIL DE TRAVAIL (ASS)	187
CABLAGE DE CHASSIS (ASS)	174
CÂBLAGE DE KLAXON (ASS)	183
CABLAGE DE LA MACHINE (ASS)	184
CABLAGE DE MOTEUR (ASS)	178
	181
CABLAGE D'ECLAIRAGE ARRIERE (ASS)	186
CABLAGE MOTEUR (ENS)	178
	181
CÂBLE DE COMMANDE DU RÉGULATEUR (ASS)	110
CACHE-SOUPAPES (ASS)	23
CADENAS (ASS)	232
	235
	237
	641
CADRE DE VITRE (ASS)	575
	576
CANALISATIONS - BRANCHEMENT (ASS)	311
	313
CANALISATIONS - OUTIL DE TRAVAIL (ASS)	347
	350
CANALISATIONS A COMMANDE PILOTE (ASS)	335
	337
CANALISATIONS-COMMANDE D'ABAISSEMENT (ASS)	331
	333
CANALISATIONS D'AIR (ASS)	99

* TRADUCTION NON DISPONIBLE AU MOMENT DE LA PUBLICATION

INDEX

Désignation	Page
CANALISATIONS DE CHAUFFAGE (ASS)	605
CANALISATIONS DE CLIMATISEUR (ASS)	603
CANALISATIONS DE FILTRE ET D'AMORÇAGE DE CARBURANT (ASS)	118
CANALISATIONS DE POMPE (ASS)	339 341
CANALISATIONS DE RÉCHAUFFEUR DE LIQUIDE DE REFROIDISSEMENT	605
CANALISATIONS DE REFROIDISSEUR D'HUILE HYDR. (ASS)	325
CANALISATIONS DE VÉRIN DE LEVAGE (ASS)	327 329
CANALISATIONS DU VÉRIN D'INCLINAISON (ASS)	343 345
CANALISATIONS HYDRAULIQUES DE VENTILATEUR (ASS)	321 323
CANALISATIONS HYDROSTATIQUES (ASS)	199
CAPITONNAGE	602
CAPTEUR - TEMP. ET PRESSION (ASS)	164
CAPTEUR DE TEMPERATURE (ASS) (HUILE HYDRAULIQUE)	367
CAPTEUR DE TEMPERATURE (ASS) (LIQUIDE DE REFROIDISSEMENT DU MOTEUR)	92
CAPTEUR DE VITESSE (CALAGE DU MOTEUR)	116
CAPTEUR DE VITESSE (MOTEUR DE VENTILATEUR)	372
CARENAGE DE MOTEUR (ASS)	242
CARTER AV (ASS)	47 49
CARTER DE VOLANT (ASS)	45 46
CEINTURE DE SECURITE (ASS)	624 625 626 627
CHAPEAU (ENS) (RÉSERVOIR D'EAU)	502
CHAPEAU (GOULOTTE D'HUILE MOTEUR)	57 61 78
CHAUFFAGE DE CABINE (ASS)	585 587 589
CHAUFFAGE DE CABINE (VERSION)	584
CHAUFFAGE ET MONTAGE - CABINE (ASS)	583
CLAPET DE DECHARGE (ASS)	363 371
CLAPET DE DECHARGE (ASS)	403
CLAPET DE DECHARGE (ASS) (CHARGE)	209
CLAPET DE DECHARGE (ASS) (INCLINAISON, AUXILIAIRE)	393
CLAPET DE DECHARGE (ASS) (LEVAGE)	393
CLAPET DE DECHARGE (ASS) (VITESSE DU VENTILATEUR)	369
CLAPET DE DECHARGE (LIMITEUR SECONDAIRE)	209
CLAPET DE RETENUE (ENS)	363
CLÉ	235
CLÉ ÉLECTRONIQUE (ENS) (SÉCURITÉ)	141
CLÉ ÉLECTRONIQUE (ENS) (SÉCURITÉ)	147
CLIGNOTANT (ENS) (12 VOLTS)	160 249 252
CLIMATISEUR (ASS)	508 510
CLIMATISEUR ET MONTAGE (ASS)	506
CLIMATISEUR (VERSION)	507
COFFRE DE RANGEMENT (ASS)	515
COLLECTEUR - COMMANDE (ASS)	362
COLLECTEUR - COMMANDE (ASS)	363
COLLECTEUR - COMMANDE (ASS)	364
COLLECTEUR - COMMANDE (ASS) (*BOOSTED AUXILIARY HYD FLOW)	292
COLLECTEUR - COMMANDE (ASS) (*BOOSTED AUXILIARY HYD FLOW)	357
COLLECTEUR D'ÉCHAPPEMENT (ASS)	100
COLLECTEUR ET CANALISATIONS (ASS) - COMMANDE	352 354
COLLECTEUR ET SOLÉNOÏDE (ASS)- COMMANDE	359 360 361
COLLECTEUR-RETOUR (ASS)	201
COMMANDE DE COLLECTEUR ET MONTAGE (ASS)	356 357 358
COMMANDE DE FAISCEAU (ENS) (SÉCURITÉ)	148
COMMANDE DE FAISCEAU (ENS) (SÉCURITÉ)	147
COMMANDE DE POIGNÉE (ASS)	524 525 526 527 528 529 530 531
COMMANDE DE RÉGULATEUR (ASS)	111
COMMANDE DE VENTILATEUR (ASS)	184

* TRADUCTION NON DISPONIBLE AU MOMENT DE LA PUBLICATION

INDEX

Désignation	Page
COMMANDE D'INTERVERROUILLAGE (ASS)	136
COMMANDE ÉLECTRONIQUE D'ÉQUIPEMENT (ASS)	140
COMMANDE HYDRAULIQUE PILOTE (ASS)	532
	535
	536
	538
	539
	541
	542
	544
	545
	546
	548
	554
COMMANDE HYDRAULIQUE PILOTE (ASS)	551
COMMANDE MANUELLE DÉMARRAGE/ARRÊT (ASS)	137
COMMANDE NON PROGRAMMEE (ASS)	140
COMMANDE NON PROGRAMMEE (ASS) (SÉCURITÉ)	141
COMPRESSEUR DE REFRIGERANT (ASS)	519
	520
	592
	594
COMPRESSEUR ET MONTAGE - RÉFRIGÉRANT (ASS)	522
COMPRESSEUR ET MOTEUR DE RÉFRIGÉRATION (ASS)	519
	520
COMPTEUR D'ENTRETIEN (ASS)	561
CONDENSATEUR ET MONTAGE (RÉFRIGÉRANT)	523
CONDUIT ET COMMANDE (ASS)	573
CONNEXION (ASS)	292
	341
CONTACTEUR DE DÉMARRAGE À CLÉ (ENS)	577
CONTACTEUR (ENS) (SIÈGE)	630
CONTREPOIDS (ASS)	239
	240
	241
CÔTÉ CARTER (ENS)	591
COUPLEUR EXPRESS (ASS)	458
	459
COUPLEUR EXPRESS (VERSION)	457
COURROIE TRAPEZOIDALE (POMPE À EAU)	72
	74
COUVERCLE - PANNEAU DE FUSIBLES (ASS)	139
COUVERCLE-CANALISATIONS (ASS)	461
COUVERCLE DE CARTER AV (ASS)	22
COUVERCLE DE LA CONSOLE (ASS)	559
	560
COUVERCLE DU TABLEAU DE BORD (ASS)	561
CULASSE (ASS)	36
	37
	39
CULASSE (ENS)	34
CULBUTERIE (ASS)	75
	76

D

DÉMARREUR ÉLECTRIQUE (ASS)	165
	167
	168
DENT MONOBLOC (ASS)	503
DISJONCTEUR DE SECURITE (ENS) (ESSUIE-GLACE)	568
DISJONCTEUR DE SECURITE (ENS) (ESSUIE-GLACE)	570
DISJONCTEUR (ENS) (105A)	178
	181
DISJONCTEUR (ENS) (30A)	249
	252
DISJONCTEUR (ENS) (30A) (ÉCLAIRAGE)	160
DISTRIBUTEUR (ASS)	393
DISTRIBUTEUR DE POMPE (ASS) (POMPE À PISTONS)	209
DISTRIBUTEUR ET MONTAGE (ASS)	392

E

EAU DES CHEMISES - RECHAUFFEUR (ASS)	146
EAU DES CHEMISES - RECHAUFFEUR (ASS)	145
ÉCLAIRAGE - FEUX DE ROUTE (ASS)	160
ÉCLAIRAGE - GYROPHARE (ASS)	163
ÉCLAIRAGE - PROJECTEURS (ASS)	158
	159
ECLAIRAGE DE GODET (ASS)	298
	300
	302
	304
	306
	308
	310
ÉCLAIRAGE-FEUX DE STOP ET ARRIÈRE (ASS)	162
ÉCRAN (HYDRAULIQUE)	337
ÉCRAN (RÉSERVOIR D'EAU)	498
ÉLECTRONIQUE - MACHINE (ENS)	141
ÉLÉMENT DE FILTRE À AIR DE CABINE	508
	510

* TRADUCTION NON DISPONIBLE AU MOMENT DE LA PUBLICATION

INDEX

Désignation	Page
	585
	587
ÉLÉMENT DE FILTRE À AIR DE CABINE (AIR)	510
	587
ÉLÉMENT DE FILTRE À AIR (ENS) (PRINCIPAL)	98
ÉLÉMENT DE FILTRE À AIR (ENS) (SECONDAIRE)	98
ÉLÉMENT DE FILTRE À CARBURANT (SÉPARATEUR D'EAU)	112
ÉLÉMENT DE FILTRE (ENS)-HUILE MOTEUR	196
ÉLÉMENT DE FILTRE (ENS)-HUILE MOTEUR	57
	61
ÉLÉMENT DU RÉCHAUFFEUR D'EAU DES CHEMISES (ENS) (MOTEUR)	145
	146
EMBOUT ET LAME DE COUPE (ASS)	464
EMBRAYAGE-ROUE AV (ASS)	80
ENTRAINEMENT EN TANDEM (ASS)	192
ENTRAÎNEMENT POUR COURROIE (GYROPHARE)	157
ESSIEU (ASS)	189
	190
	191

F

FAISCEAU DE CABLES DE LA PLATE-FORME	175
FAISCEAU DE CABLES DE LA PLATE-FORME (INFÉRIEUR)	174
FAISCEAU DE CABLES (ENS) (BOUGIE DE PRÉCHAUFFAGE)	181
FAISCEAU DE CABLES (ENS) (COMPTEUR D'ENTRETIEN)	561
FAISCEAU DE CHÂSSIS (ENS) (BOITE DE VITESSE)	593
FAISCEAU DE CHÂSSIS (ENS) (BOITE DE VITESSE)	595
FAISCEAU DE CHÂSSIS (ENS) (KLAXON)	183
FAISCEAU DE CHAUFFAGE ET CLIMATISATION	173
	585
	587
	593
	595
FAISCEAU DE COMMANDES (ENS) (DÉBIT ÉLEVÉ)	292
	554
FAISCEAU DE COMMANDES (ENS) (LEVIER)	535
	538
	541
FAISCEAU DE COMMANDES (ENS) (LEVIER)	292
	551
	554
FAISCEAU DE CONTACTEUR (ENS)	184
FAISCEAU DE RÉSERVOIR DE CARBURANT (ENS)	173
	593
	595
FAISCEAU D'ÉCLAIRAGE ARRIÈRE (ENS)	160
	174
	233
	261
FAISCEAU D'ÉCLAIRAGE ARRIÈRE (ENS)	249
	252
FAISCEAU D'ÉCLAIRAGE ARRIÈRE (ENS) (FREIN)	186
	233
FAISCEAU D'ÉCLAIRAGE ARRIÈRE (ENS) (FREIN)	249
	252
FAISCEAU D'ÉCLAIRAGE AVANT (ENS)	160
	249
	252
FAISCEAU D'ESSUIE-GLACE (ENS)	562
	565
	597
	598
FAISCEAU D'ESSUIE-GLACE (ENS)	568
	570
FAISCEAU D'OUTIL DE TRAVAIL (ENS)	499
FAISCEAU D'OUTIL DE TRAVAIL (ENS) (ACCOUPLEMENT)	410
FAISCEAU D'OUTIL DE TRAVAIL (ENS) (BRAS DE LEVAGE)	149
	187
FAISCEAU D'OUTIL DE TRAVAIL (ENS) (PLATEFORME)	149
	187
FEUX ARRIÈRE ET FEUX D'ARRÊT	155
	156
FILTRE A AIR (ASS)	97
	98
FILTRE A HUILE (ASS)	195
	196
	197
FILTRE À HUILE (ENS) (EFFICACITÉ AVANCÉE) (HYDRAULIQUE)	195
FILTRE DE SÉPARATEUR D'EAU ET DE CARBURANT (ASS)	112
FILTRE ET CANALISATIONS HYRAULIQUES (ASS)	193
FLEXIBLE (INFÉRIEUR)	93
	95

* TRADUCTION NON DISPONIBLE AU MOMENT DE LA PUBLICATION

INDEX

Désignation	Page
FLEXIBLE (SUPERIEUR)	93
	95
FOURCHE - PINCE (ASS)	472
	473
	474
FOURCHE - PINCE (VERSION)	470
	471
FOURCHE PALLETTE (ASS)	475
	476
FOURCHE-RÉSEAU PUBLIC (ASS)	477
	478
FUSIBLE (10A)	149
	150
	172
	174
	187
	295
	457
	548
FUSIBLE (15A)	149
	173
	174
	187
FUSIBLE (20A)	174
FUSIBLE (30A)	173
	174
	593
FUSIBLE (30A)	595

G

GODET - MATÉRIAUX MEUBLES (VERSION)	425
GODET - PINCE (ASS)	441
	442
	443
	444
GODET - PINCE (VERSION)	421
	422
	423
	424
GODET - SALETÉ (ENS)	430
	431
	432
	433
GODET - SALETÉ (VERSION)	418
GODET NORMAL (ENS)	434
	435
	436
	437
GODET NORMAL (VERSION)	419
	420
GODET POUR MATERIAUX MEUBLES (ENS)	438
	439
	440
GODET POUR TRAVAUX DE SERVITUDE (ASS)	450
	451
	452
GODET TOUS-TRAVAUX (ASS)	445
	446
	447
	448
	449
GODET TOUS-TRAVAUX (VERSION)	425
	426
	427
	428
GRAISSEUR HYDRAULIQUE (ASS)	286
	287
	288
GRAISSEUR HYDRAULIQUE (ASS)	339
GROUPE DE MONTAGE	592
GROUPE DE MOTEUR A PISTONS	204
GROUPE DE PIECES DIVERSES	648
GROUPE DE ROTATION DE POMPE (DROITE)	209
GROUPE DE ROTATION DE POMPE (GAUCHE)	209
GROUPE DE TRANSFORMATION - DÉPLACEMENT ROUTIER	235
	236
	237
	238
GUIDE - CANALISATIONS (ASS)	247

H

*HOLDER-CUP	590
HUILE MOTEUR - CARTER (ASS)	57
HUILE MOTEUR - CARTER (ASS)	61
	65

I

INDICATEURS ET TÉMOINS LUMINEUX (ASS)	577
	578
INSONORISATION (ASS)	263
INTERRUPTEUR - CONTACTEUR (SIÈGE)	629
INTERRUPTEUR À BASCULE (ASS) (DÉBIT ÉLEVÉ)	292
INTERRUPTEUR À BASCULE (ASS) (DÉBIT ÉLEVÉ)	554
INTERRUPTEUR À BASCULE (ASS) (DÉBIT ÉLEVÉ)	551

* TRADUCTION NON DISPONIBLE AU MOMENT DE LA PUBLICATION

INDEX

Désignation	Page
INTERRUPTEUR À BASCULE (ASS) (POSITIONNEUR D'OUTIL DE TRAVAIL)	290
INTERRUPTEUR BALANCIER (ENS) (ALIMENTATION ÉLECTRIQUE, OUTIL DE TRAVAIL)	150, 187
INTERRUPTEUR BALANCIER (ENS) (ALIMENTATION ÉLECTRIQUE, OUTIL DE TRAVAIL)	149
INTERRUPTEUR BALANCIER (ENS) (CLIGNOTANT)	160, 249, 252
INTERRUPTEUR BALANCIER (ENS) (CLIMATISEUR)	510
INTERRUPTEUR BALANCIER (ENS) (CLIMATISEUR)	508
INTERRUPTEUR BALANCIER (ENS) (COUPLEUR EXPRESS)	295, 457
INTERRUPTEUR BALANCIER (ENS) (DÉMARRAGE À FROID)	613, 615
INTERRUPTEUR BALANCIER (ENS) (ESSUIE-GLACE ARRIÈRE)	568, 570
INTERRUPTEUR BALANCIER (ENS) (FEUX DE DÉPLACEMENT SUR ROUTE)	160, 249, 252
INTERRUPTEUR BALANCIER (ENS) (FEUX DE DÉTRESSE)	160, 249, 252
INTERRUPTEUR BALANCIER (ENS) (FREIN DE STATIONNEMENT)	613, 615
INTERRUPTEUR BALANCIER (ENS) (GYROPHARE)	163
INTERRUPTEUR BALANCIER (ENS) (PROJECTEUR AVANT)	613, 615
INTERRUPTEUR BALANCIER (ENS) (PROJECTEURS ARRIÈRE)	158
INTERRUPTEUR-CULBUTEUR (RÉCHAUFFEUR)	508, 510, 585, 587

J

Désignation	Page
JOINT DE CABINE (ASS)	622
JOINT DE CACHE-SOUPAPES	23, 106
JOINT DE COUVERCLE	86
JOINT DE COUVERCLE (THERMOSTAT)	83

K

Désignation	Page
KIT DE CÂBLAGE D'OUTIL DE TRAVAIL	150
KIT DE COMMANDE D'OUTIL DE TRAVAIL ET CÂBLAGE	149
KIT DE JOINT DE CABINE	599
KIT DE JOINTS	398
KIT DE JOINTS (POMPE À ENGRENAGES)	369
KIT DE MONTAGE DE CLIMATISEUR ET CHAUFFAGE	592, 594
KIT DE PLAQUE DE DÉPLACEMENT ROUTIER ET MONTAGE	490
KIT DE PORTE DE CABINE ET MONTAGE	597, 598
KIT DE PRISE DE CONNEXION	513
KIT DE SOUPAPE PILOTE (RESSORT)	398
KIT DE TRANSFORMATION DE DÉBIT ÉLEVÉ	292
KIT DE TRANSFORMATION DU COUPLEUR EXPRESS	295
KIT DE TRANSFORMATION POUR DÉPLACEMENTS SUR ROUTE	248, 249, 252
KLAXON (ENS) (BAS)	545, 546
KLAXON (ENS) (24V, FAIBLE)	548

L

Désignation	Page
LAME À ORIENTATION (ASS)	411, 412, 413
LAME DE COUPE (ASS)	464, 465, 466, 467, 468, 469, 470
LAME DE GODET TOUS-TRAVAUX	414, 415, 416, 417
LAME (VERSION)	409, 410
LAMPE - FEUX AV	153

* TRADUCTION NON DISPONIBLE AU MOMENT DE LA PUBLICATION

INDEX

Désignation	Page
LAMPE - GYROPHARE (ASS)	157
LAMPE - PHARE (ASS)	151
	152
LAMPE - PHARE ET CLIGNOTANT	153
LAMPE (ENS) (ROUGE, VERT, TÉMOIN LUMINEUX, 12V)	148
LAMPE-PLAQUE D'IMMATRICULATION (ASS)	233
	259
LEVIER DE RÉGULATEUR (ASS)	600
LITTÉRATURE (ASS)	606
LOGEMENT DE RÉGULATEUR D'EAU (ASS)	83
LOGICIEL - MACHINE (ENS) (SÉCURITÉ)	141
	147

M

MACHINE DE LEVAGE	255
	256
MANOCONTACT	169
	170
MANOCONTACT (AVERTISSEUR DE RECUL)	172
MANOCONTACT (ENS) (CLIMATISEUR)	603
MANOCONTACT (ENS) (HUILE HYDRAULIQUE)	195
MANOCONTACT (ENS) (RÉFRIGÉRANT)	593
	595
MANOCONTACT (HUILE MOTEUR)	164
	170
MARCHEPIED-BRAS DE MANUTENTION (ASS)	496
MODULE - TÉMOIN (ASS)	608
	609
MONTAGE - IMMATRICULATION (ASS)	259
MONTAGE - IMMATRICULATION (ASS)	260
MONTAGE DE FEUX DE DÉPLACEMENT SUR ROUTE (ASS)	261
MONTAGE DE MOTEUR (ASS)	53
	54
MONTAGE DE MOTEUR (VERSION)	18
	19
MONTAGE DE POMPE (ASS)	206
MONTAGE DE RADIATEUR ET REFROIDISSEUR D'HUILE (ASS)	84
MONTAGE DE VENTILATEUR (ASS)	55
	56
MONTAGE DE VÉRIN (ASS)	374
	375
	376
MONTAGE DU TOIT ROPS (ASS)	610
MONTAGE-SÉCURITÉ (ASS)	147
	148
MOTEUR À ENGRENAGES (ASS)	368
	369
	370
	371
	372
	373
MOTEUR D'ESSUIE-GLACE (ASS)	568
	570
MOTEUR ET MONTAGE - HYDROSTATIQUE (ASS)	203
MOTEUR ET MONTAGE DE VENTILATEUR HYDRAULIQUE (ASS)	365
	366
	367
MOTEUR (VERSION)	14
MOTEUR (VERSION PRINCIPALE)	15
	16
	17

O

OEILLETONS DE LEVAGE MOTEUR (ASS)	51
	52

P

PANNEAU - FUSIBLES (ASS)	149
	150
	174
PANNEAU - FUSIBLES (ASS)	187
PANNEAU LATERAL (ASS)	617
PARE-CHOCS (ASS)	227
PARE-SOLEIL	632
	633
PINCE - BÂTI (ASS)	482
PINCE - CANALISATIONS (ASS)	315
	317
	319
PINCE - VÉRIN (ASS)	274
PINCE-RÉSEAU PUBLIC (ASS)	483
	484
	485
PISTON ET BIELLE (ASS)	67
	68
PLAFONNIER (ASS) (12 VOLTS)	578
PLAQUE-DÉPLACEMENT ROUTIER (ASS)	494
PLAQUE-DÉPLACEMENT ROUTIER (ASS)	493
PLAQUE (IDENTIFICATION) (*ENGLISH, GERMAN, SPANISH)	237
	238
PLAQUE (IDENTIFICATION) (MACHINE)	651
	654
	661
	667

* TRADUCTION NON DISPONIBLE AU MOMENT DE LA PUBLICATION

INDEX

Désignation	Page
	670
PLAQUE SIGNALÉTIQUE (ASS)	289
	290
	291
	642
	643
	645
	647
PLAQUE SIGNALÉTIQUE (POIDS MAXIMUM)	235
PLAQUES SIGNALETIQUES ET AUTOCOLLANTS (ASS)	650
	651
	654
	657
	659
	661
	664
	667
	670
	673
PLATE-FORME DE CABINE	620
PNEU ET JANTE (ASS)	211
	212
	213
	214
	215
	216
	217
	218
	219
	220
	221
POIGNÉE	580
POIGNÉE (ASS)	518
POIGNÉE DE COUPLEUR (ASS)	488
	489
POIGNÉE ET AXE DE COUPLEUR (ASS)	486
	487
POIGNÉE MODULAIRE (ASS)	527
	528
	529
	581
	582
POMPE - DIAPHRAGME (ASS)	499
POMPE A EAU (ASS)	86
	88
POMPE A ENGRENAGES (ASS)	380
	381
	382
	383
POMPE A HUILE MOTEUR (ASS)	80
POMPE A PISTONS (ASS)	209
POMPE D'ALIMENTATION ET MONTAGE (ASS)	120
	121
POMPE D'AMORÇAGE DE CARBURANT (ASS)	128
POMPE D'AMORÇAGE DE CARBURANT ET FILTRE PRINCIPAL	128
POMPE D'INJECTION DE CARBURANT (ASS)	122
	125
	126
POMPE ET MONTAGE - OUTIL DE TRAVAIL (ASS)	378
	379
	380
	381
POMPE HYDROSTATIQUE ET MONTAGE (ASS)	208
PORTE DE CABINE ET MONTAGE (ASS)	562
	565
PORTIÈRE DE CABINE (ASS)	570
	572
PORTIÈRE DE CABINE (ASS)	567
	568
PORTIÈRE DE CABINE (ASS) (POLYCARBONATE)	562
	597
POSITIONNEUR DE FOURCHE (ASS)	475
POULIE DE POMPE À EAU (ASS)	72
	73
PROTECTION DE ROPS/FOPS (ASS)	579
PROTEGE-COURROIE (ASS)	44

R

RACCORD (ASS)	292
	339
	341
	347
RACCORD DE CANALISATION D'HUILE (ASS)	265
RADIATEUR ET REFROIDISSEUR D'HUILE HYDRAULIQUE (ASS)	91
RADIATEUR ET REFROIDISSEUR D'HUILE HYDRAULIQUE (ASS)	92
RADIATEUR ET REFROIDISSEUR D'HUILE-MONTAGE (ASS)	93
RADIATEUR ET REFROIDISSEUR D'HUILE-MONTAGE (ASS)	95
REGARD DE NIVEAU (NIVEAU DE LIQUIDE DE REFROIDISSEMENT)	92
REGARD DE NIVEAU (RADIATEUR)	91

* TRADUCTION NON DISPONIBLE AU MOMENT DE LA PUBLICATION

INDEX

Désignation	Page
REGARD DE NIVEAU (RÉSERVOIR HYDRAULIQUE)	385
RÉGULATEUR - PÉDALE (ASS)	618, 619
REGULATEUR (ASS)	113, 116
RELAIS (ENS) (COQUILLE)	175
RELAIS (ENS) (12 VOLTS)	149, 233, 293, 508, 510, 551, 554
RELAIS (ENS) (12 VOLTS)	249, 252
RELAIS (ENS) (12 VOLTS)	149, 150, 187
RELAIS (ENS) (12 VOLTS) (DÉMARRAGE)	178
RELAIS (ENS) (12 VOLTS) (DÉMARRAGE)	181
RELAIS (ENS) (12 VOLTS) (DÉMARRAGE À FROID)	178
RELAIS (ENS) (12 VOLTS) (DÉMARRAGE À FROID)	181
RELAIS (ENS) (12 VOLTS) (ÉCLAIRAGE DE FREIN)	186
RELAIS (ENS) (12 VOLTS) (OUTIL DE TRAVAIL)	187
RELAIS (ENS) (12 VOLTS) (PUISSANCE PRINCIPALE)	174
RELAIS (ENS) (12 VOLTS) (PUISSANCE PRINCIPALE)	187
RELAIS (ENS) (12 VOLTS) (RÉCHAUFFEUR)	585, 587
RENIFLARD (CARTER DE TANDEM)	244
RENIFLARD (CLIMATISEUR)	519, 520
RENIFLARD (COMPRESSEUR DE CLIMATISEUR)	592, 594
RENIFLARD (ENS) (*INLINE) (HUILE HYDRAULIQUE)	384
RÉSERVOIR D'EAU (ASS)	502
RÉSERVOIR D'EAU ET MONTAGE (ASS)	499
RÉSERVOIR HYDRAULIQUE (ASS)	385
RÉSERVOIR HYDRAULIQUE ET MONTAGE (ASS)	384
RESSORT DE LAME (ASS)	495
RESSORT-GAZ (ASS)	631
RETROVISEUR - CABINE (ASS)	632, 633
RÉTROVISEUR (ASS)	607
RÉTROVISEUR ET MONTAGE (ASS)	257, 258
ROTATION DE LA ROUE DU VENTILATEUR SOUFFLANT (COMMANDE DE MACHINE, LIRE LE GUIDE D'UTILISATION ET D'ENTRETIEN)	536, 538, 542, 544, 545, 546, 548
ROTATION DE LA ROUE DU VENTILATEUR SOUFFLANT (COMMANDES DE MACHINE)	294, 539, 541, 551, 554
ROTATION DE LA ROUE DU VENTILATEUR SOUFFLANT (COMMANDES DE MACHINE)	532, 535
ROTATION DE LA ROUE DU VENTILATEUR SOUFFLANT (ISSUE DE SECOURS)	634
ROTATION DE LA ROUE DU VENTILATEUR SOUFFLANT (ISSUE DE SECOURS)	572
ROTATION DE LA ROUE DU VENTILATEUR SOUFFLANT (*MACHINE SECURITY, INTL)	147, 148
ROTATION DE LA ROUE DU VENTILATEUR SOUFFLANT (N. D'ÉTAPE)	295, 386, 389, 657
ROTATION DE LA ROUE DU VENTILATEUR SOUFFLANT (TABLEAU DE BORD)	577, 578
ROUE ET PNEU (ASS)	226
ROUE ET PNEU (VERSION)	221, 222, 223, 224, 225

S

Désignation	Page
SIÈGE (ASS)	628, 629
SIÈGE RÉGLABLE (ASS)	630
SILENCIEUX (ASS)	101, 102

* TRADUCTION NON DISPONIBLE AU MOMENT DE LA PUBLICATION

INDEX

Désignation	Page
	103
SOLÉNOÏDE (ARRÊT DE CARBURANT)	122
	137
SOLÉNOÏDE (DÉMARREUR)	165
SOUPAPE - RENIFLARD (VILEBREQUIN)	23
	106
SOUPAPE - SOLÉNOÏDE (ASS)	367
	404
	405
	406
	407
SOUPAPE - SOLÉNOÏDE (ASS) (COUPLEUR EXPRESS)	362
SOUPAPE - SOLÉNOÏDE (ASS) (DÉBIT ÉLEVÉ)	363
SOUPAPE - SOLÉNOÏDE (ASS) (SURALIMENTATION DE DÉBIT)	363
SOUPAPE - SOLÉNOÏDE (ASS) (12 VCC)	373
	594
SOUPAPE - SOLÉNOÏDE (ASS) (12 VCC)	592
SOUPAPE A COMMANDE MANUELLE (ASS)	395
SOUPAPE D'ARRET	595
	605
SOUPAPE D'ARRET (EAU)	589
SOUPAPE ET CANALISATIONS DE COUPLEUR (ASS)	389
SOUPAPE ET CANALISATIONS DE COUPLEUR (ASS)	386
SOUPAPE PILOTE (ASS)	396
	398
	400
	401
SUPPORT - MONTAGE (ASS)	641
SUPPORT DE BOÎTE DE RANGEMENT (ASS)	6
	8
	12
	13
	228
	230

T

Désignation	Page
TABLEAU DE BORD (ASS)	613
	615
TABLIER - FOURCHE (ASS)	454
	455
TAMIS D'ASPIRATION (RÉSERVOIR HYDRAULIQUE)	385
TAMIS D'EAU (ASS)	498
TAPIS DE PLANCHER	1
	2
	3
	4
	5
	6
	7
	8
	228
	229
	230
	231
THERMOCONTACT (CLIMATISEUR)	508
	510
THERMOCONTACT (ENS) (HUILE HYDRAULIQUE)	385
THERMOCONTACT (LIQUIDE DE REFROIDISSEMENT DU MOTEUR)	164
	171
THERMOSTAT-TEMPÉRATURE D'EAU	86
	88
TOILE (RENIFLARD DE CARTER MOTEUR)	23
	106
TRANSFORMATION D'OUTIL DE TRAVAIL (ASS)	456
TRANSMISSION (VERSION)	207
TURBOCOMPRESSEUR (ASS)	104
	106

V

Désignation	Page
*V-BELT GP	74
VASE D'EXPANSION POUR LIQUIDE RÉFRIGERANT	93
	95
VENTILATEUR SOUFFLANT (ASS)	92
VENTILATEUR SOUFFLANT (ASS)	91
VÉRIN DE BRAS DE LEVAGE ET MONTAGE (ASS)	269
VERIN DE GODET (ASS)	272
	273
VÉRIN DE LAME D'ORIENTATION ET MONTAGE (ASS)	266
	267
VÉRIN DE LEVAGE (ASS)	282
	283
VÉRIN D'INCLINAISON (ASS)	284
	285
VÉRIN ET BIELLE DE COUPLEUR (ASS)	462
	463
VÉRIN ET MONTAGE - GODET (ASS)	268
VERIN-GAZ (ENS)	84
	256
	579
VERIN-GAZ (ENS) (CABINE)	631
VERIN-GAZ (ENS) (VERROUILLAGE)	562
	565

* TRADUCTION NON DISPONIBLE AU MOMENT DE LA PUBLICATION

INDEX

Désignation	Page
	597
	598
VÉRIN HYDRAULIQUE (ASS)	295
VÉRIN HYDRAULIQUE (ASS)	275
	276
	277
	278
	279
	280
	281
VERROUILLAGE DE COUPLEUR EXPRESS (ASS)	492
VERROUILLAGE DE VÉRIN (ASS)	515
VERSION DE CHASSIS	1
VERSION DE COMMANDE DE MACHINE	2
VERSION DE GODET POUR TRAVAUX DE SERVITUDE	428
	429
VERSION DE TABLEAU DE BORD	612
VERSION DE TABLIER ET DE FOURCHE	453
VERSION DE TRANSFORMATION - DÉPLACEMENT NON ROUTIER	138
VERSION DE TRANSFORMATION MACHINE	3
	4
	5
	6
	7
	8
	9
	10
	11
	12
	13
VERSION DE TRANSFORMATION POUR DÉPLACEMENT ROUTIER	228
	229
	230
	231
	232
	233
	234
VERSION D'OPTION DE CABINE	611
	612
VERSION HYDRAULIQUE	289
	290
	291
VERSION NORMALE	1
	2
VIDANGE-HUILE DE MOTEUR (ASS)	41
VILEBREQUIN - POULIE (ASS)	70
	71
VILEBREQUIN (ASS)	25
	26
	28
VITRE DE CABINE (ASS)	634
	635
	636
	637
	639
VOLANT MOTEUR (ASS)	42
	43

* TRADUCTION NON DISPONIBLE AU MOMENT DE LA PUBLICATION

INDICE

Nombre	Página

A

ACONDICIONADOR DE AIRE (CONFIG) 507
ACONDICIONADOR DE AIRE (GR) 508
510
ACONDICIONADOR DE AIRE Y MONTAJE (GR) 506
ACOPLADOR DE MANIJA 488
489
ACOPLADOR RÁPIDO (CONFIG) 457
ACOPLADOR RÁPIDO (GR) 458
459
ACUMULADOR DEL ACONDICIONADOR DE AIRE (GR) 504
505
ACUMULADOR DEL ACONDICIONADOR DE AIRE (GR) (CON DESECANTE) 592
ACUMULADOR HIDRAULICO Y MONTAJE (GR) 264
AGUA DE LAS CAMISAS - CALENTADOR DEL (GR) 145
146
AGUILÓN TELESCÓPICO (GR) 408
AIRE - TUBERÍAS DE (GR) 99
ALAMBRADO DE LUCES TRASERAS (GR) 186
ALFOMBRILLA DEL PISO 1
2
3
4
5
6
7
8
228
229
230
231
ÁRBOL DE LEVAS (GR) 20
21
ARO Y LLANTA (GR) 211
212
213
214
215
216
217
218
219
220
221
ASIENTO AJUSTABLE (GR) 630
ASIENTO (GR) 628
629

Nombre	Página

B

BASTIDOR DE GARFIO (GR) 482
BASTIDOR DE HOJA (GR) 479
BASTIDOR DE LA VENTANA (GR) 575
576
BASTIDOR DEL CARGADOR (GR) 244
BATERÍA (GR) 132
133
BATERÍA (12 VOLTIOS, ESTANDAR) 132
BATERÍA (12-VOLTIOS, LIBRE DE MANTENIMIENTO) 133
BLOQUE MOTOR (GR) 30
32
BOCINA (CONJ) (TONO BAJO) 545
546
BOCINA (CONJ) (24-VOLTIOS, TONO BAJO) . . . 548
BOMBA - TUBERÍAS DE (GR) 339
341
BOMBA DE ACEITE DEL MOTOR (GR) 80
BOMBA DE AGUA (GR) 86
88
BOMBA DE CEBADO DE COMBUSTIBLE (GR) 128
BOMBA DE CEBADO Y FILTRO PRIMARIO DE COMBUSTIBLE (GR) 128
BOMBA DE ENGRANAJES (GR) 380
381
382
383
BOMBA DE INYECCIÓN DE COMBUSTIBLE (GR) 122
125
126
BOMBA DE PISTONES (GR) 209
BOMBA DE TRANSFERENCIA DE COMBUSTIBLE Y MONTAJE (GR) 120
121
BOMBA DEL DIAFRAGMA (GR) 499
BOMBA Y MONTAJE DE LA HERRAMIENTA DE TRABAJO (GR) 378
379
380
381
BRAZO DE LIMPIAPARABRISAS (GR) 568
BRAZO DE LIMPIAPARABRISAS (GR) (DELANTERO) 570
BUJÍA INCANDESCENTE 143
144
BUJÍA INCANDESCENTE (GR) 143
144

* NO HAY TRADUCCION DISPONIBLE EN EL MOMENTO DE LA IMPRESION

INDICE

Nombre	Página

C

CABINA INCLUYE ROPS (GR)	517
CABLE DE CONTROL (GR)	518
CABLE GR-BOCINA	183
CABLE GR-CONTROL DE MANDO	110
CABLES CONJ. - TANQUE DE COMBUSTIBLE	173 593 595
CABLES CONJ. -LIMPIADOR DE VENTANAS	562 565 568 570 597 598
CABLES DE LA HERRAMIENTA DE TRABAJO (GR)	187
CABLES DE LA MÁQUINA (GR)	184
CABLES DEL ACONDICIONADOR DE AIRE (GR)	173
CABLES DEL CHASIS (GR)	174
CABLES DEL MOTOR (GR)	178 181
CAJA DE ALMACENAMIENTO	515
CAJA DELANTERA (GR)	47 49
CALCOMANÍA (CONTROL DE TEMPERATURA)	508 510 585 587
CALCOMANÍA DE ADVERTENCIA (CONTROLES DE LA MAQUINA)	294 532 535 539 541 551 554
CALCOMANÍA DE ADVERTENCIA (*CRUSH HAZARD, STAY BACK, U.S.)	657
CALCOMANÍA DE ADVERTENCIA (DIRECCIÓN)	232 237
CALCOMANÍA DE ADVERTENCIA (ESPACIO)	248 642
CALCOMANÍA DE ADVERTENCIA (*HIGH PRESSURE, READ MANUAL)	651 667 670
CALCOMANÍA DE ADVERTENCIA (*JUMP START, READ OMM, U.S.)	664
CALCOMANÍA DE ADVERTENCIA (*MACHINE CONTROL, READ OMM)	536 538 542 544 546 548
CALCOMANÍA DE ADVERTENCIA (*MACHINE CONTROL, READ OMM)	545
CALCOMANÍA DE ADVERTENCIA (*MACHINE SECURITY, INTL)	147 148
CALCOMANÍA DE ADVERTENCIA (*NO ACCESS)	651 667
CALCOMANÍA DE ADVERTENCIA (NO ESPACIO LIBRE, MANTENGASE DETRAS DE ESTE LUGAR)	411 412
CALCOMANÍA DE ADVERTENCIA (NO PISAR)	295 386 389 657
CALCOMANÍA DE ADVERTENCIA (PELIGRO DE APLASTAMIENTO)	445 446 447 449
CALCOMANÍA DE ADVERTENCIA (PELIGRO DE APLASTAMIENTO, MANTENGASE DETRAS DE ESTE LUGAR)	657
CALCOMANÍA DE ADVERTENCIA (PELIGRO DE EMPALAMIENTO)	473 474 482
CALCOMANÍA DE ADVERTENCIA (PELIGRO DE EMPALAMIENTO)	478
CALCOMANÍA DE ADVERTENCIA (PRESIÓN ALTA, LEER OMM, EE.UU.)	654 661 664
CALCOMANÍA DE ADVERTENCIA (SALIDA ALTERNATIVA)	634
CALCOMANÍA DE ADVERTENCIA (SALIDA ALTERNATIVA)	572
CALCOMANÍA DE ADVERTENCIA (TABLERO)	578
CALCOMANÍA DE ADVERTENCIA (TABLERO DE INSTRUMENTOS)	577
CALCOMANÍA DE ADVERTENCIA (*UNIVERSAL, READ OMM, U.S.)	664

* NO HAY TRADUCCION DISPONIBLE EN EL MOMENTO DE LA IMPRESION

INDICE

Nombre	Página
CALCOMANÍA DE IDENTIFICACIÓN (INTERRUPTOR DE ENCENDIDO)	147, 148
CALCOMANÍA DE IDENTIFICACIÓN (*POWER RECEPTACLE, 12-VOLT)	651, 654, 661, 664
CALCOMANÍA DE IDENTIFICACIÓN (*POWER RECEPTACLE, 12-VOLT)	667, 670
CALCOMANÍA DE IDENTIFICACIÓN (*13-KM/H)	6, 8, 12, 13, 228, 232
CALCOMANÍA DE RAYAS (*REFLECTIVE, RED, WHITE)	493, 494
CALCOMANÍA (FLUJO ALTO)	293
CALCOMANÍA (FLUJO ALTO)	289, 290
CALCOMANÍA (*FOPS)	579
CALCOMANIA-FUSIBLE/RELÉ	139
CALCOMANÍA (*REFLECTIVE)	493, 494
CALCOMANÍAS Y PLACAS DE IDENTIFICACIÓN (GR)	650, 651, 654, 657, 659, 661, 667, 670, 673
CALCOMANÍAS Y PLACAS DE IDENTIFICACIÓN (GR)	664
CALEFACCIÓN DE LA CABINA (CONFIG)	584
CALEFACCIÓN DE LA CABINA (GR)	585
CALEFACCIÓN DE LA CABINA (GR)	587, 589
CALEFACCIÓN Y MONTAJE DE LA CABINA (GR)	583
CÁNCAMOS DE LEVANTAMIENTO DEL MOTOR (GR)	51, 52
CANDADO (GR)	232, 235, 237, 641
CARGA - ALTERNADOR DE (GR)	129, 131
CARGADOR Y HORQUILLA (CONF)	453
CÁRTER - COLECTOR DEL (GR)	61, 65
CÁRTER - COLECTOR DEL (GR)	57
CHASIS (CONFIG)	1
CIGÜEÑAL - POLEA DE (GR)	70, 71
CIGÜEÑAL (GR)	25, 26, 28
CILINDRO DE CUCHARÓN (GR)	272, 273
CILINDRO DE GARFIO (GR)	274
CILINDRO DE LEVANTAMIENTO - TUBERÍAS DEL (GR)	327, 329
CILINDRO DE LEVANTAMIENTO (GR)	282, 283
CILINDRO HIDRÁULICO (GRUPO)	275, 276, 277, 278, 279, 280, 281, 295
CILINDRO Y MONTAJE (GR)- INCLINACIÓN DE LA HOJA	266, 267
CINTURÓN DE SEGURIDAD (GR)	624, 625, 626, 627
*COIL AS-SOLENOID (12 VOLTIOS)	404
COLADOR DEL AGUA (GR)	498
COMPARTIMENTO CONJ-LATERAL	591
COMPARTIMIENTO DEL MOTOR (GR)	242
COMPRESOR DE REFRIGERANTE (GR)	519, 520, 592, 594
COMPRESOR DE REFRIGERANTE Y GRUPO DE MONTAJE	522
COMPRESOR Y MOTOR GR-REFRIGERANTE	519, 520
CONDENSADOR DEL REFRIGERANTE Y MONTAJE (GR)	523
CONDUCTO Y CONTROL (GR)	573
CONEXIÓN ELÉCTRICA (GR)	134, 135

* NO HAY TRADUCCION DISPONIBLE EN EL MOMENTO DE LA IMPRESION

INDICE

Nombre	Página
CONEXIÓN (GR)	292, 339, 341, 347
CONEXION HIDRAULICA (GR)	286, 287, 288, 339
CONFIGURACIÓN COMÚN	1, 2
CONFIGURACIÓN DE CABLERIA, CALENTADOR Y ACONDICIONADOR DE AIRE	173, 585, 587, 593, 595
CONFIGURACIÓN DE INSTALACIÓN DEL MOTOR	18, 19
CONFIGURACIÓN DE MOTORES	14
CONFIGURACIÓN DE TRANSFORMACIÓN PARA CARRETERA	228, 229, 230, 231, 232, 233, 234
CONFIGURACIÓN DE TRANSFORMACIÓN PARA OBRAS	138
CONJUNTO DE DESTELLADOR (12 VOLTIOS)	160, 249, 252
CONJUNTO DE LLAVE, ELECTRONICA (SEGURIDAD)	141, 147
CONJUNTO MAZO DE CABLES-CONTROLES DEL OPERADOR (FLUJO ALTO)	292, 554
CONJUNTO MAZO DE CABLES-CONTROLES DEL OPERADOR (PALANCA UNIVERSAL)	535, 538, 541, 551, 554
CONJUNTO MAZO DE CABLES-CONTROLES DEL OPERADOR (PALANCA UNIVERSAL)	292
CONJUNTO, MAZO DE CABLES, LUCES DELANTERAS	160, 249, 252
CONTRAPESO (GR)	239, 240, 241
*CONTROL AR-MACHINE	2
CONTROL DE MANIJA (GR)	524, 525, 526, 527
CONTROL DE MANIJA (GR)	528, 529, 530, 531
CONTROL DE REGULADOR (GR)	111
CONTROL DE TRABA (GR)	136
CONTROL DEL MULTIPLE (GR)	362, 363
CONTROL DEL MULTIPLE (GR)	364
CONTROL DEL MULTIPLE (GR) (*BOOSTED AUXILIARY HYD FLOW)	292, 357
CONTROL DEL VENTILADOR (GR)	184
CONTROL HIDRÁULICO DE OPERACIÓN PILOTO (GR)	532, 535, 536, 538, 539, 541, 542, 544, 545, 546, 548, 554
CONTROL HIDRÁULICO DE OPERACIÓN PILOTO (GR)	551
CONTROL MANUAL DE ARRANQUE/PARADA (GR)	137
CONTROL NO PROGRAMADO (GR)	140
CONTROL NO PROGRAMADO (GR) (SEGURIDAD)	141
CONVERSION DE LA MAQUINA (CONFIG)	3, 4, 5, 6, 7, 8, 9, 10, 11, 12, 13

* NO HAY TRADUCCION DISPONIBLE EN EL MOMENTO DE LA IMPRESION

INDICE

Nombre	Página
CONVERSION PARA DESPLAZAMIENTO POR CARRETERA (GR)	235
	236
	237
	238
CORREA TRAPEZOIDAL (BOMBA DE AGUA)	72
	74
*COUPLING GP-DRIVE	557
	592
	594
CUBIERTO DEL PANEL DE FUSIBLES (GR)	139
CUCHARON DE GARFIO (CONF)	421
	422
	423
	424
CUCHARON DE GARFIO (GR)	441
	442
	443
	444
CUCHARÓN DE USO GENERAL (CONFIG)	419
	420
CUCHARÓN DE USO GENERAL (CONJ)	434
	435
	436
	437
CUCHARÓN DE USO MÚLTIPLE (CONFIG)	425
	426
	427
	428
CUCHARÓN DE USO MÚLTIPLE (GR)	445
CUCHARÓN DE USO MÚLTIPLE (GR)	446
	447
	448
	449
CUCHARÓN PARA MATERIALES LIVIANOS	438
	439
	440
CUCHARÓN PARA MATERIALES LIVIANOS (CONFIG)	425
CUCHARON PARA TIERRA (CONF)	418
CUCHARON PARA TIERRA (CONJ)	430
	431
	432
	433
CUCHARON UTILITARIO (CONFIG)	428
	429
CUCHARÓN UTILITARIO (GR)	450
	451
	452
CUCHILLA (GR)	464
	465
	466
	467
	468
	469
	470
CULATA DE CILINDROS (CONJ)	34
CULATA DE CILINDROS (GR)	36
	37
	39

D

DIENTE DE UNA PIEZA (UNI-TOOTH) (GR)	503
DISYUNTOR (CONJ) (105 AMPERIOS)	178
	181
DISYUNTOR (CONJ) (30-AMPERIOS)	249
	252
DISYUNTOR (CONJ) (30-AMPERIOS) (LUCES)	160
DRENAJE DEL ACEITE DE MOTOR	41

E

EJE (GR)	189
	190
	191
ELECTRÓNICA DE LA MÁQUINA (GR)	141
ELEMENTO DE FILTRO DE ACEITE DE MOTOR (CONJ)	196
ELEMENTO DE FILTRO DE ACEITE DE MOTOR (CONJ)	57
	61
ELEMENTO DE FILTRO DE COMBUSTIBLE (SEPARADOR DE AGUA)	112
ELEMENTO DEL CALENTADOR DEL AGUA DE LAS CAMISAS (MOTOR)	145
	146
ELEMENTO DEL FILTRO DE AIRE (CONJ) (PRIMARIO)	98
ELEMENTO DEL FILTRO DE AIRE (CONJ) (SECUNDARIO)	98
ESCALON DE BRAZO DE MANEJO DE MATERIALES (GR)	496
ETIQUETA DE ADVERTENCIA (GR)	289
	290
	291
	643
	645
	647
ETIQUETA DE ADVERTENCIA (GR)	642

F

*FILTER ELEMENT-CAB AIR	508
	510

* NO HAY TRADUCCION DISPONIBLE EN EL MOMENTO DE LA IMPRESION

INDICE

Nombre	Página
	585
	587
*FILTER ELEMENT-CAB AIR (AIRE)	510
	587
FILTRO DE ACEITE (CONJ) (EFICIENCIA AVANZADA) (HIDRÁULICO)	195
FILTRO DE ACEITE (GR)	195
	196
	197
FILTRO DE AIRE (GR)	97
	98
FILTRO DE COMBUSTIBLE Y SEPARADOR DE AGUA (GR)	112
FILTROS Y TUBERÍAS HIDRÁULICAS (GR)	193
FUSIBLE (10-AMPERIOS)	172
	295
	457
	548
FUSIBLE (10-AMPERIOS)	149
	150
	174
	187
FUSIBLE (15 AMPERIOS)	173
FUSIBLE (15 AMPERIOS)	149
	174
	187
FUSIBLE (20-AMPERIOS)	174
FUSIBLE (30-AMPERIOS)	173
	593
	595
FUSIBLE (30-AMPERIOS)	174

G

GARFIO DE UTILIDAD (GR)	483
	484
	485
GASA (RESPIRADERO DE CARTER)	23
	106
GR. VÁLVULA Y TUBERIAS-ACOPLADOR	386
	389
GRUPO ADAPTADOR-TUBERIA DE ACEITE	265
GRUPO DE BASTIDOR DE HORQUILLA	480
	481
GRUPO DE BASTIDOR, MAQUINARIA	246
GRUPO DE CANTONERA Y CUCHILLA	464
GRUPO DE CILINDRO Y ESLABON, ACOPLADOR	462
	463
GRUPO DE CONEXIÓN	292
	341
GRUPO DE CONVERSIÓN DE LA HERRAMIENTA	456
GRUPO DE ESLABON, ACOPLADOR	491
GRUPO DE HOJA DE CUCHARÓN DE USO MÚLTIPLE	414
	415
	416
	417
GRUPO DE INSTALACIÓN	592
GRUPO DE MANIJA Y PIN-ACOPLADOR	486
	487
GRUPO DE MONTAJE Y CILINDRO, LEVANTAMIENTO DEL BRAZO	269
GRUPO DE PALANCA-REGULADOR	600
GRUPO DE POSICIONADOR DE LA HORQUILLA	475
GRUPO DE RESPALDO DE CAJA DE ALMACENAMIENTO	228
	230
GRUPO DE SENSORES DE TEMPERATURA Y PRESIÓN	164
GRUPO DE TRABA-CILINDRO	515
GRUPO DEMONTAJE DE RADIADOR Y ENFRIAMIENTO DE ACEITE	84
GRUPO GIRATORIO DE BOMBA (LADO DERECHO)	209
GRUPO GIRATORIO DE BOMBA (LADO IZQUIERDO)	209
GRUPO, MANIJA, BOMBA DE AGUA	72
	73

H

*HANDLE GP	518
HIDRÁULICA (CONFIG)	289
	290
	291
HIDRÁULICA (CONFIG)	289
HIDROSTATICO, BOMBA Y GRUPO DE MONTAJE	208
HOJA (CONFIG)	409
	410
HOJA DE LIMPIAPARABRISAS (CONJ) (*558-MM) (DELANTERO, TRASERO)	568
HOJA DE LIMPIAPARABRISAS (CONJ) (*558-MM) (PUERTA, CABINA)	570
HOJA ORIENTABLE (GR)	411
	412
	413
*HOLDER-CUP	590
HORQUILLA DE GARFIO (CONF)	470
	471
HORQUILLA DE GARFIO (GR)	472
	473
	474

* NO HAY TRADUCCION DISPONIBLE EN EL MOMENTO DE LA IMPRESION

INDICE

Nombre	Página
HORQUILLA DE UTILIDAD (GR)	477, 478
HORQUILLA PARA TARIMAS (GR)	475, 476
*HOUSING GP-WATER REGULATOR	83

I

IMPLEMENTOS (GR ELECTRÓNICO)	140
INCLINACIÓN HORIZONTAL - CILINDRO DE (GR)	284, 285
INDICADOR DEL NIVEL DE ACEITE (GR)	578
INDICADORES Y ADVERTENCIA (GR)	578
INDICADORES Y ADVERTENCIA (GR)	577
INSONORIZADOR (GR)	263
INSTALACION DE SEGURIDAD (GR)	147
INSTALACION DE SEGURIDAD (GR)	148
INTERRUPTOR (ASIENTO)	629
INTERRUPTOR BASCULANTE (CALEFACTOR)	508, 510, 585, 587
INTERRUPTOR (CONJ) (ASIENTO)	630
INTERRUPTOR DE ARRANQUE CON LLAVE (CONJ)	577
INTERRUPTOR DE LÍMITE (CONJ) (LIMPIADOR)	568, 570
INTERRUPTOR DE PRESIÓN (ACEITE DEL MOTOR)	164, 170
INTERRUPTOR DE PRESIÓN (CONJ) (ACEITE HIDRÁULICO)	195
INTERRUPTOR DE PRESIÓN (CONJ) (AIRE ACONDICIONADO)	603
INTERRUPTOR DE PRESIÓN (CONJ) (REFRIGERANTE)	593, 595
INTERRUPTOR DE PRESIÓN (GR)	169, 170
INTERRUPTOR DE PRESIÓN (GR) (ALARMA DE RETROCESO)	172
INTERRUPTOR DE TEMPERATURA (AIRE ACONDICIONADO)	508, 510
INTERRUPTOR DE TEMPERATURA (CONJ) (ACEITE HIDRÁULICO)	385
INTERRUPTOR DE TEMPERATURA (REFRIGERANTE DEL MOTOR)	164, 171
INTERRUPTOR DE VOLQUETE (CONJ) (ACONDICIONADOR DE AIRE)	510
INTERRUPTOR DE VOLQUETE (CONJ) (ACONDICIONADOR DE AIRE)	508
INTERRUPTOR DE VOLQUETE (CONJ) (ACOPLADOR RAPIDO)	295
INTERRUPTOR DE VOLQUETE (CONJ) (ACOPLADOR RAPIDO)	457
INTERRUPTOR DE VOLQUETE (CONJ) (ARRANQUE EN FRIO)	613, 615
INTERRUPTOR DE VOLQUETE (CONJ) (BALIZA DE ADVERTENCIA)	163
INTERRUPTOR DE VOLQUETE (CONJ) (FRENO DE ESTACIONAMIENTO)	613, 615
INTERRUPTOR DE VOLQUETE (CONJ) (LIMPIAPARABRISAS TRASERO)	568, 570
INTERRUPTOR DE VOLQUETE (CONJ) (LUCES DE ADVERTENCIA DE PELIGRO)	160, 249, 252
INTERRUPTOR DE VOLQUETE (CONJ) (LUCES DE DESPLAZAMIENTO)	160, 249, 252
INTERRUPTOR DE VOLQUETE (CONJ) (LUCES DE TRABAJO TRASERAS)	158
INTERRUPTOR DE VOLQUETE (CONJ) (LUZ DE TRABAJO DELANTERA)	613, 615
INTERRUPTOR DE VOLQUETE (CONJ) (POTENCIA ELECTRICA, HERRAMIENTA DE TRABAJO)	149, 150, 187
INTERRUPTOR DE VOLQUETE (CONJ) (SEÑAL DE GIRO)	160
INTERRUPTOR DE VOLQUETE (CONJ) (SEÑAL DE GIRO)	249, 252
INTERRUPTOR DE VOLQUETE (GR) (FLUJO ALTO)	551, 554
INTERRUPTOR DE VOLQUETE (GR) (FLUJO ALTO)	292
INTERRUPTOR DE VOLQUETE (GR) (UBICADOR DE HERRAMIENTA DE TRABAJO)	290
INTERRUPTOR PARA LA TEMPERATURA (GR)	171

* NO HAY TRADUCCION DISPONIBLE EN EL MOMENTO DE LA IMPRESION

INDICE

Nombre	Página

J

JUEGO DE ENCHUFE DE CONEXIÓN 513
JUEGO DE INSTALACIÓN DEL ACONDICIONADOR DE AIRE Y CALENTADOR 592, 594
JUEGO DE SELLOS 398
JUEGO DE SELLOS (BOMBA DE ENGRANAJE) 369
JUEGO DE VÁLVULA PILOTO (RESORTE) 398
JUEGO-PLACA DE DESPLAZAMIENTO Y MONTAJE 490
JUEGO, PUERTA DE CABINA Y MONTAJE 597, 598
JUNTA DE LA TAPA DE VÁLVULAS 86
JUNTA DE LA TAPA DE VÁLVULAS (REGULADOR DE TEMPERATURA) 83

K

*KIT-CAB SEAL 599
*KIT-HIGH FLOW CONVERSION 292
*KIT-QUICK COUPLER CONVERSION 295
*KIT-ROADING CONVERSION 248, 249, 252
*KIT-WORK TOOL CONTROL & WIRING 149
*KIT-WORK TOOL WIRING 150

L

LÁMPARA (CONJ) (ROJO, VERDE, DIODO, 12 VOLTIOS) 148
LÁMPARA DE BALIZA DE ADVERTENCIA (GR) 157
LÁMPARA DE FARO DELANTERO 153
LÁMPARA DE LUZ DELANTERA Y DE SEÑAL (GR) 153
LAMPARA DE PLACA DE REGISTRO (GR) 233, 259
LÁMPARA DEL TECHO (GR) (12 VOLTIOS) 578
LÁMPARA (12 VLOTIOS, 5 VATIOS) 155, 156
LÁMPARA (12 VOLTIOS) 578
LÁMPARA (12 VOLTIOS) (PLACA DE REGISTRACIÓN) 259
LÁMPARA (12 VOLTIOS, 10 VATIOS) 578
LÁMPARA (12 VOLTIOS, 10 VATIOS) 233
LÁMPARA (12 VOLTIOS, 21 VATIOS) 153, 156
LÁMPARA (12 VOLTIOS, 4 VATIOS) 153
LÁMPARA (12 VOLTIOS, 55 VATIOS) 151, 152
LEVANTAMIENTO DE LA MÁQUINA (GR) 157, 255, 256
*LINES GP-LOWERING CONTROL 331, 333
LLAVE 235
LUCES DE DESPLAZAMIENTO (GR) 160
LUCES DE PARADA Y COLA (GR) 155, 156
LUCES DE PARADA Y DE COLA (GR) 162
LUCES DE REFLECTOR (GR) 158
LUCES DE REFLECTOR (GR) 159
LUZ DE BALIZA (GR) 163

M

MANDO DE CORREA (BALIZA DE ADVERTENCIA) 157
MANDO TANDEM (GR) 192
MANGUERA (INFERIOR) 93, 95
MANGUERA (SUPERIOR) 93, 95
*MANIFOLD & LINES GP-CONTROL 352, 354
*MANIFOLD & SOLENOID GP-CONTROL 359, 360, 361
MANIJA MODULAR (GR) 527, 528, 529
MANIJA MODULAR (GR) 581, 582
MAZO DE CABLES (CONJ) (BUJÍA INCANDESCENTE) 181
MAZO DE CABLES (CONJ) (MEDIDOR DE SERVICIO) 561
MAZO DE CABLES DE CONTROL (CONJ) (SEGURIDAD) 147, 148
MAZO DE CABLES DE LA HERRAMIENTA 499
MAZO DE CABLES DE LA HERRAMIENTA (*CONNECTING) 410
MAZO DE CABLES DE LA HERRAMIENTA (*LIFT ARM) 149, 187
MAZO DE CABLES DE LA HERRAMIENTA (PLATAFORMA) 149, 187
MAZO DE CABLES DE LA PLATAFORMA (CONJ) 175
MAZO DE CABLES DE LA PLATAFORMA (CONJ) (INFERIOR) 174

* NO HAY TRADUCCION DISPONIBLE EN EL MOMENTO DE LA IMPRESION

INDICE

Nombre	Página
MAZO DE CABLES DE LUCES TRASERAS (CONJ)	160, 174, 233, 249, 252, 261
MAZO DE CABLES DE LUCES TRASERAS (CONJ) (FRENO)	186, 233, 249, 252
MAZO DE CABLES DEL CHASIS (CONJ) (BOCINA)	183
MAZO DE CABLES DEL CHASIS (CONJ) (TRANSMISION)	593, 595
MAZO DE CABLES DEL INTERRUPTOR (CONFIG)	184
MAZO DE CABLES DEL MOTOR (CONJ)	178, 181
MECANISMO DE VÁLVULAS (GR)	75, 76
MEDIDOR DE SERVICIO (GR)	561
MIRILLA (NIVEL DE REFRIGERANTE)	92
MIRILLA (RADIADOR)	91
MIRILLA (TANQUE HIDRÁULICO)	385
MÓDULO INDICADOR DE ADVERTENCIA (GR)	608, 609
MONTAJE DE CILINDRO (GR)	374, 375, 376
MONTAJE DE LA BOMBA (GR)	206
MONTAJE DE LA ESTRUCTURA ROPS (GR)	610
MONTAJE DE LUCES DE DESPLAZAMIENTO POR CARRETERA (GR)	261
MONTAJE DE RADIADOR Y ENFRIAMIENTO DE ACEITE (GR)	93, 95
MONTAJE DEL CILINDRO DEL CUCHARÓN (GR)	268
MONTAJE DEL MOTOR (GR)	53, 54
MONTAJE DEL TANQUE DE AGUA (GR)	499
MONTAJE DEL VENTILADOR (GR)	55, 56
MONTAJE-REGISTRO (GR)	259, 260
MOTOR DE ARRANQUE ELÉCTRICO (GR)	165
MOTOR DE ARRANQUE ELÉCTRICO (GR)	167, 168
MOTOR DE ENGRANAJES (GR)	368, 369, 370, 371, 372, 373
MOTOR HIDROSTATICO Y MONTAJE (GR)	203
MOTOR-LIMPIAPARABRISAS (GR)	568, 570
MOTOR PRIMARIO (CONFIG)	15, 16, 17
MOTOR Y MONTAJE DE VENTILADOR HIDRAULICO (GR)	365, 366, 367
MUELLE DE GAS (CONJ)	84, 256, 579
MUELLE DE GAS (CONJ) (CABINA)	631
MUELLE DE GAS (CONJ) (TRABA)	597, 598
MUELLE DE GAS (CONJ) (TRABA)	562, 565
MÚLTIPLE DE ESCAPE (GR)	100
MULTIPLE Y MONTAJE (GR) - CONTROL	356, 357, 358

O

*OPTION AR-CAB	611, 612

P

PANEL DE FUSIBLES (GR)	149, 150, 174, 187
PANEL LATERAL (GR)	617
PARACHOQUES (GR)	227
PASAMANOS (GR)	580
PIEZAS DIVERSAS (GR)	648
PISTÓN Y BIELA (GR)	67, 68
PISTONES DEL MOTOR (GR)	204
PLACA DE DESPLAZAMIENTO POR CARRETERA (GR)	493, 494
PLACA DE IDENTIFICACION (*ENGLISH, GERMAN, SPANISH)	237, 238
PLACA DE IDENTIFICACION (*MACHINE)	651

* NO HAY TRADUCCION DISPONIBLE EN EL MOMENTO DE LA IMPRESION

INDICE

Nombre	Página
	654
	661
	667
	670
PLACA DE INFORMACION (PESO MAXIMO)	235
PLACA DE INFORMACION (PUNTO DE AMARRE)	408
	643
PLATAFORMA DE LA CABINA	620
PORTAHORQUILLAS (GR)	454
	455
POSABRAZOS (GR)	513
POSABRAZOS Y MONTAJE (GR)	512
PROTECTOR DE CORREA (GR)	44
PROTECTOR DE ROPS/FOPS	579
PUBLICACIONES (GR)	606
PUERTA DE CABINA	567
	568
	570
	572
PUERTA DE CABINA (*POLYCARBONATE)	562
	597
PUERTA Y MONTAJE DE CABINA (GR)	562
	565

R

Nombre	Página
RADIADOR Y ENFRIADOR DE ACEITE HIDRÁULICO (GR)	91
	92
RECUPERACIÓN DEL REFRIGERANTE (GR)	93
	95
REFLECTOR (GR)	151
	152
REGULADOR - PEDAL DEL (GR)	618
	619
REGULADOR DE TEMPERATURA DEL AGUA	86
	88
REGULADOR (GR)	113
	116
REJILLA DE SUCCIÓN (TANQUE HIDRÁULICO)	385
REJILLA (HIDRÁULICO)	337
REJILLA (TANQUE DE AGUA)	498
RELÉ (CONJ) (*SHELL)	175
RELÉ (CONJ) (12 VOLTIOS)	149
	150
	187
	233
	249
	252
	293
	508
	510
	551
	554
RELÉ (CONJ) (12 VOLTIOS) (ARRANQUE)	178
	181
RELÉ (CONJ) (12 VOLTIOS) (ARRANQUE EN FRIO)	178
	181
RELÉ (CONJ) (12 VOLTIOS) (CALEFACTOR)	585
	587
RELÉ (CONJ) (12 VOLTIOS) (CORRIENTE PRINCIPAL)	174
RELÉ (CONJ) (12 VOLTIOS) (CORRIENTE PRINCIPAL)	187
RELÉ (CONJ) (12 VOLTIOS) (HERRAMIENTA)	187
RELÉ (CONJ) (12 VOLTIOS) (LUZ DEL FRENO)	186
RESORTE DE GAS (GR)	631
RESORTE DE HOJA (GR)	495
RESPIRADERO (AIRE ACONDICIONADO)	519
	520
RESPIRADERO (COMPARTIMENTO DE TANDEM)	244
RESPIRADERO (COMPRESOR DE AIRE ACONDICIONADO)	592
	594
RESPIRADERO (CONJ) (*INLINE) (ACEITE HIDRÁULICO)	384
RETORNO EN EL MULTIPLE(GR)	201
RETROCESO - ALARMA DE (GR)	172
RETROVISOR (GR)	607
RETROVISOR Y MONTAJE (GR)	257
	258
REVESTIMIENTO DE LA CABINA (GR)	601
REVESTIMIENTO-TECHO	602
RUEDA MOTRIZ DEL ENGRANAJE(GR)	80
RUEDA Y LLANTA (CONFIG)	221
	222
	223
	224
	225
RUEDA Y NEUMÁTICO (GR)	226

S

Nombre	Página
*SEAL-VALVE COVER	106
SELLO - TAPA DE VÁLVULA	23
SELLO DE CABINA (GR)	622
SENSOR DE TEMPERATURA (GR) (ACEITE HIDRÁULICO)	367
SENSOR DE TEMPERATURA (GR) (REFRIGERANTE DEL MOTOR)	92

* NO HAY TRADUCCION DISPONIBLE EN EL MOMENTO DE LA IMPRESION

INDICE

Nombre	Página
SENSOR DE VELOCIDAD (SINCRONIZACION DEL MOTOR)	116
SENSOR DE VELOCIDAD (VENTILADOR DEL MOTOR)	372
SILENCIADOR (GR)	101
	102
	103
SISTEMA ROPS DE CABINA CERRADA (CONFIG)	516
SOFTWARE PARA LA MAQUINA (GR) (SEGURIDAD)	147
SOFTWARE PARA LA MAQUINA (GR) (SEGURIDAD)	141
SOLENOIDE (CORTE DE COMBUSTIBLE)	122
	137
SOLENOIDE (MOTOR DE ARRANQUE)	165
SOPLADOR - VENTILADOR (GR)	92
SOPLADOR - VENTILADOR (GR)	91
SOPORTE DE MONTAJE (GR)	641
*SUPPORT GP-STORAGE BOX	6
	8
	12
	13

T

TABLERO DE INSTRUMENTOS (CONFIG)	612
TABLERO DE INSTRUMENTOS (GR)	613
	615
TANQUE DEL AGUA (GR)	502
TANQUE HIDRÁULICO (GR)	385
TANQUE HIDRÁULICO Y MONTAJE (GR)	384
TAPA CON RESPIRADERO (RECUPERACIÓN DE REFRIGERANTE)	93
	95
TAPA DE LA CAJA DELANTERA (GR)	22
TAPA DE LA CONSOLA (GR)	559
	560
TAPA DE LLENADO (CONJ) (COMBUSTIBLE)	118
TAPA DE LLENADO (CONJ) (TANQUE HIDRAULICO)	385
TAPA DE RADIADOR (CONJ) (INTERCAMBIADOR DE CALOR PARA AGUA DE MAR)	91
	92
TAPA DE TUBERIAS (GR)	461
TAPA DEL MECANISMO DE VÁLVULAS (GR)	23
TAPA DEL TABLERO DE INSTRUMENTOS (GR)	561
TAPA DEL TUBO DE LLENADO DE ACEITE (MOTOR)	78
TAPA (LLENADO DE ACEITE DEL MOTOR)	57
	61
	78
TAPÓN (CONJ) (TANQUE DE AGUA)	502
TAPÓN DE DRENAJE (ACEITE DEL MOTOR)	61
TAPÓN DE DRENAJE (ACEITE DEL MOTOR)	57
TAPÓN DE DRENAJE (COLECTOR DE ACEITE DEL MOTOR)	69
TAPON DE LA VALVULA PILOTO (GR)	377
TAPÓN DEL MOTOR (GR)	69
TAPÓN MAGNÉTICO (BASTIDOR)	244
TOPE DEL GARFIO(GR)	484
	485
	497
TORNILLERIA DE MAZO DE CABLES (GR)	142
TRABA-ACOPLADOR RAPIDO (GR)	492
TREN DE FUERZA (CONFIG)	207
TUBERÍAS CON SERVOMANDO (GR)	335
	337
TUBERÍAS DE ACONDICIONADOR DE AIRE (GR)	603
TUBERIAS DE CALEFACCION	605
TUBERIAS DE CONEXION (GR)	311
	313
TUBERÍAS DE LA CALEFACCIÓN (GR)	605
TUBERIAS DE LA GUIA (GR)	247
TUBERIAS DE LA HERRAMIENTA DE TRABAJO	347
	350
TUBERÍAS DEL CILINDRO DE INCLINACIÓN (GR)	343
	345
TUBERÍAS DEL CUCHARÓN (GR)	298
	300
	302
	304
	306
	308
	310
TUBERÍAS DEL ENFRIADOR DE ACEITE HIDRÁULICO (GR)	325
TUBERÍAS DEL GARFIO (GR)	315
	317
	319
TUBERIAS (GR) -COMBUSTIBLE PRIMARIO Y FILTRO	118
TUBERÍAS HIDRÁULICAS DEL VENTILADOR (GR)	321
	323
TUBERÍAS HIDROSTÁTICAS (GR)	199
TUBO DE LLENADO DE ACEITE (GR)	78
TURBOCOMPRESOR (GR)	104
	106

* NO HAY TRADUCCION DISPONIBLE EN EL MOMENTO DE LA IMPRESION

INDICE

Nombre	Página

V

*V-BELT GP	74
VALVULA DE ALIVIO (CRUCE)	209
VÁLVULA DE ALIVIO (GR)	363
	371
VÁLVULA DE ALIVIO (GR)	403
VÁLVULA DE ALIVIO (GR) (ACEITE DEL MOTOR)	209
VÁLVULA DE ALIVIO (GR) (LEVANTAMIENTO)	393
VÁLVULA DE ALIVIO (GR) (*TILT, AUXILIARY)	393
VÁLVULA DE ALIVIO (GR) (VELOCIDAD DEL VENTILADOR)	369
VALVULA DE CONTROL DE LA BOMBA (GR) (BOMBA DE PISTON)	209
VÁLVULA DE CONTROL (GR)	393
VÁLVULA DE CONTROL MANUAL (GR)	395
VÁLVULA DE CONTROL Y MONTAJE (GR)	392
VALVULA DE CORTE (CONJ)	595
	605
VALVULA DE CORTE (CONJ) (AGUA)	589
VÁLVULA DE RETENCIÓN (GR)	363
VÁLVULA DE RETENCIÓN (GR)	363
VÁLVULA DE SOLENOIDE (GR)	367
	405
	406
	407
VÁLVULA DE SOLENOIDE (GR)	404
VÁLVULA DE SOLENOIDE (GR) (ACOPLADOR RAPIDO)	362
VÁLVULA DE SOLENOIDE (GR) (*HIGH FLOW)	363
VÁLVULA DE SOLENOIDE (GR) (*HIGH FLOW)	363
VÁLVULA DE SOLENOIDE (GR) (*HIGH FLOW BOOST)	363
VÁLVULA DE SOLENOIDE (GR) (12 VOLTIOS CORRIENTE DIRECTA)	373
	594
VÁLVULA DE SOLENOIDE (GR) (12 VOLTIOS CORRIENTE DIRECTA)	592
VÁLVULA PILOTO (GR)	396
	398
	400
	401
VÁLVULA-RESPIRADERO (CÁRTER DEL MOTOR)	106
VÁLVULA-RESPIRADERO (CÁRTER DEL MOTOR)	23
VENTANA DE LA CABINA (GR)	634
VENTANA DE LA CABINA (GR)	635
	636
	637
	639
VISERA	632
	633
VISERA (GR)	632
	633
VOLANTE - CAJA DE (GR)	45
	46
VOLANTE (GR)	42
	43

* NO HAY TRADUCCION DISPONIBLE EN EL MOMENTO DE LA IMPRESION

ÍNDICE

Designação	Página
A	
ACOPLADOR RÁPIDO	457, 458, 459
ACOPLAMENTO DE COMANDO	557, 592, 594
ACUMULADOR - AR CONDICIONADO	504, 505
ACUMULADOR - AR CONDICIONADO (COM DESSECANTE)	592
ACUMULADOR HIDRÁULICO E MONTAGEM	264
ADAPTADOR-TUBULAÇÃO DE ÓLEO	265
ADESIVO - FUSÍVEL/RELÉ	139
ALARME DE MARCHA À RÉ	172
ALAVANCA - GOVERNADOR	600
ALAVANCA DE CONTROLE - MODULAR	527, 528, 529, 581, 582
ALÇA	518
ALÇA - ACOPLADOR	488, 489
ALÇA E PINO - ACOPLADOR	486, 487
ALOJAMENTO - LATERAL	591
ALOJAMENTO-TERMOSTATO DE ÁGUA	83
ALTERNADOR DE CORRENTE	129, 131
AQUECEDOR DA ÁGUA DO MOTOR	145, 146
AQUECEDOR DA CABINE	584, 585, 587, 589
AQUECEDOR DA CABINE E MONTAGEM	583
ARMAÇÃO - LÂMINA	479
ARMAÇÃO DA GARRA	482
ARMAÇÃO DO VIDRO	575, 576
ARMAÇÃO-GARFO	480, 481
ARRANJO BÁSICO	1, 2
ARTICULAÇÃO - ACOPLADOR	491
ASSENTO	628, 629
ASSENTO AJUSTÁVEL	630
B	
BATENTE - GARRA	484, 485, 497
BATERIA	132, 133
BATERIA (12 VOLTS, ISENTO DE MANUTENÇÃO)	133
BATERIA (12 VOLTS, PADRÃO)	132
BEIRA - PONTA CORTANTE	464
BLOCO DO MOTOR	30, 32
BOBINA-SOLENÓIDE (12-VOLTS)	404
BOCAL DE ENCHIMENTO DE ÓLEO DO MOTOR	78
BOMBA DA FERRAMENTA DE TRABALHO E MONTAGEM	378, 379, 380, 381
BOMBA DE ÁGUA	86, 88
BOMBA DE DIAFRAGMA	499
BOMBA DE ENGRENAGENS	380, 381, 382, 383
BOMBA DE ESCORVA DO COMBUSTÍVEL	128
BOMBA DE ESCORVA DO COMBUSTÍVEL E DO FILTRO PRIMÁRIO	128
BOMBA DE INJEÇÃO DO COMBUSTÍVEL	122, 125, 126
BOMBA DE ÓLEO - MOTOR	80
BOMBA DE PISTÃO	209
BOMBA E MONTAGEM - HIDROSTÁTICA	208
BOMBA E MONTAGEM - TRANSFERÊNCIA DE COMBUSTÍVEL	120, 121
BORDA CORTANTE	464, 465, 466, 467, 468, 469, 470
BRAÇO - MANIPULADOR DE MATERIAIS	408
BRAÇO DO ASSENTO	513
BRAÇO DO LIMPADOR	568
BRAÇO DO LIMPADOR (DIANTEIRO)	570
BUJÃO DA VÁLVULA PILOTO	377
BUJÃO DO DRENO (CÁRTER DE ÓLEO DO MOTOR)	69
BUJÃO DO DRENO (ÓLEO DO MOTOR)	57, 61

* TRADUÇÃO NÃO DISPONÍVEL NO MOMENTO DA IMPRESSÃO

ÍNDICE

Designação	Página
BUJÃO DO MOTOR	69
BUJÃO MAGNÉTICO (ARMAÇÃO)	244
BUZINA (TOM BAIXO)	545
	546
BUZINA (24 VOLTS, TOM BAIXO)	548

C

CABEÇOTE DO MOTOR	34
	36
	37
	39
CABINE - ESTRUTURA DE PROTEÇÃO CONTRA CAPOTAMENTO	517
CABINE - ESTRUTURA ROPS COBERTA	516
CABO - CONTROLE DO GOVERNADOR	110
CABO DE CONTROLE	518
CABOS E FIOS ELÉTRICOS-LUZES TRASEIRAS	186
CABOS/FIOS ELÉTRICOS - AR CONDICIONADO	173
CABOS/FIOS ELÉTRICOS - CHASSI	174
CABOS/FIOS ELÉTRICOS - FERRAMENTAS DE TRABALHO	187
CABOS/FIOS ELÉTRICOS - MÁQUINA	184
CABOS/FIOS ELÉTRICOS - MOTOR	178
	181
CAÇAMBA - GARRA	421
	422
	423
	424
	441
	442
	443
	444
CAÇAMBA - PARA APLICAÇAO GERAL	419
	420
CAÇAMBA - SERVIÇOS GERAIS	428
	429
CAÇAMBA DE MÚLTIPLAS APLICAÇÕES	425
	426
	427
	428
	445
	446
	447
	448
	449
CACAMBA E GARFO	453
CAÇAMBA PARA APLICAÇÃO GERAL	434
	435
	436
	437
CACAMBA PARA MATERIAL LEVE	438
	439
	440
CAÇAMBA PARA MATERIAL LEVE	425
CAÇAMBA PARA SERVIÇOS GERAIS	450
	451
	452
CAÇAMBA PARA TERRA	418
	430
	431
	432
	433
CADEADO	232
	235
	237
	641
CAIXA DE ARMAZENAMENTO	515
CAIXA DIANTEIRA	47
	49
CAIXA DO VOLANTE DO MOTOR	45
	46
CÁRTER DO ÓLEO DO MOTOR	57
	61
	65
CHASSI	1
CHASSI - MÁQUINA	246
CHASSI DIANTEIRO	244
CHAVE	235
CHAVE - ELETRÔNICO (SEGURANÇA)	141
	147
CHAVE INTERRUPTORA DE PARTIDA	577
CHICOTE - CABOS ELÉTRICOS (MARCADOR DE HORAS DE SERVIÇO)	561
CHICOTE - CABOS ELÉTRICOS (VELA DE AQUECIMENTO)	181
CHICOTE - CHASSI (BUZINA)	183
CHICOTE - CHASSI (TRANSMISSÃO)	593
	595
CHICOTE - MOTOR	178
	181
CHICOTE - PLATAFORMA	175
CHICOTE - PLATAFORMA (INFERIOR)	174
CILINDRO DA CAÇAMBA	272
	273
CILINDRO DA GARRA	274
CILINDRO DE INCLINAÇÃO	284
	285
CILINDRO DE LEVANTAMENTO	282
	283
CILINDRO E ARTICULAÇÃO - ACOPLADOR	462
	463
CILINDRO E MONTAGEM - BRAÇO DE LEVANTAMENTO	269

* TRADUÇÃO NÃO DISPONÍVEL NO MOMENTO DA IMPRESSÃO

ÍNDICE

Designação	Página
CILINDRO E MONTAGEM - CAÇAMBA	268
CILINDRO E MONTAGEM - LÂMINA ANGULÁVEL	266
	267
CILINDRO HIDRÁULICO	275
	276
	277
	278
	279
	280
	281
	295
CINTO DE SEGURANÇA	624
	625
	626
	627
COBERTURA DO MOTOR	242
COLETOR - CONTROLE	362
	363
	364
COLETOR - CONTROLE (*BOOSTED AUXILIARY HYD FLOW)	292
	357
COLETOR - RETORNO	201
COLETOR DE ESCAPE	100
COLETOR E MONTAGEM - CONTROLE	356
	357
	358
COLETOR E SOLENÓIDE-CONTROLE	359
	360
	361
COLETOR E TUBULAÇÕES -CONTROLE	352
	354
COMANDO DO TANDEM	192
COMANDO HIDRÁULICO	289
	290
	291
COMPRESSOR DE REFRIGERANTE	519
	520
	592
	594
COMPRESSOR DE REFRIGERANTE E MONTAGEM	522
COMPRESSOR E MOTOR - REFRIGERADO	519
	520
CONDENSADOR DO REFRIGERANTE E MONTAGEM	523
CONDICIONADOR DE AR	507
	508
	510
CONDICIONADOR DE AR E MONTAGEM	506
CONECTOR	292
	341
CONEXÃO	292
	339
	341
	347
CONEXÃO - ELÉTRICA	134
	135
CONEXÃO - HIDRÁULICA	286
	287
	288
	339
CONTRAPESO	239
	240
	241
CONTROLE - NÃO PROGRAMADO	140
CONTROLE - NÃO PROGRAMADO (SEGURANÇA)	141
CONTROLE-CABO	524
	525
	526
	527
	528
	529
	530
	531
CONTROLE DE TRAVAMENTO	136
CONTROLE DO GOVERNADOR	111
CONTROLE DO VENTILADOR	184
CONTROLE HIDRÁULICO DE OPERAÇÃO PILOTO	532
	535
	536
	538
	539
	541
	542
	544
	545
	546
	548
	551
	554
CONTROLE MANUAL DE PARTIDA E PARADA	137
CONVERSÃO-FERRAMENTA DE TRABALHO	456
CORREIA DE COMANDO (PISCA-ALERTA)	157
CORREIA EM V (BOMBA D'ÁGUA)	72
	74

D

DECALQUE	289
	290
	291

* TRADUÇÃO NÃO DISPONÍVEL NO MOMENTO DA IMPRESSÃO

ÍNDICE

Designação	Página
	642
	643
	645
	647
DECALQUE - ADVERTÊNCIA (ALTA PRESSÃO, CONSULTAR MANUAL)	651
	667
	670
DECALQUE - ADVERTÊNCIA (ALTA PRESSÃO, CONSULTAR OMM, EUA)	654
	661
	664
DECALQUE - ADVERTÊNCIA (DIREÇÃO)	232
	237
DECALQUE - ADVERTÊNCIA (FOLGA)	248
	642
DECALQUE - ADVERTÊNCIA (NÃO É ACESSO)	651
	667
DECALQUE - ADVERTÊNCIA (NAO HÁ VAO LIVRE, MANTENHA DISTANCIA)	411
	412
DECALQUE - ADVERTÊNCIA (PARTIDA COM CABO AUXILIAR DE PARTIDA, CONSULTAR OMM, EUA)	664
DECALQUE - ADVERTÊNCIA (PERIGO DE ESMAGAMENTO)	445
	446
	447
	449
DECALQUE - ADVERTÊNCIA (PERIGO DE ESMAGAMENTO, MANTENHA DISTÂNCIA)	657
DECALQUE - ADVERTÊNCIA (PERIGO DE ESMAGAMENTO, MANTENHA DISTANCIA, EUA)	657
DECALQUE - ADVERTÊNCIA (PONTO DE UNIÃO)	473
	474
	478
	482
DECALQUE - ADVERTÊNCIA (*UNIVERSAL, READ OMM, U.S.)	664
DECALQUE - IDENTIFICAÇÃO (IGNIÇÃO)	147
	148
DECALQUE - IDENTIFICAÇÃO (TOMADA DE FORÇA, 12 VOLTS)	654
	661
	664
	667
	670
DECALQUE - IDENTIFICAÇÃO (TOMADA DE FORÇA, 12 VOLTS)	651
DECALQUE - IDENTIFICAÇÃO (13 KM/H)	6
	8
	12
	13
	228
	232
DECALQUE - INFORMAÇÕES (LOCAL DE AMARRAÇÃO)	408
	643
DECALQUE - INSTRUÇÃO (CONTROLE DA MÁQUINA, LER OMM)	538
DECALQUE - INSTRUÇÃO (CONTROLE DA MÁQUINA, LER OMM)	536
	542
	544
	545
	546
	548
DECALQUE - INSTRUÇÃO (CONTROLES DA MÁQUINA)	294
	532
	535
	539
	541
	551
	554
DECALQUE - INSTRUÇÃO (*MACHINE SECURITY, INTL)	147
	148
DECALQUE - INSTRUÇÃO (PAINEL)	578
DECALQUE - INSTRUÇÃO (PAINEL DE INSTRUMENTOS)	577
DECALQUE - INSTRUÇÃO (SAÍDA DE EMERGÊNCIA)	572
	634
DECALQUE - INSTRUÇÃO (SEM DEGRAUS)	295
	386
	389
	657
DECALQUE - TIRA (*REFLECTIVE, RED, WHITE)	493
	494
DECALQUE (CONTROLE DE TEMPERATURA)	508
	585
DECALQUE (CONTROLE DE TEMPERATURA)	510
	587
DECALQUE (FLUXO ALTO)	289
	290
	293
DECALQUE (FOPS)	579
DECALQUE (REFLETOR)	493

* TRADUÇÃO NÃO DISPONÍVEL NO MOMENTO DA IMPRESSÃO

ÍNDICE

Designação	Página
	494
DEGRAU - BRAÇO DE MANIPULAÇÃO DE MATERIAIS	496
DISJUNTOR AUTOMÁTICO DE CIRCUITO (105 AMPERES)	178
	181
DISJUNTOR AUTOMÁTICO DE CIRCUITO (30 AMPERES)	249
	252
DISJUNTOR AUTOMÁTICO DE CIRCUITO (30 AMPERES) (ILUMINAÇÃO)	160
DRENO - ÓLEO DO MOTOR	41
DUCTO E CONTROLE	573

E

EIXO	189
	190
	191
EIXO-COMANDO DE VÁLVULA	20
	21
ELEMENTO - AQUECEDOR DE ÁGUA DA CAMISA (MOTOR)	145
	146
ELEMENTO DO FILTRO DE AR (PRIMÁRIO)	98
ELEMENTO DO FILTRO DE AR (SECUNDÁRIO)	98
ELEMENTO DO FILTRO DE COMBUSTÍVEL (SEPARADOR DE ÁGUA)	112
ELEMENTO FILTRANE-AR DA CABINE	508
	510
	585
	587
ELEMENTO FILTRANE-AR DA CABINE (AR)	510
	587
ELEMENTO FILTRANTE - ÓLEO DO MOTOR	57
	61
	196
ENCOSTO DO BRAÇO E MONTAGEM	512
ENGRENAGEM DA RODA-GUIA	80
ESPELHO RETROVISOR	607
ESPELHO RETROVISOR E MONTAGEM	257
	258

F

FAROL DIANTEIRO	153
FIAÇÃO - AQUECEDOR E AR CONDICIONADO	173
	585
	587
	593
	595
FIAÇÃO - BUZINA	183
FIAÇÃO - CONTROLE (SEGURANÇA)	148
FIAÇÃO - CONTROLE (SEGURANÇA)	147
FIAÇAO - CONTROLES DO OPERADOR (ALAVANCA DE CONTROLE)	292
	535
	538
	541
	551
	554
FIAÇAO - CONTROLES DO OPERADOR (FLUXO ALTO)	292
	554
FIAÇÃO - FERRAMENTA DE TRABALHO	499
FIAÇÃO - FERRAMENTA DE TRABALHO (BRAÇO DE LEVANTAMENTO)	149
	187
FIAÇÃO - FERRAMENTA DE TRABALHO (CONECTANDO)	410
FIAÇÃO - FERRAMENTA DE TRABALHO (PLATAFORMA)	149
	187
FIAÇÃO - INTERRUPTOR	184
FIAÇÃO - LUZES TRASEIRAS	160
	174
	233
	249
	252
	261
FIAÇÃO - LUZES TRASEIRAS (FREIO)	186
	233
FIAÇÃO - LUZES TRASEIRAS (FREIO)	249
	252
FIAÇÃO -LUZES DIANTEIRAS	160
	249
	252
FIAÇÃO-LIMPADOR DE VIDROS	562
	565
	568
	570
	597
	598
FIAÇÃO-TANQUE DE COMBUSTÍVEL	173
	593
	595
FILTRO - ÓLEO	195
	196
	197
FILTRO - ÓLEO (EFICIÊNCIA AVANÇADA) (HIDRÁULICO)	195
FILTRO DE COMBUSTÍVEL E SEPARADOR DE ÁGUA	112
FILTRO HIDRÁULICO E TUBOS	193

* TRADUÇÃO NÃO DISPONÍVEL NO MOMENTO DA IMPRESSÃO

ÍNDICE

Designação	Página
FILTRO (RESPIRO DO CÁRTER)	23, 106
FIXADORES - CHICOTE	142
FUSÍVEL (10 AMPERES)	149, 150, 172, 174, 187, 295, 457
FUSÍVEL (10 AMPERES)	548
FUSÍVEL (15 AMPERES)	149, 173, 174, 187
FUSÍVEL (20-AMPERES)	174
FUSÍVEL (30 AMPERES)	173, 174, 593, 595
G	
GARFO - SERVIÇOS PÚBLICOS	477, 478
GARFO DA GARRA	470, 471, 472, 473, 474
GARFO DE PALETAS	475, 476
GARRA - SERVIÇOS PÚBLICOS	483, 484, 485
GOVERNADOR	113, 116
GR. DE CONVERSÃO - ARRANJO NÃO RODOVIÁRIO	138
GR. DE CONVERSÃO - OPERAÇÃO RODOVIÁRIA	235, 236, 237, 238
GRUPO DE CONVERSÃO - ARRANJO RODOVIÁRIO	228, 229, 230, 231, 232, 233, 234
GRUPO DE INSTALAÇÃO - MOTOR	18, 19
GRUPO DE POLIA - BOMBA DE ÁGUA	72, 73
GRUPO ROTATIVO DA BOMBA (DIREITO)	209
GRUPO ROTATIVO DA BOMBA (ESQUERDO)	209
GUIA - TUBOS	247
H	
*HOLDER-CUP	590
I	
ILUMINAÇÃO - FREIO E MARCHA À RÉ	162
ILUMINAÇÃO - RODOVIÁRIA	160
INDICADOR E ALARME	577, 578
INSTALAÇÃO	592
INSTALAÇÃO-SEGURANÇA	147, 148
INTERRUPTOR - BALANCIM (ACOPLADOR RAPIDO)	295, 457
INTERRUPTOR - BALANCIM (AQUECEDOR)	508, 510, 585, 587
INTERRUPTOR - BALANCIM (CONDICIONADOR DE AR)	508
INTERRUPTOR - BALANCIM (CONDICIONADOR DE AR)	510
INTERRUPTOR - BALANCIM (ENERGIA ELÉTRICA, FERRAMENTA DE TRABALHO)	149, 150, 187
INTERRUPTOR - BALANCIM (FARÓIS DE ESTRADA)	160, 249
INTERRUPTOR - BALANCIM (FARÓIS DE ESTRADA)	252
INTERRUPTOR - BALANCIM (FAROL DIANTEIRO)	613, 615
INTERRUPTOR - BALANCIM (FLUXO ALTO)	292
INTERRUPTOR - BALANCIM (FLUXO ALTO)	551, 554
INTERRUPTOR - BALANCIM (FREIO DE ESTACIONAMENTO)	613, 615
INTERRUPTOR - BALANCIM (LIMPADOR TRASEIRO)	568, 570

* TRADUÇÃO NÃO DISPONÍVEL NO MOMENTO DA IMPRESSÃO

ÍNDICE

Designação	Página
INTERRUPTOR - BALANCIM (LUZES DE ADVERTÊNCIA CONTRA PERIGO)	249
INTERRUPTOR - BALANCIM (LUZES DE ADVERTÊNCIA CONTRA PERIGO)	160
INTERRUPTOR - BALANCIM (LUZES DE ADVERTÊNCIA CONTRA PERIGO)	252
INTERRUPTOR - BALANCIM (LUZES DE TRABALHO TRASEIRAS)	158
INTERRUPTOR - BALANCIM (PARTIDA A FRIO)	613 615
INTERRUPTOR - BALANCIM (PISCA-ALERTA)	163
INTERRUPTOR - BALANCIM (POSICIONADOR DA FERRAMENTA DE TRABALHO)	290
INTERRUPTOR - BALANCIM (SETA DE DIREÇÃO)	160 249 252
INTERRUPTOR - LIMITADOR (LIMPADOR)	568 570
INTERRUPTOR - PRESSÃO	169 170
INTERRUPTOR - PRESSÃO (ALARME DE MARCHA-À-RÉ)	172
INTERRUPTOR - PRESSÃO (AR CONDICIONADO)	603
INTERRUPTOR - PRESSÃO (ÓLEO DO MOTOR)	164 170
INTERRUPTOR - PRESSÃO (ÓLEO HIDRÁULICO)	195
INTERRUPTOR - PRESSÃO (REFRIGERANTE)	593 595
INTERRUPTOR - TEMPERATURA	171
INTERRUPTOR - TEMPERATURA (AR CONDICIONADO)	508 510
INTERRUPTOR - TEMPERATURA (LÍQUIDO ARREFECEDOR DO MOTOR)	164 171
INTERRUPTOR - TEMPERATURA (ÓLEO HIDRÁULICO)	385
INTERRUPTOR (ASSENTO)	629 630

J

Designação	Página
JANELA DA CABINE	634 635 636 637 639
JOGO - PORTA DA CABINE E MONTAGEM	597 598
JOGO - VÁLVULA PILOTO (MOLA)	398
JOGO DE BUJÃO-CON	513
JOGO DE RETENTOR	398
JOGO DE RETENTOR (BOMBA DE ENGRENAGEM)	369
JOGO-INSTALAÇÃO DO CONDICIONADOR DE AR E AQUECEDOR	592 594
JOGO-PLACA DE RODAGEM E MONTAGEM	490
JUNTA - TAMPA	86
JUNTA - TAMPA (TERMOSTATO)	83

K

Designação	Página
KIT-CONTROLE E FIAÇÃO DA FERRAMENTA DE TRABALHO	149
KIT-CONVERSÃO DE FLUXO ALTO	292
KIT-CONVERSÃO DE RODAGEM	248 249 252
KIT-CONVERSÃO DO ACOPLADOR RÁPIDO	295
KIT-FIAÇÃO DA FERRAMENTA DE TRABALHO	150
KIT-RETENTOR DA CABINE	599

L

Designação	Página
LÂMINA	409 410
LÂMINA ANGULÁVEL	411 412 413
LÂMINA-CAÇAMBA DE APLICAÇÕES MÚLTIPLAS	414 415 416 417
LÂMINA DO LIMPADOR DE PÁRA-BRISA (*558-MM) (DIANTEIRO, TRASEIRO)	568
LÂMINA DO LIMPADOR DE PÁRA-BRISA (*558-MM) (PORTA DA CABINE)	570
LÂMPADA - FAROL	151 152
LÂMPADA - TETO (12-VOLTS)	578
LÂMPADA DIANTEIRA E DE SINAL	153
LAMPADA-PLACA DE REGISTRO	233 259
LÂMPADA (VERMELHA, VERDE, LED, 12 VOLTS)	148
LÂMPADA (12-VOLTS)	578

* TRADUÇÃO NÃO DISPONÍVEL NO MOMENTO DA IMPRESSÃO

ÍNDICE

Designação	Página
LÂMPADA (12-VOLTS) (PLACA DE REGISTRO)	259
LÂMPADA (12-VOLTS, 10-WATTS)	233, 578
LÂMPADA (12-VOLTS, 21-WATTS)	153, 156
LÂMPADA (12-VOLTS, 4-WATTS)	153
LÂMPADA (12 VOLTS, 5 WATTS)	155, 156
LÂMPADA (12-VOLTS, 55-WATTS)	151, 152, 157
LEVANTAMENTO DA MÁQUINA	255, 256
LEVANTAMENTO DO MOTOR	51, 52
LUZ GIRATÓRIA DE ALARME	157
LUZ INTERMITENTE (12-VOLTS)	160, 249, 252
LUZ TRASEIRA E DE FREIO	155, 156

M

Designação	Página
MANGUEIRA (INFERIOR)	93, 95
MANGUEIRA (SUPERIOR)	93, 95
MÁQUINA - CONVERSÃO	3, 4, 5, 6, 7, 8, 9, 10, 11, 12, 13
MÁQUINA AR DE CONTROLE	2
MARCADOR DE HORAS DE SERVIÇO	561
MECANISMO DAS VÁLVULAS	75, 76
MEDIDOR - NÍVEL DE COMBUSTÍVEL	578
MÓDULO - INDICADOR DE ALARME	608, 609
MOLA - LÂMINA	495
MOLA A GÁS	631
MOLA ACIONADA A GAS	84, 256, 579
MOLA ACIONADA A GAS (CABINE)	631
MOLA ACIONADA A GAS (TRAVAMENTO)	562, 565, 597, 598
MONTAGEM - BOMBA	206
MONTAGEM - CILINDRO	374, 375, 376
MONTAGEM - ESTRUTURA ROPS	610
MONTAGEM - LUZES PARA ILUMINAÇÃO RODOVIÁRIA	261
MONTAGEM - MOTOR	53, 54
MONTAGEM - VENTILADOR	55, 56
MONTAGEM DA PLACA DE REGISTRO	259, 260
MOTOR	14
MOTOR - ENGRENAGENS	368, 369, 370, 371, 372, 373
MOTOR - LIMPADOR DO VIDRO	568, 570
MOTOR - PISTÃO	204
MOTOR E MONTAGEM - VENTILADOR HIDRÁULICO	365, 366, 367
MOTOR ELÉTRICO DE PARTIDA	165, 167, 168
MOTOR HIDROSTÁTICO E MONTAGEM	203
MOTOR PRIMÁRIO	15, 16, 17

O

Designação	Página
OPÇÃO-CABINE	611, 612

P

Designação	Página
PAINEL DE FUSÍVEIS	149, 150, 174, 187
PAINEL DE INSTRUMENTOS	612, 613, 615

* TRADUÇÃO NÃO DISPONÍVEL NO MOMENTO DA IMPRESSÃO

ÍNDICE

Designação	Página
PAINEL LATERAL	617
PÁRA-CHOQUE	227
PÁRA-SOL	632 633
PÁRA-SOL DA CABINE	632 633
PEÇAS DIVERSAS	648
PEDAL DO GOVERNADOR	618 619
PEGA-MÃO	580
PISTÃO E BIELA	67 68
PLACA DE IDENTIFICAÇÃO (*ENGLISH, GERMAN, SPANISH)	237 238
PLACA DE IDENTIFICAÇÃO (MÁQUINA)	651 654 661 667 670
PLACA DE INFORMAÇÃO (PESO MÁXIMO)	235
PLACA E DECALQUE	650 651 654 657 659 661 664 667 670 673
PLACA-RODOVIÁRIO	493 494
PLATAFORMA DO OPERADOR	620
PNEU E ARO	211 212 213 214 215 216 217 218 219 220 221
POLIA DO VIRABREQUIM	70 71
PORTA DA CABINE	567 568 570 572
PORTA DA CABINE (POLICARBONATO)	597
PORTA DA CABINE (POLICARBONATO)	562
PORTA E MONTAGEM-CABINA	562 565
POSICIONADOR-GARFO	475
PROTETOR - CORREIAS	44
PROTETOR - ROPS/FOPS	579
PUBLICAÇÃO	606
PURIFICADOR DE AR	97 98

R

Designação	Página
RADIADOR E ARREFECEDOR DE ÓLEO - MONTAGEM	93 95
RADIADOR E ARREFECEDOR DO ÓLEO HIDRÁULICO	91 92
RECUPERAÇÃO DE LÍQUIDO ARREFECEDOR	93 95
REDUÇÃO DE RUÍDO	263
REGULADOR DE TEMPERATURA DA ÁGUA	86 88
RELÉ (CONJ) (CARCAÇA)	175
RELÉ (CONJ) (12-VOLTS)	149 150 187 249 252 293 508 510 551 554
RELÉ (CONJ) (12-VOLTS)	233
RELÉ (CONJ) (12-VOLTS) (AQUECEDOR)	585 587
RELÉ (CONJ) (12-VOLTS) (FERRAMENTA DE TRABALHO)	187
RELÉ (CONJ) (12-VOLTS) (LUZ DE FREIO)	186
RELÉ (CONJ) (12-VOLTS) (PARTIDA)	178 181
RELÉ (CONJ) (12-VOLTS) (PARTIDA A FRIO)	178 181
RELÉ (CONJ) (12-VOLTS) (POTÊNCIA PRINCIPAL)	174 187
RESPIRO (ALOJAMENTO DO TANDEM)	244
RESPIRO (AR CONDICIONADO)	519 520
RESPIRO (COMPRESSOR DO AR CONDICIONADO)	592 594

* TRADUÇÃO NÃO DISPONÍVEL NO MOMENTO DA IMPRESSÃO

ÍNDICE

Designação	Página
RESPIRO (EM LINHA) (ÓLEO HIDRÁULICO)	384
RETENTOR - TAMPA DA VÁLVULA	23, 106
RETENTOR-CABINE	622
REVESTIMENTO - CABINE	602
REVESTIMENTO DA CABINE	601
RODA E PNEU	221, 222, 223, 224, 225, 226

S

SENSOR - TEMPERATURA (LÍQUIDO ARREFECEDOR DO MOTOR)	92
SENSOR - TEMPERATURA (ÓLEO HIDRÁULICO)	367
SENSOR DE PRESSÃO E TEMPERATURA	164
SENSOR DE VELOCIDADE (MOTOR DO VENTILADOR)	372
SENSOR DE VELOCIDADE (SINCRONIZAÇÃO DO MOTOR)	116
SILENCIADOR	101, 102, 103
SIST. DE ILUMINAÇÃO - PISCA-PISCA GIRATÓRIO DE ADVERTÊNCIA	163
SIST. ELETRÔNICO - ACESSÓRIO	140
SISTEMA DE ILUMINAÇÃO - FARÓIS	158, 159
SISTEMA ELETRÔNICO - MÁQUINA	141
SOFTWARE - MÁQUINA (SEGURANÇA)	141, 147
SOLENÓIDE (DESLIGAMENTO - COMBUSTÍVEL)	122, 137
SOLENÓIDE (MOTOR DE PARTIDA)	165
SUPORTE - ARREFECEDR DE ÓLEO E RADIADOR	84
SUPORTE - CAIXA DE ARMAZENAGEM	6, 8, 12, 13, 228, 230
SUPORTE - GARFO	454, 455
SUPORTE - MONTAGEM	641

T

TAMPA - BOCAL DE ENCHIMENTO (COMBUSTÍVEL)	118
TAMPA - BOCAL DE ENCHIMENTO DE ÓLEO (MOTOR)	78
TAMPA - BOCAL DE ENCHIMENTO (TANQUE HIDRÁULICO)	385
TAMPA - CAIXA DIANTEIRA	22
TAMPA - CONSOLO	559, 560
TAMPA - MECANISMO DAS VÁLVULAS	23
TAMPA - PAINEL DE INSTRUMENTOS	561
TAMPA - RADIADOR (PERMUTADOR DE CALOR DE AGUA SALGADA)	91, 92
TAMPA - TUBULAÇÕES	461
TAMPA (BOCAL DE ENCHIMENTO DO ÓLEO DO MOTOR)	57, 61, 78
TAMPA COM RESPIRO (RECUPERAÇÃO DO LÍQUIDO ARREFECEDOR)	93, 95
TAMPA DO PAINEL DO FUSÍVEL	139
TAMPA (TANQUE DE ÁGUA)	502
TANQUE DE ÁGUA	502
TANQUE DE ÁGUA E MONTAGEM	499
TANQUE DE ÓLEO HIDRÁULICO E MONTAGEM	384
TANQUE HIDRÁULICO	385
TAPETE	1, 2, 3, 4, 5, 6, 7, 8, 228, 229, 230, 231
TELA DE SUCÇÃO (TANQUE HIDRÁULICO)	385
TELA FILTRANTE - ÁGUA	498
TELA FILTRANTE (HIDRÁULICO)	337
TELA FILTRANTE (TANQUE DE ÁGUA)	498
TRAVA - ACOPLADOR RÁPIDO	492
TRAVA-CILINDRO	515
TREM DE FORÇA	207
TUBOS - AQUECEDOR	605
TUBOS - AR	99
TUBOS - AR CONDICIONADO	603

* TRADUÇÃO NÃO DISPONÍVEL NO MOMENTO DA IMPRESSÃO

ÍNDICE

Designação	Página
TUBOS - ARREFECEDOR DE ÓLEO HIDRÁULICO	325
TUBOS - BOMBA	339
	341
TUBOS - CAÇAMBA	298
	300
	302
	304
	306
	308
	310
TUBOS - CILINDRO DE INCLINAÇÃO	343
	345
TUBOS - CILINDRO DE LEVANTAMENTO	327
	329
TUBOS - CIRCUITO PILOTO	335
	337
TUBOS - FERRAMENTA DE TRABALHO	347
	350
TUBOS - GARRA	315
	317
	319
TUBOS - SISTEMA HIDROSTÁTICO	199
TUBOS - VENTILADOR HIDRÁULICOS	321
	323
TUBOS DE CONEXÃO	311
	313
TUBOS DO AQUECEDOR	605
TUBULAÇÕES - FILTRO E ESCORVA DO COMBUSTÍVEL	118
TUBULAÇÕES-CONTROLE DE ABAIXAMENTO	331
	333
TURBOALIMENTADOR	104
	106

U

UNI-DENTE	503

V

*V-BELT GP	74
VÁLVULA DE ALÍVIO	363
	371
	403
VÁLVULA DE ALÍVIO (CARGA)	209
VÁLVULA DE ALÍVIO (DE DUAS DIREÇÕES)	209
VÁLVULA DE ALÍVIO (INCLINAÇÃO, AUXILIAR)	393
VÁLVULA DE ALÍVIO (LEVANTAMENTO)	393
VÁLVULA DE ALÍVIO (VELOCIDADE DO VENTILADOR)	369
VÁLVULA DE CONTROLE	393
VÁLVULA DE CONTROLE DA BOMBA (BOMBA DO PISTÃO)	209
VÁLVULA DE CONTROLE E MONTAGEM	392
VÁLVULA DE CONTROLE PILOTO	396
	398
	400
	401
VÁLVULA DE FECHAMENTO	595
	605
VÁLVULA DE FECHAMENTO (ÁGUA)	589
VÁLVULA DE RETENÇÃO	363
VÁLVULA DO RESPIRO (CÁRTER)	23
	106
VÁLVULA E TUBULAÇÔES - ACOPLADOR	386
	389
VÁLVULA MANUAL	395
VÁLVULA SOLENÓIDE	367
	404
	405
	406
	407
VÁLVULA SOLENÓIDE (ACOPLADOR RÁPIDO)	362
VÁLVULA SOLENÓIDE (FLUXO ALTO)	363
VÁLVULA SOLENÓIDE (REFORÇO DO FLUXO ALTO)	363
VÁLVULA SOLENÓIDE (12 VDC)	373
	592
	594
VELA DE AQUECIMENTO; VELA INCANDESCENTE	143
	144
VENTILADOR DE SOPRO	91
	92
VIGIA (NÍVEL DO LÍQUIDO ARREFECEDOR)	92
VIGIA (RADIADOR)	91
VIGIA (TANQUE HIDRÁULICO)	385
VIRABREQUIM	25
	26
	28
VOLANTE DO MOTOR	42
	43

* TRADUÇÃO NÃO DISPONÍVEL NO MOMENTO DA IMPRESSÃO

STICHWORTVERZEICHNIS

Bezeichnung	Seite

A

ABLASSSTOPFEN (MOTORÖL)	57, 61
ABLASSSTOPFEN (MOTORÖLWANNE)	69
ABSPERRVENTIL	595, 605
ABSPERRVENTIL (WASSER)	589
ACHSE	189, 190, 191
ADAPTER - ÖLLEITUNG	265
ANSAUGSIEB (HYDRAULIKTANK)	385
ANSCHLUSS, ELEKTR.	134, 135
ANSCHLUSSGRIFF	488, 489
ANSCHLUSSLEITUNGEN	311, 313
ANSCHLUSSSTÜCK	292, 339, 341, 347
ANTRIEBSKUPPLUNG	557, 592, 594
ARBEITSGERÄT - LEITUNGEN	347, 350
ARBEITSGERÄT - VERDRAHTUNG	187
ARBEITSGERÄTEELEKTRONIK	140
ARBEITSGERÄTEPUMPE U. BEFESTIGUNG	378, 379, 380, 381
ARBEITSGERÄTEVERDRAHTUNGSSATZ	150
ARBEITSLEUCHTEN	151, 152, 158, 159
ARMLEHNE	513
ARNLEHNE U. BEFESTIGUNG	512
AUFKLEBER	289, 290, 291, 642, 643, 645, 647
AUFKLEBER - INFORMATION (FESTZURR-STELLE)	408, 643
AUFKLEBER - SOICHERUNG/RELAIS	139
AUFKLEBER (*FOPS)	579
AUFKLEBER (HOHER FLUSS)	289, 290, 293
AUFKLEBER (REFLEKTIEREND, ROT, WEISS)	493, 494
AUFKLEBER (REFLEKTIV)	493, 494
AUFKLEBER (TEMPERATURREGELUNG)	508, 510, 585, 587
AUSPUFFKRÜMMER	100

B

BATTERIE	132, 133
BATTERIE (12 V, STANDARD)	132
BATTERIE (12 V, WARTUNGSFREI)	133
BEDIENUNGSELEMENTE - KABELSTRANG (HOHER FLUSS)	292, 554
BEDIENUNGSELEMENTE - KABELSTRANG (JOYSTICK)	292, 535, 538, 541, 551, 554
BEFESTIGUNGSHALTERUNG	641
BELEUCHTUNG FÜR STRASSENFAHRT - BEFESTIGUNG	261
BELEUCHTUNGSANLAGE (ROT, GRÜN, LED, 12 V)	148
BELEUCHTUNGSANLAGE (STRASSENAUSRÜSTUNG)	160
BETRIEBSSTUNDENZÄHLER	561
BLINKER (12 V)	160, 249, 252
BREMS- UND RÜCKLEUCHTE	155, 156
BREMS- UND RÜCKLEUCHTEN	162
*BUCKET AR-UTILITY	428, 429

C

*CYLINDER & MTG GP-BUCKET	268

D

DICHTUNGSSATZ	398

* ÜBERSETZUNG ZUM ZEITPUNKT DER DRUCKLEGUNG NICHT VORHANDEN

STICHWORTVERZEICHNIS

Bezeichnung	Seite
DICHTUNGSSATZ (ZAHNRADPUMPE)	369
DOKUMENTATION	606
DREHSTROMGENERATOR	129, 131
DREHZAHLREGLERKABEL	110
DREHZAHLSENSOR (LÜFTERMOTOR)	372
DREHZAHLSENSOR (ZÜNDZEITPUNKT-EINSTELLUNG)	116
DRUCKBEGRENZUNGSVENTIL (UMSCHALT-VENTIL)	209
DRUCKLÜFTER	91, 92
DRUCKLUFTLEITUNGEN	99
DRUCKSCHALTER	169, 170
DRUCKSCHALTER (HYDRAULIKÖL)	195
DRUCKSCHALTER (KLIMAANLAGE)	603
DRUCKSCHALTER (KÜHLMITTEL)	593, 595
DRUCKSCHALTER (MOTORÖL)	164, 170
DRUCKSCHALTER (RÜCKFAHRALARM)	172

E

EINBAUSATZ	592
EINBAUSATZ - KLIMAANLAGE U. HEIZUNG	592, 594
EINFÜLLKAPPE (HYDRAULIKTANK)	385
EINFÜLLKAPPE (KRAFTSTOFF)	118
ELEKTRONIK - MASCHINE	141
ELEKTRONISCHER SCHLÜSSEL (SICHERHEIT)	141, 147
ENDSCHALTER (SCHEIBENWISCHER)	568, 570
ENTLÜFTER (*INLINE) (HYDRAULIKÖL)	384
ENTLÜFTER (KLIMAANLAGE)	519, 520
ENTLÜFTER (KLIMAANLAGENKOMRESSOR)	592, 594
ENTLÜFTER (TANDEMGEHÄUSE)	244
ENTLÜFTERVENTIL (KURBELGEHÄUSE)	23, 106
ERDSCHAUFEL	418, 430, 431, 432, 433

F

FAHERHAUSDICHTUNG	622
FAHRERHAUS - LINER	602
FAHRERHAUS MIT ÜBERROLLSCHUTZ	516, 517
FAHRERHAUS, SONNENBLENDE	632, 633
FAHRERHAUSAUSKLEIDUNG	601
FAHRERHAUSBELEUCHTUNG (12 V)	578
FAHRERHAUSDICHTUNGSSATZ	599
FAHRERHAUSFENSTER	634, 635, 636, 637, 639
FAHRERHAUSHEIZUNG	584, 585, 587, 589
FAHRERHAUSHEIZUNG U. BEFESTIGUNGSTEILE	583
FAHRERHAUSTÜR	567, 568, 570, 572
FAHRERHAUSTÜR (*POLYCARBONATE)	562
FAHRERHAUSTÜR (*POLYCARBONATE)	597
FAHRERHAUSTÜR U. BEFESTIGUNG	562, 565, 597, 598
FAHRERPLATTFORM	620
FAHRERPLATTFORM-KABELSTRANG	175
FAHRERPLATTFORM-KABELSTRANG (UNTEN)	174
FAHRERSITZ	628, 629
FAHRERSITZ, VERSTELLBAR	630
FAHRGESTELLVERDRAHTUNG	174
FAHRWERK	1
FAHRWERK-KABELBAUM (GETRIEBE)	593, 595
FAHRWERK-KABELBAUM (WARNHORN)	183
FENSTERRAHMEN	575, 576
*FILTER ELEMENT-CAB AIR	508, 510, 585, 587
*FILTER ELEMENT-CAB AIR (DRUCKLUFT)	510, 587
*FRAME GP-FORK	480, 481

* ÜBERSETZUNG ZUM ZEITPUNKT DER DRUCKLEGUNG NICHT VORHANDEN

STICHWORTVERZEICHNIS

Bezeichnung	Seite
FUSSMATTE	1
	2
	3
	4
	5
	6
	7
	8
	228
	229
	230
	231

G

GABELEINSTELLER	475
GABELTRÄGER	454
	455
GASFEDER	84
	256
	579
GASFEDER (FAHRERHAUS)	631
GASFEDER (SPERRUNG)	562
	565
	597
	598
GASFEDERGRUPPE	631
GASPEDAL	618
	619
GAZE (KURBELGEHÄUSEENTLÜFTER)	23
	106
GEGENGEWICHT	239
	240
	241
GLÜHKERZE	143
	144
GREIEFERSCHAUFEL	441
	442
	443
	444
GREIFERANSCHLAG	484
	485
	497
GREIFERGABEL	470
	471
	472
	473
	474
GREIFERLEITUNGEN	315
	317
	319
GREIFERRAHMEN	482
GREIFERSCHAUFEL	421
	422
	423
	424
GREIFERZYLINDER	274
GRIFF U. BOLZEN - ANSCHLUSS	486
	487
GRUNDAUSFÜHRUNG	1
	2

H

HALTEGRIFF	580
*HANDLE GP	518
HECKBELEUCHTUNGSVERDRAHTUNG	186
HEIZUNGSLEITUNGEN	605
*HOLDER-CUP	590
HUBARMZYLINDER U. BEFESTIGUNGS-SATZ	269
HUBZYLINDER	282
	283
HUBZYLINDERLEITUNGEN	327
	329
HYDRAULIKBEDIENUNG (MIT VORSTEUE-RUNG)	532
	535
	536
	538
	539
	541
	542
	544
	545
	546
	548
	551
	554
HYDRAULIKDRUCKSPEICHER U. BEFESTIGUNG	264
HYDRAULIKFILTER U. LEITUNGEN	193
HYDRAULIKFITTING	286
	287
	288
	339
HYDRAULIKKÜHLERMOTOR U. BEFESTI-GUNG	365
	366
	367
HYDRAULIKLÜFTERLEITUNGEN	321
	323
HYDRAULIKÖLKÜHLERLEITUNGEN	325
HYDRAULIKPUMPE UND LEITUNGEN	339
	341
HYDRAULIKSYSTEM	289

* ÜBERSETZUNG ZUM ZEITPUNKT DER DRUCKLEGUNG NICHT VORHANDEN

STICHWORTVERZEICHNIS

Bezeichnung	Seite
	290
	291
HYDRAULIKTANK	385
HYDRAULIKTANK UND BEFESTIGUNGSTEILE	384
HYDRAULIKZYLINDER	275
	276
	277
	278
	279
	280
	281
	295
HYDROSTATIKLEITUNGEN	199
HYDROSTATIKMOTOR U. BEFESTIGUNG	203
HYDROSTATIKPUMPE U. BEFESTIGUNG	208

I

IDENTIFIKATIONSSCHILD (*ENGLISH, GERMAN, SPANISH)	238
IDENTIFIKATIONSSCHILD (*ENGLISH, GERMAN, SPANISH)	237
IDENTIFIKATIONSSCHILD (MASCHINE)	651
	654
	661
	667
	670
IDENTIFIZIERUNGS-AUFKLEBER (START-SCHLÜSSELSCHALTER)	147
	148
IDENTIFIZIERUNGS-AUFKLEBER (STECKDOSE, 12 V)	651
	654
	664
	667
	670
IDENTIFIZIERUNGS-AUFKLEBER (STECKDOSE, 12 V)	661
IDENTIFIZIERUNGS-AUFKLEBER (12 KM/H)	6
	8
	12
	13
	228
	232
INFORMATIONSSCHILD (MAX. GEWICHT)	235
INSTRUKTIONS-AUFKLEBER (INSTRUMENTENBRETT)	578
INSTRUKTIONS-AUFKLEBER (INSTRUMENTENTAFEL)	577
INSTRUKTIONS-AUFKLEBER (*MACHINE SECURITY, INTL)	147
	148
INSTRUKTIONS-AUFKLEBER (MASCHINEN-STEUERUNG, HANDBUCH LESEN)	536
	538
	542
	544
	546
	548
INSTRUKTIONS-AUFKLEBER (MASCHINEN-STEUERUNG, HANDBUCH LESEN)	545
INSTRUKTIONS-AUFKLEBER (MASCHINEN-STEUERUNGEN)	532
	535
	539
	541
	551
INSTRUKTIONS-AUFKLEBER (MASCHINEN-STEUERUNGEN)	294
	554
INSTRUKTIONS-AUFKLEBER (NICHT BETRETEN)	295
	657
INSTRUKTIONS-AUFKLEBER (NICHT BETRETEN)	386
	389
INSTRUKTIONS-AUFKLEBER (NOTAUSGANG)	572
	634
INSTRUMENTENTAFEL	612
	613
	615
INSTRUMENTENTAFEL-SICHERUNG	149
	150
	174
	187
INSTRUMENTENTAFELABDECKUNG	561

K

KABELSTRANG - ARBEITSGERÄT	499
KABELSTRANG - ARBEITSGERÄT (*CONNECTING)	410
KABELSTRANG - ARBEITSGERÄT (*LIFT ARM)	149
	187
KABELSTRANG - ARBEITSGERÄT (PLATTFORM)	149
	187
KABELSTRANG - HECKBELEUCHTUNG	160
	174
	233
	249
	252
	261

* ÜBERSETZUNG ZUM ZEITPUNKT DER DRUCKLEGUNG NICHT VORHANDEN

STICHWORTVERZEICHNIS

Bezeichnung	Seite
KABELSTRANG - HECKBELEUCHTUNG (BREMSE)	249, 252
KABELSTRANG - HECKBELEUCHTUNG (BREMSE)	186, 233
KABELSTRANG - HEIZUNG U. KLIMAANLAGE	173, 585, 587, 593, 595
KABELSTRANG - VORDERE BELEUCHTUNG	160, 249, 252
KÄLTEMITTELKOMPRESSOR	519, 520, 592, 594
KÄLTEMITTELKOMPRESSOR U. BEFESTIGUNG	522
KÄLTEMITTELKONDENSATOR U. BEFESTIGUNGSTEILE	523
KAPPE MIT ENTLÜFTER (KÄLTEMITTELRÜCKGEWINNUNG)	93, 95
KAPPE (MOTORÖLFÜLLUNG)	57, 78
KAPPE (MOTORÖLFÜLLUNG)	61
KAPPE (WASSERTANK)	502
KEILRIEMEN (WASSERPUMPE)	72, 74
KIPPSCHALTER (ARBEITSGERÄTEANORDNUNG)	290
KIPPSCHALTER (ELEKTRISCHER STROM, ARBEITSGERÄT)	149, 150, 187
KIPPSCHALTER (FAHRTRICHTUNGSBLINKER)	160, 249, 252
KIPPSCHALTER (FESTSTELLBREMSE)	613, 615
KIPPSCHALTER (HEIZUNG)	508, 510
KIPPSCHALTER (HEIZUNG)	585, 587
KIPPSCHALTER (HINTERE ARBEITSSCHEINWERFER)	158
KIPPSCHALTER (HINTERER SCHEIBENWISCHER)	568, 570
KIPPSCHALTER (HOHER FLUSS)	551, 554
KIPPSCHALTER (HOHER FLUSS)	292
KIPPSCHALTER (KALTSTART)	613, 615
KIPPSCHALTER (KLIMAANLAGE)	508, 510
KIPPSCHALTER (RUNDUM-KENNLEUCHTE)	163
KIPPSCHALTER (SCHNELLWECHSELEINRICHTUNG)	295, 457
KIPPSCHALTER (STRASSENBELEUCHTUNG)	160, 249, 252
KIPPSCHALTER (VORDERER ARBIETSSCHEINWERFER)	613, 615
KIPPSCHALTER (WARNLEUCHTEN)	160, 249, 252
KIPPZYLINDER	284, 285
*KIT-QUICK COUPLER CONVERSION	295
KLIMAANLAGE	507, 508, 510
KLIMAANLAGE UND AUFHÄNGUNG	506
KLIMAANLAGENDRUCKSPEICHER	504, 505
KLIMAANLAGENDRUCKSPEICHER (MIT TROCKENMITTEL)	592
KLIMAANLAGENLEITUNGEN	603
KLIMAANLAGENVERDRAHTUNG	173
KOLBENMOTOR	204
KOLBENPUMPE	209
KOLBENPUMPENUMLAUFSATZ (LINKS)	209
KOLBENPUMPENUMLAUFSATZ (RECHTS)	209
KOMBISCHAUFEL	425, 426, 427, 428, 445, 446, 447, 448, 449
KRAFTSTOFF-ENTLÜFTUNGSPUMPE	128
KRAFTSTOFFEINSPRITZPUMPE	122, 125, 126

* ÜBERSETZUNG ZUM ZEITPUNKT DER DRUCKLEGUNG NICHT VORHANDEN

STICHWORTVERZEICHNIS

Bezeichnung	Seite
KRAFTSTOFFENTLÜFTUNGS- U. FILTERLEITUNGEN	118
KRAFTSTOFFENTLÜFTUNGSPUMPE UND -HAUPTFILTER	128
KRAFTSTOFFILTERELEMENT (WASSERABSCHEIDER)	112
KRAFTSTOFFÖRDERPUMPE UND BEFESTIGUNGSTEILE	120
	121
KRAFTSTOFFSTANDANZEIGE	578
KRAFTSTOFFTANK-KABELSTRANG	173
	593
	595
KRAFTÜBERTRAGUNG	207
KRÜMMER U. LEITUNGEN - STEUERUNG	352
	354
KRÜMMERSTEUERUNG U. BEFESTIGUNG	356
	357
	358
KÜHLER U. ÖLKÜHLER - BEFESTIGUNG	84
KÜHLER U. ÖLKÜHLERBEFESTIGUNG	93
	95
KÜHLER UND HYDRAULIKÖLKÜHLER	91
	92
KÜHLERKAPPE (ROHWASSERHEIZUNGSAUSTAUSCHER)	91
	92
KÜHLKOMPRESSOR U. MOTOR	519
	520
KÜHLMITTELÜBERLAUFBEHÄLTER	93
	95
KÜHLWASSERPUMPE	86
	88
KUPPLUNGSVENTIL U. LEITUNGEN	386
	389
KURBELWELLE	25
	26
	28
KURBELWELLEN-RIEMENSCHEIBE	70
	71

L

Bezeichnung	Seite
LADERRAHMEN	244
LAUFBAND UND ANTRIEB (RUNDUM-KENNLEUCHTE)	157
LEICHTGUTSCHAUFEL	425
	438
	439
	440
LEITUNGEN, ABSENKSTEUERUNG	331
	333
LEITUNGSABDECKUNG	461
LEITUNGSFÜHRUNG	247
LEUCHTE (12 V)	578
LEUCHTE (12 V) (KENNZEICHEN)	259
LEUCHTE (12 V, 10 W)	233
LEUCHTE (12 V, 10 W)	578
LEUCHTE (12 V, 21 W)	153
	156
LEUCHTE (12 V, 4 W)	153
LEUCHTE (12 V, 5 W)	155
LEUCHTE (12 V, 5 W)	156
LEUCHTE (12 V, 55 W)	151
	152
	157
LÜFTERBEFESTIGUNG	55
	56
LÜFTERSTEUERUNG	184
LUFTFILTER (HAUPTELEMENT)	98
LUFTFILTER (HILFSELEMENT)	98
LUFTKANAL UND REGULIERUNG	573
LUFTREINIGER	97
	98

M

Bezeichnung	Seite
MAGNETSTOPFEN (RAHMEN)	244
MAGNETVENTIL	367
	404
	405
	406
	407
MAGNETVENTIL (*HIGH FLOW)	363
MAGNETVENTIL (HIGH FLOW BOOST)	363
MAGNETVENTIL (SCHNELLWECHSELEINRICHTUNG)	362
MAGNETVENTIL (12 V DC)	373
	592
	594
*MANIFOLD & SOLENOID GP-CONTROL	359
	360
	361
MASCHINEN-UMBAUSATZ	3
	4
	5
	6
	7
	8
	9
	10
	11
	12
	13
MASCHINENHUBÖSE	255
	256

* ÜBERSETZUNG ZUM ZEITPUNKT DER DRUCKLEGUNG NICHT VORHANDEN

STICHWORTVERZEICHNIS

Bezeichnung	Seite
MASCHINENRAHMEN	246
MASCHINENSTEUERUNG	2
MASCHINENVERDRAHTUNG	184
MEHRZWECKGABEL	477
	478
MEHRZWECKGREIFER	483
	484
	485
MEHRZWECKSCHAUFEL	450
	451
	452
MEMBRANPUMPE	499
MODULARHEBEL	527
	528
	529
	581
	582
MOTOR-EINBAUSATZ	18
	19
MOTORANTRIEB	368
	369
	370
	371
	372
	373
MOTORAUFLAGER	53
	54
MOTORAUSFÜHRUNG	14
	15
	16
	17
MOTORBLOCK	30
	32
MOTORHUBÖSE	51
	52
MOTORKABELSTRANG	178
	181
MOTORÖLABLASS	41
MOTORÖLEINFÜLLSTUTZEN	78
MOTORÖLFILTERELEMENT	57
	61
	196
MOTORSTOPFEN	69
MOTORVERDRAHTUNG	178
	181
MOTORVERKLEIDUNG	242

N

NEIGEZYLINDERLEITUNGEN	343
	345
NOCKENWELLE	20
	21

O

ÖLEINFÜLLKAPPE (MOTOR)	78
ÖLFILTER	195
	196
	197
ÖLFILTER (HOCHLEISTUNG) (HYDRAULIK)	195
ÖLWANNE	57
	61
	65
OPTION - FAHRERHAUS	611
	612

P

PALETTENGABEL	475
	476
PLEUELSTANGE UND KOLBEN	67
	68
*PLUG KIT-CONN	513
PUMPENAUFHÄNGUNG	206
PUMPENSTEUERVENTIL (KOLBENPUMPE)	209

R

RAD UND REIFEN	221
	222
	223
	224
	225
	226
REGELERHEBEL	600
REGLER	113
	116
REGLERSTEUERUNG	111
REIFEN UND FELGE	211
	212
	213
	214
	215
	216
	217
	218
	219
	220
	221
RELAIS (SCHALE)	175
RELAIS (12 V)	149
	150
	187
	233
	293
	508
	510

* ÜBERSETZUNG ZUM ZEITPUNKT DER DRUCKLEGUNG NICHT VORHANDEN

STICHWORTVERZEICHNIS

Bezeichnung	Seite
	551
	554
RELAIS (12 V)	249
	252
RELAIS (12 V) (ARBEITSGERÄT)	187
RELAIS (12 V) (BREMSLEUCHTE)	186
RELAIS (12 V) (HAUPTSTROM)	174
	187
RELAIS (12 V) (HEIZUNG)	585
	587
RELAIS (12 V) (KALTSTART)	178
	181
RELAIS (12 V) (STARTEN)	178
	181
RIEMENSCHUTZ	44
RÜCKFAHRWARNHORN	172
RÜCKLAUFVENTIL - VERTEILER	201
RÜCKSPIEGEL	607
RÜCKSPIEGEL U. BEFESTIGUNG	257
	258
RUNDUM-KENNLEUCHTE	157
	163

S

SATZ - ARBEITSGERÄTE U. VERDRAHTUNG	149
SCHALLDÄMPFER	101
	102
	103
SCHALLDÄMPFUNG	263
SCHALTER (SITZ)	629
SCHALTER (SITZ)	630
SCHALTERKABELSTRANG	184
SCHAUFELLEITUNGEN	298
	300
	302
	304
	306
	308
	310
SCHAUFELZYLINDER	272
	273
SCHAUGLAS (HYDRAULIKTANK)	385
SCHAUGLAS (KÜHLER)	91
SCHAUGLAS (KÜHLMITTELSTAND)	92
SCHEIBENWISCHERARM	568
SCHEIBENWISCHERARM (VORNE)	570
SCHEIBENWISCHERBLATT (*558-MM) (FAHRERHAUSTÜR)	570
SCHEIBENWISCHERBLATT (*558-MM) (VORN, HINTEN)	568
SCHEIBENWISCHERKABELSTRANG	562
	565
	568
	570
	597
	598
SCHEIBENWISCHERMOTOR	568
	570
SCHEINWERFER	153
SCHEINWERFER U. RICHTUNGSLEUCHTE	153
SCHILD	409
	410
SCHILD - STRASSENFAHRT	493
	494
SCHILD UND AUFKLEBER	650
	651
	654
	657
	659
	661
	664
	667
	670
	673
SCHILDFEDER	495
SCHILDRAHMEN	479
SCHLAUCHLEITUNG (OBEN)	93
	95
SCHLAUCHLEITUNG (UNTEN)	93
	95
SCHLÜSSEL	235
SCHMIERPUMPE	80
SCHNEIDMESSER	464
	465
	466
	467
	468
	469
	470
SCHNEIDMESSER - KOMBISCHAUFEL	414
	415
	416
	417
SCHNEIDMESSER UND EINSATZSTÜCK	464
SCHNELLWECHSELEINRICHTUNG	458
	459
SCHNELLWECHSELEINRICHTUNG - ZYLINDER U. VERBINDUNG	462
	463
SCHNELLWECHSELEINRICHTUNGSSPERRE	492
SCHNELLWECHSELVORRICHTUNG	457
SCHWENKSCHILD	411
	412
	413

* ÜBERSETZUNG ZUM ZEITPUNKT DER DRUCKLEGUNG NICHT VORHANDEN

STICHWORTVERZEICHNIS

Bezeichnung	Seite
SCHWUNGRAD	42
	43
SCHWUNGRADGEHÄUSE	45
	46
SCREEN (HYDRAULIK)	337
SCREEN (WASSERTANK)	498
SEITENGEHÄUSE	591
SEITENVERKLEIDUNG	617
SICHERHEITSEINBAUSATZ	147
	148
SICHERHEITSGURT	624
	625
	626
	627
SICHERUNG (10 A)	149
	150
	172
	174
	187
	295
	457
	548
SICHERUNG (15 A)	149
	173
	174
	187
SICHERUNG (20 A)	174
SICHERUNG (30 A)	173
	174
	593
	595
SICHERUNGSTAFEL - ABDECKUNG	139
SOFTWARE - MASCHINE (SICHERHEIT)	141
SOFTWARE - MASCHINE (SICHERHEIT)	147
SOLENOID (KRAFTSTOFFABSTELLUNG)	122
	137
SOLENOID (STARTERMOTOR)	165
SOLENOIDSPULE (12 V)	404
SONNENBLENDE	632
	633
SORTIMENTSATZ	648
SPERRVENTIL	363
STARTERMOTOR	165
	167
	168
STARTSCHLÜSSELSCHALTER	577
STEUERHEBEL	524
	525
	526
	527
	528
	529
	530
	531
STEUERKABEL	518
STEUERKONSOLENABDECKUNG	559
	560
STEUERKRÜMMER	362
	363
	364
STEUERKRÜMMER (*BOOSTED AUXILIARY HYD FLOW)	292
	357
STEUERUNG - MANUELLES STARTEN/ ABSTELLEN	137
STEUERUNG - NICHT PROGRAMMIERT	140
STEUERUNG - NICHT PROGRAMMIERT (SICHERHEIT)	141
STEUERUNGS-KABELSTRANG (SICHERHEIT)	147
	148
STEUERVENTIL	393
STEUERVENTIL UND BEFESTIGUNGSTEILE	392
STIRNRADGEHÄUSE	47
	49
STIRNRADGEHÄUSEDECKEL	22
STOSSSTANGE	227
STRASSENFAHRT - UMRÜSTSATZ	235
	236
	237
	238
STRASSENFAHRTSCHILD UND BEFESTIGUNG	490

T

TANDEMANTRIEB	192
TEMPERATUR- U. DRUCKSENSOR	164
TEMPERATURSCHALTER	171
TEMPERATURSCHALTER (HYDRAULIKÖL)	385
TEMPERATURSCHALTER (KLIMAANLAGE)	508
	510
TEMPERATURSCHALTER (MOTORKÜHLMITTEL)	164
	171
TEMPERATURSENSOR (HYDRAULIKÖL)	367
TEMPERATURSENSOR (MOTORKÜHLMITTEL)	92
THERMOSTATGEHÄUSE	83
TRAGARM	408
TRAGARMSTUFE	496
TRÄGER - STAUKASTEN	6
	8
	12
	13
	228

* ÜBERSETZUNG ZUM ZEITPUNKT DER DRUCKLEGUNG NICHT VORHANDEN

STICHWORTVERZEICHNIS

Bezeichnung	Seite
	230
TRÄGER U. GABEL	453
TURBOLADER	104
	106
TYPENSCHILDBEFESTIGUNG	259
	260

U

ÜBERDRUCKVENTIL	363
	371
	403
ÜBERDRUCKVENTIL (GEBLÄSEGESCHWINDIGKEIT)	369
ÜBERDRUCKVENTIL (HUB)	393
ÜBERDRUCKVENTIL (LADUNG)	209
ÜBERDRUCKVENTIL (*TILT, AUXILIARY)	393
ÜBERROLLSCHUTZAUFLAGER	610
UMBAUSATZ - FÜR STRASSENVERKEHR	228
	229
	230
	231
	232
	233
	234
UMBAUSATZ - NICHT FÜR STRASSENVERKEHR	138
UMLAUFKÜHLWASSERHEIZUNG	145
	146
UMLAUFKÜHLWASSERHEIZUNGS-ELEMENT (MOTOR)	145
	146
UMRÜSTSATZ - ARBEITSGERÄT	456
UMRÜSTSATZ FÜR STRASSENFAHRT	248
	249
	252
UMRÜSTUNGSSATZ - HOCHFLUSS	292
UNIVERSAL-ZAHNSPITZE	503
UNIVERSALSCHAUFEL	419
	420
	434
	435
	436
	437
UNTERBRECHER (105 A)	178
	181
UNTERBRECHER (30 A)	249
	252
UNTERBRECHER (30 A) (BELEUCHTUNG)	160

V

*V-BELT GP	74
VENTIL, MECH.	395
VENTILDECKEL	23
VENTILDECKELDICHTUNG	23
	86
	106
VENTILDECKELDICHTUNG (THERMOSTAT)	83
VENTILSTEUERUNG	75
	76
VERBINDER	292
	341
VERBINDUNG - SCHNELLWECHSELEINRICHTUNG	491
VERDRAHTUNGSKABELBAUM (GLÜHKERZE)	181
VERDRAHTUNGSKABELBAUM-HALTETEILE	142
VERDRAHTUNGSKABELBAUM (WARTUNGSANZEIGE)	561
VERKLEIDUNG - ÜBERROLLSCHUTZ/ STEINSCHLAGSCHUTZ	579
VERRIEGELUNGSSTEUERUNG	136
VERSTAUKASTEN	515
VORHÄNGESCHLOSS	232
	235
	237
	641
VORSTEUERLEITUNGEN	335
	337
VORSTEUERVENTIL	396
	398
	400
	401
VORSTEUERVENTILSATZ (FEDER)	398
VORSTEUERVENTILSTOPFEN	377

W

WARNANZEIGEMODUL	608
	609
WARNANZEIGENSATZ	577
	578
WARNAUFKLEBER (AUFGESPIESSTER PUNKT)	473
	474
	478
	482
WARNAUFKLEBER (*CRUSH HAZARD, STAY BACK, U.S.)	657
WARNAUFKLEBER (FREIRAUM)	248
	642
WARNAUFKLEBER (FREMDSTART, HANDBUCH LESEN, US)	664
WARNAUFKLEBER (HOCHDRUCK, HANDBICH LESEN, US)	654

* ÜBERSETZUNG ZUM ZEITPUNKT DER DRUCKLEGUNG NICHT VORHANDEN

STICHWORTVERZEICHNIS

Bezeichnung	Seite
	661
	664
WARNAUFKLEBER (HOCHDRUCK, HANDBUCH LESEN)	651
	667
	670
WARNAUFKLEBER (KEIN ZUGANG)	651
	667
WARNAUFKLEBER (LENKUNG)	232
	237
WARNAUFKLEBER (QUETSCHGEFAHR)	445
	446
	447
	449
WARNAUFKLEBER (QUETSCHGEFAHR, DIESEN BEREICH NICHT BETRETEN)	411
	412
WARNAUFKLEBER (QUETSCHGEFAHR, NICHT BETRETEN)	657
WARNAUFKLEBER (*UNIVERSAL, READ OMM, U.S.)	664
WARNHORN (NIEDRIGER TON)	545
	546
WARNHORN (24 V, NIEDRIGER TON)	548
WARNHORNVERDRAHTUNG	183
WASSERABSCHEIDER- U. KRAFTSTOFFILTER	112
WASSERPUMPE - RIEMENSCHEIBE	72
	73
WASSERSIEBEINSATZ	498
WASSERTANK	502
WASSERTANK U. BEFESTIGUNGSTEILE	499
WASSERTEMPERATURREGLER	86
	88

Z

Bezeichnung	Seite
ZAHNRADPUMPE	380
	381
	382
	383
ZULASSUNGSSCHILDLEUCHTE	233
	259
ZWISCHENRAD	80
ZYLINDER - SPERRVORRICHTUNG	515
ZYLINDER U. BEFESTIGUNG - WINKELSCHLID	266
	267
ZYLINDERAUFHÄNGUNG	374
	375
	376
ZYLINDERKOPF	34
	36
	37
	39

* ÜBERSETZUNG ZUM ZEITPUNKT DER DRUCKLEGUNG NICHT VORHANDEN

MACHINE ARRANGEMENT

295-7110 CHASSIS AR

S/N: MJH10575-UP

PART OF 295-7226, 295-7227 COMMON AR

SMCS-7000 **i02730756**

NOTE	PART NUMBER	QTY	PART NAME 1 2 3 4 5 6 (PRODUCT LEVEL)	SEE PAGE
Y	*261-6255*	1	AXLE GP	191
Y	*218-5650*	1	BUMPER GP (REAR)	227
Y	*218-5602*	1	CONTROL GP-GOVERNOR	111
Y	*218-6799*	1	CYLINDER & MTG GP-LIFT ARM	269
Y	*218-5803*	1	ENCLOSURE GP-ENGINE	242
Y	*295-7075*	1	FRAME GP-LOADER	244
Y	*156-9809*	1	GUIDE GP-LINES	247
Y	*228-1781*	1	LINES GP-FUEL PRM & FILTER	118
Y	*218-6430*	1	PANEL GP-SIDE	617
Y	*218-6360*	1	PLATFORM GP-OPERATOR	620
Y	*225-8001*	1	WIRING GP-CHASSIS	174

Y-SEPARATE ILLUSTRATION

<END>

295-7226 COMMON AR

S/N: MJH10575-12174

BASE

SMCS-7000 **i02732821**

NOTE	PART NUMBER	QTY	PART NAME 1 2 3 4 5 6 (PRODUCT LEVEL)	SEE PAGE
Y	*218-6350*	1	CAB AR-ENCLOSED ROPS	516
Y	*295-7110*	1	CHASSIS AR	1
Y	*142-8830*	1	COUNTERWEIGHT GP	239
Y	*295-7126*	1	FILM GP	647
Y	*278-1227*	1	HYDRAULIC AR	291
Y	*295-7027*	1	INSTALLATION AR-ENGINE	18
Y	*216-4746*	1	LIGHTING GP-FLOOD (REAR)	158
Y	*6V-1970*	1	LITERATURE GP	606
Y	*261-5750*	1	POWER TRAIN AR	207
Y	*225-7969*	1	WARNING GP-BACKUP	172
	218-5601	1	FLOOR MAT	

Y-SEPARATE ILLUSTRATION

<END>

MACHINE ARRANGEMENT

295-7227 COMMON AR

S/N: MJH12175-UP

SMCS-7000 **i02835654**

NOTE	PART NUMBER	QTY	PART NAME 1 2 3 4 5 6 (PRODUCT LEVEL)	SEE PAGE
Y	*218-6350*	1	CAB AR-ENCLOSED ROPS	516
Y	*295-7110*	1	CHASSIS AR	1
Y	*142-8830*	1	COUNTERWEIGHT GP	239
Y	*295-7126*	1	FILM GP	647
Y	*278-1227*	1	HYDRAULIC AR	291
Y	*295-7028*	1	INSTALLATION AR-ENGINE	19
Y	*216-4746*	1	LIGHTING GP-FLOOD (REAR)	158
Y	*6V-1970*	1	LITERATURE GP	606
Y	*261-5750*	1	POWER TRAIN AR	207
Y	*225-7969*	1	WARNING GP-BACKUP	172
	218-5601	1	FLOOR MAT	

Y-SEPARATE ILLUSTRATION

<END>

295-7491 CONTROL AR-MACHINE—ON, OFF AUXILIARY CONTROL

S/N: MJH10575-UP

AN ATTACHMENT

SMCS-4062, 4284, 4351, 5059, 5705 **i02736507**

NOTE	PART NUMBER	QTY	PART NAME 1 2 3 4 5 6 (PRODUCT LEVEL)	SEE PAGE
Y	*218-5611*	1	CONTROL GP-PILOT OPERATED HYD (WORK TOOL)	532
Y	*218-5931*	1	CONTROL GP-PILOT OPERATED HYD (HYDROSTATIC)	545

Y-SEPARATE ILLUSTRATION

<END>

295-7493 CONTROL AR-MACHINE—AUX PROPORTIONAL FLOW

S/N: MJH10575-UP

AN ATTACHMENT

SMCS-4062, 4284, 4351, 5059, 5705 **i02736504**

NOTE	PART NUMBER	QTY	PART NAME 1 2 3 4 5 6 (PRODUCT LEVEL)	SEE PAGE
Y	*218-5618*	1	CONTROL GP-PILOT OPERATED HYD (WORK TOOL)	539
Y	*218-5932*	1	CONTROL GP-PILOT OPERATED HYD (HYDROSTATIC)	546

Y-SEPARATE ILLUSTRATION

<END>

MACHINE ARRANGEMENT

261-6157 CONVERSION AR-MACHINE—OUTSIDE NACD

S/N: MJH10575-UP
AN ATTACHMENT

SMCS-7000 **i02432695**

NOTE	PART NUMBER	QTY	PART NAME 1 2 3 4 5 6 (PRODUCT LEVEL)	SEE PAGE
Y	*216-6146*	1	BOX GP-STORAGE	515
Y	*218-6708*	1	LIFTING GP-MACHINE	255
Y	*142-8652*	1	LIGHTING GP-STOP & TAIL	162
Y	*261-6121*	1	MOTOR & MTG GP-HYDRAULIC FAN	367
Y	*272-3047*	1	MUFFLER GP	102
Y	*218-5791*	1	PANEL AR-INSTRUMENT	612
Y	*261-6118*	1	RADIATOR & OIL COOLER MTG GP	95
Y	*233-5616*	1	SUPPRESSION GP-SOUND	263
Y	*230-3743*	1	WIRING GP-HORN (WITH MOUNTING)	183
Y	*272-1625*	1	WIRING GP-MACHINE (DEMAND FAN)	184
	218-5601	1	FLOOR MAT	

Y-SEPARATE ILLUSTRATION

<END>

261-6160 CONVERSION AR-MACHINE—NACD

S/N: MJH10575-UP
AN ATTACHMENT

SMCS-7000 **i02454485**

NOTE	PART NUMBER	QTY	PART NAME 1 2 3 4 5 6 (PRODUCT LEVEL)	SEE PAGE
Y	*142-8652*	1	LIGHTING GP-STOP & TAIL	162
Y	*218-6058*	1	MOTOR & MTG GP-HYDRAULIC FAN	365
Y	*272-3047*	1	MUFFLER GP	102
Y	*218-5790*	1	PANEL AR-INSTRUMENT	612
Y	*228-1783*	1	RADIATOR & OIL COOLER MTG GP	93

Y-SEPARATE ILLUSTRATION

<END>

MACHINE ARRANGEMENT

261-6187 CONVERSION AR-MACHINE—GERMANY, ITALY

S/N: MJH10575-UP

AN ATTACHMENT

SMCS-7000 **i02456105**

NOTE	PART NUMBER	QTY	PART NAME 1 2 3 4 5 6 (PRODUCT LEVEL)	SEE PAGE
Y	*216-6146*	1	BOX GP-STORAGE	515
Y	**177-9152**	1	KIT-ROADING PLATE & MOUNTING (BUCKET)	490
Y	*218-6708*	1	LIFTING GP-MACHINE	255
Y	*216-4715*	1	LIGHTING GP-ROADING	160
Y	*175-4238*	1	LOCK GP-QUICK COUPLER (MECHANICAL)	492
Y	*238-7671*	1	MIRROR & MTG GP-REAR VIEW (WITH ROADING LIGHT MOUNT)	257
Y	*261-6121*	1	MOTOR & MTG GP-HYDRAULIC FAN	367
Y	*272-3047*	1	MUFFLER GP	102
Y	*218-5791*	1	PANEL AR-INSTRUMENT	612
Y	*261-6118*	1	RADIATOR & OIL COOLER MTG GP	95
Y	*233-5616*	1	SUPPRESSION GP-SOUND	263
Y	*230-3743*	1	WIRING GP-HORN (WITH MOUNTING)	183
Y	*272-1625*	1	WIRING GP-MACHINE (DEMAND FAN)	184
	218-5601	1	FLOOR MAT	

Y-SEPARATE ILLUSTRATION

<END>

261-6197 CONVERSION AR-MACHINE—OUTSIDE NACD

S/N: MJH10575-UP

AN ATTACHMENT

SMCS-7000 **i02456104**

NOTE	PART NUMBER	QTY	PART NAME 1 2 3 4 5 6 (PRODUCT LEVEL)	SEE PAGE
Y	*216-6146*	1	BOX GP-STORAGE	515
Y	*218-6708*	1	LIFTING GP-MACHINE	255
Y	*142-8652*	1	LIGHTING GP-STOP & TAIL	162
Y	*261-6121*	1	MOTOR & MTG GP-HYDRAULIC FAN	367
Y	*272-3047*	1	MUFFLER GP	102
Y	*218-5791*	1	PANEL AR-INSTRUMENT	612
Y	*261-6118*	1	RADIATOR & OIL COOLER MTG GP	95
Y	*233-5616*	1	SUPPRESSION GP-SOUND	263
Y	*230-3743*	1	WIRING GP-HORN (WITH MOUNTING)	183
Y	*272-1625*	1	WIRING GP-MACHINE (DEMAND FAN)	184
	218-5601	1	FLOOR MAT	

Y-SEPARATE ILLUSTRATION

<END>

MACHINE ARRANGEMENT

278-1212 CONVERSION AR-MACHINE—ITALY

S/N: MJH10575-UP
AN ATTACHMENT

SMCS-7000 **i02445031**

NOTE	PART NUMBER	QTY	PART NAME 1 2 3 4 5 6 (PRODUCT LEVEL)	SEE PAGE
Y	*216-6146*	1	BOX GP-STORAGE	515
Y	*278-1293*	1	CONVERSION GP-ROADING	238
Y	**177-9152**	1	KIT-ROADING PLATE & MOUNTING (BUCKET)	490
Y	*218-6708*	1	LIFTING GP-MACHINE	255
Y	*216-4715*	1	LIGHTING GP-ROADING	160
Y	*175-4238*	1	LOCK GP-QUICK COUPLER (MECHANICAL)	492
Y	*238-7671*	1	MIRROR & MTG GP-REAR VIEW (WITH ROADING LIGHT MOUNT)	257
Y	*261-6121*	1	MOTOR & MTG GP-HYDRAULIC FAN	367
Y	*225-7963*	1	MOUNTING GP-REGISTRATION	260
Y	*272-3047*	1	MUFFLER GP	102
Y	*218-5791*	1	PANEL AR-INSTRUMENT	612
Y	*261-6118*	1	RADIATOR & OIL COOLER MTG GP	95
Y	*233-5616*	1	SUPPRESSION GP-SOUND	263
Y	*230-3743*	1	WIRING GP-HORN (WITH MOUNTING)	183
Y	*272-1625*	1	WIRING GP-MACHINE (DEMAND FAN)	184
Y	*225-7964*	1	WIRING GP-REAR LIGHTING	186
	218-5601	1	FLOOR MAT	

Y-SEPARATE ILLUSTRATION

<END>

278-1220 CONVERSION AR-MACHINE—OUTSIDE NACD

S/N: MJH10575-UP
AN ATTACHMENT

SMCS-7000 **i02444343**

NOTE	PART NUMBER	QTY	PART NAME 1 2 3 4 5 6 (PRODUCT LEVEL)	SEE PAGE
Y	*216-6146*	1	BOX GP-STORAGE	515
Y	**191-9684**	1	FILM GP (CLEARANCE)	642
Y	*218-6708*	1	LIFTING GP-MACHINE	255
Y	*142-8652*	1	LIGHTING GP-STOP & TAIL	162
Y	*261-6121*	1	MOTOR & MTG GP-HYDRAULIC FAN	367
Y	*272-3047*	1	MUFFLER GP	102
Y	*218-5791*	1	PANEL AR-INSTRUMENT	612
Y	*261-6118*	1	RADIATOR & OIL COOLER MTG GP	95
Y	*233-5616*	1	SUPPRESSION GP-SOUND	263
Y	*230-3743*	1	WIRING GP-HORN (WITH MOUNTING)	183
Y	*272-1625*	1	WIRING GP-MACHINE (DEMAND FAN)	184
	218-5601	1	FLOOR MAT	

Y-SEPARATE ILLUSTRATION

<END>

MACHINE ARRANGEMENT

278-1224 CONVERSION AR-MACHINE—GERMANY

S/N: MJH10575-UP

AN ATTACHMENT

SMCS-7000 **i02712904**

NOTE	PART NUMBER	QTY	PART NAME 1 2 3 4 5 6 (PRODUCT LEVEL)	SEE PAGE
Y	*216-6146*	1	BOX GP-STORAGE	515
Y	*278-1292*	1	CONVERSION GP-ROADING (GERMANY)	237
Y	**177-9152**	1	KIT-ROADING PLATE & MOUNTING (BUCKET)	490
Y	*218-6708*	1	LIFTING GP-MACHINE	255
Y	*216-4715*	1	LIGHTING GP-ROADING	160
Y	*175-4238*	1	LOCK GP-QUICK COUPLER (MECHANICAL)	492
Y	*238-7671*	1	MIRROR & MTG GP-REAR VIEW (WITH ROADING LIGHT MOUNT)	257
Y	*261-6121*	1	MOTOR & MTG GP-HYDRAULIC FAN	367
Y	*272-3047*	1	MUFFLER GP	102
Y	*218-5791*	1	PANEL AR-INSTRUMENT	612
Y	*261-6118*	1	RADIATOR & OIL COOLER MTG GP	95
Y	*233-5616*	1	SUPPRESSION GP-SOUND	263
Y	*173-3022*	1	VISOR GP-CAB	633
Y	*230-3743*	1	WIRING GP-HORN (WITH MOUNTING)	183
Y	*272-1625*	1	WIRING GP-MACHINE (DEMAND FAN)	184
	222-5695	1	SUPPORT GP-STORAGE BOX	
	216-6144	1	BRACKET AS	
	233-5680	3	FILM-IDENTIFICATION (13-KM/H)	
			(1-FACING THE REAR OF THE MACHINE, ON THE ENGINE ENCLOSURE, THE LEFT EDGE OF THE FILM TO BE LOCATED 17-MM FROM THE	
			VERTICAL CENTERLINE OF THE MACHINE. THE BOTTOM EDGE OF THE FILM IS 5-MM ABOVE THE SEAM BETWEEN THE HOOD & DOOR ASSEMBLY)	
			(1-FACING THE RIGHT SIDE OF THE MACHINE, LOCATED ON THE LOWER FRAME ASSEMBLY, THE RIGHT EDGE OF THE FILM IS TO BE 661-MM	
			FROM THE FRONT EDGE OF THE LOWER FRAME ASSEMBLY. THE BOTTOM EDGE OF THE FILM IS 425-MM FROM THE BOTTOM EDGE OF THE LOWER	
			FRAME ASSEMBLY)	
			(1-FACING THE LEFT SIDE OF THE MACHINE, LOCATED ON THE LOWER FRAME ASSEMBLY, THE RIGHT EDGE OF THE FILM IS TO BE 661-MM	
			FROM THE FRONT EDGE OF THE LOWER FRAME ASSEMBLY. THE BOTTOM EDGE OF THE FILM IS 425-MM FROM THE BOTTOM EDGE OF THE LOWER	
			FRAME ASSEMBLY)	
	218-5601	1	FLOOR MAT	

Y-SEPARATE ILLUSTRATION

<END>

MACHINE ARRANGEMENT

278-5408 CONVERSION AR-MACHINE—ITALY, HIGH FLOW

S/N: MJH10575-UP

AN ATTACHMENT

SMCS-7000 **i02471459**

NOTE	PART NUMBER	QTY	PART NAME 1 2 3 4 5 6 (PRODUCT LEVEL)	SEE PAGE
Y	*216-6146*	1	BOX GP-STORAGE	515
Y	*278-1293*	1	CONVERSION GP-ROADING	238
Y	**177-9152**	1	KIT-ROADING PLATE & MOUNTING (BUCKET)	490
Y	*218-6708*	1	LIFTING GP-MACHINE	255
Y	*216-4715*	1	LIGHTING GP-ROADING	160
Y	*175-4238*	1	LOCK GP-QUICK COUPLER (MECHANICAL)	492
Y	*238-7672*	1	MIRROR & MTG GP-REAR VIEW (WITH ROADING LIGHT MOUNT)	258
Y	*261-6121*	1	MOTOR & MTG GP-HYDRAULIC FAN	367
Y	*225-7963*	1	MOUNTING GP-REGISTRATION	260
Y	*272-3047*	1	MUFFLER GP	102
Y	*218-5791*	1	PANEL AR-INSTRUMENT	612
Y	*261-6118*	1	RADIATOR & OIL COOLER MTG GP	95
Y	*233-5616*	1	SUPPRESSION GP-SOUND	263
Y	*230-3743*	1	WIRING GP-HORN (WITH MOUNTING)	183
Y	*272-1625*	1	WIRING GP-MACHINE (DEMAND FAN)	184
Y	*225-7964*	1	WIRING GP-REAR LIGHTING	186
	218-5601	1	FLOOR MAT	

Y-SEPARATE ILLUSTRATION

<END>

MACHINE ARRANGEMENT

278-5441 CONVERSION AR-MACHINE—GERMANY, HIGH FLOW

S/N: MJH10575-UP

AN ATTACHMENT

SMCS-7000 **i02450010**

NOTE	PART NUMBER	QTY	PART NAME 1 2 3 4 5 6 (PRODUCT LEVEL)	SEE PAGE
Y	*216-6146*	1	BOX GP-STORAGE	515
Y	*278-1292*	1	CONVERSION GP-ROADING (GERMANY)	237
Y	**177-9152**	1	KIT-ROADING PLATE & MOUNTING (BUCKET)	490
Y	*218-6708*	1	LIFTING GP-MACHINE	255
Y	*216-4715*	1	LIGHTING GP-ROADING	160
Y	*175-4238*	1	LOCK GP-QUICK COUPLER (MECHANICAL)	492
Y	*238-7672*	1	MIRROR & MTG GP-REAR VIEW (WITH ROADING LIGHT MOUNT)	258
Y	*261-6121*	1	MOTOR & MTG GP-HYDRAULIC FAN	367
Y	*272-3047*	1	MUFFLER GP	102
Y	*218-5791*	1	PANEL AR-INSTRUMENT	612
Y	*261-6118*	1	RADIATOR & OIL COOLER MTG GP	95
Y	*233-5616*	1	SUPPRESSION GP-SOUND	263
Y	*173-3022*	1	VISOR GP-CAB	633
Y	*230-3743*	1	WIRING GP-HORN (WITH MOUNTING)	183
Y	*272-1625*	1	WIRING GP-MACHINE (DEMAND FAN)	184
	261-6362	1	PLATE & FILM GP	
	225-4148	1	PLATE	
	222-5695	1	SUPPORT GP-STORAGE BOX	
	216-6144	1	BRACKET AS	
	233-5680	3	FILM-IDENTIFICATION (13-KM/H)	
			(1 - FACING THE REAR OF THE MACHINE, ON THE ENGINE ENCLOSURE, THE LEFT EDGE OF THE FILM 17-MM FROM THE VERTICAL	
			CENTERLINE OF THE MACHINE. THE BOTTOM EDGE OF THE FILM 5-MM ABOVE THE SEAM BETWEEN THE HOOD & DOOR ASSEMBLY)	
			(2 - ON RIGHT & LEFT SIDE OF MACHINE, ON THE LOWER FRAME ASSEMBLY, THE RIGHT EDGE OF THE FILM 661-MM FROM THE FRONT	
			EDGE OF THE LOWER FRAME ASSEMBLY. THE BOTTOM EDGE OF THE FILM 425-MM FROM THE BOTTOM EDGE OF THE LOWER FRAME ASSEMBLY)	
	218-5601	1	FLOOR MAT	

Y-SEPARATE ILLUSTRATION

<END>

MACHINE ARRANGEMENT

295-7038 CONVERSION AR-MACHINE—GERMANY, ITALY

S/N: MJH10575-UP

AN ATTACHMENT

SMCS-7000 **i02732255**

NOTE	PART NUMBER	QTY	PART NAME 1 2 3 4 5 6 (PRODUCT LEVEL)	SEE PAGE
Y	*216-6146*	1	BOX GP-STORAGE	515
Y	**177-9152**	1	KIT-ROADING PLATE & MOUNTING (BUCKET)	490
Y	*218-6708*	1	LIFTING GP-MACHINE	255
Y	*216-4715*	1	LIGHTING GP-ROADING	160
Y	*175-4238*	1	LOCK GP-QUICK COUPLER (MECHANICAL)	492
Y	*238-7671*	1	MIRROR & MTG GP-REAR VIEW (WITH ROADING LIGHT MOUNT)	257
Y	*261-6121*	1	MOTOR & MTG GP-HYDRAULIC FAN	367
Y	*272-3047*	1	MUFFLER GP	102
Y	*218-5791*	1	PANEL AR-INSTRUMENT	612
Y	*261-6118*	1	RADIATOR & OIL COOLER MTG GP	95
Y	*233-5616*	1	SUPPRESSION GP-SOUND	263
Y	*230-3743*	1	WIRING GP-HORN (WITH MOUNTING)	183
Y	*272-1625*	1	WIRING GP-MACHINE (DEMAND FAN)	184

Y-SEPARATE ILLUSTRATION

<END>

295-7049 CONVERSION AR-MACHINE—OUTSIDE NACD

S/N: MJH10575-UP

AN ATTACHMENT

SMCS-7000 **i02733312**

NOTE	PART NUMBER	QTY	PART NAME 1 2 3 4 5 6 (PRODUCT LEVEL)	SEE PAGE
Y	*216-6146*	1	BOX GP-STORAGE	515
Y	*218-6708*	1	LIFTING GP-MACHINE	255
Y	*142-8652*	1	LIGHTING GP-STOP & TAIL	162
Y	*261-6121*	1	MOTOR & MTG GP-HYDRAULIC FAN	367
Y	*272-3047*	1	MUFFLER GP	102
Y	*218-5791*	1	PANEL AR-INSTRUMENT	612
Y	*261-6118*	1	RADIATOR & OIL COOLER MTG GP	95
Y	*233-5616*	1	SUPPRESSION GP-SOUND	263
Y	*230-3743*	1	WIRING GP-HORN (WITH MOUNTING)	183
Y	*272-1625*	1	WIRING GP-MACHINE (DEMAND FAN)	184

Y-SEPARATE ILLUSTRATION

<END>

MACHINE ARRANGEMENT

295-7059 CONVERSION AR-MACHINE—OUTSIDE NACD

S/N: MJH10575-UP

AN ATTACHMENT

SMCS-7000 **i02731048**

NOTE	PART NUMBER	QTY	PART NAME 1 2 3 4 5 6 (PRODUCT LEVEL)	SEE PAGE
Y	*216-6146*	1	BOX GP-STORAGE	515
Y	*218-6708*	1	LIFTING GP-MACHINE	255
Y	*142-8652*	1	LIGHTING GP-STOP & TAIL	162
Y	*261-6121*	1	MOTOR & MTG GP-HYDRAULIC FAN	367
Y	*272-3047*	1	MUFFLER GP	102
Y	*218-5791*	1	PANEL AR-INSTRUMENT	612
Y	*261-6118*	1	RADIATOR & OIL COOLER MTG GP	95
Y	*233-5616*	1	SUPPRESSION GP-SOUND	263
Y	*230-3743*	1	WIRING GP-HORN (WITH MOUNTING)	183
Y	*272-1625*	1	WIRING GP-MACHINE (DEMAND FAN)	184

Y-SEPARATE ILLUSTRATION

<END>

295-7066 CONVERSION AR-MACHINE—OUTSIDE NACD

S/N: MJH10575-UP

AN ATTACHMENT

SMCS-7000 **i02731051**

NOTE	PART NUMBER	QTY	PART NAME 1 2 3 4 5 6 (PRODUCT LEVEL)	SEE PAGE
Y	*216-6146*	1	BOX GP-STORAGE	515
Y	**191-9684**	1	FILM GP (CLEARANCE)	642
Y	*218-6708*	1	LIFTING GP-MACHINE	255
Y	*142-8652*	1	LIGHTING GP-STOP & TAIL	162
Y	*261-6121*	1	MOTOR & MTG GP-HYDRAULIC FAN	367
Y	*272-3047*	1	MUFFLER GP	102
Y	*218-5791*	1	PANEL AR-INSTRUMENT	612
Y	*261-6118*	1	RADIATOR & OIL COOLER MTG GP	95
Y	*233-5616*	1	SUPPRESSION GP-SOUND	263
Y	*230-3743*	1	WIRING GP-HORN (WITH MOUNTING)	183
Y	*272-1625*	1	WIRING GP-MACHINE (DEMAND FAN)	184

Y-SEPARATE ILLUSTRATION

<END>

MACHINE ARRANGEMENT

295-7149 CONVERSION AR-MACHINE—ROADING (ITALY)

S/N: MJH10575-UP
STANDARD FLOW
AN ATTACHMENT

SMCS-7000 **i02731014**

NOTE	PART NUMBER	QTY	PART NAME 1 2 3 4 5 6 (PRODUCT LEVEL)	SEE PAGE
Y	*216-6146*	1	BOX GP-STORAGE	515
Y	*278-1293*	1	CONVERSION GP-ROADING	238
Y	**177-9152**	1	KIT-ROADING PLATE & MOUNTING (BUCKET)	490
Y	*218-6708*	1	LIFTING GP-MACHINE	255
Y	*216-4715*	1	LIGHTING GP-ROADING	160
Y	*175-4238*	1	LOCK GP-QUICK COUPLER (MECHANICAL)	492
Y	*238-7671*	1	MIRROR & MTG GP-REAR VIEW (WITH ROADING LIGHT MOUNT)	257
Y	*261-6121*	1	MOTOR & MTG GP-HYDRAULIC FAN	367
Y	*225-7963*	1	MOUNTING GP-REGISTRATION	260
Y	*272-3047*	1	MUFFLER GP	102
Y	*218-5791*	1	PANEL AR-INSTRUMENT	612
Y	*261-6118*	1	RADIATOR & OIL COOLER MTG GP	95
Y	*233-5616*	1	SUPPRESSION GP-SOUND	263
Y	*230-3743*	1	WIRING GP-HORN (WITH MOUNTING)	183
Y	*272-1625*	1	WIRING GP-MACHINE (DEMAND FAN)	184
Y	*225-7964*	1	WIRING GP-REAR LIGHTING	186

Y-SEPARATE ILLUSTRATION

<END>

295-7158 CONVERSION AR-MACHINE—ROADING (ITALY)

S/N: MJH10575-UP
HIGH FLOW
AN ATTACHMENT

SMCS-7000 **i02726337**

NOTE	PART NUMBER	QTY	PART NAME 1 2 3 4 5 6 (PRODUCT LEVEL)	SEE PAGE
Y	*216-6146*	1	BOX GP-STORAGE	515
Y	*278-1293*	1	CONVERSION GP-ROADING	238
Y	**177-9152**	1	KIT-ROADING PLATE & MOUNTING (BUCKET)	490
Y	*218-6708*	1	LIFTING GP-MACHINE	255
Y	*216-4715*	1	LIGHTING GP-ROADING	160
Y	*175-4238*	1	LOCK GP-QUICK COUPLER (MECHANICAL)	492
Y	*238-7672*	1	MIRROR & MTG GP-REAR VIEW (WITH ROADING LIGHT MOUNT)	258
Y	*261-6121*	1	MOTOR & MTG GP-HYDRAULIC FAN	367
Y	*225-7963*	1	MOUNTING GP-REGISTRATION	260
Y	*272-3047*	1	MUFFLER GP	102
Y	*218-5791*	1	PANEL AR-INSTRUMENT	612
Y	*261-6118*	1	RADIATOR & OIL COOLER MTG GP	95
Y	*233-5616*	1	SUPPRESSION GP-SOUND	263
Y	*230-3743*	1	WIRING GP-HORN (WITH MOUNTING)	183
Y	*272-1625*	1	WIRING GP-MACHINE (DEMAND FAN)	184
Y	*225-7964*	1	WIRING GP-REAR LIGHTING	186

Y-SEPARATE ILLUSTRATION

<END>

MACHINE ARRANGEMENT

295-7162 CONVERSION AR-MACHINE—GERMANY

S/N: MJH10575-UP

STANDARD FLOW

CANNOT BE USED WITH HIGH FLOW AUXILIARY HYDRAULICS

AN ATTACHMENT

SMCS-7000 **i02726335**

NOTE	PART NUMBER	QTY	PART NAME 1 2 3 4 5 6 (PRODUCT LEVEL)	SEE PAGE
Y	*216-6146*	1	BOX GP-STORAGE	515
Y	*278-1292*	1	CONVERSION GP-ROADING (GERMANY)	237
Y	**177-9152**	1	KIT-ROADING PLATE & MOUNTING (BUCKET)	490
Y	*218-6708*	1	LIFTING GP-MACHINE	255
Y	*216-4715*	1	LIGHTING GP-ROADING	160
Y	*175-4238*	1	LOCK GP-QUICK COUPLER (MECHANICAL)	492
Y	*238-7671*	1	MIRROR & MTG GP-REAR VIEW (WITH ROADING LIGHT MOUNT)	257
Y	*261-6121*	1	MOTOR & MTG GP-HYDRAULIC FAN	367
Y	*272-3047*	1	MUFFLER GP	102
Y	*218-5791*	1	PANEL AR-INSTRUMENT	612
Y	*261-6118*	1	RADIATOR & OIL COOLER MTG GP	95
Y	*233-5616*	1	SUPPRESSION GP-SOUND	263
Y	*173-3022*	1	VISOR GP-CAB	633
Y	*230-3743*	1	WIRING GP-HORN (WITH MOUNTING)	183
Y	*272-1625*	1	WIRING GP-MACHINE (DEMAND FAN)	184
	222-5695	1	SUPPORT GP-STORAGE BOX	
	216-6144	1	BRACKET AS	
	233-5680	3	FILM-IDENTIFICATION (13-KM/H)	
			(1-FACING THE REAR OF THE MACHINE, ON THE ENGINE ENCLOSURE, THE LEFT EDGE OF THE FILM TO BE LOCATED 17-MM FROM THE	
			VERTICAL CENTERLINE OF THE MACHINE. THE BOTTOM EDGE OF THE FILM IS 5-MM ABOVE THE SEAM BETWEEN THE HOOD & DOOR ASSEMBLY)	
			(1-FACING THE RIGHT SIDE OF THE MACHINE, LOCATED ON THE LOWER FRAME ASSEMBLY, THE RIGHT EDGE OF THE FILM IS TO BE 661-MM	
			FROM THE FRONT EDGE OF THE LOWER FRAME ASSEMBLY. THE BOTTOM EDGE OF THE FILM IS 425-MM FROM THE BOTTOM EDGE OF THE LOWER	
			FRAME ASSEMBLY)	
			(1-FACING THE LEFT SIDE OF THE MACHINE, LOCATED ON THE LOWER FRAME ASSEMBLY, THE RIGHT EDGE OF THE FILM IS TO BE 661-MM	
			FROM THE FRONT EDGE OF THE LOWER FRAME ASSEMBLY. THE BOTTOM EDGE OF THE FILM IS 425-MM FROM THE BOTTOM EDGE OF THE LOWER	
			FRAME ASSEMBLY)	

Y-SEPARATE ILLUSTRATION

<END>

MACHINE ARRANGEMENT

295-7167 CONVERSION AR-MACHINE—GERMANY

S/N: MJH10575-UP

HIGH FLOW

CANNOT BE USED WITH STANDARD FLOW AUXILIARY HYDRAULICS

AN ATTACHMENT

SMCS-7000 **i02726334**

NOTE	PART NUMBER	QTY	PART NAME 1 2 3 4 5 6 (PRODUCT LEVEL)	SEE PAGE
Y	*216-6146*	1	BOX GP-STORAGE	515
Y	*278-1292*	1	CONVERSION GP-ROADING (GERMANY)	237
Y	**177-9152**	1	KIT-ROADING PLATE & MOUNTING (BUCKET)	490
Y	*218-6708*	1	LIFTING GP-MACHINE	255
Y	*216-4715*	1	LIGHTING GP-ROADING	160
Y	*175-4238*	1	LOCK GP-QUICK COUPLER (MECHANICAL)	492
Y	*238-7672*	1	MIRROR & MTG GP-REAR VIEW (WITH ROADING LIGHT MOUNT)	258
Y	*261-6121*	1	MOTOR & MTG GP-HYDRAULIC FAN	367
Y	*272-3047*	1	MUFFLER GP	102
Y	*218-5791*	1	PANEL AR-INSTRUMENT	612
Y	*261-6118*	1	RADIATOR & OIL COOLER MTG GP	95
Y	*233-5616*	1	SUPPRESSION GP-SOUND	263
Y	*173-3022*	1	VISOR GP-CAB	633
Y	*230-3743*	1	WIRING GP-HORN (WITH MOUNTING)	183
Y	*272-1625*	1	WIRING GP-MACHINE (DEMAND FAN)	184
	222-5695	1	SUPPORT GP-STORAGE BOX	
	216-6144	1	BRACKET AS	
	233-5680	3	FILM-IDENTIFICATION (13-KM/H)	
			(1 - FACING THE REAR OF THE MACHINE, ON THE ENGINE ENCLOSURE, THE LEFT EDGE OF THE FILM 17-MM FROM THE VERTICAL	
			CENTERLINE OF THE MACHINE. THE BOTTOM EDGE OF THE FILM 5-MM ABOVE THE SEAM BETWEEN THE HOOD & DOOR ASSEMBLY)	
			(2 - ON RIGHT & LEFT SIDE OF MACHINE, ON THE LOWER FRAME ASSEMBLY, THE RIGHT EDGE OF THE FILM 661-MM FROM THE FRONT	
			EDGE OF THE LOWER FRAME ASSEMBLY. THE BOTTOM EDGE OF THE FILM 425-MM FROM THE BOTTOM EDGE OF THE LOWER FRAME ASSEMBLY)	

Y-SEPARATE ILLUSTRATION

<END>

ENGINE ARRANGEMENT

295-7123 ENGINE AR

S/N: MJH10575-UP

AN ATTACHMENT

SMCS-1000 **i02747709**

NOTE	PART NUMBER	QTY	PART NAME 1 2 3 4 5 6 (PRODUCT LEVEL)	SEE PAGE
Y	**300-5206**	1	ENGINE AR-PRIMARY	17

Y-SEPARATE ILLUSTRATION

ENGINE ARRANGEMENT

292-5719 ENGINE AR-PRIMARY

S/N: CYP1-UP
46 BRAKE KW (61 BHP) AT 3000 RPM
PART OF 295-7023 ENGINE AR-PRIMARY
AN ATTACHMENT

SMCS-1000 **i02890111**

NOTE	PART NUMBER	QTY	PART NAME 1 2 3 4 5 6 (PRODUCT LEVEL)	SEE PAGE
Y	*316-6963*	1	ALTERNATOR GP-CHARGING	131
Y	*308-2306*	1	V-BELT GP (FAN DRIVE)	74
Y	*317-0971*	1	CAMSHAFT GP	21
Y	*317-0967*	1	GOVERNOR GP	116
Y	*308-2313*	1	CONTROL GP-MANUAL START/STOP	137
Y	*308-2283*	1	CRANKSHAFT GP	28
Y	*308-2281*	1	CYLINDER BLOCK GP	32
Y	*308-2284*	1	CYLINDER HEAD GP	39
Y	*315-7813*	1	MOUNTING GP-FAN	56
Y	*308-2297*	1	FILLER GP-ENGINE OIL	78
Y	*308-2298*	1	FILTER GP-OIL	196
Y	*317-0974*	1	FILTER GP-OIL	197
Y	*308-2291*	1	FLYWHEEL GP	43
Y	*316-6896*	1	GLOW PLUG GP	144
Y	*316-7030*	1	HOUSING GP-FLYWHEEL	46
Y	*317-0965*	1	HOUSING GP-FRONT	49
Y	*317-0980*	1	HOUSING GP-WATER REGULATOR	83
Y	*317-0982*	1	LIFTING GP-ENGINE	52
Y	*316-6997*	1	PAN GP-OIL	65
Y	*317-0972*	1	PARTS GP-MISCELLANEOUS	648
Y	*308-2286*	1	PISTON & ROD GP	68
Y	*308-2307*	1	COVER GP-FRONT HOUSING	22
Y	*315-5252*	1	PLUG GP-ENGINE	69
Y	*308-2300*	1	PULLEY GP-CRANKSHAFT	71
Y	*308-2294*	1	PULLEY GP-WATER PUMP	73
Y	*315-7814*	1	PUMP & MTG GP-FUEL TRANSFER	121
Y	*308-2287*	1	PUMP GP-ENGINE OIL	80
Y	*317-0977*	1	PUMP GP-FUEL INJECTION	126
Y	*317-0979*	1	PUMP GP-WATER	88
Y	*308-2293*	1	STARTING MOTOR GP-ELECTRIC	168
Y	*316-6890*	1	SWITCH GP-PRESSURE	170
Y	*308-2317*	1	SWITCH GP-TEMPERATURE (ENGINE COOLANT)	171
Y	*317-0981*	1	TURBOCHARGER GP	106
Y	*308-2285*	1	VALVE MECHANISM GP	76

Y-SEPARATE ILLUSTRATION

ENGINE ARRANGEMENT

295-7023 ENGINE AR-PRIMARY

S/N: MJH12175-UP

AN ATTACHMENT

SMCS-1000 **i02760042**

NOTE	PART NUMBER	QTY	PART NAME 1 2 3 4 5 6 (PRODUCT LEVEL)	SEE PAGE
Y	**292-5719**	1	ENGINE AR-PRIMARY	15

Y-SEPARATE ILLUSTRATION

ENGINE ARRANGEMENT

300-5206 ENGINE AR-PRIMARY

S/N: CSD1-11322
45 BRAKE KW (61 BHP) AT 3000 RPM
PART OF 295-7123 ENGINE AR
AN ATTACHMENT

SMCS-1000 **i02746865**

NOTE	PART NUMBER	QTY	PART NAME 1 2 3 4 5 6 (PRODUCT LEVEL)	SEE PAGE
Y	*246-4319*	1	ALTERNATOR GP-CHARGING	129
Y	*246-3337*	1	CAMSHAFT GP	20
Y	*217-2778*	1	CONNECTION GP-ELECTRICAL	134
Y	*217-5884*	1	CONNECTION GP-ELECTRICAL (ALTERNATOR, STARTING MOTOR)	135
Y	*238-9348*	1	COVER GP-VALVE MECHANISM	23
Y	*270-6915*	1	CRANKSHAFT GP	26
Y	*270-6932*	1	CYLINDER BLOCK GP	30
Y	*303-0337*	1	CYLINDER HEAD GP	37
Y	*217-7221*	1	FLYWHEEL GP	42
Y	*192-0104*	1	GLOW PLUG GP	143
Y	*246-3415*	1	GOVERNOR GP	113
Y	*217-7238*	1	HOUSING GP-FLYWHEEL	45
Y	*246-3338*	1	HOUSING GP-FRONT	47
Y	*251-7618*	1	LIFTING GP-ENGINE	51
Y	*239-0233*	1	MANIFOLD GP-EXHAUST	100
Y	*307-8201*	1	STARTING MOTOR GP-ELECTRIC	167
Y	*154-2435*	1	MOUNTING GP-FAN	55
Y	*311-2345*	1	PAN GP-OIL	57
Y	*270-6930*	1	PISTON & ROD GP	67
Y	*217-2777*	1	PULLEY GP-CRANKSHAFT	70
Y	*251-6791*	1	PULLEY GP-WATER PUMP	72
Y	*176-7711*	1	PUMP & MTG GP-FUEL TRANSFER	120
Y	*295-8181*	1	PUMP GP-FUEL INJECTION	122
Y	*246-3451*	1	PUMP GP-WATER	86
Y	*247-0323*	1	SENSOR GP-TEMP & PRESS (ENGINE COOLANT, ENGINE OIL)	164
Y	*239-0230*	1	TURBOCHARGER GP	104

Y-SEPARATE ILLUSTRATION

ENGINE ARRANGEMENT

295-7027 INSTALLATION AR-ENGINE

S/N: MJH10575-12174

PART OF 295-7226 COMMON AR

SMCS-1000 **i02748615**

NOTE	PART NUMBER	QTY	PART NAME 1 2 3 4 5 6 (PRODUCT LEVEL)	SEE PAGE
Y	*228-1773*	1	AIR CLEANER GP	97
Y	*229-8730*	1	DRAIN GP-ENGINE OIL	41
Y	*246-8723*	1	GUARD GP-BELT	44
Y	*280-8365*	1	LINES GP-AIR	99
Y	*228-1764*	1	MOUNTING GP-ENGINE (SUPPORTS)	53
Y	*241-5789*	1	MOUNTING GP-ENGINE (HARDWARE)	54
Y	*228-1763*	1	MOUNTING GP-PUMP	206
Y	*228-1762*	1	MOUNTING GP-RAD & OIL COOLER	84
Y	*225-8010*	1	WIRING GP-ENGINE	178

Y-SEPARATE ILLUSTRATION

ENGINE ARRANGEMENT

295-7028 INSTALLATION AR-ENGINE

S/N: MJH12175-UP

PART OF 295-7227 COMMON AR

SMCS-1000 **i02748614**

NOTE	PART NUMBER	QTY	PART NAME 1 2 3 4 5 6 (PRODUCT LEVEL)	SEE PAGE
Y	*228-1773*	1	AIR CLEANER GP	97
Y	*229-8730*	1	DRAIN GP-ENGINE OIL	41
Y	*246-8723*	1	GUARD GP-BELT	44
Y	*280-8365*	1	LINES GP-AIR	99
Y	*228-1764*	1	MOUNTING GP-ENGINE (SUPPORTS)	53
Y	*241-5789*	1	MOUNTING GP-ENGINE (HARDWARE)	54
Y	*228-1763*	1	MOUNTING GP-PUMP	206
Y	*228-1762*	1	MOUNTING GP-RAD & OIL COOLER	84
Y	*225-8010*	1	WIRING GP-ENGINE	178

Y-SEPARATE ILLUSTRATION

BASIC ENGINE

246-3337 CAMSHAFT GP

S/N: CSD1-11322
PART OF 300-5206 ENGINE AR-PRIMARY
AN ATTACHMENT

SMCS-1210, 1211, 1212 **i01992078**

NOTE	REF NO	GRAPHIC REF	PART NUMBER	QTY	PART NAME 1 2 3 4 5 6 (PRODUCT LEVEL)	SEE PAGE
	1	1	**217-7174**	1	TAPPET	
	2	1	**154-4504**	1	CAMSHAFT AS	
	2A	1	**153-6492**	1	KEY-WOODRUFF	
	2B	1	**154-4506**	3	SPACER	
	2C	1	**154-4507**	1	GEAR-CAMSHAFT (22 TEETH)	
	2D	1	**154-4508**	1	GEAR-CAMSHAFT (66 TEETH)	
	2E	1	**154-4505**	1	BEARING	

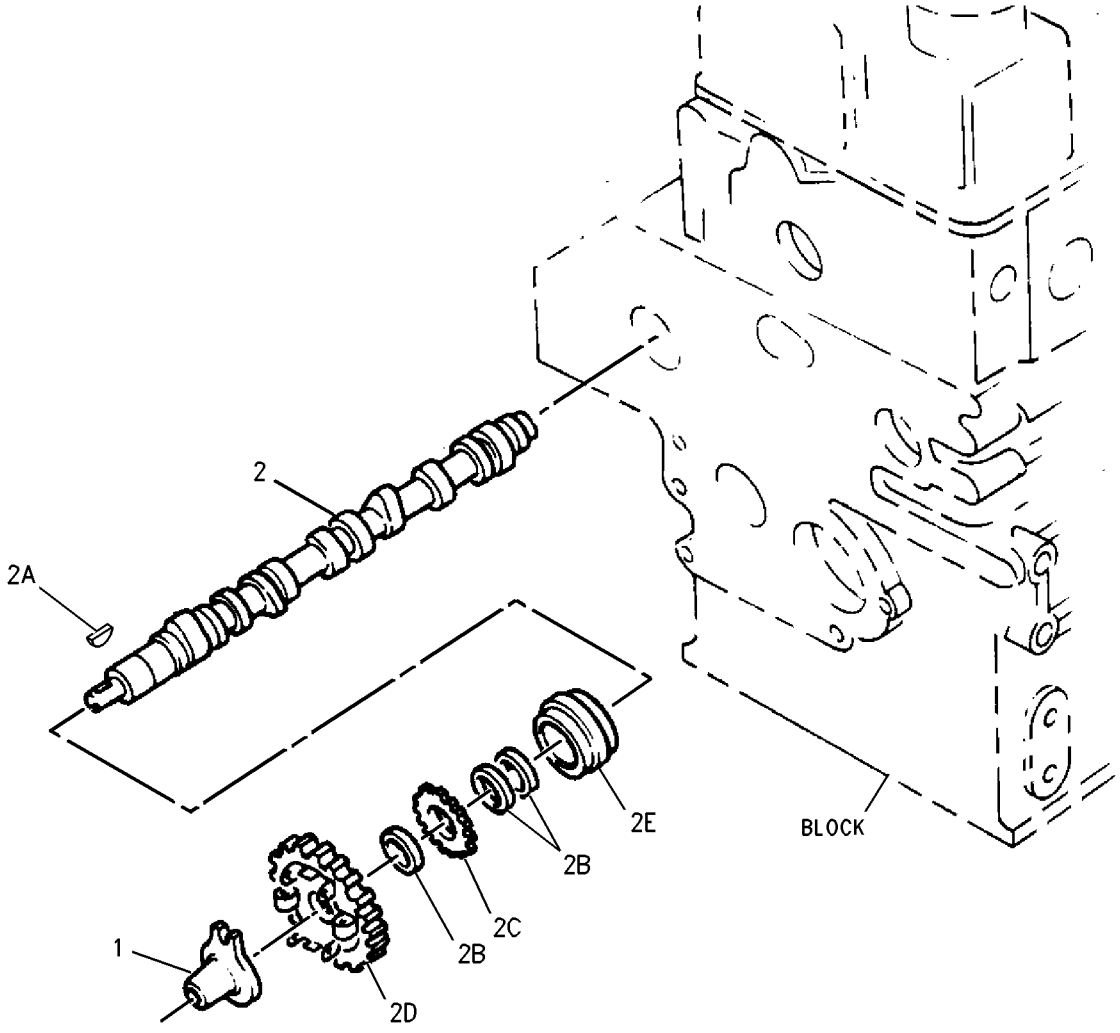

GRAPHIC #1 **<END>** g00715135

317-0971 CAMSHAFT GP

S/N: CYP1-UP

PART OF 292-5719 ENGINE AR-PRIMARY

AN ATTACHMENT

SMCS-1210, 1211, 1212 **i02827173**

NOTE	REF NO	GRAPHIC REF	PART NUMBER	QTY	PART NAME 1 2 3 4 5 6 (PRODUCT LEVEL)	SEE PAGE
	1	1	**153-6838**	2	BOLT	
	2	1	**154-1680**	1	PLATE	
	3	1	**308-1904**	1	SLIDER	
	4	1	**308-1902**	1	CAMSHAFT AS	
	4A	1	**153-6492**	1	KEY-WOODRUFF	
	4B	1	**154-4505**	1	BEARING	
	4C	1	**308-1903**	1	GEAR-CAMSHAFT (66-TEETH)	
	4D	1	**313-9323**	1	SPACER	

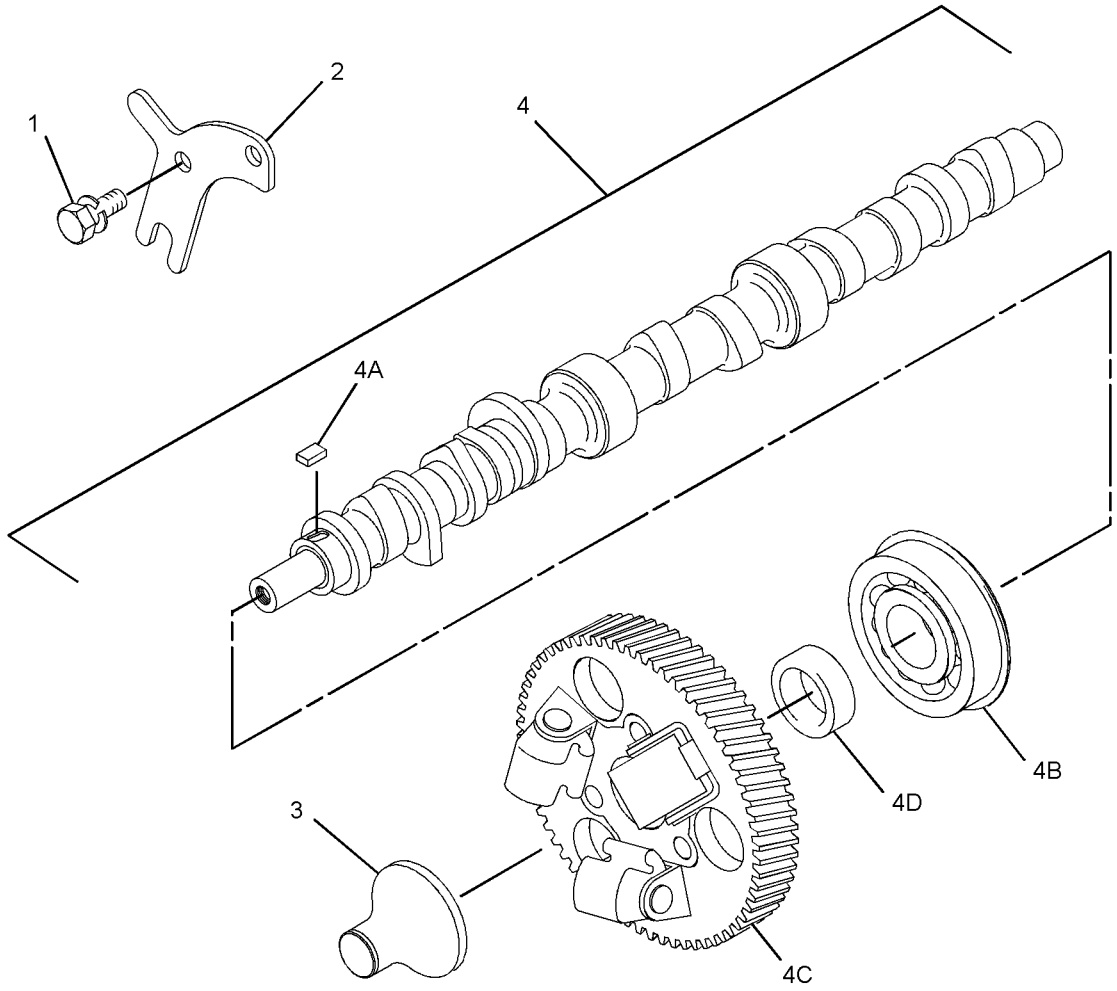

GRAPHIC #1 **<END>** g01418833

BASIC ENGINE

308-2307 COVER GP-FRONT HOUSING

S/N: CYP1-UP
PART OF 292-5719 ENGINE AR-PRIMARY
AN ATTACHMENT

SMCS-1166 **i02752401**

NOTE	REF NO	GRAPHIC REF	PART NUMBER	QTY	PART NAME 1 2 3 4 5 6 (PRODUCT LEVEL)	SEE PAGE
	1	1	**154-2403**	2	WASHER	
	2	1	**308-1875**	2	SEAL-O-RING	
	3	1	**308-1912**	2	COVER	
	4	1	**308-1913**	2	BOLT	
	5	1	**311-1171**	2	NUT	

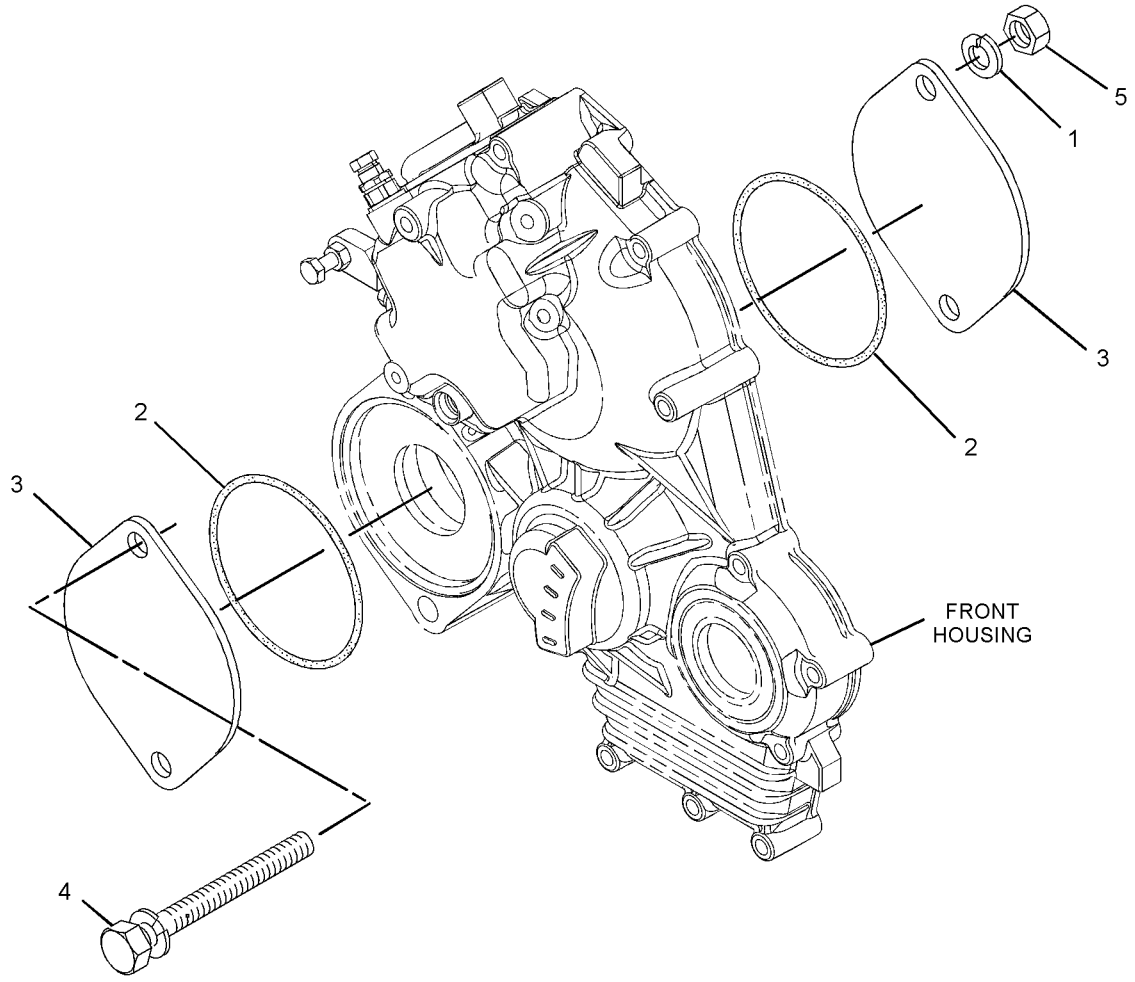

GRAPHIC #1 **<END>** g01415718

238-9348 COVER GP-VALVE MECHANISM

S/N: CSD1-11322
PART OF 300-5206 ENGINE AR-PRIMARY
AN ATTACHMENT

SMCS-1107 **i02546696**

NOTE	REF NO	GRAPHIC REF	PART NUMBER	QTY	PART NAME 1 2 3 4 5 6 (PRODUCT LEVEL)	SEE PAGE
	1	1	**153-5939**	1	GAUZE (CRANKCASE BREATHER)	
	2	1	**165-2140**	2	BOLT	
	3	1	**153-5962**	3	BOLT	
	4	1	**153-7640**	2	BOLT	
	5	1	**154-1347**	4	NUT	
	6	1	**190-3762**	4	WASHER	
	7	1	**183-1165**	1	PLUG	
	8	1	**217-5859**	1	VALVE-BREATHER (CRANKCASE)	
	9	1	**217-5861**	1	PLATE-RETAINING	
	10	1	**217-5862**	6	BOLT	
	11	1	**217-5864**	1	GASKET	
	12	1	**233-0695**	1	SEAL-VALVE COVER	
	13	1	**238-8731**	1	ADAPTER-BREATHER	
	14	1	**238-9289**	1	COVER-VALVE	
	15	1	**238-9295**	1	BOLT	
C	16	1	**262-3975**	1	GASKET	
C	17	1	**249-1486**	1	CONNECTION-AIR	

C-CHANGE FROM PREVIOUS TYPE

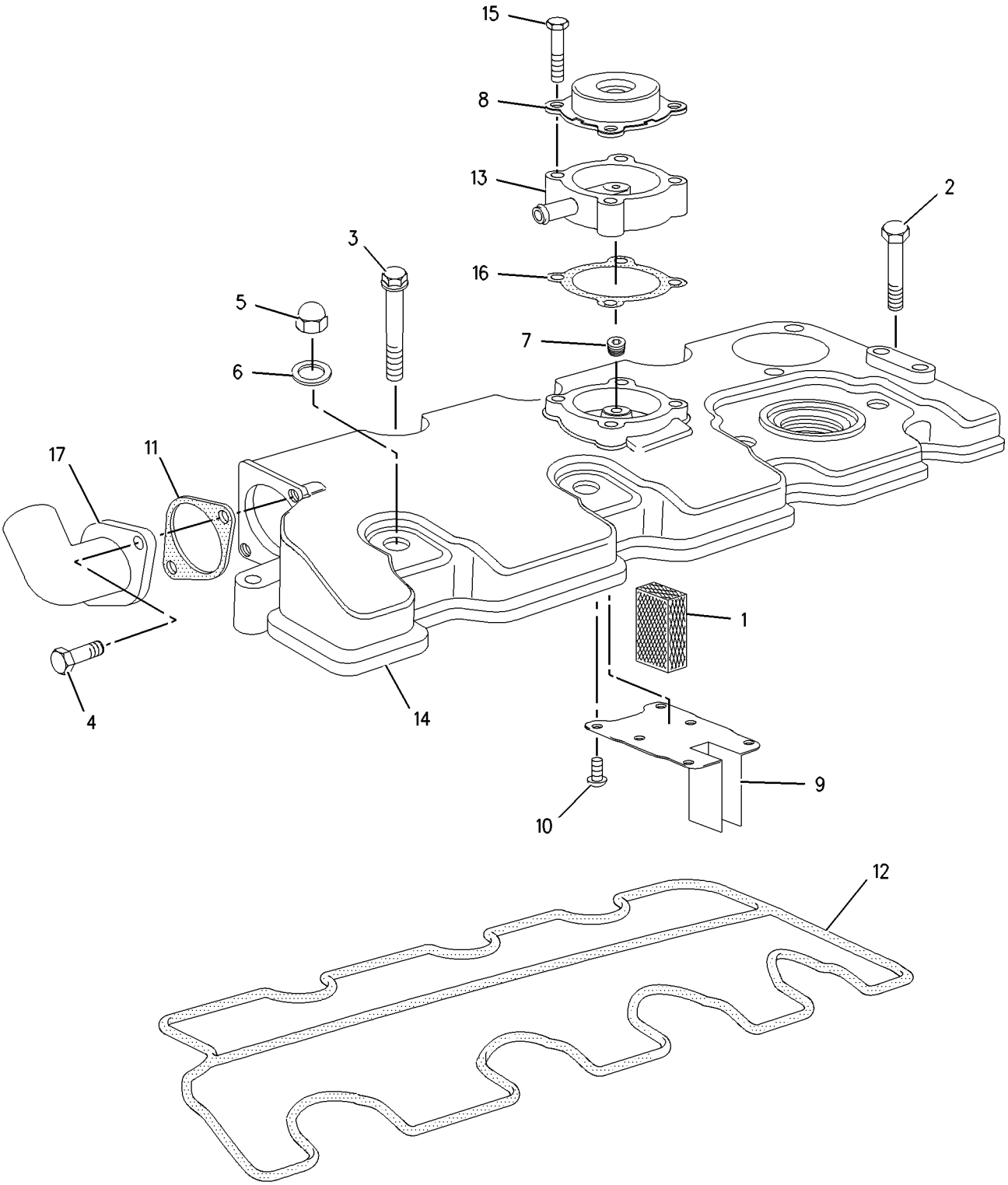

GRAPHIC #1 **<END>** g01007735

154-1201 CRANKSHAFT GP

S/N: CSD9241-11322
PART OF 270-6915 CRANKSHAFT GP
AN ATTACHMENT

SMCS-1202 **i01498296**

NOTE	REF NO	GRAPHIC REF	PART NUMBER	QTY	PART NAME 1 2 3 4 5 6 (PRODUCT LEVEL)	SEE PAGE
	1	1	*153-5518*	1	KEY	
	2	1	*154-1202*	1	GEAR-CRANKSHAFT (33 TEETH)	

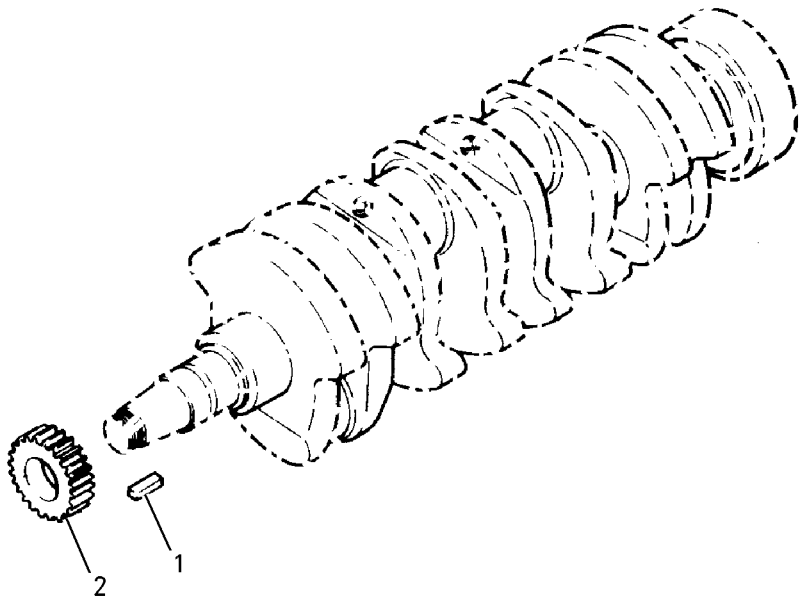

GRAPHIC #1 **<END>** g00777635

BASIC ENGINE

270-6915 CRANKSHAFT GP

S/N: CSD1-11322
PART OF 300-5206 ENGINE AR-PRIMARY
AN ATTACHMENT

SMCS-1202 **i02817662**

NOTE	REF NO	GRAPHIC REF	PART NUMBER	QTY	PART NAME 1 2 3 4 5 6 (PRODUCT LEVEL)	SEE PAGE
	1	1	**154-0181**	1	CAP AS-BEARING	
	1A	1	**153-5402**	2	DOWEL	
	1B	1	**154-0385**	2	BOLT	
	2	1	**154-0386**	1	CAP AS-BEARING	
	2A	1	**153-5402**	2	DOWEL	
	2B	1	**154-0385**	2	BOLT	
	3	1	**154-0388**	1	CAP AS-BEARING	
	3A	1	**153-5402**	2	DOWEL	
	3B	1	**154-0385**	2	BOLT	
	4	1	**154-0389**	1	CAP AS-BEARING	
	4A	1	**153-5402**	2	DOWEL	
	4B	1	**154-0385**	2	BOLT	
Y	5	1	**154-1201**	1	CRANKSHAFT GP	25
	6	1	**154-1230**	1	WASHER-THRUST	
	7	1	**154-1231**	2	WASHER-THRUST	
	8	1	**156-6971**	3	BOLT	
	9	1	**154-1203**	1	KIT-CRANKSHAFT BEARING (MAIN)	
		1	**161-7163**	1	KIT-CRANKSHAFT BEARING (0.25-MM US)	
		1	**161-7164**		KIT-CRANKSHAFT BEARING (0.5-MM US)	
	10	1	**183-1336**	2	BOLT	

Y-SEPARATE ILLUSTRATION

270-6915 **CRANKSHAFT GP** *(contd.)* **i02817662**

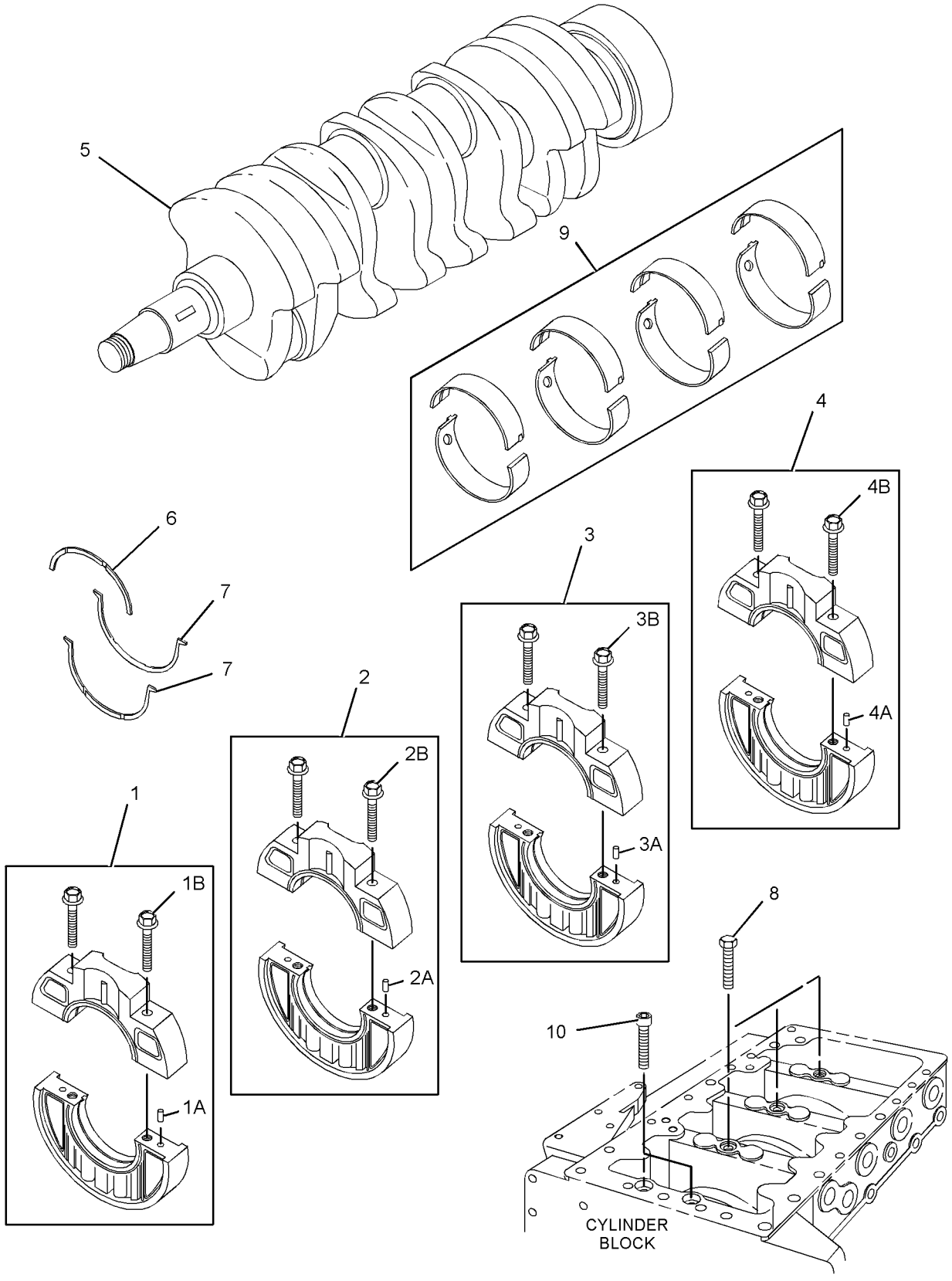

GRAPHIC #1 **<END>** g01193079

BASIC ENGINE

308-2283 CRANKSHAFT GP

S/N: CYP1-UP

PART OF 292-5719 ENGINE AR-PRIMARY

AN ATTACHMENT

SMCS-1202 **i02752406**

NOTE	REF NO	GRAPHIC REF	PART NUMBER	QTY	PART NAME 1 2 3 4 5 6 (PRODUCT LEVEL)	SEE PAGE
	1	1	**154-0181**	1	CAP AS-BEARING	
	1A	1	**153-5402**	2	DOWEL	
	1B	1	**154-0385**	2	BOLT	
	2	1	**154-0386**	1	CAP AS-BEARING	
	2A	1	**153-5402**	2	DOWEL	
	2B	1	**154-0385**	2	BOLT	
	3	1	**154-0388**	1	CAP AS-BEARING	
	3A	1	**153-5402**	2	DOWEL	
	3B	1	**154-0385**	2	BOLT	
	4	1	**154-0389**	1	CAP AS-BEARING	
	4A	1	**153-5402**	2	DOWEL	
	4B	1	**154-0385**	2	BOLT	
	5	1	**154-1230**	1	WASHER-THRUST	
	6	1	**154-1231**	2	WASHER-THRUST	
	7	1	**156-6971**	3	BOLT	
	8	1	**183-1336**	2	BOLT	
	9	1	**308-1852**	1	CRANKSHAFT AS	
	9A	1	**153-5518**	1	KEY	
	9B	1	**308-1853**	1	GEAR-CRANKSHAFT	
	10	1	**308-1855**	1	KIT-BEARING	
	11	1	**308-2362**	1	KIT-BEARING	

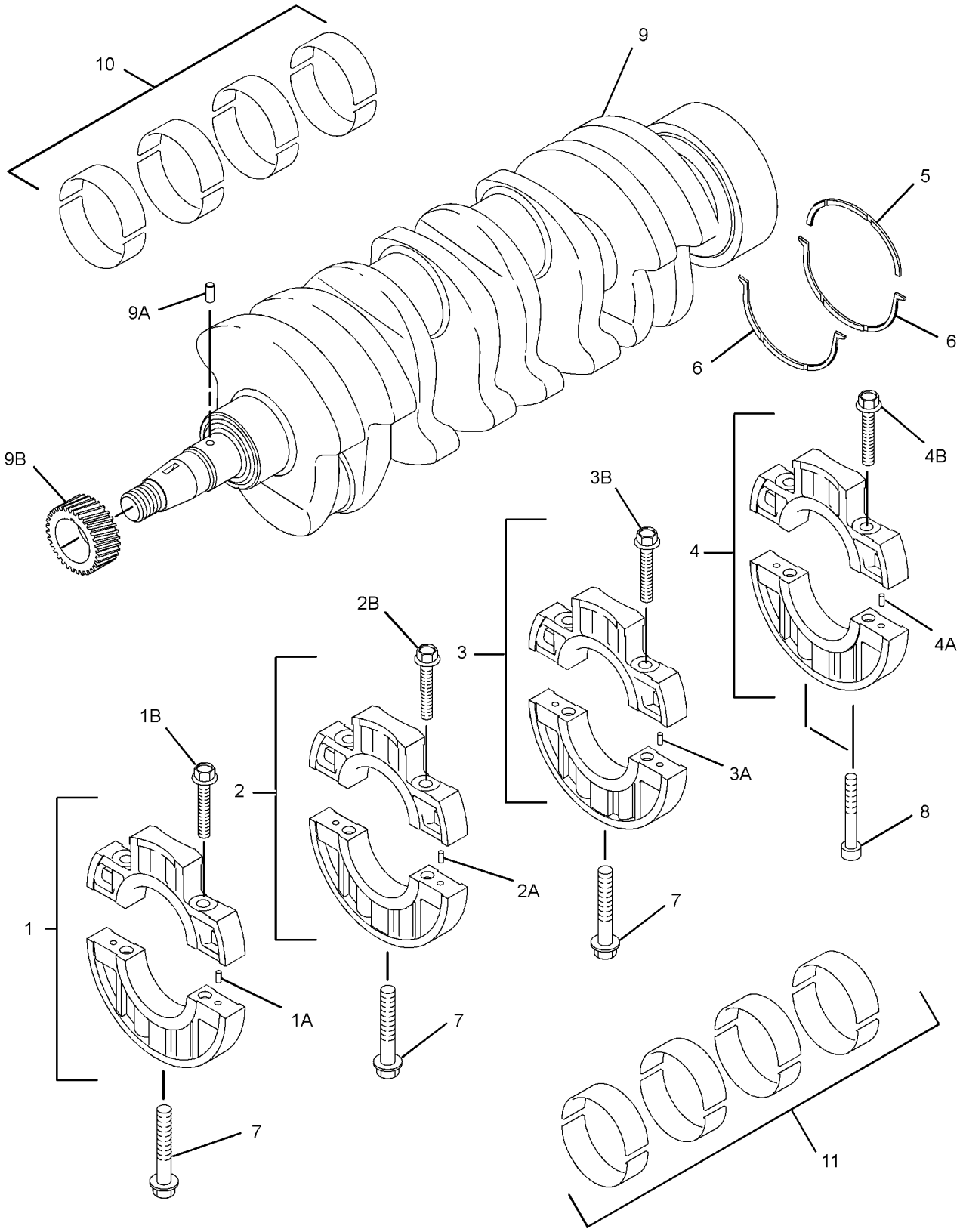

GRAPHIC #1 **<END>** g01406829

BASIC ENGINE

270-6932 CYLINDER BLOCK GP

S/N: CSD1-11322

PART OF 300-5206 ENGINE AR-PRIMARY

AN ATTACHMENT

SMCS-1201 **i02585857**

NOTE	REF NO	GRAPHIC REF	PART NUMBER	QTY	PART NAME 1 2 3 4 5 6 (PRODUCT LEVEL)	SEE PAGE
	1	1	**237-9315**	1	PLUG	
	2	1	**153-5387**	3	PLUG	
	3	1	**6B-0924**	1	BALL BEARING	
	4	1	**153-5394**	2	DOWEL	
	5	1	**153-5395**	2	DOWEL	
	6	1	**153-5396**	2	PIN	
	7	1	**153-5402**	1	DOWEL	
	8	1	**153-6838**	2	BOLT	
	9	1	**154-0175**	2	PLUG	
	10	1	**154-0176**	1	BUSHING	
	11	1	**154-0177**	1	BUSHING	
	12	1	**154-0178**	1	SEAL	
	13	1	**154-0391**	1	PLATE	
	14	1	**154-0393**	3	STUD	
	15	1	**183-1163**	1	STUD	
	16	1	**183-1164**	1	STUD	
	17	1	**294-4916**	1	BUSHING	
	18	1	**215-2620**	1	GASKET (PLATE)	
	19	1	**217-5770**	2	PLUG	
	20	1	**217-5771**	1	SHAFT	
	21	1	**221-1136**	3	PLUG	

270-6932 **CYLINDER BLOCK GP** *(contd.)* **i02585857**

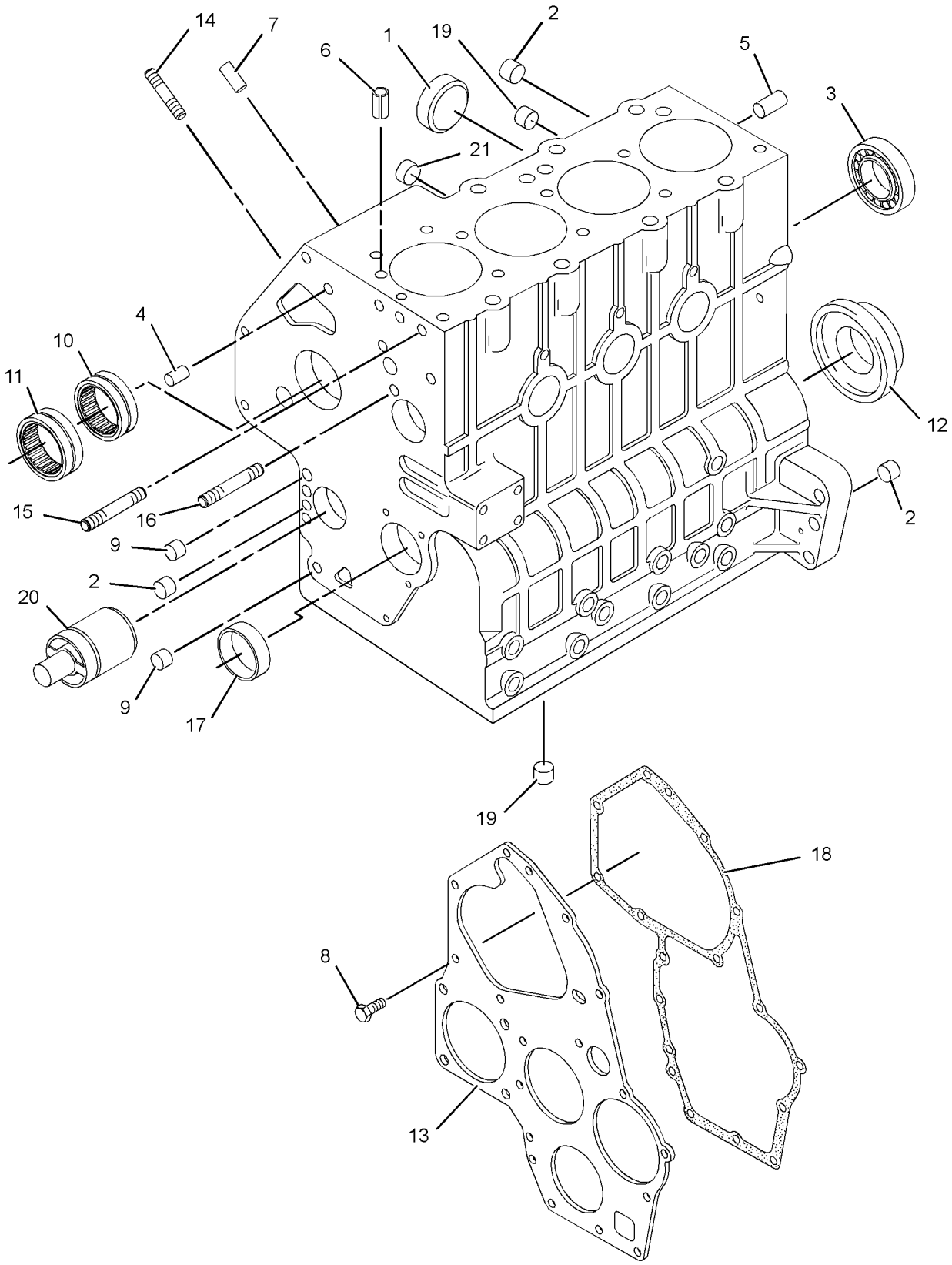

GRAPHIC #1 **<END>** g01192267

BASIC ENGINE

308-2281 CYLINDER BLOCK GP

S/N: CYP1-UP

PART OF 292-5719 ENGINE AR-PRIMARY

AN ATTACHMENT

SMCS-1201 **i02883558**

NOTE	REF NO	GRAPHIC REF	PART NUMBER	QTY	PART NAME 1 2 3 4 5 6 (PRODUCT LEVEL)	SEE PAGE
	1	1	**153-5387**	3	PLUG	
	2	1	**6B-0924**	1	BALL BEARING	
	3	1	**153-5391**	1	PLUG	
	4	1	**153-5394**	2	DOWEL	
	5	1	**153-5395**	2	DOWEL	
	6	1	**153-5396**	2	PIN	
	7	1	**153-5402**	2	DOWEL	
	8	1	**153-6838**	2	BOLT	
	9	1	**154-0175**	2	PLUG	
	10	1	**154-0176**	1	BUSHING	
	11	1	**154-0177**	1	BUSHING	
	12	1	**154-0178**	1	SEAL	
	13	1	**154-0393**	1	STUD	
	14	1	**183-1163**	1	STUD	
	15	1	**183-1164**	1	STUD	
	16	1	**215-2620**	1	GASKET	
	17	1	**217-5770**	3	PLUG	
	18	1	**221-1136**	4	PLUG	
	19	1	**237-9315**	2	PLUG (SEALING)	
	20	1	**237-9316**	5	PLUG (SEALING)	
	21	1	**294-4916**	1	BUSHING (STANDARD)	
B		1	**302-4181**	1	BUSHING (0.25-MM US)	
B		1	**302-4182**	1	BUSHING (0.50-MM US)	
	22	1	**308-1850**	1	SHAFT	
	23	1	**321-5907**	1	PLATE	

B-USE AS REQUIRED

308-2281 **CYLINDER BLOCK GP** *(contd.)* **i02883558**

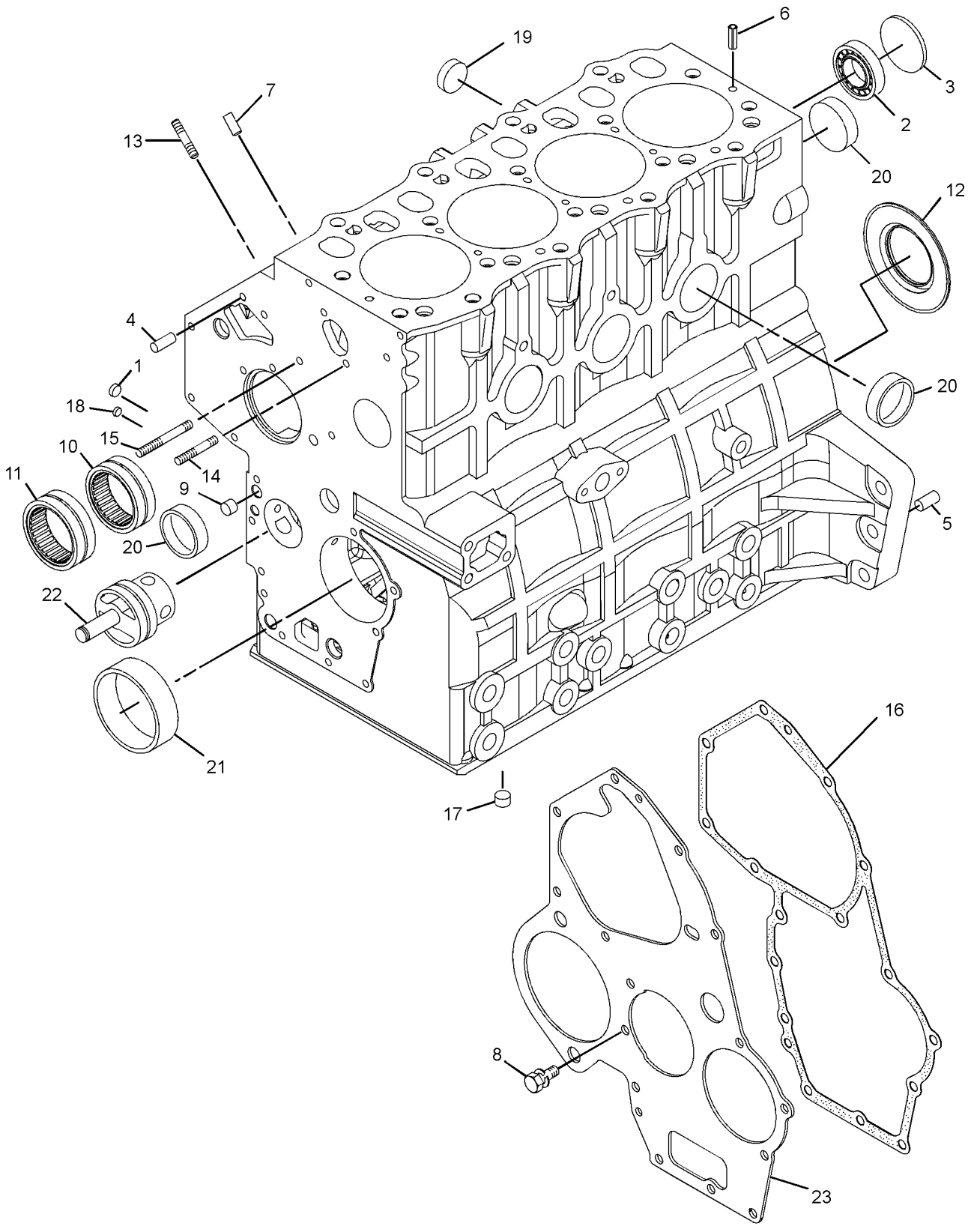

GRAPHIC #1 **<END>** g01398795

BASIC ENGINE

308-1859 CYLINDER HEAD AS

S/N: CYP1-UP

PART OF 308-2284 CYLINDER HEAD GP

AN ATTACHMENT

SMCS-1100 **i02752395**

NOTE	REF NO	GRAPHIC REF	PART NUMBER	QTY	PART NAME 1 2 3 4 5 6 (PRODUCT LEVEL)	SEE PAGE
	1	1	**153-5554**	4	SEAL	
	2	1	**153-5556**	8	RETAINER	
	3	1	**153-5557**	8	CAP	
	4	1	**153-5558**	8	SPRING	
	5	1	**153-5559**	4	SEAL	
	6	1	**237-9315**	6	PLUG (SEALING)	
	7	1	**256-2084**	4	INSERT-INLET VALVE	
	8	1	**256-2085**	4	INSERT-EXHAUST VALVE	
	9	1	**288-6537**	7	CAP	
	10	1	**291-1808**	2	CAP	
	11	1	**303-0338**	3	PLUG	
	12	1	**308-1860**	4	VALVE-INLET	
	13	1	**308-1861**	4	VALVE-EXHAUST	

308-1859 **CYLINDER HEAD AS** *(contd.)* **i02752395**

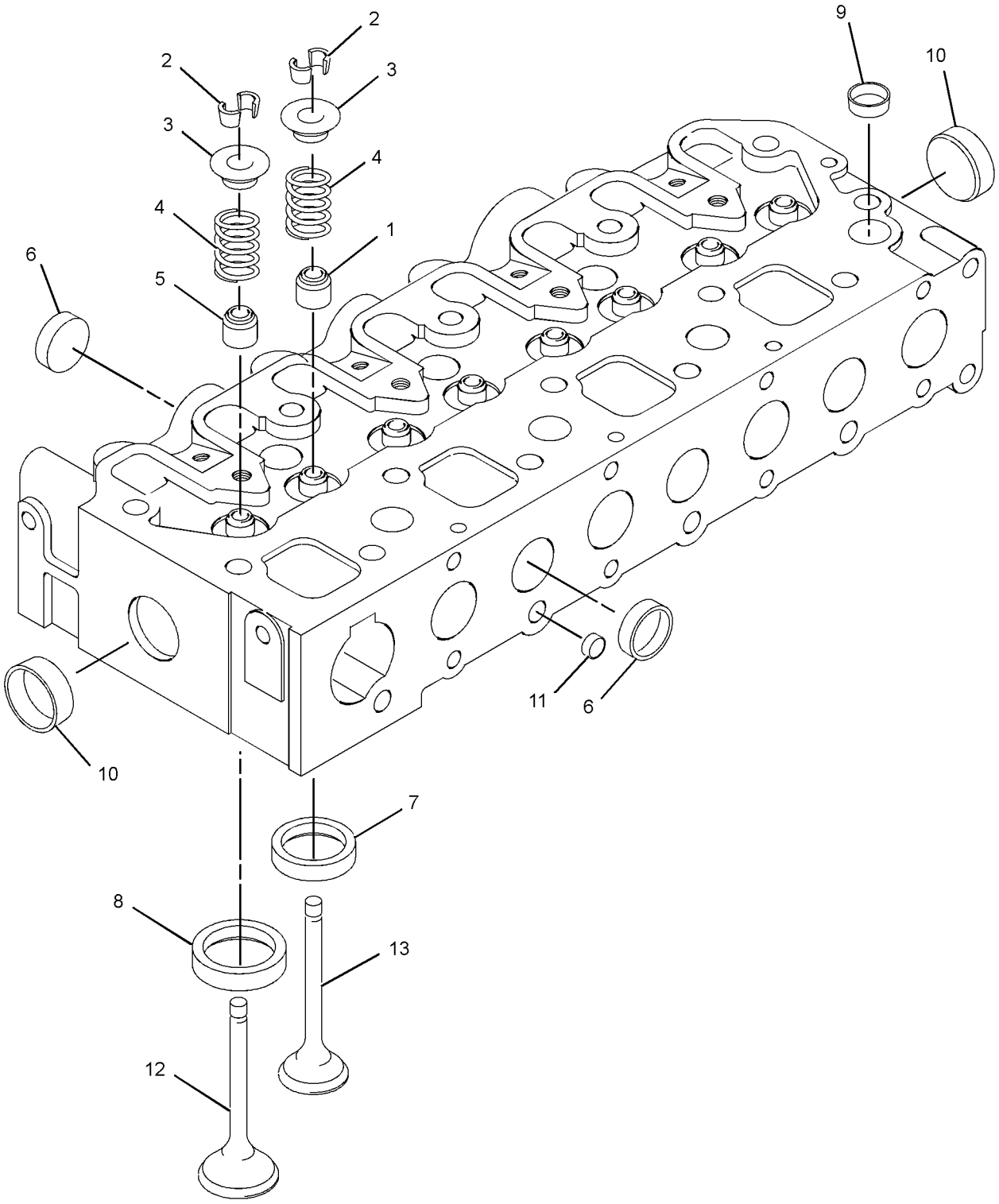

GRAPHIC #1 **<END>** g01418931

236-5127 CYLINDER HEAD GP

S/N: CSD1-11322
PART OF 303-0337 CYLINDER HEAD GP
AN ATTACHMENT

SMCS-1100, 1101, 1103, 1104, 1105, 1108, 1109, 1115, 1117, 1121, 1124, 1125

i02787223

NOTE	REF NO	GRAPHIC REF	PART NUMBER	QTY	PART NAME 1 2 3 4 5 6 (PRODUCT LEVEL)	SEE PAGE
	1	1	**237-9315**	5	PLUG (SEALING)	
	2	1	**291-1808**	2	CAP	
	3	1	**288-6537**	7	CAP	
	4	1	**153-5556**	16	RETAINER	
	5	1	**153-5557**	8	CAP	
	6	1	**153-5558**	8	SPRING	
	7	1	**303-0338**	3	PLUG	
	8	1	**154-0888**	4	VALVE-INLET	
	9	1	**154-0889**	4	VALVE-EXHAUST	
	10	1	**256-2085**	4	INSERT-EXHAUST VALVE	
	11	1	**256-2084**	4	INSERT-INLET VALVE	
	12	1	**153-5554**	4	SEAL (EXHAUST)	
	13	1	**153-5559**	4	SEAL (INLET)	

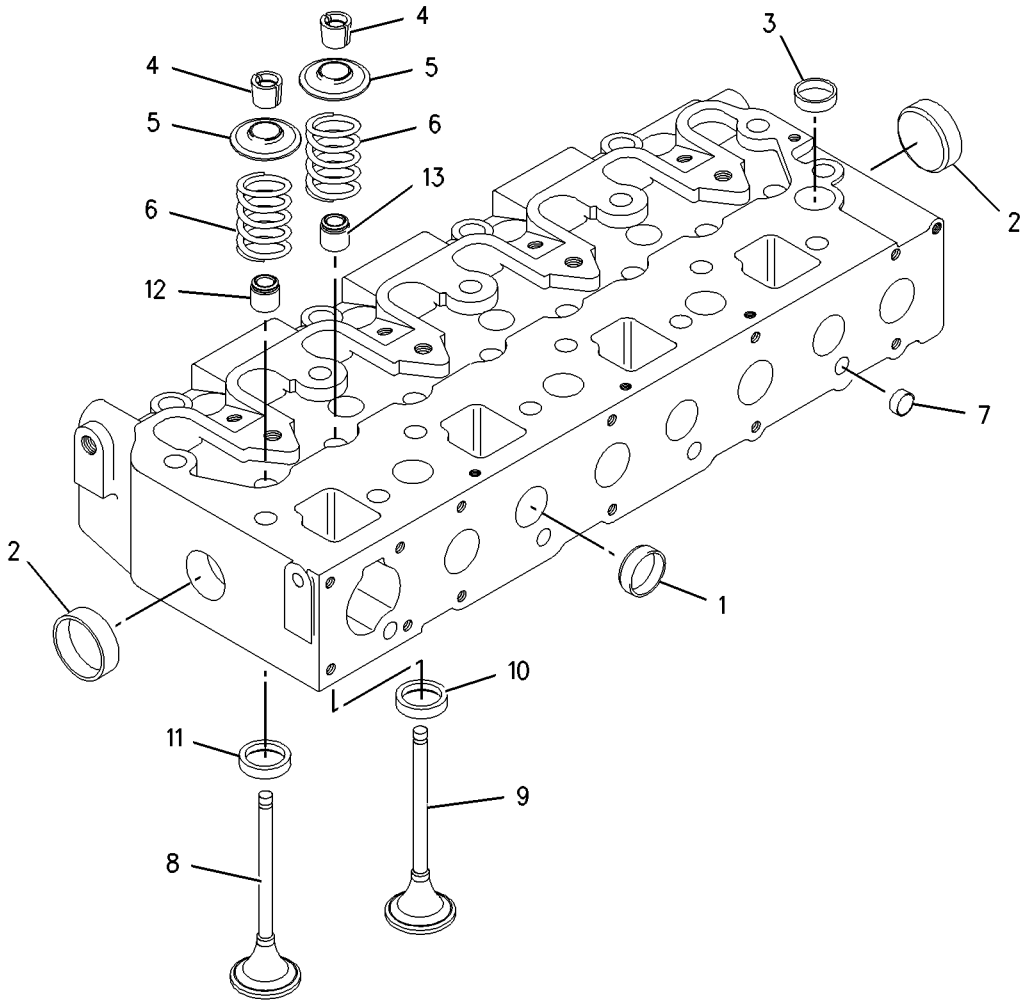

GRAPHIC #1

<END>

g01007374

303-0337 CYLINDER HEAD GP

S/N: CSD1-11322
PART OF 300-5206 ENGINE AR-PRIMARY
AN ATTACHMENT

SMCS-1100, 1101, 1103, 1104, 1105, 1108, 1109, 1115, 1117, 1121, 1124, 1125

i02870321

NOTE	REF NO	GRAPHIC REF	PART NUMBER	QTY	PART NAME 1 2 3 4 5 6 (PRODUCT LEVEL)	SEE PAGE
	1	1	**153-5573**	8	CAP	
	2	2	**153-5961**	2	BOLT	
	3	2	**153-7988**	4	NUT	
	4	2	**154-1246**	4	STUD	
	5	2	**154-1248**	8	ROD	
	6	2	**154-1249**	8	TAPPET	
	7	1	**156-6988**	14	BOLT	
	8	1	**156-6989**	4	BOLT	
	9	1	**183-1164**	1	STUD	
	10	1	**183-3213**	4	STUD	
	11	2	**217-2752**	1	GASKET (VALVE BRACKET)	
Y	12	1	**236-5127**	1	CYLINDER HEAD GP	36
	13	1	**291-3781**	1	GASKET-CYLINDER HEAD (0.5-MM THK)	
Y	14	2	**293-2167**	1	VALVE MECHANISM GP	75

Y-SEPARATE ILLUSTRATION

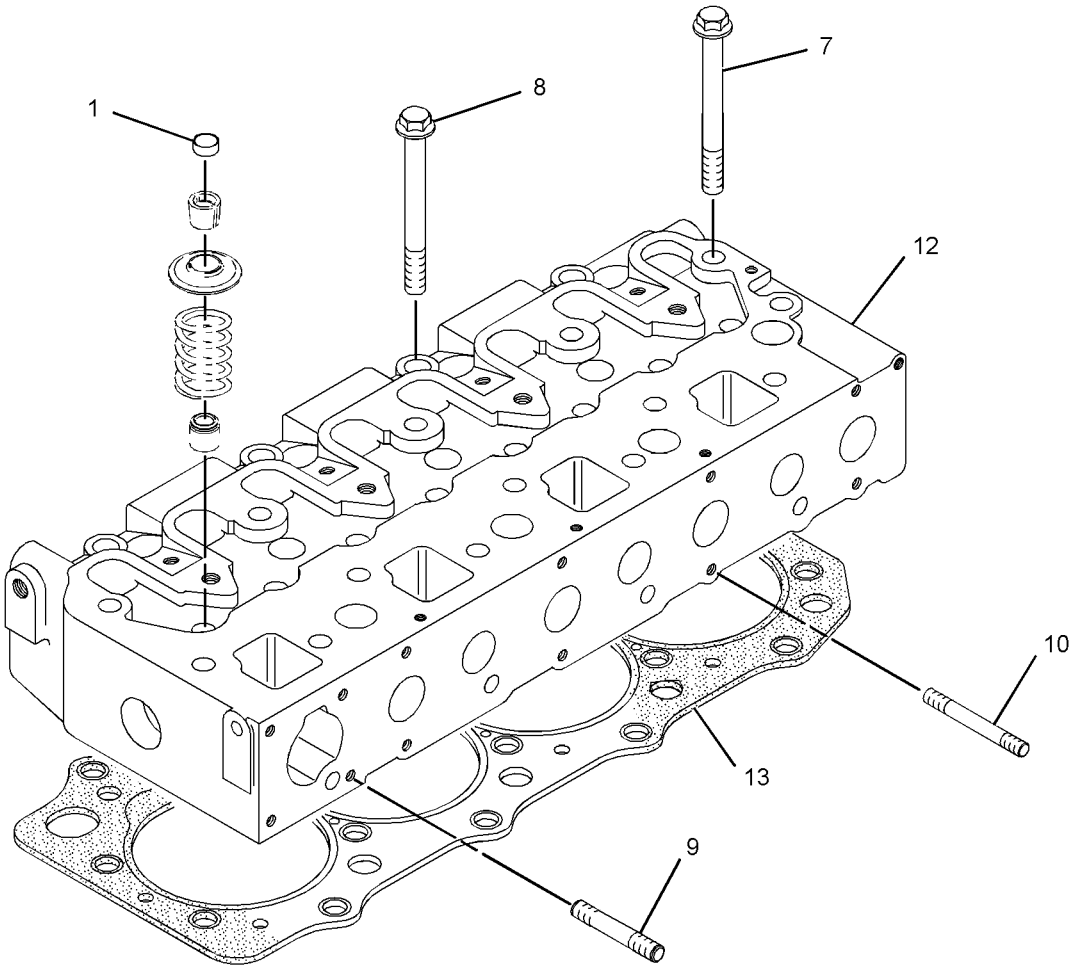

GRAPHIC #1

g01379270

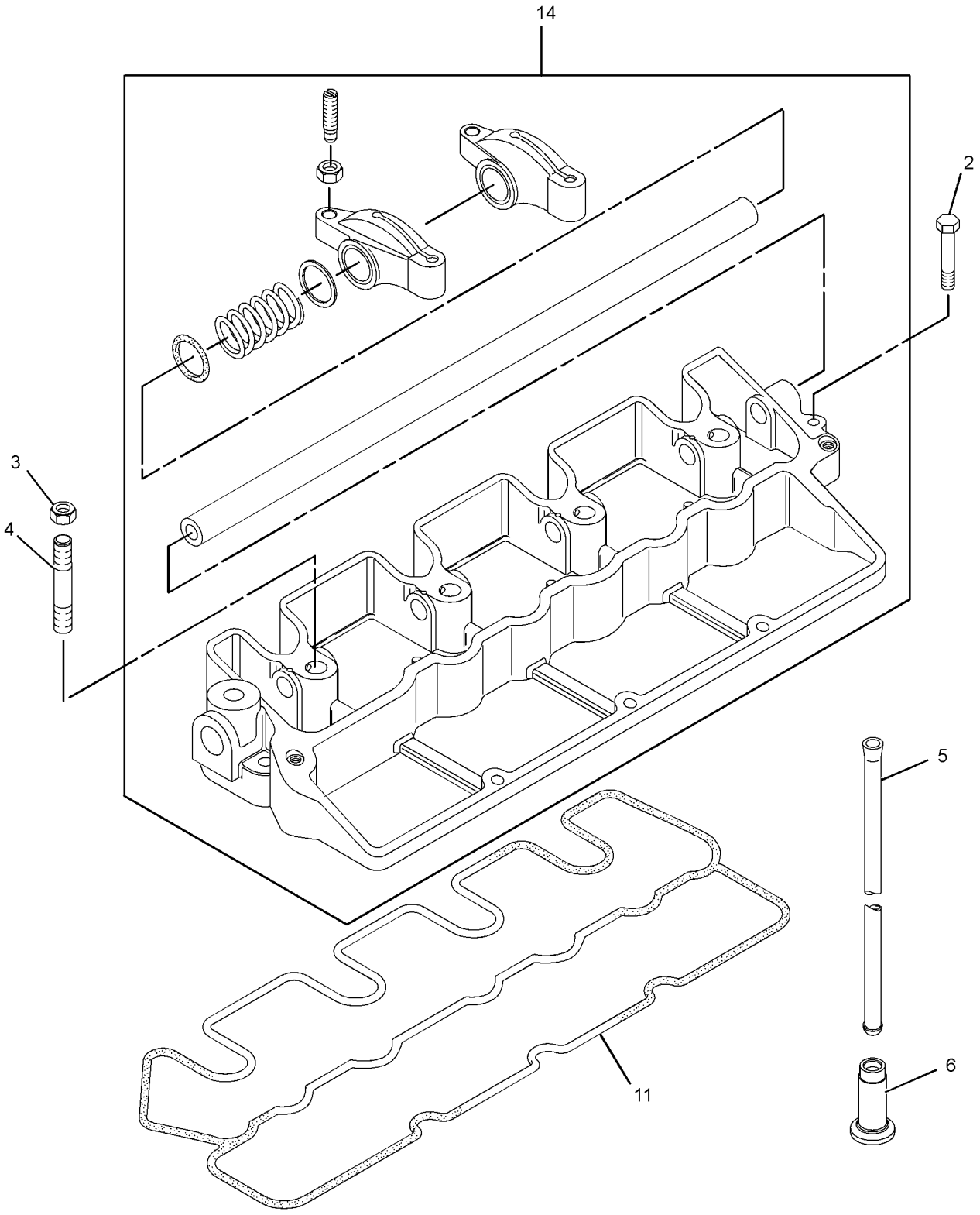

GRAPHIC #2 **<END>** g01379272

308-2284 CYLINDER HEAD GP

S/N: CYP1-UP
PART OF 292-5719 ENGINE AR-PRIMARY
AN ATTACHMENT

SMCS-1100, 1101, 1103, 1104, 1105, 1108, 1109, 1115, 1117, 1121, 1124, 1125

i02752404

NOTE	REF NO	GRAPHIC REF	PART NUMBER	QTY	PART NAME 1 2 3 4 5 6 (PRODUCT LEVEL)	SEE PAGE
	1	1	**153-5573**	8	CAP	
	2	1	**156-6988**	14	BOLT	
	3	1	**156-6989**	4	BOLT	
	4	1	**183-3213**	2	STUD	
Y	5	1	**308-1859**	1	CYLINDER HEAD AS	34
	6	1	**308-1862**	2	STUD	
B	7	1	**308-1910**	1	GASKET (1.2-MM)	
B		1	**308-1911**	1	GASKET (1.3-MM)	

B-USE AS REQUIRED
Y-SEPARATE ILLUSTRATION

308-2284 **CYLINDER HEAD GP** *(contd.)* **i02752404**

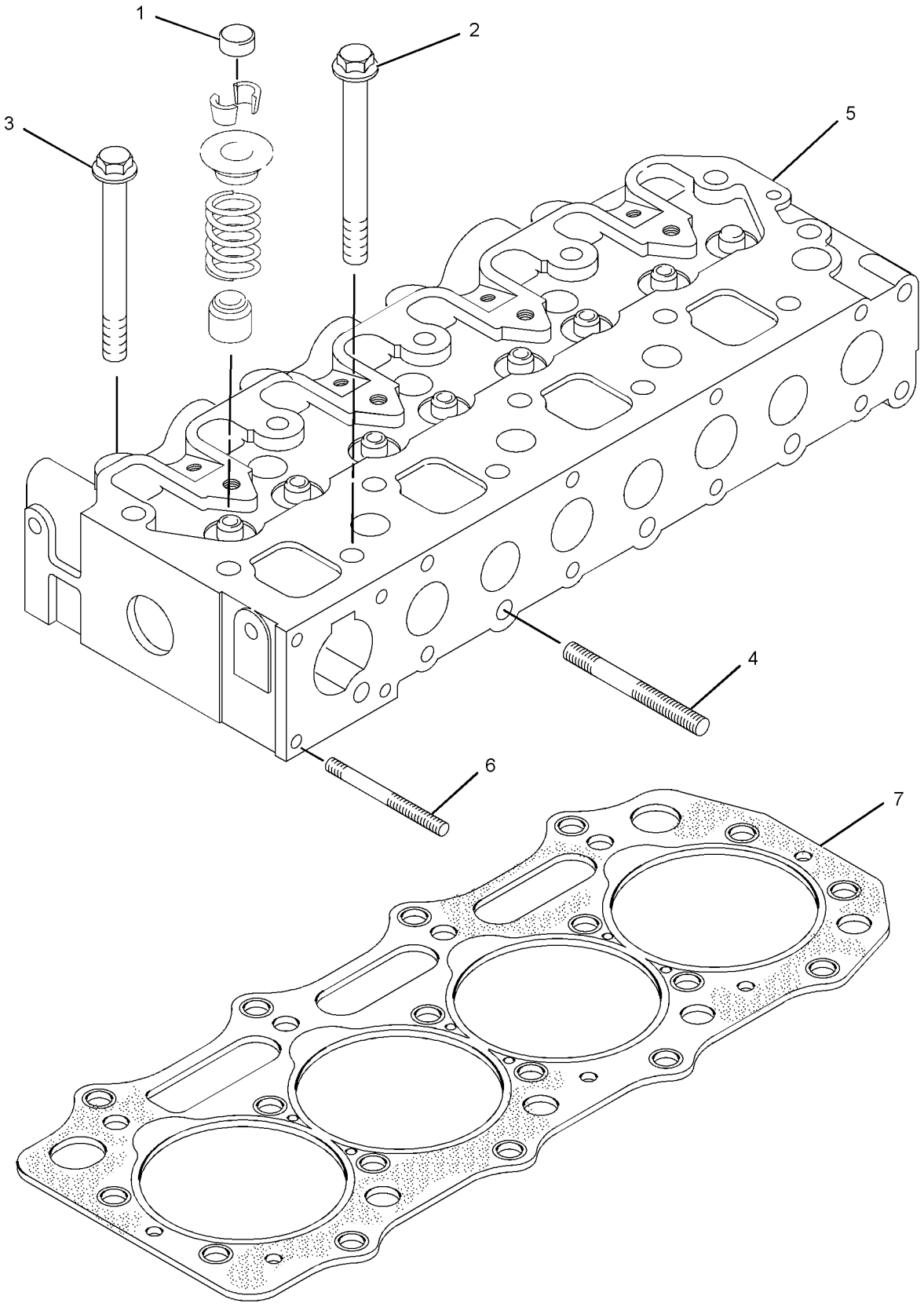

GRAPHIC #1 **<END>** g01409220

229-8730 DRAIN GP-ENGINE OIL

S/N: MJH10575-UP

PART OF 295-7027, 295-7028 INSTALLATION AR-ENGINE

SMCS-1302 **i02752749**

NOTE	REF NO	GRAPHIC REF	PART NUMBER	QTY	PART NAME 1 2 3 4 5 6 (PRODUCT LEVEL)	SEE PAGE
	1	1	**5P-4961**	1	CLAMP-HOSE	
	2	1	**8C-3445**	1	CAP-DUST	
	3	1	**8C-3446**	1	VALVE-FLUID SAMPLING	
	6	1	**218-0919**	1	ADAPTER	
	8	1	**8L-2779**	1	SEAL-O-RING	
CE	9	1	**5P-1505**		HOSE (35-CM)	

C-CHANGE FROM PREVIOUS TYPE
E-ORDER BY THE CENTIMETER

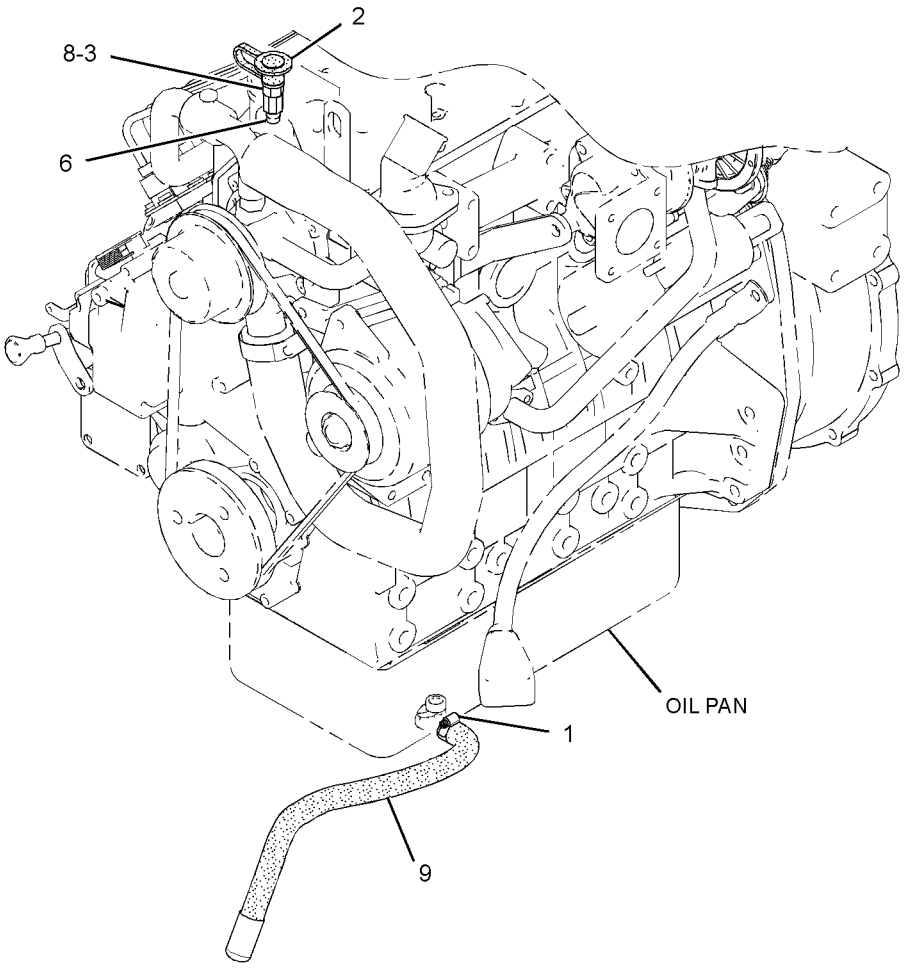

GRAPHIC #1 **<END>** g01381559

BASIC ENGINE

217-7221 FLYWHEEL GP

S/N: CSD1-11322
PART OF 300-5206 ENGINE AR-PRIMARY
AN ATTACHMENT

SMCS-1156, 1158 **i01649085**

NOTE	REF NO	GRAPHIC REF	PART NUMBER	QTY	PART NAME 1 2 3 4 5 6 (PRODUCT LEVEL)	SEE PAGE
	1	1	**138-7446**	1	FLYWHEEL AS	
	1A	1	**154-2405**	1	GEAR-STARTER (126 TEETH)	
	2	1	**154-2406**	6	BOLT	

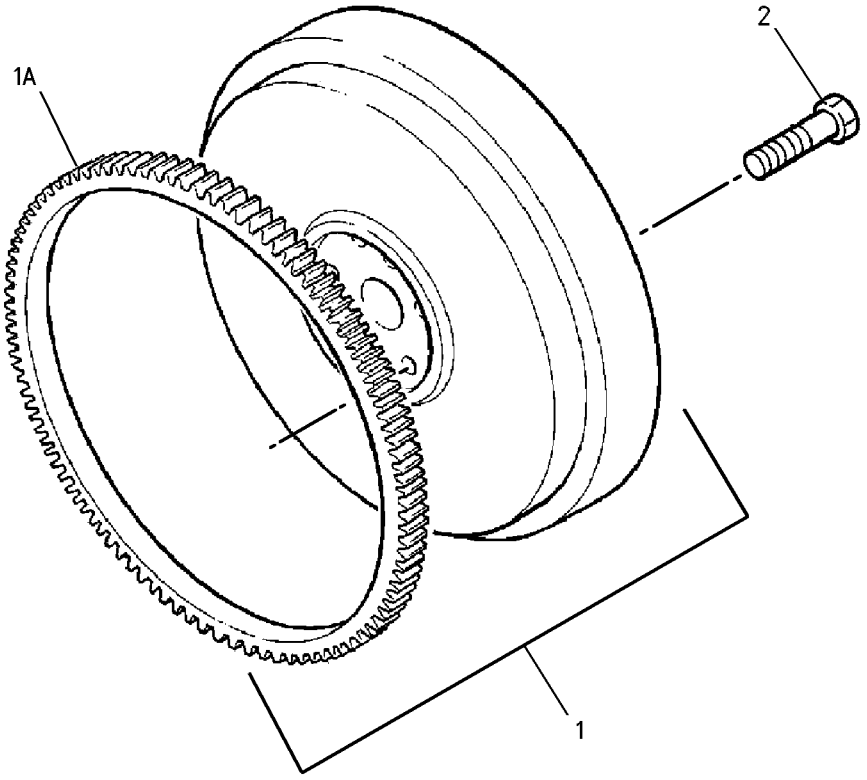

GRAPHIC #1 **<END>** g00640776

308-2291 FLYWHEEL GP

S/N: CYP1-UP
PART OF 292-5719 ENGINE AR-PRIMARY
AN ATTACHMENT

SMCS-1156, 1158 **i02724854**

NOTE	REF NO	GRAPHIC REF	PART NUMBER	QTY	PART NAME 1 2 3 4 5 6 (PRODUCT LEVEL)	SEE PAGE
	1	1	**138-7446**	1	FLYWHEEL AS	
	1A	1	**154-2405**	1	GEAR-STARTER (126-TEETH)	
	2	1	**154-2406**	6	BOLT	

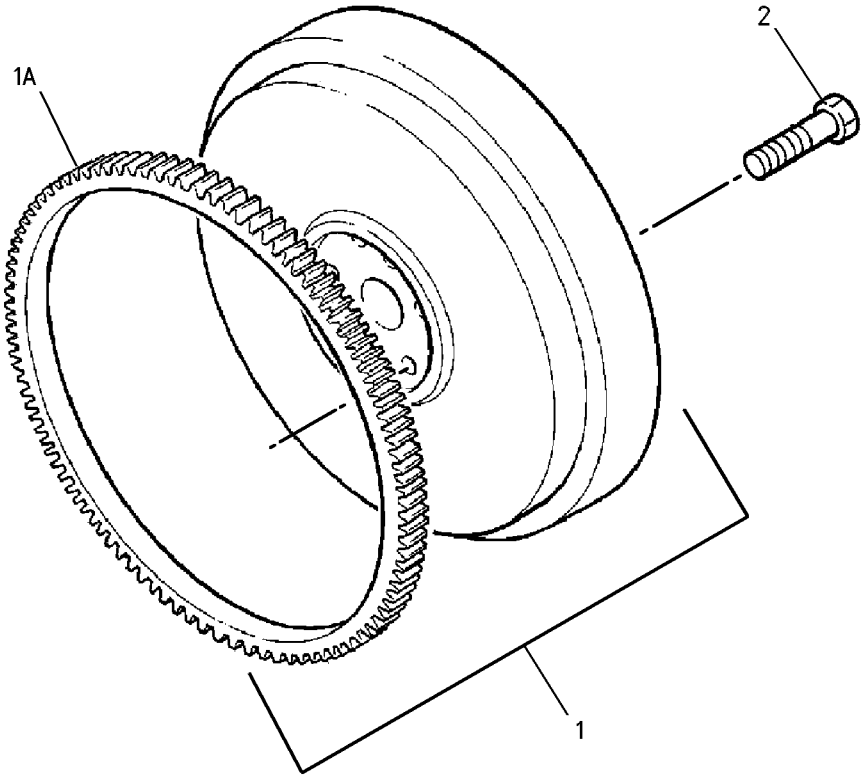

GRAPHIC #1 **<END>** g00640776

246-8723 GUARD GP-BELT

S/N: MJH10575-UP

PART OF 295-7027, 295-7028 INSTALLATION AR-ENGINE

SMCS-7174 **i02634185**

NOTE	REF NO	GRAPHIC REF	PART NUMBER	QTY	PART NAME 1 2 3 4 5 6 (PRODUCT LEVEL)	SEE PAGE
	1	1	**149-7694**	1	BRACKET AS	
M		1	**8T-3612**	4	NUT-WELD (M8X1.25-THD)	
	2	1	**208-0044**	1	GUARD-BELT	
	3	1	**228-9953**	1	BRACKET AS	
M		1	**8T-3490**	2	NUT-WELD (M10X1.5-THD)	
M		1	**8T-3612**	2	NUT-WELD (M8X1.25-THD)	
	4	1	**5P-4116**	8	WASHER-HARD (8.8X20.5X2-MM THK)	
M	5	1	**8T-4189**	4	BOLT (M8X1.25X20-MM)	
M	6	1	**8T-4908**	2	BOLT (M8X1.25X25-MM)	
M	7	1	**8T-5091**	2	BOLT (M8X1.25X20-MM)	

M-METRIC PART

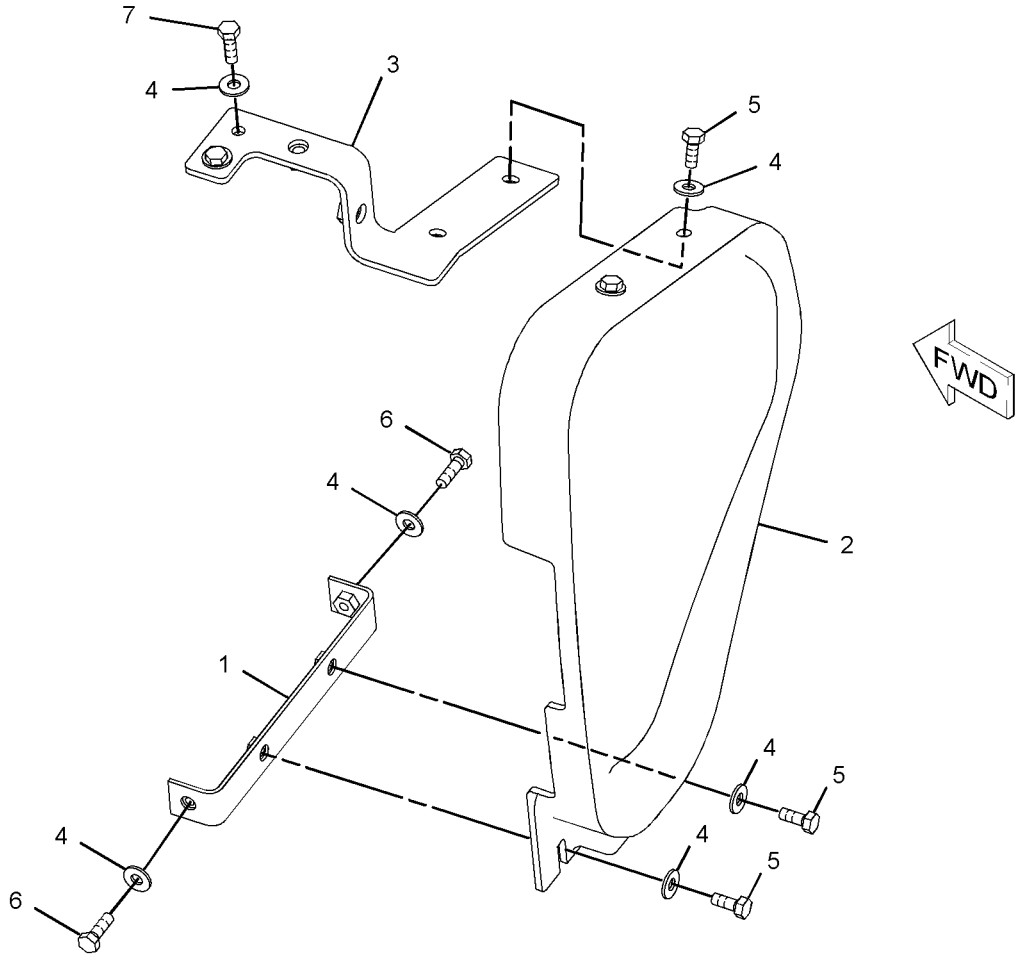

GRAPHIC #1 **<END>** g01071917

217-7238 HOUSING GP-FLYWHEEL

S/N: CSD1-11322
PART OF 300-5206 ENGINE AR-PRIMARY
AN ATTACHMENT

SMCS-1157 **i01649087**

NOTE	REF NO	GRAPHIC REF	PART NUMBER	QTY	PART NAME 1 2 3 4 5 6 (PRODUCT LEVEL)	SEE PAGE
	1	1	**217-7225**	1	HOUSING-FLYWHEEL	
	2	1	**138-7402**	6	BOLT	
	3	1	**153-6375**	10	BOLT	
	4	1	**153-6868**	3	BOLT	
	5	1	**154-2394**	1	PLATE	
	6	1	**154-2395**	1	PLUG	
	7	1	**154-2403**	4	WASHER	
	8	1	**165-2142**	2	BOLT	
	9	1	**138-7162**	4	BOLT	
	10	1	**166-2338**	4	NUT	

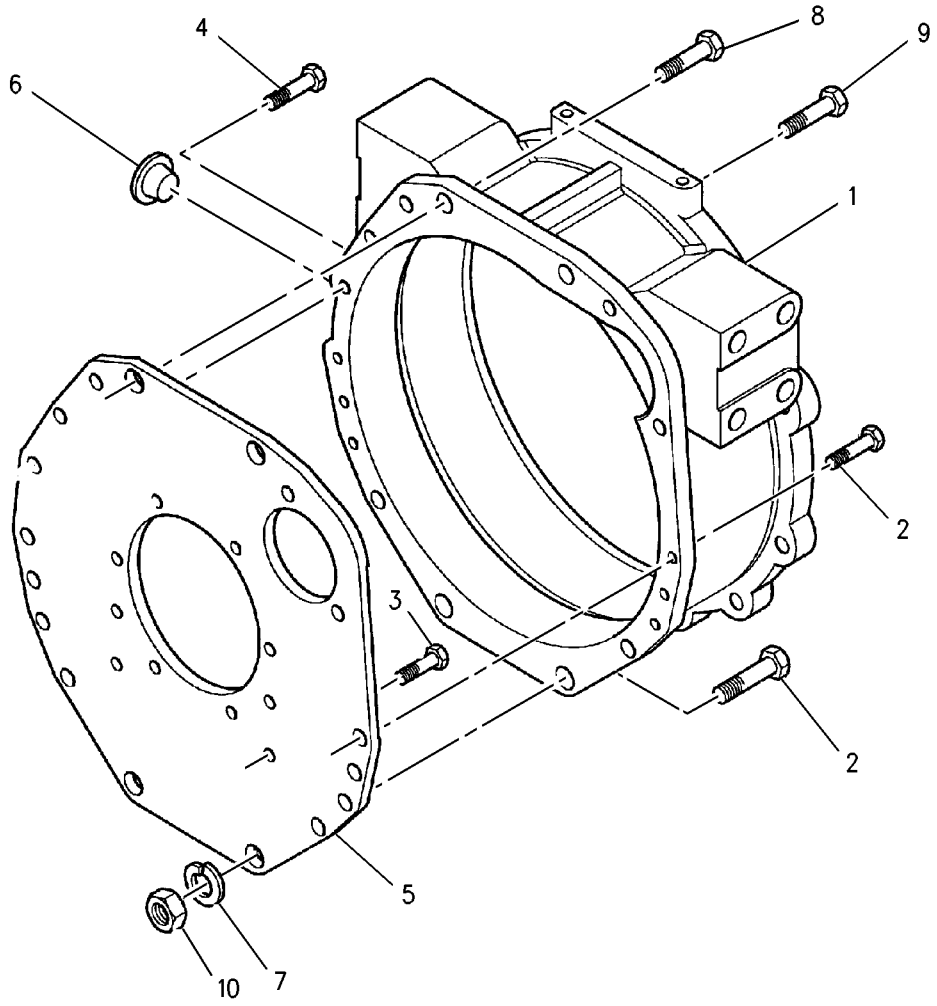

GRAPHIC #1 **<END>** g00852718

BASIC ENGINE

316-7030 HOUSING GP-FLYWHEEL

S/N: CYP1-UP

PART OF 292-5719 ENGINE AR-PRIMARY

AN ATTACHMENT

SMCS-1157 **i02826809**

NOTE	PART NUMBER	QTY	PART NAME 1 2 3 4 5 6 (PRODUCT LEVEL)	SEE PAGE
	138-7162	4	BOLT	
	252-1802	6	BOLT	
	153-6375	10	BOLT	
	153-6868	2	BOLT	
	165-2142	2	BOLT	
	217-7225	1	HOUSING-FLYWHEEL	
	166-2338	4	NUT	
	154-2394	1	PLATE	
	154-2395	1	PLUG	
	154-2403	4	WASHER	

<END>

246-3338 HOUSING GP-FRONT

S/N: CSD1-11322
PART OF 300-5206 ENGINE AR-PRIMARY
AN ATTACHMENT

SMCS-1151, 1160, 1162, 1166, 3108 **i02576123**

NOTE	REF NO	GRAPHIC REF	PART NUMBER	QTY	PART NAME 1 2 3 4 5 6 (PRODUCT LEVEL)	SEE PAGE
	1	1	**153-5960**	2	NUT	
	2	1	**153-5962**	3	BOLT	
	3	1	**153-6838**	4	BOLT	
	4	1	**153-6856**	6	BOLT	
	5	1	**153-7985**	1	WASHER	
	6	1	**154-1680**	1	PLATE	
	7	1	**154-1672**	1	HOUSING-FRONT	
	8	1	**154-1673**	1	PIN	
	9	1	**154-1675**	1	SEAL	
	10	1	**297-3050**	1	GEAR AS (62-TEETH)	
	10A	1	**154-1677**	3	BUSHING	
	10B	1	**154-1678**	3	DOWEL	
	10C	1	**154-1679**	1	SPRING	
	11	1	**165-2139**	2	BOLT	
	12	1	*215-2621*	1	GASKET	
F		1	**160-7626**	1	STUD	

F-NOT SHOWN

246-3338 **HOUSING GP-FRONT** *(contd.)* **i02576123**

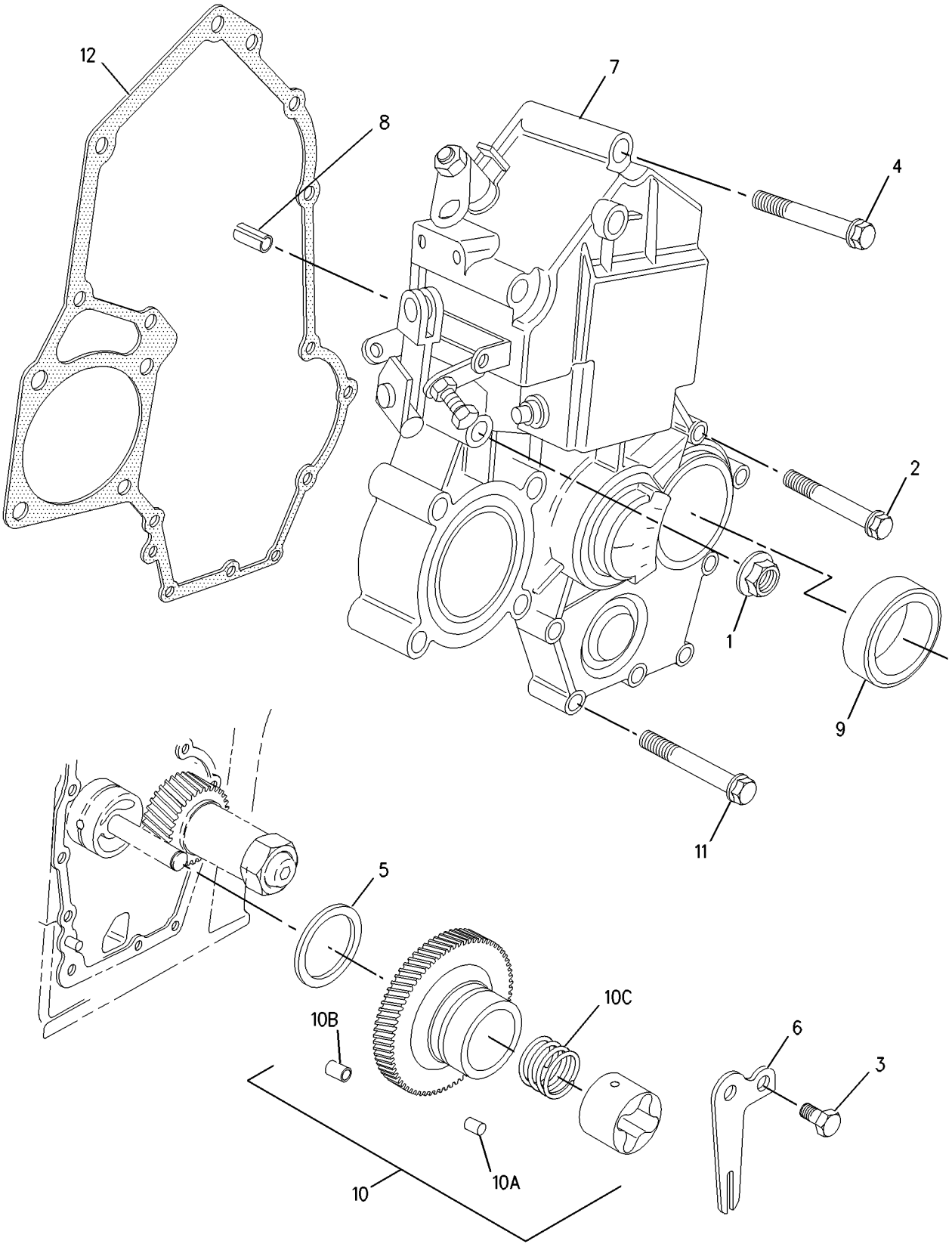

GRAPHIC #1 **<END>** g00995977

317-0965 HOUSING GP-FRONT

S/N: CYP1-UP

PART OF 292-5719 ENGINE AR-PRIMARY

AN ATTACHMENT

SMCS-1151, 1160, 1162, 1166, 3108 **i02827170**

NOTE	REF NO	GRAPHIC REF	PART NUMBER	QTY	PART NAME 1 2 3 4 5 6 (PRODUCT LEVEL)	SEE PAGE
	1	1	**153-5960**	2	NUT	
	2	1	**153-5962**	4	BOLT	
	3	1	**154-1673**	1	PIN	
	4	1	**154-1675**	1	SEAL	
	5	1	**165-2140**	7	BOLT	
	6	1	**308-1871**	1	GASKET	
	7	1	**308-1874**	1	HOLDER	
	8	1	**308-1875**	3	SEAL-O-RING	
	9	1	**311-0656**	1	CASE	

317-0965 **HOUSING GP-FRONT** *(contd.)* **i02827170**

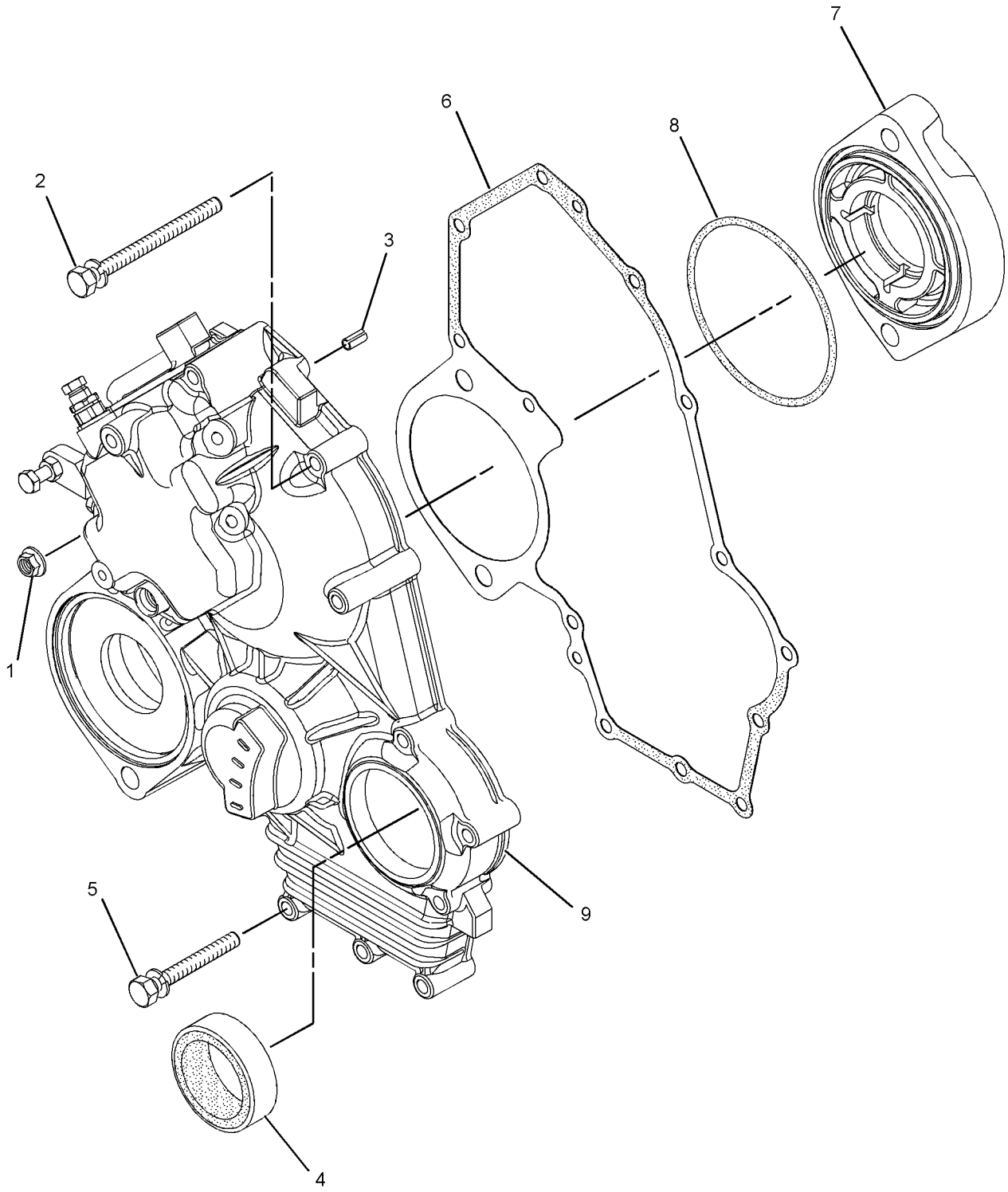

GRAPHIC #1 **<END>** g01438892

251-7618 LIFTING GP-ENGINE

S/N: CSD1-11322
PART OF 300-5206 ENGINE AR-PRIMARY
AN ATTACHMENT

SMCS-1122 **i02089687**

NOTE	REF NO	GRAPHIC REF	PART NUMBER	QTY	PART NAME 1 2 3 4 5 6 (PRODUCT LEVEL)	SEE PAGE
	1	1	**155-7984**	2	WASHER	
	2	1	**165-2141**	2	BOLT	
	3	1	**251-7615**	2	PLATE-LIFTING	

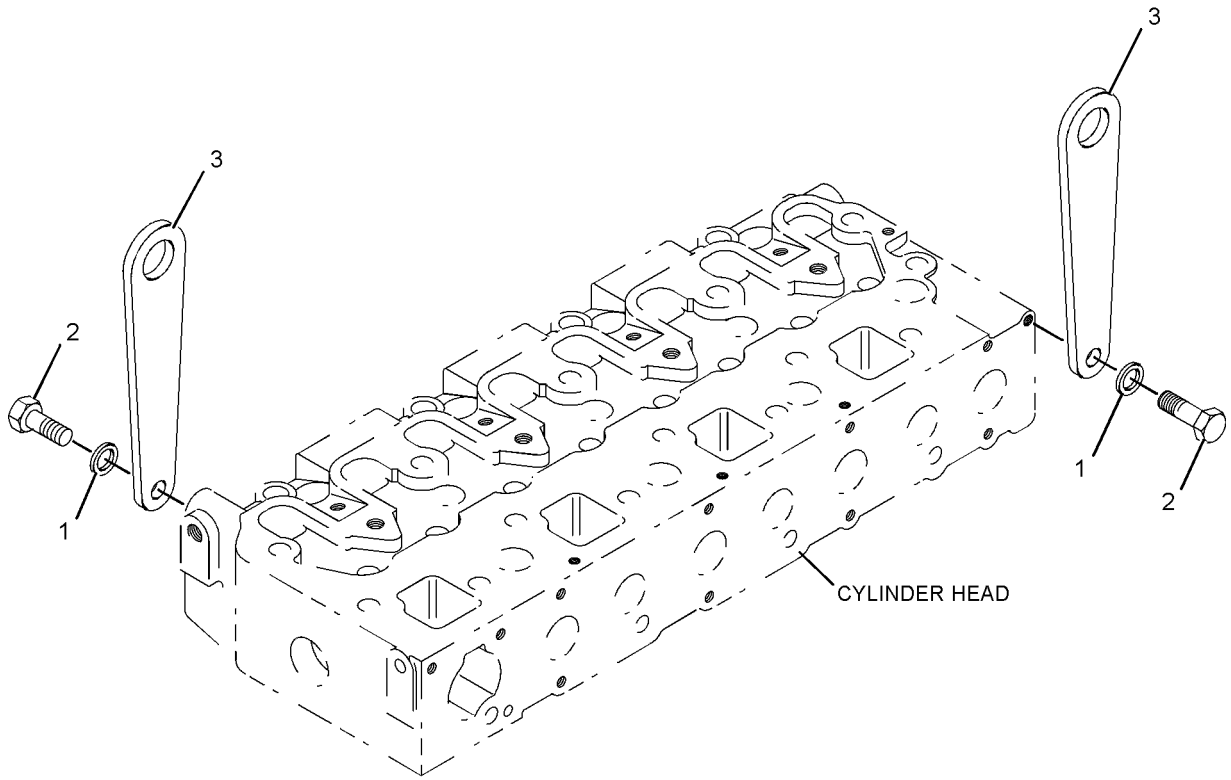

GRAPHIC #1 **<END>** g01091205

317-0982 LIFTING GP-ENGINE

S/N: CYP1-UP
PART OF 292-5719 ENGINE AR-PRIMARY
AN ATTACHMENT

SMCS-1122 **i02827332**

NOTE	REF NO	GRAPHIC REF	PART NUMBER	QTY	PART NAME 1 2 3 4 5 6 (PRODUCT LEVEL)	SEE PAGE
	1	1	**155-7984**	2	WASHER	
	2	1	**165-2141**	2	BOLT	
	3	1	**251-7615**	2	PLATE-LIFTING	

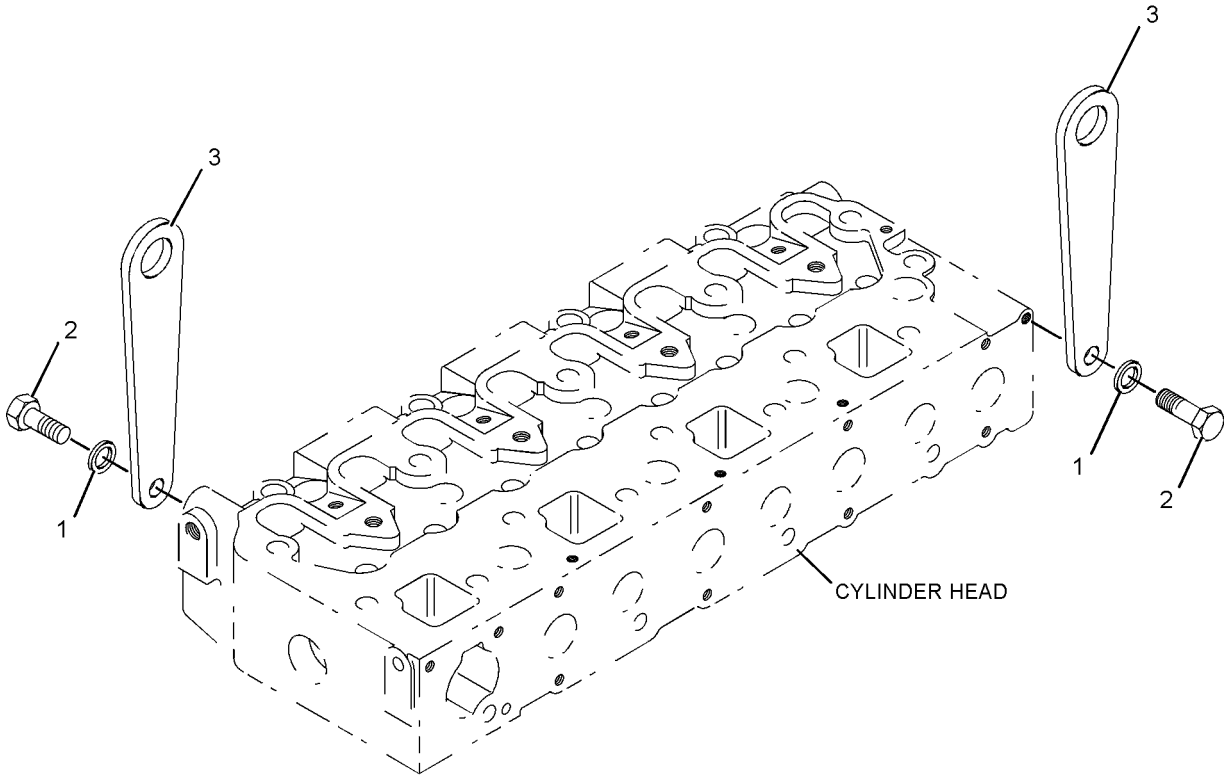

GRAPHIC #1 **<END>** g01091205

228-1764 MOUNTING GP-ENGINE—SUPPORTS

S/N: MJH10575-UP

PART OF 295-7027, 295-7028 INSTALLATION AR-ENGINE

SMCS-1152, 1153, 1154 **i02579693**

NOTE	REF NO	GRAPHIC REF	PART NUMBER	QTY	PART NAME 1 2 3 4 5 6 (PRODUCT LEVEL)	SEE PAGE
	1	1	**205-3185**	1	BRACKET AS	
	2	1	**237-0419**	1	BRACKET AS	
	3	1	**237-0420**	1	BRACKET AS	
M	4	1	**141-5453**	8	BOLT (M14X1.5X30-MM) (M14X1.5X35-MM)	
	5	1	**8T-4122**	8	WASHER-HARD (17X32X3.5-MM THK)	
M	6	1	**8T-4192**	8	BOLT (M12X1.75X25-MM)	
	7	1	**8T-4223**	8	WASHER-HARD (13.5X25.5X3-MM THK)	

M-METRIC PART

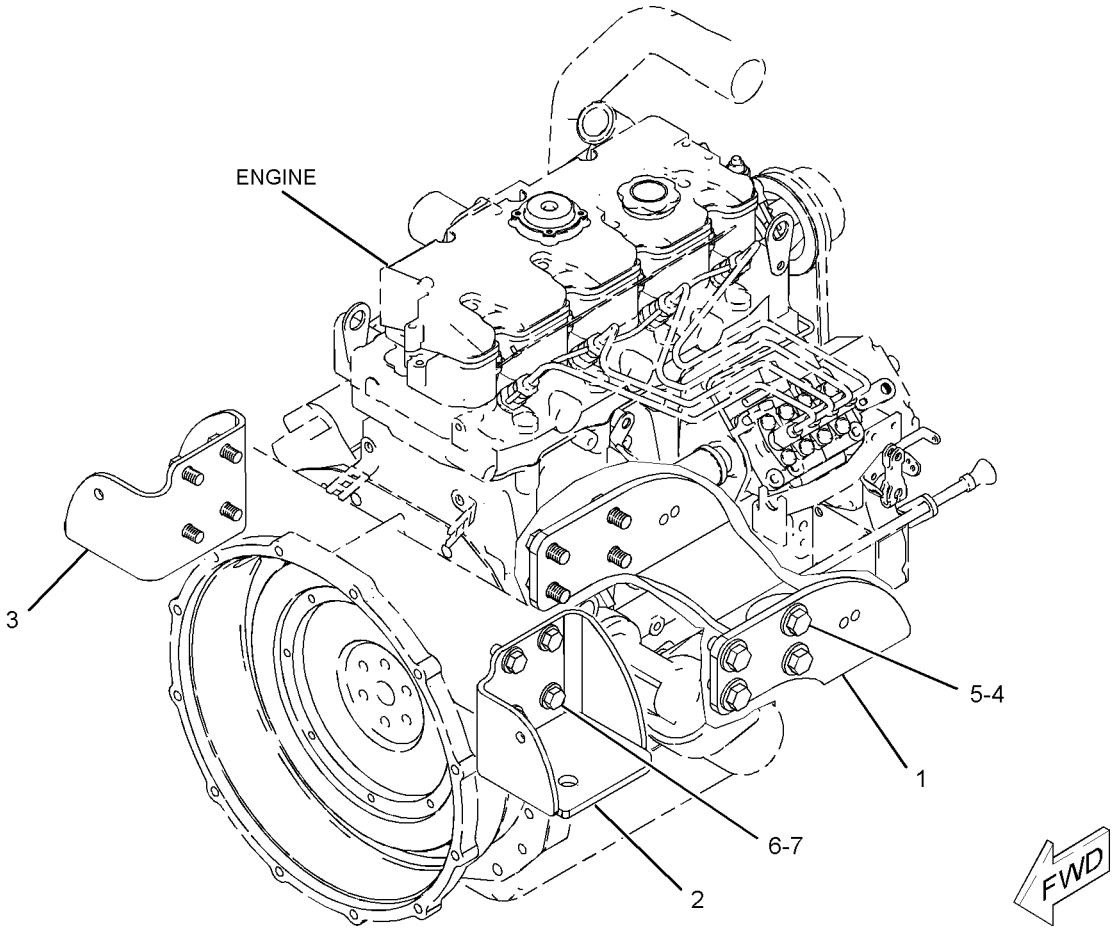

GRAPHIC #1 **<END>** g01072247

241-5789 MOUNTING GP-ENGINE—HARDWARE

S/N: MJH10575-UP

PART OF 295-7027, 295-7028 INSTALLATION AR-ENGINE

SMCS-1152, 1153, 1154 **i02003955**

NOTE	REF NO	GRAPHIC REF	PART NUMBER	QTY	PART NAME 1 2 3 4 5 6 (PRODUCT LEVEL)	SEE PAGE
	1	1	**211-9061**	3	MOUNT AS	
	2	1	**165-7095**	6	WASHER (16.5X71.5X3-MM THK)	
M	3	1	**7X-2556**	3	BOLT (M16X2X100-MM)	
	4	1	**8T-4122**	3	WASHER-HARD (17X32X3.5-MM THK)	
M	5	1	**8T-4132**	3	NUT (M16X2-THD)	

M-METRIC PART

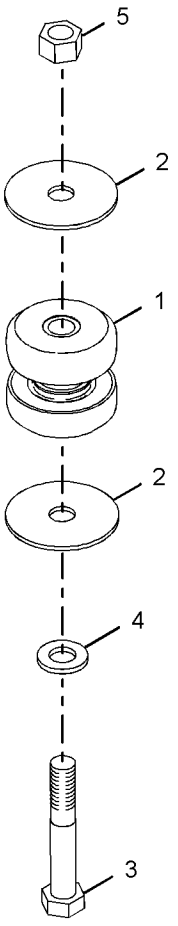

VIEW OF AREA A

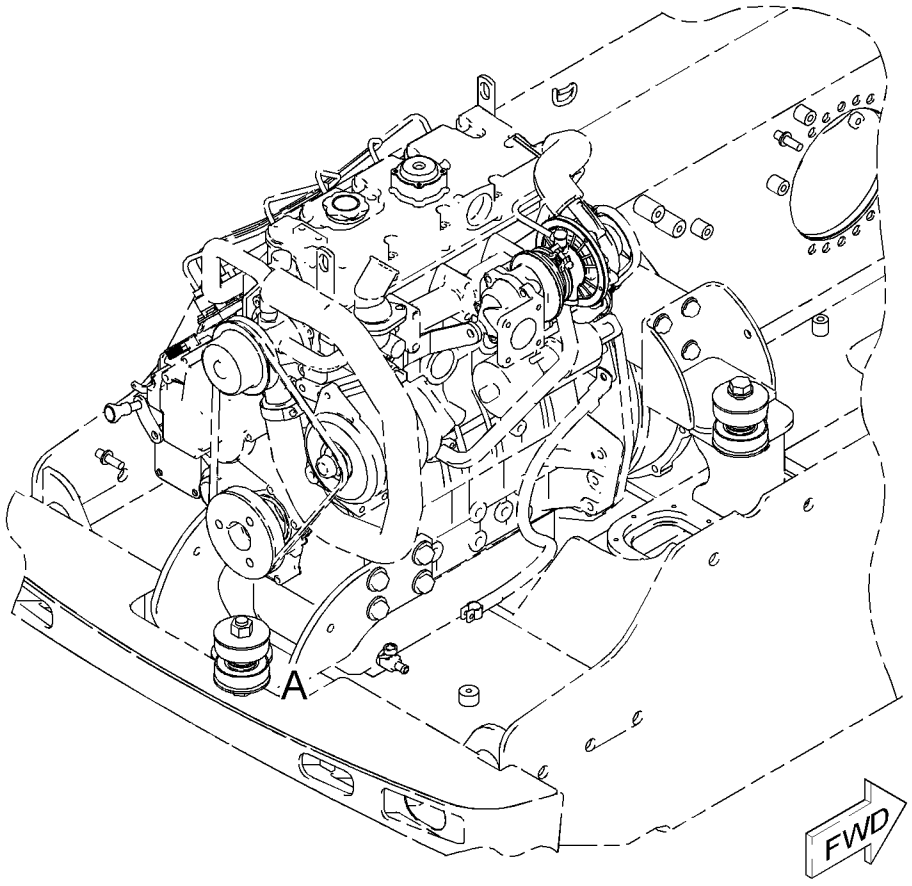

GRAPHIC #1

<END>

g01036490

154-2435 MOUNTING GP-FAN

S/N: CSD1-11322
PART OF 300-5206 ENGINE AR-PRIMARY
AN ATTACHMENT

SMCS-1356 **i00897568**

NOTE	REF NO	GRAPHIC REF	PART NUMBER	QTY	PART NAME 1 2 3 4 5 6 (PRODUCT LEVEL)	SEE PAGE
	1	1	**153-7640**	4	BOLT	
	2	1	**154-2433**	1	PLATE	

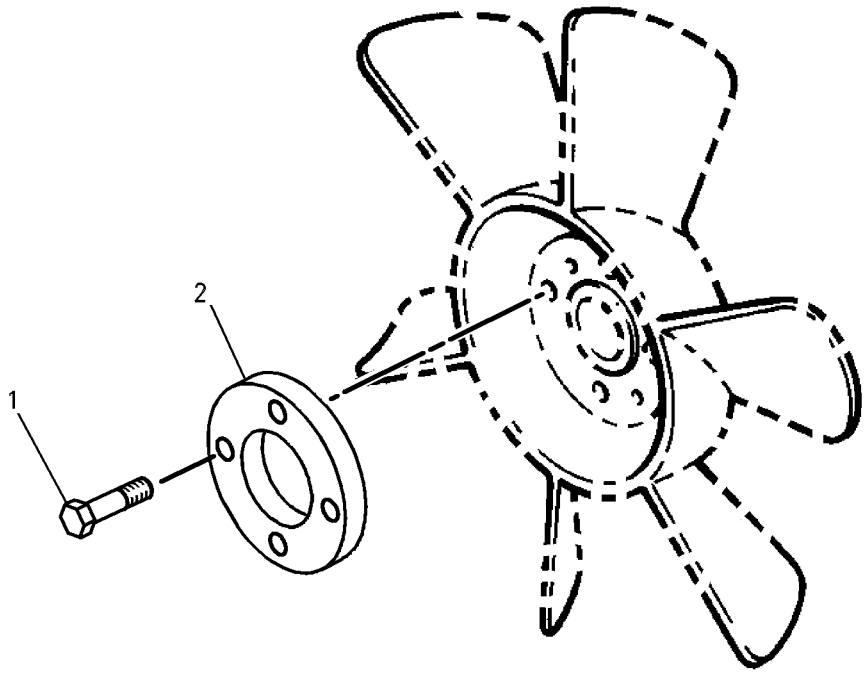

GRAPHIC #1 **<END>** g00485543

BASIC ENGINE

315-7813 MOUNTING GP-FAN

S/N: CYP1-UP
PART OF 292-5719 ENGINE AR-PRIMARY
AN ATTACHMENT

SMCS-1356 **i02810575**

NOTE	REF NO	GRAPHIC REF	PART NUMBER	QTY	PART NAME 1 2 3 4 5 6 (PRODUCT LEVEL)	SEE PAGE
	1	1	**153-7640**	4	BOLT	
	2	1	**154-2433**	1	PLATE	

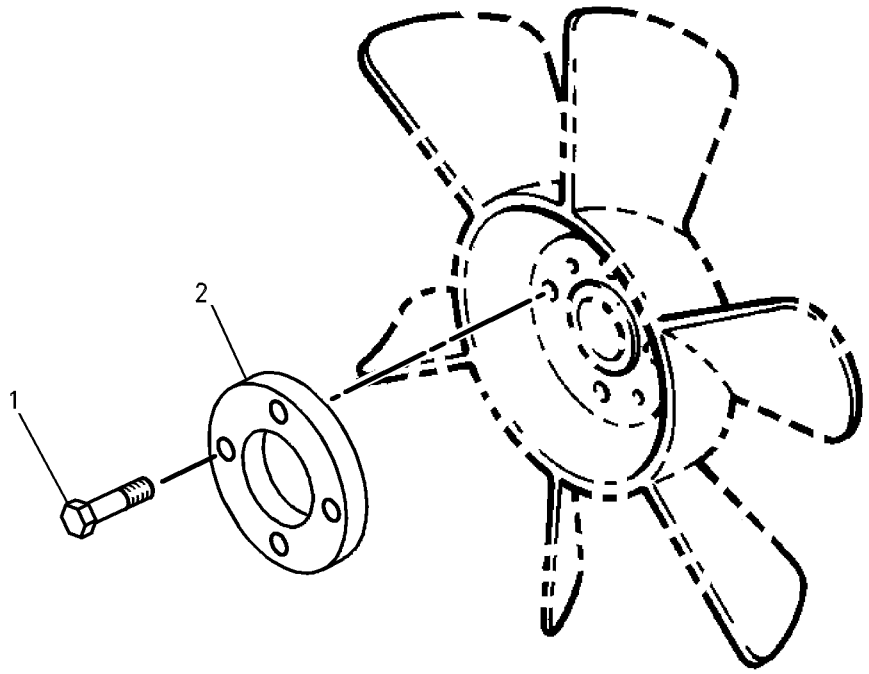

GRAPHIC #1 **<END>** g00485543

BASIC ENGINE

311-2345 PAN GP-OIL

S/N: CSD1-11322
PART OF 300-5206 ENGINE AR-PRIMARY
AN ATTACHMENT
TYPE 1

SMCS-1302 **i02746911**

NOTE	REF NO	GRAPHIC REF	PART NUMBER	QTY	PART NAME 1 2 3 4 5 6 (PRODUCT LEVEL)	SEE PAGE
	1	2	**6I-1201**	1	SEAL-O-RING	
	2	2	**118-9145**	1	CONNECTOR	
	3	2	**153-5933**	1	SEAL	
	4	3	**153-5936**	2	WASHER	
	5	1	**153-6412**	2	WASHER	
	6	1	**153-6833**	30	BOLT	
	7	1	**153-6835**	1	SEAL-O-RING	
	8	1,2	**153-6838**	3	BOLT	
	9	2	**153-6841**	2	SEAL-O-RING	
	10	3	**153-6848**	1	COVER	
	11	3	**153-6849**	1	SPRING	
	12	3	**153-6850**	1	COLLAR	
	13	3	**153-6851**	1	CLIP	
	14	3	**153-6853**	1	SEAL-O-RING	
	15	2	**153-6879**	1	STUD-HOLLOW	
	16	3	**153-6881**	1	BOLT	
	17	3	**154-1942**	1	VALVE-RELIEF	
	18	3	**154-2353**	1	TUBE AS-OIL	
	19	2	**155-8084**	1	WASHER	
	20	2	**156-7347**	1	TUBE AS	
B	21	3	**160-4150**	1	SHIM (0.1-MM THK)	
B		3	**160-4151**	1	SHIM (0.15-MM THK)	
B		3	**160-4152**	1	SHIM (0.2-MM THK)	
B		3	**160-4153**	1	SHIM (0.5-MM THK)	
	22	2	**164-7619**	1	SEAL-O-RING	
	23	2	**198-2663**	1	BOLT	
	24	1	**215-2605**	1	GASKET	
	25	1	**217-7352**	1	COVER-VALVE	
	26	2	**217-7358**	1	CAP (ENGINE OIL FILLER)	
	27	1	**218-2333**	1	PAN-OIL	
	28	1	**218-2334**	1	PLUG-DRAIN (ENGINE OIL)	
	29	2	**220-1523**	1	FILTER ELEMENT AS-ENGINE OIL	
	30	2	**231-8920**	1	BOLT	
	31	1	**249-7264**	1	VALVE-DRAIN	
	32	2	**252-0787**	1	SEAL-O-RING	
	33	2	**252-0788**	1	BASE-OIL FILTER	
	34	2	**293-4781**	1	GAUGE AS-OIL LEVEL (DIPSTICK) (ENGINE)	
	35	3	**296-5162**	1	ROTOR	
	36	1	**305-0584**	1	STRAINER (ENGINE OIL)	
	37	1	**305-0585**	1	TUBE-OIL SUCTION	
	38	2	**311-2349**	1	WASHER	

B-USE AS REQUIRED

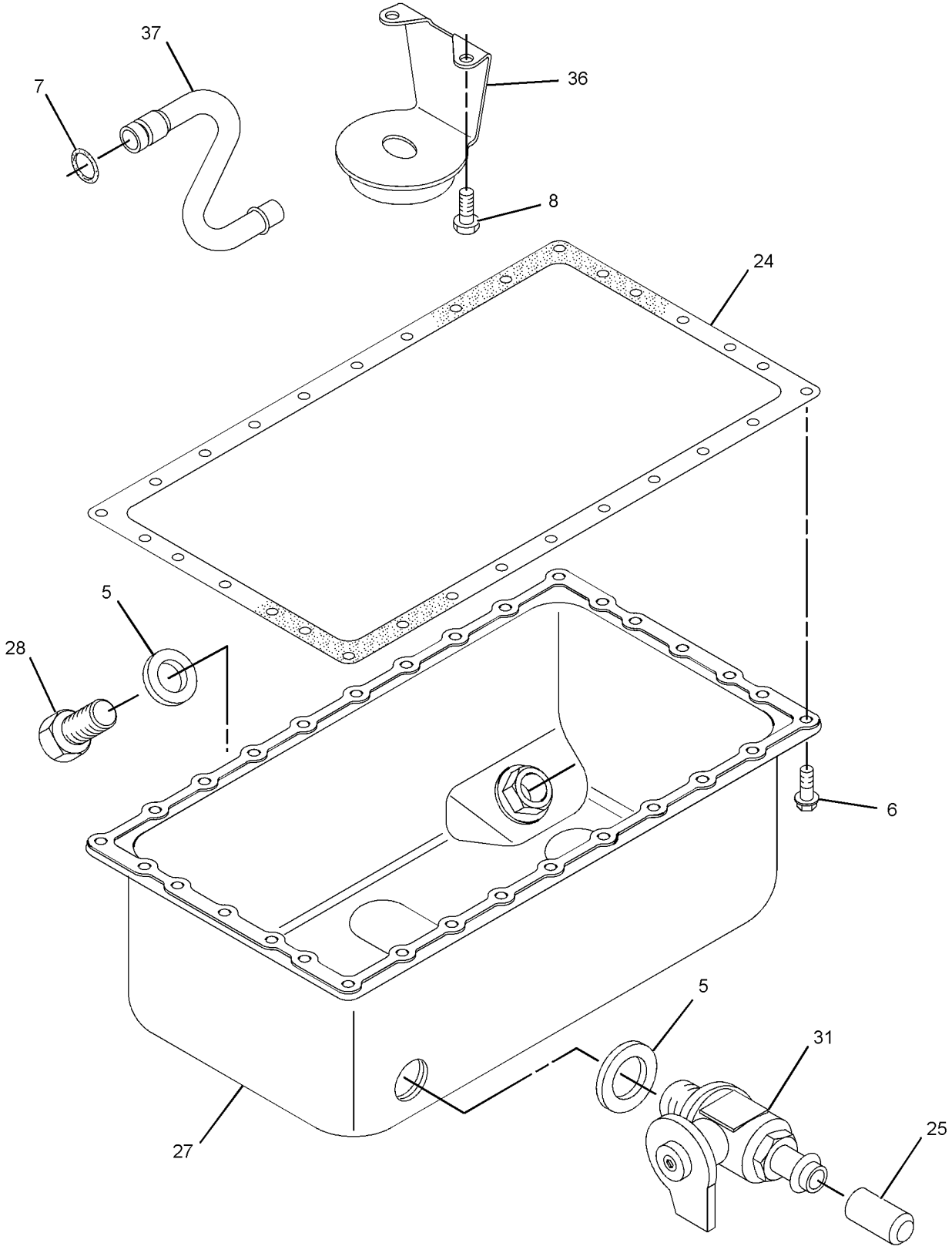

GRAPHIC #1 g01392649

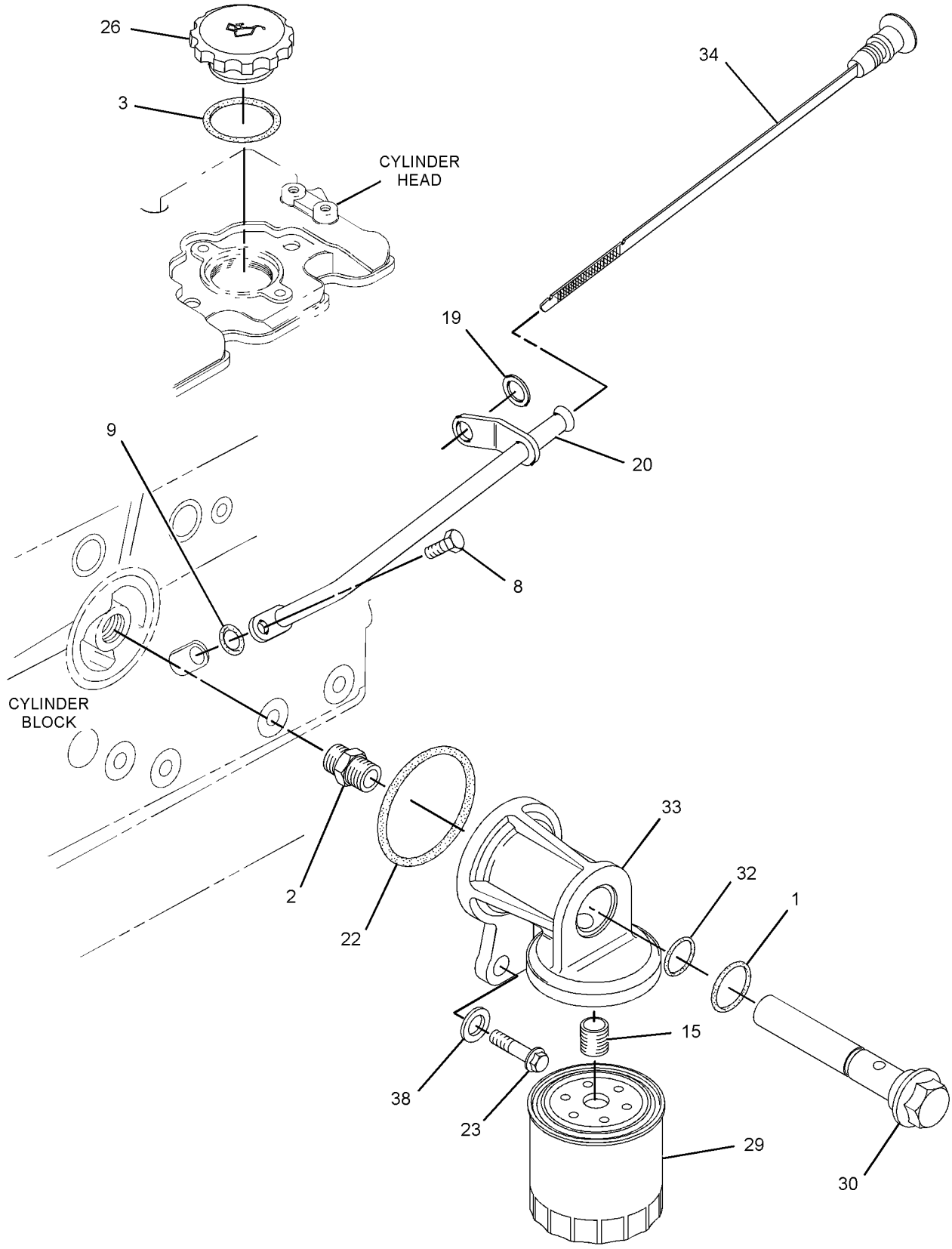

GRAPHIC #2

g01392650

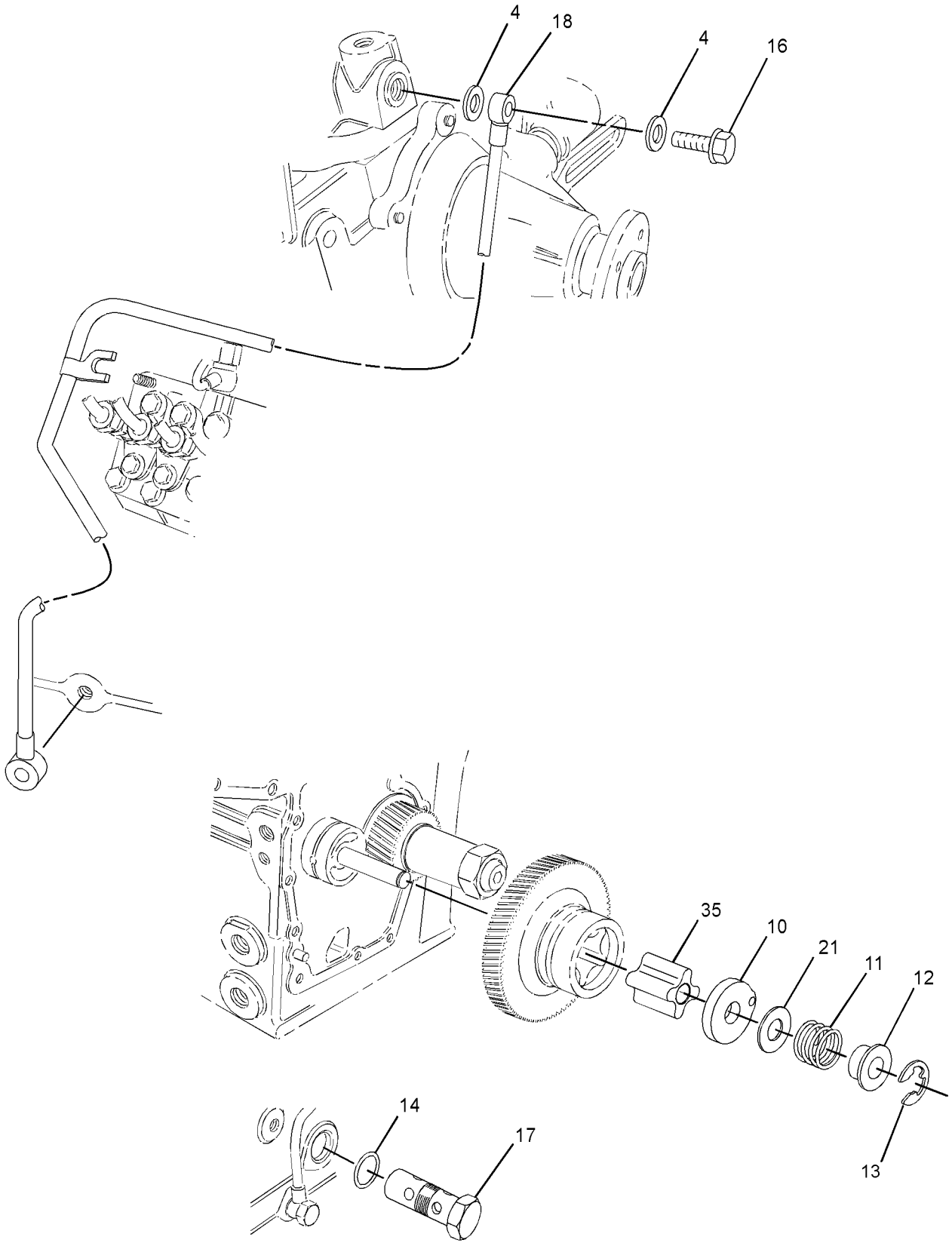

GRAPHIC #3 **<END>** g01392652

BASIC ENGINE

311-2345 PAN GP-OIL

S/N: CSD1-11322
PART OF 300-5206 ENGINE AR-PRIMARY
AN ATTACHMENT
TYPE 2

SMCS-1302 **i02810882**

NOTE	REF NO	GRAPHIC REF	PART NUMBER	QTY	PART NAME 1 2 3 4 5 6 (PRODUCT LEVEL)	SEE PAGE
	1	2	**6I-1201**	1	SEAL-O-RING	
	2	2	**118-9145**	1	CONNECTOR	
	3	2	**153-5933**	1	SEAL	
	4	3	**153-5936**	2	WASHER	
	5	1	**153-6412**	2	WASHER	
	6	1	**153-6833**	30	BOLT	
	7	1	**153-6835**	1	SEAL-O-RING	
	8	1,2	**153-6838**	3	BOLT	
	9	2	**153-6841**	2	SEAL-O-RING	
	10	3	**153-6848**	1	COVER	
	11	3	**153-6849**	1	SPRING	
	12	3	**153-6850**	1	COLLAR	
	13	3	**153-6851**	1	CLIP	
	14	3	**153-6853**	1	SEAL-O-RING	
	15	2	**153-6879**	1	STUD-HOLLOW	
	16	3	**153-6881**	1	BOLT	
	17	3	**154-1942**	1	VALVE-RELIEF	
	18	3	**154-2353**	1	TUBE AS-OIL	
	19	2	**155-8084**	1	WASHER	
	20	2	**156-7347**	1	TUBE AS	
B	21	3	**160-4150**	1	SHIM (0.1-MM THK)	
B		3	**160-4151**	1	SHIM (0.15-MM THK)	
B		3	**160-4152**	1	SHIM (0.2-MM THK)	
B		3	**160-4153**	1	SHIM (0.5-MM THK)	
	22	2	**164-7619**	1	SEAL-O-RING	
	23	2	**198-2663**	1	BOLT	
	24	1	**215-2605**	1	GASKET	
	25	1	**217-7352**	1	COVER-VALVE	
	26	2	**217-7358**	1	CAP (ENGINE OIL FILLER)	
	27	1	**218-2333**	1	PAN-OIL	
	28	1	**218-2334**	1	PLUG-DRAIN (ENGINE OIL)	
	29	2	**220-1523**	1	FILTER ELEMENT AS-ENGINE OIL	
	30	2	**231-8920**	1	BOLT	
C	31	1	**312-4560**	1	VALVE-DRAIN	
	32	2	**252-0787**	1	SEAL-O-RING	
	33	2	**252-0788**	1	BASE-OIL FILTER	
	34	2	**293-4781**	1	GAUGE AS-OIL LEVEL (DIPSTICK) (ENGINE)	
	35	3	**296-5162**	1	ROTOR	
	36	1	**305-0584**	1	STRAINER (ENGINE OIL)	
C	37	1	**316-1016**	1	PIPE-SUCTION	
	38	2	**311-2349**	1	WASHER	

B-USE AS REQUIRED
C-CHANGE FROM PREVIOUS TYPE

311-2345 **PAN GP-OIL** *(contd.)* **i02810882**

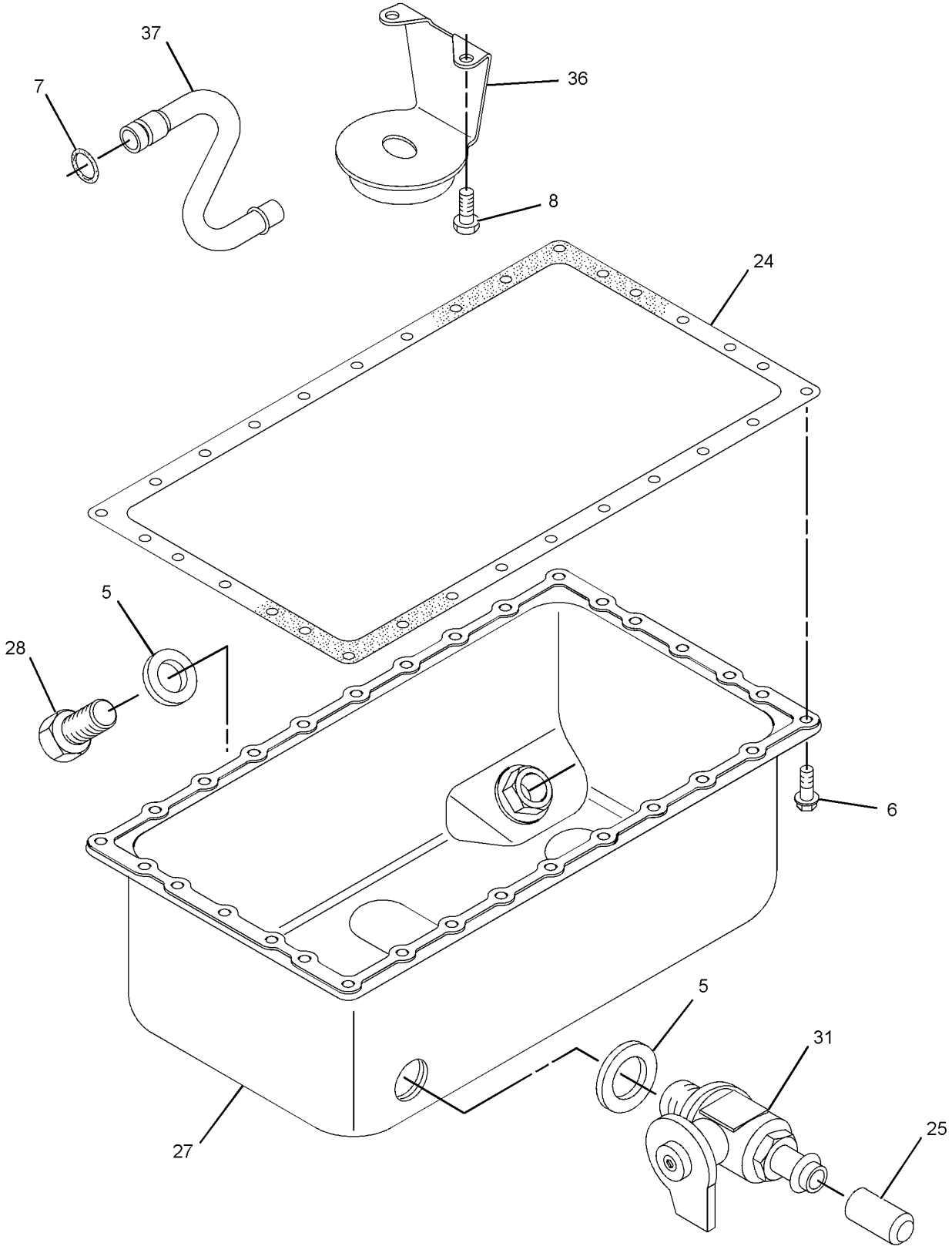

GRAPHIC #1 g01392649

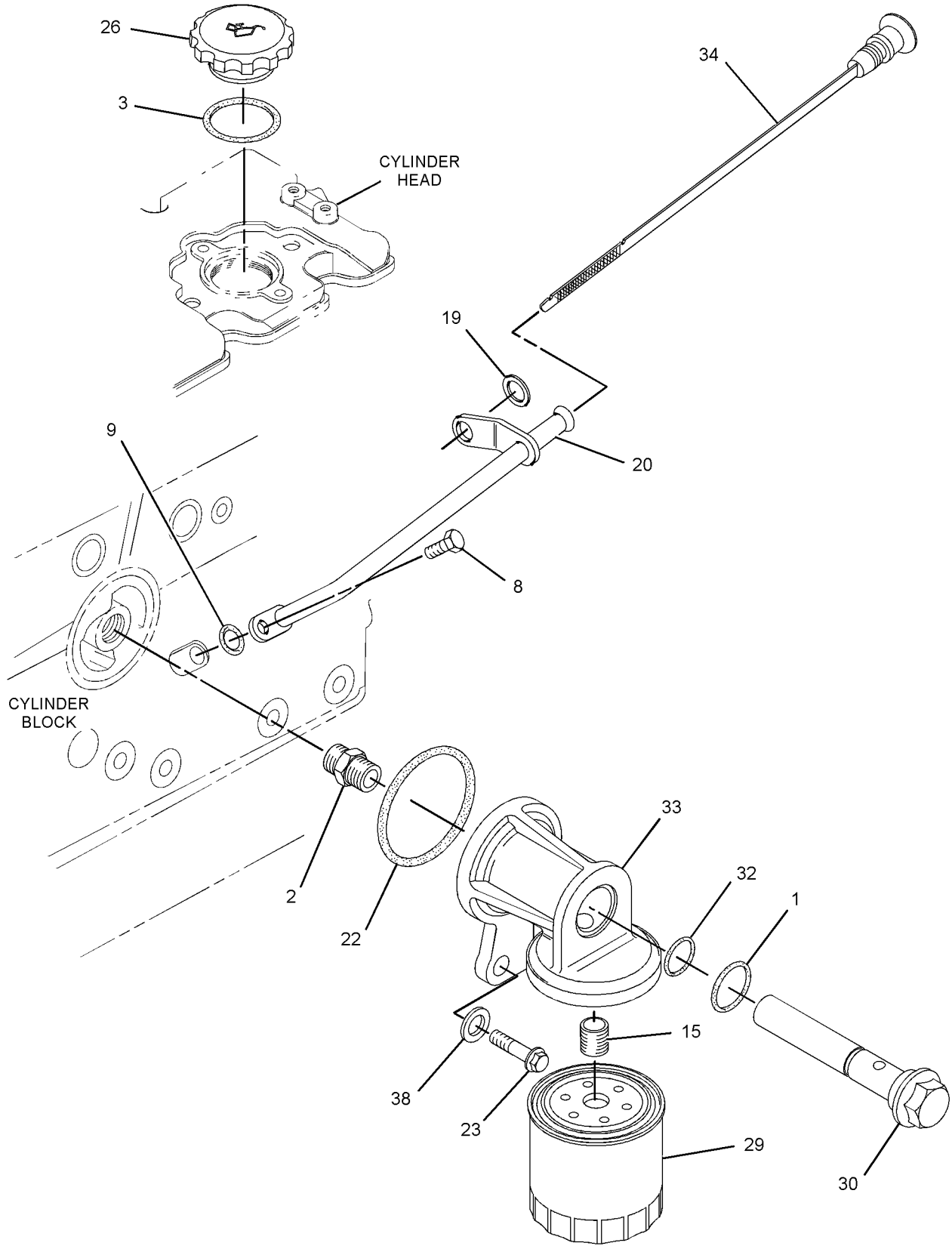

GRAPHIC #2

g01392650

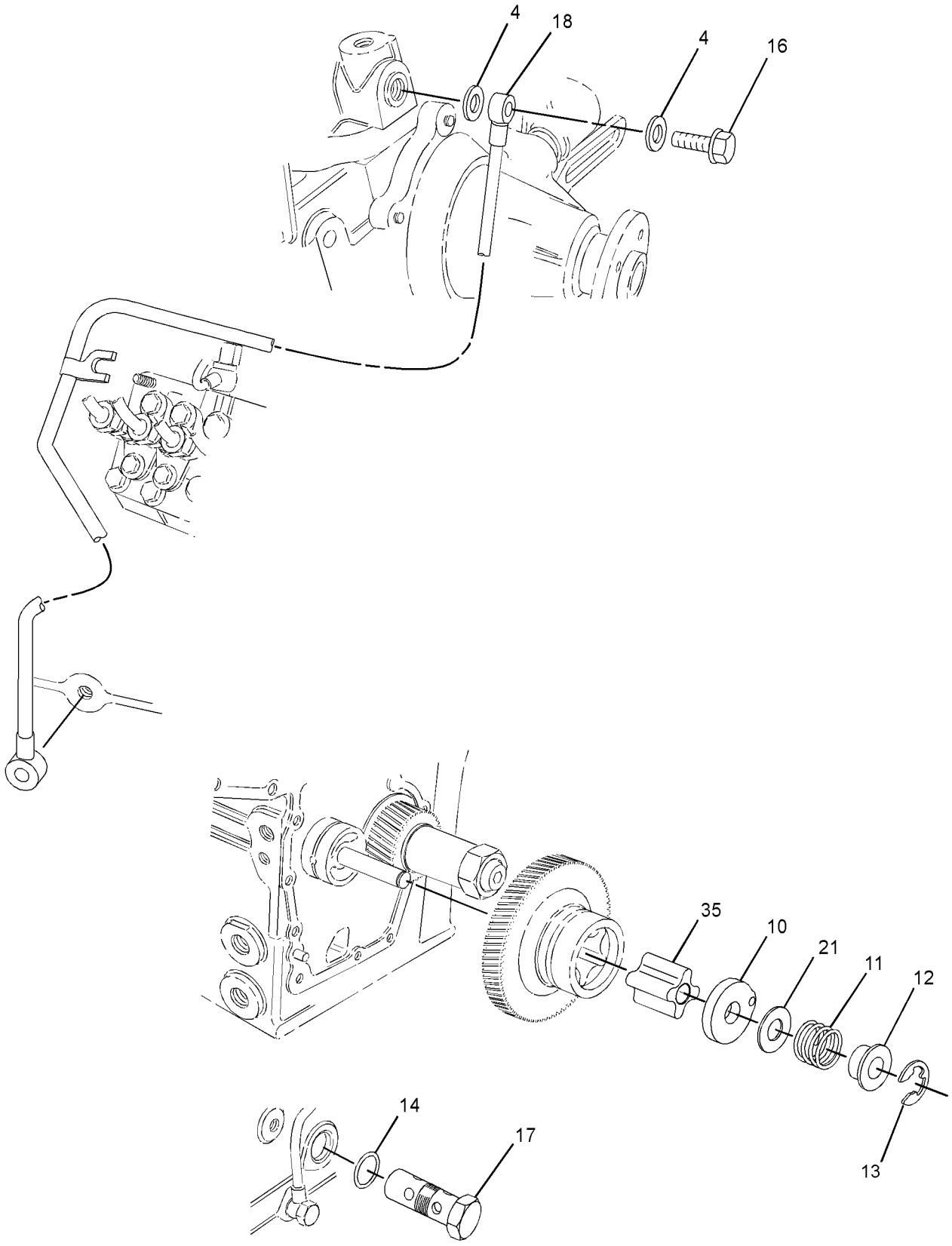

GRAPHIC #3 **<END>** g01392652

316-6997 PAN GP-OIL

S/N: CYP1-UP

PART OF 292-5719 ENGINE AR-PRIMARY

AN ATTACHMENT

SMCS-1302 **i02826911**

NOTE	REF NO	GRAPHIC REF	PART NUMBER	QTY	PART NAME 1 2 3 4 5 6 (PRODUCT LEVEL)	SEE PAGE
	1	1	**153-6833**	30	BOLT	
	2	1	**153-6835**	1	SEAL-O-RING	
	3	1	**153-6838**	2	BOLT	
	4	1	**215-2605**	1	GASKET	
	5	1	**218-2333**	1	PAN-OIL	
	6	1	**305-0584**	1	STRAINER (ENGINE OIL)	
	7	1	**316-1016**	1	PIPE-SUCTION	

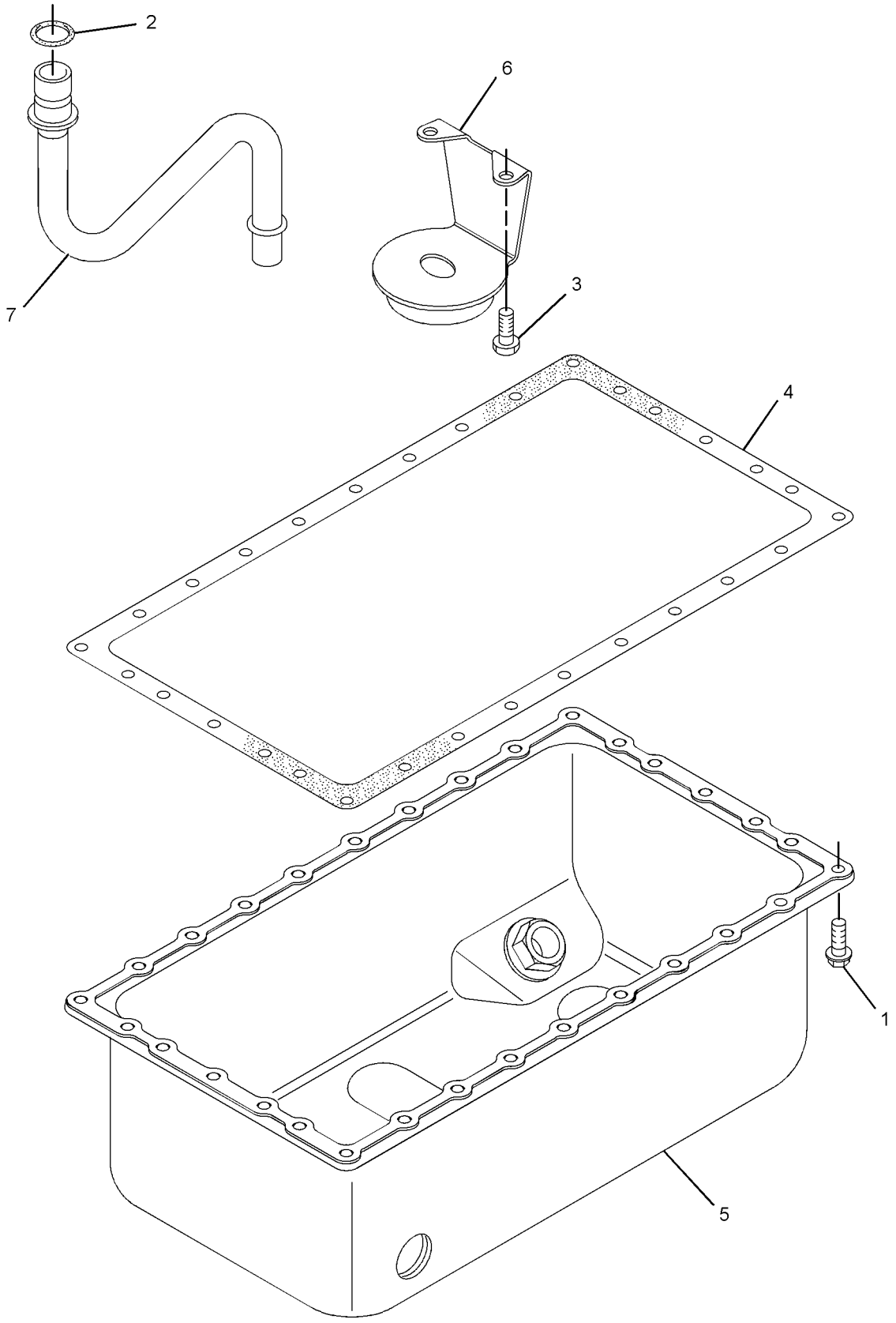

GRAPHIC #1 **<END>** g01439578

270-6930 PISTON & ROD GP

S/N: CSD1-11322
23.3:1 COMPRESSION RATIO
PART OF 300-5206 ENGINE AR-PRIMARY
AN ATTACHMENT

SMCS-1225 **i02817674**

NOTE	REF NO	GRAPHIC REF	PART NUMBER	QTY	PART NAME 1 2 3 4 5 6 (PRODUCT LEVEL)	SEE PAGE
	1	1	**146-7808**	4	KIT-BEARING (ROD)	
		1	**307-9855**	1	KIT-BEARING (ROD) (0.25-MM OS)	
		1	**307-9856**	1	KIT-BEARING (ROD) (0.50-MM OS)	
	2	1	**154-0867**	4	ROD AS-CONNECTING	
					(EACH INCLUDES)	
	2A	1	**154-0869**	1	BUSHING	
	2B	1	**154-0870**	2	BOLT	
	2C	1	**154-0871**	2	NUT	
	3	1	**154-0873**	1	PIN	
	4	1	**154-0874**	2	CLIP	
	5	1	**270-6968**	4	PISTON AS	
					(EACH INCLUDES)	
	5A	1	**270-6970**	4	KIT-PISTON RING	

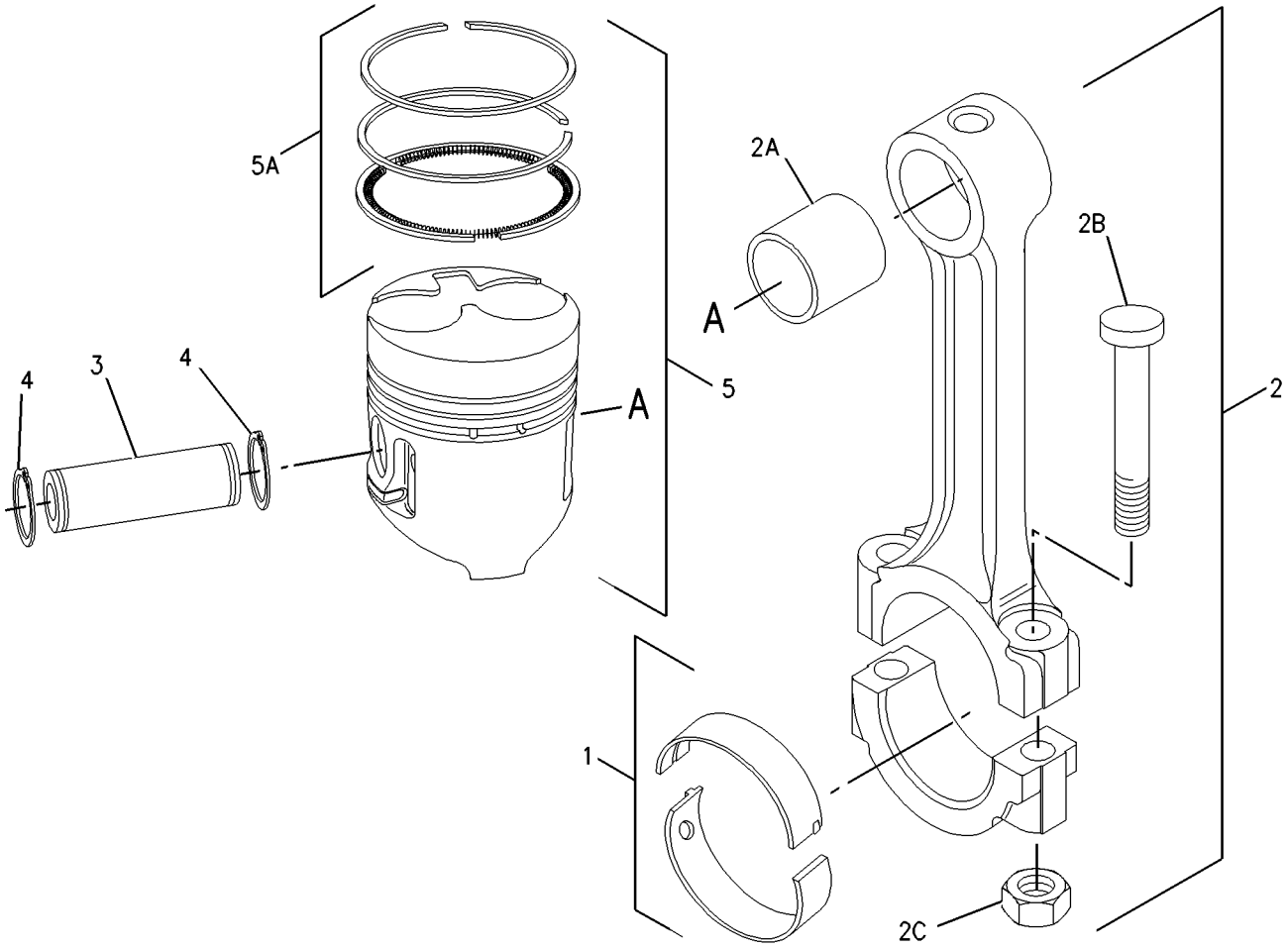

GRAPHIC #1 **<END>** g01006481

308-2286 PISTON & ROD GP

S/N: CYP1-UP
PART OF 292-5719 ENGINE AR-PRIMARY
AN ATTACHMENT

SMCS-1225 **i02752166**

NOTE	REF NO	GRAPHIC REF	PART NUMBER	QTY	PART NAME 1 2 3 4 5 6 (PRODUCT LEVEL)	SEE PAGE
	1	1	**154-0867**	4	ROD AS-CONNECTING	
					(EACH INCLUDES)	
	1A	1	**154-0869**	1	BUSHING	
	1B	1	**154-0870**	2	BOLT	
	1C	1	**154-0871**	2	NUT	
	2	1	**154-0873**	1	PIN	
	3	1	**154-0874**	2	CLIP	
	4	1	**270-6968**	4	PISTON AS	
					(EACH INCLUDES)	
	4A	1	**270-6970**	1	KIT-PISTON RING	

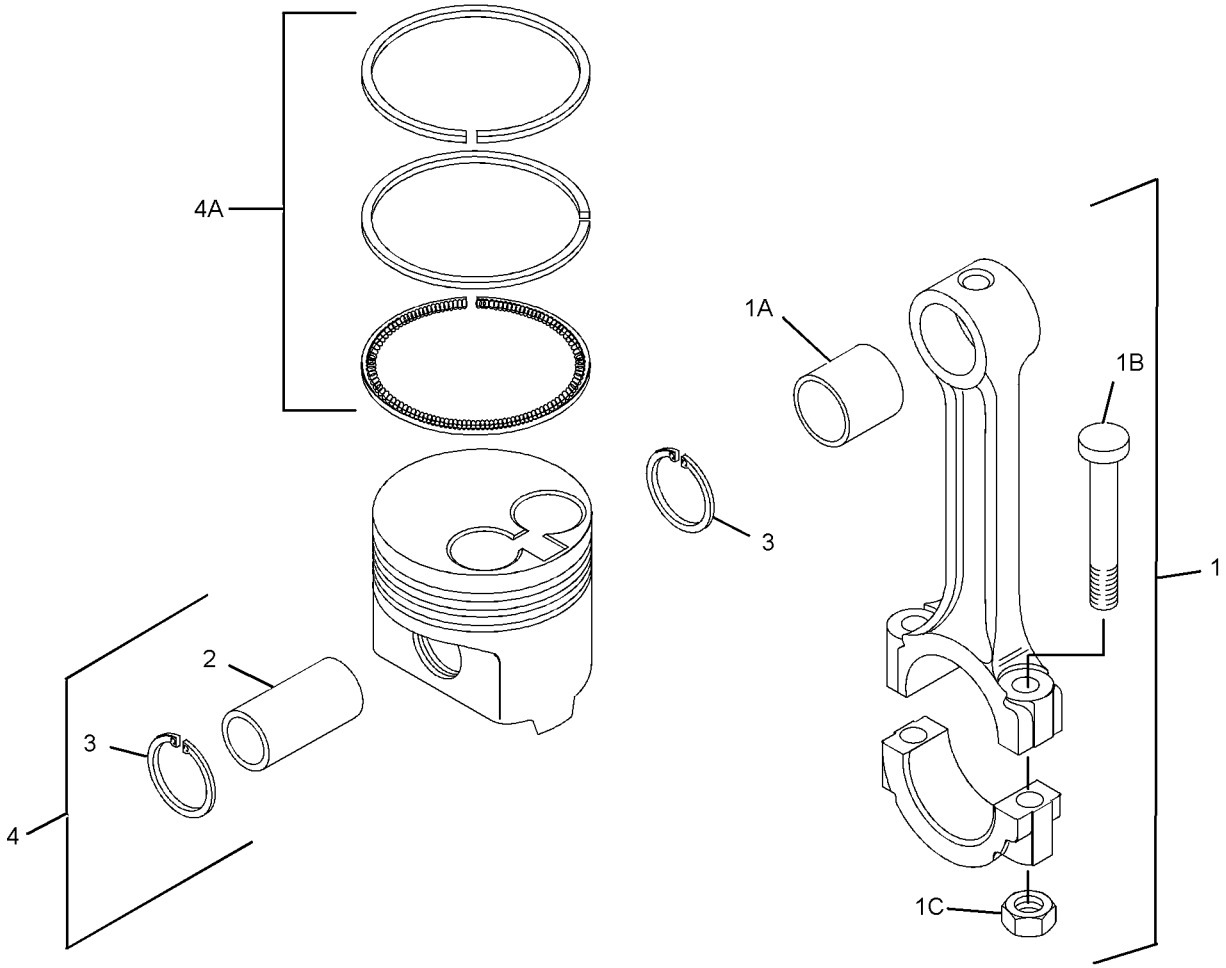

GRAPHIC #1 **<END>** g01410074

315-5252 PLUG GP-ENGINE

S/N: CYP1-UP
PART OF 292-5719 ENGINE AR-PRIMARY
AN ATTACHMENT

SMCS-1000 **i02810593**

NOTE	REF NO	GRAPHIC REF	PART NUMBER	QTY	PART NAME 1 2 3 4 5 6 (PRODUCT LEVEL)	SEE PAGE
	1	1	**153-6412**	2	WASHER	
	2	1	**218-2334**	1	PLUG-DRAIN (ENGINE OIL PAN)	
	3	1	**312-4560**	1	VALVE-DRAIN	

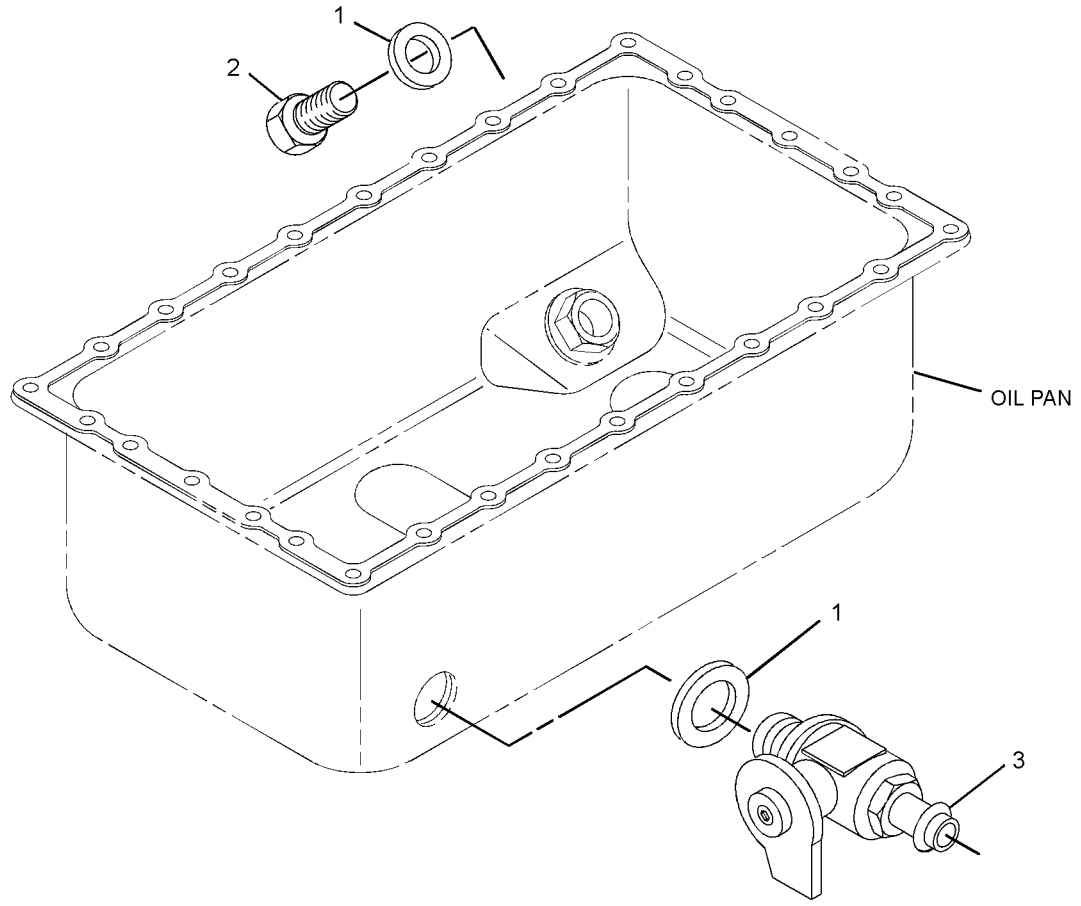

GRAPHIC #1 **<END>** g01414783

217-2777 PULLEY GP-CRANKSHAFT

S/N: CSD1-11322
PART OF 300-5206 ENGINE AR-PRIMARY
AN ATTACHMENT

SMCS-1205 **i01649069**

NOTE	REF NO	GRAPHIC REF	PART NUMBER	QTY	PART NAME 1 2 3 4 5 6 (PRODUCT LEVEL)	SEE PAGE
	1	1	**153-5592**	4	NUT	
	2	1	**153-6492**	1	KEY-WOODRUFF	
	3	1	**153-6494**	1	GASKET	
	4	1	**153-6497**	1	SEAL-O-RING	
	5	1	**154-1880**	1	NUT	
	6	1	**154-1882**	2	PLATE	
	7	1	**180-6115**	4	BOLT	
	8	1	**217-2776**	1	PULLEY-CRANKSHAFT	

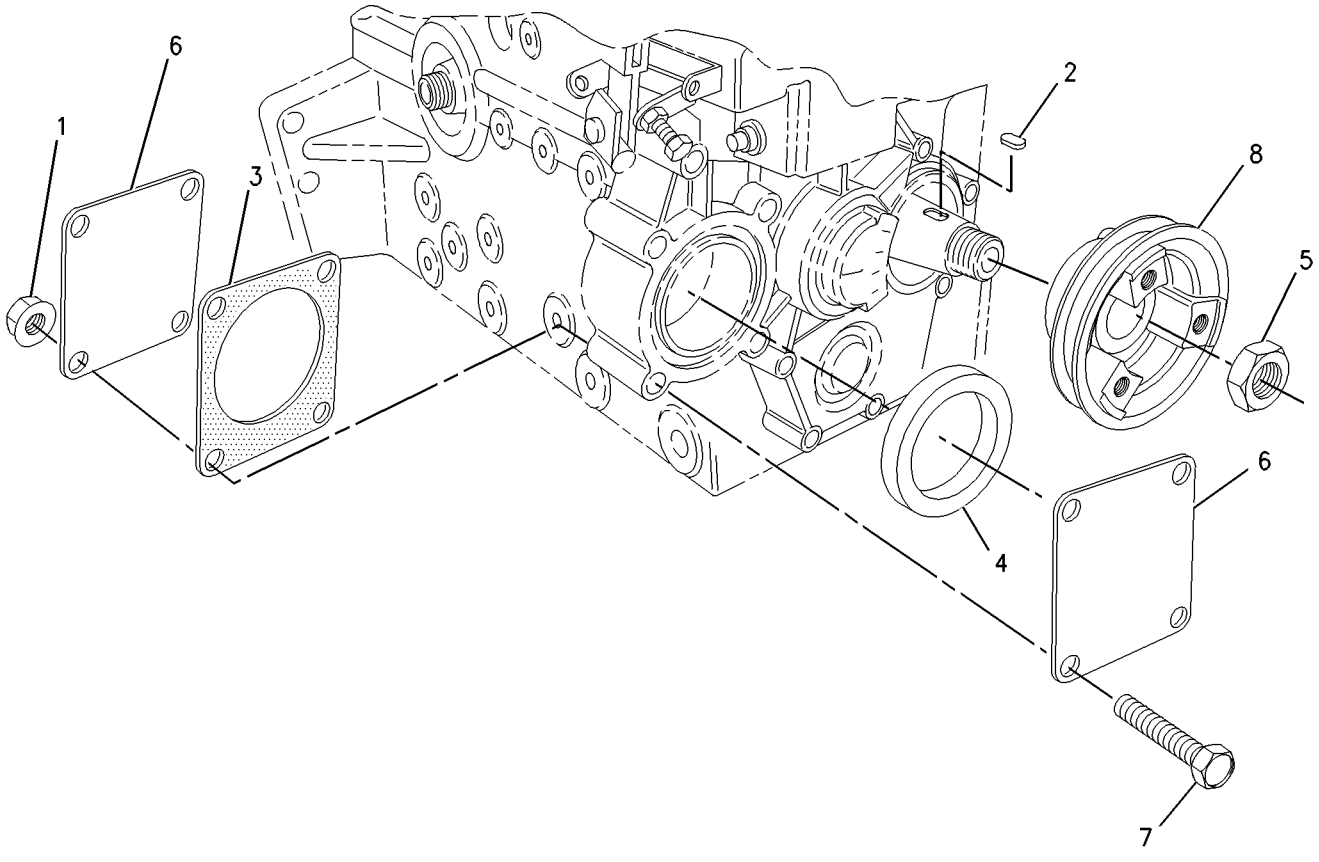

GRAPHIC #1 **<END>** g00852781

308-2300 PULLEY GP-CRANKSHAFT

S/N: CYP1-UP
PART OF 292-5719 ENGINE AR-PRIMARY
AN ATTACHMENT

SMCS-1205 **i02752268**

NOTE	REF NO	GRAPHIC REF	PART NUMBER	QTY	PART NAME 1 2 3 4 5 6 (PRODUCT LEVEL)	SEE PAGE
	1	1	**153-6492**	1	KEY-WOODRUFF	
	2	1	**154-1880**	1	NUT	
	3	1	**217-2776**	1	PULLEY-CRANKSHAFT	

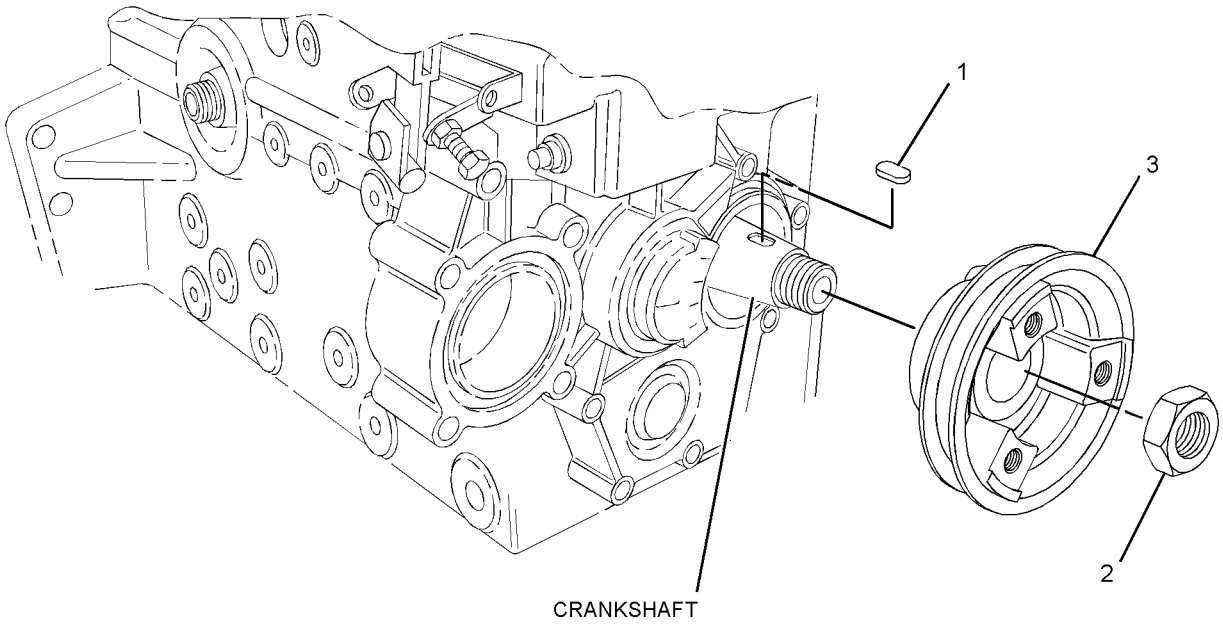

GRAPHIC #1 **<END>** g01390599

251-6791 PULLEY GP-WATER PUMP

S/N: CSD1-11322
PART OF 300-5206 ENGINE AR-PRIMARY
AN ATTACHMENT

SMCS-1384 **i02089686**

NOTE	REF NO	GRAPHIC REF	PART NUMBER	QTY	PART NAME 1 2 3 4 5 6 (PRODUCT LEVEL)	SEE PAGE
	1	1	**154-1822**	1	PULLEY-WATER PUMP	
	2	1	**251-6789**	1	V-BELT (WATER PUMP)	

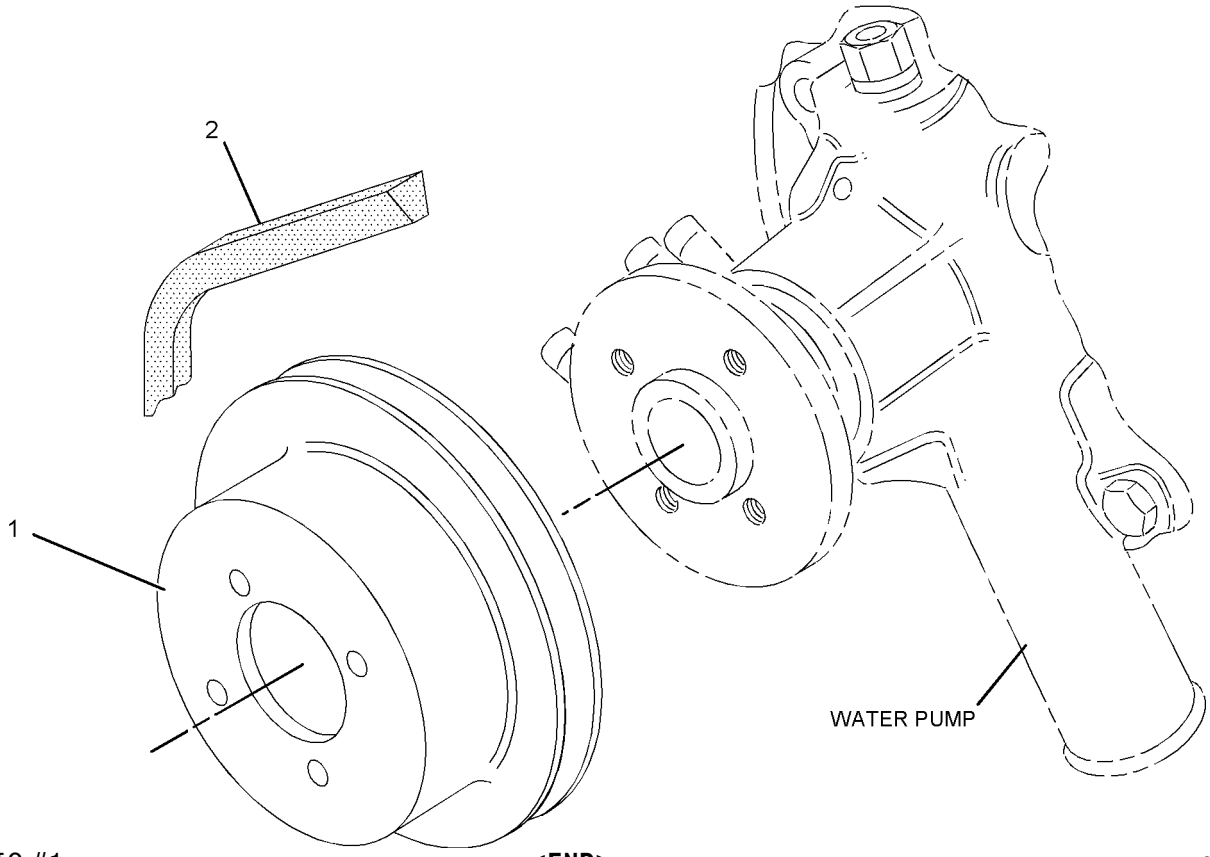

GRAPHIC #1 **<END>** g01048774

308-2294 PULLEY GP-WATER PUMP

S/N: CYP1-UP
PART OF 292-5719 ENGINE AR-PRIMARY
AN ATTACHMENT

SMCS-1384 **i02743517**

NOTE	REF NO	GRAPHIC REF	PART NUMBER	QTY	PART NAME 1 2 3 4 5 6 (PRODUCT LEVEL)	SEE PAGE
	1	1	**154-1822**	1	PULLEY-WATER PUMP	

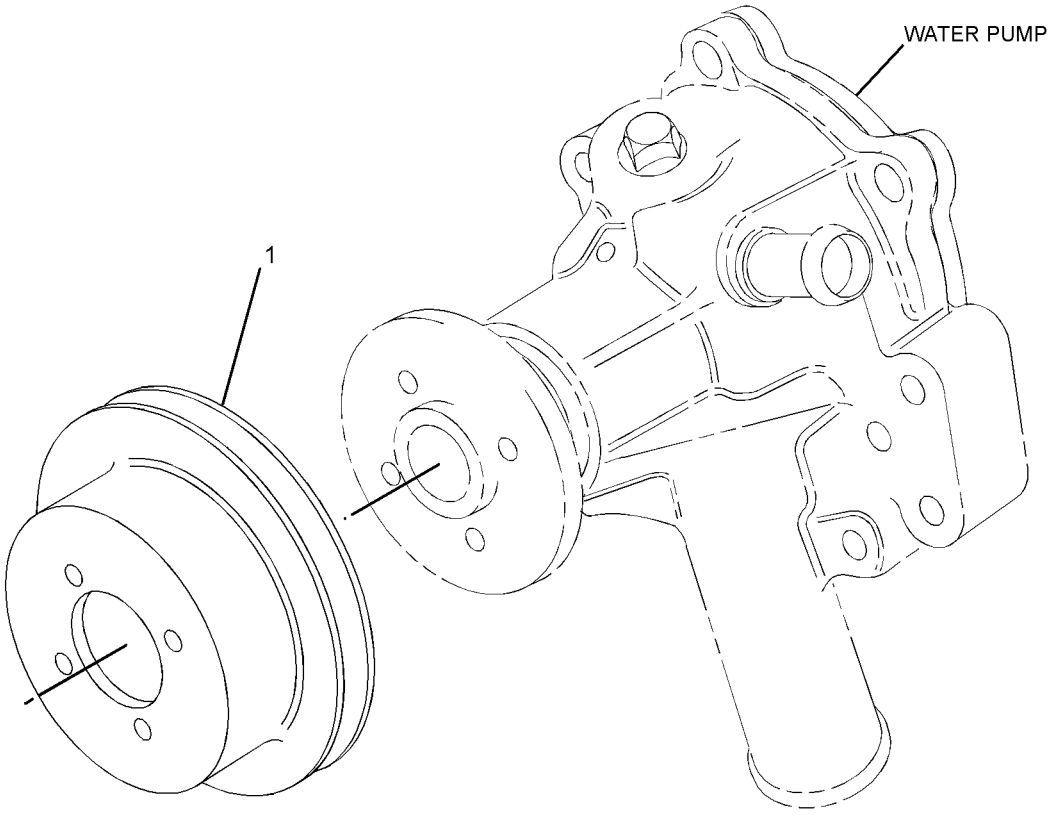

GRAPHIC #1 **<END>** g01412305

BASIC ENGINE

308-2306 V-BELT GP–FAN DRIVE

S/N: CYP1-UP

PART OF 292-5719 ENGINE AR-PRIMARY

AN ATTACHMENT

SMCS-1357 **i02890359**

NOTE	REF NO	GRAPHIC REF	PART NUMBER	QTY	PART NAME 1 2 3 4 5 6 (PRODUCT LEVEL)	SEE PAGE
	1	1	**211-5172**	1	V-BELT (WATER PUMP)	

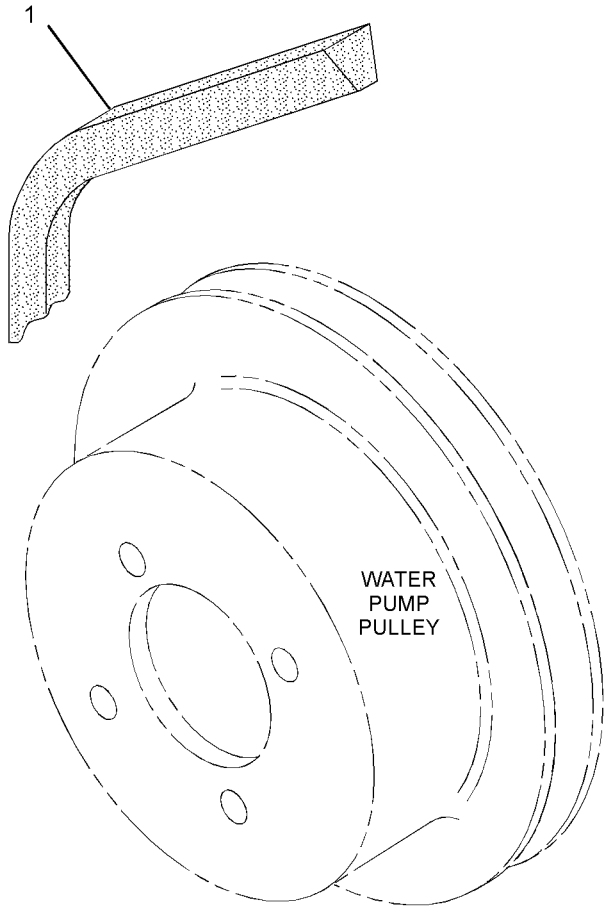

GRAPHIC #1 **<END>** g01407842

293-2167 VALVE MECHANISM GP

S/N: CSD1-11322; CYP1-UP

PART OF 303-0337 CYLINDER HEAD GP, 308-2285 VALVE MECHANISM GP

AN ATTACHMENT

SMCS-1102, 1112, 1121, 1123, 1208, 1209 **i02869546**

NOTE	REF NO	GRAPHIC REF	PART NUMBER	QTY	PART NAME 1 2 3 4 5 6 (PRODUCT LEVEL)	SEE PAGE
	1	1	**154-1243**	6	WASHER	
	2	1	**153-5587**	8	SCREW-ADJUSTMENT	
	3	1	**153-5590**	8	NUT	
	4	1	**153-6835**	1	SEAL-O-RING	
	5	1	**206-3499**	1	SHAFT-ROCKER ARM	
	7	1	**154-1240**	4	LEVER-RH	
	8	1	**154-1241**	4	LEVER-LH	
	9	1	**154-1242**	3	SPRING	

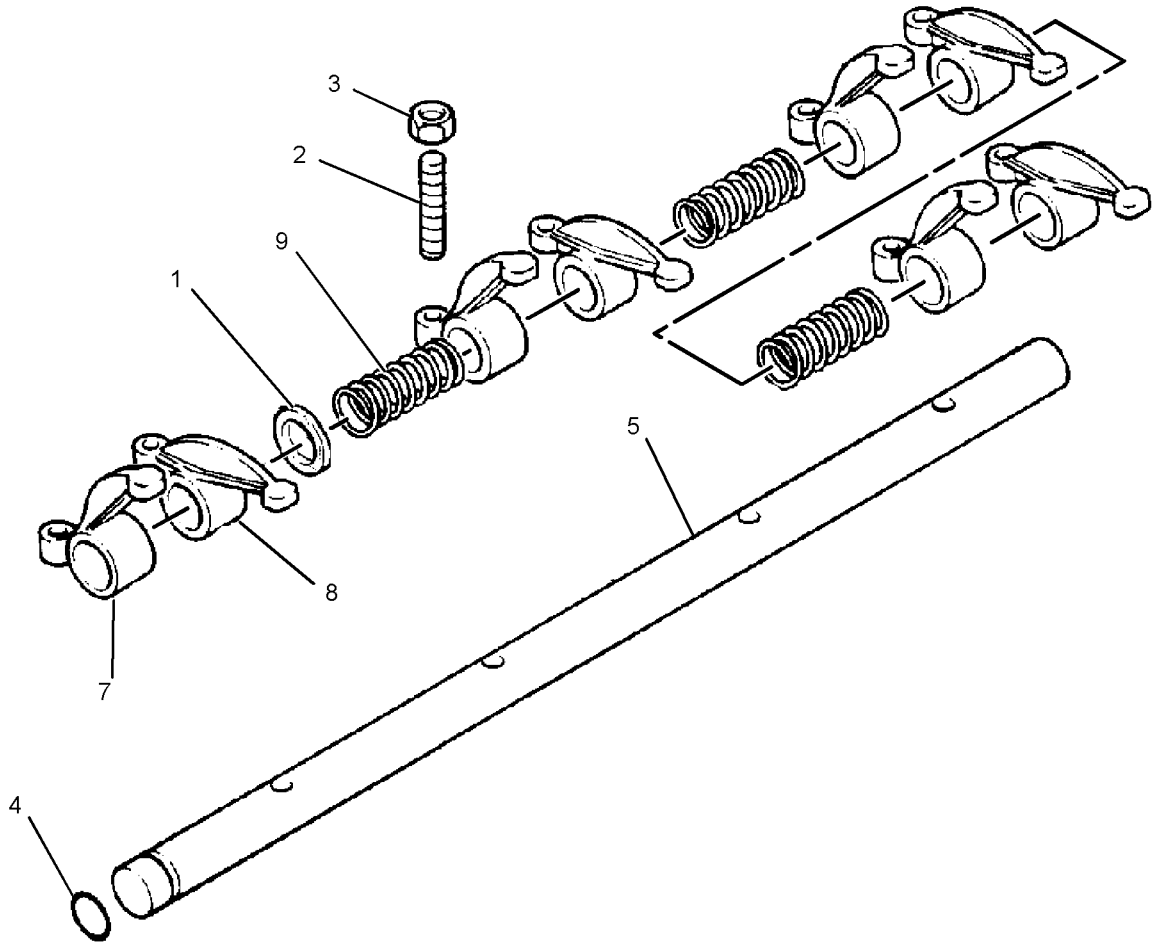

GRAPHIC #1 **<END>** g01395519

BASIC ENGINE

308-2285 VALVE MECHANISM GP

S/N: CYP1-UP

PART OF 292-5719 ENGINE AR-PRIMARY

AN ATTACHMENT

SMCS-1102, 1112, 1121, 1123, 1208, 1209 **i02752240**

NOTE	REF NO	GRAPHIC REF	PART NUMBER	QTY	PART NAME 1 2 3 4 5 6 (PRODUCT LEVEL)	SEE PAGE
	1	1	**153-5961**	2	BOLT	
	2	1	**153-7988**	4	NUT	
	3	1	**154-1246**	4	STUD	
	4	1	**154-1248**	8	ROD	
	5	1	**154-1249**	8	TAPPET	
	6	1	**217-2752**	1	GASKET (VALVE BRACKET)	
Y	7	1	**293-2167**	1	VALVE MECHANISM GP	75

Y-SEPARATE ILLUSTRATION

308-2285 **VALVE MECHANISM GP** *(contd.)* **i02752240**

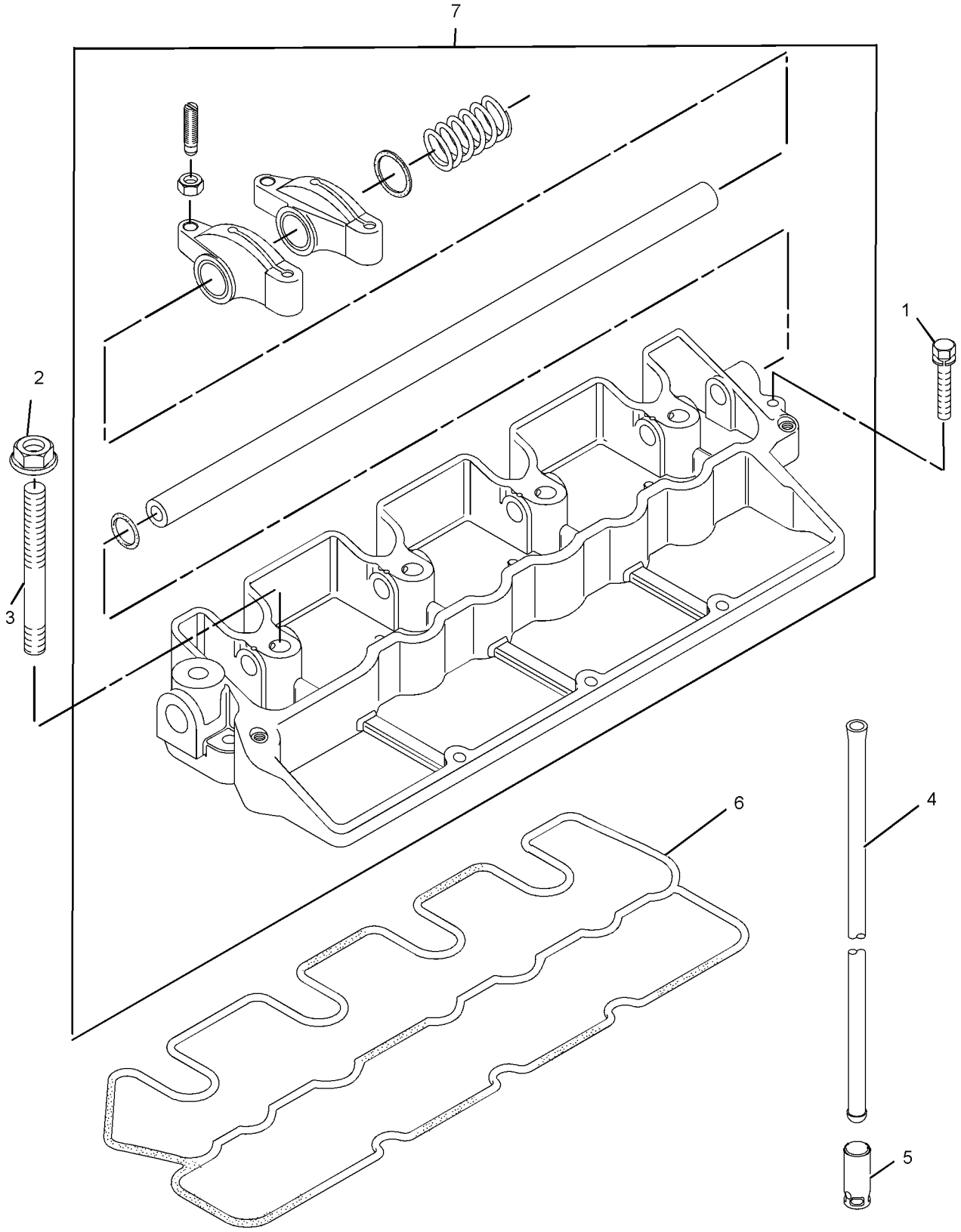

GRAPHIC #1 **<END>** g01409366

LUBRICATION SYSTEM

308-2297 FILLER GP-ENGINE OIL—ENGINE

S/N: CYP1-UP

PART OF 292-5719 ENGINE AR-PRIMARY

AN ATTACHMENT

SMCS-1316 **i02743497**

NOTE	REF NO	GRAPHIC REF	PART NUMBER	QTY	PART NAME 1 2 3 4 5 6 (PRODUCT LEVEL)	SEE PAGE
	1	1	**153-5933**	1	SEAL	
	2	1	**217-7358**	1	CAP (ENGINE OIL FILLER)	
	3	1	**288-6593**	1	SEAL	
	4	1	**289-6120**	1	CAP-OIL FILLER (ENGINE)	

308-2297 **FILLER GP-ENGINE OIL** *(contd.)* **i02743497**

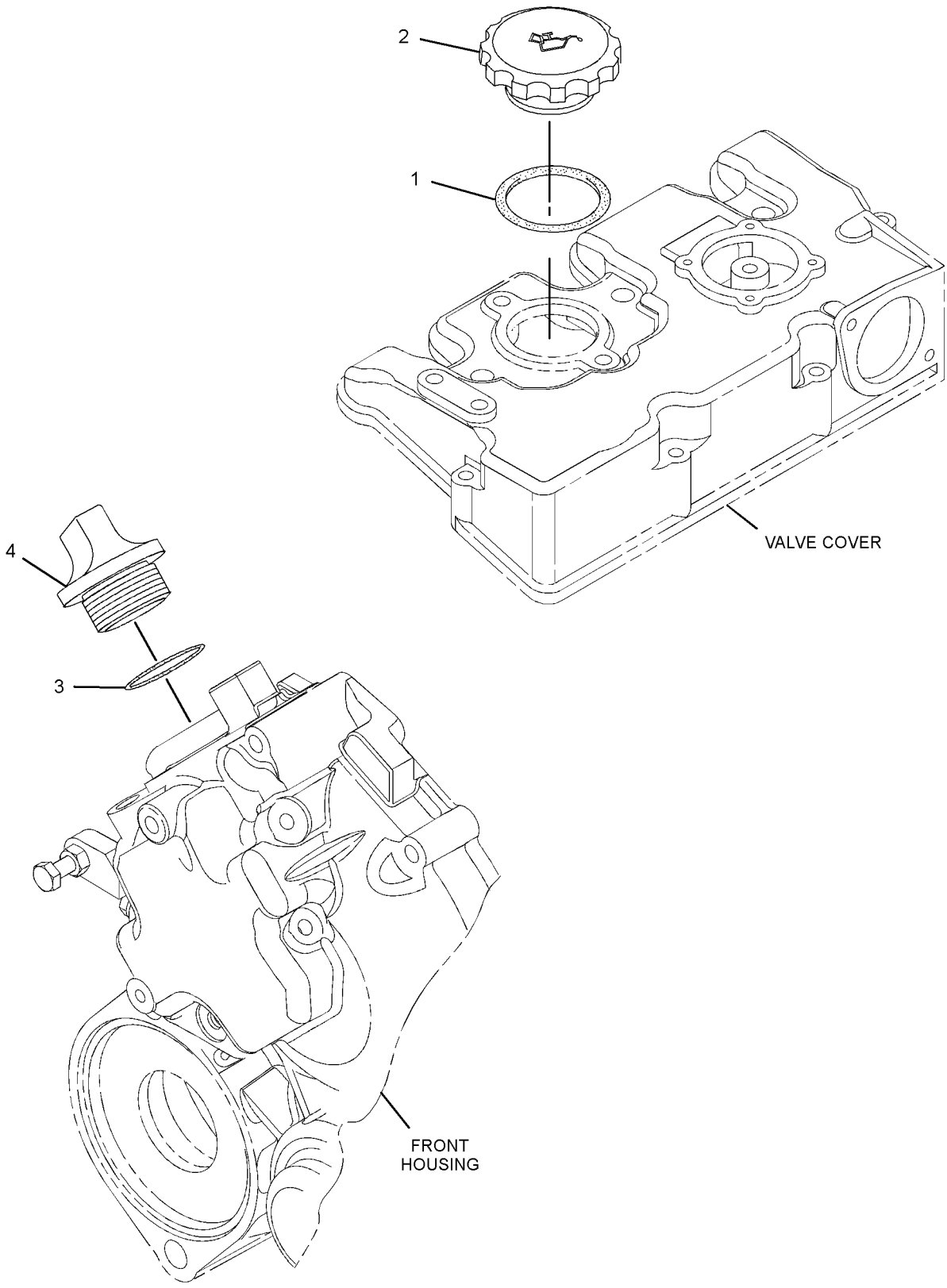

GRAPHIC #1 **<END>** g01412730

LUBRICATION SYSTEM

308-2287 PUMP GP-ENGINE OIL

S/N: CYP1-UP
PART OF 292-5719 ENGINE AR-PRIMARY
AN ATTACHMENT

SMCS-1304, 1315 **i02877258**

NOTE	REF NO	GRAPHIC REF	PART NUMBER	QTY	PART NAME 1 2 3 4 5 6 (PRODUCT LEVEL)	SEE PAGE
	1	1	**153-5936**	2	WASHER	
	2	1	**153-6849**	1	SPRING	
	3	1	**153-6850**	1	COLLAR	
	4	1	**153-6851**	1	CLIP	
	5	1	**153-6853**	1	SEAL-O-RING	
	6	1	**153-6881**	1	BOLT	
	7	1	**154-1942**	1	VALVE-RELIEF	
	8	1	**154-2353**	1	TUBE AS-OIL	
B	9	1	**160-4150**	1	SHIM (0.1-MM THK)	
B		1	**160-4151**	1	SHIM (0.15-MM THK)	
B		1	**160-4152**	1	SHIM (0.2-MM THK)	
B		1	**160-4153**	1	SHIM (0.5-MM THK)	
	10	1	**318-8382**	1	GEAR GP-IDLER	
	10A	1	**154-1677**	3	BUSHING	
	10B	1	**154-1678**	3	DOWEL	
	10C	1	**308-1984**	1	SPRING	
	11	1	**308-1867**	1	WASHER-THRUST	
	12	1	**308-1869**	1	COVER	

B-USE AS REQUIRED

308-2287 **PUMP GP-ENGINE OIL** *(contd.)* **i02877258**

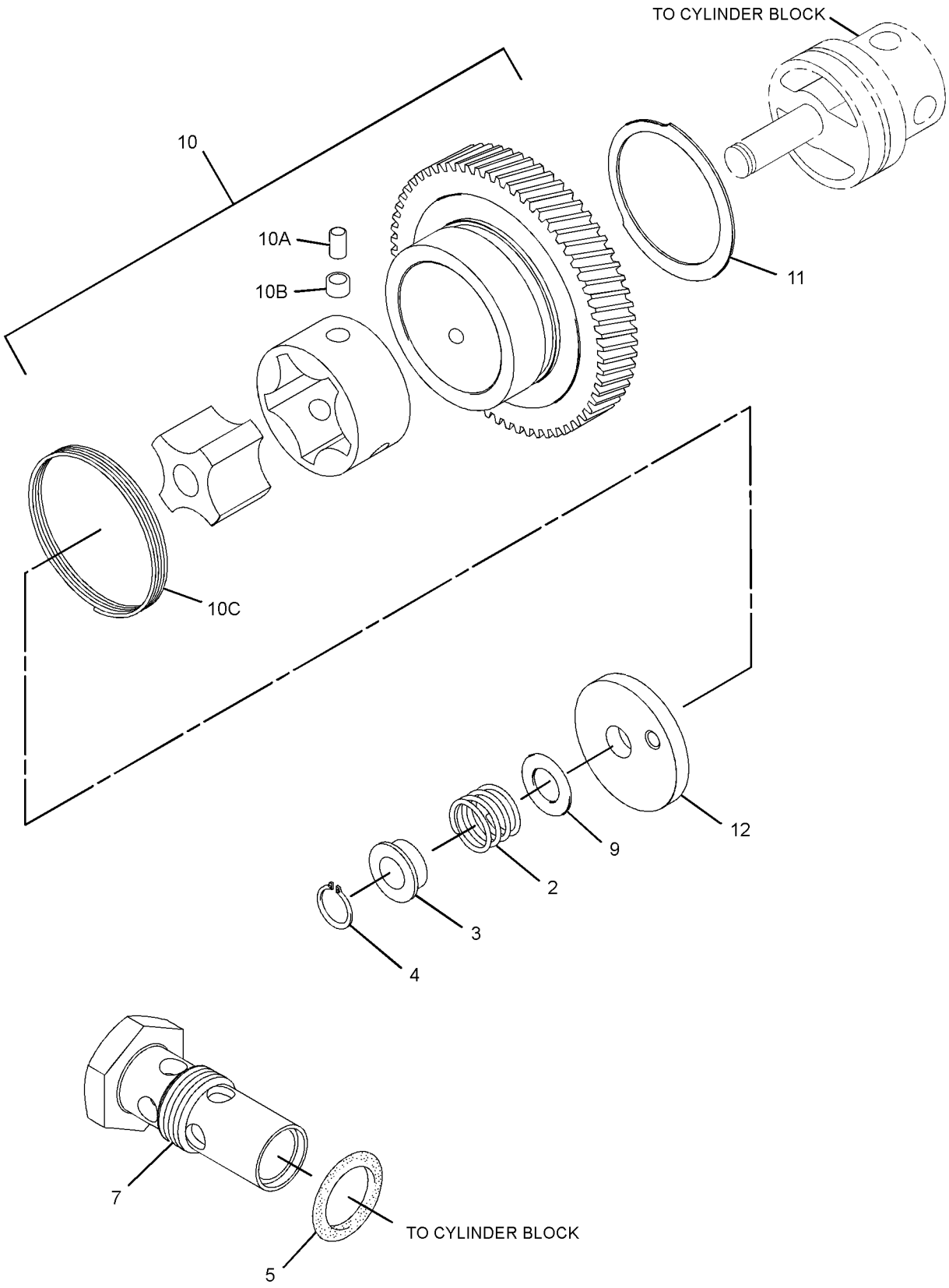

GRAPHIC #1 g01410345

308-2287 **PUMP GP-ENGINE OIL** *(contd.)* **i02877258**

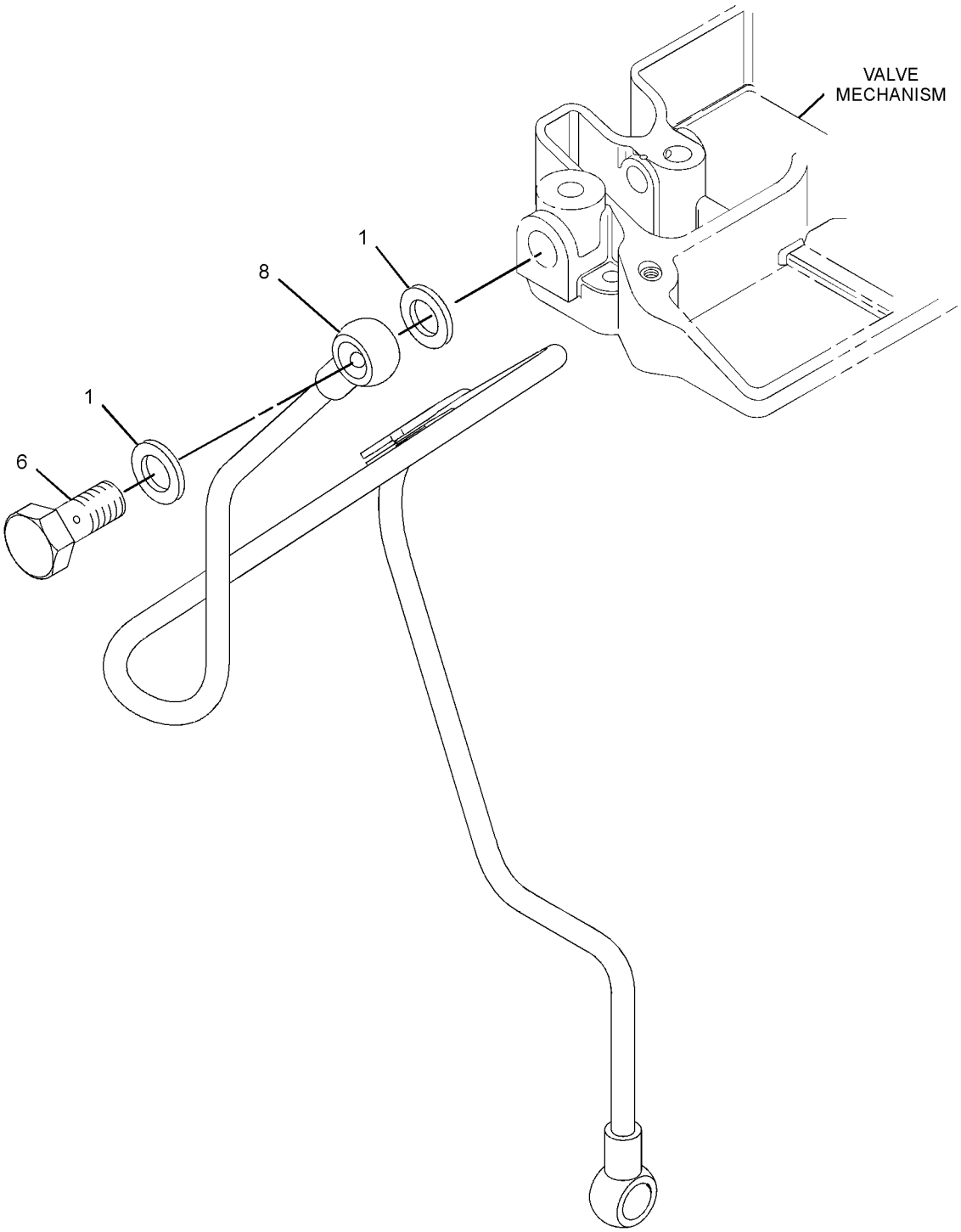

GRAPHIC #2 **<END>** g01410346

317-0980 HOUSING GP-WATER REGULATOR

S/N: CYP1-UP
PART OF 292-5719 ENGINE AR-PRIMARY
AN ATTACHMENT

SMCS-1393 **i02826830**

NOTE	REF NO	GRAPHIC REF	PART NUMBER	QTY	PART NAME 1 2 3 4 5 6 (PRODUCT LEVEL)	SEE PAGE
	1	1	**154-1828**	1	GASKET-COVER (TEMPERATURE REGULATOR)	
	2	1	**168-9001**	2	BOLT	
	3	1	**217-7379**	1	HOUSING	

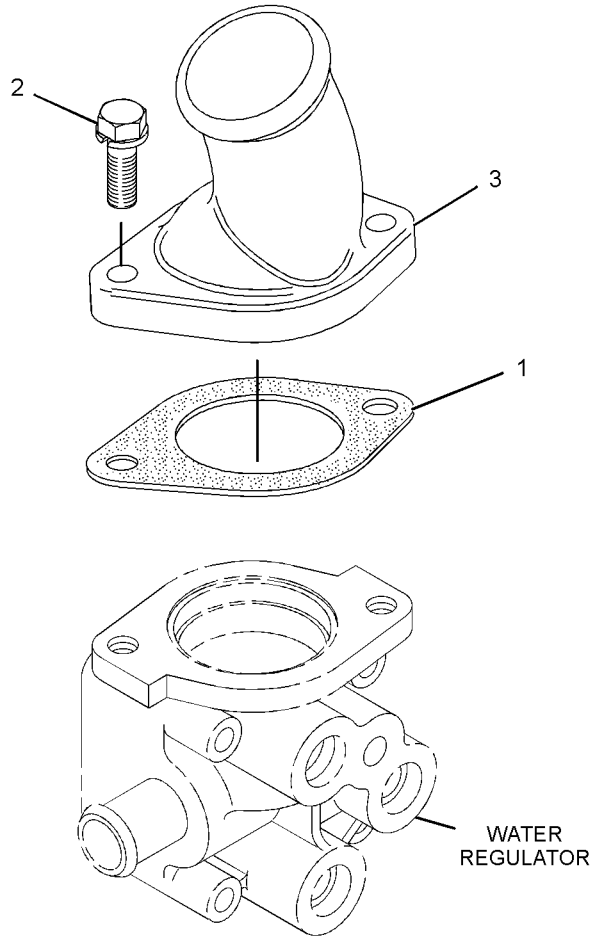

GRAPHIC #1 **<END>** g01439312

COOLING SYSTEM

228-1762 MOUNTING GP-RAD & OIL COOLER

S/N: MJH10575-UP

PART OF 295-7027, 295-7028 INSTALLATION AR-ENGINE

SMCS-1353, 1374 **i02602679**

NOTE	REF NO	GRAPHIC REF	PART NUMBER	QTY	PART NAME 1 2 3 4 5 6 (PRODUCT LEVEL)	SEE PAGE
	1	1	**5P-0372**	2	LOCK PIN	
	2	1	**5V-8309**	1	STRIKER AS	
B	3	1	**8T-0318**	1	SHIM (0.8-MM THK)	
	4	1	**8T-4159**	1	BUMPER	
	5	1	**142-8812**	1	SUPPORT AS	
	6	1	**142-8832**	1	PIN AS	
	7	1	**161-2347**	1	LATCH AS	
	8	1	**193-8345**	1	SPRING AS-GAS	
	9	1	**208-6176**	4	STUD-BALL	
	10	1	**228-3724**	1	SUPPORT AS	
	11	1	**228-9641**	1	GRILL AS	
	12	1	**232-1789**	1	SPRING AS-GAS	
	13	1	**178-2255**	2	PIN	
	14	1	**2K-4973**	1	LOCKNUT (3/8-16-THD)	
M	15	1	**5C-7261**	1	NUT (M8X1.25-THD)	
	16	1	**7X-7729**	1	WASHER (11X25X3-MM THK)	
	17	1	**8T-4121**	8	WASHER-HARD (11X21X2.5-MM THK)	
M	18	1	**8T-4133**	4	NUT (M10X1.5-THD)	
M	19	1	**8T-4181**	3	BOLT (M6X1X20-MM)	
	20	1	**8T-4205**	3	WASHER-HARD (7.2X14.5X2-MM THK)	
M	21	1	**8T-6466**	4	BOLT (M10X1.5X60-MM)	
D	22	1	**5P-8309**		SEAL (0.5-M EACH)	

B-USE AS REQUIRED
D-ORDER BY THE METER
M-METRIC PART

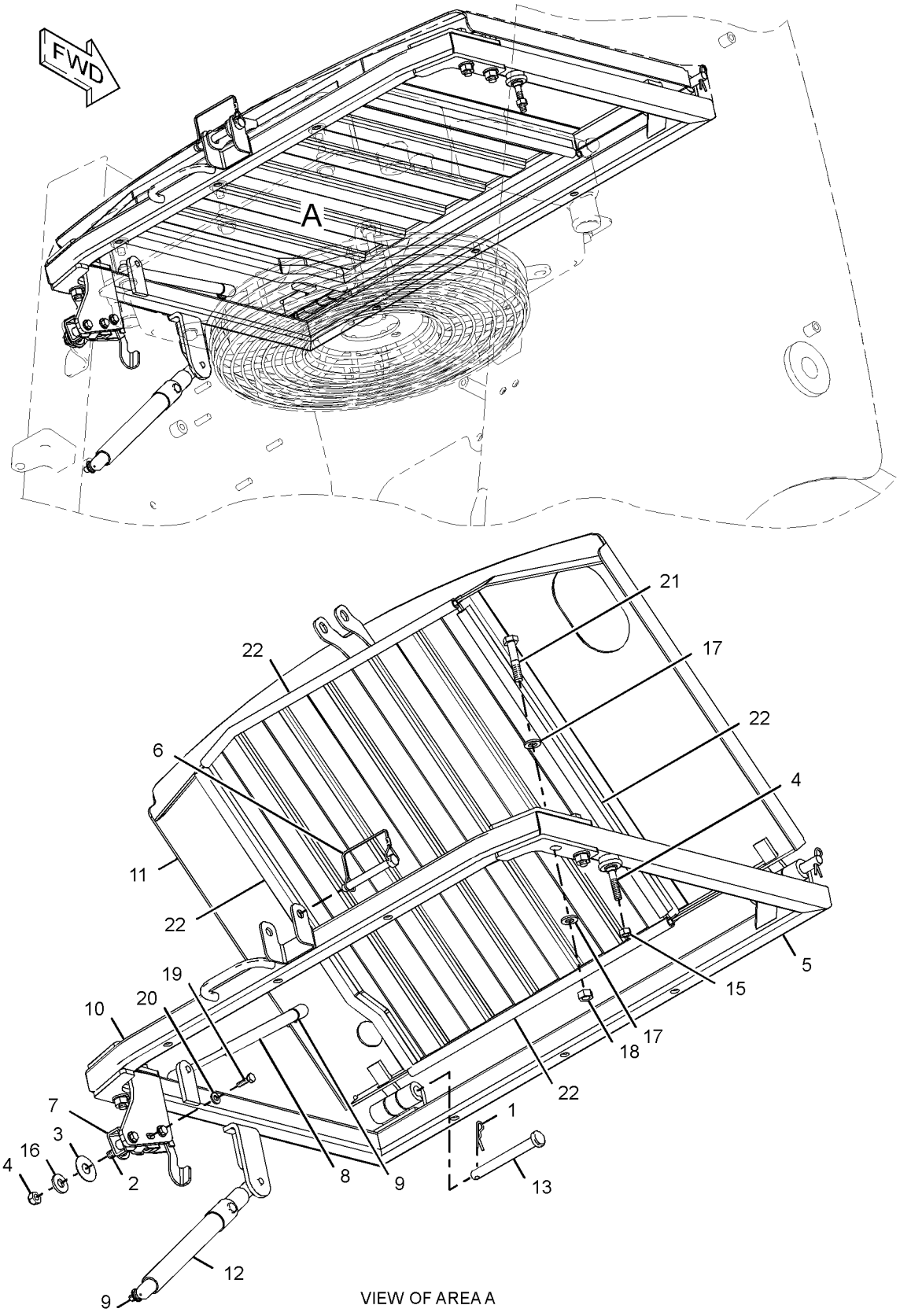

VIEW OF AREA A

GRAPHIC #1 **<END>** g01313171

COOLING SYSTEM

246-3451 PUMP GP-WATER

S/N: CSD1-11322
PART OF 300-5206 ENGINE AR-PRIMARY
AN ATTACHMENT

SMCS-1355, 1361 **i02877607**

NOTE	REF NO	GRAPHIC REF	PART NUMBER	QTY	PART NAME 1 2 3 4 5 6 (PRODUCT LEVEL)	SEE PAGE
	1	1	**5P-2369**	1	CLIP	
	2	1,1	**153-5960**	5	NUT	
	3	1	**153-5961**	4	BOLT	
	4	1	**218-2317**	1	PLUG	
C	5	1	**311-0023**	1	PUMP GP-WATER	
C	7	1	**5D-1026**	2	CLAMP-HOSE	
	8	1	**154-1828**	1	GASKET-COVER	
C	9	1	**286-7496**	1	HOSE-WATER	
	11	1	**165-2141**	2	BOLT	
	13	1	**205-4585**	1	HOSE	
	14	1	**303-0307**	1	GASKET	
	15	1	**215-2617**	1	GASKET (HOUSING)	
	16	1	**217-7379**	1	HOUSING	
	17	1	**154-1817**	4	PLUG	
C	18	1	**286-7495**	1	HOUSING-THERMOSTAT	
	19	1	**5P-2230**	1	CLAMP-HOSE	
	20	1	**153-6856**	2	BOLT	
	21	1	**249-5541**	1	REGULATOR-WATER TEMPERATURE	
	22	1	**153-6375**	1	BOLT	
F			**267-0328**	1	HOSE	

C-CHANGE FROM PREVIOUS TYPE
F-NOT SHOWN

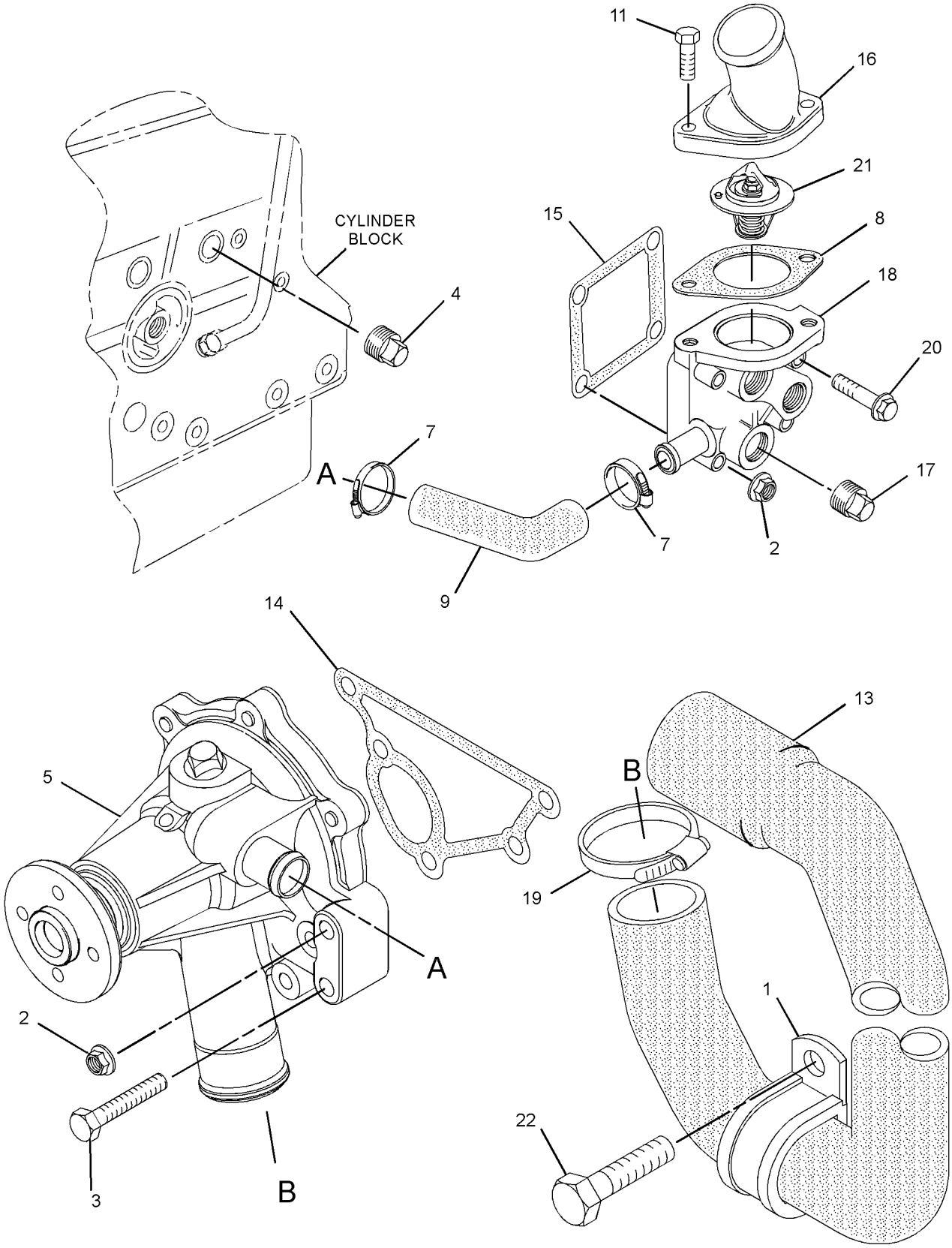

GRAPHIC #1 **<END>** g01435281

COOLING SYSTEM

317-0979 PUMP GP-WATER

S/N: CYP1-UP
PART OF 292-5719 ENGINE AR-PRIMARY
AN ATTACHMENT

SMCS-1355, 1361 **i02826936**

NOTE	REF NO	GRAPHIC REF	PART NUMBER	QTY	PART NAME 1 2 3 4 5 6 (PRODUCT LEVEL)	SEE PAGE
	1	1	**5D-1026**	2	CLAMP-HOSE	
	2	2	**127-8281**	1	CLIP	
	3	1	**153-5960**	3	NUT	
	4	1	**153-5961**	4	BOLT	
	5	1	**154-1817**	1	PLUG	
	6	1	**154-1831**	1	PLUG	
	7	2	**155-7984**	1	WASHER	
	8	2	**180-6118**	1	BOLT	
	9	1	**215-2617**	1	GASKET	
	10	1	**238-9137**	1	CONNECTION	
	11	2	**238-9143**	1	CONNECTION	
	12	2	**245-1361**	1	COOLER AS-OIL (ENGINE)	
	12A	2	**245-1362**	1	CONNECTOR	
	12B	2	**245-1364**	1	SEAL	
	13	1	**249-5541**	1	REGULATOR-WATER TEMPERATURE	
	14	1	**286-7495**	1	HOUSING-THERMOSTAT	
	15	1	**286-7496**	1	HOSE-WATER	
	16	1	**308-1907**	2	BOLT	
	17	1	**308-1908**	1	GASKET-WATER PUMP	
	18	1	**311-0023**	1	PUMP GP-WATER	

317-0979 **PUMP GP-WATER** *(contd.)* **i02826936**

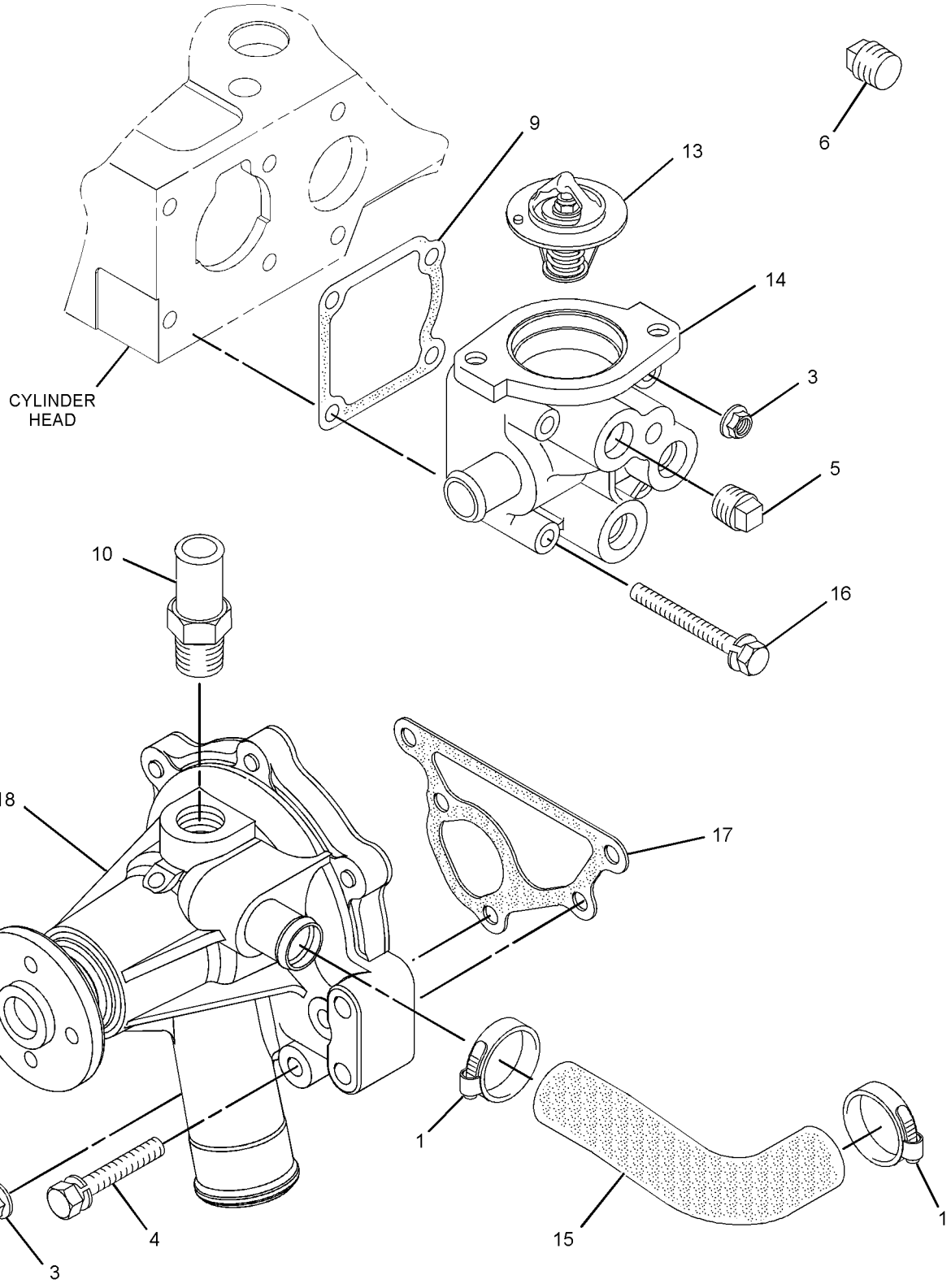

GRAPHIC #1 g01439166

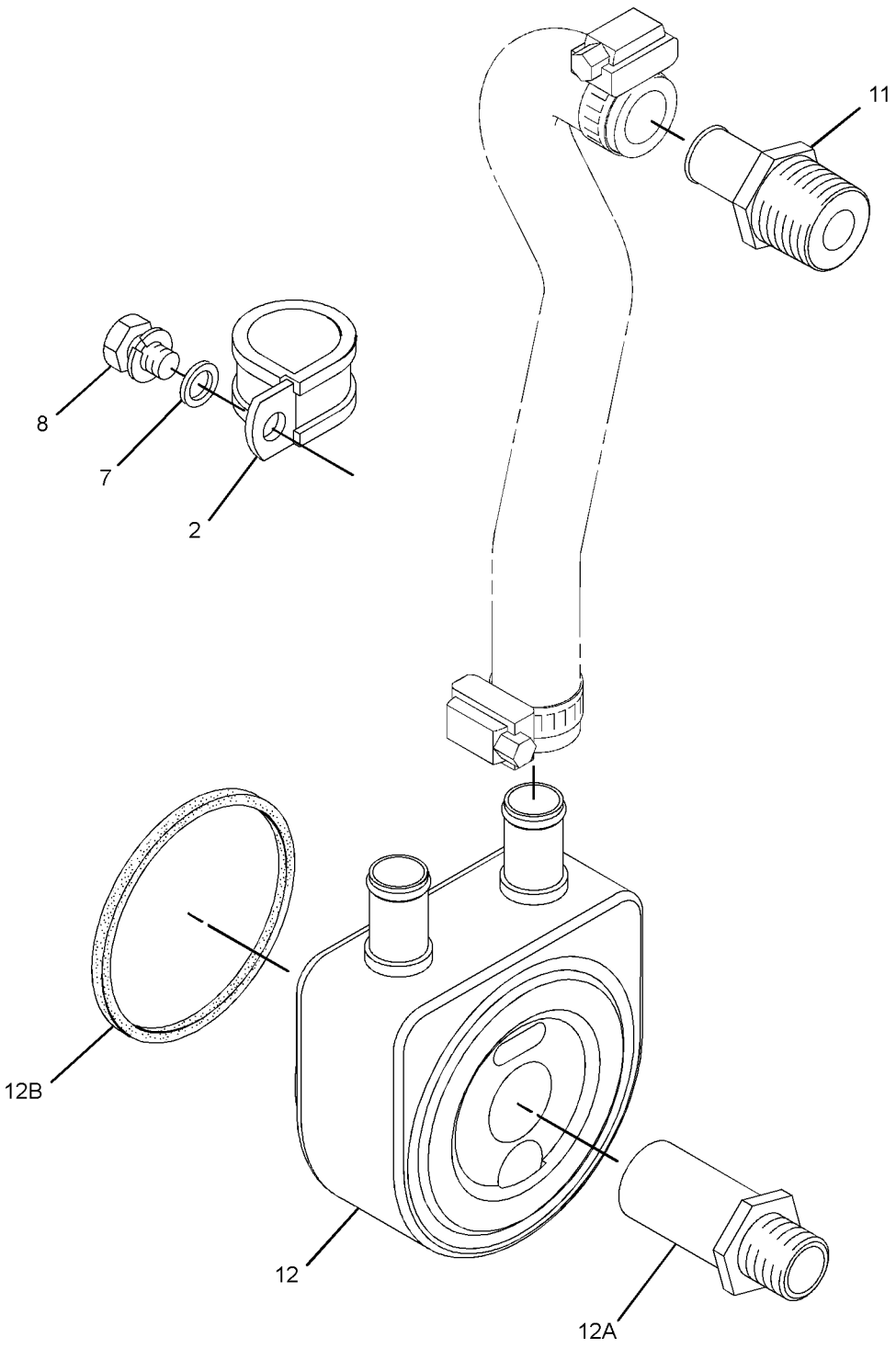

GRAPHIC #2 **<END>** g01439167

228-3359 RADIATOR & HYD OIL COOLER GP

S/N: MJH10575-UP

PART OF 228-1783 RADIATOR & OIL COOLER MTG GP

AN ATTACHMENT

SMCS-1351, 1356, 1386 **i02799297**

NOTE	REF NO	GRAPHIC REF	PART NUMBER	QTY	PART NAME 1 2 3 4 5 6 (PRODUCT LEVEL)	SEE PAGE
	1	1	**036-1865**	1	CAP AS-RADIATOR (SEA WATER HEAT EXCHANGER)	
	2	1	**069-4080**	1	FITTING	
	4	1	**207-6154**	1	GAUGE-SIGHT (RADIATOR)	
	5	1	**280-8310**	1	RADIATOR & HYD OIL COOLER AS	
	6	1	**228-3350**	1	SHROUD AS	
	7	1	**233-6683**	1	GUARD AS (FAN)	
	8	1	*236-5816*	1	FAN GP-BLOWER	
		1	**8T-4224**	4	WASHER-HARD (8.8X16X2-MM THK)	
M		1	**8T-4908**	4	BOLT (M8X1.25X25-MM)	
		1	**205-3727**	1	FAN AS	
		1	**229-8796**	1	ADAPTER	
	9	1	**7M-7410**	1	PLUG-PIPE	
	10	1	**7X-7729**	12	WASHER (11X25X3-MM THK)	
	11	1	**8T-4121**	3	WASHER-HARD (11X21X2.5-MM THK)	
M	12	1	**8T-4133**	6	NUT (M10X1.5-THD)	
M	13	1	**8T-4196**	9	BOLT (M10X1.5X35-MM)	

M-METRIC PART

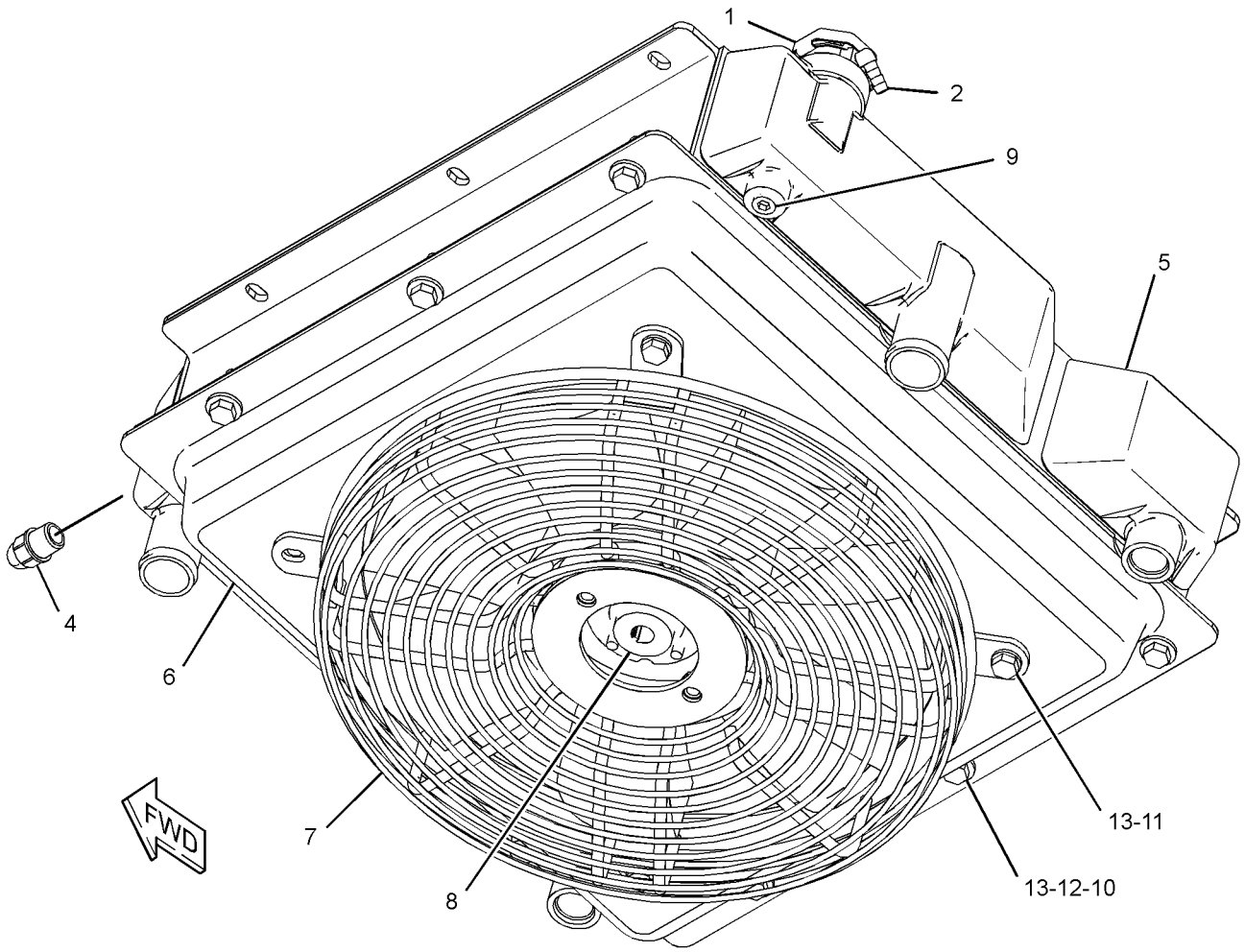

GRAPHIC #1 **<END>** g01399073

COOLING SYSTEM

261-6119 RADIATOR & HYD OIL COOLER GP

S/N: MJH10575-UP

PART OF 261-6118 RADIATOR & OIL COOLER MTG GP

AN ATTACHMENT

SMCS-1351, 1356, 1386 **i02799295**

NOTE	REF NO	GRAPHIC REF	PART NUMBER	QTY	PART NAME 1 2 3 4 5 6 (PRODUCT LEVEL)	SEE PAGE
	1	1	**036-1865**	1	CAP AS-RADIATOR (SEA WATER HEAT EXCHANGER)	
	2	1	**069-4080**	1	FITTING	
	3	1	**207-6154**	1	GAUGE-SIGHT (COOLANT LEVEL)	
	5	1	**228-3350**	1	SHROUD AS	
	6	1	**233-6683**	1	GUARD AS	
	7	1	*236-5816*	1	FAN GP-BLOWER	
		1	**8T-4224**	4	WASHER-HARD (8.8X16X2-MM THK)	
M		1	**8T-4908**	4	BOLT (M8X1.25X25-MM)	
		1	**205-3727**	1	FAN AS	
		1	**229-8796**	1	ADAPTER	
	8	1	**280-8311**	1	RADIATOR & HYD OIL COOLER AS	
	9	1	**238-0112**	1	SENSOR GP-TEMPERATURE (ENGINE COOLANT)	
	10	1	**6V-9028**	1	SEAL-O-RING	
	11	1	**7M-7410**	1	PLUG-PIPE	
	12	1	**7X-7729**	12	WASHER (11X25X3-MM THK)	
	13	1	**8T-4121**	3	WASHER-HARD (11X21X2.5-MM THK)	
M	14	1	**8T-4133**	6	NUT (M10X1.5-THD)	
M	15	1	**8T-4196**	9	BOLT (M10X1.5X35-MM)	

M-METRIC PART

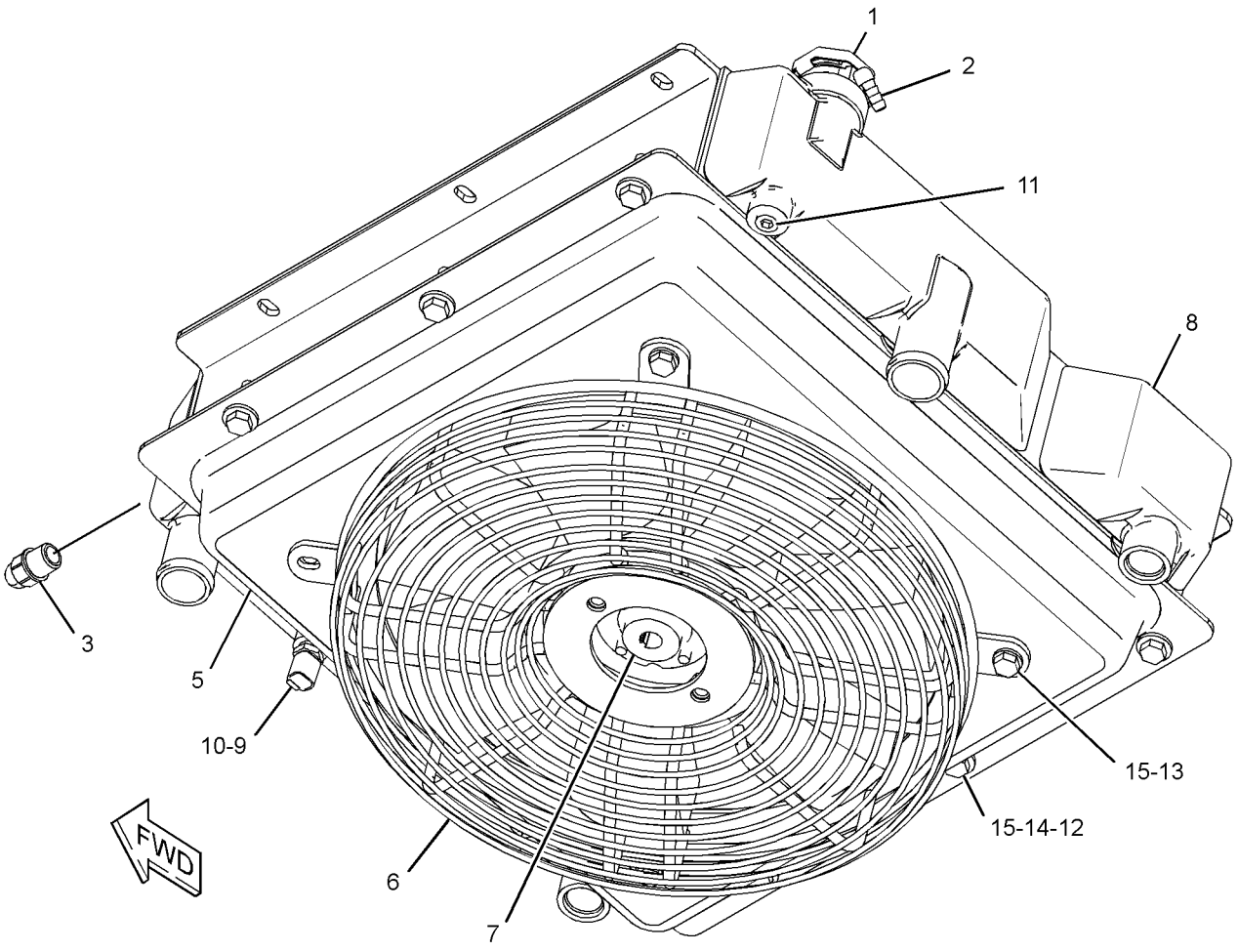

GRAPHIC #1 **<END>** g01399078

228-1783 RADIATOR & OIL COOLER MTG GP

S/N: MJH10575-UP
PART OF 261-6160 CONVERSION AR-MACHINE
AN ATTACHMENT

SMCS-1351, 1354 **i02890396**

NOTE	REF NO	GRAPHIC REF	PART NUMBER	QTY	PART NAME 1 2 3 4 5 6 (PRODUCT LEVEL)	SEE PAGE
	1	1	**1P-4278**	2	CLAMP-HOSE	
	2	1	**7X-1443**	4	PROTECTOR	
	3	1	**124-6264**	1	CLAMP-HOSE	
	4	1	**205-6383**	1	TUBE	
	5	1	**222-1178**	2	CLAMP	
Y	6	1	*228-3359*	1	RADIATOR & HYD OIL COOLER GP	91
C	7	1	**285-5794**	1	RECOVERY GP-COOLANT	
		1	**169-6715**	1	CAP-VENTED (COOLANT RECOVERY)	
	8	1	**231-3578**	1	HOSE (UPPER)	
	9	1	**231-3579**	1	HOSE (LOWER)	
	10	1	**231-3925**	1	BRACKET AS	
	11	1	**232-4901**	2	CLAMP	
	12	1	**143-4535**	1	CLIP (SLOT)	
	13	1	**143-4536**	1	CLIP (TAB)	
	14	1	**4K-8864**	2	CLIP	
	15	1	**7X-7729**	12	WASHER (11X25X3-MM THK)	
	16	1	**8T-4121**	2	WASHER-HARD (11X21X2.5-MM THK)	
M	17	1	**8T-4133**	6	NUT (M10X1.5-THD)	
M	18	1	**8T-4136**	1	BOLT (M10X1.5X25-MM)	
M	19	1	**8T-4137**	1	BOLT (M10X1.5X20-MM)	
	20	1	**8T-4224**	2	WASHER-HARD (8.8X16X2-MM THK)	
M	21	1	**8T-5005**	1	BOLT (M10X1.5X70-MM)	
M	22	1	**8T-5091**	2	BOLT (M8X1.25X20-MM)	
M	23	1	**8T-6466**	5	BOLT (M10X1.5X60-MM)	
E	24	1	**5P-1420**		HOSE (110-CM)	

C-CHANGE FROM PREVIOUS TYPE
E-ORDER BY THE CENTIMETER
M-METRIC PART
Y-SEPARATE ILLUSTRATION

228-1783 **RADIATOR & OIL COOLER MTG GP** *(contd.)* **i02890396**

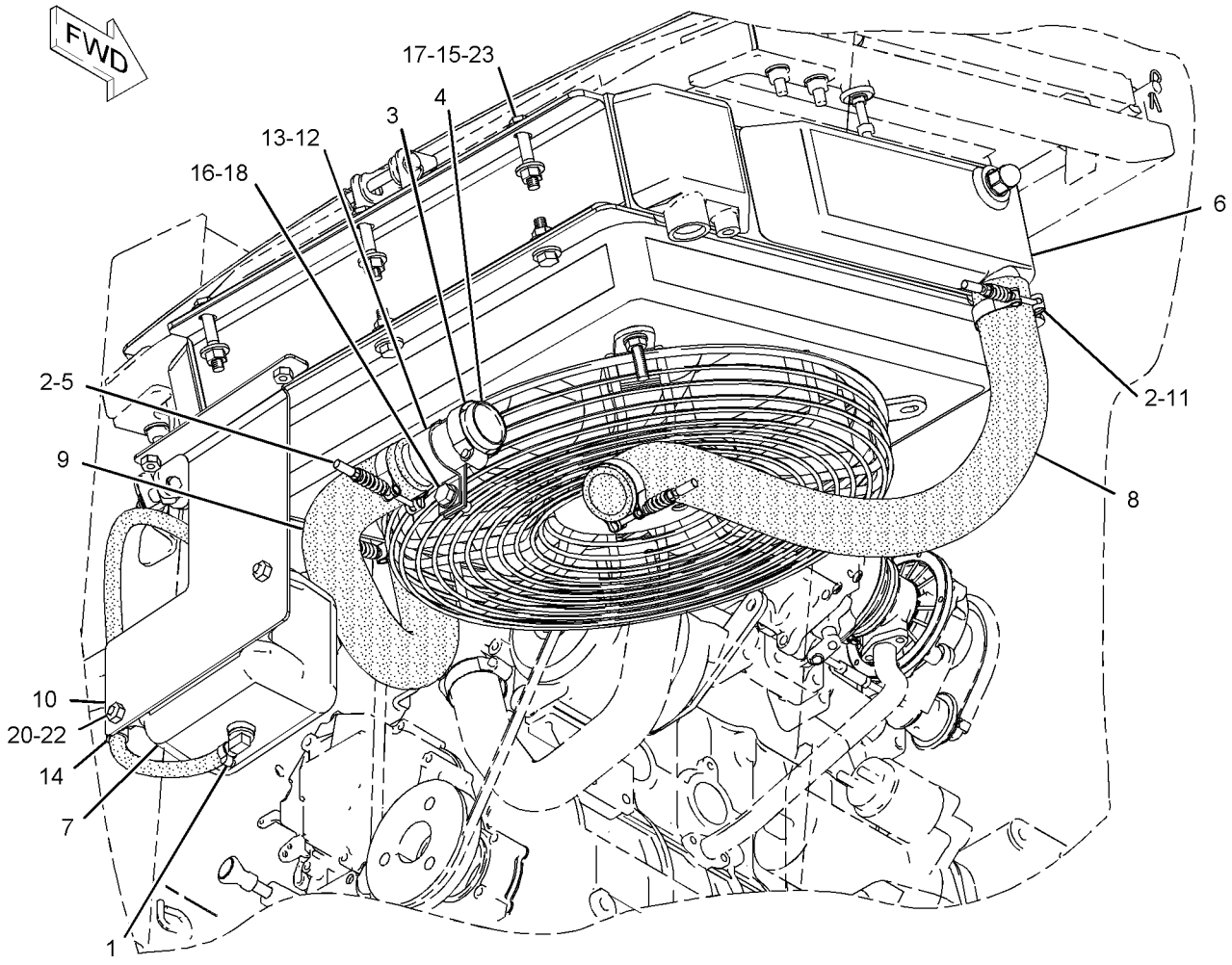

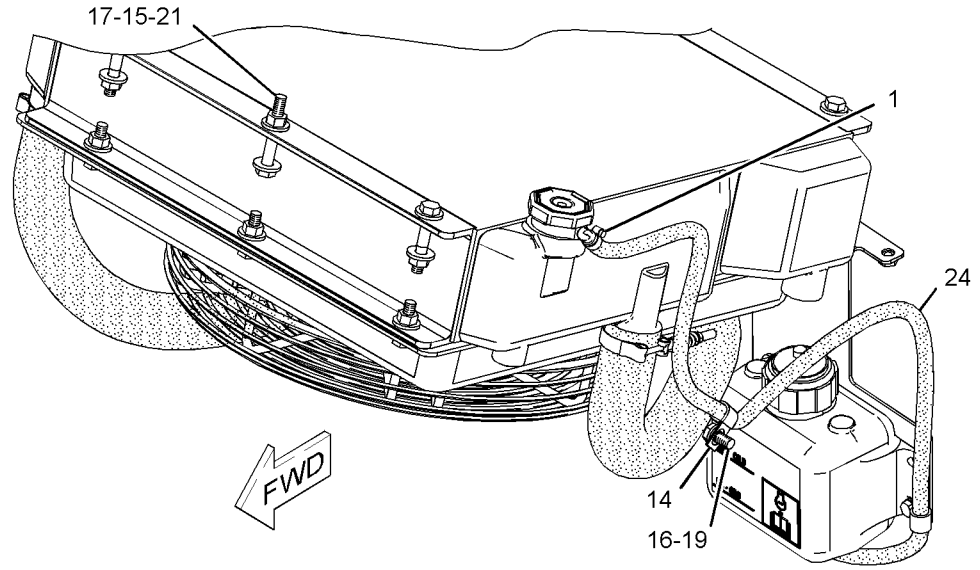

GRAPHIC #1 **<END>** g01051095

261-6118 RADIATOR & OIL COOLER MTG GP

S/N: MJH10575-UP
STAGE II SOUND
PART OF 261-6157, 261-6187, 261-6197, 278-1212, 278-1220, 278-1224, 278-5408, 278-5441, 295-7038, 295-7049, 295-7059, 295-7066, 295-7149, 295-7158, 295-7162, 295-7167 CONVERSION AR-MACHINE, 257-5717, 295-7043 CONVERSION AR-ROADING AN ATTACHMENT

SMCS-1351, 1354 **i02890399**

NOTE	REF NO	GRAPHIC REF	PART NUMBER	QTY	PART NAME 1 2 3 4 5 6 (PRODUCT LEVEL)	SEE PAGE
	1	1	**1P-4278**	2	CLAMP-HOSE	
	2	1	**7X-1443**	4	PROTECTOR	
	3	1	**124-6264**	1	CLAMP-HOSE	
	4	1	**205-6383**	1	TUBE	
	5	1	**222-1178**	2	CLAMP	
C	6	1	**285-5794**	1	RECOVERY GP-COOLANT	
		1	**169-6715**	1	CAP-VENTED (COOLANT RECOVERY)	
	7	1	**231-3578**	1	HOSE (UPPER)	
	8	1	**231-3579**	1	HOSE (LOWER)	
	9	1	**231-3925**	1	BRACKET AS	
M		1	**8T-3612**	4	NUT-WELD (M8X1.25-THD)	
	10	1	**232-4901**	2	CLAMP	
Y	11	1	*261-6119*	1	RADIATOR & HYD OIL COOLER GP	92
	12	1	**143-4535**	1	CLIP (SLOT)	
	13	1	**143-4536**	1	CLIP (TAB)	
	14	1	**4K-8864**	2	CLIP	
	15	1	**7X-7729**	12	WASHER (11X25X3-MM THK)	
	16	1	**8T-4121**	2	WASHER-HARD (11X21X2.5-MM THK)	
M	17	1	**8T-4133**	6	NUT (M10X1.5-THD)	
M	18	1	**8T-4136**	1	BOLT (M10X1.5X25-MM)	
M	19	1	**8T-4137**	1	BOLT (M10X1.5X20-MM)	
	20	1	**8T-4224**	2	WASHER-HARD (8.8X16X2-MM THK)	
M	21	1	**8T-5005**	1	BOLT (M10X1.5X70-MM)	
M	22	1	**8T-5091**	2	BOLT (M8X1.25X20-MM)	
M	23	1	**8T-6466**	5	BOLT (M10X1.5X60-MM)	
E	24	1	**5P-1420**		HOSE (110-CM)	

C-CHANGE FROM PREVIOUS TYPE
E-ORDER BY THE CENTIMETER
M-METRIC PART
Y-SEPARATE ILLUSTRATION

261-6118 **RADIATOR & OIL COOLER MTG GP** *(contd.)* **i02890399**

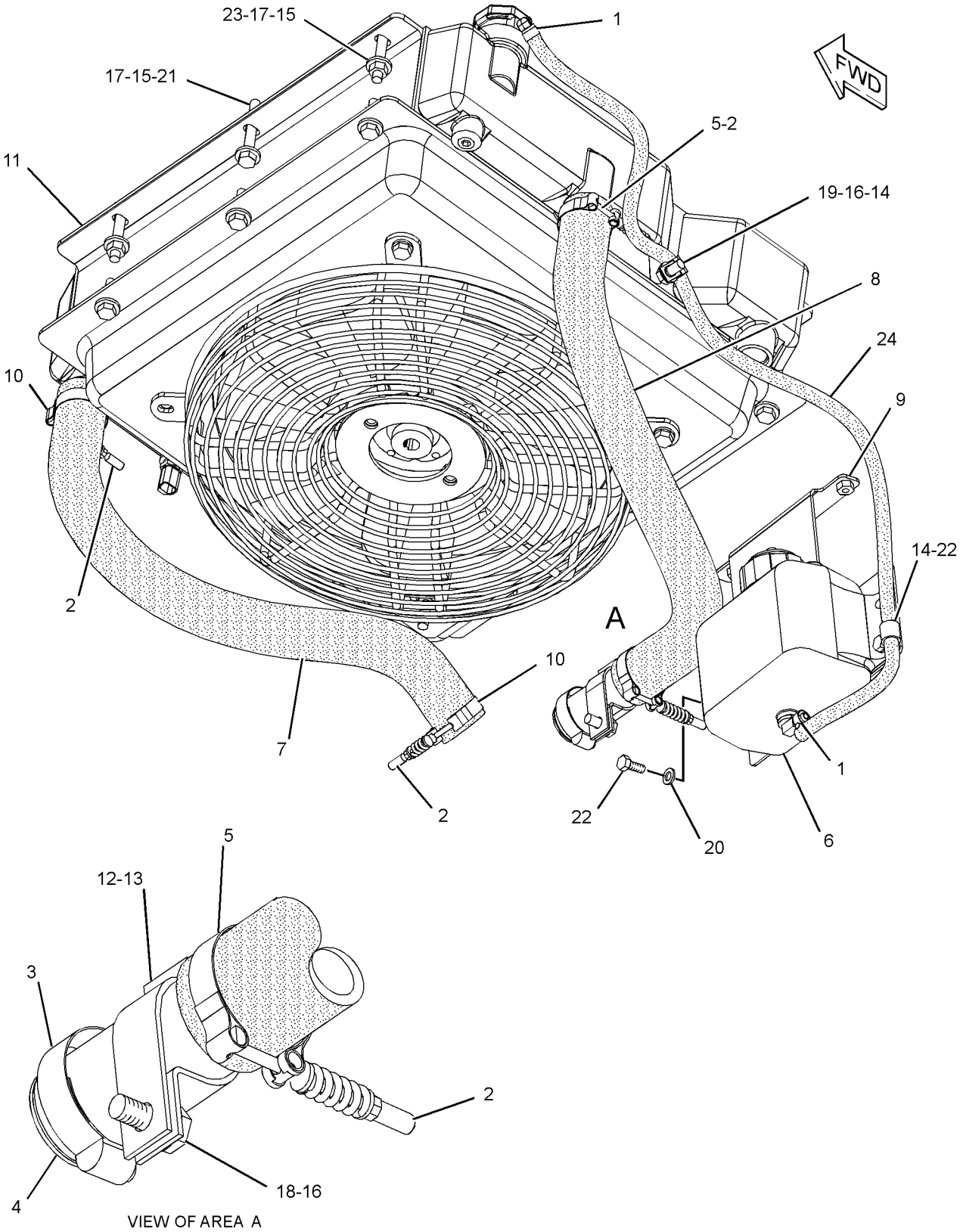

VIEW OF AREA A

GRAPHIC #1 **<END>** g01229599

AIR INLET AND EXHAUST SYSTEM

228-1773 AIR CLEANER GP

S/N: MJH10575-UP

PART OF 295-7027, 295-7028 INSTALLATION AR-ENGINE

SMCS-1051, 1054 **i02796039**

NOTE	REF NO	GRAPHIC REF	PART NUMBER	QTY	PART NAME 1 2 3 4 5 6 (PRODUCT LEVEL)	SEE PAGE
Y	1	1	*242-0171*	1	AIR CLEANER GP	98
	2	1	**307-8337**	2	STUD	
	3	1	**5P-4116**	6	WASHER-HARD (8.8X20.5X2-MM THK)	
M	4	1	**5C-7261**	2	NUT (M8X1.25-THD)	

M-METRIC PART
Y-SEPARATE ILLUSTRATION

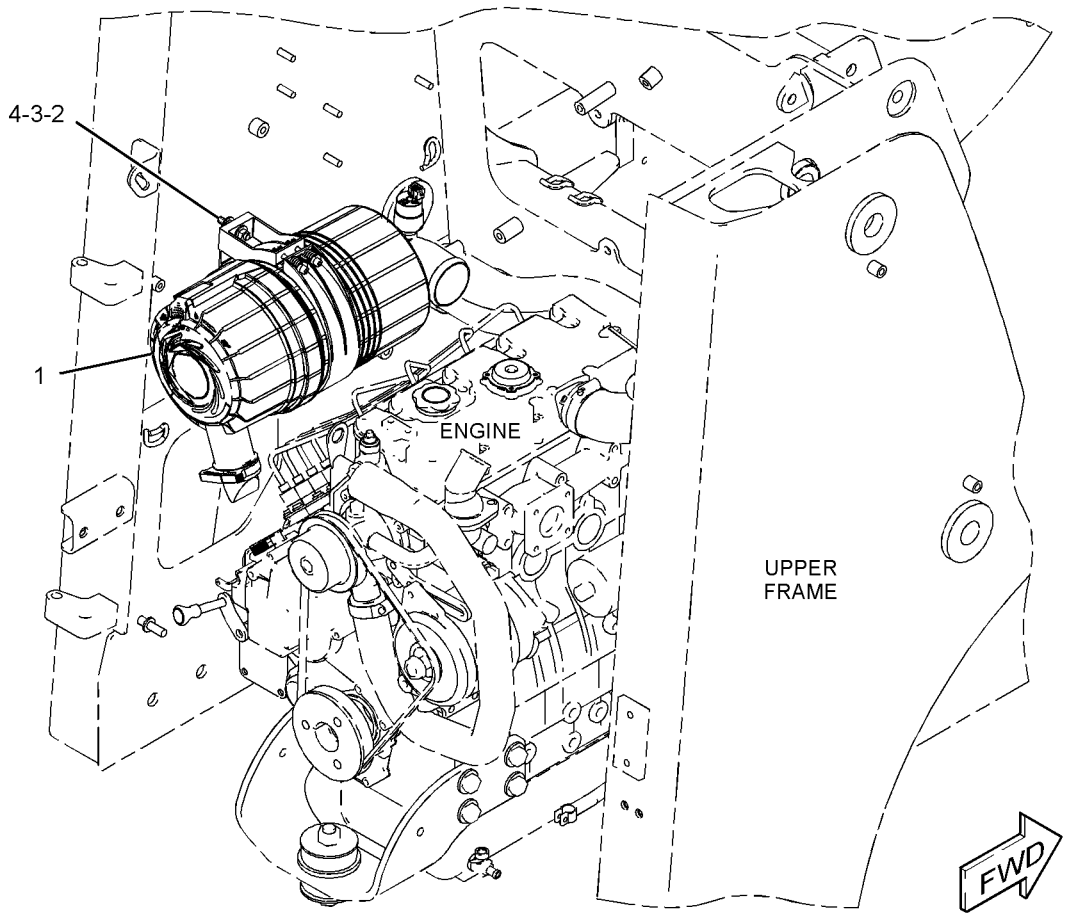

GRAPHIC #1 **<END>** g01406934

AIR INLET AND EXHAUST SYSTEM

242-0171 AIR CLEANER GP

S/N: MJH10575-UP

PART OF 228-1773 AIR CLEANER GP

SMCS-1051, 1054 **i02650200**

NOTE	REF NO	GRAPHIC REF	PART NUMBER	QTY	PART NAME 1 2 3 4 5 6 (PRODUCT LEVEL)	SEE PAGE
	1	1	**5L-3233**	1	FITTING	
	2	1	**231-0169**	1	BAND AS	
	3	1	**241-3394**	1	INDICATOR	
	4	1	**242-0172**	1	AIR CLEANER GP	
		1	**112-9717**	1	VALVE-VACUATOR	
		1	**231-0167**	1	FILTER ELEMENT AS-AIR (PRIMARY)	
		1	**231-0168**	1	FILTER ELEMENT AS-AIR (SECONDARY)	
		1	**242-0173**	1	COVER AS	
	5	1	**280-8298**		CLAMP	

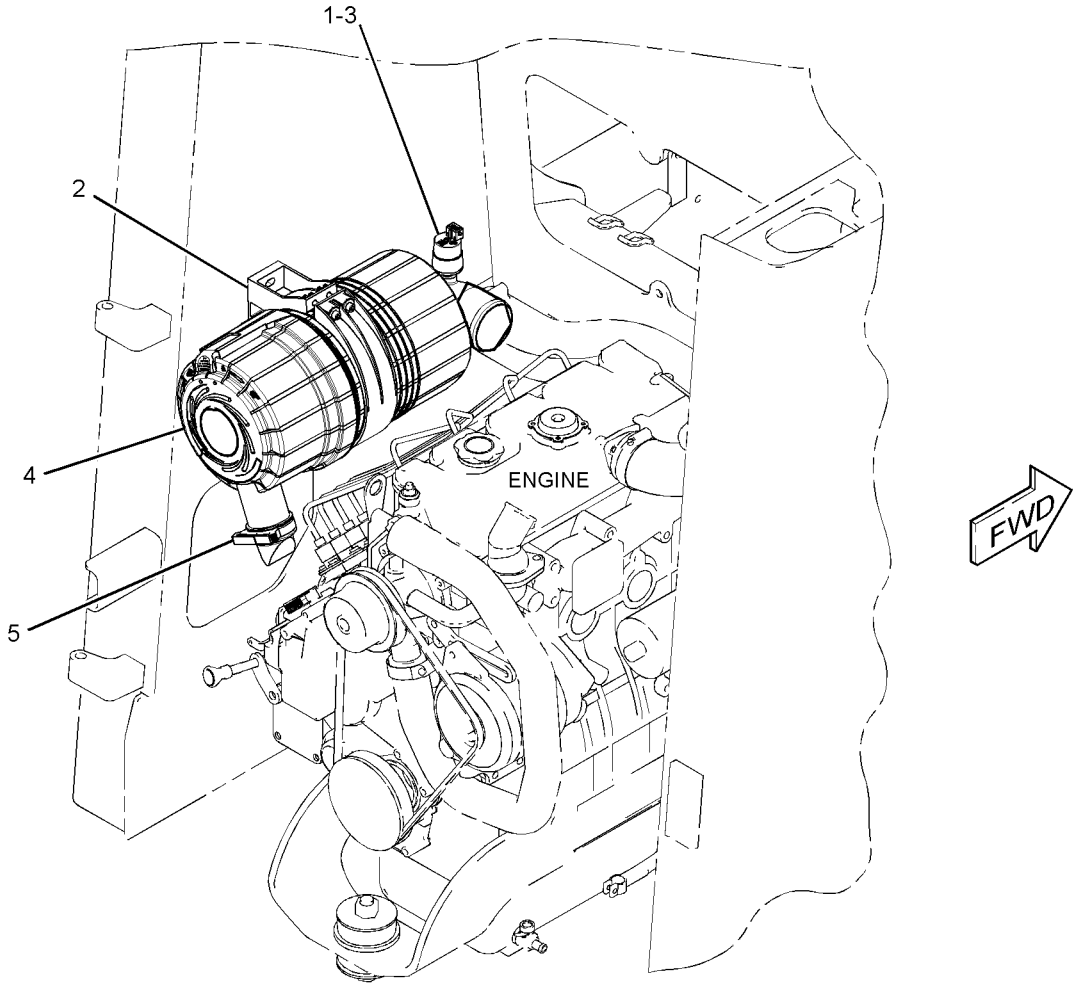

GRAPHIC #1 **<END>** g01336653

AIR INLET AND EXHAUST SYSTEM

280-8365 LINES GP-AIR

S/N: MJH10575-UP

PART OF 295-7027, 295-7028 INSTALLATION AR-ENGINE

SMCS-1071 **i02796126**

NOTE	REF NO	GRAPHIC REF	PART NUMBER	QTY	PART NAME 1 2 3 4 5 6 (PRODUCT LEVEL)	SEE PAGE
	1	1	**5P-4868**	1	CLAMP-HOSE	
	2	1	**5P-4961**	1	CLAMP-HOSE	
	3	1	**280-8341**	1	SPACER (8.7X15.8X21.1-MM THK)	
	4	1	**280-8364**	1	HOSE	
	5	1	**3S-2093**	1	STRAP-CABLE	
	6	1	**5P-0597**	1	CLAMP-HOSE	
	7	1	**5P-4116**	1	WASHER-HARD (8.8X20.5X2-MM THK)	
	8	1	**6D-4246**	2	CLIP	
M	9	1	**7X-2537**	1	BOLT (M8X1.25X35-MM)	
M	10	1	**7X-2621**	1	BOLT (M10X1.5X12-MM)	
	11	1	**8T-4121**	1	WASHER-HARD (11X21X2.5-MM THK)	
E	12	1	**5P-1505**		HOSE (75-CM)	

E-ORDER BY THE CENTIMETER
M-METRIC PART

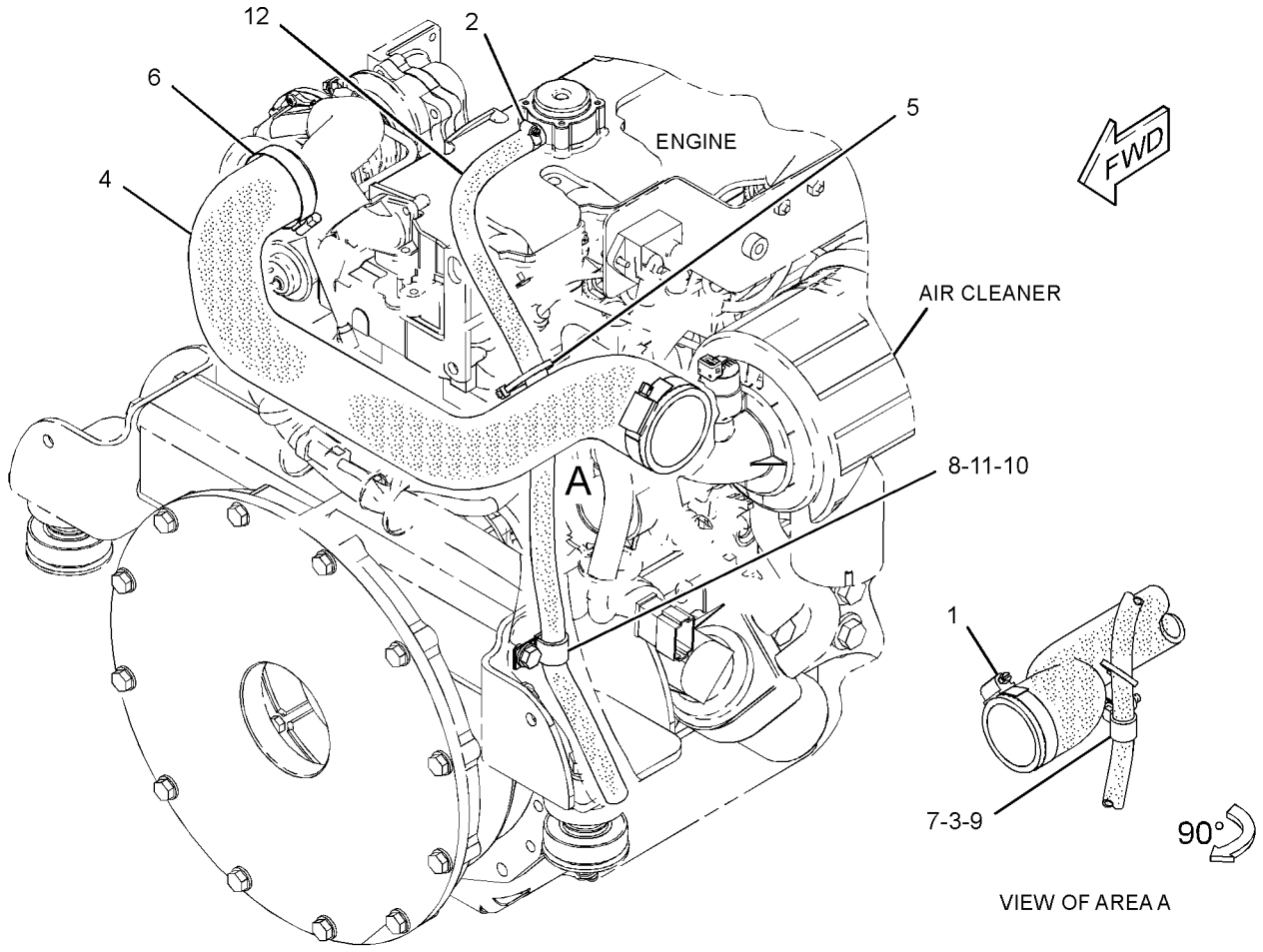

GRAPHIC #1 **<END>** g01421851

AIR INLET AND EXHAUST SYSTEM

239-0233 MANIFOLD GP-EXHAUST

S/N: CSD1-11322
PART OF 300-5206 ENGINE AR-PRIMARY
AN ATTACHMENT

SMCS-1059 **i02656861**

NOTE	REF NO	GRAPHIC REF	PART NUMBER	QTY	PART NAME 1 2 3 4 5 6 (PRODUCT LEVEL)	SEE PAGE
	1	1	**153-5592**	8	NUT	
	2	1	**154-2427**	1	GASKET-EXHAUST	
	3	1	**154-2428**	4	BOLT	
	4	1	**163-5372**	5	WASHER (8X15.4X4-MM THK)	
	5	1	**236-9987**	1	MANIFOLD-EXHAUST	
	6	1	**238-9196**	1	GASKET-TURBOCHARGER	
	7	1	**238-9198**	1	ELBOW-EXHAUST	
	8	1	**304-5061**	1	GASKET	
	9	1	**238-9200**	5	BOLT (M8X1.25X25-MM)	
	10	1	**239-0232**	4	STUD (M8X1.25X31-MM)	

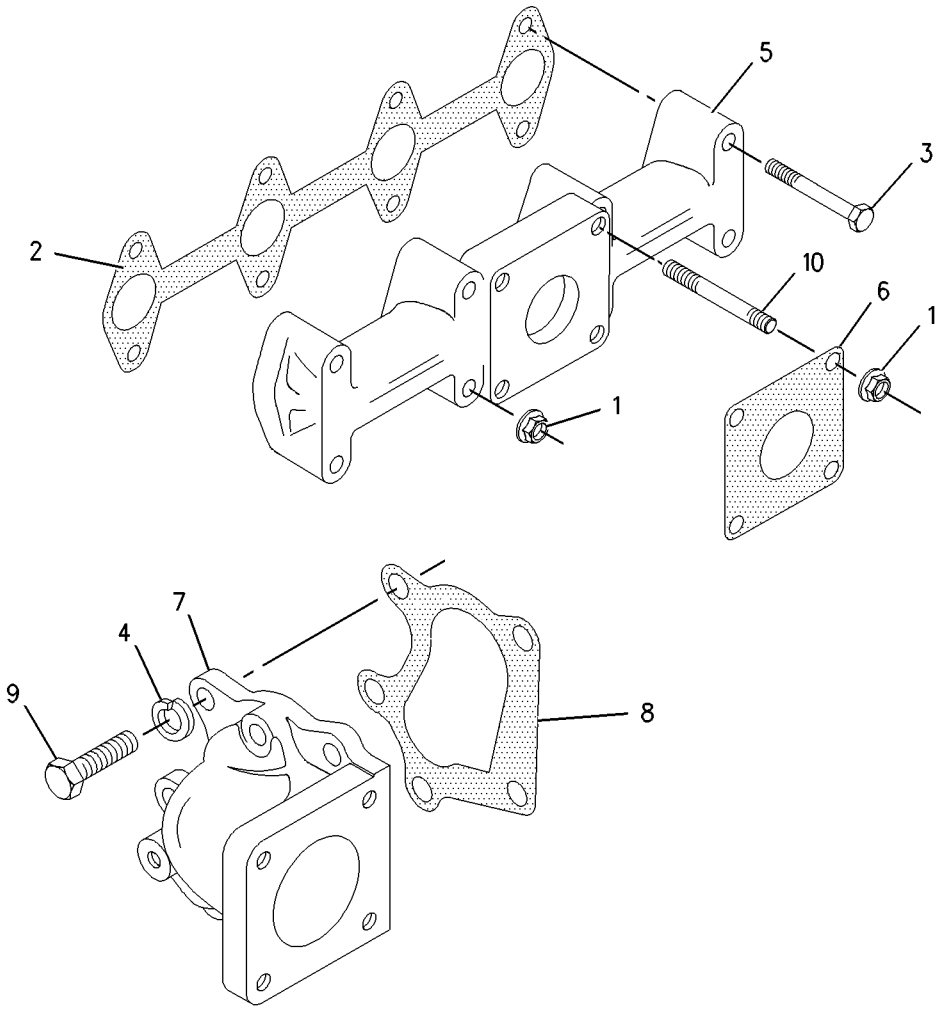

GRAPHIC #1 **<END>** g01007667

272-3046 MUFFLER GP

S/N: MJH10575-UP
STAGE II SOUND
PART OF 272-3047 MUFFLER GP
AN ATTACHMENT

SMCS-1062 **i02531476**

NOTE	REF NO	GRAPHIC REF	PART NUMBER	QTY	PART NAME 1 2 3 4 5 6 (PRODUCT LEVEL)	SEE PAGE
	1	1	**142-8818**	1	CLAMP-PIPE	
	2	1	**228-2524**	1	ELBOW AS-EXHAUST	
	3	1	**272-3056**	1	MUFFLER AS	

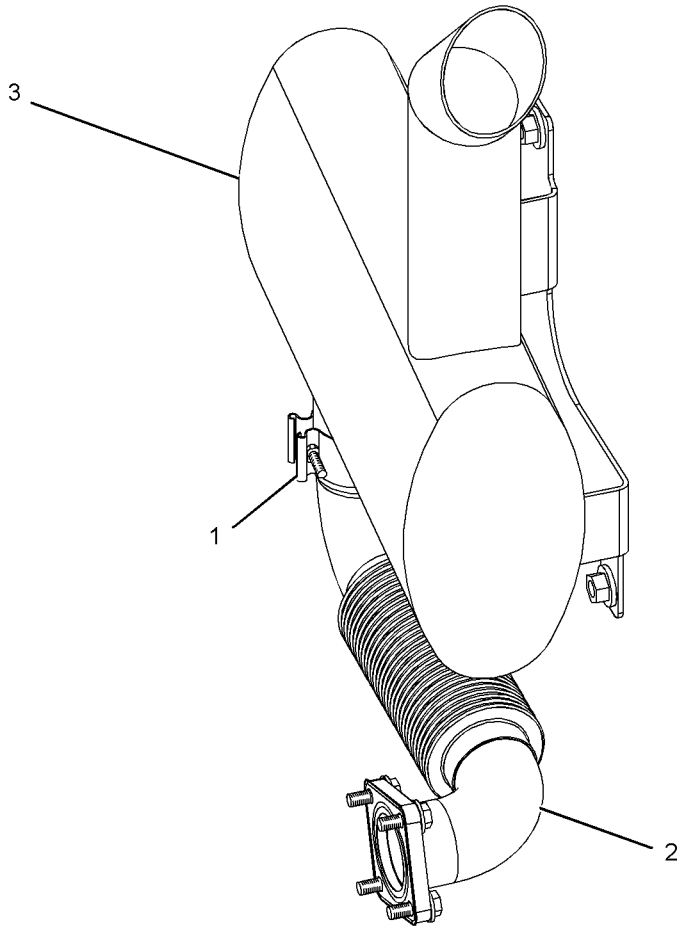

REAR VIEW
(UPPER LEFT)

GRAPHIC #1 **<END>** g01266510

AIR INLET AND EXHAUST SYSTEM

272-3047 MUFFLER GP

S/N: MJH10575-UP
STAGE II SOUND
PART OF 261-6157, 261-6160, 261-6187, 261-6197, 278-1212, 278-1220, 278-1224, 278-5408, 278-5441, 295-7038, 295-7049, 295-7059, 295-7066, 295-7149, 295-7158, 295-7162, 295-7167 CONVERSION AR-MACHINE, 257-5717, 295-7043 CONVERSION AR-ROADING
AN ATTACHMENT

SMCS-1062 **i02431659**

NOTE	REF NO	GRAPHIC REF	PART NUMBER	QTY	PART NAME 1 2 3 4 5 6 (PRODUCT LEVEL)	SEE PAGE
	1	1	**153-7920**	1	GASKET	
Y	2	1	*272-3046*	1	MUFFLER GP	101
	3	1	**5P-4116**	4	WASHER-HARD (8.8X20.5X2-MM THK)	
	4	1	**7X-7729**	3	WASHER (11X25X3-MM THK)	
M	5	1	**8T-4133**	3	NUT (M10X1.5-THD)	
M	6	1	**8T-4908**	4	BOLT (M8X1.25X25-MM)	

M-METRIC PART
Y-SEPARATE ILLUSTRATION

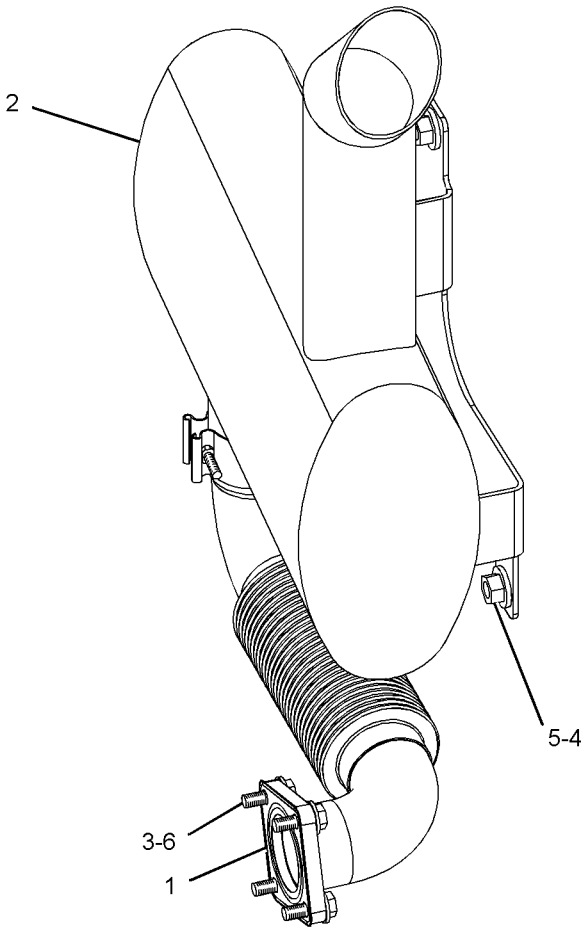

REAR VIEW
(UPPER LEFT)

GRAPHIC #1

<END>

g01229585

AIR INLET AND EXHAUST SYSTEM

272-3049 MUFFLER GP

S/N: MJH10575-UP
STAGE II SOUND
PART OF 257-5716 CONVERSION AR-ROADING
AN ATTACHMENT

SMCS-1062 **i02432676**

NOTE	REF NO	GRAPHIC REF	PART NUMBER	QTY	PART NAME 1 2 3 4 5 6 (PRODUCT LEVEL)	SEE PAGE
	1	1	**153-7920**	1	GASKET	
	2	1	*272-3048*	1	MUFFLER GP	
		1	**142-8818**	1	CLAMP-PIPE	
		1	**230-3731**	1	MUFFLER AS	
		1	**272-3058**	1	ELBOW AS-EXHAUST	
	3	1	**5P-4116**	4	WASHER-HARD (8.8X20.5X2-MM THK)	
	4	1	**7X-7729**	3	WASHER (11X25X3-MM THK)	
M	5	1	**8T-4133**	3	NUT (M10X1.5-THD)	
M	6	1	**8T-4908**	4	BOLT (M8X1.25X25-MM)	

M-METRIC PART

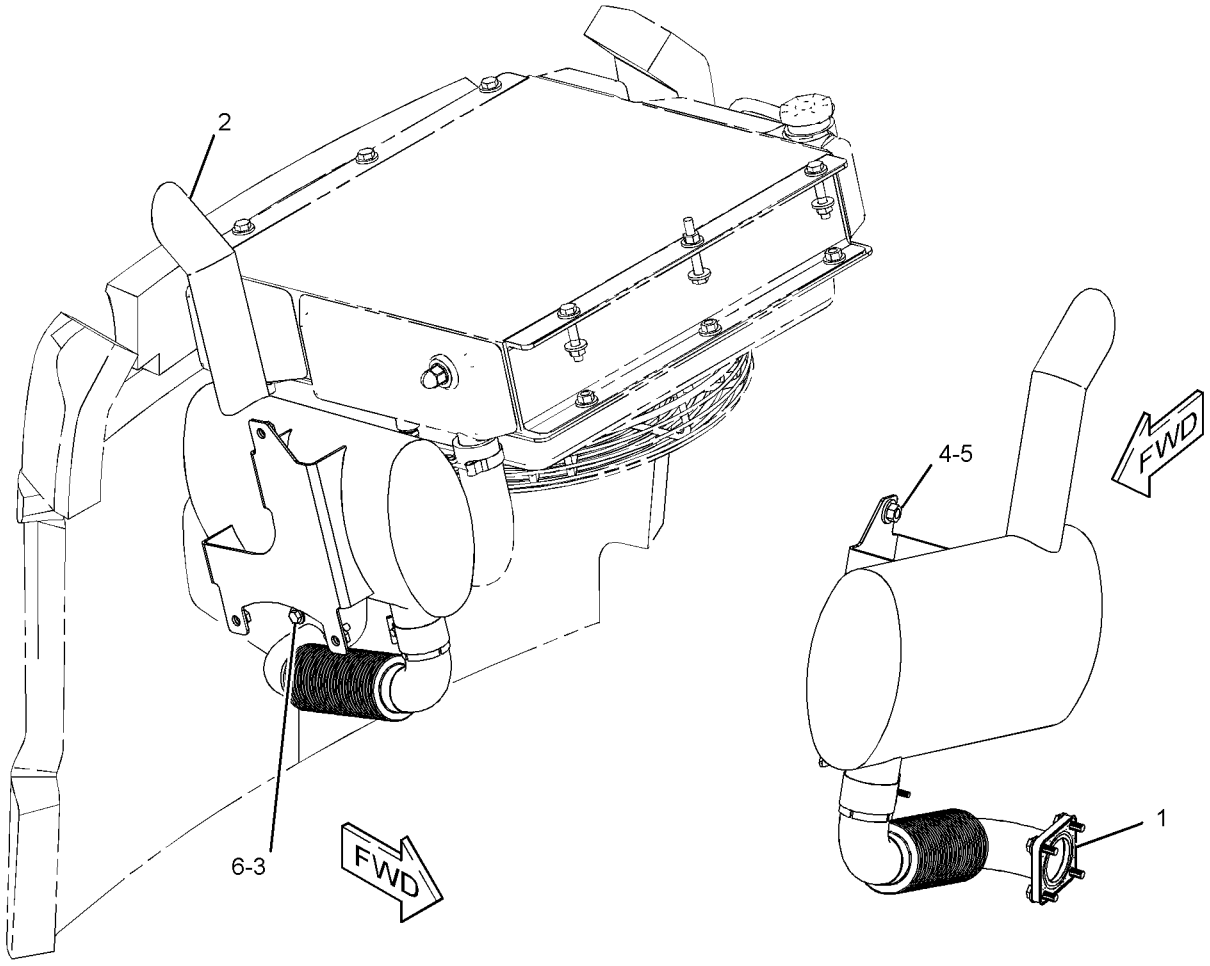

GRAPHIC #1 **<END>** g01229532

AIR INLET AND EXHAUST SYSTEM

239-0230 TURBOCHARGER GP

S/N: CSD1-11322
PART OF 300-5206 ENGINE AR-PRIMARY
AN ATTACHMENT

SMCS-1052, 1053 **i02874985**

NOTE	REF NO	GRAPHIC REF	PART NUMBER	QTY	PART NAME 1 2 3 4 5 6 (PRODUCT LEVEL)	SEE PAGE
	1	1	**064-3058**	2	CLAMP-HOSE	
	2	1	**249-7263**	2	BOLT	
	3	1	**153-6853**	1	SEAL-O-RING	
	4	1	**155-7984**	2	WASHER	
	5	1	**165-2141**	2	BOLT	
	6	1	**168-9001**	2	BOLT	
	7	1	**183-3572**	3	BOLT	
	8	1	**225-8533**	2	GASKET	
	9	1	**238-9349**	1	TURBOCHARGER GP	
	10	1	**249-1532**	1	HOSE-AIR INLET	
	11	1	**317-0962**	1	TUBE-TURBOCHARGER OIL	
	12	1	**239-0187**	1	BRACKET	
	13	1	**317-0959**	1	CONNECTION GP-OIL	
	13A	1	**317-0960**	1	BOLT-SPECIAL (BANJO)	
	13B	1	**225-8526**	2	WASHER (10.4X13.75X1.37-MM THK)	
	13C	1	**317-0961**	1	CLIP	
	14	1	**239-0229**	1	SPACER	

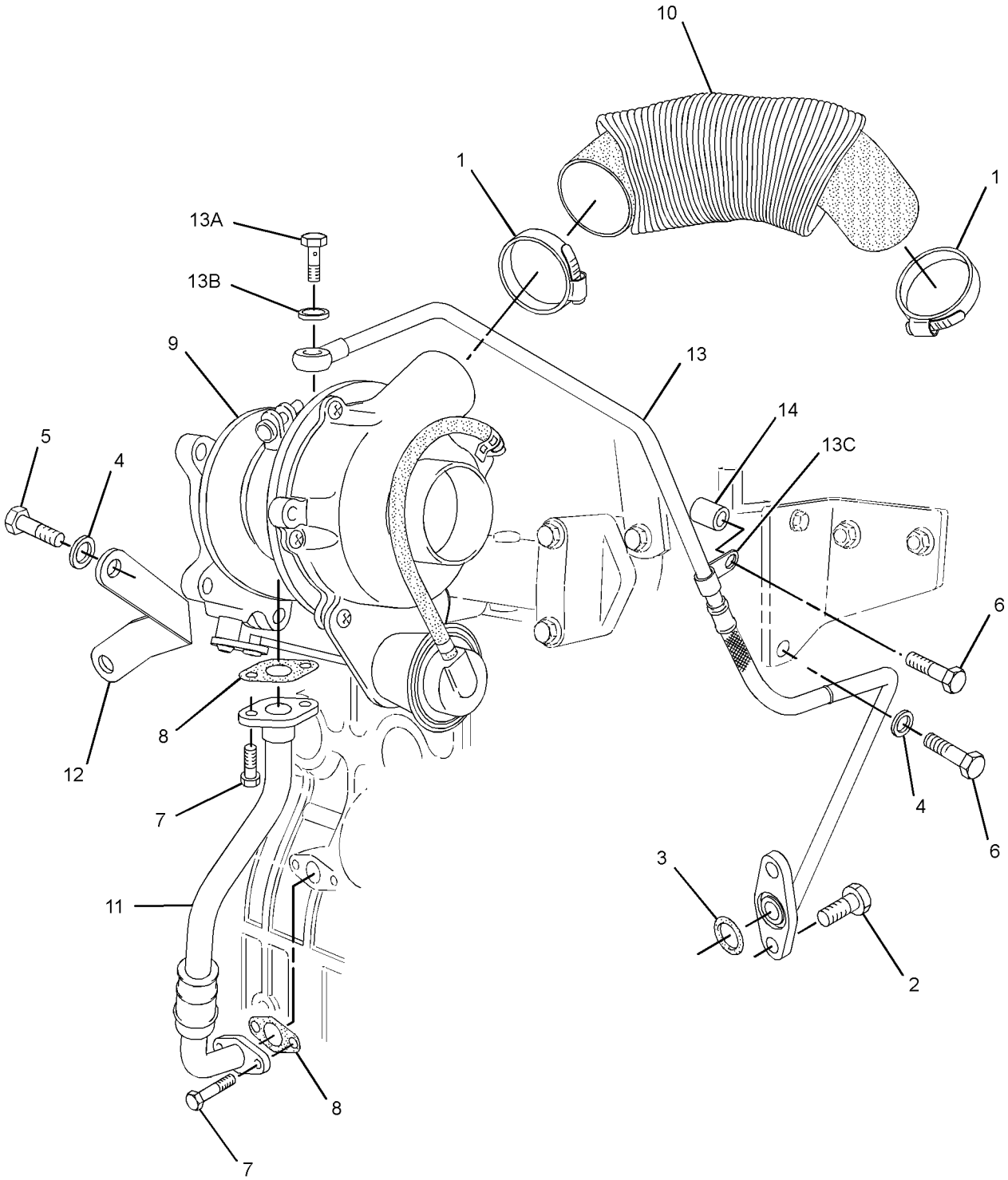

GRAPHIC #1 **<END>** g01395263

AIR INLET AND EXHAUST SYSTEM

317-0981 TURBOCHARGER GP

S/N: CYP1-UP

PART OF 292-5719 ENGINE AR-PRIMARY

AN ATTACHMENT

SMCS-1052, 1053 **i02862676**

NOTE	REF NO	GRAPHIC REF	PART NUMBER	QTY	PART NAME 1 2 3 4 5 6 (PRODUCT LEVEL)	SEE PAGE
	1	2	**064-3058**	2	CLAMP-HOSE	
	2	2	**153-5592**	8	NUT	
	3	3	**153-5939**	1	GAUZE (CRANKCASE BREATHER)	
	4	3	**153-5962**	3	BOLT	
	5	1	**153-6375**	1	BOLT	
	6	1	**153-6853**	1	SEAL-O-RING	
	7	2	**153-7640**	2	BOLT	
	8	3	**154-1347**	4	NUT	
	9	2	**154-2427**	1	GASKET-EXHAUST	
	10	2	**154-2428**	4	BOLT	
	11	1	**155-8009**	4	BOLT	
	12	1	**163-5372**	5	WASHER (8X15.4X4-MM THK)	
	13	3	**165-2140**	2	BOLT	
	14	1	**165-2141**	1	BOLT	
	15	1	**168-9001**	4	BOLT	
	16	3	**183-1165**	1	PLUG	
	17	3	**190-3762**	4	WASHER	
	18	3	**217-5859**	1	VALVE-BREATHER (CRANKCASE)	
	19	3	**217-5861**	1	PLATE-RETAINING	
	20	3	**217-5862**	6	BOLT	
	21	2	**217-5864**	1	GASKET	
	22	1	**225-8533**	2	GASKET	
	23	3	**233-0695**	1	SEAL-VALVE COVER	
	24	2	**236-9987**	1	MANIFOLD-EXHAUST	
	25	3	**238-8731**	1	ADAPTER-BREATHER	
	26	2	**238-9196**	1	GASKET-TURBOCHARGER	
	27	1	**238-9198**	1	ELBOW-EXHAUST	
	28	1	**238-9200**	5	BOLT (M8X1.25X25-MM)	
	29	3	**238-9289**	1	COVER-VALVE	
	30	3	**238-9295**	4	BOLT	
	31	2	**238-9349**	1	TURBOCHARGER GP	
	32	1	**239-0187**	1	BRACKET	
	33	1	**239-0229**	1	SPACER	
	34	2	**239-0232**	4	STUD (M8X1.25X31-MM)	
	35	2	**249-1486**	1	CONNECTION-AIR	
	36	2	**249-1532**	1	HOSE-AIR INLET	
	37	3	**262-3975**	1	GASKET	
	38	1	**304-5061**	1	GASKET	
	39	1	**317-0959**	1	CONNECTION GP-OIL	
	39A	1	**225-8526**	2	WASHER (10.4X13.75X1.37-MM THK)	
	39B	1	**317-0960**	1	BOLT-SPECIAL (BANJO)	
	39C	1	**317-0961**	1	CLIP	
	40	1	**317-0962**	1	TUBE-TURBOCHARGER OIL	

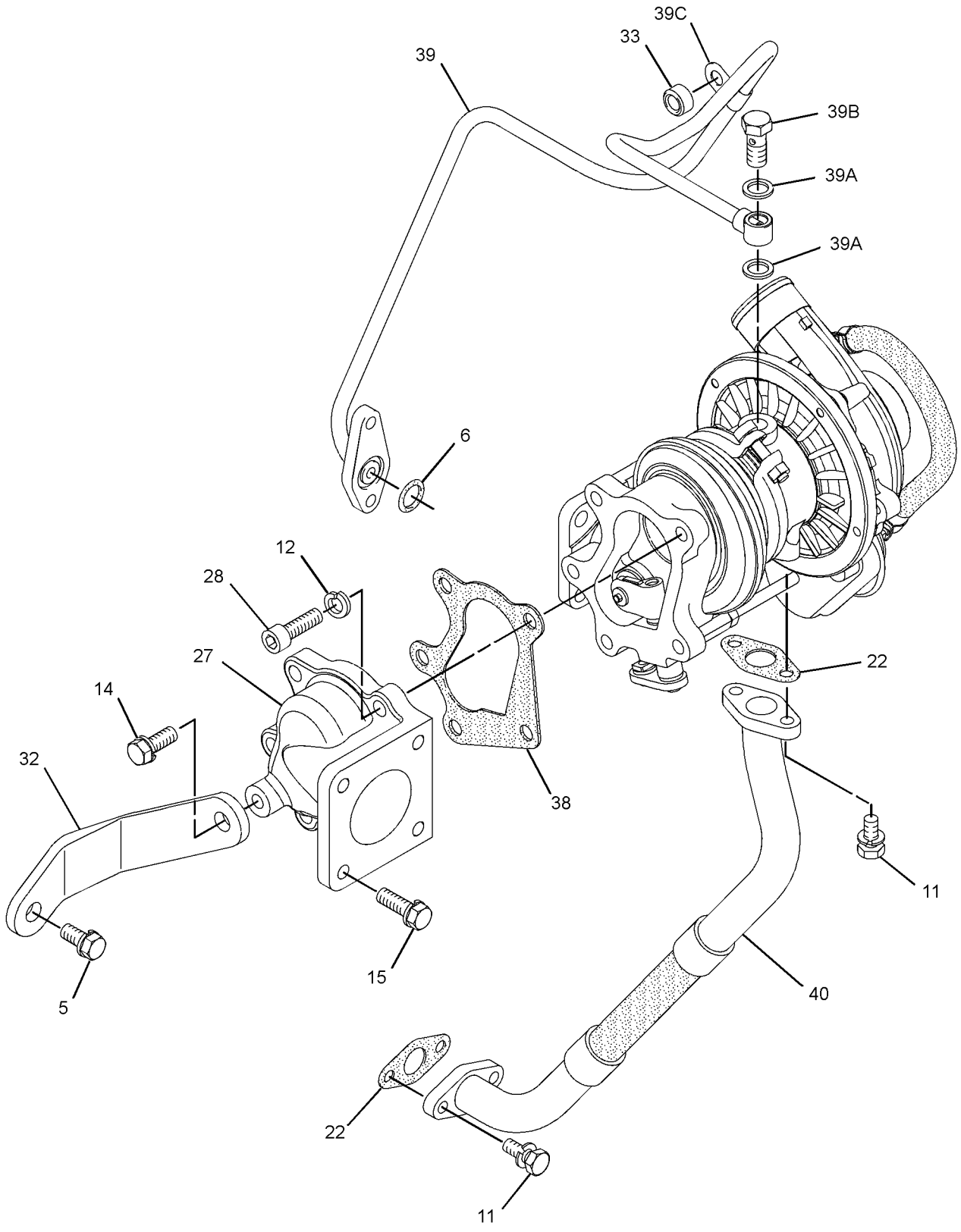

GRAPHIC #1 g01439498

317-0981 **TURBOCHARGER GP** ***(contd.)*** **i02862676**

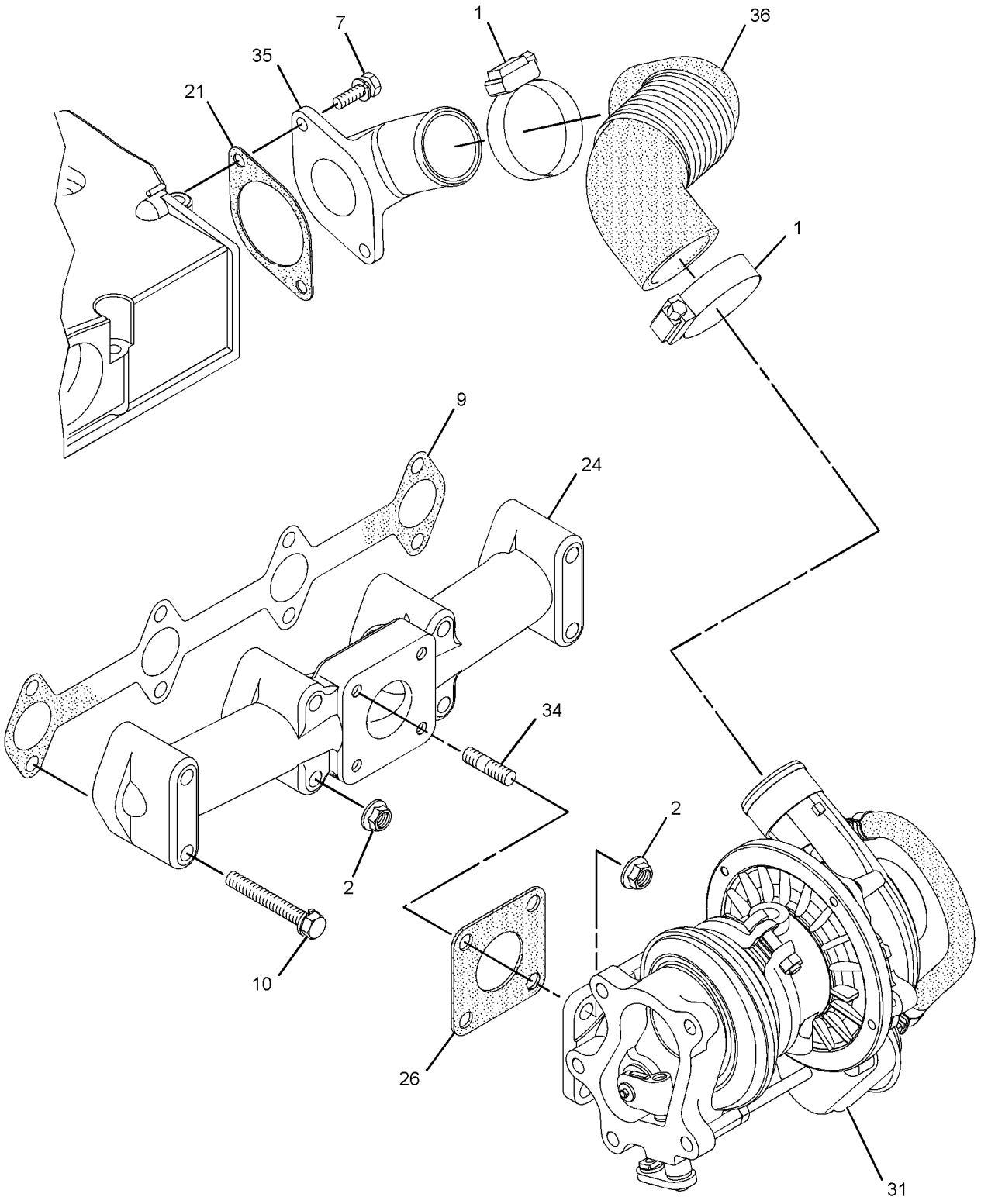

GRAPHIC #2 g01439501

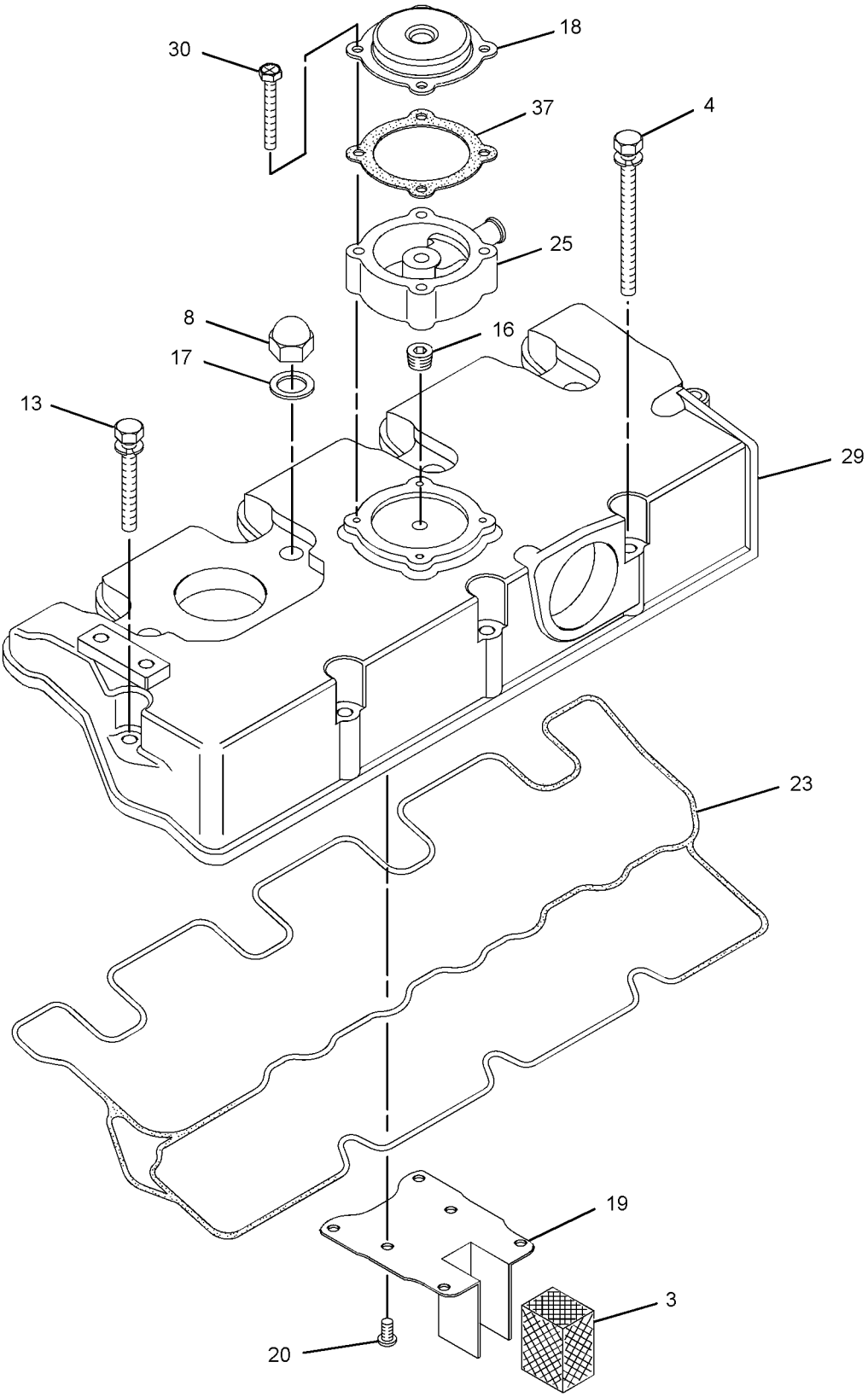

GRAPHIC #3 **<END>** g01439503

218-5566 CABLE GP-GOVERNOR CONTROL

S/N: MJH10575-UP

PART OF 218-5565 PEDAL GP-GOVERNOR

SMCS-1265 **i02533085**

NOTE	REF NO	GRAPHIC REF	PART NUMBER	QTY	PART NAME 1 2 3 4 5 6 (PRODUCT LEVEL)	SEE PAGE
	1	1	**8T-4744**	1	PIN AS-SPRING	
	2	1	**253-8677**	1	PIN AS-SPRING	
	3	1	**285-7970**	1	END-YOKE ROD	
M	4	1	**5C-2874**	1	NUT (M5X0.8-THD)	
M	5	1	**5C-2890**	1	NUT (M6X1-THD)	
	6	1	**8T-4742**	1	END-YOKE ROD	

M-METRIC PART

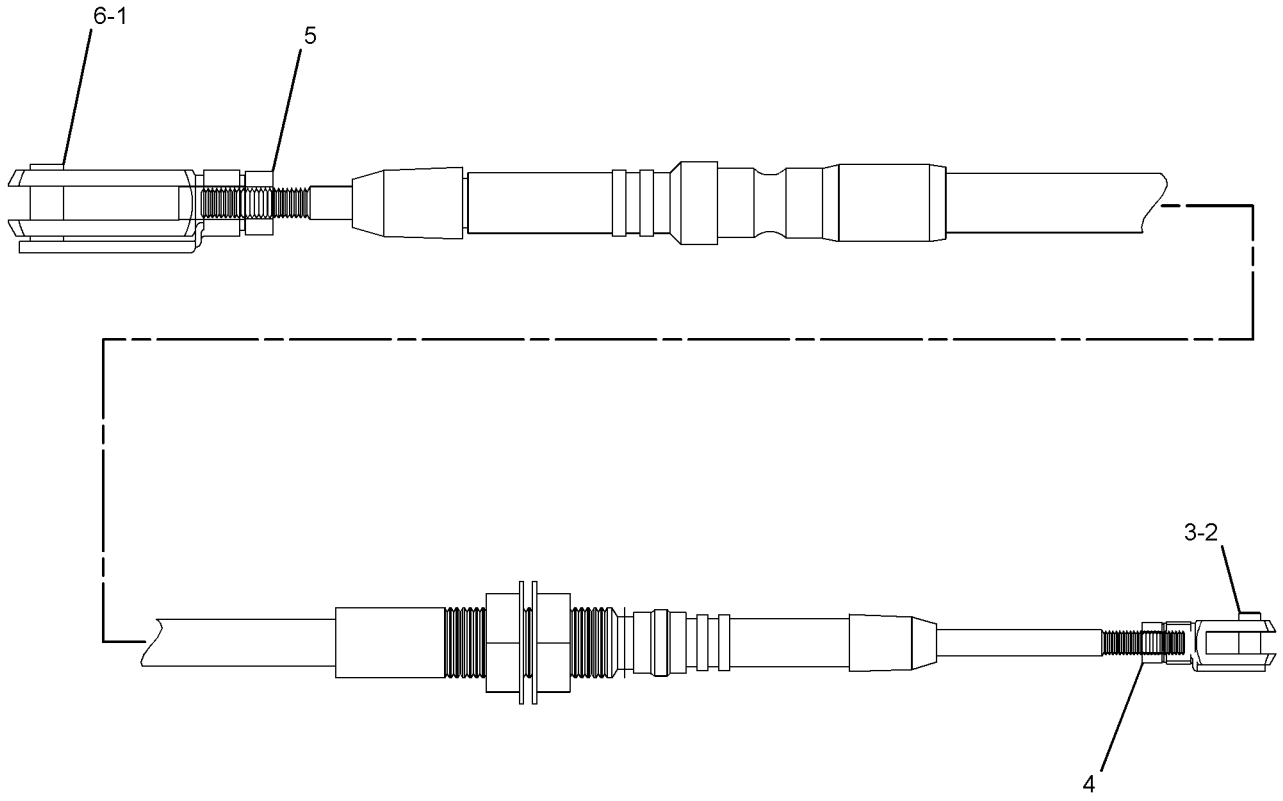

GRAPHIC #1 **<END>** g01266306

218-5602 CONTROL GP-GOVERNOR

S/N: MJH10575-UP

PART OF 295-7110 CHASSIS AR

SMCS-1265, 1276 **i01934895**

NOTE	REF NO	GRAPHIC REF	PART NUMBER	QTY	PART NAME 1 2 3 4 5 6 (PRODUCT LEVEL)	SEE PAGE
	1	1	**7K-1181**	1	STRAP-CABLE	
	2	1	**218-6616**	1	BRACKET AS	
	3	1	**218-6617**	1	BRACKET-STOP	
Y	4	1	*218-5565*	1	PEDAL GP-GOVERNOR (INCLUDES LEVER)	618
	5	1	**237-7296**	4	SCREW-FLAT HEAD (M6X1X35-MM)	
	6	1	**4B-4863**	2	WASHER (4.7X11X1.2-MM THK)	
M	7	1	**5C-2890**	4	NUT (M6X1-THD)	
	8	1	**8T-3984**	1	KNOB	
M	9	1	**8T-3998**	2	BOLT (M4X0.7X12-MM)	
M	10	1	**8T-4138**	3	BOLT (M6X1X20-MM)	
	11	1	**8T-4205**	7	WASHER-HARD (7.2X14.5X2-MM THK)	

M-METRIC PART
Y-SEPARATE ILLUSTRATION

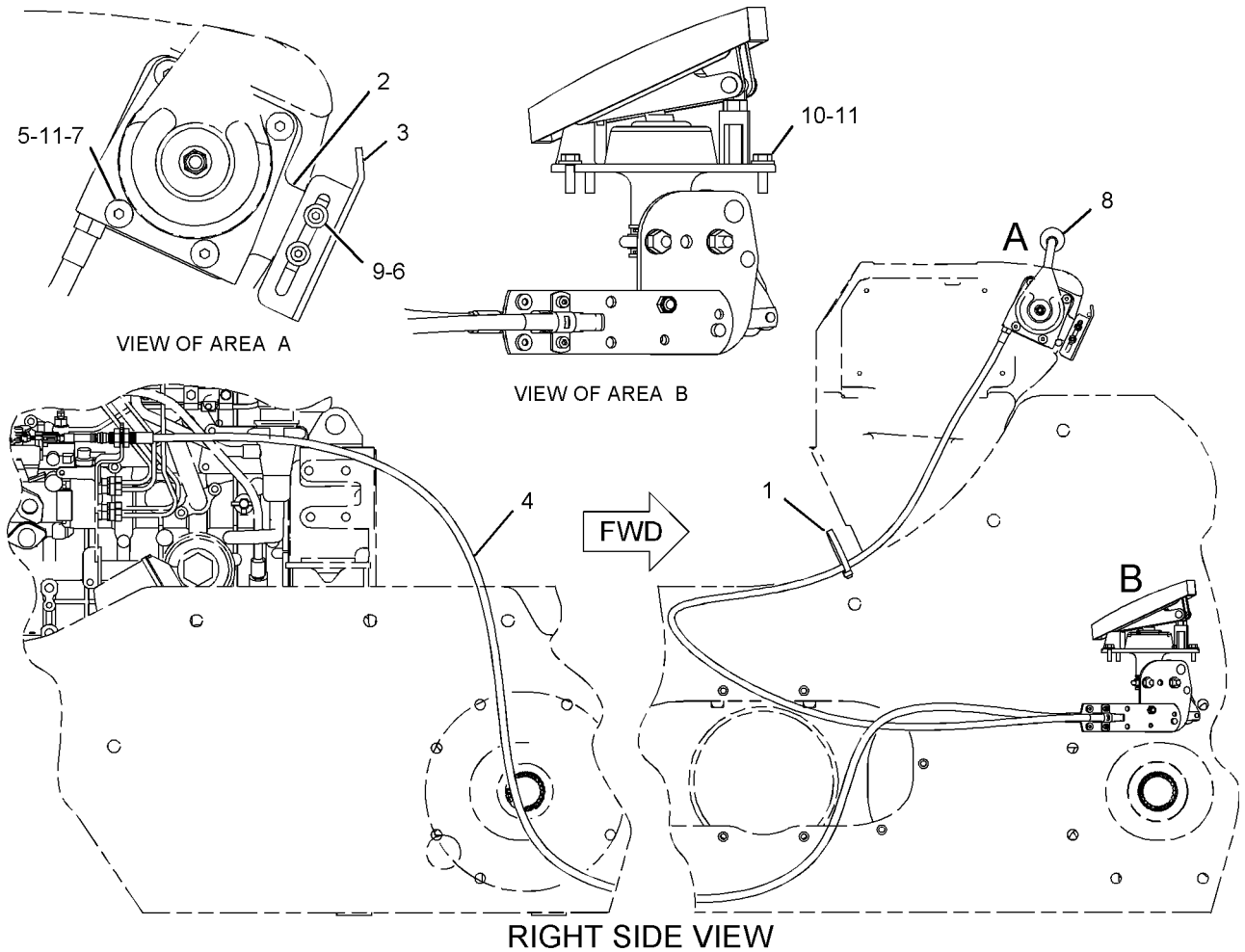

GRAPHIC #1 **<END>** g01029882

144-9962 FILTER GP-WATER SEP & FUEL

S/N: MJH10575-UP

PART OF 176-9954 PUMP GP-FUEL PRM & PRIM FILTER

SMCS-1261, 1263 **i02152337**

NOTE	REF NO	GRAPHIC REF	PART NUMBER	QTY	PART NAME 1 2 3 4 5 6 (PRODUCT LEVEL)	SEE PAGE
	1	1	**156-1200**	1	FILTER ELEMENT-FUEL (WATER SEPARATOR)	
	2	1	**149-3516**	1	BASE AS	
	3	1	**118-8118**	1	RING-RETAINING	
	4	1	**112-9401**	1	BOWL AS-WATER COLLECTION	
		1	**128-8614**	1	KIT-SEAL (WATER SEPARATOR)	
	5	1	**118-8119**	1	NUT	
					AVAILABLE REPAIR KIT(S):	
			121-4480	1	KIT-WATER BASE (WATER SEPARATOR)	

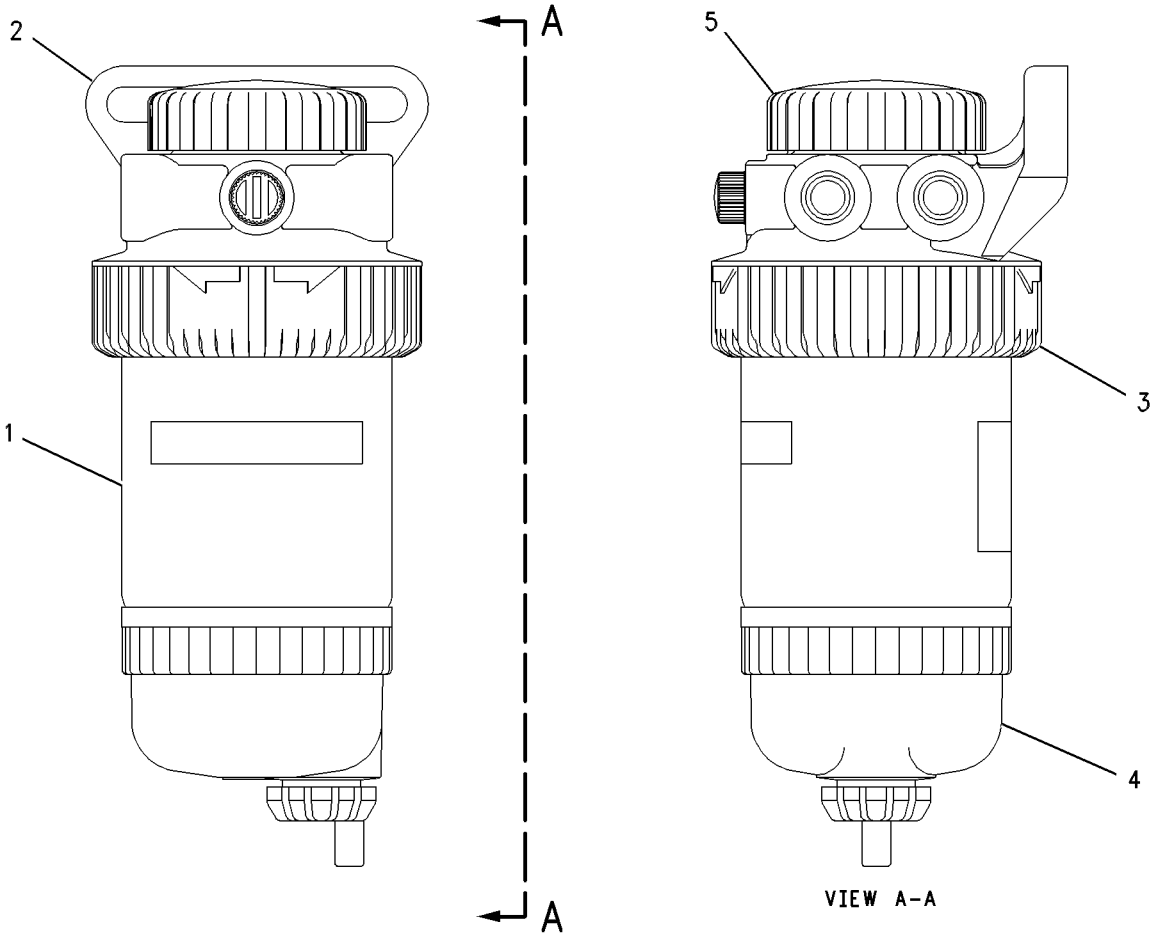

GRAPHIC #1 **<END>** g00430959

246-3415 GOVERNOR GP

S/N: CSD1-11322
PART OF 300-5206 ENGINE AR-PRIMARY
AN ATTACHMENT

SMCS-1264, 1908 **i02883346**

NOTE	REF NO	GRAPHIC REF	PART NUMBER	QTY	PART NAME 1 2 3 4 5 6 (PRODUCT LEVEL)	SEE PAGE
M	1	1,2	**5C-2890**	1	NUT (M6X1-THD)	
	2	2	**139-5511**	1	CAP (TAMPER RESISTANT)	
	3	1	**153-5960**	1	NUT	
	4	1	**153-7983**	1	PIN	
	5	2	**153-7987**	1	WASHER	
	6	1	**154-1396**	1	CLIP	
	7	1	**154-1401**	1	ARM	
	8	1	**154-1403**	1	SEAL-O-RING	
	9	1	**154-1405**	1	LEVER	
	10	1	**154-1408**	1	WASHER	
	11	1	**154-1410**	2	SEAL-O-RING	
	12	1	**154-1411**	1	CLIP	
	13	1	**154-1416**	1	SPRING	
	14	1	**154-1636**	2	NUT	
	15	1	**154-1637**	1	ARM	
	16	1	**154-1638**	1	SEAL-O-RING	
	17	1	**154-1639**	1	CLIP	
	18	1	**310-7139**	1	SPRING	
	19	1	**155-8009**	1	BOLT	
	20	1,2	**158-7936**	2	BOLT	
	21	1	**162-2207**	1	NUT	
	22	1	**249-7263**	2	BOLT	
	23	1	**191-0542**	1	SHAFT	
	24	2	**191-9293**	1	CAP-COVER	
	25	2	**191-9296**	1	BOLT	
	26	2	**191-9297**	1	NUT	
	27	1	**217-5794**	1	LEVER	
	28	1	**217-7108**	1	SPRING	
	29	2	**217-7111**	1	BOLT AS	
	29A	2	**153-7987**	1	WASHER	
	29B	2	**212-0743**	1	NUT	
	29C	2	**212-0744**	1	SEAL-O-RING	
	29D	2	**212-0745**	1	BOLT	
	29E	2	**212-0747**	1	RING-RETAINING	
	30	2	**217-7115**	1	CAP (TAMPER RESISTANT)	
	31	1	**293-3319**	1	SENSOR (TORQUE)	
	32	1	**238-1266**	1	LEVER	
	33	2	**211-7739**	1	KIT-CAP (TAMPER RESISTANT)	
	34	1	**265-5624**	1	SPRING-RETURN	
	35	1	**265-5625**	1	BRACKET-THROTTLE	
	36	1	**265-6944**	1	PLUG	

M-METRIC PART

246-3415 **GOVERNOR GP** *(contd.)* **i02883346**

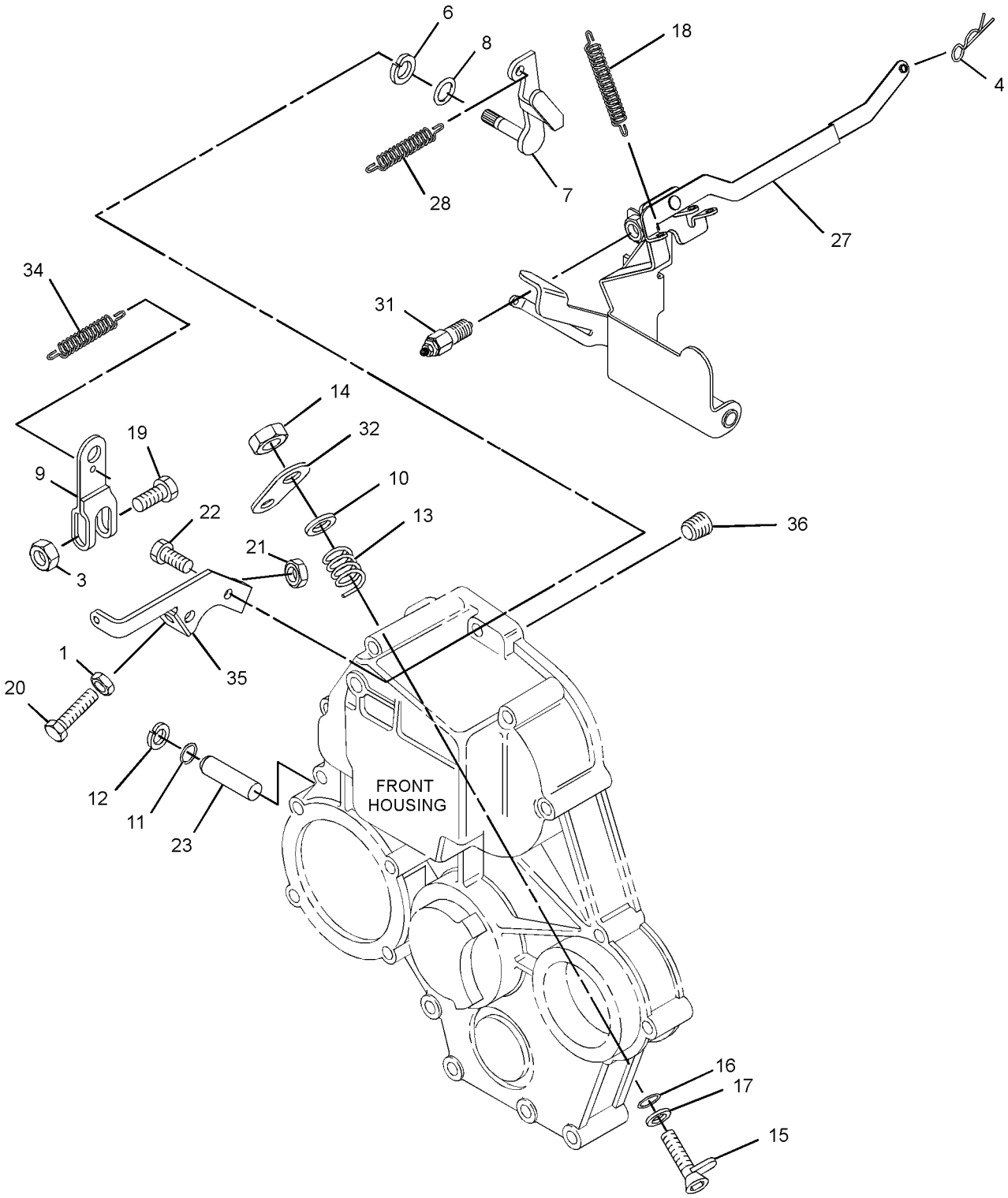

GRAPHIC #1 g01439456

246-3415 **GOVERNOR GP** *(contd.)* **i02883346**

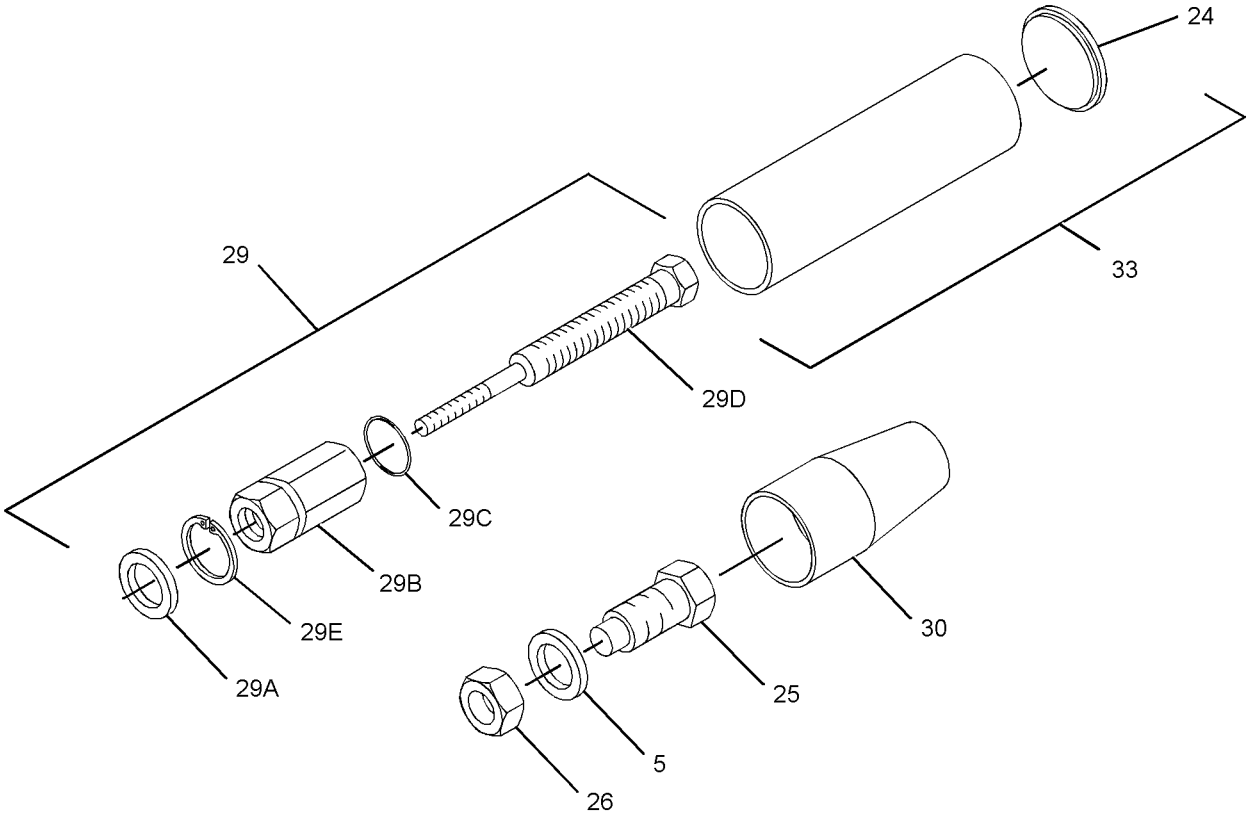

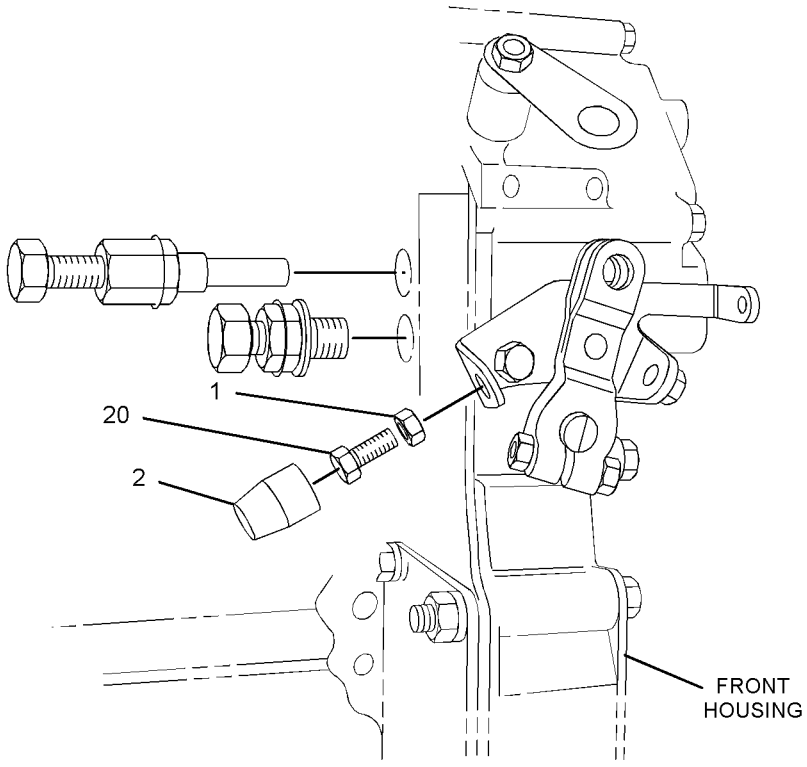

GRAPHIC #2 **<END>** g01439457

FUEL SYSTEM

317-0967 GOVERNOR GP

S/N: CYP1-UP

PART OF 292-5719 ENGINE AR-PRIMARY

AN ATTACHMENT

SMCS-1264, 1908 **i02826941**

NOTE	REF NO	GRAPHIC REF	PART NUMBER	QTY	PART NAME 1 2 3 4 5 6 (PRODUCT LEVEL)	SEE PAGE
M	1	1	**5C-2890**	1	NUT (M6X1-THD)	
	2	1	**139-5511**	1	CAP (TAMPER RESISTANT)	
	3	1	**153-5592**	1	NUT	
	4	1	**153-6415**	2	WASHER	
	5	1	**153-7983**	1	PIN	
	6	1	**154-1403**	1	SEAL-O-RING	
	7	1	**154-2715**	1	WASHER	
	8	1	**158-7936**	2	BOLT	
	9	1	**162-2207**	1	NUT	
	10	1	**183-3538**	4	BOLT	
	11	1	**217-7115**	1	CAP (TAMPER RESISTANT)	
	12	1	**308-1877**	1	BRACKET	
	13	1	**308-1878**	1	GASKET	
	14	1	**308-1879**	1	ARM	
	15	1	**308-1882**	1	SPRING	
	16	1	**308-1889**	1	NUT	
	17	1	**308-1890**	1	LEVER-CONTROL	
	18	1	**308-1892**	1	NUT	
	19	1	**308-1897**	1	RING	
	20	1	**308-1899**	1	CAP	
	21	1	**308-1900**	1	NUT	
	22	1	**308-1901**	1	CAP	
	23	1	**308-4266**	1	SHAFT	
	24	1	**309-6728**	1	SHAFT	
	25	1	**309-6732**	1	BOLT	
	26	1	**317-7195**	1	SPRING	
	27	1	**311-0655**	1	SPRING	
	28	1	**313-5832**	1	BOLT AS	
	28A	1	**153-7987**	1	WASHER	
	28B	1	**191-9297**	1	NUT	
	28C	1	**313-5833**	1	SPRING	
	29	1	**313-6211**	1	LEVER-CONTROL	
	30	1	**319-3251**	1	SENSOR-SPEED (ENGINE TIMING)	

M-METRIC PART

317-0967 **GOVERNOR GP** *(contd.)* **i02826941**

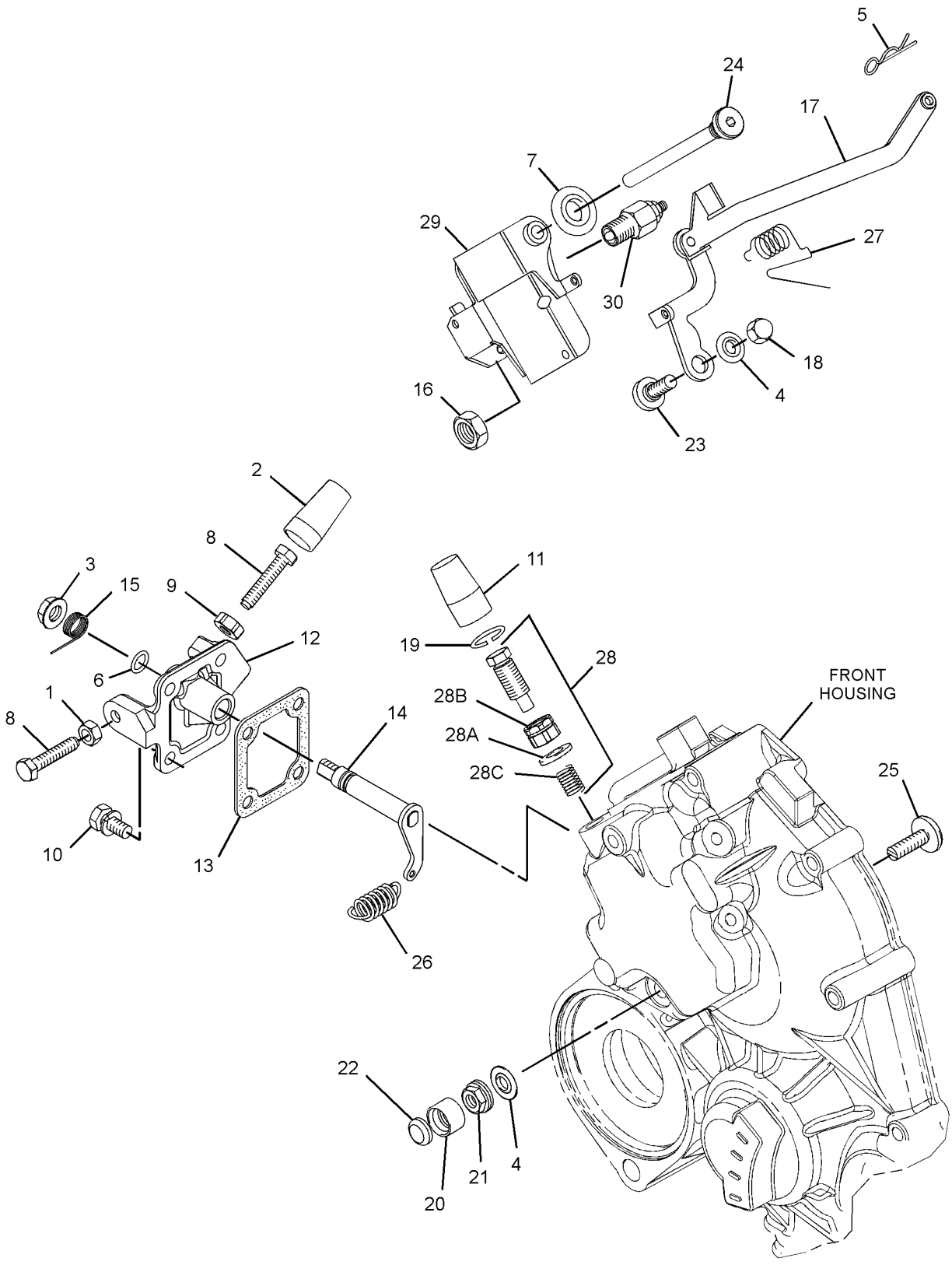

GRAPHIC #1 **<END>** g01439404

FUEL SYSTEM

228-1781 LINES GP-FUEL PRM & FILTER

S/N: MJH10575-UP

PART OF 295-7110 CHASSIS AR

SMCS-1258, 1263, 1274 **i02889631**

NOTE	REF NO	GRAPHIC REF	PART NUMBER	QTY	PART NAME 1 2 3 4 5 6 (PRODUCT LEVEL)	SEE PAGE
	1	1	**1P-4278**	9	CLAMP-HOSE	
	2	1	**3E-7404**	1	CLAMP-HOSE	
	3	1	**5P-4961**	1	CLAMP-HOSE	
	4	1	**9X-2038**	2	WASHER (7X19X2-MM THK)	
	5	1	**3K-8460**	2	PLUG	
	6	1	**252-0368**	1	GUARD AS	
		1	**6W-5698**	1	GROMMET	
		1	**142-8928**	1	ELBOW	
	7	1	**142-8828**	1	CAP AS-FILLER (FUEL)	
Y	8	1	*176-9954*	1	PUMP GP-FUEL PRM & PRIM FILTER (WATER SEPARATOR)	128
	9	1	**180-3007**	1	CLAMP-HOSE	
	10	1	**218-6661**	1	HOSE	
	11	1	**231-3041**	1	CONNECTOR	
	12	1	**246-2622**	2	ELBOW	
	13	1	**4D-6466**	1	CLIP	
M	14	1	**5C-9553**	2	BOLT (M6X1X16-MM)	
	15	1	**5P-7814**	2	SEAL-O-RING	
	16	1	**8F-8513**	1	CLIP	
	17	1	**8T-4121**	5	WASHER-HARD (11X21X2.5-MM THK)	
M	18	1	**8T-4133**	2	NUT (M10X1.5-THD)	
M	19	1	**8T-4137**	1	BOLT (M10X1.5X20-MM)	
M	20	1	**8T-4196**	2	BOLT (M10X1.5X35-MM)	
E	21	1	**158-6067**		HOSE (29-CM)	
E	22	1	**158-6067**		HOSE (8-CM)	
E	23	1	**5P-9770**		HOSE (45-CM)	
E	24	1	**5P-1442**		HOSE (125-CM)	
E	25	1	**8C-6959**		HOSE (22-CM)	
E	26	1	**158-6067**		HOSE (73-CM)	

E-ORDER BY THE CENTIMETER
M-METRIC PART
Y-SEPARATE ILLUSTRATION

228-1781 **LINES GP-FUEL PRM & FILTER** *(contd.)* **i02889631**

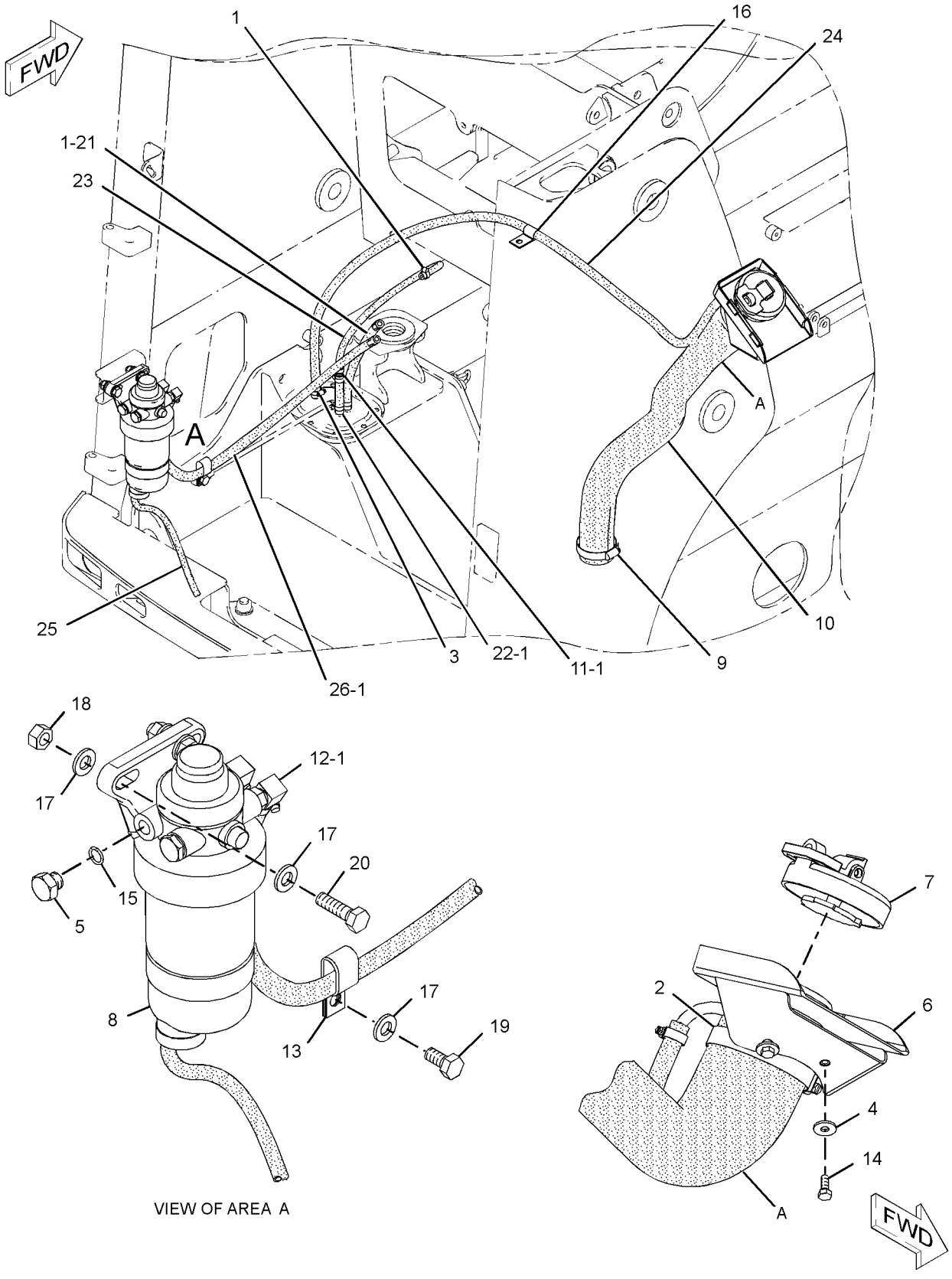

VIEW OF AREA A

GRAPHIC #1 **<END>** g01267901

176-7711 PUMP & MTG GP-FUEL TRANSFER

S/N: CSD1-11322
PART OF 300-5206 ENGINE AR-PRIMARY
AN ATTACHMENT

SMCS-1256 **i02572746**

NOTE	REF NO	GRAPHIC REF	PART NUMBER	QTY	PART NAME 1 2 3 4 5 6 (PRODUCT LEVEL)	SEE PAGE
	1	1	**153-6873**	2	BOLT	
	2	1	**295-4070**	1	PUMP AS-FUEL TRANSFER	
	3	1	**176-7719**	1	SEAL-O-RING	

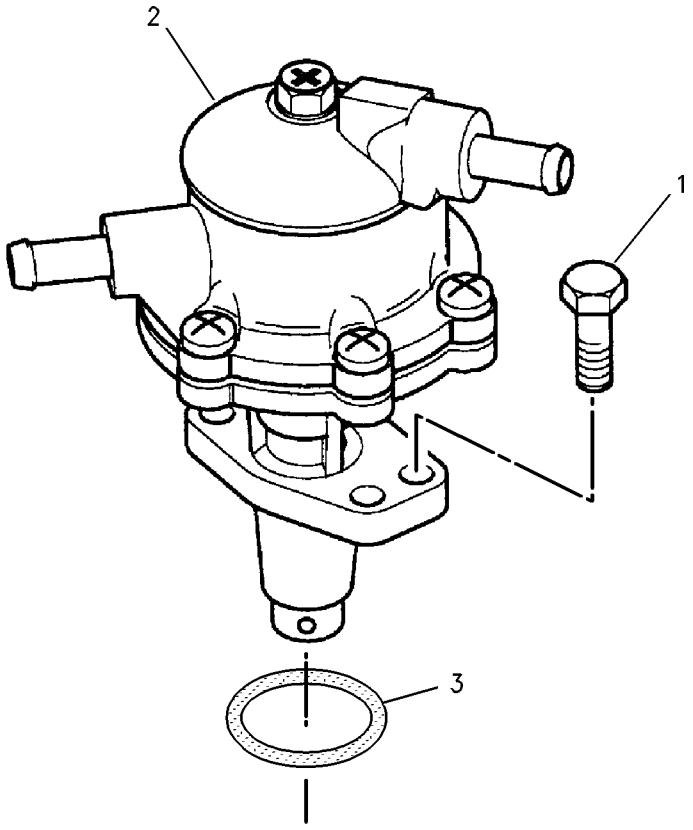

GRAPHIC #1 **<END>** g00758159

315-7814 PUMP & MTG GP-FUEL TRANSFER

S/N: CYP1-UP
PART OF 292-5719 ENGINE AR-PRIMARY
AN ATTACHMENT

SMCS-1256 **i02810614**

NOTE	REF NO	GRAPHIC REF	PART NUMBER	QTY	PART NAME 1 2 3 4 5 6 (PRODUCT LEVEL)	SEE PAGE
	1	1	**6I-0846**	2	BOLT (M6X1X14-MM)	
	2	1	**295-4070**	1	PUMP AS-FUEL TRANSFER	
	3	1	**176-7719**	1	SEAL-O-RING	

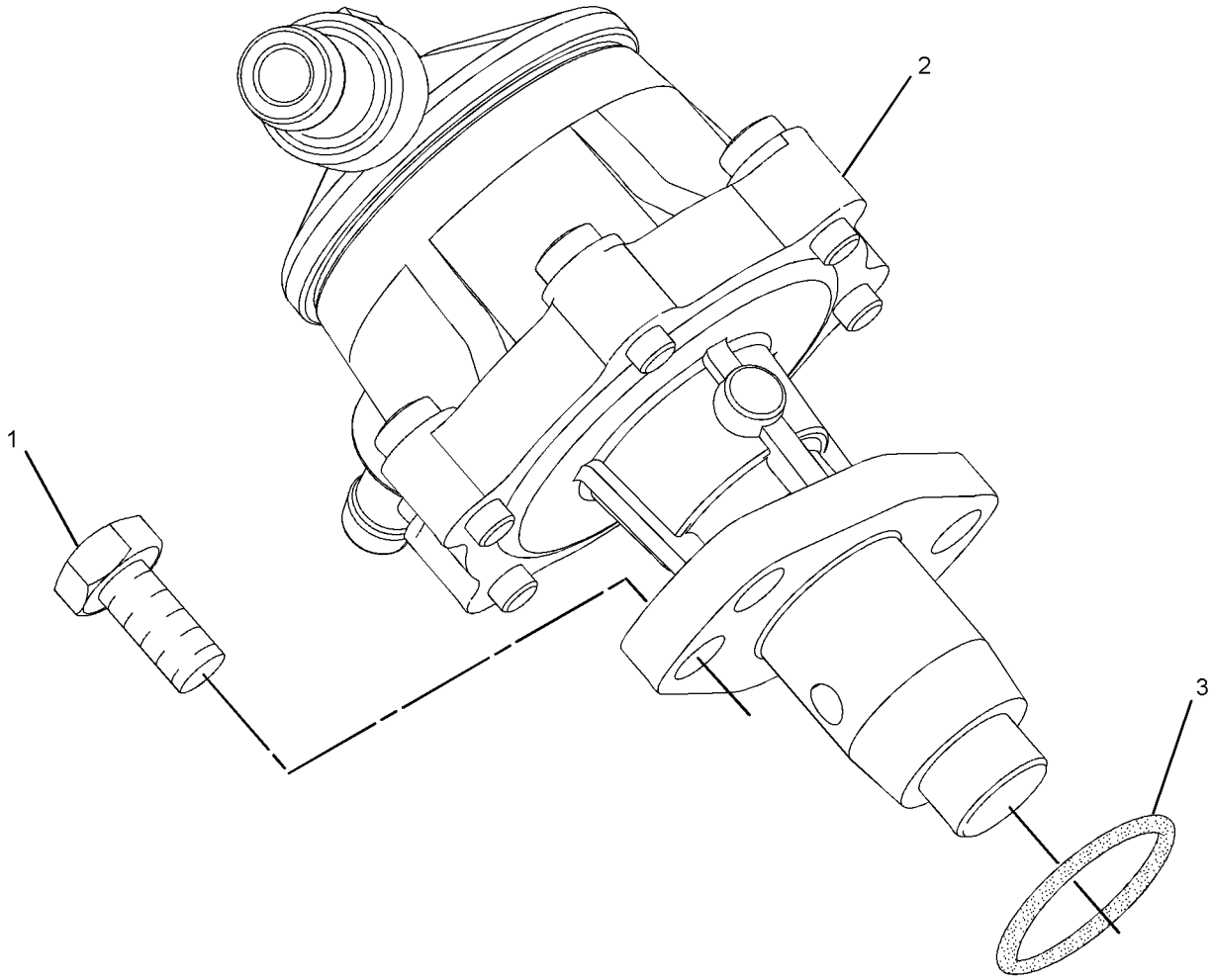

GRAPHIC #1 **<END>** g01421535

FUEL SYSTEM

295-8181 PUMP GP-FUEL INJECTION

S/N: CSD1-11322
PART OF 300-5206 ENGINE AR-PRIMARY
AN ATTACHMENT

SMCS-1251, 1290, 5479 **i02845307**

NOTE	REF NO	GRAPHIC REF	PART NUMBER	QTY	PART NAME 1 2 3 4 5 6 (PRODUCT LEVEL)	SEE PAGE
	1	1	**153-5592**	3	NUT	
	2	1	**153-5960**	3	NUT	
	3	2	**153-6412**	1	WASHER	
	4	1	**154-2713**	2	BOLT	
	5	2	**154-2715**	2	WASHER	
	6	2	**154-2716**	4	SEAL	
	7	2	**154-3018**	1	INJECTOR AS-FUEL	
	7A	2	**202-1196**	1	WASHER-SPECIAL	
	7B	2	**205-4731**	1	NUT	
	8	1	**160-3550**	1	CLAMP-HOSE	
B	9	1	**154-3017**	1	SHIM (0.2-MM THK)	
B		1	**160-3555**	1	SHIM (0.3-MM THK)	
B		1	**160-3556**	1	SHIM (0.4-MM THK)	
B		1	**160-3557**	1	SHIM (0.5-MM THK)	
B		1	**160-3558**	1	SHIM (0.5-MM THK)	
	10	1	**163-5372**	1	WASHER (8X15.4X4-MM THK)	
	11	1	**183-3353**	3	BOLT	
	12	2	**190-3803**	1	BOLT	
	13	1	**217-2760**	1	TUBE AS (CYL NO. 1)	
	14	1	**217-2761**	1	TUBE AS (CYL NO. 2)	
	15	1	**217-2762**	1	TUBE AS (CYL NO. 3)	
	16	1	**217-2763**	1	TUBE AS (CYL NO. 4)	
	17	2	**311-7561**	1	TUBE	
M	19	1	**8T-4189**	1	BOLT (M8X1.25X20-MM)	
	20	2	**271-2117**	1	SOLENOID (FUEL SHUTOFF)	
	21	1	**290-8014**	4	CLAMP	
Y	22	1	**302-7821**	1	PUMP GP-FUEL INJECTION	125
	23	1	**295-8184**	1	HOSE	

B-USE AS REQUIRED
M-METRIC PART
Y-SEPARATE ILLUSTRATION

295-8181 **PUMP GP-FUEL INJECTION** *(contd.)* **i02845307**

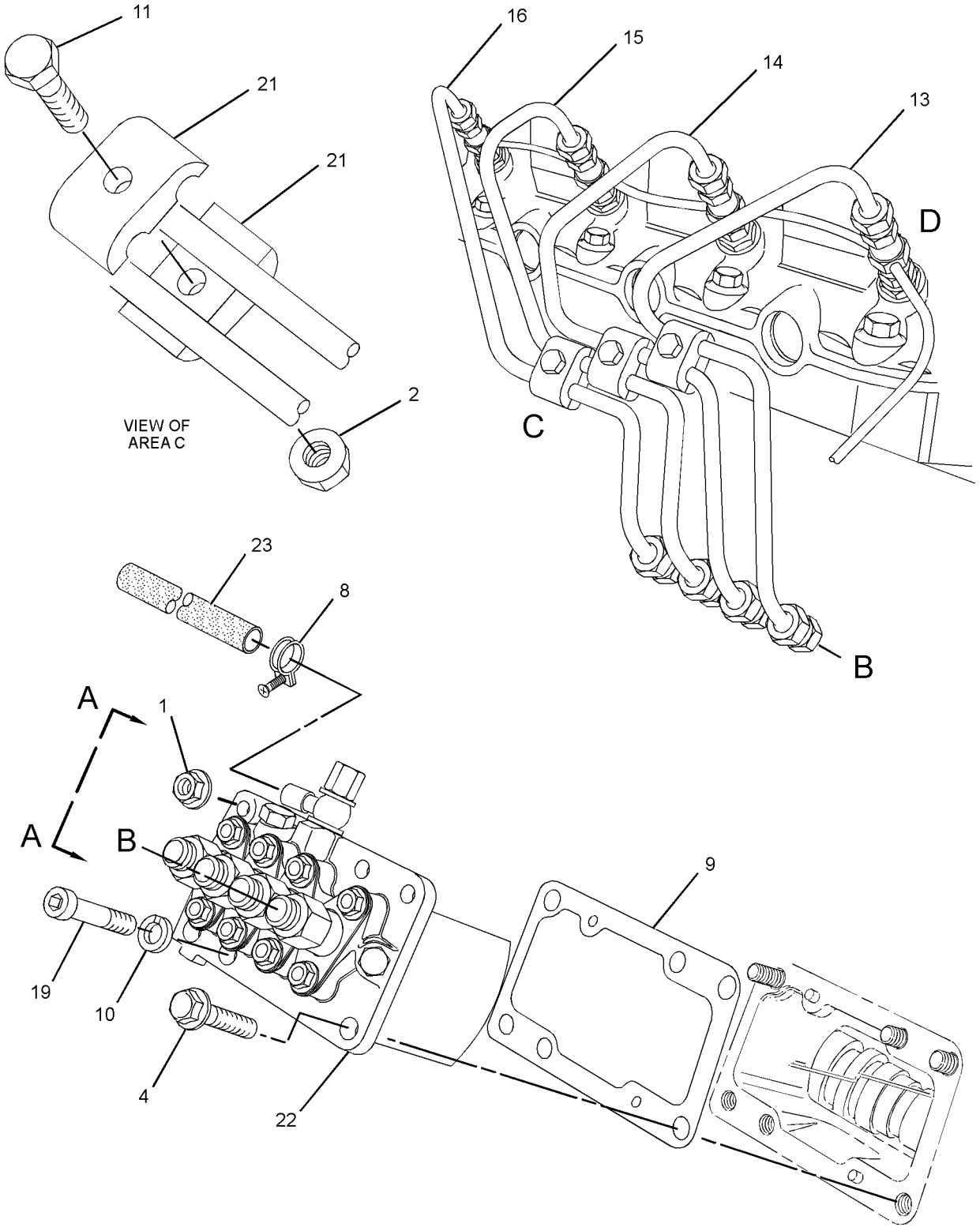

REFER TO ALL ILLUSTRATIONS OF
THIS GROUP FOR AUXILIARY VIEWS

GRAPHIC #1

g01393730

295-8181 **PUMP GP-FUEL INJECTION** *(contd.)* **i02845307**

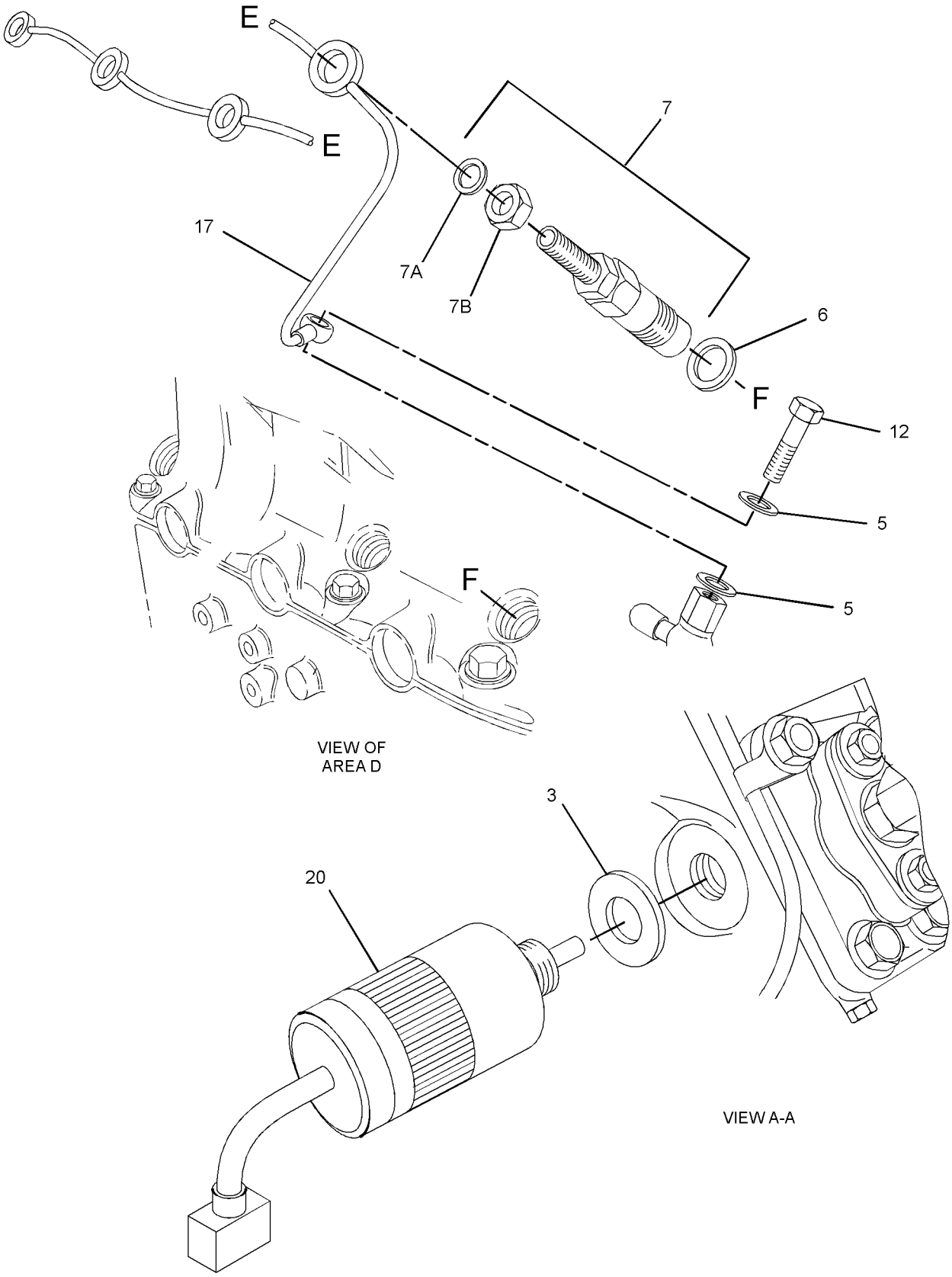

GRAPHIC #2 **<END>** g01393731

302-7821 PUMP GP-FUEL INJECTION

S/N: CSD1-11322
PART OF 295-8181 PUMP GP-FUEL INJECTION
AN ATTACHMENT

SMCS-1251, 1290, 5479 **i02794118**

NOTE	REF NO	GRAPHIC REF	PART NUMBER	QTY	PART NAME 1 2 3 4 5 6 (PRODUCT LEVEL)	SEE PAGE
	1	1	**205-4726**	1	BOLT	
	2	1	**205-4727**	2	WASHER	
	3	1	**205-4728**	1	CONNECTOR	

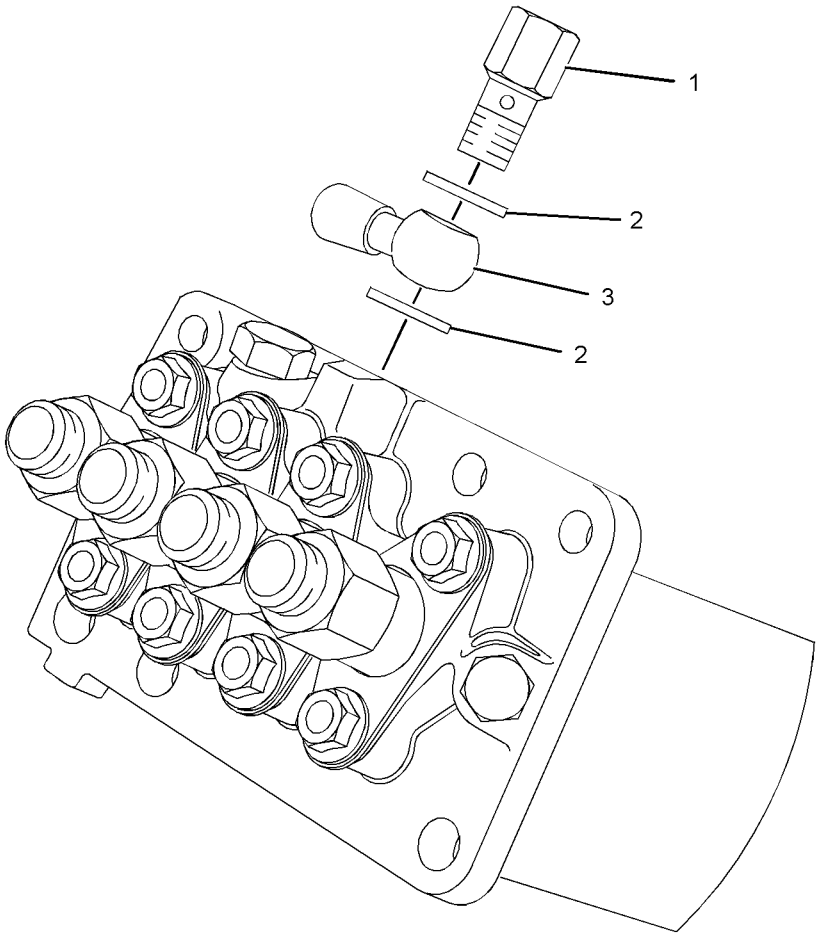

GRAPHIC #1 **<END>** g01281336

FUEL SYSTEM

317-0977 PUMP GP-FUEL INJECTION

S/N: CYP1-UP
PART OF 292-5719 ENGINE AR-PRIMARY
AN ATTACHMENT

SMCS-1251, 1290, 5479 **i02826920**

NOTE	REF NO	GRAPHIC REF	PART NUMBER	QTY	PART NAME 1 2 3 4 5 6 (PRODUCT LEVEL)	SEE PAGE
	1	1	**153-5592**	3	NUT	
	2	1	**153-5960**	3	NUT	
	3	1	**154-2713**	2	BOLT	
	4	1	**154-2715**	2	WASHER	
	5	1	**154-2716**	4	SEAL	
B	6	1	**154-3017**	1	SHIM (0.2-MM THK)	
B		1	**302-7822**	1	SHIM (0.25-MM THK)	
B		1	**160-3555**	1	SHIM (0.3-MM THK)	
B		1	**302-7823**	1	SHIM (0.35-MM THK)	
B		1	**160-3556**	1	SHIM (0.4-MM THK)	
B		1	**160-3557**	1	SHIM (0.5-MM THK)	
B		1	**160-3558**	1	SHIM (0.5-MM THK)	
	7	1	**163-5372**	1	WASHER (8X15.4X4-MM THK)	
	8	1	**183-3353**	3	BOLT	
	9	1	**190-3803**	1	BOLT	
	10	1	**217-2760**	1	TUBE AS (CYL NO. 1)	
	11	1	**217-2761**	1	TUBE AS (CYL NO. 2)	
	12	1	**217-2762**	1	TUBE AS (CYL NO. 3)	
	13	1	**217-2763**	1	TUBE AS (CYL NO. 4)	
M	14	1	**8T-4189**	1	BOLT (M8X1.25X20-MM)	
	15	1	**290-8014**	6	CLAMP	
	16	1	**308-1905**	1	PUMP-FUEL INJECTION	
	17	1	**308-1906**	4	ATOMIZER	
	17A	1	**202-1196**	1	WASHER-SPECIAL	
	18	1	**311-7561**	1	TUBE	

B-USE AS REQUIRED
M-METRIC PART

317-0977 **PUMP GP-FUEL INJECTION** *(contd.)* **i02826920**

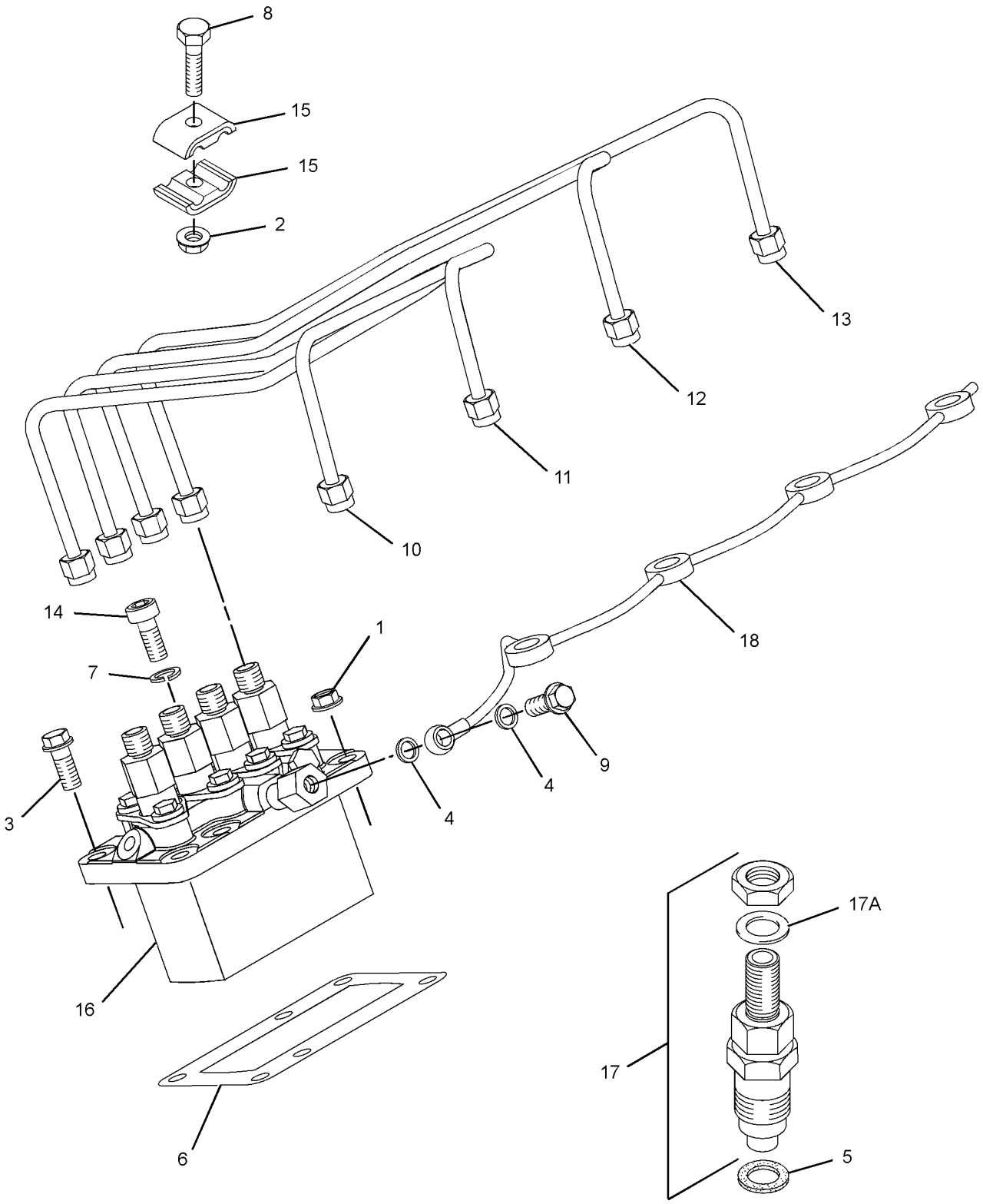

GRAPHIC #1 **<END>** g01438681

176-9954 PUMP GP-FUEL PRM & PRIM FILTER–WATER SEPARATOR

S/N: MJH10575-UP

PART OF 228-1781 LINES GP-FUEL PRM & FILTER

SMCS-1258, 1261, 1263 **i01757278**

NOTE	PART NUMBER	QTY	PART NAME 1 2 3 4 5 6 (PRODUCT LEVEL)	SEE PAGE
Y	**144-9962**	1	FILTER GP-WATER SEP & FUEL	112
	129-6259	1	PUMP GP-FUEL PRIMING	
	129-6262	1	BLADDER	

Y-SEPARATE ILLUSTRATION

<END>

246-4319 ALTERNATOR GP-CHARGING

S/N: CSD1-11322
PART OF 300-5206 ENGINE AR-PRIMARY
AN ATTACHMENT

SMCS-1405 **i02869232**

NOTE	REF NO	GRAPHIC REF	PART NUMBER	QTY	PART NAME 1 2 3 4 5 6 (PRODUCT LEVEL)	SEE PAGE
	1	1	**100-8451**	1	BOLT (M8X1.25X130-MM)	
	2	1	**180-8579**	1	NUT	
	3	1	**155-7984**	2	WASHER	
	4	1	**165-2141**	1	BOLT	
	5	1	**168-8999**	1	LEVER-ADJUSTING	
	6	1	**168-9001**	4	BOLT	
	7	1	**168-9002**	1	WASHER	
	8	1	**225-3143**	1	ALTERNATOR GP-CHARGING	
	9	1	**225-7955**	1	CABLE AS-BATTERY (NEGATIVE)	
		1	**225-7956**	1	TERMINAL-CABLE	
	9A	1	**3S-6050**	1	TERMINAL AS-BATTERY (NEGATIVE)	
		1	**1M-6119**	1	BOLT (5/16-18X1.375-IN)	
		1	**1M-6120**	1	NUT (5/16-18-THD)	
		1	**7N-5274**	1	COVER-TERMINAL (BLACK)	
		1	**8L-8413**	1	STRAP-CABLE	
	9B	1	**159-8050**		CABLE (02-GA, BLACK) (51-CM)	
	10	1	**246-3198**	1	PULLEY-ALTERNATOR	
	11	1	**246-4267**	1	BRACKET	
	12	1	**246-4318**	5	CLIP	
	13	1	**163-5372**	1	WASHER (8X15.4X4-MM THK)	
	14	1	**280-8336**	1	BRACKET AS	
M	14A	1	**8T-3612**	1	NUT-WELD (M8X1.25-THD)	

M-METRIC PART

246-4319 **ALTERNATOR GP-CHARGING** *(contd.)* **i02869232**

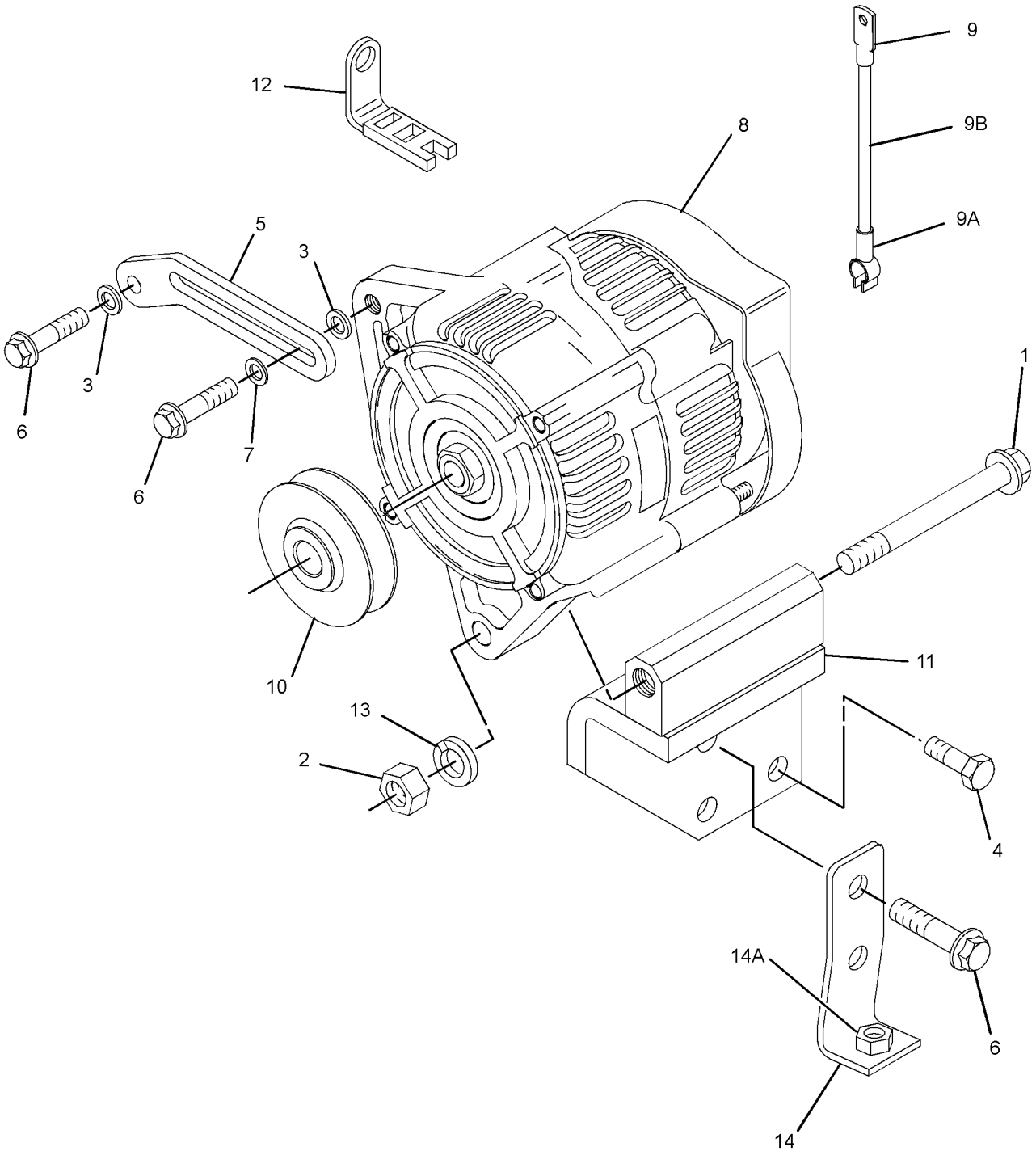

GRAPHIC #1 **<END>** g01429716

316-6963 ALTERNATOR GP-CHARGING

S/N: CYP1-UP
PART OF 292-5719 ENGINE AR-PRIMARY
AN ATTACHMENT

SMCS-1405 **i02826949**

NOTE	REF NO	GRAPHIC REF	PART NUMBER	QTY	PART NAME 1 2 3 4 5 6 (PRODUCT LEVEL)	SEE PAGE
	1	1	**100-8451**	1	BOLT (M8X1.25X130-MM)	
	2	1	**153-5592**	1	NUT	
	3	1	**155-7984**	1	WASHER	
	4	1	**165-2141**	3	BOLT	
	5	1	**168-8999**	1	LEVER-ADJUSTING	
	6	1	**168-9001**	2	BOLT	
	7	1	**168-9002**	1	WASHER	
	8	1	**246-4267**	1	BRACKET	
	9	1	**305-3661**	1	ALTERNATOR GP-CHARGING	

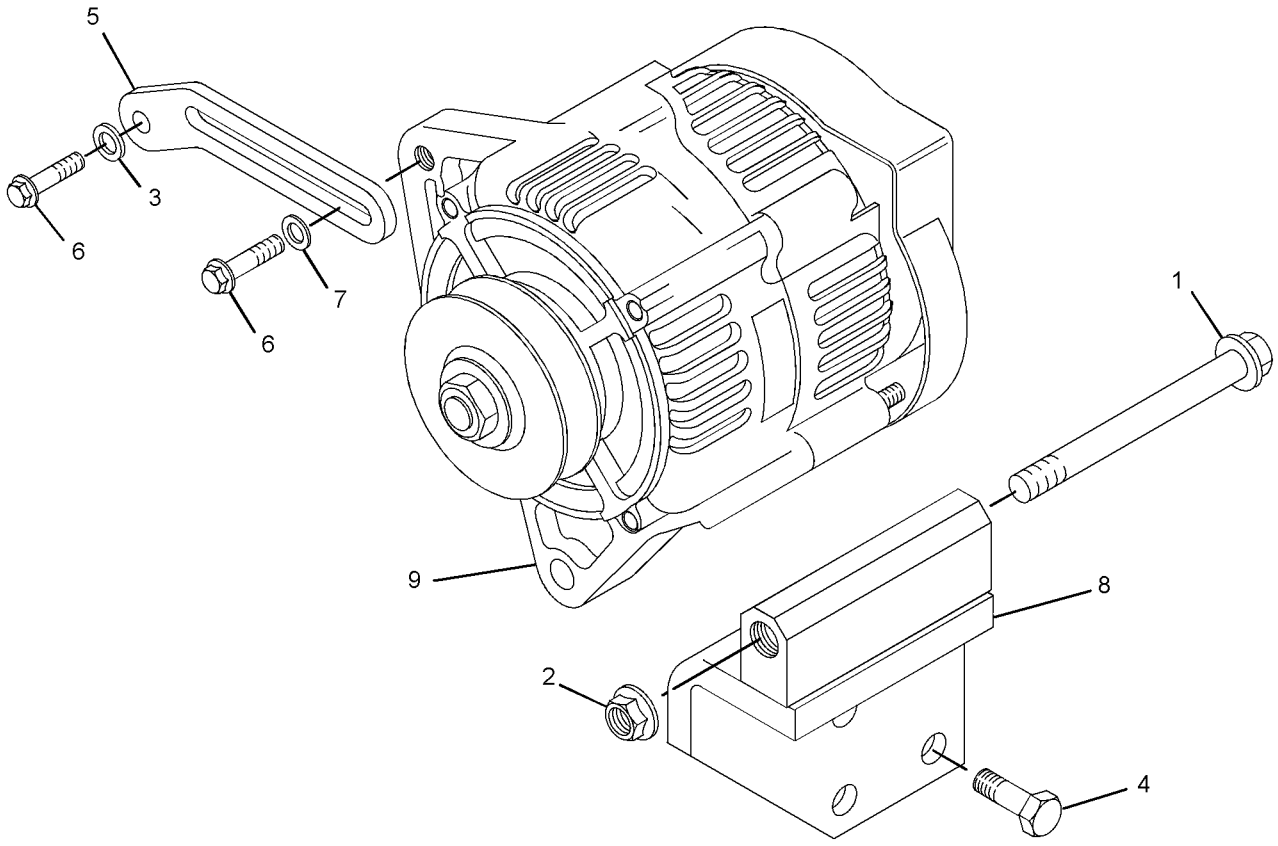

GRAPHIC #1 **<END>** g01439071

225-7950 BATTERY GP–STANDARD

S/N: MJH10575-UP
CANNOT BE USED WITH 225-7952–PAGE 133
AN ATTACHMENT

SMCS-1401 **i02014204**

NOTE	REF NO	GRAPHIC REF	PART NUMBER	QTY	PART NAME 1 2 3 4 5 6 (PRODUCT LEVEL)	SEE PAGE
	1	1	**153-5656**	1	BATTERY (12 VOLT, STANDARD)	
	2	1	**193-8329**	1	CLAMP	
	3	1	**5P-4116**	2	WASHER-HARD (8.8X20.5X2-MM THK)	
M	4	1	**8T-4189**	1	BOLT (M8X1.25X20-MM)	
M	5	1	**8T-6912**	1	BOLT (M8X1.25X50-MM)	

M-METRIC PART

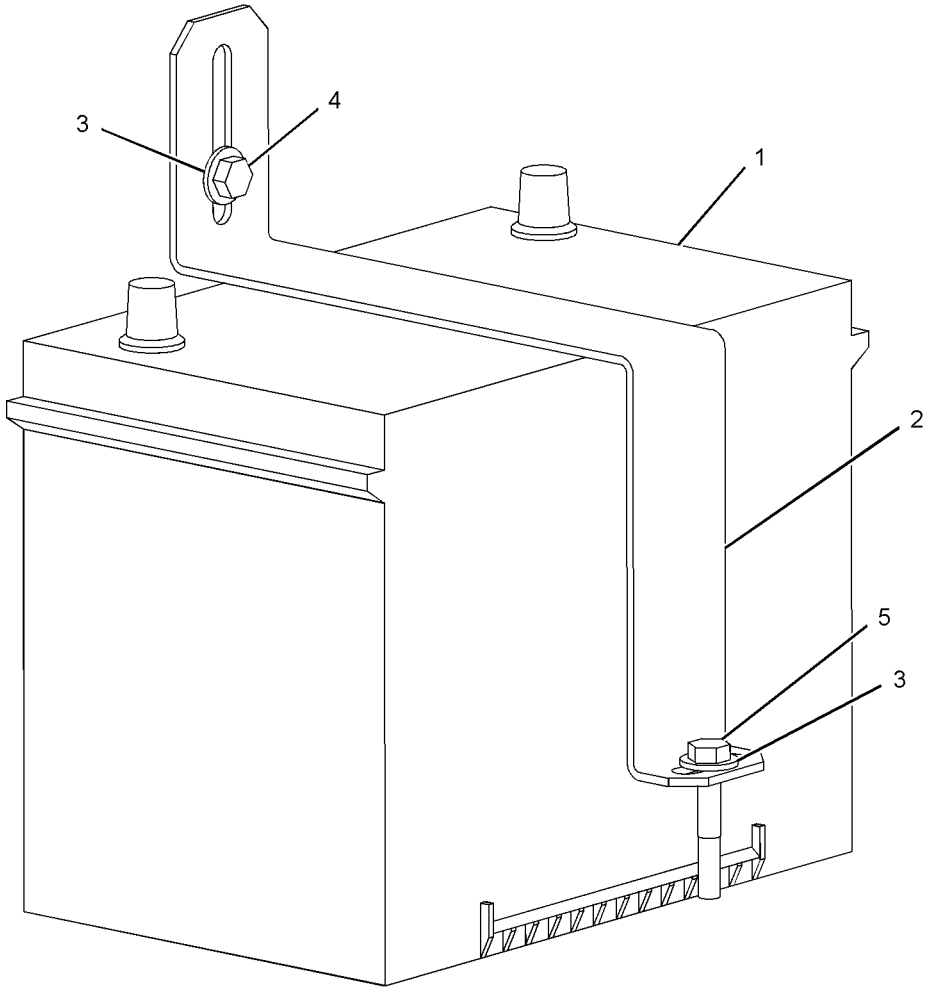

GRAPHIC #1 **<END>** g01010454

225-7952 BATTERY GP—HEAVY DUTY

S/N: MJH10575-UP

CANNOT BE USED WITH 225-7950—PAGE 132

AN ATTACHMENT

SMCS-1401 **i02014205**

NOTE	REF NO	GRAPHIC REF	PART NUMBER	QTY	PART NAME 1 2 3 4 5 6 (PRODUCT LEVEL)	SEE PAGE
	1	1	**193-8329**	1	CLAMP	
	2	1	**230-6368**	1	BATTERY (12-VOLT, MAINTENANCE FREE)	
	3	1	**5P-4116**	2	WASHER-HARD (8.8X20.5X2-MM THK)	
M	4	1	**8T-4189**	2	BOLT (M8X1.25X20-MM)	

M-METRIC PART

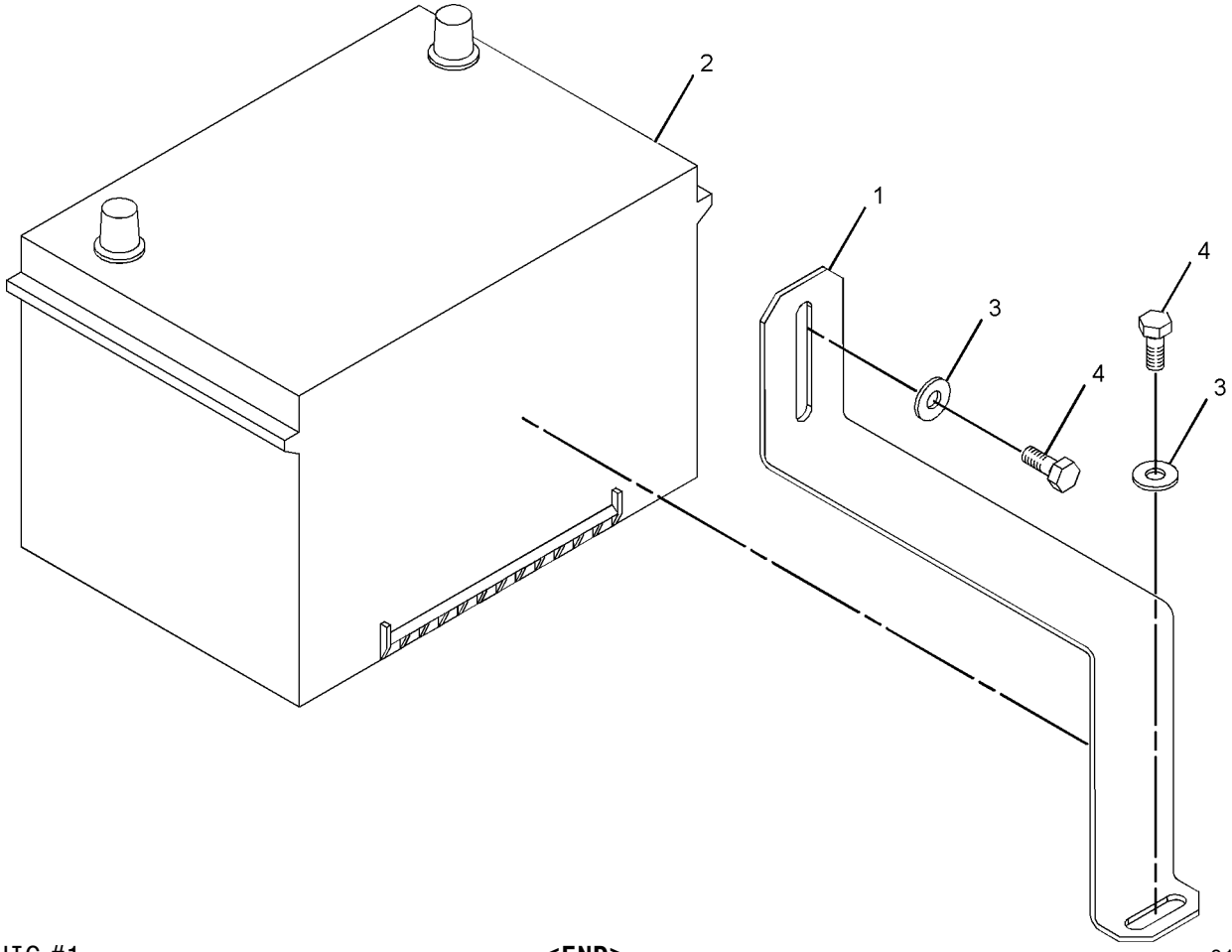

GRAPHIC #1 **<END>** g01015484

217-2778 CONNECTION GP-ELECTRICAL

S/N: CSD1-11322
PART OF 300-5206 ENGINE AR-PRIMARY
AN ATTACHMENT

SMCS-1408, 4459 **i01649071**

NOTE	REF NO	GRAPHIC REF	PART NUMBER	QTY	PART NAME 1 2 3 4 5 6 (PRODUCT LEVEL)	SEE PAGE
	1	1	**183-4037**	1	CONNECTOR AS	
	2	1	**200-5976**	1	CONNECTION	

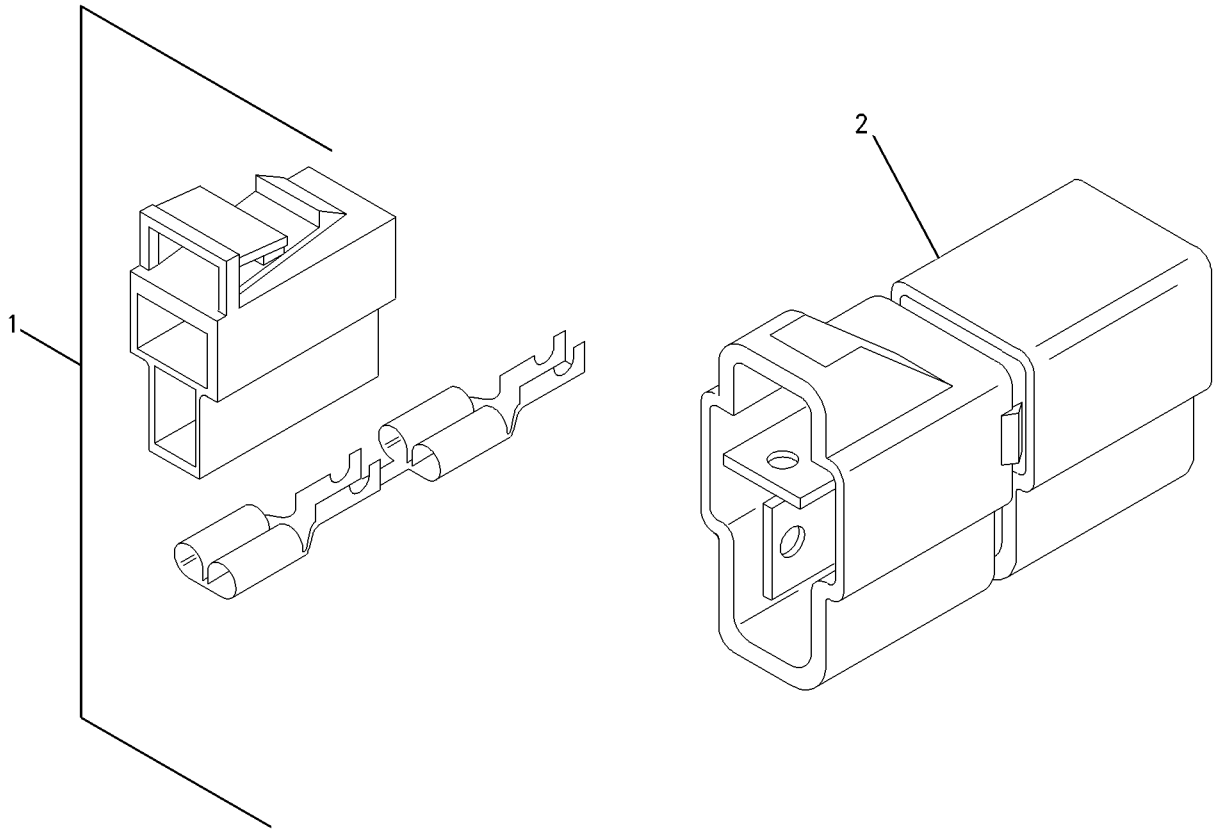

GRAPHIC #1 **<END>** g00852746

217-5884 CONNECTION GP-ELECTRICAL

S/N: CSD1-11322
PART OF 300-5206 ENGINE AR-PRIMARY
AN ATTACHMENT

SMCS-1408, 4459 **i02135600**

NOTE	REF NO	GRAPHIC REF	PART NUMBER	QTY	PART NAME 1 2 3 4 5 6 (PRODUCT LEVEL)	SEE PAGE
	1	1	**193-0161**	3	CABLE AS-ADAPTER	

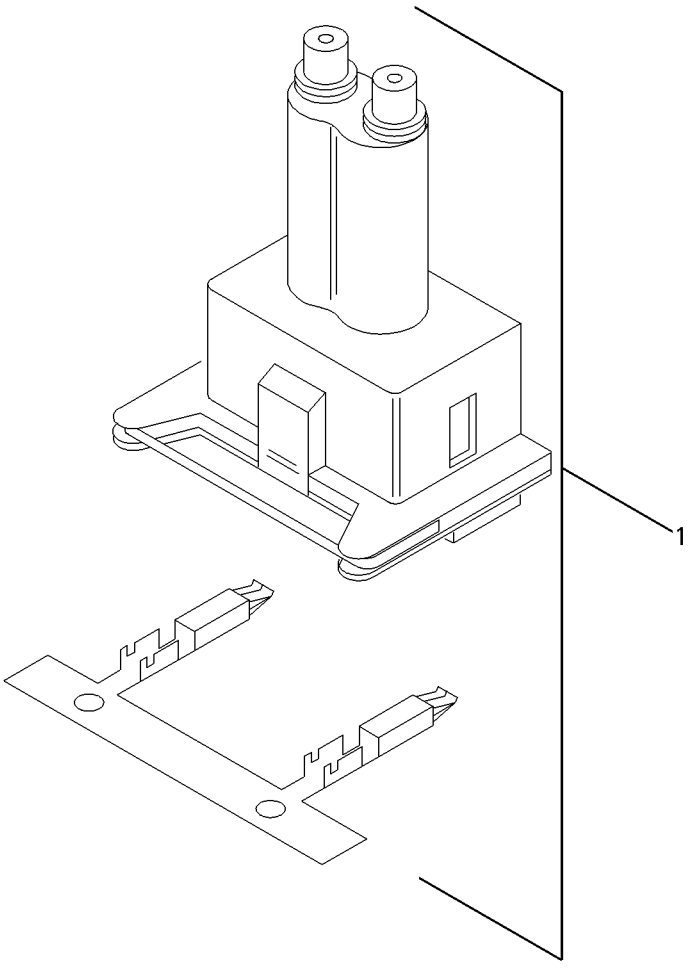

GRAPHIC #1 **<END>** g00852753

154-4233 CONTROL GP-INTERLOCK

S/N: MJH10575-UP

PART OF 225-8001 WIRING GP-CHASSIS

SMCS-7630 **i01698898**

NOTE	REF NO	GRAPHIC REF	PART NUMBER	QTY	PART NAME 1 2 3 4 5 6 (PRODUCT LEVEL)	SEE PAGE
	1	1	**7X-6315**	1	STRAP AS-GROUND	
	2	1	**184-2472**	1	SCREW-PAN HEAD (NO 8-32X9.52-MM)	
	3	1	**134-4126**	1	WASHER (4.52X8.28X0.76-MM THK)	

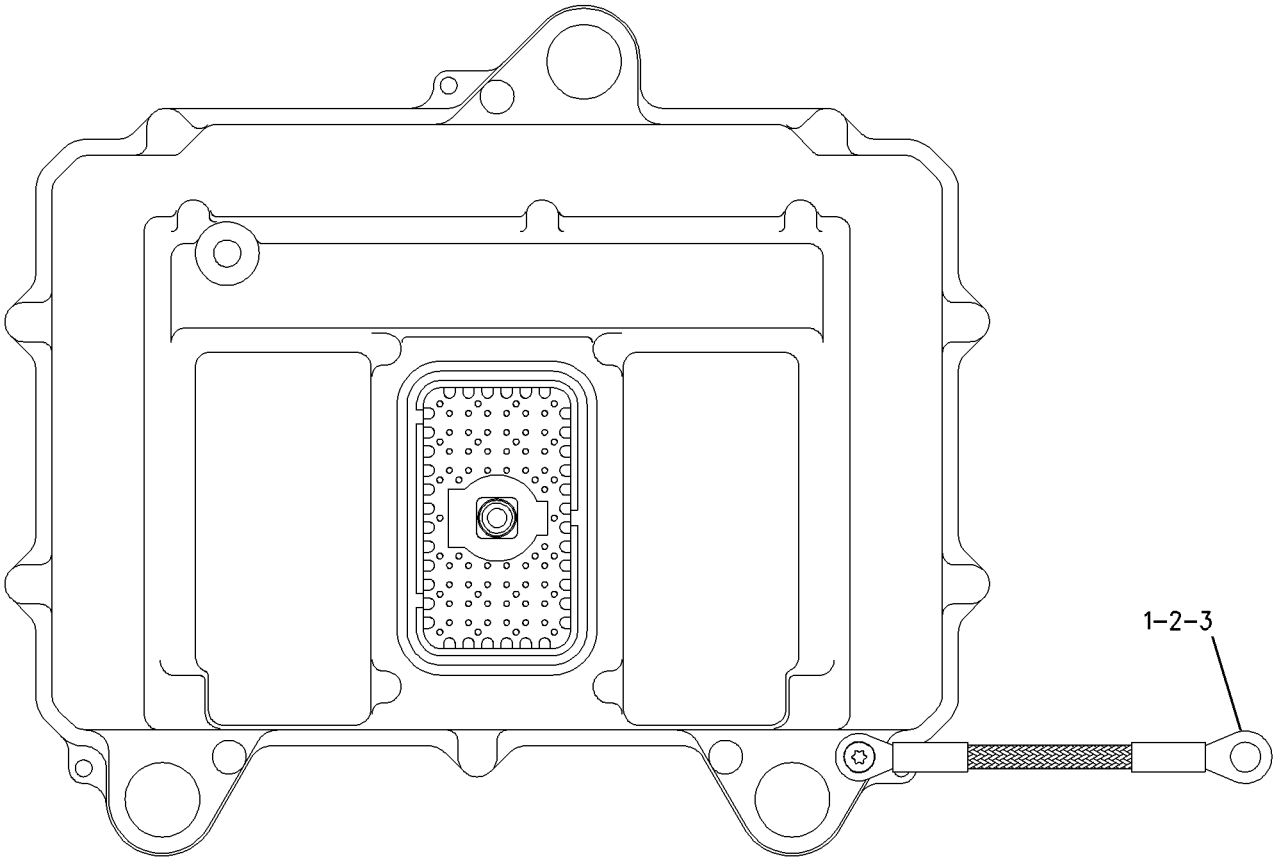

GRAPHIC #1 **<END>** g00843169

308-2313 CONTROL GP-MANUAL START/STOP

S/N: CYP1-UP
PART OF 292-5719 ENGINE AR-PRIMARY
AN ATTACHMENT

SMCS-1426, 7418 **i02752301**

NOTE	REF NO	GRAPHIC REF	PART NUMBER	QTY	PART NAME 1 2 3 4 5 6 (PRODUCT LEVEL)	SEE PAGE
	1	1	**153-6412**	1	WASHER	
	2	1	**271-2117**	1	SOLENOID (FUEL SHUTOFF)	
	3	1	**308-1914**	1	LEVER-CONTROL	

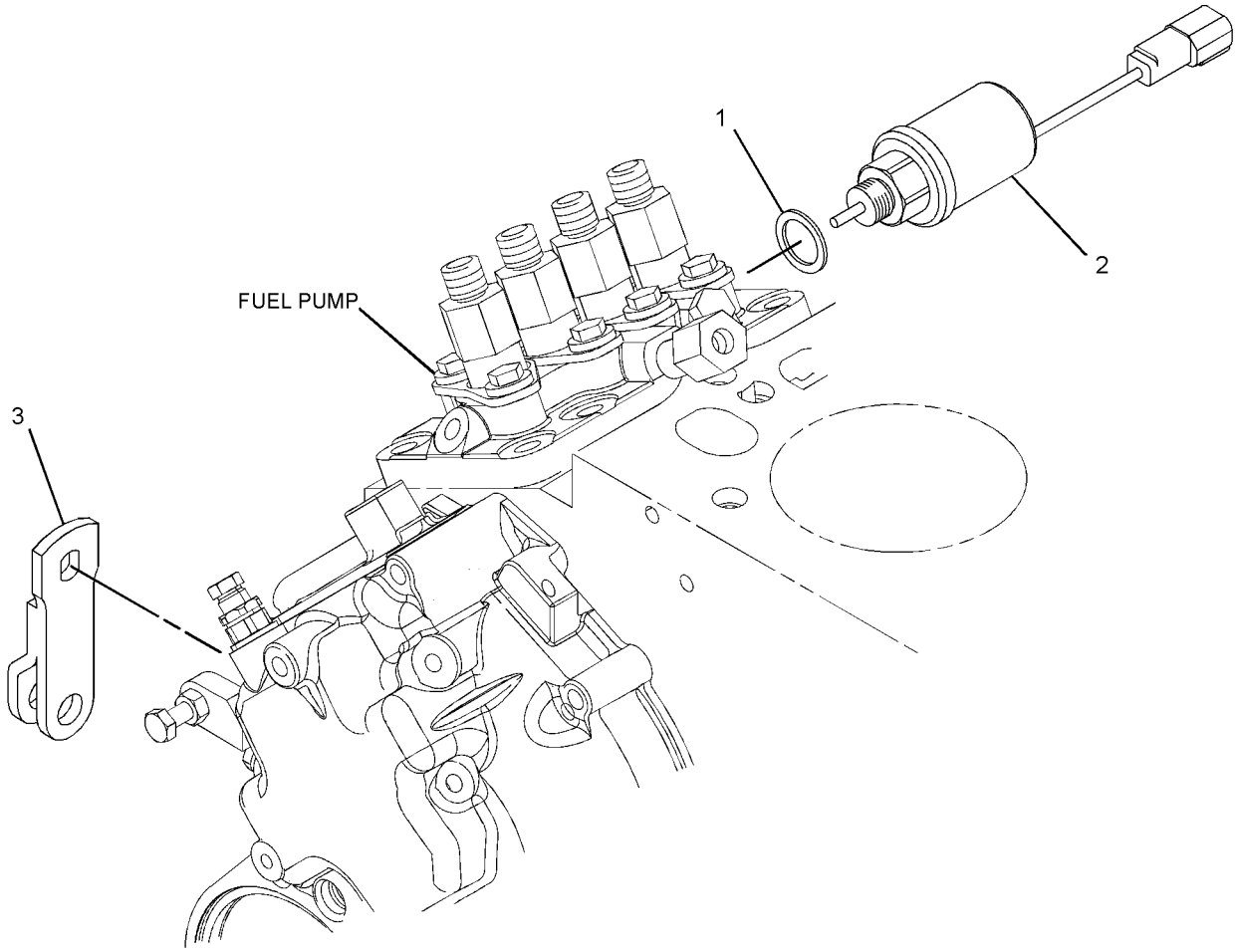

GRAPHIC #1 **<END>** g01420648

ELECTRICAL AND STARTING SYSTEM

233-5670 CONVERSION AR-NON-ROADING—NACD

S/N: MJH10575-UP

AN ATTACHMENT

SMCS-7000 **i02009667**

NOTE	PART NUMBER	QTY	PART NAME 1 2 3 4 5 6 (PRODUCT LEVEL)	SEE PAGE
Y	*142-8652*	1	LIGHTING GP-STOP & TAIL	162
Y	*218-5790*	1	PANEL AR-INSTRUMENT	612

Y-SEPARATE ILLUSTRATION

<END>

216-4755 COVER GP-FUSE PANEL

S/N: MJH10575-UP

PART OF 225-8001 WIRING GP-CHASSIS

SMCS-1417 **i02757074**

NOTE	REF NO	GRAPHIC REF	PART NUMBER	QTY	PART NAME 1 2 3 4 5 6 (PRODUCT LEVEL)	SEE PAGE
	1	1	**116-7471**	1	PULLER-MINIFUSE	
	2	1	**164-3765**	2	RETAINER	
	3	1	**216-4714**	1	FILM-FUSE/RELAY	
	4	1	**225-5193**	1	COVER AS	
M	5	1	**232-6692**	2	SCREW (M6X1X20-MM)	
E	6	1	**103-2543**		SEAL (3-CM)	
CJ	7	1	**5P-5969**		SEAL (9-DM)	

C-CHANGE FROM PREVIOUS TYPE
E-ORDER BY THE CENTIMETER
J-ORDER BY THE DECIMETER
M-METRIC PART

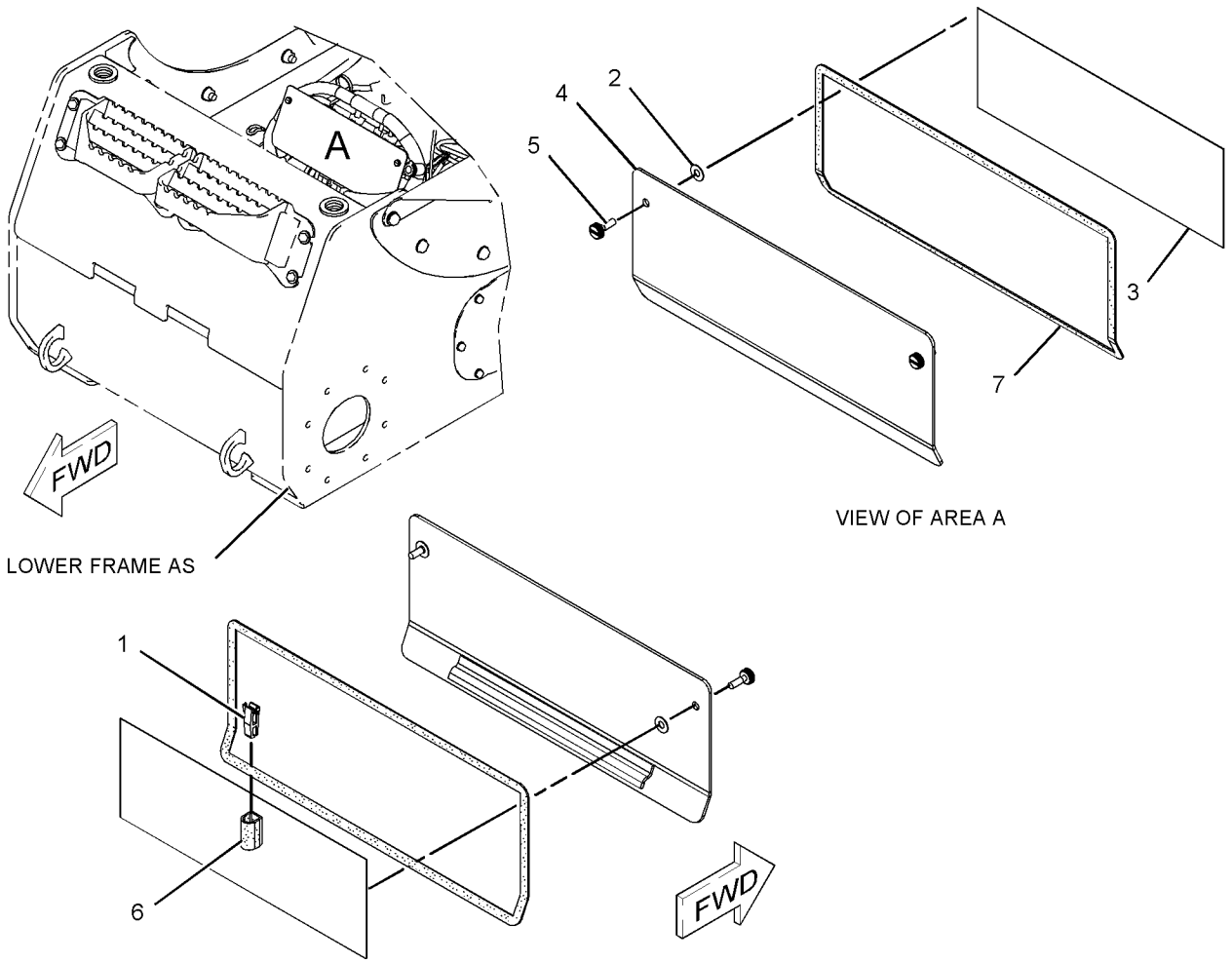

GRAPHIC #1 **<END>** g01056852

225-8000 ELECTRONICS GP-IMPLEMENT—WORK TOOL

S/N: MJH10575-UP

PART OF 225-8001 WIRING GP-CHASSIS

SMCS-7610, 7620 **i02492938**

NOTE	PART NUMBER	QTY	PART NAME 1 2 3 4 5 6 (PRODUCT LEVEL)	SEE PAGE
R	**216-0658**	1	CONTROL GP-UNPROGRAMMED	
	7X-6315	1	STRAP AS-GROUND	
	120-4897	1	SCREW-PAN HEAD (NO 8-32X9.52)	
	134-4126	1	WASHER (4.52X8.28X0.76-MM THK)	
	284-3058	1	SOFTWARE GP-IMPLEMENT	
			—OR—	
	284-3059	1	SERVICE GP-IMPLEMENT	
			(OPTIONAL SERVICE REPLACEMENT)	
			(INCLUDES CONTROL GP, SOFTWARE GP)	

R-REMFG PART MAY BE AVAILABLE

<END>

207-5262 ELECTRONICS GP-MACHINE–SECURITY

S/N: MJH10575-UP

PART OF 225-7991, 239-5010 INSTALLATION GP-SECURITY

AN ATTACHMENT

SMCS-7610, 7620 **i02348756**

NOTE	REF NO	GRAPHIC REF	PART NUMBER	QTY	PART NAME 1 2 3 4 5 6 (PRODUCT LEVEL)	SEE PAGE
	1	1	*156-6155*	1	CONTROL GP-UNPROGRAMMED (SECURITY)	
	1A	1	**7X-6315**	1	STRAP AS-GROUND	
	1B	1	**184-2472**	1	SCREW-PAN HEAD (NO 8-32X9.52-MM)	
	1C	1	**134-4126**	1	WASHER (4.52X8.28X0.76-MM THK)	
	2	1	**243-6464**	1	SOFTWARE GP-MACHINE (SECURITY)	
	3	1	**206-5162**	2	KEY AS-ELECTRONIC (SECURITY)	
					–OR–	
		1	**206-5165**	2	KEY AS-ELECTRONIC (SECURITY)	
	4	1	**219-6314**	2	KEY RING (IDENTIFICATION)	

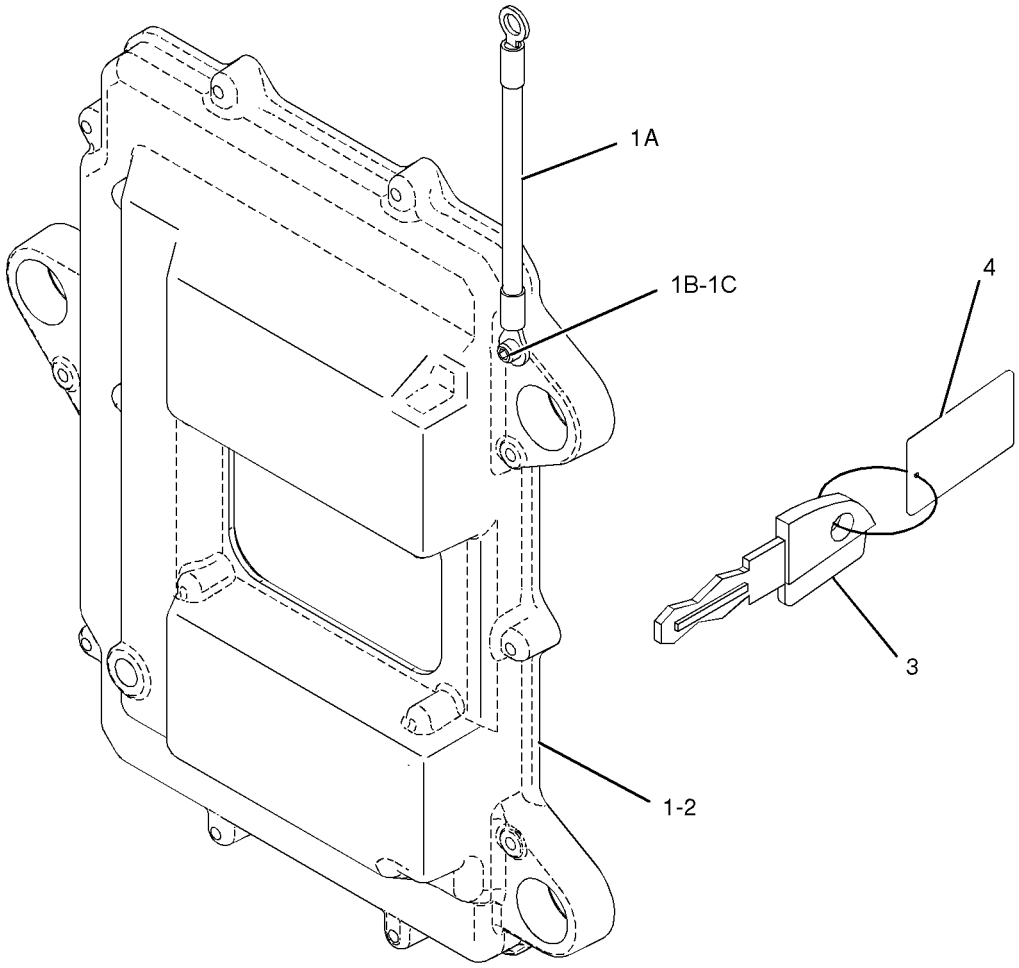

GRAPHIC #1 **<END>** g01026135

216-4750 FASTENER GP-WIRING HARNESS

S/N: MJH10575-UP

PART OF 218-6350 CAB AR-ENCLOSED ROPS

SMCS-1408 **i02738481**

NOTE	REF NO	GRAPHIC REF	PART NUMBER	QTY	PART NAME 1 2 3 4 5 6 (PRODUCT LEVEL)	SEE PAGE
	1	1	**4B-4863**	2	WASHER (4.7X11X1.2-MM THK)	
	2	1	**7G-1060**	1	STRAP AS-GROUND	
	3	1	**9R-7941**	1	SOCKET AS	
		1	**9R-7980**	1	COVER	
M	4	1	**111-4627**	4	SCREW-MACHINE (M6X1X30-MM)	
	5	1	**195-0936**	4	INSERT-THREADED (M6X1)	
B	6	1	**3S-2093**	6	STRAP-CABLE	
M	7	1	**5C-8312**	2	NUT (M4X0.7-THD)	
	8	1	**7G-7053**	1	GROMMET	
	9	1	**8T-4121**	2	WASHER-HARD (11X21X2.5-MM THK)	
M	10	1	**8T-4133**	1	NUT (M10X1.5-THD)	
M	11	1	**9X-1046**	2	SCREW (M4X0.7X18-MM)	
M	12	1	**9X-2042**	6	SCREW-TRUSS HEAD (M6X1X12-MM)	
	13	1	**101-2867**	4	WASHER-HARD (7.2X25X2-MM THK)	

B-USE AS REQUIRED
M-METRIC PART

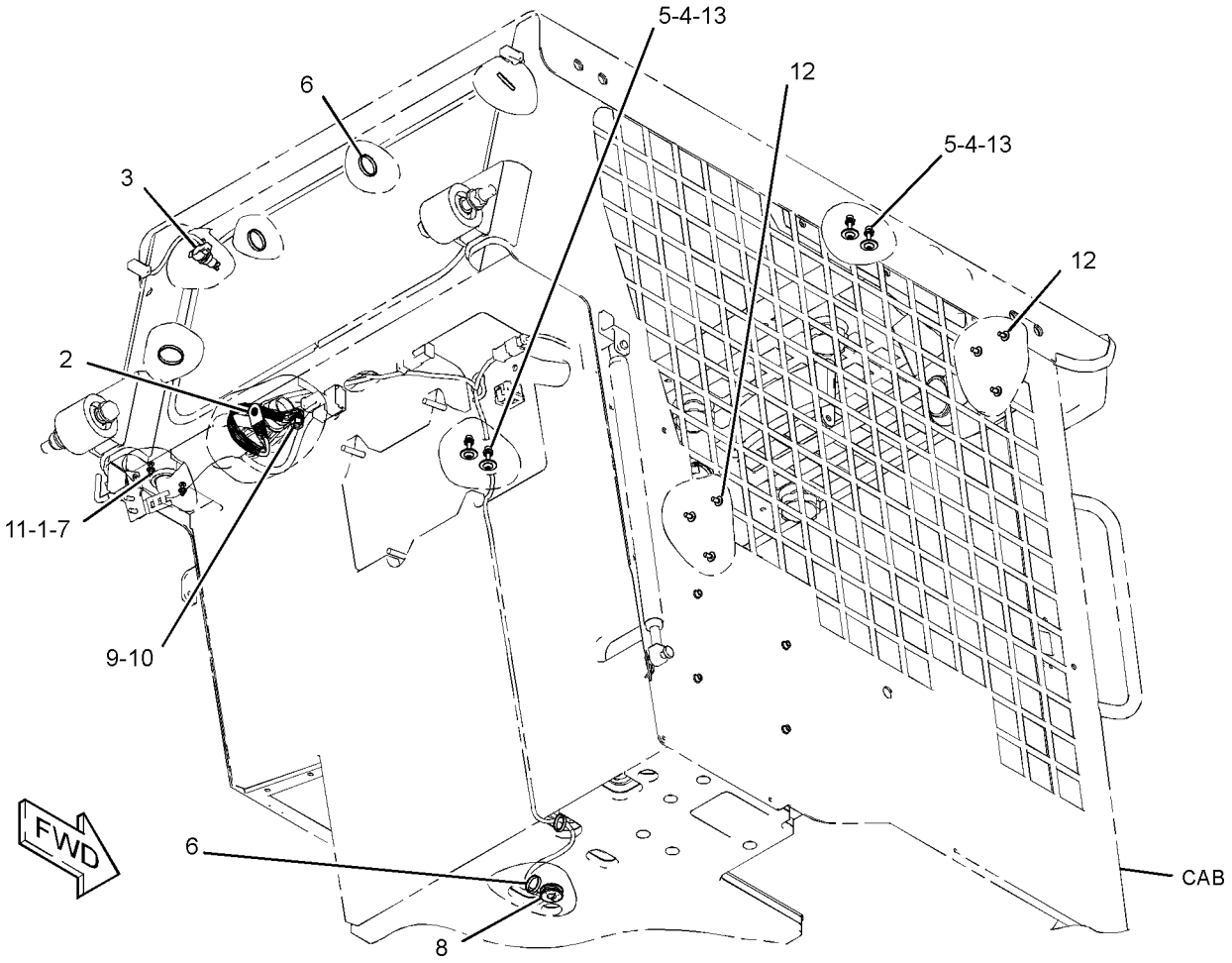

GRAPHIC #1 **<END>** g01376950

192-0104 GLOW PLUG GP

S/N: CSD1-11322
PART OF 300-5206 ENGINE AR-PRIMARY
AN ATTACHMENT

SMCS-1412 **i01992077**

NOTE	REF NO	GRAPHIC REF	PART NUMBER	QTY	PART NAME 1 2 3 4 5 6 (PRODUCT LEVEL)	SEE PAGE
	1	1	**155-8076**	1	NUT	
	2	1	**155-8077**	1	WASHER	
	3	1	**172-4585**	4	GLOW PLUG	
	4	1	**192-0105**	1	SUPPORT-PLUG	

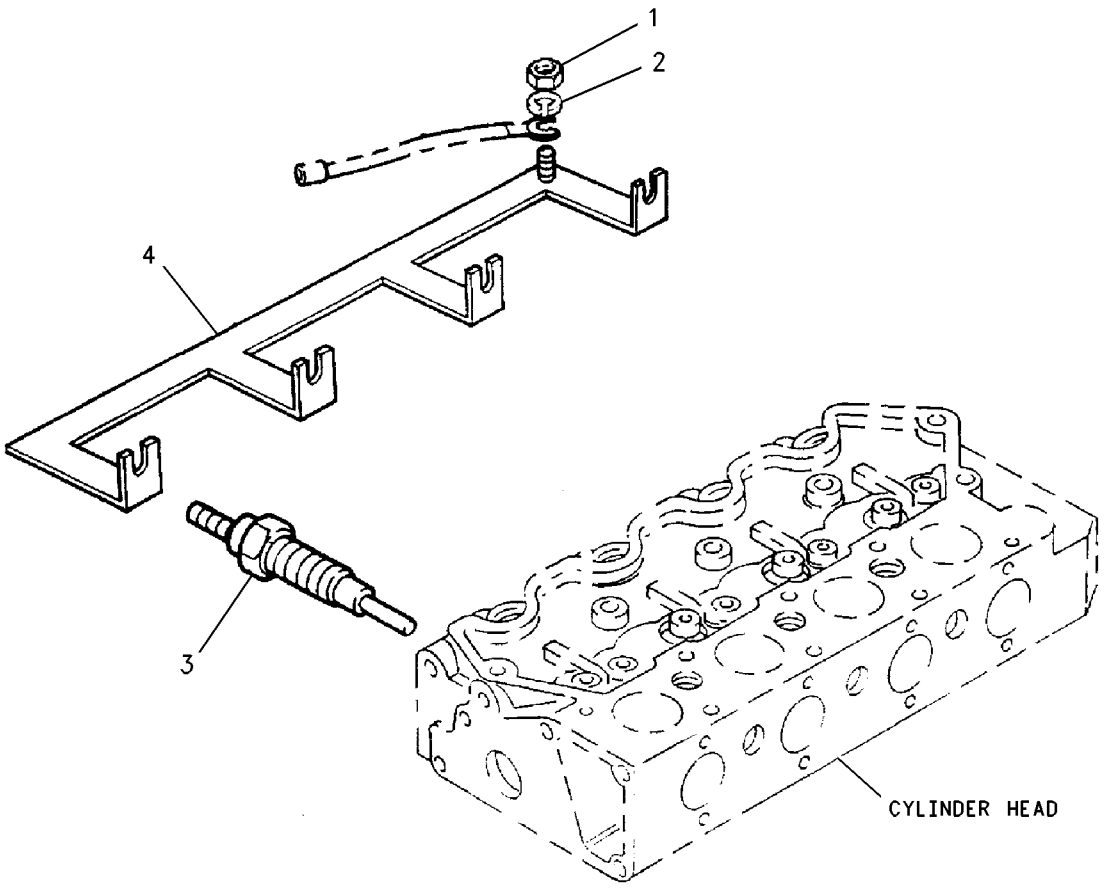

GRAPHIC #1 **<END>** g00708690

316-6896 GLOW PLUG GP

S/N: CYP1-UP
PART OF 292-5719 ENGINE AR-PRIMARY
AN ATTACHMENT

SMCS-1412 **i02827168**

NOTE	REF NO	GRAPHIC REF	PART NUMBER	QTY	PART NAME 1 2 3 4 5 6 (PRODUCT LEVEL)	SEE PAGE
	1	1	**155-8076**	1	NUT	
	2	1	**155-8077**	1	WASHER	
	3	1	**172-4585**	4	GLOW PLUG	
	4	1	**192-0105**	1	SUPPORT-PLUG	

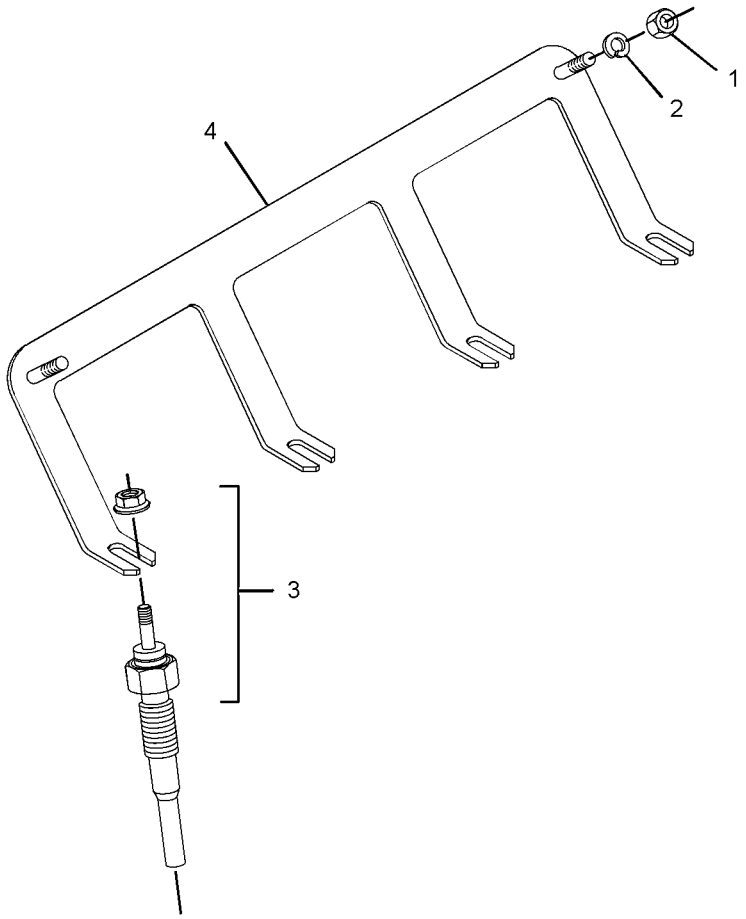

GRAPHIC #1 **<END>** g01439420

172-4445 HEATER GP-JACKET WATER

S/N: MJH10575-UP
120-VOLTS, 530-WATTS
CANNOT BE USED WITH 172-4446–PAGE 146
AN ATTACHMENT

SMCS-1383 **i02577831**

NOTE	REF NO	GRAPHIC REF	PART NUMBER	QTY	PART NAME 1 2 3 4 5 6 (PRODUCT LEVEL)	SEE PAGE
	1	1	*154-3927*	1	HEATER GP-JACKET WATER	
		1	**7X-6312**	1	CORD AS-JACKET WATER HEATER	
		1	**149-3499**	1	ELEMENT AS-JACKET WATER HEATER (ENGINE)	
		1	**133-6517**	1	CAP AS-DUST	
	2	1	**9X-6772**	1	STRAP-CABLE	

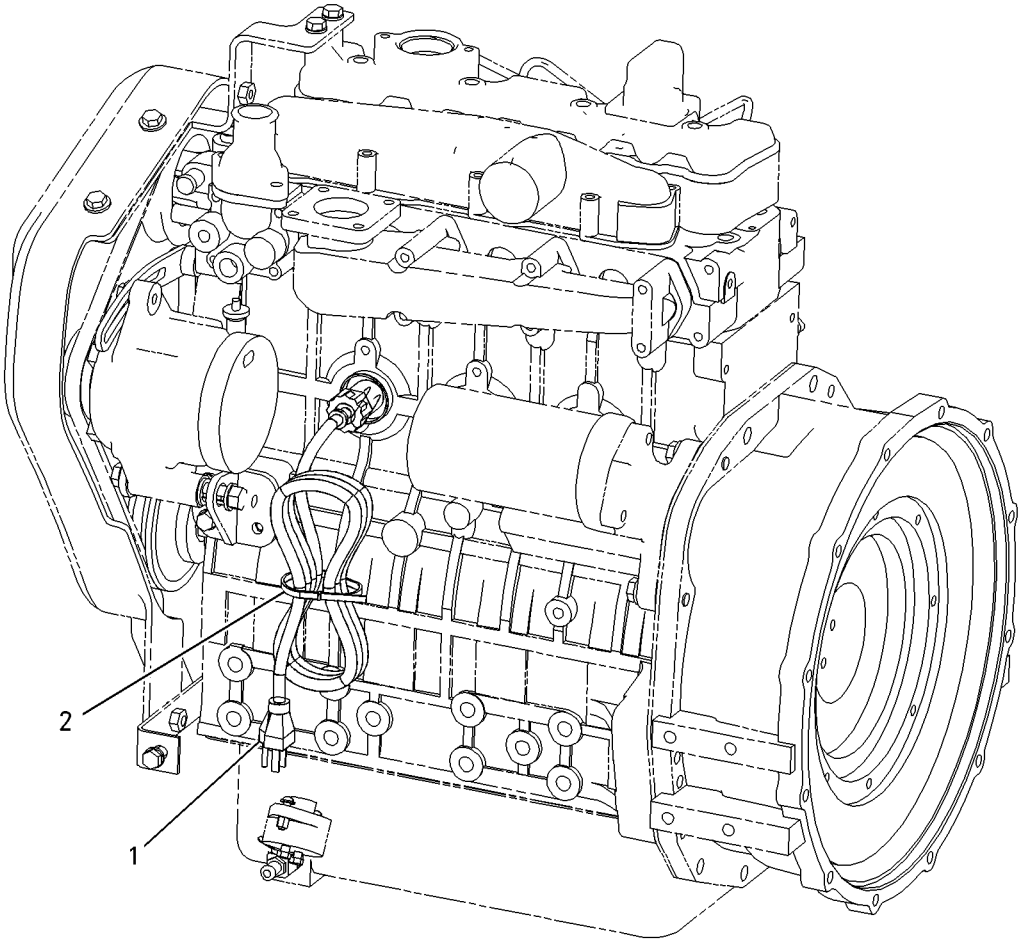

GRAPHIC #1 **<END>** g00808146

172-4446 HEATER GP-JACKET WATER

S/N: MJH10575-UP
240-VOLTS, 530-WATTS
CANNOT BE USED WITH 172-4445—PAGE 145
AN ATTACHMENT

SMCS-1383 **i02577832**

NOTE	REF NO	GRAPHIC REF	PART NUMBER	QTY	PART NAME 1 2 3 4 5 6 (PRODUCT LEVEL)	SEE PAGE
	1	1	*154-3928*	1	HEATER GP-JACKET WATER	
		1	**127-8609**	1	CORD AS-JACKET WATER HEATER	
		1	**151-1394**	11	ELEMENT AS-JACKET WATER HEATER (ENGINE)	
		1	**133-6517**	1	CAP AS-DUST	
	2	1	**9X-6772**	1	STRAP-CABLE	

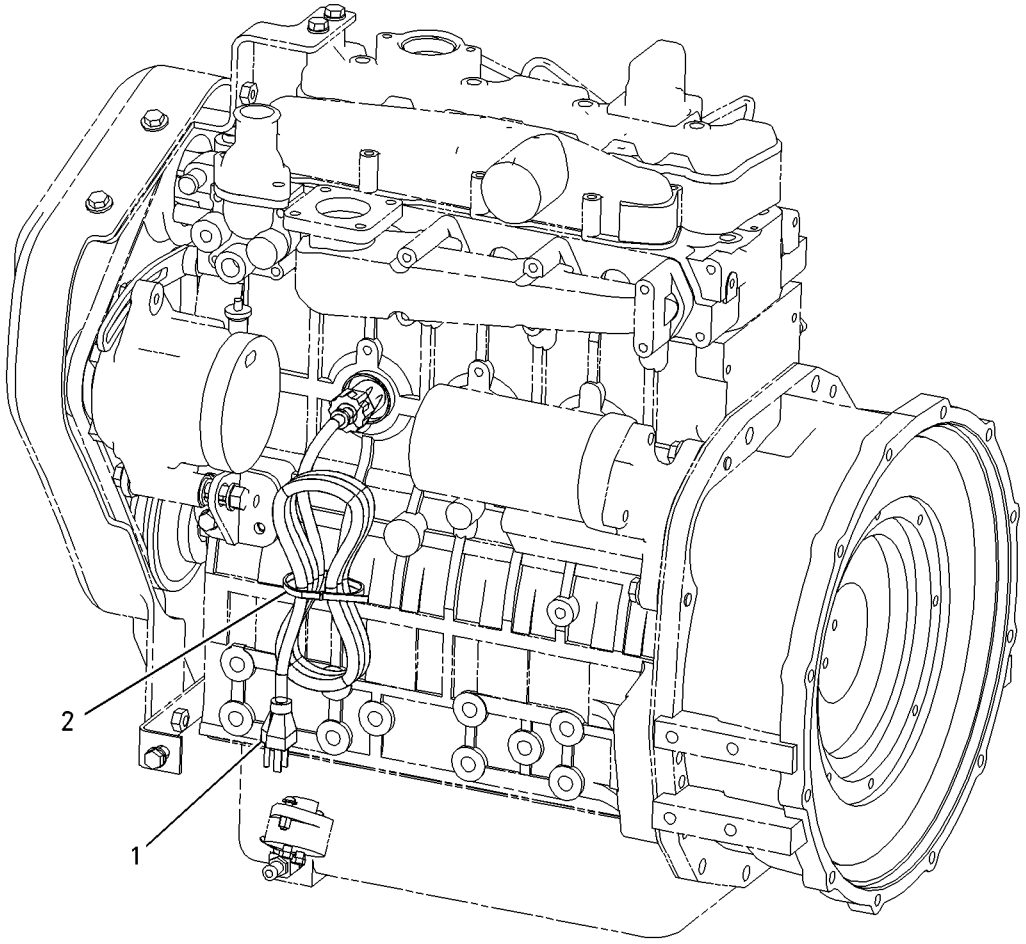

GRAPHIC #1 **<END>** g00808142

ELECTRICAL AND STARTING SYSTEM

225-7991 INSTALLATION GP-SECURITY

S/N: MJH10575-UP
AN ATTACHMENT

SMCS-7631 **i02659112**

NOTE	PART NUMBER	QTY	PART NAME 1 2 3 4 5 6 (PRODUCT LEVEL)	SEE PAGE
Y	**207-5262**	1	ELECTRONICS GP-MACHINE (SECURITY)	141
	243-6464	1	SOFTWARE GP-MACHINE (SECURITY)	
	205-8257	1	COIL AS (EXCITER)	
D	**5P-5677**		WIRE (18-GA, BLACK) (0.4-M)	
	186-3735	2	PIN-CONNECTOR (16-GA TO 18-GA)	
	222-3870	1	COIL AS (FERRITE)	
	102-8802	2	KIT-RECEPTACLE (2-PIN)	
			(INCLUDES RECEPTACLE AS & WEDGE)	
	186-3735	4	PIN-CONNECTOR (16-GA TO 18-GA)	
D	**5P-5677**		WIRE (18-GA, BLACK) (0.4-M)	
E	**9X-1813**		SLEEVE (15-CM)	
	216-4709	1	HARNESS AS-CONTROL (SECURITY)	
	102-8804	1	KIT-RECEPTACLE (4-PIN)	
	102-8801	1	KIT-RECEPTACLE (12-PIN)	
			(EACH KIT INCLUDES RECEPTACLE AS & WEDGE)	
	155-2270	2	KIT-CONNECTING PLUG (2-PIN)	
			(INCLUDES PLUG AS, WEDGE & INTERFACE SEAL)	
E	**125-7874**		TUBE-HEAT SHRINK (5.72-MM DIA) (10-CM)	
	150-6766	1	PLUG AS-CONNECTOR (26-PIN)	
	206-5162	2	KEY AS-ELECTRONIC (SECURITY)	
			—OR—	
	206-5165	1	KEY AS-ELECTRONIC (SECURITY)	
	198-5389	1	FILM-IDENTIFICATION (IGNITION SWITCH)	
	205-0826	1	FILM-INSTRUCTION (MACHINE SECURITY, INTL)	
	102-8802	1	KIT-RECEPTACLE (2-PIN)	
			(INCLUDES RECEPTACLE AS & WEDGE)	
	8T-9655	6	MOUNT-ISOLATION	
M	**5C-7261**	3	NUT (M8X1.25-THD)	
	4P-8134	3	CLIP	
	6I-1418	3	SPACER (8.2X12.7X28.7-MM THK)	
	3S-2093	7	STRAP-CABLE	
	7K-1181	5	STRAP-CABLE	
	7X-0579	3	WASHER-HARD (8.8X25.5X2-MM THK)	

D-ORDER BY THE METER
E-ORDER BY THE CENTIMETER
M-METRIC PART
Y-SEPARATE ILLUSTRATION

<END>

ELECTRICAL AND STARTING SYSTEM

239-5010 INSTALLATION GP-SECURITY–KIT

S/N: MJH10575-UP

FIELD INSTALLATION

SMCS-7631 **i02359042**

NOTE	PART NUMBER	QTY	PART NAME 1 2 3 4 5 6 (PRODUCT LEVEL)	SEE PAGE
Y	**207-5262**	1	ELECTRONICS GP-MACHINE (SECURITY)	141
M	**7X-0818**	3	BOLT (M8X1.25X45-MM)	
	4P-7581	3	CLIP	
	205-8257	1	COIL AS (EXCITER)	
	186-3735	2	PIN-CONNECTOR (16-GA TO 18-GA)	
BD	**5P-5677**		WIRE (18-GA, BLACK)	
	222-3870	1	COIL AS (FERRITE)	
	102-8802	2	KIT-RECEPTACLE (2-PIN)	
			(INCLUDES RECEPTACLE AS & WEDGE)	
	186-3735	4	PIN-CONNECTOR (16-GA TO 18-GA)	
BD	**5P-5677**		WIRE (18-GA, BLACK)	
BE	**9X-1813**		SLEEVE (1)	
	198-5389	1	FILM-IDENTIFICATION (IGNITION SWITCH)	
	205-0826	1	FILM-INSTRUCTION (MACHINE SECURITY, INTL)	
	216-4709	1	HARNESS AS-CONTROL (SECURITY)	
	102-8804	1	KIT-RECEPTACLE (4-PIN)	
	102-8801	1	KIT-RECEPTACLE (12-PIN)	
			(EACH KIT INCLUDES RECEPTACLE AS & WEDGE)	
	155-2270	2	KIT-CONNECTING PLUG (2-PIN)	
			(INCLUDES PLUG AS, WEDGE & INTERFACE SEAL)	
M	**195-0937**	3	INSERT-THREADED (M8X1.25-THD)	
	155-2260	1	KIT-CONNECTING PLUG (3-PIN)	
			(INCLUDES PLUG AS & WEDGE)	
	102-8802	1	KIT-RECEPTACLE (2-PIN)	
			(INCLUDES RECEPTACLE AS & WEDGE)	
	102-8803	1	KIT-RECEPTACLE (3-PIN)	
			(INCLUDES RECEPTACLE AS & WEDGE)	
	165-5655	1	LAMP AS (RED, GREEN, LED, 12-VOLT)	
	186-3735	3	PIN-CONNECTOR (16-GA TO 18-GA)	
	8T-9655	6	MOUNT-ISOLATION	
M	**5C-7261**	3	NUT (M8X1.25-THD)	
	8T-8737	2	PLUG-SEAL	
	6I-1418	3	SPACER (8.2X12.7X28.7-MM THK)	
	115-8109	1	SPLICE-WIRE	
	7K-1181	12	STRAP-CABLE	
	9N-0869	9	WASHER-HARD (8.8X25.5X2-MM THK)	
	207-3814	1	WIRE AS (PRODUCT LINK, SPLICE)	
	186-3735	1	PIN-CONNECTOR (16-GA TO 18-GA)	
	186-3736	2	SOCKET-CONNECTOR (16-GA TO 18-GA)	
BE	**125-7874**		TUBE-HEAT SHRINK (5.72-MM DIA)	

B-USE AS REQUIRED
D-ORDER BY THE METER
E-ORDER BY THE CENTIMETER
M-METRIC PART
Y-SEPARATE ILLUSTRATION

<END>

233-5706 KIT-WORK TOOL CONTROL & WIRING—RADIAL LIFT

S/N: MJH10575-UP
AN ATTACHMENT

SMCS-1408, 5705 **i02302986**

NOTE	PART NUMBER	QTY	PART NAME 1 2 3 4 5 6 (PRODUCT LEVEL)	SEE PAGE
Y	**231-4258**	1	CONTROL GP-HANDLE (LH)	529
	221-3881	1	PANEL GP-FUSE	
	113-8490	4	FUSE (10-AMPERE)	
	113-8491	2	FUSE (15-AMPERE)	
	146-9439	5	RELAY AS (12-VOLT)	
	215-5564	2	SUPPRESSOR-ARC	
	225-7961	1	HARNESS AS-WORK TOOL (LIFT ARM)	
	156-1460	1	RECEPTACLE (8-PIN)	
			(INCLUDES RECEPTACLE AS & WEDGE)	
	156-1458	1	COVER	
	1S-9593	1	STRAP-CABLE	
	225-8012	1	HARNESS AS-WORK TOOL (PLATFORM)	
	155-2255	1	KIT-CONNECTING PLUG (12-PIN)	
	155-2265	1	KIT-CONNECTING PLUG (8-PIN)	
	196-2382	1	KIT-CONNECTING PLUG (2-PIN)	
	196-2383	11	KIT-CONNECTING PLUG (8-PIN)	
	196-2384		KIT-CONNECTING PLUG (8-PIN)	
			(EACH PLUG KIT INCLUDES PLUG AS, WEDGE & INTERFACE SEAL)	
	177-9645	1	KIT-RECEPTACLE (2-PIN)	
			(INCLUDES RECEPTACLE AS & WEDGE)	
	102-8806	1	KIT-RECEPTACLE (8-PIN)	
			(INCLUDES RECEPTACLE AS & WEDGE)	
	115-1615	1	RELAY AS (12-VOLT)	
	146-9439	1	RELAY AS (12-VOLT)	
	142-8633	1	SWITCH AS-ROCKER (ELECTRIC POWER, WORK TOOL)	
M	**5C-9553**	1	BOLT (M6X1X16-MM)	
	159-9496	1	LOCKWASHER	
M	**095-0733**	2	SCREW-MACHINE (M4X0.7X40-MM)	
	3S-2093	9	STRAP-CABLE	
	4B-4863	2	WASHER (4.7X11X1.2-MM THK)	
	8T-4205	1	WASHER-HARD (7.2X14.5X2-MM THK)	
	3E-3389	1	WEDGE-RECEPTACLE LOCK	

M-METRIC PART
Y-SEPARATE ILLUSTRATION

<END>

ELECTRICAL AND STARTING SYSTEM

218-6741 KIT-WORK TOOL WIRING—RADIAL LIFT

S/N: MJH10575-UP

AN ATTACHMENT

SMCS-1408 **i02293279**

NOTE	PART NUMBER	QTY	PART NAME 1 2 3 4 5 6 (PRODUCT LEVEL)	SEE PAGE
M	**5C-9553**	1	BOLT (M6X1X16-MM)	
	225-7961	1	HARNESS AS-WORK TOOL (LIFT ARM)	
	156-1460	1	RECEPTACLE (8-PIN)	
	1S-9593	1	STRAP-CABLE	
	156-1458	1	COVER	
	225-8012	1	HARNESS AS-WORK TOOL (PLATFORM)	
	155-2255	1	KIT-CONNECTING PLUG (12-PIN)	
	155-2265	1	KIT-CONNECTING PLUG (8-PIN)	
			(EACH INCLUDES PLUG AS, WEDGE, & INTERFACE SEAL)	
	196-2381	1	KIT-CONNECTING PLUG (2-PIN)	
			(INCLUDES PLUG AS, LOCK, & TERMINAL AS)	
	177-9645	1	KIT-RECEPTACLE (2-PIN)	
			(INCLUDES RECEPTACLE AS & WEDGE)	
	159-9496	1	LOCKWASHER	
	159-9495	1	NUT (1-1/2-18-THD)	
	221-3881	1	PANEL GP-FUSE	
	113-8490	4	FUSE (10-AMPERE)	
	113-9491	2	MUFFLER	
	146-9439	5	RELAY AS (12-VOLT)	
	215-5564	2	SUPPRESSOR-ARC	
	115-1615	1	RELAY AS (12-VOLT)	
	146-9439	1	RELAY AS (12-VOLT)	
M	**095-0733**	2	SCREW-MACHINE (M4X0.7X40-MM)	
	3S-2093	9	STRAP-CABLE	
	142-8633	1	SWITCH AS-ROCKER (ELECTRIC POWER, WORK TOOL)	
	4B-4863	2	WASHER (4.7X11X1.2-MM THK)	
	8T-4205	1	WASHER-HARD (7.2X14.5X2-MM THK)	
	3E-3389	1	WEDGE-RECEPTACLE LOCK	

M-METRIC PART

<END>

234-4328 LAMP GP-FLOOD

S/N: MJH10575-UP
12-VOLT
PART OF 218-6425 LIGHTING GP-FLOOD

SMCS-1434 **i02532634**

NOTE	REF NO	GRAPHIC REF	PART NUMBER	QTY	PART NAME 1 2 3 4 5 6 (PRODUCT LEVEL)	SEE PAGE
	1	1	**9W-0607**	1	LAMP (12-VOLT, 55-WATT)	
M	2	1	**8T-0389**	1	LOCKNUT (M10X1.5-THD)	
	3	1	**9X-4244**	2	SCREW-SPECIAL	
	4	1	**202-6614**	1	LENS AS	
	5	1	**234-7730**	1	BODY AS	
	6	1	**164-7556**	1	BRACKET (LAMP RETAINING)	
	7	1	**234-7731**	1	BRACKET AS	
	8	1	**8T-4121**	1	WASHER-HARD (11X21X2.5-MM THK)	

M-METRIC PART

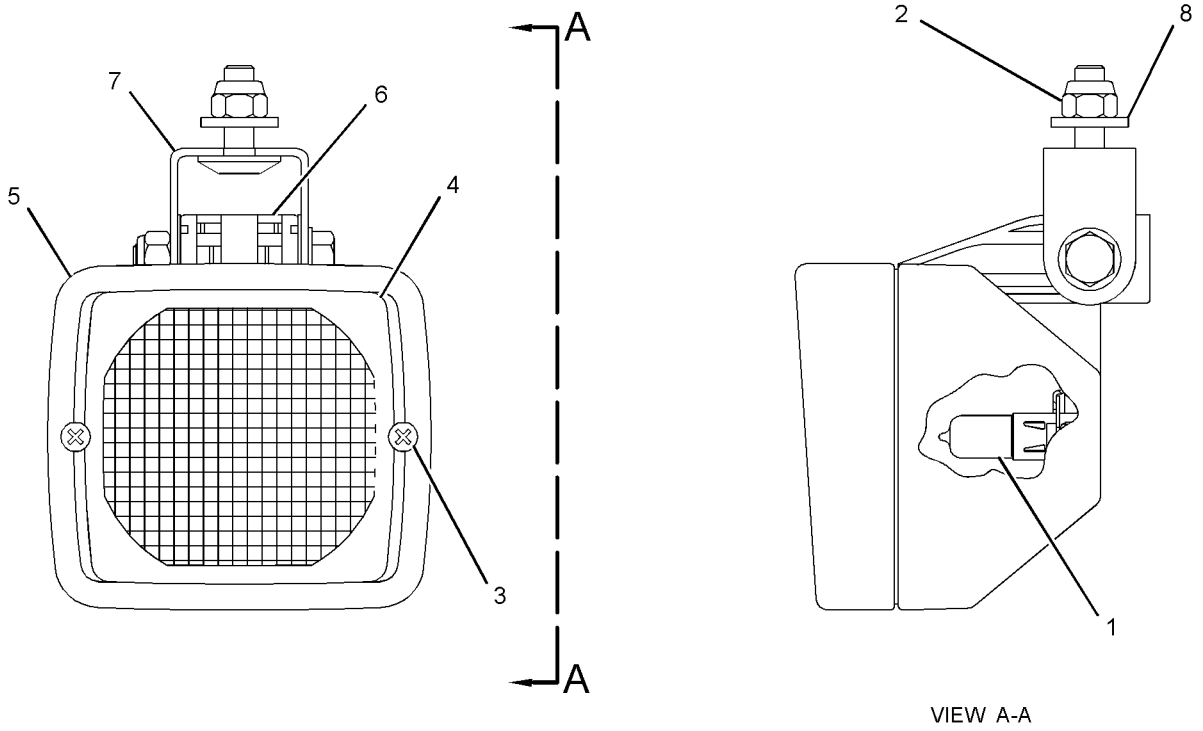

GRAPHIC #1 **<END>** g01283627

234-7727 LAMP GP-FLOOD–12-VOLT, VERTICAL MOUNT

S/N: MJH10575-UP

PART OF 216-4746 LIGHTING GP-FLOOD

ALSO AN ATTACHMENT

SMCS-1434 **i01957412**

NOTE	REF NO	GRAPHIC REF	PART NUMBER	QTY	PART NAME 1 2 3 4 5 6 (PRODUCT LEVEL)	SEE PAGE
	1	1	**9W-0607**	1	LAMP (12-VOLT, 55-WATT)	
	2	1	**9X-4244**	2	SCREW-SPECIAL	
	3	1	**202-6611**	1	LENS AS	
	4	1	**234-7758**	1	BODY AS	
	5	1	**164-7556**	1	BRACKET (LAMP RETAINING)	
	6	1	**234-7756**	1	BRACKET-MOUNTING	

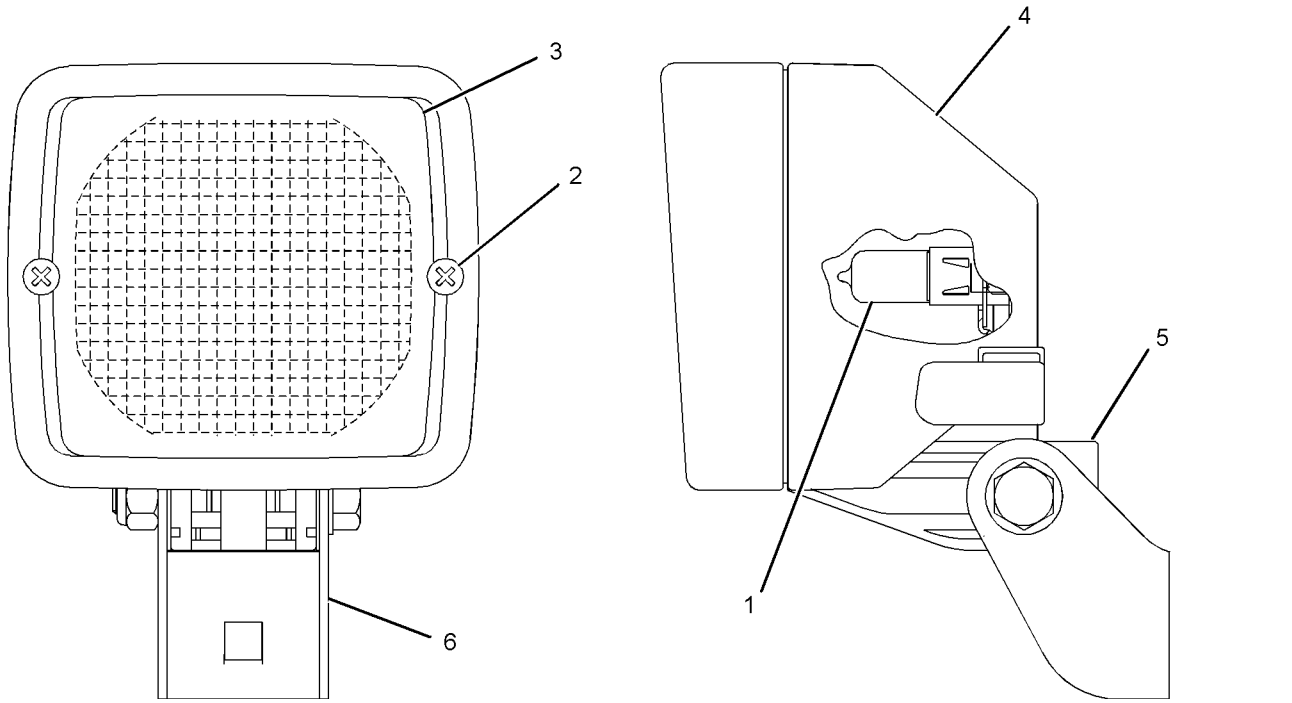

GRAPHIC #1 **<END>** g01017848

3E-7584 LAMP GP-HEAD & SIGNAL

S/N: MJH10575-UP

PART OF 277-0650, 277-0652 KIT-ROADING CONVERSION, 216-4715 LIGHTING GP-ROADING AN ATTACHMENT

SMCS-1429, 1430 **i02577854**

NOTE	REF NO	GRAPHIC REF	PART NUMBER	QTY	PART NAME 1 2 3 4 5 6 (PRODUCT LEVEL)	SEE PAGE
	1	1	**9X-4244**	4	SCREW-SPECIAL	
	2	1	**100-3251**	2	SCREW-LENS	
	3	1	**9X-9865**	1	SEAL	
	4	1	**100-3248**	1	LENS AS (HEADLIGHT)	
	5	1	**9W-3324**	1	LAMP-HEAD	
	6	1	**100-3247**	1	BODY AS-LAMP	
M	7	1	**8T-5005**	1	BOLT (M10X1.5X70-MM)	
M	8	1	**8T-0389**	1	LOCKNUT (M10X1.15-THD)	
	9	1	**100-3253**	1	SPACER (SPHERICAL)	
	10	1	**100-3254**	1	SPACER (SPHERICAL)	
	11	1	**100-3255**	1	WASHER (SPHERICAL)	
J	12	1	**102-8805**	1	KIT-RECEPTACLE (6-PIN)	
					(INCLUDES RECEPTACLE AS & WEDGE)	
	13	1	**8T-8729**	5	PIN-CONNECTOR	
J	14	1	**3E-3383**	1	WEDGE-RECEPTACLE LOCK (6-PIN)	
	15	1	**8T-8737**	1	PLUG-SEAL	
	16	1	**100-3246**	1	LAMP (12-VOLT, 4-WATT)	
	17	1	**5G-3244**	1	LAMP (12-VOLT, 21-WATT)	
	18	1	**100-3250**	1	LENS (AMBER) (FRONT TURN)	

J-KIT MARKED J INCLUDES PART MARKED J
M-METRIC PART

3E-7584 LAMP GP-HEAD & SIGNAL *(contd.)* **i02577854**

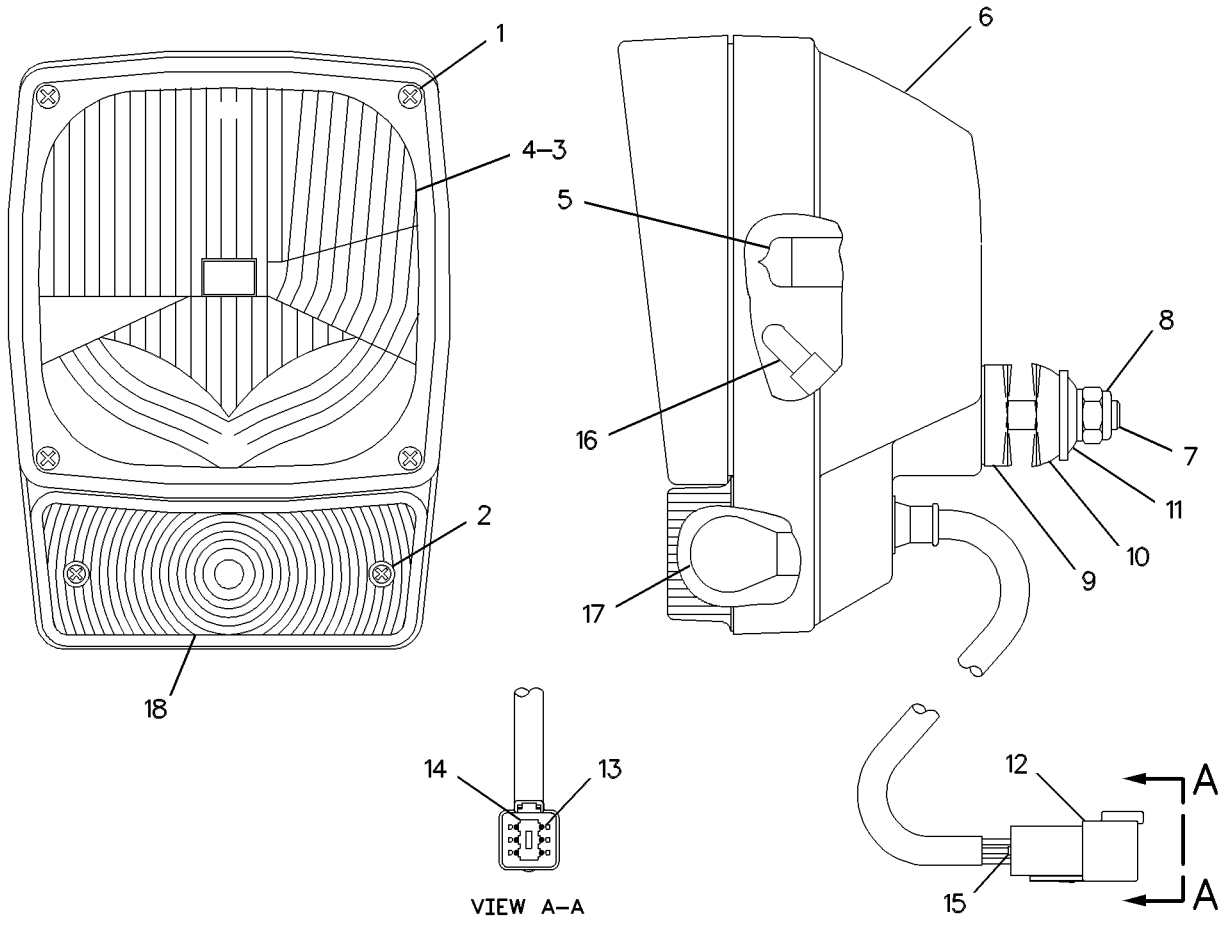

GRAPHIC #1 **<END>** g00460921

142-7503 LAMP GP-STOP & TAIL

S/N: MJH10575-UP
12-VOLT
PART OF 142-8652 LIGHTING GP-STOP & TAIL
AN ATTACHMENT

SMCS-1432 **i02577856**

NOTE	REF NO	GRAPHIC REF	PART NUMBER	QTY	PART NAME 1 2 3 4 5 6 (PRODUCT LEVEL)	SEE PAGE
	1	1	**084-4348**	1	LAMP (12-VOLT, 5-WATT)	
	2	1	**102-8804**	1	KIT-RECEPTACLE (4-PIN)	
					(INCLUDES RECEPTACLE AS & WEDGE)	
	3	1	**165-4895**	1	LENS	
M	4	1	**5C-2890**	2	NUT (M6X1-THD)	
	5	1	**8T-0087**	2	LOCKWASHER	

M-METRIC PART

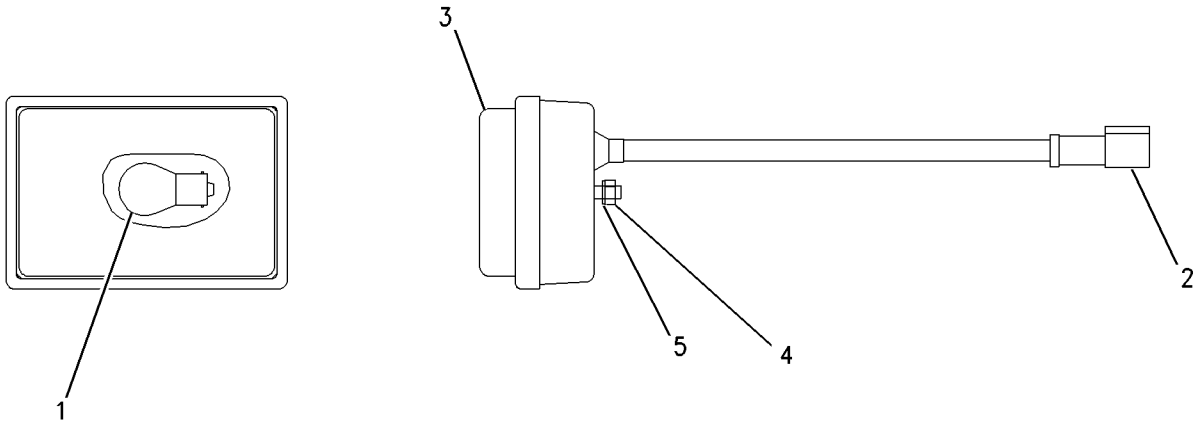

GRAPHIC #1 **<END>** g00669668

142-8634 LAMP GP-STOP & TAIL

S/N: MJH10575-UP
12-VOLT
PART OF 277-0650, 277-0652 KIT-ROADING CONVERSION, 216-4715 LIGHTING GP-ROADING AN ATTACHMENT

SMCS-1432 **i02570776**

NOTE	REF NO	GRAPHIC REF	PART NUMBER	QTY	PART NAME 1 2 3 4 5 6 (PRODUCT LEVEL)	SEE PAGE
	1	1	**9W-3326**	1	LAMP (12-VOLT, 21-WATT)	
	2	1	**084-4348**	1	LAMP (12-VOLT, 5-WATT)	
	3	1	**102-8804**	1	KIT-RECEPTACLE (4-PIN)	
					(INCLUDES RECEPTACLE AS & WEDGE)	
	4	1	**146-2438**	1	LENS-LAMP (REAR, LH)	
M	5	1	**5C-2890**	2	NUT (M6X1-THD)	
	6	1	**1H-3244**	2	LOCKWASHER	
	7	1	**186-3735**	4	PIN-CONNECTOR (16-GA TO 18-GA)	

M-METRIC PART

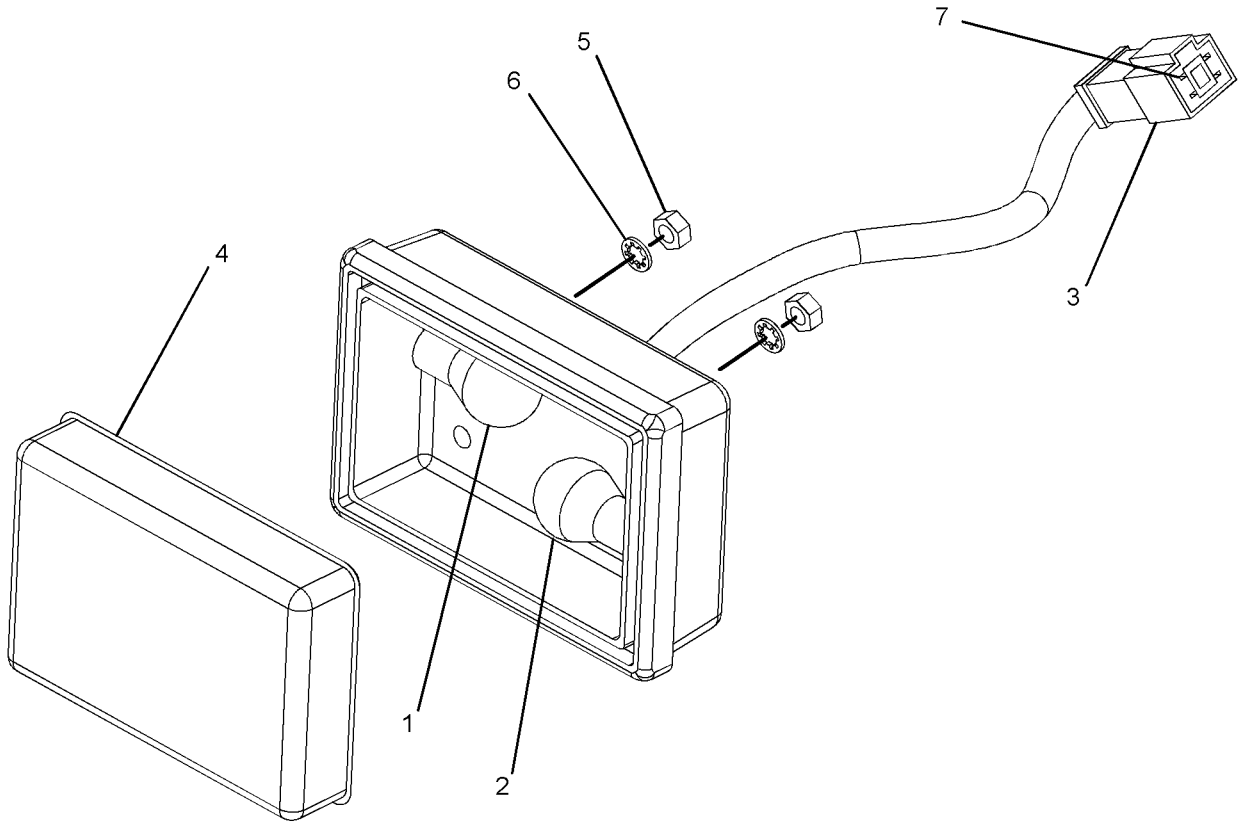

GRAPHIC #1 **<END>** g01212497

128-6985 LAMP GP-WARNING BEACON–12-VOLT, AMBER

S/N: MJH10575-UP

PART OF 257-5727 CONVERSION AR-ROADING, 234-0793, 278-1293 CONVERSION GP-ROADING, 142-8653 LIGHTING GP-WARNING BEACON AN ATTACHMENT

SMCS-1431 **i02712963**

NOTE	REF NO	GRAPHIC REF	PART NUMBER	QTY	PART NAME 1 2 3 4 5 6 (PRODUCT LEVEL)	SEE PAGE
	1	1	**9X-8121**	1	LENS (AMBER, WARNING BEACON)	
	2	1	**9X-8118**	1	LAMP (12-VOLT, 55-WATT)	
	3	1	**9X-8139**	1	BELT-DRIVE (WARNING BEACON)	
	4	1	**9R-7958**	1	CORD AS	
	5	1	**9R-7942**	1	PLUG AS	

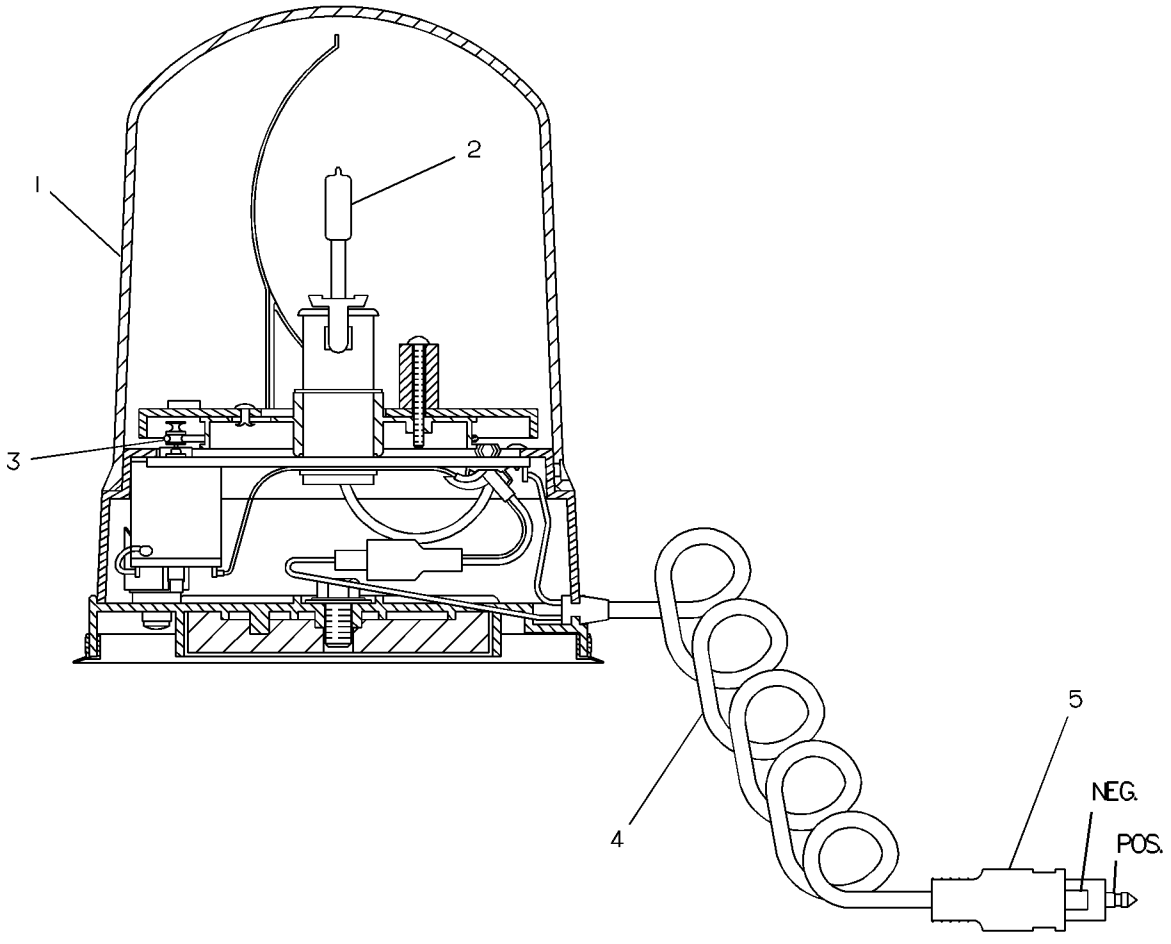

GRAPHIC #1 **<END>** g00130921

216-4746 LIGHTING GP-FLOOD–REAR

S/N: MJH10575-UP
PART OF 295-7226, 295-7227 COMMON AR
ALSO AN ATTACHMENT

SMCS-1434 **i02262618**

NOTE	REF NO	GRAPHIC REF	PART NUMBER	QTY	PART NAME 1 2 3 4 5 6 (PRODUCT LEVEL)	SEE PAGE
	1	1	**142-9326**	1	SWITCH AS-ROCKER (REAR WORK LAMPS)	
		1	**111-7899**	1	GASKET	
Y	2	1	**234-7727**	2	LAMP GP-FLOOD (12-VOLT) (REAR)	152
M	3	1	**195-0937**	2	INSERT-THREADED (M8X1.25-THD)	
	4	1	**5P-8439**	2	GROMMET	
M	5	1	**6V-2317**	2	BOLT (M8X1.25X30-MM)	
	6	1	**8T-4224**	4	WASHER-HARD (8.8X16X2-MM THK)	

M-METRIC PART
Y-SEPARATE ILLUSTRATION

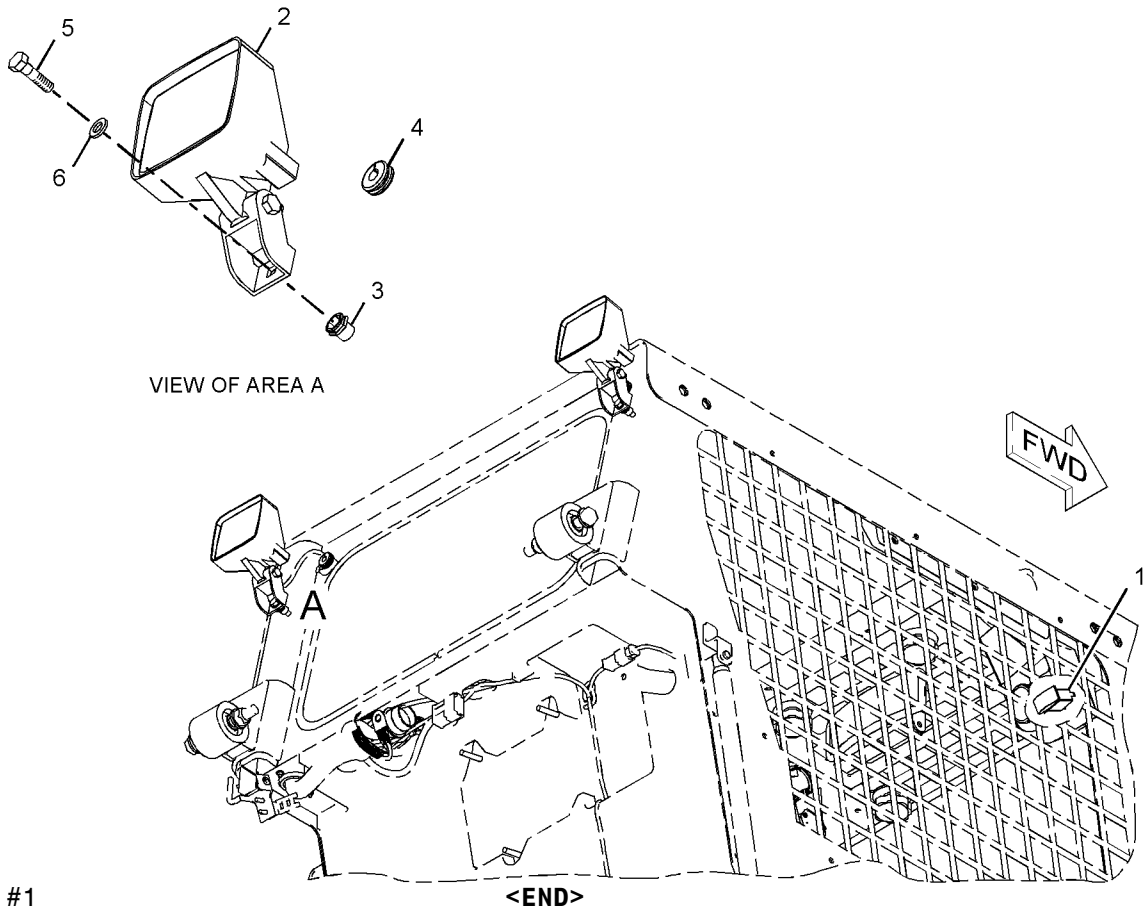

GRAPHIC #1 **<END>** g01136313

218-6425 LIGHTING GP-FLOOD–FRONT

S/N: MJH10575-UP

PART OF 218-6350 CAB AR-ENCLOSED ROPS

SMCS-1434 **i02889665**

NOTE	REF NO	GRAPHIC REF	PART NUMBER	QTY	PART NAME 1 2 3 4 5 6 (PRODUCT LEVEL)	SEE PAGE
Y	1		**234-4328**	2	LAMP GP-FLOOD (12-VOLT) (FRONT)	151
	2		**5P-8439**	2	GROMMET	
	3		**8T-4121**	4	WASHER-HARD (11X21X2.5-MM THK)	

Y-SEPARATE ILLUSTRATION

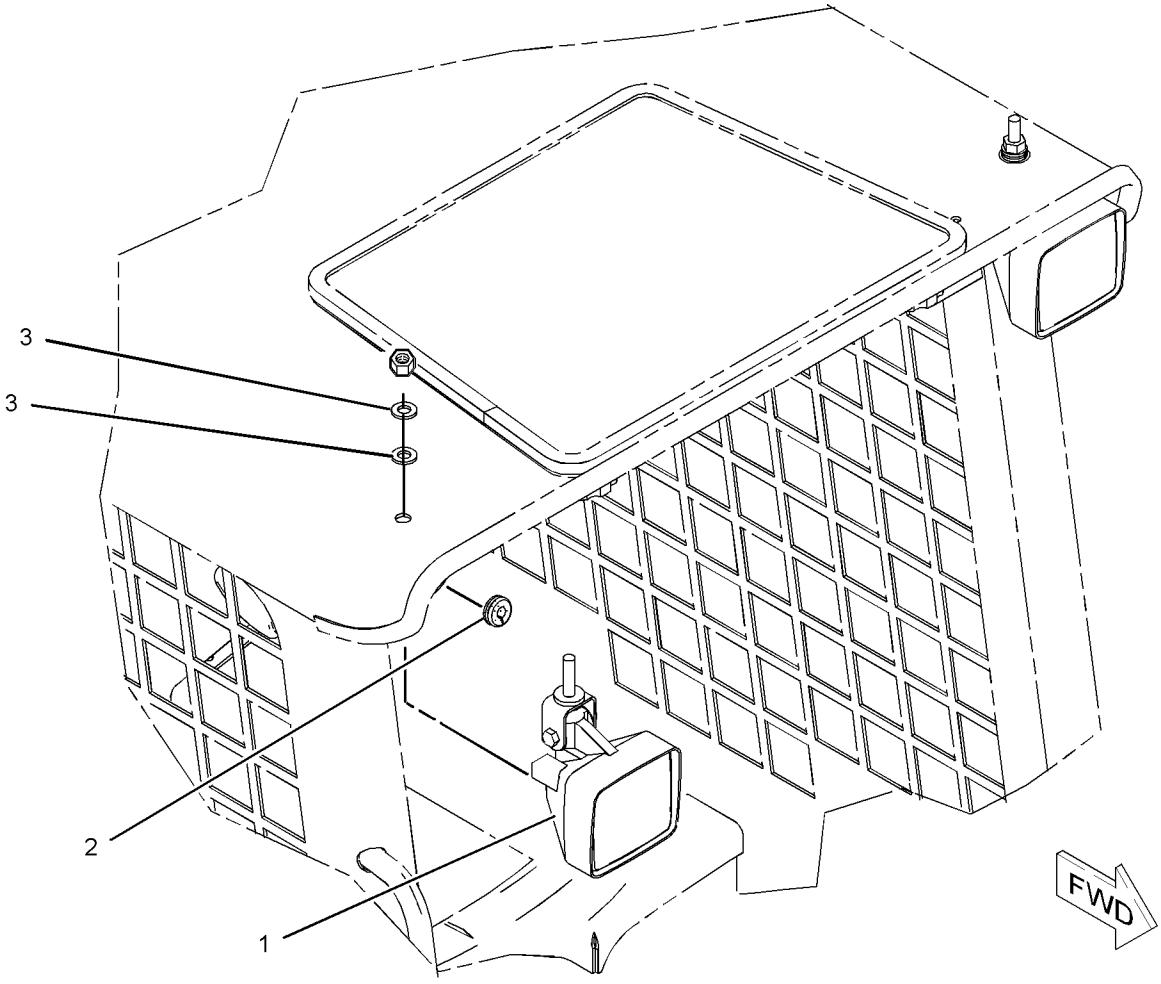

GRAPHIC #1 **<END>** g01040888

ELECTRICAL AND STARTING SYSTEM

216-4715 LIGHTING GP-ROADING

S/N: MJH10575-UP

PART OF 261-6187, 278-1212, 278-1224, 278-5408, 278-5441, 295-7038, 295-7149, 295-7158, 295-7162, 295-7167 CONVERSION AR-MACHINE, 233-5672, 233-5673, 233-5675, 233-5676, 257-5716, 257-5717, 295-7043 CONVERSION AR-ROADING AN ATTACHMENT

SMCS-1429 **i02771658**

NOTE	REF NO	GRAPHIC REF	PART NUMBER	QTY	PART NAME 1 2 3 4 5 6 (PRODUCT LEVEL)	SEE PAGE
Y	1	1	**3E-7584**	2	LAMP GP-HEAD & SIGNAL	153
	2	1	**7D-5473**	2	BOLT-SOCKET HEAD (8-32X0.75-IN)	
	3	1	**8T-1887**	2	CLIP (SLOT)	
	4	1	**8T-1888**	2	CLIP (TAB)	
	5	1	**8W-8909**	2	SLEEVE	
	6	1	**9R-1499**	2	REFLECTOR	
Y	7	1	**142-8634**	2	LAMP GP-STOP & TAIL	156
	8	1	**147-1773**	1	CIRCUIT BREAKER AS (30-AMPERE) (LIGHTING)	
		1	**6V-8378**	2	NUT (10-32-THD)	
		1	**8F-1434**	2	LOCKWASHER	
		1	**8T-0328**	2	WASHER-HARD (5.5X10X1-MM THK)	
	9	1	**216-4727**	1	HARNESS AS-REAR LIGHTING	
		1	**102-8805**	1	KIT-RECEPTACLE (6-PIN)	
		1	**102-8806**	1	KIT-RECEPTACLE (8-PIN)	
					(EACH KIT INCLUDES RECEPTACLE AS & WEDGE)	
		1	**155-2265**	1	KIT-CONNECTING PLUG (8-PIN)	
					(INCLUDES PLUG AS, WEDGE & INTERFACE SEAL)	
	10	1	**225-7962**	1	SWITCH GP-ROCKER (ROADING)	
		1	**226-5900**	1	SWITCH AS-ROCKER (TURN SIGNAL)	
		1	**142-9329**	1	SWITCH AS-ROCKER (ROADING LIGHTS)	
		1	**142-9331**	1	SWITCH AS-ROCKER (HAZARD WARNING LIGHTS)	
					(EACH SWITCH AS-ROCKER INCLUDES)	
		1	**111-7899**	1	GASKET	
	11	1	**225-7990**	1	HARNESS AS-FRONT LIGHTING	
		1	**155-2274**	1	KIT-CONNECTING PLUG (6-PIN)	
					(INCLUDES PLUG AS, WEDGE & INTERFACE SEAL)	
	12	1	**225-8013**	1	WIRE AS	
	13	1	**242-9000**	1	FLASHER AS (12-VOLT)	
	14	1	**195-0935**	1	INSERT-THREADED (M6X1-THD)	
	15	1	**206-1346**	2	STRAP-CABLE	
	16	1	**3S-2093**	18	STRAP-CABLE	
	17	1	**4B-4863**	2	WASHER (4.7X11X1.2-MM THK)	
	18	1	**4P-7581**	1	CLIP	
M	19	1	**8T-4201**	1	BOLT-LOCKING (M10X1.5X20-MM)	
M	20	1	**9X-2042**	1	SCREW-TRUSS HEAD (M6X1X12-MM)	

M-METRIC PART
Y-SEPARATE ILLUSTRATION

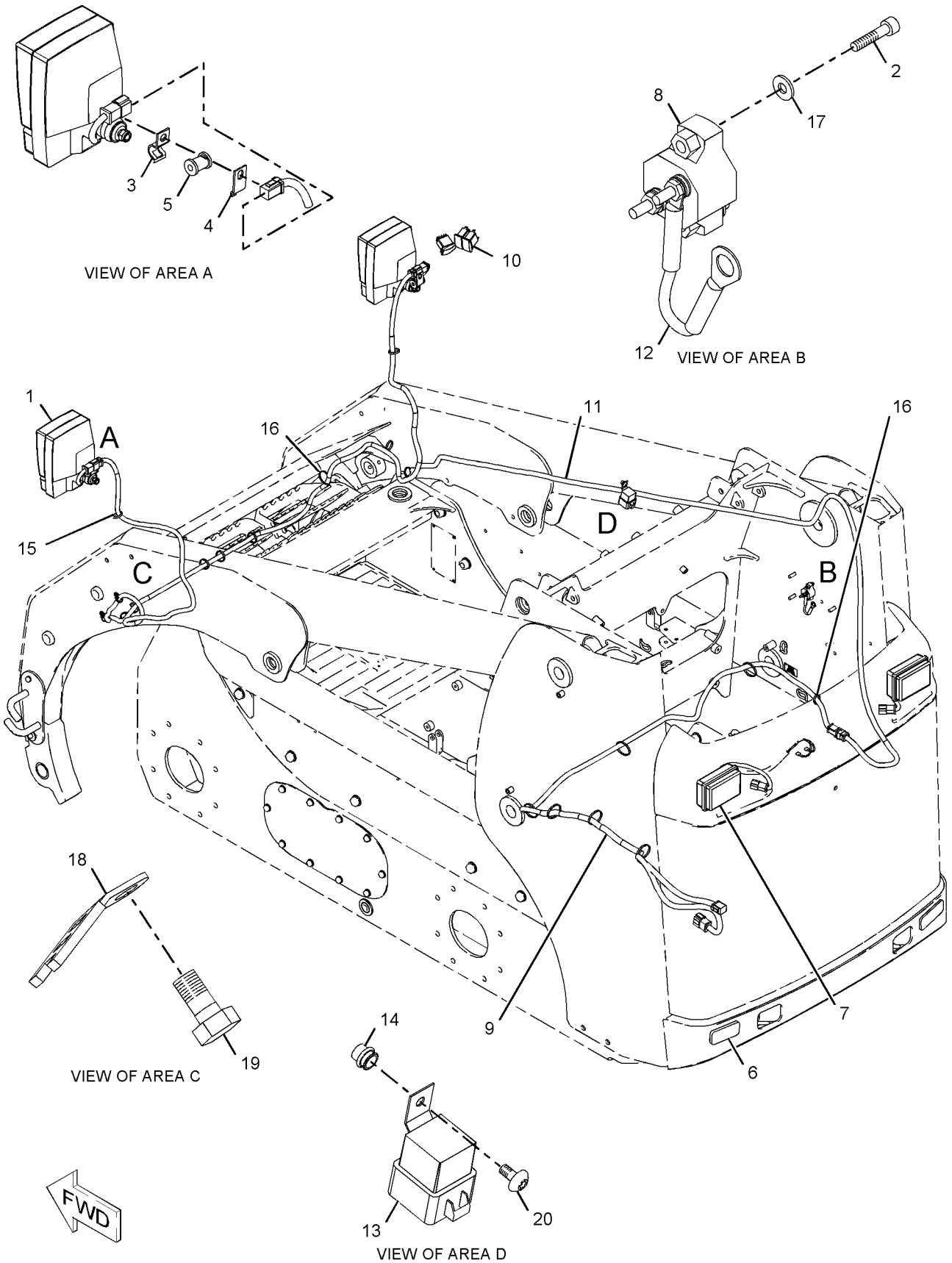

GRAPHIC #1

<END>

g01029883

142-8652 LIGHTING GP-STOP & TAIL

S/N: MJH10575-UP

PART OF 261-6157, 261-6160, 261-6197, 278-1220, 295-7049, 295-7059, 295-7066 CONVERSION AR-MACHINE, 233-5670 CONVERSION AR-NON-ROADING, 233-5671, 233-5674 CONVERSION AR-ROADING AN ATTACHMENT

SMCS-1432 **i02757097**

NOTE	REF NO	GRAPHIC REF	PART NUMBER	QTY	PART NAME 1 2 3 4 5 6 (PRODUCT LEVEL)	SEE PAGE
	1	1	**3S-2093**	2	STRAP-CABLE	
	2	1	**9R-1499**	2	REFLECTOR	
Y	3	1	**142-7503**	2	LAMP GP-STOP & TAIL (12-VOLT)	155
	4	1	**4P-7581**	2	CLIP	
	5	1	**8T-4205**	4	WASHER-HARD (7.2X14.5X2-MM THK)	

Y-SEPARATE ILLUSTRATION

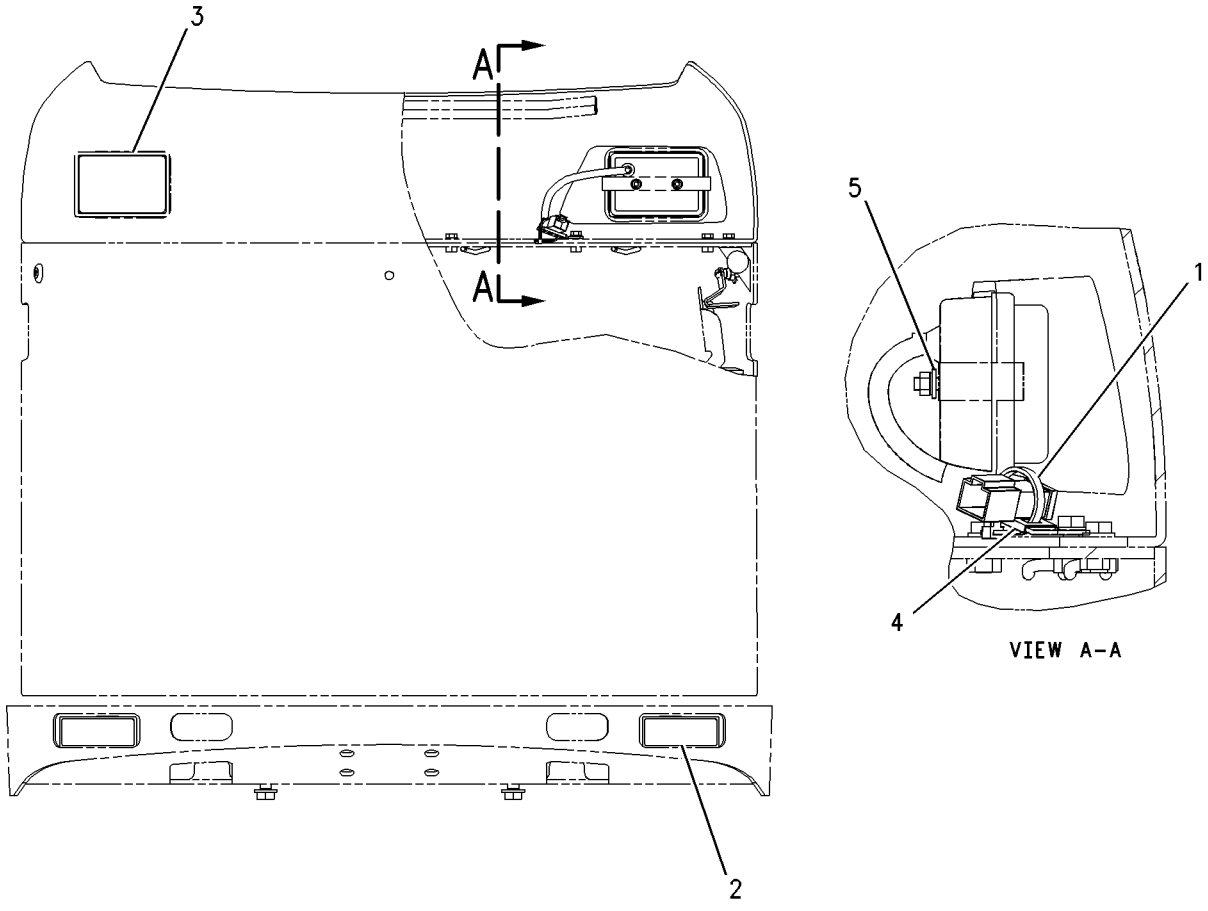

GRAPHIC #1 **<END>** g00771277

142-8653 LIGHTING GP-WARNING BEACON–12-VOLT

S/N: MJH10575-UP
AN ATTACHMENT

SMCS-1431 **i02262621**

NOTE	REF NO	GRAPHIC REF	PART NUMBER	QTY	PART NAME 1 2 3 4 5 6 (PRODUCT LEVEL)	SEE PAGE
Y	1	1	**128-6985**	1	LAMP GP-WARNING BEACON (12-VOLT, AMBER)	157
	2	1	**142-9327**	1	SWITCH AS-ROCKER (WARNING BEACON)	
		1	**111-7899**	1	GASKET	

Y-SEPARATE ILLUSTRATION

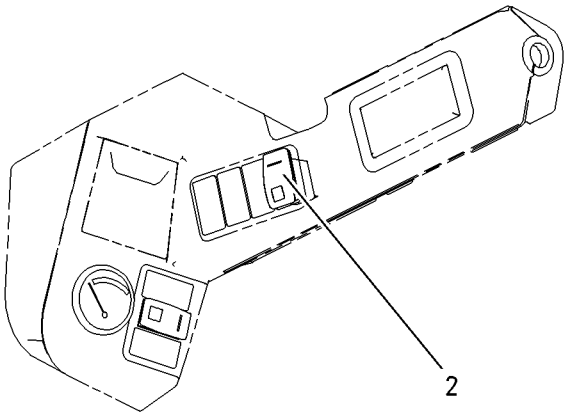

RH CONTROL PANEL

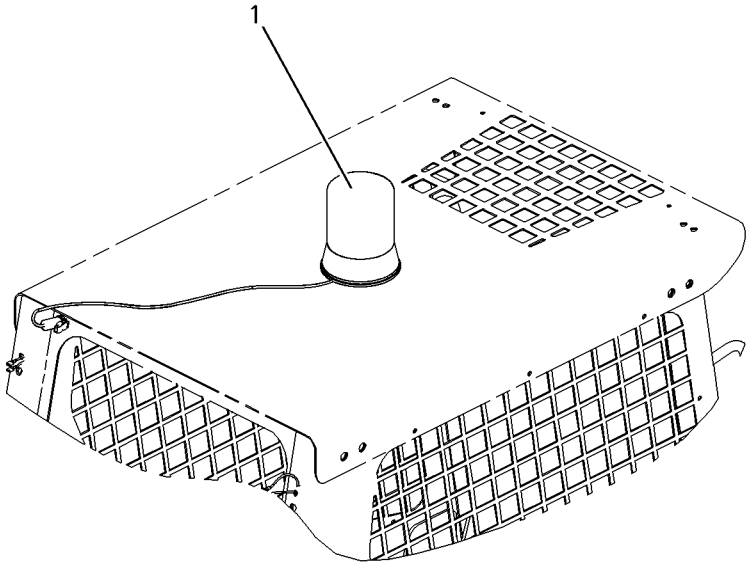

GRAPHIC #1 **<END>** g00867567

247-0323 SENSOR GP-TEMP & PRESS

S/N: CSD1-11322
PART OF 300-5206 ENGINE AR-PRIMARY
AN ATTACHMENT

SMCS-1906, 1924 **i02707018**

NOTE	REF NO	GRAPHIC REF	PART NUMBER	QTY	PART NAME 1 2 3 4 5 6 (PRODUCT LEVEL)	SEE PAGE
	1	1	**308-1222**	1	ADAPTER	
	2	1	**291-1265**	1	SWITCH-PRESSURE (ENGINE OIL)	
	3	1	**231-2999**	1	SWITCH-TEMPERATURE (ENGINE COOLANT)	
	4	1	**153-5936**	2	WASHER	

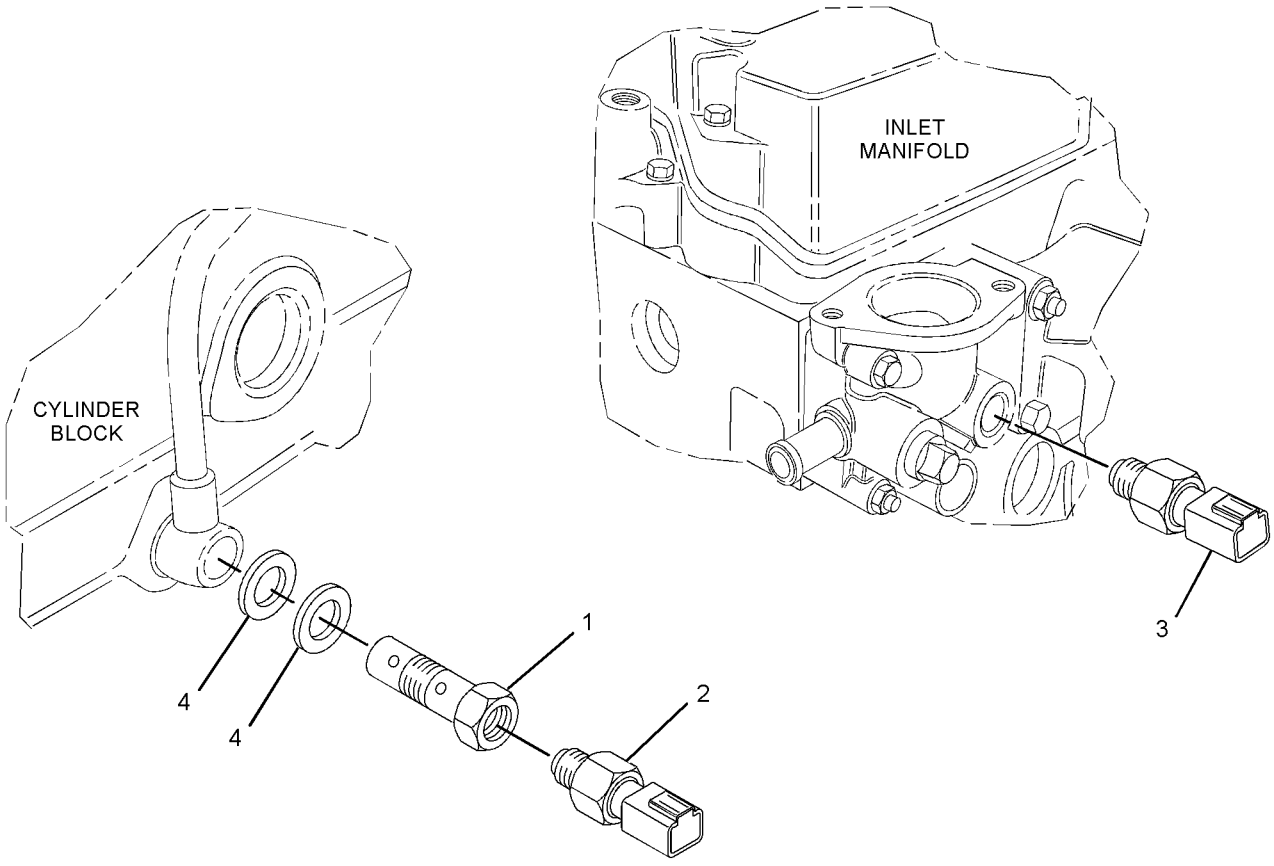

GRAPHIC #1 **<END>** g01369034

163-3361 STARTING MOTOR GP-ELECTRIC

S/N: CSD1-11322; CYP1-UP
12-VOLT
PART OF 307-8201, 308-2293 STARTING MOTOR GP-ELECTRIC
AN ATTACHMENT

SMCS-1453 **i02385155**

NOTE	REF NO	GRAPHIC REF	PART NUMBER	QTY	PART NAME 1 2 3 4 5 6 (PRODUCT LEVEL)	SEE PAGE
	1	1	**242-7070**	1	BUSHING	
	2	1	**242-7071**	1	SOLENOID (STARTING MOTOR)	
	3	1	**242-7073**	1	BUSHING	
	4	1	**242-7074**	1	DRIVE-MOTOR	
	5	1	**242-7075**	1	HOLDER	
	6	1	**242-7076**	1	BUSHING	
	7	1	**242-7077**	1	KIT-STARTING MOTOR	
	8	1	**242-7078**	1	ARMATURE	

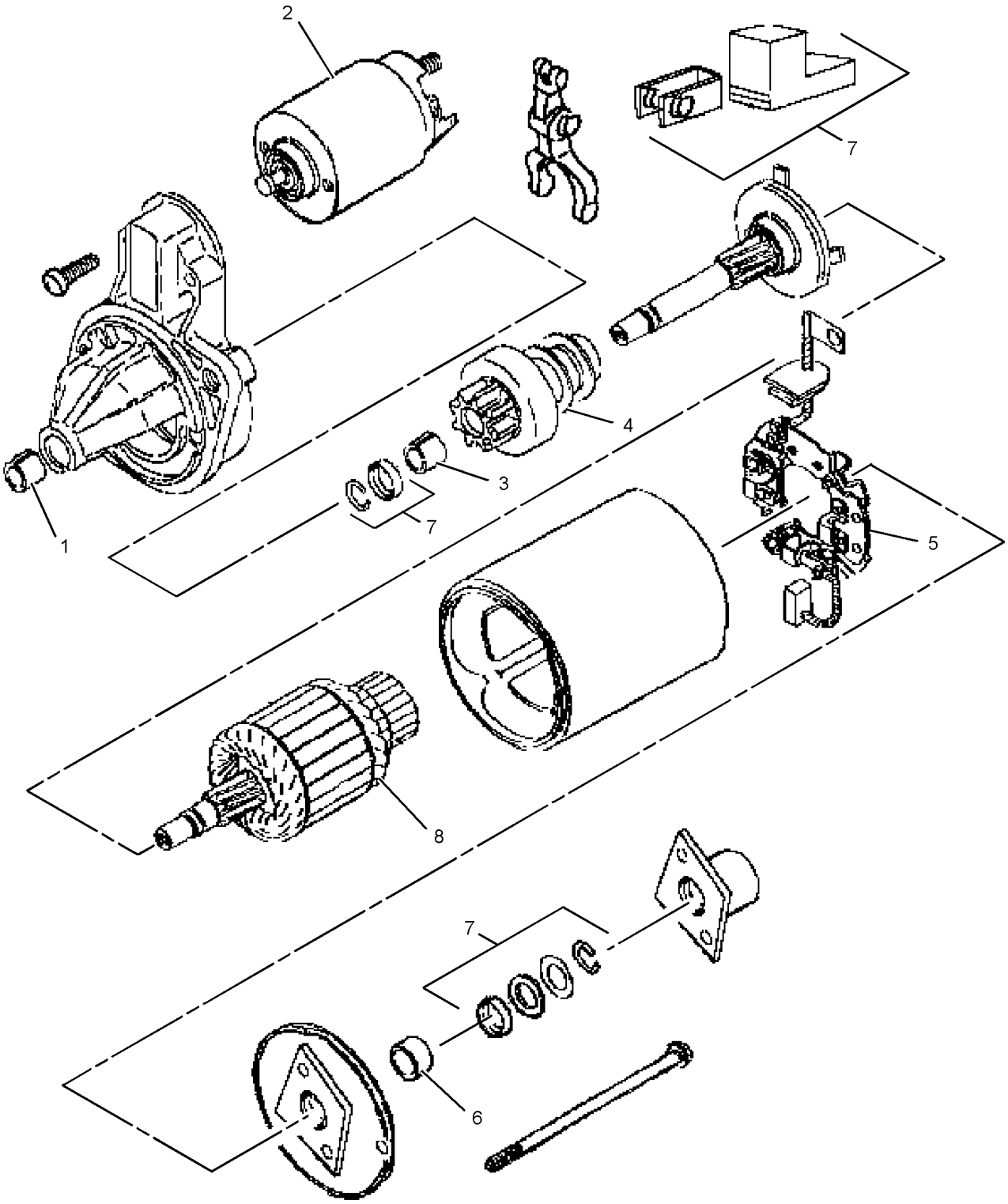

GRAPHIC #1 **<END>** g01158306

307-8201 STARTING MOTOR GP-ELECTRIC

S/N: CSD1-11322
PART OF 300-5206 ENGINE AR-PRIMARY
AN ATTACHMENT

SMCS-1453 **i02702403**

NOTE	REF NO	GRAPHIC REF	PART NUMBER	QTY	PART NAME 1 2 3 4 5 6 (PRODUCT LEVEL)	SEE PAGE
	1	1	**154-1399**	2	WASHER	
	2	1	**197-8004**	2	BOLT	
	3	1	**154-2403**	2	WASHER	
Y	4	1	**163-3361**	1	STARTING MOTOR GP-ELECTRIC	165

Y-SEPARATE ILLUSTRATION

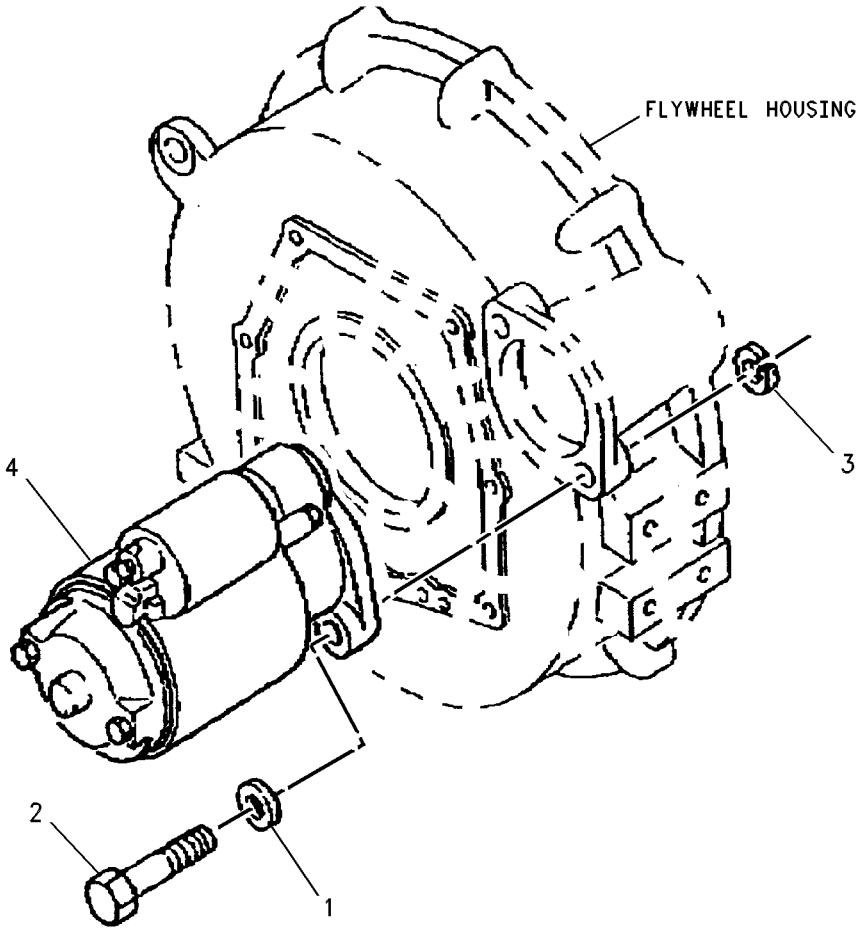

GRAPHIC #1 **<END>** g00582487

ELECTRICAL AND STARTING SYSTEM

308-2293 STARTING MOTOR GP-ELECTRIC

S/N: CYP1-UP
PART OF 292-5719 ENGINE AR-PRIMARY
AN ATTACHMENT

SMCS-1453 **i02743439**

NOTE	REF NO	GRAPHIC REF	PART NUMBER	QTY	PART NAME 1 2 3 4 5 6 (PRODUCT LEVEL)	SEE PAGE
Y	1	1	**163-3361**	1	STARTING MOTOR GP-ELECTRIC	165

Y-SEPARATE ILLUSTRATION

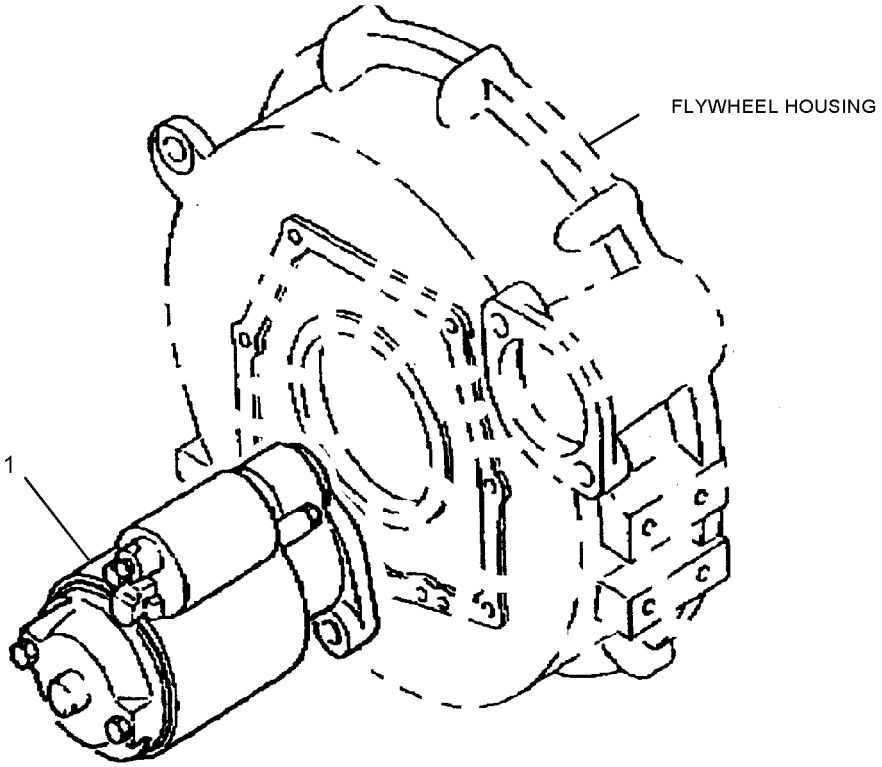

GRAPHIC #1 **<END>** g01140591

184-1564 SWITCH GP-PRESSURE–BRAKE LIGHT

S/N: MJH10575-UP
PART OF 257-5727 CONVERSION AR-ROADING, 277-0650, 277-0652 KIT-ROADING CONVERSION, 225-7964 WIRING GP-REAR LIGHTING AN ATTACHMENT

SMCS-1435, 7400 **i02570793**

NOTE	REF NO	GRAPHIC REF	PART NUMBER	QTY	PART NAME 1 2 3 4 5 6 (PRODUCT LEVEL)	SEE PAGE
	1	1	**9X-1813**		SLEEVE (19-CM)	
	2	1	**102-8802**	1	KIT-RECEPTACLE (2-PIN)	
					(INCLUDES RECECPTACLE AS & WEDGE)	
	3	1	**8T-8729**	2	PIN-CONNECTOR	
	4	1	**3E-3365**	1	WEDGE-RECEPTACLE LOCK (2-PIN)	
	5	1	**3J-1907**	1	SEAL-O-RING	

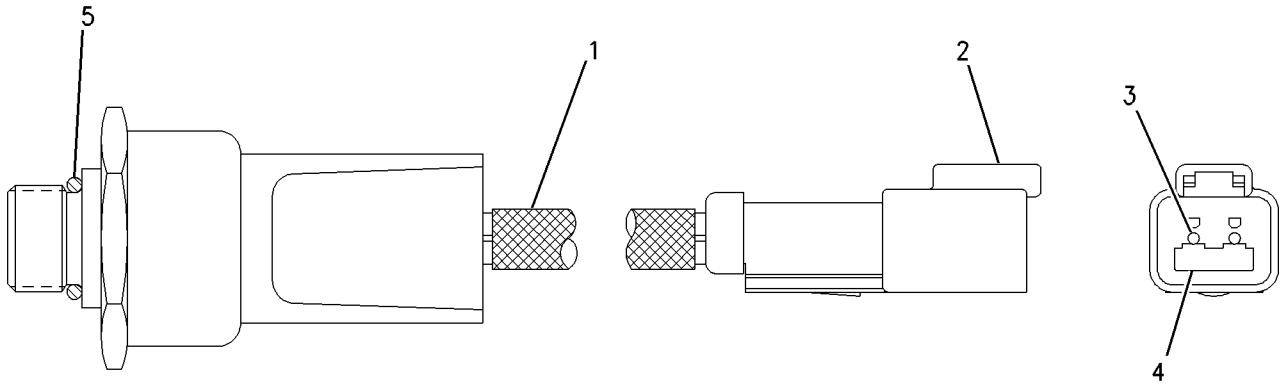

GRAPHIC #1 **<END>** g00788762

316-6890 SWITCH GP-PRESSURE

S/N: CYP1-UP
PART OF 292-5719 ENGINE AR-PRIMARY
AN ATTACHMENT

SMCS-1435, 7400 **i02862678**

NOTE	REF NO	GRAPHIC REF	PART NUMBER	QTY	PART NAME 1 2 3 4 5 6 (PRODUCT LEVEL)	SEE PAGE
	1	1	**153-5936**	2	WASHER	
	2	1	**183-1165**	1	PLUG	
	3	1	**291-1265**	1	SWITCH-PRESSURE (ENGINE OIL)	
	4	1	**308-1222**	1	ADAPTER	

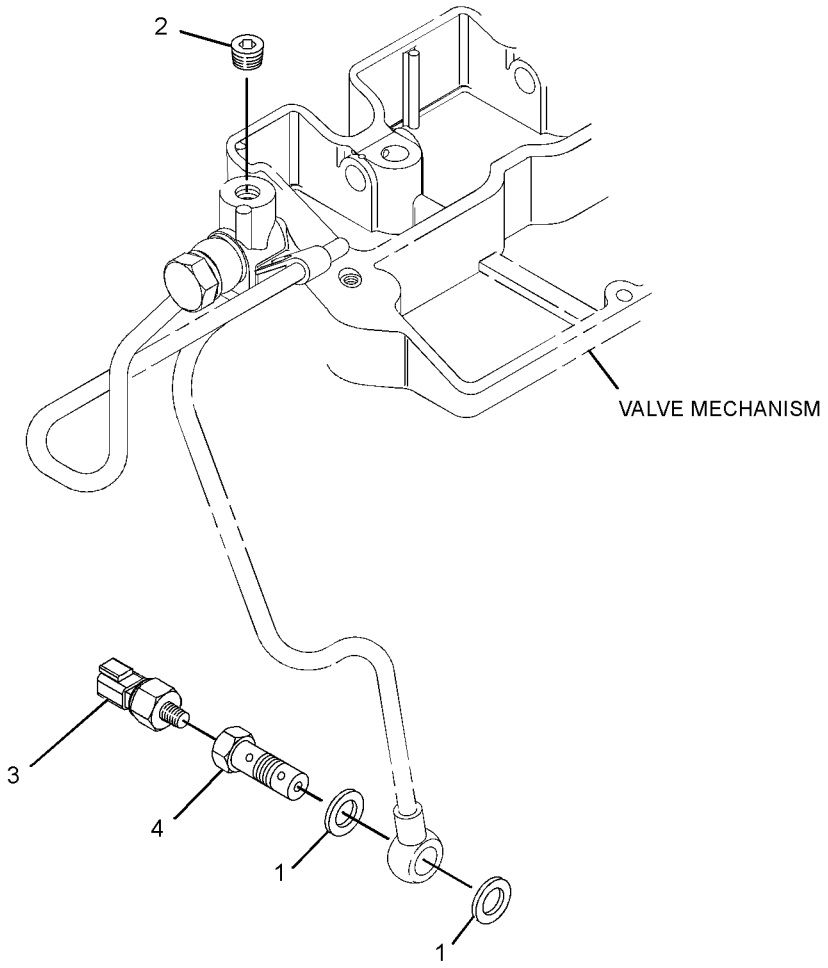

GRAPHIC #1 **<END>** g01439331

308-2317 SWITCH GP-TEMPERATURE–COOLANT

S/N: CYP1-UP
PART OF 292-5719 ENGINE AR-PRIMARY
AN ATTACHMENT

SMCS-1435, 7400 **i02752315**

NOTE	REF NO	GRAPHIC REF	PART NUMBER	QTY	PART NAME 1 2 3 4 5 6 (PRODUCT LEVEL)	SEE PAGE
	1	1	**231-2999**	1	SWITCH-TEMPERATURE (ENGINE COOLANT)	

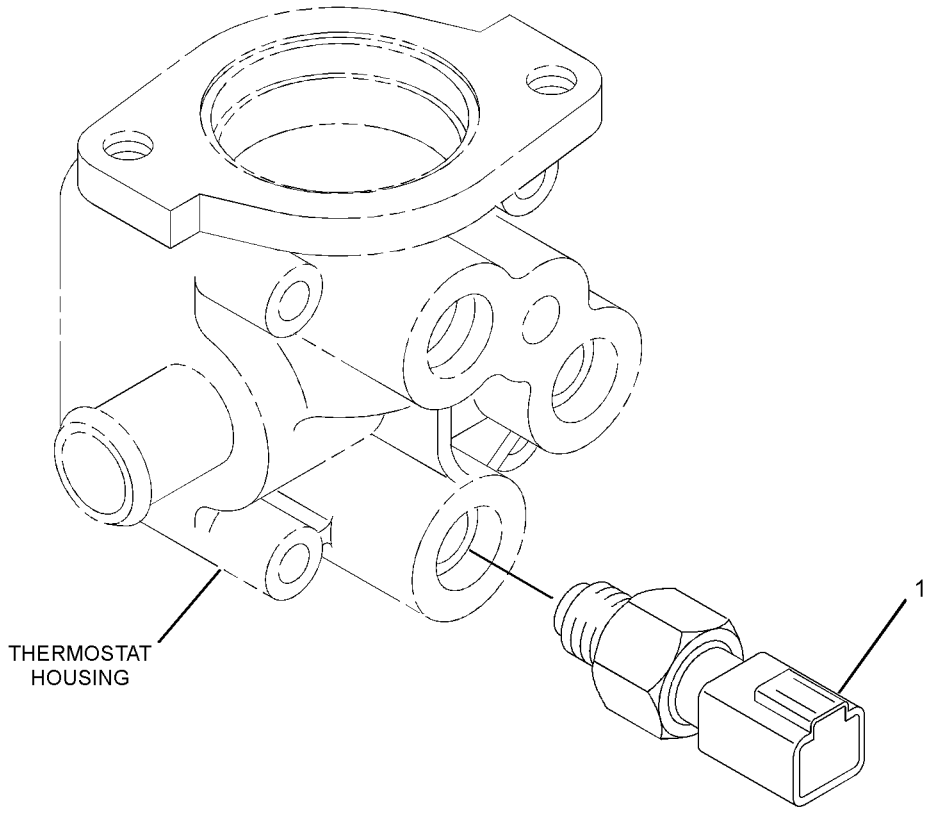

GRAPHIC #1 **<END>** g01416429

225-7969 WARNING GP-BACKUP

S/N: MJH10575-UP
PART OF 295-7226, 295-7227 COMMON AR
CANNOT BE USED WITH 142-8714—PAGE 377
ALSO AN ATTACHMENT

SMCS-7406 **i02359135**

NOTE	REF NO	GRAPHIC REF	PART NUMBER	QTY	PART NAME 1 2 3 4 5 6 (PRODUCT LEVEL)	SEE PAGE
	1	1	**8T-4205**	2	WASHER-HARD (7.2X14.5X2-MM THK)	
	2	1	**161-2539**	1	ALARM AS	
	3	1	**192-0836**	1	SWITCH GP-PRESSURE (BACKUP ALARM)	
		1	**102-8802**	2	KIT-RECEPTACLE (2-PIN)	
					(INCLUDES RECEPTACLE AS & WEDGE)	
		1	**3E-3365**	1	WEDGE-RECEPTACLE LOCK (2-PIN)	
		1	**3J-1907**	1	SEAL-O-RING	
		1	**8T-8729**	1	PIN-CONNECTOR	
M	4	1	**6V-7357**	2	BOLT (M6X1X25-MM)	
F		1	**113-8490**	1	FUSE (10-AMPERE)	

F-NOT SHOWN
M-METRIC PART

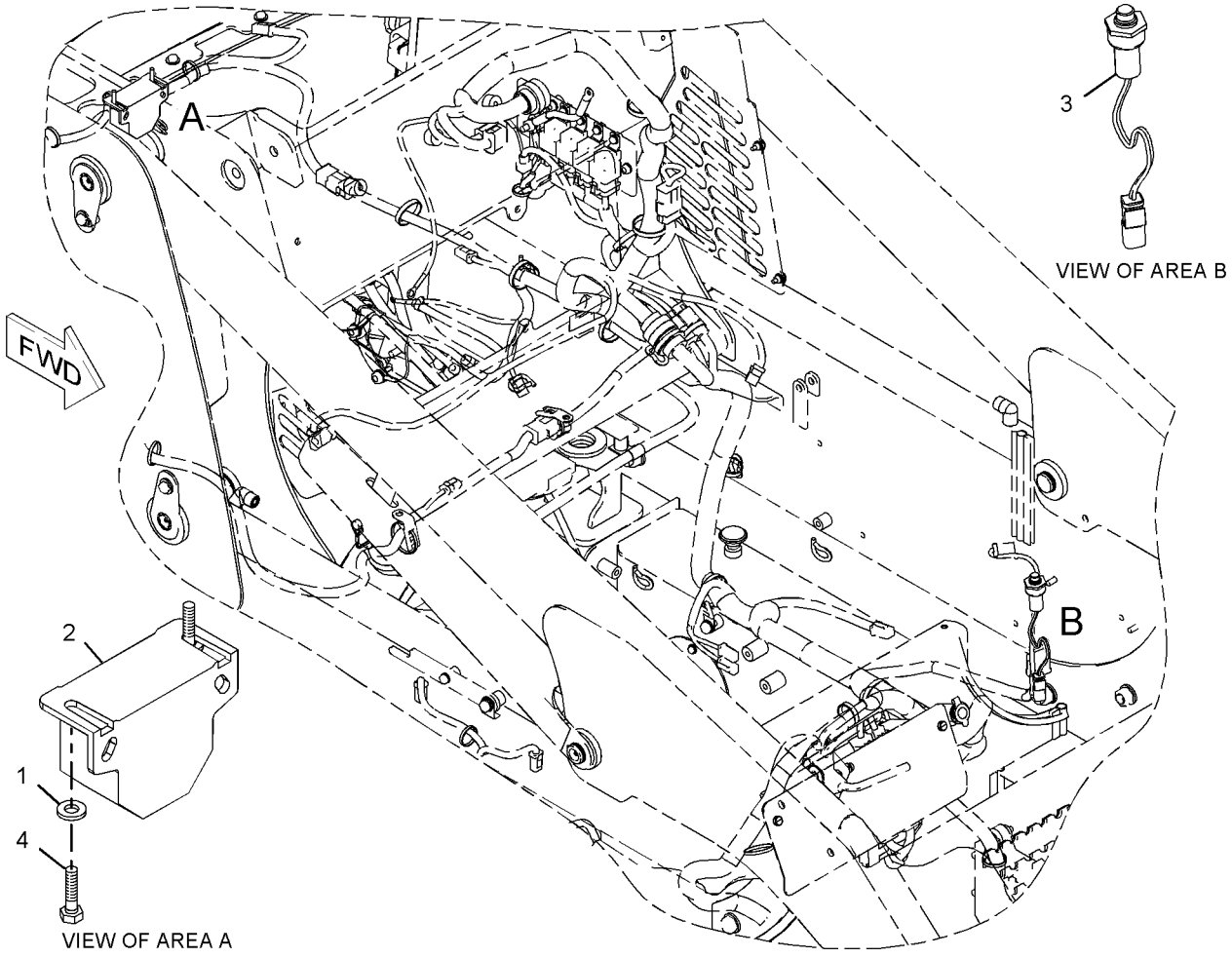

GRAPHIC #1 **<END>** g01030769

225-7948 WIRING GP-AIR CONDITIONER

S/N: MJH10575-UP
PART OF 218-6273 AIR CONDITIONER AR
AN ATTACHMENT

SMCS-1408, 7320 **i02359133**

NOTE	REF NO	GRAPHIC REF	PART NUMBER	QTY	PART NAME 1 2 3 4 5 6 (PRODUCT LEVEL)	SEE PAGE
	1	1	**3S-2093**	12	STRAP-CABLE	
	2	1	**202-2168**	1	HARNESS AS-FUEL TANK	
		1	**102-8802**	1	KIT-RECEPTACLE (2-PIN)	
					(INCLUDES RECEPTACLE AS & WEDGE)	
		1	**155-2270**	1	KIT-CONNECTING PLUG (2-PIN)	
					(INCLUDES PLUG AS, WEDGE & INTERFACE SEAL)	
	3	1	**221-3879**	1	HARNESS AS-HEATER & AIR COND	
		1	**155-2260**	1	KIT-CONNECTING PLUG (3-PIN)	
		1	**155-2270**	1	KIT-CONNECTING PLUG (2-PIN)	
					(EACH KIT INCLUDES PLUG AS, WEDGE & INTERFACE SEAL)	
BF		1	**124-3548**	1	FUSE (30-AMPERE)	
BF		1	**113-8491**	1	FUSE (15-AMPERE)	

B-USE AS REQUIRED
F-NOT SHOWN

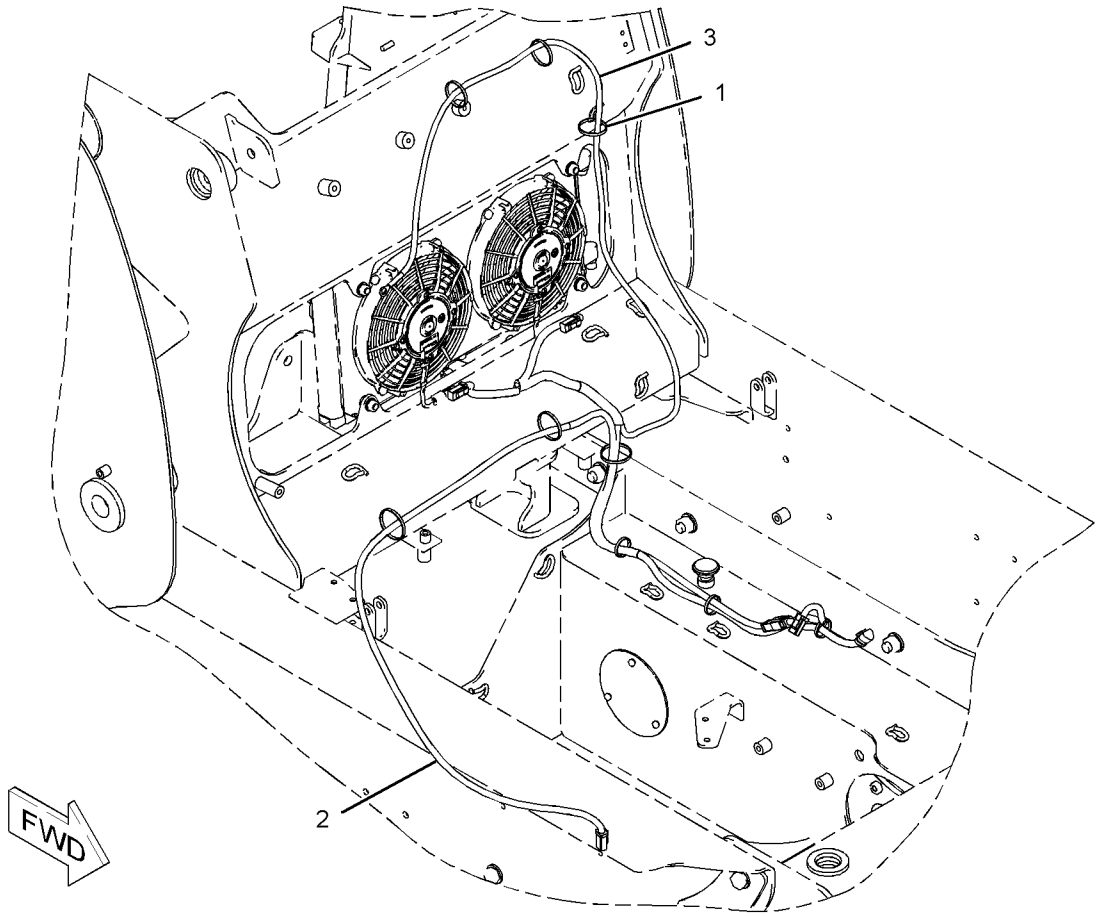

GRAPHIC #1 **<END>** g01029283

ELECTRICAL AND STARTING SYSTEM

225-8001 WIRING GP-CHASSIS

S/N: MJH10575-UP

PART OF 295-7110 CHASSIS AR

SMCS-1408, 7051 **i02752329**

NOTE	REF NO	GRAPHIC REF	PART NUMBER	QTY	PART NAME 1 2 3 4 5 6 (PRODUCT LEVEL)	SEE PAGE
	1	1	**4B-4863**	2	WASHER (4.7X11X1.2-MM THK)	
	2	1	**6I-1418**	6	SPACER (8.2X12.7X28.7-MM THK)	
	3	1	**7K-1181**	10	STRAP-CABLE	
	4	1	**8M-4963**	1	STRAP AS-GROUND	
	5	1	**8T-8799**	2	BOOT	
	6	1	**8T-9655**	12	MOUNT-ISOLATION	
E	7	1	**9X-2092**		STRIP-EDGE (50-CM)	
	8	1	**090-9434**	3	SPACER (9X20X10-MM THK)	
	9	1	**114-4516**	1	BLOCK	
	10	1	**115-1615**	3	RELAY AS (12-VOLT) (MAIN POWER)	
Y	11	1	**154-4233**	1	CONTROL GP-INTERLOCK	136
	12	1	**3S-2093**	34	STRAP-CABLE	
	13	1	**178-7539**	1	RECEPTACLE AS (POWER SUPPLY)	
	14	1	**216-4703**	1	HARNESS AS-REAR LIGHTING	
E		1	**125-7874**		TUBE-HEAT SHRINK (5.72-MM DIA) (5-CM)	
E		1	**125-7875**		TUBE-HEAT SHRINK (7.44-MM DIA) (5-CM)	
		1	**155-2271**	2	KIT-CONNECTING PLUG (4-PIN)	
					(EACH INCLUDES PLUG AS, WEDGE & INTERFACE SEAL)	
		1	**102-8806**	1	KIT-RECEPTACLE (8-PIN)	
					(INCLUDES RECEPTACLE AS & WEDGE)	
Y	15	1	*216-4755*	1	COVER GP-FUSE PANEL	139
	16	1	**221-3880**	1	PANEL GP-FUSE	
		1	**124-3548**	1	FUSE (30-AMPERE)	
		1	**113-8490**	16	FUSE (10-AMPERE)	
		1	**113-8491**	5	FUSE (15-AMPERE)	
		1	**113-8492**	2	FUSE (20-AMPERE)	
	17	1	**225-5190**	1	BRACKET AS	
	18	1	**225-7981**	1	BRACKET AS	
	19	1	**225-7982**	1	WIRE AS	
Y	20	1	*225-8000*	1	ELECTRONICS GP-IMPLEMENT (WORK TOOL)	140
	21	1	**225-8002**	1	HARNESS AS-PLATFORM (LOWER)	
		1	**7R-2750**	16	SEAL-CONNECTOR	
		1	**7R-2751**	1	PLUG-CONNECTOR	
		1	**8C-6354**	1	CAP-RECEPTACLE	
		1	**9W-1951**	1	RECEPTACLE-CONNECTOR (9-PIN)	
E		1	**119-3662**		TUBE-HEAT SHRINK (10.85-MM DIA) (7-CM)	
E		1	**125-7874**		TUBE-HEAT SHRINK (5.72-MM DIA) (60-CM)	
E		1	**125-7875**		TUBE-HEAT SHRINK (7.44-MM DIA) (20-CM)	
E		1	**128-4123**		SEAL (7-CM)	
		1	**150-6764**	1	PLUG AS-CONNECTOR (26-PIN)	
		1	**150-6765**	1	PLUG AS-CONNECTOR (26-PIN)	
					(EACH PLUG AS INCLUDES)	
		1	**159-9322**	1	SEAL-O-RING	
		1	**155-2271**	1	KIT-CONNECTING PLUG (4-PIN)	
		1	**155-2255**	2	KIT-CONNECTING PLUG (12-PIN)	
		1	**155-2265**	1	KIT-CONNECTING PLUG (8-PIN)	
		1	**155-2270**	6	KIT-CONNECTING PLUG (2-PIN)	
					(EACH PLUG KIT INCLUDES PLUG AS, WEDGE & INTERFACE SEAL)	
		1	**102-8805**	1	KIT-RECEPTACLE (6-PIN)	
		1	**102-8801**	1	KIT-RECEPTACLE (12-PIN)	
		1	**177-9653**	1	KIT-RECEPTACLE (4-PIN)	
					(EACH RECEPTACLE KIT INCLUDES RECEPTACLE AS & WEDGE)	
		1	**196-2381**	1	KIT-CONNECTING PLUG (2-PIN)	

225-8001 **WIRING GP-CHASSIS** *(contd.)* **i02752329**

NOTE	REF NO	GRAPHIC REF	PART NUMBER	QTY	PART NAME 1 2 3 4 5 6 (PRODUCT LEVEL)	SEE PAGE
		1	**196-2382**	1	KIT-CONNECTING PLUG (2-PIN)	
					(EACH PLUG KIT INCLUDES PLUG AS & WEDGE)	
		1	**196-2383**	1	KIT-CONNECTING PLUG (8-PIN)	
		1	**196-2384**	1	KIT-CONNECTING PLUG (8-PIN)	
		1	**196-2385**	1	KIT-CONNECTING PLUG (8-PIN)	
					(EACH PLUG KIT INCLUDES PLUG AS, LOCK & TERMINAL AS)	
		1	**8L-8413**	7	STRAP-CABLE	
		1	**173-8919**	4	SEAL-CONNECTOR	
		1	**167-3692**	1	RECEPTACLE AS-CONNECTOR (31-PIN)	
	22	1	**292-1159**	1	HARNESS AS-PLATFORM	
		1	**102-8804**	1	KIT-RECEPTACLE (4-PIN)	
		1	**102-8801**	1	KIT-RECEPTACLE (12-PIN)	
					(EACH RECEPTACLE KIT INCLUDES RECEPTACLE AS & WEDGE)	
		1	**8L-8413**	28	STRAP-CABLE	
		1	**9X-1054**	4	PLUG AS-CONNECTOR (4-PIN)	
		1	**100-3320**	1	PLUG AS-CONNECTOR (2-PIN)	
		1	**126-5011**	1	SEAL-CONNECTOR	
E		1	**119-3662**		TUBE-HEAT SHRINK (10.85-MM DIA) (33-CM)	
E		1	**125-7874**		TUBE-HEAT SHRINK (5.72-MM DIA) (25-CM)	
E		1	**125-7875**		TUBE-HEAT SHRINK (7.44-MM DIA) (15-CM)	
		1	**155-2255**	3	KIT-CONNECTING PLUG (12-PIN)	
		1	**155-2265**	1	KIT-CONNECTING PLUG (8-PIN)	
		1	**155-2260**	2	KIT-CONNECTING PLUG (3-PIN)	
		1	**155-2270**	2	KIT-CONNECTING PLUG (2-PIN)	
		1	**155-2271**	2	KIT-CONNECTING PLUG (4-PIN)	
		1	**155-2274**	1	KIT-CONNECTING PLUG (6-PIN)	
					(EACH PLUG KIT INCLUDES PLUG AS, WEDGE & INTERFACE SEAL)	
		1	**177-9648**	1	KIT-CONNECTING PLUG (2-PIN)	
		1	**177-9656**	1	KIT-CONNECTING PLUG (4-PIN)	
					(EACH PLUG KIT INCLUDES PLUG AS & WEDGE)	
E		1	**211-5358**		CONDUIT-FLEXIBLE (30-CM)	
		1	**213-0139**	6	PIN	
		1	**167-3693**	2	PLUG AS-CONNECTOR (31-PIN)	
M	23	1	**8T-0389**	1	LOCKNUT (M10X1.5-THD)	
M	24	1	**095-0733**	2	SCREW-MACHINE (M4X0.7X40-MM)	
B	25	1	**155-2255**	1	KIT-CONNECTING PLUG (12-PIN)	
B	26	1	**155-2271**	1	KIT-CONNECTING PLUG (4-PIN)	
					(EACH PLUG KIT INCLUDES PLUG AS, WEDGE & INTERFACE SEAL)	
B	27	1	**102-8802**	2	KIT-RECEPTACLE (2-PIN)	
B	28	1	**102-8803**	1	KIT-RECEPTACLE (3-PIN)	
B	29	1	**102-8804**	3	KIT-RECEPTACLE (4-PIN)	
B	30	1	**102-8806**	1	KIT-RECEPTACLE (8-PIN)	
B	31	1	**177-9645**	1	KIT-RECEPTACLE (2-PIN)	
					(EACH RECEPTACLE KIT INCLUDES RECEPTACLE AS & WEDGE)	
	32	1	**4P-7581**	3	CLIP	
	33	1	**4P-8134**	5	CLIP	
	34	1	**246-9371**	1	RELAY AS (SHELL)	
M	35	1	**5C-7261**	3	NUT (M8X1.25-THD)	
M	36	1	**5C-9553**	4	BOLT (M6X1X16-MM)	
M	37	1	**6V-5698**	2	SCREW-BUTTON HEAD (M4X0.7X10-MM)	
	38	1	**7X-0579**	6	WASHER-HARD (8.8X25.5X2-MM THK)	
M	39	1	**7X-0818**	6	BOLT (M8X1.25X45-MM)	
	40	1	**8C-8558**	2	SCREW-LOCK (4-40X0.25-IN)	
	41	1	**8T-4121**	5	WASHER-HARD (11X21X2.5-MM THK)	
M	42	1	**8T-4133**	3	NUT (M10X1.5-THD)	

225-8001 **WIRING GP-CHASSIS** ***(contd.)*** **i02752329**

NOTE	REF NO	GRAPHIC REF	PART NUMBER	QTY	PART NAME 1 2 3 4 5 6 (PRODUCT LEVEL)	SEE PAGE
M	43	1	**8T-4191**	2	BOLT (M10X1.5X16-MM)	
	44	1	**8T-4205**	4	WASHER-HARD (7.2X14.5X2-MM THK)	
	45	1	**8T-4224**	3	WASHER-HARD (8.8X16X2-MM THK)	
M	46	1	**9X-2044**	4	SCREW-TRUSS HEAD (M6X1X16-MM)	
B	49	1	**8T-8737**	45	PLUG-SEAL	
	50	1	**178-3620**	4	STRAP-DUAL CLAMP	

B-USE AS REQUIRED
E-ORDER BY THE CENTIMETER
M-METRIC PART
Y-SEPARATE ILLUSTRATION

225-8001 **WIRING GP-CHASSIS** *(contd.)* **i02752329**

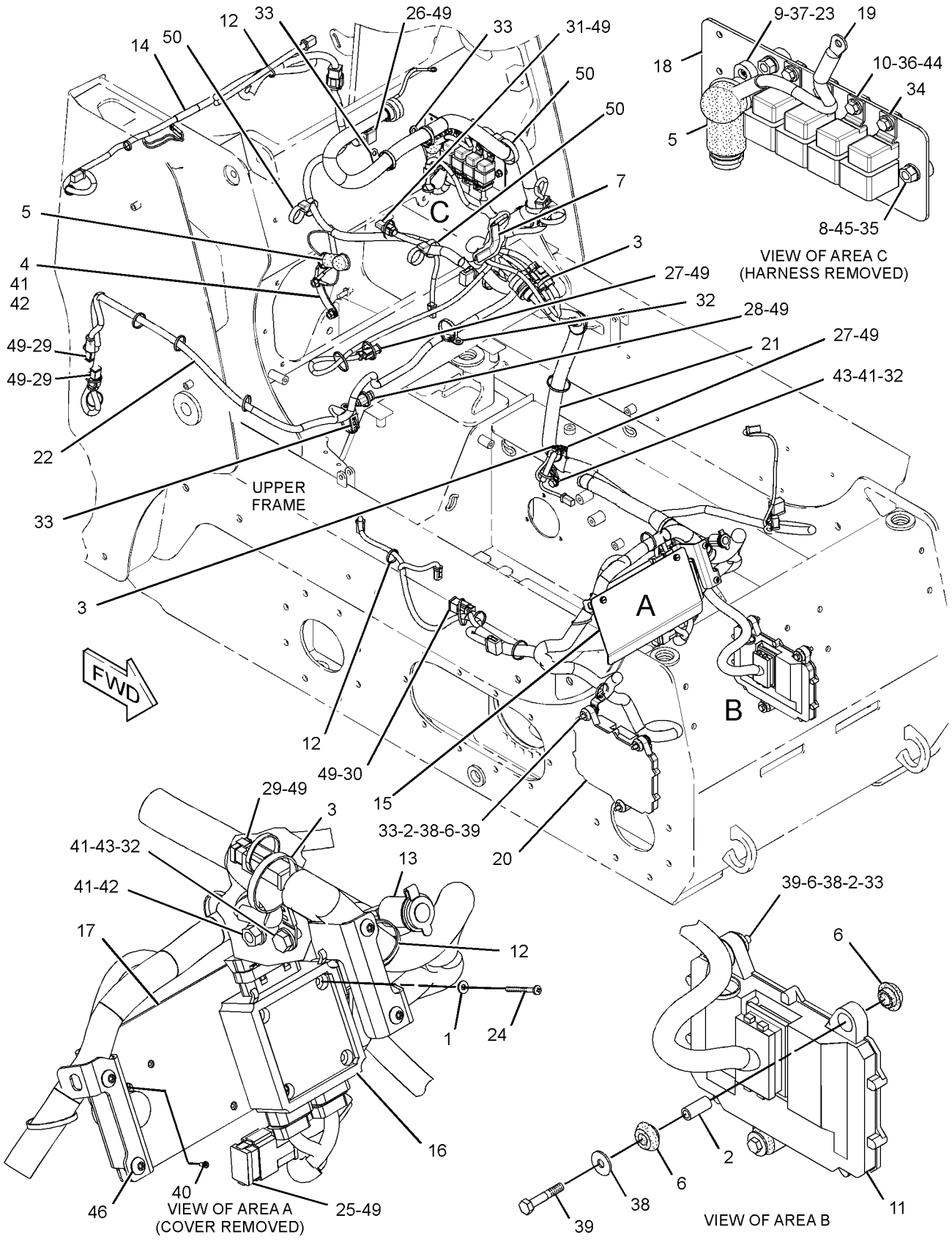

GRAPHIC #1 **<END>** g01381581

ELECTRICAL AND STARTING SYSTEM

225-8010 WIRING GP-ENGINE

S/N: MJH10575-12174

PART OF 295-7027 INSTALLATION AR-ENGINE

SMCS-1000, 1408, 1420 **i02807727**

NOTE	REF NO	GRAPHIC REF	PART NUMBER	QTY	PART NAME 1 2 3 4 5 6 (PRODUCT LEVEL)	SEE PAGE
	1	1	**4B-4274**	2	WASHER (5.5X13X1.2-MM THK)	
	2	1	**5L-4507**	2	SCREW-MACHINE (10-32X0.875-IN)	
	3	1	**7G-1060**	1	STRAP AS-GROUND	
	4	1	**8F-1434**	2	LOCKWASHER	
	5	1	**090-9434**	3	SPACER (9X20X10-MM THK)	
	6	1	**115-1615**	1	RELAY AS (12-VOLT) (COLD START)	
	6A	1	**115-1615**	1	RELAY AS (12-VOLT) (START)	
C	7	1	**106-8704**	1	SUPPRESSOR AS-ARC	
		1	**102-8802**	1	KIT-RECEPTACLE (2-PIN)	
					(INCLUDES RECEPTACLE AS & WEDGE)	
		1	**186-3735**	2	PIN-CONNECTOR (16-GA TO 18-GA)	
	8	1	**171-2212**	1	CIRCUIT BREAKER AS (105-AMPERE)	
		1	**253-2111**	2	LOCKWASHER	
		1	**6V-8187**	2	NUT (1/4-28-THD)	
		1	**8T-4205**	2	WASHER-HARD (7.2X14.5X2-MM THK)	
	9	1	**225-7954**	1	CABLE AS-BATTERY (POSITIVE)	
	10	1	**225-7980**	1	BRACKET AS	
C	11	1	**270-2702**	1	HARNESS AS-ENGINE	
		1	**102-8802**	1	KIT-RECEPTACLE (2-PIN)	
					(INCLUDES RECEPTACLE AS & WEDGE)	
		1	**7K-1181**	2	STRAP-CABLE	
		1	**155-2270**	2	KIT-CONNECTING PLUG (2-PIN)	
					(EACH INCLUDES PLUG AS, WEDGE & INTERFACE SEAL)	
	12	1	**264-8106**	1	HARNESS AS-ENGINE	
		1	**102-8801**	1	KIT-RECEPTACLE (12-PIN)	
					(INCLUDES RECEPTACLE AS & WEDGE)	
		1	**8L-8413**	7	STRAP-CABLE	
		1	**8T-8799**	2	BOOT	
		1	**9X-1054**	2	PLUG AS-CONNECTOR (4-PIN)	
E		1	**119-3662**		TUBE-HEAT SHRINK (10.85-MM DIA) (7-CM)	
E		1	**125-7874**		TUBE-HEAT SHRINK (5.72-MM DIA) (10-CM)	
E		1	**125-7875**		TUBE-HEAT SHRINK (7.44-MM DIA) (5-CM)	
		1	**155-2270**	4	KIT-CONNECTING PLUG (2-PIN)	
		1	**155-2271**	1	KIT-CONNECTING PLUG (4-PIN)	
					(EACH PLUG KIT INCLUDES PLUG AS, WEDGE & INTERFACE SEAL)	
E		1	**211-5358**		CONDUIT-FLEXIBLE (32-CM)	
	13	1	**238-9397**	1	RESISTOR AS	
		1	**102-8802**	1	KIT-RECEPTACLE (2-PIN)	
					(INCLUDES RECEPTACLE AS & WEDGE)	
		1	**186-3735**	2	PIN-CONNECTOR (16-GA TO 18-GA)	
	14	1	**172-9200**	1	SUPPRESSOR-ARC	
	15	1	**1H-3244**	1	LOCKWASHER	
C	16	1	**3S-2093**	10	STRAP-CABLE	
	17	1	**4P-8134**	1	CLIP	
M	18	1	**5C-2874**	2	NUT (M5X0.8-THD)	
M	19	1	**5C-2890**	1	NUT (M6X1-THD)	
M	20	1	**5C-7261**	4	NUT (M8X1.25-THD)	
M	21	1	**5C-9553**	2	BOLT (M6X1X16-MM)	
	22	1	**8T-0328**	2	WASHER-HARD (5.5X10X1-MM THK)	
	23	1	**8T-4121**	2	WASHER-HARD (11X21X2.5-MM THK)	
M	24	1	**8T-4133**	1	NUT (M10X1.5-THD)	
M	25	1	**8T-4200**	1	BOLT (M8X1.25X16-MM)	
	26	1	**8T-4205**	3	WASHER-HARD (7.2X14.5X2-MM THK)	
	27	1	**8T-4224**	4	WASHER-HARD (8.8X16X2-MM THK)	

225-8010 **WIRING GP-ENGINE** ***(contd.)*** **i02807727**

NOTE	REF NO	GRAPHIC REF	PART NUMBER	QTY	PART NAME 1 2 3 4 5 6 (PRODUCT LEVEL)	SEE PAGE
	29	1	**7K-1181**	1	STRAP-CABLE	
	30	1	**8T-4122**	1	WASHER-HARD (17X32X3.5-MM THK)	
	31	1	**104-6202**	1	CLIP	
M	32	1	**141-5453**	1	BOLT (M14X1.5X30-MM)	

C-CHANGE FROM PREVIOUS TYPE
E-ORDER BY THE CENTIMETER
M-METRIC PART

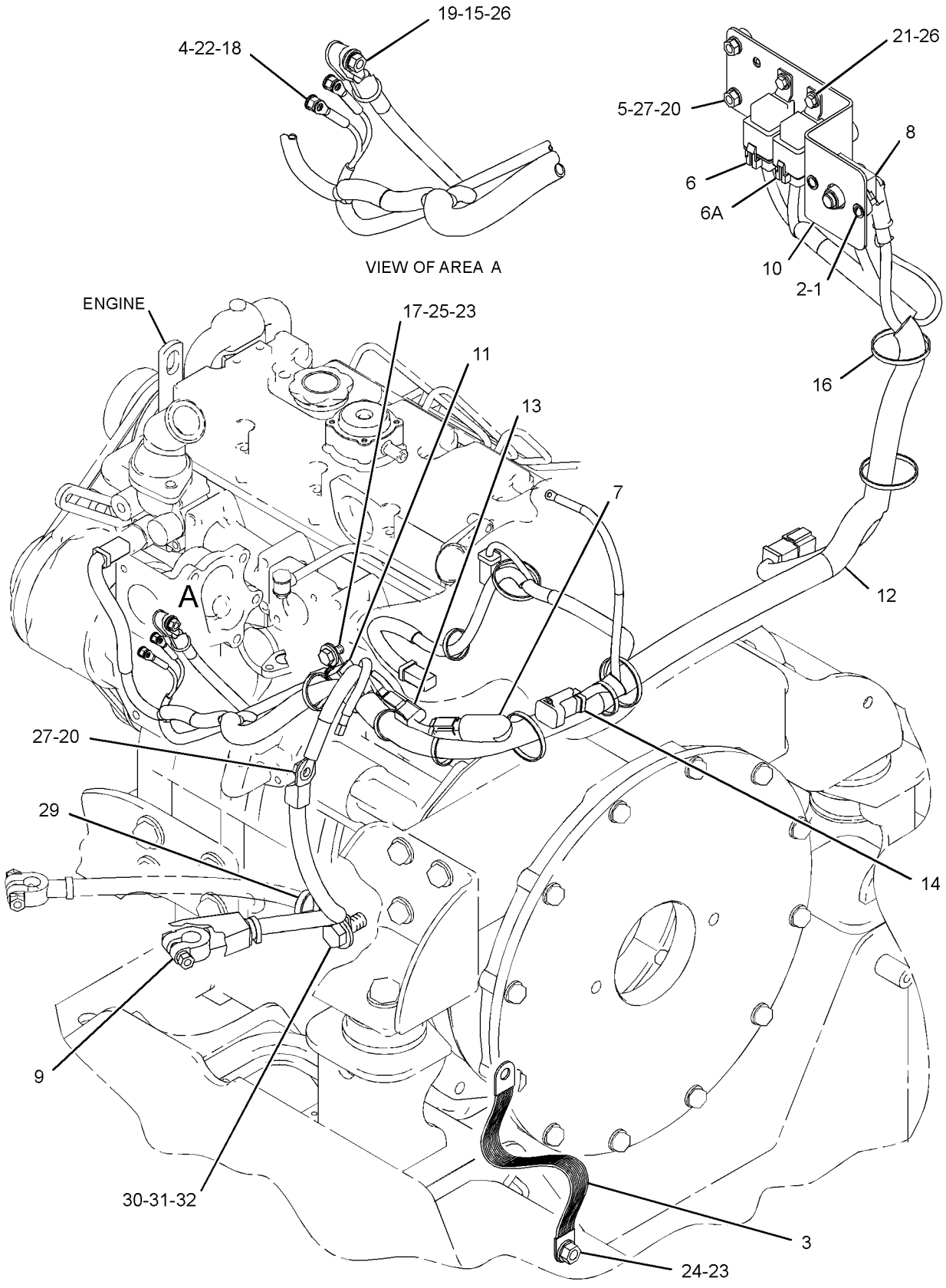

GRAPHIC #1

<END>

g01416086

225-8010 WIRING GP-ENGINE

S/N: MJH12175-UP

PART OF 295-7028 INSTALLATION AR-ENGINE

SMCS-1000, 1408, 1420 **i02881009**

NOTE	REF NO	GRAPHIC REF	PART NUMBER	QTY	PART NAME 1 2 3 4 5 6 (PRODUCT LEVEL)	SEE PAGE
	1	1	**4B-4274**	2	WASHER (5.5X13X1.2-MM THK)	
	2	1	**5L-4507**	2	SCREW-MACHINE (10-32X0.875-IN)	
	3	1	**7G-1060**	1	STRAP AS-GROUND	
	4	1	**8F-1434**	2	LOCKWASHER	
	5	1	**090-9434**	3	SPACER (9X20X10-MM THK)	
	6	1	**115-1615**	1	RELAY AS (12-VOLT) (COLD START)	
	6A	1	**115-1615**	1	RELAY AS (12-VOLT) (START)	
	7	1	**106-8704**	1	SUPPRESSOR AS-ARC	
	8	1	**171-2212**	1	CIRCUIT BREAKER AS (105-AMPERE)	
		1	**253-2111**	2	LOCKWASHER	
		1	**6V-8187**	2	NUT (1/4-28-THD)	
		1	**8T-4205**	2	WASHER-HARD (7.2X14.5X2-MM THK)	
	9	1	**225-7954**	1	CABLE AS-BATTERY (POSITIVE)	
	10	1	**225-7980**	1	BRACKET AS	
C	11	1	**317-2691**	1	HARNESS AS-ENGINE	
C	12	1	**318-0555**	1	HARNESS AS-WIRING (GLOW PLUG)	
	13	1	**238-9397**	1	RESISTOR AS	
		1	**102-8802**	1	KIT-RECEPTACLE (2-PIN)	
					(INCLUDES RECEPTACLE AS & WEDGE)	
		1	**186-3735**	2	PIN-CONNECTOR (16-GA TO 18-GA)	
	14	1	**172-9200**	1	SUPPRESSOR-ARC	
	15	1	**1H-3244**	1	LOCKWASHER	
	16	1	**3S-2093**	10	STRAP-CABLE	
	17	1	**4P-8134**	1	CLIP	
M	18	1	**5C-2874**	2	NUT (M5X0.8-THD)	
M	19	1	**5C-2890**	1	NUT (M6X1-THD)	
CM	20	1	**5C-7261**	3	NUT (M8X1.25-THD)	
M	21	1	**5C-9553**	2	BOLT (M6X1X16-MM)	
	22	1	**8T-0328**	2	WASHER-HARD (5.5X10X1-MM THK)	
	23	1	**8T-4121**	2	WASHER-HARD (11X21X2.5-MM THK)	
M	24	1	**8T-4133**	1	NUT (M10X1.5-THD)	
M	25	1	**8T-4200**	1	BOLT (M8X1.25X16-MM)	
	26	1	**8T-4205**	3	WASHER-HARD (7.2X14.5X2-MM THK)	
C	27	1	**8T-4224**	3	WASHER-HARD (8.8X16X2-MM THK)	
	29	1	**7K-1181**	1	STRAP-CABLE	
	30	1	**8T-4122**	1	WASHER-HARD (17X32X3.5-MM THK)	
	31	1	**104-6202**	1	CLIP	
M	32	1	**141-5453**	1	BOLT (M14X1.5X30-MM)	

C-CHANGE FROM PREVIOUS TYPE
M-METRIC PART

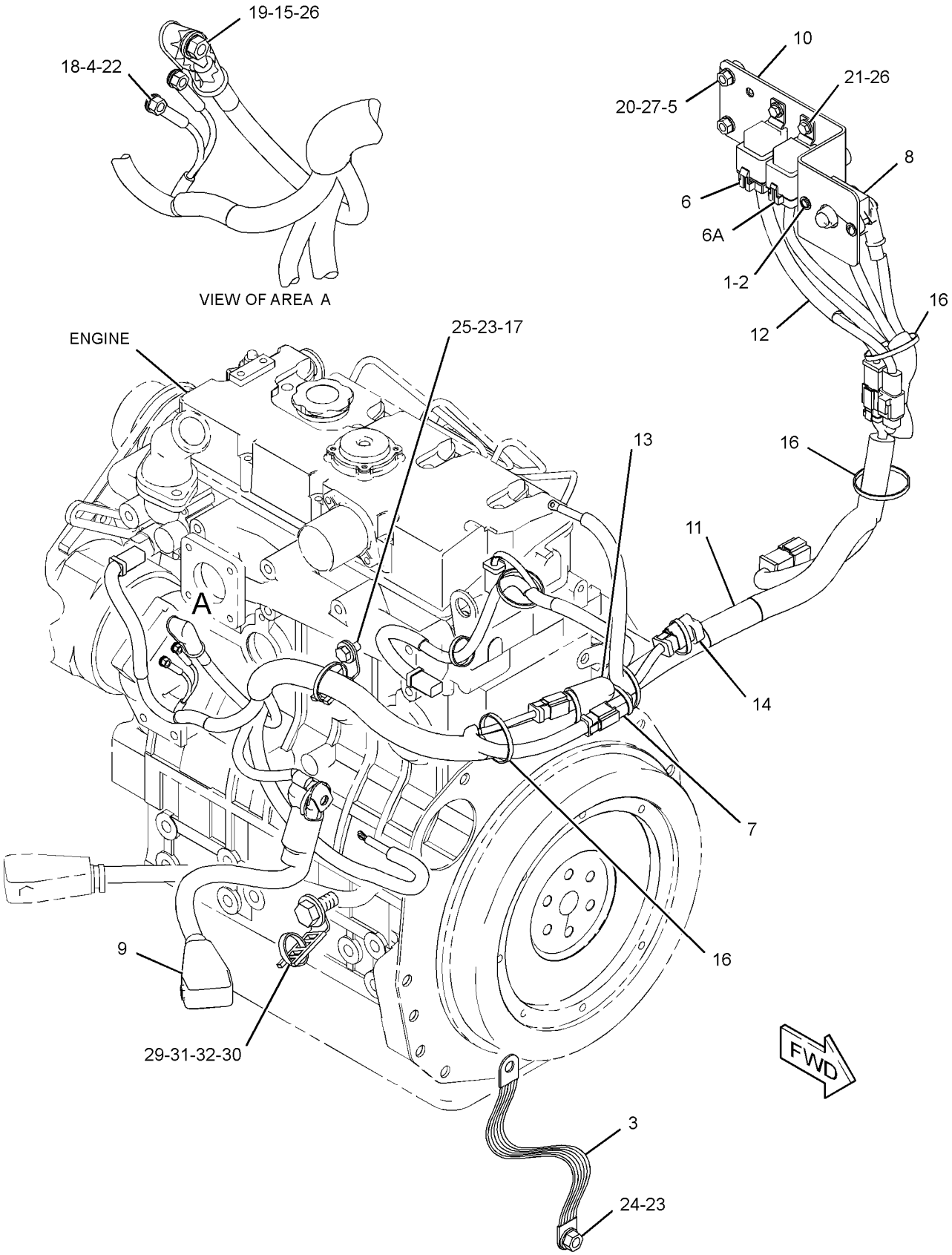

GRAPHIC #1 **<END>** g01437866

230-3743 WIRING GP-HORN

S/N: MJH10575-UP

PART OF 261-6157, 261-6187, 261-6197, 278-1212, 278-1220, 278-1224, 278-5408, 278-5441, 295-7038, 295-7049, 295-7059, 295-7066, 295-7149, 295-7158, 295-7162, 295-7167 CONVERSION AR-MACHINE, 233-5671, 233-5672, 233-5673, 233-5674, 233-5675, 233-5676, 257-5716, 257-5717, 295-7043 CONVERSION AR-ROADING AN ATTACHMENT

SMCS-1408, 7402 **i02757122**

NOTE	REF NO	GRAPHIC REF	PART NUMBER	QTY	PART NAME 1 2 3 4 5 6 (PRODUCT LEVEL)	SEE PAGE
	1	1	**3S-2093**	5	STRAP-CABLE	
M	2	1	**8T-4186**	1	BOLT (M10X1.5X40-MM)	
	3	1	**142-8833**	1	SPACER (11X14.3X9-MM THK)	
M	4	1	**8T-4133**	1	NUT (M10X1.5-THD)	
	5	1	**186-3362**	1	HARNESS AS-CHASSIS (HORN)	
		1	**102-8802**	1	KIT-RECEPTACLE (2-PIN)	
					(INCLUDES RECEPTACLE AS & WEDGE)	
		1	**155-2270**	1	KIT-CONNECTING PLUG (2-PIN)	
					(INCLUDES PLUG AS, WEDGE & INTERFACE SEAL)	
	6	1	**8T-4121**	3	WASHER-HARD (11X21X2.5-MM THK)	

M-METRIC PART

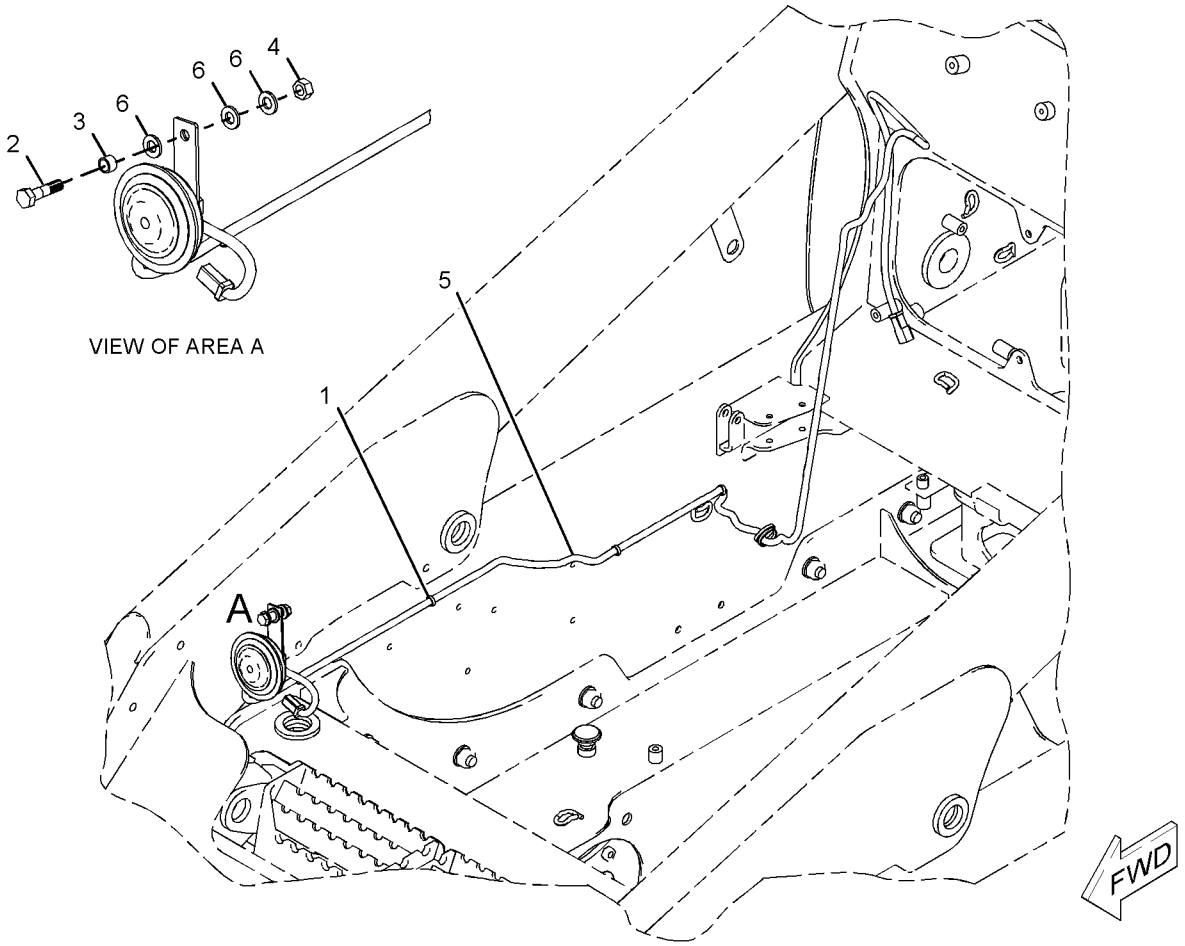

GRAPHIC #1 **<END>** g01037702

272-1625 WIRING GP-MACHINE–DEMAND FAN

S/N: MJH10575-UP
STAGE II SOUND
PART OF 261-6157, 261-6187, 261-6197, 278-1212, 278-1220, 278-1224, 278-5408, 278-5441, 295-7038, 295-7049, 295-7059, 295-7066, 295-7149, 295-7158, 295-7162, 295-7167 CONVERSION AR-MACHINE, 257-5717, 295-7043 CONVERSION AR-ROADING AN ATTACHMENT

SMCS-1408 **i02639958**

NOTE	REF NO	GRAPHIC REF	PART NUMBER	QTY	PART NAME 1 2 3 4 5 6 (PRODUCT LEVEL)	SEE PAGE
	1	1	**7K-1181**	10	STRAP-CABLE	
	2	1	**8T-8737**	5	PLUG-SEAL	
	3	1	**206-2423**	8	SADDLE	
C	4	1	**292-9624**	1	CONTROL GP-FAN	
	5	1	**272-1626**	1	HARNESS AS-SWITCH	
		1	**102-8803**	1	KIT-RECEPTACLE (3-PIN)	
					(INCLUDES RECEPTACLE AS & WEDGE)	
		1	**8L-8413**	10	STRAP-CABLE	
E		1	**119-3662**		TUBE-HEAT SHRINK (10.85-MM DIA) (7-CM)	
E		1	**125-7874**		TUBE-HEAT SHRINK (5.72-MM DIA) (10-CM)	
		1	**155-2260**	3	KIT-CONNECTING PLUG (3-PIN)	
		1	**155-2270**	3	KIT-CONNECTING PLUG (2-PIN)	
		1	**155-2271**	1	KIT-CONNECTING PLUG (4-PIN)	
					(EACH PLUG KIT INCLUDES PLUG AS, WEDGE & INTERFACE SEAL)	
		1	**230-4011**	1	PLUG AS-CONNECTOR (2-PIN)	
		1	**253-8110**	1	PLUG	
	6	1	**278-1061**	1	BRACKET AS	
	7	1	**205-7048**	3	INSERT-THREADED (M6X1-THD)	
	8	1	**102-8802**	1	KIT-RECEPTACLE (2-PIN)	
	9	1	**102-8803**	1	KIT-RECEPTACLE (3-PIN)	
					(EACH RECEPTACLE KIT INCLUDES RECEPTACLE AS & WEDGE)	
	10	1	**3S-2093**	19	STRAP-CABLE	
	11	1	**4P-8134**	1	CLIP (LADDER)	
M	12	1	**8T-4138**	3	BOLT (M6X1X20-MM)	
	13	1	**8T-4205**	5	WASHER-HARD (7.2X14.5X2-MM THK)	
M	14	1	**8T-4971**	2	BOLT (M6X1X30-MM)	

C-CHANGE FROM PREVIOUS TYPE
E-ORDER BY THE CENTIMETER
M-METRIC PART

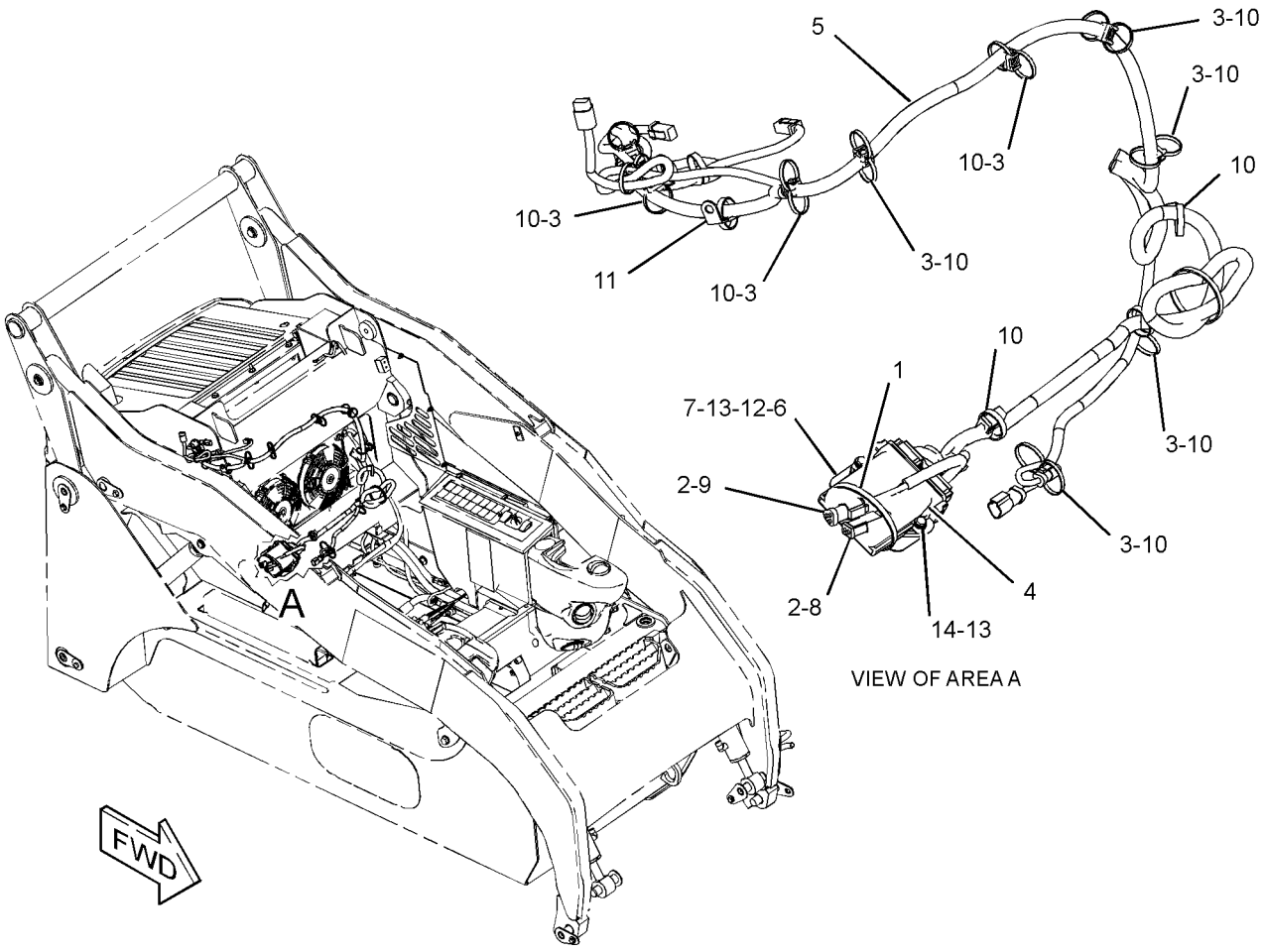

GRAPHIC #1 **<END>** g01229171

225-7964 WIRING GP-REAR LIGHTING

S/N: MJH10575-UP

PART OF 278-1212, 278-5408, 295-7149, 295-7158 CONVERSION AR-MACHINE, 233-5673, 233-5676 CONVERSION AR-ROADING AN ATTACHMENT

SMCS-1408, 1429 **i02359264**

NOTE	REF NO	GRAPHIC REF	PART NUMBER	QTY	PART NAME 1 2 3 4 5 6 (PRODUCT LEVEL)	SEE PAGE
	1	1	**115-1615**	1	RELAY AS (12-VOLT) (BRAKE LIGHT)	
	2	1	*166-2033*	2	TEE AS	
					(EACH INCLUDES)	
		1	**4J-5477**	1	SEAL-O-RING	
		1	**7X-2444**	1	TEE-SWIVEL	
Y	3	1	**184-1564**	2	SWITCH GP-PRESSURE (BRAKE LIGHT)	169
	4	1	**216-4711**	1	HARNESS AS-REAR LIGHTING (BRAKE)	
		1	**102-8803**	1	KIT-RECEPTACLE (3-PIN)	
					(INCLUDES RECEPTACLE AS & WEDGE)	
		1	**155-2270**	2	KIT-CONNECTING PLUG (2-PIN)	
					(EACH INCLUDES PLUG AS, WEDGE & INTERFACE SEAL)	
B	5	1	**3S-2093**	4	STRAP-CABLE	

B-USE AS REQUIRED
Y-SEPARATE ILLUSTRATION

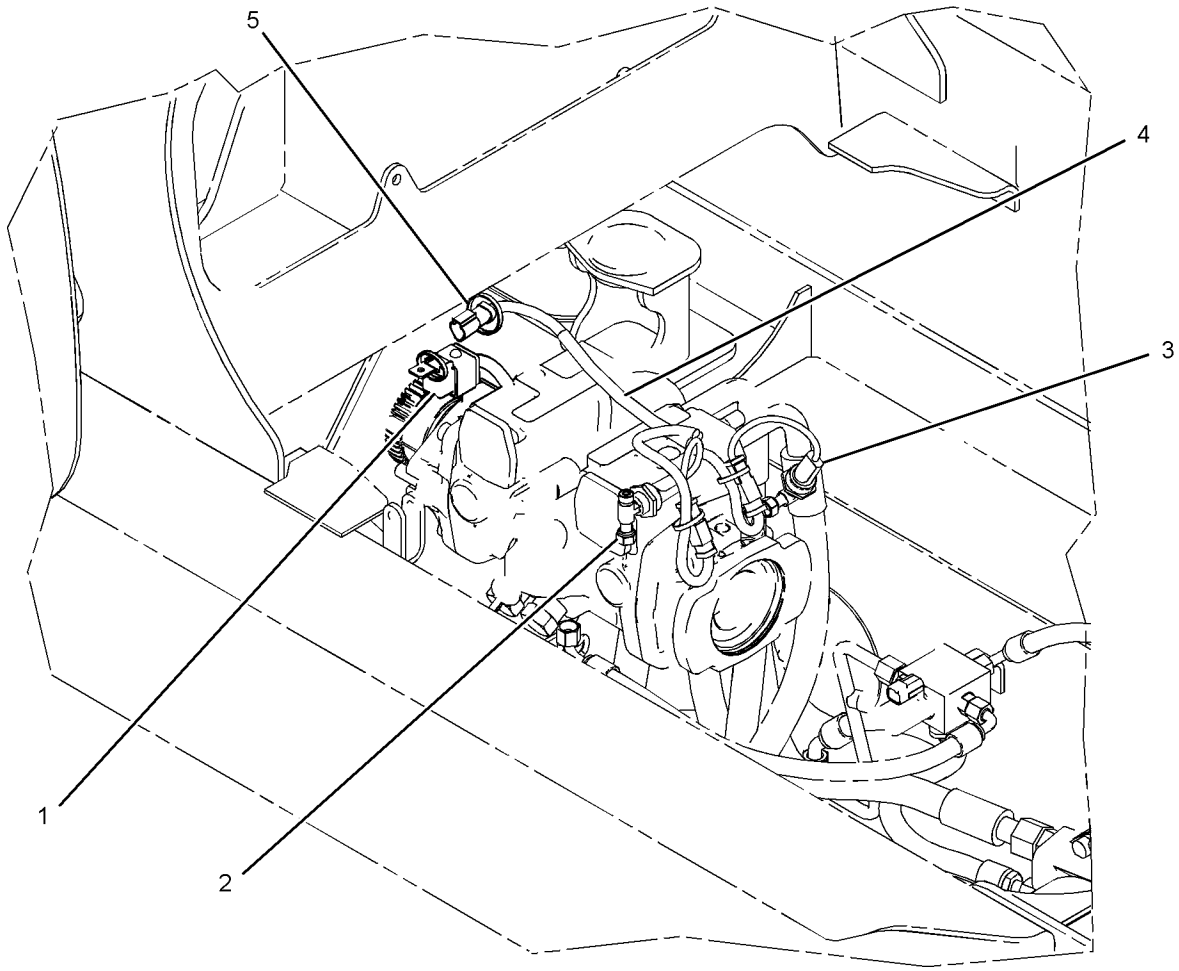

GRAPHIC #1 **<END>** g01030665

225-7960 WIRING GP-WORK TOOL

S/N: MJH10575-UP

PART OF 218-5933 CONTROL GP-PILOT OPERATED HYD

AN ATTACHMENT

SMCS-1408 **i02536847**

NOTE	REF NO	GRAPHIC REF	PART NUMBER	QTY	PART NAME 1 2 3 4 5 6 (PRODUCT LEVEL)	SEE PAGE
	1	1	**4B-4863**	2	WASHER (4.7X11X1.2-MM THK)	
	2	1	**115-1615**	1	RELAY AS (12-VOLT) (MAIN POWER)	
	3	1	**142-8633**	1	SWITCH AS-ROCKER (ELECTRIC POWER, WORK TOOL)	
	4	1	**146-9439**	1	RELAY AS (12-VOLT) (WORK TOOL)	
	5	1	**159-9495**	1	NUT (1-1/2-18-THD)	
	6	1	**159-9496**	1	LOCKWASHER	
	7	1	**221-3881**	1	PANEL GP-FUSE	
		1	**113-8490**	4	FUSE (10-AMPERE)	
		1	**113-8491**	2	FUSE (15-AMPERE)	
		1	**146-9439**	5	RELAY AS (12-VOLT)	
		1	**215-5564**	2	SUPPRESSOR-ARC	
	8	1	**225-7961**	1	HARNESS AS-WORK TOOL (LIFT ARM)	
		1	**102-8806**	1	KIT-RECEPTACLE (8-PIN)	
					(INCLUDES RECEPTACLE AS & WEDGE)	
	9	1	**225-8012**	1	HARNESS AS-WORK TOOL (PLATFORM)	
		1	**177-9645**	1	KIT-RECEPTACLE (2-PIN)	
					(INCLUDES RECEPTACLE AS & WEDGE)	
		1	**155-2255**	1	KIT-CONNECTING PLUG (12-PIN)	
		1	**155-2265**	1	KIT-CONNECTING PLUG (8-PIN)	
					(EACH KIT INCLUDES PLUG AS, WEDGE & INTERFACE SEAL)	
		1	**196-2383**	1	KIT-CONNECTING PLUG (8-PIN)	
		1	**196-2384**	1	KIT-CONNECTING PLUG (8-PIN)	
M	10	1	**095-0733**	2	SCREW-MACHINE (M4X0.7X40-MM)	
	11	1	**102-8806**	1	KIT-RECEPTACLE (8-PIN)	
					(INCLUDES RECEPTACLE AS & WEDGE)	
	12	1	**3E-3389**	1	WEDGE-RECEPTACLE LOCK	
	13	1	**3S-2093**	8	STRAP-CABLE	
M	14	1	**5C-9553**	1	BOLT (M6X1X16-MM)	
	15	1	**8T-4205**	1	WASHER-HARD (7.2X14.5X2-MM THK)	
	16	1	**178-3620**	1	STRAP-DUAL CLAMP	

M-METRIC PART

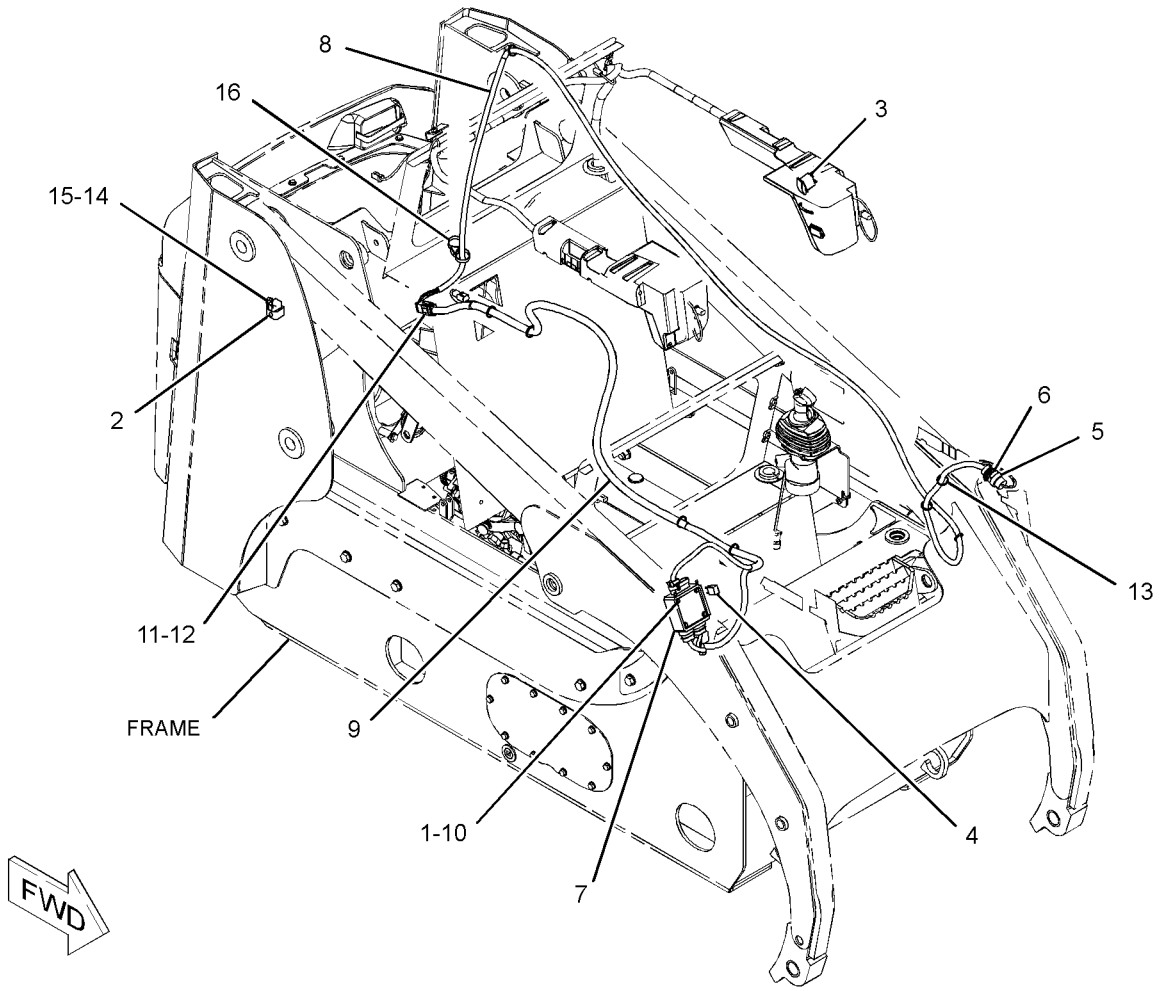

GRAPHIC #1 **<END>** g01304905

142-8758 AXLE GP

S/N: MJH10575-UP
PART OF 261-6255 AXLE GP
ALSO AN ATTACHMENT

SMCS-3278 **i01790260**

NOTE	REF NO	GRAPHIC REF	PART NUMBER	QTY	PART NAME 1 2 3 4 5 6 (PRODUCT LEVEL)	SEE PAGE
	1	1	**142-8723**	1	HOUSING-AXLE	
	2	1	**142-8724**	1	SPINDLE-WHEEL	
	3	1	**142-8729**	1	SPACER (32.045 MM THK)	
	4	1	**150-4385**	2	CONE	
	5	1	**150-4386**	2	CUP	
	6	1	**150-5472**	1	SEAL-LIP TYPE	
	7	1	**159-5772**	8	STUD (9/16-18-2A THD)	
	8	1	**166-3678**	1	SEAL-LIP TYPE	

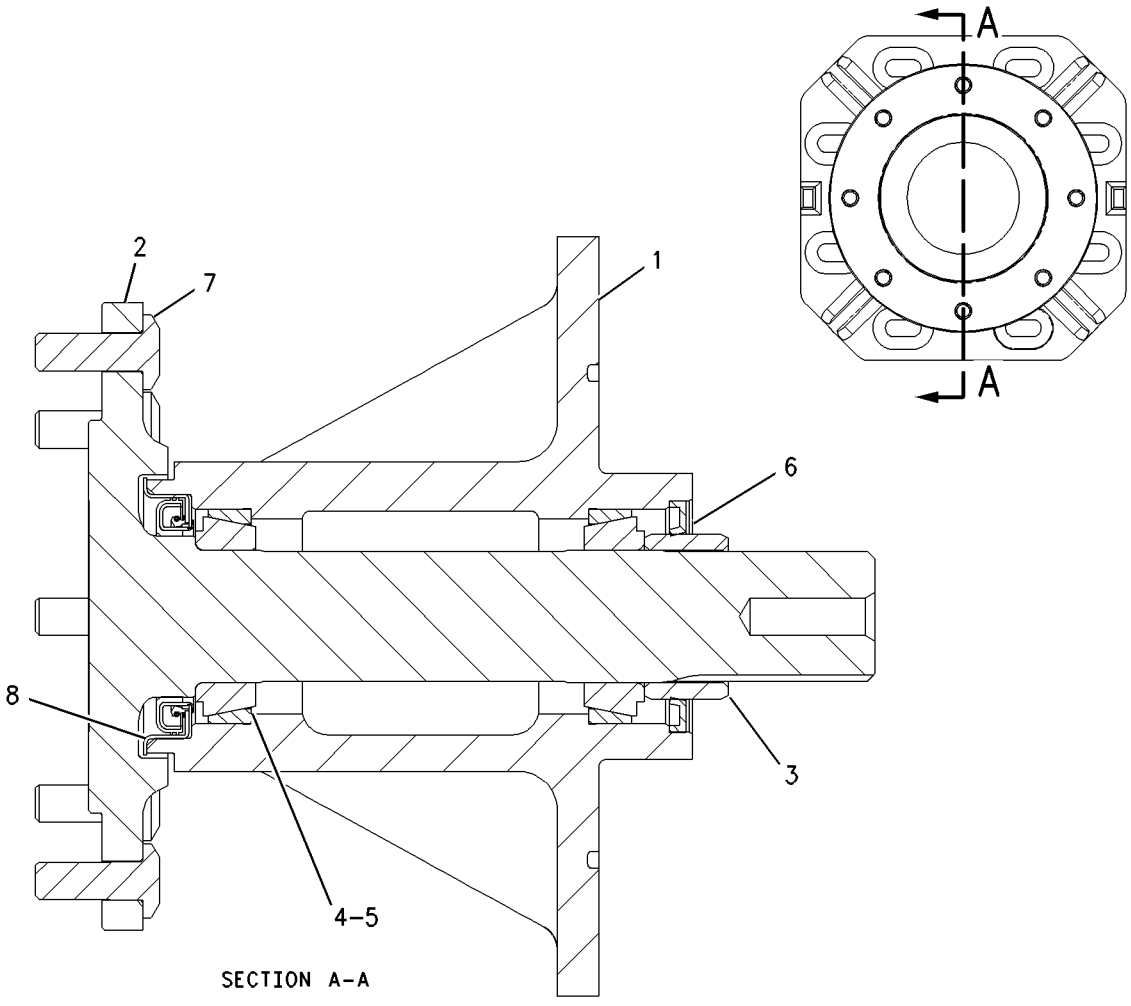

GRAPHIC #1 **<END>** g00916188

POWER TRAIN

258-2759 AXLE GP

S/N: MJH10575-UP
PART OF 261-6245 AXLE GP
AN ATTACHMENT

SMCS-3278 **i02505423**

NOTE	REF NO	GRAPHIC REF	PART NUMBER	QTY	PART NAME 1 2 3 4 5 6 (PRODUCT LEVEL)	SEE PAGE
	1	1	**142-8724**	1	SPINDLE-WHEEL	
	2	1	**142-8729**	1	SPACER (50.8X63.5X32-MM THK)	
	3	1	**150-4385**	2	CONE	
	4	1	**150-4386**	2	CUP	
	5	1	**159-5772**	8	STUD	
	6	1	**264-4319**	1	RETAINER-SEAL	
	7	1	**2B-0858**	1	PLUG-PIPE	
	8	1	**262-2915**	1	SEAL-LIP TYPE	

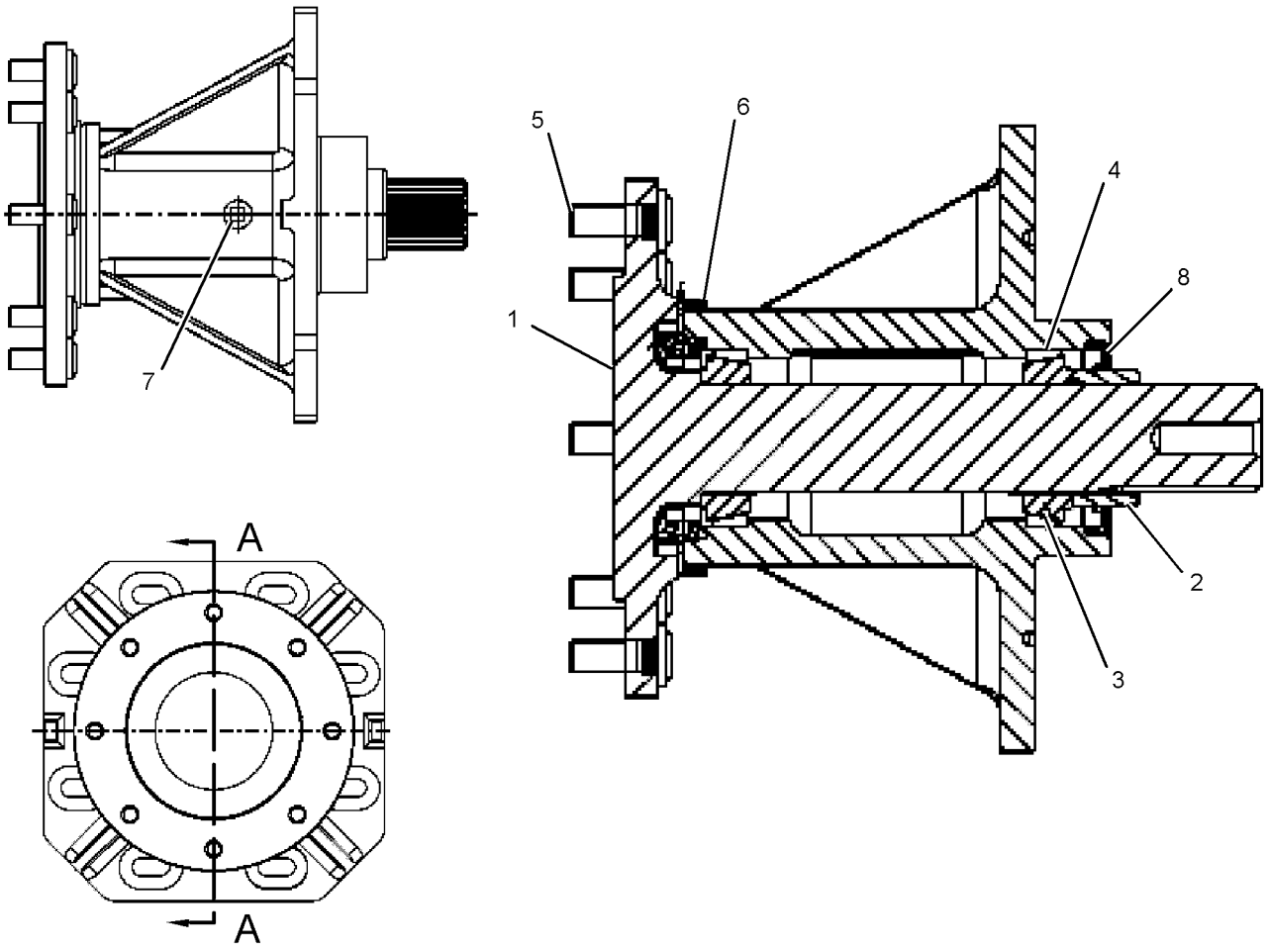

GRAPHIC #1 **<END>** g01254289

261-6245 AXLE GP

S/N: MJH10575-UP
AN ATTACHMENT

SMCS-3278 **i02476352**

NOTE	PART NUMBER	QTY	PART NAME 1 2 3 4 5 6 (PRODUCT LEVEL)	SEE PAGE
Y	**258-2759**	4	AXLE GP	190

Y-SEPARATE ILLUSTRATION

<END>

261-6255 AXLE GP

S/N: MJH10575-UP
PART OF 295-7110 CHASSIS AR
ALSO AN ATTACHMENT

SMCS-3278 **i02476310**

NOTE	PART NUMBER	QTY	PART NAME 1 2 3 4 5 6 (PRODUCT LEVEL)	SEE PAGE
Y	**142-8758**	4	AXLE GP	189

Y-SEPARATE ILLUSTRATION

<END>

POWER TRAIN

142-8760 DRIVE GP-TANDEM

S/N: MJH10575-UP

PART OF 261-5750 POWER TRAIN AR

SMCS-4062 **i02567593**

NOTE	REF NO	GRAPHIC REF	PART NUMBER	QTY	PART NAME 1 2 3 4 5 6 (PRODUCT LEVEL)	SEE PAGE
	1	1	**142-8732**	4	SPROCKET (12-TEETH) (MOTOR)	
	2	1	**142-8734**	4	SPROCKET (35-TEETH) (AXLE)	
	3	1	**142-8757**	2	CHAIN AS	
	4	1	**152-1157**	32	WASHER (15.5X32X8-MM THK)	
	5	1	**159-5793**	2	SPACER (14.3-MM THK)	
	6	1	**168-7572**	2	CHAIN AS	
	7	1	**200-0999**	32	STUD	
M	8	1	**099-4691**	2	BOLT-LOCKING (M12X1.75X25-MM)	
M	9	1	**100-3866**	4	BOLT-SELF-LOCKING (M16X2X40-MM)	
	10	1	**142-9036**	32	NUT (9/16-18-THD)	
	11	1	**5K-1787**	4	SEAL-O-RING	
	12	1	**7G-8839**	2	SPACER (13.5X57X6-MM THK)	
	13	1	**7X-0610**	4	WASHER-HARD (20X75X6-MM THK)	
	14	1	**8T-4122**	4	WASHER-HARD (17X32X3.5-MM THK)	

M-METRIC PART

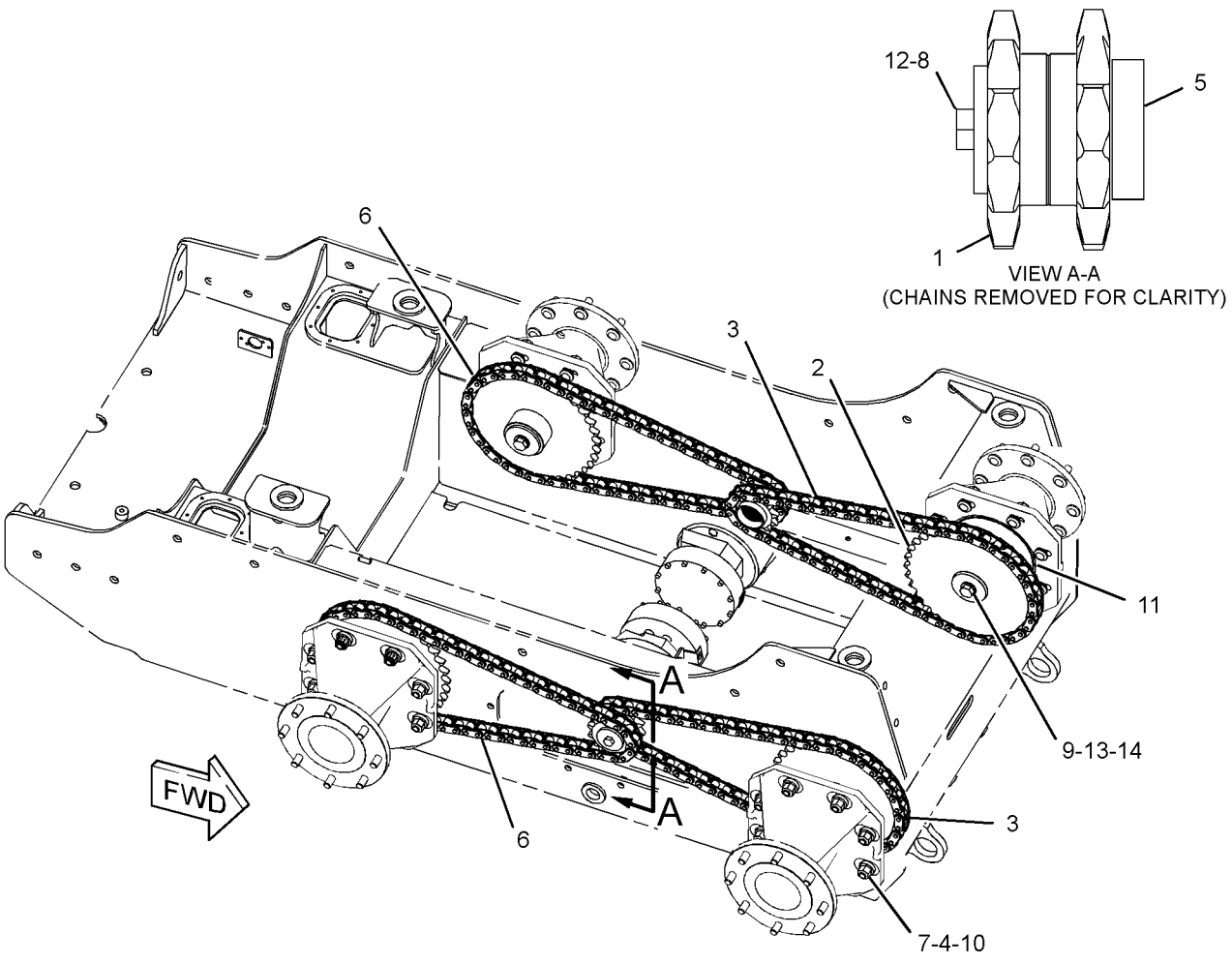

GRAPHIC #1 **<END>** g01229385

218-6624 FILTER & LINES GP-HYDRAULIC

S/N: MJH10575-UP

PART OF 278-1227 HYDRAULIC AR

SMCS-5057, 5068 **i02879732**

NOTE	REF NO	GRAPHIC REF	PART NUMBER	QTY	PART NAME 1 2 3 4 5 6 (PRODUCT LEVEL)	SEE PAGE
C	1	1	**7K-1181**	1	STRAP-CABLE	
C	2	1	**178-3620**	1	STRAP-DUAL CLAMP	
	3	1	**218-5671**	1	PLATE	
	4	1	**218-6677**	1	HOSE AS	
Y	5	1	**223-9974**	1	FILTER GP-OIL (HYDRAULIC)	195
CI	7	1	**311-5903**	1	HOSE AS	
	8	1	*148-8315*	1	CONNECTOR AS	
		1	**2M-9780**	1	SEAL-O-RING	
		1	**6V-8642**	1	CONNECTOR	
		1	**7J-9108**	1	SEAL-O-RING	
	9	1	*148-8328*	1	CONNECTOR AS	
		1	**3D-2824**	1	SEAL-O-RING	
		1	**6V-8398**	1	SEAL-O-RING	
		1	**6V-8633**	1	CONNECTOR	
	10	1	*148-8340*	1	CONNECTOR AS	
		1	**3K-0360**	1	SEAL-O-RING	
		1	**6V-8398**	1	SEAL-O-RING	
		1	**6V-8639**	1	CONNECTOR	
	11	1	*148-8382*	1	ELBOW AS	
		1	**3D-2824**	1	SEAL-O-RING	
		1	**7J-9108**	1	SEAL-O-RING	
		1	**8T-0404**	1	ELBOW	
C	12	1	**4P-8134**	1	CLIP	
C	13	1	**8T-4121**	5	WASHER-HARD (11X21X2.5-MM THK)	
M	14	1	**8T-4133**	2	NUT (M10X1.5-THD)	
M	15	1	**8T-4137**	4	BOLT (M10X1.5X20-MM)	
CE	16	1	**9X-2092**		STRIP-EDGE (20-CM)	

C-CHANGE FROM PREVIOUS TYPE
E-ORDER BY THE CENTIMETER
I-REFER TO HYDRAULIC INFORMATION SYSTEM
M-METRIC PART
Y-SEPARATE ILLUSTRATION

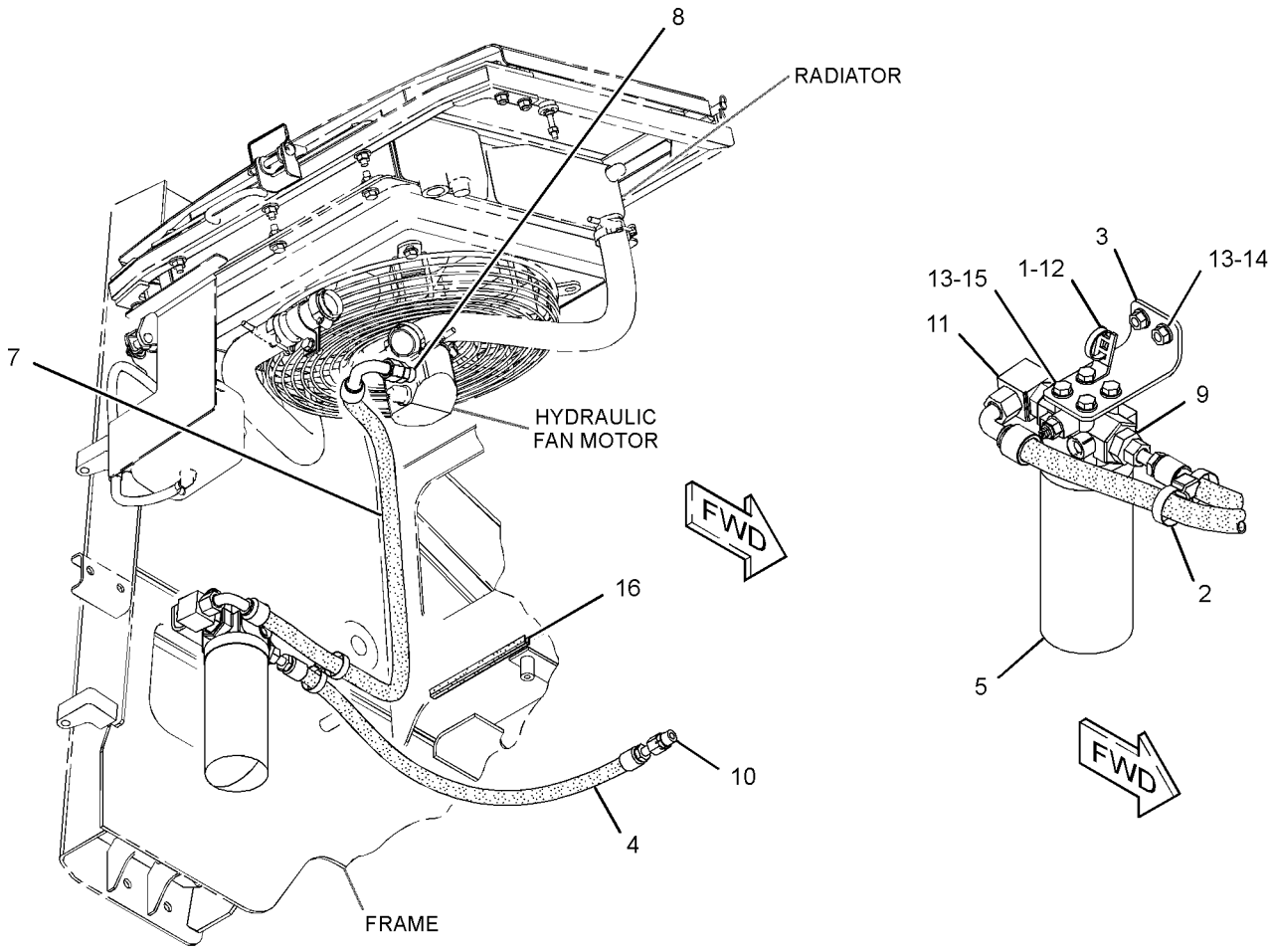

GRAPHIC #1 **<END>** g01437749

223-9974 FILTER GP-OIL–HYDRAULIC

S/N: MJH10575-UP

PART OF 218-6624 FILTER & LINES GP-HYDRAULIC

SMCS-5068 **i02469830**

NOTE	REF NO	GRAPHIC REF	PART NUMBER	QTY	PART NAME 1 2 3 4 5 6 (PRODUCT LEVEL)	SEE PAGE
	1	1	**3J-1907**	1	SEAL-O-RING	
	2	1	**134-0404**	1	SWITCH AS-PRESSURE (HYDRAULIC OIL)	
	3	1	**1G-8878**	1	FILTER AS-OIL (ADVANCED EFFICIENCY) (HYDRAULIC)	

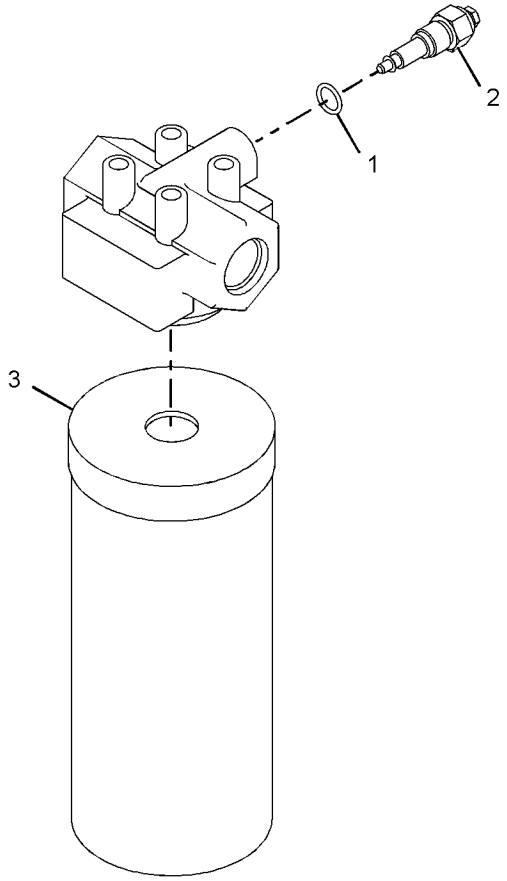

GRAPHIC #1 **<END>** g01035150

308-2298 FILTER GP-OIL–ENGINE

S/N: CYP1-UP
PART OF 292-5719 ENGINE AR-PRIMARY
AN ATTACHMENT

SMCS-5068 **i02752264**

NOTE	REF NO	GRAPHIC REF	PART NUMBER	QTY	PART NAME 1 2 3 4 5 6 (PRODUCT LEVEL)	SEE PAGE
	1	1	**220-1523**	1	FILTER ELEMENT AS-ENGINE OIL	

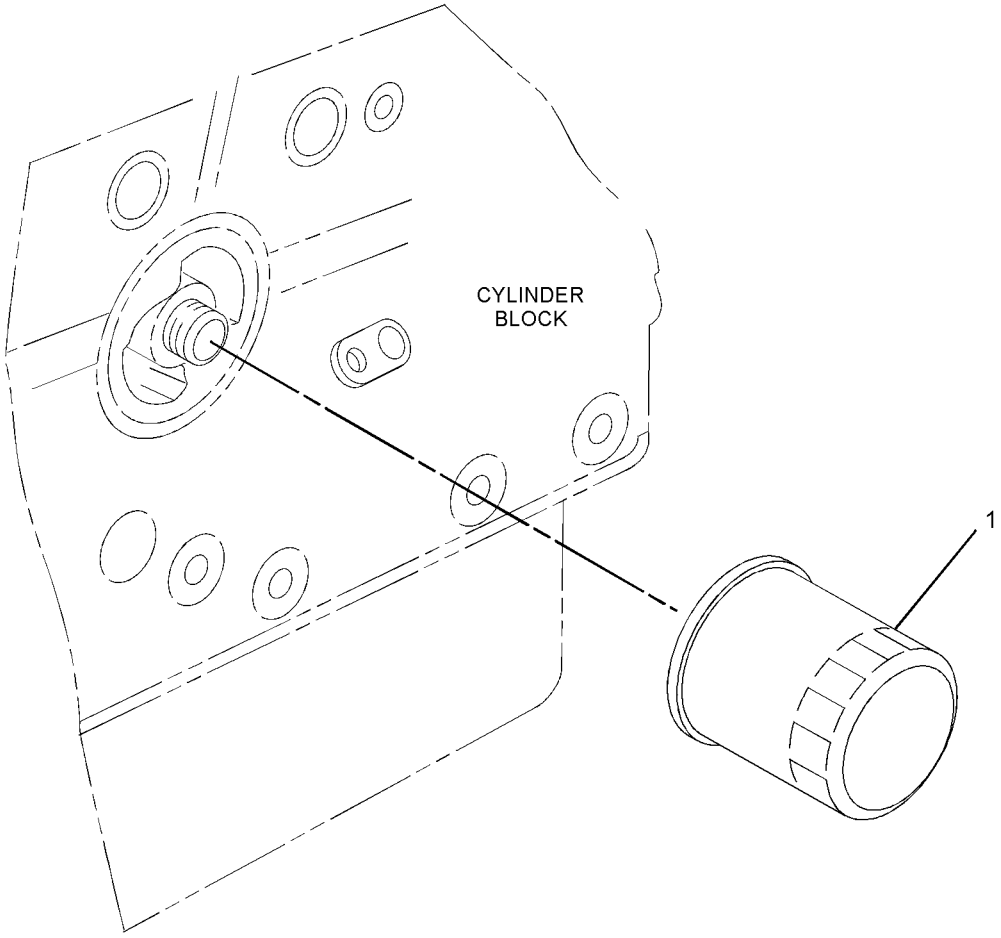

GRAPHIC #1 **<END>** g01389723

317-0974 FILTER GP-OIL

S/N: CYP1-UP
PART OF 292-5719 ENGINE AR-PRIMARY
AN ATTACHMENT

SMCS-5068 **i02827171**

NOTE	REF NO	GRAPHIC REF	PART NUMBER	QTY	PART NAME 1 2 3 4 5 6 (PRODUCT LEVEL)	SEE PAGE
	1	1	**6I-1201**	1	SEAL-O-RING	
	2	1	**118-9145**	1	CONNECTOR	
	3	1	**153-6879**	1	STUD-HOLLOW	
	4	2	**160-4826**	4	CLAMP-HOSE	
	5	1	**164-7619**	1	SEAL-O-RING	
	6	1	**198-2663**	1	BOLT	
	7	1	**231-8920**	1	BOLT	
	8	2	**246-3470**	1	HOSE	
	9	2	**246-3471**	1	HOSE	
	10	1	**252-0787**	1	SEAL-O-RING	
	11	1	**252-0788**	1	BASE-OIL FILTER	
	12	1	**311-2349**	1	WASHER	

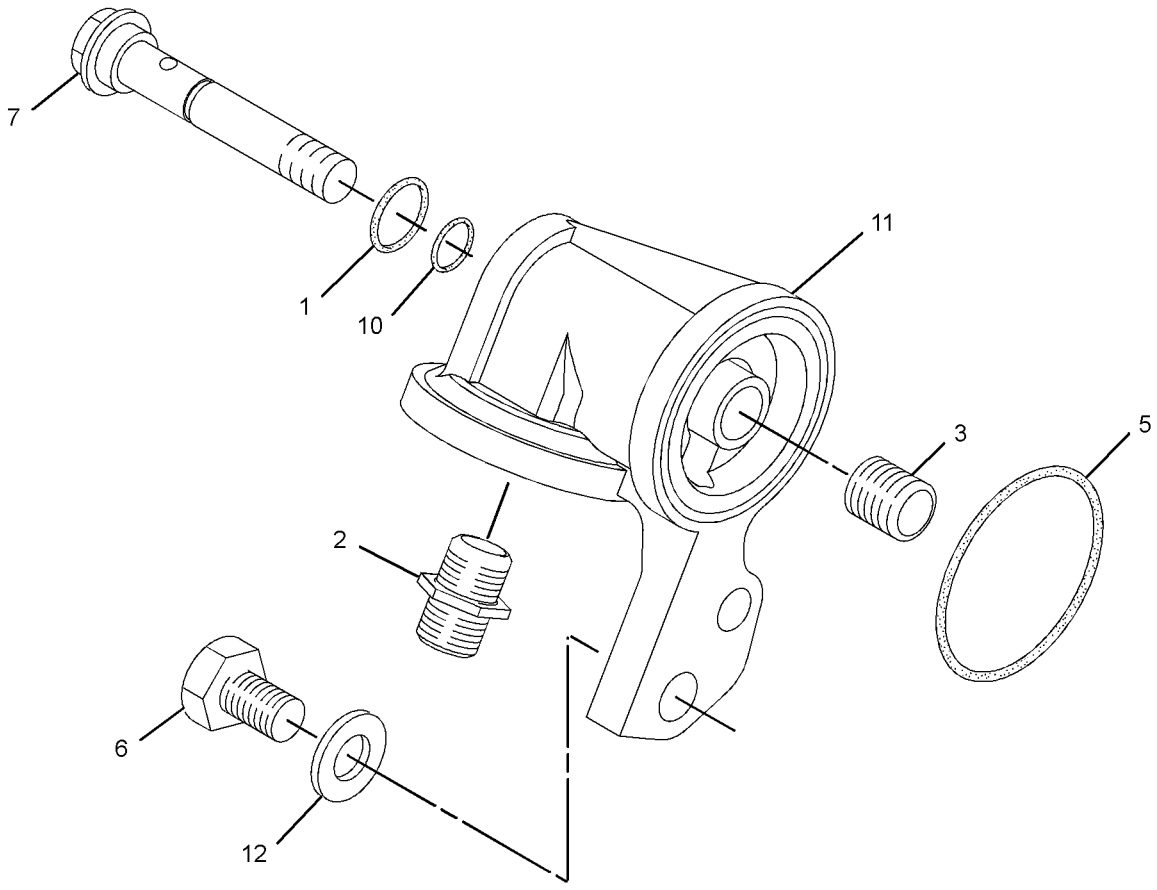

GRAPHIC #1 g01439021

317-0974 **FILTER GP-OIL** *(contd.)* **i02827171**

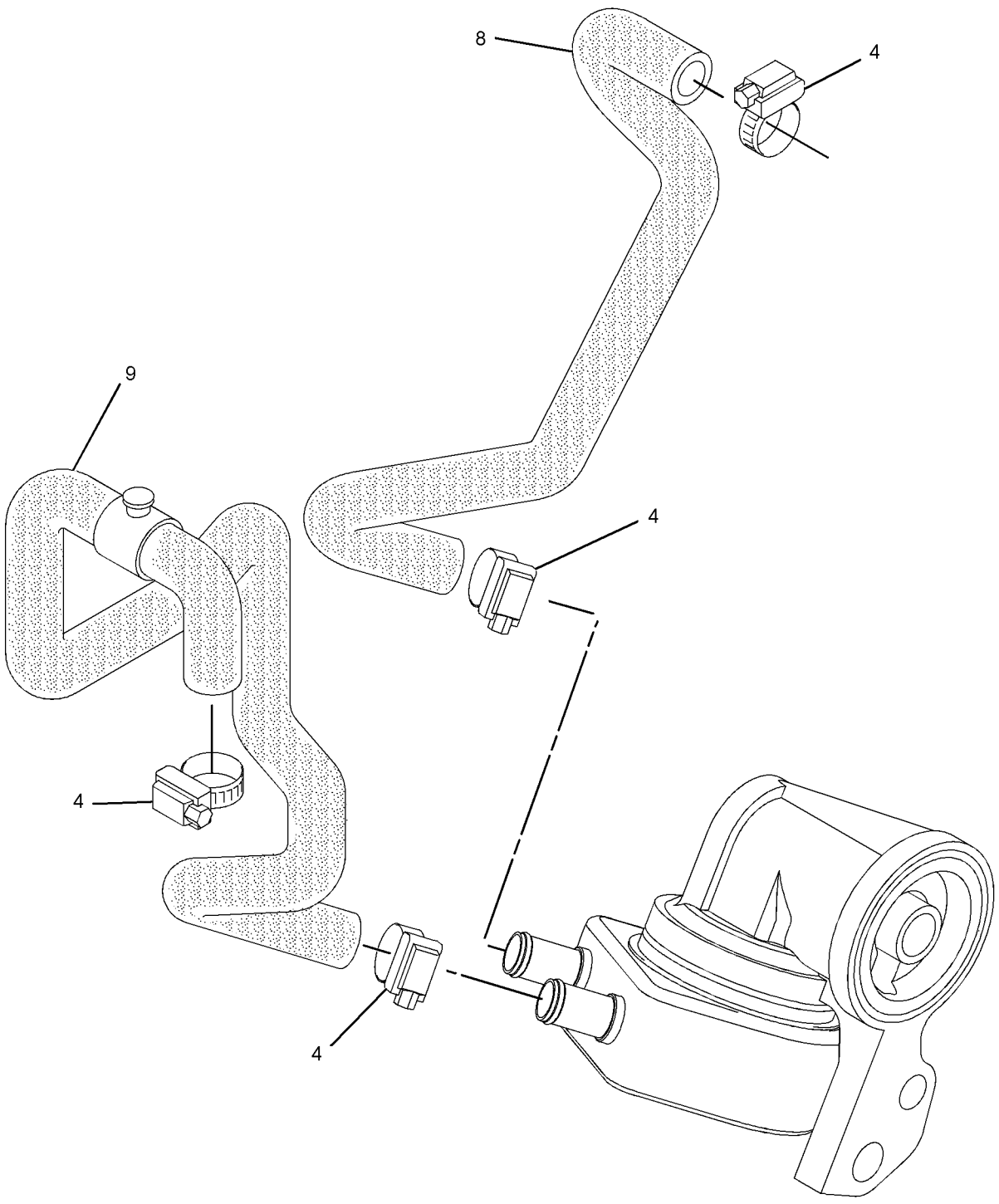

GRAPHIC #2 **<END>** g01439024

218-6089 LINES GP-HYDROSTATIC

S/N: MJH10575-UP

PART OF 278-1227 HYDRAULIC AR

SMCS-3154 **i02769709**

NOTE	REF NO	GRAPHIC REF	PART NUMBER	QTY	PART NAME 1 2 3 4 5 6 (PRODUCT LEVEL)	SEE PAGE
	2	1	**6V-0852**	5	CAP-DUST	
C	3	1	*148-8362*	2	ELBOW AS	
					(EACH INCLUDES)	
		1	**5K-9090**	1	SEAL-O-RING	
		1	**8T-6684**	1	ELBOW (90-DEG)	
		1	**3D-2824**	1	SEAL-O-RING	
	4	1	*164-5567*	5	COUPLER AS-QUICK	
					(EACH INCLUDES)	
		1	**3J-1907**	1	SEAL-O-RING	
		1	**6V-3965**	1	COUPLER-QUICK DISCONNECT	
CY	5	1	*308-0421*	1	MANIFOLD GP-RETURN	201
I	7	1	**142-9241**	2	HOSE AS	
I	8	1	**218-6095**	2	HOSE AS	
I	9	1	**218-6096**	1	HOSE AS	
I	10	1	**218-6862**	1	HOSE AS	
	11	1	*148-8322*	4	CONNECTOR AS	
					(EACH INCLUDES)	
		1	**2M-9780**	1	SEAL-O-RING	
		1	**6V-8640**	1	CONNECTOR	
		1	**6V-9746**	1	SEAL-O-RING	
	12	1	*148-8327*	4	CONNECTOR AS	
					(EACH INCLUDES)	
		1	**3D-2824**	1	SEAL-O-RING	
		1	**6V-8637**	1	CONNECTOR (SEAL)	
		1	**6V-9746**	1	SEAL-O-RING	
	13	1	*148-8338*	2	CONNECTOR AS	
					(EACH INCLUDES)	
		1	**3J-1907**	1	SEAL-O-RING	
		1	**6V-8397**	1	SEAL-O-RING	
		1	**8T-0075**	1	CONNECTOR	
M	14	1	**5C-7261**	3	NUT (M8X1.25-THD)	
	16	1	**5P-4116**	3	WASHER-HARD (8.8X20.5X2-MM THK)	

C-CHANGE FROM PREVIOUS TYPE
I-REFER TO HYDRAULIC INFORMATION SYSTEM
M-METRIC PART
Y-SEPARATE ILLUSTRATION

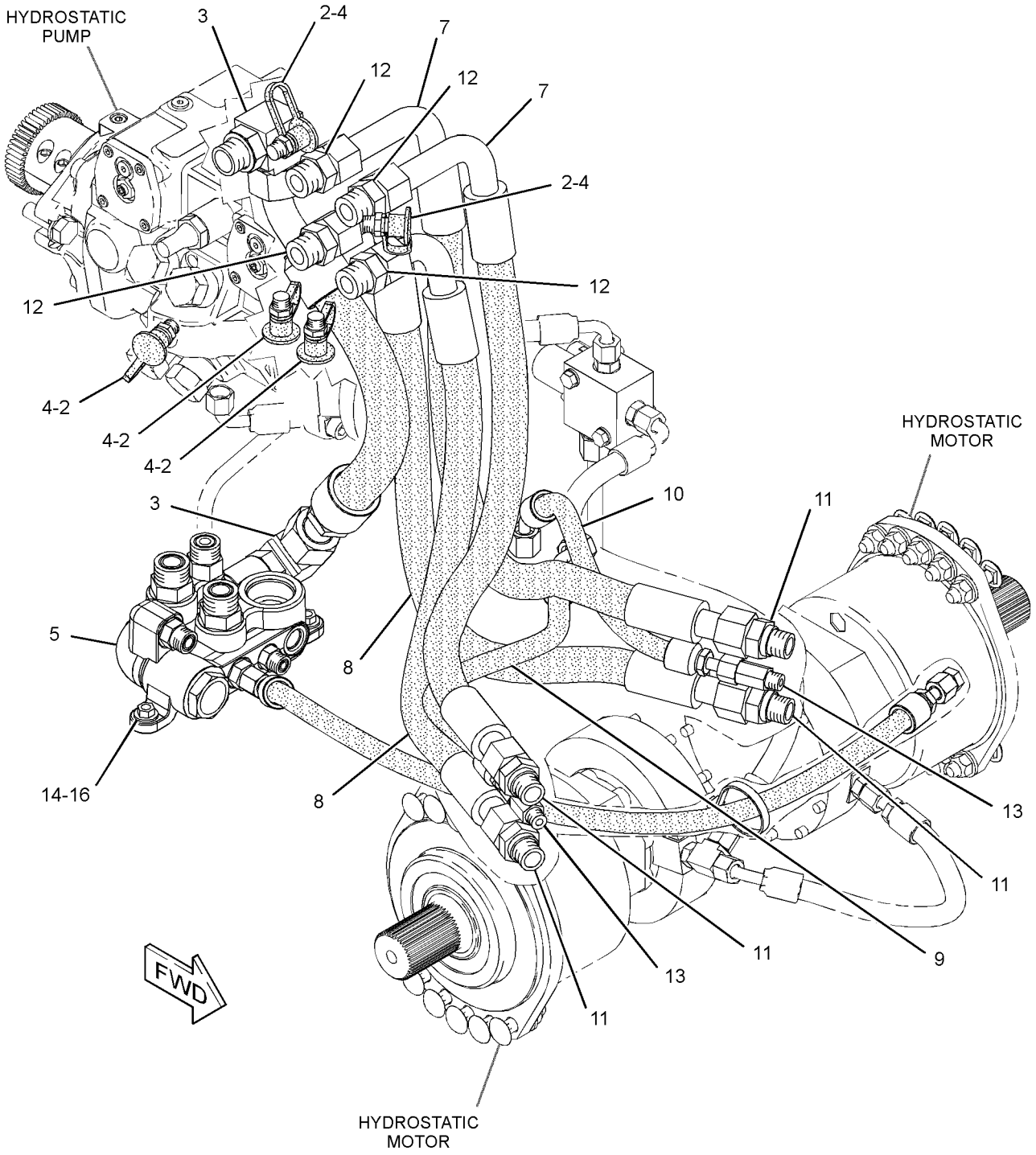

GRAPHIC #1 **<END>** g01388524

308-0421 MANIFOLD GP-RETURN

S/N: MJH10575-UP

PART OF 218-6089 LINES GP-HYDROSTATIC

SMCS-5264 **i02730543**

NOTE	REF NO	GRAPHIC REF	PART NUMBER	QTY	PART NAME 1 2 3 4 5 6 (PRODUCT LEVEL)	SEE PAGE
	1	1	**7K-1181**	1	STRAP-CABLE	
	2	1	**105-4593**	1	POPPET	
	3	1	**212-6603**	1	PLUG AS	
		1	**6V-8978**	1	SEAL-O-RING	
	4	1	**212-6604**	1	SPRING	
I	5	1	**233-5716**	1	HOSE AS	
	6	1	**305-4185**	1	BLOCK	
	7	1	*148-8318*	1	CONNECTOR AS	
		1	**3K-0360**	1	SEAL-O-RING	
		1	**6V-8397**	1	SEAL-O-RING	
		1	**6V-8634**	1	CONNECTOR	
	8	1	*148-8327*	2	CONNECTOR AS	
					(EACH INCLUDES)	
		1	**3D-2824**	1	SEAL-O-RING	
		1	**6V-8637**	1	CONNECTOR	
		1	**6V-9746**	1	SEAL-O-RING	
	9	1	*148-8336*	1	CONNECTOR AS	
		1	**3J-1907**	1	SEAL-O-RING	
		1	**6V-8397**	1	SEAL-O-RING	
		1	**6V-8636**	1	CONNECTOR	
	10	1	*148-8340*	1	CONNECTOR AS	
		1	**3K-0360**	1	SEAL-O-RING	
		1	**6V-8398**	1	SEAL-O-RING	
		1	**6V-8639**	1	CONNECTOR	
	11	1	*148-8342*	1	CONNECTOR AS	
		1	**3K-0360**	1	SEAL-O-RING	
		1	**6V-8632**	1	CONNECTOR	
		1	**7J-9108**	1	SEAL-O-RING	
	12	1	*165-4934*	1	PLUG AS	
		1	**6V-8397**	1	SEAL-O-RING	
		1	**6V-9508**	1	PLUG	

I-REFER TO HYDRAULIC INFORMATION SYSTEM

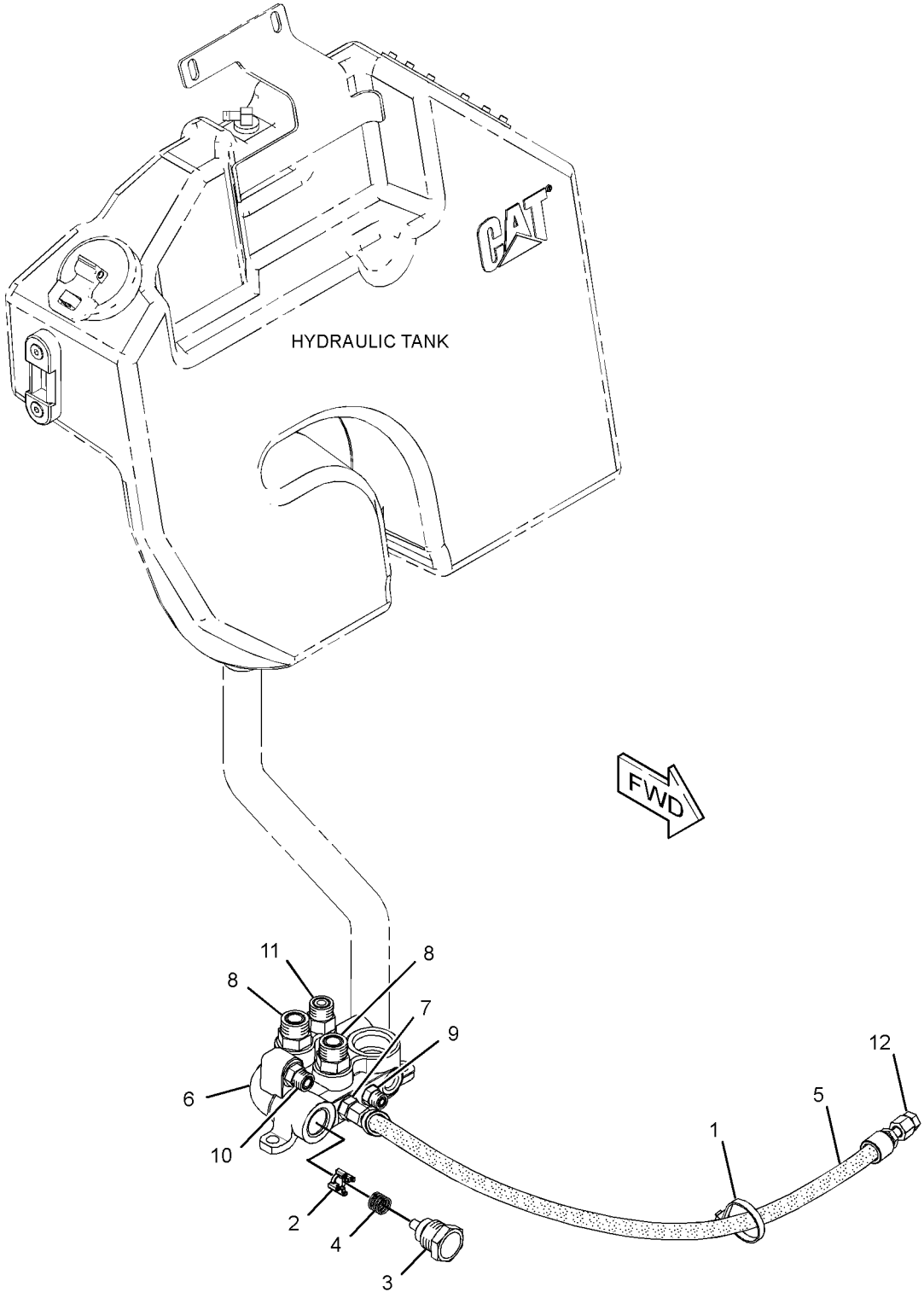

GRAPHIC #1 **<END>** g01380873

191-9650 MOTOR & MTG GP-HYDROSTATIC

S/N: MJH10575-UP

PART OF 261-5750 POWER TRAIN AR

SMCS-5058 **i02639962**

NOTE	REF NO	GRAPHIC REF	PART NUMBER	QTY	PART NAME 1 2 3 4 5 6 (PRODUCT LEVEL)	SEE PAGE
	1	1	**206-5143**	20	BOLT (M12X1.75-THD)	
CYR	2	1	**280-7854**	2	MOTOR GP-PISTON	204
M	3	1	**6V-7687**	20	LOCKNUT (M12X1.75-THD)	
	4	1	**8T-4223**	20	WASHER-HARD (13.5X25.5X3-MM THK)	

C-CHANGE FROM PREVIOUS TYPE
M-METRIC PART
R-REMFG PART MAY BE AVAILABLE
Y-SEPARATE ILLUSTRATION

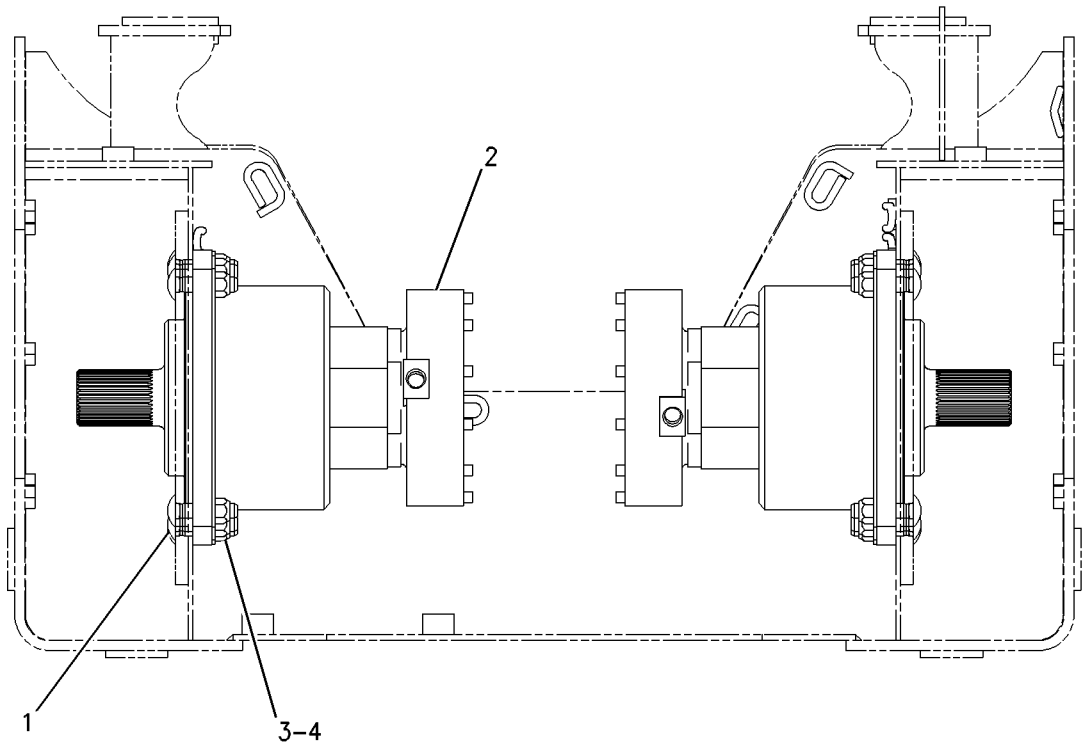

REAR VIEW

GRAPHIC #1 **<END>** g00978901

280-7854 MOTOR GP-PISTON*R

S/N: MJH10575-UP

PART OF 191-9650 MOTOR & MTG GP-HYDROSTATIC

SMCS-5058 **i02752612**

NOTE	REF NO	GRAPHIC REF	PART NUMBER	QTY	PART NAME 1 2 3 4 5 6 (PRODUCT LEVEL)	SEE PAGE
	1	1	**140-2490**	1	RING-SPLIT	
	2	1	**3K-0360**	1	SEAL-O-RING	
	3	1	**279-0733**	1	KIT-SHIM (PISTON MOTOR)	
					(INCLUDES WASHERS)	
J	4	1	**033-5853**	1	SEAL-O-RING	
	5	1	**172-8175**	13	DISC-BRAKE (INNER)	
	6	1	**216-6124**	1	PLUG	
J	7	1	**095-1517**	1	SEAL-O-RING	
M	8	1	**5C-7883**	12	BOLT-SOCKET HEAD (M6X1X16-MM)	
	9	1	**222-5693**	1	PLUG-O-RING	
	10	1	**172-8173**	15	DISC-BRAKE (OUTER)	
M	11	1	**8T-0271**	5	BOLT-SOCKET HEAD (M10X1.5X35-MM)	
	12	1	**140-2492**	1	BEARING	
	13	1	**268-1936**	1	BEARING AS-TAPERED ROLLER	
	14	1	**140-2513**	1	SHIM (0.01-MM THK)	
	15	1	**140-2514**	2	SHIM (0.3-MM THK)	
	16	1	**9S-8005**	1	PLUG-O-RING	
M	17	1	**289-6347**	6	BOLT-SOCKET HEAD (M12X1.75X55-MM)	
					AVAILABLE REPAIR KIT(S):	
J			**289-6336**	1	KIT-SEAL (PISTON MOTOR)	
					(INCLUDES SEALS, SEAL RINGS & GASKET)	

J-KIT MARKED J INCLUDES PARTS MARKED J
M-METRIC PART

280-7854 MOTOR GP-PISTON *(contd.)* **i02752612**

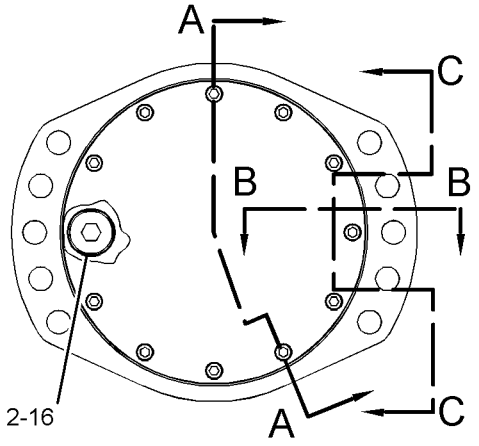

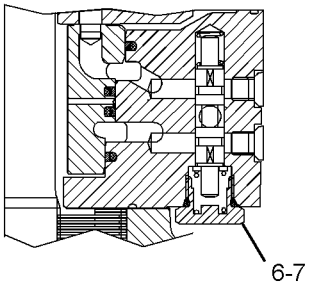

SECTION B-B

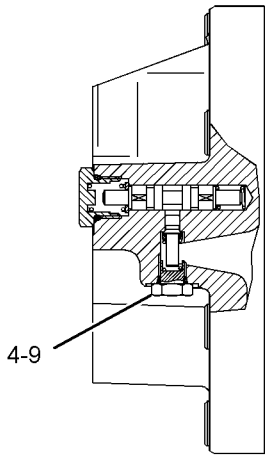

SECTION C-C

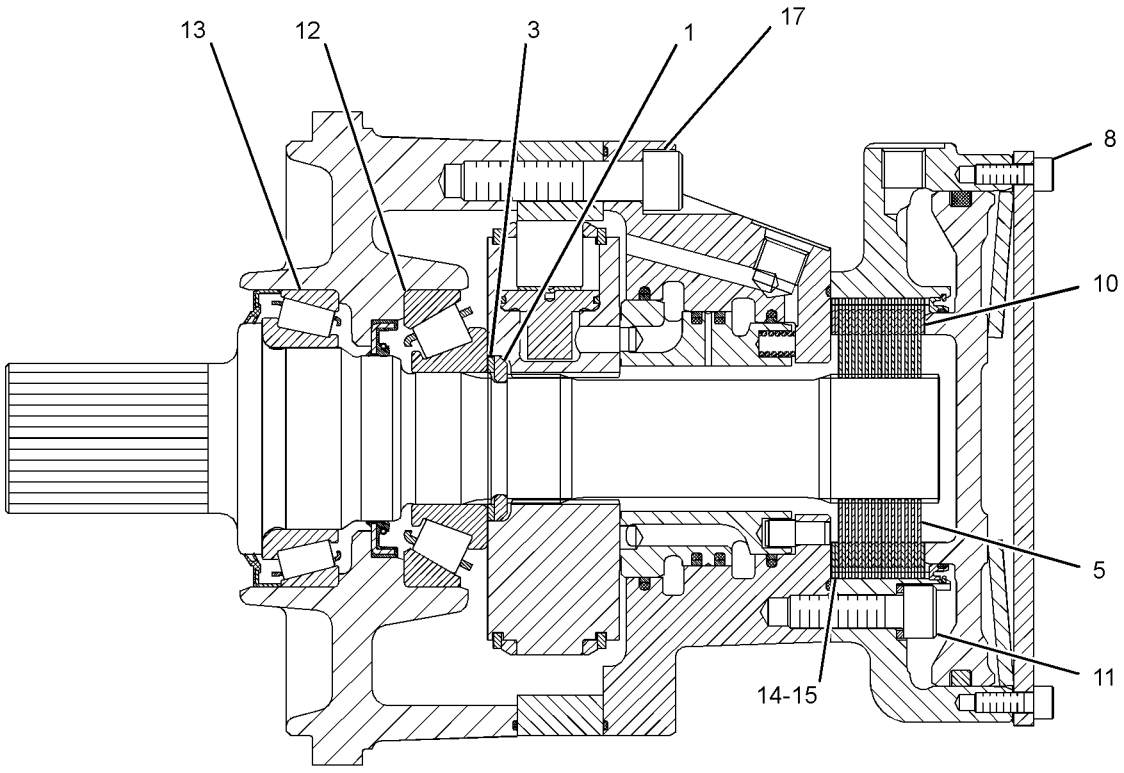

SECTION A-A

GRAPHIC #1 **<END>** g01380520

228-1763 MOUNTING GP-PUMP

S/N: MJH10575-UP

PART OF 295-7027, 295-7028 INSTALLATION AR-ENGINE

SMCS-3203, 5062, 5070 **i01988423**

NOTE	REF NO	GRAPHIC REF	PART NUMBER	QTY	PART NAME 1 2 3 4 5 6 (PRODUCT LEVEL)	SEE PAGE
	1	1	**141-7562**	1	FLANGE-NYLON	
	2	1	**142-8719**	1	PLATE-ADAPTER	
	3	1	**6V-8918**	8	BOLT (5/16-18X1.25-IN)	
	4	1	**8T-4121**	12	WASHER-HARD (11X21X2.5-MM THK)	
M	5	1	**8T-4196**	12	BOLT (M10X1.5X35-MM)	

M-METRIC PART

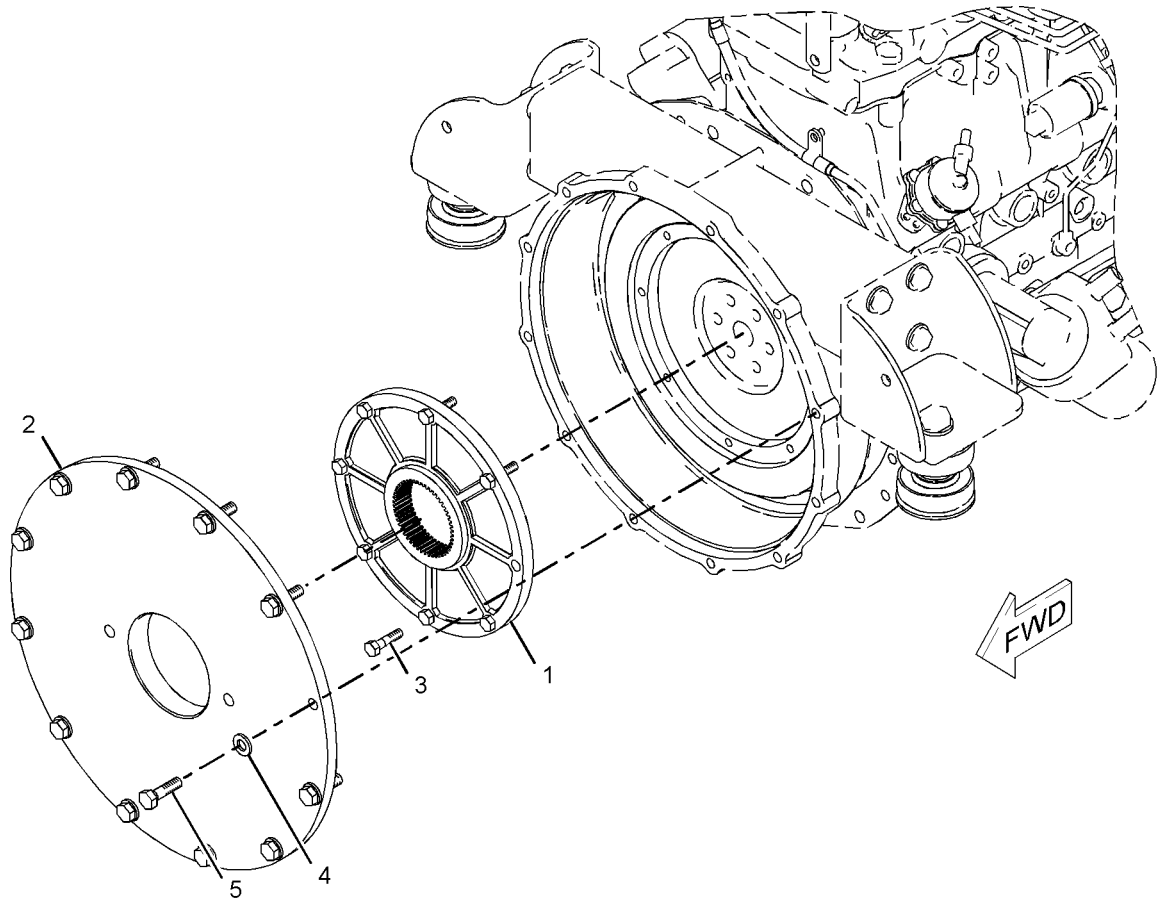

GRAPHIC #1 **<END>** g01030422

261-5750 POWER TRAIN AR

S/N: MJH10575-UP

PART OF 295-7226, 295-7227 COMMON AR

SMCS-3203, 4062, 5058, 5070 **i02289158**

NOTE	PART NUMBER	QTY	PART NAME 1 2 3 4 5 6 (PRODUCT LEVEL)	SEE PAGE
Y	*142-8760*	1	DRIVE GP-TANDEM	192
Y	*191-9650*	1	MOTOR & MTG GP-HYDROSTATIC	203
Y	*261-5660*	1	PUMP & MTG GP-HYDROSTATIC	208

Y-SEPARATE ILLUSTRATION

<END>

261-5660 PUMP & MTG GP-HYDROSTATIC

S/N: MJH10575-UP

PART OF 261-5750 POWER TRAIN AR

SMCS-3203, 5070 **i02619542**

NOTE	REF NO	GRAPHIC REF	PART NUMBER	QTY	PART NAME 1 2 3 4 5 6 (PRODUCT LEVEL)	SEE PAGE
	1	1	**165-0142**	2	WASHER-HARD (14.8X27X3-MM THK)	
CYR	2	1	**289-6342**	1	PUMP GP-PISTON	209
	3	1	**252-9167**	2	BOLT-SOCKET HEAD	
	4	1	**263-4997**	1	HUB AS-COUPLING	
		1	**096-0194**	1	RING-RETAINING	
M	5	1	**167-4339**	2	BOLT (M14X2X40-MM)	

C-CHANGE FROM PREVIOUS TYPE
M-METRIC PART
R-REMFG PART MAY BE AVAILABLE
Y-SEPARATE ILLUSTRATION

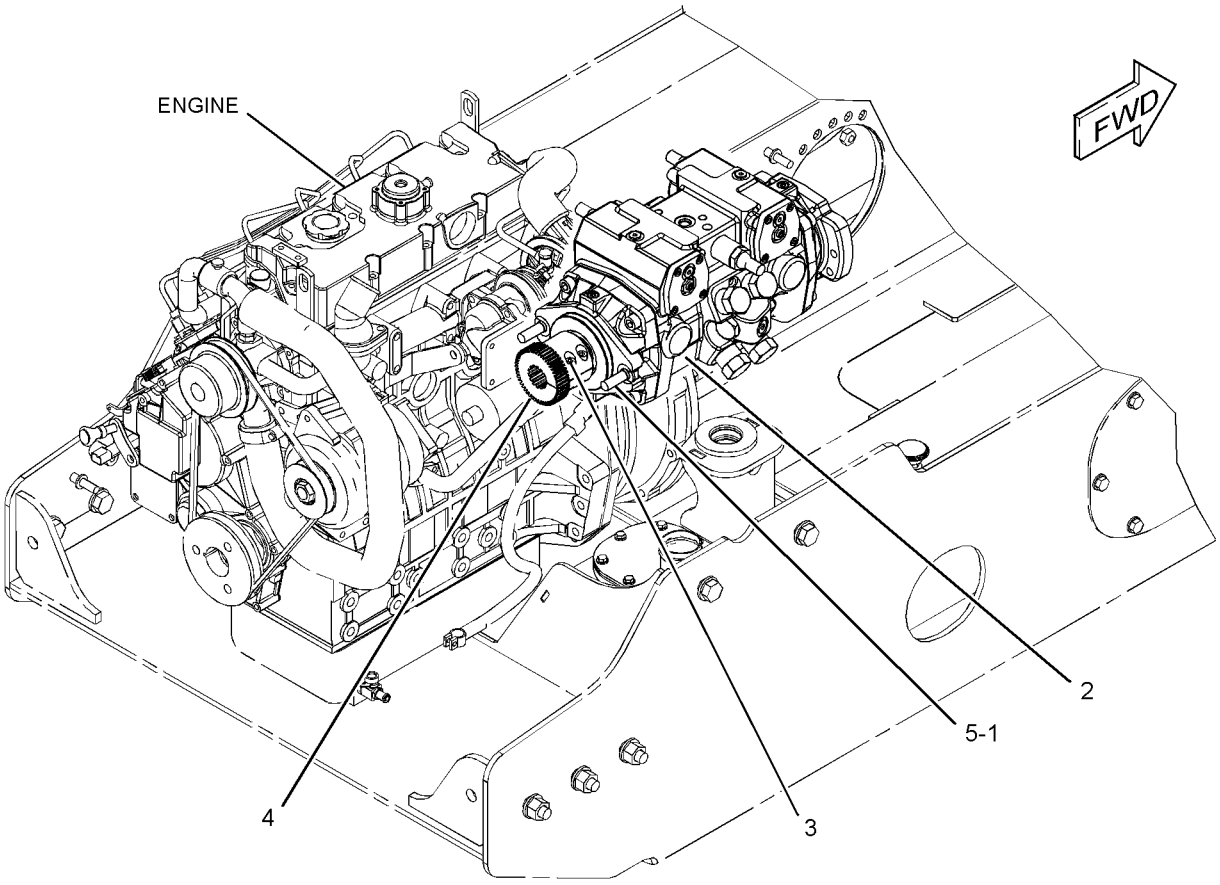

GRAPHIC #1 **<END>** g01174571

289-6342 PUMP GP-PISTON*R

S/N: MJH10575-UP

PART OF 261-5660 PUMP & MTG GP-HYDROSTATIC

SMCS-3203, 5070 **i02619344**

NOTE	REF NO	GRAPHIC REF	PART NUMBER	QTY	PART NAME 1 2 3 4 5 6 (PRODUCT LEVEL)	SEE PAGE
	1	1	**6E-5060**	3	CAP AS	
	2	1	**167-7713**	4	RING-BACKUP	
	3	1	**121-4459**	2	BEARING-ROLLER	
	4	1	**108-3565**	2	CLIP	
	5	1	**204-1454**	2	PIN-THREADED	
	6	1	**204-1455**	2	LOCKNUT	
	7	1	**204-1456**	1	SHIM	
	8	1	**280-7805**	1	VALVE GP-PUMP CONTROL (PISTON PUMP)	
	9	1	**121-4870**	4	VALVE-RELIEF (CROSSOVER)	
	10	1	**204-1459**	1	VALVE GP-RELIEF (CHARGE)	
	11	1	**135-2655**	2	SEAL-O-RING	
	12	1	**3J-7354**	2	SEAL-O-RING	
	13	1	**3K-0715**	1	SEAL-O-RING	
	14	1	**6V-5326**	4	SEAL-O-RING	
	15	1	**6V-5586**	2	SEAL-O-RING	
	16	1	**6V-8352**	1	SEAL-O-RING	
M	17	1	**8T-0267**	8	BOLT-SOCKET HEAD (M6X1X12-MM)	
	18	1	**9S-8002**	2	PLUG-O-RING	
M	19	1	**9X-6606**	2	NUT-HEX (M10X1-THD)	
	20	1	**126-5643**	2	CAGE	
	21	1	**081-3698**	2	BEARING	
	22	1	**204-1452**	3	RING-RETAINING	
	23	1	**140-1802**	1	SEAL-RING	
	24	1	**126-5640**	2	BEARING-ROLLER	
	25	1	**1G-3410**	4	WIRE	
	26	1	**280-7863**	1	ROTATING GP-PUMP (RH)	
	27	1	**6E-0725**	4	ROLLER	
	28	1	**280-7865**	1	ROTATING GP-PUMP (LH)	
	29	1	**268-1929**	2	CRADLE	
	30	1	**261-5659**	1	ORIFICE	
					AVAILABLE GASKET KIT(S):	
			268-9529	1	KIT-SEAL (PISTON PUMP)	
					(INCLUDES SHAFT SEAL, SEALS, SEAL-O-RINGS, SEAL LOCK NUTS, SPACERS & RING)	

M-METRIC PART

289-6342 PUMP GP-PISTON *(contd.)* **i02619344**

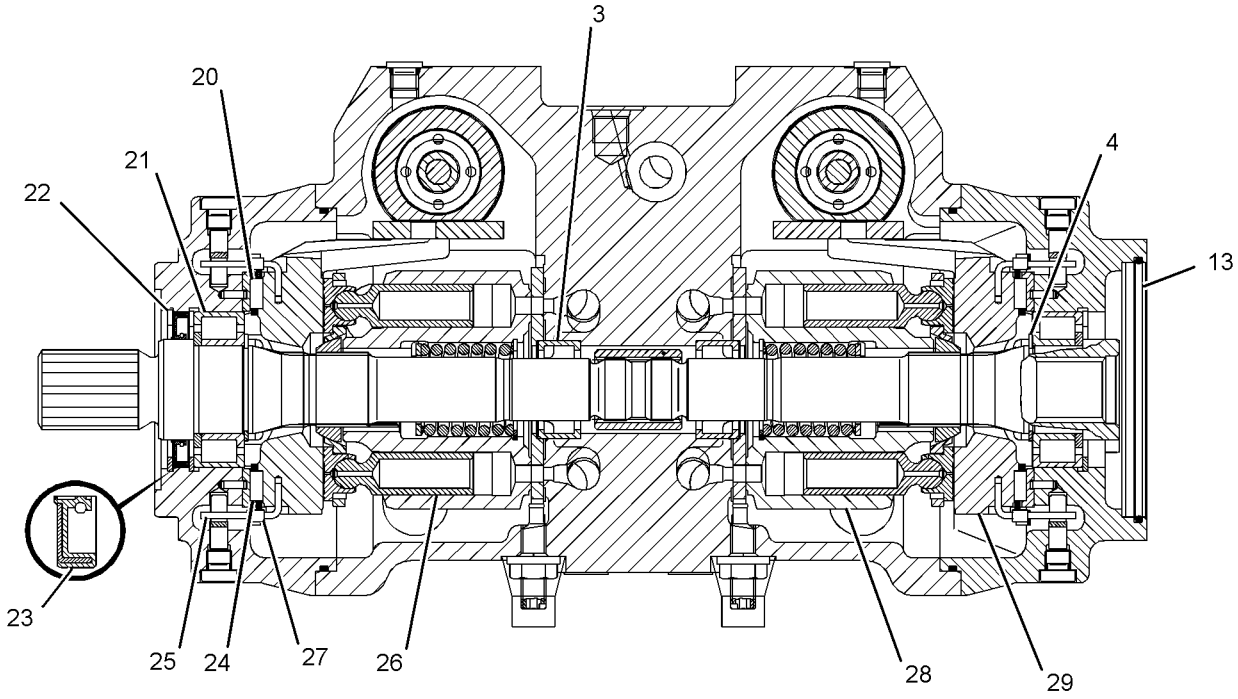

SECTION A-A

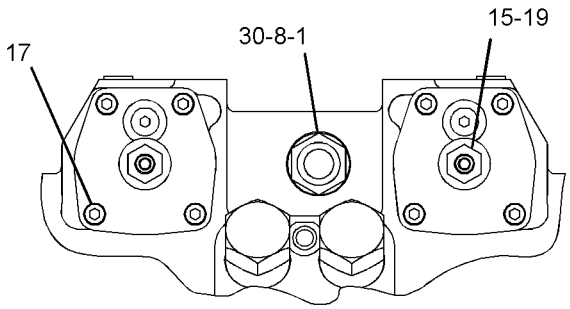

VIEW B-B

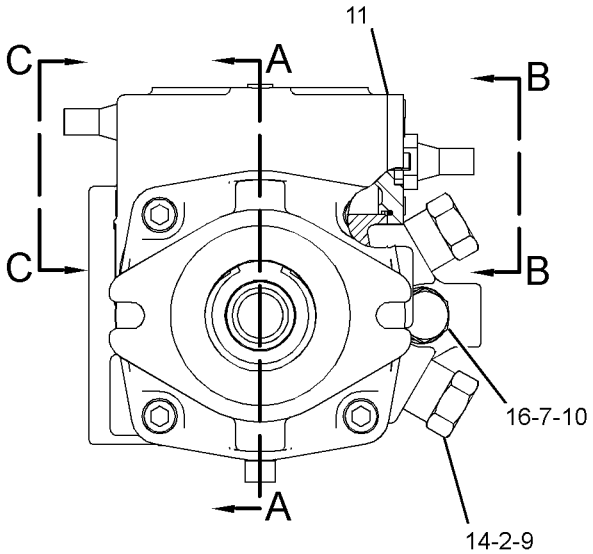

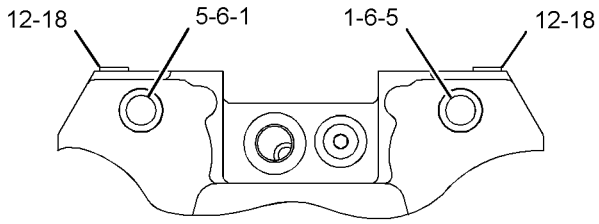

VIEW C-C

GRAPHIC #1 **<END>** g01312749

142-7484 TIRE & RIM GP–LH

S/N: MJH10575-UP
(16.5X8.25). DIRECTIONAL TIRE
PART OF 142-8666 WHEEL & TIRE AR
AN ATTACHMENT

SMCS-4202 **i02578088**

NOTE	PART NUMBER	QTY	PART NAME 1 2 3 4 5 6 (PRODUCT LEVEL)	SEE PAGE
	150-8599	1	VALVE AS-TIRE	
	142-7485	1	WHEEL AS	
	142-7486	1	TIRE (10-16.5)	

<END>

142-7487 TIRE & RIM GP–LH

S/N: MJH10575-UP
(16.5X8.25). DIRECTIONAL TIRE
PART OF 142-8667 WHEEL & TIRE AR
AN ATTACHMENT

SMCS-4202 **i02578089**

NOTE	PART NUMBER	QTY	PART NAME 1 2 3 4 5 6 (PRODUCT LEVEL)	SEE PAGE
	150-8599	1	VALVE AS-TIRE	
	142-7485	1	WHEEL AS	
	142-7488	1	TIRE (10-16.5)	

<END>

142-7489 TIRE & RIM GP–LH

S/N: MJH10575-UP
(16.5X8.25). DIRECTIONAL TIRE
PART OF 142-8649 WHEEL & TIRE AR
AN ATTACHMENT

SMCS-4202 **i02578090**

NOTE	PART NUMBER	QTY	PART NAME 1 2 3 4 5 6 (PRODUCT LEVEL)	SEE PAGE
	150-8599	1	VALVE AS-TIRE	
	142-7490	1	WHEEL AS	
	142-7486	1	TIRE (10-16.5)	

<END>

142-7491 TIRE & RIM GP–LH

S/N: MJH10575-UP
(16.5X8.25). DIRECTIONAL TIRE
PART OF 142-8648 WHEEL & TIRE AR
AN ATTACHMENT

SMCS-4202 **i02578131**

NOTE	PART NUMBER	QTY	PART NAME 1 2 3 4 5 6 (PRODUCT LEVEL)	SEE PAGE
	150-8599	1	VALVE AS-TIRE	
	142-7490	1	WHEEL AS	
	142-7488	1	TIRE (10-16.5)	

<END>

150-8590 TIRE & RIM GP–RH

S/N: MJH10575-UP
(16.5X8.25). DIRECTIONAL TIRE
PART OF 142-8649 WHEEL & TIRE AR
AN ATTACHMENT

SMCS-4202 **i02578132**

NOTE	PART NUMBER	QTY	PART NAME 1 2 3 4 5 6 (PRODUCT LEVEL)	SEE PAGE
	150-8599	1	VALVE AS-TIRE	
	142-7490	1	WHEEL AS	
	142-7486	1	TIRE (10-16.5)	

<END>

150-8591 TIRE & RIM GP–RH

S/N: MJH10575-UP
(16.5X8.25). DIRECTIONAL TIRE
PART OF 142-8648 WHEEL & TIRE AR
AN ATTACHMENT

SMCS-4202 **i02578153**

NOTE	PART NUMBER	QTY	PART NAME 1 2 3 4 5 6 (PRODUCT LEVEL)	SEE PAGE
	150-8599	1	VALVE AS-TIRE	
	142-7490	1	WHEEL AS	
	142-7488	1	TIRE (10-16.5)	

<END>

150-8592 TIRE & RIM GP–RH

S/N: MJH10575-UP
(16.5X8.25). DIRECTIONAL TIRE
PART OF 142-8666 WHEEL & TIRE AR
AN ATTACHMENT

SMCS-4202 **i02578156**

NOTE	PART NUMBER	QTY	PART NAME 1 2 3 4 5 6 (PRODUCT LEVEL)	SEE PAGE
	150-8599	1	VALVE AS-TIRE	
	142-7485	1	WHEEL AS	
	142-7486	1	TIRE (10-16.5)	

<END>

150-8593 TIRE & RIM GP–RH

S/N: MJH10575-UP
(16.5X8.25). DIRECTIONAL TIRE
PART OF 142-8667 WHEEL & TIRE AR
AN ATTACHMENT

SMCS-4202 **i02578158**

NOTE	PART NUMBER	QTY	PART NAME 1 2 3 4 5 6 (PRODUCT LEVEL)	SEE PAGE
	150-8599	1	VALVE AS-TIRE	
	142-7485	1	WHEEL AS	
	142-7488	1	TIRE (10-16.5)	

<END>

165-2605 TIRE & RIM GP–LH

S/N: MJH10575-UP
(16.5X8.25). DIRECTIONAL TIRE
PART OF 165-2602 WHEEL & TIRE AR
AN ATTACHMENT

SMCS-4202 **i02362220**

NOTE	PART NUMBER	QTY	PART NAME 1 2 3 4 5 6 (PRODUCT LEVEL)	SEE PAGE
	150-8599	1	VALVE AS-TIRE	
	142-7490	1	WHEEL AS	
	165-4908	1	TIRE (10-16.5)	

<END>

165-2606 TIRE & RIM GP–RH

S/N: MJH10575-UP
(16.5X8.25). DIRECTIONAL TIRE
PART OF 165-2602 WHEEL & TIRE AR
AN ATTACHMENT

SMCS-4202 **i02362218**

NOTE	PART NUMBER	QTY	PART NAME 1 2 3 4 5 6 (PRODUCT LEVEL)	SEE PAGE
	150-8599	1	VALVE AS-TIRE	
	142-7490	1	WHEEL AS	
	165-4908	1	TIRE (10-16.5)	

<END>

165-2609 TIRE & RIM GP–LH

S/N: MJH10575-UP
(16.5X8.25). DIRECTIONAL TIRE
PART OF 165-4891 WHEEL & TIRE AR
AN ATTACHMENT

SMCS-4202 **i02362238**

NOTE	PART NUMBER	QTY	PART NAME 1 2 3 4 5 6 (PRODUCT LEVEL)	SEE PAGE
	150-8599	1	VALVE AS-TIRE	
	142-7485	1	WHEEL AS	
	165-4908	1	TIRE (10-16.5)	

<END>

165-2610 TIRE & RIM GP–RH

S/N: MJH10575-UP
(16.5X8.25). DIRECTIONAL TIRE
PART OF 165-4891 WHEEL & TIRE AR
AN ATTACHMENT

SMCS-4202 **i02362235**

NOTE	PART NUMBER	QTY	PART NAME 1 2 3 4 5 6 (PRODUCT LEVEL)	SEE PAGE
	150-8599	1	VALVE AS-TIRE	
	142-7485	1	WHEEL AS	
	165-4908	1	TIRE (10-16.5)	

<END>

185-8670 TIRE & RIM GP–LH

S/N: MJH10575-UP
(265-MMX521-MM). DIRECTIONAL TIRE
PART OF 185-8660 WHEEL & TIRE AR
AN ATTACHMENT

SMCS-4202 **i02362163**

NOTE	PART NUMBER	QTY	PART NAME 1 2 3 4 5 6 (PRODUCT LEVEL)	SEE PAGE
	150-8599	1	VALVE AS-TIRE	
	185-8668	1	WHEEL AS	
	185-9934	1	TIRE (265-521)	

<END>

185-8671 TIRE & RIM GP–RH

S/N: MJH10575-UP
(265-MMX521-MM). DIRECTIONAL TIRE
PART OF 185-8660 WHEEL & TIRE AR
AN ATTACHMENT

SMCS-4202 **i02362161**

NOTE	PART NUMBER	QTY	PART NAME 1 2 3 4 5 6 (PRODUCT LEVEL)	SEE PAGE
	150-8599	1	VALVE AS-TIRE	
	185-8668	1	WHEEL AS	
	185-9934	1	TIRE (265-521)	

<END>

185-8672 TIRE & RIM GP–LH

S/N: MJH10575-UP
(521-MMX210-MM). DIRECTIONAL TIRE
PART OF 185-8661 WHEEL & TIRE AR
AN ATTACHMENT

SMCS-4202 **i02362165**

NOTE	PART NUMBER	QTY	PART NAME 1 2 3 4 5 6 (PRODUCT LEVEL)	SEE PAGE
	150-8599	1	VALVE AS-TIRE	
	185-8669	1	WHEEL AS	
	185-9934	1	TIRE (265-521)	

<END>

185-8673 TIRE & RIM GP–RH

S/N: MJH10575-UP
(521-MMX210-MM). DIRECTIONAL TIRE
PART OF 185-8661 WHEEL & TIRE AR
AN ATTACHMENT

SMCS-4202 **i02362171**

NOTE	PART NUMBER	QTY	PART NAME 1 2 3 4 5 6 (PRODUCT LEVEL)	SEE PAGE
	150-8599	1	VALVE AS-TIRE	
	185-8669	1	WHEEL AS	
	185-9934	1	TIRE (265-521)	

<END>

185-8678 TIRE & RIM GP–LH

S/N: MJH10575-UP
(16.5X8.25). DIRECTIONAL TIRE
PART OF 185-8664 WHEEL & TIRE AR
AN ATTACHMENT

SMCS-4202 **i02361343**

NOTE	PART NUMBER	QTY	PART NAME 1 2 3 4 5 6 (PRODUCT LEVEL)	SEE PAGE
	150-8599	1	VALVE AS-TIRE	
	142-7485	1	WHEEL AS	
	185-9932	1	TIRE (10-16.5)	

<END>

185-8679 TIRE & RIM GP–RH

S/N: MJH10575-UP
(16.5X8.25). DIRECTIONAL TIRE
PART OF 185-8664 WHEEL & TIRE AR
AN ATTACHMENT

SMCS-4202 **i02361345**

NOTE	PART NUMBER	QTY	PART NAME 1 2 3 4 5 6 (PRODUCT LEVEL)	SEE PAGE
	150-8599	1	VALVE AS-TIRE	
	142-7485	1	WHEEL AS	
	185-9932	1	TIRE (10-16.5)	

<END>

185-9926 TIRE & RIM GP–LH

S/N: MJH10575-UP
(16.5X8.25). DIRECTIONAL TIRE
PART OF 185-8665 WHEEL & TIRE AR
AN ATTACHMENT

SMCS-4202 **i02362228**

NOTE	PART NUMBER	QTY	PART NAME 1 2 3 4 5 6 (PRODUCT LEVEL)	SEE PAGE
	150-8599	1	VALVE AS-TIRE	
	142-7490	1	WHEEL AS	
	185-9932	1	TIRE (10-16.5)	

<END>

185-9927 TIRE & RIM GP–RH

S/N: MJH10575-UP
(16.5X8.25). DIRECTIONAL TIRE
PART OF 185-8665 WHEEL & TIRE AR
AN ATTACHMENT

SMCS-4202 **i02362230**

NOTE	PART NUMBER	QTY	PART NAME 1 2 3 4 5 6 (PRODUCT LEVEL)	SEE PAGE
	150-8599	1	VALVE AS-TIRE	
	142-7490	1	WHEEL AS	
	185-9932	1	TIRE (10-16.5)	

<END>

199-5291 TIRE & RIM GP

S/N: MJH10575-UP
(16.5X8.25)
AN ATTACHMENT

SMCS-4202 **i01983212**

NOTE	PART NUMBER	QTY	PART NAME 1 2 3 4 5 6 (PRODUCT LEVEL)	SEE PAGE
Y	*193-0450*	1	BRACKET GP-MOUNTING (TIRE)	641
	142-7487	1	TIRE & RIM GP (LH)	
	150-8593	1	TIRE & RIM GP (RH)	
			(EACH TIRE & RIM GP INCLUDES)	
	142-7485	1	WHEEL AS	
	150-8599	1	VALVE AS-TIRE	
J	*142-7488*	1	TIRE (10-16.5)	

J-CONTACT LOCAL CATERPILLAR DEALER FOR PROPER TIRE REPLACEMENT
Y-SEPARATE ILLUSTRATION

<END>

199-5292 TIRE & RIM GP

S/N: MJH10575-UP
(16.5 X 8.25)
AN ATTACHMENT

SMCS-4202 **i01983213**

NOTE	PART NUMBER	QTY	PART NAME 1 2 3 4 5 6 (PRODUCT LEVEL)	SEE PAGE
Y	*193-0450*	1	BRACKET GP-MOUNTING (TIRE)	641
	165-2609	1	TIRE & RIM GP (LH)	
	165-2610	1	TIRE & RIM GP (RH)	
			(EACH TIRE & RIM GP INCLUDES)	
	142-7485	1	WHEEL AS (16.5X8.25)	
	150-8599	1	VALVE AS-TIRE	
J	*165-4908*	1	TIRE	

J-CONTACT LOCAL CATERPILLAR DEALER FOR PROPER TIRE REPLACEMENT
Y-SEPARATE ILLUSTRATION

<END>

199-5392 TIRE & RIM GP—LOW SIDE WALL

S/N: MJH10575-UP
521MM X 210MM
AN ATTACHMENT

SMCS-4202 **i01983215**

NOTE	PART NUMBER	QTY	PART NAME 1 2 3 4 5 6 (PRODUCT LEVEL)	SEE PAGE
Y	*193-0450*	1	BRACKET GP-MOUNTING (TIRE)	641
	185-8672	1	TIRE & RIM GP (LH)	
	185-8673	1	TIRE & RIM GP (RH)	
			(EACH TIRE & RIM GP INCLUDES)	
	150-8599	1	VALVE AS-TIRE	
	185-8669	1	WHEEL AS	
J	**185-9934**	1	TIRE (265-521)	

J-CONTACT LOCAL CATERPILLAR DEALER FOR PROPER TIRE REPLACEMENT
Y-SEPARATE ILLUSTRATION

<END>

199-5393 TIRE & RIM GP

S/N: MJH10575-UP
(16.5 X 8.25)
AN ATTACHMENT

SMCS-4202 **i01983216**

NOTE	PART NUMBER	QTY	PART NAME 1 2 3 4 5 6 (PRODUCT LEVEL)	SEE PAGE
Y	*193-0450*	1	BRACKET GP-MOUNTING (TIRE)	641
	185-8678	1	TIRE & RIM GP (LH)	
	185-8679	1	TIRE & RIM GP (RH)	
			(EACH TIRE & RIM GP INCLUDES)	
	142-7485	1	WHEEL AS (16.5X8.25)	
	150-8599	1	VALVE AS-TIRE	
J	**185-9932**	1	TIRE	

J-CONTACT LOCAL CATERPILLAR DEALER FOR PROPER TIRE REPLACEMENT
Y-SEPARATE ILLUSTRATION

<END>

199-5394 TIRE & RIM GP

S/N: MJH10575-UP
(16.5 X 8.25)
AN ATTACHMENT

SMCS-4202 **i01983217**

NOTE	PART NUMBER	QTY	PART NAME 1 2 3 4 5 6 (PRODUCT LEVEL)	SEE PAGE
Y	*193-0450*	1	BRACKET GP-MOUNTING (TIRE)	641
	185-9926	1	TIRE & RIM GP (LH)	
	185-9927	1	TIRE & RIM GP (RH)	
			(EACH TIRE & RIM GP INCLUDES)	
	142-7490	1	WHEEL AS (16.5X8.25)	
	150-8599	1	VALVE AS-TIRE	
J	**185-9932**	1	TIRE	

J-CONTACT LOCAL CATERPILLAR DEALER FOR PROPER TIRE REPLACEMENT
Y-SEPARATE ILLUSTRATION

<END>

199-5434 TIRE & RIM GP—LH

S/N: MJH10575-UP
(16.5X12). DIRECTIONAL TIRE
PART OF 142-9121 WHEEL & TIRE AR
AN ATTACHMENT

SMCS-4202 **i02361277**

NOTE	PART NUMBER	QTY	PART NAME 1 2 3 4 5 6 (PRODUCT LEVEL)	SEE PAGE
	150-8599	1	VALVE AS-TIRE	
	178-2270	1	WHEEL AS	
	199-5436	1	TIRE (31-15.5-16.5)	

<END>

199-5435 TIRE & RIM GP—RH

S/N: MJH10575-UP
(16.5X12). DIRECTIONAL TIRE
PART OF 142-9121 WHEEL & TIRE AR
AN ATTACHMENT

SMCS-4202 **i02361622**

NOTE	PART NUMBER	QTY	PART NAME 1 2 3 4 5 6 (PRODUCT LEVEL)	SEE PAGE
	150-8599	1	VALVE AS-TIRE	
	178-2270	1	WHEEL AS	
	199-5436	1	TIRE (31-15.5-16.5)	

<END>

225-9270 TIRE & RIM GP

S/N: MJH10575-UP
(16.5X8.25)
PART OF 228-9214 WHEEL & TIRE AR
AN ATTACHMENT

SMCS-4202 **i02366917**

NOTE	PART NUMBER	QTY	PART NAME 1 2 3 4 5 6 (PRODUCT LEVEL)	SEE PAGE
	150-8599	1	VALVE AS-TIRE	
	142-7490	1	WHEEL AS	
	225-9267	1	TIRE (10-16.5)	

<END>

225-9271 TIRE & RIM GP

S/N: MJH10575-UP
(16.5X8.25)
PART OF 228-9215 WHEEL & TIRE AR
AN ATTACHMENT

SMCS-4202 **i02362162**

NOTE	PART NUMBER	QTY	PART NAME 1 2 3 4 5 6 (PRODUCT LEVEL)	SEE PAGE
	150-8599	1	VALVE AS-TIRE	
	142-7485	1	WHEEL AS	
	225-9267	1	TIRE (10-16.5)	

<END>

265-2894 TIRE & RIM GP—LH

S/N: MJH10575-UP
PART OF 252-0344 WHEEL & TIRE AR
AN ATTACHMENT

SMCS-4202 **i02279688**

NOTE	PART NUMBER	QTY	PART NAME 1 2 3 4 5 6 (PRODUCT LEVEL)	SEE PAGE
	150-8599	1	VALVE AS-TIRE	
	142-7490	1	WHEEL AS	
	222-3962	1	TIRE (10-16.5)	

<END>

265-2895 TIRE & RIM GP–RH

S/N: MJH10575-UP
PART OF 252-0344 WHEEL & TIRE AR
AN ATTACHMENT

SMCS-4202 **i02279722**

NOTE	PART NUMBER	QTY	PART NAME 1 2 3 4 5 6 (PRODUCT LEVEL)	SEE PAGE
	150-8599	1	VALVE AS-TIRE	
	142-7490	1	WHEEL AS	
	222-3962	1	TIRE (10-16.5)	

<END>

265-2896 TIRE & RIM GP–LH

S/N: MJH10575-UP
PART OF 252-0345 WHEEL & TIRE AR
AN ATTACHMENT

SMCS-4202 **i02279732**

NOTE	PART NUMBER	QTY	PART NAME 1 2 3 4 5 6 (PRODUCT LEVEL)	SEE PAGE
	150-8599	1	VALVE AS-TIRE	
	142-7485	1	WHEEL AS	
	222-3962	1	TIRE (10-16.5)	

<END>

265-2897 TIRE & RIM GP–RH

S/N: MJH10575-UP
PART OF 252-0345 WHEEL & TIRE AR
AN ATTACHMENT

SMCS-4202 **i02363184**

NOTE	PART NUMBER	QTY	PART NAME 1 2 3 4 5 6 (PRODUCT LEVEL)	SEE PAGE
	150-8599	1	VALVE AS-TIRE	
	142-7485	1	WHEEL AS	
	222-3962	1	TIRE (10-16.5)	

<END>

142-8648 WHEEL & TIRE AR–HEAVY DUTY

S/N: MJH10575-UP
AN ATTACHMENT

SMCS-4200, 4201, 4203 **i02361112**

NOTE	PART NUMBER	QTY	PART NAME 1 2 3 4 5 6 (PRODUCT LEVEL)	SEE PAGE
Y	*142-7491*	2	TIRE & RIM GP (LH)	212
Y	*150-8591*	2	TIRE & RIM GP (RH)	212
	142-7493	32	NUT-LUG (9/16-18-2B THD)	

Y-SEPARATE ILLUSTRATION

<END>

POWER TRAIN

142-8649 WHEEL & TIRE AR

S/N: MJH10575-UP

AN ATTACHMENT

SMCS-4200, 4201, 4203 **i02361113**

NOTE	PART NUMBER	QTY	PART NAME 1 2 3 4 5 6 (PRODUCT LEVEL)	SEE PAGE
Y	*142-7489*	2	TIRE & RIM GP (LH)	211
Y	*150-8590*	2	TIRE & RIM GP (RH)	212
	142-7493	32	NUT-LUG (9/16-18-2B THD)	

Y-SEPARATE ILLUSTRATION

<END>

142-8666 WHEEL & TIRE AR

S/N: MJH10575-UP

AN ATTACHMENT

SMCS-4200, 4201, 4203 **i02361114**

NOTE	PART NUMBER	QTY	PART NAME 1 2 3 4 5 6 (PRODUCT LEVEL)	SEE PAGE
Y	*142-7484*	2	TIRE & RIM GP (LH)	211
Y	*150-8592*	2	TIRE & RIM GP (RH)	213
	142-7493	32	NUT-LUG (9/16-18-2B THD)	

Y-SEPARATE ILLUSTRATION

<END>

142-8667 WHEEL & TIRE AR—HEAVY DUTY

S/N: MJH10575-UP

AN ATTACHMENT

SMCS-4200, 4201, 4203 **i02361115**

NOTE	PART NUMBER	QTY	PART NAME 1 2 3 4 5 6 (PRODUCT LEVEL)	SEE PAGE
Y	*142-7487*	2	TIRE & RIM GP (LH)	211
Y	*150-8593*	2	TIRE & RIM GP (RH)	213
	142-7493	32	NUT-LUG (9/16-18-2B THD)	

Y-SEPARATE ILLUSTRATION

<END>

142-9121 WHEEL & TIRE AR—HIGH FLOTATION

S/N: MJH10575-UP

AN ATTACHMENT

SMCS-4200, 4201, 4203 **i02361138**

NOTE	PART NUMBER	QTY	PART NAME 1 2 3 4 5 6 (PRODUCT LEVEL)	SEE PAGE
Y	*199-5434*	2	TIRE & RIM GP (LH)	219
Y	*199-5435*	2	TIRE & RIM GP (RH)	219
	142-7493	32	NUT-LUG (9/16-18-2B THD)	

Y-SEPARATE ILLUSTRATION

<END>

165-2602 WHEEL & TIRE AR—HEAVY DUTY

S/N: MJH10575-UP
AN ATTACHMENT

SMCS-4200, 4201, 4203 **i02361177**

NOTE	PART NUMBER	QTY	PART NAME 1 2 3 4 5 6 (PRODUCT LEVEL)	SEE PAGE
Y	*165-2605*	2	TIRE & RIM GP (LH)	213
Y	*165-2606*	2	TIRE & RIM GP (RH)	214
	142-7493	32	NUT-LUG (9/16-18-2B THD)	

Y-SEPARATE ILLUSTRATION

<END>

165-4891 WHEEL & TIRE AR—HEAVY DUTY

S/N: MJH10575-UP
AN ATTACHMENT

SMCS-4200, 4201, 4203 **i02361179**

NOTE	PART NUMBER	QTY	PART NAME 1 2 3 4 5 6 (PRODUCT LEVEL)	SEE PAGE
Y	*165-2609*	2	TIRE & RIM GP (LH)	214
Y	*165-2610*	2	TIRE & RIM GP (RH)	214
	142-7493	32	NUT-LUG (9/16-18-2B THD)	

Y-SEPARATE ILLUSTRATION

<END>

185-8660 WHEEL & TIRE AR—LOW SIDE WALL

S/N: MJH10575-UP
AN ATTACHMENT

SMCS-4200, 4201, 4203 **i02361192**

NOTE	PART NUMBER	QTY	PART NAME 1 2 3 4 5 6 (PRODUCT LEVEL)	SEE PAGE
Y	*185-8670*	2	TIRE & RIM GP (LH)	215
Y	*185-8671*	2	TIRE & RIM GP (RH)	215
	142-7493	32	NUT-LUG (9/16-18-2B THD)	

Y-SEPARATE ILLUSTRATION

<END>

185-8661 WHEEL & TIRE AR—LOW SIDE WALL

S/N: MJH10575-UP
AN ATTACHMENT

SMCS-4200, 4201, 4203 **i02361196**

NOTE	PART NUMBER	QTY	PART NAME 1 2 3 4 5 6 (PRODUCT LEVEL)	SEE PAGE
Y	*185-8672*	2	TIRE & RIM GP (LH)	215
Y	*185-8673*	2	TIRE & RIM GP (RH)	216
	142-7493	32	NUT-LUG (9/16-18-2B THD)	

Y-SEPARATE ILLUSTRATION

<END>

POWER TRAIN

185-8664 WHEEL & TIRE AR—HEAVY DUTY

S/N: MJH10575-UP

AN ATTACHMENT

SMCS-4200, 4201, 4203 **i02361199**

NOTE	PART NUMBER	QTY	PART NAME 1 2 3 4 5 6 (PRODUCT LEVEL)	SEE PAGE
Y	*185-8678*	2	TIRE & RIM GP (LH)	216
Y	*185-8679*	2	TIRE & RIM GP (RH)	216
	142-7493	32	NUT-LUG (9/16-18-2B THD)	

Y-SEPARATE ILLUSTRATION

<END>

185-8665 WHEEL & TIRE AR—HEAVY DUTY

S/N: MJH10575-UP

AN ATTACHMENT

SMCS-4200, 4201, 4203 **i02361201**

NOTE	PART NUMBER	QTY	PART NAME 1 2 3 4 5 6 (PRODUCT LEVEL)	SEE PAGE
Y	*185-9926*	2	TIRE & RIM GP (LH)	217
Y	*185-9927*	2	TIRE & RIM GP (RH)	217
	142-7493	32	NUT-LUG (9/16-18-2B THD)	

Y-SEPARATE ILLUSTRATION

<END>

228-9214 WHEEL & TIRE AR

S/N: MJH10575-UP

AN ATTACHMENT

SMCS-4200, 4201, 4203 **i02361208**

NOTE	PART NUMBER	QTY	PART NAME 1 2 3 4 5 6 (PRODUCT LEVEL)	SEE PAGE
Y	*225-9270*	4	TIRE & RIM GP	220
	142-7493	32	NUT-LUG (9/16-18-2B THD)	

Y-SEPARATE ILLUSTRATION

<END>

228-9215 WHEEL & TIRE AR

S/N: MJH10575-UP

AN ATTACHMENT

SMCS-4200, 4201, 4203 **i02361209**

NOTE	PART NUMBER	QTY	PART NAME 1 2 3 4 5 6 (PRODUCT LEVEL)	SEE PAGE
Y	*225-9271*	4	TIRE & RIM GP	220
	142-7493	32	NUT-LUG (9/16-18-2B THD)	

Y-SEPARATE ILLUSTRATION

<END>

252-0344 WHEEL & TIRE AR

S/N: MJH10575-UP
AN ATTACHMENT

SMCS-4200, 4201, 4203 **i02279641**

NOTE	PART NUMBER	QTY	PART NAME 1 2 3 4 5 6 (PRODUCT LEVEL)	SEE PAGE
Y	**265-2895**	2	TIRE & RIM GP (RH)	221
Y	**265-2894**	2	TIRE & RIM GP (LH)	220
	142-7493	32	NUT-LUG (9/16-18-2B THD)	

Y-SEPARATE ILLUSTRATION

<END>

252-0345 WHEEL & TIRE AR

S/N: MJH10575-UP
AN ATTACHMENT

SMCS-4200, 4201, 4203 **i02279670**

NOTE	PART NUMBER	QTY	PART NAME 1 2 3 4 5 6 (PRODUCT LEVEL)	SEE PAGE
Y	**265-2896**	2	TIRE & RIM GP (LH)	221
Y	**265-2897**	2	TIRE & RIM GP (RH)	221
	142-7493	32	NUT-LUG (9/16-18-2B THD)	

Y-SEPARATE ILLUSTRATION

<END>

252-0367 WHEEL & TIRE AR—SOLID

S/N: MJH10575-UP
AN ATTACHMENT

SMCS-4200, 4201, 4203 **i02279677**

NOTE	PART NUMBER	QTY	PART NAME 1 2 3 4 5 6 (PRODUCT LEVEL)	SEE PAGE
	142-7493	32	NUT-LUG (9/16-18-2B THD)	
	226-3736	2	TIRE-SOLID (31X6X10)	
	226-3737	2	TIRE-SOLID (31X6X10)	

<END>

252-0378 WHEEL & TIRE AR—SOLID

S/N: MJH10575-UP
AN ATTACHMENT

SMCS-4200, 4201, 4203 **i02279683**

NOTE	PART NUMBER	QTY	PART NAME 1 2 3 4 5 6 (PRODUCT LEVEL)	SEE PAGE
	142-7493	32	NUT-LUG (9/16-18-2B THD)	
	226-3736	2	TIRE-SOLID (31X6X10)	
	226-3737	2	TIRE-SOLID (31X6X10)	

<END>

317-0690 WHEEL & TIRE GP

S/N: MJH10575-UP

FIELD INSTALLATION

SMCS-4200, 4201, 4202, 4203, 4208, 4209 **i02839895**

NOTE	REF NO	GRAPHIC REF	PART NUMBER	QTY	PART NAME 1 2 3 4 5 6 (PRODUCT LEVEL)	SEE PAGE
	1	1	**311-4926**	4	TIRE (31X5X9)	

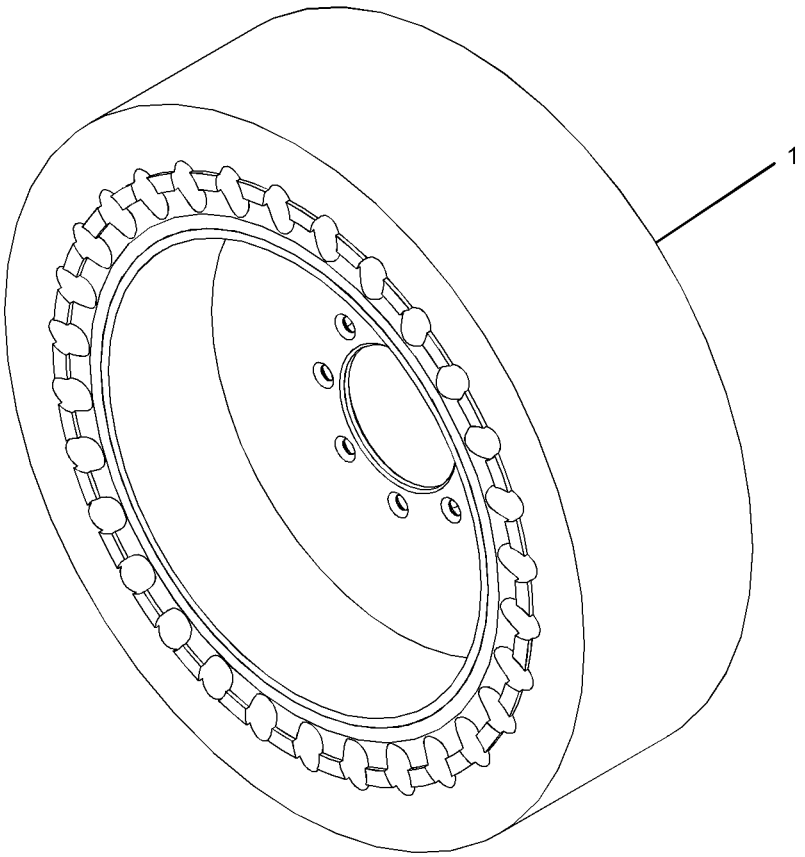

GRAPHIC #1 **<END>** g01417446

218-5650 BUMPER GP–REAR

S/N: MJH10575-UP

PART OF 295-7110 CHASSIS AR

SMCS-7156 **i01948738**

NOTE	REF NO	GRAPHIC REF	PART NUMBER	QTY	PART NAME 1 2 3 4 5 6 (PRODUCT LEVEL)	SEE PAGE
	1	1	**218-5647**	2	SPACER	
	2	1	**218-5651**	1	BUMPER AS	
	3	1	**218-5773**	1	PLATE	
	4	1	**229-4895**	2	BOLT-WHEEL	
	5	1	**8T-4122**	6	WASHER-HARD (17X32X3.5-MM THK)	
M	6	1	**8T-4132**	4	NUT (M16X2-THD)	
M	7	1	**8T-7338**	2	BOLT (M16X2X45-MM)	

M-METRIC PART

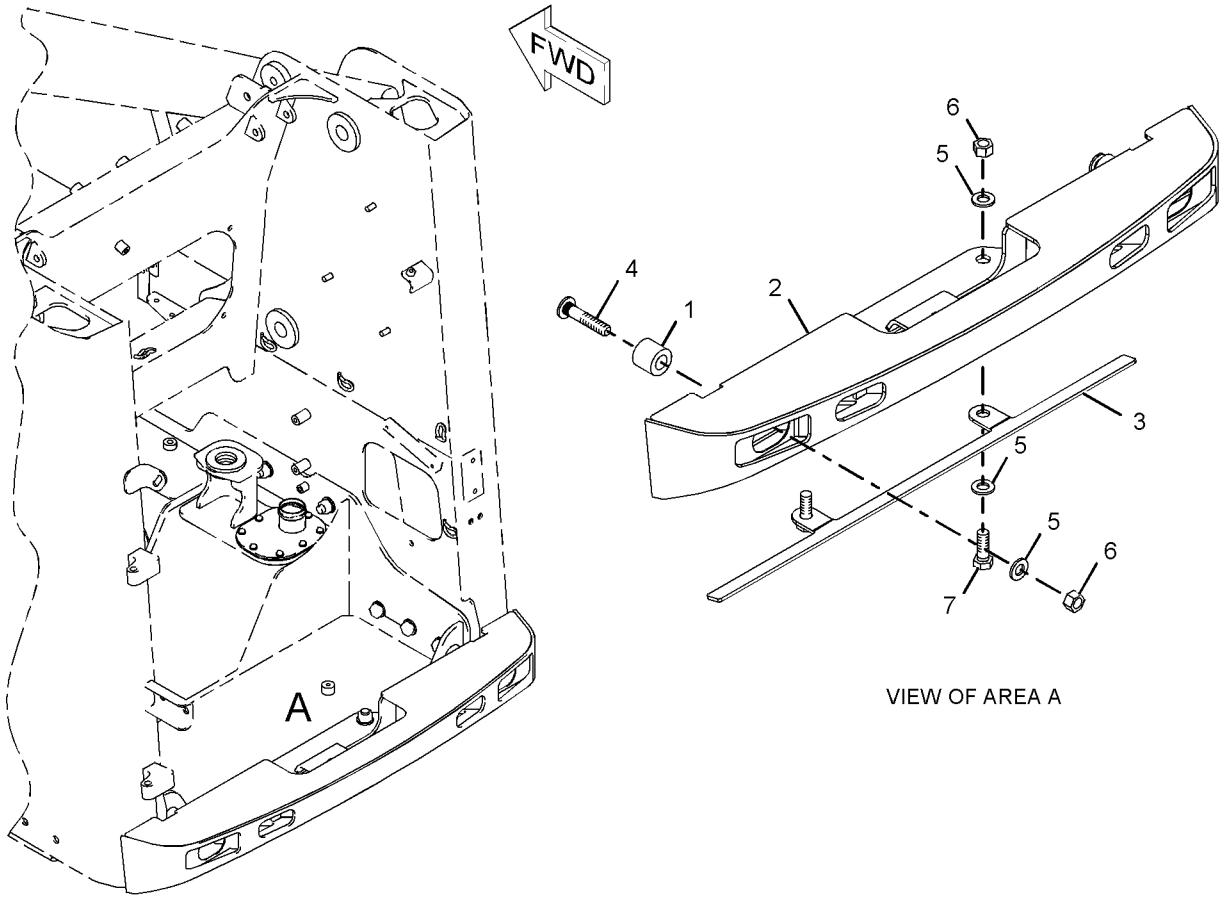

VIEW OF AREA A

GRAPHIC #1 **<END>** g01019651

233-5671 CONVERSION AR-ROADING—OUTSIDE NACD

S/N: MJH10575-UP

AN ATTACHMENT

SMCS-7000 **i02124770**

NOTE	PART NUMBER	QTY	PART NAME 1 2 3 4 5 6 (PRODUCT LEVEL)	SEE PAGE
Y	*216-6146*	1	BOX GP-STORAGE	515
Y	*218-6708*	1	LIFTING GP-MACHINE	255
Y	*142-8652*	1	LIGHTING GP-STOP & TAIL	162
Y	*218-5791*	1	PANEL AR-INSTRUMENT	612
Y	*233-5616*	1	SUPPRESSION GP-SOUND (ENGINE)	263
Y	*230-3743*	1	WIRING GP-HORN (WITH MOUNTING)	183
	218-5601	1	FLOOR MAT	

Y-SEPARATE ILLUSTRATION

<END>

233-5672 CONVERSION AR-ROADING—GERMANY

S/N: MJH10575-UP

AN ATTACHMENT

SMCS-7000 **i02889670**

NOTE	PART NUMBER	QTY	PART NAME 1 2 3 4 5 6 (PRODUCT LEVEL)	SEE PAGE
Y	*216-6146*	1	BOX GP-STORAGE	515
Y	*234-0792*	1	CONVERSION GP-ROADING (GERMANY)	235
Y	**177-9152**	1	KIT-ROADING PLATE & MOUNTING (BUCKET)	490
Y	*218-6708*	1	LIFTING GP-MACHINE	255
Y	*216-4715*	1	LIGHTING GP-ROADING	160
Y	*175-4238*	1	LOCK GP-QUICK COUPLER (MECHANICAL)	492
Y	*238-7671*	1	MIRROR & MTG GP-REAR VIEW (WITH ROADING LIGHT MOUNT)	257
Y	*218-5791*	1	PANEL AR-INSTRUMENT	612
Y	*233-5616*	1	SUPPRESSION GP-SOUND	263
Y	*173-3022*	1	VISOR GP-CAB	633
Y	*230-3743*	1	WIRING GP-HORN (WITH MOUNTING)	183
	222-5695	1	SUPPORT GP-STORAGE BOX	
	216-6144	1	BRACKET AS	
	233-5680	3	FILM-IDENTIFICATION (13-KM/H)	
	218-5601	1	FLOOR MAT	

Y-SEPARATE ILLUSTRATION

<END>

233-5673 CONVERSION AR-ROADING—ITALY

S/N: MJH10575-UP
AN ATTACHMENT

SMCS-7000 **i02889698**

NOTE	PART NUMBER	QTY	PART NAME 1 2 3 4 5 6 (PRODUCT LEVEL)	SEE PAGE
Y	*216-6146*	1	BOX GP-STORAGE	515
Y	*234-0793*	1	CONVERSION GP-ROADING (ITALY)	236
Y	**177-9152**	1	KIT-ROADING PLATE & MOUNTING (BUCKET)	490
Y	*218-6708*	1	LIFTING GP-MACHINE	255
Y	*216-4715*	1	LIGHTING GP-ROADING	160
Y	*175-4238*	1	LOCK GP-QUICK COUPLER (MECHANICAL)	492
Y	*238-7671*	1	MIRROR & MTG GP-REAR VIEW (WITH ROADING LIGHT MOUNT)	257
Y	*225-7963*	1	MOUNTING GP-REGISTRATION	260
Y	*218-5791*	1	PANEL AR-INSTRUMENT	612
Y	*233-5616*	1	SUPPRESSION GP-SOUND	263
Y	*230-3743*	1	WIRING GP-HORN (WITH MOUNTING)	183
Y	*225-7964*	1	WIRING GP-REAR LIGHTING	186
	218-5601	1	FLOOR MAT	

Y-SEPARATE ILLUSTRATION

<END>

233-5674 CONVERSION AR-ROADING—OUTSIDE NACD

S/N: MJH10575-UP
AN ATTACHMENT

SMCS-7000 **i02124773**

NOTE	PART NUMBER	QTY	PART NAME 1 2 3 4 5 6 (PRODUCT LEVEL)	SEE PAGE
Y	*216-6146*	1	BOX GP-STORAGE	515
Y	**191-9684**	1	FILM GP (CLEARANCE)	642
Y	*218-6708*	1	LIFTING GP-MACHINE	255
Y	*142-8652*	1	LIGHTING GP-STOP & TAIL	162
Y	*218-5791*	1	PANEL AR-INSTRUMENT	612
Y	*233-5616*	1	SUPPRESSION GP-SOUND	263
Y	*230-3743*	1	WIRING GP-HORN (WITH MOUNTING)	183
	218-5601	1	FLOOR MAT	

Y-SEPARATE ILLUSTRATION

<END>

233-5675 CONVERSION AR-ROADING—GERMANY

S/N: MJH10575-UP
HIGH FLOW
AN ATTACHMENT

SMCS-7000 **i02360650**

NOTE	PART NUMBER	QTY	PART NAME 1 2 3 4 5 6 (PRODUCT LEVEL)	SEE PAGE
Y	*216-6146*	1	BOX GP-STORAGE	515
Y	*234-0792*	1	CONVERSION GP-ROADING	235
Y	*230-3743*	1	WIRING GP-HORN (WITH MOUNTING)	183
Y	**177-9152**	1	KIT-ROADING PLATE & MOUNTING (BUCKET)	490
Y	*218-6708*	1	LIFTING GP-MACHINE	255
Y	*216-4715*	1	LIGHTING GP-ROADING	160
Y	*175-4238*	1	LOCK GP-QUICK COUPLER (MECHANICAL)	492
Y	*238-7672*	1	MIRROR & MTG GP-REAR VIEW (WITH ROADING LIGHT MOUNT)	258
Y	*218-5791*	1	PANEL AR-INSTRUMENT	612
Y	*233-5616*	1	SUPPRESSION GP-SOUND	263
Y	*173-3022*	1	VISOR GP-CAB	633
	222-5695	1	SUPPORT GP-STORAGE BOX	
	216-6144	1	BRACKET AS	
	218-5601	1	FLOOR MAT	

Y-SEPARATE ILLUSTRATION

<END>

233-5676 CONVERSION AR-ROADING—ITALY

S/N: MJH10575-UP
HIGH FLOW
AN ATTACHMENT

SMCS-7000 **i02338198**

NOTE	PART NUMBER	QTY	PART NAME 1 2 3 4 5 6 (PRODUCT LEVEL)	SEE PAGE
Y	*216-6146*	1	BOX GP-STORAGE	515
Y	*234-0793*	1	CONVERSION GP-ROADING	236
Y	**177-9152**	1	KIT-ROADING PLATE & MOUNTING (BUCKET)	490
Y	*218-6708*	1	LIFTING GP-MACHINE	255
Y	*216-4715*	1	LIGHTING GP-ROADING	160
Y	*175-4238*	1	LOCK GP-QUICK COUPLER (MECHANICAL)	492
Y	*238-7672*	1	MIRROR & MTG GP-REAR VIEW (WITH ROADING LIGHT MOUNT)	258
Y	*225-7963*	1	MOUNTING GP-REGISTRATION	260
Y	*218-5791*	1	PANEL AR-INSTRUMENT	612
Y	*233-5616*	1	SUPPRESSION GP-SOUND	263
Y	*230-3743*	1	WIRING GP-HORN (WITH MOUNTING)	183
Y	*225-7964*	1	WIRING GP-REAR LIGHTING	186
	218-5601	1	FLOOR MAT	

Y-SEPARATE ILLUSTRATION

<END>

257-5716 CONVERSION AR-ROADING—GERMANY, ITALY

S/N: MJH10575-UP

FOR USE WITH 257-5726—PAGE 232, 257-5727—PAGE 233

AN ATTACHMENT

SMCS-7000 **i02492680**

NOTE	PART NUMBER	QTY	PART NAME 1 2 3 4 5 6 (PRODUCT LEVEL)	SEE PAGE
Y	*216-6146*	1	BOX GP-STORAGE	515
Y	**177-9152**	1	KIT-ROADING PLATE & MOUNTING (BUCKET)	490
Y	*218-6708*	1	LIFTING GP-MACHINE	255
Y	*216-4715*	1	LIGHTING GP-ROADING	160
Y	*175-4238*	1	LOCK GP-QUICK COUPLER (MECHANICAL)	492
Y	*238-7671*	1	MIRROR & MTG GP-REAR VIEW (WITH ROADING LIGHT MOUNT)	257
Y	*272-3049*	1	MUFFLER GP	103
Y	*218-5791*	1	PANEL AR-INSTRUMENT	612
Y	*261-6094*	1	PUMP & MTG GP-WORK TOOL	380
Y	*233-5616*	1	SUPPRESSION GP-SOUND	263
Y	*230-3743*	1	WIRING GP-HORN (WITH MOUNTING)	183
	218-5601	1	FLOOR MAT	

Y-SEPARATE ILLUSTRATION

<END>

257-5717 CONVERSION AR-ROADING—GERMANY, ITALY

S/N: MJH10575-UP

AN ATTACHMENT

SMCS-7000 **i02844443**

NOTE	PART NUMBER	QTY	PART NAME 1 2 3 4 5 6 (PRODUCT LEVEL)	SEE PAGE
Y	*216-6146*	1	BOX GP-STORAGE	515
Y	**177-9152**	1	KIT-ROADING PLATE & MOUNTING (BUCKET)	490
Y	*218-6708*	1	LIFTING GP-MACHINE	255
Y	*216-4715*	1	LIGHTING GP-ROADING	160
Y	*175-4238*	1	LOCK GP-QUICK COUPLER (MECHANICAL)	492
Y	*238-7672*	1	MIRROR & MTG GP-REAR VIEW (WITH ROADING LIGHT MOUNT)	258
Y	*261-6121*	1	MOTOR & MTG GP-HYDRAULIC FAN	367
Y	*272-3047*	1	MUFFLER GP	102
Y	*218-5791*	1	PANEL AR-INSTRUMENT	612
Y	*261-6118*	1	RADIATOR & OIL COOLER MTG GP	95
Y	*233-5616*	1	SUPPRESSION GP-SOUND	263
Y	*230-3743*	1	WIRING GP-HORN (WITH MOUNTING)	183
Y	*272-1625*	1	WIRING GP-MACHINE (DEMAND FAN)	184
	218-5601	1	FLOOR MAT	

Y-SEPARATE ILLUSTRATION

<END>

257-5726 CONVERSION AR-ROADING—GERMANY

S/N: MJH10575-UP

FOR USE WITH 257-5716—PAGE 231

AN ATTACHMENT

SMCS-7000 **i02866438**

NOTE	PART NUMBER	QTY	PART NAME 1 2 3 4 5 6 (PRODUCT LEVEL)	SEE PAGE
Y	**166-2569**	1	VISOR GP-CAB	632
	246-2641	1	PADLOCK GP	
	5P-8500	1	KEY	
			(WITH PLASTIC OVERMOLD)	
	173-3015	1	BRACKET AS	
	216-6144	1	BRACKET AS	
	166-2562	1	PLATE AS	
M	**8T-4171**	5	BOLT (M6X1X12-MM)	
	173-3018	1	BRACKET	
	173-3016	1	CHOCK	
	233-5680	3	FILM-IDENTIFICATION (13-KM/H)	
	113-7634	1	FILM-WARNING (STEERING)	
	195-0936	4	INSERT-THREADED (M6X1-THD)	
	258-3849	1	PLATE-IDENTIFICATION (ENGLISH, GERMAN, SPANISH)	
M	**9X-2045**	4	SCREW-TRUSS HEAD (M6X1X20-MM)	
	8T-4205	5	WASHER-HARD (7.2X14.5X2-MM THK)	

M-METRIC PART
Y-SEPARATE ILLUSTRATION

<END>

257-5727 CONVERSION AR-ROADING—ITALY

S/N: MJH10575-UP

FOR USE WITH 257-5716—PAGE 231, 257-5717—PAGE 231

AN ATTACHMENT

SMCS-7000 **i02866479**

NOTE	PART NUMBER	QTY	PART NAME 1 2 3 4 5 6 (PRODUCT LEVEL)	SEE PAGE
Y	**128-6985**	1	LAMP GP-WARNING BEACON (12-VOLT, AMBER)	157
Y	**184-1564**	2	SWITCH GP-PRESSURE (BRAKE LIGHT)	169
	190-8962	1	LAMP GP-REGISTRATION PLATE	
	195-9712	1	LAMP (12-VOLT, 10-WATT)	
	207-9780	1	BRACKET AS	
	186-2360	4	COVER AS	
E	**129-1854**		FASTENER-LOOP (10-CM)	
E	**129-1855**		FASTENER-HOOK (10-CM)	
	186-0239	1	HARNESS AS-REAR LIGHTING	
	216-4711	1	HARNESS AS-REAR LIGHTING (BRAKE)	
	115-1615	1	RELAY AS (12-VOLT)	
	166-2033	2	TEE AS	
			(EACH INCLUDES)	
	4J-5477	1	SEAL-O-RING	
	7X-2444	1	TEE-SWIVEL	
M	**8T-4171**	3	BOLT (M6X1X12-MM)	
M	**5C-8312**	2	NUT (M4X0.7-THD)	
	175-4236	1	PLATE	
	204-1365	1	PLATE	
	215-4001	1	PLATE	
	258-3849	1	PLATE-IDENTIFICATION (ENGLISH, GERMAN, SPANISH)	
M	**6V-9672**	2	SCREW-MACHINE (M4X0.7X16-MM)	
	3S-2093	4	STRAP-CABLE	
	4B-4863	2	WASHER (4.7X11X1.2-MM THK)	
	8T-4205	1	WASHER-HARD (7.2X14.5X2-MM THK)	

E-ORDER BY THE CENTIMETER
M-METRIC PART
Y-SEPARATE ILLUSTRATION

<END>

295-7043 CONVERSION AR-ROADING—GERMANY, ITALY, HIGH FLOW

S/N: MJH10575-UP

AN ATTACHMENT

SMCS-7000 **i02733273**

NOTE	PART NUMBER	QTY	PART NAME 1 2 3 4 5 6 (PRODUCT LEVEL)	SEE PAGE
Y	*216-6146*	1	BOX GP-STORAGE	515
Y	**177-9152**	1	KIT-ROADING PLATE & MOUNTING (BUCKET)	490
Y	*218-6708*	1	LIFTING GP-MACHINE	255
Y	*216-4715*	1	LIGHTING GP-ROADING	160
Y	*175-4238*	1	LOCK GP-QUICK COUPLER (MECHANICAL)	492
Y	*238-7672*	1	MIRROR & MTG GP-REAR VIEW (WITH ROADING LIGHT MOUNT)	258
Y	*261-6121*	1	MOTOR & MTG GP-HYDRAULIC FAN	367
Y	*272-3047*	1	MUFFLER GP	102
Y	*218-5791*	1	PANEL AR-INSTRUMENT	612
Y	*261-6118*	1	RADIATOR & OIL COOLER MTG GP	95
Y	*233-5616*	1	SUPPRESSION GP-SOUND	263
Y	*230-3743*	1	WIRING GP-HORN (WITH MOUNTING)	183
Y	*272-1625*	1	WIRING GP-MACHINE (DEMAND FAN)	184

Y-SEPARATE ILLUSTRATION

<END>

234-0792 CONVERSION GP-ROADING—GERMANY

S/N: MJH10575-UP

PART OF 233-5672, 233-5675 CONVERSION AR-ROADING

AN ATTACHMENT

SMCS-7000 **i02785770**

NOTE	REF NO	GRAPHIC REF	PART NUMBER	QTY	PART NAME 1 2 3 4 5 6 (PRODUCT LEVEL)	SEE PAGE
	1	1	**246-2641**	1	PADLOCK GP	
		1	**5P-8500**	1	KEY	
					(WITH PLASTIC OVERMOLD)	
	2	1	**113-7634**	1	FILM-WARNING (STEERING)	
	3	1	**159-7342**	1	PLATE-INFORMATION (MAXIMUM WEIGHT)	
	4	1	**168-8389**	4	TACK-FASTENER	
	5	1	**173-3015**	1	BRACKET AS	
	6	1	**173-3016**	1	CHOCK	
	7	1	**173-3018**	1	BRACKET	
M	8	1	**8T-4171**	5	BOLT (M6X1X12-MM)	
	9	1	**8T-4205**	5	WASHER-HARD (7.2X14.5X2-MM THK)	

M-METRIC PART

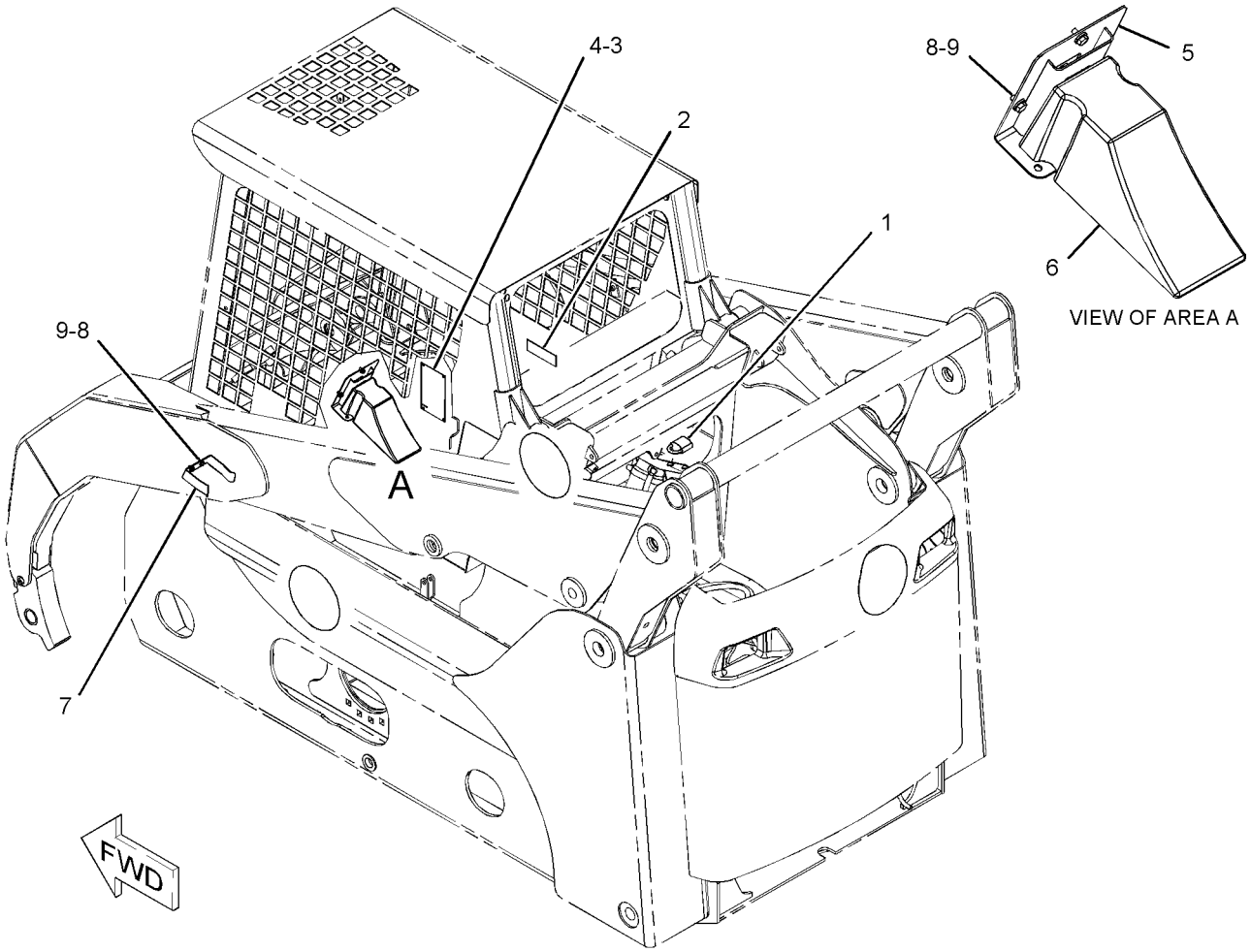

GRAPHIC #1 **<END>** g01131744

234-0793 CONVERSION GP-ROADING–ITALY

S/N: MJH10575-UP
PART OF 233-5673, 233-5676 CONVERSION AR-ROADING
AN ATTACHMENT

SMCS-7000 **i02771681**

NOTE	REF NO	GRAPHIC REF	PART NUMBER	QTY	PART NAME 1 2 3 4 5 6 (PRODUCT LEVEL)	SEE PAGE
Y	1	1	**128-6985**	1	LAMP GP-WARNING BEACON (12-VOLT, AMBER)	157
	2	1	**159-7342**	1	PLATE-INFORMATION (MAXIMUM WEIGHT)	
	3	1	**168-8389**	4	TACK-FASTENER	
	4	1	**186-2360**	4	COVER AS	
					(EACH INCLUDES)	
BE		1	**129-1854**		FASTENER-LOOP	
BE		1	**129-1855**		FASTENER-HOOK	

B-USE AS REQUIRED
E-ORDER BY THE CENTIMETER
Y-SEPARATE ILLUSTRATION

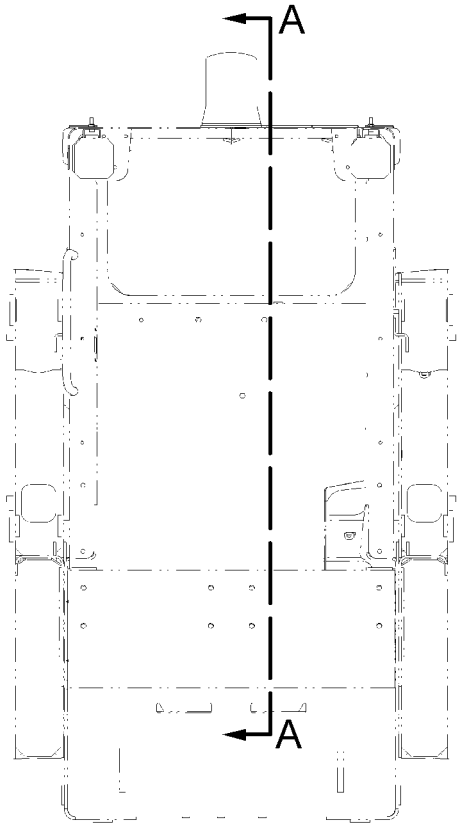

FRONT VIEW

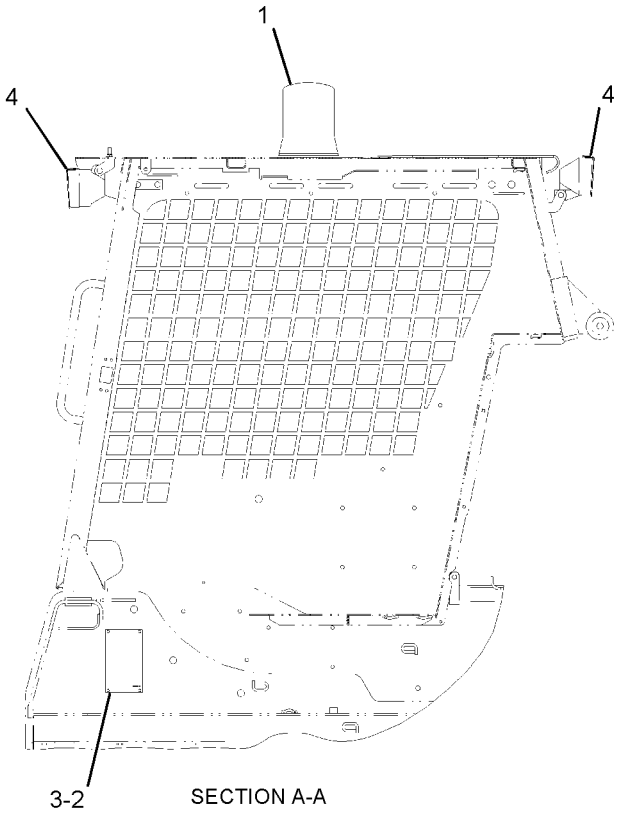

SECTION A-A

GRAPHIC #1 **<END>** g01130743

278-1292 CONVERSION GP-ROADING—GERMANY

S/N: MJH10575-UP

PART OF 278-1224, 278-5441, 295-7162, 295-7167 CONVERSION AR-MACHINE AN ATTACHMENT

SMCS-7000 **i02866415**

NOTE	REF NO	GRAPHIC REF	PART NUMBER	QTY	PART NAME 1 2 3 4 5 6 (PRODUCT LEVEL)	SEE PAGE
	1	1	**246-2641**	1	PADLOCK GP	
		1	**5P-8500**	1	KEY	
					(WITH PLASTIC OVERMOLD)	
	2	1	**113-7634**	1	FILM-WARNING (STEERING)	
	3	1	**258-3849**	1	PLATE-IDENTIFICATION (ENGLISH, GERMAN, SPANISH)	
	5	1	**173-3015**	1	BRACKET AS	
	6	1	**173-3016**	1	CHOCK	
	7	1	**173-3018**	1	BRACKET	
M	8	1	**8T-4171**	5	BOLT (M6X1X12-MM)	
	9	1	**8T-4205**	5	WASHER-HARD (7.2X14.5X2-MM THK)	

M-METRIC PART

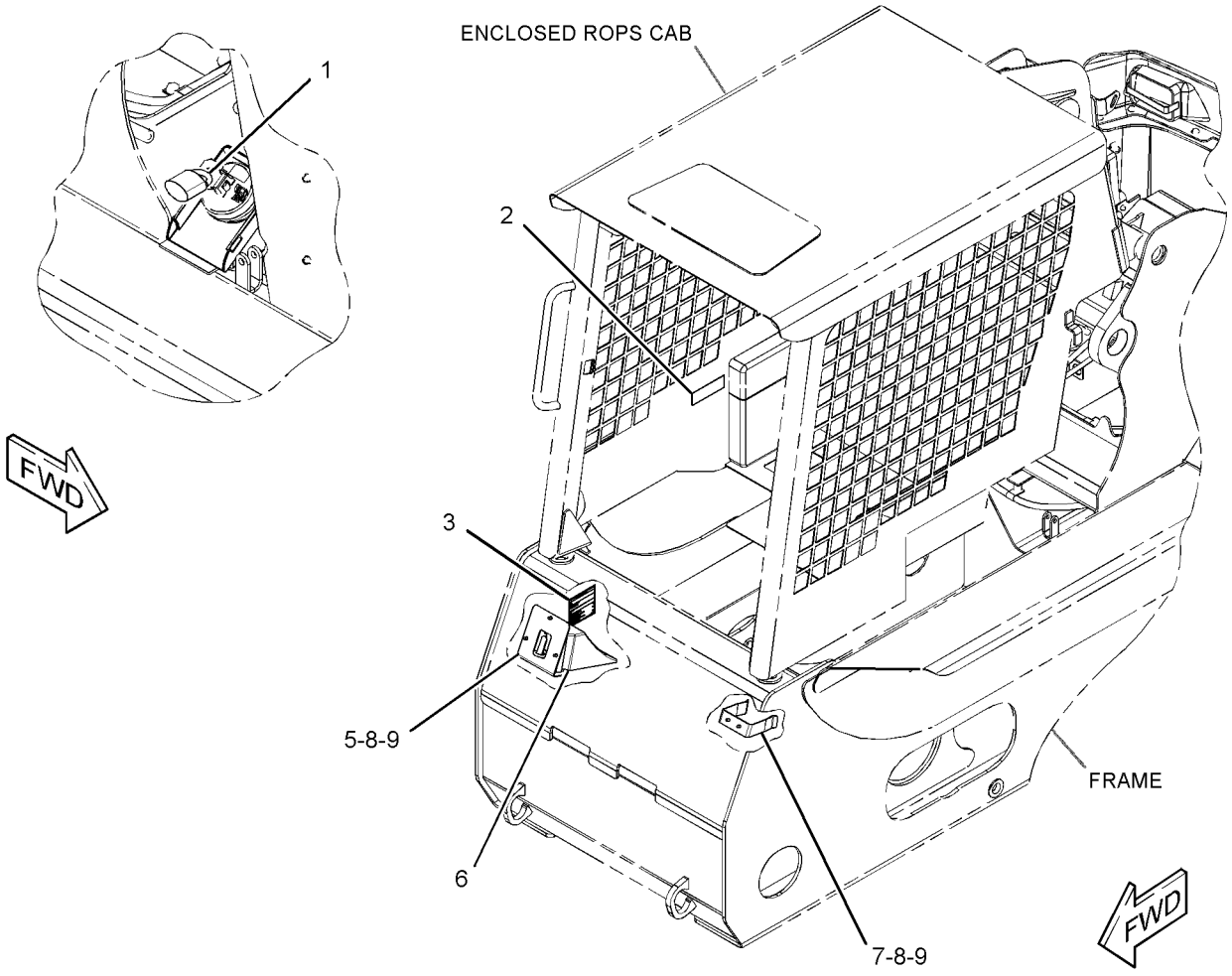

GRAPHIC #1 **<END>** g01437301

FRAME AND BODY

278-1293 CONVERSION GP-ROADING—ITALY

S/N: MJH10575-UP

PART OF 278-1212, 278-5408, 295-7149, 295-7158 CONVERSION AR-MACHINE AN ATTACHMENT

SMCS-7000 **i02866420**

NOTE	REF NO	GRAPHIC REF	PART NUMBER	QTY	PART NAME 1 2 3 4 5 6 (PRODUCT LEVEL)	SEE PAGE
Y	1	1	**128-6985**	1	LAMP GP-WARNING BEACON (12-VOLT, AMBER)	157
	2	1	**186-2360**	4	COVER AS	
					(EACH INCLUDES)	
E		1	**129-1854**		FASTENER-LOOP (10-CM)	
E		1	**129-1855**		FASTENER-HOOK (10-CM)	
	3	1	**258-3849**	1	PLATE-IDENTIFICATION (ENGLISH, GERMAN, SPANISH)	

E-ORDER BY THE CENTIMETER
Y-SEPARATE ILLUSTRATION

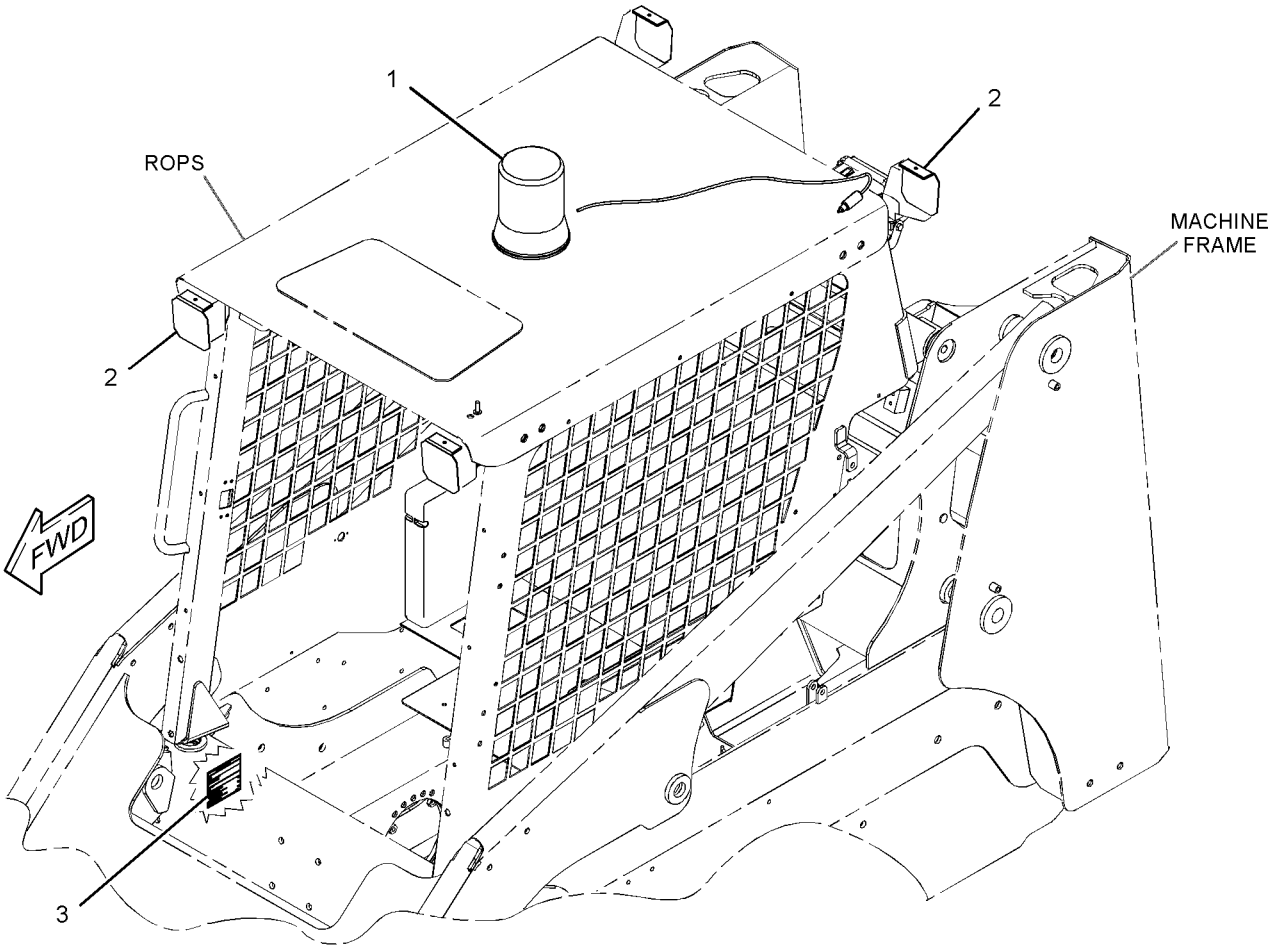

GRAPHIC #1 **<END>** g01436156

142-8830 COUNTERWEIGHT GP

S/N: MJH10575-UP
41.14KG (90.50 LBS)
PART OF 295-7226, 295-7227 COMMON AR

SMCS-7056 **i01883925**

NOTE	REF NO	GRAPHIC REF	PART NUMBER	QTY	PART NAME 1 2 3 4 5 6 (PRODUCT LEVEL)	SEE PAGE
	1	1	**177-9580**	10	BLOCK	
	2	1	**7X-0590**	2	WASHER-HARD (13.5X44.5X6MM THK)	
M	3	1	**8T-7930**	2	BOLT (M12X1.75X160MM)	

M-METRIC PART

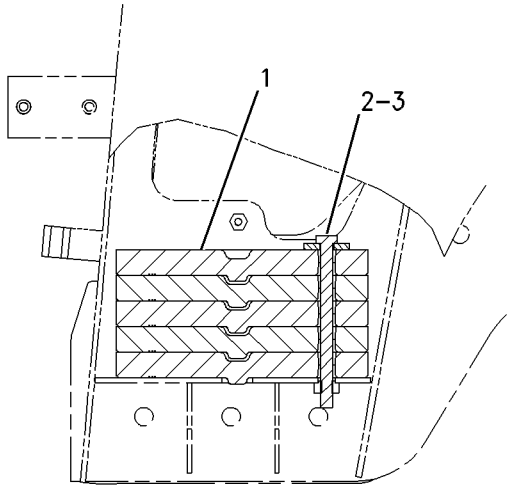

SECTION A-A

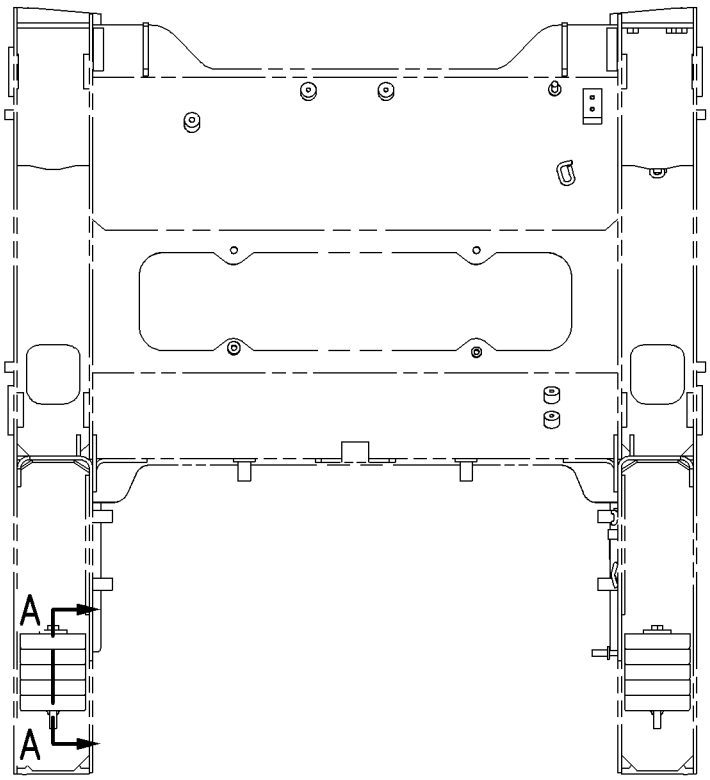

REAR VIEW

GRAPHIC #1 **<END>** g00914383

FRAME AND BODY

183-7122 COUNTERWEIGHT GP

S/N: MJH10575-UP
84.3KG (185.46 LBS)
AN ATTACHMENT

SMCS-7056 **i01763195**

NOTE	REF NO	GRAPHIC REF	PART NUMBER	QTY	PART NAME 1 2 3 4 5 6 (PRODUCT LEVEL)	SEE PAGE
	1	1	**183-7123**	1	BLOCK-LH (33.70 KG)	
	2	1	**183-7124**	1	BLOCK (RH) (33.70 KG)	
	3	1	**183-7131**	2	BLOCK (16.90 KG)	
M	4	1	**8T-4189**	4	BOLT (M8X1.25X20-MM)	
	5	1	**8T-4223**	4	WASHER-HARD (13.5X25.5X3-MM THK)	
	6	1	**8T-4224**	4	WASHER-HARD (8.8X16X2-MM THK)	
M	7	1	**8T-4648**	4	BOLT (M12X1.75X70-MM)	

M-METRIC PART

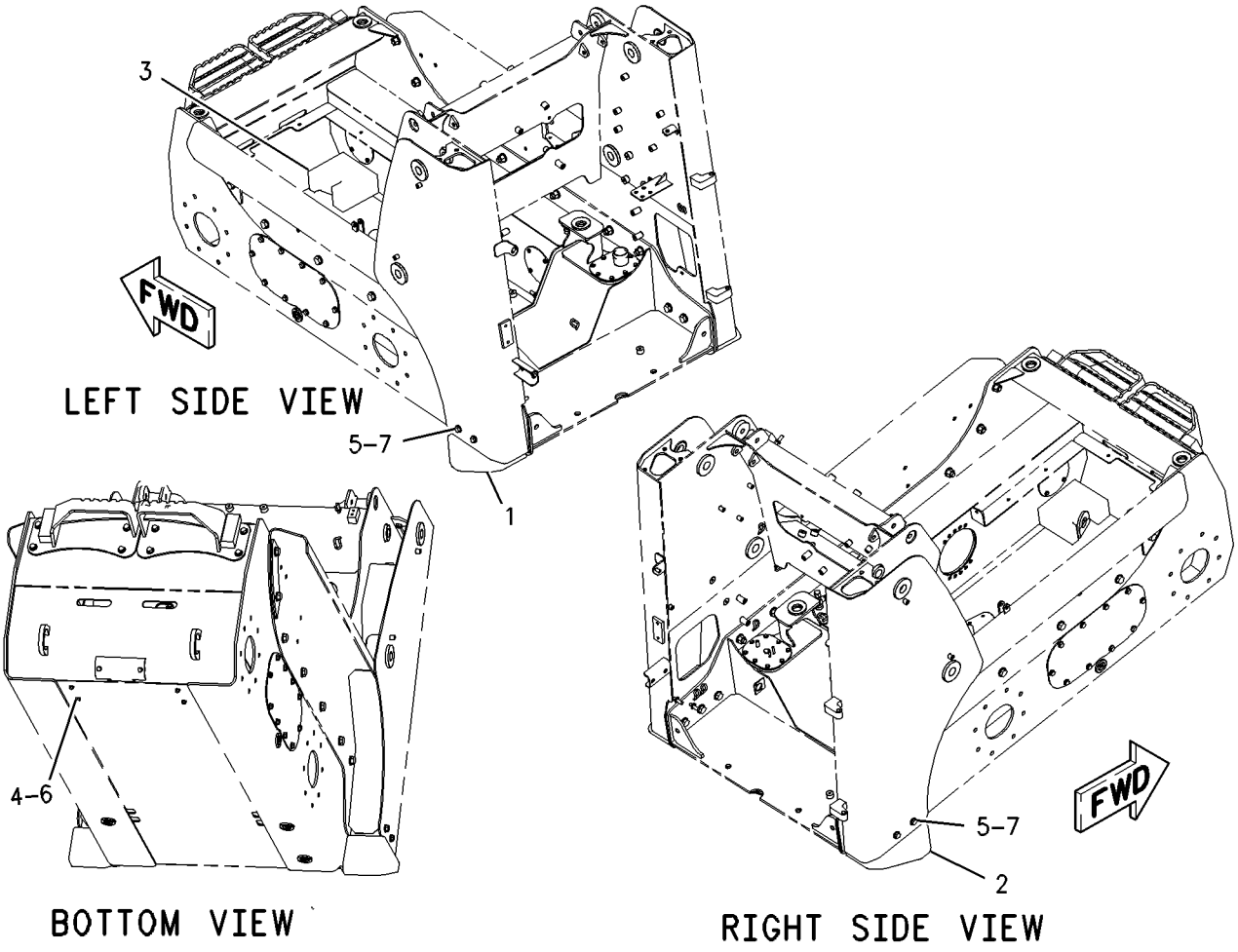

GRAPHIC #1 **<END>** g00902035

185-9940 COUNTERWEIGHT GP–KIT

S/N: MJH10575-UP
84.3KG (185.46 LBS)
AN ATTACHMENT

SMCS-7056 **i01787102**

NOTE	REF NO	GRAPHIC REF	PART NUMBER	QTY	PART NAME 1 2 3 4 5 6 (PRODUCT LEVEL)	SEE PAGE
	1	1	**183-7123**	1	BLOCK-LH (33.70 KG)	
	2	1	**183-7124**	1	BLOCK (RH) (33.70 KG)	
	3	1	**183-7131**	2	BLOCK (16.9 KG)	
M	4	1	**8T-4189**	4	BOLT (M8X1.25X20-MM)	
	5	1	**8T-4223**	4	WASHER-HARD (13.5X25.5X3-MM THK)	
	6	1	**8T-4224**	4	WASHER-HARD (8.8X16X2-MM THK)	
M	7	1	**8T-4648**	4	BOLT (M12X1.75X70-MM)	

M-METRIC PART

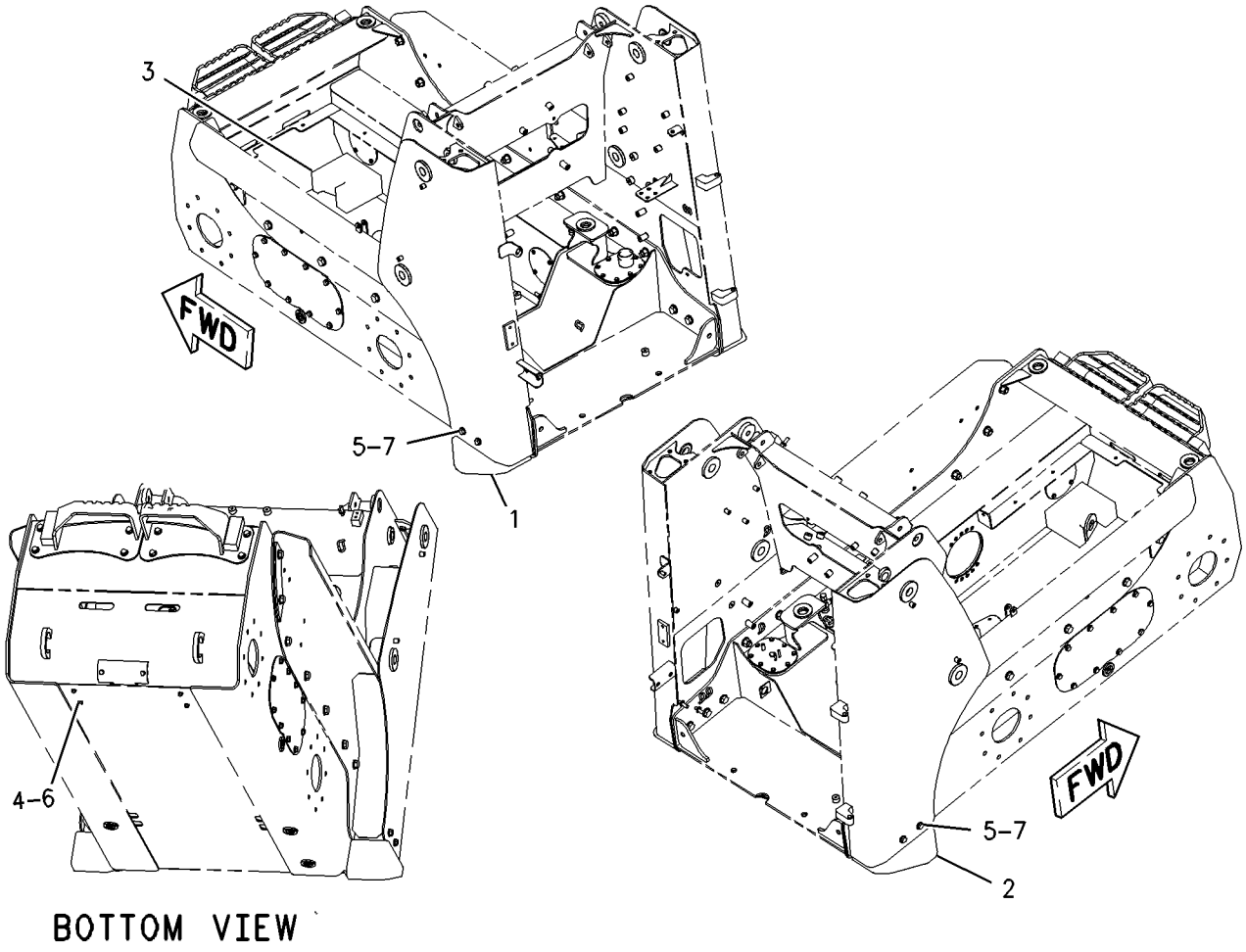

BOTTOM VIEW

GRAPHIC #1 **<END>** g00914398

218-5803 ENCLOSURE GP-ENGINE

S/N: MJH10575-UP

PART OF 295-7110 CHASSIS AR

SMCS-7263 **i02014410**

NOTE	REF NO	GRAPHIC REF	PART NUMBER	QTY	PART NAME 1 2 3 4 5 6 (PRODUCT LEVEL)	SEE PAGE
	1	1	**110-0885**	2	BUMPER	
	2	1	**142-8801**	1	HOOD AS	
	3	1	**142-8831**	1	STRIKER AS	
	4	1	**142-8832**	1	PIN AS	
	5	1	**159-8405**	2	BOLT-SHOULDER	
	6	1	**218-5802**	1	DOOR AS	
	7	1	**223-4240**	1	LATCH AS	
J	8	1	**224-3875**	1	LOCK GP	
		1	**226-0291**	1	LOCK AS	
		1	**233-4872**	1	CAM	
M	9	1	**131-3540**	3	LOCKNUT (M8X1.25-THD)	
	10	1	**2K-4973**	2	LOCKNUT (3/8-16-THD)	
M	11	1	**5C-7261**	2	NUT (M8X1.25-THD)	
	12	1	**5P-4116**	11	WASHER-HARD (8.8X20.5X2-MM THK)	
M	13	1	**7X-2537**	3	BOLT (M8X1.25X35-MM)	
	14	1	**7X-7729**	2	WASHER (11X25X3-MM THK)	
M	15	1	**8T-4137**	2	BOLT (M10X1.5X20-MM)	
M	16	1	**8T-4181**	4	BOLT (M6X1X20-MM)	
	17	1	**8T-4205**	4	WASHER-HARD (7.2X14.5X2-MM THK)	
M	18	1	**8T-4908**	5	BOLT (M8X1.25X25-MM)	

J-REQUIRES 5P-8500 KEY
M-METRIC PART

218-5803 **ENCLOSURE GP-ENGINE** *(contd.)* **i02014410**

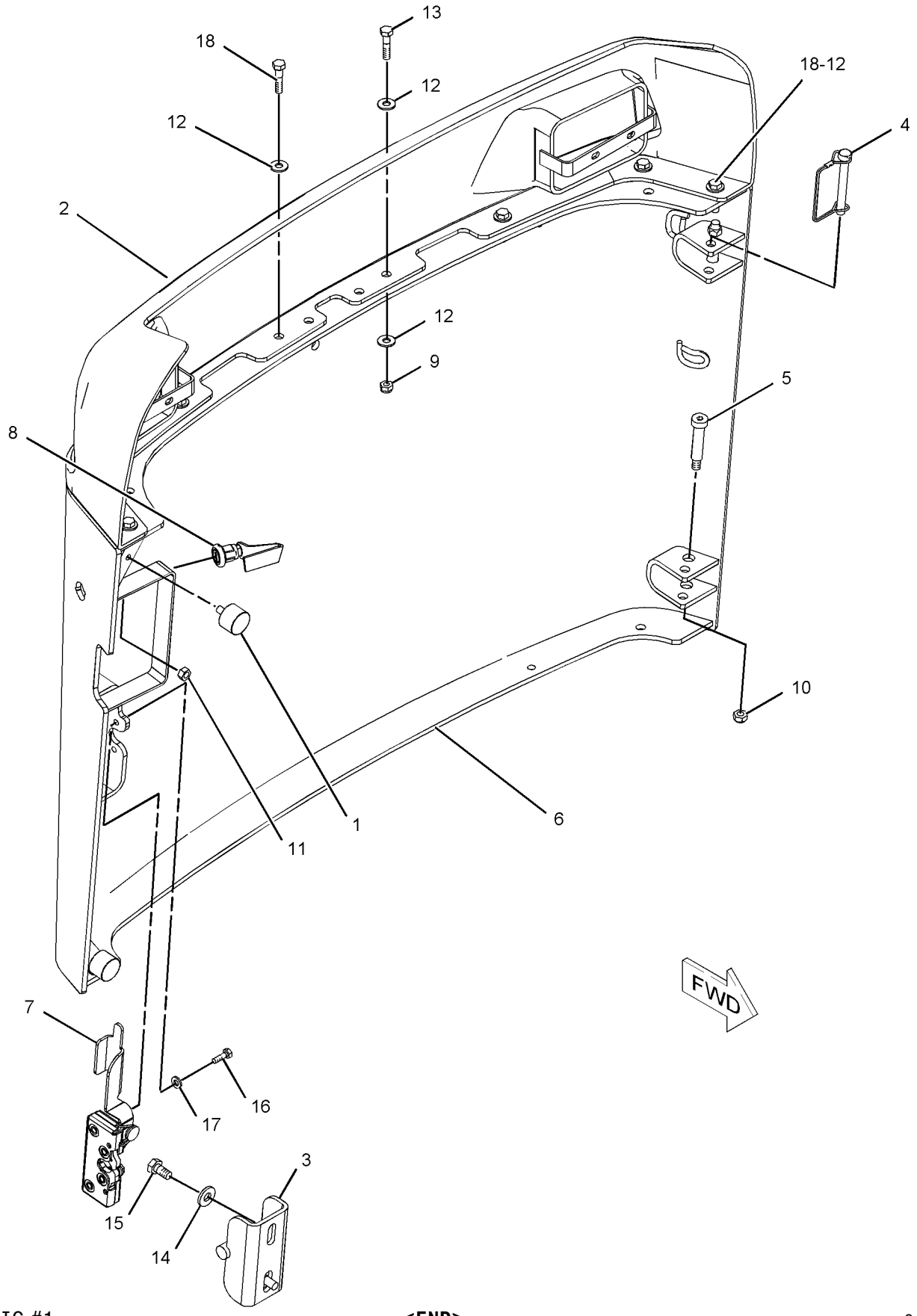

GRAPHIC #1 **<END>** g01030767

FRAME AND BODY

295-7075 FRAME GP-LOADER

S/N: MJH10575-UP

PART OF 295-7110 CHASSIS AR

SMCS-7054 **i02779206**

NOTE	REF NO	GRAPHIC REF	PART NUMBER	QTY	PART NAME 1 2 3 4 5 6 (PRODUCT LEVEL)	SEE PAGE
	1	1	**3S-9182**	5	PLUG-MAGNETIC (FRAME)	
	2	1	**9G-5127**	2	BREATHER (TANDEM HOUSING)	
	3	1	**142-8810**	1	PLATE AS	
	4	1	**142-8823**	2	GASKET	
	5	1	**142-8897**	2	COVER	
	6	1	**191-9576**	1	COVER AS	
	7	1	**207-9731**	1	STEP AS (LH)	
	8	1	**207-9732**	1	STEP AS (RH)	
	9	1	**261-6101**	4	COVER	
	10	1	**231-2105**	1	SENDER AS-FUEL LEVEL	
		1	**102-8802**	1	KIT-RECEPTACLE (2-PIN)	
					(INCLUDES RECEPTACLE AS & WEDGE)	
		1	**186-3735**	2	PIN-CONNECTOR (16-GA TO 18-GA)	
Y	11	1	*295-7026*	1	FRAME GP-MACHINE	246
	12	1	**295-7176**	1	PLATE	
	14	1	**5P-1076**	16	WASHER-HARD (13.5X30X4-MM THK)	
	15	1	**5P-4116**	4	WASHER-HARD (8.8X20.5X2-MM THK)	
M	16	1	**6V-7357**	2	BOLT (M6X1X25-MM)	
	17	1	**8T-4121**	20	WASHER-HARD (11X21X2.5-MM THK)	
	18	1	**8T-4122**	32	WASHER-HARD (17X32X3.5-MM THK)	
M	19	1	**8T-4132**	16	NUT (M16X2-THD)	
M	20	1	**8T-4136**	20	BOLT (M10X1.5X25-MM)	
M	21	1	**8T-4194**	8	BOLT (M12X1.75X50-MM)	
	22	1	**8T-4205**	18	WASHER-HARD (7.2X14.5X2-MM THK)	
M	23	1	**8T-4244**	8	NUT (M12X1.75-THD)	
M	24	1	**8T-4908**	4	BOLT (M8X1.25X25-MM)	
M	25	1	**8T-4970**	16	BOLT (M6X1X14-MM)	
M	26	1	**8T-7338**	16	BOLT (M16X2X45-MM)	

M-METRIC PART
Y-SEPARATE ILLUSTRATION

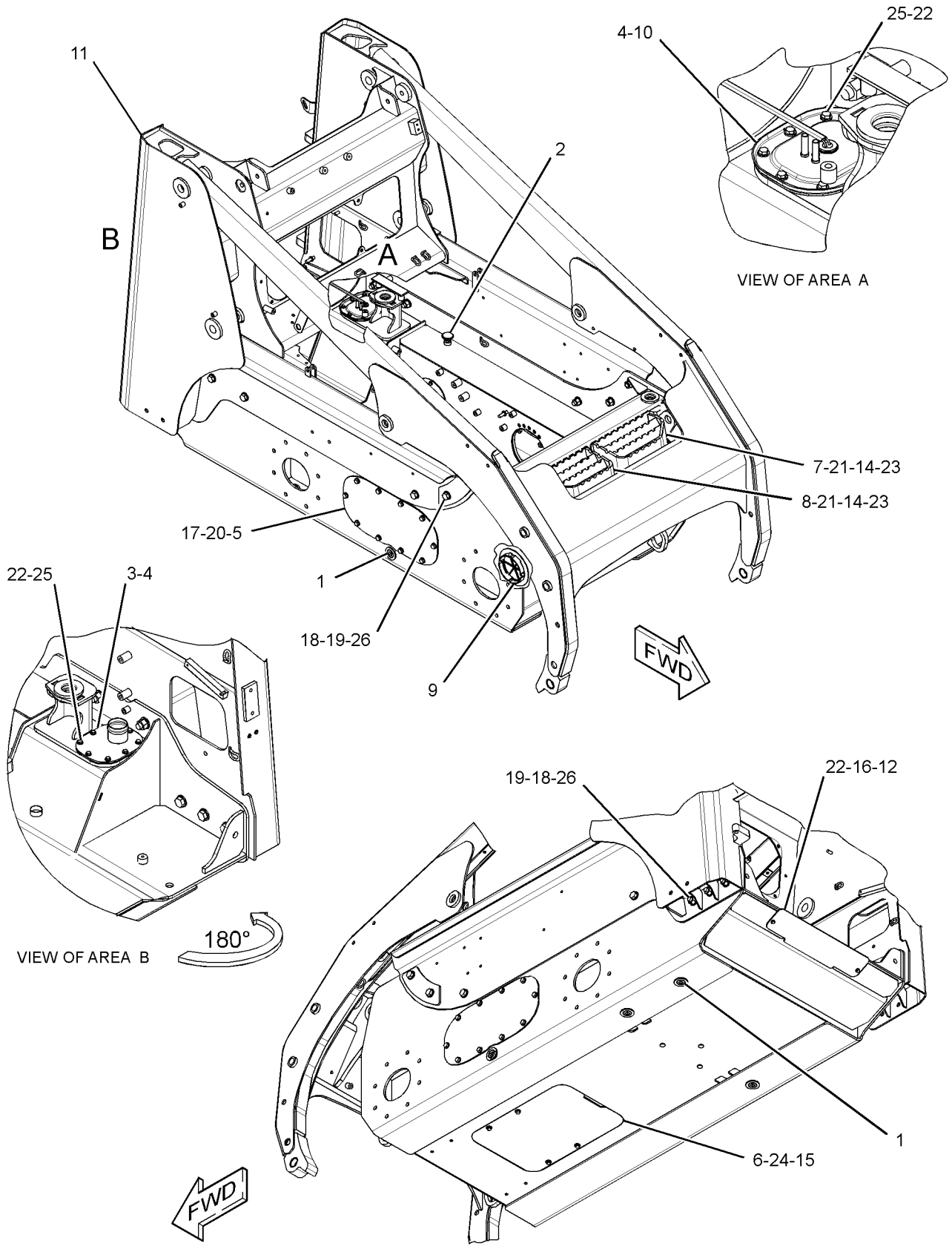

GRAPHIC #1 **<END>** g01388934

295-7026 FRAME GP-MACHINE

S/N: MJH10575-UP

PART OF 295-7075 FRAME GP-LOADER

SMCS-6119, 7050 **i02730777**

NOTE	PART NUMBER	QTY	PART NAME 1 2 3 4 5 6 (PRODUCT LEVEL)	SEE PAGE
	218-6798	1	ARM AS-LIFT	
	7T-1099	2	LINK	
M	**8T-3597**	2	NUT-WELD (M12X1.75-THD)	
	159-5756	2	BEARING-SLEEVE	
	218-6796	1	PLATE AS	
	295-7073	1	FRAME AS-LOWER	
	261-6200	1	FRAME AS-UPPER	

M-METRIC PART

<END>

FRAME AND BODY

156-9809 GUIDE GP-LINES

S/N: MJH10575-UP

PART OF 295-7110 CHASSIS AR

SMCS-5057 **i02059887**

NOTE	REF NO	GRAPHIC REF	PART NUMBER	QTY	PART NAME 1 2 3 4 5 6 (PRODUCT LEVEL)	SEE PAGE
	1	1	**227-4315**	1	PLATE AS	
	2	1	**247-4877**	1	BOLT (M8X1.25X12-MM)	
M	3	1	**6V-9189**	1	LOCKNUT (M8X1.25-THD)	
	4	1	**7X-0603**	2	WASHER-HARD (9.9X35X2.5-MM THK)	
M	5	1	**8T-4177**	1	BOLT (M8X1.25X90-MM)	
	6	1	**8T-4224**	1	WASHER-HARD (8.8X16X2-MM THK)	

M-METRIC PART

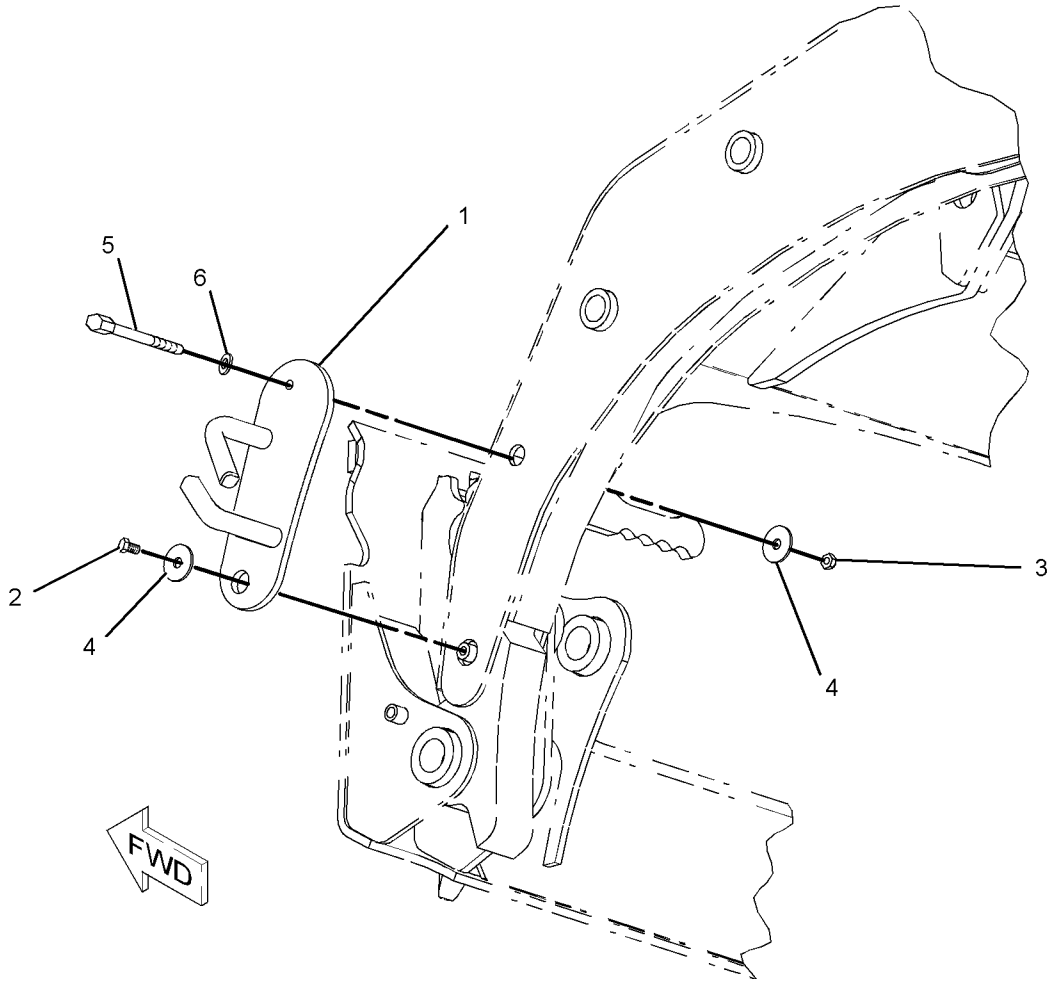

GRAPHIC #1 **<END>** g01056800

257-5730 KIT-ROADING CONVERSION—OUTSIDE NACD

S/N: MJH10575-UP

AN ATTACHMENT

SMCS-1408, 1429, 1430, 1432, 7000, 7319 **i02330195**

NOTE	PART NUMBER	QTY	PART NAME 1 2 3 4 5 6 (PRODUCT LEVEL)	SEE PAGE
	160-1600	1	FILM-WARNING (CLEARANCE)	

<END>

FRAME AND BODY

277-0650 KIT-ROADING CONVERSION—LIGHTS, MIRRORS

S/N: MJH10575-UP

AN ATTACHMENT

SMCS-1408, 1429, 1430, 1432, 7000, 7319 **i02889724**

NOTE	REF NO	GRAPHIC REF	PART NUMBER	QTY	PART NAME 1 2 3 4 5 6 (PRODUCT LEVEL)	SEE PAGE
Y	1	2	**3E-7584**	2	LAMP GP-HEAD & SIGNAL	153
	2	2	**7D-5473**	2	BOLT-SOCKET HEAD (8-32X0.75-IN)	
	3	2	**8T-1887**	2	CLIP (SLOT)	
	4	2	**8T-1888**	2	CLIP (TAB)	
	5	2	**8W-8909**	2	SLEEVE	
	6	2	**132-5166**	2	MIRROR GP	
					(EACH INCLUDES)	
		2	**148-2371**	1	CLAMP (TOP)	
		2	**148-2372**	1	CLAMP (BOTTOM)	
Y	7	1	**142-8634**	2	LAMP GP-STOP & TAIL	156
	8	2	**142-9329**	1	SWITCH AS-ROCKER (ROADING LIGHTS)	
	9	2	**142-9331**	1	SWITCH AS-ROCKER (HAZARD WARNING LIGHTS)	
	10	2	**147-1773**	1	CIRCUIT BREAKER AS (30-AMPERE)	
		2	**6V-8378**	2	NUT (10-32-THD)	
		2	**8F-1434**	2	LOCKWASHER	
		2	**8T-0328**	2	WASHER-HARD (5.5X10X1-MM THK)	
	11	2	*166-2033*	2	TEE AS	
					(EACH INCLUDES)	
		2	**4J-5477**	1	SEAL-O-RING	
		2	**7X-2444**	1	TEE-SWIVEL	
	12	2	**175-4239**	2	BRACKET AS	
Y	13	2	**184-1564**	2	SWITCH GP-PRESSURE (BRAKE LIGHT)	169
	14	2	**216-4711**	1	HARNESS AS-REAR LIGHTING (BRAKE)	
		2	**102-8803**	1	KIT-RECEPTACLE (3-PIN)	
					(INCLUDES RECEPTACLE AS & WEDGE)	
		2	**155-2270**	2	KIT-CONNECTING PLUG (2-PIN)	
					(EACH INCLUDES PLUG AS, WEDGE & INTERFACE SEAL)	
E		2	**125-7874**		TUBE-HEAT SHRINK (5.72-MM DIA) (5-CM)	
	15	1	**216-4727**	1	HARNESS AS-REAR LIGHTING	
		1	**102-8805**	1	KIT-RECEPTACLE (6-PIN)	
		1	**102-8806**	1	KIT-RECEPTACLE (8-PIN)	
					(EACH KIT INCLUDES RECEPTACLE AS & WEDGE)	
		1	**155-2265**	1	KIT-CONNECTING PLUG (8-PIN)	
					(INCLUDES PLUG AS, WEDGE & INTERFACE SEAL)	
E		1	**125-7874**		TUBE-HEAT SHRINK (5.72-MM DIA) (20-CM)	
E		1	**125-7875**		TUBE-HEAT SHRINK (7.44-MM DIA) (5-CM)	
	16	1	**225-7990**	1	HARNESS AS-FRONT LIGHTING	
		1	**155-2274**	1	KIT-CONNECTING PLUG (6-PIN)	
					(INCLUDES PLUG AS, WEDGE & INTERFACE SEAL)	
E		1	**125-7874**		TUBE-HEAT SHRINK (5.72-MM DIA) (5-CM)	
E		1	**125-7875**		TUBE-HEAT SHRINK (7.44-MM DIA) (5-CM)	
	17	2	**225-8013**	1	WIRE AS	
	18	2	**226-5900**	1	SWITCH AS-ROCKER (TURN SIGNAL)	
	19	2	**238-7675**	2	PLATE	
	20	2	**242-9000**	1	FLASHER AS (12-VOLT)	
	21	2	**115-1615**	1	RELAY AS (12-VOLT)	
	22	2	**195-0935**	1	INSERT-THREADED (M6X1-THD)	
	23	1	**206-1346**	2	STRAP-CABLE	
B	24	1,2	**3S-2093**	*22*	STRAP-CABLE	
	25	2	**4B-4863**	2	WASHER (4.7X11X1.2-MM THK)	
	26	1	**4P-7581**	1	CLIP	
M	27	2	**5C-9553**	4	BOLT (M6X1X16-MM)	
	28	2	**8T-4121**	4	WASHER-HARD (11X21X2.5-MM THK)	
M	29	2	**8T-4133**	2	NUT (M10X1.5-THD)	
M	30	2	**8T-4178**	2	BOLT (M10X1.5X90-MM)	

277-0650 KIT-ROADING CONVERSION *(contd.)* i02889724

NOTE	REF NO	GRAPHIC REF	PART NUMBER	QTY	PART NAME 1 2 3 4 5 6 (PRODUCT LEVEL)	SEE PAGE
M	31	1	**8T-4201**	1	BOLT-LOCKING (M10X1.5X20-MM)	
	32	2	**8T-4205**	4	WASHER-HARD (7.2X14.5X2-MM THK)	
M	33	2	**9X-2042**	1	SCREW-TRUSS HEAD (M6X1X12-MM)	

B-USE AS REQUIRED
E-ORDER BY THE CENTIMETER
M-METRIC PART
Y-SEPARATE ILLUSTRATION

REFER TO ALL ILLUSTRATIONS OF THIS GROUP FOR AUXILIARY VIEWS

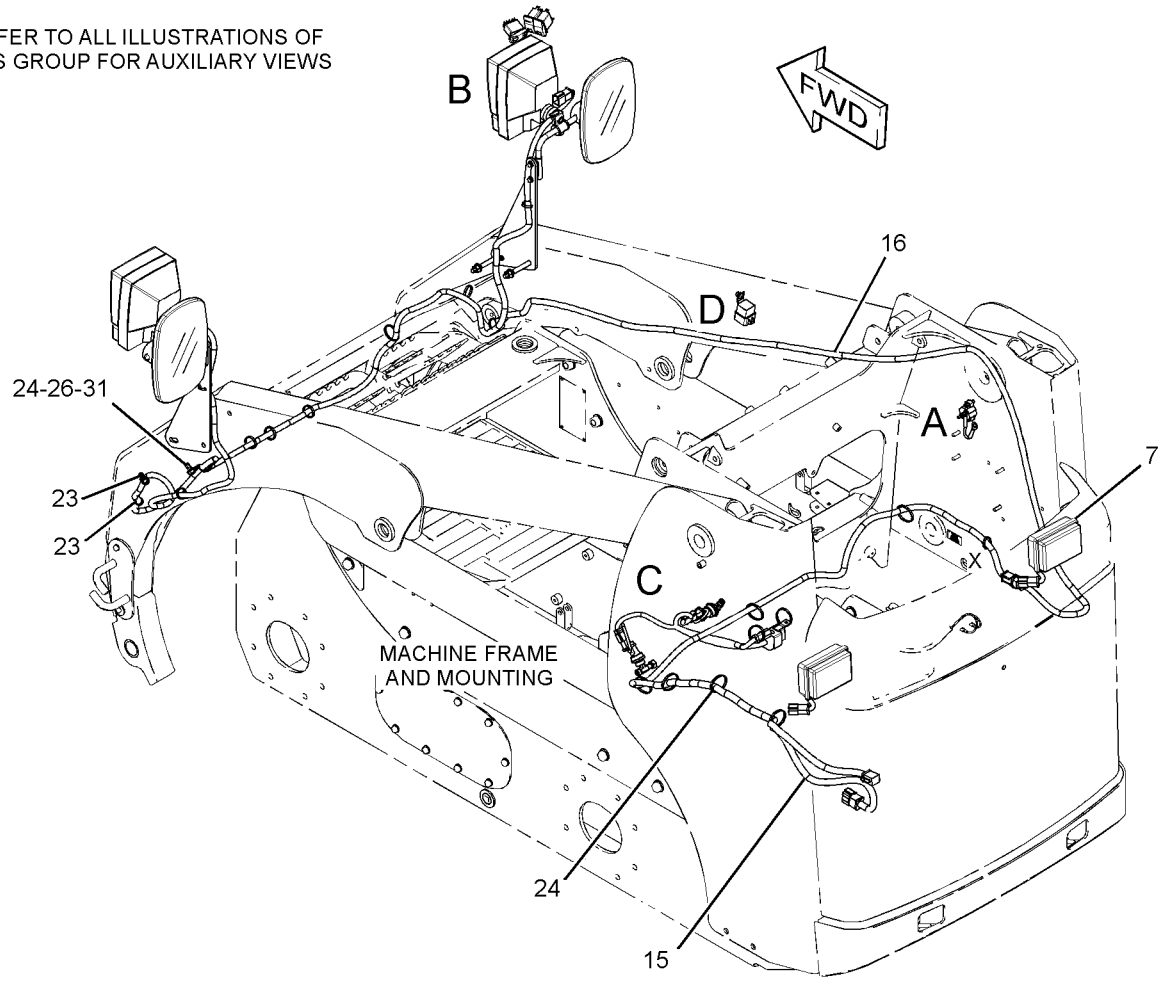

GRAPHIC #1 g01346696

277-0650 KIT-ROADING CONVERSION *(contd.)* **i02889724**

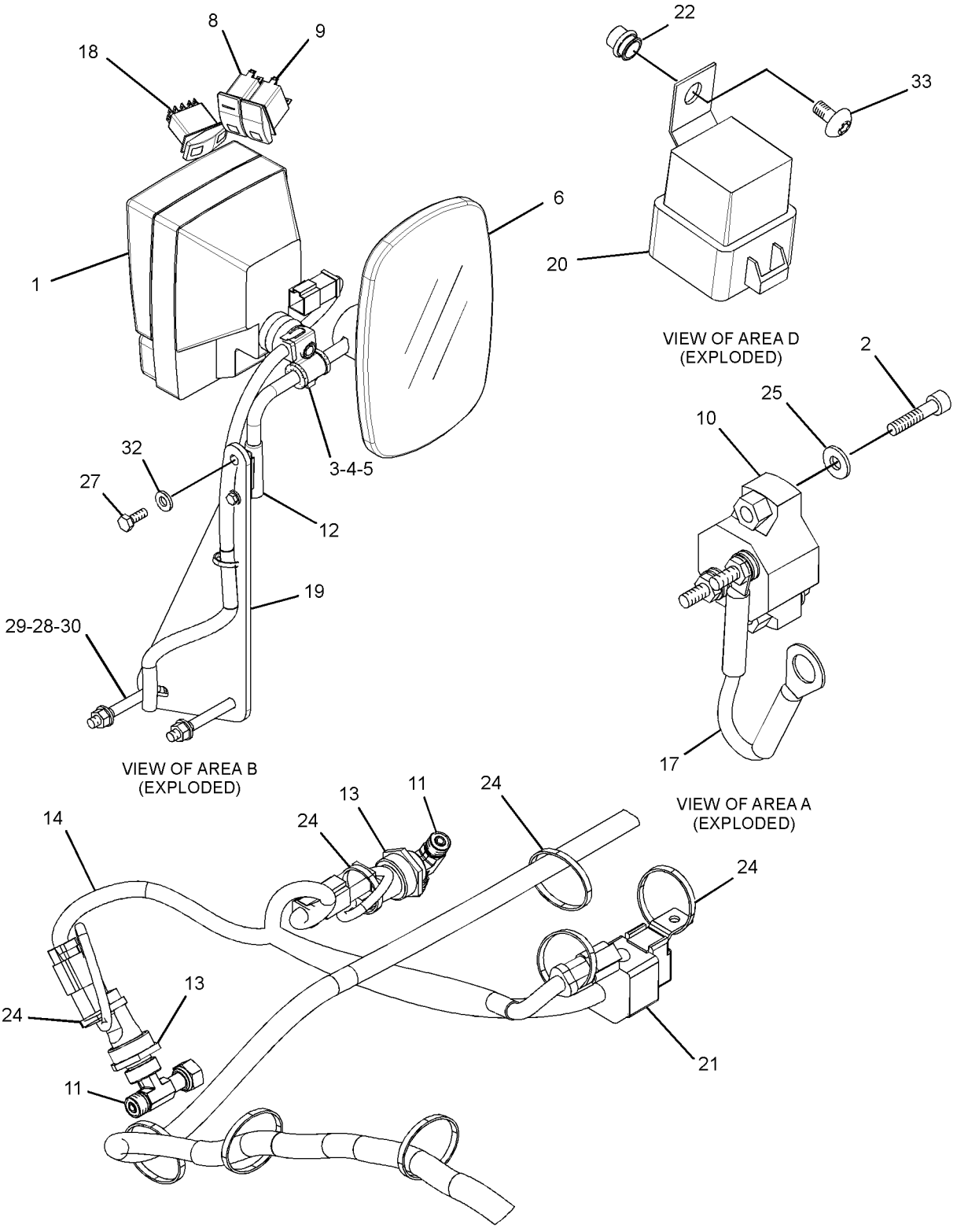

GRAPHIC #2 **<END>** g01345913

FRAME AND BODY

277-0652 KIT-ROADING CONVERSION

S/N: MJH10575-UP

AN ATTACHMENT

SMCS-1408, 1429, 1430, 1432, 7000, 7319 **i02545994**

NOTE	REF NO	GRAPHIC REF	PART NUMBER	QTY	PART NAME 1 2 3 4 5 6 (PRODUCT LEVEL)	SEE PAGE
Y	1	1	**3E-7584**	2	LAMP GP-HEAD & SIGNAL	153
	2	1	**7D-5473**	2	BOLT-SOCKET HEAD (8-32X0.75-IN)	
	3	1	**8T-1887**	2	CLIP (SLOT)	
	4	1	**8T-1888**	2	CLIP (TAB)	
	5	1	**8W-8909**	2	SLEEVE	
	6	1	**132-5166**	2	MIRROR GP	
					(EACH INCLUDES)	
		1	**148-2371**	1	CLAMP (TOP)	
		1	**148-2372**	1	CLAMP (BOTTOM)	
Y	7	1	**142-8634**	2	LAMP GP-STOP & TAIL	156
	8	1	**142-9329**	1	SWITCH AS-ROCKER (ROADING LIGHTS)	
	9	1	**142-9331**	1	SWITCH AS-ROCKER (HAZARD WARNING LIGHTS)	
	10	1	**147-1773**	1	CIRCUIT BREAKER AS (30-AMPERE)	
		1	**6V-8378**	2	NUT (10-32-THD)	
		1	**8F-1434**	2	LOCKWASHER	
		1	**8T-0328**	2	WASHER-HARD (5.5X10X1-MM THK)	
	11	1	*166-2033*	2	TEE AS	
					(EACH INCLUDES)	
		1	**4J-5477**	1	SEAL-O-RING	
		1	**7X-2444**	1	TEE-SWIVEL	
	12	1	**175-4239**	2	BRACKET AS	
Y	13	1	**184-1564**	2	SWITCH GP-PRESSURE	169
	14	1	**216-4711**	1	HARNESS AS-REAR LIGHTING (BRAKE)	
E		1	**125-7874**		TUBE-HEAT SHRINK (5.72-MM DIA) (5-CM)	
		1	**102-8803**	1	KIT-RECEPTACLE (3-PIN)	
					(INCLUDES RECEPTACLE AS & WEDGE)	
		1	**155-2270**	2	KIT-CONNECTING PLUG (2-PIN)	
					(EACH PLUG KIT INCLUDES PLUG AS ,WEDGE & INTERFACE SEAL)	
	15	1	**216-4727**	1	HARNESS AS-REAR LIGHTING	
E		1	**125-7875**		TUBE-HEAT SHRINK (7.44-MM DIA) (5-CM)	
E		1	**125-7874**		TUBE-HEAT SHRINK (5.72-MM DIA) (20-CM)	
		1	**102-8806**	1	KIT-RECEPTACLE (8-PIN)	
		1	**102-8805**	1	KIT-RECEPTACLE (6-PIN)	
					(EACH RECEPTACLE KIT INCLUDES RECEPTACLE AS & WEDGE)	
		1	**155-2265**	1	KIT-CONNECTING PLUG (8-PIN)	
					(INCLUDES PLUG AS, WEDGE & INTERFACE SEAL)	
	16	1	**225-7990**	1	HARNESS AS-FRONT LIGHTING	
		1	**155-2274**	3	KIT-CONNECTING PLUG (6-PIN)	
					(EACH INCLUDES PLUG AS ,WEDGE & INTERFACE SEAL)	
E		1	**125-7874**		TUBE-HEAT SHRINK (5.72-MM DIA) (5-CM)	
E		1	**125-7875**		TUBE-HEAT SHRINK (7.44-MM DIA) (5-CM)	
	17	1	**225-8013**	1	WIRE AS	
	18	1	**226-5900**	1	SWITCH AS-ROCKER (TURN SIGNAL)	
	19	1	**238-7675**	1	PLATE	
	20	1	**238-7676**	1	BRACKET AS	
	21	1	**242-9000**	1	FLASHER AS (12-VOLT)	
	22	1	**115-1615**	1	RELAY AS (12-VOLT)	
	23	1	**195-0935**	1	INSERT-THREADED (M6X1)	
	24	1	**206-1346**	2	STRAP-CABLE	
B	25	1	**3S-2093**	22	STRAP-CABLE	
	26	1	**4B-4863**	2	WASHER (4.7X11X1.2-MM THK)	
	27	1	**4P-7581**	1	CLIP	
M	28	1	**5C-9553**	4	BOLT (M6X1X16-MM)	

277-0652 KIT-ROADING CONVERSION *(contd.)* i02545994

NOTE	REF NO	GRAPHIC REF	PART NUMBER	QTY	PART NAME 1 2 3 4 5 6 (PRODUCT LEVEL)	SEE PAGE
M	29	1	**7X-0818**	1	BOLT (M8X1.25X45-MM)	
	30	1	**8T-4121**	4	WASHER-HARD (11X21X2.5-MM THK)	
M	31	1	**8T-4133**	2	NUT (M10X1.5-THD)	
M	32	1	**8T-4178**	2	BOLT (M10X1.5X90-MM)	
M	33	1	**8T-4201**	1	BOLT-LOCKING (M10X1.5X20-MM)	
	34	1	**8T-4205**	4	WASHER-HARD (7.2X14.5X2-MM THK)	
M	35	1	**8T-7547**	1	BOLT (M8X1.25X30-MM)	
M	36	1	**9X-2042**	1	SCREW-TRUSS HEAD (M6X1X12-MM)	

B-USE AS REQUIRED
E-ORDER BY THE CENTIMETER
M-METRIC PART
Y-SEPARATE ILLUSTRATION

277-0652 KIT-ROADING CONVERSION *(contd.)* i02545994

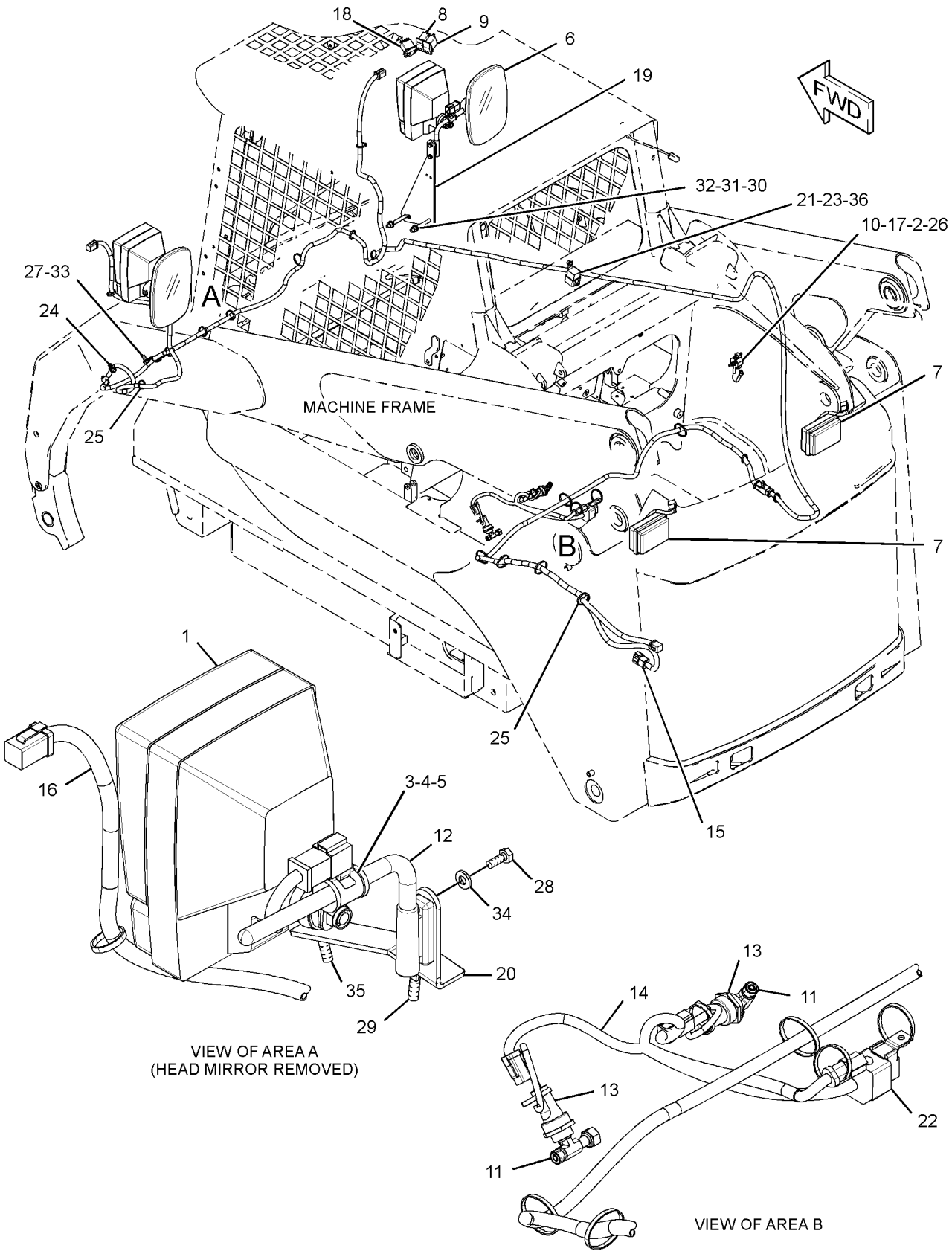

GRAPHIC #1 **<END>** g01348838

218-6708 LIFTING GP-MACHINE

S/N: MJH10575-UP

PART OF 261-6157, 261-6187, 261-6197, 278-1212, 278-1220, 278-1224, 278-5408, 278-5441, 295-7038, 295-7049, 295-7059, 295-7066, 295-7149, 295-7158, 295-7162, 295-7167 CONVERSION AR-MACHINE, 233-5671, 233-5672, 233-5673, 233-5674, 233-5675, 233-5676, 257-5716, 257-5717, 295-7043 CONVERSION AR-ROADING AN ATTACHMENT

SMCS-1122, 6459, 7000 **i01951888**

NOTE	REF NO	GRAPHIC REF	PART NUMBER	QTY	PART NAME 1 2 3 4 5 6 (PRODUCT LEVEL)	SEE PAGE
	1	1	**7E-2700**	4	FILM-SYMBOL (LIFT EYE LOCATION)	
	2	1	**142-8826**	4	PLATE-LIFT	
	3	1	**218-6711**	1	PLATE AS	
	4	1	**218-6726**	1	PLATE AS	
M	5	1	**159-2953**	8	SCREW-FLAT HEAD (M16X2-THD)	
	6	1	**8T-4121**	4	WASHER-HARD (11X21X2.5-MM THK)	
	7	1	**8T-4122**	4	WASHER-HARD (17X32X3.5-MM THK)	
M	8	1	**8T-4132**	4	NUT (M16X2-THD)	
M	9	1	**8T-4137**	4	BOLT (M10X1.5X20-MM)	

M-METRIC PART

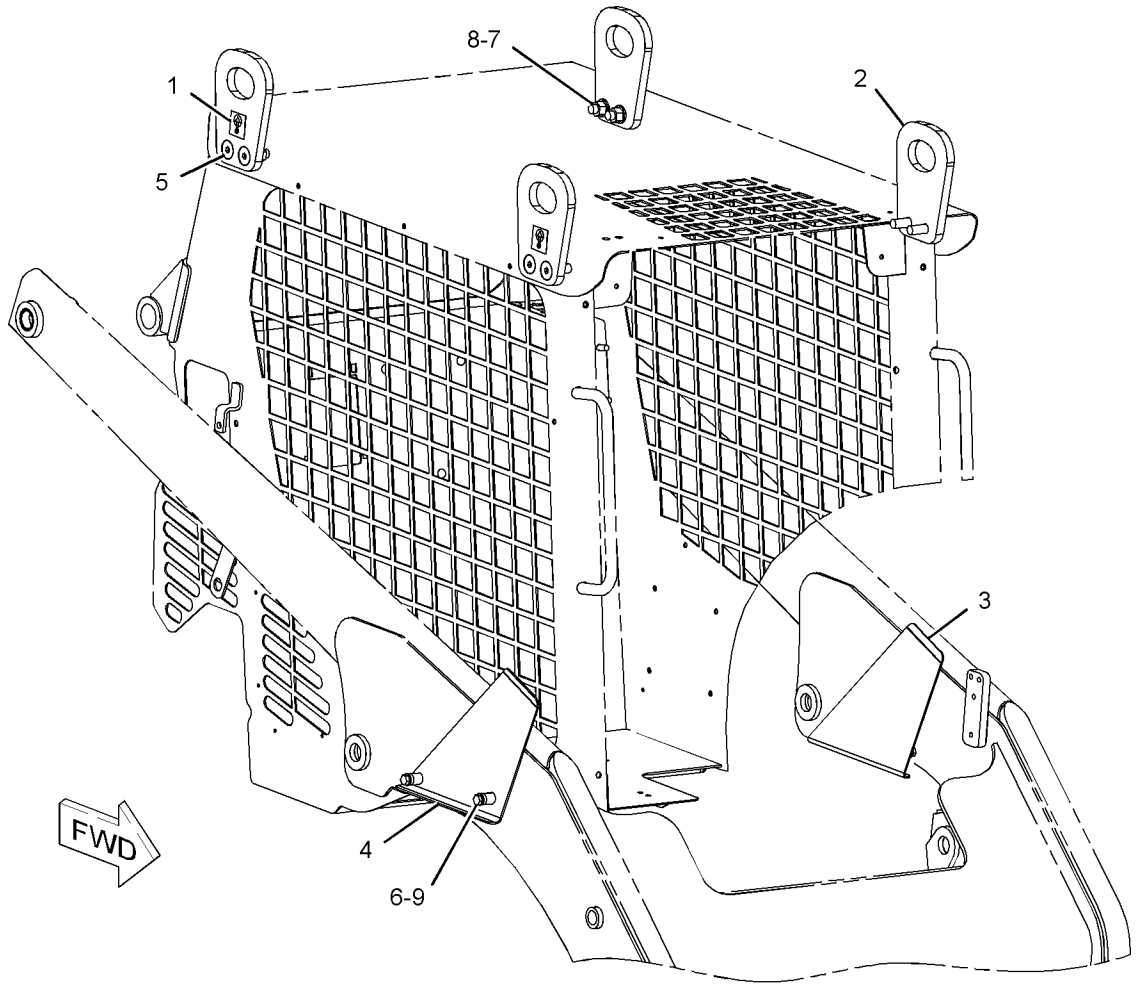

GRAPHIC #1 **<END>** g01015781

218-6709 LIFTING GP-MACHINE

S/N: MJH10575-UP

AN ATTACHMENT

SMCS-1122, 6459, 7000 **i01990566**

NOTE	REF NO	GRAPHIC REF	PART NUMBER	QTY	PART NAME 1 2 3 4 5 6 (PRODUCT LEVEL)	SEE PAGE
	1	1	**5P-0372**	2	LOCK PIN	
	2	1	**7E-2700**	2	FILM-SYMBOL (LIFT EYE LOCATION)	
	3	1	**9C-5344**	1	SPACER (10.5X20X18-MM THK)	
	4	1	**095-1325**	1	PIN-CLEVIS	
	5	1	**152-1154**	1	BRACKET AS-LIFT	
	6	1	**152-1156**	4	PLATE	
	7	1	**153-2683**	1	SPRING AS-GAS	
	8	1	**177-3405**	1	PIN	
	9	1	**218-6711**	1	PLATE AS	
M		1	**9R-2672**	2	BOSS (M10X1.5X20-MM)	
	10	1	**218-6726**	1	PLATE AS	
M		1	**9R-2672**	2	BOSS (M10X1.5X20-MM)	
M	11	1	**159-2953**	8	SCREW-FLAT HEAD (M16X2-THD)	
	12	1	**8T-4121**	4	WASHER-HARD (11X21X2.5-MM THK)	
	13	1	**8T-4122**	4	WASHER-HARD (17X32X3.5-MM THK)	
M	14	1	**8T-4132**	4	NUT (M16X2-THD)	
M	15	1	**8T-4137**	4	BOLT (M10X1.5X20-MM)	

M-METRIC PART

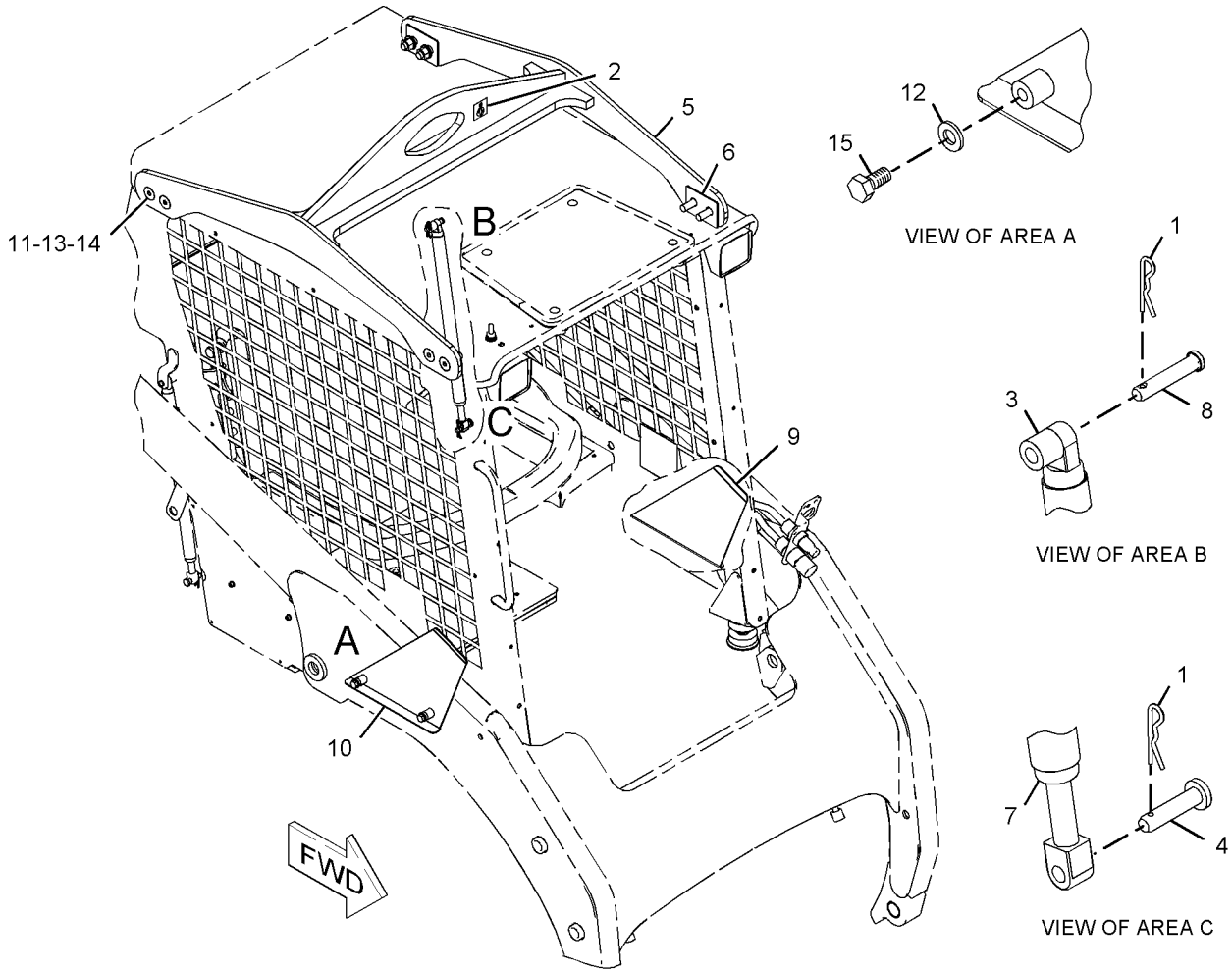

GRAPHIC #1

<END>

g01030934

238-7671 MIRROR & MTG GP-REAR VIEW–

WITH ROADING LIGHT MOUNT

S/N: MJH10575-UP

PART OF 261-6187, 278-1212, 278-1224, 295-7038, 295-7149, 295-7162 CONVERSION AR-MACHINE, 233-5672, 233-5673, 257-5716 CONVERSION AR-ROADING AN ATTACHMENT

SMCS-7319 **i01958287**

NOTE	REF NO	GRAPHIC REF	PART NUMBER	QTY	PART NAME 1 2 3 4 5 6 (PRODUCT LEVEL)	SEE PAGE
	1	1	**132-5166**	2	MIRROR GP	
					(EACH INCLUDES)	
		1	**148-2371**	1	CLAMP (TOP)	
		1	**148-2372**	1	CLAMP (BOTTOM)	
	2	1	**175-4237**	1	BLOCK AS	
	3	1	**175-4239**	2	BRACKET AS	
	4	1	**238-7675**	2	PLATE	
M	5	1	**5C-9553**	4	BOLT (M6X1X16-MM)	
	6	1	**8T-4121**	4	WASHER-HARD (11X21X2.5-MM THK)	
M	7	1	**8T-4133**	2	NUT (M10X1.5-THD)	
M	8	1	**8T-4178**	2	BOLT (M10X1.5X90-MM)	
	9	1	**8T-4205**	4	WASHER-HARD (7.2X14.5X2-MM THK)	

M-METRIC PART

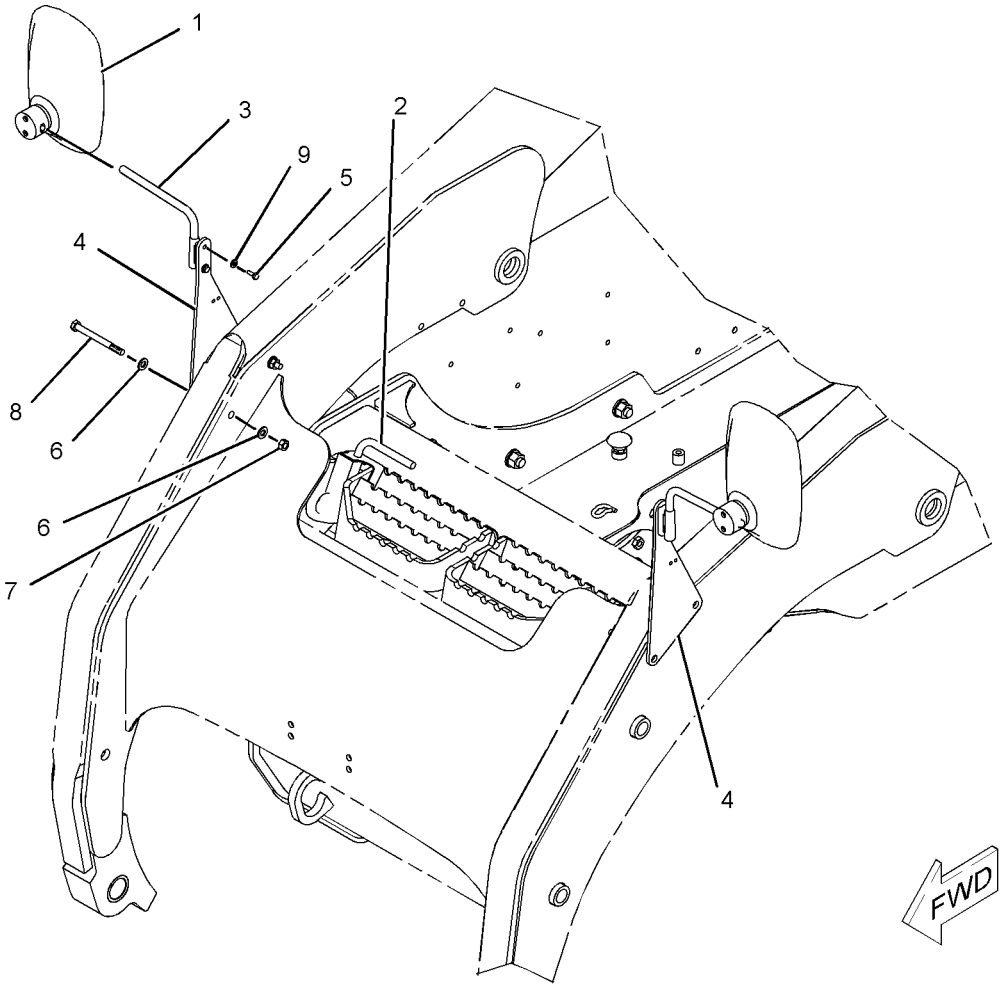

GRAPHIC #1 **<END>** g01017865

238-7672 MIRROR & MTG GP-REAR VIEW

S/N: MJH10575-UP
HIGH FLOW
PART OF 278-5408, 278-5441, 295-7158, 295-7167 CONVERSION AR-MACHINE, 233-5675, 233-5676, 257-5717, 295-7043 CONVERSION AR-ROADING
AN ATTACHMENT

SMCS-7319 **i01957890**

NOTE	REF NO	GRAPHIC REF	PART NUMBER	QTY	PART NAME 1 2 3 4 5 6 (PRODUCT LEVEL)	SEE PAGE
	1	1	**132-5166**	2	MIRROR GP	
					(EACH INCLUDES)	
		1	**148-2371**	1	CLAMP (TOP)	
		1	**148-2372**	1	CLAMP (BOTTOM)	
	2	1	**175-4237**	1	BLOCK AS	
	3	1	**175-4239**	2	BRACKET AS	
	4	1	**238-7675**	1	PLATE	
	5	1	**238-7676**	1	BRACKET AS	
M	6	1	**5C-9553**	4	BOLT (M6X1X16-MM)	
M	7	1	**7X-0818**	1	BOLT (M8X1.25X45-MM)	
	8	1	**8T-4121**	4	WASHER-HARD (11X21X2.5-MM THK)	
M	9	1	**8T-4133**	2	NUT (M10X1.5-THD)	
M	10	1	**8T-4178**	2	BOLT (M10X1.5X90-MM)	
	11	1	**8T-4205**	4	WASHER-HARD (7.2X14.5X2-MM THK)	
M	12	1	**8T-7547**	1	BOLT (M8X1.25X30-MM)	

M-METRIC PART

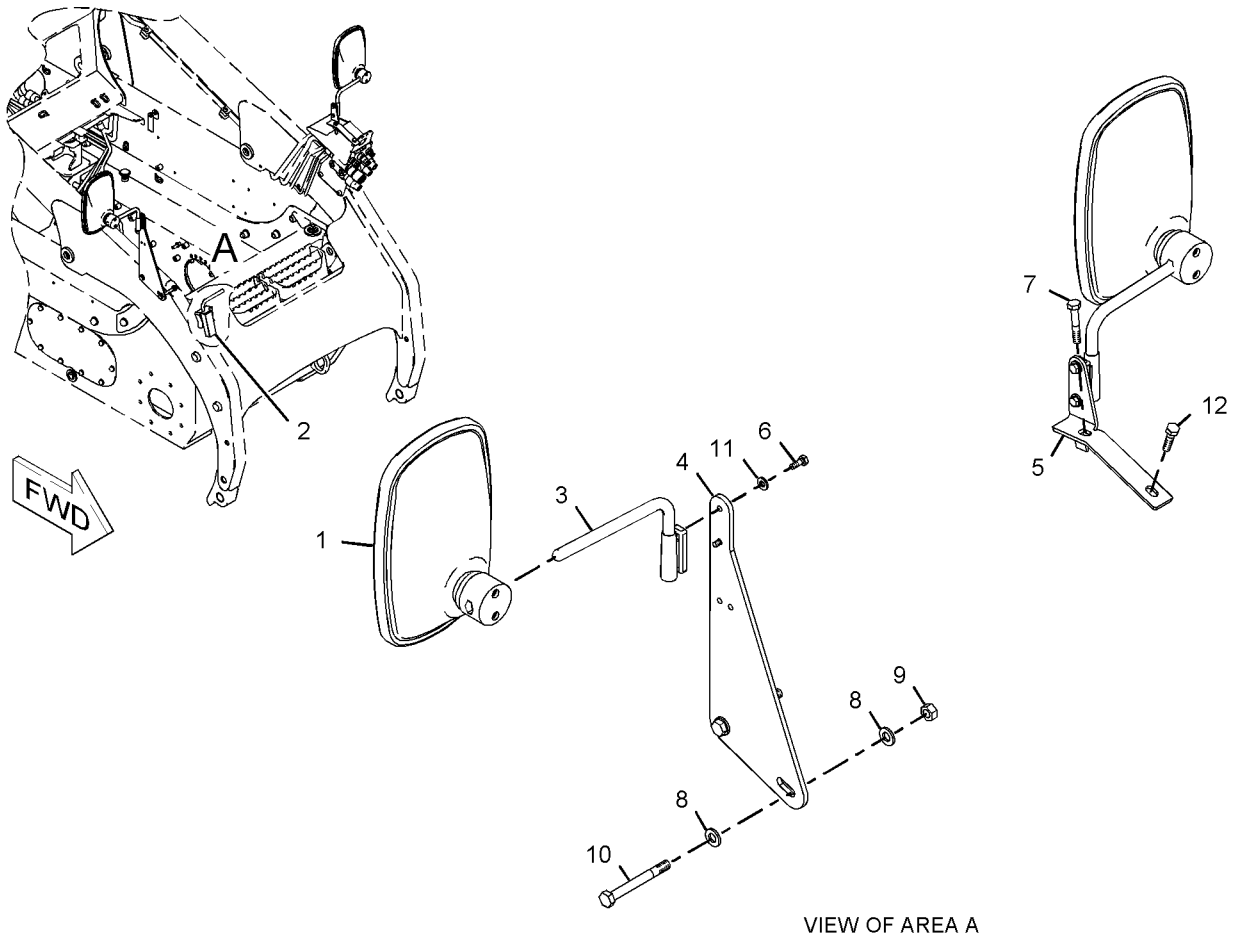

VIEW OF AREA A

GRAPHIC #1 **<END>** g01030330

173-3021 MOUNTING GP-REGISTRATION

S/N: MJH10575-UP

PART OF 225-7963 MOUNTING GP-REGISTRATION

AN ATTACHMENT

SMCS-1408, 1429, 7050 **i02005879**

NOTE	REF NO	GRAPHIC REF	PART NUMBER	QTY	PART NAME 1 2 3 4 5 6 (PRODUCT LEVEL)	SEE PAGE
	1	1	**175-4236**	1	PLATE	
	2	1	**190-8962**	1	LAMP GP-REGISTRATION PLATE	
		1	**7M-9957**	1	LAMP (12-VOLT) (REGISTRATION PLATE)	
	3	1	**204-1365**	1	PLATE	
	4	1	**207-9780**	1	BRACKET AS	
	5	1	**215-4001**	1	PLATE	
	6	1	**4B-4863**	2	WASHER (4.7X11X1.2-MM THK)	
M	7	1	**5C-8312**	2	NUT (M4X0.7 THD)	
M	8	1	**6V-9672**	2	SCREW-MACHINE (M4X0.7X16-MM)	
M	9	1	**8T-4171**	3	BOLT (M6X1X12-MM)	
	10	1	**8T-4205**	3	WASHER-HARD (7.2X14.5X2-MM THK)	

M-METRIC PART

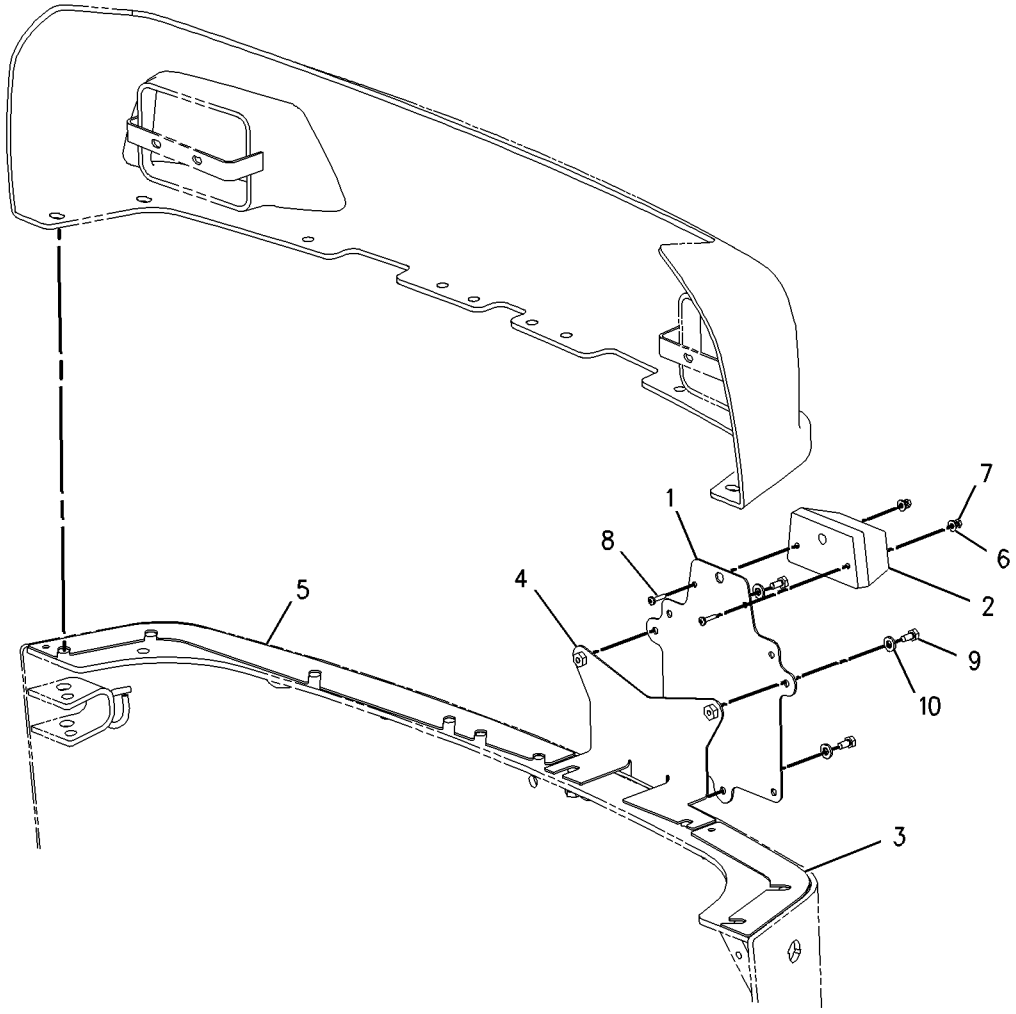

GRAPHIC #1 **<END>** g00874745

225-7963 MOUNTING GP-REGISTRATION

S/N: MJH10575-UP

PART OF 278-1212, 278-5408, 295-7149, 295-7158 CONVERSION AR-MACHINE, 233-5673, 233-5676 CONVERSION AR-ROADING

AN ATTACHMENT

SMCS-1408, 1429, 7050 **i01951893**

NOTE	REF NO	GRAPHIC REF	PART NUMBER	QTY	PART NAME 1 2 3 4 5 6 (PRODUCT LEVEL)	SEE PAGE
Y	1	1	*173-3021*	1	MOUNTING GP-REGISTRATION	259
	2	1	**186-0239**	1	HARNESS AS-REAR LIGHTING	
		1	**102-8804**	1	KIT-RECEPTACLE (4-PIN)	
		1	**155-2271**	1	KIT-CONNECTING PLUG (4-PIN)	

Y-SEPARATE ILLUSTRATION

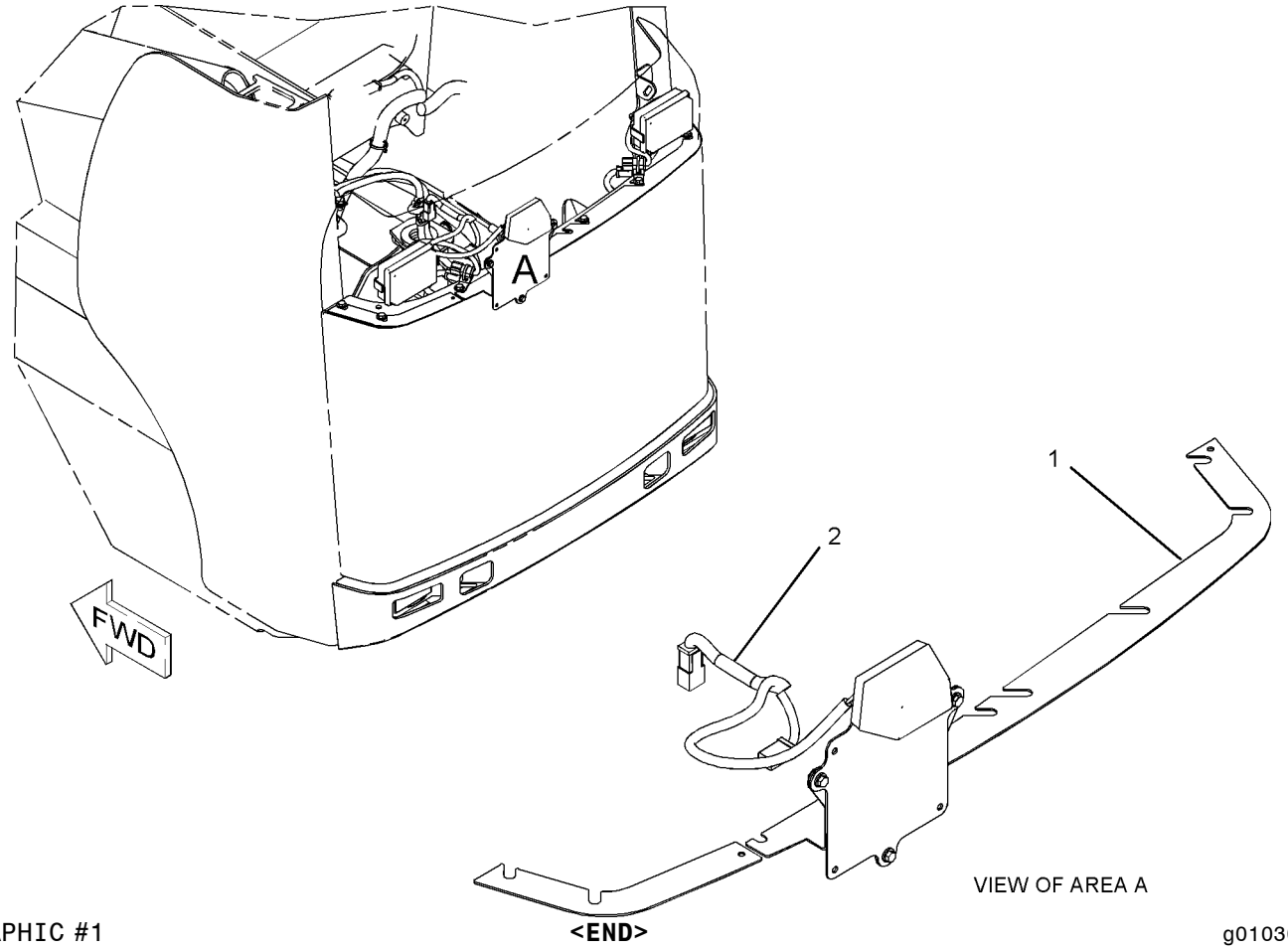

GRAPHIC #1

<END>

g01030726

175-4228 MOUNTING GP-ROADING LIGHTS–REAR

S/N: MJH10575-UP

CANNOT BE USED WITH 233-5670–PAGE 138, 233-5671–PAGE 228, 233-5674–PAGE 229 AN ATTACHMENT

SMCS-1429 **i02571196**

NOTE	REF NO	GRAPHIC REF	PART NUMBER	QTY	PART NAME 1 2 3 4 5 6 (PRODUCT LEVEL)	SEE PAGE
	1	1	**3S-2093**	6	STRAP-CABLE	
	2	1	**9R-1499**	2	REFLECTOR	
	3	1	**165-7098**	2	SUPPORT AS	
	4	1	**166-2561**	1	BRACKET AS	
	5	1	**183-7117**	2	HARNESS AS-REAR LIGHTING	
					(EACH INCLUDES)	
		1	**102-8804**	1	KIT-RECEPTACLE (4-PIN)	
M	6	1	**5C-2890**	4	NUT (M6X1-THD)	
M	7	1	**6V-7357**	4	BOLT (M6X1X25-MM)	
M	8	1	**8T-4138**	4	BOLT (M6X1X20-MM)	
	9	1	**8T-4205**	12	WASHER-HARD (7.2X14.5X2-MM THK)	

M-METRIC PART

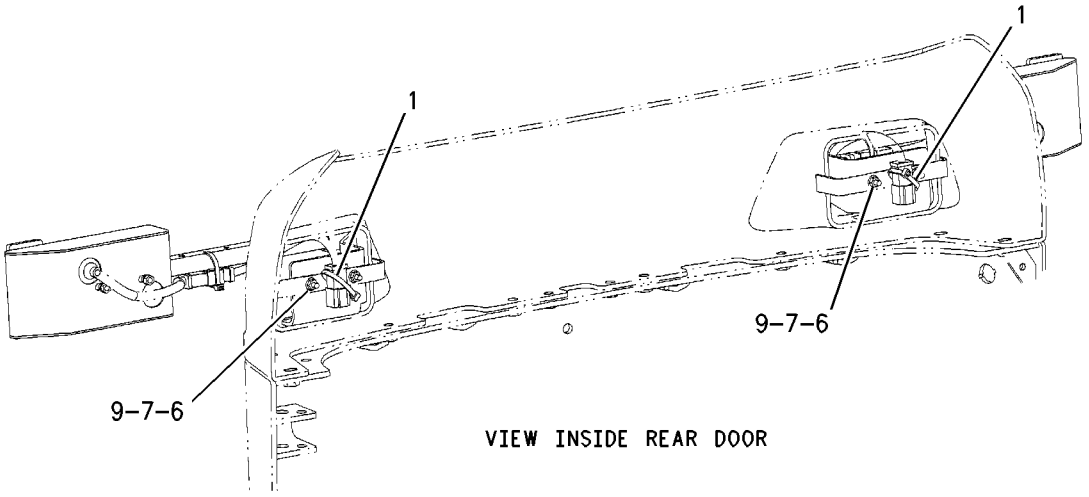

VIEW INSIDE REAR DOOR

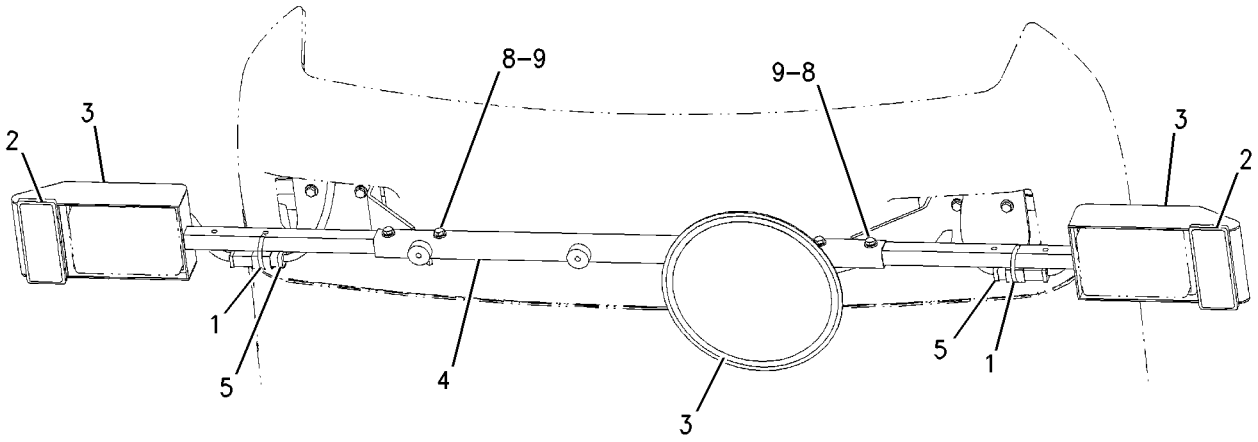

REAR VIEW
GERMAN MACHINE

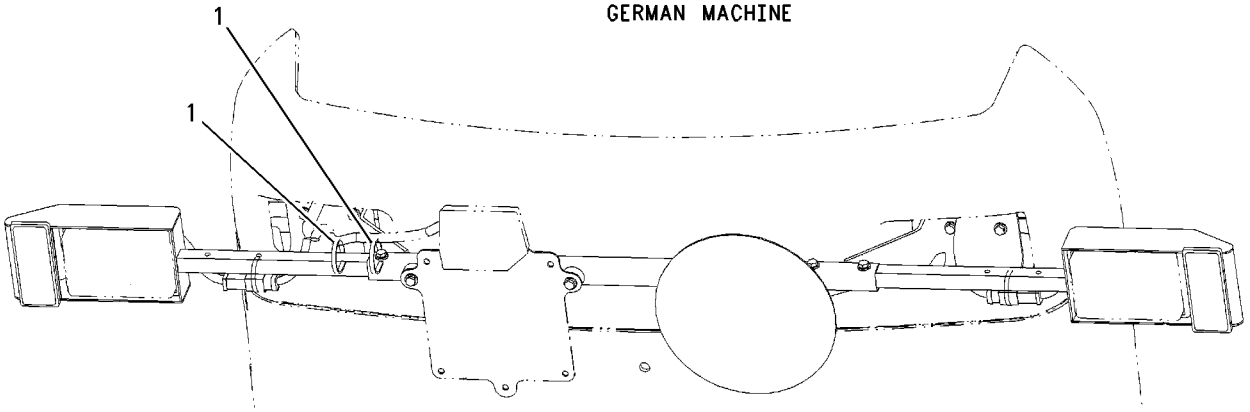

REAR VIEW
ITALIAN MACHINE

GRAPHIC #1 **<END>** g00902191

233-5616 SUPPRESSION GP-SOUND

S/N: MJH10575-UP

PART OF 261-6157, 261-6187, 261-6197, 278-1212, 278-1220, 278-1224, 278-5408, 278-5441, 295-7038, 295-7049, 295-7059, 295-7066, 295-7149, 295-7158, 295-7162, 295-7167 CONVERSION AR-MACHINE, 233-5671, 233-5672, 233-5673, 233-5674, 233-5675, 233-5676, 257-5716, 257-5717, 295-7043 CONVERSION AR-ROADING AN ATTACHMENT

SMCS-1801, 7076 **i01952009**

NOTE	REF NO	GRAPHIC REF	PART NUMBER	QTY	PART NAME 1 2 3 4 5 6 (PRODUCT LEVEL)	SEE PAGE
	1	1	**176-4079**	2	INSULATION	
	2	1	**236-5088**	1	INSULATION	
	3	1	**241-5648**	1	INSULATION	
	4	1	**241-5649**	1	INSULATION	

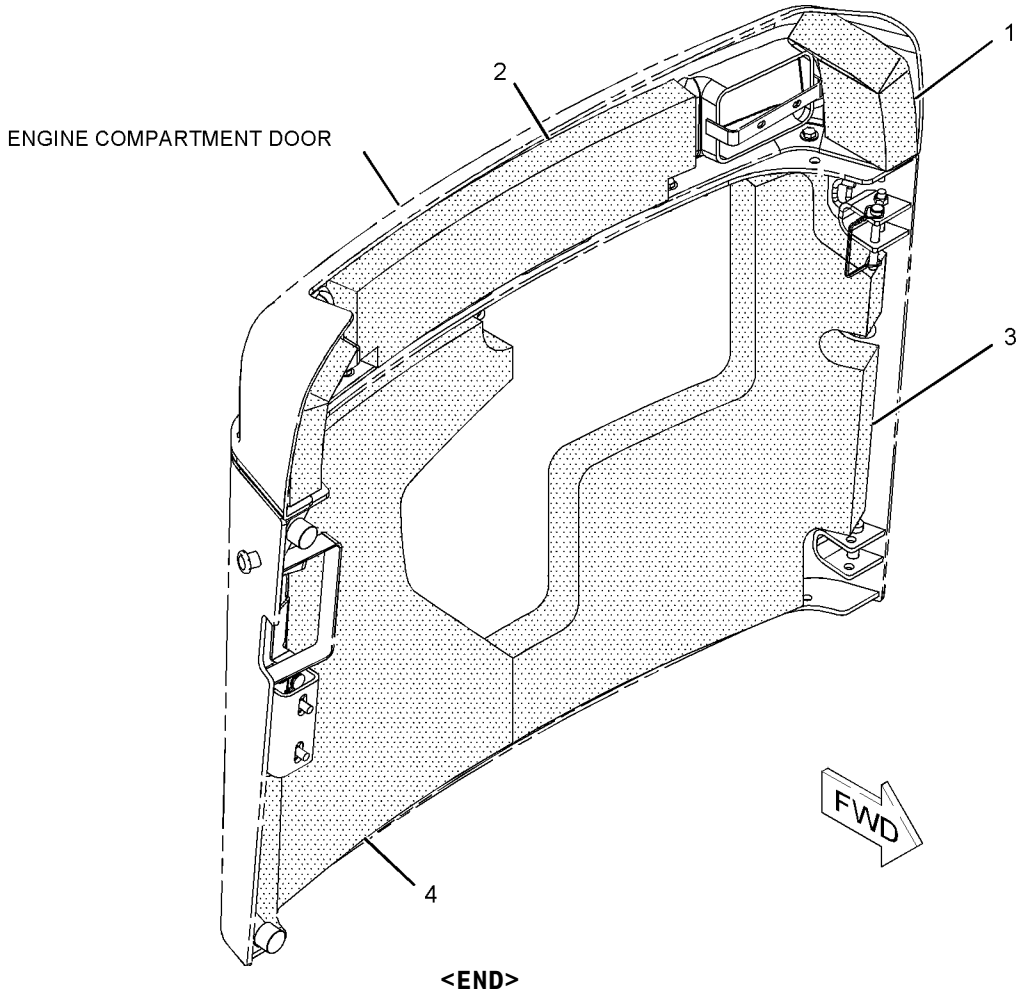

GRAPHIC #1 **<END>** g01018949

193-0447 ACCUMULATOR & MTG GP-HYDRAULIC

S/N: MJH10575-UP

PART OF 278-1227 HYDRAULIC AR

SMCS-5077 **i02565521**

NOTE	REF NO	GRAPHIC REF	PART NUMBER	QTY	PART NAME 1 2 3 4 5 6 (PRODUCT LEVEL)	SEE PAGE
	1	1	*149-0686*	1	ACCUMULATOR GP-HYDRAULIC (CHARGED)	
		1	**227-8807**	1	ACCUMULATOR GP-HYDRAULIC (UNCHARGED)	
	2	1	*194-7632*	1	ELBOW AS	
		1	**3K-0360**	1	SEAL-O-RING	
		1	**194-7631**	1	ELBOW	
	3	1	**3K-0360**	1	SEAL-O-RING	

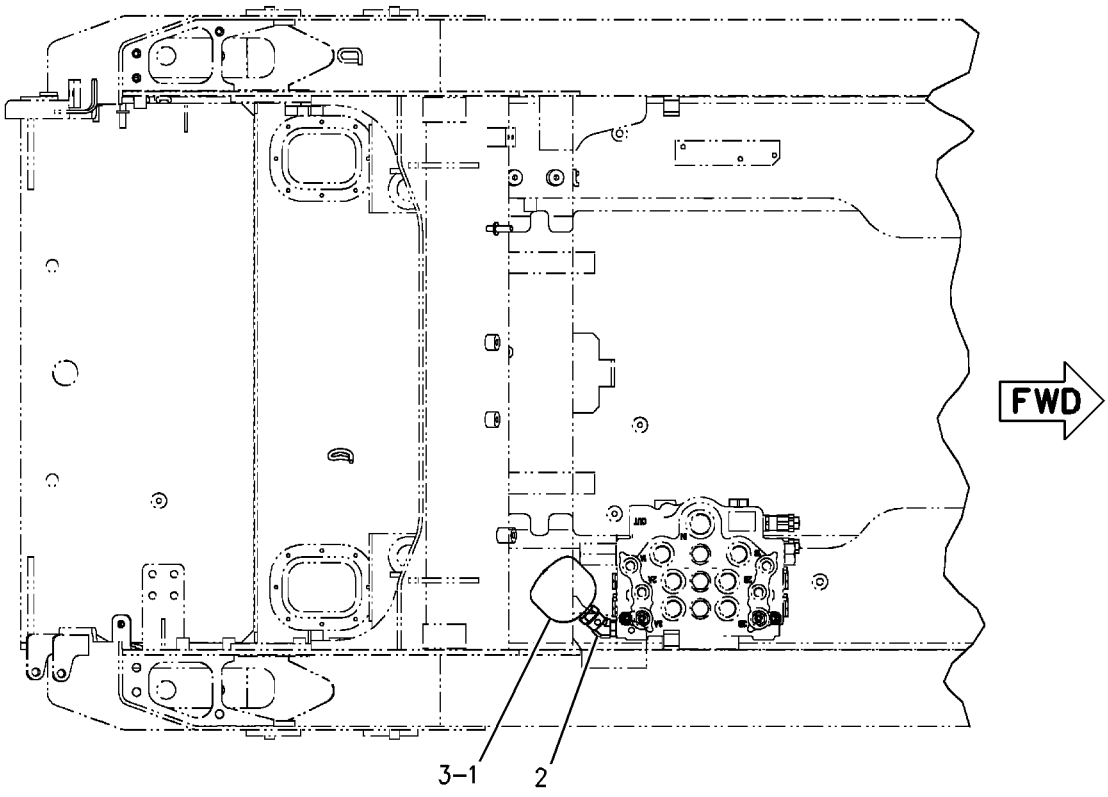

TOP VIEW

GRAPHIC #1 **<END>** g00902240

179-7001 ADAPTER GP-OIL LINE

S/N: MJH10575-UP

PART OF 218-6099 LINES GP-PILOT

SMCS-5057 **i01836385**

NOTE	REF NO	GRAPHIC REF	PART NUMBER	QTY	PART NAME 1 2 3 4 5 6 (PRODUCT LEVEL)	SEE PAGE
	1	1	**179-7002**	1	ADAPTER AS	
	2	1	**214-7568**	1	SEAL-O-RING	

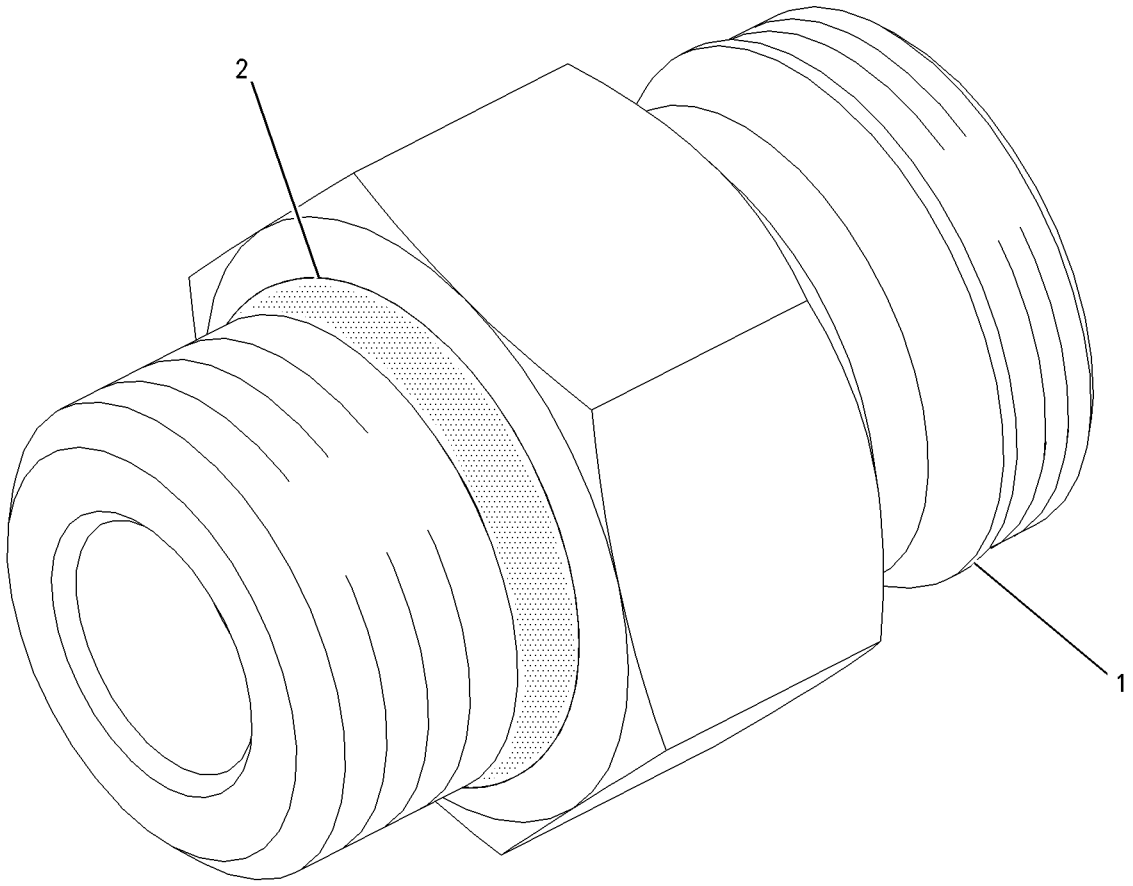

GRAPHIC #1 **<END>** g00938522

230-5406 CYLINDER & MTG GP-ANGLE BLADE

S/N: MJH10575-UP
PART OF 177-1989, 177-1990 BLADE AR
AN ATTACHMENT

SMCS-6701 **i01860855**

NOTE	REF NO	GRAPHIC REF	PART NUMBER	QTY	PART NAME 1 2 3 4 5 6 (PRODUCT LEVEL)	SEE PAGE
	1	1	**064-3843**	1	RING-SNAP	
	2	1	**210-0855**	1	PIN AS	
	3	1	**213-3943**	1	BUSHING	
Y	4	1	**225-9521**	1	CYLINDER GP-HYDRAULIC (ANGLE BLADE)	276
	5	1	**3B-8489**	1	FITTING-GREASE	
	6	1	**7X-7729**	1	WASHER (11X25X3-MM THK)	
M	7	1	**8T-4137**	1	BOLT (M10X1.5X20-MM)	

M-METRIC PART
Y-SEPARATE ILLUSTRATION

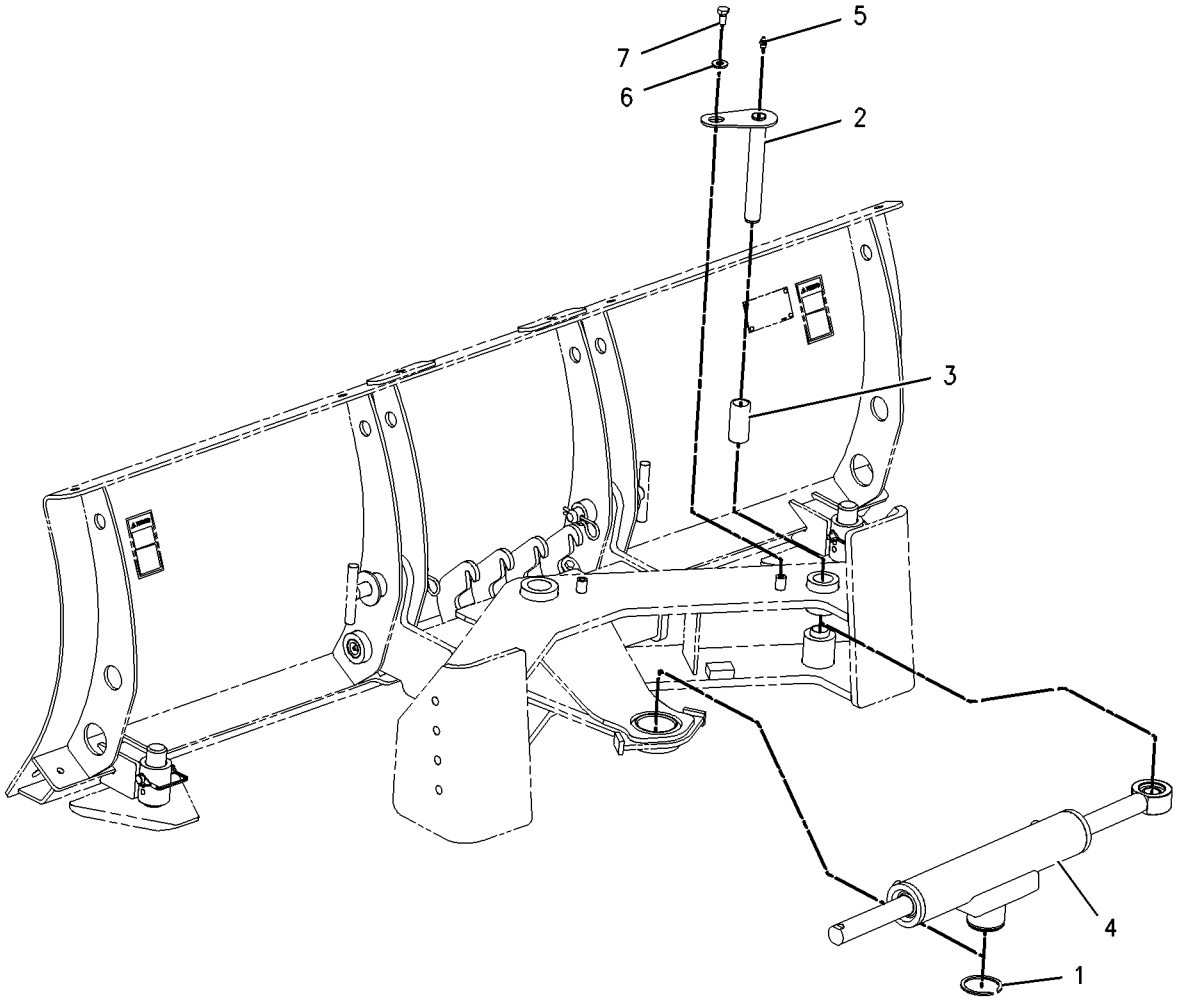

GRAPHIC #1 **<END>** g00978845

HYDRAULIC SYSTEM

231-5274 CYLINDER & MTG GP-ANGLE BLADE

S/N: MJH10575-UP
PART OF 231-5277 BLADE AR
AN ATTACHMENT

SMCS-6701 **i02785772**

NOTE	REF NO	GRAPHIC REF	PART NUMBER	QTY	PART NAME 1 2 3 4 5 6 (PRODUCT LEVEL)	SEE PAGE
CJY	1	1	**274-9930**	2	CYLINDER GP-HYDRAULIC (LOWER RADIATOR)	278
CJY	2	1	**274-9931**	1	CYLINDER GP-HYDRAULIC (UPPER)	279
	3	1	**231-5266**	6	PIN AS	
	4	1	**238-0999**	12	SPACER (25.4X28.4X13-MM THK)	
M	5	1	**8T-4200**	6	BOLT (M8X1.25X16-MM)	
	6	1	**6V-8397**	6	SEAL-O-RING	
	7	1	**8T-4224**	6	WASHER-HARD (8.8X16X2-MM THK)	
	8	1	**244-1370**	6	SPACER (8.2X13X6-MM THK)	
					AVAILABLE REPAIR KIT(S):	
J			**266-6140**	1	KIT-SEAL (SWING CYLINDER)	
					(INCLUDES RINGS, SEALS & SETSCREW)	

C-CHANGE FROM PREVIOUS TYPE
J-KIT MARKED J AVAILABLE FOR PART(S) MARKED J
M-METRIC PART
Y-SEPARATE ILLUSTRATION

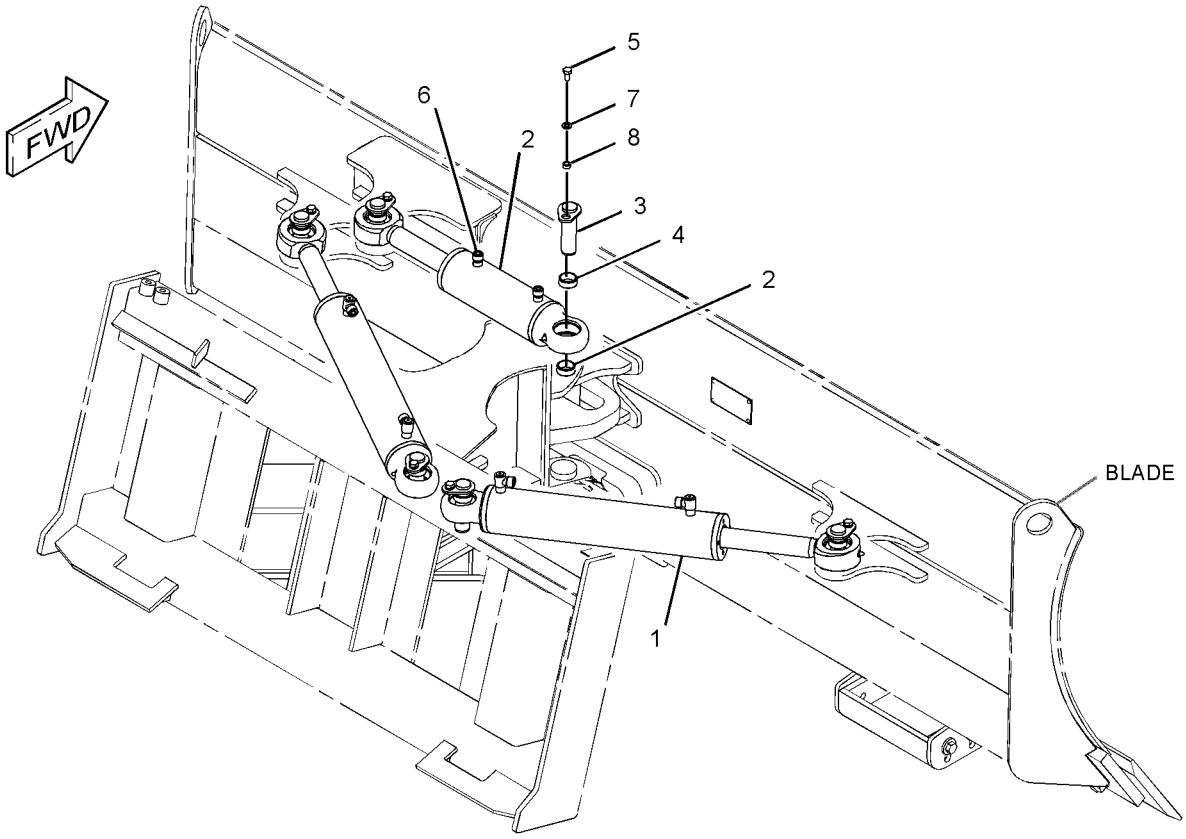

GRAPHIC #1 **<END>** g01270108

HYDRAULIC SYSTEM

286-9248 CYLINDER & MTG GP-BUCKET

S/N: MJH10575-UP

PART OF 286-9300, 286-9301 BUCKET AR-GRAPPLE

AN ATTACHMENT

SMCS-5457 **i02723716**

NOTE	REF NO	GRAPHIC REF	PART NUMBER	QTY	PART NAME 1 2 3 4 5 6 (PRODUCT LEVEL)	SEE PAGE
	1	1	**157-0941**	2	PIN	
	2	1	**157-0942**	2	PIN	
	3	1	**286-9273**	2	PLATE	
	4	1	**286-9289**	2	PLATE AS	
	5	1	**3B-8489**	2	FITTING-GREASE	
	6	1	**4M-5285**	4	RING-RETAINING (EXTERNAL)	
M	7	1	**6V-9189**	2	LOCKNUT (M8X1.25-THD)	
	8	1	**7X-7729**	8	WASHER (11X25X3-MM THK)	
M	9	1	**8T-4195**	8	BOLT (M10X1.5X30-MM)	
M	10	1	**8T-6869**	2	BOLT (M8X1.25X60-MM)	
	11	1	**9X-6274**	4	WASHER (32.5X50X1.6-MM THK)	

M-METRIC PART

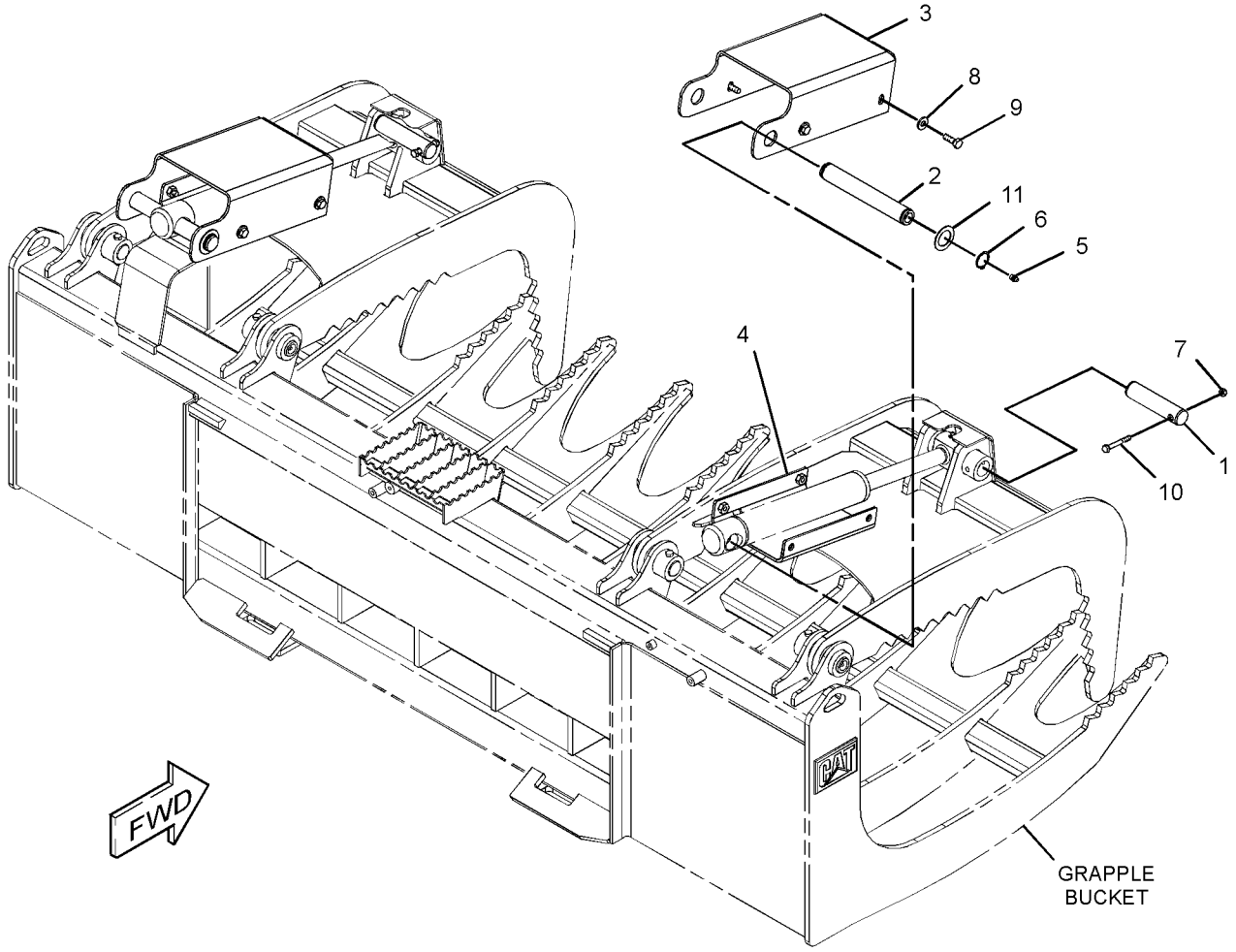

GRAPHIC #1 **<END>** g01372951

218-6799 CYLINDER & MTG GP-LIFT ARM

S/N: MJH10575-UP

PART OF 295-7110 CHASSIS AR

SMCS-5102, 5104, 6118, 6119 **i02318241**

NOTE	REF NO	GRAPHIC REF	PART NUMBER	QTY	PART NAME 1 2 3 4 5 6 (PRODUCT LEVEL)	SEE PAGE
	1	1	**142-8789**	1	SUPPORT-LOADER	
	2	2	**142-8790**	4	PIN AS	
	3	2	**142-8791**	2	PIN AS	
	4	1	**142-8792**	1	PIN	
	5	2	**142-8793**	2	PIN	
	6	1	**142-8794**	1	PIN	
	7	2	**142-8808**	2	SPACER (32.5X50.5X28-MM THK)	
	8	2	**142-8832**	1	PIN AS	
	9	1	**142-8880**	1	LEVER	
	10	1	**142-8881**	1	BRACKET	
	11	2	**191-9588**	2	PIN AS	
Y	12	1	**230-3683**	1	CYLINDER GP-LIFT (LH)	282
Y	13	2	**230-3684**	1	CYLINDER GP-TILT (LH)	284
Y	14	1	**230-3693**	1	CYLINDER GP-LIFT (RH)	283
Y	15	2	**230-3694**	1	CYLINDER GP-TILT (RH)	285
	16	2	**3B-8489**	10	FITTING-GREASE	
	17	1	**3S-8536**	1	SPACER (3X17X9.7-MM THK)	
	18	1	**4M-5285**	4	RING-RETAINING (EXTERNAL)	
	19	2	**5H-9743**	1	GROMMET	
M	20	2	**6V-9189**	2	LOCKNUT (M8X1.25-THD)	
	21	2	**7X-7729**	8	WASHER (11X25X3-MM THK)	
M	22	2	**8T-3647**	2	BOLT (M8X1.25X80-MM)	
	23	1	**8T-4121**	1	WASHER-HARD (11X21X2.5-MM THK)	
M	24	1	**8T-4136**	1	BOLT (M10X1.5X25-MM)	
M	25	1	**8T-4189**	1	BOLT (M8X1.25X20-MM)	
M	26	2	**8T-4191**	8	BOLT (M10X1.5X16-MM)	
	27	1	**8T-4224**	1	WASHER-HARD (8.8X16X2-MM THK)	

M-METRIC PART
Y-SEPARATE ILLUSTRATION

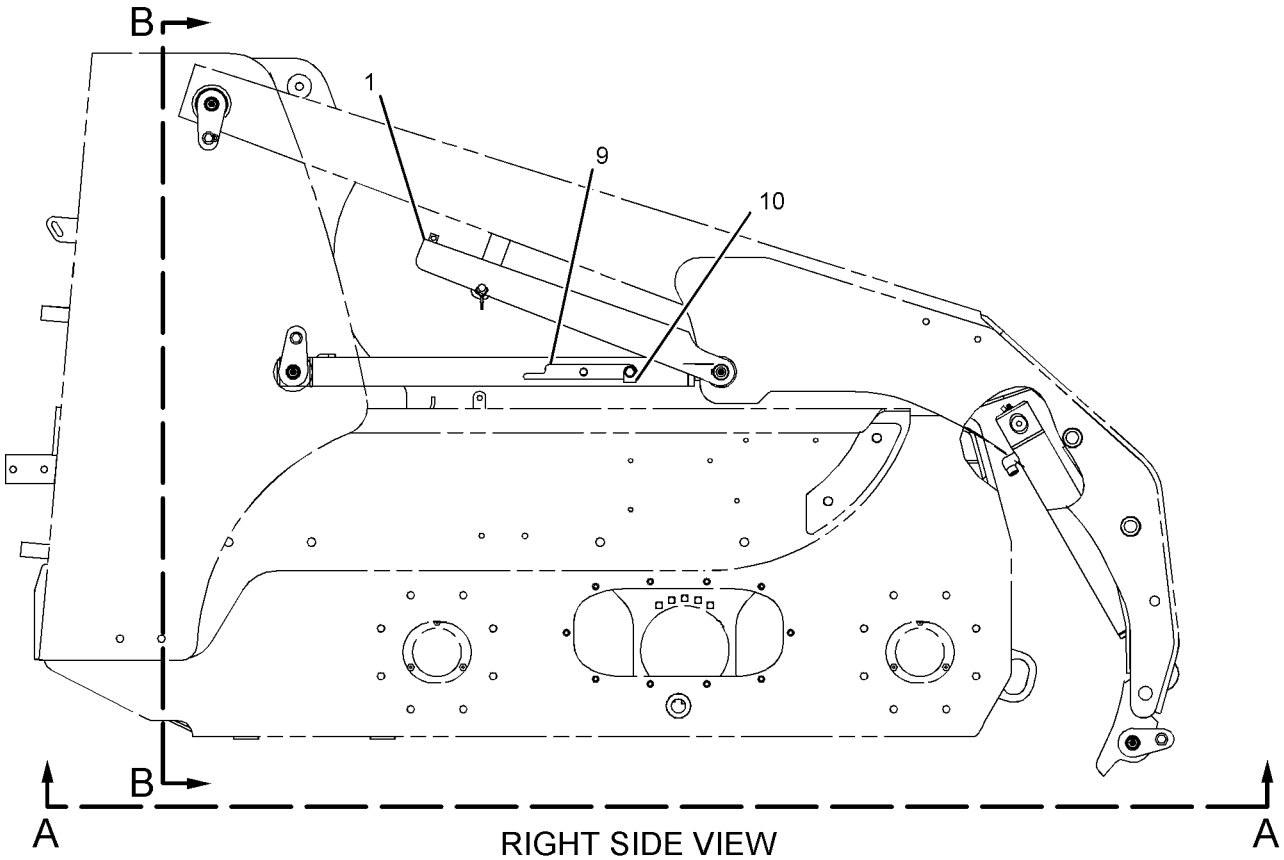

RIGHT SIDE VIEW

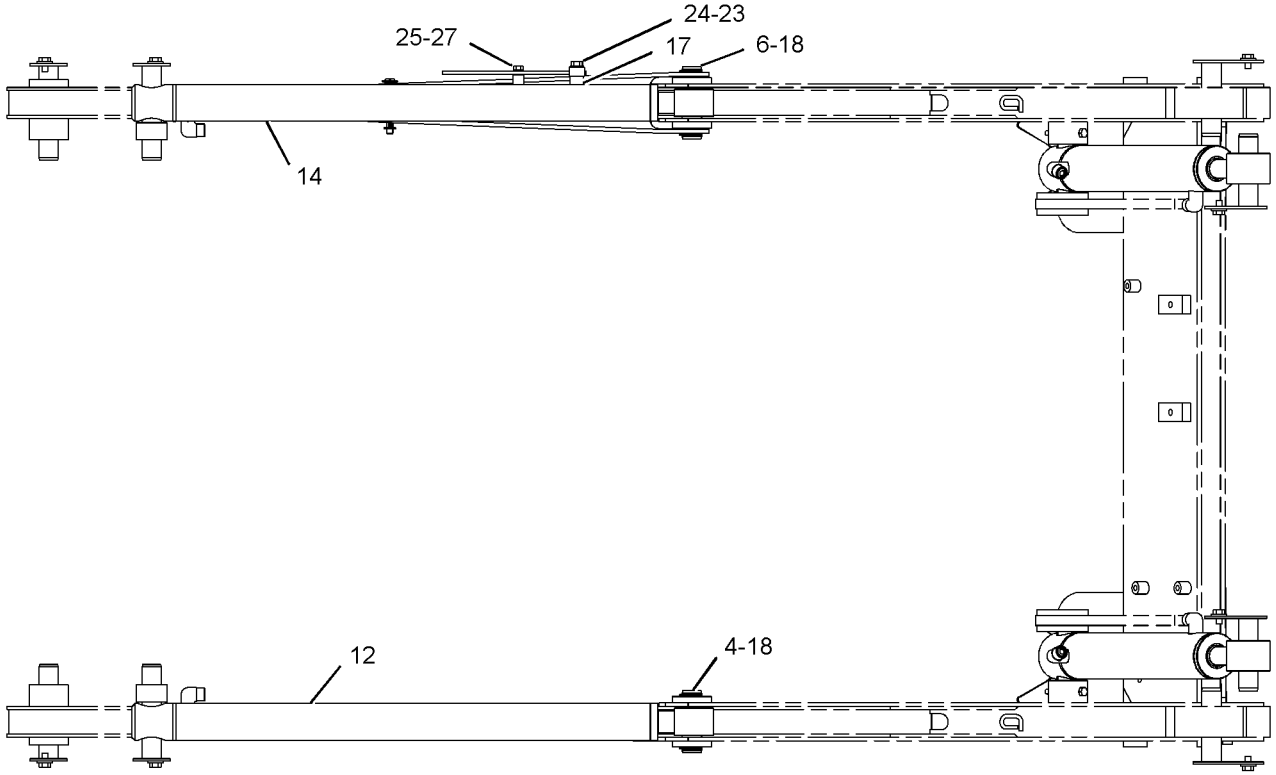

VIEW A-A

GRAPHIC #1

g01026736

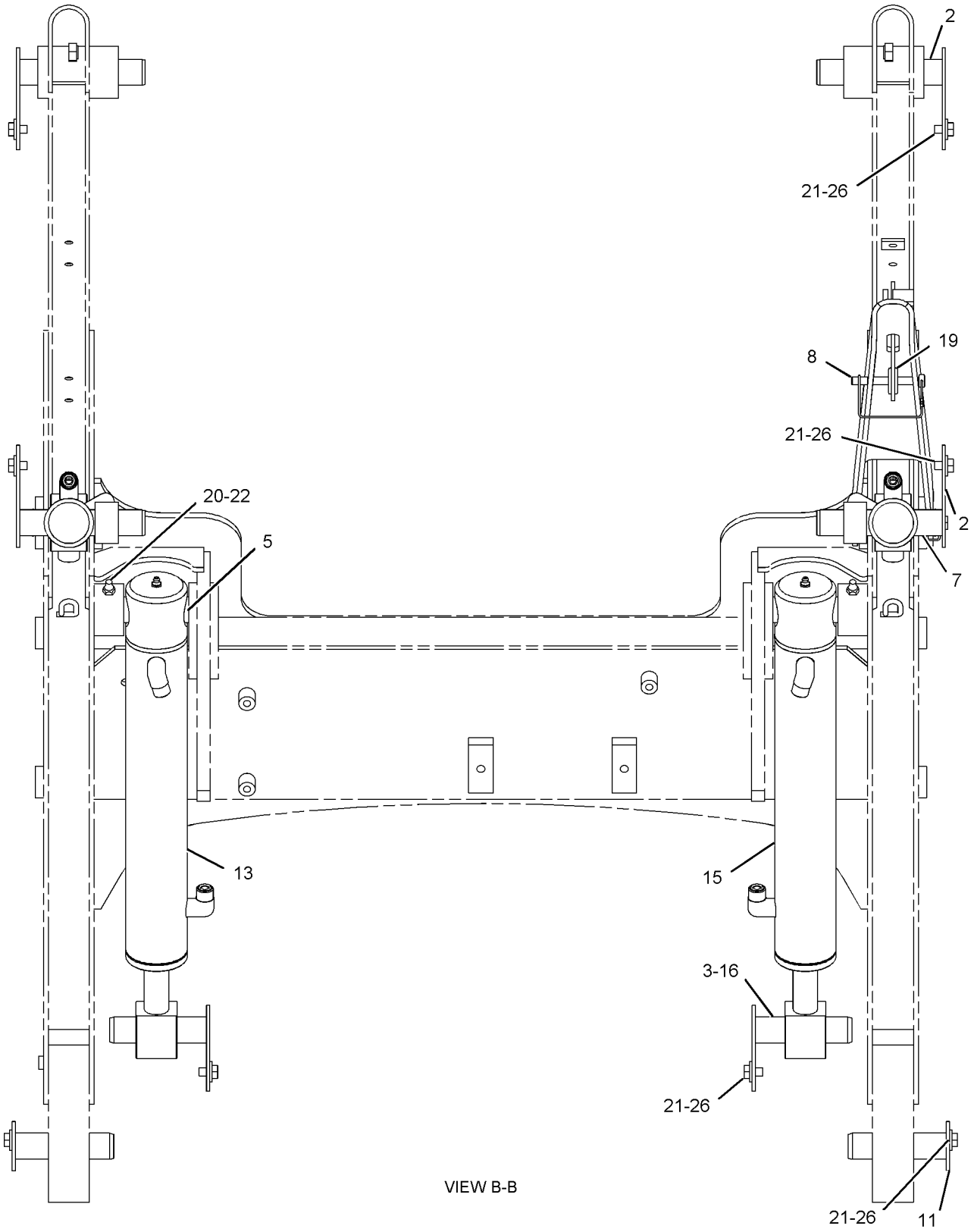

VIEW B-B

GRAPHIC #2 **<END>** g01026737

HYDRAULIC SYSTEM

154-5018 CYLINDER GP-BUCKET

S/N: MJH10575-UP
60-MM(2.3-IN)BORE X 200-MM(7.7-IN)STROKE
PART OF 279-5382, 279-5390, 279-5398, 279-5403 BUCKET AR-MULTIPURPOSE
AN ATTACHMENT

SMCS-5498 **i02712981**

NOTE	REF NO	GRAPHIC REF	PART NUMBER	QTY	PART NAME 1 2 3 4 5 6 (PRODUCT LEVEL)	SEE PAGE
	1	1	**3B-8489**	1	FITTING-GREASE	
					AVAILABLE REPAIR KIT(S):	
			164-3213	1	KIT-SEAL	
					(INCLUDES O-RINGS, SEALS, BACK RINGS, PISTON GUIDE RING, SET SCREW, & WIPER RING)	

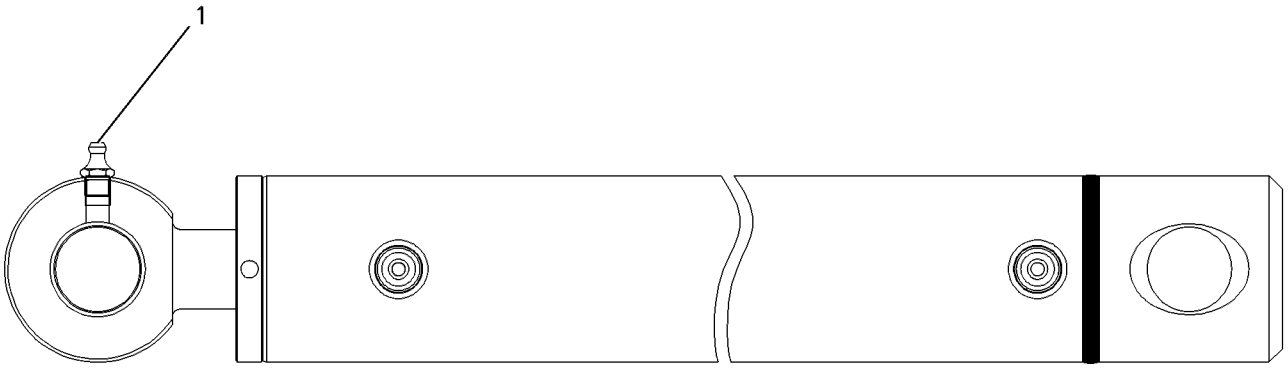

GRAPHIC #1 **<END>** g00564347

293-6264 CYLINDER GP-BUCKET

S/N: MJH10575-UP
50-MM (2-IN) BORE X 225-MM (8.9-IN) STROKE
PART OF 286-9300, 286-9301 BUCKET AR-GRAPPLE
AN ATTACHMENT

SMCS-5498 **i02723730**

NOTE	REF NO	GRAPHIC REF	PART NUMBER	QTY	PART NAME 1 2 3 4 5 6 (PRODUCT LEVEL)	SEE PAGE
	1	1	**6B-6682**	1	NUT-FULL (3/4-16-THD)	
	2	1	**3B-8489**	1	FITTING-GREASE	
	3	1	**7J-0204**	2	SEAL-O-RING	
	4	1	**9S-8007**	2	PLUG	
					AVAILABLE REPAIR KIT(S):	
			262-0941	1	KIT-SEAL	
					(INCLUDES RINGS, SEALS & SEAL O-RINGS)	

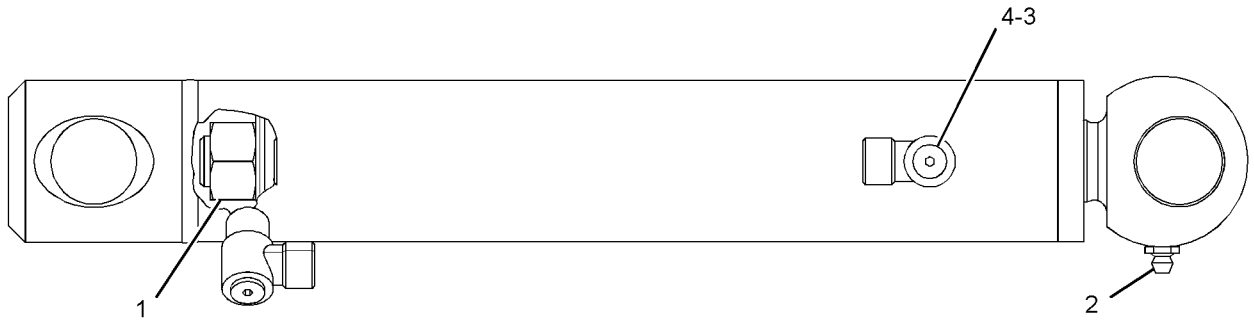

GRAPHIC #1 **<END>** g01373044

164-9295 CYLINDER GP-GRAPPLE

S/N: MJH10575-UP
40-MM (1.58-IN) BORE X 200-MM (7.7-IN) STROKE
PART OF 285-6116 GRAPPLE GP-UTILITY
AN ATTACHMENT

SMCS-5457 **i01217084**

NOTE	REF NO	GRAPHIC REF	PART NUMBER	QTY	PART NAME 1 2 3 4 5 6 (PRODUCT LEVEL)	SEE PAGE
	1	1	**3B-8489**	1	FITTING-GREASE	
					AVAILABLE REPAIR KIT(S):	
			172-5285	1	KIT-SEAL	
					(INCLUDES WIPER RING, PISTON GUIDE RING, PISTON SEAL AND O-RINGS)	

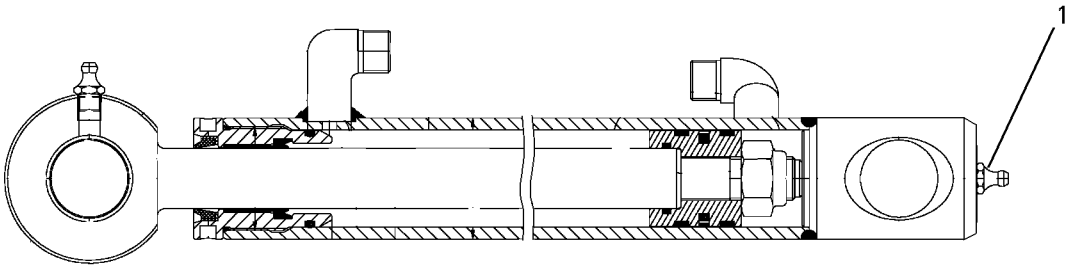

GRAPHIC #1 **<END>** g00604934

192-2640 CYLINDER GP-HYDRAULIC–COUPLER

S/N: MJH10575-UP
35-MM (1.4-IN) BORE X 103.5-MM (4.14-IN) STROKE
PART OF 215-3962, 215-3963 CYLINDER & LINK GP-COUPLER, 218-6757 KIT-QUICK COUPLER CONVERSION
AN ATTACHMENT

SMCS-5362, 7562 **i01672784**

NOTE	PART NUMBER	QTY	PART NAME 1 2 3 4 5 6 (PRODUCT LEVEL)	SEE PAGE
			(NO SERVICED PARTS)	

<END>

225-9521 CYLINDER GP-HYDRAULIC—ANGLE BLADE

S/N: MJH10575-UP
63-MM (2.48-IN) BORE X 300-MM (11.81-IN) STROKE
PART OF 230-5406 CYLINDER & MTG GP-ANGLE BLADE
AN ATTACHMENT

SMCS-5362, 7562 **i02757293**

NOTE	REF NO	GRAPHIC REF	PART NUMBER	QTY	PART NAME 1 2 3 4 5 6 (PRODUCT LEVEL)	SEE PAGE
	1	1	**214-5555**	1	ROD END AS	
					AVAILABLE REPAIR KIT(S):	
			177-1958	1	KIT-SEAL	
					(INCLUDES O-RINGS,SEALS,BACK RINGS,PISTON GUIDE RING.ROD GUIDE RING AND WIPER RINGS)	

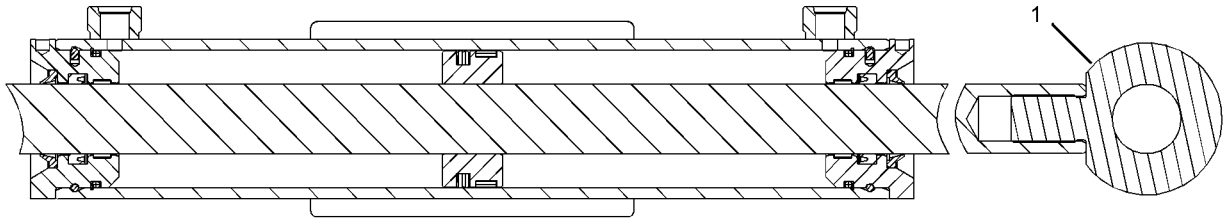

GRAPHIC #1 **<END>** g01282929

HYDRAULIC SYSTEM

255-0943 CYLINDER GP-HYDRAULIC

S/N: MJH10575-UP

PART OF 285-6116 GRAPPLE GP-UTILITY

AN ATTACHMENT

SMCS-5362, 7562 **i02888528**

NOTE	REF NO	GRAPHIC REF	PART NUMBER	QTY	PART NAME 1 2 3 4 5 6 (PRODUCT LEVEL)	SEE PAGE
	1	1	**254-9097**	1	BEARING-SLEEVE	
	2	1	**3B-8489**	2	FITTING-GREASE	
	3	1	**7J-0204**	2	SEAL-O-RING	
	4	1	**9S-8007**	2	PLUG	
	5	1	**2K-4821**	1	LOCKNUT (5/8-18-THD)	
					AVAILABLE REPAIR KIT(S):	
			286-3591	1	KIT-SEAL	
					(INCLUDES SEALS, SEAL-O-RINGS & RING BACK-UPS)	

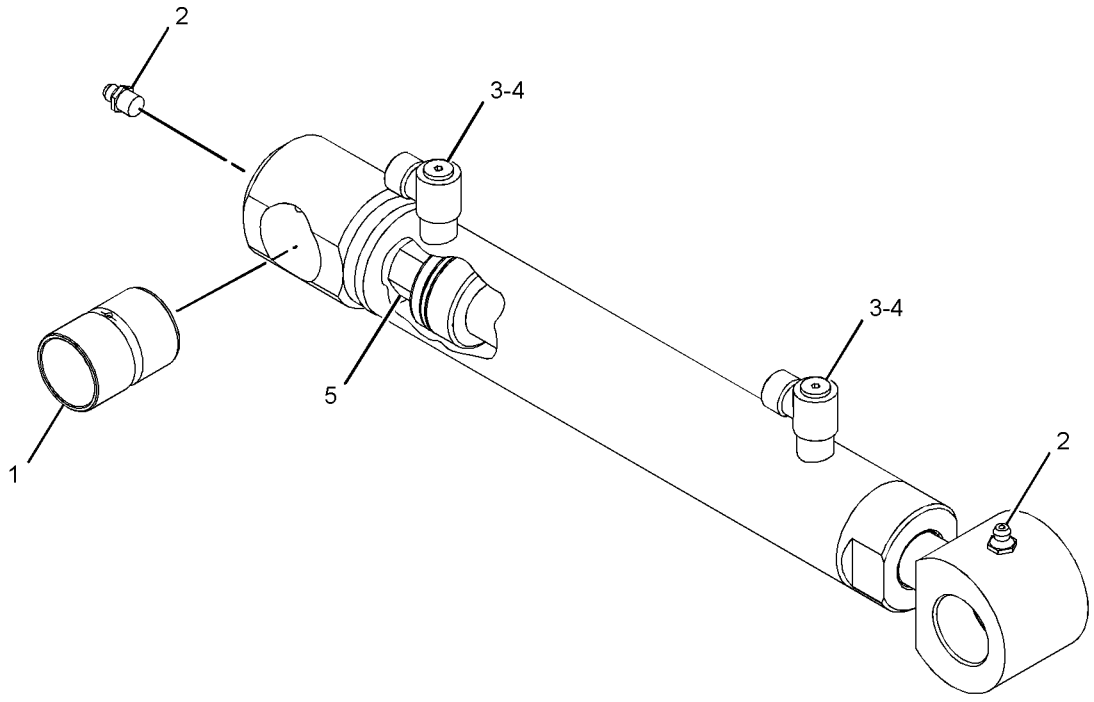

GRAPHIC #1 **<END>** g01439380

HYDRAULIC SYSTEM

274-9930 CYLINDER GP-HYDRAULIC

S/N: MJH10575-UP
70-MM (2.75-IN) BORE X 314-MM (12.36-IN) STROKE
PART OF 231-5274 CYLINDER & MTG GP-ANGLE BLADE
AN ATTACHMENT

SMCS-5362, 7562 **i02785773**

NOTE	REF NO	GRAPHIC REF	PART NUMBER	QTY	PART NAME 1 2 3 4 5 6 (PRODUCT LEVEL)	SEE PAGE
	1	1	**7D-8508**	1	NUT-FULL (7/8-14-THD)	
	2	1	**8Q-6027**	2	BEARING-SPHERICAL	
	3	1	**027-1287**	2	FITTING-GREASE	
	4	1	**278-4524**	1	ROD AS	
	5	1	**278-4875**	2	RING-RETAINING	
	6	1	**7J-0204**	2	SEAL-O-RING	
	7	1	**9S-8007**	2	PLUG	
					AVAILABLE REPAIR KIT(S):	
			266-6140	1	KIT-SEAL (SWING CYLINDER)	
					(INCLUDES SEALS, RINGS & SETSCREW)	

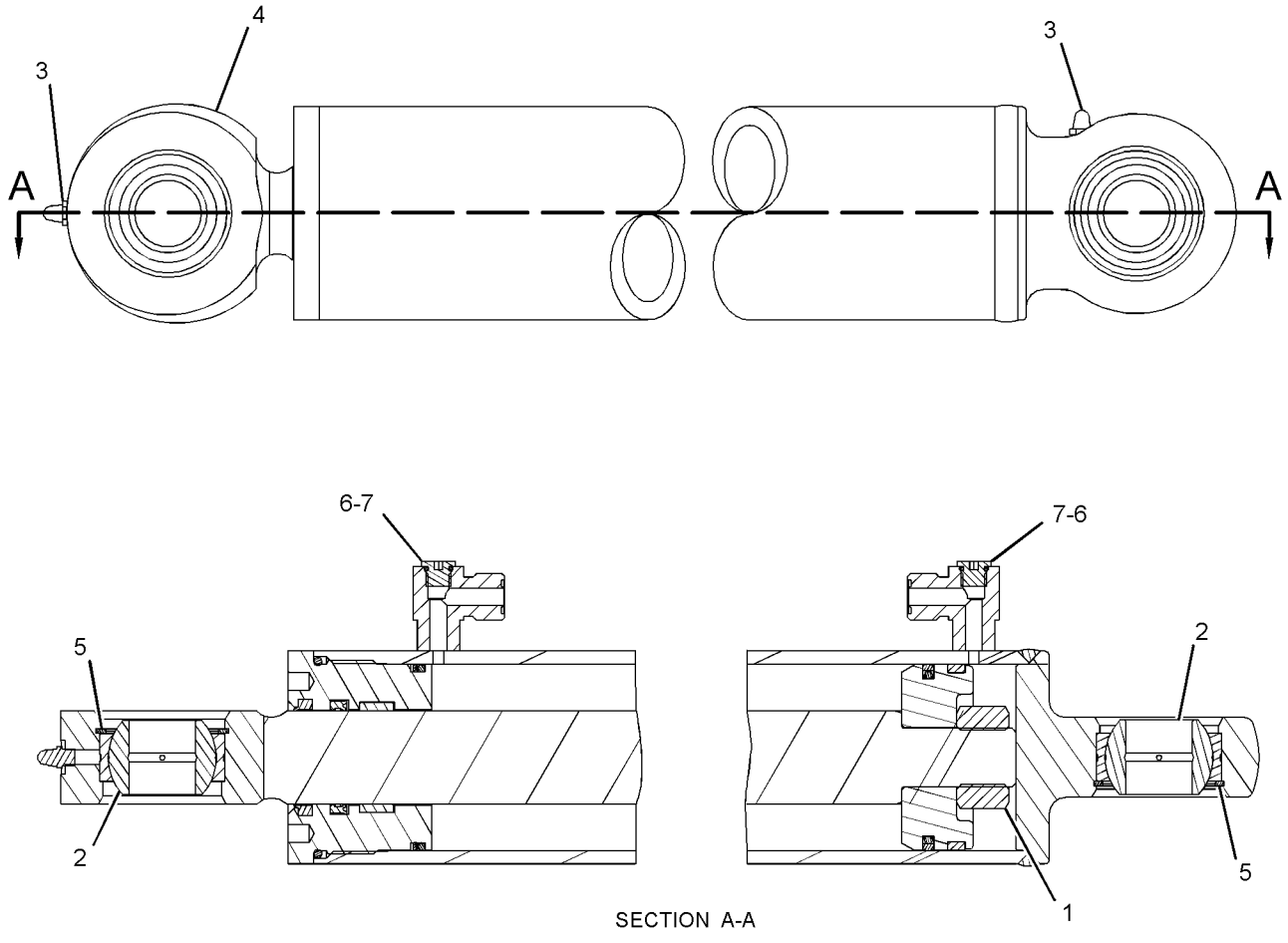

GRAPHIC #1 **<END>** g01305293

274-9931 CYLINDER GP-HYDRAULIC

S/N: MJH10575-UP
70-MM (2.75-IN) BORE X 120-MM (4.72-IN) STROKE
PART OF 231-5274 CYLINDER & MTG GP-ANGLE BLADE
AN ATTACHMENT

SMCS-5362, 7562 **i02785774**

NOTE	REF NO	GRAPHIC REF	PART NUMBER	QTY	PART NAME 1 2 3 4 5 6 (PRODUCT LEVEL)	SEE PAGE
	1	1	**7D-8508**	1	NUT-FULL (7/8-14-THD)	
	2	1	**8Q-6027**	2	BEARING-SPHERICAL	
	3	1	**027-1287**	2	FITTING-GREASE	
	4	1	**278-4525**	1	ROD AS	
	5	1	**278-4875**	2	RING-RETAINING	
					AVAILABLE REPAIR KIT(S):	
			266-6140	1	KIT-SEAL	
					(INCLUDES RINGS, SEALS & SCREW)	

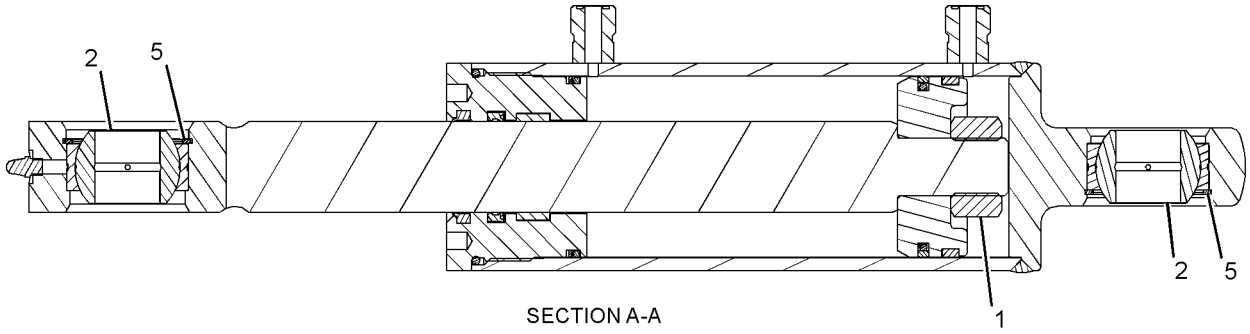

SECTION A-A

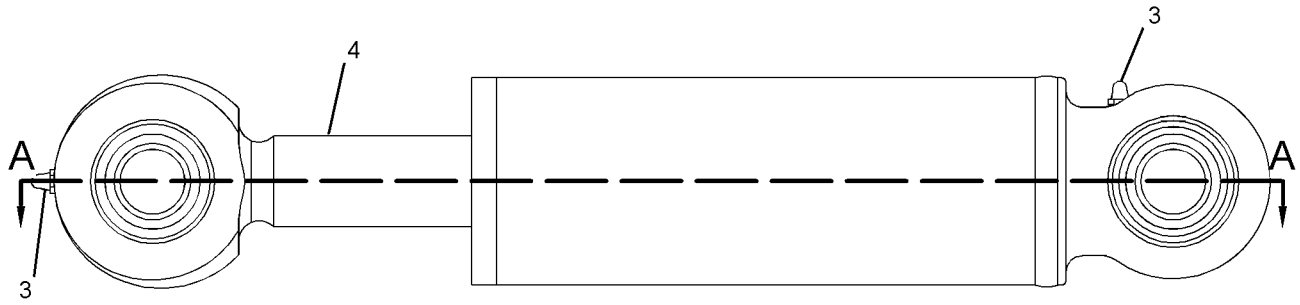

GRAPHIC #1 **<END>** g01270194

278-1969 CYLINDER GP-HYDRAULIC

S/N: MJH10575-UP
60-MM (2.36-IN) BORE X 200-MM (7.9-IN) STROKE
PART OF 279-5382, 279-5390, 279-5398, 279-5403 BUCKET AR-MULTIPURPOSE AN ATTACHMENT

SMCS-5362, 7562 **i02712982**

NOTE	REF NO	GRAPHIC REF	PART NUMBER	QTY	PART NAME 1 2 3 4 5 6 (PRODUCT LEVEL)	SEE PAGE
	1	1	**7D-8508**	1	NUT-FULL (7/8-14-THD)	
	2	1	**254-9097**	1	BEARING-SLEEVE	
	3	1	**3B-8489**	1	FITTING-GREASE	
					AVAILABLE REPAIR KIT(S):	
			278-1970	1	KIT-SEAL (HYDRAULIC CYLINDER)	
					(INCLUDES RINGS & SEALS)	

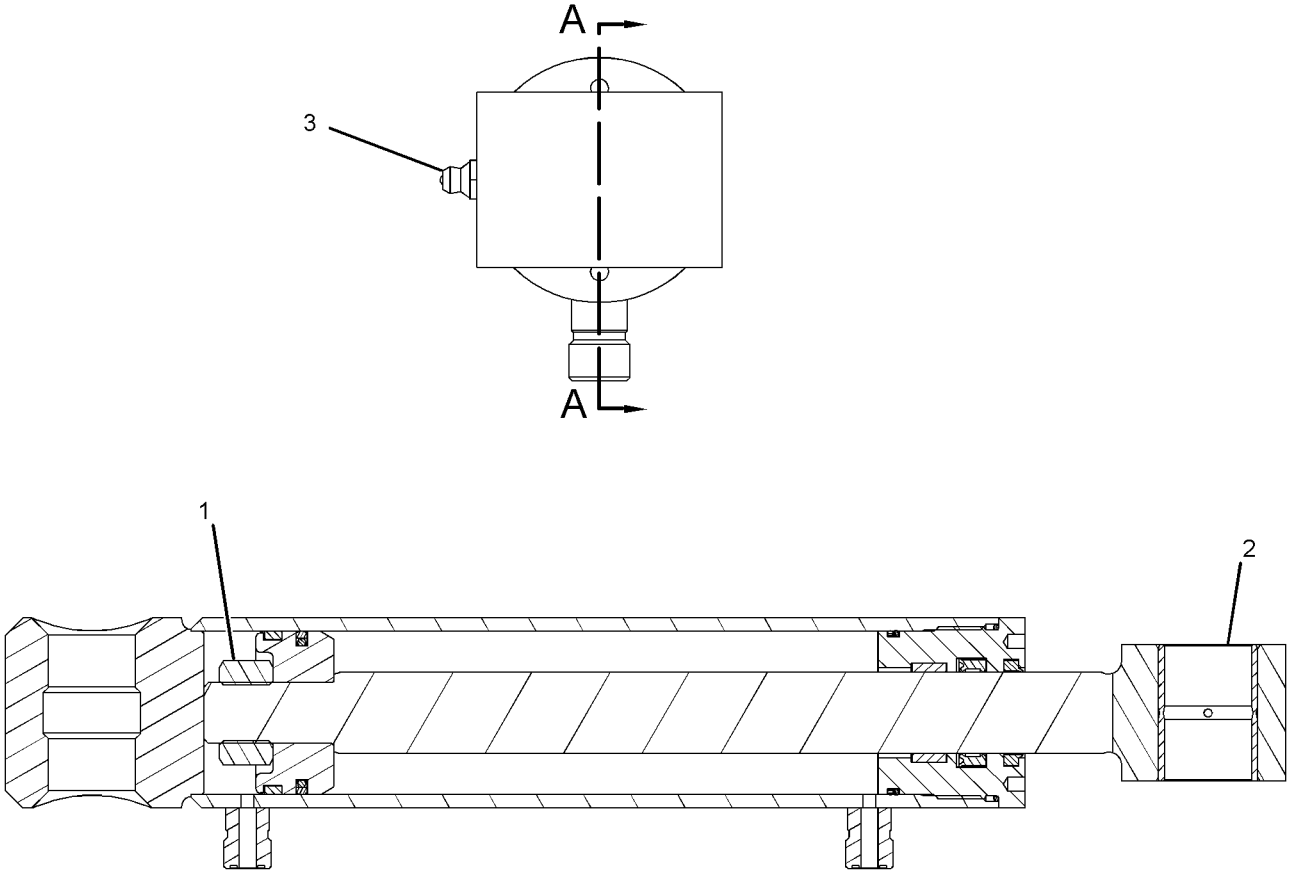

SECTION A-A

GRAPHIC #1 **<END>** g01281180

278-1975 CYLINDER GP-HYDRAULIC

S/N: MJH10575-UP
60-MM (2.3-IN) BORE X 200-MM (7.7-IN) STROKE
PART OF 157-7223, 157-7224 BUCKET AR-GRAPPLE, 279-5350, 279-5360 FORK AR-GRAPPLE AN ATTACHMENT

SMCS-5362, 7562 **i02712984**

NOTE	REF NO	GRAPHIC REF	PART NUMBER	QTY	PART NAME 1 2 3 4 5 6 (PRODUCT LEVEL)	SEE PAGE
	1	1	**7D-8508**	1	NUT-FULL (7/8-14-THD)	
	2	1	**254-9097**	1	BEARING-SLEEVE	
	3	1	**255-0942**	1	BEARING-SLEEVE	
	4	1	**3B-8489**	1	FITTING-GREASE	
	5	1	**7J-0204**	2	SEAL-O-RING	
	6	1	**9S-8007**	2	PLUG	
					AVAILABLE REPAIR KIT(S):	
			278-1970	1	KIT-SEAL (HYDRAULIC CYLINDER)	
					(INCLUDES RINGS, SEALS & SEAL-O-RINGS)	

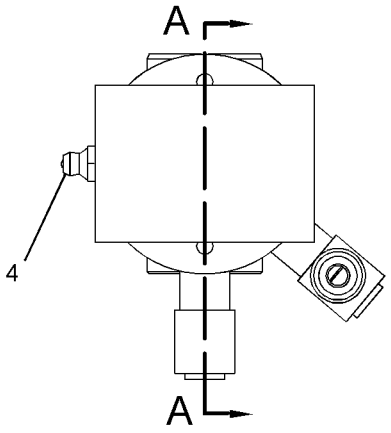

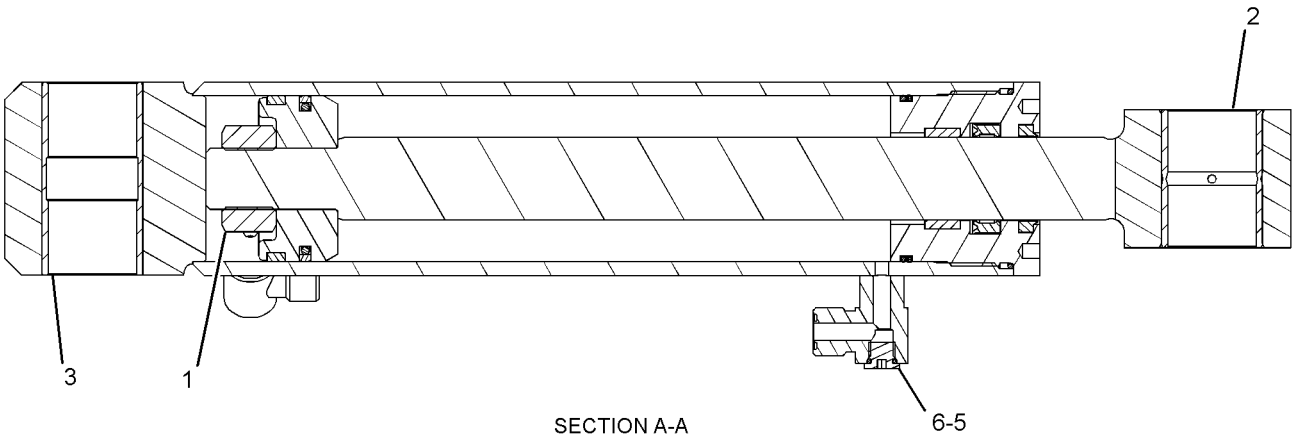

SECTION A-A

GRAPHIC #1 **<END>** g01280909

HYDRAULIC SYSTEM

230-3683 CYLINDER GP-LIFT–LH

S/N: MJH10575-UP
50-MM (1.97-IN) BORE X 653-MM (25.71-IN) STROKE
PART OF 218-6799 CYLINDER & MTG GP-LIFT ARM

SMCS-5102 **i01934855**

NOTE	REF NO	GRAPHIC REF	PART NUMBER	QTY	PART NAME 1 2 3 4 5 6 (PRODUCT LEVEL)	SEE PAGE
					AVAILABLE REPAIR KIT(S):	
			218-6826	1	KIT-SEAL	
					(INCLUDES SEALS, PISTON WEAR BAND, O-RINGS, & BACK UP RING)	

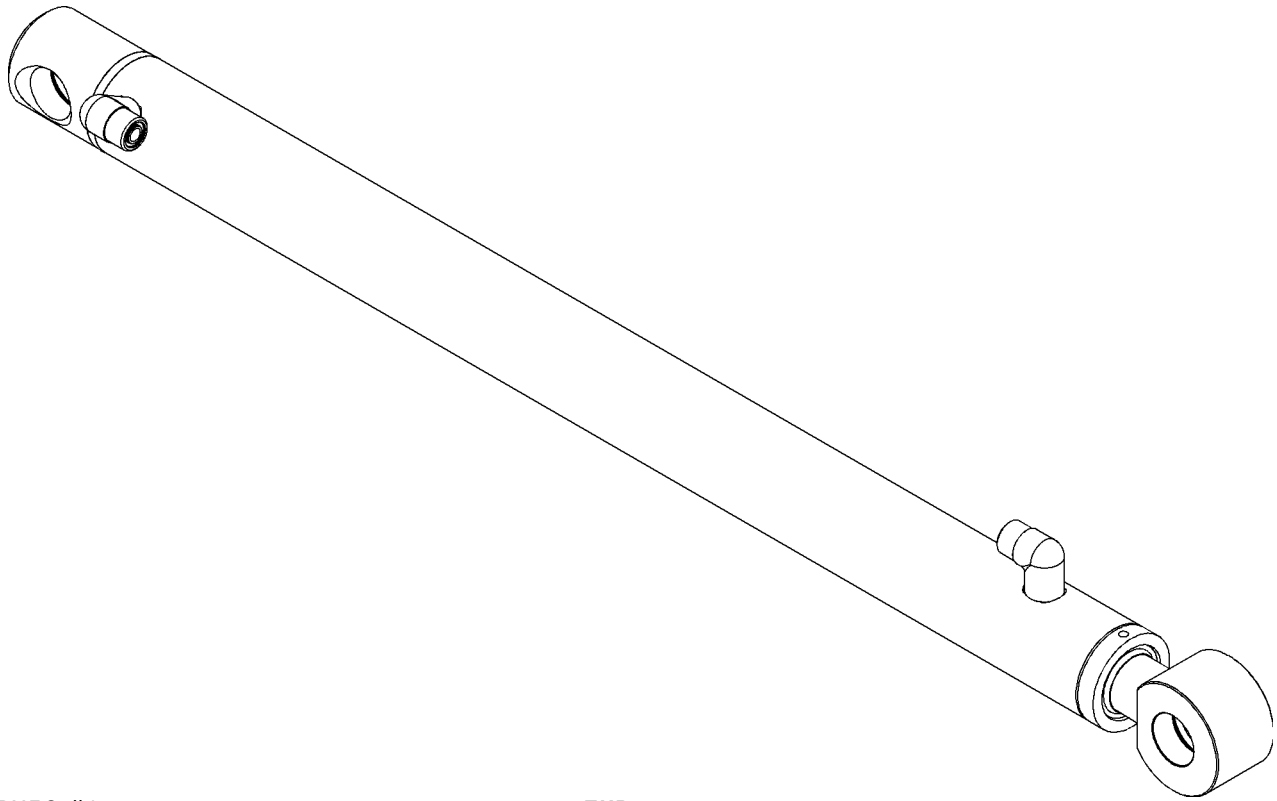

GRAPHIC #1 **<END>** g01010863

HYDRAULIC SYSTEM

230-3693 CYLINDER GP-LIFT–RH

S/N: MJH10575-UP
50-MM (1.97-IN) BORE X 653-MM (25.71-IN) STROKE
PART OF 218-6799 CYLINDER & MTG GP-LIFT ARM

SMCS-5102 **i01934885**

NOTE	REF NO	GRAPHIC REF	PART NUMBER	QTY	PART NAME 1 2 3 4 5 6 (PRODUCT LEVEL)	SEE PAGE
					AVAILABLE REPAIR KIT(S):	
			218-6826	1	KIT-SEAL	
					(INCLUDES SEALS, PISTON WEAR BAND, O-RINGS & BACK UP RING)	

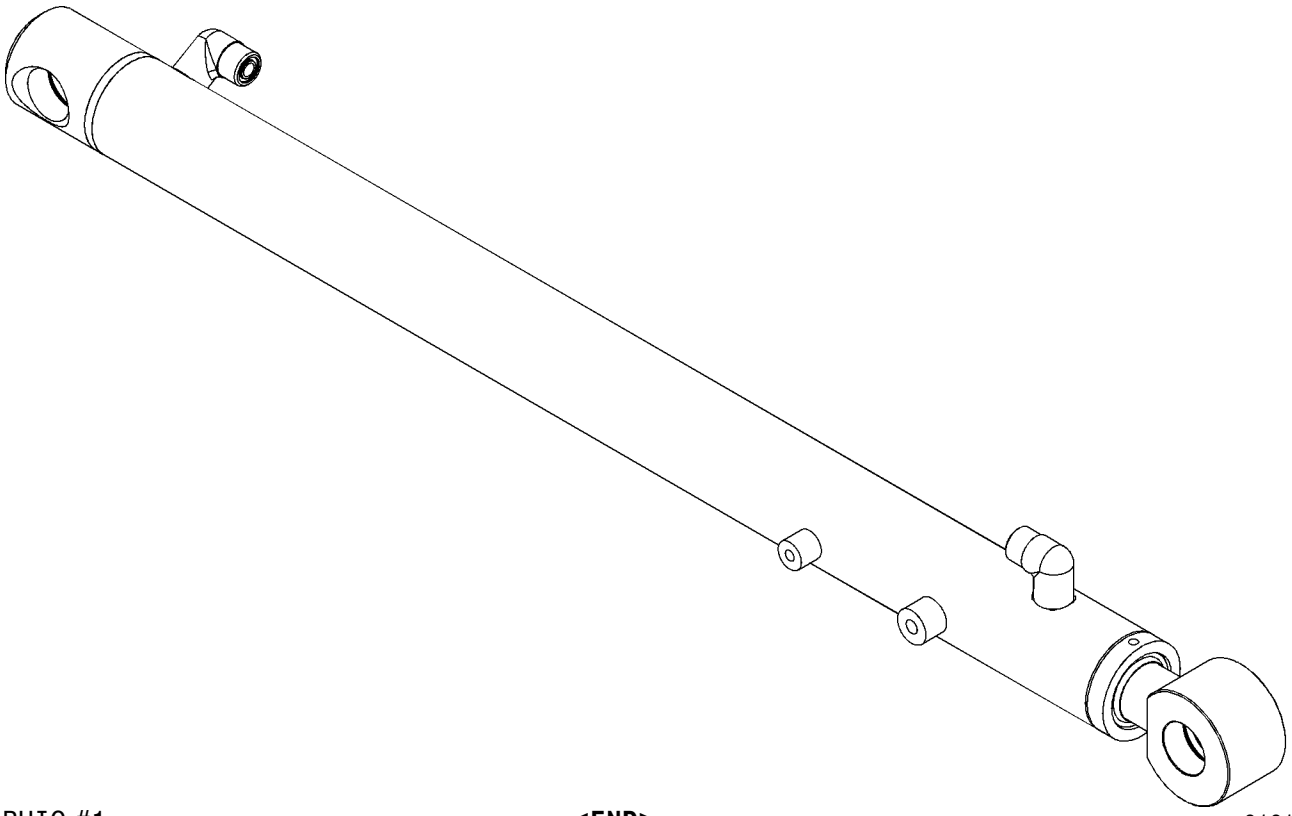

GRAPHIC #1 **<END>** g01010790

230-3684 CYLINDER GP-TILT–BUCKET EJECTOR, LH

S/N: MJH10575-UP
65-MM (2.556-IN) BORE X 295-MM (11.61-IN) STROKE
PART OF 218-6799 CYLINDER & MTG GP-LIFT ARM

SMCS-5104 **i01934882**

NOTE	REF NO	GRAPHIC REF	PART NUMBER	QTY	PART NAME 1 2 3 4 5 6 (PRODUCT LEVEL)	SEE PAGE
	1	1	**3B-8489**	1	FITTING-GREASE	
					AVAILABLE REPAIR KIT(S):	
			218-6825	1	KIT-SEAL	
					(INCLUDES PISTON SEAL, PISTON WEAR BAND, O-RINGS, BACK UP RINGS, WIPER SEAL & ROD SEAL)	

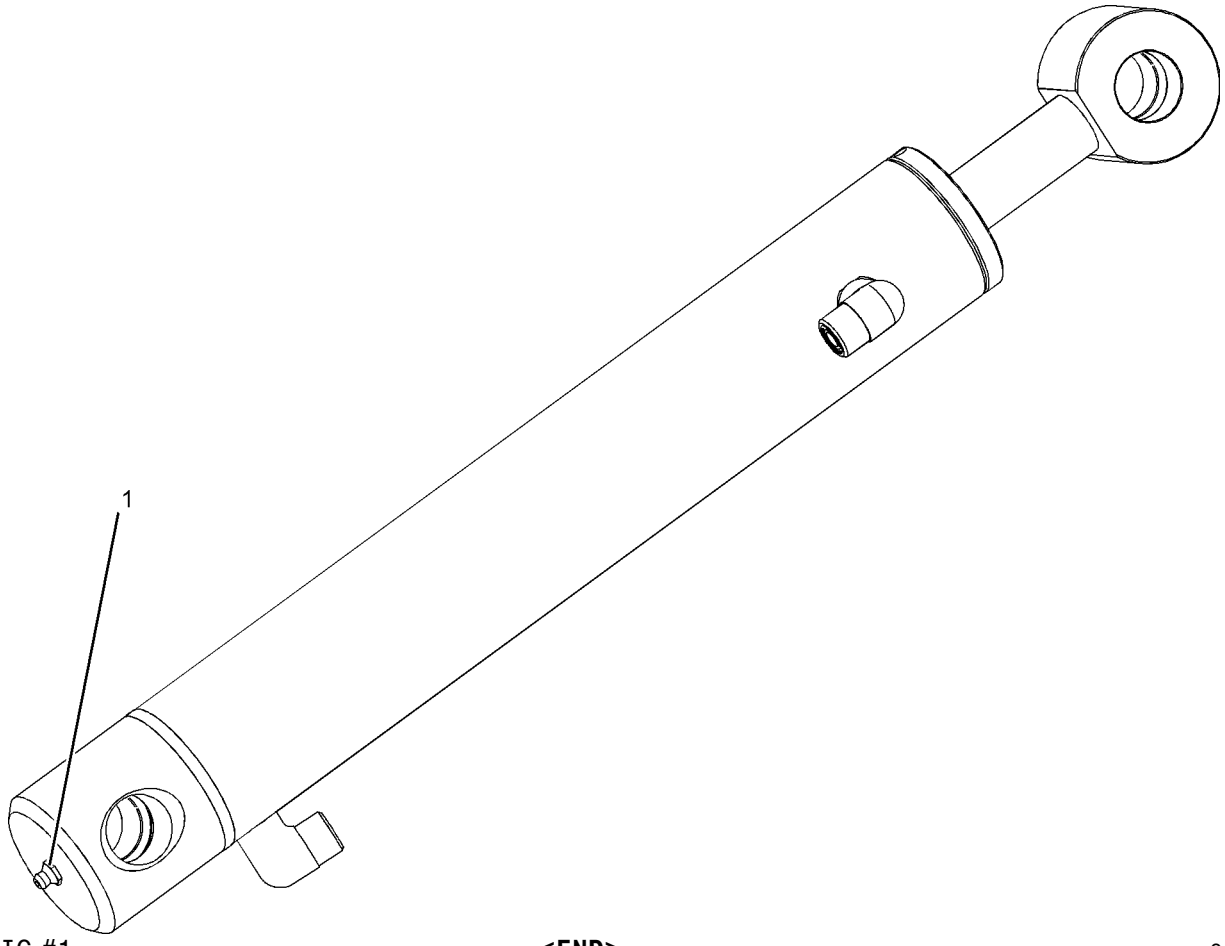

GRAPHIC #1 **<END>** g01012081

HYDRAULIC SYSTEM

230-3694 CYLINDER GP-TILT–BUCKET EJECTOR, RH

S/N: MJH10575-UP

65-MM (2.56-IN) BORE X 295-MM (11.61-IN) STROKE

PART OF 218-6799 CYLINDER & MTG GP-LIFT ARM

SMCS-5104 **i01934887**

NOTE	REF NO	GRAPHIC REF	PART NUMBER	QTY	PART NAME 1 2 3 4 5 6 (PRODUCT LEVEL)	SEE PAGE
F		1	**3B-8489**	1	FITTING-GREASE	
					AVAILABLE REPAIR KIT(S):	
			218-6825	1	KIT-SEAL	
					(INCLUDES SEAL, PISTON WEAR BAND, O-RINGS & BACK UP RINGS)	

F-NOT SHOWN

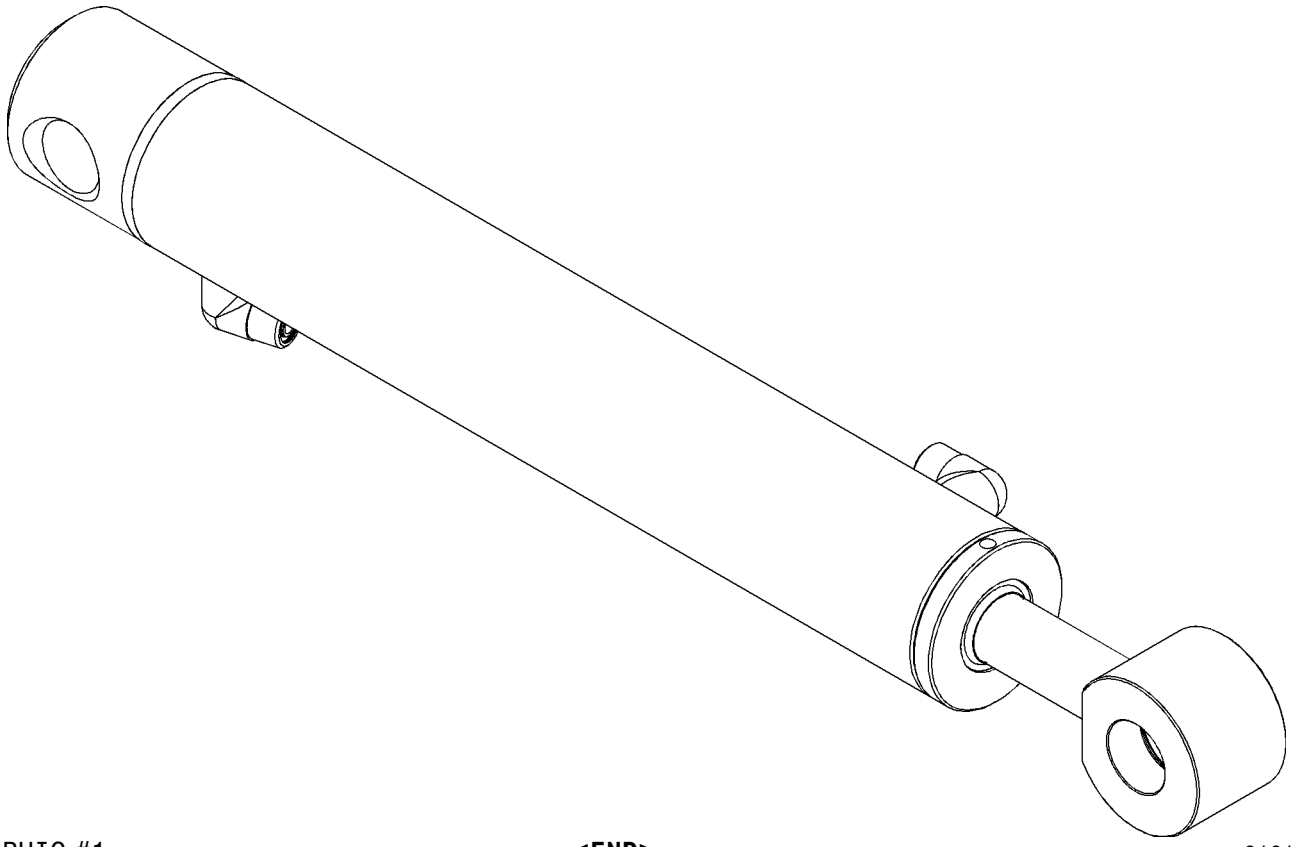

GRAPHIC #1 **<END>** g01010855

9U-6995 FITTING GP-HYDRAULIC

S/N: MJH10575-UP
PART OF 218-6132 LINES GP-PUMP
AN ATTACHMENT

SMCS-5057 **i02445230**

NOTE	REF NO	GRAPHIC REF	PART NUMBER	QTY	PART NAME 1 2 3 4 5 6 (PRODUCT LEVEL)	SEE PAGE
	1	1	**2S-4078**	1	SEAL-O-RING	

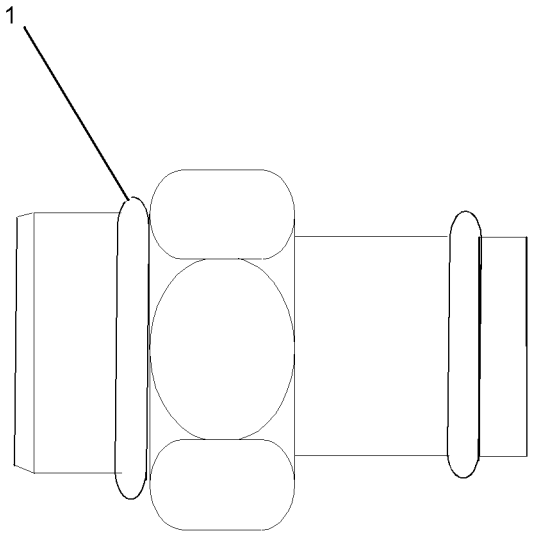

GRAPHIC #1 **<END>** g01221963

218-5840 FITTING GP-HYDRAULIC–
QUICK DISCONNECT, MALE, HIGH FLOW
S/N: MJH10575-UP

PART OF 218-6737 KIT-HIGH FLOW CONVERSION, 218-5853 LINES GP-WORK TOOL AN ATTACHMENT

SMCS-5057 **i01974387**

NOTE	REF NO	GRAPHIC REF	PART NUMBER	QTY	PART NAME 1 2 3 4 5 6 (PRODUCT LEVEL)	SEE PAGE
	1	1	**218-5843**	1	FITTING AS (QUICK DISCONNECT, MALE)	
	2	1	**218-5844**	1	FITTING AS (QUICK DISCONNECT, MALE)	
	3	1	**2M-9780**	1	SEAL-O-RING	
	4	1	**6V-8640**	1	CONNECTOR	
	5	1	**6V-9746**	1	SEAL-O-RING	

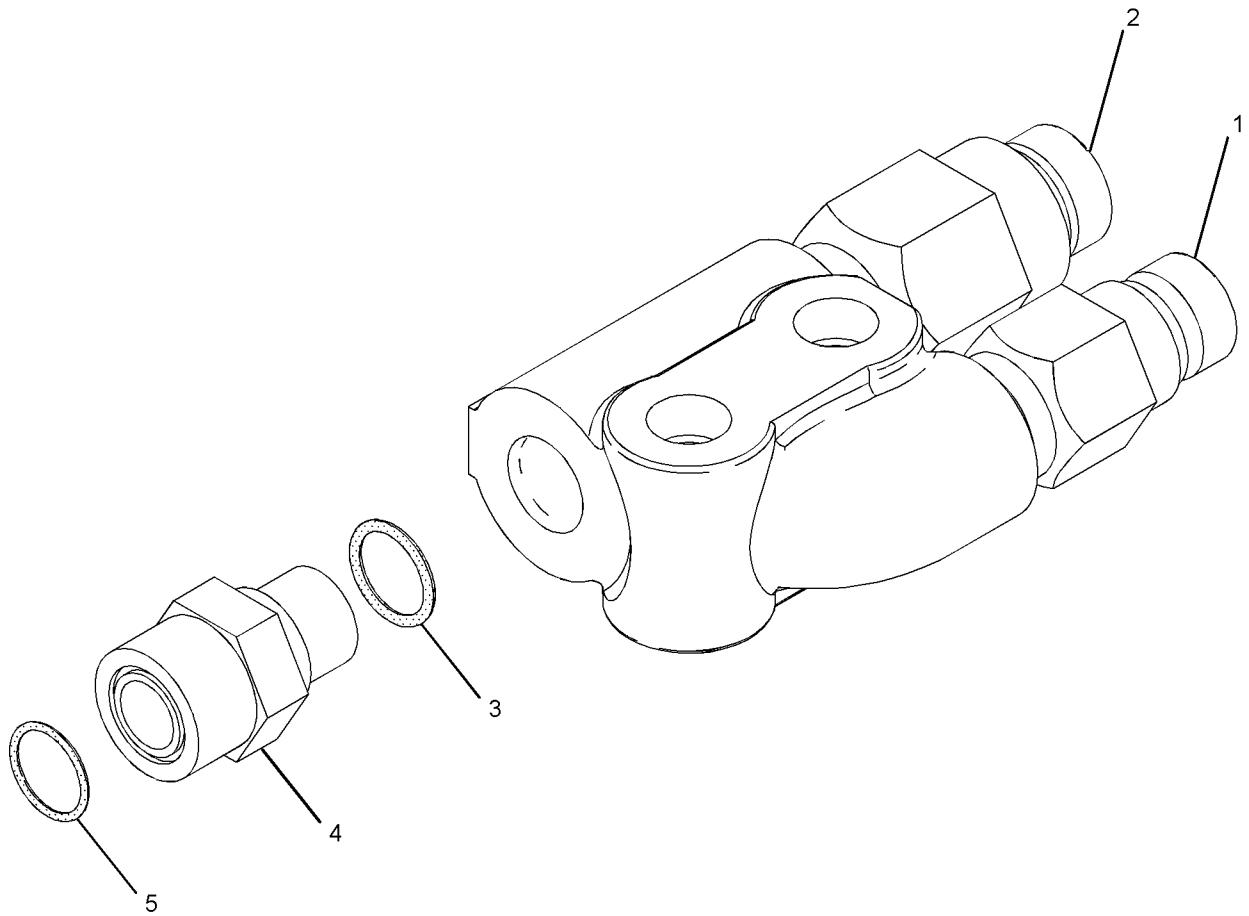

GRAPHIC #1 **<END>** g01026062

218-5841 FITTING GP-HYDRAULIC–
QUICK DISCONNECT, FEMALE, HIGH FLOW
S/N: MJH10575-UP

PART OF 218-6737 KIT-HIGH FLOW CONVERSION, 218-5853 LINES GP-WORK TOOL AN ATTACHMENT

SMCS-5057 **i02129402**

NOTE	REF NO	GRAPHIC REF	PART NUMBER	QTY	PART NAME 1 2 3 4 5 6 (PRODUCT LEVEL)	SEE PAGE
	1	1	**218-5845**	1	FITTING AS (QUICK DISCONNECT, FEMALE)	
	2	1	**218-5846**	1	FITTING AS (QUICK DISCONNECT, FEMALE)	
	3	1	**2M-9780**	1	SEAL-O-RING	
	4	1	**6V-8640**	1	CONNECTOR	
	5	1	**6V-9746**	1	SEAL-O-RING	

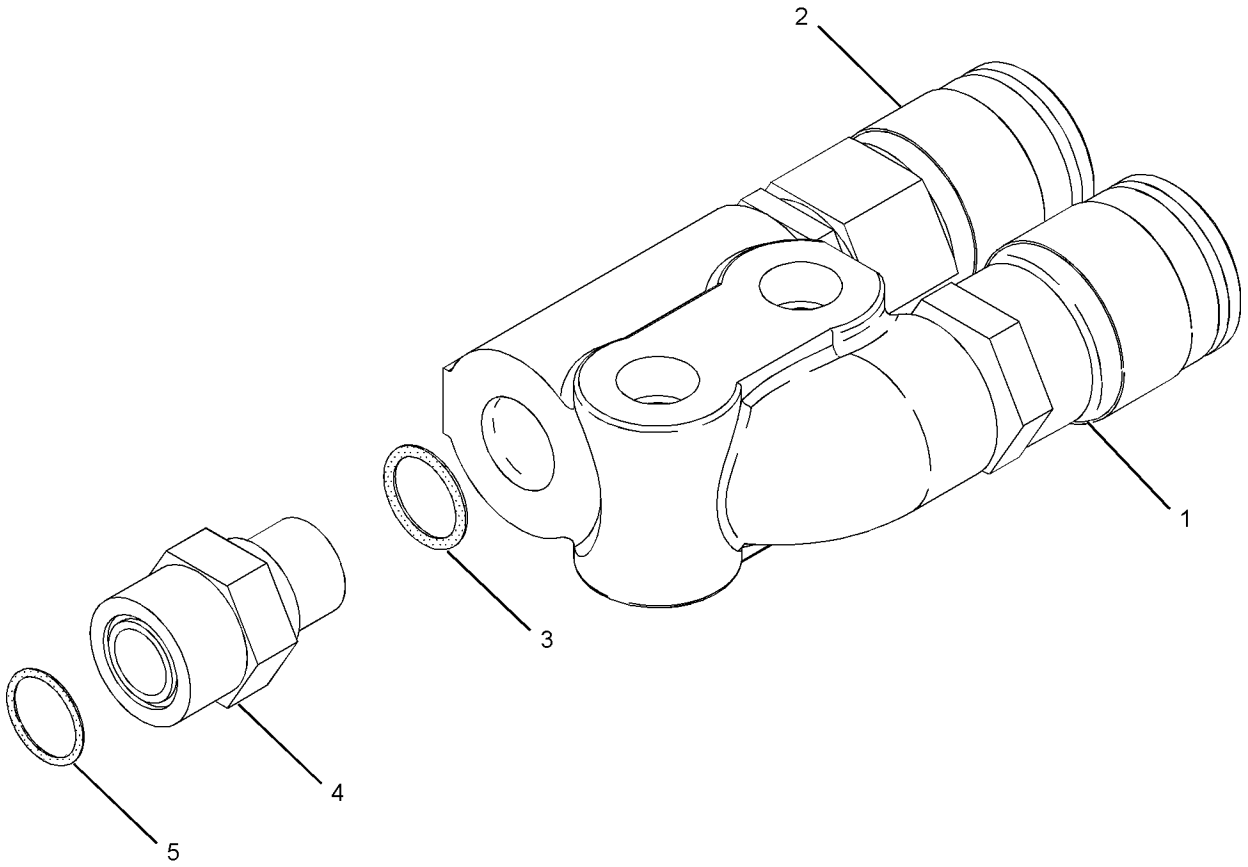

GRAPHIC #1 **<END>** g01084158

218-6130 HYDRAULIC AR

S/N: MJH10575-UP
CANNOT BE USED WITH 218-6131—PAGE 289
AN ATTACHMENT

SMCS-5050 **i01951401**

NOTE	PART NUMBER	QTY	PART NAME 1 2 3 4 5 6 (PRODUCT LEVEL)	SEE PAGE
Y	*218-6132*	1	LINES GP-PUMP	339
Y	*218-6197*	1	LINES GP-WORK TOOL	350
Y	*218-6175*	1	PUMP & MTG GP-WORK TOOL	379
Y-SEPARATE ILLUSTRATION				

<END>

218-6131 HYDRAULIC AR

S/N: MJH10575-UP
HIGH FLOW
CANNOT BE USED WITH 218-6130—PAGE 289
AN ATTACHMENT

SMCS-5050 **i02469370**

NOTE	PART NUMBER	QTY	PART NAME 1 2 3 4 5 6 (PRODUCT LEVEL)	SEE PAGE
Y	*218-6133*	1	LINES GP-PUMP	341
Y	*218-5853*	1	LINES GP-WORK TOOL	347
Y	*218-5812*	1	MANIFOLD & MTG GP-CONTROL	357
Y	*218-6079*	1	PUMP & MTG GP-WORK TOOL	378
	236-4706	1	FILM GP	
	236-4707	2	FILM (HIGH FLOW)	
Y-SEPARATE ILLUSTRATION				

<END>

218-6180 HYDRAULIC AR

S/N: MJH10575-UP
AN ATTACHMENT

SMCS-5050 **i01951403**

NOTE	PART NUMBER	QTY	PART NAME 1 2 3 4 5 6 (PRODUCT LEVEL)	SEE PAGE
Y	*218-6207*	1	LINES GP-LIFT CYLINDER	329
Y	*218-5819*	1	LINES GP-TILT CYLINDER	343
Y-SEPARATE ILLUSTRATION				

<END>

HYDRAULIC SYSTEM

218-6181 HYDRAULIC AR

S/N: MJH10575-UP

AN ATTACHMENT

SMCS-5050 **i02360657**

NOTE	PART NUMBER	QTY	PART NAME 1 2 3 4 5 6 (PRODUCT LEVEL)	SEE PAGE
Y	*218-5851*	1	LINES GP-LIFT CYLINDER	327
Y	*218-5852*	1	LINES GP-TILT CYLINDER	345
Y	*159-5753*	1	MANIFOLD & MTG GP-CONTROL	356
	142-9116	1	SWITCH GP-ROCKER (WORK TOOL POSITIONER)	
	111-7899	1	GASKET	
			(LOCATE SECOND SLOT FROM REAR ON LH INSTRUMENT PANEL)	

Y-SEPARATE ILLUSTRATION

<END>

261-6132 HYDRAULIC AR—SOUND SUPPRESSION

S/N: MJH10575-UP

CANNOT BE USED WITH HIGH FLOW, 218-6131 HYDRAULIC AR, 218-6130 HYDRAULIC AR, HIGH FLOW, SOUND SUPPRESSION, 261-6139 HYDRAULIC AR

AN ATTACHMENT

SMCS-5050 **i02449578**

NOTE	PART NUMBER	QTY	PART NAME 1 2 3 4 5 6 (PRODUCT LEVEL)	SEE PAGE
Y	*218-6132*	1	LINES GP-PUMP	339
Y	*218-6197*	1	LINES GP-WORK TOOL	350
Y	*261-6094*	1	PUMP & MTG GP-WORK TOOL	380

Y-SEPARATE ILLUSTRATION

<END>

261-6139 HYDRAULIC AR—HIGH FLOW, SOUND SUPPRESSION

S/N: MJH10575-UP

CANNOT BE USED WITH 218-6130 HYDRAULIC AR, HIGH FLOW, 218-6131 HYDRAULIC AR, SOUND SUPPRESSION, 261-6132 HYDRAULIC AR

AN ATTACHMENT

SMCS-5050 **i02449586**

NOTE	PART NUMBER	QTY	PART NAME 1 2 3 4 5 6 (PRODUCT LEVEL)	SEE PAGE
Y	*218-6133*	1	LINES GP-PUMP	341
Y	*218-5853*	1	LINES GP-WORK TOOL	347
Y	*218-5812*	1	MANIFOLD & MTG GP-CONTROL	357
Y	*261-6095*	1	PUMP & MTG GP-WORK TOOL	381
	236-4706	1	FILM GP	
	236-4707	2	FILM (HIGH FLOW)	

Y-SEPARATE ILLUSTRATION

<END>

HYDRAULIC SYSTEM

278-1227 HYDRAULIC AR

S/N: MJH10575-UP

PART OF 295-7226, 295-7227 COMMON AR

SMCS-5050 **i02440224**

NOTE	PART NUMBER	QTY	PART NAME 1 2 3 4 5 6 (PRODUCT LEVEL)	SEE PAGE
Y	*193-0447*	1	ACCUMULATOR & MTG GP-HYDRAULIC	264
Y	*218-6235*	1	MANIFOLD & LINES GP-CONTROL (PARKING BRAKE)	352
Y	*218-6624*	1	FILTER & LINES GP-HYDRAULIC	193
Y	*218-6143*	1	LINES GP-HYDRAULIC OIL COOLER	325
Y	*218-6089*	1	LINES GP-HYDROSTATIC	199
Y	*218-5978*	1	LINES GP-PILOT (DIRECTION, SPEED)	335
Y	*218-6099*	1	LINES GP-PILOT	337
Y	*233-5980*	1	TANK & MTG GP-HYDRAULIC	384
Y	*218-6781*	1	VALVE & MTG GP-CONTROL	392
Y-SEPARATE ILLUSTRATION				

<END>

295-7504 HYDRAULIC AR—HIGH FLOW

S/N: MJH10575-UP

AN ATTACHMENT

SMCS-5050 **i02736404**

NOTE	PART NUMBER	QTY	PART NAME 1 2 3 4 5 6 (PRODUCT LEVEL)	SEE PAGE
Y	*218-5933*	1	CONTROL GP-PILOT OPERATED HYD (FOURTH FUNCTION)	548
Y	*218-6571*	1	CONTROL GP-PILOT OPERATED HYD (WORK TOOL)	551
Y	*218-6133*	1	LINES GP-PUMP	341
Y	*218-5853*	1	LINES GP-WORK TOOL	347
Y	*218-5812*	1	MANIFOLD & MTG GP-CONTROL	357
Y	*218-6079*	1	PUMP & MTG GP-WORK TOOL	378
	295-7418	1	FILM GP	
	295-7438	2	FILM-IDENTIFICATION (HIGH FLOW)	
Y-SEPARATE ILLUSTRATION				

<END>

295-7507 HYDRAULIC AR—HIGH FLOW

S/N: MJH10575-UP

AN ATTACHMENT

SMCS-5050 **i02736402**

NOTE	PART NUMBER	QTY	PART NAME 1 2 3 4 5 6 (PRODUCT LEVEL)	SEE PAGE
Y	*218-5933*	1	CONTROL GP-PILOT OPERATED HYD (FOURTH FUNCTION)	548
Y	*218-6571*	1	CONTROL GP-PILOT OPERATED HYD (WORK TOOL)	551
Y	*218-6133*	1	LINES GP-PUMP	341
Y	*218-5853*	1	LINES GP-WORK TOOL	347
Y	*218-5812*	1	MANIFOLD & MTG GP-CONTROL	357
Y	*261-6095*	1	PUMP & MTG GP-WORK TOOL	381
	295-7418	1	FILM GP	
	295-7438	2	FILM-IDENTIFICATION (HIGH FLOW)	
Y-SEPARATE ILLUSTRATION				

<END>

HYDRAULIC SYSTEM

218-6737 KIT-HIGH FLOW CONVERSION–KIT

S/N: MJH10575-UP
HIGH FLOW
AN ATTACHMENT

SMCS-1408, 5057, 5264, 5705 **i02514003**

NOTE	PART NUMBER	QTY	PART NAME 1 2 3 4 5 6 (PRODUCT LEVEL)	SEE PAGE
Y	**231-4259**	1	CONTROL GP-HANDLE (RH)	530
Y	**218-5840**	1	FITTING GP-HYDRAULIC (QUICK DISCONNECT, MALE)	287
Y	**218-5841**	1	FITTING GP-HYDRAULIC (QUICK DISCONNECT, FEMALE)	288
Y	**248-7696**	1	MANIFOLD GP-CONTROL (BOOSTED AUXILIARY HYD FLOW)	363
Y	**225-9238**	1	PUMP GP-GEAR (WORK TOOL, HIGH FLOW)	382
	176-4074	1	CONNECTOR GP	
	2S-4078	1	SEAL-O-RING	
	177-9567	1	TEE AS	
	9U-6993	1	FITTING GP	
	3D-2824	1	SEAL-O-RING	
	9U-6994	2	FITTING GP	
			(EACH INCLUDES)	
	7M-8485	1	SEAL-O-RING	
	223-5942	1	SWITCH GP-ROCKER (HIGH FLOW)	
	111-7899	1	GASKET	
	218-6727	1	BRACKET AS	
	218-6002	2	BRACKET AS	
	148-8327	2	CONNECTOR AS	
			(EACH INCLUDES)	
	3D-2824	1	SEAL-O-RING	
	6V-8637	1	CONNECTOR	
	6V-9746	1	SEAL-O-RING	
	148-8336	2	CONNECTOR AS	
			(EACH INCLUDES)	
	3J-1907	1	SEAL-O-RING	
	6V-8397	1	SEAL-O-RING	
	6V-8636	1	CONNECTOR	
	148-8340	3	CONNECTOR AS	
			(EACH INCLUDES)	
	3K-0360	1	SEAL-O-RING	
	6V-8398	1	SEAL-O-RING	
	6V-8639	1	CONNECTOR	
	218-6776	1	COVER AS	
	229-5468	1	FITTING AS (QUICK DISCONNECT, MALE)	
	229-5471	1	FITTING AS (QUICK DISCONNECT, FEMALE)	
	229-5473	1	FITTING AS (QUICK DISCONNECT, MALE)	
	225-8005	1	HARNESS AS-OPERATOR CONTROLS (HIGH FLOW)	
E	**125-7874**		TUBE-HEAT SHRINK (5.72-MM DIA) (5-CM)	
E	**125-7875**		TUBE-HEAT SHRINK (7.44-MM DIA) (5-CM)	
	100-5041	4	TERMINAL-RECEPTACLE	
	9X-1054	1	PLUG AS-CONNECTOR (4-PIN)	
	102-8802	1	KIT-RECEPTACLE (2-PIN)	
	102-8806	1	KIT-RECEPTACLE (8-PIN)	
			(EACH RECEPTACLE KIT INCLUDES RECEPTACLE AS & WEDGE)	
	155-2270	5	KIT-CONNECTING PLUG (2-PIN)	
			(EACH INCLUDES PLUG AS, WEDGE, & INTERFACE SEAL)	
	225-8009	1	HARNESS AS-OPERATOR CONTROLS (JOYSTICK)	
	8L-8413	10	STRAP-CABLE	
E	**125-7874**		TUBE-HEAT SHRINK (5.72-MM DIA) (20-CM)	
	100-5041	4	TERMINAL-RECEPTACLE	

218-6737 KIT-HIGH FLOW CONVERSION *(contd.)* i02514003

NOTE	PART NUMBER	QTY	PART NAME 1 2 3 4 5 6 (PRODUCT LEVEL)	SEE PAGE
	9X-1054	1	PLUG AS-CONNECTOR (4-PIN)	
	155-2260	1	KIT-CONNECTING PLUG (3-PIN)	
	155-2255	1	KIT-CONNECTING PLUG (12-PIN)	
	155-2270	2	KIT-CONNECTING PLUG (2-PIN)	
			(EACH CONNECTING PLUG KIT INCLUDES PLUG AS, WEDGE, & INTERFACE SEAL)	
	102-8802	1	KIT-RECEPTACLE (2-PIN)	
	102-8801	1	KIT-RECEPTACLE (12-PIN)	
			(EACH RECEPTACLE KIT INCLUDES RECEPTACLE AS & WEDGE)	
	218-6142	1	HOSE	
I	**218-5813**	1	HOSE AS	
I	**233-5896**	2	HOSE AS	
I	**233-5897**	1	HOSE AS	
I	**233-5976**	1	HOSE AS	
	133-9931	1	JUMPER AS	
	102-8803	1	KIT-RECEPTACLE (3-PIN)	
			(INCLUDES RECEPTACLE AS AND WEDGE)	
D	**5P-5677**		WIRE (18-GA, BLACK) (0.1-M)	
	8T-8737	1	PLUG-SEAL	
	186-3735	2	PIN-CONNECTOR (16-GA TO 18-GA)	
	115-1615	2	RELAY AS (12-VOLT)	
	214-4253	1	TEE AS	
	4J-5477	1	SEAL-O-RING	
	6V-8398	1	SEAL-O-RING	
	214-4252	1	TEE	
	218-5906	1	TUBE AS	
	218-5907	1	TUBE AS	
I	**218-5915**	2	HOSE AS	
	218-5909	1	TUBE AS	
	218-5919	1	TUBE AS	
	238-7724	1	TUBE AS	
	238-7723		TUBE AS	
	252-0388	1	TUBE AS	
	218-6140	1	ADAPTER	
	218-6005	2	BLOCK	
	218-6004	2	BLOCK	
C	**285-9287**	3	BLOCK	
M	**8T-4136**	3	BOLT (M10X1.5X25-MM)	
M	**8T-0341**	4	BOLT-SOCKET HEAD (M10X1.5X60-MM)	
M	**8T-2192**	4	BOLT (M6X1X45-MM)	
M	**8T-4195**	2	BOLT (M10X1.5X30-MM)	
M	**5C-9553**	4	BOLT (M6X1X16-MM)	
M	**8T-4178**	2	BOLT (M10X1.5X90-MM)	
M	**8T-4908**	2	BOLT (M8X1.25X25-MM)	
M	**8T-4956**	2	BOLT (M12X1.75X35-MM)	
M	**8T-7547**	4	BOLT (M8X1.25X30-MM)	
M	**108-2989**	3	BOLT (M8X1.25X130-MM)	
M	**8T-0269**	3	BOLT-SOCKET HEAD (M6X1X20-MM)	
	2S-3440	6	CLAMP-HOSE	
	5P-2230	3	CLAMP-HOSE	
	180-3007	3	CLAMP-HOSE	
	1S-1409	2	CLIP	
	4P-7581	2	CLIP	
	236-4707	2	FILM (HIGH FLOW)	
			(RH & LH TOWER 23 MM BELOW HORIZONTAL LINE ON MODEL NUMBER FILM)	
			(FILM SHOULD BE TANGENT TO MODEL NUMBER FILM & PARALLEL WITH REAR DOOR)	

218-6737 KIT-HIGH FLOW CONVERSION *(contd.)* i02514003

NOTE	PART NUMBER	QTY	PART NAME 1 2 3 4 5 6 (PRODUCT LEVEL)	SEE PAGE
	235-5243	1	FILM-INSTRUCTION (MACHINE CONTROLS)	
			(INSIDE CAB ON RH WALL OF CANOPY ADJACENT TO RH PILOT CONTROL VALVE)	
	1P-4574	2	FLANGE-HALF	
	218-6141	1	HOSE	
	218-5818	1	HOSE	
	218-6147	1	HOSE	
	200-6345	1	MOUNT (DUAL SWIVEL)	
M	**095-1207**	1	NUT (M12X1.75-THD)	
	218-5764	3	PLATE	
	4J-0522	1	SEAL-O-RING	
	4J-5140	1	SEAL-O-RING	
	4J-5267	1	SEAL-O-RING	
	6V-8397	2	SEAL-O-RING	
	6V-8398	2	SEAL-O-RING	
	6V-9746	4	SEAL-O-RING	
	8T-5049	1	SEAL-O-RING	
	110-8760	1	STRAP	
C	**7K-1181**	7	STRAP-CABLE	
M	**101-3129**	2	STUD (M10X1.5-THD)	
	8T-4121	7	WASHER-HARD (11X21X2.5-MM THK)	
	8T-4205	11	WASHER-HARD (7.2X14.5X2-MM THK)	
	8T-4223	2	WASHER-HARD (13.5X25.5X3-MM THK)	
	8T-4224	9	WASHER-HARD (8.8X16X2-MM THK)	
	7X-7729	2	WASHER (11X25X3-MM THK)	
	5P-1076	2	WASHER-HARD (13.5X30X4-MM THK)	

C-CHANGE FROM PREVIOUS TYPE
D-ORDER BY THE METER
E-ORDER BY THE CENTIMETER
I-REFER TO HYDRAULIC INFORMATION SYSTEM
M-METRIC PART
Y-SEPARATE ILLUSTRATION

<END>

HYDRAULIC SYSTEM

218-6757 KIT-QUICK COUPLER CONVERSION—HYDRAULIC

S/N: MJH10575-UP
AN ATTACHMENT

SMCS-5057, 5133, 5479, 6129 **i02233157**

NOTE	REF NO	GRAPHIC REF	PART NUMBER	QTY	PART NAME 1 2 3 4 5 6 (PRODUCT LEVEL)	SEE PAGE
	1	1	**3S-2093**	1	STRAP-CABLE	
C	2	1	**9X-6581**	1	NUT-O-RING SEAL (1-14-THD)	
	3	1	**113-8490**	1	FUSE (10-AMPERE)	
	4	1	**124-2456**	1	FILM-INSTRUCTION (NO STEP)	
	5	1	**166-2560**	2	PIN-SPRING	
Y	6	1	**192-2640**	2	CYLINDER GP-HYDRAULIC	275
	7	1	**195-6754**	2	PIN-SPRING	
	8	1	**207-9737**	1	BRACKET AS	
I	9	1	**207-9756**	4	HOSE AS	
	10	1	**207-9785**	2	PIN	
	11	1	**212-6521**	1	SWITCH AS-ROCKER (QUICK COUPLER)	
	12	1	**212-6690**	1	GUARD	
Y	13	1	*215-3957*	2	LINK GP-COUPLER	491
I	14	1	**218-6241**	1	HOSE AS	
I	15	1	**218-6245**	2	HOSE AS	
I	16	1	**218-6249**	1	HOSE AS	
	17	1	**218-6334**	1	BRACKET AS	
	18	1	**218-6335**	1	BRACKET AS	
	19	1	**218-6938**	1	BRACKET	
I	20	1	**219-4335**	2	HOSE AS	
Y	21	1	**233-7128**	1	MANIFOLD GP-CONTROL (QUICK COUPLER)	362
C	22	1	**252-0342**	1	TUBE AS	
C	23	1	**252-0343**	1	TUBE AS	
	24	1	*148-8325*	4	CONNECTOR AS	
					(EACH INCLUDES)	
		1	**6V-8641**	1	CONNECTOR	
		1	**3J-1907**	1	SEAL-O-RING	
		1	**4J-5477**	1	SEAL-O-RING	
	25	1	*148-8336*	3	CONNECTOR AS	
					(EACH INCLUDES)	
		1	**6V-8636**	1	CONNECTOR	
		1	**3J-1907**	1	SEAL-O-RING	
		1	**6V-8397**	1	SEAL-O-RING	
	26	1	*148-8378*	1	ELBOW AS	
		1	**6V-8724**	1	ELBOW	
		1	**3J-1907**	1	SEAL-O-RING	
		1	**6V-8397**	1	SEAL-O-RING	
	27	1	*148-8446*	1	TEE AS-SWIVEL	
		1	**6V-9838**	1	TEE-SWIVEL	
		1	**7J-9108**	2	SEAL-O-RING	
	28	1	*150-4034*	2	TEE AS	
					(EACH INCLUDES)	
		1	**8T-0379**	1	TEE-BULKHEAD	
		1	**6V-8397**	3	SEAL-O-RING	
	29	1	*156-4282*	1	REDUCER AS	
		1	**6V-8938**	1	REDUCER-O-RING	
		1	**6V-8397**	1	SEAL-O-RING	
	30	1	**2V-3216**	4	CLIP	
	31	1	**3B-4628**	2	PIN-COTTER	
	32	1	**4P-7581**	1	CLIP	
	33	1	**5P-0372**	2	LOCK PIN	
	34	1	**6V-8397**	4	SEAL-O-RING	
	35	1	**6V-9168**	2	NUT (11/16-16-THD)	
	36	1	**7B-1597**	1	CLIP	
	37	1	**7G-2950**	1	CLIP (SLOT)	
	38	1	**7G-2951**	1	CLIP (TAB)	

218-6757 KIT-QUICK COUPLER CONVERSION *(contd.)* i02233157

NOTE	REF NO	GRAPHIC REF	PART NUMBER	QTY	PART NAME 1 2 3 4 5 6 (PRODUCT LEVEL)	SEE PAGE
	39	1	**7H-7055**	2	CLIP	
	40	1	**7X-7729**	6	WASHER (11X25X3-MM THK)	
	41	1	**8L-5188**	2	PIN	
	42	1	**8T-4121**	13	WASHER-HARD (11X21X2.5-MM THK)	
M	43	1	**8T-4133**	6	NUT (M10X1.5-THD)	
M	44	1	**8T-4136**	1	BOLT (M10X1.5X25-MM)	
M	45	1	**8T-4189**	2	BOLT (M8X1.25X20-MM)	
M	46	1	**8T-4191**	2	BOLT (M10X1.5X16-MM)	
M	47	1	**8T-4196**	4	BOLT (M10X1.5X35-MM)	
M	48	1	**8T-4201**	3	BOLT-LOCKING (M10X1.5X20-MM)	
	49	1	**8T-4224**	2	WASHER-HARD (8.8X16X2-MM THK)	
M	50	1	**8T-5005**	2	BOLT (M10X1.5X70-MM)	
	51	1	**9M-8406**	2	CLIP	
	52	1	**9S-1350**	1	CLIP	
	53	1	**9T-7303**	4	SPACER (16X28X1.5-MM THK)	

C-CHANGE FROM PREVIOUS TYPE
I-REFER TO HYDRAULIC INFORMATION SYSTEM
M-METRIC PART
Y-SEPARATE ILLUSTRATION

218-6757 KIT-QUICK COUPLER CONVERSION *(contd.)* **i02233157**

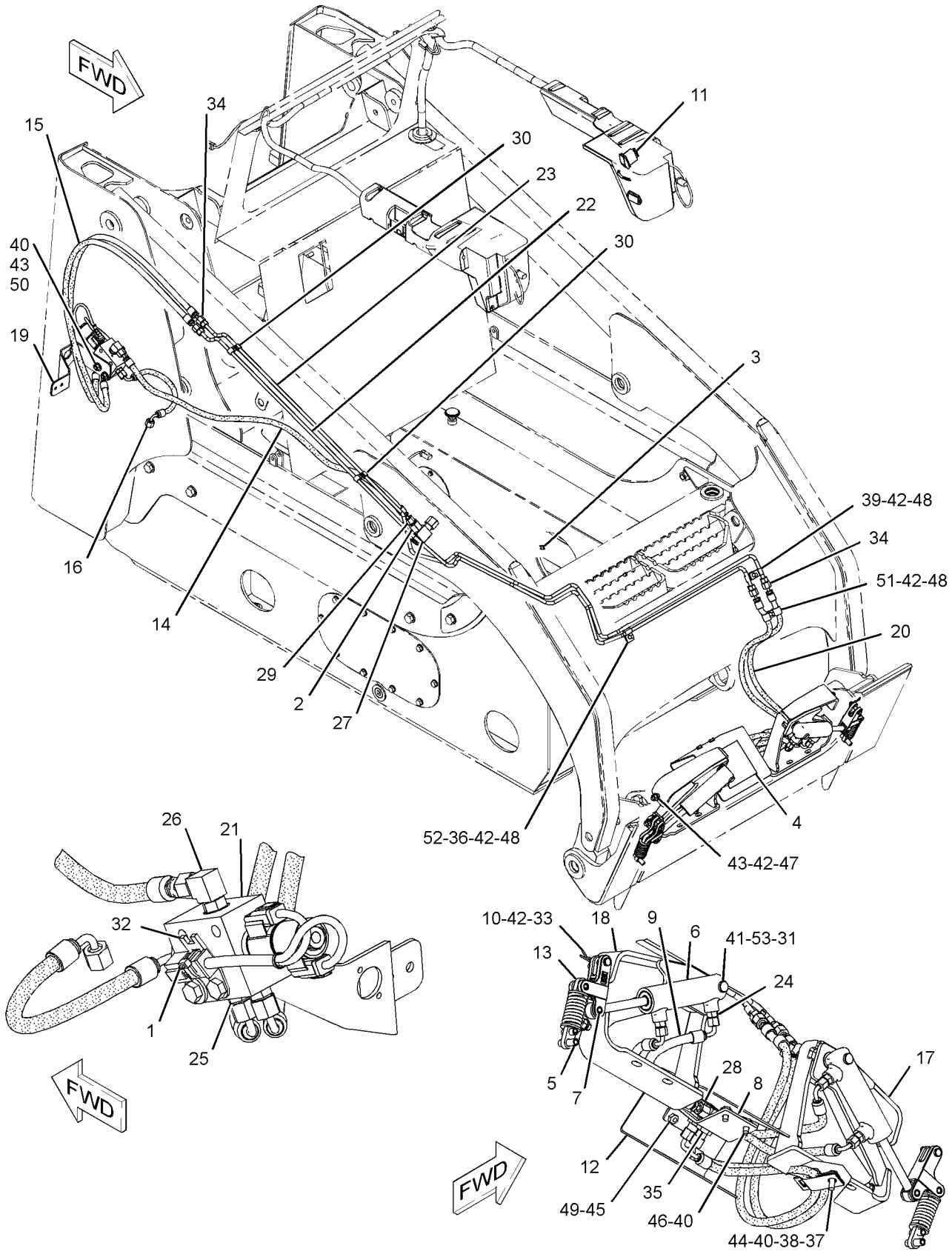

GRAPHIC #1 **<END>** g01151070

HYDRAULIC SYSTEM

279-5412 LINES GP-BUCKET—INDUSTRIAL

S/N: MJH10575-UP

PART OF 279-5350, 279-5360 FORK AR-GRAPPLE

AN ATTACHMENT

SMCS-5057 **i02616554**

NOTE	REF NO	GRAPHIC REF	PART NUMBER	QTY	PART NAME 1 2 3 4 5 6 (PRODUCT LEVEL)	SEE PAGE
	1	1	**3E-7404**	2	CLAMP-HOSE	
I	2	1	**294-5503**	1	HOSE AS	
	3	1	**153-2994**	1	COUPLING AS-QUICK DISCONNECT (FEMALE)	
	4	1	**153-2995**	1	FITTING AS (QUICK DISCONNECT, MALE)	
	5	1	**161-0185**	1	TUBE AS	
	6	1	**161-0186**	1	TUBE AS	
	7	1	**161-0188**	2	TUBE AS	
I	8	1	**161-0189**	2	HOSE AS	
I	9	1	**161-0190**	2	HOSE AS	
	10	1	**163-1385**	1	ELBOW	
I	11	1	**294-5502**	1	HOSE AS	
	12	1	*148-8319*	2	CONNECTOR AS	
					(EACH INCLUDES)	
		1	**2M-9780**	1	SEAL-O-RING	
		1	**6V-8397**	1	SEAL-O-RING	
		1	**6V-8715**	1	CONNECTOR	
	13	1	**2V-3216**	6	CLIP	
	14	1	**6V-8397**	13	SEAL-O-RING	
	15	1	**7S-3916**	2	CLIP (TAB)	
	16	1	**7S-3919**	2	CLIP (SLOT)	
	17	1	**8T-4121**	2	WASHER-HARD (11X21X2.5-MM THK)	
M	18	1	**8T-4136**	2	BOLT (M10X1.5X25-MM)	
M	19	1	**8T-4171**	4	BOLT (M6X1X12-MM)	
	20	1	**9R-2004**	2	BLOCK	

I-REFER TO HYDRAULIC INFORMATION SYSTEM
M-METRIC PART

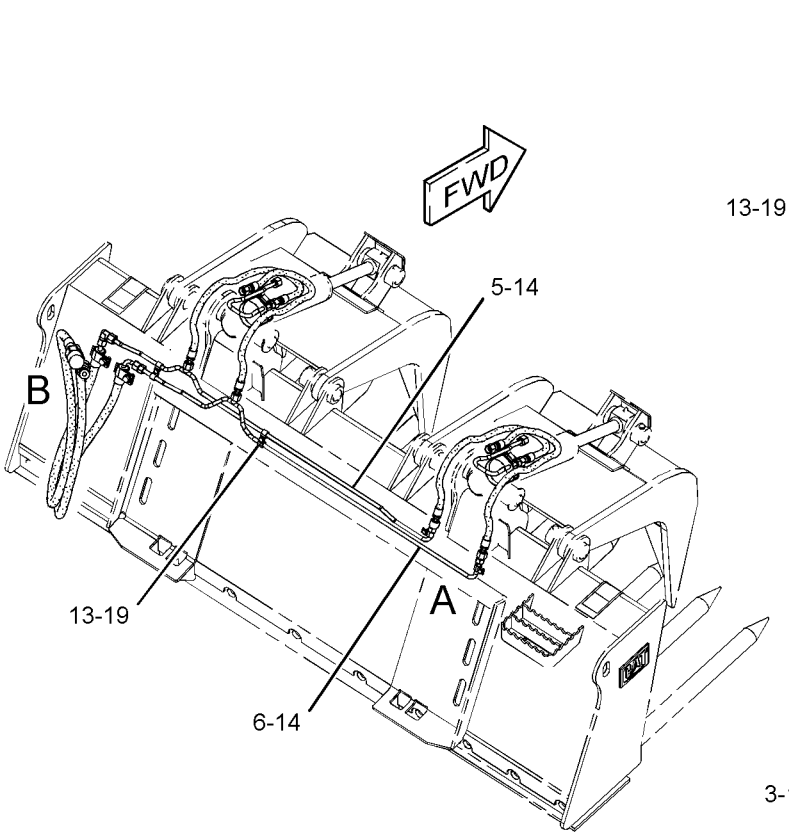

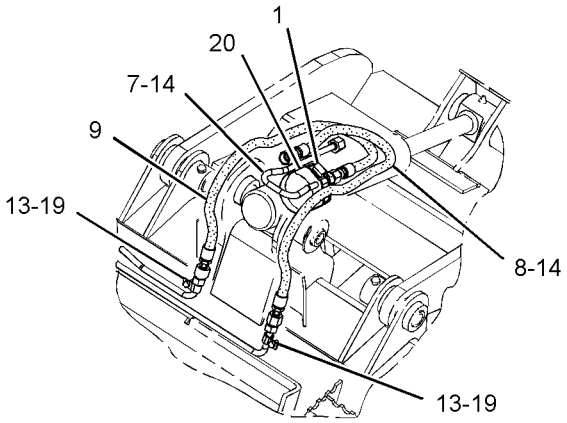

VIEW OF AREA A

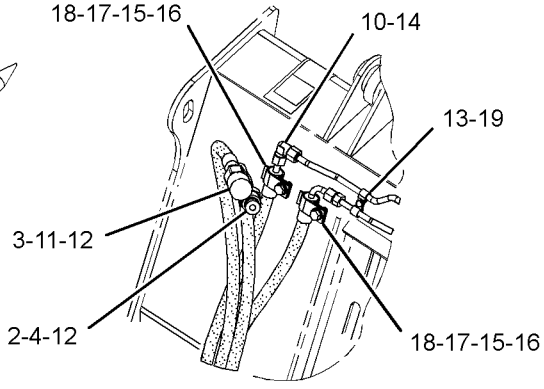

VIEW OF AREA B

GRAPHIC #1 **<END>** g01280859

HYDRAULIC SYSTEM

279-5413 LINES GP-BUCKET

S/N: MJH10575-UP

PART OF 279-5382 BUCKET AR-MULTIPURPOSE

AN ATTACHMENT

SMCS-5057 **i02552042**

NOTE	REF NO	GRAPHIC REF	PART NUMBER	QTY	PART NAME 1 2 3 4 5 6 (PRODUCT LEVEL)	SEE PAGE
	1	1	**153-2994**	1	COUPLING AS-QUICK DISCONNECT (FEMALE)	
I	2	1	**154-5020**	2	HOSE AS	
I	3	1	**154-5021**	1	HOSE AS	
I	4	1	**154-5022**	1	HOSE AS	
		1	**163-8811**	2	CLAMP	
	5	1	**163-1386**	1	TEE-UNION	
	6	1	**185-7887**	1	COUPLING AS-QUICK DISCONNECT (MALE)	
I	7	1	**279-5417**	1	HOSE AS	
I	8	1	**279-5418**	1	HOSE AS	
	9	1	*148-8319*	2	CONNECTOR AS	
					(EACH INCLUDES)	
		1	**2M-9780**	1	SEAL-O-RING	
		1	**6V-8397**	1	SEAL-O-RING	
		1	**6V-8715**	1	CONNECTOR	
	10	1	*150-3056*	1	TEE AS	
		1	**6V-8397**	3	SEAL-O-RING	
		1	**6V-8788**	1	TEE	
	11	1	**1S-0994**	1	CLIP	
	12	1	**6D-4247**	3	CLIP	
	13	1	**6V-8397**	7	SEAL-O-RING	
M	14	1	**8T-4189**	4	BOLT (M8X1.25X20-MM)	
	15	1	**8T-4224**	4	WASHER-HARD (8.8X16X2-MM THK)	
B	16	1	**9X-6273**	2	WASHER (32.5X50X0.8-MM THK)	
B	17	1	**9X-6274**	2	WASHER (32.5X50X1.6-MM THK)	

B-USE AS REQUIRED
I-REFER TO HYDRAULIC INFORMATION SYSTEM
M-METRIC PART

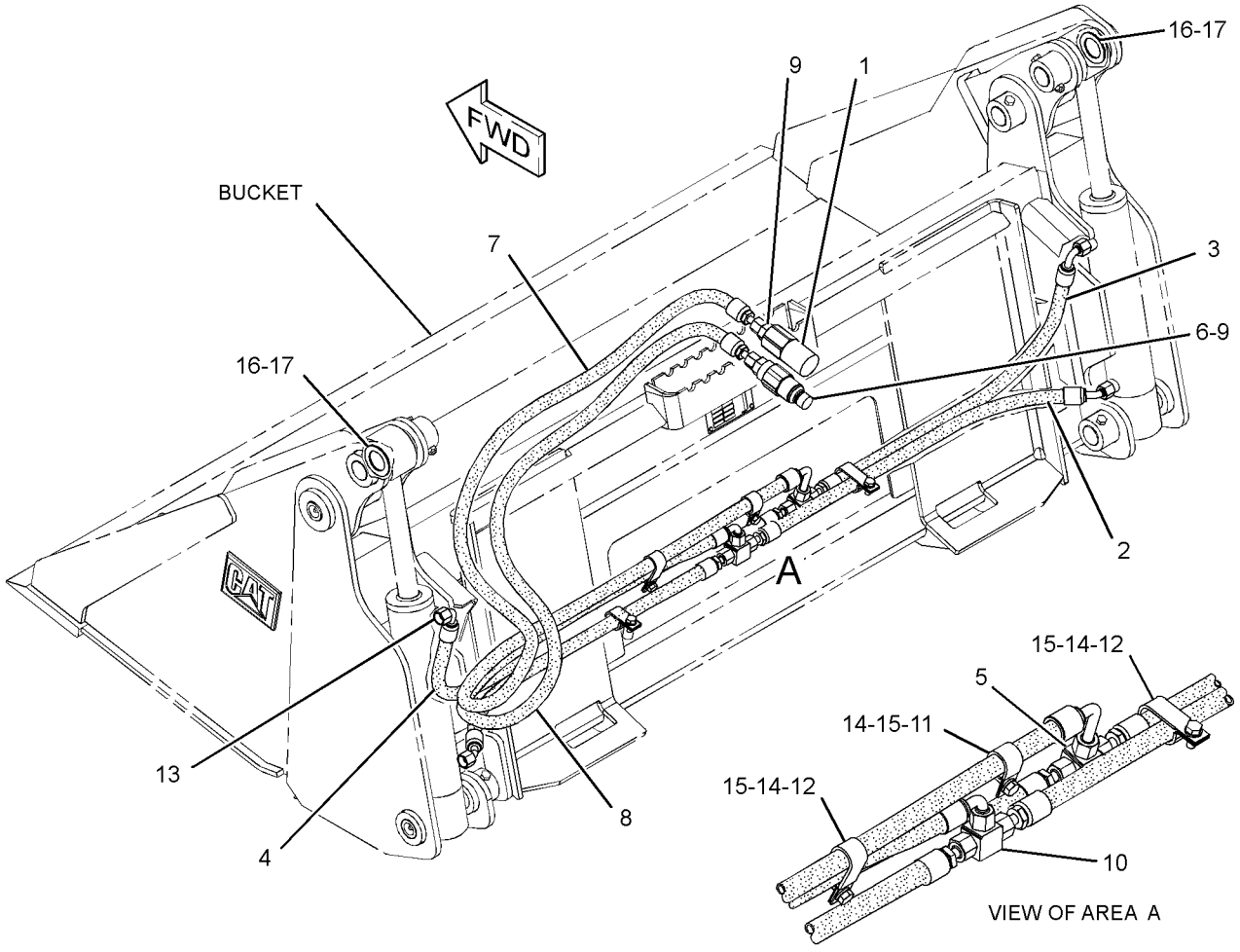

GRAPHIC #1 **<END>** g01278435

HYDRAULIC SYSTEM

279-5414 LINES GP-BUCKET

S/N: MJH10575-UP

PART OF 279-5390 BUCKET AR-MULTIPURPOSE

AN ATTACHMENT

SMCS-5057 **i02664837**

NOTE	REF NO	GRAPHIC REF	PART NUMBER	QTY	PART NAME 1 2 3 4 5 6 (PRODUCT LEVEL)	SEE PAGE
	1	1	**153-2994**	1	COUPLING AS-QUICK DISCONNECT (FEMALE)	
I	2	1	**156-5508**	1	HOSE AS	
I	3	1	**156-5509**	2	HOSE AS	
I	4	1	**156-5510**	1	HOSE AS	
	5	1	**163-1386**	1	TEE-UNION	
	6	1	**185-7887**	1	COUPLING AS-QUICK DISCONNECT (MALE)	
I	7	1	**279-5417**	1	HOSE AS	
I	8	1	**279-5418**	1	HOSE AS	
	9	1	*148-8319*	2	CONNECTOR AS	
					(EACH INCLUDES)	
		1	**2M-9780**	1	SEAL-O-RING	
		1	**6V-8397**	1	SEAL-O-RING	
		1	**6V-8715**	1	CONNECTOR	
	10	1	*150-3056*	1	TEE AS	
		1	**6V-8397**	3	SEAL-O-RING	
		1	**6V-8788**	1	TEE	
	11	1	**1S-0994**	1	CLIP	
	12	1	**6D-4247**	3	CLIP	
	13	1	**6V-8397**	7	SEAL-O-RING	
M	14	1	**8T-4189**	4	BOLT (M8X1.25X20-MM)	
	15	1	**8T-4224**	4	WASHER-HARD (8.8X16X2-MM THK)	
B	16	1	**9X-6273**	2	WASHER (32.5X50X0.8-MM THK)	
B	17	1	**9X-6274**	2	WASHER (32.5X50X1.6-MM THK)	

B-USE AS REQUIRED
I-REFER TO HYDRAULIC INFORMATION SYSTEM
M-METRIC PART

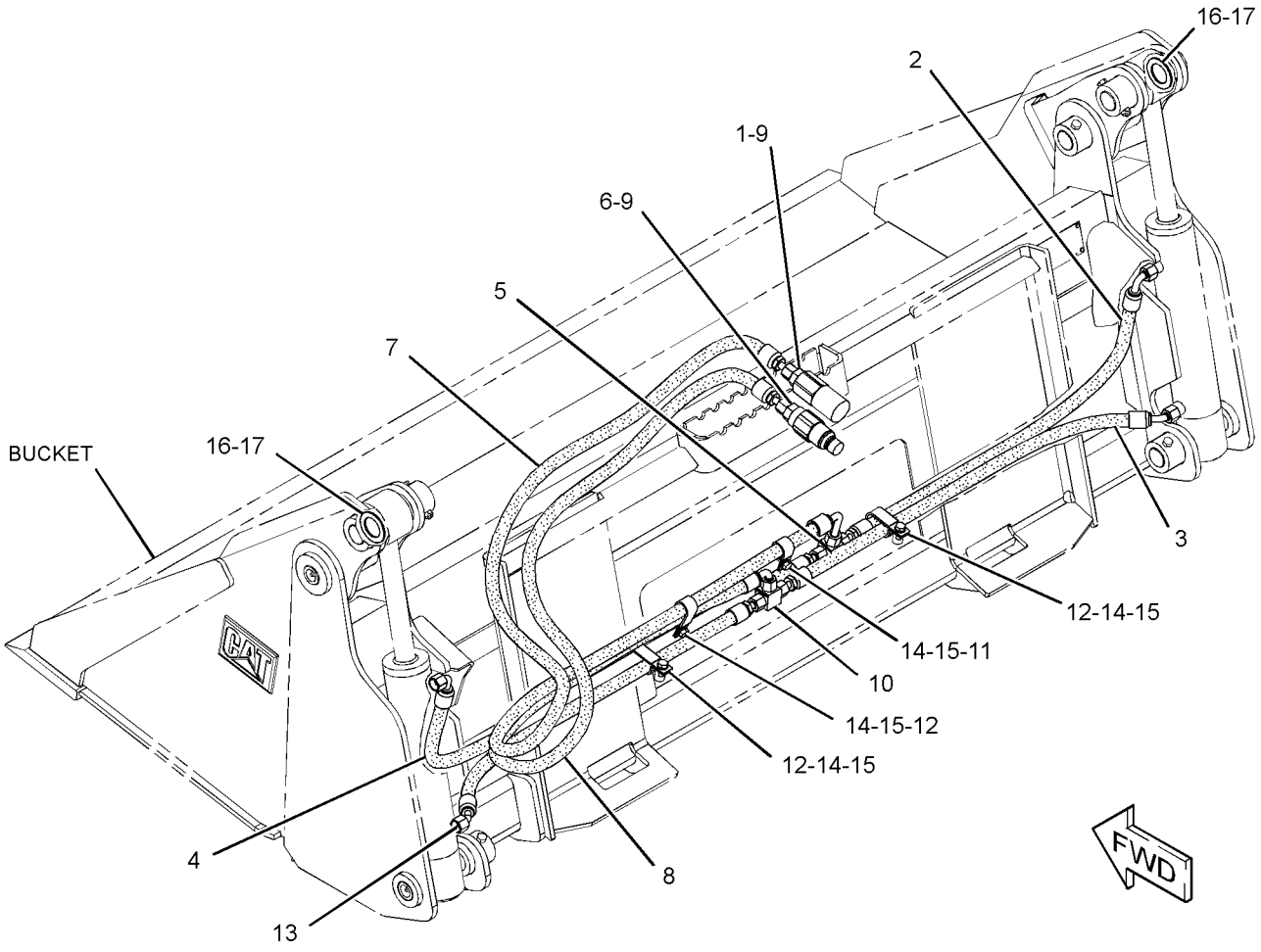

GRAPHIC #1 **<END>** g01339126

HYDRAULIC SYSTEM

279-5415 LINES GP-BUCKET

S/N: MJH10575-UP

PART OF 279-5398 BUCKET AR-MULTIPURPOSE

AN ATTACHMENT

SMCS-5057 **i02552160**

NOTE	REF NO	GRAPHIC REF	PART NUMBER	QTY	PART NAME 1 2 3 4 5 6 (PRODUCT LEVEL)	SEE PAGE
	1	1	**153-2994**	1	COUPLING AS-QUICK DISCONNECT (FEMALE)	
I	2	1	**159-4535**	1	HOSE AS	
I	3	1	**159-4536**	2	HOSE AS	
I	4	1	**159-4537**	1	HOSE AS	
	5	1	**163-1386**	1	TEE-UNION	
	6	1	**185-7887**	1	COUPLING AS-QUICK DISCONNECT (MALE)	
I	7	1	**279-5417**	1	HOSE AS	
I	8	1	**279-5418**	1	HOSE AS	
	9	1	*148-8319*	2	CONNECTOR AS	
					(EACH INCLUDES)	
		1	**2M-9780**	1	SEAL-O-RING	
		1	**6V-8397**	1	SEAL-O-RING	
		1	**6V-8715**	1	CONNECTOR	
	10	1	*150-3056*	1	TEE AS	
		1	**6V-8397**	3	SEAL-O-RING	
		1	**6V-8788**	1	TEE	
	11	1	**1S-0994**	1	CLIP	
	12	1	**6D-4247**	3	CLIP	
	13	1	**6V-8397**	7	SEAL-O-RING	
M	14	1	**8T-4189**	4	BOLT (M8X1.25X20-MM)	
	15	1	**8T-4224**	4	WASHER-HARD (8.8X16X2-MM THK)	
B	16	1	**9X-6273**	2	WASHER (32.5X50X0.8-MM THK)	
B	17	1	**9X-6274**	2	WASHER (32.5X50X1.6-MM THK)	

B-USE AS REQUIRED
I-REFER TO HYDRAULIC INFORMATION SYSTEM
M-METRIC PART

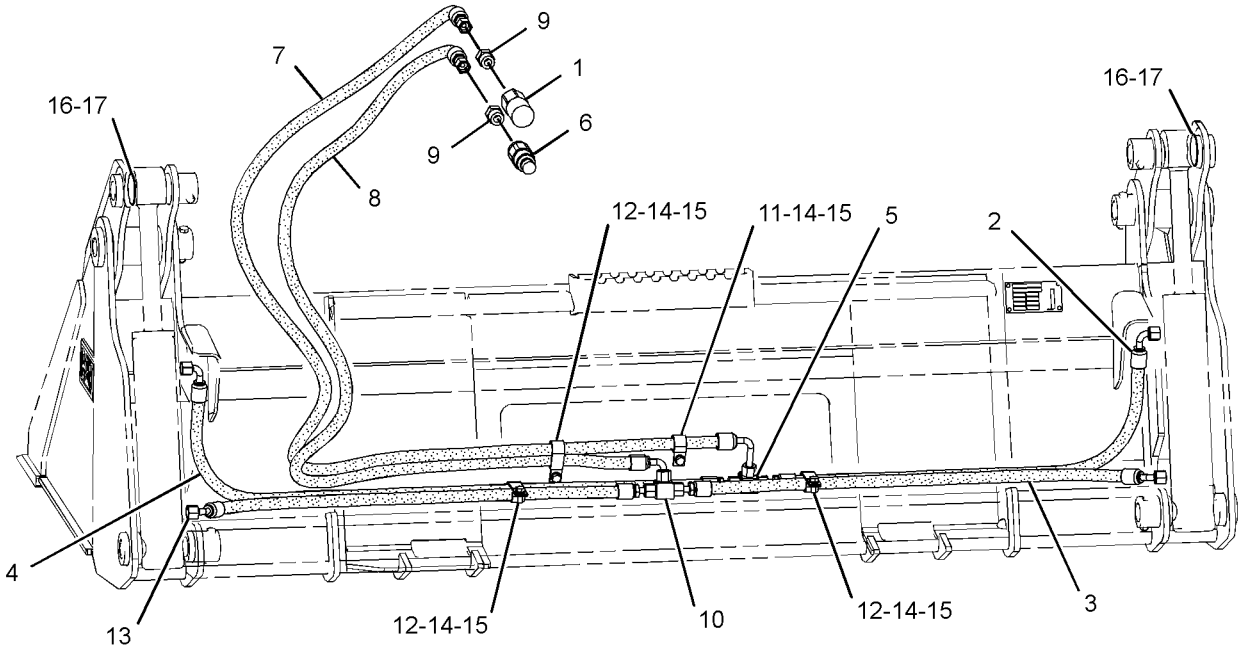

REAR VIEW
(UPPER LEFT)

GRAPHIC #1 **<END>** g01280163

HYDRAULIC SYSTEM

279-5416 LINES GP-BUCKET

S/N: MJH10575-UP

PART OF 279-5403 BUCKET AR-MULTIPURPOSE

AN ATTACHMENT

SMCS-5057 **i02552257**

NOTE	REF NO	GRAPHIC REF	PART NUMBER	QTY	PART NAME 1 2 3 4 5 6 (PRODUCT LEVEL)	SEE PAGE
	1	1	**153-2994**	1	COUPLING AS-QUICK DISCONNECT (FEMALE)	
	2	1	**163-1386**	1	TEE-UNION	
	3	1	**185-7887**	1	COUPLING AS-QUICK DISCONNECT (MALE)	
I	4	1	**199-8309**	1	HOSE AS	
I	5	1	**199-8310**	2	HOSE AS	
I	6	1	**199-8311**	1	HOSE AS	
I	7	1	**279-5417**	1	HOSE AS	
I	8	1	**279-5418**	1	HOSE AS	
	9	1	*148-8319*	2	CONNECTOR AS	
					(EACH INCLUDES)	
		1	**2M-9780**	1	SEAL-O-RING	
		1	**6V-8397**	1	SEAL-O-RING	
		1	**6V-8715**	1	CONNECTOR	
	10	1	*150-3056*	1	TEE AS	
		1	**6V-8397**	3	SEAL-O-RING	
		1	**6V-8788**	1	TEE	
	11	1	**1S-0994**	1	CLIP	
	12	1	**6D-4247**	3	CLIP	
	13	1	**6V-8397**	7	SEAL-O-RING	
M	14	1	**8T-4189**	4	BOLT (M8X1.25X20-MM)	
	15	1	**8T-4224**	4	WASHER-HARD (8.8X16X2-MM THK)	
B	16	1	**9X-6273**	2	WASHER (32.5X50X0.8-MM THK)	
B	17	1	**9X-6274**	2	WASHER (32.5X50X1.6-MM THK)	

B-USE AS REQUIRED
I-REFER TO HYDRAULIC INFORMATION SYSTEM
M-METRIC PART

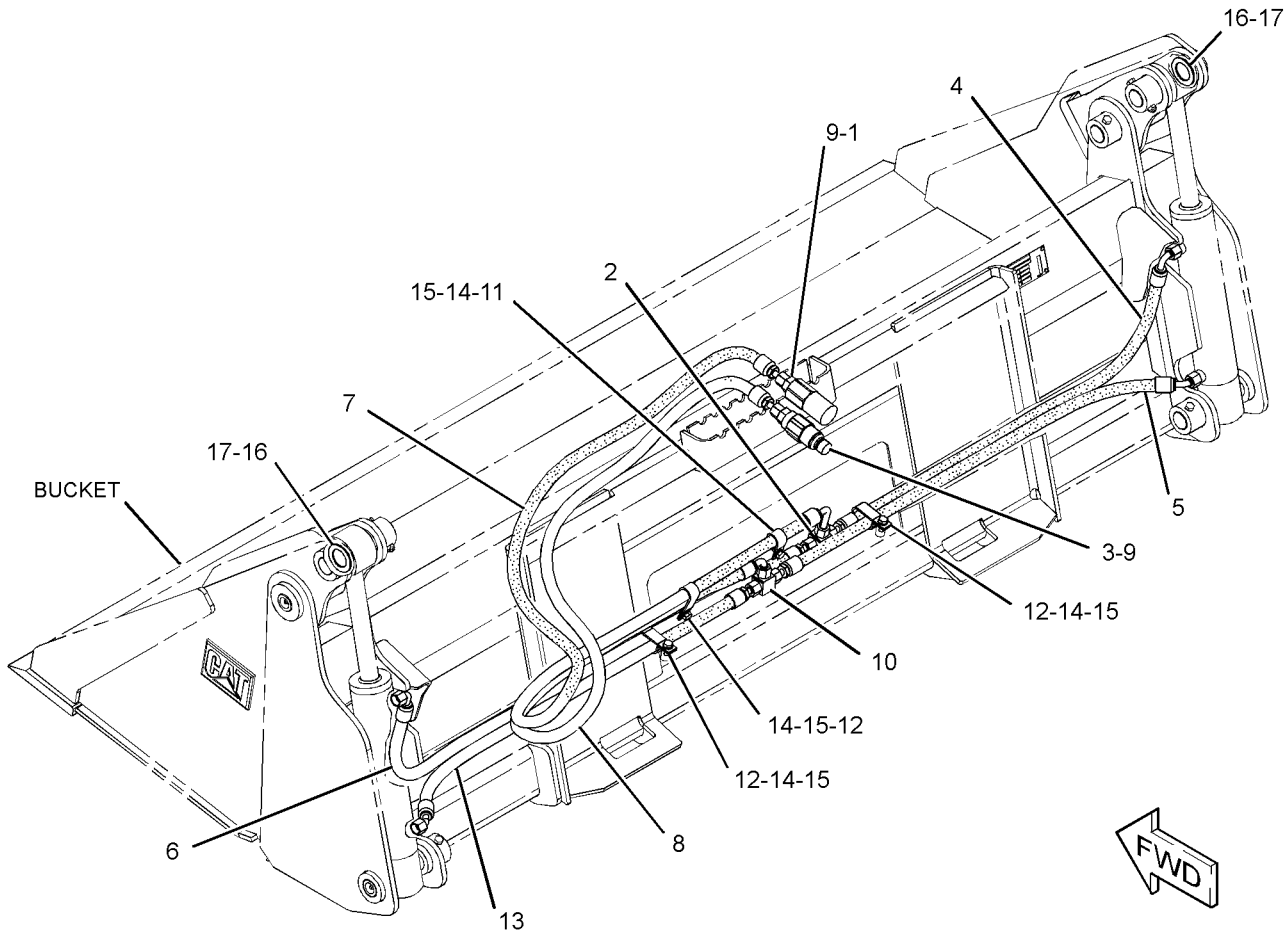

GRAPHIC #1 **<END>** g01278627

HYDRAULIC SYSTEM

285-6113 LINES GP-BUCKET

S/N: MJH10575-UP
PART OF 285-6116 GRAPPLE GP-UTILITY
AN ATTACHMENT
TYPE 1

SMCS-5057 **i02645962**

NOTE	REF NO	GRAPHIC REF	PART NUMBER	QTY	PART NAME 1 2 3 4 5 6 (PRODUCT LEVEL)	SEE PAGE
	1	1	**2J-6540**	1	CLAMP (HOSE)	
	2	1	**153-2994**	1	COUPLING AS-QUICK DISCONNECT (FEMALE)	
	3	1	**153-2995**	1	FITTING AS (QUICK DISCONNECT, MALE)	
	4	1	**174-2388**	1	TUBE AS	
	5	1	**174-2389**	1	TUBE AS	
I	6	1	**174-2393**	2	HOSE AS	
	7	1	**174-3097**	1	TUBE AS	
	8	1	*183-4085*	1	ELBOW AS	
		1	**6V-8397**	2	SEAL-O-RING	
		1	**183-4084**	1	ELBOW	
I	9	1	**294-5504**	1	HOSE AS	
I	10	1	**294-5505**	1	HOSE AS	
	11	1	*148-8319*	2	CONNECTOR AS	
					(EACH INCLUDES)	
		1	**2M-9780**	1	SEAL-O-RING	
		1	**6V-8397**	1	SEAL-O-RING	
		1	**6V-8715**	1	CONNECTOR	
	12	1	**6V-8397**	6	SEAL-O-RING	
	13	1	**7S-3912**	2	CLIP (TAB)	
	14	1	**7S-3913**	2	CLIP (SLOT)	
	15	1	**8T-1893**	2	CLIP (SLOT)	
	16	1	**8T-1894**	2	CLIP (TAB)	
	17	1	**8T-4121**	6	WASHER-HARD (11X21X2.5-MM THK)	
M	18	1	**8T-4137**	4	BOLT (M10X1.5X20-MM)	
	19	1	**9R-2004**	1	BLOCK	

I-REFER TO HYDRAULIC INFORMATION SYSTEM
M-METRIC PART

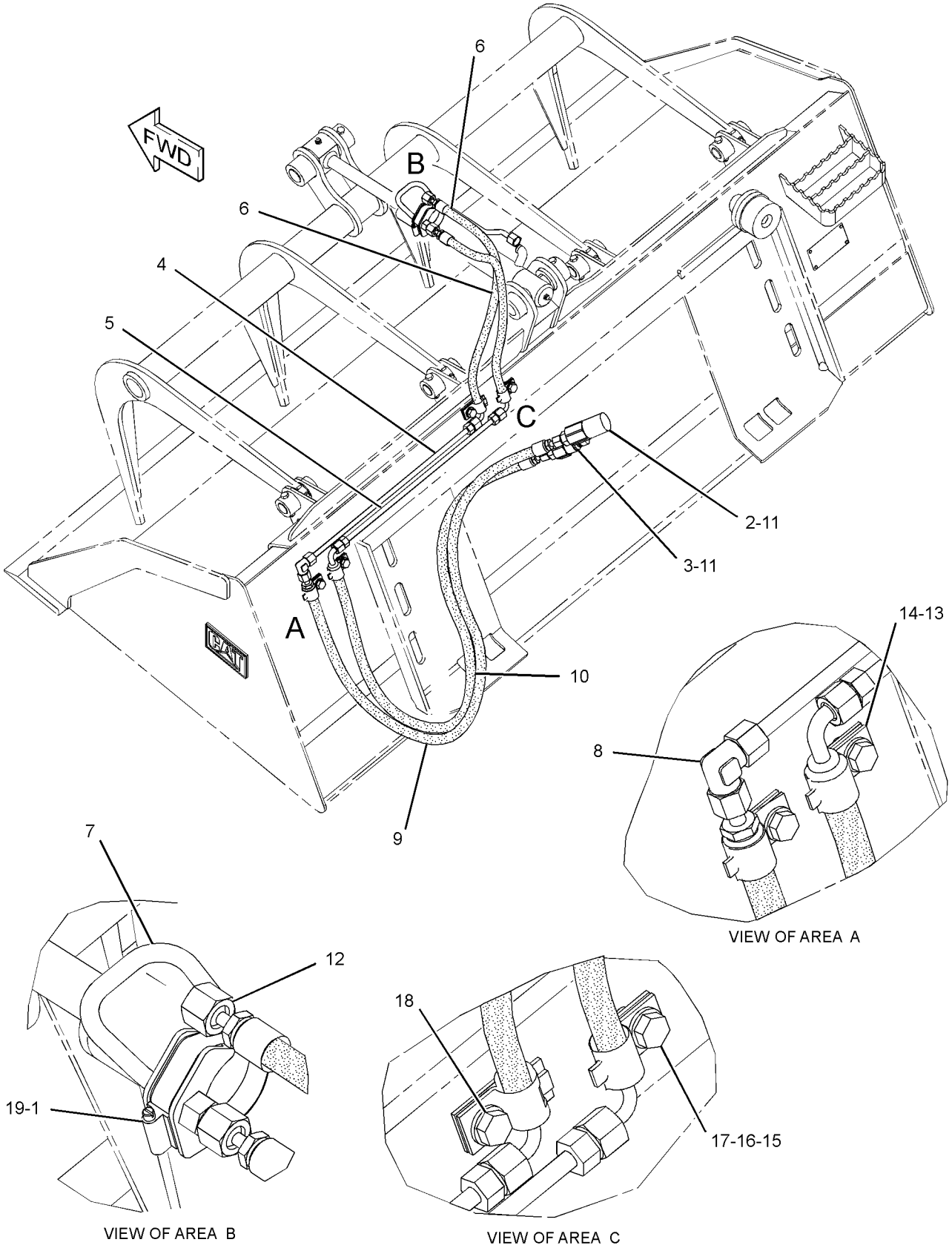

GRAPHIC #1 **<END>** g01279537

HYDRAULIC SYSTEM

285-6113 LINES GP-BUCKET

S/N: MJH10575-UP
PART OF 285-6116 GRAPPLE GP-UTILITY
AN ATTACHMENT
TYPE 2

SMCS-5057 **i02888539**

NOTE	PART NUMBER	QTY	PART NAME 1 2 3 4 5 6 (PRODUCT LEVEL)	SEE PAGE
M	**8T-4137**	4	BOLT (M10X1.5X20-MM)	
	7S-3912	2	CLIP (TAB)	
	7S-3913	2	CLIP (SLOT)	
	8T-1893	2	CLIP (SLOT)	
	8T-1894	2	CLIP (TAB)	
	148-8319	2	CONNECTOR AS	
			(EACH INCLUDES)	
	2M-9780	1	SEAL-O-RING	
	6V-8397	1	SEAL-O-RING	
	6V-8715	1	CONNECTOR	
	153-2994	1	COUPLING AS-QUICK DISCONNECT (FEMALE)	
	183-4085	1	ELBOW AS	
	6V-8397	2	SEAL-O-RING	
	183-4084	1	ELBOW	
	153-2995	1	FITTING AS (QUICK DISCONNECT, MALE)	
CI	**307-3808**	1	HOSE AS	
CI	**174-2393**	1	HOSE AS	
I	**294-5504**	1	HOSE AS	
I	**294-5505**	1	HOSE AS	
C	**6V-8397**	5	SEAL-O-RING	
	174-2388	1	TUBE AS	
	174-2389	1	TUBE AS	
	8T-4121	6	WASHER-HARD (11X21X2.5-MM THK)	

C-CHANGE FROM PREVIOUS TYPE
I-REFER TO HYDRAULIC INFORMATION SYSTEM
M-METRIC PART

<END>

HYDRAULIC SYSTEM

177-1986 LINES GP-CONNECTING

S/N: MJH10575-UP

PART OF 177-1989, 177-1990 BLADE AR

AN ATTACHMENT

SMCS-5057 **i01928980**

NOTE	REF NO	GRAPHIC REF	PART NUMBER	QTY	PART NAME 1 2 3 4 5 6 (PRODUCT LEVEL)	SEE PAGE
	1	1	**153-2994**	1	COUPLING AS-QUICK DISCONNECT (FEMALE)	
	2	1	**153-2995**	1	FITTING AS (QUICK DISCONNECT, MALE)	
	3	1	**163-1385**	2	ELBOW	
I	4	1	**177-1910**	2	HOSE AS	
I	5	1	**177-1911**	1	HOSE AS	
I	6	1	**177-1912**	1	HOSE AS	
	7	1	*148-8319*	2	CONNECTOR AS	
					(EACH INCLUDES)	
		1	**2M-9780**	1	SEAL-O-RING	
		1	**6V-8397**	1	SEAL-O-RING	
		1	**6V-8715**	1	CONNECTOR	
	8	1	**148-8378**	2	ELBOW AS	
					(EACH INCLUDES)	
		1	**3J-1907**	1	SEAL-O-RING	
		1	**6V-8397**	1	SEAL-O-RING	
		1	**6V-8724**	1	ELBOW	
	9	1	**6V-8397**	4	SEAL-O-RING	
	10	1	**8T-4121**	4	WASHER-HARD (11X21X2.5-MM THK)	
M	11	1	**8T-4133**	2	NUT (M10X1.5-THD)	
M	12	1	**8T-4185**	1	BOLT (M10X1.5X50-MM)	
M	13	1	**8T-4195**	1	BOLT (M10X1.5X30-MM)	
	14	1	**8T-8192**	2	CLIP (SLOT)	
	15	1	**8T-8193**	2	CLIP (TAB)	

I-REFER TO HYDRAULIC INFORMATION SYSTEM
M-METRIC PART

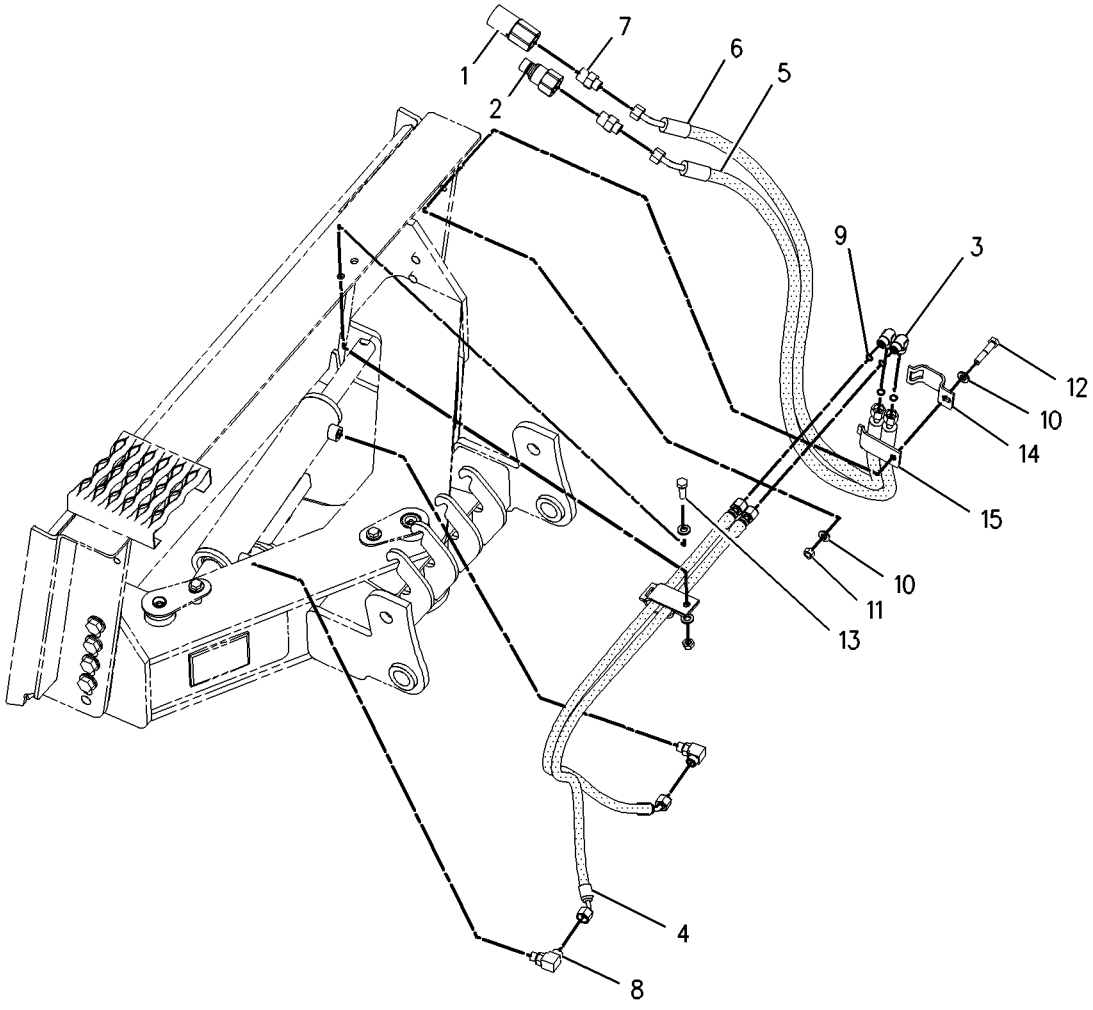

GRAPHIC #1 **<END>** g00978933

HYDRAULIC SYSTEM

231-5273 LINES GP-CONNECTING

S/N: MJH10575-UP
PART OF 231-5277 BLADE AR
AN ATTACHMENT

SMCS-5057 **i01964116**

NOTE	REF NO	GRAPHIC REF	PART NUMBER	QTY	PART NAME 1 2 3 4 5 6 (PRODUCT LEVEL)	SEE PAGE
	1	1	**153-2994**	1	COUPLING AS-QUICK DISCONNECT (FEMALE)	
	2	1	**153-2995**	1	FITTING AS (QUICK DISCONNECT, MALE)	
I	3	1	**231-0124**	2	HOSE AS	
I	4	1	**231-0125**	1	HOSE AS	
I	5	1	**231-0126**	2	HOSE AS	
I	6	1	**231-0127**	2	HOSE AS	
I	7	1	**238-1003**	1	HOSE AS	
	8	1	*148-8315*	2	CONNECTOR AS	
					(EACH INCLUDES)	
		1	**2M-9780**	1	SEAL-O-RING	
		1	**6V-8642**	1	CONNECTOR	
		1	**7J-9108**	1	SEAL-O-RING	
	9	1	*148-8336*	6	CONNECTOR AS	
					(EACH INCLUDES)	
		1	**3J-1907**	1	SEAL-O-RING	
		1	**6V-8397**	1	SEAL-O-RING	
		1	**6V-8636**	1	CONNECTOR	
	10	1	*148-8342*	2	CONNECTOR AS	
					(EACH INCLUDES)	
		1	**3K-0360**	1	SEAL-O-RING	
		1	**6V-8632**	1	CONNECTOR	
		1	**7J-9108**	1	SEAL-O-RING	
	11	1	**5P-1076**	2	WASHER-HARD (13.5X30X4-MM THK)	
	12	1	**7G-5984**	1	CLIP (TAB)	
	13	1	**7G-5985**	1	CLIP (SLOT)	
	14	1	**7G-5986**	1	GROMMET	
M	15	1	**8T-4139**	2	BOLT (M12X1.75X30-MM)	

I-REFER TO HYDRAULIC INFORMATION SYSTEM
M-METRIC PART

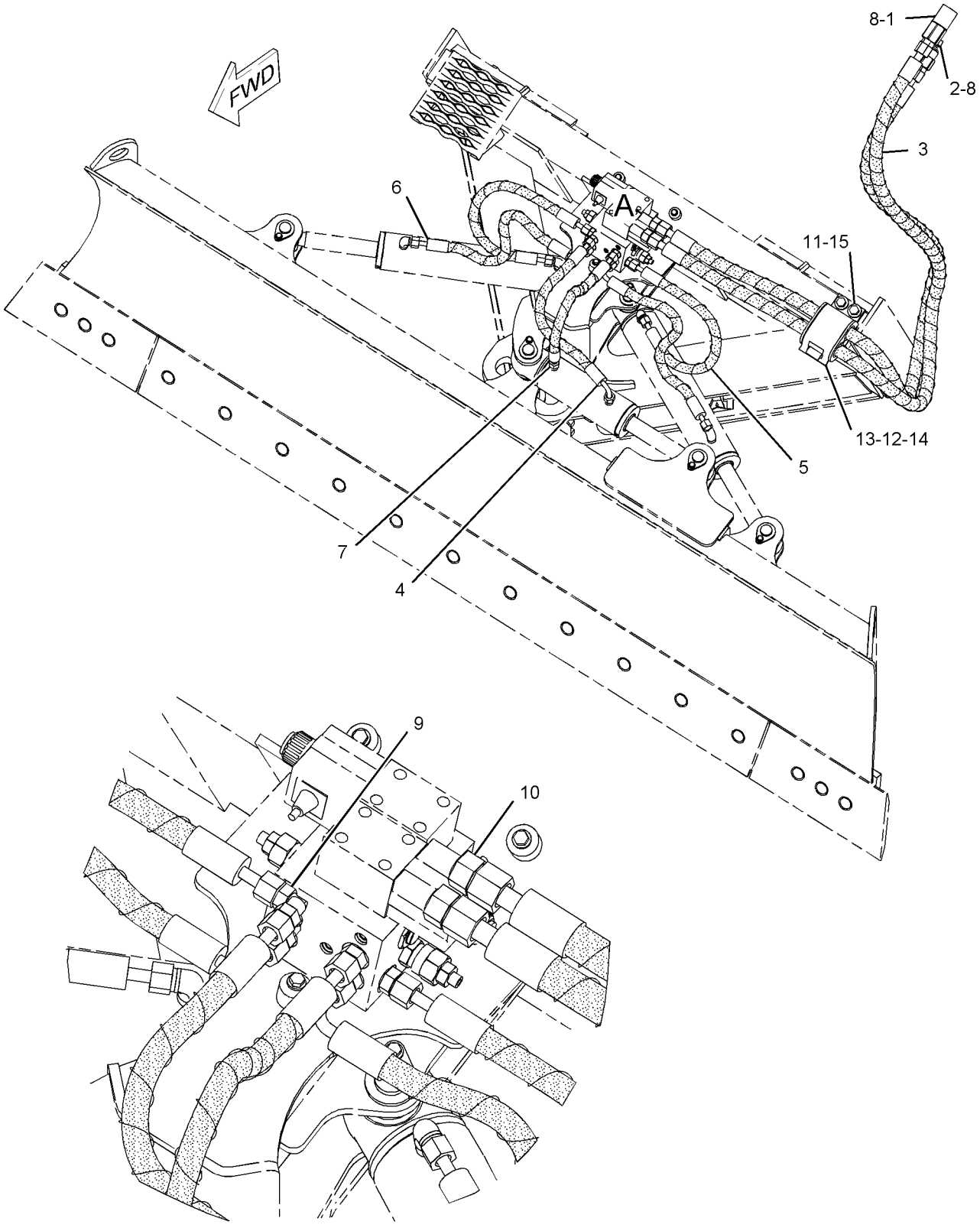

VIEW OF AREA A

GRAPHIC #1 **<END>** g01041993

161-0187 LINES GP-GRAPPLE

S/N: MJH10575-UP
INDUSTRIAL
PART OF 157-7223, 157-7224 BUCKET AR-GRAPPLE
AN ATTACHMENT

SMCS-5057, 5555 **i01928983**

NOTE	REF NO	GRAPHIC REF	PART NUMBER	QTY	PART NAME 1 2 3 4 5 6 (PRODUCT LEVEL)	SEE PAGE
	1	1	**3E-7404**	2	CLAMP-HOSE	
	2	1	**153-2994**	1	COUPLING AS-QUICK DISCONNECT (FEMALE)	
	3	1	**153-2995**	1	FITTING AS (QUICK DISCONNECT, MALE)	
	4	1	**161-0185**	1	TUBE AS	
	5	1	**161-0186**	1	TUBE AS	
	6	1	**161-0188**	2	TUBE AS	
I	7	1	**161-0189**	2	HOSE AS	
I	8	1	**161-0190**	2	HOSE AS	
	9	1	**163-1385**	1	ELBOW	
I	10	1	**163-9320**	1	HOSE AS	
I	11	1	**166-9312**	1	HOSE AS	
	12	1	*148-8319*	2	CONNECTOR AS	
					(EACH INCLUDES)	
		1	**2M-9780**	1	SEAL-O-RING	
		1	**6V-8397**	1	SEAL-O-RING	
		1	**6V-8715**	1	CONNECTOR	
	13	1	**2V-3216**	6	CLIP	
	14	1	**6V-8397**	13	SEAL-O-RING	
	15	1	**7S-3916**	2	CLIP (TAB)	
	16	1	**7S-3919**	2	CLIP (SLOT)	
	17	1	**8T-4121**	2	WASHER-HARD (11X21X2.5-MM THK)	
M	18	1	**8T-4136**	2	BOLT (M10X1.5X25-MM)	
M	19	1	**8T-4171**	4	BOLT (M6X1X12-MM)	
	20	1	**9R-2004**	2	BLOCK	

I-REFER TO HYDRAULIC INFORMATION SYSTEM
M-METRIC PART

161-0187 **LINES GP-GRAPPLE** *(contd.)* **i01928983**

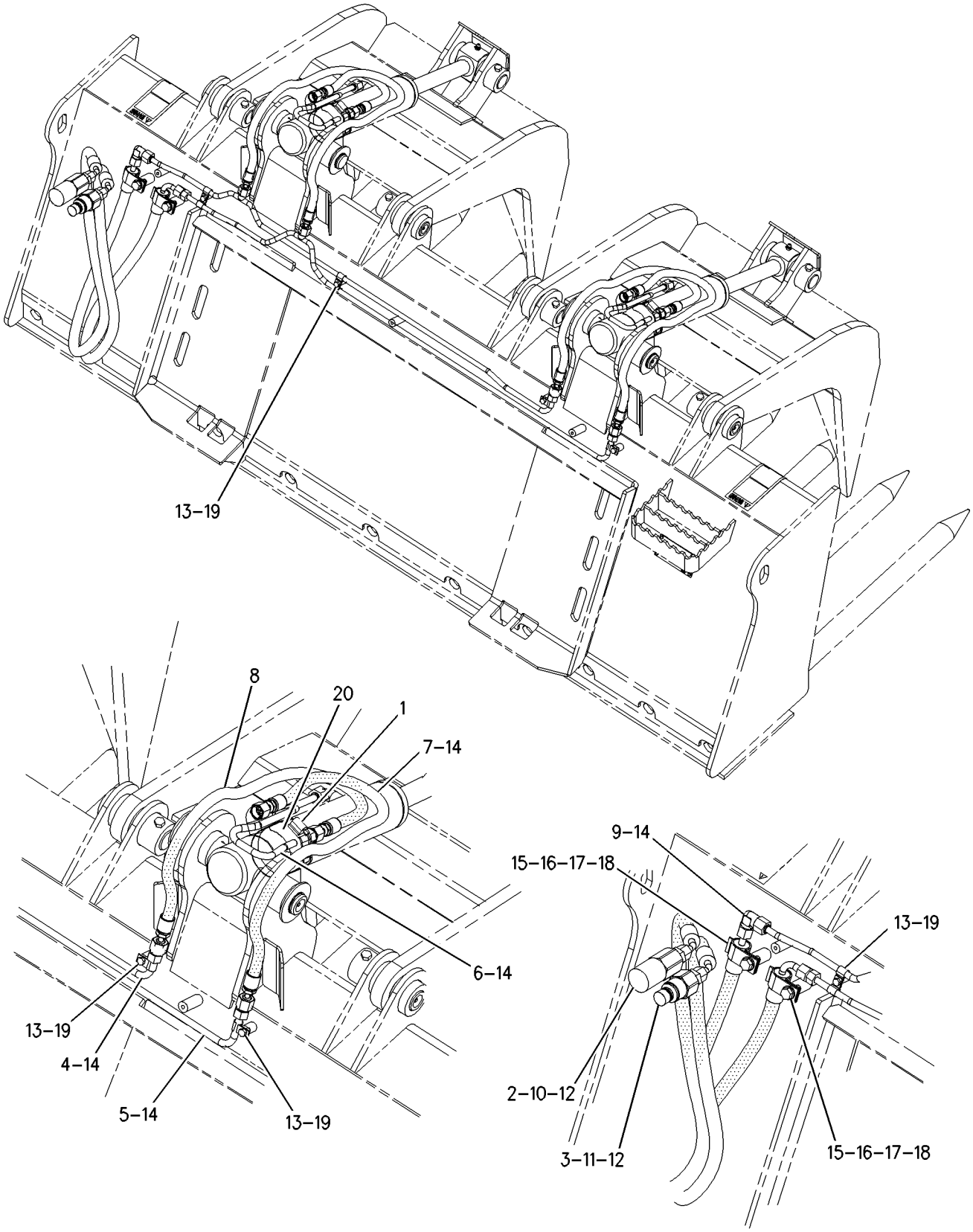

GRAPHIC #1 **<END>** g00733464

HYDRAULIC SYSTEM

286-9250 LINES GP-GRAPPLE

S/N: MJH10575-UP
2134-MM (84-IN)
PART OF 286-9301 BUCKET AR-GRAPPLE
AN ATTACHMENT

SMCS-5057, 5555 **i02742008**

NOTE	REF NO	GRAPHIC REF	PART NUMBER	QTY	PART NAME 1 2 3 4 5 6 (PRODUCT LEVEL)	SEE PAGE
	1	1	**2H-7829**	10	CLIP	
	2	1	**9S-4200**	2	CLIP	
	3	1	**153-2994**	1	COUPLING AS-QUICK DISCONNECT (FEMALE)	
I	4	1	**161-0189**	2	HOSE AS	
	5	1	**163-1385**	1	ELBOW	
I	6	1	**177-1911**	2	HOSE AS	
	7	1	**185-7887**	1	COUPLING AS-QUICK DISCONNECT (MALE)	
I	8	1	**286-9263**	2	HOSE AS	
	9	1	**286-9265**	1	TUBE AS	
	10	1	**286-9266**	1	TUBE AS	
	11	1	**286-9267**	1	TUBE AS	
	12	1	**286-9268**	1	TUBE AS	
	13	1	**286-9271**	1	GUARD	
	14	1	*148-8319*	2	CONNECTOR AS	
					(EACH INCLUDES)	
		1	**2M-9780**	1	SEAL-O-RING	
		1	**6V-8397**	1	SEAL-O-RING	
		1	**6V-8715**	1	CONNECTOR	
	15	1	**5P-4116**	6	WASHER-HARD (8.8X20.5X2-MM THK)	
	16	1	**6V-8397**	13	SEAL-O-RING	
	17	1	**7S-3916**	2	CLIP (TAB)	
	18	1	**7S-3919**	2	CLIP (SLOT)	
	19	1	**7X-7729**	5	WASHER (11X25X3-MM THK)	
M	20	1	**8T-4195**	5	BOLT (M10X1.5X30-MM)	
M	21	1	**8T-4200**	6	BOLT (M8X1.25X16-MM)	

I-REFER TO HYDRAULIC INFORMATION SYSTEM
M-METRIC PART

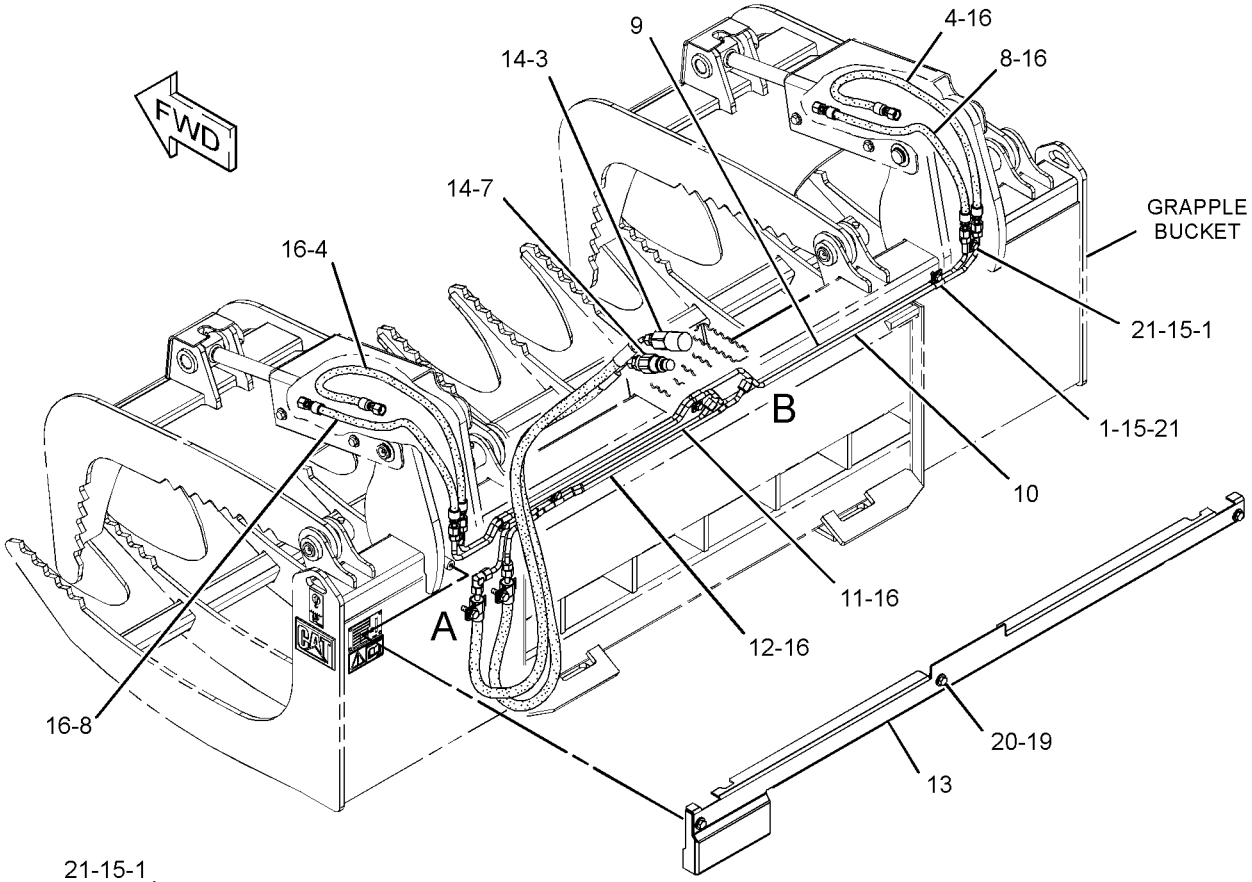

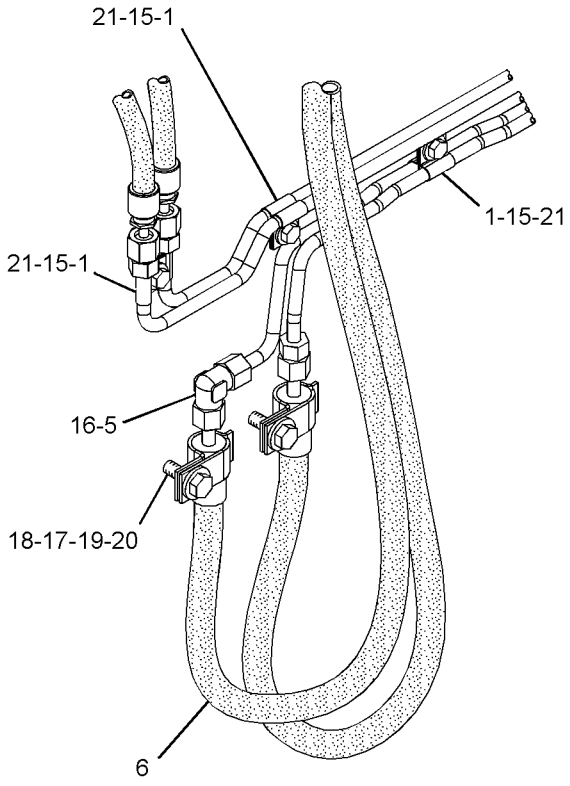

VIEW OF AREA A

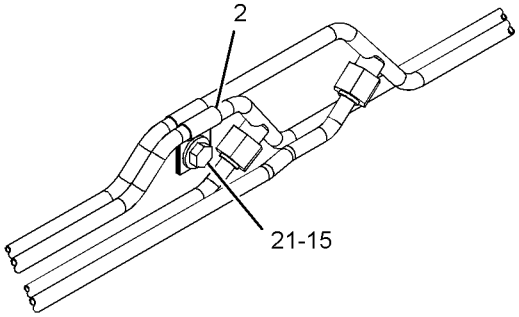

VIEW OF AREA B

GRAPHIC #1 **<END>** g01373025

HYDRAULIC SYSTEM

286-9279 LINES GP-GRAPPLE

S/N: MJH10575-UP
1829-MM (72-IN)
PART OF 286-9300 BUCKET AR-GRAPPLE
AN ATTACHMENT

SMCS-5057, 5555 **i02723728**

NOTE	REF NO	GRAPHIC REF	PART NUMBER	QTY	PART NAME 1 2 3 4 5 6 (PRODUCT LEVEL)	SEE PAGE
	1	1	**2H-7829**	10	CLIP	
	2	1	**9S-4200**	2	CLIP	
	3	1	**153-2994**	1	COUPLING AS-QUICK DISCONNECT (FEMALE)	
I	4	1	**161-0189**	2	HOSE AS	
	5	1	**163-1385**	1	ELBOW	
I	6	1	*177-1911*	2	HOSE AS	
	7	1	**185-7887**	1	COUPLING AS-QUICK DISCONNECT (MALE)	
	8	1	**286-9249**	1	GUARD	
I	9	1	*286-9263*	2	HOSE AS	
	10	1	**286-9267**	1	TUBE AS	
	11	1	**286-9268**	1	TUBE AS	
	12	1	**286-9280**	1	TUBE AS	
	13	1	**286-9281**	1	TUBE AS	
	14	1	*148-8319*	2	CONNECTOR AS	
					(EACH INCLUDES)	
		1	**2M-9780**	1	SEAL-O-RING	
		1	**6V-8397**	1	SEAL-O-RING	
		1	**6V-8715**	1	CONNECTOR	
	15	1	**5P-4116**	6	WASHER-HARD (8.8X20.5X2-MM THK)	
	16	1	**6V-8397**	13	SEAL-O-RING	
	17	1	**7S-3916**	2	CLIP (TAB)	
	18	1	**7S-3919**	2	CLIP (SLOT)	
	19	1	**7X-7729**	5	WASHER (11X25X3-MM THK)	
M	20	1	**8T-4195**	5	BOLT (M10X1.5X30-MM)	
M	21	1	**8T-4200**	6	BOLT (M8X1.25X16-MM)	

I-REFER TO HYDRAULIC INFORMATION SYSTEM
M-METRIC PART

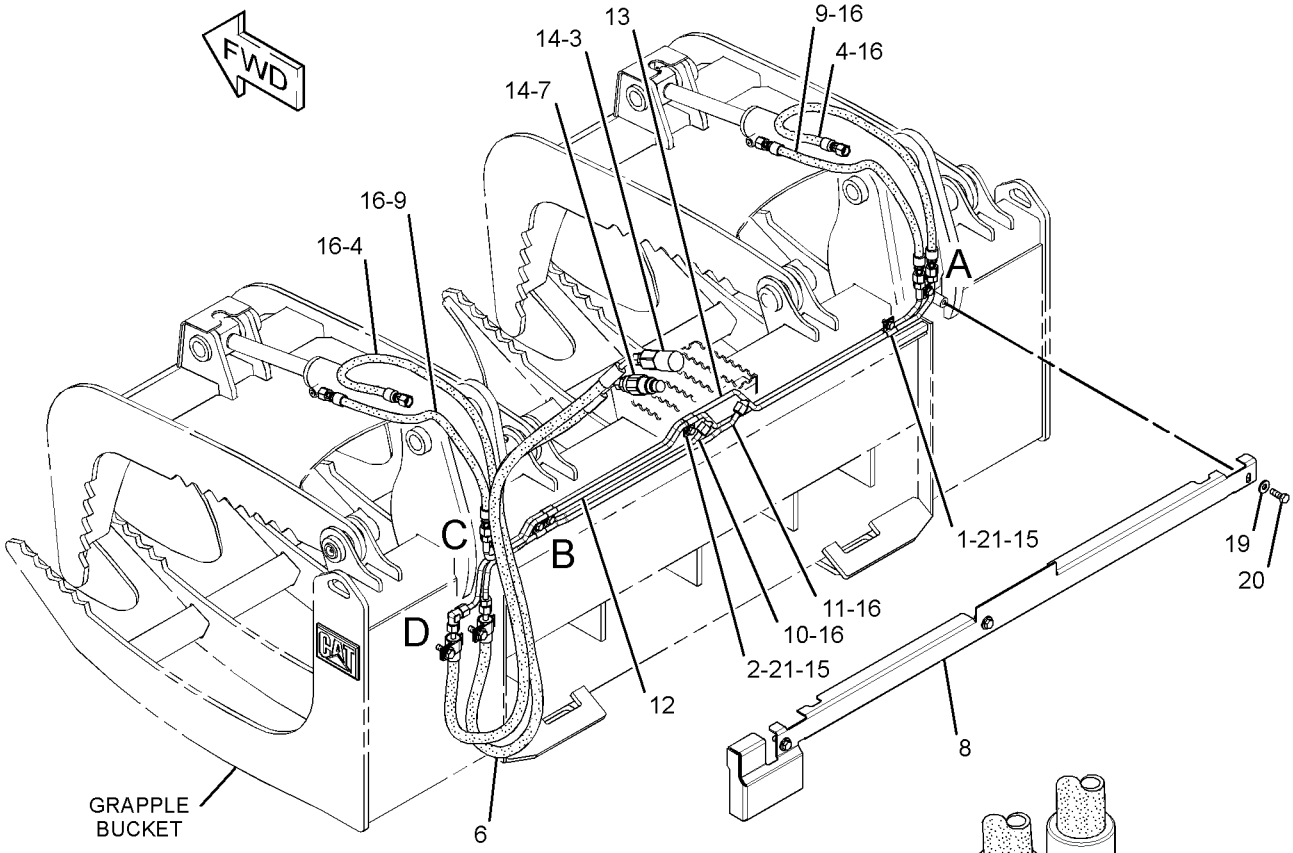

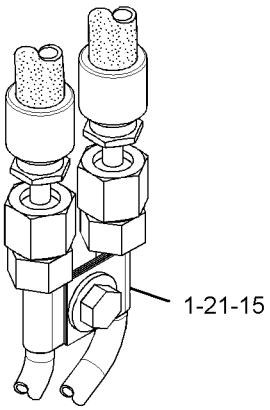

VIEW OF AREA A

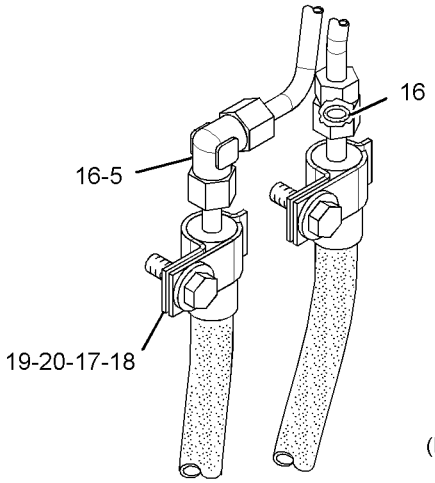

VIEW OF AREA D

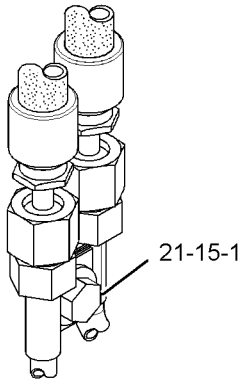

VIEW OF AREA C
(HOSES REMOVED FOR CLARITY)

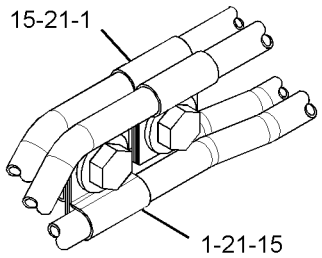

VIEW OF AREA B

GRAPHIC #1 **<END>** g01373354

HYDRAULIC SYSTEM

218-6059 LINES GP-HYDRAULIC FAN

S/N: MJH10575-UP

PART OF 218-6272 HEATER AR-CAB, 218-6271 INSTALLATION GP

AN ATTACHMENT

SMCS-5057 **i02820492**

NOTE	REF NO	GRAPHIC REF	PART NUMBER	QTY	PART NAME 1 2 3 4 5 6 (PRODUCT LEVEL)	SEE PAGE
C	1	1	**7K-1181**	3	STRAP-CABLE	
C	2	1	**178-3620**	1	STRAP-DUAL CLAMP	
I	3	1	**218-6063**	1	HOSE AS	
	4	1	*229-5466*	1	FITTING AS	
		1	**229-5465**	1	FITTING	
		1	**3J-7354**	1	SEAL-O-RING	
CI	5	1	**311-5909**	1	HOSE AS	
	6	1	*148-8315*	1	CONNECTOR AS	
		1	**6V-8642**	1	CONNECTOR	
		1	**2M-9780**	1	SEAL-O-RING	
		1	**7J-9108**	1	SEAL-O-RING	
	7	1	*148-8316*	1	CONNECTOR AS	
		1	**6V-8647**	1	CONNECTOR	
		1	**3J-7354**	1	SEAL-O-RING	
		1	**4J-5477**	1	SEAL-O-RING	
	8	1	*148-8369*	1	ELBOW AS	
		1	**6V-8628**	1	ELBOW	
		1	**3J-7354**	1	SEAL-O-RING	
		1	**4J-5477**	1	SEAL-O-RING	
	9	1	*153-6256*	1	ELBOW AS	
		1	**8C-7563**	1	ELBOW	
		1	**7J-9108**	1	SEAL-O-RING	
C	10	1	**6V-1228**	1	CLIP	
	11	1	**6V-9829**	1	CAP AS	
	12	1	**8C-3451**	1	CAP-DUST	

C-CHANGE FROM PREVIOUS TYPE
I-REFER TO HYDRAULIC INFORMATION SYSTEM

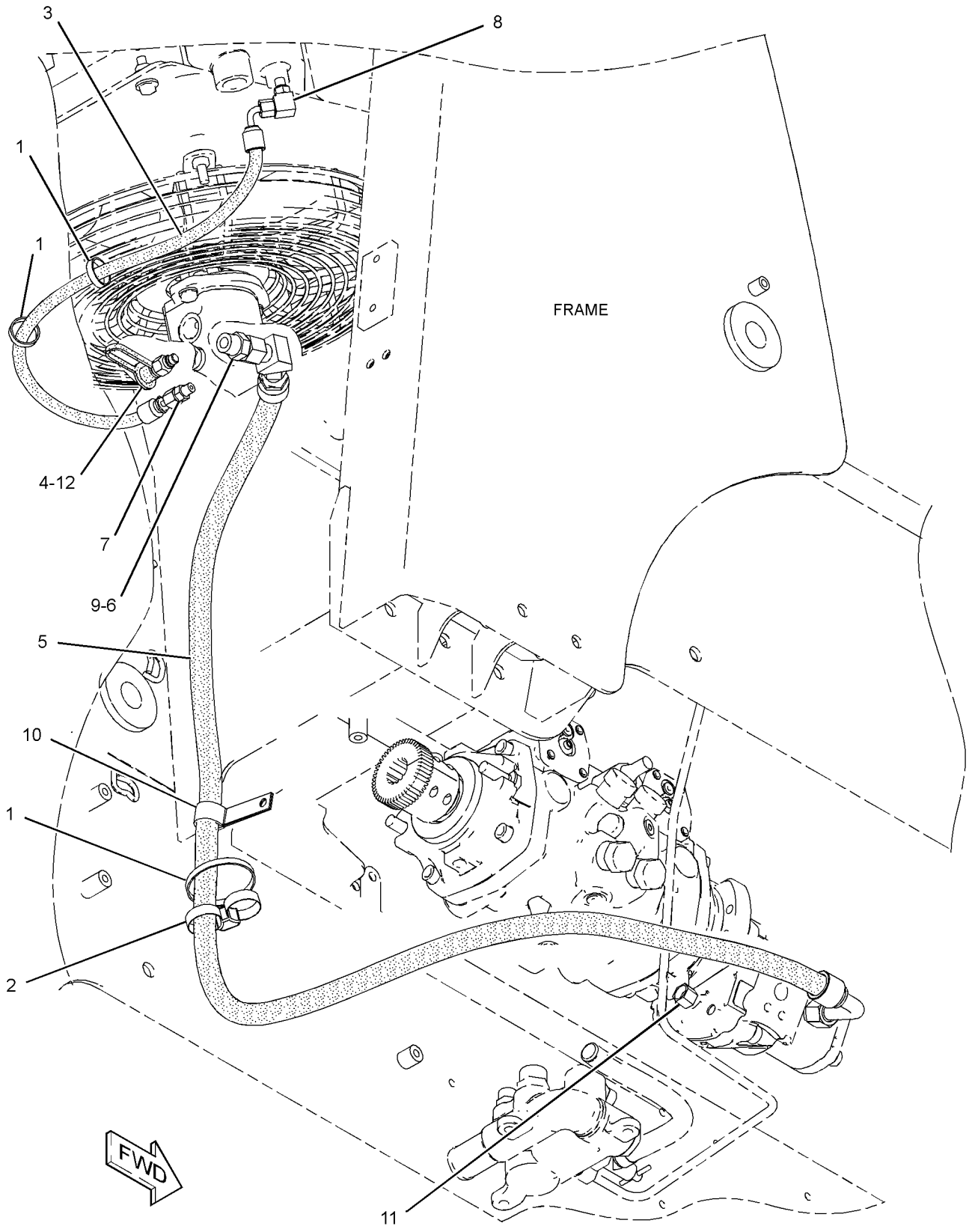

GRAPHIC #1 **<END>** g01408663

HYDRAULIC SYSTEM

218-6693 LINES GP-HYDRAULIC FAN

S/N: MJH10575-UP

PART OF 218-6273 AIR CONDITIONER AR

AN ATTACHMENT

SMCS-5057 **i02820507**

NOTE	REF NO	GRAPHIC REF	PART NUMBER	QTY	PART NAME 1 2 3 4 5 6 (PRODUCT LEVEL)	SEE PAGE
C	1	1	**7K-1181**	4	STRAP-CABLE	
C	2	1	**178-3620**	1	STRAP-DUAL CLAMP	
I	3	1	**218-6063**	1	HOSE AS	
I	4	1	**218-6107**	1	HOSE AS	
I	5	1	**218-6108**	1	HOSE AS	
	6	1	*229-5466*	1	FITTING AS	
		1	**229-5465**	2	FITTING	
		1	**3J-7354**	2	SEAL-O-RING	
CI	7	1	**311-5906**	1	HOSE AS	
	8	1	*148-8315*	3	CONNECTOR AS	
					(EACH INCLUDES)	
		1	**6V-8642**	1	CONNECTOR	
		1	**2M-9780**	1	SEAL-O-RING	
		1	**7J-9108**	1	SEAL-O-RING	
	9	1	*148-8316*	1	CONNECTOR AS	
		1	**6V-8647**	1	CONNECTOR	
		1	**3J-7354**	1	SEAL-O-RING	
		1	**4J-5477**	1	SEAL-O-RING	
	10	1	*148-8326*	1	CONNECTOR AS	
		1	**6V-9872**	1	CONNECTOR	
		1	**3J-7354**	1	SEAL-O-RING	
		1	**6V-8397**	1	SEAL-O-RING	
	11	1	*148-8369*	1	ELBOW AS	
		1	**6V-8628**	1	ELBOW	
		1	**3J-7354**	1	SEAL-O-RING	
		1	**4J-5477**	1	SEAL-O-RING	
	12	1	*153-6256*	1	ELBOW AS	
		1	**8C-7563**	1	ELBOW	
		1	**7J-9108**	1	SEAL-O-RING	
C	13	1	**6V-1228**	1	CLIP	
	14	1	**8C-3451**	1	CAP-DUST	

C-CHANGE FROM PREVIOUS TYPE
I-REFER TO HYDRAULIC INFORMATION SYSTEM

218-6693 **LINES GP-HYDRAULIC FAN** *(contd.)* **i02820507**

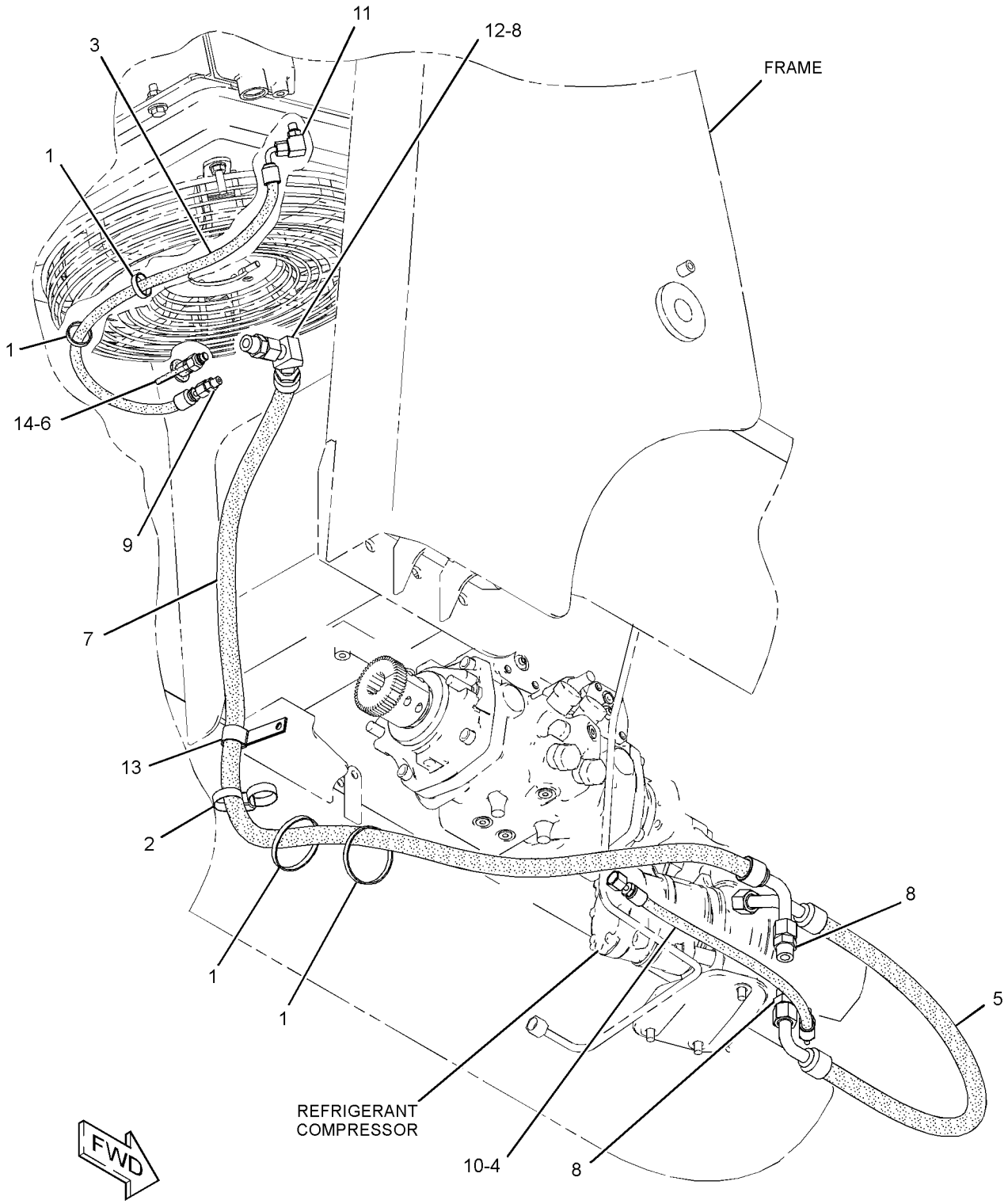

GRAPHIC #1 **<END>** g01409077

218-6143 LINES GP-HYDRAULIC OIL COOLER

S/N: MJH10575-UP

PART OF 278-1227 HYDRAULIC AR

SMCS-5057 **i02820460**

NOTE	REF NO	GRAPHIC REF	PART NUMBER	QTY	PART NAME 1 2 3 4 5 6 (PRODUCT LEVEL)	SEE PAGE
C	1	1	**7K-1181**	3	STRAP-CABLE	
	2	1	*106-8715*	2	ELBOW AS	
					(EACH INCLUDES)	
		1	**3D-2824**	1	SEAL-O-RING	
		1	**6V-9746**	1	SEAL-O-RING	
		1	**8C-8400**	1	ELBOW	
	3	1	**122-7052**	1	SPACER (10.5X20X28-MM THK)	
C	4	1	**178-3620**	2	STRAP-DUAL CLAMP	
CI	5	1	**311-3219**	1	HOSE AS	
CI	6	1	**311-5899**	1	HOSE AS	
	7	1	**234-9525**	1	STUD (M10X1.5-THD)	
C	8	1	**4P-8134**	1	CLIP	
	9	1	**5D-0718**	2	CLIP	
	10	1	**6V-1889**	3	CLIP	
	11	1	**7X-7729**	3	WASHER (11X25X3-MM THK)	
C	12	1	**8T-4121**	1	WASHER-HARD (11X21X2.5-MM THK)	
CM	13	1	**8T-4133**	2	NUT (M10X1.5-THD)	
M	14	1	**8T-4136**	1	BOLT (M10X1.5X25-MM)	
M	15	1	**8T-4196**	1	BOLT (M10X1.5X35-MM)	

C-CHANGE FROM PREVIOUS TYPE
I-REFER TO HYDRAULIC INFORMATION SYSTEM
M-METRIC PART

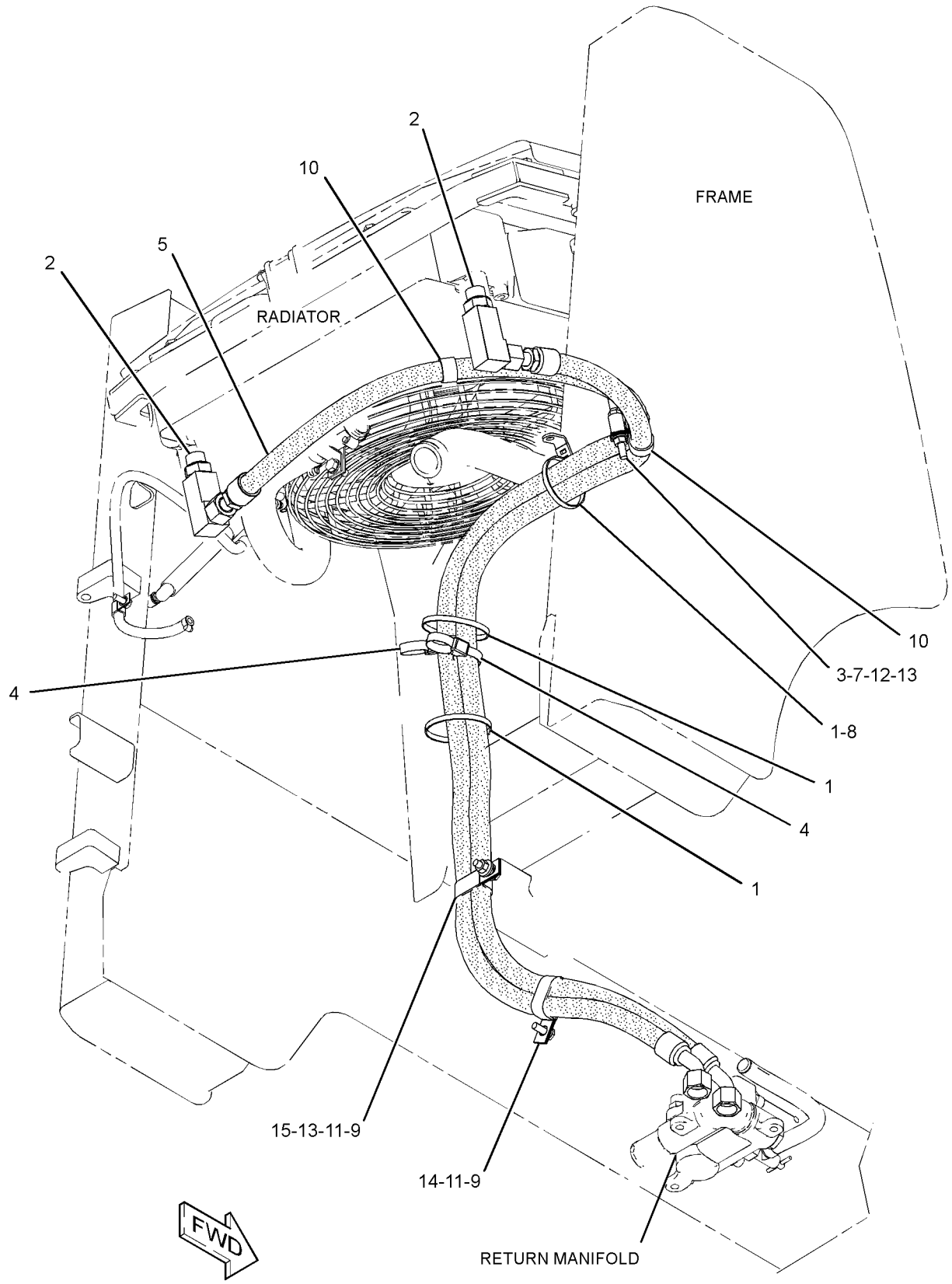

GRAPHIC #1 **<END>** g01408979

HYDRAULIC SYSTEM

218-5851 LINES GP-LIFT CYLINDER

S/N: MJH10575-UP
PART OF 218-6181 HYDRAULIC AR
FOR USE WITH WORK TOOL POSITIONER
AN ATTACHMENT

SMCS-5057, 5102 **i02644373**

NOTE	REF NO	GRAPHIC REF	PART NUMBER	QTY	PART NAME 1 2 3 4 5 6 (PRODUCT LEVEL)	SEE PAGE
	1	1	**3E-7404**	2	CLAMP-HOSE	
	2	1	**142-8997**	2	BLOCK	
	3	1	**187-1273**	2	TUBE AS	
	4	1	**187-3231**	1	TUBE AS	
	5	1	**187-3232**	1	TUBE AS	
	6	1	**218-5764**	1	PLATE	
	7	1	**285-9286**	1	BLOCK	
C	8	1	**289-3769**	1	TUBE AS	
C	9	1	**290-3293**	1	TUBE AS	
C	10	1	**290-3294**	1	TUBE AS	
C	11	1	**290-3296**	1	TUBE AS	
C	12	1	**290-3297**	1	TUBE AS	
C	13	1	**290-3384**	1	TUBE AS	
CI	14	1	**290-3392**	4	HOSE AS	
	15	1	*148-8315*	2	CONNECTOR AS	
					(EACH INCLUDES)	
		1	**2M-9780**	1	SEAL-O-RING	
		1	**6V-8642**	1	CONNECTOR	
		1	**7J-9108**	1	SEAL-O-RING	
	16	1	*148-8341*	2	CONNECTOR AS	
					(EACH INCLUDES)	
		1	**3D-2824**	1	SEAL-O-RING	
		1	**6V-8713**	1	CONNECTOR	
		1	**7J-9108**	1	SEAL-O-RING	
C	17	1	**6V-8398**	9	SEAL-O-RING	
C	18	1	**7J-9108**	7	SEAL-O-RING	
	19	1	**8T-4121**	2	WASHER-HARD (11X21X2.5-MM THK)	
M	20	1	**8T-4136**	2	BOLT (M10X1.5X25-MM)	

C-CHANGE FROM PREVIOUS TYPE
I-REFER TO HYDRAULIC INFORMATION SYSTEM
M-METRIC PART

218-5851 **LINES GP-LIFT CYLINDER** *(contd.)* **i02644373**

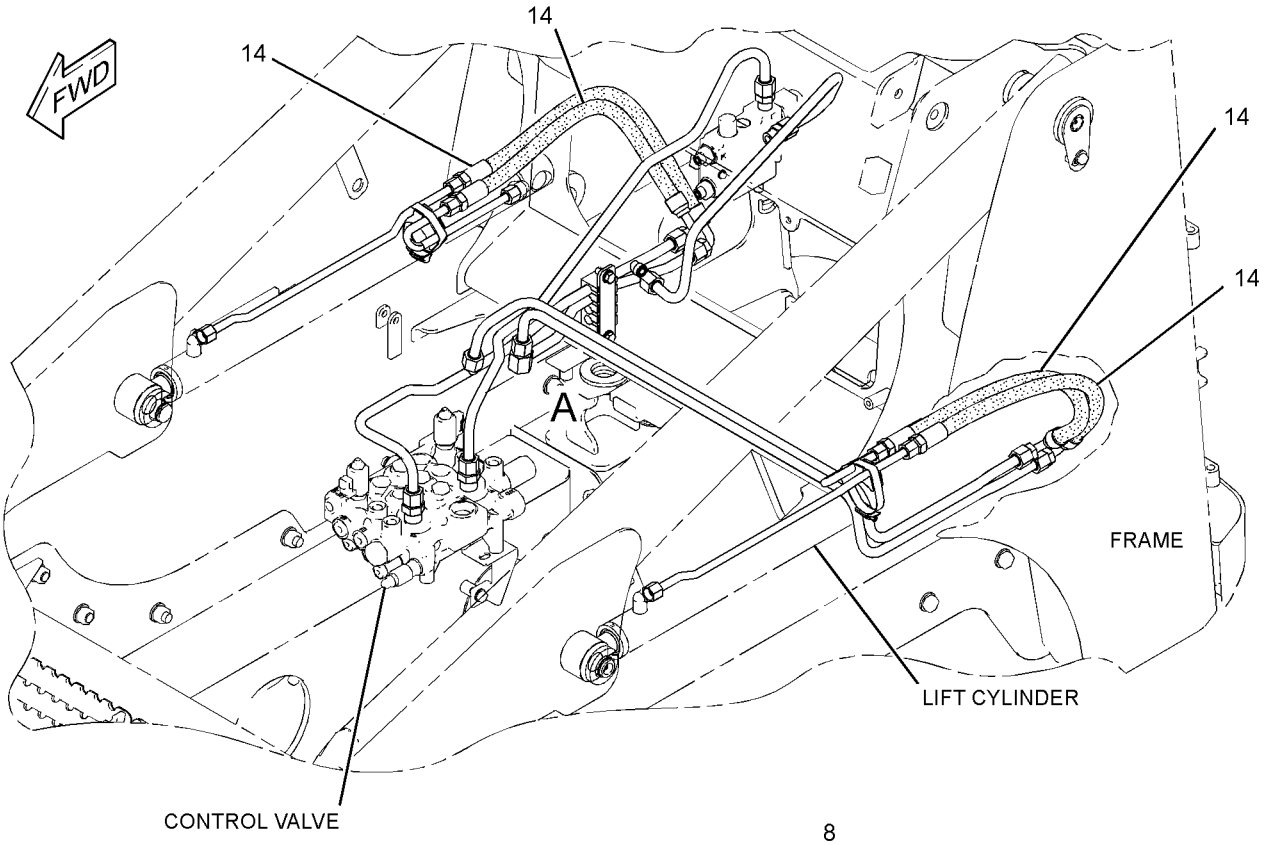

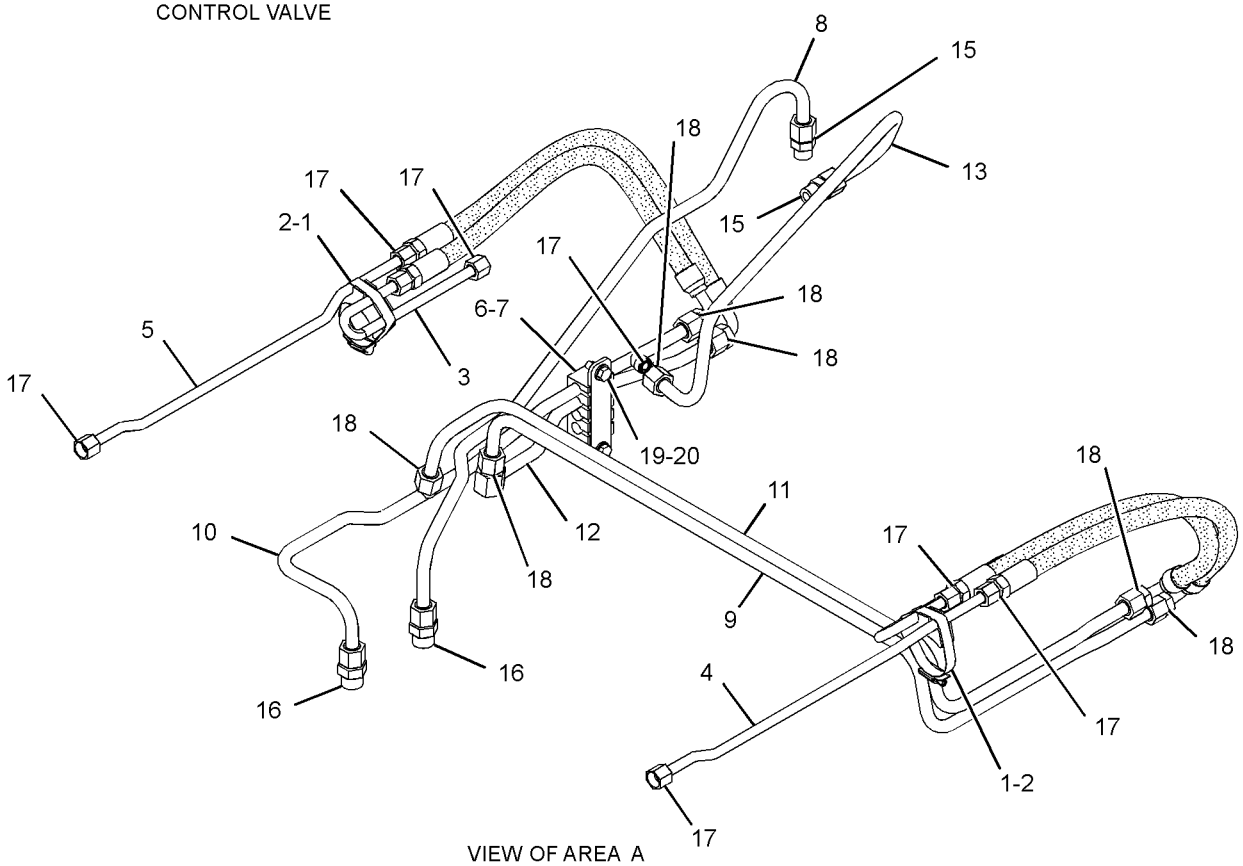

VIEW OF AREA A

GRAPHIC #1 **<END>** g01328592

218-6207 LINES GP-LIFT CYLINDER

S/N: MJH10575-UP
PART OF 218-6180 HYDRAULIC AR
AN ATTACHMENT

SMCS-5057, 5102 **i02717250**

NOTE	REF NO	GRAPHIC REF	PART NUMBER	QTY	PART NAME 1 2 3 4 5 6 (PRODUCT LEVEL)	SEE PAGE
	1	1	**3E-7404**	2	CLAMP-HOSE	
	2	1	**142-8997**	2	BLOCK	
	3	1	**187-1273**	2	TUBE AS	
	4	1	**187-3231**	1	TUBE AS	
	5	1	**187-3232**	1	TUBE AS	
	6	1	**285-9286**	1	BLOCK	
	7	1	**218-5764**	1	PLATE	
C	8	1	**290-3293**	1	TUBE AS	
C	9	1	**290-3294**	1	TUBE AS	
C	10	1	**290-3296**	1	TUBE AS	
CI	11	1	**290-3392**	4	HOSE AS	
C	12	1	**290-3301**	1	TUBE AS	
	13	1	*148-8341*	2	CONNECTOR AS	
					(EACH INCLUDES)	
		1	**3D-2824**	1	SEAL-O-RING	
		1	**6V-8713**	1	CONNECTOR	
		1	**7J-9108**	1	SEAL-O-RING	
C	14	1	**6V-8398**	9	SEAL-O-RING	
C	15	1	**7J-9108**	6	SEAL-O-RING	
	16	1	**8T-4121**	2	WASHER-HARD (11X21X2.5-MM THK)	
M	17	1	**8T-4136**	2	BOLT (M10X1.5X25-MM)	

C-CHANGE FROM PREVIOUS TYPE
I-REFER TO HYDRAULIC INFORMATION SYSTEM
M-METRIC PART

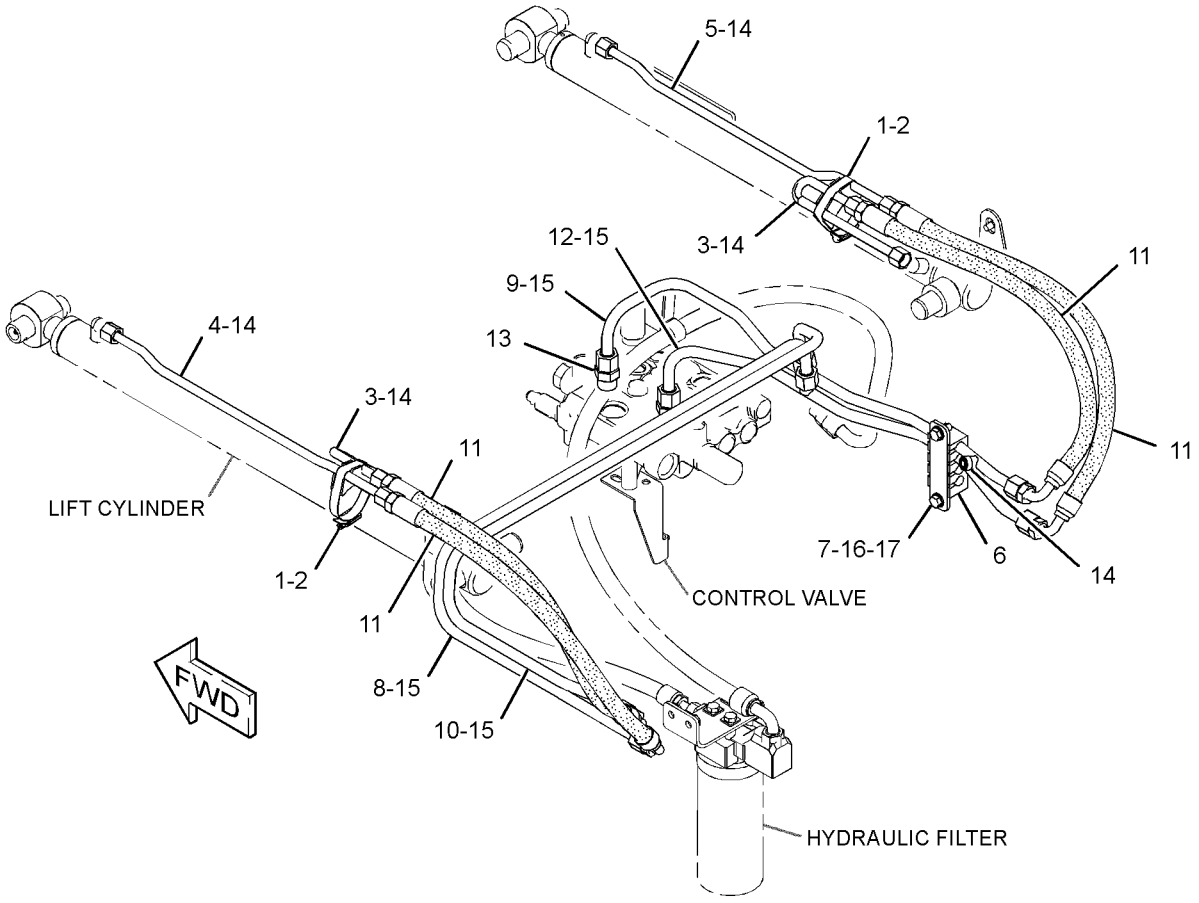

GRAPHIC #1 **<END>** g01364249

218-6211 LINES GP-LOWERING CONTROL–MANUAL

S/N: MJH10575-UP
PART OF 218-6321 COUPLER AR-QUICK
AN ATTACHMENT
TYPE 1

SMCS-5057, 5147, 5154 **i02710051**

NOTE	REF NO	GRAPHIC REF	PART NUMBER	QTY	PART NAME 1 2 3 4 5 6 (PRODUCT LEVEL)	SEE PAGE
Y	1	1	**112-1817**	1	VALVE GP-MANUAL (LOWERING CONTROL)	395
	2	1	**218-6213**	1	TUBE AS	
	3	1	**218-6937**	1	BRACKET	
	4	1	**269-9404**	1	BRACKET	
	5	1	**270-0216**	1	BRACKET	
	6	1	**276-0074**	1	CABLE AS	
		1	**8T-4742**	1	END-YOKE ROD	
		1	**8T-4744**	1	PIN AS-SPRING	
CI	7	1	**291-3755**	1	HOSE AS	
	8	1	**283-9264**	1	BRACKET	
	9	1	*148-8378*	1	ELBOW AS	
		1	**3J-1907**	1	SEAL-O-RING	
		1	**6V-8397**	1	SEAL-O-RING	
		1	**6V-8724**	1	ELBOW	
	10	1	*164-5624*	1	ELBOW AS	
		1	**3J-1907**	1	SEAL-O-RING	
		1	**6V-8398**	1	SEAL-O-RING	
		1	**9X-2085**	1	ELBOW	
	11	1	**1F-7567**	1	CLIP	
	12	1	**4B-4274**	1	WASHER (5.5X13X1.2-MM THK)	
	13	1	**6V-8397**	2	SEAL-O-RING	
M	14	1	**8T-0287**	1	BOLT (M5X0.8X10-MM)	
	15	1	**6V-9829**	1	CAP AS	
	16	1	**8M-4791**	2	WASHER-HARD (13.5X27X3-MM THK)	
M	17	1	**8T-0285**	4	SCREW-MACHINE (M4X0.7X12-MM)	
C	18	1	**8T-4121**	5	WASHER-HARD (11X21X2.5-MM THK)	
M	19	1	**8T-4133**	2	NUT (M10X1.5-THD)	
M	20	1	**8T-4189**	2	BOLT (M8X1.25X20-MM)	
M	21	1	**8T-4191**	1	BOLT (M10X1.5X16-MM)	
CM	22	1	**8T-4136**	2	BOLT (M10X1.5X25-MM)	
	23	1	**8T-4224**	2	WASHER-HARD (8.8X16X2-MM THK)	
	24	1	**9X-1481**	1	WASHER (13X25.4X1.6-MM THK)	

C-CHANGE FROM PREVIOUS TYPE
I-REFER TO HYDRAULIC INFORMATION SYSTEM
M-METRIC PART
Y-SEPARATE ILLUSTRATION

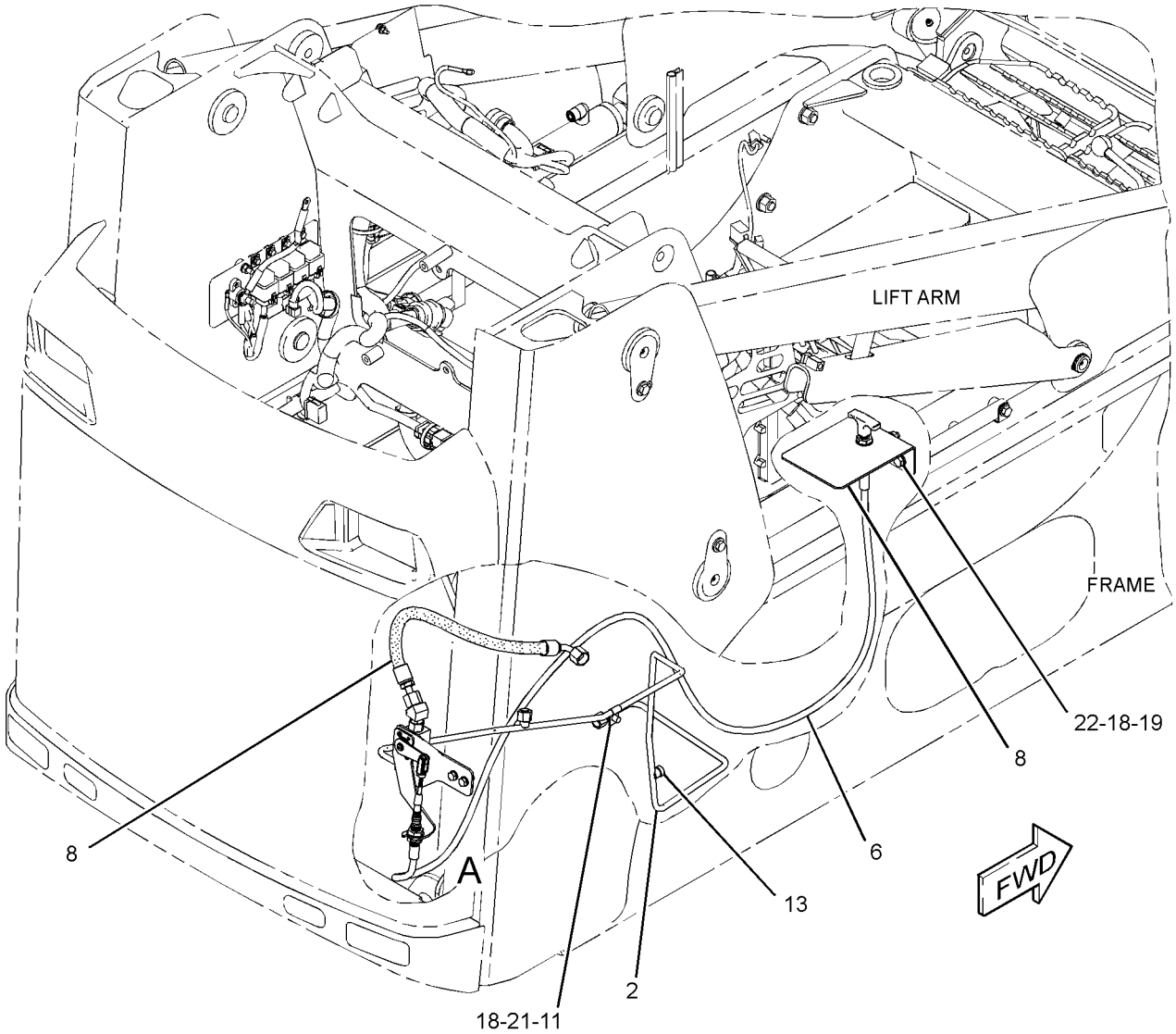

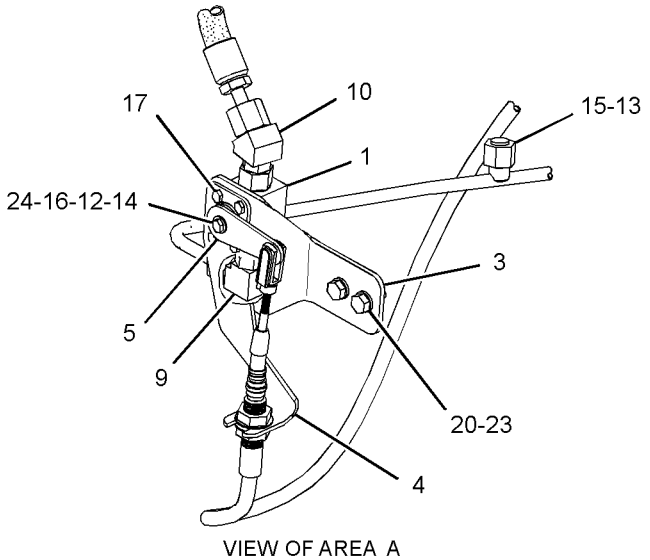

VIEW OF AREA A

GRAPHIC #1 **<END>** g01361969

218-6211 LINES GP-LOWERING CONTROL–MANUAL

S/N: MJH10575-UP
PART OF 218-6321 COUPLER AR-QUICK
AN ATTACHMENT
TYPE 2

SMCS-5057, 5147, 5154 **i02748067**

NOTE	REF NO	GRAPHIC REF	PART NUMBER	QTY	PART NAME 1 2 3 4 5 6 (PRODUCT LEVEL)	SEE PAGE
Y	1	1	**112-1817**	1	VALVE GP-MANUAL (LOWERING CONTROL)	395
	2	1	**218-6213**	1	TUBE AS	
	3	1	**218-6937**	1	BRACKET	
	4	1	**269-9404**	1	BRACKET	
	5	1	**270-0216**	1	BRACKET	
	6	1	**283-9264**	1	BRACKET	
I	7	1	**291-3755**	1	HOSE AS	
CY	8	1	*298-7198*	1	CABLE GP-CONTROL (MANUAL LOWERING)	518
	9	1	*148-8378*	1	ELBOW AS	
		1	**3J-1907**	1	SEAL-O-RING	
		1	**6V-8397**	1	SEAL-O-RING	
		1	**6V-8724**	1	ELBOW	
	10	1	*164-5624*	1	ELBOW AS	
		1	**3J-1907**	1	SEAL-O-RING	
		1	**6V-8398**	1	SEAL-O-RING	
		1	**9X-2085**	1	ELBOW	
	11	1	**1F-7567**	1	CLIP	
	12	1	**4B-4274**	1	WASHER (5.5X13X1.2-MM THK)	
	13	1	**6V-8397**	2	SEAL-O-RING	
	14	1	**6V-9829**	1	CAP AS	
	15	1	**8M-4791**	2	WASHER-HARD (13.5X27X3-MM THK)	
M	16	1	**8T-0285**	4	SCREW-MACHINE (M4X0.7X12-MM)	
M	17	1	**8T-0287**	1	BOLT (M5X0.8X10-MM)	
	18	1	**8T-4121**	5	WASHER-HARD (11X21X2.5-MM THK)	
M	19	1	**8T-4133**	2	NUT (M10X1.5-THD)	
M	20	1	**8T-4136**	2	BOLT (M10X1.5X25-MM)	
M	21	1	**8T-4189**	2	BOLT (M8X1.25X20-MM)	
M	22	1	**8T-4191**	1	BOLT (M10X1.5X16-MM)	
	23	1	**8T-4224**	2	WASHER-HARD (8.8X16X2-MM THK)	
	24	1	**9X-1481**	1	WASHER (13X25.4X1.6-MM THK)	

C-CHANGE FROM PREVIOUS TYPE
I-REFER TO HYDRAULIC INFORMATION SYSTEM
M-METRIC PART
Y-SEPARATE ILLUSTRATION

218-6211 **LINES GP-LOWERING CONTROL** *(contd.)* **i02748067**

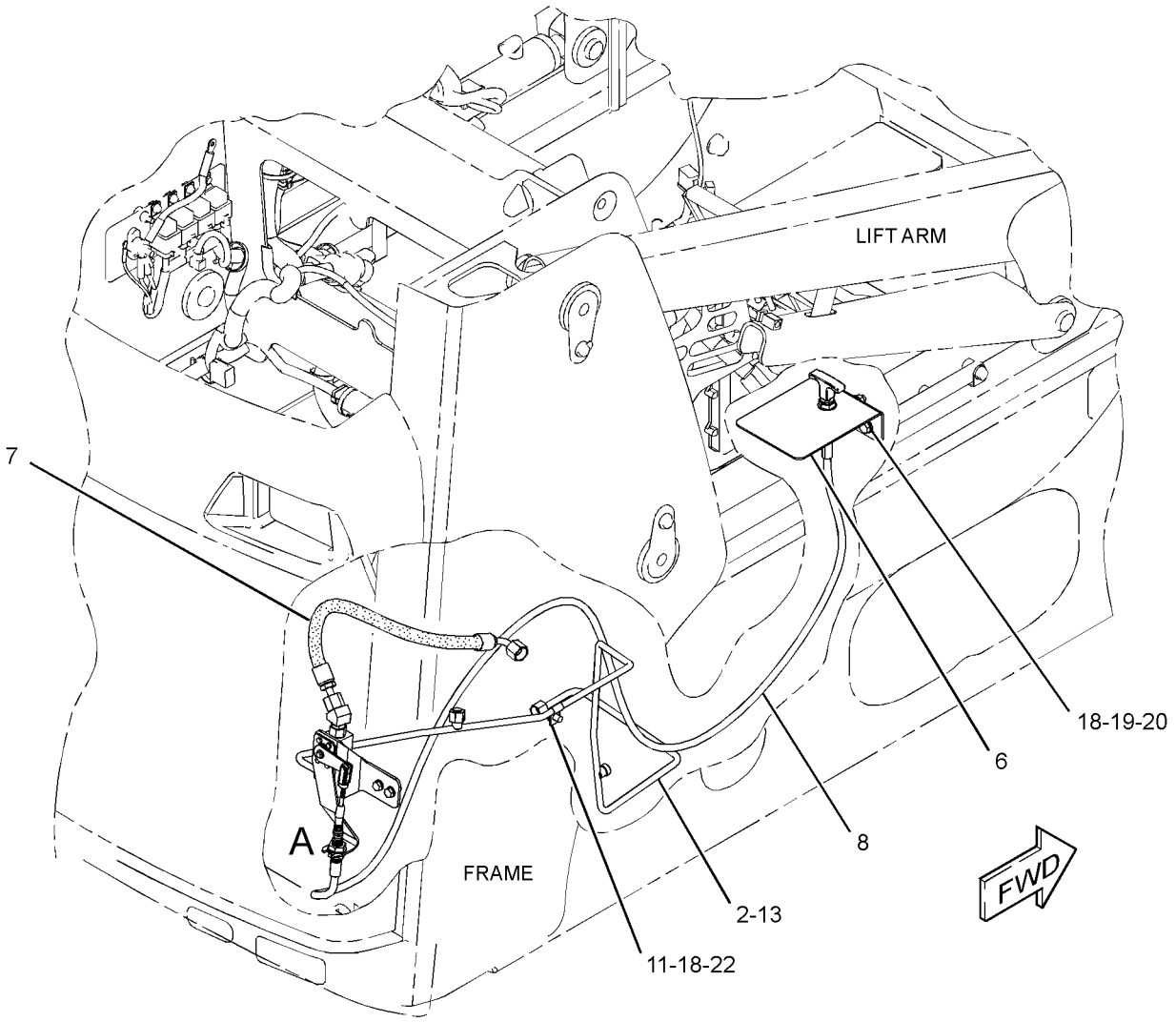

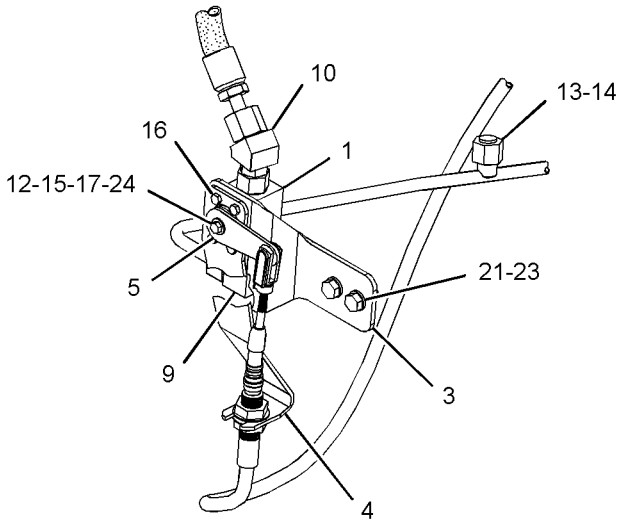

VIEW OF AREA A

GRAPHIC #1 **<END>** g01377511

218-5978 LINES GP-PILOT—DIRECTION, SPEED

S/N: MJH10575-UP

PART OF 278-1227 HYDRAULIC AR

SMCS-5057, 5059 **i02059897**

NOTE	REF NO	GRAPHIC REF	PART NUMBER	QTY	PART NAME 1 2 3 4 5 6 (PRODUCT LEVEL)	SEE PAGE
	1	1	**6V-0852**	1	CAP-DUST	
	2	1	**7K-1181**	2	STRAP-CABLE	
	3	1	*148-8423*	1	TEE AS	
		1	**3J-1907**	1	SEAL-O-RING	
		1	**4J-5477**	1	SEAL-O-RING	
		1	**8T-3311**	1	TEE	
	4	1	*164-5567*	1	COUPLER AS-QUICK	
		1	**3J-1907**	1	SEAL-O-RING	
		1	**6V-3965**	1	COUPLER-QUICK DISCONNECT	
	5	1	**193-8392**	2	HOSE AS	
	6	1	**218-5968**	1	BRACKET	
	7	1	**218-6644**	1	HOSE AS	
	8	1	**218-6864**	1	HOSE AS	
	9	1	*148-8316*	2	CONNECTOR AS	
					(EACH INCLUDES)	
		1	**3J-7354**	1	SEAL-O-RING	
		1	**4J-5477**	1	SEAL-O-RING	
		1	**6V-8647**	1	CONNECTOR	
	10	1	*148-8325*	5	CONNECTOR AS	
					(EACH INCLUDES)	
		1	**3J-1907**	1	SEAL-O-RING	
		1	**4J-5477**	1	SEAL-O-RING	
		1	**6V-8641**	1	CONNECTOR	
	11	1	*148-8369*	2	ELBOW AS	
					(EACH INCLUDES)	
		1	**3J-7354**	1	SEAL-O-RING	
		1	**4J-5477**	1	SEAL-O-RING	
		1	**6V-8628**	1	ELBOW	
	12	1	*150-4043*	1	CONNECTOR AS	
		1	**3J-1907**	1	SEAL-O-RING	
		1	**6V-8398**	1	SEAL-O-RING	
		1	**6V-9873**	1	CONNECTOR	
	13	1	**234-0786**	2	HOSE AS	

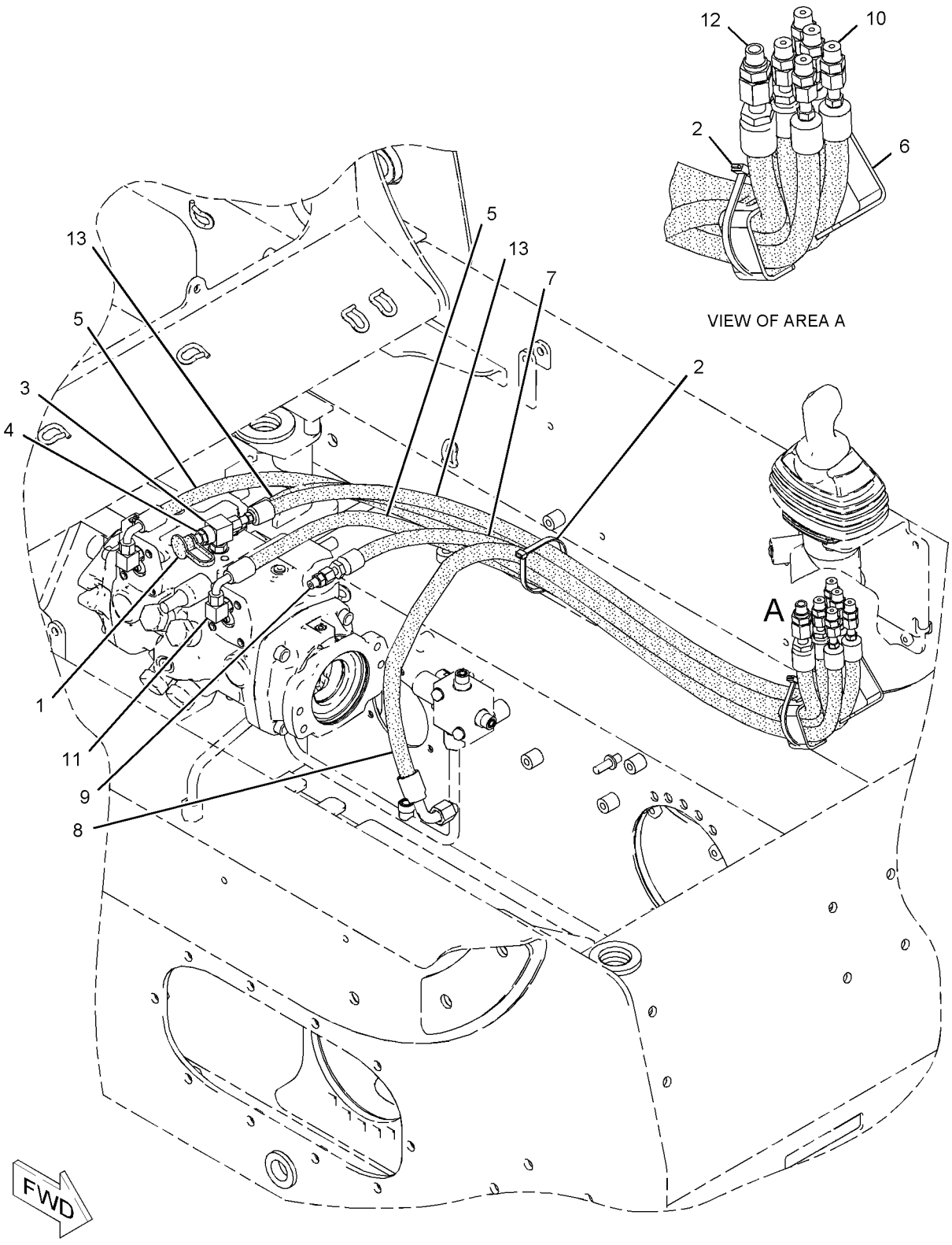

GRAPHIC #1 **<END>** g01086809

218-6099 LINES GP-PILOT—WORK TOOL

S/N: MJH10575-UP

PART OF 278-1227 HYDRAULIC AR

SMCS-5057, 5059 **i02890363**

NOTE	REF NO	GRAPHIC REF	PART NUMBER	QTY	PART NAME 1 2 3 4 5 6 (PRODUCT LEVEL)	SEE PAGE
Y	1	1	*179-7001*	1	ADAPTER GP-OIL LINE	265
	2	1	**195-6768**	1	SCREEN (HYDRAULIC)	
	3	1	**195-6769**	1	WASHER (6.99X12.7X5.46-MM THK)	
	4	1	**218-6109**	1	HOSE AS	
	5	1	**218-5571**	2	HOSE AS	
	6	1	**218-5572**	2	HOSE AS	
I	7	1	**193-8313**	1	HOSE AS	
	8	1	**234-0782**	1	HOSE AS	
	9	1	**123-4750**	1	VALVE-CHECK	
	10	1	*148-8325*	9	CONNECTOR AS	
					(EACH INCLUDES)	
		1	**3J-1907**	1	SEAL-O-RING	
		1	**4J-5477**	1	SEAL-O-RING	
		1	**6V-8641**	1	CONNECTOR	
	11	1	*148-8435*	1	TEE AS	
		1	**3J-1907**	1	SEAL-O-RING	
		1	**6V-8397**	2	SEAL-O-RING	
		1	**6V-8781**	1	TEE-FACE SEAL	
	12	1	*150-4027*	1	TEE AS	
		1	**3E-2310**	1	TEE	
		1	**3J-1907**	1	SEAL-O-RING	
		1	**6V-8397**	1	SEAL-O-RING	
	13	1	**6D-3479**	1	CLIP	
	14	1	**8T-4121**	1	WASHER-HARD (11X21X2.5-MM THK)	
M	15	1	**8T-4191**	1	BOLT (M10X1.5X16-MM)	

I-REFER TO HYDRAULIC INFORMATION SYSTEM
M-METRIC PART
Y-SEPARATE ILLUSTRATION

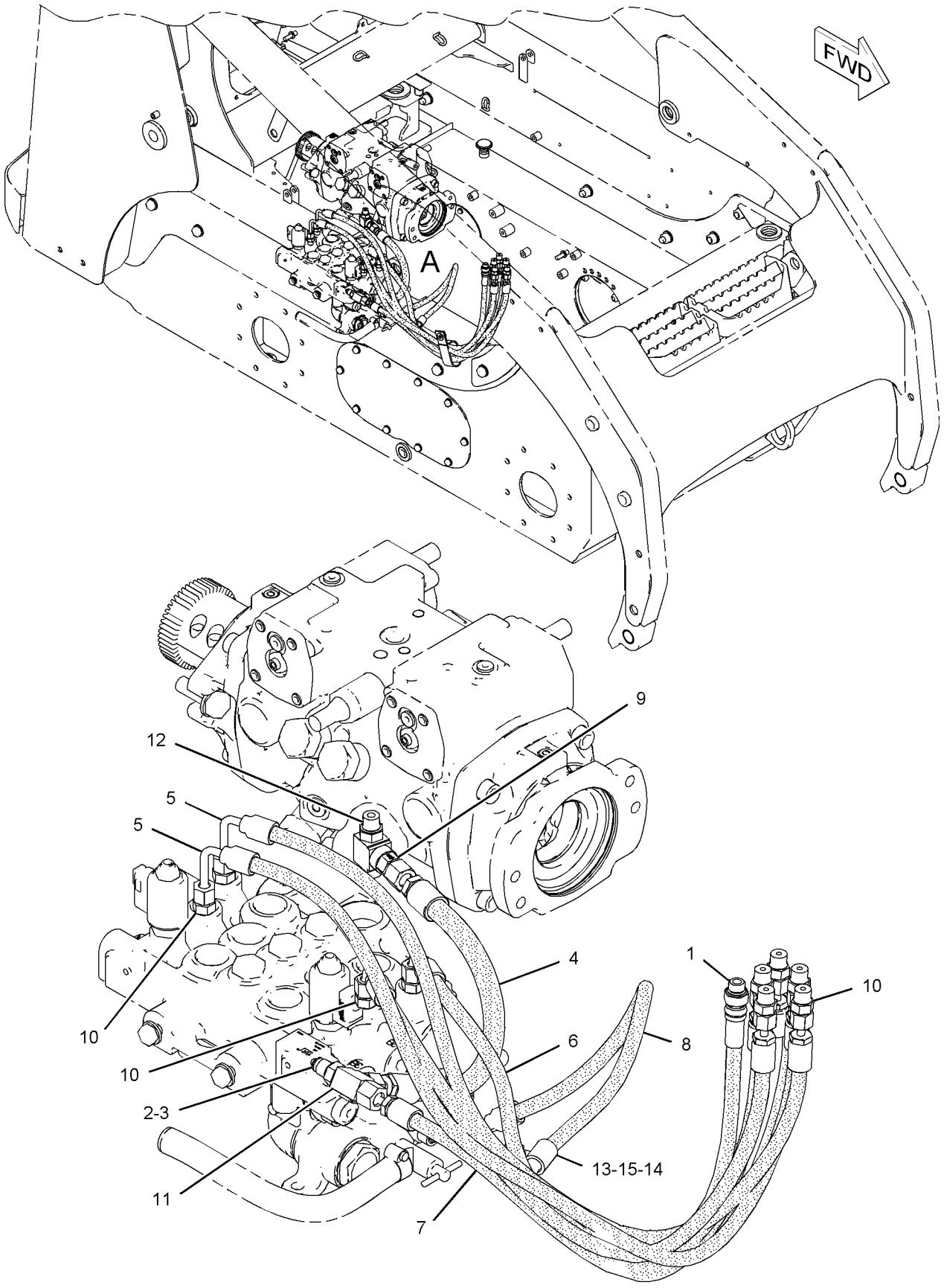

VIEW OF AREA A

<END>

GRAPHIC #1 g01033214

HYDRAULIC SYSTEM

218-6132 LINES GP-PUMP

S/N: MJH10575-UP
PART OF 218-6130, 261-6132 HYDRAULIC AR
AN ATTACHMENT

SMCS-5057 **i02447976**

NOTE	REF NO	GRAPHIC REF	PART NUMBER	QTY	PART NAME 1 2 3 4 5 6 (PRODUCT LEVEL)	SEE PAGE
	1	1	**2S-3440**	2	CLAMP-HOSE	
	2	1	**6V-0852**	1	CAP-DUST	
	3	1	**9U-6994**	1	FITTING GP	
		1	**7M-8485**	1	SEAL-O-RING	
Y	4	1	**9U-6995**	1	FITTING GP-HYDRAULIC	286
	5	1	**159-5740**	1	HOSE	
	6	1	*164-5567*	1	COUPLER AS-QUICK	
		1	**3J-1907**	1	SEAL-O-RING	
		1	**6V-3965**	1	COUPLER-QUICK DISCONNECT	
	7	1	**180-3007**	3	CLAMP-HOSE	
	8	1	**283-9478**	1	HOSE	
	9	1	**193-8308**	1	ADAPTER	
I	10	1	**193-8321**	1	HOSE AS	
	11	1	**218-6137**	1	TUBE	
	12	1	**218-6138**	1	HOSE	
	13	1	**218-6146**	1	HOSE	
	14	1	*148-8315*	1	CONNECTOR AS	
		1	**2M-9780**	1	SEAL-O-RING	
		1	**6V-8642**	1	CONNECTOR	
		1	**7J-9108**	1	SEAL-O-RING	
	15	1	*148-8360*	1	ELBOW AS	
		1	**6V-9182**	1	ELBOW	
		1	**6V-9746**	1	SEAL-O-RING	
		1	**7M-8485**	1	SEAL-O-RING	
	16	1	**1P-4578**	2	FLANGE-HALF	
	17	1	**4J-0522**	1	SEAL-O-RING	
	18	1	**4J-5267**	1	SEAL-O-RING	
M	19	1	**8T-4196**	8	BOLT (M10X1.5X35-MM)	
	20	1	**5P-2230**	3	CLAMP-HOSE	
	21	1	**8C-3205**	2	FLANGE-HALF	
	22	1	**8T-4121**	8	WASHER-HARD (11X21X2.5-MM THK)	

I-REFER TO HYDRAULIC INFORMATION SYSTEM
M-METRIC PART
Y-SEPARATE ILLUSTRATION

218-6132 **LINES GP-PUMP** ***(contd.)*** **i02447976**

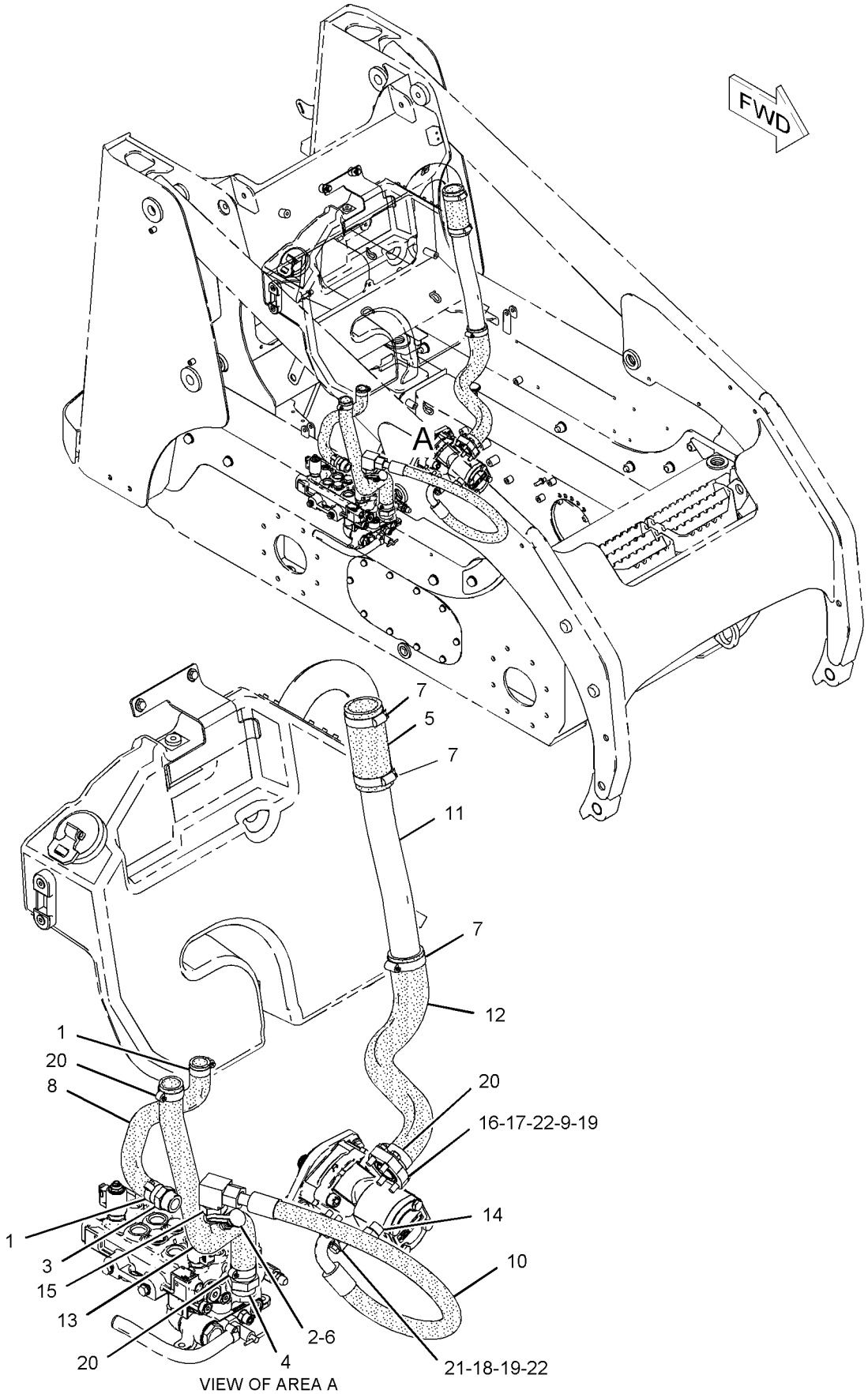

GRAPHIC #1 **<END>** g01036390

HYDRAULIC SYSTEM

218-6133 LINES GP-PUMP—HIGH FLOW

S/N: MJH10575-UP

PART OF 218-6131, 261-6139, 295-7504, 295-7507 HYDRAULIC AR

AN ATTACHMENT

SMCS-5057 **i02447938**

NOTE	REF NO	GRAPHIC REF	PART NUMBER	QTY	PART NAME 1 2 3 4 5 6 (PRODUCT LEVEL)	SEE PAGE
	1	1	**2S-3440**	4	CLAMP-HOSE	
	2	1	**6V-0852**	1	CAP-DUST	
	3	1	**9U-6994**	2	FITTING GP	
					(EACH INCLUDES)	
		1	**7M-8485**	1	SEAL-O-RING	
	4	1	**159-5740**	1	HOSE	
	5	1	*164-5567*	1	COUPLER AS-QUICK	
		1	**3J-1907**	1	SEAL-O-RING	
		1	**6V-3965**	1	COUPLER-QUICK DISCONNECT	
	6	1	*176-4074*	1	CONNECTOR GP	
		1	**2S-4078**	1	SEAL-O-RING	
		1	**177-9567**	1	TEE AS	
	7	1	**180-3007**	3	CLAMP-HOSE	
	8	1	**283-9478**	1	HOSE	
I	9	1	**193-8321**	1	HOSE AS	
	10	1	**218-6137**	1	TUBE	
	11	1	**218-6140**	1	ADAPTER	
	12	1	**218-6141**	1	HOSE	
	13	1	**218-6142**	1	HOSE	
	14	1	**218-6147**	1	HOSE	
	15	1	*148-8315*	1	CONNECTOR AS	
		1	**2M-9780**	1	SEAL-O-RING	
		1	**6V-8642**	1	CONNECTOR	
		1	**7J-9108**	1	SEAL-O-RING	
	16	1	*148-8360*	1	ELBOW AS	
		1	**6V-9182**	1	ELBOW	
		1	**6V-9746**	1	SEAL-O-RING	
		1	**7M-8485**	1	SEAL-O-RING	
	17	1	**1P-4578**	2	FLANGE-HALF	
	18	1	**4J-0522**	1	SEAL-O-RING	
	19	1	**4J-5267**	1	SEAL-O-RING	
	20	1	**5P-2230**	3	CLAMP-HOSE	
	21	1	**8C-3205**	2	FLANGE-HALF	
	22	1	**8T-4121**	8	WASHER-HARD (11X21X2.5-MM THK)	
M	23	1	**8T-4196**	8	BOLT (M10X1.5X35-MM)	

I-REFER TO HYDRAULIC INFORMATION SYSTEM
M-METRIC PART

218-6133 **LINES GP-PUMP** *(contd.)* **i02447938**

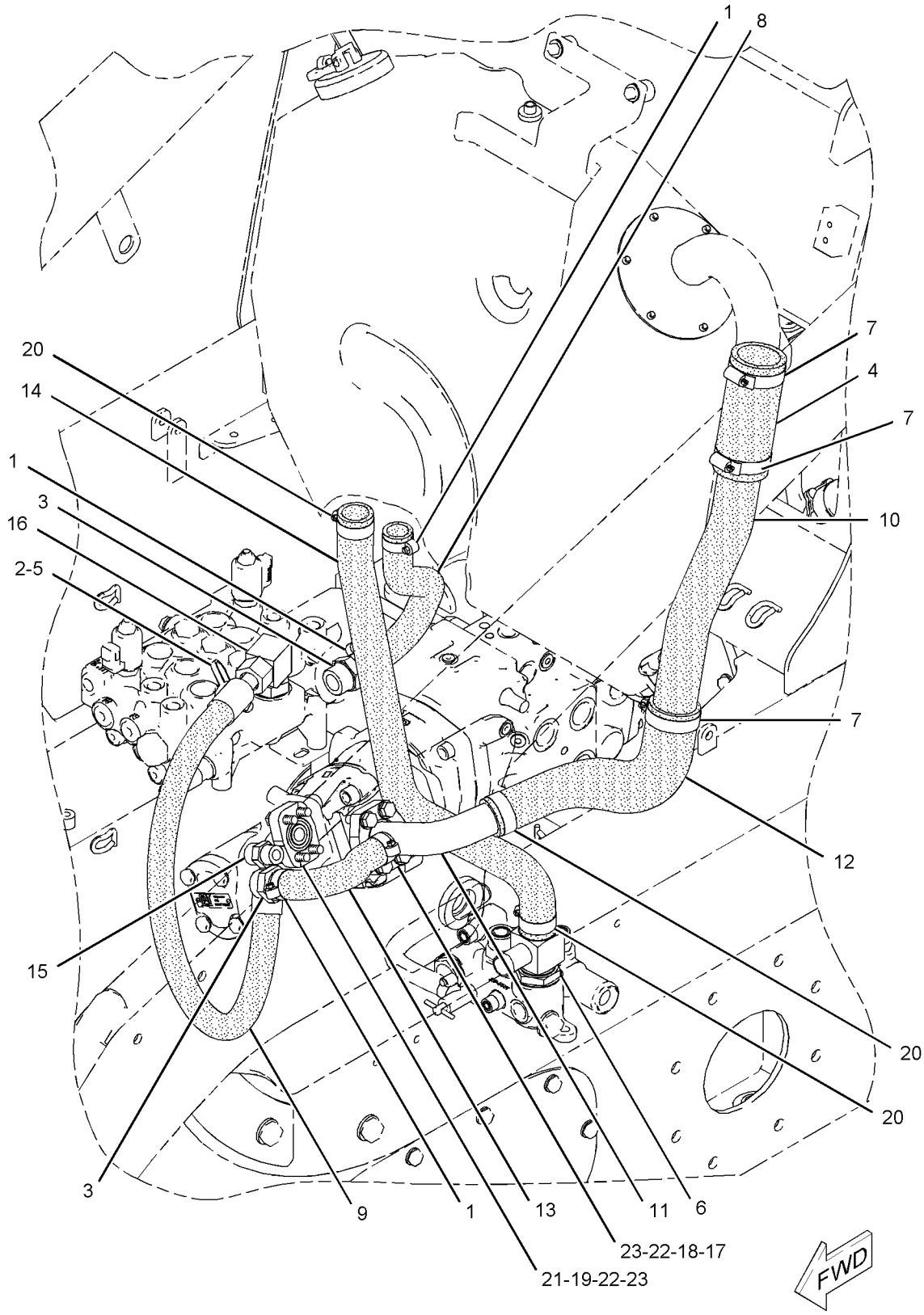

GRAPHIC #1 **<END>** g01034169

HYDRAULIC SYSTEM

218-5819 LINES GP-TILT CYLINDER

S/N: MJH10575-UP
PART OF 218-6180 HYDRAULIC AR
AN ATTACHMENT

SMCS-5057, 5104 **i02241309**

NOTE	REF NO	GRAPHIC REF	PART NUMBER	QTY	PART NAME 1 2 3 4 5 6 (PRODUCT LEVEL)	SEE PAGE
	1	1	**116-4415**	2	PLATE-COVER	
	2	1	**142-8998**	2	CLIP	
I	3	1	**142-9234**	4	HOSE AS	
I	4	1	**218-6194**	2	HOSE AS	
	5	1	**218-6196**	1	TUBE AS	
	6	1	**218-6198**	1	TUBE AS	
C	7	1	**238-7725**	1	TUBE AS	
C	8	1	**238-7726**	1	TUBE AS	
	9	1	*148-8315*	2	CONNECTOR AS	
					(EACH INCLUDES)	
		1	**2M-9780**	1	SEAL-O-RING	
		1	**6V-8642**	1	CONNECTOR	
		1	**7J-9108**	1	SEAL-O-RING	
	10	1	**6V-8398**	8	SEAL-O-RING	
	11	1	**7J-9108**	3	SEAL-O-RING	
M	12	1	**8T-2192**	2	BOLT (M6X1X45-MM)	
	13	1	**8T-4121**	2	WASHER-HARD (11X21X2.5-MM THK)	
M	14	1	**8T-4136**	2	BOLT (M10X1.5X25-MM)	
	15	1	**9R-1005**	2	CLIP (SLOT)	
	16	1	**9R-7802**	2	CLIP (SLOT)	
	17	1	**9R-7803**	2	CLIP (TAB)	

C-CHANGE FROM PREVIOUS TYPE
I-REFER TO HYDRAULIC INFORMATION SYSTEM
M-METRIC PART

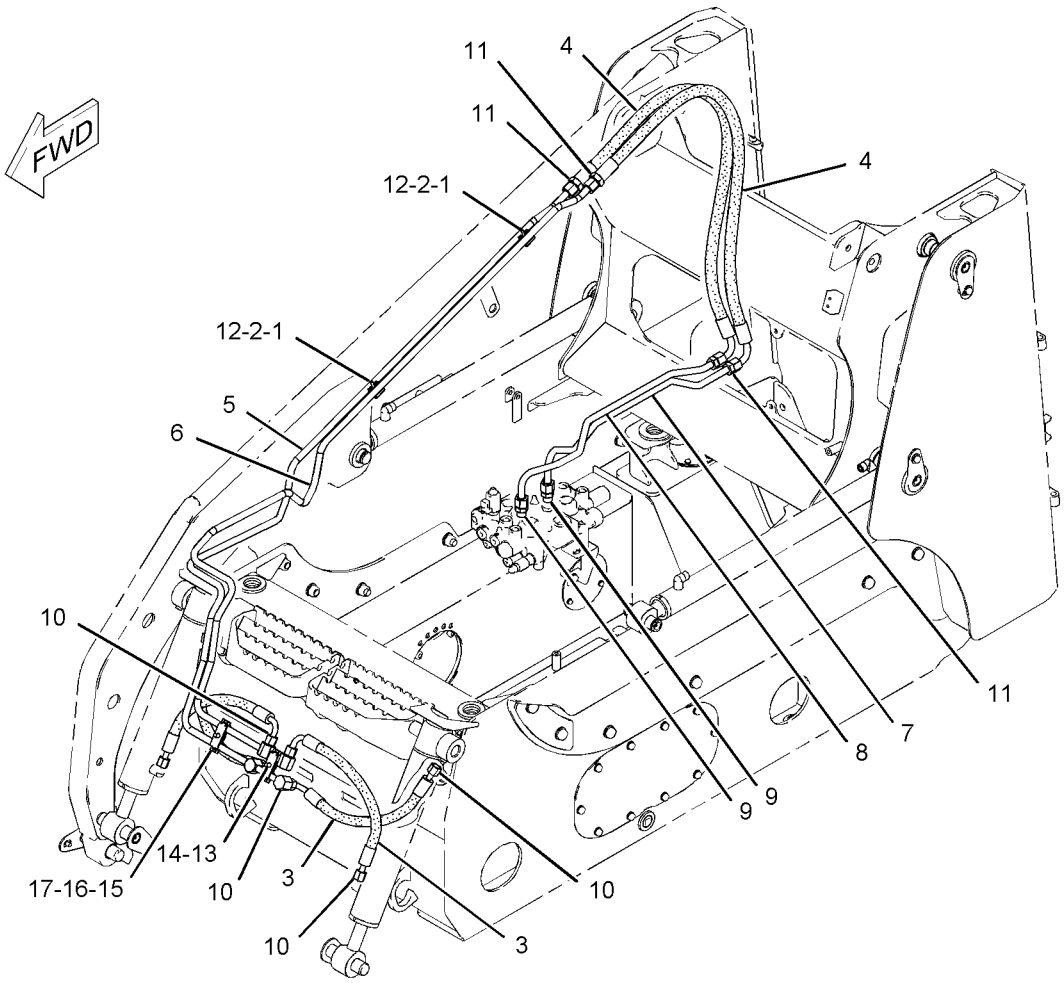

GRAPHIC #1 **<END>** g01132638

HYDRAULIC SYSTEM

218-5852 LINES GP-TILT CYLINDER

S/N: MJH10575-UP
PART OF 218-6181 HYDRAULIC AR
FOR USE WITH WORK TOOL POSITIONER
AN ATTACHMENT

SMCS-5057, 5104 **i02286687**

NOTE	REF NO	GRAPHIC REF	PART NUMBER	QTY	PART NAME 1 2 3 4 5 6 (PRODUCT LEVEL)	SEE PAGE
	1	1	**116-4415**	2	PLATE-COVER	
	2	1	**142-8998**	2	CLIP	
I	3	1	**142-9234**	4	HOSE AS	
I	4	1	**218-6194**	2	HOSE AS	
	5	1	**218-6196**	1	TUBE AS	
	6	1	**218-6198**	1	TUBE AS	
C	7	1	**238-7727**	1	TUBE AS	
C	8	1	**238-7731**	1	TUBE AS	
C	9	1	**238-7732**	1	TUBE AS	
C	10	1	**252-0341**	1	TUBE AS	
	11	1	*148-8315*	2	CONNECTOR AS	
					(EACH INCLUDES)	
		1	**3D-2824**	1	SEAL-O-RING	
		1	**6V-8642**	1	CONNECTOR	
		1	**7J-9108**	1	SEAL-O-RING	
	12	1	*148-8319*	2	CONNECTOR AS	
					(EACH INCLUDES)	
		1	**2M-9780**	1	SEAL-O-RING	
		1	**6V-8397**	1	SEAL-O-RING	
		1	**6V-8715**	1	CONNECTOR	
	13	1	**6V-8397**	2	SEAL-O-RING	
	14	1	**6V-8398**	8	SEAL-O-RING	
	15	1	**7J-9108**	4	SEAL-O-RING	
M	16	1	**8T-2192**	2	BOLT (M6X1X45-MM)	
	17	1	**8T-4121**	2	WASHER-HARD (11X21X2.5-MM THK)	
M	18	1	**8T-4136**	2	BOLT (M10X1.5X25-MM)	
	19	1	**9R-1005**	2	CLIP (SLOT)	
	20	1	**9R-7802**	2	CLIP (SLOT)	
	21	1	**9R-7803**	2	CLIP (TAB)	

C-CHANGE FROM PREVIOUS TYPE
I-REFER TO HYDRAULIC INFORMATION SYSTEM
M-METRIC PART

218-5852 **LINES GP-TILT CYLINDER** *(contd.)* **i02286687**

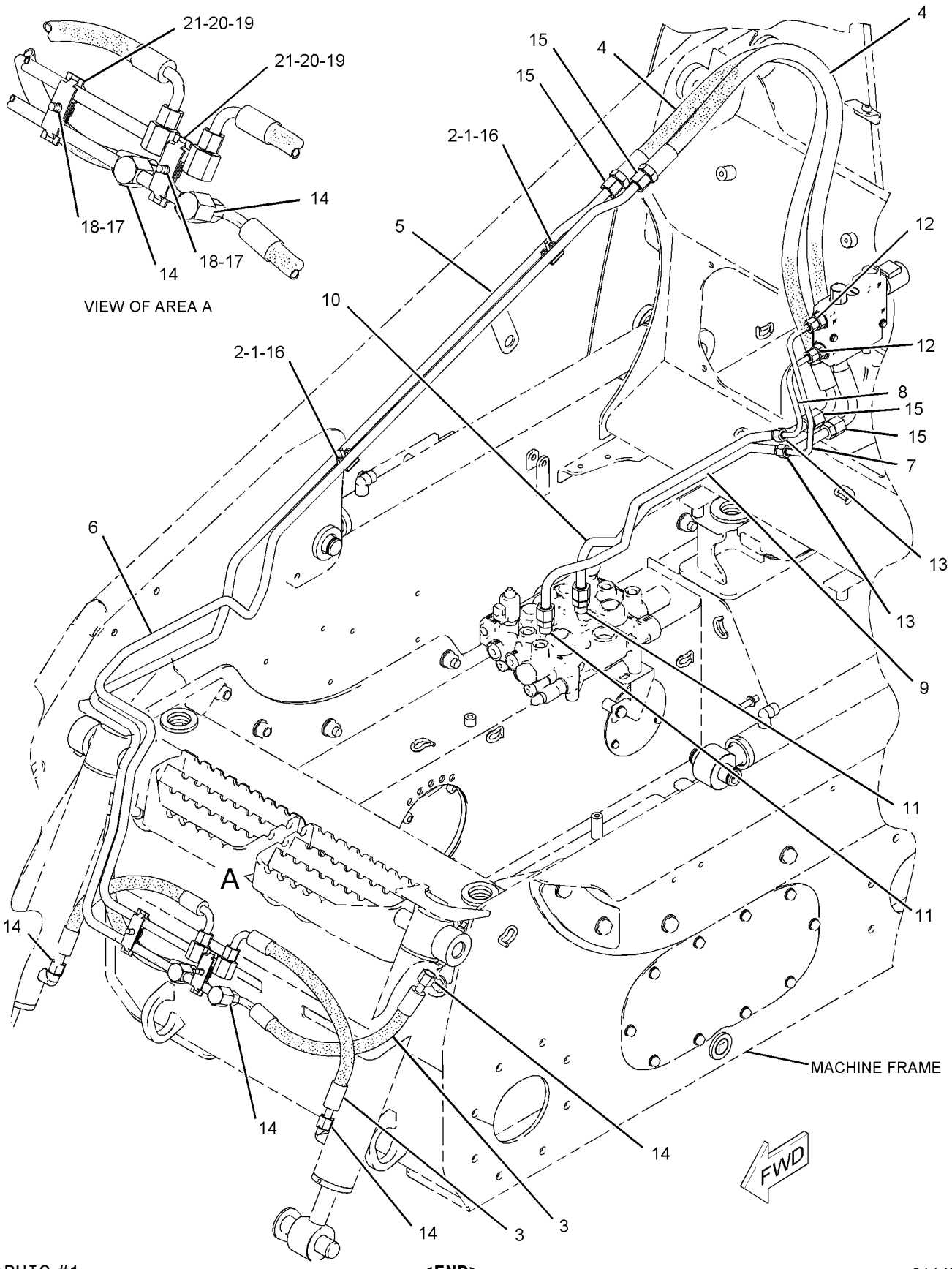

GRAPHIC #1 **<END>** g01147734

HYDRAULIC SYSTEM

218-5853 LINES GP-WORK TOOL

S/N: MJH10575-UP
HIGH FLOW
PART OF 218-6131, 261-6139, 295-7504, 295-7507 HYDRAULIC AR
AN ATTACHMENT

SMCS-5057 **i02514023**

NOTE	REF NO	GRAPHIC REF	PART NUMBER	QTY	PART NAME 1 2 3 4 5 6 (PRODUCT LEVEL)	SEE PAGE
	1	1	**2S-3440**	2	CLAMP-HOSE	
	2	1	**7K-1181**	4	STRAP-CABLE	
	3	1	**9U-6993**	1	FITTING GP	
		1	**3D-2824**	1	SEAL-O-RING	
M	4	1	**101-3129**	4	STUD (M10X1.5-THD)	
C	5	1	**285-9287**	3	BLOCK	
	6	1	**218-5764**	3	PLATE	
I	7	1	**218-5813**	1	HOSE AS	
	8	1	**218-5815**	1	TUBE AS	
	9	1	**218-5818**	1	HOSE	
Y	10	1	**218-5840**	1	FITTING GP-HYDRAULIC (QUICK DISCONNECT, MALE)	287
Y	11	1	**218-5841**	1	FITTING GP-HYDRAULIC (QUICK DISCONNECT, FEMALE)	288
	12	1	**238-7723**	1	TUBE AS	
	13	1	**238-7724**	1	TUBE AS	
	14	1	**218-5906**	1	TUBE AS	
	15	1	**218-5907**	1	TUBE AS	
	16	1	**252-0388**	1	TUBE AS	
	17	1	**218-5909**	1	TUBE AS	
I	18	1	**218-5915**	2	HOSE AS	
I	19	1	**218-5916**	2	HOSE AS	
	20	1	**218-5917**	1	TUBE AS	
I	21	1	**218-5918**	1	HOSE AS	
	22	1	**218-5919**	1	TUBE AS	
	23	1	**218-6002**	2	BRACKET AS	
	24	1	**218-6004**	2	BLOCK	
	25	1	**218-6005**	2	BLOCK	
	26	1	**218-6727**	1	BRACKET AS	
	27	1	**218-6776**	1	COVER AS	
	28	1	**218-6784**	1	TUBE AS	
	29	1	**218-6785**	1	TUBE AS	
	30	1	**229-5468**	1	FITTING AS (QUICK DISCONNECT, MALE)	
	31	1	**229-5471**	1	FITTING AS (QUICK DISCONNECT, FEMALE)	
	32	1	**229-5473**	1	FITTING AS (QUICK DISCONNECT, MALE)	
	33	1	*148-8327*	2	CONNECTOR AS	
					(EACH INCLUDES)	
		1	**3D-2824**	1	SEAL-O-RING	
		1	**6V-8637**	1	CONNECTOR	
		1	**6V-9746**	1	SEAL-O-RING	
	34	1	*148-8336*	2	CONNECTOR AS	
					(EACH INCLUDES)	
		1	**3J-1907**	1	SEAL-O-RING	
		1	**6V-8397**	1	SEAL-O-RING	
		1	**6V-8636**	1	CONNECTOR	
	35	1	*148-8340*	3	CONNECTOR AS	
					(EACH INCLUDES)	
		1	**3K-0360**	1	SEAL-O-RING	
		1	**6V-8398**	1	SEAL-O-RING	
		1	**6V-8639**	1	CONNECTOR	
	36	1	**1P-4574**	2	FLANGE-HALF	
	37	1	**4J-5140**	1	SEAL-O-RING	
	38	1	**4J-5477**	1	SEAL-O-RING	
M	39	1	**5C-9553**	4	BOLT (M6X1X16-MM)	
	40	1	**5M-8429**	1	CLIP	
	41	1	**6V-8397**	4	SEAL-O-RING	

218-5853 **LINES GP-WORK TOOL** *(contd.)* **i02514023**

NOTE	REF NO	GRAPHIC REF	PART NUMBER	QTY	PART NAME 1 2 3 4 5 6 (PRODUCT LEVEL)	SEE PAGE
	42	1	**6V-8398**	3	SEAL-O-RING	
	43	1	**200-6345**	1	MOUNT (DUAL SWIVEL)	
	45	1	**6V-9746**	4	SEAL-O-RING	
	46	1	**7B-1597**	2	CLIP	
	47	1	**1F-7567**	1	CLIP	
M	48	1	**8T-0341**	4	BOLT-SOCKET HEAD (M10X1.5X60-MM)	
M	49	1	**8T-2192**	4	BOLT (M6X1X45-MM)	
	50	1	**8T-4121**	8	WASHER-HARD (11X21X2.5-MM THK)	
M	51	1	**8T-4133**	2	NUT (M10X1.5-THD)	
M	52	1	**8T-4136**	2	BOLT (M10X1.5X25-MM)	
M	53	1	**8T-4178**	2	BOLT (M10X1.5X90-MM)	
	54	1	**8T-4205**	8	WASHER-HARD (7.2X14.5X2-MM THK)	
	55	1	**8T-4224**	6	WASHER-HARD (8.8X16X2-MM THK)	
M	56	1	**8T-4908**	2	BOLT (M8X1.25X25-MM)	
M	57	1	**8T-7547**	4	BOLT (M8X1.25X30-MM)	
M	58	1	**8T-4195**	2	BOLT (M10X1.5X30-MM)	
	59	1	**4B-0418**	1	CLIP	
	60	1	**5P-1076**	2	WASHER-HARD (13.5X30X4-MM THK)	
	61	1	**7H-7055**	1	CLIP	
	62	1	**7X-7729**	2	WASHER (11X25X3-MM THK)	

C-CHANGE FROM PREVIOUS TYPE
I-REFER TO HYDRAULIC INFORMATION SYSTEM
M-METRIC PART
Y-SEPARATE ILLUSTRATION

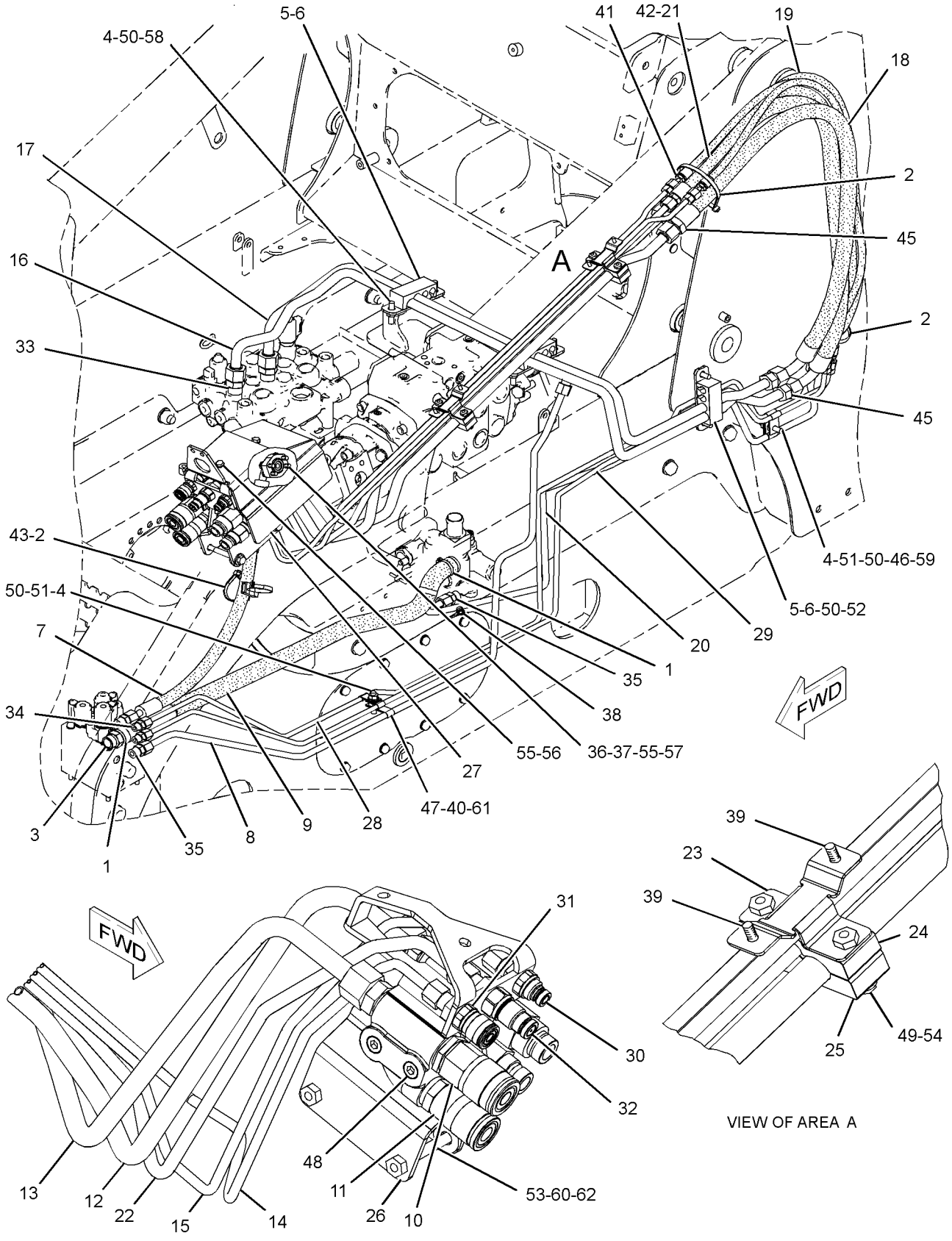

GRAPHIC #1 **<END>** g01223621

HYDRAULIC SYSTEM

218-6197 LINES GP-WORK TOOL

S/N: MJH10575-UP
PART OF 218-6130, 261-6132 HYDRAULIC AR
AN ATTACHMENT

SMCS-5057 **i02514019**

NOTE	REF NO	GRAPHIC REF	PART NUMBER	QTY	PART NAME 1 2 3 4 5 6 (PRODUCT LEVEL)	SEE PAGE
M	1	1	**101-3129**	2	STUD (M10X1.5 THD)	
	2	1	**102-8703**	2	PLATE-COVER	
	3	1	*154-5232*	1	ADAPTER AS (WORK TOOL)	
		1	**3K-0360**	1	SEAL-O-RING	
		1	**4J-5477**	1	SEAL-O-RING	
		1	**112-9783**	1	ADAPTER	
	4	1	**193-8334**	1	FITTING AS (QUICK DISCONNECT, MALE)	
	5	1	**193-8335**	1	FITTING AS (QUICK DISCONNECT, FEMALE)	
	6	1	**195-6750**	4	CLAMP-DOUBLE	
C	7	1	**285-9286**	3	BLOCK	
	8	1	**218-5764**	3	PLATE	
	9	1	**218-6011**	2	BRACKET AS	
I	10	1	**218-6194**	2	HOSE AS	
	11	1	**252-0387**	1	TUBE AS	
	12	1	**218-6201**	1	TUBE AS	
	13	1	**218-6202**	1	TUBE AS	
	14	1	**218-6203**	1	TUBE AS	
	15	1	**218-6204**	1	BRACKET	
	17	1	*148-8341*	2	CONNECTOR AS	
					(EACH INCLUDES)	
		1	**3D-2824**	1	SEAL-O-RING	
		1	**6V-8713**	1	CONNECTOR	
		1	**7J-9108**	1	SEAL-O-RING	
M	18	1	**5C-9553**	4	BOLT (M6X1X16-MM)	
	19	1	**6V-9170**	2	NUT-BULKHEAD (1-14-THD)	
	20	1	**7J-9108**	6	SEAL-O-RING	
	21	1	**8T-4121**	8	WASHER-HARD (11X21X2.5-MM THK)	
M	22	1	**8T-4136**	2	BOLT (M10X1.5X25-MM)	
M	23	1	**8T-4178**	2	BOLT (M10X1.5X90-MM)	
M	24	1	**8T-4195**	2	BOLT (M10X1.5X30-MM)	
	25	1	**8T-4205**	4	WASHER-HARD (7.2X14.5X2-MM THK)	
	26	1	**8T-4224**	2	WASHER-HARD (8.8X16X2-MM THK)	

C-CHANGE FROM PREVIOUS TYPE
I-REFER TO HYDRAULIC INFORMATION SYSTEM
M-METRIC PART

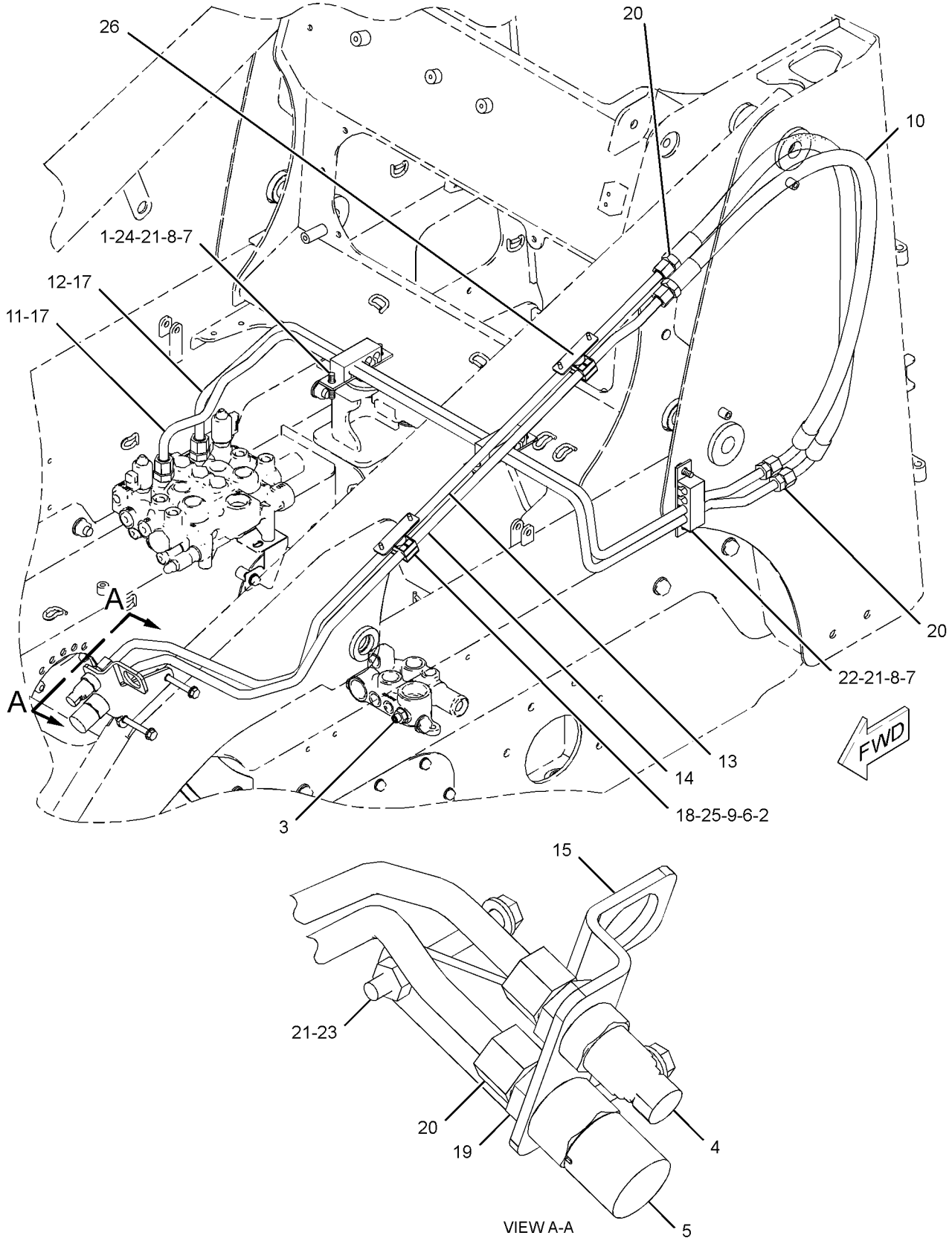

GRAPHIC #1 **<END>** g01258117

HYDRAULIC SYSTEM

218-6235 MANIFOLD & LINES GP-CONTROL—PARKING BRAKE

S/N: MJH10575-10746

PART OF 278-1227 HYDRAULIC AR

SMCS-1435, 5057, 5264 **i02595711**

NOTE	REF NO	GRAPHIC REF	PART NUMBER	QTY	PART NAME 1 2 3 4 5 6 (PRODUCT LEVEL)	SEE PAGE
I	1	1	**100-7530**	1	HOSE AS	
CY	2	1	*233-7131*	1	MANIFOLD & SOLENOID GP-CONTROL (PARKING BRAKE)	360
I	3	1	**218-5580**	1	HOSE AS	
I	4	1	**218-6231**	1	HOSE AS	
	5	1	**233-5849**	1	TUBE AS	
	6	1	*148-8336*	3	CONNECTOR AS	
					(EACH INCLUDES)	
		1	**3J-1907**	1	SEAL-O-RING	
		1	**6V-8397**	1	SEAL-O-RING	
		1	**6V-8636**	1	CONNECTOR	
	7	1	*148-8435*	1	TEE AS	
		1	**3J-1907**	1	SEAL-O-RING	
		1	**6V-8397**	2	SEAL-O-RING	
		1	**6V-8781**	1	TEE-FACE SEAL	
	8	1	*161-8560*	1	CONNECTOR AS	
		1	**3J-1907**	1	SEAL-O-RING	
		1	**7J-9108**	1	SEAL-O-RING	
		1	**8C-6758**	1	CONNECTOR	
	9	1	**6V-8398**	2	SEAL-O-RING	
	10	1	**8T-4224**	2	WASHER-HARD (8.8X16X2-MM THK)	
M	11	1	**8T-6869**	2	BOLT (M8X1.25X60-MM)	

C-CHANGE FROM PREVIOUS TYPE
I-REFER TO HYDRAULIC INFORMATION SYSTEM
M-METRIC PART
Y-SEPARATE ILLUSTRATION

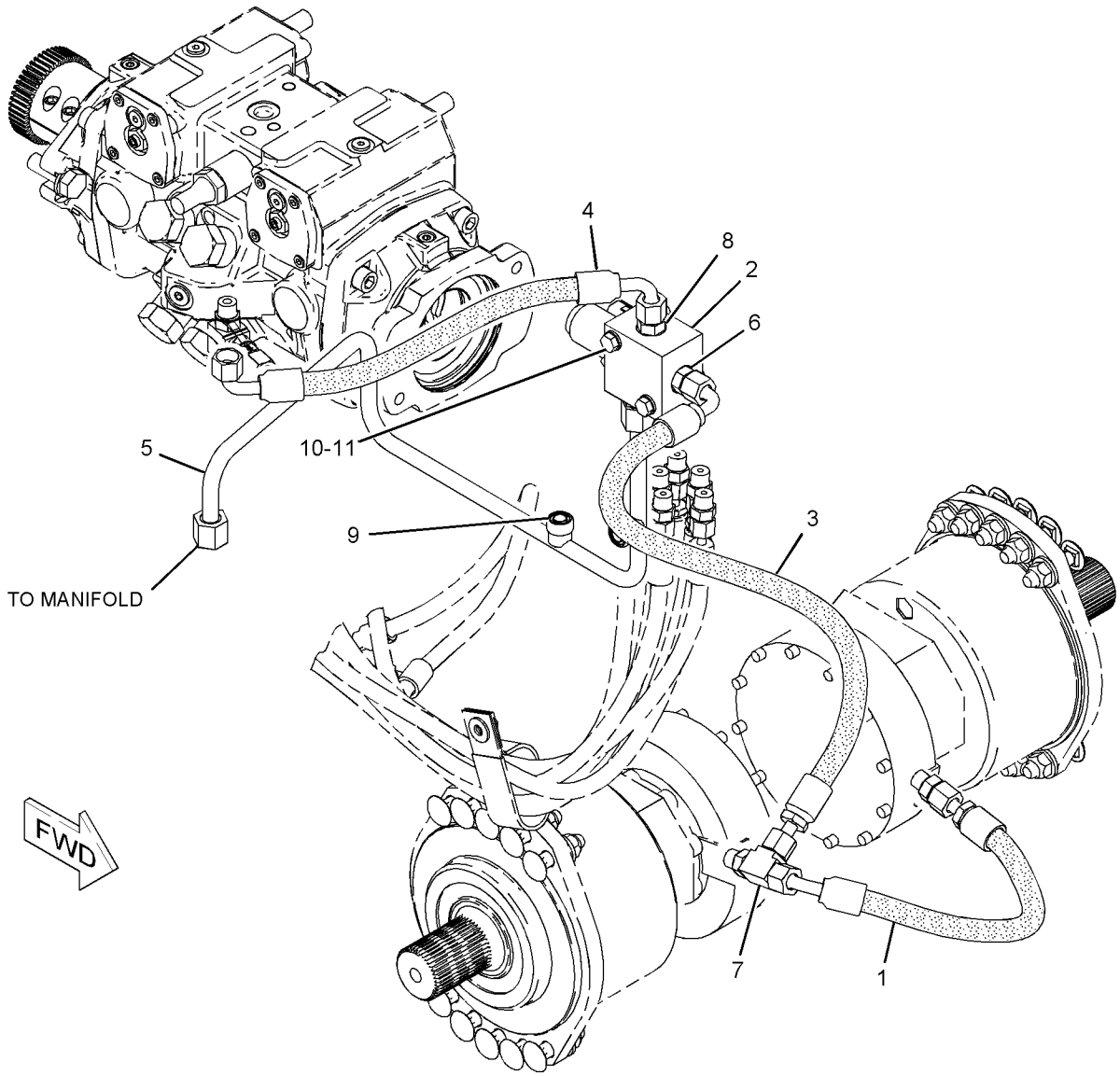

GRAPHIC #1

<END>

g01126804

218-6235 MANIFOLD & LINES GP-CONTROL—PARKING BRAKE

S/N: MJH10747-UP

PART OF 278-1227 HYDRAULIC AR

SMCS-1435, 5057, 5264 **i02857885**

NOTE	REF NO	GRAPHIC REF	PART NUMBER	QTY	PART NAME 1 2 3 4 5 6 (PRODUCT LEVEL)	SEE PAGE
I	1	1	**100-7530**	1	HOSE AS (LEFT PARKING BRAKE OIL)	
CY	2	1	**248-1268**	1	MANIFOLD & SOLENOID GP-CONTROL (PARKING BRAKE)	361
I	3	1	**218-5580**	1	HOSE AS (RIGHT PARKING BRAKE OIL)	
I	4	1	**218-6231**	1	HOSE AS (PARKING BRAKE OIL)	
	5	1	**233-5849**	1	TUBE AS (PARKING BRAKE OIL)	
	6	1	*148-8336*	3	CONNECTOR AS	
					(EACH INCLUDES)	
		1	**3J-1907**	1	SEAL-O-RING	
		1	**6V-8397**	1	SEAL-O-RING	
		1	**6V-8636**	1	CONNECTOR	
	7	1	*148-8435*	1	TEE AS (ORFS)	
		1	**3J-1907**	1	SEAL-O-RING	
		1	**6V-8397**	2	SEAL-O-RING	
		1	**6V-8781**	1	TEE-FACE SEAL	
	8	1	*161-8560*	1	CONNECTOR AS	
		1	**3J-1907**	1	SEAL-O-RING	
		1	**7J-9108**	1	SEAL-O-RING	
		1	**8C-6758**	1	CONNECTOR	
	9	1	**6V-8398**	2	SEAL-O-RING	
	10	1	**8T-4224**	2	WASHER-HARD (8.8X16X2-MM THK)	
M	11	1	**8T-6869**	2	BOLT (M8X1.25X60-MM)	

C-CHANGE FROM PREVIOUS TYPE
I-REFER TO HYDRAULIC INFORMATION SYSTEM
M-METRIC PART
Y-SEPARATE ILLUSTRATION

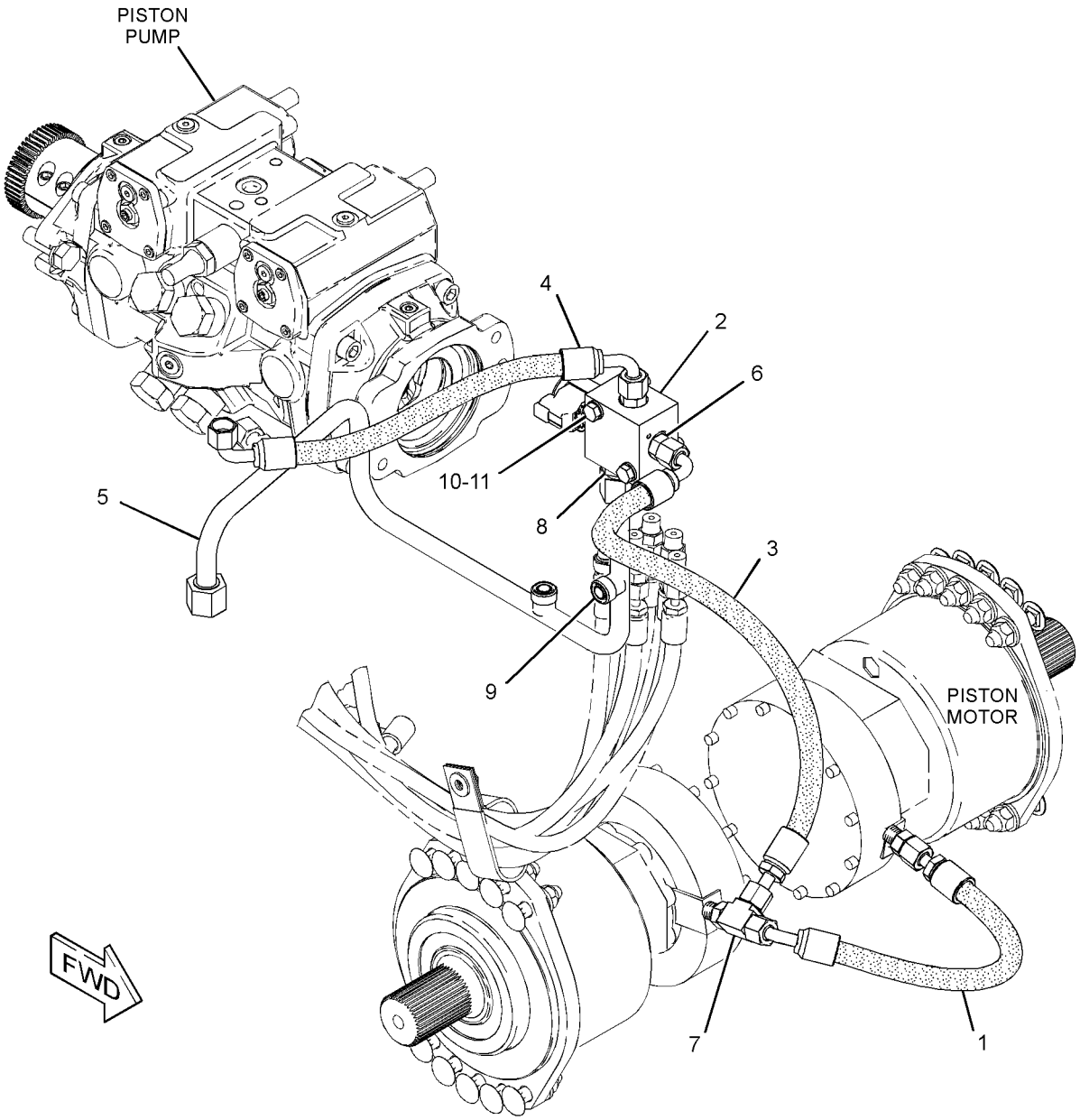

GRAPHIC #1 **<END>** g01425237

159-5753 MANIFOLD & MTG GP-CONTROL

S/N: MJH10575-UP
WORK TOOL POSITIONER
PART OF 218-6181 HYDRAULIC AR
AN ATTACHMENT

SMCS-5264 **i01951651**

NOTE	REF NO	GRAPHIC REF	PART NUMBER	QTY	PART NAME 1 2 3 4 5 6 (PRODUCT LEVEL)	SEE PAGE
Y	1	1	**224-9418**	1	MANIFOLD & SOLENOID GP-CONTROL	359
CM	2	1	**7X-2535**	2	BOLT (M6X1X60-MM)	
C	3	1	**8T-4205**	2	WASHER-HARD (7.2X14.5X2-MM THK)	

C-CHANGE FROM PREVIOUS TYPE
M-METRIC PART
Y-SEPARATE ILLUSTRATION

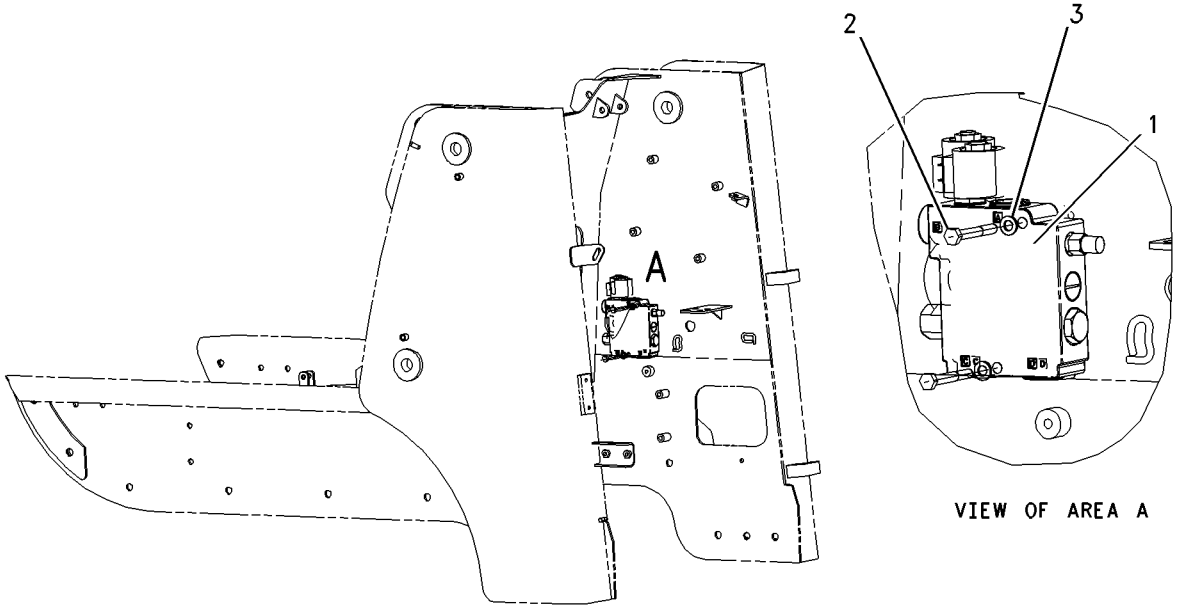

GRAPHIC #1 **<END>** g01003425

218-5812 MANIFOLD & MTG GP-CONTROL

S/N: MJH10575-UP
HIGH FLOW
PART OF 218-6131, 261-6139, 295-7504, 295-7507 HYDRAULIC AR
AN ATTACHMENT

SMCS-5264 **i02292955**

NOTE	REF NO	GRAPHIC REF	PART NUMBER	QTY	PART NAME 1 2 3 4 5 6 (PRODUCT LEVEL)	SEE PAGE
M	1	1	**108-2989**	3	BOLT (M8X1.25X130-MM)	
CY	2	1	**248-7696**	1	MANIFOLD GP-CONTROL (BOOSTED AUXILIARY HYD FLOW)	363
	3	1	**8T-4224**	3	WASHER-HARD (8.8X16X2-MM THK)	

C-CHANGE FROM PREVIOUS TYPE
M-METRIC PART
Y-SEPARATE ILLUSTRATION

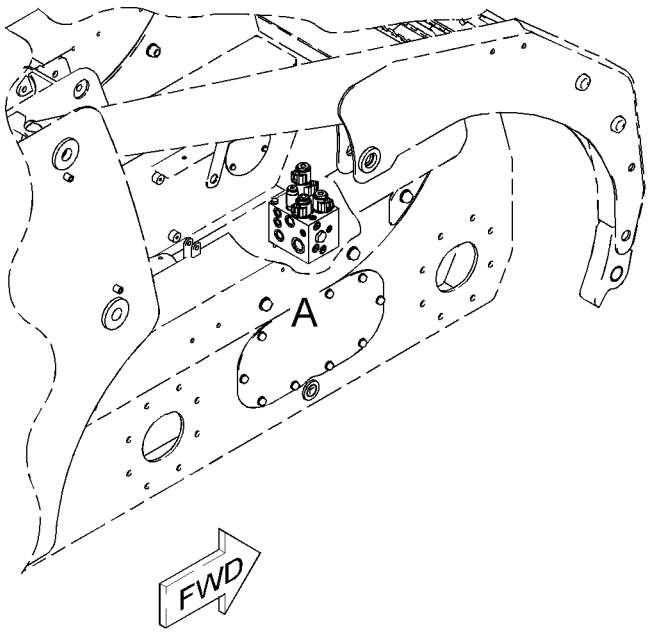

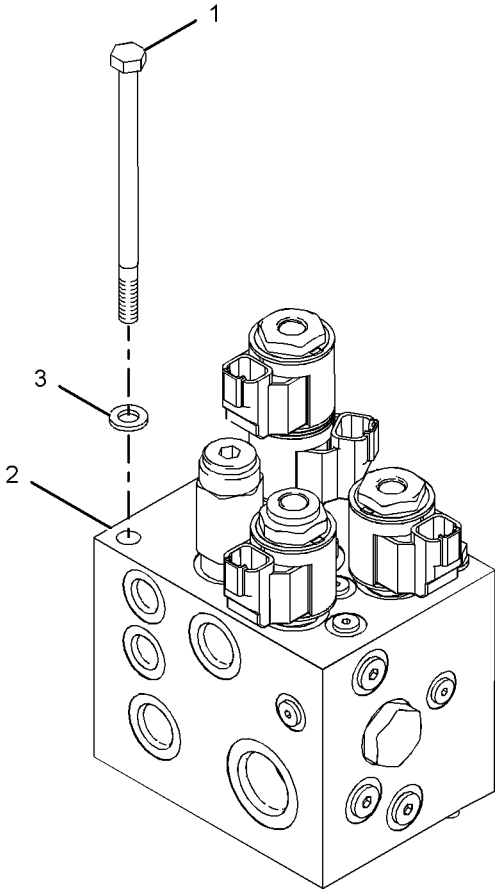

VIEW OF AREA A

GRAPHIC #1 **<END>** g01017940

HYDRAULIC SYSTEM

231-5278 MANIFOLD & MTG GP-CONTROL—ANGLING BLADE

S/N: MJH10575-UP
PART OF 231-5277 BLADE AR
AN ATTACHMENT

SMCS-5264 **i02337085**

NOTE	REF NO	GRAPHIC REF	PART NUMBER	QTY	PART NAME 1 2 3 4 5 6 (PRODUCT LEVEL)	SEE PAGE
Y	1	1	**258-9011**	1	MANIFOLD GP-CONTROL (ANGLING BLADE)	364
	2	1	**231-5279**	1	COVER	
	3	1	**5P-4116**	3	WASHER-HARD (8.8X20.5X2-MM THK)	
M	4	1	**8T-4189**	2	BOLT (M8X1.25X20-MM)	
M	5	1	**8T-4200**	3	BOLT (M8X1.25X16-MM)	
	6	1	**8T-4224**	2	WASHER-HARD (8.8X16X2-MM THK)	

M-METRIC PART
Y-SEPARATE ILLUSTRATION

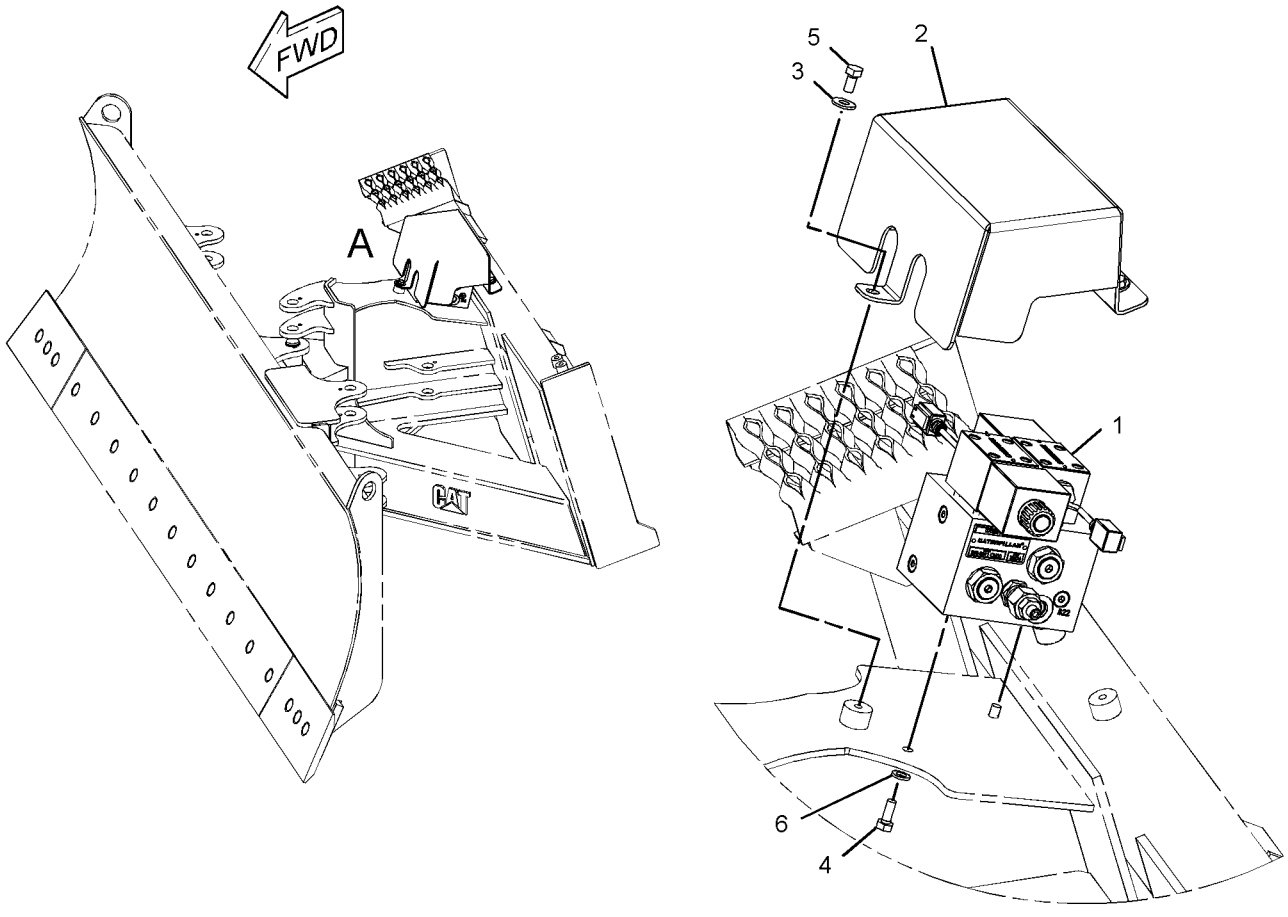

VIEW OF AREA A

GRAPHIC #1 **<END>** g01167422

224-9418 MANIFOLD & SOLENOID GP-CONTROL

S/N: MJH10575-UP
WITH WORK TOOL POSITIONER
PART OF 159-5753 MANIFOLD & MTG GP-CONTROL
AN ATTACHMENT

SMCS-5264, 5479 **i02359412**

NOTE	REF NO	GRAPHIC REF	PART NUMBER	QTY	PART NAME 1 2 3 4 5 6 (PRODUCT LEVEL)	SEE PAGE
	1	1	**102-8804**	1	KIT-RECEPTACLE (4-PIN)	
					(INCLUDES RECEPTACLE AS & WEDGE)	
	2	1	**3E-3377**	1	WEDGE-RECEPTACLE LOCK (4-PIN)	
	3	1	**186-3735**	2	PIN-CONNECTOR (16-GA TO 18-GA)	
	4	1	**9G-3695**	2	PLUG	
J	5	1	**218-6858**	1	CARTRIDGE AS-VALVE	
J	6	1	**218-6857**	1	COIL AS	
					AVAILABLE REPAIR KIT(S):	
			218-6856	1	KIT-SEAL	
					(INCLUDES O-RINGS, COVER & BACK-UP WASHER)	
J			**155-1279**	1	KIT-SEAL	

J-KIT MARKED J SERVICES PARTS MARKED J

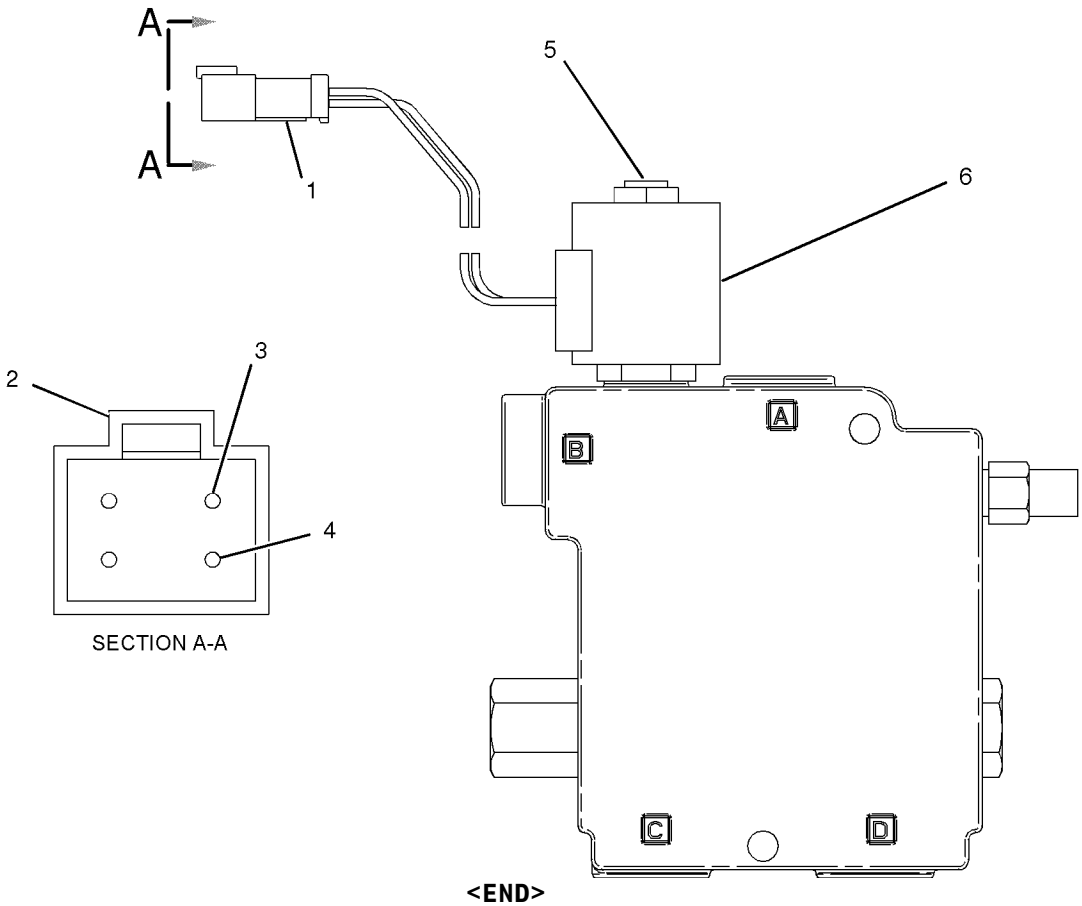

SECTION A-A

GRAPHIC #1 **<END>** g01014949

HYDRAULIC SYSTEM

233-7131 MANIFOLD & SOLENOID GP-CONTROL–PARKING BRAKE

S/N: MJH10575-10746

PART OF 218-6235 MANIFOLD & LINES GP-CONTROL

SMCS-5264, 5479 **i02837179**

NOTE	REF NO	GRAPHIC REF	PART NUMBER	QTY	PART NAME 1 2 3 4 5 6 (PRODUCT LEVEL)	SEE PAGE
Y	1	1	**259-8194**	1	VALVE GP-SOLENOID	407
	2	1	**259-8195**	1	MANIFOLD	

Y-SEPARATE ILLUSTRATION

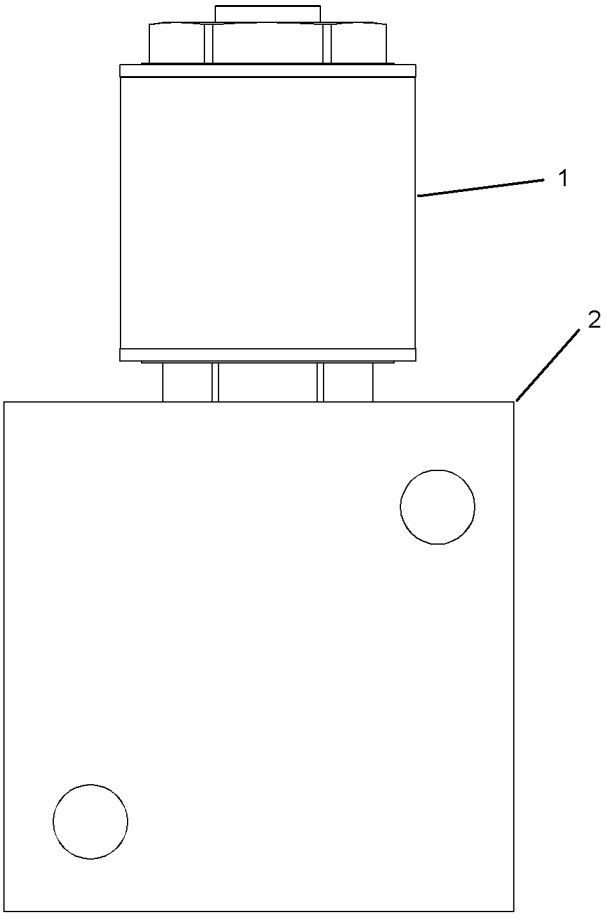

RIGHT SIDE VIEW

GRAPHIC #1

<END>

g01416438

248-1268 MANIFOLD & SOLENOID GP-CONTROL–PARKING BRAKE

S/N: MJH10747-UP

PART OF 218-6235 MANIFOLD & LINES GP-CONTROL

SMCS-5264, 5479 **i02200066**

NOTE	REF NO	GRAPHIC REF	PART NUMBER	QTY	PART NAME 1 2 3 4 5 6 (PRODUCT LEVEL)	SEE PAGE
Y	1	1	**259-8194**	1	VALVE GP-SOLENOID	407

Y-SEPARATE ILLUSTRATION

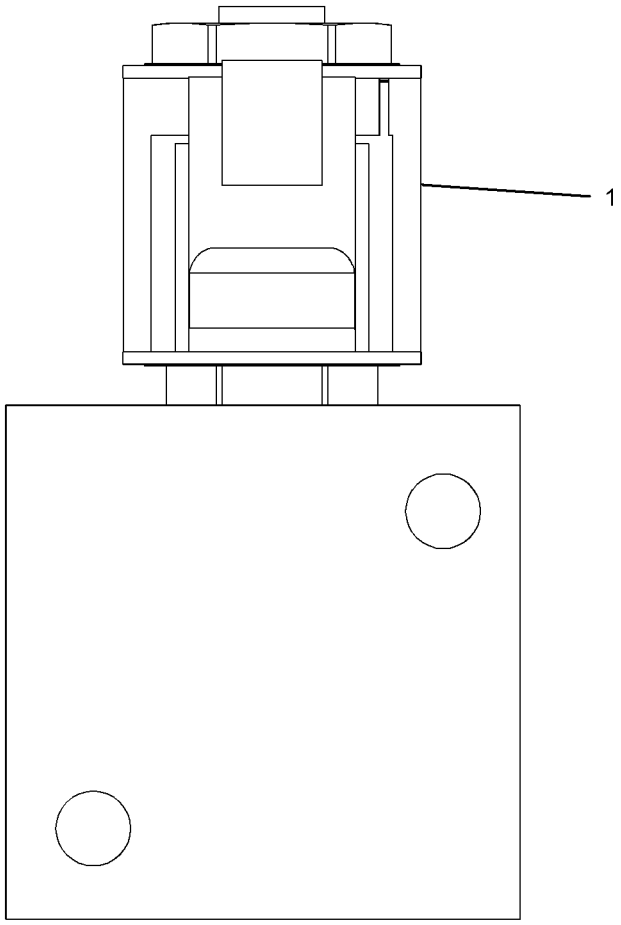

RIGHT SIDE VIEW

GRAPHIC #1 **<END>** g01132704

233-7128 MANIFOLD GP-CONTROL–QUICK COUPLER

S/N: MJH10575-UP

PART OF 218-6757 KIT-QUICK COUPLER CONVERSION, 218-6240 VALVE & LINES GP-COUPLER AN ATTACHMENT

SMCS-5117, 5264, 5479 **i02216438**

NOTE	REF NO	GRAPHIC REF	PART NUMBER	QTY	PART NAME 1 2 3 4 5 6 (PRODUCT LEVEL)	SEE PAGE
	1	1	**245-1911**	1	WIRE AS	
J	2	1	**249-7160**	1	VALVE GP-SOLENOID (QUICK COUPLER)	
		1	**238-4626**	2	COIL AS	
					AVAILABLE REPAIR KIT(S):	
J			**106-3108**	1	KIT-SEAL	

J-KIT MARKED J IS AVAILABLE FOR PART MARKED J

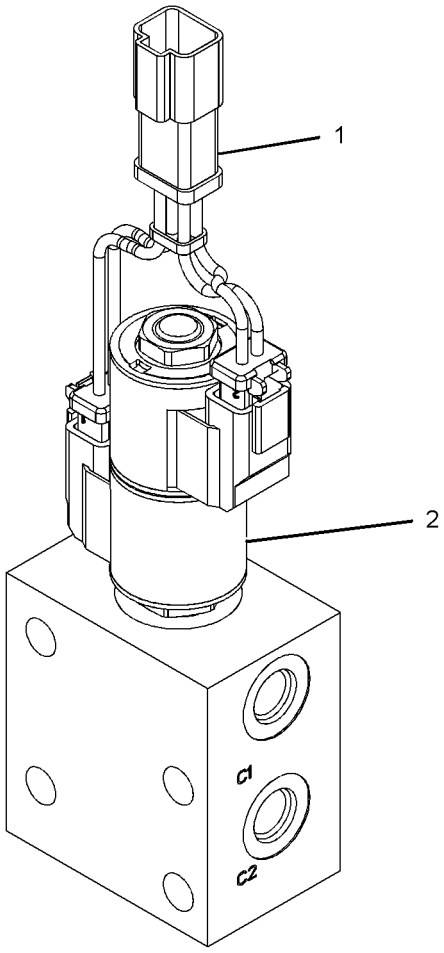

GRAPHIC #1 **<END>** g01132286

248-7696 MANIFOLD GP-CONTROL

S/N: MJH10575-UP

PART OF 218-6737 KIT-HIGH FLOW CONVERSION, 218-5812 MANIFOLD & MTG GP-CONTROL

AN ATTACHMENT

SMCS-5117, 5264, 5479 **i02359407**

NOTE	REF NO	GRAPHIC REF	PART NUMBER	QTY	PART NAME 1 2 3 4 5 6 (PRODUCT LEVEL)	SEE PAGE
	1	1	**134-9911**	1	VALVE-CHECK	
	2	1	**148-9364**	1	VALVE GP-CHECK	
J	3	1	**238-4625**	1	VALVE GP-SOLENOID (HIGH FLOW)	
		1	**238-4626**	1	COIL AS	
	4	1	**238-4629**	1	VALVE GP-RELIEF	
J	5	1	**240-6866**	1	VALVE GP-SOLENOID (HIGH FLOW BOOST)	
		1	**238-4626**	1	COIL AS	
L	6	1	**249-7707**	1	VALVE GP-SOLENOID (HIGH FLOW)	
		1	**238-4628**	1	COIL AS	
	7	1	**250-7662**	1	VALVE GP-CHECK	
					AVAILABLE REPAIR KIT(S):	
J			**106-3108**	1	KIT-SEAL	
L			**141-0888**	1	KIT-SEAL	

J-KIT MARKED J AVAILABLE FOR PART(S) MARKED J
L-KIT MARKED L AVAILABLE FOR PART(S) MARKED L

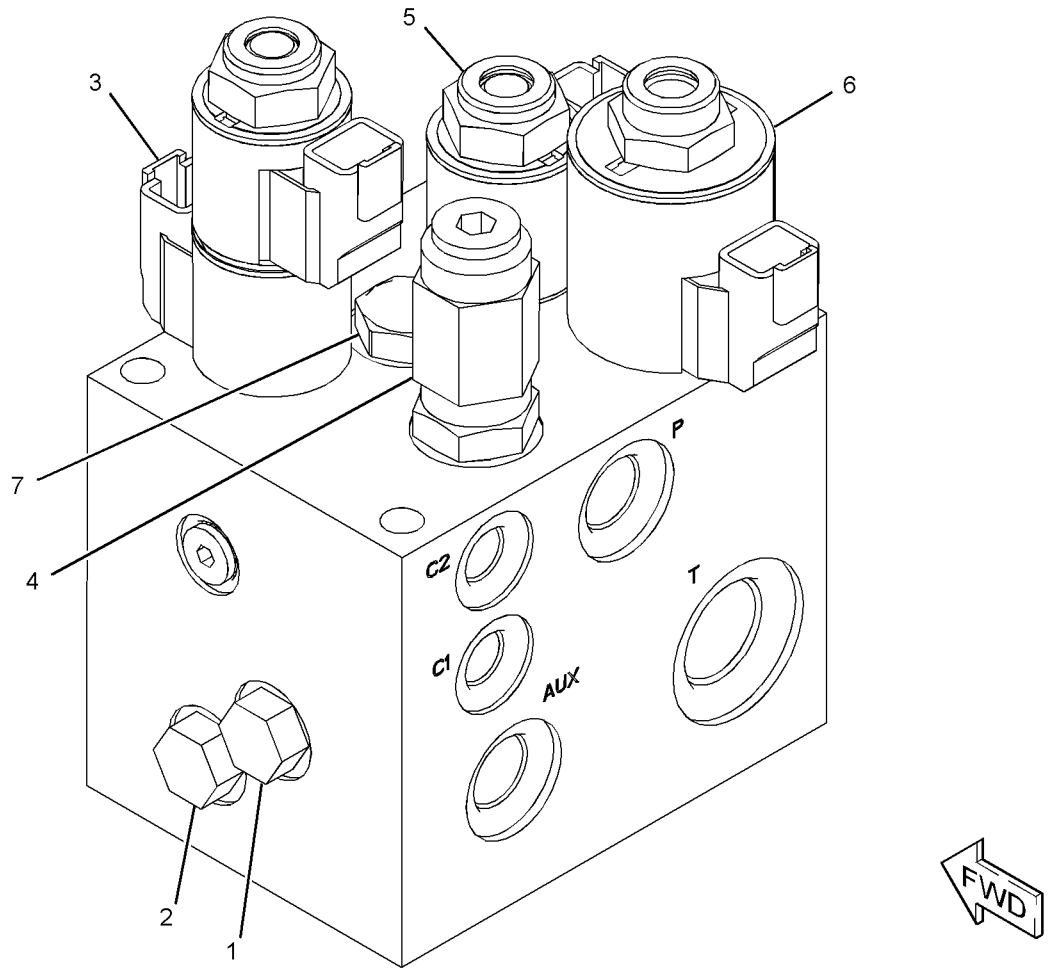

GRAPHIC #1 **<END>** g01151254

258-9011 MANIFOLD GP-CONTROL–ANGLING BLADE

S/N: MJH10575-UP

PART OF 231-5278 MANIFOLD & MTG GP-CONTROL

AN ATTACHMENT

SMCS-5117, 5264, 5479 **i02318509**

NOTE	REF NO	GRAPHIC REF	PART NUMBER	QTY	PART NAME 1 2 3 4 5 6 (PRODUCT LEVEL)	SEE PAGE
M	1	1	**9X-6615**	8	BOLT (M5X0.8X30-MM)	
	2	1	**243-5601**	7	PLUG	
	3	1	**244-1363**	1	VALVE GP-SOLENOID	
	4	1	**244-1364**	1	VALVE GP-SOLENOID	
	5	1	**244-1365**	2	VALVE GP-RELIEF	
	6	1	**266-8903**	4	VALVE GP-CHECK	
	7	1	**180-7451**	8	WASHER-HARD (5.3X8.8X2-MM THK)	

M-METRIC PART

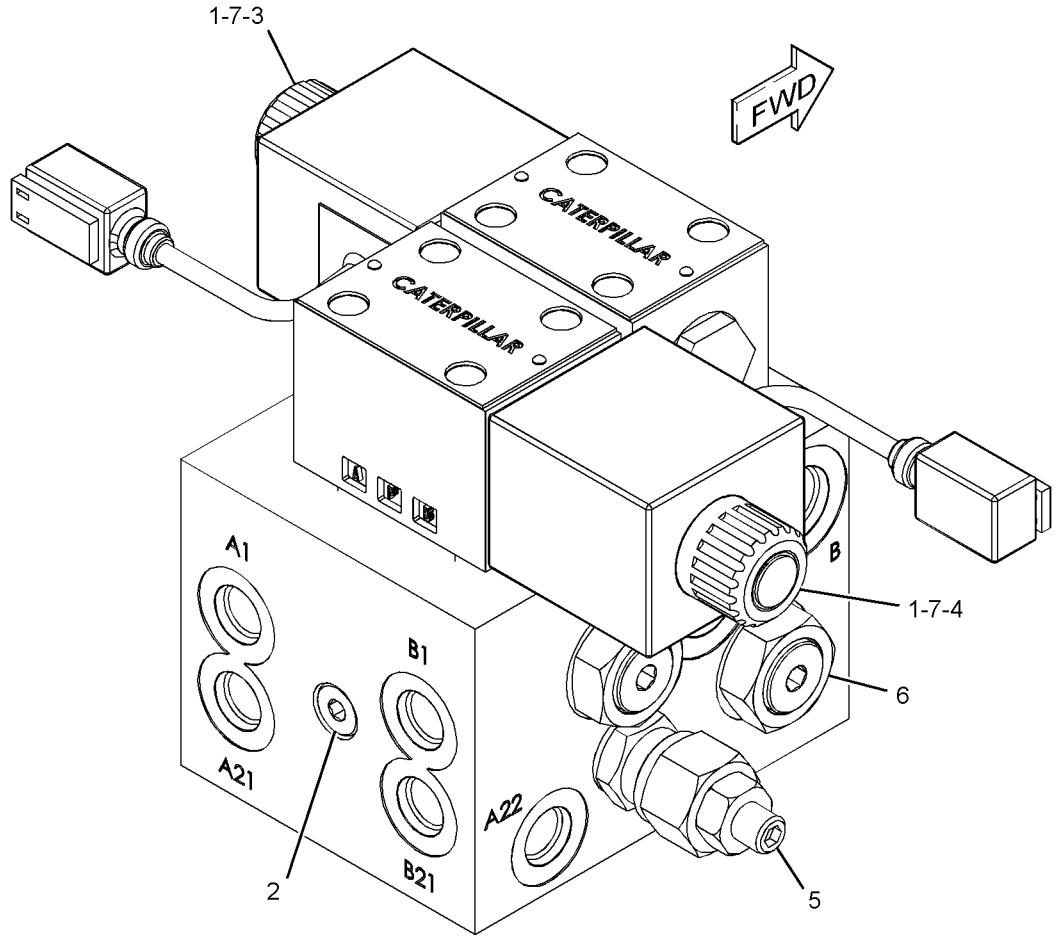

GRAPHIC #1 **<END>** g01178679

218-6058 MOTOR & MTG GP-HYDRAULIC FAN

S/N: MJH10575-10673
PART OF 261-6160 CONVERSION AR-MACHINE
AN ATTACHMENT

SMCS-1386 **i01964111**

NOTE	REF NO	GRAPHIC REF	PART NUMBER	QTY	PART NAME 1 2 3 4 5 6 (PRODUCT LEVEL)	SEE PAGE
Y	1	1	**230-3727**	1	MOTOR GP-GEAR (HYDRAULIC FAN)	369
	2	1	**8T-4121**	2	WASHER-HARD (11X21X2.5-MM THK)	
M	3	1	**8T-4196**	2	BOLT (M10X1.5X35-MM)	
	4	1	**8T-4224**	1	WASHER-HARD (8.8X16X2-MM THK)	
M	5	1	**8T-7547**	1	BOLT (M8X1.25X30-MM)	

M-METRIC PART
Y-SEPARATE ILLUSTRATION

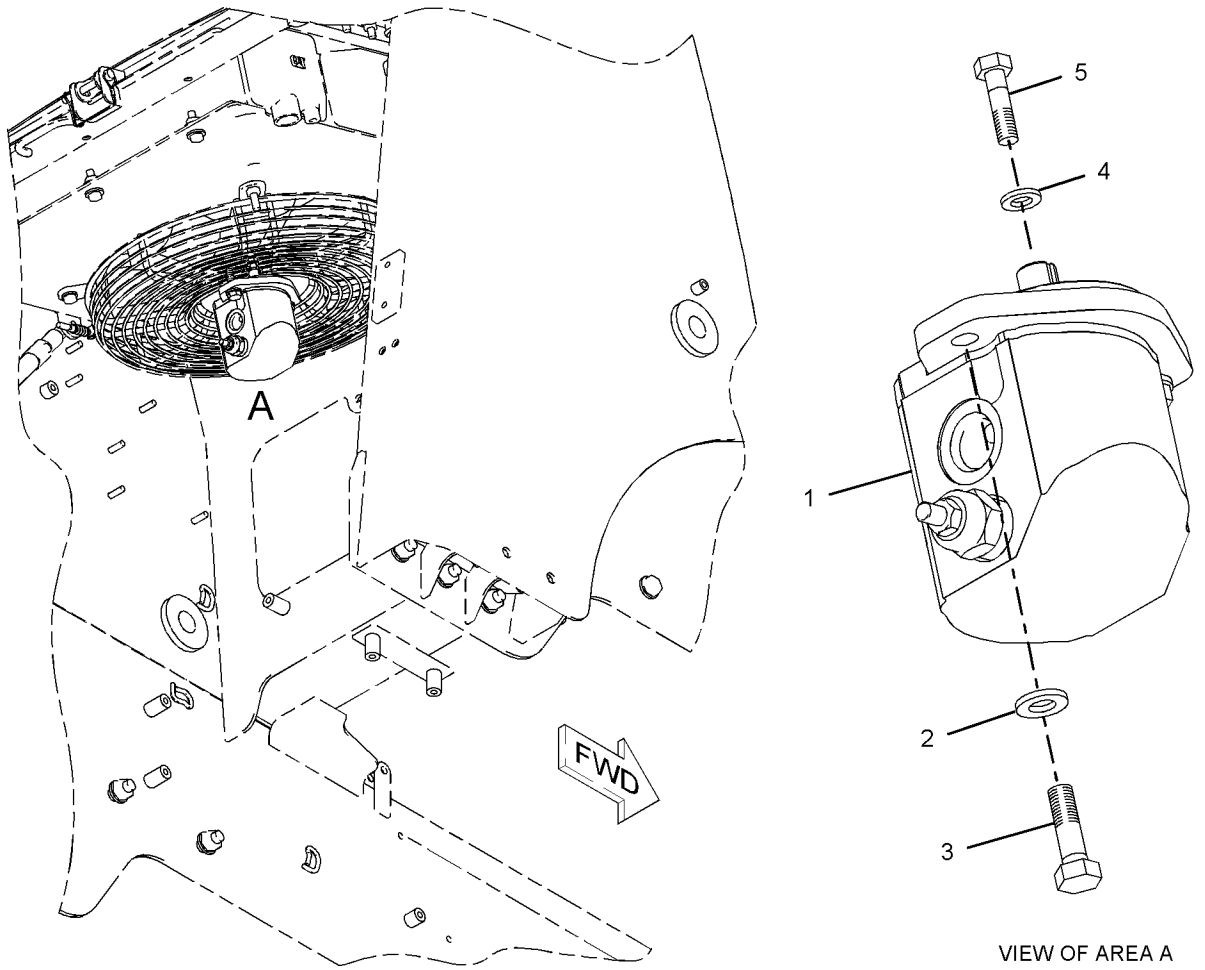

VIEW OF AREA A

GRAPHIC #1 **<END>** g01023064

218-6058 MOTOR & MTG GP-HYDRAULIC FAN

S/N: MJH10674-UP
PART OF 261-6160 CONVERSION AR-MACHINE
AN ATTACHMENT

SMCS-1386 **i02839810**

NOTE	REF NO	GRAPHIC REF	PART NUMBER	QTY	PART NAME 1 2 3 4 5 6 (PRODUCT LEVEL)	SEE PAGE
CY	1	1	**307-3036**	1	MOTOR GP-GEAR (HYDRAULIC FAN)	371
	2	1	**8T-4121**	2	WASHER-HARD (11X21X2.5-MM THK)	
M	3	1	**8T-4196**	2	BOLT (M10X1.5X35-MM)	
	4	1	**8T-4224**	1	WASHER-HARD (8.8X16X2-MM THK)	
M	5	1	**8T-7547**	1	BOLT (M8X1.25X30-MM)	

C-CHANGE FROM PREVIOUS TYPE
M-METRIC PART
Y-SEPARATE ILLUSTRATION

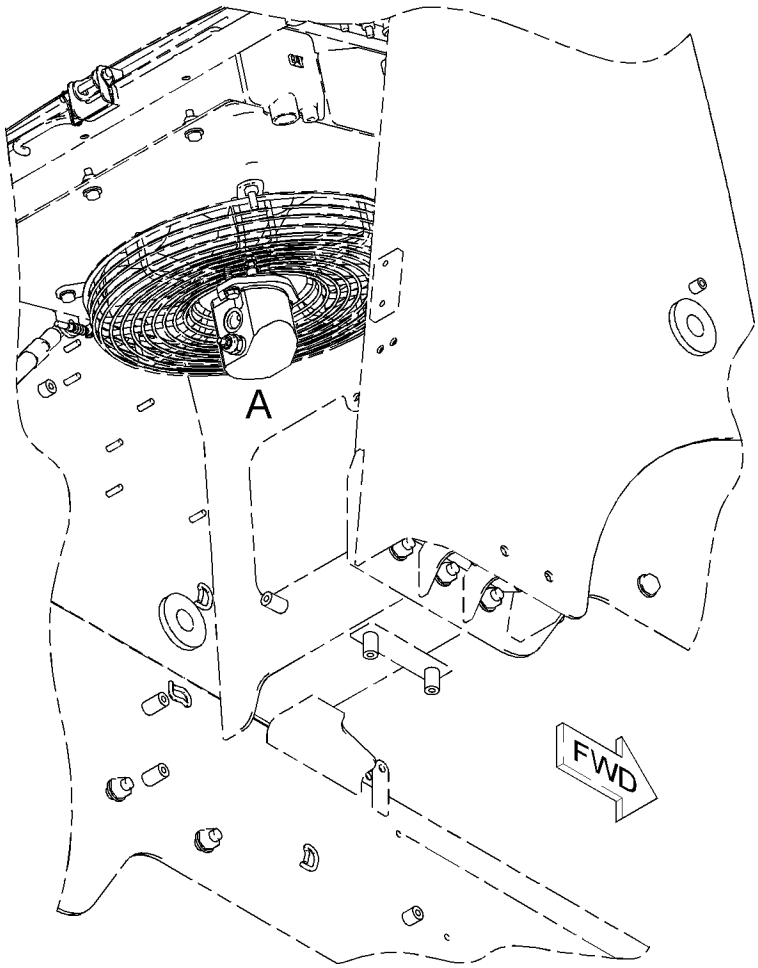

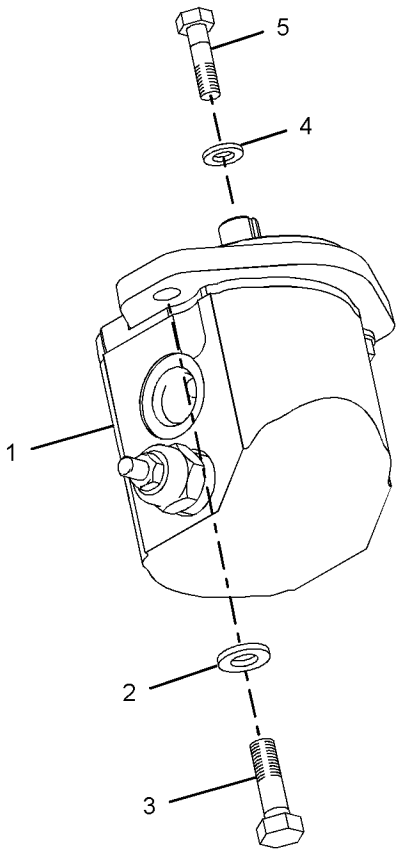

VIEW OF AREA A

GRAPHIC #1 **<END>** g01023064

261-6121 MOTOR & MTG GP-HYDRAULIC FAN

S/N: MJH10575-UP
STAGE II SOUND
PART OF 261-6157, 261-6187, 261-6197, 278-1212, 278-1220, 278-1224, 278-5408, 278-5441, 295-7038, 295-7049, 295-7059, 295-7066, 295-7149, 295-7158, 295-7162, 295-7167 CONVERSION AR-MACHINE, 257-5717, 295-7043 CONVERSION AR-ROADING AN ATTACHMENT

SMCS-1386 **i02758768**

NOTE	REF NO	GRAPHIC REF	PART NUMBER	QTY	PART NAME 1 2 3 4 5 6 (PRODUCT LEVEL)	SEE PAGE
	1	1	**107-5630**	1	WIRE AS	
	2	1	**261-6727**	1	VALVE GP-SOLENOID	
		1	**261-6728**	1	COIL AS	
	3	1	*264-4297*	1	SENSOR GP-TEMPERATURE (HYDRAULIC OIL)	
		1	**137-6645**	1	PAD (CONNECTOR)	
Y	4	1	**307-3038**	1	MOTOR GP-GEAR (HYDRAULIC FAN)	372
	5	1	**8T-4121**	2	WASHER-HARD (11X21X2.5-MM THK)	
M	6	1	**8T-4196**	2	BOLT (M10X1.5X35-MM)	
	7	1	**8T-4224**	1	WASHER-HARD (8.8X16X2-MM THK)	
M	8	1	**8T-7547**	1	BOLT (M8X1.25X30-MM)	

M-METRIC PART
Y-SEPARATE ILLUSTRATION

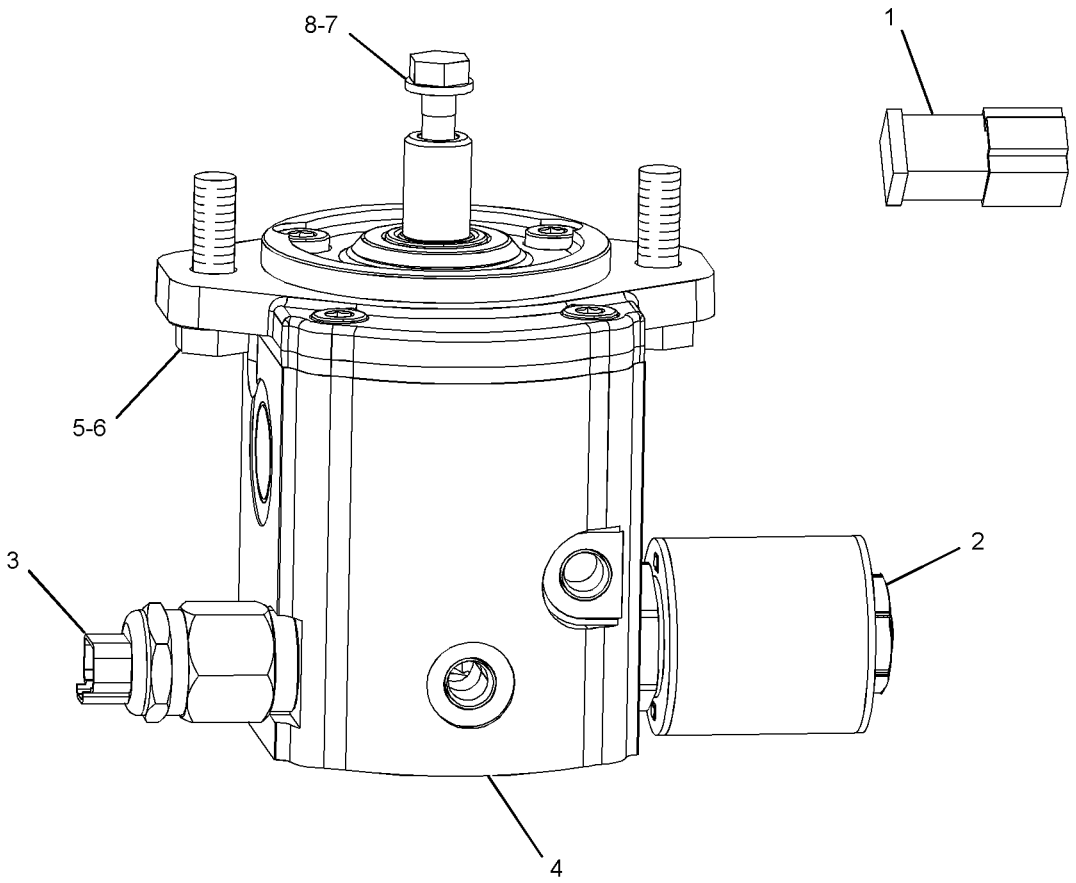

LEFT SIDE VIEW

GRAPHIC #1 **<END>** g01229655

218-6840 MOTOR GP-GEAR–A/C COMPRESSOR

S/N: MJH10575-UP

PART OF 218-6832 COMPRESSOR & MOTOR GP-REFRIG, 233-5588, 233-5589 KIT-AIR COND & HEATER INSTL

AN ATTACHMENT

SMCS-1386, 5061 **i02881089**

NOTE	REF NO	GRAPHIC REF	PART NUMBER	QTY	PART NAME 1 2 3 4 5 6 (PRODUCT LEVEL)	SEE PAGE
	1	1	**230-3726**	1	SEAL-SHAFT	
Y	2	1	**231-6287**	1	VALVE GP-SOLENOID (A/C COMPRESSOR)	406
	3	1	**096-0194**	1	RING-RETAINING	
	4	1	**2M-9780**	1	SEAL-O-RING	
	5	1	**3D-2824**	1	SEAL-O-RING	
	6	1	**9S-8006**	1	PLUG-O-RING	

Y-SEPARATE ILLUSTRATION

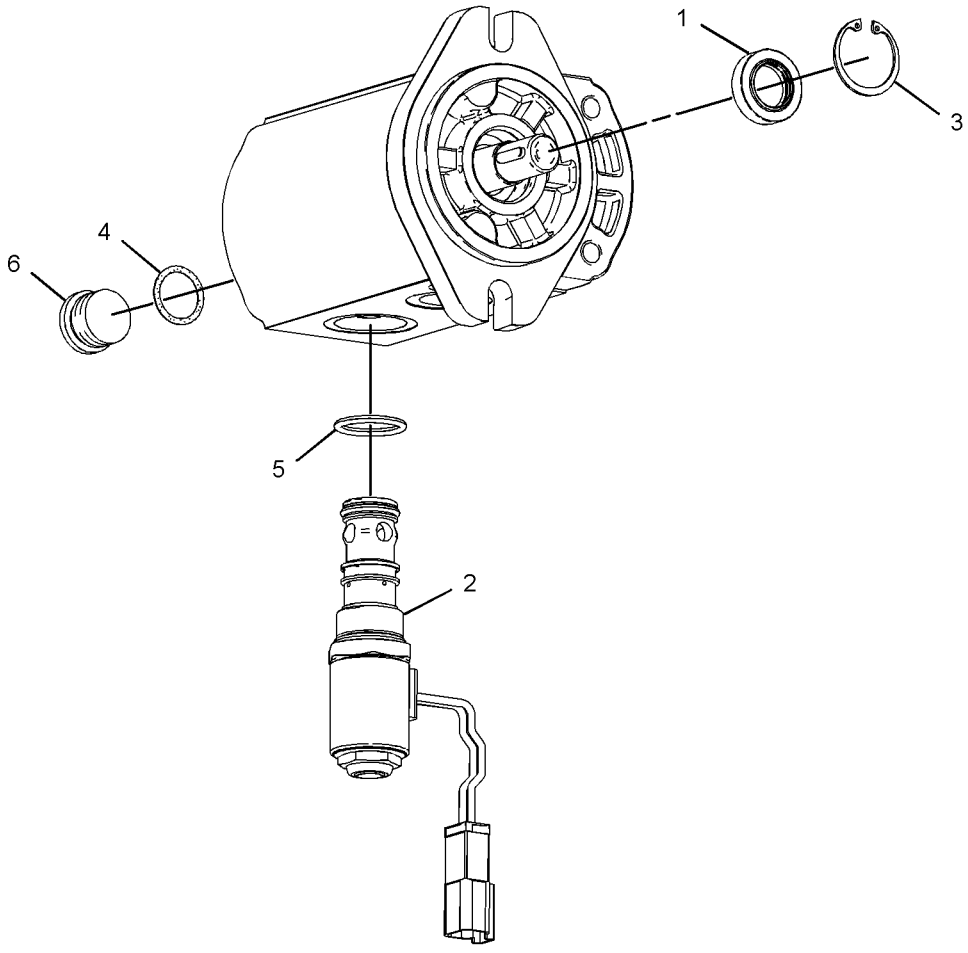

GRAPHIC #1 **<END>** g01437613

230-3727 MOTOR GP-GEAR–HYDRAULIC FAN

S/N: MJH10575-10673

PART OF 218-6058 MOTOR & MTG GP-HYDRAULIC FAN

AN ATTACHMENT

SMCS-1386, 5061 **i02633904**

NOTE	REF NO	GRAPHIC REF	PART NUMBER	QTY	PART NAME 1 2 3 4 5 6 (PRODUCT LEVEL)	SEE PAGE
	1	1	**228-9240**	1	VALVE GP-RELIEF (FAN SPEED)	
		1	**6F-6672**	1	SEAL-O-RING	
		1	**215-3277**	1	SEAL-O-RING	
					AVAILABLE REPAIR KIT(S):	
C			**278-8716**	1	KIT-SEAL (GEAR PUMP)	
					(INCLUDES SEALS, SNAP RING, SEAL BACK-UPS & AXIAL SEAL KIT)	

C-CHANGE FROM PREVIOUS TYPE

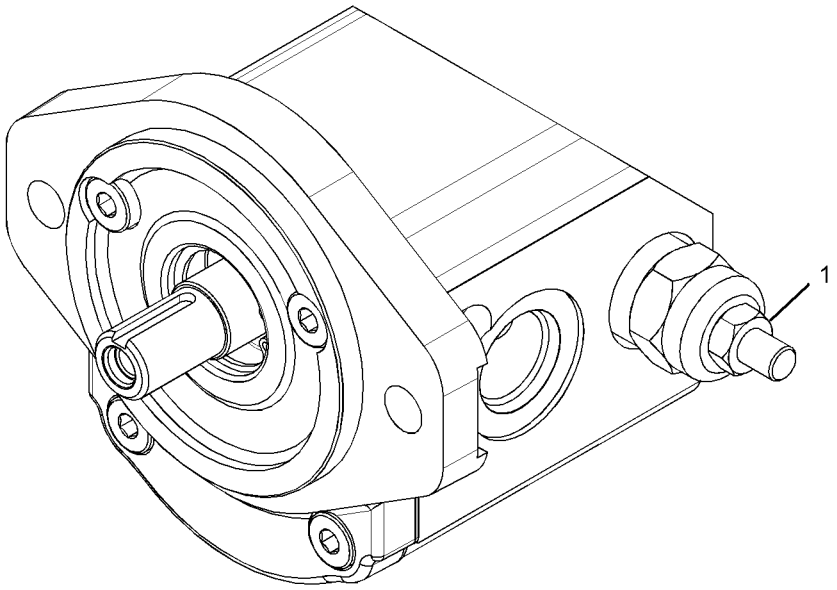

GRAPHIC #1 **<END>** g01320775

HYDRAULIC SYSTEM

289-6360 MOTOR GP-GEAR

S/N: MJH10575-UP

PART OF 233-5588, 233-5589 KIT-AIR COND & HEATER INSTL, 307-6115 MOTOR GP-GEAR AN ATTACHMENT

SMCS-1386, 5061 **i02876777**

NOTE	REF NO	GRAPHIC REF	PART NUMBER	QTY	PART NAME 1 2 3 4 5 6 (PRODUCT LEVEL)	SEE PAGE
M	1	1	**086-2369**	4	BOLT-SOCKET HEAD (M10X1.5X130-MM)	
	2	1	**8T-5095**	4	WASHER-PLATED (11X16X2-MM THK)	
	3	1	**2M-9780**	1	SEAL-O-RING	
	4	1	**9S-8006**	1	PLUG-O-RING	
					PARTS SHOWN IN GRAPHIC(S) WITHOUT A REFERENCE NUMBER ARE NOT SERVICED SEPARATELY	
					AVAILABLE GASKET KIT(S):	
			278-8716	1	KIT-SEAL	
					(INCLUDES O-RING, E-SEAL, SHAFT SEAL, SNAP RING, & SEAL BACK-UPS)	

M-METRIC PART

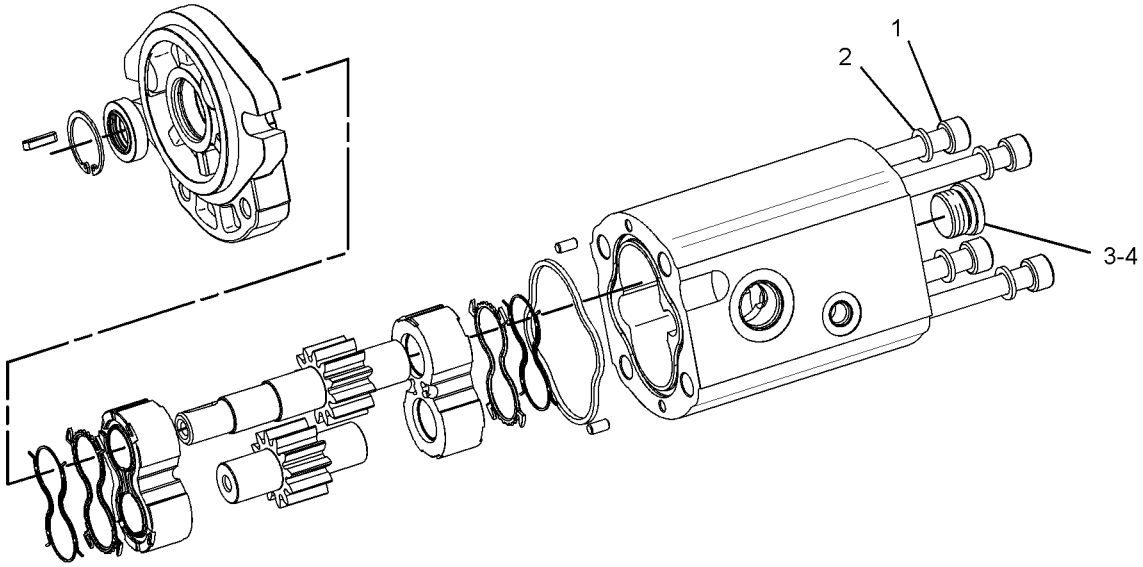

GRAPHIC #1 **<END>** g01434677

HYDRAULIC SYSTEM

307-3036 MOTOR GP-GEAR

S/N: MJH10674-UP

PART OF 218-6058 MOTOR & MTG GP-HYDRAULIC FAN

AN ATTACHMENT

SMCS-1386, 5061 **i02839812**

NOTE	REF NO	GRAPHIC REF	PART NUMBER	QTY	PART NAME 1 2 3 4 5 6 (PRODUCT LEVEL)	SEE PAGE
	1	1	**228-9240**	1	VALVE GP-RELIEF	
		1	**6F-6672**	1	SEAL-O-RING	
		1	**215-3277**	1	SEAL-O-RING	
M	2	1	**9T-4884**	2	BOLT (M10X1.5X30-MM)	
					AVAILABLE REPAIR KIT(S):	
			278-8716	1	KIT-SEAL	
					(INCLUDES SEALS, SNAP RING, AND AXIAL SEAL KIT)	

M-METRIC PART

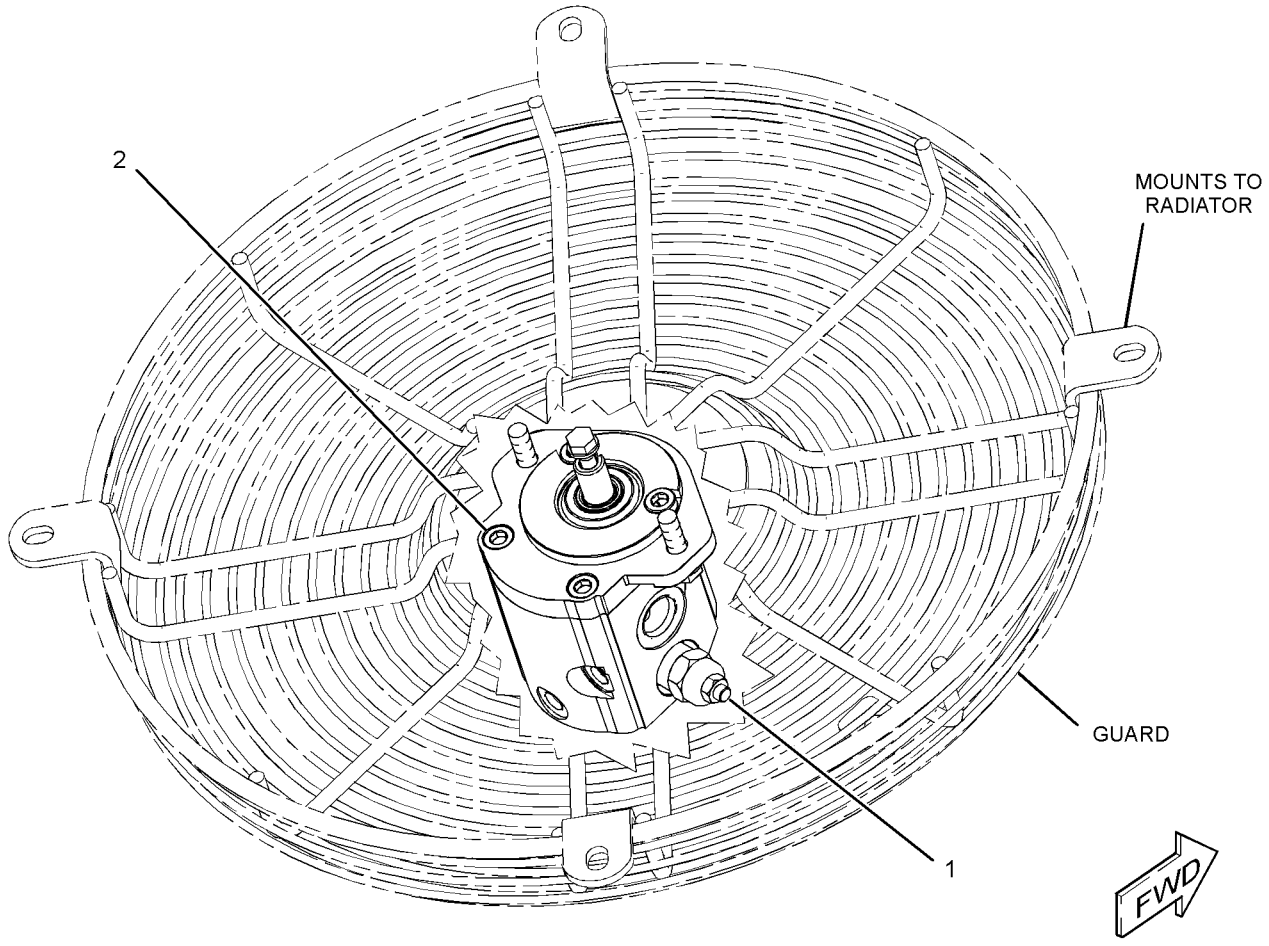

GRAPHIC #1 **<END>** g01417312

HYDRAULIC SYSTEM

307-3038 MOTOR GP-GEAR

S/N: MJH10575-UP

PART OF 261-6121 MOTOR & MTG GP-HYDRAULIC FAN

AN ATTACHMENT

SMCS-1386, 5061 **i02758769**

NOTE	REF NO	GRAPHIC REF	PART NUMBER	QTY	PART NAME 1 2 3 4 5 6 (PRODUCT LEVEL)	SEE PAGE
	1	1	**4D-2297**	1	SEAL-O-RING	
	2	1	**6V-5049**	1	SEAL-O-RING	
	3	1	**230-3686**	1	SEAL-LIP TYPE	
	4	1	**096-0194**	1	RING-RETAINING	
	5	1	**278-8713**	1	SENSOR-SPEED (FAN MOTOR)	
	6	1	**278-8717**	1	SEAL-SHAFT	
M	7	1	**9T-4884**	2	BOLT (M10X1.5X30-MM)	
					AVAILABLE REPAIR KIT(S):	
			278-8716	1	KIT-SEAL	
					(INCLUDES SEALS & RINGS)	

M-METRIC PART

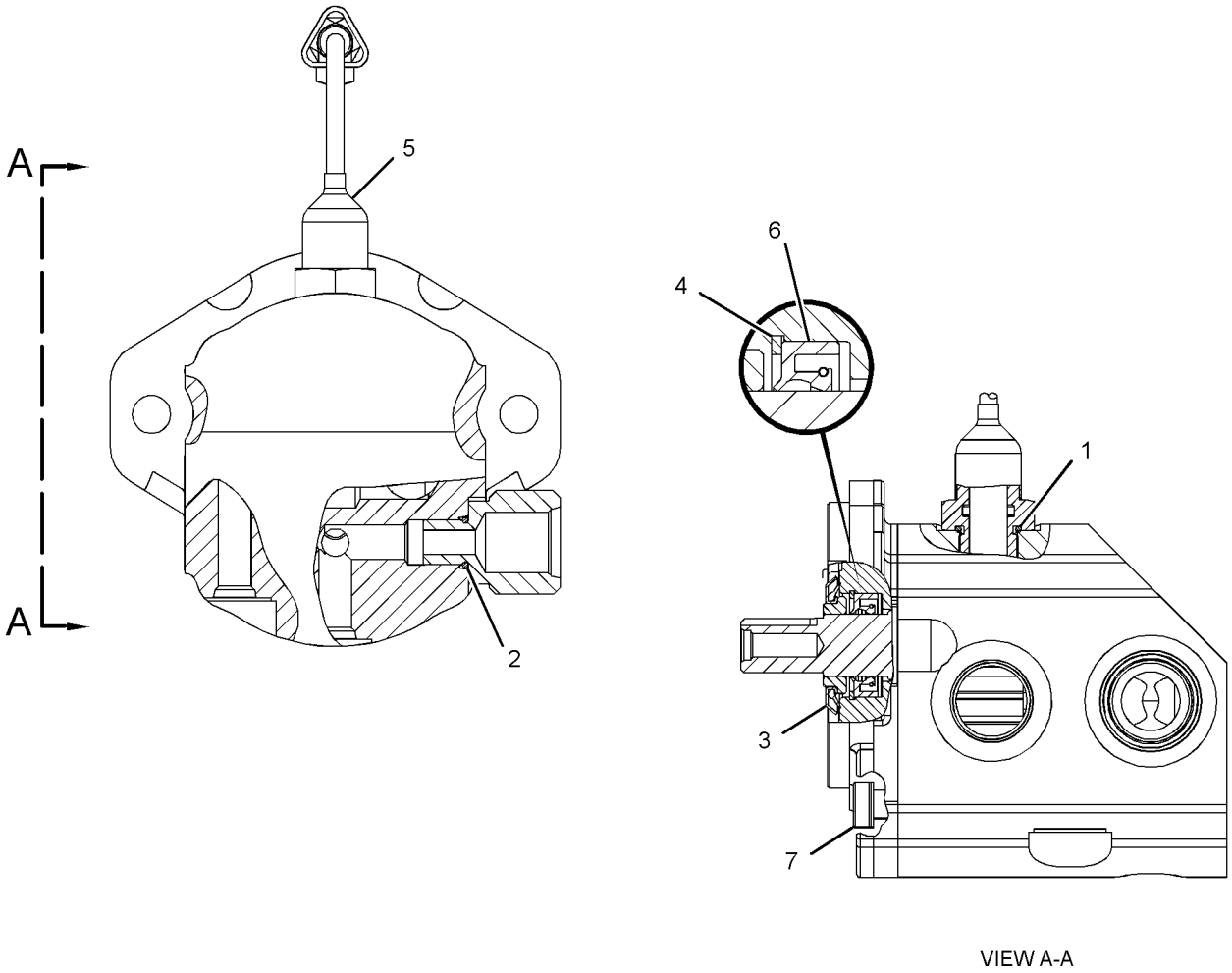

VIEW A-A

GRAPHIC #1 **<END>** g01381787

HYDRAULIC SYSTEM

307-6115 MOTOR GP-GEAR

S/N: MJH10575-UP

PART OF 218-6832 COMPRESSOR & MOTOR GP-REFRIG

AN ATTACHMENT

SMCS-1386, 5061 **i02877059**

NOTE	REF NO	GRAPHIC REF	PART NUMBER	QTY	PART NAME 1 2 3 4 5 6 (PRODUCT LEVEL)	SEE PAGE
	1	1	**283-9566**	1	VALVE GP-SOLENOID (12 VDC)	
Y	2	1	**289-6360**	1	MOTOR GP-GEAR	370

Y-SEPARATE ILLUSTRATION

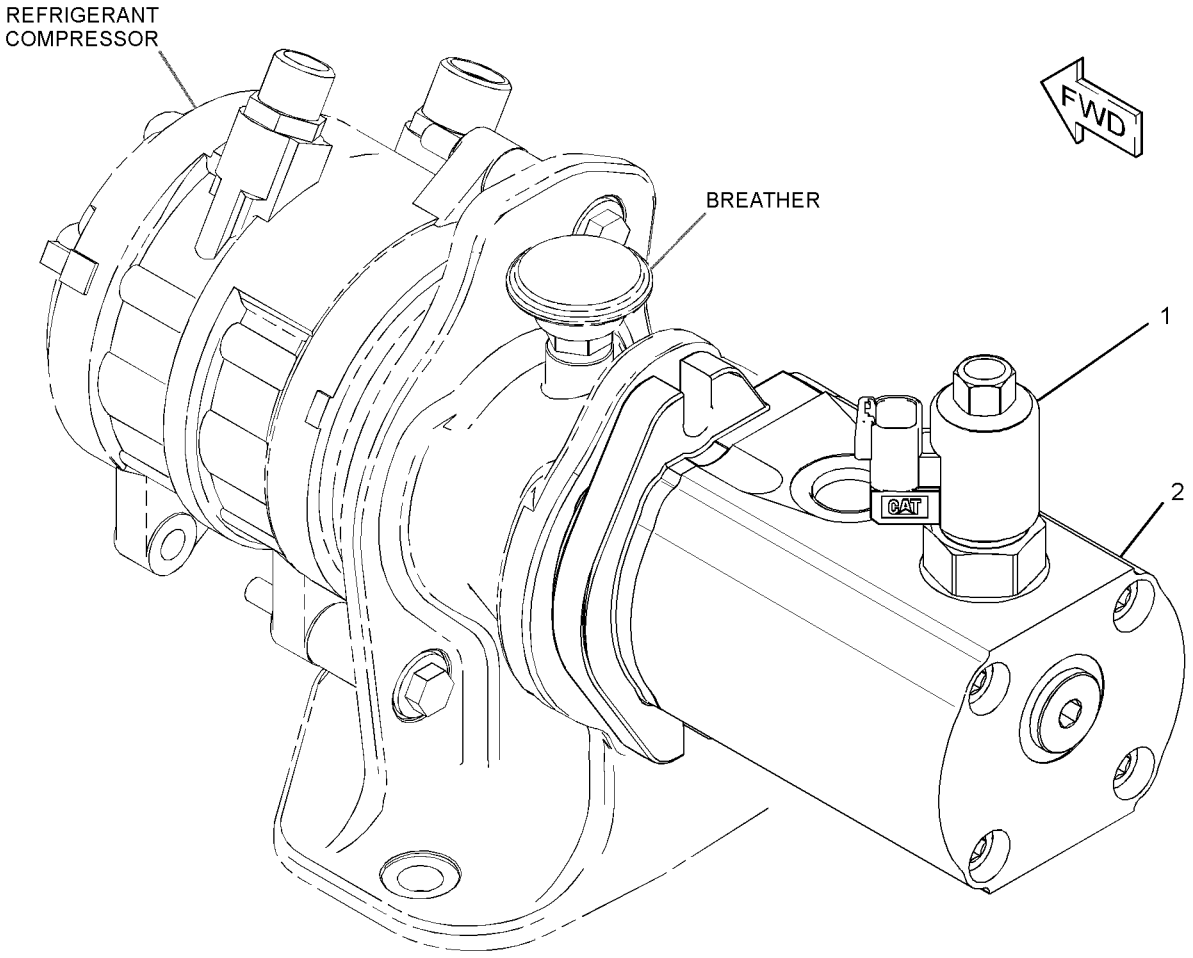

GRAPHIC #1 **<END>** g01432998

HYDRAULIC SYSTEM

154-5011 MOUNTING GP-CYLINDER

S/N: MJH10575-UP

PART OF 279-5382, 279-5390, 279-5398, 279-5403 BUCKET AR-MULTIPURPOSE AN ATTACHMENT

SMCS-5498 **i01066088**

NOTE	REF NO	GRAPHIC REF	PART NUMBER	QTY	PART NAME 1 2 3 4 5 6 (PRODUCT LEVEL)	SEE PAGE
	1	1	**154-5012**	2	PIN	
	2	1	**154-5013**	2	PIN	
	3	1	**3B-8489**	2	FITTING-GREASE	
M	4	1	**6V-9189**	4	LOCKNUT (M8X1.25-THD)	
M	5	1	**8T-6869**	4	BOLT (M8X1.25X60-MM)	

M-METRIC PART

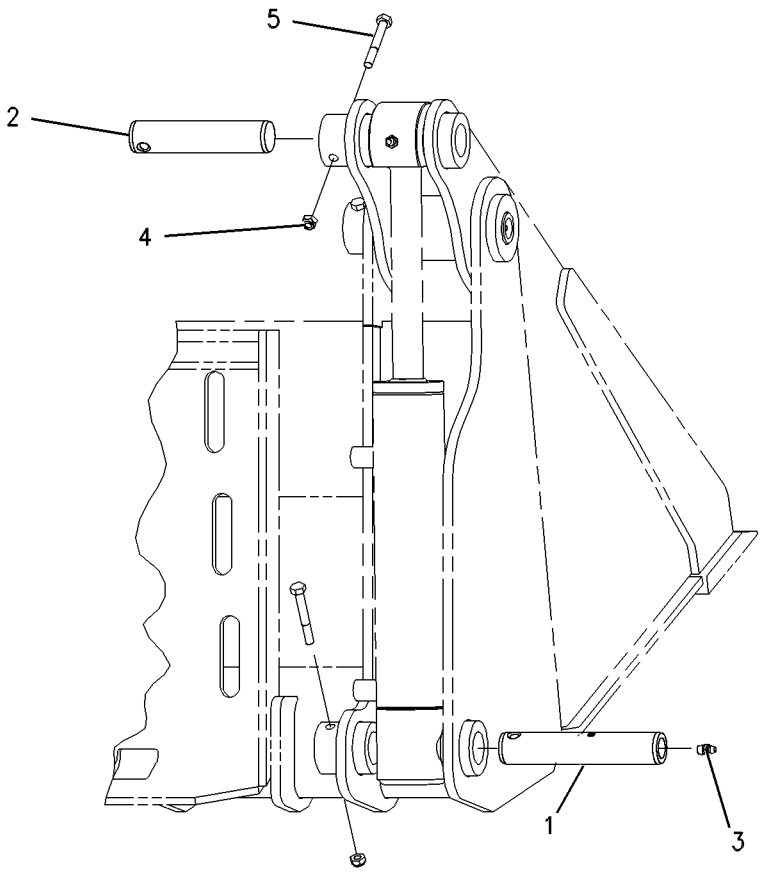

GRAPHIC #1 **<END>** g00560356

156-0891 MOUNTING GP-CYLINDER

S/N: MJH10575-UP

PART OF 157-7223, 157-7224 BUCKET AR-GRAPPLE, 279-5350, 279-5360 FORK AR-GRAPPLE AN ATTACHMENT

SMCS-5498 **i02578037**

NOTE	REF NO	GRAPHIC REF	PART NUMBER	QTY	PART NAME 1 2 3 4 5 6 (PRODUCT LEVEL)	SEE PAGE
	1	1	**255-8058**	2	PLATE	
	2	1	**156-0913**	1	PLATE	
	3	1	**157-0941**	2	PIN	
	4	1	**157-0942**	2	PIN	
	5	1	**159-8035**	2	FILM-WARNING (CRUSH HAZARD, STAY BACK)	
	6	1	**3B-8489**	2	FITTING-GREASE	
	7	1	**4M-5285**	4	RING-RETAINING (EXTERNAL)	
M	8	1	**6V-9189**	2	LOCKNUT (M8X1.25-THD)	
M	9	1	**8T-4138**	3	BOLT (M6X1X20-MM)	
M	10	1	**8T-6869**	2	BOLT (M8X1.25X60-MM)	
	11	1	**9X-2026**	3	WASHER (6.5X17X1-MM THK)	
	12	1	**9X-6274**	4	WASHER (32.5X50X1.6-MM THK)	

M-METRIC PART

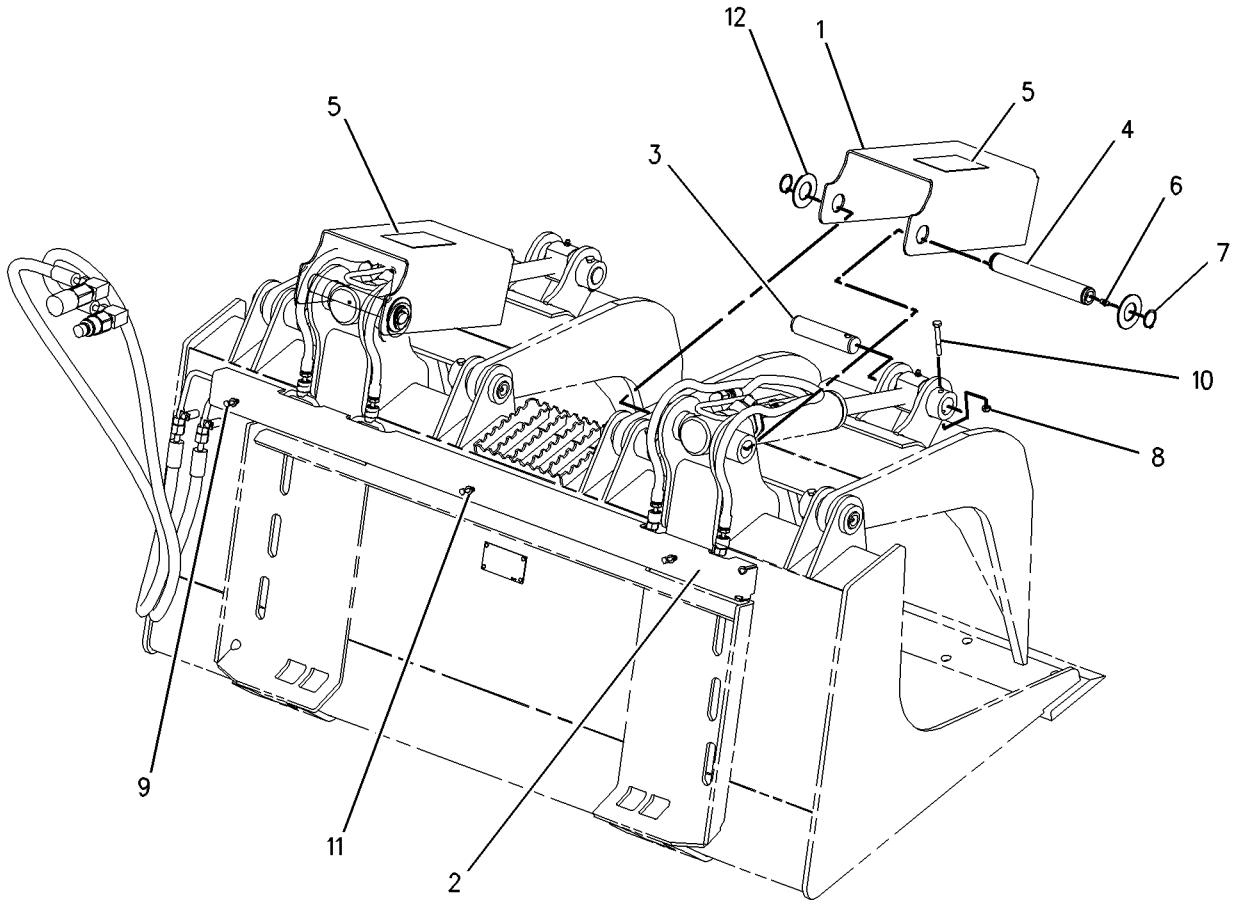

GRAPHIC #1 **<END>** g00777681

HYDRAULIC SYSTEM

165-8731 MOUNTING GP-CYLINDER

S/N: MJH10575-UP
PART OF 285-6116 GRAPPLE GP-UTILITY
AN ATTACHMENT

SMCS-5498 **i02017132**

NOTE	REF NO	GRAPHIC REF	PART NUMBER	QTY	PART NAME 1 2 3 4 5 6 (PRODUCT LEVEL)	SEE PAGE
	1	1	**154-5013**	2	PIN	
M	2	1	**6V-9189**	2	LOCKNUT (M8X1.25-THD)	
M	3	1	**8T-6869**	2	BOLT (M8X1.25X60-MM)	

M-METRIC PART

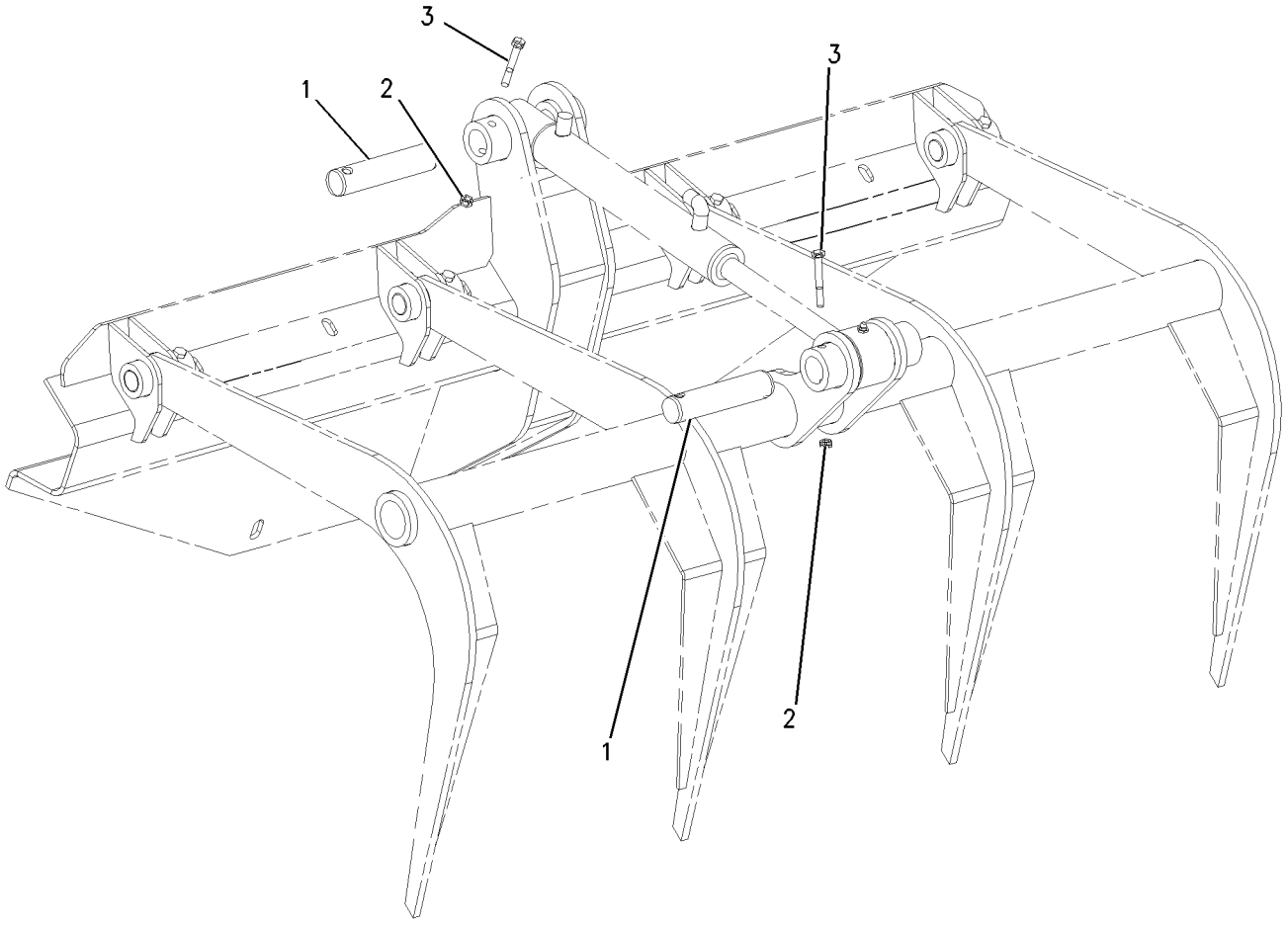

GRAPHIC #1 **<END>** g00652937

142-8714 PLUG GP-PILOT VALVE

S/N: MJH10575-UP
CANNOT BE USED WITH 225-7969—PAGE 172
AN ATTACHMENT

SMCS-5059 **i01788841**

NOTE	REF NO	GRAPHIC REF	PART NUMBER	QTY	PART NAME 1 2 3 4 5 6 (PRODUCT LEVEL)	SEE PAGE
	1	1	*148-8407*	1	PLUG AS	
		1	**3J-1907**	1	SEAL-O-RING	
		1	**9S-4191**	1	PLUG-O-RING	

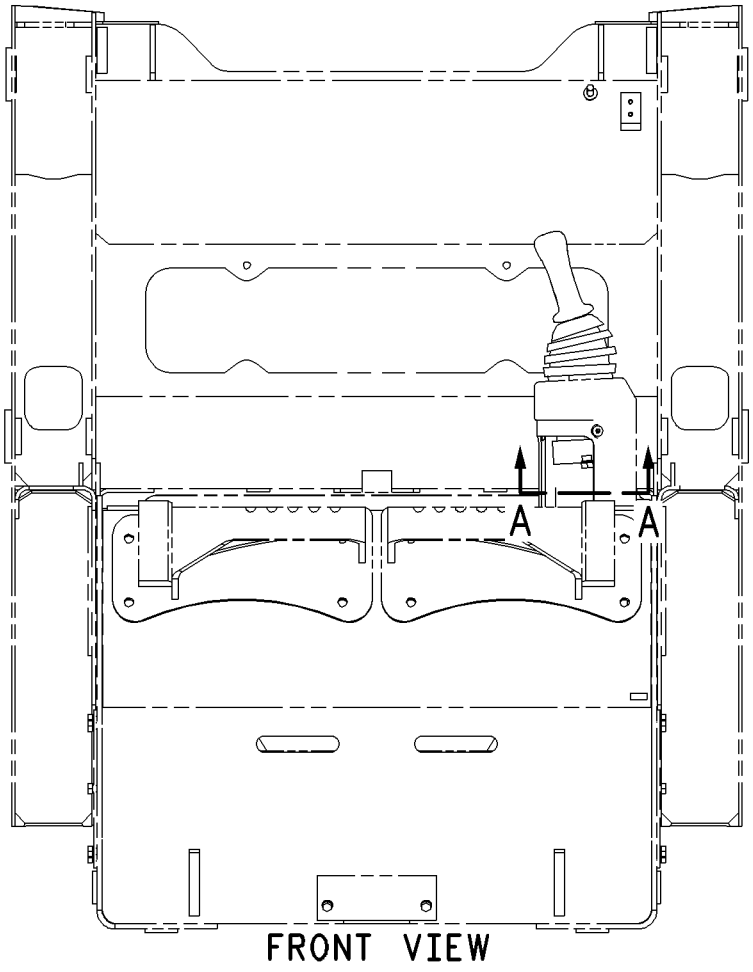

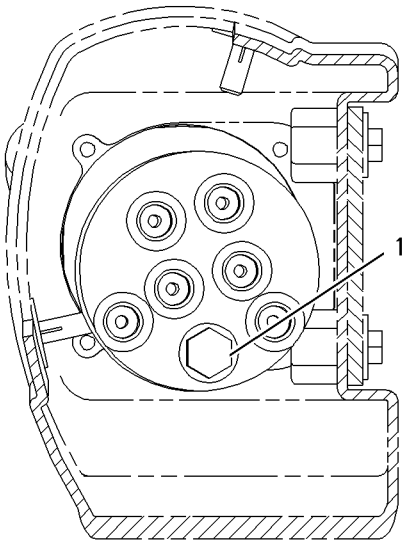

GRAPHIC #1 **<END>** g00915486

218-6079 PUMP & MTG GP-WORK TOOL

S/N: MJH10575-UP

PART OF 218-6131, 295-7504 HYDRAULIC AR

AN ATTACHMENT

SMCS-6700 **i02014441**

NOTE	REF NO	GRAPHIC REF	PART NUMBER	QTY	PART NAME 1 2 3 4 5 6 (PRODUCT LEVEL)	SEE PAGE
Y	1	1	**225-9238**	1	PUMP GP-GEAR (WORK TOOL, HIGH FLOW)	382
	2	1	**8T-4223**	2	WASHER-HARD (13.5X25.5X3-MM THK)	
M	3	1	**8T-4956**	2	BOLT (M12X1.75X35-MM)	
	4	1	**8T-5049**	1	SEAL-O-RING	

M-METRIC PART
Y-SEPARATE ILLUSTRATION

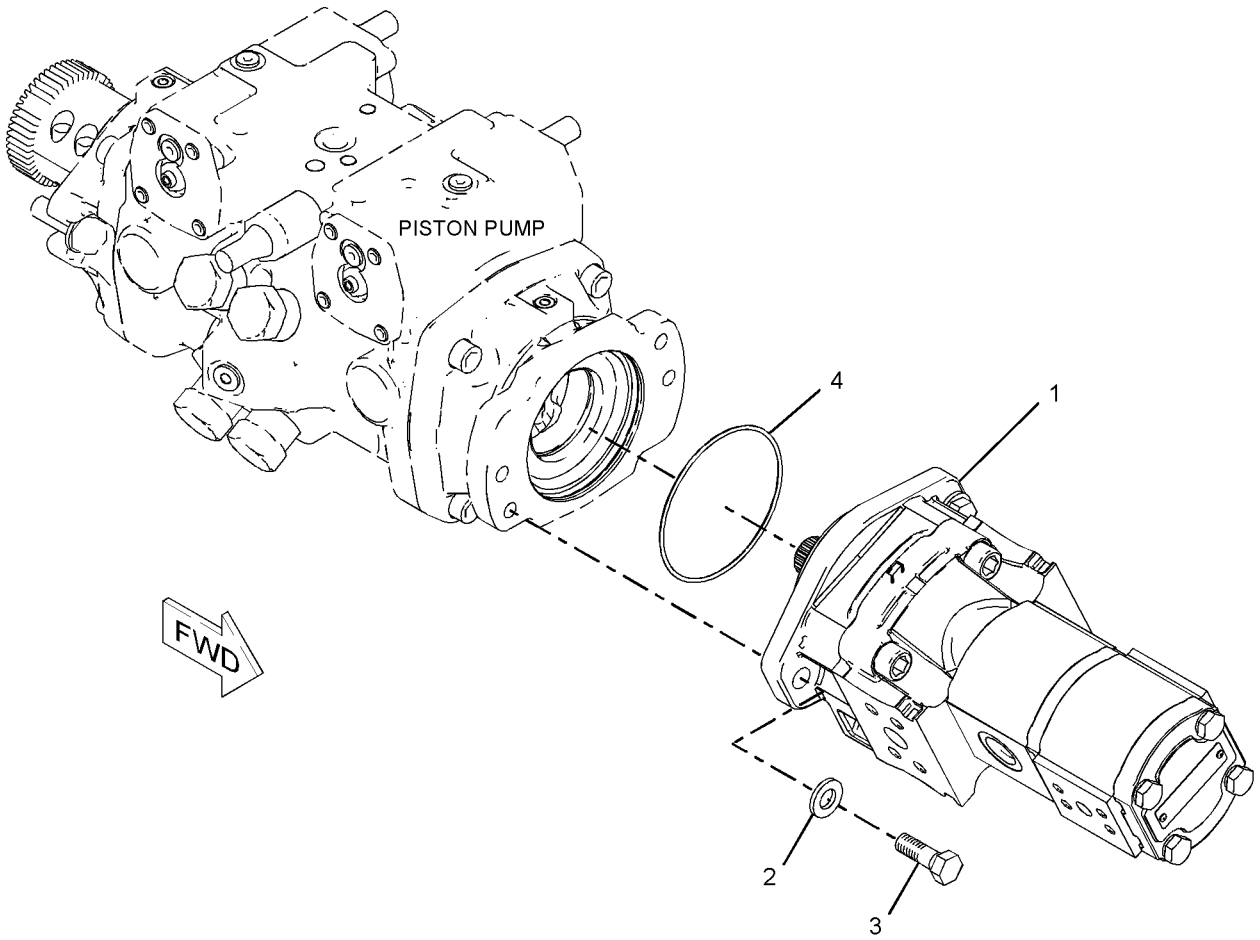

GRAPHIC #1 **<END>** g01017958

218-6175 PUMP & MTG GP-WORK TOOL

S/N: MJH10575-UP
PART OF 218-6130 HYDRAULIC AR
AN ATTACHMENT

SMCS-6700 **i02478211**

NOTE	REF NO	GRAPHIC REF	PART NUMBER	QTY	PART NAME 1 2 3 4 5 6 (PRODUCT LEVEL)	SEE PAGE
CY	1	1	**269-9427**	1	PUMP GP-GEAR (WORK TOOL)	383
	2	1	**8T-4223**	2	WASHER-HARD (13.5X25.5X3-MM THK)	
M	3	1	**8T-4956**	2	BOLT (M12X1.75X35-MM)	
	4	1	**8T-5049**	1	SEAL-O-RING	

C-CHANGE FROM PREVIOUS TYPE
M-METRIC PART
Y-SEPARATE ILLUSTRATION

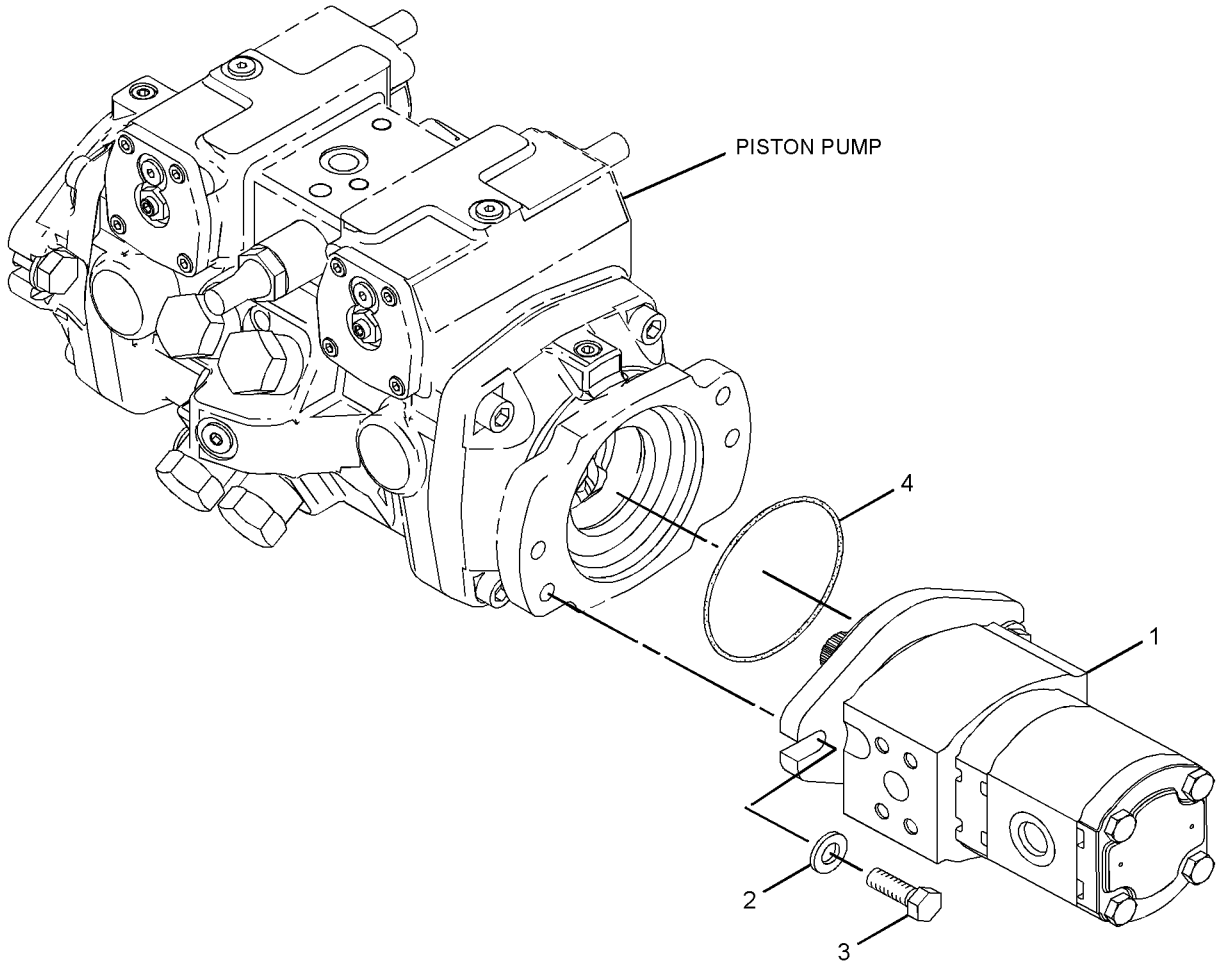

GRAPHIC #1 **<END>** g01293808

261-6094 PUMP & MTG GP-WORK TOOL

S/N: MJH10575-UP
STAGE II SOUND
PART OF 257-5716 CONVERSION AR-ROADING, 261-6132 HYDRAULIC AR
AN ATTACHMENT

SMCS-6700 **i02431671**

NOTE	REF NO	GRAPHIC REF	PART NUMBER	QTY	PART NAME 1 2 3 4 5 6 (PRODUCT LEVEL)	SEE PAGE
	1	1	**269-9462**	1	PUMP GP-GEAR	
		1	**8C-3110**	1	RING-RETAINING	
		1	**230-3757**	2	SEAL-SHAFT	
	2	1	**8T-4223**	2	WASHER-HARD (13.5X25.5X3-MM THK)	
M	3	1	**8T-4956**	2	BOLT (M12X1.75X35-MM)	
	4	1	**8T-5049**	1	SEAL-O-RING	

M-METRIC PART

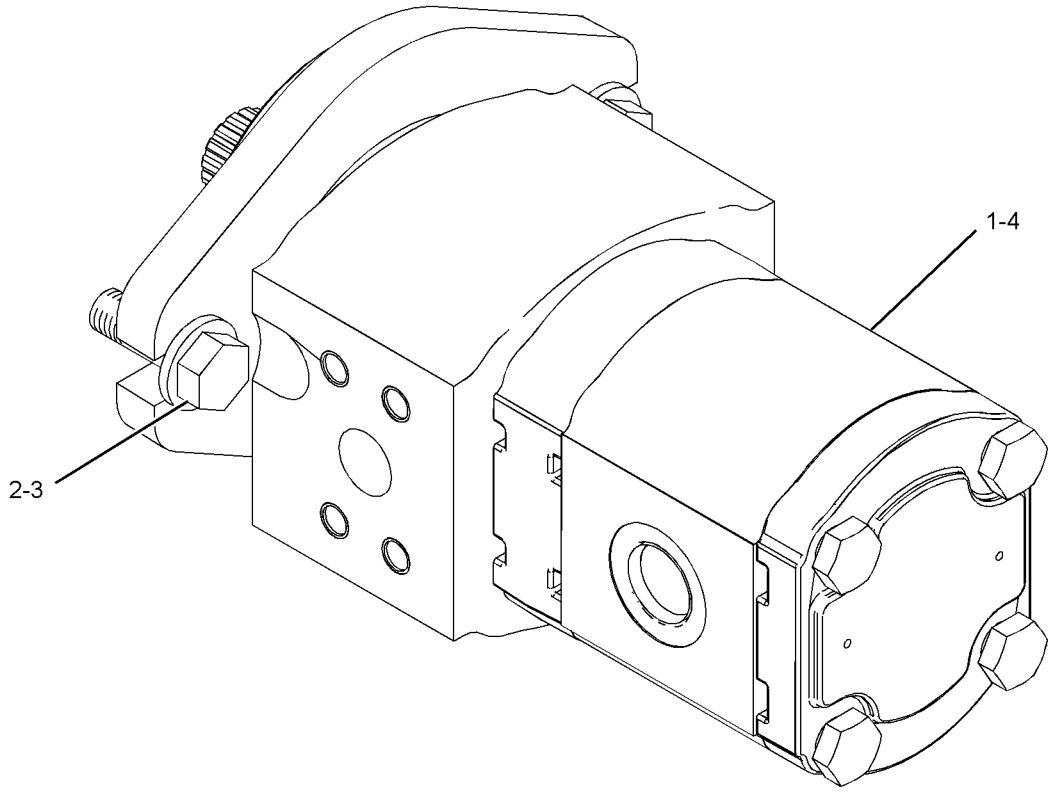

GRAPHIC #1 **<END>** g01229588

HYDRAULIC SYSTEM

261-6095 PUMP & MTG GP-WORK TOOL

S/N: MJH10575-UP

PART OF 261-6139, 295-7507 HYDRAULIC AR

AN ATTACHMENT

SMCS-6700 **i02453730**

NOTE	REF NO	GRAPHIC REF	PART NUMBER	QTY	PART NAME 1 2 3 4 5 6 (PRODUCT LEVEL)	SEE PAGE
	1	1	**269-9465**	1	PUMP GP-GEAR	
		1	**8C-3110**	1	RING-RETAINING	
		1	**230-3757**	2	SEAL-SHAFT	
	2	1	**8T-4223**	2	WASHER-HARD (13.5X25.5X3-MM THK)	
M	3	1	**8T-4956**	2	BOLT (M12X1.75X35-MM)	
	4	1	**8T-5049**	1	SEAL-O-RING	

M-METRIC PART

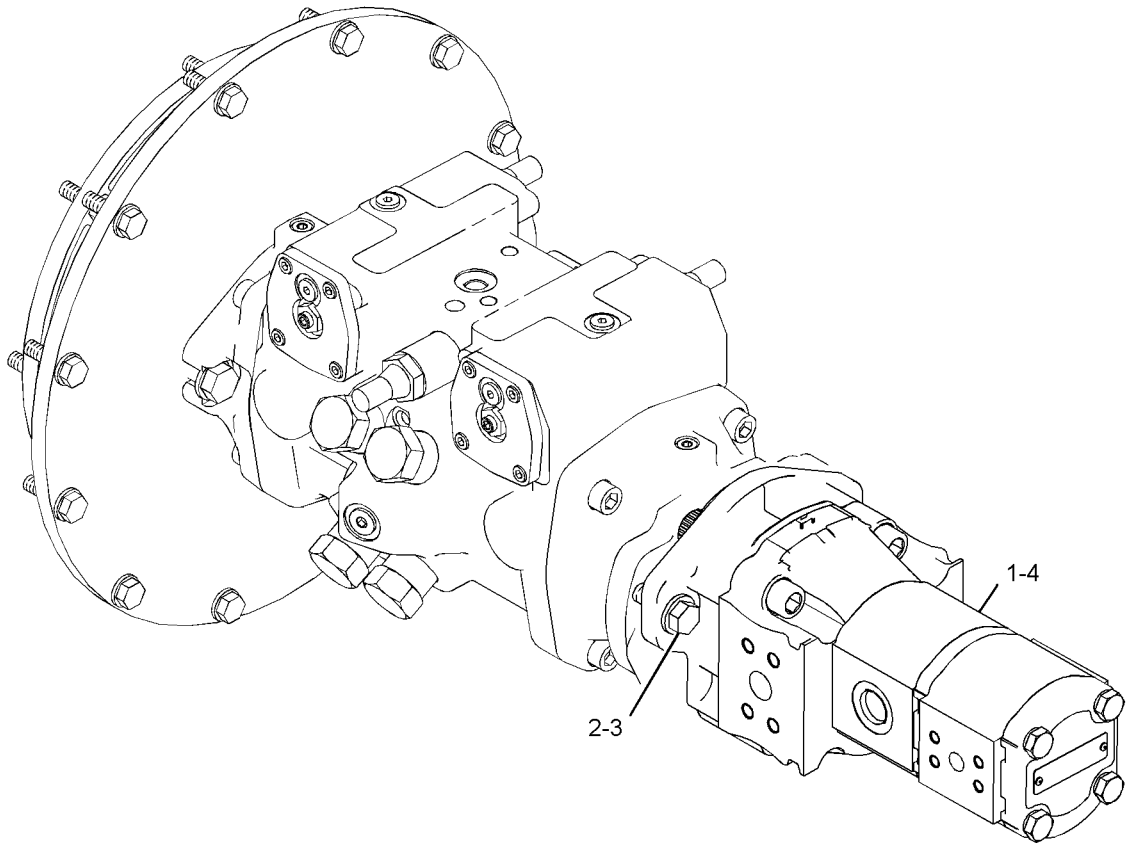

GRAPHIC #1 **<END>** g01229699

225-9238 PUMP GP-GEAR–WORK TOOL

S/N: MJH10575-UP
HIGH FLOW
PART OF 218-6737 KIT-HIGH FLOW CONVERSION, 218-6079 PUMP & MTG GP-WORK TOOL
AN ATTACHMENT

SMCS-5073 **i01964579**

NOTE	REF NO	GRAPHIC REF	PART NUMBER	QTY	PART NAME 1 2 3 4 5 6 (PRODUCT LEVEL)	SEE PAGE
	1	1	**230-3757**	2	SEAL-SHAFT	
	2	1	**8C-3110**	1	RING-RETAINING	

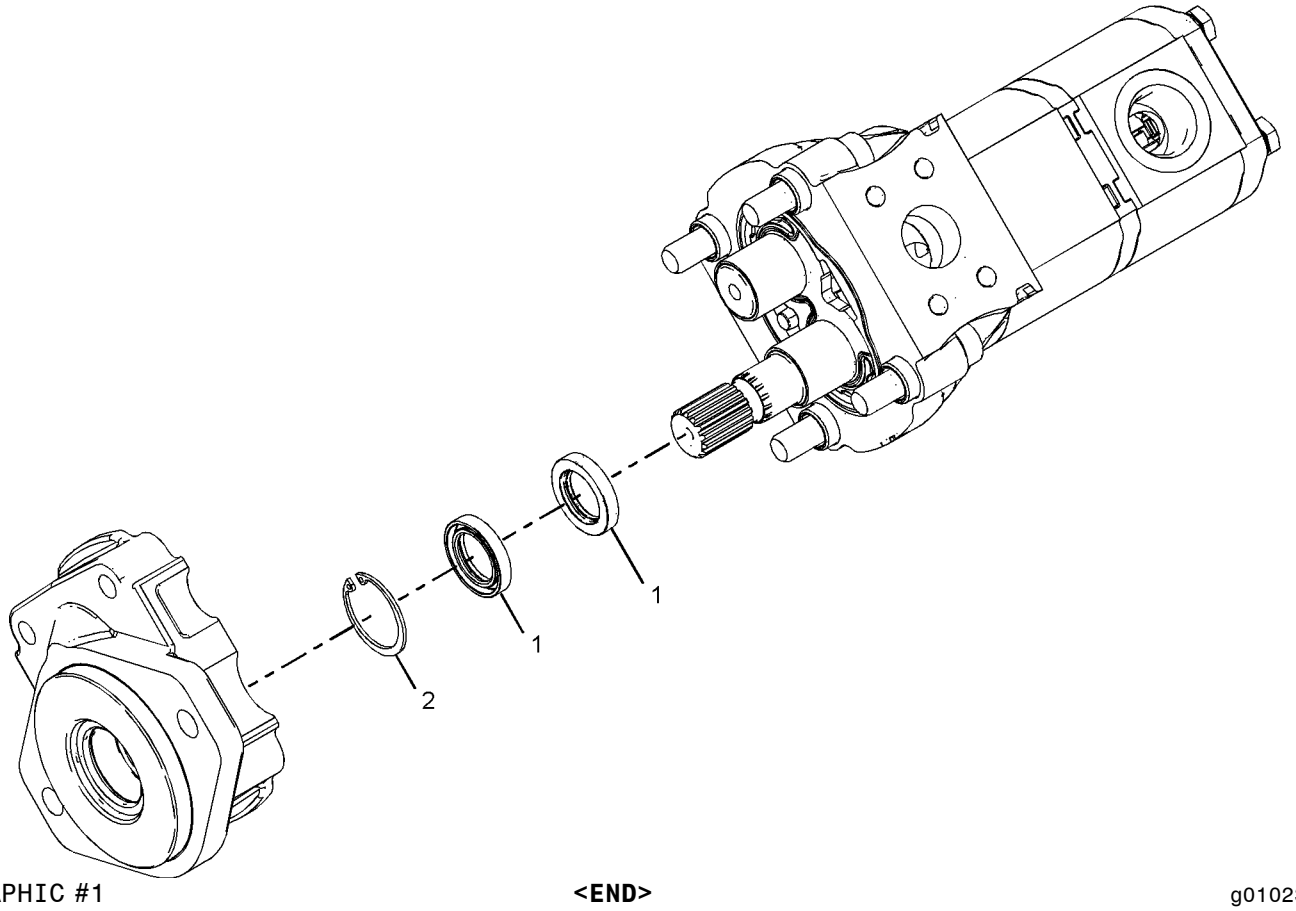

GRAPHIC #1 **<END>** g01023802

HYDRAULIC SYSTEM

269-9427 PUMP GP-GEAR

S/N: MJH10575-UP

PART OF 218-6175 PUMP & MTG GP-WORK TOOL

AN ATTACHMENT

SMCS-5073 **i02536697**

NOTE	REF NO	GRAPHIC REF	PART NUMBER	QTY	PART NAME 1 2 3 4 5 6 (PRODUCT LEVEL)	SEE PAGE
	1	1	**271-8674**	1	COUPLER	
	2	1	**8T-5095**	4	WASHER-PLATED (11X16X2-MM THK)	
	3	1	**289-6352**	4	BOLT (M10X1.5X195-MM)	
J	4	1	**096-0194**	1	RING-RETAINING	
J	5	1	**271-8661**	1	SEAL-SHAFT	
J	6	1	**230-3726**	1	SEAL-SHAFT	
					AVAILABLE REPAIR KIT(S):	
J			**289-6356**	4	KIT-SEAL	

J-KIT MARKED J SERVICES PARTS MARKED J

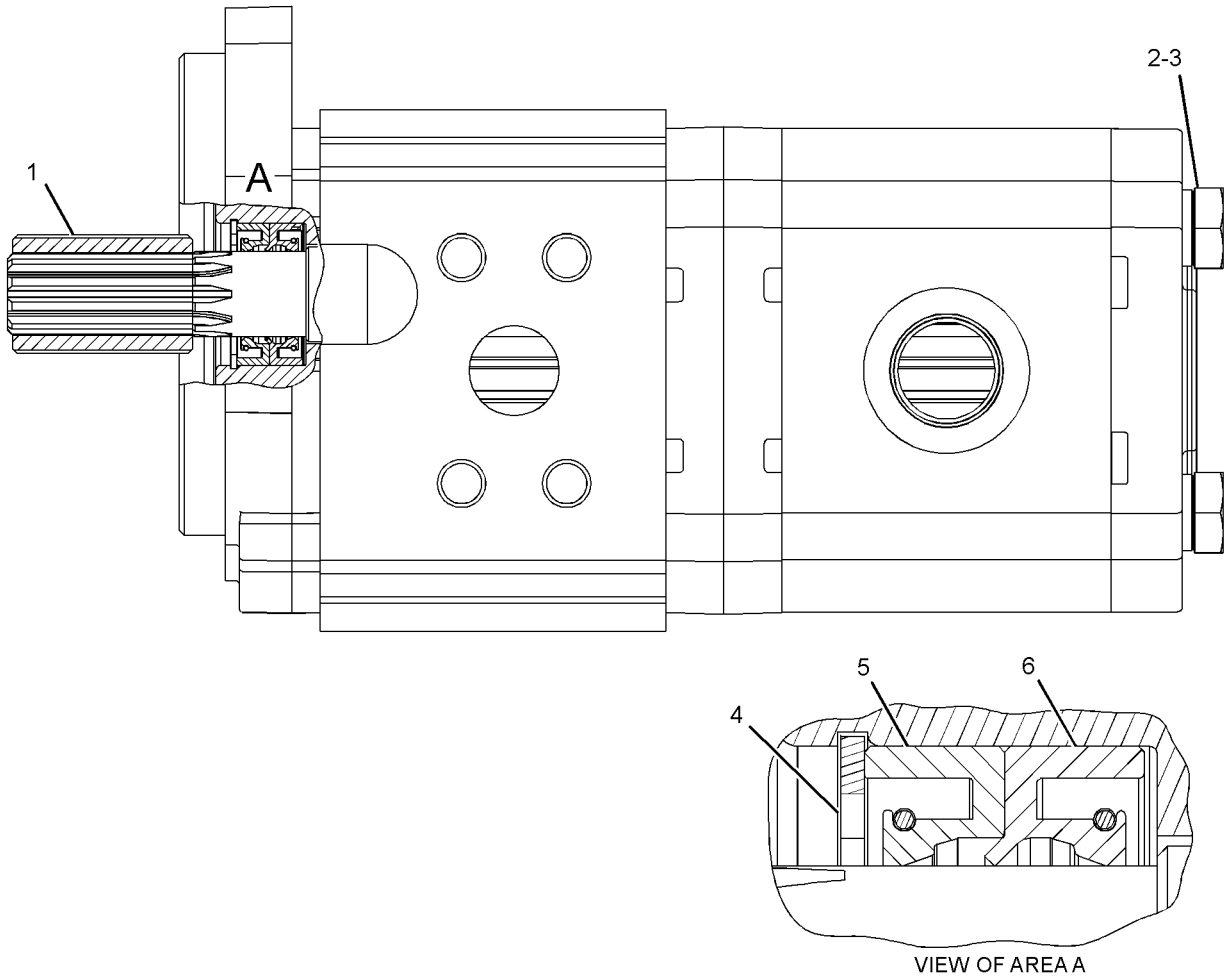

GRAPHIC #1 **<END>** g01342407

HYDRAULIC SYSTEM

233-5980 TANK & MTG GP-HYDRAULIC

S/N: MJH10575-UP

PART OF 278-1227 HYDRAULIC AR

SMCS-5056 **i02890213**

NOTE	REF NO	GRAPHIC REF	PART NUMBER	QTY	PART NAME 1 2 3 4 5 6 (PRODUCT LEVEL)	SEE PAGE
	1	1	**5P-4961**	2	CLAMP-HOSE	
	2	1	**154-4014**	1	BRACKET	
Y	3	1	**204-1491**	1	TANK GP-HYDRAULIC	385
	4	1	**207-9729**	1	BREATHER AS (INLINE) (HYDRAULIC OIL)	
B	5	1	**233-5997**	1	HOSE	
	6	1	**6D-4246**	1	CLIP	
	7	1	**8T-4121**	1	WASHER-HARD (11X21X2.5-MM THK)	
M	8	1	**8T-4136**	1	BOLT (M10X1.5X25-MM)	
M	9	1	**8T-4189**	2	BOLT (M8X1.25X20-MM)	
E	10	1	**5P-1442**		HOSE (65-CM)	

B-USE AS REQUIRED
E-ORDER BY THE CENTIMETER
M-METRIC PART
Y-SEPARATE ILLUSTRATION

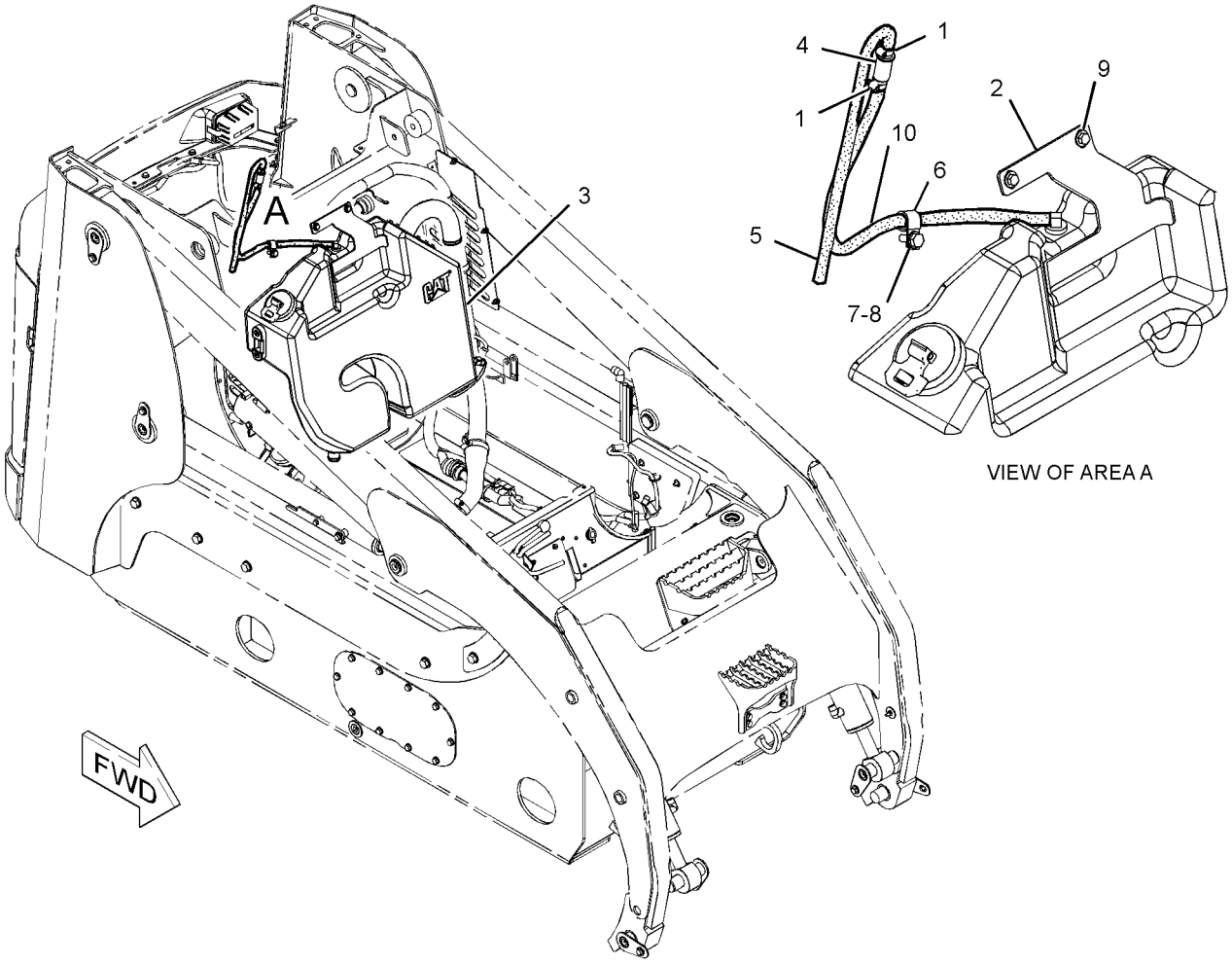

GRAPHIC #1 **<END>** g01309558

HYDRAULIC SYSTEM

204-1491 TANK GP-HYDRAULIC

S/N: MJH10575-UP

PART OF 233-5980 TANK & MTG GP-HYDRAULIC

SMCS-5056 **i02014392**

NOTE	REF NO	GRAPHIC REF	PART NUMBER	QTY	PART NAME 1 2 3 4 5 6 (PRODUCT LEVEL)	SEE PAGE
	1	1	**6W-5698**	1	GROMMET	
M	2	1	**099-2374**	6	BOLT-SOCKET HEAD (M5X0.8X12-MM)	
	3	1	**132-3056**	1	SEAL-O-RING	
	4	1	**142-8928**	1	ELBOW	
	5	1	**142-8929**	1	SCREEN-SUCTION (HYDRAULIC TANK)	
	6	1	**142-8937**	1	CAP AS-FILLER (HYDRAULIC TANK)	
	7	1	**204-1492**	1	TANK GP-HYDRAULIC	
		1	**192-2668**	1	GAUGE-SIGHT (HYDRAULIC TANK)	
	8	1	**204-1499**	1	TUBE AS	
	9	1	**236-1872**	1	SWITCH AS-TEMPERATURE (HYDRAULIC OIL)	
		1	**102-8803**	1	KIT-RECEPTACLE (3-PIN)	
	10	1	**3K-0360**	1	SEAL-O-RING	

M-METRIC PART

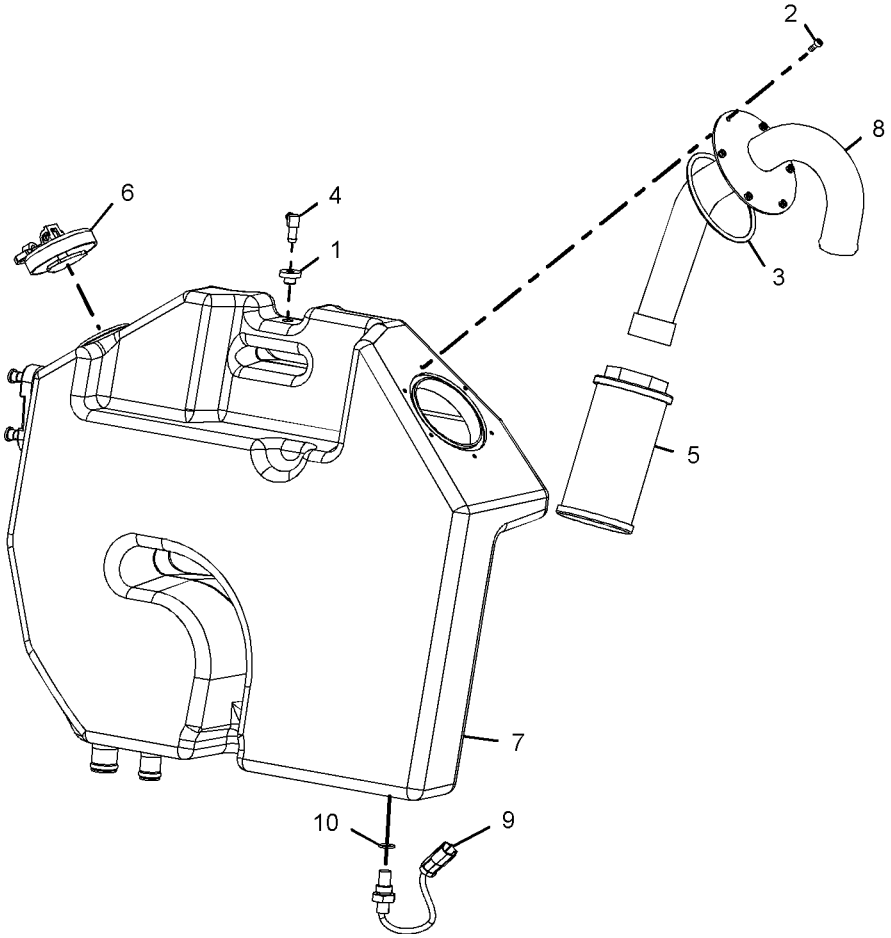

GRAPHIC #1

<END>

g01032724

HYDRAULIC SYSTEM

218-6240 VALVE & LINES GP-COUPLER

S/N: MJH10575-UP
WITH MANUAL LOWERING CONTROL
PART OF 218-6322 COUPLER AR-QUICK
AN ATTACHMENT
TYPE 1

SMCS-5057, 5147, 5479 **i02710053**

NOTE	REF NO	GRAPHIC REF	PART NUMBER	QTY	PART NAME 1 2 3 4 5 6 (PRODUCT LEVEL)	SEE PAGE
	1	1	**9X-6581**	1	NUT-O-RING SEAL (1-14-THD)	
Y	2	1	**112-1817**	1	VALVE GP-MANUAL (MANUAL LOWERING CONTROL)	395
	3	1	**124-2456**	1	FILM-INSTRUCTION (NO STEP)	
	4	1	**207-9737**	1	BRACKET AS	
I	5	1	**207-9756**	4	HOSE AS	
	6	1	**212-6690**	1	GUARD	
	7	1	**218-6213**	1	TUBE AS	
I	8	1	**218-6241**	1	HOSE AS	
I	9	1	**218-6245**	2	HOSE AS	
I	10	1	**218-6249**	1	HOSE AS	
	11	1	**218-6938**	1	BRACKET	
I	12	1	**219-4335**	2	HOSE AS	
Y	13	1	**233-7128**	1	MANIFOLD GP-CONTROL (QUICK COUPLER)	362
	14	1	**252-0342**	1	TUBE AS	
	15	1	**252-0343**	1	TUBE AS	
	16	1	**269-9404**	1	BRACKET	
	17	1	**270-0216**	1	BRACKET	
	18	1	**276-0074**	1	CABLE AS	
		1	**8T-4742**	1	END-YOKE ROD	
		1	**8T-4744**	1	PIN AS-SPRING	
	19	1	**283-9264**	1	BRACKET	
CI	20	1	**291-3755**	1	HOSE AS	
	21	1	*148-8325*	4	CONNECTOR AS	
					(EACH INCLUDES)	
		1	**3J-1907**	1	SEAL-O-RING	
		1	**4J-5477**	1	SEAL-O-RING	
		1	**6V-8641**	1	CONNECTOR	
	22	1	*148-8336*	3	CONNECTOR AS	
					(EACH INCLUDES)	
		1	**3J-1907**	1	SEAL-O-RING	
		1	**6V-8397**	1	SEAL-O-RING	
		1	**6V-8636**	1	CONNECTOR	
	23	1	*148-8378*	2	ELBOW AS	
					(EACH INCLUDES)	
		1	**3J-1907**	1	SEAL-O-RING	
		1	**6V-8397**	1	SEAL-O-RING	
		1	**6V-8724**	1	ELBOW	
	24	1	*148-8446*	1	TEE AS-SWIVEL	
		1	**6V-9838**	1	TEE-SWIVEL	
		1	**7J-9108**	2	SEAL-O-RING	
	25	1	*150-4034*	2	TEE AS	
					(EACH INCLUDES)	
		1	**6V-8397**	3	SEAL-O-RING	
		1	**8T-0379**	1	TEE-BULKHEAD	
	26	1	*156-4282*	1	REDUCER AS	
		1	**6V-8397**	1	SEAL-O-RING	
		1	**6V-8938**	1	REDUCER-O-RING	
	27	1	*164-5624*	1	ELBOW AS	
		1	**3J-1907**	1	SEAL-O-RING	
		1	**6V-8398**	1	SEAL-O-RING	
		1	**9X-2085**	1	ELBOW	
	28	1	**1F-7567**	1	CLIP (LOOP)	
	29	1	**2V-3216**	4	CLIP	

218-6240 VALVE & LINES GP-COUPLER *(contd.)* i02710053

NOTE	REF NO	GRAPHIC REF	PART NUMBER	QTY	PART NAME 1 2 3 4 5 6 (PRODUCT LEVEL)	SEE PAGE
	30	1	**3S-2093**	1	STRAP-CABLE	
	31	1	**4B-4274**	1	WASHER (5.5X13X1.2-MM THK)	
	32	1	**4P-7581**	1	CLIP (LADDER)	
	33	1	**6V-8397**	6	SEAL-O-RING	
	34	1	**6V-9168**	2	NUT (11/16-16-THD)	
M	35	1	**8T-0287**	1	BOLT (M5X0.8X10-MM)	
	36	1	**7B-1597**	1	CLIP (LOOP)	
	37	1	**7G-2950**	1	CLIP (SLOT)	
	38	1	**7G-2951**	1	CLIP (TAB)	
	39	1	**7H-7055**	2	CLIP	
	40	1	**7X-7729**	6	WASHER (11X25X3-MM THK)	
	41	1	**8M-4791**	2	WASHER-HARD (13.5X27X3-MM THK)	
M	42	1	**8T-0285**	4	SCREW-MACHINE (M4X0.7X12-MM)	
C	43	1	**8T-4121**	8	WASHER-HARD (11X21X2.5-MM THK)	
M	44	1	**8T-4133**	4	NUT (M10X1.5-THD)	
CM	45	1	**8T-4136**	3	BOLT (M10X1.5X25-MM)	
M	46	1	**8T-4189**	4	BOLT (M8X1.25X20-MM)	
M	47	1	**8T-4191**	3	BOLT (M10X1.5X16-MM)	
M	48	1	**8T-4201**	3	BOLT-LOCKING (M10X1.5X20-MM)	
	49	1	**8T-4224**	4	WASHER-HARD (8.8X16X2-MM THK)	
M	50	1	**8T-5005**	2	BOLT (M10X1.5X70-MM)	
	51	1	**9M-8406**	2	CLIP	
	52	1	**9S-1350**	1	CLIP	
	53	1	**9X-1481**	1	WASHER (13X25.4X1.6-MM THK)	

C-CHANGE FROM PREVIOUS TYPE
I-REFER TO HYDRAULIC INFORMATION SYSTEM
M-METRIC PART
Y-SEPARATE ILLUSTRATION

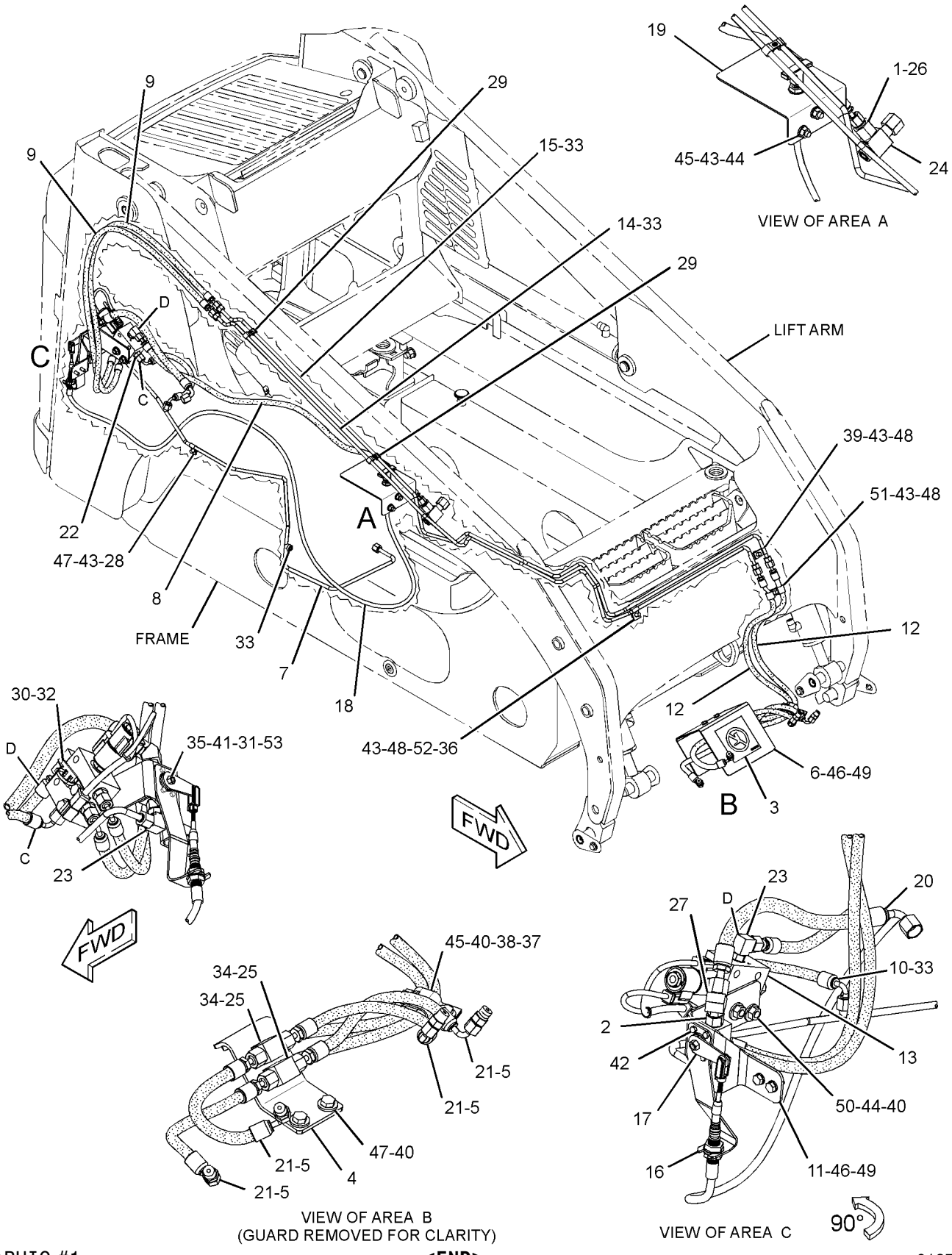

GRAPHIC #1

<END>

g01378129

HYDRAULIC SYSTEM

218-6240 VALVE & LINES GP-COUPLER

S/N: MJH10575-UP
WITH MANUAL LOWERING CONTROL
PART OF 218-6322 COUPLER AR-QUICK
AN ATTACHMENT
TYPE 2

SMCS-5057, 5147, 5479 **i02753317**

NOTE	REF NO	GRAPHIC REF	PART NUMBER	QTY	PART NAME 1 2 3 4 5 6 (PRODUCT LEVEL)	SEE PAGE
	1	1	**9X-6581**	1	NUT-O-RING SEAL (1-14-THD)	
Y	2	1	**112-1817**	1	VALVE GP-MANUAL (MANUAL LOWERING CONTROL)	395
	3	1	**124-2456**	1	FILM-INSTRUCTION (NO STEP)	
	4	1	**207-9737**	1	BRACKET AS	
I	5	1	**207-9756**	4	HOSE AS	
	6	1	**212-6690**	1	GUARD	
	7	1	**218-6213**	1	TUBE AS	
I	8	1	**218-6241**	1	HOSE AS	
I	9	1	**218-6245**	2	HOSE AS	
I	10	1	**218-6249**	1	HOSE AS	
	11	1	**218-6938**	1	BRACKET	
I	12	1	**219-4335**	2	HOSE AS	
Y	13	1	**233-7128**	1	MANIFOLD GP-CONTROL (QUICK COUPLER)	362
	14	1	**252-0342**	1	TUBE AS	
	15	1	**252-0343**	1	TUBE AS	
	16	1	**269-9404**	1	BRACKET	
	17	1	**270-0216**	1	BRACKET	
CY	18	1	*298-7198*	1	CABLE GP-CONTROL (MANUAL LOWERING)	518
	19	1	**283-9264**	1	BRACKET	
I	20	1	**291-3755**	1	HOSE AS	
	21	1	*148-8325*	4	CONNECTOR AS	
					(EACH INCLUDES)	
		1	**3J-1907**	1	SEAL-O-RING	
		1	**4J-5477**	1	SEAL-O-RING	
		1	**6V-8641**	1	CONNECTOR	
	22	1	*148-8336*	3	CONNECTOR AS	
					(EACH INCLUDES)	
		1	**3J-1907**	1	SEAL-O-RING	
		1	**6V-8397**	1	SEAL-O-RING	
		1	**6V-8636**	1	CONNECTOR	
	23	1	*148-8378*	2	ELBOW AS	
					(EACH INCLUDES)	
		1	**3J-1907**	1	SEAL-O-RING	
		1	**6V-8397**	1	SEAL-O-RING	
		1	**6V-8724**	1	ELBOW	
	24	1	*148-8446*	1	TEE AS-SWIVEL	
		1	**6V-9838**	1	TEE-SWIVEL	
		1	**7J-9108**	2	SEAL-O-RING	
	25	1	*150-4034*	2	TEE AS	
					(EACH INCLUDES)	
		1	**6V-8397**	3	SEAL-O-RING	
		1	**8T-0379**	1	TEE-BULKHEAD	
	26	1	*156-4282*	1	REDUCER AS	
		1	**6V-8397**	1	SEAL-O-RING	
		1	**6V-8938**	1	REDUCER-O-RING	
	27	1	*164-5624*	1	ELBOW AS	
		1	**3J-1907**	1	SEAL-O-RING	
		1	**6V-8398**	1	SEAL-O-RING	
		1	**9X-2085**	1	ELBOW	
	28	1	**1F-7567**	1	CLIP (LOOP)	
	29	1	**2V-3216**	4	CLIP	
	30	1	**3S-2093**	1	STRAP-CABLE	
	31	1	**4B-4274**	1	WASHER (5.5X13X1.2-MM THK)	

218-6240 VALVE & LINES GP-COUPLER *(contd.)* i02753317

NOTE	REF NO	GRAPHIC REF	PART NUMBER	QTY	PART NAME 1 2 3 4 5 6 (PRODUCT LEVEL)	SEE PAGE
	32	1	**4P-7581**	1	CLIP (LADDER)	
	33	1	**6V-8397**	6	SEAL-O-RING	
	34	1	**6V-9168**	2	NUT (11/16-16-THD)	
M	35	1	**8T-0287**	1	BOLT (M5X0.8X10-MM)	
	36	1	**7B-1597**	1	CLIP (LOOP)	
	37	1	**7G-2950**	1	CLIP (SLOT)	
	38	1	**7G-2951**	1	CLIP (TAB)	
	39	1	**7H-7055**	2	CLIP	
	40	1	**7X-7729**	6	WASHER (11X25X3-MM THK)	
	41	1	**8M-4791**	2	WASHER-HARD (13.5X27X3-MM THK)	
M	42	1	**8T-0285**	4	SCREW-MACHINE (M4X0.7X12-MM)	
	43	1	**8T-4121**	8	WASHER-HARD (11X21X2.5-MM THK)	
M	44	1	**8T-4133**	4	NUT (M10X1.5-THD)	
M	45	1	**8T-4136**	3	BOLT (M10X1.5X25-MM)	
M	46	1	**8T-4189**	4	BOLT (M8X1.25X20-MM)	
M	47	1	**8T-4191**	3	BOLT (M10X1.5X16-MM)	
M	48	1	**8T-4201**	3	BOLT-LOCKING (M10X1.5X20-MM)	
	49	1	**8T-4224**	4	WASHER-HARD (8.8X16X2-MM THK)	
M	50	1	**8T-5005**	2	BOLT (M10X1.5X70-MM)	
	51	1	**9M-8406**	2	CLIP	
	52	1	**9S-1350**	1	CLIP	
	53	1	**9X-1481**	1	WASHER (13X25.4X1.6-MM THK)	

C-CHANGE FROM PREVIOUS TYPE
I-REFER TO HYDRAULIC INFORMATION SYSTEM
M-METRIC PART
Y-SEPARATE ILLUSTRATION

218-6240 **VALVE & LINES GP-COUPLER** *(contd.)* **i02753317**

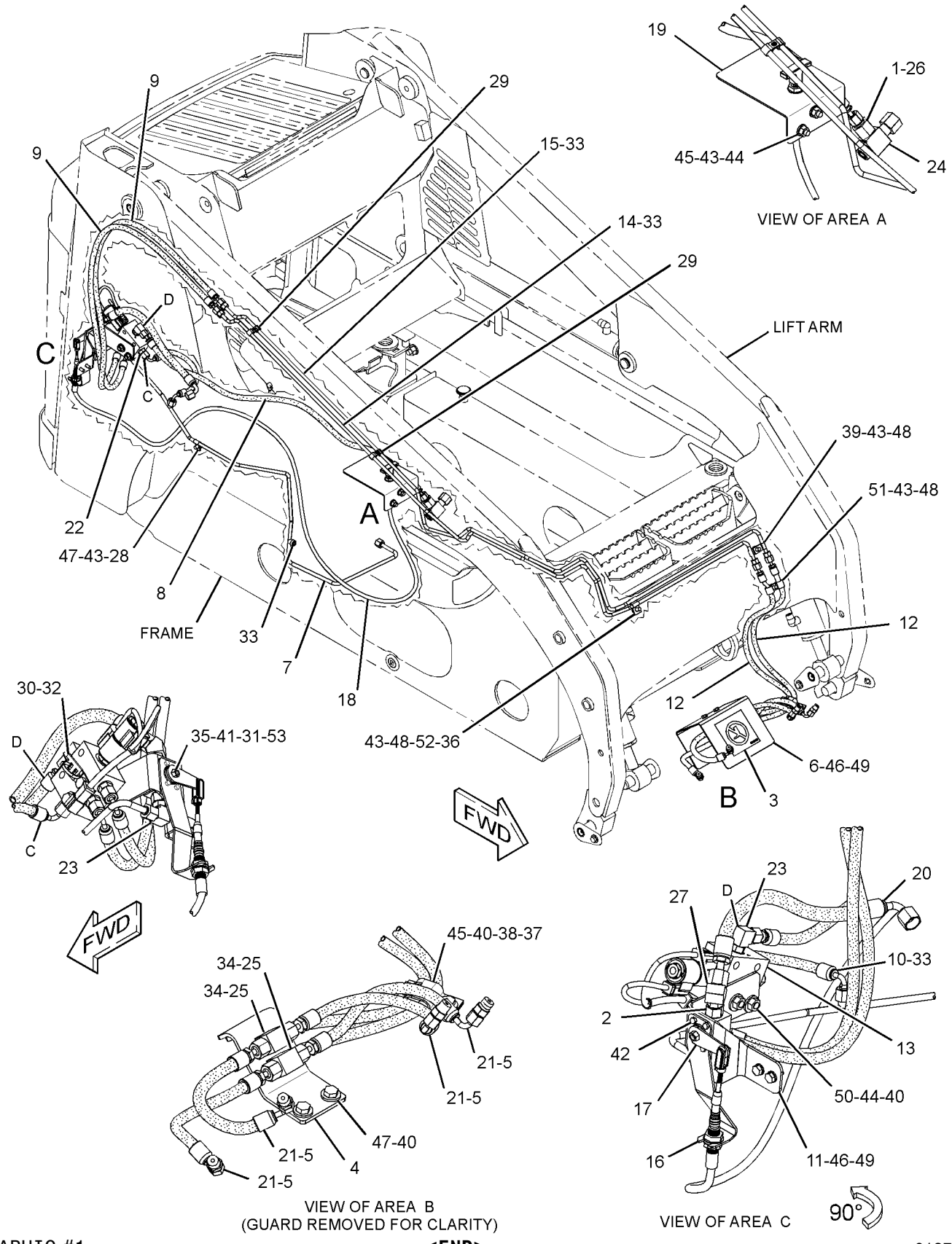

GRAPHIC #1

<END>

g01378129

HYDRAULIC SYSTEM

218-6781 VALVE & MTG GP-CONTROL

S/N: MJH10575-UP

PART OF 278-1227 HYDRAULIC AR

SMCS-5051 **i01946045**

NOTE	REF NO	GRAPHIC REF	PART NUMBER	QTY	PART NAME 1 2 3 4 5 6 (PRODUCT LEVEL)	SEE PAGE
Y	1	1	**216-6167**	1	VALVE GP-CONTROL (WORK TOOL)	393
	2	1	**218-6561**	1	BRACKET	
	3	1	**8T-4121**	4	WASHER-HARD (11X21X2.5-MM THK)	
M	4	1	**8T-4136**	2	BOLT (M10X1.5X25-MM)	
M	5	1	**8T-4137**	2	BOLT (M10X1.5X20-MM)	

M-METRIC PART
Y-SEPARATE ILLUSTRATION

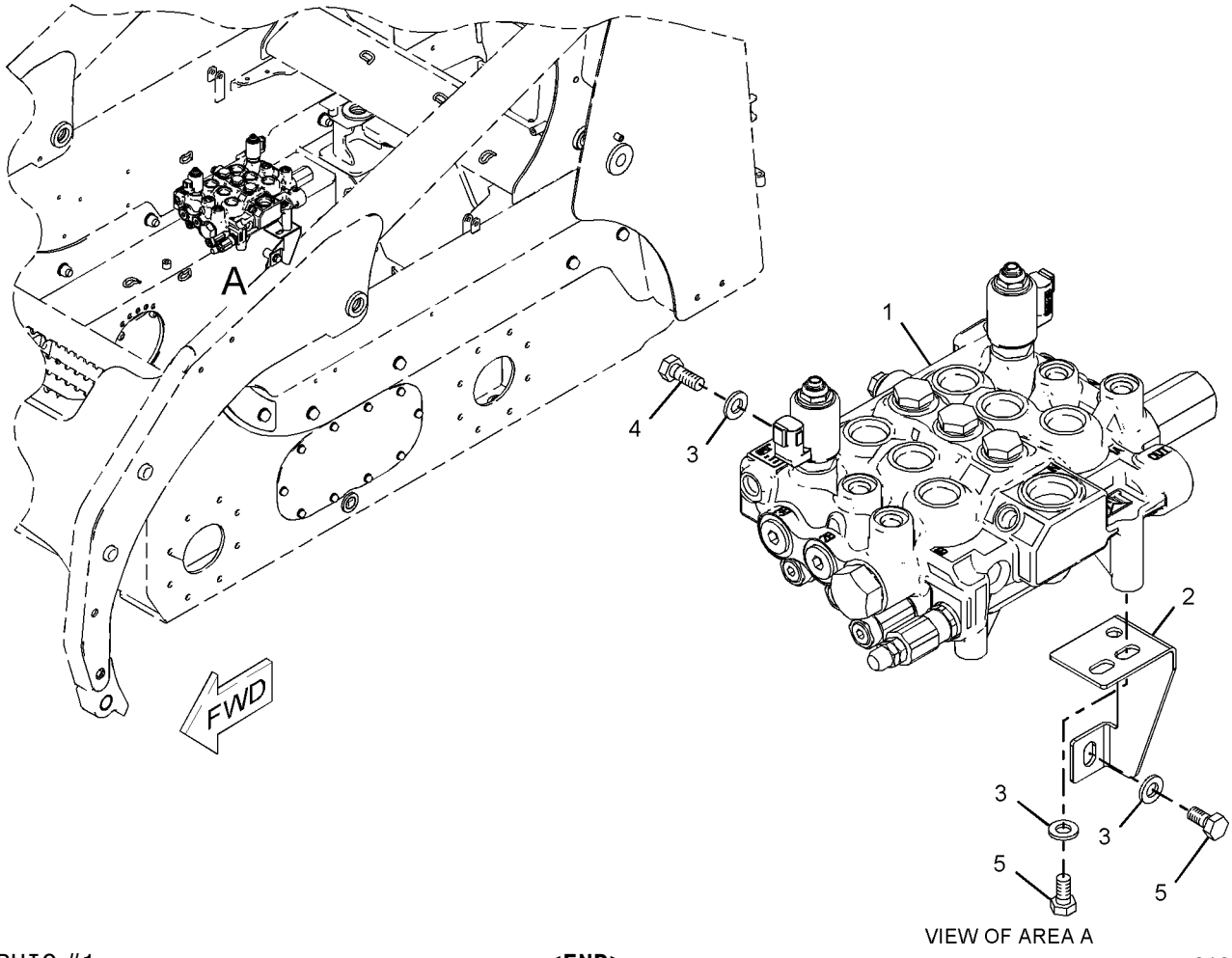

VIEW OF AREA A

GRAPHIC #1 **<END>** g01017870

216-6167 VALVE GP-CONTROL

S/N: MJH10575-UP

PART OF 218-6781 VALVE & MTG GP-CONTROL

SMCS-5051 **i02890220**

NOTE	REF NO	GRAPHIC REF	PART NUMBER	QTY	PART NAME 1 2 3 4 5 6 (PRODUCT LEVEL)	SEE PAGE
CY	1	1	**298-1309**	1	VALVE GP-RELIEF (MAIN)	403
	2	1	**216-6160**	2	VALVE GP-RELIEF (TILT, AUXILIARY)	
	3	1	**216-6161**	2	VALVE GP-RELIEF (LIFT)	
Y	4	1	**185-4254**	2	VALVE GP-SOLENOID (12-VOLT) (AUXILIARY)	404
C	5	1	**4J-7533**	2	SEAL-O-RING	
	6	1	**204-1485**	6	WASHER (0.47X0.75X0.02-MM THK)	
	7	1	**204-1482**	1	SPRING	
	8	1	**204-1488**	1	SPRING	
	9	1	**204-1489**	4	SPRING	
	10	1	**204-1486**	1	WASHER (0.32X0.74X0.02-MM THK)	
	11	1	**127-6316**	1	BOLT-SHOULDER	
	12	1	**204-1476**	4	PLUG	
C	13	1	**4K-1388**	2	SEAL-O-RING	
	14	1	**204-1471**	1	CAP	
	15	1	**204-1481**	1	CAP	
	16	1	**144-4531**	3	VALVE-CHECK	
	17	1	**003-3082**	3	SPRING	
	18	1	**8I-5078**	3	SEAL-O-RING	
	19	1	**144-4532**	3	PLUG	
	20	1	**216-6156**	1	VALVE-CHECK	
	21	1	**216-6157**	1	SPRING	
C	22	1	**3J-1907**	1	SEAL-O-RING	
	23	1	**216-6159**	1	PLUG	
C	24	1	**2M-9780**	4	SEAL-O-RING	

C-CHANGE FROM PREVIOUS TYPE
Y-SEPARATE ILLUSTRATION

216-6167 VALVE GP-CONTROL *(contd.)* i02890220

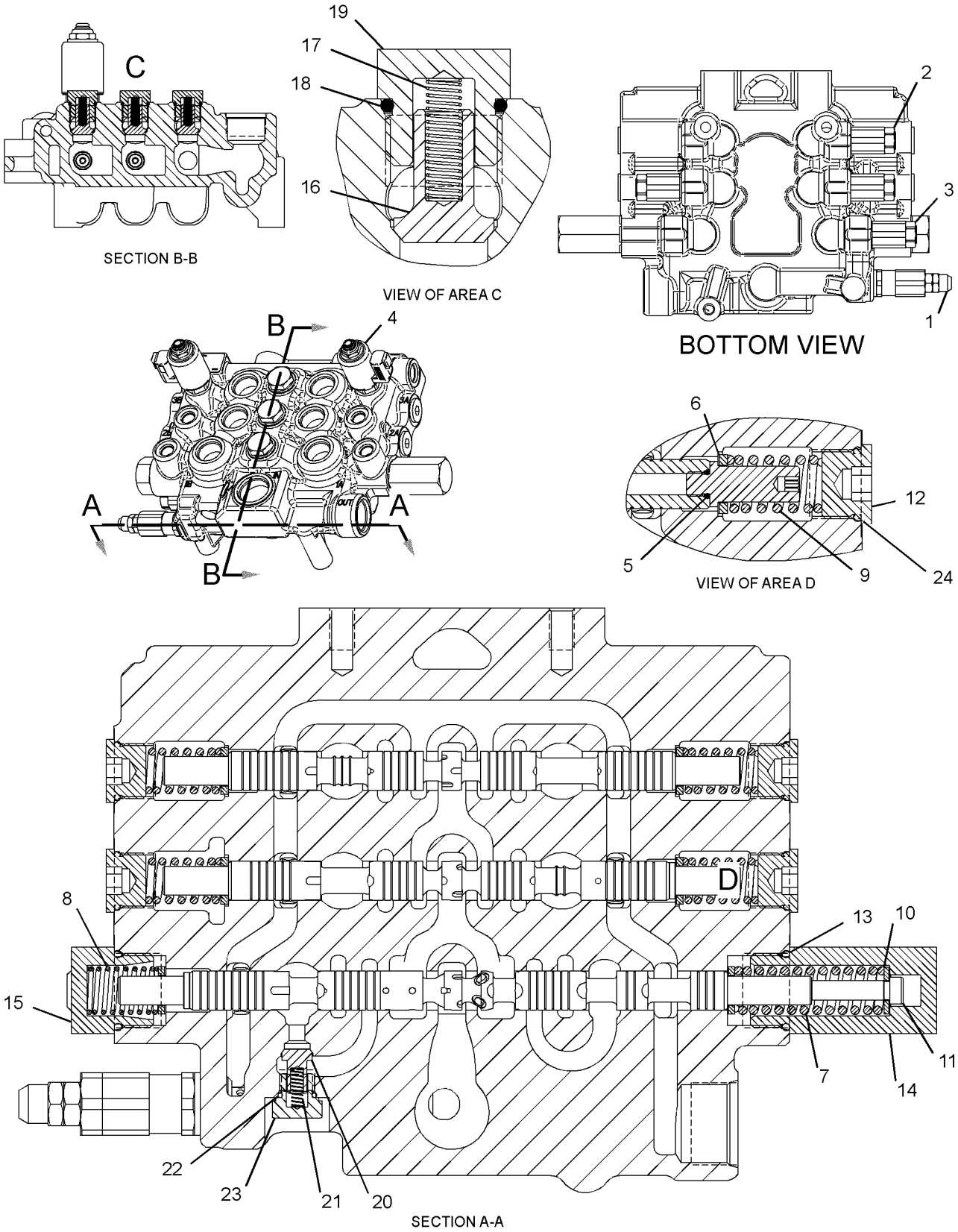

GRAPHIC #1 **<END>** g01304481

112-1817 VALVE GP-MANUAL

S/N: MJH10575-UP

PART OF 218-6211 LINES GP-LOWERING CONTROL, 218-6240 VALVE & LINES GP-COUPLER AN ATTACHMENT

SMCS-5147 **i02757385**

NOTE	PART NUMBER	QTY	PART NAME 1 2 3 4 5 6 (PRODUCT LEVEL)	SEE PAGE
J	*202-0671*	1	VALVE GP-MANUAL (LOWERING CONTROL)	
			—OR—	
J	*202-0673*	1	VALVE GP-MANUAL (LOWERING CONTROL)	
			—OR—	
J	*202-0674*	1	VALVE GP-MANUAL (LOWERING CONTROL)	
			AVAILABLE REPAIR KIT(S):	
J	**112-9861**	1	KIT-SEAL (DEAD ENGINE LOWERING)	
			(INCLUDES SEALS, CONNECTORS & THRUST RING)	

J-KIT MARKED J SERVICES PARTS MARKED J

<END>

HYDRAULIC SYSTEM

218-6119 VALVE GP-PILOT

S/N: MJH10575-UP

PART OF 218-5930, 218-5931, 218-5932, 218-5933 CONTROL GP-PILOT OPERATED HYD AN ATTACHMENT

SMCS-5059, 5705 **i02513658**

NOTE	REF NO	GRAPHIC REF	PART NUMBER	QTY	PART NAME 1 2 3 4 5 6 (PRODUCT LEVEL)	SEE PAGE
Y	1	1	**195-9700**	1	VALVE GP-SOLENOID (12-VOLT)	405
M	2	1	**8T-1158**	1	BOLT-SOCKET HEAD (M8X1.25X20-MM)	
	3	1	**217-3850**	1	KIT-UNIVERSAL JOINT	
					(INCLUDES UNIVERSAL JOINT & SHIMS)	
	4	1	**122-1904**	1	PLATE	
	5	1	**289-8451**	2	KIT-PLUNGER	
					(INCLUDES PLUNGER GUIDE, PLUNGER, SNAP RING, WASHER & BUSHING)	
	6	1	**160-6778**	1	KIT-PILOT VALVE (SPRING)	
					(INCLUDES SPRINGS)	
	7	1	**289-9560**	1	KIT-SEAL	
					(INCLUDES O-RINGS, PINS & ASSEMBLY SCREW)	
	8	1	**151-4965**	1	KIT-SEAL	
					(INCLUDES O-RINGS, PIN & BOLT)	
	9	1	**282-7760**	1	VALVE GP-SHUTTLE	
					PARTS SHOWN IN GRAPHIC(S) WITHOUT A REFERENCE NUMBER ARE NOT SERVICED SEPARATELY	

M-METRIC PART
Y-SEPARATE ILLUSTRATION

218-6119 VALVE GP-PILOT *(contd.)* **i02513658**

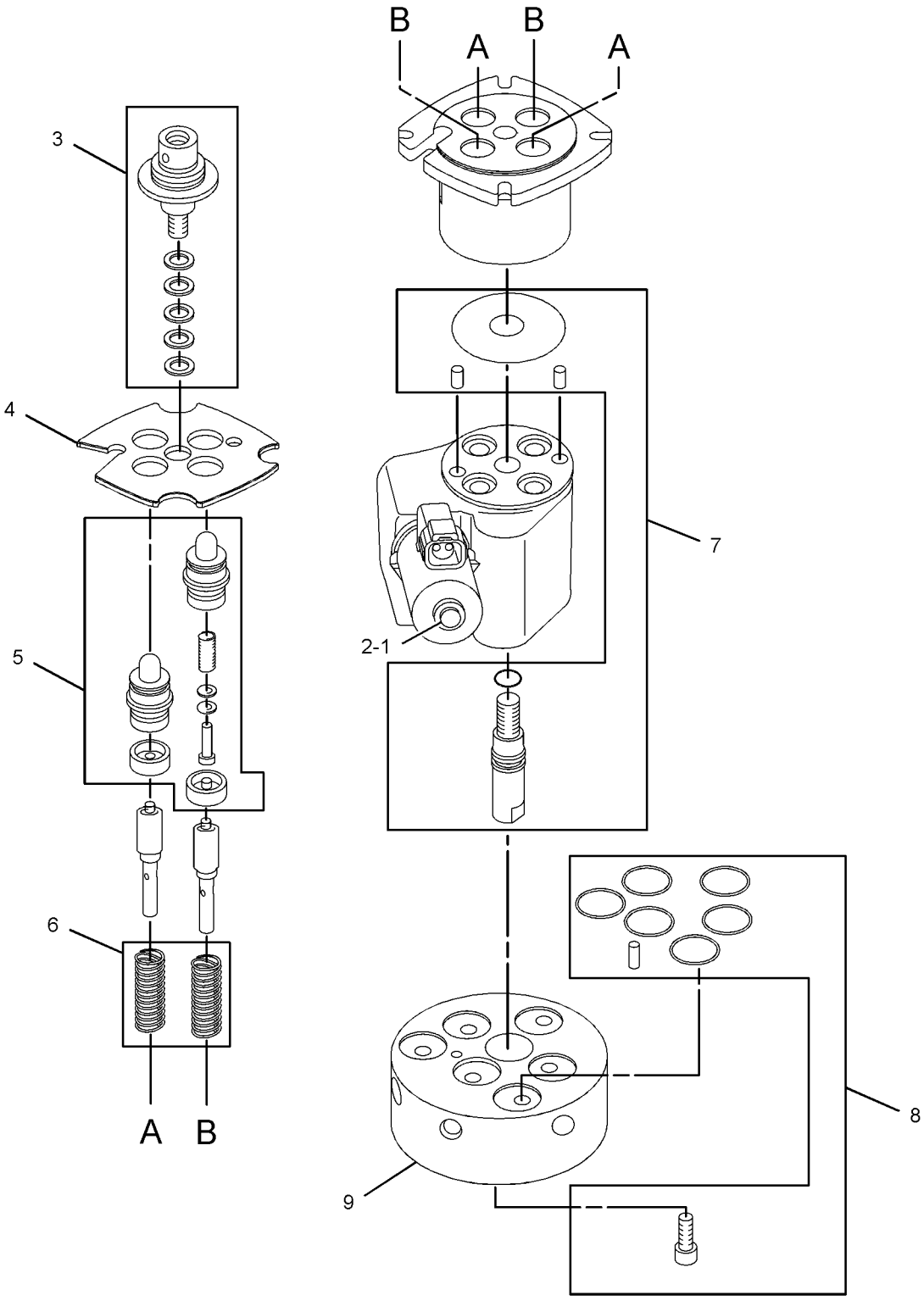

GRAPHIC #1 **<END>** g01301843

HYDRAULIC SYSTEM

228-9228 VALVE GP-PILOT—WORK TOOL

S/N: MJH10575-10747

PART OF 218-5611, 218-5612, 218-5618, 218-6571 CONTROL GP-PILOT OPERATED HYD AN ATTACHMENT

SMCS-5059, 5705 **i02513660**

NOTE	REF NO	GRAPHIC REF	PART NUMBER	QTY	PART NAME 1 2 3 4 5 6 (PRODUCT LEVEL)	SEE PAGE
	1	1	**7K-1181**	1	STRAP-CABLE	
	2	1	**172-0970**	1	COIL AS	
		1	**102-8802**	1	KIT-RECEPTACLE (2-PIN)	
					(INCLUDES RECEPTACLE AS & WEDGE)	
		1	**8T-8729**	2	PIN-CONNECTOR (16-GA TO 18-GA)	
Y	3	1	**195-9700**	1	VALVE GP-SOLENOID (12-VOLT) (SPEED & DIRECTION)	405
M	4	1	**8T-1158**	1	BOLT-SOCKET HEAD (M8X1.25X20-MM)	
M	5	1	**8T-9405**	1	BOLT-SOCKET HEAD (M4X0.7X16-MM)	
	6	1	**102-8802**	1	KIT-RECEPTACLE (2-PIN)	
					(INCLUDES RECEPTACLE AS AND WEDGE)	
	7	1	**289-8440**	1	KIT-JOINT (PILOT VALVE)	
					(INCLUDES PLATE AS)	
	8	1	**164-9440**	1	PLATE	
	9	1	**8U-9427**	3	KIT-PLUNGER	
	10	1	**203-1100**	1	KIT-PLUNGER	
					(INCLUDES PLUNGER,GUIDE,RING,CLIP & CUP)	
	11	1	**160-6778**	1	KIT-PILOT VALVE (SPRING)	
					(INCLUDES SPRINGS)	
	12	1	**9T-2837**	1	KIT-SEAL	
					(INCLUDES PINS,SEALS & BOLT)	
					PARTS SHOWN IN GRAPHIC(S) WITHOUT A REFERENCE NUMBER ARE NOT SERVICED SEPARATELY	

M-METRIC PART
Y-SEPARATE ILLUSTRATION

228-9228 VALVE GP-PILOT *(contd.)* **i02513660**

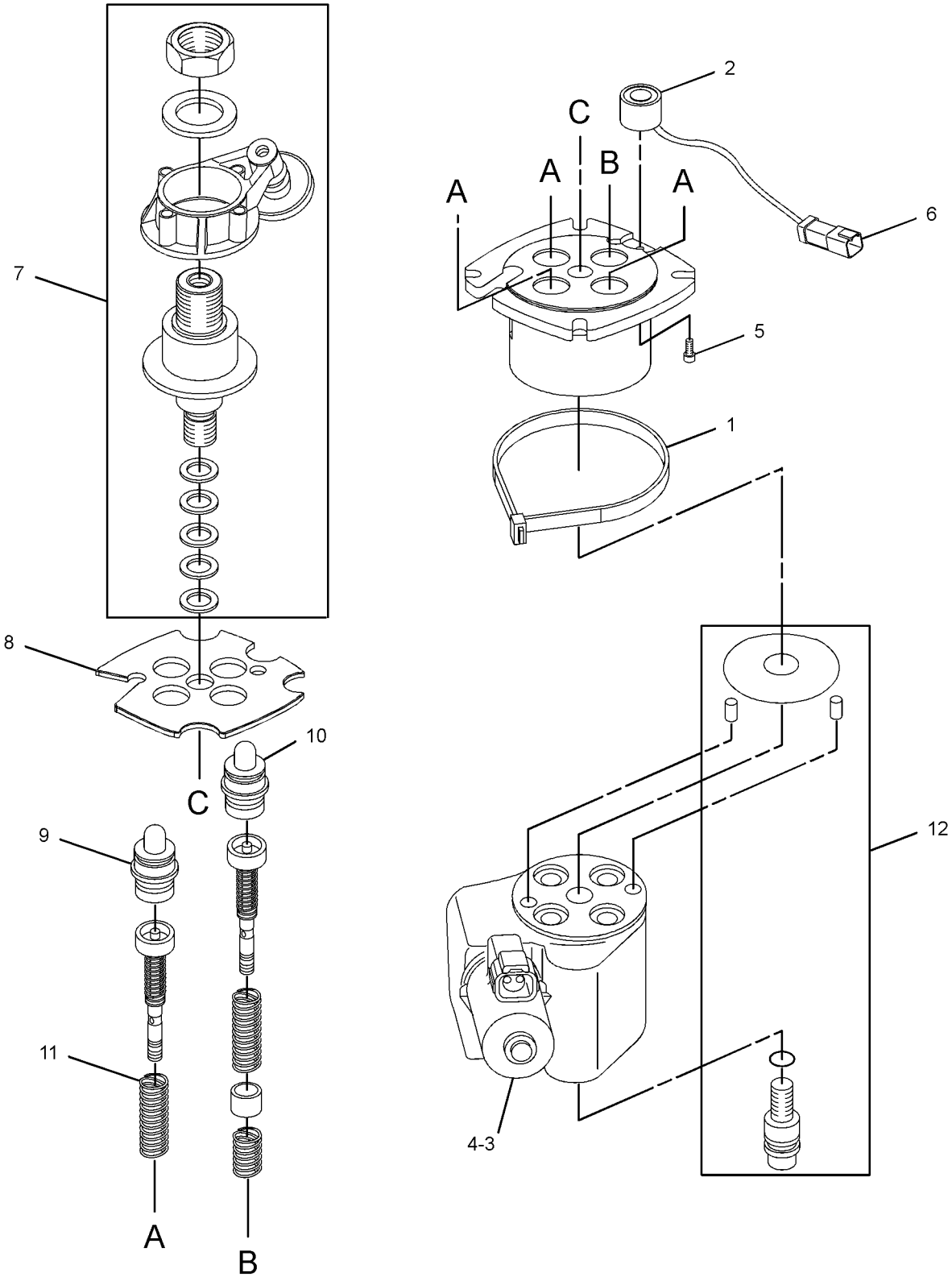

GRAPHIC #1 **<END>** g01298433

HYDRAULIC SYSTEM

299-9116 VALVE GP-PILOT

S/N: MJH10748-UP
PART OF 218-5930 CONTROL GP-PILOT OPERATED HYD
AN ATTACHMENT

SMCS-5059, 5705 **i02890238**

NOTE	REF NO	GRAPHIC REF	PART NUMBER	QTY	PART NAME 1 2 3 4 5 6 (PRODUCT LEVEL)	SEE PAGE
Y	1	1	**195-9700**	1	VALVE GP-SOLENOID (12-VOLT)	405
M	2	1	**8T-1158**	1	BOLT-SOCKET HEAD (M8X1.25X20-MM)	
	3	1	**217-3850**	1	KIT-UNIVERSAL JOINT	
					(INCLUDES SHIMS & UNIVERSAL JOINT)	
	4	1	**299-9121**	1	PLATE	
	5	1	**289-8451**	2	KIT-PLUNGER	
					(INCLUDES PLUNGERS, RINGS, WASHERS, & BUSHINGS)	
	6	1	**160-6778**	1	KIT-PILOT VALVE (SPRING)	
					(INCLUDES SPRINGS)	
	7	1	**289-9560**	1	KIT-SEAL	
					(INCLUDES RINGS, PLUG, & SCREW)	
	8	1	**151-4965**	1	KIT-SEAL	
					(INCLUDES O-RINGS, PIN, & BOLT)	
	9	1	**312-7676**	1	VALVE GP-SHUTTLE	
					PARTS SHOWN IN GRAPHIC(S) WITHOUT A REFERENCE NUMBER ARE NOT SERVICED SEPARATELY	

M-METRIC PART
Y-SEPARATE ILLUSTRATION

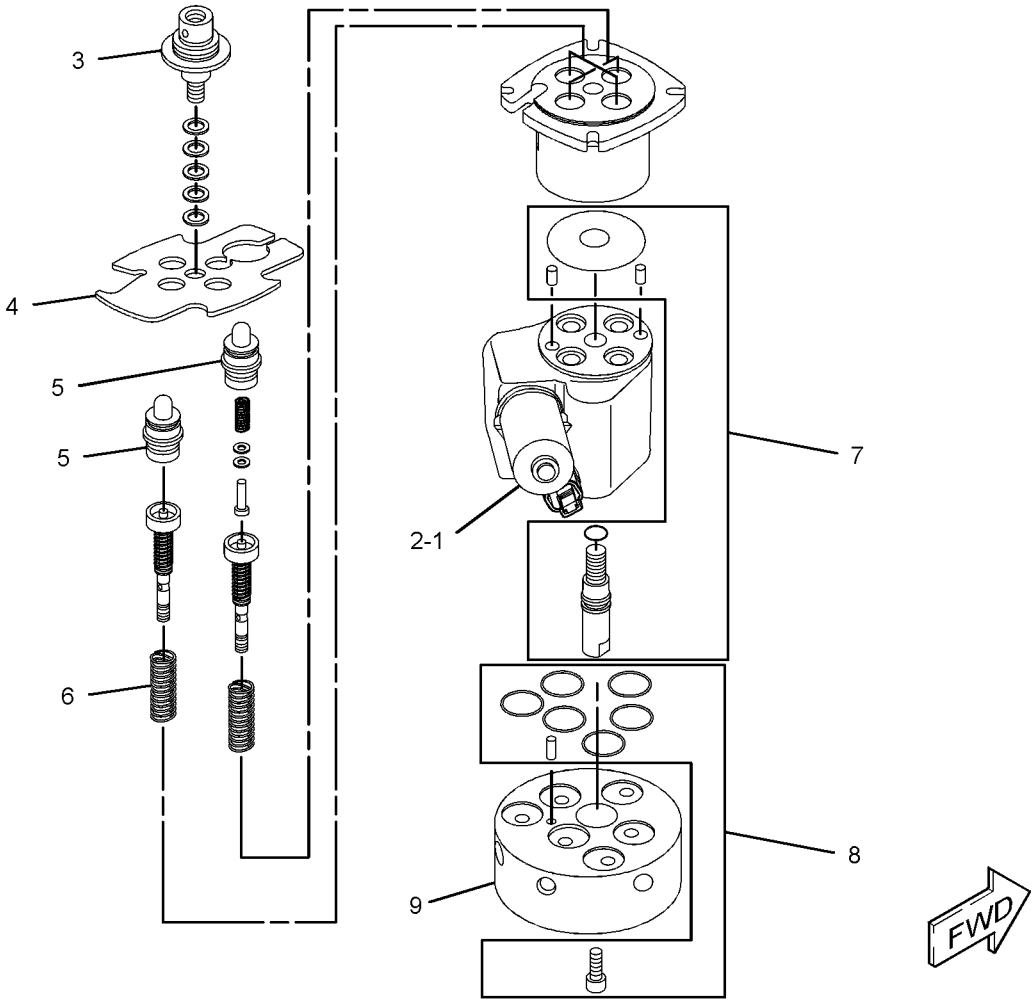

GRAPHIC #1 **<END>** g01417329

299-9119 VALVE GP-PILOT

S/N: MJH10748-UP

PART OF 218-5611, 218-5612, 218-5618, 218-6571 CONTROL GP-PILOT OPERATED HYD AN ATTACHMENT

SMCS-5059, 5705 **i02890245**

NOTE	REF NO	GRAPHIC REF	PART NUMBER	QTY	PART NAME 1 2 3 4 5 6 (PRODUCT LEVEL)	SEE PAGE
	1	1	**7K-1181**	1	STRAP-CABLE	
	2	1	**172-0970**	1	COIL AS	
		1	**186-3735**	2	PIN-CONNECTOR (16-GA TO 18-GA)	
		1	**102-8802**	1	KIT-RECEPTACLE (2-PIN)	
					(INCLUDES RECEPTACLE AS & WEDGE)	
Y	3	1	**195-9700**	1	VALVE GP-SOLENOID (12-VOLT)	405
M	4	1	**8T-1158**	1	BOLT-SOCKET HEAD (M8X1.25X20-MM)	
M	5	1	**8T-9405**	1	BOLT-SOCKET HEAD (M4X0.7X16-MM)	
	6	1	**102-8802**	1	KIT-RECEPTACLE (2-PIN)	
					(INCLUDES RECEPTACLE AS & WEDGE)	
	7	1	**313-6251**	1	KIT-JOINT	
					(INCLUDES SHIMS, NUT, WASHER, DETENT ARM & CARDAN)	
	8	1	**299-9121**	1	PLATE	
	9	1	**8U-9427**	3	KIT-PLUNGER (PILOT VALVE)	
	10	1	**203-1100**	1	KIT-PLUNGER	
					(INCLUDES PLUNGERS, SNAP RINGS & RETAINERS)	
	11	1	**160-6778**	1	KIT-PILOT VALVE (SPRING)	
					(INCLUDES SPRINGS)	
	12	1	**9T-2837**	1	KIT-SEAL (PILOT VALVE)	
					(INCLUDES PINS, O-RINGS & BOLT)	

M-METRIC PART
Y-SEPARATE ILLUSTRATION

299-9119 VALVE GP-PILOT *(contd.)* **i02890245**

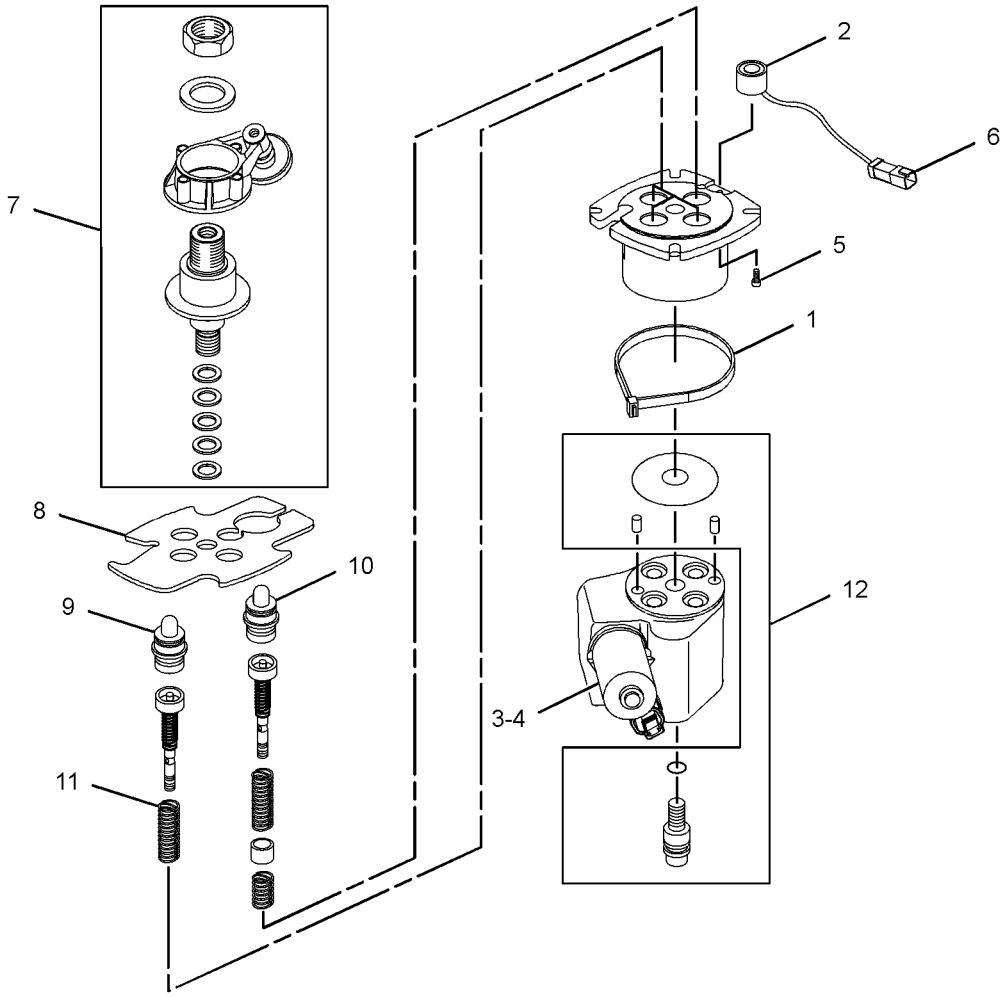

GRAPHIC #1 **<END>** g01417349

HYDRAULIC SYSTEM

298-1309 VALVE GP-RELIEF

S/N: MJH10575-UP

PART OF 216-6167 VALVE GP-CONTROL

SMCS-5069, 5117 **i02605580**

NOTE	REF NO	GRAPHIC REF	PART NUMBER	QTY	PART NAME 1 2 3 4 5 6 (PRODUCT LEVEL)	SEE PAGE
	1	1	**130-1676**	1	SEAL-O-RING	

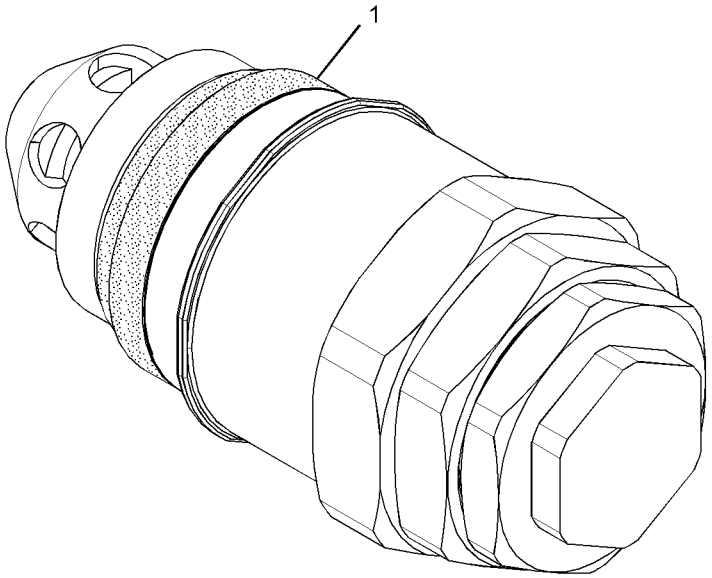

GRAPHIC #1 **<END>** g01304645

HYDRAULIC SYSTEM

185-4254 VALVE GP-SOLENOID–AUXILIARY

S/N: MJH10575-UP

PART OF 216-6167 VALVE GP-CONTROL

SMCS-5479 **i02372783**

NOTE	REF NO	GRAPHIC REF	PART NUMBER	QTY	PART NAME 1 2 3 4 5 6 (PRODUCT LEVEL)	SEE PAGE
	1	1	**226-9629**	1	COIL AS-SOLENOID (12-VOLT)	
	2	1	**164-2108**	1	WASHER (13.03X25.4X2.38-MM THK)	
	3	1	**218-2373**	1	NUT (1/2-28-THD)	
	4	1	*185-4253*	1	VALVE AS	

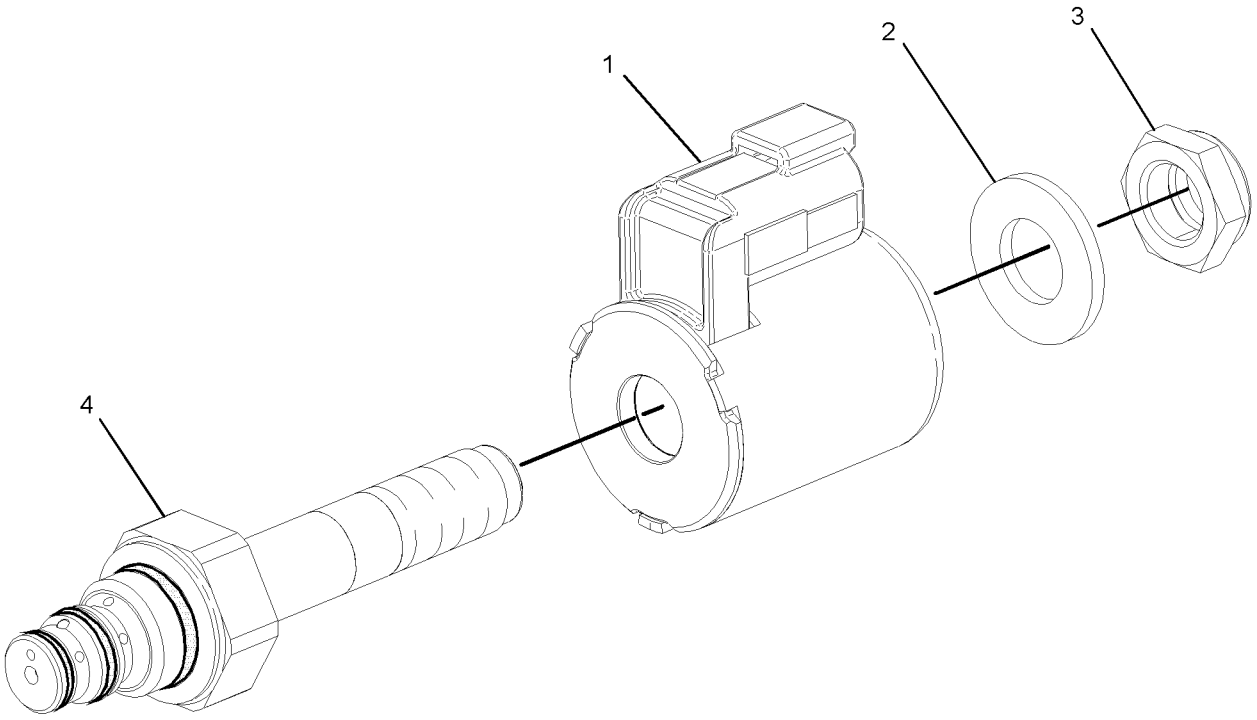

GRAPHIC #1 **<END>** g01185611

HYDRAULIC SYSTEM

195-9700 VALVE GP-SOLENOID

S/N: MJH10575-UP

PART OF 218-6119, 228-9228, 299-9116, 299-9119 VALVE GP-PILOT

AN ATTACHMENT

SMCS-5479 **i02712998**

NOTE	REF NO	GRAPHIC REF	PART NUMBER	QTY	PART NAME 1 2 3 4 5 6 (PRODUCT LEVEL)	SEE PAGE
	1	1	**212-0061**	1	FLANGE	
					AVAILABLE REPAIR KIT(S):	
			200-2371	1	KIT-SEAL	
					(INCLUDES 3 SEALS)	

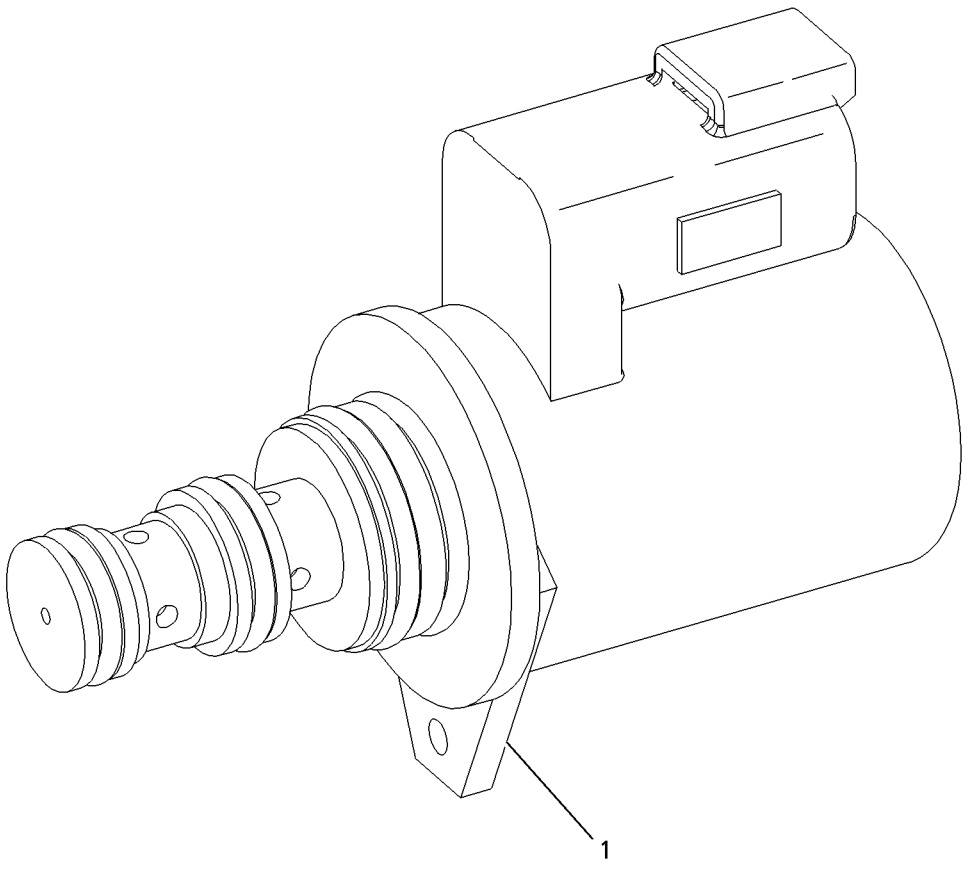

GRAPHIC #1 **<END>** g00947284

231-6287 VALVE GP-SOLENOID–A/C COMPRESSOR

S/N: MJH10575-UP
PART OF 218-6840 MOTOR GP-GEAR
AN ATTACHMENT

SMCS-5479 **i01961984**

NOTE	REF NO	GRAPHIC REF	PART NUMBER	QTY	PART NAME 1 2 3 4 5 6 (PRODUCT LEVEL)	SEE PAGE
	1	1	**3E-8621**	1	COIL AS	
		1	**1S-9593**	1	STRAP-CABLE	
		1	**3E-3365**	1	WEDGE-RECEPTACLE LOCK (2-PIN)	
		1	**186-3735**	2	PIN-CONNECTOR (16-GA TO 18-GA)	
		1	**102-8802**	1	KIT-RECEPTACLE (2-PIN)	
					(INCLUDES RECEPTACLE AS & WEDGE)	
	2	1	**156-5970**	1	NUT (1/2-20-2B-THD)	
	3	1	**231-6564**	1	CARTRIDGE AS-VALVE	
		1	**3D-2824**	1	SEAL-O-RING	
		1	**6F-6672**	1	SEAL-O-RING	
		1	**156-5970**	1	NUT (1/2-20-2B-THD)	
		1	**194-3873**	2	RING-BACKUP	
	4	1	**3D-2824**	1	SEAL-O-RING	
	5	1	**6F-6672**	1	SEAL-O-RING	

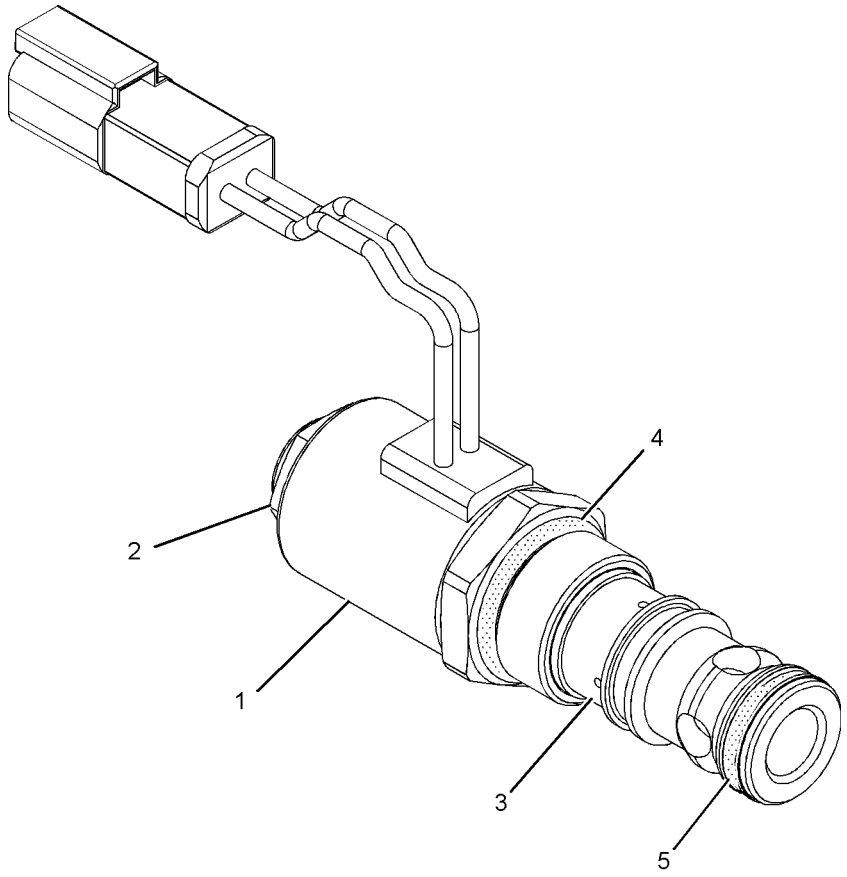

GRAPHIC #1 **<END>** g01026804

259-8194 VALVE GP-SOLENOID

S/N: MJH10575-UP

PART OF 233-7131, 248-1268 MANIFOLD & SOLENOID GP-CONTROL

SMCS-5479 **i02485890**

NOTE	REF NO	GRAPHIC REF	PART NUMBER	QTY	PART NAME 1 2 3 4 5 6 (PRODUCT LEVEL)	SEE PAGE
	1	1	**238-4626**	1	COIL AS (AUXILIARY FLOW CONTROL)	

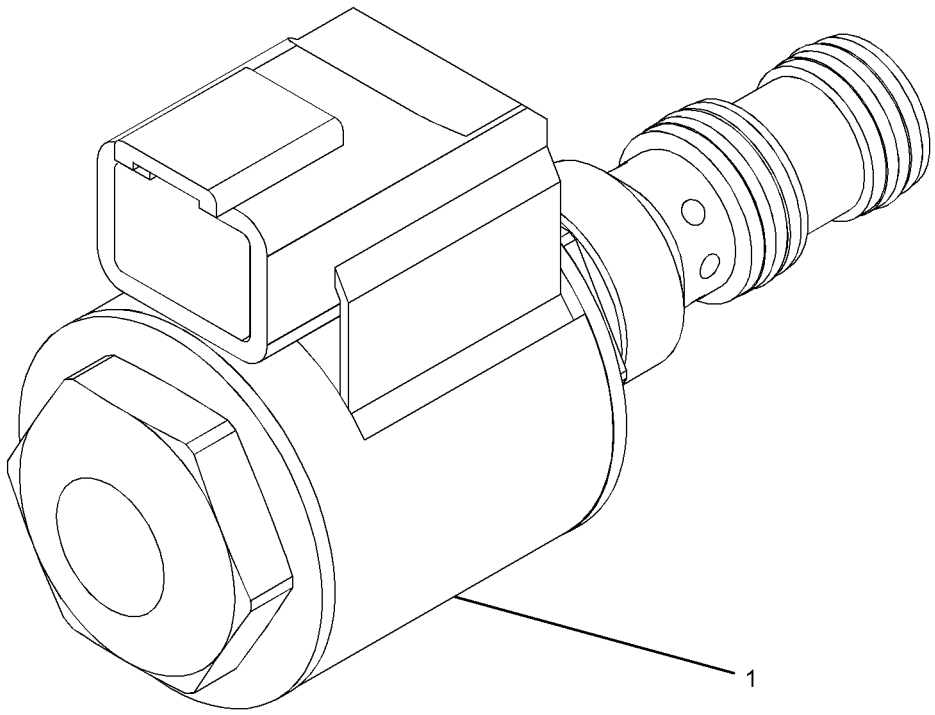

GRAPHIC #1 **<END>** g01121017

216-8756 ARM GP-MATERIAL HANDLING

S/N: MJH10575-UP

AN ATTACHMENT

SMCS-6542 **i02342557**

NOTE	REF NO	GRAPHIC REF	PART NUMBER	QTY	PART NAME 1 2 3 4 5 6 (PRODUCT LEVEL)	SEE PAGE
	1	1	**9V-2714**	1	HOOK	
	2	1	**9V-2715**	1	SHACKLE AS	
	3	1	**156-5762**	2	FILM-INFORMATION (TIE-DOWN LOCATION)	
Y	4	1	*188-7733*	1	STEP GP-MATERIAL HANDLING ARM	496
	5	1	**216-8850**	1	ARM AS	
M	6	1	**7X-2475**	1	BOLT (M16X2X130-MM)	
	7	1	**8T-4122**	1	WASHER-HARD (17X32X3.5-MM THK)	
M	8	1	**8T-1757**	1	NUT (M16X2-THD)	

M-METRIC PART
Y-SEPARATE ILLUSTRATION

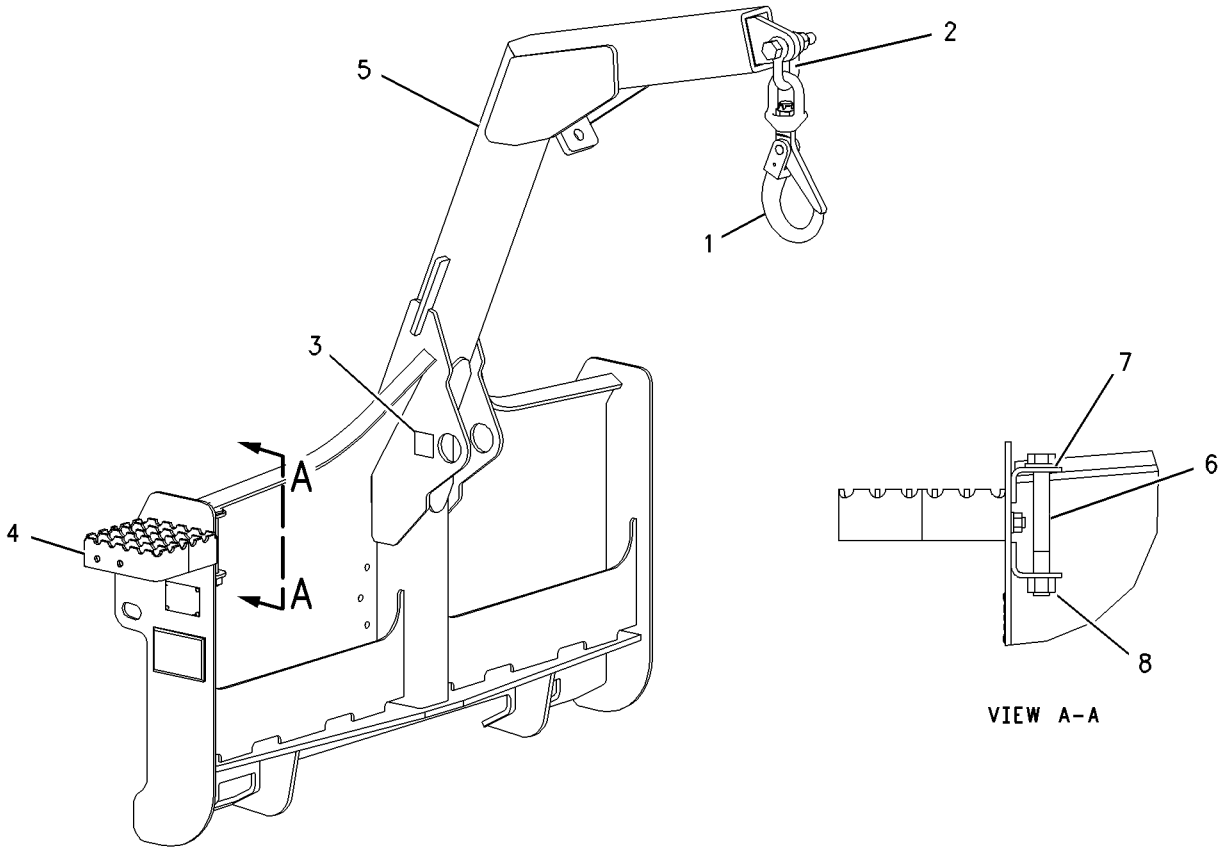

GRAPHIC #1 **<END>** g00934159

177-1989 BLADE AR–ANGLING

S/N: MJH10575-UP
1829-MM (72-IN)
AN ATTACHMENT

SMCS-6060, 6701 **i01860746**

NOTE	PART NUMBER	QTY	PART NAME 1 2 3 4 5 6 (PRODUCT LEVEL)	SEE PAGE
Y	*177-1981*	1	BLADE GP-ANGLING	411
Y	*230-5406*	1	CYLINDER & MTG GP-ANGLE BLADE	266
Y	*135-9386*	1	EDGE GP-CUTTING	467
Y	*230-5670*	1	FRAME GP-BLADE	479
Y	*177-1986*	1	LINES GP-CONNECTING	311
Y	*177-1983*	1	SPRING GP-BLADE	495

Y-SEPARATE ILLUSTRATION

<END>

177-1990 BLADE AR–ANGLING

S/N: MJH10575-UP
2134-MM (84-IN)
AN ATTACHMENT

SMCS-6060, 6701 **i01861063**

NOTE	PART NUMBER	QTY	PART NAME 1 2 3 4 5 6 (PRODUCT LEVEL)	SEE PAGE
Y	*177-1982*	1	BLADE GP-ANGLING	412
Y	*230-5406*	1	CYLINDER & MTG GP-ANGLE BLADE	266
Y	*149-5741*	1	EDGE GP-CUTTING	469
Y	*230-5670*	1	FRAME GP-BLADE	479
Y	*177-1986*	1	LINES GP-CONNECTING	311
Y	*177-1983*	1	SPRING GP-BLADE	495

Y-SEPARATE ILLUSTRATION

<END>

WORK TOOLS

231-5277 BLADE AR—ANGLING

S/N: MJH10575-UP
2007-MM (79-IN)
AN ATTACHMENT

SMCS-6060, 6701 **i02752372**

NOTE	REF NO	GRAPHIC REF	PART NUMBER	QTY	PART NAME 1 2 3 4 5 6 (PRODUCT LEVEL)	SEE PAGE
	1	1	**7K-1181**	3	STRAP-CABLE	
	2	1	**225-8015**	1	HARNESS AS-WORK TOOL (CONNECTING)	
Y	3	1	*231-5273*	1	LINES GP-CONNECTING	313
Y	4	1	*231-5274*	1	CYLINDER & MTG GP-ANGLE BLADE	267
Y	5	1	*231-5276*	1	BLADE GP-ANGLING	413
Y	6	1	*231-5278*	1	MANIFOLD & MTG GP-CONTROL (ANGLING BLADE)	358
Y	7	1	*247-0678*	1	PLATE & FILM GP	657

Y-SEPARATE ILLUSTRATION

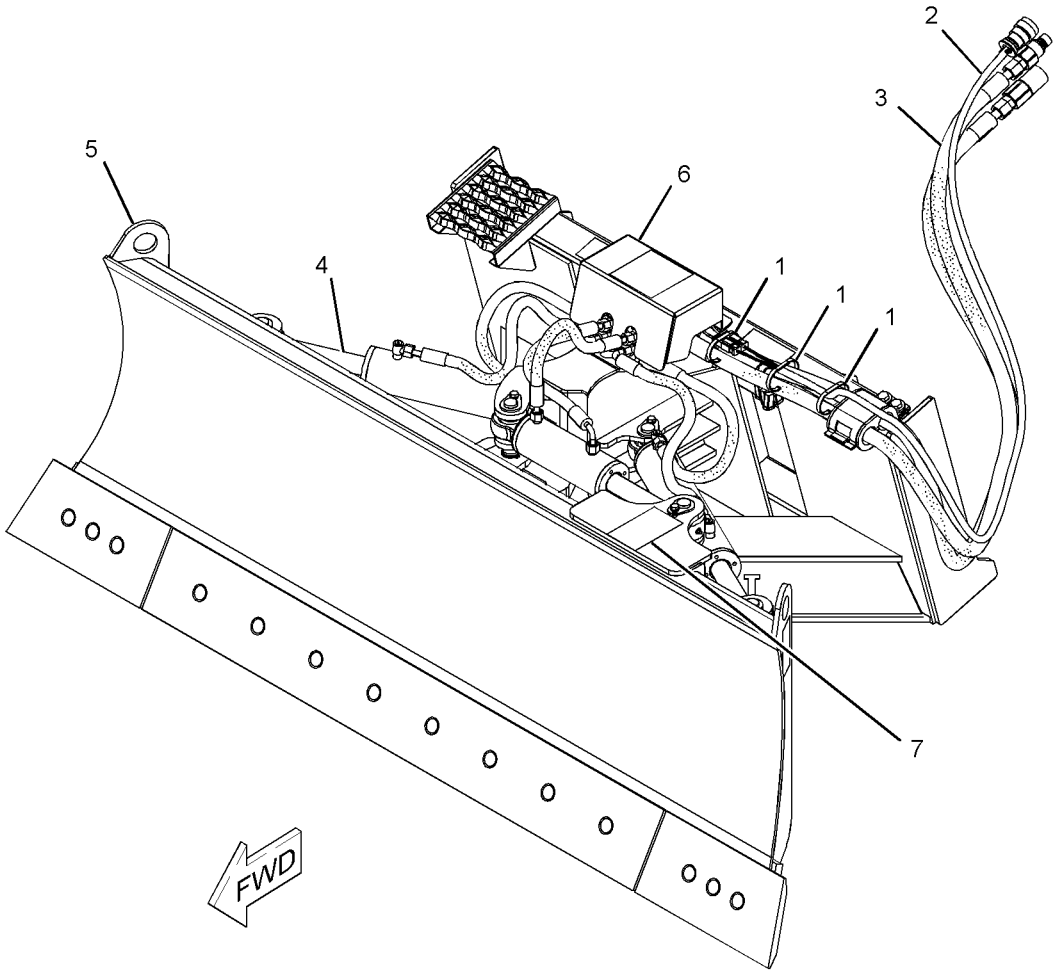

GRAPHIC #1 **<END>** g01381202

WORK TOOLS

177-1981 BLADE GP-ANGLING

S/N: MJH10575-UP
1829-MM (72-IN)
PART OF 177-1989 BLADE AR
AN ATTACHMENT

SMCS-6060, 6701 **i01905763**

NOTE	REF NO	GRAPHIC REF	PART NUMBER	QTY	PART NAME 1 2 3 4 5 6 (PRODUCT LEVEL)	SEE PAGE
	1	1	**157-0940**	2	PIN	
	2	1	**166-0319**	2	PIN AS	
	3	1	**169-4868**	2	FILM-WARNING (NO CLEARANCE, STAY BACK)	
	4	1	**177-1921**	2	PIN AS	
	5	1	**177-1972**	2	SKID AS	
	6	1	**177-1987**	1	BLADE AS	
	7	1	**3B-8489**	2	FITTING-GREASE	
M	8	1	**6V-9189**	2	LOCKNUT (M8X1.25-THD)	
M	9	1	**8T-6869**	2	BOLT (M8X1.25X60-MM)	
	10	1	**9R-2959**	2	CLIP	

M-METRIC PART

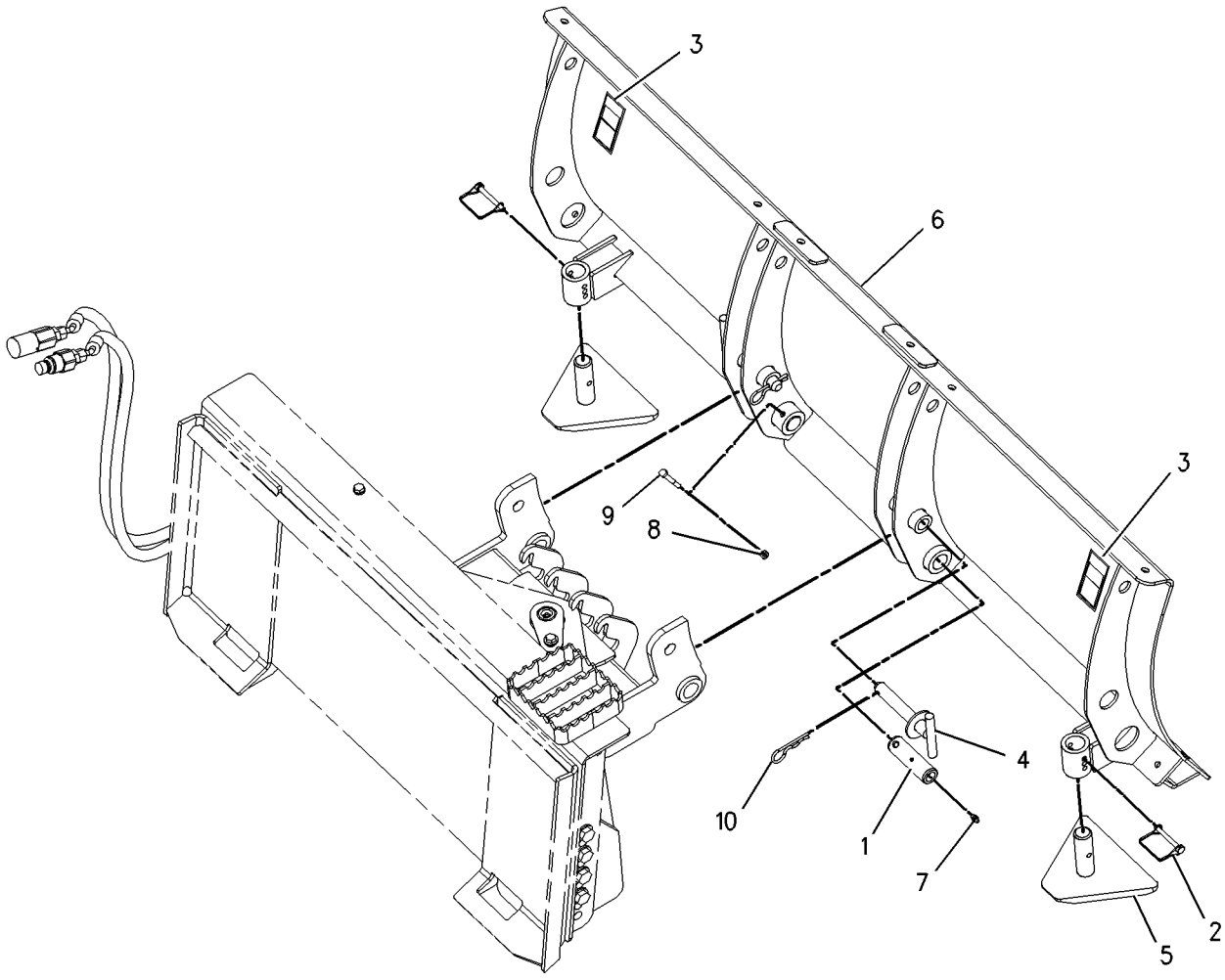

GRAPHIC #1 **<END>** g00777694

WORK TOOLS

177-1982 BLADE GP-ANGLING

S/N: MJH10575-UP
2134-MM (84-IN)
PART OF 177-1990 BLADE AR
AN ATTACHMENT

SMCS-6060, 6701 **i01911992**

NOTE	REF NO	GRAPHIC REF	PART NUMBER	QTY	PART NAME 1 2 3 4 5 6 (PRODUCT LEVEL)	SEE PAGE
	1	1	**157-0940**	2	PIN	
	2	1	**166-0319**	2	PIN AS	
	3	1	**169-4868**	2	FILM-WARNING (NO CLEARANCE, STAY BACK)	
	4	1	**177-1921**	2	PIN AS	
	5	1	**177-1972**	2	SKID AS	
	6	1	**177-1988**	1	BLADE AS	
	7	1	**3B-8489**	2	FITTING-GREASE	
M	8	1	**6V-9189**	2	LOCKNUT (M8X1.25-THD)	
M	9	1	**8T-6869**	2	BOLT (M8X1.25X60-MM)	
	10	1	**9R-2959**	2	CLIP	

M-METRIC PART

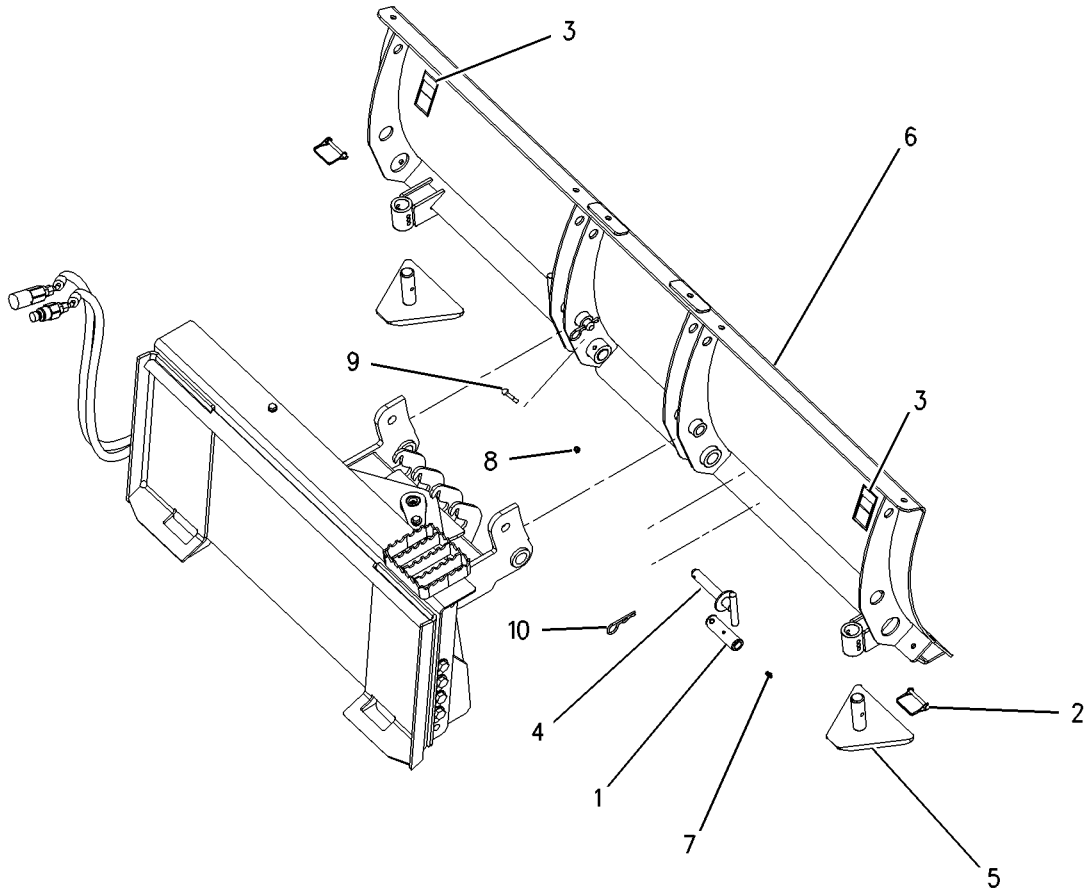

GRAPHIC #1 **<END>** g00710327

WORK TOOLS

231-5276 BLADE GP-ANGLING

S/N: MJH10575-UP
1829-MM (72-IN)
PART OF 231-5277 BLADE AR
AN ATTACHMENT

SMCS-6060, 6701 **i02280916**

NOTE	REF NO	GRAPHIC REF	PART NUMBER	QTY	PART NAME 1 2 3 4 5 6 (PRODUCT LEVEL)	SEE PAGE
B	1	1	**8E-5702**	22	SHIM (0.8-MM THK)	
	2	1	**255-6540**	1	PLATE-INSTRUCTION (BUCKET SPECIFICATIONS)	
	3	1	**168-8389**	4	TACK-FASTENER	
	4	1	**222-7725**	1	FRAME GP-BLADE	
	5	1	**230-4596**	1	BLADE AS-ANGLING	
	6	1	**231-5271**	1	PIN	
	7	1	**238-1004**	2	MOUNT AS	
	8	1	**238-1005**	2	SKID AS	
	9	1	**244-1367**	1	BUSHING	
Y	10	1	*222-7545*	1	EDGE GP-BIT & CUTTING	464
	11	1	**5P-1076**	8	WASHER-HARD (13.5X30X4-MM THK)	
	12	1	**6V-7644**	2	RING-RETAINING	
M	13	1	**8C-8478**	4	BOLT (M20X2.5X140-MM)	
	14	1	**8J-2880**	1	CAP-BEARING	
	15	1	**8T-4123**	4	WASHER (22X35X3.5-MM THK)	
M	16	1	**8T-4139**	8	BOLT (M12X1.75X30-MM)	

B-USE AS REQUIRED
M-METRIC PART
Y-SEPARATE ILLUSTRATION

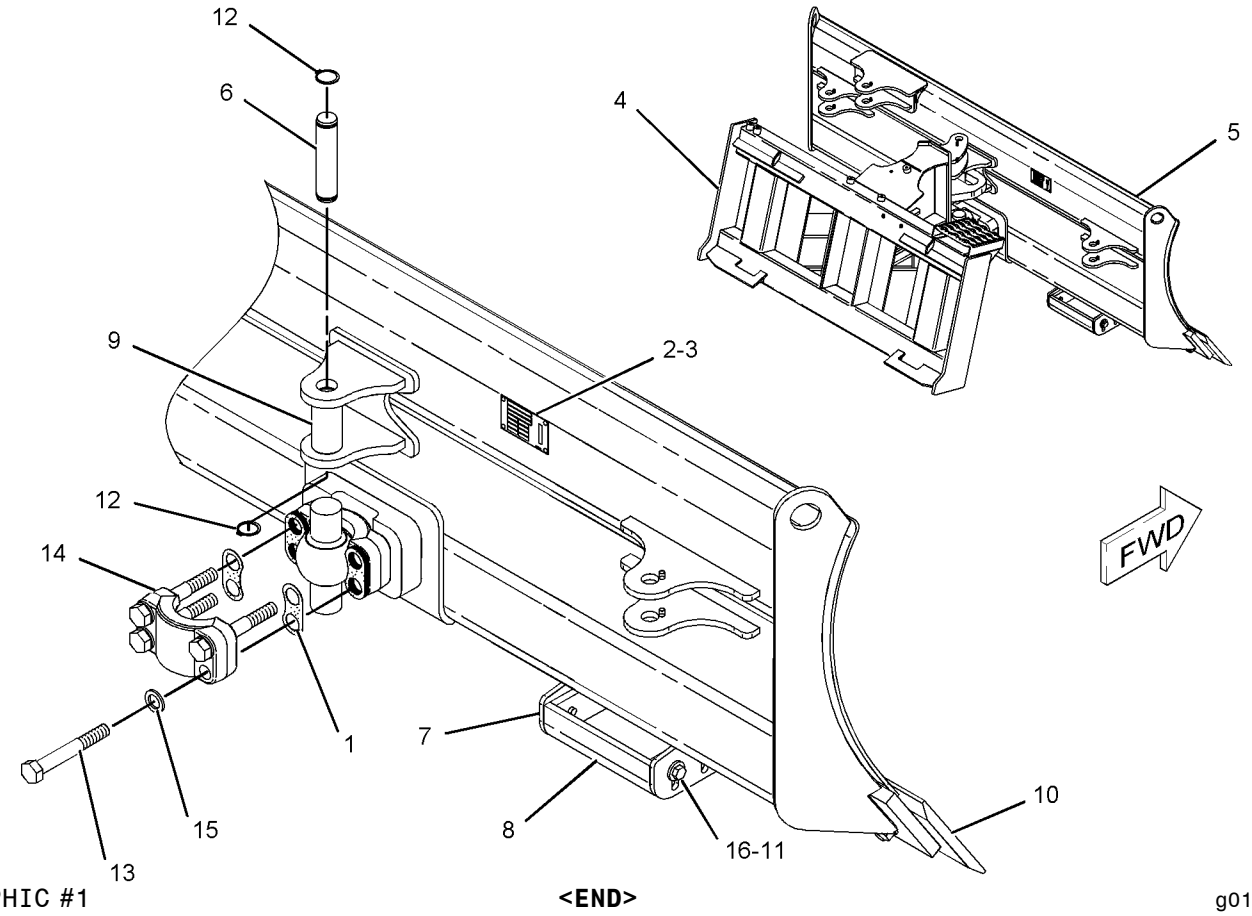

GRAPHIC #1 **<END>** g01020723

279-5384 BLADE GP-MULTIPURPOSE BUCKET

S/N: MJH10575-UP
1524-MM (60-IN)
PART OF 279-5383 BUCKET GP-MULTIPURPOSE
AN ATTACHMENT

SMCS-6060, 6104 **i02552040**

NOTE	REF NO	GRAPHIC REF	PART NUMBER	QTY	PART NAME 1 2 3 4 5 6 (PRODUCT LEVEL)	SEE PAGE
	1	1	**154-2704**	1	PLATE-INSTRUCTION (BUCKET SPECIFICATIONS)	
	2	1	**168-8389**	4	TACK-FASTENER	
	3	1	**279-5385**	1	BLADE AS	

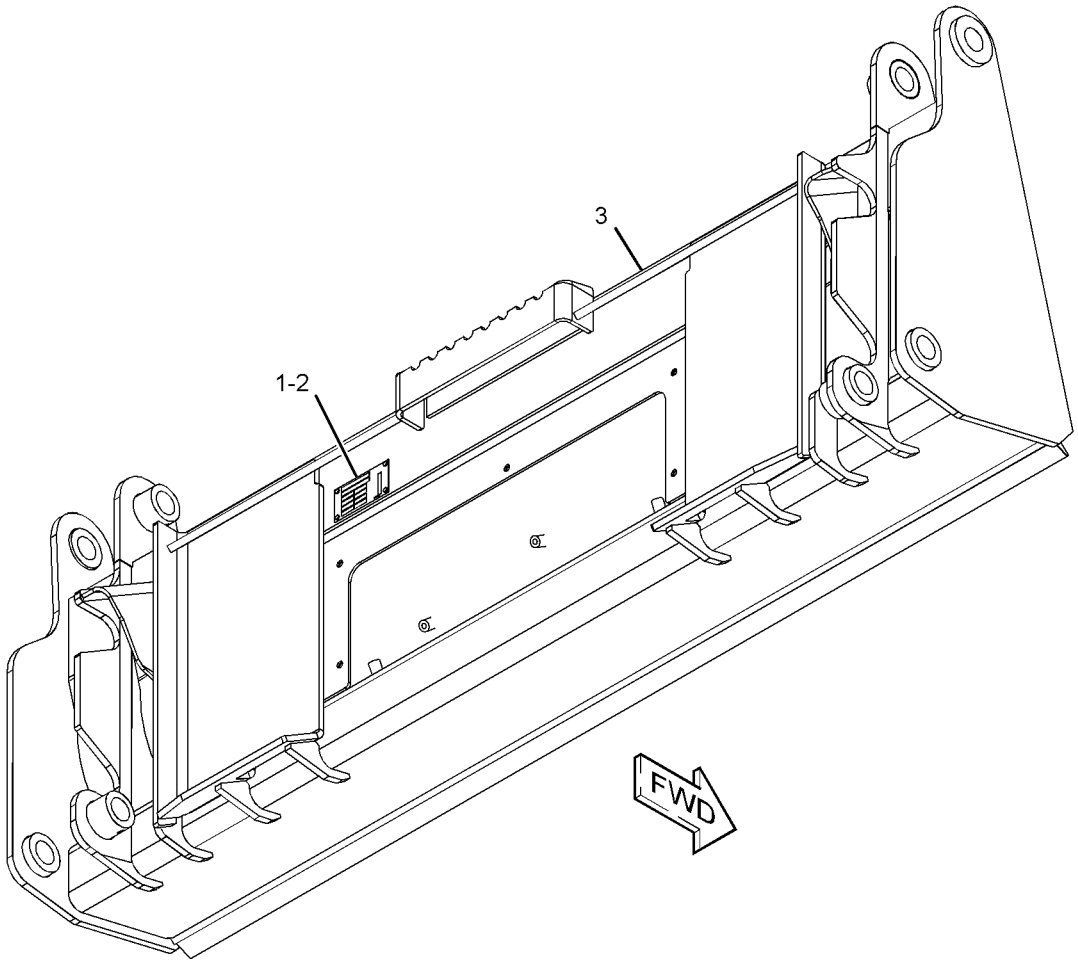

GRAPHIC #1 **<END>** g01278496

WORK TOOLS

279-5388 BLADE GP-MULTIPURPOSE BUCKET

S/N: MJH10575-UP
1676-MM (66-IN)
PART OF 279-5389 BUCKET GP-MULTIPURPOSE
AN ATTACHMENT

SMCS-6060, 6104 **i02552100**

NOTE	REF NO	GRAPHIC REF	PART NUMBER	QTY	PART NAME 1 2 3 4 5 6 (PRODUCT LEVEL)	SEE PAGE
	1	1	**154-2704**	1	PLATE-INSTRUCTION (BUCKET SPECIFICATIONS)	
	2	1	**168-8389**	4	TACK-FASTENER	
	3	1	**279-5387**	1	BLADE AS	

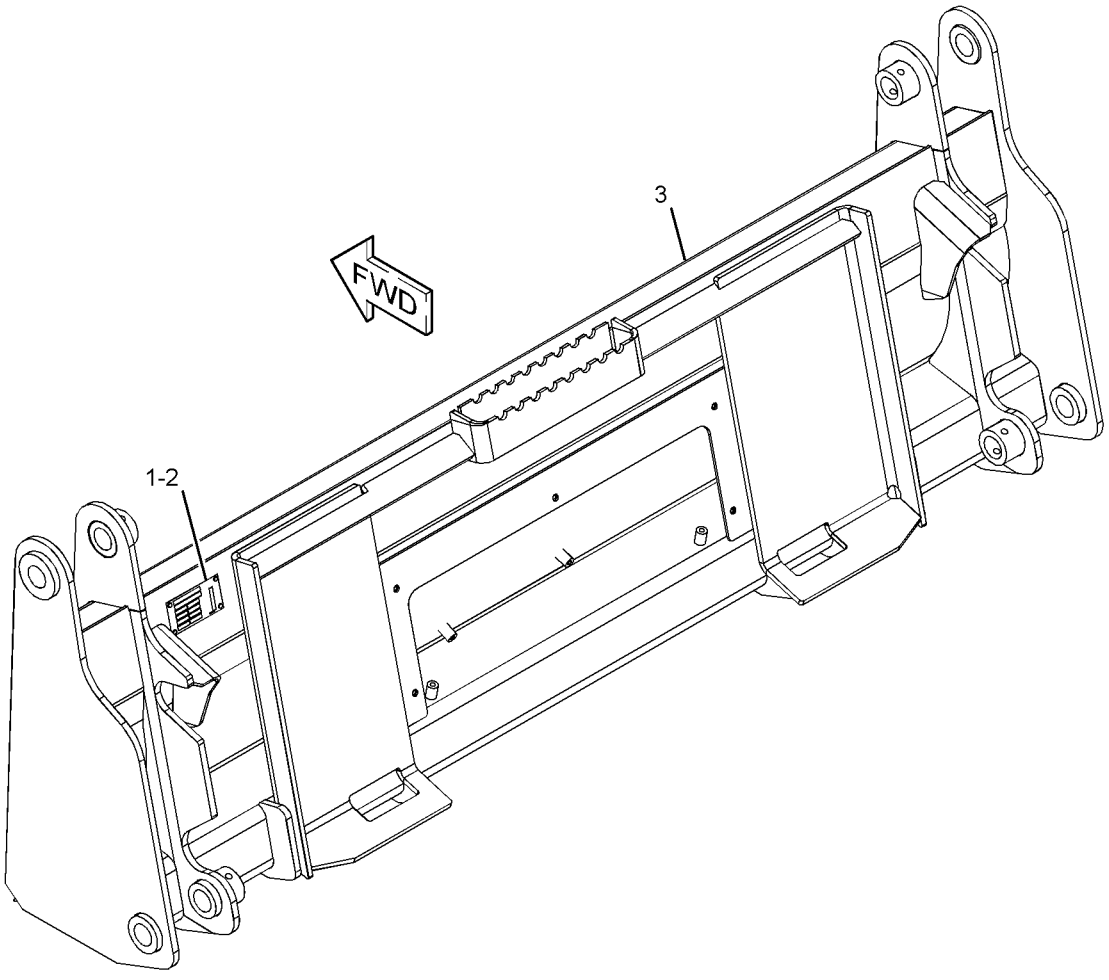

GRAPHIC #1 **<END>** g01279242

279-5396 BLADE GP-MULTIPURPOSE BUCKET

S/N: MJH10575-UP
1829-MM (72-IN)
PART OF 279-5397 BUCKET GP-MULTIPURPOSE
AN ATTACHMENT

SMCS-6060, 6104 **i02552170**

NOTE	REF NO	GRAPHIC REF	PART NUMBER	QTY	PART NAME 1 2 3 4 5 6 (PRODUCT LEVEL)	SEE PAGE
	1	1	**154-2704**	1	PLATE-INSTRUCTION (BUCKET SPECIFICATIONS)	
	2	1	**168-8389**	4	TACK-FASTENER	
	3	1	**279-5395**	1	BLADE AS	

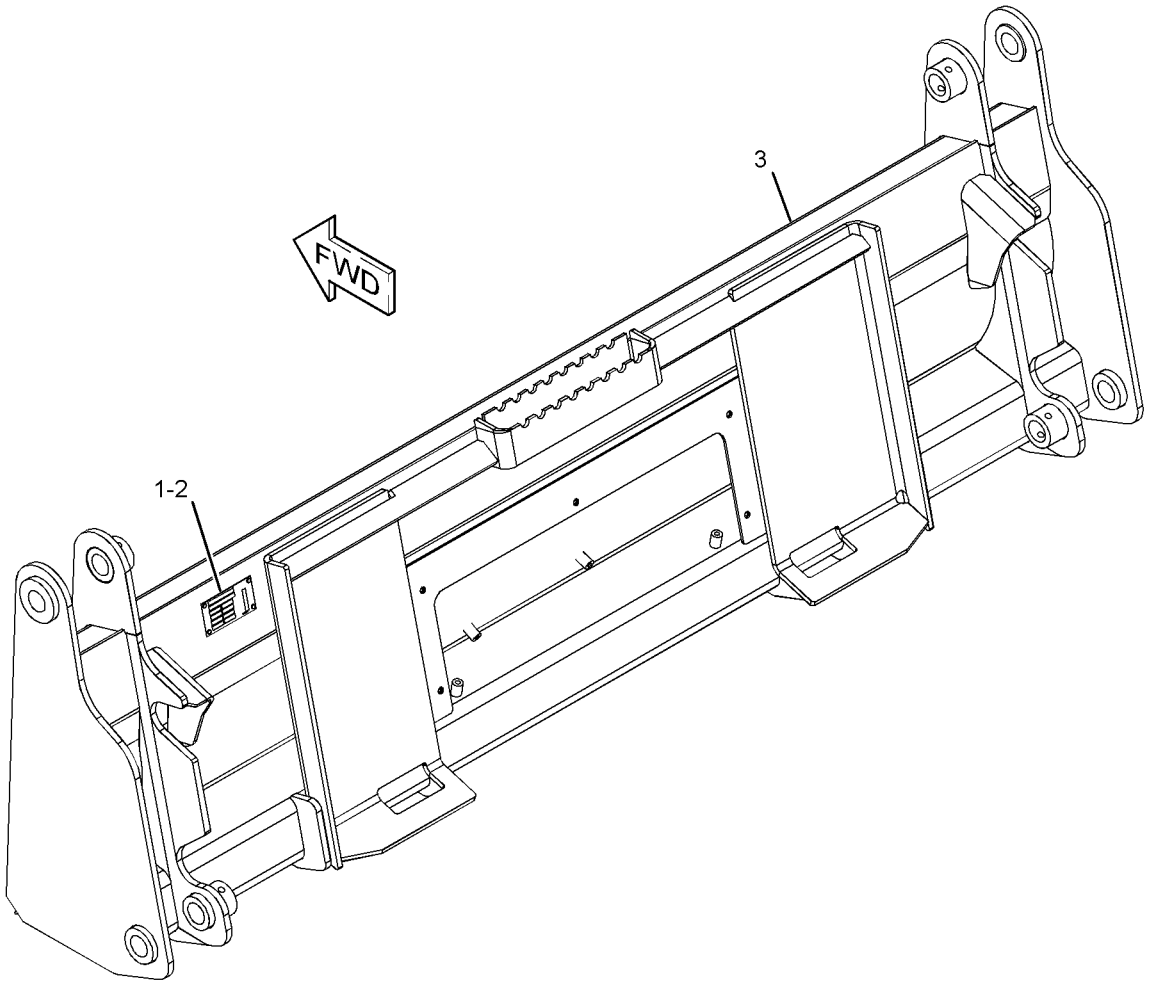

GRAPHIC #1 **<END>** g01279973

279-5405 BLADE GP-MULTIPURPOSE BUCKET

S/N: MJH10575-UP
1981-MM (78-IN)
PART OF 279-5404 BUCKET GP-MULTIPURPOSE
AN ATTACHMENT

SMCS-6060, 6104 **i02552256**

NOTE	REF NO	GRAPHIC REF	PART NUMBER	QTY	PART NAME 1 2 3 4 5 6 (PRODUCT LEVEL)	SEE PAGE
	1	1	**154-2704**	1	PLATE-INSTRUCTION (BUCKET SPECIFICATIONS)	
	2	1	**168-8389**	4	TACK-FASTENER	
	3	1	**279-5406**	1	BLADE AS	

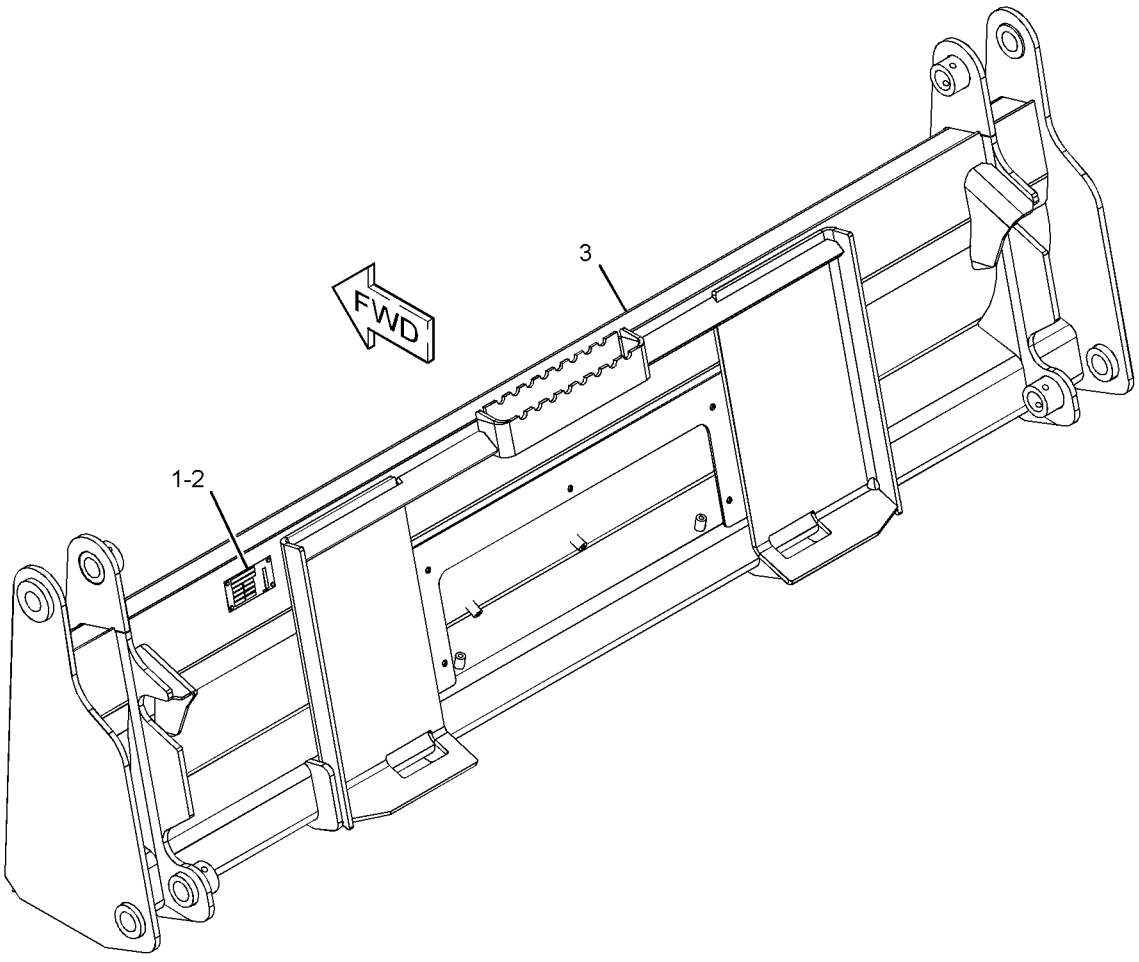

GRAPHIC #1 **<END>** g01278518

WORK TOOLS

279-5435 BUCKET AR-DIRT

S/N: MJH10575-UP

AN ATTACHMENT

SMCS-6001 **i02552331**

NOTE	PART NUMBER	QTY	PART NAME 1 2 3 4 5 6 (PRODUCT LEVEL)	SEE PAGE
Y	**279-5434**	1	BUCKET AS-DIRT	430
Y	*135-9383*	1	EDGE GP-CUTTING	464

Y-SEPARATE ILLUSTRATION

<END>

279-5438 BUCKET AR-DIRT

S/N: MJH10575-UP

AN ATTACHMENT

SMCS-6001 **i02571312**

NOTE	PART NUMBER	QTY	PART NAME 1 2 3 4 5 6 (PRODUCT LEVEL)	SEE PAGE
Y	**279-5437**	1	BUCKET AS-DIRT	431
Y	*135-9384*	1	EDGE GP-CUTTING	465

Y-SEPARATE ILLUSTRATION

<END>

279-5441 BUCKET AR-DIRT

S/N: MJH10575-UP

AN ATTACHMENT

SMCS-6001 **i02571314**

NOTE	PART NUMBER	QTY	PART NAME 1 2 3 4 5 6 (PRODUCT LEVEL)	SEE PAGE
Y	**279-5440**	1	BUCKET AS-DIRT	432
Y	*135-9385*	1	EDGE GP-CUTTING	466

Y-SEPARATE ILLUSTRATION

<END>

285-6090 BUCKET AR-DIRT

S/N: MJH10575-UP

AN ATTACHMENT

SMCS-6001 **i02552446**

NOTE	PART NUMBER	QTY	PART NAME 1 2 3 4 5 6 (PRODUCT LEVEL)	SEE PAGE
Y	**285-6089**	1	BUCKET AS-DIRT	433
Y	*135-9386*	1	EDGE GP-CUTTING (DIRT)	467

Y-SEPARATE ILLUSTRATION

<END>

WORK TOOLS

279-5365 BUCKET AR-GENERAL PURPOSE

S/N: MJH10575-UP
AN ATTACHMENT

SMCS-6101 **i02550406**

NOTE	PART NUMBER	QTY	PART NAME 1 2 3 4 5 6 (PRODUCT LEVEL)	SEE PAGE
Y	**279-5364**	1	BUCKET AS-GENERAL PURPOSE	434
Y	*135-9384*	1	EDGE GP-CUTTING	465

Y-SEPARATE ILLUSTRATION

<END>

279-5366 BUCKET AR-GENERAL PURPOSE

S/N: MJH10575-UP
AN ATTACHMENT

SMCS-6101 **i02550436**

NOTE	PART NUMBER	QTY	PART NAME 1 2 3 4 5 6 (PRODUCT LEVEL)	SEE PAGE
Y	**279-5364**	1	BUCKET AS-GENERAL PURPOSE	434
Y	*141-4999*	8	TOOTH GP-UNI	503

Y-SEPARATE ILLUSTRATION

<END>

279-5369 BUCKET AR-GENERAL PURPOSE

S/N: MJH10575-UP
AN ATTACHMENT

SMCS-6101 **i02551081**

NOTE	PART NUMBER	QTY	PART NAME 1 2 3 4 5 6 (PRODUCT LEVEL)	SEE PAGE
Y	**279-5368**	1	BUCKET AS-GENERAL PURPOSE	435
Y	*135-9385*	1	EDGE GP-CUTTING	466

Y-SEPARATE ILLUSTRATION

<END>

279-5370 BUCKET AR-GENERAL PURPOSE

S/N: MJH10575-UP
AN ATTACHMENT

SMCS-6101 **i02551084**

NOTE	PART NUMBER	QTY	PART NAME 1 2 3 4 5 6 (PRODUCT LEVEL)	SEE PAGE
Y	**279-5368**	1	BUCKET AS-GENERAL PURPOSE	435
Y	*141-4999*	8	TOOTH GP-UNI	503

Y-SEPARATE ILLUSTRATION

<END>

279-5373 BUCKET AR-GENERAL PURPOSE

S/N: MJH10575-UP
AN ATTACHMENT

SMCS-6101 **i02552012**

NOTE	PART NUMBER	QTY	PART NAME 1 2 3 4 5 6 (PRODUCT LEVEL)	SEE PAGE
Y	**279-5372**	1	BUCKET AS-GENERAL PURPOSE	436
Y	*135-9386*	1	EDGE GP-CUTTING	467
Y-SEPARATE ILLUSTRATION				

<END>

279-5374 BUCKET AR-GENERAL PURPOSE

S/N: MJH10575-UP
AN ATTACHMENT

SMCS-6101 **i02552011**

NOTE	PART NUMBER	QTY	PART NAME 1 2 3 4 5 6 (PRODUCT LEVEL)	SEE PAGE
Y	**279-5372**	1	BUCKET AS-GENERAL PURPOSE	436
Y	*141-4999*	8	TOOTH GP-UNI	503
Y-SEPARATE ILLUSTRATION				

<END>

279-5377 BUCKET AR-GENERAL PURPOSE

S/N: MJH10575-UP
AN ATTACHMENT

SMCS-6101 **i02552020**

NOTE	PART NUMBER	QTY	PART NAME 1 2 3 4 5 6 (PRODUCT LEVEL)	SEE PAGE
Y	**279-5376**	1	BUCKET AS-GENERAL PURPOSE	437
Y	*135-9387*	1	EDGE GP-CUTTING	468
Y-SEPARATE ILLUSTRATION				

<END>

279-5378 BUCKET AR-GENERAL PURPOSE

S/N: MJH10575-UP
AN ATTACHMENT

SMCS-6101 **i02552018**

NOTE	PART NUMBER	QTY	PART NAME 1 2 3 4 5 6 (PRODUCT LEVEL)	SEE PAGE
Y	**279-5376**	1	BUCKET AS-GENERAL PURPOSE	437
Y	*141-4999*	9	TOOTH GP-UNI	503
Y-SEPARATE ILLUSTRATION				

<END>

157-7223 BUCKET AR-GRAPPLE

S/N: MJH10575-UP
INDUSTRIAL
PART OF 157-7226 BUCKET AR-GRAPPLE
AN ATTACHMENT

SMCS-6704 **i02508973**

NOTE	PART NUMBER	QTY	PART NAME 1 2 3 4 5 6 (PRODUCT LEVEL)	SEE PAGE
Y	*156-0884*	1	BUCKET GP-GRAPPLE	441
Y	**278-1975**	2	CYLINDER GP-HYDRAULIC	281
Y	*161-0187*	1	LINES GP-GRAPPLE	315
Y	*156-0891*	1	MOUNTING GP-CYLINDER	375
Y-SEPARATE ILLUSTRATION				

<END>

157-7224 BUCKET AR-GRAPPLE

S/N: MJH10575-UP
INDUSTRIAL
PART OF 157-7227 BUCKET AR-GRAPPLE
AN ATTACHMENT

SMCS-6704 **i02508941**

NOTE	PART NUMBER	QTY	PART NAME 1 2 3 4 5 6 (PRODUCT LEVEL)	SEE PAGE
Y	*156-0885*	1	BUCKET GP-GRAPPLE	442
Y	*156-0891*	1	MOUNTING GP-CYLINDER	375
Y	**278-1975**	2	CYLINDER GP-HYDRAULIC	281
Y	*161-0187*	1	LINES GP-GRAPPLE	315
Y-SEPARATE ILLUSTRATION				

<END>

157-7226 BUCKET AR-GRAPPLE—INDUSTRIAL

S/N: MJH10575-UP
AN ATTACHMENT

SMCS-6704 **i01788957**

NOTE	PART NUMBER	QTY	PART NAME 1 2 3 4 5 6 (PRODUCT LEVEL)	SEE PAGE
Y	**157-7223**	1	BUCKET AR-GRAPPLE	421
Y	*135-9384*	1	EDGE GP-CUTTING	465
Y-SEPARATE ILLUSTRATION				

<END>

157-7227 BUCKET AR-GRAPPLE—INDUSTRIAL

S/N: MJH10575-UP
AN ATTACHMENT

SMCS-6704 **i01788965**

NOTE	PART NUMBER	QTY	PART NAME 1 2 3 4 5 6 (PRODUCT LEVEL)	SEE PAGE
Y	**157-7224**	1	BUCKET AR-GRAPPLE	421
Y	*135-9385*	1	EDGE GP-CUTTING	466
Y-SEPARATE ILLUSTRATION				

<END>

285-6093 BUCKET AR-GRAPPLE

S/N: MJH10575-UP
AN ATTACHMENT

SMCS-6704 **i02552451**

NOTE	PART NUMBER	QTY	PART NAME 1 2 3 4 5 6 (PRODUCT LEVEL)	SEE PAGE
Y	**285-6099**	1	BUCKET GP-UTILITY (66-IN)	451
Y	*285-6116*	1	GRAPPLE GP-UTILITY	484

Y-SEPARATE ILLUSTRATION

<END>

285-6104 BUCKET AR-GRAPPLE

S/N: MJH10575-UP
AN ATTACHMENT

SMCS-6704 **i02552487**

NOTE	PART NUMBER	QTY	PART NAME 1 2 3 4 5 6 (PRODUCT LEVEL)	SEE PAGE
Y	**285-6102**	1	BUCKET GP-UTILITY (72-IN)	452
Y	*285-6116*	1	GRAPPLE GP-UTILITY	484

Y-SEPARATE ILLUSTRATION

<END>

285-6111 BUCKET AR-GRAPPLE

S/N: MJH10575-UP
AN ATTACHMENT

SMCS-6704 **i02552741**

NOTE	PART NUMBER	QTY	PART NAME 1 2 3 4 5 6 (PRODUCT LEVEL)	SEE PAGE
Y	**285-6100**	1	BUCKET AR-UTILITY	429
Y	*285-6116*	1	GRAPPLE GP-UTILITY	484

Y-SEPARATE ILLUSTRATION

<END>

285-6112 BUCKET AR-GRAPPLE

S/N: MJH10575-UP
AN ATTACHMENT

SMCS-6704 **i02552759**

NOTE	PART NUMBER	QTY	PART NAME 1 2 3 4 5 6 (PRODUCT LEVEL)	SEE PAGE
Y	**285-6101**	1	BUCKET AR-UTILITY	429
Y	*285-6116*	1	GRAPPLE GP-UTILITY	484

Y-SEPARATE ILLUSTRATION

<END>

WORK TOOLS

286-9300 BUCKET AR-GRAPPLE

S/N: MJH10575-UP
AN ATTACHMENT

SMCS-6704 **i02723699**

NOTE	REF NO	GRAPHIC REF	PART NUMBER	QTY	PART NAME 1 2 3 4 5 6 (PRODUCT LEVEL)	SEE PAGE
Y	1	1	*286-9248*	1	CYLINDER & MTG GP-BUCKET	268
Y	2	1	*286-9251*	1	PLATE & FILM GP	659
Y	3	1	*286-9278*	1	BUCKET GP-GRAPPLE	444
Y	4	1	*286-9279*	1	LINES GP-GRAPPLE	319
Y	5	1	*293-6264*	2	CYLINDER GP-BUCKET	273

Y-SEPARATE ILLUSTRATION

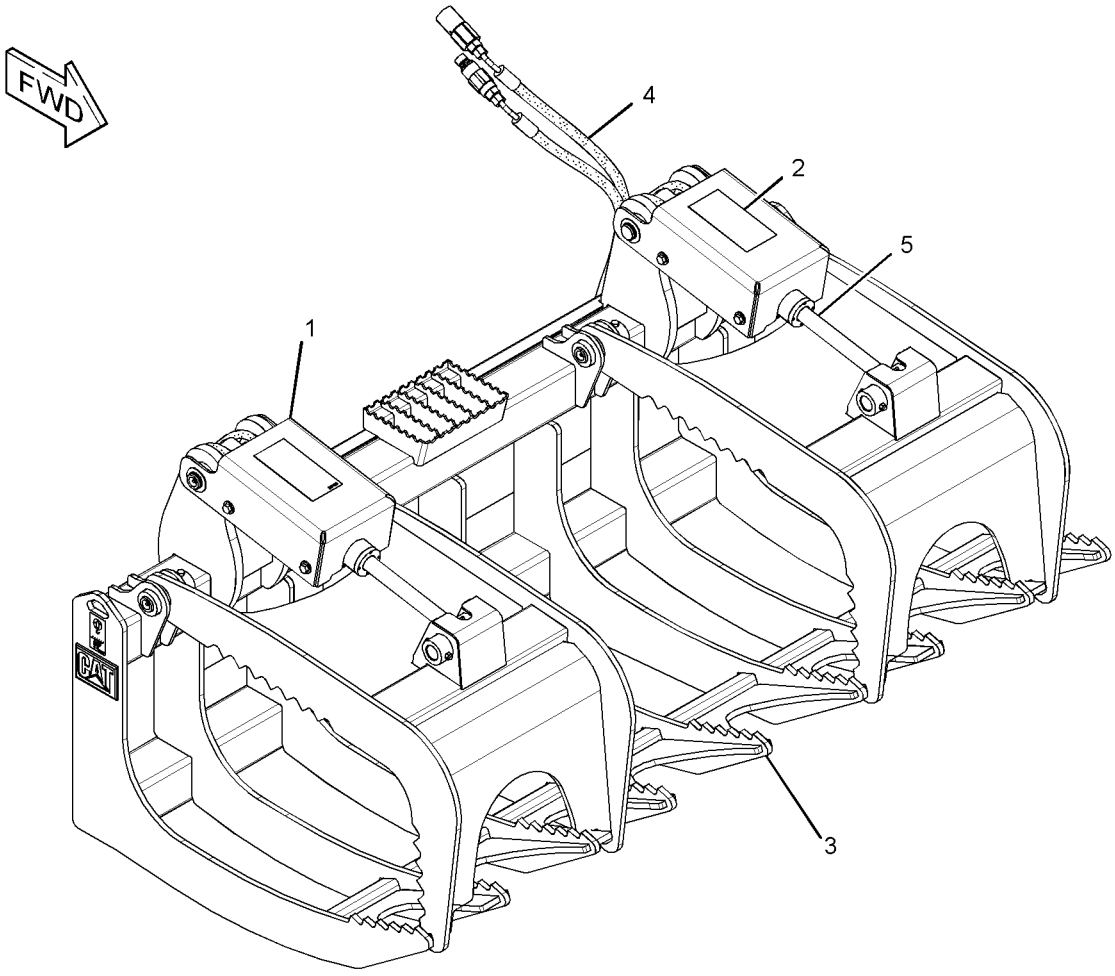

GRAPHIC #1 **<END>** g01372572

WORK TOOLS

286-9301 BUCKET AR-GRAPPLE

S/N: MJH10575-UP

AN ATTACHMENT

SMCS-6704 **i02723700**

NOTE	REF NO	GRAPHIC REF	PART NUMBER	QTY	PART NAME 1 2 3 4 5 6 (PRODUCT LEVEL)	SEE PAGE
Y	1	1	*286-9244*	1	BUCKET GP-GRAPPLE	443
Y	2	1	*286-9248*	1	CYLINDER & MTG GP-BUCKET	268
Y	3	1	*286-9250*	1	LINES GP-GRAPPLE	317
Y	4	1	*286-9251*	1	PLATE & FILM GP	659
Y	5	1	**293-6264**	2	CYLINDER GP-BUCKET	273

Y-SEPARATE ILLUSTRATION

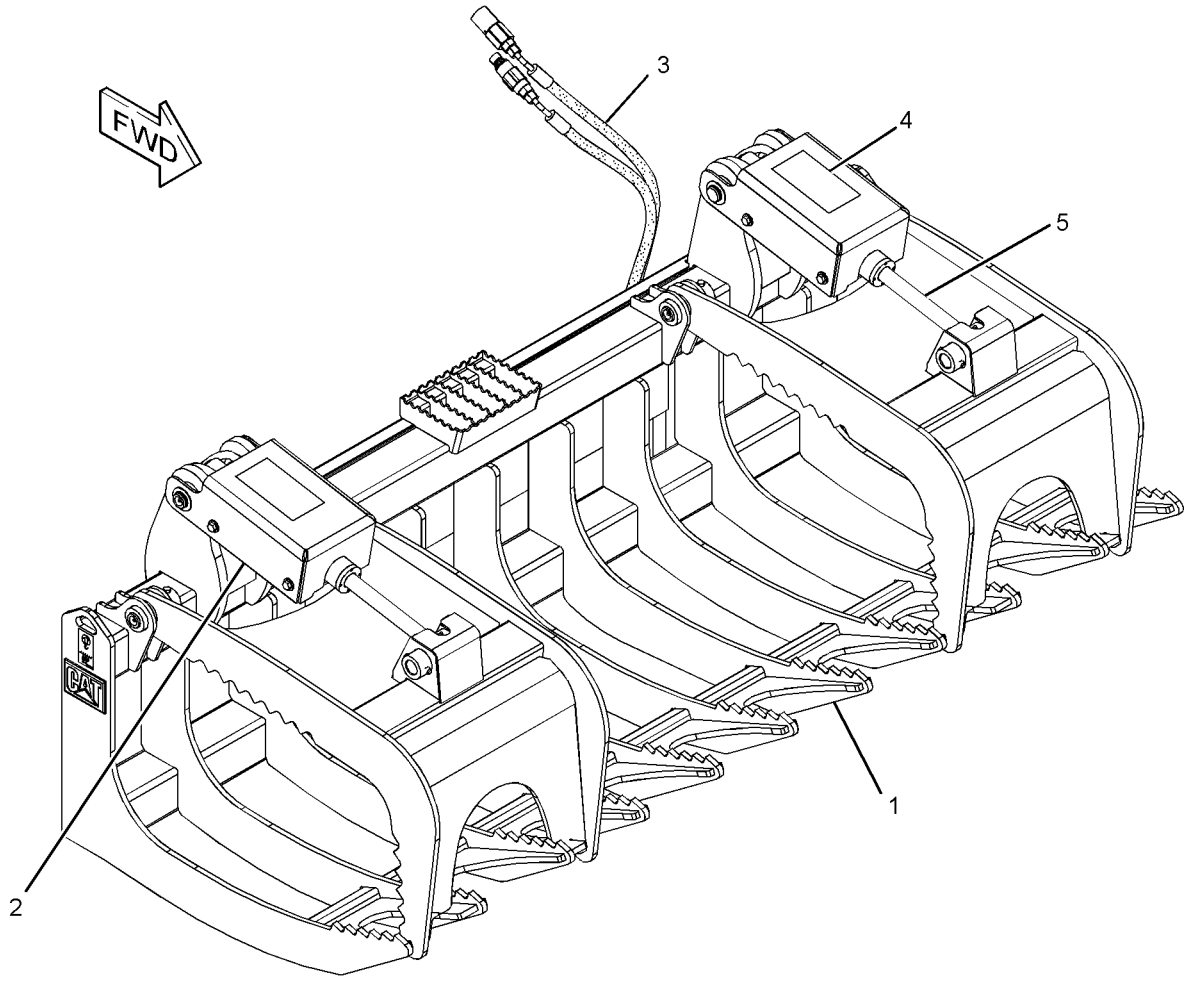

GRAPHIC #1 **<END>** g01372972

279-5420 BUCKET AR-LIGHT MATERIAL

S/N: MJH10575-UP
AN ATTACHMENT

SMCS-6103 **i02552302**

NOTE	PART NUMBER	QTY	PART NAME 1 2 3 4 5 6 (PRODUCT LEVEL)	SEE PAGE
Y	**279-5421**	1	BUCKET AS-LIGHT MATERIAL	438
Y	*135-9386*	1	EDGE GP-CUTTING	467
Y-SEPARATE ILLUSTRATION				

<END>

279-5425 BUCKET AR-LIGHT MATERIAL

S/N: MJH10575-UP
AN ATTACHMENT

SMCS-6103 **i02552308**

NOTE	PART NUMBER	QTY	PART NAME 1 2 3 4 5 6 (PRODUCT LEVEL)	SEE PAGE
Y	**279-5424**	1	BUCKET AS-LIGHT MATERIAL	439
Y	*135-9387*	1	EDGE GP-CUTTING	468
Y-SEPARATE ILLUSTRATION				

<END>

279-5430 BUCKET AR-LIGHT MATERIAL

S/N: MJH10575-UP
AN ATTACHMENT

SMCS-6103 **i02552313**

NOTE	PART NUMBER	QTY	PART NAME 1 2 3 4 5 6 (PRODUCT LEVEL)	SEE PAGE
Y	**279-5429**	1	BUCKET AS-LIGHT MATERIAL	440
Y	*195-7124*	1	EDGE GP-CUTTING	470
Y-SEPARATE ILLUSTRATION				

<END>

279-5380 BUCKET AR-MULTIPURPOSE

S/N: MJH10575-UP
AN ATTACHMENT

SMCS-6104 **i02552027**

NOTE	PART NUMBER	QTY	PART NAME 1 2 3 4 5 6 (PRODUCT LEVEL)	SEE PAGE
Y	**279-5382**	1	BUCKET AR-MULTIPURPOSE	426
Y	*141-4999*	8	TOOTH GP-UNI	503
Y-SEPARATE ILLUSTRATION				

<END>

WORK TOOLS

279-5381 BUCKET AR-MULTIPURPOSE

S/N: MJH10575-UP

AN ATTACHMENT

SMCS-6104 **i02552030**

NOTE	PART NUMBER	QTY	PART NAME 1 2 3 4 5 6 (PRODUCT LEVEL)	SEE PAGE
Y	**279-5382**	1	BUCKET AR-MULTIPURPOSE	426
Y	*135-9384*	1	EDGE GP-CUTTING	465
Y-SEPARATE ILLUSTRATION				

<END>

279-5382 BUCKET AR-MULTIPURPOSE

S/N: MJH10575-UP

PART OF 279-5380, 279-5381 BUCKET AR-MULTIPURPOSE

AN ATTACHMENT

SMCS-6104 **i02770080**

NOTE	PART NUMBER	QTY	PART NAME 1 2 3 4 5 6 (PRODUCT LEVEL)	SEE PAGE
Y	*279-5383*	1	BUCKET GP-MULTIPURPOSE (60-IN)	445
Y	*162-5236*	1	COVER GP-LINES	461
Y	**154-5018**	2	CYLINDER GP-BUCKET	272
			—OR—	
Y	*278-1969*	2	CYLINDER GP-HYDRAULIC	280
Y	*279-5413*	1	LINES GP-BUCKET	300
Y	*154-5011*	1	MOUNTING GP-CYLINDER	374
Y-SEPARATE ILLUSTRATION				

<END>

279-5390 BUCKET AR-MULTIPURPOSE

S/N: MJH10575-UP

PART OF 279-5391, 279-5392 BUCKET AR-MULTIPURPOSE

AN ATTACHMENT

SMCS-6104 **i02770129**

NOTE	PART NUMBER	QTY	PART NAME 1 2 3 4 5 6 (PRODUCT LEVEL)	SEE PAGE
Y	*279-5389*	1	BUCKET GP-MULTIPURPOSE	446
Y	*162-5236*	1	COVER GP-LINES	461
Y	**154-5018**	2	CYLINDER GP-BUCKET	272
			—OR—	
Y	*278-1969*	2	CYLINDER GP-HYDRAULIC	280
Y	*279-5414*	1	LINES GP-BUCKET	302
Y	*154-5011*	1	MOUNTING GP-CYLINDER	374
Y-SEPARATE ILLUSTRATION				

<END>

279-5391 BUCKET AR-MULTIPURPOSE

S/N: MJH10575-UP
AN ATTACHMENT

SMCS-6104 **i02552078**

NOTE	PART NUMBER	QTY	PART NAME 1 2 3 4 5 6 (PRODUCT LEVEL)	SEE PAGE
Y	**279-5390**	1	BUCKET AR-MULTIPURPOSE	426
Y	*135-9385*	1	EDGE GP-CUTTING	466
Y-SEPARATE ILLUSTRATION				

<END>

279-5392 BUCKET AR-MULTIPURPOSE

S/N: MJH10575-UP
AN ATTACHMENT

SMCS-6104 **i02552071**

NOTE	PART NUMBER	QTY	PART NAME 1 2 3 4 5 6 (PRODUCT LEVEL)	SEE PAGE
Y	**279-5390**	1	BUCKET AR-MULTIPURPOSE	426
Y	*141-4999*	8	TOOTH GP-UNI	503
Y-SEPARATE ILLUSTRATION				

<END>

279-5398 BUCKET AR-MULTIPURPOSE

S/N: MJH10575-UP
PART OF 279-5400 BUCKET AR-MULTIPURPOSE, 279-5399 BUCKET GP-MULTIPURPOSE
AN ATTACHMENT

SMCS-6104 **i02770203**

NOTE	PART NUMBER	QTY	PART NAME 1 2 3 4 5 6 (PRODUCT LEVEL)	SEE PAGE
Y	*279-5397*	1	BUCKET GP-MULTIPURPOSE	447
Y	*162-5236*	1	COVER GP-LINES	461
Y	**154-5018**	2	CYLINDER GP-BUCKET	272
			—OR—	
Y	*278-1969*	2	CYLINDER GP-HYDRAULIC	280
Y	*279-5415*	1	LINES GP-BUCKET	304
Y	*154-5011*	1	MOUNTING GP-CYLINDER	374
Y-SEPARATE ILLUSTRATION				

<END>

279-5400 BUCKET AR-MULTIPURPOSE

S/N: MJH10575-UP
AN ATTACHMENT

SMCS-6104 **i02552121**

NOTE	PART NUMBER	QTY	PART NAME 1 2 3 4 5 6 (PRODUCT LEVEL)	SEE PAGE
Y	**279-5398**	1	BUCKET AR-MULTIPURPOSE	427
Y	*141-4999*	8	TOOTH GP-UNI	503
Y-SEPARATE ILLUSTRATION				

<END>

WORK TOOLS

279-5401 BUCKET AR-MULTIPURPOSE

S/N: MJH10575-UP

AN ATTACHMENT

SMCS-6104 **i02552198**

NOTE	PART NUMBER	QTY	PART NAME 1 2 3 4 5 6 (PRODUCT LEVEL)	SEE PAGE
Y	**279-5403**	1	BUCKET AR-MULTIPURPOSE	428
Y	*141-4999*	9	TOOTH GP-UNI	503
Y-SEPARATE ILLUSTRATION				

<END>

279-5402 BUCKET AR-MULTIPURPOSE

S/N: MJH10575-UP

AN ATTACHMENT

SMCS-6104 **i02552200**

NOTE	PART NUMBER	QTY	PART NAME 1 2 3 4 5 6 (PRODUCT LEVEL)	SEE PAGE
Y	**279-5403**	1	BUCKET AR-MULTIPURPOSE	428
Y	*135-9387*	1	EDGE GP-CUTTING	468
Y-SEPARATE ILLUSTRATION				

<END>

279-5403 BUCKET AR-MULTIPURPOSE

S/N: MJH10575-UP

PART OF 279-5401, 279-5402 BUCKET AR-MULTIPURPOSE

AN ATTACHMENT

SMCS-6104 **i02770224**

NOTE	PART NUMBER	QTY	PART NAME 1 2 3 4 5 6 (PRODUCT LEVEL)	SEE PAGE
Y	*279-5404*	1	BUCKET GP-MULTIPURPOSE (78-IN)	449
Y	*162-5236*	1	COVER GP-LINES	461
Y	**154-5018**	2	CYLINDER GP-BUCKET	272
			—OR—	
Y	*278-1969*	2	CYLINDER GP-HYDRAULIC	280
Y	*279-5416*	1	LINES GP-BUCKET	306
Y	*154-5011*	1	MOUNTING GP-CYLINDER	374
Y-SEPARATE ILLUSTRATION				

<END>

285-6095 BUCKET AR-UTILITY

S/N: MJH10575-UP

AN ATTACHMENT

i02552467

NOTE	PART NUMBER	QTY	PART NAME 1 2 3 4 5 6 (PRODUCT LEVEL)	SEE PAGE
Y	**285-6096**	1	BUCKET GP-UTILITY (60-IN)	450
Y	*135-9384*	1	EDGE GP-CUTTING	465
Y-SEPARATE ILLUSTRATION				

<END>

285-6100 BUCKET AR-UTILITY

S/N: MJH10575-UP
PART OF 285-6111 BUCKET AR-GRAPPLE
AN ATTACHMENT

i02552478

NOTE	PART NUMBER	QTY	PART NAME 1 2 3 4 5 6 (PRODUCT LEVEL)	SEE PAGE
Y	**285-6099**	1	BUCKET GP-UTILITY (66-IN)	451
Y	*135-9385*	1	EDGE GP-CUTTING	466
Y-SEPARATE ILLUSTRATION				

<END>

285-6101 BUCKET AR-UTILITY

S/N: MJH10575-UP
PART OF 285-6112 BUCKET AR-GRAPPLE
AN ATTACHMENT

i02552482

NOTE	PART NUMBER	QTY	PART NAME 1 2 3 4 5 6 (PRODUCT LEVEL)	SEE PAGE
Y	**285-6102**	1	BUCKET GP-UTILITY (72-IN)	452
Y	*135-9386*	1	EDGE GP-CUTTING	467
Y-SEPARATE ILLUSTRATION				

<END>

279-5434 BUCKET AS-DIRT

S/N: MJH10575-UP
1372-MM (54-IN)
PART OF 279-5435 BUCKET AR-DIRT
AN ATTACHMENT

SMCS-6001 **i02552332**

NOTE	REF NO	GRAPHIC REF	PART NUMBER	QTY	PART NAME 1 2 3 4 5 6 (PRODUCT LEVEL)	SEE PAGE
	1	1	**154-2704**	1	PLATE-INSTRUCTION (BUCKET SPECIFICATIONS)	
	2	1	**168-8389**	4	TACK-FASTENER	
					PARTS SHOWN IN GRAPHIC WITHOUT A REFERENCE NUMBER ARE NOT SERVICED SEPARATELY	

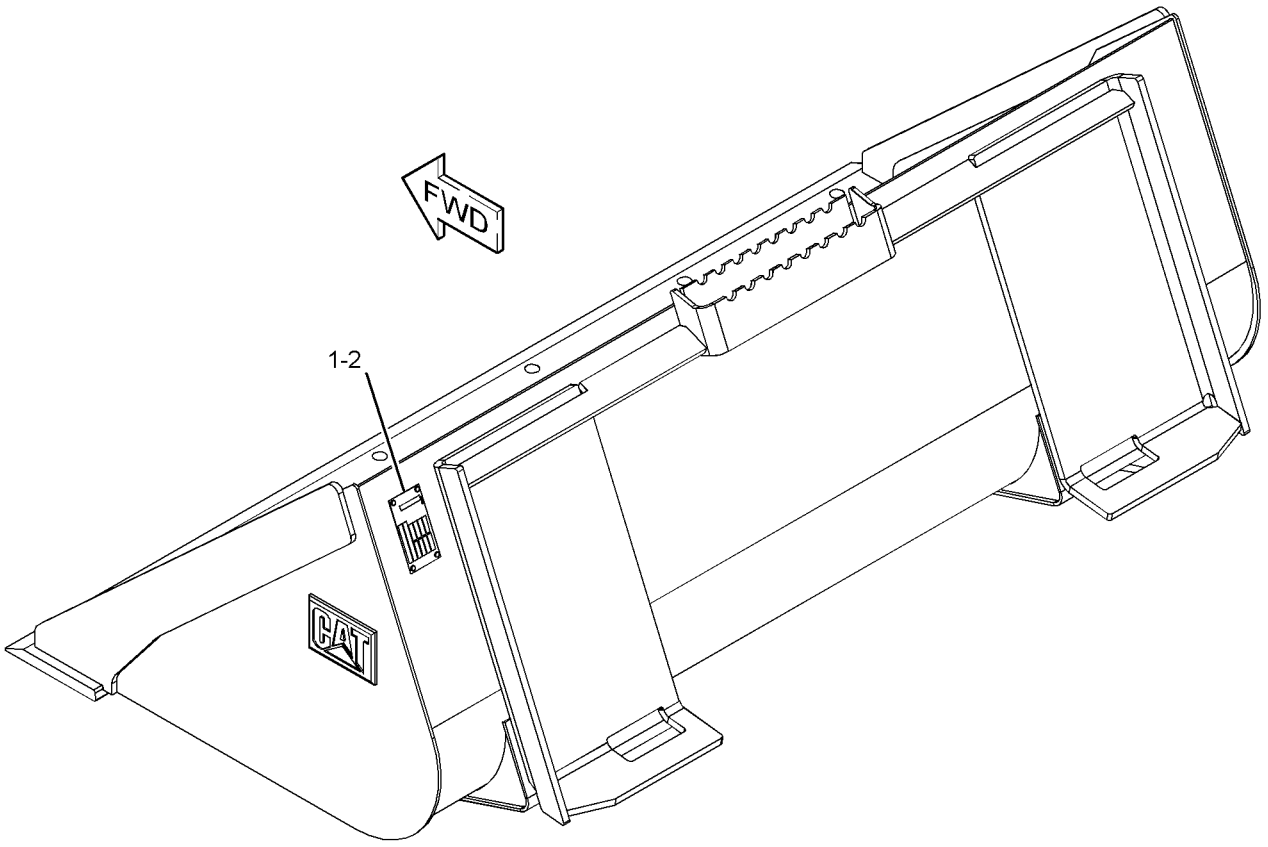

GRAPHIC #1 **<END>** g01280557

WORK TOOLS

279-5437 BUCKET AS-DIRT

S/N: MJH10575-UP
1524-MM (60-IN)
PART OF 279-5438 BUCKET AR-DIRT
AN ATTACHMENT

SMCS-6001 **i02757638**

NOTE	REF NO	GRAPHIC REF	PART NUMBER	QTY	PART NAME 1 2 3 4 5 6 (PRODUCT LEVEL)	SEE PAGE
	1	1	**154-2704**	1	PLATE-INSTRUCTION (BUCKET SPECIFICATIONS)	
	2	1	**168-8389**	4	TACK-FASTENER	
					PARTS SHOWN IN GRAPHIC WITHOUT A REFERENCE NUMBER ARE NOT SERVICED SEPARATELY	

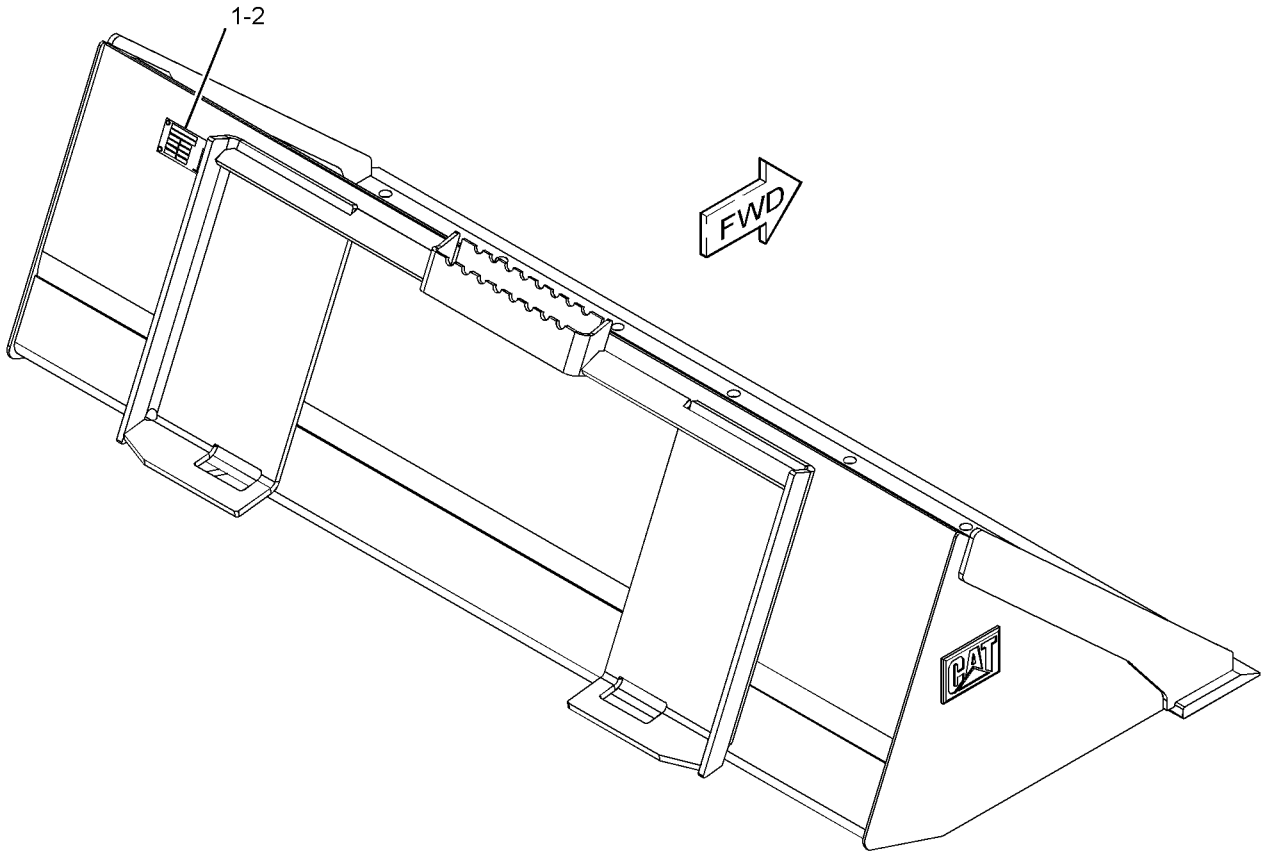

GRAPHIC #1 **<END>** g01280552

WORK TOOLS

279-5440 BUCKET AS-DIRT

S/N: MJH10575-UP
1676-MM (66-IN)
PART OF 279-5441 BUCKET AR-DIRT
AN ATTACHMENT

SMCS-6001 **i02552428**

NOTE	REF NO	GRAPHIC REF	PART NUMBER	QTY	PART NAME 1 2 3 4 5 6 (PRODUCT LEVEL)	SEE PAGE
	1	1	**154-2704**	1	PLATE-INSTRUCTION (BUCKET SPECIFICATIONS)	
	2	1	**168-8389**	4	TACK-FASTENER	
					PARTS SHOWN IN GRAPHIC WITHOUT A REFERENCE NUMBER ARE NOT SERVICED SEPARATELY	

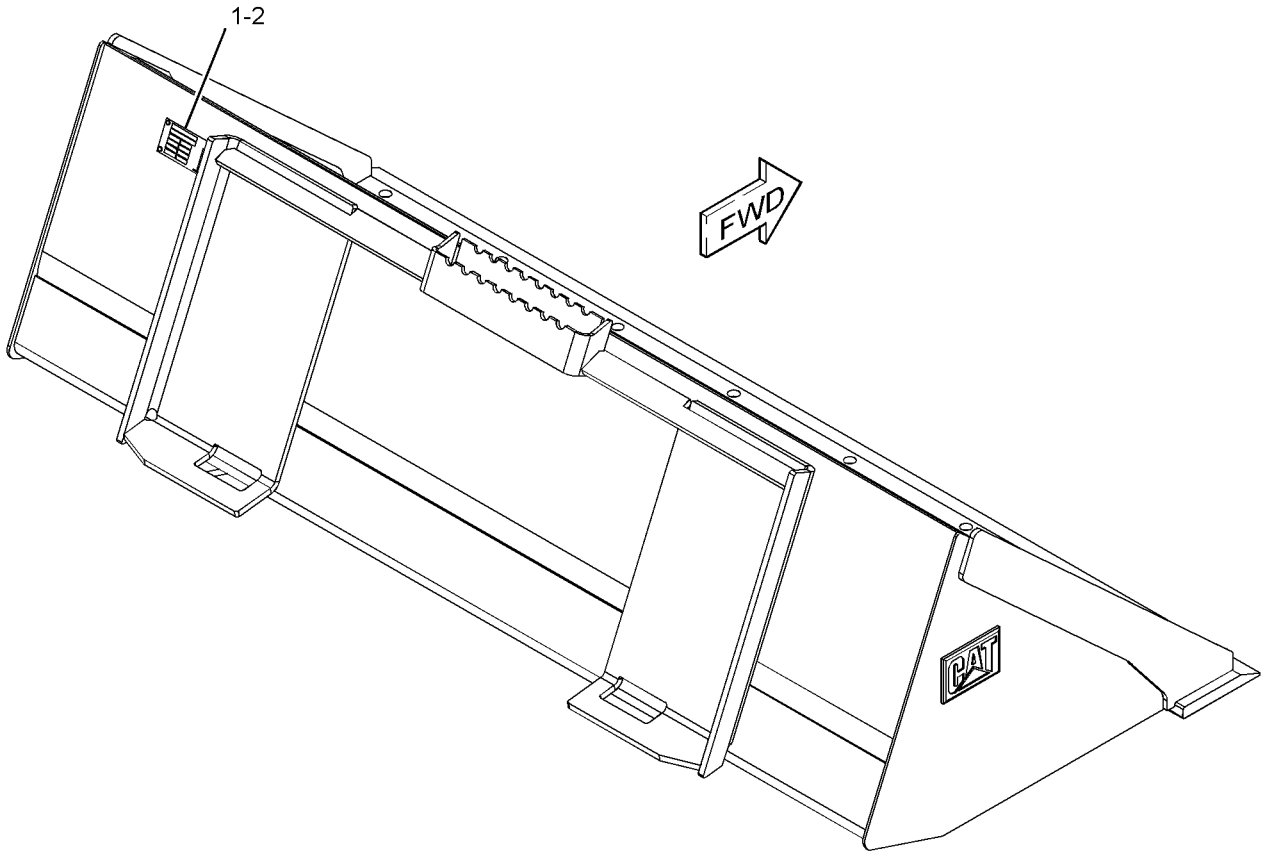

GRAPHIC #1 **<END>** g01280552

WORK TOOLS

285-6089 BUCKET AS-DIRT

S/N: MJH10575-UP
1829-MM (72-IN)
PART OF 285-6090 BUCKET AR-DIRT
AN ATTACHMENT

SMCS-6001 **i02552447**

NOTE	REF NO	GRAPHIC REF	PART NUMBER	QTY	PART NAME 1 2 3 4 5 6 (PRODUCT LEVEL)	SEE PAGE
	1	1	**154-2704**	1	PLATE-INSTRUCTION (BUCKET SPECIFICATIONS)	
	2	1	**168-8389**	4	TACK-FASTENER	
					PARTS SHOWN IN GRAPHIC(S) WITHOUT A REFERENCE NUMBER ARE NOT SERVICED SEPARATELY	

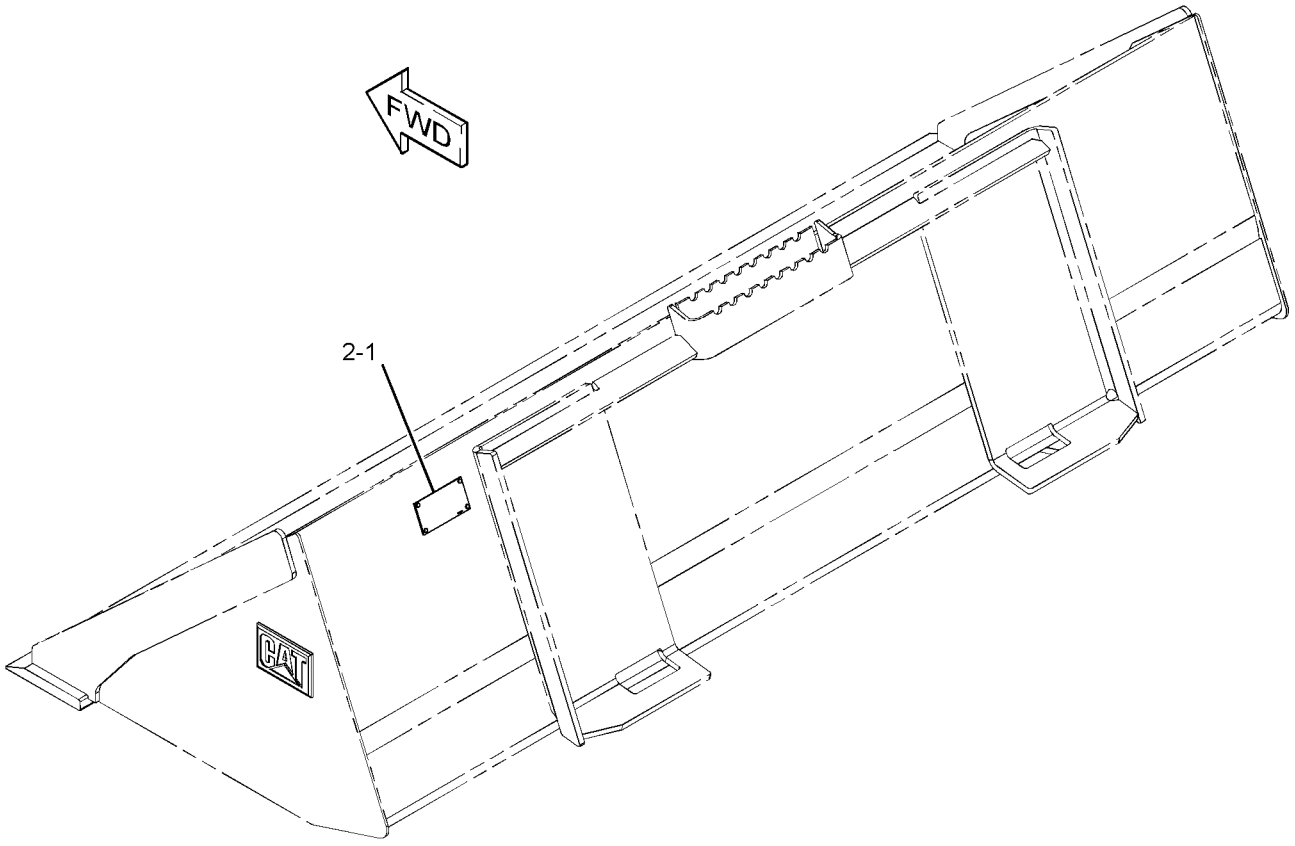

GRAPHIC #1 **<END>** g01279287

279-5364 BUCKET AS-GENERAL PURPOSE

S/N: MJH10575-UP
1524-MM (60-IN)
PART OF 279-5365, 279-5366 BUCKET AR-GENERAL PURPOSE
AN ATTACHMENT

SMCS-6101 **i02550408**

NOTE	REF NO	GRAPHIC REF	PART NUMBER	QTY	PART NAME 1 2 3 4 5 6 (PRODUCT LEVEL)	SEE PAGE
	1	1	**154-2704**	1	PLATE-INSTRUCTION (BUCKET SPECIFICATIONS)	
	2	1	**168-8389**	4	TACK-FASTENER	
					PARTS SHOWN IN GRAPHIC(S) WITHOUT A REFERENCE NUMBER ARE NOT SERVICED SEPARATELY	

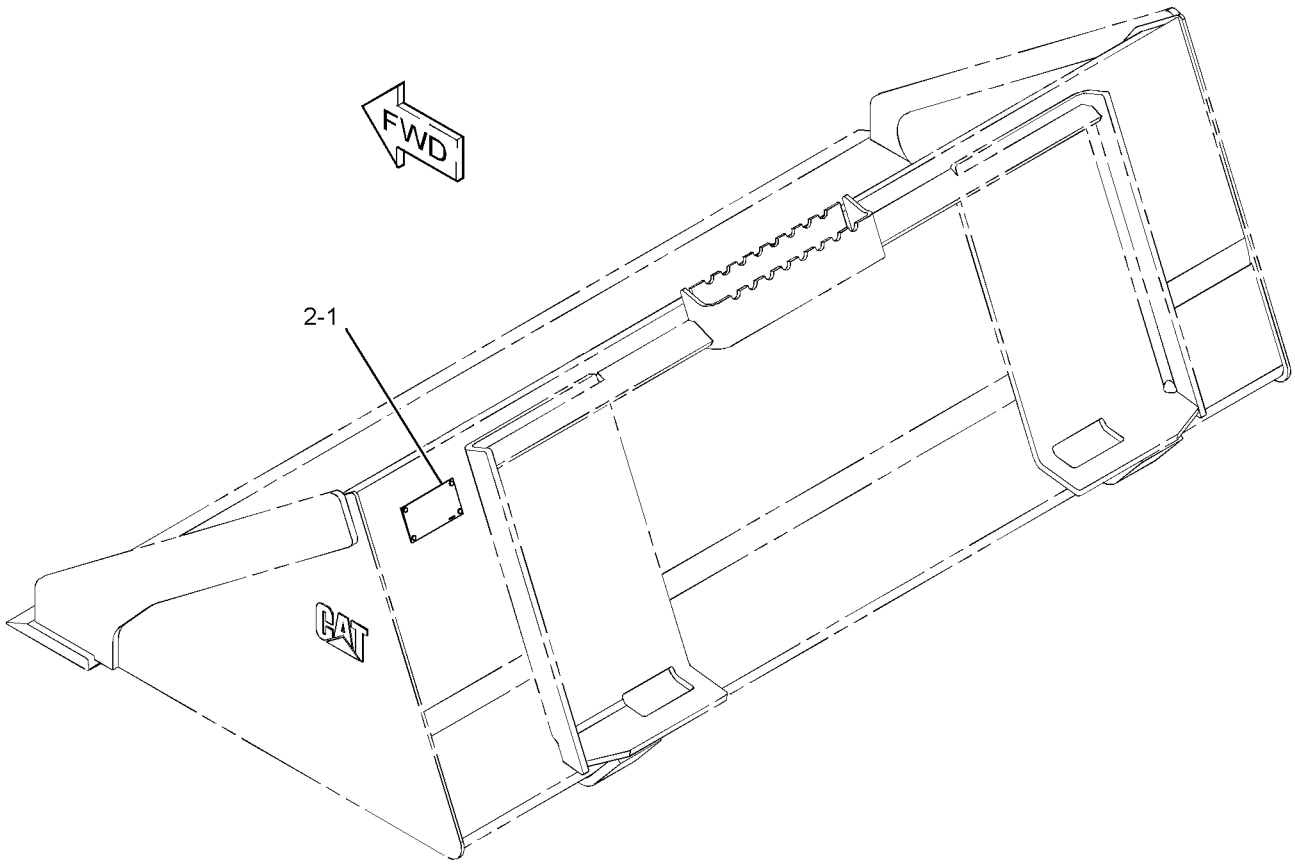

GRAPHIC #1 **<END>** g01279308

279-5368 BUCKET AS-GENERAL PURPOSE

S/N: MJH10575-UP
1676-MM (66-IN)
PART OF 279-5369, 279-5370 BUCKET AR-GENERAL PURPOSE
AN ATTACHMENT

SMCS-6101 **i02551091**

NOTE	REF NO	GRAPHIC REF	PART NUMBER	QTY	PART NAME 1 2 3 4 5 6 (PRODUCT LEVEL)	SEE PAGE
	1	1	**154-2704**	1	PLATE-INSTRUCTION (BUCKET SPECIFICATIONS)	
	2	1	**168-8389**	4	TACK-FASTENER	
					PARTS SHOWN IN GRAPHIC(S) WITHOUT A REFERENCE NUMBER ARE NOT SERVICED SEPARATELY	

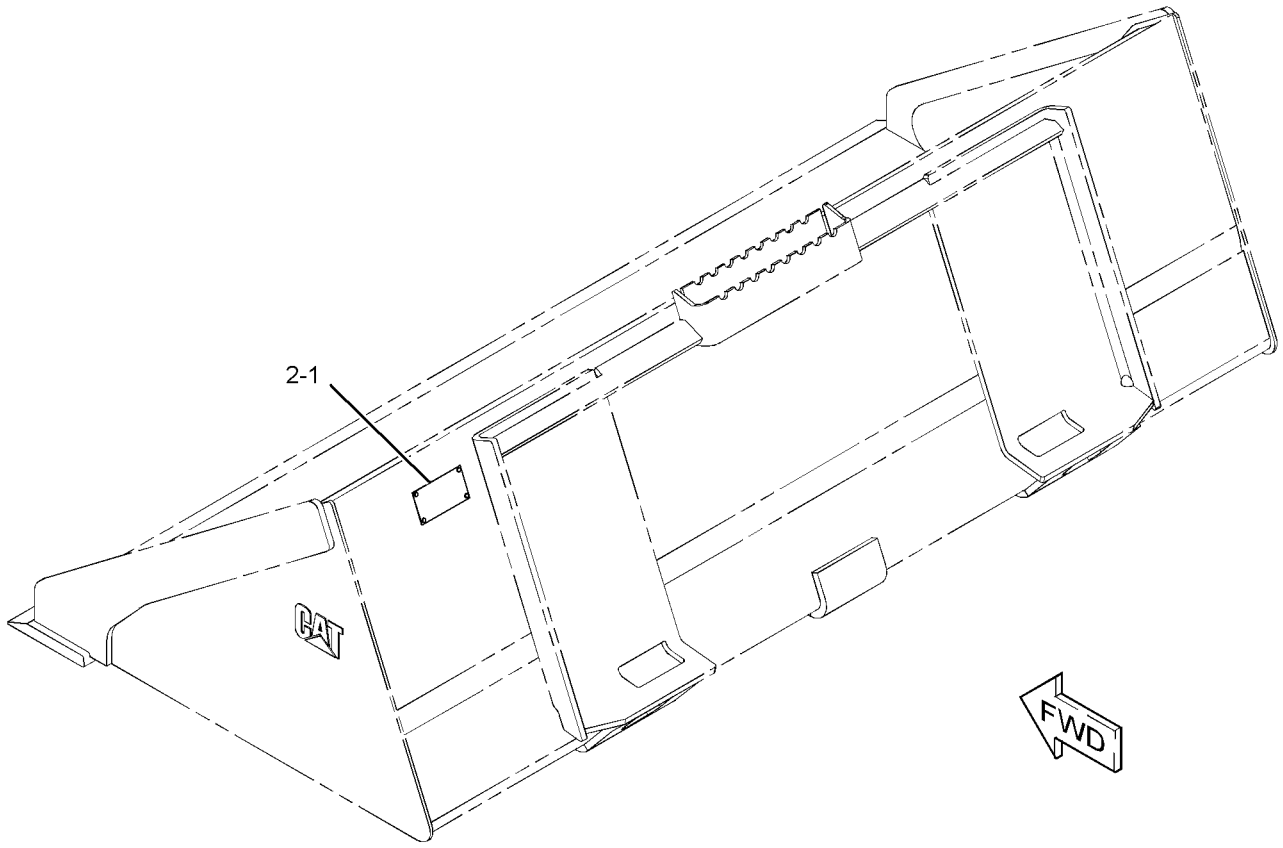

GRAPHIC #1 **<END>** g01279437

279-5372 BUCKET AS-GENERAL PURPOSE

S/N: MJH10575-UP
1829-MM (72-IN)
PART OF 279-5373, 279-5374 BUCKET AR-GENERAL PURPOSE
AN ATTACHMENT

SMCS-6101 **i02552014**

NOTE	REF NO	GRAPHIC REF	PART NUMBER	QTY	PART NAME 1 2 3 4 5 6 (PRODUCT LEVEL)	SEE PAGE
	1	1	**154-2704**	1	PLATE-INSTRUCTION (BUCKET SPECIFICATIONS)	
	2	1	**168-8389**	4	TACK-FASTENER	
					PARTS SHOWN IN GRAPHIC(S) WITHOUT A REFERENCE NUMBER ARE NOT SERVICED SEPARATELY	

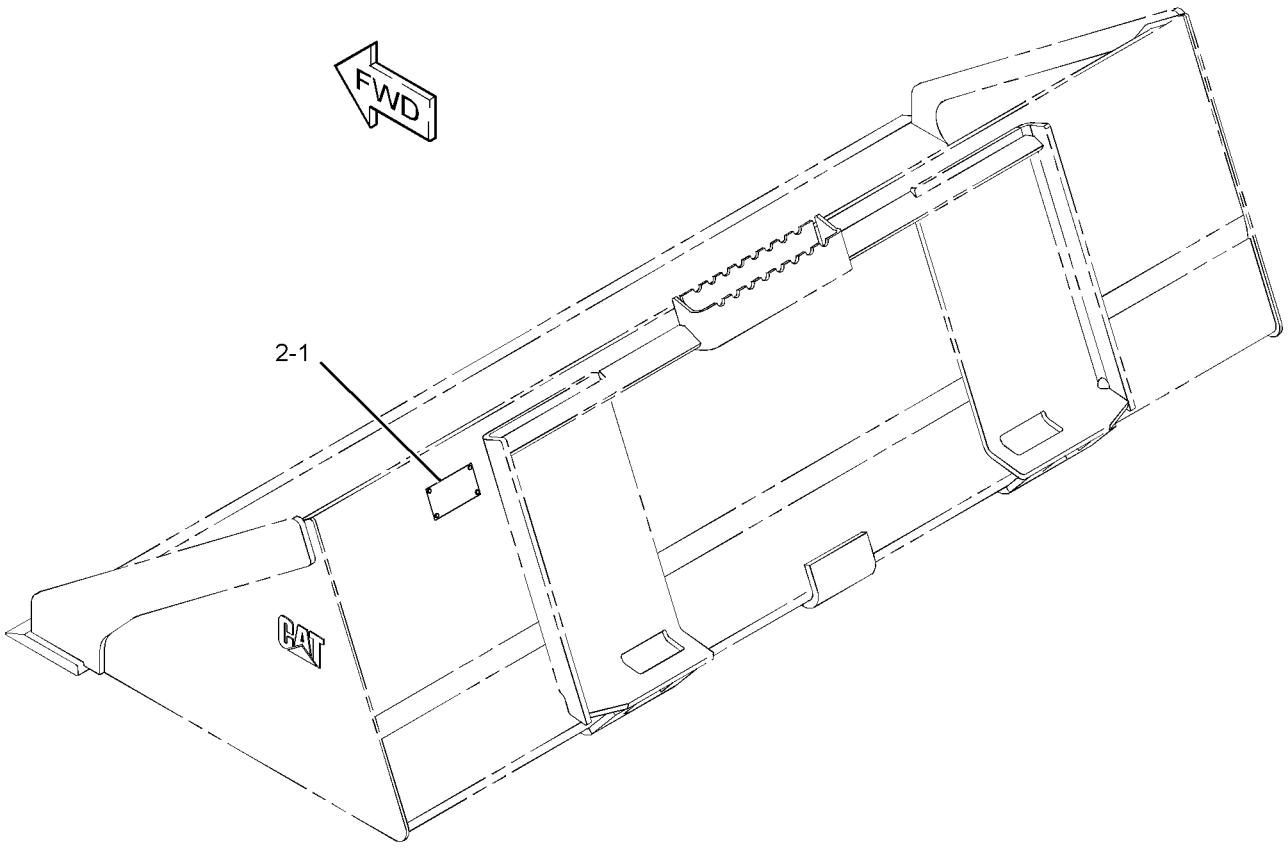

GRAPHIC #1 **<END>** g01279461

WORK TOOLS

279-5376 BUCKET AS-GENERAL PURPOSE

S/N: MJH10575-UP
1981-MM (78-IN)
PART OF 279-5377, 279-5378 BUCKET AR-GENERAL PURPOSE
AN ATTACHMENT

SMCS-6101 **i02571315**

NOTE	REF NO	GRAPHIC REF	PART NUMBER	QTY	PART NAME 1 2 3 4 5 6 (PRODUCT LEVEL)	SEE PAGE
	1	1	**154-2704**	1	PLATE-INSTRUCTION (BUCKET SPECIFICATIONS)	
	2	1	**168-8389**	4	TACK-FASTENER	
					PARTS SHOWN IN GRAPHIC(S) WITHOUT A REFERENCE NUMBER ARE NOT SERVICED SEPARATELY	

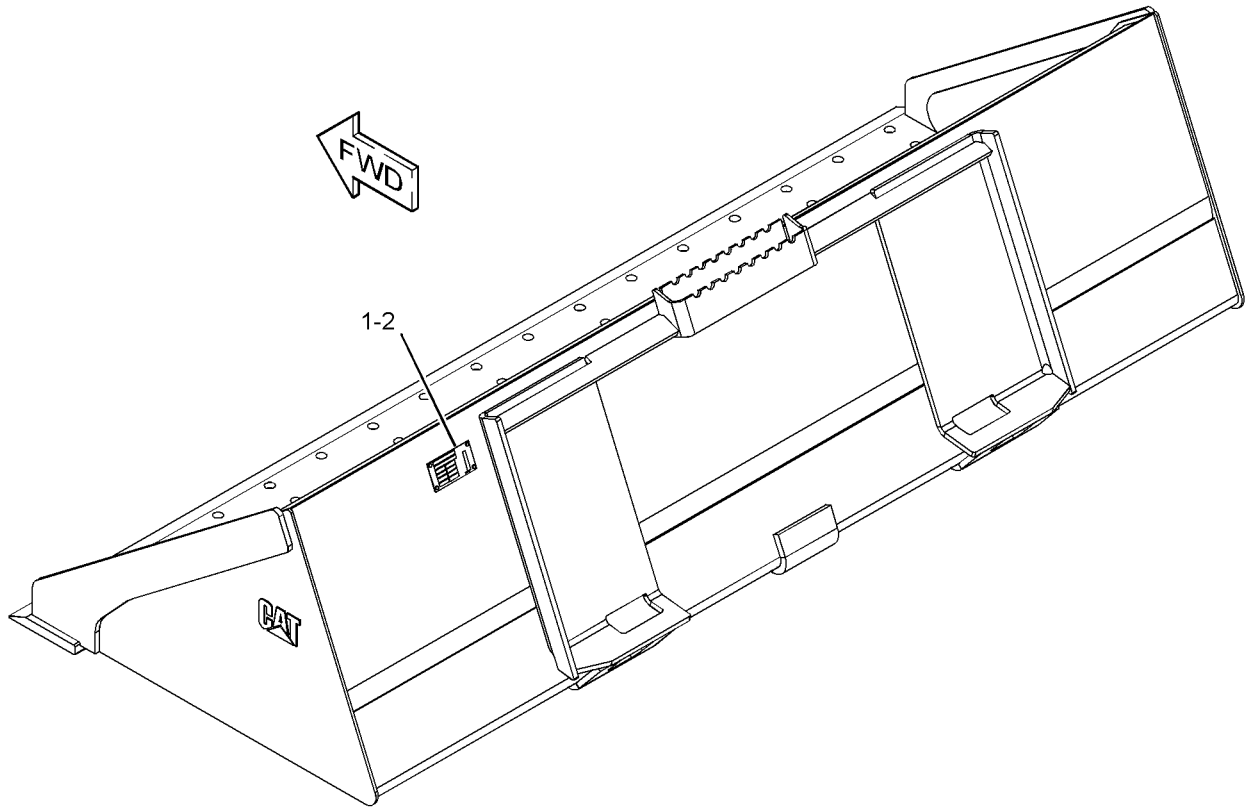

GRAPHIC #1 **<END>** g01288290

WORK TOOLS

279-5421 BUCKET AS-LIGHT MATERIAL

S/N: MJH10575-UP
1829-MM (72-IN)
PART OF 279-5420 BUCKET AR-LIGHT MATERIAL
AN ATTACHMENT

SMCS-6103 **i02571326**

NOTE	REF NO	GRAPHIC REF	PART NUMBER	QTY	PART NAME 1 2 3 4 5 6 (PRODUCT LEVEL)	SEE PAGE
	1	1	**154-2704**	1	PLATE-INSTRUCTION (BUCKET SPECIFICATIONS)	
	2	1	**168-8389**	4	TACK-FASTENER	
					PARTS SHOWN IN GRAPHIC(S) WITHOUT A REFERENCE NUMBER ARE NOT SERVICED SEPARATELY	

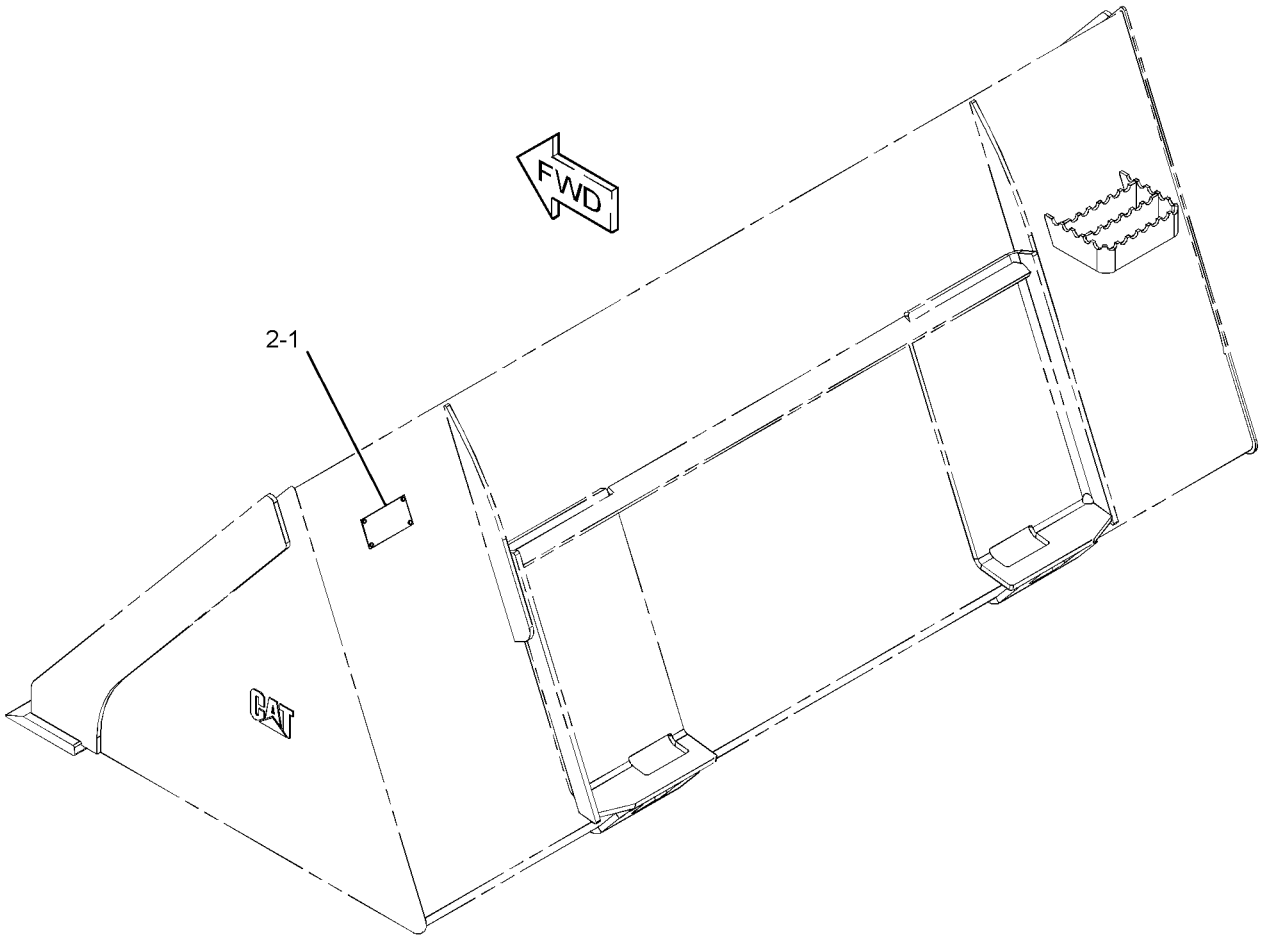

GRAPHIC #1 **<END>** g01278476

WORK TOOLS

279-5424 BUCKET AS-LIGHT MATERIAL

S/N: MJH10575-UP
1981-MM (78-IN)
PART OF 279-5425 BUCKET AR-LIGHT MATERIAL
AN ATTACHMENT

SMCS-6103 **i02571330**

NOTE	REF NO	GRAPHIC REF	PART NUMBER	QTY	PART NAME 1 2 3 4 5 6 (PRODUCT LEVEL)	SEE PAGE
	1	1	**154-2704**	1	PLATE-INSTRUCTION (BUCKET SPECIFICATIONS)	
	2	1	**168-8389**	4	TACK-FASTENER	
					PARTS SHOWN IN GRAPHIC(S) WITHOUT A REFERENCE NUMBER ARE NOT SERVICED SEPARATELY	

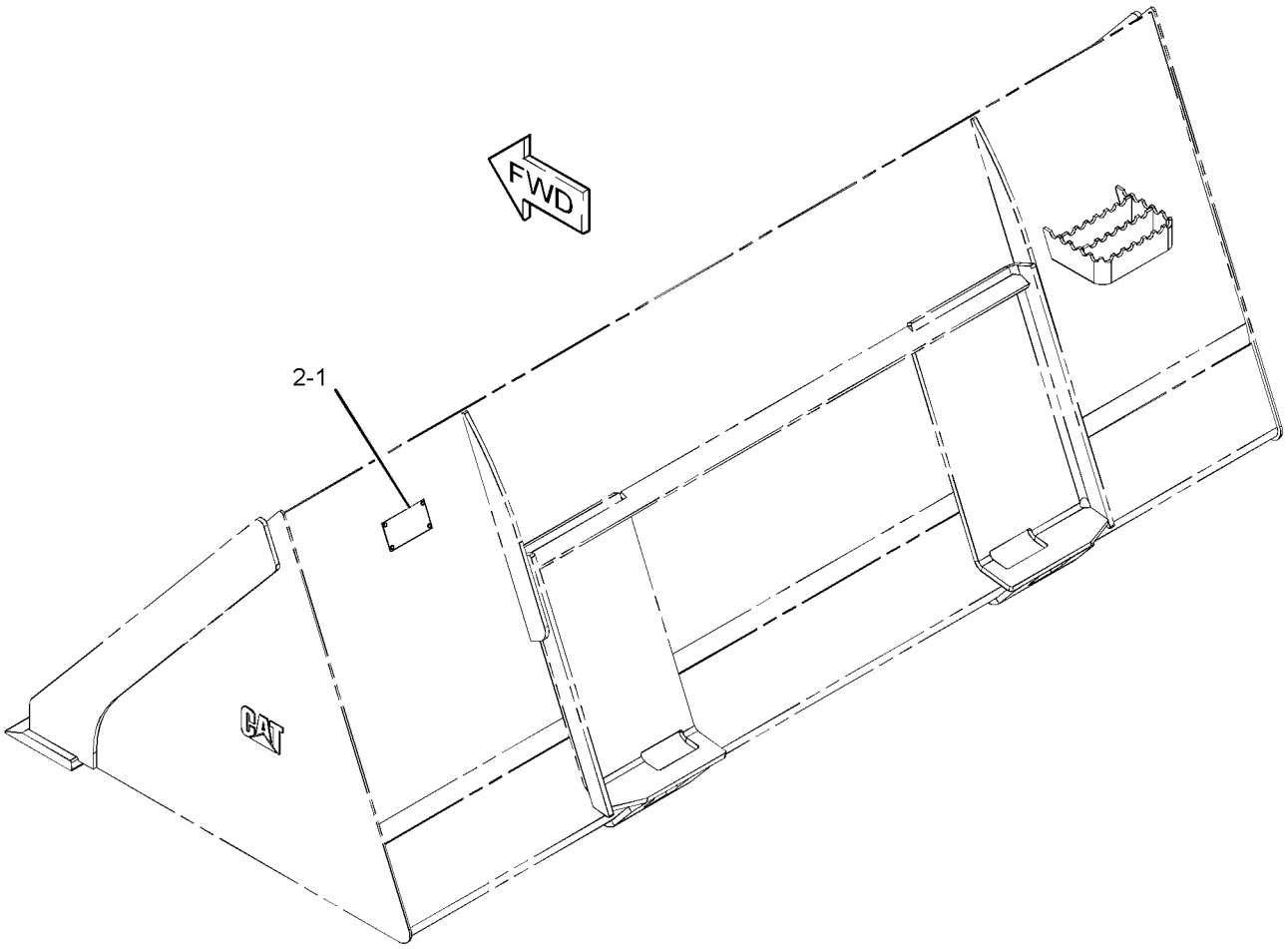

GRAPHIC #1 **<END>** g01278485

WORK TOOLS

279-5429 BUCKET AS-LIGHT MATERIAL

S/N: MJH10575-UP
2134-MM (84-IN)
PART OF 279-5430 BUCKET AR-LIGHT MATERIAL
AN ATTACHMENT

SMCS-6103 **i02571331**

NOTE	REF NO	GRAPHIC REF	PART NUMBER	QTY	PART NAME 1 2 3 4 5 6 (PRODUCT LEVEL)	SEE PAGE
	1	1	**154-2704**	1	PLATE-INSTRUCTION (BUCKET SPECIFICATIONS)	
	2	1	**168-8389**	4	TACK-FASTENER	
					PARTS SHOWN IN GRAPHIC(S) WITHOUT A REFERENCE NUMBER ARE NOT SERVICED SEPARATELY	

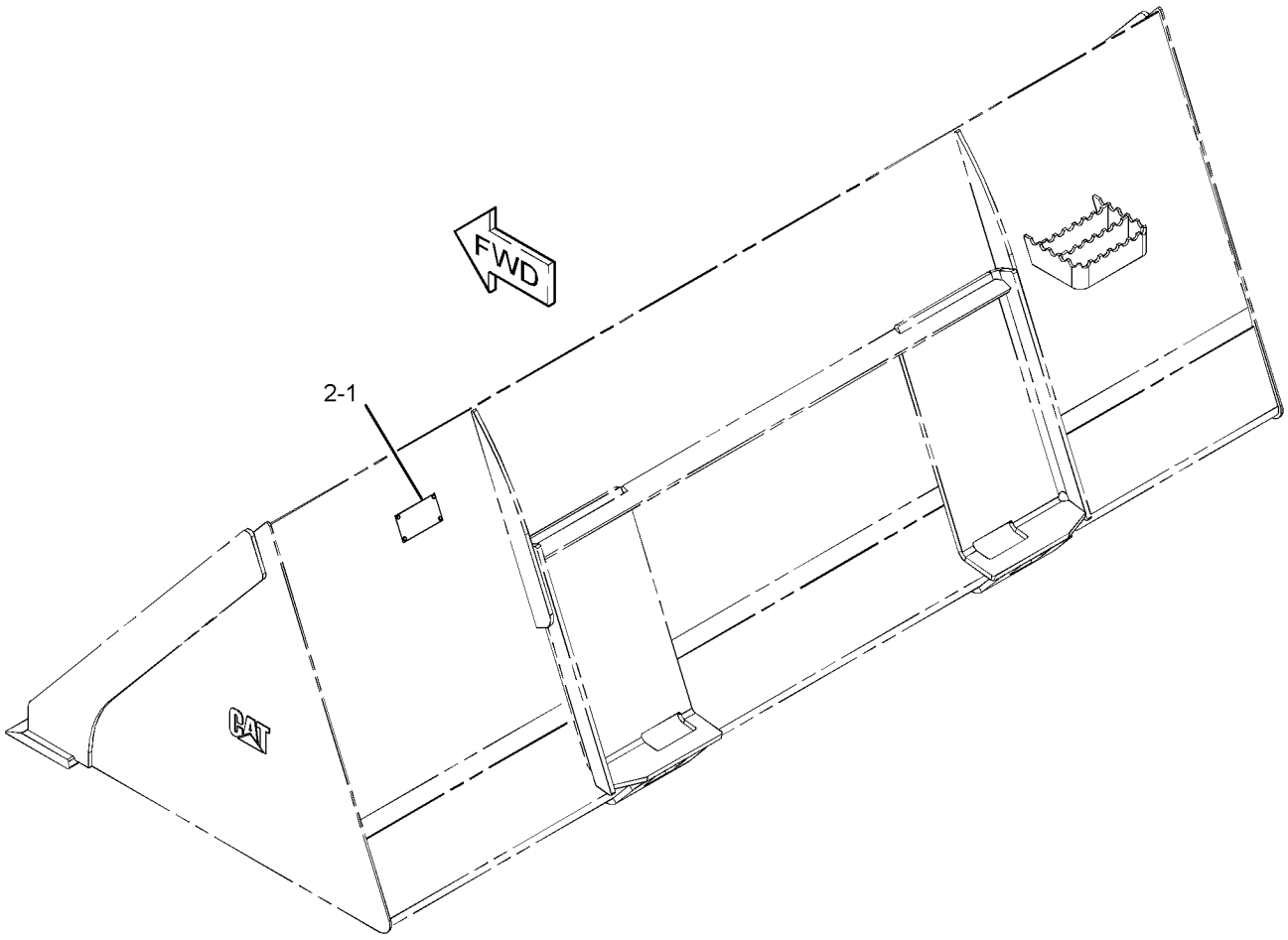

GRAPHIC #1 **<END>** g01278489

WORK TOOLS

156-0884 BUCKET GP-GRAPPLE

S/N: MJH10575-UP
152.4-CM (60-IN). INDUSTRIAL
PART OF 157-7223 BUCKET AR-GRAPPLE
AN ATTACHMENT

SMCS-6704 **i02024106**

NOTE	REF NO	GRAPHIC REF	PART NUMBER	QTY	PART NAME 1 2 3 4 5 6 (PRODUCT LEVEL)	SEE PAGE
	1	1	**157-0940**	4	PIN	
	2	1	**169-8941**	1	BUCKET AS-GRAPPLE	
M		1	**8Y-4489**	2	BOSS (M10X1.5-THD)	
		1	**149-5435**	1	EDGE	
	3	1	**222-7467**	2	FORK AS	
					(EACH INCLUDES)	
		1	**158-5648**	2	BEARING-SLEEVE	
	4	1	**3B-8489**	4	FITTING-GREASE	
M	5	1	**6V-9189**	4	LOCKNUT (M8X1.25-THD)	
M	6	1	**8T-6869**	4	BOLT (M8X1.25X60-MM)	

M-METRIC PART

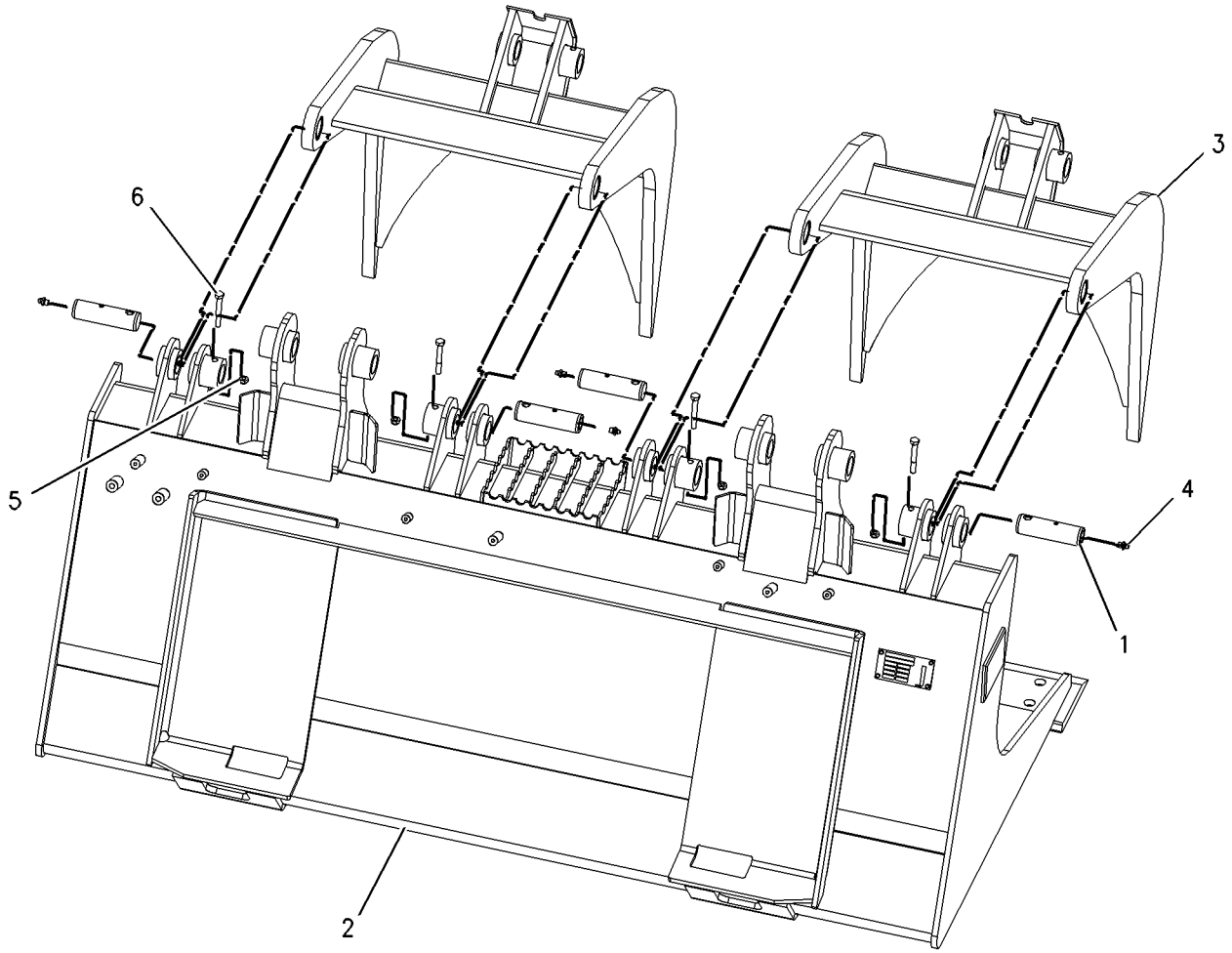

GRAPHIC #1 **<END>** g00978796

WORK TOOLS

156-0885 BUCKET GP-GRAPPLE

S/N: MJH10575-UP
1676-MM (66-IN). INDUSTRIAL
PART OF 157-7224 BUCKET AR-GRAPPLE
AN ATTACHMENT

SMCS-6704 **i01886368**

NOTE	REF NO	GRAPHIC REF	PART NUMBER	QTY	PART NAME 1 2 3 4 5 6 (PRODUCT LEVEL)	SEE PAGE
	1	1	**157-0940**	4	PIN	
	2	1	**169-8942**	1	BUCKET AS-GRAPPLE	
M		1	**8Y-4489**	2	BOSS (M10X1.5-THD)	
		1	**149-5436**	1	EDGE	
	3	1	**222-7467**	2	FORK AS	
					(EACH INCLUDES)	
		1	**158-5648**	2	BEARING-SLEEVE	
	4	1	**3B-8489**	4	FITTING-GREASE	
M	5	1	**6V-9189**	4	LOCKNUT (M8X1.25-THD)	
M	6	1	**8T-6869**	4	BOLT (M8X1.25X60-MM)	

M-METRIC PART

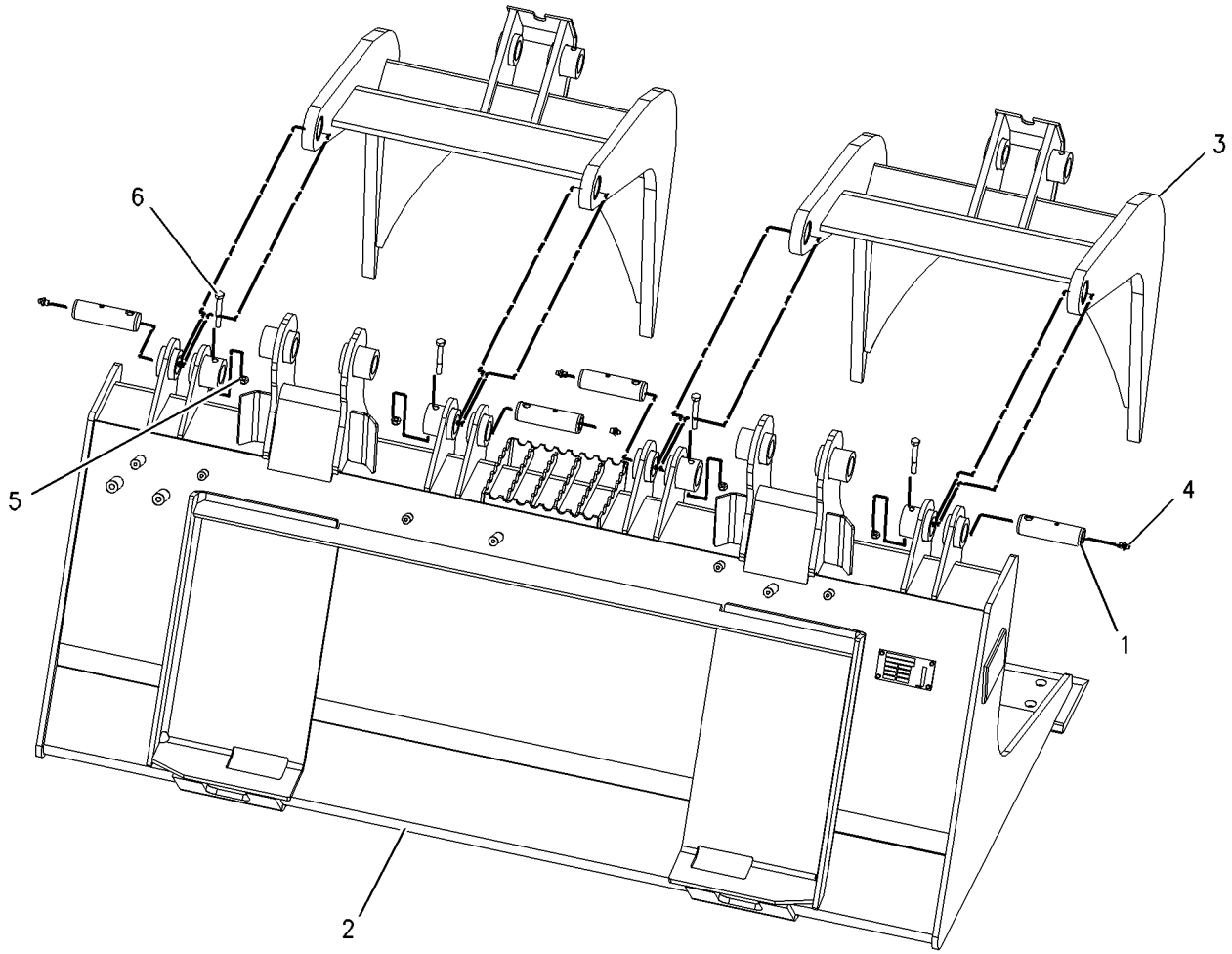

GRAPHIC #1 **<END>** g00978796

286-9244 BUCKET GP-GRAPPLE

S/N: MJH10575-UP
PART OF 286-9301 BUCKET AR-GRAPPLE
AN ATTACHMENT

SMCS-6704 **i02723701**

NOTE	REF NO	GRAPHIC REF	PART NUMBER	QTY	PART NAME 1 2 3 4 5 6 (PRODUCT LEVEL)	SEE PAGE
	1	1	**157-0940**	4	PIN	
	2	1	**286-9229**	1	TINE AS	
	3	1	**286-9243**	2	FORK AS	
					(EACH INCLUDES)	
		1	**158-5648**	2	BEARING-SLEEVE	
	4	1	**3B-8489**	4	FITTING-GREASE	
M	5	1	**6V-9189**	4	LOCKNUT (M8X1.25-THD)	
M	6	1	**8T-6869**	4	BOLT (M8X1.25X60-MM)	

M-METRIC PART

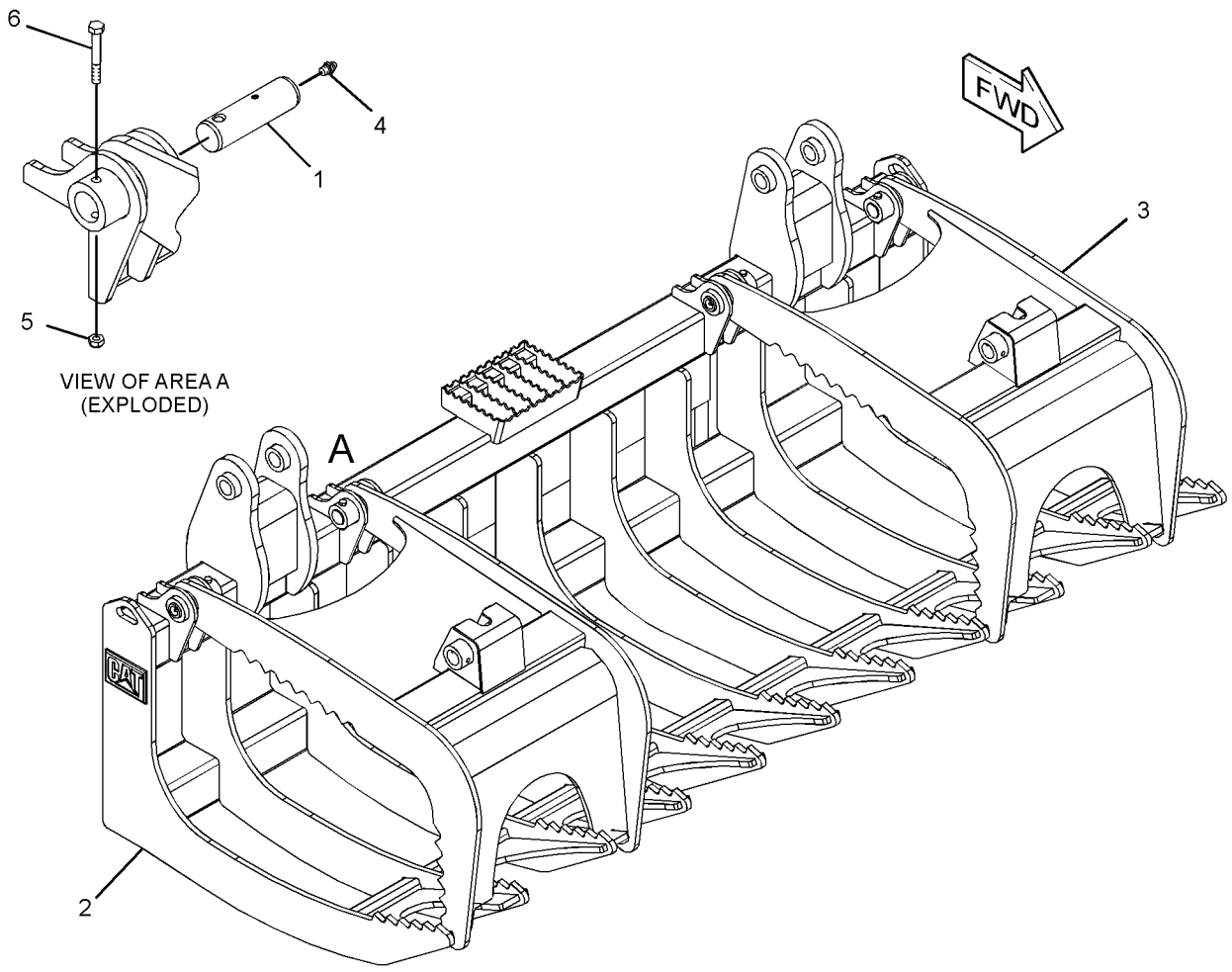

GRAPHIC #1 **<END>** g01372924

WORK TOOLS

286-9278 BUCKET GP-GRAPPLE

S/N: MJH10575-UP

PART OF 286-9300 BUCKET AR-GRAPPLE

AN ATTACHMENT

SMCS-6704 **i02723727**

NOTE	REF NO	GRAPHIC REF	PART NUMBER	QTY	PART NAME 1 2 3 4 5 6 (PRODUCT LEVEL)	SEE PAGE
	1	1	**157-0940**	4	PIN	
	2	1	**286-9243**	2	FORK AS	
					(EACH INCLUDES)	
		1	**158-5648**	2	BEARING-SLEEVE	
	3	1	**286-9274**	1	TINE AS	
		1	**8R-3857**	5	BOSS (M8X1.2X12-MM)	
		1	**161-4130**	2	PLATE-IDENTIFICATION (CAT)	
	4	1	**3B-8489**	4	FITTING-GREASE	
M	5	1	**6V-9189**	4	LOCKNUT (M8X1.25-THD)	
M	6	1	**8T-6869**	4	BOLT (M8X1.25X60-MM)	

M-METRIC PART

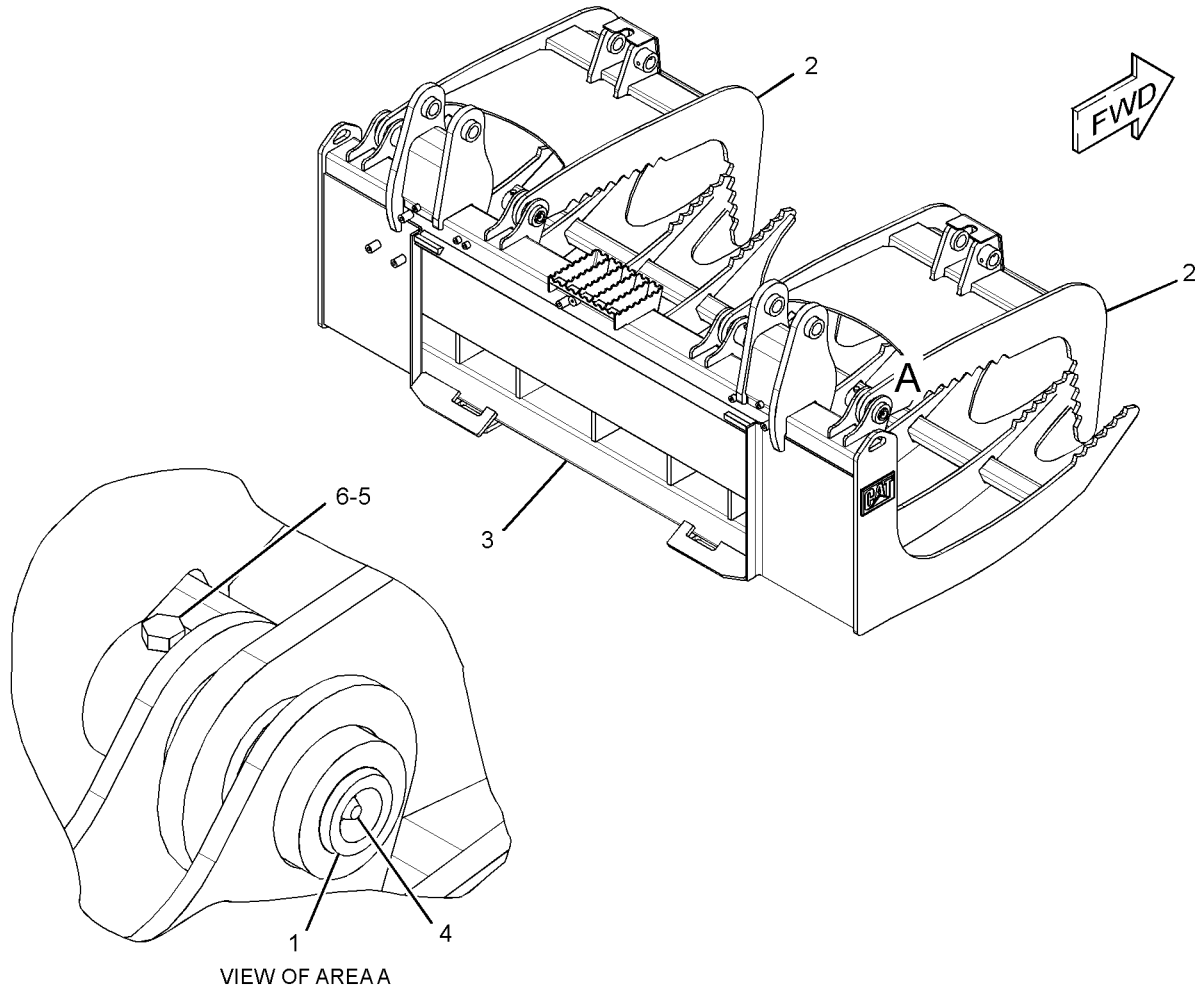

VIEW OF AREA A

GRAPHIC #1 **<END>** g01372568

279-5383 BUCKET GP-MULTIPURPOSE

S/N: MJH10575-UP
PART OF 279-5382 BUCKET AR-MULTIPURPOSE
AN ATTACHMENT

SMCS-6104 **i02772041**

NOTE	REF NO	GRAPHIC REF	PART NUMBER	QTY	PART NAME 1 2 3 4 5 6 (PRODUCT LEVEL)	SEE PAGE
	1	1	**149-4232**	1	CLAM AS	
		1	**159-8038**	2	FILM-WARNING (CRUSH HAZARD)	
	1A	1	**142-8805**	4	BEARING-SLEEVE	
	1B	1	**149-5435**	1	EDGE	
	1C	1	**161-4130**	2	PLATE-IDENTIFICATION (CAT)	
	2	1	**154-5012**	2	PIN	
	3	1	**159-8038**	2	FILM-WARNING (CRUSH HAZARD)	
Y	4	1	*279-5384*	1	BLADE GP-MULTIPURPOSE BUCKET (60-IN)	414
	5	1	**3B-8489**	2	FITTING-GREASE	
M	6	1	**6V-9189**	2	LOCKNUT (M8X1.25-THD)	
M	7	1	**8T-6869**	2	BOLT (M8X1.25X60-MM)	

M-METRIC PART
Y-SEPARATE ILLUSTRATION

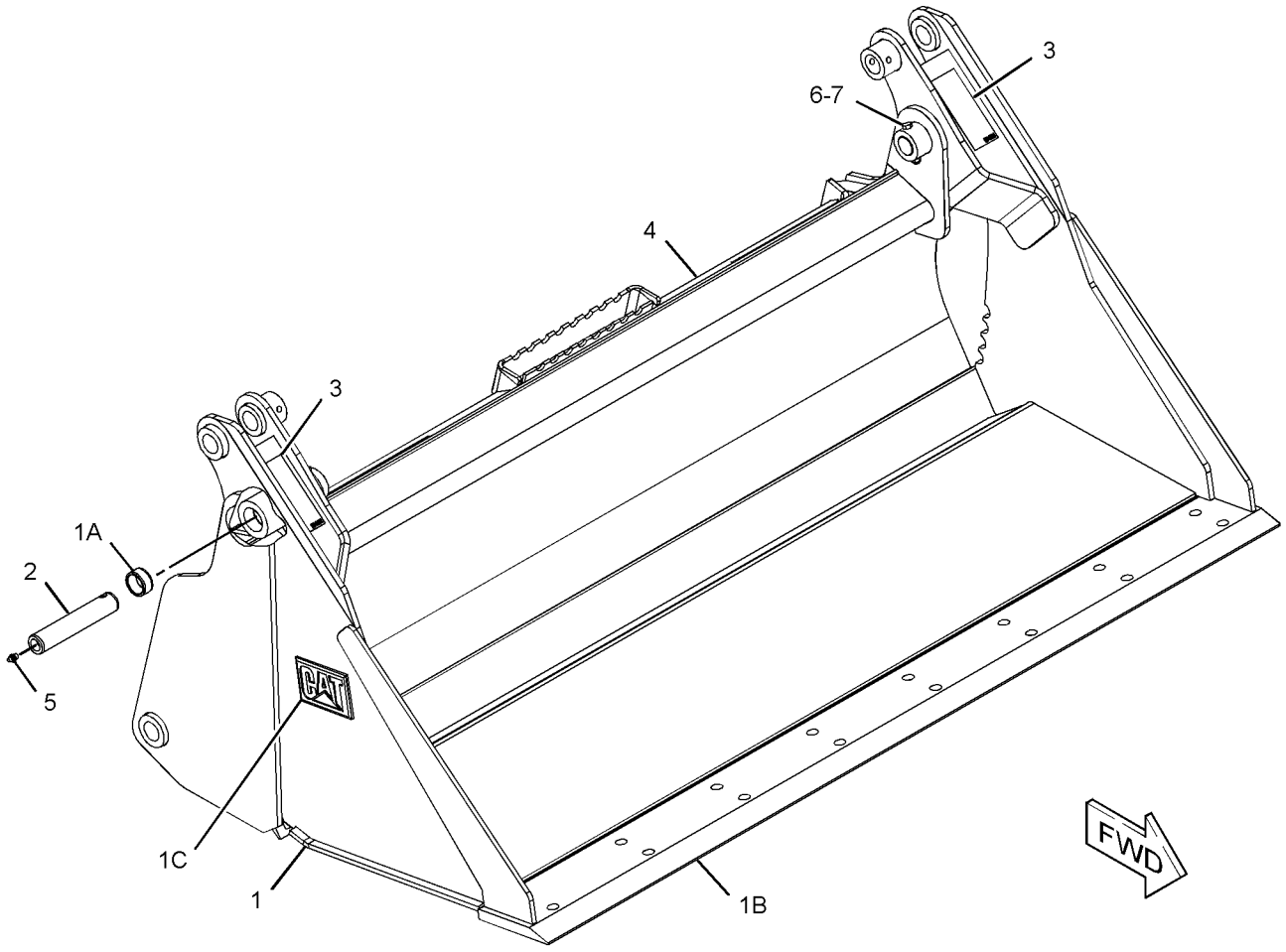

GRAPHIC #1 **<END>** g01278464

279-5389 BUCKET GP-MULTIPURPOSE

S/N: MJH10575-UP
PART OF 279-5390 BUCKET AR-MULTIPURPOSE
AN ATTACHMENT

SMCS-6104 **i02772043**

NOTE	REF NO	GRAPHIC REF	PART NUMBER	QTY	PART NAME 1 2 3 4 5 6 (PRODUCT LEVEL)	SEE PAGE
	1	1	**154-5012**	2	PIN	
	2	1	**154-5053**	1	CLAM AS	
	2A	1	**142-8805**	4	BEARING-SLEEVE	
	2B	1	**149-5436**	1	EDGE	
	2C	1	**159-8038**	2	FILM-WARNING (CRUSH HAZARD)	
	2D	1	**161-4130**	2	PLATE-IDENTIFICATION (CAT)	
Y	3	1	*279-5388*	1	BLADE GP-MULTIPURPOSE BUCKET (66-IN)	415
	4	1	**3B-8489**	2	FITTING-GREASE	
M	5	1	**6V-9189**	2	LOCKNUT (M8X1.25-THD)	
M	6	1	**8T-6869**	2	BOLT (M8X1.25X60-MM)	

M-METRIC PART
Y-SEPARATE ILLUSTRATION

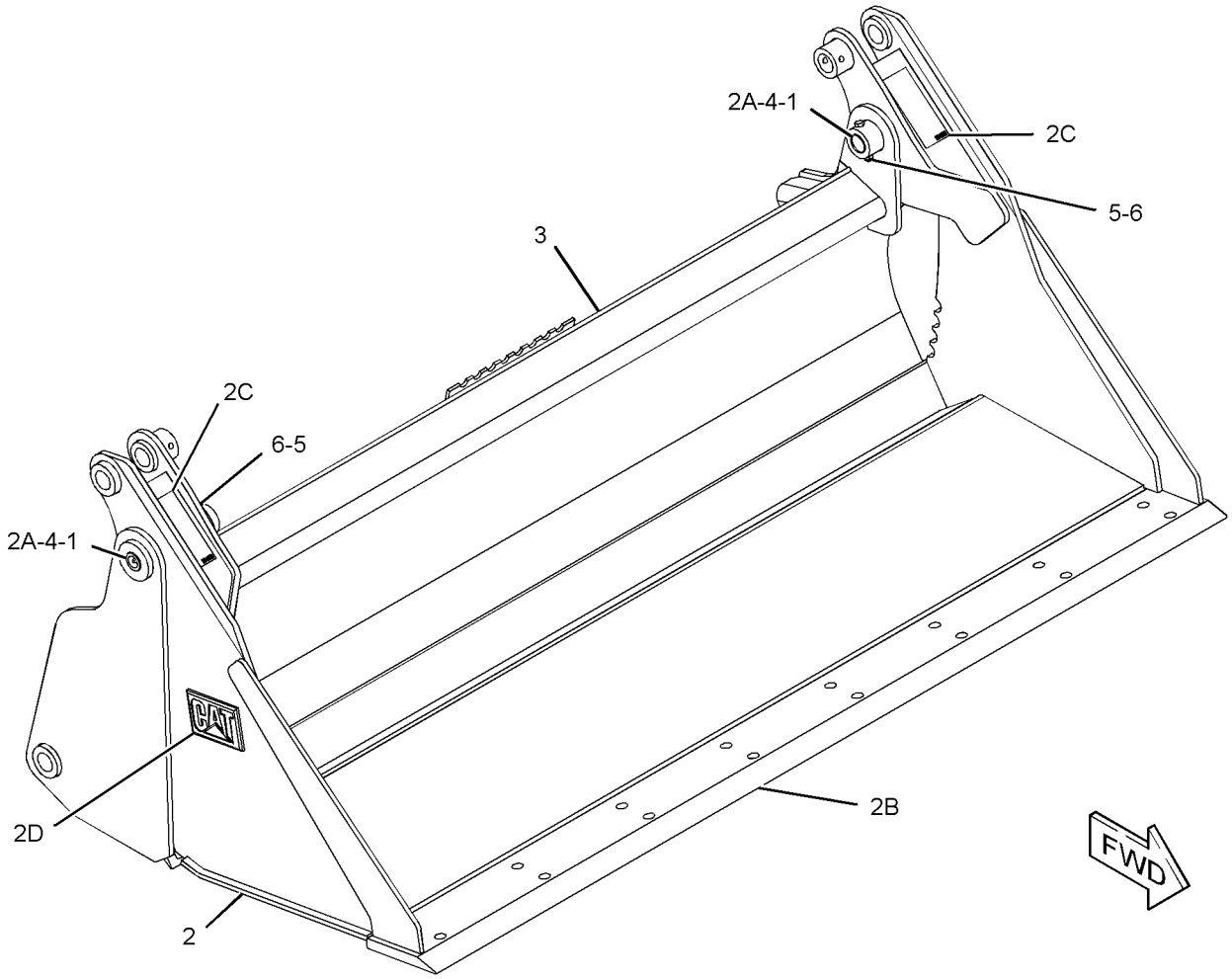

GRAPHIC #1 **<END>** g01279399

279-5397 BUCKET GP-MULTIPURPOSE

S/N: MJH10575-UP
PART OF 279-5398 BUCKET AR-MULTIPURPOSE
AN ATTACHMENT

SMCS-6104 **i02772044**

NOTE	REF NO	GRAPHIC REF	PART NUMBER	QTY	PART NAME 1 2 3 4 5 6 (PRODUCT LEVEL)	SEE PAGE
	1	1	**154-5012**	2	PIN	
	2	1	**154-5070**	1	CLAM AS	
	2A	1	**142-8805**	4	BEARING-SLEEVE	
	2B	1	**149-5437**	1	EDGE	
	2C	1	**161-4130**	2	PLATE-IDENTIFICATION (CAT)	
	2D	1	**159-8038**	2	FILM-WARNING (CRUSH HAZARD)	
M	3	1	**8T-6869**	2	BOLT (M8X1.25X60-MM)	
Y	4	1	*279-5396*	1	BLADE GP-MULTIPURPOSE BUCKET (72-IN)	416
	5	1	**3B-8489**	2	FITTING-GREASE	
M	6	1	**6V-9189**	2	LOCKNUT (M8X1.25-THD)	

M-METRIC PART
Y-SEPARATE ILLUSTRATION

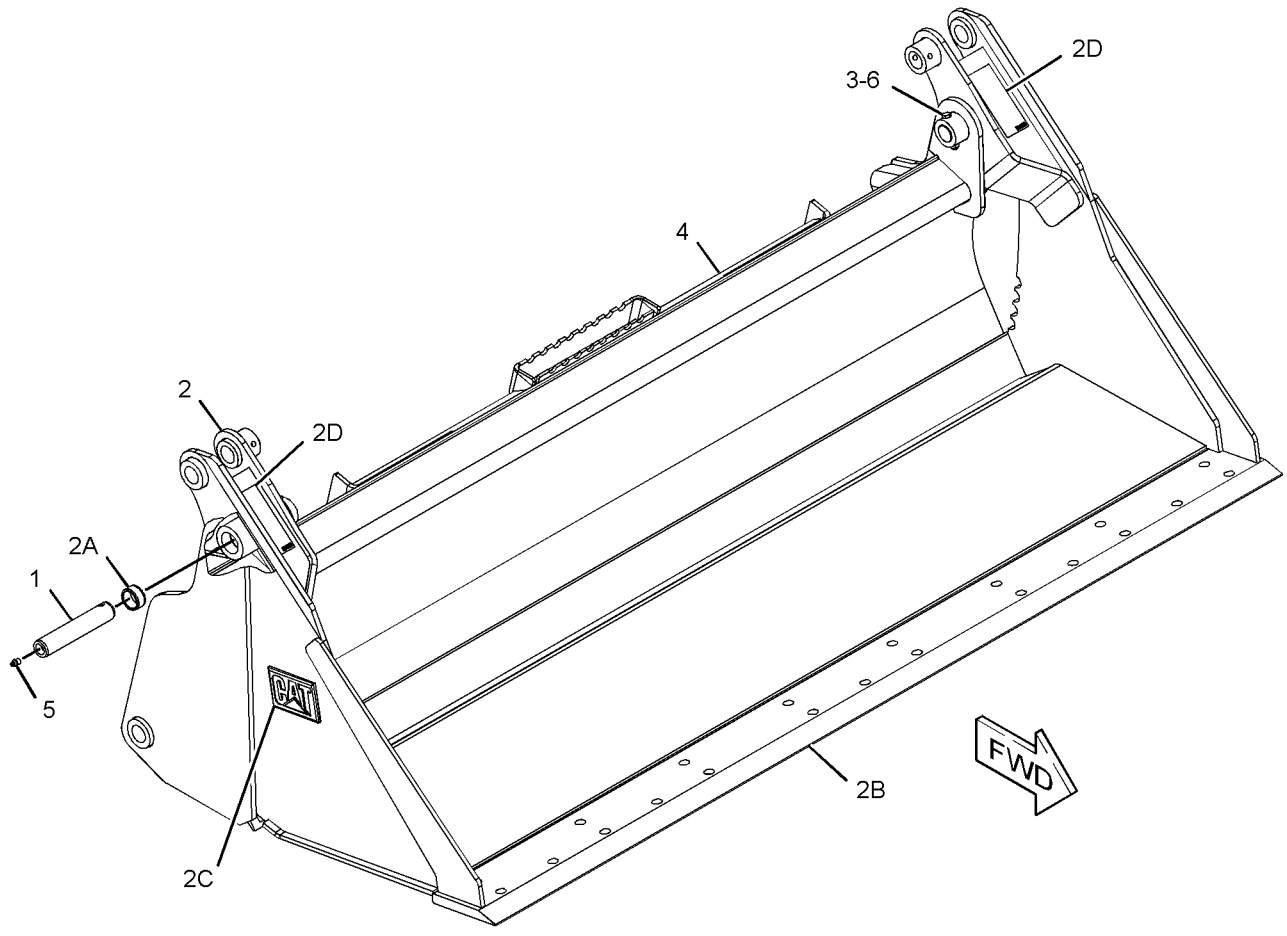

GRAPHIC #1 **<END>** g01280800

WORK TOOLS

279-5399 BUCKET GP-MULTIPURPOSE

S/N: MJH10575-UP

AN ATTACHMENT

SMCS-6104 **i02552131**

NOTE	PART NUMBER	QTY	PART NAME 1 2 3 4 5 6 (PRODUCT LEVEL)	SEE PAGE
Y	**279-5398**	1	BUCKET AR-MULTIPURPOSE	427
Y	*135-9386*	1	EDGE GP-CUTTING	467

Y-SEPARATE ILLUSTRATION

<END>

WORK TOOLS

279-5404 BUCKET GP-MULTIPURPOSE

S/N: MJH10575-UP
PART OF 279-5403 BUCKET AR-MULTIPURPOSE
AN ATTACHMENT

SMCS-6104 **i02552254**

NOTE	REF NO	GRAPHIC REF	PART NUMBER	QTY	PART NAME 1 2 3 4 5 6 (PRODUCT LEVEL)	SEE PAGE
	1	1	**154-5012**	2	PIN	
	2	1	**159-8038**	2	FILM-WARNING (CRUSH HAZARD)	
	3	1	**199-8308**	1	CLAM AS	
		1	**142-8805**	4	BEARING-SLEEVE	
		1	**159-8038**	2	FILM-WARNING (CRUSH HAZARD)	
		1	**161-4130**	2	PLATE-IDENTIFICATION (CAT)	
		1	**199-7722**	1	EDGE	
		1	**199-8317**	1	EDGE	
Y	4	1	*279-5405*	1	BLADE GP-MULTIPURPOSE BUCKET (78-IN)	417
	5	1	**3B-8489**	2	FITTING-GREASE	
M	6	1	**6V-9189**	2	LOCKNUT (M8X1.25-THD)	
M	7	1	**8T-6869**	2	BOLT (M8X1.25X60-MM)	

M-METRIC PART
Y-SEPARATE ILLUSTRATION

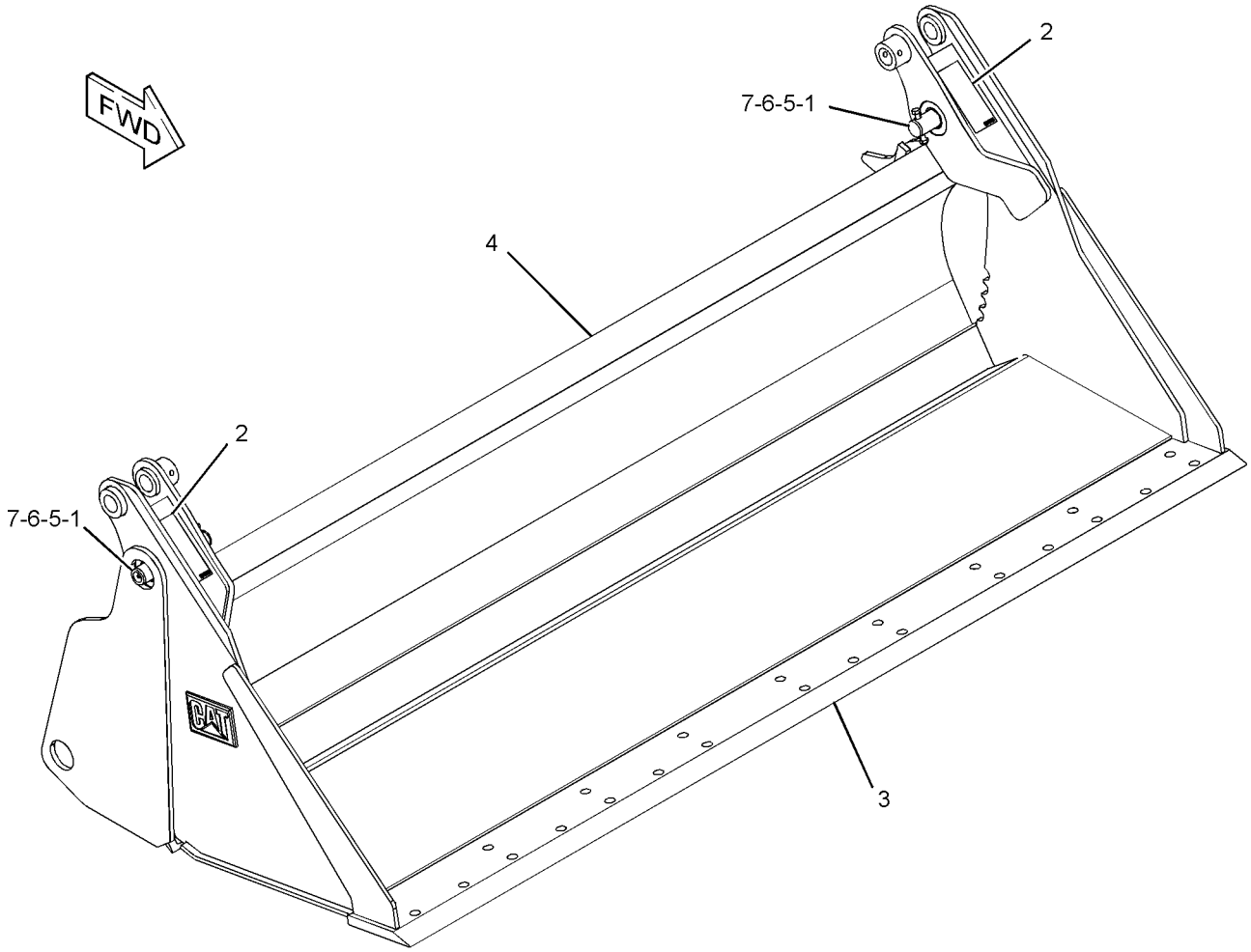

GRAPHIC #1 **<END>** g01278497

WORK TOOLS

285-6096 BUCKET GP-UTILITY

S/N: MJH10575-UP
1524-MM (60-IN)
PART OF 285-6095 BUCKET AR-UTILITY
AN ATTACHMENT

SMCS-6101 **i02764095**

NOTE	REF NO	GRAPHIC REF	PART NUMBER	QTY	PART NAME 1 2 3 4 5 6 (PRODUCT LEVEL)	SEE PAGE
	1	1	**154-2704**	1	PLATE-INSTRUCTION (BUCKET SPECIFICATIONS)	
	2	1	**168-8389**	4	TACK-FASTENER	
					PARTS SHOWN IN GRAPHIC(S) WITHOUT A REFERENCE NUMBER ARE NOT SERVICED SEPARATELY	

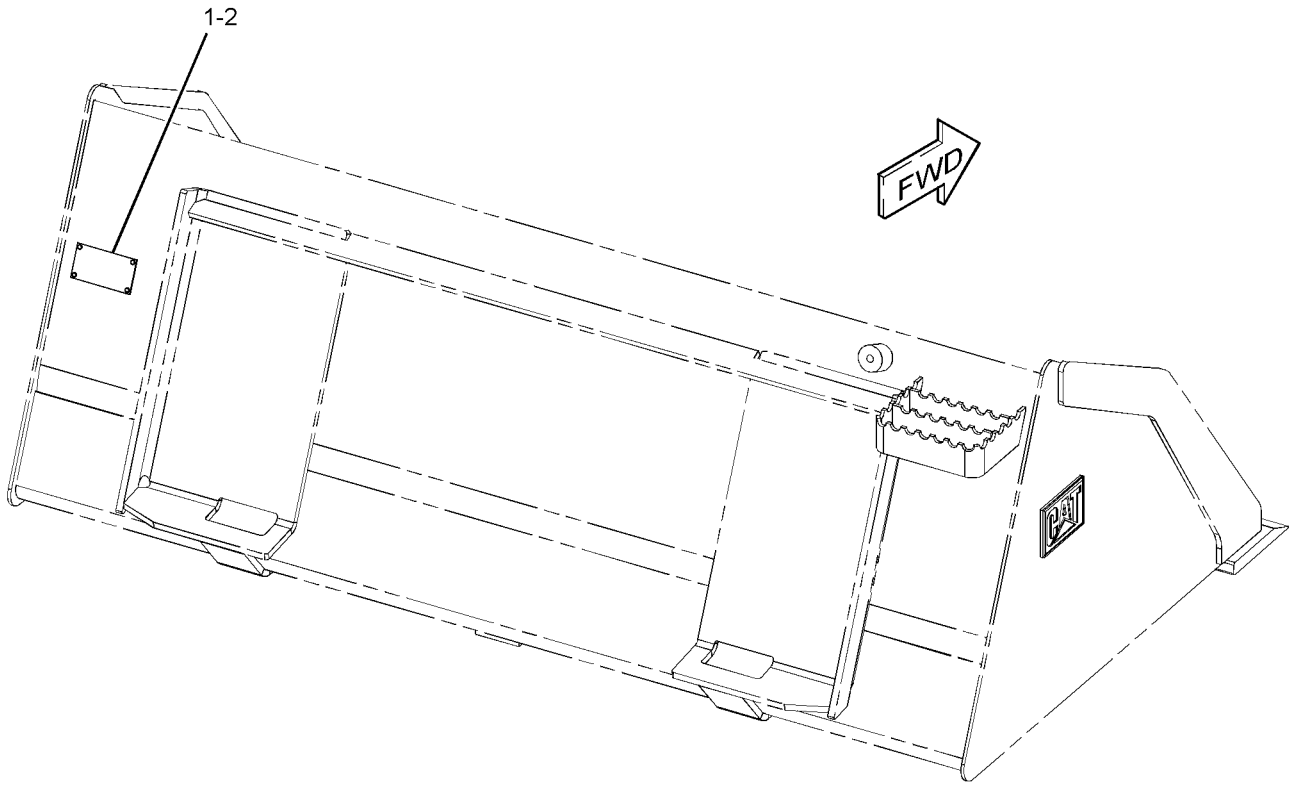

GRAPHIC #1 **<END>** g01278644

WORK TOOLS

285-6099 BUCKET GP-UTILITY

S/N: MJH10575-UP
1676-MM (66-IN)
PART OF 285-6093 BUCKET AR-GRAPPLE, 285-6100 BUCKET AR-UTILITY
AN ATTACHMENT

SMCS-6101 **i02552452**

NOTE	REF NO	GRAPHIC REF	PART NUMBER	QTY	PART NAME 1 2 3 4 5 6 (PRODUCT LEVEL)	SEE PAGE
	1	1	**154-2704**	1	PLATE-INSTRUCTION (BUCKET SPECIFICATIONS)	
	2	1	**168-8389**	4	TACK-FASTENER	
					PARTS SHOWN IN GRAPHIC(S) WITHOUT A REFERENCE NUMBER ARE NOT SERVICED SEPARATELY	

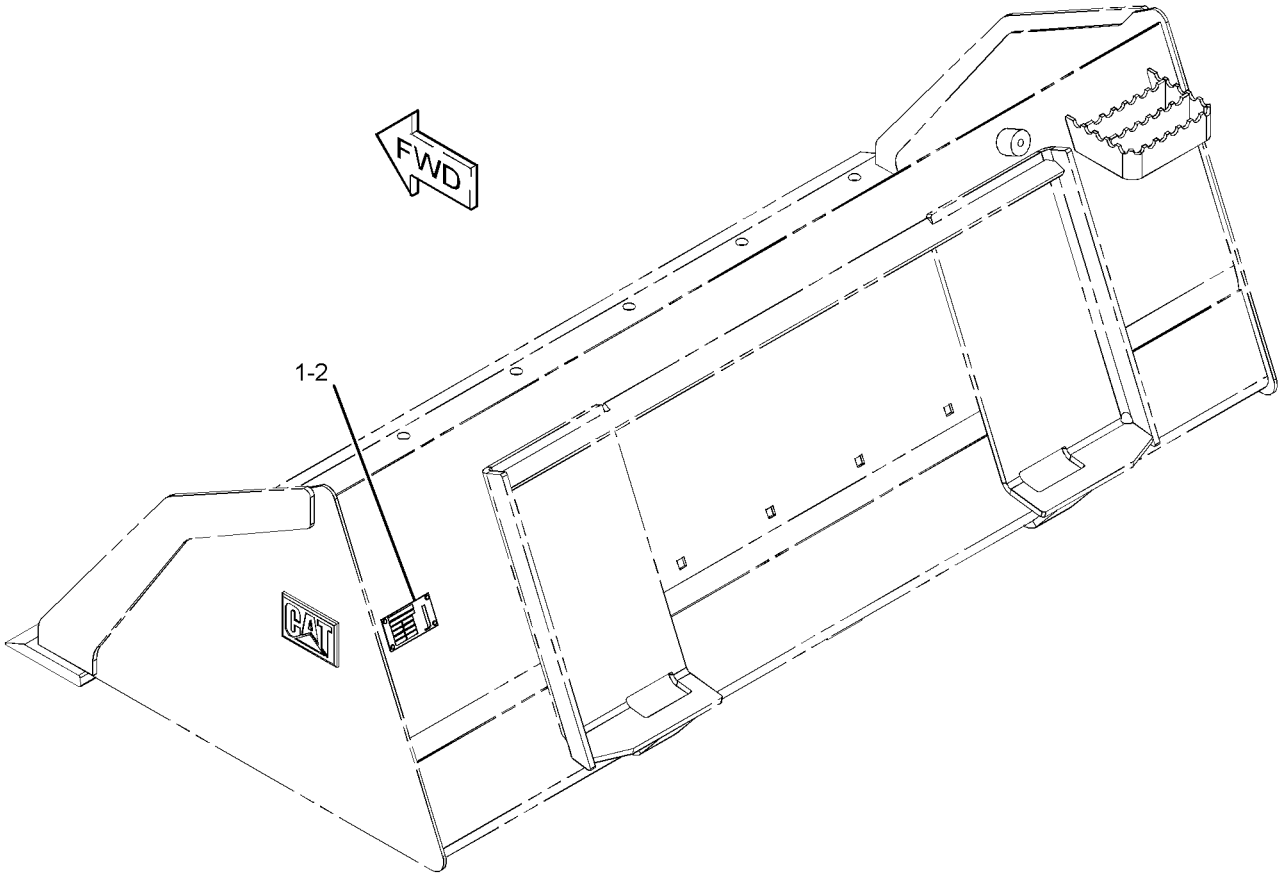

GRAPHIC #1 **<END>** g01279288

WORK TOOLS

285-6102 BUCKET GP-UTILITY

S/N: MJH10575-UP
1829-MM (72-IN)
PART OF 285-6104 BUCKET AR-GRAPPLE, 285-6101 BUCKET AR-UTILITY
AN ATTACHMENT

SMCS-6101 **i02760165**

NOTE	REF NO	GRAPHIC REF	PART NUMBER	QTY	PART NAME 1 2 3 4 5 6 (PRODUCT LEVEL)	SEE PAGE
	1	1	**154-2704**	1	PLATE-INSTRUCTION (BUCKET SPECIFICATIONS)	
	2	1	**168-8389**	4	TACK-FASTENER	
					PARTS SHOWN IN GRAPHIC (S) WITHOUT A REFERENCE NUMBER ARE NOT SERVICED SEPARATELY	

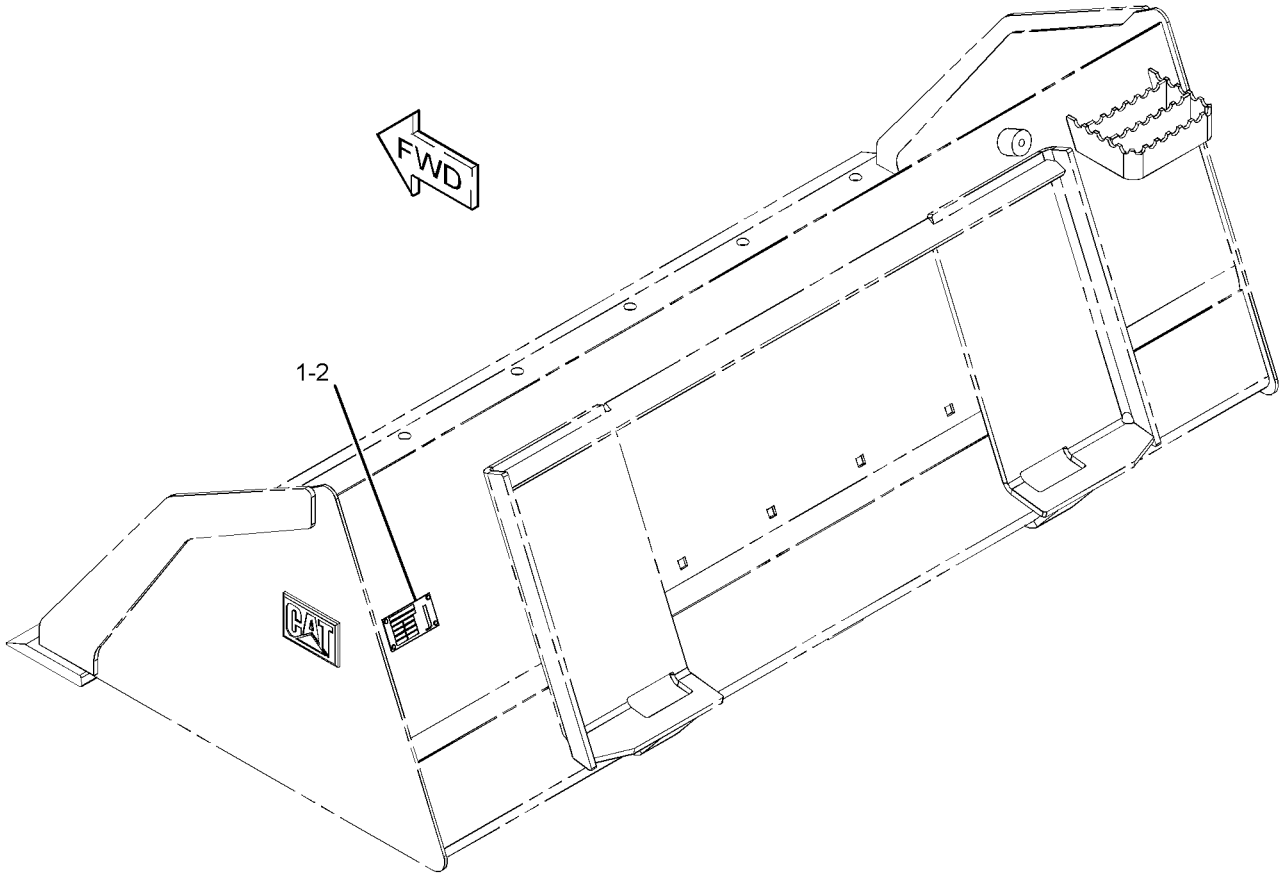

GRAPHIC #1 **<END>** g01279288

WORK TOOLS

293-9427 CARRIAGE & FORK AR

S/N: MJH10575-UP
AN ATTACHMENT

SMCS-6136, 6402 **i02628876**

NOTE	PART NUMBER	QTY	PART NAME 1 2 3 4 5 6 (PRODUCT LEVEL)	SEE PAGE
Y	**261-6681**	1	CARRIAGE GP-FORK	454
Y	**195-6943**	2	FORK GP-PALLET (36-IN)	475
Y-SEPARATE ILLUSTRATION				

<END>

293-9428 CARRIAGE & FORK AR

S/N: MJH10575-UP
AN ATTACHMENT

SMCS-6136, 6402 **i02628877**

NOTE	PART NUMBER	QTY	PART NAME 1 2 3 4 5 6 (PRODUCT LEVEL)	SEE PAGE
Y	**261-6681**	1	CARRIAGE GP-FORK	454
Y	**195-6942**	2	FORK GP-PALLET (42-IN)	475
Y-SEPARATE ILLUSTRATION				

<END>

293-9429 CARRIAGE & FORK AR

S/N: MJH10575-UP
AN ATTACHMENT

SMCS-6136, 6402 **i02628878**

NOTE	PART NUMBER	QTY	PART NAME 1 2 3 4 5 6 (PRODUCT LEVEL)	SEE PAGE
Y	**261-6681**	1	CARRIAGE GP-FORK	454
Y	**195-8545**	2	FORK GP-PALLET (48-IN)	475
Y-SEPARATE ILLUSTRATION				

<END>

WORK TOOLS

261-6681 CARRIAGE GP-FORK

S/N: MJH10575-UP

PART OF 293-9427, 293-9428, 293-9429 CARRIAGE & FORK AR, 293-9426 CARRIAGE GP-FORK

AN ATTACHMENT

SMCS-6402 **i02539756**

NOTE	REF NO	GRAPHIC REF	PART NUMBER	QTY	PART NAME 1 2 3 4 5 6 (PRODUCT LEVEL)	SEE PAGE
	1	1	**157-4835**	1	PLATE-INSTRUCTION	
	2	1	**168-8389**	4	TACK-FASTENER	
	3	1	**252-8595**	1	STEP AS	
	4	1	**8T-4121**	2	WASHER-HARD (11X21X2.5-MM THK)	
M	5	1	**8T-4133**	2	NUT (M10X1.5-THD)	
M	6	1	**8T-4136**	2	BOLT (M10X1.5X25-MM)	
					PARTS SHOWN IN GRAPHIC(S) WITHOUT A REFERENCE NUMBER ARE NOT SERVICED SEPARATELY	

M-METRIC PART

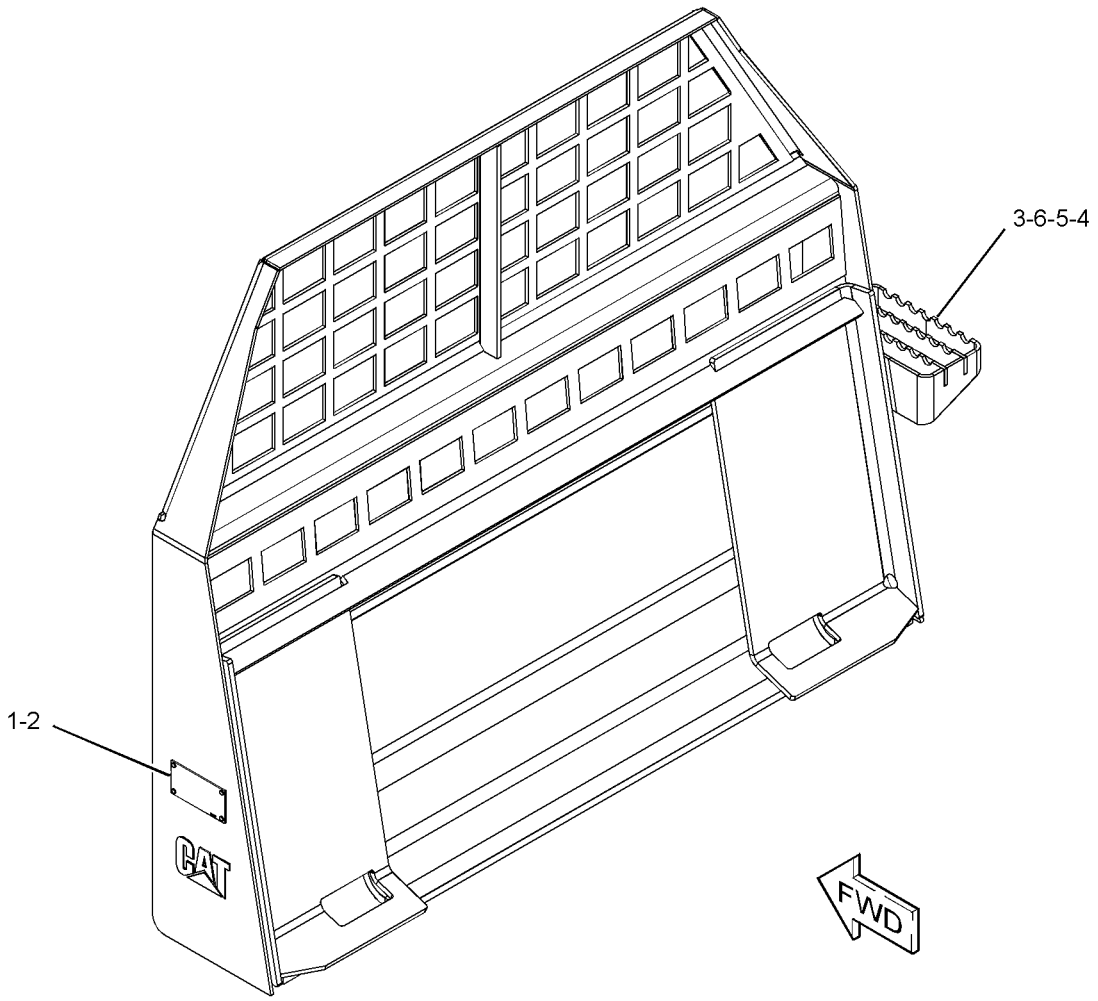

GRAPHIC #1 **<END>** g01282475

WORK TOOLS

293-9426 CARRIAGE GP-FORK

S/N: MJH10575-UP

AN ATTACHMENT

SMCS-6402 **i02628875**

NOTE	PART NUMBER	QTY	PART NAME 1 2 3 4 5 6 (PRODUCT LEVEL)	SEE PAGE
Y	**261-6681**	6	CARRIAGE GP-FORK	454

Y-SEPARATE ILLUSTRATION

<END>

241-8672 CONVERSION GP-WORK TOOL—KIT, HIGH FLOW

S/N: MJH10575-UP
AN ATTACHMENT

SMCS-1408, 4283, 5057, 7553 **i02477946**

NOTE	REF NO	GRAPHIC REF	PART NUMBER	QTY	PART NAME 1 2 3 4 5 6 (PRODUCT LEVEL)	SEE PAGE
	1	1	**5C-8311**	1	RING	
	2	1	**142-8948**	1	FITTING AS (QUICK DISCONNECT, MALE)	
	3	1	**142-8949**	1	FITTING AS (QUICK DISCONNECT, FEMALE)	
	4	1	**152-8181**	1	FITTING AS (QUICK DISCONNECT, MALE)	
	5	1	**204-5098**	1	FITTING AS (QUICK DISCONNECT, FEMALE)	
	6	1	**225-8014**	1	HARNESS AS-WORK TOOL (POWER)	
		1	**155-2270**	6	KIT-CONNECTING PLUG (2-PIN)	
	7	1	**241-3763**	1	PLUG AS	
	8	1	**246-1501**	1	PLATE	
	9	1	**3D-2824**	4	SEAL-O-RING	
	10	1	**3J-1907**	2	SEAL-O-RING	
	11	1	**5K-9090**	2	SEAL-O-RING	
	12	1	**6V-8397**	2	SEAL-O-RING	
	13	1	**6V-8636**	2	CONNECTOR	
	14	1	**6V-8637**	2	CONNECTOR	
	15	1	**6V-8714**	2	CONNECTOR	
	16	1	**6V-9746**	2	SEAL-O-RING	

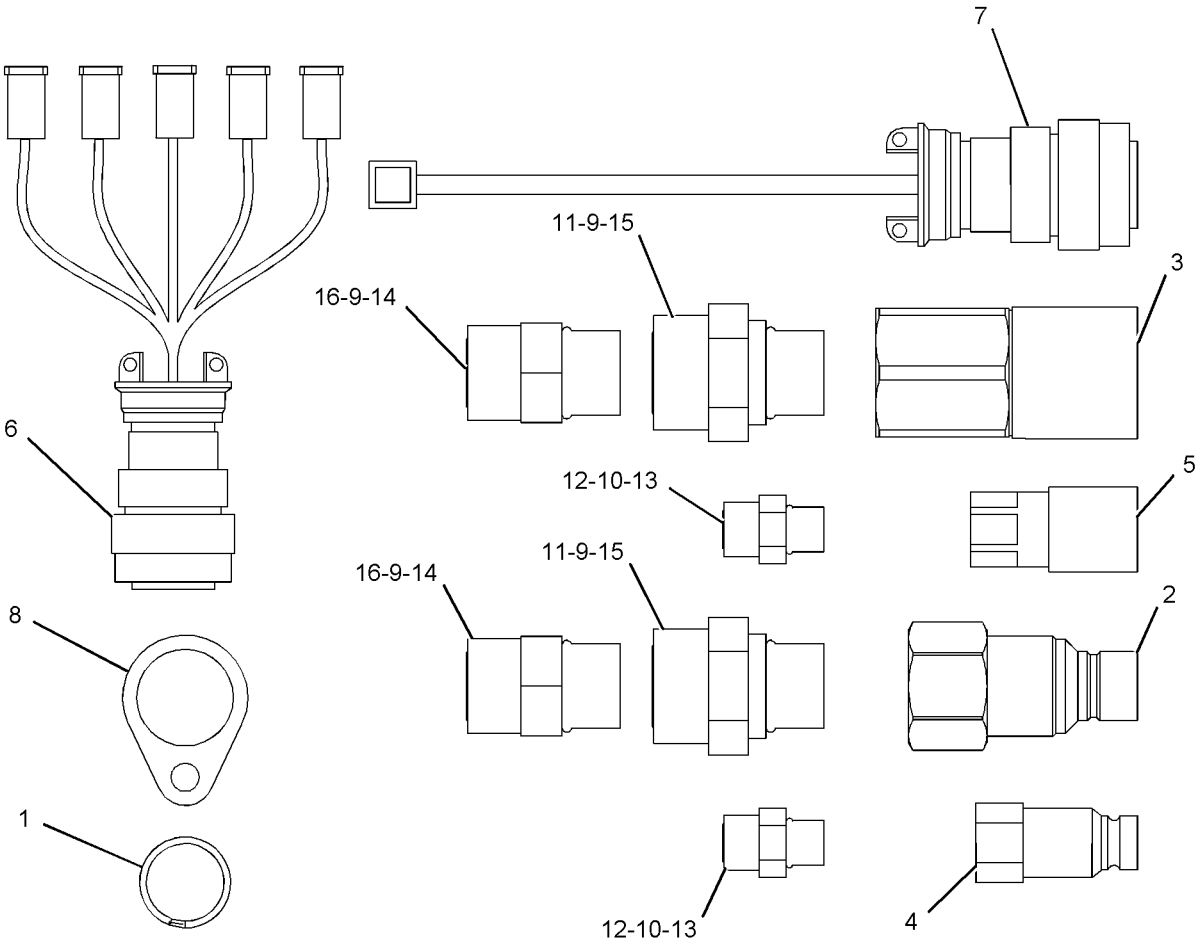

GRAPHIC #1 **<END>** g01056078

218-6321 COUPLER AR-QUICK—MANUAL

S/N: MJH10575-UP
AN ATTACHMENT

SMCS-6129 **i01971828**

NOTE	PART NUMBER	QTY	PART NAME 1 2 3 4 5 6 (PRODUCT LEVEL)	SEE PAGE
Y	*206-3820*	1	COUPLER GP-QUICK	458
Y	*218-6211*	1	LINES GP-LOWERING CONTROL (MANUAL)	331
Y-SEPARATE ILLUSTRATION				

<END>

218-6322 COUPLER AR-QUICK—HYDRAULIC

S/N: MJH10575-UP
AN ATTACHMENT

SMCS-6129 **i01990735**

NOTE	PART NUMBER	QTY	PART NAME 1 2 3 4 5 6 (PRODUCT LEVEL)	SEE PAGE
Y	*206-3821*	1	COUPLER GP-QUICK	459
	113-8490		FUSE (10-AMPERE)	
	212-6521	1	SWITCH AS-ROCKER (QUICK COUPLER)	
			(LOCATE IN FOURTH SLOT FROM REAR OF LH INSTRUMENT PANEL)	
	111-7899	1	GASKET	
Y	*218-6240*	1	VALVE & LINES GP-COUPLER	386
Y-SEPARATE ILLUSTRATION				

<END>

WORK TOOLS

206-3820 COUPLER GP-QUICK

S/N: MJH10575-UP
PART OF 218-6321 COUPLER AR-QUICK
AN ATTACHMENT

SMCS-6129 **i02359462**

NOTE	REF NO	GRAPHIC REF	PART NUMBER	QTY	PART NAME 1 2 3 4 5 6 (PRODUCT LEVEL)	SEE PAGE
	1	1	**159-5797**	2	SPRING	
	2	1	**252-0425**	1	COUPLER AS	
		1	**126-5701**	2	PLATE-RETAINER	
Y	3	1	*215-3960*	1	HANDLE & PIN GP-COUPLER (LH)	486
Y	4	1	*215-3961*	1	HANDLE & PIN GP-COUPLER (RH)	487
	5	1	**131-5879**	2	WASHER (11X32X3-MM THK)	
	6	1	**132-7551**	2	SPACER (11X19X6-MM THK)	
	7	1	**5B-0651**	2	FITTING-STRAIGHT	
M	8	1	**6V-7744**	2	LOCKNUT (M10X1.5-THD)	
M	9	1	**7X-2621**	2	BOLT (M10X1.5X12-MM)	
	10	1	**7X-7729**	4	WASHER (11X25X3-MM THK)	
	11	1	**8T-4121**	6	WASHER-HARD (11X21X2.5-MM THK)	
M	12	1	**8T-4172**	2	BOLT (M10X1.5X80-MM)	
M	13	1	**8T-4196**	4	BOLT (M10X1.5X35-MM)	

M-METRIC PART
Y-SEPARATE ILLUSTRATION

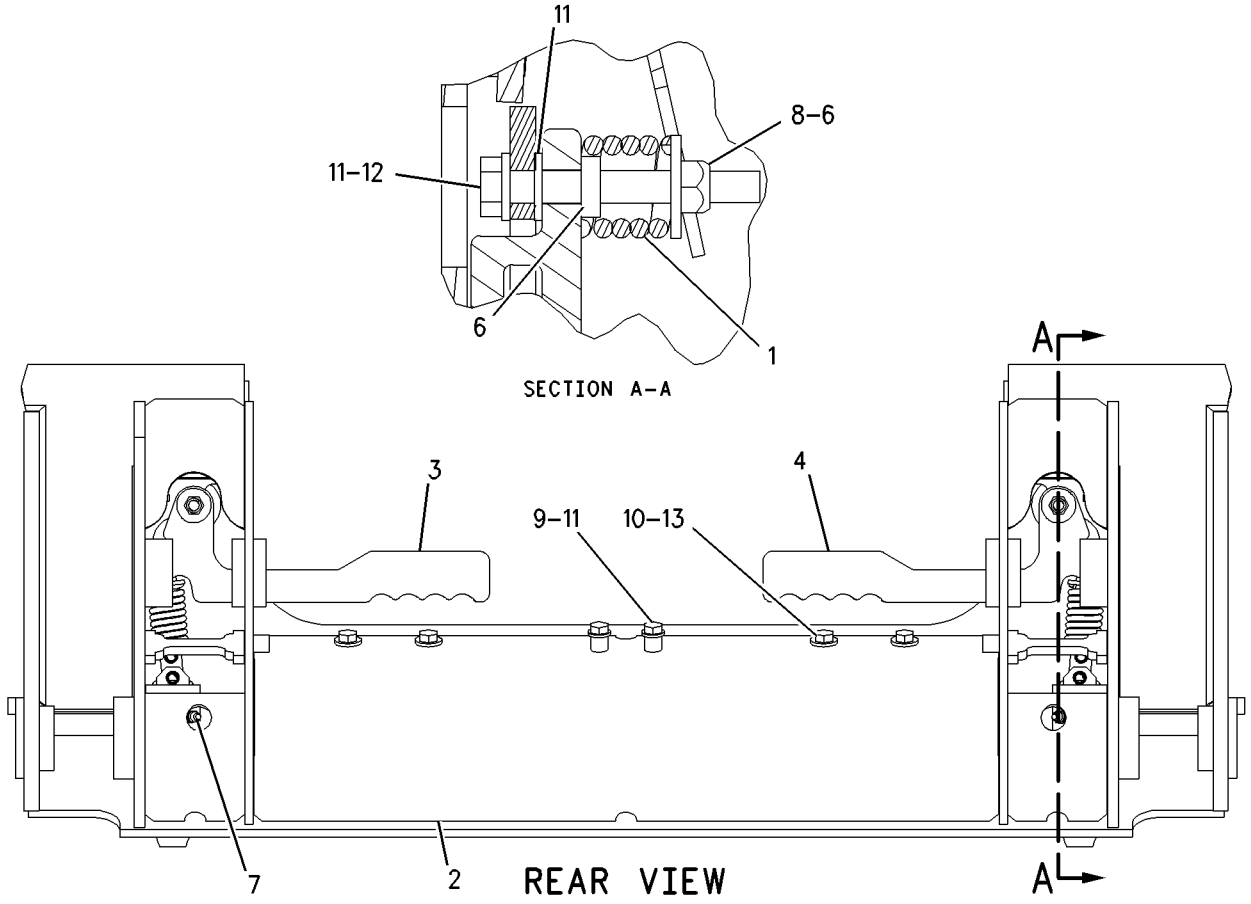

GRAPHIC #1 **<END>** g00914702

206-3821 COUPLER GP-QUICK

S/N: MJH10575-UP
PART OF 218-6322 COUPLER AR-QUICK
AN ATTACHMENT

SMCS-6129 **i02195792**

NOTE	REF NO	GRAPHIC REF	PART NUMBER	QTY	PART NAME 1 2 3 4 5 6 (PRODUCT LEVEL)	SEE PAGE
	1	1	**5P-0372**	2	LOCK PIN	
	2	1	**252-0425**	1	COUPLER AS	
		1	**126-5701**	2	PLATE-RETAINER	
	3	1	**207-9785**	2	PIN	
Y	4	1	*215-3962*	1	CYLINDER & LINK GP-COUPLER (LH)	462
Y	5	1	*215-3963*	1	CYLINDER & LINK GP-COUPLER (RH)	463
C	6	1	**218-6334**	1	BRACKET AS (LH)	
C	7	1	**218-6335**	1	BRACKET AS (RH)	
	8	1	**3B-4628**	2	PIN-COTTER	
	9	1	**5B-0651**	2	FITTING-STRAIGHT	
	10	1	**8L-5188**	2	PIN	
	11	1	**8T-4121**	14	WASHER-HARD (11X21X2.5-MM THK)	
M	12	1	**8T-4133**	4	NUT (M10X1.5-THD)	
M	13	1	**8T-4196**	8	BOLT (M10X1.5X35-MM)	
	14	1	**9T-7303**	4	SPACER (16X28X1.5-MM THK)	

C-CHANGE FROM PREVIOUS TYPE
M-METRIC PART
Y-SEPARATE ILLUSTRATION

206-3821 **COUPLER GP-QUICK** *(contd.)* **i02195792**

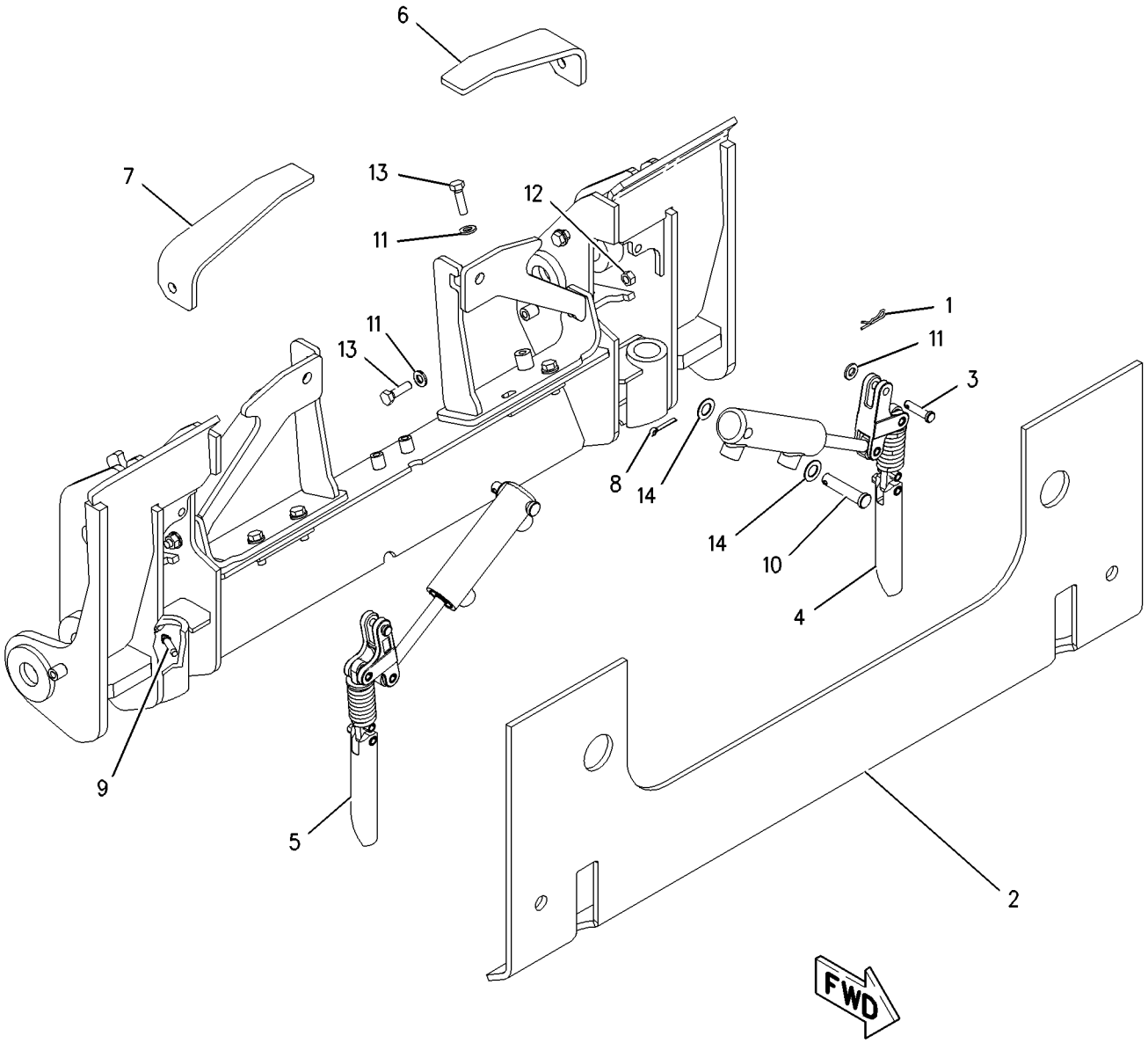

GRAPHIC #1 **<END>** g00983866

162-5236 COVER GP-LINES

S/N: MJH10575-UP

PART OF 279-5382, 279-5390, 279-5398, 279-5403 BUCKET AR-MULTIPURPOSE AN ATTACHMENT

SMCS-5057 **i01227894**

NOTE	REF NO	GRAPHIC REF	PART NUMBER	QTY	PART NAME 1 2 3 4 5 6 (PRODUCT LEVEL)	SEE PAGE
	1	1	**161-4128**	1	PLATE	
M	2	1	**5C-9553**	5	BOLT (M6X1.0X16MM)	
	3	1	**9X-2026**	5	WASHER (1MM THK)	

M-METRIC PART

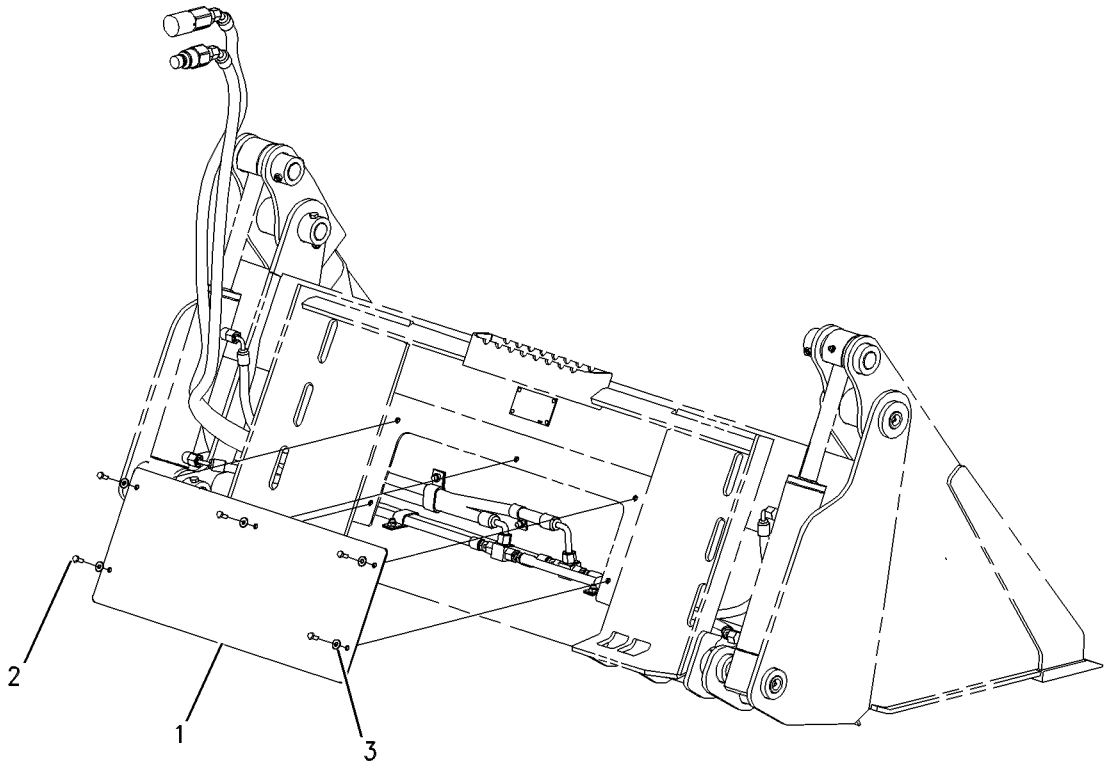

GRAPHIC #1 **<END>** g00560360

215-3962 CYLINDER & LINK GP-COUPLER–LH

S/N: MJH10575-UP
PART OF 206-3821 COUPLER GP-QUICK
AN ATTACHMENT

SMCS-5133, 6129 **i02711951**

NOTE	REF NO	GRAPHIC REF	PART NUMBER	QTY	PART NAME 1 2 3 4 5 6 (PRODUCT LEVEL)	SEE PAGE
	1	1	**166-2560**	1	PIN-SPRING	
Y	2	1	**192-2640**	1	CYLINDER GP-HYDRAULIC (COUPLER)	275
	3	1	**192-2642**	1	PIN	
	4	1	**195-6754**	1	PIN-SPRING	
Y	5	1	*215-3957*	1	LINK GP-COUPLER	491

Y-SEPARATE ILLUSTRATION

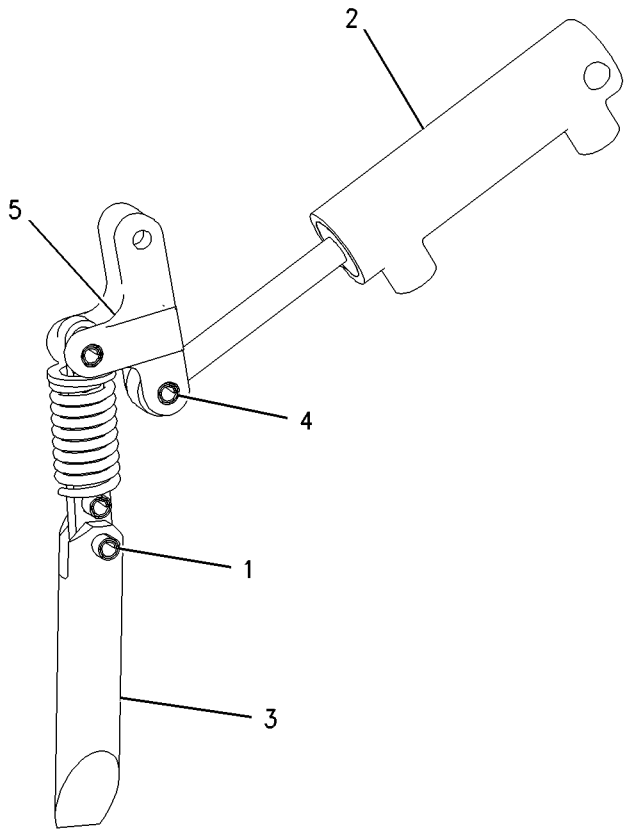

GRAPHIC #1 **<END>** g00871294

215-3963 CYLINDER & LINK GP-COUPLER–RH

S/N: MJH10575-UP
PART OF 206-3821 COUPLER GP-QUICK
AN ATTACHMENT

SMCS-5133, 6129 **i02711952**

NOTE	REF NO	GRAPHIC REF	PART NUMBER	QTY	PART NAME 1 2 3 4 5 6 (PRODUCT LEVEL)	SEE PAGE
	1	1	**166-2560**	1	PIN-SPRING	
Y	2	1	**192-2640**	1	CYLINDER GP-HYDRAULIC (COUPLER)	275
	3	1	**192-2642**	1	PIN	
	4	1	**195-6754**	1	PIN-SPRING	
Y	5	1	*215-3957*	1	LINK GP-COUPLER	491

Y-SEPARATE ILLUSTRATION

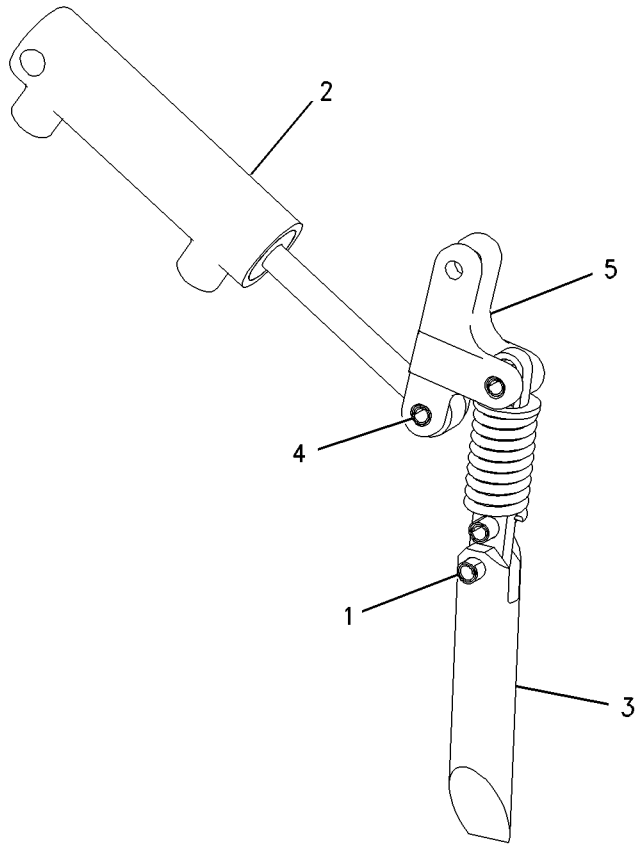

GRAPHIC #1 **<END>** g00871299

WORK TOOLS

222-7545 EDGE GP-BIT & CUTTING

S/N: MJH10575-UP
PART OF 231-5276 BLADE GP-ANGLING
AN ATTACHMENT

SMCS-6801, 6804 **i02103534**

NOTE	PART NUMBER	QTY	PART NAME 1 2 3 4 5 6 (PRODUCT LEVEL)	SEE PAGE
	6Y-5839	1	BIT-END	
	6Y-5840	1	BIT-END	
	3F-5108	10	BOLT-PLOW (5/8-11X2.25-IN)	
	4F-3658	4	BOLT-PLOW (5/8-11X3-IN)	
	142-4914	1	EDGE-CUTTING	
	4K-0367	14	NUT-FULL (5/8-11-THD)	
	5P-8247	14	WASHER-HARD (17X32X3.5-MM THK)	

<END>

135-9383 EDGE GP-CUTTING

S/N: MJH10575-UP
PART OF 279-5435 BUCKET AR-DIRT
FOR USE WITH 137.20-CM (54-IN) BUCKET
AN ATTACHMENT

SMCS-6801 **i02571125**

NOTE	PART NUMBER	QTY	PART NAME 1 2 3 4 5 6 (PRODUCT LEVEL)	SEE PAGE
	135-9393	1	EDGE-CUTTING	
M	**8T-4778**	6	LOCKNUT (M16X2-THD)	
M	**159-2953**	6	SCREW-FLAT HEAD (M16X2-THD)	

M-METRIC PART

<END>

135-9384 EDGE GP-CUTTING

S/N: MJH10575-UP

PART OF 279-5438 BUCKET AR-DIRT, 279-5365 BUCKET AR-GENERAL PURPOSE, 157-7226 BUCKET AR-GRAPPLE, 279-5381 BUCKET AR-MULTIPURPOSE, 285-6095 BUCKET AR-UTILITY

FOR USE WITH 152.40-CM (60-IN) BUCKET

AN ATTACHMENT

SMCS-6801 **i01372033**

NOTE	REF NO	GRAPHIC REF	PART NUMBER	QTY	PART NAME 1 2 3 4 5 6 (PRODUCT LEVEL)	SEE PAGE
	1	1	**135-9394**	1	EDGE-CUTTING	
M	2	1	**8T-4778**	8	LOCKNUT (M16X2.00 THD)	
M	3	1	**159-2953**	8	SCREW-FLAT HEAD (M16X2.00 THD)	

M-METRIC PART

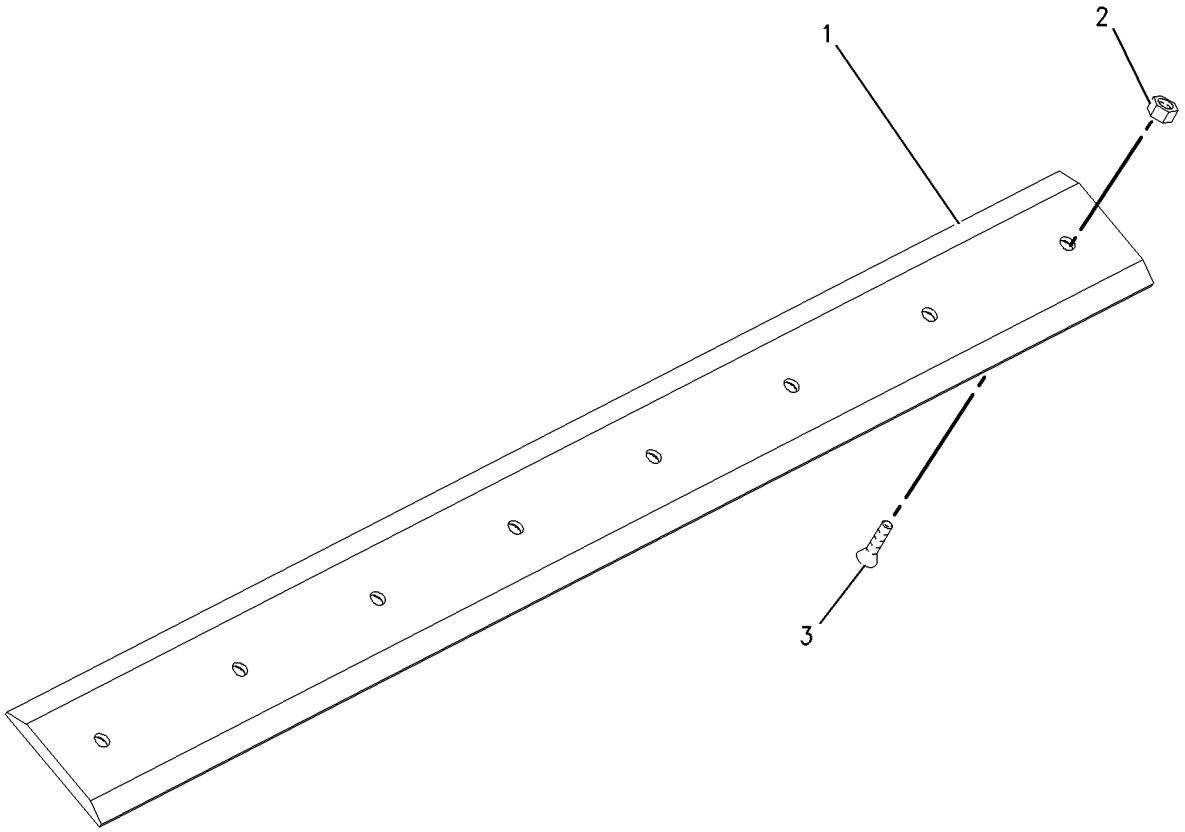

GRAPHIC #1 **<END>** g00724087

135-9385 EDGE GP-CUTTING

S/N: MJH10575-UP

PART OF 279-5441 BUCKET AR-DIRT, 279-5369 BUCKET AR-GENERAL PURPOSE, 157-7227 BUCKET AR-GRAPPLE, 279-5391 BUCKET AR-MULTIPURPOSE, 285-6100 BUCKET AR-UTILITY
FOR USE WITH 167.64-CM (66-IN) BUCKET
AN ATTACHMENT

SMCS-6801 **i01228508**

NOTE	REF NO	GRAPHIC REF	PART NUMBER	QTY	PART NAME 1 2 3 4 5 6 (PRODUCT LEVEL)	SEE PAGE
	1	1	**135-9395**	1	EDGE-CUTTING	
M	2	1	**8T-4778**	8	LOCKNUT (M16X2.00 THD)	
M	3	1	**159-2953**	8	SCREW-FLAT HEAD (M16X2.00 THD)	

M-METRIC PART

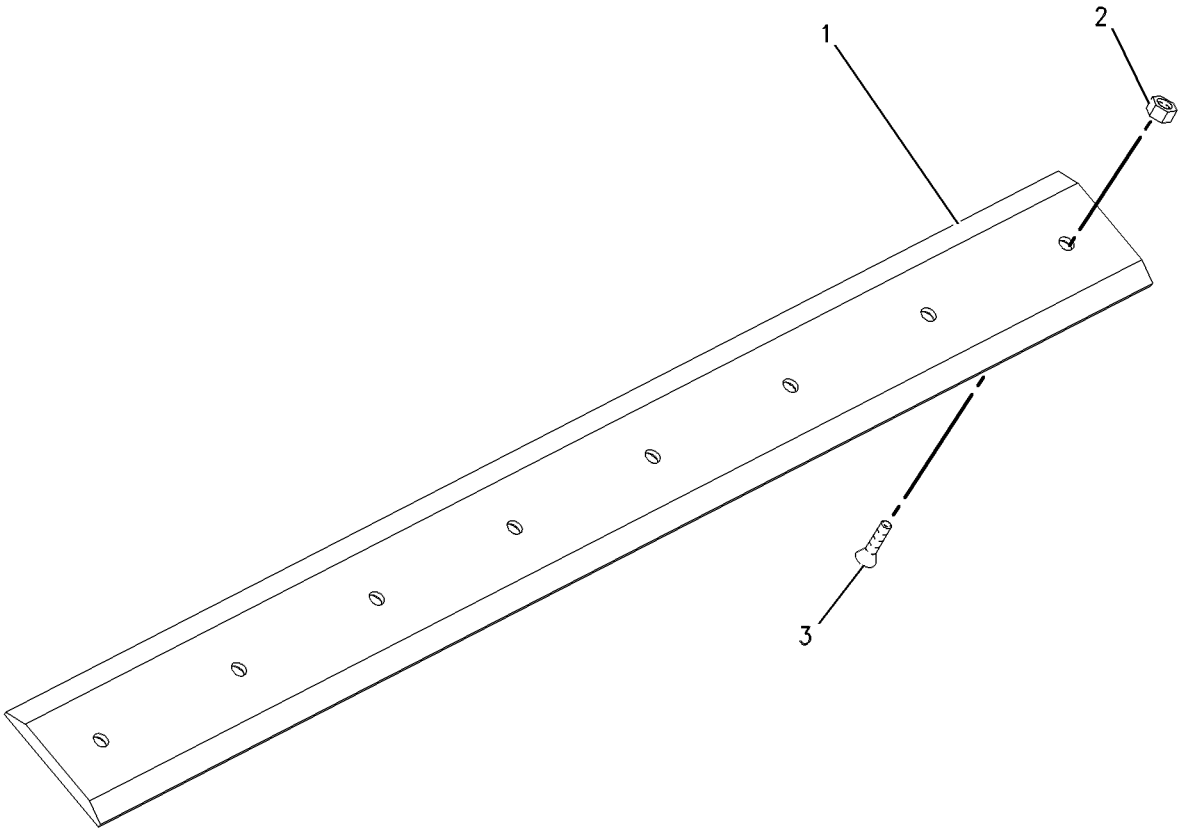

GRAPHIC #1 **<END>** g00657004

135-9386 EDGE GP-CUTTING

S/N: MJH10575-UP

PART OF 177-1989 BLADE AR, 285-6090 BUCKET AR-DIRT, 279-5373 BUCKET AR-GENERAL PURPOSE, 279-5420 BUCKET AR-LIGHT MATERIAL, 285-6101 BUCKET AR-UTILITY, 279-5399 BUCKET GP-MULTIPURPOSE

FOR USE WITH 182.88-CM (72-IN) BUCKET

AN ATTACHMENT

SMCS-6801 **i01372498**

NOTE	REF NO	GRAPHIC REF	PART NUMBER	QTY	PART NAME 1 2 3 4 5 6 (PRODUCT LEVEL)	SEE PAGE
	1	1	**135-9396**	1	EDGE-CUTTING	
M	2	1	**8T-4778**	11	LOCKNUT (M16X2.00 THD)	
M	3	1	**159-2953**	11	SCREW-FLAT HEAD (M16X2.00 THD)	

M-METRIC PART

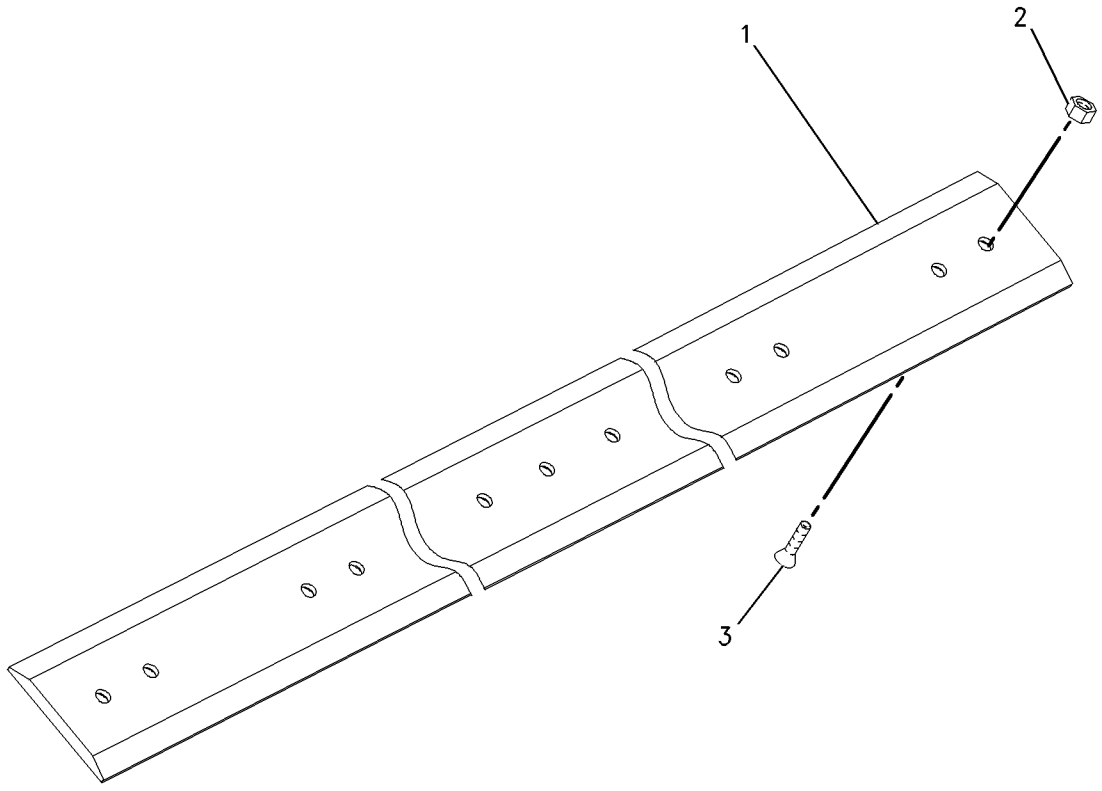

GRAPHIC #1 **<END>** g00724435

WORK TOOLS

135-9387 EDGE GP-CUTTING

S/N: MJH10575-UP
PART OF 279-5377 BUCKET AR-GENERAL PURPOSE, 279-5425 BUCKET AR-LIGHT MATERIAL, 279-5402 BUCKET AR-MULTIPURPOSE
FOR USE WITH 198.12-CM (78-IN) BUCKET
AN ATTACHMENT

SMCS-6801 **i01755490**

NOTE	REF NO	GRAPHIC REF	PART NUMBER	QTY	PART NAME 1 2 3 4 5 6 (PRODUCT LEVEL)	SEE PAGE
	1	1	**135-9397**	1	EDGE-CUTTING	
M	2	1	**8T-4778**	11	LOCKNUT (M16X2 THD)	
M	3	1	**159-2953**	11	SCREW-FLAT HEAD (M16X2.00 THD)	

M-METRIC PART

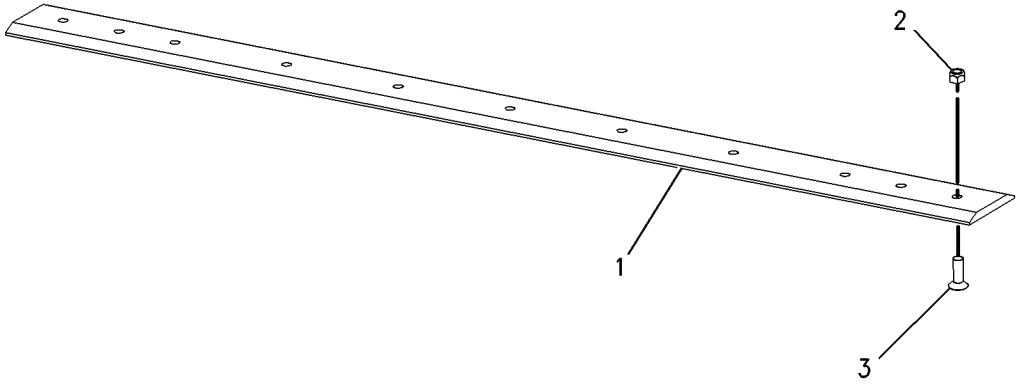

GRAPHIC #1 **<END>** g00898154

WORK TOOLS

149-5741 EDGE GP-CUTTING

S/N: MJH10575-UP
PART OF 177-1990 BLADE AR
FOR USE WITH 218.9-CM (85-IN) BUCKET
AN ATTACHMENT

SMCS-6801 **i01832720**

NOTE	REF NO	GRAPHIC REF	PART NUMBER	QTY	PART NAME 1 2 3 4 5 6 (PRODUCT LEVEL)	SEE PAGE
	1	1	**195-5124**	1	EDGE-CUTTING	
M	2	1	**8T-4778**	7	LOCKNUT (M16X2 THD)	
M	3	1	**159-2953**	7	SCREW-FLAT HEAD (M16X2.00 THD)	

M-METRIC PART

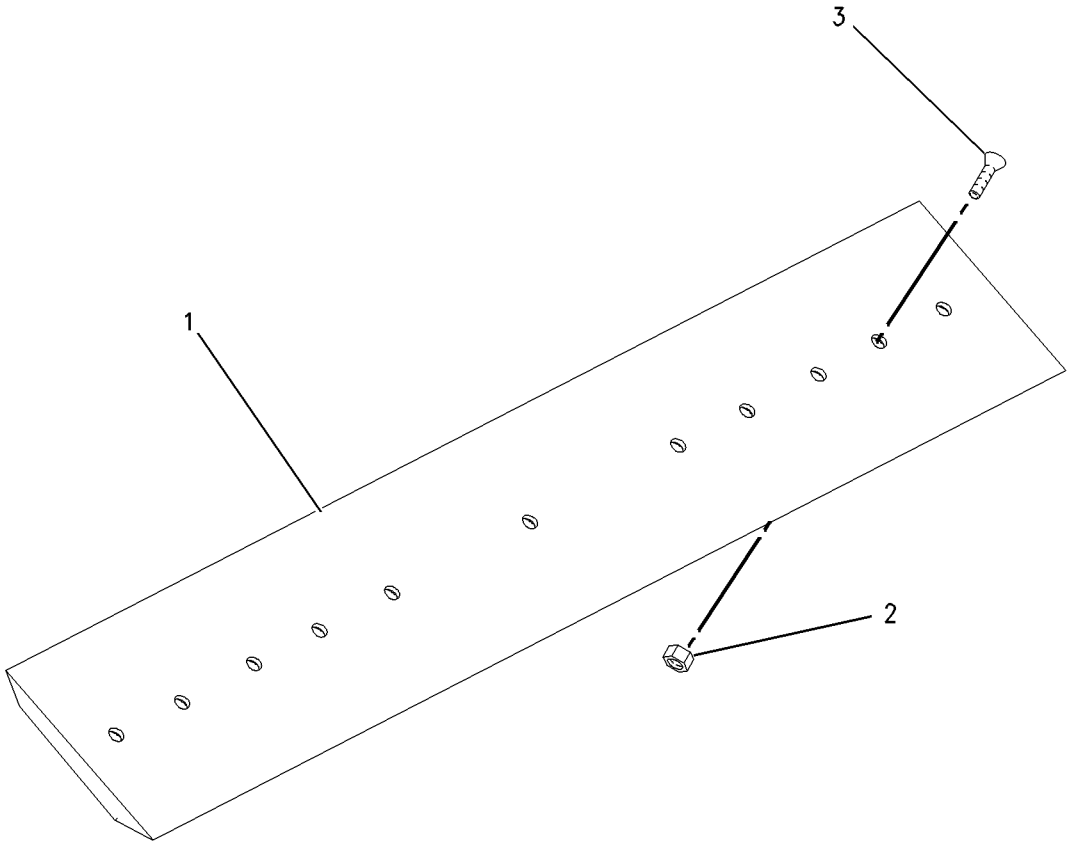

GRAPHIC #1 **<END>** g00936281

WORK TOOLS

195-7124 EDGE GP-CUTTING

S/N: MJH10575-UP
PART OF 279-5430 BUCKET AR-LIGHT MATERIAL
FOR USE WITH 213.36CM (84 IN) BUCKET
AN ATTACHMENT

SMCS-6801 **i01859534**

NOTE	PART NUMBER	QTY	PART NAME 1 2 3 4 5 6 (PRODUCT LEVEL)	SEE PAGE
	195-5124	1	EDGE-CUTTING	
M	**8T-4778**	11	LOCKNUT (M16X2 THD)	
M	**159-2953**	11	SCREW-FLAT HEAD (M16X2.00 THD)	

M-METRIC PART

<END>

279-5350 FORK AR-GRAPPLE—INDUSTRIAL

S/N: MJH10575-UP
1676-MM (66-IN)
AN ATTACHMENT

SMCS-6705 **i02715580**

NOTE	PART NUMBER	QTY	PART NAME 1 2 3 4 5 6 (PRODUCT LEVEL)	SEE PAGE
Y	**278-1975**	2	CYLINDER GP-HYDRAULIC	281
Y	*164-9614*	9	FORK GP-GRAPPLE (INDUSTRIAL)	472
Y	*279-5351*	1	FORK GP-GRAPPLE (66-IN, INDUSTRIAL)	473
Y	*279-5412*	1	LINES GP-BUCKET (INDUSTRIAL)	298
Y	*156-0891*	1	MOUNTING GP-CYLINDER (INDUSTRIAL)	375

Y-SEPARATE ILLUSTRATION

<END>

279-5360 FORK AR-GRAPPLE—INDUSTRIAL

S/N: MJH10575-UP
1829-MM (72-IN)
AN ATTACHMENT

SMCS-6705 **i02715593**

NOTE	PART NUMBER	QTY	PART NAME 1 2 3 4 5 6 (PRODUCT LEVEL)	SEE PAGE
Y	**278-1975**	2	CYLINDER GP-HYDRAULIC	281
Y	*164-9614*	2	FORK GP-GRAPPLE (INDUSTRIAL)	472
Y	*279-5359*	1	FRAME GP-GRAPPLE (72-IN, INDUSTRIAL)	482
Y	*279-5412*	1	LINES GP-BUCKET (INDUSTRIAL)	298
Y	*156-0891*	1	MOUNTING GP-CYLINDER (INDUSTRIAL)	375

Y-SEPARATE ILLUSTRATION

<END>

285-6114 FORK AR-GRAPPLE–UTILITY

S/N: MJH10575-UP
1676-MM (66-IN)
AN ATTACHMENT

SMCS-6705 **i02552497**

NOTE	PART NUMBER	QTY	PART NAME 1 2 3 4 5 6 (PRODUCT LEVEL)	SEE PAGE
Y	**285-6105**	1	FORK GP-UTILITY (66-IN)	478
Y	*285-6116*	1	GRAPPLE GP-UTILITY	484

Y-SEPARATE ILLUSTRATION

<END>

285-6115 FORK AR-GRAPPLE–UTILITY

S/N: MJH10575-UP
1829-MM(72-IN)
AN ATTACHMENT

SMCS-6705 **i02552699**

NOTE	PART NUMBER	QTY	PART NAME 1 2 3 4 5 6 (PRODUCT LEVEL)	SEE PAGE
Y	**285-6110**	1	FORK GP-GRAPPLE	474
Y	*285-6116*	1	GRAPPLE GP-UTILITY	484

Y-SEPARATE ILLUSTRATION

<END>

WORK TOOLS

164-9614 FORK GP-GRAPPLE

S/N: MJH10575-UP

PART OF 279-5350, 279-5360 FORK AR-GRAPPLE

AN ATTACHMENT

SMCS-6705 **i01075196**

NOTE	REF NO	GRAPHIC REF	PART NUMBER	QTY	PART NAME 1 2 3 4 5 6 (PRODUCT LEVEL)	SEE PAGE
	1	1	**3E-4370**	1	PIN-SPRING	
	2	1	**162-8154**	1	TINE	

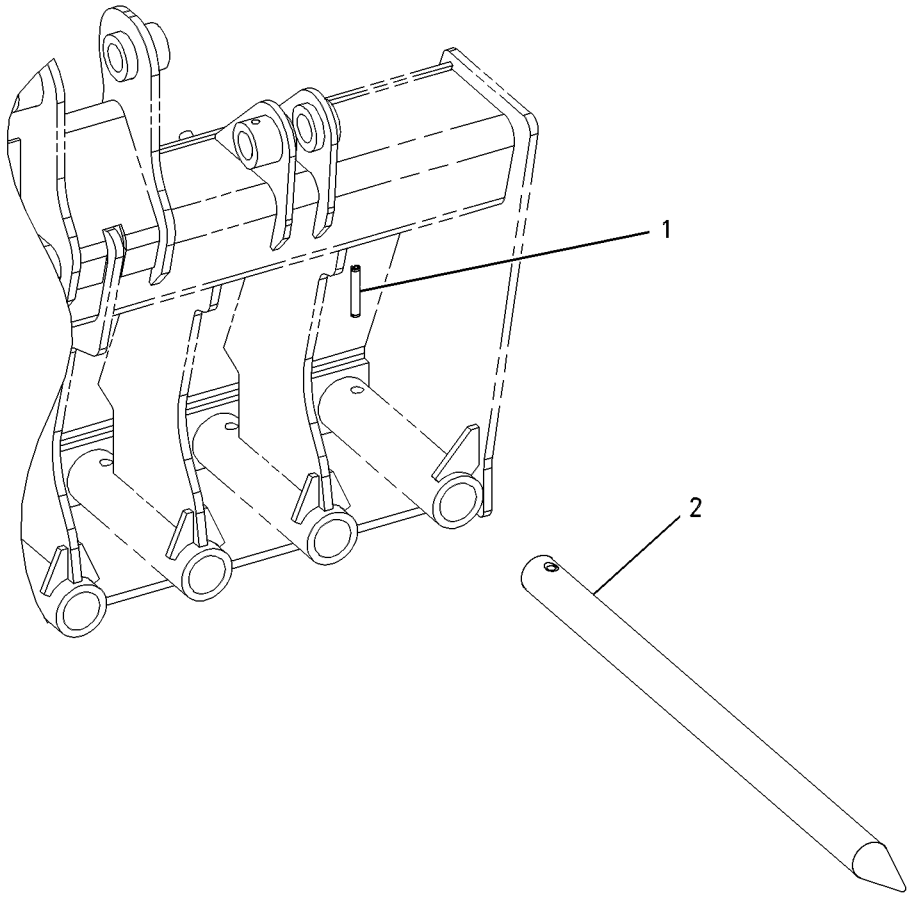

GRAPHIC #1 **<END>** g00559648

279-5351 FORK GP-GRAPPLE–INDUSTRIAL

S/N: MJH10575-UP
1676-MM (66-IN)
PART OF 279-5350 FORK AR-GRAPPLE
AN ATTACHMENT

SMCS-6705 **i02571199**

NOTE	REF NO	GRAPHIC REF	PART NUMBER	QTY	PART NAME 1 2 3 4 5 6 (PRODUCT LEVEL)	SEE PAGE
	1	1	**157-0940**	4	PIN	
	2	1	**164-9989**	2	FILM-WARNING (IMPALED POINT)	
	3	1	**222-7467**	2	FORK AS	
Y	4	1	*279-5352*	1	FRAME GP-FORK (66-IN, INDUSTRIAL)	480
	5	1	**3B-8489**	4	FITTING-GREASE	
M	6	1	**6V-9189**	4	LOCKNUT (M8X1.25-THD)	
M	7	1	**8T-6869**	4	BOLT (M8X1.25X60-MM)	

M-METRIC PART
Y-SEPARATE ILLUSTRATION

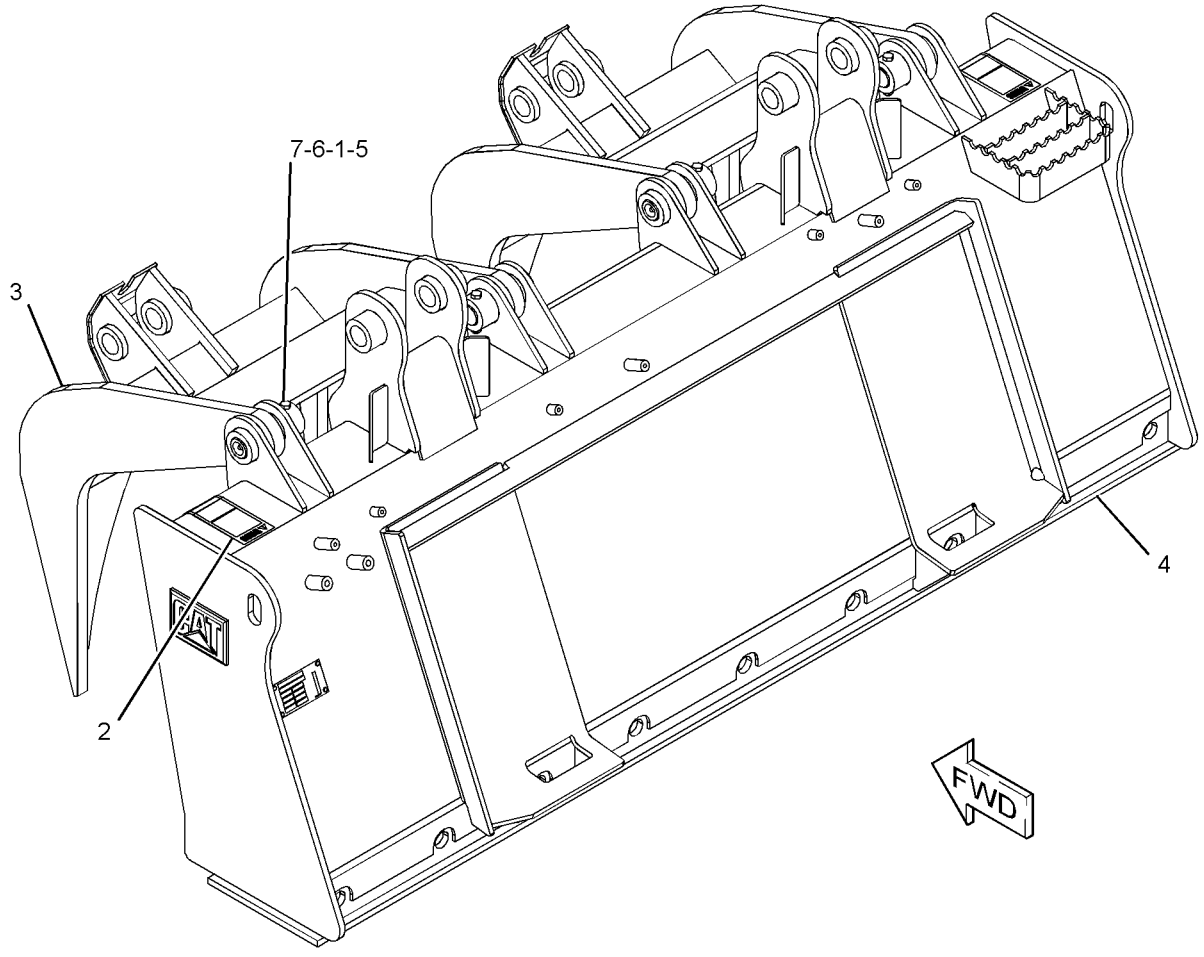

GRAPHIC #1 **<END>** g01279797

285-6110 FORK GP-GRAPPLE

S/N: MJH10575-UP
1829-MM (72-IN)
PART OF 285-6115 FORK AR-GRAPPLE
AN ATTACHMENT

SMCS-6705 **i02760170**

NOTE	REF NO	GRAPHIC REF	PART NUMBER	QTY	PART NAME 1 2 3 4 5 6 (PRODUCT LEVEL)	SEE PAGE
	1	1	**164-9989**	2	FILM-WARNING (IMPALED POINT)	
Y	2	1	*165-8732*	9	FORK GP-UTILITY	477
					PARTS SHOWN IN GRAPHIC(S) WITHOUT A REFERENCE NUMBER ARE NOT SERVICED SEPARATELY	

Y-SEPARATE ILLUSTRATION

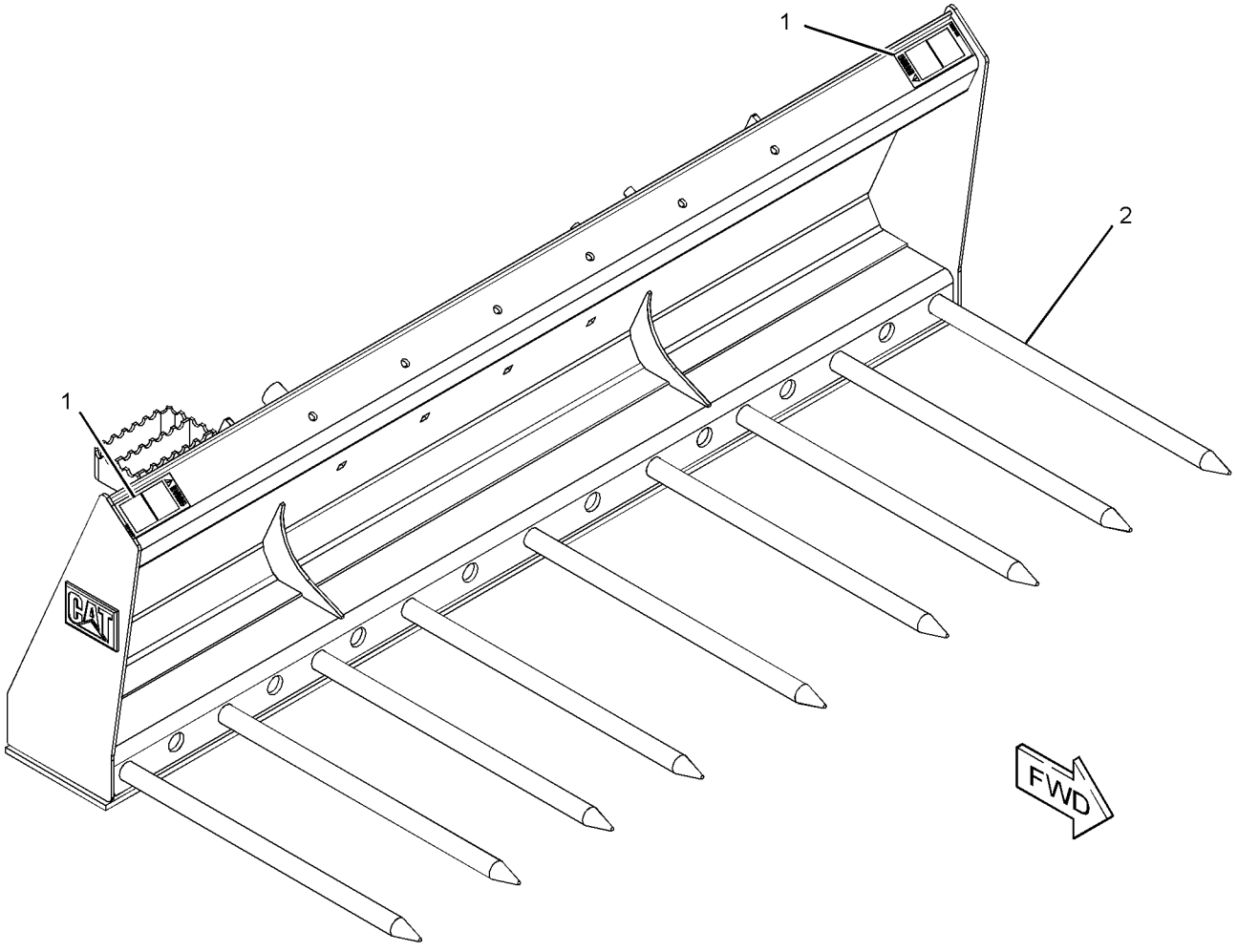

GRAPHIC #1 **<END>** g01381750

195-6942 FORK GP-PALLET

S/N: MJH10575-UP
1067-MM (42-IN)
PART OF 293-9428 CARRIAGE & FORK AR
AN ATTACHMENT

SMCS-6136 **i02569271**

NOTE	PART NUMBER	QTY	PART NAME 1 2 3 4 5 6 (PRODUCT LEVEL)	SEE PAGE
	221-3429	1	POSITIONER GP-FORK	

<END>

195-6943 FORK GP-PALLET

S/N: MJH10575-UP
914-MM (36-IN)
PART OF 293-9427 CARRIAGE & FORK AR
AN ATTACHMENT

SMCS-6136 **i02569272**

NOTE	PART NUMBER	QTY	PART NAME 1 2 3 4 5 6 (PRODUCT LEVEL)	SEE PAGE
	221-3429	1	POSITIONER GP-FORK	

<END>

195-8545 FORK GP-PALLET

S/N: MJH10575-UP
1219-MM (48-IN)
PART OF 293-9429 CARRIAGE & FORK AR
AN ATTACHMENT

SMCS-6136 **i02569274**

NOTE	PART NUMBER	QTY	PART NAME 1 2 3 4 5 6 (PRODUCT LEVEL)	SEE PAGE
	221-3429	1	POSITIONER GP-FORK	

<END>

243-0001 FORK GP-PALLET–KIT

S/N: MJH10575-UP
914-MM (36-IN)
AN ATTACHMENT

SMCS-6136 **i01964024**

NOTE	PART NUMBER	QTY	PART NAME 1 2 3 4 5 6 (PRODUCT LEVEL)	SEE PAGE
	195-6943	12	FORK GP-PALLET (36 IN)	
			(EACH INCLUDES)	
	221-3429	1	POSITIONER GP-FORK	

<END>

WORK TOOLS

243-0002 FORK GP-PALLET–KIT

S/N: MJH10575-UP
1067-MM (42-IN)
AN ATTACHMENT

SMCS-6136 **i01964030**

NOTE	PART NUMBER	QTY	PART NAME 1 2 3 4 5 6 (PRODUCT LEVEL)	SEE PAGE
	195-6942	12	FORK GP-PALLET (42 IN)	
			(EACH INCLUDES)	
	221-3429	1	POSITIONER GP-FORK	

<END>

243-0003 FORK GP-PALLET–KIT

S/N: MJH10575-UP
1219-MM (48-IN)
AN ATTACHMENT

SMCS-6136 **i01964031**

NOTE	PART NUMBER	QTY	PART NAME 1 2 3 4 5 6 (PRODUCT LEVEL)	SEE PAGE
	195-8545	12	FORK GP-PALLET (48 IN)	
			(EACH INCLUDES)	
	221-3429	1	POSITIONER GP-FORK	

<END>

165-8732 FORK GP-UTILITY

S/N: MJH10575-UP
PART OF 285-6110 FORK GP-GRAPPLE, 285-6105 FORK GP-UTILITY
AN ATTACHMENT

SMCS-6458 **i01204324**

NOTE	REF NO	GRAPHIC REF	PART NUMBER	QTY	PART NAME 1 2 3 4 5 6 (PRODUCT LEVEL)	SEE PAGE
	1	1	**9R-2959**	1	CLIP	
	2	1	**166-4041**	1	TINE	

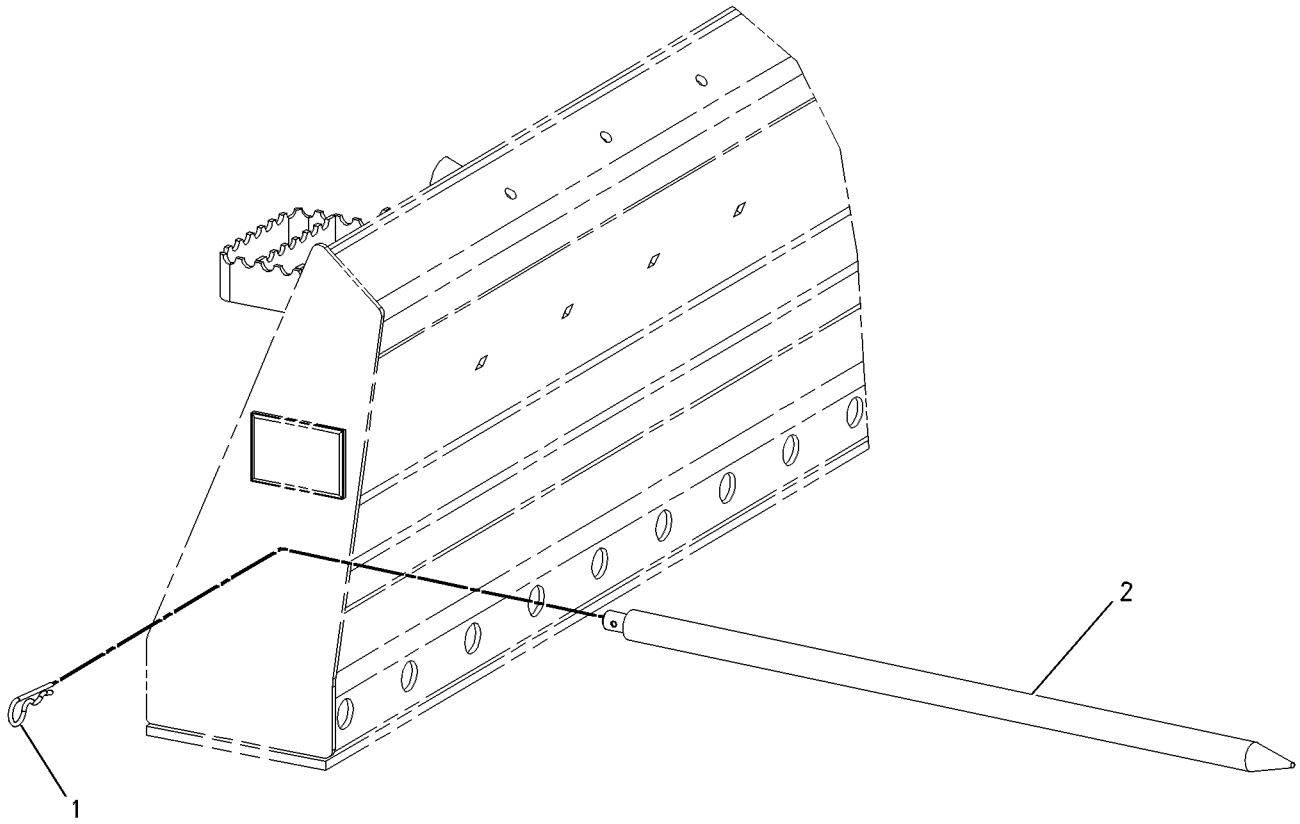

GRAPHIC #1 **<END>** g00639778

285-6105 FORK GP-UTILITY

S/N: MJH10575-UP
1676-MM (66-IN)
PART OF 285-6114 FORK AR-GRAPPLE
AN ATTACHMENT

SMCS-6458 **i02552504**

NOTE	REF NO	GRAPHIC REF	PART NUMBER	QTY	PART NAME 1 2 3 4 5 6 (PRODUCT LEVEL)	SEE PAGE
	1	1	**164-9989**	2	FILM-WARNING (IMPALED POINT)	
Y	2	1	*165-8732*	7	FORK GP-UTILITY	477
					PARTS SHOWN IN GRAPHIC(S) WITHOUT A REFERENCE NUMBER ARE NOT SERVICED SEPARATELY	

Y-SEPARATE ILLUSTRATION

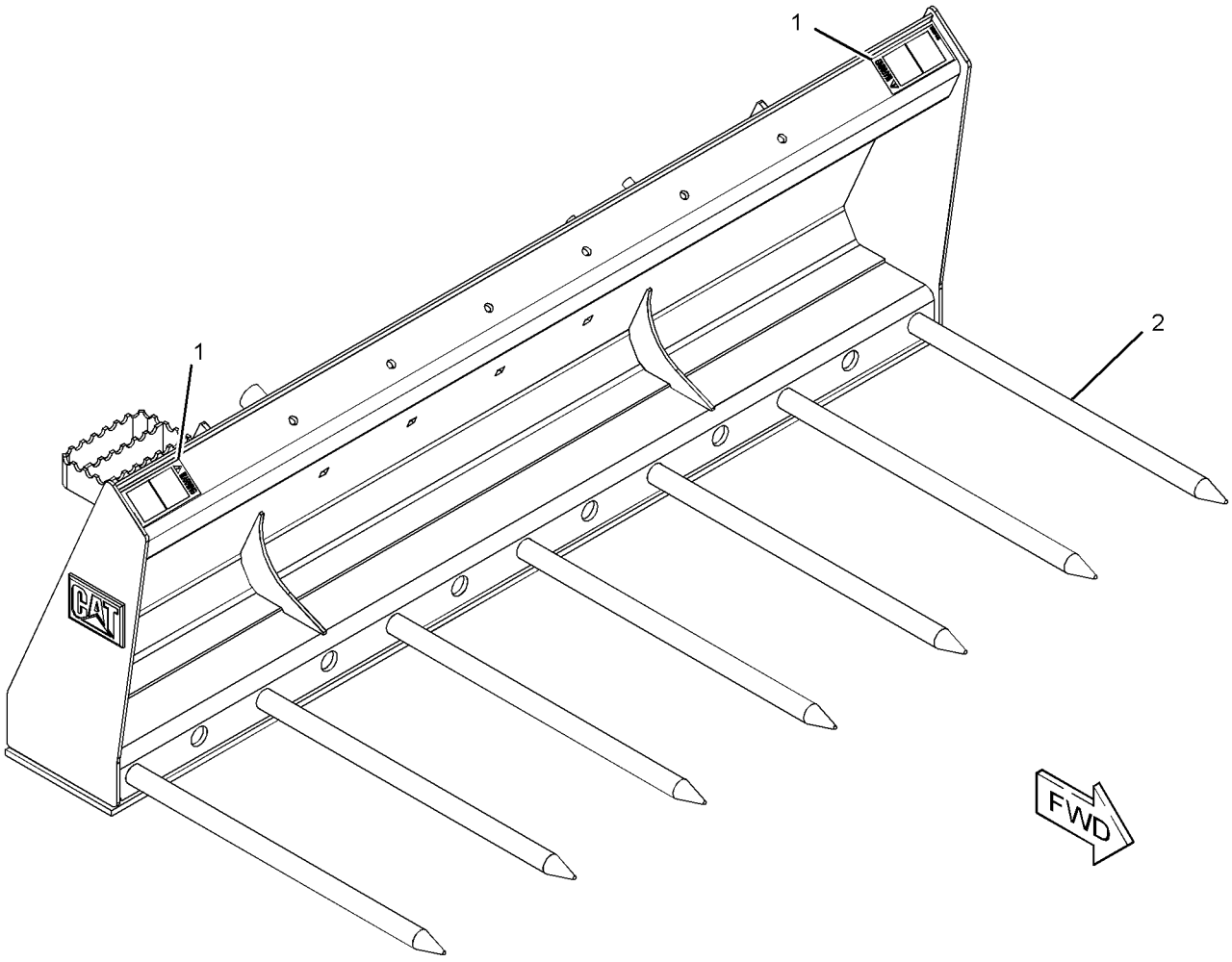

GRAPHIC #1 **<END>** g01280417

WORK TOOLS

230-5670 FRAME GP-BLADE

S/N: MJH10575-UP
PART OF 177-1989, 177-1990 BLADE AR
AN ATTACHMENT

SMCS-6060 **i01860873**

NOTE	REF NO	GRAPHIC REF	PART NUMBER	QTY	PART NAME 1 2 3 4 5 6 (PRODUCT LEVEL)	SEE PAGE
	1	1	**177-1914**	1	PIN AS	
B	2	1	**177-1955**	1	SHIM (1-MM)	
B	3	1	**177-1956**	1	SHIM (2-MM)	
B	4	1	**177-1957**	1	SHIM (3-MM)	
	5	1	**177-1971**	1	FRAME AS	
	6	1	**177-1975**	1	FRAME AS	
	7	1	**230-5407**	1	FRAME AS	
	8	1	**3B-8489**	1	FITTING-GREASE	
	9	1	**5B-0935**	1	FITTING-GREASE	
M	10	1	**7X-2553**	8	BOLT (M16X2X40-MM)	
	11	1	**7X-7729**	1	WASHER (11X25X3-MM THK)	
	12	1	**8T-4122**	8	WASHER-HARD (17X32X3.5-MM THK)	
M	13	1	**8T-4137**	1	BOLT (M10X1.5X20-MM)	

B-USE AS REQUIRED
M-METRIC PART

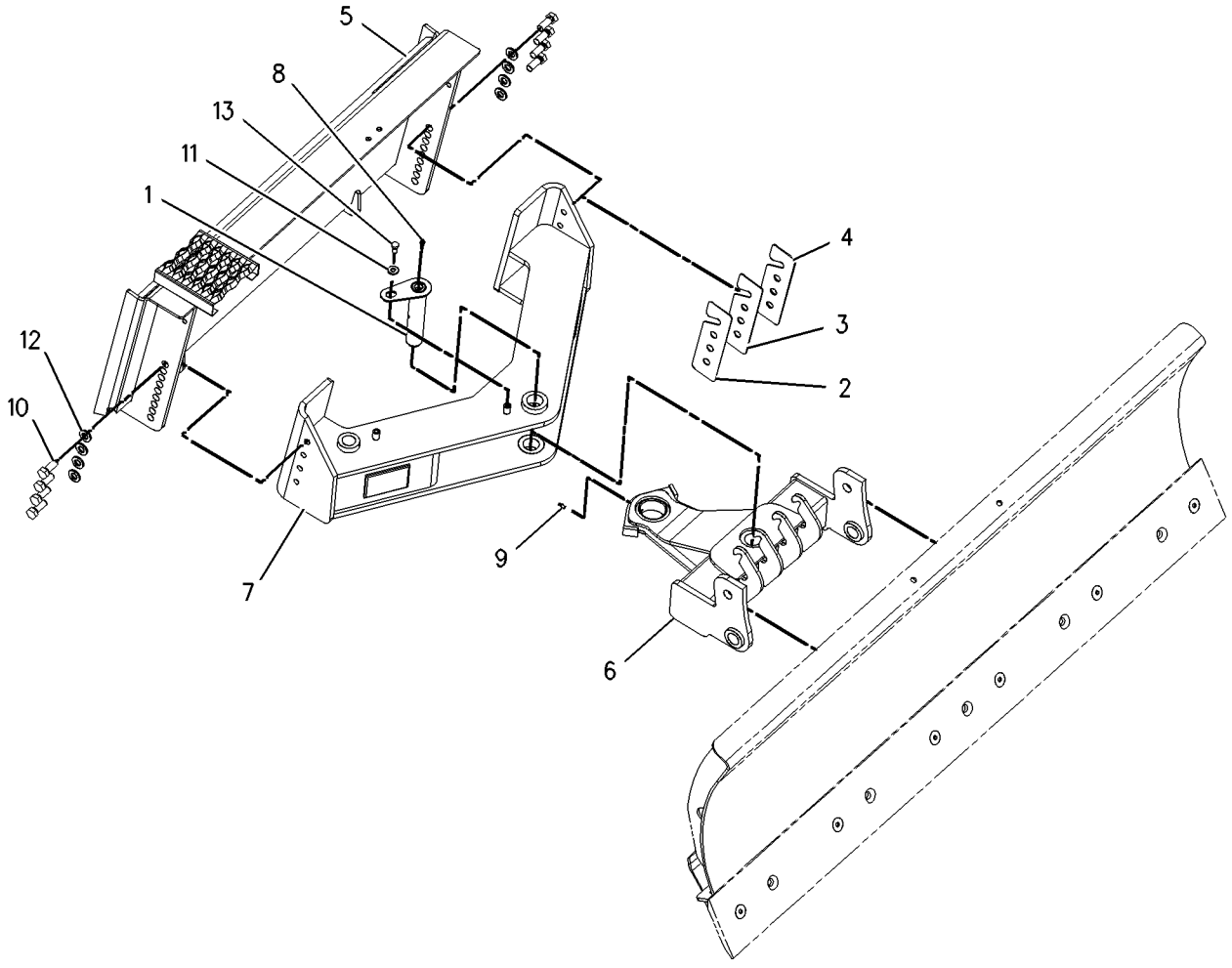

GRAPHIC #1 **<END>** g00978893

279-5352 FRAME GP-FORK–INDUSTRIAL

S/N: MJH10575-UP

PART OF 279-5351 FORK GP-GRAPPLE

AN ATTACHMENT

SMCS-6705 **i02550300**

NOTE	REF NO	GRAPHIC REF	PART NUMBER	QTY	PART NAME 1 2 3 4 5 6 (PRODUCT LEVEL)	SEE PAGE
	1	1	**154-2704**	1	PLATE-INSTRUCTION (BUCKET SPECIFICATIONS)	
	2	1	**168-8389**	4	TACK-FASTENER	
	3	1	**279-5353**	1	FORK AS	

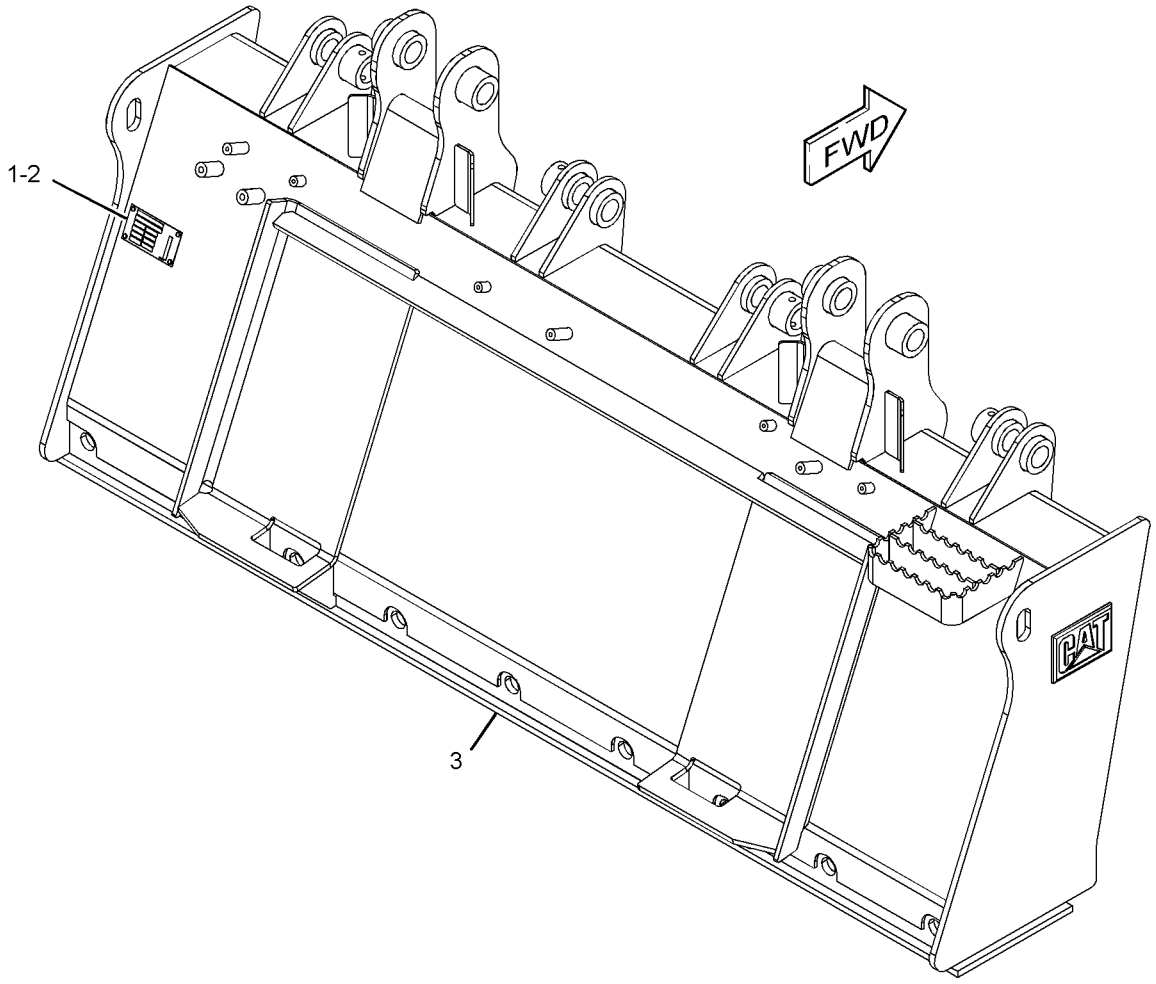

GRAPHIC #1 **<END>** g01280687

279-5358 FRAME GP-FORK–INDUSTRIAL

S/N: MJH10575-UP
PART OF 279-5359 FRAME GP-GRAPPLE
AN ATTACHMENT

SMCS-6705 **i02550334**

NOTE	REF NO	GRAPHIC REF	PART NUMBER	QTY	PART NAME 1 2 3 4 5 6 (PRODUCT LEVEL)	SEE PAGE
	1	1	**154-2704**	1	PLATE-INSTRUCTION (BUCKET SPECIFICATIONS)	
	2	1	**168-8389**	4	TACK-FASTENER	
	3	1	**279-5357**	1	FORK AS	

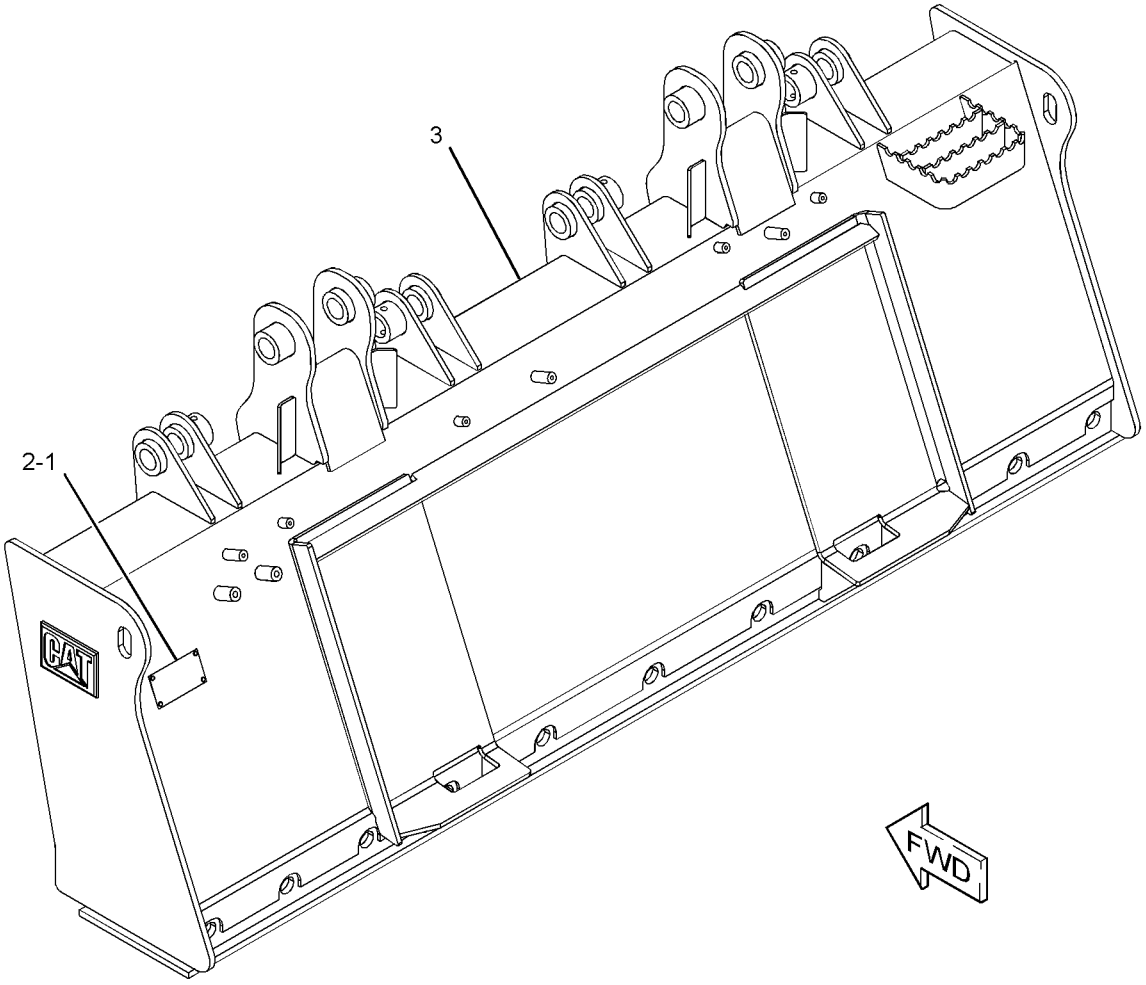

GRAPHIC #1 **<END>** g01279388

279-5359 FRAME GP-GRAPPLE–INDUSTRIAL

S/N: MJH10575-UP

PART OF 279-5360 FORK AR-GRAPPLE

AN ATTACHMENT

SMCS-6705 **i02550333**

NOTE	REF NO	GRAPHIC REF	PART NUMBER	QTY	PART NAME 1 2 3 4 5 6 (PRODUCT LEVEL)	SEE PAGE
	1	1	**157-0940**	4	PIN	
	2	1	**164-9989**	2	FILM-WARNING (IMPALED POINT)	
	3	1	**222-7467**	2	FORK AS	
Y	4	1	*279-5358*	1	FRAME GP-FORK (72-IN, INDUSTRIAL)	481
	5	1	**3B-8489**	4	FITTING-GREASE	
M	6	1	**6V-9189**	4	LOCKNUT (M8X1.25-THD)	
M	7	1	**8T-6869**	4	BOLT (M8X1.25X60-MM)	

M-METRIC PART
Y-SEPARATE ILLUSTRATION

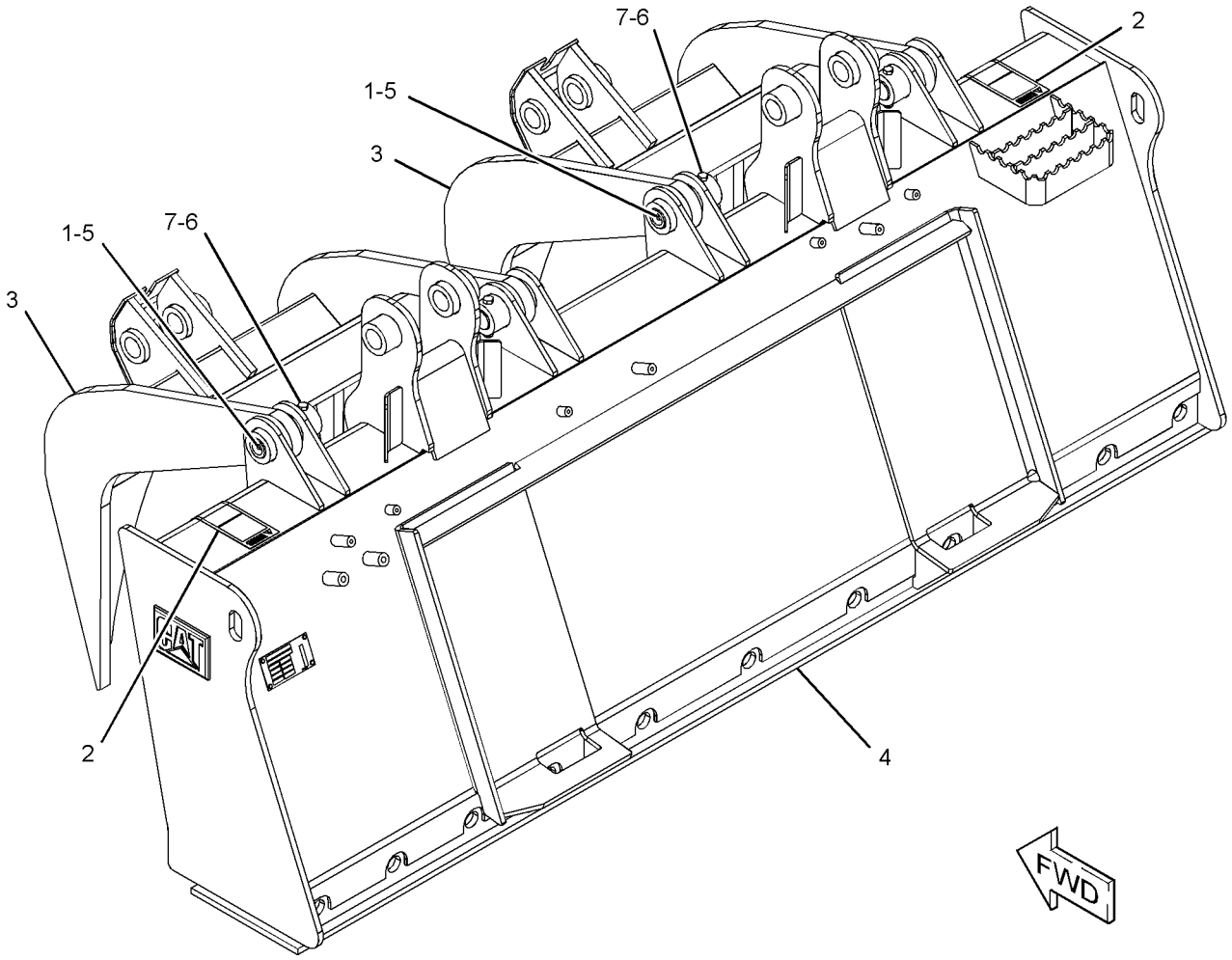

GRAPHIC #1 **<END>** g01280924

WORK TOOLS

165-8740 GRAPPLE GP-UTILITY

S/N: MJH10575-UP
PART OF 285-6116 GRAPPLE GP-UTILITY
AN ATTACHMENT

SMCS-6307 **i02772047**

NOTE	REF NO	GRAPHIC REF	PART NUMBER	QTY	PART NAME 1 2 3 4 5 6 (PRODUCT LEVEL)	SEE PAGE
	1	1	**3B-8488**	4	FITTING-GREASE	
	2	1	**159-5411**	4	PIN	
	3	1	**165-8743**	1	ARM AS	
	4	1	**169-3569**	1	BRACKET AS	
		1	**159-8035**	2	FILM-WARNING (CRUSH HAZARD, STAY BACK)	
M	5	1	**6V-9189**	4	LOCKNUT (M8X1.25-THD)	
M	6	1	**8T-6912**	4	BOLT (M8X1.25X50-MM)	

M-METRIC PART

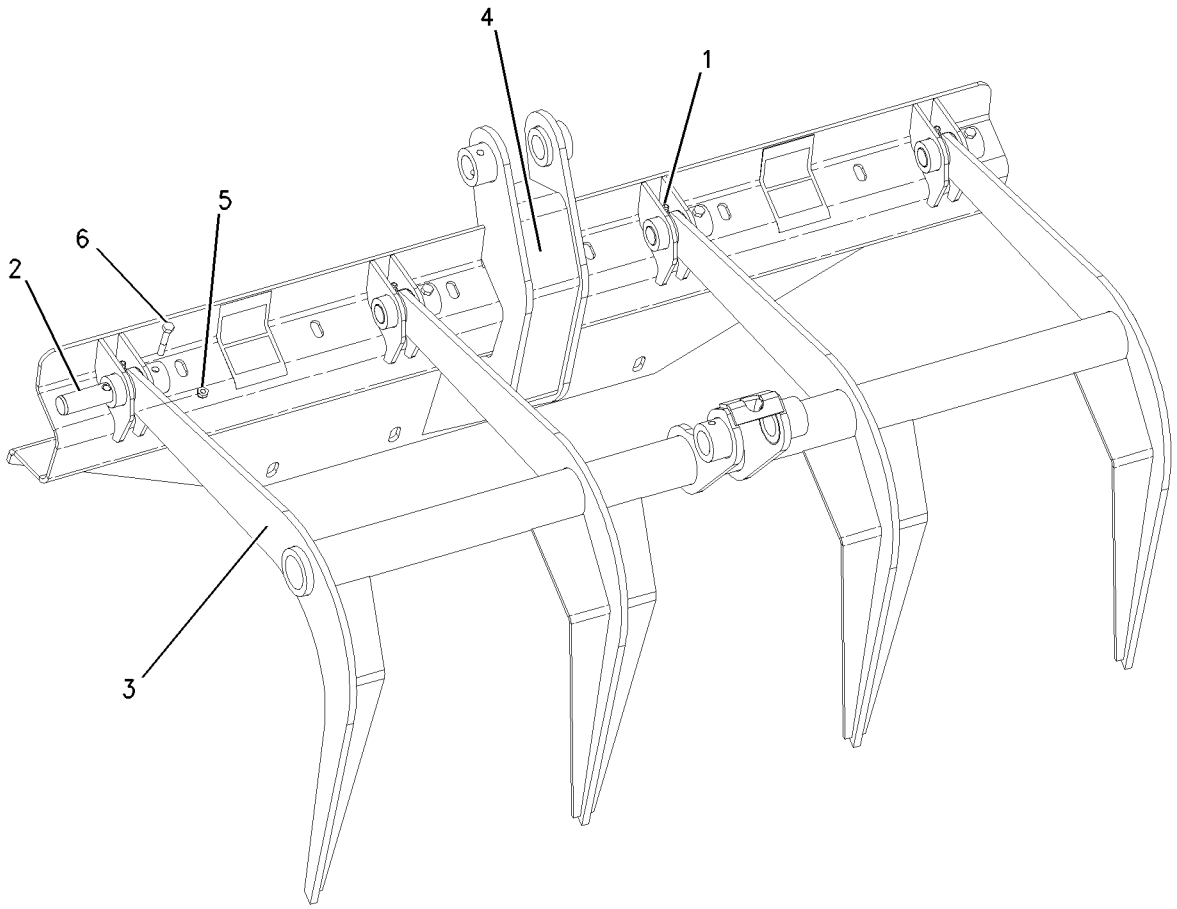

GRAPHIC #1 **<END>** g00777325

285-6116 GRAPPLE GP-UTILITY

S/N: MJH10575-UP
PART OF 285-6093, 285-6104, 285-6111, 285-6112 BUCKET AR-GRAPPLE, 285-6114, 285-6115 FORK AR-GRAPPLE
AN ATTACHMENT
TYPE 1

SMCS-6307 **i02711972**

NOTE	REF NO	GRAPHIC REF	PART NUMBER	QTY	PART NAME 1 2 3 4 5 6 (PRODUCT LEVEL)	SEE PAGE
Y	1	1	**164-9295**	1	CYLINDER GP-GRAPPLE	274
Y	2	1	*165-8731*	1	MOUNTING GP-CYLINDER (UTILITY)	376
Y	3	1	*165-8740*	1	GRAPPLE GP-UTILITY	483
M	4	1	**170-5836**	4	BOLT	
Y	5	1	*173-7407*	1	STOP GP-GRAPPLE	497
	6	1	**239-5029**	1	GUARD	
Y	7	1	*285-6113*	1	LINES GP-BUCKET	308
	8	1	**5P-1076**	4	WASHER-HARD (13.5X30X4-MM THK)	
M	9	1	**8T-4139**	6	BOLT (M12X1.75X30-MM)	
	10	1	**8T-4223**	6	WASHER-HARD (13.5X25.5X3-MM THK)	
M	11	1	**8T-4244**	10	NUT (M12X1.75-THD)	

M-METRIC PART
Y-SEPARATE ILLUSTRATION

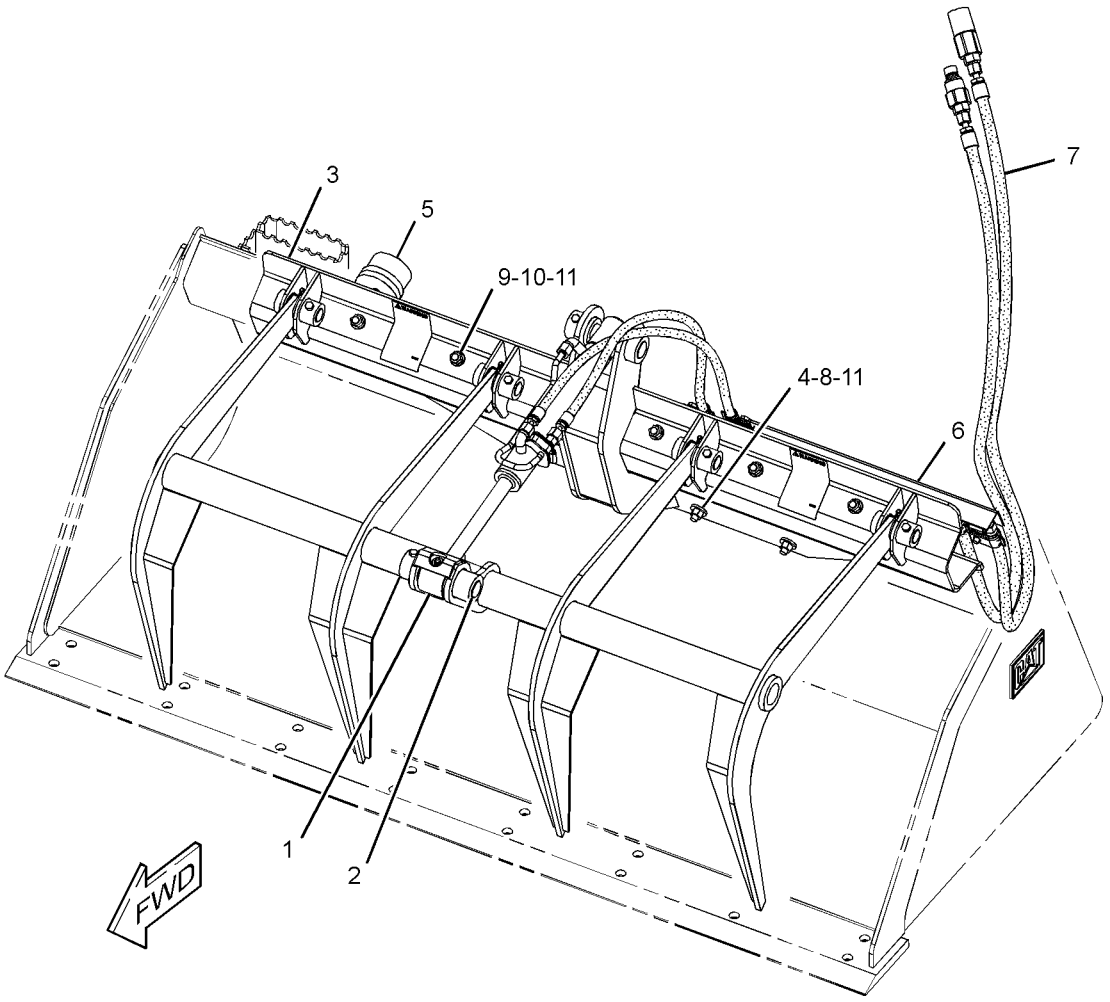

GRAPHIC #1 **<END>** g01278678

285-6116 GRAPPLE GP-UTILITY

S/N: MJH10575-UP
PART OF 285-6093, 285-6104, 285-6111, 285-6112 BUCKET AR-GRAPPLE, 285-6114, 285-6115 FORK AR-GRAPPLE
AN ATTACHMENT
TYPE 2

SMCS-6307 **i02888549**

NOTE	REF NO	GRAPHIC REF	PART NUMBER	QTY	PART NAME 1 2 3 4 5 6 (PRODUCT LEVEL)	SEE PAGE
CY	1	1	**255-0943**	1	CYLINDER GP-HYDRAULIC	277
Y	2	1	*165-8731*	1	MOUNTING GP-CYLINDER (UTILITY)	376
Y	3	1	*165-8740*	1	GRAPPLE GP-UTILITY	483
M	4	1	**170-5836**	4	BOLT	
Y	5	1	*173-7407*	1	STOP GP-GRAPPLE	497
	6	1	**239-5029**	1	GUARD	
Y	7	1	*285-6113*	1	LINES GP-BUCKET	308
	8	1	**5P-1076**	4	WASHER-HARD (13.5X30X4-MM THK)	
M	9	1	**8T-4139**	6	BOLT (M12X1.75X30-MM)	
	10	1	**8T-4223**	6	WASHER-HARD (13.5X25.5X3-MM THK)	
M	11	1	**8T-4244**	10	NUT (M12X1.75-THD)	

C-CHANGE FROM PREVIOUS TYPE
M-METRIC PART
Y-SEPARATE ILLUSTRATION

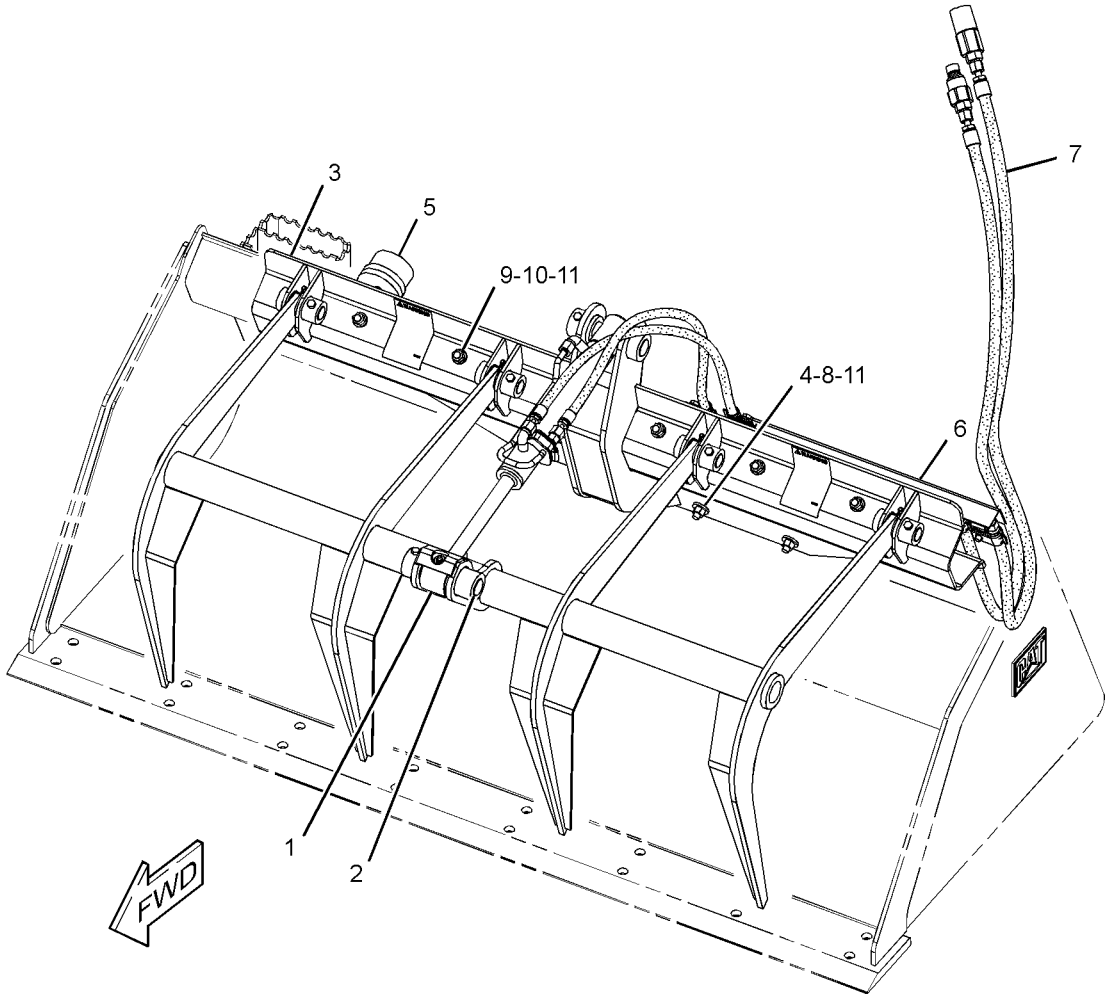

GRAPHIC #1 **<END>** g01278678

215-3960 HANDLE & PIN GP-COUPLER–LH

S/N: MJH10575-UP
PART OF 206-3820 COUPLER GP-QUICK
AN ATTACHMENT

SMCS-6129 **i01928985**

NOTE	REF NO	GRAPHIC REF	PART NUMBER	QTY	PART NAME 1 2 3 4 5 6 (PRODUCT LEVEL)	SEE PAGE
	1	1	**166-2560**	1	PIN-SPRING	
	2	1	**192-2642**	1	PIN	
Y	3	1	*215-3958*	1	HANDLE GP-COUPLER (LH)	488

Y-SEPARATE ILLUSTRATION

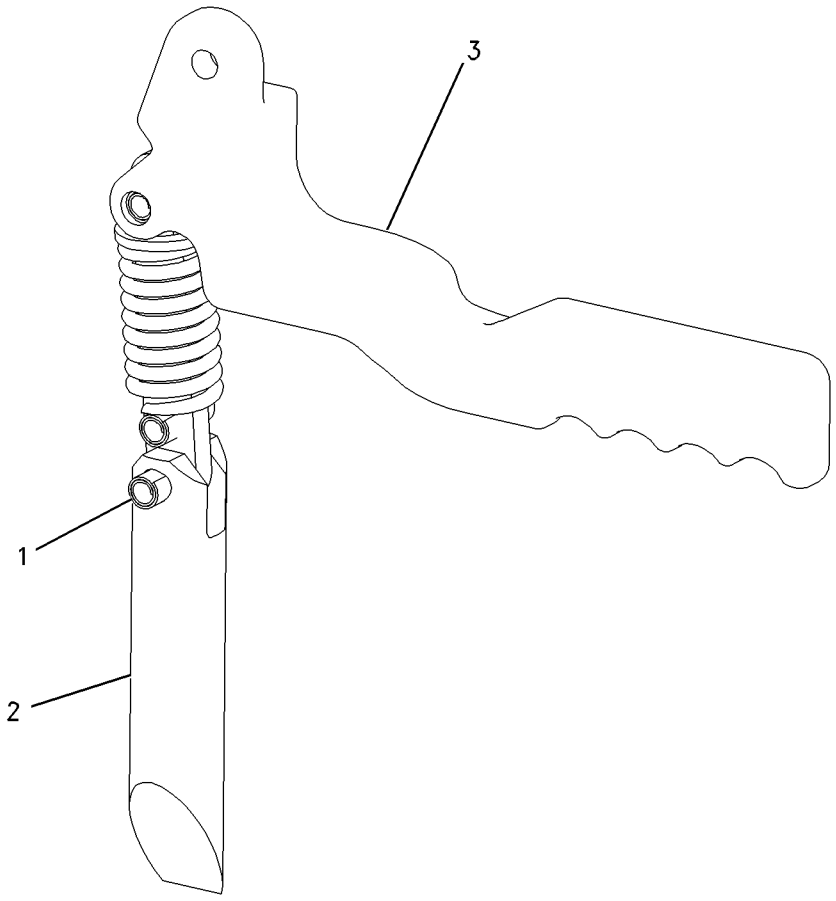

GRAPHIC #1 **<END>** g00861964

215-3961 HANDLE & PIN GP-COUPLER–RH

S/N: MJH10575-UP
PART OF 206-3820 COUPLER GP-QUICK
AN ATTACHMENT

SMCS-6129 **i01928984**

NOTE	REF NO	GRAPHIC REF	PART NUMBER	QTY	PART NAME 1 2 3 4 5 6 (PRODUCT LEVEL)	SEE PAGE
	1	1	**166-2560**	1	PIN-SPRING	
	2	1	**192-2642**	1	PIN	
Y	3	1	*215-3959*	1	HANDLE GP-COUPLER (RH)	489

Y-SEPARATE ILLUSTRATION

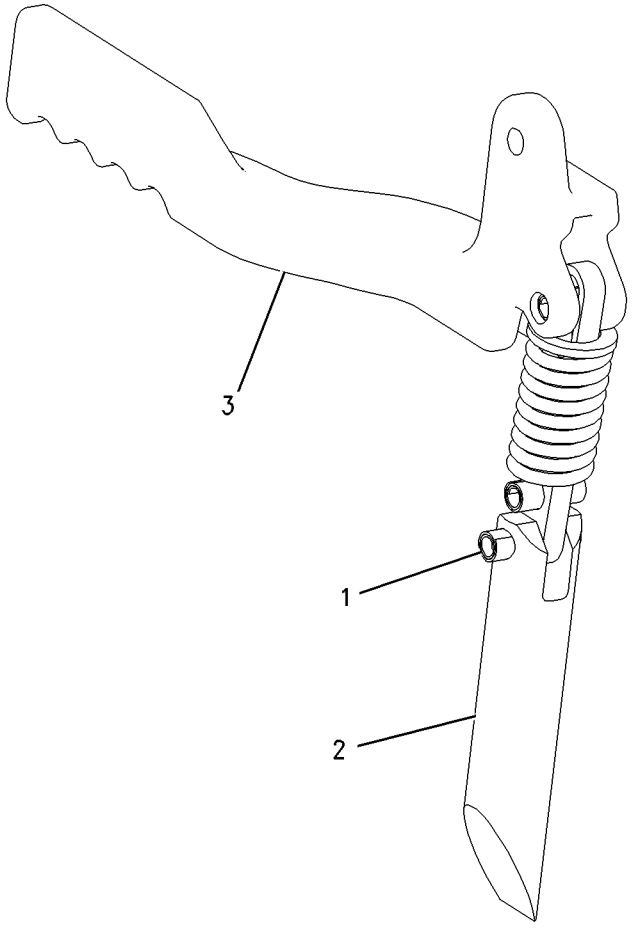

GRAPHIC #1 **<END>** g00861970

215-3958 HANDLE GP-COUPLER–LH

S/N: MJH10575-UP
PART OF 215-3960 HANDLE & PIN GP-COUPLER
AN ATTACHMENT

SMCS-6129 **i02706274**

NOTE	REF NO	GRAPHIC REF	PART NUMBER	QTY	PART NAME 1 2 3 4 5 6 (PRODUCT LEVEL)	SEE PAGE
	1	1	**192-2637**	1	PLATE	
	2	1	**238-7693**	1	SPRING	
	3	1	**258-2533**	1	HANDLE-LH	
	4	1	**195-6754**	2	PIN-SPRING	
	5	1	**8T-4123**	2	WASHER (22X35X3.5-MM THK)	

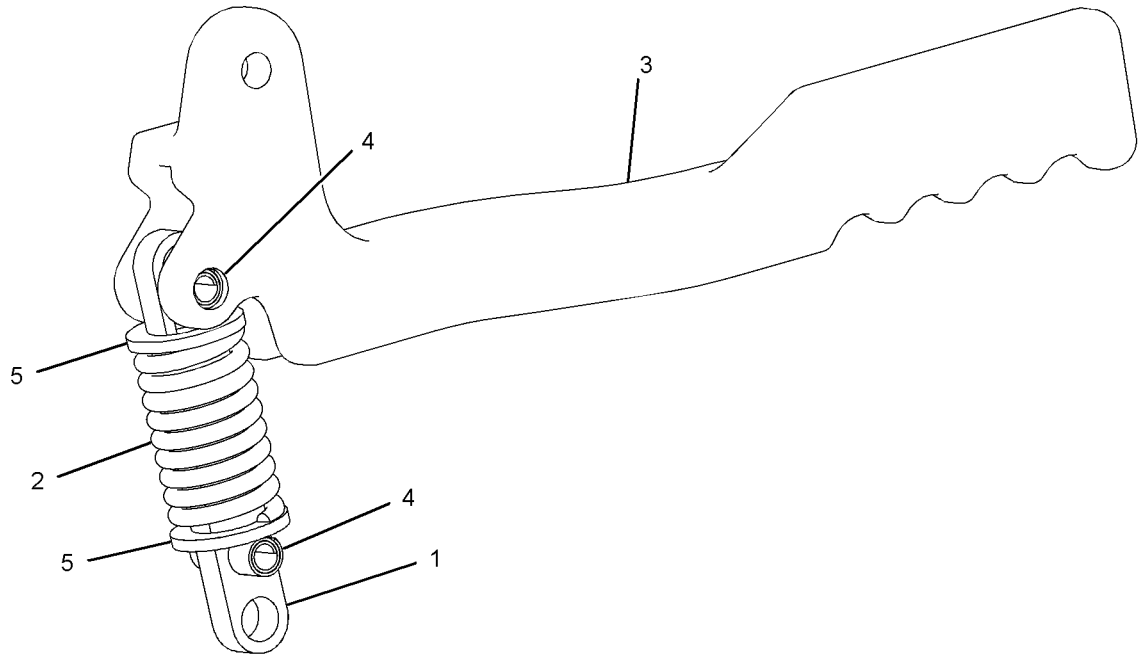

GRAPHIC #1 **<END>** g01154451

WORK TOOLS

215-3959 HANDLE GP-COUPLER–RH

S/N: MJH10575-UP
PART OF 215-3961 HANDLE & PIN GP-COUPLER
AN ATTACHMENT

SMCS-6129 **i02706275**

NOTE	REF NO	GRAPHIC REF	PART NUMBER	QTY	PART NAME 1 2 3 4 5 6 (PRODUCT LEVEL)	SEE PAGE
	1	1	**192-2637**	1	PLATE	
	2	1	**258-2534**	1	HANDLE-RH	
	3	1	**195-6754**	2	PIN-SPRING	
	4	1	**238-7693**	1	SPRING	
	5	1	**8T-4123**	2	WASHER (22X35X3.5-MM THK)	

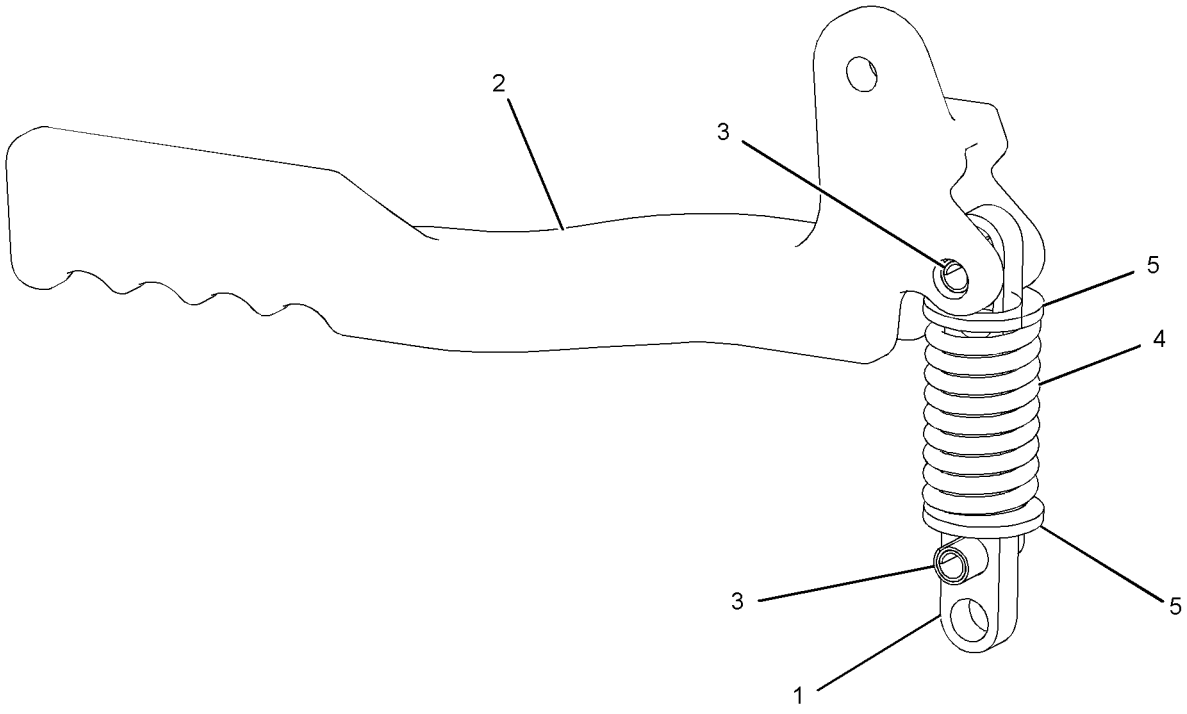

GRAPHIC #1 **<END>** g01104663

177-9152 KIT-ROADING PLATE & MOUNTING–BUCKET

S/N: MJH10575-UP

PART OF 261-6187, 278-1212, 278-1224, 278-5408, 278-5441, 295-7038, 295-7149, 295-7158, 295-7162, 295-7167 CONVERSION AR-MACHINE, 233-5672, 233-5673, 233-5675, 233-5676, 257-5716, 257-5717, 295-7043 CONVERSION AR-ROADING AN ATTACHMENT

SMCS-7405, 7557 **i01905397**

NOTE	REF NO	GRAPHIC REF	PART NUMBER	QTY	PART NAME 1 2 3 4 5 6 (PRODUCT LEVEL)	SEE PAGE
	1	1	**177-9153**	2	PLATE	
Y	2	1	*184-6097*	1	PLATE GP-ROADING (LH)	493
Y	3	1	*184-6098*	1	PLATE GP-ROADING (RH)	494
	4	1	**039-8557**	2	WASHER (13X26X6-MM THK)	
M	5	1	**6V-8949**	4	NUT (M10X1.5-6H THD)	
	6	1	**8T-4121**	8	WASHER-HARD (11X21X2.5-MM THK)	
M	7	1	**8T-4137**	2	BOLT (M10X1.5X20-MM)	
M	8	1	**8T-4186**	2	BOLT (M10X1.5X40-MM)	

M-METRIC PART
Y-SEPARATE ILLUSTRATION

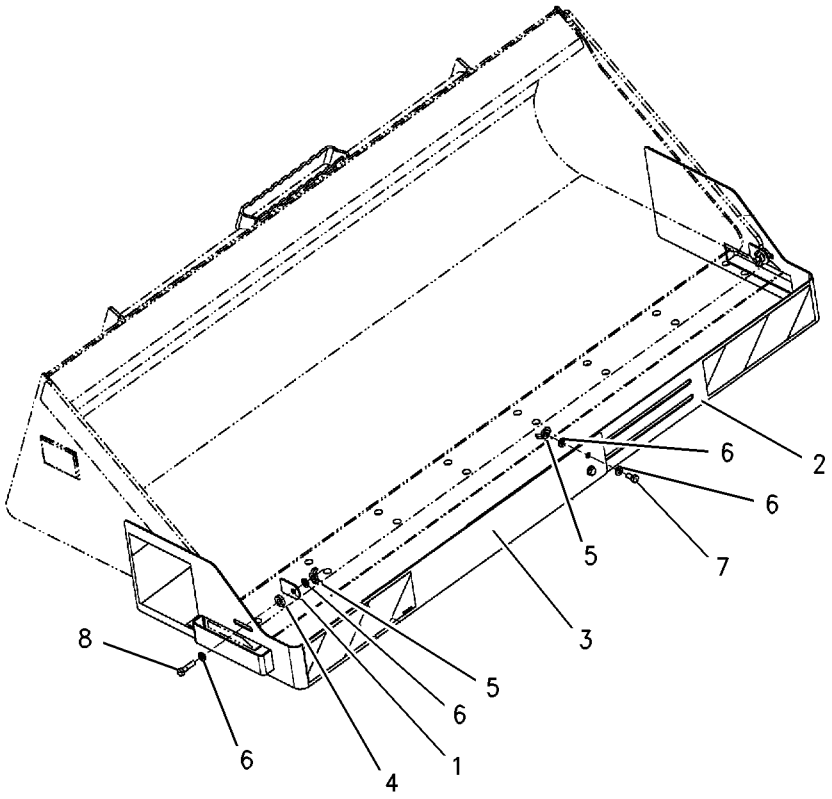

GRAPHIC #1 **<END>** g00778934

WORK TOOLS

215-3957 LINK GP-COUPLER

S/N: MJH10575-UP

PART OF 215-3962, 215-3963 CYLINDER & LINK GP-COUPLER, 218-6757 KIT-QUICK COUPLER CONVERSION

AN ATTACHMENT

SMCS-6129 **i02232650**

NOTE	REF NO	GRAPHIC REF	PART NUMBER	QTY	PART NAME 1 2 3 4 5 6 (PRODUCT LEVEL)	SEE PAGE
	1	1	**192-2637**	1	PLATE	
	2	1	**192-2638**	1	BRACKET	
C	3	1	**238-7693**	1	SPRING	
	4	1	**195-6754**	2	PIN-SPRING	
C	5	1	**8T-4123**	2	WASHER (22X35X3.5-MM THK)	

C-CHANGE FROM PREVIOUS TYPE

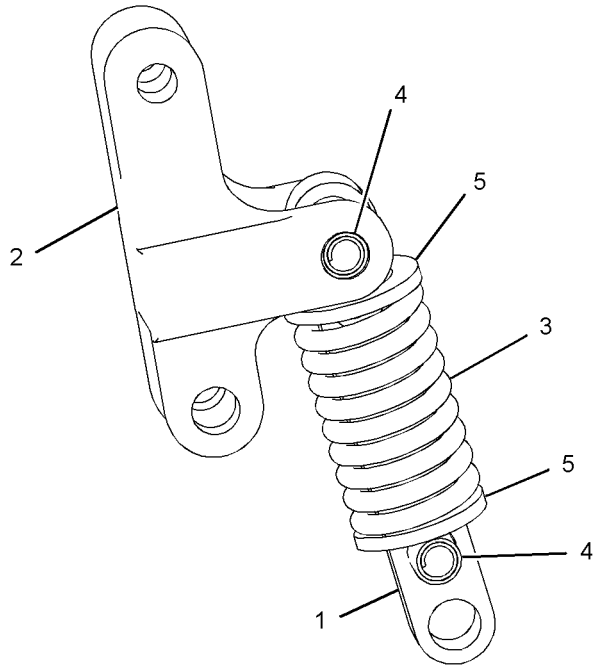

GRAPHIC #1 **<END>** g01130555

175-4238 LOCK GP-QUICK COUPLER–MECHANICAL

S/N: MJH10575-UP

PART OF 261-6187, 278-1212, 278-1224, 278-5408, 278-5441, 295-7038, 295-7149, 295-7158, 295-7162, 295-7167 CONVERSION AR-MACHINE, 233-5672, 233-5673, 233-5675, 233-5676, 257-5716, 257-5717, 295-7043 CONVERSION AR-ROADING AN ATTACHMENT

SMCS-6129 **i01408856**

NOTE	REF NO	GRAPHIC REF	PART NUMBER	QTY	PART NAME 1 2 3 4 5 6 (PRODUCT LEVEL)	SEE PAGE
	1	1	**9R-5301**	1	PIN-COTTER	
	2	1	**178-2247**	1	PIN	
	3	1	**9X-8257**	1	WASHER (17.5X30X3.5-MM THK)	

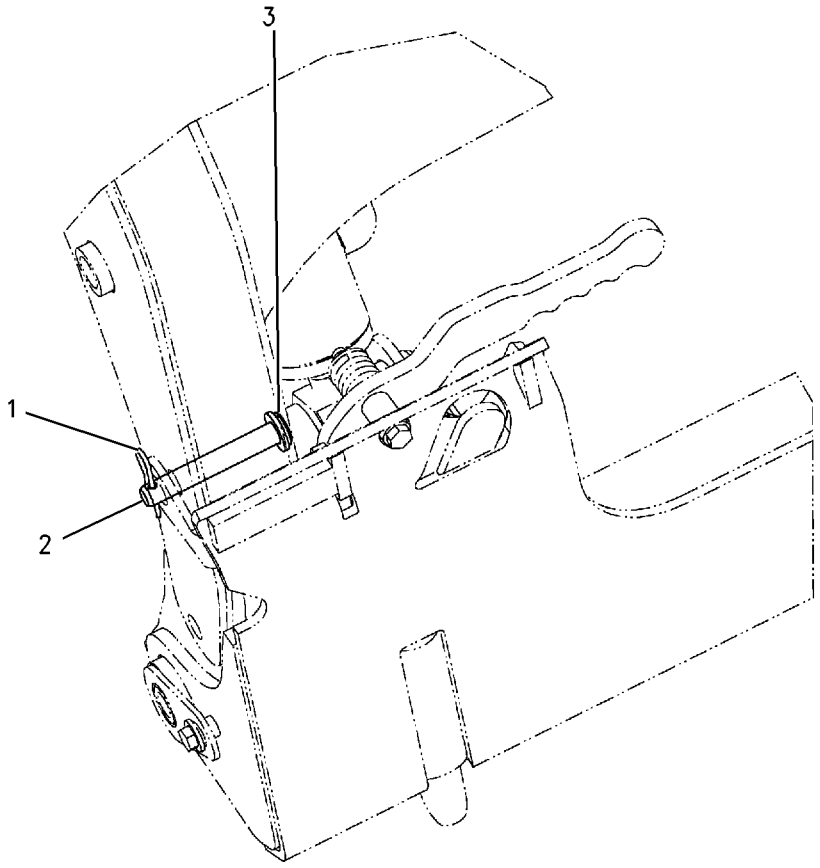

GRAPHIC #1 **<END>** g00741828

184-6097 PLATE GP-ROADING–LH

S/N: MJH10575-UP
PART OF 177-9152 KIT-ROADING PLATE & MOUNTING
AN ATTACHMENT

SMCS-7405, 7557 **i02253410**

NOTE	REF NO	GRAPHIC REF	PART NUMBER	QTY	PART NAME 1 2 3 4 5 6 (PRODUCT LEVEL)	SEE PAGE
	1	1	**177-7414**	1	FILM-STRIPE (REFLECTIVE, RED, WHITE)	
	2	1	**177-7415**	1	FILM (REFLECTIVE)	
	3	1	**177-9150**	1	PLATE AS (LH)	

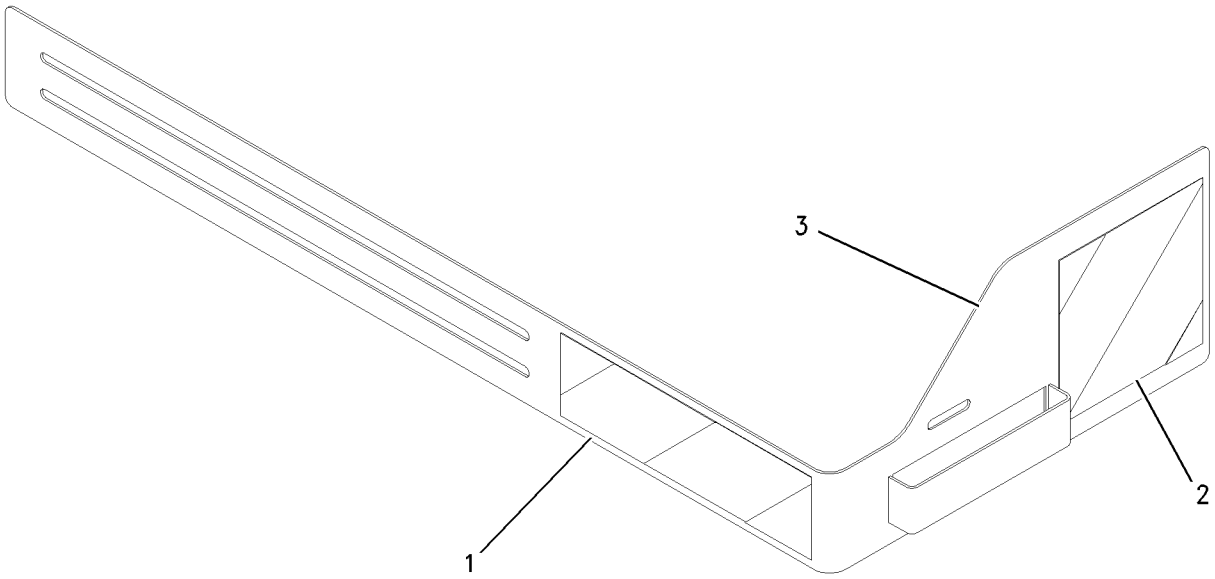

GRAPHIC #1 **<END>** g00995785

184-6098 PLATE GP-ROADING–RH

S/N: MJH10575-UP

PART OF 177-9152 KIT-ROADING PLATE & MOUNTING

AN ATTACHMENT

SMCS-7405, 7557 **i02253411**

NOTE	REF NO	GRAPHIC REF	PART NUMBER	QTY	PART NAME 1 2 3 4 5 6 (PRODUCT LEVEL)	SEE PAGE
	1	1	**177-7414**	1	FILM-STRIPE (REFLECTIVE, RED, WHITE)	
	2	1	**177-7415**	1	FILM (REFLECTIVE)	
	3	1	**177-9151**	1	PLATE AS (RH)	

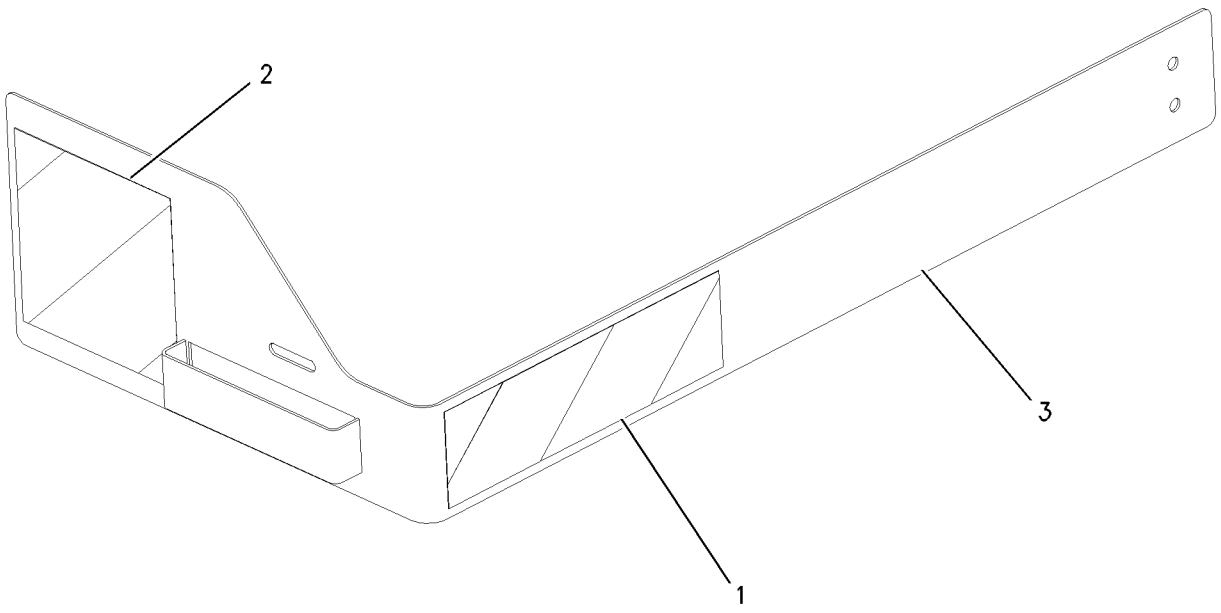

GRAPHIC #1 **<END>** g00995786

177-1983 SPRING GP-BLADE

S/N: MJH10575-UP

PART OF 177-1989, 177-1990 BLADE AR

AN ATTACHMENT

SMCS-6060 **i01497986**

NOTE	REF NO	GRAPHIC REF	PART NUMBER	QTY	PART NAME 1 2 3 4 5 6 (PRODUCT LEVEL)	SEE PAGE
	1	1	**177-1941**	4	SPRING	
	2	1	**177-1973**	1	PLATE AS	
M	3	1	**8T-4194**	2	BOLT (M12X1.75X50-MM)	
	4	1	**8T-4223**	4	WASHER-HARD (13.5X25.5X3-MM THK)	
M	5	1	**8T-4244**	2	NUT (M12X1.75-THD)	

M-METRIC PART

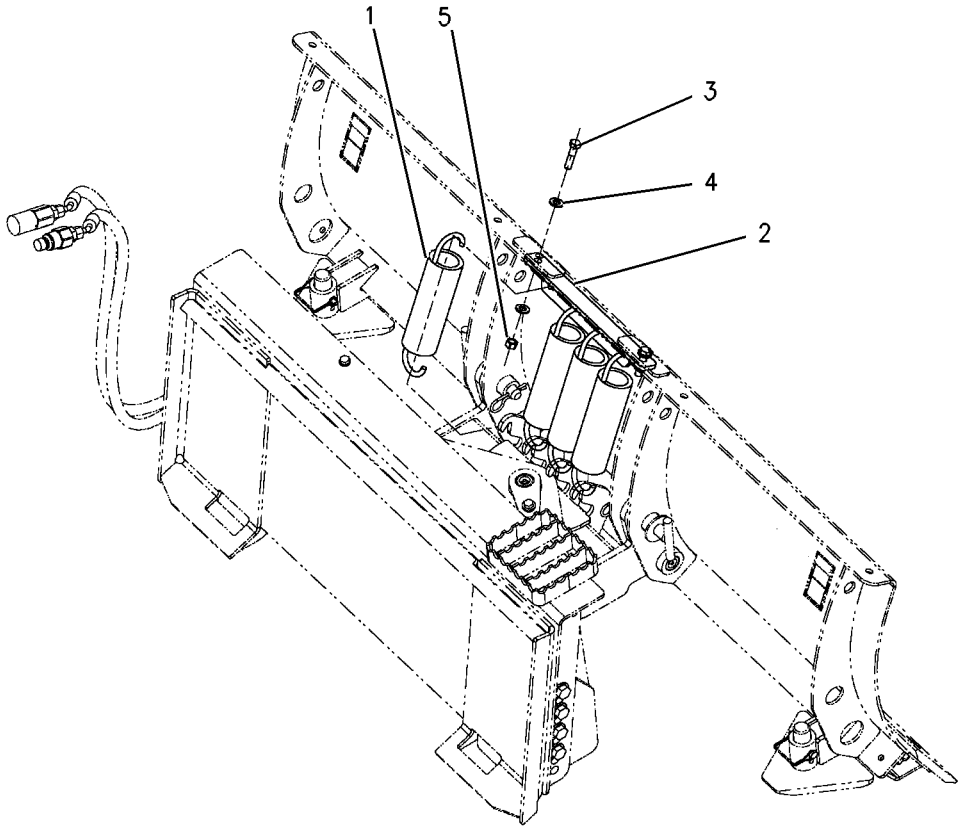

GRAPHIC #1 **<END>** g00777337

WORK TOOLS

188-7733 STEP GP-MATERIAL HANDLING ARM

S/N: MJH10575-UP

PART OF 216-8756 ARM GP-MATERIAL HANDLING

AN ATTACHMENT

SMCS-6542 **i01498007**

NOTE	REF NO	GRAPHIC REF	PART NUMBER	QTY	PART NAME 1 2 3 4 5 6 (PRODUCT LEVEL)	SEE PAGE
	1	1	**186-5186**	1	STEP AS	
	2	1	**8T-4121**	2	WASHER-HARD (11X21X2.5-MM THK)	
M	3	1	**8T-4133**	2	NUT (M10X1.5-THD)	
M	4	1	**8T-4136**	2	BOLT (M10X1.5X25-MM)	

M-METRIC PART

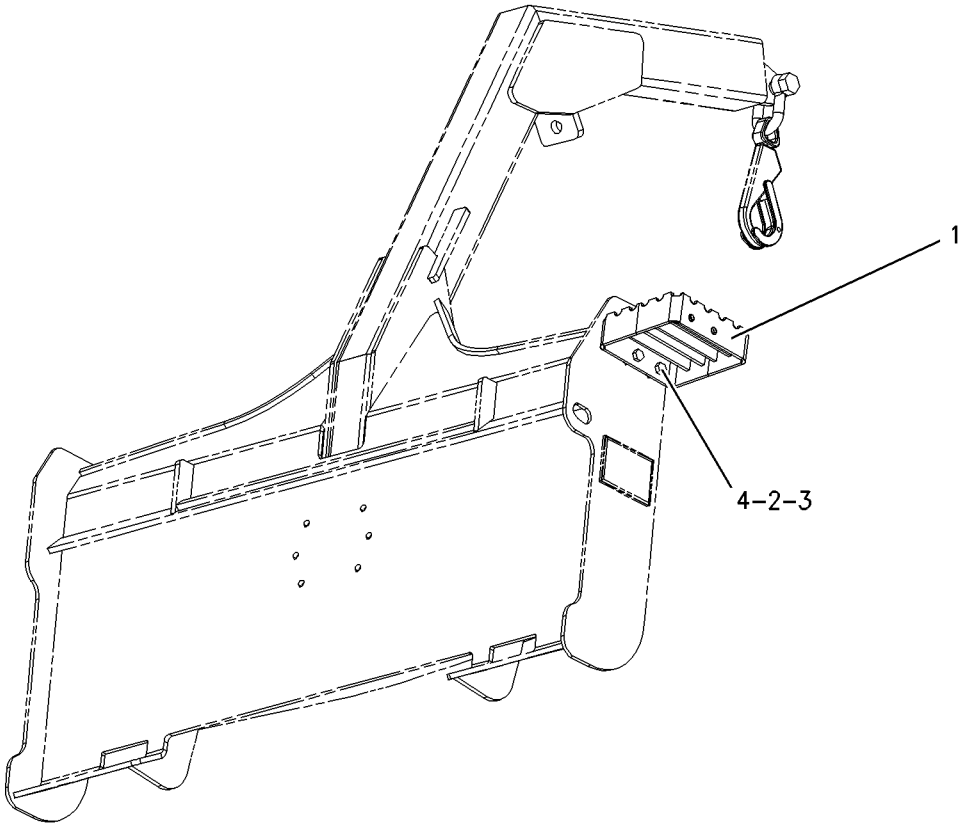

GRAPHIC #1 **<END>** g00777345

173-7407 STOP GP-GRAPPLE–UTILITY

S/N: MJH10575-UP
PART OF 285-6116 GRAPPLE GP-UTILITY
AN ATTACHMENT

SMCS-6307 **i01218895**

NOTE	REF NO	GRAPHIC REF	PART NUMBER	QTY	PART NAME 1 2 3 4 5 6 (PRODUCT LEVEL)	SEE PAGE
	1	1	**8Y-7386**	1	SPACER (12.5X17.1X16.5-MM THK)	
	2	1	**2S-6408**	2	WASHER-RETAINING (0.531X3.25X0.438-IN THK)	
	3	1	**8T-4223**	1	WASHER-HARD (13.5X25.5X3-MM THK)	
M	4	1	**8T-4910**	1	BOLT (M12X1.75X60-MM)	
	5	1	**8Y-7385**	1	STOP	

M-METRIC PART

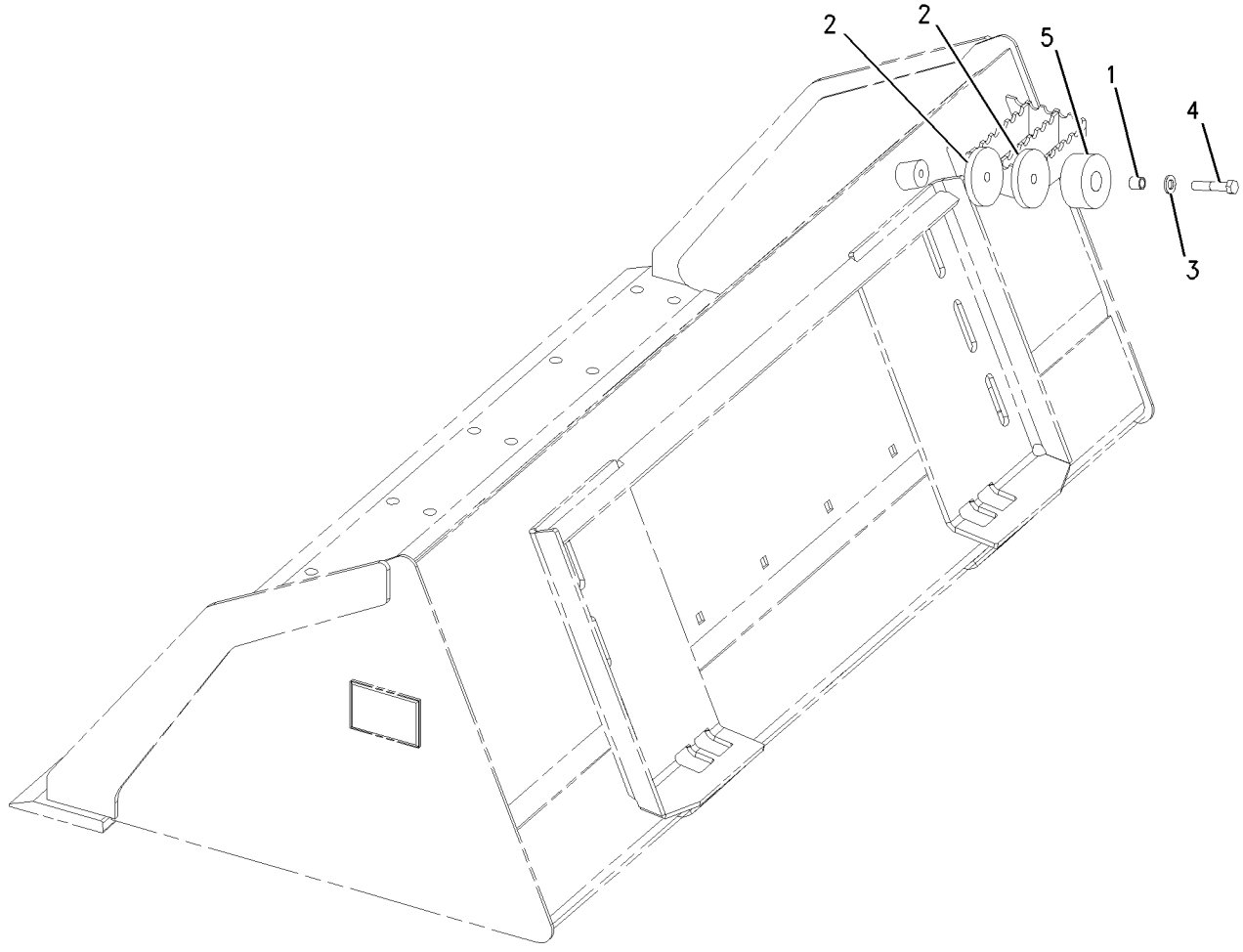

GRAPHIC #1 **<END>** g00651574

116-2001 STRAINER GP-WATER

S/N: MJH10575-UP
PART OF 252-0386 TANK & MTG GP-WATER
AN ATTACHMENT

SMCS-5612 **i02571404**

NOTE	REF NO	GRAPHIC REF	PART NUMBER	QTY	PART NAME 1 2 3 4 5 6 (PRODUCT LEVEL)	SEE PAGE
	1	1	**119-1415**	1	GASKET	
	2	1	**119-1414**	1	SCREEN (WATER TANK)	

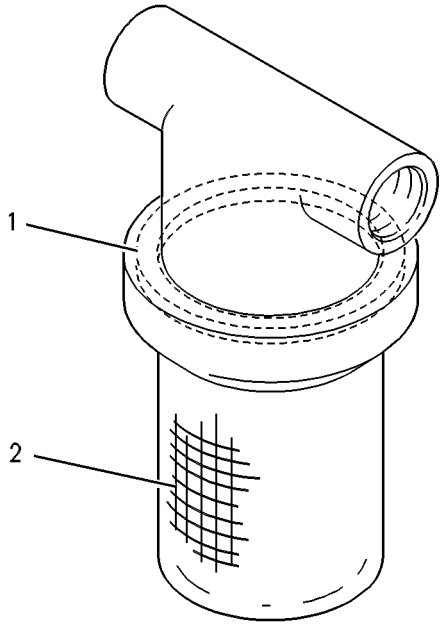

GRAPHIC #1 **<END>** g00293866

WORK TOOLS

252-0386 TANK & MTG GP-WATER

S/N: MJH10575-UP
AN ATTACHMENT

SMCS-5613 **i02571301**

NOTE	REF NO	GRAPHIC REF	PART NUMBER	QTY	PART NAME 1 2 3 4 5 6 (PRODUCT LEVEL)	SEE PAGE
	1	1	**3B-7255**	1	BUSHING-REDUCING	
	2	1	**3S-2093**	4	STRAP-CABLE	
	3	1	**4E-0724**	1	SPACER (9X20X28-MM THK)	
	4	1	**7X-0495**	1	ADAPTER	
	5	1	**8T-0737**	1	VALVE-SHUTOFF	
Y	6	1	**116-2001**	1	STRAINER GP-WATER	498
	7	1	**124-1916**	1	COUPLING-PERMANENT	
	8	1	**124-1917**	1	COUPLING-PERMANENT	
	9	1	**165-4894**	1	HARNESS AS-WORK TOOL	
		1	**102-8806**	1	KIT-RECEPTACLE (8-PIN)	
					(INCLUDES RECEPTACLE AS & WEDGE)	
		1	**155-2265**	1	KIT-CONNECTING PLUG (8-PIN)	
		1	**155-2270**	1	KIT-CONNECTING PLUG (2-PIN)	
					(EACH PLUG KIT INCLUDES PLUG AS, WEDGE & INTERFACE SEAL)	
Y	10	1	**166-2551**	1	TANK GP-WATER	502
I	11	1	**166-2552**	1	HOSE AS	
	12	1	**166-2557**	1	PLATE	
	13	1	**166-2558**	1	COUPLING	
	14	1	**166-2559**	2	BRACKET	
	15	1	**218-5847**	1	PLATE	
	16	1	**218-5975**	1	BRACKET AS	
	17	1	**233-5719**	1	PUMP GP-DIAPHRAGM	
	18	1	**233-5892**	1	PLATE AS	
	19	1	**233-5893**	1	PLATE AS	
	20	1	**003-2143**	1	ELBOW	
	21	1	**067-2551**	2	CLIP	
	22	1	**095-0912**	2	CLIP	
M	23	1	**111-4627**	4	SCREW-MACHINE (M6X1X30-MM)	
	24	1	**119-3859**	6	SCREW-PAN HEAD (10-16X0.75-IN)	
M	25	1	**129-3178**	4	LOCKNUT (M6X1-THD)	
	26	1	**1L-2279**	1	ELBOW	
M	27	1	**5C-7261**	3	NUT (M8X1.25-THD)	
	28	1	**5P-4116**	1	WASHER-HARD (8.8X20.5X2-MM THK)	
	29	1	**5P-8246**	2	WASHER-HARD (15.5X29X3-MM THK)	
	30	1	**8T-4122**	16	WASHER-HARD (17X32X3.5-MM THK)	
M	31	1	**8T-4132**	4	NUT (M16X2-THD)	
	32	1	**8T-4205**	6	WASHER-HARD (7.2X14.5X2-MM THK)	
	33	1	**8T-4224**	8	WASHER-HARD (8.8X16X2-MM THK)	
M	34	1	**8T-4779**	12	BOLT (M16X2X35-MM)	
M	35	1	**8T-4908**	6	BOLT (M8X1.25X25-MM)	
M	36	1	**8T-6869**	1	BOLT (M8X1.25X60-MM)	
G	37	1	**122-6869**		HOSE-HYDRAULIC (142-IN)	
	38	1	**142-7505**	2	PLATE AS	
	39	1	**166-2556**	1	BRACKET	
BE	40	1	**167-0608**		SEAL	
	41	1	**195-6696**	1	PLATE	
	42	1	**7K-1181**	2	STRAP-CABLE	
	43	1	**8T-4121**	7	WASHER-HARD (11X21X2.5-MM THK)	
M	44	1	**8T-4133**	2	NUT (M10X1.5-THD)	
M	45	1	**8T-4136**	2	BOLT (M10X1.5X25-MM)	
M	46	1	**8T-4137**	5	BOLT (M10X1.5X20-MM)	
M	47	1	**8T-4191**	2	BOLT (M10X1.5X16-MM)	

252-0386 TANK & MTG GP-WATER *(contd.)* i02571301

B-USE AS REQUIRED
E-ORDER BY THE CENTIMETER
G-ORDER BY THE INCH
I-REFER TO HYDRAULIC INFORMATION SYSTEM
M-METRIC PART
Y-SEPARATE ILLUSTRATION

252-0386 TANK & MTG GP-WATER *(contd.)* i02571301

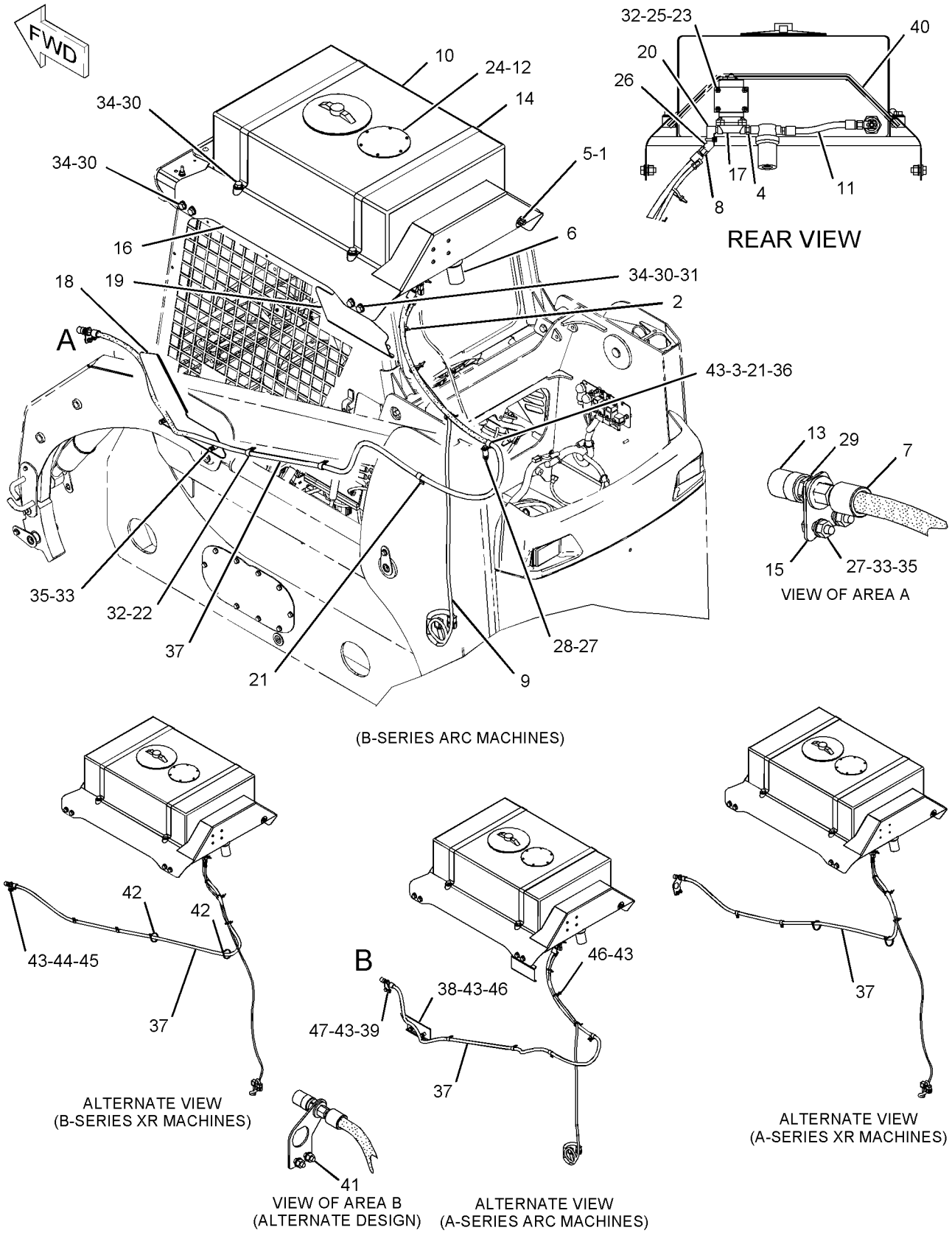

GRAPHIC #1

<END>

g01094533

WORK TOOLS

166-2551 TANK GP-WATER

S/N: MJH10575-UP
PART OF 252-0386 TANK & MTG GP-WATER
AN ATTACHMENT

SMCS-5613 **i02571400**

NOTE	REF NO	GRAPHIC REF	PART NUMBER	QTY	PART NAME 1 2 3 4 5 6 (PRODUCT LEVEL)	SEE PAGE
	1	1	**192-2606**	1	CAP AS (WATER TANK)	
	2	1	**192-2607**	1	FITTING-DRAIN	

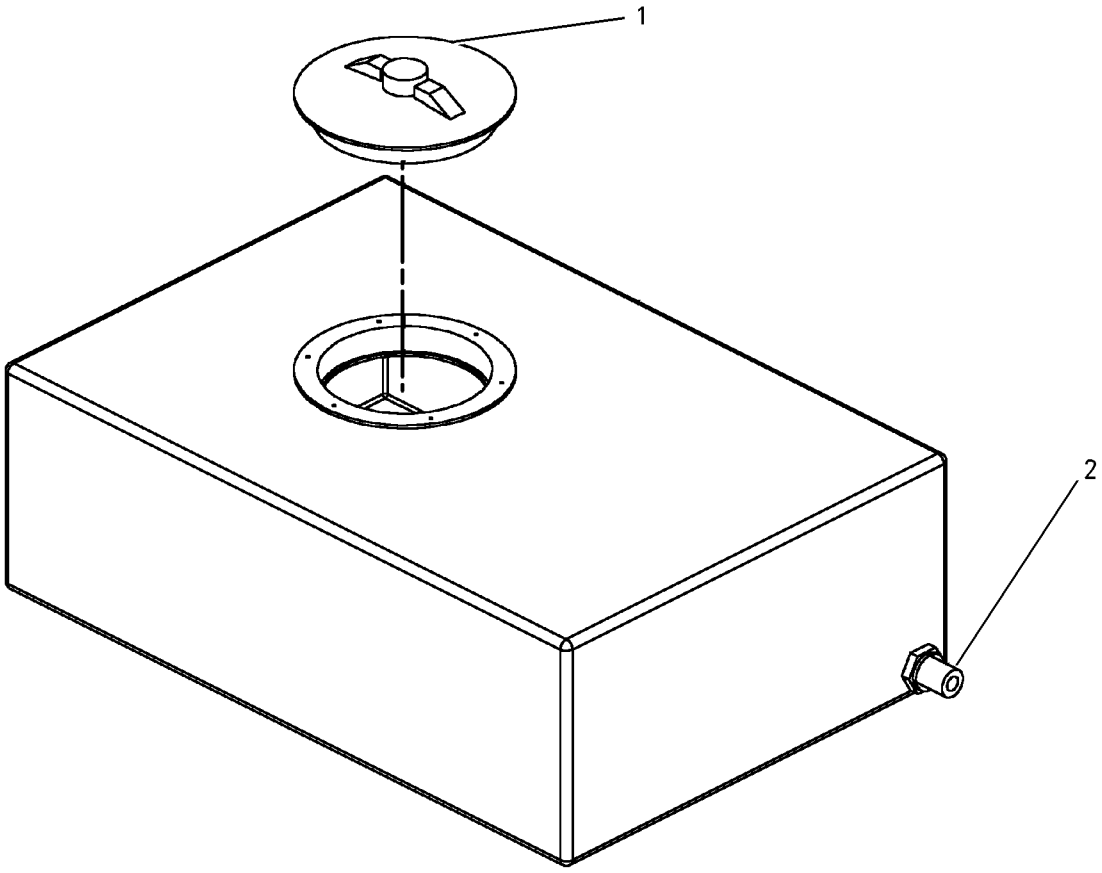

GRAPHIC #1 **<END>** g00742953

141-4999 TOOTH GP-UNI

S/N: MJH10575-UP

PART OF 279-5366, 279-5370, 279-5374, 279-5378 BUCKET AR-GENERAL PURPOSE, 279-5380, 279-5392, 279-5400, 279-5401 BUCKET AR-MULTIPURPOSE AN ATTACHMENT

SMCS-6822 **i02163942**

NOTE	REF NO	GRAPHIC REF	PART NUMBER	QTY	PART NAME 1 2 3 4 5 6 (PRODUCT LEVEL)	SEE PAGE
	1	1	**132-4720**	1	TOOTH-UNI-SINGLE STRAP	
	2	1	**246-4349**	2	SCREW-FLAT HEAD (M16X2-THD)	
M	3	1	**8T-4778**	2	LOCKNUT (M16X2-THD)	

M-METRIC PART

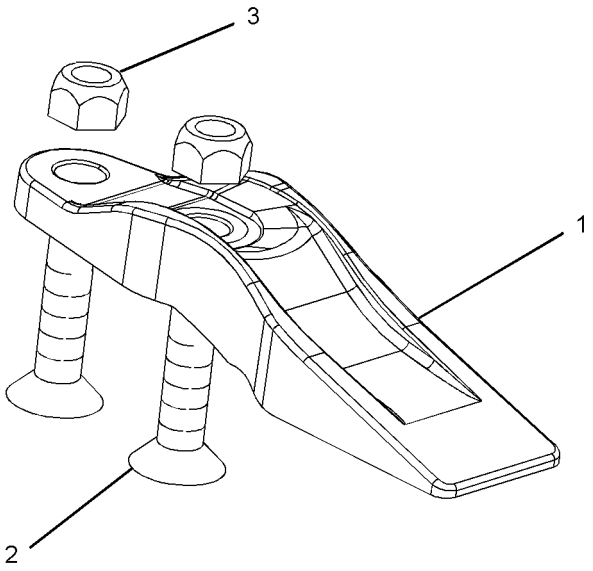

GRAPHIC #1 **<END>** g01097424

OPERATOR STATION

176-3900 ACCUMULATOR GP-REFRIGERANT—WITH DESICCANT

S/N: MJH10575-UP
PART OF 233-5588 KIT-AIR COND & HEATER INSTL
FIELD REPLACEMENT FOR 186-6190—PAGE 505
AN ATTACHMENT

SMCS-7320 **i02195254**

NOTE	REF NO	GRAPHIC REF	PART NUMBER	QTY	PART NAME 1 2 3 4 5 6 (PRODUCT LEVEL)	SEE PAGE
					(NO SERVICED PARTS)	

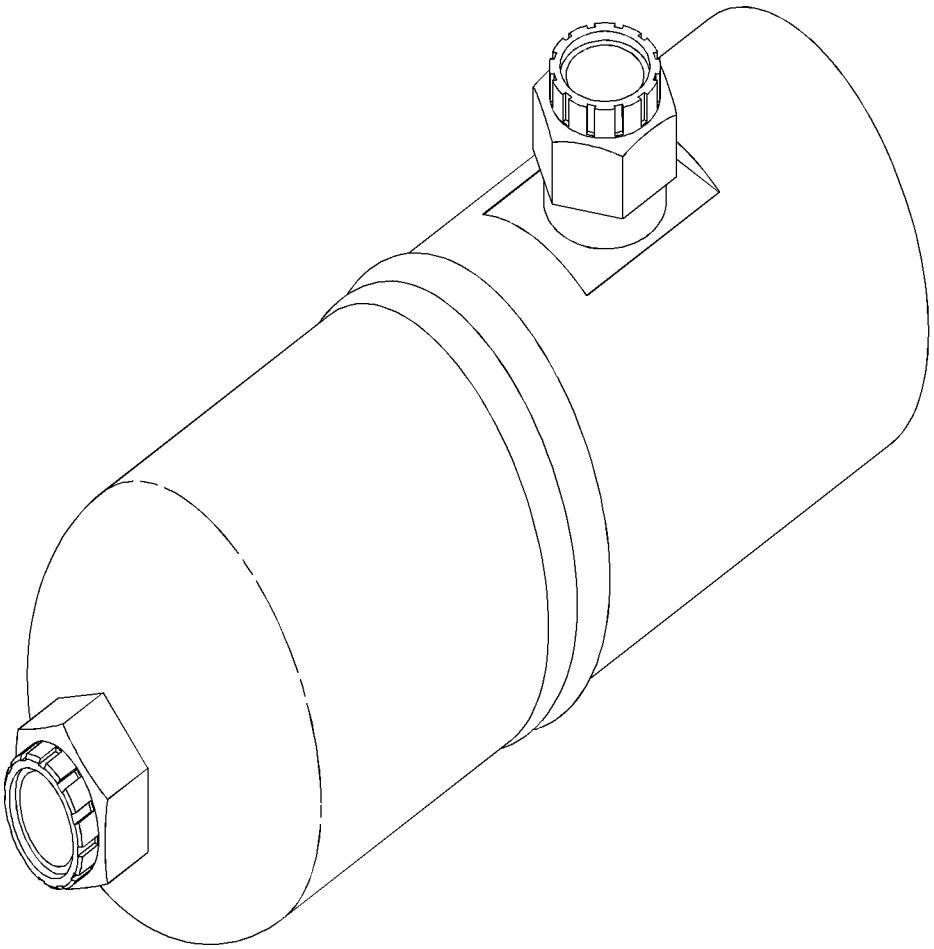

GRAPHIC #1 **<END>** g01035076

186-6190 ACCUMULATOR GP-REFRIGERANT—WITH DESICCANT

S/N: MJH10575-UP

PART OF 233-5588, 233-5589 KIT-AIR COND & HEATER INSTL, 218-6560 LINES GP-AIR CONDITIONER

FIELD REPLACEMENT ORDER 176-3900—PAGE 504

AN ATTACHMENT

SMCS-7320 **i02306357**

NOTE	REF NO	GRAPHIC REF	PART NUMBER	QTY	PART NAME 1 2 3 4 5 6 (PRODUCT LEVEL)	SEE PAGE
					(NO SERVICED PARTS)	

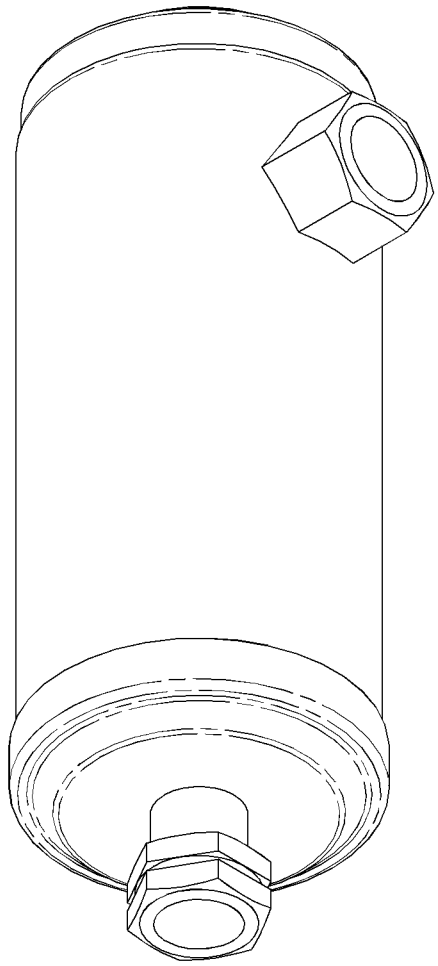

GRAPHIC #1 **<END>** g01155244

OPERATOR STATION

229-8747 AIR CONDITIONER & MOUNTING GP

S/N: MJH10575-UP

PART OF 218-6273 AIR CONDITIONER AR

AN ATTACHMENT

SMCS-7320 **i02010226**

NOTE	REF NO	GRAPHIC REF	PART NUMBER	QTY	PART NAME 1 2 3 4 5 6 (PRODUCT LEVEL)	SEE PAGE
Y	1	1	*218-6405*	1	AIR CONDITIONER GP	508
M	2	1	**7X-2537**	4	BOLT (M8X1.25X35MM)	
	3	1	**8T-4224**	4	WASHER-HARD (8.8X16X2MM THK)	

M-METRIC PART
Y-SEPARATE ILLUSTRATION

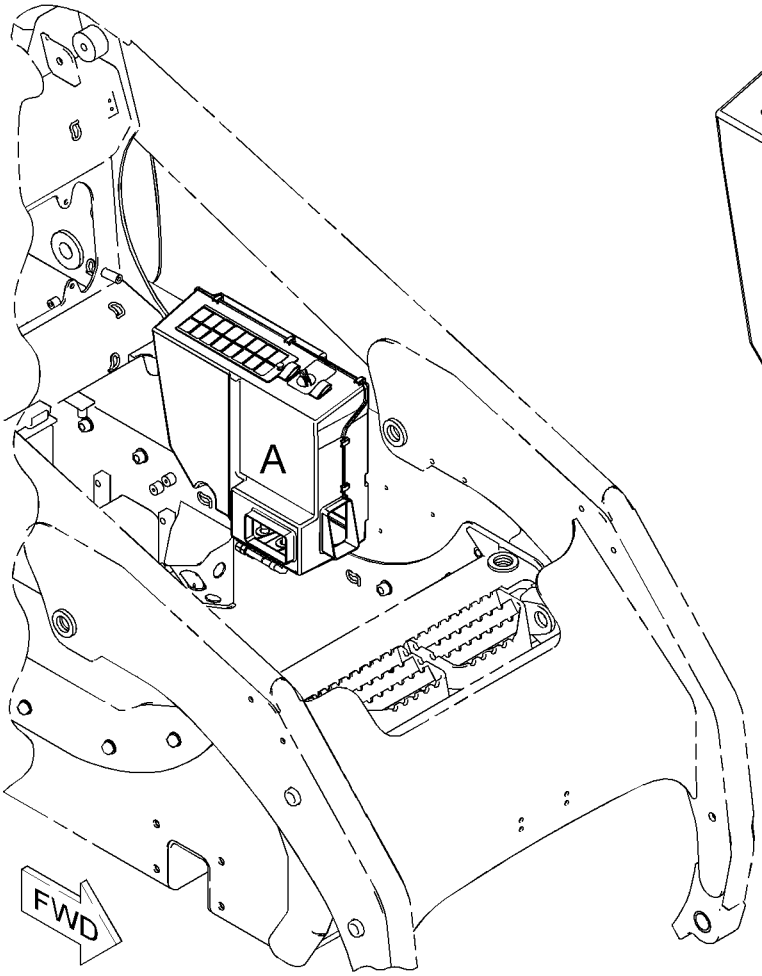

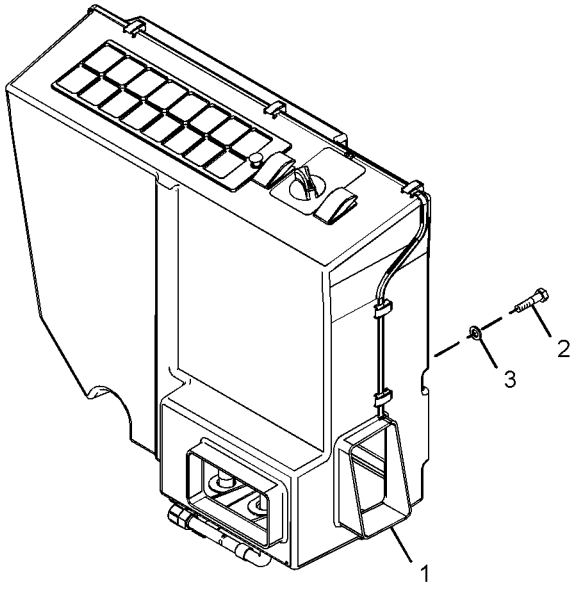

VIEW OF AREA A

GRAPHIC #1 **<END>** g01018777

OPERATOR STATION

218-6273 AIR CONDITIONER AR

S/N: MJH10575-UP

PART OF 295-7331 OPTION AR-CAB

CANNOT BE USED WITH 218-6271—PAGE 592, 218-6272—PAGE 584

AN ATTACHMENT

SMCS-7320 **i02789973**

NOTE	PART NUMBER	QTY	PART NAME 1 2 3 4 5 6 (PRODUCT LEVEL)	SEE PAGE
Y	*229-8747*	1	AIR CONDITIONER & MOUNTING GP	506
Y	*218-6830*	1	COMPRESSOR & MTG GP-REFRIG	522
Y	*218-6348*	1	CONDENSER & MTG GP-REFRIGERANT	523
Y	*218-6394*	1	DUCT & CONTROL GP	573
Y	*218-6560*	1	LINES GP-AIR CONDITIONER	603
Y	*218-6086*	1	LINES GP-HEATER	605
Y	*218-6693*	1	LINES GP-HYDRAULIC FAN	323
Y	*225-7948*	1	WIRING GP-AIR CONDITIONER	173

Y-SEPARATE ILLUSTRATION

<END>

OPERATOR STATION

218-6405 AIR CONDITIONER GP

S/N: MJH10575-UP

PART OF 229-8747 AIR CONDITIONER & MOUNTING GP, 233-5588, 233-5589 KIT-AIR COND & HEATER INSTL

AN ATTACHMENT

TYPE 1

SMCS-7320, 7342 **i02839369**

NOTE	REF NO	GRAPHIC REF	PART NUMBER	QTY	PART NAME 1 2 3 4 5 6 (PRODUCT LEVEL)	SEE PAGE
	1	1	**185-4015**	10	CLIP	
	2	1	**202-2284**	1	SWITCH AS-ROCKER (AIR CONDITIONER)	
	3	1	**218-6399**	1	SEAL	
	4	1	**206-7398**	1	KNOB-CONTROL (TEMPERATURE SELECT)	
	5	1	**119-9631**	1	SWITCH-TEMPERATURE (AIR CONDITIONER)	
	6	1	**305-2969**	2	THUMBSCREW	
	7	1	**231-8123**	1	COIL AS-EVAPORATOR	
	8	1	**231-8124**	1	COIL AS-HEATER	
	9	1	**295-5440**	1	MOTOR	
	10	1	**236-5067**	1	SWITCH-ROCKER (HEATER)	
	11	1	**231-8127**	2	GROMMET	
	12	1	**231-8128**	1	GRILL	
	13	1	**231-8129**	1	PIN	
	14	1	**231-8130**	1	FILTER ELEMENT-CAB AIR	
	15	1	**231-8131**	1	PLATE	
	16	1	**231-8132**	1	FILTER ELEMENT-CAB AIR	
	17	1	**231-8133**	1	PANEL	
	18	1	**231-8137**	1	FILM (TEMPERATURE CONTROL)	
	19	1	**231-8141**	1	GROMMET	
	20	1	**231-8142**	1	RETAINER	
	21	1	**236-5069**	3	RELAY AS (12-VOLT)	
	22	1	**231-8121**	1	HOUSING	
Y	23	1	**231-8122**	1	HOUSING AS-SIDE (AIR CONDITIONER, HEATER)	591
	24	1	**231-8126**	1	VALVE AS	
	25	1	**232-1384**	1	TUBE	
	26	1	**218-6948**	1	HARNESS AS-HEATER & AIR COND	

Y-SEPARATE ILLUSTRATION

218-6405 **AIR CONDITIONER GP** *(contd.)* **i02839369**

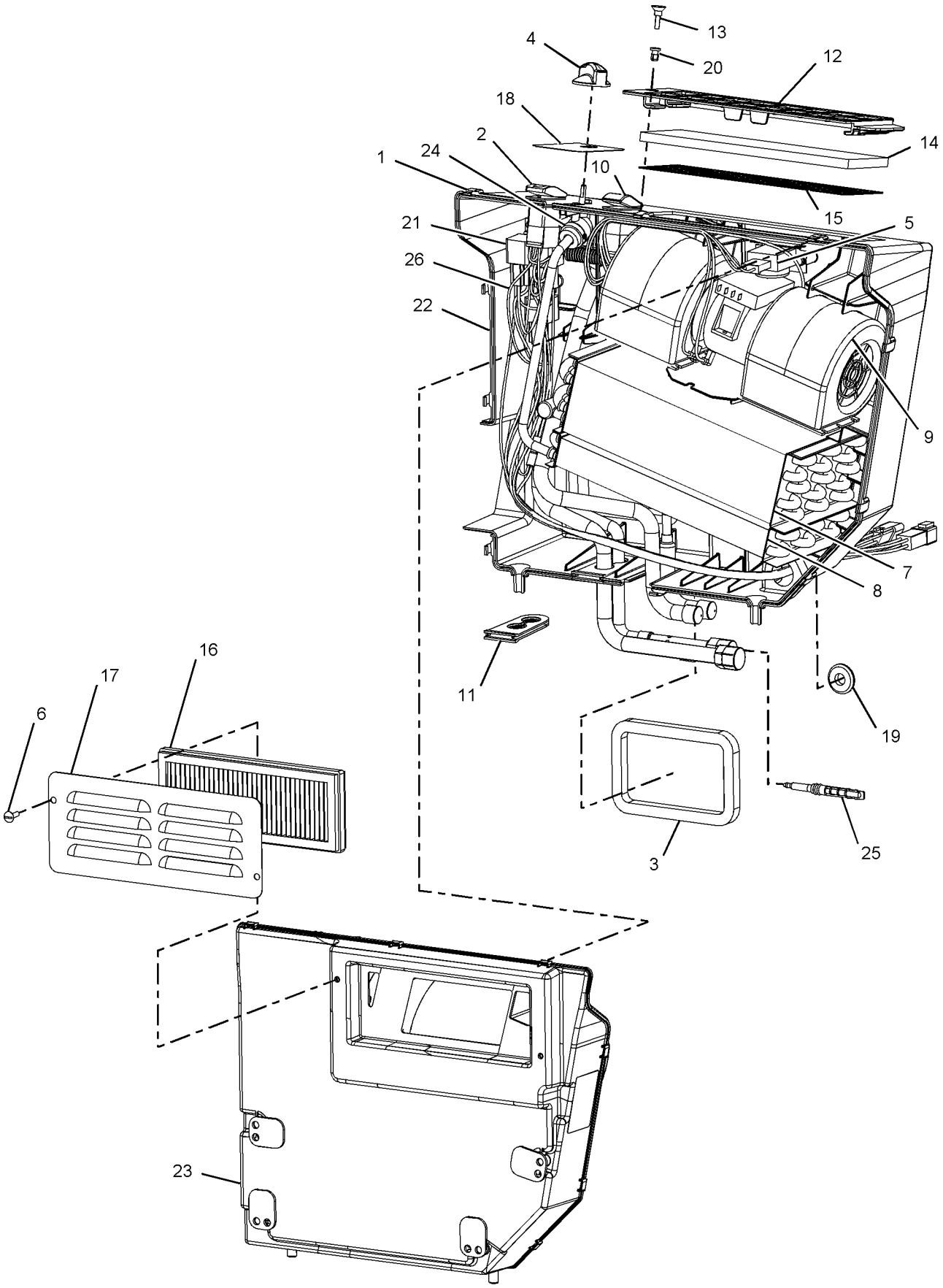

GRAPHIC #1 **<END>** g01039889

OPERATOR STATION

218-6405 AIR CONDITIONER GP

S/N: MJH10575-UP

PART OF 229-8747 AIR CONDITIONER & MOUNTING GP, 233-5588, 233-5589 KIT-AIR COND & HEATER INSTL

AN ATTACHMENT

TYPE 2

SMCS-7320, 7342 **i02839376**

NOTE	REF NO	GRAPHIC REF	PART NUMBER	QTY	PART NAME 1 2 3 4 5 6 (PRODUCT LEVEL)	SEE PAGE
	1	1	**185-4015**	10	CLIP	
	2	1	**202-2284**	1	SWITCH AS-ROCKER (AIR CONDITIONER)	
	3	1	**218-6399**	1	SEAL	
	4	1	**206-7398**	1	KNOB-CONTROL (TEMPERATURE SELECT)	
	5	1	**119-9631**	1	SWITCH-TEMPERATURE (AIR CONDITIONER)	
	6	1	**305-2969**	2	THUMBSCREW	
	7	1	**231-8123**	1	COIL AS-EVAPORATOR	
	8	1	**231-8124**	1	COIL AS-HEATER	
	9	1	**295-5440**	1	MOTOR	
	10	1	**236-5067**	1	SWITCH-ROCKER (HEATER)	
	11	1	**231-8127**	2	GROMMET	
C	12	1	**312-2635**	1	COVER GP-ACCESS	
		1	**231-8129**	1	PIN	
		1	**231-8142**	1	RETAINER	
C	14	1	**303-6658**	1	FILTER ELEMENT-CAB AIR (AIR)	
	16	1	**231-8132**	1	FILTER ELEMENT-CAB AIR	
	17	1	**231-8133**	1	PANEL	
	18	1	**231-8137**	1	FILM (TEMPERATURE CONTROL)	
	19	1	**231-8141**	1	GROMMET	
	21	1	**236-5069**	3	RELAY AS (12-VOLT)	
C	22	1	**312-1683**	1	HOUSING-COVER	
Y	23	1	**231-8122**	1	HOUSING AS-SIDE (AIR CONDITIONER, HEATER)	591
	24	1	**231-8126**	1	VALVE AS	
	25	1	**232-1384**	1	TUBE	
	26	1	**218-6948**	1	HARNESS AS-HEATER & AIR COND	

C-CHANGE FROM PREVIOUS TYPE
Y-SEPARATE ILLUSTRATION

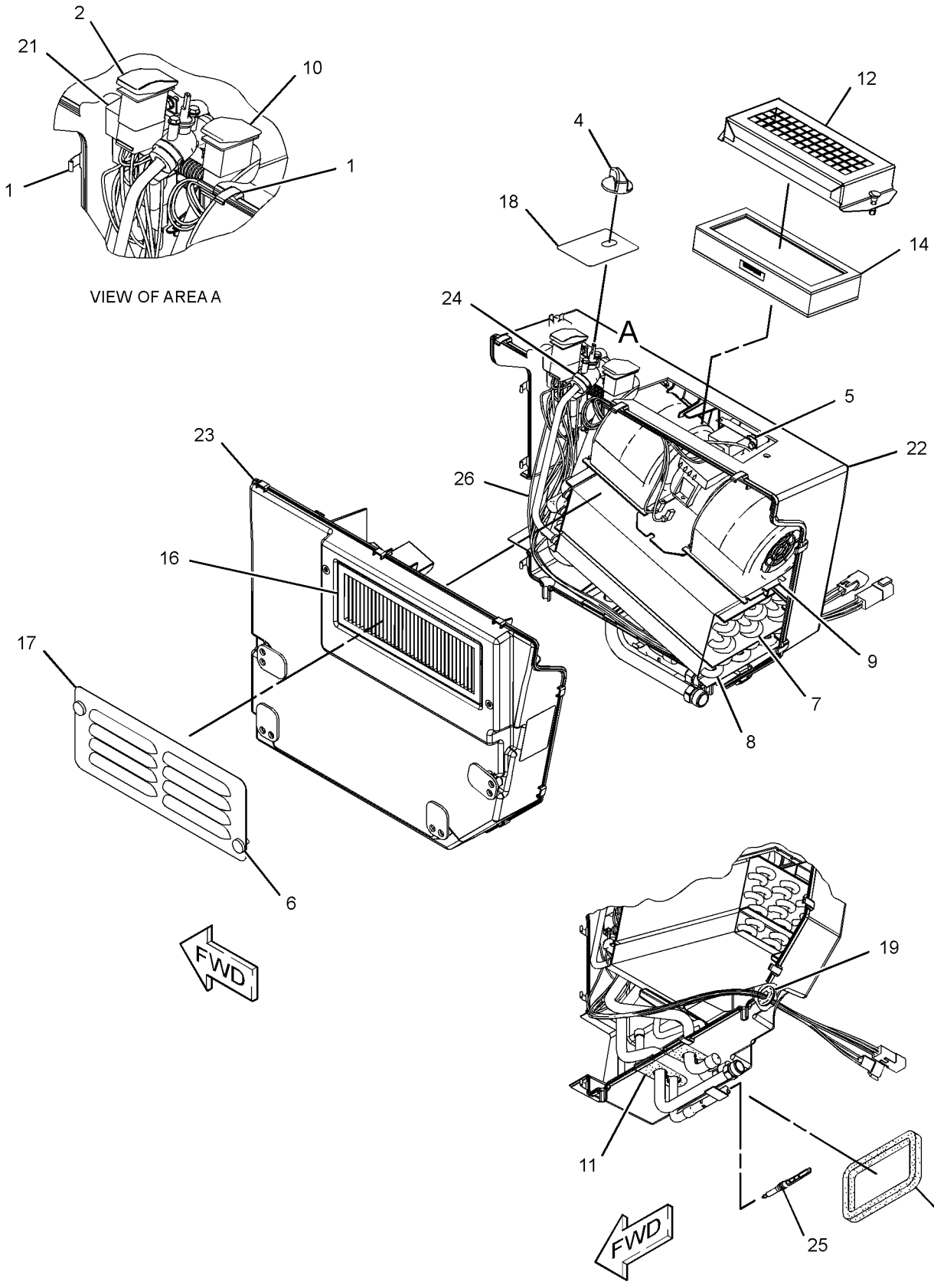

GRAPHIC #1 **<END>** g01416823

OPERATOR STATION

236-4830 ARMREST & MOUNTING GP

S/N: MJH10575-UP

PART OF 218-6350 CAB AR-ENCLOSED ROPS

SMCS-7307 **i01955195**

NOTE	REF NO	GRAPHIC REF	PART NUMBER	QTY	PART NAME 1 2 3 4 5 6 (PRODUCT LEVEL)	SEE PAGE
	1	1	**4E-1384**	2	BUMPER-CONICAL	
	2	1	**195-0939**	4	STUD	
	3	1	**218-6442**	2	PLATE	
Y	4	1	**236-4833**	1	ARMREST GP	513
M	5	1	**195-0937**	2	INSERT-THREADED (M8X1.25-THD)	
M	6	1	**5C-7261**	2	NUT (M8X1.25-THD)	
	7	1	**8T-4121**	4	WASHER-HARD (11X21X2.5-MM THK)	
M	8	1	**8T-4133**	4	NUT (M10X1.5-THD)	

M-METRIC PART
Y-SEPARATE ILLUSTRATION

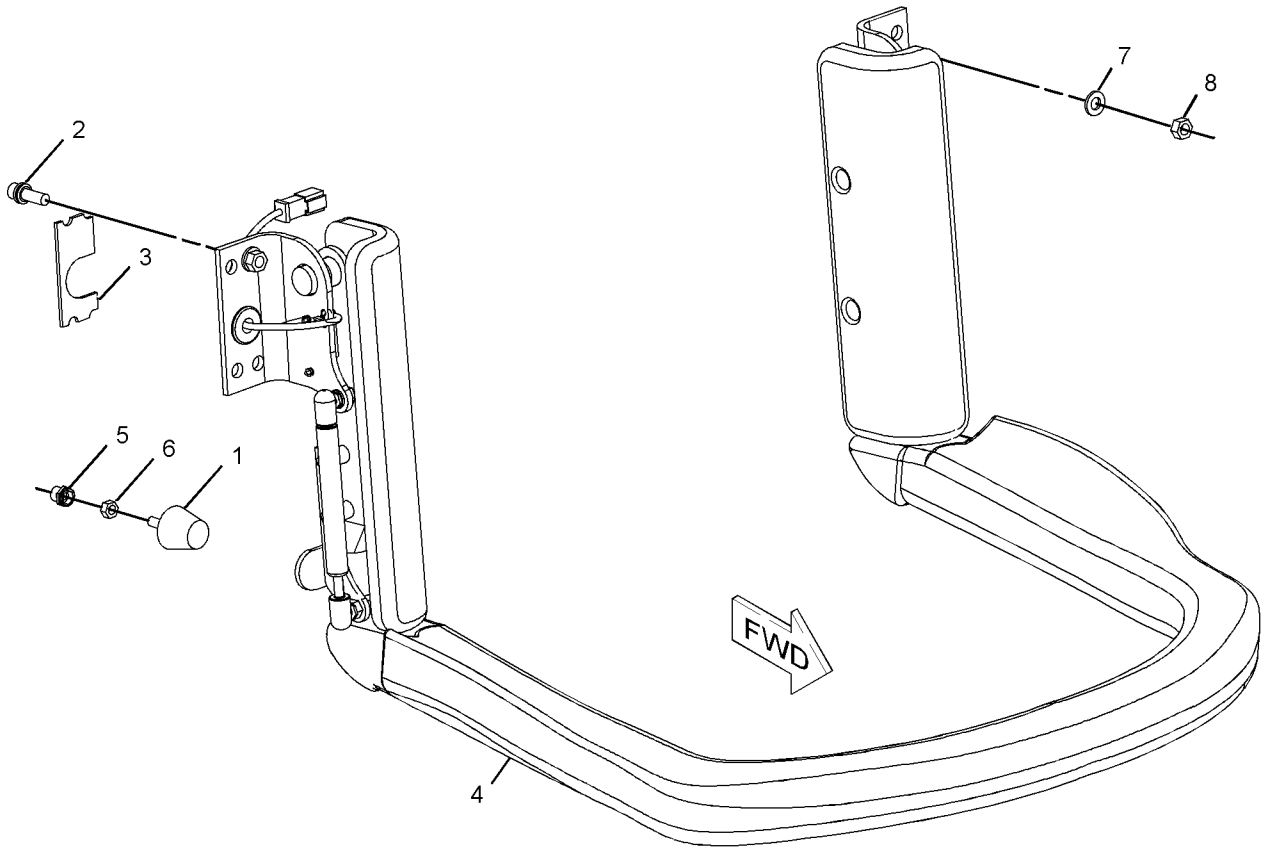

GRAPHIC #1 **<END>** g01016683

OPERATOR STATION

236-4833 ARMREST GP

S/N: MJH10575-UP

PART OF 236-4830 ARMREST & MOUNTING GP

SMCS-7307 **i01955198**

NOTE	REF NO	GRAPHIC REF	PART NUMBER	QTY	PART NAME 1 2 3 4 5 6 (PRODUCT LEVEL)	SEE PAGE
	1	1	**3S-2093**	1	STRAP-CABLE	
	2	1	**7D-8431**	2	RING-RETAINING	
	3	1	**7G-7053**	1	GROMMET	
	4	1	**9P-4609**	1	ACTUATOR-MAGNETIC	
	5	1	**9S-0285**	2	BEARING-SLEEVE	
	6	1	**130-1916**	2	STUD-BALL	
	7	1	**142-9278**	1	BRACKET AS	
	8	1	**142-9279**	1	BRACKET AS	
	9	1	**142-9287**	1	SPRING AS-GAS	
	10	1	**142-9386**	1	BRACKET AS (LH)	
	11	1	**152-4875**	2	COVER AS	
	12	1	**152-4884**	1	BRACKET AS (RH)	
	13	1	**162-0223**	1	SWITCH AS (INTERLOCK)	
		1	**3E-3374**	1	WEDGE-PLUG LOCK (4-PIN)	
		1	**186-3736**	1	SOCKET-CONNECTOR (16-GA TO 18-GA)	
		1	**9G-3695**	1	PLUG	
		1	**9X-1813**		SLEEVE (24CM)	
		1	**176-2947**	1	PLUG KIT-CONN	
	14	1	**236-4832**	1	ARMREST AS	
	15	1	**103-6262**	4	SCREW-MACHINE (4-40X0.63-IN)	
	16	1	**142-2928**	4	LOCKNUT (4-40-THD)	
M	17	1	**5C-9553**	4	BOLT (M6X1X16-MM)	
	18	1	**8T-4205**	4	WASHER-HARD (7.2X14.5X2-MM THK)	
	19	1	**8T-4224**	1	WASHER-HARD (8.8X16X2-MM THK)	
M	20	1	**9X-2042**	4	SCREW-TRUSS HEAD (M6X1X12-MM)	

M-METRIC PART

236-4833 ARMREST GP *(contd.)* **i01955198**

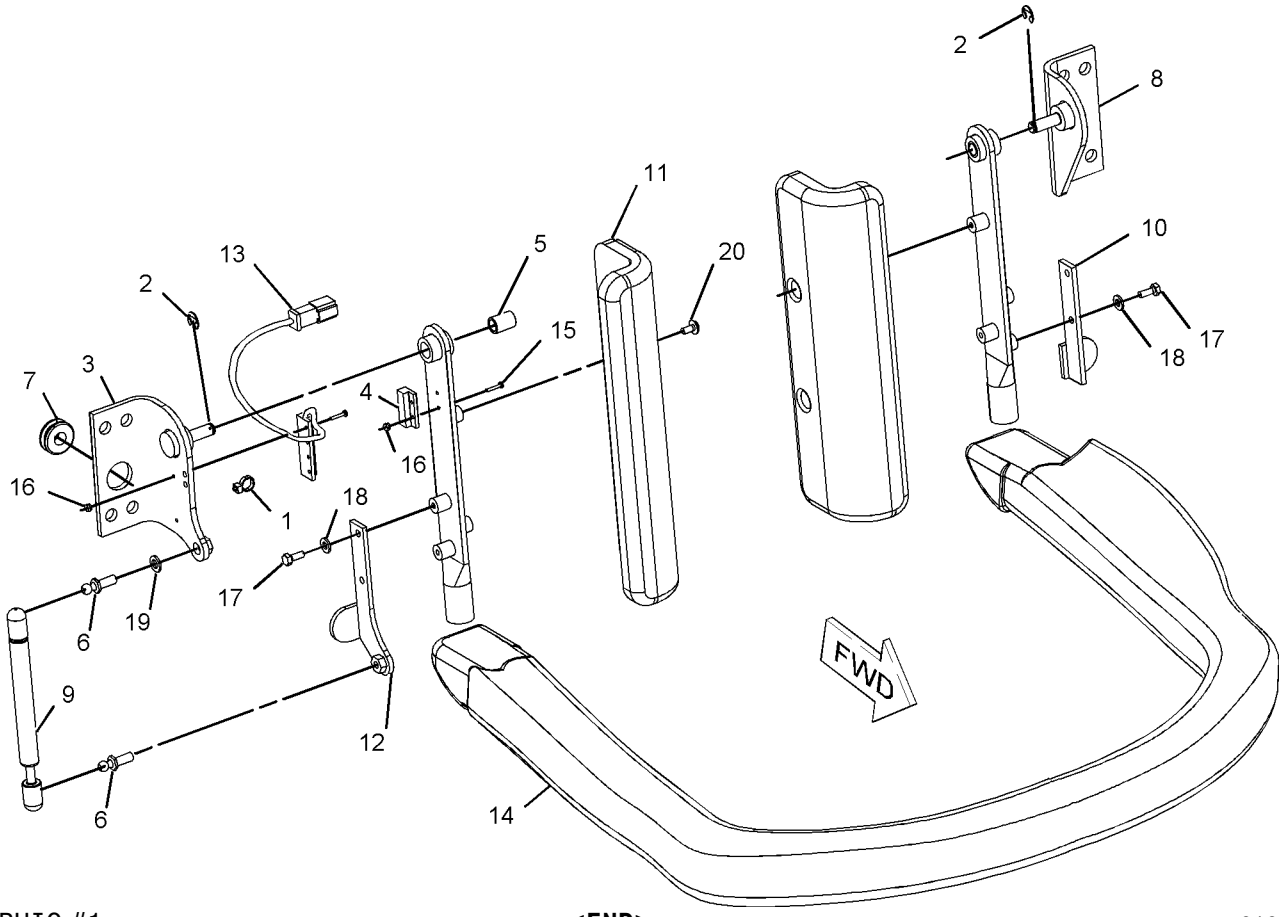

GRAPHIC #1 **<END>** g01016724

OPERATOR STATION

216-6146 BOX GP-STORAGE

S/N: MJH10575-UP

PART OF 261-6157, 261-6187, 261-6197, 278-1212, 278-1220, 278-1224, 278-5408, 278-5441, 295-7038, 295-7049, 295-7059, 295-7066, 295-7149, 295-7158, 295-7162, 295-7167 CONVERSION AR-MACHINE, 233-5671, 233-5672, 233-5673, 233-5674, 233-5675, 233-5676, 257-5716, 257-5717, 295-7043 CONVERSION AR-ROADING AN ATTACHMENT

SMCS-7268 **i02014480**

NOTE	REF NO	GRAPHIC REF	PART NUMBER	QTY	PART NAME 1 2 3 4 5 6 (PRODUCT LEVEL)	SEE PAGE
J	1	1	**8T-2895**	1	LOCK GP-CYLINDER	
		1	**226-0323**	1	CAM-LOCK	
		1	**226-0291**	1	LOCK AS	
	2	1	**216-6145**	1	BOX AS-STORAGE	
		1	**7G-4262**	1	HINGE	
D	3	1	**6V-1392**		SEAL (1M)	

D-ORDER BY THE METER
J-REQUIRES 5P8500 KEY

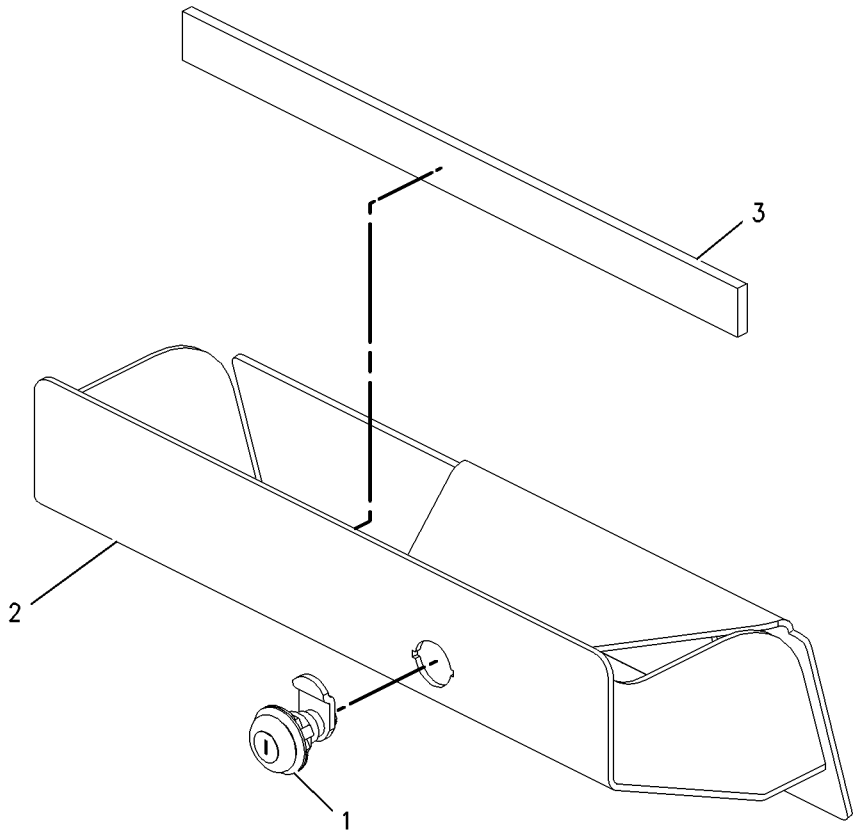

GRAPHIC #1 **<END>** g00932357

OPERATOR STATION

218-6350 CAB AR-ENCLOSED ROPS

S/N: MJH10575-UP

PART OF 295-7226, 295-7227 COMMON AR

SMCS-7301 **i02014475**

NOTE	PART NUMBER	QTY	PART NAME 1 2 3 4 5 6 (PRODUCT LEVEL)	SEE PAGE
Y	*236-4830*	1	ARMREST & MOUNTING GP	512
Y	*218-6367*	1	CAB GP-ENCLOSED ROPS	517
Y	*216-4750*	1	FASTENER GP-WIRING HARNESS	142
Y	*218-6425*	1	LIGHTING GP-FLOOD (FRONT)	159
Y	*218-6356*	1	LINER GP-CAB	601
Y	*218-6395*	1	MIRROR GP-REAR VIEW	607
Y	*218-6370*	1	MOUNTING GP-ROPS	610
Y	*218-6380*	1	SPRING GP-GAS (CAB)	631
Y	*195-6723*	1	WINDOW GP-CAB (UPPER REAR)	634
	218-6420	1	BOX GP-STORAGE (LITERATURE)	
	152-4871	1	BOX-STORAGE	
	5P-7957	1	LANYARD	
M	**9X-2042**	4	SCREW-TRUSS HEAD (M6X1X12-MM)	
	195-0935	4	INSERT-THREADED (M6X1-THD)	

M-METRIC PART
Y-SEPARATE ILLUSTRATION

<END>

OPERATOR STATION

218-6367 CAB GP-ENCLOSED ROPS

S/N: MJH10575-UP

PART OF 218-6350 CAB AR-ENCLOSED ROPS

SMCS-7301 **i02851608**

NOTE	REF NO	GRAPHIC REF	PART NUMBER	QTY	PART NAME 1 2 3 4 5 6 (PRODUCT LEVEL)	SEE PAGE
	1	1	**214-9186**	7	BUTTON	
	2	1	**280-6072**	1	WINDOW	
					PARTS SHOWN IN GRAPHIC(S) WITHOUT A REFERENCE NUMBER ARE NOT SERVICED SEPARATELY	

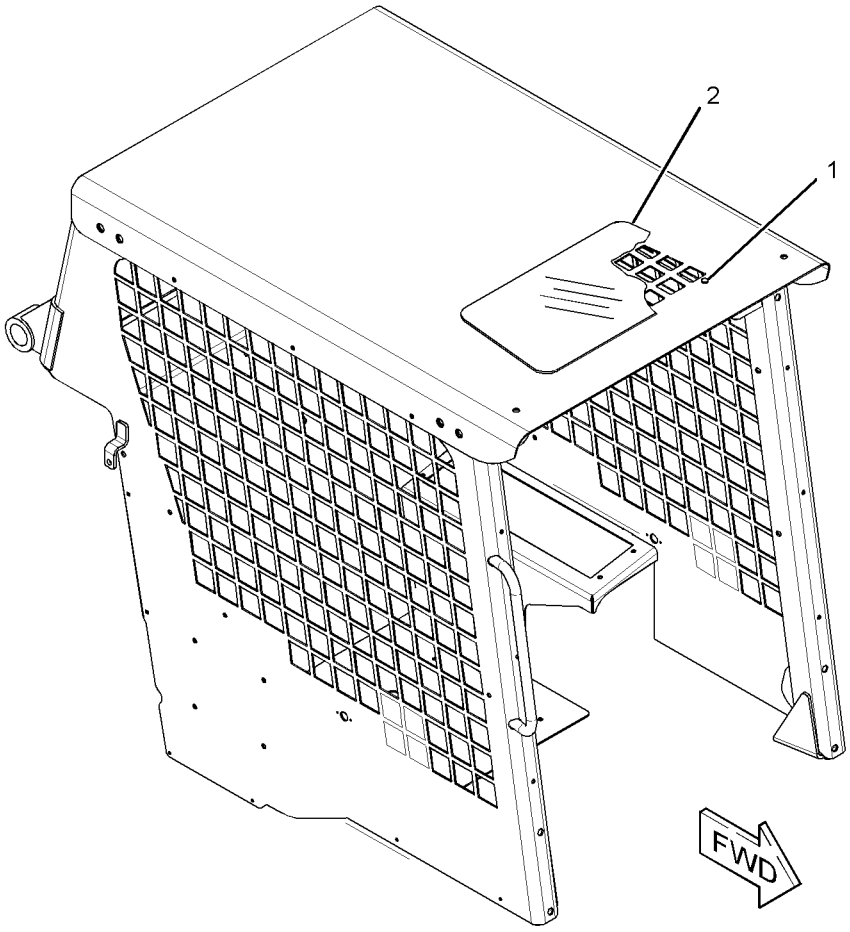

GRAPHIC #1 **<END>** g01420647

OPERATOR STATION

298-7198 CABLE GP-CONTROL—MANUAL LOWERING

S/N: MJH10575-UP

PART OF 218-6211 LINES GP-LOWERING CONTROL, 218-6240 VALVE & LINES GP-COUPLER

AN ATTACHMENT

SMCS-5154 **i02748033**

NOTE	PART NUMBER	QTY	PART NAME 1 2 3 4 5 6 (PRODUCT LEVEL)	SEE PAGE
	276-0074	1	CABLE AS	
	8T-4742	1	END-YOKE ROD	
	8T-4744	1	PIN AS-SPRING	
	298-7197	1	HANDLE GP	
	292-2437	1	NUT	
	292-2438	1	SEAL	
	284-3914	1	HANDLE	

<END>

218-6832 COMPRESSOR & MOTOR GP-REFRIG

S/N: MJH10575-UP
PART OF 218-6830 COMPRESSOR & MTG GP-REFRIG
AN ATTACHMENT
TYPE 1

SMCS-1802, 5061 **i02454674**

NOTE	REF NO	GRAPHIC REF	PART NUMBER	QTY	PART NAME 1 2 3 4 5 6 (PRODUCT LEVEL)	SEE PAGE
	1	1	**2D-5248**	1	GASKET	
	2	1	**9G-5127**	1	BREATHER (AIR CONDITIONER)	
	3	1	**9G-7101**	2	SPACER (10.5X20X30-MM THK)	
	4	1	**218-6833**	1	COMPRESSOR GP-REFRIGERANT	
Y	5	1	*276-5708*	1	COUPLING GP-DRIVE	557
Y	6	1	**218-6840**	1	MOTOR GP-GEAR	368
	7	1	**233-5590**	1	HOUSING-SUPPORT	
M	8	1	**5C-7261**	2	NUT (M8X1.25-THD)	
	9	1	**5P-4116**	2	WASHER-HARD (8.8X20.5X2-MM THK)	
	10	1	**8T-4121**	2	WASHER-HARD (11X21X2.5-MM THK)	
	11	1	**8T-4224**	2	WASHER-HARD (8.8X16X2-MM THK)	
M	12	1	**8T-6870**	2	BOLT (M8X1.25X70-MM)	
M	13	1	**9X-6032**	2	BOLT-SOCKET HEAD (M10X1.5X30-MM)	

M-METRIC PART
Y-SEPARATE ILLUSTRATION

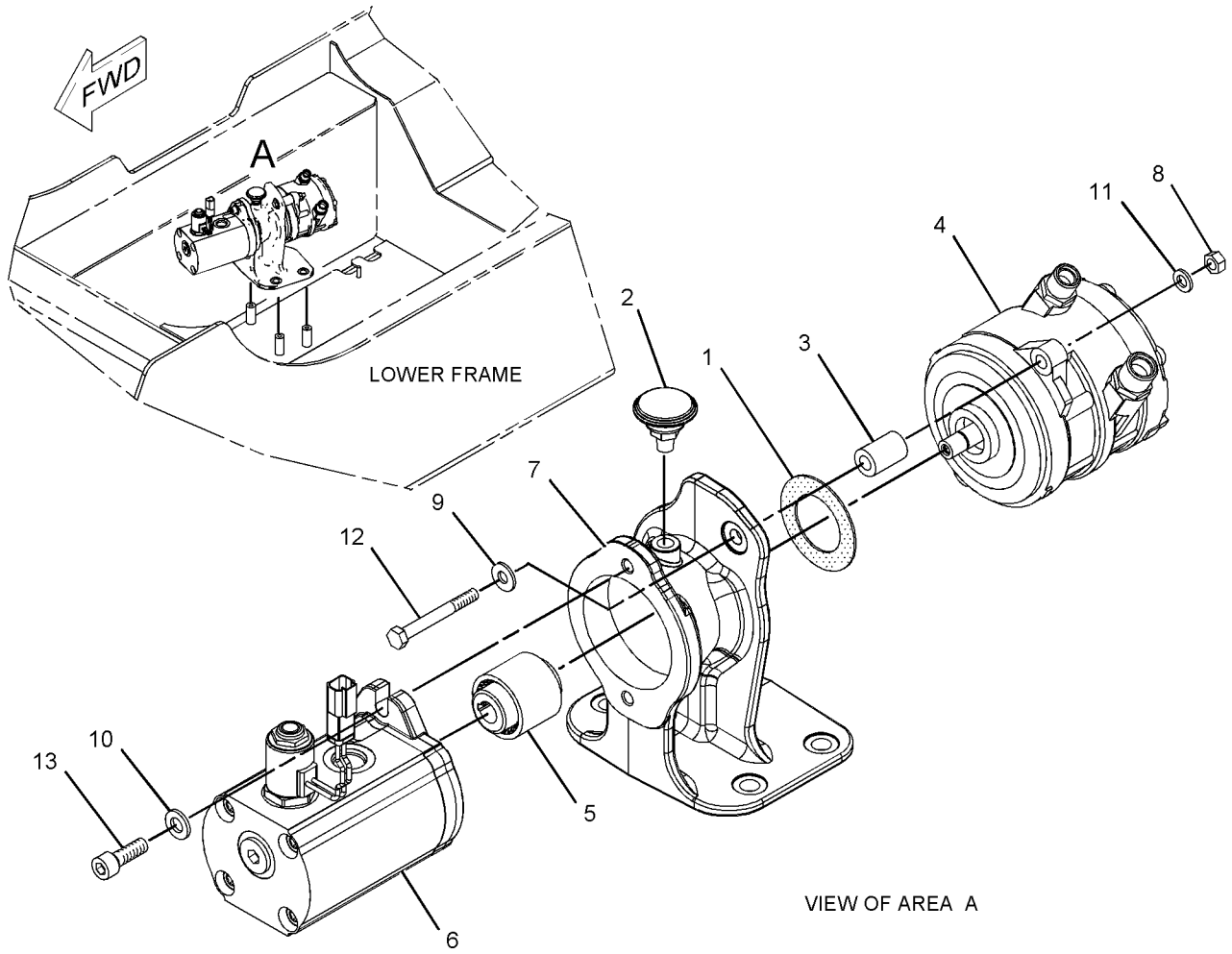

GRAPHIC #1 **<END>** g01059394

OPERATOR STATION

218-6832 COMPRESSOR & MOTOR GP-REFRIG

S/N: MJH10575-UP
PART OF 218-6830 COMPRESSOR & MTG GP-REFRIG
AN ATTACHMENT
TYPE 2

SMCS-1802, 5061 **i02877015**

NOTE	REF NO	GRAPHIC REF	PART NUMBER	QTY	PART NAME 1 2 3 4 5 6 (PRODUCT LEVEL)	SEE PAGE
	1	1	**2D-5248**	1	GASKET	
	2	1	**9G-5127**	1	BREATHER (AIR CONDITIONER)	
	3	1	**9G-7101**	2	SPACER (10.5X20X30-MM THK)	
	4	1	**218-6833**	1	COMPRESSOR GP-REFRIGERANT	
Y	5	1	*276-5708*	1	COUPLING GP-DRIVE	557
CY	6	1	**307-6115**	1	MOTOR GP-GEAR (VALVE)	373
	7	1	**233-5590**	1	HOUSING-SUPPORT	
M	8	1	**5C-7261**	2	NUT (M8X1.25-THD)	
	9	1	**5P-4116**	2	WASHER-HARD (8.8X20.5X2-MM THK)	
	10	1	**8T-4121**	2	WASHER-HARD (11X21X2.5-MM THK)	
	11	1	**8T-4224**	2	WASHER-HARD (8.8X16X2-MM THK)	
M	12	1	**8T-6870**	2	BOLT (M8X1.25X70-MM)	
M	13	1	**9X-6032**	2	BOLT-SOCKET HEAD (M10X1.5X30-MM)	

C-CHANGE FROM PREVIOUS TYPE
M-METRIC PART
Y-SEPARATE ILLUSTRATION

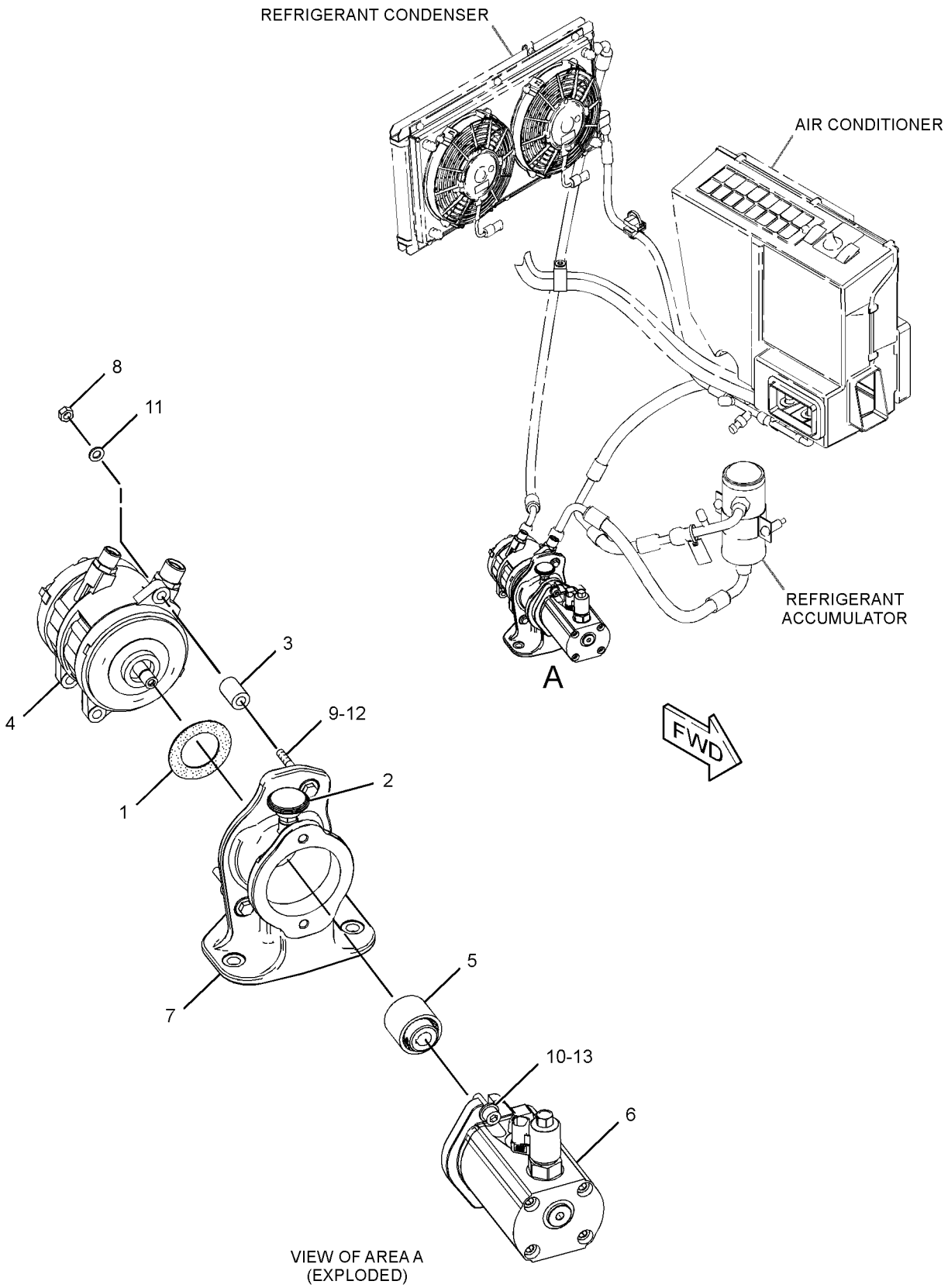

VIEW OF AREA A
(EXPLODED)

GRAPHIC #1 **<END>** g01433559

218-6830 COMPRESSOR & MTG GP-REFRIG

S/N: MJH10575-UP

PART OF 218-6273 AIR CONDITIONER AR

AN ATTACHMENT

SMCS-1802 **i01958280**

NOTE	REF NO	GRAPHIC REF	PART NUMBER	QTY	PART NAME 1 2 3 4 5 6 (PRODUCT LEVEL)	SEE PAGE
Y	1	1	*218-6832*	1	COMPRESSOR & MOTOR GP-REFRIG	519
	2	1	**8T-4121**	3	WASHER-HARD (11X21X2.5-MM THK)	
M	3	1	**8T-4136**	3	BOLT (M10X1.5X25-MM)	

M-METRIC PART
Y-SEPARATE ILLUSTRATION

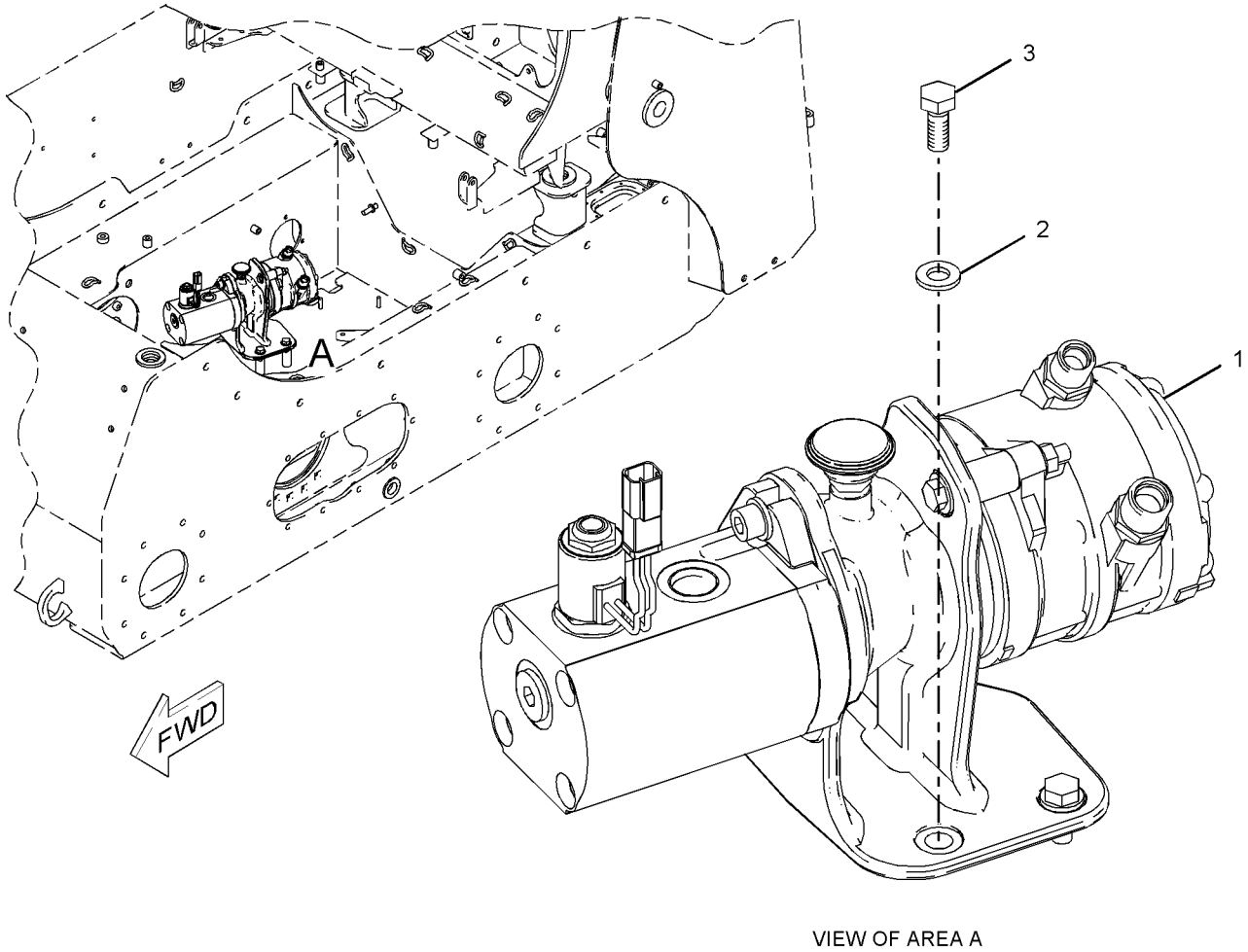

VIEW OF AREA A

GRAPHIC #1 **<END>** g01018664

218-6348 CONDENSER & MTG GP-REFRIGERANT

S/N: MJH10575-UP
PART OF 218-6273 AIR CONDITIONER AR
AN ATTACHMENT

SMCS-1805 **i02338119**

NOTE	REF NO	GRAPHIC REF	PART NUMBER	QTY	PART NAME 1 2 3 4 5 6 (PRODUCT LEVEL)	SEE PAGE
	1	1	**218-6060**	1	SHROUD AS	
	2	1	**218-6250**	2	FAN AS	
C	3	1	**233-5927**	1	COIL AS	
M	4	1	**5C-7261**	14	NUT (M8X1.25-THD)	
	5	1	**8T-4121**	4	WASHER-HARD (11X21X2.5-MM THK)	
M	6	1	**8T-4133**	4	NUT (M10X1.5-THD)	
M	7	1	**8T-4189**	14	BOLT (M8X1.25X20-MM)	
	8	1	**8T-4224**	20	WASHER-HARD (8.8X16X2-MM THK)	

C-CHANGE FROM PREVIOUS TYPE
M-METRIC PART

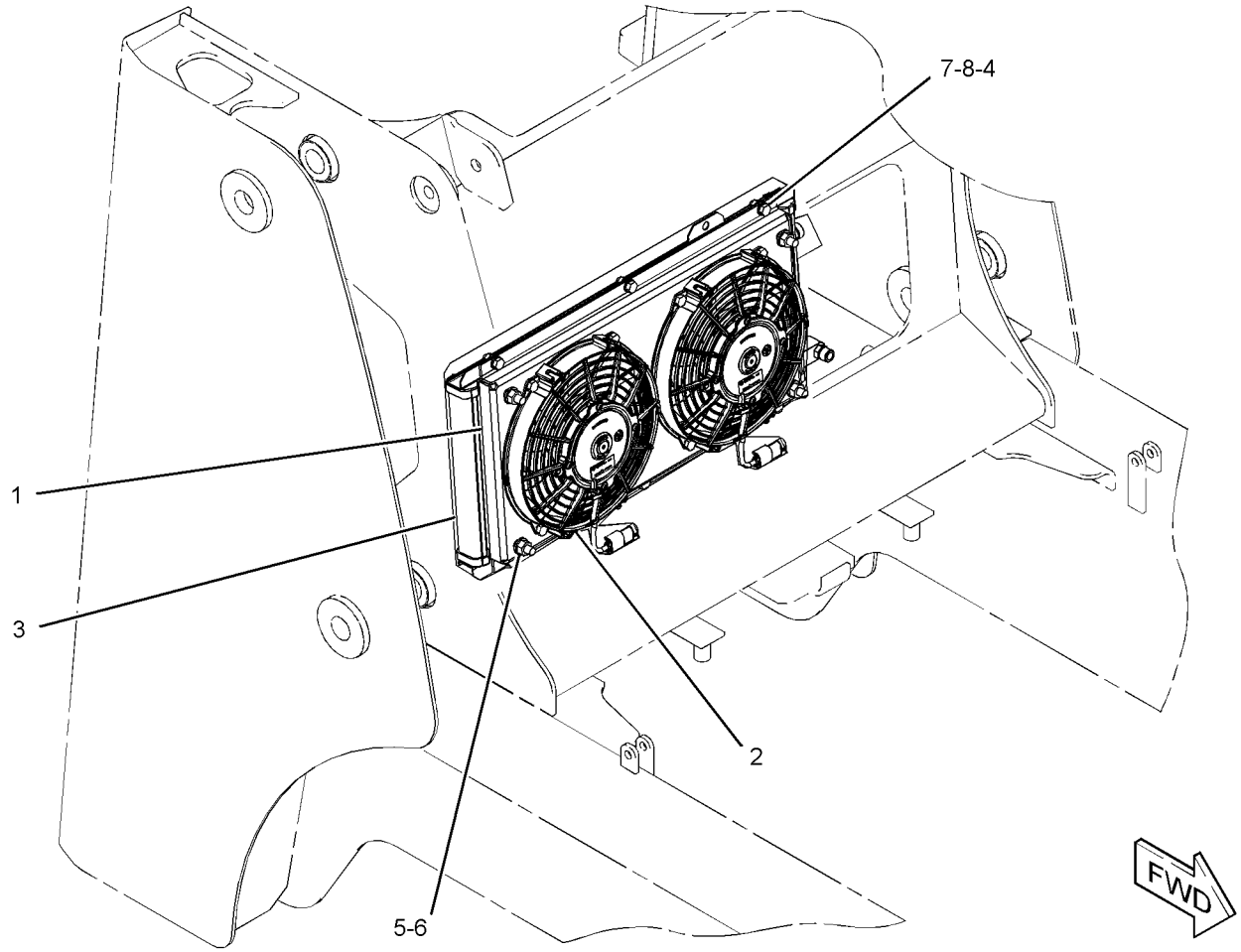

GRAPHIC #1 **<END>** g01195603

218-6480 CONTROL GP-HANDLE–DIRECTION, SPEED

S/N: MJH10575-UP

PART OF 218-5930 CONTROL GP-PILOT OPERATED HYD

AN ATTACHMENT

SMCS-5705 **i02545867**

NOTE	REF NO	GRAPHIC REF	PART NUMBER	QTY	PART NAME 1 2 3 4 5 6 (PRODUCT LEVEL)	SEE PAGE
	1	1	**173-0702**	1	BOOT	
Y	2	1	**218-6117**	1	HANDLE GP-MODULAR	581
	3	1	**158-3770**	1	KIT-PILOT VALVE (LEVER)	
					(INCLUDES NUT, LEVER & PIN)	

Y-SEPARATE ILLUSTRATION

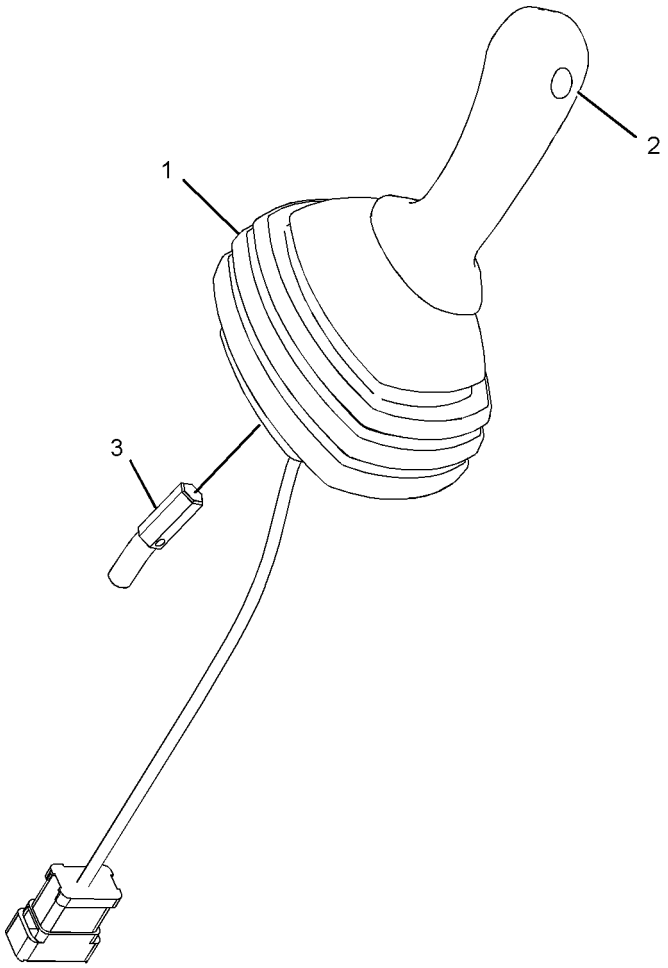

GRAPHIC #1 **<END>** g01111218

218-6485 CONTROL GP-HANDLE–DIRECTION, SPEED

S/N: MJH10575-UP

PART OF 218-5931 CONTROL GP-PILOT OPERATED HYD

AN ATTACHMENT

SMCS-5705 **i02545868**

NOTE	REF NO	GRAPHIC REF	PART NUMBER	QTY	PART NAME 1 2 3 4 5 6 (PRODUCT LEVEL)	SEE PAGE
	1	1	**173-0702**	1	BOOT	
Y	2	1	**218-6118**	1	HANDLE GP-MODULAR	582
	3	1	**158-3770**	1	KIT-PILOT VALVE (LEVER)	
					(INCLUDES NUT, LEVER & PIN)	

Y-SEPARATE ILLUSTRATION

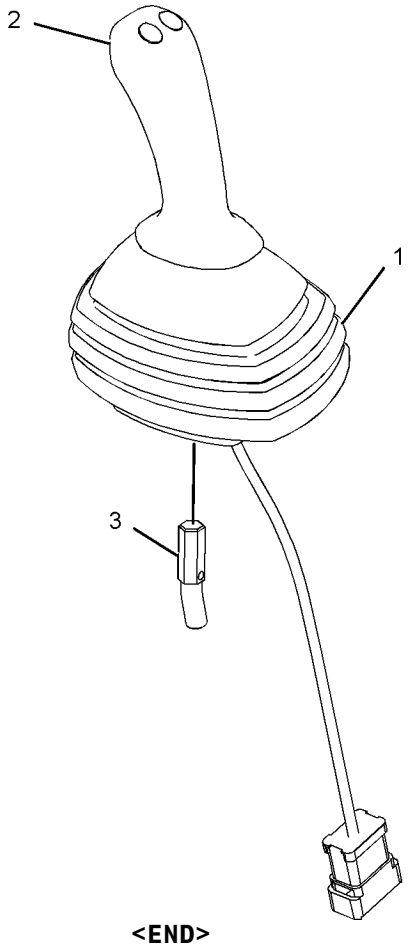

GRAPHIC #1 **<END>** g01111214

OPERATOR STATION

218-6490 CONTROL GP-HANDLE—WORK TOOL

S/N: MJH10575-UP

PART OF 218-5611 CONTROL GP-PILOT OPERATED HYD

AN ATTACHMENT

SMCS-5705 **i02545869**

NOTE	REF NO	GRAPHIC REF	PART NUMBER	QTY	PART NAME 1 2 3 4 5 6 (PRODUCT LEVEL)	SEE PAGE
	1	1	**173-0703**	1	BOOT	
Y	2	1	**218-6118**	1	HANDLE GP-MODULAR	582
	3	1	**158-3770**	1	KIT-PILOT VALVE (LEVER)	
					(INCLUDES NUT, LEVER & PIN)	

Y-SEPARATE ILLUSTRATION

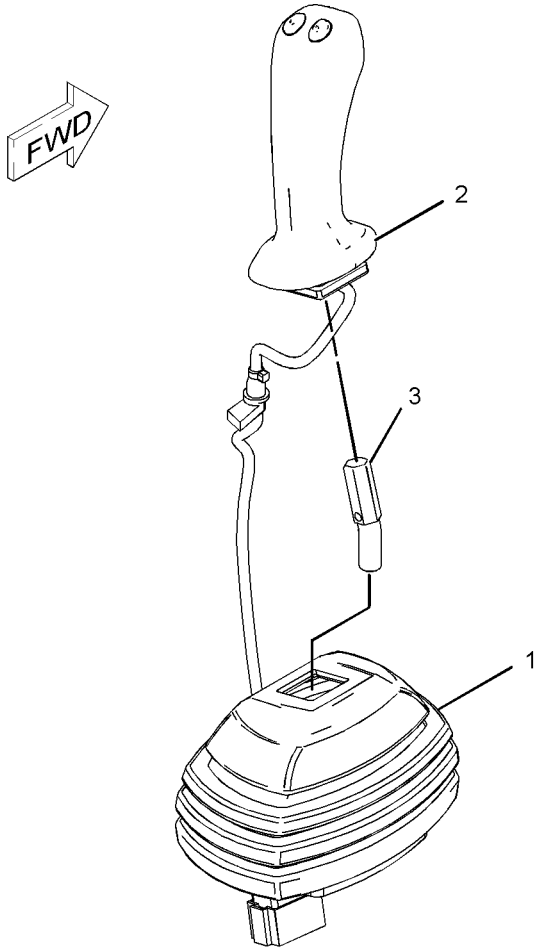

GRAPHIC #1 **<END>** g01111213

OPERATOR STATION

231-4256 CONTROL GP-HANDLE–LH

S/N: MJH10575-UP

PART OF 218-5932 CONTROL GP-PILOT OPERATED HYD

AN ATTACHMENT

SMCS-5705 **i02189555**

NOTE	REF NO	GRAPHIC REF	PART NUMBER	QTY	PART NAME 1 2 3 4 5 6 (PRODUCT LEVEL)	SEE PAGE
	1	1	**223-3725**	1	HANDLE GP-MODULAR	
	1A	1	**186-3735**	4	PIN-CONNECTOR (16-GA TO 18-GA)	
	1B	1	**174-3091**	1	KIT-RECEPTACLE (12-PIN)	
					(INCLUDES RECEPTACLE AS & WEDGE)	
	2	1	**223-3728**	1	BOOT	
	3	1	**231-4261**	1	ADAPTER (LH)	
M	4	1	**213-7489**	3	SCREW (M4X25-MM)	
M	5	1	**178-9983**	3	LOCKNUT (M4X0.7-THD)	
	6	1	**1S-9593**	1	STRAP-CABLE	
	7	1	**8T-8737**	8	PLUG-SEAL	
	8	1	**252-6934**	1	GROMMET	

M-METRIC PART

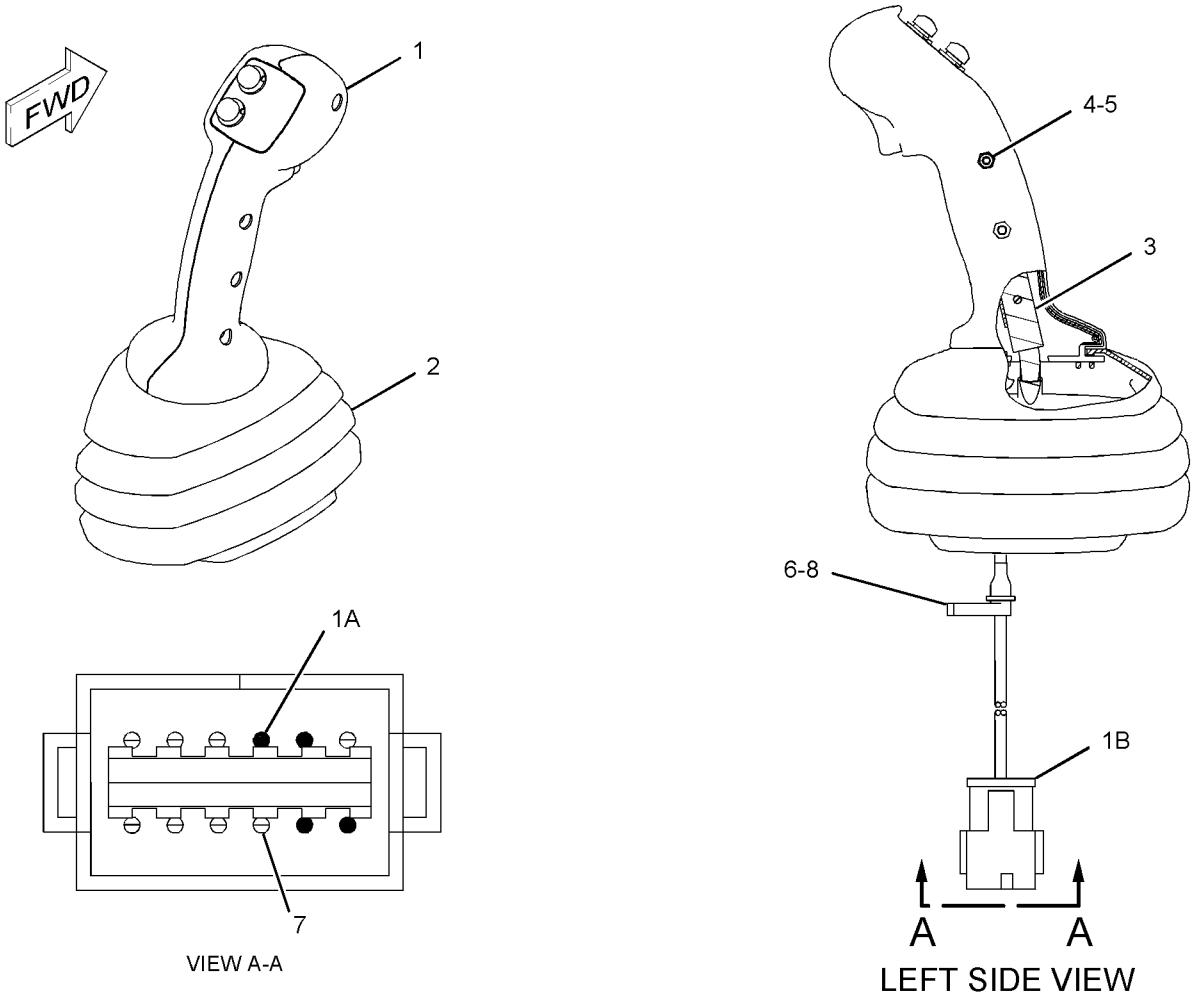

GRAPHIC #1 **<END>** g01132335

OPERATOR STATION

231-4257 CONTROL GP-HANDLE–RH

S/N: MJH10575-UP

PART OF 218-5612 CONTROL GP-PILOT OPERATED HYD

AN ATTACHMENT

SMCS-5705 **i02250695**

NOTE	REF NO	GRAPHIC REF	PART NUMBER	QTY	PART NAME 1 2 3 4 5 6 (PRODUCT LEVEL)	SEE PAGE
	1	1	**223-3725**	1	HANDLE GP-MODULAR	
	1A	1	**186-3735**	4	PIN-CONNECTOR (16-GA TO 18-GA)	
	1B	1	**174-3091**	1	KIT-RECEPTACLE (12-PIN)	
					(INCLUDES RECEPTACLE AS & WEDGE)	
	2	1	**223-3728**	1	BOOT	
	3	1	**231-4262**	1	ADAPTER (RH)	
M	4	1	**213-7489**	3	SCREW (M4X25-MM)	
M	5	1	**178-9983**	3	LOCKNUT (M4X0.7-THD)	
	6	1	**1S-9593**	1	STRAP-CABLE	
	7	1	**8T-8737**	8	PLUG-SEAL	
	8	1	**252-6934**	1	GROMMET	

M-METRIC PART

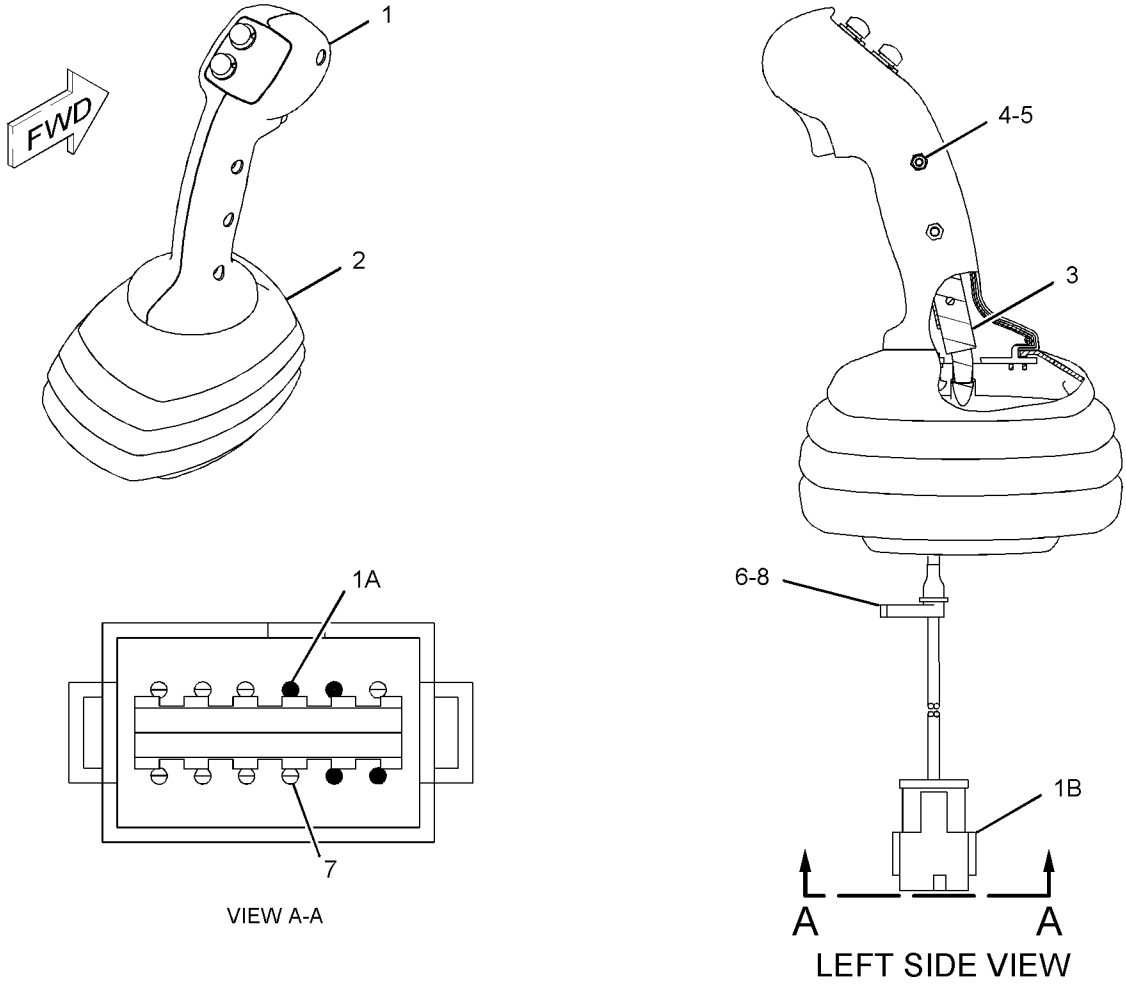

GRAPHIC #1 **<END>** g01133018

231-4258 CONTROL GP-HANDLE–LH

S/N: MJH10575-UP

PART OF 218-5933 CONTROL GP-PILOT OPERATED HYD, 233-5706 KIT-WORK TOOL CONTROL & WIRING AN ATTACHMENT

SMCS-5705 **i02189624**

NOTE	REF NO	GRAPHIC REF	PART NUMBER	QTY	PART NAME 1 2 3 4 5 6 (PRODUCT LEVEL)	SEE PAGE
	1	1	**223-3726**	1	HANDLE GP-MODULAR	
	1A	1	**186-3735**	7	PIN-CONNECTOR (16-GA TO 18-GA)	
	1B	1	**174-3091**	1	KIT-RECEPTACLE (12-PIN)	
					(INCLUDES RECEPTACLE AS & WEDGE)	
	2	1	**223-3728**	1	BOOT	
	3	1	**231-4261**	1	ADAPTER (LH)	
M	4	1	**213-7489**	3	SCREW (M4X25-MM)	
M	5	1	**178-9983**	3	LOCKNUT (M4X0.7-THD)	
	6	1	**1S-9593**	1	STRAP-CABLE	
	7	1	**8T-8737**	3	PLUG-SEAL	
	8	1	**252-6934**	1	GROMMET	

M-METRIC PART

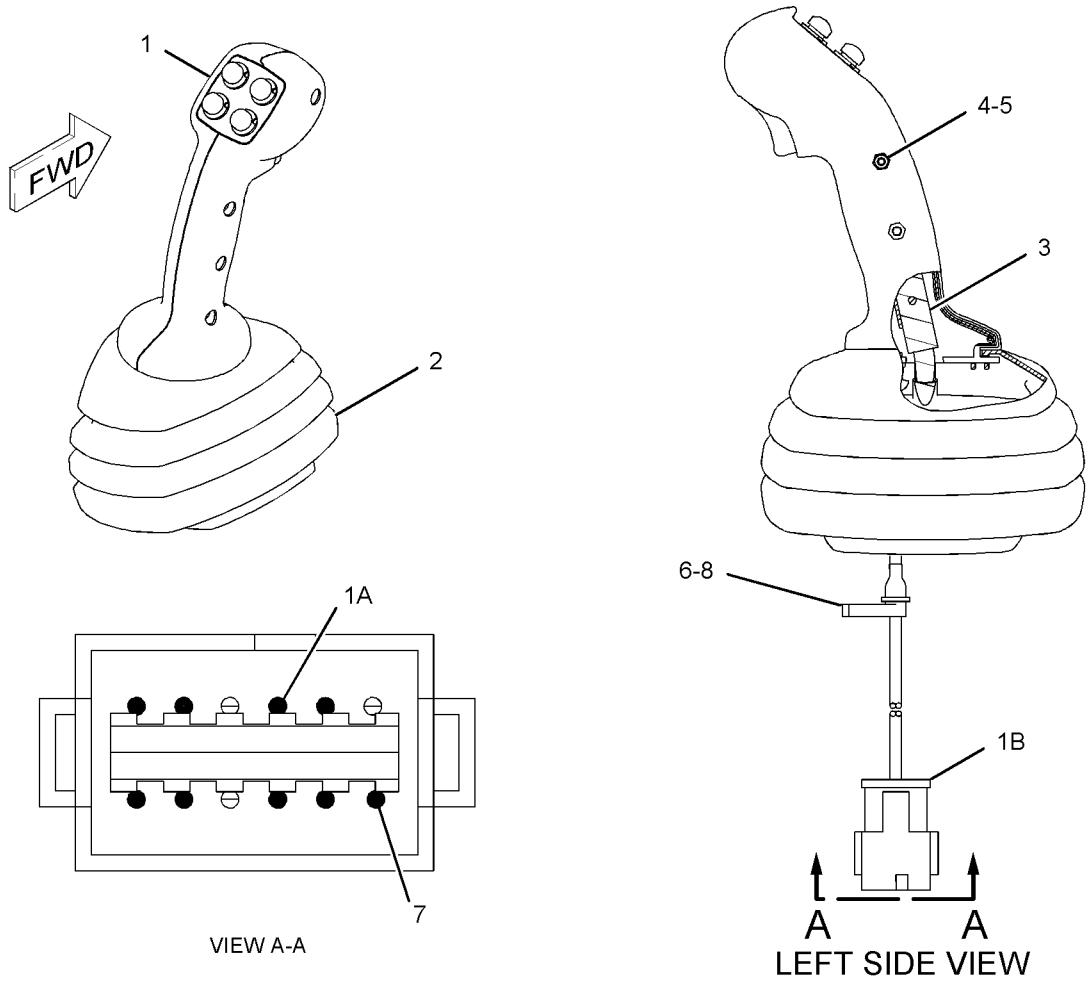

GRAPHIC #1 **<END>** g01132255

OPERATOR STATION

231-4259 CONTROL GP-HANDLE—WORK TOOL

S/N: MJH10575-UP

PART OF 218-6571 CONTROL GP-PILOT OPERATED HYD, 218-6737 KIT-HIGH FLOW CONVERSION

AN ATTACHMENT

SMCS-5705 **i02265596**

NOTE	REF NO	GRAPHIC REF	PART NUMBER	QTY	PART NAME 1 2 3 4 5 6 (PRODUCT LEVEL)	SEE PAGE
	1	1	**215-8308**	1	CONTROL GP-HANDLE	
	1A	1	**174-3091**	1	KIT-RECEPTACLE (12-PIN)	
	1B	1	**3E-5180**	1	WEDGE-RECEPTACLE LOCK (12-PIN)	
	1C	1	**186-3735**	11	PIN-CONNECTOR (16-GA TO 18-GA)	
	2	1	**223-3728**	1	BOOT	
	3	1	**231-4262**	1	ADAPTER (RH)	
M	4	1	**213-7489**	3	SCREW (M4X25-MM)	
M	5	1	**178-9983**	3	LOCKNUT (M4X0.7-THD)	
	6	1	**252-6934**	1	GROMMET	
	7	1	**8T-8737**	1	PLUG-SEAL	
	8	1	**1S-9593**	1	STRAP-CABLE	

M-METRIC PART

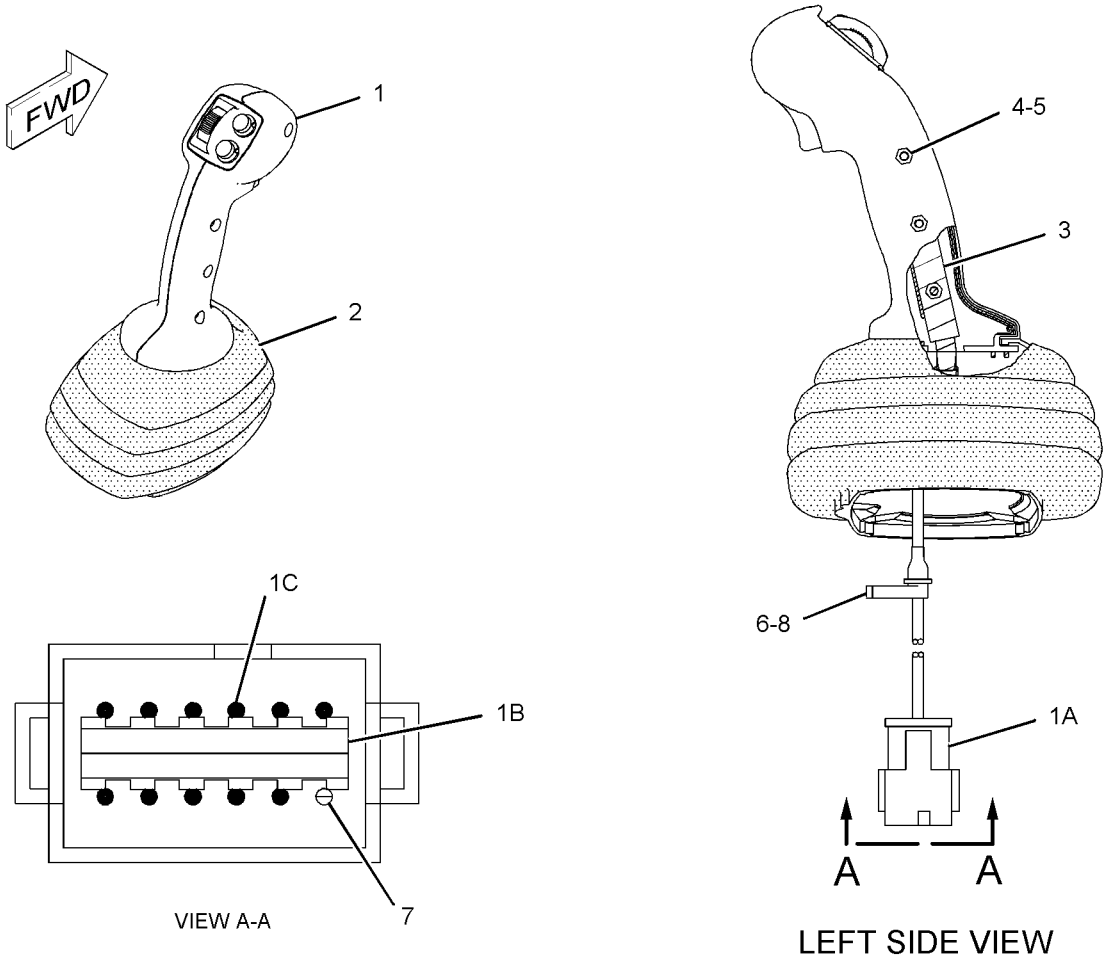

GRAPHIC #1 **<END>** g01132563

OPERATOR STATION

231-4260 CONTROL GP-HANDLE–RH

S/N: MJH10575-UP

PART OF 218-5618 CONTROL GP-PILOT OPERATED HYD

AN ATTACHMENT

SMCS-5705 **i02189795**

NOTE	REF NO	GRAPHIC REF	PART NUMBER	QTY	PART NAME 1 2 3 4 5 6 (PRODUCT LEVEL)	SEE PAGE
	1	1	**215-8307**	1	CONTROL GP-HANDLE	
	1A	1	**186-3735**	7	PIN-CONNECTOR (16-GA TO 18-GA)	
	1B	1	**174-3091**	1	KIT-RECEPTACLE (12-PIN)	
					(INCLUDES RECEPTACLE AS & WEDGE)	
	2	1	**223-3728**	1	BOOT	
	3	1	**231-4262**	1	ADAPTER (RH)	
M	4	1	**213-7489**	3	SCREW (M4X25-MM)	
M	5	1	**178-9983**	3	LOCKNUT (M4X0.7-THD)	
	6	1	**1S-9593**	1	STRAP-CABLE	
	7	1	**8T-8737**	5	PLUG-SEAL	
	8	1	**252-6934**	1	GROMMET	

M-METRIC PART

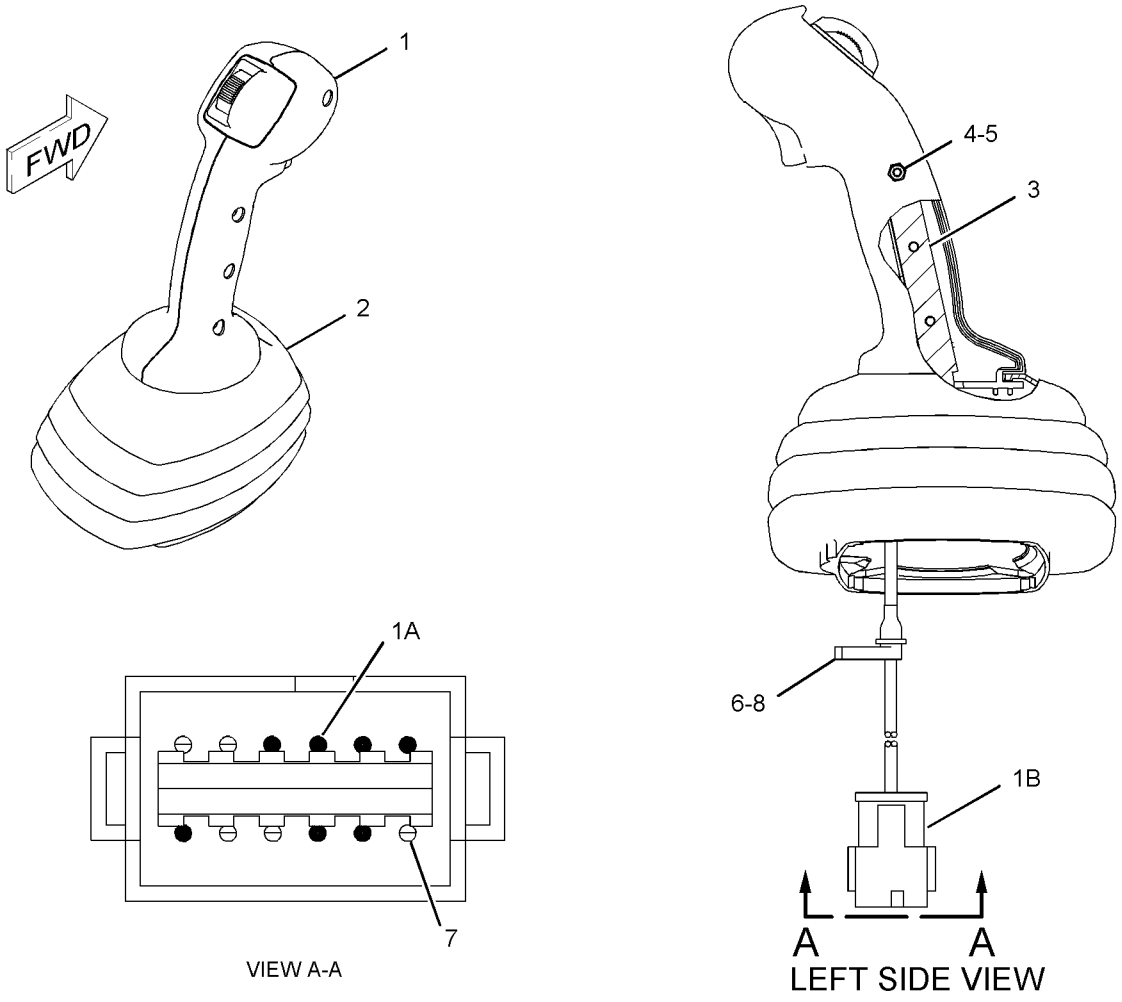

GRAPHIC #1 **<END>** g01132271

OPERATOR STATION

218-5611 CONTROL GP-PILOT OPERATED HYD

S/N: MJH10575-10747
ON/OFF AUXILIARY SWITCH
PART OF 295-7491 CONTROL AR-MACHINE
CANNOT BE USED WITH 218-5612—PAGE 536, 218-5618—PAGE 539, 218-6571—PAGE 551
AN ATTACHMENT

SMCS-5059, 5705 **i02195836**

NOTE	REF NO	GRAPHIC REF	PART NUMBER	QTY	PART NAME 1 2 3 4 5 6 (PRODUCT LEVEL)	SEE PAGE
	1	2	**8T-4205**	3	WASHER-HARD (7.2X14.5X2-MM THK)	
	2	2	**110-8760**	1	STRAP	
	3	2	**216-4704**	1	HARNESS AS-OPERATOR CONTROLS (JOYSTICK)	
		2	**155-2255**	1	KIT-CONNECTING PLUG (12-PIN)	
		2	**155-2270**	2	KIT-CONNECTING PLUG (2-PIN)	
					(EACH PLUG KIT INCLUDES PLUG AS, WEDGE & INTERFACE SEAL)	
		2	**102-8801**	1	KIT-RECEPTACLE (12-PIN)	
					(INCLUDES RECEPTACLE AS & WEDGE)	
	4	2	**218-6421**	1	BRACKET AS	
M		1	**6V-9632**	3	NUT-WELD (M6X1-THD)	
		1	**7T-1099**	1	LINK	
M		1	**8T-3612**	3	NUT-WELD (M8X1.25-THD)	
Y	5	2	**218-6490**	1	CONTROL GP-HANDLE (WORK TOOL)	526
Y	6	2	**228-9228**	1	VALVE GP-PILOT (WORK TOOL)	398
	7	1	**237-5332**	1	FILM-INSTRUCTION (MACHINE CONTROLS)	
M	8	2	**8T-0269**	3	BOLT-SOCKET HEAD (M6X1X20-MM)	

M-METRIC PART
Y-SEPARATE ILLUSTRATION

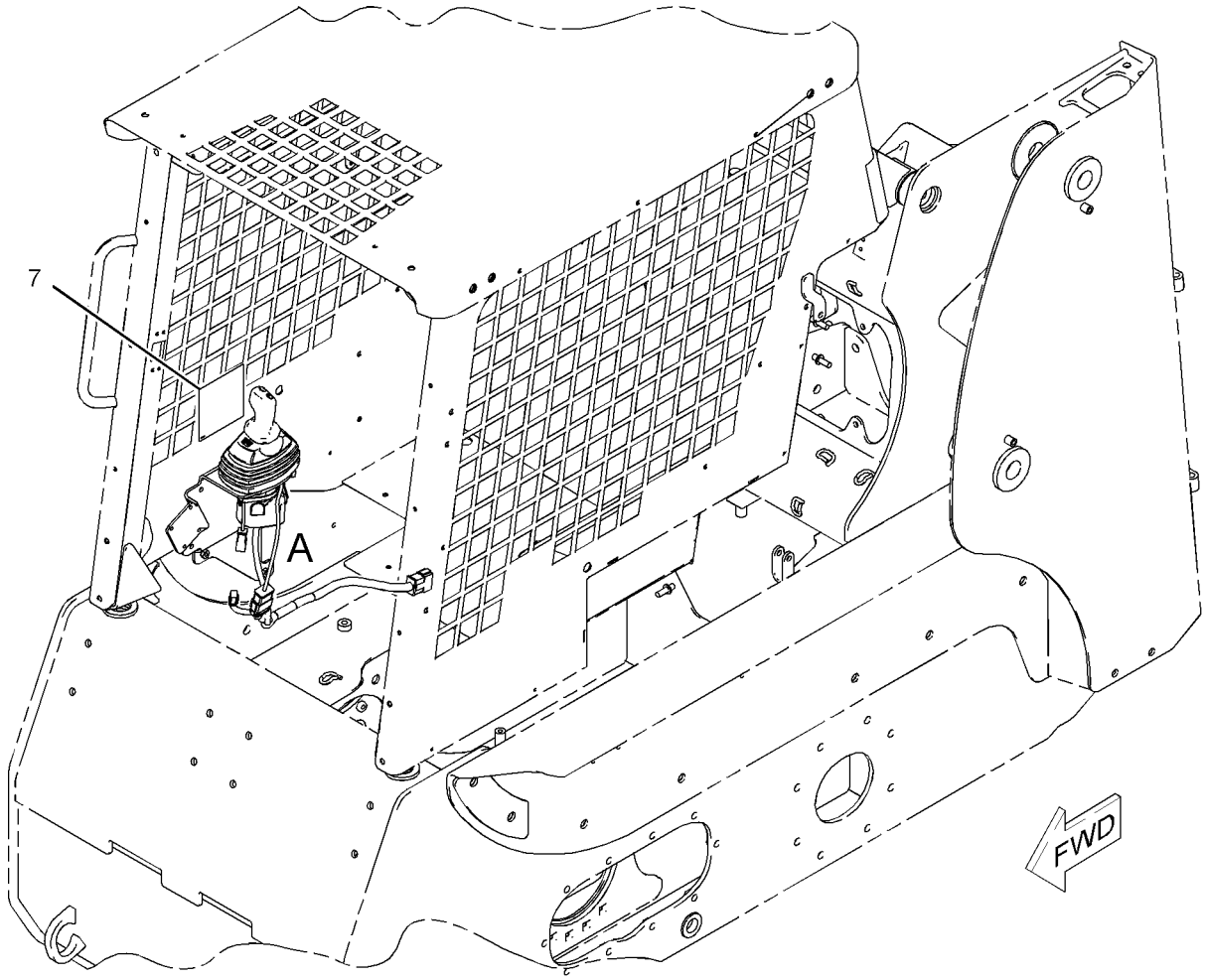

GRAPHIC #1 g01016393

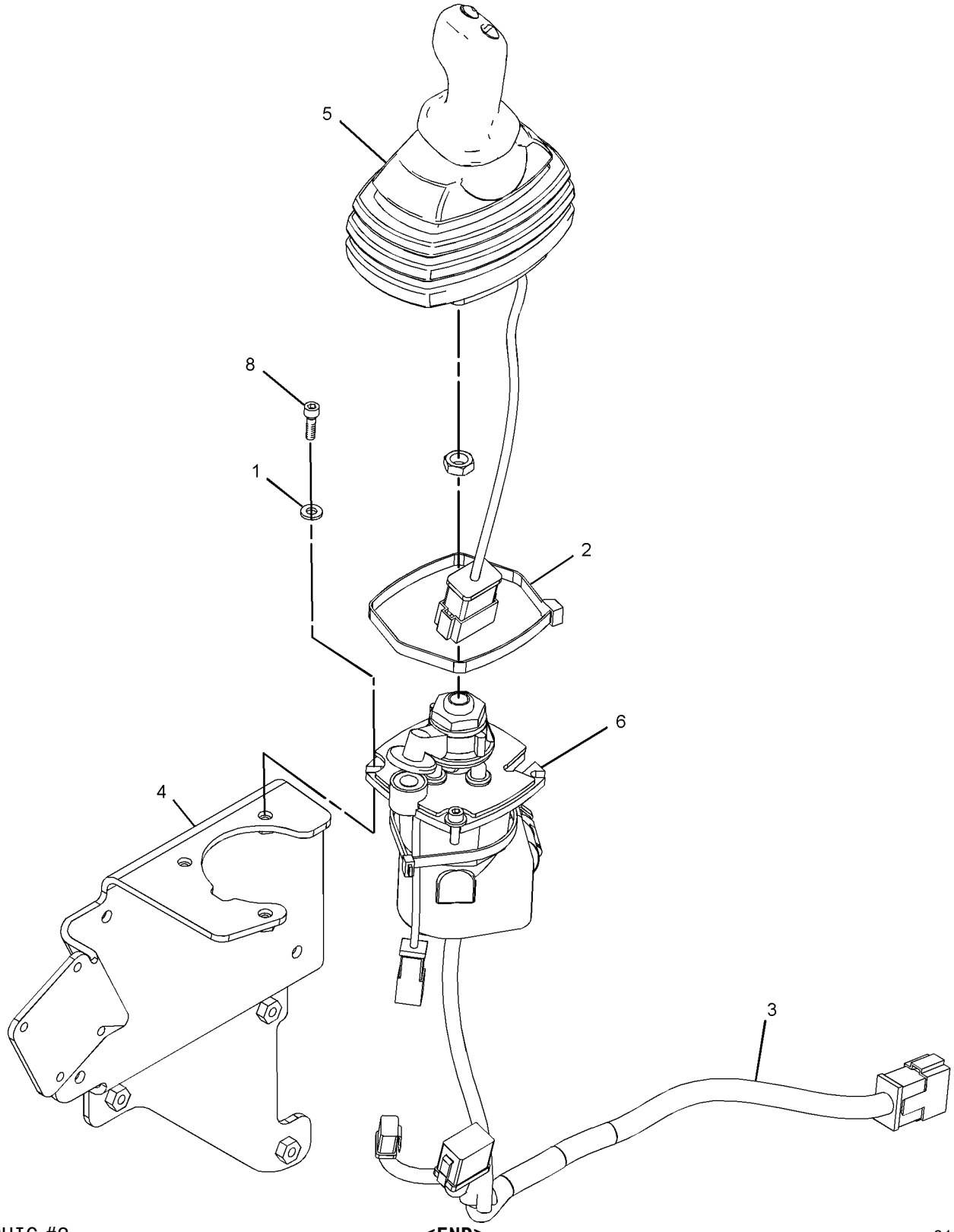

GRAPHIC #2

<END>

g01111318

218-5611 CONTROL GP-PILOT OPERATED HYD

S/N: MJH10748-UP
ON/OFF AUXILIARY SWITCH
PART OF 295-7491 CONTROL AR-MACHINE
CANNOT BE USED WITH 218-5612–PAGE 536, 218-5618–PAGE 539, 218-6571–PAGE 551
AN ATTACHMENT

SMCS-5059, 5705 **i02839671**

NOTE	REF NO	GRAPHIC REF	PART NUMBER	QTY	PART NAME 1 2 3 4 5 6 (PRODUCT LEVEL)	SEE PAGE
CY	1	1	**299-9119**	1	VALVE GP-PILOT	401
	2	1	**216-4704**	1	HARNESS AS-OPERATOR CONTROLS (JOYSTICK)	
	3	1	**218-6421**	1	BRACKET AS	
Y	4	1	**218-6490**	1	CONTROL GP-HANDLE (WORK TOOL)	526
	5	1	**237-5332**	1	FILM-INSTRUCTION (MACHINE CONTROLS)	
					CENTER FILM ON CANOPY	
M	6	1	**8T-0269**	3	BOLT-SOCKET HEAD (M6X1X20-MM)	
	7	1	**8T-4205**	3	WASHER-HARD (7.2X14.5X2-MM THK)	

C-CHANGE FROM PREVIOUS TYPE
M-METRIC PART
Y-SEPARATE ILLUSTRATION

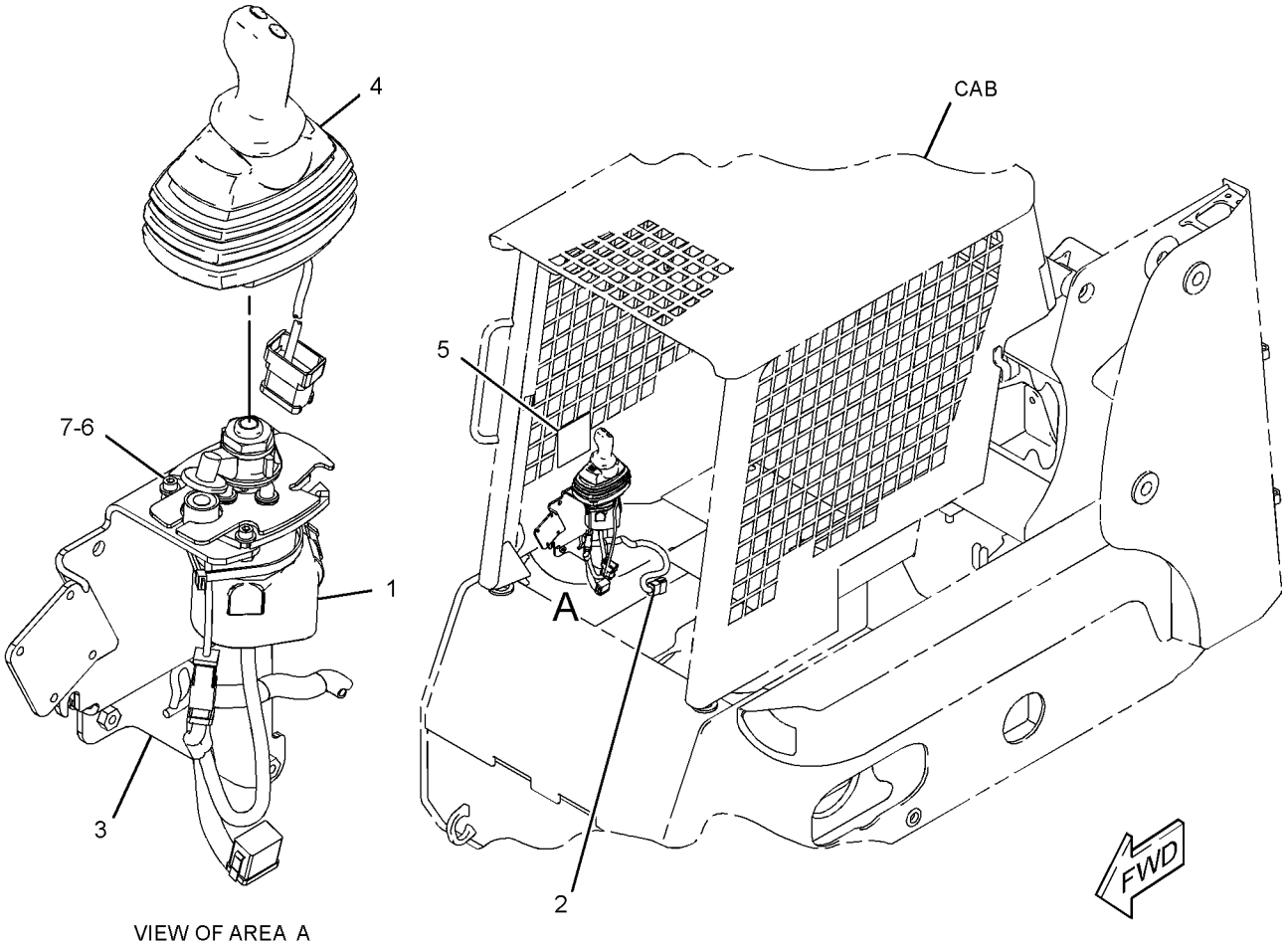

VIEW OF AREA A
(EXPLODED)

GRAPHIC #1 **<END>** g01417487

OPERATOR STATION

218-5612 CONTROL GP-PILOT OPERATED HYD

S/N: MJH10575-10747
ON/OFF AUXILIARY SWITCH
CANNOT BE USED WITH 218-5611—PAGE 532, 218-5618—PAGE 539, 218-6571—PAGE 551
AN ATTACHMENT

SMCS-5059, 5705 **i02280917**

NOTE	REF NO	GRAPHIC REF	PART NUMBER	QTY	PART NAME 1 2 3 4 5 6 (PRODUCT LEVEL)	SEE PAGE
M	1	2	**095-1207**	1	NUT (M12X1.75-THD)	
	2	2	**110-8760**	1	STRAP	
	3	2	**216-4704**	1	HARNESS AS-OPERATOR CONTROLS (JOYSTICK)	
		2	**155-2255**	1	KIT-CONNECTING PLUG (12-PIN)	
		2	**155-2270**	2	KIT-CONNECTING PLUG (2-PIN)	
					(EACH PLUG KIT INCLUDES PLUG AS, WEDGE & INTERFACE SEAL)	
		2	**102-8801**	1	KIT-RECEPTACLE (12-PIN)	
					(INCLUDES RECEPTACLE AS & WEDGE)	
	4	2	**218-6421**	1	BRACKET AS	
Y	5	2	**228-9228**	1	VALVE GP-PILOT (WORK TOOL)	398
Y	6	2	**231-4257**	1	CONTROL GP-HANDLE (RH) (WORK TOOL)	528
	7	1	**262-7668**	1	FILM-INSTRUCTION (MACHINE CONTROL, READ OMM)	
M	8	2	**8T-0269**	3	BOLT-SOCKET HEAD (M6X1X20-MM)	
	9	2	**8T-4205**	3	WASHER-HARD (7.2X14.5X2-MM THK)	

M-METRIC PART
Y-SEPARATE ILLUSTRATION

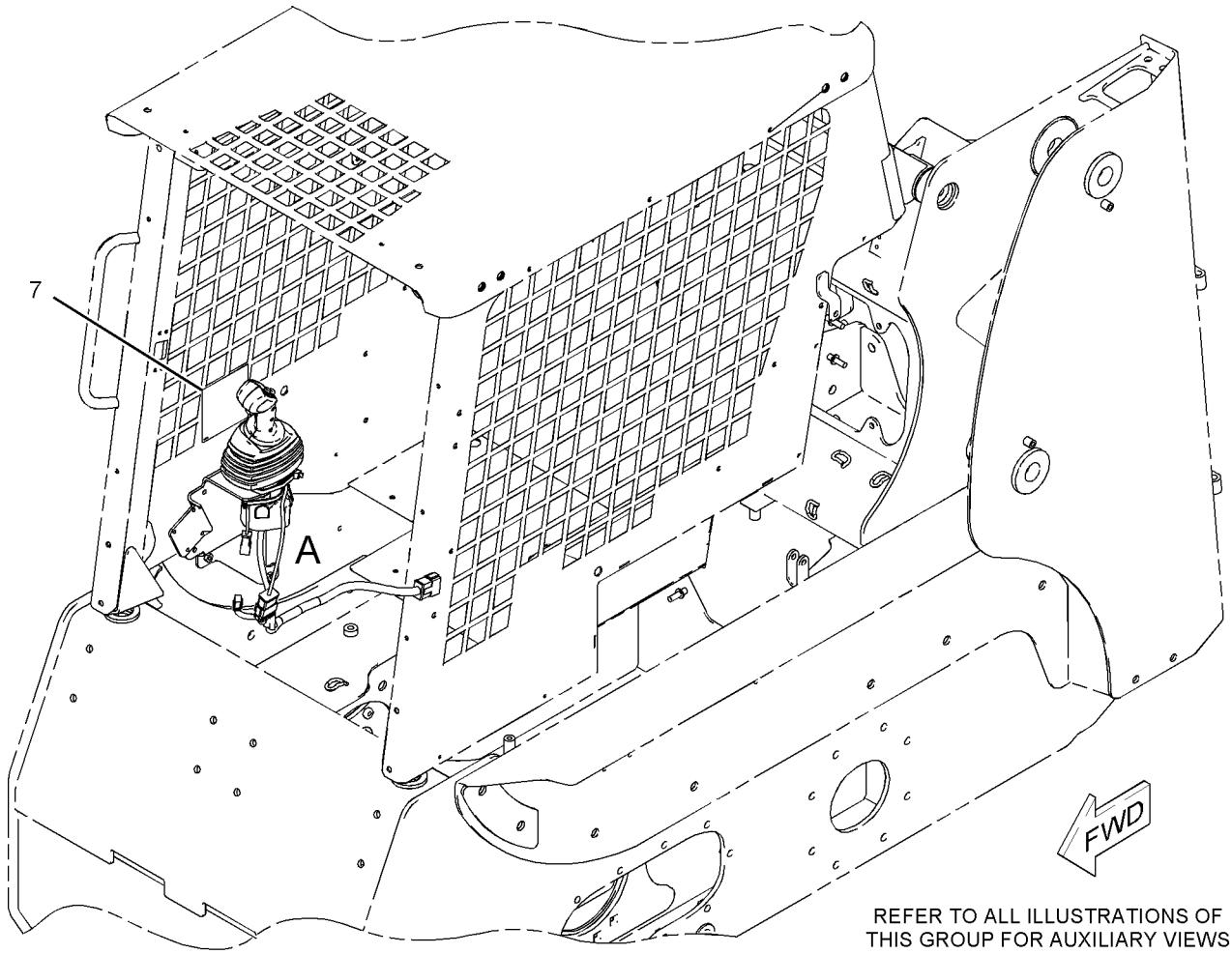

REFER TO ALL ILLUSTRATIONS OF THIS GROUP FOR AUXILIARY VIEWS

GRAPHIC #1 g01017033

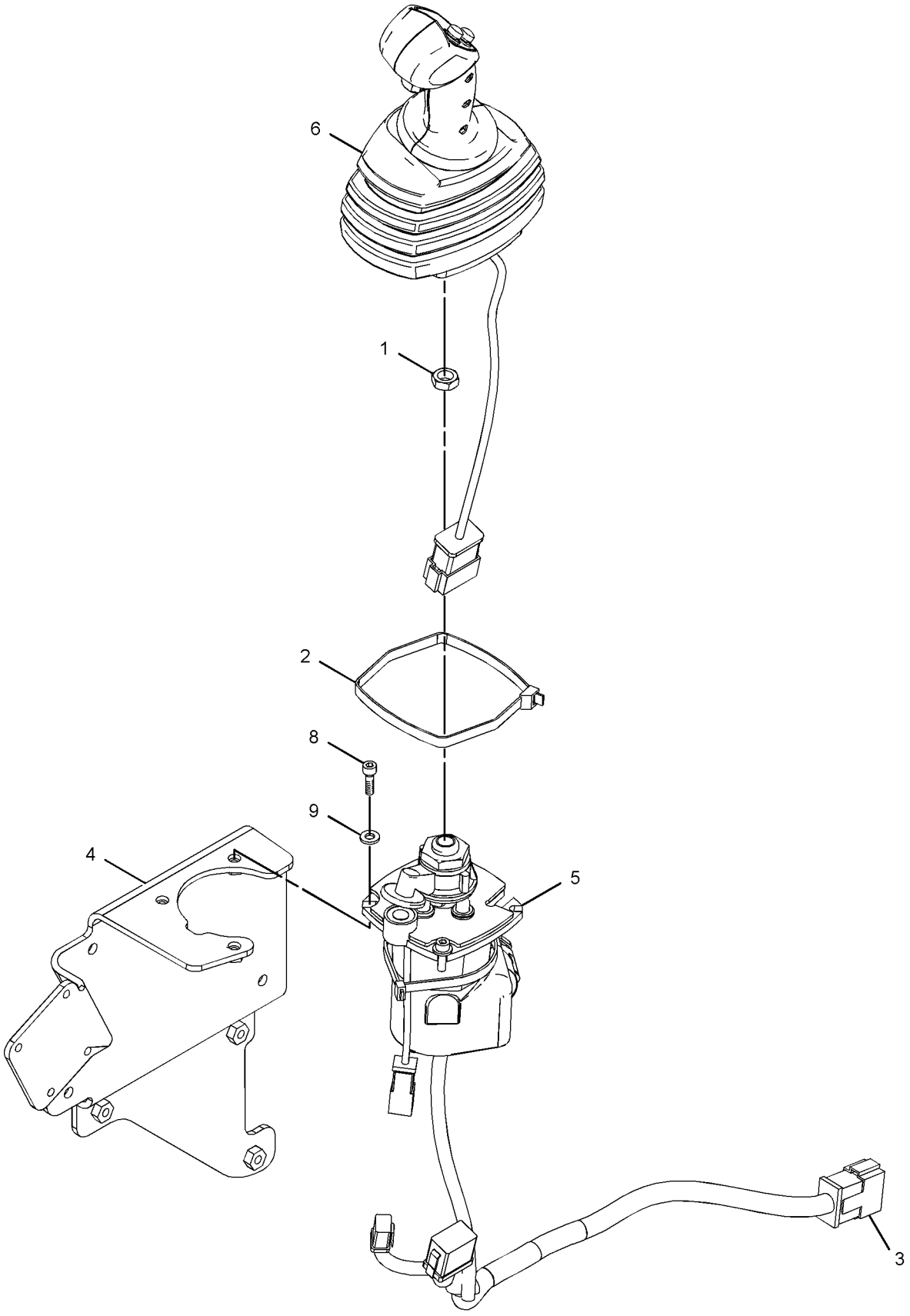

VIEW OF AREA A

<END>

GRAPHIC #2 g01017034

OPERATOR STATION

218-5612 CONTROL GP-PILOT OPERATED HYD

S/N: MJH10748-UP
ON/OFF AUXILIARY SWITCH
CANNOT BE USED WITH 218-5611—PAGE 532, 218-5618—PAGE 539, 218-6571—PAGE 551
AN ATTACHMENT

SMCS-5059, 5705 **i02839693**

NOTE	REF NO	GRAPHIC REF	PART NUMBER	QTY	PART NAME 1 2 3 4 5 6 (PRODUCT LEVEL)	SEE PAGE
M	1	1	**095-1207**	1	NUT (M12X1.75-THD)	
	2	1	**216-4704**	1	HARNESS AS-OPERATOR CONTROLS (JOYSTICK)	
	3	1	**218-6421**	1	BRACKET AS	
	4	1	**262-7668**	1	FILM-INSTRUCTION (MACHINE CONTROL, READ OMM)	
					CENTER FILM ON CANOPY	
Y	5	1	**299-9119**	1	VALVE GP-PILOT	401
Y	6	1	**231-4257**	1	CONTROL GP-HANDLE (RH) (WORK TOOL)	528
M	7	1	**8T-0269**	3	BOLT-SOCKET HEAD (M6X1X20-MM)	
	8	1	**8T-4205**	3	WASHER-HARD (7.2X14.5X2-MM THK)	

M-METRIC PART
Y-SEPARATE ILLUSTRATION

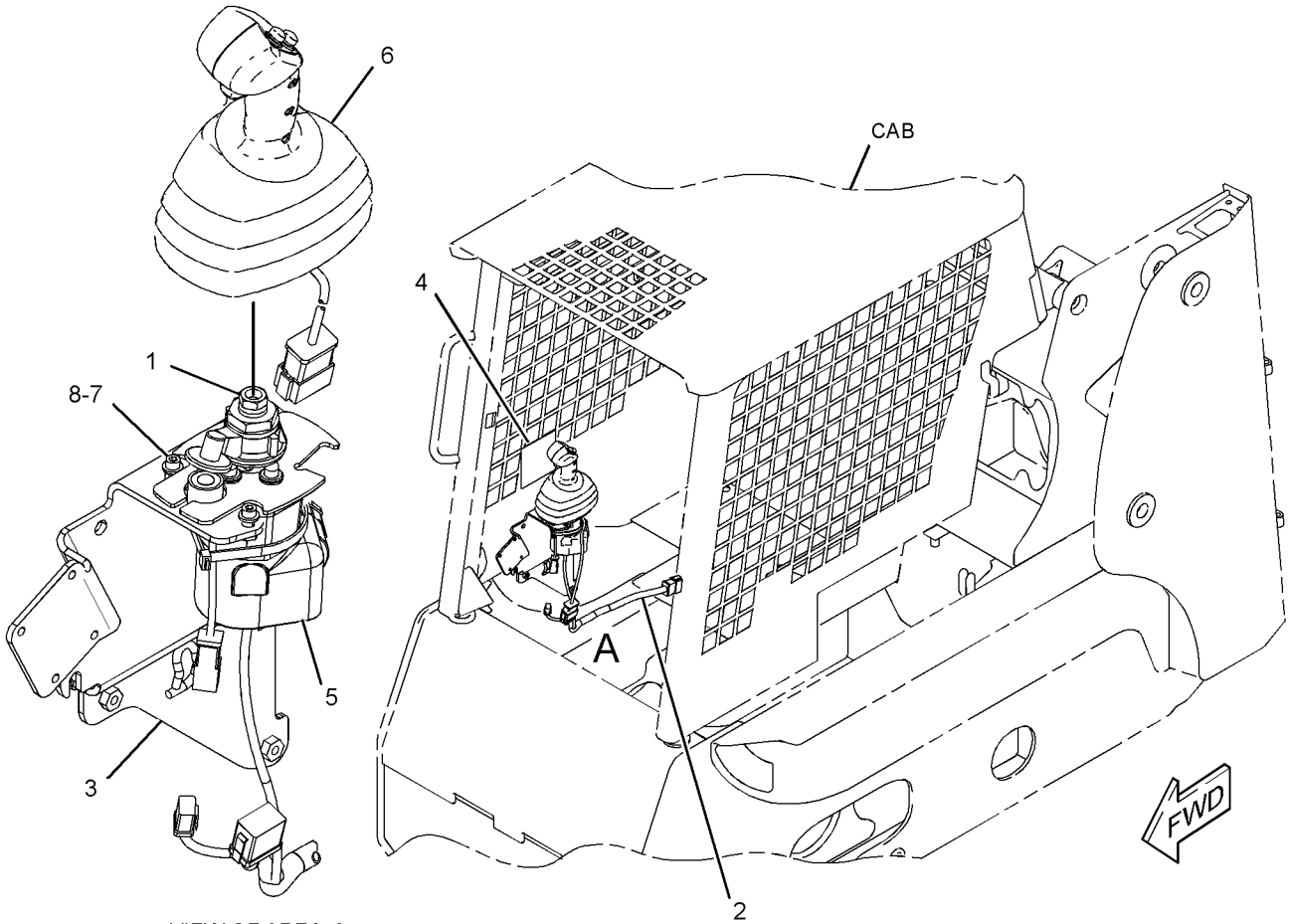

VIEW OF AREA A
(EXPLODED)

GRAPHIC #1 **<END>** g01417504

218-5618 CONTROL GP-PILOT OPERATED HYD

S/N: MJH10575-10747
PROPORTIONAL AUXILIARY SWITCH
PART OF 295-7493 CONTROL AR-MACHINE
CANNOT BE USED WITH 218-5611—PAGE 532, 218-5612—PAGE 536, 218-6571—PAGE 551
AN ATTACHMENT

SMCS-5059, 5705 **i01954541**

NOTE	REF NO	GRAPHIC REF	PART NUMBER	QTY	PART NAME 1 2 3 4 5 6 (PRODUCT LEVEL)	SEE PAGE
M	1	2	**095-1207**	1	NUT (M12X1.75-THD)	
	2	2	**110-8760**	1	STRAP	
	3	2	**216-4704**	1	HARNESS AS-OPERATOR CONTROLS (JOYSTICK)	
		2	**155-2255**	1	KIT-CONNECTING PLUG (12-PIN)	
		2	**155-2270**	2	KIT-CONNECTING PLUG (2-PIN)	
		2	**102-8801**	1	KIT-RECEPTACLE (12-PIN)	
	4	2	**218-6421**	1	BRACKET AS	
Y	5	2	**228-9228**	1	VALVE GP-PILOT (WORK TOOL)	398
Y	6	2	**231-4260**	1	CONTROL GP-HANDLE (RH) (WORK TOOL)	531
	7	1	**235-5243**	1	FILM-INSTRUCTION (MACHINE CONTROLS)	
M	8	2	**8T-0269**	3	BOLT-SOCKET HEAD (M6X1X20-MM)	
	9	2	**8T-4205**	3	WASHER-HARD (7.2X14.5X2-MM THK)	

M-METRIC PART
Y-SEPARATE ILLUSTRATION

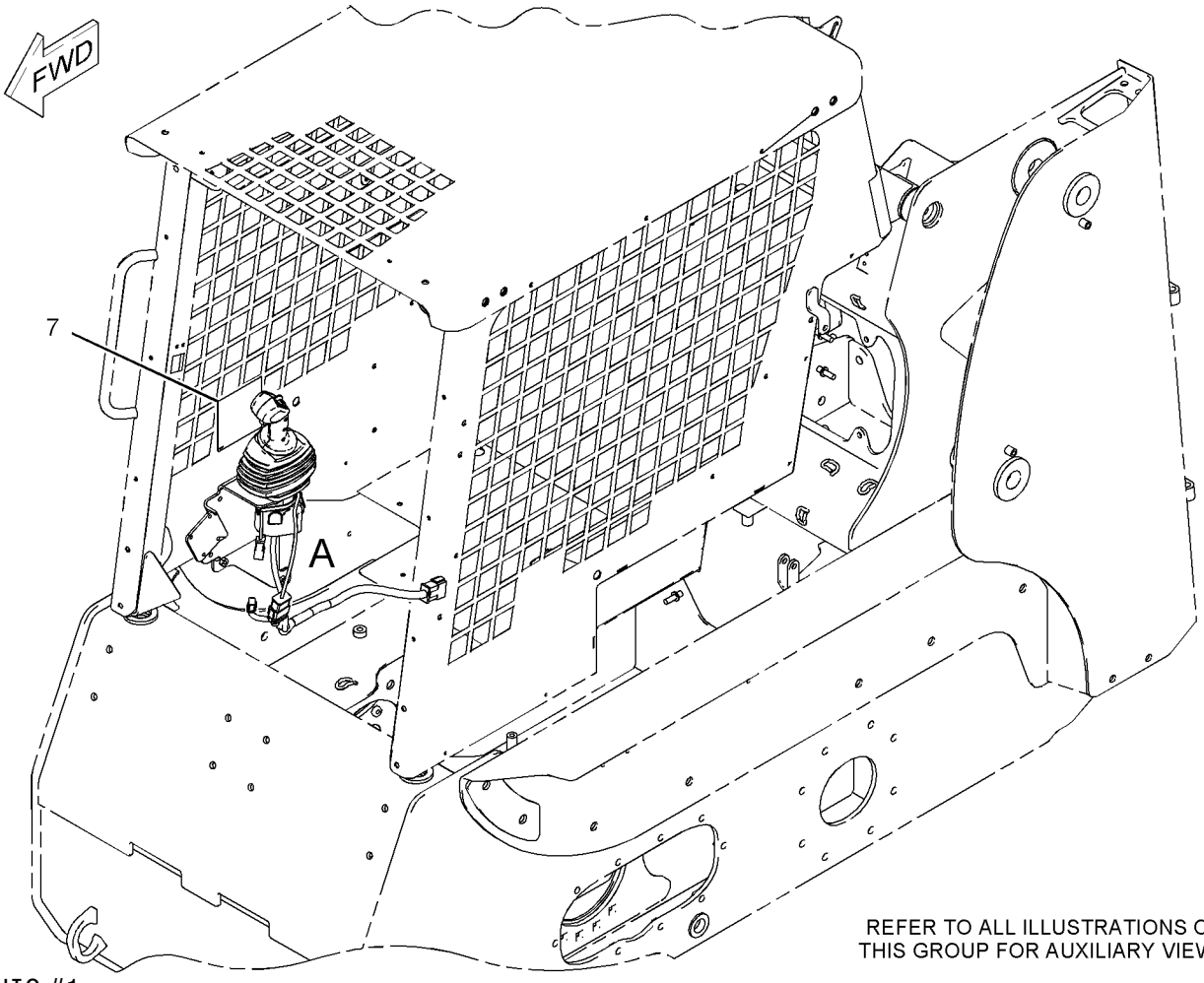

REFER TO ALL ILLUSTRATIONS OF THIS GROUP FOR AUXILIARY VIEWS

GRAPHIC #1 g01016439

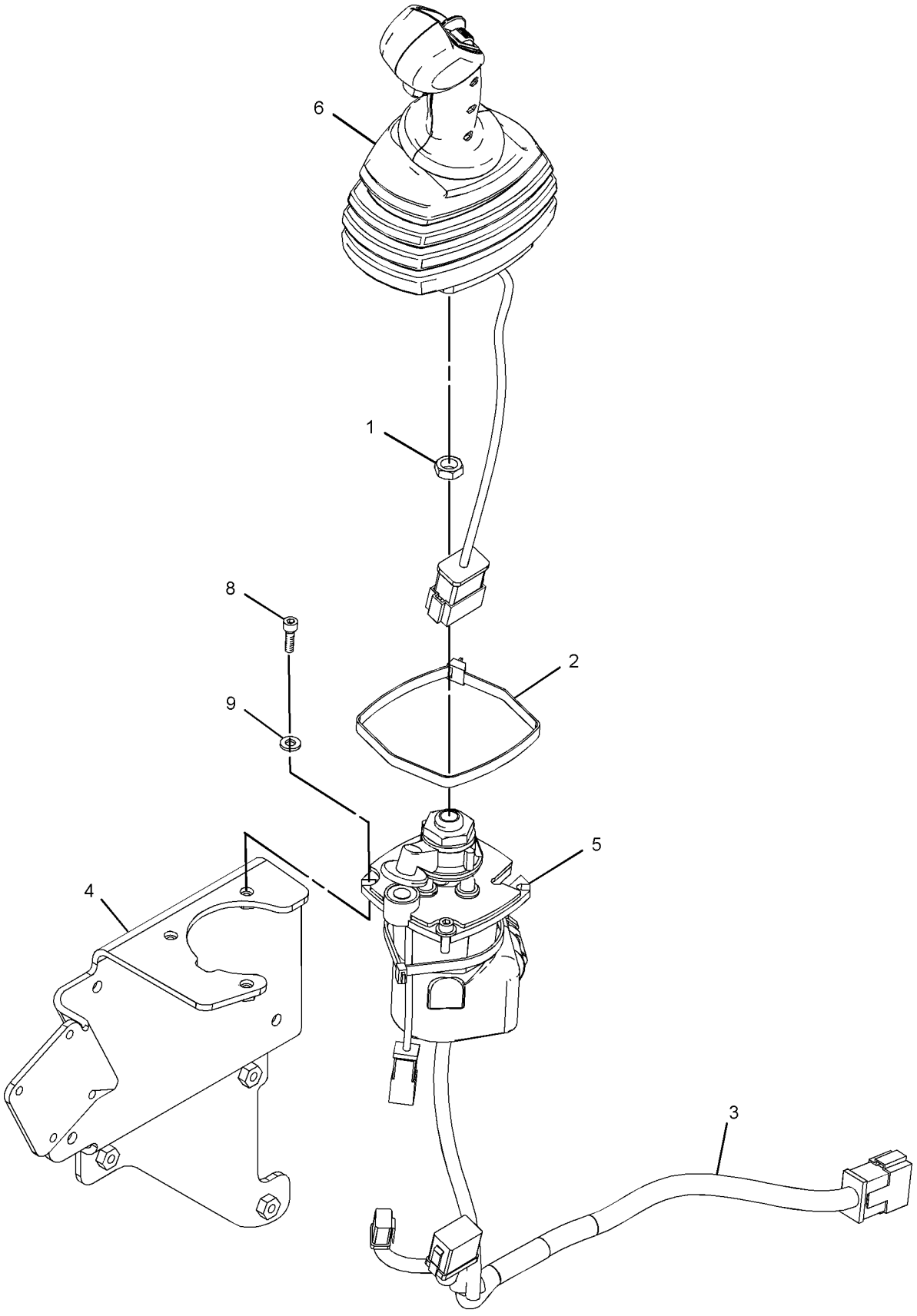

VIEW OF AREA A

GRAPHIC #2 **<END>** g01016444

218-5618 CONTROL GP-PILOT OPERATED HYD

S/N: MJH10748-UP
PROPORTIONAL AUXILIARY SWITCH
PART OF 295-7493 CONTROL AR-MACHINE
CANNOT BE USED WITH 218-5611—PAGE 532, 218-5612—PAGE 536, 218-6571—PAGE 551
AN ATTACHMENT

SMCS-5059, 5705 **i02839699**

NOTE	REF NO	GRAPHIC REF	PART NUMBER	QTY	PART NAME 1 2 3 4 5 6 (PRODUCT LEVEL)	SEE PAGE
M	1	1	**095-1207**	1	NUT (M12X1.75-THD)	
	2	1	**216-4704**	1	HARNESS AS-OPERATOR CONTROLS (JOYSTICK)	
	3	1	**218-6421**	1	BRACKET AS	
CY	4	1	**299-9119**	1	VALVE GP-PILOT	401
Y	5	1	**231-4260**	1	CONTROL GP-HANDLE (RH) (WORK TOOL)	531
	6	1	**235-5243**	1	FILM-INSTRUCTION (MACHINE CONTROLS)	
					CENTER FILM ON CANOPY	
M	7	1	**8T-0269**	3	BOLT-SOCKET HEAD (M6X1X20-MM)	
	8	1	**8T-4205**	3	WASHER-HARD (7.2X14.5X2-MM THK)	

C-CHANGE FROM PREVIOUS TYPE
M-METRIC PART
Y-SEPARATE ILLUSTRATION

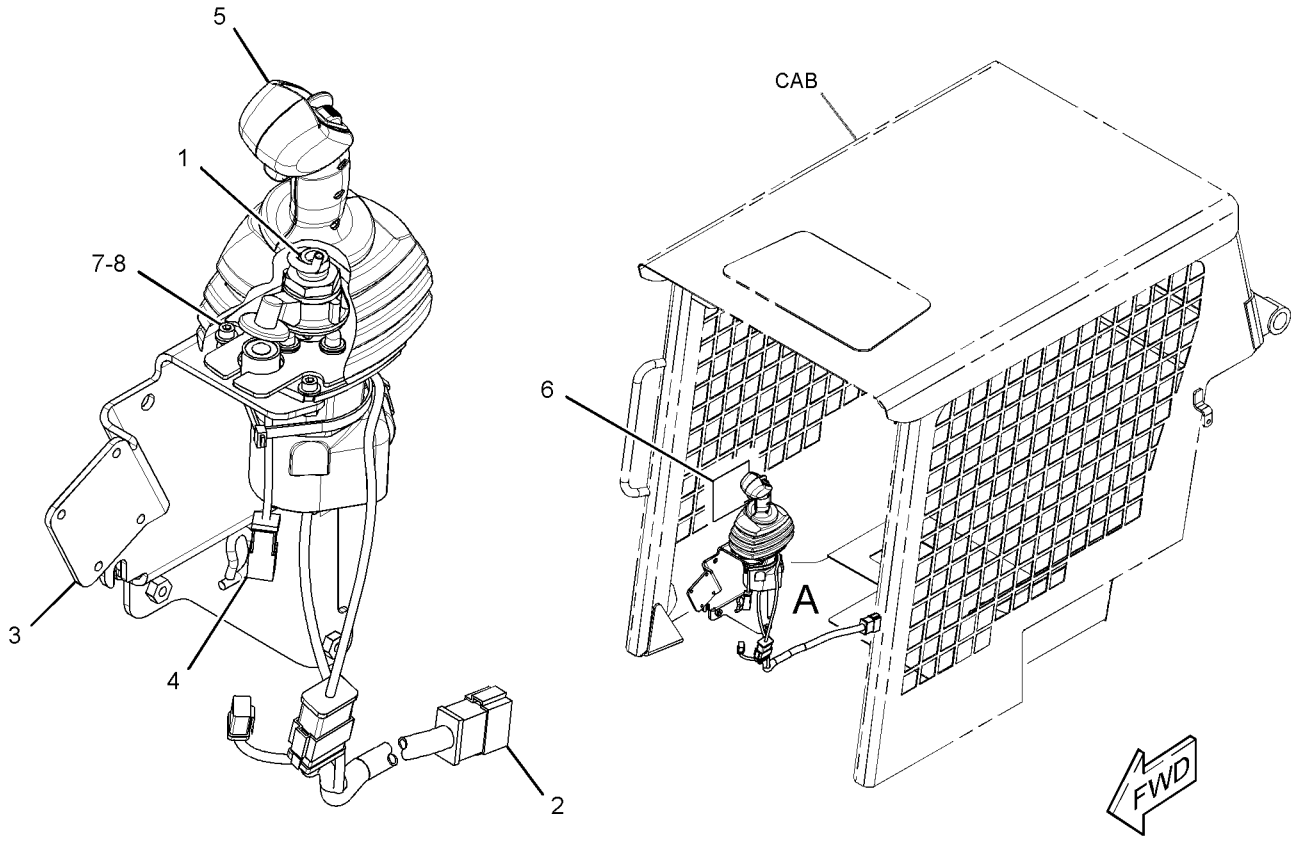

VIEW OF AREA A

GRAPHIC #1 **<END>** g01417564

OPERATOR STATION

218-5930 CONTROL GP-PILOT OPERATED HYD

S/N: MJH10575-10747

CANNOT BE USED WITH 218-5931—PAGE 545, 218-5932—PAGE 546

AN ATTACHMENT

SMCS-5059, 5705 **i02451276**

NOTE	REF NO	GRAPHIC REF	PART NUMBER	QTY	PART NAME 1 2 3 4 5 6 (PRODUCT LEVEL)	SEE PAGE
	1	2	**110-8760**	1	STRAP	
Y	3	2	**218-6119**	1	VALVE GP-PILOT (DIRECTION, SPEED)	396
	4	2	**218-6422**	1	BRACKET AS	
Y	5	2	**218-6480**	1	CONTROL GP-HANDLE (DIRECTION, SPEED)	524
	6	1	**237-5331**	1	FILM-INSTRUCTION (MACHINE CONTROL, READ OMM)	
M	7	2	**8T-0269**	3	BOLT-SOCKET HEAD (M6X1X20-MM)	
	8	2	**8T-4205**	3	WASHER-HARD (7.2X14.5X2-MM THK)	

M-METRIC PART
Y-SEPARATE ILLUSTRATION

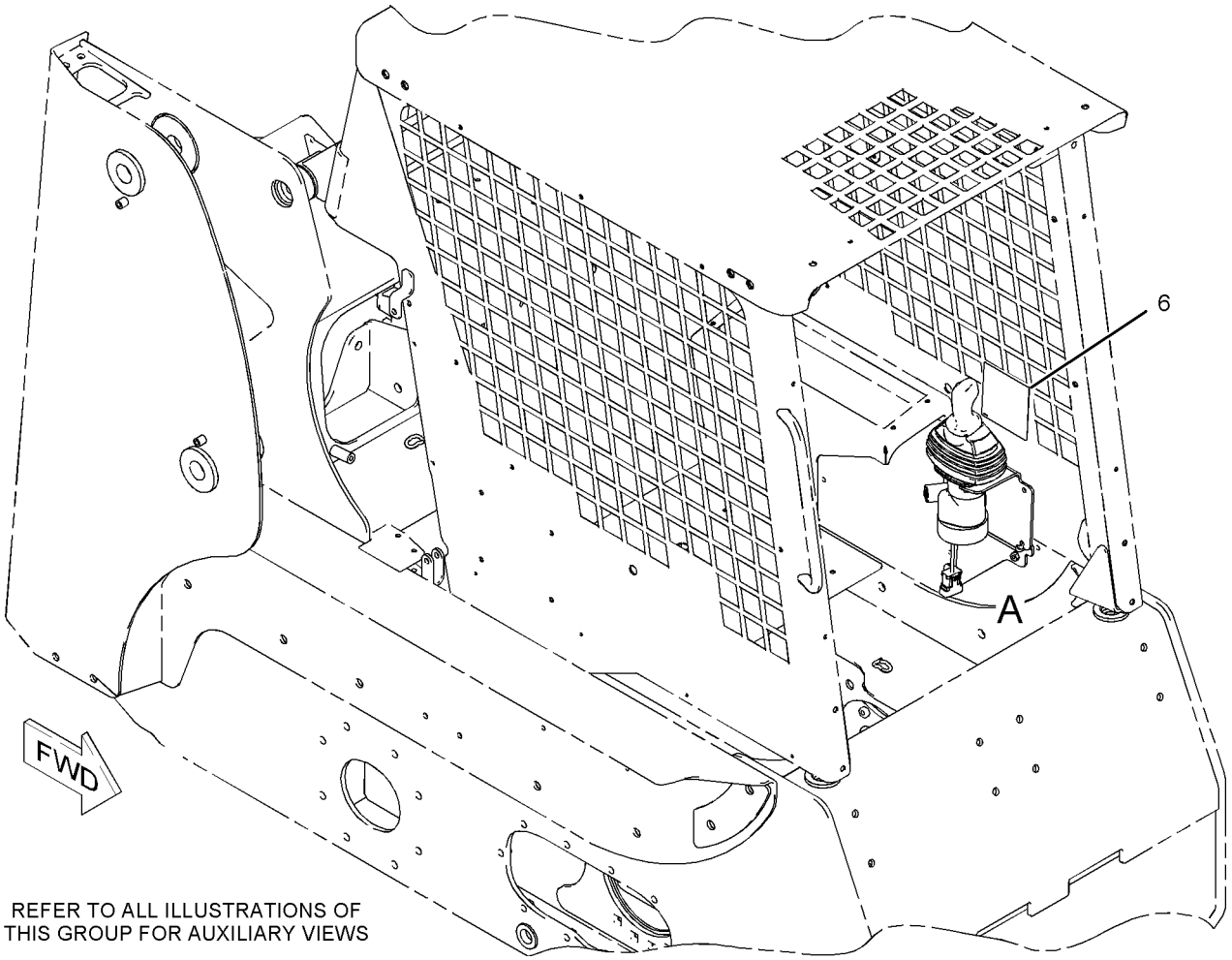

REFER TO ALL ILLUSTRATIONS OF THIS GROUP FOR AUXILIARY VIEWS

GRAPHIC #1 g01017159

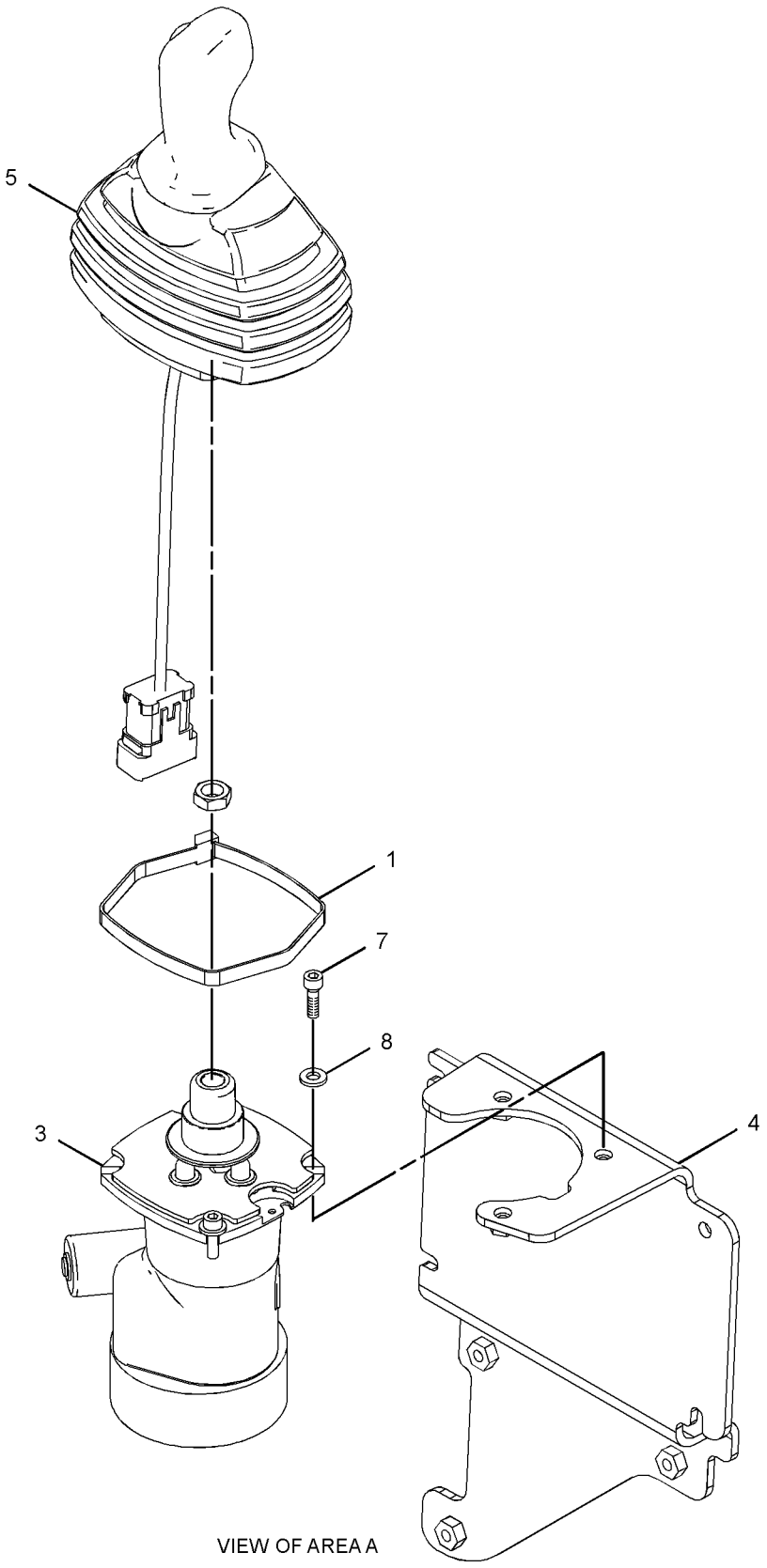

VIEW OF AREA A

GRAPHIC #2 **<END>** g01225787

OPERATOR STATION

218-5930 CONTROL GP-PILOT OPERATED HYD

S/N: MJH10748-UP

CANNOT BE USED WITH 218-5931—PAGE 545, 218-5932—PAGE 546

AN ATTACHMENT

SMCS-5059, 5705 **i02839730**

NOTE	REF NO	GRAPHIC REF	PART NUMBER	QTY	PART NAME 1 2 3 4 5 6 (PRODUCT LEVEL)	SEE PAGE
	1	1	**218-6422**	1	BRACKET AS	
Y	2	1	**218-6480**	1	CONTROL GP-HANDLE (DIRECTION, SPEED)	524
CY	3	1	**299-9116**	1	VALVE GP-PILOT (DIRECTION, SPEED)	400
	4	1	**237-5331**	1	FILM-INSTRUCTION (MACHINE CONTROL, READ OMM)	
M	5	1	**8T-0269**	3	BOLT-SOCKET HEAD (M6X1X20-MM)	
	6	1	**8T-4205**	3	WASHER-HARD (7.2X14.5X2-MM THK)	

C-CHANGE FROM PREVIOUS TYPE
M-METRIC PART
Y-SEPARATE ILLUSTRATION

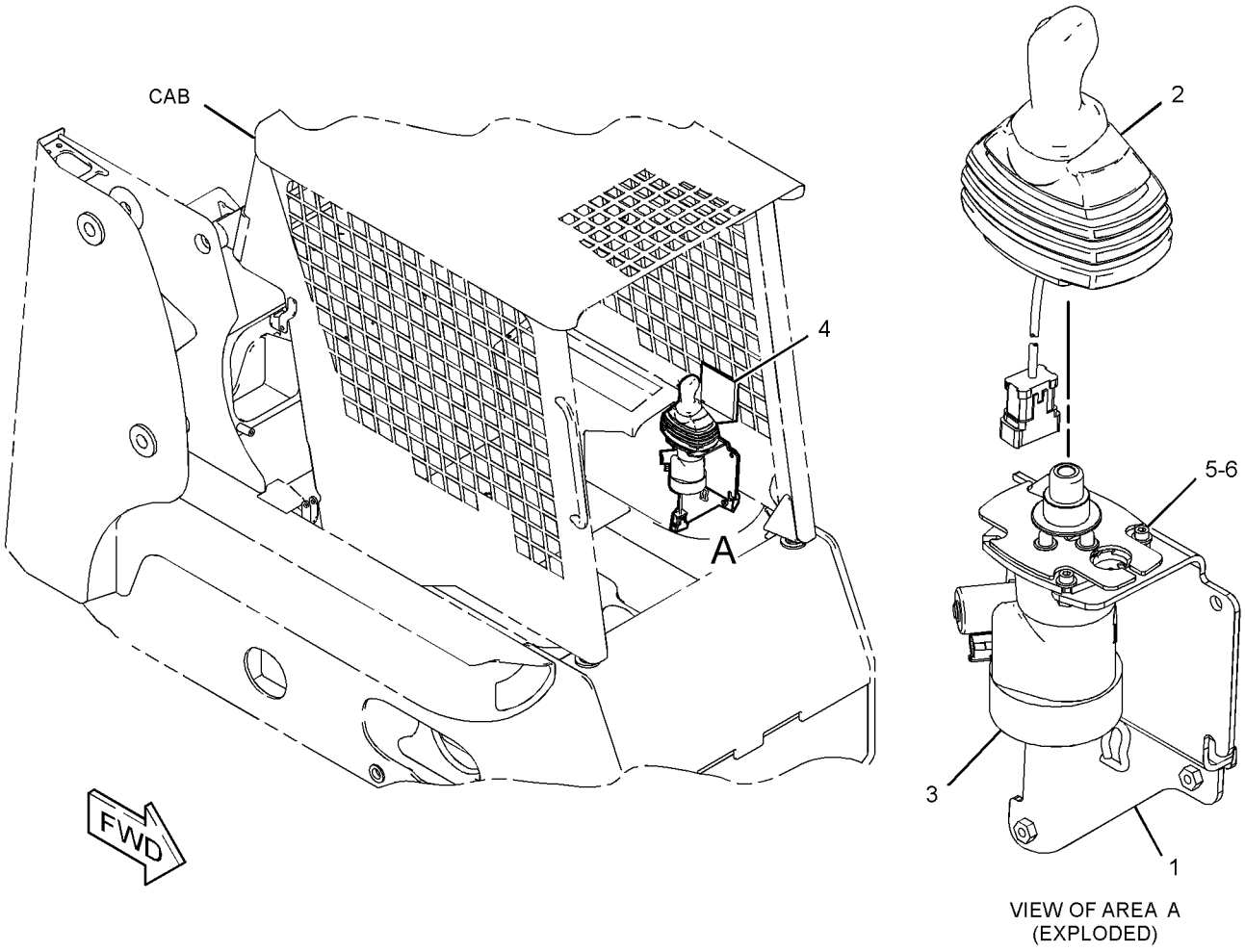

VIEW OF AREA A
(EXPLODED)

GRAPHIC #1 **<END>** g01417246

218-5931 CONTROL GP-PILOT OPERATED HYD

S/N: MJH10575-UP
HORN
PART OF 295-7491 CONTROL AR-MACHINE
CANNOT BE USED WITH 218-5930—PAGE 542, 218-5932—PAGE 546
AN ATTACHMENT

SMCS-5059, 5705 **i02451259**

NOTE	REF NO	GRAPHIC REF	PART NUMBER	QTY	PART NAME 1 2 3 4 5 6 (PRODUCT LEVEL)	SEE PAGE
	1	1	**110-8760**	1	STRAP	
M	2	1	**8T-4137**	1	BOLT (M10X1.5X20-MM)	
	3	1	**164-9425**	1	HORN AS (LOW TONE)	
	4	1	**8T-4205**	3	WASHER-HARD (7.2X14.5X2-MM THK)	
Y	5	1	**218-6119**	1	VALVE GP-PILOT (DIRECTION, SPEED)	396
	6	1	**218-6422**	1	BRACKET AS	
Y	7	1	**218-6485**	1	CONTROL GP-HANDLE (DIRECTION, SPEED)	525
	8	1	**237-5331**	1	FILM-INSTRUCTION (MACHINE CONTROL, READ OMM)	
M	9	1	**8T-0269**	3	BOLT-SOCKET HEAD (M6X1X20-MM)	
	10	1	**8T-4121**	1	WASHER-HARD (11X21X2.5-MM THK)	

M-METRIC PART
Y-SEPARATE ILLUSTRATION

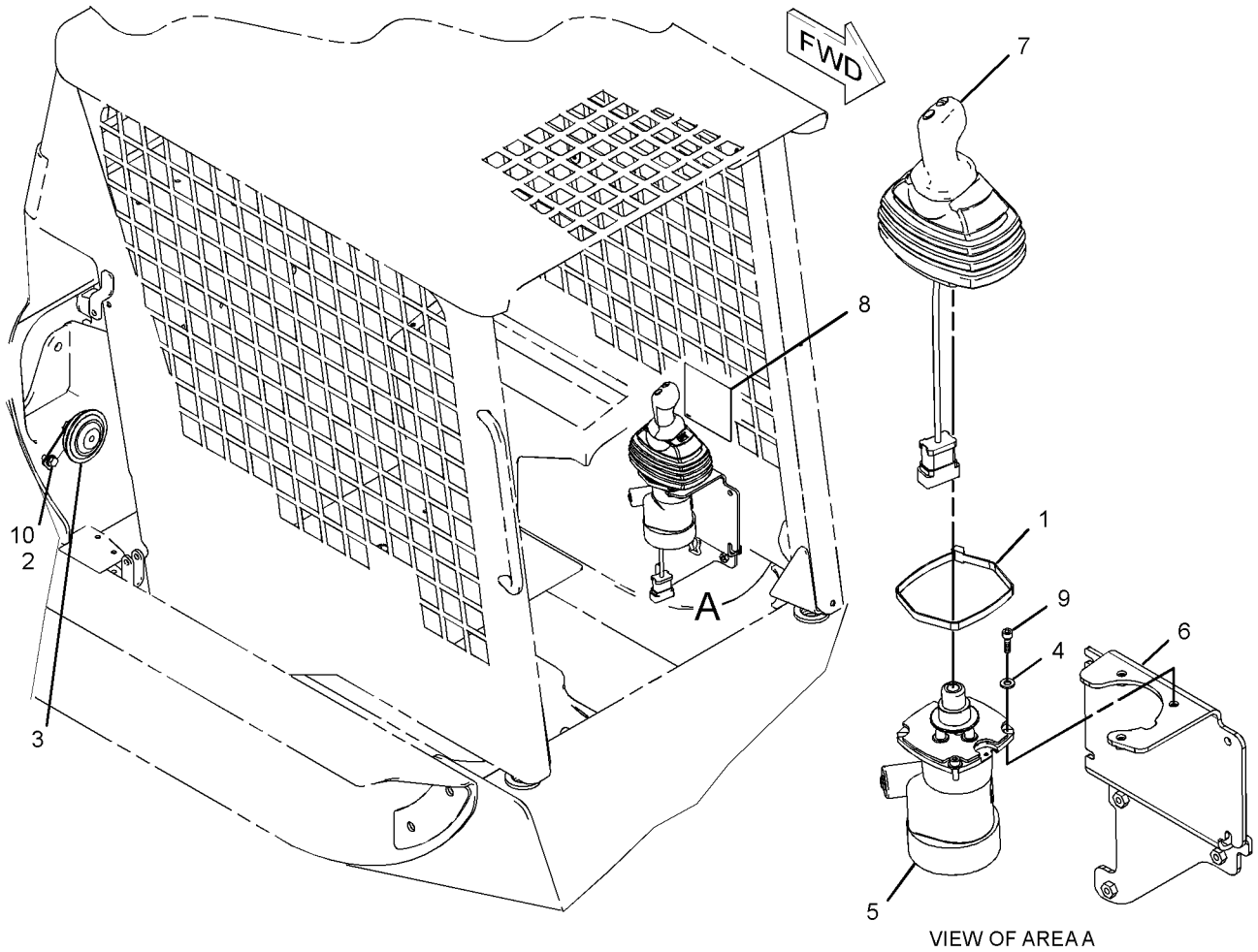

VIEW OF AREA A

GRAPHIC #1 **<END>** g01225060

OPERATOR STATION

218-5932 CONTROL GP-PILOT OPERATED HYD

S/N: MJH10575-UP
HORN
PART OF 295-7493 CONTROL AR-MACHINE
CANNOT BE USED WITH 218-5930—PAGE 542, 218-5931—PAGE 545
AN ATTACHMENT

SMCS-5059, 5705 **i02451290**

NOTE	REF NO	GRAPHIC REF	PART NUMBER	QTY	PART NAME 1 2 3 4 5 6 (PRODUCT LEVEL)	SEE PAGE
M	1	2	**095-1207**	1	NUT (M12X1.75-THD)	
	2	2	**110-8760**	1	STRAP	
Y	3	2	**218-6119**	1	VALVE GP-PILOT (DIRECTION, SPEED)	396
	4	2	**218-6422**	1	BRACKET AS	
Y	5	2	**231-4256**	1	CONTROL GP-HANDLE (LH) (DIRECTION, SPEED)	527
	6	1	**235-5246**	1	FILM-INSTRUCTION (MACHINE CONTROL, READ OMM)	
M	7	2	**8T-0269**	3	BOLT-SOCKET HEAD (M6X1X20-MM)	
	8	2	**8T-4205**	3	WASHER-HARD (7.2X14.5X2-MM THK)	
M	9	2	**8T-4137**	1	BOLT (M10X1.5X20-MM)	
	10	2	**164-9425**	1	HORN AS (LOW TONE)	
	11	2	**8T-4121**	1	WASHER-HARD (11X21X2.5-MM THK)	

M-METRIC PART
Y-SEPARATE ILLUSTRATION

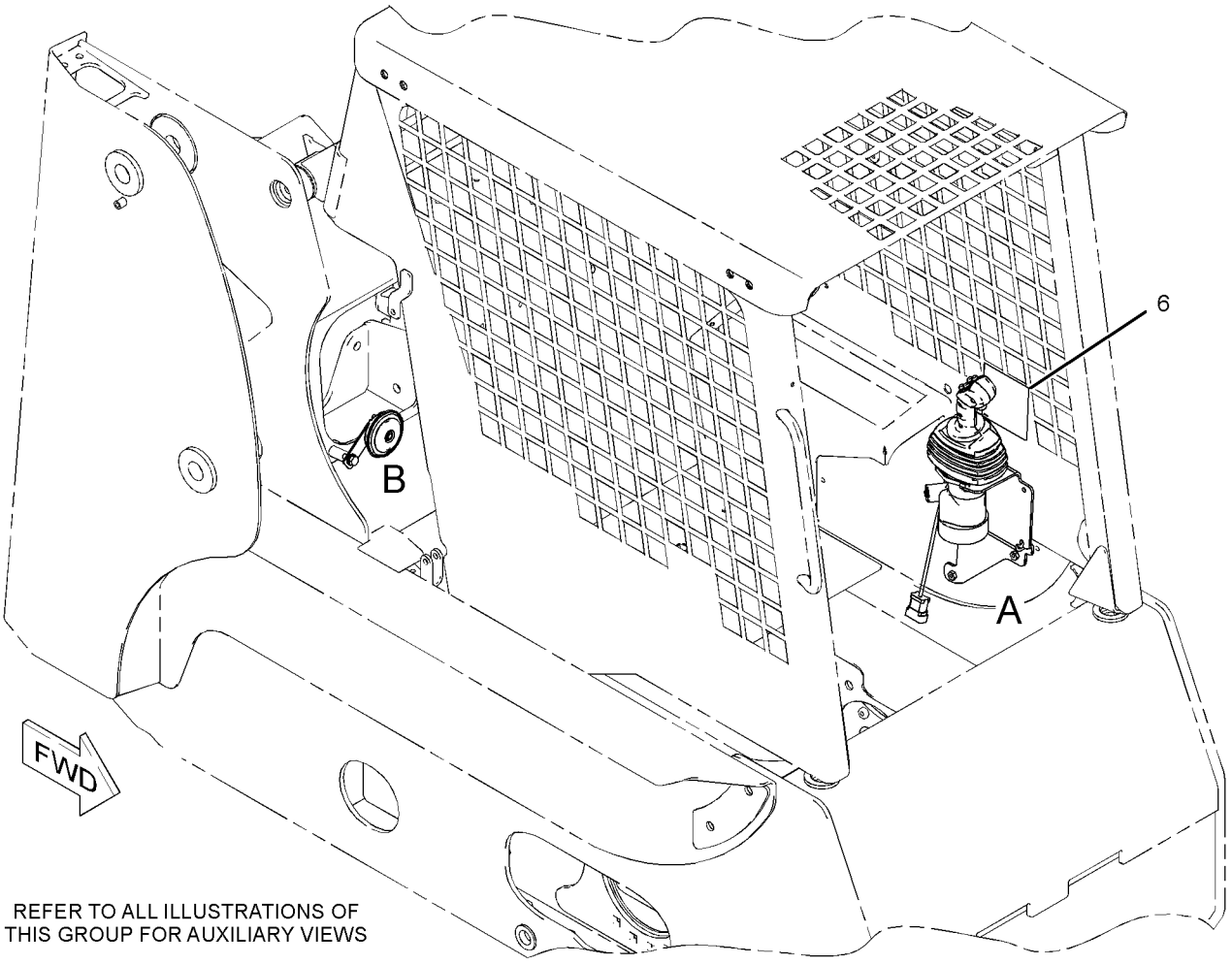

REFER TO ALL ILLUSTRATIONS OF THIS GROUP FOR AUXILIARY VIEWS

GRAPHIC #1 g01229647

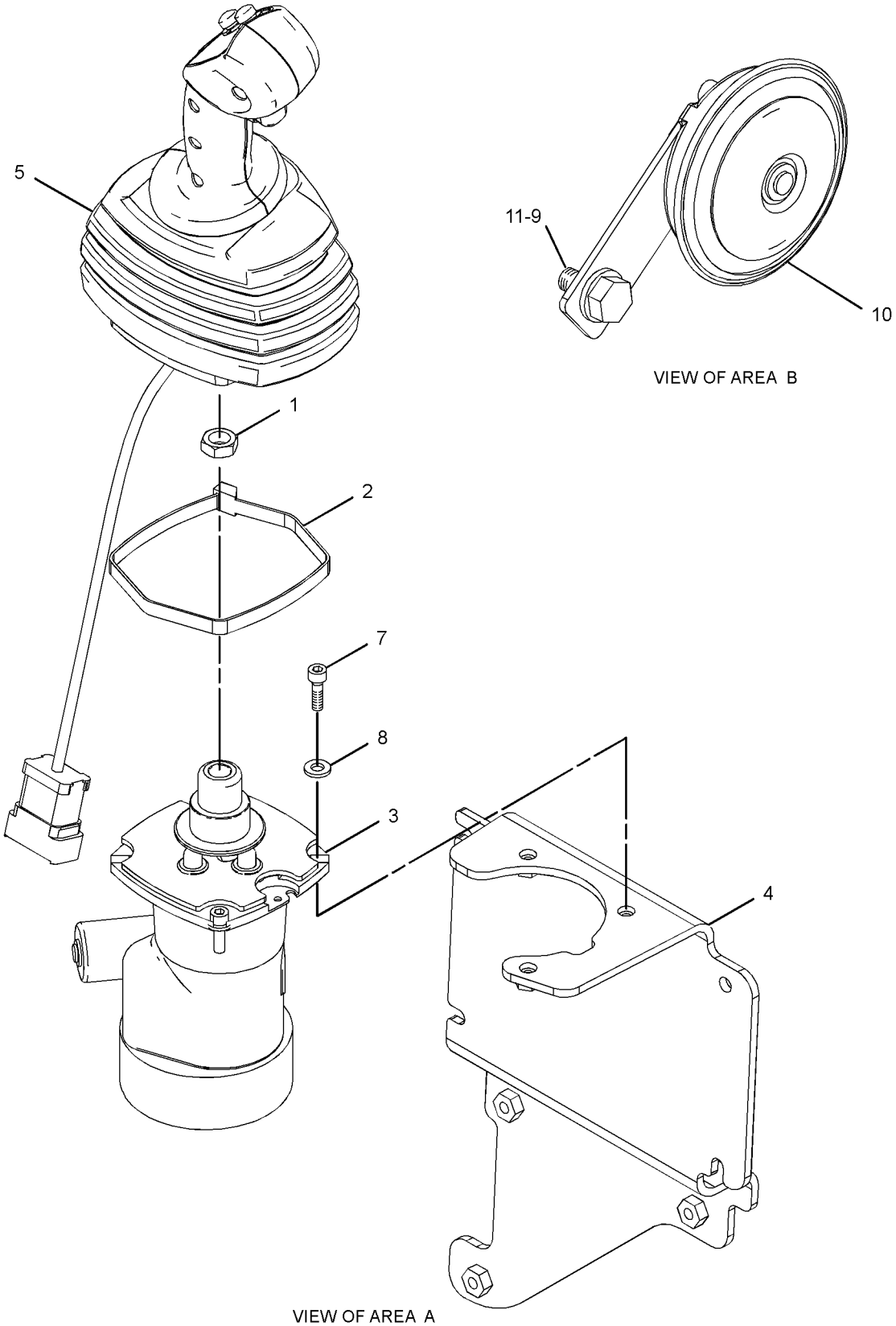

GRAPHIC #2 **<END>** g01229637

OPERATOR STATION

218-5933 CONTROL GP-PILOT OPERATED HYD

S/N: MJH10575-UP
HORN, FOURTH FUNCTION
PART OF 295-7504, 295-7507 HYDRAULIC AR
AN ATTACHMENT

SMCS-5059, 5705 **i02639946**

NOTE	REF NO	GRAPHIC REF	PART NUMBER	QTY	PART NAME 1 2 3 4 5 6 (PRODUCT LEVEL)	SEE PAGE
M	1	2	**095-1207**	1	NUT (M12X1.75-THD)	
	2	2	**110-8760**	1	STRAP	
	3	2	**8T-4205**	3	WASHER-HARD (7.2X14.5X2-MM THK)	
M	4	2	**8T-0269**	3	BOLT-SOCKET HEAD (M6X1X20-MM)	
	5	1	**235-5246**	1	FILM-INSTRUCTION (MACHINE CONTROL, READ OMM)	
Y	6	2	**218-6119**	1	VALVE GP-PILOT (DIRECTION, SPEED)	396
	7	2	**218-6422**	1	BRACKET AS	
Y	8	2	*225-7960*	1	WIRING GP-WORK TOOL (RADIAL LIFT)	187
Y	9	2	**231-4258**	1	CONTROL GP-HANDLE (LH) (DIRECTION, SPEED)	529
BF		1	**113-8490**	1	FUSE (10-AMPERE)	
BF		1	**164-9425**	1	HORN AS (24-VOLT, LOW TONE)	
BF		1	**177-9853**	1	RECEPTACLE AS	
F		1	**178-3586**	1	LOCK	
BF		1	**8T-4121**	1	WASHER-HARD (11X21X2.5-MM THK)	
BFM		1	**8T-4137**	1	BOLT (M10X1.5X20-MM)	

B-USE AS REQUIRED
F-NOT SHOWN
M-METRIC PART
Y-SEPARATE ILLUSTRATION

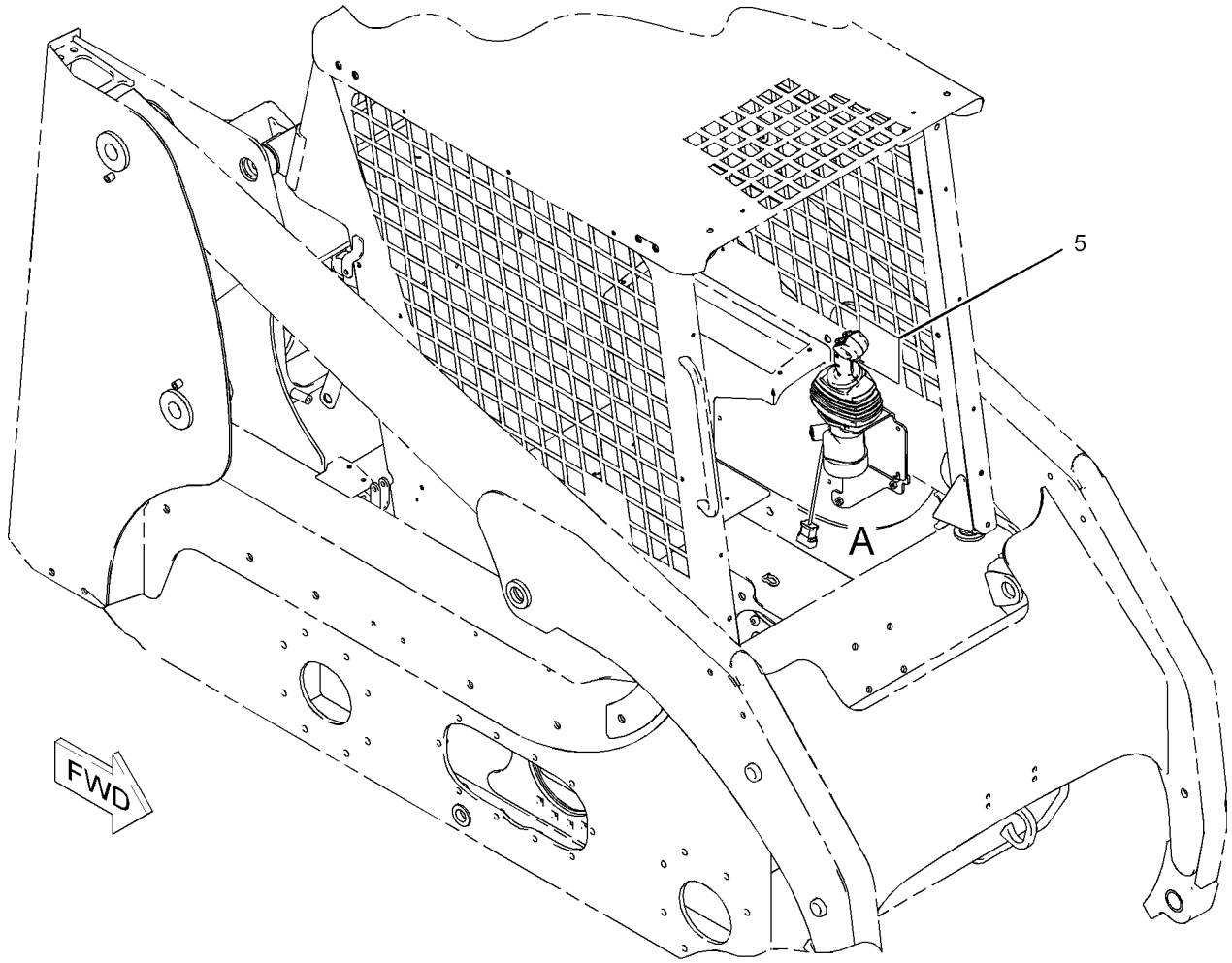

GRAPHIC #1 g01041619

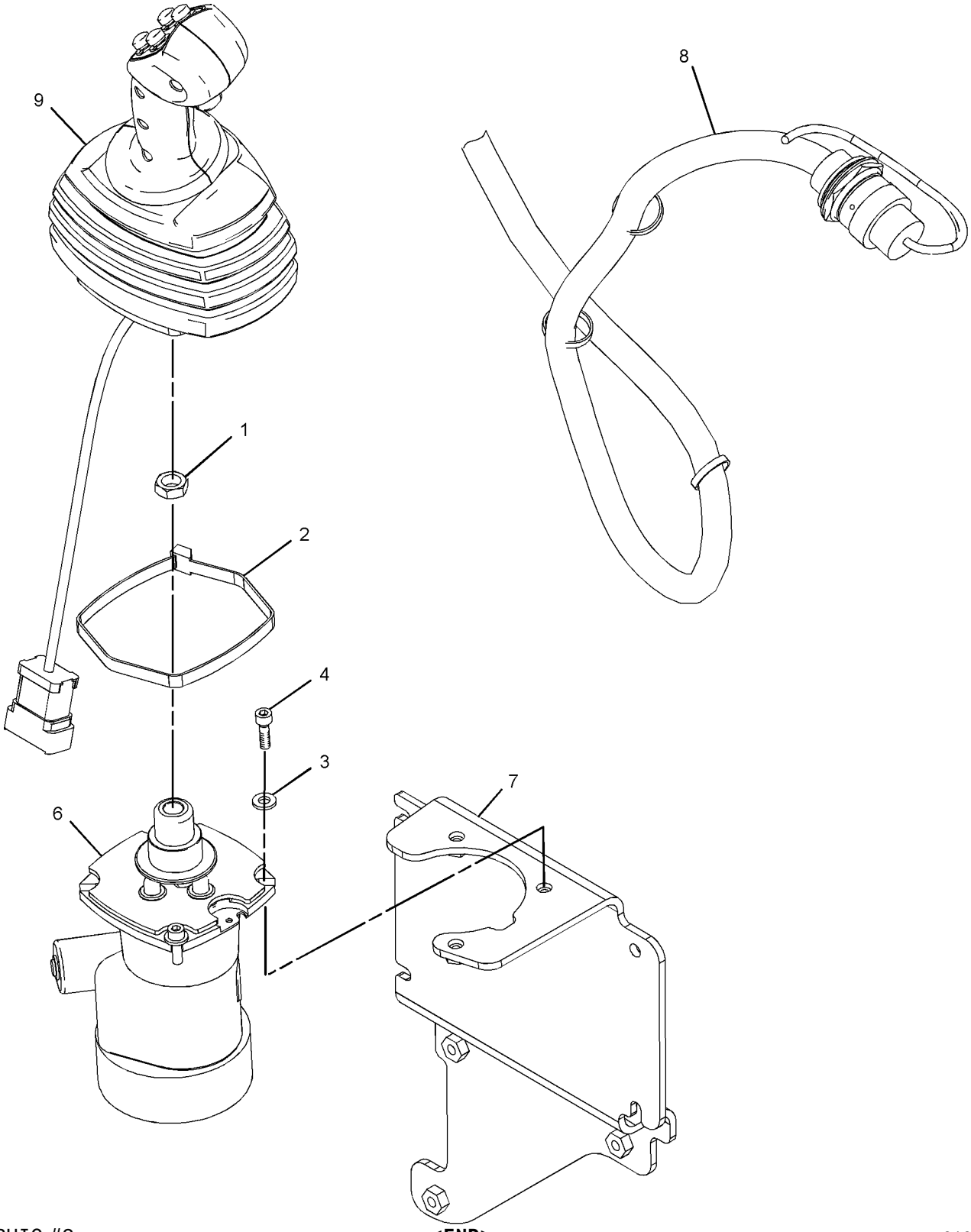

GRAPHIC #2

<END>

g01041620

OPERATOR STATION

218-6571 CONTROL GP-PILOT OPERATED HYD

S/N: MJH10575-10747
HIGH FLOW, PROPORTIONAL AUXILIARY
PART OF 295-7504, 295-7507 HYDRAULIC AR
AN ATTACHMENT

SMCS-5059, 5705 **i02359323**

NOTE	REF NO	GRAPHIC REF	PART NUMBER	QTY	PART NAME 1 2 3 4 5 6 (PRODUCT LEVEL)	SEE PAGE
M	1	2	**095-1207**	1	NUT (M12X1.75-THD)	
	2	2	**110-8760**	1	STRAP	
	3	1,2	**115-1615**	1	RELAY AS (12-VOLT)	
	4	2	**133-9931**	1	JUMPER AS	
		2	**102-8803**		KIT-RECEPTACLE (3-PIN)	
					(INCLUDES RECEPTACLE AS & WEDGE)	
	5	2	**218-6421**	1	BRACKET AS	
	6	1	**223-5942**	1	SWITCH GP-ROCKER (HIGH FLOW)	
		1	**111-7899**	1	GASKET	
	7	2	**225-8005**	1	HARNESS AS-OPERATOR CONTROLS (HIGH FLOW)	
		2	**102-8802**	1	KIT-RECEPTACLE (2-PIN)	
		2	**102-8806**	1	KIT-RECEPTACLE (8-PIN)	
					(EACH KIT INCLUDES RECEPTACLE AS & WEDGE)	
		2	**155-2270**	5	KIT-CONNECTING PLUG (2-PIN)	
					(EACH KIT INCLUDES PLUG AS, WEDGE & INTERFACE SEAL)	
	8	1	**225-8009**	1	HARNESS AS-OPERATOR CONTROLS (JOYSTICK)	
		1	**155-2255**	1	KIT-CONNECTING PLUG (12-PIN)	
		1	**155-2260**	1	KIT-CONNECTING PLUG (3-PIN)	
		1	**155-2270**	2	KIT-CONNECTING PLUG (2-PIN)	
					(EACH KIT INCLUDES PLUG AS, WEDGE & INTERFACE SEAL)	
		1	**102-8802**	1	KIT-RECEPTACLE (2-PIN)	
		1	**102-8801**	1	KIT-RECEPTACLE (12-PIN)	
					(EACH KIT INCLUDES RECEPTACLE AS & WEDGE)	
Y	9	2	**228-9228**	1	VALVE GP-PILOT (WORK TOOL)	398
Y	10	2	**231-4259**	1	CONTROL GP-HANDLE (RH)	530
	11	1	**235-5243**	1	FILM-INSTRUCTION (MACHINE CONTROLS)	
M	12	2	**8T-0269**	3	BOLT-SOCKET HEAD (M6X1X20-MM)	
	13	2	**8T-4205**	3	WASHER-HARD (7.2X14.5X2-MM THK)	

M-METRIC PART
Y-SEPARATE ILLUSTRATION

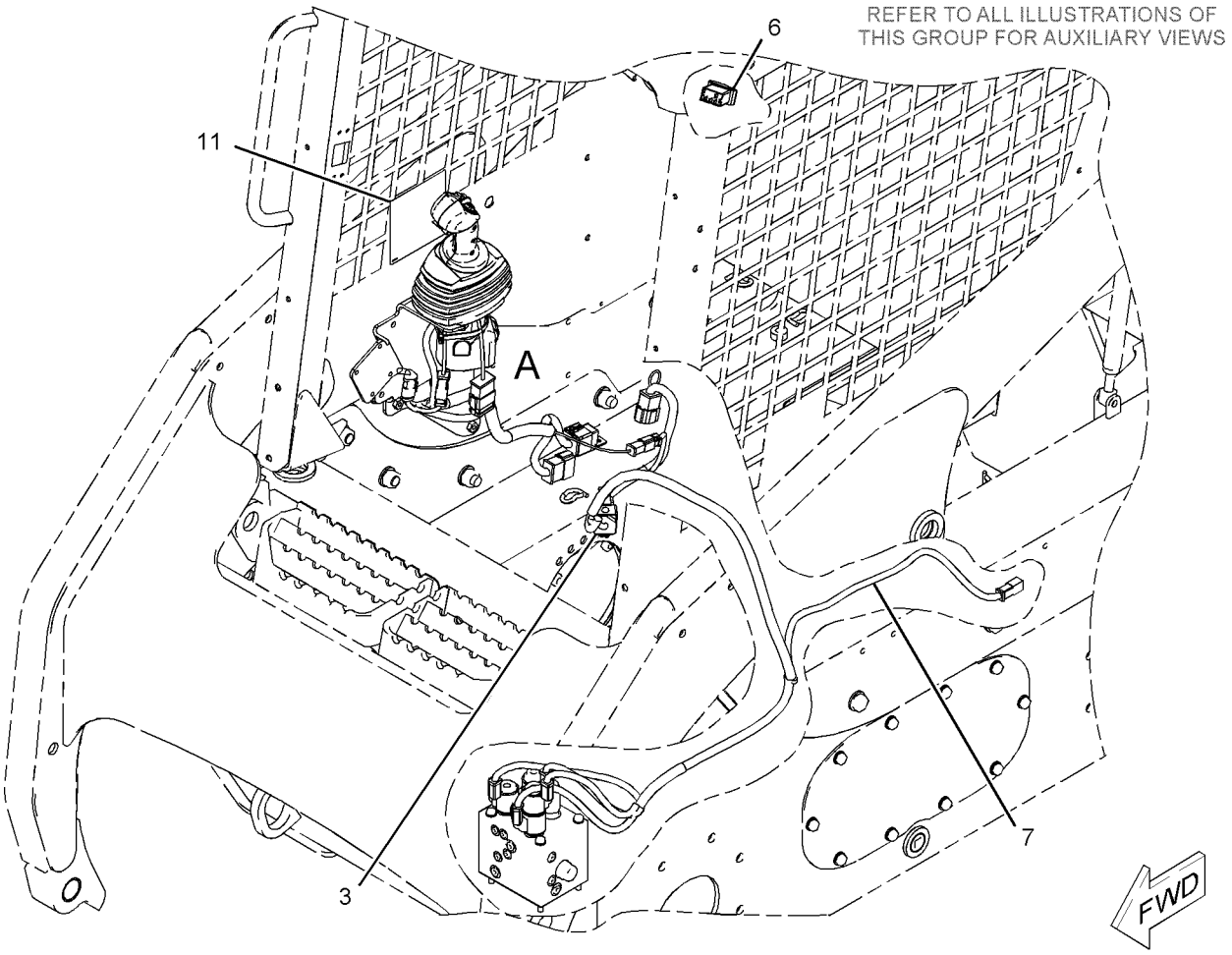

GRAPHIC #1 g01038717

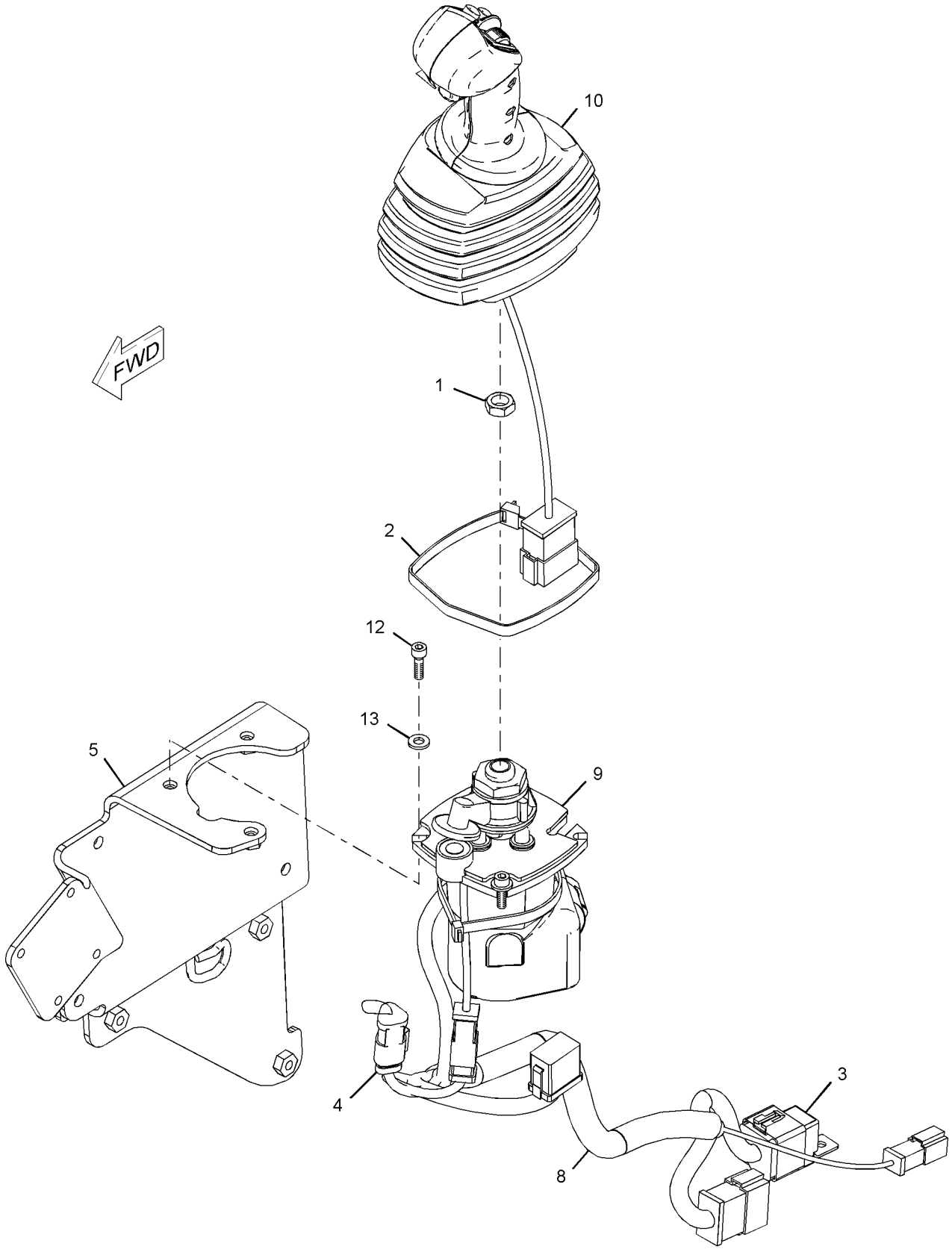

VIEW OF AREA A

GRAPHIC #2 **<END>** g01038719

OPERATOR STATION

218-6571 CONTROL GP-PILOT OPERATED HYD

S/N: MJH10748-UP
HIGH FLOW, PROPORTIONAL AUXILIARY
PART OF 295-7504, 295-7507 HYDRAULIC AR
AN ATTACHMENT

SMCS-5059, 5705 **i02839721**

NOTE	REF NO	GRAPHIC REF	PART NUMBER	QTY	PART NAME 1 2 3 4 5 6 (PRODUCT LEVEL)	SEE PAGE
M	1	2	**095-1207**	1	NUT (M12X1.75-THD)	
	3	2	**115-1615**	1	RELAY AS (12-VOLT)	
	4	2	**133-9931**	1	JUMPER AS	
		2	**8T-8737**	1	PLUG-SEAL	
		2	**186-3735**	2	PIN-CONNECTOR (16-GA TO 18-GA)	
		2	**102-8803**	1	KIT-RECEPTACLE (3-PIN)	
					(INCLUDES RECEPTACLE AS & WEDGE)	
	5	2	**218-6421**	1	BRACKET AS	
	6	1	**223-5942**	1	SWITCH GP-ROCKER (HIGH FLOW)	
		1	**111-7899**	1	GASKET	
	7	1	**225-8005**	1	HARNESS AS-OPERATOR CONTROLS (HIGH FLOW)	
	8	2	**225-8009**	1	HARNESS AS-OPERATOR CONTROLS (JOYSTICK)	
CY	9	2	**299-9119**	1	VALVE GP-PILOT (WORK TOOL)	401
Y	10	2	**231-4259**	1	CONTROL GP-HANDLE (RH)	530
	11	1	**235-5243**	1	FILM-INSTRUCTION (MACHINE CONTROLS)	
M	12	2	**8T-0269**	3	BOLT-SOCKET HEAD (M6X1X20-MM)	
	13	2	**8T-4205**	3	WASHER-HARD (7.2X14.5X2-MM THK)	

C-CHANGE FROM PREVIOUS TYPE
M-METRIC PART
Y-SEPARATE ILLUSTRATION

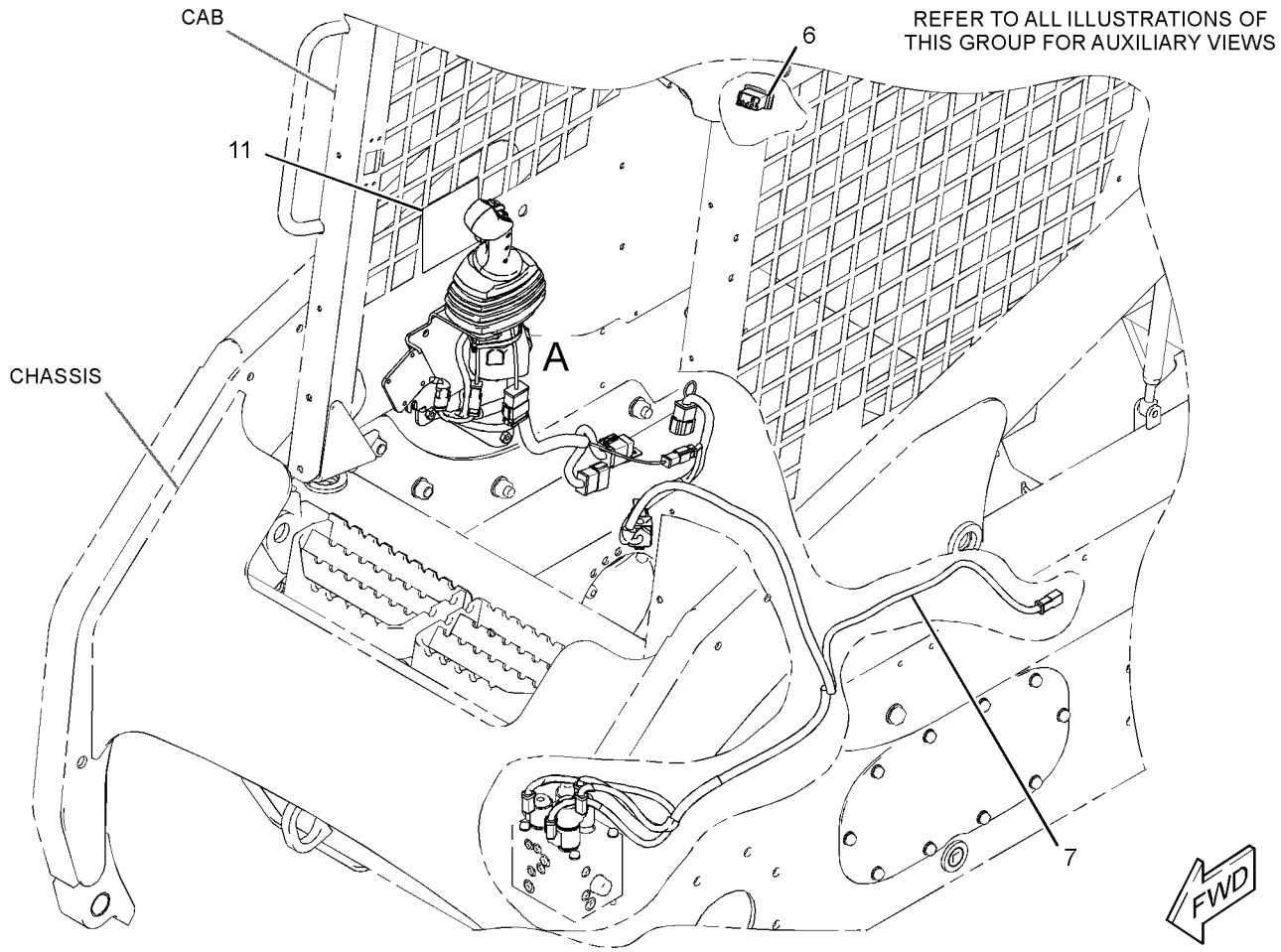

GRAPHIC #1 g01417536

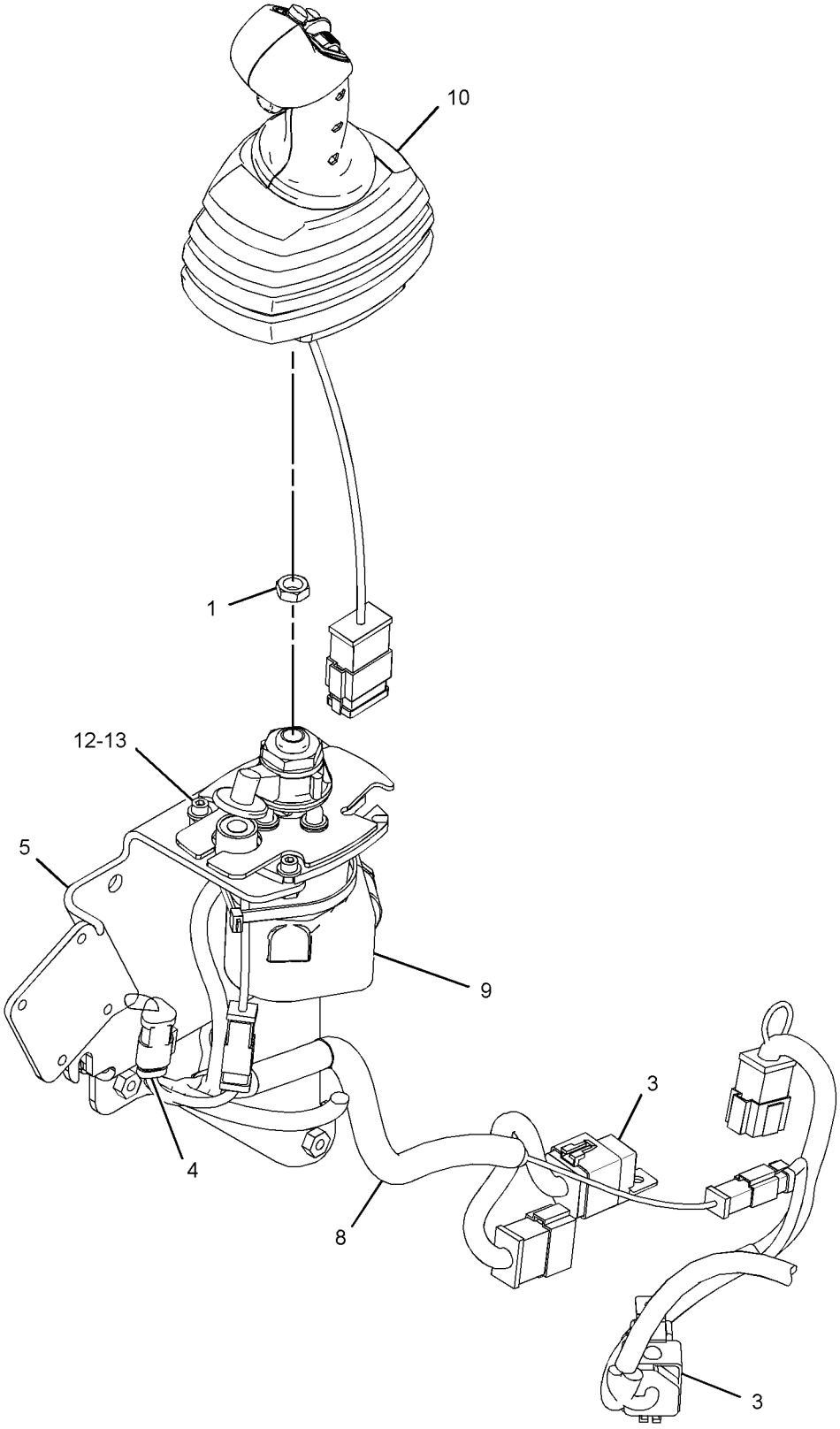

VIEW OF AREA A
(EXPLODED)

GRAPHIC #2

<END>

g01417537

OPERATOR STATION

276-5708 COUPLING GP-DRIVE

S/N: MJH10575-UP

PART OF 218-6832 COMPRESSOR & MOTOR GP-REFRIG

AN ATTACHMENT

SMCS-1802, 5061 **i02445864**

NOTE	REF NO	GRAPHIC REF	PART NUMBER	QTY	PART NAME 1 2 3 4 5 6 (PRODUCT LEVEL)	SEE PAGE
	1	1	**218-6836**	1	COUPLING GP-DRIVE	
		1	**218-6837**	1	COUPLING	
		1	**218-6838**	1	HUB (COMPRESSOR)	
		1	**276-4063**	1	HUB (MOTOR)	
M	2	1	**233-1012**	1	SETSCREW-HEX SOCKET (M5X0.8X8-MM)	

M-METRIC PART

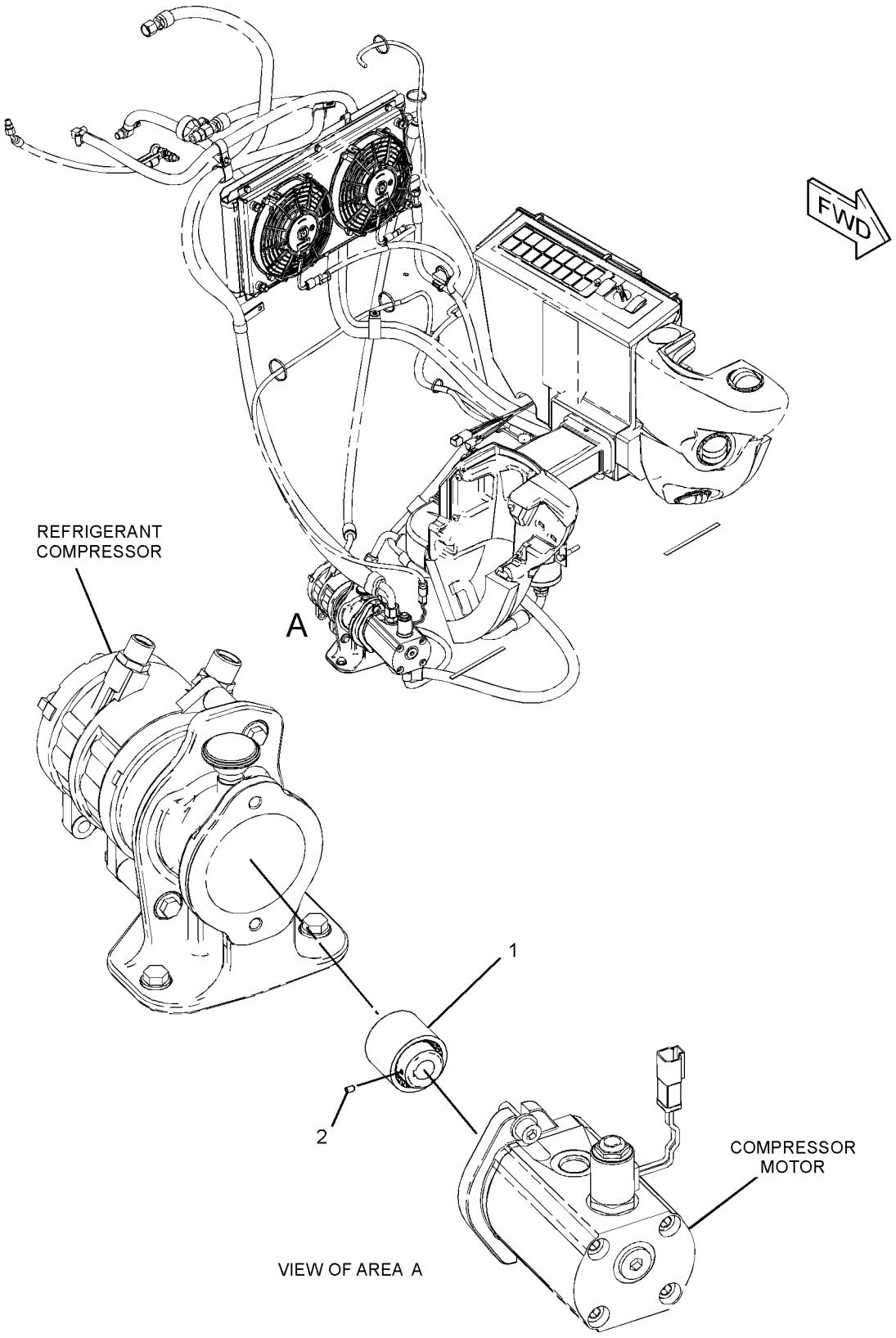

GRAPHIC #1 **<END>** g01229666

OPERATOR STATION

218-6419 COVER GP-CONSOLE

S/N: MJH10575-UP
PART OF 218-6271 INSTALLATION GP
AN ATTACHMENT

SMCS-5258 **i02392269**

NOTE	REF NO	GRAPHIC REF	PART NUMBER	QTY	PART NAME 1 2 3 4 5 6 (PRODUCT LEVEL)	SEE PAGE
	1	1	**218-6389**	1	CONSOLE (RH)	
	2	1	**218-6391**	1	CONSOLE (LH)	
M	3	1	**175-0005**	8	SCREW-BUTTON HEAD (M6X1X25-MM)	

M-METRIC PART

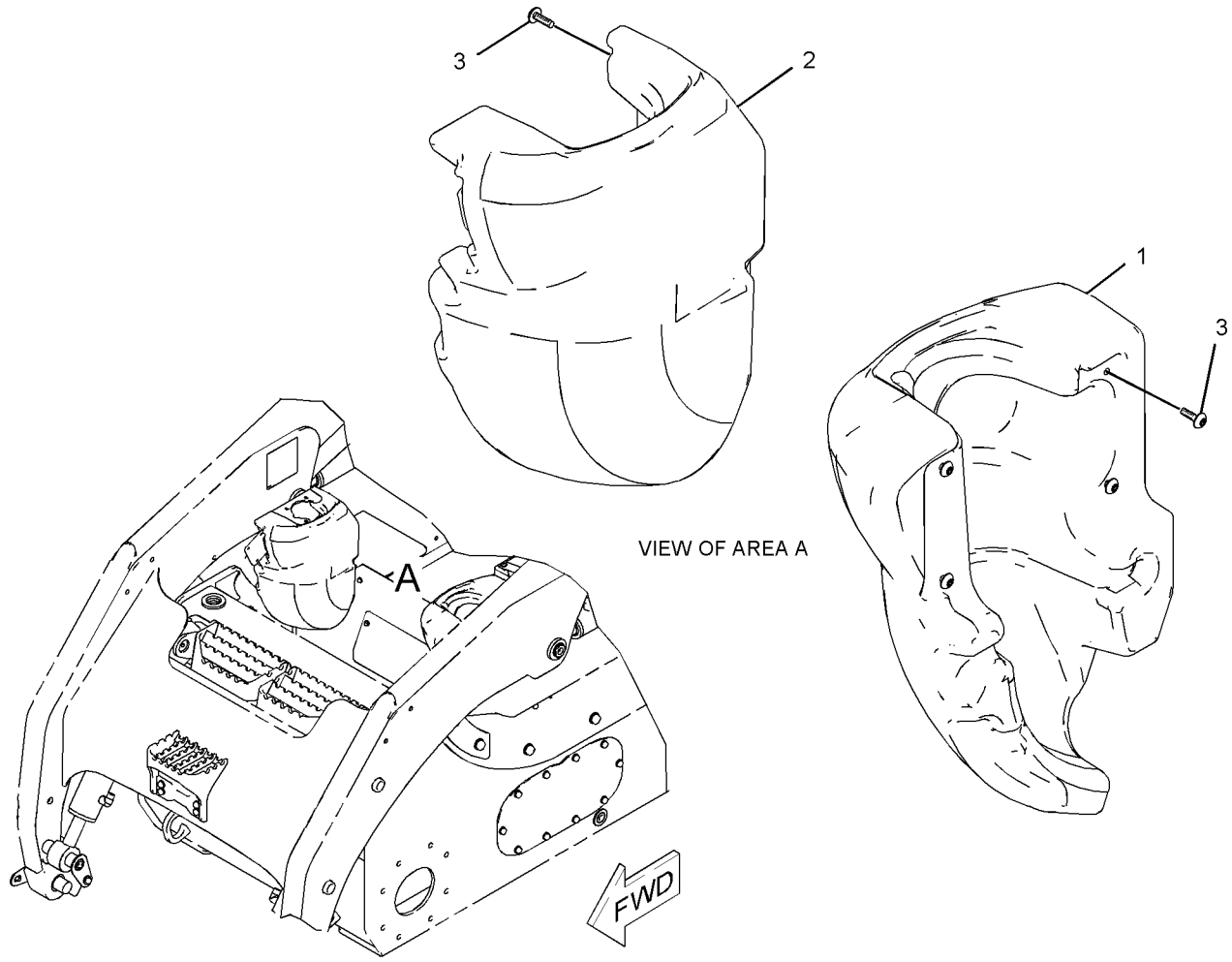

GRAPHIC #1 **<END>** g01019449

OPERATOR STATION

229-8744 COVER GP-CONSOLE

S/N: MJH10575-UP
WITHOUT HEATER & AIR COND
PART OF 218-6271 INSTALLATION GP
AN ATTACHMENT

SMCS-5258 **i02392270**

NOTE	REF NO	GRAPHIC REF	PART NUMBER	QTY	PART NAME 1 2 3 4 5 6 (PRODUCT LEVEL)	SEE PAGE
	1	1	**114-6658**	4	WASHER (6.5X17X1-MM THK)	
	2	1	**218-6386**	1	COVER AS	
	3	1	**218-6387**	1	COVER AS	
	4	1	**218-6388**	1	COVER AS	
M	5	1	**8T-4189**	2	BOLT (M8X1.25X20-MM)	
	6	1	**8T-4224**	2	WASHER-HARD (8.8X16X2-MM THK)	
M	7	1	**9X-2044**	7	SCREW-TRUSS HEAD (M6X1X16-MM)	
	8	1	**9X-6165**	1	WASHER (6.5X22X2.5-MM THK)	
BE	9	1	**124-3243**		SEAL	

B-USE AS REQUIRED
E-ORDER BY THE CENTIMETER
M-METRIC PART

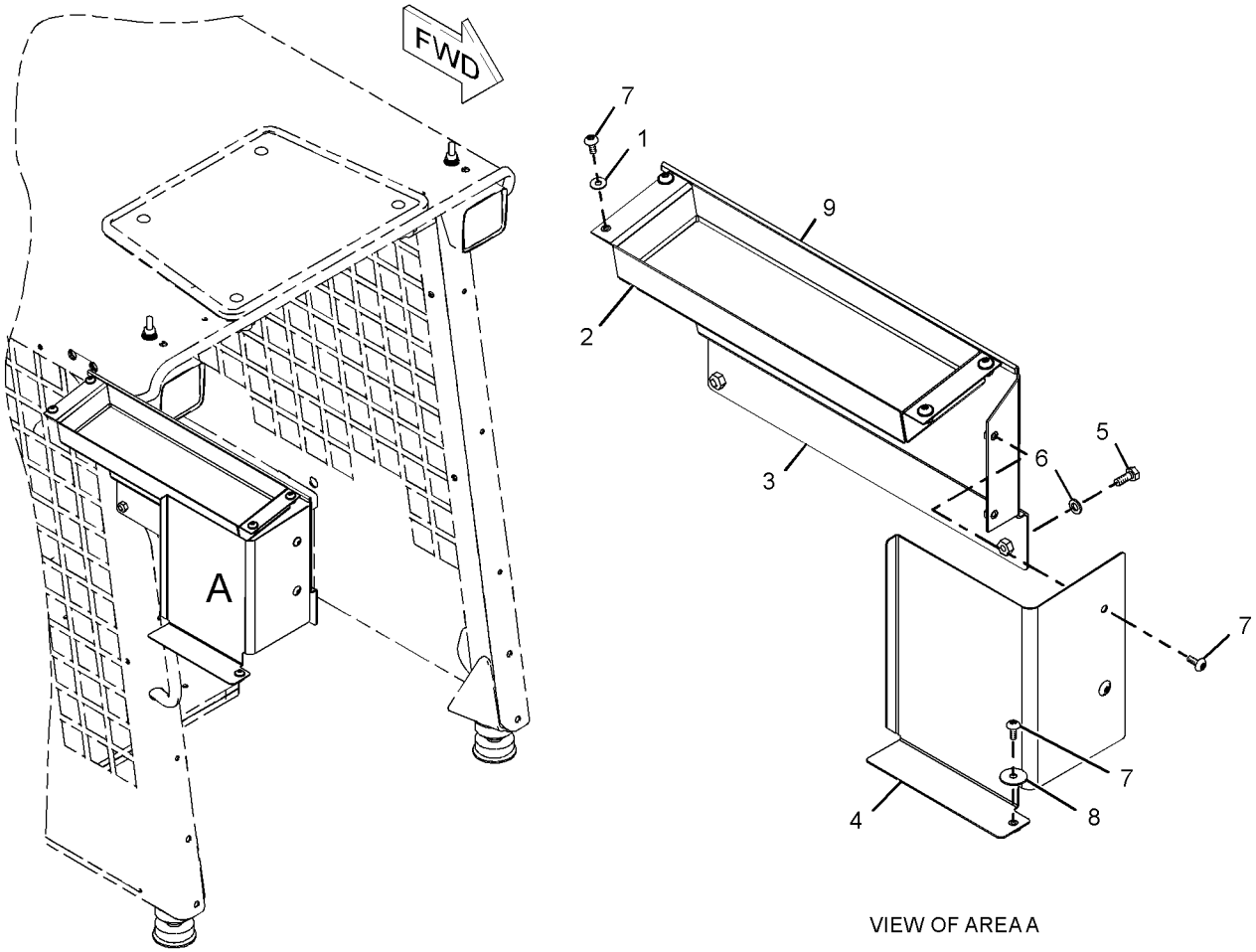

VIEW OF AREA A

GRAPHIC #1 **<END>** g01198919

142-9118 COVER GP-INSTRUMENT PANEL

S/N: MJH10575-UP

PART OF 216-4751, 225-7998 PANEL GP-INSTRUMENT

AN ATTACHMENT

SMCS-1408, 7451, 7478 **i02757282**

NOTE	REF NO	GRAPHIC REF	PART NUMBER	QTY	PART NAME 1 2 3 4 5 6 (PRODUCT LEVEL)	SEE PAGE
C	1	1	**106-8704**	1	SUPPRESSOR AS-ARC (HOUR METER)	
		1	**102-8802**	1	KIT-RECEPTACLE (2-PIN)	
					(INCLUDES RECEPTACLE AS & WEDGE)	
		1	**186-3735**	2	PIN-CONNECTOR (16-GA TO 18-GA)	
		1	**155-2270**	1	KIT-CONNECTING PLUG (2-PIN)	
					(INCLUDES PLUG AS, WEDGE & INTERFACE SEAL)	
	2	1	**158-6695**	1	COVER	
C	3	1	**200-5717**	1	METER GP-SERVICE	
		1	**214-2465**	1	KIT-SERVICE METER	
					(INCLUDES BOLTS, LOCKNUTS & FILM)	
C	4	1	**266-2928**	1	HARNESS AS-WIRING (SERVICE METER)	
		1	**8L-8413**	1	STRAP-CABLE	
		1	**155-2270**	1	KIT-CONNECTING PLUG (2-PIN)	
					(INCLUDES PLUG AS, WEDGE & INTERFACE SEAL)	
	5	1	**103-2006**	2	SCREW-PAN HEAD (6-19X0.37-IN)	
C	6	1	**3S-2093**	1	STRAP-CABLE	

C-CHANGE FROM PREVIOUS TYPE

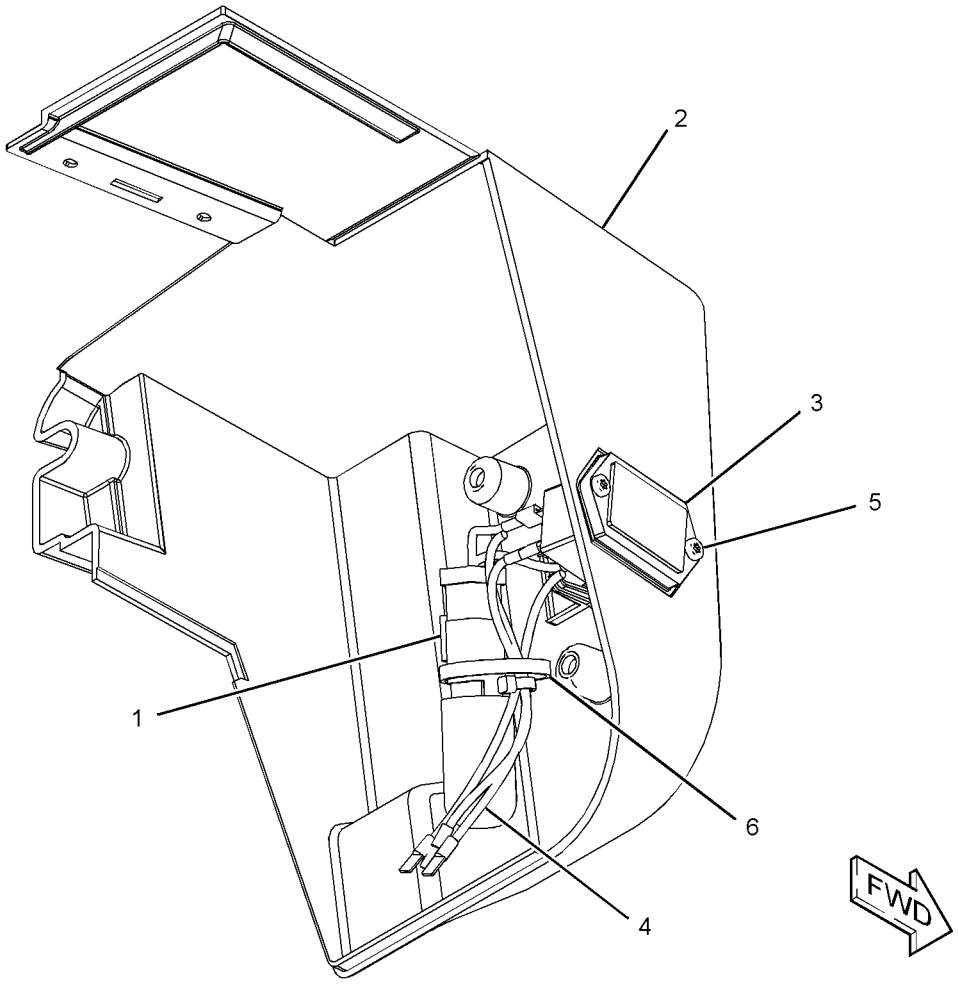

GRAPHIC #1 **<END>** g01195576

OPERATOR STATION

218-6440 DOOR & MTG GP-CAB—POLYCARBONATE

S/N: MJH10575-UP

CANNOT BE USED WITH 218-6400—PAGE 580, 223-0600—PAGE 565

AN ATTACHMENT

SMCS-7308 **i02772052**

NOTE	REF NO	GRAPHIC REF	PART NUMBER	QTY	PART NAME 1 2 3 4 5 6 (PRODUCT LEVEL)	SEE PAGE
E	1	2	**125-3518**		SEAL (6-CM EACH)	
E	2	2	**125-3518**		SEAL (65-CM)	
E	3	2	**144-0195**		HOSE (40-CM)	
D	4	2	**5P-9909**		SEAL (0.05-M EACH)	
	5	1	**5P-0372**	2	LOCK PIN	
	6	2	**8T-2444**	2	STUD-BALL	
	7	2	**8T-3848**	1	STRIKER AS-LATCH	
		2	**6V-4270**	1	LOCKWASHER	
	8	1	**9C-5344**	1	SPACER (10.5X20X18-MM THK)	
	9	1	**095-1325**	1	PIN-CLEVIS	
	10	1	**153-2683**	1	SPRING AS-GAS (LOCKING)	
	11	1	**177-3405**	1	PIN	
	12	2	**218-0728**	2	SPRING	
CY	13	2	*276-3440*	1	DOOR GP-CAB (POLYCARBONATE)	570
	14	2	**219-9739**	1	TANK AS-WINDOW WASHER	
	15	2	**221-3877**	1	HARNESS AS-WINDOW WIPER	
		2	**102-8805**	1	KIT-RECEPTACLE (6-PIN)	
					(INCLUDES RECEPTACLE AS & WEDGE)	
		2	**123-7615**	1	CONNECTOR	
		2	**5W-1987**	2	TERMINAL	
E		2	**125-7875**		TUBE-HEAT SHRINK (7.44-MM DIA) (5-CM)	
		2	**155-2274**	1	KIT-CONNECTING PLUG (6-PIN)	
					(INCLUDES PLUG AS, WEDGE & INTERFACE SEAL)	
	16	2	**280-1575**	1	PLATE AS	
	17	2	**223-0591**	1	PLATE AS	
	18	2	**223-0601**	2	PLATE AS	
	19	2	**223-0608**	1	HINGE AS	
	20	2	**223-0617**	1	MOUNT	
	21	2	**230-3214**	1	SPRING AS-GAS (CAB DOOR)	
M	22	2	**127-2170**	8	SCREW-TRUSS HEAD (M8X1.25X20-MM)	
	23	2	**142-9356**	1	BLOCK	
M	24	2	**195-0937**	8	INSERT-THREADED (M8X1.25-THD)	
	25	2	**3S-2093**	3	STRAP-CABLE	
M	26	2	**5C-2890**	13	NUT (M6X1-THD)	
D	27	2	**5P-5969**		SEAL (2.2-M)	
	28	2	**8T-4121**	4	WASHER-HARD (11X21X2.5-MM THK)	
M	29	2	**8T-4133**	4	NUT (M10X1.5-THD)	
	30	2	**8T-4205**	13	WASHER-HARD (7.2X14.5X2-MM THK)	
	31	2	**8T-4222**	1	WASHER-PLATED (11X32X2.5-MM THK)	
	32	2	**8T-4224**	2	WASHER-HARD (8.8X16X2-MM THK)	
M	33	2	**9X-2041**	4	SCREW-TRUSS HEAD (M10X1.5X20-MM)	
M	34	2	**9X-2044**	3	SCREW-TRUSS HEAD (M6X1X16-MM)	
M	35	2	**9X-2045**	4	SCREW-TRUSS HEAD (M6X1X20-MM)	
D	36	2	**5P-8309**		SEAL (0.72)	

C-CHANGE FROM PREVIOUS TYPE
D-ORDER BY THE METER
E-ORDER BY THE CENTIMETER
M-METRIC PART
Y-SEPARATE ILLUSTRATION

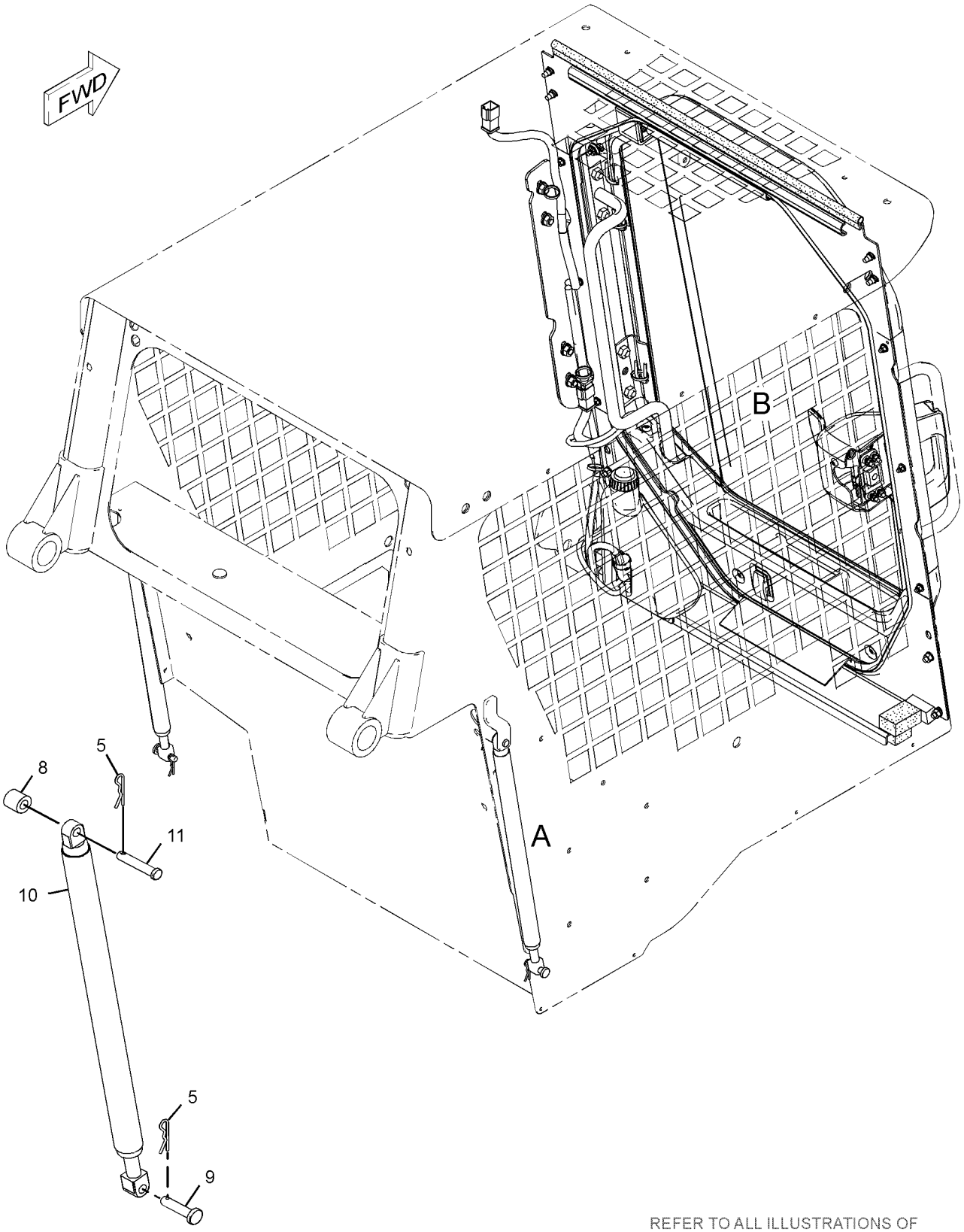

VIEW OF AREA A

REFER TO ALL ILLUSTRATIONS OF
THIS GROUP FOR AUXILIARY VIEWS

GRAPHIC #1

g01249527

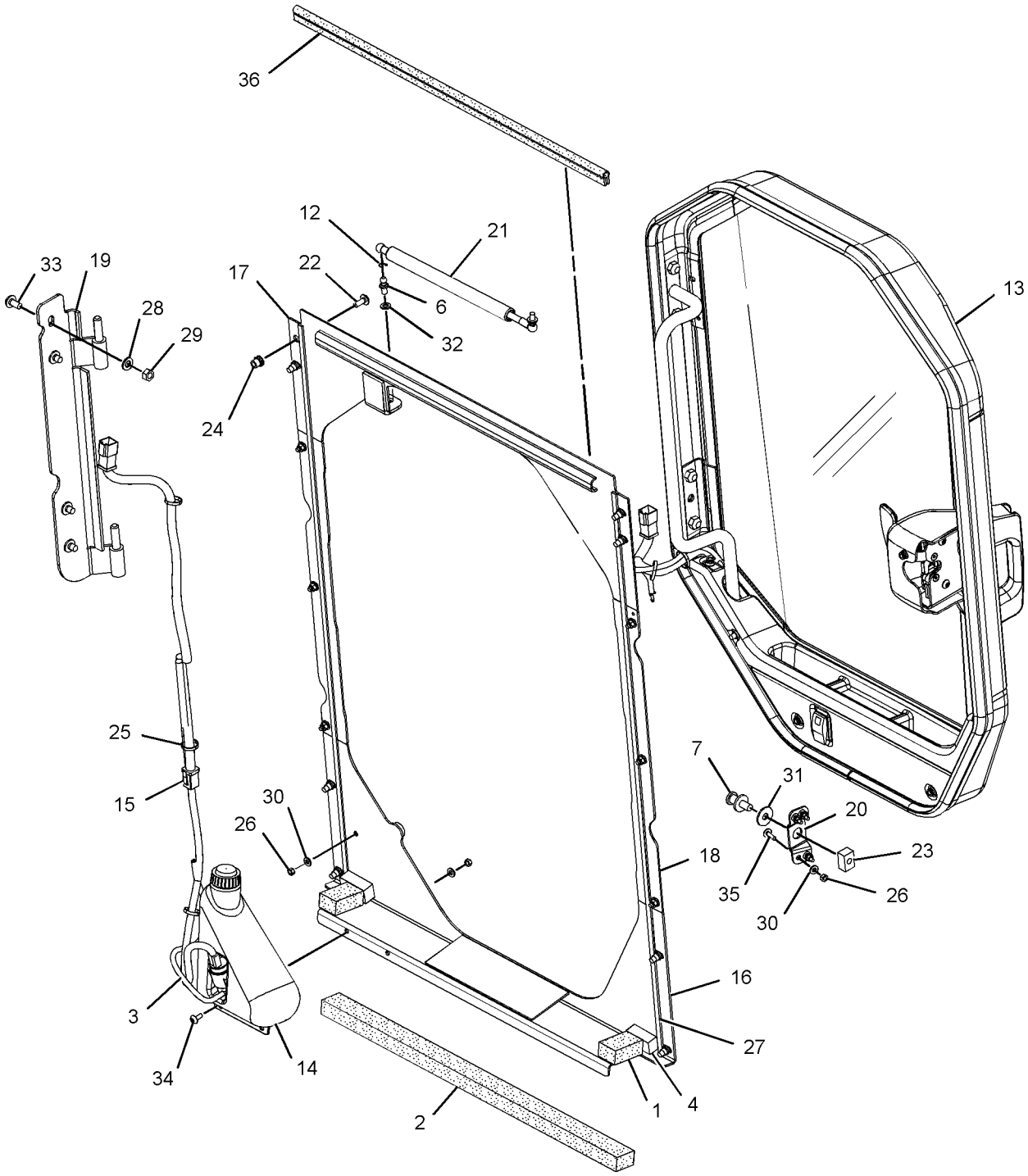

VIEW OF AREA B

GRAPHIC #2 **<END>** g01249529

OPERATOR STATION

223-0600 DOOR & MTG GP-CAB—GLASS

S/N: MJH10575-UP

CANNOT BE USED WITH 218-6400—PAGE 580, 218-6440—PAGE 562

AN ATTACHMENT

SMCS-7308 **i02545016**

NOTE	REF NO	GRAPHIC REF	PART NUMBER	QTY	PART NAME 1 2 3 4 5 6 (PRODUCT LEVEL)	SEE PAGE
D	1	1	**5P-8309**		SEAL (0.72-M)	
E	2	1	**125-3518**		SEAL (65-CM)	
E	3	1	**144-0195**		HOSE (40-CM)	
D	4	1	**5P-9909**		SEAL (.05-M EACH)	
	5	1	**5P-0372**	2	LOCK PIN	
	6	1	**8T-2444**	2	STUD-BALL	
	7	1	**8T-3848**	1	STRIKER AS-LATCH	
		1	**6V-4270**	1	LOCKWASHER	
	8	1	**9C-5344**	1	SPACER (10.5X20X18-MM THK)	
	9	1	**095-1325**	1	PIN-CLEVIS	
	10	1	**153-2683**	1	SPRING AS-GAS (LOCKING)	
	11	1	**177-3405**	1	PIN	
	12	1	**218-0728**	2	SPRING	
	13	1	**219-9739**	1	TANK AS-WINDOW WASHER	
	14	1	**221-3877**	1	HARNESS AS-WINDOW WIPER	
		1	**102-8805**	1	KIT-RECEPTACLE (6-PIN)	
					(INCLUDES RECEPTACLE AS & WEDGE)	
		1	**5W-1987**	2	TERMINAL	
E		1	**125-7875**		TUBE-HEAT SHRINK (7.44-MM DIA) (5-CM)	
		1	**155-2274**	1	KIT-CONNECTING PLUG (6-PIN)	
					(INCLUDES PLUG AS, WEDGE & INTERFACE SEAL)	
C	15	1	**280-1575**	1	PLATE AS	
	16	1	**223-0591**	1	PLATE AS	
	17	1	**223-0601**	2	PLATE AS	
	18	1	**223-0608**	1	HINGE AS	
Y	19	1	*223-0616*	1	DOOR GP-CAB (GLASS)	568
	20	1	**223-0617**	1	MOUNT	
	21	1	**230-3214**	1	SPRING AS-GAS (CAB DOOR)	
M	22	1	**127-2170**	8	SCREW-TRUSS HEAD (M8X1.25X20-MM)	
	23	1	**142-9356**	1	BLOCK	
CM	24	1	**195-0937**	8	INSERT-THREADED (M8X1.25-THD)	
	25	1	**3S-2093**	3	STRAP-CABLE	
M	26	1	**5C-2890**	13	NUT (M6X1-THD)	
	28	1	**8T-4121**	4	WASHER-HARD (11X21X2.5-MM THK)	
M	29	1	**8T-4133**	4	NUT (M10X1.5-THD)	
	30	1	**8T-4205**	13	WASHER-HARD (7.2X14.5X2-MM THK)	
B	31	1	**8T-4222**	1	WASHER-PLATED (11X32X2.5-MM THK)	
C	32	1	**8T-4224**	2	WASHER-HARD (8.8X16X2-MM THK)	
M	33	1	**9X-2041**	4	SCREW-TRUSS HEAD (M10X1.5X20-MM)	
M	34	1	**9X-2044**	3	SCREW-TRUSS HEAD (M6X1X16-MM)	
M	35	1	**9X-2045**	4	SCREW-TRUSS HEAD (M6X1X20-MM)	
E	36	1	**125-3518**		SEAL (6-CM EACH)	
CD	37	1	**5P-5969**		SEAL (1.1-M EACH)	

B-USE AS REQUIRED
C-CHANGE FROM PREVIOUS TYPE
D-ORDER BY THE METER
E-ORDER BY THE CENTIMETER
M-METRIC PART
Y-SEPARATE ILLUSTRATION

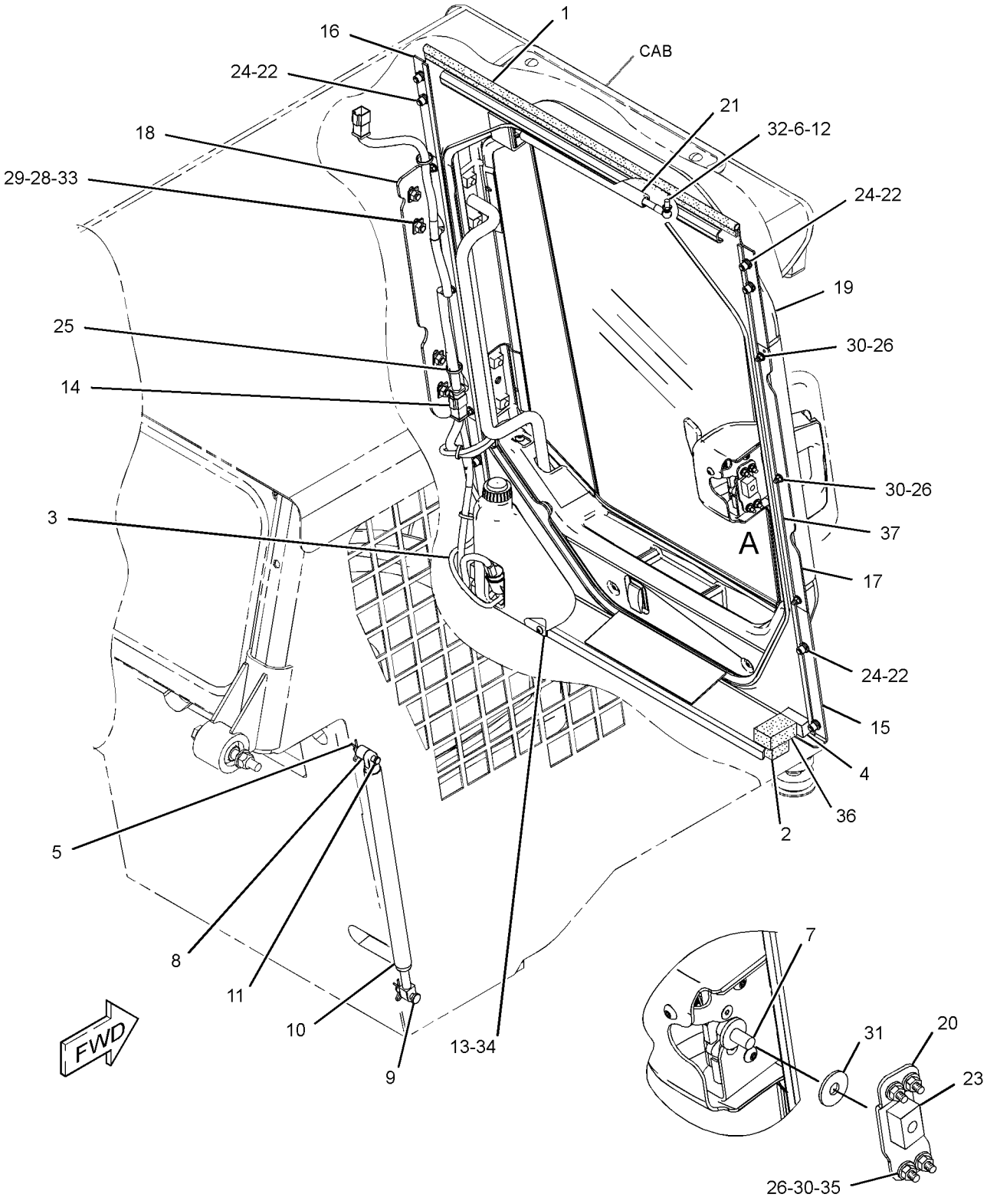

VIEW OF AREA A
(EXPLODED)

GRAPHIC #1 **<END>** g01258688

218-6431 DOOR GP-CAB–GLASS

S/N: MJH10575-UP
PART OF 223-0616 DOOR GP-CAB
AN ATTACHMENT

SMCS-7308 **i02619575**

NOTE	REF NO	GRAPHIC REF	PART NUMBER	QTY	PART NAME 1 2 3 4 5 6 (PRODUCT LEVEL)	SEE PAGE
	1	1	**223-0609**	1	GLASS-CAB (DOOR)	
	2	1	**223-0610**	1	GLASS-CAB (DOOR)	
	3	1	**223-0612**	1	GLASS-CAB (DOOR)	
	4	1	**282-9059**	1	FRAME AS	

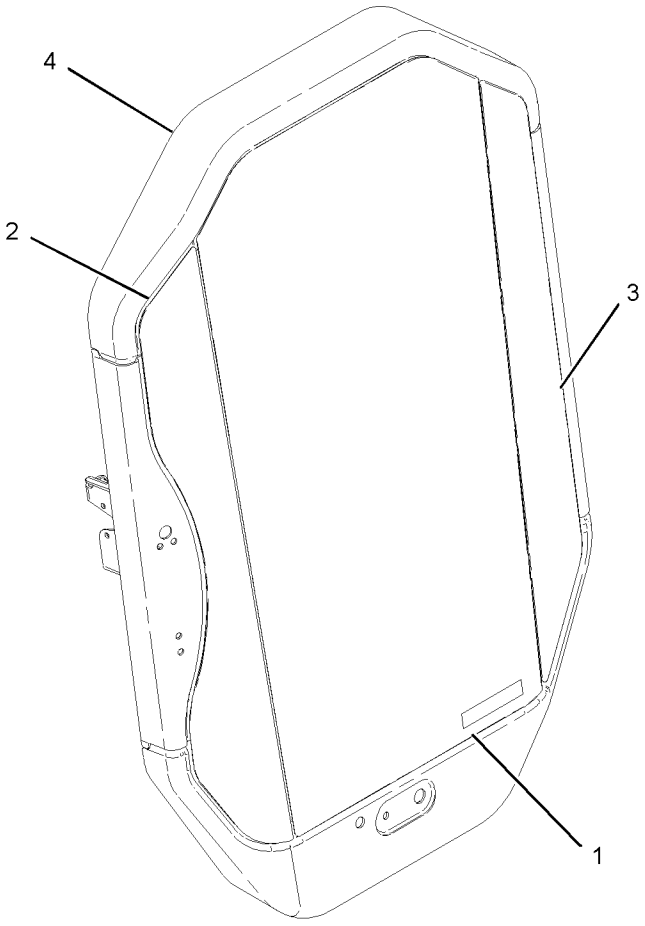

GRAPHIC #1

<END>

g01010846

OPERATOR STATION

223-0616 DOOR GP-CAB—GLASS

S/N: MJH10575-UP

PART OF 223-0600 DOOR & MTG GP-CAB, 218-6744 KIT-CAB DOOR & MOUNTING

AN ATTACHMENT

SMCS-7308 **i02870323**

NOTE	REF NO	GRAPHIC REF	PART NUMBER	QTY	PART NAME 1 2 3 4 5 6 (PRODUCT LEVEL)	SEE PAGE
E	1	1	**124-3243**		SEAL (306-CM)	
E	2	1	**144-0195**		HOSE (73-CM)	
	3	1	**8G-1151**	2	CONNECTOR	
	4	1	**6W-3924**	1	BLADE AS-WIPER (558-MM) (FRONT, REAR)	
	6	1	**138-4883**	1	SWITCH AS-ROCKER (REAR WIPER)	
	7	1	**205-5148**	2	SCREW-FLAT HEAD (M6X1X25-MM)	
Y	8	1	*218-6431*	1	DOOR GP-CAB (GLASS)	567
	9	1	**221-3876**	1	HARNESS AS-WINDOW WIPER	
	10	1	**263-2135**	1	ARM GP-WINDOW WIPER	
		1	**136-3191**	1	NOZZLE AS-WASHER	
E		1	**194-5171**		HOSE (60-CM)	
		1	**240-8666**	2	CLIP (WASHER HOSE)	
C	11	1	**313-9185**	1	COVER AS	
	12	1	**223-8488**	1	COVER-LATCH	
	13	1	**223-8495**	1	HANDLE AS	
M		1	**6V-9632**	1	NUT-WELD (M6X1-THD)	
	14	1	**225-3187**	1	LATCH AS	
	15	1	**229-8757**	1	SWITCH AS-LIMIT (WIPER)	
	17	1	**235-4768**	2	HINGE	
	18	1	**248-2171**	1	HANDLE AS	
	19	1	**248-2376**	1	MOTOR GP-WINDOW WIPER	
		1	**102-8804**	1	KIT-RECEPTACLE (4-PIN)	
					(INCLUDES RECEPTACLE AS & WEDGE)	
		1	**186-3735**	4	PIN-CONNECTOR (16-GA TO 18-GA)	
	20	1	**032-9828**	1	GROMMET	
M	21	1	**134-8273**	4	SCREW-FLAT HEAD (M10X1.15-THD)	
	22	1	**3S-2093**	3	STRAP-CABLE	
M	23	1	**9X-2044**	14	SCREW-TRUSS HEAD (M6X1X16-MM)	
M	24	1	**9X-2045**	2	SCREW-TRUSS HEAD (M6X1X20-MM)	

C-CHANGE FROM PREVIOUS TYPE
E-ORDER BY THE CENTIMETER
M-METRIC PART
Y-SEPARATE ILLUSTRATION

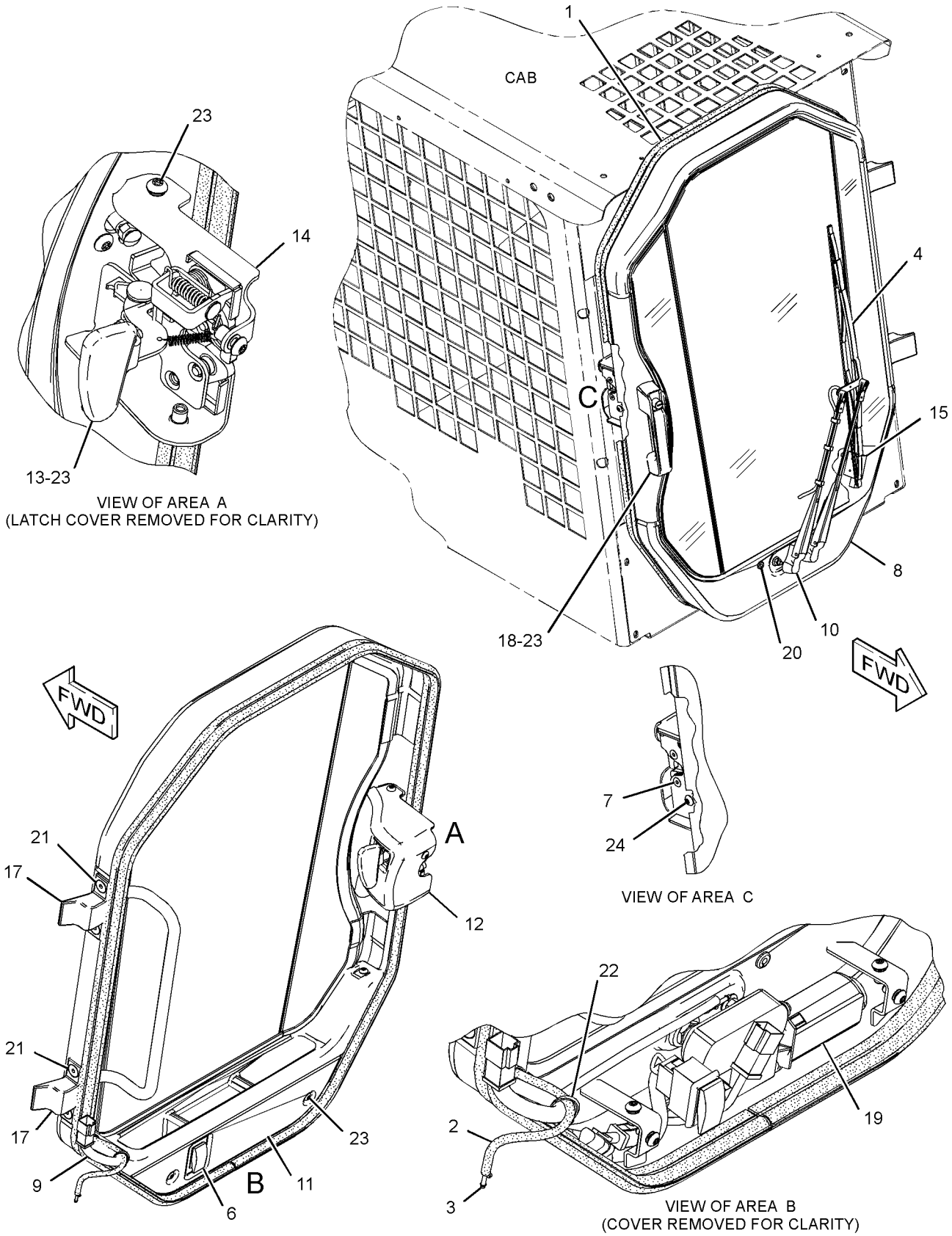

GRAPHIC #1 **<END>** g01431673

OPERATOR STATION

276-3440 DOOR GP-CAB—POLYCARBONATE

S/N: MJH10575-UP

PART OF 218-6440 DOOR & MTG GP-CAB, 218-6743 KIT-CAB DOOR & MOUNTING

AN ATTACHMENT

SMCS-7308 **i02870329**

NOTE	REF NO	GRAPHIC REF	PART NUMBER	QTY	PART NAME 1 2 3 4 5 6 (PRODUCT LEVEL)	SEE PAGE
	1	1	**8G-1151**	2	CONNECTOR (HOSE)	
	2	1	**6W-3924**	1	BLADE AS-WIPER (558-MM) (CAB DOOR)	
	4	1	**138-4883**	1	SWITCH AS-ROCKER (REAR WIPER)	
	5	1	**205-5148**	2	SCREW-FLAT HEAD (M6X1X25-MM)	
	6	1	**221-3876**	1	HARNESS AS-WINDOW WIPER	
	7	1	**223-8488**	1	COVER-LATCH	
	8	1	**223-8495**	1	HANDLE AS	
M		1	**6V-9632**	1	NUT-WELD (M6X1-THD)	
	9	1	**225-3187**	1	LATCH AS	
	10	1	**229-8757**	1	SWITCH AS-LIMIT (WIPER)	
	11	1	**235-4768**	2	HINGE	
	12	1	**248-2171**	1	HANDLE AS	
	13	1	**248-2376**	1	MOTOR GP-WINDOW WIPER	
		1	**102-8802**	1	KIT-RECEPTACLE (2-PIN)	
					(INCLUDES RECEPTACLE AS & WEDGE)	
		1	**186-3735**	4	PIN-CONNECTOR (16-GA TO 18-GA)	
	14	1	**263-2135**	1	ARM GP-WINDOW WIPER (FRONT)	
		1	**136-3191**	1	NOZZLE AS-WASHER	
		1	**194-5171**		HOSE (60-CM)	
		1	**240-8666**	2	CLIP	
Y	15	1	*276-3615*	1	DOOR GP-CAB	572
	16	1	**313-9185**	1	COVER AS	
	17	1	**032-9828**	1	GROMMET	
M	18	1	**134-8273**	4	SCREW-FLAT HEAD (M10X1.15-THD)	
	19	1	**3S-2093**	3	STRAP-CABLE	
M	20	1	**9X-2044**	14	SCREW-TRUSS HEAD (M6X1X16-MM)	
M	21	1	**9X-2045**	2	SCREW-TRUSS HEAD (M6X1X20-MM)	
E	22	1	**144-0195**		HOSE (73-CM)	
E	23	1	**124-3243**		SEAL (306-CM)	

E-ORDER BY THE CENTIMETER
M-METRIC PART
Y-SEPARATE ILLUSTRATION

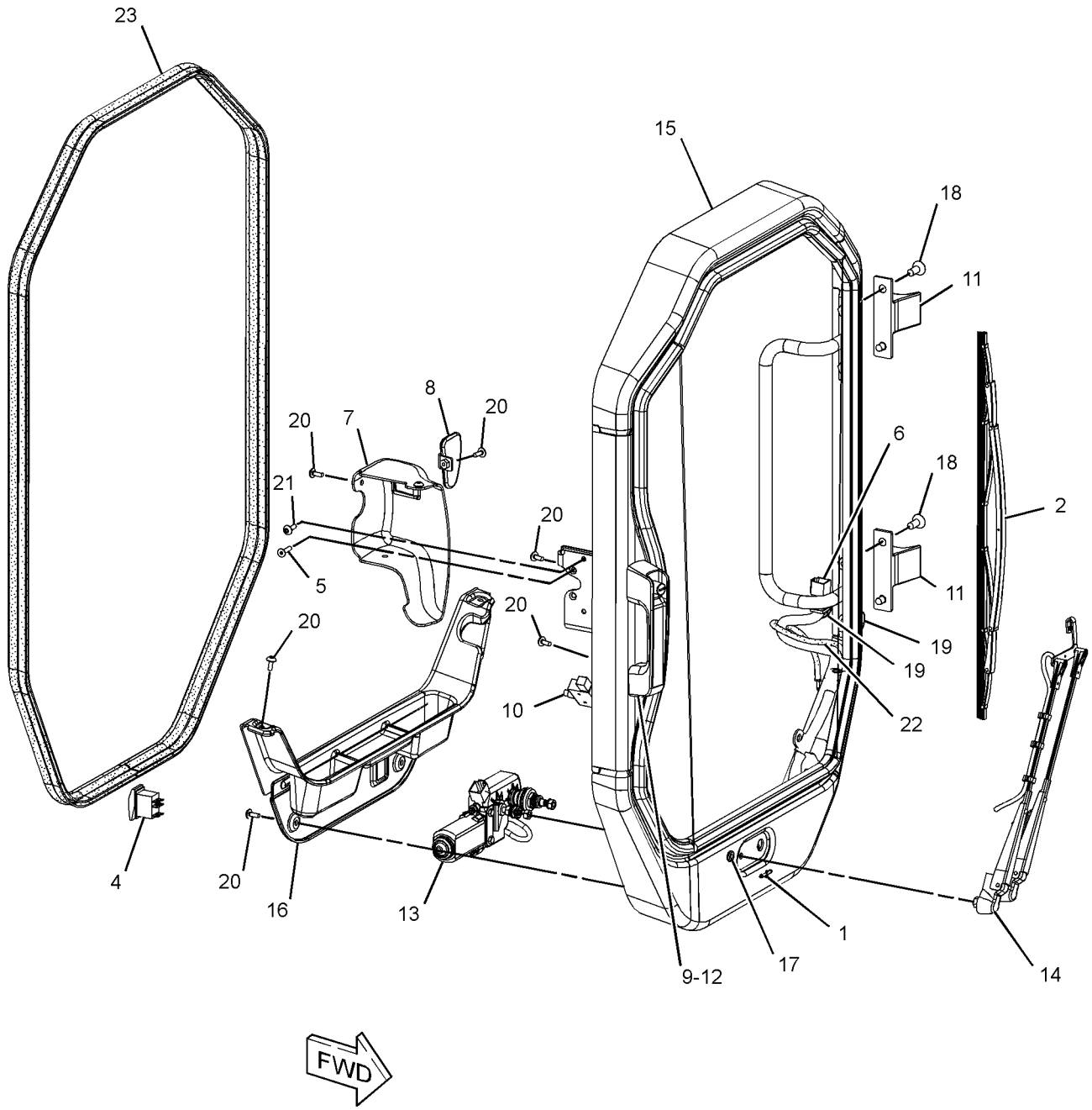

GRAPHIC #1 **<END>** g01380641

OPERATOR STATION

276-3615 DOOR GP-CAB

S/N: MJH10575-UP
PART OF 276-3440 DOOR GP-CAB
AN ATTACHMENT

SMCS-7308 **i02644469**

NOTE	REF NO	GRAPHIC REF	PART NUMBER	QTY	PART NAME 1 2 3 4 5 6 (PRODUCT LEVEL)	SEE PAGE
	1	1	**5C-8310**	1	BRACKET-RING	
	2	1	**5C-8311**	1	RING	
	3	1	**8T-6842**	1	FILM-INSTRUCTION (ALTERNATE EXIT)	
	4	1	**276-3599**	1	WINDOW (POLYCARBONATE)	
	5	1	**279-3232**	1	SEAL	
	6	1	**282-9059**	1	FRAME AS	
	7	1	**283-7554**	1	STRIP-LOCKING	

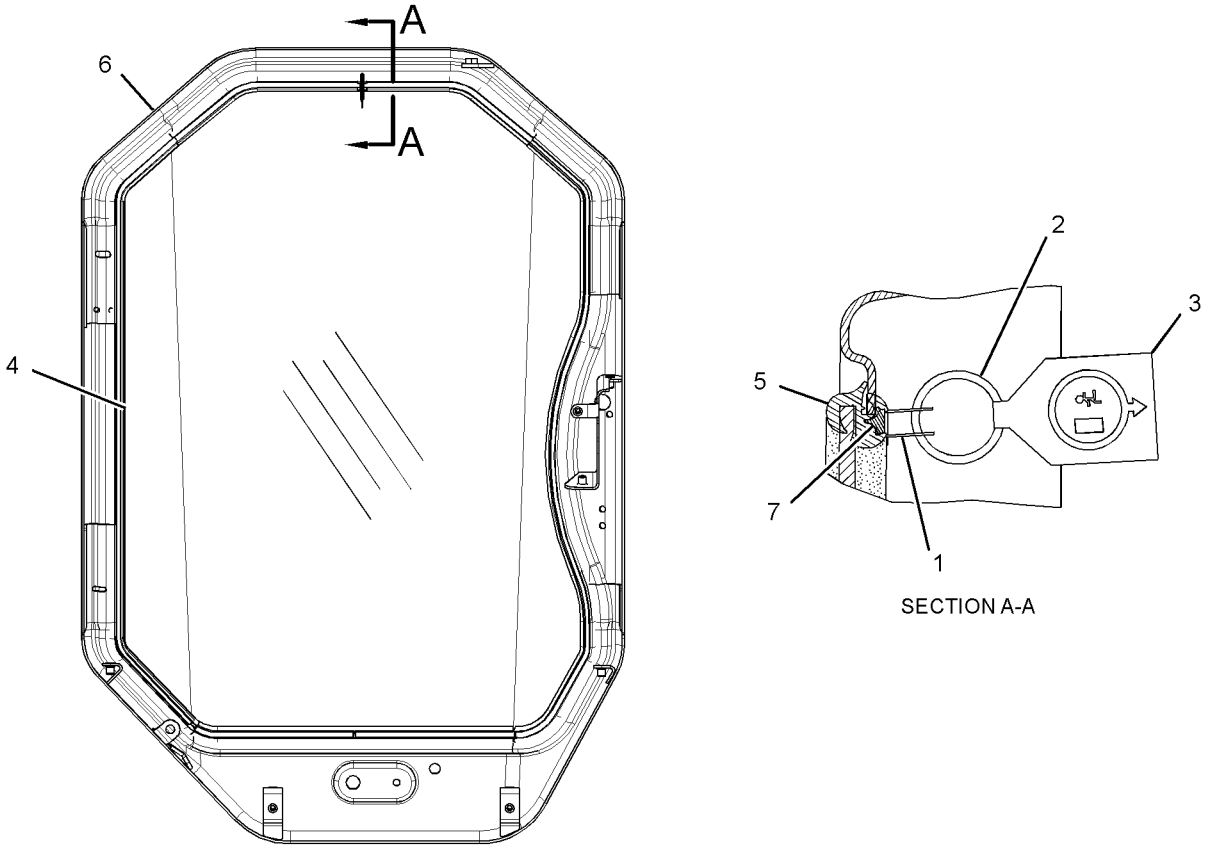

SECTION A-A

REAR VIEW

GRAPHIC #1 **<END>** g01327089

OPERATOR STATION

218-6394 DUCT & CONTROL GP

S/N: MJH10575-UP

PART OF 218-6273 AIR CONDITIONER AR, 218-6272 HEATER AR-CAB

AN ATTACHMENT

SMCS-7337, 734D **i02541254**

NOTE	REF NO	GRAPHIC REF	PART NUMBER	QTY	PART NAME 1 2 3 4 5 6 (PRODUCT LEVEL)	SEE PAGE
CD	1	1	**5P-5969**		SEAL (0.2-M EACH)	
	2	1	**146-6371**	6	LOUVER AS	
	3	1	**218-6396**	1	DUCT	
	4	1	**218-6397**	1	CONSOLE (RH)	
	5	1	**218-6398**	1	CONSOLE (LH)	
CD	6	1	**5P-7070**		INSULATION-STRIP (0.5-M)	
	7	1	**218-6414**	1	SEAL	
	8	1	**285-9133**	1	INSULATION	
M	9	1	**175-0005**	8	SCREW-BUTTON HEAD (M6X1X25-MM)	
	10	1	**285-8570**	1	INSULATION	
	11	1	**240-6877**	1	SEAL	
	12	1	**240-6878**	1	SEAL	
	13	1	**240-6879**	2	SEAL	
	14	1	**6V-6689**	2	SCREW-SELF-TAPPING (10-16X.625-IN)	
	15	1	**285-8565**	1	INSULATION	

C-CHANGE FROM PREVIOUS TYPE
D-ORDER BY THE METER
M-METRIC PART

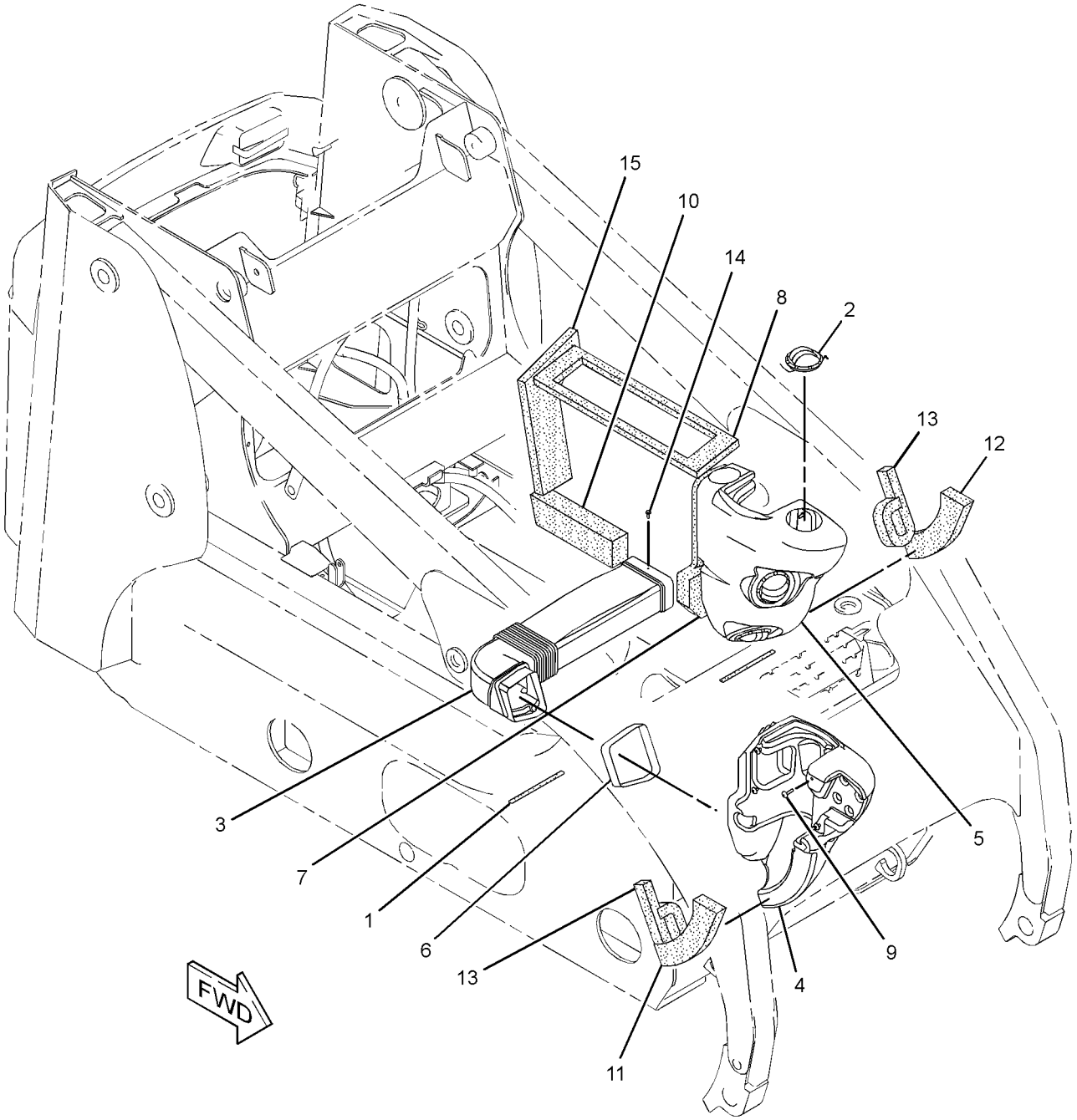

GRAPHIC #1 **<END>** g01293158

OPERATOR STATION

231-7325 FRAME GP-WINDOW–RH

S/N: MJH10575-UP
PART OF 224-7058 WINDOW GP-CAB
AN ATTACHMENT

SMCS-7310 **i02064824**

NOTE	REF NO	GRAPHIC REF	PART NUMBER	QTY	PART NAME 1 2 3 4 5 6 (PRODUCT LEVEL)	SEE PAGE
	1	1	**231-7326**	1	FRAME AS-WINDOW (RH)	
	1A	1	**5C-7682**	1	SCREW (8-32-THD)	
JZ	1B	1		1	BOLT	
JZ	1C	1		1	LATCH	
JZ	1D	1		1	SCREW	
JZ	1E	1		1	SPRING	
JZ	1F	1		2	CLIP	
JZ	1G	1		2	WASHER	
	1H	1	**231-7401**	1	HINGE	
	2	1	**239-6138**	1	BRACKET AS	
	3	1	**5C-7682**	2	SCREW (8-32-THD)	
					AVAILABLE REPAIR KIT(S):	
J			**231-7329**	1	KIT-LATCH	

J-KIT MARKED J SERVICES PART MARKED J
Z-NOT SERVICED SEPARATELY

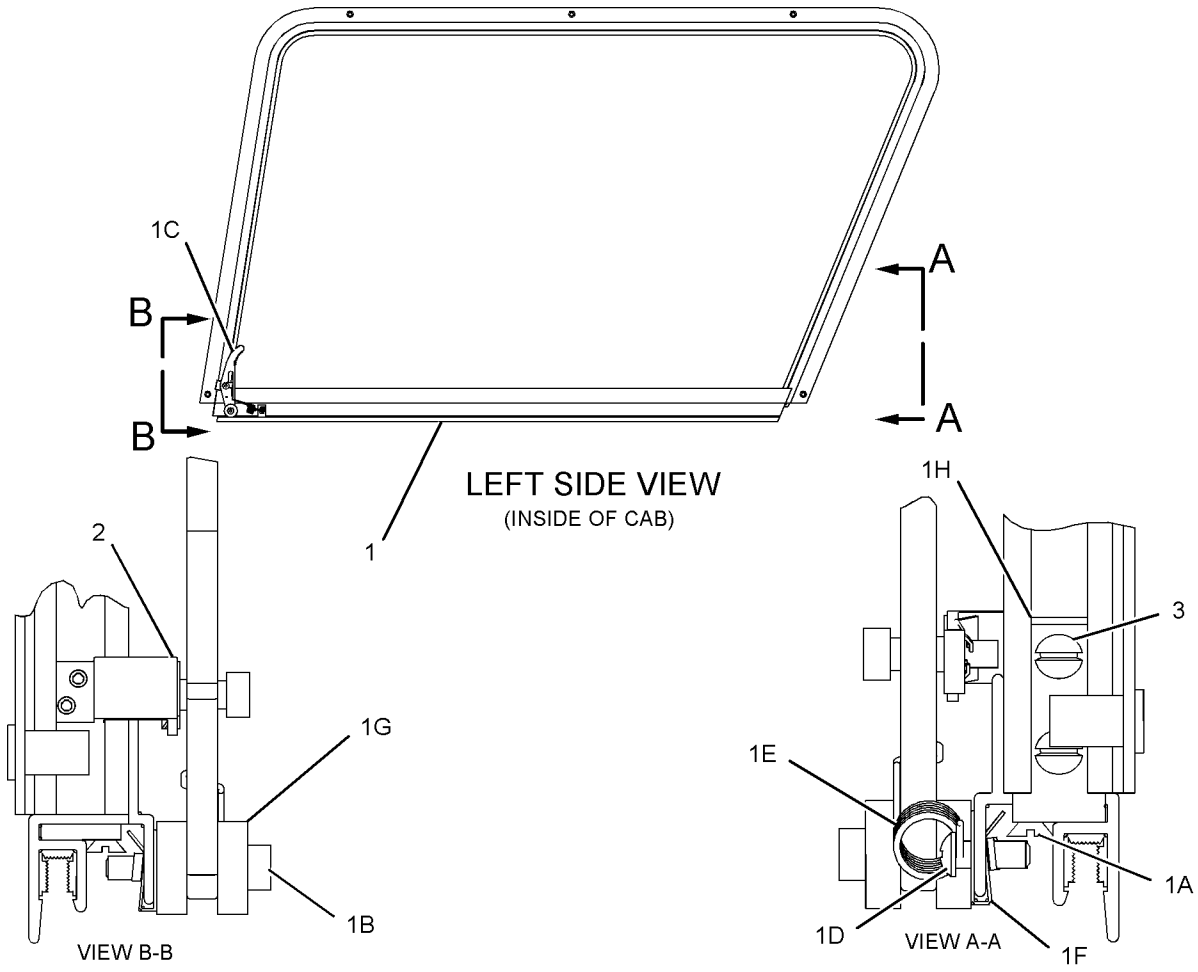

GRAPHIC #1 **<END>** g01066130

OPERATOR STATION

231-7327 FRAME GP-WINDOW–LH

S/N: MJH10575-UP
PART OF 224-7057 WINDOW GP-CAB
AN ATTACHMENT

SMCS-7310 **i02064823**

NOTE	REF NO	GRAPHIC REF	PART NUMBER	QTY	PART NAME 1 2 3 4 5 6 (PRODUCT LEVEL)	SEE PAGE
	1	1	**231-7328**	1	FRAME AS-WINDOW (LH)	
	1A	1	**5C-7682**	1	SCREW (8-32-THD)	
JZ	1B	1		1	BOLT	
JZ	1C	1		1	LATCH	
JZ	1D	1		1	SCREW	
JZ	1E	1		1	SPRING	
JZ	1F	1		2	CLIP	
JZ	1G	1		2	WASHER	
	1H	1	**231-7401**	1	HINGE	
	2	1	**239-6138**	1	BRACKET AS	
	3	1	**5C-7682**	2	SCREW (8-32-THD)	
					AVAILABLE REPAIR KIT(S):	
J			**231-7329**	1	KIT-LATCH	

J-KIT MARKED J SERVICES PARTS MAKED J
Z-NOT SERVICED SEPARATELY

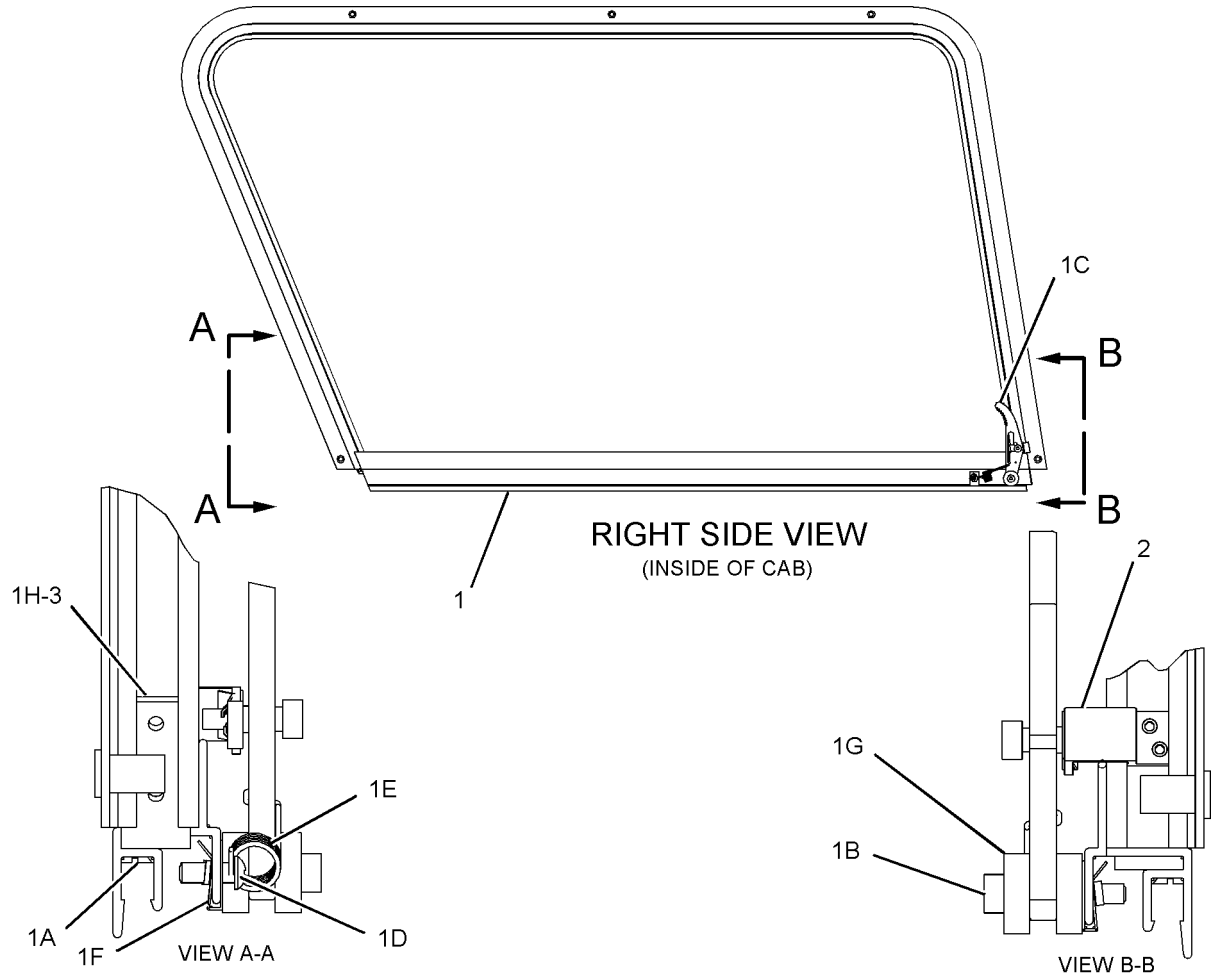

GRAPHIC #1 **<END>** g01066272

OPERATOR STATION

216-4712 GAUGE & WARNING GP–LH

S/N: MJH10575-UP

PART OF 216-4751, 225-7998 PANEL GP-INSTRUMENT

AN ATTACHMENT

SMCS-7450, 7451 **i02014376**

NOTE	REF NO	GRAPHIC REF	PART NUMBER	QTY	PART NAME 1 2 3 4 5 6 (PRODUCT LEVEL)	SEE PAGE
J	1	1	**142-8858**	1	SWITCH AS-KEY START	
		1	**167-1530**	1	NUT (1-32-THD)	
	2	1	**158-6694**	1	PANEL	
	3	1	**197-6894**	1	FILM-INSTRUCTION (INSTRUMENT PANEL)	
	4	1	**216-4753**	1	FILM (KEY SWITCH)	
Y	5	1	**223-6537**	1	MODULE GP-WARNING INDICATOR	608
	6	1	**103-2006**	2	SCREW-PAN HEAD (6-19X0.37-IN)	

J-REQUIRES 5P-8500 KEY
Y-SEPARATE ILLUSTRATION

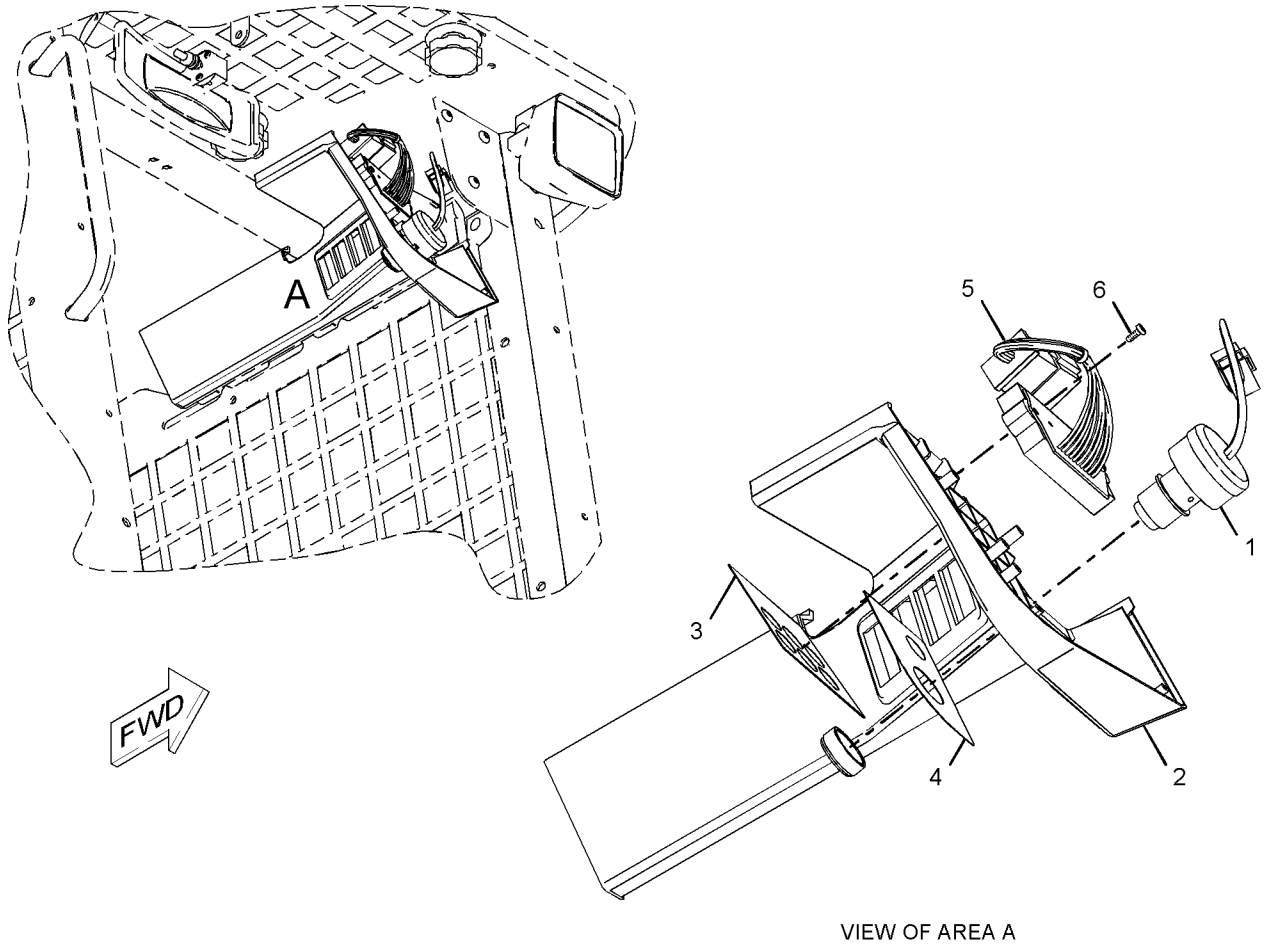

VIEW OF AREA A

GRAPHIC #1 **<END>** g01028652

OPERATOR STATION

216-4713 GAUGE & WARNING GP–RH

S/N: MJH10575-UP

PART OF 216-4751, 225-7998 PANEL GP-INSTRUMENT

AN ATTACHMENT

SMCS-7450, 7451 **i02772056**

NOTE	REF NO	GRAPHIC REF	PART NUMBER	QTY	PART NAME 1 2 3 4 5 6 (PRODUCT LEVEL)	SEE PAGE
	1	1	**084-4277**	1	LAMP GP-DOME (12-VOLT)	
		1	**6R-7490**	1	LAMP (12-VOLT, 10-WATT)	
	2	1	**158-6697**	1	PANEL	
	3	1	**216-4754**	1	FILM-INSTRUCTION (DASH)	
Y	4	1	**249-2910**	1	MODULE GP-WARNING INDICATOR	609
	5	1	**103-2006**	2	SCREW-PAN HEAD (6-19X0.37-IN)	
	6	1	**170-6305**	1	GAUGE GP-FUEL LEVEL	
		1	**4B-2043**	3	NUT (8-32-THD)	
		1	**7X-9065**	1	LAMP (12-VOLT)	
		1	**9B-7233**	3	LOCKWASHER	

Y-SEPARATE ILLUSTRATION

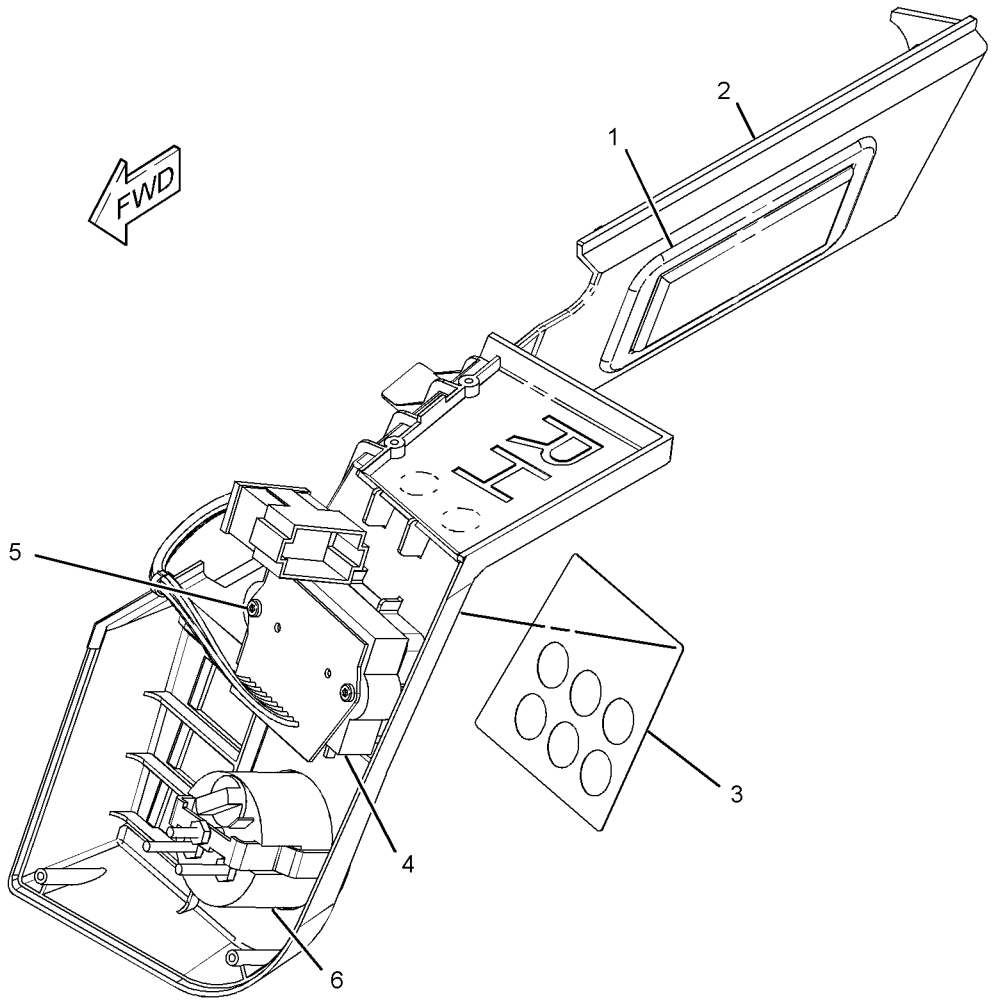

GRAPHIC #1 **<END>** g01142720

OPERATOR STATION

233-5632 GUARD GP-ROPS/FOPS

S/N: MJH10575-UP
AN ATTACHMENT

SMCS-7323 **i02866878**

NOTE	REF NO	GRAPHIC REF	PART NUMBER	QTY	PART NAME 1 2 3 4 5 6 (PRODUCT LEVEL)	SEE PAGE
	1	1	**152-1161**	1	PLATE AS-FOPS	
	2	1	**153-2683**	1	SPRING AS-GAS	
	4	1	**247-7182**	1	FILM (FOPS)	
M	5	1	**7X-2553**	8	BOLT (M16X2X40-MM)	
	6	1	**8T-4122**	12	WASHER-HARD (17X32X3.5-MM THK)	
M	7	1	**8T-4132**	4	NUT (M16X2-THD)	
D	8	1	**8T-5372**		SEAL (1.4-M)	

D-ORDER BY THE METER
M-METRIC PART

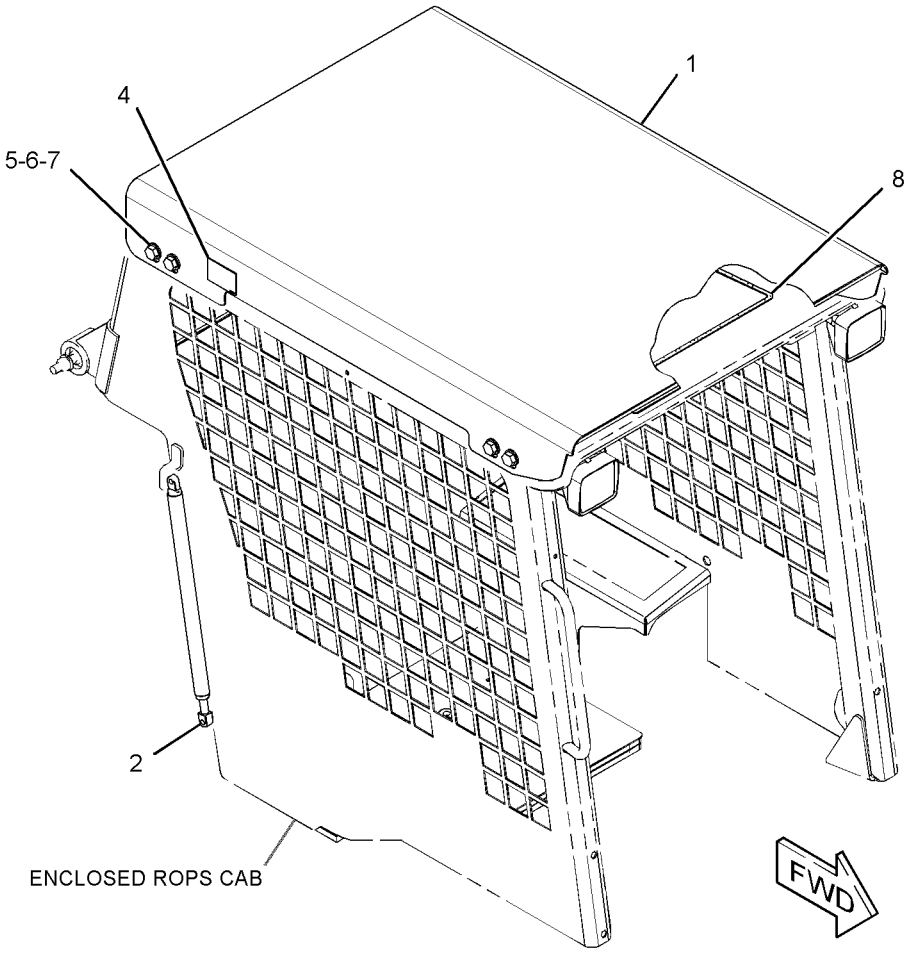

GRAPHIC #1 **<END>** g01437181

OPERATOR STATION

218-6400 HANDHOLD GP

S/N: MJH10575-UP
PART OF 295-7301, 295-7311 OPTION AR-CAB
CANNOT BE USED WITH 218-6440—PAGE 562, 223-0600—PAGE 565
AN ATTACHMENT

SMCS-7256 **i01908092**

NOTE	REF NO	GRAPHIC REF	PART NUMBER	QTY	PART NAME 1 2 3 4 5 6 (PRODUCT LEVEL)	SEE PAGE
	1	1	**218-6377**	1	HANDLE	
	2	1	**8T-4121**	2	WASHER-HARD (11X21X2.5-MM THK)	
M	3	1	**8T-4133**	2	NUT (M10X1.5-THD)	
M	4	1	**9X-2041**	2	SCREW-TRUSS HEAD (M10X1.5X20-MM)	

M-METRIC PART

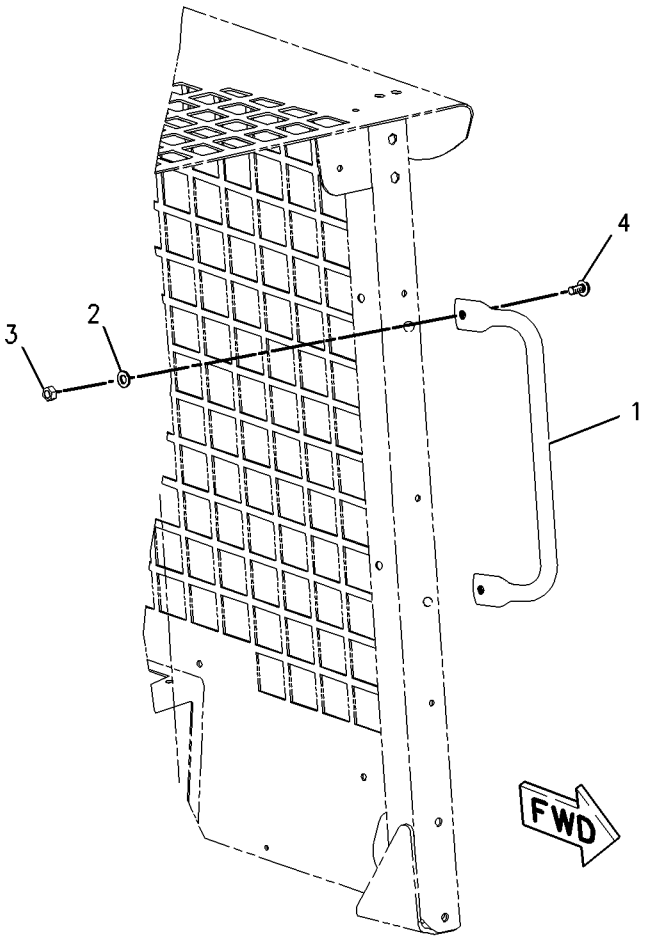

GRAPHIC #1 **<END>** g01002446

OPERATOR STATION

218-6117 HANDLE GP-MODULAR

S/N: MJH10575-UP

PART OF 218-6480 CONTROL GP-HANDLE

AN ATTACHMENT

SMCS-5705 **i02492650**

NOTE	REF NO	GRAPHIC REF	PART NUMBER	QTY	PART NAME 1 2 3 4 5 6 (PRODUCT LEVEL)	SEE PAGE
	1	1	**8L-8413**	1	STRAP-CABLE	
	2	1	**159-9853**	1	GROMMET	
	3	1	**174-3091**	1	KIT-RECEPTACLE (12-PIN)	
					(INCLUDES RECEPTACLE AS & WEDGE)	
	4	1	**186-3735**	2	PIN-CONNECTOR (16-GA TO 18-GA)	
	5	1	**8T-8737**	10	PLUG-SEAL	

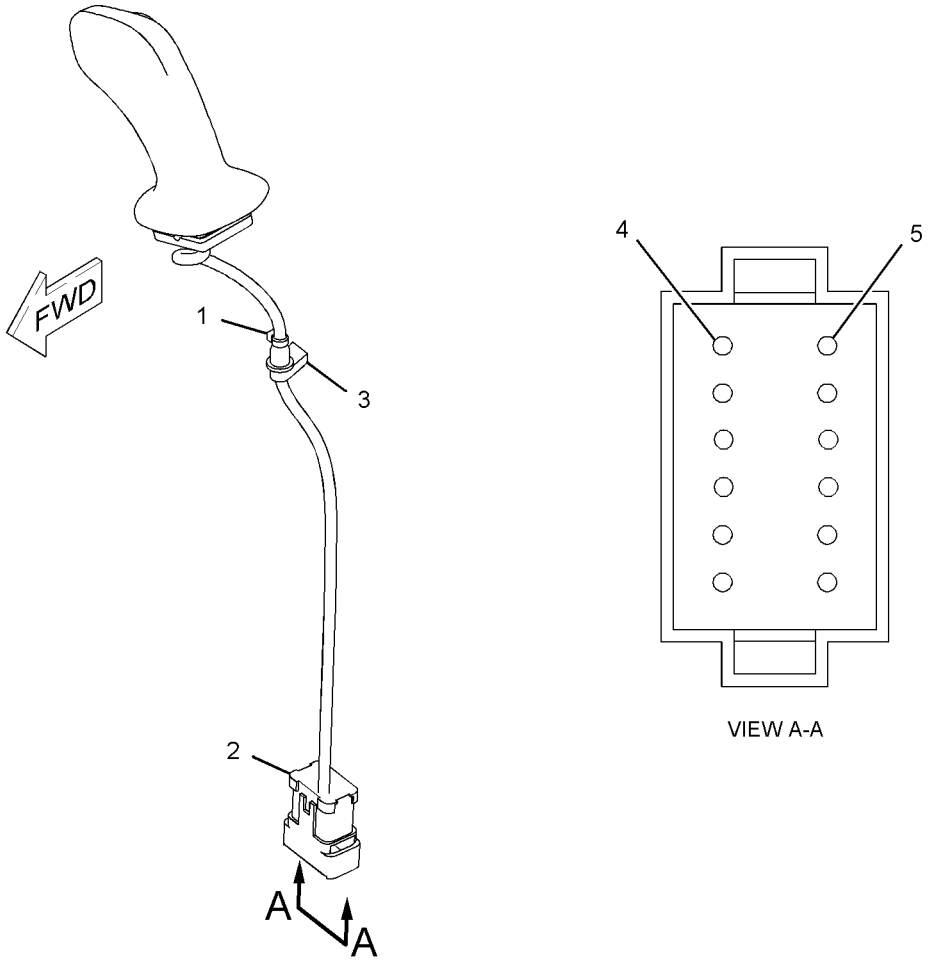

GRAPHIC #1 **<END>** g01010901

OPERATOR STATION

218-6118 HANDLE GP-MODULAR

S/N: MJH10575-UP

PART OF 218-6485, 218-6490 CONTROL GP-HANDLE

AN ATTACHMENT

SMCS-5705 **i02578035**

NOTE	REF NO	GRAPHIC REF	PART NUMBER	QTY	PART NAME 1 2 3 4 5 6 (PRODUCT LEVEL)	SEE PAGE
	1	1	**8L-8413**	1	STRAP-CABLE	
	2	1	**159-9853**	1	GROMMET	
	3	1	**174-3091**	1	KIT-RECEPTACLE (12-PIN)	
					(INCLUDES RECEPTACLE AS & WEDGE)	
	4	1	**186-3735**	4	PIN-CONNECTOR (16-GA TO 18-GA)	
	5	1	**8T-8737**	8	PLUG-SEAL	

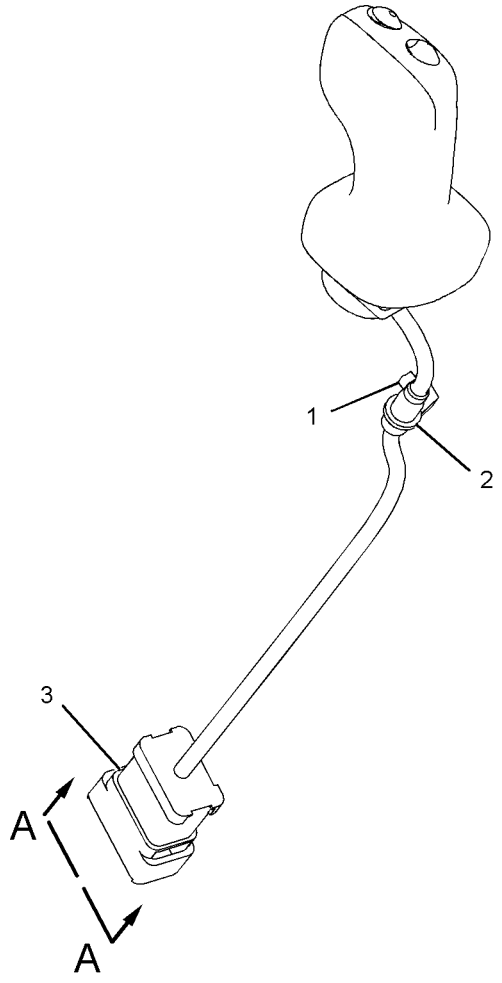

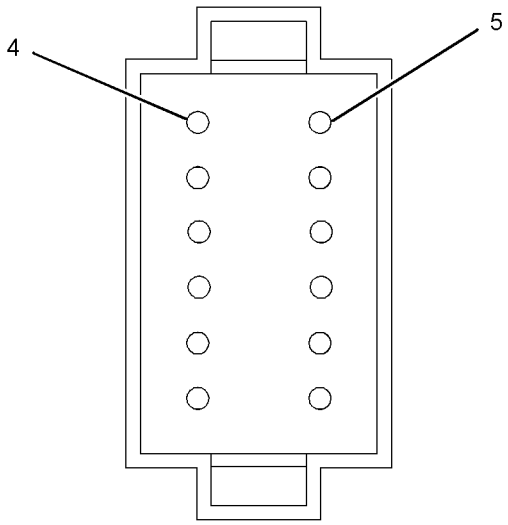

VIEW A-A

GRAPHIC #1 **<END>** g01113888

OPERATOR STATION

229-8746 HEATER & MTG GP-CAB

S/N: MJH10575-UP
PART OF 218-6272 HEATER AR-CAB
AN ATTACHMENT

SMCS-7304 **i02010980**

NOTE	REF NO	GRAPHIC REF	PART NUMBER	QTY	PART NAME 1 2 3 4 5 6 (PRODUCT LEVEL)	SEE PAGE
Y	1	1	*218-6393*	1	HEATER GP-CAB	585
M	2	1	**7X-2537**	4	BOLT (M8X1.25X35MM)	
	3	1	**8T-4224**	4	WASHER-HARD (8.8X16X2MM THK)	

M-METRIC PART
Y-SEPARATE ILLUSTRATION

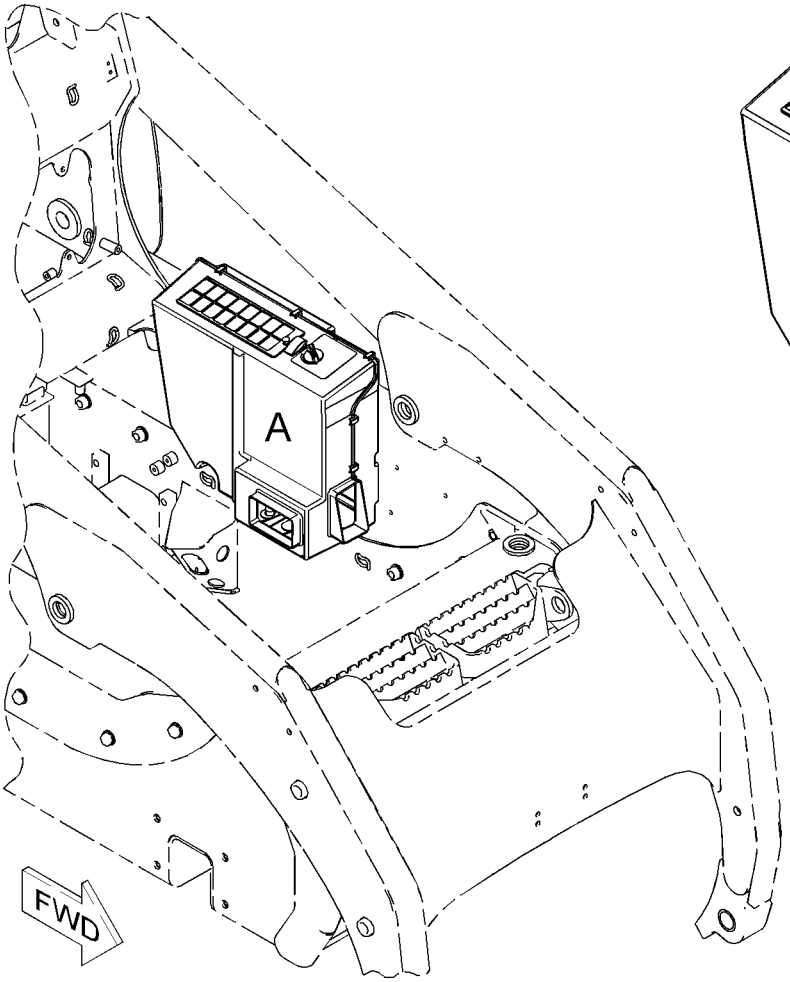

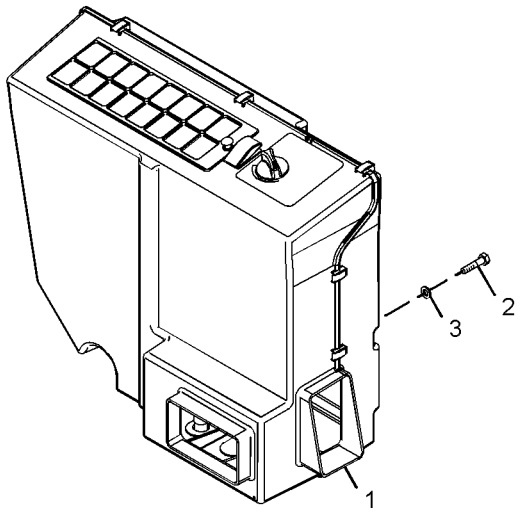

VIEW OF AREA A

GRAPHIC #1 **<END>** g01018708

OPERATOR STATION

218-6272 HEATER AR-CAB

S/N: MJH10575-UP
PART OF 295-7321 OPTION AR-CAB
AN ATTACHMENT

SMCS-7304 **i01990910**

NOTE	PART NUMBER	QTY	PART NAME 1 2 3 4 5 6 (PRODUCT LEVEL)	SEE PAGE
Y	*218-6394*	1	DUCT & CONTROL GP	573
Y	*229-8746*	1	HEATER & MTG GP-CAB	583
Y	*218-6086*	1	LINES GP-HEATER	605
Y	*218-6059*	1	LINES GP-HYDRAULIC FAN	321

Y-SEPARATE ILLUSTRATION

<END>

OPERATOR STATION

218-6393 HEATER GP-CAB

S/N: MJH10575-UP

PART OF 229-8746 HEATER & MTG GP-CAB, 218-6746 HEATER GP-CAB

AN ATTACHMENT

TYPE 1

SMCS-7304, 7342 **i02839368**

NOTE	REF NO	GRAPHIC REF	PART NUMBER	QTY	PART NAME 1 2 3 4 5 6 (PRODUCT LEVEL)	SEE PAGE
	1	1	**185-4015**	10	CLIP	
	2	1	**218-6399**	1	SEAL	
	3	1	**231-8121**	1	HOUSING	
Y	4	1	**231-8122**	1	HOUSING AS-SIDE (AIR CONDITIONER, HEATER)	591
	5	1	**231-8124**	1	COIL AS-HEATER	
	6	1	**295-5440**	1	MOTOR	
	7	1	**231-8126**	1	VALVE AS	
	8	1	**231-8127**	1	GROMMET	
	9	1	**231-8128**	1	GRILL	
	10	1	**231-8129**	1	PIN	
	11	1	**231-8130**	1	FILTER ELEMENT-CAB AIR	
	12	1	**231-8131**	1	PLATE	
	13	1	**231-8132**	1	FILTER ELEMENT-CAB AIR	
	14	1	**231-8133**	1	PANEL	
	15	1	**231-8141**	1	GROMMET	
	16	1	**231-8142**	1	RETAINER	
	17	1	**231-8143**	1	FILM (TEMPERATURE CONTROL)	
	18	1	**231-8144**	1	BAFFLE	
	19	1	**231-8145**	1	GROMMET	
	20	1	**206-7398**	1	KNOB-CONTROL (TEMPERATURE SELECT)	
	21	1	**305-2969**	2	THUMBSCREW	
	22	1	**218-6947**	1	HARNESS AS-HEATER & AIR COND	
	23	1	**236-5067**	1	SWITCH-ROCKER (HEATER)	
	24	1	**236-5069**	1	RELAY AS (12-VOLT) (HEATER)	

Y-SEPARATE ILLUSTRATION

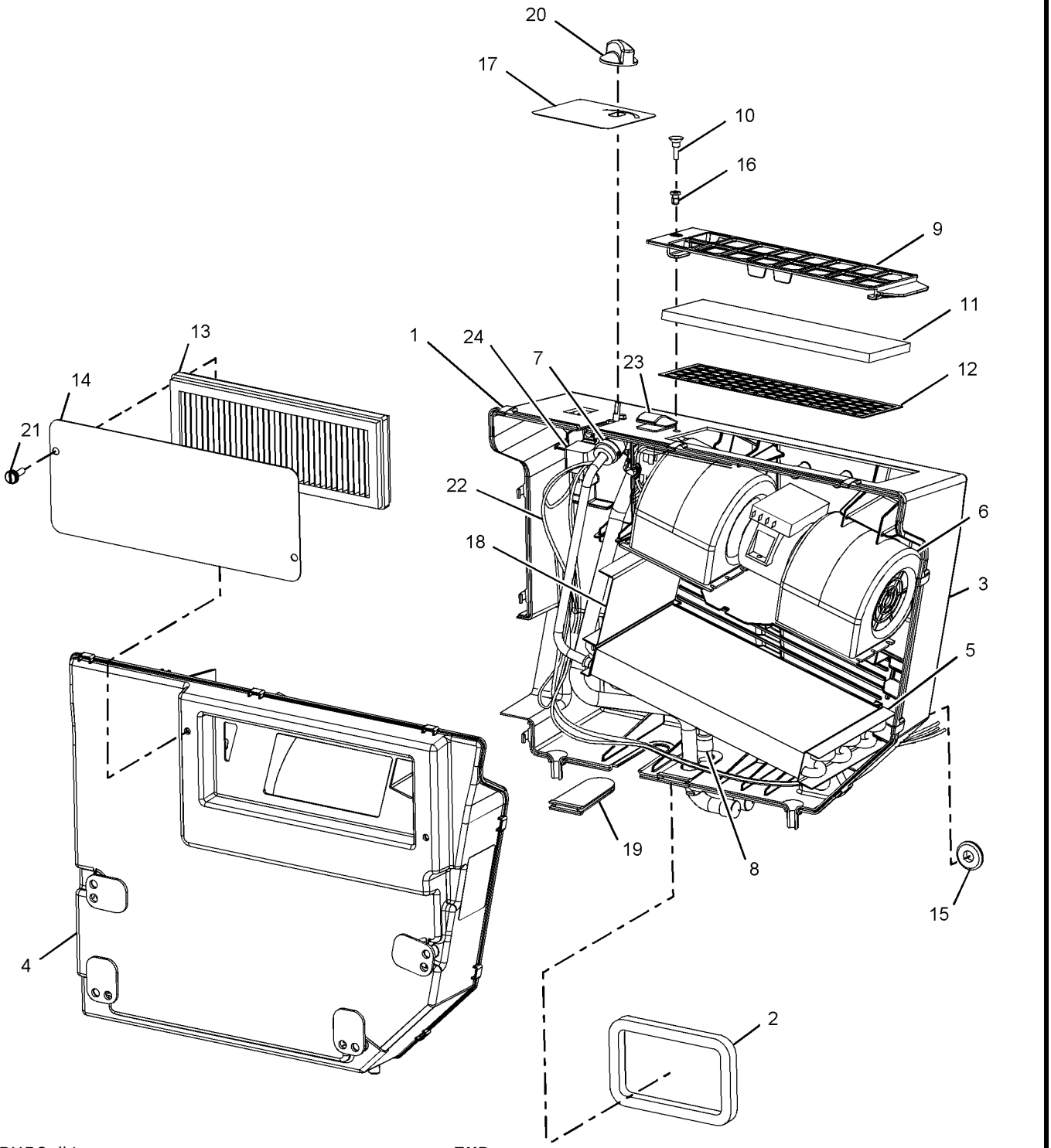

GRAPHIC #1 **<END>** g01027810

OPERATOR STATION

218-6393 HEATER GP-CAB

S/N: MJH10575-UP
PART OF 218-6746 HEATER GP-CAB
AN ATTACHMENT
TYPE 2

SMCS-7304, 7342 **i02839375**

NOTE	REF NO	GRAPHIC REF	PART NUMBER	QTY	PART NAME 1 2 3 4 5 6 (PRODUCT LEVEL)	SEE PAGE
	1	1	**185-4015**	10	CLIP	
	2	1	**218-6399**	1	SEAL	
C	3	1	**312-1683**	1	HOUSING-COVER	
Y	4	1	**231-8122**	1	HOUSING AS-SIDE (AIR CONDITIONER, HEATER)	591
	5	1	**231-8124**	1	COIL AS-HEATER	
	6	1	**295-5440**	1	MOTOR	
	7	1	**231-8126**	1	VALVE AS	
	8	1	**231-8127**	1	GROMMET	
C	9	1	**312-2635**	1	COVER GP-ACCESS	
		1	**231-8129**	2	PIN	
		1	**231-8142**	2	RETAINER	
C	11	1	**303-6658**	1	FILTER ELEMENT-CAB AIR (AIR)	
	13	1	**231-8132**	1	FILTER ELEMENT-CAB AIR	
	14	1	**231-8133**	1	PANEL	
	15	1	**231-8141**	1	GROMMET	
	17	1	**231-8143**	1	FILM (TEMPERATURE CONTROL)	
	18	1	**231-8144**	1	BAFFLE	
	19	1	**231-8145**	1	GROMMET	
	20	1	**206-7398**	1	KNOB-CONTROL (TEMPERATURE SELECT)	
	21	1	**305-2969**	2	THUMBSCREW	
	22	1	**218-6947**	1	HARNESS AS-HEATER & AIR COND	
	23	1	**236-5067**	1	SWITCH-ROCKER (HEATER)	
	24	1	**236-5069**	1	RELAY AS (12-VOLT) (HEATER)	

C-CHANGE FROM PREVIOUS TYPE
Y-SEPARATE ILLUSTRATION

218-6393 **HEATER GP-CAB** *(contd.)* **i02839375**

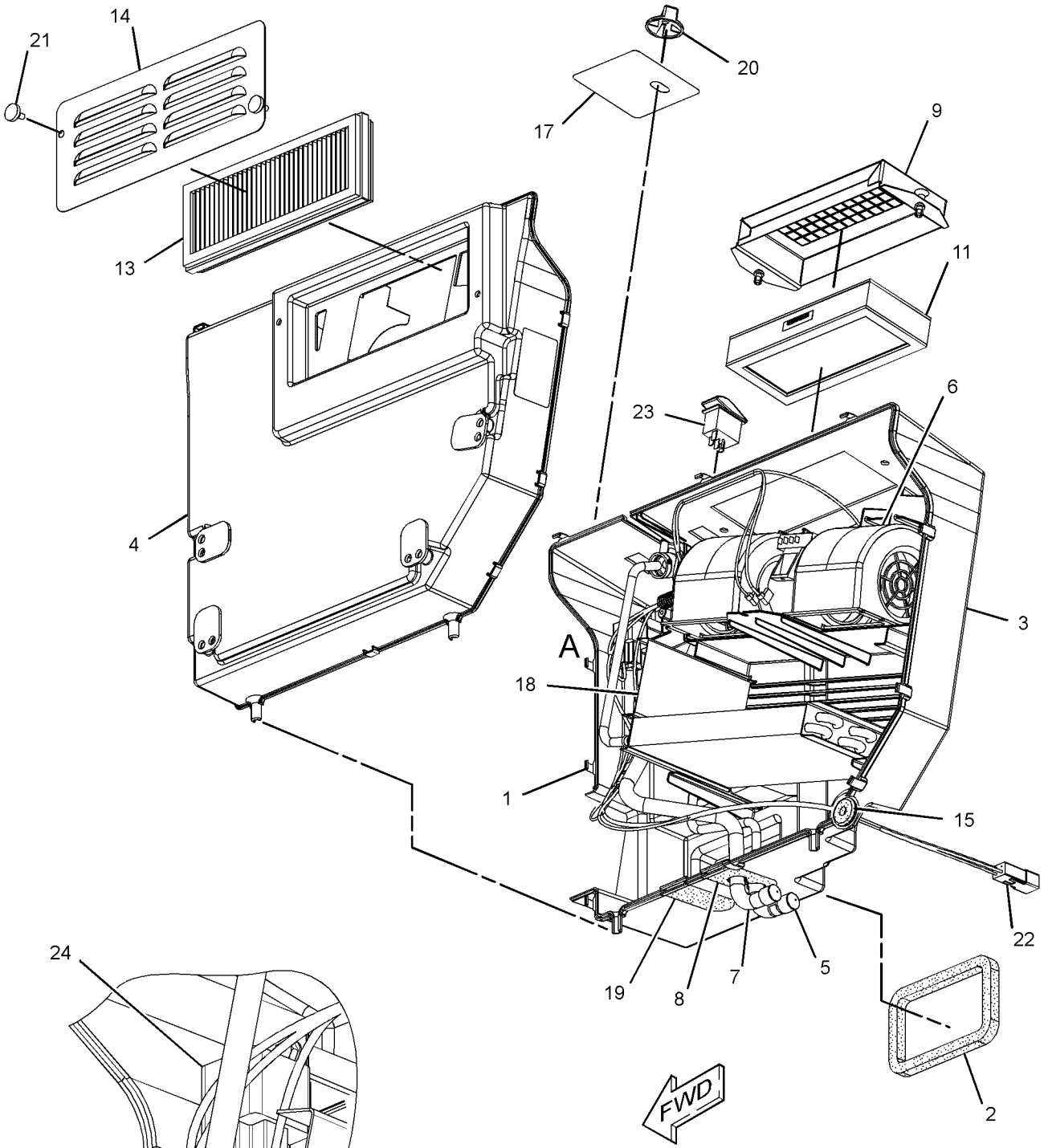

VIEW OF AREA A

GRAPHIC #1 **<END>** g01416774

OPERATOR STATION

218-6746 HEATER GP-CAB–KIT

S/N: MJH10575-UP
AN ATTACHMENT

SMCS-7304, 7342 **i02890258**

NOTE	PART NUMBER	QTY	PART NAME 1 2 3 4 5 6 (PRODUCT LEVEL)	SEE PAGE
Y	*218-6393*	1	HEATER GP-CAB	585
	218-6402	1	INSULATION AS	
	146-6371	6	LOUVER AS	
	8F-8151	1	VALVE AS-SHUTOFF (WATER)	
	150-7568	1	ADAPTER	
M	**7X-2537**	4	BOLT (M8X1.25X35-MM)	
M	**8T-4137**	1	BOLT (M10X1.5X20-MM)	
M	**8T-4189**	1	BOLT (M8X1.25X20-MM)	
M	**8T-4191**	1	BOLT (M10X1.5X16-MM)	
M	**8T-4200**	1	BOLT (M8X1.25X16-MM)	
M	**8T-6869**	4	BOLT (M8X1.25X60-MM)	
	8T-0154	4	CLAMP-HOSE	
	6D-4636	2	CLIP	
	3S-8665	1	CLIP	
	6D-1641	2	CLIP	
	6V-2235	1	CLIP	
	9X-8250	4	CLIP	
	218-6398	1	CONSOLE (LH)	
	218-6397	1	CONSOLE (RH)	
	218-6396	1	DUCT (CROSSOVER)	
	004-6810	1	ELBOW	
	218-6645	1	ELBOW	
	250-1493	1	ELBOW	
E	**206-2724**		GUARD (110-CM)	
E	**136-1953**		HOSE (387-CM)	
	176-4079	1	INSULATION	
	285-9133	1	INSULATION	
	285-8570	1	INSULATION	
	285-8565	1	INSULATION	
M	**8T-4133**	2	NUT (M10X1.5-THD)	
M	**175-0005**	8	SCREW-BUTTON HEAD (M6X1X25-MM)	
	6V-6689	2	SCREW-SELF-TAPPING (10-16X.625-IN)	
	240-6879	2	SEAL	
	240-6878	1	SEAL	
	240-6877	1	SEAL	
	218-6414	1	SEAL	
	218-6401	1	SEAL	
D	**8T-5372**		SEAL (0.4-M)	
	178-3620	2	STRAP-DUAL CLAMP (DUAL CLAMP)	
	5P-4116	1	WASHER-HARD (8.8X20.5X2-MM THK)	
	8T-4121	5	WASHER-HARD (11X21X2.5-MM THK)	
	8T-4224	5	WASHER-HARD (8.8X16X2-MM THK)	

D-ORDER BY THE METER
E-ORDER BY THE CENTIMETER
M-METRIC PART
Y-SEPARATE ILLUSTRATION

<END>

OPERATOR STATION

245-6811 HOLDER-CUP

S/N: MJH10575-UP

AN ATTACHMENT

SMCS-731C **i02825213**

NOTE	REF NO	GRAPHIC REF	PART NUMBER	QTY	PART NAME 1 2 3 4 5 6 (PRODUCT LEVEL)	SEE PAGE
					(NO SERVICED PARTS)	

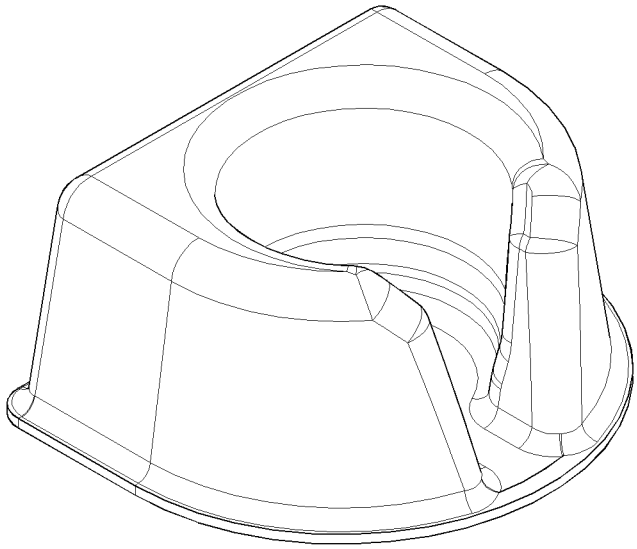

GRAPHIC #1 **<END>** g01409609

OPERATOR STATION

231-8122 HOUSING AS-SIDE–A/C, HEATER

S/N: MJH10575-UP

PART OF 218-6405 AIR CONDITIONER GP, 218-6393 HEATER GP-CAB

AN ATTACHMENT

SMCS-7320 **i02014573**

NOTE	REF NO	GRAPHIC REF	PART NUMBER	QTY	PART NAME 1 2 3 4 5 6 (PRODUCT LEVEL)	SEE PAGE
	1	1	**233-5929**	2	LOCKWASHER	
	2	1	**233-5931**	4	LOCKWASHER	
M	3	1	**131-3540**	4	LOCKNUT (M8X1.25 THD)	
	4	1	**233-5934**	4	MOUNT	
M	5	1	**129-3178**	2	LOCKNUT (M6X1 THD)	

M-METRIC PART

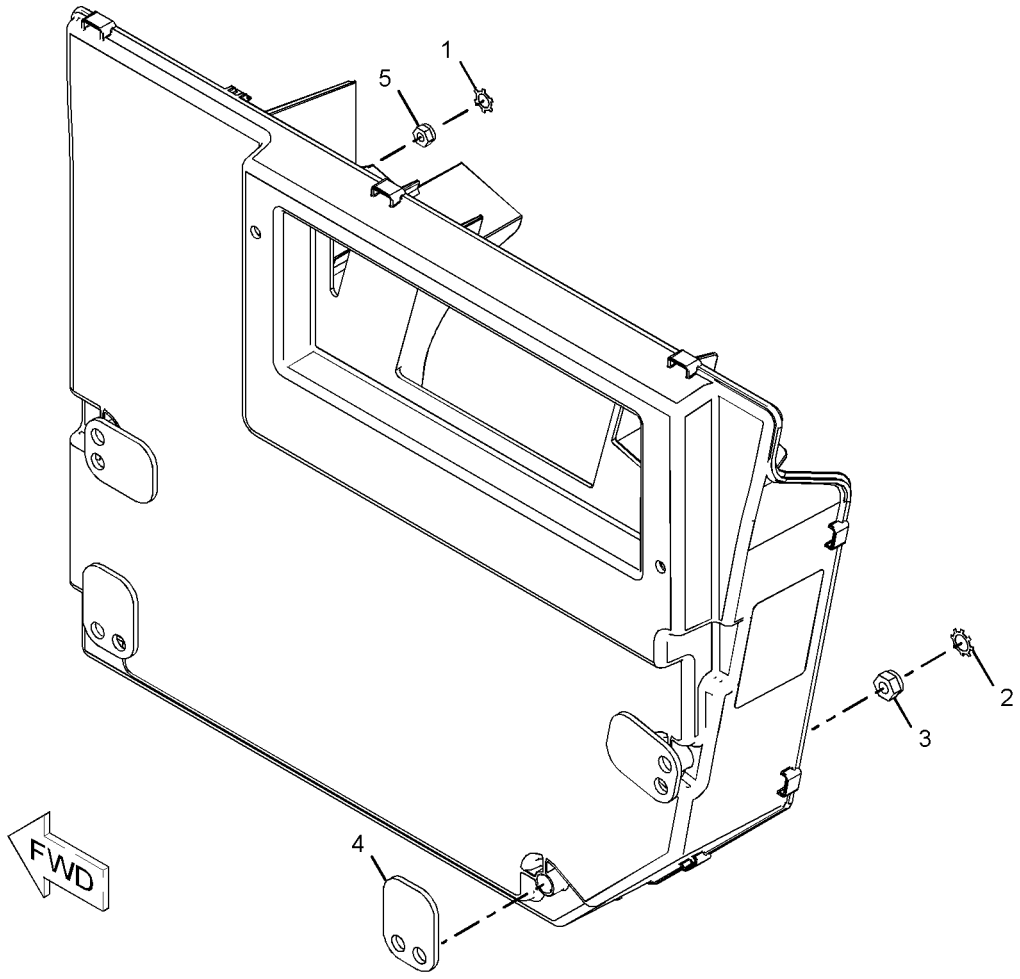

GRAPHIC #1 **<END>** g01041727

OPERATOR STATION

218-6271 INSTALLATION GP—WITHOUT HEATER OR A/C

S/N: MJH10575-UP
PART OF 295-7301, 295-7311 OPTION AR-CAB
CANNOT BE USED WITH 218-6272—PAGE 584, 218-6273—PAGE 507
AN ATTACHMENT

SMCS-5057, 5258 **i01971142**

NOTE	PART NUMBER	QTY	PART NAME 1 2 3 4 5 6 (PRODUCT LEVEL)	SEE PAGE
Y	*218-6419*	1	COVER GP-CONSOLE	559
Y	*229-8744*	1	COVER GP-CONSOLE	560
Y	*218-6059*	1	LINES GP-HYDRAULIC FAN	321
Y-SEPARATE ILLUSTRATION				

<END>

233-5588 KIT-AIR COND & HEATER INSTL

S/N: MJH10575-UP
AN ATTACHMENT

SMCS-1405, 1802, 1805, 1808, 7174, 7304, 7320, 734D **i02876738**

NOTE	PART NUMBER	QTY	PART NAME 1 2 3 4 5 6 (PRODUCT LEVEL)	SEE PAGE
Y	**176-3900**	1	ACCUMULATOR GP-REFRIGERANT (WITH DESICCANT)	504
Y	**218-6405**	1	AIR CONDITIONER GP	508
Y	**218-6840**	1	MOTOR GP-GEAR	368
			—OR—	
Y	**289-6360**	1	MOTOR GP-GEAR (REFRIGERANT COMPRESSOR)	370
	218-6833	1	COMPRESSOR GP-REFRIGERANT	
	218-6836	1	COUPLING GP-DRIVE	
	218-6837	1	COUPLING	
	218-6838		HUB (COMPRESSOR)	
	276-4063	1	HUB (MOTOR)	
	283-9566	1	VALVE GP-SOLENOID (12 VDC)	
M	**8T-4191**	1	BOLT (M10X1.5X16-MM)	
M	**085-8091**	2	BOLT (M10X1.5X55-MM)	
M	**8T-6870**	2	BOLT (M8X1.25X70-MM)	
M	**8T-4136**	3	BOLT (M10X1.5X25-MM)	
M	**8T-4189**	14	BOLT (M8X1.25X20-MM)	
M	**9X-6032**	2	BOLT-SOCKET HEAD (M10X1.5X30-MM)	
	9G-5127	1	BREATHER (AIR CONDITIONER COMPRESSOR)	
	101-8296	2	CLIP	
	4P-8134	1	CLIP	
	233-5927	1	COIL AS	
	148-8315	2	CONNECTOR AS	
			(EACH INCLUDES)	
	2M-9780	1	SEAL-O-RING	
	6V-8642	1	CONNECTOR	
	7J-9108	1	SEAL-O-RING	
	148-8326	1	CONNECTOR AS	
	3J-7354	1	SEAL-O-RING	
	6V-8397	1	SEAL-O-RING	
	6V-9872	1	CONNECTOR	
	124-2113	1	COUPLING-PERMANENT	
	124-2119	1	COUPLING-PERMANENT	
	124-2141	1	COUPLING-PERMANENT	
	124-2150	2	COUPLING-PERMANENT	
	124-2164	2	COUPLING-PERMANENT	
	124-2168	1	COUPLING-PERMANENT	
	153-6256	1	ELBOW AS	

233-5588 KIT-AIR COND & HEATER INSTL *(contd.)* i02876738

NOTE	PART NUMBER	QTY	PART NAME 1 2 3 4 5 6 (PRODUCT LEVEL)	SEE PAGE
	7J-9108	1	SEAL-O-RING	
	8C-7563	1	ELBOW	
	218-6250	2	FAN AS	
	234-0566	1	FITTING AS	
	3E-4051	1	CAP-SEAL	
	3E-4057	1	VALVE AS	
	124-3548	1	FUSE (30-AMPERE)	
	2D-5248	1	GASKET	
	242-7389	1	HARNESS AS-CHASSIS (TRANSMISSION)	
	202-2168	1	HARNESS AS-FUEL TANK	
	102-8802	1	KIT-RECEPTACLE (2-PIN)	
			(INCLUDES RECEPTACLE AS & WEDGE)	
	155-2270		KIT-CONNECTING PLUG (2-PIN)	
			(INCLUDES PLUG AS, WEDGE & INTERFACE SEAL)	
	221-3879	1	HARNESS AS-HEATER & AIR COND	
	100-6674	2	SEAL-CONNECTOR	
E	**119-3662**		TUBE-HEAT SHRINK (10.85-MM DIA) (13-CM)	
	155-2260	1	KIT-CONNECTING PLUG (3-PIN)	
	155-2270	3	KIT-CONNECTING PLUG (2-PIN)	
			(EACH PLUG KIT INCLUDES PLUG AS, WEDGE & INTERFACE SEAL)	
GI	**122-6867**		HOSE (19-IN)	
I	**233-5951**	1	HOSE AS	
	218-6584	1	HOSE AS	
I	**233-5856**	1	HOSE AS	
I	**233-5863**	1	HOSE AS	
	252-0330	1	HOSE AS	
	218-6582	1	HOSE AS	
G	**122-6871**		HOSE-HYDRAULIC (29.2-IN)	
G	**122-6871**		HOSE-HYDRAULIC (2.8-IN)	
G	**213-8711**		HOSE-HYDRAULIC (67.8-IN)	
	233-5590	1	HOUSING-SUPPORT	
M	**5C-7261**	16	NUT (M8X1.25-THD)	
M	**8T-4133**	4	NUT (M10X1.5-THD)	
	246-9039	1	PLATE-INFORMATION (AIR CONDITIONER REFRIGERANT)	
D	**5P-5924**		SEAL (0.3-M)	
	9X-7378	1	SEAL-O-RING	
	9X-7380	1	SEAL-O-RING	
	9X-7381	3	SEAL-O-RING	
	9X-7382	2	SEAL-O-RING	
	9X-7383	3	SEAL-O-RING	
M	**233-1012**	1	SETSCREW-HEX SOCKET (M5X0.8X8-MM)	
	218-6060	1	SHROUD AS	
	9C-2741	2	SPACER (13.94X17.14X34-MM THK)	
	9G-7101	2	SPACER (10.5X20X30-MM THK)	
	3S-2093	14	STRAP-CABLE	
	7K-1181	2	STRAP-CABLE	
	236-6923	1	SWITCH AS-PRESSURE (REFRIGERANT)	
	8T-4121	12	WASHER-HARD (11X21X2.5-MM THK)	
	5P-4116	2	WASHER-HARD (8.8X20.5X2-MM THK)	
	8T-4224	22	WASHER-HARD (8.8X16X2-MM THK)	

D-ORDER BY THE METER
E-ORDER BY THE CENTIMETER
G-ORDER BY THE INCH
I-REFER TO HYDRAULIC INFORMATION SYSTEM
M-METRIC PART
Y-SEPARATE ILLUSTRATION

<END>

OPERATOR STATION

233-5589 KIT-AIR COND & HEATER INSTL–A/C, HEATER

S/N: MJH10575-UP

AN ATTACHMENT

SMCS-1405, 1802, 1805, 1808, 7174, 7304, 7320, 734D **i02890500**

NOTE	PART NUMBER	QTY	PART NAME 1 2 3 4 5 6 (PRODUCT LEVEL)	SEE PAGE
Y	*186-6190*	1	ACCUMULATOR GP-REFRIGERANT (WITH DESICCANT)	505
Y	*218-6405*	1	AIR CONDITIONER GP	508
Y	**218-6840**	1	MOTOR GP-GEAR (VALVE)	368
			–OR–	
Y	**289-6360**	1	MOTOR GP-GEAR	370
	283-9566	1	VALVE GP-SOLENOID (12 VDC)	
	150-7568	1	ADAPTER	
M	**8T-4191**	2	BOLT (M10X1.5X16-MM)	
M	**085-8091**	2	BOLT (M10X1.5X55-MM)	
M	**7X-2537**	4	BOLT (M8X1.25X35-MM)	
M	**8T-4136**	3	BOLT (M10X1.5X25-MM)	
M	**8T-4189**	14	BOLT (M8X1.25X20-MM)	
M	**8T-4200**	1	BOLT (M8X1.25X16-MM)	
M	**8T-6870**	2	BOLT (M8X1.25X70-MM)	
M	**9X-6032**	2	BOLT-SOCKET HEAD (M10X1.5X30-MM)	
	9G-5127	1	BREATHER (AIR CONDITIONER COMPRESSOR)	
	8T-0154	4	CLAMP-HOSE	
	6D-4636	2	CLIP	
	101-8296	2	CLIP	
	4P-8134	1	CLIP	
	3S-8665	1	CLIP	
	6D-1641	2	CLIP	
	233-5927	1	COIL AS	
	218-6833	1	COMPRESSOR GP-REFRIGERANT	
	148-8326	1	CONNECTOR AS	
	3J-7354	1	SEAL-O-RING	
	6V-8397	1	SEAL-O-RING	
	6V-9872	1	CONNECTOR	
	148-8315	2	CONNECTOR AS	
			(EACH INCLUDES)	
	2M-9780	1	SEAL-O-RING	
	6V-8642	1	CONNECTOR	
	7J-9108	1	SEAL-O-RING	
	218-6397		CONSOLE (RH)	
	218-6398	1	CONSOLE (LH)	
	218-6836	1	COUPLING GP-DRIVE	
	218-6837	1	COUPLING	
	218-6838	1	HUB (COMPRESSOR)	
	276-4063	1	HUB (MOTOR)	
	124-2119	1	COUPLING-PERMANENT	
	124-2113	1	COUPLING-PERMANENT	
	124-2141	1	COUPLING-PERMANENT	
	124-2150	2	COUPLING-PERMANENT	
	124-2164	2	COUPLING-PERMANENT	
	124-2168	1	COUPLING-PERMANENT	
	218-6396	1	DUCT	
	250-1493	1	ELBOW	
	153-6256	1	ELBOW AS	
	7J-9108	1	SEAL-O-RING	
	8C-7563	1	ELBOW	
	218-6250	2	FAN AS	
	234-0566	1	FITTING AS	
	3E-4051	1	CAP-SEAL	
	3E-4057	1	VALVE AS	

233-5589 KIT-AIR COND & HEATER INSTL *(contd.)* i02890500

NOTE	PART NUMBER	QTY	PART NAME 1 2 3 4 5 6 (PRODUCT LEVEL)	SEE PAGE
	124-3548	1	FUSE (30-AMPERE)	
	2D-5248	1	GASKET	
	206-2724		GUARD (110-CM)	
	242-7389	1	HARNESS AS-CHASSIS (TRANSMISSION)	
	202-2168	1	HARNESS AS-FUEL TANK	
	221-3879	1	HARNESS AS-HEATER & AIR COND	
E	**136-1953**		HOSE (330-CM)	
GI	**122-6867**		HOSE (19-IN)	
	218-6582	1	HOSE AS	
	218-6584	1	HOSE AS	
I	**233-5856**	1	HOSE AS	
I	**233-5863**	1	HOSE AS	
I	**233-5951**	1	HOSE AS	
	252-0330	1	HOSE AS	
	213-8711		HOSE-HYDRAULIC (172-CM)	
E	**122-6877**		HOSE-HYDRAULIC (48-CM)	
E	**122-6871**		HOSE-HYDRAULIC (256-CM)	
	233-5590	1	HOUSING-SUPPORT	
	176-4079	1	INSULATION	
	285-8565	1	INSULATION	
	285-8570	1	INSULATION	
	285-9133	1	INSULATION	
	146-6371	6	LOUVER AS	
M	**5C-7261**	16	NUT (M8X1.25-THD)	
M	**8T-4133**	4	NUT (M10X1.5-THD)	
	246-9039	1	PLATE-INFORMATION (AIR CONDITIONER REFRIGERANT)	
M	**175-0005**	8	SCREW-BUTTON HEAD (M6X1X25-MM)	
	6V-6689	2	SCREW-SELF-TAPPING (10-16X.625-IN)	
D	**5P-5924**		SEAL (0.3-M)	
D	**8T-5372**		SEAL (0.4-M)	
	218-6401	1	SEAL	
	218-6414	1	SEAL	
	240-6877	1	SEAL	
	240-6878	1	SEAL	
	240-6879	2	SEAL	
	9X-7378	1	SEAL-O-RING	
	9X-7380	1	SEAL-O-RING	
	9X-7381	3	SEAL-O-RING	
	9X-7382	2	SEAL-O-RING	
	9X-7383	3	SEAL-O-RING	
M	**233-1012**	1	SETSCREW-HEX SOCKET (M5X0.8X8-MM)	
	218-6060	1	SHROUD AS	
	9C-2741	2	SPACER (13.94X17.14X34-MM THK)	
	9G-7101	2	SPACER (10.5X20X30-MM THK)	
	3S-2093	14	STRAP-CABLE	
	7K-1181	2	STRAP-CABLE	
	178-3620	2	STRAP-DUAL CLAMP	
	236-6923	1	SWITCH AS-PRESSURE (REFRIGERANT)	
	8F-8151	1	VALVE AS-SHUTOFF	
	8T-4121	13	WASHER-HARD (11X21X2.5-MM THK)	
	5P-4116	2	WASHER-HARD (8.8X20.5X2-MM THK)	
	8T-4224	27	WASHER-HARD (8.8X16X2-MM THK)	

D-ORDER BY THE METER
E-ORDER BY THE CENTIMETER
G-ORDER BY THE INCH
I-REFER TO HYDRAULIC INFORMATION SYSTEM
M-METRIC PART

Y-SEPARATE ILLUSTRATION

<END>

OPERATOR STATION

218-6743 KIT-CAB DOOR & MOUNTING—POLYCARBONATE

S/N: MJH10575-UP

CANNOT BE USED WITH 218-6744—PAGE 598

AN ATTACHMENT

SMCS-7308 **i02772066**

NOTE	PART NUMBER	QTY	PART NAME 1 2 3 4 5 6 (PRODUCT LEVEL)	SEE PAGE
Y	*276-3440*	1	DOOR GP-CAB (POLYCARBONATE)	570
	221-3877	1	HARNESS AS-WINDOW WIPER	
E	**125-7875**		TUBE-HEAT SHRINK (7.44-MM DIA) (5-CM)	
	102-8805	1	KIT-RECEPTACLE (6-PIN)	
			(INCLUDES RECEPTACLE AS & WEDGE)	
	5W-1987	2	TERMINAL	
	123-7615	1	CONNECTOR	
	155-2274	1	KIT-CONNECTING PLUG (6-PIN)	
			(INCLUDES PLUG AS, WEDGE & INTERFACE SEAL)	
	223-0608	1	HINGE AS	
	280-1575	1	PLATE AS	
	223-0591	1	PLATE AS	
	223-0601	2	PLATE AS	
	153-2683	1	SPRING AS-GAS (LOCKING)	
	230-3214	1	SPRING AS-GAS (CAB DOOR)	
	8T-3848	1	STRIKER AS-LATCH	
	6V-4270	1	LOCKWASHER	
	219-9739	1	TANK AS-WINDOW WASHER	
	142-9356	1	BLOCK	
E	**144-0195**		HOSE (40-CM)	
M	**195-0937**	8	INSERT-THREADED (M8X1.25-THD)	
	5P-0372	2	LOCK PIN	
	223-0617	1	MOUNT	
M	**5C-2890**	13	NUT (M6X1-THD)	
M	**8T-4133**	4	NUT (M10X1.5-THD)	
	177-3405	1	PIN	
	095-1325	1	PIN-CLEVIS	
M	**9X-2041**	4	SCREW-TRUSS HEAD (M10X1.5X20-MM)	
M	**9X-2044**	3	SCREW-TRUSS HEAD (M6X1X16-MM)	
M	**9X-2045**	4	SCREW-TRUSS HEAD (M6X1X20-MM)	
M	**127-2170**	8	SCREW-TRUSS HEAD (M8X1.25X20-MM)	
D	**5P-8309**		SEAL (0.72-M)	
D	**5P-9909**		SEAL (0.1-M)	
E	**125-3518**		SEAL (77-CM)	
D	**5P-5969**		SEAL (2.2-M)	
	9C-5344	1	SPACER (10.5X20X18-MM THK)	
	218-0728	2	SPRING	
	3S-2093	3	STRAP-CABLE	
	8T-2444	2	STUD-BALL	
	8T-4121	4	WASHER-HARD (11X21X2.5-MM THK)	
	8T-4205	13	WASHER-HARD (7.2X14.5X2-MM THK)	
	8T-4224	2	WASHER-HARD (8.8X16X2-MM THK)	
	8T-4222	1	WASHER-PLATED (11X32X2.5-MM THK)	

D-ORDER BY THE METER
E-ORDER BY THE CENTIMETER
M-METRIC PART
Y-SEPARATE ILLUSTRATION

<END>

OPERATOR STATION

218-6744 KIT-CAB DOOR & MOUNTING—GLASS

S/N: MJH10575-UP

CANNOT BE USED WITH 218-6743—PAGE 597

AN ATTACHMENT

SMCS-7308 **i02772068**

NOTE	PART NUMBER	QTY	PART NAME 1 2 3 4 5 6 (PRODUCT LEVEL)	SEE PAGE
Y	*223-0616*	1	DOOR GP-CAB (GLASS)	568
	221-3877	1	HARNESS AS-WINDOW WIPER	
	102-8805	1	KIT-RECEPTACLE (6-PIN)	
			(INCLUDES RECEPTACLE AS & WEDGE)	
	5W-1987	2	TERMINAL	
	123-7615	1	CONNECTOR	
E	**125-7875**		TUBE-HEAT SHRINK (7.44-MM DIA) (5-CM)	
	155-2274	1	KIT-CONNECTING PLUG (6-PIN)	
			(INCLUDES PLUG AS, WEDGE & INTERFACE SEAL)	
	223-0608	1	HINGE AS	
	223-0591	1	PLATE AS	
	223-0601	2	PLATE AS	
C	**280-1575**	1	PLATE AS	
	153-2683	1	SPRING AS-GAS (LOCKING)	
	230-3214	1	SPRING AS-GAS (CAB DOOR)	
	8T-3848	1	STRIKER AS-LATCH	
	6V-4270	1	LOCKWASHER	
	219-9739	1	TANK AS-WINDOW WASHER	
	142-9356	1	BLOCK	
E	**144-0195**		HOSE (40-CM)	
CM	**195-0937**	8	INSERT-THREADED (M8X1.25-THD)	
	5P-0372	2	LOCK PIN	
	223-0617	1	MOUNT	
M	**5C-2890**	13	NUT (M6X1-THD)	
M	**8T-4133**	4	NUT (M10X1.5-THD)	
	177-3405	1	PIN	
	095-1325	1	PIN-CLEVIS	
M	**9X-2041**	4	SCREW-TRUSS HEAD (M10X1.5X20-MM)	
M	**9X-2044**	3	SCREW-TRUSS HEAD (M6X1X16-MM)	
M	**9X-2045**	4	SCREW-TRUSS HEAD (M6X1X20-MM)	
M	**127-2170**	8	SCREW-TRUSS HEAD (M8X1.25X20-MM)	
D	**5P-8309**		SEAL (0.72-M)	
D	**5P-9909**		SEAL (0.1-M)	
E	**125-3518**		SEAL (77-CM)	
CD	**5P-5969**		SEAL (2.2-M)	
	9C-5344	1	SPACER (10.5X20X18-MM THK)	
	218-0728	2	SPRING	
	3S-2093	3	STRAP-CABLE	
	8T-2444	2	STUD-BALL	
	8T-4121	4	WASHER-HARD (11X21X2.5-MM THK)	
	8T-4205	13	WASHER-HARD (7.2X14.5X2-MM THK)	
	8T-4224	2	WASHER-HARD (8.8X16X2-MM THK)	
	8T-4222	1	WASHER-PLATED (11X32X2.5-MM THK)	

C-CHANGE FROM PREVIOUS TYPE
D-ORDER BY THE METER
E-ORDER BY THE CENTIMETER
M-METRIC PART
Y-SEPARATE ILLUSTRATION

<END>

OPERATOR STATION

233-5864 KIT-CAB SEAL—DEBRIS BARRIER

S/N: MJH10575-UP
AN ATTACHMENT

SMCS-7301 **i02513705**

NOTE	PART NUMBER	QTY	PART NAME 1 2 3 4 5 6 (PRODUCT LEVEL)	SEE PAGE
	287-7006	1	BLOCK AS (RH)	
	287-7004	1	BLOCK AS (LH)	
M	**7X-2537**	2	BOLT (M8X1.25X35-MM)	
	189-4523	2	BOSS	
	187-3212	1	PLATE	
	187-3211	1	PLATE AS	
M	**8T-3612**	2	NUT-WELD (M8X1.25-THD)	
	288-5767	8	PLUG-BUTTON	
	3T-7856	2	PLUG-BUTTON	
	287-6603	2	PLUG-BUTTON	
E	**128-7037**		SEAL (98-CM)	
	284-3744	1	SEAL-RUBBER	
	284-3743	1	SEAL-RUBBER	
	284-3595	2	SEAL-RUBBER	
	8T-4224	2	WASHER-HARD (8.8X16X2-MM THK)	

E-ORDER BY THE CENTIMETER
M-METRIC PART

<END>

OPERATOR STATION

234-0774 LEVER GP-GOVERNOR

S/N: MJH10575-UP

PART OF 218-5565 PEDAL GP-GOVERNOR

SMCS-1265, 1276 **i01910964**

NOTE	REF NO	GRAPHIC REF	PART NUMBER	QTY	PART NAME 1 2 3 4 5 6 (PRODUCT LEVEL)	SEE PAGE
	1	1	**192-2663**	1	LEVER GP-GOVERNOR	
M		1	**8T-4971**	1	BOLT (M6X1X30-MM)	
M		1	**129-3178**	1	LOCKNUT (M6X1-THD)	
	2	1	**234-0732**	1	CABLE AS	
	3	1	**8T-4742**	1	END-YOKE ROD	
	4	1	**8T-4744**	1	PIN AS-SPRING	
M	5	1	**5C-2890**	1	NUT (M6X1-THD)	
M	6	1	**8T-4971**	1	BOLT (M6X1X30-MM)	
M	7	1	**129-3178**	1	LOCKNUT (M6X1-THD)	

M-METRIC PART

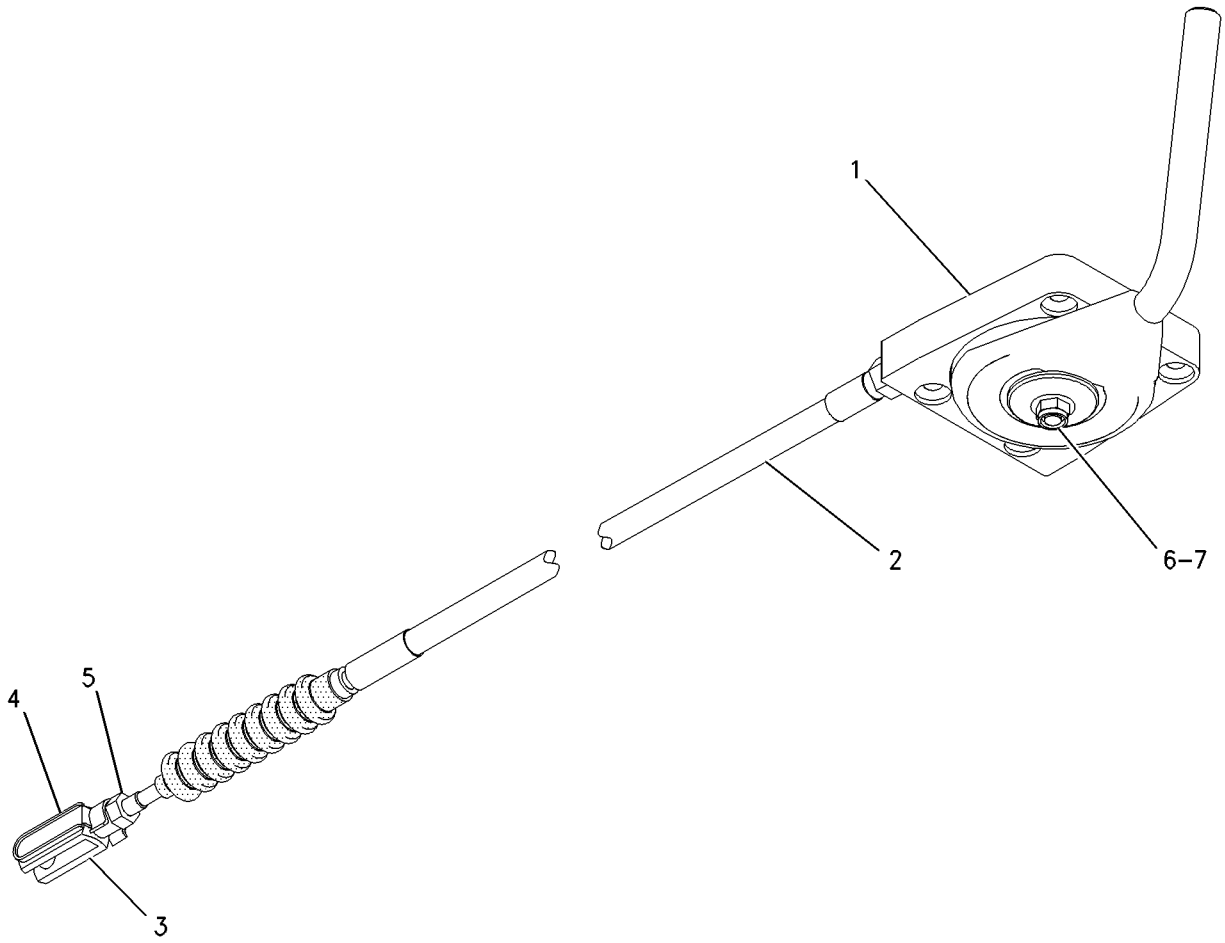

GRAPHIC #1 **<END>** g00995803

OPERATOR STATION

218-6356 LINER GP-CAB

S/N: MJH10575-UP

PART OF 218-6350 CAB AR-ENCLOSED ROPS

SMCS-7268, 7329 **i02634183**

NOTE	REF NO	GRAPHIC REF	PART NUMBER	QTY	PART NAME 1 2 3 4 5 6 (PRODUCT LEVEL)	SEE PAGE
E	1	1	**9X-2092**		STRIP-EDGE (113CM)	
	2	1	**218-6357**	1	INSULATION	
	3	1	**218-6359**	1	LINER-REAR WALL	
	4	1	**218-6436**	1	INSULATION	
	5	1	**292-3114**	2	SEAL	

E-ORDER BY THE CENTIMETER

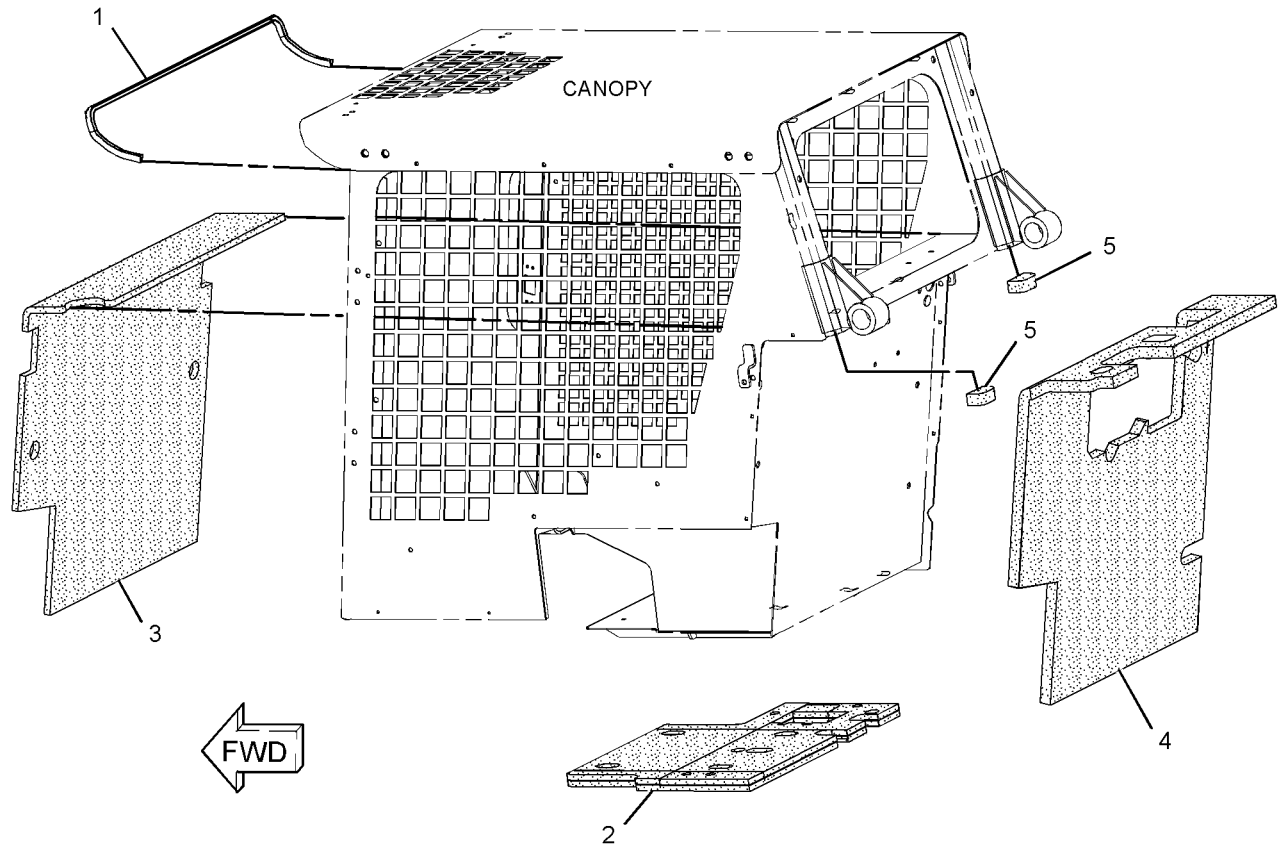

GRAPHIC #1 **<END>** g01352204

OPERATOR STATION

142-9311 LINER-CAB

S/N: MJH10575-UP

AN ATTACHMENT

SMCS-7329 **i02016735**

NOTE	REF NO	GRAPHIC REF	PART NUMBER	QTY	PART NAME 1 2 3 4 5 6 (PRODUCT LEVEL)	SEE PAGE
					(NO SERVICED PARTS)	

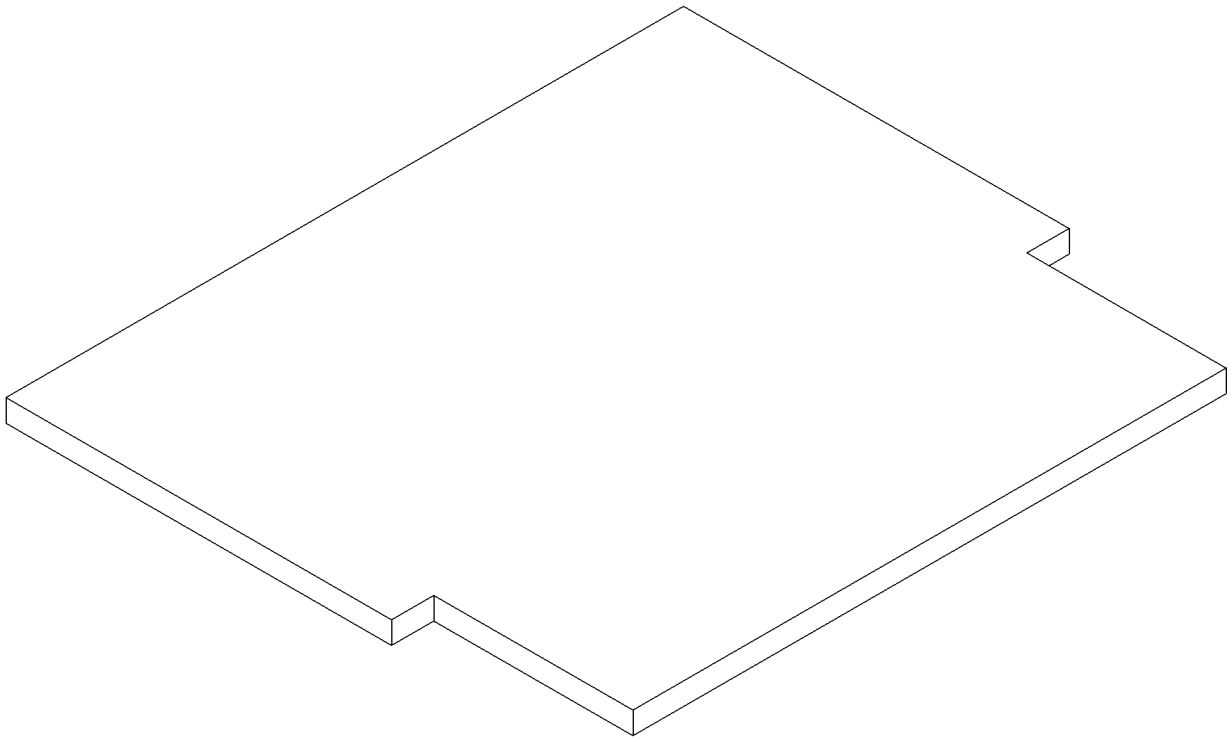

GRAPHIC #1 **<END>** g00782727

OPERATOR STATION

218-6560 LINES GP-AIR CONDITIONER

S/N: MJH10575-UP

PART OF 218-6273 AIR CONDITIONER AR

AN ATTACHMENT

SMCS-1808, 7320 **i02475389**

NOTE	REF NO	GRAPHIC REF	PART NUMBER	QTY	PART NAME 1 2 3 4 5 6 (PRODUCT LEVEL)	SEE PAGE
	1	1	**3S-2093**	2	STRAP-CABLE	
	3	1	**236-6923**	1	SWITCH AS-PRESSURE (AIR CONDITIONER)	
M	4	1	**085-8091**	2	BOLT (M10X1.5X55-MM)	
	5	1	**101-8296**	2	CLIP	
Y	6	1	*186-6190*	1	ACCUMULATOR GP-REFRIGERANT (WITH DESICCANT)	505
CI	7	1	**233-5856**	1	HOSE AS	
CI	8	1	**233-5951**	1	HOSE AS	
	9	1	**218-6582**	1	HOSE AS	
	10	1	**218-6584**	1	HOSE AS	
	11	1	*234-0566*	1	FITTING AS	
		1	**3E-4051**	1	CAP-SEAL	
		1	**3E-4057**	1	VALVE AS	
	12	1	**246-9039**	1	PLATE-INFORMATION (AIR CONDITIONER REFRIGERANT)	
	13	1	**8T-4121**	2	WASHER-HARD (11X21X2.5-MM THK)	
	15	1	**9C-2741**	2	SPACER (13.94X17.14X34-MM THK)	
	16	1	**9X-7378**	1	SEAL-O-RING	
	17	1	**9X-7380**	1	SEAL-O-RING	
	18	1	**9X-7381**	3	SEAL-O-RING	
	19	1	**9X-7382**	2	SEAL-O-RING	
	20	1	**9X-7383**	3	SEAL-O-RING	
D	21	1	**5P-5924**		SEAL (0.15-M EACH)	

C-CHANGE FROM PREVIOUS TYPE
D-ORDER BY THE METER
I-REFER TO HYDRAULIC INFORMATION SYSTEM
M-METRIC PART
Y-SEPARATE ILLUSTRATION

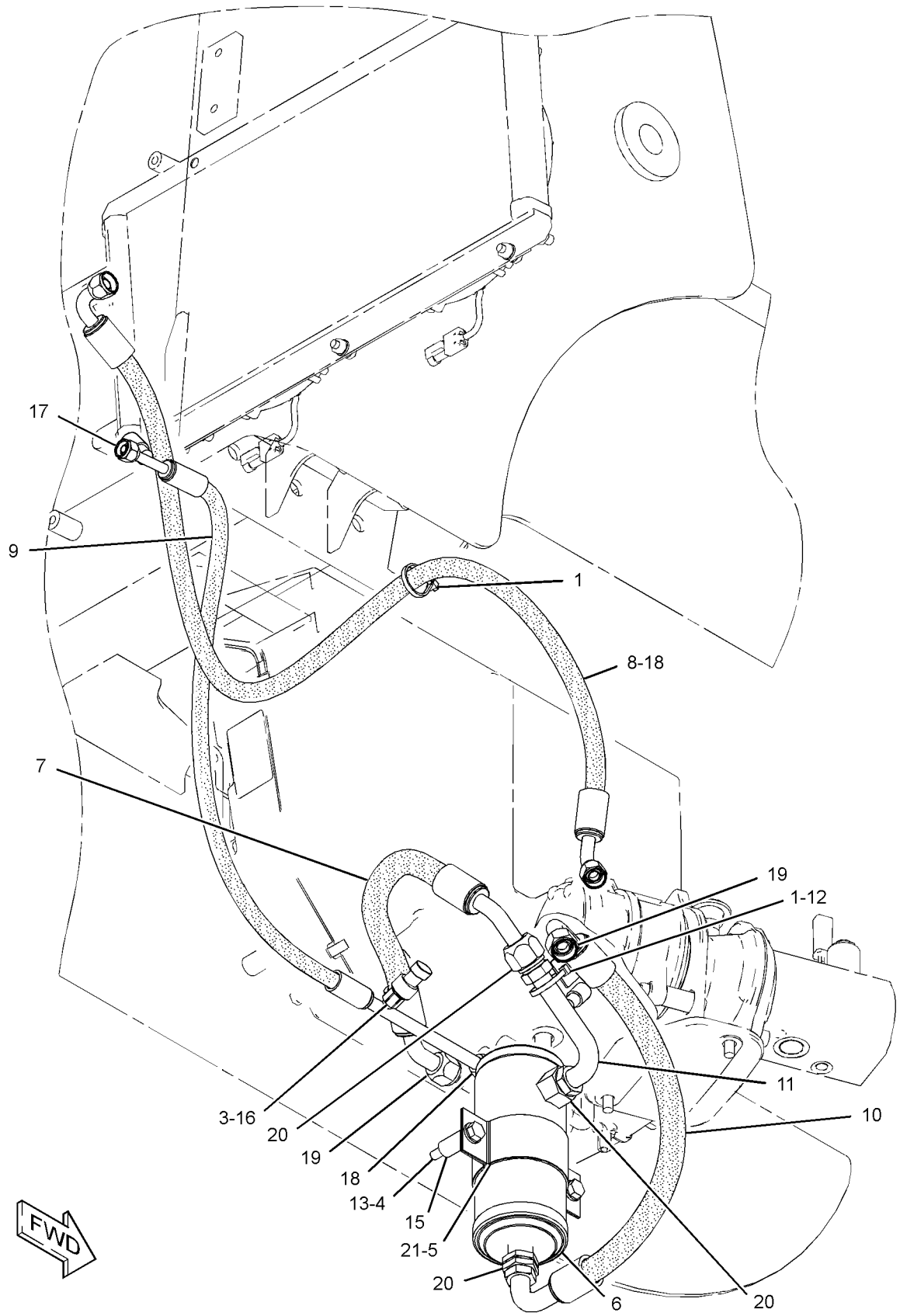

GRAPHIC #1

<END>

g01178590

OPERATOR STATION

218-6086 LINES GP-HEATER

S/N: MJH10575-UP

PART OF 218-6273 AIR CONDITIONER AR, 218-6272 HEATER AR-CAB

AN ATTACHMENT

SMCS-1812, 7304 **i02820098**

NOTE	REF NO	GRAPHIC REF	PART NUMBER	QTY	PART NAME 1 2 3 4 5 6 (PRODUCT LEVEL)	SEE PAGE
C	1	1	**7K-1181**	2	STRAP-CABLE	
	2	1	**8F-8151**	1	VALVE AS-SHUTOFF	
	3	1	**8T-0154**	4	CLAMP-HOSE	
	4	1	**150-7568**	1	ADAPTER	
C	5	1	**178-3620**	1	STRAP-DUAL CLAMP	
	6	1	**250-1493**	1	ELBOW	
	7	1	**3S-8665**	1	CLIP	
C	8	1	**4P-8134**	1	CLIP	
C	9	1	**8T-4121**	1	WASHER-HARD (11X21X2.5-MM THK)	
M	10	1	**8T-4195**	1	BOLT (M10X1.5X30-MM)	
CE	11	1	**206-2724**		GUARD (50-CM)	
CE	11A	1	**206-2724**		GUARD (60-CM)	
CE	12	1	**136-1953**		HOSE (159-CM)	
CE	12A	1	**136-1953**		HOSE (167-CM)	

C-CHANGE FROM PREVIOUS TYPE
E-ORDER BY THE CENTIMETER
M-METRIC PART

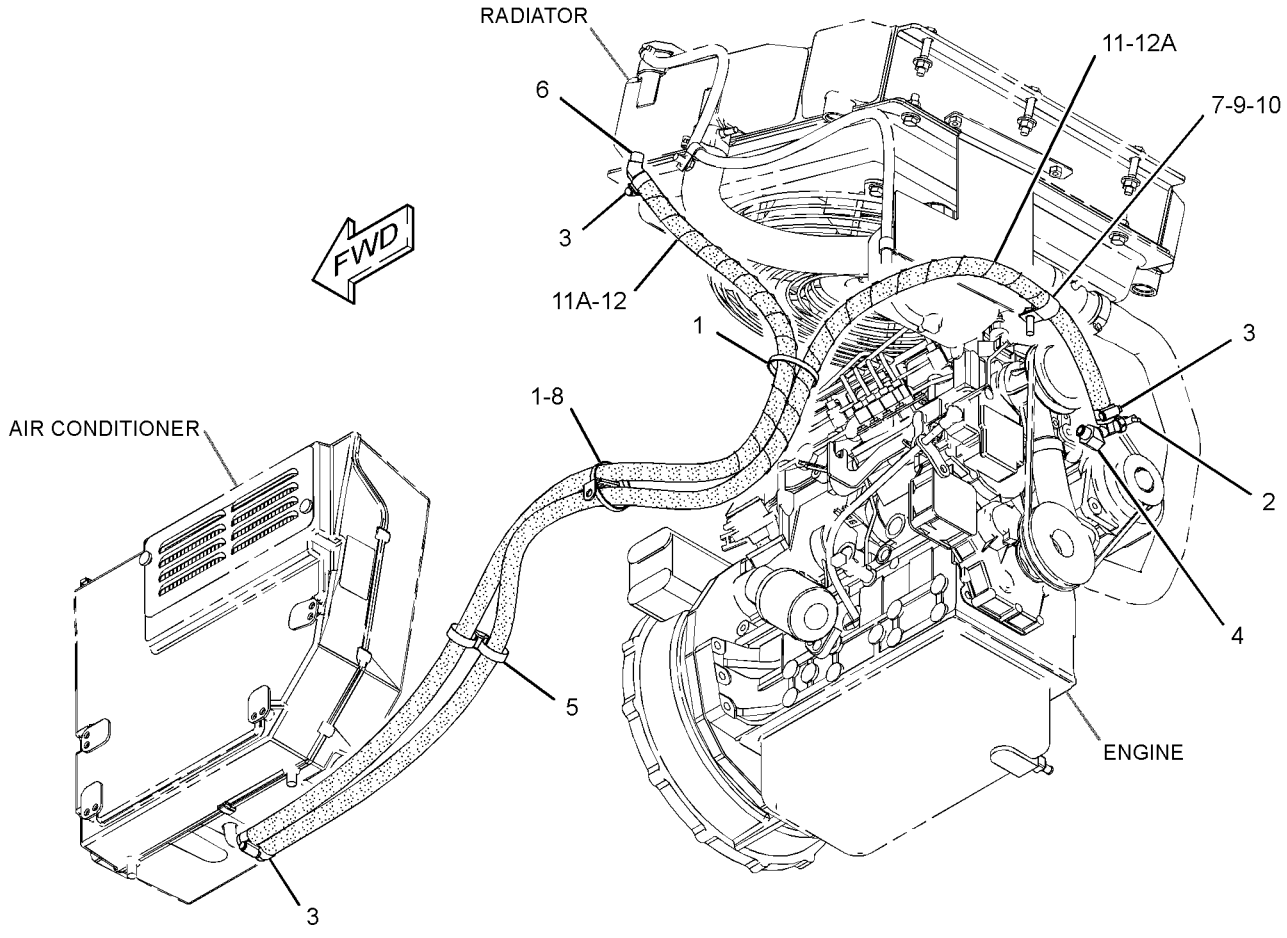

GRAPHIC #1 **<END>** g01409020

OPERATOR STATION

6V-1970 LITERATURE GP

S/N: MJH10575-UP

PART OF 295-7226, 295-7227 COMMON AR

SMCS-0374, 0375, 7300 **i02831417**

NOTE	PART NUMBER	QTY	PART NAME 1 2 3 4 5 6 (PRODUCT LEVEL)	SEE PAGE
	5P-8500	2	KEY (LITERATURE COMPARTMENT)	
	5P-7958	1	SLEEVE-CABLE SPLICE	

<END>

OPERATOR STATION

218-6395 MIRROR GP-REAR VIEW

S/N: MJH10575-UP

PART OF 218-6350 CAB AR-ENCLOSED ROPS

SMCS-7319 **i02007402**

NOTE	REF NO	GRAPHIC REF	PART NUMBER	QTY	PART NAME 1 2 3 4 5 6 (PRODUCT LEVEL)	SEE PAGE
	1	1	**218-6384**	1	MIRROR AS	
	2	1	**3B-4505**	1	LOCKWASHER	
M	3	1	**5C-7261**	1	NUT (M8X1.25-THD)	
	4	1	**8T-4224**		WASHER-HARD (8.8X16X2-MM THK)	

M-METRIC PART

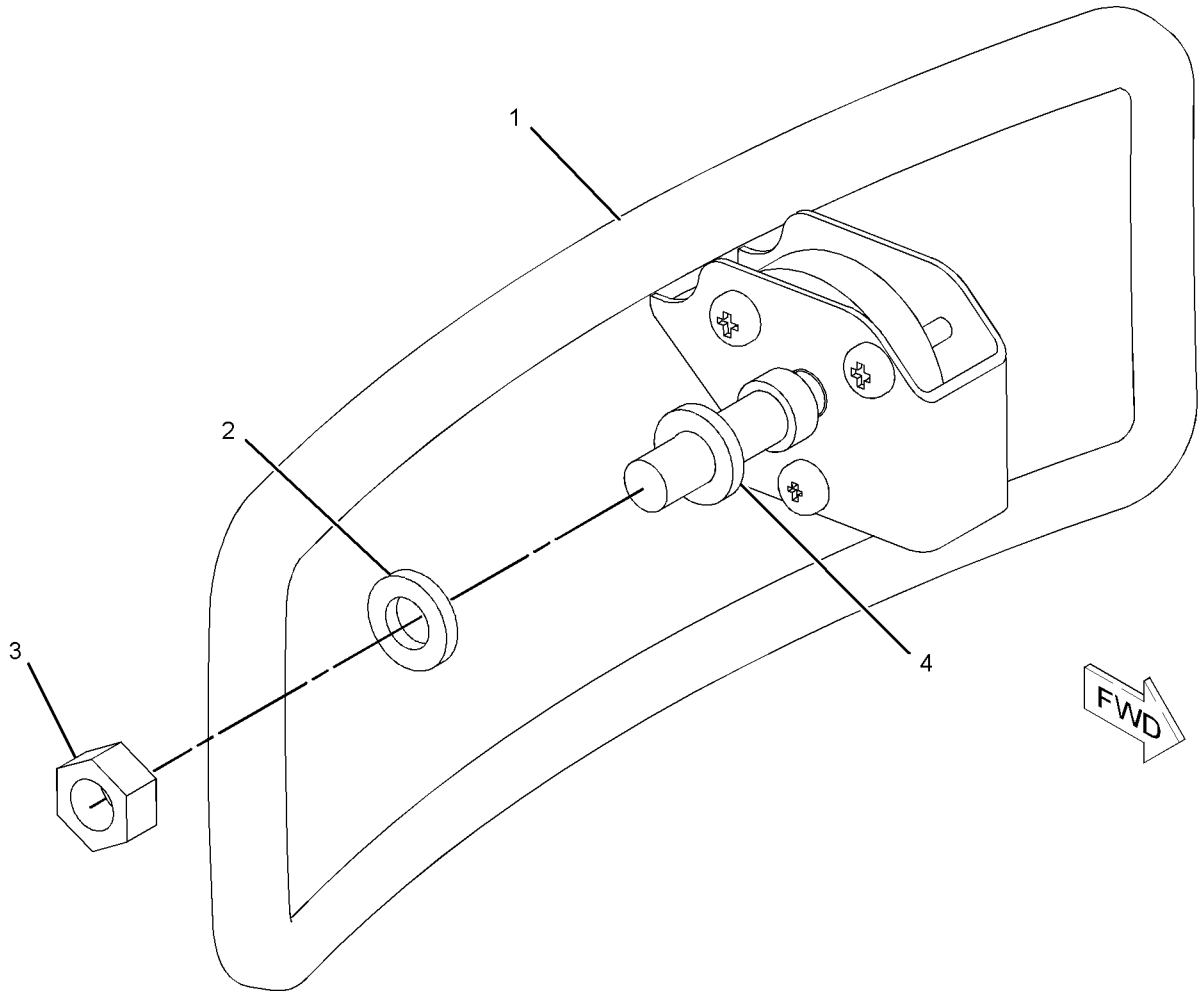

GRAPHIC #1 **<END>** g01038484

OPERATOR STATION

223-6537 MODULE GP-WARNING INDICATOR

S/N: MJH10575-UP

PART OF 216-4712 GAUGE & WARNING GP

AN ATTACHMENT

SMCS-7407, 7431 **i02492652**

NOTE	REF NO	GRAPHIC REF	PART NUMBER	QTY	PART NAME 1 2 3 4 5 6 (PRODUCT LEVEL)	SEE PAGE
	1	1	**102-8801**	1	KIT-RECEPTACLE (12-PIN)	
					(INCLUDES RECEPTACLE AS & WEDGE)	
	2	1	**232-4706**	1	GASKET	
	4	1	**186-3735**	9	PIN-CONNECTOR (16-GA TO 18-GA)	
	5	1	**8T-8737**	1	PLUG-SEAL	

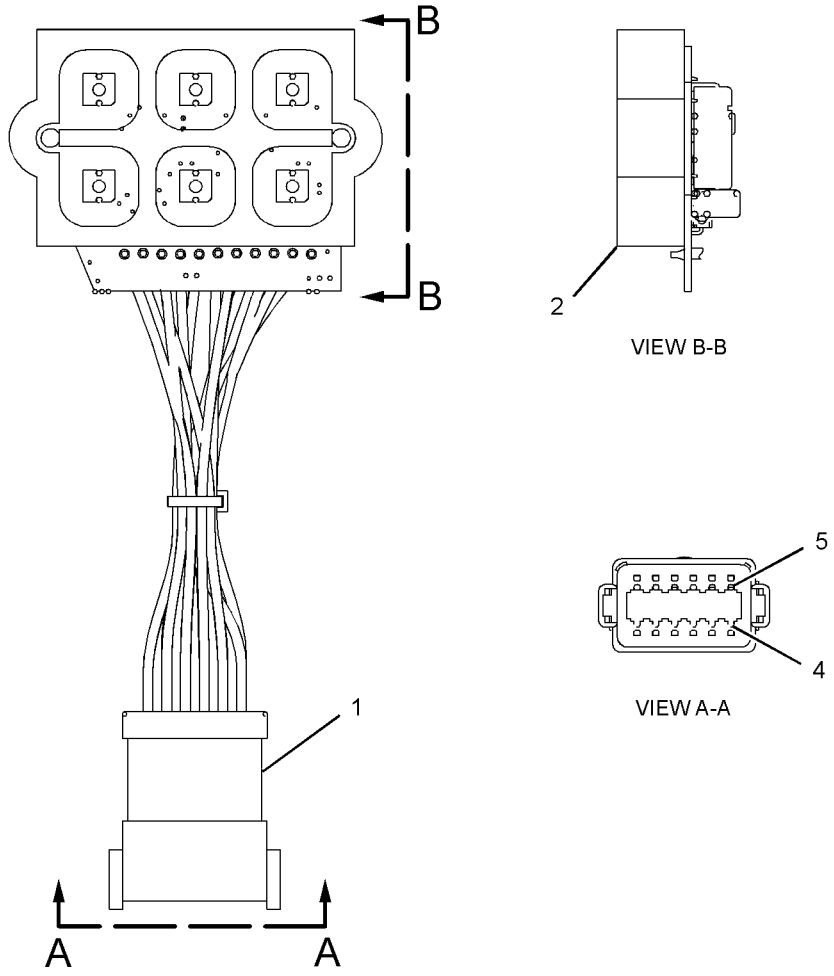

GRAPHIC #1 **<END>** g01307796

249-2910 MODULE GP-WARNING INDICATOR

S/N: MJH10575-UP

PART OF 216-4713 GAUGE & WARNING GP

AN ATTACHMENT

SMCS-7407, 7431 **i02757214**

NOTE	REF NO	GRAPHIC REF	PART NUMBER	QTY	PART NAME 1 2 3 4 5 6 (PRODUCT LEVEL)	SEE PAGE
	1	1	**8T-8737**	3	PLUG-SEAL	
	2	1	**232-4706**	1	GASKET	
	3	1	**186-3735**	9	PIN-CONNECTOR (16-GA TO 18-GA)	
	4	1	**102-8801**	1	KIT-RECEPTACLE (12-PIN)	
					(INCLUDES RECEPTACLE AS & WEDGE)	

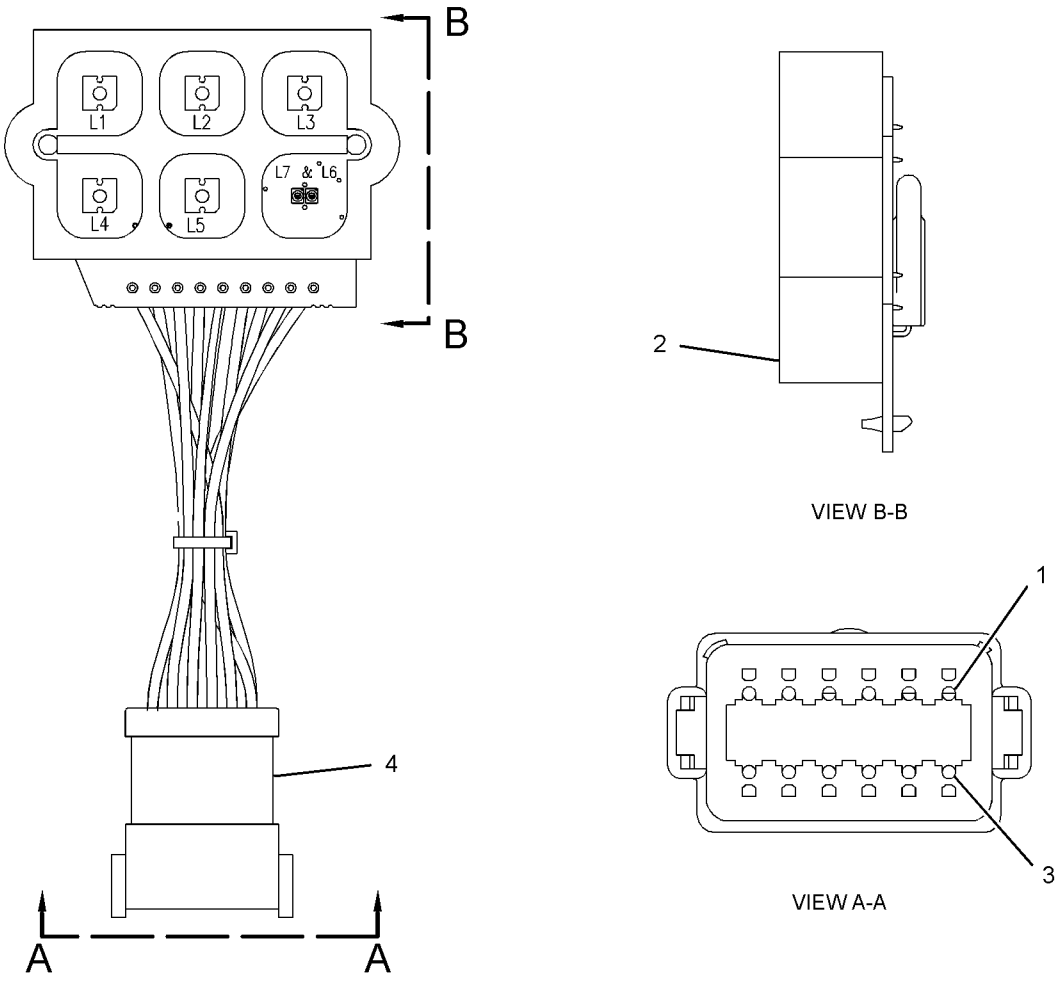

GRAPHIC #1 **<END>** g01152784

OPERATOR STATION

218-6370 MOUNTING GP-ROPS

S/N: MJH10575-UP

PART OF 218-6350 CAB AR-ENCLOSED ROPS

SMCS-7266, 7325 **i01955254**

NOTE	REF NO	GRAPHIC REF	PART NUMBER	QTY	PART NAME 1 2 3 4 5 6 (PRODUCT LEVEL)	SEE PAGE
	1	1	**152-5878**	2	MOUNT AS	
	2	1	**153-6981**	2	MOUNT	
	3	1	**159-5790**	1	BRACKET	
	4	1	**159-5792**	1	BAR AS	
	5	1	**159-5794**	1	SPRING	
	6	1	**218-6381**	2	SPACER	
	7	1	**165-7095**	4	WASHER (16.5X71.5X3-MM THK)	
	8	1	**4P-7581**	1	CLIP	
M	9	1	**6V-9805**	2	BOLT (M6X1X20-MM)	
M	10	1	**7X-2475**	2	BOLT (M16X2X130-MM)	
	11	1	**8T-4122**	4	WASHER-HARD (17X32X3.5-MM THK)	
M	12	1	**8T-4173**	2	BOLT (M16X2X110-MM)	
	13	1	**8T-4205**	2	WASHER-HARD (7.2X14.5X2-MM THK)	
M	14	1	**8T-4778**	4	LOCKNUT (M16X2-THD)	

M-METRIC PART

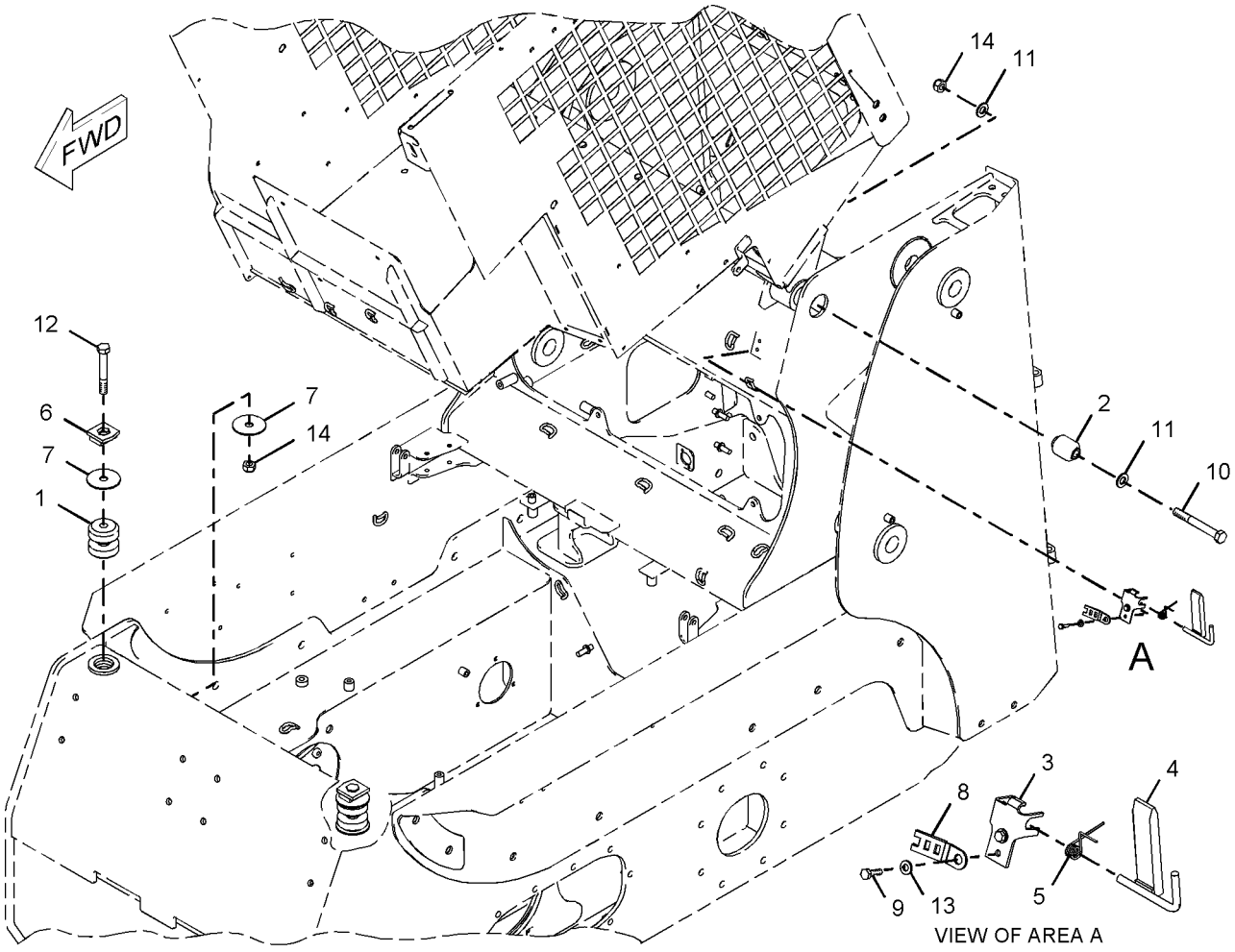

GRAPHIC #1 **<END>** g01018977

OPERATOR STATION

295-7301 OPTION AR-CAB

S/N: MJH10575-UP

AN ATTACHMENT

SMCS-7301 **i02736301**

NOTE	PART NUMBER	QTY	PART NAME 1 2 3 4 5 6 (PRODUCT LEVEL)	SEE PAGE
Y	*218-6400*	1	HANDHOLD GP	580
Y	*218-6271*	1	INSTALLATION GP (WITHOUT HEATER OR A/C)	592
Y	*218-5562*	1	SEAT GP (STATIC)	629

Y-SEPARATE ILLUSTRATION

<END>

295-7311 OPTION AR-CAB

S/N: MJH10575-UP

AN ATTACHMENT

SMCS-7301 **i02736298**

NOTE	PART NUMBER	QTY	PART NAME 1 2 3 4 5 6 (PRODUCT LEVEL)	SEE PAGE
Y	*218-6400*	1	HANDHOLD GP	580
Y	*218-6271*	1	INSTALLATION GP (WITHOUT HEATER OR A/C)	592
Y	*142-9305*	1	SEAT GP (SUSPENSION)	628
	245-6811	1	HOLDER-CUP	

Y-SEPARATE ILLUSTRATION

<END>

295-7321 OPTION AR-CAB

S/N: MJH10575-UP

AN ATTACHMENT

SMCS-7301 **i02736294**

NOTE	PART NUMBER	QTY	PART NAME 1 2 3 4 5 6 (PRODUCT LEVEL)	SEE PAGE
Y	*218-6272*	1	HEATER AR-CAB	584
Y	*218-6407*	1	SEAL GP-CAB	622
Y	*142-9305*	1	SEAT GP (SUSPENSION)	628
Y	*218-6411*	1	WINDOW GP-CAB (SIDE)	635
	245-6811	1	HOLDER-CUP	

Y-SEPARATE ILLUSTRATION

<END>

OPERATOR STATION

295-7331 OPTION AR-CAB

S/N: MJH10575-UP

AN ATTACHMENT

SMCS-7301 **i02736311**

NOTE	PART NUMBER	QTY	PART NAME 1 2 3 4 5 6 (PRODUCT LEVEL)	SEE PAGE
Y	*218-6273*	1	AIR CONDITIONER AR	507
Y	*218-6407*	1	SEAL GP-CAB	622
Y	*142-9305*	1	SEAT GP (SUSPENSION)	628
Y	*218-6411*	1	WINDOW GP-CAB (SIDE)	635
	245-6811	1	HOLDER-CUP	

Y-SEPARATE ILLUSTRATION

<END>

218-5790 PANEL AR-INSTRUMENT

S/N: MJH10575-UP

NACD

PART OF 261-6160 CONVERSION AR-MACHINE, 233-5670 CONVERSION AR-NON-ROADING

CANNOT BE USED WITH 218-5791—PAGE 612

AN ATTACHMENT

SMCS-7451 **i01957627**

NOTE	PART NUMBER	QTY	PART NAME 1 2 3 4 5 6 (PRODUCT LEVEL)	SEE PAGE
Y	**225-7998**	1	PANEL GP-INSTRUMENT	615

Y-SEPARATE ILLUSTRATION

<END>

218-5791 PANEL AR-INSTRUMENT

S/N: MJH10575-UP

EAME

PART OF 261-6157, 261-6187, 261-6197, 278-1212, 278-1220, 278-1224, 278-5408, 278-5441, 295-7038, 295-7049, 295-7059, 295-7066, 295-7149, 295-7158, 295-7162, 295-7167 CONVERSION AR-MACHINE, 233-5671, 233-5672, 233-5673, 233-5674, 233-5675, 233-5676, 257-5716, 257-5717, 295-7043 CONVERSION AR-ROADING

CANNOT BE USED WITH 218-5790—PAGE 612

AN ATTACHMENT

SMCS-7451 **i01957887**

NOTE	PART NUMBER	QTY	PART NAME 1 2 3 4 5 6 (PRODUCT LEVEL)	SEE PAGE
Y	**216-4751**	1	PANEL GP-INSTRUMENT	613

Y-SEPARATE ILLUSTRATION

<END>

OPERATOR STATION

216-4751 PANEL GP-INSTRUMENT

S/N: MJH10575-UP
EAME
PART OF 218-5791 PANEL AR-INSTRUMENT
AN ATTACHMENT

SMCS-7451 **i02360197**

NOTE	REF NO	GRAPHIC REF	PART NUMBER	QTY	PART NAME 1 2 3 4 5 6 (PRODUCT LEVEL)	SEE PAGE
	1	1	**109-2356**	5	PLUG	
Y	2	1	*142-9118*	1	COVER GP-INSTRUMENT PANEL (SERVICE METER)	561
	3	1	**142-9320**	1	SWITCH AS-ROCKER (PARKING BRAKE)	
		1	**111-7899**	1	GASKET	
	4	1	**142-9325**	1	SWITCH AS-ROCKER (COLD START)	
		1	**111-7899**	1	GASKET	
	5	1	**142-9328**	1	SWITCH AS-ROCKER (FRONT WORK LIGHT)	
		1	**111-7899**	1	GASKET	
	6	1	**158-6696**	1	COVER	
	7	1	**158-6698**	1	COVER	
	8	1	**158-6699**	1	COVER	
	9	1	**165-0312**	1	WIRE AS	
Y	10	1	*216-4712*	1	GAUGE & WARNING GP (LH)	577
Y	11	1	*216-4713*	1	GAUGE & WARNING GP (RH)	578
	12	1	**216-4752**	1	HARNESS AS-PANEL	
		1	**155-2255**	2	KIT-CONNECTING PLUG (12-PIN)	
		1	**155-2260**	1	KIT-CONNECTING PLUG (3-PIN)	
		1	**155-2270**	6	KIT-CONNECTING PLUG (2-PIN)	
		1	**155-2271**	3	KIT-CONNECTING PLUG (4-PIN)	
		1	**155-2274**	1	KIT-CONNECTING PLUG (6-PIN)	
					(EACH PLUG KIT INCLUDES PLUG AS, WEDGE & INTERFACE SEAL)	
		1	**102-8804**	2	KIT-RECEPTACLE (4-PIN)	
		1	**102-8805**	1	KIT-RECEPTACLE (6-PIN)	
		1	**102-8801**	1	KIT-RECEPTACLE (12-PIN)	
					(EACH RECEPTACLE KIT INCLUDES RECEPTACLE AS & WEDGE)	
	13	1	**223-5941**	1	SWITCH AS-ROCKER (WORK TOOL HYD PRESS RELEASE)	
		1	**111-7899**	1	GASKET	
	14	1	**226-5901**	1	SWITCH AS-ROCKER (INTERLOCK OVERRIDE)	
		1	**111-7899**	1	GASKET	
	15	1	**103-2006**	16	SCREW-PAN HEAD (6-19X0.37-IN)	

Y-SEPARATE ILLUSTRATION

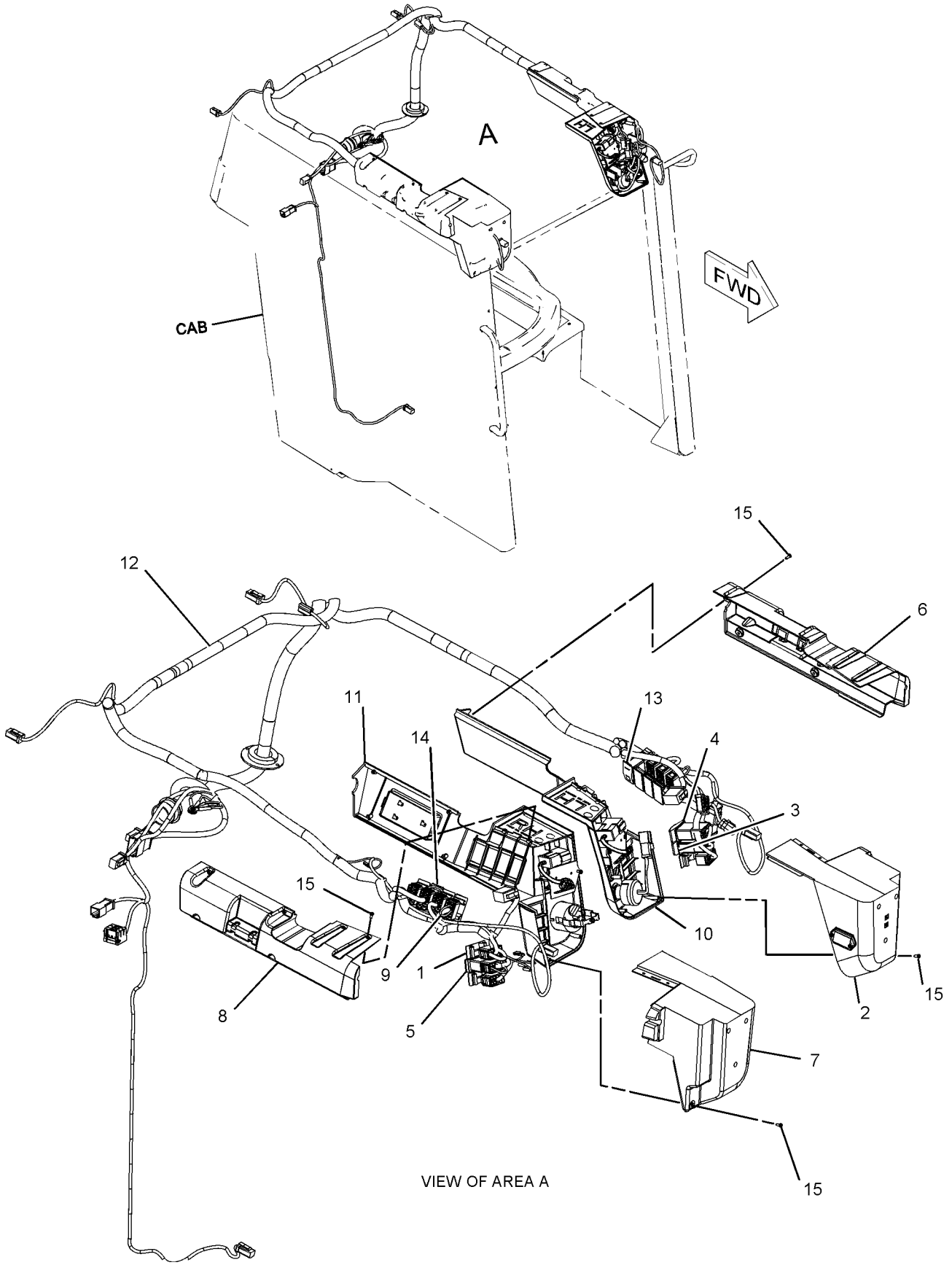

GRAPHIC #1 **<END>** g01125969

OPERATOR STATION

225-7998 PANEL GP-INSTRUMENT

S/N: MJH10575-UP
NACD
PART OF 218-5790 PANEL AR-INSTRUMENT
AN ATTACHMENT

SMCS-7451 **i02259865**

NOTE	REF NO	GRAPHIC REF	PART NUMBER	QTY	PART NAME 1 2 3 4 5 6 (PRODUCT LEVEL)	SEE PAGE
	1	1	**109-2356**	5	PLUG	
Y	2	1	*142-9118*	1	COVER GP-INSTRUMENT PANEL (SERVICE METER)	561
	3	1	**142-9320**	1	SWITCH AS-ROCKER (PARKING BRAKE)	
		1	**111-7899**	1	GASKET	
	4	1	**142-9325**	1	SWITCH AS-ROCKER (COLD START)	
		1	**111-7899**	1	GASKET	
	5	1	**142-9328**	1	SWITCH AS-ROCKER (FRONT WORK LIGHT)	
		1	**111-7899**	1	GASKET	
	6	1	**158-6696**	1	COVER	
	7	1	**158-6698**	1	COVER	
	8	1	**158-6699**	1	COVER	
Y	9	1	*216-4712*	1	GAUGE & WARNING GP (LH)	577
Y	10	1	*216-4713*	1	GAUGE & WARNING GP (RH)	578
	11	1	**223-5941**	1	SWITCH AS-ROCKER (WORK TOOL HYD PRESS RELEASE)	
		1	**111-7899**	1	GASKET	
	12	1	**225-7999**	1	HARNESS AS-PANEL	
		1	**102-8804**	2	KIT-RECEPTACLE (4-PIN)	
		1	**102-8805**	1	KIT-RECEPTACLE (6-PIN)	
		1	**102-8801**	1	KIT-RECEPTACLE (12-PIN)	
					(EACH RECEPTACLE KIT INCLUDES RECEPTACLE AS & WEDGE)	
		1	**155-2255**	1	KIT-CONNECTING PLUG (12-PIN)	
		1	**155-2271**	2	KIT-CONNECTING PLUG (4-PIN)	
		1	**155-2274**	1	KIT-CONNECTING PLUG (6-PIN)	
		1	**155-2270**	6	KIT-CONNECTING PLUG (2-PIN)	
					(EACH PLUG KIT INCLUDES PLUG AS, WEDGE, & INTERFACE SEAL)	
		1	**155-2260**	1	KIT-CONNECTING PLUG (3-PIN)	
					(INCLUDES PLUG AS, WEDGES, & INTERFACE SEAL)	
	13	1	**226-5901**	1	SWITCH AS-ROCKER (INTERLOCK OVERRIDE)	
		1	**111-7899**	1	GASKET	
	14	1	**103-2006**	16	SCREW-PAN HEAD (6-19X0.37-IN)	

Y-SEPARATE ILLUSTRATION

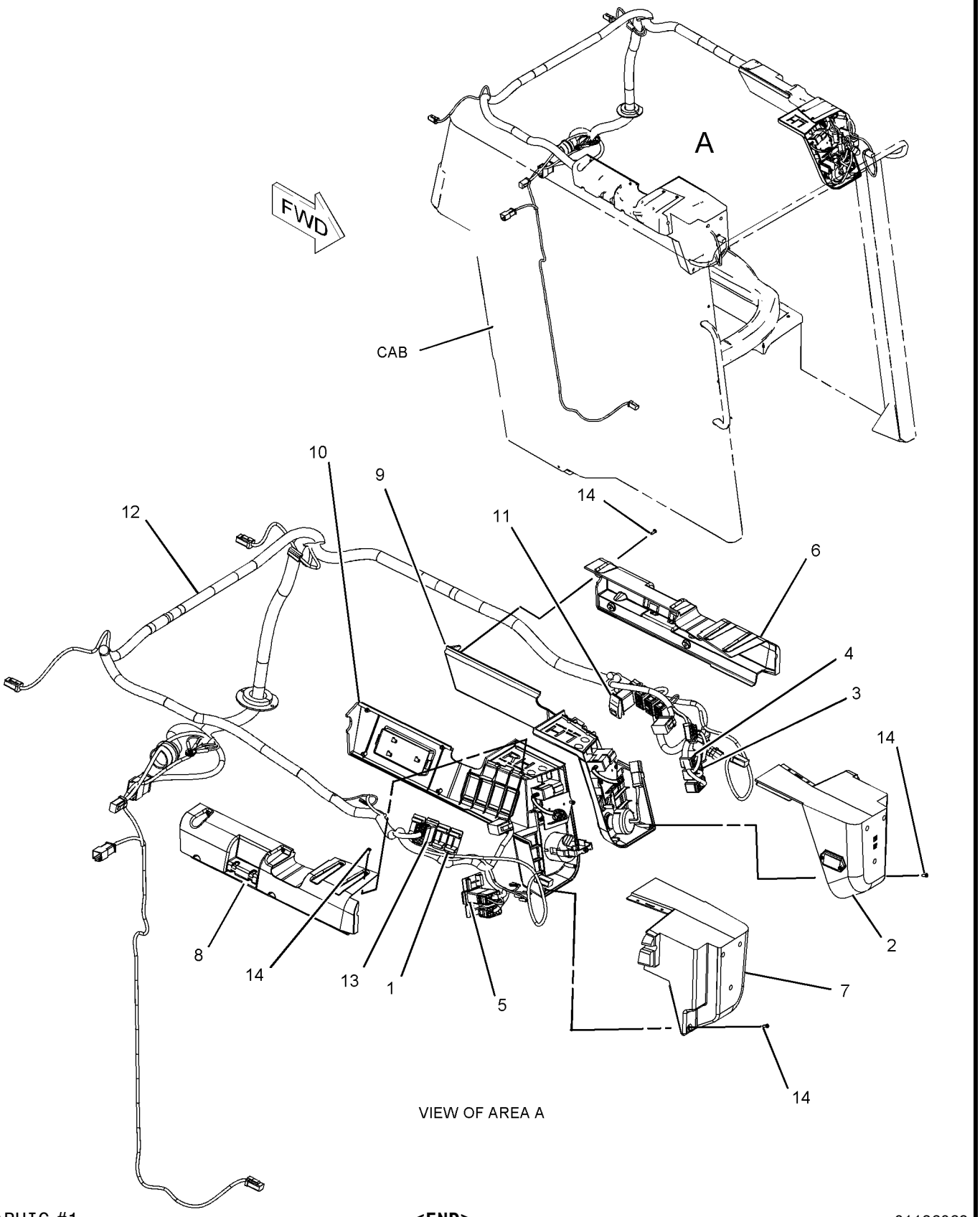

VIEW OF AREA A

GRAPHIC #1 **<END>** g01136068

OPERATOR STATION

218-6430 PANEL GP-SIDE

S/N: MJH10575-UP

PART OF 295-7110 CHASSIS AR

SMCS-7267 **i01955463**

NOTE	REF NO	GRAPHIC REF	PART NUMBER	QTY	PART NAME 1 2 3 4 5 6 (PRODUCT LEVEL)	SEE PAGE
	1	1	**193-8385**	1	PLATE (RH)	
	2	1	**218-6423**	1	PLATE (LH)	
M	3	1	**131-3543**	5	BOLT-ROUND HEAD (M6X1-6G-THD)	
M	4	1	**5C-2890**	5	NUT (M6X1-THD)	
	5	1	**8T-4205**	5	WASHER-HARD (7.2X14.5X2-MM THK)	

M-METRIC PART

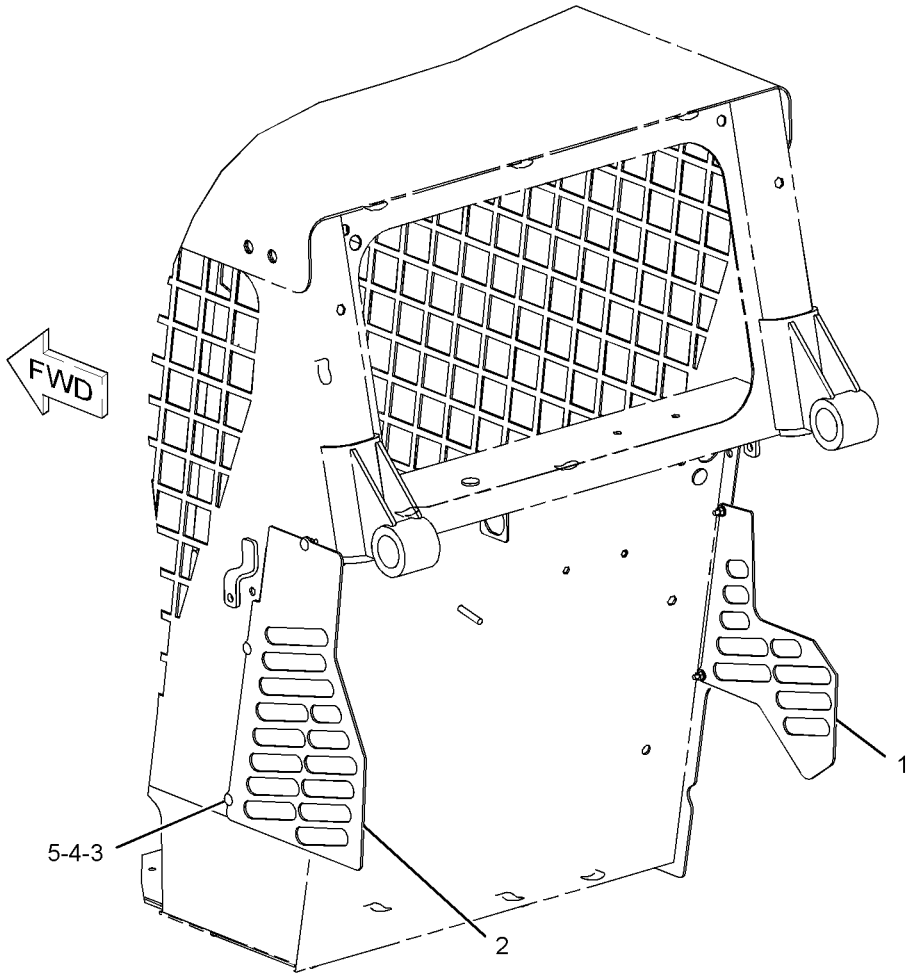

GRAPHIC #1 **<END>** g01017460

OPERATOR STATION

218-5565 PEDAL GP-GOVERNOR—INCLUDES LEVER

S/N: MJH10575-UP

PART OF 218-5602 CONTROL GP-GOVERNOR

SMCS-1265, 1276 **i02312058**

NOTE	REF NO	GRAPHIC REF	PART NUMBER	QTY	PART NAME 1 2 3 4 5 6 (PRODUCT LEVEL)	SEE PAGE
Y	1	1	**218-5566**	1	CABLE GP-GOVERNOR CONTROL	110
Y	2	1	**263-6688**	1	PEDAL GP-GOVERNOR	619
Y	3	1	**234-0774**	1	LEVER GP-GOVERNOR	600

Y-SEPARATE ILLUSTRATION

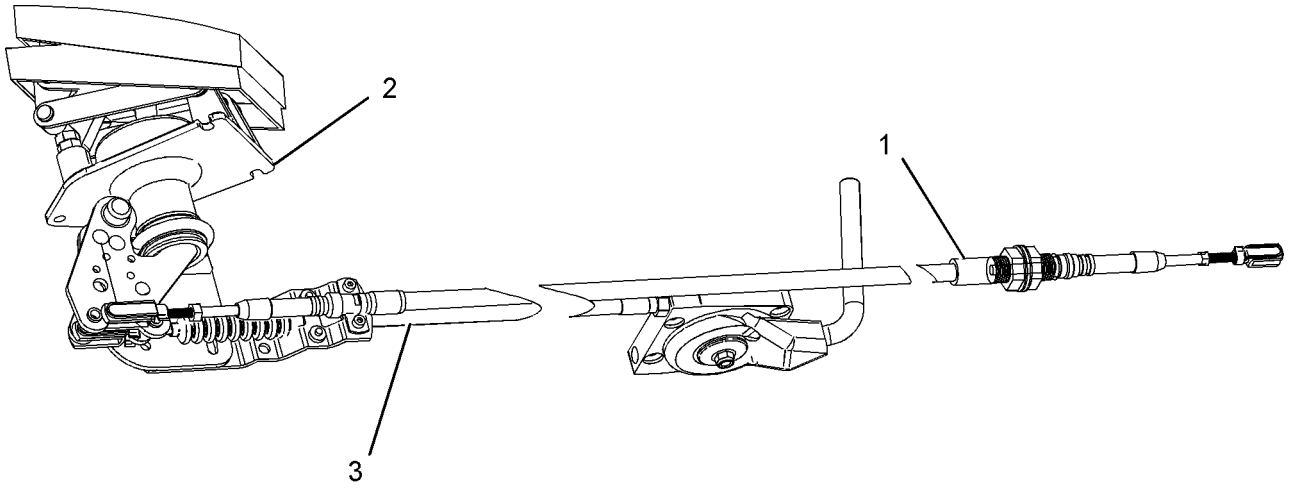

GRAPHIC #1 **<END>** g01010528

OPERATOR STATION

263-6688 PEDAL GP-GOVERNOR

S/N: MJH10575-UP

PART OF 218-5565 PEDAL GP-GOVERNOR

SMCS-1265, 1276 **i02757215**

NOTE	REF NO	GRAPHIC REF	PART NUMBER	QTY	PART NAME 1 2 3 4 5 6 (PRODUCT LEVEL)	SEE PAGE
M	1	1	**095-0641**	4	BOLT-SOCKET HEAD (M4X0.7X10-MM)	
M	2	1	**129-3178**	1	LOCKNUT (M6X1-THD)	
	3	1	**3F-9556**	2	LOCKWASHER	
M	4	1	**5C-7261**	1	NUT (M8X1.25-THD)	
M	5	1	**5C-9553**	1	BOLT (M6X1X16-MM)	
	6	1	**6V-8186**	2	NUT-FULL (5/16-24-THD)	
M	7	1	**8T-4197**	1	BOLT (M8X1.25X40-MM)	
	8	1	**8T-4205**	1	WASHER-HARD (7.2X14.5X2-MM THK)	
	9	1	**8T-6902**	1	CLIP	
					AVAILABLE REPAIR KIT(S):	
			164-1154	1	KIT-SERVICE	
					(INCLUDES CLAMPS & SCREWS)	

M-METRIC PART

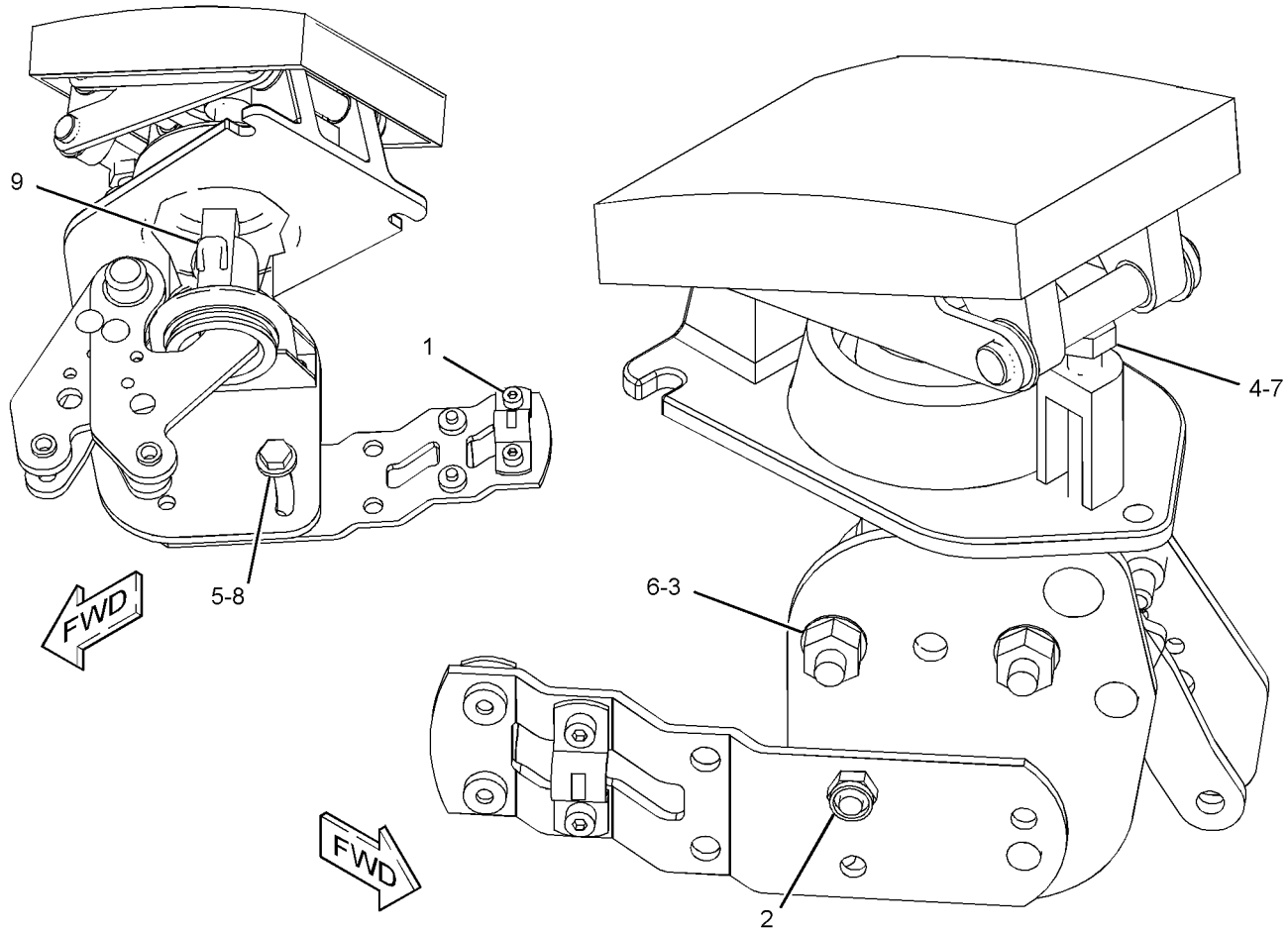

GRAPHIC #1 **<END>** g01164366

OPERATOR STATION

218-6360 PLATFORM GP-OPERATOR

S/N: MJH10575-UP

PART OF 295-7110 CHASSIS AR

SMCS-7253 **i02884780**

NOTE	REF NO	GRAPHIC REF	PART NUMBER	QTY	PART NAME 1 2 3 4 5 6 (PRODUCT LEVEL)	SEE PAGE
E	1	1	**124-3243**		SEAL (19.5-CM)	
D	2	1	**5P-5927**		SEAL (0.31-M EACH)	
	3	1	**218-6416**	1	PLATE AS	
	4	1	**218-6417**	1	FLOORPLATE AS	
	5	1	**218-6424**	1	PLATE AS	
	6	1	**218-6438**	1	SEAL	
	7	1	**101-2867**	1	WASHER-HARD (7.2X25X2-MM THK)	
M	8	1	**5C-7261**	1	NUT (M8X1.25-THD)	
EM	9	1	**5C-9553**	6	BOLT (M6X1X16-MM)	
M	10	1	**8T-4138**	2	BOLT (M6X1X20-MM)	
M	11	1	**8T-4197**	1	BOLT (M8X1.25X40-MM)	
	12	1	**8T-4205**	6	WASHER-HARD (7.2X14.5X2-MM THK)	
	13	1	**8T-4224**	10	WASHER-HARD (8.8X16X2-MM THK)	
M	14	1	**8T-4908**	8	BOLT (M8X1.25X25-MM)	
M	15	1	**9X-2045**	3	SCREW-TRUSS HEAD (M6X1X20-MM)	
	16	1	**9X-6165**	2	WASHER (6.5X22X2.5-MM THK)	
	17	1	**124-3243**		SEAL (6-CM EACH)	

D-ORDER BY THE METER
E-ORDER BY THE CENTIMETER
M-METRIC PART

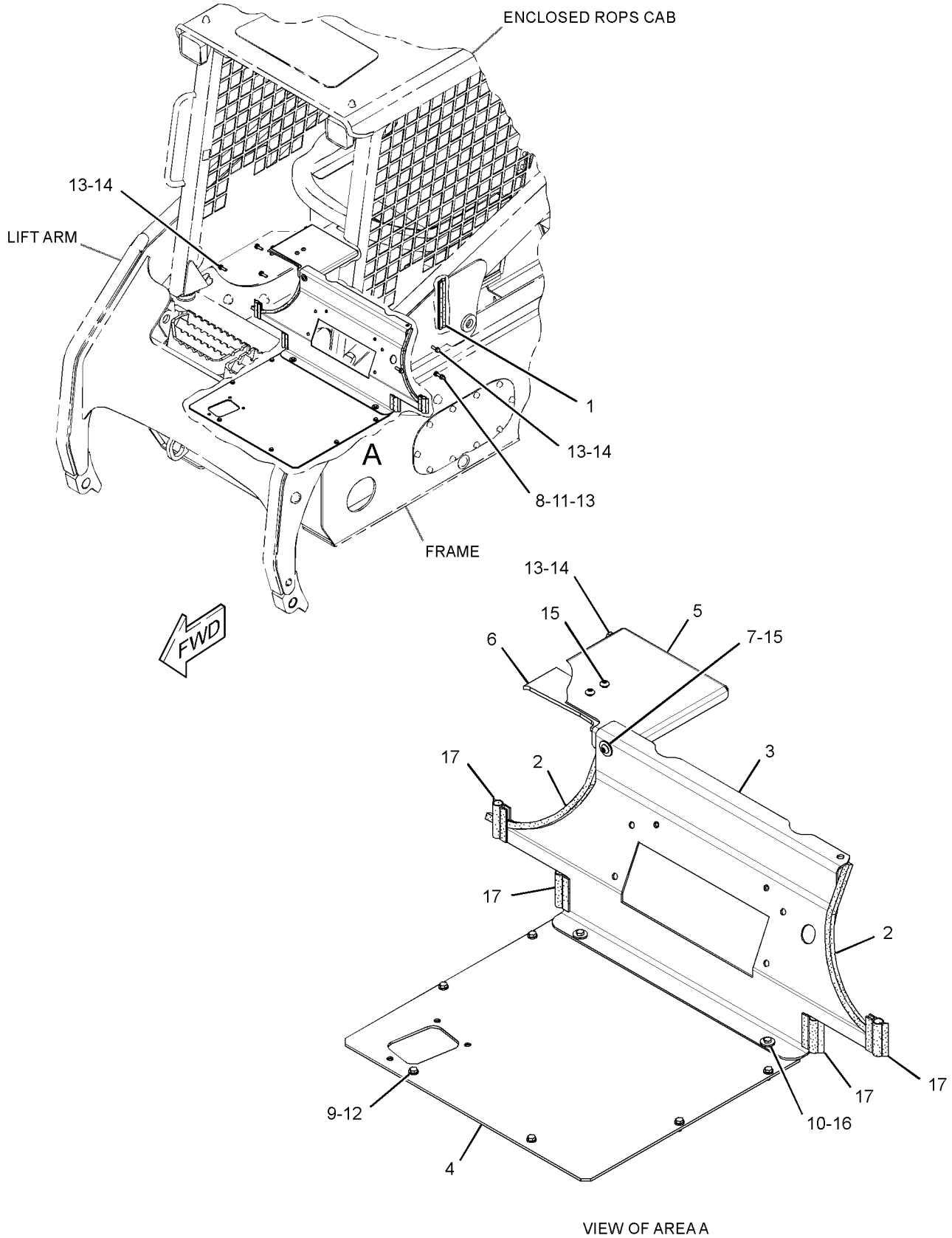

VIEW OF AREA A

GRAPHIC #1 **<END>** g01437661

OPERATOR STATION

218-6407 SEAL GP-CAB—DEBRIS BARRIER

S/N: MJH10575-UP

PART OF 295-7321, 295-7331 OPTION AR-CAB

AN ATTACHMENT

SMCS-7301 **i02866081**

NOTE	REF NO	GRAPHIC REF	PART NUMBER	QTY	PART NAME 1 2 3 4 5 6 (PRODUCT LEVEL)	SEE PAGE
E	1	1	**128-7037**		SEAL (59-CM)	
E	1A	1	**128-7037**		SEAL (39-CM)	
	2	1	**187-3211**	1	PLATE AS	
M		1	**8T-3612**	2	NUT-WELD (M8X1.25-THD)	
	3	1	**187-3212**	1	PLATE	
	4	1	**284-3595**	2	SEAL-RUBBER	
	5	1	**284-3743**	2	SEAL-RUBBER	
	6	1	**284-3744**	1	SEAL-RUBBER	
B	7	1	**287-6603**	2	PLUG-BUTTON	
	8	1	**287-7004**	1	BLOCK AS (LH)	
	9	1	**287-7006**	1	BLOCK AS (RH)	
B	10	1	**288-5767**	8	PLUG-BUTTON	
	11	1	**189-4523**	2	BOSS	
M	12	1	**7X-2537**	2	BOLT (M8X1.25X35-MM)	
	13	1	**8T-4224**	2	WASHER-HARD (8.8X16X2-MM THK)	

B-USE AS REQUIRED
E-ORDER BY THE CENTIMETER
M-METRIC PART

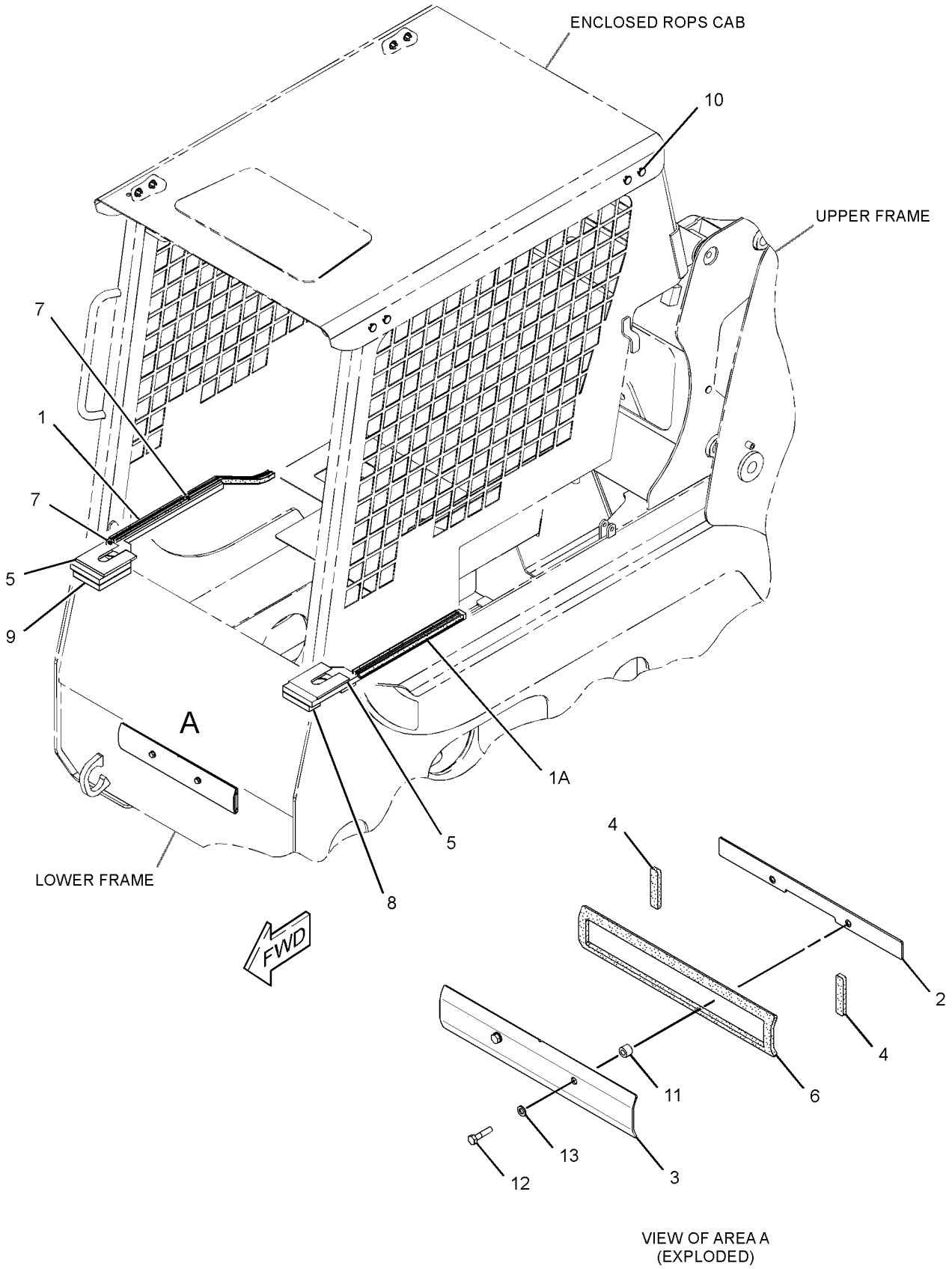

VIEW OF AREA A
(EXPLODED)

GRAPHIC #1 **<END>** g01439361

OPERATOR STATION

276-6019 SEAT BELT GP

S/N: MJH10575-UP
3-INCH, RETRACTABLE SUSPENSION
AN ATTACHMENT

SMCS-7327 **i02450731**

NOTE	REF NO	GRAPHIC REF	PART NUMBER	QTY	PART NAME 1 2 3 4 5 6 (PRODUCT LEVEL)	SEE PAGE
	1	1	**6E-6549**	2	WASHER (11X27X6-MM THK)	
	2	1	**0T-0244**	2	BOLT (7/16-20X1.25-IN)	
	3	1	**8S-0934**	2	LOCKNUT-FLANGE (7/16-20-THD)	
	4	1	**8T-4223**	2	WASHER-HARD (13.5X25.5X3-MM THK)	

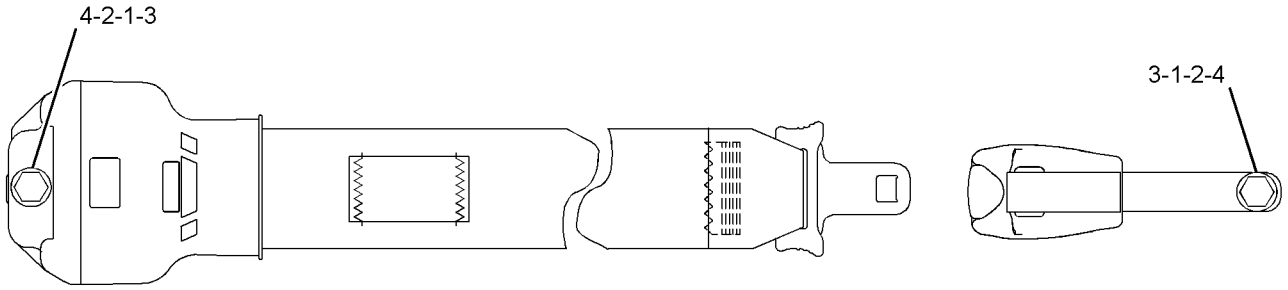

GRAPHIC #1 **<END>** g01230176

OPERATOR STATION

276-6020 SEAT BELT GP

S/N: MJH10575-UP
3-INCH, RETRACTABLE STATIC
AN ATTACHMENT

SMCS-7327 **i02718272**

NOTE	REF NO	GRAPHIC REF	PART NUMBER	QTY	PART NAME 1 2 3 4 5 6 (PRODUCT LEVEL)	SEE PAGE
	1	1	**2D-6412**	2	WASHER (7/16X15/16X1/4-IN THK)	
	2	1	**0T-0244**	2	BOLT (7/16-20X1.25-IN)	
	3	1	**8S-0934**	2	LOCKNUT-FLANGE (7/16-20-THD)	
	4	1	**8T-4223**	2	WASHER-HARD (13.5X25.5X3-MM THK)	

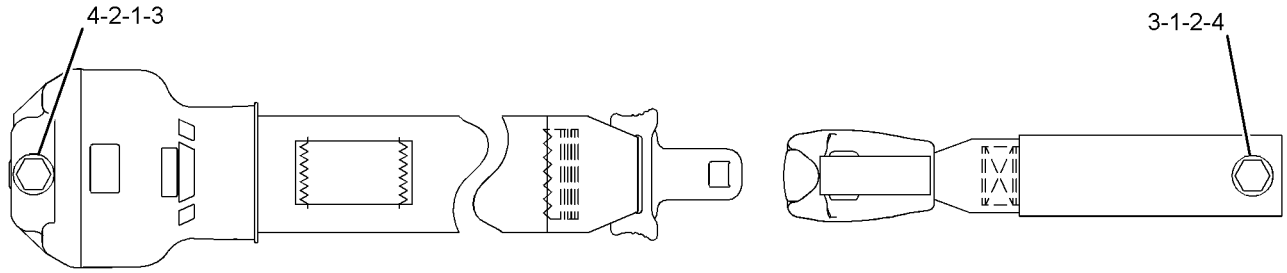

GRAPHIC #1 **<END>** g01230231

OPERATOR STATION

276-7276 SEAT BELT GP

S/N: MJH10575-UP
2-INCH, SUSPENSION
AN ATTACHMENT

SMCS-7327 **i02738465**

NOTE	REF NO	GRAPHIC REF	PART NUMBER	QTY	PART NAME 1 2 3 4 5 6 (PRODUCT LEVEL)	SEE PAGE
	1	1	**2D-6412**	2	WASHER (7/16X15/16X1/4-IN THK)	
	2	1	**0T-0244**	2	BOLT (7/16-20X1.25-IN)	
	3	1	**8S-0934**	2	LOCKNUT-FLANGE (7/16-20-THD)	
	4	1	**8T-4223**	2	WASHER-HARD (13.5X25.5X3-MM THK)	

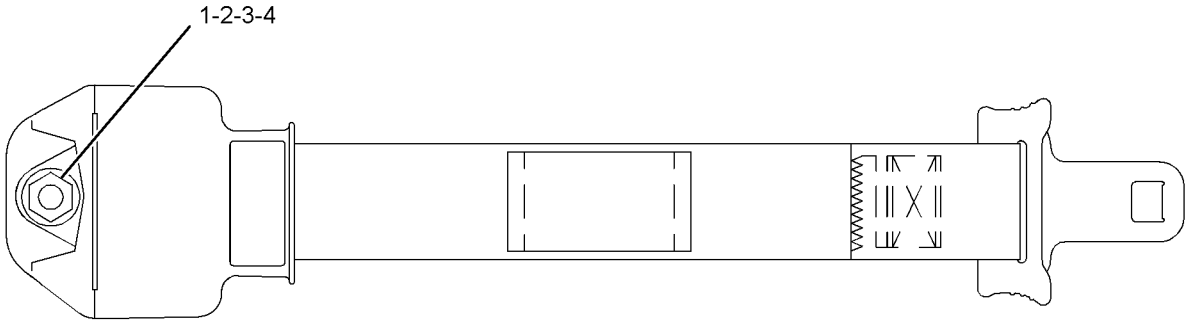

GRAPHIC #1 **<END>** g01230125

OPERATOR STATION

276-7277 SEAT BELT GP

S/N: MJH10575-UP
2-INCH, RETRACTABLE SUSPENSION
AN ATTACHMENT

SMCS-7327 **i02712903**

NOTE	REF NO	GRAPHIC REF	PART NUMBER	QTY	PART NAME 1 2 3 4 5 6 (PRODUCT LEVEL)	SEE PAGE
	1	1	**2D-6412**	2	WASHER (7/16X15/16X1/4-IN THK)	
	2	1	**0T-0244**	2	BOLT (7/16-20X1.25-IN)	
	3	1	**8S-0934**	2	LOCKNUT-FLANGE (7/16-20-THD)	
	4	1	**8T-4223**	2	WASHER-HARD (13.5X25.5X3-MM THK)	

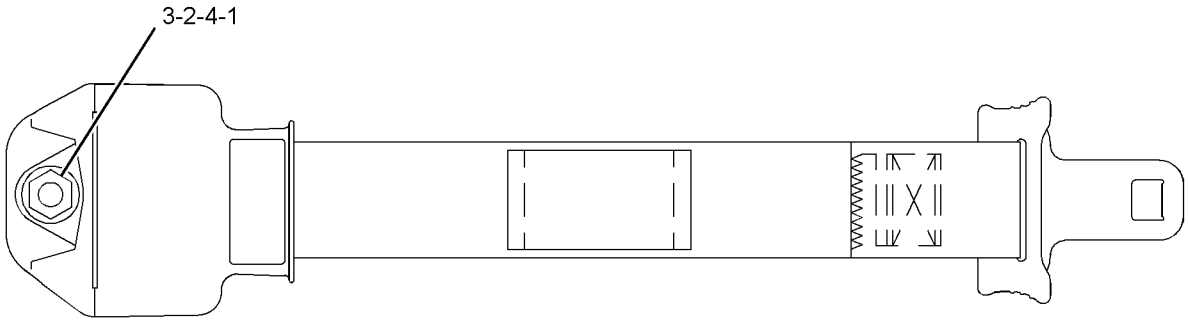

GRAPHIC #1 **<END>** g01230239

OPERATOR STATION

142-9305 SEAT GP—SUSPENSION

S/N: MJH10575-UP

PART OF 295-7311, 295-7321, 295-7331 OPTION AR-CAB

CANNOT BE USED WITH 218-5562—PAGE 629, 218-5611—PAGE 532, 218-5618—PAGE 539, 218-6571—PAGE 551

AN ATTACHMENT

SMCS-7312, 7324 **i02571422**

NOTE	REF NO	GRAPHIC REF	PART NUMBER	QTY	PART NAME 1 2 3 4 5 6 (PRODUCT LEVEL)	SEE PAGE
CY	1	1	**219-4380**	1	SEAT GP-ADJUSTABLE	630
M	2	1	**5C-7261**	4	NUT (M8X1.25-THD)	
	3	1	**8T-4224**	4	WASHER-HARD (8.8X16X2-MM THK)	

C-CHANGE FROM PREVIOUS TYPE
M-METRIC PART
Y-SEPARATE ILLUSTRATION

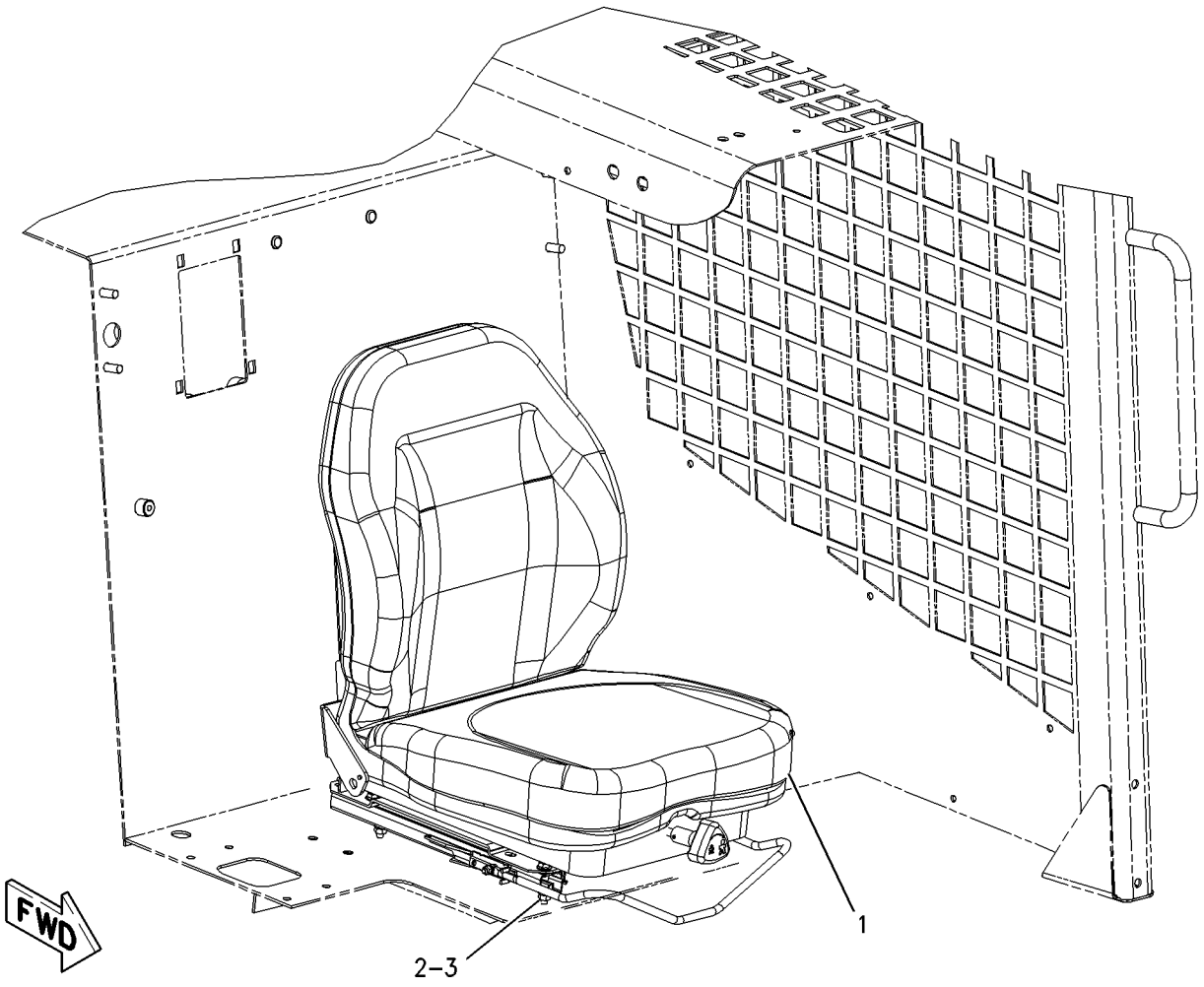

GRAPHIC #1 **<END>** g00914893

218-5562 SEAT GP

S/N: MJH10575-UP
STATIC
PART OF 295-7301 OPTION AR-CAB
CANNOT BE USED WITH 142-9305—PAGE 628
AN ATTACHMENT

SMCS-7312, 7324 **i02757222**

NOTE	REF NO	GRAPHIC REF	PART NUMBER	QTY	PART NAME 1 2 3 4 5 6 (PRODUCT LEVEL)	SEE PAGE
	1	1	**218-6662**	1	SEAT GP (STATIC)	
		1	**153-1260**	1	SWITCH (SEAT)	
		1	**154-3985**	1	WIRE AS	
		1	**219-4379**	1	HANDLE	
M	2	1	**5C-7261**	4	NUT (M8X1.25-THD)	
	3	1	**8T-4224**	4	WASHER-HARD (8.8X16X2-MM THK)	

M-METRIC PART

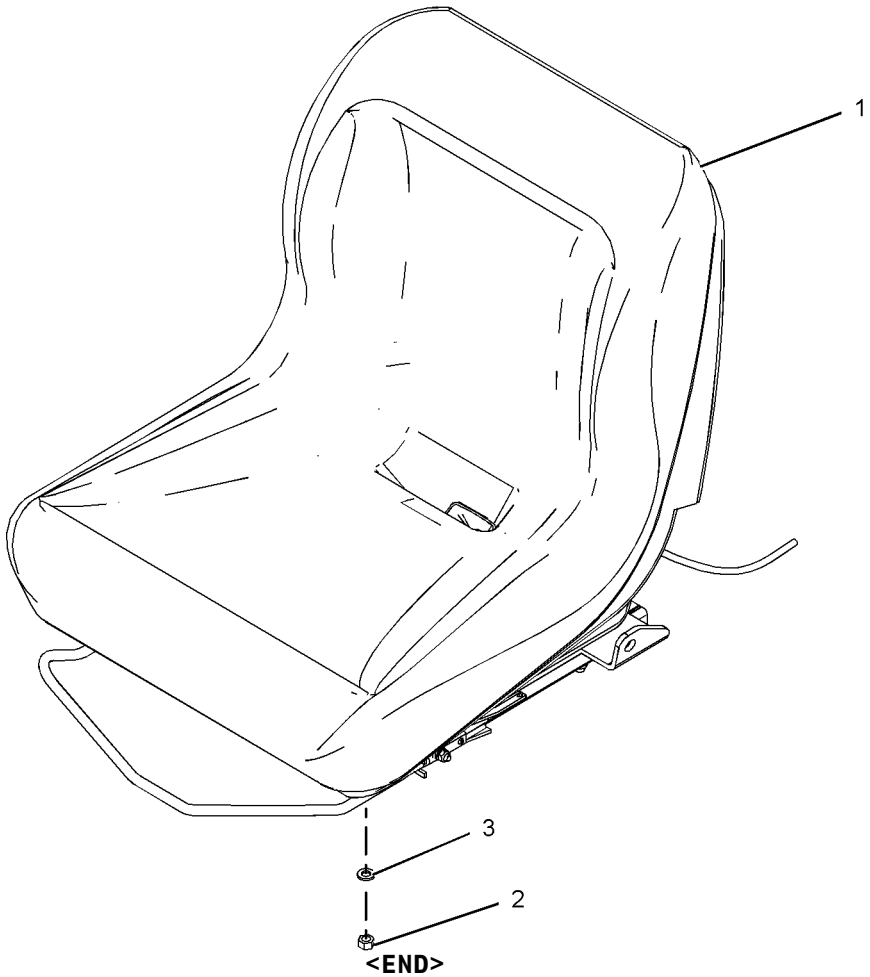

GRAPHIC #1

<END>

g01018112

OPERATOR STATION

219-4380 SEAT GP-ADJUSTABLE

S/N: MJH10575-UP
PART OF 142-9305 SEAT GP
AN ATTACHMENT

SMCS-7312, 7321 **i01901346**

NOTE	REF NO	GRAPHIC REF	PART NUMBER	QTY	PART NAME 1 2 3 4 5 6 (PRODUCT LEVEL)	SEE PAGE
	1	1	**154-3985**	1	WIRE AS	
	2	1	**154-3986**	1	SWITCH AS (SEAT)	
	3	1	**154-8711**	1	KIT-SPRING (ADJUSTABLE SEAT)	
Z		1		2	SPRING	
Z	3A	1		1	CABLE AS	
Z	3B	1		2	NUT-PUSH	
	4	1	**154-8715**	1	KIT-DAMPER (ADJUSTABLE SEAT)	
					(INCLUDES DAMPER, NUT-LOCK, WASHER & SPACER)	
	5	1	**173-2543**	1	KIT-CUSHION	
	6	1	**219-4379**	1	HANDLE	
	7	1	**219-4388**	1	KIT-HANDLE (KNOB)	
Z		1		1	KNOB	
Z	7A	1		1	SHAFT	
Z	7B	1		2	PIN-SPRING	
Z	7C	1		1	HANGER (SPRING)	
Z	7D	1		1	NUT-PUSH	
Z		1		2	SPACER	

Z-NOT SERVICED SEPARATELY

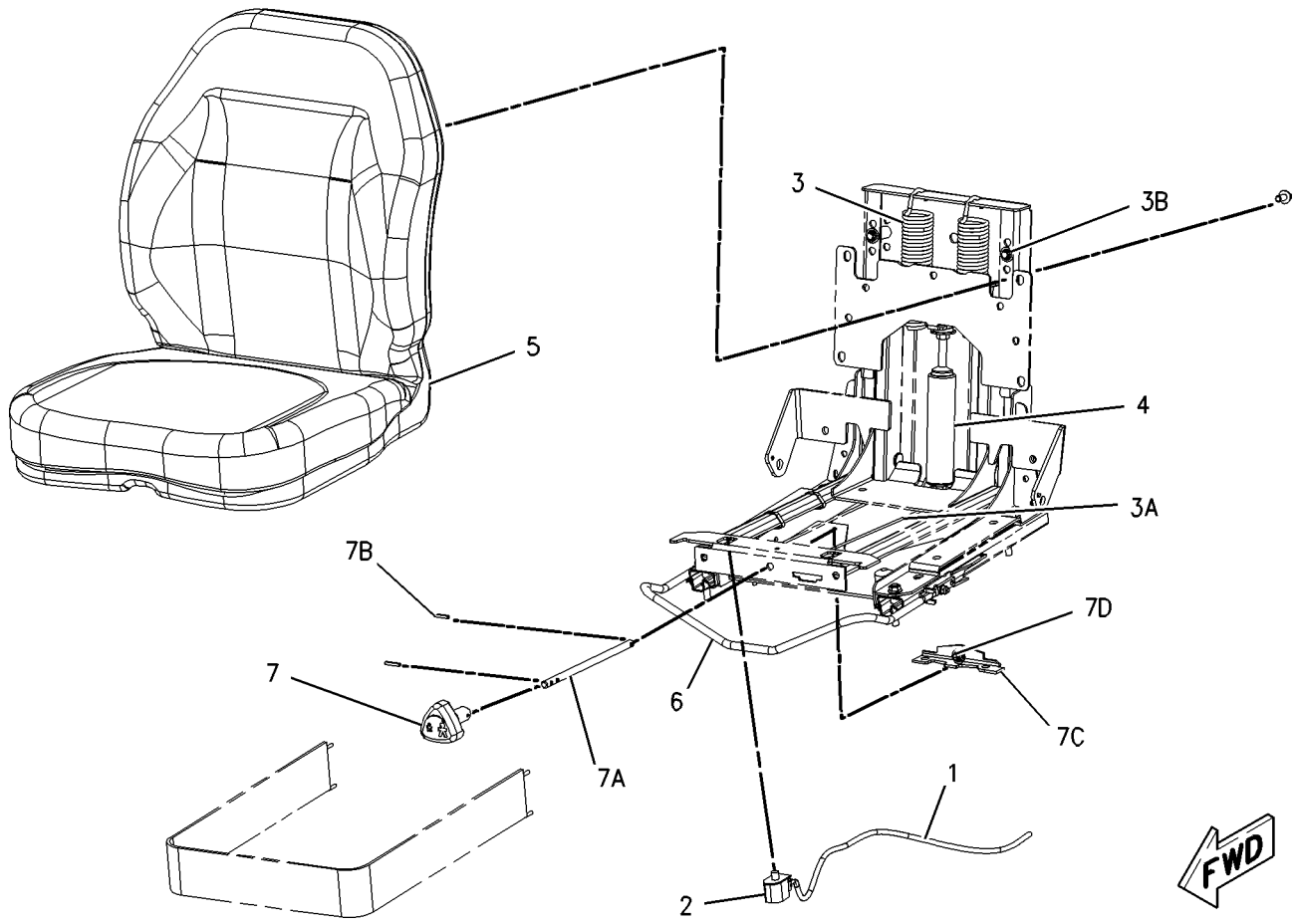

GRAPHIC #1 **<END>** g00915009

OPERATOR STATION

218-6380 SPRING GP-GAS

S/N: MJH10575-UP

PART OF 218-6350 CAB AR-ENCLOSED ROPS

SMCS-7301 **i02772071**

NOTE	REF NO	GRAPHIC REF	PART NUMBER	QTY	PART NAME 1 2 3 4 5 6 (PRODUCT LEVEL)	SEE PAGE
	1	1	**5P-0372**	2	LOCK PIN	
	2	1	**9C-5344**	1	SPACER (10.5X20X18-MM THK)	
	3	1	**095-1325**	1	PIN-CLEVIS	
	4	1	**153-2682**	1	SPRING AS-GAS (CAB)	
	5	1	**177-3405**	1	PIN	

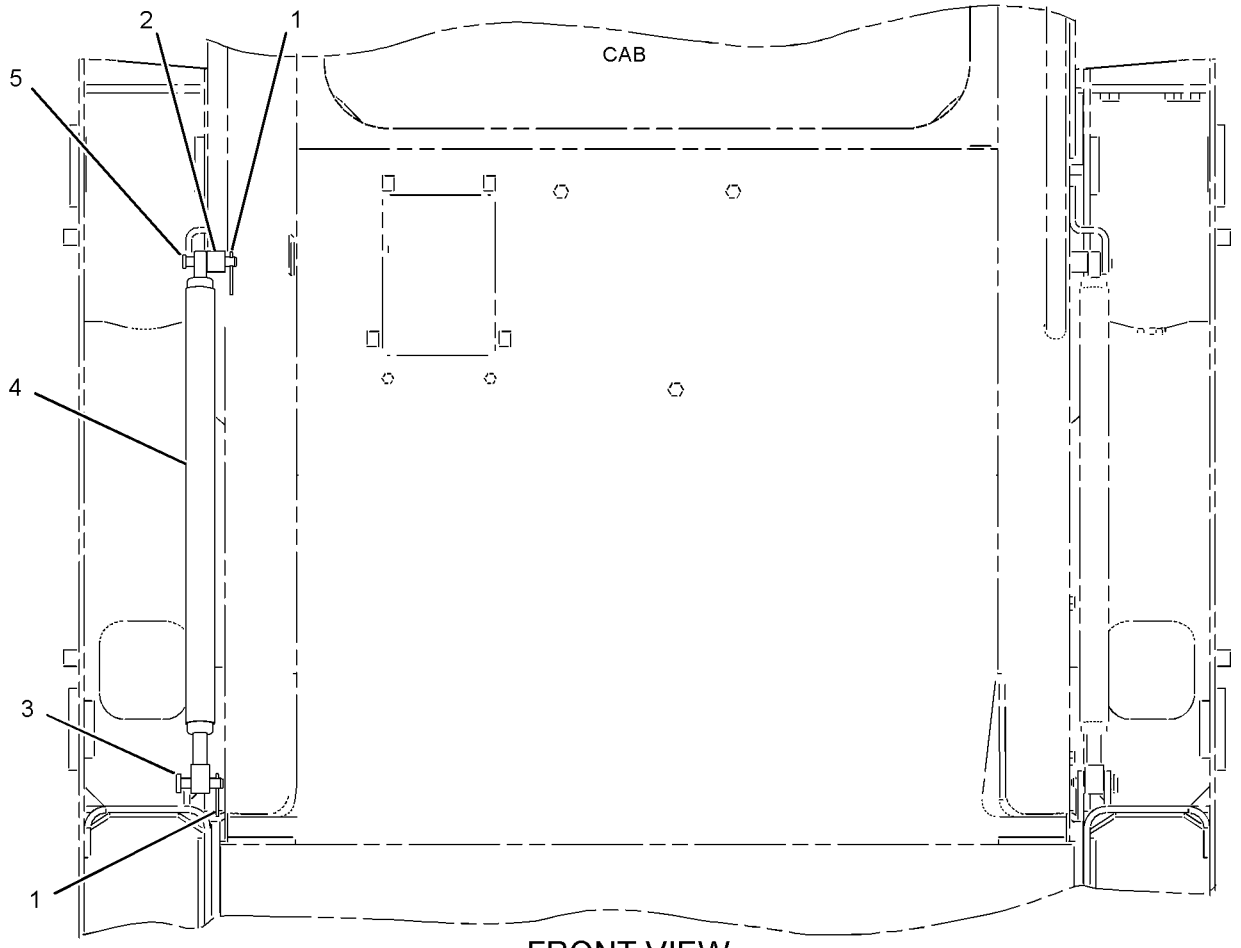

FRONT VIEW

GRAPHIC #1

<END>

g01031997

OPERATOR STATION

166-2569 VISOR GP-CAB

S/N: MJH10575-UP
PART OF 257-5726 CONVERSION AR-ROADING, 173-3022 VISOR GP-CAB
AN ATTACHMENT

SMCS-7301 **i01297216**

NOTE	REF NO	GRAPHIC REF	PART NUMBER	QTY	PART NAME 1 2 3 4 5 6 (PRODUCT LEVEL)	SEE PAGE
	1	1	**2S-5717**	1	LOCKNUT (3/8-16-THD)	
	2	1	**5T-7869**	2	CLAMP	
	3	1	**5T-7870**	1	KNOB	
	4	1	**1D-4677**	2	BOLT-ROUND HEAD (3/8-16X1-IN)	
M	5	1	**9X-2042**	4	SCREW-TRUSS HEAD (M6X1X12-MM)	

M-METRIC PART

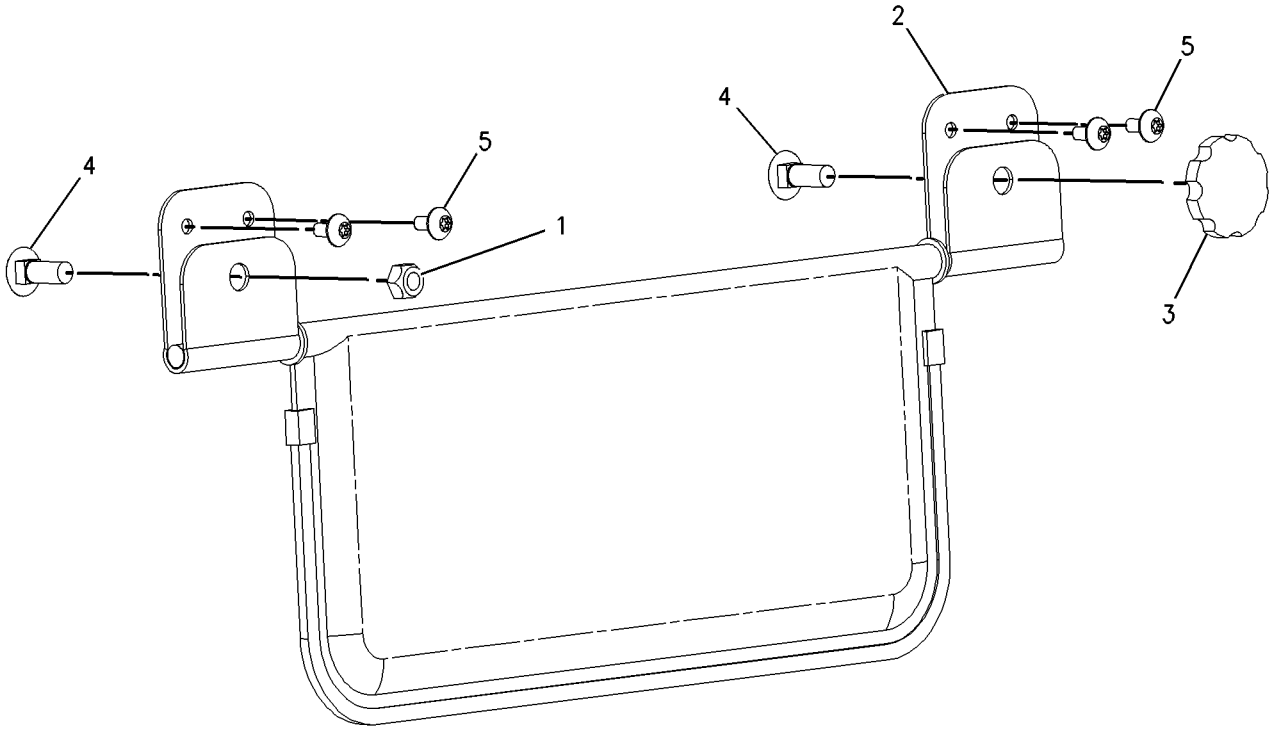

GRAPHIC #1 **<END>** g00695703

OPERATOR STATION

173-3022 VISOR GP-CAB

S/N: MJH10575-UP

PART OF 278-1224, 278-5441, 295-7162, 295-7167 CONVERSION AR-MACHINE, 233-5672, 233-5675 CONVERSION AR-ROADING

AN ATTACHMENT

SMCS-7301 **i01486233**

NOTE	REF NO	GRAPHIC REF	PART NUMBER	QTY	PART NAME 1 2 3 4 5 6 (PRODUCT LEVEL)	SEE PAGE
	1	1	**166-2562**	1	PLATE AS	
Y	2	1	**166-2569**	1	VISOR GP-CAB	632
	3	1	**195-0936**	4	INSERT-THREADED (M6X1)	
M	4	1	**9X-2045**	4	SCREW-TRUSS HEAD (M6X1X20-MM)	

M-METRIC PART
Y-SEPARATE ILLUSTRATION

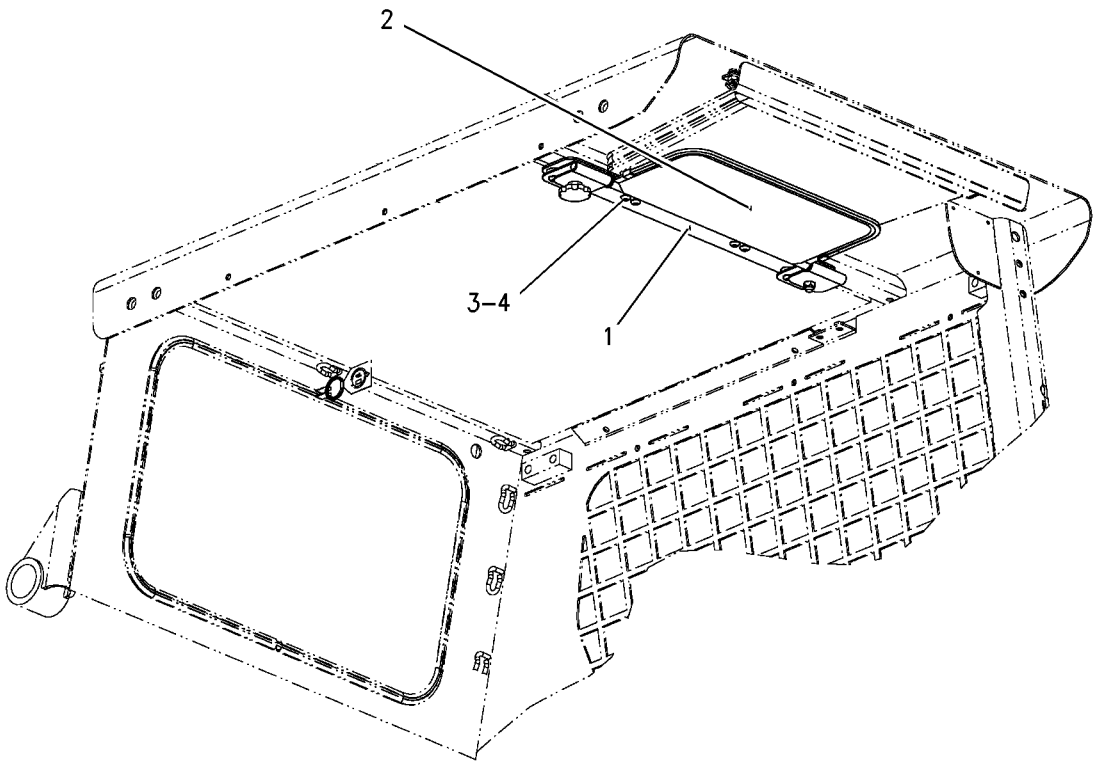

GRAPHIC #1 **<END>** g00772669

OPERATOR STATION

195-6723 WINDOW GP-CAB

S/N: MJH10575-UP
TOP & REAR
PART OF 218-6350 CAB AR-ENCLOSED ROPS

SMCS-7310 **i02534285**

NOTE	REF NO	GRAPHIC REF	PART NUMBER	QTY	PART NAME 1 2 3 4 5 6 (PRODUCT LEVEL)	SEE PAGE
	1	1	**5C-8310**	1	BRACKET-RING	
	2	1	**5C-8311**	1	RING	
	3	1	**8T-6842**	1	FILM-INSTRUCTION (ALTERNATE EXIT)	
	4	1	**142-9319**	1	WINDOW	
CE	5	1	**108-0656**		SEAL (192-CM)	
CE	6	1	**104-5957**		STRIP-LOCKING (186-CM)	

C-CHANGE FROM PREVIOUS TYPE
E-ORDER BY THE CENTIMETER

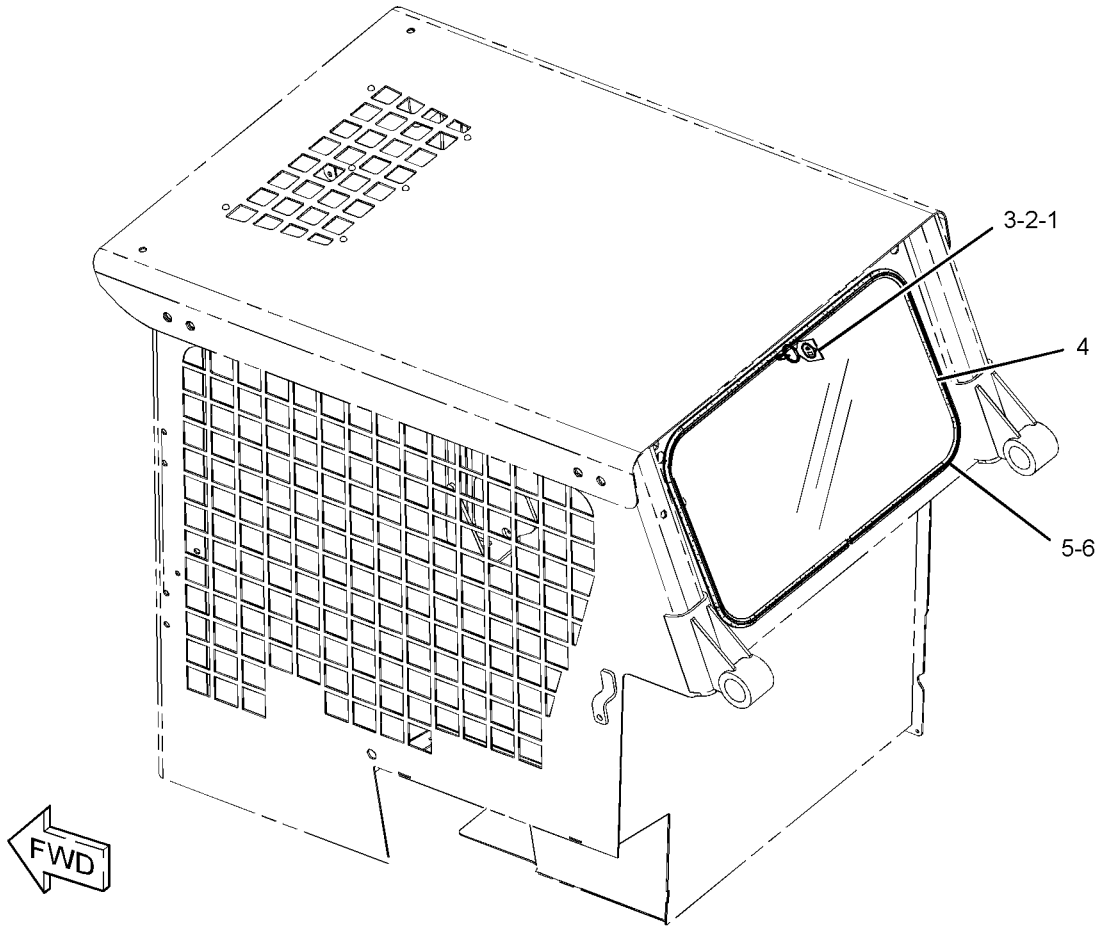

GRAPHIC #1 **<END>** g01268492

218-6411 WINDOW GP-CAB

S/N: MJH10575-UP
SIDE
PART OF 295-7321, 295-7331 OPTION AR-CAB
AN ATTACHMENT

SMCS-7310 **i02501965**

NOTE	REF NO	GRAPHIC REF	PART NUMBER	QTY	PART NAME 1 2 3 4 5 6 (PRODUCT LEVEL)	SEE PAGE
Y	1	1	**224-7057**	1	WINDOW GP-CAB (UPPER, LH)	637
Y	2	1	**224-7058**	1	WINDOW GP-CAB (UPPER, RH)	639
	3	1	**231-7321**	1	WINDOW AS-CAB (LOWER, RH)	
		1	**239-6109**	1	LATCH AS	
E		1	**282-6961**		SEAL (122-CM)	
	4	1	**231-7324**	1	WINDOW AS-CAB (LOWER, LH)	
		1	**239-6109**	1	LATCH AS	
E		1	**282-6961**		SEAL (122-CM)	
M	5	1	**9X-2045**	10	SCREW-TRUSS HEAD (M6X1X20-MM)	

E-ORDER BY THE CENTIMETER
M-METRIC PART
Y-SEPARATE ILLUSTRATION

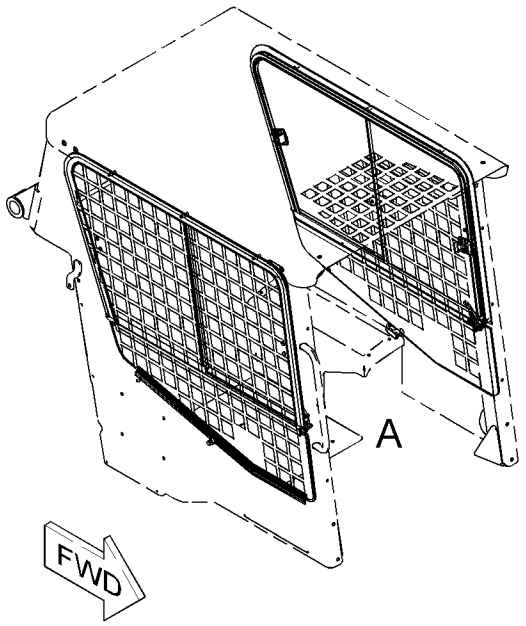

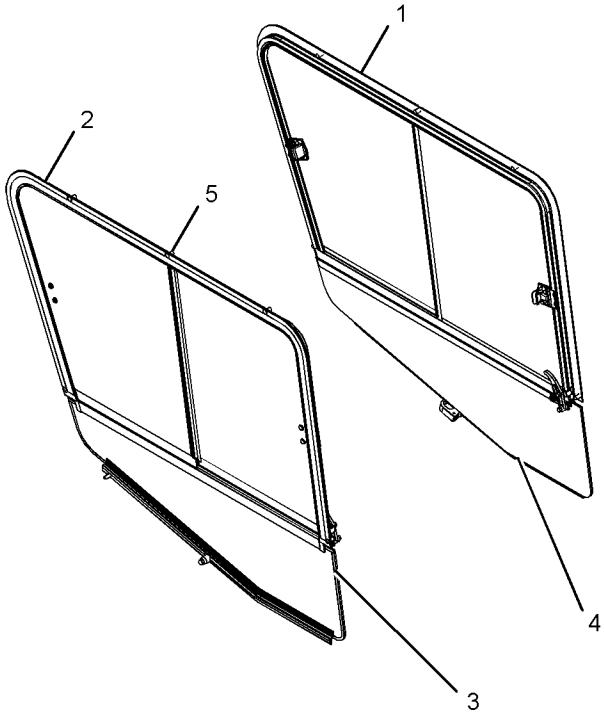

VIEW OF AREA A

GRAPHIC #1 **<END>** g01057739

OPERATOR STATION

218-6745 WINDOW GP-CAB—KIT

S/N: MJH10575-UP
SIDE
CANNOT BE USED WITH 218-6411—PAGE 635
AN ATTACHMENT

SMCS-7310 **i02300613**

NOTE	PART NUMBER	QTY	PART NAME 1 2 3 4 5 6 (PRODUCT LEVEL)	SEE PAGE
Y	**224-7057**	1	WINDOW GP-CAB (UPPER, LH)	637
Y	**224-7058**	1	WINDOW GP-CAB (UPPER, RH)	639
	231-7321	1	WINDOW AS-CAB (LOWER, RH)	
D	**5P-5930**		SEAL (12-M)	
	239-6109		LATCH AS	
	231-7324	1	WINDOW AS-CAB (LOWER, LH)	
	239-6109	1	LATCH AS	
D	**5P-5930**		SEAL (2-M)	
M	**9X-2045**	10	SCREW-TRUSS HEAD (M6X1X20-MM)	

D-ORDER BY THE METER
M-METRIC PART
Y-SEPARATE ILLUSTRATION

<END>

OPERATOR STATION

224-7057 WINDOW GP-CAB—UPPER,LH

S/N: MJH10575-UP
PART OF 218-6411, 218-6745 WINDOW GP-CAB
AN ATTACHMENT

SMCS-7310 **i02492653**

NOTE	REF NO	GRAPHIC REF	PART NUMBER	QTY	PART NAME 1 2 3 4 5 6 (PRODUCT LEVEL)	SEE PAGE
	1	1	**231-7322**	1	WINDOW AS-CAB (SLIDING, REAR)	
E		1	**207-0573**		SEAL (76-CM)	
		1	**231-7331**	1	LATCH AS	
	2	1	**231-7323**	1	WINDOW AS-CAB (SLIDING, FRONT)	
E		1	**207-0573**		SEAL (41-CM)	
		1	**231-7331**	1	LATCH AS	
Y	3	1	**231-7327**	1	FRAME GP-WINDOW (LH)	576
	4	1	**231-7372**	1	CATCH	
	5	1	**243-1323**	1	CATCH	
	6	1	**6D-5797**	2	SCREW-SOCKET	
	7	1	**9X-8918**	2	SCREW-FLAT HEAD (8-32X0.5-IN)	
E	8	1	**207-0539**		SEAL (125-CM)	
E	9	1	**207-0539**		SEAL (138-CM)	
E	10	1	**207-0539**		SEAL (81-CM)	
E	11	1	**207-0573**		SEAL (62-CM)	
E	12	1	**207-0573**		SEAL (80-CM)	
E	13	1	**3E-3892**		SEAL (31-CM EACH)	
E	14	1	**3E-3892**		SEAL (75-CM)	
E	15	1	**3E-3892**		SEAL (65-CM)	
E	16	1	**3E-3892**		SEAL (4-CM EACH)	

E-ORDER BY THE CENTIMETER
Y-SEPARATE ILLUSTRATION

224-7057 WINDOW GP-CAB *(contd.)* **i02492653**

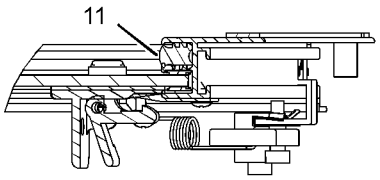

VIEW OF AREA E

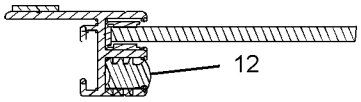

SECTION H-H

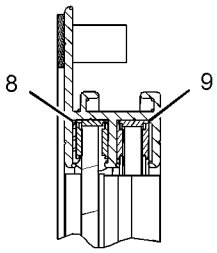

VIEW OF AREA C

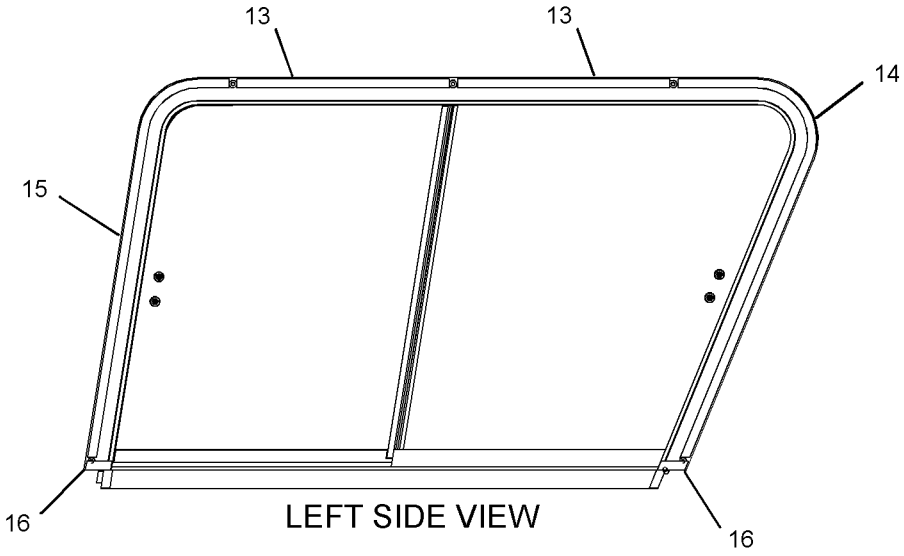

LEFT SIDE VIEW

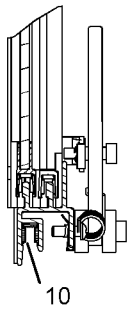

VIEW OF AREA D

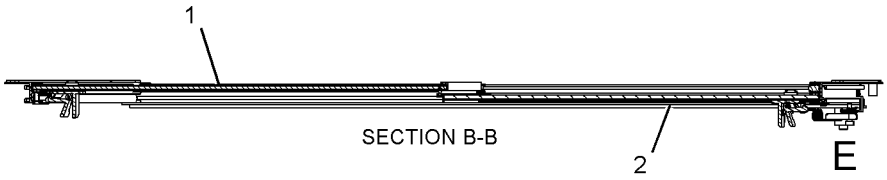

SECTION B-B

E

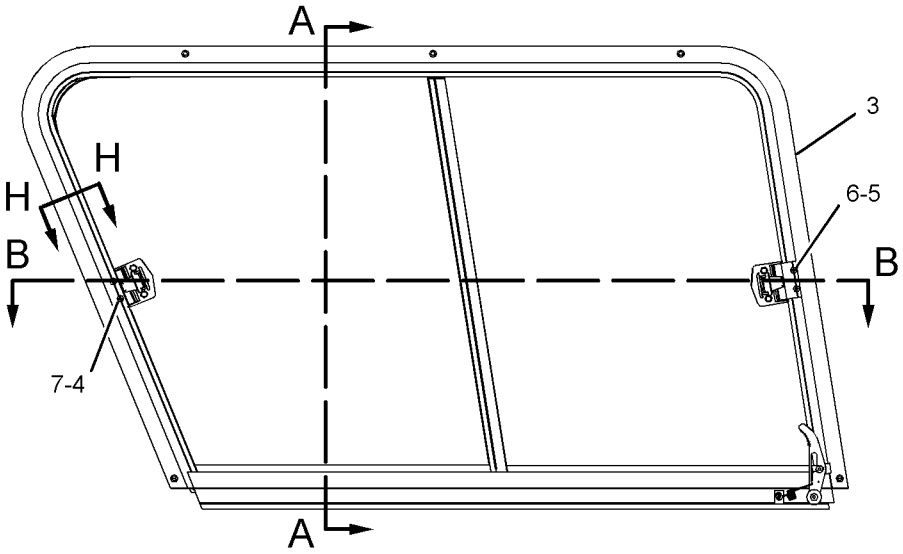

RIGHT SIDE VIEW
(INSIDE OF CAB)

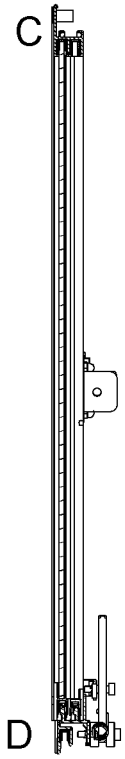

SECTION A-A

GRAPHIC #1 **<END>** g01276116

224-7058 WINDOW GP-CAB–RH,UPPER

S/N: MJH10575-UP

PART OF 218-6411, 218-6745 WINDOW GP-CAB

AN ATTACHMENT

SMCS-7310 **i02492654**

NOTE	REF NO	GRAPHIC REF	PART NUMBER	QTY	PART NAME 1 2 3 4 5 6 (PRODUCT LEVEL)	SEE PAGE
	1	1	**231-7319**	1	WINDOW AS-CAB (SLIDING, REAR)	
E			**207-0573**		SEAL (38-CM)	
			231-7331	1	LATCH AS	
	2	1	**231-7320**	1	WINDOW AS-CAB (SLIDING, FRONT)	
E		1	**207-0573**		SEAL (41-CM)	
		1	**231-7331**	1	LATCH AS	
Y	3	1	**231-7325**	1	FRAME GP-WINDOW (RH)	575
	4	1	**231-7372**	1	CATCH	
	5	1	**243-1323**	1	CATCH	
	6	1	**6D-5797**	2	SCREW-SOCKET	
	7	1	**9X-8918**	2	SCREW-FLAT HEAD (8-32X0.5-IN)	
E	8	1	**3E-3892**		SEAL (4-CM EACH)	
E	9	1	**3E-3892**		SEAL (31-CM EACH)	
E	10	1	**3E-3892**		SEAL (75-CM)	
E	11	1	**3E-3892**		SEAL (65-CM)	
E	12	1	**207-0539**		SEAL (81-CM)	
E	13	1	**207-0539**		SEAL (138-CM)	
E	14	1	**207-0539**		SEAL (125-CM)	
E	15	1	**207-0573**		SEAL (80-CM)	
E	16	1	**207-0573**		SEAL (62-CM)	

E-ORDER BY THE CENTIMETER
Y-SEPARATE ILLUSTRATION

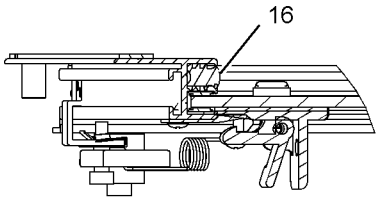

VIEW OF AREA E

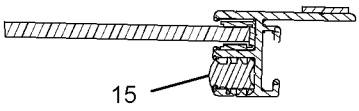

SECTION H-H

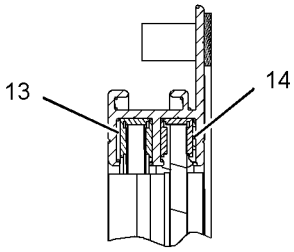

VIEW OF AREA C

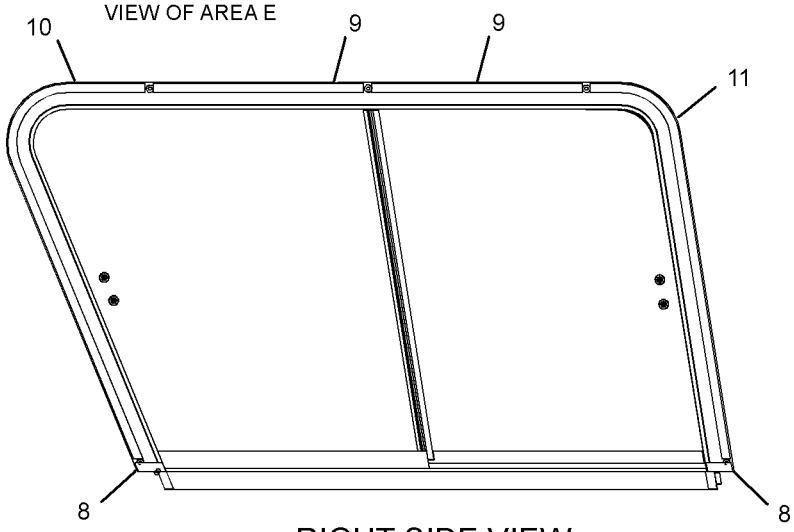

RIGHT SIDE VIEW

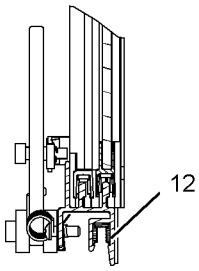

VIEW OF AREA D

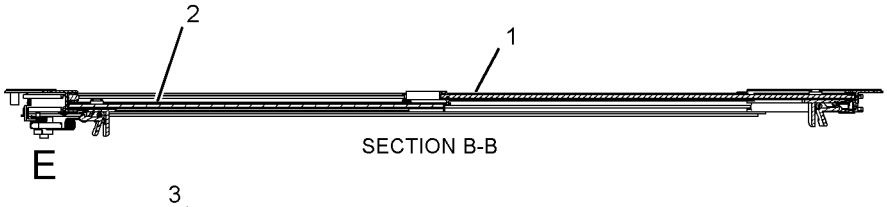

SECTION B-B

E

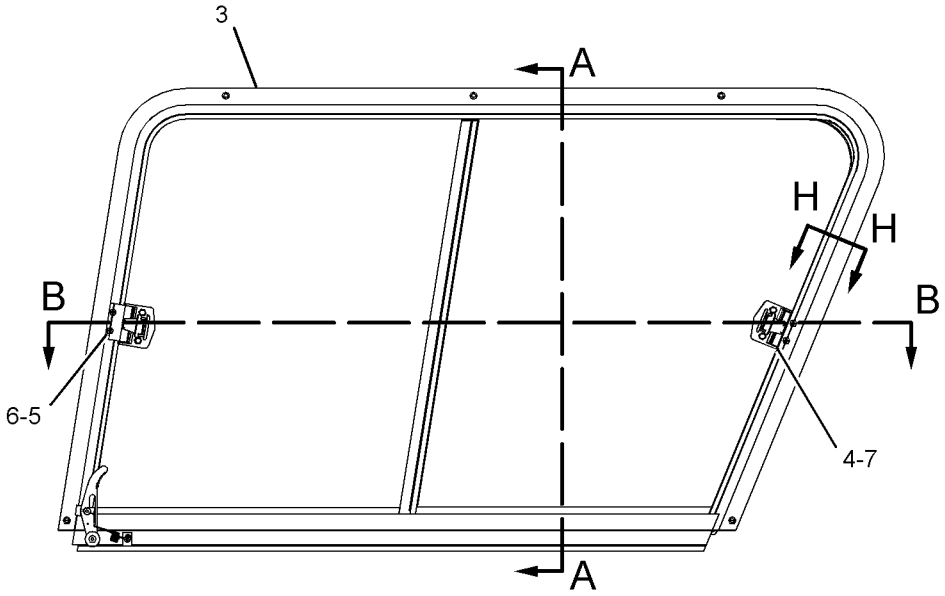

LEFT SIDE VIEW
(INSIDE OF CAB)

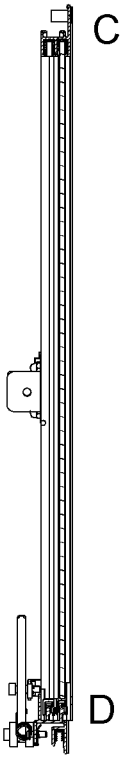

SECTION A-A

GRAPHIC #1 **<END>** g01276182

SERVICE EQUIPMENT AND SUPPLIES

193-0450 BRACKET GP-MOUNTING

S/N: MJH10575-UP
SPARE TIRE
PART OF 199-5291, 199-5292, 199-5392, 199-5393, 199-5394 TIRE & RIM GP
AN ATTACHMENT

SMCS-4200 **i01952027**

NOTE	REF NO	GRAPHIC REF	PART NUMBER	QTY	PART NAME 1 2 3 4 5 6 (PRODUCT LEVEL)	SEE PAGE
	1	1	**5P-8502**	2	PADLOCK GP	
					(EACH INCLUDES)	
		1	**5P-8500**	1	KEY	
		1	**8Y-6364**	1	SLEEVE	
	2	1	**154-3968**	2	STRIP	
E	3	1	**128-7037**	2	SEAL (39CM EACH)	
E	4	1	**9X-2092**	2	STRIP-EDGE (20CM EACH)	
M	5	1	**8T-4136**	2	BOLT (M10X1.5X25-MM)	
M	6	1	**8T-4132**	8	NUT (M16X2-THD)	
	7	1	**8T-4122**	4	WASHER-HARD (17X32X3.5-MM THK)	
	8	1	**8T-4121**	2	WASHER-HARD (11X21X2.5-MM THK)	

E-ORDER BY THE CENTIMETER
M-METRIC PART

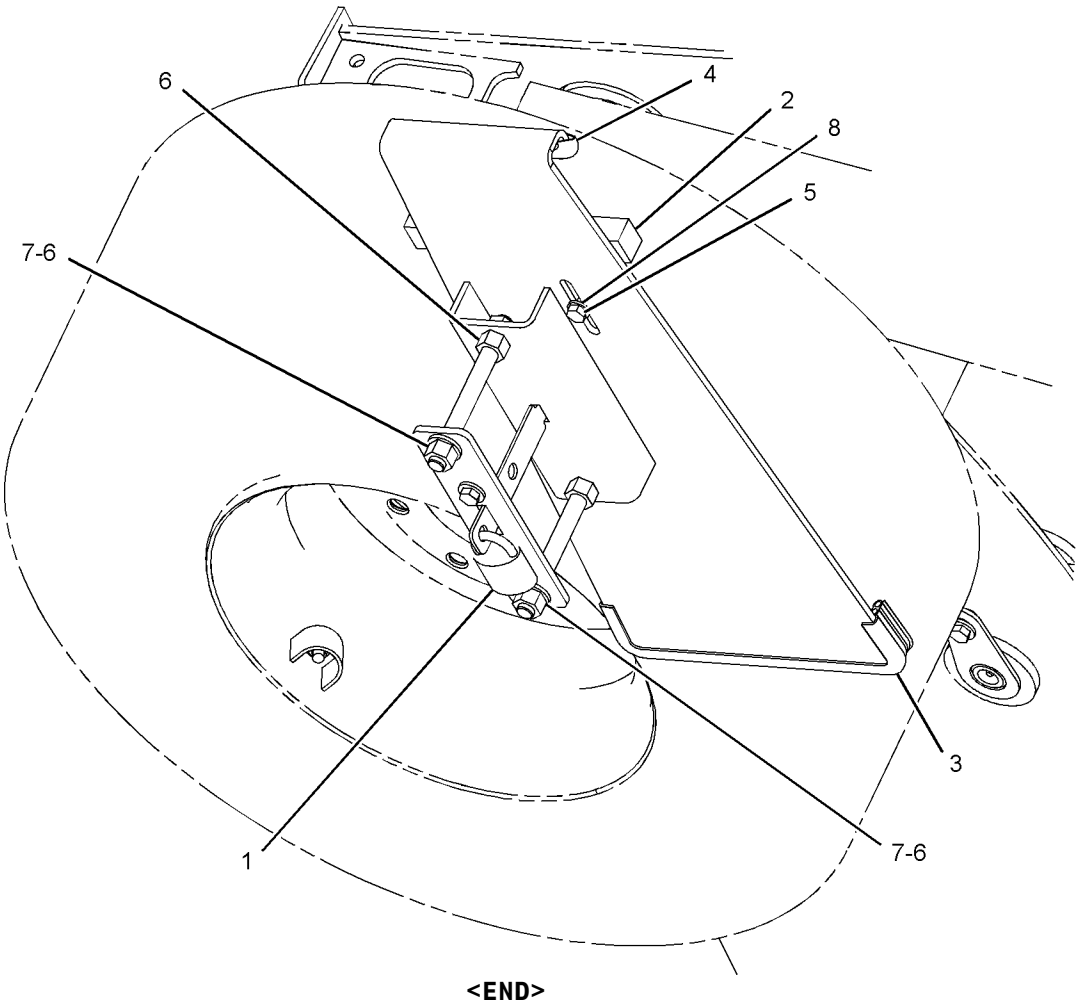

GRAPHIC #1 **<END>** g01015823

SERVICE EQUIPMENT AND SUPPLIES

191-9684 FILM GP–CLEARANCE

S/N: MJH10575-UP
PART OF 278-1220, 295-7066 CONVERSION AR-MACHINE, 233-5674 CONVERSION AR-ROADING
AN ATTACHMENT

SMCS-7557 **i01983232**

NOTE	REF NO	GRAPHIC REF	PART NUMBER	QTY	PART NAME 1 2 3 4 5 6 (PRODUCT LEVEL)	SEE PAGE
	1	1	**160-1600**	1	FILM-WARNING (CLEARANCE)	

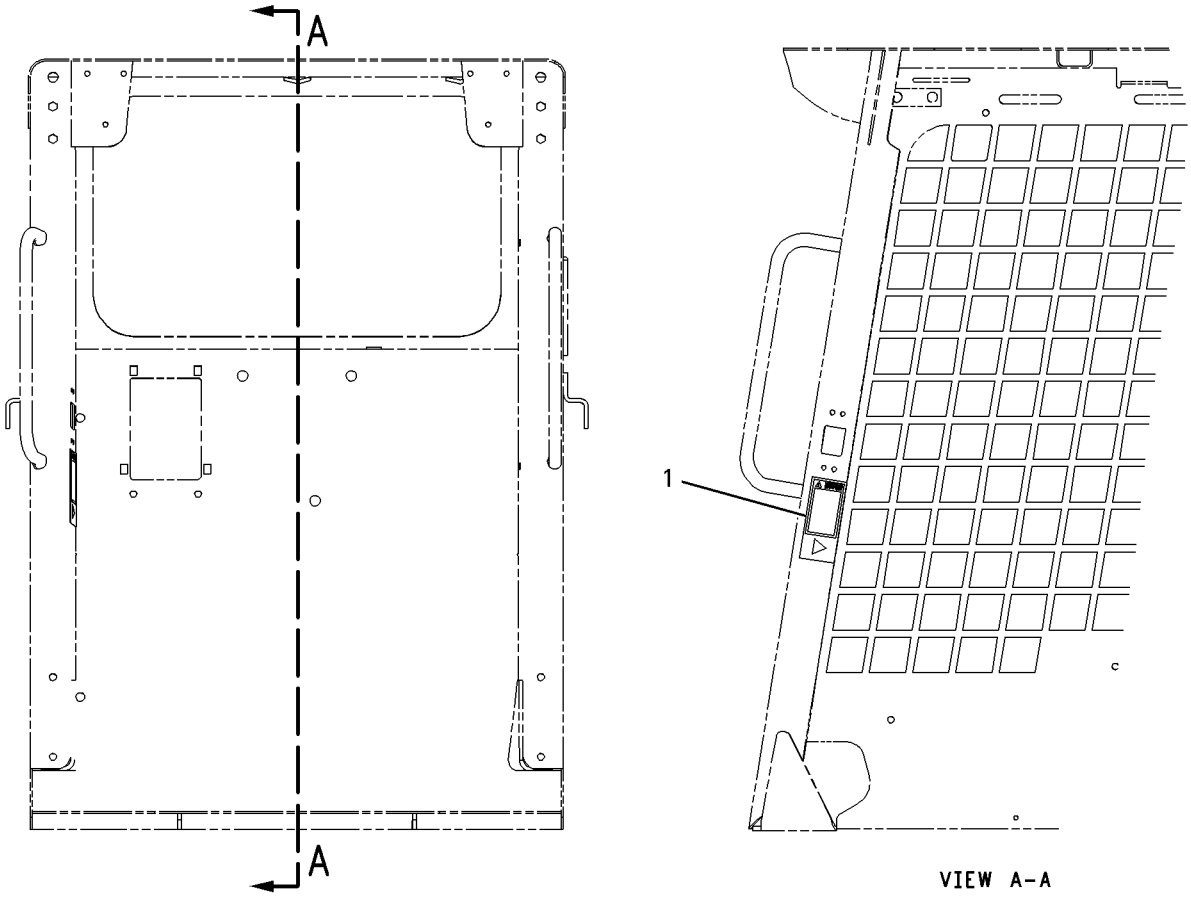

GRAPHIC #1 **<END>** g00771257

SERVICE EQUIPMENT AND SUPPLIES

218-6732 FILM GP–KIT

S/N: MJH10575-UP

AN ATTACHMENT

SMCS-7557 **i01988975**

NOTE	REF NO	GRAPHIC REF	PART NUMBER	QTY	PART NAME 1 2 3 4 5 6 (PRODUCT LEVEL)	SEE PAGE
	1	1	**9X-2754**	1	FILM (CAT)	
	2	1	**162-6889**	1	FILM (CATERPILLAR)	
	3	1	**218-6223**	1	FILM-STRIPE (226B)	
	4	1	**218-6224**	1	FILM-STRIPE (226B)	
	5	1	**234-0744**	1	FILM (ROOF, LH) (LH)	
	6	1	**234-0745**	1	FILM (ROOF, RH) (RH)	
	7	1	**234-0748**	2	FILM (TURBOCHARGER)	
	8	1	**238-7669**	1	FILM (CAT, RH)	
	9	1	**238-7670**	1	FILM (CAT, LH)	
E	10	1	**120-0210**		FILM (RED STRIPE) (27CM)	
E	11	1	**120-0210**		FILM (RED STRIPE) (33CM)	
	12	1	**156-5762**	4	FILM-INFORMATION (TIE-DOWN LOCATION)	
	13	1	**233-5711**	1	FILM-INSTRUCTION (SERVICE CHART)	

E-ORDER BY THE CENTIMETER

218-6732 FILM GP *(contd.)* **i01988975**

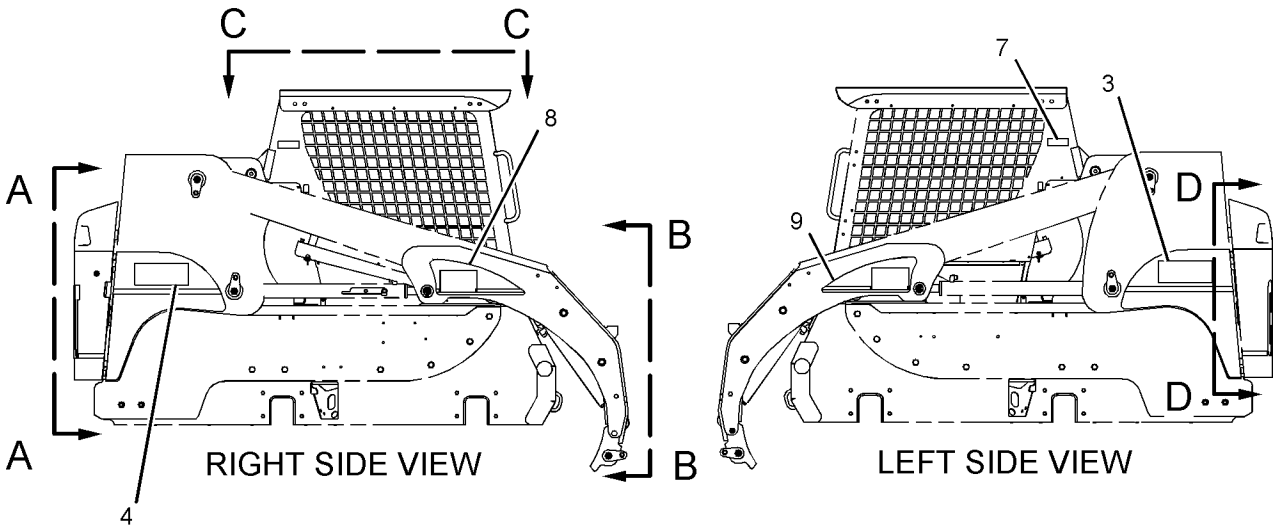

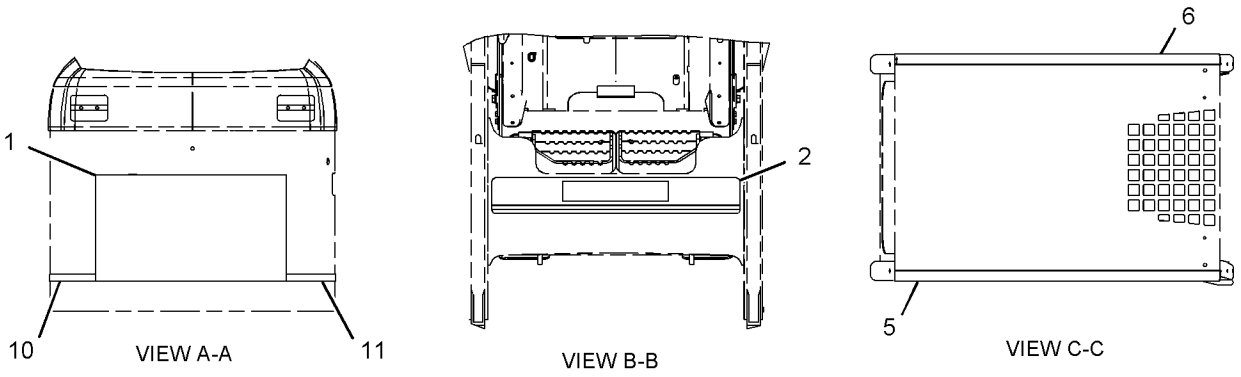

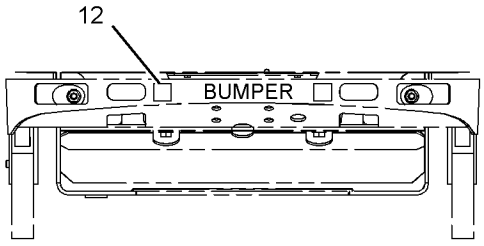

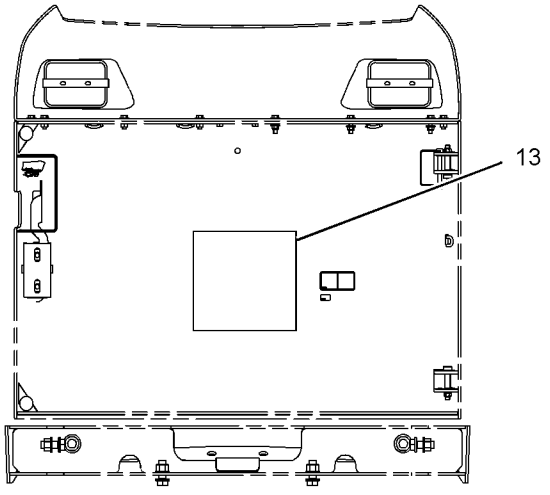

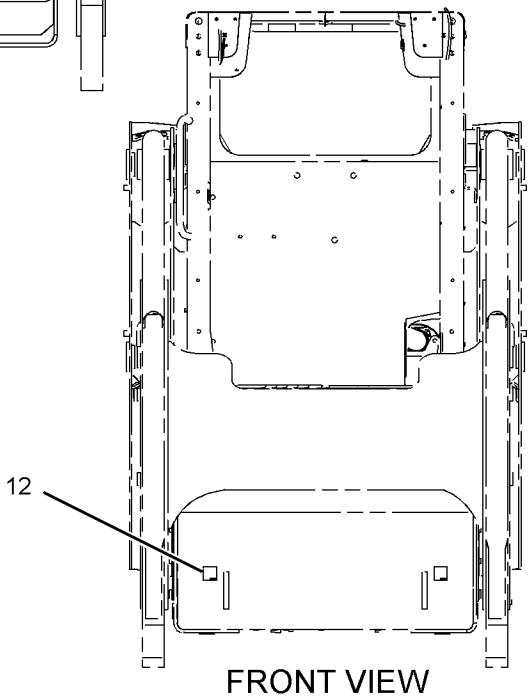

GRAPHIC #1 **<END>** g01031364

SERVICE EQUIPMENT AND SUPPLIES

238-7734 FILM GP–UN

S/N: MJH10575-UP

AN ATTACHMENT

SMCS-7557 **i02797728**

NOTE	REF NO	GRAPHIC REF	PART NUMBER	QTY	PART NAME 1 2 3 4 5 6 (PRODUCT LEVEL)	SEE PAGE
	1	1	**252-9015**	1	FILM-IDENTIFICATION (UN)	
	2	1	**252-9016**	2	FILM-IDENTIFICATION (UN)	
	3	1	**252-9017**	2	FILM-IDENTIFICATION (UN)	

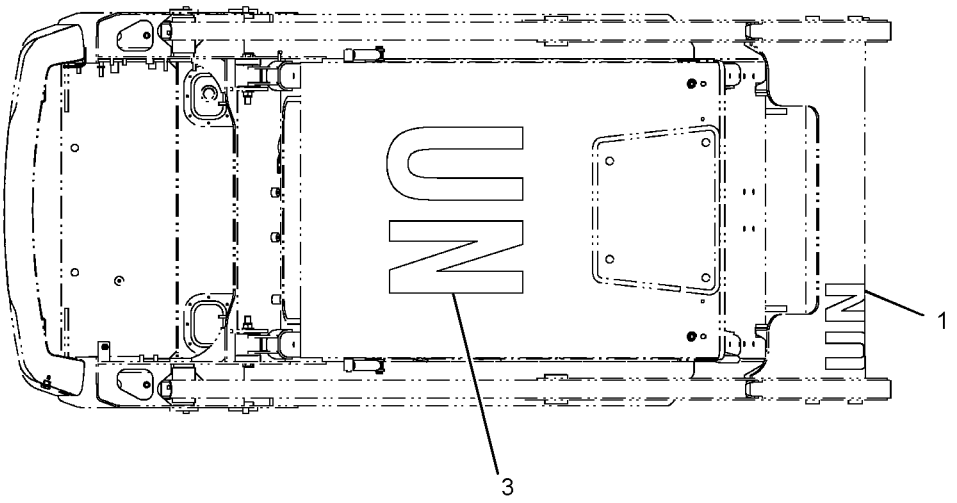

TOP VIEW FWD

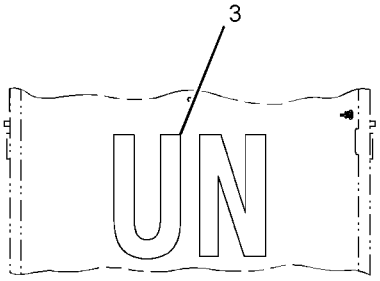

VIEW A-A

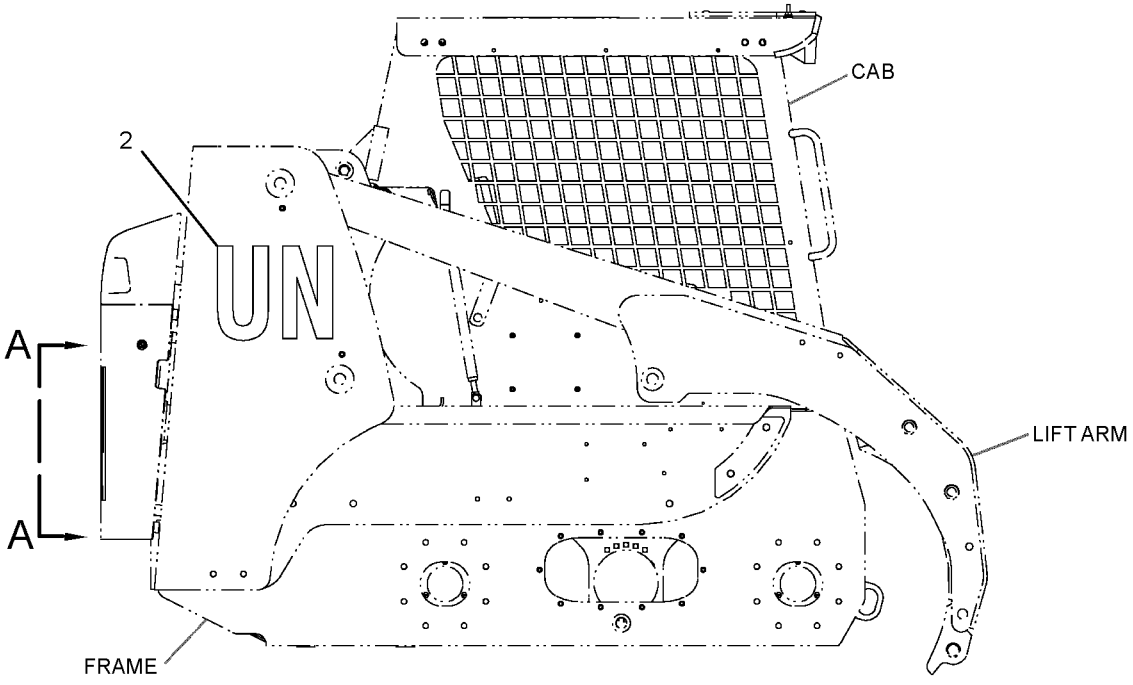

RIGHT SIDE VIEW

GRAPHIC #1

<END>

g01397986

SERVICE EQUIPMENT AND SUPPLIES

295-7126 FILM GP

S/N: MJH10575-UP

PART OF 295-7226, 295-7227 COMMON AR

SMCS-7557 **i02732837**

NOTE	REF NO	GRAPHIC REF	PART NUMBER	QTY	PART NAME 1 2 3 4 5 6 (PRODUCT LEVEL)	SEE PAGE
	1	1	**258-3423**	1	FILM-IDENTIFICATION (CATERPILLAR)	
	2	1	**258-3424**	1	FILM-IDENTIFICATION (CAT, LIFT ARM, LH)	
	3	1	**258-3425**	1	FILM-IDENTIFICATION (CAT, LIFT ARM, RH)	
	4	1	**258-3427**	1	FILM-IDENTIFICATION (CAT, REAR)	
	5	1	**295-7422**	1	FILM-IDENTIFICATION (226B2, LH)	
	6	1	**295-7423**	1	FILM-IDENTIFICATION (226B2, RH)	

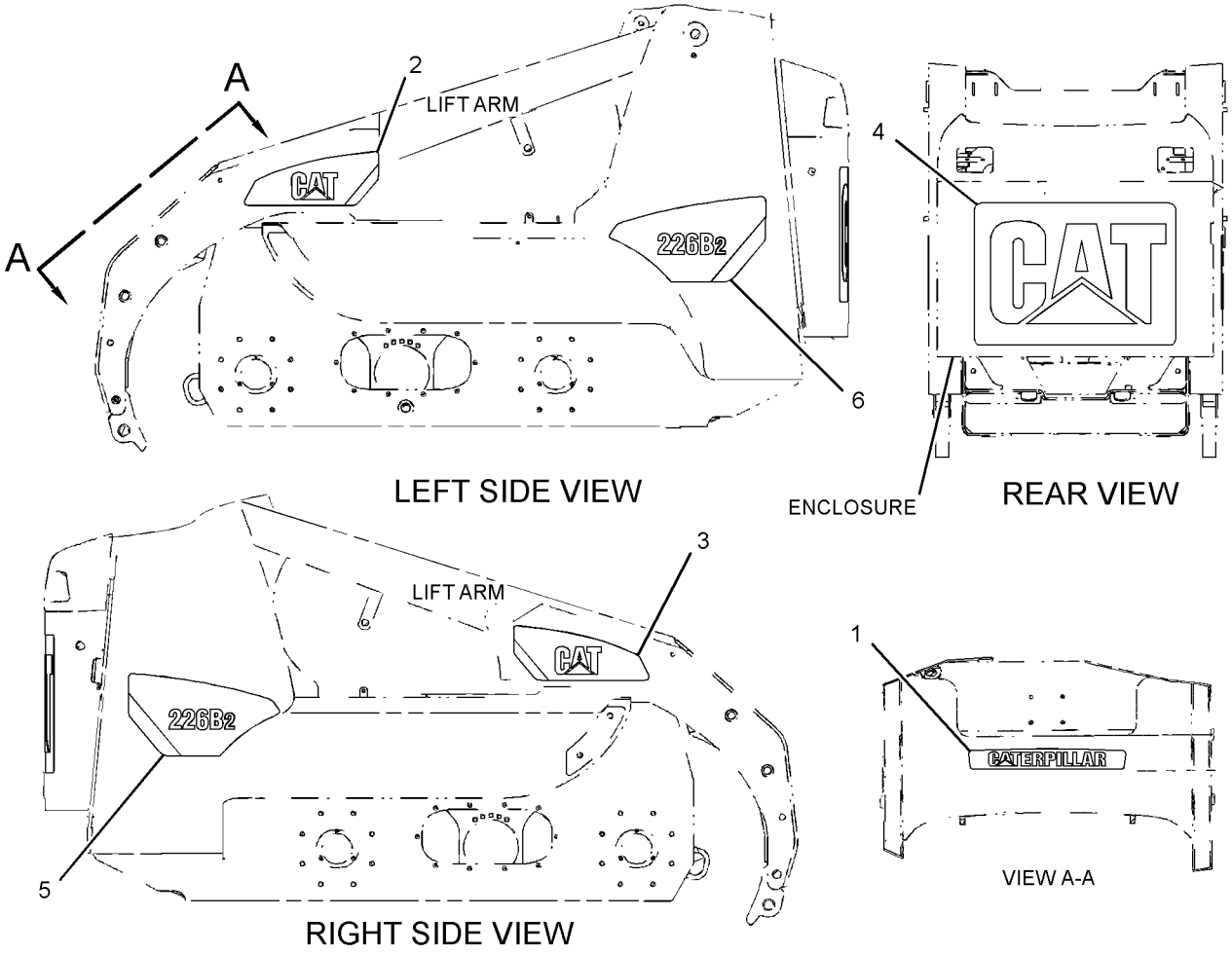

GRAPHIC #1 **<END>** g01372526

SERVICE EQUIPMENT AND SUPPLIES

317-0972 PARTS GP-MISCELLANEOUS

S/N: CYP1-UP

PART OF 292-5719 ENGINE AR-PRIMARY

AN ATTACHMENT

SMCS-1000, 7000, 7950 **i02827333**

NOTE	REF NO	GRAPHIC REF	PART NUMBER	QTY	PART NAME 1 2 3 4 5 6 (PRODUCT LEVEL)	SEE PAGE
	1	1	**5P-2369**	1	CLIP	
	2	1	**153-6375**	5	BOLT	
	3	1	**155-7984**	1	WASHER	
	4	1	**160-3550**	1	CLAMP-HOSE	
	5	1	**163-5372**	1	WASHER (8X15.4X4-MM THK)	
	6	1	**180-8579**	1	NUT	
	7	1	**183-4037**	1	CONNECTOR AS	
	8	1	**200-0807**	1	BRACKET	
	9	1	**200-5976**	1	CONNECTION	
	10	1	**205-4585**	1	HOSE	
	11	1	**217-7352**	1	COVER-VALVE	
	12	1	**225-7955**	1	CABLE AS-BATTERY (NEGATIVE)	
	13	1	**246-4318**	4	CLIP	
	14	1	**265-5624**	1	SPRING-RETURN	
	15	1	**265-5625**	1	BRACKET-THROTTLE	
	16	1	**280-8336**	1	BRACKET AS	
M	16A	1	**8T-3612**	1	NUT-WELD (M8X1.25-THD)	
	17	1	**295-8184**	1	HOSE	
	18	1	**316-6881**	1	CLAMP	

M-METRIC PART

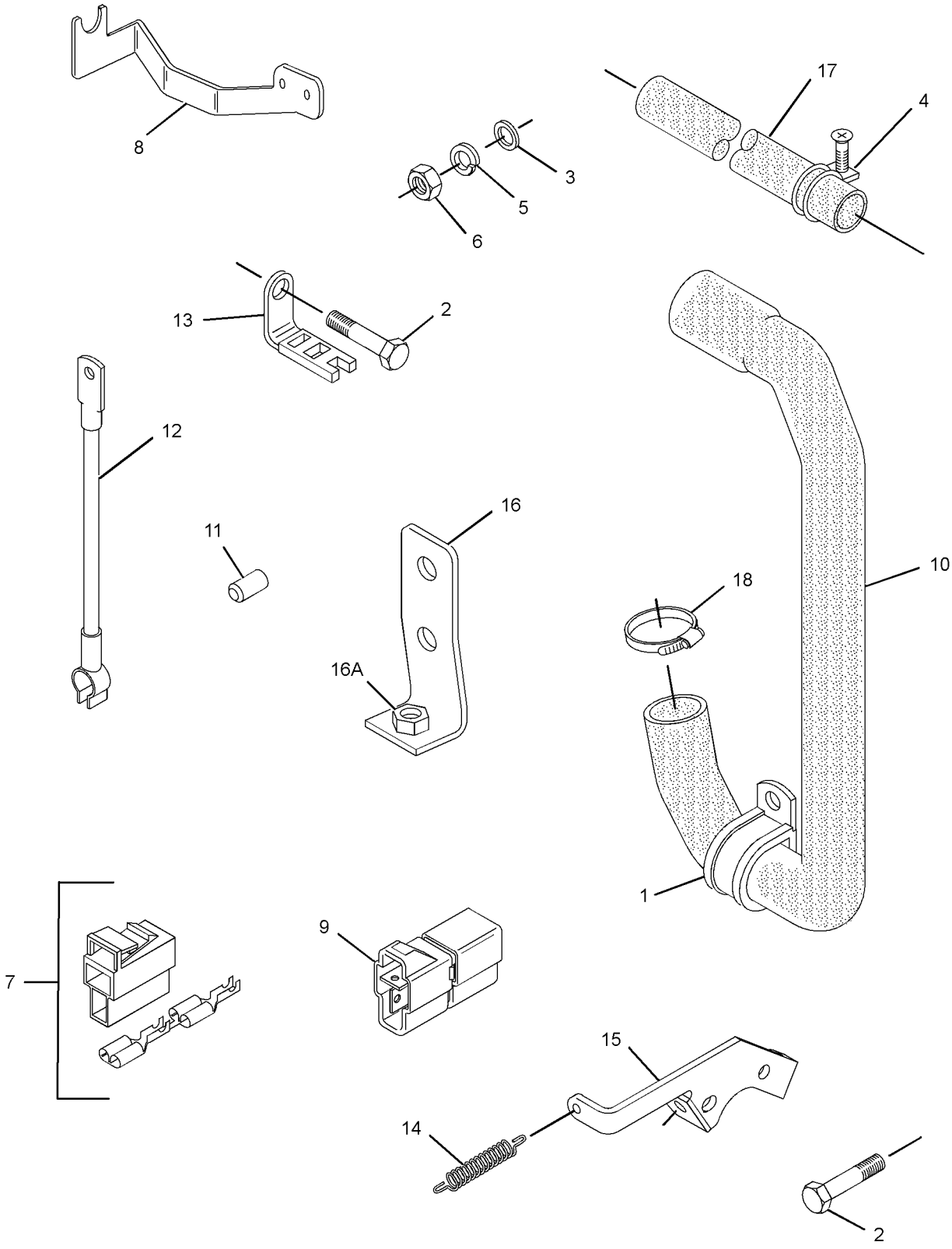

GRAPHIC #1 **<END>** g01439494

SERVICE EQUIPMENT AND SUPPLIES

195-6740 PLATE & FILM GP

S/N: MJH10575-UP

AN ATTACHMENT

SMCS-7405, 7557 **i02890284**

NOTE	REF NO	GRAPHIC REF	PART NUMBER	QTY	PART NAME 1 2 3 4 5 6 (PRODUCT LEVEL)	SEE PAGE
	1	1	**199-3410**	1	FILM-IDENTIFICATION (SYNTHETIC OIL)	

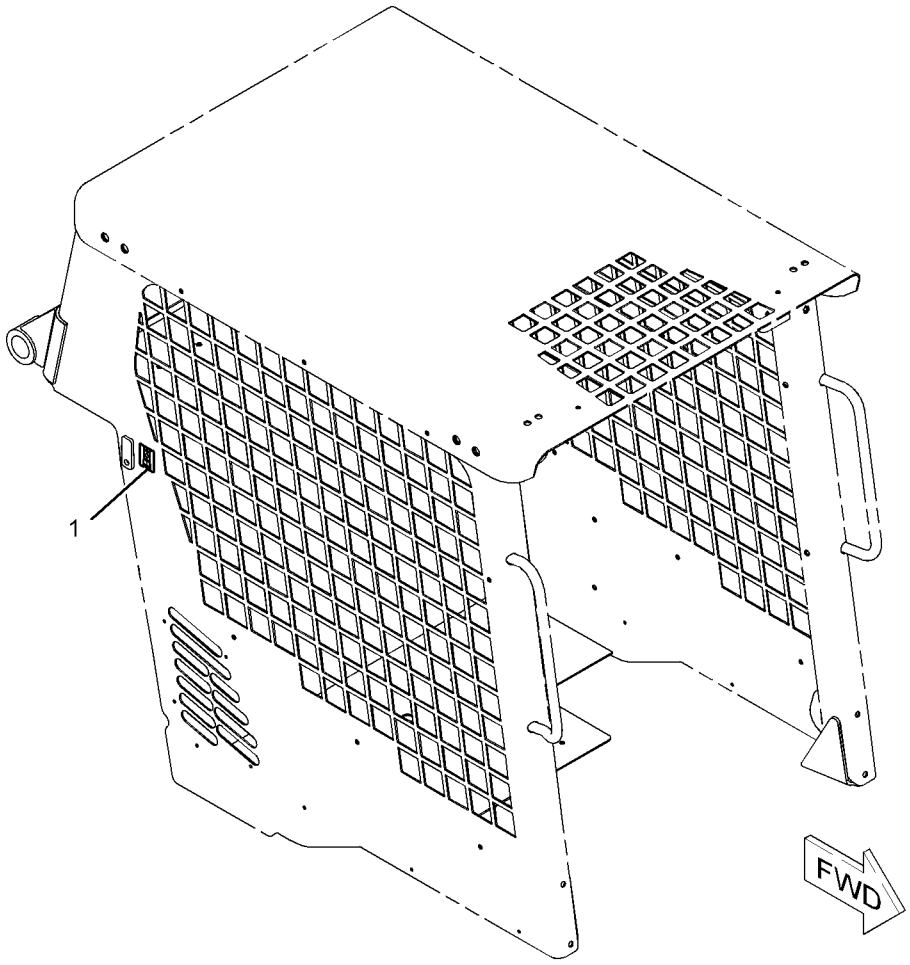

GRAPHIC #1 **<END>** g01086583

SERVICE EQUIPMENT AND SUPPLIES

218-5951 PLATE & FILM GP

S/N: MJH10575-UP

AN ATTACHMENT

SMCS-7405, 7557 **i02843436**

NOTE	REF NO	GRAPHIC REF	PART NUMBER	QTY	PART NAME 1 2 3 4 5 6 (PRODUCT LEVEL)	SEE PAGE
	1	1	**239-6986**	1	PLATE-IDENTIFICATION (MACHINE)	
	2	2	**157-2853**	1	FILM-INFORMATION (READ OMM)	
	3	1,2	**225-7977**	1	FILM-IDENTIFICATION (RELAY LAYOUT)	
	4	1	**224-0554**	1	FILM-WARNING (UNIVERSAL, READ OMM, INTL)	
	5	1	**224-9022**	1	FILM-WARNING (SEAT BELT)	
	6	2	**233-5711**	1	FILM-INSTRUCTION (SERVICE CHART)	
	7	1	**4P-6422**	1	FILM-WARNING (NO ETHER SPRAY/AIR INTAKE)	
	8	1	**235-1368**	1	FILM-WARNING (RADIATOR)	
	9	2	**169-2876**	1	FILM-IDENTIFICATION (POWER RECEPTACLE, 12-VOLT)	
	10	1	**219-0302**	1	FILM-WARNING (NO WELD, NO DRILL, READ OMM)	
	11	2	**224-0672**	1	FILM-WARNING (HIGH PRESSURE, READ MANUAL)	
	12	1	**224-9855**	1	FILM-INSTRUCTION (START AID, READ OMM, INTL)	
	13	2	**225-0312**	1	FILM-WARNING (JUMP START, READ OMM, INTL)	
	14	1	**225-7976**	1	FILM-IDENTIFICATION (RELAY LAYOUT)	
	15	1	**234-6069**	1	FILM-WARNING (CRUSH HAZARD)	
	16	2	**234-6071**	1	FILM-WARNING (LIFT ARM BRACE)	
	17	1	**234-6076**	1	FILM-WARNING (NO ACCESS)	
	18	1,2	**234-6078**	2	FILM-WARNING (CAB TILT SUPPORT)	
	19	1	**234-6081**	1	FILM-WARNING (WORK TOOL)	
	20	2	**234-9575**	1	FILM-INSTRUCTION (GOVERNOR CONTROL)	
	21	1	**156-5762**	4	FILM-INFORMATION (TIE-DOWN LOCATION)	
	22	1	**234-6065**	1	FILM-CERTIFICATION (OPS, READ OMM)	
	23	2	**295-2567**	1	FILM-INSTRUCTION (BUCKET LOWER)	

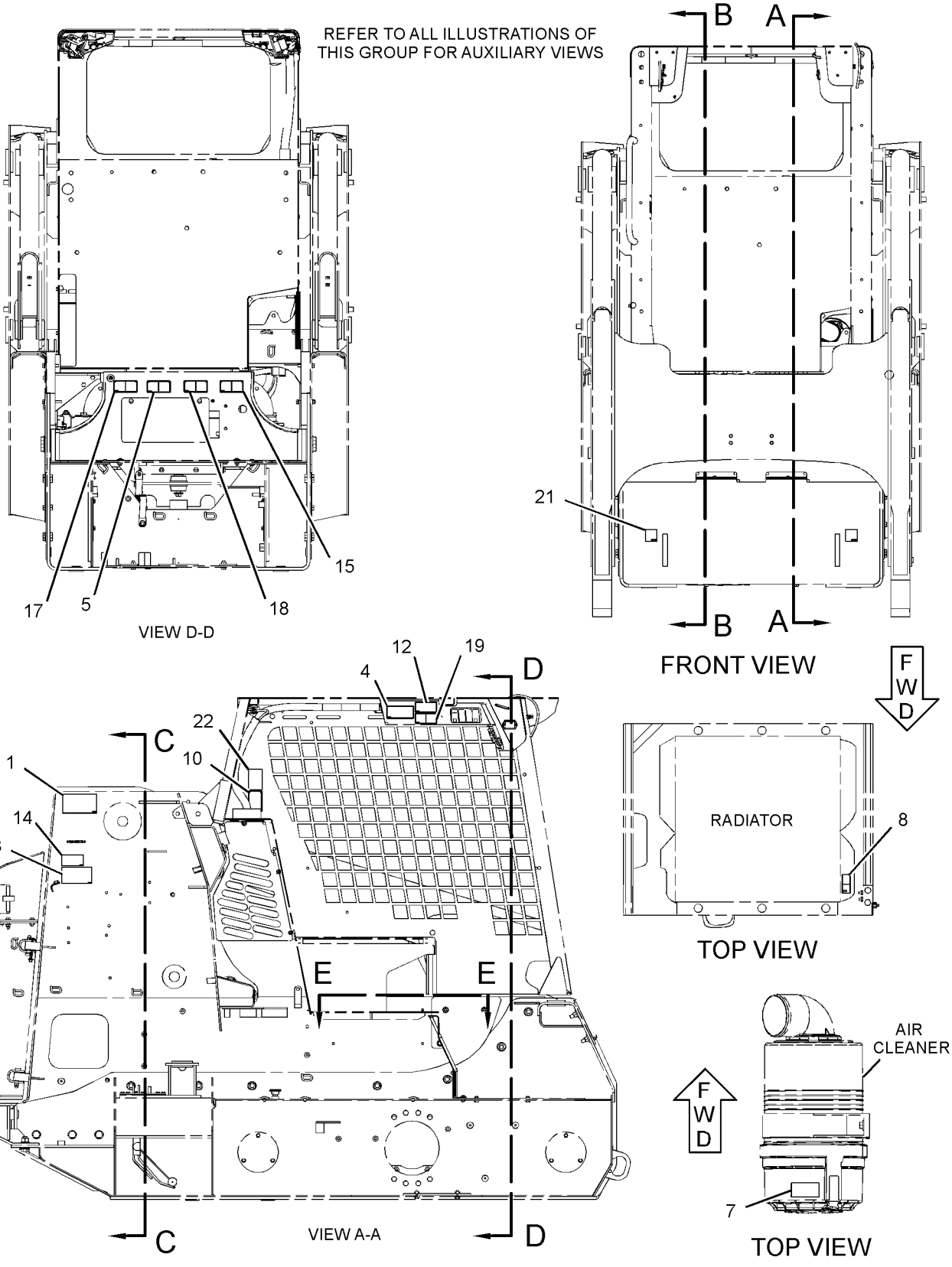

GRAPHIC #1 g01323054

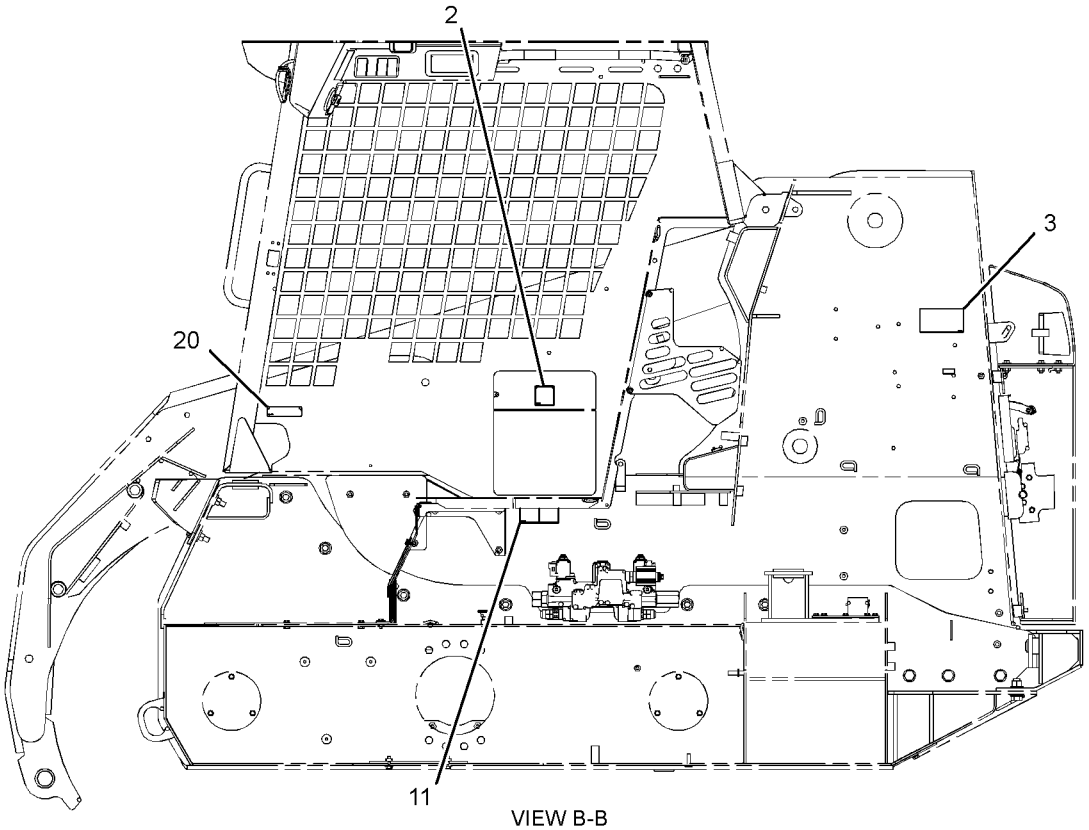

VIEW B-B

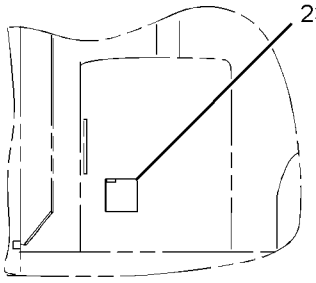

VIEW E-E

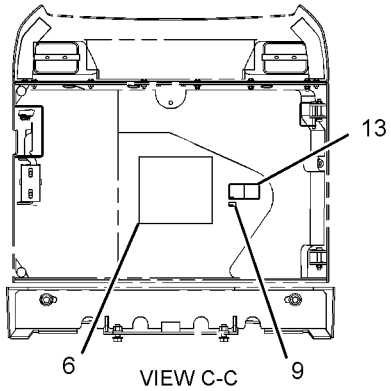

VIEW C-C

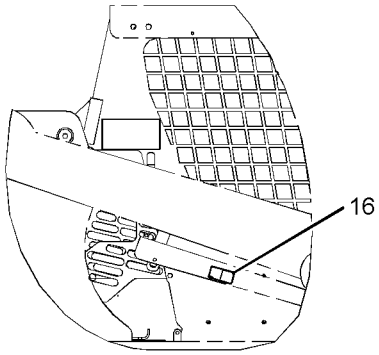

RIGHT SIDE VIEW

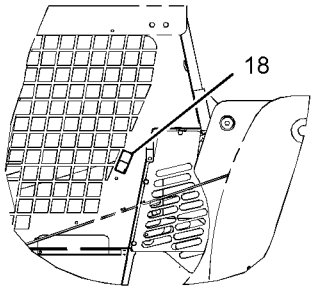

LEFT SIDE VIEW

GRAPHIC #2 **<END>** g01323051

SERVICE EQUIPMENT AND SUPPLIES

218-6291 PLATE & FILM GP

S/N: MJH10575-UP

AN ATTACHMENT

SMCS-7405, 7557 **i02593859**

NOTE	REF NO	GRAPHIC REF	PART NUMBER	QTY	PART NAME 1 2 3 4 5 6 (PRODUCT LEVEL)	SEE PAGE
	1	1	**239-6986**	1	PLATE-IDENTIFICATION (MACHINE)	
	2	1	**157-2853**	1	FILM-INFORMATION (READ OMM)	
	3	1	**225-7977**	1	FILM-IDENTIFICATION (RELAY LAYOUT)	
	4	1	**224-7830**	1	FILM-WARNING (HIGH PRESSURE, READ OMM, U.S.)	
	5	2	**224-9021**	1	FILM-WARNING (SEAT BELT)	
	6	1	**225-3305**	1	FILM-WARNING (UNIVERSAL, READ OMM, U.S.)	
	7	2	**233-5711**	1	FILM-INSTRUCTION (SERVICE CHART)	
	8	2	**4P-6422**	1	FILM-WARNING (NO ETHER SPRAY/AIR INTAKE)	
	9	2	**235-1365**	1	FILM-WARNING (HOT FLUID UNDER PRESSURE)	
	10	2	**169-2876**	1	FILM-IDENTIFICATION (POWER RECEPTACLE, 12-VOLT)	
	11	1	**219-0302**	1	FILM-WARNING (NO WELD, NO DRILL, READ OMM)	
	12	1	**224-9855**	1	FILM-INSTRUCTION (START AID, READ OMM, INTL)	
	13	2	**225-0313**	1	FILM-WARNING (JUMP START, READ OMM, U.S.)	
	14	1	**225-7976**	1	FILM-IDENTIFICATION (RELAY LAYOUT)	
	15	2	**234-6067**	2	FILM-WARNING (CRUSH HAZARD, CAB, READ OMM)	
	16	2	**234-6070**	1	FILM-WARNING (CRUSH HAZARD, CAB, READ OMM)	
	17	2	**234-6072**	1	FILM-WARNING (CRUSH HAZARD, READ OMM)	
	18	2	**234-6074**	1	FILM-WARNING (FALL/CRUSH HAZARD, NO ACCESS)	
	19	1	**234-6077**	1	FILM-WARNING (CRUSH HAZARD, READ OMM)	
	20	1	**234-9575**	1	FILM-INSTRUCTION (GOVERNOR CONTROL)	
	21	1	**156-5762**	4	FILM-INFORMATION (TIE-DOWN LOCATION)	
	22	1	**234-6065**	1	FILM-CERTIFICATION (OPS, READ OMM)	
	23	1	**295-2567**	1	FILM-INSTRUCTION (BUCKET LOWER)	
A			**246-4291**	1	PLATE-SERIAL NUMBER (ENGINE)	

A-NOT PART OF THIS GROUP

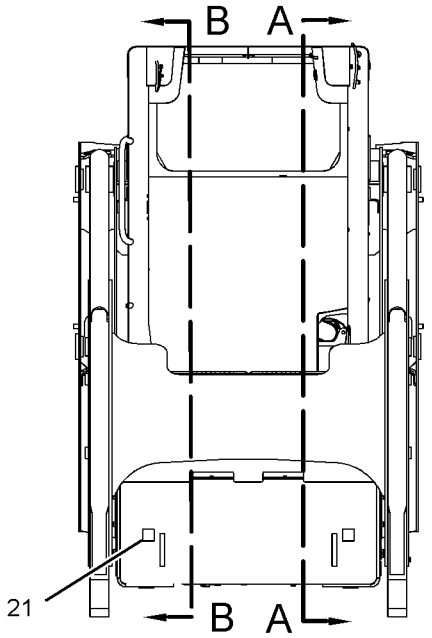

FRONT VIEW

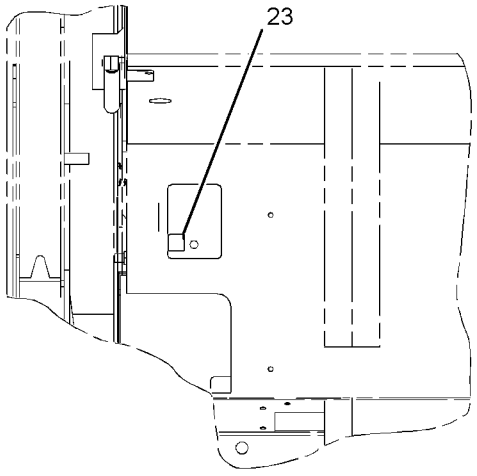

VIEW J-J

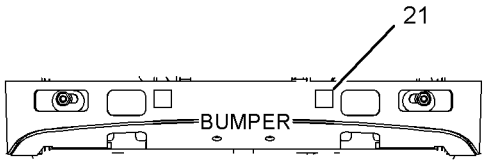

REAR VIEW

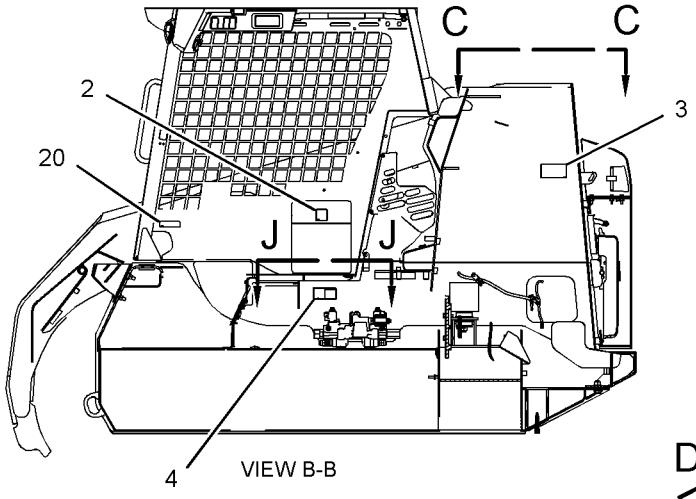

VIEW B-B

REFER TO ALL ILLUSTRATIONS OF THIS GROUP FOR AUXILIARY VIEWS

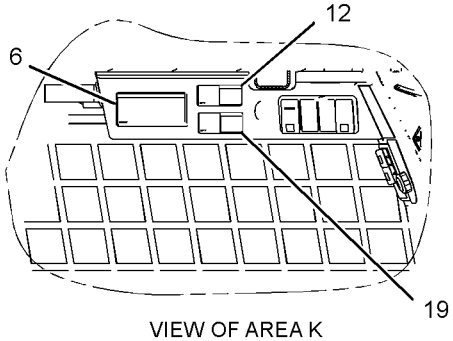

VIEW OF AREA K

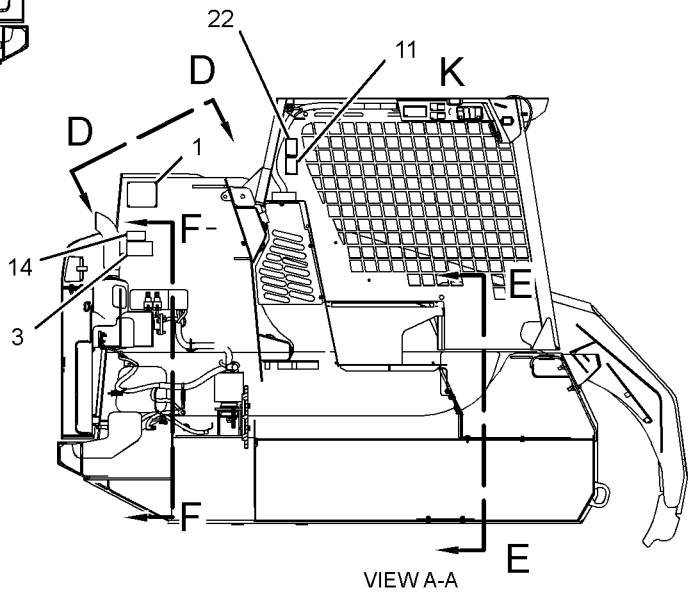

VIEW A-A

GRAPHIC #1

g01305792

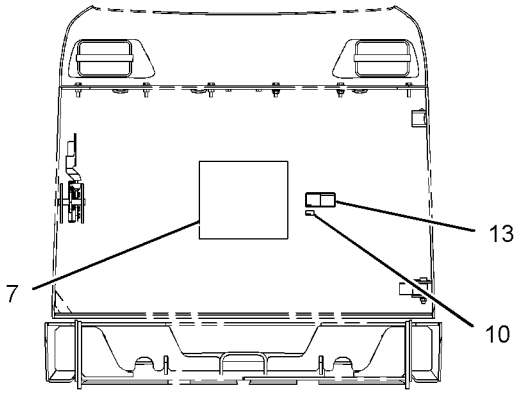

VIEW F-F

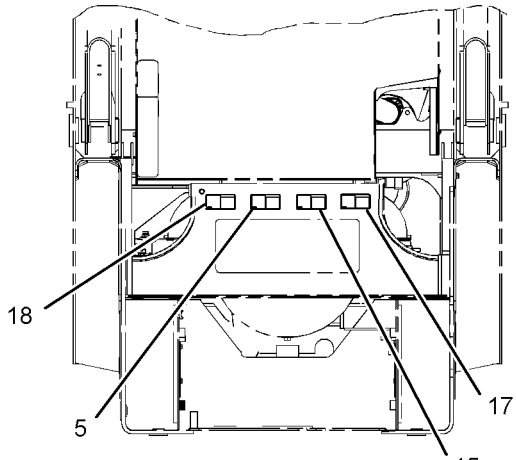

VIEW E-E

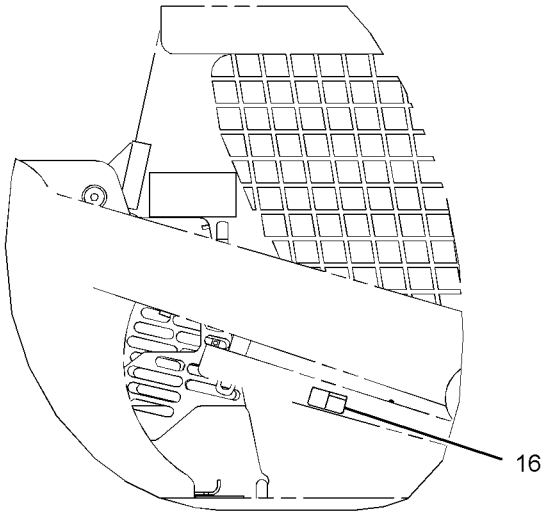

RIGHT SIDE VIEW

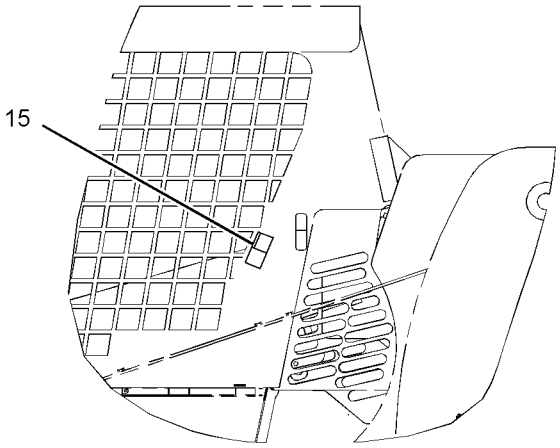

LEFT SIDE VIEW

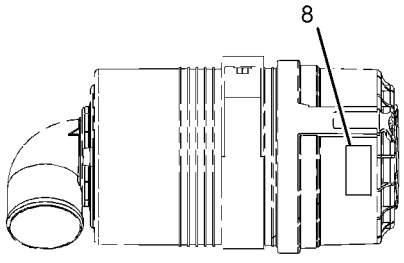

VIEW C-C

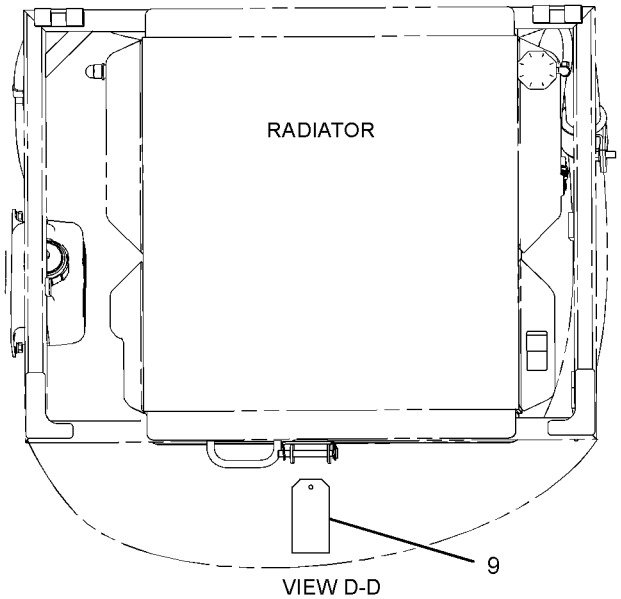

VIEW D-D

GRAPHIC #2 **<END>** g01305793

SERVICE EQUIPMENT AND SUPPLIES

247-0678 PLATE & FILM GP

S/N: MJH10575-UP
PART OF 231-5277 BLADE AR
AN ATTACHMENT

SMCS-7405, 7557 **i02469823**

NOTE	REF NO	GRAPHIC REF	PART NUMBER	QTY	PART NAME 1 2 3 4 5 6 (PRODUCT LEVEL)	SEE PAGE
	1	1	**7X-3229**	4	FILM-INSTRUCTION (LIFT EYE, TIE-DOWN LOCATION)	
	2	1	**226-1242**	2	FILM-WARNING (CRUSH HAZARD, STAY BACK, U.S.)	
	3	1	**228-3581**	1	FILM-WARNING (DO NOT OPERATE, READ OMM)	
	4	1	**159-8035**	1	FILM-WARNING (CRUSH HAZARD, STAY BACK)	
	5	1	**124-2456**	1	FILM-INSTRUCTION (NO STEP)	

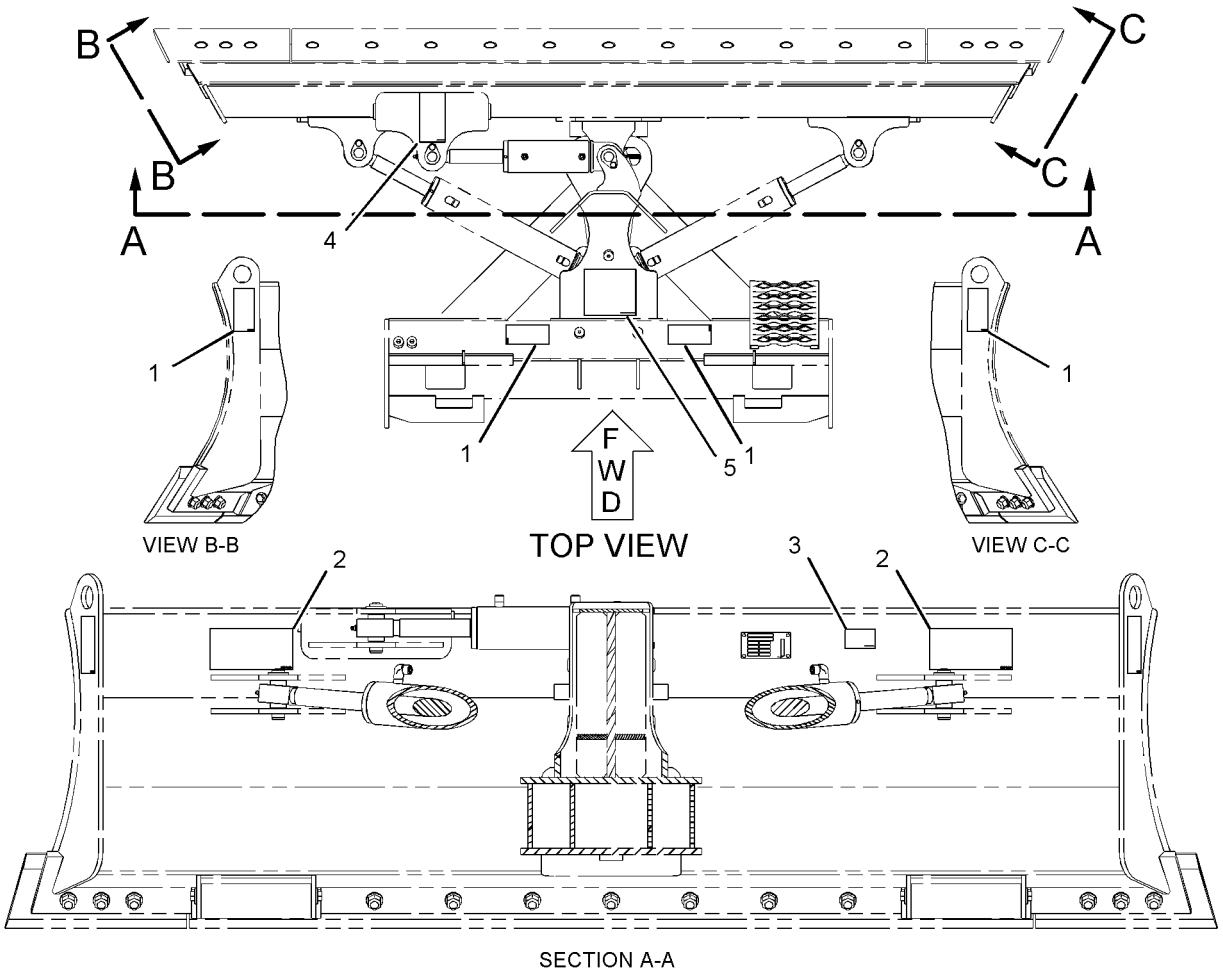

GRAPHIC #1 **<END>** g01120449

SERVICE EQUIPMENT AND SUPPLIES

286-9251 PLATE & FILM GP

S/N: MJH10575-UP

PART OF 286-9300, 286-9301 BUCKET AR-GRAPPLE

AN ATTACHMENT

SMCS-7405, 7557 **i02723719**

NOTE	REF NO	GRAPHIC REF	PART NUMBER	QTY	PART NAME 1 2 3 4 5 6 (PRODUCT LEVEL)	SEE PAGE
	1	1	**168-8389**	4	TACK-FASTENER	
	2	1	**228-3369**	1	FILM-WARNING (DO NOT OPERATE, READ OMM)	
	3	1	**247-6118**	2	FILM-WARNING (CRUSH HAZARD, STAY BACK)	
	4	1	**248-5245**	2	FILM-INFORMATION (LIFT EYE, TIE-DOWN LOCATION)	
	5	1	**255-6540**	1	PLATE-INSTRUCTION (BUCKET SPECIFICATIONS)	

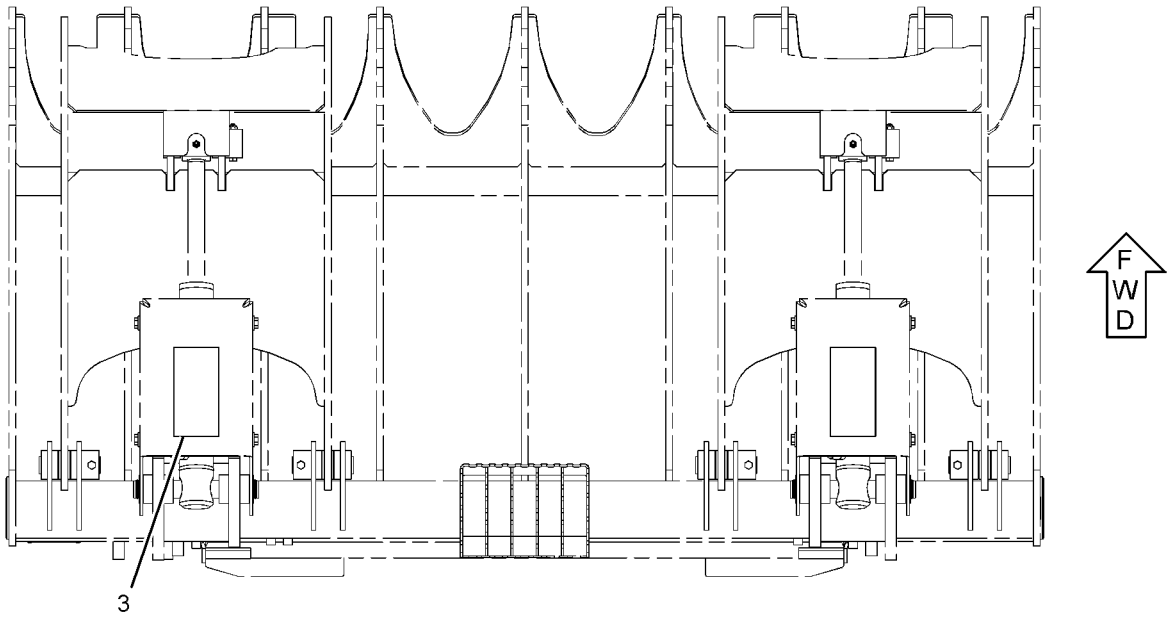

TOP VIEW

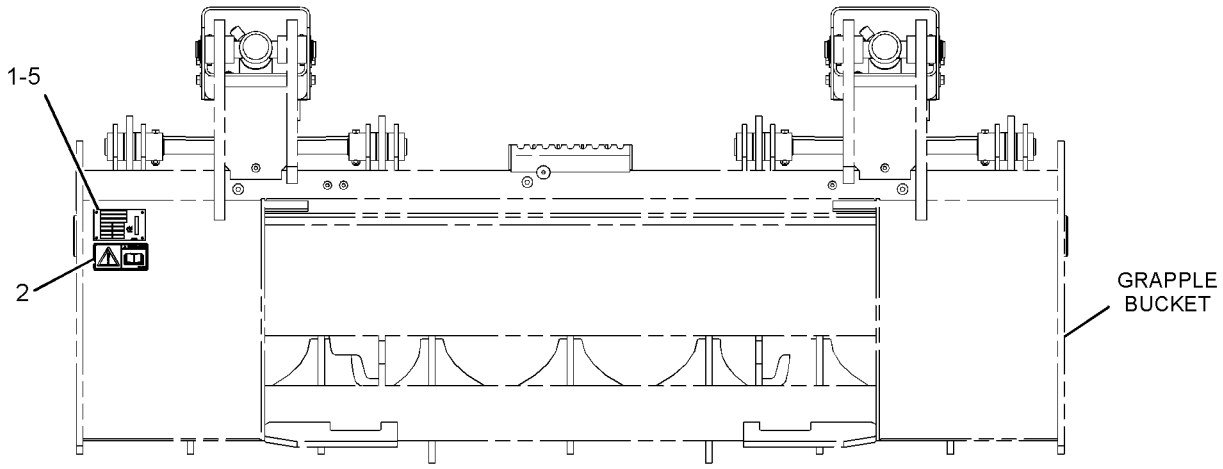

REAR VIEW

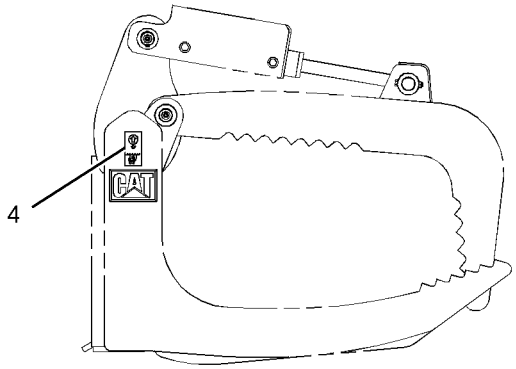

RIGHT SIDE VIEW

GRAPHIC #1

<END>

g01373367

SERVICE EQUIPMENT AND SUPPLIES

295-7191 PLATE & FILM GP

S/N: MJH10575-12174

AN ATTACHMENT

SMCS-7405, 7557 **i02796051**

NOTE	REF NO	GRAPHIC REF	PART NUMBER	QTY	PART NAME 1 2 3 4 5 6 (PRODUCT LEVEL)	SEE PAGE
	1	1	**157-2853**	1	FILM-INFORMATION (READ OMM)	
	2	1	**225-7977**	1	FILM-IDENTIFICATION (RELAY LAYOUT)	
	3	2	**169-2876**	1	FILM-IDENTIFICATION (POWER RECEPTACLE, 12-VOLT)	
	4	1	**219-0302**	1	FILM-WARNING (NO WELD, NO DRILL, READ OMM)	
	5	1	**224-7830**	1	FILM-WARNING (HIGH PRESSURE, READ OMM, U.S.)	
	6	2	**224-8945**	1	FILM-WARNING (DO NOT USE ETHER, U.S)	
	7	1	**224-9021**	1	FILM-WARNING (SEAT BELT)	
	8	1	**225-3305**	1	FILM-WARNING (UNIVERSAL, READ OMM, U.S.)	
	9	1	**234-6065**	1	FILM-CERTIFICATION (OPS, READ OMM)	
	10	2	**234-6070**	1	FILM-WARNING (CRUSH HAZARD, CAB, READ OMM)	
	11	1	**234-6074**	1	FILM-WARNING (FALL/CRUSH HAZARD, NO ACCESS)	
	12	1	**234-6077**	1	FILM-WARNING (CRUSH HAZARD, READ OMM)	
	14	2	**235-1365**	1	FILM-WARNING (HOT FLUID UNDER PRESSURE)	
	15	1	**239-6986**	1	PLATE-IDENTIFICATION (MACHINE)	
	16	1	**263-4836**	4	FILM-SYMBOL (TIE-DOWN)	
	17	2	**295-2567**	1	FILM-INSTRUCTION (BUCKET LOWER)	
	18	2	**295-7199**	1	FILM-INSTRUCTION (SERVICE CHART)	
	19	1	**224-9855**	1	FILM-INSTRUCTION (START AID, READ OMM, INTL)	
	20	2	**225-0313**	1	FILM-WARNING (JUMP START, READ OMM, U.S.)	
	21	1	**225-7976**	1	FILM-IDENTIFICATION (RELAY LAYOUT)	
	22	1,2	**234-6067**	2	FILM-WARNING (CRUSH HAZARD, CAB, READ OMM)	
	23	1	**234-6072**	1	FILM-WARNING (CRUSH HAZARD, READ OMM)	
	24	1	**234-9575**	1	FILM-INSTRUCTION (GOVERNOR CONTROL)	
	25	2	**312-7747**	1	PLATE-WARNING (UNIVERSAL)	

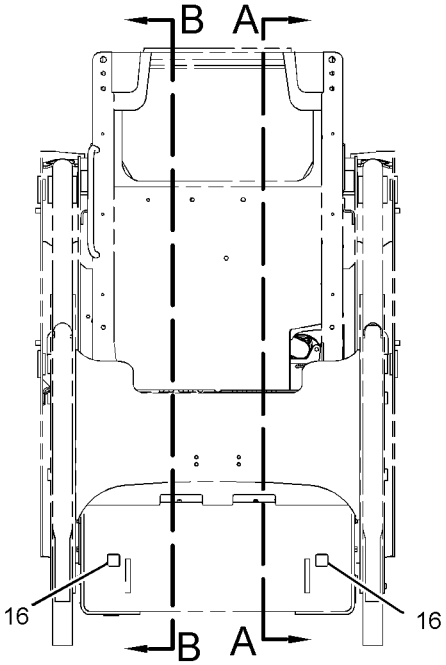

FRONT VIEW

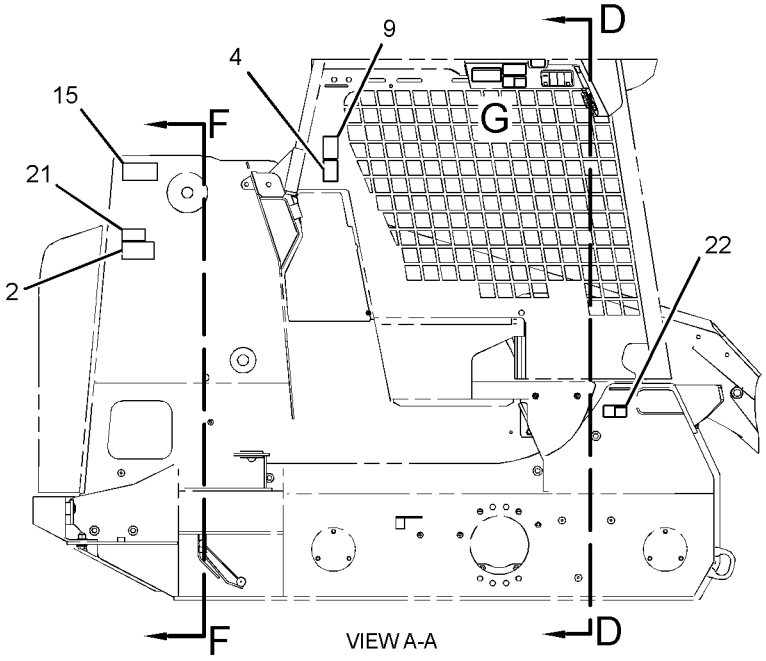

VIEW A-A

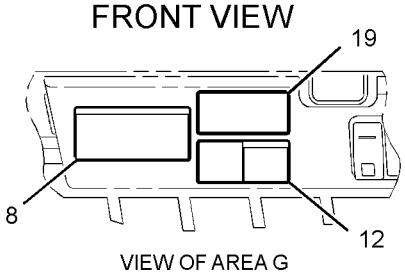

VIEW OF AREA G

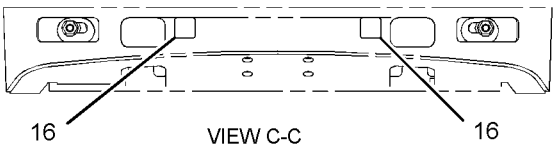

VIEW C-C

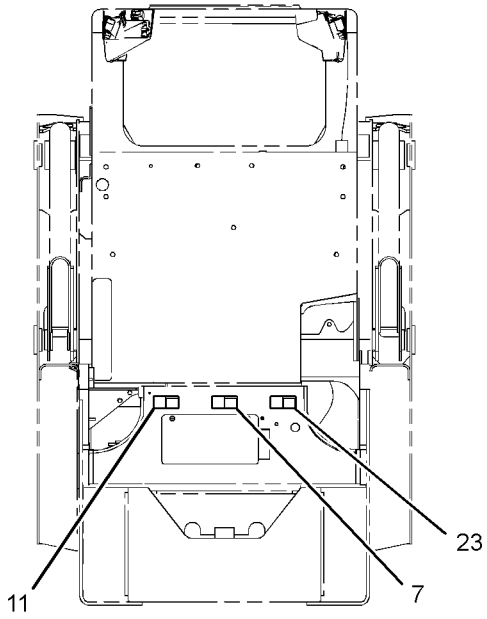

VIEW D-D

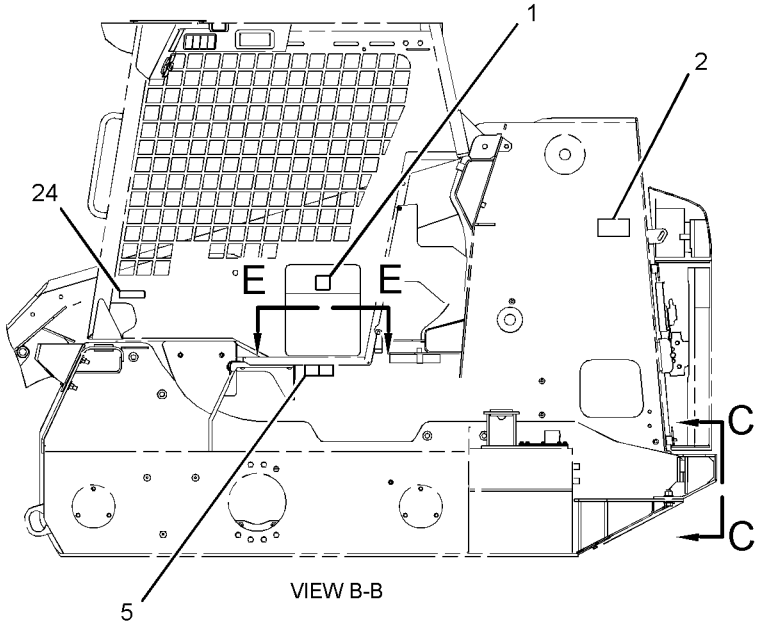

VIEW B-B

REFER TO ALL ILLUSTRATIONS OF THIS GROUP FOR AUXILIARY VIEWS

GRAPHIC #1

g01419802

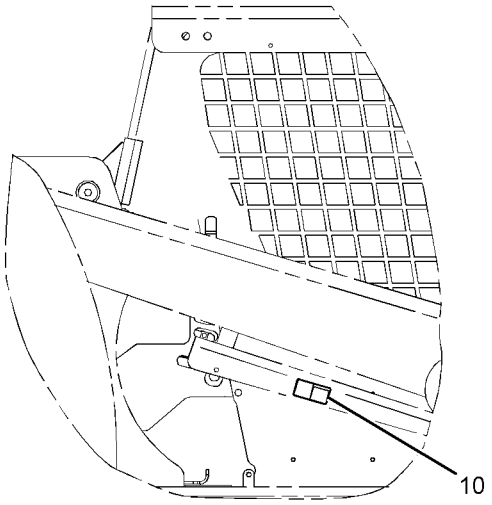

RIGHT SIDE VIEW

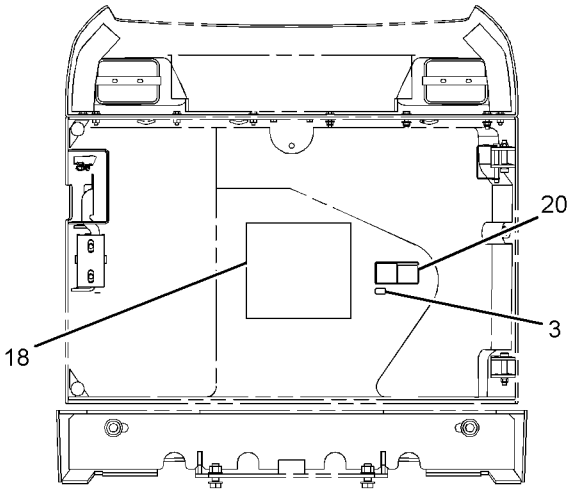

VIEW F-F

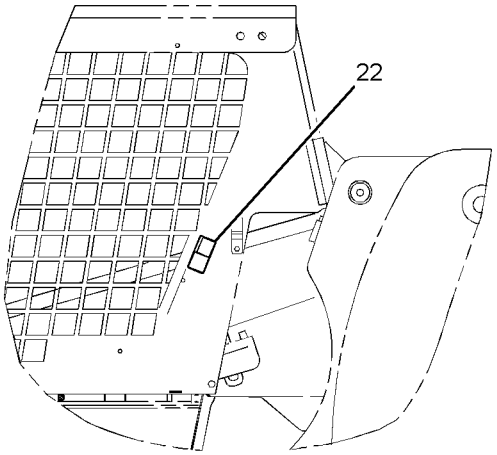

LEFT SIDE VIEW

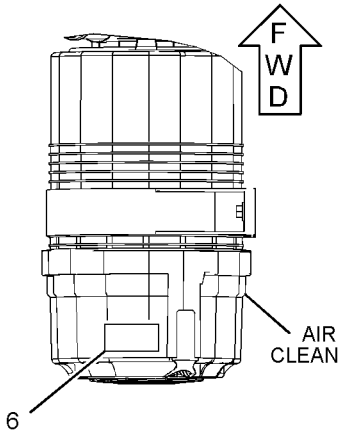

TOP VIEW

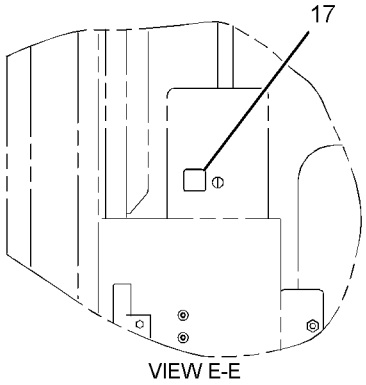

VIEW E-E

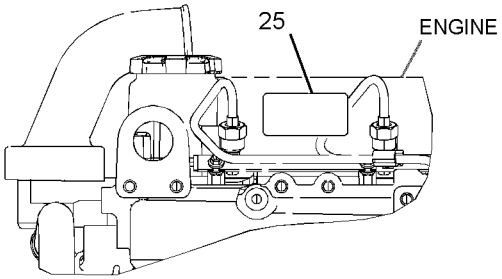

LEFT SIDE VIEW

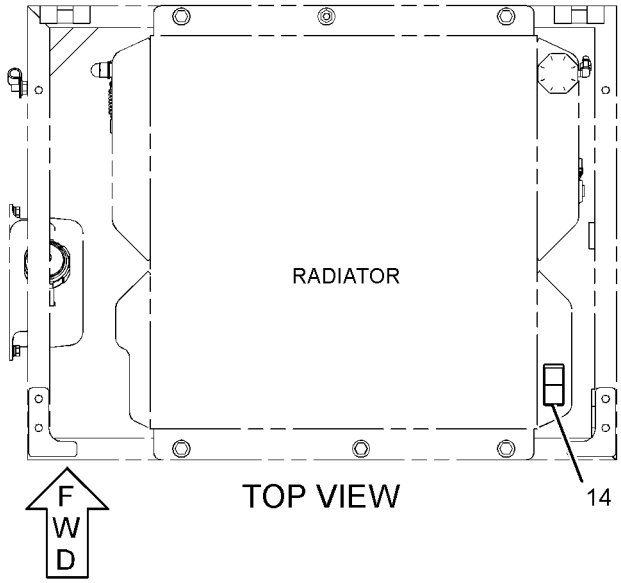

TOP VIEW

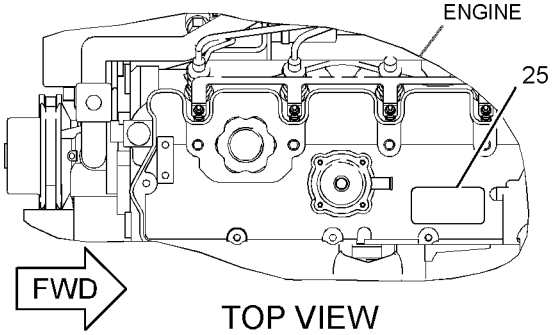

TOP VIEW

GRAPHIC #2

<END>

g01419803

SERVICE EQUIPMENT AND SUPPLIES

295-7191 PLATE & FILM GP

S/N: MJH12175-UP

AN ATTACHMENT

SMCS-7405, 7557 **i02875370**

NOTE	REF NO	GRAPHIC REF	PART NUMBER	QTY	PART NAME 1 2 3 4 5 6 (PRODUCT LEVEL)	SEE PAGE
	1	1	**157-2853**	1	FILM-INFORMATION (READ OMM)	
	2	1	**225-7977**	1	FILM-IDENTIFICATION (RELAY LAYOUT)	
	3	2	**169-2876**	1	FILM-IDENTIFICATION (POWER RECEPTACLE, 12-VOLT)	
	4	1	**219-0302**	1	FILM-WARNING (NO WELD, NO DRILL, READ OMM)	
	5	1	**224-7830**	1	FILM-WARNING (HIGH PRESSURE, READ OMM, U.S.)	
	6	2	**224-8945**	1	FILM-WARNING (DO NOT USE ETHER, U.S)	
	7	1	**224-9021**	1	FILM-WARNING (SEAT BELT)	
	8	1	**225-3305**	1	FILM-WARNING (UNIVERSAL, READ OMM, U.S.)	
	9	1	**234-6065**	1	FILM-CERTIFICATION (OPS, READ OMM)	
	10	2	**295-7317**	1	FILM-WARNING (CRUSH HAZARD, CAB, READ OMM)	
	11	1	**295-7318**	1	FILM-WARNING (FALL/CRUSH HAZARD, NO ACCESS)	
	12	1	**295-7319**	1	FILM-WARNING (CRUSH HAZARD, READ OMM)	
	14	2	**235-1365**	1	FILM-WARNING (HOT FLUID UNDER PRESSURE)	
	15	1	**239-6986**	1	PLATE-IDENTIFICATION (MACHINE)	
	16	1	**263-4836**	4	FILM-SYMBOL (TIE-DOWN)	
	17	2	**295-2567**	1	FILM-INSTRUCTION (BUCKET LOWER)	
	18	2	**295-7199**	1	FILM-INSTRUCTION (SERVICE CHART)	
	19	1	**224-9855**	1	FILM-INSTRUCTION (START AID, READ OMM, INTL)	
	20	2	**225-0313**	1	FILM-WARNING (JUMP START, READ OMM, U.S.)	
	21	1	**225-7976**	1	FILM-IDENTIFICATION (RELAY LAYOUT)	
	22	1,2	**295-7315**	2	FILM-WARNING (CRUSH HAZARD, CAB, READ OMM)	
	23	1	**295-7320**	1	FILM-WARNING (CRUSH HAZARD, READ OMM)	
	24	1	**234-9575**	1	FILM-INSTRUCTION (GOVERNOR CONTROL)	
	25	2	**312-7747**	1	PLATE-WARNING (UNIVERSAL)	

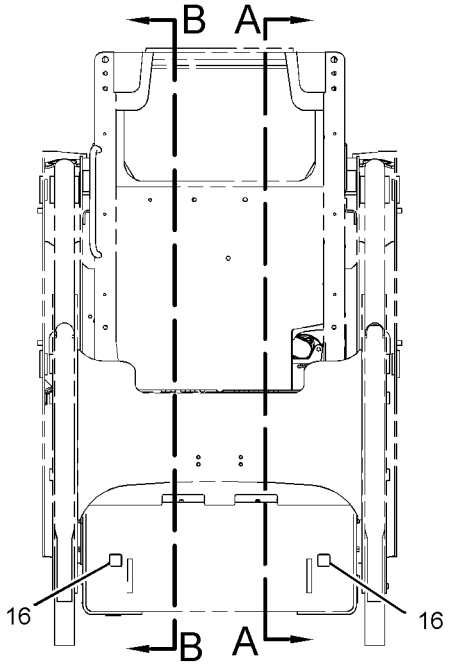

FRONT VIEW

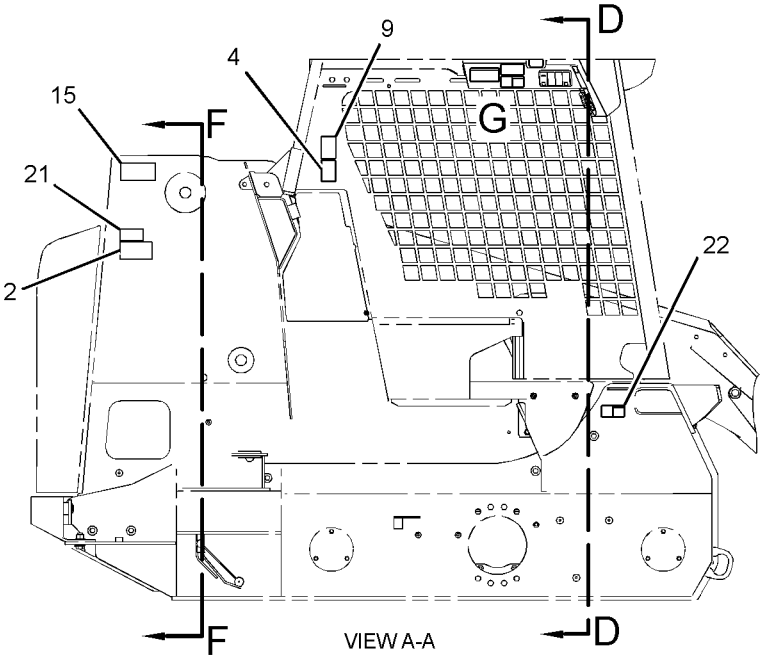

VIEW A-A

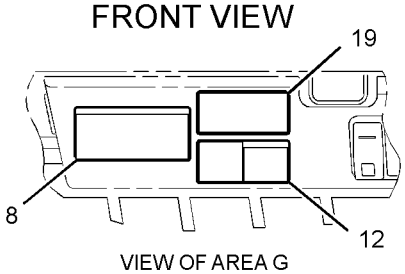

VIEW OF AREA G

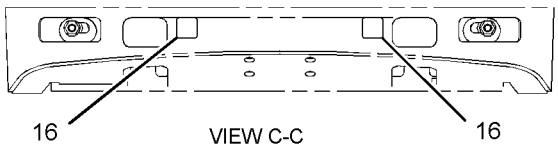

VIEW C-C

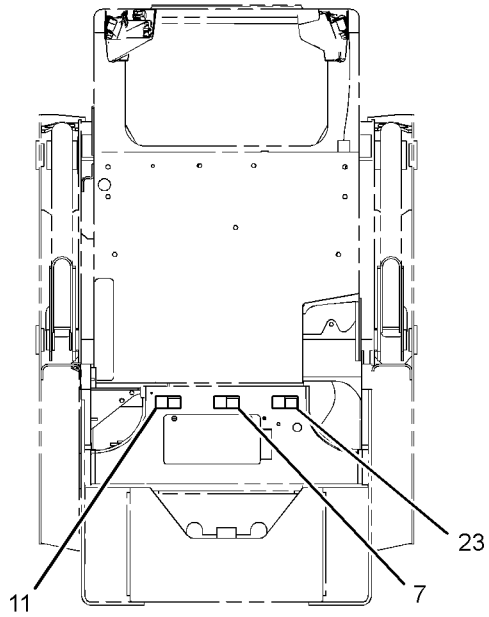

VIEW D-D

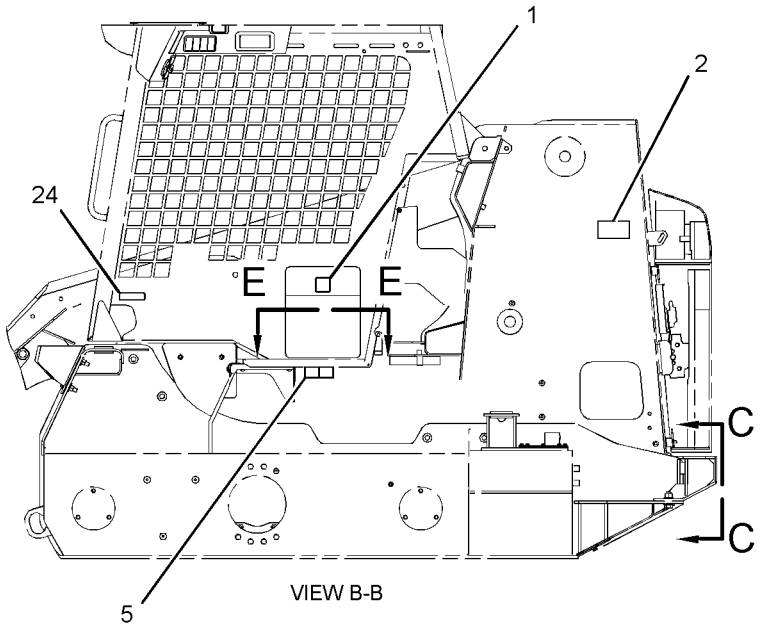

VIEW B-B

REFER TO ALL ILLUSTRATIONS OF THIS GROUP FOR AUXILIARY VIEWS

GRAPHIC #1

g01419802

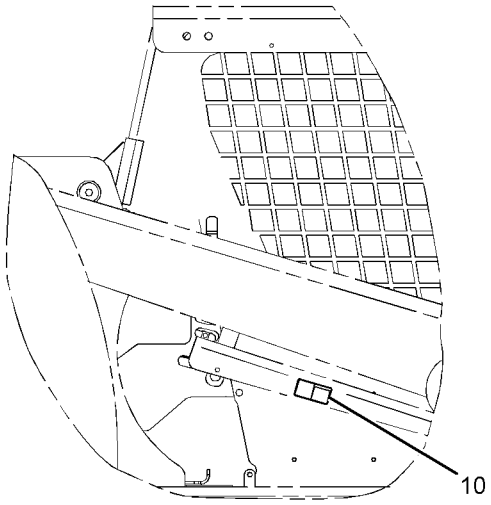

RIGHT SIDE VIEW

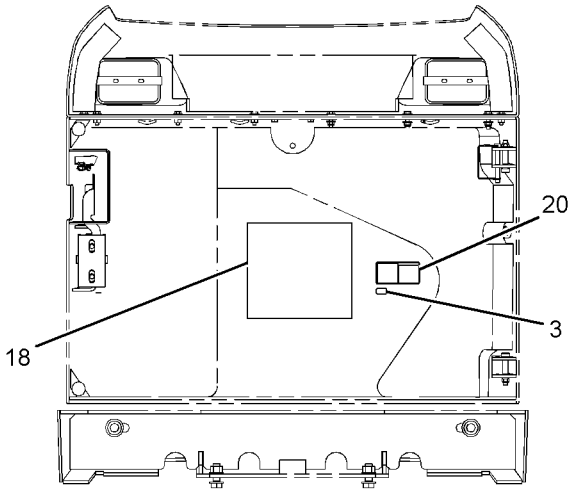

VIEW F-F

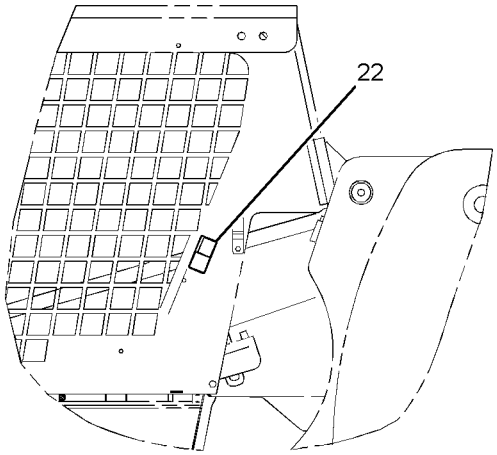

LEFT SIDE VIEW

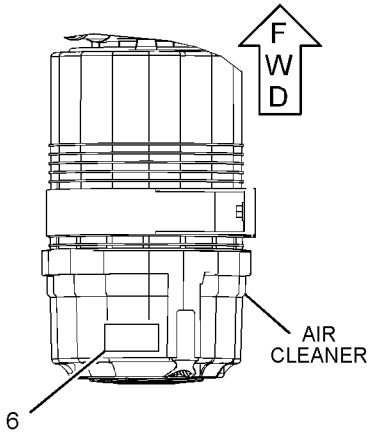

TOP VIEW

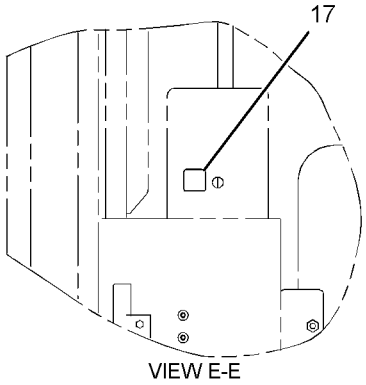

VIEW E-E

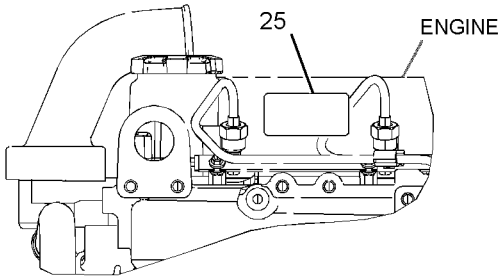

LEFT SIDE VIEW

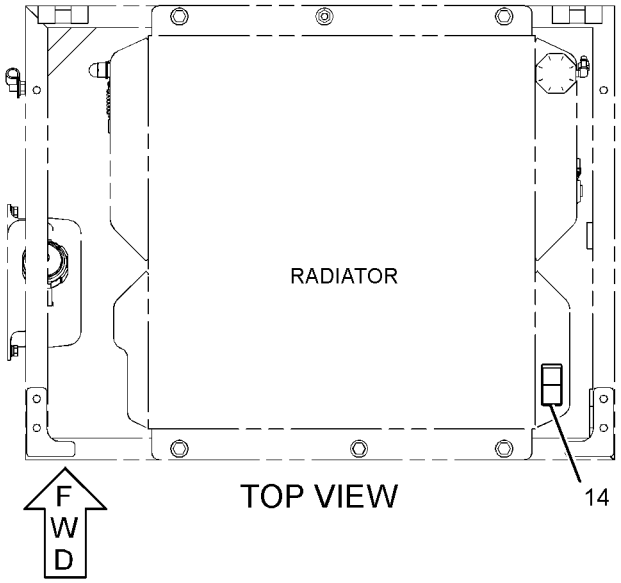

TOP VIEW

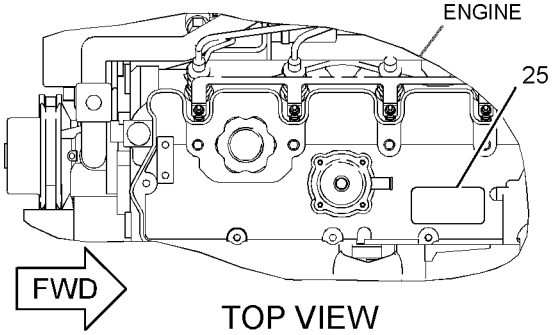

TOP VIEW

GRAPHIC #2

<END>

g01419803

SERVICE EQUIPMENT AND SUPPLIES

295-7195 PLATE & FILM GP

S/N: MJH10575-12174

AN ATTACHMENT

SMCS-7405, 7557 **i02796056**

NOTE	REF NO	GRAPHIC REF	PART NUMBER	QTY	PART NAME 1 2 3 4 5 6 (PRODUCT LEVEL)	SEE PAGE
	1	1	**157-2853**	1	FILM-INFORMATION (READ OMM)	
	2	2	**295-2567**	1	FILM-INSTRUCTION (BUCKET LOWER)	
	3	2	**169-2876**	1	FILM-IDENTIFICATION (POWER RECEPTACLE, 12-VOLT)	
	4	1	**219-0302**	1	FILM-WARNING (NO WELD, NO DRILL, READ OMM)	
	5	1	**225-7976**	1	FILM-IDENTIFICATION (RELAY LAYOUT)	
	6	1	**234-6065**	1	FILM-CERTIFICATION (OPS, READ OMM)	
	7	1	**239-6986**	1	PLATE-IDENTIFICATION (MACHINE)	
	8	1	**224-0554**	1	FILM-WARNING (UNIVERSAL, READ OMM, INTL)	
	9	2	**295-7199**	1	FILM-INSTRUCTION (SERVICE CHART)	
	10	1	**224-0672**	1	FILM-WARNING (HIGH PRESSURE, READ MANUAL)	
	11	2	**224-8946**	1	FILM-WARNING (NO ETHER SPRAY/AIR INTK, INTL)	
	12	1	**224-9022**	1	FILM-WARNING (SEAT BELT)	
	13	1	**224-9855**	1	FILM-INSTRUCTION (START AID, READ OMM, INTL)	
	14	2	**225-0312**	1	FILM-WARNING (JUMP START, READ OMM, INTL)	
	15	1	**225-7977**	1	FILM-IDENTIFICATION (RELAY LAYOUT)	
	16	1	**234-6069**	1	FILM-WARNING (CRUSH HAZARD)	
	17	2	**234-6071**	1	FILM-WARNING (LIFT ARM BRACE)	
	18	1	**234-6076**	1	FILM-WARNING (NO ACCESS)	
	19	1,2	**234-6078**	2	FILM-WARNING (CAB TILT SUPPORT)	
	20	1	**234-6081**	1	FILM-WARNING (WORK TOOL)	
	21	1	**234-9575**	1	FILM-INSTRUCTION (GOVERNOR CONTROL)	
	22	2	**235-1368**	1	FILM-WARNING (RADIATOR)	
	23	1	**263-4836**	4	FILM-SYMBOL (TIE-DOWN)	
	24	1	**312-7748**	1	PLATE-WARNING (UNIVERSAL, READ OMM)	

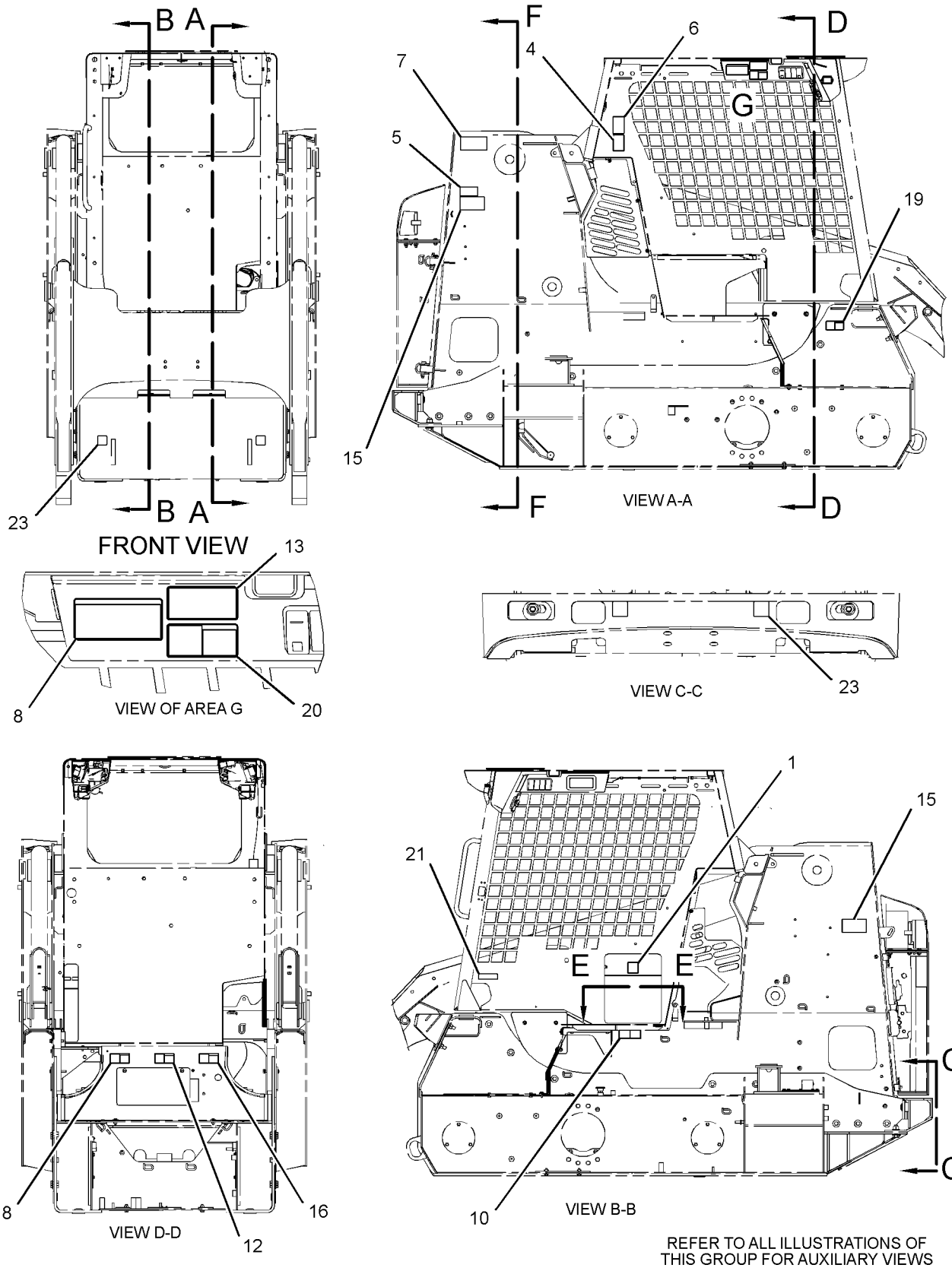

GRAPHIC #1

g01377028

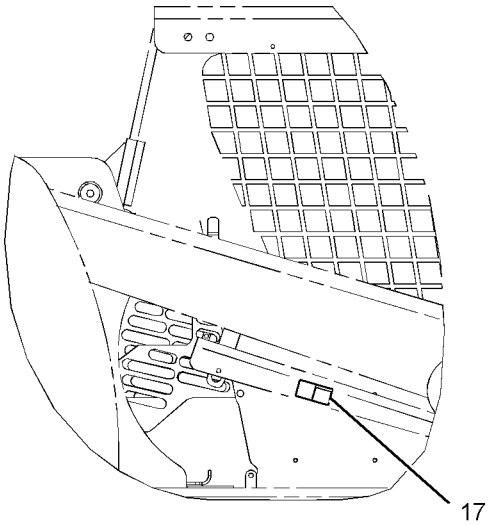

RIGHT SIDE VIEW

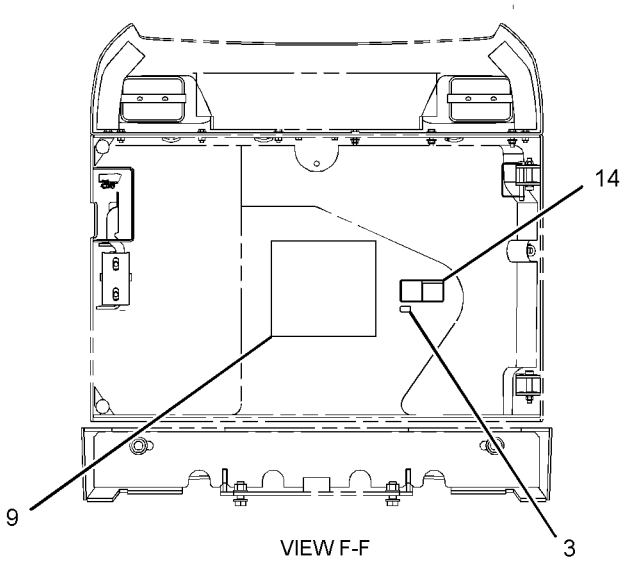

VIEW F-F

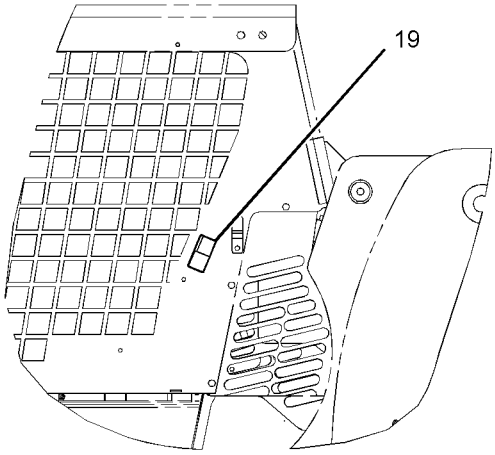

LEFT SIDE VIEW

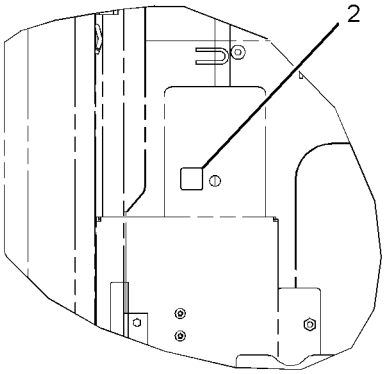

VIEW E-E

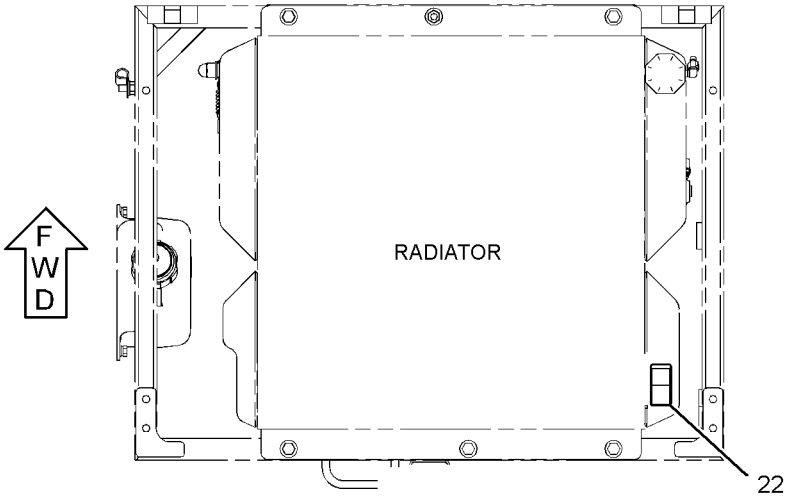

TOP VIEW

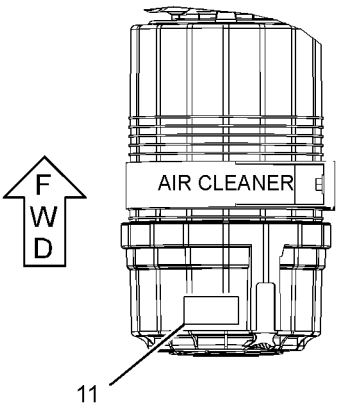

TOP VIEW

GRAPHIC #2 **<END>** g01377037

SERVICE EQUIPMENT AND SUPPLIES

295-7195 PLATE & FILM GP

S/N: MJH12175-UP

AN ATTACHMENT

SMCS-7405, 7557 **i02875427**

NOTE	REF NO	GRAPHIC REF	PART NUMBER	QTY	PART NAME 1 2 3 4 5 6 (PRODUCT LEVEL)	SEE PAGE
	1	1	**157-2853**	1	FILM-INFORMATION (READ OMM)	
	2	2	**295-2567**	1	FILM-INSTRUCTION (BUCKET LOWER)	
	3	2	**169-2876**	1	FILM-IDENTIFICATION (POWER RECEPTACLE, 12-VOLT)	
	4	1	**219-0302**	1	FILM-WARNING (NO WELD, NO DRILL, READ OMM)	
	5	1	**225-7976**	1	FILM-IDENTIFICATION (RELAY LAYOUT)	
	6	1	**234-6065**	1	FILM-CERTIFICATION (OPS, READ OMM)	
	7	1	**239-6986**	1	PLATE-IDENTIFICATION (MACHINE)	
	8	1	**224-0554**	1	FILM-WARNING (UNIVERSAL, READ OMM, INTL)	
	9	2	**295-7199**	1	FILM-INSTRUCTION (SERVICE CHART)	
	10	1	**224-0672**	1	FILM-WARNING (HIGH PRESSURE, READ MANUAL)	
	11	2	**224-8946**	1	FILM-WARNING (NO ETHER SPRAY/AIR INTK, INTL)	
	12	1	**224-9022**	1	FILM-WARNING (SEAT BELT)	
	13	1	**224-9855**	1	FILM-INSTRUCTION (START AID, READ OMM, INTL)	
	14	2	**225-0312**	1	FILM-WARNING (JUMP START, READ OMM, INTL)	
	15	1	**225-7977**	1	FILM-IDENTIFICATION (RELAY LAYOUT)	
C	16	1	**295-7330**	1	FILM-WARNING (CRUSH HAZARD, READ OMM) (STATION)	
C	17	2	**295-7327**	1	FILM-WARNING (CRUSH HAZARD, READ OMM)	
C	18	1	**295-7328**	1	FILM-WARNING (FALL/CRUSH HAZARD, NO ACCESS)	
C	19	1,2	**295-7325**	2	FILM-WARNING (CRUSH HAZARD, CAB, READ OMM) (CAB SUPPORT)	
C	20	1	**295-7329**	1	FILM-WARNING (CRUSH HAZARD, READ OMM) (WORKTOOL)	
	21	1	**234-9575**	1	FILM-INSTRUCTION (GOVERNOR CONTROL)	
	22	2	**235-1368**	1	FILM-WARNING (RADIATOR)	
	23	1	**263-4836**	4	FILM-SYMBOL (TIE-DOWN)	
	24	1	**312-7748**	1	PLATE-WARNING (UNIVERSAL, READ OMM)	

C-CHANGE FROM PREVIOUS TYPE

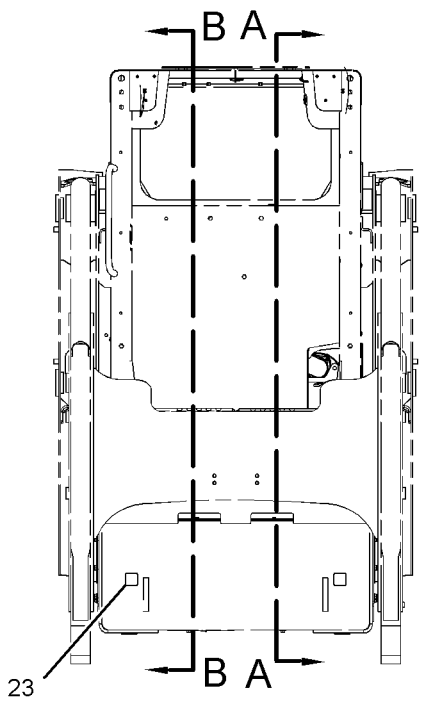

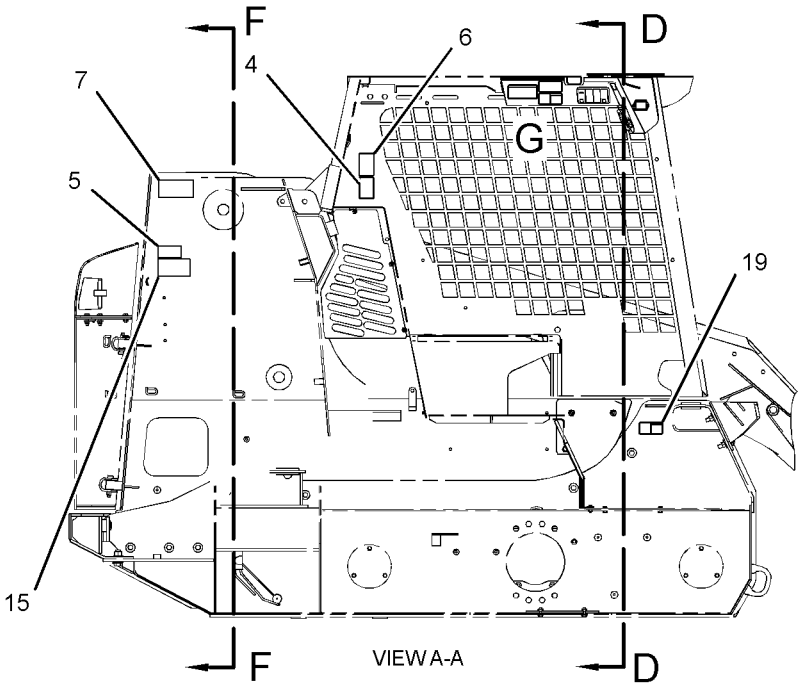

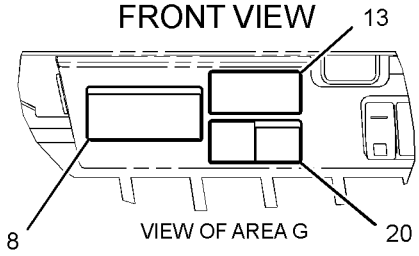

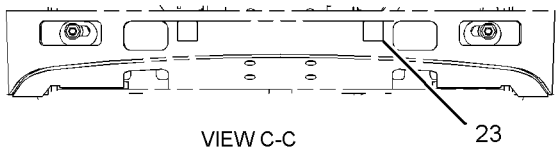

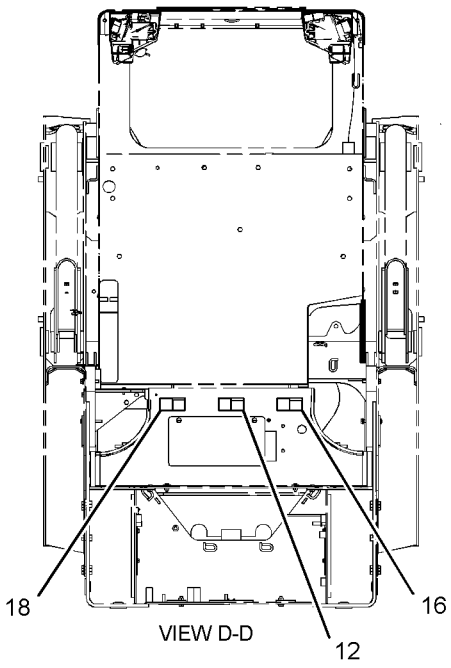

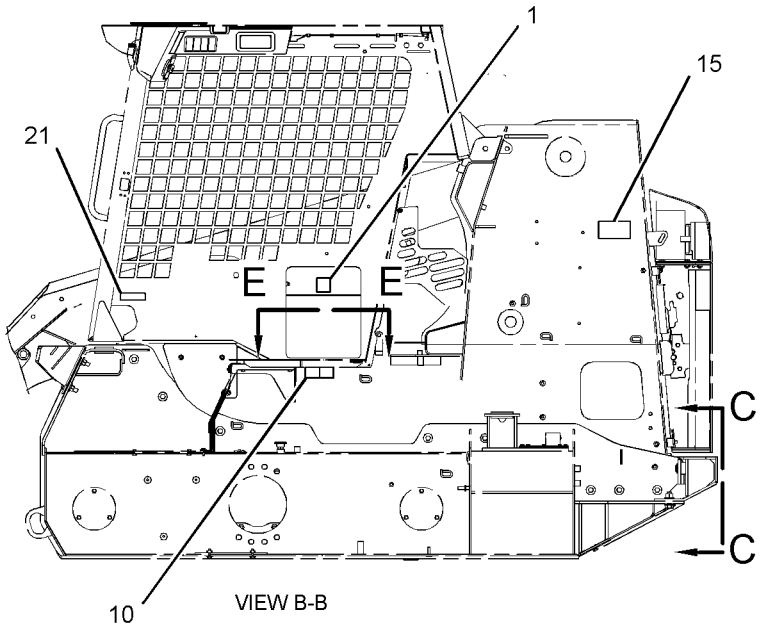

REFER TO ALL ILLUSTRATIONS OF THIS GROUP FOR AUXILIARY VIEWS

GRAPHIC #1

g01377028

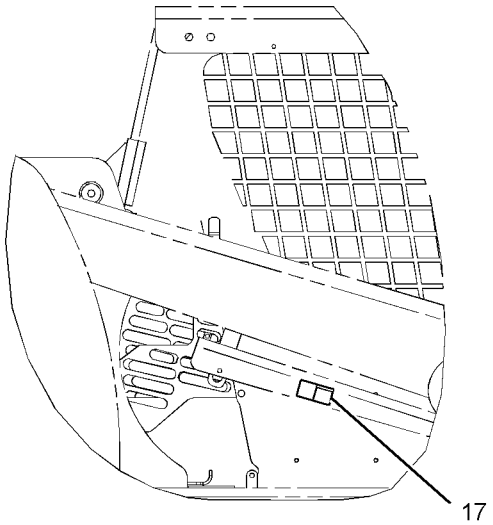

RIGHT SIDE VIEW

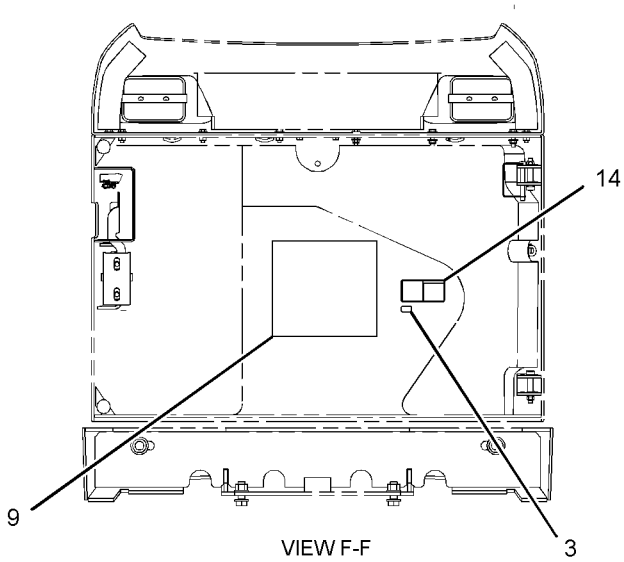

VIEW F-F

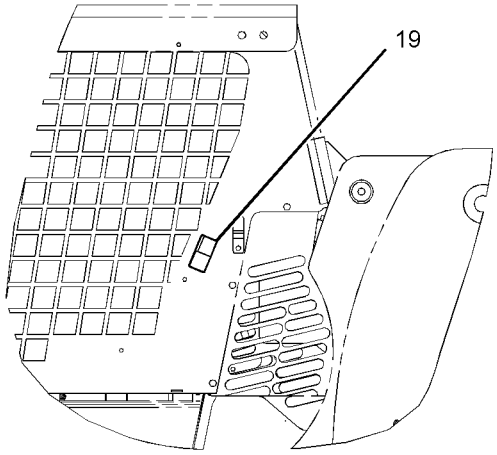

LEFT SIDE VIEW

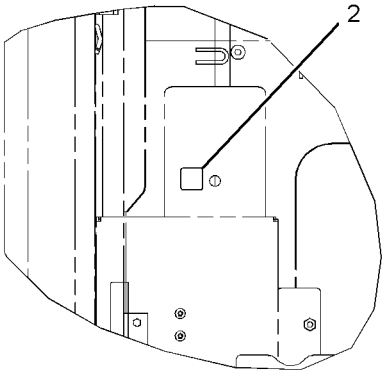

VIEW E-E

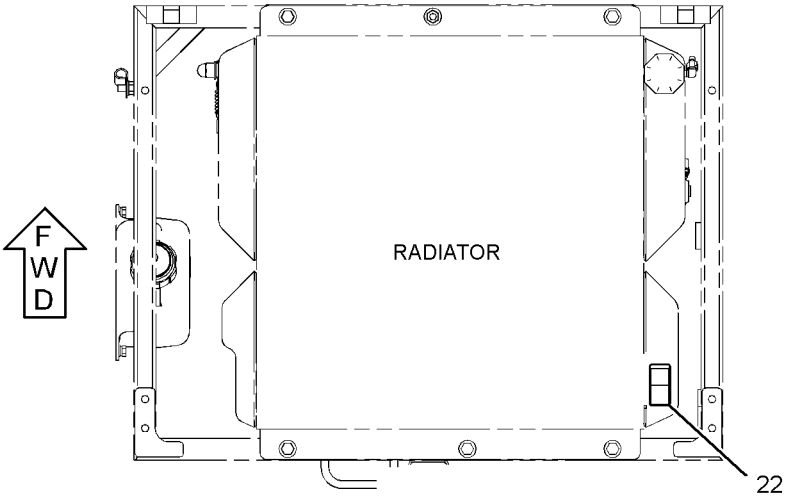

TOP VIEW

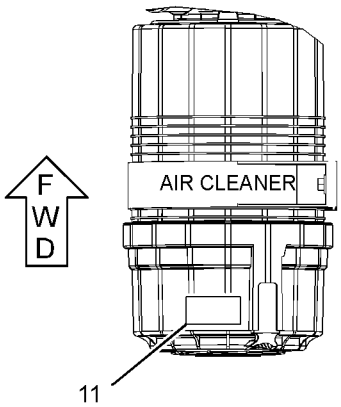

TOP VIEW

GRAPHIC #2 **<END>** g01377037

SERVICE EQUIPMENT AND SUPPLIES

308-5206 PLATE & FILM GP

S/N: MJH10575-UP
AN ATTACHMENT

SMCS-7405, 7557 **i02769774**

NOTE	REF NO	GRAPHIC REF	PART NUMBER	QTY	PART NAME 1 2 3 4 5 6 (PRODUCT LEVEL)	SEE PAGE
	1	1	**199-3410**	1	FILM-IDENTIFICATION (SYNTHETIC OIL) (OIL)	

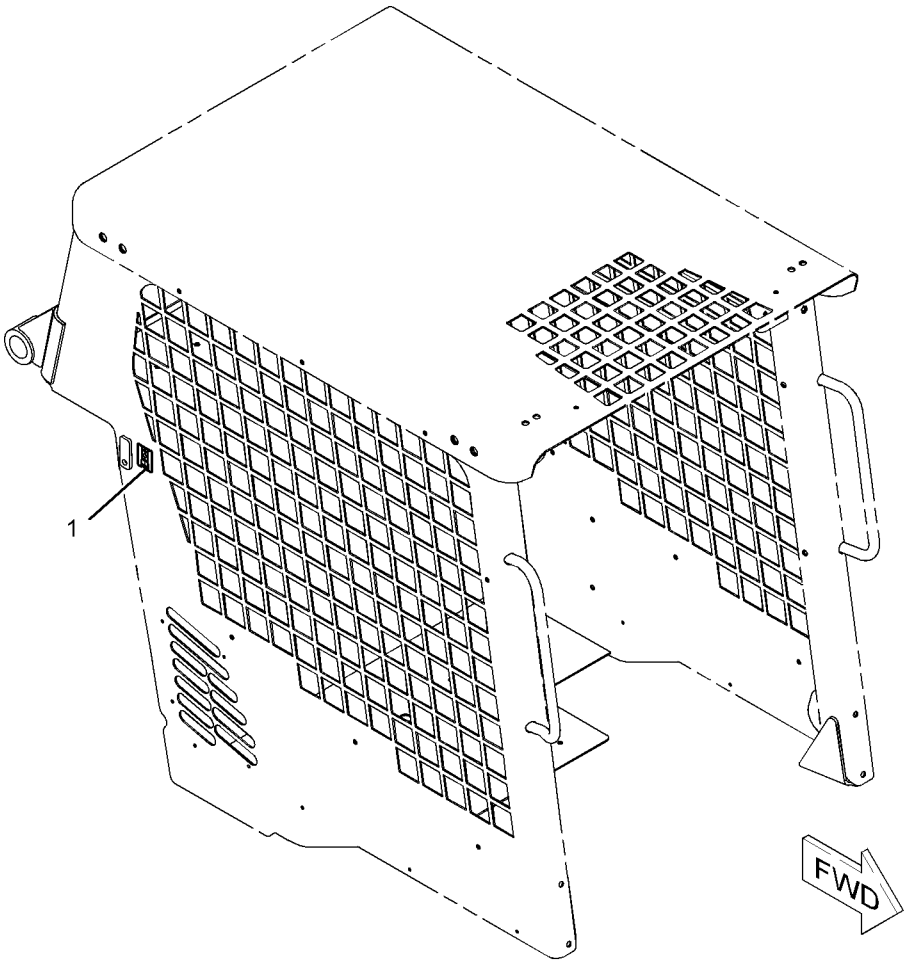

GRAPHIC #1 **<END>** g01086583

MEMORANDA

PART NUMBER INDEX

Part	Page
0	
0T-0244	624
	625
	626
	627
1	
1D-4677	632
1F-7567	331
	333
	348
	386
	389
1G-3410	209
1G-8878	195
1H-3244	156
	178
	181
1L-2279	499
1M-6119	129
1M-6120	129
1P-4278	93
	95
	118
1P-4574	294
	347
1P-4578	339
	341
1S-0994	300
	302
	304
	306
1S-1409	293
1S-9593	149
	150
	406
	527
	528
	529
	530
	531
2	
2B-0858	190
2D-5248	519
	520
	593
	595
2D-6412	625
	626
	627
2H-7829	317
	319
2J-6540	308
2K-4821	277
2K-4973	84
	242
2M-9780	193
	199
	287
	288
	298
	300
	302
	304
	306
	308
	310
	311
	313
	315
	317
	319
	321
	323
	327
	339
	341
	343
	345
	368
	370
	393
	592
	594
2S-3440	293
	339
	341
	347
2S-4078	286
	292
	341
2S-5717	632
2S-6408	497
2V-3216	295
	298
	315
	386
	389
3	
3B-4505	607
3B-4628	295
	459
3B-7255	499
3B-8488	483
3B-8489	266
	268
	269
	272
	273
	274
	277
	280
	281
	284
	285
	374
	375
	411
	412
	441
	442
	443
	444
	445
	446
	447
	449
	473
	479
	482
3D-2824	193
	199
	201
	292
	325
	327
	329
	345
	347
	350
	368
	406
	456
3E-2310	337
3E-3365	169
	172
	406
	513
3E-3374	359
3E-3377	153
3E-3383	149
3E-3389	150
	187
3E-3892	637
	639
3E-4051	593
	594
	603
3E-4057	593
	594
	603
3E-4370	472
3E-5180	530
3E-7404	118
	298
	315
	327
	329
3E-7584	►153
	160
	249
	252
3E-8621	406
3F-5108	464
3F-9556	619
3J-1907	169
	172
	195
	199
	201
	292
	295
	311
	313
	331
	333
	335
	337
	339
	341
	347
	352
	354
	377
	386
	389
	393
	456
3J-7354	209
	321
	323
	335
	592
	594
3K-0360	193
	201
	204
	264
	292
	313
	347
	350
	385
3K-0715	209
3K-8460	118
3S-2093	99
	142
	147
	149
	150
	160
	162
	173
	174
	178
	181
	183
	184
	186
	187
	233
	249
	252
	261
	295
	387
	389
	499
	513
	561
	562
	565
	568
	570
	593
	595
	597
	598
	603
3S-6050	129
3S-8536	269
3S-8665	589

► **PRIMARY REFERENCE**

PART NUMBER INDEX

Part	Page
	594
	605
3S-9182	244
3T-7856	599
4	
4B-0418	348
4B-2043	578
4B-4274	178
	181
	331
	333
	387
	389
4B-4863	111
	142
	149
	150
	160
	174
	187
	233
	249
	252
	259
4D-2297	372
4D-6466	118
4E-0724	499
4E-1384	512
4F-3658	464
4J-0522	294
	339
	341
4J-5140	294
	347
4J-5267	294
	339
	341
4J-5477	186
	233
	249
	252
	293
	295
	321
	323
	335
	337
	347
	350
	386
	389
4J-7533	393
4K-0367	464
4K-1388	393
4K-8864	93
	95
4M-5285	268
	269
	375
4P-6422	651
	654
4P-7581	148
	160
	162
	175
	249
	252
	293
	295
	387
	390
	610
4P-8134	147
	175
	178
	181
	184
	193
	325
	592
	594
	605
5	
5B-0651	458
	459
5B-0935	479
5C-2874	110
	178
	181
5C-2890	110
	111
	113
	116
	155
	156
	178
	181
	261
	562
	565
	597
	598
	600
	617
5C-7261	84
	97
	147
	148
	175
	178
	181
	199
	242
	499
	512
	519
	520
	523
	593
	595
	607
	619
	620
	628
	629
5C-7682	575
	576
5C-7883	204
5C-8310	572
	634
5C-8311	456
	572
	634
5C-8312	142
	233
	259
5C-9553	118
	149
	150
	175
	178
	181
	187
	249
	252
	257
	258
	293
	347
	350
	461
	513
	619
	620
5D-0718	325
5D-1026	86
	88
5G-3244	153
5H-9743	269
5K-1787	192
5K-9090	199
	456
5L-3233	98
5L-4507	178
	181
5M-8429	347
5P-0372	84
	256
	295
	459
	562
	565
	597
	598
	631
5P-0597	99
5P-1076	244
	294
	313
	348
	413
	484
	485
5P-1420	93
	95
5P-1442	118
	384
5P-1505	41
	99
5P-2230	86
	293
	339
	341
5P-2369	86
	648
5P-4116	44
	97
	99
	102
	103
	132
	133
	199
	242
	244
	317
	319
	358
	499
	519
	520
	589
	593
	595
5P-4868	99
5P-4961	41
	99
	118
	384
5P-5677	147
	148
	293
5P-5924	593
	595
	603
5P-5927	620
5P-5930	636
5P-5969	139
	562
	565
	573
	597
	598
5P-7070	573
5P-7814	118
5P-7957	516
5P-7958	606
5P-8246	499
5P-8247	464
5P-8309	84
	562
	565
	597
	598
5P-8439	158
	159
5P-8500	232
	235
	237
	606
	641
5P-8502	641
5P-9770	118
5P-9909	562

► **PRIMARY REFERENCE**

PART NUMBER INDEX

Part	Page
	565
	597
	598
5T-7869	632
5T-7870	632
5V-8309	84
5W-1987	562
	565
	597
	598
6	
6B-0924	30
	32
6B-6682	273
6D-1641	589
	594
6D-3479	337
6D-4246	99
	384
6D-4247	300
	302
	304
	306
6D-4636	589
	594
6D-5797	637
	639
6E-0725	209
6E-5060	209
6E-6549	624
6F-6672	369
	371
	406
6I-0846	121
6I-1201	57
	61
	197
6I-1418	147
	148
	174
6R-7490	578
6V-0852	199
	335
	339
	341
6V-1228	321
	323
6V-1392	515
6V-1889	325
6V-1970	1
	2
	►606
6V-2235	589
6V-2317	158
6V-3965	199
	335
	339
	341
6V-4270	562
	565
	597
	598
6V-5049	372
6V-5326	209
6V-5586	209
6V-5698	175
6V-6689	573
	589
	595
6V-7357	172
	244
	261
6V-7644	413
6V-7687	203
6V-7744	458
6V-8186	619
6V-8187	178
	181
6V-8352	209
6V-8378	160
	249
	252
6V-8397	199
	201
	267
	292
	294
	295
	298
	300
	302
	304
	306
	308
	310
	311
	313
	315
	319
	321
	323
	327
	329
	331
	333
	335
	337
	339
	343
	345
6V-8398	193
	201
	292
	293
	294
	327
	329
	331
	333
	335
	343
	345
	347
	348
	352
	354
	386
	389
6V-8628	321
	323
	335
6V-8632	201
	313
6V-8633	193
6V-8634	201
6V-8636	201
	292
	295
	313
	347
	352
	354
	386
	389
6V-8637	199
	201
	292
	347
	456
6V-8639	193
	201
	292
	347
6V-8640	199
	287
	288
6V-8641	295
	335
	337
	386
	389
6V-8642	193
	313
	321
	323
	327
	339
	341
	343
	345
	592
	594
6V-8647	321
	323
	335
6V-8713	327
	329
	350
6V-8714	456
6V-8715	298
	300
	302
	304
	306
	308
	310
6V-8724	295
	311
6V-8781	337
	352
	354
6V-8788	300
	302
	304
	306
6V-8918	206
6V-8938	295
	386
	389
6V-8949	490
6V-8978	201
6V-9028	92
6V-9168	295
	387
	390
6V-9170	350
6V-9182	339
	341
6V-9189	247
	268
	269
	374
	375
	376
	411
	412
	441
	442
	443
	444
	445
	446
	447
	449
	473
	482
	483
6V-9508	201
6V-9632	532
	568
	570
6V-9672	233
	259
6V-9746	199
	201
	287
	288
	292
	294
	325
	339
	341

► **PRIMARY REFERENCE**

PART NUMBER INDEX

Part	Page
	347
	348
	456
6V-9805	610
6V-9829	321
	331
	333
6V-9838	295
	386
	389
6V-9872	323
	592
	594
6V-9873	335
6W-3924	568
	570
6W-5698	118
	385
6Y-5839	464
6Y-5840	464
7	
7B-1597	295
	348
	387
	390
7D-5473	160
	249
	252
7D-8431	513
7D-8508	278
	279
	280
	281
7E-2700	255
	256
7G-1060	142
	178
	181
7G-2950	295
	387
	390
7G-2951	295
	387
	390
7G-4262	515
7G-5984	313
7G-5985	313
7G-5986	313
7G-7053	142
	513
7G-8839	192
7H-7055	296
	348
	387
	390
7J-0204	273
	277
	278
	281
7J-9108	193
	201
	295
	313
	321
	323
	327
	329
	339
	341
	343
	345
	350
	352
	354
	386
	389
	592
	593
	594
7K-1181	111
	147
	148
	174
	178
	179
	181
	184
	193
	201
	294
	321
	323
	325
	335
	347
	348
	456
	610
	321
	331
	333
	295
	386
	389
	323
	592
	594
	335
	568
	570
	118
	385
	464
	464
7M-7410	91
	92
7M-8485	292
	339
	341
7M-9957	259
7N-5274	129
7R-2750	174
7R-2751	174
7S-3912	308
	310
7S-3913	308
	310
7S-3916	298
	315
	317
	319
7S-3919	298
	315
	317
	319
7T-1099	246
	532
7X-0495	499
7X-0579	147
7X-0590	239
7X-0603	247
7X-0610	192
7X-0818	148
	175
	253
	258
7X-1443	93
	95
7X-2444	186
	233
	249
	252
7X-2475	408
	610
7X-2535	356
7X-2537	99
	242
	506
	583
	589
	594
	599
	622
7X-2553	479
	579
7X-2556	54
7X-2621	99
	458
7X-3229	657
7X-6312	145
7X-6315	136
	140
	141
7X-7729	84
	91
	92
	93
	95
	102
	103
	242
	266
	268
	269
	294
	296
	317
	319
	325
	348
	387
	390
	458
	479
7X-9065	578
8	
8C-3110	380
	381
	382
8C-3205	339
	341
8C-3445	41
8C-3446	41
8C-3451	321
	323
8C-6354	174
8C-6758	352
	354
8C-6959	118
8C-7563	321
	323
	593
	594
8C-8400	325
8C-8478	413
8C-8558	175
8E-5702	413
8F-1434	160
	178
	181
	249
	252
8F-8151	589
	595
	605
8F-8513	118
8G-1151	568
	570
8I-5078	393
8J-2880	413
8L-2779	41
8L-5188	296
	459
8L-8413	129
	175
	178
	184
	292
	561
	581
	582
8M-4791	331
	333
	387
	390
8M-4963	174
8Q-6027	278
	279
8R-3857	444
8S-0934	624
	625
	626
	627
8T-0075	199
8T-0087	155
8T-0154	589
	594
	605
8T-0267	209
8T-0269	293
	532
	535
	536
	538
	539

PART NUMBER INDEX

Part	Page	Part	Page	Part	Page	Part	Page
	541		622		512		311
	542		648		519		325
	544	8T-3647	269		520		331
	545	8T-3848	562		522		333
	546		565		523		348
	548		597		545		387
	551		598		546		390
	554	8T-3984	111		548		454
8T-0271	204	8T-3998	111		562		459
8T-0285	331	8T-4121	84		565		496
	333		91		580		499
	387		92		589		512
	390		93		593		523
8T-0287	331		95		595		562
	333		99		597		565
	387		118		598		580
	390		142		603		589
8T-0318	84		151		605		593
8T-0328	160		159		641		595
	178		175	8T-4122	53		597
	181		178		54		598
	249		181		179	8T-4136	93
	252		183		181		95
8T-0341	293		193		192		244
	348		206		227		269
8T-0379	295		244		244		293
	386		249		255		296
	389		253		256		298
8T-0389	151		255		408		315
	153		256		479		325
	175		257		499		327
8T-0404	193		258		579		329
8T-0737	499		269		610		331
8T-1158	396		294		641		333
	398		296	8T-4123	413		343
	400		298		488		345
	401		308		489		348
8T-1757	408		310		491		350
8T-1887	160		311	8T-4132	54		384
	249		315		227		387
	252		325		244		390
8T-1888	160		327		255		392
	249		329		256		454
	252		331		499		496
8T-1893	308		333		579		499
	310		337		641		522
8T-1894	308		339	8T-4133	84		592
	310		341		91		594
8T-2192	293		343		92		641
	343		345		93	8T-4137	93
	345		348		95		95
	348		350		102		118
8T-2444	562		365		103		193
	565		366		118		242
	597		367		142		255
	598		384		175		256
8T-2895	515		387		178		266
8T-3311	335		390		181		308
8T-3490	44		392		183		310
8T-3597	246		454		193		392
8T-3612	44		458		249		479
	95		459		253		490
	129		490		257		499
	532		496		258		545
	599		499		296		546

► **PRIMARY REFERENCE**

PART NUMBER INDEX

Part	Page
	548
	589
8T-4138	111
	184
	261
	375
	620
8T-4139	313
	413
	484
	485
8T-4159	84
8T-4171	232
	233
	235
	237
	259
	298
	315
8T-4172	458
8T-4173	610
8T-4177	247
8T-4178	249
	253
	257
	258
	293
	348
	350
8T-4181	84
	242
8T-4185	311
8T-4186	183
	490
8T-4189	44
	122
	126
	132
	133
	240
	241
	269
	296
	300
	302
	304
	306
	331
	333
	358
	384
	387
	390
	523
	560
	589
	592
	594
8T-4191	176
	269
	296
	331
	333
	337
	387
	390
	499
	589
	592
	594
8T-4192	53
8T-4194	244
	495
8T-4195	268
	293
	311
	317
	319
	348
	350
	605
8T-4196	91
	92
	118
	206
	296
	325
	339
	341
	365
	366
	367
	458
	459
8T-4197	619
	620
8T-4200	178
	181
	267
	317
	319
	358
	589
	594
8T-4201	160
	250
	253
	296
	387
	390
8T-4205	84
	111
	149
	150
	162
	172
	176
	178
	181
	184
	187
	232
	233
	235
	237
	242
	244
	250
	253
	257
	258
	259
	261
	294
	348
	350
	356
	499
	513
	532
	535
	536
	538
	539
	541
	542
	544
	545
	546
	548
	551
	554
	562
	565
	597
	598
	610
	617
	619
	620
8T-4222	562
	565
	597
	598
8T-4223	53
	203
	240
	241
	294
	378
	379
	380
	381
	484
	485
	495
	497
	624
	625
	626
	627
8T-4224	91
	92
	93
	95
	158
	176
	178
	181
	240
	241
	247
	267
	269
	294
	296
	300
	302
	304
	306
	331
	333
	348
	350
	352
	354
	357
	358
	365
	366
	367
	387
	390
	499
	506
	513
	519
	520
	523
	560
	562
	565
	583
	589
	593
	595
	597
	598
	599
	607
	620
	622
	628
	629
8T-4244	244
	484
	485
	495
8T-4648	240
	241
8T-4742	110
	331
	386
	518
	600
8T-4744	110
	331
	386
	518
	600
8T-4778	464
	465
	466
	467
	468
	469
	470
	503
	610
8T-4779	499

► **PRIMARY REFERENCE**

PART NUMBER INDEX

Part	Page
8T-4908	44
	91
	92
	102
	103
	242
	244
	293
	348
	499
	620
8T-4910	497
8T-4956	293
	378
	379
	380
	381
8T-4970	244
8T-4971	184
	600
8T-5005	93
	95
	153
	296
	387
	390
8T-5049	294
	378
	379
	380
	381
8T-5091	44
	93
	95
8T-5095	370
	383
8T-5372	579
	589
	595
8T-6466	84
	93
	95
8T-6684	199
8T-6842	572
	634
8T-6869	268
	352
	354
	374
	375
	376
	411
	412
	441
	442
	443
	444
	445
	446
	447
	449
	473
	482
	499
	589
8T-6870	519
	520
	592
	594
8T-6902	619
8T-6912	132
	483
8T-7338	227
	244
8T-7547	253
	258
	293
	348
	365
	366
	367
8T-7930	239
8T-8192	311
8T-8193	311
8T-8729	153
	169
	172
	398
8T-8737	148
	153
	176
	184
	293
	527
	528
	529
	530
	531
	554
	581
	582
	608
	609
8T-8799	174
	178
8T-9405	398
	401
8T-9655	147
	148
	174
8U-9427	398
	401
8W-8909	160
	249
	252
8Y-4489	441
	442
8Y-6364	641
8Y-7385	497
8Y-7386	497
9B-7233	578
9C-2741	593
	595
	603
9C-5344	256
	562
	565
	597
	598
	631
9G-3695	359
	513
9G-5127	244
	519
	520
	592
	594
9G-7101	519
	520
	593
	595
9M-8406	296
	387
	390
9N-0869	148
9P-4609	513
9R-1005	343
	345
9R-1499	160
	162
	261
9R-2004	298
	308
	315
9R-2672	256
9R-2959	411
	412
	477
9R-5301	492
9R-7802	343
	345
9R-7803	343
	345
9R-7941	142
9R-7942	157
9R-7958	157
9R-7980	142
9S-0285	513
9S-1350	296
	387
	390
9S-4191	377
9S-4200	317
	319
9S-8002	209
9S-8005	204
9S-8006	368
	370
9S-8007	273
	277
	278
	281
9T-2837	398
	401
9T-4884	371
	372
9T-7303	296
	459
9U-6993	292
	347
9U-6994	292
	339
	341
9U-6995	►286
	339
9V-2714	408
9V-2715	408
9W-0607	151
	152
9W-1951	174
9W-3324	153
9W-3326	156
9X-1046	142
9X-1054	175
	178
	292
	293
9X-1481	331
	333
	387
	390
9X-1813	147
	148
	169
	513
9X-2026	375
	461
9X-2038	118
9X-2041	562
	565
	580
	597
	598
9X-2042	142
	160
	250
	253
	513
	516
	632
9X-2044	176
	560
	562
	565
	568
	570
	597
	598
9X-2045	232
	562
	565
	568
	570
	597
	598
	620
	633
	635
	636
9X-2085	331
	333
	386
	389
9X-2092	174
	193
	601

9

► **PRIMARY REFERENCE**

PART NUMBER INDEX

Part	Page
	641
9X-2754	643
9X-4244	151
	152
	153
9X-6032	519
	520
	592
	594
9X-6165	560
	620
9X-6273	300
	302
	304
	306
9X-6274	268
	300
	302
	304
	306
	375
9X-6581	295
	386
	389
9X-6606	209
9X-6615	364
9X-6772	145
	146
9X-7378	593
	595
	603
9X-7380	593
	595
	603
9X-7381	593
	595
	603
9X-7382	593
	595
	603
9X-7383	593
	595
	603
9X-8118	157
9X-8121	157
9X-8139	157
9X-8250	589
9X-8257	492
9X-8918	637
	639
9X-9865	153

0

Part	Page
003-2143	499
003-3082	393
004-6810	589
027-1287	278
	279
032-9828	568
	570
033-5853	204
036-1865	91
	92
039-8557	490
064-3058	104
	106
064-3843	266
067-2551	499
069-4080	91
	92
081-3698	209
084-4277	578
084-4348	155
	156
085-8091	592
	594
	603
086-2369	370
090-9434	174
	178
	181
095-0641	619
095-0733	149
	150
	175
	187
095-0912	499
095-1207	294
	536
	538
	539
	541
	546
	548
	551
	554
095-1325	256
	562
	565
	597
	598
	631
095-1517	204
096-0194	208
	368
	372
	383
099-2374	385
099-4691	192

1

Part	Page
100-3246	153
100-3247	153
100-3248	153
100-3250	153
100-3251	153
100-3253	153
100-3254	153
100-3255	153
100-3320	175
100-3866	192
100-5041	292
100-6674	593
100-7530	352
	354
100-8451	129
	131
101-2867	142
	620
101-3129	294
	347
	350
101-8296	592
	594
	603
102-8703	350
102-8801	147
	148
	174
	175
	178
	293
	532
	536
	539
	551
	608
	609
	613
	615
102-8802	147
	148
	169
	172
	173
	175
	178
	181
	183
	184
	244
	292
	293
	398
	401
	406
	551
	561
	570
	593
102-8803	148
	175
	184
	186
	249
	252
	293
	385
	551
	554
102-8804	147
	148
	155
	156
	175
	260
	261
	359
	568
	613
	615
102-8805	153
	160
	174
	249
	252
	562
	565
	597
	598
	613
	615
102-8806	149
	160
	174
	175
	187
	249
	252
	292
	499
	551
103-2006	561
	577
	578
	613
	615
103-2543	139
103-6262	513
104-5957	634
104-6202	179
	181
105-4593	201
106-3108	362
	363
106-8704	178
	181
	561
106-8715	325
107-5630	367
108-0656	634
108-2989	293
	357
108-3565	209
109-2356	613
	615
110-0885	242
110-8760	294
	532
	536
	539
	542
	545
	546
	548
	551
111-4627	142
	499
111-7899	158
	160
	163
	290
	292
	457
	551
	554

► **PRIMARY REFERENCE**

PART NUMBER INDEX

Part	Page	Part	Page	Part	Page	Part	Page
	613	120-4897	140		597		419
	615	121-4459	209		598		421
112-1817	331	121-4480	112	126-5011	175		426
	333	121-4870	209	126-5640	209		428
	386	122-1904	396	126-5643	209		▶465
	389	122-6867	593	126-5701	458	135-9385	418
	▶395		595		459		419
112-9401	112	122-6869	499	127-2170	562		421
112-9717	98	122-6871	593		565		427
112-9783	350		595		597		429
112-9861	395	122-6877	595		598		▶466
113-7634	232	122-7052	325	127-6316	393	135-9386	409
	235	123-4750	337	127-8281	88		418
	237	123-7615	562	127-8609	146		420
113-8490	149		597	128-4123	174		425
	150		598	128-6985	▶157		429
	172	124-1916	499		163		448
	174	124-1917	499		233		▶467
	187	124-2113	592		236	135-9387	420
	295		594		238		425
	457	124-2119	592	128-7037	599		428
	548		594		622		▶468
113-8491	149	124-2141	592		641	135-9393	464
	173		594	128-8614	112	135-9394	465
	174	124-2150	592	129-1854	233	135-9395	466
	187		594		236	135-9396	467
113-8492	174	124-2164	592		238	135-9397	468
113-9491	150		594	129-1855	233	136-1953	589
114-4516	174	124-2168	592		236		595
114-6658	560		594		238		605
115-1615	149	124-2456	295	129-3178	499	136-3191	568
	150		386		591		570
	174		389		600	137-6645	367
	178		657		619	138-4883	568
	181	124-3243	560	129-6259	128		570
	186		568	129-6262	128	138-7162	45
	187		570	130-1676	403		46
	233		620	130-1916	513	138-7402	45
	249	124-3548	173	131-3540	242	138-7446	42
	252		174		591		43
	293		593	131-3543	617	139-5511	113
	551		595	131-5879	458		116
	554	124-6264	93	132-3056	385	140-1802	209
115-8109	148		95	132-4720	503	140-2490	204
116-2001	▶498	125-3518	562	132-5166	249	140-2492	204
	499		565		252	140-2513	204
116-4415	343		597		257	140-2514	204
	345		598		258	141-0888	363
116-7471	139	125-7874	147	132-7551	458	141-4999	419
118-8118	112		148	133-6517	145		420
118-8119	112		174		146		425
118-9145	57		175	133-9931	293		427
	61		178		551		428
	197		184		554		▶503
119-1414	498		249	134-0404	195	141-5453	53
119-1415	498		252	134-4126	136		179
119-3662	174		292		140		181
	175	125-7875	174		141	141-7562	206
	178		175	134-8273	568	142-2928	513
	184		178		570	142-4914	464
	593		249	134-9911	363	142-7484	▶211
119-3859	499		252	135-2655	209		222
119-9631	508		292	135-9383	418	142-7485	211
	510		562		▶464		213
120-0210	643		565	135-9384	418		214

▶ **PRIMARY REFERENCE**

PART NUMBER INDEX

Part	Page
	216
	217
	218
	220
	221
142-7486	211
	212
	213
142-7487	▶211
	217
	222
142-7488	211
	212
	213
	217
142-7489	▶211
	222
142-7490	211
	212
	213
	214
	217
	219
	220
	221
142-7491	▶212
	221
142-7493	221
	222
	223
	224
	225
142-7503	▶155
	162
142-7505	499
142-8633	149
	150
	187
142-8634	▶156
	160
	249
	252
142-8648	▶221
142-8649	▶222
142-8652	3
	4
	5
	9
	10
	138
	▶162
	228
	229
142-8653	▶163
142-8666	▶222
142-8667	▶222
142-8714	▶377
142-8719	206
142-8723	189
142-8724	189
	190
142-8729	189
	190
142-8732	192
142-8734	192
142-8757	192
142-8758	▶189
	191
142-8760	▶192
	207
142-8789	269
142-8790	269
142-8791	269
142-8792	269
142-8793	269
142-8794	269
142-8801	242
142-8805	445
	446
	447
	449
142-8808	269
142-8810	244
142-8812	84
142-8818	101
	103
142-8823	244
142-8826	255
142-8828	118
142-8830	1
	2
	▶239
142-8831	242
142-8832	84
	242
	269
142-8833	183
142-8858	577
142-8880	269
142-8881	269
142-8897	244
142-8928	118
	385
142-8929	385
142-8937	385
142-8948	456
142-8949	456
142-8997	327
	329
142-8998	343
	345
142-9036	192
142-9116	290
142-9118	▶561
	613
	615
142-9121	▶222
142-9234	343
	345
142-9241	199
142-9278	513
142-9279	513
142-9287	513
142-9305	611
	612
	▶628
142-9311	▶602
142-9319	634
142-9320	613
	615
142-9325	613
	615
142-9326	158
142-9327	163
142-9328	613
	615
142-9329	160
	249
	252
142-9331	160
	249
	252
142-9356	562
	565
	597
	598
142-9386	513
143-4535	93
	95
143-4536	93
	95
144-0195	562
	565
	568
	570
	597
	598
144-4531	393
144-4532	393
144-9962	▶112
	128
146-2438	156
146-6371	573
	589
	595
146-7808	67
146-9439	149
	150
	187
147-1773	160
	249
	252
148-2371	249
	252
	257
	258
148-2372	249
	252
	257
	258
148-8315	193
	313
	321
	323
	327
	339
	341
	343
	345
	592
	594
148-8316	321
	323
	335
148-8318	201
148-8319	298
	300
	302
	304
	306
	308
	310
	311
	315
	317
	319
	345
148-8322	199
148-8325	295
	335
	337
	386
	389
148-8326	323
	592
	594
148-8327	199
	201
	292
	347
148-8328	193
148-8336	201
	292
	295
	313
	347
	352
	354
	386
	389
148-8338	199
148-8340	193
	201
	292
	347
148-8341	327
	329
	350
148-8342	201
	313
148-8360	339
	341
148-8362	199
148-8369	321
	323
	335
148-8378	295
	311
	331
	333
	386
	389
148-8382	193
148-8407	377
148-8423	335
148-8435	337
	352
	354
148-8446	295
	386

▶ **PRIMARY REFERENCE**

PART NUMBER INDEX

Part	Page
	389
148-9364	363
149-0686	264
149-3499	145
149-3516	112
149-4232	445
149-5435	441
	445
149-5436	442
	446
149-5437	447
149-5741	409
	▶469
149-7694	44
150-3056	300
	302
	304
	306
150-4027	337
150-4034	295
	386
	389
150-4043	335
150-4385	189
	190
150-4386	189
	190
150-5472	189
150-6764	174
150-6765	174
150-6766	147
150-7568	589
	594
	605
150-8590	▶212
	222
150-8591	▶212
	221
150-8592	▶213
	222
150-8593	▶213
	217
	222
150-8599	211
	212
	213
	214
	215
	216
	217
	218
	219
	220
	221
151-1394	146
151-4965	396
	400
152-1154	256
152-1156	256
152-1157	192
152-1161	579
152-4871	516
152-4875	513
152-4884	513
152-5878	610
152-8181	456
153-1260	629
153-2682	631
153-2683	256
	562
	565
	579
	597
	598
153-2994	298
	300
	302
	304
	306
	308
	310
	311
	313
	315
	317
	319
153-2995	298
	308
	310
	311
	313
	315
153-5387	30
	32
153-5391	32
153-5394	30
	32
153-5395	30
	32
153-5396	30
	32
153-5402	26
	28
	30
	32
153-5518	25
	28
153-5554	34
	36
153-5556	34
	36
153-5557	34
	36
153-5558	34
	36
153-5559	34
	36
153-5573	37
	39
153-5587	75
153-5590	75
153-5592	70
	100
	106
	116
	122
	126
	131
153-5656	132
153-5933	57
	61
	78
153-5936	57
	61
	80
	164
	170
153-5939	23
	106
153-5960	47
	49
	86
	88
	113
	122
	126
153-5961	37
	76
	86
	88
153-5962	23
	47
	49
	106
153-6256	321
	323
	592
	594
153-6375	45
	46
	86
	106
	648
153-6412	57
	61
	69
	122
	137
153-6415	116
153-6492	20
	21
	70
	71
153-6494	70
153-6497	70
153-6833	57
	61
	65
153-6835	57
	61
	65
	75
153-6838	21
	30
	32
	47
	57
	61
	65
153-6841	57
	61
153-6848	57
	61
153-6849	57
	61
153-6850	57
	61
	80
153-6851	57
	61
	80
153-6853	57
	61
	80
153-6856	47
	86
153-6868	45
	46
153-6873	120
153-6879	57
	61
	197
153-6881	57
	61
	80
153-6981	610
153-7640	23
	55
	56
	106
153-7920	102
	103
153-7983	113
	116
153-7985	47
153-7987	113
	116
153-7988	37
	76
154-0175	30
	32
154-0176	30
	32
154-0177	30
	32
154-0178	30
	32
154-0181	26
	28
154-0385	26
	28
154-0386	26
	28
154-0388	26
	28
154-0389	26
	28
154-0391	30
154-0393	30
	32
154-0867	67
	68
154-0869	67
	68
154-0870	67
	68
154-0871	67

▶ **PRIMARY REFERENCE**

PART NUMBER INDEX

Part	Page
	68
154-0873	67
	68
154-0874	67
	68
154-0888	36
154-0889	36
154-1201	▶25
	26
154-1202	25
154-1203	26
154-1230	26
	28
154-1231	26
	28
154-1240	75
154-1241	75
154-1242	75
154-1243	75
154-1246	37
	76
154-1248	37
	76
154-1249	37
	76
154-1347	23
	106
154-1396	113
154-1399	167
154-1401	113
154-1403	113
	116
154-1405	113
154-1408	113
154-1410	113
154-1411	113
154-1416	113
154-1636	113
154-1637	113
154-1638	113
154-1639	113
154-1672	47
154-1673	47
	49
154-1675	47
	49
154-1677	47
	80
154-1678	47
	80
154-1679	47
154-1680	21
	47
154-1817	86
	88
154-1822	72
	73
154-1828	83
	86
154-1831	88
154-1880	70
	71
154-1882	70
154-1942	57
	61
	80
154-2353	57
	61
	80
154-2394	45
	46
154-2395	45
	46
154-2403	22
	45
	46
	167
154-2405	42
	43
154-2406	42
	43
154-2427	100
	106
154-2428	100
	106
154-2433	55
	56
154-2435	17
	▶55
154-2704	414
	415
	416
	417
	430
	431
	432
	433
	434
	435
	436
	437
	438
	439
	440
	450
	451
	452
	480
	481
154-2713	122
	126
154-2715	116
	122
	126
154-2716	122
	126
154-3017	122
	126
154-3018	122
154-3927	145
154-3928	146
154-3968	641
154-3985	629
	630
154-3986	630
154-4014	384
154-4233	▶136
	174
154-4504	20
154-4505	20
	21
154-4506	20
154-4507	20
154-4508	20
154-5011	▶374
	426
	427
	428
154-5012	374
	445
	446
	447
	449
154-5013	374
	376
154-5018	▶272
	426
	427
	428
154-5020	300
154-5021	300
154-5022	300
154-5053	446
154-5070	447
154-5232	350
154-8711	630
154-8715	630
155-1279	359
155-2255	149
	150
	174
	175
	187
	293
	532
	536
	539
	551
	613
	615
155-2260	148
	173
	175
	184
	293
	551
	593
	613
	615
155-2265	149
	150
	160
	174
	175
	187
	249
	252
	499
155-2270	147
	148
	173
	174
	175
	178
	183
	184
	186
	249
	252
	292
	293
	456
	499
	532
	536
	539
	551
	561
	593
	613
	615
155-2271	174
	175
	178
	184
	260
	613
	615
155-2274	160
	175
	249
	252
	562
	565
	597
	598
	613
	615
155-7984	51
	52
	88
	104
	129
	131
	648
155-8009	106
	113
155-8076	143
	144
155-8077	143
	144
155-8084	57
	61
156-0884	421
	▶441
156-0885	421
	▶442
156-0891	▶375
	421
	470
156-0913	375
156-1200	112
156-1458	149
	150
156-1460	149
	150
156-4282	295
	386
	389
156-5508	302

▶ **PRIMARY REFERENCE**

PART NUMBER INDEX

Part	Page	Part	Page	Part	Page	Part	Page
156-5509	302		467		398		339
156-5510	302		468		400		341
156-5762	408		469		401	164-5624	331
	643		470	160-7626	47		333
	651	159-4535	304	161-0185	298		386
	654	159-4536	304		315		389
156-5970	406	159-4537	304	161-0186	298	164-7556	151
156-6155	141	159-5411	483		315		152
156-6971	26	159-5740	339	161-0187	▶315	164-7619	57
	28		341		421		61
156-6988	37	159-5753	290	161-0188	298		197
	39		▶356		315	164-9295	▶274
156-6989	37	159-5756	246	161-0189	298		484
	39	159-5772	189		315	164-9425	545
156-7347	57		190		317		546
	61	159-5790	610		319		548
156-9809	1	159-5792	610	161-0190	298	164-9440	398
	▶247	159-5793	192		315	164-9614	470
157-0940	411	159-5794	610	161-2347	84		▶472
	412	159-5797	458	161-2539	172	164-9989	473
	441	159-7342	235	161-4128	461		474
	442		236	161-4130	444		478
	443	159-8035	375		445		482
	444		483		446	165-0142	208
	473		657		447	165-0312	613
	482	159-8038	445		449	165-2139	47
157-0941	268		446	161-7163	26	165-2140	23
	375		447	161-7164	26		49
157-0942	268		449	161-8560	352		106
	375	159-8050	129		354	165-2141	51
157-2853	651	159-8405	242	162-0223	513		52
	654	159-9322	174	162-2207	113		86
	661	159-9495	150		116		104
	664		187	162-5236	426		106
	667	159-9496	149		427		129
	670		150		428		131
157-4835	454		187		▶461	165-2142	45
157-7223	421	159-9853	581	162-6889	643		46
157-7224	421		582	162-8154	472	165-2602	▶223
157-7226	▶421	160-1600	248	163-1385	298	165-2605	▶213
157-7227	▶421		642		311		223
158-3770	524	160-3550	122		315	165-2606	▶214
	525		648		317		223
	526	160-3555	122		319	165-2609	▶214
158-5648	441		126	163-1386	300		218
	442	160-3556	122		302		223
	443		126		304	165-2610	▶214
	444	160-3557	122		306		218
158-6067	118		126	163-3361	▶165		223
158-6694	577	160-3558	122		167	165-4891	▶223
158-6695	561		126		168	165-4894	499
158-6696	613	160-4150	57	163-5372	100	165-4895	155
	615		61		106	165-4908	213
158-6697	578		80		122		214
158-6698	613	160-4151	57		126		218
	615		61		129	165-4934	201
158-6699	613		80		648	165-5655	148
	615	160-4152	57	163-8811	300	165-7095	54
158-7936	113		61	163-9320	315		610
	116		80	164-1154	619	165-7098	261
159-2953	255	160-4153	57	164-2108	404	165-8731	▶376
	256		61	164-3213	272		484
	464		80	164-3765	139		485
	465	160-4826	197	164-5567	199	165-8732	474
	466	160-6778	396		335		▶477

▶ **PRIMARY REFERENCE**

PART NUMBER INDEX

Part	Page	Part	Page	Part	Page	Part	Page
	478		659	174-2388	308	177-1955	479
165-8740	▶483	168-8999	129		310	177-1956	479
	484		131	174-2389	308	177-1957	479
	485	168-9001	83		310	177-1958	276
165-8743	483		104	174-2393	308	177-1971	479
166-0319	411		106		310	177-1972	411
	412		129	174-3091	527		412
166-2033	186		131		528	177-1973	495
	233	168-9002	129		529	177-1975	479
	249		131		530	177-1981	409
	252	169-2876	651		531		▶411
166-2338	45		654		581	177-1982	409
	46		661		582		▶412
166-2551	499		664	174-3097	308	177-1983	409
	▶502		667	175-0005	559		▶495
166-2552	499		670		573	177-1986	▶311
166-2556	499	169-3569	483		589		409
166-2557	499	169-4868	411		595	177-1987	411
166-2558	499		412	175-4228	▶261	177-1988	412
166-2559	499	169-6715	93	175-4236	233	177-1989	▶409
166-2560	295		95		259	177-1990	▶409
	462	169-8941	441	175-4237	257	177-3405	256
	463	169-8942	442		258		562
	486	170-5836	484	175-4238	4		565
	487		485		5		597
166-2561	261	170-6305	578		6		598
166-2562	232	171-2212	178		7		631
	633		181		8	177-7414	493
166-2569	232	172-0970	398		9		494
	▶632		401		11	177-7415	493
	633	172-4445	▶145		12		494
166-3678	189	172-4446	▶146		13	177-9150	493
166-4041	477	172-4585	143		228	177-9151	494
166-9312	315		144		229	177-9152	4
167-0608	499	172-5285	274		230		5
167-1530	577	172-8173	204		231		6
167-3692	175	172-8175	204		234		7
167-3693	175	172-9200	178		▶492		8
167-4339	208		181	175-4239	249		9
167-7713	209	173-0702	524		252		11
168-7572	192		525		257		12
168-8389	235	173-0703	526		258		13
	236	173-2543	630	176-2947	513		228
	413	173-3015	232	176-3900	▶504		229
	414		235		592		230
	415		237	176-4074	292		231
	416	173-3016	232		341		234
	417		235	176-4079	263		▶490
	430		237		589	177-9153	490
	431	173-3018	232		595	177-9567	292
	432		235	176-7711	17		341
	433		237		▶120	177-9580	239
	434	173-3021	▶259	176-7719	120	177-9645	149
	435		260		121		150
	436	173-3022	6	176-9954	118		175
	437		8		▶128		187
	438		12	177-1910	311	177-9648	175
	439		13	177-1911	311	177-9653	174
	440		228		317	177-9656	175
	450		230		319	177-9853	548
	451		▶633	177-1912	311	178-2247	492
	452	173-7407	484	177-1914	479	178-2255	84
	454		485	177-1921	411	178-2270	219
	480		▶497		412	178-3586	548
	481	173-8919	175	177-1941	495	178-3620	176

PART NUMBER INDEX

Part	Page	Part	Page	Part	Page	Part	Page
	187	184-6098	490		293		491
	193		▶494		359	192-2638	491
	321	185-4015	508		401	192-2640	▶275
	323		510		406		295
	325		585		527		462
	589		587		528		463
	595	185-4253	404		529	192-2642	462
	605	185-4254	393		530		463
178-7539	174		▶404		531		486
178-9983	527	185-7887	300		554		487
	528		302		561	192-2663	600
	529		304		568	192-2668	385
	530		306		570	193-0161	135
	531		317		581	193-0447	▶264
179-7001	▶265		319		582		291
	337	185-8660	▶223		608	193-0450	217
179-7002	265	185-8661	▶223		609		218
180-3007	118	185-8664	▶224	186-3736	148		219
	293	185-8665	▶224		513		▶641
	339	185-8668	215	186-5186	496	193-8308	339
	341	185-8669	215	186-6190	▶505	193-8313	337
180-6115	70		216		594	193-8321	339
180-6118	88		218		603		341
180-7451	364	185-8670	▶215	187-1273	327	193-8329	132
180-8579	129		223		329		133
	648	185-8671	▶215	187-3211	599	193-8334	350
183-1163	30		223		622	193-8335	350
	32	185-8672	▶215	187-3212	599	193-8345	84
183-1164	30		218		622	193-8385	617
	32		223	187-3231	327	193-8392	335
	37	185-8673	▶216		329	194-3873	406
183-1165	23		218	187-3232	327	194-5171	568
	106		223		329		570
	170	185-8678	▶216	188-7733	408	194-7631	264
183-1336	26		218		▶496	194-7632	264
	28		224	189-4523	599	195-0935	160
183-3213	37	185-8679	▶216		622		249
	39		218	190-3762	23		252
183-3353	122		224		106		516
	126	185-9926	▶217	190-3803	122	195-0936	142
183-3538	116		219		126		232
183-3572	104		224	190-8962	233		633
183-4037	134	185-9927	▶217		259	195-0937	148
	648		219	191-0542	113		158
183-4084	308		224	191-9293	113		512
	310	185-9932	216	191-9296	113		562
183-4085	308		217	191-9297	113		565
	310		218		116		597
183-7117	261		219	191-9576	244		598
183-7122	▶240	185-9934	215	191-9588	269	195-0939	512
183-7123	240		216	191-9650	▶203	195-5124	469
	241		218		207		470
183-7124	240	185-9940	▶241	191-9684	5	195-6696	499
	241	186-0239	233		10	195-6723	516
183-7131	240		260		229		▶634
	241	186-2360	233		▶642	195-6740	▶650
184-1564	▶169		236	192-0104	17	195-6750	350
	186		238		▶143	195-6754	295
	233	186-3362	183	192-0105	143		462
	249	186-3735	147		144		463
	252		148	192-0836	172		488
184-2472	136		156	192-2606	502		489
	141		178	192-2607	502		491
184-6097	490		181	192-2637	488	195-6768	337
	▶493		244		489	195-6769	337

▶ **PRIMARY REFERENCE**

PART NUMBER INDEX

Part	Page
195-6942	453
	▶475
	476
195-6943	453
	▶475
195-7124	425
	▶470
195-8545	453
	▶475
	476
195-9700	396
	398
	400
	401
	▶405
195-9712	233
196-2381	150
	174
196-2382	149
	175
196-2383	149
	175
	187
196-2384	149
	175
	187
196-2385	175
197-6894	577
197-8004	167
198-2663	57
	61
	197
198-5389	147
	148
199-3410	650
	673
199-5291	▶217
199-5292	▶218
199-5392	▶218
199-5393	▶218
199-5394	▶219
199-5434	▶219
	222
199-5435	▶219
	222
199-5436	219
199-7722	449
199-8308	449
199-8309	306
199-8310	306
199-8311	306
199-8317	449

2

Part	Page
200-0807	648
200-0999	192
200-2371	405
200-5717	561
200-5976	134
	648
200-6345	294
	348
202-0671	395
202-0673	395
202-0674	395
202-1196	122
	126
202-2168	173
	593
	595
202-2284	508
	510
202-6611	152
202-6614	151
203-1100	398
	401
204-1365	233
	259
204-1452	209
204-1454	209
204-1455	209
204-1456	209
204-1459	209
204-1471	393
204-1476	393
204-1481	393
204-1482	393
204-1485	393
204-1486	393
204-1488	393
204-1489	393
204-1491	384
	▶385
204-1492	385
204-1499	385
204-5098	456
205-0826	147
	148
205-3185	53
205-3727	91
	92
205-4585	86
	648
205-4726	125
205-4727	125
205-4728	125
205-4731	122
205-5148	568
	570
205-6383	93
	95
205-7048	184
205-8257	147
	148
206-1346	160
	249
	252
206-2423	184
206-2724	589
	595
206-3499	75
206-3820	457
	▶458
206-3821	457
	▶459
206-5143	203
206-5162	141
	147
206-5165	141
	147
206-7398	508
	510
	585
	587
207-0539	637
	639
207-0573	637
	639
207-3814	148
207-5262	▶141
	147
	148
207-6154	91
	92
207-9729	384
207-9731	244
207-9732	244
207-9737	295
	386
	389
207-9756	295
	386
	389
207-9780	233
	259
207-9785	295
	459
208-0044	44
208-6176	84
210-0855	266
211-5172	74
211-5358	175
	178
211-7739	113
211-9061	54
212-0061	405
212-0743	113
212-0744	113
212-0745	113
212-0747	113
212-6521	295
	457
212-6603	201
212-6604	201
212-6690	295
	386
	389
213-0139	175
213-3943	266
213-7489	527
	528
	529
	530
	531
213-8711	593
	595
214-2465	561
214-4252	293
214-4253	293
214-5555	276
214-7568	265
214-9186	517
215-2605	57
	61
	65
215-2617	86
	88
215-2620	30
	32
215-2621	47
215-3277	369
	371
215-3957	295
	462
	463
	▶491
215-3958	486
	▶488
215-3959	487
	▶489
215-3960	458
	▶486
215-3961	458
	▶487
215-3962	459
	▶462
215-3963	459
	▶463
215-4001	233
	259
215-5564	149
	150
	187
215-8307	531
215-8308	530
216-0658	140
216-4703	174
216-4704	532
	535
	536
	538
	539
	541
216-4709	147
	148
216-4711	186
	233
	249
	252
216-4712	▶577
	613
	615
216-4713	▶578
	613
	615
216-4714	139
216-4715	4
	5
	6
	7
	8
	9
	11
	12
	13
	▶160
	228

▶ PRIMARY REFERENCE

PART NUMBER INDEX

Part	Page
	229
	230
	231
	234
216-4727	160
	249
	252
216-4746	1
	2
	▶158
216-4750	▶142
	516
216-4751	612
	▶613
216-4752	613
216-4753	577
216-4754	578
216-4755	▶139
	174
216-6124	204
216-6144	6
	8
	12
	13
	228
	230
	232
216-6145	515
216-6146	3
	4
	5
	6
	7
	8
	9
	10
	11
	12
	13
	228
	229
	230
	231
	234
	▶515
216-6156	393
216-6157	393
216-6159	393
216-6160	393
216-6161	393
216-6167	392
	▶393
216-8756	▶408
216-8850	408
217-2752	37
	76
217-2760	122
	126
217-2761	122
	126
217-2762	122
	126
217-2763	122
	126
217-2776	70
	71
217-2777	17
	▶70
217-2778	17
	▶134
217-3850	396
	400
217-5770	30
	32
217-5771	30
217-5794	113
217-5859	23
	106
217-5861	23
	106
217-5862	23
	106
217-5864	23
	106
217-5884	17
	▶135
217-7108	113
217-7111	113
217-7115	113
	116
217-7174	20
217-7221	17
	▶42
217-7225	45
	46
217-7238	17
	▶45
217-7352	57
	61
	648
217-7358	57
	61
	78
217-7379	83
	86
218-0728	562
	565
	597
	598
218-0919	41
218-2317	86
218-2333	57
	61
	65
218-2334	57
	61
	69
218-2373	404
218-5562	611
	▶629
218-5565	111
	▶618
218-5566	▶110
	618
218-5571	337
218-5572	337
218-5580	352
	354
218-5601	1
	2
	3
	4
	5
	6
	7
	8
	228
	229
	230
	231
218-5602	1
	▶111
218-5611	2
	▶532
	▶535
218-5612	▶536
	▶538
218-5618	2
	▶539
	▶541
218-5647	227
218-5650	1
	▶227
218-5651	227
218-5671	193
218-5764	294
	327
	329
	347
	350
218-5773	227
218-5790	3
	138
	▶612
218-5791	3
	4
	5
	6
	7
	8
	9
	10
	11
	12
	13
218-5802	242
218-5803	1
	▶242
218-5812	289
	290
	291
	▶357
218-5813	293
	347
218-5815	347
218-5818	294
	347
218-5819	289
	▶343
218-5840	▶287
	292
	347
218-5841	▶288
	292
	347
218-5843	287
218-5844	287
218-5845	288
218-5846	288
218-5847	499
218-5851	290
	▶327
218-5852	290
	▶345
218-5853	289
	290
	291
	▶347
218-5906	293
	347
218-5907	293
	347
218-5909	293
	347
218-5915	293
	347
218-5916	347
218-5917	347
218-5918	347
218-5919	293
	347
218-5930	▶542
	▶544
218-5931	2
	▶545
218-5932	2
	▶546
218-5933	291
	▶548
218-5951	▶651
218-5968	335
218-5975	499
218-5978	291
	▶335
218-6002	292
	347
218-6004	293
	347
218-6005	293
	347
218-6011	350
218-6058	3
	▶365
	▶366
218-6059	▶321
	584
	592
218-6060	523
	593
	595
218-6063	321
	323
218-6079	289
	291

▶ **PRIMARY REFERENCE**

PART NUMBER INDEX

Part	Page	Part	Page	Part	Page	Part	Page
	▶378		▶329	218-6388	560		516
218-6086	507	218-6211	▶331	218-6389	559	218-6430	1
	584		▶333	218-6391	559		▶617
	▶605		457	218-6393	583	218-6431	▶567
218-6089	▶199	218-6213	331		▶585		568
	291		333		▶587	218-6436	601
218-6095	199		386		589	218-6438	620
218-6096	199		389	218-6394	507	218-6440	▶562
218-6099	291	218-6223	643		▶573	218-6442	512
	▶337	218-6224	643		584	218-6480	▶524
218-6107	323	218-6231	352	218-6395	516		542
218-6108	323		354		▶607		544
218-6109	337	218-6235	291	218-6396	573	218-6485	▶525
218-6117	524		▶352		589		545
	▶581		▶354		594	218-6490	▶526
218-6118	525	218-6240	▶386	218-6397	573		532
	526		▶389		589		535
	▶582		457		594	218-6560	507
218-6119	▶396	218-6241	295	218-6398	573		▶603
	542		386		589	218-6561	392
	545		389		594	218-6571	291
	546	218-6245	295	218-6399	508		▶551
	548		386		510		▶554
218-6130	▶289		389		585	218-6582	593
218-6131	▶289	218-6249	295		587		595
218-6132	289		386	218-6400	▶580		603
	290		389		611	218-6584	593
	▶339	218-6250	523	218-6401	589		595
218-6133	289		593		595		603
	290		594	218-6402	589	218-6616	111
	291	218-6271	▶592	218-6405	506	218-6617	111
	▶341		611		▶508	218-6624	▶193
218-6137	339	218-6272	▶584		▶510		291
	341		611		592	218-6644	335
218-6138	339	218-6273	▶507		594	218-6645	589
218-6140	293		612	218-6407	611	218-6661	118
	341	218-6291	▶654		612	218-6662	629
218-6141	294	218-6321	▶457		▶622	218-6677	193
	341	218-6322	▶457	218-6411	611	218-6693	▶323
218-6142	293	218-6334	295		612		507
	341		459		▶635	218-6708	3
218-6143	291	218-6335	295	218-6414	573		4
	▶325		459		589		5
218-6146	339	218-6348	507		595		6
218-6147	294		▶523	218-6416	620		7
	341	218-6350	1	218-6417	620		8
218-6175	289		2	218-6419	▶559		9
	▶379		▶516		592		10
218-6180	▶289	218-6356	516	218-6420	516		11
218-6181	▶290		▶601	218-6421	532		12
218-6194	343	218-6357	601		535		13
	345	218-6359	601		536		228
	350	218-6360	1		538		229
218-6196	343		▶620		539		230
	345	218-6367	516		541		231
218-6197	289		▶517		551		234
	290	218-6370	516		554		▶255
	▶350		▶610	218-6422	542	218-6709	▶256
218-6198	343	218-6377	580		544	218-6711	255
	345	218-6380	516		545		256
218-6201	350		▶631		546	218-6726	255
218-6202	350	218-6381	610		548		256
218-6203	350	218-6384	607	218-6423	617	218-6727	292
218-6204	350	218-6386	560	218-6424	620		347
218-6207	289	218-6387	560	218-6425	▶159	218-6732	▶643

▶ **PRIMARY REFERENCE**

PART NUMBER INDEX

Part	Page	Part	Page	Part	Page	Part	Page
218-6737	▶292		389	223-0610	567	225-0312	651
218-6741	▶150	219-4379	629	223-0612	567		667
218-6743	▶597		630	223-0616	565		670
218-6744	▶598	219-4380	628		▶568	225-0313	654
218-6745	▶636		▶630		598		661
218-6746	▶589	219-4388	630	223-0617	562		664
218-6757	▶295	219-6314	141		565	225-3143	129
218-6776	292	219-9739	562		597	225-3187	568
	347		565		598		570
218-6781	291		597	223-3725	527	225-3305	654
	▶392		598		528		661
218-6784	347	220-1523	57	223-3726	529		664
218-6785	347		61	223-3728	527	225-4148	8
218-6796	246		196		528	225-5190	174
218-6798	246	221-1136	30		529	225-5193	139
218-6799	1		32		530	225-7948	▶173
	▶269	221-3429	475		531		507
218-6825	284		476	223-4240	242	225-7950	▶132
	285	221-3876	568	223-5941	613	225-7952	▶133
218-6826	282		570		615	225-7954	178
	283	221-3877	562	223-5942	292		181
218-6830	507		565		551	225-7955	129
	▶522		597		554		648
218-6832	▶519		598	223-6537	577	225-7956	129
	▶520	221-3879	173		▶608	225-7960	▶187
	522		593	223-8488	568		548
218-6833	519		595		570	225-7961	149
	520	221-3880	174	223-8495	568		150
	592	221-3881	149		570		187
	594		150	223-9974	193	225-7962	160
218-6836	557		187		▶195	225-7963	5
	592	222-1178	93	224-0554	651		7
	594		95		667		11
218-6837	557	222-3870	147		670		229
	592		148	224-0672	651		230
	594	222-3962	220		667		▶260
218-6838	557		221		670	225-7964	5
	592	222-5693	204	224-3875	242		7
	594	222-5695	6	224-7057	635		11
218-6840	▶368		8		636		▶186
	519		12		▶637		229
	592		13	224-7058	635		230
	594		228		636	225-7969	1
218-6856	359		230		▶639		2
218-6857	359	222-7467	441	224-7830	654		▶172
218-6858	359		442		661	225-7976	651
218-6862	199		473		664		654
218-6864	335		482	224-8945	661		661
218-6937	331	222-7545	413		664		664
	333		▶464	224-8946	667		667
218-6938	295	222-7725	413		670		670
	386	223-0591	562	224-9021	654	225-7977	651
	389		565		661		654
218-6947	585		597		664		661
	587		598	224-9022	651		664
218-6948	508	223-0600	▶565		667		667
	510	223-0601	562		670		670
219-0302	651		565	224-9418	356	225-7980	178
	654		597		▶359		181
	661		598	224-9855	651	225-7981	174
	664	223-0608	562		654	225-7982	174
	667		565		661	225-7990	160
	670		597		664		249
219-4335	295		598		667		252
	386	223-0609	567		670	225-7991	▶147

▶ **PRIMARY REFERENCE**

PART NUMBER INDEX

Part	Page
225-7998	612
	▶615
225-7999	615
225-8000	▶140
	174
225-8001	1
	▶174
225-8002	174
225-8005	292
	551
	554
225-8009	292
	551
	554
225-8010	18
	19
	▶178
	▶181
225-8012	149
	150
	187
225-8013	160
	249
	252
225-8014	456
225-8015	410
225-8526	104
	106
225-8533	104
	106
225-9238	292
	378
	▶382
225-9267	220
225-9270	▶220
	224
225-9271	▶220
	224
225-9521	266
	▶276
226-0291	242
	515
226-0323	515
226-1242	657
226-3736	225
226-3737	225
226-5900	160
	249
	252
226-5901	613
	615
226-9629	404
227-4315	247
227-8807	264
228-1762	18
	19
	▶84
228-1763	18
	19
	▶206
228-1764	18
	19
	▶53
228-1773	18
	19
	▶97
228-1781	1
	▶118
228-1783	3
	▶93
228-2524	101
228-3350	91
	92
228-3359	▶91
	93
228-3369	659
228-3581	657
228-3724	84
228-9214	▶224
228-9215	▶224
228-9228	▶398
	532
	536
	539
	551
228-9240	369
	371
228-9641	84
228-9953	44
229-4895	227
229-5465	321
	323
229-5466	321
	323
229-5468	292
	347
229-5471	292
	347
229-5473	292
	347
229-8730	18
	19
	▶41
229-8744	▶560
	592
229-8746	▶583
	584
229-8747	▶506
	507
229-8757	568
	570
229-8796	91
	92
230-3214	562
	565
	597
	598
230-3683	269
	▶282
230-3684	269
	▶284
230-3686	372
230-3693	269
	▶283
230-3694	269
	▶285
230-3726	368
	383
230-3727	365
	▶369
230-3731	103
230-3743	3
	4
	5
	6
	7
	8
	9
	10
	11
	12
	13
	▶183
	228
	229
	230
	231
	234
230-3757	380
	381
	382
230-4011	184
230-4596	413
230-5406	▶266
	409
230-5407	479
230-5670	409
	▶479
230-6368	133
231-0124	313
231-0125	313
231-0126	313
231-0127	313
231-0167	98
231-0168	98
231-0169	98
231-2105	244
231-2999	164
	171
231-3041	118
231-3578	93
	95
231-3579	93
	95
231-3925	93
	95
231-4256	▶527
	546
231-4257	▶528
	536
	538
231-4258	149
	▶529
	548
231-4259	292
	▶530
	551
	554
231-4260	▶531
	539
	541
231-4261	527
	529
231-4262	528
	530
	531
231-5266	267
231-5271	413
231-5273	▶313
	410
231-5274	▶267
	410
231-5276	410
	▶413
231-5277	▶410
231-5278	▶358
	410
231-5279	358
231-6287	368
	▶406
231-6564	406
231-7319	639
231-7320	639
231-7321	635
	636
231-7322	637
231-7323	637
231-7324	635
	636
231-7325	▶575
	639
231-7326	575
231-7327	▶576
	637
231-7328	576
231-7329	575
	576
231-7331	637
	639
231-7372	637
	639
231-7401	575
	576
231-8121	508
	585
231-8122	508
	510
	585
	587
	▶591
231-8123	508
	510
231-8124	508
	510
	585
	587
231-8126	508
	510
	585
	587
231-8127	508
	510
	585
	587
231-8128	508
	585
231-8129	508
	510
	585
	587

▶ PRIMARY REFERENCE

PART NUMBER INDEX

Part	Page
231-8130	508
	585
231-8131	508
	585
231-8132	508
	510
	585
	587
231-8133	508
	510
	585
	587
231-8137	508
	510
231-8141	508
	510
	585
	587
231-8142	508
	510
	585
	587
231-8143	585
	587
231-8144	585
	587
231-8145	585
	587
231-8920	57
	61
	197
232-1384	508
	510
232-1789	84
232-4706	608
	609
232-4901	93
	95
232-6692	139
233-0695	23
	106
233-1012	557
	593
	595
233-4872	242
233-5588	▶592
233-5589	▶594
233-5590	519
	520
	593
	595
233-5616	3
	4
	5
	6
	7
	8
	9
	10
	11
	12
	13
	228
	229
	230
	231
	234
	▶263
233-5632	▶579
233-5670	▶138
233-5671	▶228
233-5672	▶228
233-5673	▶229
233-5674	▶229
233-5675	▶230
233-5676	▶230
233-5680	6
	8
	12
	13
	228
	232
233-5706	▶149
233-5711	643
	651
	654
233-5716	201
233-5719	499
233-5849	352
	354
233-5856	593
	595
	603
233-5863	593
	595
233-5864	▶599
233-5892	499
233-5893	499
233-5896	293
233-5897	293
233-5927	523
	592
	594
233-5929	591
233-5931	591
233-5934	591
233-5951	593
	595
	603
233-5976	293
233-5980	291
	▶384
233-5997	384
233-6683	91
	92
233-7128	295
	▶362
	386
	389
233-7131	352
	▶360
234-0566	593
	594
	603
234-0732	600
234-0744	643
234-0745	643
234-0748	643
234-0774	▶600
	618
234-0782	337
234-0786	335
234-0792	228
	230
	▶235
234-0793	229
	230
	▶236
234-4328	▶151
	159
234-6065	651
	654
	661
	664
	667
	670
234-6067	654
	661
234-6069	651
	667
234-6070	654
	661
234-6071	651
	667
234-6072	654
	661
234-6074	654
	661
234-6076	651
	667
234-6077	654
	661
234-6078	651
	667
234-6081	651
	667
234-7727	▶152
	158
234-7730	151
234-7731	151
234-7756	152
234-7758	152
234-9525	325
234-9575	651
	654
	661
	664
	667
	670
235-1365	654
	661
	664
235-1368	651
	667
	670
235-4768	568
	570
235-5243	294
	539
	541
	551
	554
235-5246	546
	548
236-1872	385
236-4706	289
	290
236-4707	289
	290
	293
236-4830	▶512
	516
236-4832	513
236-4833	512
	▶513
236-5067	508
	510
	585
	587
236-5069	508
	510
	585
	587
236-5088	263
236-5127	▶36
	37
236-5816	91
	92
236-6923	593
	595
	603
236-9987	100
	106
237-0419	53
237-0420	53
237-5331	542
	544
	545
237-5332	532
	535
237-7296	111
237-9315	30
	32
	34
	36
237-9316	32
238-0112	92
238-0999	267
238-1003	313
238-1004	413
238-1005	413
238-1266	113
238-4625	363
238-4626	362
	363
	407
238-4628	363
238-4629	363
238-7669	643
238-7670	643
238-7671	4
	5
	6
	9
	11
	12
	228
	229
	231
	▶257

▶ **PRIMARY REFERENCE**

PART NUMBER INDEX

Part	Page
238-7672	7
	8
	11
	13
	230
	231
	234
	▶258
238-7675	249
	252
	257
	258
238-7676	252
	258
238-7693	488
	489
	491
238-7723	293
	347
238-7724	293
	347
238-7725	343
238-7726	343
238-7727	345
238-7731	345
238-7732	345
238-7734	▶645
238-8731	23
	106
238-9137	88
238-9143	88
238-9196	100
	106
238-9198	100
	106
238-9200	100
	106
238-9289	23
	106
238-9295	23
	106
238-9348	17
	▶23
238-9349	104
	106
238-9397	178
	181
239-0187	104
	106
239-0229	104
	106
239-0230	17
	▶104
239-0232	100
	106
239-0233	17
	▶100
239-5010	▶148
239-5029	484
	485
239-6109	635
	636
239-6138	575
	576
239-6986	651
240-6866	363
240-6877	573
	589
	595
240-6878	573
	589
	595
240-6879	573
	589
	595
240-8666	568
	570
241-3394	98
241-3763	456
241-5648	263
241-5649	263
241-5789	18
	19
	▶54
241-8672	▶456
242-0171	97
	▶98
242-0172	98
242-0173	98
242-7070	165
242-7071	165
242-7073	165
242-7074	165
242-7075	165
242-7076	165
242-7077	165
242-7078	165
242-7389	593
	595
242-9000	160
	249
	252
243-0001	▶475
243-0002	▶476
243-0003	▶476
243-1323	637
	639
243-5601	364
243-6464	141
	147
244-1363	364
244-1364	364
244-1365	364
244-1367	413
244-1370	267
245-1361	88
245-1362	88
245-1364	88
245-1911	362
245-6811	▶590
	611
	612
246-1501	456
246-2622	118
246-2641	232
	235
	237
246-3198	129
246-3337	17
	▶20
246-3338	17
	▶47
246-3415	17
	▶113
246-3451	17
	▶86
246-3470	197
246-3471	197
246-4267	129
	131
246-4291	654
246-4318	129
	648
246-4319	17
	▶129
246-4349	503
246-8723	18
	19
	▶44
246-9039	593
	595
	603
246-9371	175
247-0323	17
	▶164
247-0678	410
	▶657
247-4877	247
247-6118	659
247-7182	579
248-1268	354
	▶361
248-2171	568
	570
248-2376	568
	570
248-5245	659
248-7696	292
	357
	▶363
249-1486	23
	106
249-1532	104
	106
249-2910	578
	▶609
249-5541	86
	88
249-7160	362
249-7263	104
	113
249-7264	57
249-7707	363
250-1493	589
	594
	605
250-7662	363
251-6789	72
251-6791	17
	▶72
251-7615	51
	52
251-7618	17
	▶51
252-0330	593
	595
252-0341	345
252-0342	295
	386
	389
252-0343	295
	386
	389
252-0344	▶225
252-0345	▶225
252-0367	▶225
252-0368	118
252-0378	▶225
252-0386	▶499
252-0387	350
252-0388	293
	347
252-0425	458
	459
252-0787	57
	61
	197
252-0788	57
	61
	197
252-1802	46
252-6934	527
	528
	529
	530
	531
252-8595	454
252-9015	645
252-9016	645
252-9017	645
252-9167	208
253-2111	178
	181
253-8110	184
253-8677	110
254-9097	277
	280
	281
255-0942	281
255-0943	▶277
	485
255-6540	413
	659
255-8058	375
256-2084	34
	36
256-2085	34
	36
257-5716	▶231
257-5717	▶231
257-5726	▶232
257-5727	▶233
257-5730	▶248
258-2533	488
258-2534	489

▶ PRIMARY REFERENCE

PART NUMBER INDEX

Part	Page
258-2759	▶190
	191
258-3423	647
258-3424	647
258-3425	647
258-3427	647
258-3849	232
	233
	237
	238
258-9011	358
	▶364
259-8194	360
	361
	▶407
259-8195	360
261-5659	209
261-5660	207
	▶208
261-5750	1
	2
	▶207
261-6094	231
	290
	▶380
261-6095	290
	291
	▶381
261-6101	244
261-6118	3
	4
	5
	6
	7
	8
	9
	10
	11
	12
	13
	▶95
	231
	234
261-6119	▶92
	95
261-6121	3
	4
	5
	6
	7
	8
	9
	10
	11
	12
	13
	231
	234
	▶367
261-6132	▶290
261-6139	▶290
261-6157	▶3
261-6160	▶3
261-6187	▶4
261-6197	▶4
261-6200	246
261-6245	▶191
261-6255	1
	▶191
261-6362	8
261-6681	453
	▶454
	455
261-6727	367
261-6728	367
262-0941	273
262-2915	190
262-3975	23
	106
262-7668	536
	538
263-2135	568
	570
263-4836	661
	664
	667
	670
263-4997	208
263-6688	618
	▶619
264-4297	367
264-4319	190
264-8106	178
265-2894	▶220
	225
265-2895	▶221
	225
265-2896	▶221
	225
265-2897	▶221
	225
265-5624	113
	648
265-5625	113
	648
265-6944	113
266-2928	561
266-6140	267
	278
	279
266-8903	364
267-0328	86
268-1929	209
268-1936	204
268-9529	209
269-9404	331
	333
	386
	389
269-9427	379
	▶383
269-9462	380
269-9465	381
270-0216	331
	333
	386
	389
270-2702	178
270-6915	17
	▶26
270-6930	17
	▶67
270-6932	17
	▶30
270-6968	67
	68
270-6970	67
	68
271-2117	122
	137
271-8661	383
271-8674	383
272-1625	3
	4
	5
	6
	7
	8
	9
	10
	11
	12
	13
	▶184
	231
	234
272-1626	184
272-3046	▶101
	102
272-3047	3
	4
	5
	6
	7
	8
	9
	10
	11
	12
	13
	▶102
	231
	234
272-3048	103
272-3049	▶103
	231
272-3056	101
272-3058	103
274-9930	267
	▶278
274-9931	267
	▶279
276-0074	331
	386
	518
276-3440	562
	▶570
	597
276-3599	572
276-3615	570
	▶572
276-4063	557
	592
	594
276-5708	519
	520
	▶557
276-6019	▶624
276-6020	▶625
276-7276	▶626
276-7277	▶627
277-0650	▶249
277-0652	▶252
278-1061	184
278-1212	▶5
278-1220	▶5
278-1224	▶6
278-1227	1
	2
	▶291
278-1292	6
	8
	12
	13
	▶237
278-1293	5
	7
	11
	▶238
278-1969	▶280
	426
	427
	428
278-1970	280
	281
278-1975	▶281
	421
	470
278-4524	278
278-4525	279
278-4875	278
	279
278-5408	▶7
278-5441	▶8
278-8713	372
278-8716	369
	370
	371
	372
278-8717	372
279-0733	204
279-3232	572
279-5350	▶470
279-5351	470
	▶473
279-5352	473
	▶480
279-5353	480
279-5357	481
279-5358	▶481
	482
279-5359	470
	▶482
279-5360	▶470
279-5364	419
	▶434
279-5365	▶419
279-5366	▶419
279-5368	419
	▶435

▶ **PRIMARY REFERENCE**

PART NUMBER INDEX

Part	Page	Part	Page	Part	Page	Part	Page
279-5369	▶419		▶438	285-6095	▶428		319
279-5370	▶419	279-5424	425	285-6096	428	286-9265	317
279-5372	420		▶439		▶450	286-9266	317
	▶436	279-5425	▶425	285-6099	422	286-9267	317
279-5373	▶420	279-5429	425		429		319
279-5374	▶420		▶440		▶451	286-9268	317
279-5376	420	279-5430	▶425	285-6100	422		319
	▶437	279-5434	418		▶429	286-9271	317
279-5377	▶420		▶430	285-6101	422	286-9273	268
279-5378	▶420	279-5435	▶418		▶429	286-9274	444
279-5380	▶425	279-5437	418	285-6102	422	286-9278	423
279-5381	▶426		▶431		429		▶444
279-5382	425	279-5438	▶418		▶452	286-9279	▶319
	426	279-5440	418	285-6104	▶422		423
279-5383	426		▶432	285-6105	471	286-9280	319
	▶445	279-5441	▶418		▶478	286-9281	319
279-5384	▶414	280-1575	562	285-6110	471	286-9289	268
	445		565		▶474	286-9300	▶423
279-5385	414		597	285-6111	▶422	286-9301	▶424
279-5387	415		598	285-6112	▶422	287-6603	599
279-5388	▶415	280-6072	517	285-6113	▶308		622
	446	280-7805	209		▶310	287-7004	599
279-5389	426	280-7854	203		484		622
	▶446		▶204		485	287-7006	599
279-5390	▶426	280-7863	209	285-6114	▶471		622
	427	280-7865	209	285-6115	▶471	288-5767	599
279-5391	▶427	280-8298	98	285-6116	422		622
279-5392	▶427	280-8310	91		471	288-6537	34
279-5395	416	280-8311	92		▶484		36
279-5396	▶416	280-8336	129		▶485	288-6593	78
	447		648	285-7970	110	289-3769	327
279-5397	427	280-8341	99	285-8565	573	289-6120	78
	▶447	280-8364	99		589	289-6336	204
279-5398	▶427	280-8365	18		595	289-6342	208
	448		19	285-8570	573		▶209
279-5399	▶448		▶99		589	289-6347	204
279-5400	▶427	282-6961	635		595	289-6352	383
279-5401	▶428	282-7760	396	285-9133	573	289-6356	383
279-5402	▶428	282-9059	567		589	289-6360	▶370
279-5403	428		572		595		373
279-5404	428	283-7554	572	285-9286	327		592
	▶449	283-9264	331		329		594
279-5405	▶417		333		350	289-8440	398
	449		386	285-9287	293	289-8451	396
279-5406	417		389		347		400
279-5412	▶298	283-9478	339	286-3591	277	289-9560	396
	470		341	286-7495	86		400
279-5413	▶300	283-9566	373		88	290-3293	327
	426		592	286-7496	86		329
279-5414	▶302		594		88	290-3294	327
	426	284-3058	140	286-9229	443		329
279-5415	▶304	284-3059	140	286-9243	443	290-3296	327
	427	284-3595	599		444		329
279-5416	▶306		622	286-9244	424	290-3297	327
	428	284-3743	599		▶443	290-3301	329
279-5417	300		622	286-9248	▶268	290-3384	327
	302	284-3744	599		423	290-3392	327
	304		622		424		329
	306	284-3914	518	286-9249	319	290-8014	122
279-5418	300	285-5794	93	286-9250	▶317		126
	302		95		424	291-1265	164
	304	285-6089	418	286-9251	423		170
	306		▶433		424	291-1808	34
279-5420	▶425	285-6090	▶418		▶659		36
279-5421	425	285-6093	▶422	286-9263	317	291-3755	331

▶ PRIMARY REFERENCE

PART NUMBER INDEX

Part	Page
	333
	386
	389
291-3781	37
292-1159	175
292-2437	518
292-2438	518
292-3114	601
292-5719	▶15
	16
292-9624	184
293-2167	37
	▶75
	76
293-3319	113
293-4781	57
	61
293-6264	▶273
	423
	424
293-9426	▶455
293-9427	▶453
293-9428	▶453
293-9429	▶453
294-4916	30
	32
294-5502	298
294-5503	298
294-5504	308
	310
294-5505	308
	310
295-2567	651
	654
	661
	664
	667
	670
295-4070	120
	121
295-5440	508
	510
	585
	587
295-7023	▶16
295-7026	244
	▶246
295-7027	1
	▶18
295-7028	2
	▶19
295-7038	▶9
295-7043	▶234
295-7049	▶9
295-7059	▶10
295-7066	▶10
295-7073	246
295-7075	1
	▶244
295-7110	1
	2
295-7123	▶14
295-7126	1
	2
	▶647
295-7149	▶11
295-7158	▶11
295-7162	▶12
295-7167	▶13
295-7176	244
295-7191	▶661
	▶664
295-7195	▶667
	▶670
295-7199	661
	664
	667
	670
295-7226	▶1
295-7227	▶2
295-7301	▶611
295-7311	▶611
295-7315	664
295-7317	664
295-7318	664
295-7319	664
295-7320	664
295-7321	▶611
295-7325	670
295-7327	670
295-7328	670
295-7329	670
295-7330	670
295-7331	▶612
295-7418	291
295-7422	647
295-7423	647
295-7438	291
295-7491	▶2
295-7493	▶2
295-7504	▶291
295-7507	▶291
295-8181	17
	▶122
295-8184	122
	648
296-5162	57
	61
297-3050	47
298-1309	393
	▶403
298-7197	518
298-7198	333
	389
	▶518
299-9116	▶400
	544
299-9119	▶401
	535
	538
	541
	554
299-9121	400
	401
300-5206	14
	▶17
302-4181	32
302-4182	32
302-7821	122
	▶125
302-7822	126
302-7823	126
303-0307	86
303-0337	17
	▶37
303-0338	34
	36
303-6658	510
	587
304-5061	100
	106
305-0584	57
	61
	65
305-0585	57
305-2969	508
	510
	585
	587
305-3661	131
305-4185	201
307-3036	366
	▶371
307-3038	367
	▶372
307-3808	310
307-6115	▶373
	520
307-8201	17
	▶167
307-8337	97
307-9855	67
307-9856	67
308-0421	199
	▶201
308-1222	164
	170
308-1850	32
308-1852	28
308-1853	28
308-1855	28
308-1859	▶34
	39
308-1860	34
308-1861	34
308-1862	39
308-1867	80
308-1869	80
308-1871	49
308-1874	49
308-1875	22
	49
308-1877	116
308-1878	116
308-1879	116
308-1882	116
308-1889	116
308-1890	116
308-1892	116
308-1897	116
308-1899	116
308-1900	116
308-1901	116
308-1902	21
308-1903	21
308-1904	21
308-1905	126
308-1906	126
308-1907	88
308-1908	88
308-1910	39
308-1911	39
308-1912	22
308-1913	22
308-1914	137
308-1984	80
308-2281	15
	▶32
308-2283	15
	▶28
308-2284	15
	▶39
308-2285	15
	▶76
308-2286	15
	▶68
308-2287	15
	▶80
308-2291	15
	▶43
308-2293	15
	▶168
308-2294	15
	▶73
308-2297	15
	▶78
308-2298	15
	▶196
308-2300	15
	▶71
308-2306	15
	▶74
308-2307	15
	▶22
308-2313	15
	▶137
308-2317	15
	▶171
308-2362	28
308-4266	116
308-5206	▶673
309-6728	116
309-6732	116
310-7139	113
311-0023	86
	88
311-0655	116
311-0656	49
311-1171	22
311-2345	17
	▶57
	▶61
311-2349	57
	61
	197
311-3219	325

3

▶ **PRIMARY REFERENCE**

PART NUMBER INDEX

Part	Page
311-4926	226
311-5899	325
311-5903	193
311-5906	323
311-5909	321
311-7561	122
	126
312-1683	510
	587
312-2635	510
	587
312-4560	61
	69
312-7676	400
312-7747	661
	664
312-7748	667
	670
313-5832	116
313-5833	116
313-6211	116
313-6251	401
313-9185	568
	570
313-9323	21
315-5252	15
	▶69
315-7813	15
	▶56
315-7814	15
	▶121
316-1016	61
	65
316-6881	648
316-6890	15
	▶170
316-6896	15
	▶144
316-6963	15
	▶131
316-6997	15
	▶65
316-7030	15
	▶46
317-0690	▶226
317-0959	104
	106
317-0960	104
	106
317-0961	104
	106
317-0962	104
	106
317-0965	15
	▶49
317-0967	15
	▶116
317-0971	15
	▶21
317-0972	15
	▶648
317-0974	15
	▶197
317-0977	15
	▶126
317-0979	15
	▶88
317-0980	15
	▶83
317-0981	15
	▶106
317-0982	15
	▶52
317-2691	181
317-7195	116
318-0555	181
318-8382	80
319-3251	116
321-5907	32

▶ PRIMARY REFERENCE



© 2007 Caterpillar
All Rights Reserved

Printed in U.S.A.