CATERPILLAR®

SEBP5920
June 2010

RUTHZIL TRATOR COMERCIAL DE PEÇAS LTDA 11 97083-6812 ROLANDO

Parts Manual

SIS

See “General Information” for New Parts Manual Features.

226B3 Skid Steer Loader

MWD1-Up (Machine)
CYP1-Up (Engine)

MOTOR PERKINS 3024C C2.2 PARA SERIE:- CAT0226BASNA01212-SI81667

Powered By C2.2 Engine
This Parts Manual is also available .pdf format on Compact Disc (CD - ROM) Caterpillar Form No. SERP5920.

Product and Dealer Information

Note: For product identification plate locations, see the section “Product Identification Information” in the Operation and Maintenance Manual.

Delivery Date: _____

Product Information

Model: _____

Product Identification Number: _____

Engine Serial Number: _____

Transmission Serial Number: _____

Generator Serial Number: _____

Attachment Serial Numbers: _____

Attachment Information: _____

Customer Equipment Number: _____

Dealer Equipment Number: _____

Dealer Information

Name: _____ Branch: _____

Address: _____

_____

_____

	Dealer Contact	Phone Number	Hours
Sales:	_____	_____	_____
Parts:	_____	_____	_____
Service:	_____	_____	_____

MEMORANDA

TABLE OF CONTENTS

Name	Page
GENERAL INFORMATION	A4
REPAIR ALTERNATIVES	A7
SUPPLEMENTAL COOLANT ADDITIVES	A8
MAINTENANCE PARTS	A9
INDEX	A11
MACHINE ARRANGEMENT	1
CHASSIS AR	1
COMMON AR	1
CONTROL AR-MACHINE	1
CONVERSION AR-MACHINE	2
ENGINE ARRANGEMENT	7
ENGINE AR-PRIMARY	7
INSTALLATION AR-ENGINE	9
BASIC ENGINE	10
CAMSHAFT GP	10
CRANKSHAFT GP	11
CYLINDER BLOCK GP	13
CYLINDER HEAD AS	15
CYLINDER HEAD GP	17
DRAIN GP-ENGINE OIL	19
FLYWHEEL GP	20
GUARD GP-BELT	21
HOUSING GP-FLYWHEEL	22
HOUSING GP-FRONT	23
KIT-FRONT GEAR	24
LIFTING GP-ENGINE	25
MOUNTING GP-ENGINE	26
MOUNTING GP-FAN	28
PAN GP-OIL	29
PISTON GP	32
PLATE GP-COVER	33
PULLEY GP-CRANKSHAFT	34
PULLEY GP-WATER PUMP	35
V-BELT GP	36
VALVE MECHANISM GP	37
LUBRICATION SYSTEM	40
FILLER GP-ENGINE OIL	40
FILTER GP-ENGINE OIL	42
PUMP GP-ENGINE OIL	43
COOLING SYSTEM	44
HOUSING GP-WATER REGULATOR	44
MOUNTING GP-RAD & OIL COOLER	45
PUMP GP-WATER	47
RADIATOR & HYD OIL COOLER GP	50
RADIATOR & OIL COOLER MTG GP	51
AIR INLET AND EXHAUST SYSTEM	53
AIR CLEANER GP	53
LINES GP-AIR	55
MUFFLER GP	56
TURBOCHARGER GP	58
FUEL SYSTEM	62
CONTROL GP-GOVERNOR	62
FILTER GP-WATER SEP & FUEL	63
GOVERNOR GP	64
LINES GP-FUEL PRM & FILTER	66
PUMP & MTG GP-FUEL TRANSFER	68
PUMP GP-FUEL INJECTION	69
PUMP GP-FUEL PRM & PRIM FILTER	71
ELECTRICAL AND STARTING SYSTEM	72
ALTERNATOR GP-CHARGING	72
BATTERY GP	73
ELECTRONICS GP-MACHINE	75
GLOW PLUG GP	76
HEATER GP-JACKET WATER	77
LAMP GP-FLOOD	81
LAMP GP-HEAD & SIGNAL	83
LAMP GP-STOP & TAIL	84
LAMP GP-WARNING BEACON	88
LIGHTING GP-FLOOD	89
LIGHTING GP-ROADING	91
RELAY GP	93
SOLENOID GP-SHUTOFF	94
STARTING MOTOR GP-ELECTRIC	95
SWITCH GP-PRESSURE	96
SWITCH GP-TEMPERATURE	99
WIRING GP-AIR CONDITIONER	100
WIRING GP-CAB	101
WIRING GP-CHASSIS	104
WIRING GP-ENGINE	107
WIRING GP-HORN	109
WIRING GP-MACHINE	110
WIRING GP-WORK TOOL	111
POWER TRAIN	112
AXLE GP	112
DRIVE GP-TANDEM	114
FILTER & LINES GP-HYDRAULIC	115
FILTER GP-OIL	117
LINES GP-HYDROSTATIC	120
MANIFOLD GP-RETURN	124
MOTOR & MTG GP-HYDROSTATIC	126
MOTOR GP-PISTON	127
MOUNTING GP-PUMP	129
POWER TRAIN AR	130
PUMP & MTG GP-HYDROSTATIC	131
PUMP GP-PISTON	132
TIRE & RIM GP	134
WHEEL & TIRE AR	140

TABLE OF CONTENTS

Name	Page
FRAME AND BODY	144
BUMPER GP	144
CONVERSION GP-ROADING	145
COUNTERWEIGHT GP	147
ENCLOSURE GP-ENGINE	149
FRAME GP-LOADER	151
FRAME GP-MACHINE	153
GUIDE GP-LINES	154
LIFTING GP-MACHINE	155
MIRROR & MTG GP-REAR VIEW	157
MOUNTING GP-REGISTRATION	159
SUPPRESSION GP-SOUND	161
HYDRAULIC SYSTEM	162
ACCUMULATOR & MTG GP-HYDRAULIC	162
ACCUMULATOR GP-HYDRAULIC	163
ADAPTER GP-OIL LINE	165
CYLINDER & MTG GP-LIFT ARM	166
CYLINDER GP-HYDRAULIC	169
CYLINDER GP-LIFT	170
CYLINDER GP-TILT	172
FITTING GP-HYDRAULIC	174
HYDRAULIC AR	176
LINES GP-COUPLER	179
LINES GP-HYDRAULIC FAN	182
LINES GP-HYDRAULIC OIL COOLER	186
LINES GP-LIFT CYLINDER	188
LINES GP-PILOT	192
LINES GP-PUMP	196
LINES GP-TILT CYLINDER	200
LINES GP-WORK TOOL	204
MANIFOLD & LINES GP-CONTROL	209
MANIFOLD & MTG GP-CONTROL	211
MANIFOLD & SOLENOID GP-CONTROL	213
MANIFOLD GP-CONTROL	215
MOTOR & MTG GP-HYDRAULIC FAN	217
MOTOR AR-HYDRAULIC FAN	219
MOTOR GP-GEAR	220
PUMP & MTG GP-WORK TOOL	223
PUMP GP-GEAR	227
TANK & MTG GP-HYDRAULIC	230
TANK GP-HYDRAULIC	231
VALVE & MTG GP-CONTROL	232
VALVE GP-CONTROL	233
VALVE GP-MANUAL	235
VALVE GP-PILOT	236
VALVE GP-RELIEF	239
VALVE GP-SOLENOID	240
IMPLEMENTS	242
ARM AS-LIFT	242
BRACKET GP-SUPPORT	243
WORK TOOLS	244
COUPLER AR-QUICK	244
COUPLER GP-QUICK	245
CYLINDER & LINK GP-COUPLER	247
HANDLE & PIN GP-COUPLER	249
KIT-ROADING PLATE & MOUNTING	251
LINK GP-COUPLER	252
LOCK GP-QUICK COUPLER	253
OPERATOR STATION	256
ACCUMULATOR GP-REFRIGERANT	256
AIR CONDITIONER & MOUNTING GP	258
AIR CONDITIONER AR	259
AIR CONDITIONER GP	260
ARM GP-WINDOW WIPER	262
ARMREST & MOUNTING GP	263
ARMREST GP	264
BOX GP-STORAGE	266
CAB AR	268
CAB AR-ENCLOSED ROPS	268
CAB AR-OPEN ROPS	269
CAB AS	270
CAB GP-ENCLOSED ROPS	271
COMPRESSOR & MOTOR GP-REFRIG	272
COMPRESSOR & MTG GP-REFRIG	274
CONDENSER & MTG GP-REFRIGERANT	275
CONTROL GP-HANDLE	276
CONTROL GP-PILOT OPERATED HYD	282
COUPLING GP-DRIVE	289
COVER GP-CONSOLE	291
DOOR & MTG GP-CAB	292
DOOR GP-CAB	297
DUCT GP-CAB AIR	303
FRAME GP-WINDOW	305
GUARD GP-ROPS/FOPS	307
HANDHOLD GP	308
HANDLE GP-MODULAR	309
HEATER & MTG GP-CAB	310
HEATER AR-CAB	311
HEATER GP-CAB	312
HOUSING AS-SIDE	314
INSTALLATION GP-COVER & LINES	315
LEVER GP-GOVERNOR	316
LINER GP-CAB	317
LINER-CAB	318
LINES GP-AIR CONDITIONER	319
LINES GP-HEATER	321
MIRROR GP-REAR VIEW	322
MODULE GP-WARNING INDICATOR	323
MOTOR GP-WINDOW WIPER	325
MOUNTING GP-ROPS	326
PANEL GP-INSTRUMENT	327

TABLE OF CONTENTS

Name	Page	Name	Page
PANEL GP-SIDE	330		
PEDAL GP-GOVERNOR	332		
PLATFORM GP-OPERATOR	334		
SEAL GP-CAB	335		
SEAT BELT GP	337		
SEAT GP	341		
SEAT GP-ADJUSTABLE	343		
SPRING GP-GAS	344		
VISOR GP-CAB	345		
WINDOW GP-CAB	347		
SERVICE EQUIPMENT AND SUPPLIES	353		
FILM GP	353		
PARTS GP-MISCELLANEOUS	358		
PLATE & FILM GP	360		
PART NUMBER INDEX	B1		

GENERAL INFORMATION

1. MACHINE IDENTIFICATION

Caterpillar machines are identified by Product Identification Numbers (PIN). Some components included in a machine may be identified by Serial Numbers (S/N). Typical components that will be serialized include engines, transmissions, bulldozers, and rippers. The machine and engine are further identified by arrangement numbers and in some cases modification numbers. These numbers are shown on the product identification plate(s) and on the master plate in the operator's compartment.

Caterpillar dealers need all of these numbers to determine accurate parts identification.

SIS *New Feature*

Effective First Quarter 2001 the Caterpillar Product Identification Number (PIN) changed from 8 to 17 characters. In an effort to provide uniform equipment identification, Caterpillar and other construction equipment manufacturers are moving to comply with the latest version of the product identification numbering standard. Non-road machine PINs are defined by ISO 10261. The new PIN format will apply to all Caterpillar machines and generator sets. The PIN plates and frame marking will display the 17 character PIN. The new format will look like the following:

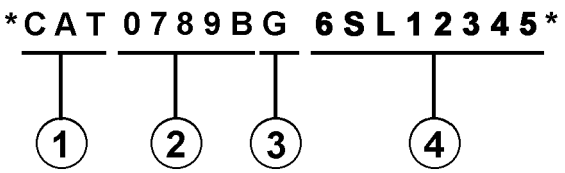

Where:

1. Caterpillar's World Manufacturing Code (characters 1-3)

2. Machine Descriptor (characters 4-8)

3. Check Character (character 9)

4. Machine Indicator Section (MIS) or Product Sequence Number (characters 10-17). These were previously referred to as the Serial Number.

Machines and generator sets produced before First Quarter 2001 will maintain their 8 character PIN format.

Components such as engines, transmissions, axles, etc. and work tools will continue to use an 8 character Serial Number (S/N).

2. ORDERING PARTS

⚠ WARNING

When replacement parts are required for this product Caterpillar recommends using Caterpillar replacement parts or parts with equivalent specifications including, but not limited to, physical dimensions, type, strength and material.

Failure to heed this warning can lead to premature failures, product damage, personal injury or death.

Quality Caterpillar replacement parts are available from Caterpillar dealers throughout the world. Their parts inventories are up to date and include all parts normally required to protect your investment in Caterpillar machines. Dealers may offer repair kits or remanufactured parts to allow selection of the most effective repair alternative for a particular situation. When ordering parts, your order should specify the quantity, part number, part name, and the serial number/product identification number of the machine for which the parts are needed.

3. PARTS MANUAL ORGANIZATION

Product information in this manual is presented as "information elements" that represent all of the components for the specific model. Engine Arrangement and Seat Group are examples of information elements. The information elements are organized alphabetically by part name and secondarily by part number within each major section of the manual.

4. TABLE OF CONTENTS

A table of contents (TOC) is found at the beginning of the manual. The TOC lists each section of the manual with a complete list of all information elements organized as they appear in the manual. Page numbers are provided for quick reference to detailed parts identification illustrations and serviceable consist lists.

5. MAINTENANCE PARTS INDEX

The Maintenance Parts Index, located near the beginning of the manual, references most frequently used maintenance part numbers, providing description, quantity, usage and page number. This information is organized alphabetically by part description.

6. INDEX

The index located near the front of the manual is an alphabetical listing of all information elements included in the manual. Page numbers are provided for quick reference to detailed parts identification illustrations and serviceable consist lists.

7. PART NUMBER INDEX

A numerical index listing all part numbers and the corresponding page number(s) appears at the back of the manual.

8. CAPTIONS

Captions located at the beginning of each information element identify the part number and part name along with additional descriptive information. PIN and S/N information found in each caption should be used to select correct information for a specific machine. Field replacement options, identification of optional attachment components, and where used ("part of") information is also provided.

The first line of a caption is shown in larger type font to indicate the beginning of an information element. Captions for additional pages that may be required to illustrate an information element will be shown in standard type font and will include the term *(contd.)* .

9. NON-SERVICED PARTS

In some instances it is necessary to display non-serviced parts that are a link to a lower level serviceable consist lists. These non-serviced part numbers are shown in *italic* type indicating that they are not available.

10. PARTS LIST REFERENCE NUMBERS

Numbers shown in the Ref No column correspond to numbers used in the associated graphic(s). An alphabetic suffix may be added to a reference number to identify lower level consist items. Numbers shown in the Graphic Ref column refer to the graphic number identifier displayed in the lower left corner of each illustration. The Graphic Ref number may be used in combination with the item Ref No to determine the correct part number. There may be intentional omission of a Ref No in a consist list as information is updated to reflect the latest serviceable part numbers.

11. INDENTED PART NAMES

When a part name is indented in a parts list, it is part of (included in) the group or assembly under which it is indented.

12. ILLUSTRATION REFERENCE LETTERS

When necessary, illustrations contain reference letters (A, B, C etc.) that are intended to track lines and harnesses from one point to another. They are also used to show where to reconnect illustrations that have been separated.

13. ABBREVIATIONS AND SYMBOLS

O.D. – Outside Diameter
I.D. – Inside Diameter
A – Not Part Of This Group
B – Use As Required
C – Change From Previous Type
D – Order By The Meter
E – Order By The Centimeter
F – Not Shown
G – Order By The Inch
I – Refer To Hydraulic Information System
M – Metric Part
R – Remfg Part May Be Available
Y – Separate Illustration
Z – Not Serviced Separately

SIS *New Feature*

14. DESCRIPTION OF TYPE CHANGES

Type - A type is defined as any configuration change that requires an additional Information Element for an Arrangement, Group, or Assembly. If serial number breaks for types are not available, a type # (Type 1, Type 2, etc.) will be displayed in the caption. These "type" changes are identified with a "C" note (change from previous type) in the Parts List. Only the "types" that apply to this Parts Manual will be included. Additional types may exist causing "C" notes to appear on an Information Element when no other types are shown.

15.<END>

This symbol indicates the end of an information element.

NOTE:

Continuing improvement and advancement of product design may cause changes to your machine which may not be included in this publication. Whenever a question arises regarding your Caterpillar product or this publication, please consult your Caterpillar dealer for the latest available information.

GENERAL INFORMATION

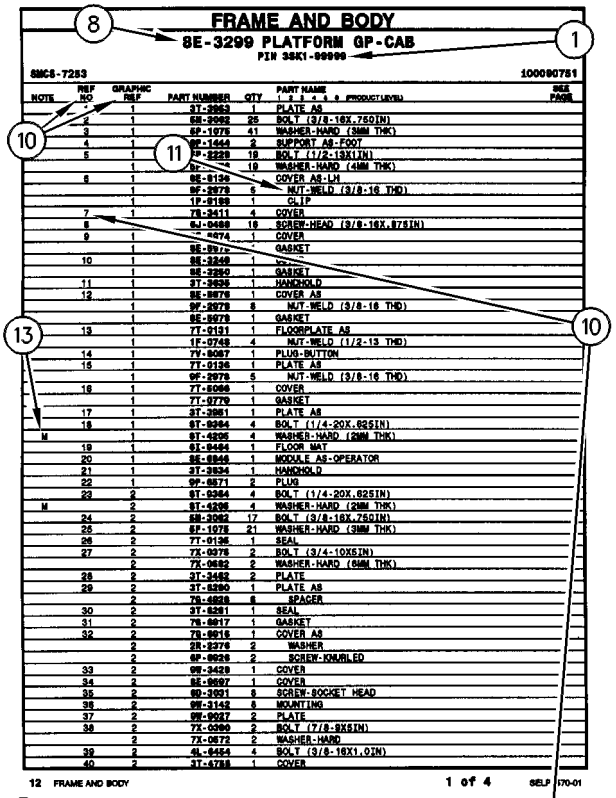

FRAME AND BODY

8E-3299 PLATFORM GP-CAB

PIN 3SK1-99999

SMCS-7283 100090751

NOTE	REF NO	GRAPHIC REF	PART NUMBER	QTY	PART NAME 1 2 3 4 5 6 (PRODUCT LEVEL)	SEE PAGE
	*	1	3T-3963	1	PLATE AS	
	2	1	6M-2062	25	BOLT (3/8-16X.750IN)	
	3	1	6P-1075	41	WASHER-HARD (3MM THK)	
	4	1	9F-1444	2	SUPPORT AS-FOOT	
	5	1	9P-2229	19	BOLT (1/2-13X1IN)	
		1	9P-[illegible]	19	WASHER-HARD (4MM THK)	
	6	1	8E-8136	*	COVER AS-LH	
		1	9F-2078	6	NUT-WELD (3/8-16 THD)	
		1	1P-8189	1	CLIP	
	7	1	7X-3411	4	COVER	
	8	1	6J-0468	18	SCREW-HEAD (3/8-16X.875IN)	
	9	1	[illegible]-0074	1	COVER	
		1	8E-8976	*	GASKET	
	10	1	8E-3248	1	[illegible]	
		1	8E-2260	1	GASKET	
	11	1	3T-3636	1	HANDHOLD	
	12	1	8E-8976	1	COVER AS	
		1	9F-2078	8	NUT-WELD (3/8-16 THD)	
		1	8E-8978	1	GASKET	
	13	1	7T-0131	1	FLOORPLATE AS	
		1	1F-0748	4	NUT-WELD (1/2-13 THD)	
	14	1	7Y-8067	1	PLUG-BUTTON	
	15	1	7T-0126	1	PLATE AS	
		1	9F-2078	5	NUT-WELD (3/8-16 THD)	
	16	1	7T-8066	1	COVER	
		1	7T-0779	1	GASKET	
	17	1	3T-3961	1	PLATE AS	
	18	1	9T-0264	4	BOLT (1/4-20X.625IN)	
M		1	9T-4295	4	WASHER-HARD (2MM THK)	
	19	1	9X-8464	1	FLOOR MAT	
	20	1	8E-8846	1	MODULE AS-OPERATOR	
	21	1	3T-3934	1	HANDHOLD	
	22	1	9F-8871	2	PLUG	
	23	2	9T-0264	4	BOLT (1/4-20X.625IN)	
M		2	9T-4295	4	WASHER-HARD (2MM THK)	
	24	2	6M-2062	17	BOLT (3/8-16X.750IN)	
	25	2	6P-1075	21	WASHER-HARD (3MM THK)	
	26	2	7T-0136	1	SEAL	
	27	2	7X-0078	2	BOLT (3/4-10X5IN)	
		2	7X-0682	2	WASHER-HARD (6MM THK)	
	28	2	3T-3482	2	PLATE	
	29	2	3T-8290	1	PLATE AS	
		2	7S-4828	8	SPACER	
	30	2	3T-8281	1	SEAL	
	31	2	7S-8817	1	GASKET	
	32	2	7S-8816	1	COVER AS	
		2	5R-2276	2	WASHER	
		2	9F-8826	2	SCREW-KNURLED	
	33	2	9M-3429	1	COVER	
	34	2	8E-8697	1	COVER	
	35	2	9D-3931	8	SCREW-SOCKET HEAD	
	36	2	9M-3142	8	MOUNTING	
	37	2	9M-9017	2	PLATE	
	38	2	7X-0360	2	BOLT (7/8-9X5IN)	
		2	7X-0672	2	WASHER-HARD	
	39	2	4L-8454	4	BOLT (3/8-16X1.0IN)	
	40	2	3T-4788	1	COVER	

12 FRAME AND BODY 1 of 4 SELP4570-01

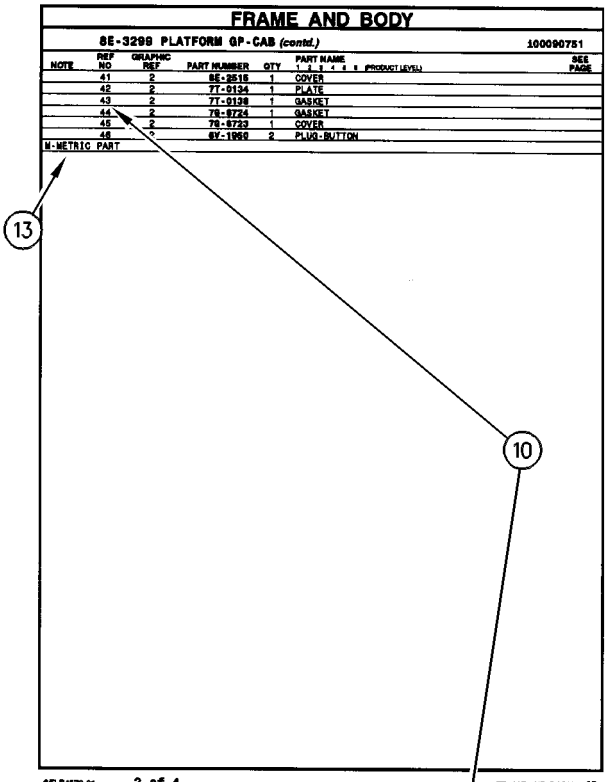

FRAME AND BODY

8E-3299 PLATFORM GP-CAB (contd.) 100090751

NOTE	REF NO	GRAPHIC REF	PART NUMBER	QTY	PART NAME 1 2 3 4 5 6 (PRODUCT LEVEL)	SEE PAGE
	41	2	8E-2516	1	COVER	
	42	2	7T-0134	1	PLATE	
	43	2	7T-0138	1	GASKET	
	44	2	7S-8724	1	GASKET	
	45	2	7S-8723	1	COVER	
	46	*	8Y-1950	2	PLUG-BUTTON	

M-METRIC PART

SELP4570-01 2 of 4 FRAME AND BODY 13

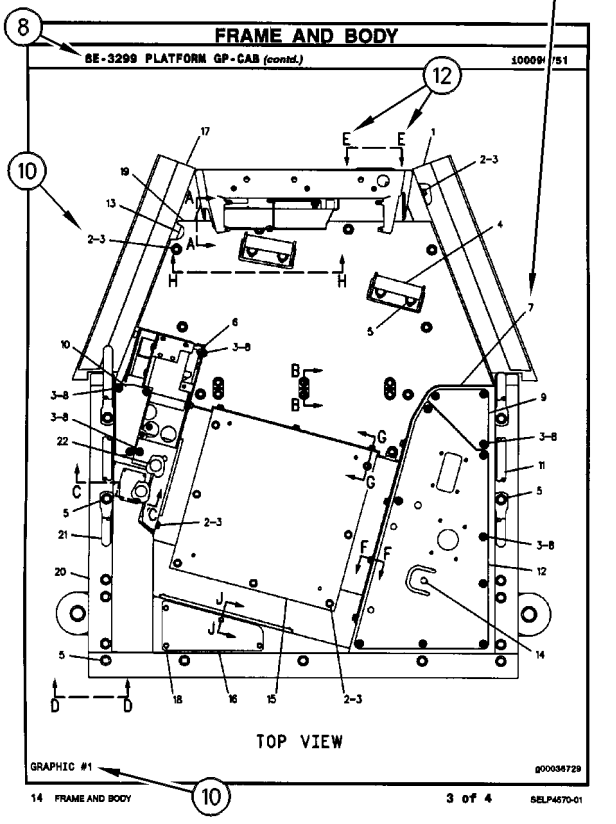

FRAME AND BODY

8E-3299 PLATFORM GP-CAB (contd.) 100090751

TOP VIEW

GRAPHIC #1 g00036729

14 FRAME AND BODY 3 of 4 SELP4570-01

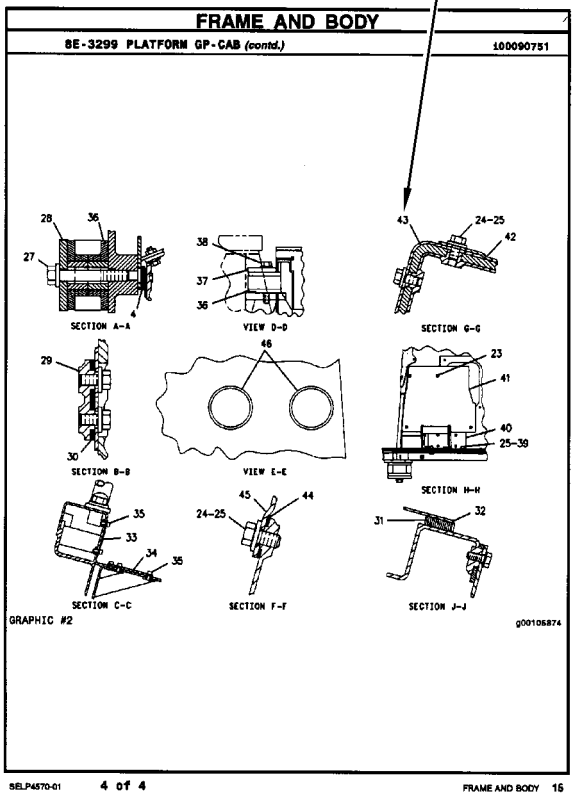

FRAME AND BODY

8E-3299 PLATFORM GP-CAB (contd.) 100090751

SECTION A-A

VIEW D-D

SECTION G-G

SECTION B-B

VIEW E-E

SECTION H-H

SECTION C-C

SECTION F-F

SECTION J-J

GRAPHIC #2 g00105874

SELP4570-01 4 of 4 FRAME AND BODY 15

REPAIR ALTERNATIVES

REMANUFACTURED COMPONENTS

As an option when making repairs consider Caterpillar Remanufactured Components. Components that are available through the Caterpillar Remanufactured Program are identified three ways in the parts book:

- with the letter R in the note field of the parts list
- with an R* at the beginning of the first line of the caption
- with an *R at the end of the first line of the caption

Typical components included in the Remanufacturing Program include:

ALTERNATORS
CONNECTING RODS
CRANKSHAFTS - UNDERSIZE
CRANKSHAFTS - UPGRADE TO NEW
CYLINDER HEADS
ELECTRONIC CONTROL MODULES (ECM)
ELECTRONIC SENSORS
FUEL INJECTORS
FUEL NOZZLES
FUEL PUMPS
GOVERNORS
OIL PUMPS
PISTONS
SHORT BLOCKS
STARTERS
TURBOCHARGERS - COMPLETE
TURBOCHARGER CARTRIDGES
WATER PUMPS

Caterpillar Remanufactured engines for many engine arrangements are also available.

SUPPLEMENTAL COOLANT ADDITIVES

CUSTOMER BENEFITS:

Protects against cavitation, foam, erosion, corrosion, and scale buildup in cooling systems.

- Provides measured coolant conditioner.

DESCRIPTION:

Additives deplete from the coolant with normal operation. For this reason, Supplemental Coolant Additives (SCA) must be added to all heavy duty coolants at regular intervals. In addition, when not using a fully formulated, pre-charged antifreeze, like Caterpillar's DEAC, an initial charge of SCA must be added to the cooling system. The amount of SCA added to the system is dependent on the capacity of the system.

The SCA for initial fill is provided as a liquid. SCA's for maintenance intervals are available in liquid form and as a spin-on element. (No Spin-on available for 3600 Family of Engines)

NOTE:

The amount of SCA added at initial fill is not the same as the amount added at maintenance intervals.

The coolant additive elements can be used with any ethylene or propylene glycol type antifreeze which meets ASTM D4985 or ASTM D5345 Specifications.

NOTE:

For use with standard heavy duty coolant only, not for use with Extended Life Coolant.

PARTS NEEDED:

Cooling System Capacity		Liquid SCA at Initial Fill	Liquid SCA at Maintenance*	Spin-on SCA Maintenance Element*
Liters	Gallons			
22-30	(6-8)	3P-2044 (1)	6V-3542 (1)	111-2370 (1)
30-38	(8-10)	3P-2044 (1) 6V-3542 (1)	111-2372 (1)	111-2369 (1)
38-49	(10-13)	3P-2044 (1) 8T-1589 (1)	111-2372 (1)	111-2369 (1)
49-64	(13-17)	3P-2044 (2)	8T-1589 (1)	9N-3368 (1)
64-83	(17-22)	3P-2044 (2) 8T-1589 (1)	111-2372 (1) 6V-3542 (1)	111-2371 (1)
83-114	(22-30)	3P-2044 (3) 8T-1589 (1)	3P-2044 (1)	9N-3718 (1)
114-163	(30-43)	3P-2044 (5)	3P-2044 (1) 6V-3542 (1)	111-2371 (2)
163-242	(43-64)	3P-2044 (8)	3P-2044 (2)	9N-3718 (2)

** Normal maintenance period is 250 hrs. See your Operation and Maintenance Manual for complete coolant maintenance instructions.*

( ) Indicates quantity required.

MAINTENANCE PARTS

DESCRIPTION	PART NUMBER	QTY	WHERE USED	PAGE
AIR INLET AND EXHAUST SYSTEM				
FILTER ELEMENT AS-AIR (PRIMARY)	231-0167	1	AIR CLEANER GP	54
FILTER ELEMENT AS-AIR (SECONDARY)	231-0168	1	AIR CLEANER GP	54
GAUZE (CRANKCASE BREATHER)	153-5939	1	TURBOCHARGER GP	58
SEAL-VALVE COVER	233-0695	1	TURBOCHARGER GP	58
BASIC ENGINE				
V-BELT (WATER PUMP)	211-5172	1	V-BELT GP	36
COOLING SYSTEM				
CAP AS-RADIATOR (SEA WATER HEAT EXCHANGER)	036-1865	1	RADIATOR & HYD OIL COOLER GP	50
CAP-VENTED (COOLANT RECOVERY)	169-6715	1	RADIATOR & OIL COOLER MTG GP	51
HOSE-RADIATOR (LOWER)	231-3579	1	RADIATOR & OIL COOLER MTG GP	51
HOSE-RADIATOR (UPPER)	231-3578	1	RADIATOR & OIL COOLER MTG GP	51
REGULATOR-WATER TEMPERATURE	249-5541	1	PUMP GP-WATER	47
ELECTRICAL AND STARTING SYSTEM				
BATTERY (12-VOLT, MAINTENANCE FREE)	153-5656	1	BATTERY GP	73
	230-6368	1	BATTERY GP	74
BELT-DRIVE (WARNING BEACON)	9X-8139	1	LAMP GP-WARNING BEACON	88
FLASHER AS (12-VOLT) (STOP LIGHT)	242-9000	1	LAMP GP-STOP & TAIL	87
		1	LIGHTING GP-ROADING	91
FUSE (10-AMPERE)	113-8490	7	WIRING GP-CAB	101
FUSE (100-AMPERE) (MAIN)	235-1845	1	WIRING GP-CHASSIS	104
FUSE (15-AMPERE)	113-8491	10	WIRING GP-CAB	101
FUSE (20-AMPERE)	113-8492	2	WIRING GP-CAB	101
	267-2680	1	RELAY GP	93
		2	WIRING GP-CAB	101
FUSE (30-AMPERE)	124-3548	1	WIRING GP-CAB	101
FUSE (60-AMPERE)	267-2701	1	RELAY GP	93
FUSE AS (MAIN POWER)	258-4136	1	WIRING GP-CAB	101
FUSE AS (ROADING)	258-4134	1	LIGHTING GP-ROADING	91
GLOW PLUG	172-4585	4	GLOW PLUG GP	76
LAMP (12-VOLT, 21-WATT)	9W-3326	1	LAMP GP-STOP & TAIL	85
LAMP (12-VOLT, 21-WATT) (TURN SIGNAL)	9W-3326	1	LAMP GP-HEAD & SIGNAL	83
LAMP (12-VOLT, 4-WATT)	100-3246	1	LAMP GP-HEAD & SIGNAL	83
LAMP (12-VOLT, 5-WATT)	084-4348	1	LAMP GP-STOP & TAIL	84
		1	LAMP GP-STOP & TAIL	85
LAMP (12-VOLT, 55-WATT) (FLOODLIGHT)	9W-0607	1	LAMP GP-FLOOD	81
		1	LAMP GP-FLOOD	82
LAMP (12-VOLT, 55-WATT) (WARNING BEACON)	9X-8118	1	LAMP GP-WARNING BEACON	88
LAMP-HEAD (12-VOLT, 60/55-WATT) (CLEAR)	9W-3324	1	LAMP GP-HEAD & SIGNAL	83

MAINTENANCE PARTS

DESCRIPTION	PART NUMBER	QTY	WHERE USED	PAGE
FRAME AND BODY				
BREATHER (EXHAUST BYPASS)	9G-5127	2	FRAME GP-LOADER	151
LAMP (12-VOLT) (REGISTRATION PLATE)	7M-9957	1	MOUNTING GP-REGISTRATION	159
PLUG-MAGNETIC (FRAME)	3S-9182	5	FRAME GP-LOADER	151
FUEL SYSTEM				
CAP-FUEL (FILTER)	304-3885	1	LINES GP-FUEL PRM & FILTER	66
FILTER ELEMENT-FUEL (WATER SEPARATOR)	156-1200	1	FILTER GP-WATER SEP & FUEL	63
FILTER-FUEL (IN-LINE)	1G-7206	1	LINES GP-FUEL PRM & FILTER	66
HYDRAULIC SYSTEM				
BREATHER (INLINE) (HYDRAULIC OIL)	207-9729	1	TANK & MTG GP-HYDRAULIC	230
CAP AS-FILLER (HYDRAULIC TANK)	142-8937	1	TANK GP-HYDRAULIC	231
SCREEN (HYDRAULIC)	195-6768	1	LINES GP-PILOT	194
SCREEN-SUCTION (HYDRAULIC TANK)	348-4609	1	TANK GP-HYDRAULIC	231
LUBRICATION SYSTEM				
CAP-FILLER (ENGINE OIL)	334-0272	1	FILLER GP-ENGINE OIL	40
CAP-OIL FILLER (ENGINE)	217-7358	1	FILLER GP-ENGINE OIL	40
FILTER AS-ENGINE OIL	220-1523	1	FILTER GP-ENGINE OIL	42
OPERATOR STATION				
BLADE-WIPER (558-MM) (CAB DOOR)	320-1390	1	DOOR GP-CAB	300
BLADE-WIPER (558-MM) (FRONT, REAR)	320-1390	1	DOOR GP-CAB	298
BREATHER (AIR CONDITIONER)	9G-5127	1	COMPRESSOR & MOTOR GP-REFRIG	272
FILTER ELEMENT-CAB AIR	231-8132	1	AIR CONDITIONER GP	260
		1	HEATER GP-CAB	312
	303-6658	1	AIR CONDITIONER GP	260
		1	HEATER GP-CAB	312
LAMP (12-VOLT) (DOME)	210-8754	1	PANEL GP-INSTRUMENT	327
LAMP (12-VOLT) (FUEL LEVEL INDICATOR)	7X-9065	1	PANEL GP-INSTRUMENT	328
POWER TRAIN				
FILTER-OIL (ADVANCED EFFICIENCY) (HYDRAULIC)	1G-8878	1	FILTER GP-OIL	117

INDEX

Name	Page
A	
ACCUMULATOR & MTG GP-HYDRAULIC	162
ACCUMULATOR GP-HYDRAULIC–CHARGED	163
ACCUMULATOR GP-HYDRAULIC–UNCHARGED	164
ACCUMULATOR GP-REFRIGERANT–CHARGED	257
ACCUMULATOR GP-REFRIGERANT–UNCHARGED	256
ADAPTER GP-OIL LINE	165
AIR CLEANER GP	53 54
AIR CONDITIONER & MOUNTING GP	258
AIR CONDITIONER AR	259
AIR CONDITIONER GP	260
ALTERNATOR GP-CHARGING	72
ARM AS-LIFT	242
ARM GP-WINDOW WIPER	262
ARMREST & MOUNTING GP	263
ARMREST GP	264
AXLE GP	112 113
B	
BATTERY (12-VOLT, MAINTENANCE FREE)	73 74
BATTERY COMPARTMENT DRIP PAN	29
BATTERY GP–HEAVY-DUTY	74
BATTERY GP–STANDARD	73
BELT-DRIVE (WARNING BEACON)	88
BLADE-WIPER (558-MM) (CAB DOOR)	300
BLADE-WIPER (558-MM) (FRONT, REAR)	298
BOX GP-STORAGE	266
BOX GP-STORAGE–LITERATURE	267
BRACKET GP-SUPPORT	243
BREATHER (AIR CONDITIONER)	272
BREATHER (EXHAUST BYPASS)	151
BREATHER (INLINE) (HYDRAULIC OIL)	230
BUMPER GP–REAR	144
C	
CAB AR	268
CAB AR-ENCLOSED ROPS–MECH SUSP SEAT	268
CAB AR-ENCLOSED ROPS–MECH SUSP SEAT & A/C	268
CAB AR-OPEN ROPS	269
CAB AR-OPEN ROPS–MECH SUSP SEAT	269
CAB AS	270
CAB GP-ENCLOSED ROPS	271
CAMSHAFT GP	10
CAP AS-FILLER (HYDRAULIC TANK)	231
CAP AS-RADIATOR (SEA WATER HEAT EXCHANGER)	50
CAP-FILLER (ENGINE OIL)	40
CAP-FUEL (FILTER)	66
CAP-OIL FILLER (ENGINE)	40
CAP-VENTED (COOLANT RECOVERY)	51
CHASSIS AR	1
COMMON AR	1
COMPRESSOR & MOTOR GP-REFRIG	272
COMPRESSOR & MTG GP-REFRIG	274
COMPRESSOR GP-REFRIGERANT	272
CONDENSER & MTG GP-REFRIGERANT	275
CONNECTOR GP	198
CONTROL AR-MACHINE–AUX PROPORTIONAL FLOW	2
CONTROL AR-MACHINE–ON, OFF AUXILIARY CONTROL	1
CONTROL GP-GOVERNOR	62
CONTROL GP-HANDLE	281
CONTROL GP-HANDLE–DIRECTION, SPEED	276
CONTROL GP-HANDLE–LH	278 279
CONTROL GP-HANDLE–RH	280 281
CONTROL GP-HANDLE–WORK TOOL	277
CONTROL GP-PILOT OPERATED HYD	282 284 286 287 288
CONTROL GP-PILOT OPERATED HYD–AUXILIARY	283
CONTROL GP-UNPROGRAMMED (MACHINE)	75
CONVERSION AR-MACHINE	3 4 5 6
CONVERSION AR-MACHINE–NACD	2
CONVERSION GP-ROADING–GERMANY	145
CONVERSION GP-ROADING–ITALY	146
COUNTERWEIGHT GP	147 148
COUPLER AR-QUICK–HYDRAULIC	244
COUPLER AR-QUICK–MECHANICAL	244
COUPLER GP-QUICK–HYDRAULIC	246
COUPLER GP-QUICK–MECHANICAL	245
COUPLING GP-DRIVE–REFRIGERANT COMPRESSOR, MOTOR	289
COVER GP-ACCESS	260 312
COVER GP-CONSOLE–WITHOUT AIR CONDITIONER, HEATER	291

INDEX

Name	Page
CRANKSHAFT GP	11
CYLINDER & LINK GP-COUPLER–LH	247
CYLINDER & LINK GP-COUPLER–RH	248
CYLINDER & MTG GP-LIFT ARM	166
CYLINDER BLOCK GP	13
CYLINDER GP-HYDRAULIC–COUPLER	169
CYLINDER GP-LIFT–LH	170
CYLINDER GP-LIFT–RH	171
CYLINDER GP-TILT–LH	172
CYLINDER GP-TILT–RH	173
CYLINDER HEAD AS	15
CYLINDER HEAD GP	17
D	
DOOR & MTG GP-CAB–GLASS	295
DOOR & MTG GP-CAB–POLYCARBONATE	292
DOOR GP-CAB–GLASS	297
	298
DOOR GP-CAB–POLYCARBONATE	300
	302
DRAIN GP-ENGINE OIL	19
DRIVE GP-TANDEM	114
DUCT GP-CAB AIR	303
E	
ELECTRONICS GP-MACHINE	75
ENCLOSURE GP-ENGINE	149
ENGINE AR-PRIMARY	7
	8
F	
FAN GP-BLOWER	50
FILLER GP-ENGINE OIL	40
FILM (FOPS)	307
FILM (POWER DISTRIBUTION)	101
FILM (REFLECTIVE)	251
FILM (TEMPERATURE CONTROL)	260
	312
FILM GP	355
	356
FILM GP–HIGH FLOW	357
FILM GP–UN	353
FILM-IDENTIFICATION (13-KM/H)	4
	6
FILM-IDENTIFICATION (FUSE, RELAY PANEL)	102
FILM-IDENTIFICATION (POWER RECEPTACLE, 12-VOLT)	362
	365
FILM-INFORMATION (LIFT EYE LOCATION)	155
	156
FILM-INFORMATION (READ OMM)	362
FILM-INSTRUCTION (DASH)	328
FILM-INSTRUCTION (INSTRUMENT PANEL)	328
FILM-INSTRUCTION (KEY SWITCH)	328
FILM-INSTRUCTION (MACHINE CONTROL, READ OMM)	284
	286
	287
	288
FILM-INSTRUCTION (MACHINE CONTROLS)	282
	283
FILM-INSTRUCTION (NO STEP)	179
FILM-INSTRUCTION (PULL RING, ALTERNATE EXIT)	302
FILM-STRIPE (REFLECTIVE, RED, WHITE)	251
FILM-WARNING (NO WELD, NO DRILL, READ OMM)	362
FILM-WARNING (STEERING)	145
FILTER & LINES GP-HYDRAULIC	115
FILTER AS-ENGINE OIL	42
FILTER ELEMENT AS-AIR (PRIMARY)	54
FILTER ELEMENT AS-AIR (SECONDARY)	54
FILTER ELEMENT-CAB AIR	260
	312
FILTER ELEMENT-FUEL (WATER SEPARATOR)	63
FILTER GP-ENGINE OIL	42
FILTER GP-OIL	118
FILTER GP-OIL–HYDRAULIC	117
FILTER GP-WATER SEP & FUEL	63
FILTER-FUEL (IN-LINE)	66
FILTER-OIL (ADVANCED EFFICIENCY) (HYDRAULIC)	117
FITTING GP	204
FITTING GP (RETURN MANIFOLD)	196
	198
FITTING GP-HYDRAULIC	196
FITTING GP-HYDRAULIC–QUICK DISCONNECT, FEMALE, HIGH FLOW	175
FITTING GP-HYDRAULIC–QUICK DISCONNECT, MALE, HIGH FLOW	174
FLASHER AS (12-VOLT) (STOP LIGHT)	87
	91
FLOOR MAT	1
FLYWHEEL GP	20
FRAME GP-LOADER	151
FRAME GP-MACHINE	153
FRAME GP-WINDOW–LH	306
FRAME GP-WINDOW–RH	305
FUSE (10-AMPERE)	101
FUSE (100-AMPERE) (MAIN)	104
FUSE (15-AMPERE)	101
FUSE (20-AMPERE)	93
	101
FUSE (30-AMPERE)	101
FUSE (60-AMPERE)	93

INDEX

Name	Page
FUSE AS (MAIN POWER)	101
FUSE AS (ROADING)	91
G	
GAUGE GP-FUEL LEVEL	328
GAUGE-SIGHT (COOLANT LEVEL)	50
GAUGE-SIGHT (HYDRAULIC TANK)	231
GAUZE (CRANKCASE BREATHER)	58
GLOW PLUG	76
GLOW PLUG GP	76
GOVERNOR GP	64
GUARD GP-BELT	21
GUARD GP-ROPS/FOPS	307
GUIDE GP-LINES	154
H	
HANDHOLD GP	308
HANDLE & PIN GP-COUPLER–LH	250
HANDLE & PIN GP-COUPLER–RH	249
HANDLE GP-MODULAR	278 279 309
HARNESS AS-CAB (CAB REAR)	101
HARNESS AS-CHASSIS (HORN)	109
HARNESS AS-ENGINE	107
HARNESS AS-FUEL TANK	100
HARNESS AS-HEATER & AIR COND	100 260 312
HARNESS AS-LIGHTING (REAR)	104
HARNESS AS-OPERATOR CONTROLS	284
HARNESS AS-PANEL	327
HARNESS AS-PLATFORM	104
HARNESS AS-REAR LIGHTING	91
HARNESS AS-REAR LIGHTING (RIGHT SIDE, LICENSE PLATE) (INDICATOR)	160
HARNESS AS-SOLENOID (DEMAND FAN)	110
HARNESS AS-SWITCH (REAR LIGHTS)	87 91
HARNESS AS-WINDOW WIPER	292 295 298 300
HARNESS AS-WORK TOOL (LIFT ARM)	111
HEATER & MTG GP-CAB	310
HEATER AR-CAB	311
HEATER GP-CAB	312
HEATER GP-JACKET WATER	77 78 79 80
HORN AS (24-VOLT, LOW TONE)	287 288
HOSE-RADIATOR (LOWER)	51
HOSE-RADIATOR (UPPER)	51
HOUSING AS-SIDE– AIR CONDITIONER, HEATER	314
HOUSING GP-FLYWHEEL	22
HOUSING GP-FRONT	23
HOUSING GP-WATER REGULATOR	44
HYDRAULIC AR	177
HYDRAULIC AR–AUXILIARY, HIGH FLOW	176
HYDRAULIC AR–AUXILIARY, HIGH FLOW, SOUND SUPPRESSION	176
HYDRAULIC AR–AUXILIARY, STANDARD	177
HYDRAULIC AR–AUXILIARY,STANDARD,SOUND SUPPRESSION	178
HYDRAULIC AR–WITH WORK TOOL POSITIONER	177
HYDRAULIC AR–WITHOUT WORK TOOL POSITIONER	176
I	
INDICATOR (AIR CLEANER)	54
INSTALLATION AR-ENGINE	9
INSTALLATION GP-COVER & LINES–WITHOUT A/C, HEATER	315
K	
KIT-FRONT GEAR	24
KIT-ROADING PLATE & MOUNTING–BUCKET	251
L	
LAMP (12-VOLT) (DOME)	327
LAMP (12-VOLT) (FUEL LEVEL INDICATOR)	328
LAMP (12-VOLT) (REGISTRATION PLATE)	159
LAMP (12-VOLT, 21-WATT)	85
LAMP (12-VOLT, 21-WATT) (TURN SIGNAL)	83
LAMP (12-VOLT, 4-WATT)	83
LAMP (12-VOLT, 5-WATT)	84 85
LAMP (12-VOLT, 55-WATT) (FLOODLIGHT)	81 82
LAMP (12-VOLT, 55-WATT) (WARNING BEACON)	88
LAMP GP-DOME (12-VOLT)	327
LAMP GP-FLOOD	81 82
LAMP GP-HEAD & SIGNAL–RH	83
LAMP GP-REGISTRATION PLATE	159
LAMP GP-STOP & TAIL	84 85

INDEX

Name	Page
LAMP GP-STOP & TAIL–REAR	86, 87
LAMP GP-WARNING BEACON–AMBER	88
LAMP-HEAD (12-VOLT, 60/55-WATT) (CLEAR)	83
LEVER GP-GOVERNOR	316
LEVER GP-HAND CONTROL (GOVERNOR)	316
LIFTING GP-ENGINE	25
LIFTING GP-MACHINE	155, 156
LIGHTING GP-FLOOD–FRONT	90
LIGHTING GP-FLOOD–REAR	89
LIGHTING GP-ROADING	91
LINER GP-CAB	317
LINER-CAB–GRAY	318
LINES GP-AIR	55
LINES GP-AIR CONDITIONER	319
LINES GP-COUPLER–HYDRAULIC	179
LINES GP-FUEL PRM & FILTER	66
LINES GP-HEATER	321
LINES GP-HYDRAULIC FAN	182
LINES GP-HYDRAULIC FAN–CAB HEATER	184
LINES GP-HYDRAULIC OIL COOLER	186
LINES GP-HYDROSTATIC	120, 122
LINES GP-LIFT CYLINDER– WITH WORK TOOL POSITIONER	190
LINES GP-LIFT CYLINDER– WITHOUT WORK TOOL POSITIONER	188
LINES GP-PILOT–DIRECTION, SPEED	192
LINES GP-PILOT–WORK TOOL	194
LINES GP-PUMP–SUCTION	196, 198
LINES GP-TILT CYLINDER– WITHOUT WORK TOOL POSITIONER	200
LINES GP-TILT CYLINDER– WORK TOOL POSITIONER	202
LINES GP-WORK TOOL	207
LINES GP-WORK TOOL–HIGH FLOW	204
LINK GP-COUPLER	252
LITERATURE GP	1
LOCK GP (ENGINE)	149
LOCK GP-CYLINDER	266
LOCK GP-QUICK COUPLER–LH	255
LOCK GP-QUICK COUPLER–MECHANICAL	253
LOCK GP-QUICK COUPLER–RH	254

M

Name	Page
MANIFOLD & LINES GP-CONTROL– PARKING BRAKE	209
MANIFOLD & MTG GP-CONTROL	212
MANIFOLD & MTG GP-CONTROL– WORK TOOL POSITIONER	211
MANIFOLD & SOLENOID GP-CONTROL– PARKING BRAKE	214
MANIFOLD & SOLENOID GP-CONTROL– WORK TOOL POSITIONER	213
MANIFOLD GP-CONTROL (BOOSTED AUXILIARY HYD FLOW)	212
MANIFOLD GP-CONTROL– BOOSTED AUXILIARY HYDRAULIC FLOW	216
MANIFOLD GP-CONTROL– QUICK COUPLER	215
MANIFOLD GP-RETURN	124
MIRROR & MTG GP-REAR VIEW– WITH ROADING LIGHT MOUNT	157, 158
MIRROR GP-REAR VIEW	157, 322
MODULE GP-WARNING INDICATOR	323, 324
MOTOR & MTG GP-HYDRAULIC FAN	217, 218
MOTOR & MTG GP-HYDROSTATIC	126
MOTOR AR-HYDRAULIC FAN–NACD	219
MOTOR AR-HYDRAULIC FAN–STANDARD	219
MOTOR GP-GEAR	222
MOTOR GP-GEAR (FAN, DEMAND)	217
MOTOR GP-GEAR–COMPRESSOR	220
MOTOR GP-GEAR–HYDRAULIC FAN	221
MOTOR GP-PISTON–HYDROSTATIC	127
MOTOR GP-WINDOW WIPER	325
MOUNTING GP-ENGINE–HARDWARE	27
MOUNTING GP-ENGINE–SUPPORTS	26
MOUNTING GP-FAN	28
MOUNTING GP-LICENSE PLATE	160
MOUNTING GP-PUMP	129
MOUNTING GP-RAD & OIL COOLER	45
MOUNTING GP-REGISTRATION	160
MOUNTING GP-REGISTRATION– WITH WIRING & LIGHTS	159
MOUNTING GP-ROPS	326
MUFFLER GP	56, 57

O

Name	Page
ORIFICE AS-AIR CONDITIONER	260

P

Name	Page
PADLOCK GP	145
PAN GP-OIL	29
PANEL GP-INSTRUMENT	327
PANEL GP-SIDE	330
PANEL GP-SIDE–WITHOUT HEATER OR A/C	331
PARTS GP-MISCELLANEOUS	358
PEDAL GP-GOVERNOR	332

INDEX

Name	Page
	333
PISTON GP	32
PLATE & FILM GP	360
	361
	362
	365
PLATE GP-COVER–BLANKING	33
PLATFORM GP-OPERATOR	334
PLUG-MAGNETIC (FRAME)	151
POWER TRAIN AR	130
PULLEY GP-CRANKSHAFT	34
PULLEY GP-WATER PUMP	35
PUMP & MTG GP-FUEL TRANSFER	68
PUMP & MTG GP-HYDROSTATIC	131
PUMP & MTG GP-WORK TOOL	223
	224
	225
	226
PUMP GP-ENGINE OIL	43
PUMP GP-FUEL INJECTION	69
PUMP GP-FUEL PRIMING (PRIMARY FILTER)	71
PUMP GP-FUEL PRM & PRIM FILTER–WATER SEPARATOR	71
PUMP GP-GEAR	225
	226
	229
PUMP GP-GEAR–WORK TOOL	228
PUMP GP-GEAR–WORK TOOL, HIGH FLOW	227
PUMP GP-PISTON	132
PUMP GP-WATER	47

R

RADIATOR & HYD OIL COOLER GP	50
RADIATOR & OIL COOLER MTG GP	51
RECOVERY GP-COOLANT	51
REGULATOR-WATER TEMPERATURE	47
RELAY AS (12-VOLT) (AIR CONDITIONER, HEATER)	260
RELAY AS (12-VOLT) (CAB)	102
RELAY AS (12-VOLT) (COLD START)	107
RELAY AS (12-VOLT) (HEATER)	312
RELAY AS (12-VOLT) (START)	107
RELAY AS (12-VOLT) (STOP LIGHT)	91
	98
RELAY AS (12-VOLT) (WORK TOOL)	111
	284
RELAY GP–MAIN POWER	93
ROTATING GP-PUMP (LH)	132
ROTATING GP-PUMP (RH)	132

S

SCREEN (HYDRAULIC)	194
SCREEN-SUCTION (HYDRAULIC TANK)	231
SEAL GP-CAB–DEBRIS BARRIER	335
SEAL-VALVE COVER	58
SEAT BELT GP	337
	338
	339
	340
SEAT GP–STATIC	342
SEAT GP–SUSPENSION	341
SEAT GP-ADJUSTABLE	343
SENDER AS-FUEL LEVEL	151
SENSOR GP-TEMPERATURE (HYDRAULIC OIL)	231
SENSOR-SPEED (TIMING, CAMSHAFT)	64
SERVICE GP-MACHINE	75
SOFTWARE GP-MACHINE	75
SOLENOID GP-SHUTOFF	94
SPRING AS-GAS	45
	264
	307
SPRING AS-GAS (CAB DOOR)	292
	295
SPRING AS-GAS (CAB)	344
SPRING AS-GAS (LOCKING)	156
	292
	295
SPRING GP-GAS–CAB, DOOR	344
STARTING MOTOR GP-ELECTRIC	95
SUN VISOR	345
	346
SUPPRESSION GP-SOUND	161
SWITCH (SEAT)	342
SWITCH AS (INTERLOCK)	264
SWITCH AS (SEAT)	343
SWITCH AS-LIMIT	300
SWITCH AS-LIMIT (ENGINE START, HYD LOCKOUT)	298
SWITCH AS-PRESSURE (AIR CONDITIONER)	319
SWITCH AS-PRESSURE (HYDRAULIC OIL)	117
SWITCH AS-ROCKER (AIR CONDITIONER)	260
SWITCH AS-ROCKER (ELECTRIC POWER, WORK TOOL)	111
SWITCH AS-ROCKER (FRONT WORK LIGHT)	327
SWITCH AS-ROCKER (HAZARD WARNING LIGHTS)	87
	91
SWITCH AS-ROCKER (INTERLOCK OVERRIDE)	327
SWITCH AS-ROCKER (PARKING BRAKE)	327
SWITCH AS-ROCKER (REAR WINDOW WASHER, WIPER)	298
	300
SWITCH AS-ROCKER (REAR WORK LAMPS)	89

INDEX

Name	Page
SWITCH AS-ROCKER (ROADING LIGHTS)	91
SWITCH AS-ROCKER (TURN SIGNAL)	87, 91
SWITCH AS-ROCKER (WARNING BEACON)	146
SWITCH AS-ROCKER (WORK TOOL HYD PRESS RELEASE)	327
SWITCH AS-START (KEY)	327
SWITCH GP-PRESSURE	97, 98
SWITCH GP-PRESSURE (BACKUP ALARM)	104
SWITCH GP-PRESSURE–BRAKE LIGHT	96
SWITCH GP-ROCKER (WORK TOOL POSITIONER)	190
SWITCH GP-TEMPERATURE–COOLANT	99
SWITCH-PRESSURE (ENGINE OIL)	97
SWITCH-ROCKER (HEATER)	260, 312

T

TANK & MTG GP-HYDRAULIC	230
TANK GP-HYDRAULIC	231
TIRE & RIM GP–LH	134, 135, 136, 137, 138, 139, 140
TIRE & RIM GP–RH	134, 135, 136, 137, 138, 139, 140
TURBOCHARGER GP	58

V

V-BELT (WATER PUMP)	36
V-BELT GP–FAN DRIVE	36
VALVE & MTG GP-CONTROL	232
VALVE GP-CHECK	216
VALVE GP-CONTROL	233
VALVE GP-MANUAL	235
VALVE GP-MANUAL (COUPLER PIN, LIFT ARM LWR CONT)	235
VALVE GP-PILOT	236, 238
VALVE GP-PUMP CONTROL (PISTON PUMP)	132
VALVE GP-RELIEF	216, 239
VALVE GP-RELIEF (CHARGE)	132
VALVE GP-RELIEF (CROSSOVER)	132
VALVE GP-RELIEF (GEAR MOTOR)	221
VALVE GP-RELIEF (LIFT)	233
VALVE GP-RELIEF (MAIN)	233
VALVE GP-RELIEF (TILT)	233
VALVE GP-SHUTTLE (DIRECTION, SPEED)	238
VALVE GP-SOLENOID (12 VDC) (AIR CONDITIONER, HEATER)	222
VALVE GP-SOLENOID (12-VOLT) (WORK TOOL)	236, 238
VALVE GP-SOLENOID (HIGH FLOW BOOST)	216
VALVE GP-SOLENOID (HIGH FLOW)	216
VALVE GP-SOLENOID (HYDRAULIC LOCKOUT)	233
VALVE GP-SOLENOID (QUICK COUPLER)	215
VALVE GP-SOLENOID (REAR AXLE FAN UNLOADER)	217
VALVE GP-SOLENOID–12-VOLT	240
VALVE GP-SOLENOID–PARKING BRAKE	241
VALVE MECHANISM GP	37, 38
VALVE-BREATHER (CRANKCASE)	58
VISOR GP-CAB	345, 346

W

WHEEL & TIRE AR	140, 142
WHEEL & TIRE AR–HEAVY DUTY	141, 142
WHEEL & TIRE AR–HIGH FLOTATION	140
WHEEL & TIRE AR–LOW SIDE WALL	141
WHEEL & TIRE AR–SOLID	143
WINDOW GP-CAB	347
WINDOW GP-CAB–SIDE	348
WINDOW GP-CAB–UPPER, RH	351
WINDOW GP-CAB–UPPER,LH	349
WIRING GP-AIR CONDITIONER	100
WIRING GP-CAB	101
WIRING GP-CHASSIS	104
WIRING GP-ENGINE	107
WIRING GP-HORN–WITH MOUNTING	109
WIRING GP-MACHINE–DEMAND FAN	110
WIRING GP-WORK TOOL	111

MACHINE ARRANGEMENT

326-4781 CHASSIS AR

S/N: MWD1-UP
PART OF 326-5416 COMMON AR

SMCS-7000 **i03906914**

NOTE	PART NUMBER	QTY	PART NAME 1 2 3 4 5 6 (PRODUCT LEVEL)	SEE PAGE
Y	*261-6255*	1	AXLE GP	113
Y	*218-5650*	1	BUMPER GP (REAR)	144
Y	*218-5602*	1	CONTROL GP-GOVERNOR	62
Y	*218-6799*	1	CYLINDER & MTG GP-LIFT ARM	166
Y	*326-5609*	1	ENCLOSURE GP-ENGINE	149
Y	*326-4788*	1	FRAME GP-LOADER	151
Y	*156-9809*	1	GUIDE GP-LINES	154
Y	*218-6430*	1	PANEL GP-SIDE	330
Y	*326-5570*	1	PLATFORM GP-OPERATOR	334
Y	*328-2350*	1	WIRING GP-CHASSIS	104
Y-SEPARATE ILLUSTRATION				

<END>

326-5416 COMMON AR

S/N: MWD1-UP

SMCS-7000 **i03906932**

NOTE	PART NUMBER	QTY	PART NAME 1 2 3 4 5 6 (PRODUCT LEVEL)	SEE PAGE
Y	*326-5400*	1	CAB AR	268
Y	*326-4781*	1	CHASSIS AR	1
Y	*142-8830*	1	COUNTERWEIGHT GP	147
Y	*354-6562*	1	FILM GP	356
Y	*354-6548*	1	HYDRAULIC AR	177
Y	*326-5360*	1	INSTALLATION AR-ENGINE	9
Y	*358-6924*	1	POWER TRAIN AR	130
	6V-1970	1	LITERATURE GP	
	5P-8500	2	KEY (LITERATURE COMPARTMENT)	
	5P-7958	1	SLEEVE-CABLE SPLICE	
	218-5601	1	FLOOR MAT	
Y-SEPARATE ILLUSTRATION				

<END>

326-5270 CONTROL AR-MACHINE–ON, OFF AUXILIARY CONTROL

S/N: MWD1-UP
AN ATTACHMENT

SMCS-4062, 4284, 4351, 5059, 5705 **i03901801**

NOTE	PART NUMBER	QTY	PART NAME 1 2 3 4 5 6 (PRODUCT LEVEL)	SEE PAGE
Y	*326-5264*	1	CONTROL GP-PILOT OPERATED HYD (AUXILIARY)	282
Y	*343-5543*	1	CONTROL GP-PILOT OPERATED HYD (HYDROSTATIC)	288
Y-SEPARATE ILLUSTRATION				

<END>

MACHINE ARRANGEMENT

326-5271 CONTROL AR-MACHINE—AUX PROPORTIONAL FLOW

S/N: MWD1-UP

AN ATTACHMENT

SMCS-4062, 4284, 4351, 5059, 5705 **i03901802**

NOTE	PART NUMBER	QTY	PART NAME 1 2 3 4 5 6 (PRODUCT LEVEL)	SEE PAGE
Y	*326-5265*	1	CONTROL GP-PILOT OPERATED HYD (AUXILIARY)	283
Y	*343-5542*	1	CONTROL GP-PILOT OPERATED HYD (HYDROSTATIC)	287

Y-SEPARATE ILLUSTRATION

<END>

326-5272 CONTROL AR-MACHINE—AUX PROPORTIONAL FLOW

S/N: MWD1-UP

AN ATTACHMENT

SMCS-4062, 4284, 4351, 5059, 5705 **i03901817**

NOTE	PART NUMBER	QTY	PART NAME 1 2 3 4 5 6 (PRODUCT LEVEL)	SEE PAGE
Y	*326-5265*	1	CONTROL GP-PILOT OPERATED HYD (AUXILIARY)	283
Y	*326-5267*	1	CONTROL GP-PILOT OPERATED HYD (HYDROSTATIC)	286
Y	*328-2355*	1	WIRING GP-WORK TOOL	111

Y-SEPARATE ILLUSTRATION

<END>

326-5247 CONVERSION AR-MACHINE—NACD

S/N: MWD1-UP

CANNOT BE USED WITH 326-5287—PAGE 3, 326-5297—PAGE 3, 326-5487—PAGE 4, 326-5557—PAGE 5, 326-5527—PAGE 4, 326-5567—PAGE 6

AN ATTACHMENT

SMCS-7000 **i03970918**

NOTE	PART NUMBER	QTY	PART NAME 1 2 3 4 5 6 (PRODUCT LEVEL)	SEE PAGE
Y	*328-2344*	1	LAMP GP-STOP & TAIL (REAR)	86

Y-SEPARATE ILLUSTRATION

<END>

MACHINE ARRANGEMENT

326-5287 CONVERSION AR-MACHINE

S/N: MWD1-UP

EUROPE

CANNOT BE USED WITH 326-5247–PAGE 2, 326-5297–PAGE 3, 326-5487–PAGE 4, 326-5557–PAGE 5, 326-5527–PAGE 4, 326-5567–PAGE 6

AN ATTACHMENT

SMCS-7000 **i03902805**

NOTE	PART NUMBER	QTY	PART NAME 1 2 3 4 5 6 (PRODUCT LEVEL)	SEE PAGE
Y	*216-6146*	1	BOX GP-STORAGE	266
Y	*295-7144*	1	FILM GP	355
Y	*328-2344*	1	LAMP GP-STOP & TAIL	86
Y	*218-6708*	1	LIFTING GP-MACHINE	155
Y	*258-2579*	1	MOTOR & MTG GP-HYDRAULIC FAN	217
Y	*354-6549*	1	SUPPRESSION GP-SOUND	161
Y	*230-3743*	1	WIRING GP-HORN (WITH MOUNTING)	109
Y	*328-2342*	1	WIRING GP-MACHINE	110
Y-SEPARATE ILLUSTRATION				

<END>

326-5297 CONVERSION AR-MACHINE

S/N: MWD1-UP

CANNOT BE USED WITH 326-5287–PAGE 3, 326-5247–PAGE 2, 326-5487–PAGE 4, 326-5557–PAGE 5, 326-5527–PAGE 4, 326-5567–PAGE 6

AN ATTACHMENT

SMCS-7000 **i03902833**

NOTE	PART NUMBER	QTY	PART NAME 1 2 3 4 5 6 (PRODUCT LEVEL)	SEE PAGE
Y	*216-6146*	1	BOX GP-STORAGE	266
Y	*295-7144*	1	FILM GP	355
Y	*328-2346*	1	LAMP GP-STOP & TAIL	87
Y	*218-6708*	1	LIFTING GP-MACHINE	155
Y	*258-2579*	1	MOTOR & MTG GP-HYDRAULIC FAN	217
Y	*354-6549*	1	SUPPRESSION GP-SOUND	161
Y	*230-3743*	1	WIRING GP-HORN (WITH MOUNTING)	109
Y	*328-2342*	1	WIRING GP-MACHINE	110
Y-SEPARATE ILLUSTRATION				

<END>

MACHINE ARRANGEMENT

326-5487 CONVERSION AR-MACHINE

S/N: MWD1-UP
ITALY
CANNOT BE USED WITH 326-5287—PAGE 3, 326-5297—PAGE 3, 326-5247—PAGE 2, 326-5557—PAGE 5, 326-5527—PAGE 4, 326-5567—PAGE 6
AN ATTACHMENT

SMCS-7000 **i03902836**

NOTE	PART NUMBER	QTY	PART NAME 1 2 3 4 5 6 (PRODUCT LEVEL)	SEE PAGE
Y	*216-6146*	1	BOX GP-STORAGE	266
Y	*278-1293*	1	CONVERSION GP-ROADING (ITALY)	146
Y	*295-7144*	1	FILM GP	355
Y	**319-9480**	1	KIT-ROADING PLATE & MOUNTING (BUCKET)	251
Y	*218-6708*	1	LIFTING GP-MACHINE	155
Y	*328-2333*	1	LIGHTING GP-ROADING	91
Y	*175-4238*	1	LOCK GP-QUICK COUPLER (MECHANICAL)	253
Y	*238-7671*	1	MIRROR & MTG GP-REAR VIEW (WITH ROADING LIGHT MOUNT)	157
Y	*258-2579*	1	MOTOR & MTG GP-HYDRAULIC FAN	217
Y	*225-7963*	1	MOUNTING GP-REGISTRATION	160
Y	*354-6549*	1	SUPPRESSION GP-SOUND	161
Y	*328-2348*	1	SWITCH GP-PRESSURE	98
Y	*230-3743*	1	WIRING GP-HORN (WITH MOUNTING)	109
Y	*328-2342*	1	WIRING GP-MACHINE	110

Y-SEPARATE ILLUSTRATION

<END>

326-5527 CONVERSION AR-MACHINE

S/N: MWD1-UP
GERMANY
CANNOT BE USED WITH 326-5287—PAGE 3, 326-5297—PAGE 3, 326-5487—PAGE 4, 326-5557—PAGE 5, 326-5247—PAGE 2, 326-5567—PAGE 6
AN ATTACHMENT

SMCS-7000 **i03902869**

NOTE	PART NUMBER	QTY	PART NAME 1 2 3 4 5 6 (PRODUCT LEVEL)	SEE PAGE
Y	*216-6146*	1	BOX GP-STORAGE	266
Y	*222-5695*	1	BRACKET GP-SUPPORT	243
Y	*278-1292*	1	CONVERSION GP-ROADING (GERMANY)	145
Y	*295-7144*	1	FILM GP	355
Y	**319-9480**	1	KIT-ROADING PLATE & MOUNTING (BUCKET)	251
Y	*218-6708*	1	LIFTING GP-MACHINE	155
Y	*328-2333*	1	LIGHTING GP-ROADING	91
Y	*175-4238*	1	LOCK GP-QUICK COUPLER (MECHANICAL)	253
Y	*238-7671*	1	MIRROR & MTG GP-REAR VIEW (WITH ROADING LIGHT MOUNT)	157
Y	*258-2579*	1	MOTOR & MTG GP-HYDRAULIC FAN	217
Y	*354-6549*	1	SUPPRESSION GP-SOUND	161
Y	*173-3022*	1	VISOR GP-CAB	346
Y	*230-3743*	1	WIRING GP-HORN (WITH MOUNTING)	109
Y	*328-2342*	1	WIRING GP-MACHINE	110
B	**233-5680**	3	FILM-IDENTIFICATION (13-KM/H)	

B-USE AS REQUIRED
Y-SEPARATE ILLUSTRATION

<END>

MACHINE ARRANGEMENT

326-5557 CONVERSION AR-MACHINE

S/N: MWD1-UP

ITALY

CANNOT BE USED WITH 326-5287—PAGE 3, 326-5297—PAGE 3, 326-5487—PAGE 4, 326-5247—PAGE 2, 326-5527—PAGE 4, 326-5567—PAGE 6

AN ATTACHMENT

SMCS-7000 **i03902870**

NOTE	PART NUMBER	QTY	PART NAME 1 2 3 4 5 6 (PRODUCT LEVEL)	SEE PAGE
Y	*216-6146*	1	BOX GP-STORAGE	266
Y	*278-1293*	1	CONVERSION GP-ROADING (ITALY)	146
Y	*295-7144*	1	FILM GP	355
Y	**319-9480**	1	KIT-ROADING PLATE & MOUNTING (BUCKET)	251
Y	*218-6708*	1	LIFTING GP-MACHINE	155
Y	*328-2333*	1	LIGHTING GP-ROADING	91
Y	*175-4238*	1	LOCK GP-QUICK COUPLER (MECHANICAL)	253
Y	*238-7672*	1	MIRROR & MTG GP-REAR VIEW (WITH ROADING LIGHT MOUNT)	158
Y	*258-2579*	1	MOTOR & MTG GP-HYDRAULIC FAN	217
Y	*225-7963*	1	MOUNTING GP-REGISTRATION	160
Y	*354-6549*	1	SUPPRESSION GP-SOUND	161
Y	*328-2348*	1	SWITCH GP-PRESSURE (BRAKE LIGHT)	98
Y	*230-3743*	1	WIRING GP-HORN (WITH MOUNTING)	109
Y	*328-2342*	1	WIRING GP-MACHINE	110

Y-SEPARATE ILLUSTRATION

<END>

MACHINE ARRANGEMENT

326-5567 CONVERSION AR-MACHINE

S/N: MWD1-UP
GERMANY
CANNOT BE USED WITH 326-5287—PAGE 3, 326-5297—PAGE 3, 326-5487—PAGE 4, 326-5557—PAGE 5, 326-5527—PAGE 4, 326-5247—PAGE 2
AN ATTACHMENT

SMCS-7000 **i03902877**

NOTE	PART NUMBER	QTY	PART NAME 1 2 3 4 5 6 (PRODUCT LEVEL)	SEE PAGE
Y	*216-6146*	1	BOX GP-STORAGE	266
Y	*222-5695*	1	BRACKET GP-SUPPORT	243
Y	*278-1292*	1	CONVERSION GP-ROADING (GERMANY)	145
Y	*295-7144*	1	FILM GP	355
Y	**319-9480**	1	KIT-ROADING PLATE & MOUNTING (BUCKET)	251
Y	*218-6708*	1	LIFTING GP-MACHINE	155
Y	*328-2333*	1	LIGHTING GP-ROADING	91
Y	*175-4238*	1	LOCK GP-QUICK COUPLER (MECHANICAL)	253
Y	*238-7672*	1	MIRROR & MTG GP-REAR VIEW (WITH ROADING LIGHT MOUNT)	158
Y	*258-2579*	1	MOTOR & MTG GP-HYDRAULIC FAN	217
Y	*354-6549*	1	SUPPRESSION GP-SOUND	161
Y	*173-3022*	1	VISOR GP-CAB	346
Y	*230-3743*	1	WIRING GP-HORN (WITH MOUNTING)	109
Y	*328-2342*	1	WIRING GP-MACHINE	110
	233-5680	3	FILM-IDENTIFICATION (13-KM/H)	
			(1-FACING REAR OF MACHINE, ON ENGINE ENCLOSURE, LEFT EDGE OF FILM 17-MM FROM VERTICAL CENTERLINE OF MACHINE.	
			BOTTOM EDGE OF FILM 5-MM ABOVE SEAM BETWEEN HOOD & DOOR ASSEMBLY)	
			(2-ON RIGHT & LEFT SIDE OF MACHINE, ON LOWER FRAME ASSEMBLY, RIGHT EDGE OF FILM 661-MM FROM FRONT EDGE OF LOWER FRAME	
			ASSEMBLY. BOTTOM EDGE OF FILM 425-MM FROM BOTTOM EDGE OF LOWER FRAME ASSEMBLY)	

Y-SEPARATE ILLUSTRATION

<END>

ENGINE ARRANGEMENT

292-5719 ENGINE AR-PRIMARY

S/N: CYP1-UP
46 BRAKE KW (61 BHP) AT 3000 RPM
PART OF 295-7023 ENGINE AR-PRIMARY
AN ATTACHMENT

SMCS-1000 **i03938334**

NOTE	PART NUMBER	QTY	PART NAME 1 2 3 4 5 6 (PRODUCT LEVEL)	SEE PAGE
Y	*316-6963*	1	ALTERNATOR GP-CHARGING	72
Y	*322-4916*	1	CAMSHAFT GP	10
Y	*322-4909*	1	CRANKSHAFT GP	11
Y	*322-4908*	1	CYLINDER BLOCK GP	13
Y	*322-4911*	1	CYLINDER HEAD GP	17
Y	*308-2297*	1	FILLER GP-ENGINE OIL	40
Y	*308-2298*	1	FILTER GP-ENGINE OIL	42
Y	*317-0974*	1	FILTER GP-OIL	118
Y	*308-2291*	1	FLYWHEEL GP	20
Y	*316-6896*	1	GLOW PLUG GP	76
Y	*322-4915*	1	GOVERNOR GP	64
Y	*316-7030*	1	HOUSING GP-FLYWHEEL	22
Y	*322-4914*	1	HOUSING GP-FRONT	23
Y	*317-0980*	1	HOUSING GP-WATER REGULATOR	44
Y	**339-3017**	1	KIT-FRONT GEAR	24
Y	*317-0982*	1	LIFTING GP-ENGINE	25
Y	*315-7813*	1	MOUNTING GP-FAN	28
Y	*316-6997*	1	PAN GP-OIL	29
Y	*317-0972*	1	PARTS GP-MISCELLANEOUS	358
Y	*322-4910*	1	PISTON GP	32
Y	*322-4924*	1	PLATE GP-COVER (BLANKING)	33
Y	*321-6740*	1	PULLEY GP-CRANKSHAFT	34
Y	*308-2294*	1	PULLEY GP-WATER PUMP	35
Y	*315-7814*	1	PUMP & MTG GP-FUEL TRANSFER	68
Y	*322-4913*	1	PUMP GP-ENGINE OIL	43
Y	*317-0977*	1	PUMP GP-FUEL INJECTION	69
Y	*317-0979*	1	PUMP GP-WATER	47
Y	*322-4928*	1	SOLENOID GP-SHUTOFF	94
Y	*322-4917*	1	STARTING MOTOR GP-ELECTRIC	95
Y	*316-6890*	1	SWITCH GP-PRESSURE	97
Y	*308-2317*	1	SWITCH GP-TEMPERATURE (ENGINE COOLANT)	99
Y	*317-0981*	1	TURBOCHARGER GP	58
Y	*308-2306*	1	V-BELT GP (WATER PUMP)	36
Y	*322-4912*	1	VALVE MECHANISM GP	38

Y-SEPARATE ILLUSTRATION

ENGINE ARRANGEMENT

295-7023 ENGINE AR-PRIMARY

S/N: MWD1-UP

AN ATTACHMENT

SMCS-1000 **i02760042**

NOTE	PART NUMBER	QTY	PART NAME 1 2 3 4 5 6 (PRODUCT LEVEL)	SEE PAGE
Y	**292-5719**	1	ENGINE AR-PRIMARY	7

Y-SEPARATE ILLUSTRATION

ENGINE ARRANGEMENT

326-5360 INSTALLATION AR-ENGINE

S/N: MWD1-UP

PART OF 326-5416 COMMON AR

SMCS-1000 **i03906950**

NOTE	PART NUMBER	QTY	PART NAME 1 2 3 4 5 6 (PRODUCT LEVEL)	SEE PAGE
Y	*228-1773*	1	AIR CLEANER GP	53
Y	*229-8730*	1	DRAIN GP-ENGINE OIL	19
Y	*280-8396*	1	GUARD GP-BELT	21
Y	*280-8365*	1	LINES GP-AIR	55
Y	*228-1781*	1	LINES GP-FUEL PRM & FILTER	66
Y	*228-1764*	1	MOUNTING GP-ENGINE (SUPPORTS)	26
Y	*241-5789*	1	MOUNTING GP-ENGINE (HARDWARE)	27
Y	*228-1763*	1	MOUNTING GP-PUMP	129
Y	*228-1762*	1	MOUNTING GP-RAD & OIL COOLER	45
Y	*272-3047*	1	MUFFLER GP	57
Y	*228-1783*	1	RADIATOR & OIL COOLER MTG GP	51
Y	*328-2338*	1	WIRING GP-ENGINE	107

Y-SEPARATE ILLUSTRATION

BASIC ENGINE

322-4916 CAMSHAFT GP

S/N: CYP1-UP
PART OF 292-5719 ENGINE AR-PRIMARY
AN ATTACHMENT

SMCS-1210, 1211, 1212 **i02938917**

NOTE	REF NO	GRAPHIC REF	PART NUMBER	QTY	PART NAME 1 2 3 4 5 6 (PRODUCT LEVEL)	SEE PAGE
	1	1	**153-6838**	2	BOLT	
	2	1	**154-1680**	1	PLATE	
	3	1	**308-1902**	1	CAMSHAFT AS	
	3A	1	**153-6492**	1	KEY-WOODRUFF	
	3B	1	**154-4505**	1	BEARING	
	3C	1	**308-1903**	1	GEAR-CAMSHAFT (66-TEETH)	
	3D	1	**313-9323**	1	SPACER	
	4	1	**308-1904**	1	SLIDER	

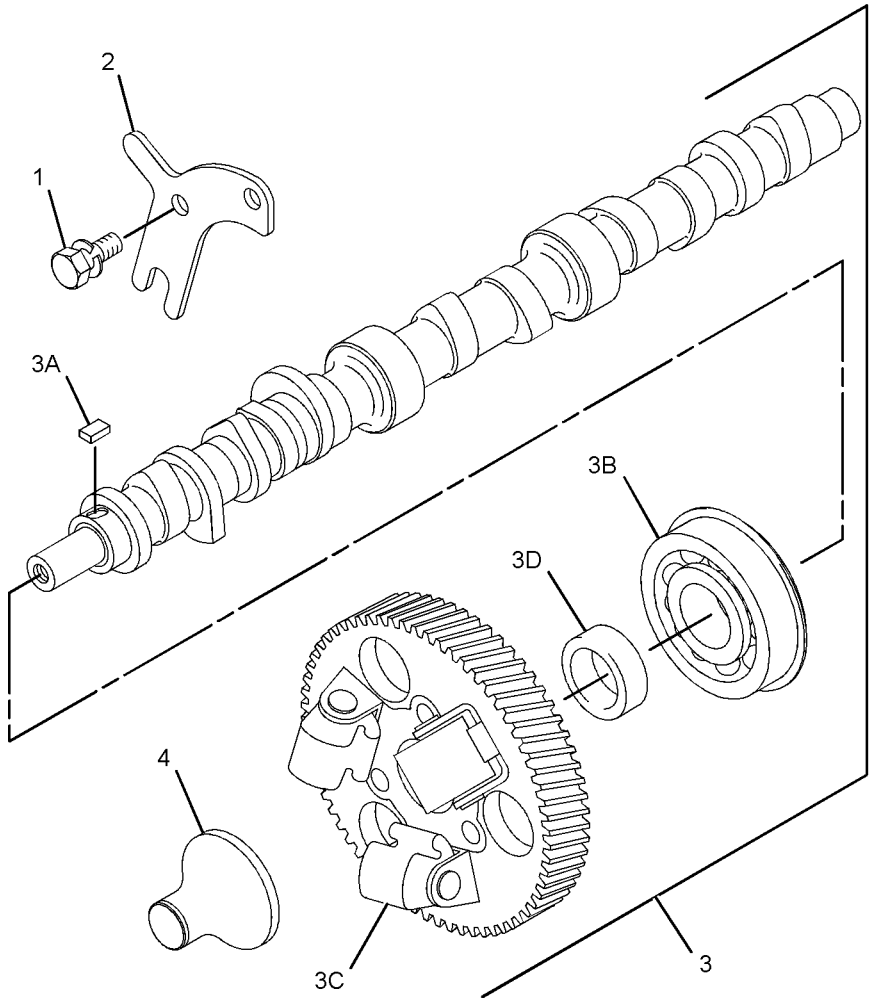

GRAPHIC #1 **<END>** g01629653

322-4909 CRANKSHAFT GP

S/N: CYP1-UP
PART OF 292-5719 ENGINE AR-PRIMARY
AN ATTACHMENT

SMCS-1202 **i02938878**

NOTE	REF NO	GRAPHIC REF	PART NUMBER	QTY	PART NAME 1 2 3 4 5 6 (PRODUCT LEVEL)	SEE PAGE
	1	1	**154-0181**	1	CAP AS-BEARING	
	1A	1	**153-5402**	2	DOWEL	
	1B	1	**154-0385**	2	BOLT	
	2	1	**154-0386**	1	CAP AS-BEARING	
	2A	1	**153-5402**	2	DOWEL	
	2B	1	**154-0385**	2	BOLT	
	3	1	**154-0388**	1	CAP AS-BEARING	
	3A	1	**153-5402**	2	DOWEL	
	3B	1	**154-0385**	2	BOLT	
	4	1	**154-0389**	1	CAP AS-BEARING	
	4A	1	**153-5402**	2	DOWEL	
	4B	1	**154-0385**	2	BOLT	
	7	1	**154-1230**	1	WASHER-THRUST	
	8	1	**154-1231**	2	WASHER-THRUST	
	9	1	**156-6971**	3	BOLT	
	10	1	**183-1336**	2	BOLT	
	11	1	**308-1852**	1	CRANKSHAFT AS	
	11A	1	**153-5518**	1	KEY	
	11B	1	**308-1853**	1	GEAR-CRANKSHAFT (62-TEETH)	
	12	1	**308-1854**	1	KIT-BEARING	
	13	1	**308-1855**	1	KIT-BEARING	

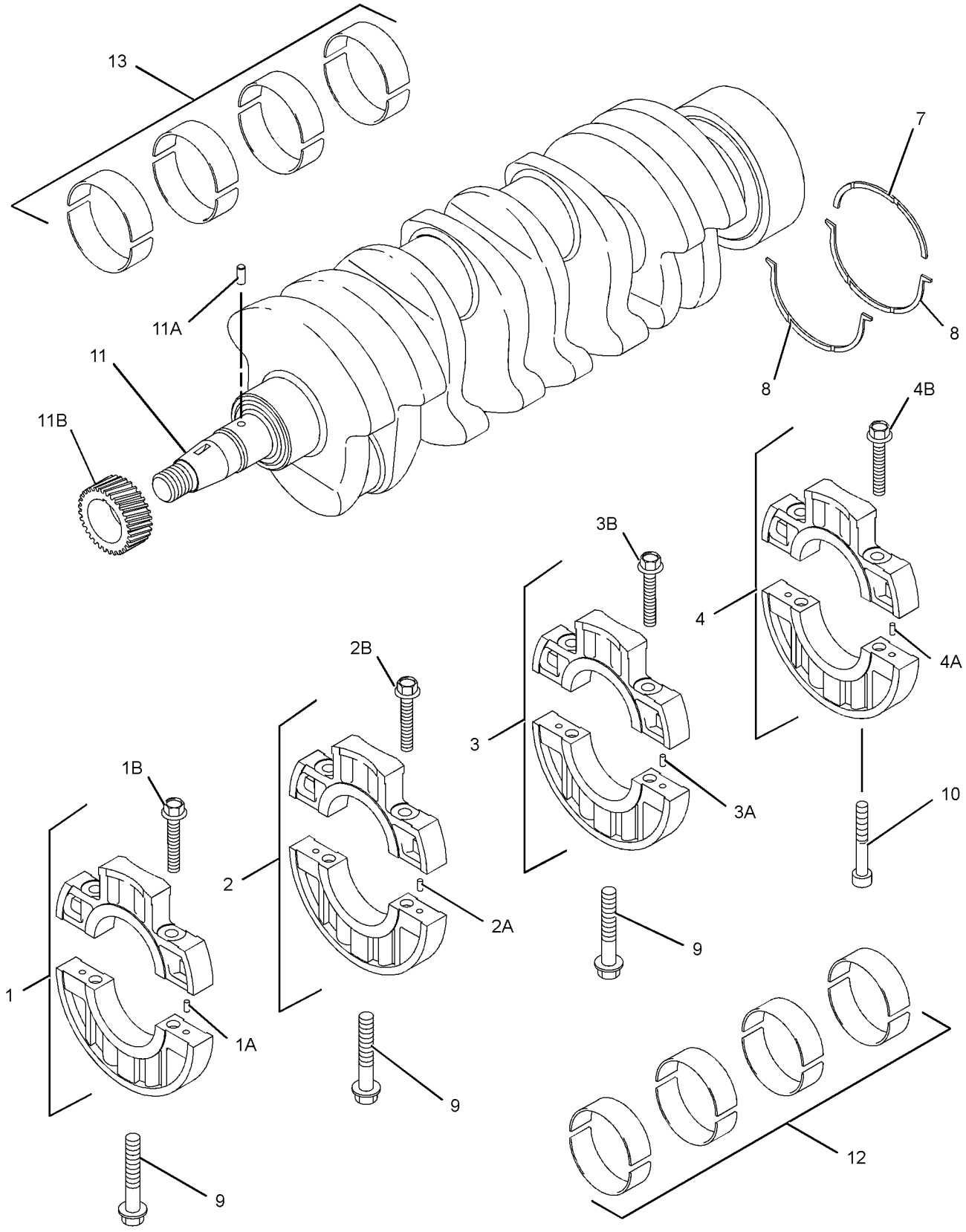

GRAPHIC #1 **<END>** g01439145

322-4908 CYLINDER BLOCK GP

S/N: CYP1-UP
PART OF 292-5719 ENGINE AR-PRIMARY
AN ATTACHMENT

SMCS-1201 **i03771131**

NOTE	REF NO	GRAPHIC REF	PART NUMBER	QTY	PART NAME 1 2 3 4 5 6 (PRODUCT LEVEL)	SEE PAGE
	1	1	**153-5387**	3	PLUG	
	2	1	**6B-0924**	1	BALL BEARING	
	3	1	**153-5391**	1	PLUG	
	4	1	**153-5394**	2	DOWEL	
	5	1	**153-5395**	2	DOWEL	
	6	1	**153-5396**	2	PIN	
	7	1	**153-5402**	2	DOWEL	
	8	1	**153-6838**	2	BOLT	
	9	1	**154-0175**	2	PLUG	
	10	1	**154-0176**	1	BUSHING	
	11	1	**154-0177**	1	BUSHING	
	12	1	**154-0393**	3	STUD	
	13	1	**160-7626**	1	STUD	
	14	1	**183-1163**	1	STUD	
	15	1	**183-1164**	1	STUD	
	16	1	**215-2620**	1	GASKET	
	17	1	**217-5770**	2	PLUG	
	18	1	**221-1136**	4	PLUG	
	19	1	**237-9315**	2	PLUG (SEALING)	
	20	1	**237-9316**	5	PLUG (SEALING)	
	21	1	**294-4916**	1	BUSHING (STANDARD)	
AB		1	**302-4181**		BUSHING (0.25-MM US)	
AB		1	**302-4182**		BUSHING (0.50-MM US)	
	22	1	**338-3403**	1	SHAFT	
	23	1	**322-6874**	1	STUD	
	24	1	**154-0178**	1	SEAL	

A-NOT PART OF THIS GROUP
B-USE AS REQUIRED

322-4908 **CYLINDER BLOCK GP** *(contd.)* **i03771131**

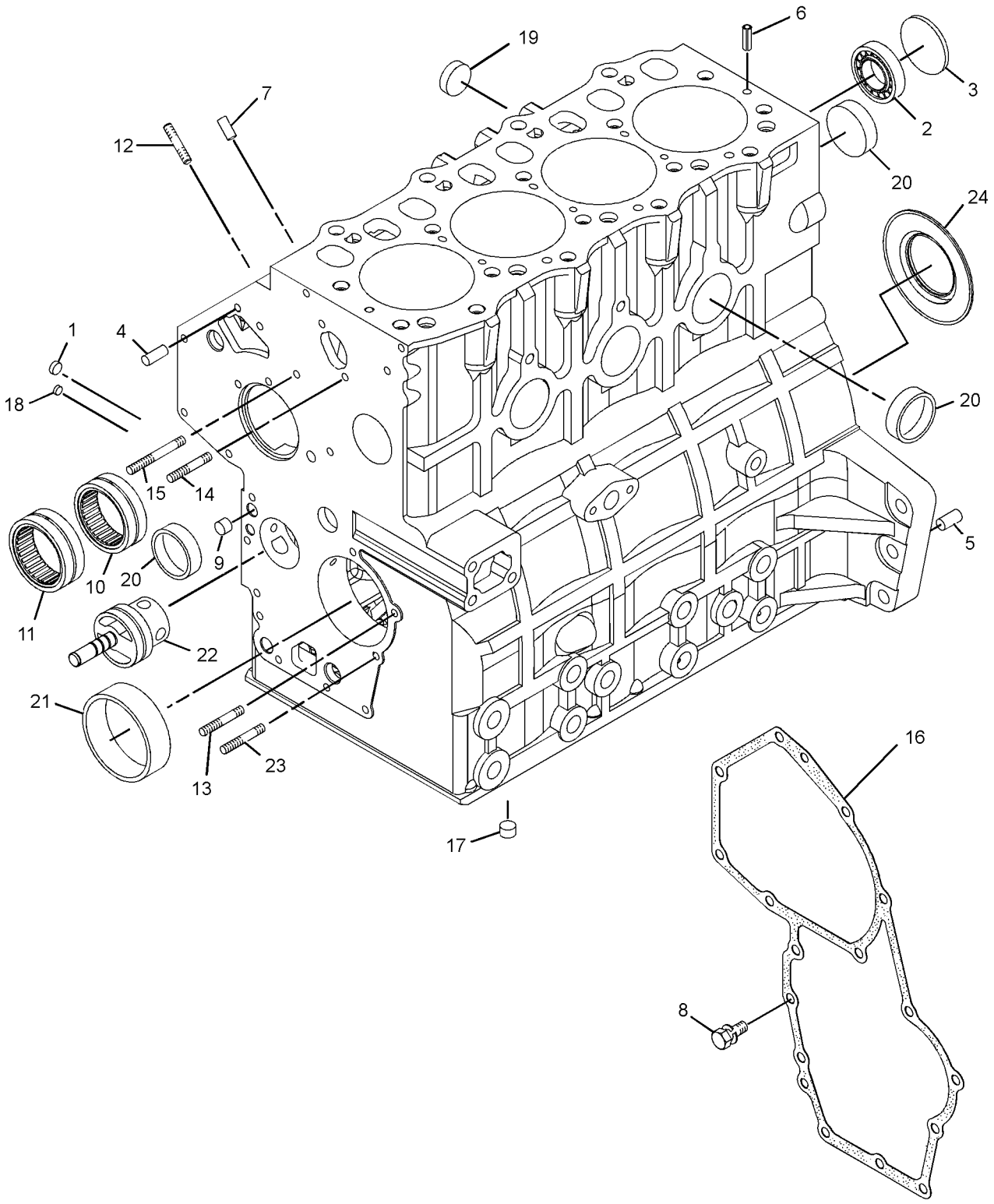

GRAPHIC #1 **<END>** g02039413

308-1859 CYLINDER HEAD AS

S/N: CYP1-UP

PART OF 322-4911 CYLINDER HEAD GP

AN ATTACHMENT

SMCS-1100 **i03718057**

NOTE	REF NO	GRAPHIC REF	PART NUMBER	QTY	PART NAME 1 2 3 4 5 6 (PRODUCT LEVEL)	SEE PAGE
	1	1	**153-5554**	4	SEAL	
	2	1	**153-5556**	8	RETAINER	
	3	1	**153-5557**	8	CAP	
	4	1	**153-5558**	8	SPRING	
	5	1	**153-5559**	4	SEAL	
	6	1	**237-9315**	6	PLUG (SEALING)	
	7	1	**256-2085**	4	INSERT-EXHAUST VALVE	
	8	1	**256-2084**	4	INSERT-INLET VALVE	
	9	1	**288-6537**	7	CAP	
	10	1	**291-1808**	2	CAP	
	11	1	**303-0338**	3	PLUG	
	12	1	**308-1860**	4	VALVE-INLET	
	13	1	**344-1624**	4	VALVE-EXHAUST	

308-1859 CYLINDER HEAD AS *(contd.)* **i03718057**

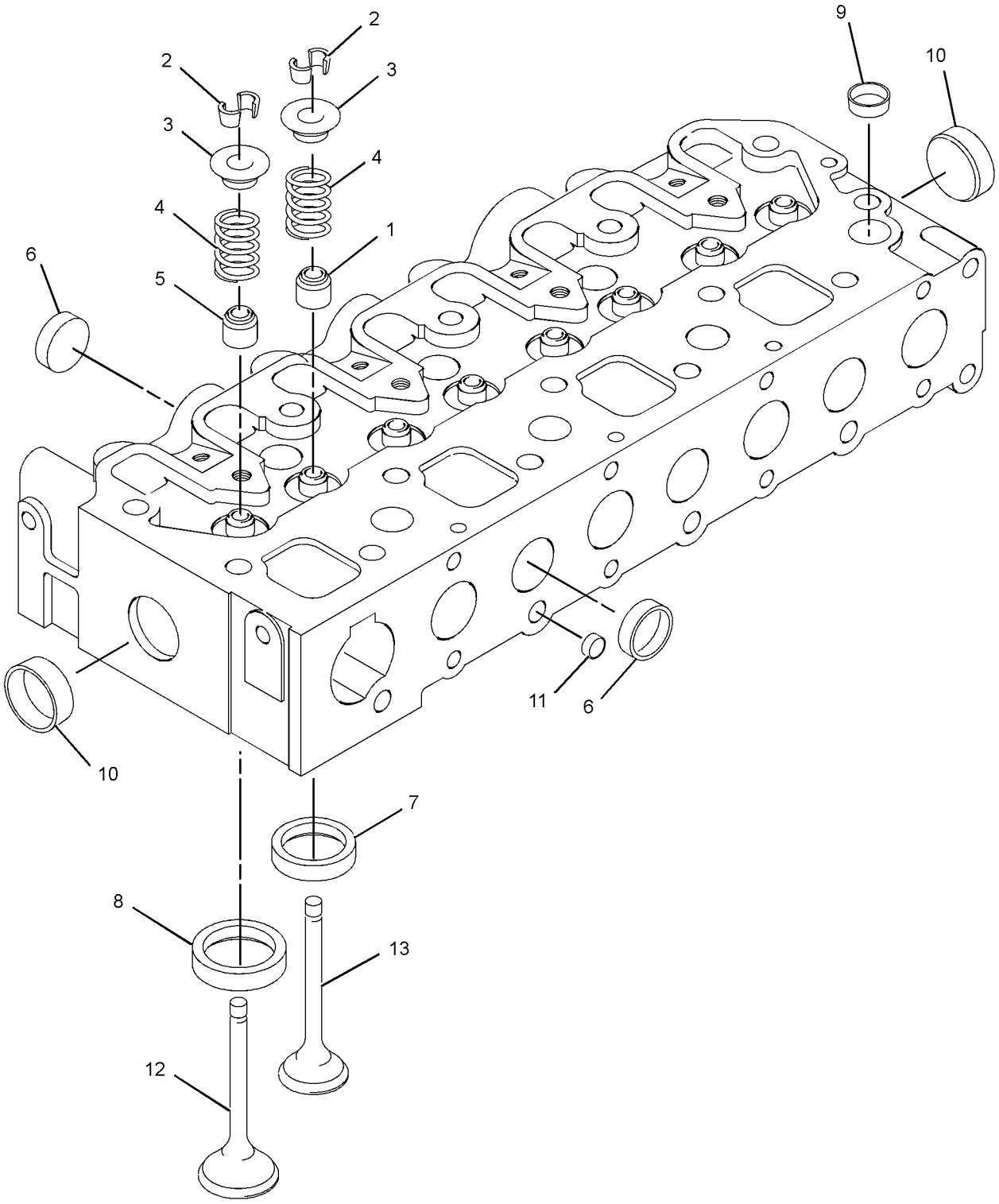

GRAPHIC #1 **<END>** g01418931

322-4911 CYLINDER HEAD GP

S/N: CYP1-UP
PART OF 292-5719 ENGINE AR-PRIMARY
AN ATTACHMENT

SMCS-1100, 1101, 1103, 1104, 1105, 1108, 1109, 1115, 1117, 1121, 1124, 1125

i02938913

NOTE	REF NO	GRAPHIC REF	PART NUMBER	QTY	PART NAME 1 2 3 4 5 6 (PRODUCT LEVEL)	SEE PAGE
	1	1	**156-6988**	14	BOLT	
	2	1	**156-6989**	4	BOLT	
	3	1	**183-3213**	4	STUD	
Y	4	1	**308-1859**	1	CYLINDER HEAD AS	15
	5	1	**308-1862**	2	STUD	
	6	1	**322-7485**	8	CAP-VALVE SPRING	
B	7	1	**322-7486**	1	GASKET (1.3-MM THK)	
BF			**322-7487**	1	GASKET (1.2-MM THK)	
BF			**322-7488**	1	GASKET (1.1-MM THK)	

B-USE AS REQUIRED
F-NOT SHOWN
Y-SEPARATE ILLUSTRATION

322-4911 **CYLINDER HEAD GP** *(contd.)* **i02938913**

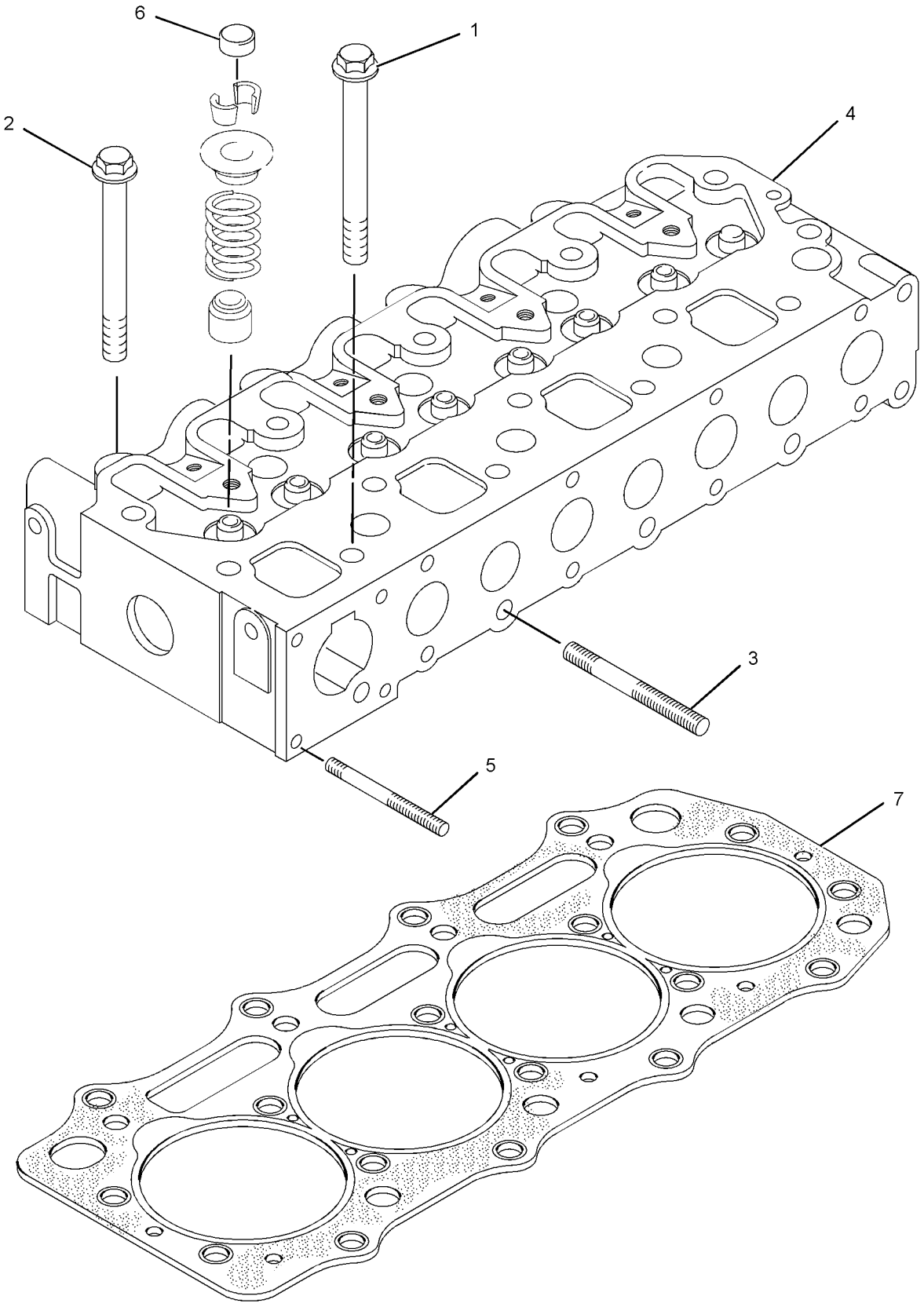

GRAPHIC #1 **<END>** g01962932

229-8730 DRAIN GP-ENGINE OIL

S/N: MWD1-UP

PART OF 326-5360 INSTALLATION AR-ENGINE

SMCS-1302 **i03825038**

NOTE	REF NO	GRAPHIC REF	PART NUMBER	QTY	PART NAME 1 2 3 4 5 6 (PRODUCT LEVEL)	SEE PAGE
	1	1	**5P-4961**	1	CLAMP-HOSE	
E	2	1	**5P-1505**		HOSE (35-CM)	

E-ORDER BY THE CENTIMETER

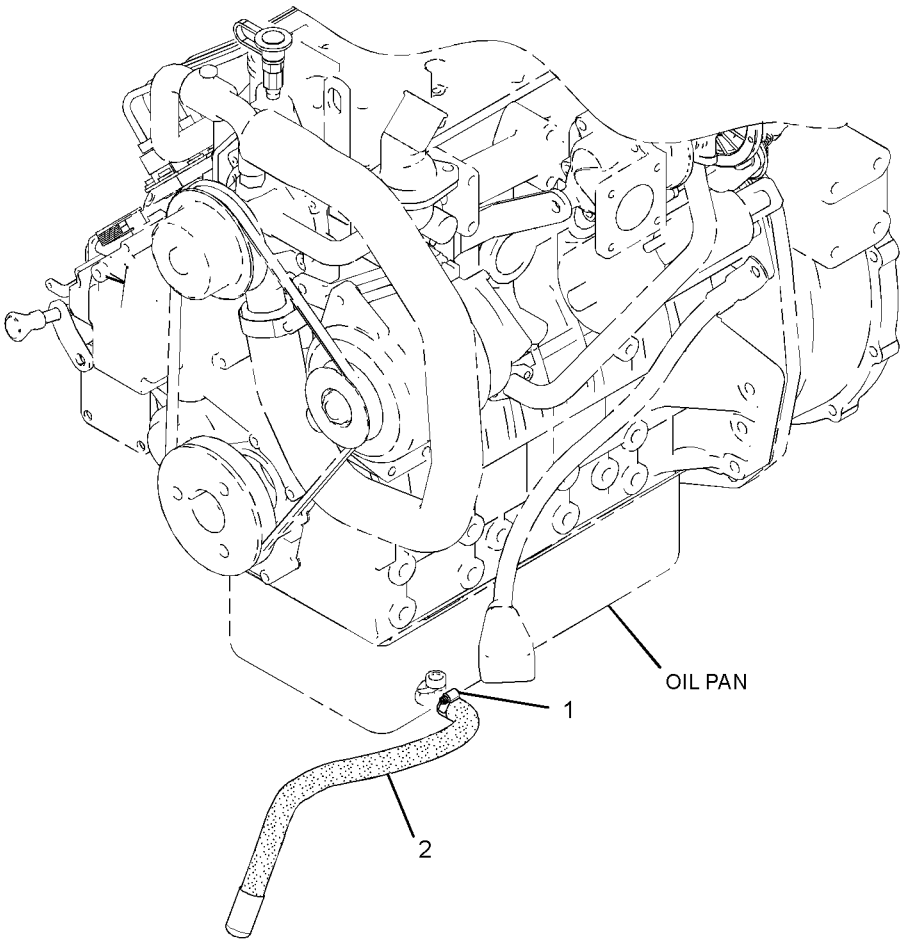

GRAPHIC #1 **<END>** g01954258

BASIC ENGINE

308-2291 FLYWHEEL GP

S/N: CYP1-UP
PART OF 292-5719 ENGINE AR-PRIMARY
AN ATTACHMENT

SMCS-1156, 1158 **i02992341**

NOTE	REF NO	GRAPHIC REF	PART NUMBER	QTY	PART NAME 1 2 3 4 5 6 (PRODUCT LEVEL)	SEE PAGE
	1	1	**327-5154**	1	FLYWHEEL GP	
	1A	1	**154-2405**	1	GEAR-STARTER (126-TEETH)	
	2	1	**154-2406**	6	BOLT	

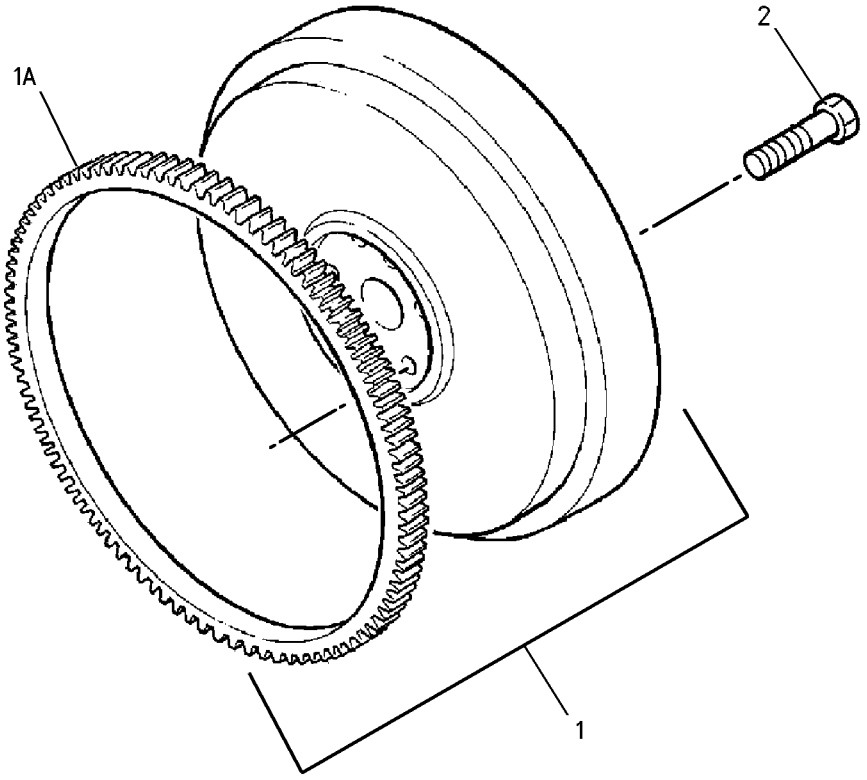

GRAPHIC #1 **<END>** g00640776

280-8396 GUARD GP-BELT

S/N: MWD1-UP

PART OF 326-5360 INSTALLATION AR-ENGINE

SMCS-7174 **i03903778**

NOTE	REF NO	GRAPHIC REF	PART NUMBER	QTY	PART NAME 1 2 3 4 5 6 (PRODUCT LEVEL)	SEE PAGE
	1	1	**229-2704**	4	SEAL	
	2	1	**280-8397**	1	GUARD-BELT	
	3	1	**280-8398**	1	BRACKET AS	
M		1	**6V-9632**	2	NUT-WELD (M6X1-THD)	
M		1	**8T-3612**	2	NUT-WELD (M8X1.25-THD)	
	4	1	**280-8399**	1	BRACKET AS	
M		1	**6V-9632**	2	NUT-WELD (M6X1-THD)	
M		1	**8T-3490**	2	NUT-WELD (M10X1.5-THD)	
	5	1	**280-8417**	4	NUT-PUSH ON	
	6	1	**354-6574**	4	BOLT-SPECIAL	
	7	1	**5P-4116**	4	WASHER-HARD (8.8X20.5X2-MM THK)	
	8	1	**8T-4224**	4	WASHER-HARD (8.8X16X2-MM THK)	
M	9	1	**8T-4908**	2	BOLT (M8X1.25X25-MM)	
M	10	1	**8T-5091**	2	BOLT (M8X1.25X20-MM)	

M-METRIC PART

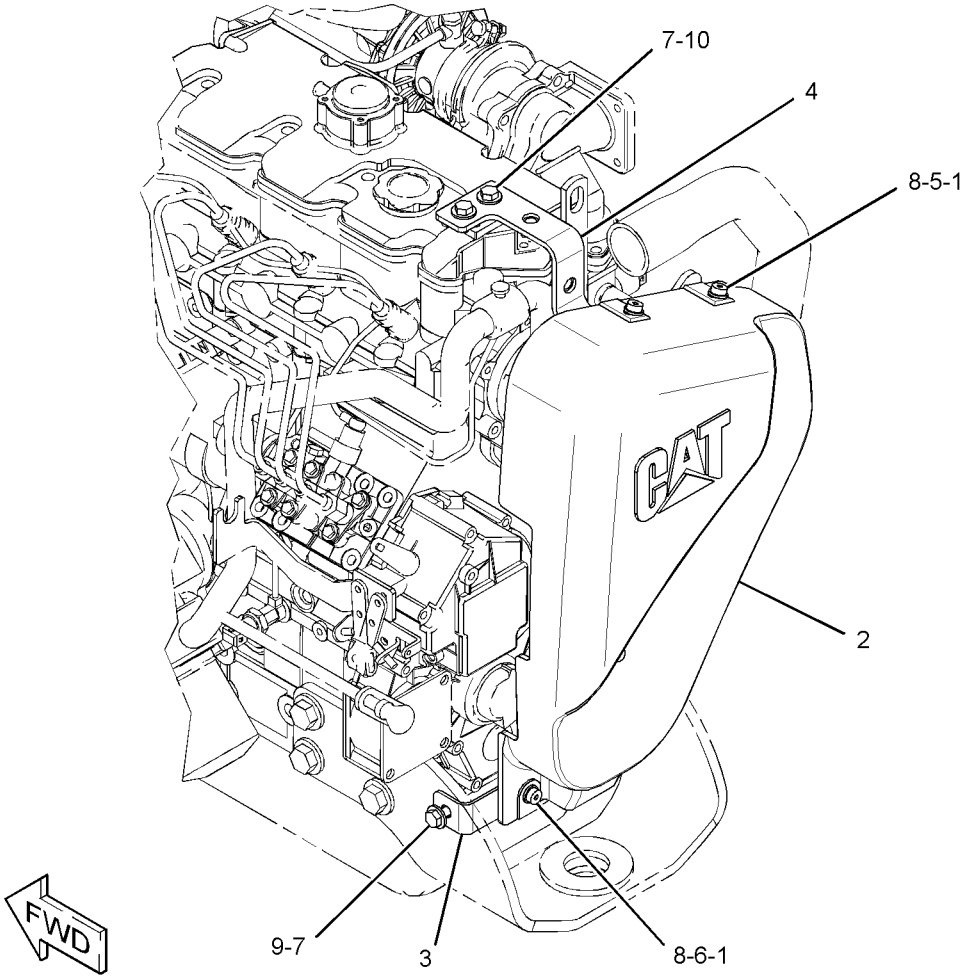

GRAPHIC #1 **<END>** g02149340

BASIC ENGINE

316-7030 HOUSING GP-FLYWHEEL

S/N: CYP1-UP
PART OF 292-5719 ENGINE AR-PRIMARY
AN ATTACHMENT

SMCS-1157 **i02890976**

NOTE	REF NO	GRAPHIC REF	PART NUMBER	QTY	PART NAME 1 2 3 4 5 6 (PRODUCT LEVEL)	SEE PAGE
	1	1	**138-7162**	4	BOLT (M10X1.5X30-MM)	
	2	1	**252-1802**	6	BOLT	
	3	1	**153-6375**	10	BOLT	
	4	1	**153-6868**	2	BOLT	
	5	1	**165-2142**	2	BOLT	
	6	1	**217-7225**	1	HOUSING-FLYWHEEL	
	7	1	**166-2338**	4	NUT	
	8	1	**154-2394**	1	PLATE	
	9	1	**154-2395**	1	PLUG	
	10	1	**154-2403**	4	WASHER	
	11	1	**123-2899**	1	BOLT (M10X1.5X40-MM)	
F			**111-0859**	1	BOLT (M10X1.5X35-MM)	

F-NOT SHOWN

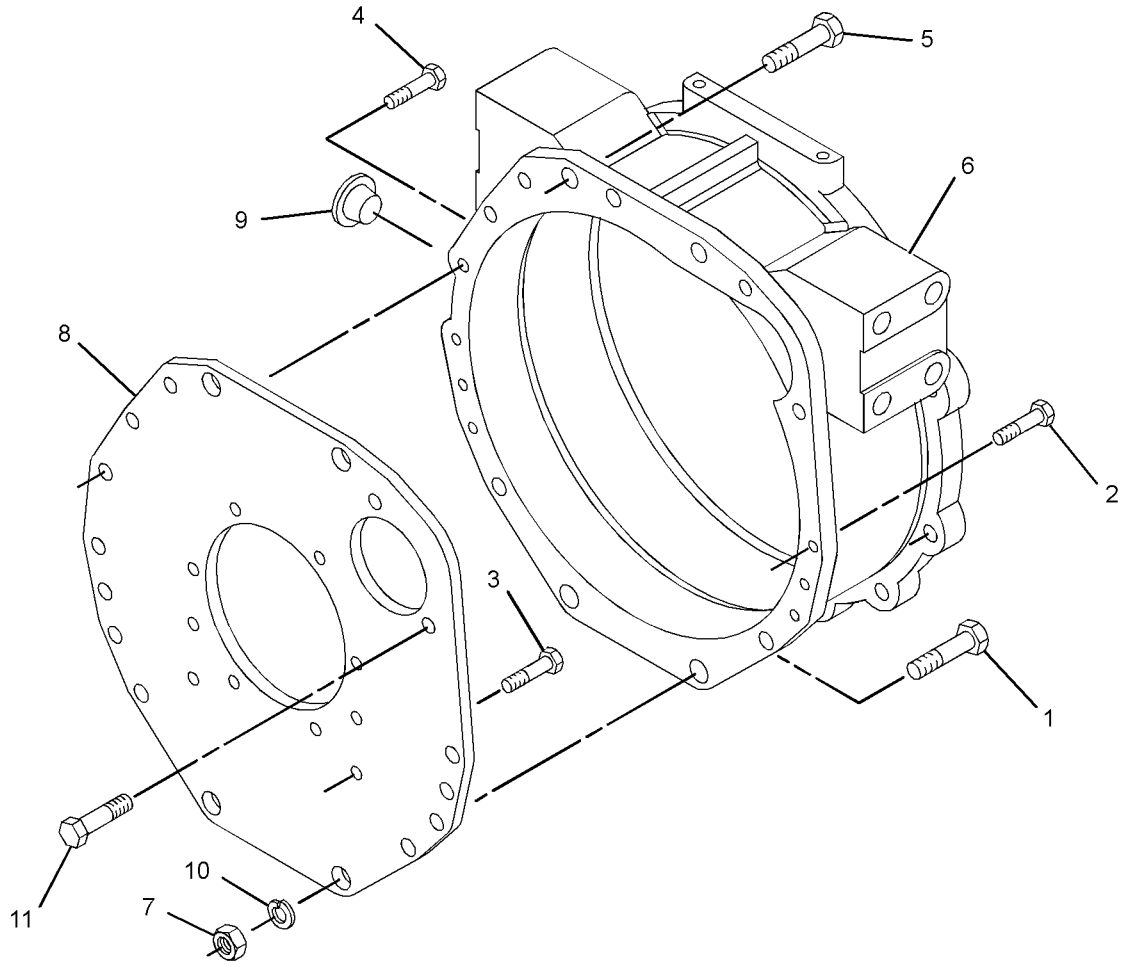

GRAPHIC #1 **<END>** g01463995

322-4914 HOUSING GP-FRONT

S/N: CYP1-UP
PART OF 292-5719 ENGINE AR-PRIMARY
AN ATTACHMENT

SMCS-1151, 1160, 1162, 1166, 3108 **i02909596**

NOTE	REF NO	GRAPHIC REF	PART NUMBER	QTY	PART NAME 1 2 3 4 5 6 (PRODUCT LEVEL)	SEE PAGE
	1	1	**153-5960**	1	NUT	
	2	1	**153-5962**	4	BOLT	
	3	1	**154-1673**	1	PIN	
	4	1	**154-1675**	1	SEAL	
	5	1	**165-2140**	7	BOLT	
	6	1	**308-1871**	1	GASKET	
	7	1	**322-7490**	1	HOUSING-FRONT	

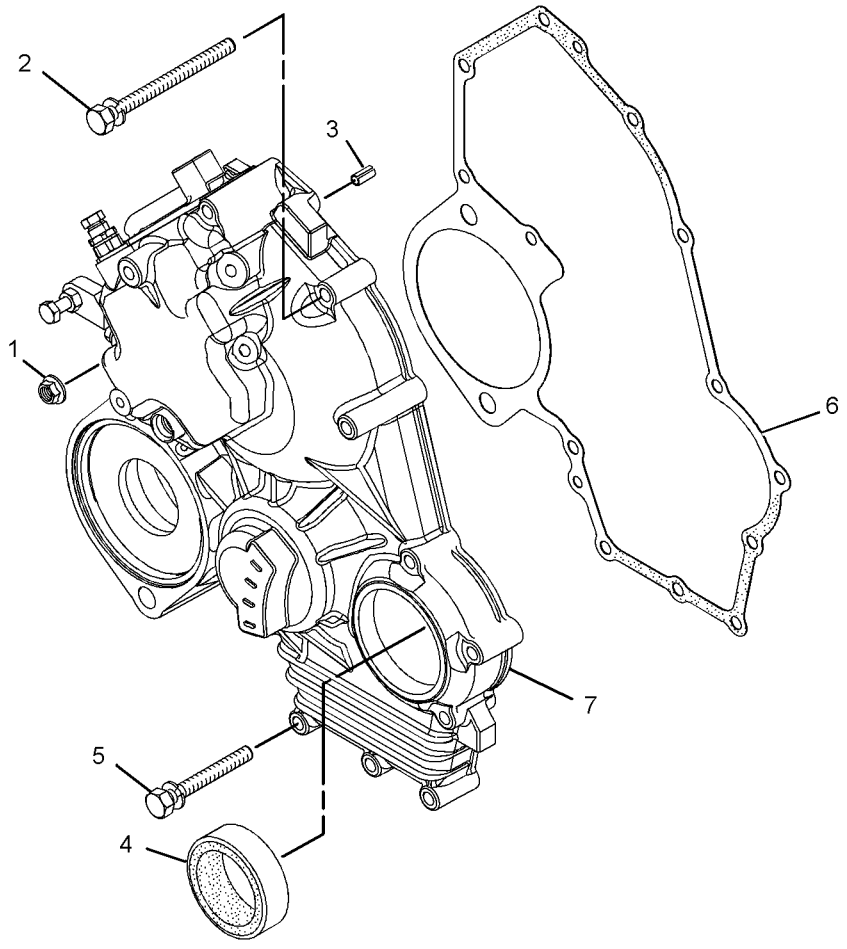

GRAPHIC #1 **<END>** g01963735

339-3017 KIT-FRONT GEAR

S/N: CYP1-UP
PART OF 292-5719 ENGINE AR-PRIMARY
AN ATTACHMENT

SMCS-1204, 1212, 1234, 1361 **i03743987**

NOTE	REF NO	GRAPHIC REF	PART NUMBER	QTY	PART NAME 1 2 3 4 5 6 (PRODUCT LEVEL)	SEE PAGE
	1	1	**153-6849**	1	SPRING	
	2	1	**153-6850**	1	COLLAR	
	3	1	**153-6851**	1	CLIP	
B	4	1	**160-4150**	1	SHIM (0.1-MM THK)	
B		1	**160-4151**	1	SHIM (0.15-MM THK)	
B		1	**160-4152**	1	SHIM (0.2-MM THK)	
B		1	**160-4153**	1	SHIM (0.5-MM THK)	
	5	1	**308-1867**	1	WASHER-THRUST	
	6	1	**308-1869**	1	COVER	

B-USE AS REQUIRED

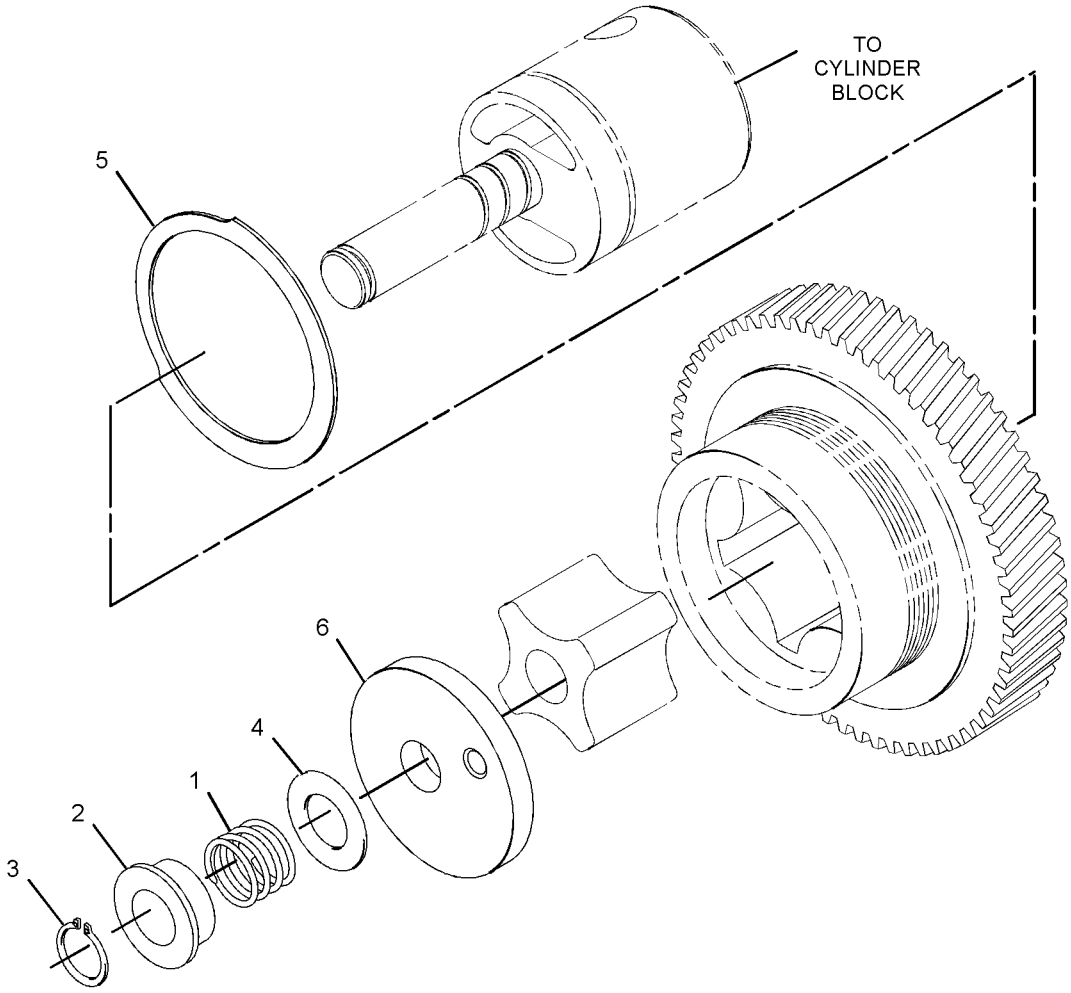

GRAPHIC #1 **<END>** g02013953

317-0982 LIFTING GP-ENGINE

S/N: CYP1-UP
PART OF 292-5719 ENGINE AR-PRIMARY
AN ATTACHMENT

SMCS-1122 **i02827332**

NOTE	REF NO	GRAPHIC REF	PART NUMBER	QTY	PART NAME 1 2 3 4 5 6 (PRODUCT LEVEL)	SEE PAGE
	1	1	**155-7984**	2	WASHER	
	2	1	**165-2141**	2	BOLT	
	3	1	**251-7615**	2	PLATE-LIFTING	

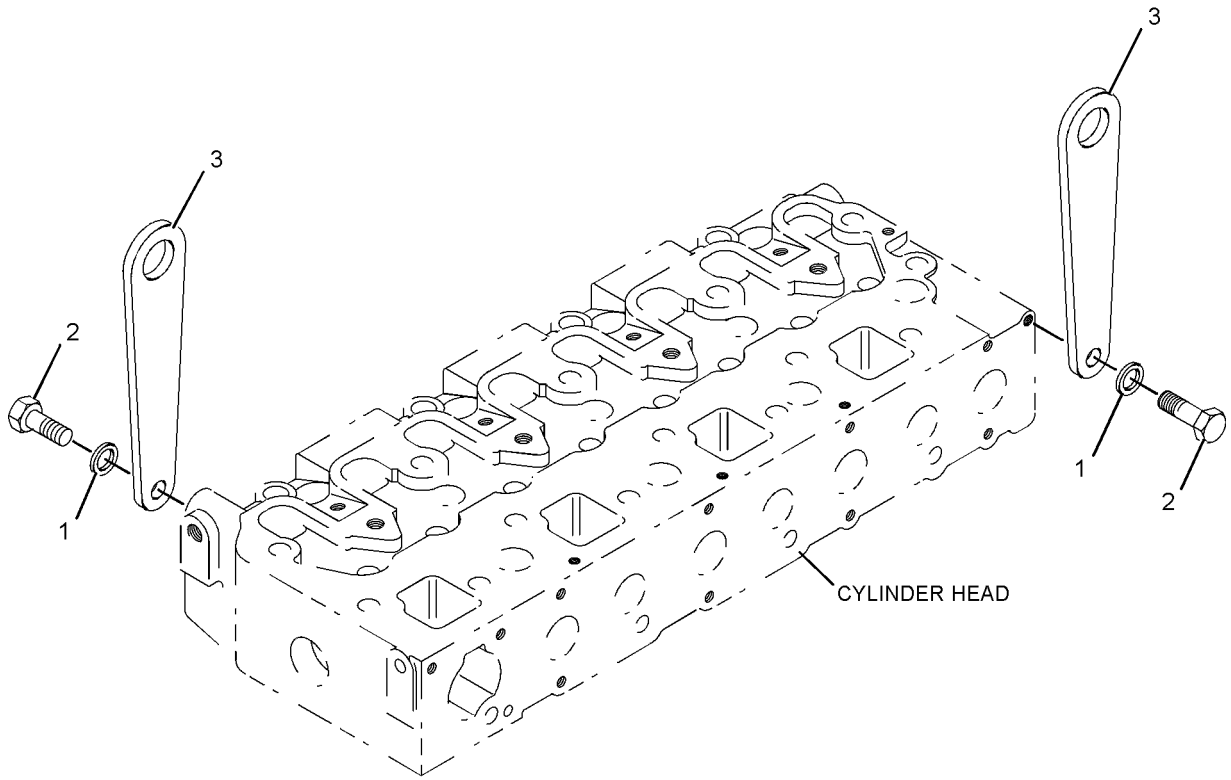

GRAPHIC #1 **<END>** g01091205

BASIC ENGINE

228-1764 MOUNTING GP-ENGINE—SUPPORTS

S/N: MWD1-UP

PART OF 326-5360 INSTALLATION AR-ENGINE

SMCS-1152, 1153, 1154 **i03970910**

NOTE	REF NO	GRAPHIC REF	PART NUMBER	QTY	PART NAME 1 2 3 4 5 6 (PRODUCT LEVEL)	SEE PAGE
	1	1	**205-3185**	1	BRACKET AS	
	2	1	**237-0419**	1	BRACKET AS	
	3	1	**237-0420**	1	BRACKET AS	
M	4	1	**141-5453**	8	BOLT (M14X1.5X30-MM)	
	5	1	**8T-4122**	8	WASHER-HARD (17X32X3.5-MM THK)	
M	6	1	**8T-4192**	8	BOLT (M12X1.75X25-MM)	
	7	1	**8T-4223**	8	WASHER-HARD (13.5X25.5X3-MM THK)	

M-METRIC PART

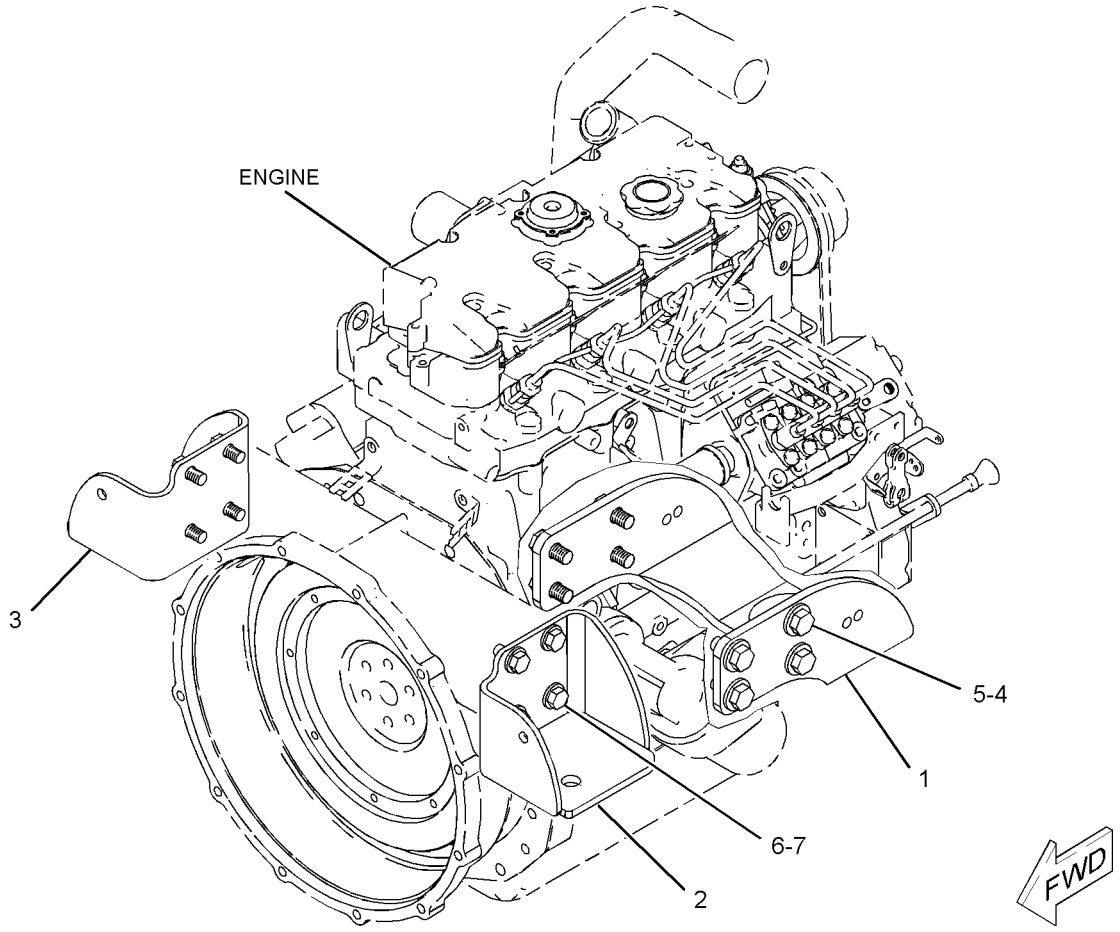

GRAPHIC #1 **<END>** g01072247

241-5789 MOUNTING GP-ENGINE—HARDWARE

S/N: MWD1-UP

PART OF 326-5360 INSTALLATION AR-ENGINE

SMCS-1152, 1153, 1154 **i02003955**

NOTE	REF NO	GRAPHIC REF	PART NUMBER	QTY	PART NAME 1 2 3 4 5 6 (PRODUCT LEVEL)	SEE PAGE
	1	1	**211-9061**	3	MOUNT AS	
	2	1	**165-7095**	6	WASHER (16.5X71.5X3-MM THK)	
M	3	1	**7X-2556**	3	BOLT (M16X2X100-MM)	
	4	1	**8T-4122**	3	WASHER-HARD (17X32X3.5-MM THK)	
M	5	1	**8T-4132**	3	NUT (M16X2-THD)	

M-METRIC PART

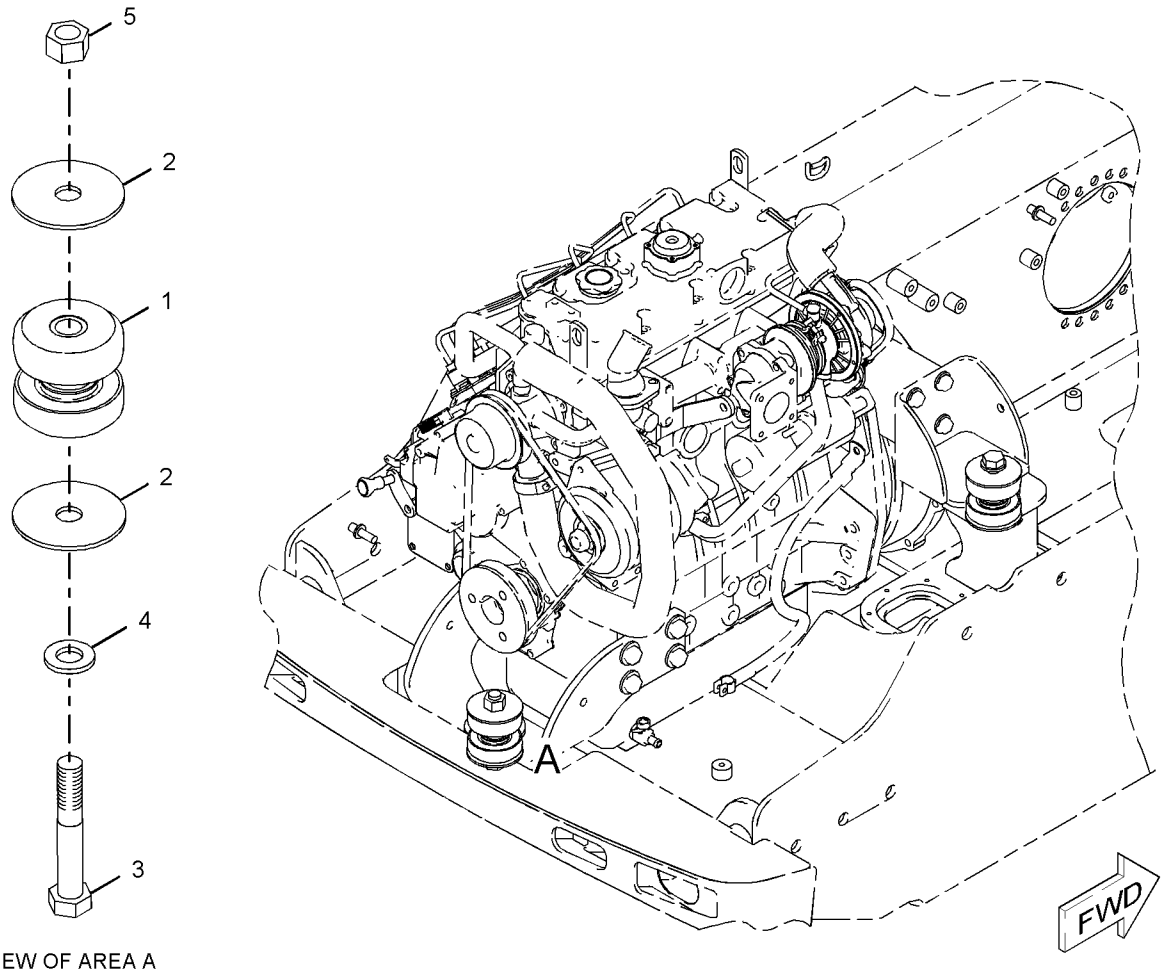

VIEW OF AREA A

GRAPHIC #1 **<END>** g01036490

BASIC ENGINE

315-7813 MOUNTING GP-FAN

S/N: CYP1-UP
PART OF 292-5719 ENGINE AR-PRIMARY
AN ATTACHMENT

SMCS-1356 **i02810575**

NOTE	REF NO	GRAPHIC REF	PART NUMBER	QTY	PART NAME 1 2 3 4 5 6 (PRODUCT LEVEL)	SEE PAGE
	1	1	**153-7640**	4	BOLT	
	2	1	**154-2433**	1	PLATE	

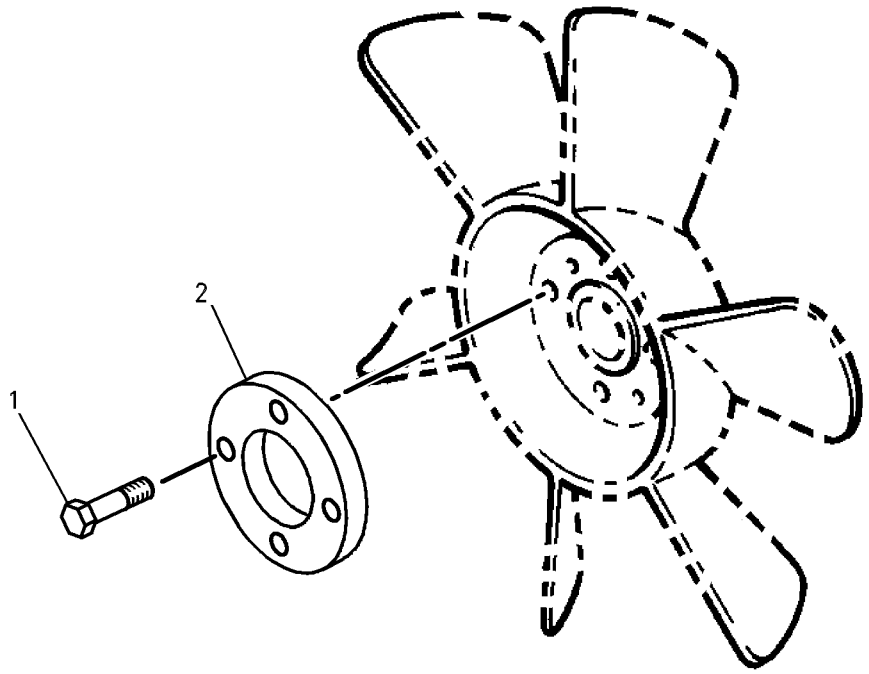

GRAPHIC #1 **<END>** g00485543

BASIC ENGINE

316-6997 PAN GP-OIL

S/N: CYP1-UP
PART OF 292-5719 ENGINE AR-PRIMARY
AN ATTACHMENT

SMCS-1302 **i03611363**

NOTE	REF NO	GRAPHIC REF	PART NUMBER	QTY	PART NAME 1 2 3 4 5 6 (PRODUCT LEVEL)	SEE PAGE
	1	1,2	**153-6833**	31	BOLT	
	2	1	**153-6835**	1	SEAL-O-RING	
	3	1,2	**153-6838**	4	BOLT	
	4	1	**215-2605**	1	GASKET	
	5	1	**218-2333**	1	PAN-OIL	
	6	1	**325-9416**	1	STRAINER-OIL (ENGINE OIL)	
	7	1	**325-9415**	1	TUBE-OIL SUCTION	
	8	2	**319-7366**	1	PLUG	
	9	2	**153-6841**	2	SEAL-O-RING	
	10	2	**329-5257**	1	TUBE-GAUGE	
	11	2	**293-4781**	1	GAUGE AS-OIL LEVEL (DIPSTICK) (ENGINE)	
	12	2	**289-6119**	2	SEAL-O-RING	

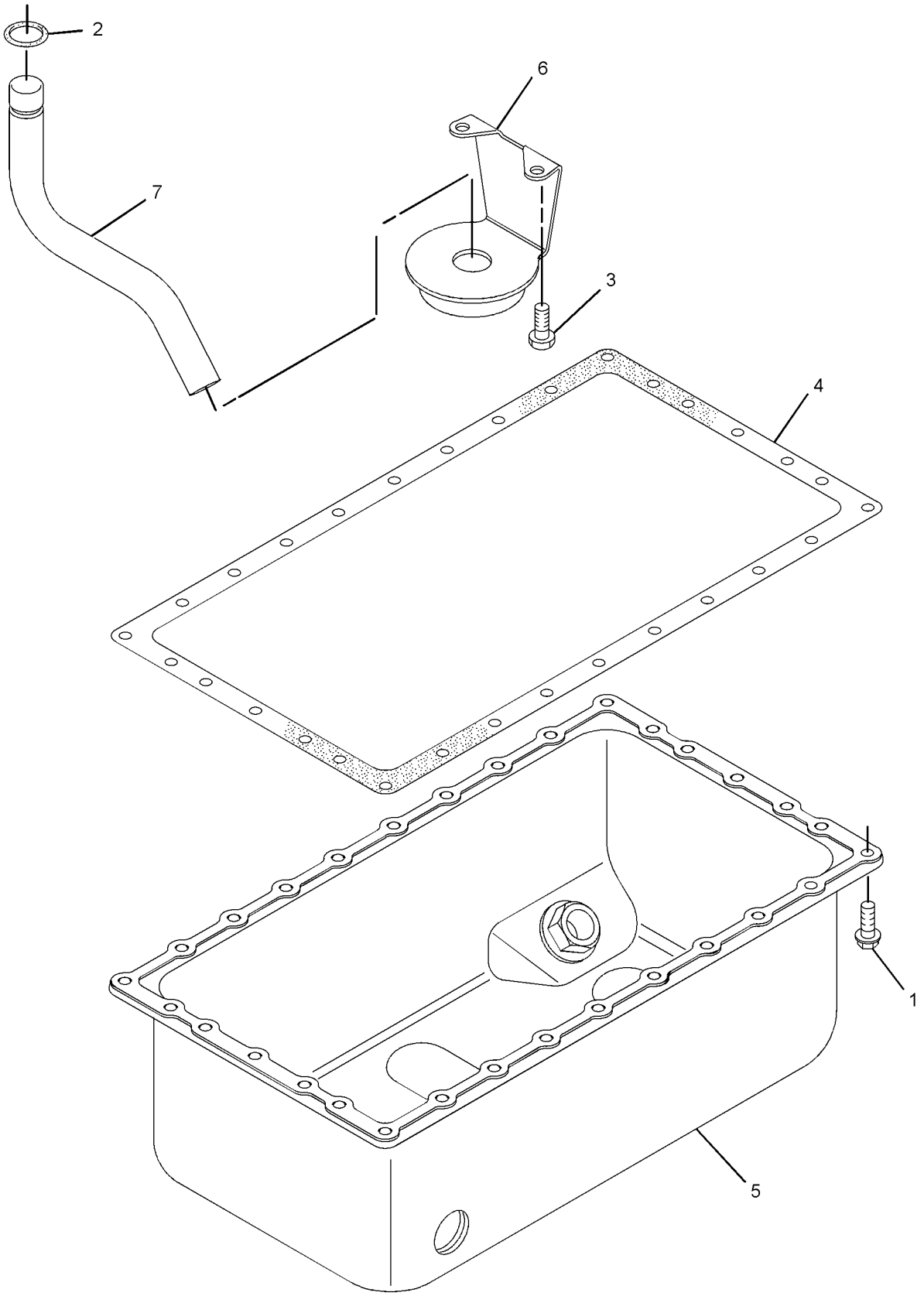

GRAPHIC #1 g01612914

316-6997 **PAN GP-OIL** *(contd.)* **i03611363**

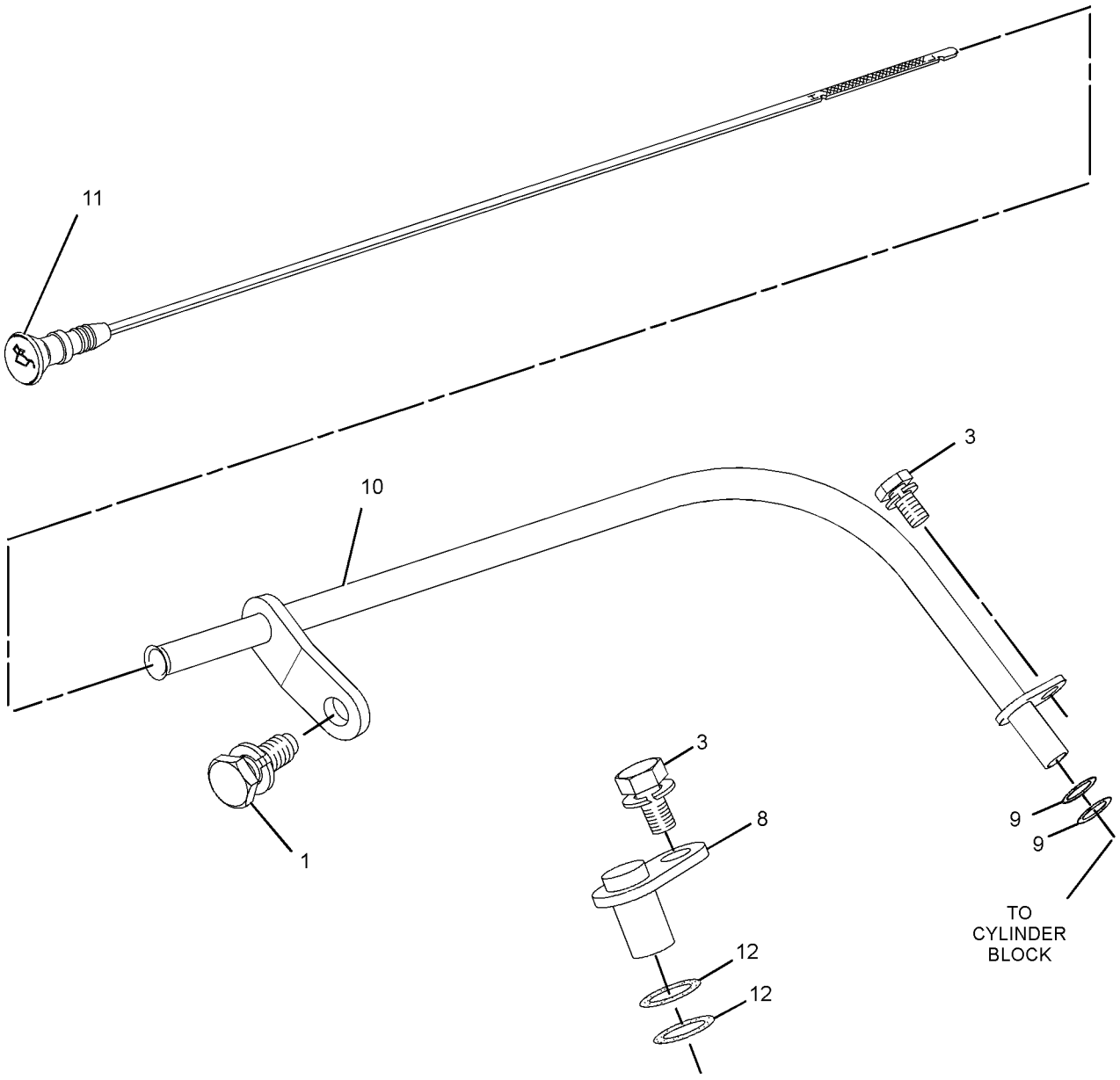

GRAPHIC #2 **<END>** g01522374

322-4910 PISTON GP

S/N: CYP1-UP
PART OF 292-5719 ENGINE AR-PRIMARY
AN ATTACHMENT

SMCS-1214, 1215 **i02938912**

NOTE	REF NO	GRAPHIC REF	PART NUMBER	QTY	PART NAME 1 2 3 4 5 6 (PRODUCT LEVEL)	SEE PAGE
	1	1	**154-0867**	4	ROD AS-CONNECTING	
					(EACH INCLUDES)	
	1A	1	**154-0869**	1	BUSHING	
	1B	1	**154-0870**	2	BOLT	
	1C	1	**154-0871**	2	NUT	
	2	1	**154-0873**	1	PIN	
	3	1	**154-0874**	2	CLIP	
	4	1	**270-6968**	4	PISTON AS	
					(EACH INCLUDES)	
	4A	1	**270-6970**	1	KIT-PISTON RING	

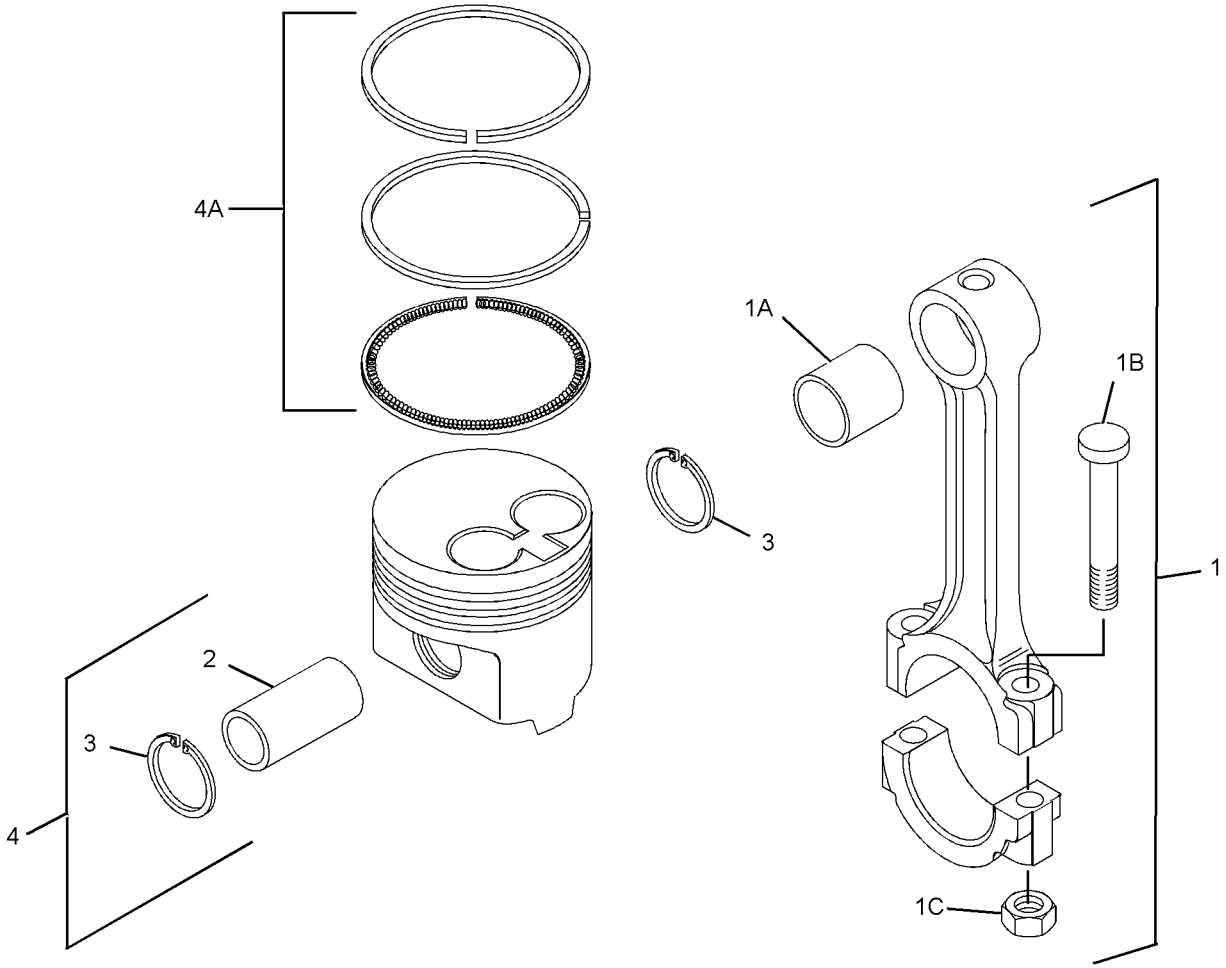

GRAPHIC #1 **<END>** g01410074

322-4924 PLATE GP-COVER—BLANKING

S/N: CYP1-UP
PART OF 292-5719 ENGINE AR-PRIMARY
AN ATTACHMENT

SMCS-6912 **i03854672**

NOTE	REF NO	GRAPHIC REF	PART NUMBER	QTY	PART NAME 1 2 3 4 5 6 (PRODUCT LEVEL)	SEE PAGE
	1	1	**164-7468**	1	BOLT	
M	2	1	**103-5687**	1	BOLT (M10X1.5X85-MM)	
	3	1	**341-2281**	1	SEAL-O-RING	
	4	1	**341-2287**	1	COVER	
	5	1	**331-0081**	1	COVER	

M-METRIC PART

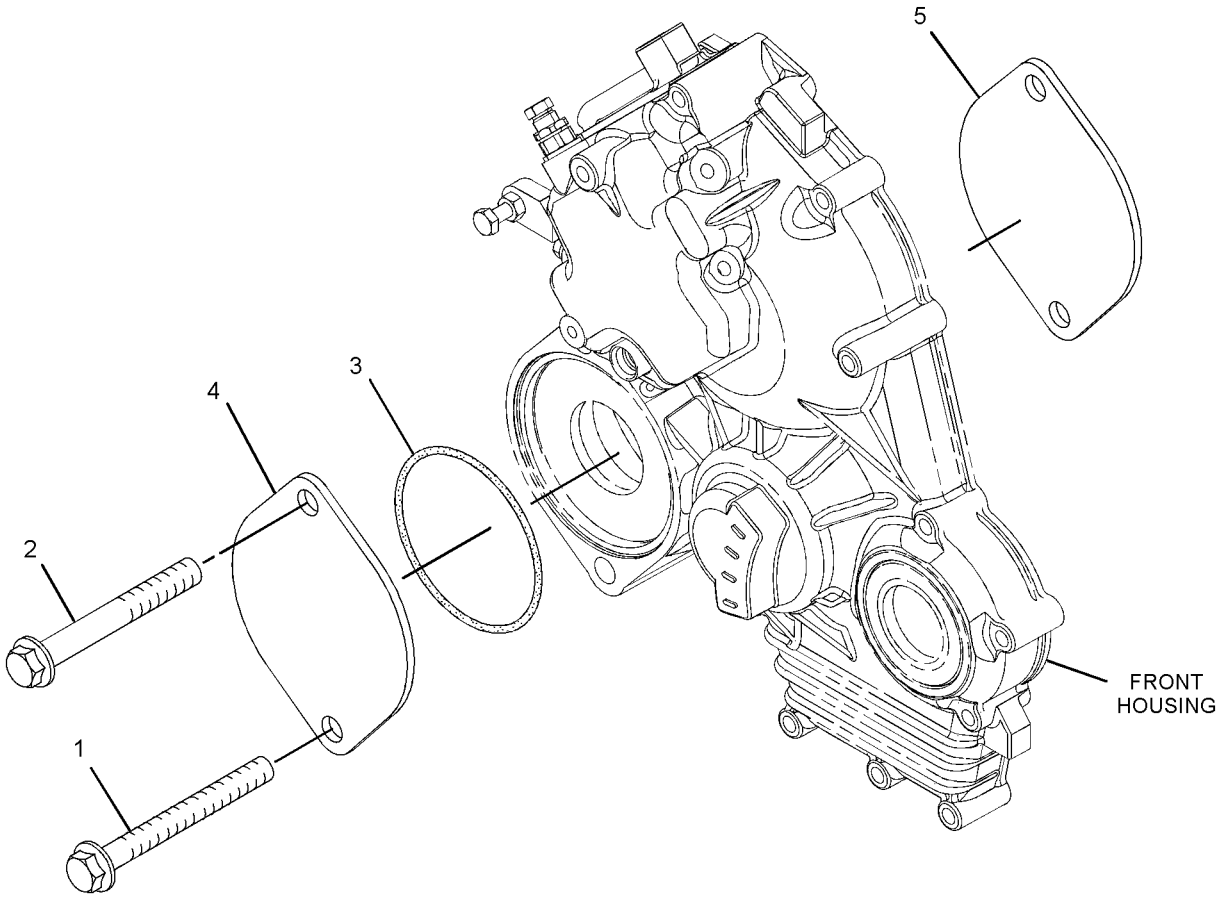

GRAPHIC #1 **<END>** g02108823

BASIC ENGINE

321-6740 PULLEY GP-CRANKSHAFT

S/N: CYP1-UP
PART OF 292-5719 ENGINE AR-PRIMARY
AN ATTACHMENT

SMCS-1205 **i03164783**

NOTE	REF NO	GRAPHIC REF	PART NUMBER	QTY	PART NAME 1 2 3 4 5 6 (PRODUCT LEVEL)	SEE PAGE
	1	1	**153-6492**	1	KEY-WOODRUFF	
	2	1	**154-1880**	1	NUT	
	3	1	**321-6738**	1	PULLEY-CRANKSHAFT	

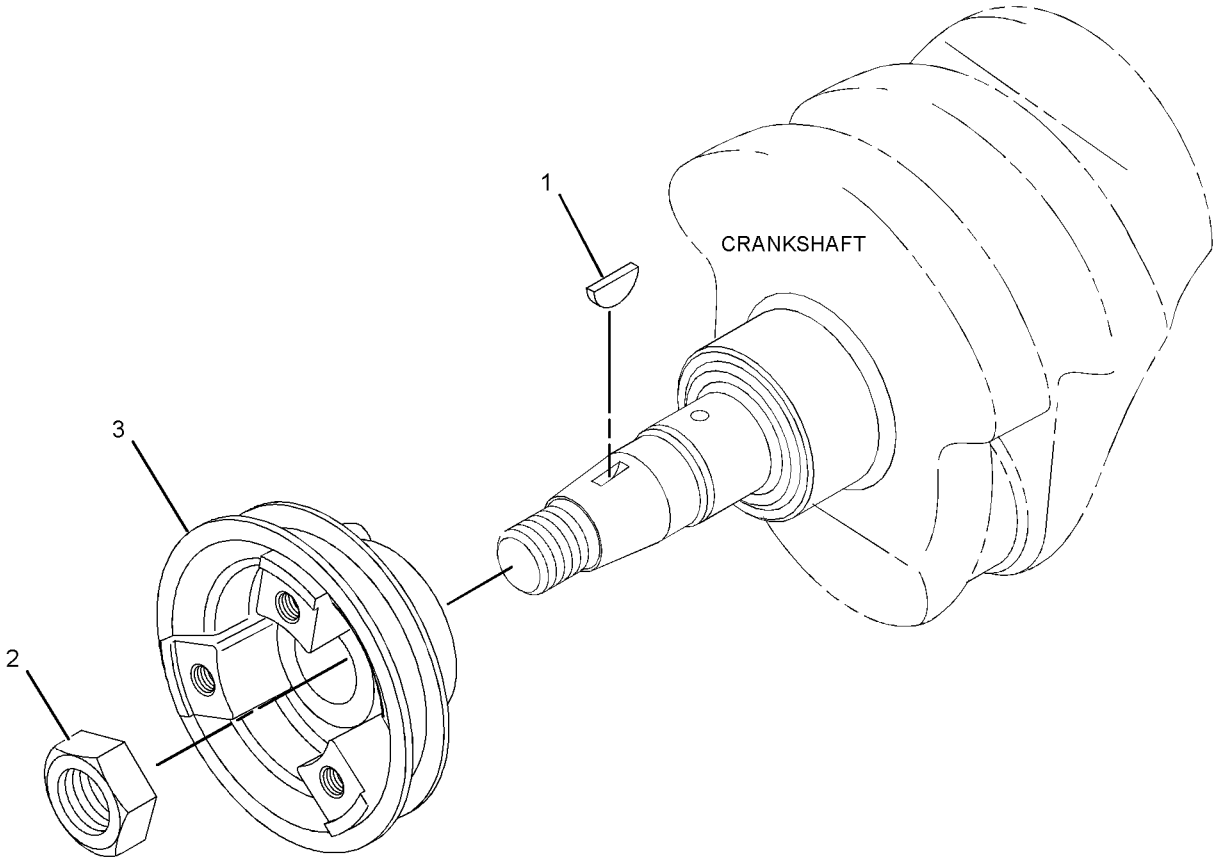

GRAPHIC #1 **<END>** g01622072

308-2294 PULLEY GP-WATER PUMP

S/N: CYP1-UP
PART OF 292-5719 ENGINE AR-PRIMARY
AN ATTACHMENT

SMCS-1384 **i02743517**

NOTE	REF NO	GRAPHIC REF	PART NUMBER	QTY	PART NAME 1 2 3 4 5 6 (PRODUCT LEVEL)	SEE PAGE
	1	1	**154-1822**	1	PULLEY-WATER PUMP	

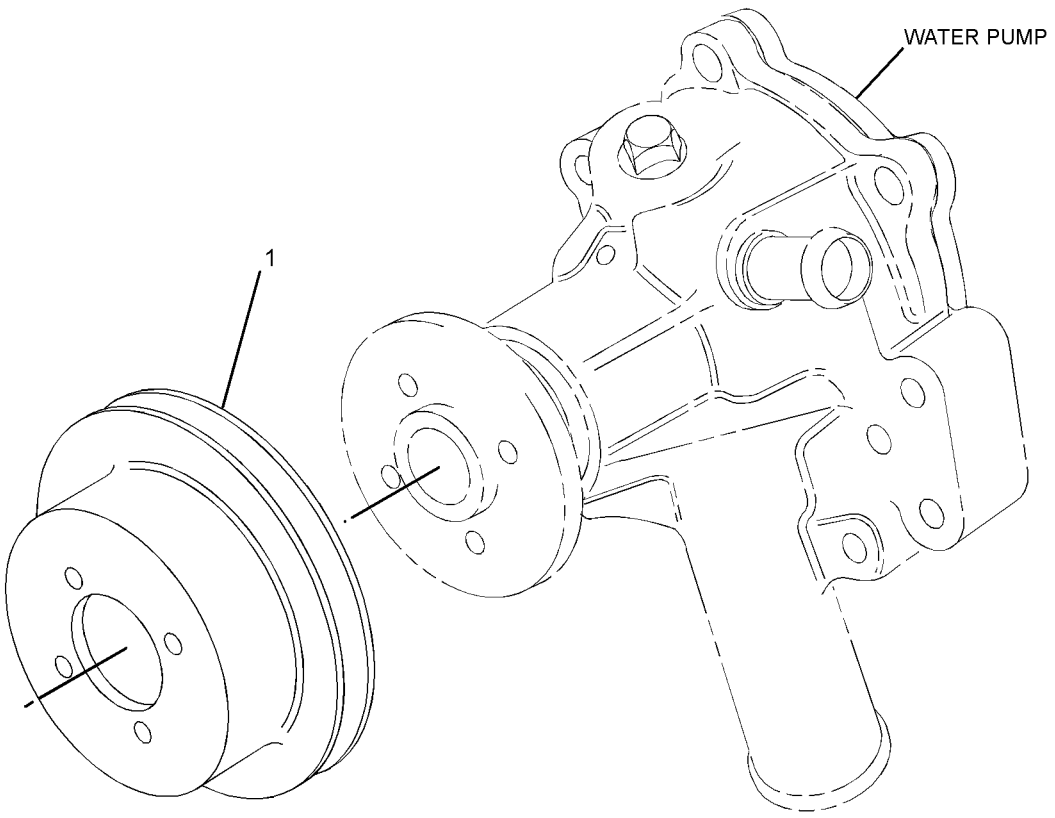

GRAPHIC #1 **<END>** g01412305

308-2306 V-BELT GP—FAN DRIVE

S/N: CYP1-UP
PART OF 292-5719 ENGINE AR-PRIMARY
AN ATTACHMENT

SMCS-1357 **i03202150**

NOTE	REF NO	GRAPHIC REF	PART NUMBER	QTY	PART NAME 1 2 3 4 5 6 (PRODUCT LEVEL)	SEE PAGE
	1	1	**211-5172**	1	V-BELT (WATER PUMP)	

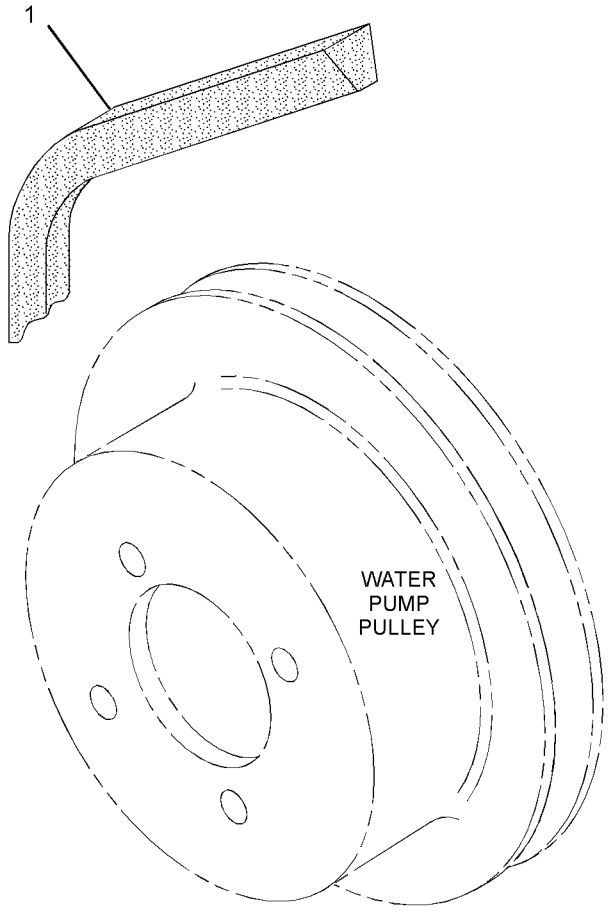

GRAPHIC #1 **<END>** g01407842

293-2167 VALVE MECHANISM GP

S/N: CYP1-UP

PART OF 322-4912 VALVE MECHANISM GP

AN ATTACHMENT

SMCS-1102, 1112, 1121, 1123, 1208, 1209 **i02869546**

NOTE	REF NO	GRAPHIC REF	PART NUMBER	QTY	PART NAME 1 2 3 4 5 6 (PRODUCT LEVEL)	SEE PAGE
	1	1	**154-1243**	6	WASHER	
	2	1	**153-5587**	8	SCREW-ADJUSTMENT	
	3	1	**153-5590**	8	NUT	
	4	1	**153-6835**	1	SEAL-O-RING	
	5	1	**206-3499**	1	SHAFT-ROCKER ARM	
	7	1	**154-1240**	4	LEVER-RH	
	8	1	**154-1241**	4	LEVER-LH	
	9	1	**154-1242**	3	SPRING	

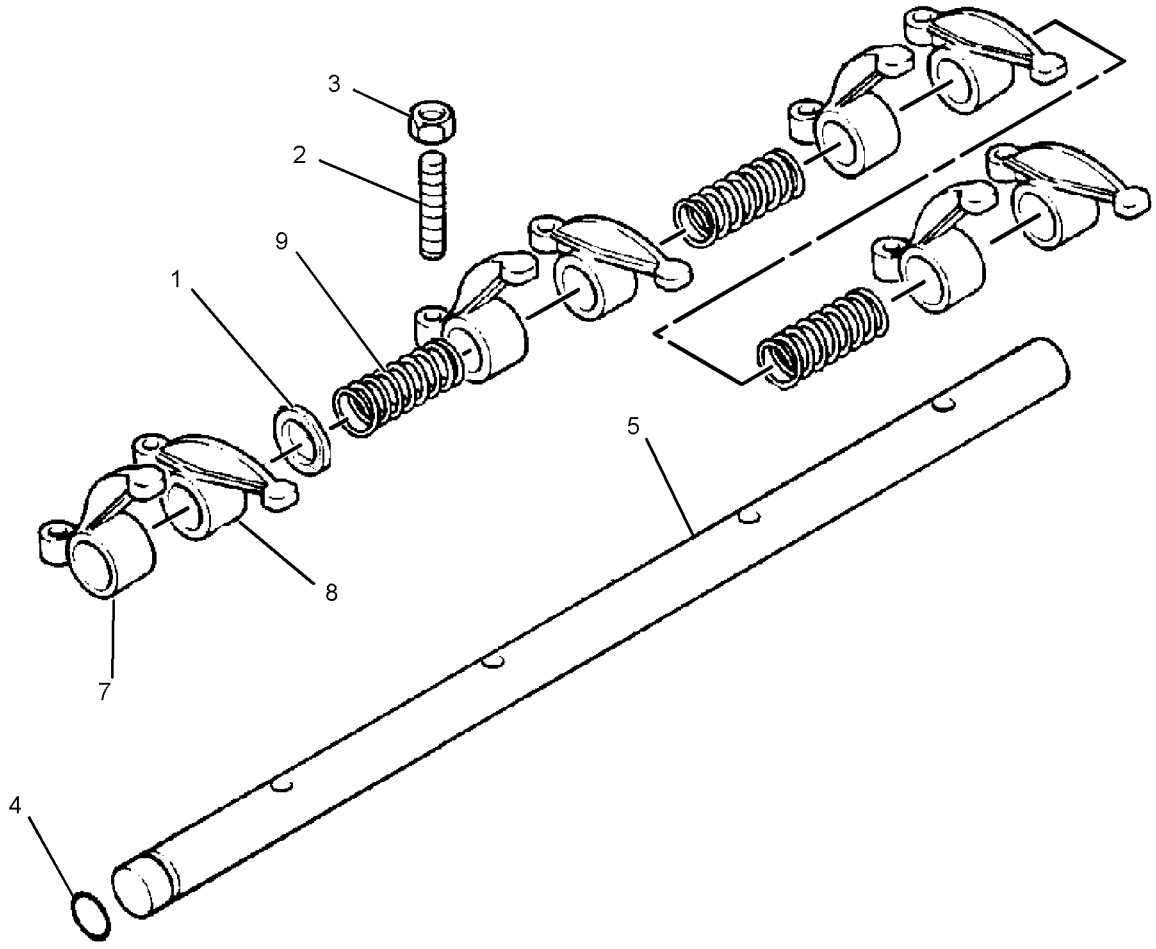

GRAPHIC #1 **<END>** g01395519

BASIC ENGINE

322-4912 VALVE MECHANISM GP

S/N: CYP1-UP

PART OF 292-5719 ENGINE AR-PRIMARY

AN ATTACHMENT

SMCS-1102, 1112, 1121, 1123, 1208, 1209 **i02938914**

NOTE	REF NO	GRAPHIC REF	PART NUMBER	QTY	PART NAME 1 2 3 4 5 6 (PRODUCT LEVEL)	SEE PAGE
	1	1	**153-5961**	2	BOLT	
	2	1	**153-7988**	4	NUT	
	3	1	**154-1246**	4	STUD	
	4	1	**154-1248**	8	ROD	
	5	1	**154-1249**	8	TAPPET	
	6	1	**217-2752**	1	GASKET (VALVE BRACKET)	
Y	7	1	**293-2167**	1	VALVE MECHANISM GP	37

Y-SEPARATE ILLUSTRATION

322-4912 **VALVE MECHANISM GP** *(contd.)* **i02938914**

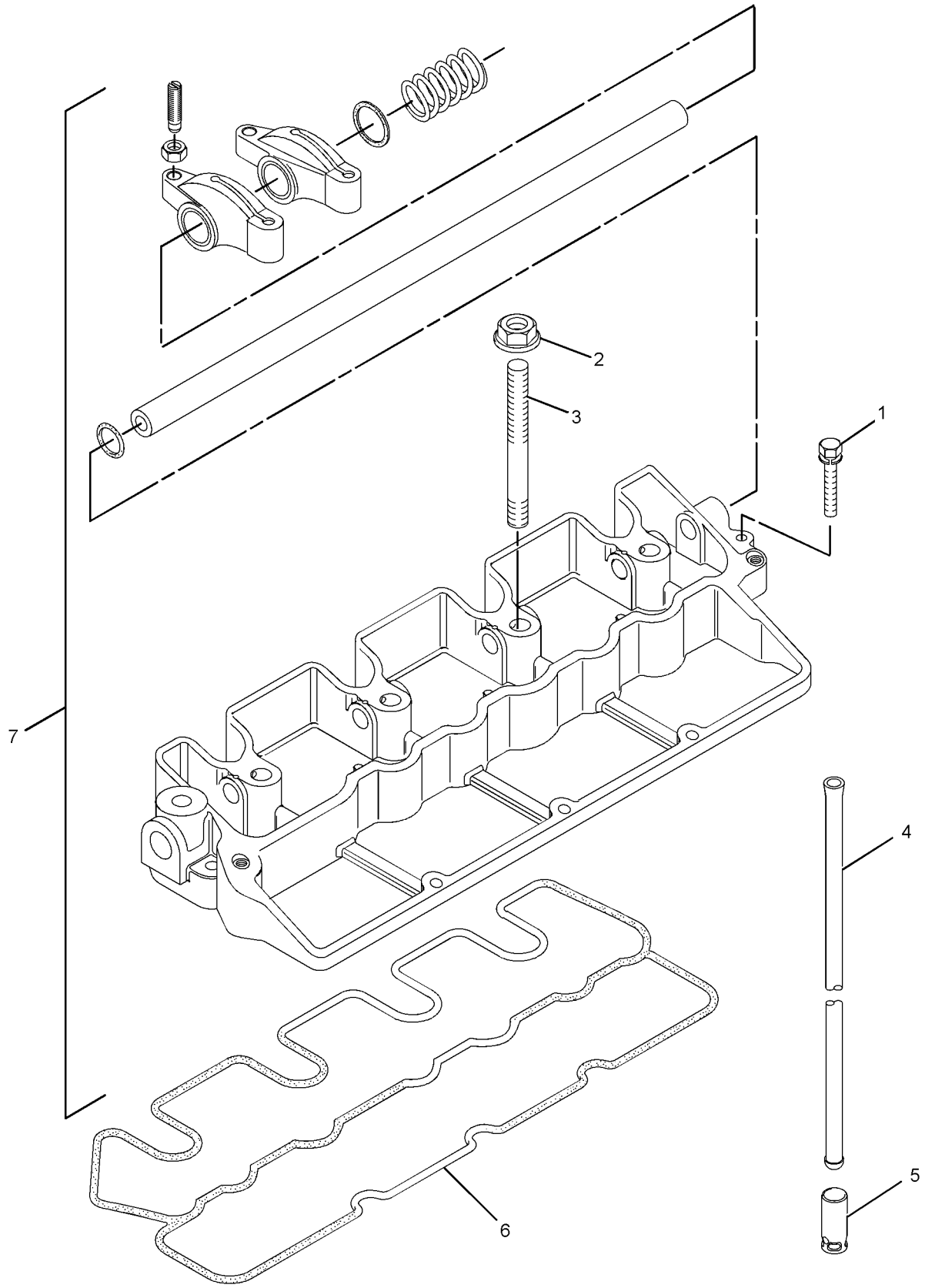

GRAPHIC #1 **<END>** g01419056

LUBRICATION SYSTEM

308-2297 FILLER GP-ENGINE OIL

S/N: CYP1-UP
PART OF 292-5719 ENGINE AR-PRIMARY
AN ATTACHMENT

SMCS-1316 **i03879879**

NOTE	REF NO	GRAPHIC REF	PART NUMBER	QTY	PART NAME 1 2 3 4 5 6 (PRODUCT LEVEL)	SEE PAGE
	1	1	**153-5933**	1	SEAL (ENGINE OIL FILL CAP)	
	2	1	**217-7358**	1	CAP-OIL FILLER (ENGINE)	
	3	1	**288-6593**	1	SEAL (ENGINE OIL FILL CAP)	
	4	1	**334-0272**	1	CAP-FILLER (ENGINE OIL)	

308-2297 **FILLER GP-ENGINE OIL** *(contd.)* **i03879879**

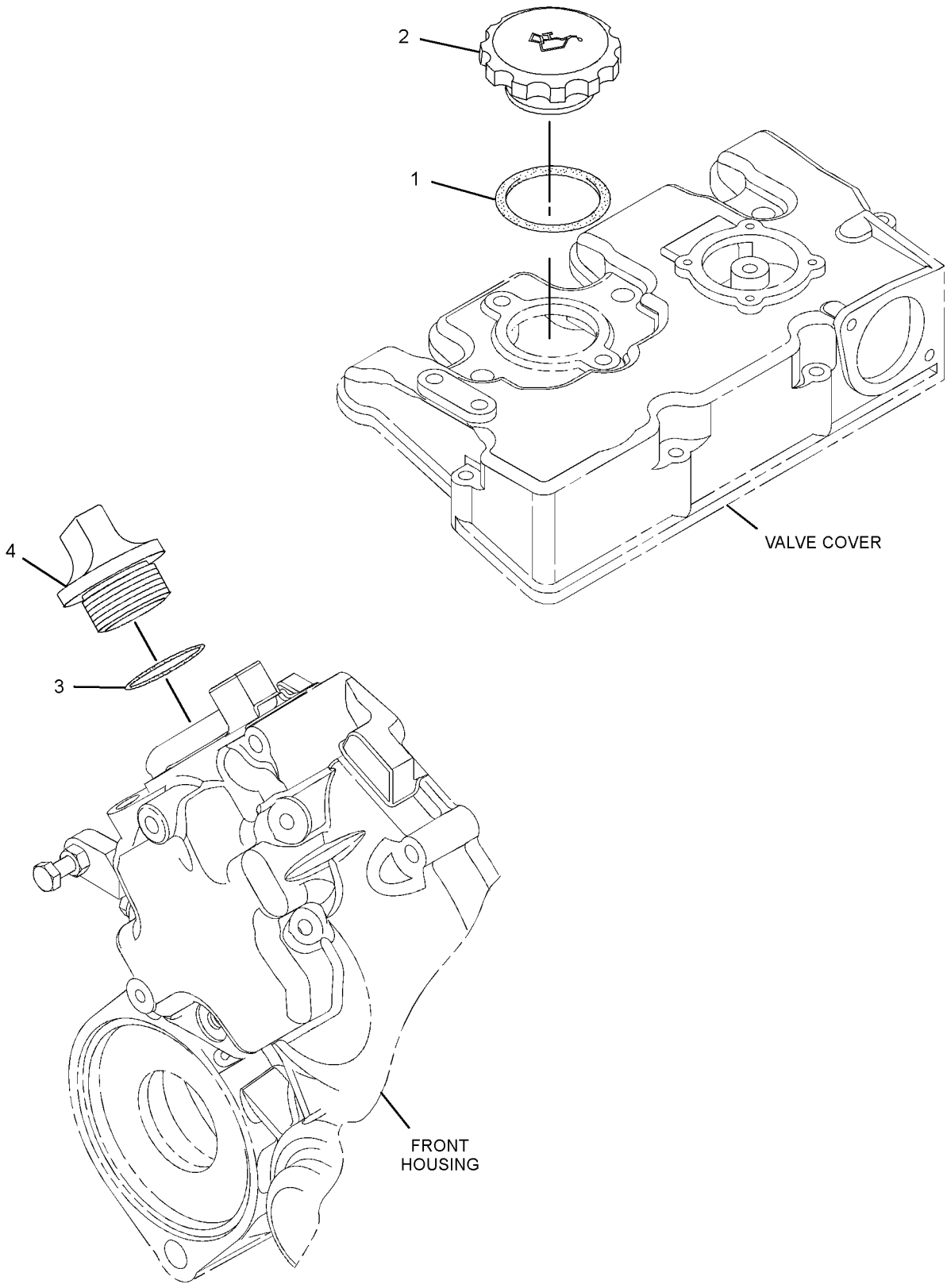

GRAPHIC #1 **<END>** g01412730

LUBRICATION SYSTEM

308-2298 FILTER GP-ENGINE OIL

S/N: CYP1-UP
PART OF 292-5719 ENGINE AR-PRIMARY
AN ATTACHMENT

SMCS-1308 **i02752264**

NOTE	REF NO	GRAPHIC REF	PART NUMBER	QTY	PART NAME 1 2 3 4 5 6 (PRODUCT LEVEL)	SEE PAGE
	1	1	**220-1523**	1	FILTER AS-ENGINE OIL	

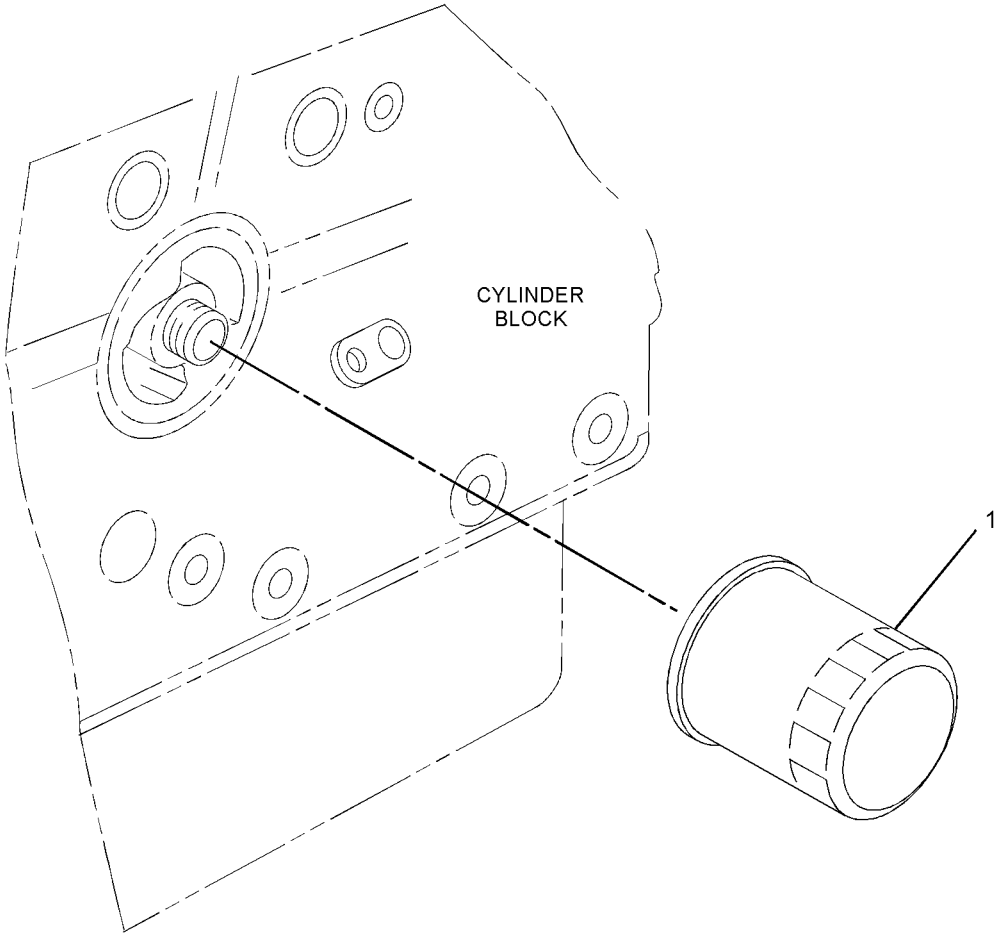

GRAPHIC #1 **<END>** g01389723

322-4913 PUMP GP-ENGINE OIL

S/N: CYP1-UP
PART OF 292-5719 ENGINE AR-PRIMARY
AN ATTACHMENT

SMCS-1304, 1315 **i03705555**

NOTE	REF NO	GRAPHIC REF	PART NUMBER	QTY	PART NAME 1 2 3 4 5 6 (PRODUCT LEVEL)	SEE PAGE
	1	1	**153-5936**	2	WASHER	
	2	1	**153-6853**	1	SEAL-O-RING	
	3	1	**153-6881**	1	BOLT	
	4	1	**154-1942**	1	VALVE-RELIEF (ENGINE OIL PRESSURE)	
	5	1	**154-2353**	1	TUBE AS-OIL	

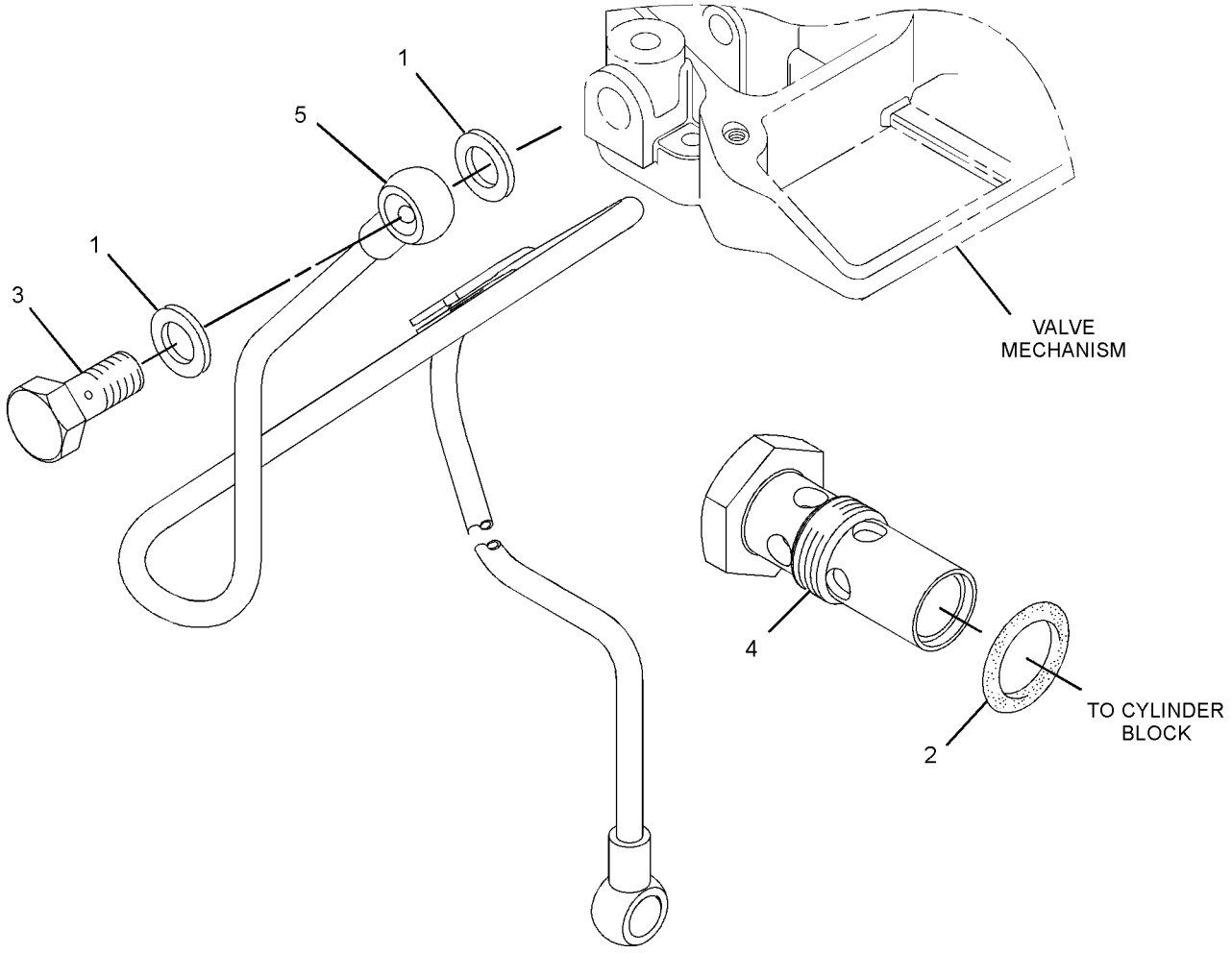

GRAPHIC #1 **<END>** g02005579

317-0980 HOUSING GP-WATER REGULATOR

S/N: CYP1-UP
PART OF 292-5719 ENGINE AR-PRIMARY
AN ATTACHMENT

SMCS-1393 **i03611364**

NOTE	REF NO	GRAPHIC REF	PART NUMBER	QTY	PART NAME 1 2 3 4 5 6 (PRODUCT LEVEL)	SEE PAGE
	1	1	**154-1828**	1	GASKET-COVER (TEMPERATURE REGULATOR)	
	2	1	**168-9001**	2	BOLT	
	3	1	**217-7379**	1	HOUSING	

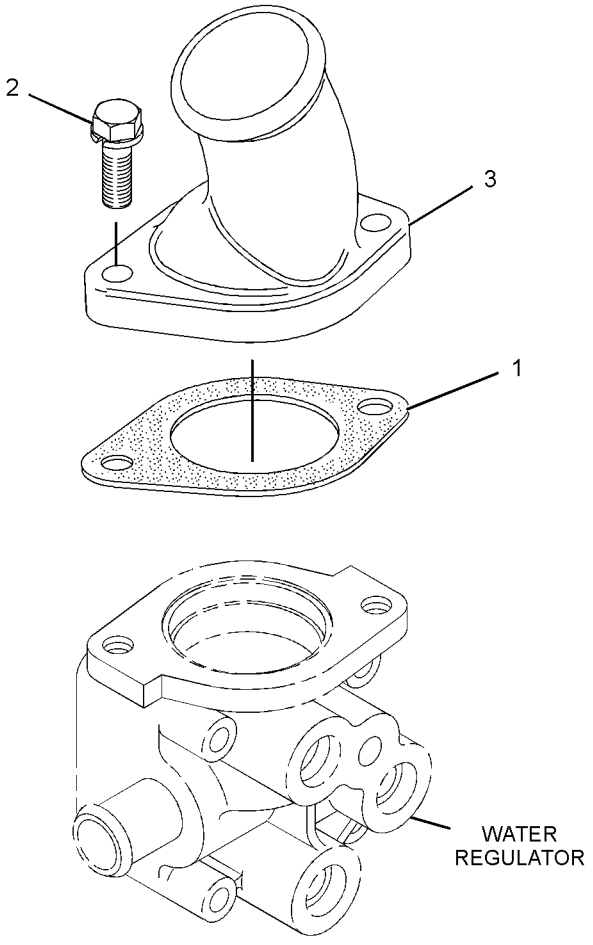

GRAPHIC #1 **<END>** g01439312

228-1762 MOUNTING GP-RAD & OIL COOLER

S/N: MWD1-UP

PART OF 326-5360 INSTALLATION AR-ENGINE

SMCS-1353, 1374 **i03970927**

NOTE	REF NO	GRAPHIC REF	PART NUMBER	QTY	PART NAME 1 2 3 4 5 6 (PRODUCT LEVEL)	SEE PAGE
	1	1	**5P-0372**	2	LOCK PIN	
	2	1	**5V-8309**	1	STRIKER AS	
B	3	1	**8T-0318**	1	SHIM (0.8-MM THK)	
	4	1	**8T-4159**	1	BUMPER	
	5	1	**142-8812**	1	SUPPORT AS	
	6	1	**142-8832**	1	PIN AS	
	7	1	**161-2347**	1	LATCH AS	
	8	1	**193-8345**	1	SPRING AS-GAS	
	9	1	**208-6176**	4	STUD-BALL	
	10	1	**228-3724**	1	SUPPORT AS	
	11	1	**228-9641**	1	GRILL AS	
M		1	**8T-3612**		NUT-WELD (M8X1.25-THD)	
	12	1	**232-1789**	1	SPRING AS-GAS	
	13	1	**178-2255**	2	PIN	
	14	1	**2K-4973**	1	LOCKNUT (3/8-16-THD)	
M	15	1	**5C-7261**	1	NUT (M8X1.25-THD)	
	16	1	**7X-7729**	1	WASHER (11X25X3-MM THK)	
	17	1	**8T-4121**	8	WASHER-HARD (11X21X2.5-MM THK)	
M	18	1	**8T-4133**	4	NUT (M10X1.5-THD)	
M	19	1	**8T-4181**	3	BOLT (M6X1X20-MM)	
	20	1	**8T-4205**	3	WASHER-HARD (7.2X14.5X2-MM THK)	
M	21	1	**8T-6466**	4	BOLT (M10X1.5X60-MM)	
D	22	1	**5P-8309**		SEAL (0.5-M EACH)	

B-USE AS REQUIRED
D-ORDER BY THE METER
M-METRIC PART

228-1762 **MOUNTING GP-RAD & OIL COOLER** *(contd.)* **i03970927**

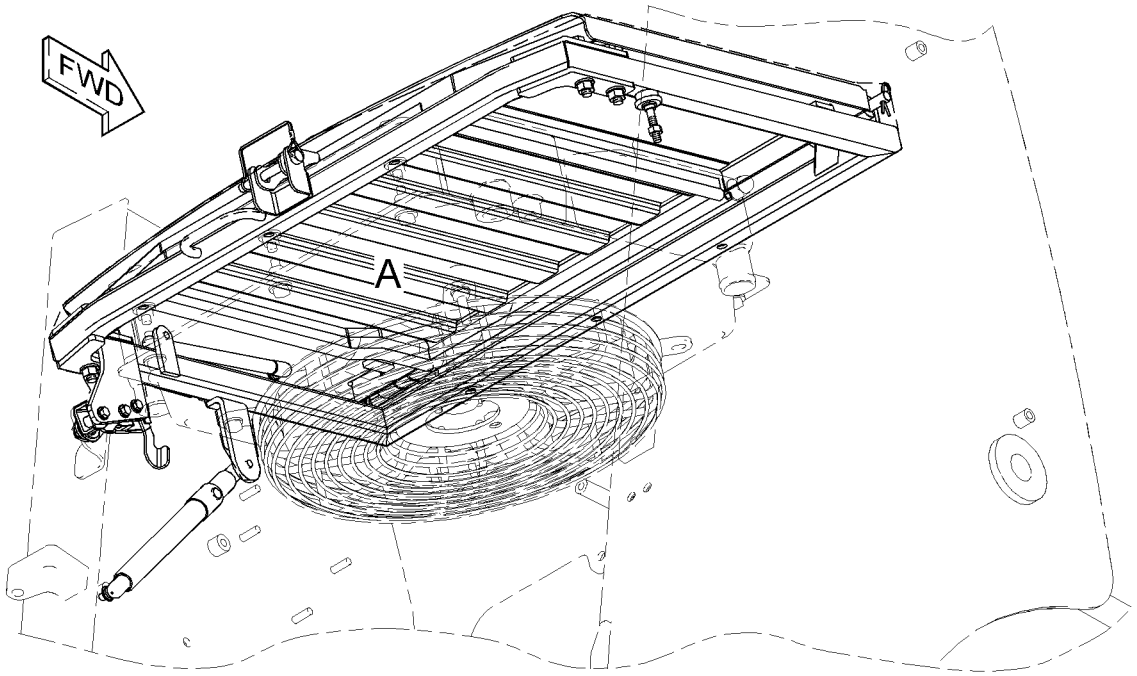

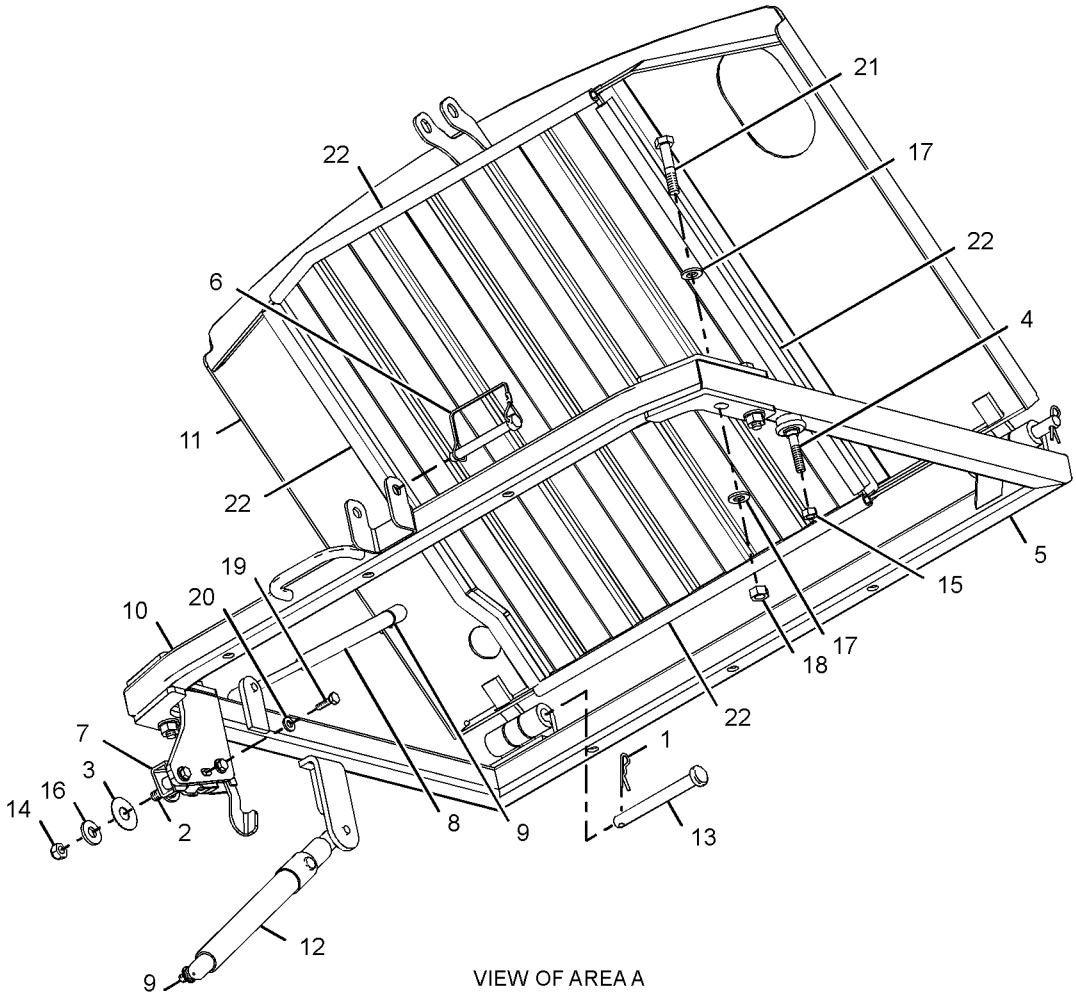

VIEW OF AREA A

GRAPHIC #1 **<END>** g01313171

317-0979 PUMP GP-WATER

S/N: CYP1-UP
PART OF 292-5719 ENGINE AR-PRIMARY
AN ATTACHMENT

SMCS-1355, 1361 **i02826936**

NOTE	REF NO	GRAPHIC REF	PART NUMBER	QTY	PART NAME 1 2 3 4 5 6 (PRODUCT LEVEL)	SEE PAGE
	1	1	**5D-1026**	2	CLAMP-BAND	
	2	2	**127-8281**	1	CLIP	
	3	1	**153-5960**	3	NUT	
	4	1	**153-5961**	4	BOLT	
	5	1	**154-1817**	1	PLUG	
	6	1	**154-1831**	1	PLUG	
	7	2	**155-7984**	1	WASHER	
	8	2	**180-6118**	1	BOLT	
	9	1	**215-2617**	1	GASKET	
	10	1	**238-9137**	1	CONNECTION	
	11	2	**238-9143**	1	CONNECTION	
	12	2	**245-1361**	1	COOLER AS-OIL (ENGINE)	
	12A	2	**245-1362**	1	CONNECTOR	
	12B	2	**245-1364**	1	SEAL	
	13	1	**249-5541**	1	REGULATOR-WATER TEMPERATURE	
	14	1	**286-7495**	1	HOUSING-THERMOSTAT	
	15	1	**286-7496**	1	HOSE-WATER	
	16	1	**308-1907**	2	BOLT	
	17	1	**308-1908**	1	GASKET-WATER PUMP	
	18	1	**311-0023**	1	PUMP-WATER	

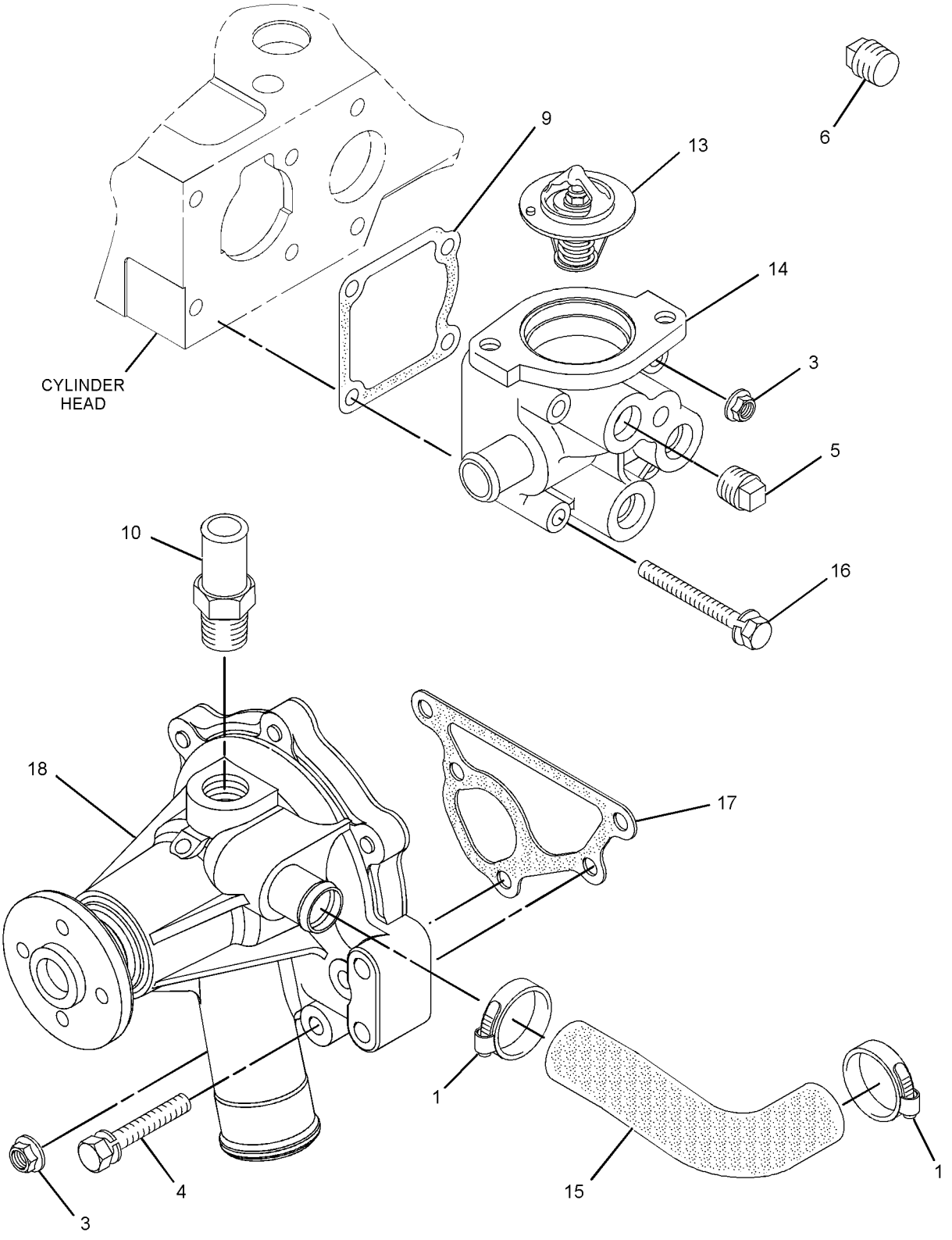

GRAPHIC #1 g01439166

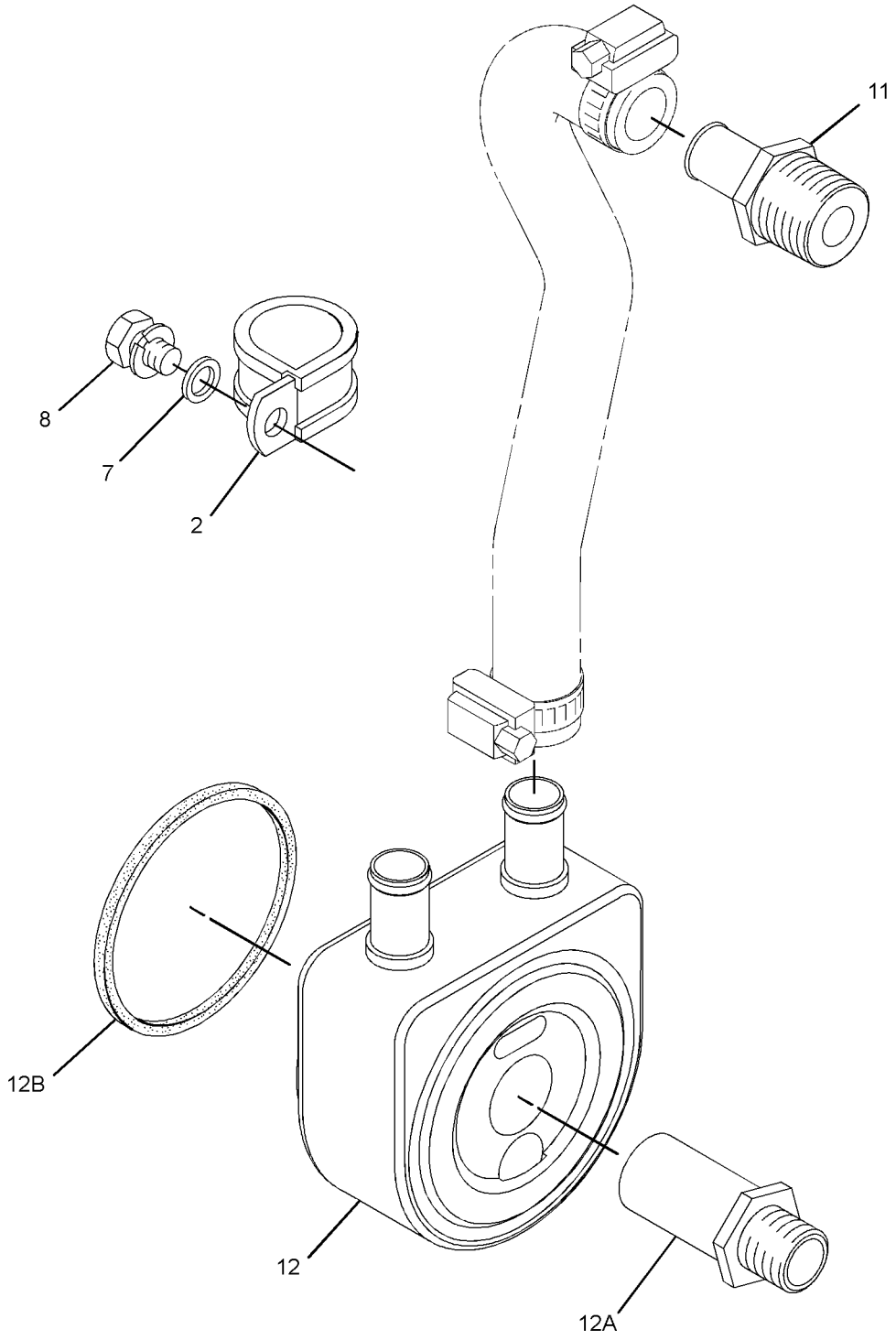

GRAPHIC #2 **<END>** g01439167

COOLING SYSTEM

228-3359 RADIATOR & HYD OIL COOLER GP

S/N: MWD1-UP

PART OF 228-1783 RADIATOR & OIL COOLER MTG GP

SMCS-1351, 1356, 1386 **i03662427**

NOTE	REF NO	GRAPHIC REF	PART NUMBER	QTY	PART NAME 1 2 3 4 5 6 (PRODUCT LEVEL)	SEE PAGE
	1	1	**036-1865**	1	CAP AS-RADIATOR (SEA WATER HEAT EXCHANGER)	
	2	1	**069-4080**	1	FITTING	
M	3	1	**8T-4196**	9	BOLT (M10X1.5X35-MM)	
	4	1	**207-6154**	1	GAUGE-SIGHT (COOLANT LEVEL)	
	5	1	**280-8310**	1	RADIATOR & HYD OIL COOLER AS	
	6	1	**228-3350**	1	SHROUD AS	
	7	1	**233-6683**	1	GUARD AS (FAN)	
	8	1	*236-5816*	1	FAN GP-BLOWER	
		1	**8T-4224**	4	WASHER-HARD (8.8X16X2-MM THK)	
M		1	**8T-4908**	4	BOLT (M8X1.25X25-MM)	
		1	**205-3727**	1	FAN AS	
		1	**229-8796**	1	ADAPTER	
	9	1	**7M-7410**	1	PLUG-PIPE	
	10	1	**7X-7729**	12	WASHER (11X25X3-MM THK)	
	11	1	**8T-4121**	3	WASHER-HARD (11X21X2.5-MM THK)	
M	12	1	**8T-4133**	6	NUT (M10X1.5-THD)	

M-METRIC PART

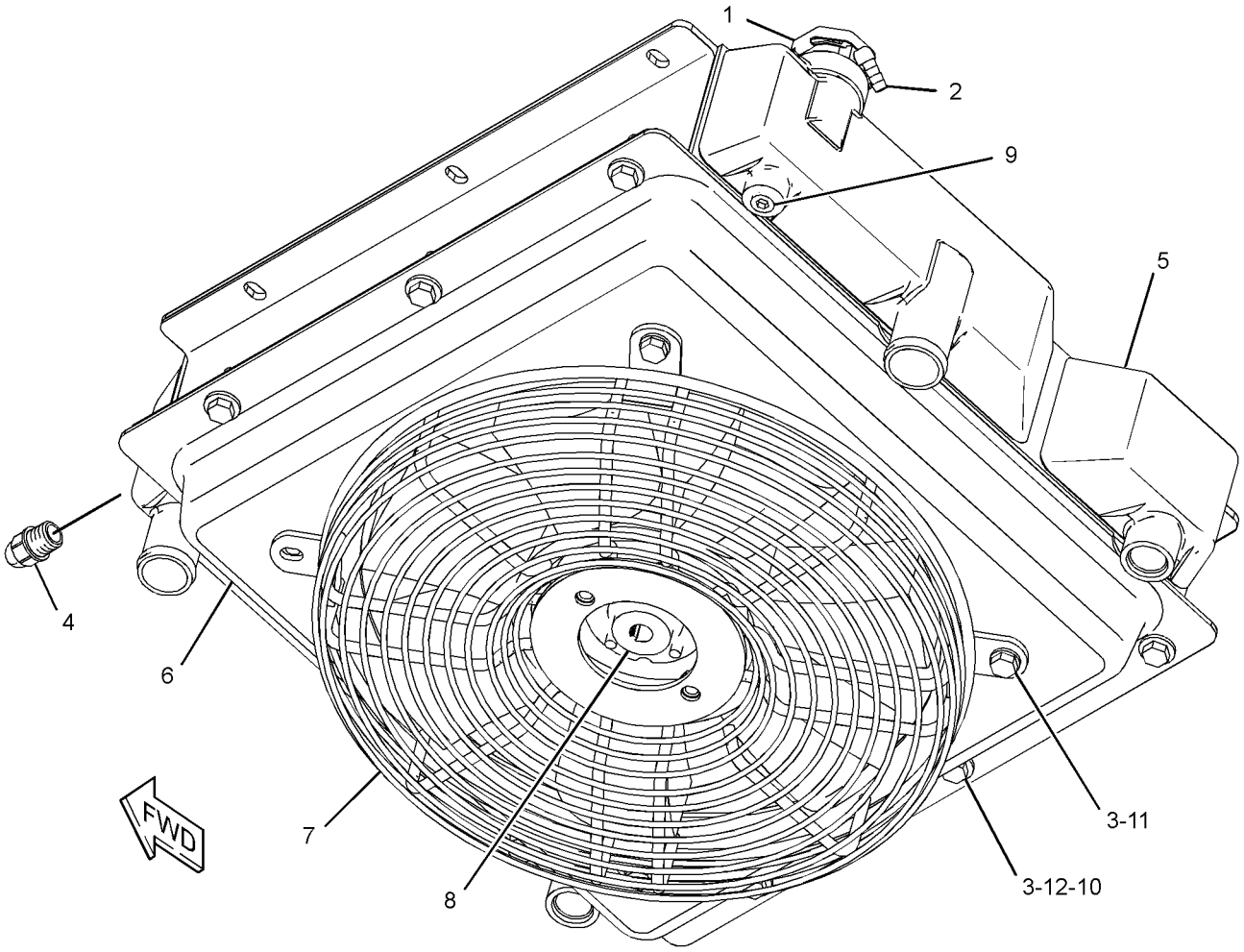

GRAPHIC #1 **<END>** g01967413

228-1783 RADIATOR & OIL COOLER MTG GP

S/N: MWD1-UP

PART OF 326-5360 INSTALLATION AR-ENGINE

SMCS-1351, 1354 **i03970929**

NOTE	REF NO	GRAPHIC REF	PART NUMBER	QTY	PART NAME 1 2 3 4 5 6 (PRODUCT LEVEL)	SEE PAGE
	1	1	**1P-4278**	2	CLAMP-HOSE	
	2	1	**7X-1443**	4	PROTECTOR	
	3	1	**124-6264**	1	CLAMP-HOSE	
	4	1	**205-6383**	1	TUBE	
	5	1	**222-1178**	2	CLAMP	
Y	6	1	*228-3359*	1	RADIATOR & HYD OIL COOLER GP	50
C	7	1	**285-5794**	1	RECOVERY GP-COOLANT	
		1	**169-6715**	1	CAP-VENTED (COOLANT RECOVERY)	
	8	1	**231-3578**	1	HOSE-RADIATOR (UPPER)	
	9	1	**231-3579**	1	HOSE-RADIATOR (LOWER)	
	10	1	**231-3925**	1	BRACKET AS	
M		1	**8T-3612**	4	NUT-WELD (M8X1.25-THD)	
	11	1	**232-4901**	2	CLAMP	
	12	1	**143-4535**	1	CLIP (SLOT)	
	13	1	**143-4536**	1	CLIP (TAB)	
	14	1	**4K-8864**	2	CLIP	
	15	1	**7X-7729**	12	WASHER (11X25X3-MM THK)	
	16	1	**8T-4121**	2	WASHER-HARD (11X21X2.5-MM THK)	
M	17	1	**8T-4133**	6	NUT (M10X1.5-THD)	
M	18	1	**8T-4136**	1	BOLT (M10X1.5X25-MM)	
M	19	1	**8T-4191**	1	BOLT (M10X1.5X16-MM)	
	20	1	**8T-4224**	2	WASHER-HARD (8.8X16X2-MM THK)	
M	21	1	**8T-5005**	1	BOLT (M10X1.5X70-MM)	
M	22	1	**8T-5091**	2	BOLT (M8X1.25X20-MM)	
M	23	1	**8T-6466**	5	BOLT (M10X1.5X60-MM)	
E	24	1	**5P-1420**		HOSE (110-CM)	
	25	1	**200-6345**	2	MOUNT (DUAL SWIVEL)	
	26	1	**204-2281**	4	STRAP-CABLE	

C-CHANGE FROM PREVIOUS TYPE
E-ORDER BY THE CENTIMETER
M-METRIC PART
Y-SEPARATE ILLUSTRATION

228-1783 **RADIATOR & OIL COOLER MTG GP** *(contd.)* **i03970929**

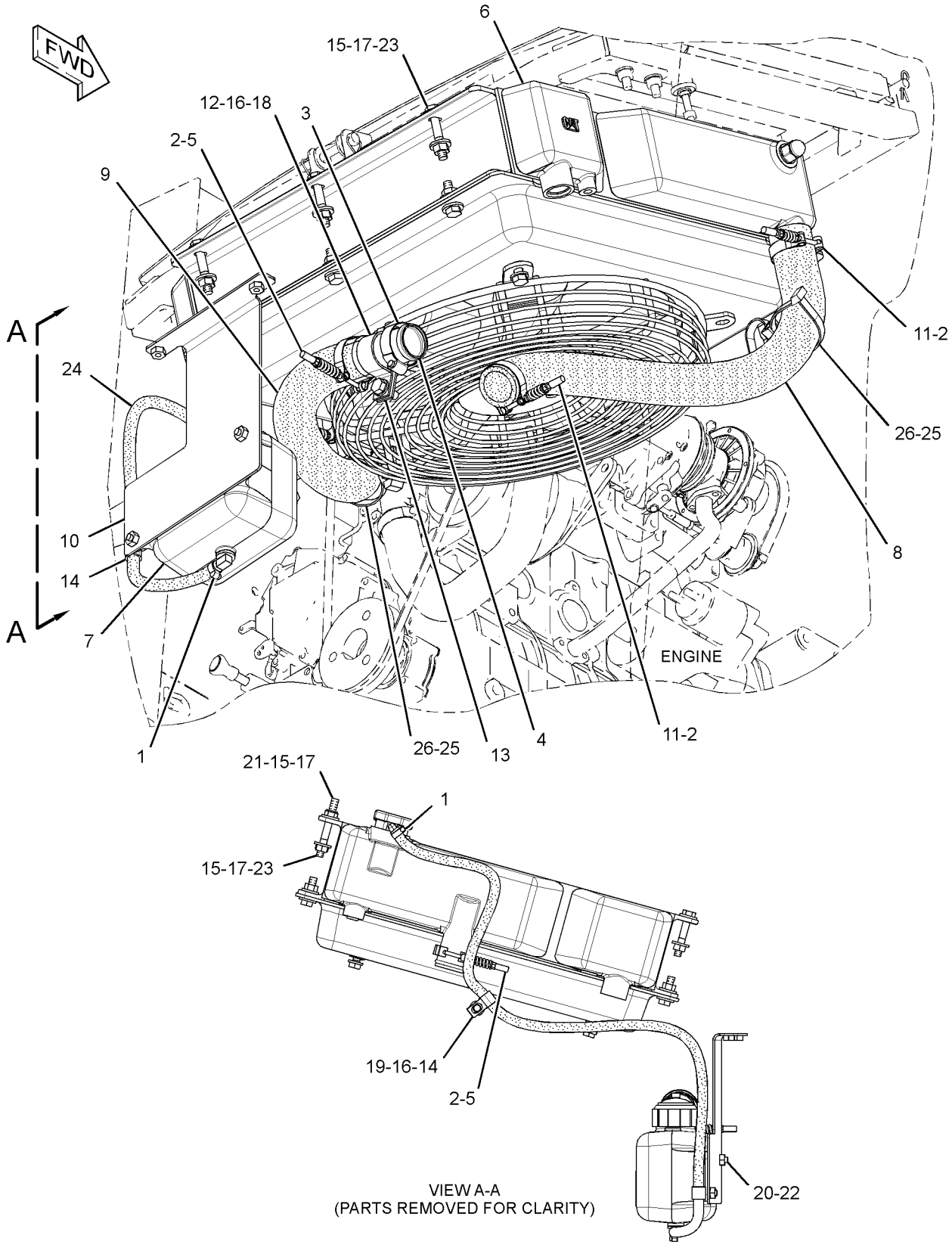

GRAPHIC #1 **<END>** g01728248

AIR INLET AND EXHAUST SYSTEM

228-1773 AIR CLEANER GP

S/N: MWD1-UP

PART OF 326-5360 INSTALLATION AR-ENGINE

SMCS-1051, 1054 **i03316801**

NOTE	REF NO	GRAPHIC REF	PART NUMBER	QTY	PART NAME 1 2 3 4 5 6 (PRODUCT LEVEL)	SEE PAGE
Y	1	1	*242-0171*	1	AIR CLEANER GP	54
	2	1	**307-8337**	2	STUD	
	3	1	**156-0283**	2	WASHER-HARD (8.4X35X2.5-MM THK)	
M	4	1	**5C-7261**	2	NUT (M8X1.25-THD)	
	5	1	**5P-4116**	4	WASHER-HARD (8.8X20.5X2-MM THK)	

M-METRIC PART
Y-SEPARATE ILLUSTRATION

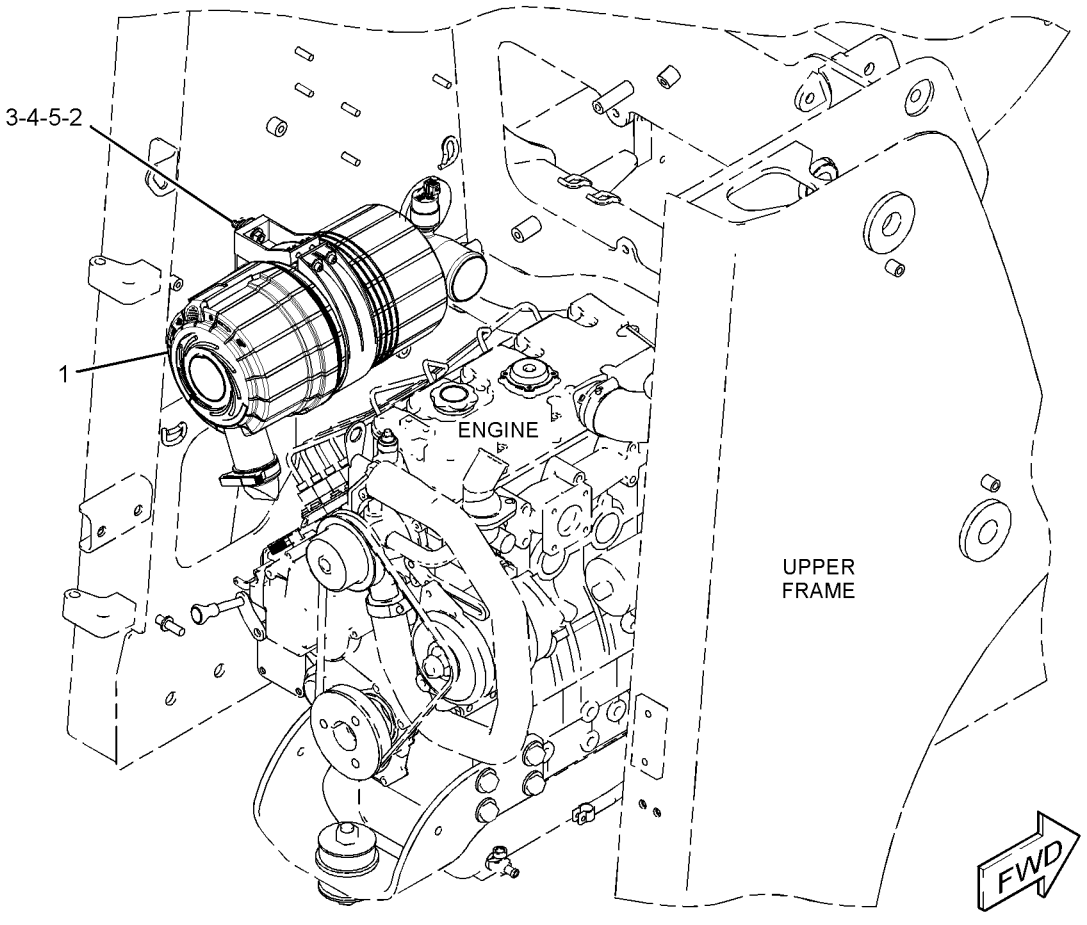

GRAPHIC #1 **<END>** g01808635

AIR INLET AND EXHAUST SYSTEM

242-0171 AIR CLEANER GP

S/N: MWD1-UP

PART OF 228-1773 AIR CLEANER GP

SMCS-1051, 1054 **i03970930**

NOTE	REF NO	GRAPHIC REF	PART NUMBER	QTY	PART NAME 1 2 3 4 5 6 (PRODUCT LEVEL)	SEE PAGE
	1	1	**5L-3233**	1	FITTING	
	2	1	**231-0169**	1	BAND AS	
	3	1	**241-3394**	1	INDICATOR (AIR CLEANER)	
	4	1	**242-0172**	1	AIR CLEANER GP	
		1	**112-9717**	1	VALVE-DUST (AIR CLEANER)	
		1	**231-0167**	1	FILTER ELEMENT AS-AIR (PRIMARY)	
		1	**231-0168**	1	FILTER ELEMENT AS-AIR (SECONDARY)	
		1	**242-0173**	1	COVER AS	
	5	1	**280-8298**	1	CLAMP	

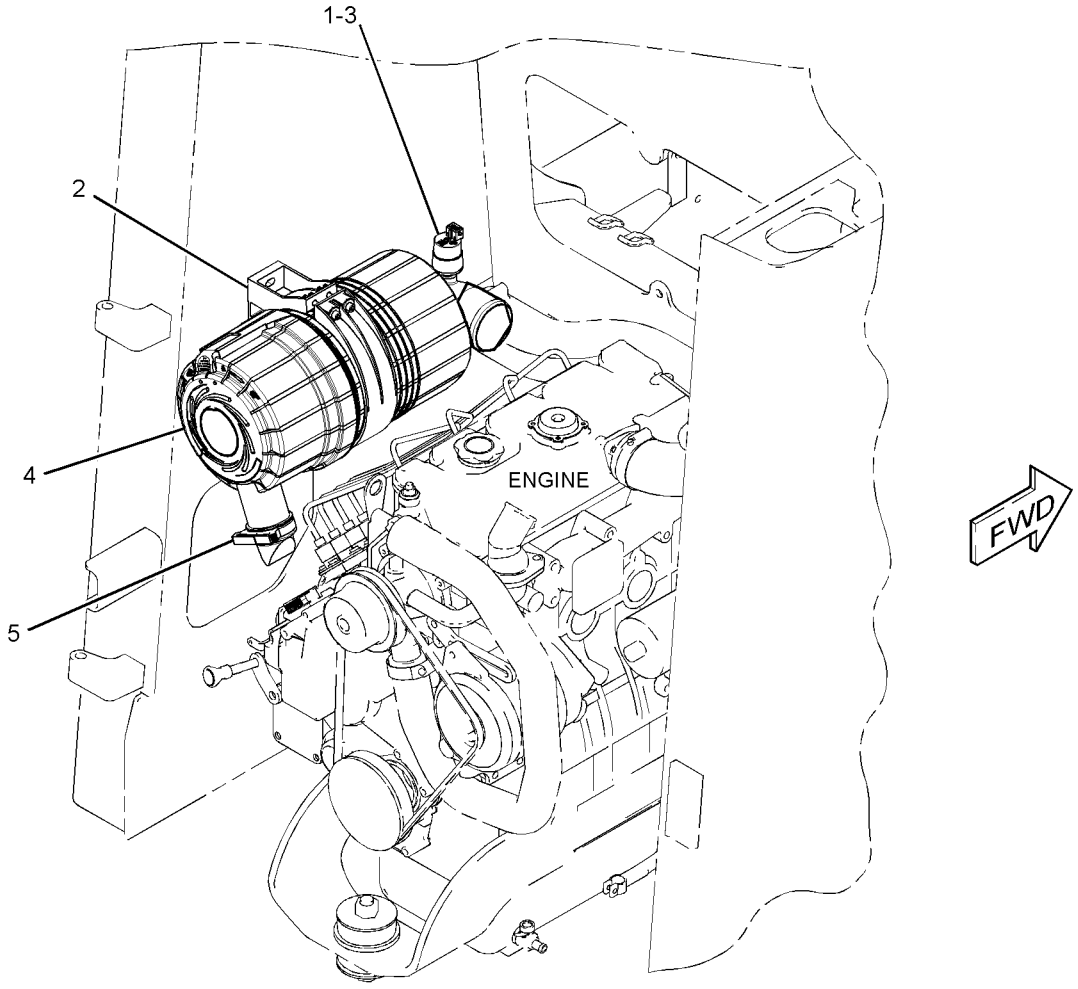

GRAPHIC #1 **<END>** g01336653

AIR INLET AND EXHAUST SYSTEM

280-8365 LINES GP-AIR

S/N: MWD1-UP

PART OF 326-5360 INSTALLATION AR-ENGINE

SMCS-1071 **i03202320**

NOTE	REF NO	GRAPHIC REF	PART NUMBER	QTY	PART NAME 1 2 3 4 5 6 (PRODUCT LEVEL)	SEE PAGE
	1	1	**144-0367**	1	CLAMP-HOSE	
	2	1	**5P-4961**	1	CLAMP-HOSE	
	3	1	**280-8341**	1	SPACER (8.7X15.8X21.1-MM THK)	
	4	1	**280-8364**	1	HOSE	
	5	1	**3S-2093**	1	STRAP-CABLE	
	6	1	**8T-6703**	1	CLAMP-HOSE	
	7	1	**5P-4116**	1	WASHER-HARD (8.8X20.5X2-MM THK)	
	8	1	**6D-4246**	2	CLIP	
M	9	1	**7X-2537**	1	BOLT (M8X1.25X35-MM)	
M	10	1	**7X-2621**	1	BOLT (M10X1.5X12-MM)	
	11	1	**8T-4121**	1	WASHER-HARD (11X21X2.5-MM THK)	
E	12	1	**5P-1505**		HOSE (75-CM)	

E-ORDER BY THE CENTIMETER
M-METRIC PART

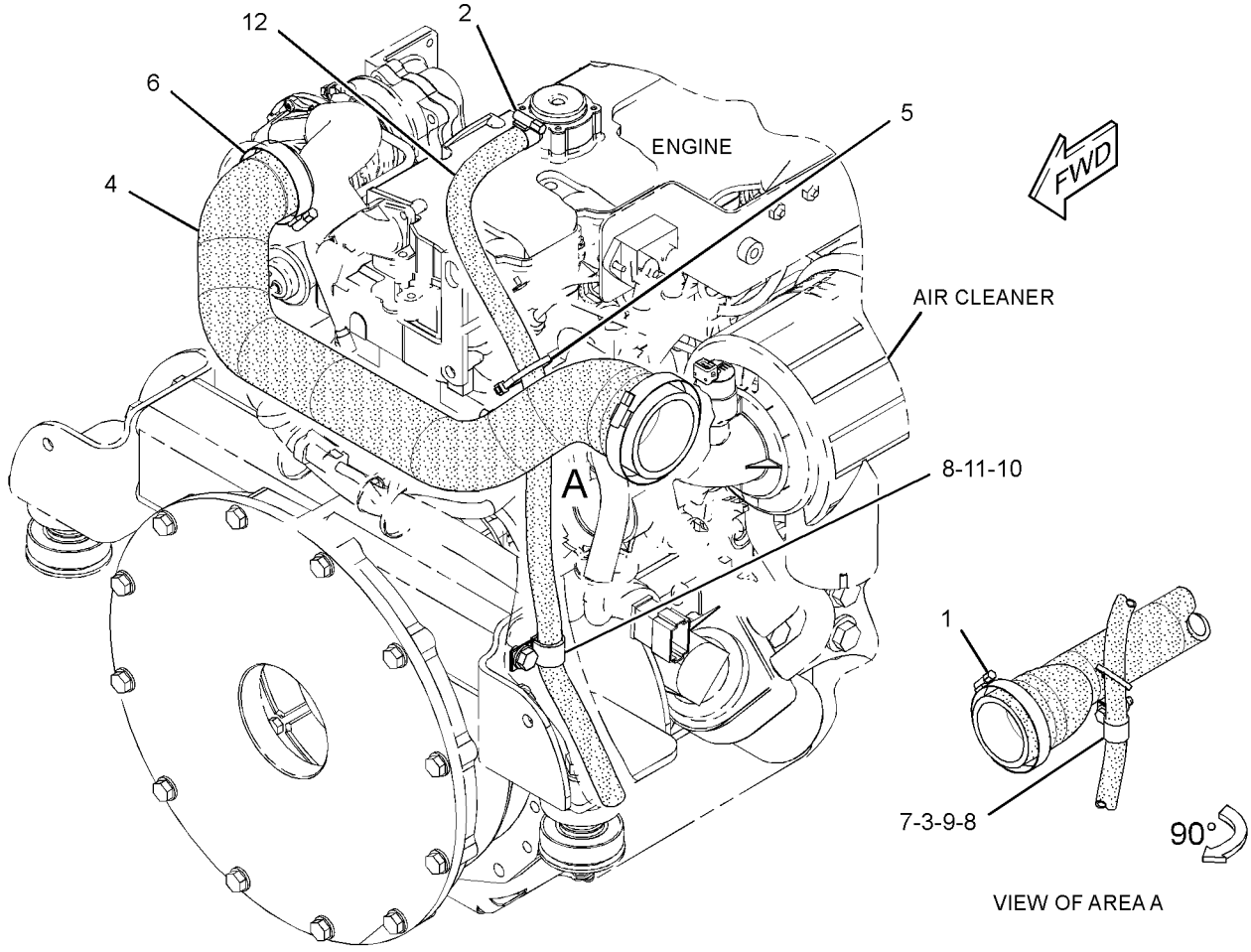

GRAPHIC #1 **<END>** g01813574

AIR INLET AND EXHAUST SYSTEM

272-3046 MUFFLER GP

S/N: MWD1-UP
STAGE II SOUND
PART OF 272-3047 MUFFLER GP

SMCS-1062 **i02905690**

NOTE	REF NO	GRAPHIC REF	PART NUMBER	QTY	PART NAME 1 2 3 4 5 6 (PRODUCT LEVEL)	SEE PAGE
	1	1	**142-8818**	1	CLAMP-PIPE	
C	2	1	**280-8389**	1	ELBOW AS-EXHAUST	
	3	1	**272-3056**	1	MUFFLER AS	

C-CHANGE FROM PREVIOUS TYPE

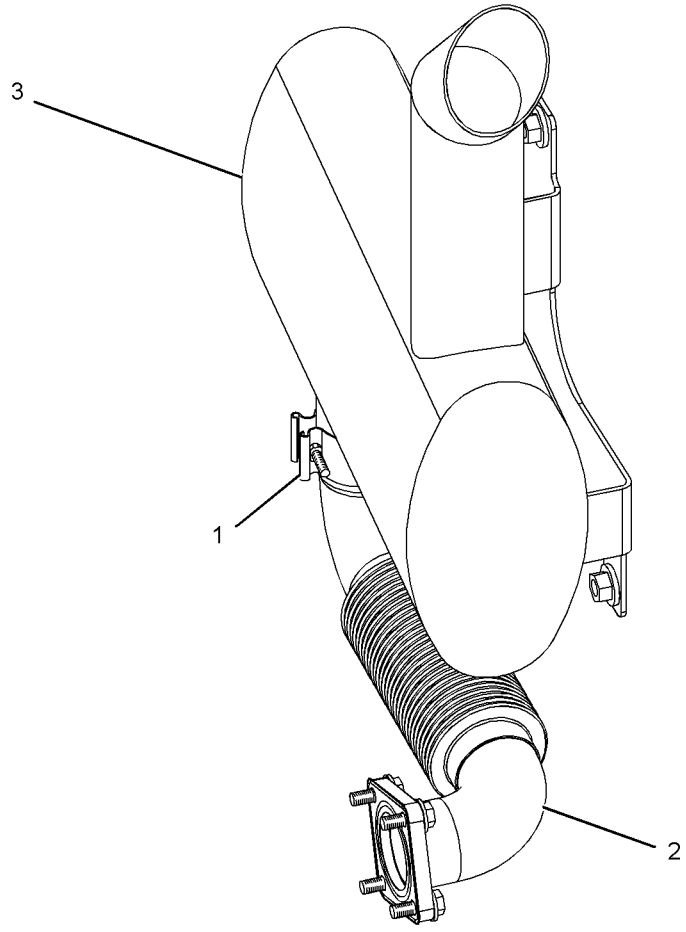

REAR VIEW
(UPPER LEFT)

GRAPHIC #1 **<END>** g01266510

272-3047 MUFFLER GP

S/N: MWD1-UP
STAGE II SOUND
PART OF 326-5360 INSTALLATION AR-ENGINE

SMCS-1062 **i02431659**

NOTE	REF NO	GRAPHIC REF	PART NUMBER	QTY	PART NAME 1 2 3 4 5 6 (PRODUCT LEVEL)	SEE PAGE
	1	1	**153-7920**	1	GASKET	
Y	2	1	*272-3046*	1	MUFFLER GP	56
	3	1	**5P-4116**	4	WASHER-HARD (8.8X20.5X2-MM THK)	
	4	1	**7X-7729**	3	WASHER (11X25X3-MM THK)	
M	5	1	**8T-4133**	3	NUT (M10X1.5-THD)	
M	6	1	**8T-4908**	4	BOLT (M8X1.25X25-MM)	

M-METRIC PART
Y-SEPARATE ILLUSTRATION

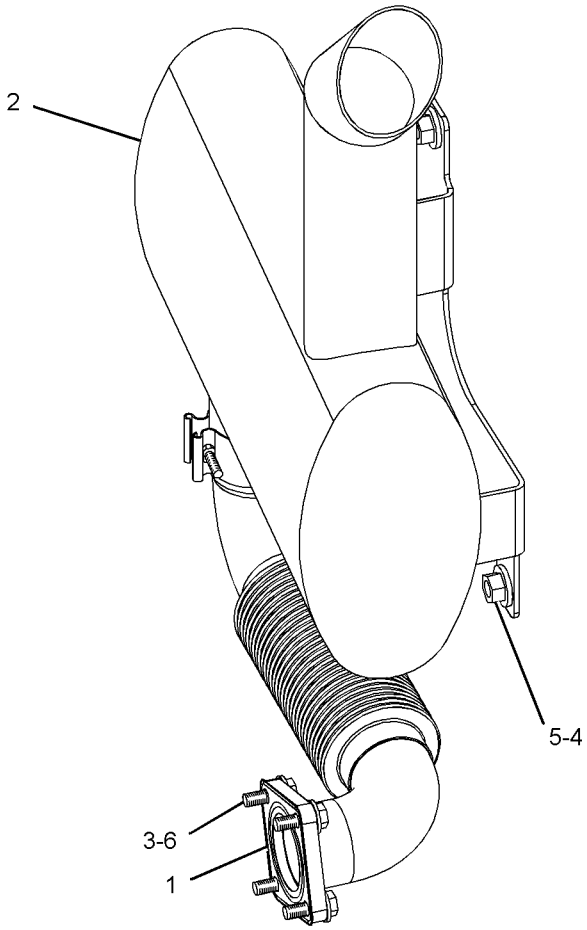

REAR VIEW
(UPPER LEFT)

GRAPHIC #1

<END>

g01229585

AIR INLET AND EXHAUST SYSTEM

317-0981 TURBOCHARGER GP

S/N: CYP1-UP
PART OF 292-5719 ENGINE AR-PRIMARY
AN ATTACHMENT

SMCS-1052, 1053 **i02909782**

NOTE	REF NO	GRAPHIC REF	PART NUMBER	QTY	PART NAME 1 2 3 4 5 6 (PRODUCT LEVEL)	SEE PAGE
	1	2	**064-3058**	2	CLAMP-HOSE	
	2	2	**153-5592**	8	NUT	
	3	3	**153-5939**	1	GAUZE (CRANKCASE BREATHER)	
	4	3	**153-5962**	3	BOLT	
	5	1	**153-6375**	1	BOLT	
	6	1	**153-6853**	1	SEAL-O-RING	
	7	2	**153-7640**	2	BOLT	
	8	3	**154-1347**	4	NUT	
	9	2	**154-2427**	1	GASKET-EXHAUST	
	10	2	**154-2428**	4	BOLT	
	11	1	**155-8009**	4	BOLT	
	12	1	**163-5372**	5	WASHER (8X15.4X4-MM THK)	
	13	3	**165-2140**	2	BOLT	
	14	1	**165-2141**	1	BOLT	
	15	1	**168-9001**	4	BOLT	
	16	3	**183-1165**	1	PLUG	
	17	3	**190-3762**	4	WASHER	
	18	3	**217-5859**	1	VALVE-BREATHER (CRANKCASE)	
	19	3	**320-8401**	1	PLATE-RETAINING	
	20	3	**217-5862**	6	BOLT	
	21	2	**217-5864**	1	GASKET	
	22	1	**225-8533**	2	GASKET	
	23	3	**233-0695**	1	SEAL-VALVE COVER	
	24	2	**236-9987**	1	MANIFOLD-EXHAUST	
	25	3	**238-8731**	1	ADAPTER-BREATHER	
	26	2	**238-9196**	1	GASKET-TURBOCHARGER	
	27	1	**238-9198**	1	ELBOW-EXHAUST	
	28	1	**238-9200**	5	BOLT (M8X1.25X25-MM)	
	29	3	**238-9289**	1	COVER-VALVE	
	30	3	**238-9295**	4	BOLT	
	31	2	**238-9349**	1	TURBOCHARGER GP	
	32	1	**239-0187**	1	BRACKET	
	33	1	**239-0229**	1	SPACER	
	34	2	**239-0232**	4	STUD (M8X1.25X31-MM)	
	35	2	**249-1486**	1	CONNECTION-AIR	
	36	2	**249-1532**	1	HOSE-AIR INLET	
	37	3	**262-3975**	1	GASKET	
	38	1	**304-5061**	1	GASKET	
	39	1	**317-0959**	1	CONNECTION GP-OIL	
	39A	1	**225-8526**	2	WASHER (10.4X13.75X1.37-MM THK)	
	39B	1	**317-0960**	1	BOLT-SPECIAL (BANJO)	
	39C	1	**317-0961**	1	CLIP	
	40	1	**335-9802**	1	TUBE-TURBOCHARGER OIL	

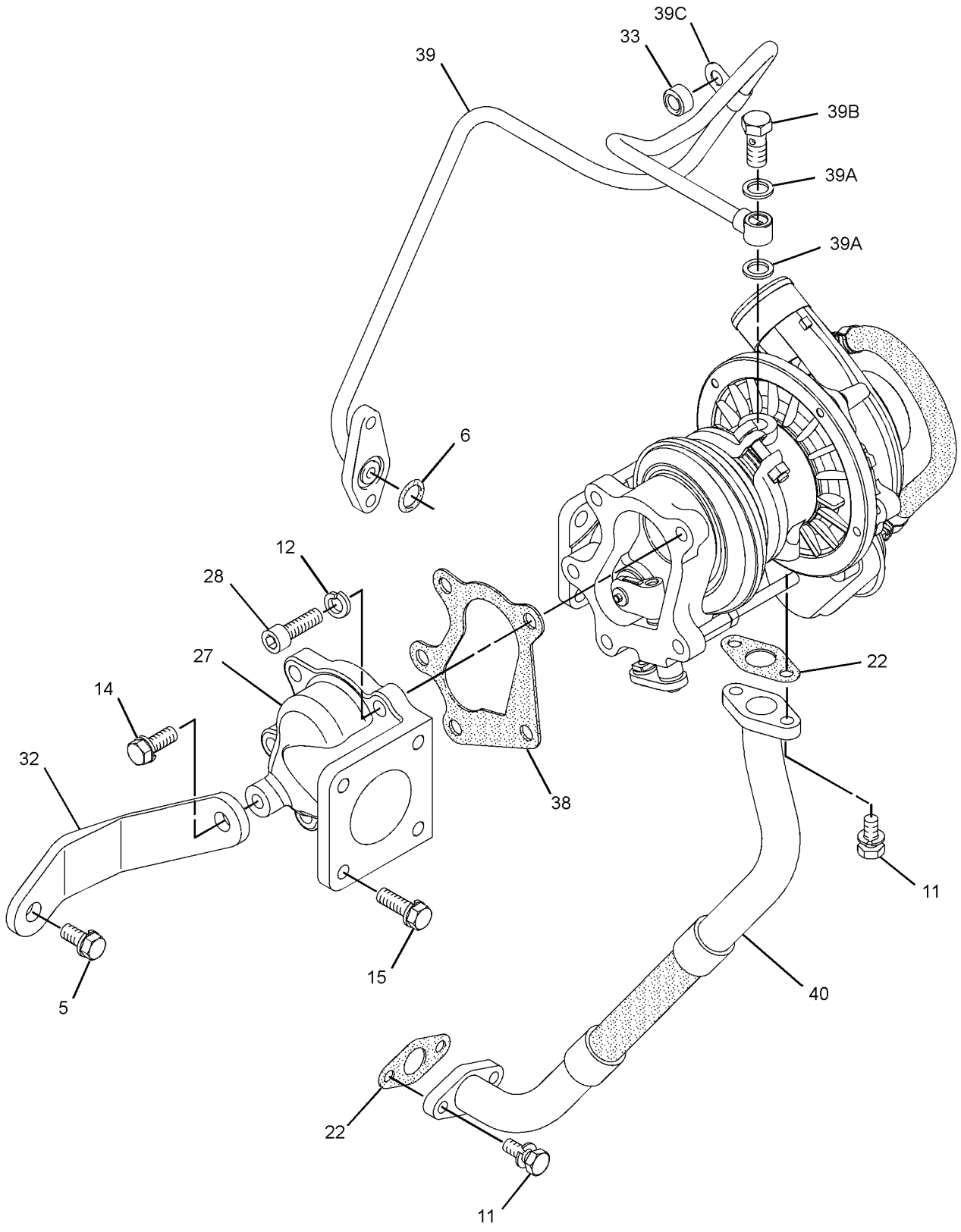

GRAPHIC #1 g01439498

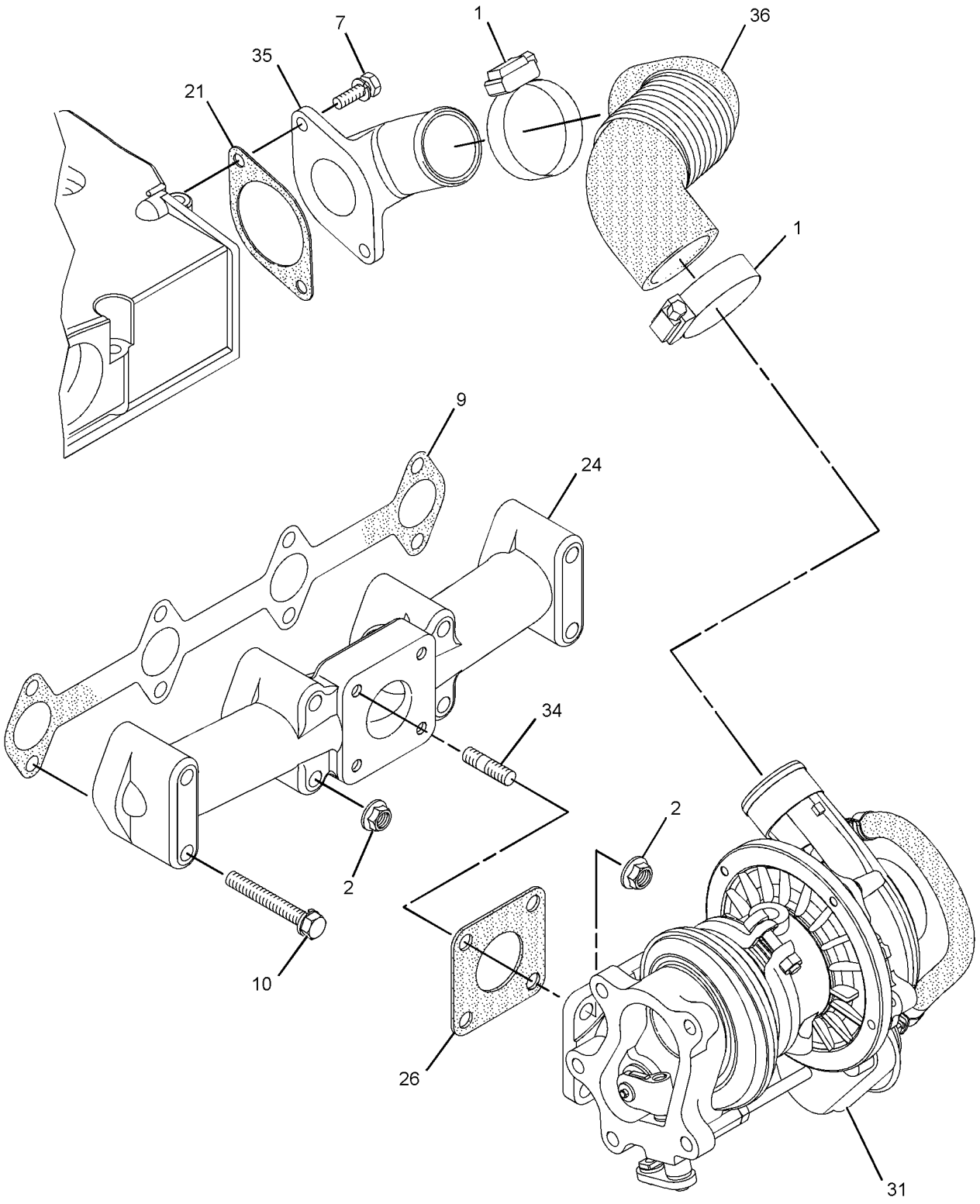

GRAPHIC #2 g01439501

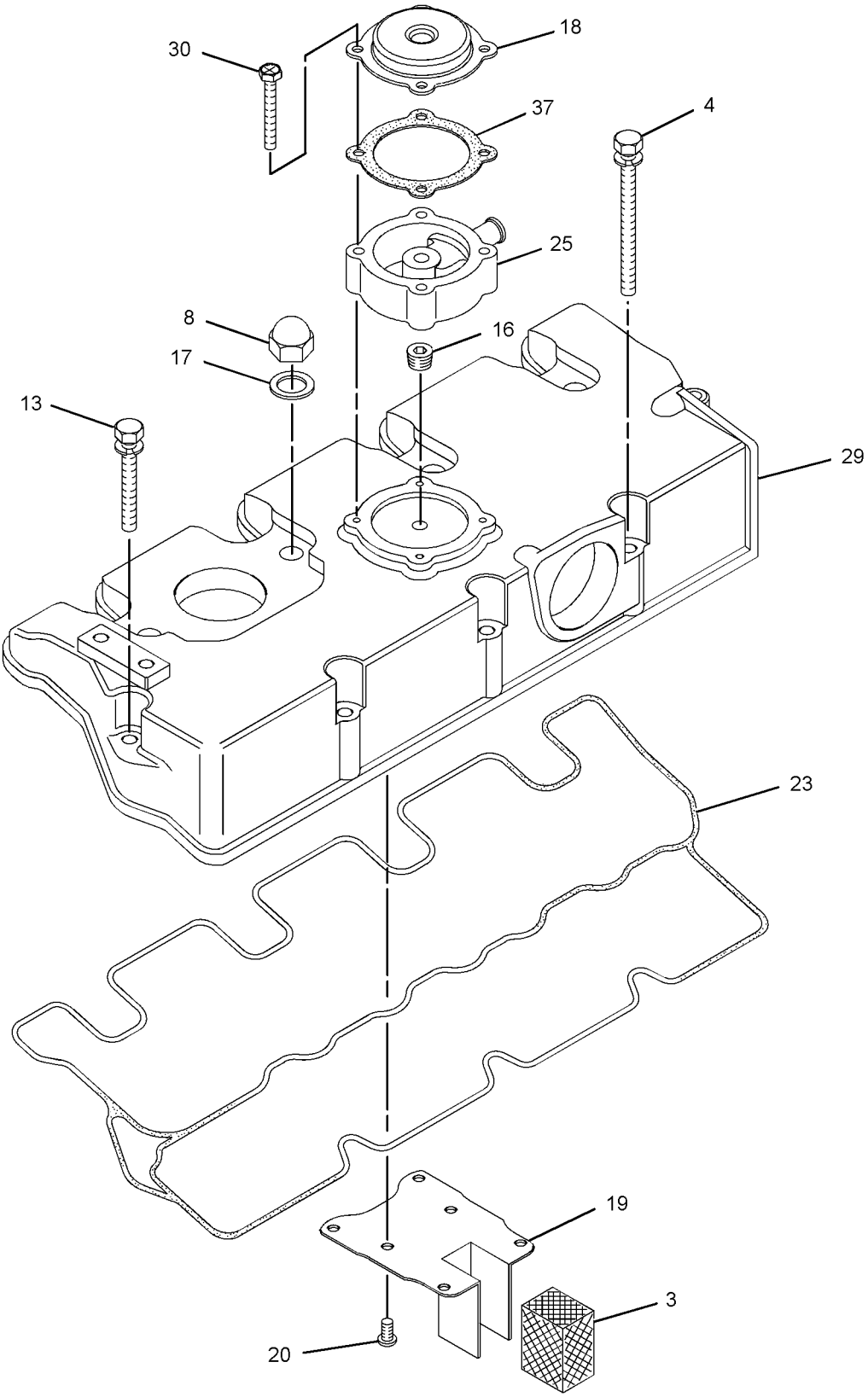

GRAPHIC #3 **<END>** g01439503

FUEL SYSTEM

218-5602 CONTROL GP-GOVERNOR

S/N: MWD1-UP

PART OF 326-4781 CHASSIS AR

SMCS-1265, 1276 **i03809973**

NOTE	REF NO	GRAPHIC REF	PART NUMBER	QTY	PART NAME 1 2 3 4 5 6 (PRODUCT LEVEL)	SEE PAGE
	1	1	**7K-1181**	1	STRAP-CABLE	
	2	1	**262-6518**	1	BRACKET AS	
	3	1	**262-6480**	1	BRACKET-STOP	
CY	4	1	**327-8939**	1	PEDAL GP-GOVERNOR	333
	5	1	**237-7296**	4	SCREW-FLAT HEAD (M6X1X35-MM)	
	6	1	**8T-4205**	9	WASHER-HARD (7.2X14.5X2-MM THK)	
M	7	1	**5C-2890**	4	NUT (M6X1-THD)	
	8	1	**8T-3984**	1	KNOB	
M	9	1	**6V-5683**	2	BOLT (M6X1X16-MM)	
M	10	1	**8T-4138**	3	BOLT (M6X1X20-MM)	

C-CHANGE FROM PREVIOUS TYPE
M-METRIC PART
Y-SEPARATE ILLUSTRATION

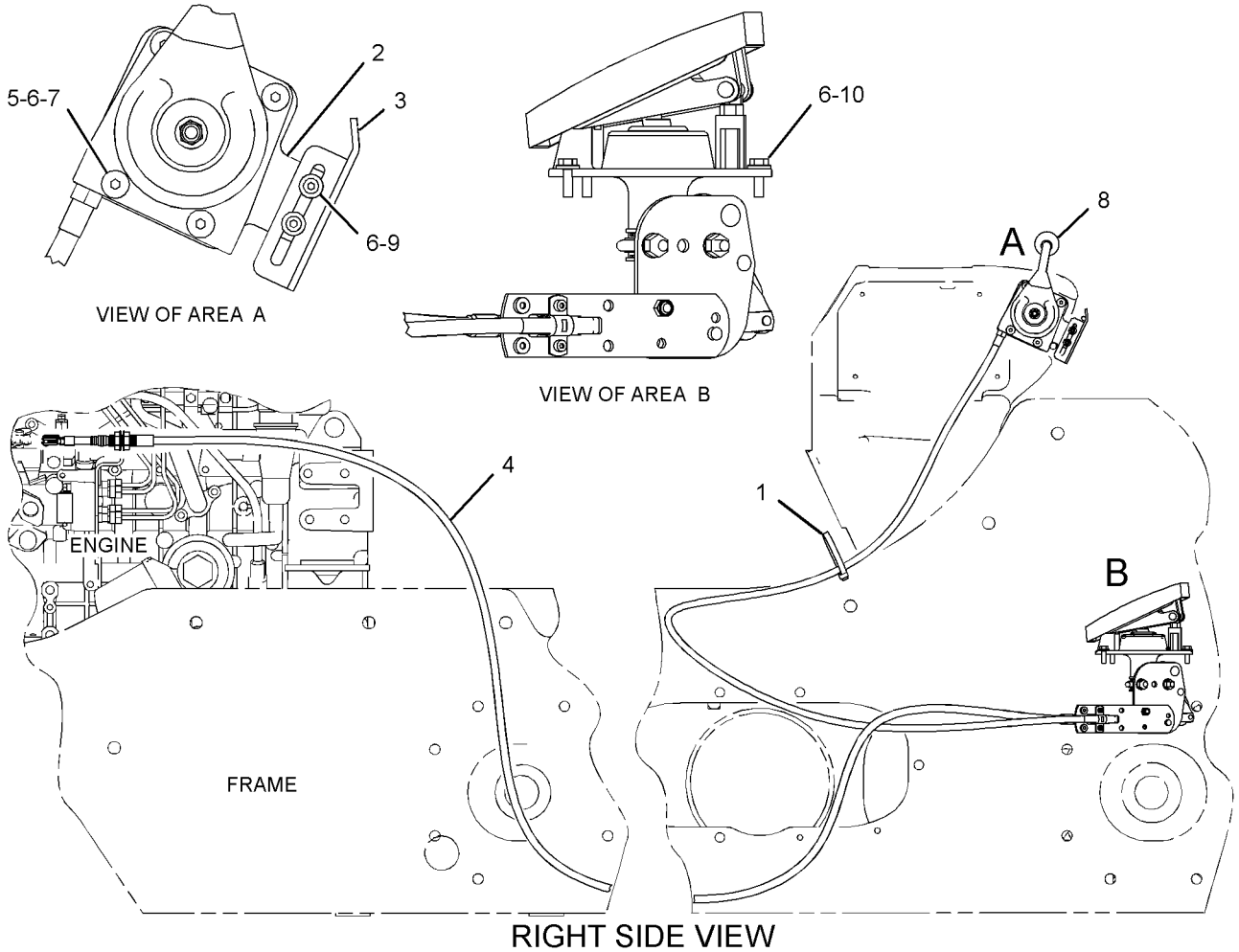

RIGHT SIDE VIEW

GRAPHIC #1 **<END>** g01927600

144-9962 FILTER GP-WATER SEP & FUEL

S/N: MWD1-UP

PART OF 176-9954 PUMP GP-FUEL PRM & PRIM FILTER

SMCS-1261, 1263 **i03970926**

NOTE	REF NO	GRAPHIC REF	PART NUMBER	QTY	PART NAME 1 2 3 4 5 6 (PRODUCT LEVEL)	SEE PAGE
	1	1	**156-1200**	1	FILTER ELEMENT-FUEL (WATER SEPARATOR)	
	2	1	**149-3516**	1	BASE AS	
	3	1	**118-8118**	1	RING-RETAINING	
J	4	1	**112-9401**	1	BOWL AS-WATER COLLECTION	
	5	1	**118-8119**	1	NUT	
					AVAILABLE REPAIR KIT(S):	
			121-4480	1	KIT-WATER BASE (WATER SEPARATOR)	
					(INCLUDES CAP NUT, CAP HEADER, CAP SEAL, PLUG VOLUME, PLUG VENT, DUST SEAL, O-RING & RETAINING RING)	
J			**128-8614**	1	KIT-SEAL (WATER SEPARATOR)	
					(INCLUDES SEALS)	

J-KIT MARKED J SERVICES PARTS MARKED J

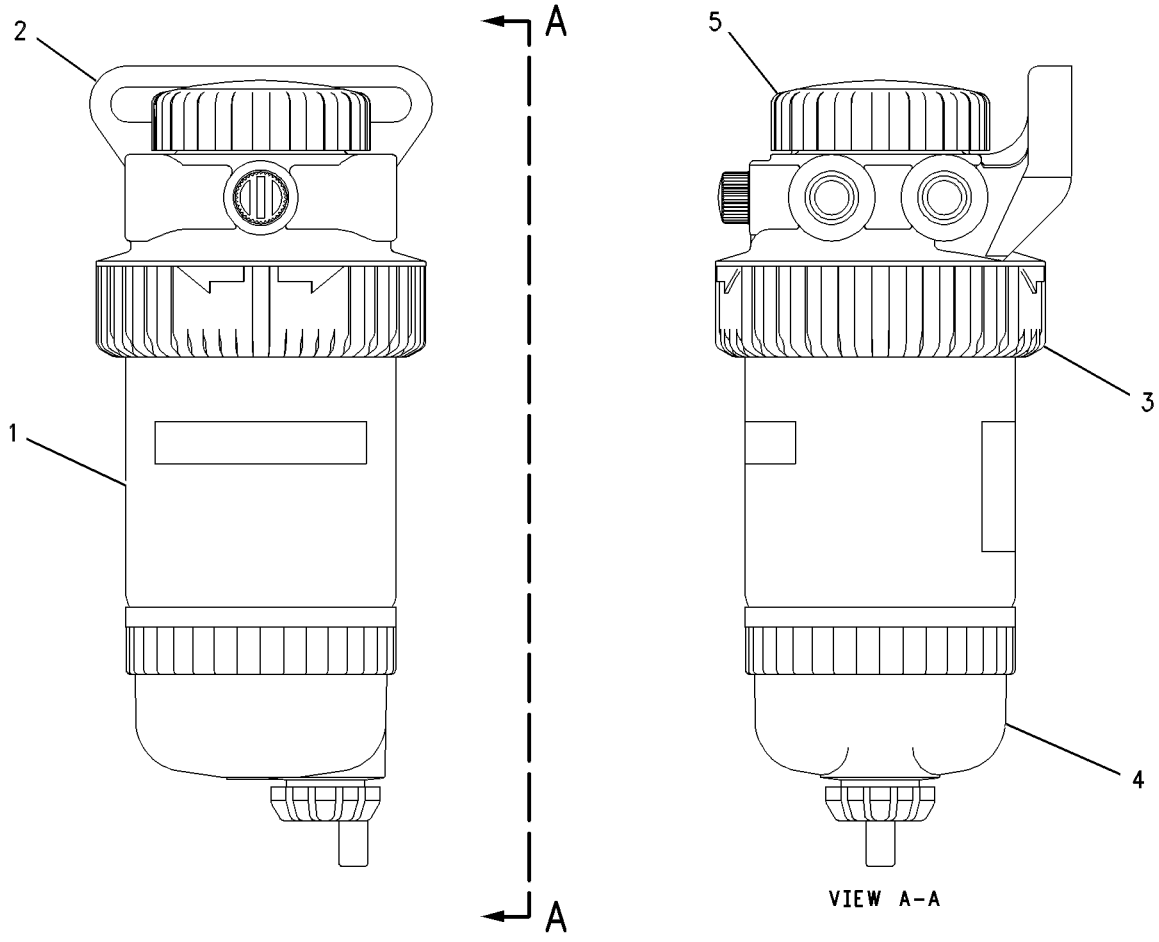

GRAPHIC #1 **<END>** g00430959

FUEL SYSTEM

322-4915 GOVERNOR GP

S/N: CYP1-UP
PART OF 292-5719 ENGINE AR-PRIMARY
AN ATTACHMENT

SMCS-1264, 1908 **i03938314**

NOTE	REF NO	GRAPHIC REF	PART NUMBER	QTY	PART NAME 1 2 3 4 5 6 (PRODUCT LEVEL)	SEE PAGE
M	1	1	**5C-2890**	1	NUT (M6X1-THD)	
	2	1	**139-5511**	1	CAP (TAMPER RESISTANT)	
	3	1	**153-5592**	1	NUT	
	4	1	**153-6415**	2	WASHER	
	5	1	**153-7983**	1	PIN	
	6	1	**154-1403**	1	SEAL-O-RING	
	7	1	**154-2715**	1	WASHER	
M	8	1	**8T-4971**	1	BOLT (M6X1X30-MM)	
	9	1	**162-2207**	1	NUT	
	10	1	**249-7263**	4	BOLT (M6X1X16-MM)	
	11	1	**217-7115**	1	CAP (TAMPER RESISTANT)	
	12	1	**335-5578**	1	BRACKET	
	13	1	**308-1878**	1	GASKET	
	14	1	**308-1882**	1	SPRING	
	15	1	**308-1889**	1	NUT	
	16	1	**308-1892**	1	NUT	
	17	1	**308-1897**	2	RING	
	18	1	**308-1901**	1	CAP	
	19	1	**308-4266**	1	SHAFT	
	20	1	**309-6728**	1	SHAFT	
	21	1	**309-6732**	1	BOLT	
	22	1	**311-0655**	1	SPRING	
	23	1	**313-2025**	1	SENSOR-SPEED (TIMING, CAMSHAFT)	
	24	1	**313-5832**	1	BOLT AS	
	24A	1	**153-7987**	1	WASHER	
	24B	1	**191-9297**	1	NUT	
	24C	1	**313-5833**	1	SPRING	
	25	1	**317-7195**	1	SPRING	
	26	1	**321-4249**	1	NUT	
	27	1	**332-1361**	1	CAP-PROTECTION	
	28	1	**334-0732**	1	ARM (FRONT HOUSING)	
	29	1	**322-7492**	1	LEVER-CONTROL	
	30	1	**322-7493**	1	LEVER-CONTROL	
	31	1	**336-2965**	1	TOOL	
	32	1	**330-9189**	1	PLUG	

M-METRIC PART

322-4915 **GOVERNOR GP** *(contd.)* **i03938314**

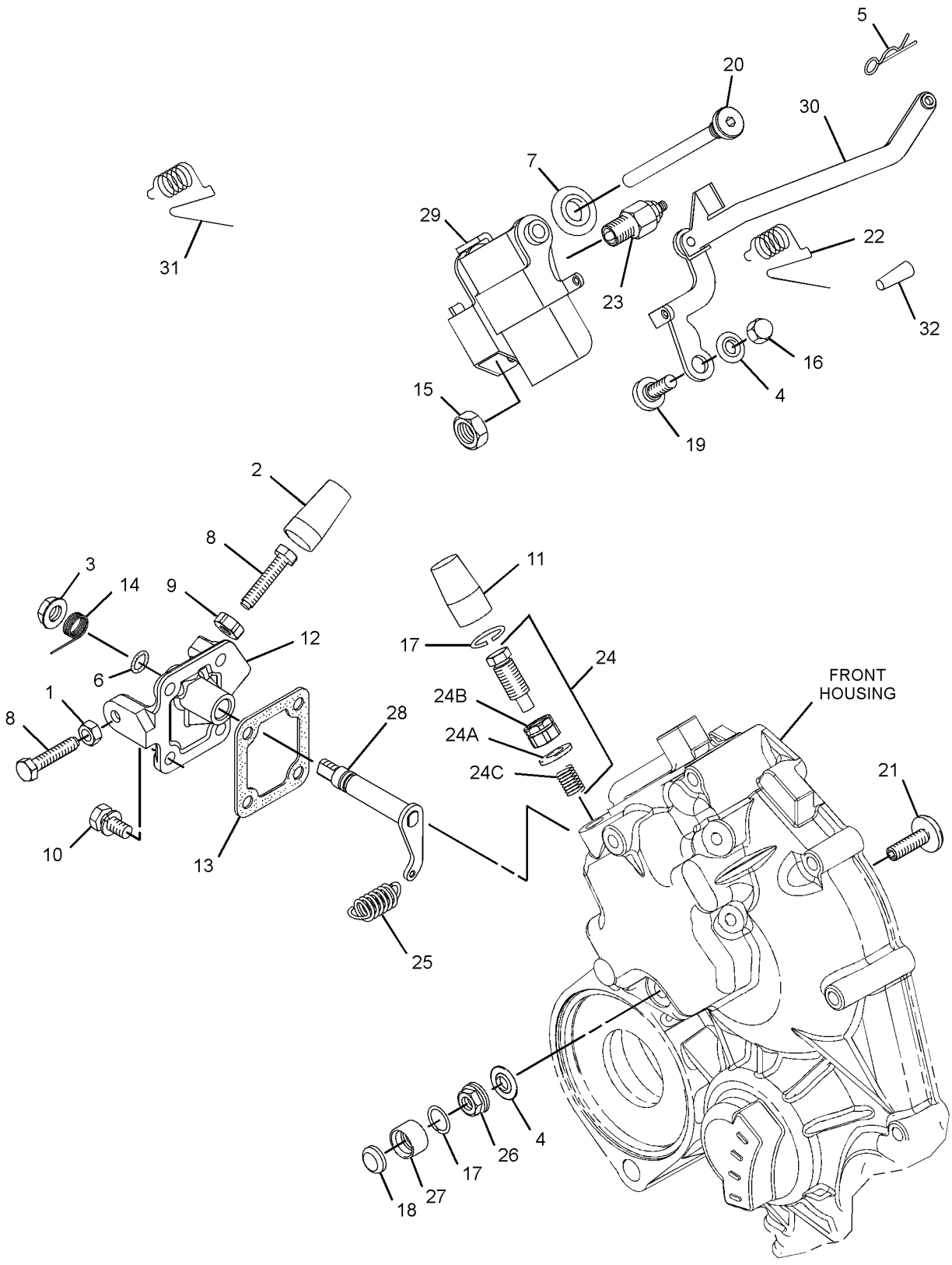

GRAPHIC #1 **<END>** g01693297

FUEL SYSTEM

228-1781 LINES GP-FUEL PRM & FILTER

S/N: MWD1-UP

PART OF 326-5360 INSTALLATION AR-ENGINE

SMCS-1258, 1263, 1274 **i03970928**

NOTE	REF NO	GRAPHIC REF	PART NUMBER	QTY	PART NAME 1 2 3 4 5 6 (PRODUCT LEVEL)	SEE PAGE
C	1	1	**1G-7206**	1	FILTER-FUEL (IN-LINE)	
C	2	1	**1P-4278**	11	CLAMP-HOSE	
	3	1	**3E-7404**	1	CLAMP-HOSE	
	4	1	**5P-4961**	2	CLAMP-HOSE	
C	5	1	**7K-1181**	1	STRAP-CABLE	
Y	6	1	*176-9954*	1	PUMP GP-FUEL PRM & PRIM FILTER (WATER SEPARATOR)	71
	7	1	**180-3007**	1	CLAMP-HOSE	
C	8	1	**195-8372**	1	CLIP	
	9	1	**218-6661**	1	HOSE	
	10	1	**231-3041**	1	CONNECTOR	
	11	1	**246-2622**	2	ELBOW	
	12	1	**252-0368**	1	GUARD AS (FUEL FILLER)	
		1	**6W-5698**	1	GROMMET	
		1	**142-8928**	1	ELBOW	
C	13	1	**304-3885**	1	CAP-FUEL (FILTER)	
	15	1	**3K-8460**	2	PLUG	
	16	1	**4D-6466**	1	CLIP	
C	17	1	**4P-7581**	1	CLIP	
M	18	1	**5C-9553**	2	BOLT (M6X1X16-MM)	
	19	1	**5P-7814**	2	SEAL-O-RING	
	20	1	**8F-8513**	1	CLIP	
C	21	1	**8T-4121**	6	WASHER-HARD (11X21X2.5-MM THK)	
M	22	1	**8T-4133**	2	NUT (M10X1.5-THD)	
M	23	1	**8T-4137**	1	BOLT (M10X1.5X20-MM)	
CM	24	1	**8T-4191**	1	BOLT (M10X1.5X16-MM)	
M	25	1	**8T-4196**	2	BOLT (M10X1.5X35-MM)	
	26	1	**9X-2038**	2	WASHER (7X19X2-MM THK)	
CE	27	1	**5P-1420**		HOSE (6-CM)	
CE	27A	1	**5P-1420**		HOSE (68-CM)	
CE	27B	1	**5P-1420**		HOSE (8-CM)	
CE	27C	1	**5P-1420**		HOSE (18-CM)	
E	28	1	**5P-9770**		HOSE (45-CM)	
E	29	1	**5P-1442**		HOSE (120-CM)	
CE	30	1	**8C-6959**		HOSE (33-CM)	

C-CHANGE FROM PREVIOUS TYPE
E-ORDER BY THE CENTIMETER
M-METRIC PART
Y-SEPARATE ILLUSTRATION

228-1781 **LINES GP-FUEL PRM & FILTER** *(contd.)* **i03970928**

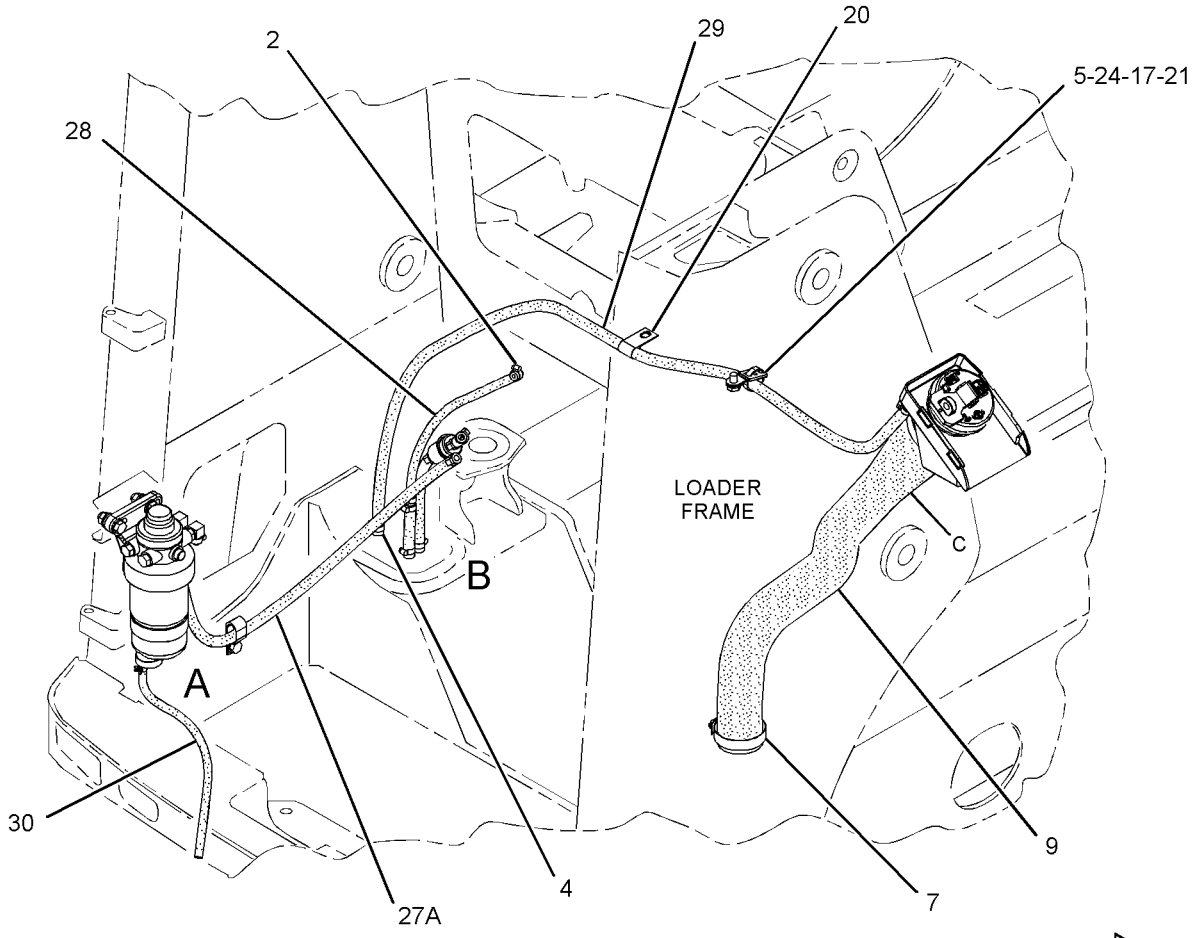

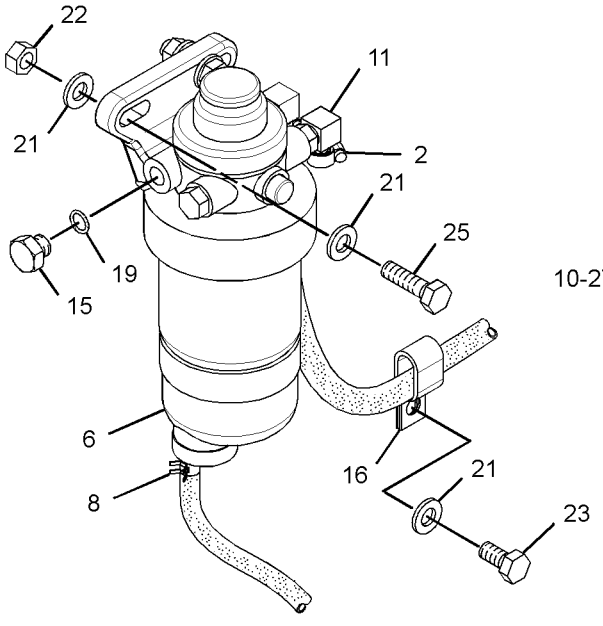

VIEW OF AREA A
(EXPLODED)

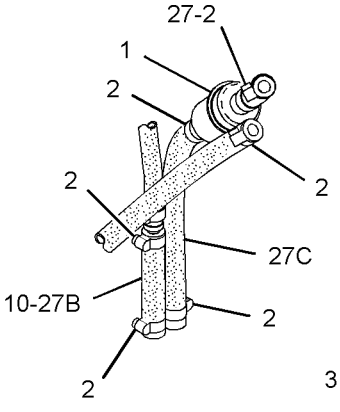

VIEW OF AREA B

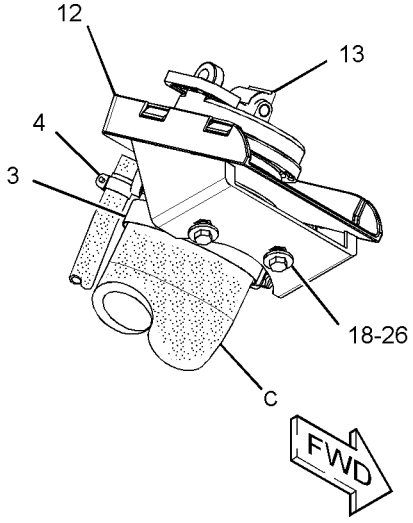

GRAPHIC #1 **<END>** g02155369

315-7814 PUMP & MTG GP-FUEL TRANSFER

S/N: CYP1-UP
PART OF 292-5719 ENGINE AR-PRIMARY
AN ATTACHMENT

SMCS-1256 **i02941455**

NOTE	REF NO	GRAPHIC REF	PART NUMBER	QTY	PART NAME 1 2 3 4 5 6 (PRODUCT LEVEL)	SEE PAGE
	1	1	**6I-0846**	2	BOLT (M6X1X14-MM)	
	2	1	**295-4070**	1	PUMP AS-FUEL TRANSFER	
	3	1	**176-7719**	1	SEAL-O-RING	
	4	1	**155-7984**	1	WASHER	
	5	1	**165-2141**	1	BOLT	

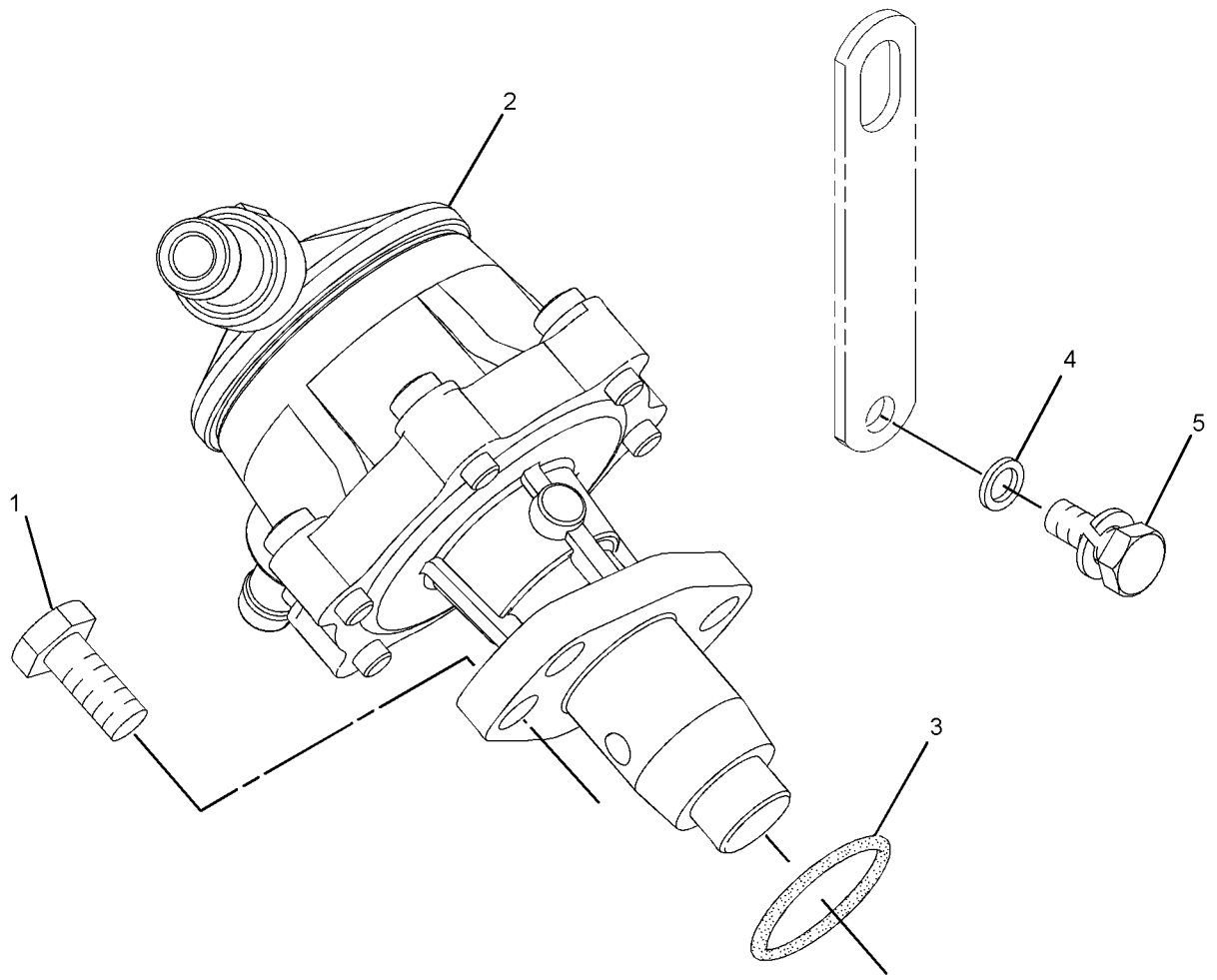

GRAPHIC #1 **<END>** g01542855

317-0977 PUMP GP-FUEL INJECTION

S/N: CYP1-UP
PART OF 292-5719 ENGINE AR-PRIMARY
AN ATTACHMENT

SMCS-1251, 1290, 5479 **i03853352**

NOTE	REF NO	GRAPHIC REF	PART NUMBER	QTY	PART NAME 1 2 3 4 5 6 (PRODUCT LEVEL)	SEE PAGE
	1	1	**153-5592**	3	NUT	
	2	1	**153-5960**	3	NUT	
	3	1	**154-2713**	1	BOLT	
	4	1	**154-2715**	2	WASHER	
	5	1	**154-2716**	4	SEAL	
B	6	1	**351-2622**	1	SHIM (0.2-MM THK)	
B		1	**351-2617**	1	SHIM (0.25-MM THK) (0.25-MM THK)	
B		1	**351-2621**	1	SHIM (0.3-MM THK)	
B		1	**351-3132**	1	SHIM (0.35-MM THK) (0.35-MM THK)	
B		1	**351-2620**	1	SHIM (0.4-MM THK)	
B		1	**351-2619**	1	SHIM (0.50-MM THK (BEADED))	
B		1	**351-2618**	1	SHIM (0.50-MM THK)	
	7	1	**163-5372**	2	WASHER (8X15.4X4-MM THK)	
	8	1	**183-3353**	3	BOLT	
	9	1	**190-3803**	1	BOLT	
	10	1	**217-2760**	1	TUBE AS (CYL NO. 1)	
	11	1	**217-2761**	1	TUBE AS (CYL NO. 2)	
	12	1	**217-2762**	1	TUBE AS (CYL NO. 3)	
	13	1	**217-2763**	1	TUBE AS (CYL NO. 4)	
M	14	1	**102-2079**	2	BOLT (M8X1.25X20-MM)	
	15	1	**290-8014**	6	CLAMP	
	16	1	**308-1905**	1	PUMP-FUEL INJECTION	
	17	1	**308-1906**	4	ATOMIZER	
	17A	1	**202-1196**	1	WASHER-SPECIAL	
	18	1	**311-7561**	1	TUBE	

B-USE AS REQUIRED
M-METRIC PART

317-0977 **PUMP GP-FUEL INJECTION** *(contd.)* **i03853352**

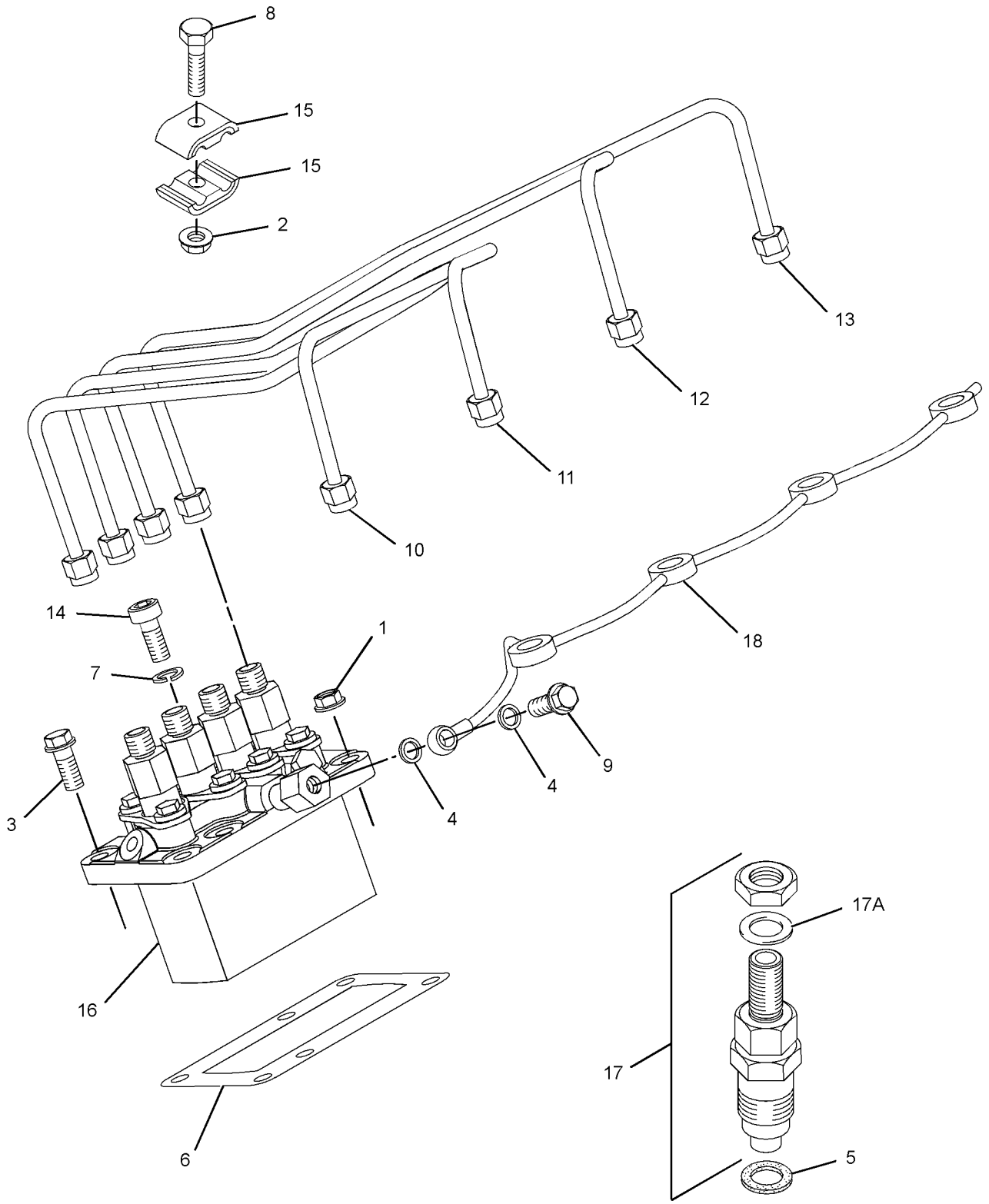

GRAPHIC #1 **<END>** g01438681

176-9954 PUMP GP-FUEL PRM & PRIM FILTER–WATER SEPARATOR

S/N: MWD1-UP

PART OF 228-1781 LINES GP-FUEL PRM & FILTER

SMCS-1258, 1261, 1263 **i03959800**

NOTE	PART NUMBER	QTY	PART NAME 1 2 3 4 5 6 (PRODUCT LEVEL)	SEE PAGE
Y	**144-9962**	1	FILTER GP-WATER SEP & FUEL	63
	129-6259	1	PUMP GP-FUEL PRIMING (PRIMARY FILTER)	
	129-6262	1	BLADDER	

Y-SEPARATE ILLUSTRATION

<END>

316-6963 ALTERNATOR GP-CHARGING

S/N: CYP1-UP
PART OF 292-5719 ENGINE AR-PRIMARY
AN ATTACHMENT

SMCS-1405 **i03913450**

NOTE	REF NO	GRAPHIC REF	PART NUMBER	QTY	PART NAME 1 2 3 4 5 6 (PRODUCT LEVEL)	SEE PAGE
	1	1	**359-9666**	1	BOLT-FLANGE HEAD	
	2	1	**180-8579**	1	NUT	
	3	1	**155-7984**	1	WASHER	
	4	1	**165-2141**	3	BOLT	
	5	1	**168-8999**	1	LEVER-ADJUSTING	
	6	1	**168-9001**	2	BOLT	
	7	1	**168-9002**	1	WASHER	
	8	1	**246-4267**	1	BRACKET	
	9	1	**349-1369**	1	ALTERNATOR GP-CHARGING	
	10	1	**163-5372**	1	WASHER (8X15.4X4-MM THK)	

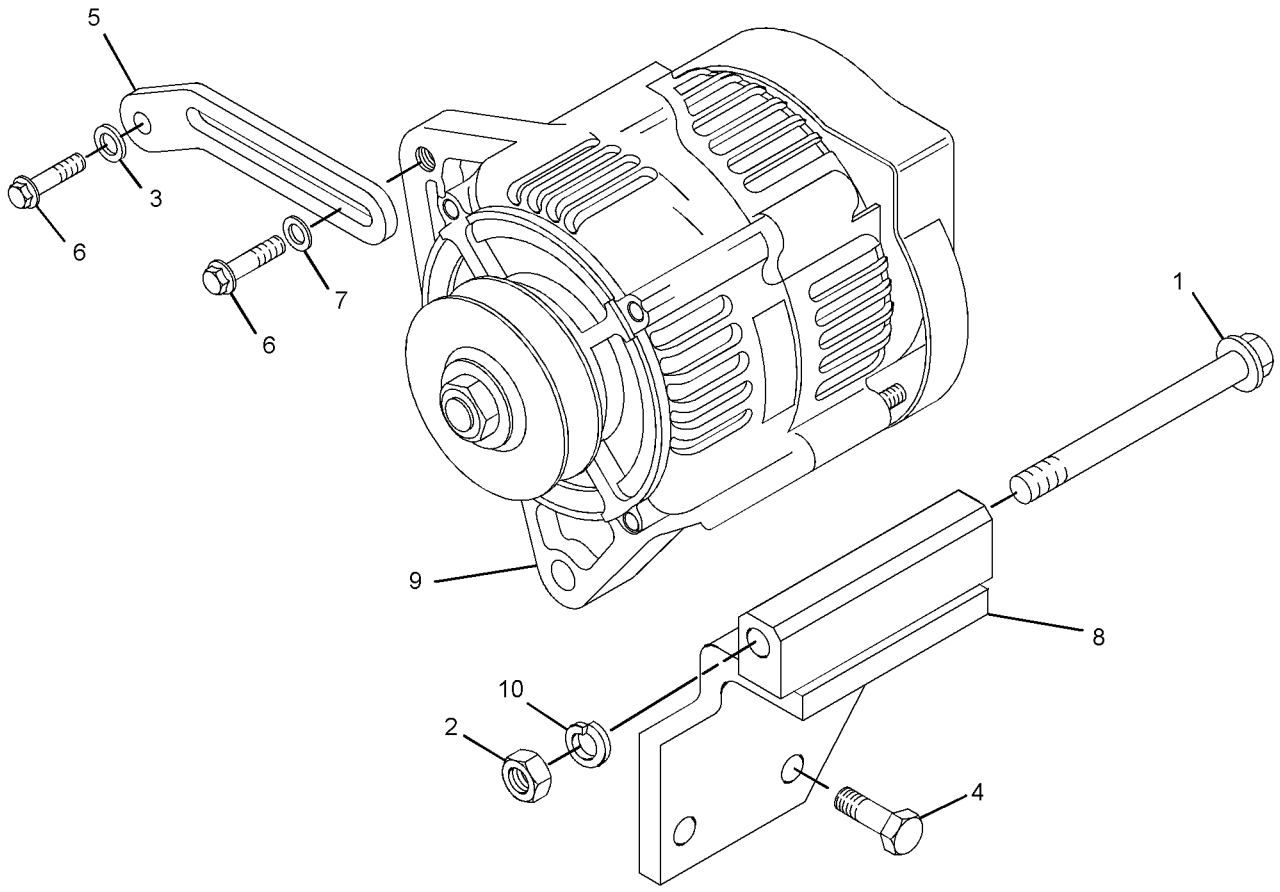

GRAPHIC #1 **<END>** g02153167

225-7950 BATTERY GP–STANDARD

S/N: MWD1-UP
12-VOLT
CANNOT BE USED WITH 225-7952–PAGE 74
AN ATTACHMENT

SMCS-1401 **i03971100**

NOTE	REF NO	GRAPHIC REF	PART NUMBER	QTY	PART NAME 1 2 3 4 5 6 (PRODUCT LEVEL)	SEE PAGE
	1	1	**153-5656**	1	BATTERY (12-VOLT, MAINTENANCE FREE)	
	2	1	**193-8329**	1	CLAMP	
	3	1	**5P-4116**	2	WASHER-HARD (8.8X20.5X2-MM THK)	
M	4	1	**8T-4189**	1	BOLT (M8X1.25X20-MM)	
M	5	1	**8T-6912**	1	BOLT (M8X1.25X50-MM)	

M-METRIC PART

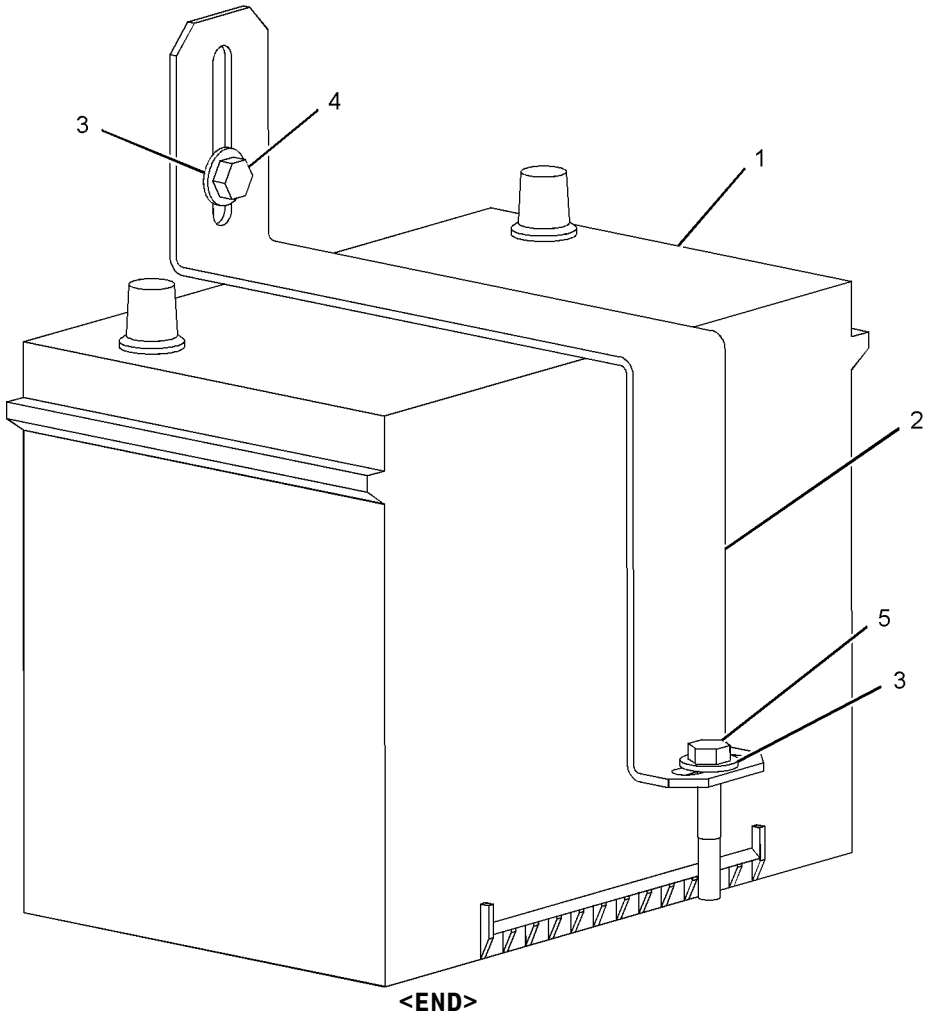

GRAPHIC #1 **<END>** g01010454

225-7952 BATTERY GP—HEAVY-DUTY

S/N: MWD1-UP
12-VOLT
CANNOT BE USED WITH 225-7950—PAGE 73
AN ATTACHMENT

SMCS-1401 **i02014205**

NOTE	REF NO	GRAPHIC REF	PART NUMBER	QTY	PART NAME 1 2 3 4 5 6 (PRODUCT LEVEL)	SEE PAGE
	1	1	**193-8329**	1	CLAMP	
	2	1	**230-6368**	1	BATTERY (12-VOLT, MAINTENANCE FREE)	
	3	1	**5P-4116**	2	WASHER-HARD (8.8X20.5X2-MM THK)	
M	4	1	**8T-4189**	2	BOLT (M8X1.25X20-MM)	

M-METRIC PART

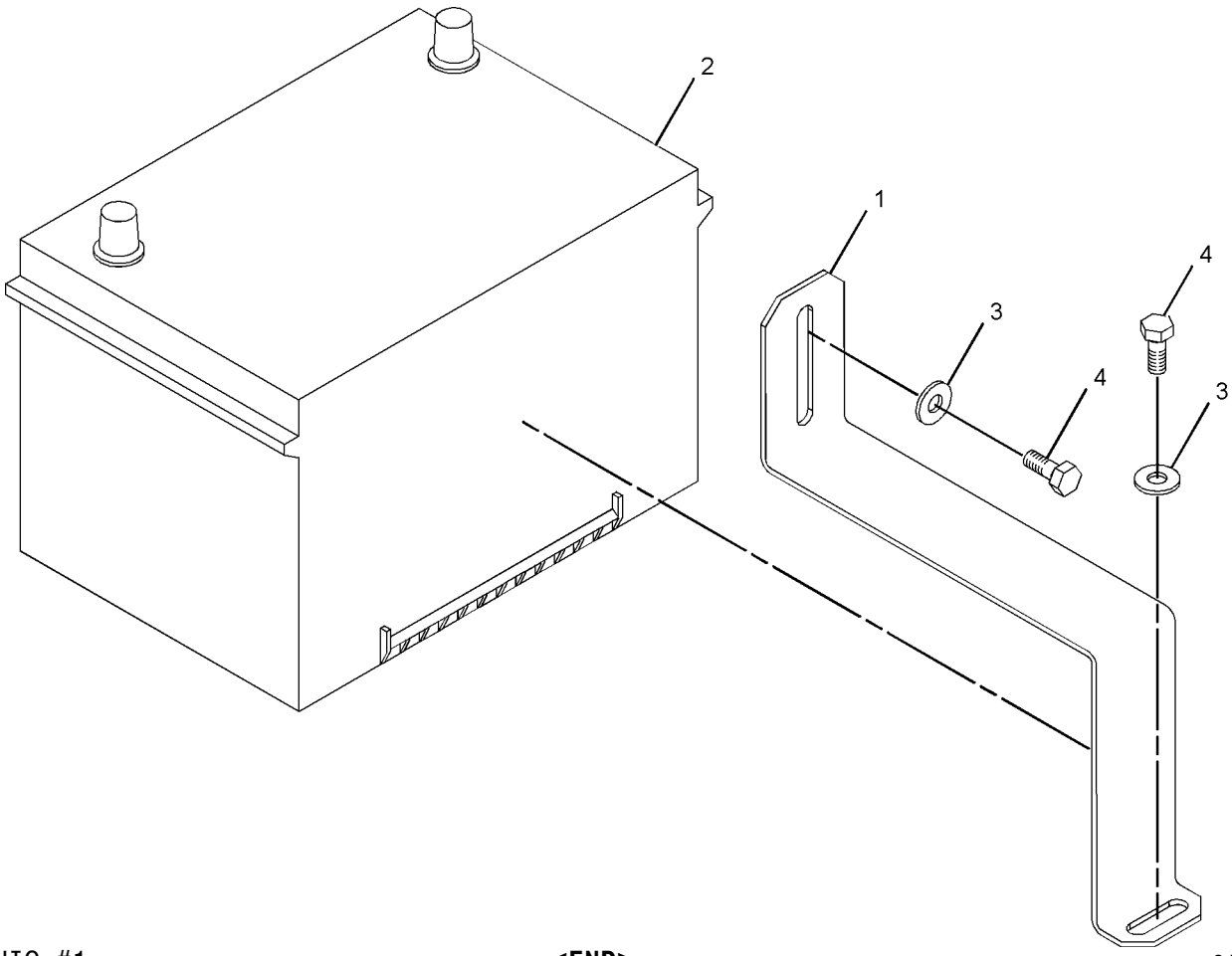

GRAPHIC #1 **<END>** g01015484

328-2345 ELECTRONICS GP-MACHINE

S/N: MWD1-UP

PART OF 328-2272 WIRING GP-CAB

SMCS-7610, 7620 **i03905349**

NOTE	PART NUMBER	QTY	PART NAME 1 2 3 4 5 6 (PRODUCT LEVEL)	SEE PAGE
	343-6004	1	SOFTWARE GP-MACHINE	
			—OR—	
	329-2576	1	CONTROL GP-UNPROGRAMMED (MACHINE)	
			—OR—	
	343-6005	1	SERVICE GP-MACHINE	
			(OPTIONAL SERVICE REPLACEMENT)(INCLUDES CONTROL GP & SOFTWARE)	

<END>

316-6896 GLOW PLUG GP

S/N: CYP1-UP
PART OF 292-5719 ENGINE AR-PRIMARY
AN ATTACHMENT

SMCS-1412 **i02827168**

NOTE	REF NO	GRAPHIC REF	PART NUMBER	QTY	PART NAME 1 2 3 4 5 6 (PRODUCT LEVEL)	SEE PAGE
	1	1	**155-8076**	1	NUT	
	2	1	**155-8077**	1	WASHER	
	3	1	**172-4585**	4	GLOW PLUG	
	4	1	**192-0105**	1	SUPPORT-PLUG	

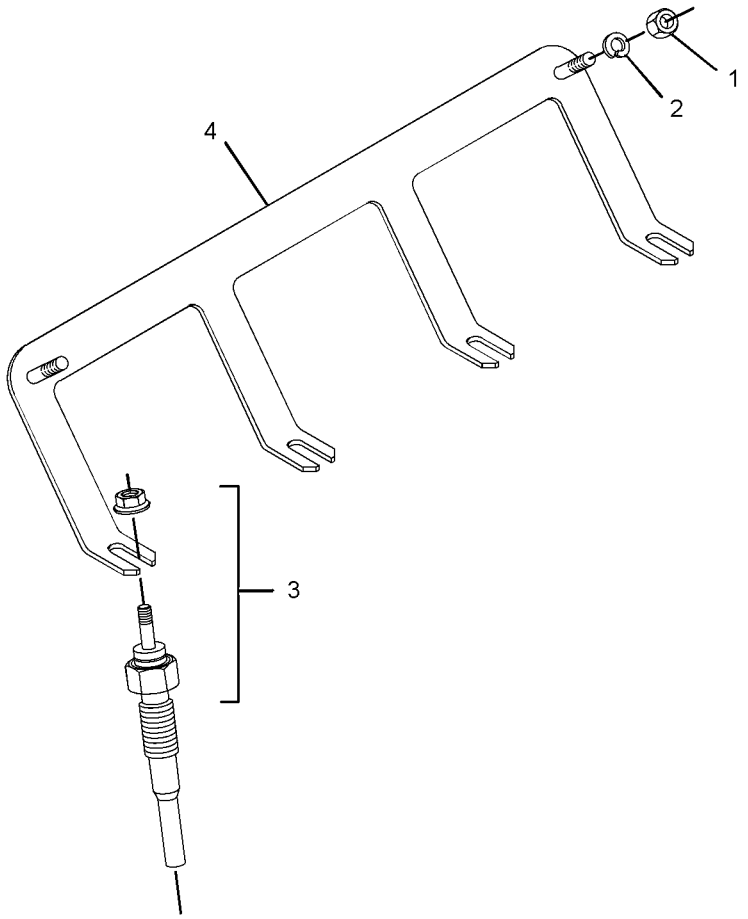

GRAPHIC #1 **<END>** g01439420

154-3927 HEATER GP-JACKET WATER

S/N: MWD1-UP
120-VOLT/530-WATT
PART OF 172-4445 HEATER GP-JACKET WATER
AN ATTACHMENT

SMCS-1383 **i03971030**

NOTE	REF NO	GRAPHIC REF	PART NUMBER	QTY	PART NAME 1 2 3 4 5 6 (PRODUCT LEVEL)	SEE PAGE
	1	1	**149-3499**	1	ELEMENT AS-JACKET WATER HEATER	
		1	**133-6517**	1	CAP AS-DUST	
	2	1	**7X-6312**	1	CORD AS-HEATER ELEMENT (120-VOLT, 15-AMPERE)	

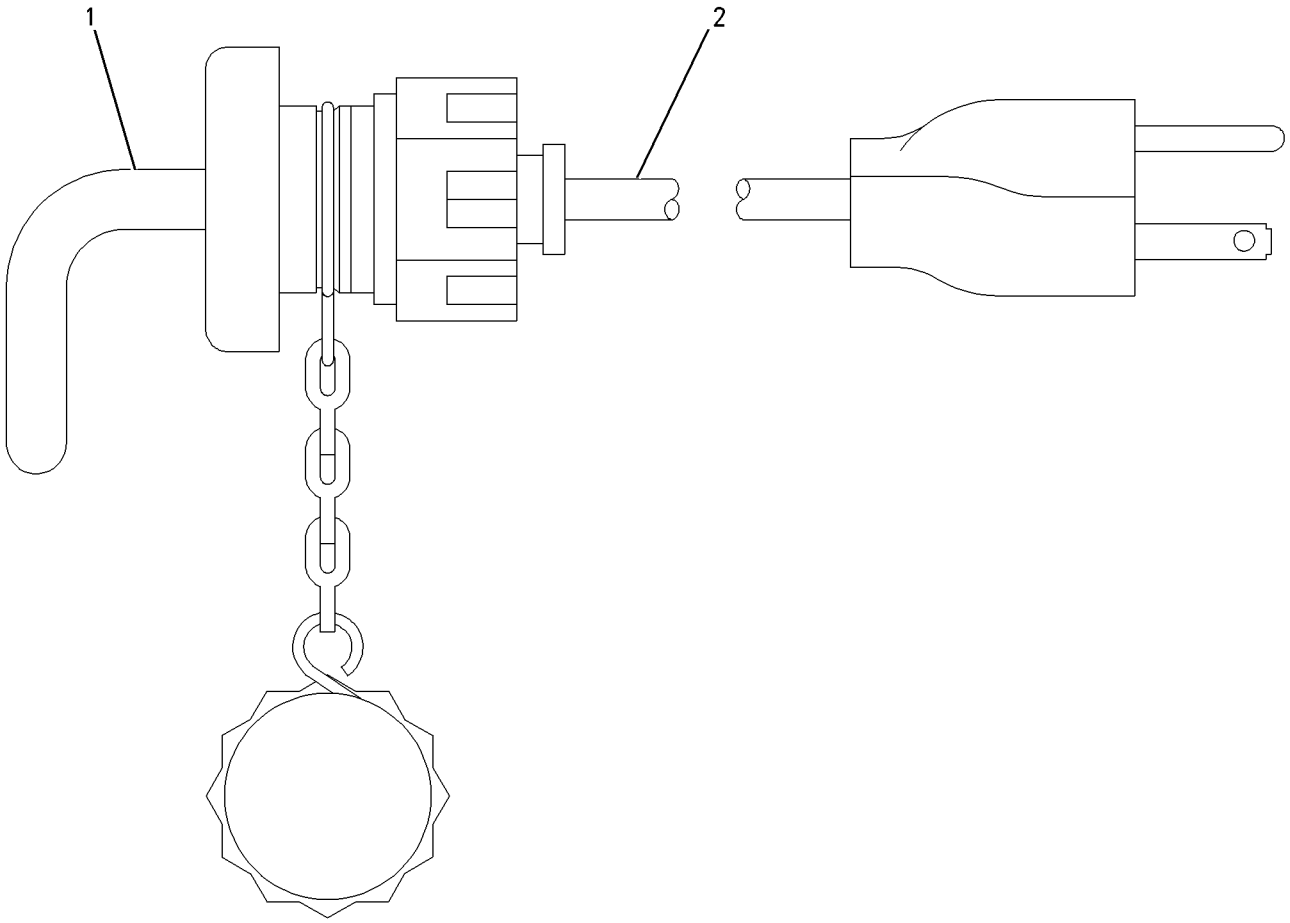

GRAPHIC #1 **<END>** g00715310

154-3928 HEATER GP-JACKET WATER

S/N: MWD1-UP
240-VOLT/530-WATT
PART OF 172-4446 HEATER GP-JACKET WATER
AN ATTACHMENT

SMCS-1383 **i03971090**

NOTE	REF NO	GRAPHIC REF	PART NUMBER	QTY	PART NAME 1 2 3 4 5 6 (PRODUCT LEVEL)	SEE PAGE
	1	1	**151-1394**	1	ELEMENT AS-JACKET WATER HEATER	
	1A	1	**133-6517**	1	CAP AS-DUST	
	2	1	**217-5912**	1	CORD AS	

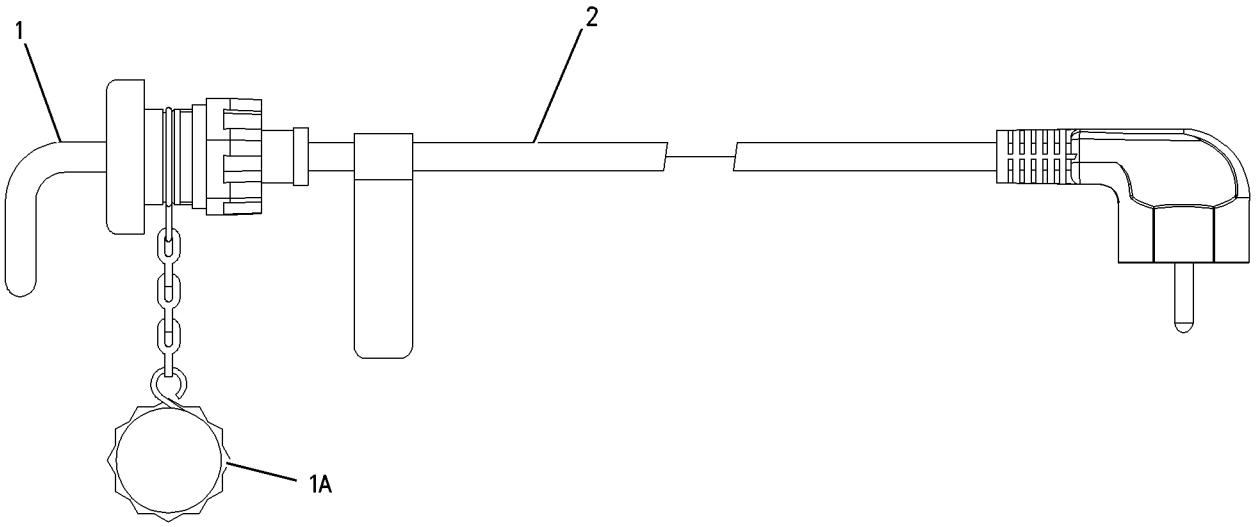

GRAPHIC #1 **<END>** g00936253

172-4445 HEATER GP-JACKET WATER

S/N: MWD1-UP
120-VOLTS, 530-WATTS
CANNOT BE USED WITH 172-4446—PAGE 80
AN ATTACHMENT

SMCS-1383 **i03971029**

NOTE	REF NO	GRAPHIC REF	PART NUMBER	QTY	PART NAME 1 2 3 4 5 6 (PRODUCT LEVEL)	SEE PAGE
Y	1	1	*154-3927*	1	HEATER GP-JACKET WATER	77
	2	1	**9X-6772**	1	STRAP-CABLE	

Y-SEPARATE ILLUSTRATION

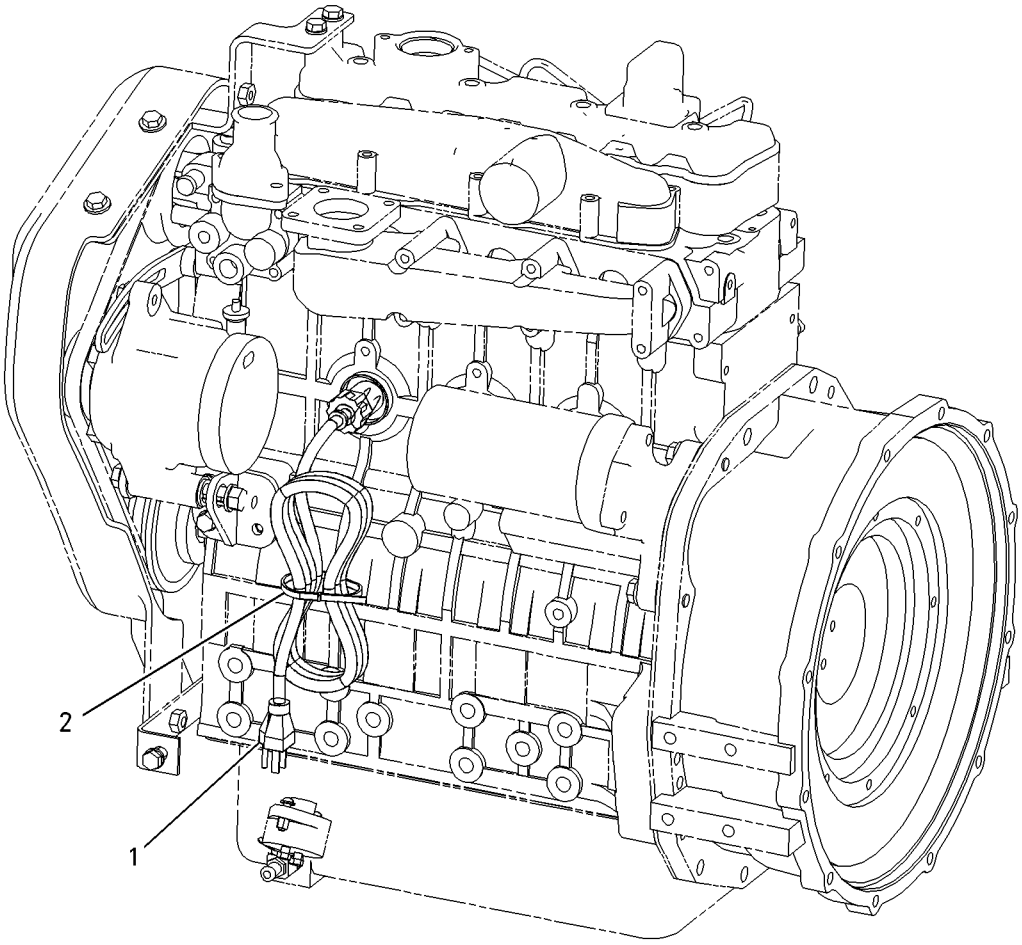

GRAPHIC #1 **<END>** g00808146

172-4446 HEATER GP-JACKET WATER

S/N: MWD1-UP
240-VOLTS, 530-WATTS
CANNOT BE USED WITH 172-4445—PAGE 79
AN ATTACHMENT

SMCS-1383 **i03971091**

NOTE	REF NO	GRAPHIC REF	PART NUMBER	QTY	PART NAME 1 2 3 4 5 6 (PRODUCT LEVEL)	SEE PAGE
Y	1	1	*154-3928*	1	HEATER GP-JACKET WATER	78
	2	1	**9X-6772**	1	STRAP-CABLE	

Y-SEPARATE ILLUSTRATION

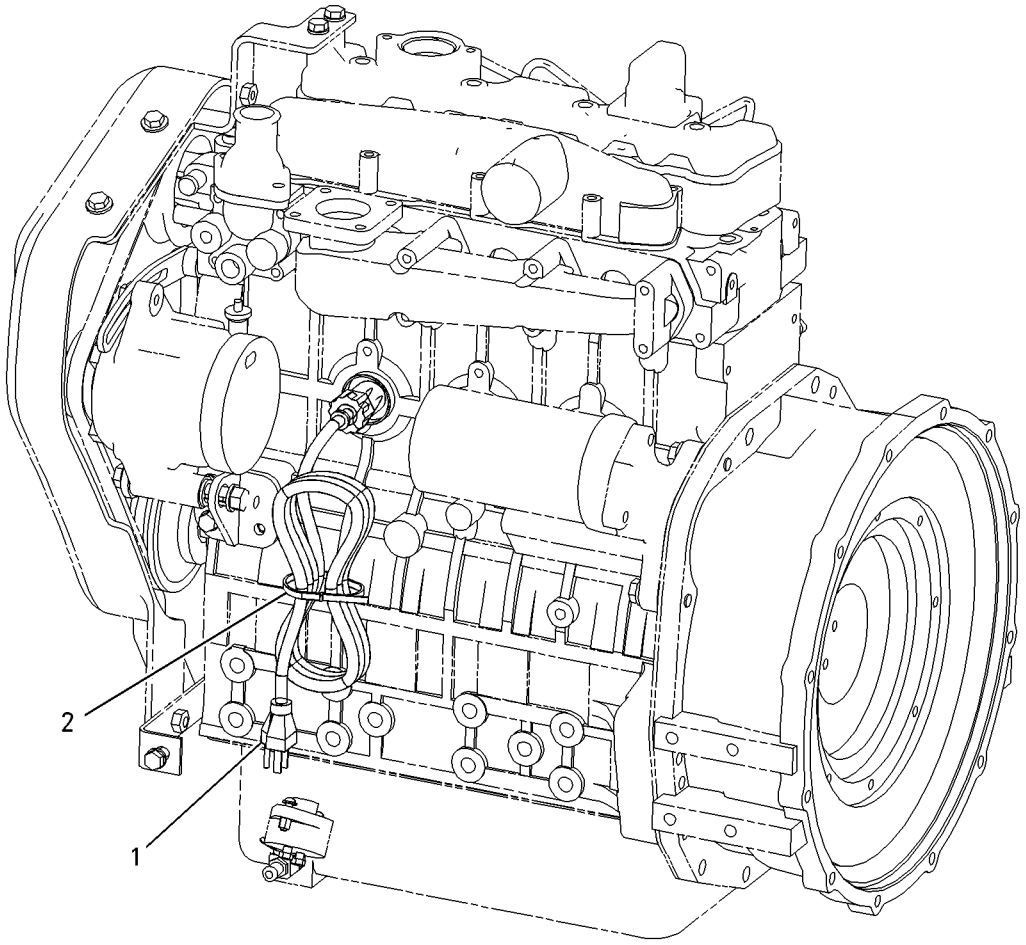

GRAPHIC #1 **<END>** g00808142

234-4328 LAMP GP-FLOOD

S/N: MWD1-UP
12-VOLT
PART OF 218-6425 LIGHTING GP-FLOOD

SMCS-1434 **i03969175**

NOTE	REF NO	GRAPHIC REF	PART NUMBER	QTY	PART NAME 1 2 3 4 5 6 (PRODUCT LEVEL)	SEE PAGE
	1	1	**9W-0607**	1	LAMP (12-VOLT, 55-WATT) (FLOODLIGHT)	
M	2	1	**8T-0389**	1	LOCKNUT (M10X1.5-THD)	
	3	1	**9X-4244**	2	SCREW-SPECIAL (M4X1.79X25-MM)	
	4	1	**202-6614**	1	LENS AS (FLOODLIGHT)	
	5	1	**234-7730**	1	BODY AS (FLOODLIGHT)	
	6	1	**164-7556**	1	BRACKET (LAMP RETAINING)	
	7	1	**234-7731**	1	BRACKET AS	
	8	1	**8T-4121**	1	WASHER-HARD (11X21X2.5-MM THK)	

M-METRIC PART

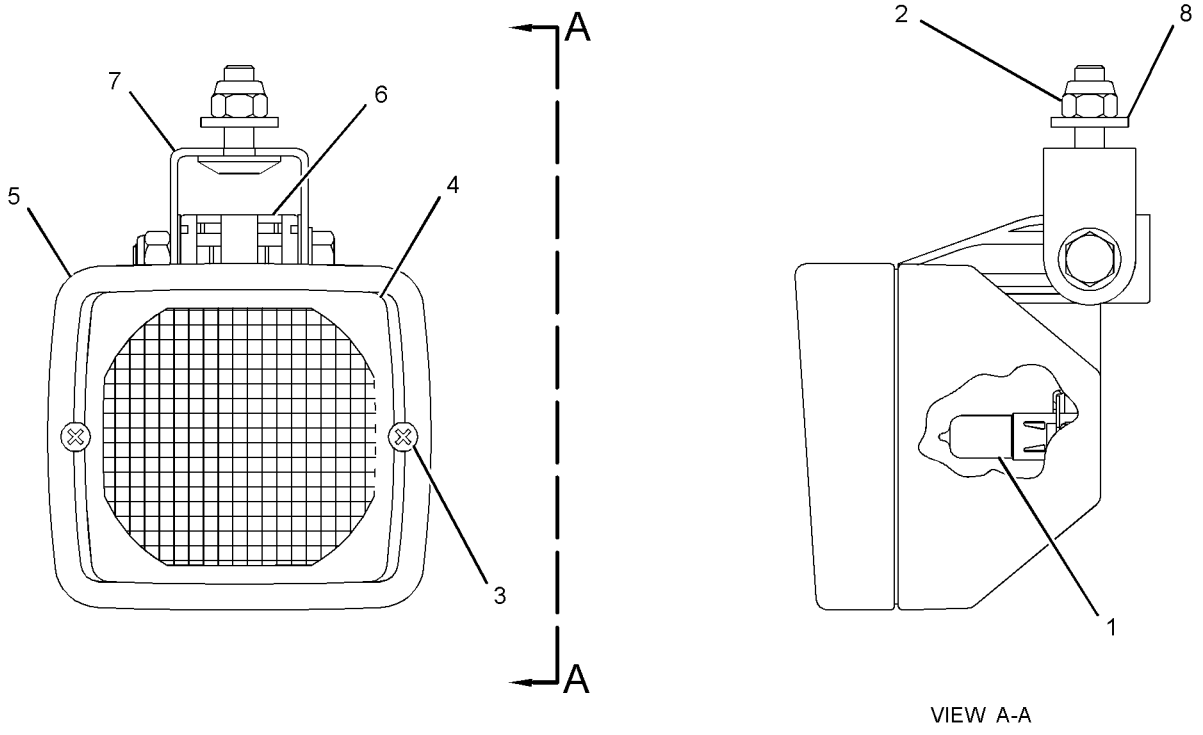

VIEW A-A

GRAPHIC #1 **<END>** g01283627

234-7727 LAMP GP-FLOOD

S/N: MWD1-UP
12-VOLT
PART OF 216-4746 LIGHTING GP-FLOOD

SMCS-1434 **i03686766**

NOTE	REF NO	GRAPHIC REF	PART NUMBER	QTY	PART NAME 1 2 3 4 5 6 (PRODUCT LEVEL)	SEE PAGE
	1	1	**9W-0607**	1	LAMP (12-VOLT, 55-WATT) (FLOODLIGHT)	
	2	1	**9X-4244**	2	SCREW-SPECIAL (M4X1.79X25-MM)	
	3	1	**202-6611**	1	LENS AS (FLOODLIGHT)	
	4	1	**234-7758**	1	BODY AS	
	5	1	**164-7556**	1	BRACKET (LAMP RETAINING)	
	6	1	**234-7756**	1	BRACKET-MOUNTING	

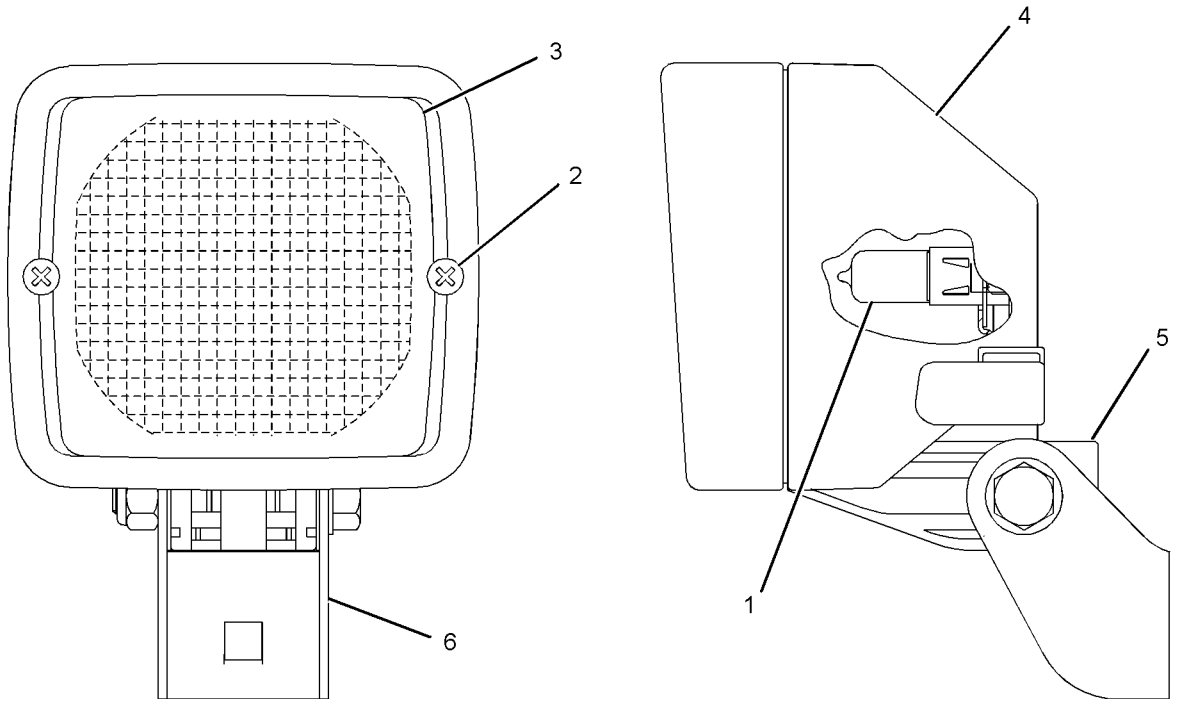

GRAPHIC #1 **<END>** g01017848

3E-7584 LAMP GP-HEAD & SIGNAL–RH

S/N: MWD1-UP
12-VOLT
PART OF 328-2333 LIGHTING GP-ROADING
AN ATTACHMENT

SMCS-1429, 1430 **i03971099**

NOTE	REF NO	GRAPHIC REF	PART NUMBER	QTY	PART NAME 1 2 3 4 5 6 (PRODUCT LEVEL)	SEE PAGE
	1	1	**9X-4244**	4	SCREW-SPECIAL (M4X1.79X25-MM)	
	2	1	**100-3251**	2	SCREW-LENS	
	3	1	**9X-9865**	1	SEAL	
	4	1	**100-3248**	1	LENS AS (HEADLIGHT) (HIGH, LOW BEAM)	
	5	1	**9W-3324**	1	LAMP-HEAD (12-VOLT, 60/55-WATT) (CLEAR)	
	6	1	**100-3247**	1	BODY AS-LAMP	
M	7	1	**8T-5005**	1	BOLT (M10X1.5X70-MM)	
M	8	1	**8T-0389**	1	LOCKNUT (M10X1.5-THD)	
	9	1	**100-3253**	1	SPACER (SPHERICAL)	
	10	1	**100-3254**	1	SPACER (SPHERICAL)	
	11	1	**100-3255**	1	WASHER (SPHERICAL)	
	12	1	**102-8805**	1	KIT-RECEPTACLE (6-PIN)	
					(INCLUDES RECEPTACLE AS & WEDGE)	
	13	1	**8T-8729**	5	PIN-CONNECTOR (16-GA TO 18-GA)	
	14	1	**100-3250**	1	LENS (AMBER) (FRONT TURN)	
	15	1	**8T-8737**	1	PLUG-SEAL	
	16	1	**100-3246**	1	LAMP (12-VOLT, 4-WATT)	
	17	1	**9W-3326**	1	LAMP (12-VOLT, 21-WATT) (TURN SIGNAL)	

M-METRIC PART

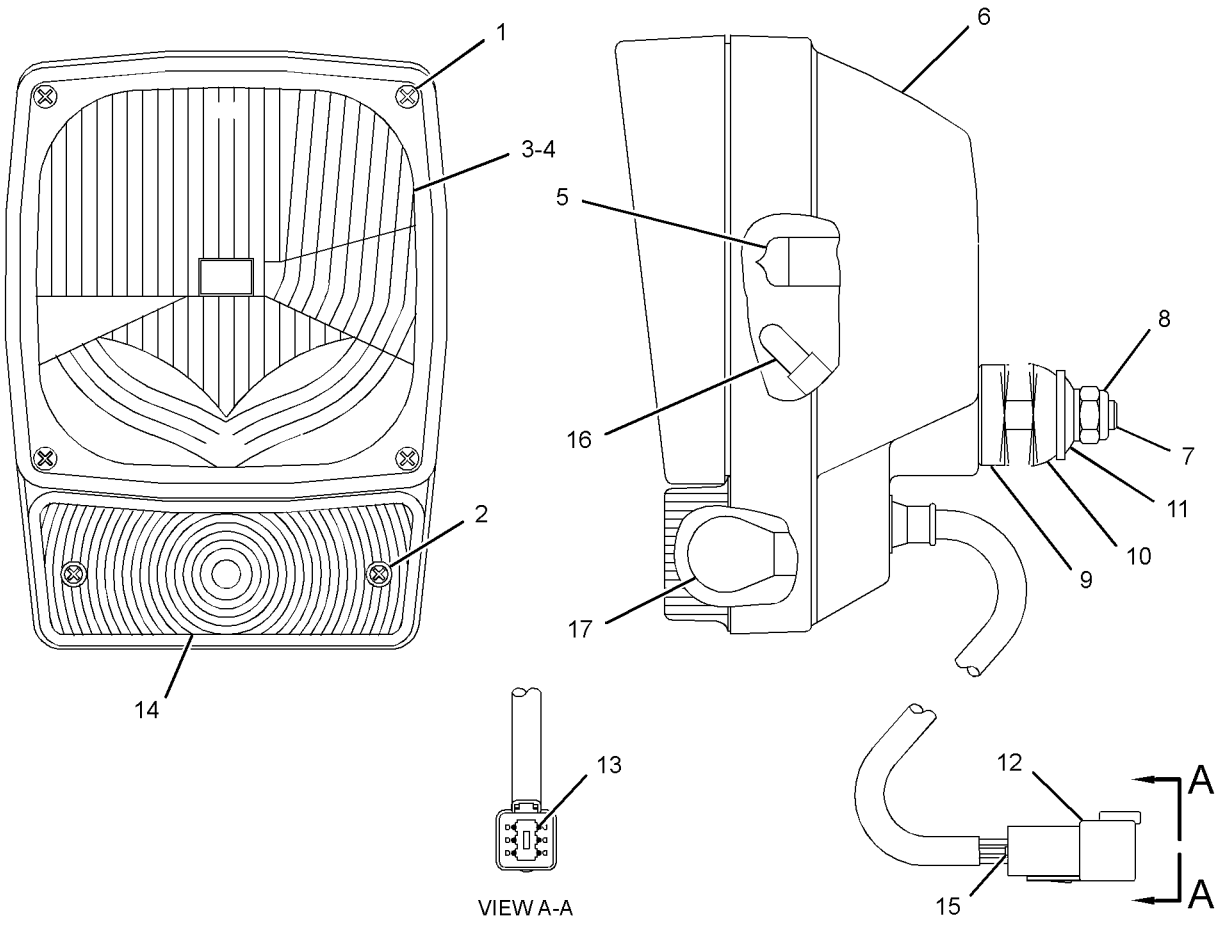

GRAPHIC #1 **<END>** g01953367

142-7503 LAMP GP-STOP & TAIL

S/N: MWD1-UP
12-VOLT
PART OF 328-2344 LAMP GP-STOP & TAIL
AN ATTACHMENT

SMCS-1432 **i02577856**

NOTE	REF NO	GRAPHIC REF	PART NUMBER	QTY	PART NAME 1 2 3 4 5 6 (PRODUCT LEVEL)	SEE PAGE
	1	1	**084-4348**	1	LAMP (12-VOLT, 5-WATT)	
	2	1	**102-8804**	1	KIT-RECEPTACLE (4-PIN)	
					(INCLUDES RECEPTACLE AS & WEDGE)	
	3	1	**165-4895**	1	LENS	
M	4	1	**5C-2890**	2	NUT (M6X1-THD)	
	5	1	**8T-0087**	2	LOCKWASHER	

M-METRIC PART

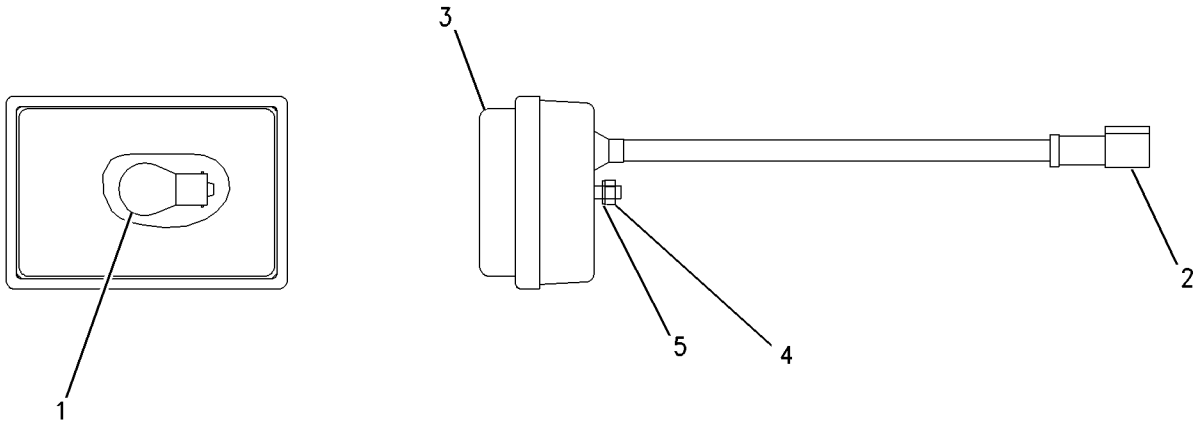

GRAPHIC #1 **<END>** g00669668

142-8634 LAMP GP-STOP & TAIL

S/N: MWD1-UP
12-VOLT
PART OF 328-2346 LAMP GP-STOP & TAIL, 328-2333 LIGHTING GP-ROADING AN ATTACHMENT

SMCS-1432 **i03959891**

NOTE	REF NO	GRAPHIC REF	PART NUMBER	QTY	PART NAME 1 2 3 4 5 6 (PRODUCT LEVEL)	SEE PAGE
	1	1	**9W-3326**	1	LAMP (12-VOLT, 21-WATT)	
	2	1	**084-4348**	1	LAMP (12-VOLT, 5-WATT)	
	3	1	**102-8804**	1	KIT-RECEPTACLE (4-PIN)	
					(INCLUDES RECEPTACLE AS & WEDGE)	
	4	1	**146-2438**	1	LENS (REAR)	
M	5	1	**5C-2890**	2	NUT (M6X1-THD)	
	6	1	**1H-3244**	2	LOCKWASHER	
	7	1	**186-3735**	4	PIN-CONNECTOR (16-GA TO 18-GA)	

M-METRIC PART

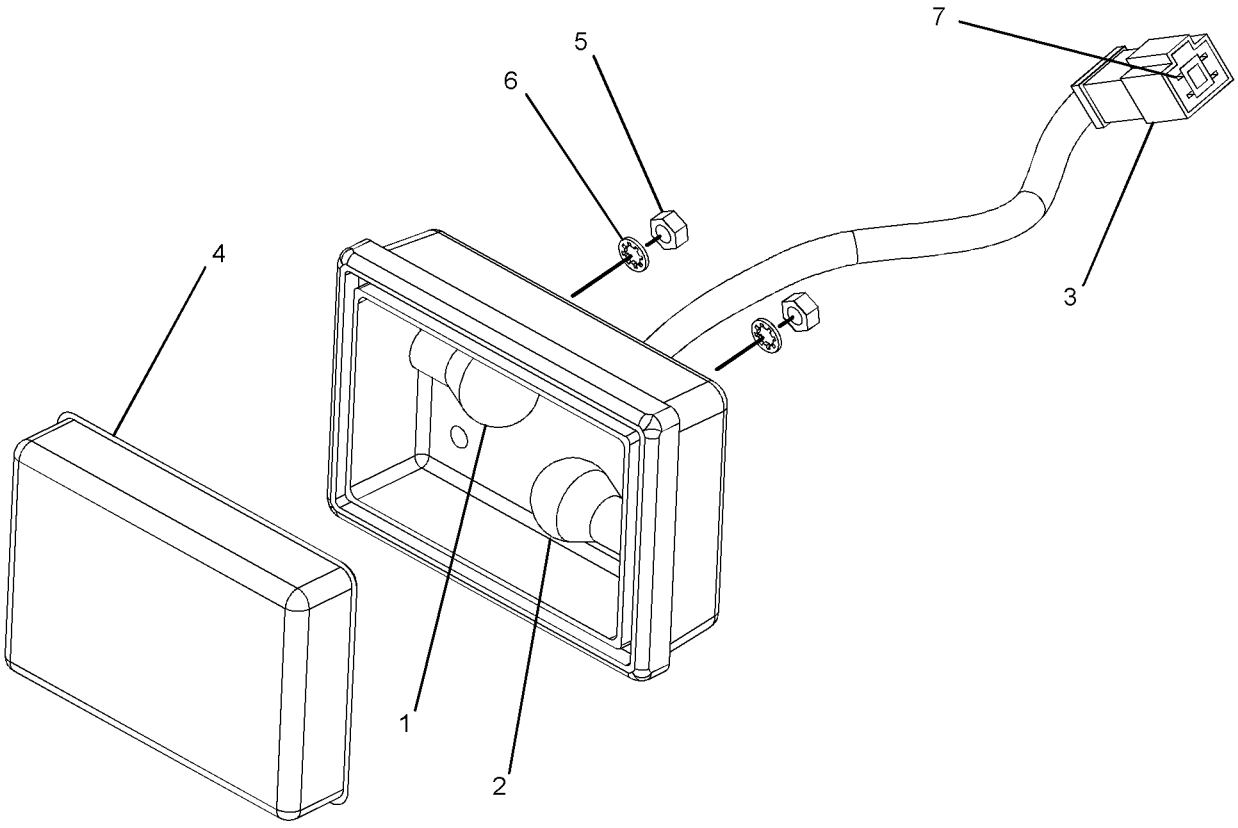

GRAPHIC #1 **<END>** g01212497

328-2344 LAMP GP-STOP & TAIL–REAR

S/N: MWD1-UP
PART OF 326-5247, 326-5287 CONVERSION AR-MACHINE
AN ATTACHMENT

SMCS-1432 **i03901797**

NOTE	REF NO	GRAPHIC REF	PART NUMBER	QTY	PART NAME 1 2 3 4 5 6 (PRODUCT LEVEL)	SEE PAGE
	1	1	**9R-1499**	2	REFLECTOR	
Y	2	1	**142-7503**	1	LAMP GP-STOP & TAIL (12-VOLT) (LH)	84
Y	2A	1	**142-7503**	1	LAMP GP-STOP & TAIL (12-VOLT) (RH)	84
	3	1	**8T-4205**	4	WASHER-HARD (7.2X14.5X2-MM THK)	

Y-SEPARATE ILLUSTRATION

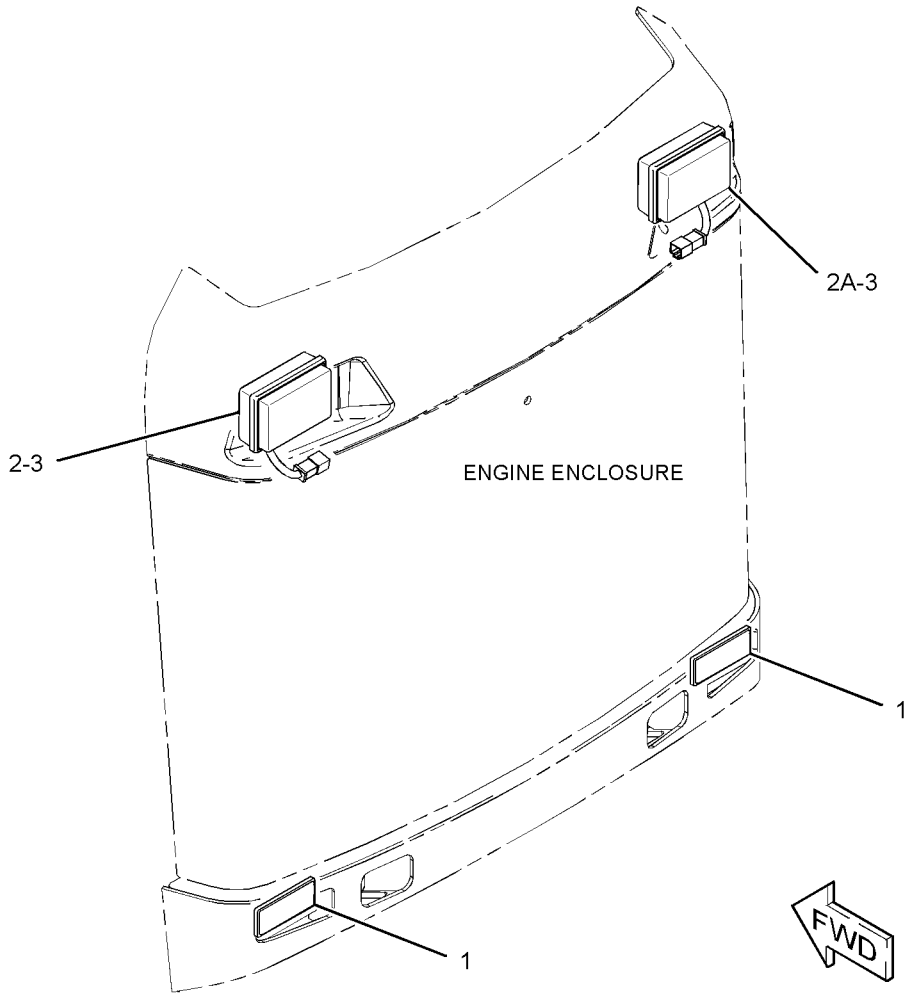

GRAPHIC #1 **<END>** g02148188

328-2346 LAMP GP-STOP & TAIL–REAR

S/N: MWD1-UP
PART OF 326-5297 CONVERSION AR-MACHINE
AN ATTACHMENT

SMCS-1432 **i03973029**

NOTE	REF NO	GRAPHIC REF	PART NUMBER	QTY	PART NAME 1 2 3 4 5 6 (PRODUCT LEVEL)	SEE PAGE
	1	1	**9R-1499**	2	REFLECTOR	
Y	2	1	**142-8634**	1	LAMP GP-STOP & TAIL (12-VOLT) (LH)	85
Y	2A	1	**142-8634**	1	LAMP GP-STOP & TAIL (12-VOLT) (RH)	85
	3	1	**142-9331**	1	SWITCH AS-ROCKER (HAZARD WARNING LIGHTS)	
	4	1	**226-5900**	1	SWITCH AS-ROCKER (TURN SIGNAL)	
					(EACH SWITCH AS INCLUDES)	
		1	**111-7899**	1	GASKET	
	5	1	**242-9000**	1	FLASHER AS (12-VOLT) (STOP LIGHT)	
	6	1	**328-2343**	1	HARNESS AS-SWITCH (REAR LIGHTS)	
		1	**186-3735**	3	PIN-CONNECTOR (16-GA TO 18-GA)	
		1	**7R-2751**	3	PLUG-CONNECTOR	
		1	**102-8803**	1	KIT-RECEPTACLE (3-PIN)	
					(INCLUDES RECEPTACLE AS & WEDGE)	
		1	**7R-2750**	3	SEAL-CONNECTOR	
		1	**202-0314**	3	TERMINAL AS	
					(EACH INCLUDES)	
		1	**128-4123**	1	SEAL	
		1	**3S-2093**	1	STRAP-CABLE	
	7	1	**3S-2093**	1	STRAP-CABLE	

Y-SEPARATE ILLUSTRATION

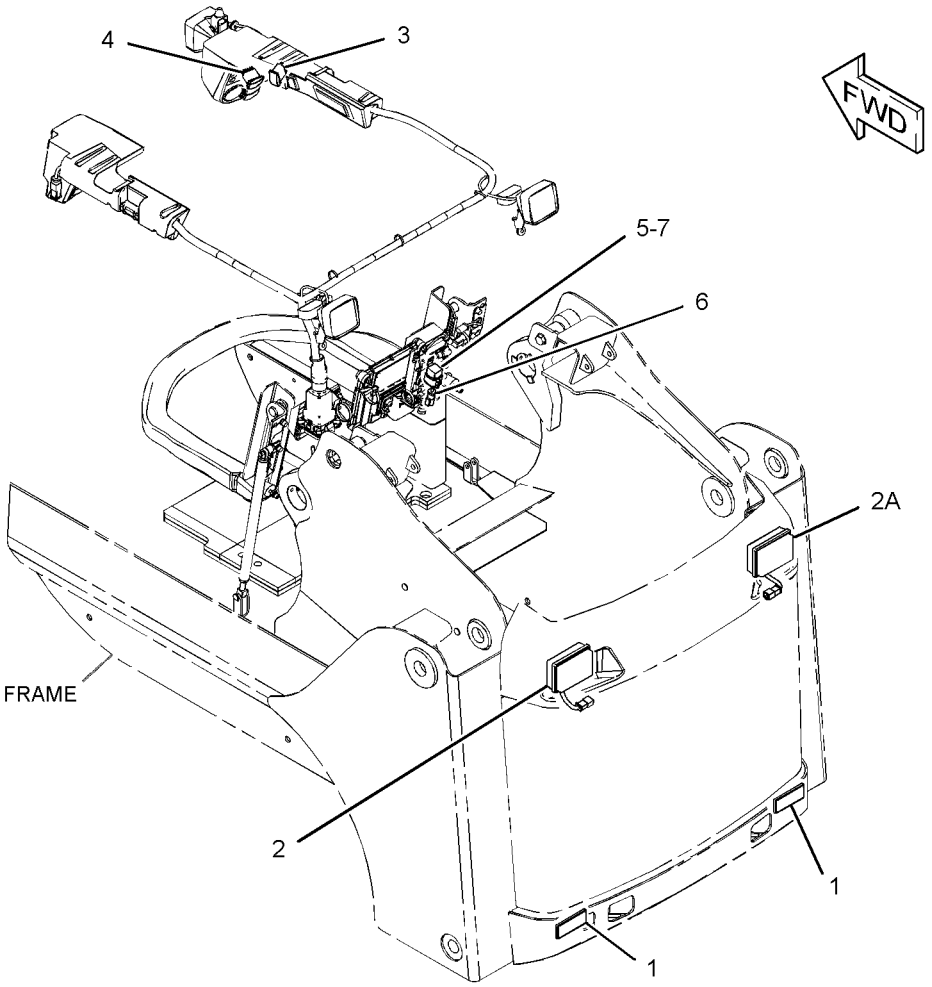

GRAPHIC #1 **<END>** g02148065

309-1325 LAMP GP-WARNING BEACON–AMBER

S/N: MWD1-UP
12-VOLT
PART OF 278-1293 CONVERSION GP-ROADING
AN ATTACHMENT

SMCS-1431 **i03686768**

NOTE	REF NO	GRAPHIC REF	PART NUMBER	QTY	PART NAME 1 2 3 4 5 6 (PRODUCT LEVEL)	SEE PAGE
	1	1	**272-9800**	1	LENS (AMBER) (WARNING BEACON)	
	2	1	**9X-8118**	1	LAMP (12-VOLT, 55-WATT) (WARNING BEACON)	
	3	1	**9X-8139**	1	BELT-DRIVE (WARNING BEACON)	
	4	1	**9R-7958**	1	CORD AS	
	4A	1	**9R-7942**	1	PLUG AS	

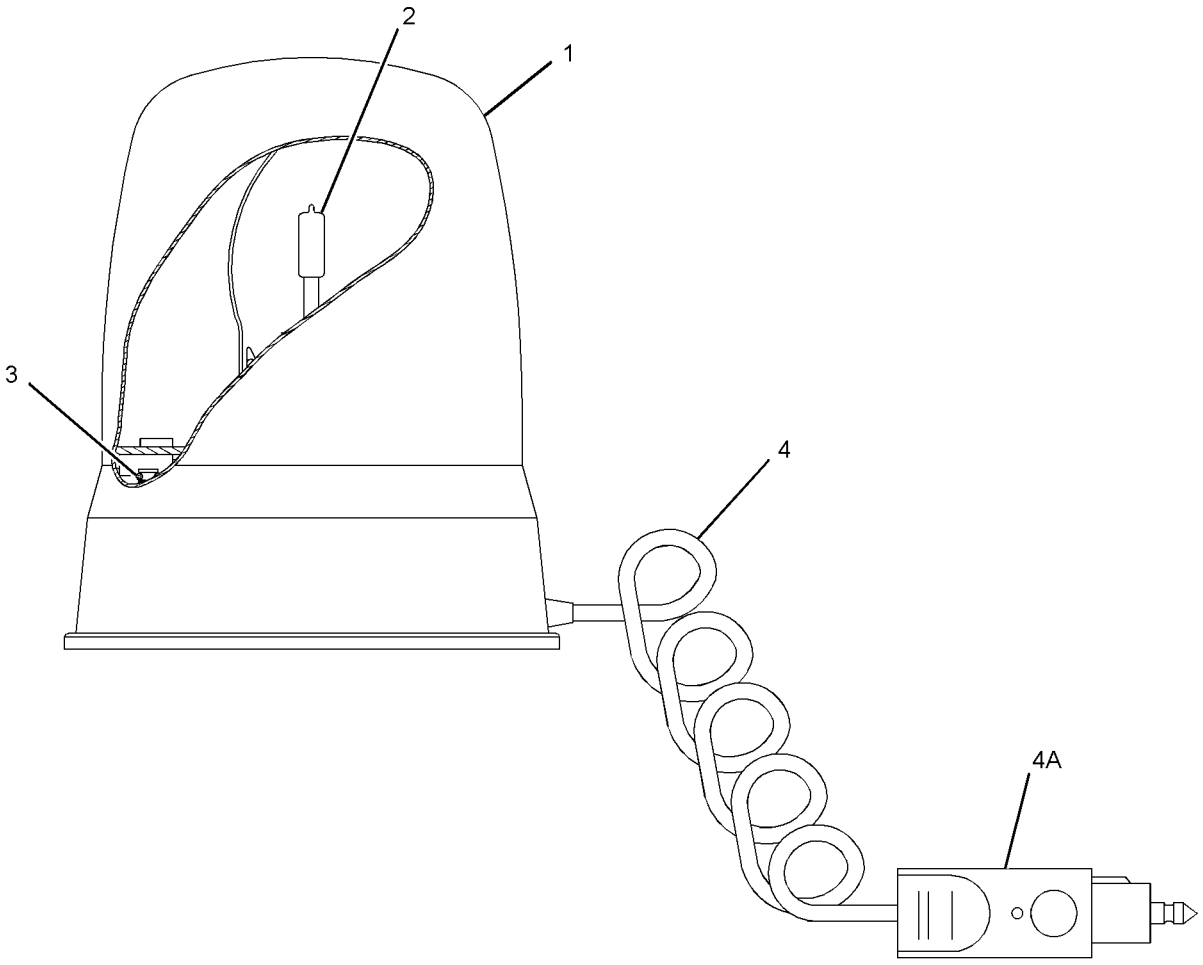

GRAPHIC #1 **<END>** g01382357

216-4746 LIGHTING GP-FLOOD–REAR

S/N: MWD1-UP

PART OF 326-5400 CAB AR

SMCS-1434 **i03961872**

NOTE	REF NO	GRAPHIC REF	PART NUMBER	QTY	PART NAME 1 2 3 4 5 6 (PRODUCT LEVEL)	SEE PAGE
	1	1	**142-9326**	1	SWITCH AS-ROCKER (REAR WORK LAMPS)	
		1	**111-7899**	1	GASKET	
Y	2	1	**234-7727**	2	LAMP GP-FLOOD (12-VOLT) (REAR)	82
M	3	1	**195-0937**	2	INSERT-THREADED (M8X1.25-THD)	
	4	1	**5P-8439**	2	GROMMET	
M	5	1	**6V-2317**	2	BOLT (M8X1.25X30-MM)	
	6	1	**8T-4224**	4	WASHER-HARD (8.8X16X2-MM THK)	

M-METRIC PART
Y-SEPARATE ILLUSTRATION

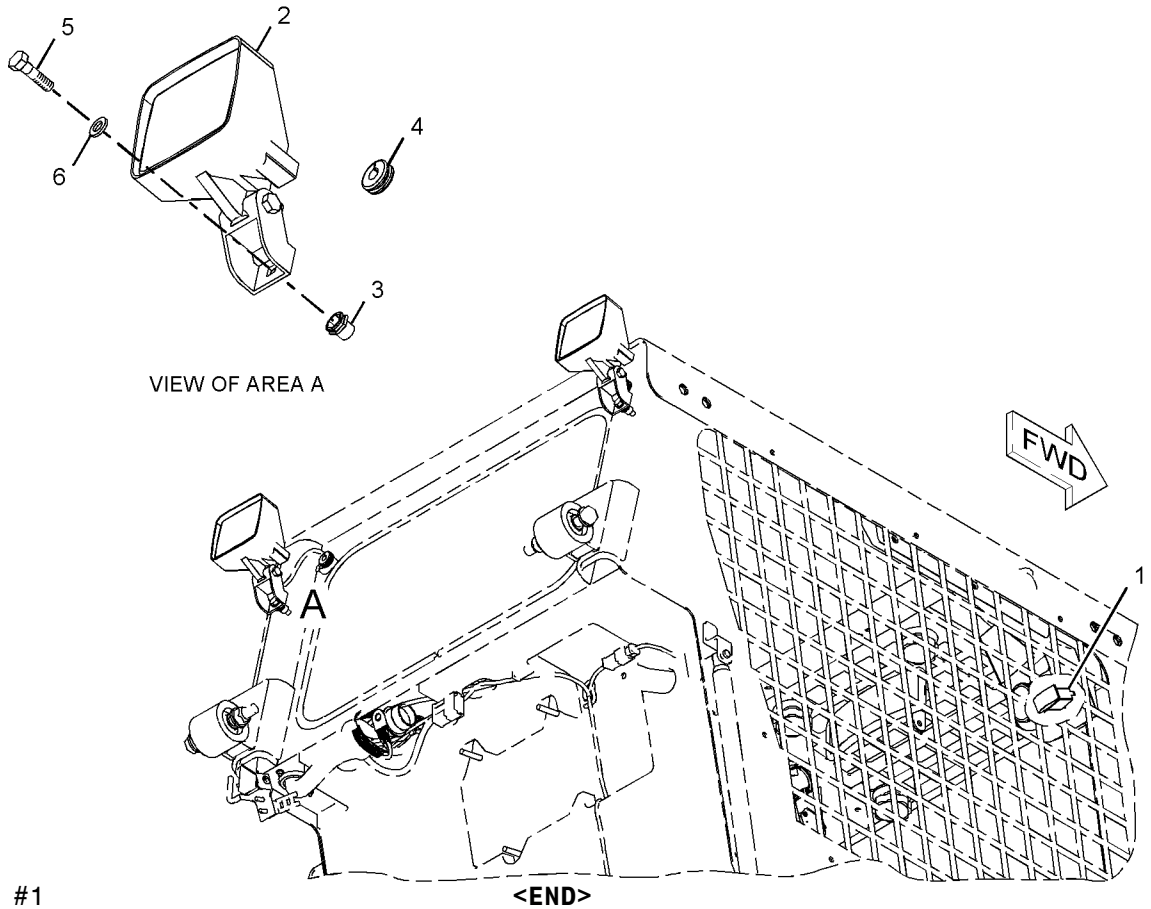

GRAPHIC #1 **<END>** g01136313

218-6425 LIGHTING GP-FLOOD–FRONT

S/N: MWD1-UP

PART OF 326-5400 CAB AR

SMCS-1434 **i03961871**

NOTE	REF NO	GRAPHIC REF	PART NUMBER	QTY	PART NAME 1 2 3 4 5 6 (PRODUCT LEVEL)	SEE PAGE
Y	1		**234-4328**	2	LAMP GP-FLOOD (12-VOLT)	81
	2		**5P-8439**	2	GROMMET	
	3		**8T-4121**	4	WASHER-HARD (11X21X2.5-MM THK)	

Y-SEPARATE ILLUSTRATION

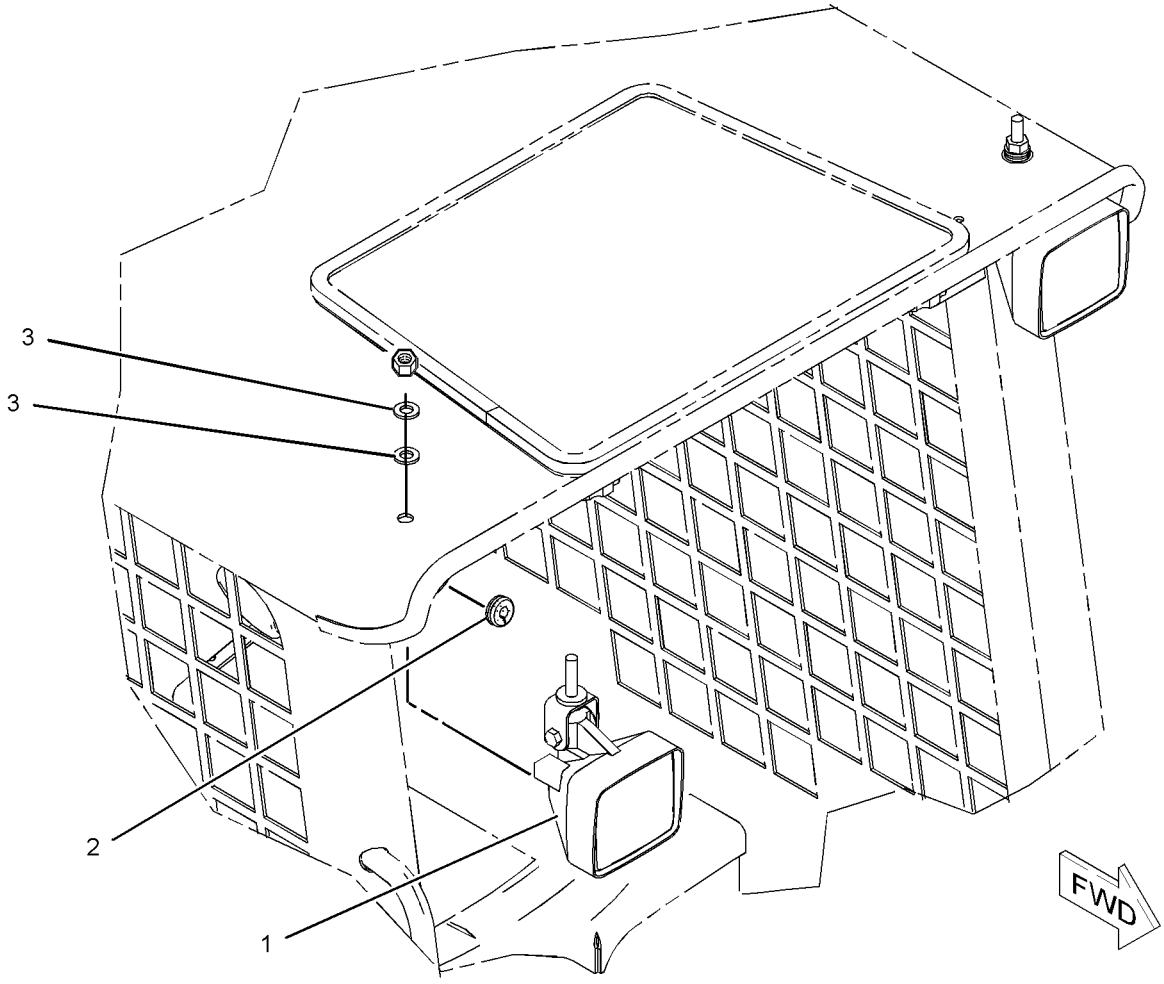

GRAPHIC #1 **<END>** g01040888

ELECTRICAL AND STARTING SYSTEM

328-2333 LIGHTING GP-ROADING

S/N: MWD1-UP

PART OF 326-5487, 326-5527, 326-5557, 326-5567 CONVERSION AR-MACHINE AN ATTACHMENT

SMCS-1429 **i03973030**

NOTE	REF NO	GRAPHIC REF	PART NUMBER	QTY	PART NAME 1 2 3 4 5 6 (PRODUCT LEVEL)	SEE PAGE
Y	1	1	**3E-7584**	2	LAMP GP-HEAD & SIGNAL (12-VOLT)	83
	2	1	**7K-1181**	1	STRAP-CABLE	
	3	1	**9R-1499**	2	REFLECTOR	
Y	4	1	**142-8634**	2	LAMP GP-STOP & TAIL (12-VOLT)	85
	5	1	**142-9329**	1	SWITCH AS-ROCKER (ROADING LIGHTS)	
	6	1	**142-9331**	1	SWITCH AS-ROCKER (HAZARD WARNING LIGHTS)	
					(EACH SWITCH AS INCLUDES)	
		1	**111-7899**	1	GASKET	
	7	1	**146-9439**	1	RELAY AS (12-VOLT) (STOP LIGHT)	
	8	1	**226-5900**	1	SWITCH AS-ROCKER (TURN SIGNAL)	
		1	**111-7899**	1	GASKET	
	9	1	**242-9000**	1	FLASHER AS (12-VOLT) (STOP LIGHT)	
	10	1	**258-4134**	1	FUSE AS (ROADING)	
	11	1	**328-2334**	1	HARNESS AS-REAR LIGHTING	
		1	**186-3735**	7	PIN-CONNECTOR (16-GA TO 18-GA)	
		1	**9W-0852**	1	PIN-CONNECTOR (14-GA)	
		1	**155-2265**	1	KIT-CONNECTING PLUG (8-PIN)	
		1	**155-2274**	2	KIT-CONNECTING PLUG (6-PIN)	
					(EACH PLUG KIT INCLUDES PLUG AS, WEDGE & INTERFACE SEAL)	
		1	**8T-8737**	5	PLUG-SEAL	
		1	**102-8806**	1	KIT-RECEPTACLE (8-PIN)	
					(INCLUDES RECEPTACLE AS & WEDEG)	
		1	**186-3736**	14	SOCKET-CONNECTOR (16-GA TO 18-GA)	
		1	**9W-0844**	1	SOCKET-CONNECTOR (14-GA)	
		1	**3S-2093**	1	STRAP-CABLE	
E		1	**125-7874**		TUBE-HEAT SHRINK (5.72-MM DIA) (30-CM)	
	12	1	**328-2343**	1	HARNESS AS-SWITCH (REAR LIGHTS)	
		1	**186-3735**	3	PIN-CONNECTOR (16-GA TO 18-GA)	
		1	**7R-2751**	3	PLUG-CONNECTOR	
		1	**102-8803**	1	KIT-RECEPTACLE (3-PIN)	
					(INCLUDES RECEPTACLE AS & WEDEG)	
		1	**7R-2750**	3	SEAL-CONNECTOR	
		1	**202-0314**	3	TERMINAL AS	
					(EACH INCLUDES)	
		1	**128-4123**	1	SEAL	
		1	**3S-2093**	1	STRAP-CABLE	
	13	1	**206-1346**	2	STRAP-CABLE	
	14	1	**3S-2093**	18	STRAP-CABLE	
	15	1	**4P-7581**	1	CLIP	
	16	1	**8T-1887**	2	CLIP (SLOT)	
	17	1	**8T-1888**	2	CLIP (TAB)	
M	18	1	**8T-4201**	1	BOLT-LOCKING (M10X1.5X20-MM)	
	19	1	**8W-8909**	2	SLEEVE	

E-ORDER BY THE CENTIMETER
M-METRIC PART
Y-SEPARATE ILLUSTRATION

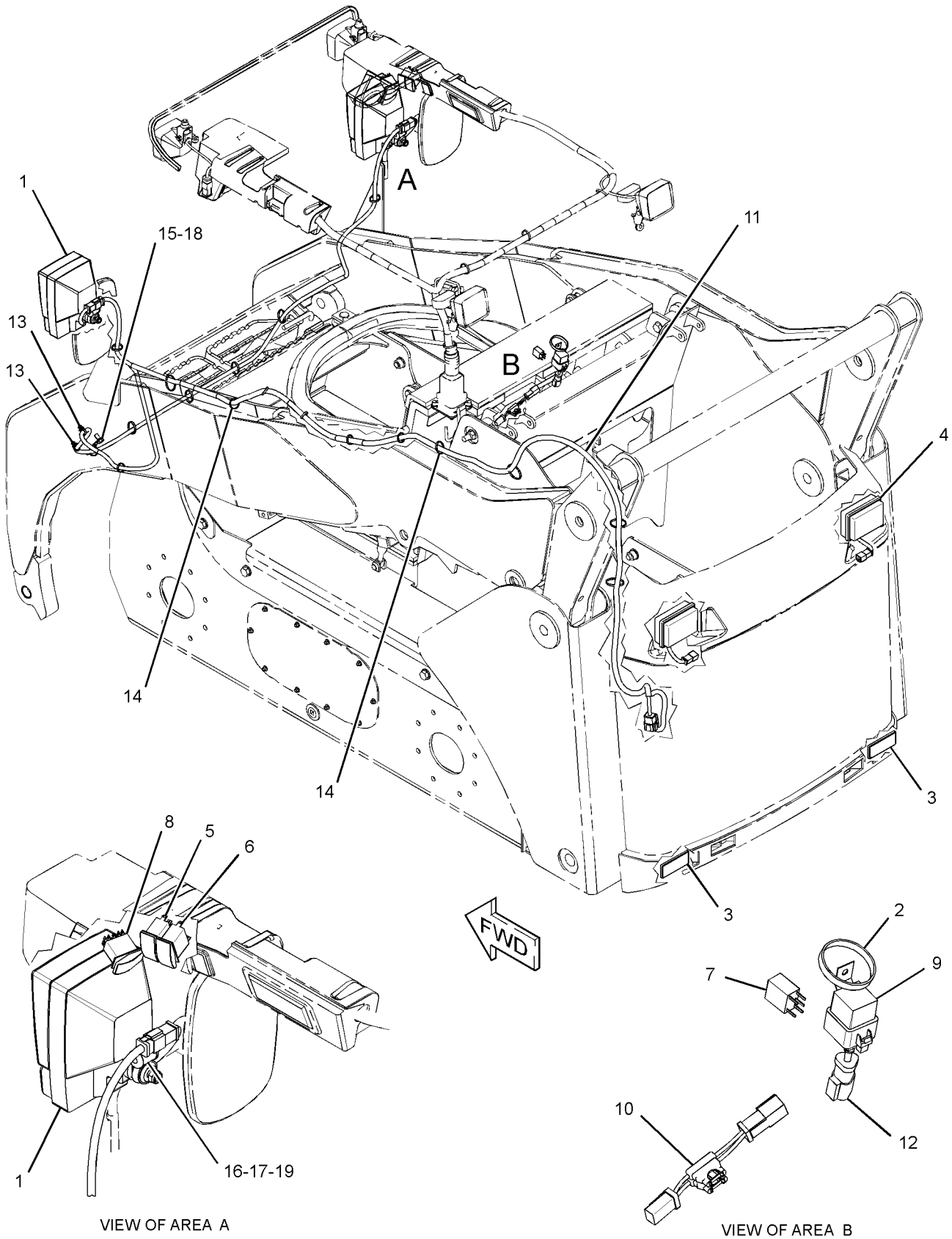

GRAPHIC #1 **<END>** g02147897

258-4135 RELAY GP–MAIN POWER

S/N: MWD1-UP
12-VOLT
PART OF 328-2272 WIRING GP-CAB

SMCS-1422, 4493 **i03959893**

NOTE	REF NO	GRAPHIC REF	PART NUMBER	QTY	PART NAME 1 2 3 4 5 6 (PRODUCT LEVEL)	SEE PAGE
M	1	1	**5C-2890**	2	NUT (M6X1-THD)	
	2	1	**8T-4205**	2	WASHER-HARD (7.2X14.5X2-MM THK)	
	3	1	**1H-3244**	2	LOCKWASHER	
M	4	1	**5C-7261**	1	NUT (M8X1.25-THD)	
	5	1	**8T-4224**	1	WASHER-HARD (8.8X16X2-MM THK)	
	6	1	**267-5213**	1	COVER (FUSE)	
	7	1	**267-5211**	1	SEAL	
	8	1	**267-2680**	1	FUSE (20-AMPERE)	
	9	1	**267-2701**	1	FUSE (60-AMPERE)	

M-METRIC PART

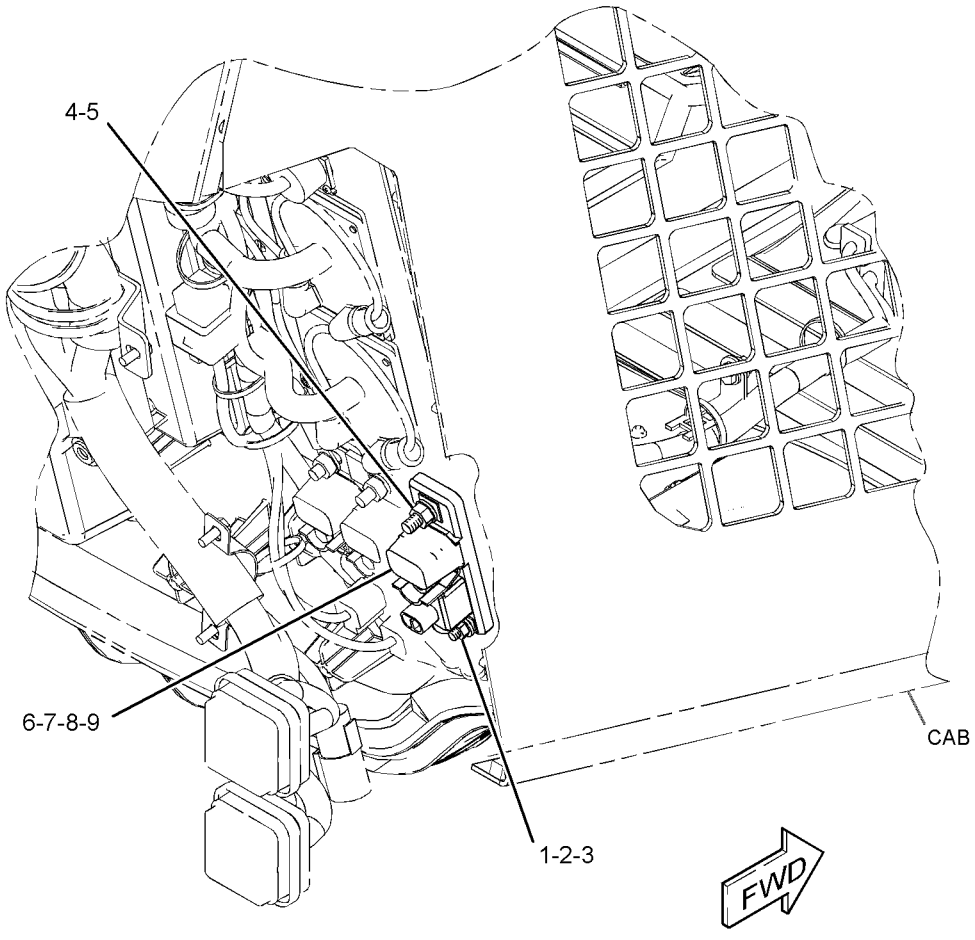

GRAPHIC #1 **<END>** g01328212

322-4928 SOLENOID GP-SHUTOFF

S/N: CYP1-UP
PART OF 292-5719 ENGINE AR-PRIMARY
AN ATTACHMENT

SMCS-1259 **i02939905**

NOTE	REF NO	GRAPHIC REF	PART NUMBER	QTY	PART NAME 1 2 3 4 5 6 (PRODUCT LEVEL)	SEE PAGE
	1	1	**153-6412**	1	WASHER	
	2	1	**324-4598**	1	SOLENOID (FUEL SHUTOFF)	
	3	1	**322-4929**	1	LEVER-THROTTLE	

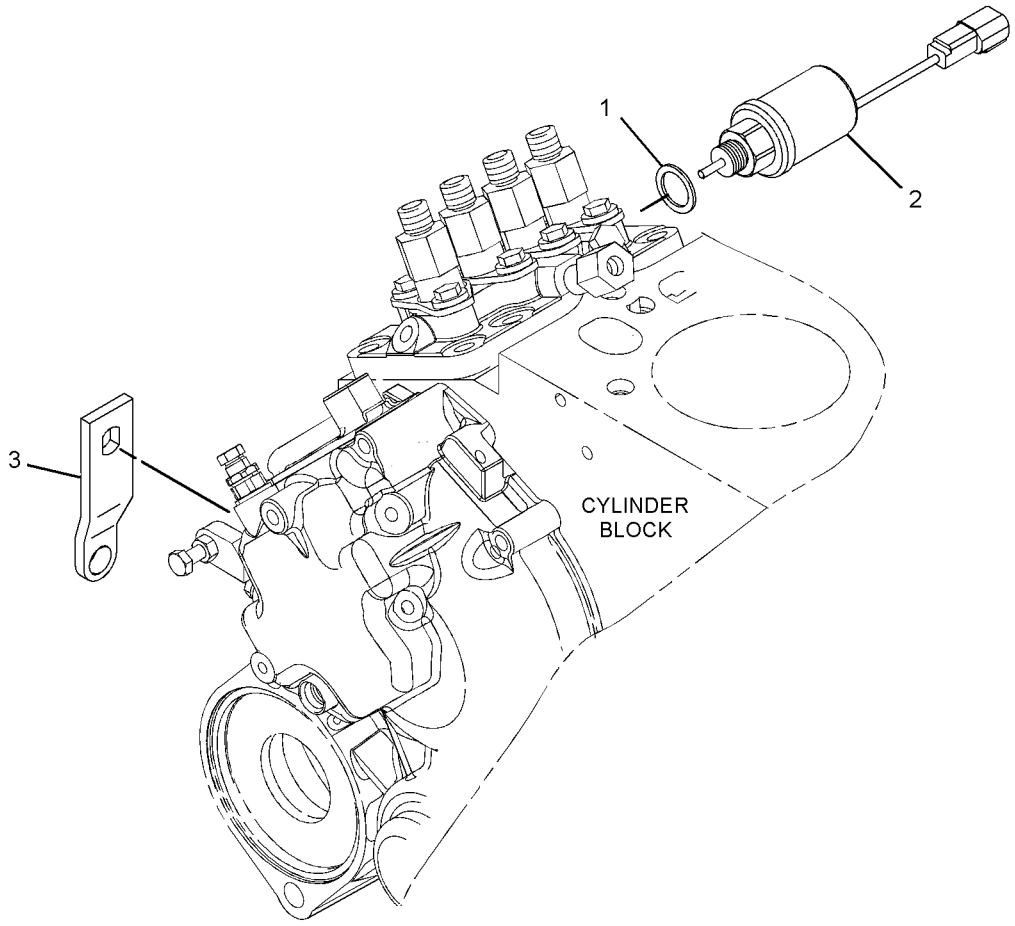

GRAPHIC #1 **<END>** g01438647

ELECTRICAL AND STARTING SYSTEM

322-4917 STARTING MOTOR GP-ELECTRIC

S/N: CYP1-UP
PART OF 292-5719 ENGINE AR-PRIMARY
AN ATTACHMENT

SMCS-1453 **i03540030**

NOTE	REF NO	GRAPHIC REF	PART NUMBER	QTY	PART NAME 1 2 3 4 5 6 (PRODUCT LEVEL)	SEE PAGE
	1	1	**323-6614**	1	STARTER-MOTOR	

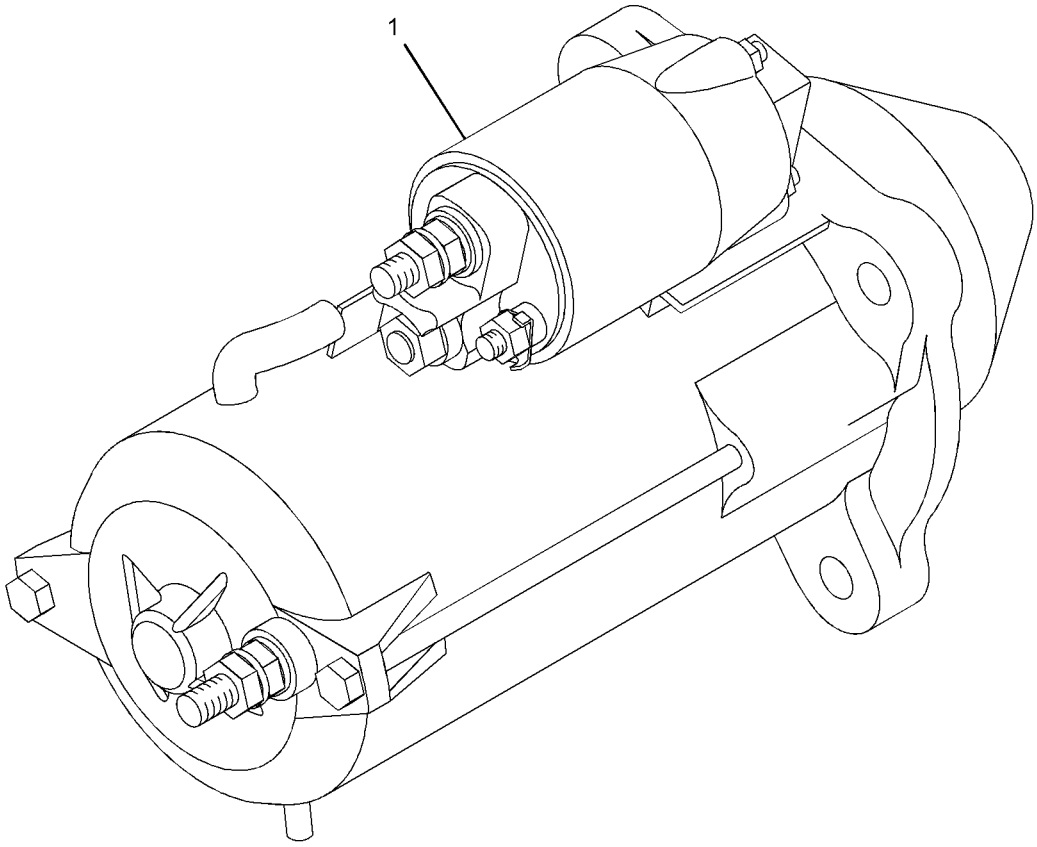

GRAPHIC #1 **<END>** g01887916

184-1564 SWITCH GP-PRESSURE–BRAKE LIGHT

S/N: MWD1-UP
PART OF 328-2348 SWITCH GP-PRESSURE
AN ATTACHMENT

SMCS-1435, 7400 **i03647947**

NOTE	REF NO	GRAPHIC REF	PART NUMBER	QTY	PART NAME 1 2 3 4 5 6 (PRODUCT LEVEL)	SEE PAGE
E	1	1	**9X-1813**		SLEEVE (19-CM)	
	2	1	**102-8802**	1	KIT-RECEPTACLE (2-PIN)	
					(INCLUDES RECECPTACLE AS & WEDGE)	
	3	1	**8T-8729**	2	PIN-CONNECTOR (16-GA TO 18-GA)	
	4	1	**3J-1907**	1	SEAL-O-RING	

E-ORDER BY THE CENTIMETER

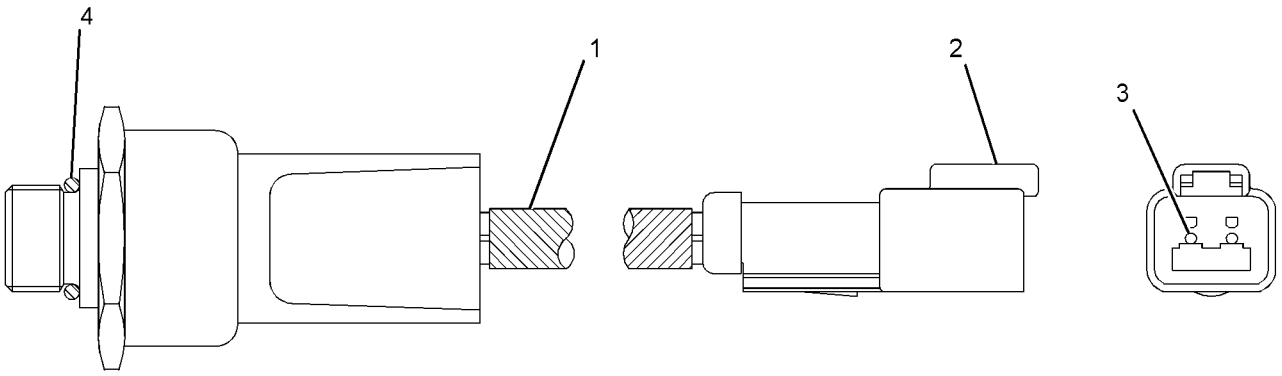

GRAPHIC #1 **<END>** g01957820

316-6890 SWITCH GP-PRESSURE

S/N: CYP1-UP

PART OF 292-5719 ENGINE AR-PRIMARY

AN ATTACHMENT

SMCS-1435, 7400 **i02862678**

NOTE	REF NO	GRAPHIC REF	PART NUMBER	QTY	PART NAME 1 2 3 4 5 6 (PRODUCT LEVEL)	SEE PAGE
	1	1	**153-5936**	2	WASHER	
	2	1	**183-1165**	1	PLUG	
	3	1	**291-1265**	1	SWITCH-PRESSURE (ENGINE OIL)	
	4	1	**308-1222**	1	ADAPTER	

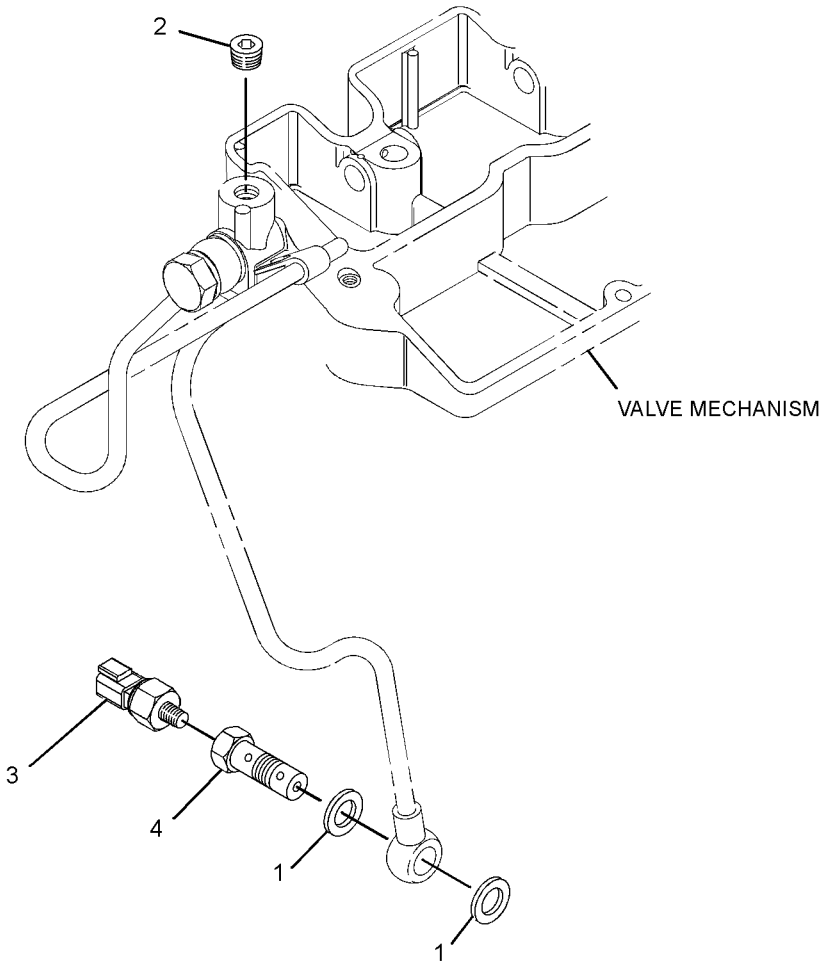

GRAPHIC #1 **<END>** g01439331

328-2348 SWITCH GP-PRESSURE

S/N: MWD1-UP
PART OF 326-5487, 326-5557 CONVERSION AR-MACHINE
AN ATTACHMENT

SMCS-1435, 7400 **i03971117**

NOTE	REF NO	GRAPHIC REF	PART NUMBER	QTY	PART NAME 1 2 3 4 5 6 (PRODUCT LEVEL)	SEE PAGE
	1	1	**146-9439**	1	RELAY AS (12-VOLT) (STOP LIGHT)	
	2	1	*166-2033*	2	TEE AS	
					(EACH INCLUDES)	
		1	**4J-5477**	1	SEAL-O-RING	
		1	**7X-2444**	1	TEE-SWIVEL	
Y	3	1	**184-1564**	2	SWITCH GP-PRESSURE (BRAKE LIGHT)	96
	4	1	**3S-2093**	2	STRAP-CABLE	

Y-SEPARATE ILLUSTRATION

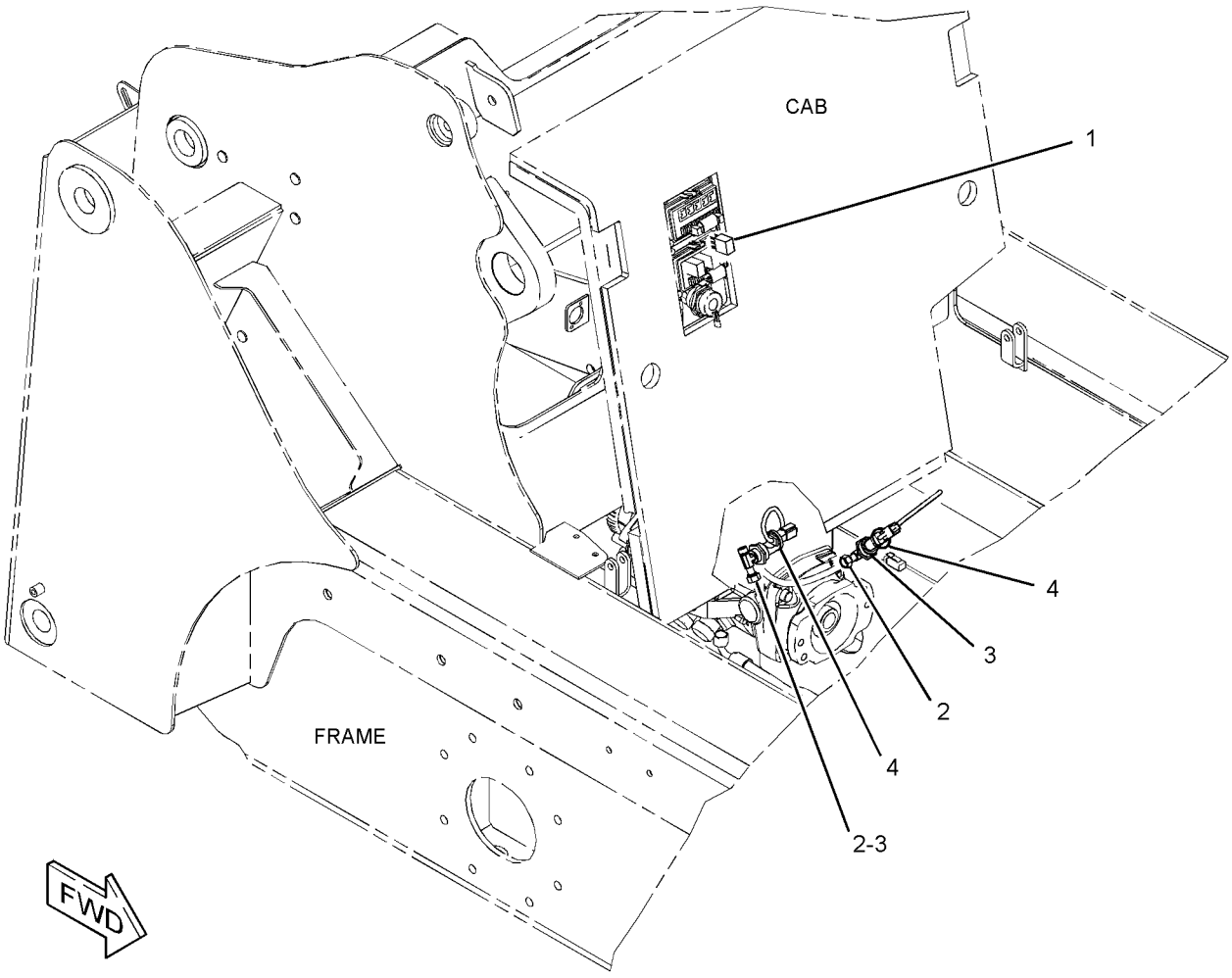

GRAPHIC #1 **<END>** g02149267

308-2317 SWITCH GP-TEMPERATURE–COOLANT

S/N: CYP1-UP
PART OF 292-5719 ENGINE AR-PRIMARY
AN ATTACHMENT

SMCS-1435, 7400 **i03398527**

NOTE	REF NO	GRAPHIC REF	PART NUMBER	QTY	PART NAME 1 2 3 4 5 6 (PRODUCT LEVEL)	SEE PAGE
	1	1	**341-3600**	1	SWITCH-TEMPERATURE	

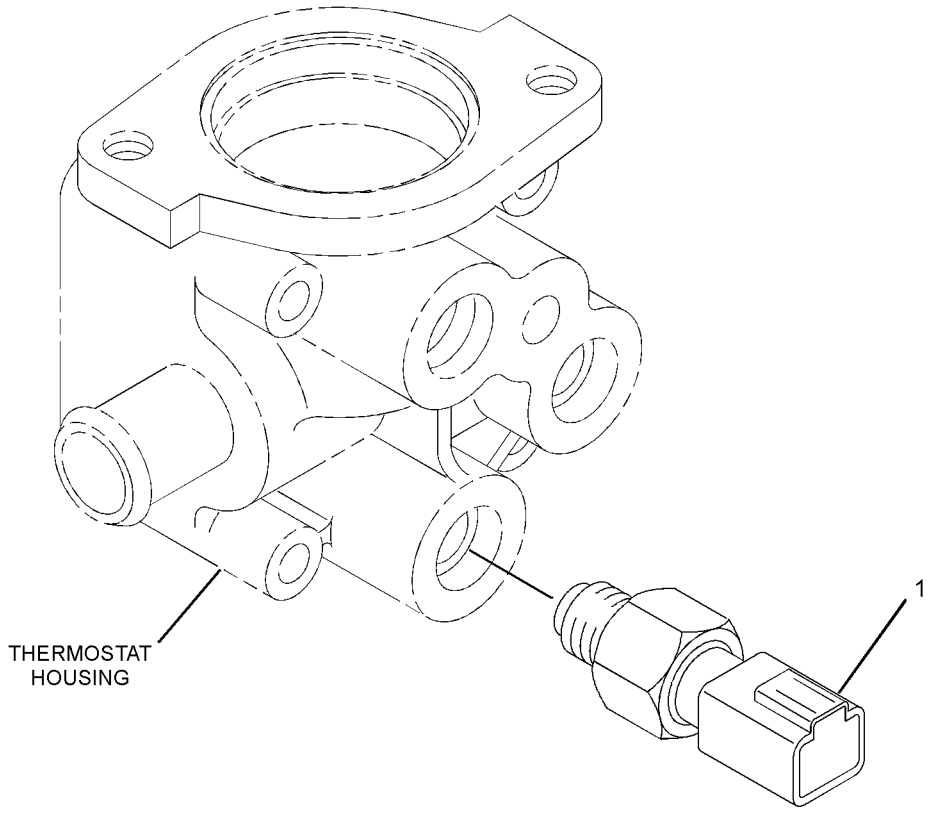

GRAPHIC #1 **<END>** g01416429

225-7948 WIRING GP-AIR CONDITIONER

S/N: MWD1-UP
PART OF 326-5536 AIR CONDITIONER AR
AN ATTACHMENT

SMCS-1408, 7320 **i03971119**

NOTE	REF NO	GRAPHIC REF	PART NUMBER	QTY	PART NAME 1 2 3 4 5 6 (PRODUCT LEVEL)	SEE PAGE
	1	1	**3S-2093**	12	STRAP-CABLE	
	2	1	**202-2168**	1	HARNESS AS-FUEL TANK	
		1	**9X-3401**	2	PIN-CONNECTOR (16-GA TO 18-GA)	
		1	**9X-3402**	2	SOCKET-CONNECTOR (16-GA TO 18-GA)	
		1	**102-8802**	1	KIT-RECEPTACLE (2-PIN)	
					(INCLUDES RECEPTACLE AS & WEDGE)	
		1	**155-2270**	1	KIT-CONNECTING PLUG (2-PIN)	
					(INCLUDES PLUG AS, WEDGE & INTERFACE SEAL)	
	3	1	**221-3879**	1	HARNESS AS-HEATER & AIR COND	
		1	**124-5640**	2	TERMINAL-SOCKET	
		1	**2L-8069**	1	TERMINAL-RING (2-GA TO 10-GA, 3/8-IN SCREW)	
		1	**100-6674**	2	SEAL-CONNECTOR	
		1	**9W-0844**	5	SOCKET-CONNECTOR (14-GA)	
		1	**180-9340**	4	SOCKET-CONNECTOR (14-GA TO 18-GA)	
E		1	**119-3662**		TUBE-HEAT SHRINK (10.85-MM DIA) (13-CM)	
		1	**155-2260**	1	KIT-CONNECTING PLUG (3-PIN)	
		1	**155-2270**	3	KIT-CONNECTING PLUG (2-PIN)	
					(EACH PLUG KIT INCLUDES PLUG AS, WEDGE & INTERFACE SEAL)	

E-ORDER BY THE CENTIMETER

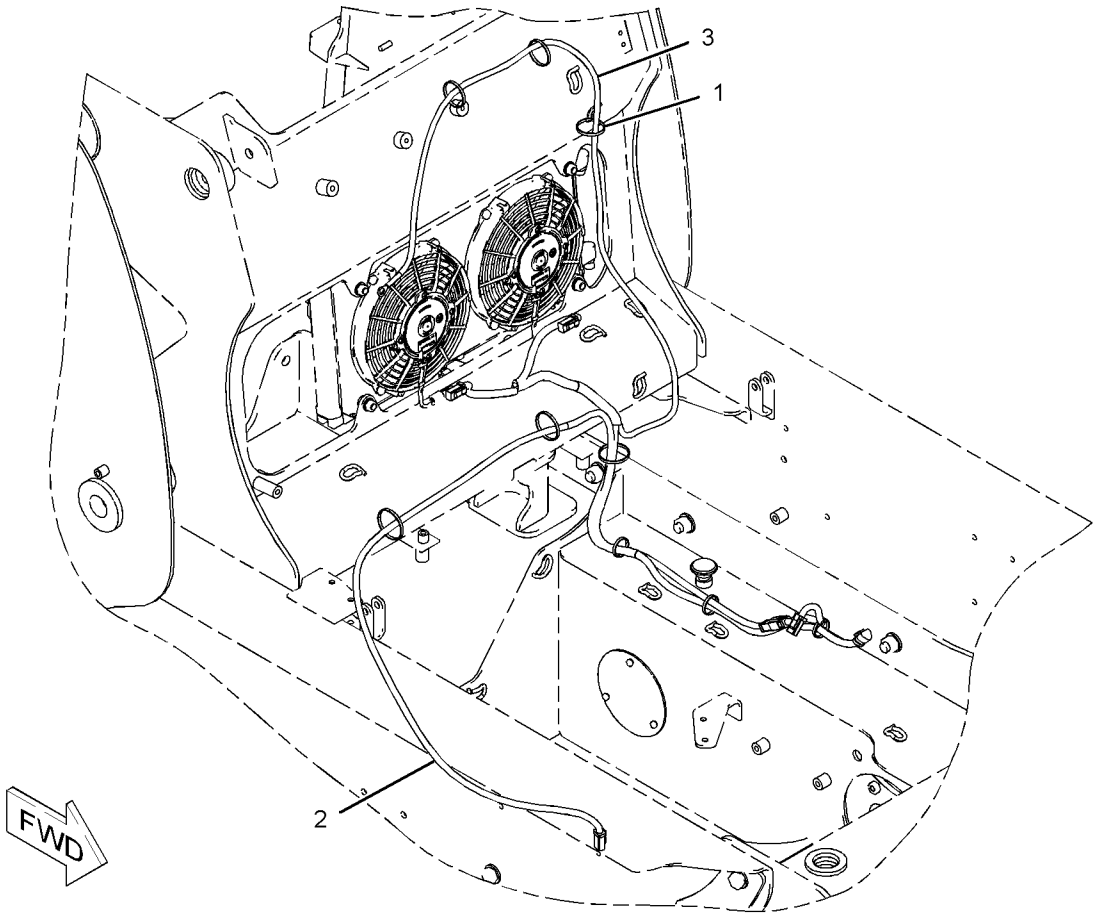

GRAPHIC #1 **<END>** g01029283

ELECTRICAL AND STARTING SYSTEM

328-2272 WIRING GP-CAB

S/N: MWD1-UP

PART OF 326-5400 CAB AR

SMCS-1408, 7301 **i03973032**

NOTE	REF NO	GRAPHIC REF	PART NUMBER	QTY	PART NAME 1 2 3 4 5 6 (PRODUCT LEVEL)	SEE PAGE
	1	1	**6I-1418**	4	SPACER (8.2X12.7X28.7-MM THK)	
	2	1	**7G-1060**	1	STRAP AS-GROUND	
	3	1	**7K-1181**	10	STRAP-CABLE	
	4	1	**8T-9655**	8	MOUNT-ISOLATION	
	5	1	**116-7471**	1	PULLER-MINIFUSE	
	6	1	**180-9900**	1	CAP AS	
		1	**5P-7958**	1	SLEEVE-CABLE SPLICE	
		1	**8C-6354**	1	CAP-RECEPTACLE	
		1	**179-9392**	1	LANYARD	
Y	7	1	**258-4135**	2	RELAY GP (12-VOLT) (MAIN POWER)	93
	8	1	**258-4136**	1	FUSE AS (MAIN POWER)	
		1	**267-2680**	2	FUSE (20-AMPERE)	
		1	**267-5211**	1	SEAL	
		1	**267-5213**	1	COVER	
	9	1	**258-4138**	1	FILM (POWER DISTRIBUTION)	
	10	1	**258-4143**	1	BAR-BUS	
	11	1	**258-4196**	2	WIRE AS	
	12	1	**267-2680**	2	FUSE (20-AMPERE)	
	13	1	**328-2273**	1	HARNESS AS-CAB (CAB REAR)	
		1	**275-7878**	2	BLOCK AS-FUSE	
					(EACH INCLUDES)	
M		1	**5C-2890**	2	NUT (M6X1-THD)	
		1	**8C-3398**	2	LOCKWASHER	
		1	**8T-4205**	2	WASHER-HARD (7.2X14.5X2-MM THK)	
		1	**306-0350**	1	COVER	
		1	**306-0351**	1	SEAL-COVER	
		1	**8T-8799**	6	BOOT	
		1	**274-3775**	1	CAP-CONNECTOR	
E		1	**283-0632**		CONDUIT (113-CM)	
E		1	**283-4198**		CONDUIT (31-CM)	
		1	**126-1774**	1	COVER-CONNECTOR	
		1	**124-3548**	1	FUSE (30-AMPERE)	
		1	**113-8490**	7	FUSE (10-AMPERE)	
		1	**113-8491**	10	FUSE (15-AMPERE)	
		1	**113-8492**	2	FUSE (20-AMPERE)	
		1	**203-9007**	1	NUT (1-1/2-18-THD)	
		1	**213-0139**	11	PIN	
		1	**8N-1548**	1	PIN-CONNECTOR (4-GA)	
		1	**186-3735**	23	PIN-CONNECTOR (16-GA TO 18-GA)	
		1	**9X-3401**	17	PIN-CONNECTOR (16-GA TO 18-GA)	
		1	**155-2260**	3	KIT-CONNECTING PLUG (3-PIN)	
		1	**155-2270**	2	KIT-CONNECTING PLUG (2-PIN)	
					(EACH PLUG KIT INCLUDES PLUG AS, WEDGE & INTERFACE SEAL)	
		1	**160-7689**	1	PLUG AS-CONNECTOR (70-PIN)	
		1	**159-9322**	1	SEAL-O-RING	
		1	**230-4011**	2	PLUG AS-CONNECTOR (2-PIN)	
					(EACH INCLUDES)	
		1	**264-7029**	1	SEAL-CONNECTOR	
		1	**7R-2751**	25	PLUG-CONNECTOR	
		1	**8T-8737**	33	PLUG-SEAL	
		1	**102-8802**	1	KIT-RECEPTACLE (2-PIN)	
		1	**102-8804**	1	KIT-RECEPTACLE (4-PIN)	
					(EACH RECEPTACLE KIT INCLUDES RECEPTACLE AS & WEDGE)	
		1	**127-5484**	1	RECEPTACLE AS-CONNECTOR (1-PIN)	

328-2272 **WIRING GP-CAB** *(contd.)* **i03973032**

NOTE	REF NO	GRAPHIC REF	PART NUMBER	QTY	PART NAME 1 2 3 4 5 6 (PRODUCT LEVEL)	SEE PAGE
		1	**134-2540**	2	RESISTOR AS-CONNECTION (3-PIN)	
		1	**167-3692**	1	RECEPTACLE AS-CONNECTOR (31-PIN)	
		1	**225-3861**	1	RECEPTACLE AS (31-PIN)	
		1	**146-9439**	3	RELAY AS (12-VOLT) (CAB)	
		1	**128-5016**	25	SEAL-CABLE	
		1	**7R-2750**	19	SEAL-CONNECTOR	
		1	**186-3736**	27	SOCKET-CONNECTOR (16-GA TO 18-GA)	
		1	**9W-0844**	11	SOCKET-CONNECTOR (14-GA)	
		1	**9X-3402**	54	SOCKET-CONNECTOR (16-GA TO 18-GA)	
		1	**180-9340**	16	SOCKET-CONNECTOR (14-GA TO 18-GA)	
		1	**202-0313**	26	TERMINAL AS	
					(EACH INCLUDES)	
		1	**128-5016**	1	SEAL-CABLE	
		1	**202-0314**	19	TERMINAL AS	
					(EACH INCLUDES)	
		1	**128-4123**	1	SEAL	
		1	**275-0601**	20	SOCKET-CONNECTOR	
		1	**3S-2093**	26	STRAP-CABLE	
		1	**9X-6772**	2	STRAP-CABLE	
		1	**2L-8069**	2	TERMINAL-RING (2-GA TO 10-GA, 3/8-IN SCREW)	
		1	**2L-8067**	6	TERMINAL-RING (10-GA TO 12-GA, 1/4-IN SCREW)	
		1	**2L-8077**	2	TERMINAL-RING (14-GA TO 16-GA, 1/4-IN SCREW)	
E		1	**125-7876**		TUBE-HEAT SHRINK (17.78-MM DIA) (4-CM)	
E		1	**119-3662**		TUBE-HEAT SHRINK (10.85-MM DIA) (20-CM)	
E		1	**125-7874**		TUBE-HEAT SHRINK (5.72-MM DIA) (70-CM)	
E		1	**125-7875**		TUBE-HEAT SHRINK (7.44-MM DIA) (20-CM)	
		1	**270-2679**	1	LOCKWASHER	
Y	14	1	*328-2345*	1	ELECTRONICS GP-MACHINE	75
	15	1	**343-6022**	1	FILM-IDENTIFICATION (FUSE, RELAY PANEL)	
	16	1	**343-6885**	1	FILM-IDENTIFICATION (FUSE, RELAY PANEL)	
	17	1	**4P-7581**	2	CLIP	
	18	1	**4P-8134**	2	CLIP	
M	19	1	**5C-2890**	10	NUT (M6X1-THD)	
M	20	1	**5C-7261**	8	NUT (M8X1.25-THD)	
	21	1	**5P-7162**	8	SCREW-MACHINE (10-32X0.5-IN)	
M	22	1	**6V-7728**	3	BOLT (M6X1X45-MM)	
	23	1	**7X-0579**	2	WASHER-HARD (8.8X25.5X2-MM THK)	
	24	1	**8C-3398**	4	LOCKWASHER	
	25	1	**8T-4205**	13	WASHER-HARD (7.2X14.5X2-MM THK)	
	26	1	**8T-4224**	4	WASHER-HARD (8.8X16X2-MM THK)	
E	27	1	**103-2543**		SEAL (3-CM EACH)	

E-ORDER BY THE CENTIMETER
M-METRIC PART
Y-SEPARATE ILLUSTRATION

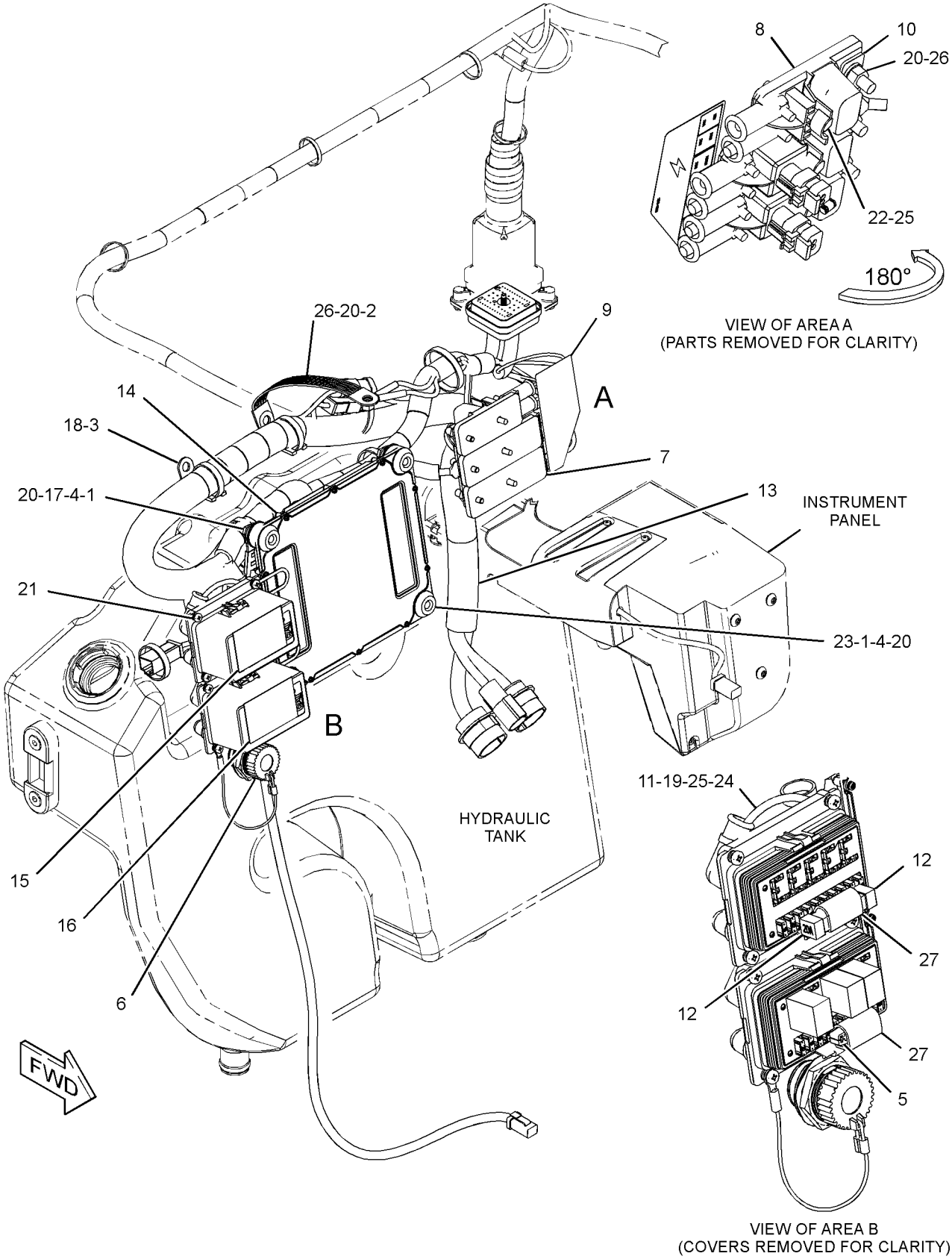

GRAPHIC #1 **<END>** g02148276

ELECTRICAL AND STARTING SYSTEM

328-2350 WIRING GP-CHASSIS

S/N: MWD1-UP

PART OF 326-4781 CHASSIS AR

SMCS-1408, 7051 **i03973036**

NOTE	REF NO	GRAPHIC REF	PART NUMBER	QTY	PART NAME 1 2 3 4 5 6 (PRODUCT LEVEL)	SEE PAGE
	1	1	**7K-1181**	23	STRAP-CABLE	
	2	1	**8M-4963**	1	STRAP AS-GROUND	
	3	1	**161-2539**	1	ALARM AS	
		1	**4B-2043**	2	NUT (8-32-THD)	
	4	1	**178-7539**	1	RECEPTACLE AS (POWER SUPPLY)	
	5	1	**192-0836**	1	SWITCH GP-PRESSURE (BACKUP ALARM)	
		1	**102-8802**	1	KIT-RECEPTACLE (2-PIN)	
					(INCLUDES RECEPTACLE AS & WEDGE)	
		1	**3J-1907**	1	SEAL-O-RING	
		1	**8T-8729**	2	PIN-CONNECTOR (16-GA TO 18-GA)	
	6	1	**235-1845**	1	FUSE (100-AMPERE) (MAIN)	
	7	1	**267-2744**	1	HOLDER AS-FUSE	
M		1	**5C-7261**	2	NUT (M8X1.25-THD)	
		1	**7X-0608**	2	WASHER-HARD (10.2X16X2-MM THK)	
		1	**9F-5644**	2	LOCKWASHER	
		1	**267-2746**	1	COVER AS	
B	8	1	**274-3774**	1	CAP-CONNECTOR	
B	9	1	**274-3776**	3	CAP-SEAL	
B	10	1	**274-3777**	1	CAP-CONNECTOR	
B	11	1	**274-3778**	1	CAP-SEAL	
	12	1	**328-2340**	1	HARNESS AS-LIGHTING (REAR)	
		1	**186-3735**	6	PIN-CONNECTOR (16-GA TO 18-GA)	
		1	**9W-0852**	1	PIN-CONNECTOR (14-GA)	
		1	**155-2271**	2	KIT-CONNECTING PLUG (4-PIN)	
					(EACH INCLUDES PLUG AS, WEDGE & INTERFACE SEAL)	
		1	**8T-8737**	1	PLUG-SEAL	
		1	**102-8806**	1	KIT-RECEPTACLE (8-PIN)	
					(INCLUDES RECEPTACLE AS & WEDGE)	
		1	**186-3736**	8	SOCKET-CONNECTOR (16-GA TO 18-GA)	
		1	**3S-2093**	2	STRAP-CABLE	
		1	**7N-9017**	2	TERMINAL-RING (18-GA TO 22-GA, NO. 10 SCREW)	
E		1	**125-7874**		TUBE-HEAT SHRINK (5.72-MM DIA) (10-CM)	
	13	1	**328-2351**	1	HARNESS AS-PLATFORM	
		1	**274-3774**	2	CAP-CONNECTOR	
E		1	**283-0632**		CONDUIT (25-CM)	
		1	**186-3735**	11	PIN-CONNECTOR (16-GA TO 18-GA)	
		1	**9W-0852**	12	PIN-CONNECTOR (14-GA)	
		1	**9X-3401**	7	PIN-CONNECTOR (16-GA TO 18-GA)	
		1	**127-5483**	1	PLUG AS-CONNECTOR (1-PIN)	
		1	**155-2255**	3	KIT-CONNECTING PLUG (12-PIN)	
		1	**155-2265**	2	KIT-CONNECTING PLUG (8-PIN)	
		1	**155-2270**	13	KIT-CONNECTING PLUG (2-PIN)	
		1	**155-2271**	3	KIT-CONNECTING PLUG (4-PIN)	
		1	**155-2274**	1	KIT-CONNECTING PLUG (6-PIN)	
					(EACH PLUG KIT INCLUDES PLUG AS, WEDGE & INTERFACE SEAL)	
		1	**167-3693**	1	PLUG AS-CONNECTOR (31-PIN)	
		1	**225-3854**	1	PLUG AS	
		1	**8T-8737**	9	PLUG-SEAL	
		1	**8N-1549**	1	SOCKET-CONNECTOR (4-GA)	
		1	**186-3736**	50	SOCKET-CONNECTOR (16-GA TO 18-GA)	
		1	**9W-0844**	12	SOCKET-CONNECTOR (14-GA)	
		1	**180-9340**	57	SOCKET-CONNECTOR (14-GA TO 18-GA)	
		1	**3S-2093**	33	STRAP-CABLE	

328-2350 **WIRING GP-CHASSIS** *(contd.)* **i03973036**

NOTE	REF NO	GRAPHIC REF	PART NUMBER	QTY	PART NAME 1 2 3 4 5 6 (PRODUCT LEVEL)	SEE PAGE
		1	**2L-8069**	2	TERMINAL-RING (2-GA TO 10-GA, 3/8-IN SCREW)	
		1	**2L-8079**	2	TERMINAL-RING (14-GA TO 16-GA, 3/8-IN SCREW)	
		1	**5P-4571**	2	TERMINAL-BLADE (14-GA TO 16-GA)	
		1	**9G-4336**	1	TERMINAL-RING (4-GA)	
		1	**7N-9017**	1	TERMINAL-RING (18-GA TO 22-GA, NO. 10 SCREW)	
E		1	**119-3662**		TUBE-HEAT SHRINK (10.85-MM DIA) (20-CM)	
E		1	**125-7874**		TUBE-HEAT SHRINK (5.72-MM DIA) (30-CM)	
	14	1	**132-5789**	3	CLIP	
	15	1	**208-9277**	2	BOLT-FLANGE HEAD (M8X1X25-MM)	
	16	1	**3S-2093**	14	STRAP-CABLE	
	17	1	**4P-8134**	1	CLIP	
M	18	1	**5C-7261**	1	NUT (M8X1.25-THD)	
	19	1	**5P-4115**	2	WASHER-HARD (7.2X19X2-MM THK)	
M	20	1	**6V-7728**	2	BOLT (M6X1X45-MM)	
	21	1	**7X-0608**	1	WASHER-HARD (10.2X16X2-MM THK)	
	22	1	**8T-4121**	3	WASHER-HARD (11X21X2.5-MM THK)	
M	23	1	**8T-4133**	3	NUT (M10X1.5-THD)	
	24	1	**9F-5644**	1	LOCKWASHER	

B-USE AS REQUIRED
E-ORDER BY THE CENTIMETER
M-METRIC PART

328-2350 **WIRING GP-CHASSIS** *(contd.)* **i03973036**

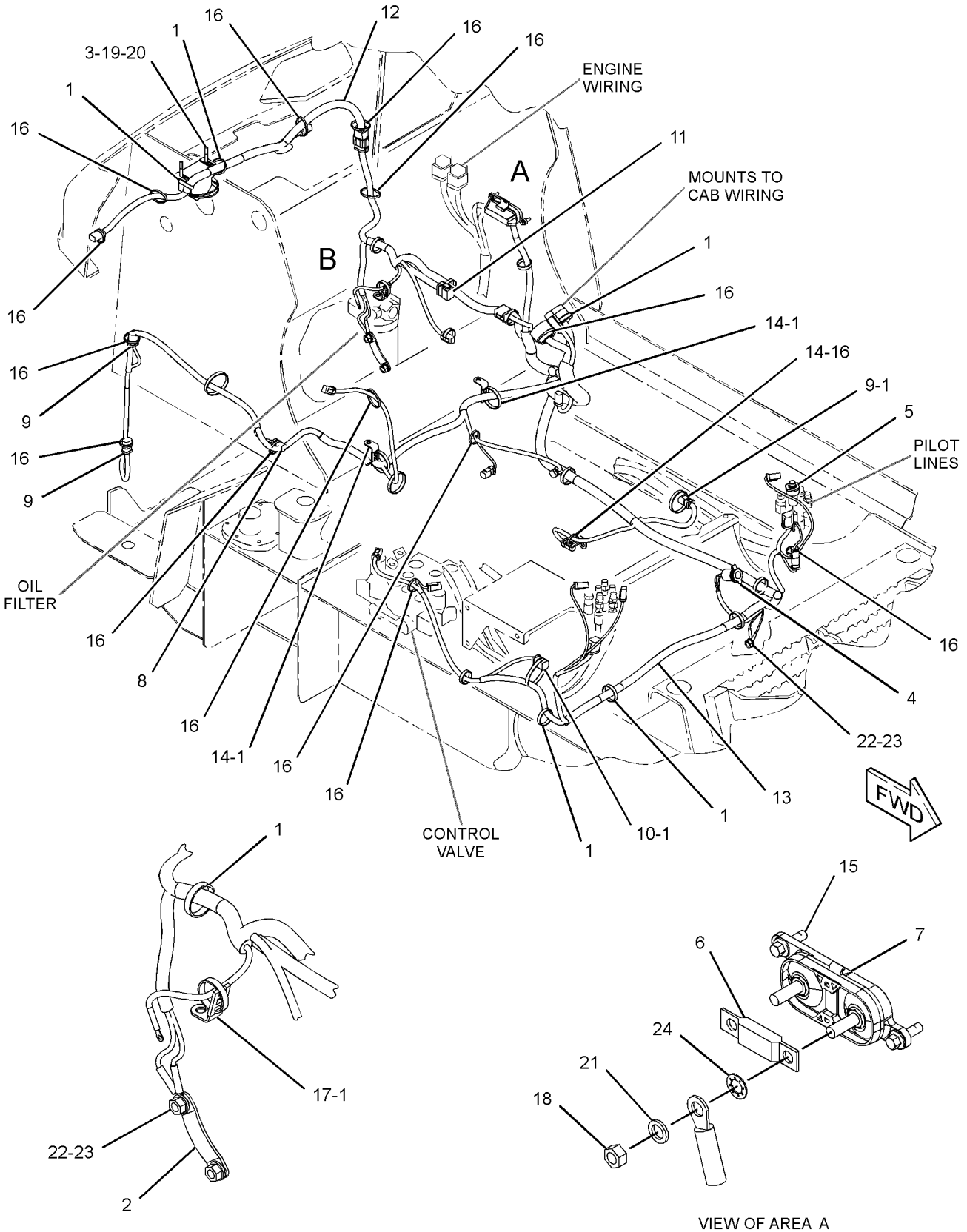

GRAPHIC #1 **<END>** g02149313

ELECTRICAL AND STARTING SYSTEM

328-2338 WIRING GP-ENGINE

S/N: MWD1-UP

PART OF 326-5360 INSTALLATION AR-ENGINE

SMCS-1000, 1408, 1420 **i03906915**

NOTE	REF NO	GRAPHIC REF	PART NUMBER	QTY	PART NAME 1 2 3 4 5 6 (PRODUCT LEVEL)	SEE PAGE
	1	1	**7G-1060**	1	STRAP AS-GROUND	
	2	1	**7K-1181**	7	STRAP-CABLE	
	3	1	**115-1615**	1	RELAY AS (12-VOLT) (START)	
	3A	1	**115-1615**	1	RELAY AS (12-VOLT) (COLD START)	
	4	1	**172-9200**	1	SUPPRESSOR-ARC	
	5	1	**326-9515**	1	CABLE AS-BATTERY (POSITIVE)	
		1	**1S-7252**	1	TERMINAL-CABLE (00-GA, 3/8-IN SCREW)	
		1	**8N-0869**	1	COVER-TERMINAL (RED)	
		1	**8N-1725**	1	COVER AS-TERMINAL (RED)	
		1	**3S-6049**	1	TERMINAL AS-BATTERY (POSITIVE)	
		1	**1M-6119**	1	BOLT (5/16-18X1.375-IN)	
		1	**1M-6120**	1	NUT (5/16-18-THD)	
E		1	**159-8049**		CABLE (00-GA, RED) (27-CM)	
	6	1	**328-2339**	1	HARNESS AS-ENGINE	
E		1	**289-3195**		CONDUIT (148-CM)	
		1	**186-3735**	3	PIN-CONNECTOR (16-GA TO 18-GA)	
		1	**9X-3401**	8	PIN-CONNECTOR (16-GA TO 18-GA)	
		1	**176-1477**	1	PLUG AS (2-PIN)	
		1	**155-2271**	1	KIT-CONNECTING PLUG (4-PIN)	
		1	**155-2270**	5	KIT-CONNECTING PLUG (2-PIN)	
					(EACH PLUG KIT INCLUDES PLUG AS, WEDGE & INTERFACE SEAL)	
		1	**9X-1054**	2	PLUG AS-CONNECTOR (4-PIN)	
		1	**8T-8737**	1	PLUG-SEAL	
		1	**102-8801**	1	KIT-RECEPTACLE (12-PIN)	
					(INCLUDES RECEPTACLE AS & WEDGE)	
		1	**238-9397**	1	RESISTOR AS	
		1	**8T-8729**	2	PIN-CONNECTOR (16-GA TO 18-GA)	
		1	**102-8802**	1	KIT-RECEPTACLE (2-PIN)	
					(INCLUDES RECEPTACLE AS & WEDGE)	
		1	**185-1861**	2	SEAL-WIRE	
		1	**180-9340**	6	SOCKET-CONNECTOR (14-GA TO 18-GA)	
		1	**186-3736**	8	SOCKET-CONNECTOR (16-GA TO 18-GA)	
		1	**3S-2093**	5	STRAP-CABLE	
		1	**189-3158**	1	SUPPRESSOR-ARC	
		1	**9G-4336**	1	TERMINAL-RING (4-GA)	
		1	**2L-8065**	1	TERMINAL-RING (10-GA TO 12-GA, NO. 8 SCREW)	
		1	**5P-1478**	1	TERMINAL-FORK (10-GA TO 12-GA, NO. 10 SCREW)	
		1	**9G-4336**	2	TERMINAL-RING (4-GA)	
		1	**7N-9017**	2	TERMINAL-RING (18-GA TO 22-GA, NO. 10 SCREW)	
		1	*242-3294*	1	TERMINAL AS	
E		1	**125-7876**		TUBE-HEAT SHRINK (17.78-MM DIA) (5-CM)	
		1	**9X-1055**	4	TERMINAL-RECEPTACLE (12-GA)	
		1	**9X-1056**	2	TERMINAL-RECEPTACLE (14-GA TO 16-GA)	
		1	**100-5041**	2	TERMINAL-RECEPTACLE (18-GA TO 20-GA)	
E		1	**125-7874**		TUBE-HEAT SHRINK (5.72-MM DIA) (10-CM)	
E		1	**125-7876**		TUBE-HEAT SHRINK (17.78-MM DIA) (8-CM)	
E		1	**125-7875**		TUBE-HEAT SHRINK (7.44-MM DIA) (5-CM)	
	7	1	**104-6202**	1	CLIP	
M	8	1	**141-5453**	1	BOLT (M14X1.5X30-MM)	
	9	1	**1H-3244**	1	LOCKWASHER	
	10	1	**208-9277**	2	BOLT-FLANGE HEAD (M8X1X25-MM)	
	11	1	**277-1873**	1	CLIP	
	12	1	**3S-2093**	3	STRAP-CABLE	

328-2338 **WIRING GP-ENGINE** *(contd.)* **i03906915**

NOTE	REF NO	GRAPHIC REF	PART NUMBER	QTY	PART NAME 1 2 3 4 5 6 (PRODUCT LEVEL)	SEE PAGE
	13	1	**4P-8134**	1	CLIP	
M	14	1	**5C-2874**	2	NUT (M5X0.8-THD)	
M	15	1	**5C-2890**	1	NUT (M6X1-THD)	
M	16	1	**5C-7261**	1	NUT (M8X1.25-THD)	
	17	1	**5P-4116**	1	WASHER-HARD (8.8X20.5X2-MM THK)	
	18	1	**7X-0608**	1	WASHER-HARD (10.2X16X2-MM THK)	
	19	1	**8F-1434**	2	LOCKWASHER	
	20	1	**8T-0328**	2	WASHER-HARD (5.5X10X1-MM THK)	
	21	1	**8T-4121**	2	WASHER-HARD (11X21X2.5-MM THK)	
	22	1	**8T-4122**	1	WASHER-HARD (17X32X3.5-MM THK)	
M	23	1	**8T-4133**	1	NUT (M10X1.5-THD)	
M	24	1	**8T-4137**	1	BOLT (M10X1.5X20-MM)	
M	25	1	**8T-4200**	1	BOLT (M8X1.25X16-MM)	
	26	1	**8T-4205**	1	WASHER-HARD (7.2X14.5X2-MM THK)	

E-ORDER BY THE CENTIMETER
M-METRIC PART

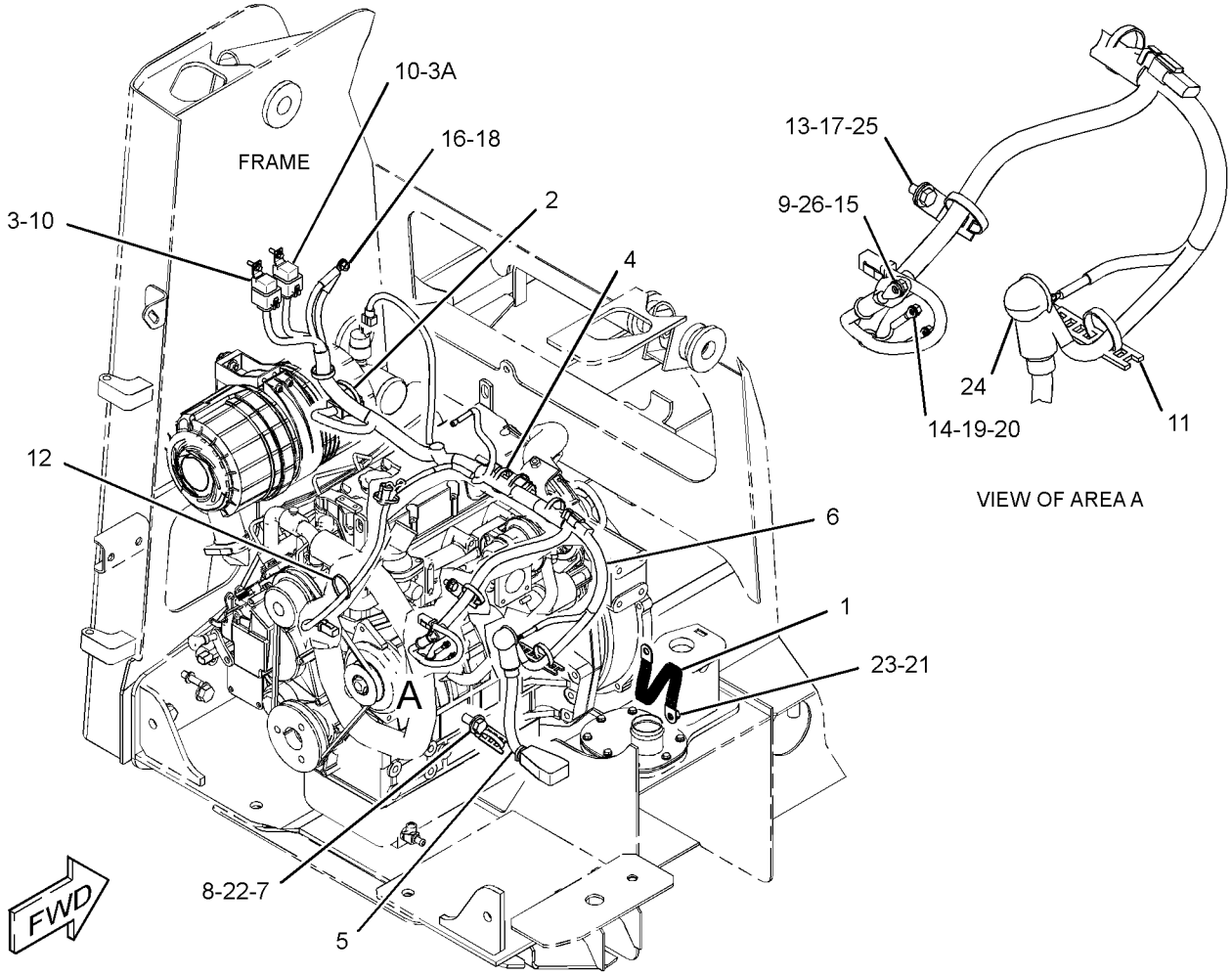

GRAPHIC #1 **<END>** g02149828

230-3743 WIRING GP-HORN—WITH MOUNTING

S/N: MWD1-UP

PART OF 326-5287, 326-5297, 326-5487, 326-5527, 326-5557, 326-5567 CONVERSION AR-MACHINE

AN ATTACHMENT

SMCS-1408, 7402 **i03971120**

NOTE	REF NO	GRAPHIC REF	PART NUMBER	QTY	PART NAME 1 2 3 4 5 6 (PRODUCT LEVEL)	SEE PAGE
	1	1	**3S-2093**	5	STRAP-CABLE	
M	2	1	**8T-4186**	1	BOLT (M10X1.5X40-MM)	
	3	1	**142-8833**	1	SPACER (11X14.3X9-MM THK)	
M	4	1	**8T-4133**	1	NUT (M10X1.5-THD)	
	5	1	**186-3362**	1	HARNESS AS-CHASSIS (HORN)	
		1	**144-1636**	2	PIN-CONNECTOR (14-GA TO 18-GA)	
		1	**126-1766**	2	SOCKET-CONNECTOR (14-GA TO 18-GA)	
		1	**102-8802**	1	KIT-RECEPTACLE (2-PIN)	
					(INCLUDES RECEPTACLE AS & WEDGE)	
		1	**155-2270**	1	KIT-CONNECTING PLUG (2-PIN)	
					(INCLUDES PLUG AS, WEDGE & INTERFACE SEAL)	
	6	1	**8T-4121**	3	WASHER-HARD (11X21X2.5-MM THK)	

M-METRIC PART

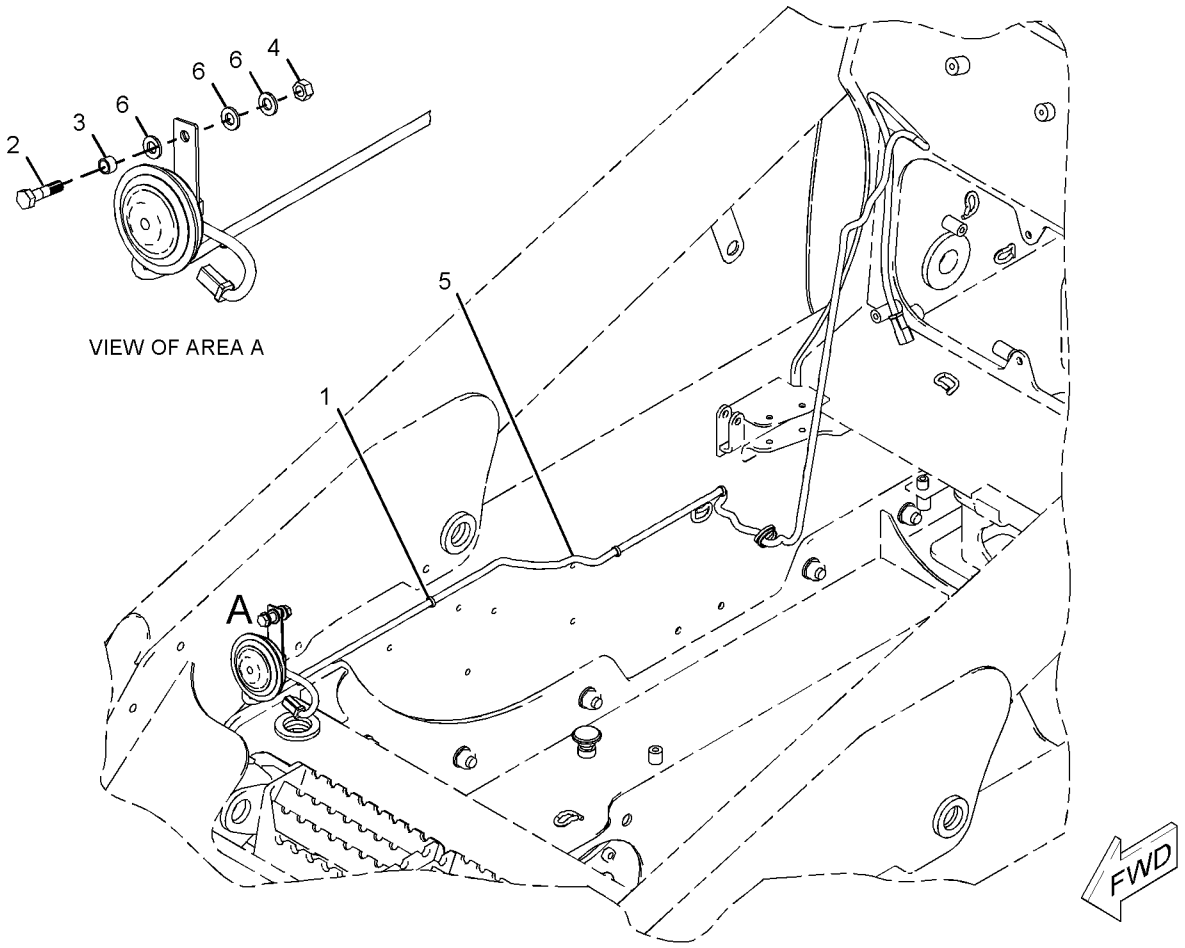

GRAPHIC #1 **<END>** g01037702

328-2342 WIRING GP-MACHINE–DEMAND FAN

S/N: MWD1-UP

PART OF 326-5287, 326-5297, 326-5487, 326-5527, 326-5557, 326-5567 CONVERSION AR-MACHINE, 356-1901 MOTOR AR-HYDRAULIC FAN AN ATTACHMENT

SMCS-1408 **i03973037**

NOTE	REF NO	GRAPHIC REF	PART NUMBER	QTY	PART NAME 1 2 3 4 5 6 (PRODUCT LEVEL)	SEE PAGE
	1	1	**328-2341**	1	HARNESS AS-SOLENOID (DEMAND FAN)	
		1	**186-3735**	2	PIN-CONNECTOR (16-GA TO 18-GA)	
		1	**155-2270**	1	KIT-CONNECTING PLUG (2-PIN)	
					(INCLUDES PLUG AS, WEDGE & INTERFACE SEAL)	
		1	**102-8802**	1	KIT-RECEPTACLE (2-PIN)	
					(INCLUDES RECEPTACLE AS & WEDGE)	
		1	**186-3736**	2	SOCKET-CONNECTOR (16-GA TO 18-GA)	
	2	1	**3S-2093**	5	STRAP-CABLE	
	3	1	**4P-7581**	1	CLIP	

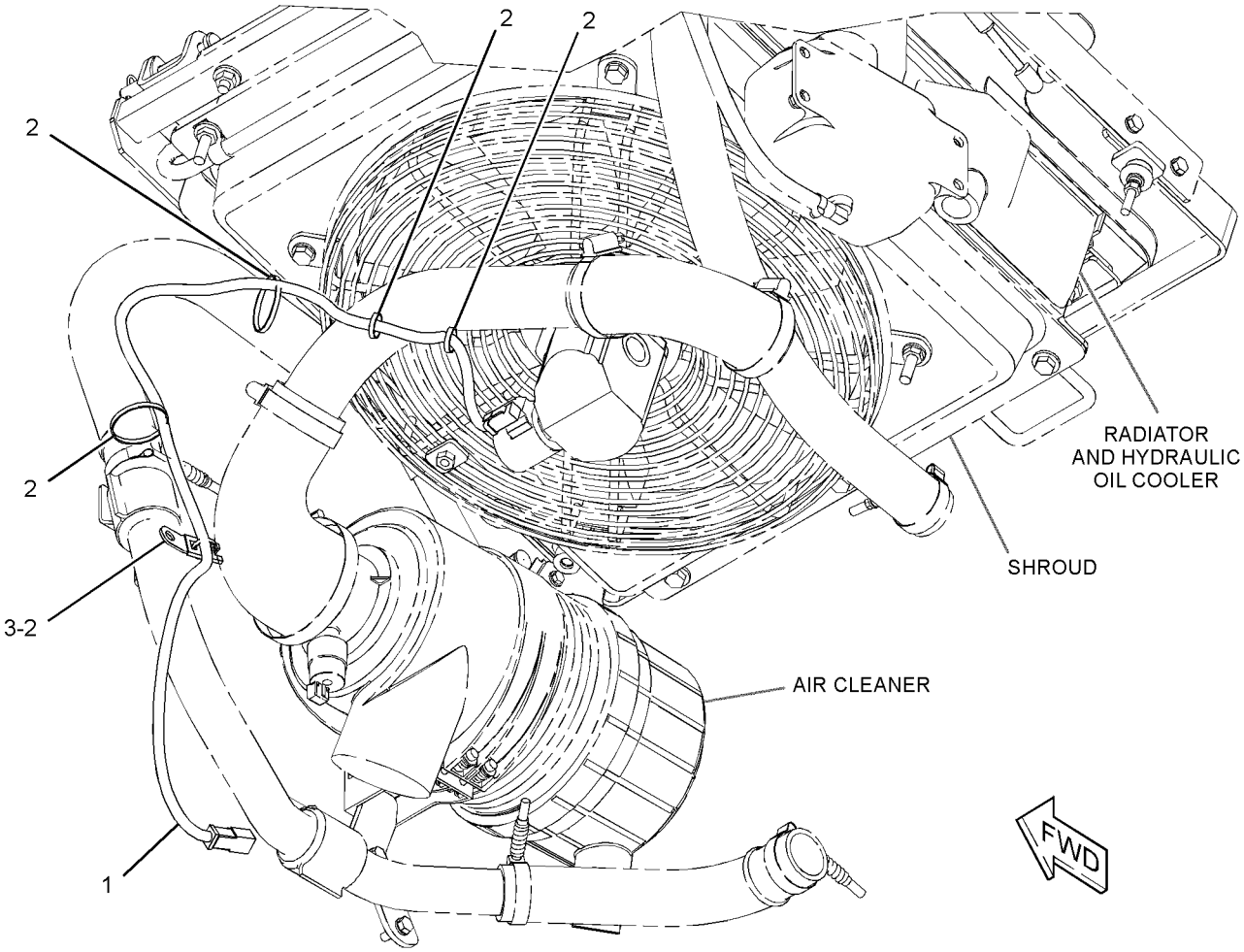

GRAPHIC #1 **<END>** g02150630

328-2355 WIRING GP-WORK TOOL

S/N: MWD1-UP

PART OF 326-5272 CONTROL AR-MACHINE, 326-5244, 326-5245 HYDRAULIC AR AN ATTACHMENT

SMCS-1408 **i03901818**

NOTE	REF NO	GRAPHIC REF	PART NUMBER	QTY	PART NAME 1 2 3 4 5 6 (PRODUCT LEVEL)	SEE PAGE
	1	1	**142-8633**	1	SWITCH AS-ROCKER (ELECTRIC POWER, WORK TOOL)	
		1	**111-7899**	1	GASKET	
	2	1	**146-9439**	5	RELAY AS (12-VOLT) (WORK TOOL)	
	3	1	**159-9495**	1	NUT (1-1/2-18-THD)	
	4	1	**225-7961**	1	HARNESS AS-WORK TOOL (LIFT ARM)	
		1	**156-1458**	1	COVER	
		1	**7T-0093**	8	PIN-CONNECTOR (12-GA TO 14-GA)	
		1	**9W-0852**	8	PIN-CONNECTOR (14-GA)	
		1	**156-1460**	1	RECEPTACLE (8-PIN)	
		1	**1S-9593**	1	STRAP-CABLE	
	5	1	**159-9496**	1	LOCKWASHER	
	6	1	**102-8806**	1	KIT-RECEPTACLE (8-PIN)	
					(INCLUDES RECEPTACLE AS & WEDGE)	
	7	1	**3S-2093**	4	STRAP-CABLE	

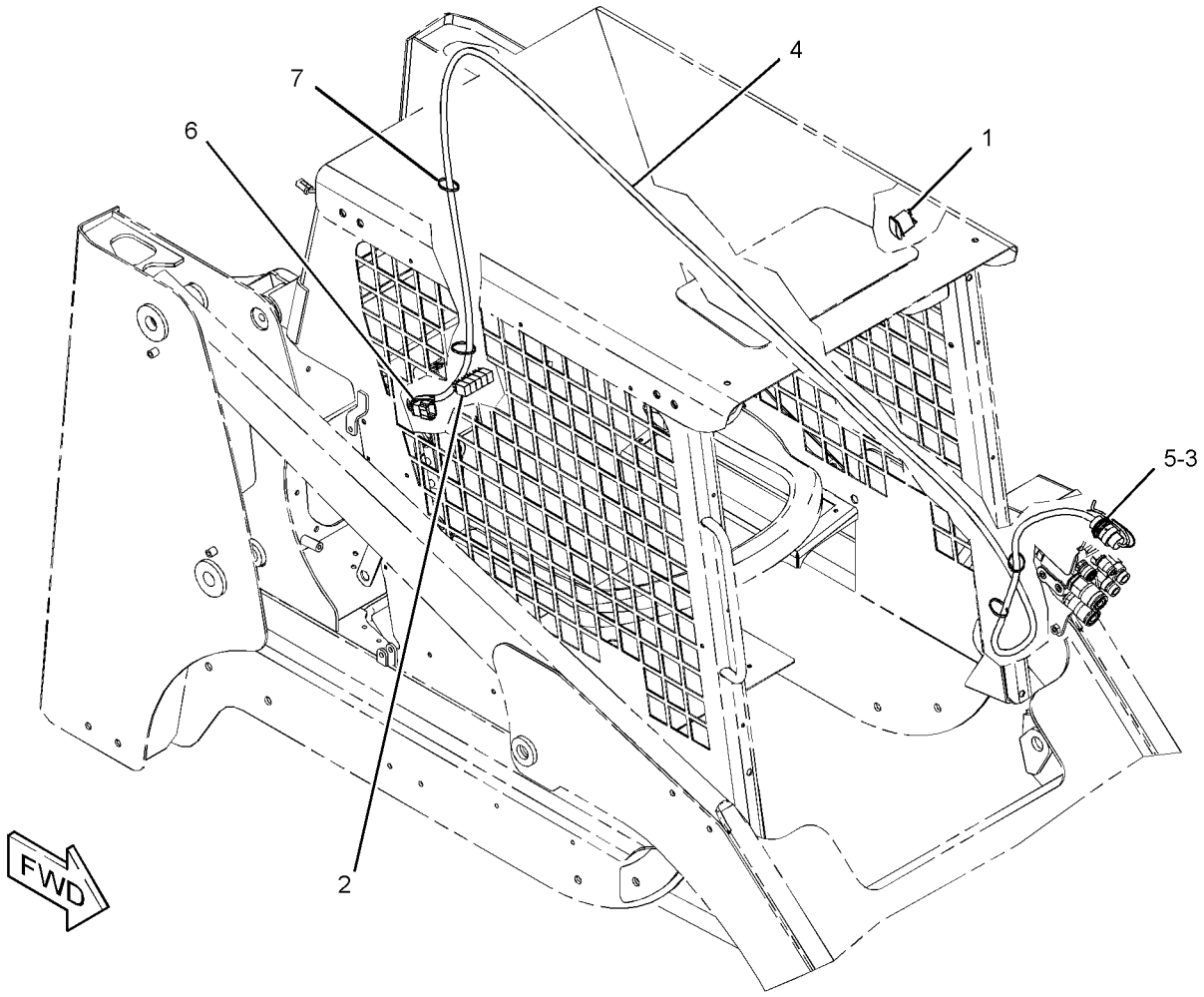

GRAPHIC #1 **<END>** g02145249

142-8758 AXLE GP

S/N: MWD1-UP

PART OF 261-6255 AXLE GP

SMCS-3278 **i01790260**

NOTE	REF NO	GRAPHIC REF	PART NUMBER	QTY	PART NAME 1 2 3 4 5 6 (PRODUCT LEVEL)	SEE PAGE
	1	1	**142-8723**	1	HOUSING-AXLE	
	2	1	**142-8724**	1	SPINDLE-WHEEL	
	3	1	**142-8729**	1	SPACER (32.045 MM THK)	
	4	1	**150-4385**	2	CONE	
	5	1	**150-4386**	2	CUP	
	6	1	**150-5472**	1	SEAL-LIP TYPE	
	7	1	**159-5772**	8	STUD (9/16-18-2A THD)	
	8	1	**166-3678**	1	SEAL-LIP TYPE	

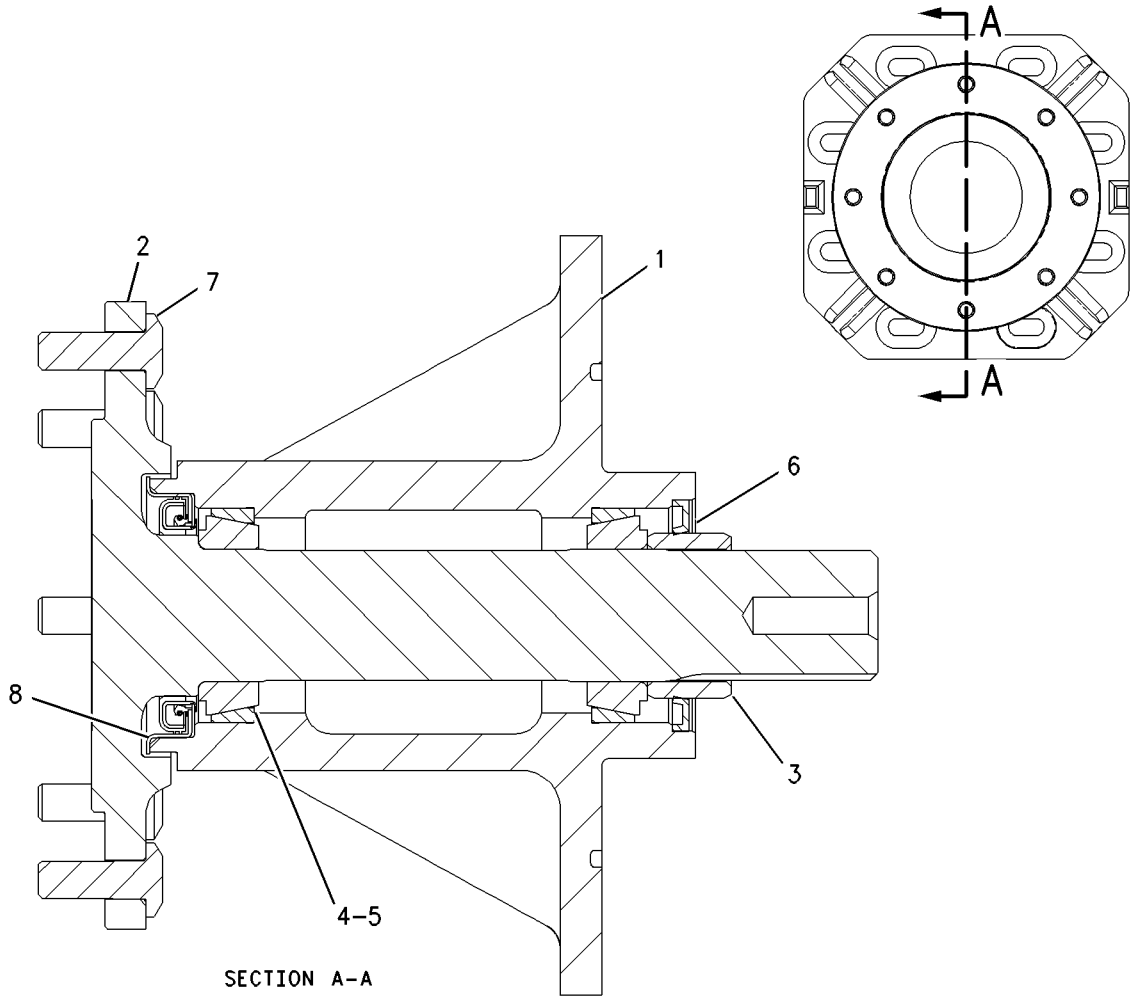

GRAPHIC #1 **<END>** g00916188

POWER TRAIN

261-6255 AXLE GP

S/N: MWD1-UP

PART OF 326-4781 CHASSIS AR

SMCS-3278 **i02476310**

NOTE	PART NUMBER	QTY	PART NAME 1 2 3 4 5 6 (PRODUCT LEVEL)	SEE PAGE
Y	**142-8758**	4	AXLE GP	112

Y-SEPARATE ILLUSTRATION

<END>

POWER TRAIN

356-1937 DRIVE GP-TANDEM

S/N: MWD1-UP

PART OF 358-6924 POWER TRAIN AR

SMCS-4062 **i03906931**

NOTE	REF NO	GRAPHIC REF	PART NUMBER	QTY	PART NAME 1 2 3 4 5 6 (PRODUCT LEVEL)	SEE PAGE
	1	1	**142-8732**	4	SPROCKET (12-TEETH)	
	2	1	**142-8734**	4	SPROCKET (35-TEETH)	
	3	1	**142-8757**	2	CHAIN AS	
	4	1	**152-1157**	32	WASHER (15.5X32X8-MM THK)	
	5	1	**168-7572**	2	CHAIN AS	
	6	1	**200-0999**	32	STUD	
M	7	1	**099-4691**	2	BOLT-LOCKING (M12X1.75X25-MM)	
M	8	1	**100-3866**	4	BOLT-SELF-LOCKING (M16X2X40-MM)	
	9	1	**142-9036**	32	NUT (9/16-18-THD)	
	10	1	**5K-1787**	4	SEAL-O-RING	
	11	1	**7G-8839**	2	SPACER (13.5X57X6-MM THK)	
	12	1	**7X-0610**	4	WASHER-HARD (20X75X6-MM THK)	
	13	1	**8T-4122**	4	WASHER-HARD (17X32X3.5-MM THK)	

QUANTITIES SHOWN ARE THOSE REQUIRED FOR BOTH LH AND RH SIDES
M-METRIC PART

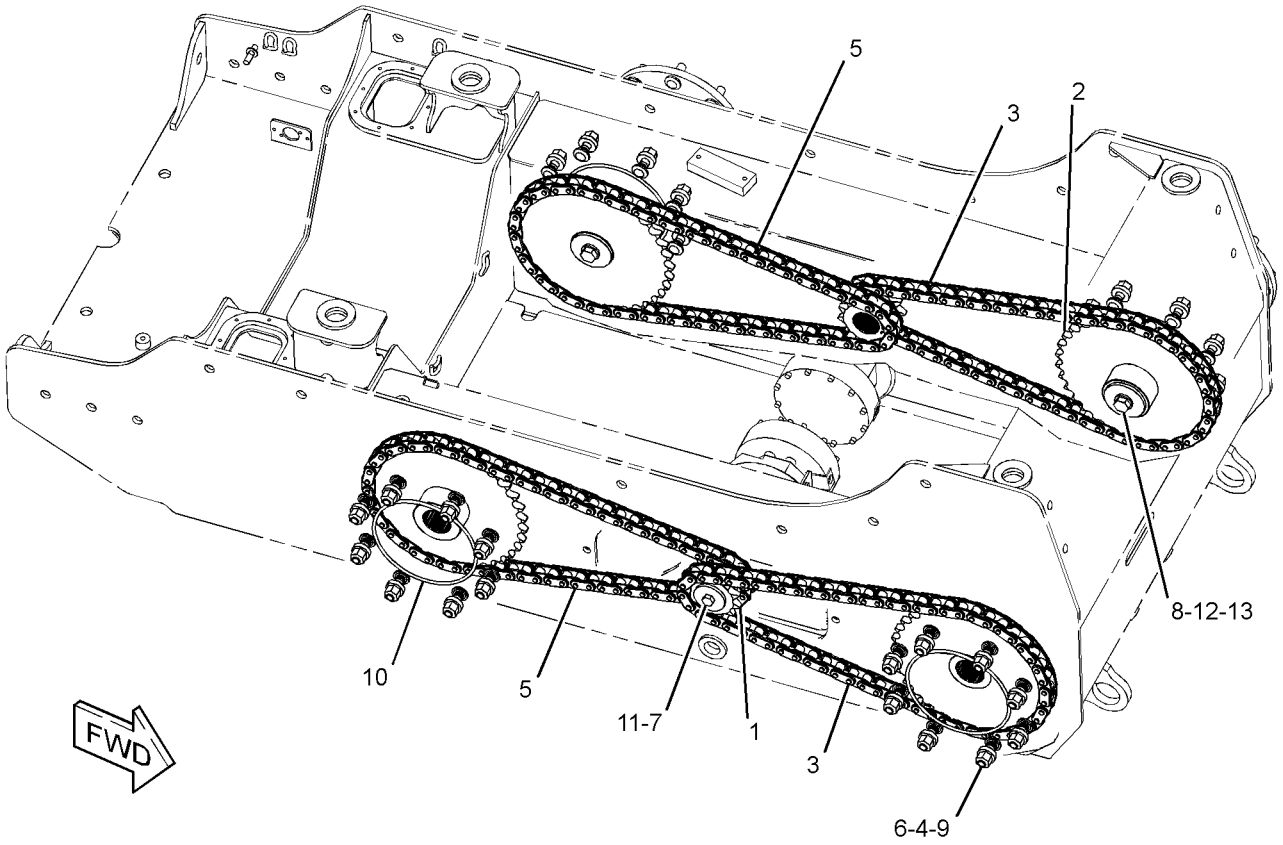

GRAPHIC #1 **<END>** g02149284

218-6624 FILTER & LINES GP-HYDRAULIC

S/N: MWD1-UP

PART OF 354-6548 HYDRAULIC AR

SMCS-5057, 5068 **i02879732**

NOTE	REF NO	GRAPHIC REF	PART NUMBER	QTY	PART NAME 1 2 3 4 5 6 (PRODUCT LEVEL)	SEE PAGE
C	1	1	**7K-1181**	1	STRAP-CABLE	
C	2	1	**178-3620**	1	STRAP-DUAL CLAMP	
	3	1	**218-5671**	1	PLATE	
I	4	1	**218-6677**	1	HOSE AS	
Y	5	1	**223-9974**	1	FILTER GP-OIL (HYDRAULIC)	117
CI	7	1	**311-5903**	1	HOSE AS	
	8	1	*148-8315*	1	CONNECTOR AS	
		1	**2M-9780**	1	SEAL-O-RING	
		1	**6V-8642**	1	CONNECTOR	
		1	**7J-9108**	1	SEAL-O-RING	
	9	1	*148-8328*	1	CONNECTOR AS	
		1	**3D-2824**	1	SEAL-O-RING	
		1	**6V-8398**	1	SEAL-O-RING	
		1	**6V-8633**	1	CONNECTOR	
	10	1	*148-8340*	1	CONNECTOR AS	
		1	**3K-0360**	1	SEAL-O-RING	
		1	**6V-8398**	1	SEAL-O-RING	
		1	**6V-8639**	1	CONNECTOR	
	11	1	*148-8382*	1	ELBOW AS	
		1	**3D-2824**	1	SEAL-O-RING	
		1	**7J-9108**	1	SEAL-O-RING	
		1	**8T-0404**	1	ELBOW	
C	12	1	**4P-8134**	1	CLIP	
C	13	1	**8T-4121**	5	WASHER-HARD (11X21X2.5-MM THK)	
M	14	1	**8T-4133**	2	NUT (M10X1.5-THD)	
M	15	1	**8T-4137**	4	BOLT (M10X1.5X20-MM)	
CE	16	1	**9X-2092**		TRIM-EDGE (20-CM)	

C-CHANGE FROM PREVIOUS TYPE
E-ORDER BY THE CENTIMETER
I-REFER TO HYDRAULIC INFORMATION SYSTEM
M-METRIC PART
Y-SEPARATE ILLUSTRATION

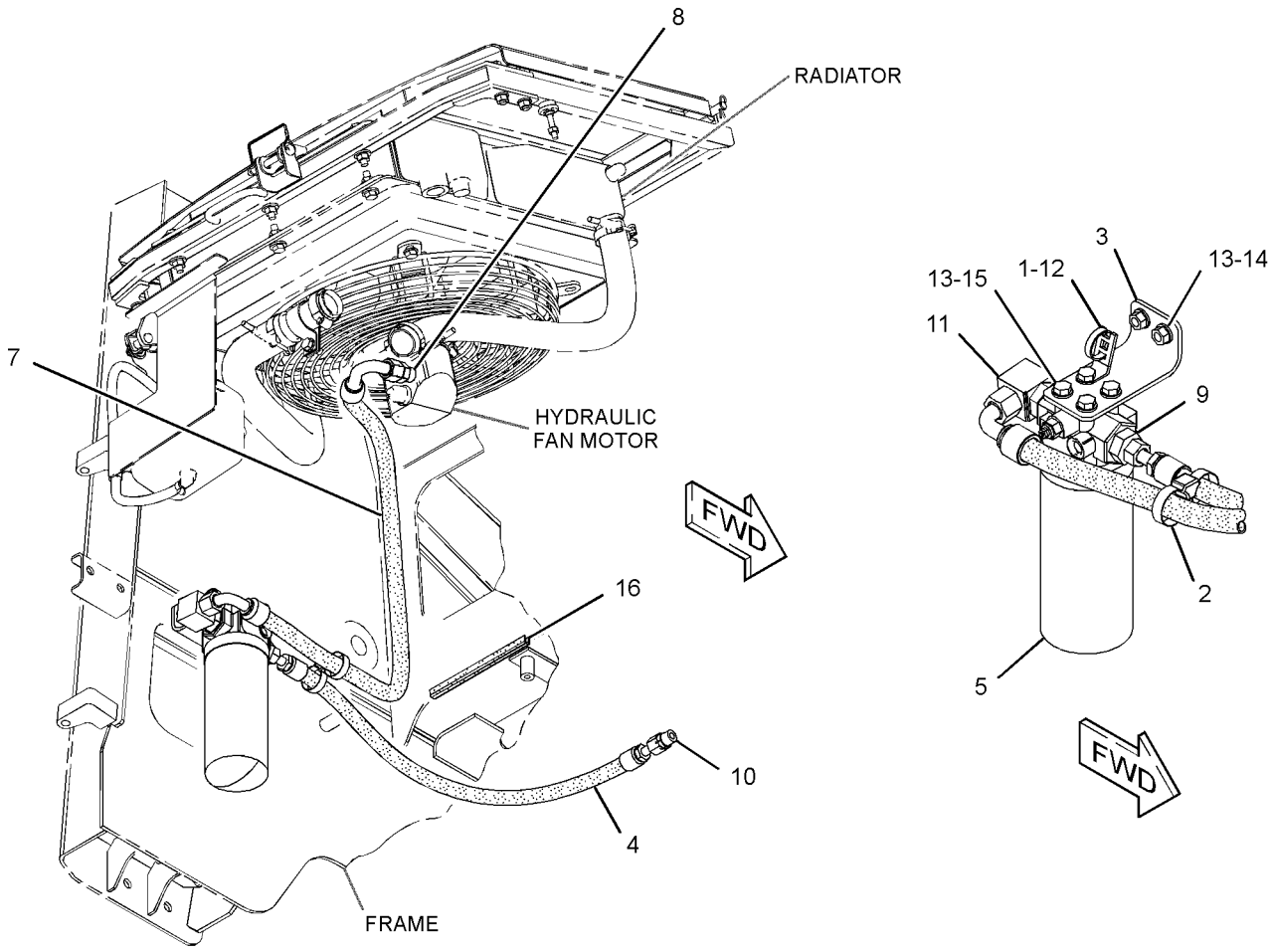

GRAPHIC #1 **<END>** g01437749

223-9974 FILTER GP-OIL–HYDRAULIC

S/N: MWD1-UP

PART OF 218-6624 FILTER & LINES GP-HYDRAULIC

SMCS-5068 **i02469830**

NOTE	REF NO	GRAPHIC REF	PART NUMBER	QTY	PART NAME 1 2 3 4 5 6 (PRODUCT LEVEL)	SEE PAGE
	1	1	**3J-1907**	1	SEAL-O-RING	
	2	1	**134-0404**	1	SWITCH AS-PRESSURE (HYDRAULIC OIL)	
	3	1	**1G-8878**	1	FILTER-OIL (ADVANCED EFFICIENCY) (HYDRAULIC)	

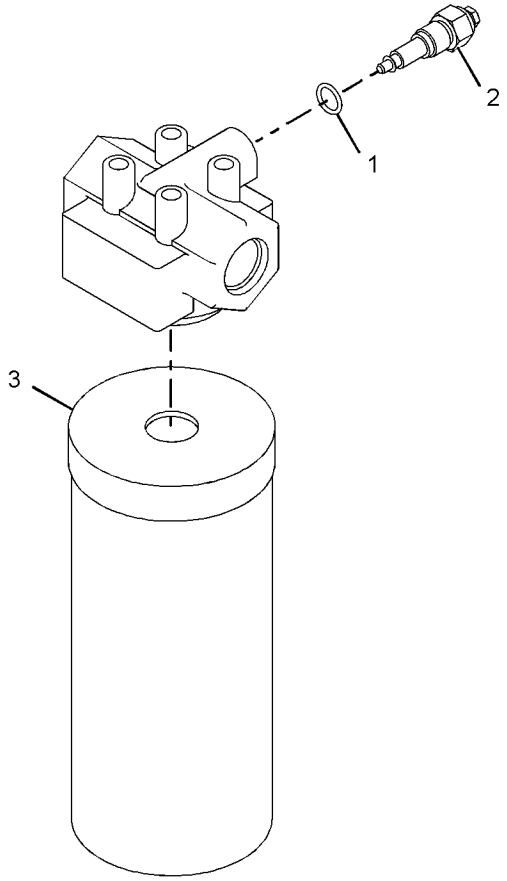

GRAPHIC #1 **<END>** g01035150

317-0974 FILTER GP-OIL

S/N: CYP1-UP
PART OF 292-5719 ENGINE AR-PRIMARY
AN ATTACHMENT

SMCS-5068 **i02827171**

NOTE	REF NO	GRAPHIC REF	PART NUMBER	QTY	PART NAME 1 2 3 4 5 6 (PRODUCT LEVEL)	SEE PAGE
	1	1	**6I-1201**	1	SEAL-O-RING	
	2	1	**118-9145**	1	CONNECTOR	
	3	1	**153-6879**	1	STUD-HOLLOW	
	4	2	**160-4826**	4	CLAMP-HOSE	
	5	1	**164-7619**	1	SEAL-O-RING	
	6	1	**198-2663**	1	BOLT	
	7	1	**231-8920**	1	BOLT	
	8	2	**246-3470**	1	HOSE	
	9	2	**246-3471**	1	HOSE	
	10	1	**252-0787**	1	SEAL-O-RING	
	11	1	**252-0788**	1	BASE-OIL FILTER	
	12	1	**311-2349**	1	WASHER	

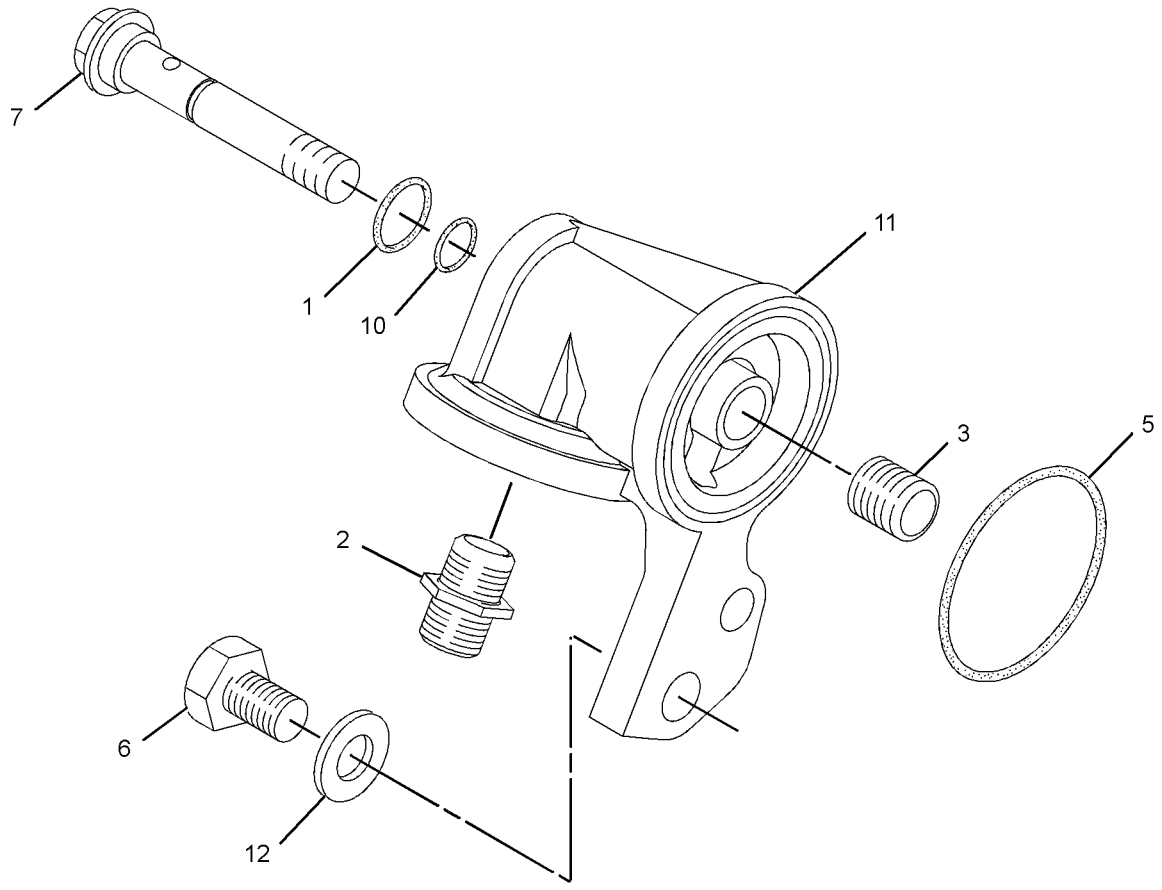

GRAPHIC #1 g01439021

317-0974 **FILTER GP-OIL** *(contd.)* **i02827171**

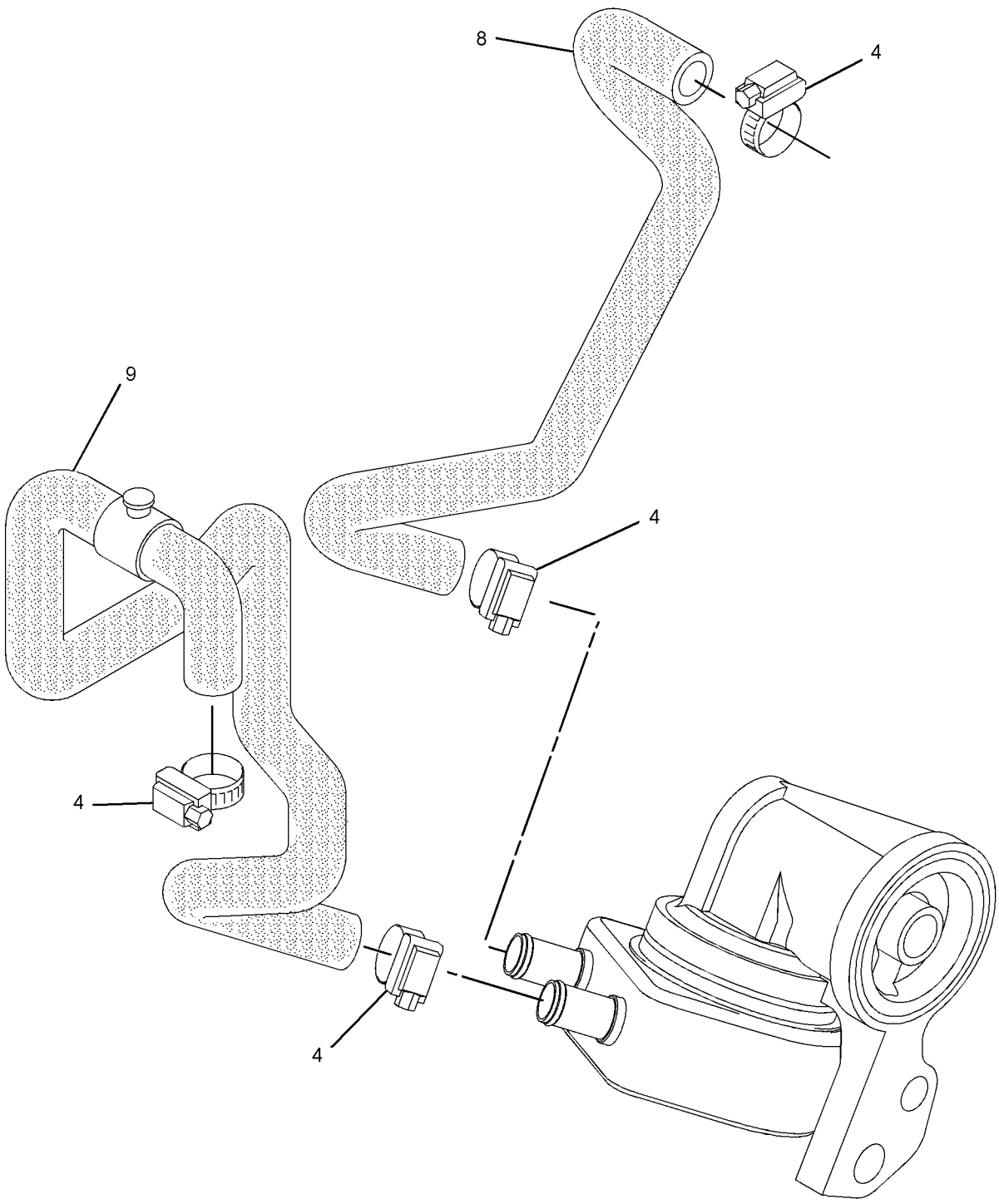

GRAPHIC #2 **<END>** g01439024

POWER TRAIN

218-6089 LINES GP-HYDROSTATIC

S/N: MWD1-UP
PART OF 356-1919, 356-1920 HYDRAULIC AR
AN ATTACHMENT

SMCS-3154 **i03662301**

NOTE	REF NO	GRAPHIC REF	PART NUMBER	QTY	PART NAME 1 2 3 4 5 6 (PRODUCT LEVEL)	SEE PAGE
	1	1	**6V-0852**	3	CAP-DUST	
I	2	1	**142-9241**	2	HOSE AS	
I	3	1	**218-6095**	2	HOSE AS	
I	4	1	**218-6096**	1	HOSE AS	
I	5	1	**218-6862**	1	HOSE AS	
CY	6	1	*308-0421*	1	MANIFOLD GP-RETURN	124
I	7	1	**316-6111**	1	HOSE AS	
	8	1	*148-8322*	4	CONNECTOR AS	
					(EACH INCLUDES)	
		1	**2M-9780**	1	SEAL-O-RING	
		1	**6V-8640**	1	CONNECTOR	
		1	**6V-9746**	1	SEAL-O-RING	
	9	1	*148-8327*	4	CONNECTOR AS	
					(EACH INCLUDES)	
		1	**3D-2824**	1	SEAL-O-RING	
		1	**6V-8637**	1	CONNECTOR	
		1	**6V-9746**	1	SEAL-O-RING	
	10	1	*148-8338*	2	CONNECTOR AS	
					(EACH INCLUDES)	
		1	**3J-1907**	1	SEAL-O-RING	
		1	**6V-8397**	1	SEAL-O-RING	
		1	**8T-0075**	1	CONNECTOR	
C	11	1	*148-8362*	2	ELBOW AS	
					(EACH INCLUDES)	
		1	**5K-9090**	1	SEAL-O-RING	
		1	**8T-6684**	1	ELBOW	
		1	**3D-2824**	1	SEAL-O-RING	
	12	1	*164-5567*	3	COUPLER AS-QUICK DISCONNECT (MALE)	
					(EACH INCLUDES)	
		1	**214-7568**	1	SEAL-O-RING	
		1	**6V-3965**	1	FITTING (QUICK DISCONNECT)	
M	13	1	**5C-7261**	3	NUT (M8X1.25-THD)	
	14	1	**5P-4116**	3	WASHER-HARD (8.8X20.5X2-MM THK)	

C-CHANGE FROM PREVIOUS TYPE
I-REFER TO HYDRAULIC INFORMATION SYSTEM
M-METRIC PART
Y-SEPARATE ILLUSTRATION

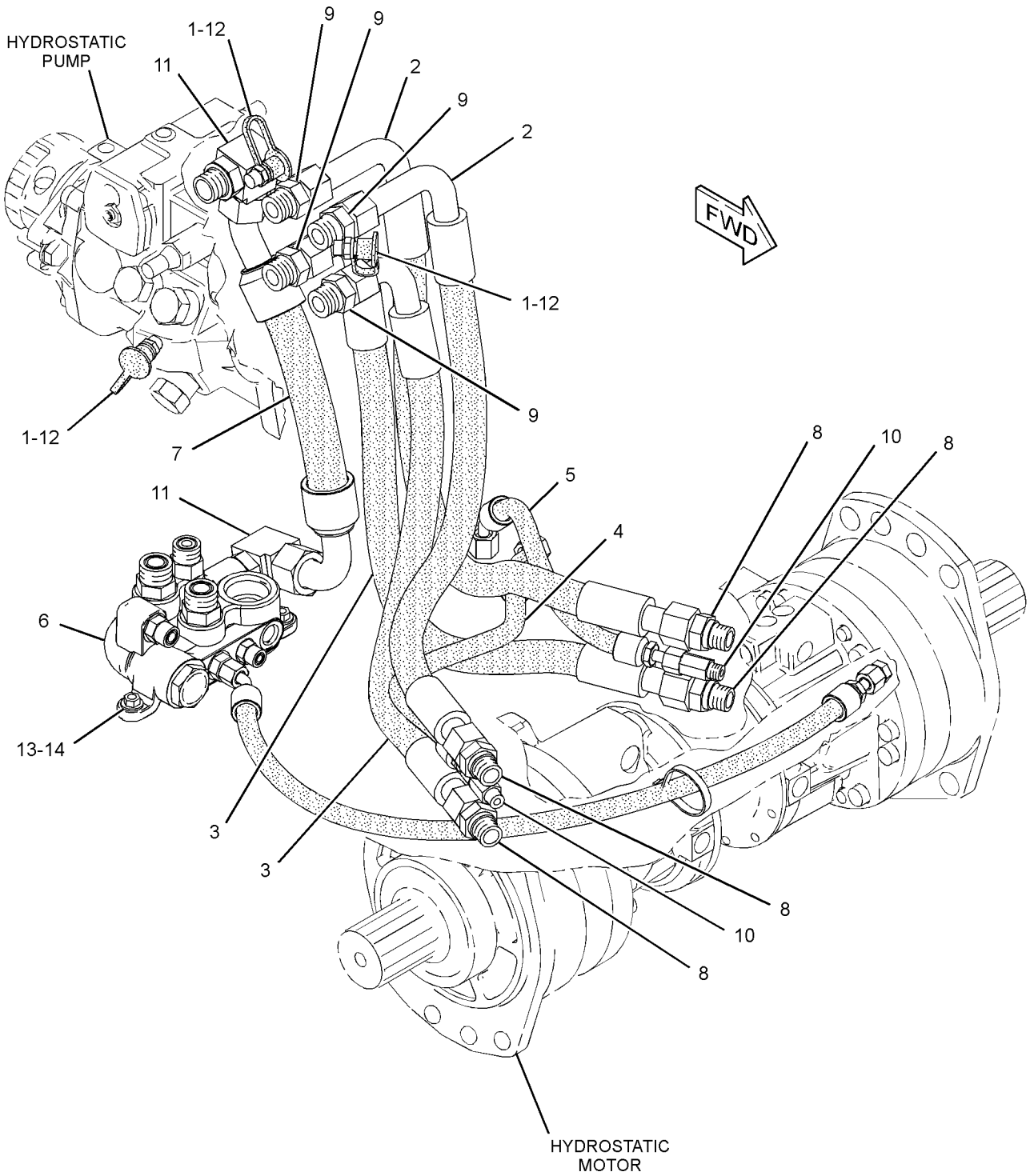

GRAPHIC #1 **<END>** g01932573

POWER TRAIN

331-6058 LINES GP-HYDROSTATIC

S/N: MWD1-UP
PART OF 326-5244, 326-5245 HYDRAULIC AR
AN ATTACHMENT

SMCS-3154 **i03633796**

NOTE	REF NO	GRAPHIC REF	PART NUMBER	QTY	PART NAME 1 2 3 4 5 6 (PRODUCT LEVEL)	SEE PAGE
	1	1	**6V-0852**	3	CAP-DUST	
I	2	1	**142-9241**	2	HOSE AS	
I	3	1	**218-6095**	2	HOSE AS	
I	4	1	**218-6096**	1	HOSE AS	
I	5	1	**218-6862**	1	HOSE AS	
	6	1	**306-4091**	1	HOSE AS	
Y	7	1	*308-0421*	1	MANIFOLD GP-RETURN	124
	8	1	*148-8322*	4	CONNECTOR AS	
					(EACH INCLUDES)	
		1	**2M-9780**	1	SEAL-O-RING	
		1	**6V-8640**	1	CONNECTOR	
		1	**6V-9746**	1	SEAL-O-RING	
	9	1	*148-8327*	4	CONNECTOR AS	
					(EACH INCLUDES)	
		1	**3D-2824**	1	SEAL-O-RING	
		1	**6V-8637**	1	CONNECTOR	
		1	**6V-9746**	1	SEAL-O-RING	
	10	1	*148-8338*	2	CONNECTOR AS	
					(EACH INCLUDES)	
		1	**3J-1907**	1	SEAL-O-RING	
		1	**6V-8397**	1	SEAL-O-RING	
		1	**8T-0075**	1	CONNECTOR	
	11	1	*148-8362*	2	ELBOW AS	
					(EACH INCLUDES)	
		1	**3D-2824**	1	SEAL-O-RING	
		1	**5K-9090**	1	SEAL-O-RING	
		1	**8T-6684**	1	ELBOW	
	12	1	*164-5567*	3	COUPLER AS-QUICK DISCONNECT (MALE)	
					(EACH INCLUDES)	
		1	**214-7568**	1	SEAL-O-RING	
		1	**6V-3965**	1	FITTING (QUICK DISCONNECT)	
M	13	1	**5C-7261**	3	NUT (M8X1.25-THD)	
	14	1	**5P-4116**	3	WASHER-HARD (8.8X20.5X2-MM THK)	

I-REFER TO HYDRAULIC INFORMATION SYSTEM
M-METRIC PART
Y-SEPARATE ILLUSTRATION

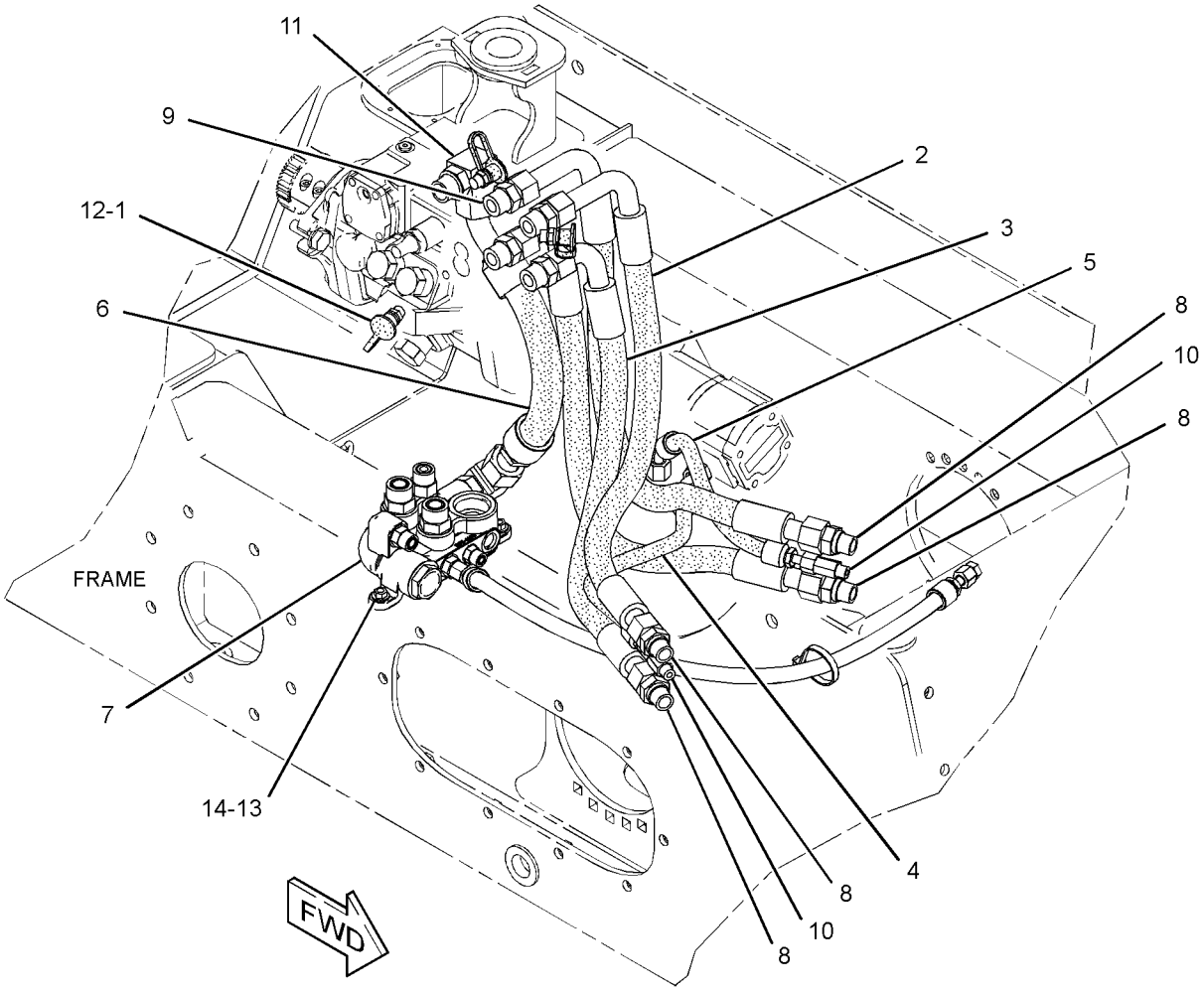

GRAPHIC #1 **<END>** g01952694

POWER TRAIN

308-0421 MANIFOLD GP-RETURN

S/N: MWD1-UP

PART OF 218-6089, 331-6058 LINES GP-HYDROSTATIC

AN ATTACHMENT

SMCS-5264 **i02730543**

NOTE	REF NO	GRAPHIC REF	PART NUMBER	QTY	PART NAME 1 2 3 4 5 6 (PRODUCT LEVEL)	SEE PAGE
	1	1	**7K-1181**	1	STRAP-CABLE	
	2	1	**105-4593**	1	POPPET	
	3	1	**212-6603**	1	PLUG AS	
		1	**6V-8978**	1	SEAL-O-RING	
	4	1	**212-6604**	1	SPRING	
I	5	1	**233-5716**	1	HOSE AS	
	6	1	**305-4185**	1	BLOCK	
	7	1	*148-8318*	1	CONNECTOR AS	
		1	**3K-0360**	1	SEAL-O-RING	
		1	**6V-8397**	1	SEAL-O-RING	
		1	**6V-8634**	1	CONNECTOR	
	8	1	*148-8327*	2	CONNECTOR AS	
					(EACH INCLUDES)	
		1	**3D-2824**	1	SEAL-O-RING	
		1	**6V-8637**	1	CONNECTOR	
		1	**6V-9746**	1	SEAL-O-RING	
	9	1	*148-8336*	1	CONNECTOR AS	
		1	**3J-1907**	1	SEAL-O-RING	
		1	**6V-8397**	1	SEAL-O-RING	
		1	**6V-8636**	1	CONNECTOR	
	10	1	*148-8340*	1	CONNECTOR AS	
		1	**3K-0360**	1	SEAL-O-RING	
		1	**6V-8398**	1	SEAL-O-RING	
		1	**6V-8639**	1	CONNECTOR	
	11	1	*148-8342*	1	CONNECTOR AS	
		1	**3K-0360**	1	SEAL-O-RING	
		1	**6V-8632**	1	CONNECTOR	
		1	**7J-9108**	1	SEAL-O-RING	
	12	1	*165-4934*	1	PLUG AS	
		1	**6V-8397**	1	SEAL-O-RING	
		1	**6V-9508**	1	PLUG (11/16-16-THD)	

I-REFER TO HYDRAULIC INFORMATION SYSTEM

308-0421 **MANIFOLD GP-RETURN** *(contd.)* **i02730543**

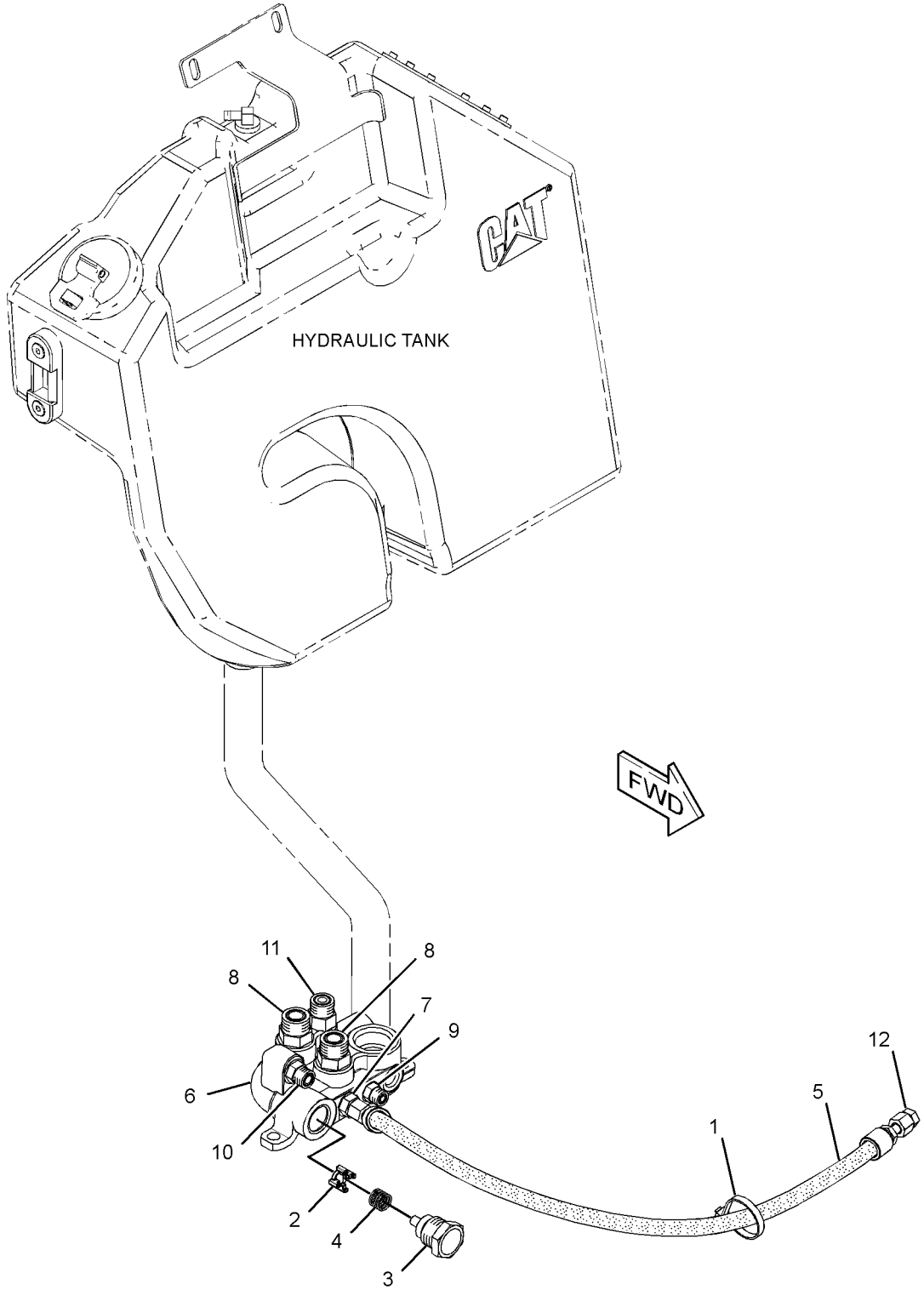

GRAPHIC #1 **<END>** g01380873

356-1938 MOTOR & MTG GP-HYDROSTATIC

S/N: MWD1-UP

PART OF 358-6924 POWER TRAIN AR

SMCS-5058 **i03906930**

NOTE	REF NO	GRAPHIC REF	PART NUMBER	QTY	PART NAME 1 2 3 4 5 6 (PRODUCT LEVEL)	SEE PAGE
	1	1	**159-5793**	2	SPACER (14.3-MM THK)	
	2	1	**206-5143**	20	BOLT (M12X1.75X42.5-MM)	
YR	3	1	**280-7854**	2	MOTOR GP-PISTON (HYDROSTATIC)	127
M	4	1	**6V-7687**	20	LOCKNUT (M12X1.75-THD)	
	5	1	**8T-4223**	20	WASHER-HARD (13.5X25.5X3-MM THK)	

M-METRIC PART
R-REMFG PART MAY BE AVAILABLE
Y-SEPARATE ILLUSTRATION

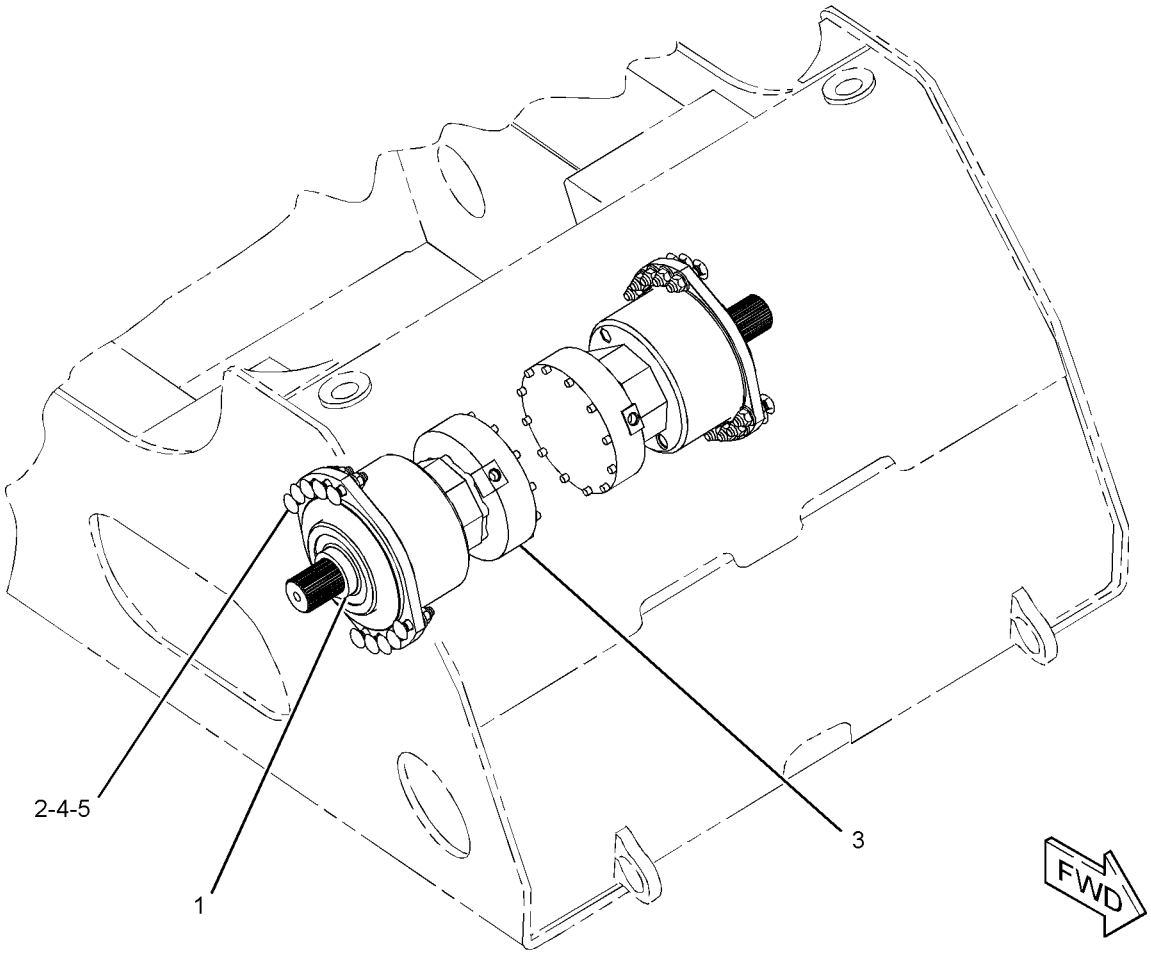

GRAPHIC #1 **<END>** g02149216

280-7854 MOTOR GP-PISTON–HYDROSTATIC*R

S/N: MWD1-UP

PART OF 356-1938 MOTOR & MTG GP-HYDROSTATIC

SMCS-4351, 5058 **i03637973**

NOTE	REF NO	GRAPHIC REF	PART NUMBER	QTY	PART NAME 1 2 3 4 5 6 (PRODUCT LEVEL)	SEE PAGE
	1	1	**140-2490**	1	RING-SPLIT	
	2	1	**3K-0360**	1	SEAL-O-RING	
	3	1	**279-0733**	1	KIT-SHIM (PISTON MOTOR)	
					(INCLUDES WASHERS)	
J	4	1	**033-5853**	1	SEAL-O-RING	
	5	1	**172-8175**	13	DISC-BRAKE (INNER)	
	6	1	**216-6124**	1	PLUG	
J	7	1	**095-1517**	1	SEAL-O-RING	
M	8	1	**5C-7883**	12	BOLT-SOCKET HEAD (M6X1X16-MM)	
	9	1	**222-5693**	1	PLUG-O-RING	
	10	1	**172-8173**	15	DISC-BRAKE (OUTER)	
M	11	1	**8T-0271**	5	BOLT-SOCKET HEAD (M10X1.5X35-MM)	
	12	1	**140-2492**	1	BEARING	
	13	1	**268-1936**	1	BEARING AS-TAPERED ROLLER	
	14	1	**140-2513**	1	SHIM (0.01-MM THK)	
	15	1	**140-2514**	2	SHIM (0.3-MM THK)	
	16	1	**9S-8005**	1	PLUG-O-RING	
M	17	1	**289-6347**	6	BOLT-SOCKET HEAD (M12X1.75X55-MM)	
	18	1	**307-3039**	1	RING-SEAL	
	19	1	**320-0650**	1	RING-RETAINING	
					AVAILABLE REPAIR KIT(S):	
J			**289-6336**	1	KIT-SEAL (PISTON MOTOR)	
					(INCLUDES SEALS, SEAL RINGS & GASKET)	

J-KIT MARKED J SERVICE(S) PARTS MARKED J
M-METRIC PART

280-7854 MOTOR GP-PISTON *(contd.)* i03637973

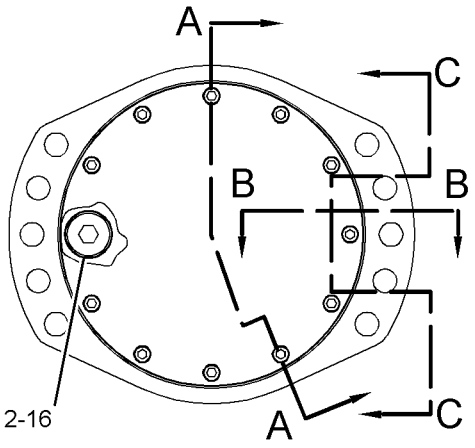

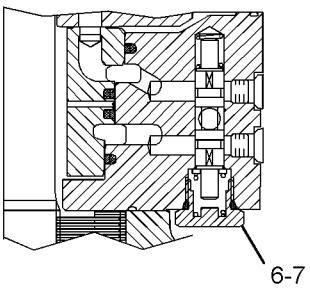

SECTION B-B

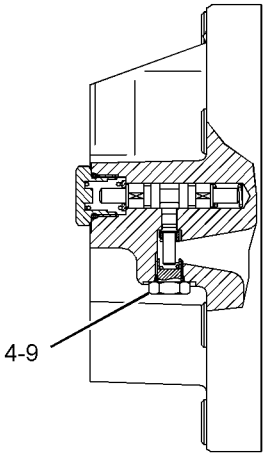

SECTION C-C

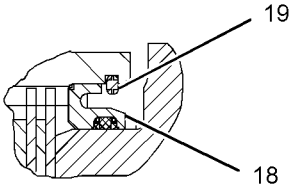

VIEW OF AREA D

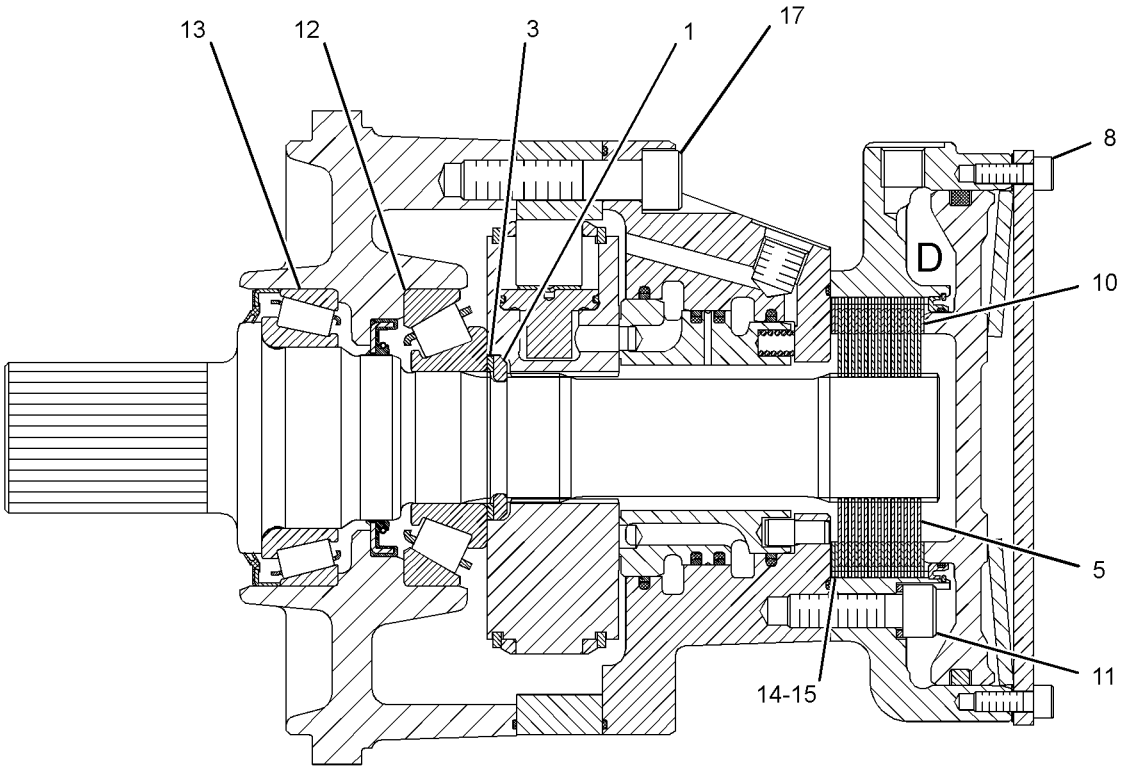

SECTION A-A

GRAPHIC #1 **<END>** g01469767

228-1763 MOUNTING GP-PUMP

S/N: MWD1-UP

PART OF 326-5360 INSTALLATION AR-ENGINE

SMCS-3203, 5062, 5070 **i01988423**

NOTE	REF NO	GRAPHIC REF	PART NUMBER	QTY	PART NAME 1 2 3 4 5 6 (PRODUCT LEVEL)	SEE PAGE
	1	1	**141-7562**	1	FLANGE-NYLON	
	2	1	**142-8719**	1	PLATE-ADAPTER	
	3	1	**6V-8918**	8	BOLT (5/16-18X1.25-IN)	
	4	1	**8T-4121**	12	WASHER-HARD (11X21X2.5-MM THK)	
M	5	1	**8T-4196**	12	BOLT (M10X1.5X35-MM)	

M-METRIC PART

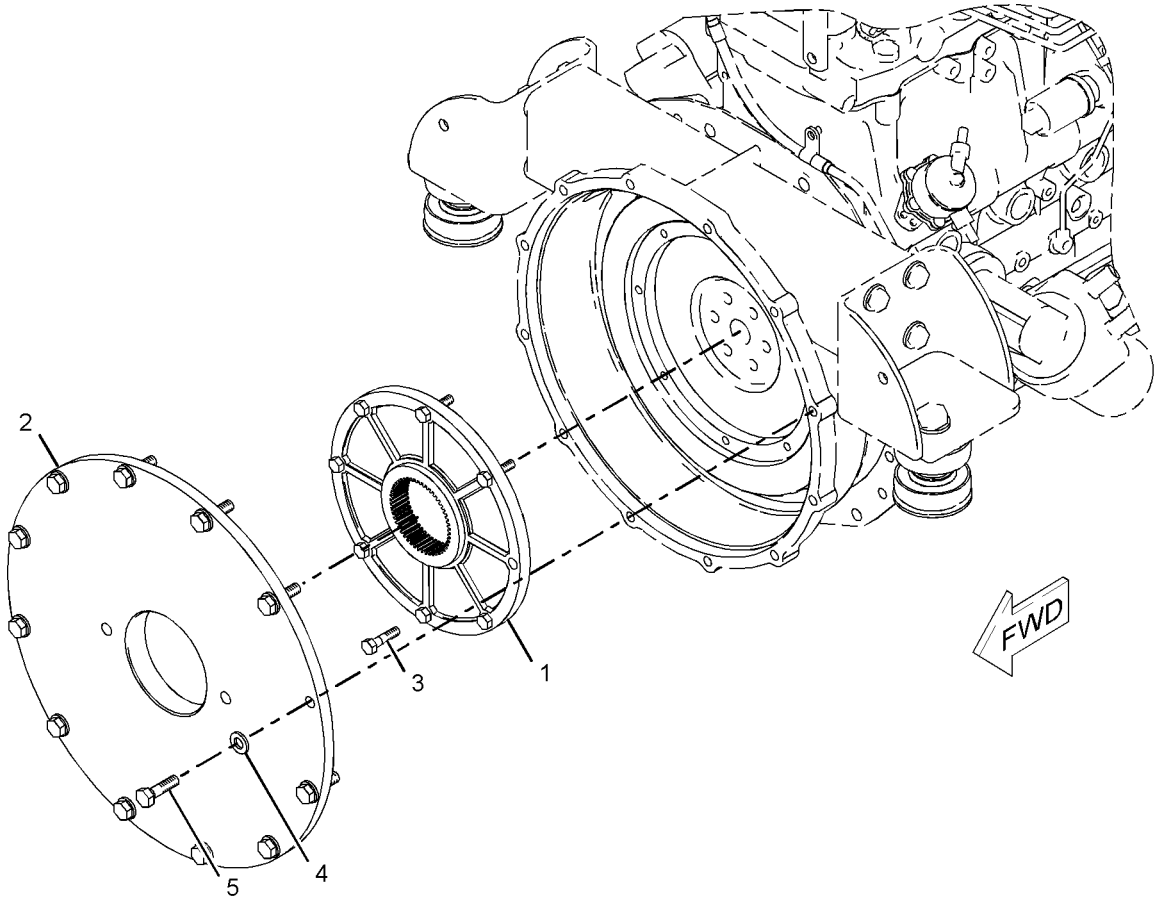

GRAPHIC #1 **<END>** g01030422

POWER TRAIN

358-6924 POWER TRAIN AR

S/N: MWD1-UP

PART OF 326-5416 COMMON AR

SMCS-3203, 4062, 5058, 5070 **i03906929**

NOTE	PART NUMBER	QTY	PART NAME 1 2 3 4 5 6 (PRODUCT LEVEL)	SEE PAGE
Y	*356-1937*	1	DRIVE GP-TANDEM	114
Y	*356-1938*	1	MOTOR & MTG GP-HYDROSTATIC	126
Y	*261-5660*	1	PUMP & MTG GP-HYDROSTATIC	131

Y-SEPARATE ILLUSTRATION

<END>

261-5660 PUMP & MTG GP-HYDROSTATIC

S/N: MWD1-UP

PART OF 358-6924 POWER TRAIN AR

SMCS-3203, 5070 **i03352681**

NOTE	REF NO	GRAPHIC REF	PART NUMBER	QTY	PART NAME 1 2 3 4 5 6 (PRODUCT LEVEL)	SEE PAGE
	1	1	**165-0142**	2	WASHER-HARD (14.8X27X3-MM THK)	
CY	2	1	**307-3064**	1	PUMP GP-PISTON	132
	3	1	**252-9167**	2	BOLT-SOCKET HEAD	
	4	1	**263-4997**	1	HUB AS-COUPLING	
		1	**096-0194**	1	RING-RETAINING	
M	5	1	**167-4339**	2	BOLT (M14X2X40-MM)	

C-CHANGE FROM PREVIOUS TYPE
M-METRIC PART
Y-SEPARATE ILLUSTRATION

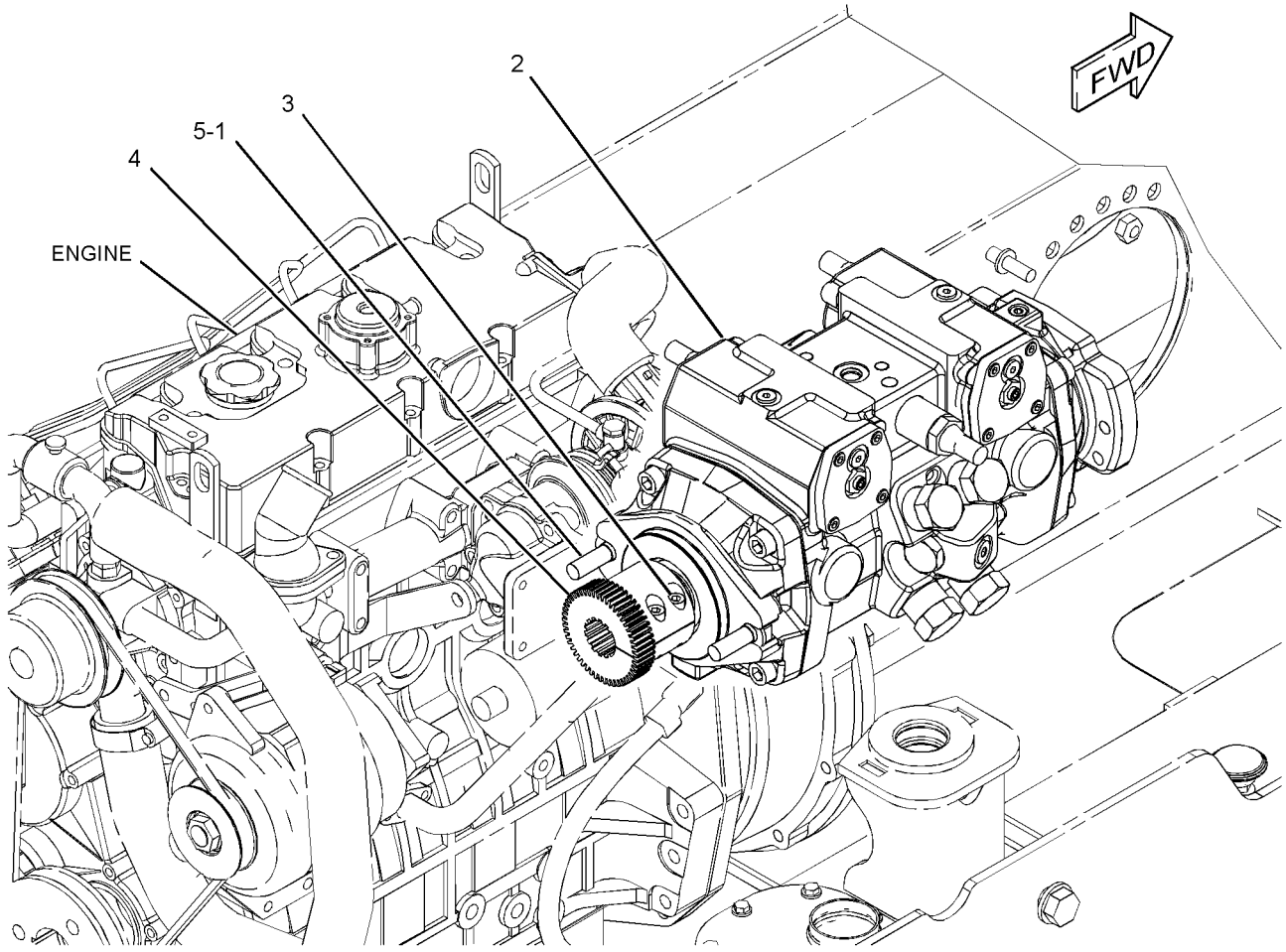

GRAPHIC #1 **<END>** g01846719

307-3064 PUMP GP-PISTON

S/N: MWD1-UP

PART OF 261-5660 PUMP & MTG GP-HYDROSTATIC

SMCS-3203, 5070, 5117, 5455, 5479 **i03971171**

NOTE	REF NO	GRAPHIC REF	PART NUMBER	QTY	PART NAME 1 2 3 4 5 6 (PRODUCT LEVEL)	SEE PAGE
	1	1	**6E-5060**	3	CAP AS	
J	2	1	**112-4719**	4	RING-BACKUP	
	3	1	**121-4459**	2	BEARING-ROLLER	
	4	1	**108-3565**	2	CLIP	
	5	1	**204-1454**	2	PIN-THREADED	
JM	6	1	**9T-4817**	2	NUT (M8X1-THD)	
	7	1	**204-1456**	1	SHIM	
	8	1	**280-7805**	1	VALVE GP-PUMP CONTROL (PISTON PUMP)	
	9	1	**204-1458**	4	VALVE GP-RELIEF (CROSSOVER)	
	10	1	**204-1459**	1	VALVE GP-RELIEF (CHARGE)	
J	11	1	**135-2655**	2	SEAL-O-RING	
	12	1	**3J-7354**	2	SEAL-O-RING	
J	13	1	**3K-0715**	1	SEAL-O-RING	
J	14	1	**6V-5326**	4	SEAL-O-RING	
J	15	1	**6V-5586**	2	SEAL-O-RING	
J	16	1	**6V-8352**	1	SEAL-O-RING	
M	17	1	**8T-0267**	8	BOLT-SOCKET HEAD (M6X1X12-MM)	
	18	1	**9S-8002**	2	PLUG-O-RING	
M	19	1	**9X-6606**	2	NUT-HEX (M10X1-THD)	
	20	1	**268-1929**	2	CRADLE	
	21	1	**107-0309**	2	BEARING	
	22	1	**204-1452**	3	RING-RETAINING	
J	23	1	**233-9744**	1	SEAL-LIP TYPE	
	24	1	**307-3075**	2	RACE-BEARING	
	25	1	**280-7865**	1	ROTATING GP-PUMP (LH)	
	26	1	**280-7863**	1	ROTATING GP-PUMP (RH)	
	27	1	**261-5659**	1	ORIFICE	
	28	1	**307-3074**	2	BEARING-ROLLER	
M	29	1	**8T-0273**	8	BOLT-SOCKET HEAD (M12X1.75X40-MM)	
					AVAILABLE REPAIR KIT(S):	
J			**268-9529**	1	KIT-SEAL	
					(ALSO INCLUDES SEAL-O-RINGS, SEAL LOCK NUTS, SPACERS, RING & SEALS)	

J-KIT MARKED J SERVICES PARTS MARKED J
M-METRIC PART

307-3064 PUMP GP-PISTON *(contd.)* **i03971171**

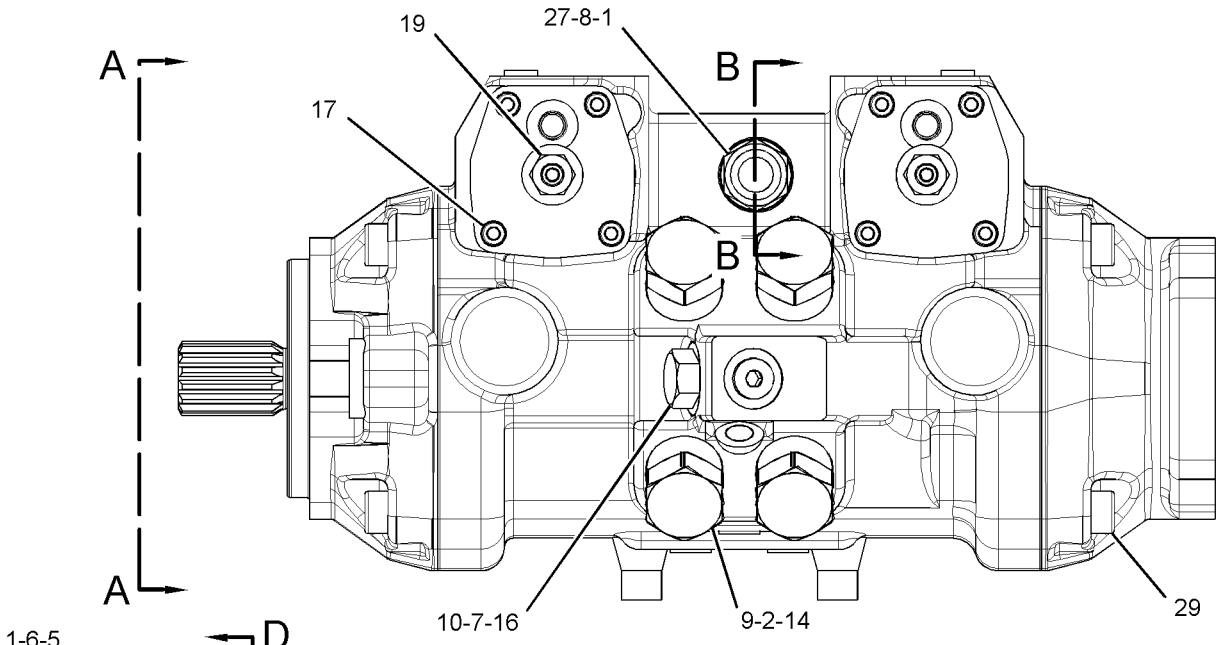

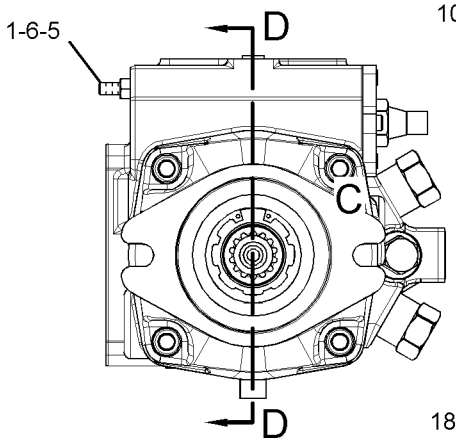

VIEW A-A

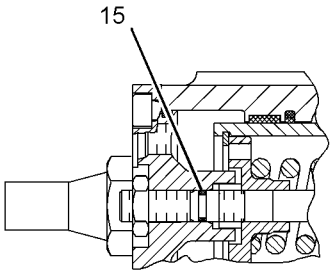

SECTION B-B

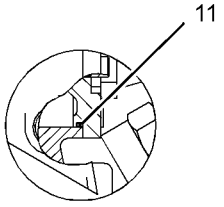

VIEW OF AREA C

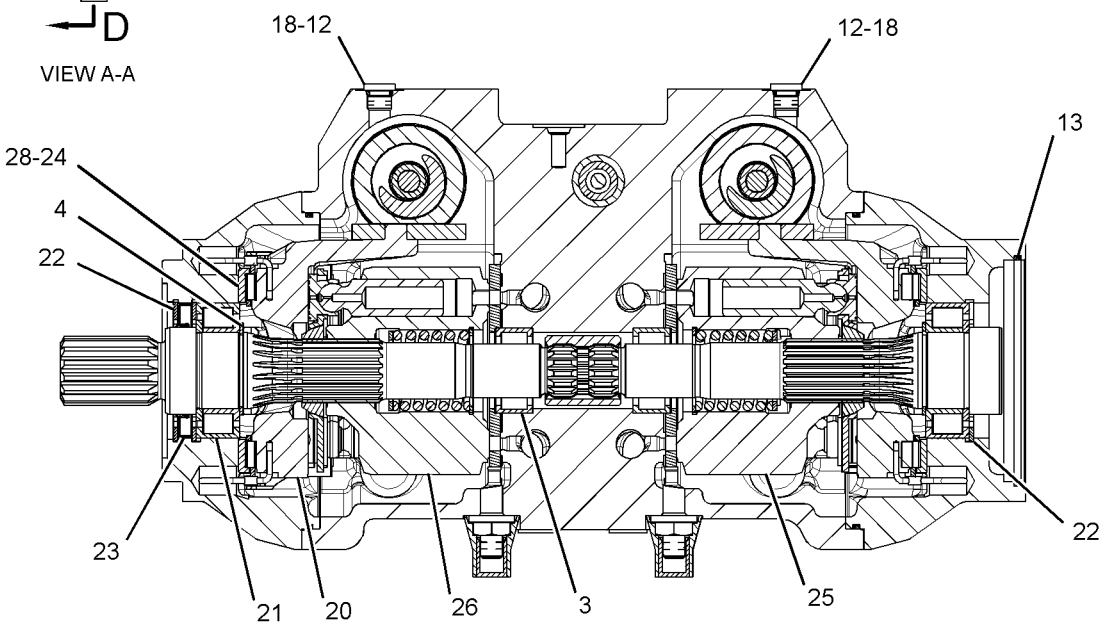

SECTION D-D

GRAPHIC #1 **<END>** g01842314

142-7484 TIRE & RIM GP–LH

S/N: MWD1-UP
(16.5X8.25). DIRECTIONAL TIRE
PART OF 142-8666 WHEEL & TIRE AR
AN ATTACHMENT

SMCS-4202 **i02578088**

NOTE	PART NUMBER	QTY	PART NAME 1 2 3 4 5 6 (PRODUCT LEVEL)	SEE PAGE
	150-8599	1	VALVE AS-TIRE	
	142-7485	1	WHEEL AS	
	142-7486	1	TIRE (10-16.5)	

<END>

150-8592 TIRE & RIM GP–RH

S/N: MWD1-UP
(16.5X8.25). DIRECTIONAL TIRE
PART OF 142-8666 WHEEL & TIRE AR
AN ATTACHMENT

SMCS-4202 **i02578156**

NOTE	PART NUMBER	QTY	PART NAME 1 2 3 4 5 6 (PRODUCT LEVEL)	SEE PAGE
	150-8599	1	VALVE AS-TIRE	
	142-7485	1	WHEEL AS	
	142-7486	1	TIRE (10-16.5)	

<END>

165-2605 TIRE & RIM GP–LH

S/N: MWD1-UP
(16.5X8.25). DIRECTIONAL TIRE
PART OF 165-2602 WHEEL & TIRE AR
AN ATTACHMENT

SMCS-4202 **i02362220**

NOTE	PART NUMBER	QTY	PART NAME 1 2 3 4 5 6 (PRODUCT LEVEL)	SEE PAGE
	150-8599	1	VALVE AS-TIRE	
	142-7490	1	WHEEL AS	
	165-4908	1	TIRE (10-16.5)	

<END>

165-2606 TIRE & RIM GP–RH

S/N: MWD1-UP
(16.5X8.25). DIRECTIONAL TIRE
PART OF 165-2602 WHEEL & TIRE AR
AN ATTACHMENT

SMCS-4202 **i02362218**

NOTE	PART NUMBER	QTY	PART NAME 1 2 3 4 5 6 (PRODUCT LEVEL)	SEE PAGE
	150-8599	1	VALVE AS-TIRE	
	142-7490	1	WHEEL AS	
	165-4908	1	TIRE (10-16.5)	

<END>

165-2609 TIRE & RIM GP–LH

S/N: MWD1-UP
(16.5X8.25). DIRECTIONAL TIRE
PART OF 165-4891 WHEEL & TIRE AR
AN ATTACHMENT

SMCS-4202 **i02362238**

NOTE	PART NUMBER	QTY	PART NAME 1 2 3 4 5 6 (PRODUCT LEVEL)	SEE PAGE
	150-8599	1	VALVE AS-TIRE	
	142-7485	1	WHEEL AS	
	165-4908	1	TIRE (10-16.5)	

<END>

165-2610 TIRE & RIM GP–RH

S/N: MWD1-UP
(16.5X8.25). DIRECTIONAL TIRE
PART OF 165-4891 WHEEL & TIRE AR
AN ATTACHMENT

SMCS-4202 **i02362235**

NOTE	PART NUMBER	QTY	PART NAME 1 2 3 4 5 6 (PRODUCT LEVEL)	SEE PAGE
	150-8599	1	VALVE AS-TIRE	
	142-7485	1	WHEEL AS	
	165-4908	1	TIRE (10-16.5)	

<END>

185-8670 TIRE & RIM GP–LH

S/N: MWD1-UP
(10X20.5). DIRECTIONAL TIRE
PART OF 185-8660 WHEEL & TIRE AR
AN ATTACHMENT

SMCS-4202 **i02362163**

NOTE	PART NUMBER	QTY	PART NAME 1 2 3 4 5 6 (PRODUCT LEVEL)	SEE PAGE
	150-8599	1	VALVE AS-TIRE	
	185-8668	1	WHEEL AS	
	185-9934	1	TIRE (265-521)	

<END>

185-8671 TIRE & RIM GP–RH

S/N: MWD1-UP
(10X20.5). DIRECTIONAL TIRE
PART OF 185-8660 WHEEL & TIRE AR
AN ATTACHMENT

SMCS-4202 **i02362161**

NOTE	PART NUMBER	QTY	PART NAME 1 2 3 4 5 6 (PRODUCT LEVEL)	SEE PAGE
	150-8599	1	VALVE AS-TIRE	
	185-8668	1	WHEEL AS	
	185-9934	1	TIRE (265-521)	

<END>

185-8672 TIRE & RIM GP–LH

S/N: MWD1-UP
(20.5X8). DIRECTIONAL TIRE
PART OF 185-8661 WHEEL & TIRE AR
AN ATTACHMENT

SMCS-4202 **i02362165**

NOTE	PART NUMBER	QTY	PART NAME 1 2 3 4 5 6 (PRODUCT LEVEL)	SEE PAGE
	150-8599	1	VALVE AS-TIRE	
	185-8669	1	WHEEL AS	
	185-9934	1	TIRE (265-521)	

<END>

185-8673 TIRE & RIM GP—RH

S/N: MWD1-UP
(521-MMX210-MM). DIRECTIONAL TIRE
PART OF 185-8661 WHEEL & TIRE AR
AN ATTACHMENT

SMCS-4202 **i02362171**

NOTE	PART NUMBER	QTY	PART NAME 1 2 3 4 5 6 (PRODUCT LEVEL)	SEE PAGE
	150-8599	1	VALVE AS-TIRE	
	185-8669	1	WHEEL AS	
	185-9934	1	TIRE (265-521)	

<END>

185-8678 TIRE & RIM GP—LH

S/N: MWD1-UP
(16.5X8.25). DIRECTIONAL TIRE
PART OF 185-8664 WHEEL & TIRE AR
AN ATTACHMENT

SMCS-4202 **i02361343**

NOTE	PART NUMBER	QTY	PART NAME 1 2 3 4 5 6 (PRODUCT LEVEL)	SEE PAGE
	150-8599	1	VALVE AS-TIRE	
	142-7485	1	WHEEL AS	
	185-9932	1	TIRE (10-16.5)	

<END>

185-8679 TIRE & RIM GP—RH

S/N: MWD1-UP
(16.5X8.25). DIRECTIONAL TIRE
PART OF 185-8664 WHEEL & TIRE AR
AN ATTACHMENT

SMCS-4202 **i02361345**

NOTE	PART NUMBER	QTY	PART NAME 1 2 3 4 5 6 (PRODUCT LEVEL)	SEE PAGE
	150-8599	1	VALVE AS-TIRE	
	142-7485	1	WHEEL AS	
	185-9932	1	TIRE (10-16.5)	

<END>

185-9926 TIRE & RIM GP–LH

S/N: MWD1-UP
(16.5X8.25). DIRECTIONAL TIRE
PART OF 185-8665 WHEEL & TIRE AR
AN ATTACHMENT

SMCS-4202 **i02362228**

NOTE	PART NUMBER	QTY	PART NAME 1 2 3 4 5 6 (PRODUCT LEVEL)	SEE PAGE
	150-8599	1	VALVE AS-TIRE	
	142-7490	1	WHEEL AS	
	185-9932	1	TIRE (10-16.5)	

<END>

185-9927 TIRE & RIM GP–RH

S/N: MWD1-UP
(16.5X8.25). DIRECTIONAL TIRE
PART OF 185-8665 WHEEL & TIRE AR
AN ATTACHMENT

SMCS-4202 **i02362230**

NOTE	PART NUMBER	QTY	PART NAME 1 2 3 4 5 6 (PRODUCT LEVEL)	SEE PAGE
	150-8599	1	VALVE AS-TIRE	
	142-7490	1	WHEEL AS	
	185-9932	1	TIRE (10-16.5)	

<END>

199-5434 TIRE & RIM GP–LH

S/N: MWD1-UP
(16.5X12). DIRECTIONAL TIRE
PART OF 142-9121 WHEEL & TIRE AR
AN ATTACHMENT

SMCS-4202 **i02361277**

NOTE	PART NUMBER	QTY	PART NAME 1 2 3 4 5 6 (PRODUCT LEVEL)	SEE PAGE
	150-8599	1	VALVE AS-TIRE	
	178-2270	1	WHEEL AS	
	199-5436	1	TIRE (31-15.5-16.5)	

<END>

199-5435 TIRE & RIM GP—RH

S/N: MWD1-UP
(16.5X12). DIRECTIONAL TIRE
PART OF 142-9121 WHEEL & TIRE AR
AN ATTACHMENT

SMCS-4202 **i02361622**

NOTE	PART NUMBER	QTY	PART NAME 1 2 3 4 5 6 (PRODUCT LEVEL)	SEE PAGE
	150-8599	1	VALVE AS-TIRE	
	178-2270	1	WHEEL AS	
	199-5436	1	TIRE (31-15.5-16.5)	

<END>

265-2894 TIRE & RIM GP—LH

S/N: MWD1-UP
(10X16.5)
PART OF 252-0344 WHEEL & TIRE AR
AN ATTACHMENT

SMCS-4202 **i02279688**

NOTE	PART NUMBER	QTY	PART NAME 1 2 3 4 5 6 (PRODUCT LEVEL)	SEE PAGE
	150-8599	1	VALVE AS-TIRE	
	142-7490	1	WHEEL AS	
	222-3962	1	TIRE (10-16.5)	

<END>

265-2895 TIRE & RIM GP—RH

S/N: MWD1-UP
(10X16.5)
PART OF 252-0344 WHEEL & TIRE AR
AN ATTACHMENT

SMCS-4202 **i02279722**

NOTE	PART NUMBER	QTY	PART NAME 1 2 3 4 5 6 (PRODUCT LEVEL)	SEE PAGE
	150-8599	1	VALVE AS-TIRE	
	142-7490	1	WHEEL AS	
	222-3962	1	TIRE (10-16.5)	

<END>

265-2896 TIRE & RIM GP—LH

S/N: MWD1-UP
(10X16.5)
PART OF 252-0345 WHEEL & TIRE AR
AN ATTACHMENT

SMCS-4202 **i02279732**

NOTE	PART NUMBER	QTY	PART NAME 1 2 3 4 5 6 (PRODUCT LEVEL)	SEE PAGE
	150-8599	1	VALVE AS-TIRE	
	142-7485	1	WHEEL AS	
	222-3962	1	TIRE (10-16.5)	

<END>

265-2897 TIRE & RIM GP—RH

S/N: MWD1-UP
(10X16.5)
PART OF 252-0345 WHEEL & TIRE AR
AN ATTACHMENT

SMCS-4202 **i02363184**

NOTE	PART NUMBER	QTY	PART NAME 1 2 3 4 5 6 (PRODUCT LEVEL)	SEE PAGE
	150-8599	1	VALVE AS-TIRE	
	142-7485	1	WHEEL AS	
	222-3962	1	TIRE (10-16.5)	

<END>

142-8666 WHEEL & TIRE AR

S/N: MWD1-UP
AN ATTACHMENT

SMCS-4200, 4201, 4203 **i02361114**

NOTE	PART NUMBER	QTY	PART NAME 1 2 3 4 5 6 (PRODUCT LEVEL)	SEE PAGE
Y	*142-7484*	2	TIRE & RIM GP (LH)	134
Y	*150-8592*	2	TIRE & RIM GP (RH)	134
	142-7493	32	NUT-LUG (9/16-18-2B THD)	

Y-SEPARATE ILLUSTRATION

<END>

142-9121 WHEEL & TIRE AR—HIGH FLOTATION

S/N: MWD1-UP
AN ATTACHMENT

SMCS-4200, 4201, 4203 **i02361138**

NOTE	PART NUMBER	QTY	PART NAME 1 2 3 4 5 6 (PRODUCT LEVEL)	SEE PAGE
Y	*199-5434*	2	TIRE & RIM GP (LH)	138
Y	*199-5435*	2	TIRE & RIM GP (RH)	139
	142-7493	32	NUT-LUG (9/16-18-2B THD)	

Y-SEPARATE ILLUSTRATION

<END>

165-2602 WHEEL & TIRE AR—HEAVY DUTY

S/N: MWD1-UP
AN ATTACHMENT

SMCS-4200, 4201, 4203 **i02361177**

NOTE	PART NUMBER	QTY	PART NAME 1 2 3 4 5 6 (PRODUCT LEVEL)	SEE PAGE
Y	*165-2605*	2	TIRE & RIM GP (LH)	134
Y	*165-2606*	2	TIRE & RIM GP (RH)	135
	142-7493	32	NUT-LUG (9/16-18-2B THD)	

Y-SEPARATE ILLUSTRATION

<END>

165-4891 WHEEL & TIRE AR—HEAVY DUTY

S/N: MWD1-UP
AN ATTACHMENT

SMCS-4200, 4201, 4203 **i02361179**

NOTE	PART NUMBER	QTY	PART NAME 1 2 3 4 5 6 (PRODUCT LEVEL)	SEE PAGE
Y	*165-2609*	2	TIRE & RIM GP (LH)	135
Y	*165-2610*	2	TIRE & RIM GP (RH)	135
	142-7493	32	NUT-LUG (9/16-18-2B THD)	

Y-SEPARATE ILLUSTRATION

<END>

185-8660 WHEEL & TIRE AR—LOW SIDE WALL

S/N: MWD1-UP
AN ATTACHMENT

SMCS-4200, 4201, 4203 **i02361192**

NOTE	PART NUMBER	QTY	PART NAME 1 2 3 4 5 6 (PRODUCT LEVEL)	SEE PAGE
Y	*185-8670*	2	TIRE & RIM GP (LH)	136
Y	*185-8671*	2	TIRE & RIM GP (RH)	136
	142-7493	32	NUT-LUG (9/16-18-2B THD)	

Y-SEPARATE ILLUSTRATION

<END>

185-8661 WHEEL & TIRE AR—LOW SIDE WALL

S/N: MWD1-UP
AN ATTACHMENT

SMCS-4200, 4201, 4203 **i02361196**

NOTE	PART NUMBER	QTY	PART NAME 1 2 3 4 5 6 (PRODUCT LEVEL)	SEE PAGE
Y	*185-8672*	2	TIRE & RIM GP (LH)	136
Y	*185-8673*	2	TIRE & RIM GP (RH)	137
	142-7493	32	NUT-LUG (9/16-18-2B THD)	

Y-SEPARATE ILLUSTRATION

<END>

POWER TRAIN

185-8664 WHEEL & TIRE AR—HEAVY DUTY

S/N: MWD1-UP

AN ATTACHMENT

SMCS-4200, 4201, 4203 **i02361199**

NOTE	PART NUMBER	QTY	PART NAME 1 2 3 4 5 6 (PRODUCT LEVEL)	SEE PAGE
Y	*185-8678*	2	TIRE & RIM GP (LH)	137
Y	*185-8679*	2	TIRE & RIM GP (RH)	137
	142-7493	32	NUT-LUG (9/16-18-2B THD)	

Y-SEPARATE ILLUSTRATION

<END>

185-8665 WHEEL & TIRE AR—HEAVY DUTY

S/N: MWD1-UP

AN ATTACHMENT

SMCS-4200, 4201, 4203 **i02361201**

NOTE	PART NUMBER	QTY	PART NAME 1 2 3 4 5 6 (PRODUCT LEVEL)	SEE PAGE
Y	*185-9926*	2	TIRE & RIM GP (LH)	138
Y	*185-9927*	2	TIRE & RIM GP (RH)	138
	142-7493	32	NUT-LUG (9/16-18-2B THD)	

Y-SEPARATE ILLUSTRATION

<END>

252-0344 WHEEL & TIRE AR

S/N: MWD1-UP

AN ATTACHMENT

SMCS-4200, 4201, 4203 **i02279641**

NOTE	PART NUMBER	QTY	PART NAME 1 2 3 4 5 6 (PRODUCT LEVEL)	SEE PAGE
Y	**265-2895**	2	TIRE & RIM GP (RH)	139
Y	**265-2894**	2	TIRE & RIM GP (LH)	139
	142-7493	32	NUT-LUG (9/16-18-2B THD)	

Y-SEPARATE ILLUSTRATION

<END>

252-0345 WHEEL & TIRE AR

S/N: MWD1-UP

AN ATTACHMENT

SMCS-4200, 4201, 4203 **i02279670**

NOTE	PART NUMBER	QTY	PART NAME 1 2 3 4 5 6 (PRODUCT LEVEL)	SEE PAGE
Y	**265-2896**	2	TIRE & RIM GP (LH)	140
Y	**265-2897**	2	TIRE & RIM GP (RH)	140
	142-7493	32	NUT-LUG (9/16-18-2B THD)	

Y-SEPARATE ILLUSTRATION

<END>

252-0367 WHEEL & TIRE AR—SOLID

S/N: MWD1-UP
AN ATTACHMENT

SMCS-4200, 4201, 4203 **i02279677**

NOTE	PART NUMBER	QTY	PART NAME 1 2 3 4 5 6 (PRODUCT LEVEL)	SEE PAGE
	142-7493	32	NUT-LUG (9/16-18-2B THD)	
	226-3736	2	TIRE-SOLID (31X6X10)	
	226-3737	2	TIRE-SOLID (31X6X10)	

<END>

252-0378 WHEEL & TIRE AR—SOLID

S/N: MWD1-UP
AN ATTACHMENT

SMCS-4200, 4201, 4203 **i02279683**

NOTE	PART NUMBER	QTY	PART NAME 1 2 3 4 5 6 (PRODUCT LEVEL)	SEE PAGE
	142-7493	32	NUT-LUG (9/16-18-2B THD)	
	226-3736	2	TIRE-SOLID (31X6X10)	
	226-3737	2	TIRE-SOLID (31X6X10)	

<END>

218-5650 BUMPER GP–REAR

S/N: MWD1-UP

PART OF 326-4781 CHASSIS AR

SMCS-7156 **i01948738**

NOTE	REF NO	GRAPHIC REF	PART NUMBER	QTY	PART NAME 1 2 3 4 5 6 (PRODUCT LEVEL)	SEE PAGE
	1	1	**218-5647**	2	SPACER	
	2	1	**218-5651**	1	BUMPER AS	
	3	1	**218-5773**	1	PLATE	
	4	1	**229-4895**	2	BOLT-WHEEL	
	5	1	**8T-4122**	6	WASHER-HARD (17X32X3.5-MM THK)	
M	6	1	**8T-4132**	4	NUT (M16X2-THD)	
M	7	1	**8T-7338**	2	BOLT (M16X2X45-MM)	

M-METRIC PART

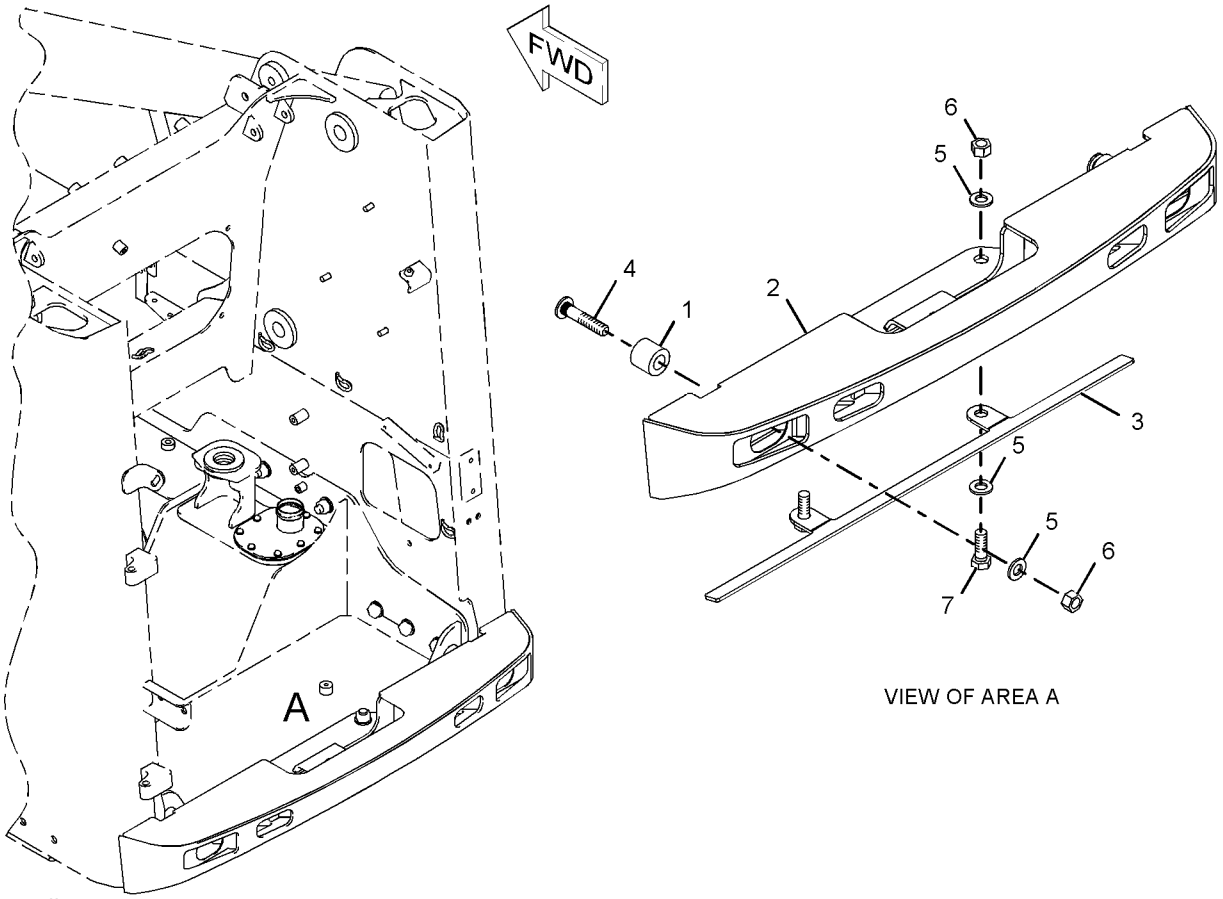

VIEW OF AREA A

GRAPHIC #1 **<END>** g01019651

278-1292 CONVERSION GP-ROADING–GERMANY

S/N: MWD1-UP

PART OF 326-5527, 326-5567 CONVERSION AR-MACHINE

AN ATTACHMENT

SMCS-7000 **i03971192**

NOTE	REF NO	GRAPHIC REF	PART NUMBER	QTY	PART NAME 1 2 3 4 5 6 (PRODUCT LEVEL)	SEE PAGE
	1	1	**246-2641**	1	PADLOCK GP	
		1	**5P-8500**	1	KEY	
	2	1	**113-7634**	1	FILM-WARNING (STEERING)	
	3	1	**258-3849**	1	PLATE-IDENTIFICATION (ENGLISH, GERMAN, ITALIAN)	
	4	1	**8T-4205**	5	WASHER-HARD (7.2X14.5X2-MM THK)	
	5	1	**173-3015**	1	BRACKET AS	
	6	1	**173-3016**	1	CHOCK	
	7	1	**173-3018**	1	BRACKET	
M	8	1	**8T-4171**	5	BOLT (M6X1X12-MM)	

M-METRIC PART

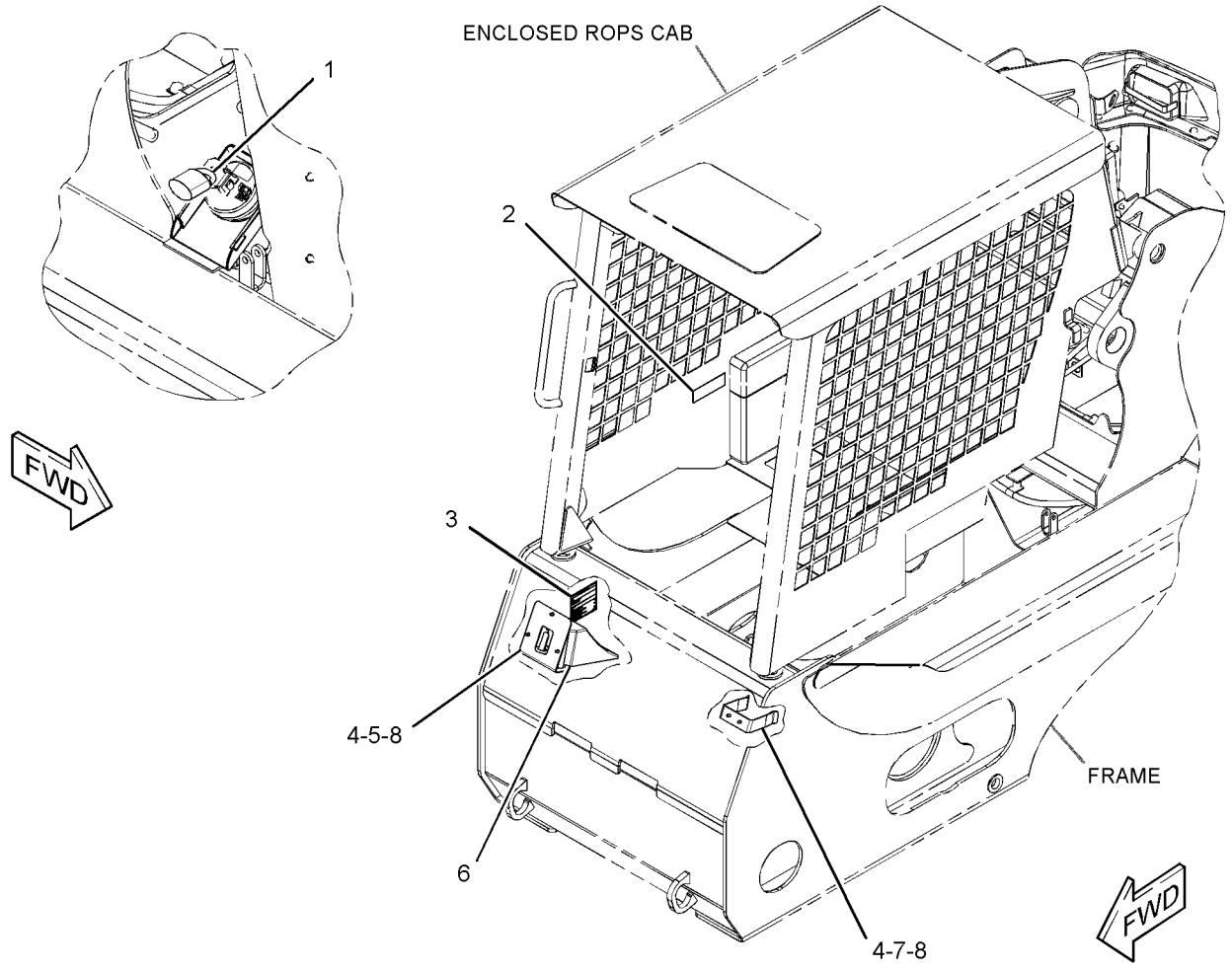

GRAPHIC #1 **<END>** g02162519

278-1293 CONVERSION GP-ROADING–ITALY

S/N: MWD1-UP

PART OF 326-5487, 326-5557 CONVERSION AR-MACHINE AN ATTACHMENT

SMCS-7000 **i03644781**

NOTE	REF NO	GRAPHIC REF	PART NUMBER	QTY	PART NAME 1 2 3 4 5 6 (PRODUCT LEVEL)	SEE PAGE
C	1	1	**142-9327**	1	SWITCH AS-ROCKER (WARNING BEACON)	
		1	**111-7899**	1	GASKET	
	2	1	**186-2360**	4	COVER AS	
					(EACH INCLUDES)	
E		1	**129-1854**		FASTENER-LOOP (10-CM)	
E		1	**129-1855**		FASTENER-HOOK (10-CM)	
	3	1	**258-3849**	1	PLATE-IDENTIFICATION (ENGLISH, GERMAN, ITALIAN)	
CY	4	1	**309-1325**	1	LAMP GP-WARNING BEACON (12-VOLT, AMBER)	88

C-CHANGE FROM PREVIOUS TYPE
E-ORDER BY THE CENTIMETER
Y-SEPARATE ILLUSTRATION

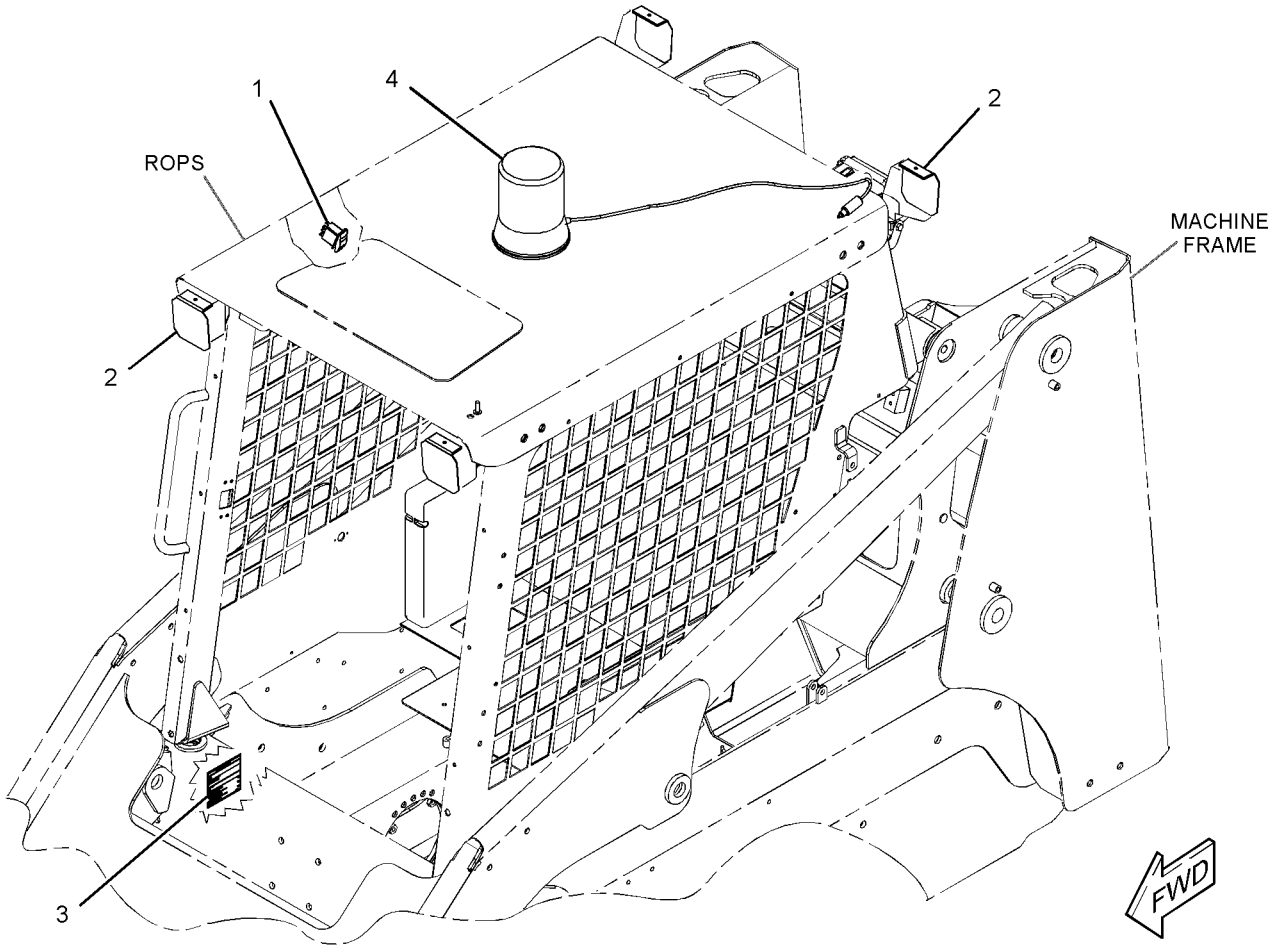

GRAPHIC #1 **<END>** g01956132

142-8830 COUNTERWEIGHT GP

S/N: MWD1-UP
41.2-KG (90.5-LBS)
PART OF 326-5416 COMMON AR

SMCS-7056 **i01883925**

NOTE	REF NO	GRAPHIC REF	PART NUMBER	QTY	PART NAME 1 2 3 4 5 6 (PRODUCT LEVEL)	SEE PAGE
	1	1	**177-9580**	10	BLOCK	
	2	1	**7X-0590**	2	WASHER-HARD (13.5X44.5X6MM THK)	
M	3	1	**8T-7930**	2	BOLT (M12X1.75X160MM)	

M-METRIC PART

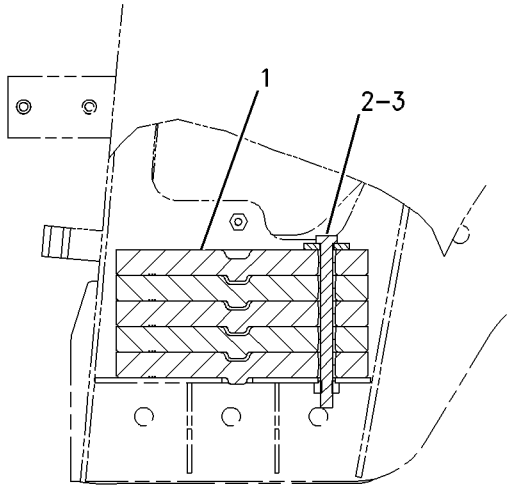

SECTION A-A

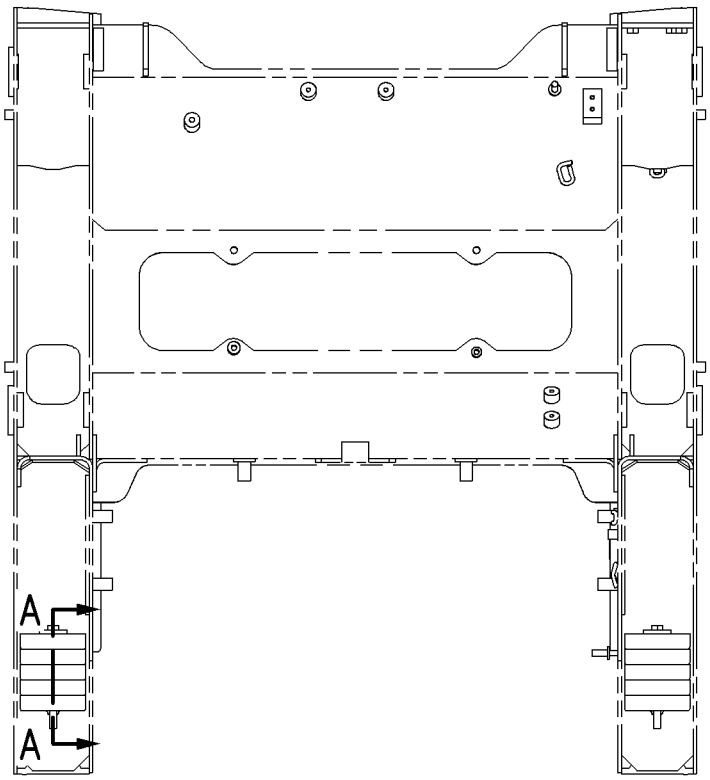

REAR VIEW

GRAPHIC #1 **<END>** g00914383

FRAME AND BODY

183-7122 COUNTERWEIGHT GP

S/N: MWD1-UP
84.3KG (185.46 LBS)
AN ATTACHMENT

SMCS-7056 **i01763195**

NOTE	REF NO	GRAPHIC REF	PART NUMBER	QTY	PART NAME 1 2 3 4 5 6 (PRODUCT LEVEL)	SEE PAGE
	1	1	**183-7123**	1	BLOCK (LH) (33.70 KG)	
	2	1	**183-7124**	1	BLOCK (RH) (33.70 KG)	
	3	1	**183-7131**	2	BLOCK (16.90 KG)	
M	4	1	**8T-4189**	4	BOLT (M8X1.25X20-MM)	
	5	1	**8T-4223**	4	WASHER-HARD (13.5X25.5X3-MM THK)	
	6	1	**8T-4224**	4	WASHER-HARD (8.8X16X2-MM THK)	
M	7	1	**8T-4648**	4	BOLT (M12X1.75X70-MM)	

M-METRIC PART

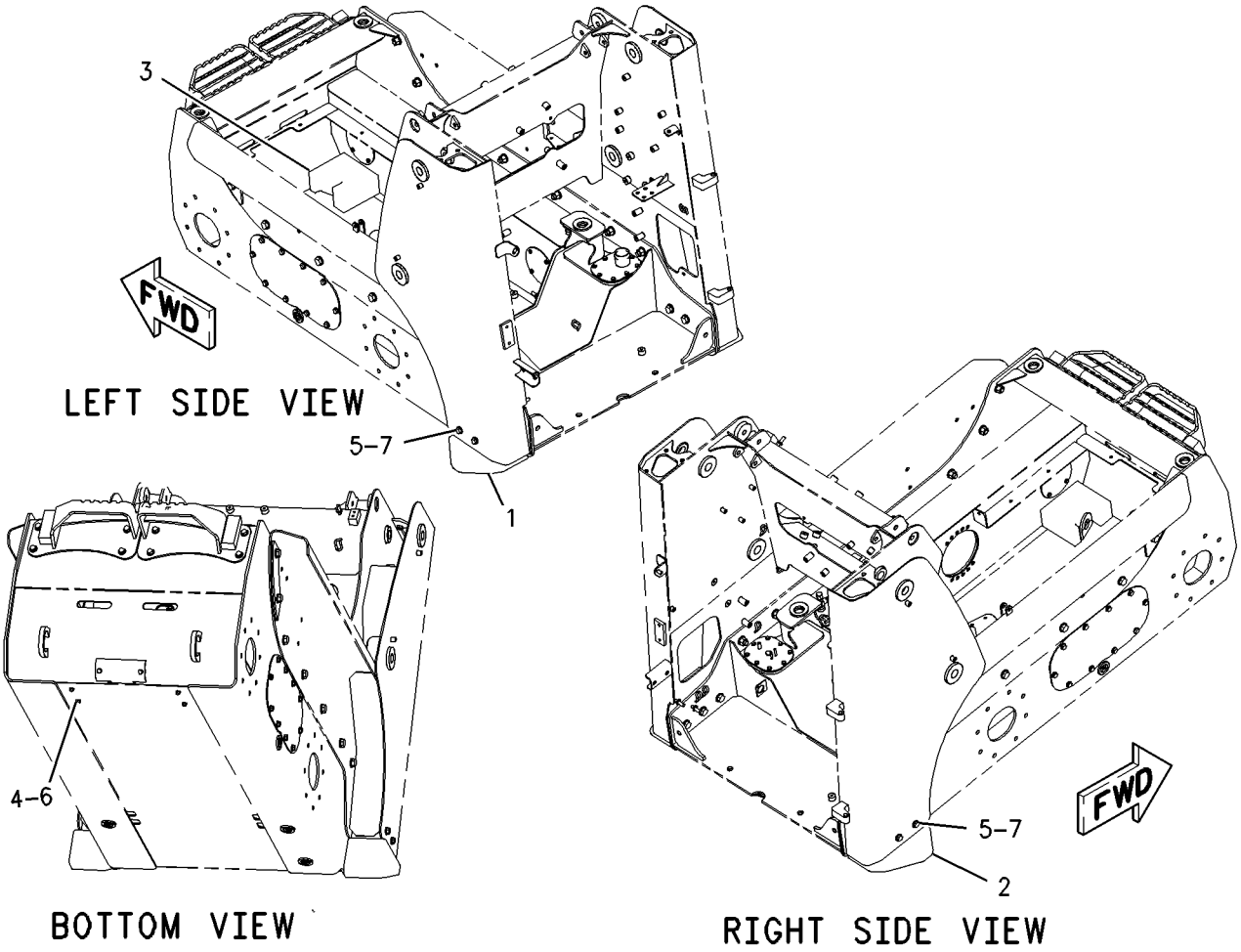

GRAPHIC #1 **<END>** g00902035

326-5609 ENCLOSURE GP-ENGINE

S/N: MWD1-UP

PART OF 326-4781 CHASSIS AR

SMCS-7263, 7273 **i03959950**

NOTE	REF NO	GRAPHIC REF	PART NUMBER	QTY	PART NAME 1 2 3 4 5 6 (PRODUCT LEVEL)	SEE PAGE
	1	1	**142-8801**	1	HOOD AS	
	2	1	**142-8831**	1	STRIKER AS	
	3	1	**142-8832**	1	PIN AS	
	4	1	**159-8405**	2	BOLT-SPECIAL	
	5	1	**223-4240**	1	LATCH AS	
	6	1	*224-3875*	1	LOCK GP (ENGINE)	
J		1	**226-0291**	1	LOCK AS	
		1	**233-4872**	1	CAM	
	7	1	**308-6767**	2	BUMPER AS	
	8	1	**326-5610**	1	DOOR AS-ACCESS	
M	9	1	**131-3540**	3	LOCKNUT (M8X1.25-THD)	
	10	1	**2K-4973**	2	LOCKNUT (3/8-16-THD)	
M	11	1	**5C-7261**	2	NUT (M8X1.25-THD)	
	12	1	**5P-4116**	11	WASHER-HARD (8.8X20.5X2-MM THK)	
M	13	1	**7X-2537**	3	BOLT (M8X1.25X35-MM)	
	14	1	**7X-7729**	2	WASHER (11X25X3-MM THK)	
M	15	1	**8T-4137**	2	BOLT (M10X1.5X20-MM)	
M	16	1	**8T-4181**	4	BOLT (M6X1X20-MM)	
	17	1	**8T-4205**	4	WASHER-HARD (7.2X14.5X2-MM THK)	
M	18	1	**8T-4908**	5	BOLT (M8X1.25X25-MM)	

J-REQUIRES CORPORATE KEY
M-METRIC PART

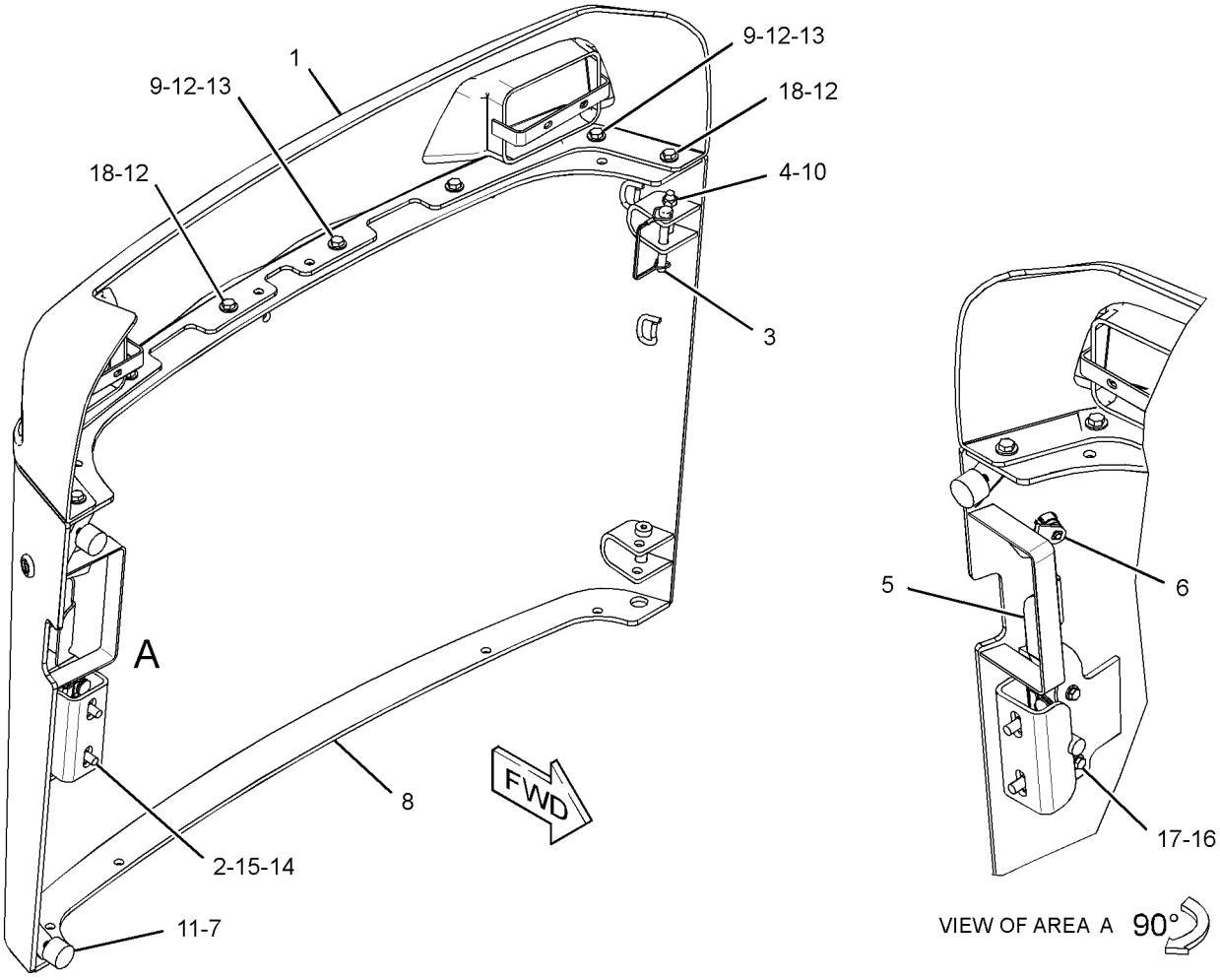

GRAPHIC #1 **<END>** g02146601

326-4788 FRAME GP-LOADER

S/N: MWD1-UP

PART OF 326-4781 CHASSIS AR

SMCS-7054 **i03959954**

NOTE	REF NO	GRAPHIC REF	PART NUMBER	QTY	PART NAME 1 2 3 4 5 6 (PRODUCT LEVEL)	SEE PAGE
	1	1	**3S-9182**	5	PLUG-MAGNETIC (FRAME)	
	2	1	**9G-5127**	2	BREATHER (EXHAUST BYPASS)	
	3	1	**142-8810**	1	PLATE AS	
	4	1	**142-8823**	2	GASKET	
	5	1	**142-8897**	2	COVER	
	6	1	**191-9576**	1	COVER AS	
	7	1	**207-9731**	1	STEP AS (LH)	
	8	1	**207-9732**	1	STEP AS (RH)	
	9	1	**231-2105**	1	SENDER AS-FUEL LEVEL	
		1	**102-8802**	1	KIT-RECEPTACLE (2-PIN)	
					(INCLUDES RECEPTACLE AS & WEDGE)	
		1	**186-3735**	2	PIN-CONNECTOR (16-GA TO 18-GA)	
	10	1	**261-6101**	4	COVER	
	11	1	**295-7176**	1	PLATE	
Y	12	1	*326-5426*	1	FRAME GP-MACHINE	153
	13	1	**5P-1076**	16	WASHER-HARD (13.5X30X4-MM THK)	
	14	1	**5P-4116**	4	WASHER-HARD (8.8X20.5X2-MM THK)	
M	15	1	**6V-7357**	2	BOLT (M6X1X25-MM)	
	16	1	**8T-4121**	20	WASHER-HARD (11X21X2.5-MM THK)	
	17	1	**8T-4122**	32	WASHER-HARD (17X32X3.5-MM THK)	
M	18	1	**8T-4132**	16	NUT (M16X2-THD)	
M	19	1	**8T-4136**	20	BOLT (M10X1.5X25-MM)	
M	20	1	**8T-4194**	8	BOLT (M12X1.75X50-MM)	
	21	1	**8T-4205**	18	WASHER-HARD (7.2X14.5X2-MM THK)	
M	22	1	**8T-4244**	8	NUT (M12X1.75-THD)	
M	23	1	**8T-4908**	4	BOLT (M8X1.25X25-MM)	
M	24	1	**8T-4970**	16	BOLT (M6X1X14-MM)	
M	25	1	**8T-7338**	16	BOLT (M16X2X45-MM)	
BF			**228-9222**	1	SHIM (3-MM THK)	

B-USE AS REQUIRED
F-NOT SHOWN
M-METRIC PART
Y-SEPARATE ILLUSTRATION

326-4788 **FRAME GP-LOADER** *(contd.)* **i03959954**

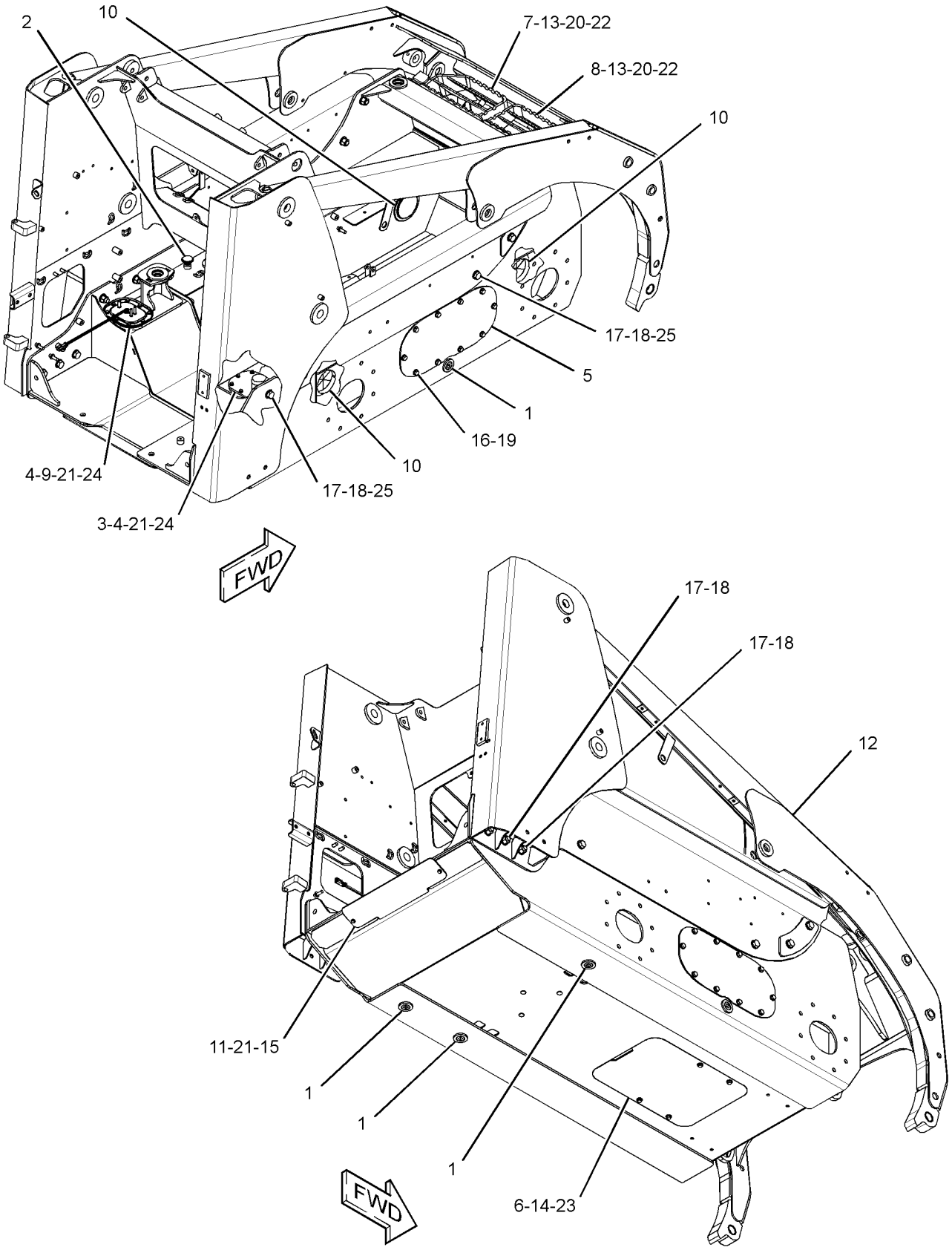

GRAPHIC #1 **<END>** g02149221

326-5426 FRAME GP-MACHINE

S/N: MWD1-UP

PART OF 326-4788 FRAME GP-LOADER

SMCS-6119, 7050 **i03906912**

NOTE	PART NUMBER	QTY	PART NAME 1 2 3 4 5 6 (PRODUCT LEVEL)	SEE PAGE
Y	**218-6798**	1	ARM AS-LIFT	242
	326-4678	1	FRAME AS-UPPER	
	326-4674	1	FRAME AS-LOWER	

Y-SEPARATE ILLUSTRATION

<END>

FRAME AND BODY

156-9809 GUIDE GP-LINES

S/N: MWD1-UP

PART OF 326-4781 CHASSIS AR

SMCS-5057 **i02059887**

NOTE	REF NO	GRAPHIC REF	PART NUMBER	QTY	PART NAME 1 2 3 4 5 6 (PRODUCT LEVEL)	SEE PAGE
	1	1	**227-4315**	1	PLATE AS	
	2	1	**247-4877**	1	BOLT (M8X1.25X12-MM)	
M	3	1	**6V-9189**	1	LOCKNUT (M8X1.25-THD)	
	4	1	**7X-0603**	2	WASHER-HARD (9.9X35X2.5-MM THK)	
M	5	1	**8T-4177**	1	BOLT (M8X1.25X90-MM)	
	6	1	**8T-4224**	1	WASHER-HARD (8.8X16X2-MM THK)	

M-METRIC PART

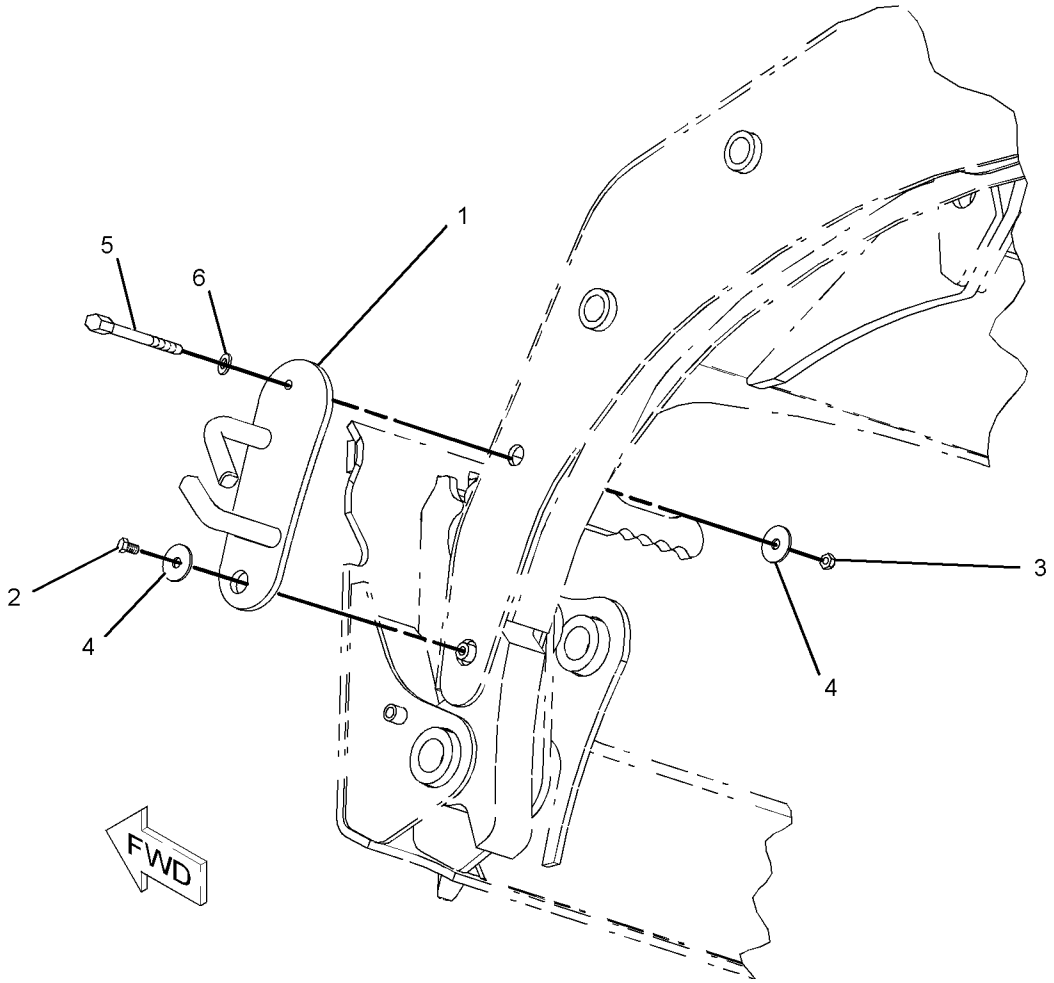

GRAPHIC #1 **<END>** g01056800

218-6708 LIFTING GP-MACHINE

S/N: MWD1-UP

PART OF 326-5287, 326-5297, 326-5487, 326-5527, 326-5557, 326-5567 CONVERSION AR-MACHINE

AN ATTACHMENT

SMCS-1122, 6459, 7000 **i03971215**

NOTE	REF NO	GRAPHIC REF	PART NUMBER	QTY	PART NAME 1 2 3 4 5 6 (PRODUCT LEVEL)	SEE PAGE
	1	1	**7E-2700**	4	FILM-INFORMATION (LIFT EYE LOCATION)	
	2	1	**142-8826**	4	PLATE-LIFT	
	3	1	**218-6711**	1	PLATE AS	
	4	1	**218-6726**	1	PLATE AS	
M	5	1	**159-2953**	8	SCREW-FLAT HEAD (M16X2-THD)	
	6	1	**8T-4121**	4	WASHER-HARD (11X21X2.5-MM THK)	
	7	1	**8T-4122**	4	WASHER-HARD (17X32X3.5-MM THK)	
M	8	1	**8T-4132**	4	NUT (M16X2-THD)	
M	9	1	**8T-4137**	4	BOLT (M10X1.5X20-MM)	

M-METRIC PART

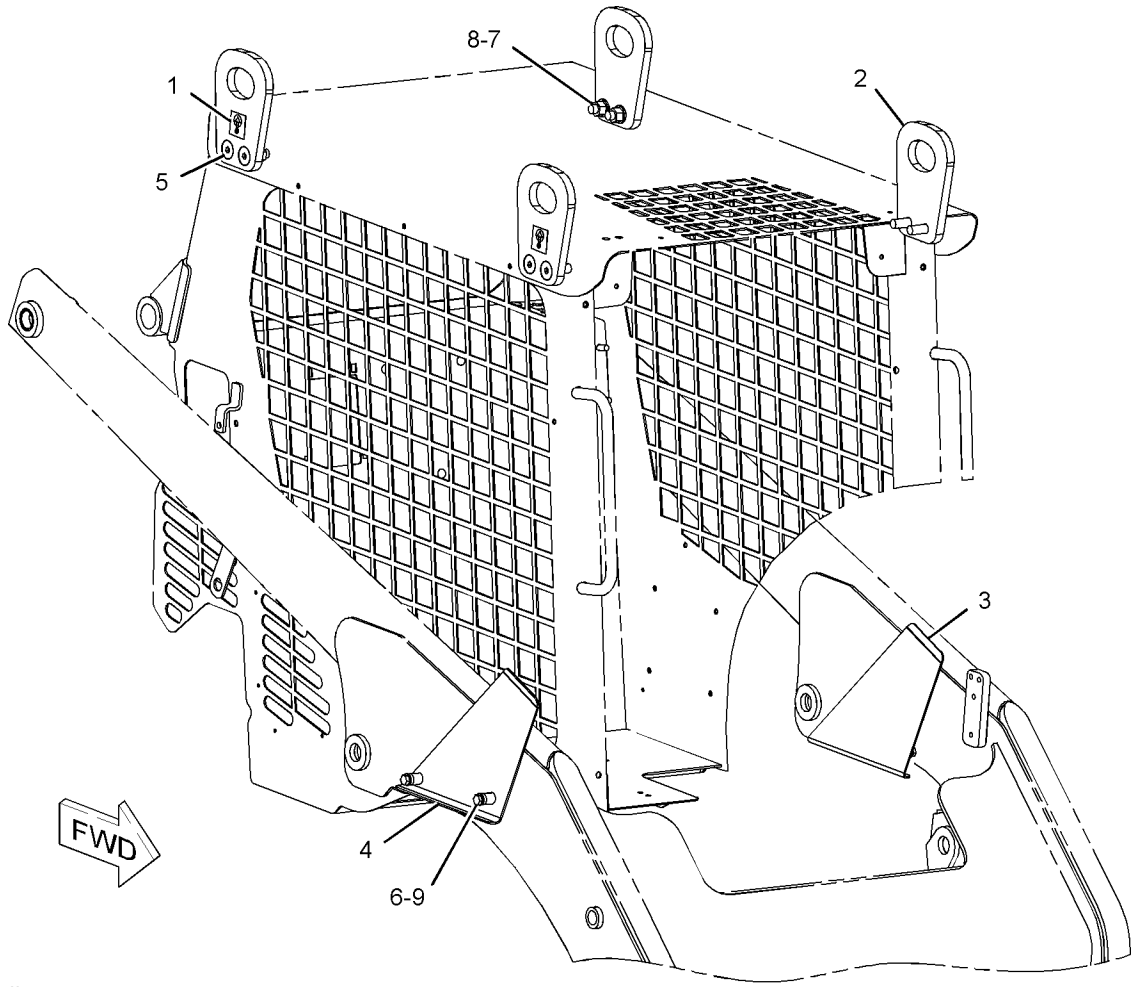

GRAPHIC #1 **<END>** g01015781

FRAME AND BODY

218-6709 LIFTING GP-MACHINE

S/N: MWD1-UP

AN ATTACHMENT

SMCS-1122, 6459, 7000 **i03973569**

NOTE	REF NO	GRAPHIC REF	PART NUMBER	QTY	PART NAME 1 2 3 4 5 6 (PRODUCT LEVEL)	SEE PAGE
	1	1	**5P-0372**	2	LOCK PIN	
	2	1	**7E-2700**	2	FILM-INFORMATION (LIFT EYE LOCATION)	
	3	1	**9C-5344**	1	SPACER (10.5X20X18-MM THK)	
	4	1	**095-1325**	1	PIN-CLEVIS	
	5	1	**152-1154**	1	BRACKET AS-LIFT	
	6	1	**152-1156**	4	PLATE	
	7	1	**153-2683**	1	SPRING AS-GAS (LOCKING)	
	8	1	**177-3405**	1	PIN	
	9	1	**218-6711**	1	PLATE AS	
	10	1	**218-6726**	1	PLATE AS	
M	11	1	**159-2953**	8	SCREW-FLAT HEAD (M16X2-THD)	
	12	1	**8T-4121**	4	WASHER-HARD (11X21X2.5-MM THK)	
	13	1	**8T-4122**	4	WASHER-HARD (17X32X3.5-MM THK)	
M	14	1	**8T-4132**	4	NUT (M16X2-THD)	
M	15	1	**8T-4137**	4	BOLT (M10X1.5X20-MM)	

M-METRIC PART

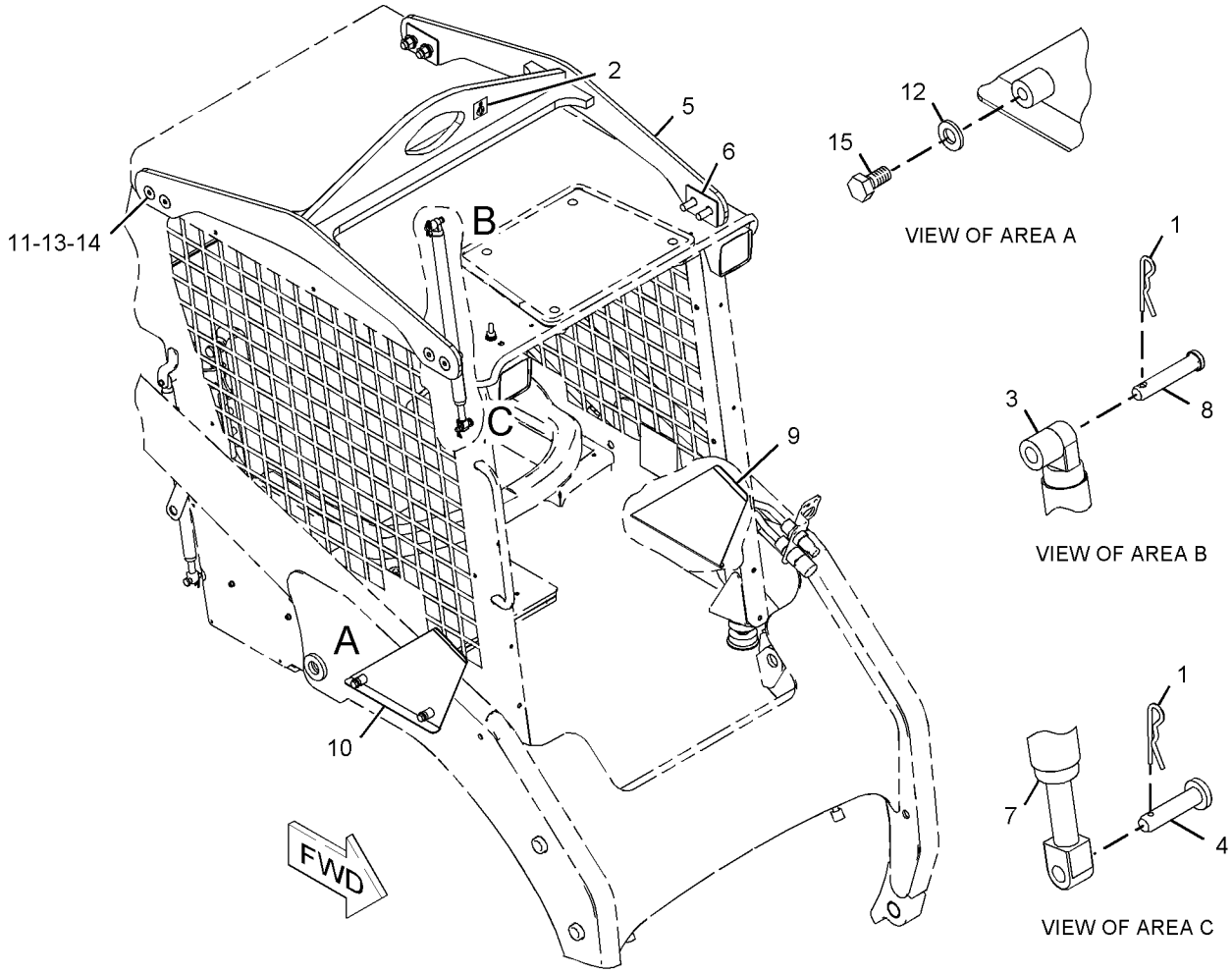

GRAPHIC #1 **<END>** g01030934

238-7671 MIRROR & MTG GP-REAR VIEW–
WITH ROADING LIGHT MOUNT
S/N: MWD1-UP
PART OF 326-5487, 326-5527 CONVERSION AR-MACHINE
AN ATTACHMENT

SMCS-7319 **i03971217**

NOTE	REF NO	GRAPHIC REF	PART NUMBER	QTY	PART NAME 1 2 3 4 5 6 (PRODUCT LEVEL)	SEE PAGE
	1	1	**132-5166**	2	MIRROR GP-REAR VIEW	
					(EACH INCLUDES)	
		1	**148-2371**	1	CLAMP (TOP)	
		1	**148-2372**	1	CLAMP (BOTTOM)	
	2	1	**175-4237**	1	BLOCK AS	
	3	1	**175-4239**	2	BRACKET AS	
	4	1	**238-7675**	2	PLATE	
M	5	1	**5C-9553**	4	BOLT (M6X1X16-MM)	
	6	1	**8T-4121**	4	WASHER-HARD (11X21X2.5-MM THK)	
M	7	1	**8T-4133**	2	NUT (M10X1.5-THD)	
M	8	1	**8T-4178**	2	BOLT (M10X1.5X90-MM)	
	9	1	**8T-4205**	4	WASHER-HARD (7.2X14.5X2-MM THK)	

M-METRIC PART

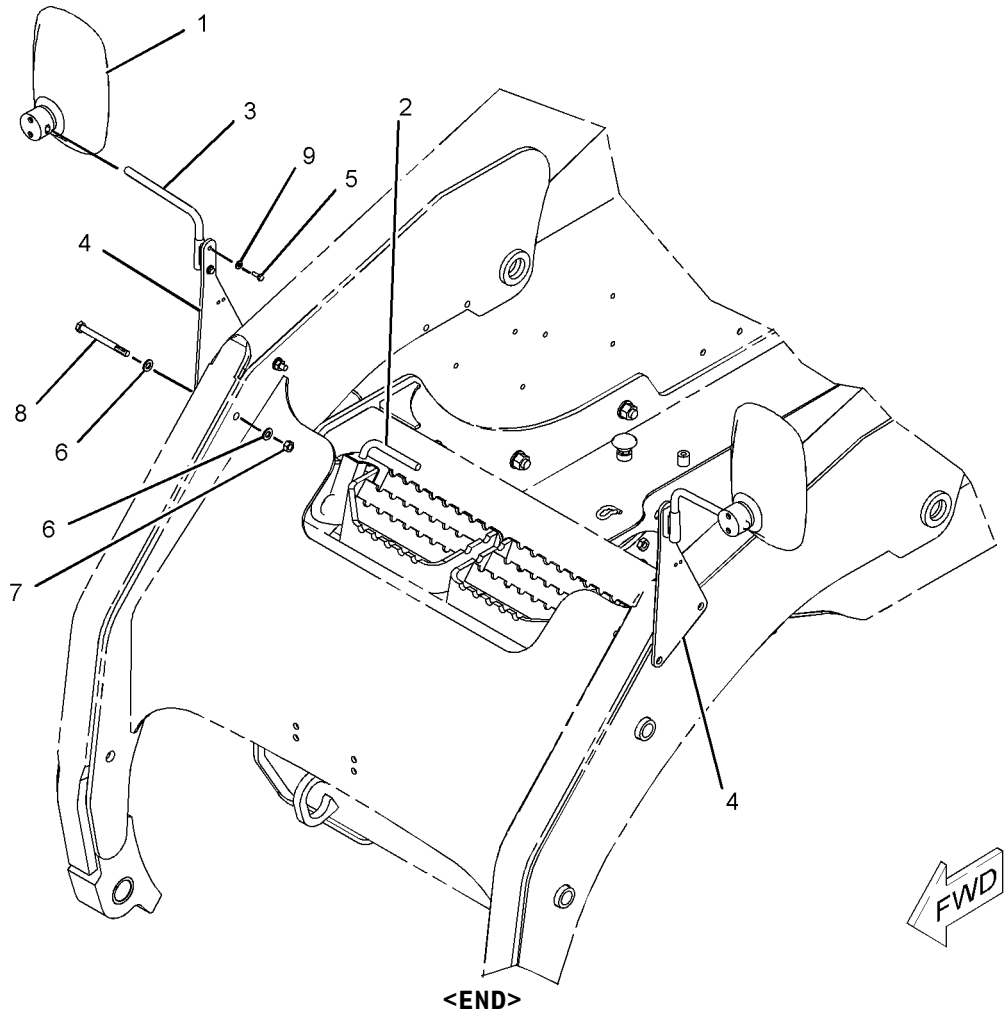

GRAPHIC #1 **<END>** g01017865

238-7672 MIRROR & MTG GP-REAR VIEW–
WITH ROADING LIGHT MOUNT

S/N: MWD1-UP

PART OF 326-5557, 326-5567 CONVERSION AR-MACHINE

AN ATTACHMENT

SMCS-7319 **i01957890**

NOTE	REF NO	GRAPHIC REF	PART NUMBER	QTY	PART NAME 1 2 3 4 5 6 (PRODUCT LEVEL)	SEE PAGE
	1	1	**132-5166**	2	MIRROR GP-REAR VIEW	
					(EACH INCLUDES)	
		1	**148-2371**	1	CLAMP (TOP)	
		1	**148-2372**	1	CLAMP (BOTTOM)	
	2	1	**175-4237**	1	BLOCK AS	
	3	1	**175-4239**	2	BRACKET AS	
	4	1	**238-7675**	1	PLATE	
	5	1	**238-7676**	1	BRACKET AS	
M	6	1	**5C-9553**	4	BOLT (M6X1X16-MM)	
M	7	1	**7X-0818**	1	BOLT (M8X1.25X45-MM)	
	8	1	**8T-4121**	4	WASHER-HARD (11X21X2.5-MM THK)	
M	9	1	**8T-4133**	2	NUT (M10X1.5-THD)	
M	10	1	**8T-4178**	2	BOLT (M10X1.5X90-MM)	
	11	1	**8T-4205**	4	WASHER-HARD (7.2X14.5X2-MM THK)	
M	12	1	**8T-7547**	1	BOLT (M8X1.25X30-MM)	

M-METRIC PART

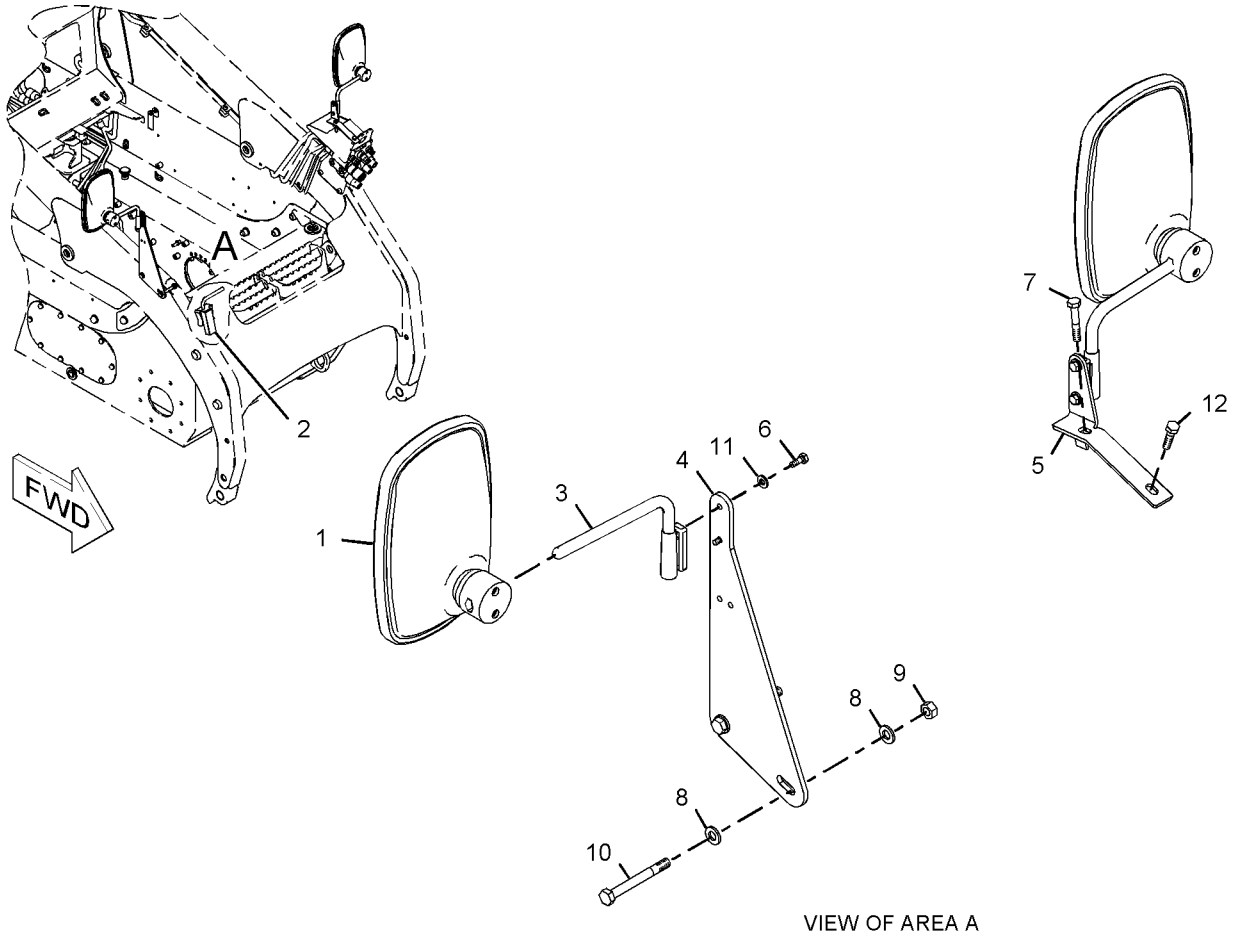

VIEW OF AREA A

GRAPHIC #1 **<END>** g01030330

173-3021 MOUNTING GP-REGISTRATION–
WITH WIRING & LIGHTS
S/N: MWD1-UP
PART OF 225-7963 MOUNTING GP-REGISTRATION
AN ATTACHMENT

SMCS-1408, 1429, 7050 **i02005879**

NOTE	REF NO	GRAPHIC REF	PART NUMBER	QTY	PART NAME 1 2 3 4 5 6 (PRODUCT LEVEL)	SEE PAGE
	1	1	**175-4236**	1	PLATE	
	2	1	**190-8962**	1	LAMP GP-REGISTRATION PLATE	
		1	**7M-9957**	1	LAMP (12-VOLT) (REGISTRATION PLATE)	
	3	1	**204-1365**	1	PLATE	
	4	1	**207-9780**	1	BRACKET AS (REGISTRATION PLATE)	
	5	1	**215-4001**	1	PLATE	
	6	1	**4B-4863**	2	WASHER (4.7X11X1.2-MM THK)	
M	7	1	**5C-8312**	2	NUT (M4X0.7-THD)	
M	8	1	**6V-9672**	2	SCREW-MACHINE (M4X0.7X16-MM)	
M	9	1	**8T-4171**	3	BOLT (M6X1X12-MM)	
	10	1	**8T-4205**	3	WASHER-HARD (7.2X14.5X2-MM THK)	

M-METRIC PART

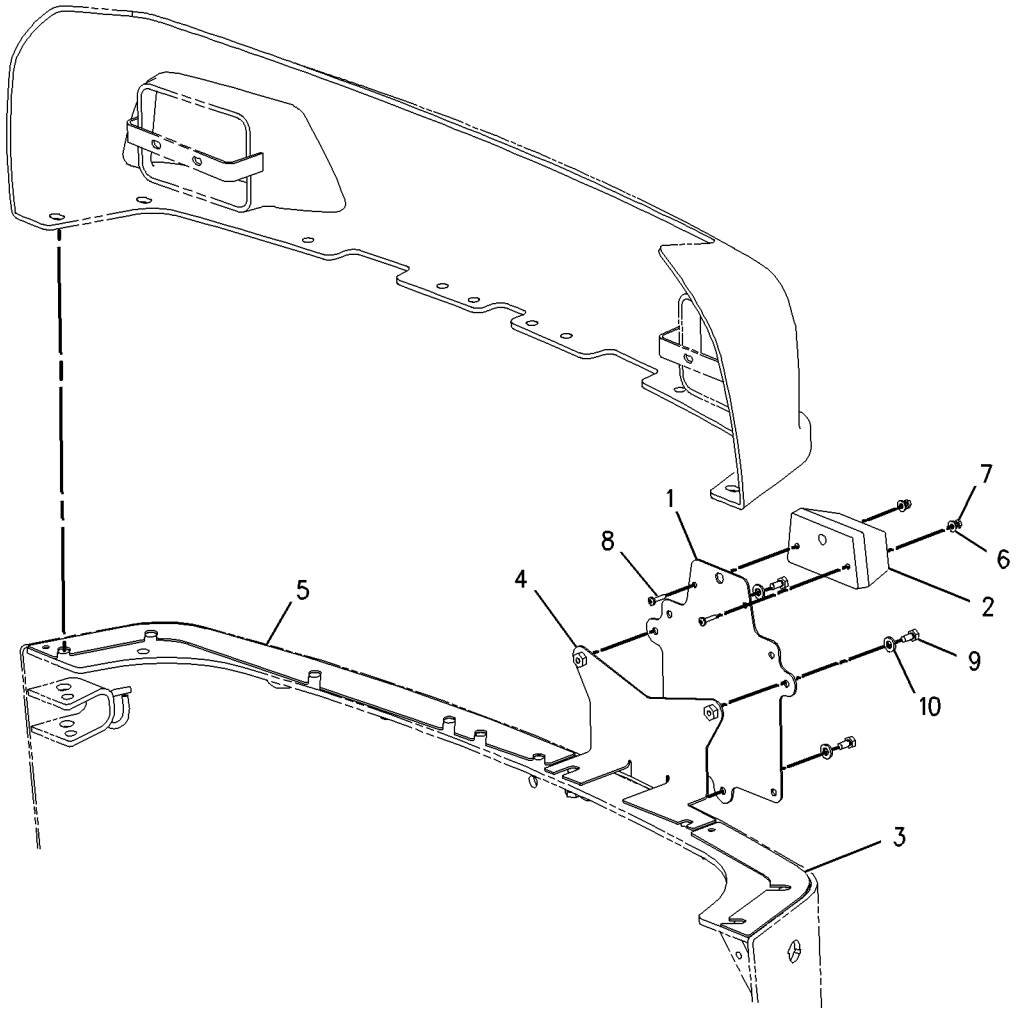

GRAPHIC #1 **<END>** g00874745

225-7963 MOUNTING GP-REGISTRATION

S/N: MWD1-UP
PART OF 326-5487, 326-5557 CONVERSION AR-MACHINE
AN ATTACHMENT

SMCS-1408, 1429, 7050 **i03613860**

NOTE	REF NO	GRAPHIC REF	PART NUMBER	QTY	PART NAME 1 2 3 4 5 6 (PRODUCT LEVEL)	SEE PAGE
Y	1	1	*173-3021*	1	MOUNTING GP-REGISTRATION (WITH WIRING, LIGHTS)	159
	2	1	**186-0239**	1	HARNESS AS-REAR LIGHTING (RIGHT SIDE, LICENSE PLATE) (INDICATOR)	
		1	**9X-3401**	4	PIN-CONNECTOR (16-GA TO 18-GA)	
		1	**126-1767**	4	PIN-CONNECTOR (14-GA)	
		1	**180-9340**	4	SOCKET-CONNECTOR (14-GA TO 18-GA)	
		1	**5P-4571**	2	TERMINAL-BLADE (14-GA TO 16-GA)	
E		1	**125-7874**		TUBE-HEAT SHRINK (5.72-MM DIA) (10-CM)	
		1	**102-8804**	1	KIT-RECEPTACLE (4-PIN)	
					(INCLUDES RECEPTACLE AS & WEDGE)	
		1	**155-2271**	1	KIT-CONNECTING PLUG (4-PIN)	
					(INCLUDES PLUG AS, WEDGE & INTERFACE SEAL)	

E-ORDER BY THE CENTIMETER
Y-SEPARATE ILLUSTRATION

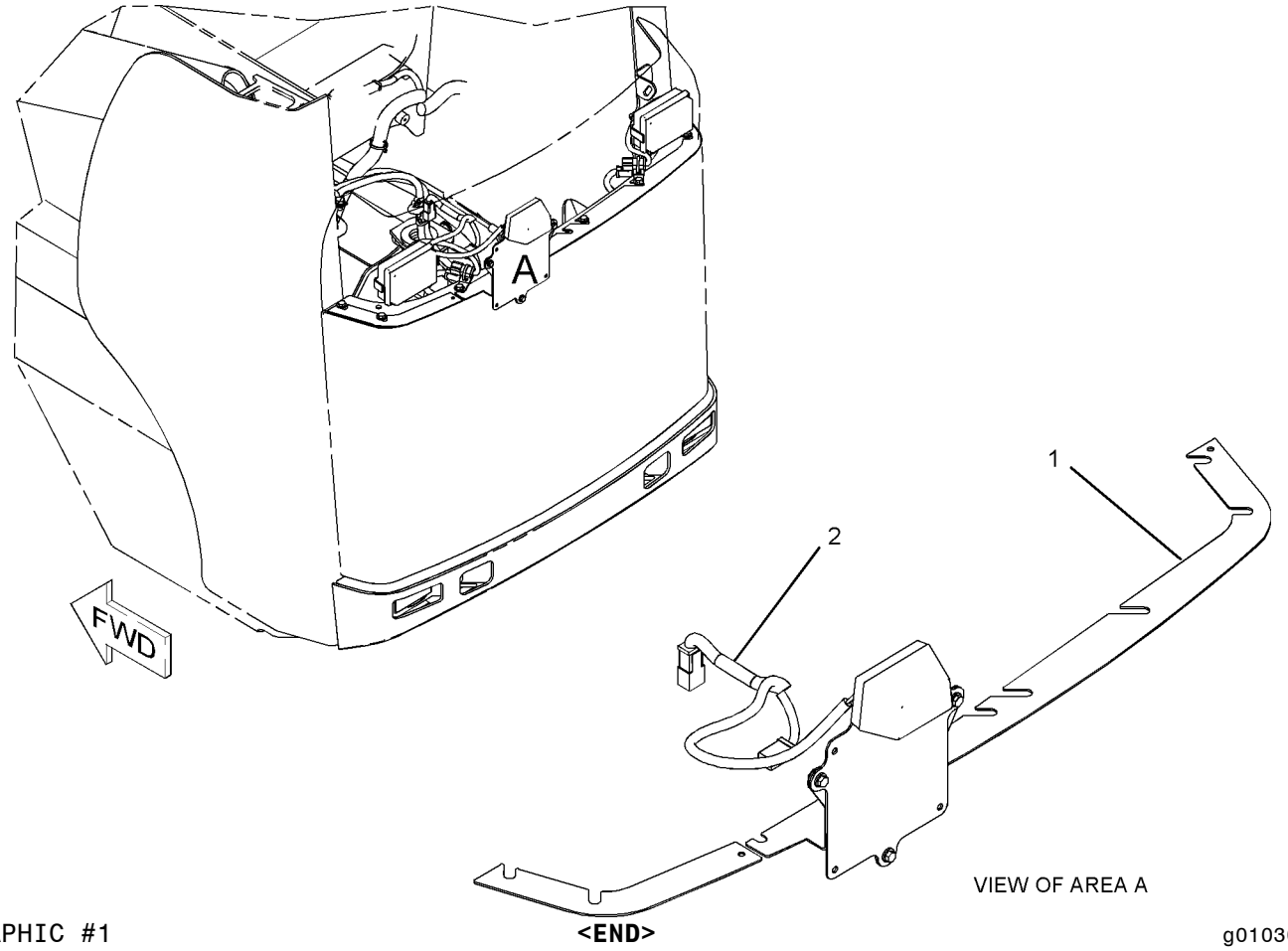

GRAPHIC #1

<END>

g01030726

354-6549 SUPPRESSION GP-SOUND

S/N: MWD1-UP
PART OF 326-5287, 326-5297, 326-5487, 326-5527, 326-5557, 326-5567
CONVERSION AR-MACHINE
AN ATTACHMENT

SMCS-1801, 7076 **i03902806**

NOTE	REF NO	GRAPHIC REF	PART NUMBER	QTY	PART NAME 1 2 3 4 5 6 (PRODUCT LEVEL)	SEE PAGE
	1	1	**176-4079**	2	INSULATION	
	2	1	**236-5088**	1	INSULATION	
	3	1	**241-5648**	1	INSULATION	
	4	1	**354-6550**	1	INSULATION	

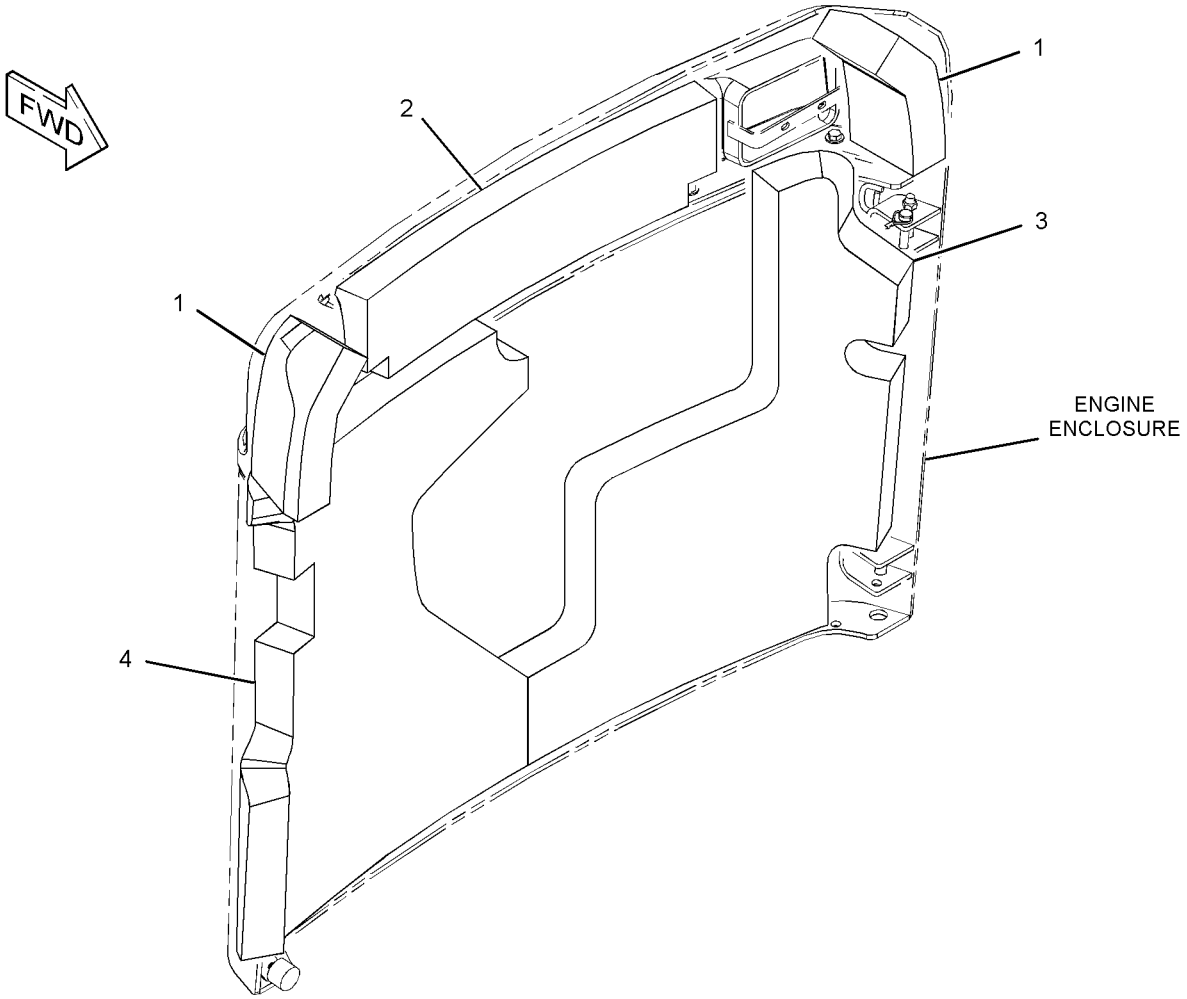

GRAPHIC #1 **<END>** g02149275

193-0447 ACCUMULATOR & MTG GP-HYDRAULIC

S/N: MWD1-UP

PART OF 354-6548 HYDRAULIC AR

SMCS-5077 **i03587742**

NOTE	REF NO	GRAPHIC REF	PART NUMBER	QTY	PART NAME 1 2 3 4 5 6 (PRODUCT LEVEL)	SEE PAGE
Y	1	1	*149-0686*	1	ACCUMULATOR GP-HYDRAULIC (CHARGED)	163
	2	1	*194-7632*	1	ELBOW AS	
		1	**3K-0360**	1	SEAL-O-RING	
		1	**194-7631**	1	ELBOW	
	3	1	**3K-0360**	1	SEAL-O-RING	

Y-SEPARATE ILLUSTRATION

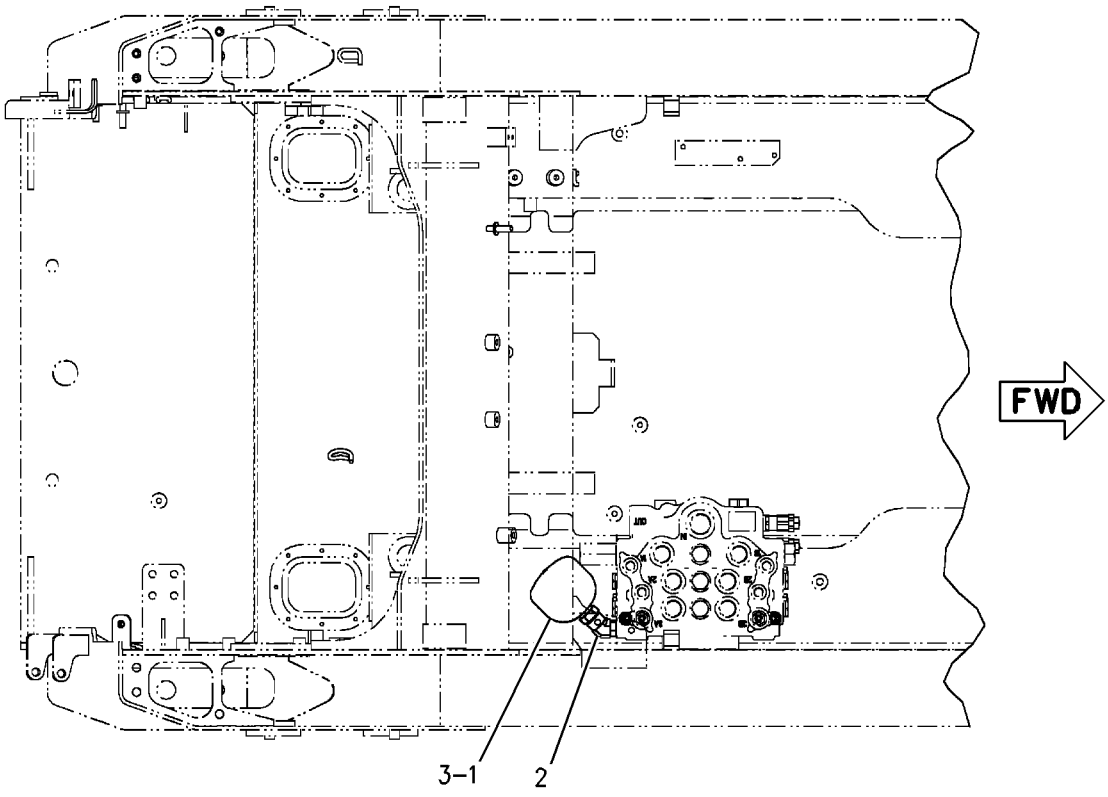

TOP VIEW

GRAPHIC #1 **<END>** g00902240

149-0686 ACCUMULATOR GP-HYDRAULIC—CHARGED

S/N: MWD1-UP

PART OF 193-0447 ACCUMULATOR & MTG GP-HYDRAULIC

FIELD REPLACEMENT ORDER 227-8807—PAGE 164

SMCS-5077 **i03971211**

NOTE	REF NO	GRAPHIC REF	PART NUMBER	QTY	PART NAME 1 2 3 4 5 6 (PRODUCT LEVEL)	SEE PAGE
					(NO SERVICED PARTS)	

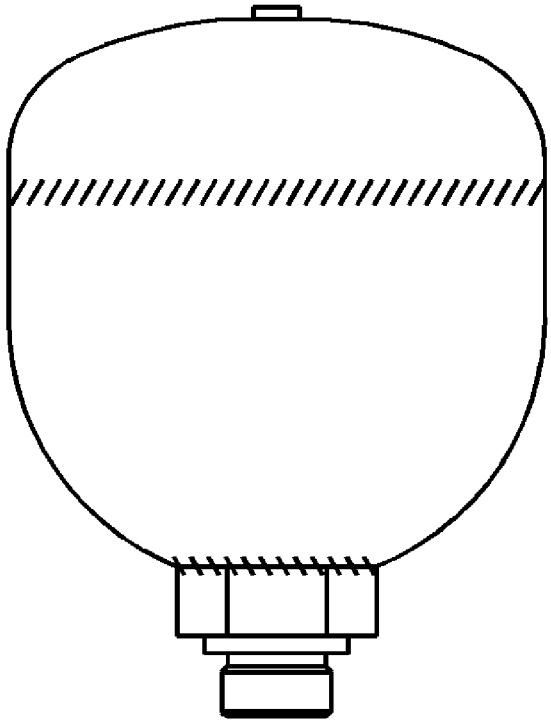

GRAPHIC #1 **<END>** g02162624

HYDRAULIC SYSTEM

227-8807 ACCUMULATOR GP-HYDRAULIC—UNCHARGED

S/N: MWD1-UP

FIELD REPLACEMENT FOR 149-0686—PAGE 163

SMCS-5077 **i03971213**

NOTE	REF NO	GRAPHIC REF	PART NUMBER	QTY	PART NAME 1 2 3 4 5 6 (PRODUCT LEVEL)	SEE PAGE
					(NO SERVICED PARTS)	

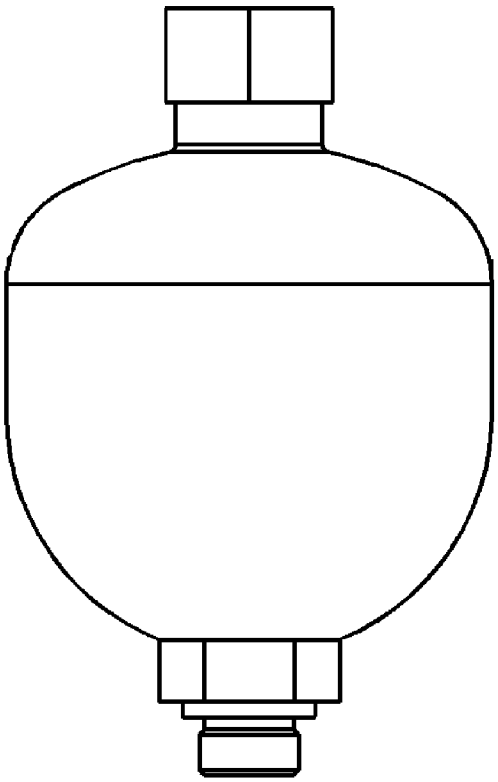

GRAPHIC #1 **<END>** g02162620

179-7001 ADAPTER GP-OIL LINE

S/N: MWD1-UP

PART OF 218-6099 LINES GP-PILOT

SMCS-5057 **i01836385**

NOTE	REF NO	GRAPHIC REF	PART NUMBER	QTY	PART NAME 1 2 3 4 5 6 (PRODUCT LEVEL)	SEE PAGE
	1	1	**179-7002**	1	ADAPTER AS	
	2	1	**214-7568**	1	SEAL-O-RING	

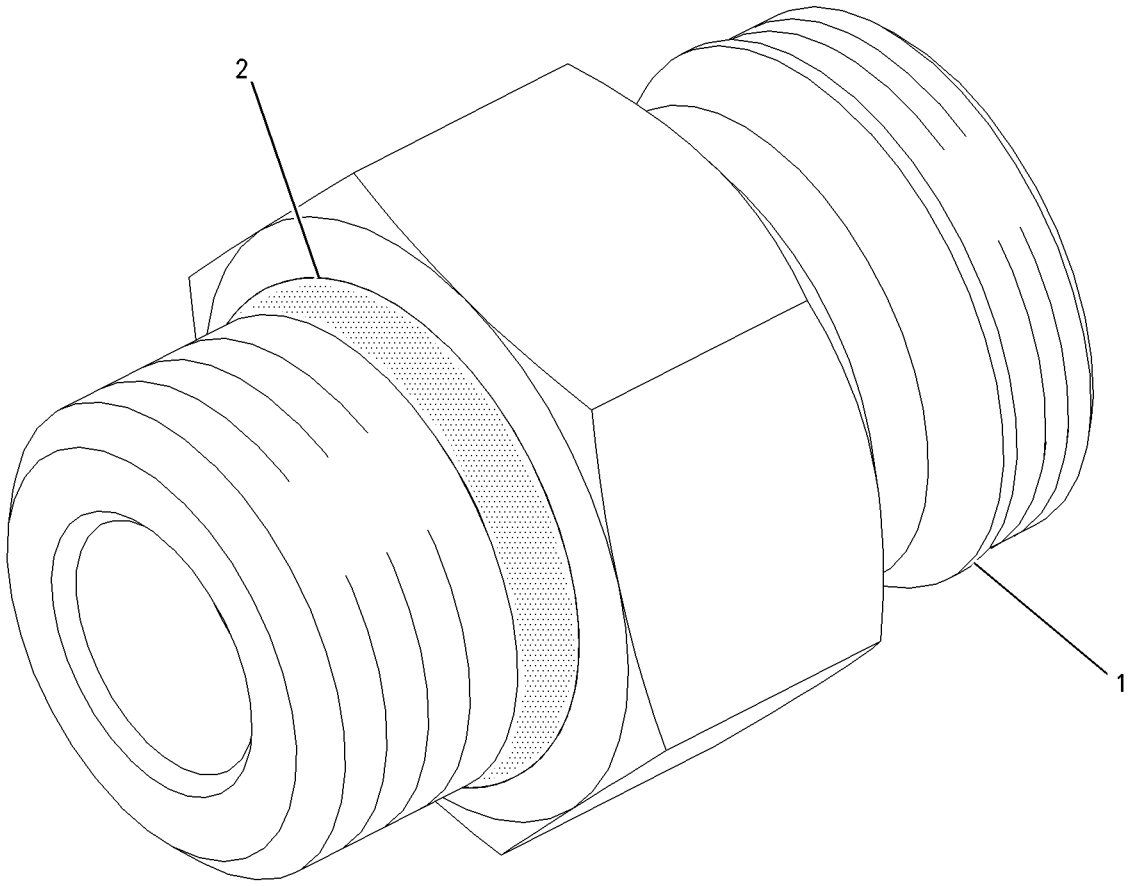

GRAPHIC #1 **<END>** g00938522

HYDRAULIC SYSTEM

218-6799 CYLINDER & MTG GP-LIFT ARM

S/N: MWD1-UP

PART OF 326-4781 CHASSIS AR

SMCS-5102, 5104, 6118, 6119 **i03970701**

NOTE	REF NO	GRAPHIC REF	PART NUMBER	QTY	PART NAME 1 2 3 4 5 6 (PRODUCT LEVEL)	SEE PAGE
	1	1	**142-8789**	1	SUPPORT-LOADER	
	2	2	**142-8790**	4	PIN AS	
	3	2	**142-8791**	2	PIN AS	
	4	1	**142-8792**	1	PIN	
	5	2	**142-8793**	2	PIN	
	6	1	**142-8794**	1	PIN	
	7	2	**142-8808**	2	SPACER (32.5X50.5X28-MM THK)	
	8	2	**142-8832**	1	PIN AS	
	9	1	**142-8880**	1	LEVER	
	10	1	**142-8881**	1	BRACKET	
	11	2	**191-9588**	2	PIN AS	
CY	12	1	**230-3683**	1	CYLINDER GP-LIFT (LH)	170
CY	13	2	**230-3684**	1	CYLINDER GP-TILT (LH)	172
CY	14	1	**230-3693**	1	CYLINDER GP-LIFT (RH)	171
CY	15	2	**230-3694**	1	CYLINDER GP-TILT (RH)	173
	16	2	**3B-8489**	10	FITTING-GREASE	
	17	1	**3S-8536**	1	SPACER (0.406X0.656X0.38-IN THK)	
	18	1	**4M-5285**	4	RING-RETAINING (EXTERNAL)	
	19	2	**5H-9743**	1	GROMMET	
M	20	2	**6V-9189**	2	LOCKNUT (M8X1.25-THD)	
	21	2	**7X-7729**	8	WASHER (11X25X3-MM THK)	
M	22	2	**8T-3647**	2	BOLT (M8X1.25X80-MM)	
	23	1	**8T-4121**	1	WASHER-HARD (11X21X2.5-MM THK)	
M	24	1	**8T-4136**	1	BOLT (M10X1.5X25-MM)	
M	25	1	**8T-4189**	1	BOLT (M8X1.25X20-MM)	
M	26	2	**8T-4191**	8	BOLT (M10X1.5X16-MM)	
	27	1	**8T-4224**	1	WASHER-HARD (8.8X16X2-MM THK)	

C-CHANGE FROM PREVIOUS TYPE
M-METRIC PART
Y-SEPARATE ILLUSTRATION

218-6799 **CYLINDER & MTG GP-LIFT ARM** *(contd.)* **i03970701**

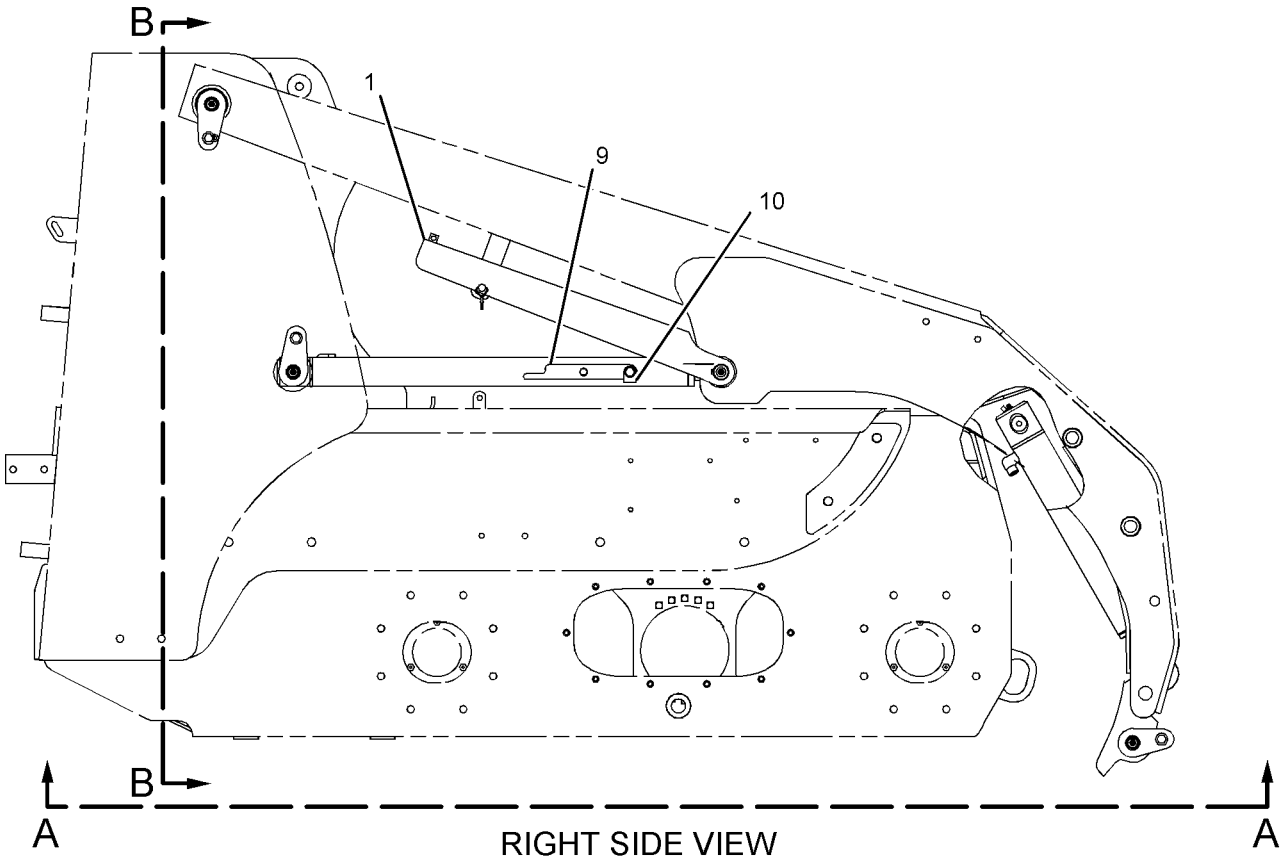

RIGHT SIDE VIEW

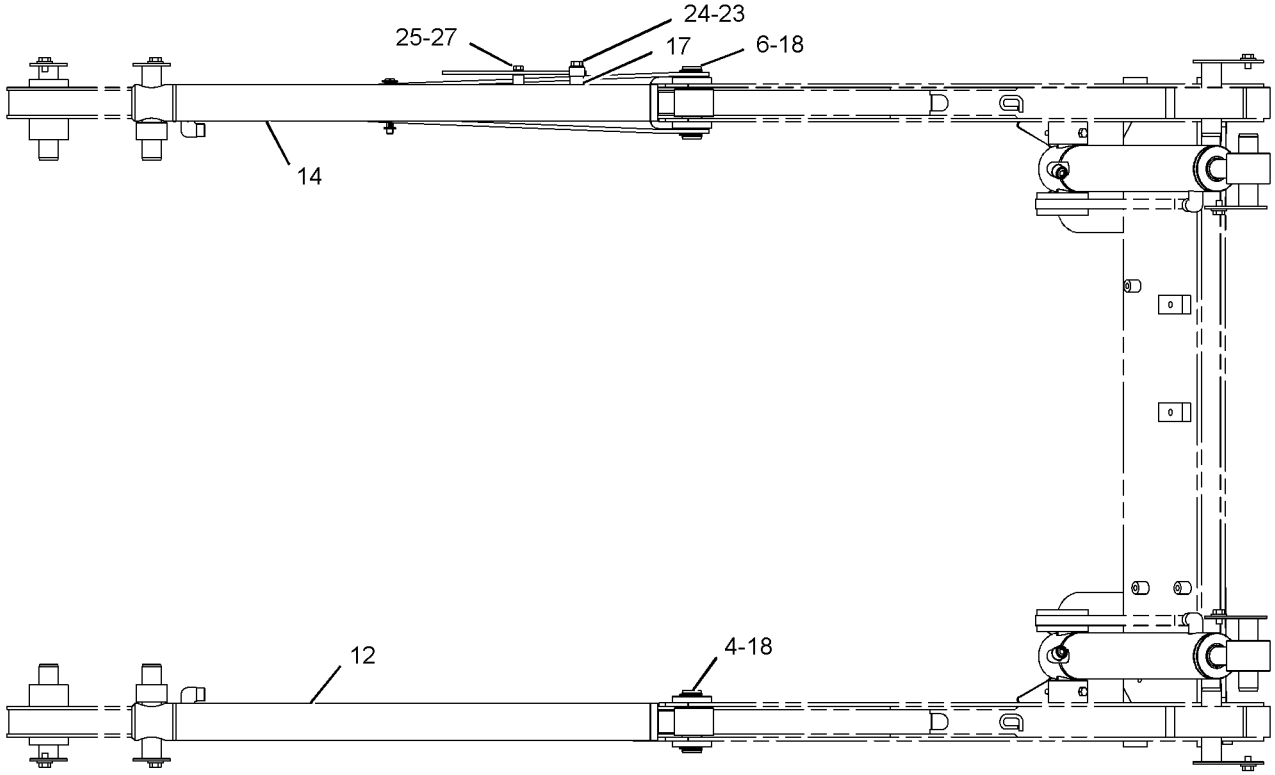

VIEW A-A

GRAPHIC #1

g01026736

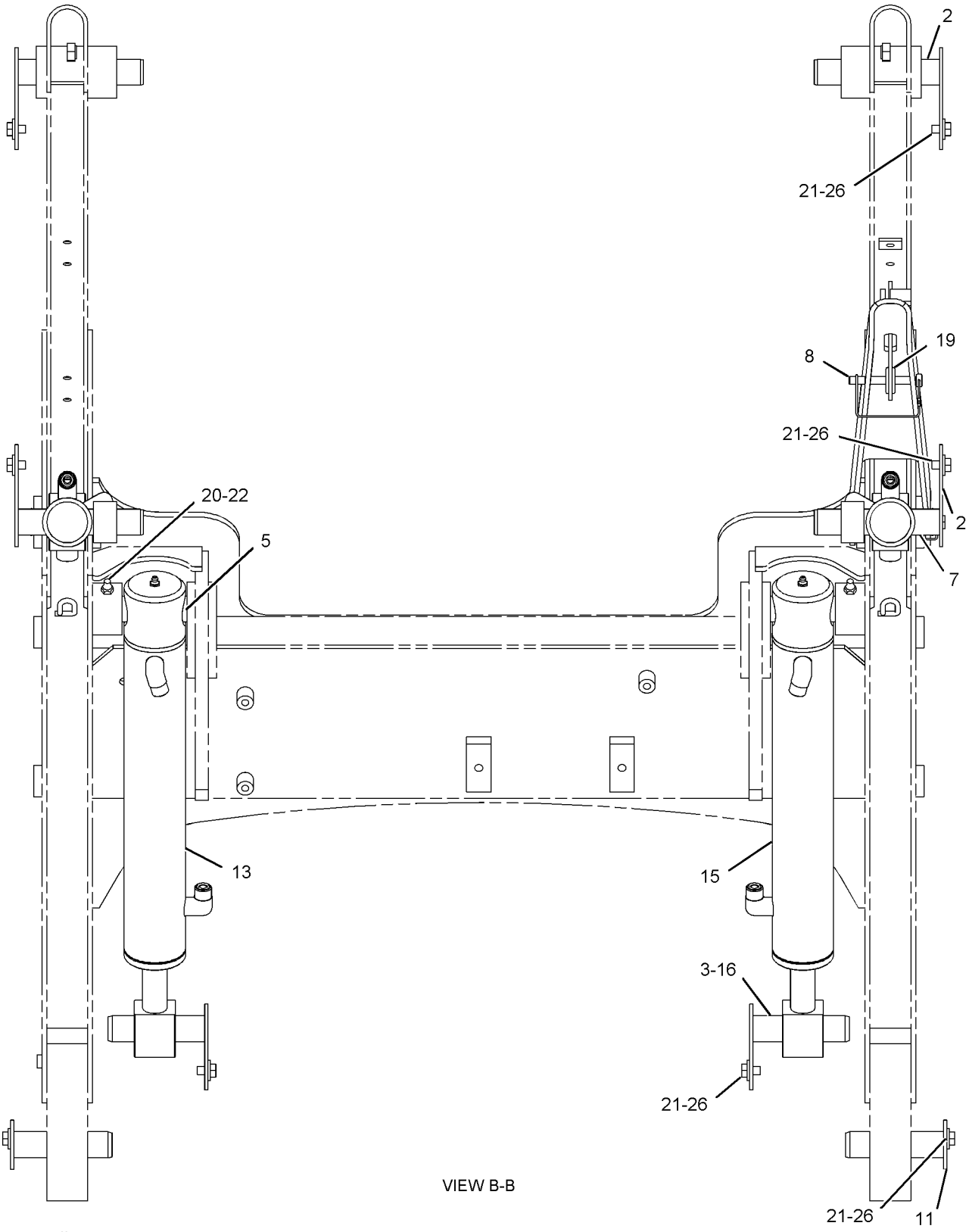

VIEW B-B

GRAPHIC #2

<END>

g01026737

192-2640 CYLINDER GP-HYDRAULIC–COUPLER

S/N: MWD1-UP
35-MM (1.4-IN) BORE X 103.5-MM (4.1-IN) STROKE
PART OF 215-3962, 215-3963 CYLINDER & LINK GP-COUPLER
AN ATTACHMENT

SMCS-5362, 7562 **i03435422**

NOTE	REF NO	GRAPHIC REF	PART NUMBER	QTY	PART NAME 1 2 3 4 5 6 (PRODUCT LEVEL)	SEE PAGE
					(NO SERVICED PARTS)	

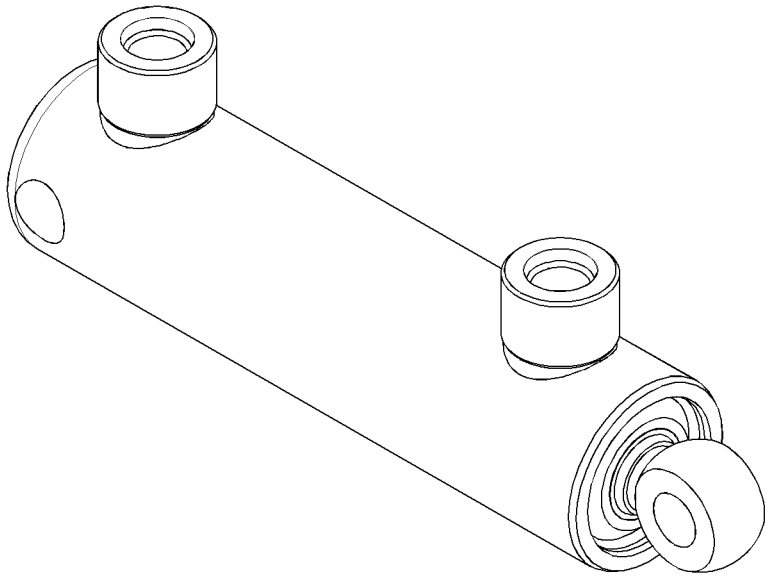

GRAPHIC #1 **<END>** g01787137

HYDRAULIC SYSTEM

230-3683 CYLINDER GP-LIFT–LH

S/N: MWD1-UP
50-MM (1.97-IN) BORE X 653-MM (25.71-IN) STROKE
PART OF 218-6799 CYLINDER & MTG GP-LIFT ARM

SMCS-5102 **i03641718**

NOTE	REF NO	GRAPHIC REF	PART NUMBER	QTY	PART NAME 1 2 3 4 5 6 (PRODUCT LEVEL)	SEE PAGE
					AVAILABLE REPAIR KIT(S):	
			218-6826	1	KIT-SEAL (LIFT CYLINDER)	
					(INCLUDES PISTON SEAL, WIPER SEAL, ROD SEAL, PISTON WEAR BAND, O-RINGS & BACK UP RING)	

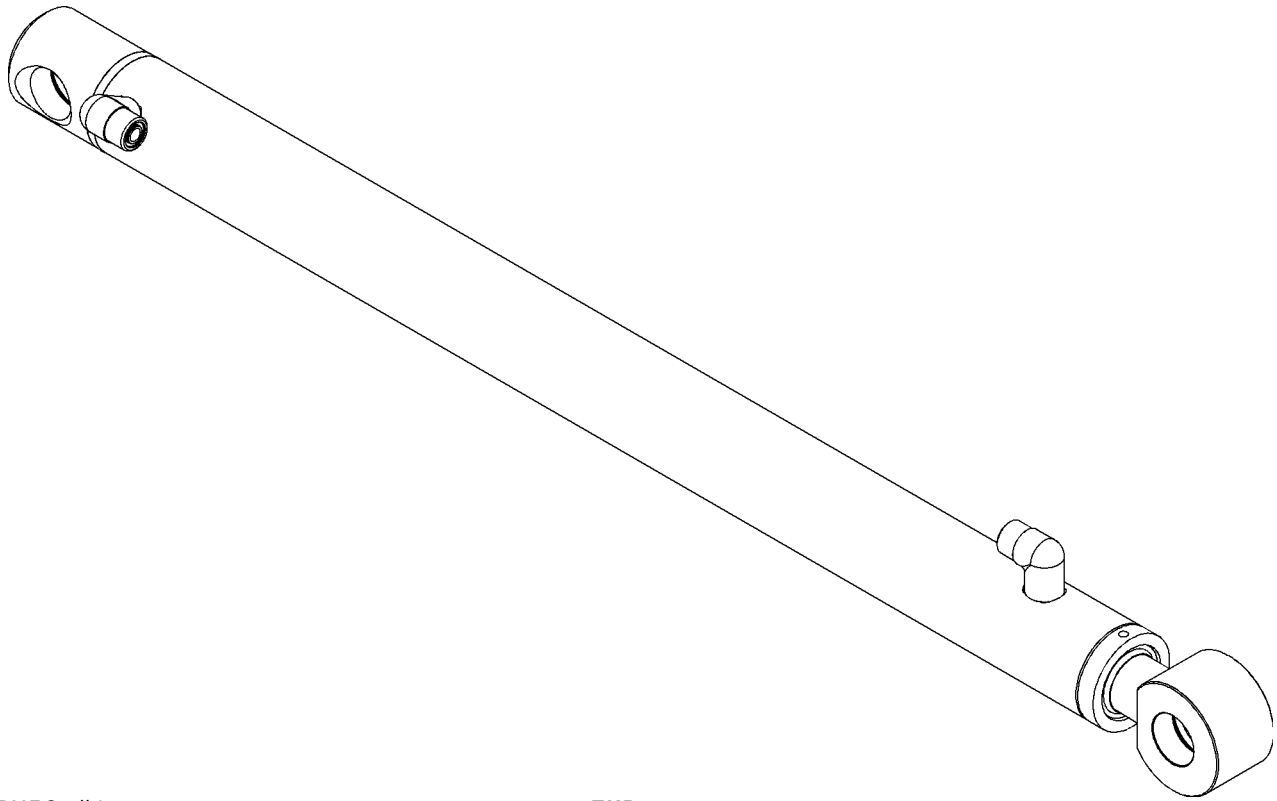

GRAPHIC #1 **<END>** g01010863

HYDRAULIC SYSTEM

230-3693 CYLINDER GP-LIFT–RH

S/N: MWD1-UP
50-MM (1.97-IN) BORE X 653-MM (25.71-IN) STROKE
PART OF 218-6799 CYLINDER & MTG GP-LIFT ARM

SMCS-5102 **i03971310**

NOTE	REF NO	GRAPHIC REF	PART NUMBER	QTY	PART NAME 1 2 3 4 5 6 (PRODUCT LEVEL)	SEE PAGE
					AVAILABLE REPAIR KIT(S):	
			218-6826	1	KIT-SEAL (LIFT CYLINDER)	
					(INCLUDES SEALS, PISTON WEAR BAND, O-RINGS & BACK UP RING)	

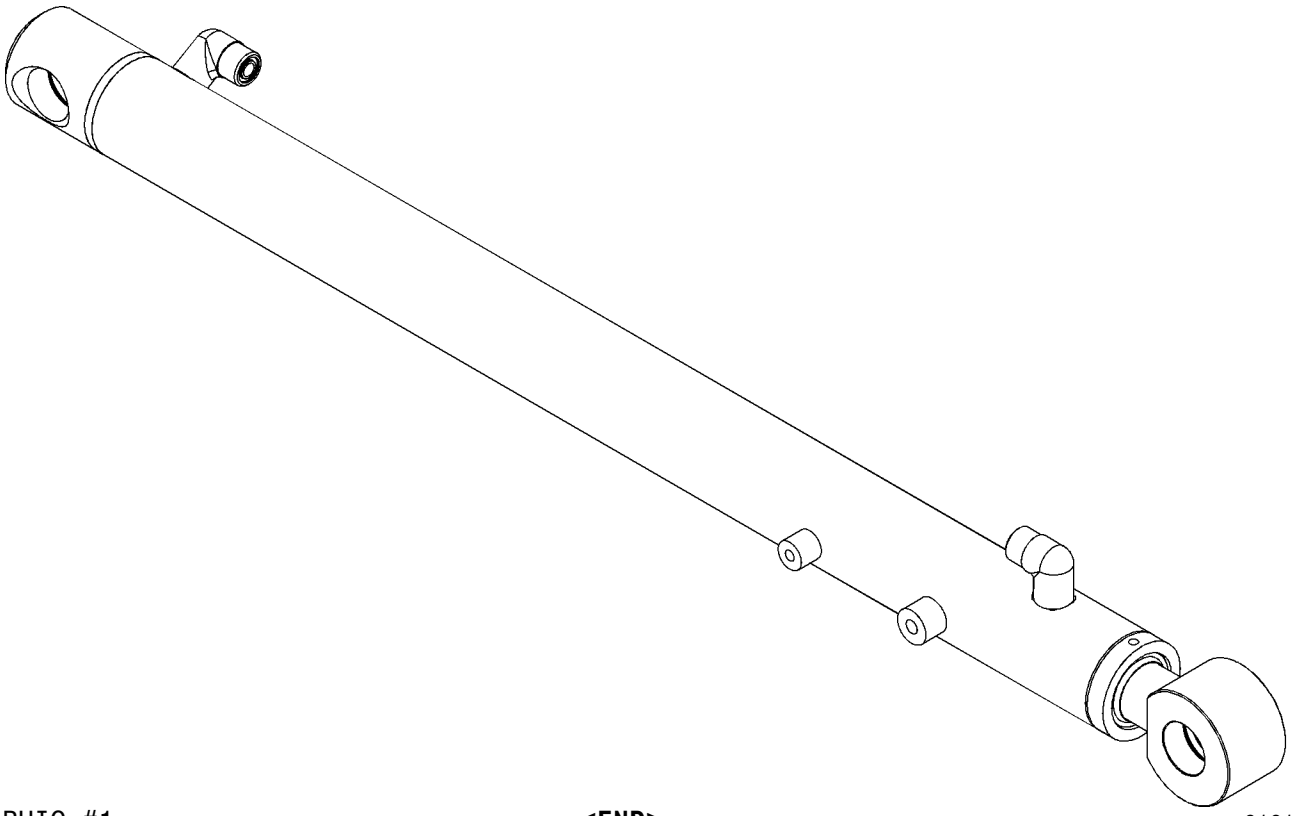

GRAPHIC #1 **<END>** g01010790

HYDRAULIC SYSTEM

230-3684 CYLINDER GP-TILT–LH

S/N: MWD1-UP
65-MM (2.556-IN) BORE X 295-MM (11.61-IN) STROKE
PART OF 218-6799 CYLINDER & MTG GP-LIFT ARM

SMCS-5104 **i03971311**

NOTE	REF NO	GRAPHIC REF	PART NUMBER	QTY	PART NAME 1 2 3 4 5 6 (PRODUCT LEVEL)	SEE PAGE
	1	1	**3B-8489**	1	FITTING-GREASE	
					AVAILABLE REPAIR KIT(S):	
			218-6825	1	KIT-SEAL (TILT CYLINDER)	
					(INCLUDES PISTON SEAL, PISTON WEAR BAND, O-RINGS, BACK UP RINGS, WIPER SEAL & ROD SEAL)	

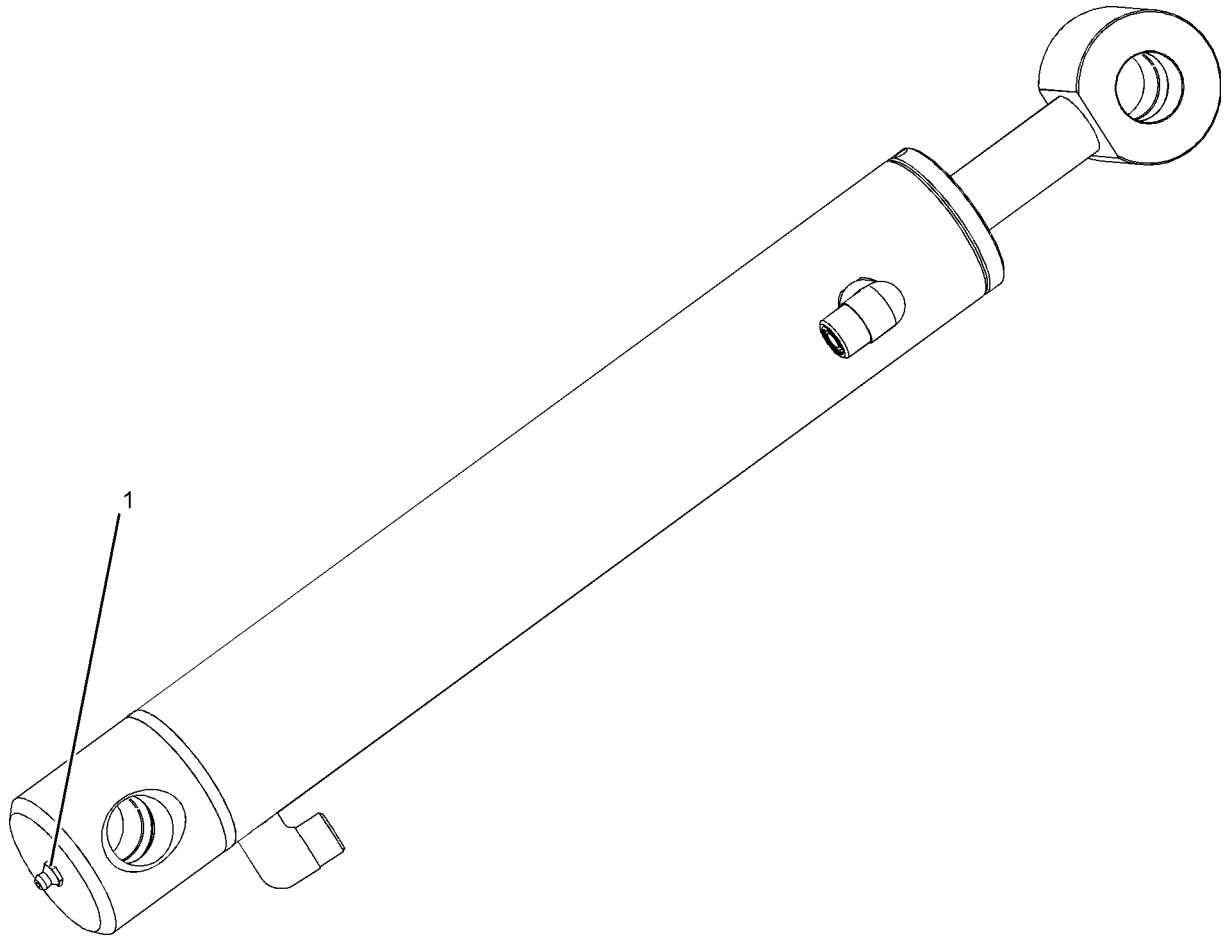

GRAPHIC #1 **<END>** g01012081

HYDRAULIC SYSTEM

230-3694 CYLINDER GP-TILT–RH

S/N: MWD1-UP
65-MM (2.56-IN) BORE X 295-MM (11.61-IN) STROKE
PART OF 218-6799 CYLINDER & MTG GP-LIFT ARM

SMCS-5104 **i03971309**

NOTE	REF NO	GRAPHIC REF	PART NUMBER	QTY	PART NAME 1 2 3 4 5 6 (PRODUCT LEVEL)	SEE PAGE
F		1	**3B-8489**	1	FITTING-GREASE	
					AVAILABLE REPAIR KIT(S):	
			218-6825	1	KIT-SEAL (TILT CYLINDER)	
					(INCLUDES SEAL, PISTON WEAR BAND, O-RINGS & BACK UP RINGS)	

F-NOT SHOWN

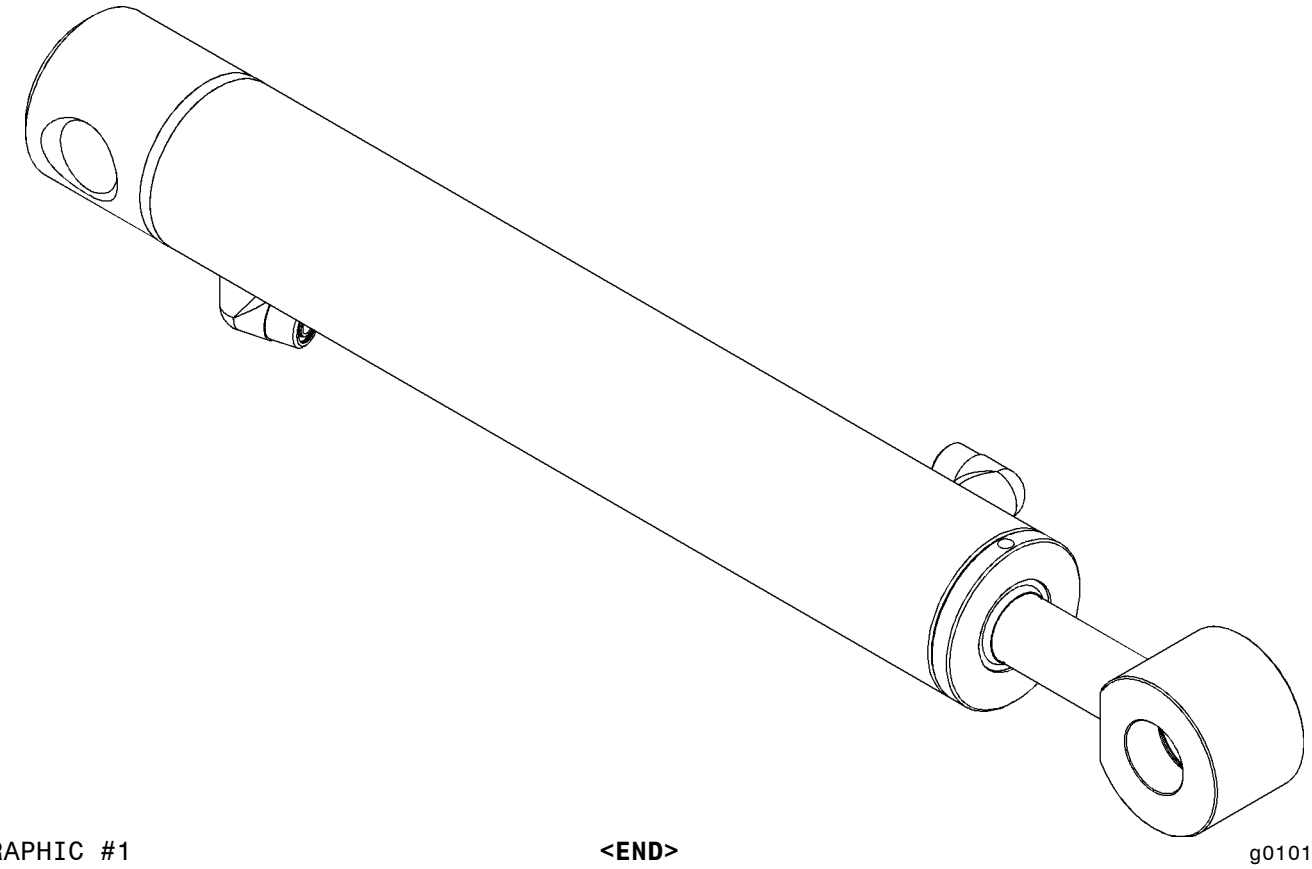

GRAPHIC #1 **<END>** g01010855

218-5840 FITTING GP-HYDRAULIC–
QUICK DISCONNECT, MALE, HIGH FLOW
S/N: MWD1-UP
PART OF 218-5853 LINES GP-WORK TOOL
AN ATTACHMENT

SMCS-5057 **i03587746**

NOTE	REF NO	GRAPHIC REF	PART NUMBER	QTY	PART NAME 1 2 3 4 5 6 (PRODUCT LEVEL)	SEE PAGE
	1	1	**218-5843**	1	FITTING AS (QUICK DISCONNECT, MALE)	
		1	**3K-0360**	1	SEAL-O-RING	
	2	1	**218-5844**	1	FITTING AS (QUICK DISCONNECT, MALE)	
		1	**2M-9780**	1	SEAL-O-RING	
	3	1	**2M-9780**	1	SEAL-O-RING	
	4	1	**6V-8640**	1	CONNECTOR	
	5	1	**6V-9746**	1	SEAL-O-RING	

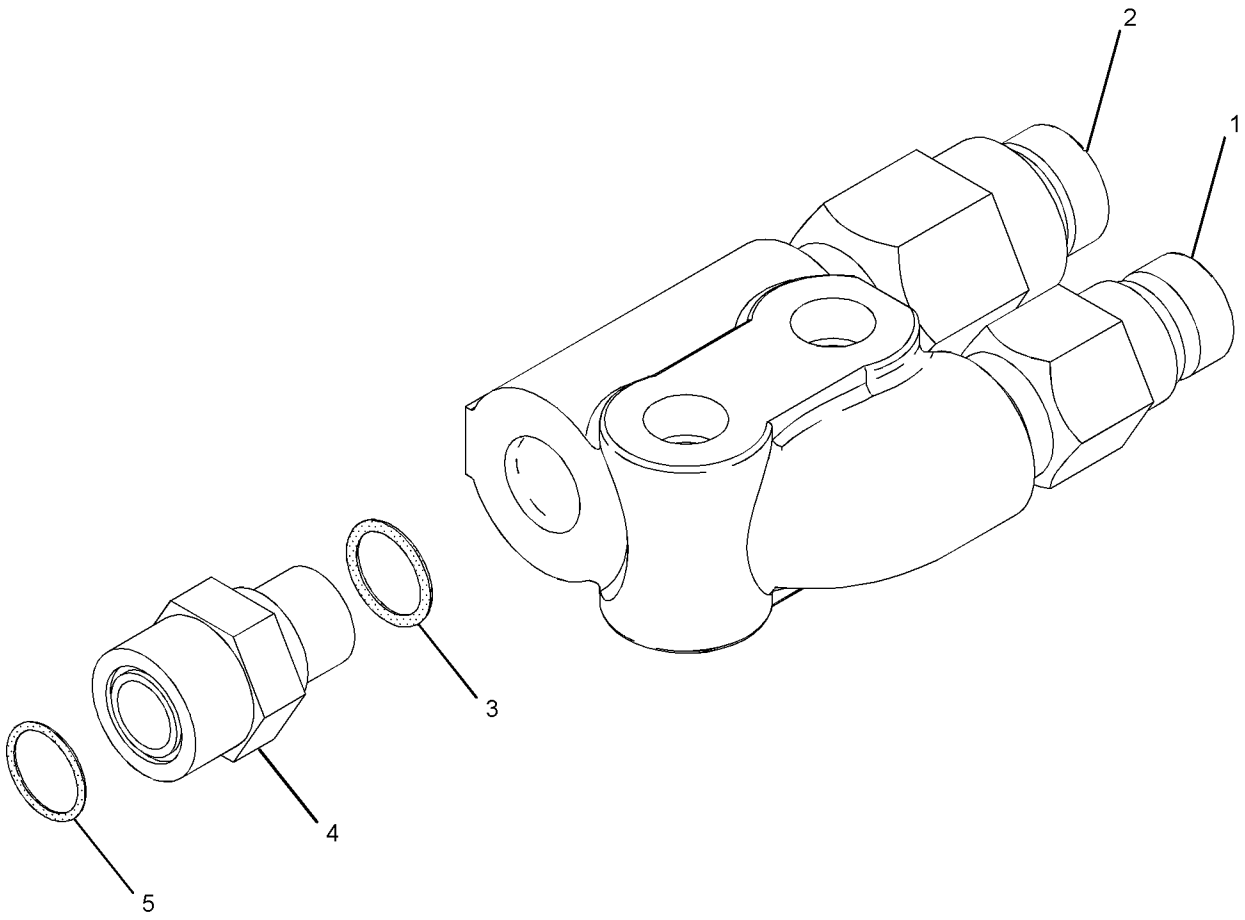

GRAPHIC #1 **<END>** g01026062

218-5841 FITTING GP-HYDRAULIC–
QUICK DISCONNECT, FEMALE, HIGH FLOW
S/N: MWD1-UP
PART OF 218-5853 LINES GP-WORK TOOL
AN ATTACHMENT

SMCS-5057 **i03587747**

NOTE	REF NO	GRAPHIC REF	PART NUMBER	QTY	PART NAME 1 2 3 4 5 6 (PRODUCT LEVEL)	SEE PAGE
	1	1	**218-5845**	1	FITTING AS (QUICK DISCONNECT, FEMALE)	
		1	**3K-0360**	1	SEAL-O-RING	
	2	1	**218-5846**	1	FITTING AS (QUICK DISCONNECT, FEMALE)	
		1	**2M-9780**	1	SEAL-O-RING	
	3	1	**2M-9780**	1	SEAL-O-RING	
	4	1	**6V-8640**	1	CONNECTOR	
	5	1	**6V-9746**	1	SEAL-O-RING	

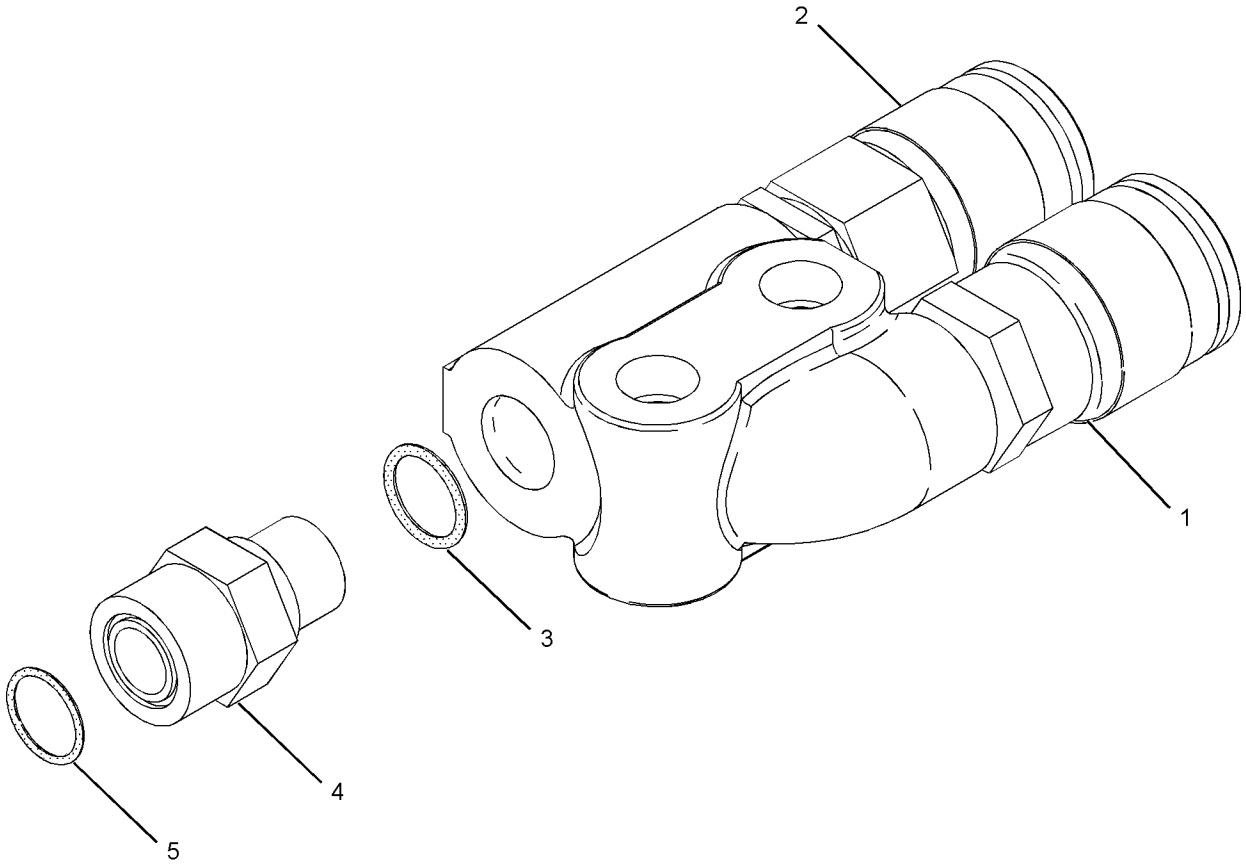

GRAPHIC #1 **<END>** g01084158

HYDRAULIC SYSTEM

326-5244 HYDRAULIC AR—AUXILIARY, HIGH FLOW

S/N: MWD1-UP

CANNOT BE USED WITH 356-1920—PAGE 178, 356-1919—PAGE 177, 326-5245—PAGE 176, 326-5270—PAGE 1, 326-5271—PAGE 2, 326-5272—PAGE 2

AN ATTACHMENT

SMCS-5050 **i03945580**

NOTE	PART NUMBER	QTY	PART NAME 1 2 3 4 5 6 (PRODUCT LEVEL)	SEE PAGE
Y	*326-5266*	1	CONTROL GP-PILOT OPERATED HYD (WORK TOOL)	284
Y	*326-5267*	1	CONTROL GP-PILOT OPERATED HYD (HYDROSTATIC)	286
Y	*356-1898*	1	FILM GP	357
Y	*331-6058*	1	LINES GP-HYDROSTATIC	122
Y	*356-1908*	1	LINES GP-PUMP	198
Y	*218-5853*	1	LINES GP-WORK TOOL (HIGH FLOW)	204
Y	*218-5812*	1	MANIFOLD & MTG GP-CONTROL (HIGH FLOW)	212
Y	*218-6079*	1	PUMP & MTG GP-WORK TOOL (HIGH FLOW)	223
Y	*328-2355*	1	WIRING GP-WORK TOOL	111

Y-SEPARATE ILLUSTRATION

<END>

326-5245 HYDRAULIC AR—AUXILIARY, HIGH FLOW, SOUND SUPPRESSION

S/N: MWD1-UP

CANNOT BE USED WITH 356-1919—PAGE 177, 326-5244—PAGE 176, 356-1920—PAGE 178, 326-5270—PAGE 1, 326-5271—PAGE 2, 326-5272—PAGE 2

AN ATTACHMENT

SMCS-5050 **i03945579**

NOTE	PART NUMBER	QTY	PART NAME 1 2 3 4 5 6 (PRODUCT LEVEL)	SEE PAGE
Y	*326-5266*	1	CONTROL GP-PILOT OPERATED HYD (WORK TOOL)	284
Y	*326-5267*	1	CONTROL GP-PILOT OPERATED HYD (HYDROSTATIC)	286
Y	*356-1898*	1	FILM GP	357
Y	*331-6058*	1	LINES GP-HYDROSTATIC	122
Y	*356-1908*	1	LINES GP-PUMP	198
Y	*218-5853*	1	LINES GP-WORK TOOL (HIGH FLOW, SOUND SUPPRESSION)	204
Y	*218-5812*	1	MANIFOLD & MTG GP-CONTROL (HIGH FLOW, SOUND SUPPRESSION)	212
Y	*261-6095*	1	PUMP & MTG GP-WORK TOOL (HIGH FLOW, SOUND SUPPRESSION)	226
Y	*328-2355*	1	WIRING GP-WORK TOOL	111

Y-SEPARATE ILLUSTRATION

<END>

326-5465 HYDRAULIC AR—WITHOUT WORK TOOL POSITIONER

S/N: MWD1-UP

CANNOT BE USED WITH 326-5478—PAGE 177

AN ATTACHMENT

SMCS-5050 **i03904552**

NOTE	PART NUMBER	QTY	PART NAME 1 2 3 4 5 6 (PRODUCT LEVEL)	SEE PAGE
Y	*326-5678*	1	LINES GP-LIFT CYLINDER	188
Y	*218-5819*	1	LINES GP-TILT CYLINDER	200

Y-SEPARATE ILLUSTRATION

<END>

326-5478 HYDRAULIC AR—WITH WORK TOOL POSITIONER

S/N: MWD1-UP
CANNOT BE USED WITH 326-5465—PAGE 176
AN ATTACHMENT

SMCS-5050 **i03904569**

NOTE	PART NUMBER	QTY	PART NAME 1 2 3 4 5 6 (PRODUCT LEVEL)	SEE PAGE
Y	*326-5679*	1	LINES GP-LIFT CYLINDER	190
Y	*218-5852*	1	LINES GP-TILT CYLINDER	202
Y-SEPARATE ILLUSTRATION				

<END>

354-6548 HYDRAULIC AR

S/N: MWD1-UP
PART OF 326-5416 COMMON AR

SMCS-5050 **i03945578**

NOTE	PART NUMBER	QTY	PART NAME 1 2 3 4 5 6 (PRODUCT LEVEL)	SEE PAGE
Y	*193-0447*	1	ACCUMULATOR & MTG GP-HYDRAULIC (WORK TOOL)	162
Y	*218-6624*	1	FILTER & LINES GP-HYDRAULIC	115
Y	*218-6143*	1	LINES GP-HYDRAULIC OIL COOLER	186
Y	*218-5978*	1	LINES GP-PILOT (DIRECTION, SPEED)	192
Y	*218-6099*	1	LINES GP-PILOT (WORK TOOL)	194
Y	*218-6235*	1	MANIFOLD & LINES GP-CONTROL (PARKING BRAKE)	209
Y	*326-5780*	1	TANK & MTG GP-HYDRAULIC	230
Y	*218-6781*	1	VALVE & MTG GP-CONTROL	232
Y-SEPARATE ILLUSTRATION				

<END>

356-1919 HYDRAULIC AR—AUXILIARY, STANDARD

S/N: MWD1-UP
CANNOT BE USED WITH 356-1920—PAGE 178, 326-5244—PAGE 176, 326-5245—PAGE 176, 326-5270—PAGE 1, 326-5271—PAGE 2, 326-5272—PAGE 2
AN ATTACHMENT

SMCS-5050 **i03945577**

NOTE	PART NUMBER	QTY	PART NAME 1 2 3 4 5 6 (PRODUCT LEVEL)	SEE PAGE
Y	*218-6089*	1	LINES GP-HYDROSTATIC	120
Y	*356-1907*	1	LINES GP-PUMP	196
Y	*218-6197*	1	LINES GP-WORK TOOL	207
Y	*218-6175*	1	PUMP & MTG GP-WORK TOOL	224
Y-SEPARATE ILLUSTRATION				

<END>

HYDRAULIC SYSTEM

356-1920 HYDRAULIC AR–
AUXILIARY,STANDARD,SOUND SUPPRESSION
S/N: MWD1-UP

CANNOT BE USED WITH 356-1919–PAGE 177, 326-5244–PAGE 176, 326-5245–PAGE 176, 326-5270–PAGE 1, 326-5271–PAGE 2, 326-5272–PAGE 2

AN ATTACHMENT

SMCS-5050 **i03945575**

NOTE	PART NUMBER	QTY	PART NAME 1 2 3 4 5 6 (PRODUCT LEVEL)	SEE PAGE
Y	*218-6089*	1	LINES GP-HYDROSTATIC	120
Y	*356-1907*	1	LINES GP-PUMP	196
Y	*218-6197*	1	LINES GP-WORK TOOL	207
Y	*261-6094*	1	PUMP & MTG GP-WORK TOOL	225

Y-SEPARATE ILLUSTRATION

<END>

HYDRAULIC SYSTEM

326-5671 LINES GP-COUPLER—HYDRAULIC

S/N: MWD1-UP
PART OF 326-5576 COUPLER AR-QUICK
AN ATTACHMENT

SMCS-5057, 6129 **i03904630**

NOTE	REF NO	GRAPHIC REF	PART NUMBER	QTY	PART NAME 1 2 3 4 5 6 (PRODUCT LEVEL)	SEE PAGE
	1	1	**9X-6581**	1	NUT-O-RING SEAL (1-14-THD)	
	2	1	**124-2456**	1	FILM-INSTRUCTION (NO STEP)	
	3	1	**207-9737**	1	BRACKET AS	
I	4	1	**207-9756**	4	HOSE AS	
	5	1	**212-6690**	1	GUARD	
I	6	1	**218-6245**	2	HOSE AS	
I	7	1	**219-4335**	2	HOSE AS	
Y	8	1	**233-7128**	1	MANIFOLD GP-CONTROL (QUICK COUPLER)	215
	9	1	**252-0342**	1	TUBE AS	
	10	1	**252-0343**	1	TUBE AS	
	11	1	**326-5687**	1	TUBE AS	
	12	1	**326-5762**	1	BRACKET AS	
M		1	**8T-3490**	4	NUT-WELD (M10X1.5-THD)	
I	13	1	**326-5763**	1	HOSE AS	
	14	1	*148-8325*	4	CONNECTOR AS	
					(EACH INCLUDES)	
		1	**3J-1907**	1	SEAL-O-RING	
		1	**4J-5477**	1	SEAL-O-RING	
		1	**6V-8641**	1	CONNECTOR	
	15	1	*148-8336*	2	CONNECTOR AS	
					(EACH INCLUDES)	
		1	**3J-1907**	1	SEAL-O-RING	
		1	**6V-8397**	1	SEAL-O-RING	
		1	**6V-8636**	1	CONNECTOR	
	16	1	*148-8353*	1	ELBOW AS	
		1	**3J-1907**	1	SEAL-O-RING	
		1	**6V-8397**	1	SEAL-O-RING	
		1	**6V-9001**	1	ELBOW	
	17	1	*148-8378*	1	ELBOW AS	
		1	**3J-1907**	1	SEAL-O-RING	
		1	**6V-8397**	1	SEAL-O-RING	
		1	**6V-8724**	1	ELBOW	
	18	1	*148-8433*	1	TEE AS	
		1	**6V-8397**	2	SEAL-O-RING	
		1	**6V-9836**	1	TEE-SWIVEL	
	19	1	*148-8446*	1	TEE AS-SWIVEL	
		1	**6V-9838**	1	TEE-SWIVEL	
		1	**7J-9108**	2	SEAL-O-RING	
	20	1	*150-4034*	2	TEE AS	
					(EACH INCLUDES)	
		1	**6V-8397**	3	SEAL-O-RING	
		1	**8T-0379**	1	TEE-BULKHEAD	
	21	1	*156-4282*	1	REDUCER AS	
		1	**6V-8397**	1	SEAL-O-RING	
		1	**6V-8938**	1	REDUCER-O-RING	
	22	1	**1F-7567**	1	CLIP	
	23	1	**2V-3216**	4	CLIP	
	24	1	**3S-2093**	1	STRAP-CABLE	
	25	1	**4P-7581**	1	CLIP	
	26	1	**6V-8397**	4	SEAL-O-RING	
	27	1	**6V-9168**	2	NUT (11/16-16-THD)	
	28	1	**7B-1597**	1	CLIP	
	29	1	**7G-2950**	1	CLIP (SLOT)	
	30	1	**7G-2951**	1	CLIP (TAB)	
	31	1	**7H-7055**	2	CLIP	

326-5671 **LINES GP-COUPLER** *(contd.)* **i03904630**

NOTE	REF NO	GRAPHIC REF	PART NUMBER	QTY	PART NAME 1 2 3 4 5 6 (PRODUCT LEVEL)	SEE PAGE
	32	1	**7X-7729**	4	WASHER (11X25X3-MM THK)	
	33	1	**8T-4121**	4	WASHER-HARD (11X21X2.5-MM THK)	
M	34	1	**8T-4136**	1	BOLT (M10X1.5X25-MM)	
M	35	1	**8T-4189**	4	BOLT (M8X1.25X20-MM)	
M	36	1	**8T-4191**	3	BOLT (M10X1.5X16-MM)	
M	37	1	**8T-4201**	3	BOLT-LOCKING (M10X1.5X20-MM)	
	38	1	**8T-4224**	4	WASHER-HARD (8.8X16X2-MM THK)	
M	39	1	**8T-5005**	2	BOLT (M10X1.5X70-MM)	
	40	1	**9M-8406**	2	CLIP	
	41	1	**9S-1350**	1	CLIP	

I-REFER TO HYDRAULIC INFORMATION SYSTEM
M-METRIC PART
Y-SEPARATE ILLUSTRATION

326-5671 **LINES GP-COUPLER** *(contd.)* **i03904630**

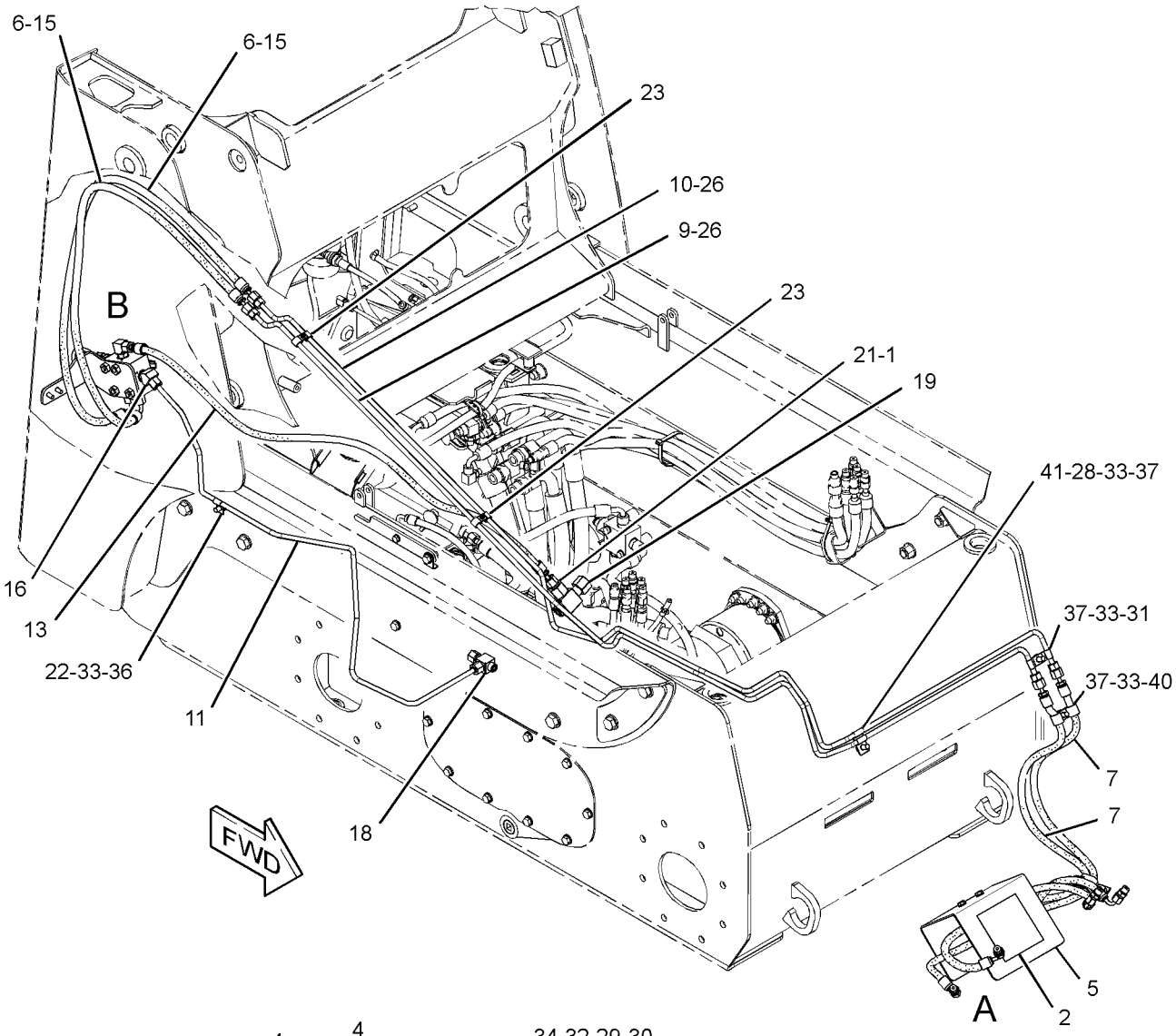

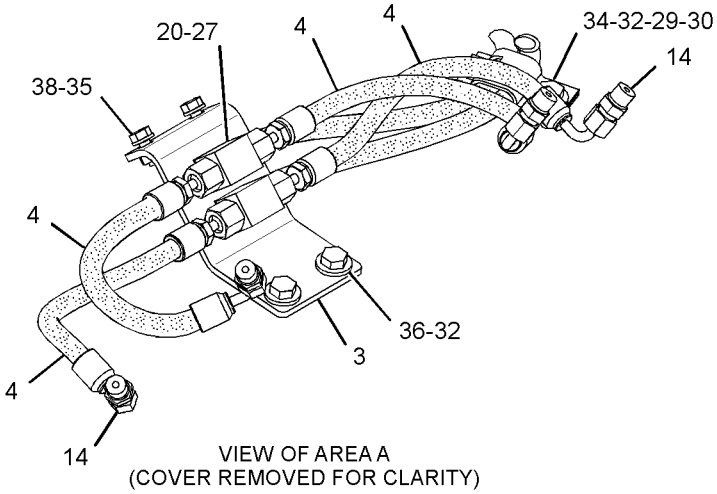

VIEW OF AREA A
(COVER REMOVED FOR CLARITY)

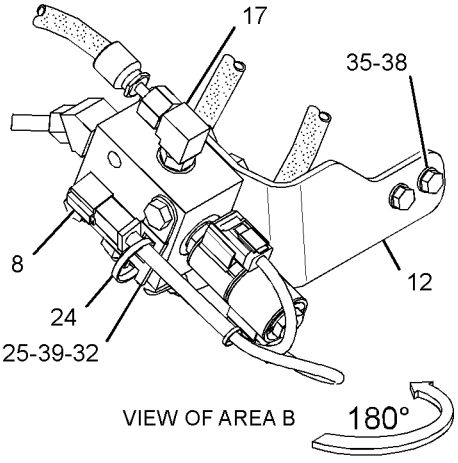

VIEW OF AREA B

GRAPHIC #1 **<END>** g02149375

HYDRAULIC SYSTEM

326-5599 LINES GP-HYDRAULIC FAN

S/N: MWD1-UP
PART OF 326-5536 AIR CONDITIONER AR
AN ATTACHMENT

SMCS-5057 **i03904592**

NOTE	REF NO	GRAPHIC REF	PART NUMBER	QTY	PART NAME 1 2 3 4 5 6 (PRODUCT LEVEL)	SEE PAGE
	1	1	**178-3620**	1	STRAP-DUAL CLAMP	
I	2	1	**218-6063**	1	HOSE AS	
I	3	1	**218-6108**	1	HOSE AS	
I	4	1	**311-5906**	1	HOSE AS	
I	5	1	**326-5636**	1	HOSE AS	
	6	1	**326-5694**	1	HOSE AS	
	7	1	**356-1939**	1	TUBE AS	
	8	1	*148-8315*	3	CONNECTOR AS	
					(EACH INCLUDES)	
		1	**2M-9780**	1	SEAL-O-RING	
		1	**6V-8642**	1	CONNECTOR	
		1	**7J-9108**	1	SEAL-O-RING	
	9	1	*148-8316*	1	CONNECTOR AS	
		1	**3J-7354**	1	SEAL-O-RING	
		1	**4J-5477**	1	SEAL-O-RING	
		1	**6V-8647**	1	CONNECTOR	
	10	1	*148-8369*	2	ELBOW AS	
					(EACH INCLUDES)	
		1	**3J-7354**	1	SEAL-O-RING	
		1	**4J-5477**	1	SEAL-O-RING	
		1	**6V-8628**	1	ELBOW	
	11	1	*148-8378*	1	ELBOW AS	
		1	**3J-1907**	1	SEAL-O-RING	
		1	**6V-8397**	1	SEAL-O-RING	
		1	**6V-8724**	1	ELBOW	
	12	1	*148-8433*	1	TEE AS	
		1	**6V-8397**	2	SEAL-O-RING	
		1	**6V-9836**	1	TEE-SWIVEL	
	13	1	*153-6256*	1	ELBOW AS	
		1	**7J-9108**	1	SEAL-O-RING	
		1	**8C-7563**	1	ELBOW	
	14	1	*164-5590*	1	VALVE AS-FLUID SAMPLING (HYDRAULIC FAN OIL)	
		1	**3J-7354**	1	SEAL-O-RING	
		1	**8C-3446**	1	VALVE-FLUID SAMPLING (HYDRAULIC FAN OIL)	
	15	1	**1F-7567**	1	CLIP	
	16	1	**3J-1907**	1	SEAL-O-RING	
	17	1	**6V-1228**	1	CLIP	
	18	1	**7K-1181**	4	STRAP-CABLE	
	19	1	**8C-3451**	1	CAP-DUST	

I-REFER TO HYDRAULIC INFORMATION SYSTEM

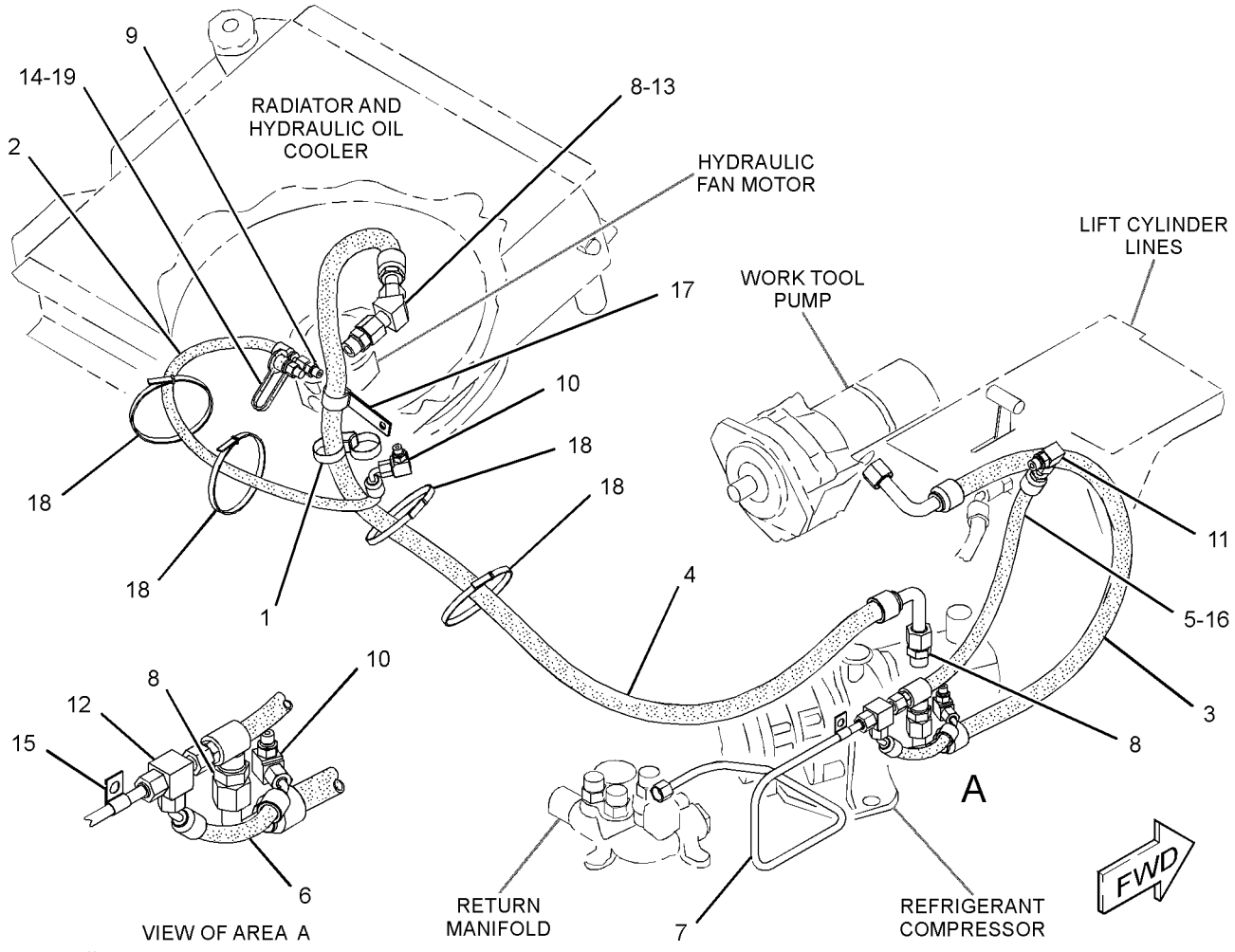

GRAPHIC #1

<END>

g02149436

HYDRAULIC SYSTEM

356-1928 LINES GP-HYDRAULIC FAN–CAB HEATER

S/N: MWD1-UP

PART OF 356-1935 HEATER AR-CAB, 356-1932 INSTALLATION GP-COVER & LINES AN ATTACHMENT

SMCS-5057 **i03901815**

NOTE	REF NO	GRAPHIC REF	PART NUMBER	QTY	PART NAME 1 2 3 4 5 6 (PRODUCT LEVEL)	SEE PAGE
	1	1	**178-3620**	1	STRAP-DUAL CLAMP	
I	2	1	**218-6063**	1	HOSE AS	
I	3	1	**311-5909**	1	HOSE AS	
I	4	1	**326-5636**	1	HOSE AS	
	5	1	**356-1939**	1	TUBE AS	
	6	1	*148-8315*	1	CONNECTOR AS	
		1	**2M-9780**	1	SEAL-O-RING	
		1	**6V-8642**	1	CONNECTOR	
		1	**7J-9108**	1	SEAL-O-RING	
	7	1	*148-8316*	1	CONNECTOR AS	
		1	**3J-7354**	1	SEAL-O-RING	
		1	**4J-5477**	1	SEAL-O-RING	
		1	**6V-8647**	1	CONNECTOR	
	8	1	*148-8369*	1	ELBOW AS	
		1	**3J-7354**	1	SEAL-O-RING	
		1	**4J-5477**	1	SEAL-O-RING	
		1	**6V-8628**	1	ELBOW	
	9	1	*148-8378*	1	ELBOW AS	
		1	**3J-1907**	1	SEAL-O-RING	
		1	**6V-8397**	1	SEAL-O-RING	
		1	**6V-8724**	1	ELBOW	
	10	1	*153-6256*	1	ELBOW AS	
		1	**7J-9108**	1	SEAL-O-RING	
		1	**8C-7563**	1	ELBOW	
	11	1	*164-5590*	1	VALVE AS-FLUID SAMPLING (HYDRAULIC FAN OIL)	
		1	**3J-7354**	1	SEAL-O-RING	
		1	**8C-3446**	1	VALVE-FLUID SAMPLING (HYDRAULIC FAN OIL)	
	12	1	**1F-7567**	1	CLIP	
	13	1	**3J-1907**	1	SEAL-O-RING	
	14	1	**6V-1228**	1	CLIP	
	15	1	**7K-1181**	3	STRAP-CABLE	
	16	1	**8C-3451**	1	CAP-DUST	

I-REFER TO HYDRAULIC INFORMATION SYSTEM

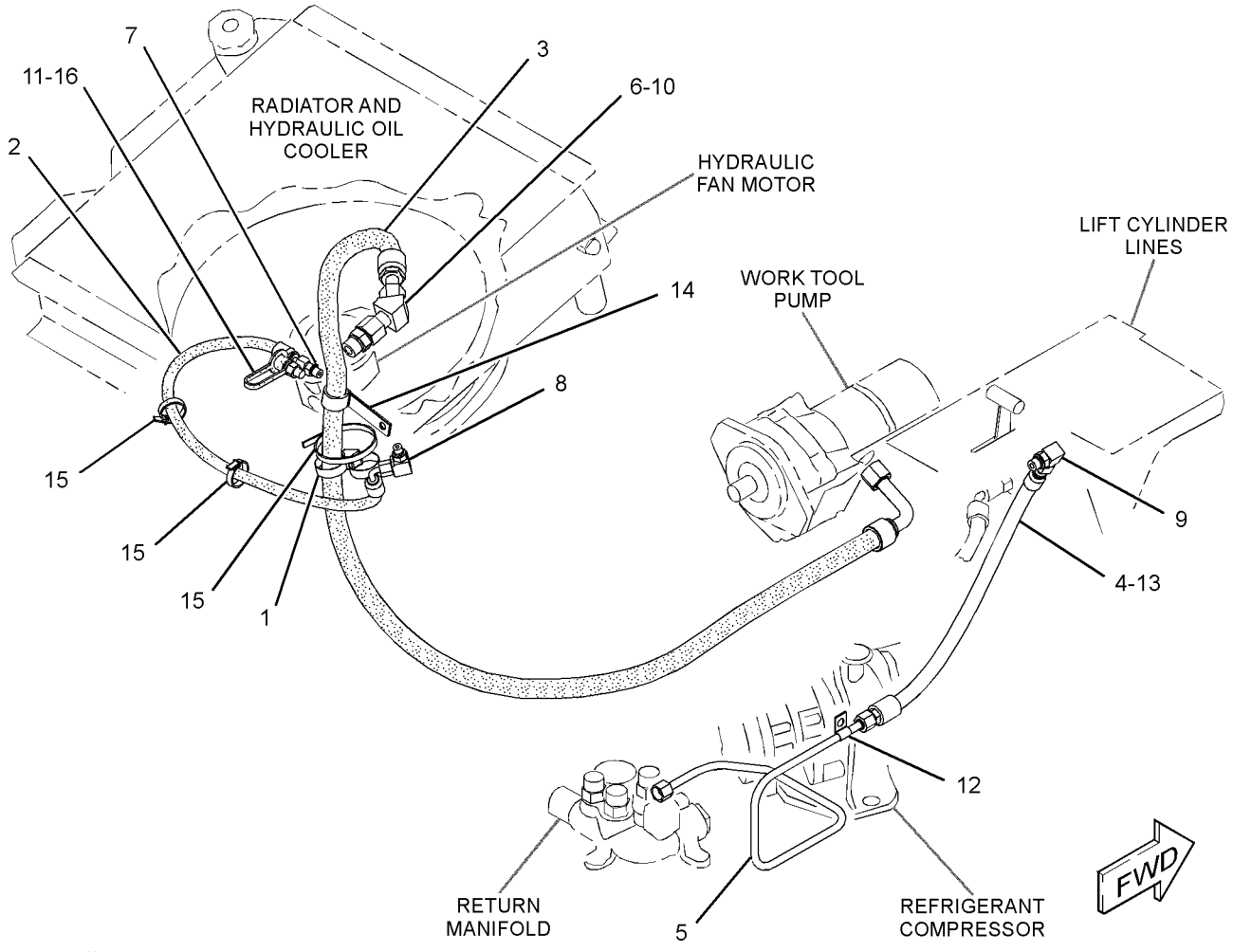

GRAPHIC #1

<END>

g02149622

HYDRAULIC SYSTEM

218-6143 LINES GP-HYDRAULIC OIL COOLER

S/N: MWD1-UP

PART OF 354-6548 HYDRAULIC AR

SMCS-5057 **i02820460**

NOTE	REF NO	GRAPHIC REF	PART NUMBER	QTY	PART NAME 1 2 3 4 5 6 (PRODUCT LEVEL)	SEE PAGE
C	1	1	**7K-1181**	3	STRAP-CABLE	
	2	1	*106-8715*	2	ELBOW AS	
					(EACH INCLUDES)	
		1	**3D-2824**	1	SEAL-O-RING	
		1	**6V-9746**	1	SEAL-O-RING	
		1	**8C-8400**	1	ELBOW	
	3	1	**122-7052**	1	SPACER (10.5X20X28-MM THK)	
C	4	1	**178-3620**	2	STRAP-DUAL CLAMP	
CI	5	1	**311-3219**	1	HOSE AS	
CI	6	1	**311-5899**	1	HOSE AS	
	7	1	**234-9525**	1	STUD (M10X1.5-THD)	
C	8	1	**4P-8134**	1	CLIP	
	9	1	**5D-0718**	2	CLIP	
	10	1	**6V-1889**	3	CLIP	
	11	1	**7X-7729**	3	WASHER (11X25X3-MM THK)	
C	12	1	**8T-4121**	1	WASHER-HARD (11X21X2.5-MM THK)	
CM	13	1	**8T-4133**	2	NUT (M10X1.5-THD)	
M	14	1	**8T-4136**	1	BOLT (M10X1.5X25-MM)	
M	15	1	**8T-4196**	1	BOLT (M10X1.5X35-MM)	

C-CHANGE FROM PREVIOUS TYPE
I-REFER TO HYDRAULIC INFORMATION SYSTEM
M-METRIC PART

218-6143 **LINES GP-HYDRAULIC OIL COOLER** *(contd.)* **i02820460**

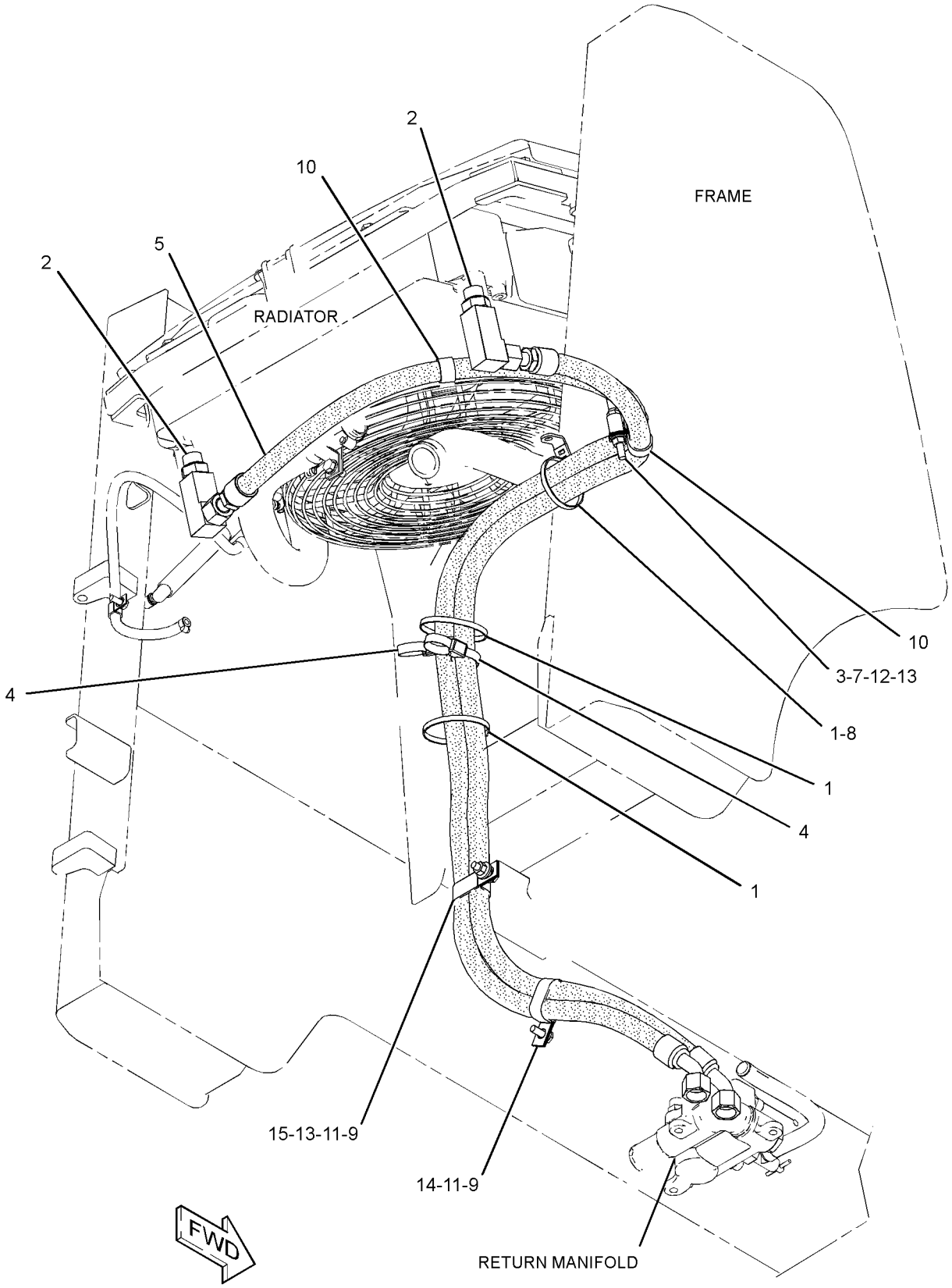

GRAPHIC #1 **<END>** g01408979

HYDRAULIC SYSTEM

326-5678 LINES GP-LIFT CYLINDER–

WITHOUT WORK TOOL POSITIONER

S/N: MWD1-UP

PART OF 326-5465 HYDRAULIC AR

AN ATTACHMENT

SMCS-5057, 5102 **i03904553**

NOTE	REF NO	GRAPHIC REF	PART NUMBER	QTY	PART NAME 1 2 3 4 5 6 (PRODUCT LEVEL)	SEE PAGE
	1	1	**3E-7404**	2	CLAMP-HOSE	
Y	2	1	**112-1817**	1	VALVE GP-MANUAL (HYDRAULIC LOCKOUT)	235
	3	1	**142-8997**	2	BLOCK	
	4	1	**178-3620**	2	STRAP-DUAL CLAMP	
	5	1	**187-1273**	2	TUBE AS	
	6	1	**187-3231**	1	TUBE AS	
	7	1	**187-3232**	1	TUBE AS	
	8	1	**218-5764**	1	PLATE	
	9	1	**218-6438**	1	SEAL	
	10	1	**285-9286**	1	BLOCK	
	11	1	**290-3293**	1	TUBE AS	
	12	1	**290-3294**	1	TUBE AS	
	13	1	**290-3296**	1	TUBE AS	
	14	1	**290-3301**	1	TUBE AS	
I	15	1	**290-3392**	4	HOSE AS	
	16	1	**326-5614**	1	HANDLE AS	
	17	1	**326-5625**	1	BRACKET AS	
M		1	**6V-9632**	3	NUT-WELD (M6X1-THD)	
M		1	**8T-3612**	3	NUT-WELD (M8X1.25-THD)	
	18	1	**326-5634**	1	BRUSH AS	
I	19	1	**326-5689**	1	HOSE AS	
	20	1	**101-2867**	1	WASHER-HARD (7.2X25X2-MM THK)	
	21	1	*148-8336*	1	CONNECTOR AS	
		1	**3J-1907**	1	SEAL-O-RING	
		1	**6V-8397**	1	SEAL-O-RING	
		1	**6V-8636**	1	CONNECTOR	
	22	1	*148-8341*	2	CONNECTOR AS	
					(EACH INCLUDES)	
		1	**3D-2824**	1	SEAL-O-RING	
		1	**6V-8713**	1	CONNECTOR	
		1	**7J-9108**	1	SEAL-O-RING	
M	23	1	**271-9408**	3	SCREW-TRUSS HEAD (M5X0.8X10-MM)	
	24	1	**4B-4863**	4	WASHER (4.7X11X1.2-MM THK)	
M	25	1	**5C-2874**	2	NUT (M5X0.8-THD)	
	26	1	**6V-8398**	9	SEAL-O-RING	
	27	1	**7J-9108**	6	SEAL-O-RING	
M	28	1	**8T-0285**	4	SCREW-MACHINE (M4X0.7X12-MM)	
	29	1	**8T-4121**	2	WASHER-HARD (11X21X2.5-MM THK)	
M	30	1	**8T-4136**	2	BOLT (M10X1.5X25-MM)	
	31	1	**8T-4224**	3	WASHER-HARD (8.8X16X2-MM THK)	
M	32	1	**8T-4908**	3	BOLT (M8X1.25X25-MM)	
M	33	1	**9X-2043**	3	SCREW-TRUSS HEAD (M6X1X14-MM)	

I-REFER TO HYDRAULIC INFORMATION SYSTEM
M-METRIC PART
Y-SEPARATE ILLUSTRATION

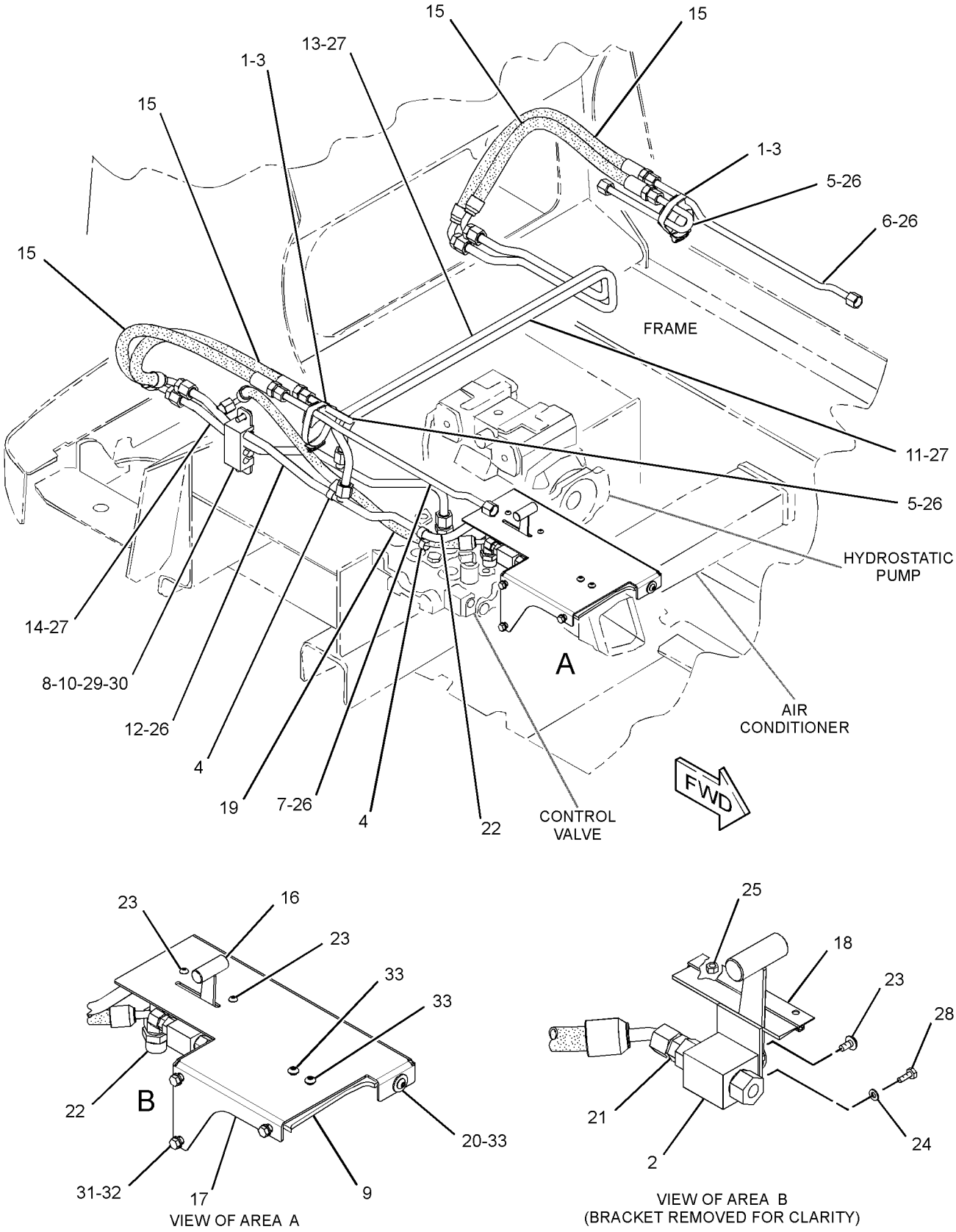

GRAPHIC #1 **<END>** g02147950

HYDRAULIC SYSTEM

326-5679 LINES GP-LIFT CYLINDER–

WITH WORK TOOL POSITIONER

S/N: MWD1-UP

PART OF 326-5478 HYDRAULIC AR

AN ATTACHMENT

SMCS-5057, 5102 **i03904570**

NOTE	REF NO	GRAPHIC REF	PART NUMBER	QTY	PART NAME 1 2 3 4 5 6 (PRODUCT LEVEL)	SEE PAGE
	1	1	**3E-7404**	2	CLAMP-HOSE	
Y	2	1	**112-1817**	1	VALVE GP-MANUAL	235
	3	1	**142-8997**	2	BLOCK	
	4	1	**142-9116**	1	SWITCH GP-ROCKER (WORK TOOL POSITIONER)	
		1	**111-7899**	1	GASKET	
Y	5	1	*159-5753*	1	MANIFOLD & MTG GP-CONTROL	211
	6	1	**178-3620**	2	STRAP-DUAL CLAMP	
	7	1	**187-1273**	2	TUBE AS	
	8	1	**187-3231**	1	TUBE AS	
	9	1	**187-3232**	1	TUBE AS	
	10	1	**218-5764**	1	PLATE	
	11	1	**218-6438**	1	SEAL	
	12	1	**285-9286**	1	BLOCK	
	13	1	**289-3769**	1	TUBE AS	
	14	1	**290-3293**	1	TUBE AS	
	15	1	**290-3294**	1	TUBE AS	
	16	1	**290-3296**	1	TUBE AS	
	17	1	**290-3297**	1	TUBE AS	
	18	1	**290-3384**	1	TUBE AS	
I	19	1	**290-3392**	4	HOSE AS	
	20	1	**326-5614**	1	HANDLE AS	
	21	1	**326-5625**	1	BRACKET AS	
M		1	**6V-9632**	3	NUT-WELD (M6X1-THD)	
M		1	**8T-3612**	3	NUT-WELD (M8X1.25-THD)	
	22	1	**326-5634**	1	BRUSH AS	
I	23	1	**326-5689**	1	HOSE AS	
	24	1	**101-2867**	1	WASHER-HARD (7.2X25X2-MM THK)	
	25	1	*148-8315*	2	CONNECTOR AS	
					(EACH INCLUDES)	
		1	**2M-9780**	1	SEAL-O-RING	
		1	**6V-8642**	1	CONNECTOR	
		1	**7J-9108**	1	SEAL-O-RING	
	26	1	*148-8336*	1	CONNECTOR AS	
		1	**3J-1907**	1	SEAL-O-RING	
		1	**6V-8397**	1	SEAL-O-RING	
		1	**6V-8636**	1	CONNECTOR	
	27	1	*148-8341*	2	CONNECTOR AS	
					(EACH INCLUDES)	
		1	**3D-2824**	1	SEAL-O-RING	
		1	**6V-8713**	1	CONNECTOR	
		1	**7J-9108**	1	SEAL-O-RING	
M	28	1	**271-9408**	3	SCREW-TRUSS HEAD (M5X0.8X10-MM)	
	29	1	**4B-4863**	4	WASHER (4.7X11X1.2-MM THK)	
M	30	1	**5C-2874**	2	NUT (M5X0.8-THD)	
	31	1	**6V-8398**	9	SEAL-O-RING	
	32	1	**7J-9108**	7	SEAL-O-RING	
M	33	1	**8T-0285**	4	SCREW-MACHINE (M4X0.7X12-MM)	
	34	1	**8T-4121**	2	WASHER-HARD (11X21X2.5-MM THK)	
M	35	1	**8T-4136**	2	BOLT (M10X1.5X25-MM)	
	36	1	**8T-4224**	3	WASHER-HARD (8.8X16X2-MM THK)	
M	37	1	**8T-4908**	3	BOLT (M8X1.25X25-MM)	
M	38	1	**9X-2043**	3	SCREW-TRUSS HEAD (M6X1X14-MM)	

326-5679 **LINES GP-LIFT CYLINDER** *(contd.)* **i03904570**

I-REFER TO HYDRAULIC INFORMATION SYSTEM
M-METRIC PART
Y-SEPARATE ILLUSTRATION

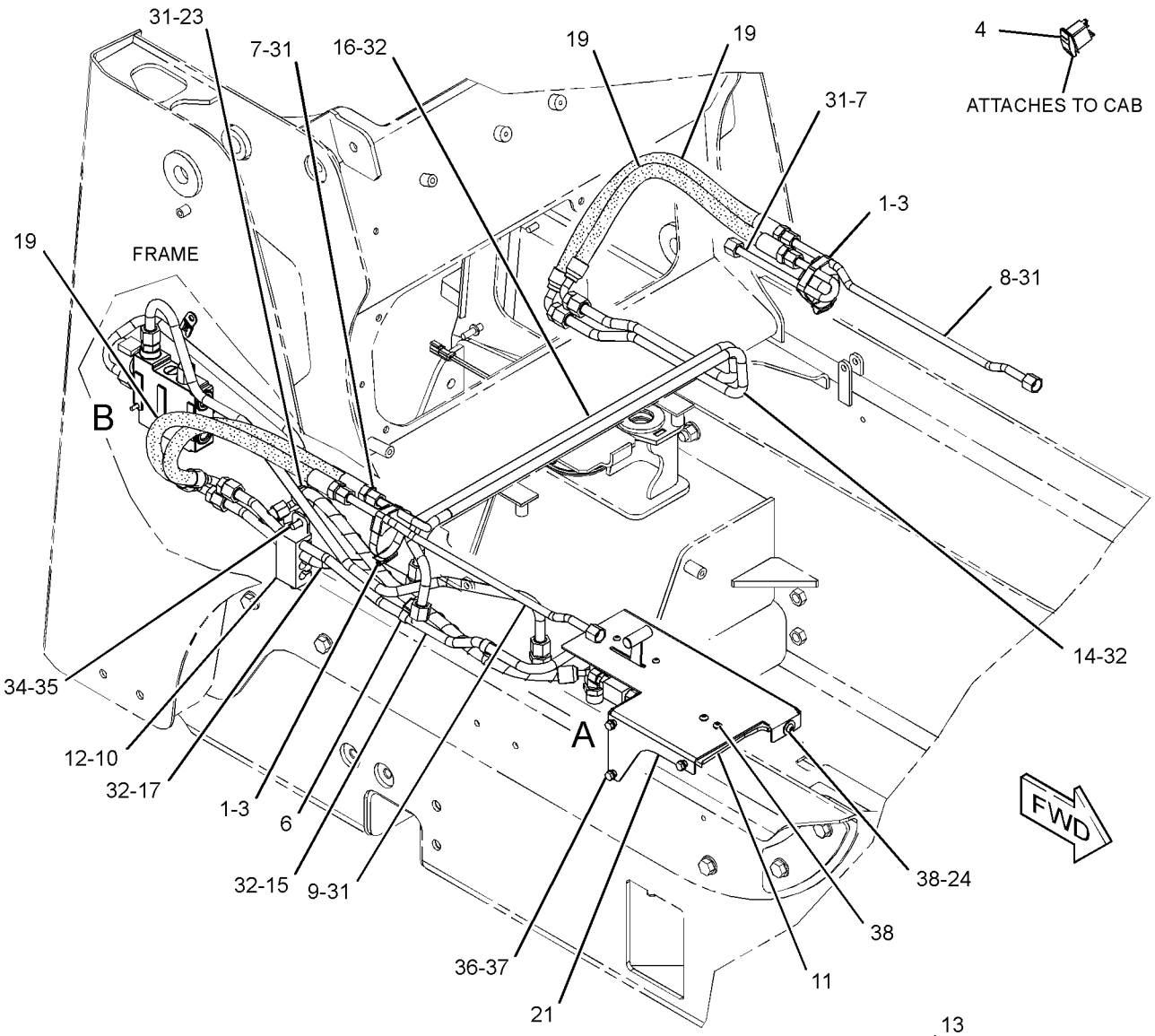

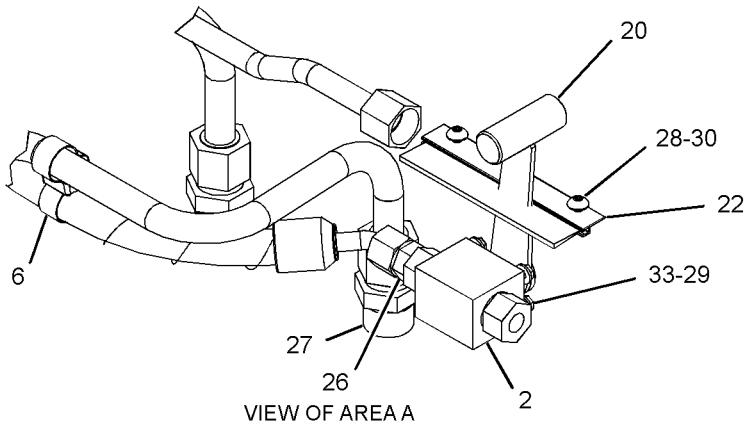

VIEW OF AREA A
(BRACKET REMOVED FOR CLARITY)

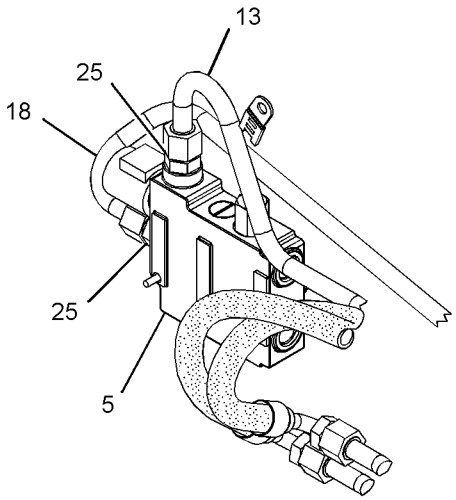

VIEW OF AREA B

GRAPHIC #1 **<END>** g02147920

HYDRAULIC SYSTEM

218-5978 LINES GP-PILOT—DIRECTION, SPEED

S/N: MWD1-UP

PART OF 354-6548 HYDRAULIC AR

SMCS-5057, 5059 **i03909562**

NOTE	REF NO	GRAPHIC REF	PART NUMBER	QTY	PART NAME 1 2 3 4 5 6 (PRODUCT LEVEL)	SEE PAGE
	1	1	**6V-0852**	1	CAP-DUST	
	2	1	**7K-1181**	2	STRAP-CABLE	
	3	1	*148-8423*	1	TEE AS	
		1	**3J-1907**	1	SEAL-O-RING	
		1	**4J-5477**	1	SEAL-O-RING	
		1	**8T-3311**	1	TEE	
	4	1	*164-5567*	1	COUPLER AS-QUICK DISCONNECT (MALE)	
		1	**214-7568**	1	SEAL-O-RING	
		1	**6V-3965**	1	FITTING (QUICK DISCONNECT)	
	5	1	**193-8392**	1	HOSE AS	
	6	1	**218-5968**	1	BRACKET	
	7	1	**218-6644**	1	HOSE AS	
	8	1	**218-6864**	1	HOSE AS	
	9	1	*148-8316*	2	CONNECTOR AS	
					(EACH INCLUDES)	
		1	**3J-7354**	1	SEAL-O-RING	
		1	**4J-5477**	1	SEAL-O-RING	
		1	**6V-8647**	1	CONNECTOR	
	10	1	*148-8325*	5	CONNECTOR AS	
					(EACH INCLUDES)	
		1	**3J-1907**	1	SEAL-O-RING	
		1	**4J-5477**	1	SEAL-O-RING	
		1	**6V-8641**	1	CONNECTOR	
	11	1	*148-8369*	2	ELBOW AS	
					(EACH INCLUDES)	
		1	**3J-7354**	1	SEAL-O-RING	
		1	**4J-5477**	1	SEAL-O-RING	
		1	**6V-8628**	1	ELBOW	
	12	1	*150-4043*	1	CONNECTOR AS	
		1	**3J-1907**	1	SEAL-O-RING	
		1	**6V-8398**	1	SEAL-O-RING	
		1	**6V-9873**	1	CONNECTOR	
	13	1	**234-0786**	2	HOSE AS	
	14	1	**348-4604**	1	HOSE AS	

218-5978 **LINES GP-PILOT** *(contd.)* **i03909562**

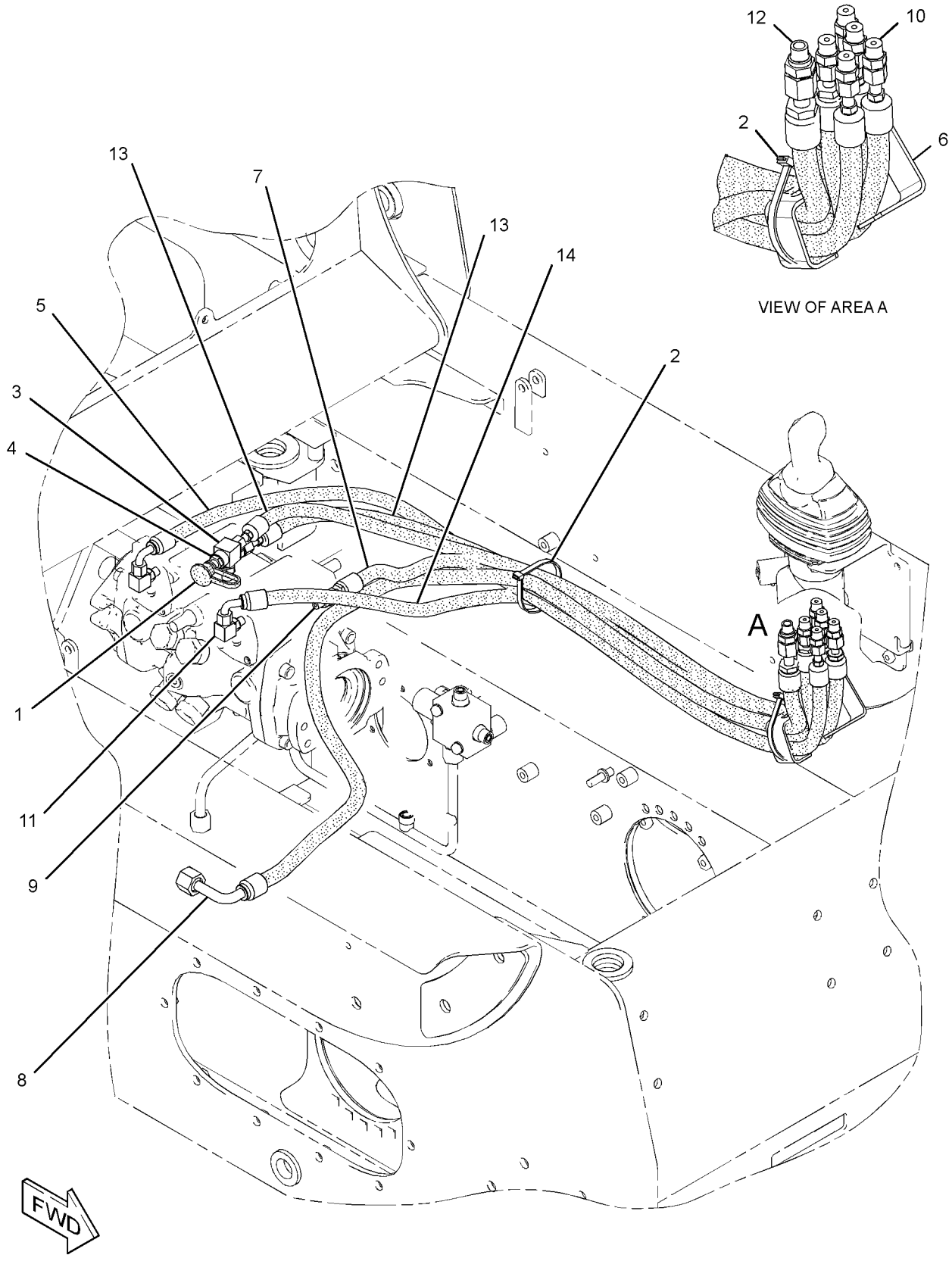

GRAPHIC #1 **<END>** g02150830

HYDRAULIC SYSTEM

218-6099 LINES GP-PILOT—WORK TOOL

S/N: MWD1-UP

PART OF 354-6548 HYDRAULIC AR

SMCS-5057, 5059 **i03971112**

NOTE	REF NO	GRAPHIC REF	PART NUMBER	QTY	PART NAME 1 2 3 4 5 6 (PRODUCT LEVEL)	SEE PAGE
Y	1	1	*179-7001*	1	ADAPTER GP-OIL LINE	165
	2	1	**195-6768**	1	SCREEN (HYDRAULIC)	
	3	1	**195-6769**	1	WASHER (6.99X12.7X5.46-MM THK)	
	4	1	**218-6109**	1	HOSE AS	
I	5	1	**218-5571**	2	HOSE AS	
I	6	1	**218-5572**	2	HOSE AS	
I	7	1	**193-8313**	1	HOSE AS	
	8	1	**234-0782**	1	HOSE AS	
	9	1	**123-4750**	1	VALVE-CHECK (HOIST PILOT OIL)	
	10	1	*148-8325*	9	CONNECTOR AS	
					(EACH INCLUDES)	
		1	**3J-1907**	1	SEAL-O-RING	
		1	**4J-5477**	1	SEAL-O-RING	
		1	**6V-8641**	1	CONNECTOR	
	11	1	*148-8435*	1	TEE AS	
		1	**3J-1907**	1	SEAL-O-RING	
		1	**6V-8397**	2	SEAL-O-RING	
		1	**6V-8781**	1	TEE-FACE SEAL	
	12	1	*150-4027*	1	TEE AS	
		1	**3E-2310**	1	TEE	
		1	**3J-1907**	1	SEAL-O-RING	
		1	**6V-8397**	1	SEAL-O-RING	
	13	1	**6D-3479**	1	CLIP	
	14	1	**8T-4121**	1	WASHER-HARD (11X21X2.5-MM THK)	
M	15	1	**8T-4191**	1	BOLT (M10X1.5X16-MM)	

I-REFER TO HYDRAULIC INFORMATION SYSTEM
M-METRIC PART
Y-SEPARATE ILLUSTRATION

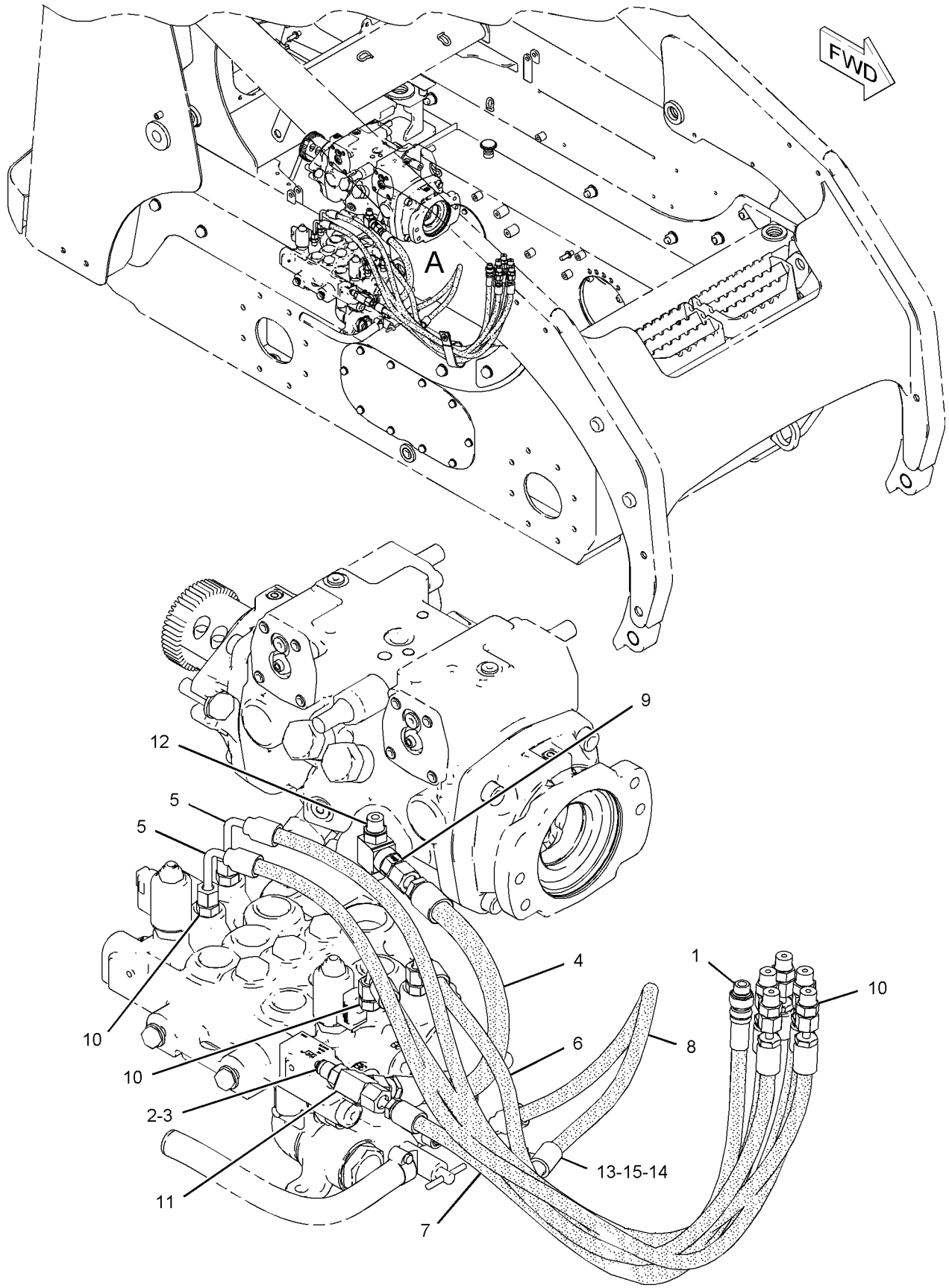

VIEW OF AREA A

GRAPHIC #1

<END>

g01033214

HYDRAULIC SYSTEM

356-1907 LINES GP-PUMP—SUCTION

S/N: MWD1-UP
PART OF 356-1919, 356-1920 HYDRAULIC AR
AN ATTACHMENT

SMCS-5057 **i03904610**

NOTE	REF NO	GRAPHIC REF	PART NUMBER	QTY	PART NAME 1 2 3 4 5 6 (PRODUCT LEVEL)	SEE PAGE
	1	1	**2S-3440**	2	CLAMP-HOSE	
	2	1	**5P-2230**	3	CLAMP-HOSE	
	3	1	**6V-0852**	1	CAP-DUST	
	4	1	**9U-6994**	1	FITTING GP (RETURN MANIFOLD)	
		1	**5P-4362**	1	CONNECTOR	
		1	**7M-8485**	1	SEAL-O-RING	
	5	1	**9U-6995**	1	FITTING GP-HYDRAULIC	
		1	**2S-4078**	1	SEAL-O-RING	
		1	**034-2151**	1	CONNECTOR	
	6	1	**180-3007**	1	CLAMP-HOSE	
	7	1	**193-8308**	1	ADAPTER	
I	8	1	**193-8321**	1	HOSE AS	
	9	1	**218-6146**	1	HOSE	
	10	1	**283-9478**	1	HOSE	
	11	1	**347-4517**	1	HOSE	
	12	1	*148-8315*	1	CONNECTOR AS	
		1	**2M-9780**	1	SEAL-O-RING	
		1	**6V-8642**	1	CONNECTOR	
		1	**7J-9108**	1	SEAL-O-RING	
	13	1	*148-8360*	1	ELBOW AS	
		1	**6V-9182**	1	ELBOW	
		1	**6V-9746**	1	SEAL-O-RING	
		1	**7M-8485**	1	SEAL-O-RING	
	14	1	*164-5567*	1	COUPLER AS-QUICK DISCONNECT (MALE)	
		1	**6V-3965**	1	FITTING (QUICK DISCONNECT)	
		1	**214-7568**	1	SEAL-O-RING	
	15	1	**1P-4578**	2	FLANGE-HALF	
	16	1	**4J-0522**	1	SEAL-O-RING	
	17	1	**4J-5267**	1	SEAL-O-RING	
	18	1	**8C-3205**	2	FLANGE-HALF	
	19	1	**8T-4121**	8	WASHER-HARD (11X21X2.5-MM THK)	
M	20	1	**8T-4196**	8	BOLT (M10X1.5X35-MM)	

I-REFER TO HYDRAULIC INFORMATION SYSTEM
M-METRIC PART

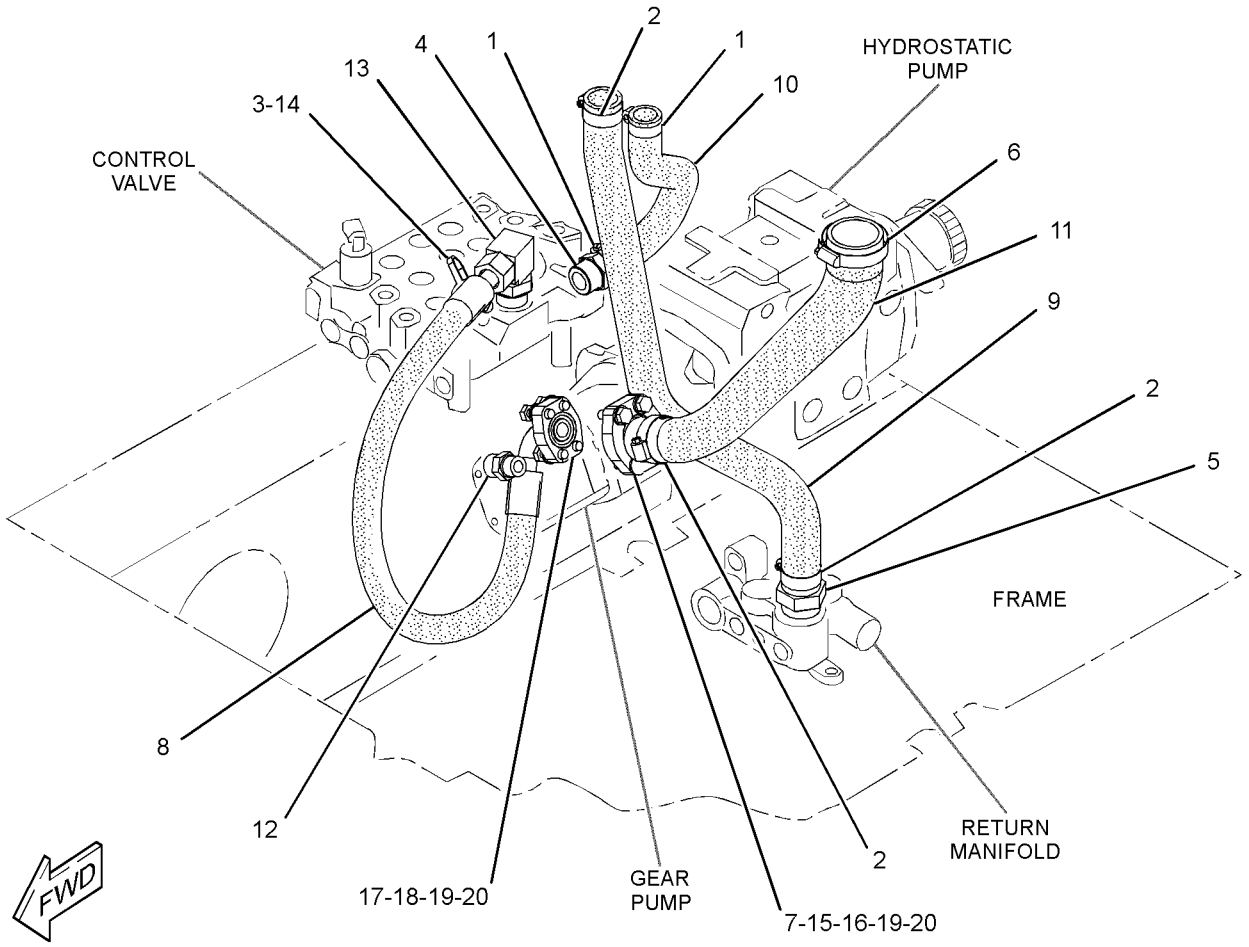

GRAPHIC #1 **<END>** g02147774

HYDRAULIC SYSTEM

356-1908 LINES GP-PUMP—SUCTION

S/N: MWD1-UP
PART OF 326-5244, 326-5245 HYDRAULIC AR
AN ATTACHMENT

SMCS-5057 **i03903713**

NOTE	REF NO	GRAPHIC REF	PART NUMBER	QTY	PART NAME 1 2 3 4 5 6 (PRODUCT LEVEL)	SEE PAGE
	1	1	**2S-3440**	4	CLAMP-HOSE	
	2	1	**5P-2230**	3	CLAMP-HOSE	
	3	1	**6V-0852**	1	CAP-DUST	
	4	1	**9U-6994**	2	FITTING GP (RETURN MANIFOLD)	
					(EACH INCLUDES)	
		1	**5P-4362**	1	CONNECTOR	
		1	**7M-8485**	1	SEAL-O-RING	
	5	1	*176-4074*	1	CONNECTOR GP	
		1	**2S-4078**	1	SEAL-O-RING	
		1	**177-9567**	1	TEE AS	
	6	1	**180-3007**	1	CLAMP-HOSE	
I	7	1	**193-8321**	1	HOSE AS	
	8	1	**218-6142**	1	HOSE	
	9	1	**218-6147**	1	HOSE	
	10	1	**283-9478**	1	HOSE	
	11	1	**347-5344**	1	HOSE	
	12	1	**347-5345**	1	ADAPTER AS	
	13	1	*148-8315*	1	CONNECTOR AS	
		1	**2M-9780**	1	SEAL-O-RING	
		1	**6V-8642**	1	CONNECTOR	
		1	**7J-9108**	1	SEAL-O-RING	
	14	1	*148-8360*	1	ELBOW AS	
		1	**6V-9182**	1	ELBOW	
		1	**6V-9746**	1	SEAL-O-RING	
		1	**7M-8485**	1	SEAL-O-RING	
	15	1	*164-5567*	1	COUPLER AS-QUICK DISCONNECT (MALE)	
		1	**6V-3965**	1	FITTING (QUICK DISCONNECT)	
		1	**214-7568**	1	SEAL-O-RING	
	16	1	**1P-4578**	2	FLANGE-HALF	
	17	1	**4J-0522**	1	SEAL-O-RING	
	18	1	**4J-5267**	1	SEAL-O-RING	
	19	1	**8C-3205**	2	FLANGE-HALF	
	20	1	**8T-4121**	8	WASHER-HARD (11X21X2.5-MM THK)	
M	21	1	**8T-4196**	8	BOLT (M10X1.5X35-MM)	

I-REFER TO HYDRAULIC INFORMATION SYSTEM
M-METRIC PART

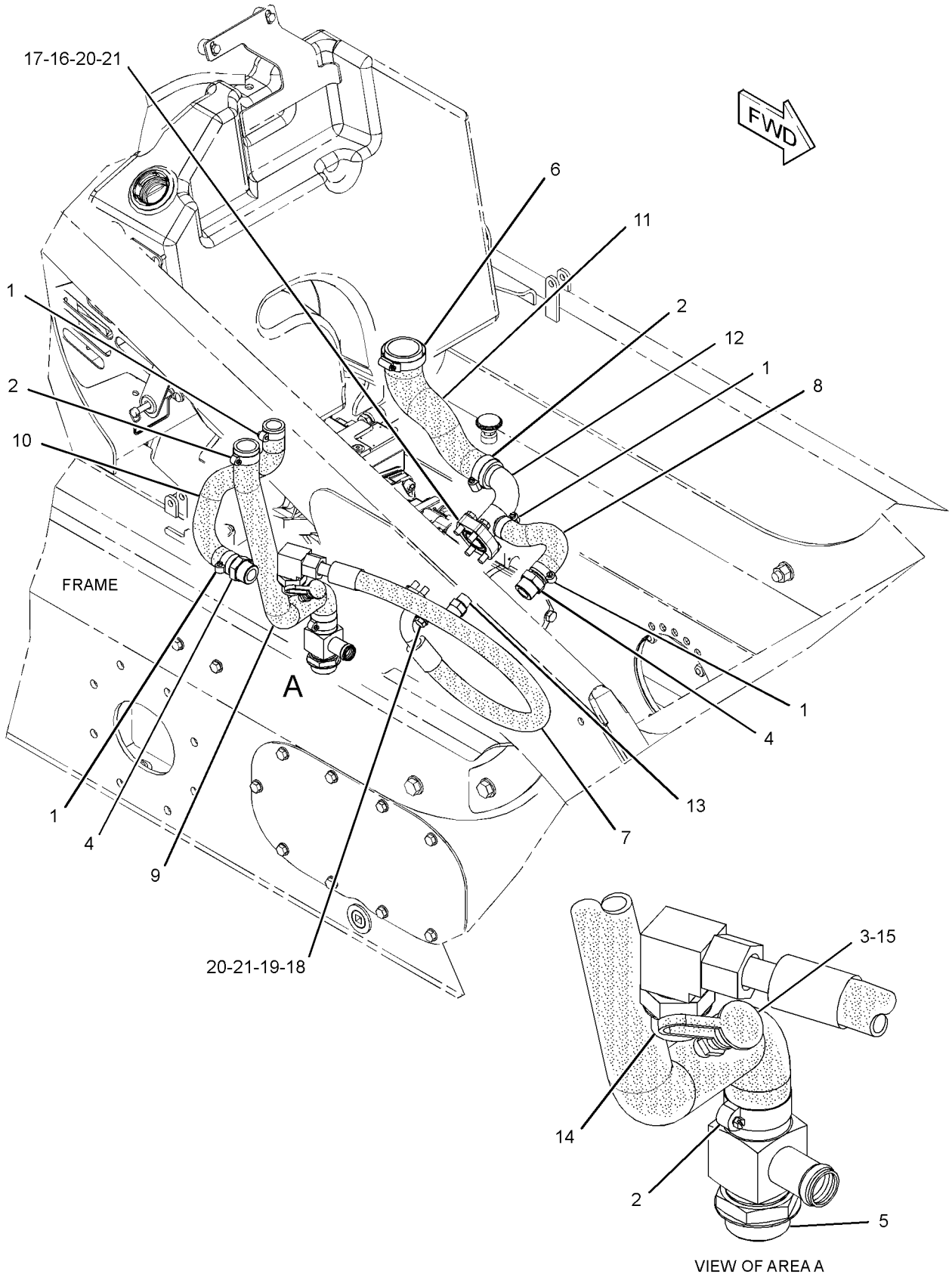

GRAPHIC #1 **<END>** g02147735

HYDRAULIC SYSTEM

218-5819 LINES GP-TILT CYLINDER–
WITHOUT WORK TOOL POSITIONER
S/N: MWD1-UP
PART OF 326-5465 HYDRAULIC AR
AN ATTACHMENT

SMCS-5057, 5104 **i03632761**

NOTE	REF NO	GRAPHIC REF	PART NUMBER	QTY	PART NAME 1 2 3 4 5 6 (PRODUCT LEVEL)	SEE PAGE
	1	1	**116-4415**	2	PLATE-COVER	
	2	1	**142-8998**	2	CLIP	
I	3	1	**142-9234**	4	HOSE AS	
CI	4	1	**290-3357**	2	HOSE AS	
	5	1	**218-6196**	1	TUBE AS	
C	6	1	**289-3790**	1	TUBE AS	
C	7	1	**289-3791**	1	TUBE AS	
C	8	1	**289-3792**	1	TUBE AS	
	9	1	*148-8315*	2	CONNECTOR AS	
					(EACH INCLUDES)	
		1	**2M-9780**	1	SEAL-O-RING	
		1	**6V-8642**	1	CONNECTOR	
		1	**7J-9108**	1	SEAL-O-RING	
	10	1	**6V-8398**	8	SEAL-O-RING	
	11	1	**7J-9108**	4	SEAL-O-RING	
M	12	1	**8T-2192**	2	BOLT (M6X1X45-MM)	
	13	1	**8T-4121**	2	WASHER-HARD (11X21X2.5-MM THK)	
M	14	1	**8T-4136**	2	BOLT (M10X1.5X25-MM)	
	15	1	**9R-1005**	2	CLIP (SLOT)	
	16	1	**9R-7802**	2	CLIP (SLOT)	
	17	1	**9R-7803**	2	CLIP (TAB)	

C-CHANGE FROM PREVIOUS TYPE
I-REFER TO HYDRAULIC INFORMATION SYSTEM
M-METRIC PART

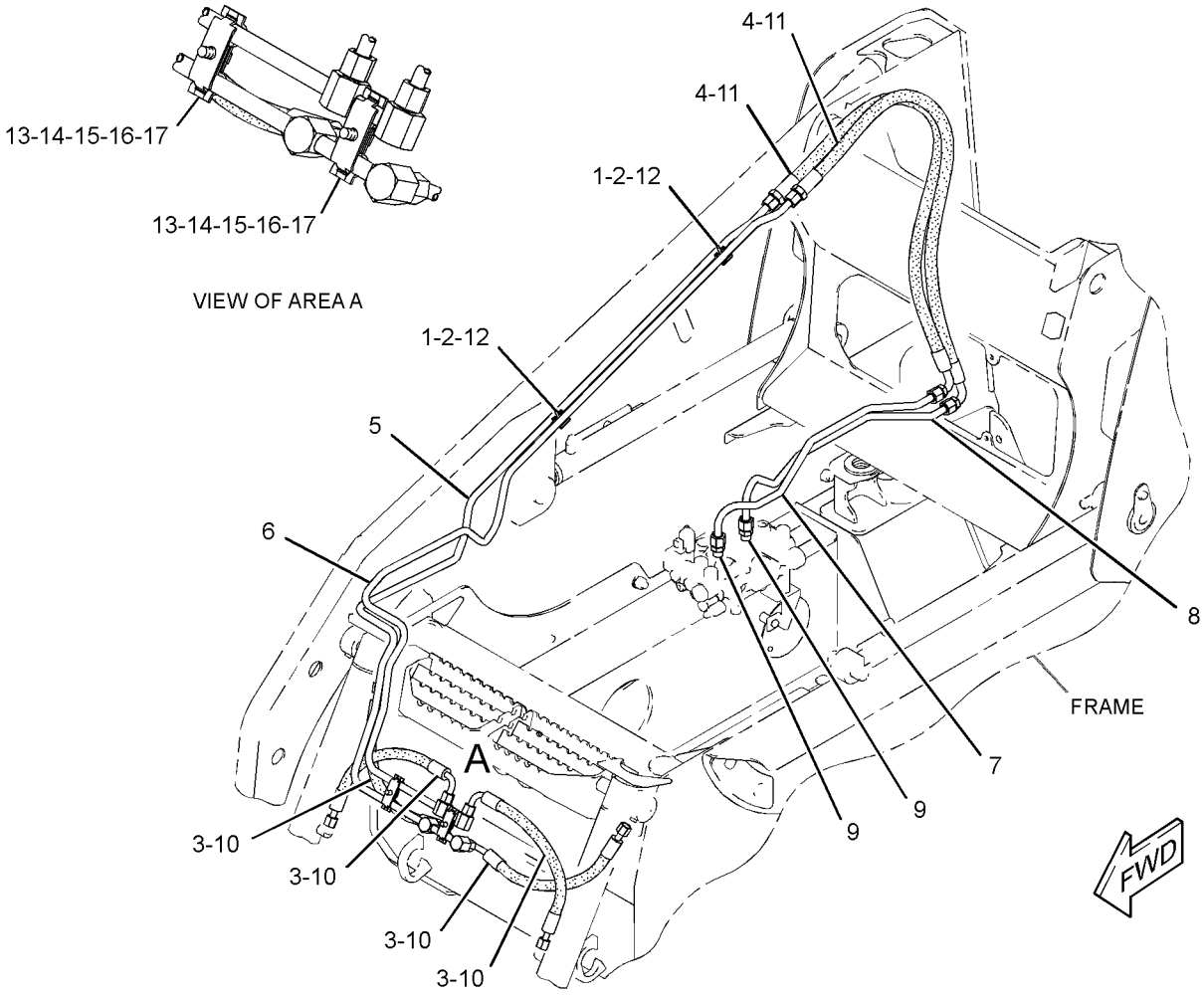

GRAPHIC #1

<END>

g01949855

HYDRAULIC SYSTEM

218-5852 LINES GP-TILT CYLINDER—WORK TOOL POSITIONER

S/N: MWD1-UP
PART OF 326-5478 HYDRAULIC AR
FOR USE WITH WORK TOOL POSITIONER
AN ATTACHMENT

SMCS-5057, 5104 **i02996404**

NOTE	REF NO	GRAPHIC REF	PART NUMBER	QTY	PART NAME 1 2 3 4 5 6 (PRODUCT LEVEL)	SEE PAGE
	1	1	**116-4415**	2	PLATE-COVER	
	2	1	**142-8998**	2	CLIP	
I	3	1	**142-9234**	4	HOSE AS	
CI	4	1	**290-3357**	2	HOSE AS	
	5	1	**218-6196**	1	TUBE AS	
C	6	1	**289-3790**	1	TUBE AS	
C	7	1	**290-3359**	1	TUBE AS	
C	8	1	**290-3289**	1	TUBE AS	
C	9	1	**290-3360**	1	TUBE AS	
C	10	1	**290-3290**	1	TUBE AS	
	11	1	*148-8315*	2	CONNECTOR AS	
					(EACH INCLUDES)	
		1	**3D-2824**	1	SEAL-O-RING	
		1	**6V-8642**	1	CONNECTOR	
		1	**7J-9108**	1	SEAL-O-RING	
	12	1	*148-8319*	2	CONNECTOR AS	
					(EACH INCLUDES)	
		1	**2M-9780**	1	SEAL-O-RING	
		1	**6V-8397**	1	SEAL-O-RING	
		1	**6V-8715**	1	CONNECTOR	
	13	1	**6V-8397**	2	SEAL-O-RING	
	14	1	**6V-8398**	8	SEAL-O-RING	
	15	1	**7J-9108**	4	SEAL-O-RING	
M	16	1	**8T-2192**	2	BOLT (M6X1X45-MM)	
	17	1	**8T-4121**	2	WASHER-HARD (11X21X2.5-MM THK)	
M	18	1	**8T-4136**	2	BOLT (M10X1.5X25-MM)	
	19	1	**9R-1005**	2	CLIP (SLOT)	
	20	1	**9R-7802**	2	CLIP (SLOT)	
	21	1	**9R-7803**	2	CLIP (TAB)	

C-CHANGE FROM PREVIOUS TYPE
I-REFER TO HYDRAULIC INFORMATION SYSTEM
M-METRIC PART

218-5852 **LINES GP-TILT CYLINDER** *(contd.)* **i02996404**

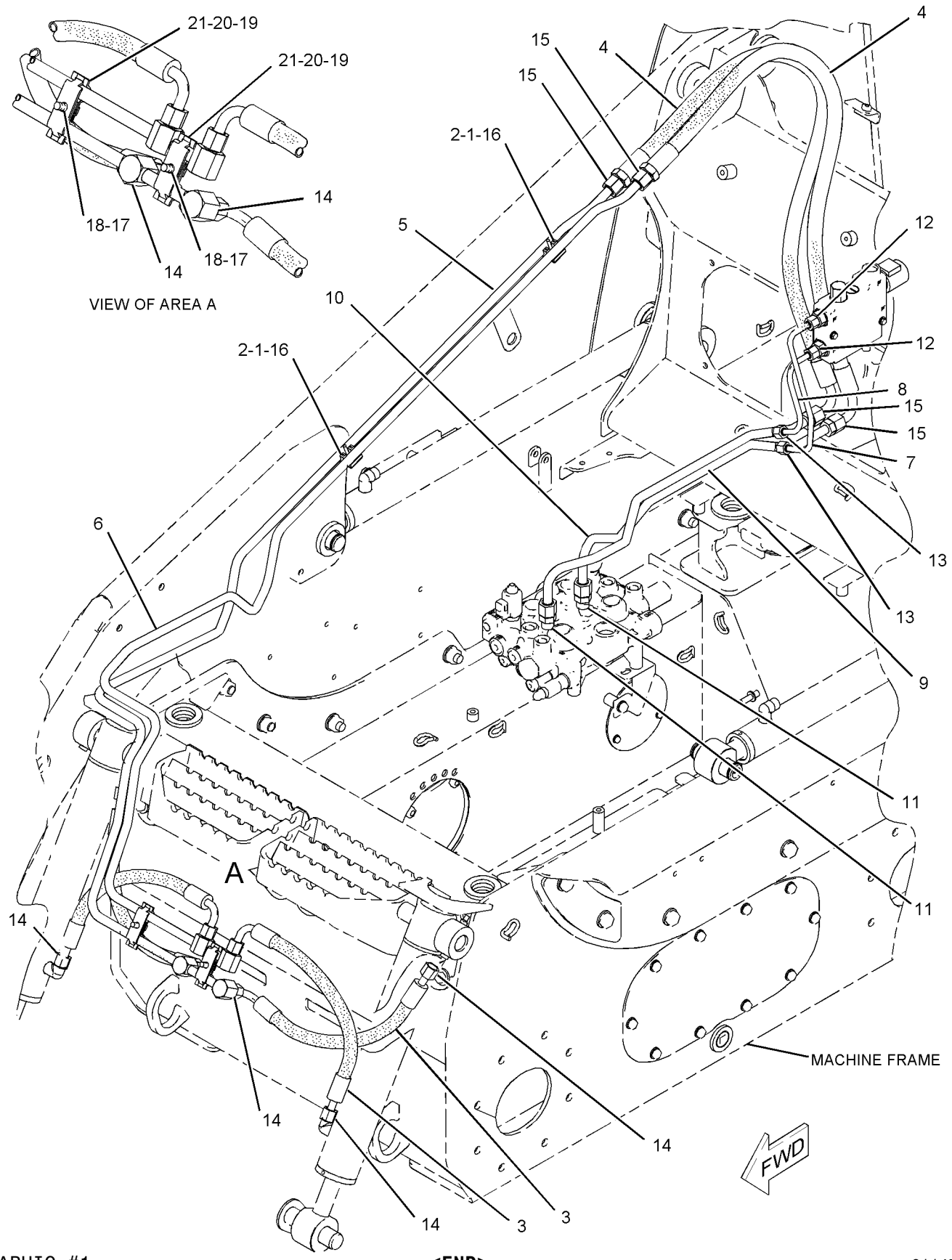

GRAPHIC #1 **<END>** g01147734

HYDRAULIC SYSTEM

218-5853 LINES GP-WORK TOOL—HIGH FLOW

S/N: MWD1-UP

PART OF 326-5244, 326-5245 HYDRAULIC AR

AN ATTACHMENT

SMCS-5057 **i03642964**

NOTE	REF NO	GRAPHIC REF	PART NUMBER	QTY	PART NAME 1 2 3 4 5 6 (PRODUCT LEVEL)	SEE PAGE
	1	1	**2S-3440**	2	CLAMP-HOSE	
	2	1	**7K-1181**	4	STRAP-CABLE	
	3	1	**9U-6993**	1	FITTING GP	
		1	**3D-2824**	1	SEAL-O-RING	
M	4	1	**101-3129**	4	STUD (M10X1.5-THD)	
	5	1	**285-9287**	3	BLOCK	
	6	1	**218-5764**	3	PLATE	
I	7	1	**218-5813**	1	HOSE AS	
	8	1	**218-5815**	1	TUBE AS	
	9	1	**218-5818**	1	HOSE	
Y	10	1	**218-5840**	1	FITTING GP-HYDRAULIC (QUICK DISCONNECT, MALE)	174
Y	11	1	**218-5841**	1	FITTING GP-HYDRAULIC (QUICK DISCONNECT, FEMALE)	175
	12	1	**238-7723**	1	TUBE AS	
	13	1	**238-7724**	1	TUBE AS	
	14	1	**218-5906**	1	TUBE AS	
	15	1	**218-5907**	1	TUBE AS	
C	16	1	**290-3305**	1	TUBE AS	
C	17	1	**290-3304**	1	TUBE AS	
CI	18	1	**290-3356**	2	HOSE AS	
I	19	1	**218-5916**	2	HOSE AS	
	20	1	**218-5917**	1	TUBE AS	
I	21	1	**218-5918**	1	HOSE AS	
	22	1	**218-5919**	1	TUBE AS	
	23	1	**218-6002**	2	BRACKET AS	
	24	1	**218-6004**	2	BLOCK	
	25	1	**218-6005**	2	BLOCK	
	26	1	**218-6727**	1	BRACKET AS	
	27	1	**218-6776**	1	COVER AS	
	28	1	**218-6784**	1	TUBE AS	
	29	1	**218-6785**	1	TUBE AS	
	30	1	**229-5468**	1	FITTING AS (QUICK DISCONNECT, MALE)	
	31	1	**229-5471**	1	FITTING AS (QUICK DISCONNECT, FEMALE)	
	32	1	**229-5473**	1	FITTING AS (QUICK DISCONNECT, MALE)	
	33	1	*148-8327*	2	CONNECTOR AS	
					(EACH INCLUDES)	
		1	**3D-2824**	1	SEAL-O-RING	
		1	**6V-8637**	1	CONNECTOR	
		1	**6V-9746**	1	SEAL-O-RING	
	34	1	*148-8336*	2	CONNECTOR AS	
					(EACH INCLUDES)	
		1	**3J-1907**	1	SEAL-O-RING	
		1	**6V-8397**	1	SEAL-O-RING	
		1	**6V-8636**	1	CONNECTOR	
	35	1	*148-8340*	3	CONNECTOR AS	
					(EACH INCLUDES)	
		1	**3K-0360**	1	SEAL-O-RING	
		1	**6V-8398**	1	SEAL-O-RING	
		1	**6V-8639**	1	CONNECTOR	
	36	1	**1P-4574**	2	FLANGE-HALF	
	37	1	**4J-5140**	1	SEAL-O-RING	
	38	1	**4J-5477**	1	SEAL-O-RING	
M	39	1	**5C-9553**	4	BOLT (M6X1X16-MM)	
	40	1	**5M-8429**	1	CLIP	
	41	1	**6V-8397**	4	SEAL-O-RING	

218-5853 **LINES GP-WORK TOOL** *(contd.)* **i03642964**

NOTE	REF NO	GRAPHIC REF	PART NUMBER	QTY	PART NAME 1 2 3 4 5 6 (PRODUCT LEVEL)	SEE PAGE
	42	1	**6V-8398**	3	SEAL-O-RING	
	43	1	**200-6345**	1	MOUNT (DUAL SWIVEL)	
	45	1	**6V-9746**	4	SEAL-O-RING	
	46	1	**7B-1597**	2	CLIP	
	47	1	**1F-7567**	1	CLIP	
M	48	1	**8T-0341**	4	BOLT-SOCKET HEAD (M10X1.5X60-MM)	
M	49	1	**8T-2192**	4	BOLT (M6X1X45-MM)	
	50	1	**8T-4121**	8	WASHER-HARD (11X21X2.5-MM THK)	
M	51	1	**8T-4133**	2	NUT (M10X1.5-THD)	
M	52	1	**8T-4136**	2	BOLT (M10X1.5X25-MM)	
M	53	1	**8T-4178**	2	BOLT (M10X1.5X90-MM)	
	54	1	**8T-4205**	8	WASHER-HARD (7.2X14.5X2-MM THK)	
	55	1	**8T-4224**	6	WASHER-HARD (8.8X16X2-MM THK)	
M	56	1	**8T-4908**	2	BOLT (M8X1.25X25-MM)	
M	57	1	**8T-7547**	4	BOLT (M8X1.25X30-MM)	
M	58	1	**8T-4195**	2	BOLT (M10X1.5X30-MM)	
	59	1	**4B-0418**	1	CLIP	
	60	1	**5P-1076**	2	WASHER-HARD (13.5X30X4-MM THK)	
	61	1	**7H-7055**	1	CLIP	
	62	1	**7X-7729**	2	WASHER (11X25X3-MM THK)	

C-CHANGE FROM PREVIOUS TYPE
I-REFER TO HYDRAULIC INFORMATION SYSTEM
M-METRIC PART
Y-SEPARATE ILLUSTRATION

218-5853 **LINES GP-WORK TOOL** *(contd.)* **i03642964**

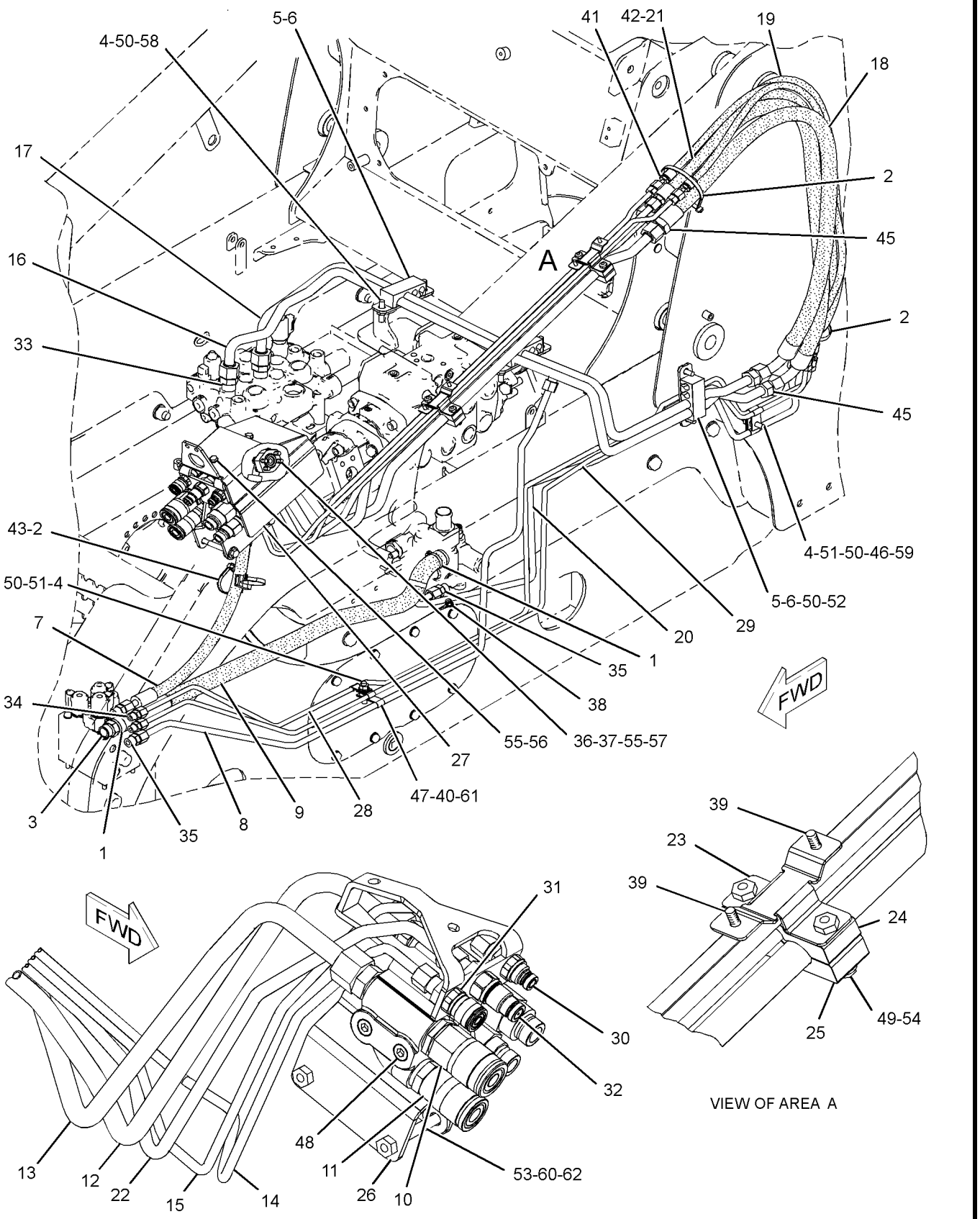

VIEW OF AREA A

GRAPHIC #1 **<END>** g01223621

HYDRAULIC SYSTEM

218-6197 LINES GP-WORK TOOL

S/N: MWD1-UP
PART OF 356-1919, 356-1920 HYDRAULIC AR
AN ATTACHMENT

SMCS-5057 **i03641717**

NOTE	REF NO	GRAPHIC REF	PART NUMBER	QTY	PART NAME 1 2 3 4 5 6 (PRODUCT LEVEL)	SEE PAGE
M	1	1	**101-3129**	2	STUD (M10X1.5-THD)	
	2	1	**102-8703**	2	PLATE-COVER	
	3	1	*154-5232*	1	ADAPTER AS	
		1	**3K-0360**	1	SEAL-O-RING	
		1	**4J-5477**	1	SEAL-O-RING	
		1	**112-9783**	1	ADAPTER	
	4	1	**193-8334**	1	FITTING AS (QUICK DISCONNECT, MALE)	
	5	1	**193-8335**	1	FITTING AS (QUICK DISCONNECT, FEMALE)	
	6	1	**195-6750**	4	CLAMP-DOUBLE	
	7	1	**285-9286**	3	BLOCK	
	8	1	**218-5764**	3	PLATE	
	9	1	**218-6011**	2	BRACKET AS	
CI	10	1	**290-3357**	2	HOSE AS	
C	11	1	**290-3303**	1	TUBE AS	
C	12	1	**290-3302**	1	TUBE AS	
C	13	1	**291-5063**	1	TUBE AS	
C	14	1	**291-5064**	1	TUBE AS	
	15	1	**218-6204**	1	BRACKET AS	
M	16	1	**6V-3918**	2	BOLT (M8X1.25X50-MM)	
	17	1	*148-8341*	2	CONNECTOR AS	
					(EACH INCLUDES)	
		1	**3D-2824**	1	SEAL-O-RING	
		1	**6V-8713**	1	CONNECTOR	
		1	**7J-9108**	1	SEAL-O-RING	
M	18	1	**5C-9553**	4	BOLT (M6X1X16-MM)	
	19	1	**6V-9170**	2	NUT-BULKHEAD (1-14-THD)	
	20	1	**7J-9108**	6	SEAL-O-RING	
	21	1	**8T-4121**	8	WASHER-HARD (11X21X2.5-MM THK)	
M	22	1	**8T-4136**	2	BOLT (M10X1.5X25-MM)	
M	23	1	**8T-4178**	2	BOLT (M10X1.5X90-MM)	
M	24	1	**8T-4195**	2	BOLT (M10X1.5X30-MM)	
	25	1	**8T-4205**	4	WASHER-HARD (7.2X14.5X2-MM THK)	
	26	1	**8T-4224**	2	WASHER-HARD (8.8X16X2-MM THK)	

C-CHANGE FROM PREVIOUS TYPE
I-REFER TO HYDRAULIC INFORMATION SYSTEM
M-METRIC PART

218-6197 **LINES GP-WORK TOOL** *(contd.)* **i03641717**

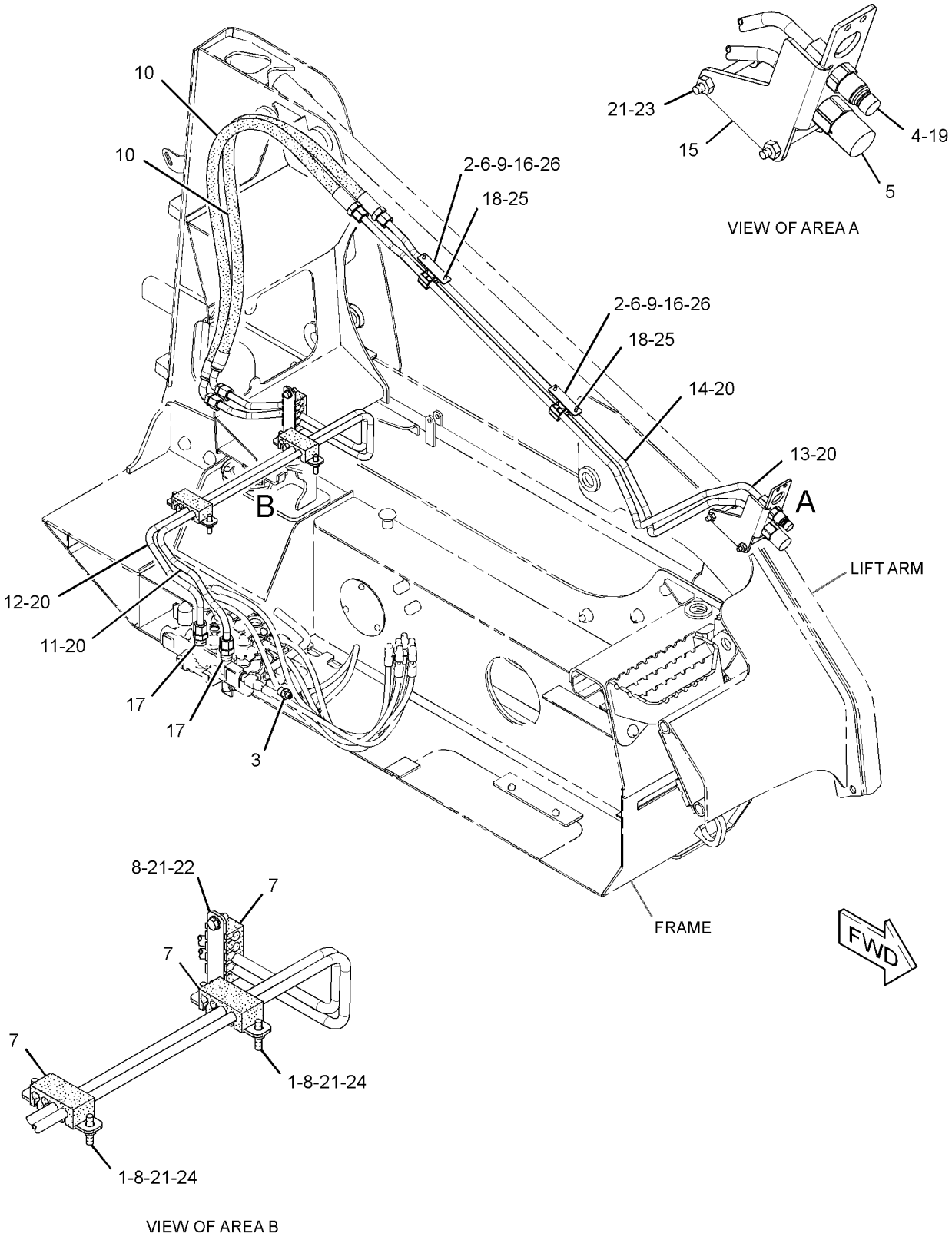

GRAPHIC #1 **<END>** g01875095

218-6235 MANIFOLD & LINES GP-CONTROL—PARKING BRAKE

S/N: MWD1-UP

PART OF 354-6548 HYDRAULIC AR

SMCS-1435, 5057, 5264 **i02857885**

NOTE	REF NO	GRAPHIC REF	PART NUMBER	QTY	PART NAME 1 2 3 4 5 6 (PRODUCT LEVEL)	SEE PAGE
I	1	1	**100-7530**	1	HOSE AS (LEFT PARKING BRAKE OIL)	
CY	2	1	**248-1268**	1	MANIFOLD & SOLENOID GP-CONTROL (PARKING BRAKE)	214
I	3	1	**218-5580**	1	HOSE AS (RIGHT PARKING BRAKE OIL)	
I	4	1	**218-6231**	1	HOSE AS (PARKING BRAKE OIL)	
	5	1	**233-5849**	1	TUBE AS (PARKING BRAKE OIL)	
	6	1	*148-8336*	3	CONNECTOR AS	
					(EACH INCLUDES)	
		1	**3J-1907**	1	SEAL-O-RING	
		1	**6V-8397**	1	SEAL-O-RING	
		1	**6V-8636**	1	CONNECTOR	
	7	1	*148-8435*	1	TEE AS (ORFS)	
		1	**3J-1907**	1	SEAL-O-RING	
		1	**6V-8397**	2	SEAL-O-RING	
		1	**6V-8781**	1	TEE-FACE SEAL	
	8	1	*161-8560*	1	CONNECTOR AS	
		1	**3J-1907**	1	SEAL-O-RING	
		1	**7J-9108**	1	SEAL-O-RING	
		1	**8C-6758**	1	CONNECTOR	
	9	1	**6V-8398**	2	SEAL-O-RING	
	10	1	**8T-4224**	2	WASHER-HARD (8.8X16X2-MM THK)	
M	11	1	**8T-6869**	2	BOLT (M8X1.25X60-MM)	

C-CHANGE FROM PREVIOUS TYPE
I-REFER TO HYDRAULIC INFORMATION SYSTEM
M-METRIC PART
Y-SEPARATE ILLUSTRATION

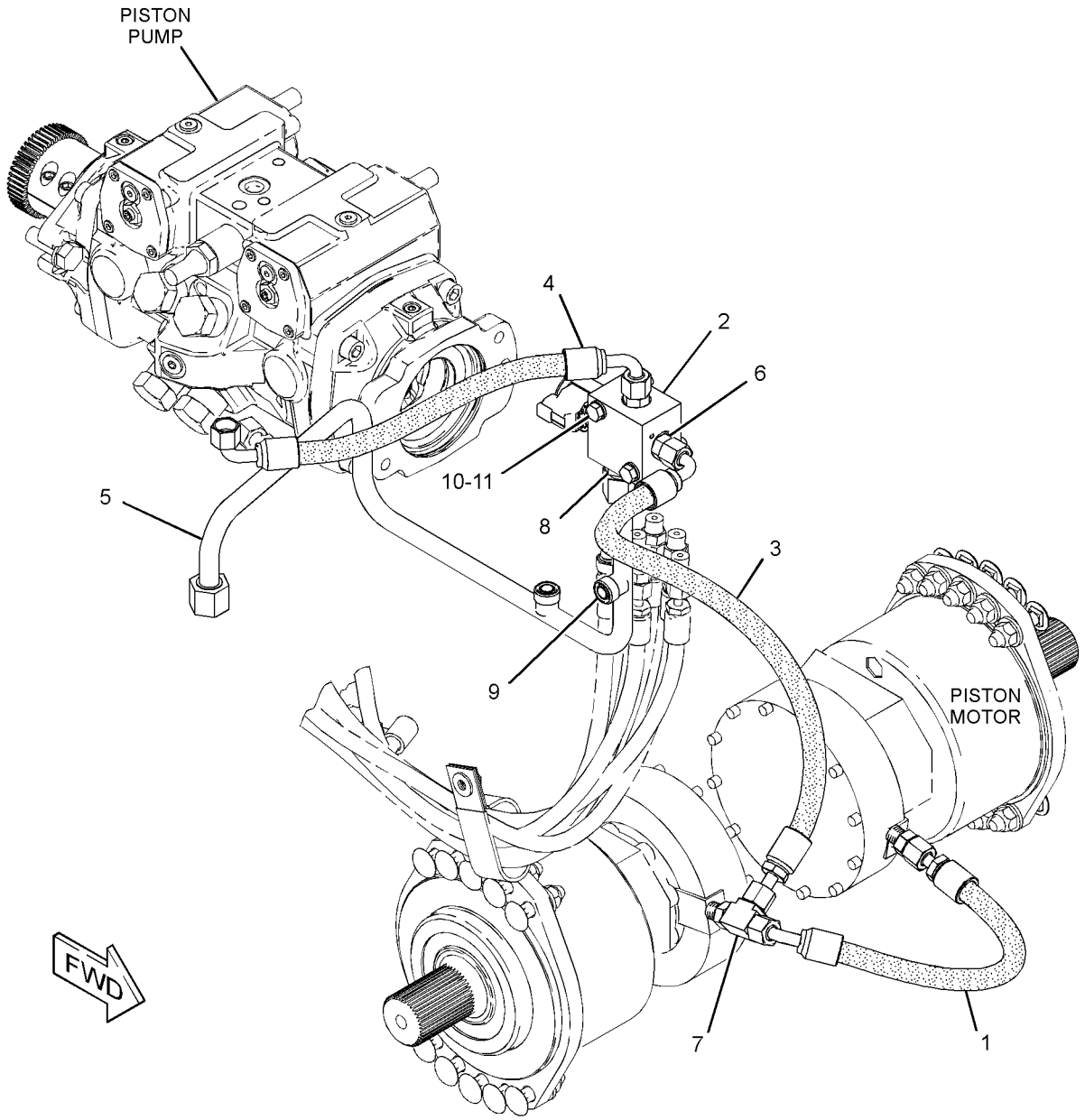

GRAPHIC #1 **<END>** g01425237

159-5753 MANIFOLD & MTG GP-CONTROL–

WORK TOOL POSITIONER

S/N: MWD1-UP

PART OF 326-5679 LINES GP-LIFT CYLINDER

AN ATTACHMENT

SMCS-5264 **i03973395**

NOTE	REF NO	GRAPHIC REF	PART NUMBER	QTY	PART NAME 1 2 3 4 5 6 (PRODUCT LEVEL)	SEE PAGE
Y	1	1	**224-9418**	1	MANIFOLD & SOLENOID GP-CONTROL (WORK TOOL POSITIONER)	213
CM	2	1	**7X-2535**	2	BOLT (M6X1X60-MM)	
C	3	1	**8T-4205**	2	WASHER-HARD (7.2X14.5X2-MM THK)	

C-CHANGE FROM PREVIOUS TYPE
M-METRIC PART
Y-SEPARATE ILLUSTRATION

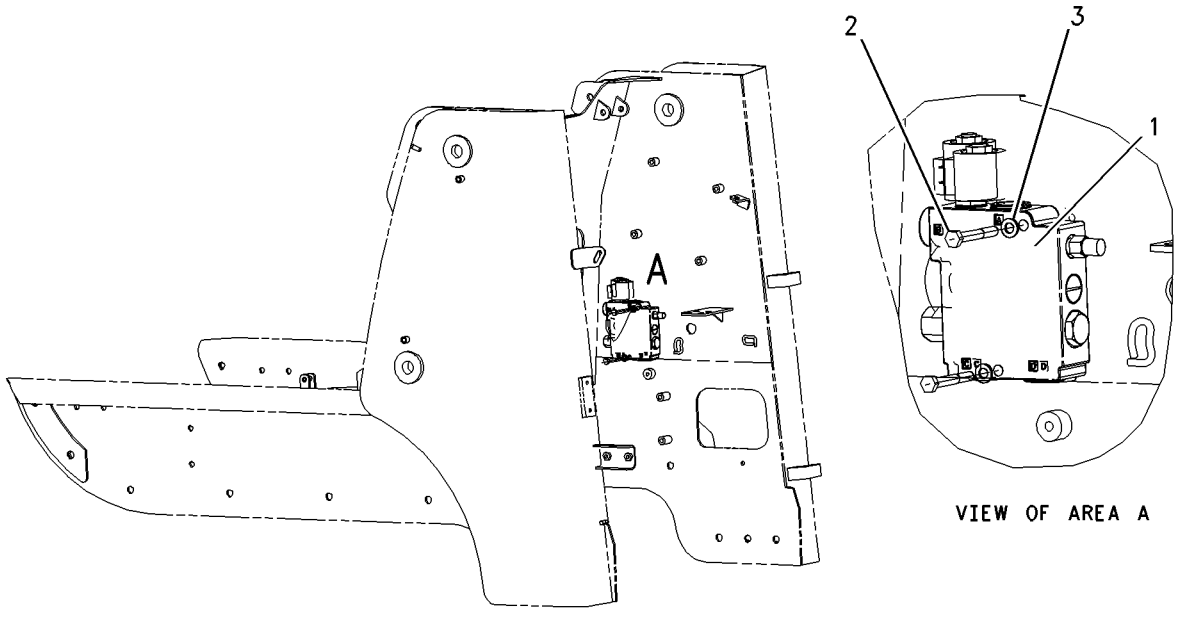

VIEW OF AREA A

GRAPHIC #1 **<END>** g01003425

218-5812 MANIFOLD & MTG GP-CONTROL

S/N: MWD1-UP
HIGH FLOW
PART OF 326-5244, 326-5245 HYDRAULIC AR
AN ATTACHMENT

SMCS-5264 **i02292955**

NOTE	REF NO	GRAPHIC REF	PART NUMBER	QTY	PART NAME 1 2 3 4 5 6 (PRODUCT LEVEL)	SEE PAGE
M	1	1	**108-2989**	3	BOLT (M8X1.25X130-MM)	
CY	2	1	**248-7696**	1	MANIFOLD GP-CONTROL (BOOSTED AUXILIARY HYD FLOW)	216
	3	1	**8T-4224**	3	WASHER-HARD (8.8X16X2-MM THK)	

C-CHANGE FROM PREVIOUS TYPE
M-METRIC PART
Y-SEPARATE ILLUSTRATION

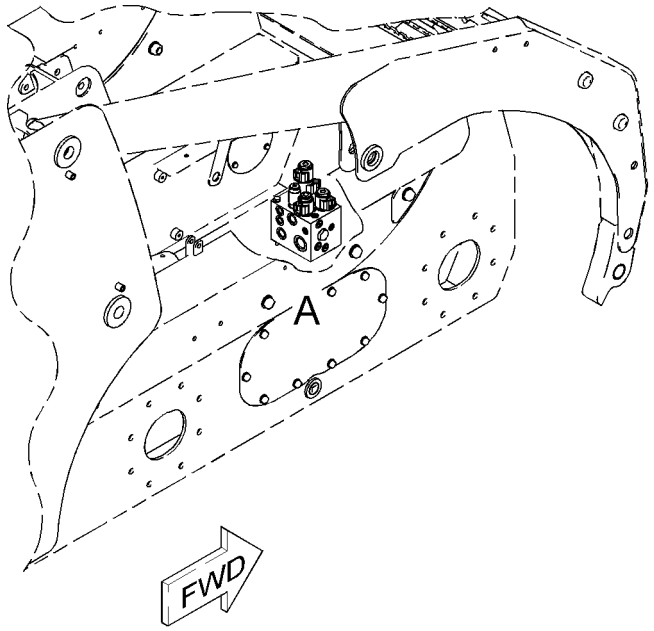

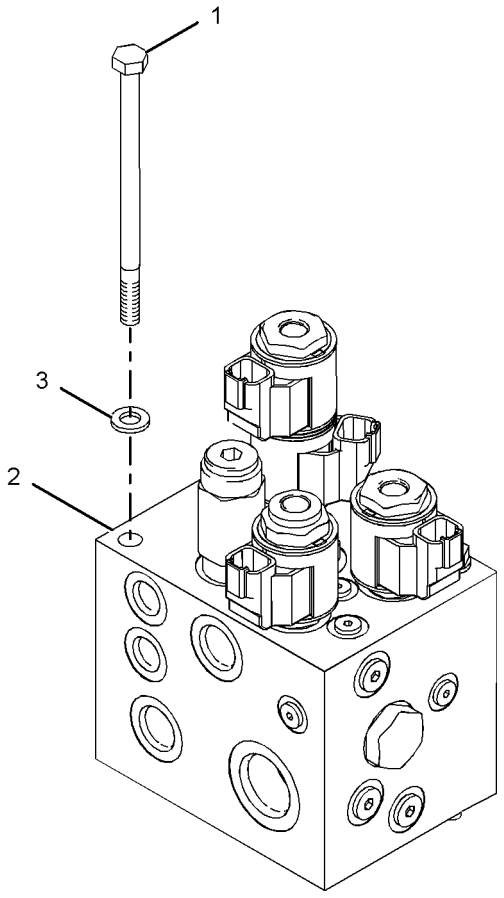

VIEW OF AREA A

GRAPHIC #1 **<END>** g01017940

224-9418 MANIFOLD & SOLENOID GP-CONTROL–

WORK TOOL POSITIONER

S/N: MWD1-UP

PART OF 159-5753 MANIFOLD & MTG GP-CONTROL

AN ATTACHMENT

SMCS-5264, 5479 **i03610940**

NOTE	REF NO	GRAPHIC REF	PART NUMBER	QTY	PART NAME 1 2 3 4 5 6 (PRODUCT LEVEL)	SEE PAGE
	1	1	**102-8804**	1	KIT-RECEPTACLE (4-PIN)	
					(INCLUDES RECEPTACLE AS & WEDGE)	
J	2	1	**218-6857**	1	COIL AS	
	3	1	**186-3735**	2	PIN-CONNECTOR (16-GA TO 18-GA)	
	4	1	**9G-3695**	2	PLUG-SEAL	
J	5	1	**218-6858**	1	CARTRIDGE AS-VALVE	
					AVAILABLE REPAIR KIT(S):	
			218-6856	1	KIT-SEAL	
					(INCLUDES O-RINGS, COVER & BACK-UP WASHER)	
J			**155-1279**	1	KIT-SEAL	
					(INCLUDES SEAL-O-RINGS & BACKUP RING)	

J-KIT MARKED J SERVICES PARTS MARKED J

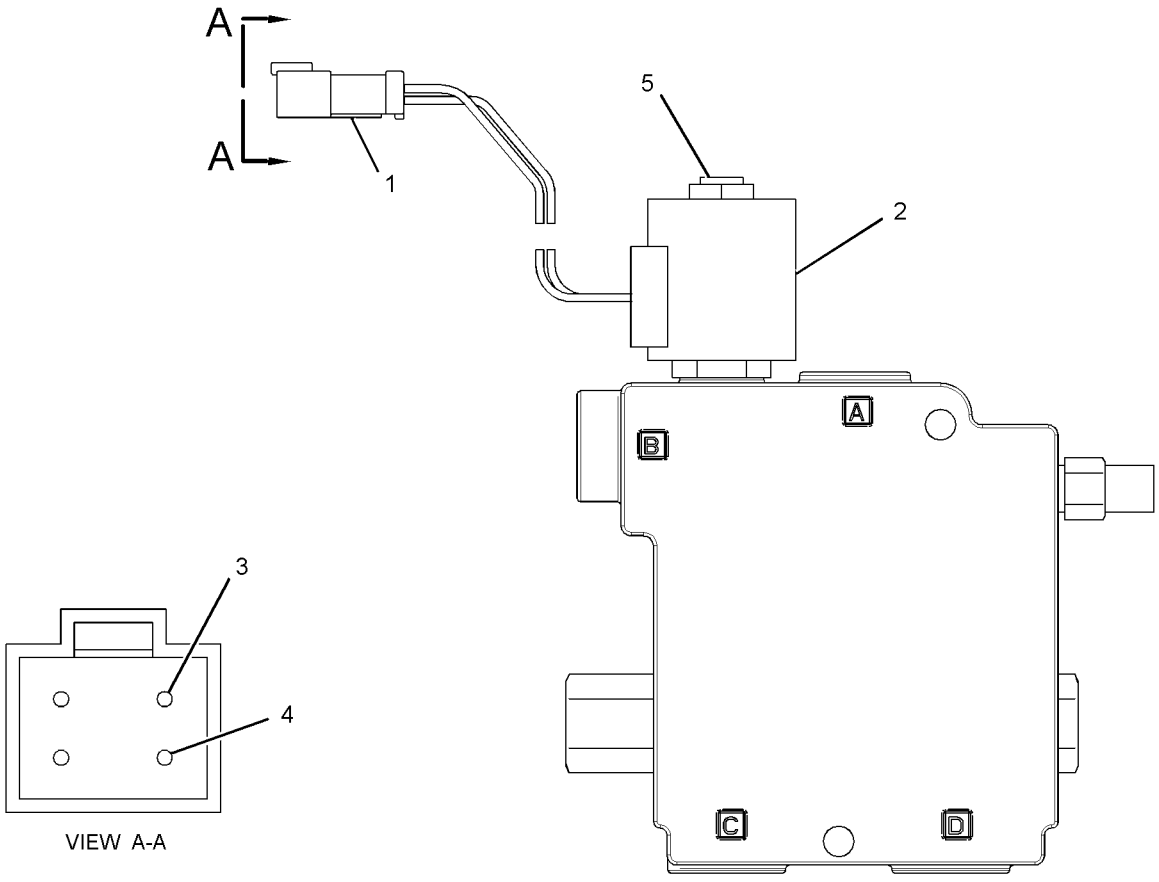

GRAPHIC #1 **<END>** g01937413

HYDRAULIC SYSTEM

248-1268 MANIFOLD & SOLENOID GP-CONTROL–

PARKING BRAKE

S/N: MWD1-UP

PART OF 218-6235 MANIFOLD & LINES GP-CONTROL

SMCS-5264, 5479 **i02200066**

NOTE	REF NO	GRAPHIC REF	PART NUMBER	QTY	PART NAME 1 2 3 4 5 6 (PRODUCT LEVEL)	SEE PAGE
Y	1	1	**259-8194**	1	VALVE GP-SOLENOID	241

Y-SEPARATE ILLUSTRATION

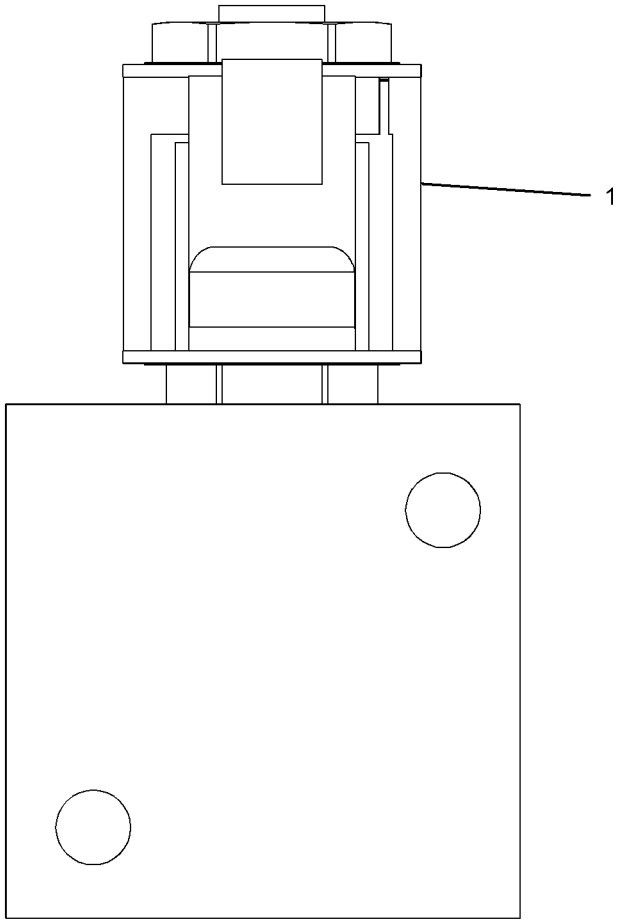

RIGHT SIDE VIEW

GRAPHIC #1 **<END>** g01132704

233-7128 MANIFOLD GP-CONTROL–QUICK COUPLER

S/N: MWD1-UP
PART OF 326-5671 LINES GP-COUPLER
AN ATTACHMENT

SMCS-5117, 5264, 5479 **i03913092**

NOTE	REF NO	GRAPHIC REF	PART NUMBER	QTY	PART NAME 1 2 3 4 5 6 (PRODUCT LEVEL)	SEE PAGE
	1	1	**245-1911**	1	WIRE AS	
	2	1	**249-7160**	1	VALVE GP-SOLENOID (QUICK COUPLER)	
		1	**351-7389**	1	SPACER-SPECIAL	
		1	**238-4626**	2	COIL AS	

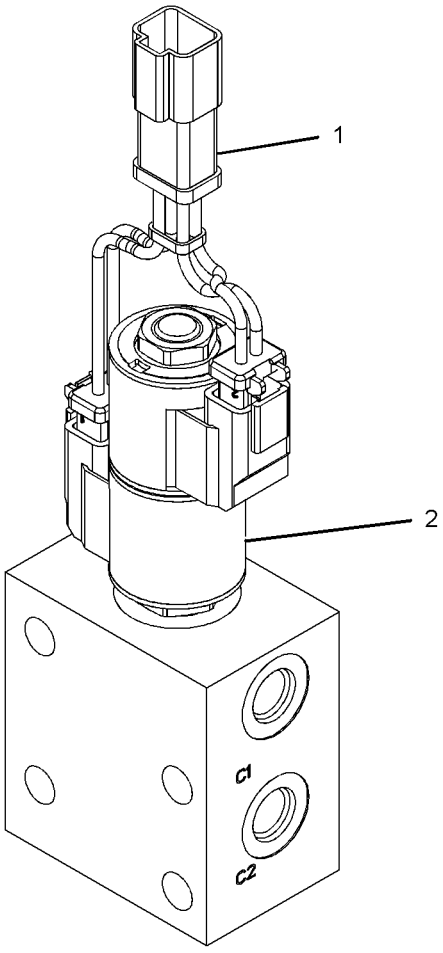

GRAPHIC #1 **<END>** g01132286

248-7696 MANIFOLD GP-CONTROL–
BOOSTED AUXILIARY HYDRAULIC FLOW
S/N: MWD1-UP
PART OF 218-5812 MANIFOLD & MTG GP-CONTROL
AN ATTACHMENT

SMCS-5117, 5264, 5479 **i03973049**

NOTE	REF NO	GRAPHIC REF	PART NUMBER	QTY	PART NAME 1 2 3 4 5 6 (PRODUCT LEVEL)	SEE PAGE
	1	1	**134-9911**	1	VALVE-CHECK	
	2	1	**148-9364**	1	VALVE GP-CHECK	
J	3	1	**238-4625**	1	VALVE GP-SOLENOID (HIGH FLOW)	
		1	**238-4626**	1	COIL AS	
	4	1	**238-4629**	1	VALVE GP-RELIEF	
J	5	1	**240-6866**	1	VALVE GP-SOLENOID (HIGH FLOW BOOST)	
		1	**238-4626**	1	COIL AS	
L	6	1	**249-7707**	1	VALVE GP-SOLENOID (HIGH FLOW)	
		1	**238-4628**	1	COIL AS	
	7	1	**250-7662**	1	VALVE GP-CHECK	
					AVAILABLE REPAIR KIT(S):	
J			**106-3108**	1	KIT-SEAL	
L			**141-0888**	1	KIT-SEAL	

J-KIT MARKED J SERVICES PARTS MARKED J
L-KIT MARKED L SERVICE PART MARKED L

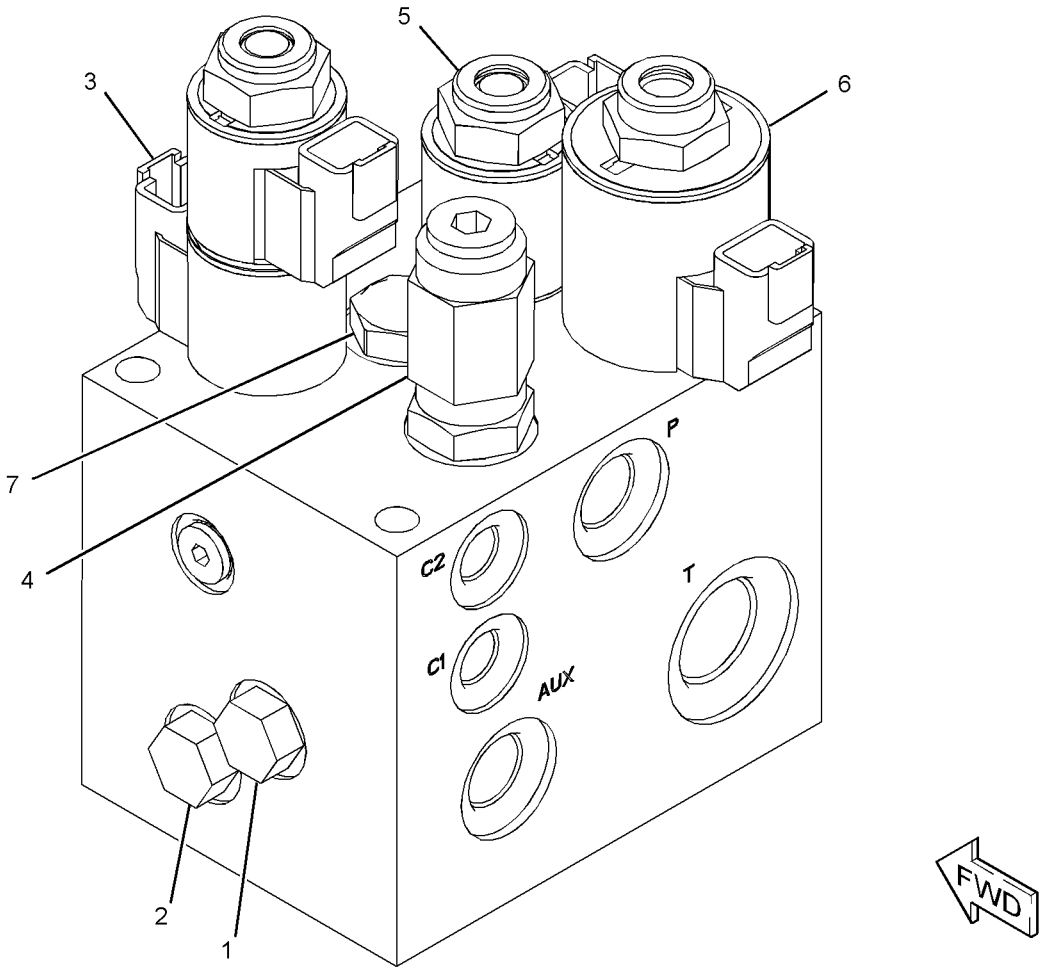

GRAPHIC #1 **<END>** g01151254

258-2579 MOTOR & MTG GP-HYDRAULIC FAN

S/N: MWD1-UP

PART OF 326-5287, 326-5297, 326-5487, 326-5527, 326-5557, 326-5567 CONVERSION AR-MACHINE, 356-1901 MOTOR AR-HYDRAULIC FAN AN ATTACHMENT

SMCS-1386 **i03970896**

NOTE	REF NO	GRAPHIC REF	PART NUMBER	QTY	PART NAME 1 2 3 4 5 6 (PRODUCT LEVEL)	SEE PAGE
J	1	1	**258-2577**	1	MOTOR GP-GEAR (FAN, DEMAND)	
M		1	**8T-0271**	2	BOLT-SOCKET HEAD (M10X1.5X35-MM)	
M		1	**9T-4884**	2	BOLT (M10X1.5X30-MM)	
	2	1	**277-8862**	1	VALVE GP-SOLENOID (REAR AXLE FAN UNLOADER)	
		1	**238-4628**	1	COIL AS (12-VOLT)	
	3	1	**8T-4121**	2	WASHER-HARD (11X21X2.5-MM THK)	
	4	1	**8T-4224**	1	WASHER-HARD (8.8X16X2-MM THK)	
M	5	1	**8T-7547**	1	BOLT (M8X1.25X30-MM)	
M	6	1	**9X-6032**	2	BOLT-SOCKET HEAD (M10X1.5X30-MM)	
					AVAILABLE REPAIR KIT(S):	
J			**278-8716**	1	KIT-SEAL	
					(INCLUDES E-SEALS, O-RINGS, SHAFT SEAL, SNAP RING, BACKUP SEALS, AXIAL SEAL KIT & SEALS)	

J-KIT MARKED J SERVICES PARTS MARKED J
M-METRIC PART

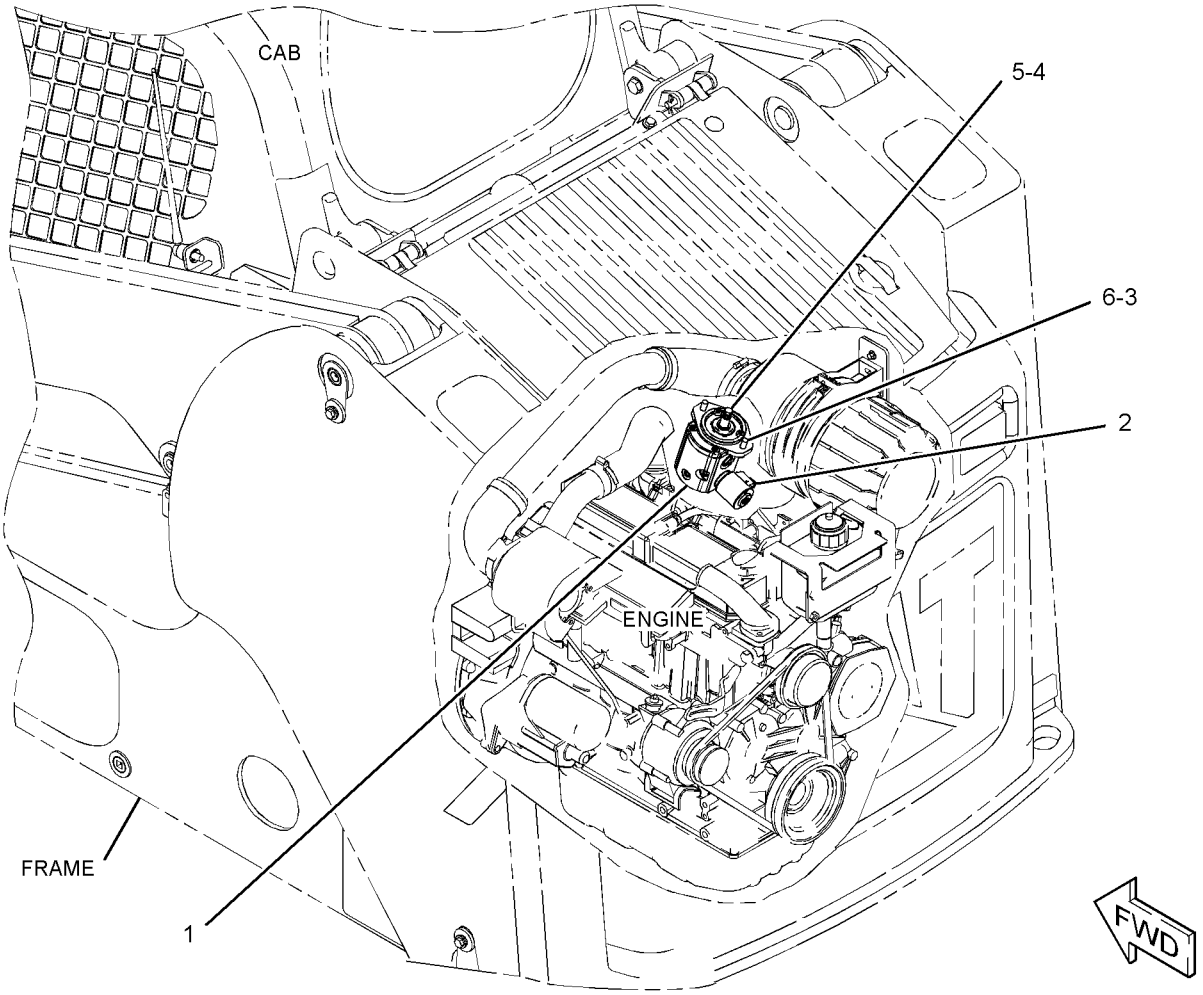

GRAPHIC #1 **<END>** g01315096

295-7221 MOTOR & MTG GP-HYDRAULIC FAN

S/N: MWD1-UP
PART OF 356-1900 MOTOR AR-HYDRAULIC FAN
AN ATTACHMENT

SMCS-1386 **i02985302**

NOTE	REF NO	GRAPHIC REF	PART NUMBER	QTY	PART NAME 1 2 3 4 5 6 (PRODUCT LEVEL)	SEE PAGE
CY	1	1	**307-3036**	1	MOTOR GP-GEAR (HYDRAULIC FAN)	221
	2	1	**8T-4121**	2	WASHER-HARD (11X21X2.5-MM THK)	
M	3	1	**8T-4196**	2	BOLT (M10X1.5X35-MM)	
	4	1	**8T-4224**	1	WASHER-HARD (8.8X16X2-MM THK)	
M	5	1	**8T-7547**	1	BOLT (M8X1.25X30-MM)	

C-CHANGE FROM PREVIOUS TYPE
M-METRIC PART
Y-SEPARATE ILLUSTRATION

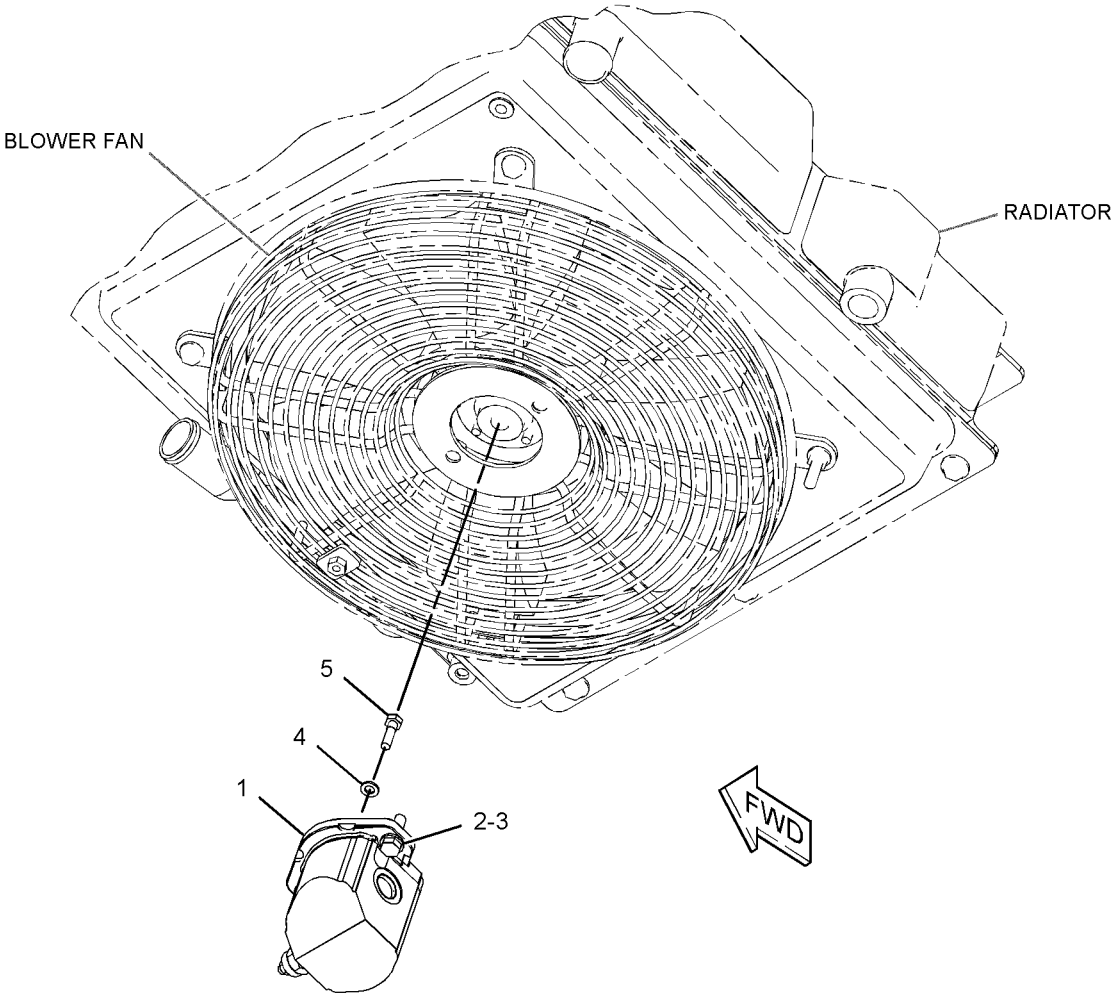

GRAPHIC #1 **<END>** g01414236

356-1900 MOTOR AR-HYDRAULIC FAN—STANDARD

S/N: MWD1-UP
AN ATTACHMENT

SMCS-1386 **i03901812**

NOTE	PART NUMBER	QTY	PART NAME 1 2 3 4 5 6 (PRODUCT LEVEL)	SEE PAGE
Y	*295-7221*	1	MOTOR & MTG GP-HYDRAULIC FAN	218

Y-SEPARATE ILLUSTRATION

<END>

356-1901 MOTOR AR-HYDRAULIC FAN—NACD

S/N: MWD1-UP
AN ATTACHMENT

SMCS-1386 **i03901813**

NOTE	PART NUMBER	QTY	PART NAME 1 2 3 4 5 6 (PRODUCT LEVEL)	SEE PAGE
Y	*258-2579*	1	MOTOR & MTG GP-HYDRAULIC FAN	217
Y	*328-2342*	1	WIRING GP-MACHINE (DEMAND FAN)	110

Y-SEPARATE ILLUSTRATION

<END>

289-6360 MOTOR GP-GEAR–COMPRESSOR

S/N: MWD1-UP
PART OF 307-6115 MOTOR GP-GEAR
AN ATTACHMENT

SMCS-1386, 5061 **i03767106**

NOTE	REF NO	GRAPHIC REF	PART NUMBER	QTY	PART NAME 1 2 3 4 5 6 (PRODUCT LEVEL)	SEE PAGE
M	1	1	**086-2369**	4	BOLT-SOCKET HEAD (M10X1.5X130-MM)	
	2	1	**8T-5095**	4	WASHER-PLATED (11X16X2-MM THK)	
	3	1	**2M-9780**	1	SEAL-O-RING	
	4	1	**9S-8006**	1	PLUG-O-RING	
					PARTS SHOWN IN GRAPHIC(S) WITHOUT A REFERENCE NUMBER ARE NOT SERVICED SEPARATELY	
					AVAILABLE GASKET KIT(S):	
			278-8716	1	KIT-SEAL (GEAR MOTOR)	
					(INCLUDES SEAL-O-RINGS, E-SEALS, SHAFT SEAL, SNAP RING & SEAL BACK-UPS)	

M-METRIC PART

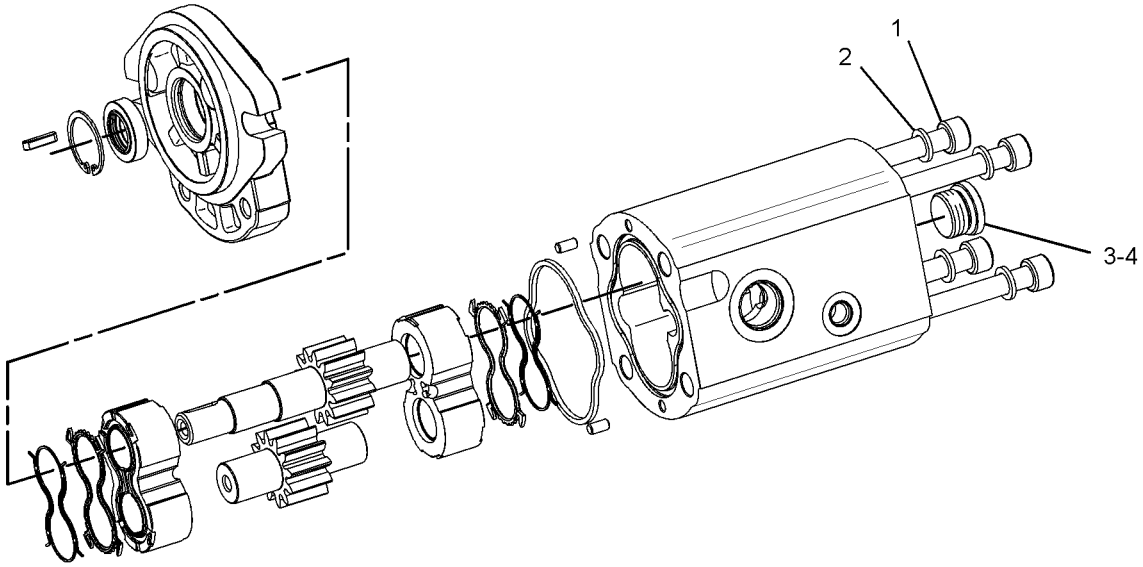

GRAPHIC #1 **<END>** g01434677

307-3036 MOTOR GP-GEAR–HYDRAULIC FAN

S/N: MWD1-UP

PART OF 295-7221 MOTOR & MTG GP-HYDRAULIC FAN

AN ATTACHMENT

SMCS-1386, 5061 **i03970898**

NOTE	REF NO	GRAPHIC REF	PART NUMBER	QTY	PART NAME 1 2 3 4 5 6 (PRODUCT LEVEL)	SEE PAGE
	1	1	**228-9240**	1	VALVE GP-RELIEF (GEAR MOTOR)	
		1	**6F-6672**	1	SEAL-O-RING	
		1	**215-3277**	1	SEAL-O-RING	
M	2	1	**9T-4884**	2	BOLT (M10X1.5X30-MM)	
M	3	1	**8T-0271**	2	BOLT-SOCKET HEAD (M10X1.5X35-MM)	
					PARTS SHOWN IN GRAPHIC(S) WITHOUT A REFERENCE NUMBER ARE NOT SERVICED SEPARATELY	
					AVAILABLE REPAIR KIT(S):	
			278-8716	1	KIT-SEAL (GEAR MOTOR)	
					(INCLUDES O-RINGS, E-SEALS, SHAFT SEAL, SNAP RING, BACKUP SEALS, AXIAL SEAL KIT & SEALS)	

M-METRIC PART

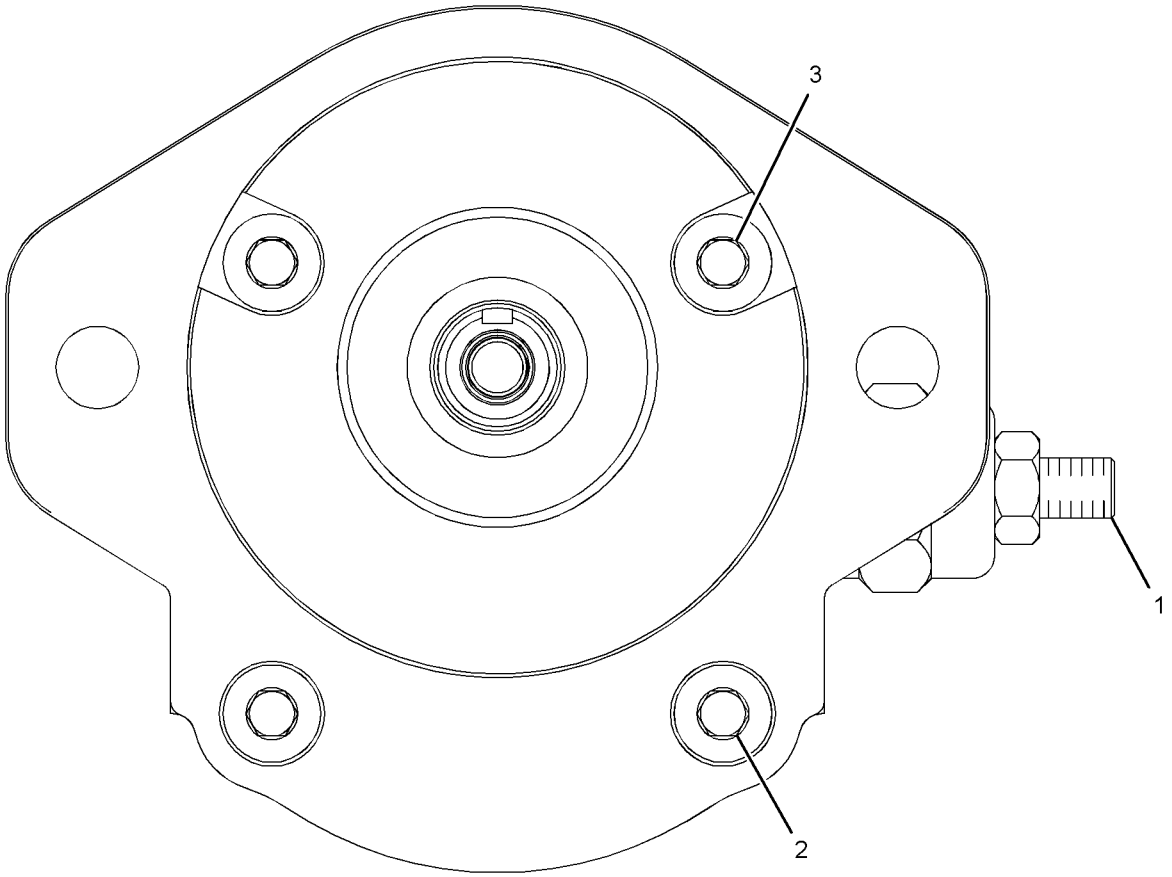

GRAPHIC #1 **<END>** g01761253

HYDRAULIC SYSTEM

307-6115 MOTOR GP-GEAR

S/N: MWD1-UP
PART OF 218-6832 COMPRESSOR & MOTOR GP-REFRIG
AN ATTACHMENT

SMCS-1386, 5061 **i03769750**

NOTE	REF NO	GRAPHIC REF	PART NUMBER	QTY	PART NAME 1 2 3 4 5 6 (PRODUCT LEVEL)	SEE PAGE
	1	1	**283-9566**	1	VALVE GP-SOLENOID (12 VDC) (AIR CONDITIONER, HEATER)	
Y	2	1	**289-6360**	1	MOTOR GP-GEAR (COMPRESSOR)	220

Y-SEPARATE ILLUSTRATION

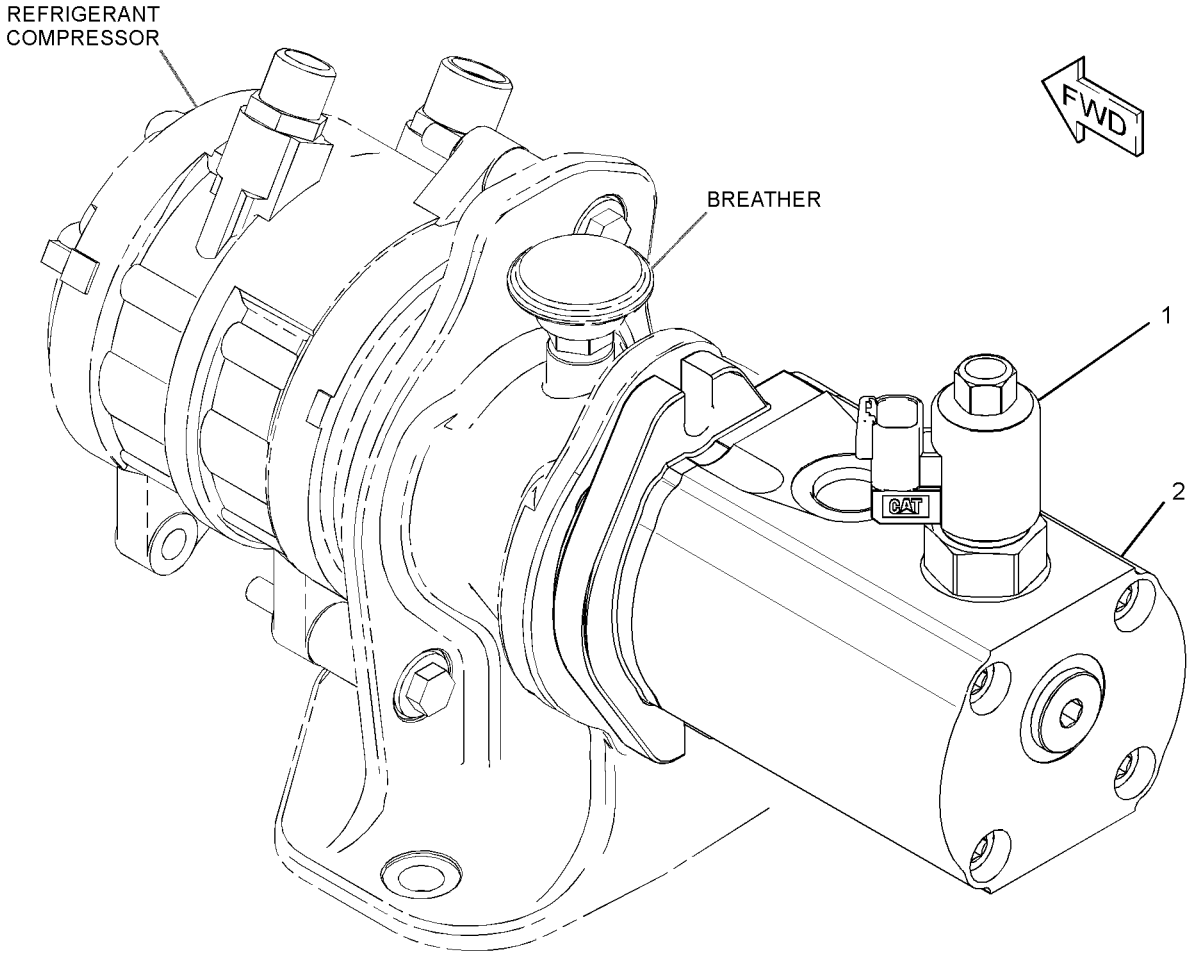

GRAPHIC #1 **<END>** g01432998

HYDRAULIC SYSTEM

218-6079 PUMP & MTG GP-WORK TOOL

S/N: MWD1-UP
PART OF 326-5244 HYDRAULIC AR
AN ATTACHMENT

SMCS-6700 **i02014441**

NOTE	REF NO	GRAPHIC REF	PART NUMBER	QTY	PART NAME 1 2 3 4 5 6 (PRODUCT LEVEL)	SEE PAGE
Y	1	1	**225-9238**	1	PUMP GP-GEAR (WORK TOOL, HIGH FLOW)	227
	2	1	**8T-4223**	2	WASHER-HARD (13.5X25.5X3-MM THK)	
M	3	1	**8T-4956**	2	BOLT (M12X1.75X35-MM)	
	4	1	**8T-5049**	1	SEAL-O-RING	

M-METRIC PART
Y-SEPARATE ILLUSTRATION

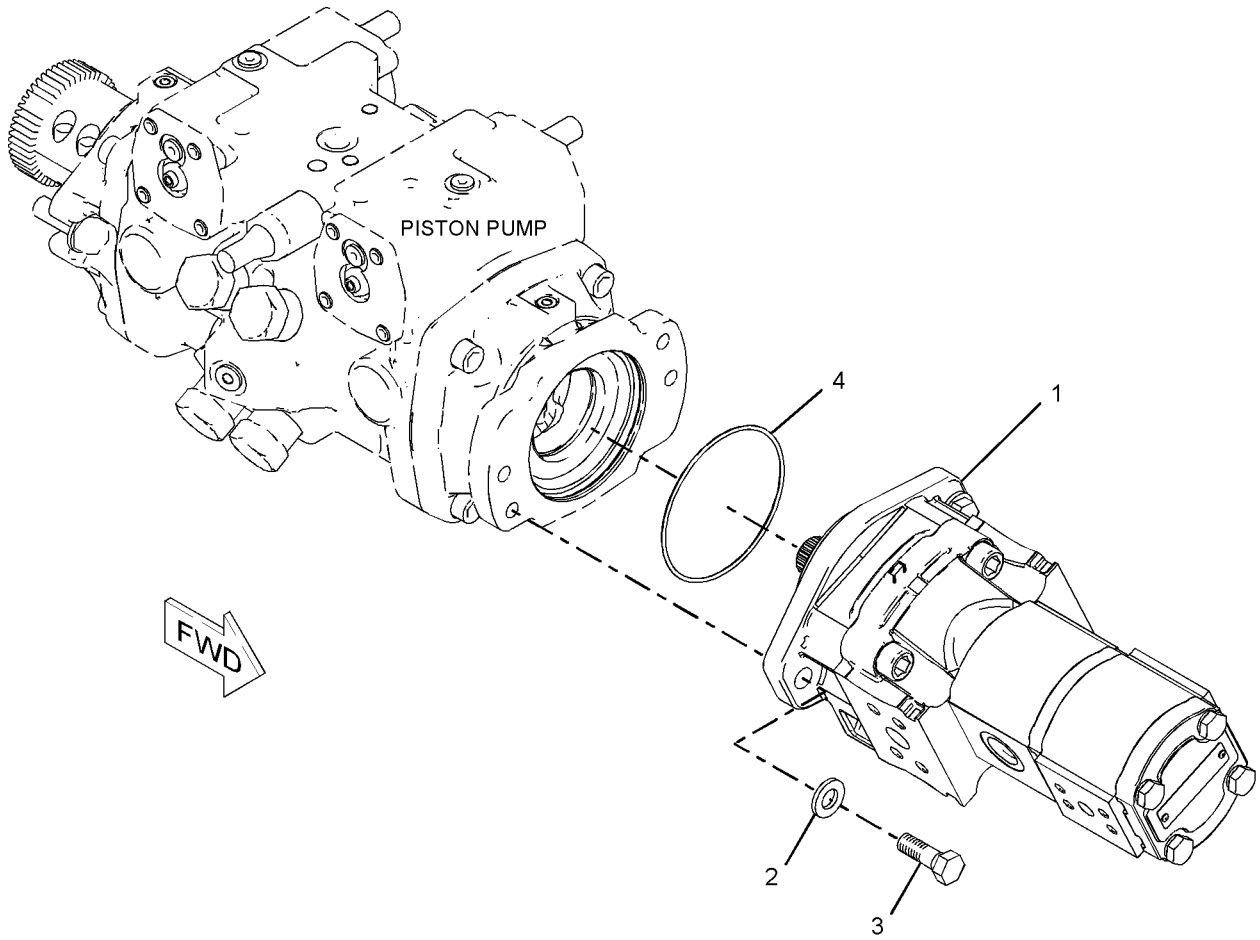

GRAPHIC #1 **<END>** g01017958

218-6175 PUMP & MTG GP-WORK TOOL

S/N: MWD1-UP
PART OF 356-1919 HYDRAULIC AR
AN ATTACHMENT

SMCS-6700 **i02934053**

NOTE	REF NO	GRAPHIC REF	PART NUMBER	QTY	PART NAME 1 2 3 4 5 6 (PRODUCT LEVEL)	SEE PAGE
CY	1	1	**236-5106**	1	PUMP GP-GEAR (WORK TOOL)	228
	2	1	**8T-4223**	2	WASHER-HARD (13.5X25.5X3-MM THK)	
M	3	1	**8T-4956**	2	BOLT (M12X1.75X35-MM)	
	4	1	**8T-5049**	1	SEAL-O-RING	

C-CHANGE FROM PREVIOUS TYPE
M-METRIC PART
Y-SEPARATE ILLUSTRATION

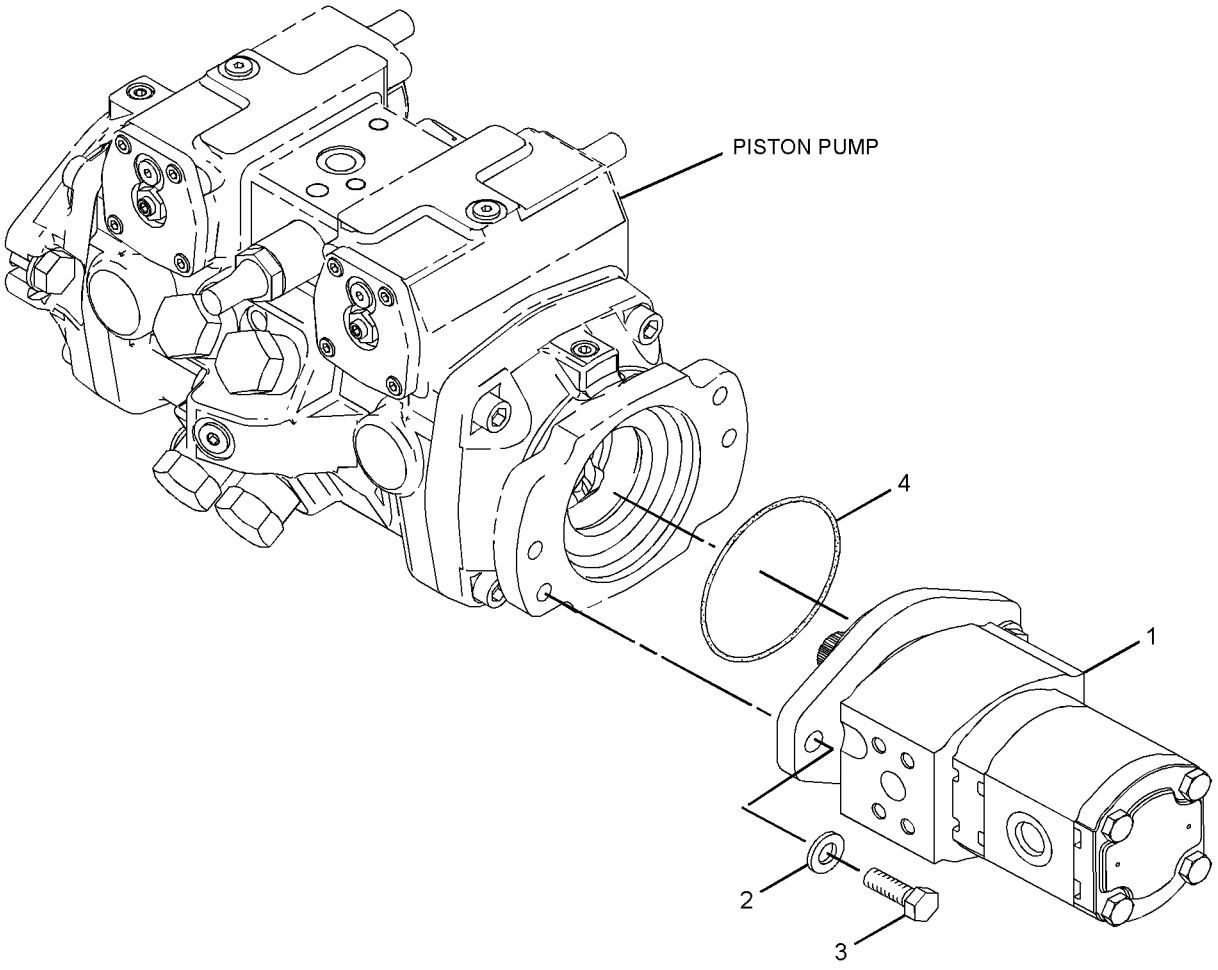

GRAPHIC #1 **<END>** g01453683

261-6094 PUMP & MTG GP-WORK TOOL

S/N: MWD1-UP
STAGE II SOUND
PART OF 356-1920 HYDRAULIC AR
AN ATTACHMENT

SMCS-6700 **i02901439**

NOTE	REF NO	GRAPHIC REF	PART NUMBER	QTY	PART NAME 1 2 3 4 5 6 (PRODUCT LEVEL)	SEE PAGE
Y	1	1	**269-9462**	1	PUMP GP-GEAR	229
	2	1	**8T-4223**	2	WASHER-HARD (13.5X25.5X3-MM THK)	
M	3	1	**8T-4956**	2	BOLT (M12X1.75X35-MM)	
	4	1	**8T-5049**	1	SEAL-O-RING	

M-METRIC PART
Y-SEPARATE ILLUSTRATION

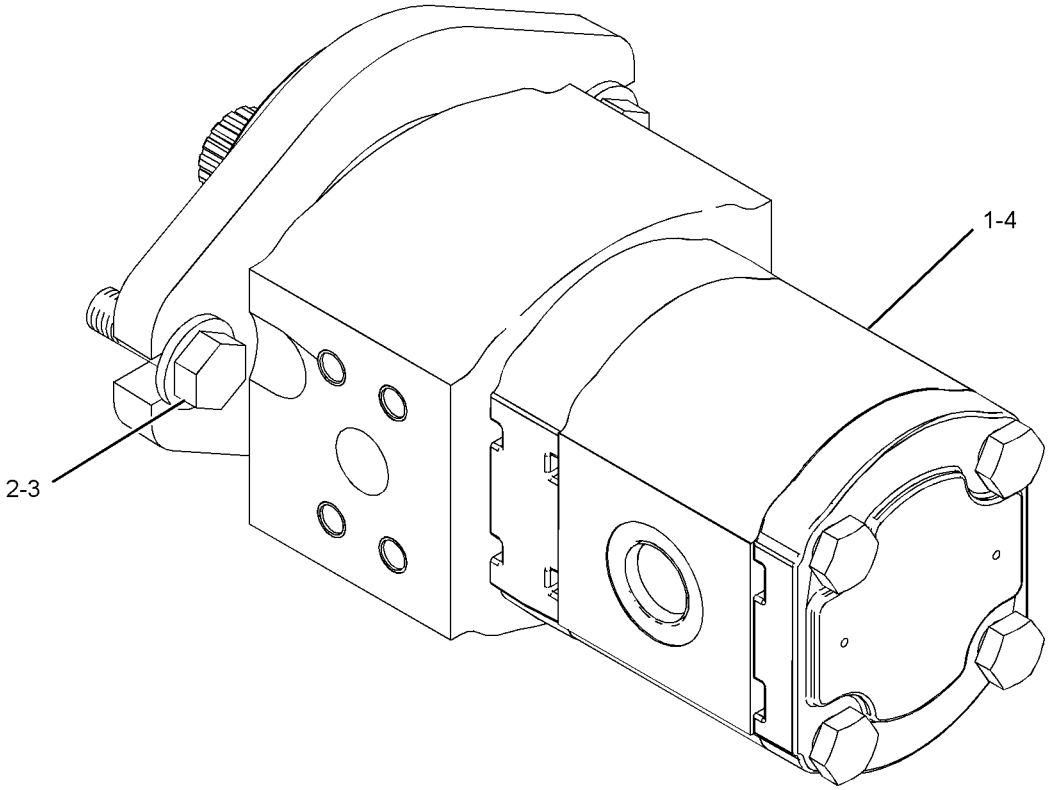

GRAPHIC #1 **<END>** g01229588

HYDRAULIC SYSTEM

261-6095 PUMP & MTG GP-WORK TOOL

S/N: MWD1-UP
PART OF 326-5245 HYDRAULIC AR
AN ATTACHMENT

SMCS-6700 **i02453730**

NOTE	REF NO	GRAPHIC REF	PART NUMBER	QTY	PART NAME 1 2 3 4 5 6 (PRODUCT LEVEL)	SEE PAGE
	1	1	**269-9465**	1	PUMP GP-GEAR	
		1	**8C-3110**	1	RING-RETAINING	
		1	**230-3757**	2	SEAL-SHAFT	
	2	1	**8T-4223**	2	WASHER-HARD (13.5X25.5X3-MM THK)	
M	3	1	**8T-4956**	2	BOLT (M12X1.75X35-MM)	
	4	1	**8T-5049**	1	SEAL-O-RING	

M-METRIC PART

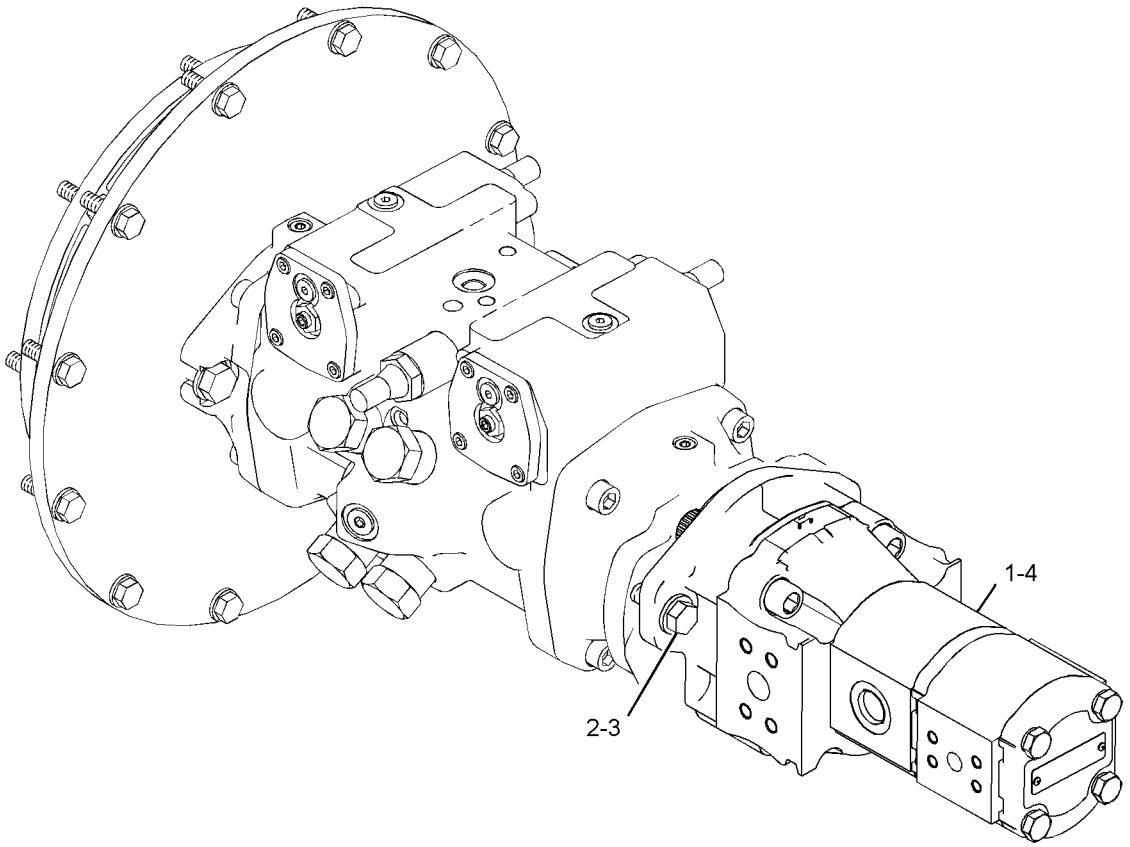

GRAPHIC #1 **<END>** g01229699

225-9238 PUMP GP-GEAR–WORK TOOL, HIGH FLOW

S/N: MWD1-UP
PART OF 218-6079 PUMP & MTG GP-WORK TOOL
AN ATTACHMENT

SMCS-5073 **i03769830**

NOTE	REF NO	GRAPHIC REF	PART NUMBER	QTY	PART NAME 1 2 3 4 5 6 (PRODUCT LEVEL)	SEE PAGE
	1	1	**8C-3110**	1	RING-RETAINING	
	2	1	**230-3757**	2	SEAL-SHAFT	
M	3	1	**313-5644**	4	BOLT-12 POINT HEAD (M14X2X55-MM)	
	4	1	**271-2360**	4	WASHER-HARD (15X22X2.5-MM THK)	
	5	1	**313-5645**	4	BOLT (M10X1.5X175-MM)	
	6	1	**8T-5095**	4	WASHER-PLATED (11X16X2-MM THK)	
					AVAILABLE REPAIR KIT(S):	
			278-8714	1	KIT-SEAL (GEAR PUMP)	
					(INCLUDES E-SEALS, SEAL-O-RINGS, SHAFT RINGS, SNAP RING & SEAL BACK-UPS)	

M-METRIC PART

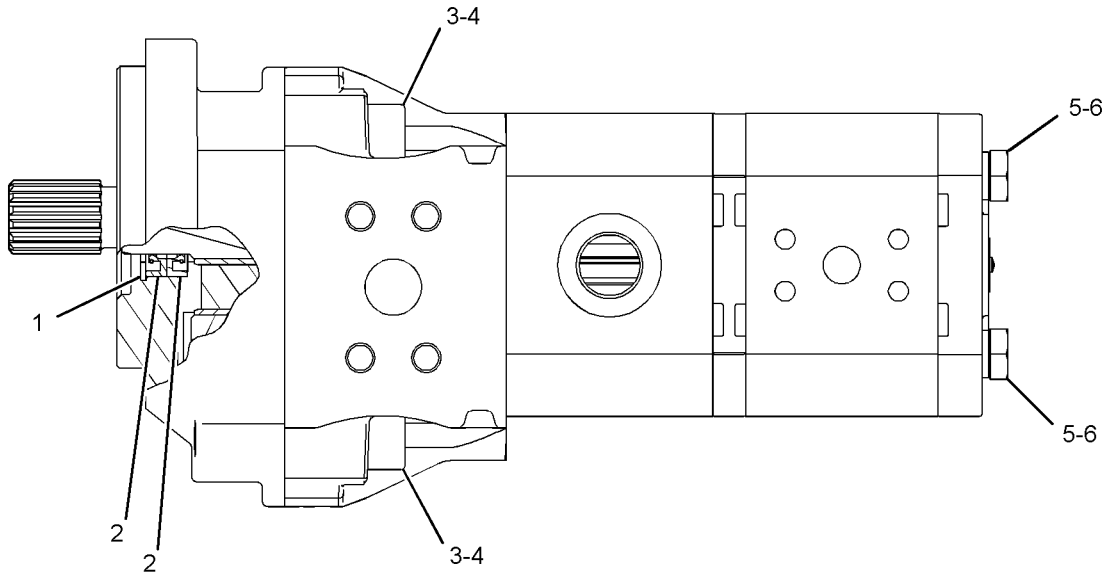

GRAPHIC #1 **<END>** g01569793

HYDRAULIC SYSTEM

236-5106 PUMP GP-GEAR—WORK TOOL

S/N: MWD1-UP
PART OF 218-6175 PUMP & MTG GP-WORK TOOL
AN ATTACHMENT

SMCS-5073 **i03461207**

NOTE	REF NO	GRAPHIC REF	PART NUMBER	QTY	PART NAME 1 2 3 4 5 6 (PRODUCT LEVEL)	SEE PAGE
	1	1	**230-3757**	2	SEAL-SHAFT	
	2	1	**8C-3110**	1	RING-RETAINING	
M	3	1	**313-5644**	4	BOLT-12 POINT HEAD (M14X2X55-MM)	
	4	1	**271-2360**	4	WASHER-HARD (15X22X2.5-MM THK)	
M	5	1	**8T-4198**	4	BOLT (M10X1.5X100-MM)	
	6	1	**8T-5095**	4	WASHER-PLATED (11X16X2-MM THK)	
					PARTS SHOWN IN GRAPHIC(S) WITHOUT A REFERENCE NUMBER ARE NOT SERVICED SEPARATELY	
					AVAILABLE REPAIR KIT(S):	
			278-8714	1	KIT-SEAL (GEAR PUMP)	
					(INCLUDES E-SEALS, SEAL-O-RINGS, SHAFT SEALS, SNAP RING & SEAL BACK-UPS)	

M-METRIC PART

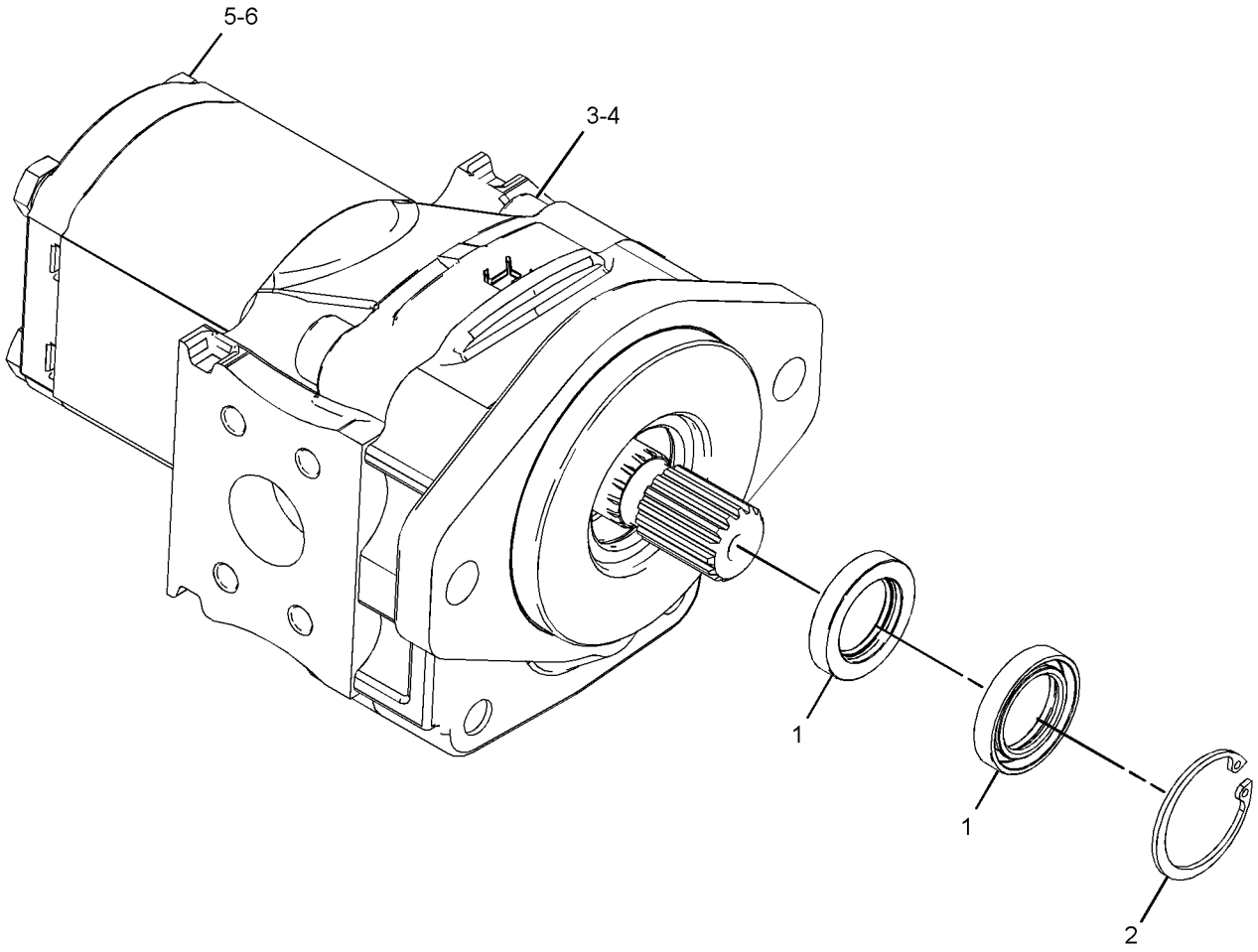

GRAPHIC #1 **<END>** g01844116

269-9462 PUMP GP-GEAR

S/N: MWD1-UP
PART OF 261-6094 PUMP & MTG GP-WORK TOOL
AN ATTACHMENT

SMCS-5073 **i03769678**

NOTE	REF NO	GRAPHIC REF	PART NUMBER	QTY	PART NAME 1 2 3 4 5 6 (PRODUCT LEVEL)	SEE PAGE
	1	1	**230-3757**	2	SEAL-SHAFT	
	2	1	**8C-3110**	1	RING-RETAINING	
M	3	1	**313-5644**	4	BOLT-12 POINT HEAD (M14X2X55-MM)	
	4	1	**271-2360**	4	WASHER-HARD (15X22X2.5-MM THK)	
M	5	1	**8T-4198**	4	BOLT (M10X1.5X100-MM)	
	6	1	**8T-5095**	4	WASHER-PLATED (11X16X2-MM THK)	
					AVAILABLE REPAIR KIT(S):	
			278-8714	1	KIT-SEAL (GEAR PUMP)	
					(INCLUDES E-SEALS, O-RING SEALS, SHAFT SEALS, SNAP RINGS & BACK-UP SEALS)	

M-METRIC PART

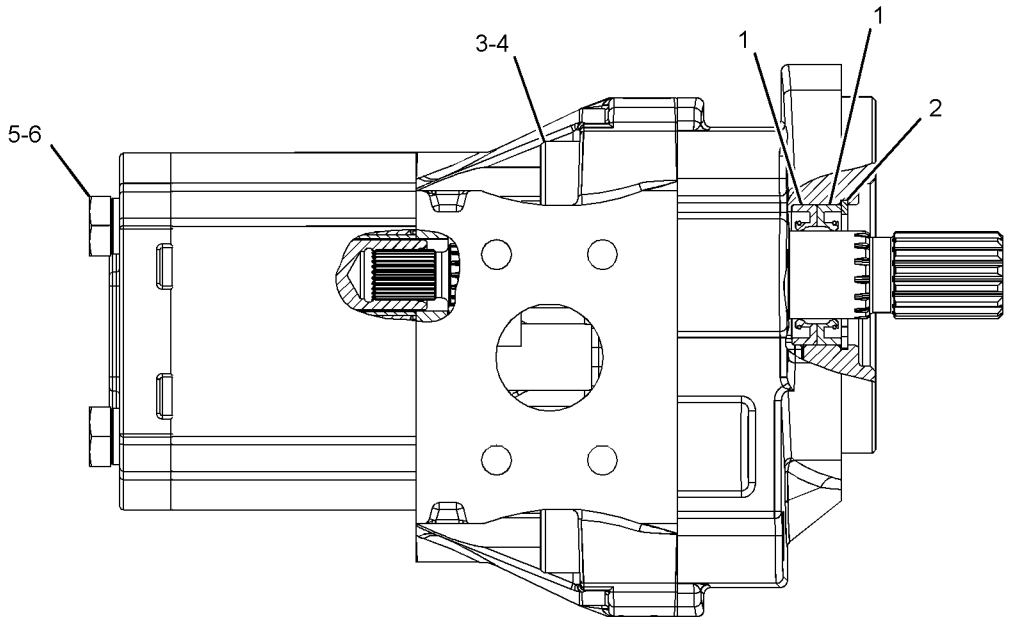

GRAPHIC #1 **<END>** g01445572

HYDRAULIC SYSTEM

326-5780 TANK & MTG GP-HYDRAULIC

S/N: MWD1-UP

PART OF 354-6548 HYDRAULIC AR

SMCS-5056 **i03902058**

NOTE	REF NO	GRAPHIC REF	PART NUMBER	QTY	PART NAME 1 2 3 4 5 6 (PRODUCT LEVEL)	SEE PAGE
	1	1	**5P-4961**	2	CLAMP-HOSE	
	2	1	**154-4014**	1	BRACKET	
	3	1	**207-9729**	1	BREATHER (INLINE) (HYDRAULIC OIL)	
	4	1	**233-5997**	1	HOSE	
Y	5	1	*326-5781*	1	TANK GP-HYDRAULIC	231
	6	1	**6D-4246**	1	CLIP	
	7	1	**8T-4121**	1	WASHER-HARD (11X21X2.5-MM THK)	
M	8	1	**8T-4136**	1	BOLT (M10X1.5X25-MM)	
M	9	1	**8T-4189**	2	BOLT (M8X1.25X20-MM)	
E	10	1	**5P-1442**		HOSE (65-CM)	

E-ORDER BY THE CENTIMETER
M-METRIC PART
Y-SEPARATE ILLUSTRATION

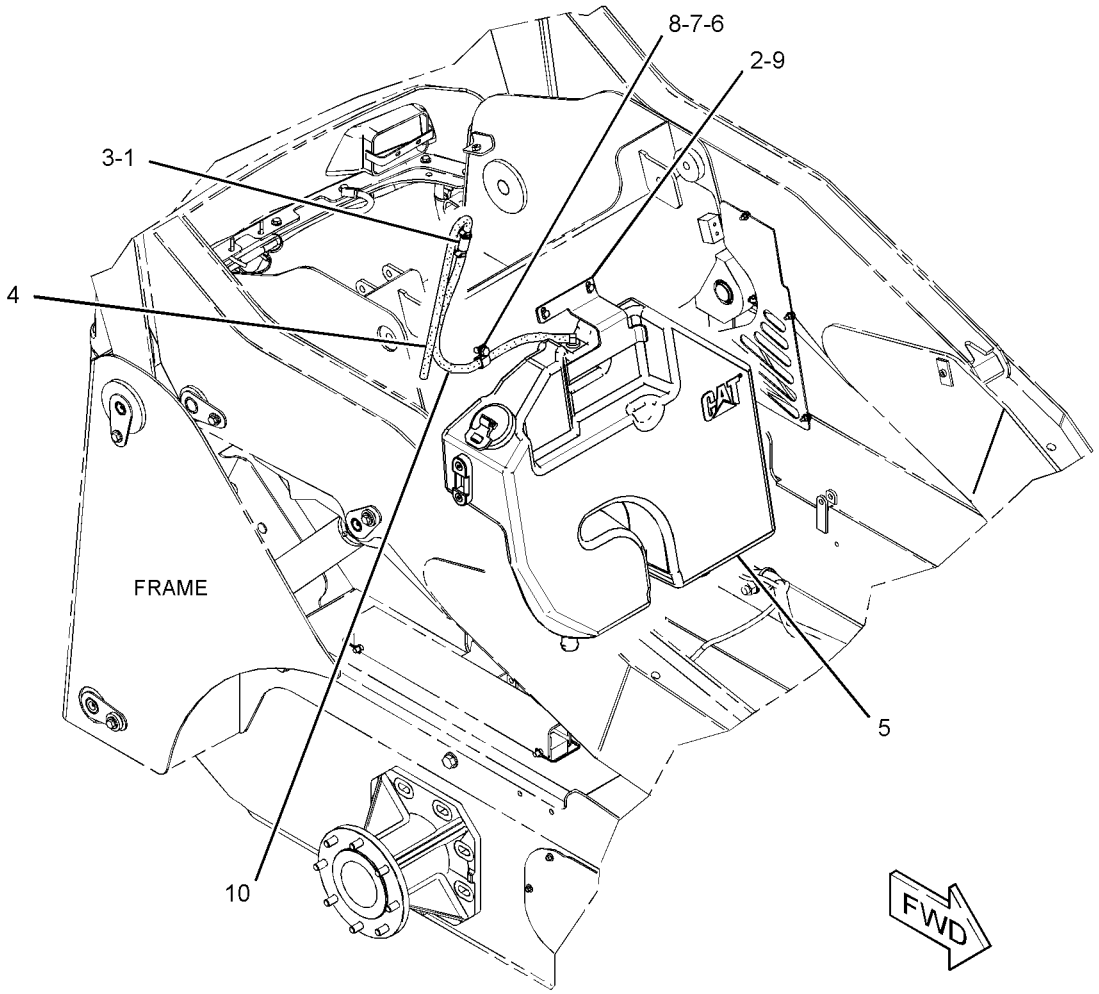

GRAPHIC #1 **<END>** g02146413

HYDRAULIC SYSTEM

326-5781 TANK GP-HYDRAULIC

S/N: MWD1-UP

PART OF 326-5780 TANK & MTG GP-HYDRAULIC

SMCS-5056 **i03902802**

NOTE	REF NO	GRAPHIC REF	PART NUMBER	QTY	PART NAME 1 2 3 4 5 6 (PRODUCT LEVEL)	SEE PAGE
	1	1	**6W-5698**	1	GROMMET	
	2	1	**142-8928**	1	ELBOW	
	3	1	**142-8937**	1	CAP AS-FILLER (HYDRAULIC TANK)	
	4	1	**264-4297**	1	SENSOR GP-TEMPERATURE (HYDRAULIC OIL)	
		1	**137-6645**	1	PAD	
	5	1	**347-5346**	1	TANK GP-HYDRAULIC	
		1	**317-3128**	1	GAUGE-SIGHT (HYDRAULIC TANK)	
		1	**348-4609**	1	SCREEN-SUCTION (HYDRAULIC TANK)	
		1	**5W-6388**	1	SEAL-O-RING	
	6	1	**3K-0360**	1	SEAL-O-RING	

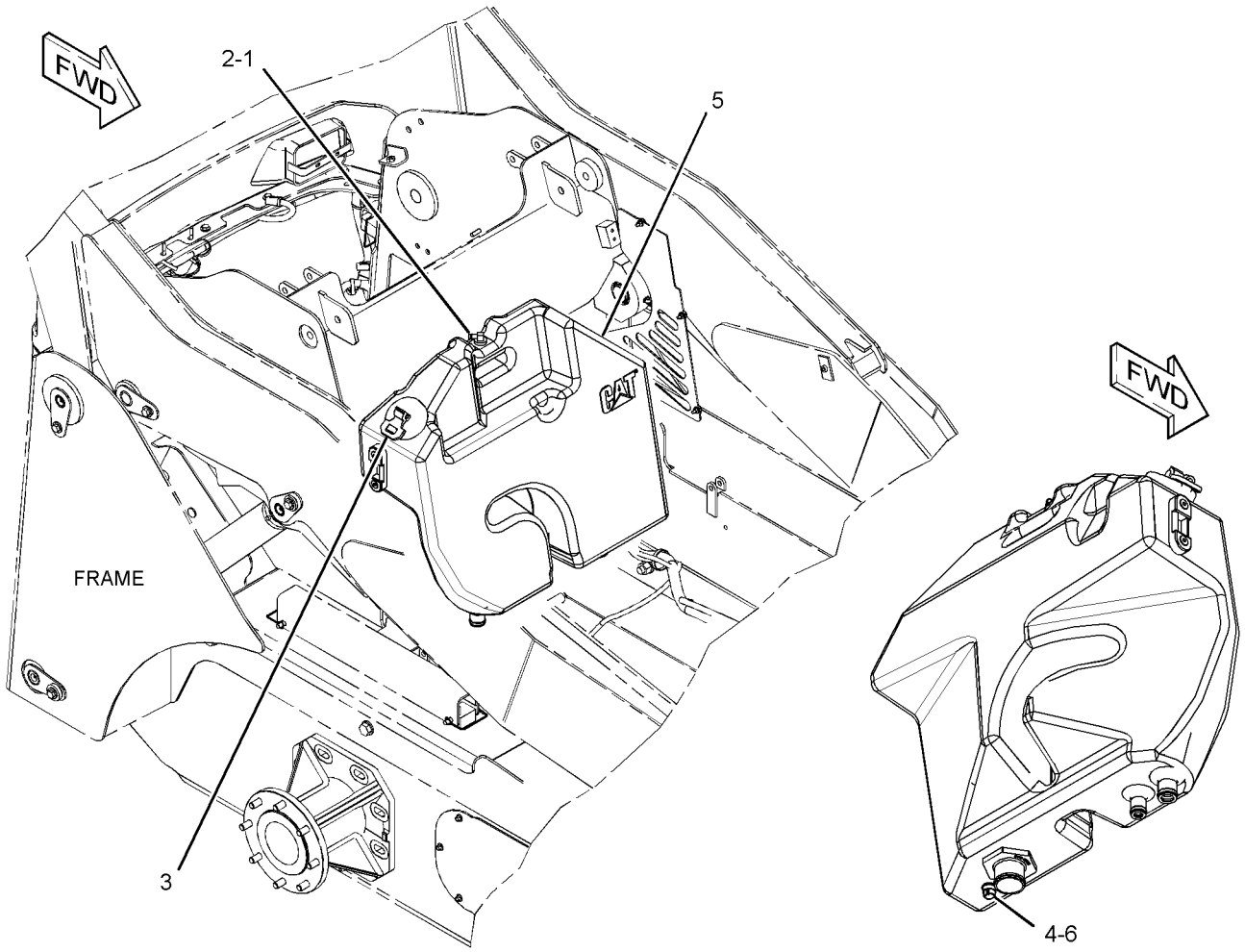

GRAPHIC #1 **<END>** g02146395

HYDRAULIC SYSTEM

218-6781 VALVE & MTG GP-CONTROL

S/N: MWD1-UP

PART OF 354-6548 HYDRAULIC AR

SMCS-5051 **i03891432**

NOTE	REF NO	GRAPHIC REF	PART NUMBER	QTY	PART NAME 1 2 3 4 5 6 (PRODUCT LEVEL)	SEE PAGE
CY	1	1	**336-1317**	1	VALVE GP-CONTROL (WORK TOOL)	233
	2	1	**218-6561**	1	BRACKET	
	3	1	**8T-4121**	4	WASHER-HARD (11X21X2.5-MM THK)	
M	4	1	**8T-4136**	2	BOLT (M10X1.5X25-MM)	
M	5	1	**8T-4137**	2	BOLT (M10X1.5X20-MM)	

C-CHANGE FROM PREVIOUS TYPE
M-METRIC PART
Y-SEPARATE ILLUSTRATION

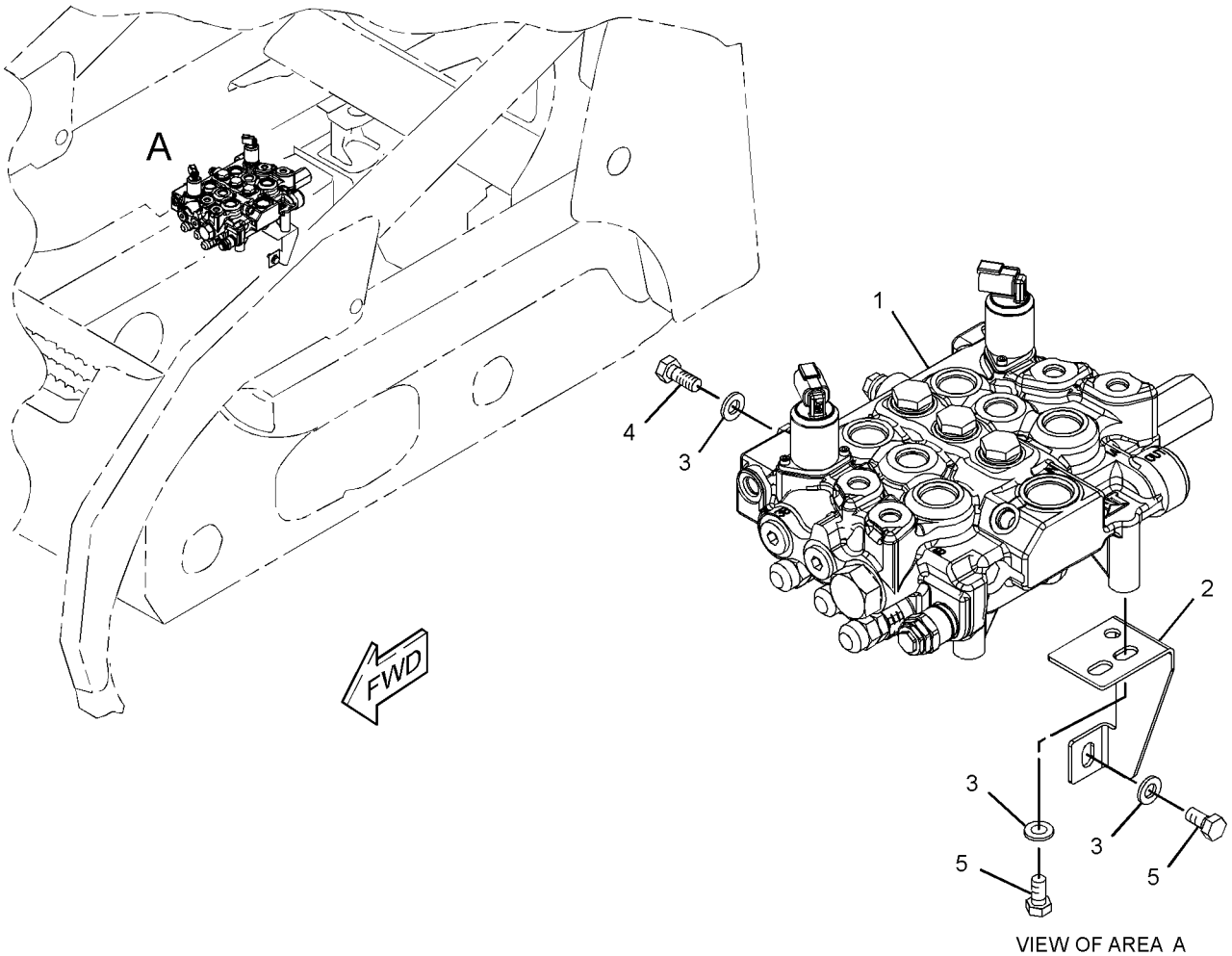

VIEW OF AREA A

GRAPHIC #1 **<END>** g02139733

HYDRAULIC SYSTEM

336-1317 VALVE GP-CONTROL

S/N: MWD1-UP

PART OF 218-6781 VALVE & MTG GP-CONTROL

SMCS-5051 **i03887711**

NOTE	REF NO	GRAPHIC REF	PART NUMBER	QTY	PART NAME 1 2 3 4 5 6 (PRODUCT LEVEL)	SEE PAGE
Y	1	1	**298-1309**	1	VALVE GP-RELIEF (MAIN)	239
	2	1	**216-6160**	2	VALVE GP-RELIEF (TILT)	
	3	1	**216-6161**	2	VALVE GP-RELIEF (LIFT)	
	4	1	**358-5951**	2	VALVE GP-SOLENOID (HYDRAULIC LOCKOUT)	
	5	1	**4J-7533**	1	SEAL-O-RING	
	6	1	**204-1485**	6	WASHER (0.47X0.75X0.02-MM THK)	
	7	1	**204-1482**	1	SPRING	
	8	1	**204-1488**	1	SPRING	
	9	1	**204-1489**	4	SPRING	
	10	1	**204-1486**	1	WASHER (0.32X0.74X0.02-MM THK)	
	11	1	**127-6316**	1	BOLT-SPECIAL	
	12	1	**180-8071**	4	PLUG-HEX SOCKET	
	13	1	**291-8148**	2	SEAL-O-RING	
	14	1	**204-1471**	1	CAP	
	15	1	**204-1481**	1	CAP	
	16	1	**144-4531**	3	VALVE-CHECK	
	17	1	**003-3082**	3	SPRING	
	18	1	**8I-5078**	3	SEAL-O-RING	
	19	1	**144-4532**	3	PLUG	
	20	1	**216-6156**	1	VALVE-CHECK	
	21	1	**216-6157**	1	SPRING	
	22	1	**3J-1907**	1	SEAL-O-RING	
	23	1	**216-6159**	1	PLUG	
	24	1	**2M-9780**	4	SEAL-O-RING	
M	25	1	**095-0641**	4	BOLT-SOCKET HEAD (M4X0.7X10-MM)	

M-METRIC PART
Y-SEPARATE ILLUSTRATION

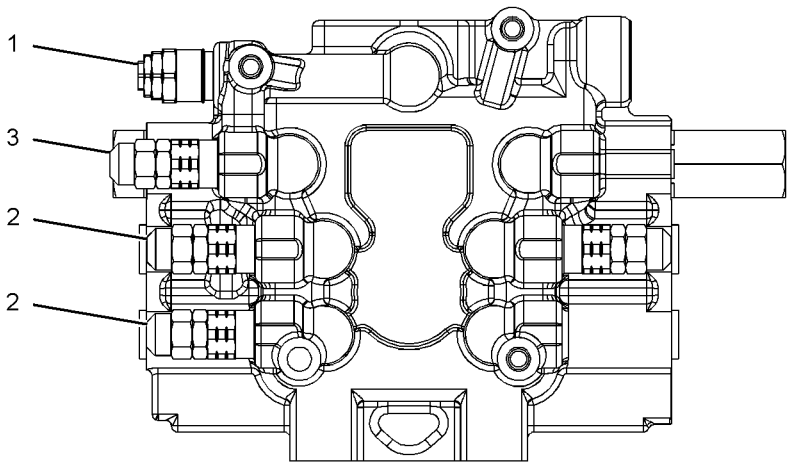

VIEW A-A

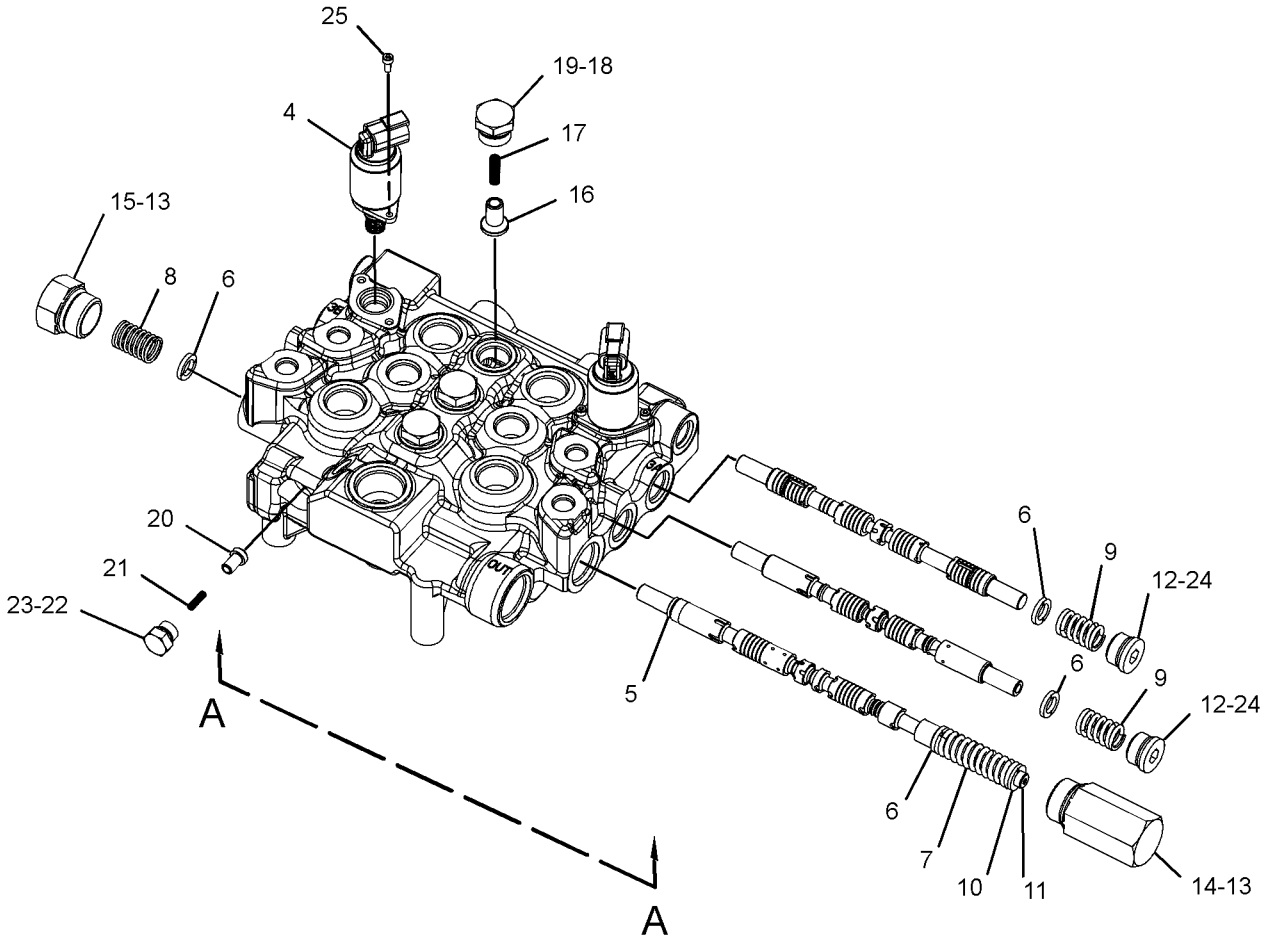

GRAPHIC #1 **<END>** g02140197

HYDRAULIC SYSTEM

112-1817 VALVE GP-MANUAL

S/N: MWD1-UP
PART OF 326-5678, 326-5679 LINES GP-LIFT CYLINDER
AN ATTACHMENT

SMCS-5147 **i03970894**

NOTE	PART NUMBER	QTY	PART NAME 1 2 3 4 5 6 (PRODUCT LEVEL)	SEE PAGE
J	*202-0671*	1	VALVE GP-MANUAL (COUPLER PIN, LIFT ARM LWR CONT)	
			—OR—	
J	*202-0673*	1	VALVE GP-MANUAL (COUPLER PIN, LIFT ARM LWR CONT)	
			—OR—	
J	*202-0674*	1	VALVE GP-MANUAL (COUPLER PIN, LIFT ARM LWR CONT)	
			AVAILABLE REPAIR KIT(S):	
J	**112-9861**	1	KIT-SEAL (DEAD ENGINE LOWERING)	
			(INCLUDES SEALS, CONNECTOR O-RINGS, THRUST RING & STEM O-RING)	
J-KIT MARKED J SERVICES PARTS MARKED J				

<END>

HYDRAULIC SYSTEM

299-9119 VALVE GP-PILOT

S/N: MWD1-UP

PART OF 326-5264, 326-5265, 326-5266 CONTROL GP-PILOT OPERATED HYD AN ATTACHMENT

SMCS-5059, 5705 **i03960051**

NOTE	REF NO	GRAPHIC REF	PART NUMBER	QTY	PART NAME 1 2 3 4 5 6 (PRODUCT LEVEL)	SEE PAGE
	1	1	**7K-1181**	1	STRAP-CABLE	
	2	1	**172-0970**	1	COIL AS	
		1	**186-3735**	2	PIN-CONNECTOR (16-GA TO 18-GA)	
		1	**102-8802**	1	KIT-RECEPTACLE (2-PIN)	
					(INCLUDES RECEPTACLE AS & WEDGE)	
Y	3	1	**195-9700**	1	VALVE GP-SOLENOID (12-VOLT) (WORK TOOL)	240
M	4	1	**8T-1158**	1	BOLT-SOCKET HEAD (M8X1.25X20-MM)	
M	5	1	**8T-9405**	1	BOLT-SOCKET HEAD (M4X0.7X16-MM)	
	6	1	**102-8802**	1	KIT-RECEPTACLE (2-PIN)	
					(INCLUDES RECEPTACLE AS & WEDGE)	
	7	1	**313-6251**	1	KIT-JOINT	
					(INCLUDES SHIMS, NUT, WASHER, DETENT ARM & CARDAN)	
	8	1	**299-9121**	1	PLATE	
	9	1	**198-1076**	3	KIT-PLUNGER (PILOT VALVE)	
					(INCLUDES PLUNGERS, SNAP RINGS, CAPS & WASHERS)	
	10	1	**203-1100**	1	KIT-PLUNGER (TILT BACK)	
					(INCLUDES PLUNGERS, SNAP RINGS & RETAINERS)	
	11	1	**160-6778**	1	KIT-PILOT VALVE (SPRING)	
					(INCLUDES SPRINGS)	
	12	1	**9T-2837**	1	KIT-SEAL (PILOT VALVE)	
					(INCLUDES PINS, O-RINGS & BOLT)	

M-METRIC PART
Y-SEPARATE ILLUSTRATION

299-9119 VALVE GP-PILOT *(contd.)* **i03960051**

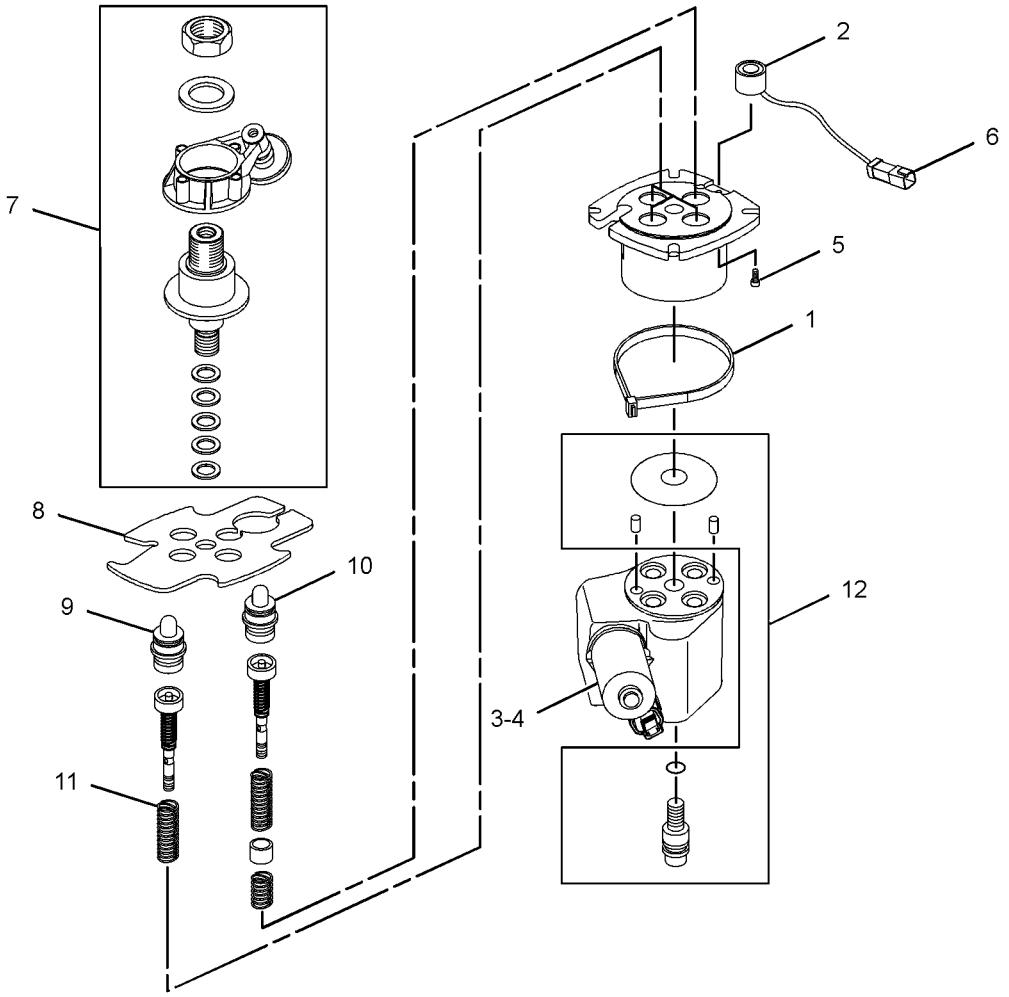

GRAPHIC #1 **<END>** g01417349

HYDRAULIC SYSTEM

343-0868 VALVE GP-PILOT

S/N: MWD1-UP

PART OF 326-5267, 343-5542, 343-5543 CONTROL GP-PILOT OPERATED HYD AN ATTACHMENT

SMCS-5059, 5705 **i03960217**

NOTE	REF NO	GRAPHIC REF	PART NUMBER	QTY	PART NAME 1 2 3 4 5 6 (PRODUCT LEVEL)	SEE PAGE
Y	1	1	**195-9700**	1	VALVE GP-SOLENOID (12-VOLT) (WORK TOOL)	240
M	2	1	**8T-1158**	1	BOLT-SOCKET HEAD (M8X1.25X20-MM)	
	3	1	**217-3850**	1	KIT-UNIVERSAL JOINT (PILOT VALVE)	
					(INCLUDES UNIVERSAL JOINT & SHIMS)	
	4	1	**299-9121**	1	PLATE	
	5	1	**198-1076**	2	KIT-PLUNGER (PILOT VALVE)	
					(EACH INCLUDES PLUNGERS, PLUNGER GUIDES, SNAP RINGS, CAPS & WASHERS)	
	6	1	**160-6778**	1	KIT-PILOT VALVE (SPRING)	
					(INCLUDE SPRINGS)	
	7	1	**289-9560**	1	KIT-SEAL (PILOT VALVE)	
					(INCLUDES O-RINGS, PINS & SCREW AS)	
	8	1	**151-4965**	1	KIT-SEAL (PILOT VALVE)	
					(INCLUDES O-RINGS, PIN & BOLT)	
	9	1	**343-0877**	1	VALVE GP-SHUTTLE (DIRECTION, SPEED)	
					PARTS SHOWN IN GRAPHIC(S) WITHOUT A REFERENCE NUMBER ARE NOT SERVICED SEPARATELY	

M-METRIC PART
Y-SEPARATE ILLUSTRATION

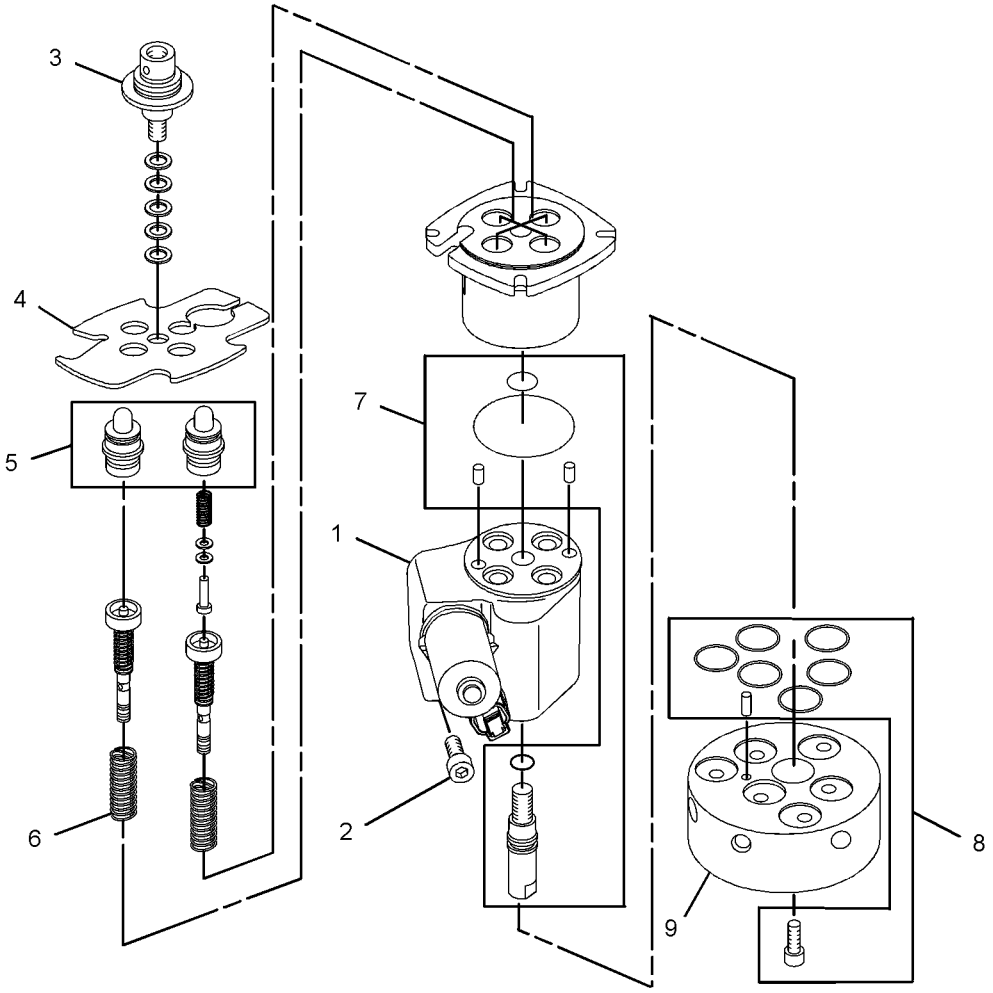

GRAPHIC #1 **<END>** g01943777

298-1309 VALVE GP-RELIEF

S/N: MWD1-UP

PART OF 336-1317 VALVE GP-CONTROL

SMCS-5069, 5117 **i02605580**

NOTE	REF NO	GRAPHIC REF	PART NUMBER	QTY	PART NAME 1 2 3 4 5 6 (PRODUCT LEVEL)	SEE PAGE
	1	1	**130-1676**	1	SEAL-O-RING	

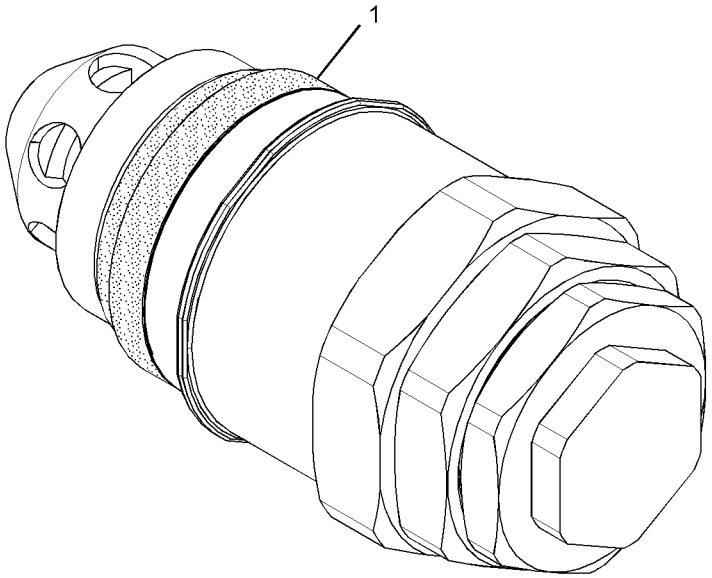

GRAPHIC #1 **<END>** g01304645

HYDRAULIC SYSTEM

195-9700 VALVE GP-SOLENOID–12-VOLT

S/N: MWD1-UP
PART OF 299-9119, 343-0868 VALVE GP-PILOT
AN ATTACHMENT

SMCS-5479 **i03690247**

NOTE	REF NO	GRAPHIC REF	PART NUMBER	QTY	PART NAME 1 2 3 4 5 6 (PRODUCT LEVEL)	SEE PAGE
	1	1	**212-0061**	1	FLANGE	
					AVAILABLE REPAIR KIT(S):	
			200-2371	1	KIT-SEAL (SOLENOID VALVE)	
					(INCLUDES SEALS)	

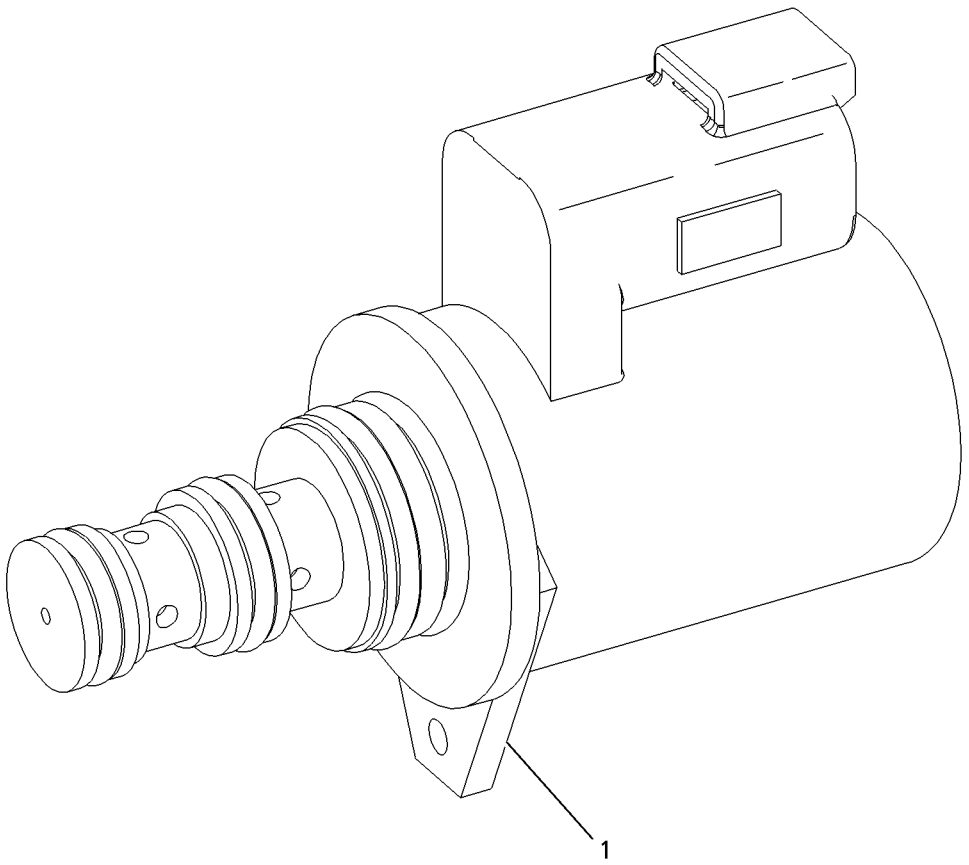

GRAPHIC #1 **<END>** g00947284

259-8194 VALVE GP-SOLENOID—PARKING BRAKE

S/N: MWD1-UP

PART OF 248-1268 MANIFOLD & SOLENOID GP-CONTROL

SMCS-5479 **i02485890**

NOTE	REF NO	GRAPHIC REF	PART NUMBER	QTY	PART NAME 1 2 3 4 5 6 (PRODUCT LEVEL)	SEE PAGE
	1	1	**238-4626**	1	COIL AS (AUXILIARY FLOW CONTROL)	

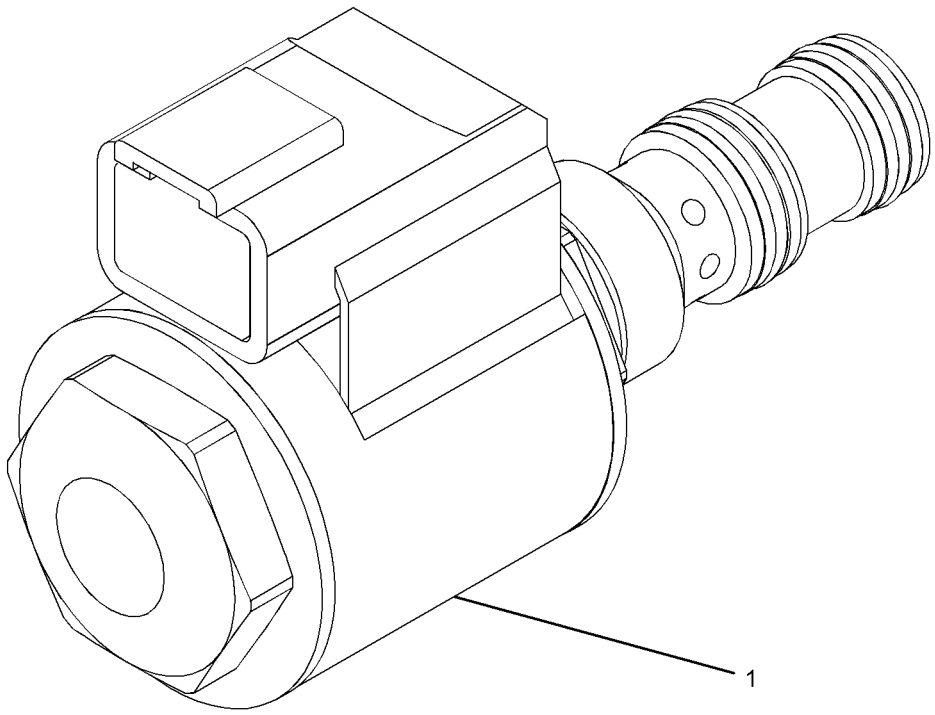

GRAPHIC #1 **<END>** g01121017

IMPLEMENTS

218-6798 ARM AS-LIFT

S/N: MWD1-UP

PART OF 326-5426 FRAME GP-MACHINE

SMCS-6119 **i03908916**

NOTE	REF NO	GRAPHIC REF	PART NUMBER	QTY	PART NAME 1 2 3 4 5 6 (PRODUCT LEVEL)	SEE PAGE
M	1	1	**8T-3597**	2	NUT-WELD (M12X1.75-THD)	
	2	1	**7T-1099**	2	LINK	
	3	1	**159-5756**	2	BUSHING	
	4	1	**218-6797**	1	PLATE AS	
	4A	1	**142-8805**	2	BUSHING	
	5	1	**218-6796**	1	PLATE AS	
	5A	1	**142-8805**	2	BUSHING	

M-METRIC PART

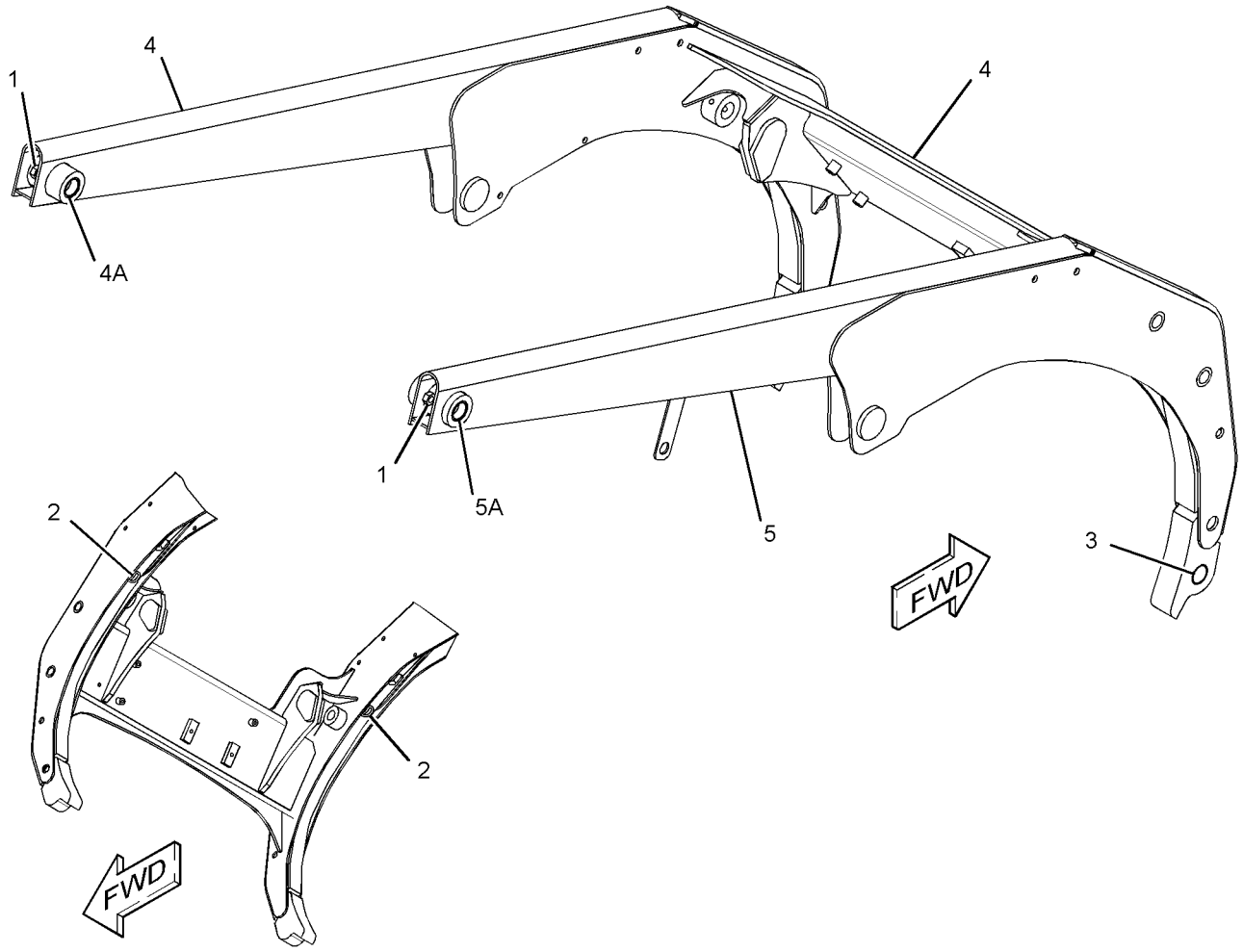

GRAPHIC #1 **<END>** g02151151

IMPLEMENTS

222-5695 BRACKET GP-SUPPORT

S/N: MWD1-UP
PART OF 326-5527, 326-5567 CONVERSION AR-MACHINE
AN ATTACHMENT

SMCS-1408, 6107 **i03620360**

NOTE	REF NO	GRAPHIC REF	PART NUMBER	QTY	PART NAME 1 2 3 4 5 6 (PRODUCT LEVEL)	SEE PAGE
	1	1	**216-6144**	1	BRACKET AS	

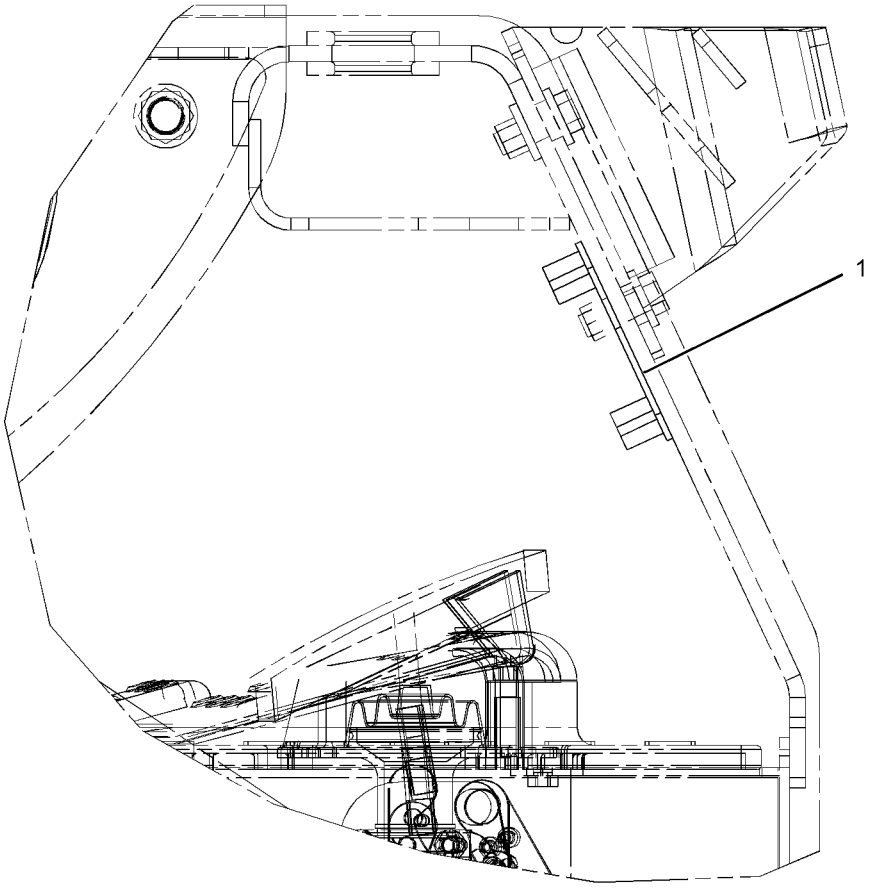

RIGHT SIDE VIEW

GRAPHIC #1 **<END>** g01944375

326-5568 COUPLER AR-QUICK—MECHANICAL

S/N: MWD1-UP
CANNOT BE USED WITH 326-5576—PAGE 244
AN ATTACHMENT

SMCS-6129 **i03932431**

NOTE	PART NUMBER	QTY	PART NAME 1 2 3 4 5 6 (PRODUCT LEVEL)	SEE PAGE
Y	*360-1363*	1	COUPLER GP-QUICK	245
Y-SEPARATE ILLUSTRATION				

<END>

326-5576 COUPLER AR-QUICK—HYDRAULIC

S/N: MWD1-UP
CANNOT BE USED WITH 326-5568—PAGE 244
AN ATTACHMENT

SMCS-6129 **i03909542**

NOTE	PART NUMBER	QTY	PART NAME 1 2 3 4 5 6 (PRODUCT LEVEL)	SEE PAGE
Y	*360-1364*	1	COUPLER GP-QUICK (HYDRAULIC)	246
Y	*326-5671*	1	LINES GP-COUPLER (HYDRAULIC)	179
Y-SEPARATE ILLUSTRATION				

<END>

360-1363 COUPLER GP-QUICK–MECHANICAL

S/N: MWD1-UP
PART OF 326-5568 COUPLER AR-QUICK
AN ATTACHMENT

SMCS-6129 **i03933809**

NOTE	REF NO	GRAPHIC REF	PART NUMBER	QTY	PART NAME 1 2 3 4 5 6 (PRODUCT LEVEL)	SEE PAGE
	1	1	**159-5797**	2	SPRING	
Y	2	1	*258-2535*	1	LOCK GP-QUICK COUPLER (RH)	254
Y	3	1	*258-2537*	1	LOCK GP-QUICK COUPLER (LH)	255
	4	1	**361-4407**	1	COUPLER AS-QUICK	
		1	**126-5701**	2	PLATE-RETAINER	
	5	1	**131-5879**	2	WASHER (11X32X3-MM THK)	
	6	1	**132-7551**	2	SPACER (11X19X6-MM THK)	
	7	1	**5B-0651**	2	FITTING-STRAIGHT	
M	8	1	**6V-7744**	2	LOCKNUT (M10X1.5-THD)	
M	9	1	**7X-2621**	2	BOLT (M10X1.5X12-MM)	
	10	1	**7X-7729**	4	WASHER (11X25X3-MM THK)	
	11	1	**8T-4121**	6	WASHER-HARD (11X21X2.5-MM THK)	
M	12	1	**8T-4172**	2	BOLT (M10X1.5X80-MM)	
M	13	1	**8T-4196**	4	BOLT (M10X1.5X35-MM)	

M-METRIC PART
Y-SEPARATE ILLUSTRATION

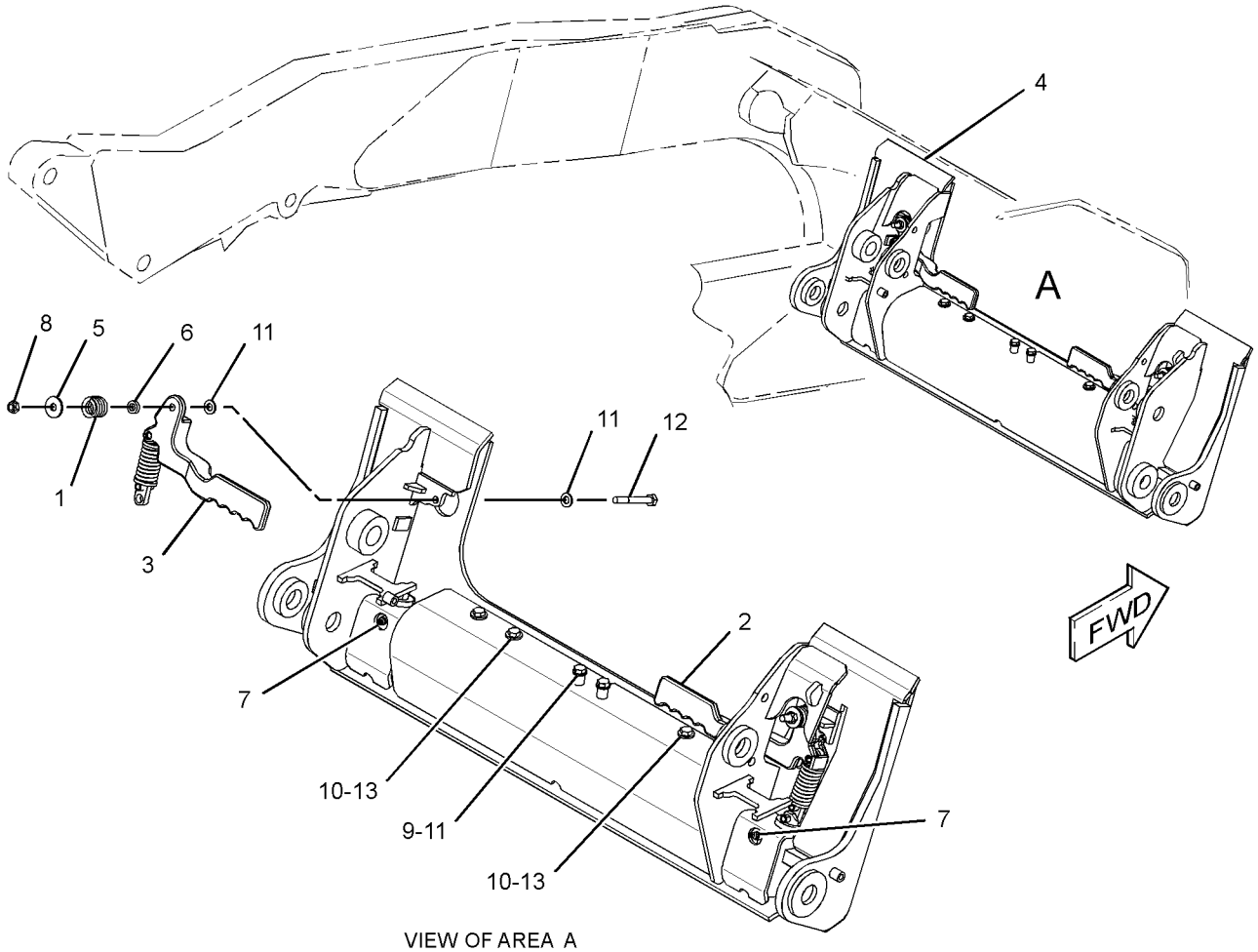

VIEW OF AREA A
(COMPONENTS REMOVED FOR CLARITY)

GRAPHIC #1 **<END>** g02155581

360-1364 COUPLER GP-QUICK–HYDRAULIC

S/N: MWD1-UP
PART OF 326-5576 COUPLER AR-QUICK
AN ATTACHMENT

SMCS-6129 **i03909543**

NOTE	REF NO	GRAPHIC REF	PART NUMBER	QTY	PART NAME 1 2 3 4 5 6 (PRODUCT LEVEL)	SEE PAGE
	1	1	**207-9785**	2	PIN	
Y	2	1	*215-3962*	1	CYLINDER & LINK GP-COUPLER (LH)	247
Y	3	1	*215-3963*	1	CYLINDER & LINK GP-COUPLER (RH)	248
	4	1	**218-6334**	1	BRACKET AS	
	5	1	**218-6335**	1	BRACKET AS	
	6	1	**361-4407**	1	COUPLER AS-QUICK	
		1	**126-5701**	2	PLATE-RETAINER	
	7	1	**3B-4628**	2	PIN-COTTER	
	8	1	**5B-0651**	2	FITTING-STRAIGHT	
	9	1	**5P-0372**	2	LOCK PIN	
	10	1	**8L-5188**	2	PIN	
	11	1	**8T-4121**	14	WASHER-HARD (11X21X2.5-MM THK)	
M	12	1	**8T-4133**	4	NUT (M10X1.5-THD)	
M	13	1	**8T-4196**	8	BOLT (M10X1.5X35-MM)	
	14	1	**9T-7303**	4	SPACER (16X28X1.5-MM THK)	

M-METRIC PART
Y-SEPARATE ILLUSTRATION

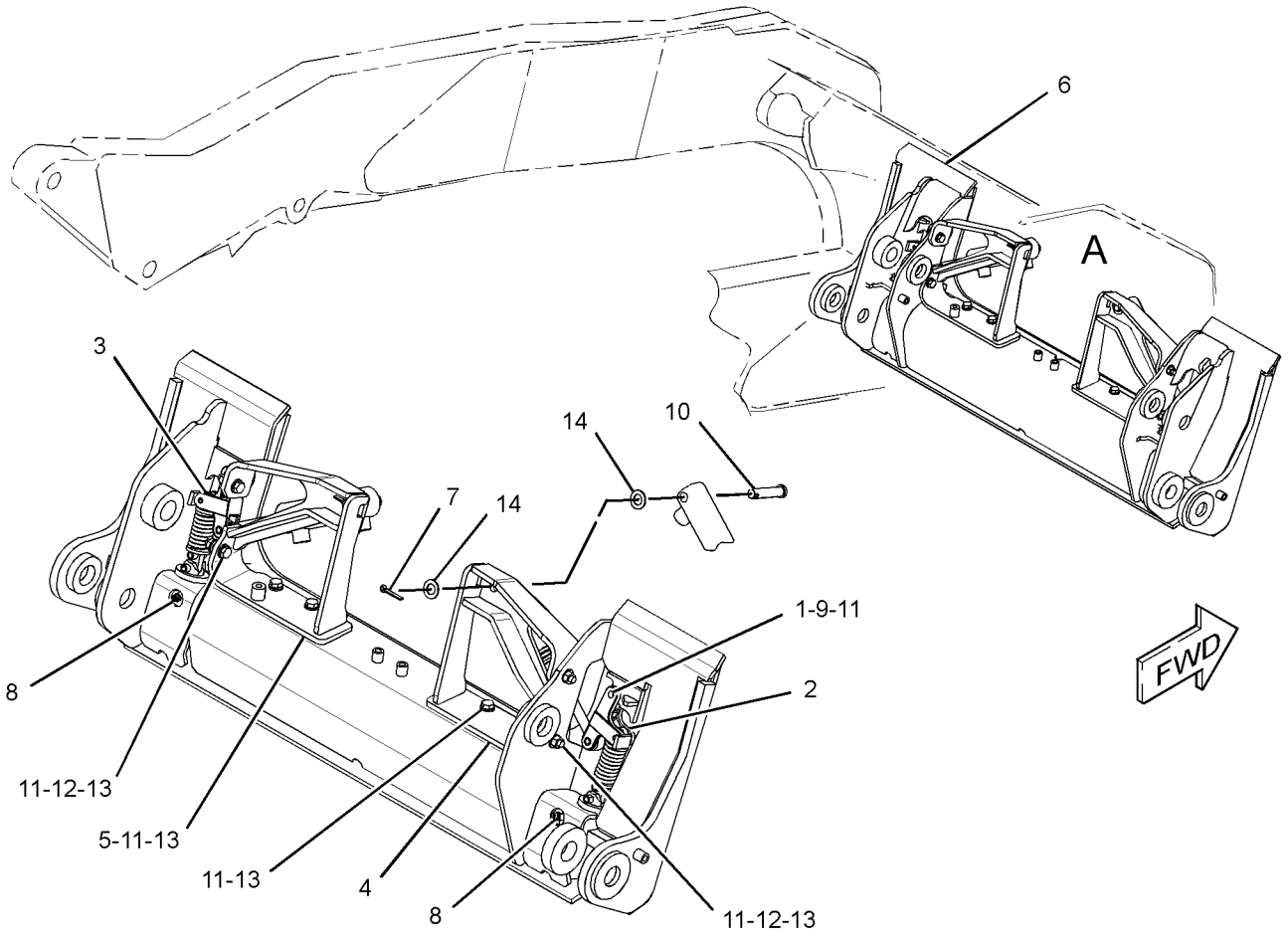

VIEW OF AREA A
(COMPONENTS REMOVED FOR CLARITY)

GRAPHIC #1 **<END>** g02149365

215-3962 CYLINDER & LINK GP-COUPLER–LH

S/N: MWD1-UP
PART OF 360-1364 COUPLER GP-QUICK
AN ATTACHMENT

SMCS-5133, 6129 **i02960140**

NOTE	REF NO	GRAPHIC REF	PART NUMBER	QTY	PART NAME 1 2 3 4 5 6 (PRODUCT LEVEL)	SEE PAGE
	1	1	**303-8767**	1	PIN-SPRING	
Y	2	1	**192-2640**	1	CYLINDER GP-HYDRAULIC (COUPLER)	169
	3	1	**192-2642**	1	PIN	
	4	1	**303-8768**	1	PIN-SPRING	
Y	5	1	*215-3957*	1	LINK GP-COUPLER	252

Y-SEPARATE ILLUSTRATION

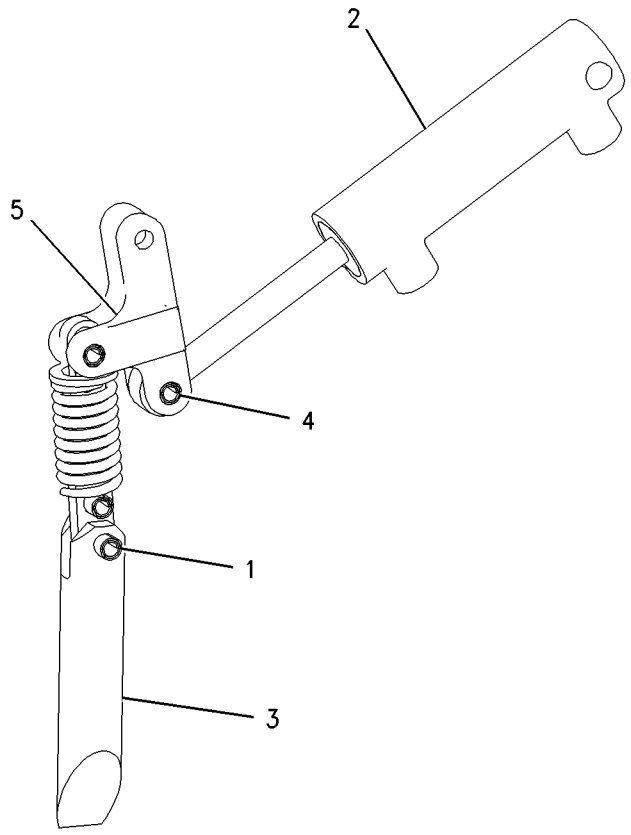

GRAPHIC #1 **<END>** g00871294

215-3963 CYLINDER & LINK GP-COUPLER–RH

S/N: MWD1-UP
PART OF 360-1364 COUPLER GP-QUICK
AN ATTACHMENT

SMCS-5133, 6129 **i02960142**

NOTE	REF NO	GRAPHIC REF	PART NUMBER	QTY	PART NAME 1 2 3 4 5 6 (PRODUCT LEVEL)	SEE PAGE
	1	1	**303-8767**	1	PIN-SPRING	
Y	2	1	**192-2640**	1	CYLINDER GP-HYDRAULIC (COUPLER)	169
	3	1	**192-2642**	1	PIN	
	4	1	**303-8768**	1	PIN-SPRING	
Y	5	1	*215-3957*	1	LINK GP-COUPLER	252

Y-SEPARATE ILLUSTRATION

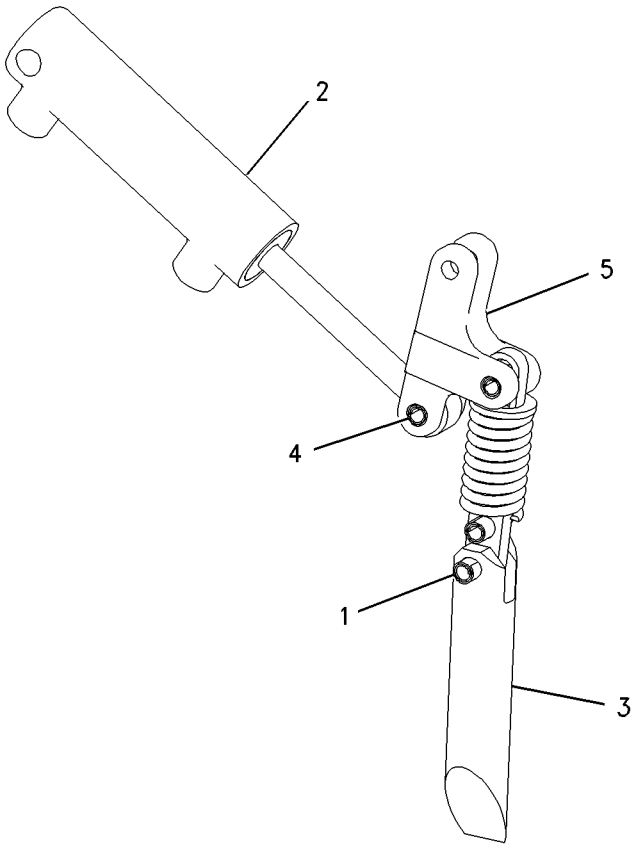

GRAPHIC #1 **<END>** g00871299

258-2536 HANDLE & PIN GP-COUPLER–RH

S/N: MWD1-UP
PART OF 258-2535 LOCK GP-QUICK COUPLER
AN ATTACHMENT

SMCS-6129 **i02960198**

NOTE	REF NO	GRAPHIC REF	PART NUMBER	QTY	PART NAME 1 2 3 4 5 6 (PRODUCT LEVEL)	SEE PAGE
	1	1	**192-2637**	1	PLATE	
	2	1	**195-6754**	2	PIN-SPRING	
	3	1	**192-2645**	1	SPRING	
	4	1	**258-2534**	1	HANDLE-RH	
M	5	1	**315-5493**	2	WASHER-HARD (22.5X35X4.5-MM THK)	

M-METRIC PART

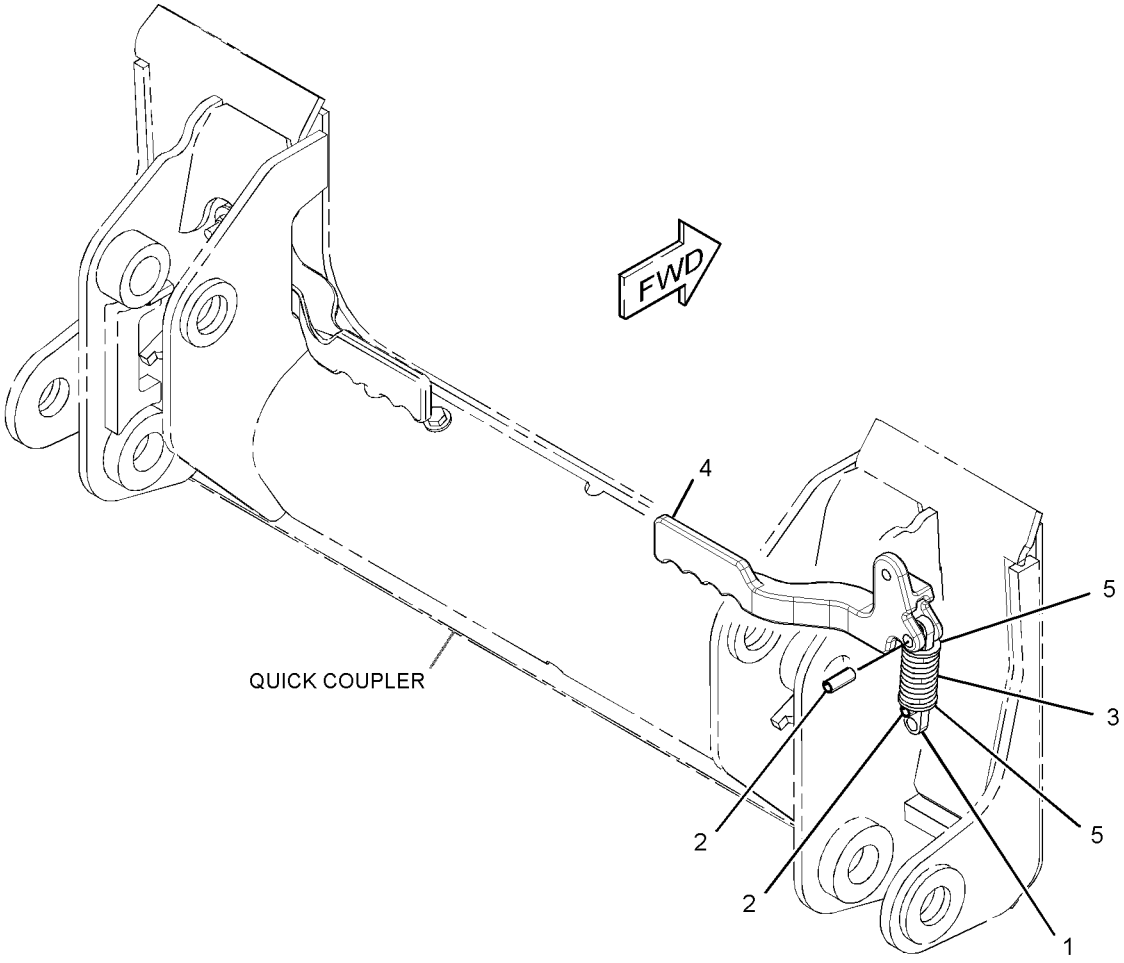

GRAPHIC #1 **<END>** g01335572

WORK TOOLS

258-2538 HANDLE & PIN GP-COUPLER—LH

S/N: MWD1-UP
PART OF 258-2537 LOCK GP-QUICK COUPLER
AN ATTACHMENT

SMCS-6129 **i02960209**

NOTE	REF NO	GRAPHIC REF	PART NUMBER	QTY	PART NAME 1 2 3 4 5 6 (PRODUCT LEVEL)	SEE PAGE
	1	1	**192-2637**	1	PLATE	
	2	1	**195-6754**	2	PIN-SPRING	
	3	1	**192-2645**	1	SPRING	
	4	1	**258-2533**	1	HANDLE-LH	
M	5	1	**315-5493**	2	WASHER-HARD (22.5X35X4.5-MM THK)	

M-METRIC PART

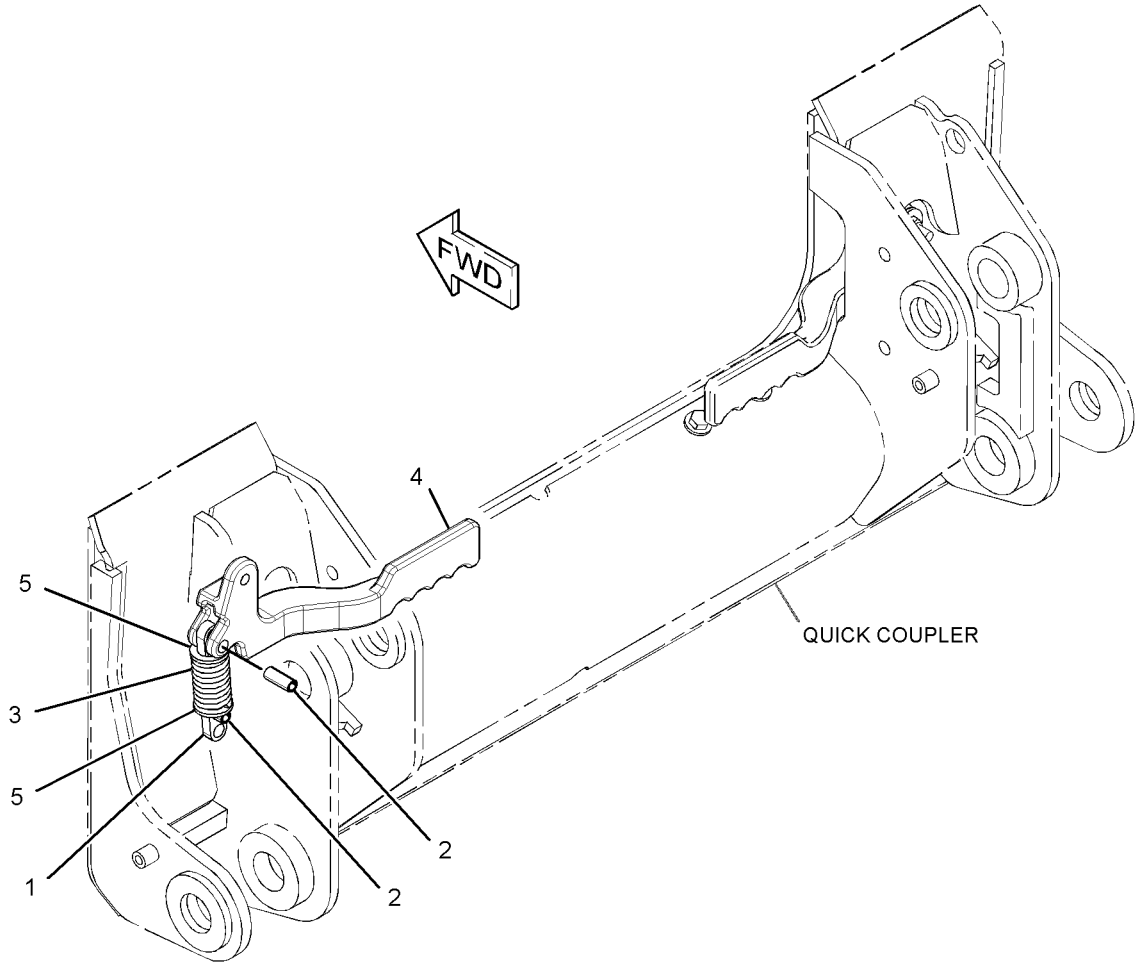

GRAPHIC #1 **<END>** g01335567

319-9480 KIT-ROADING PLATE & MOUNTING—BUCKET

S/N: MWD1-UP

PART OF 326-5487, 326-5527, 326-5557, 326-5567 CONVERSION AR-MACHINE

AN ATTACHMENT

SMCS-7405, 7557 **i03648540**

NOTE	PART NUMBER	QTY	PART NAME 1 2 3 4 5 6 (PRODUCT LEVEL)	SEE PAGE
	319-9481	1	PLATE AS (LH)	
	177-7414	1	FILM-STRIPE (REFLECTIVE, RED, WHITE)	
	177-7415	1	FILM (REFLECTIVE)	
	319-9483	1	PLATE AS	
	319-9482	1	PLATE AS (RH)	
	177-7414	1	FILM-STRIPE (REFLECTIVE, RED, WHITE)	
	177-7415	1	FILM (REFLECTIVE)	
	319-9484	1	PLATE AS	
	319-9490	2	STRAP AS	
M	**8T-4136**	8	BOLT (M10X1.5X25-MM)	
M	**8T-4186**	2	BOLT (M10X1.5X40-MM)	
M	**6V-8949**	8	NUT (M10X1.5-THD)	
	319-9489	2	PLATE	
	039-8557	4	WASHER (13X26X6-MM THK)	
	8T-4121	16	WASHER-HARD (11X21X2.5-MM THK)	

M-METRIC PART

<END>

WORK TOOLS

215-3957 LINK GP-COUPLER

S/N: MWD1-UP

PART OF 215-3962, 215-3963 CYLINDER & LINK GP-COUPLER

AN ATTACHMENT

SMCS-6129 **i02999956**

NOTE	REF NO	GRAPHIC REF	PART NUMBER	QTY	PART NAME 1 2 3 4 5 6 (PRODUCT LEVEL)	SEE PAGE
C	1	1	**192-2645**	1	SPRING	
C	2	1	**303-8768**	1	PIN-SPRING	
C	3	1	**310-6660**	1	PIN-SPRING	
C	4	1	**311-9240**	1	PLATE	
CM	5	1	**315-5493**	2	WASHER-HARD (22.5X35X4.5-MM THK)	
C	6	1	**319-2137**	1	BRACKET	

C-CHANGE FROM PREVIOUS TYPE
M-METRIC PART

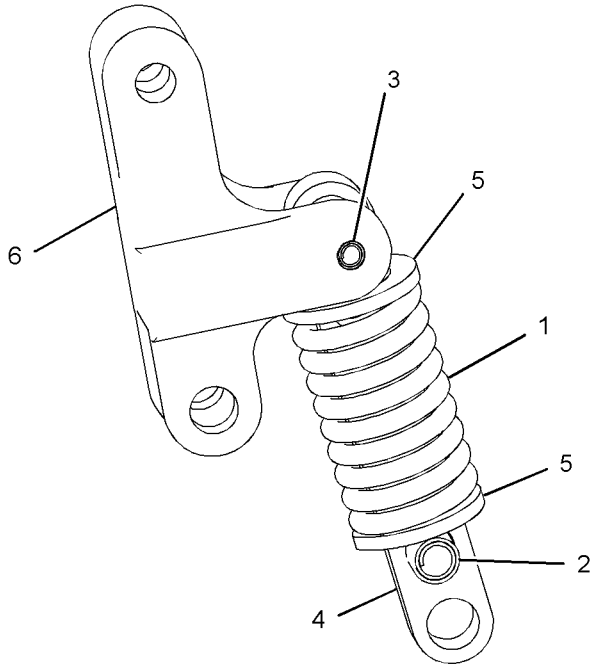

GRAPHIC #1 **<END>** g01523779

WORK TOOLS

175-4238 LOCK GP-QUICK COUPLER—MECHANICAL

S/N: MWD1-UP

PART OF 326-5487, 326-5527, 326-5557, 326-5567 CONVERSION AR-MACHINE AN ATTACHMENT

SMCS-6129 **i01408856**

NOTE	REF NO	GRAPHIC REF	PART NUMBER	QTY	PART NAME 1 2 3 4 5 6 (PRODUCT LEVEL)	SEE PAGE
	1	1	**9R-5301**	1	PIN-COTTER	
	2	1	**178-2247**	1	PIN	
	3	1	**9X-8257**	1	WASHER (17.5X30X3.5-MM THK)	

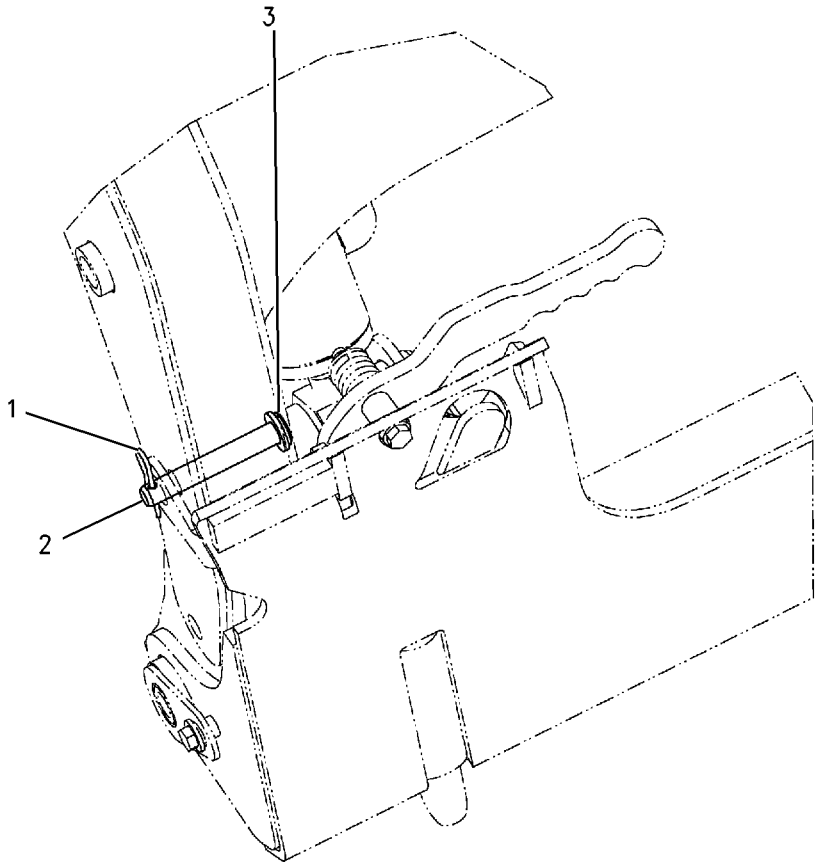

GRAPHIC #1 **<END>** g00741828

258-2535 LOCK GP-QUICK COUPLER–RH

S/N: MWD1-UP
PART OF 360-1363 COUPLER GP-QUICK
AN ATTACHMENT

SMCS-6129 **i02655596**

NOTE	REF NO	GRAPHIC REF	PART NUMBER	QTY	PART NAME 1 2 3 4 5 6 (PRODUCT LEVEL)	SEE PAGE
	1	1	**166-2560**	1	PIN-SPRING	
	2	1	**192-2642**	1	PIN	
Y	3	1	*258-2536*	1	HANDLE & PIN GP-COUPLER (RH)	249

Y-SEPARATE ILLUSTRATION

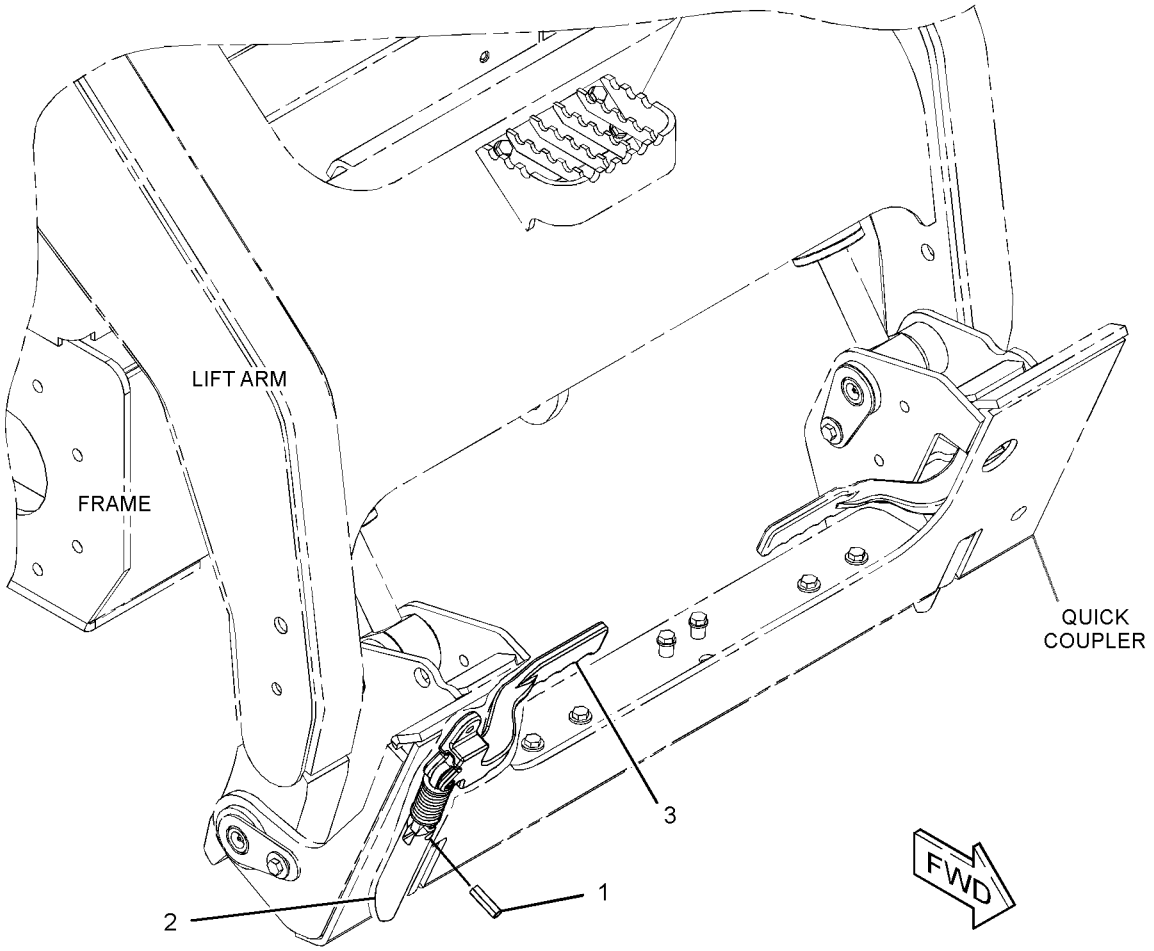

GRAPHIC #1 **<END>** g01335585

258-2537 LOCK GP-QUICK COUPLER—LH

S/N: MWD1-UP
PART OF 360-1363 COUPLER GP-QUICK
AN ATTACHMENT

SMCS-6129 **i02655597**

NOTE	REF NO	GRAPHIC REF	PART NUMBER	QTY	PART NAME 1 2 3 4 5 6 (PRODUCT LEVEL)	SEE PAGE
	1	1	**166-2560**	1	PIN-SPRING	
	2	1	**192-2642**	1	PIN	
Y	3	1	*258-2538*	1	HANDLE & PIN GP-COUPLER (LH)	250

Y-SEPARATE ILLUSTRATION

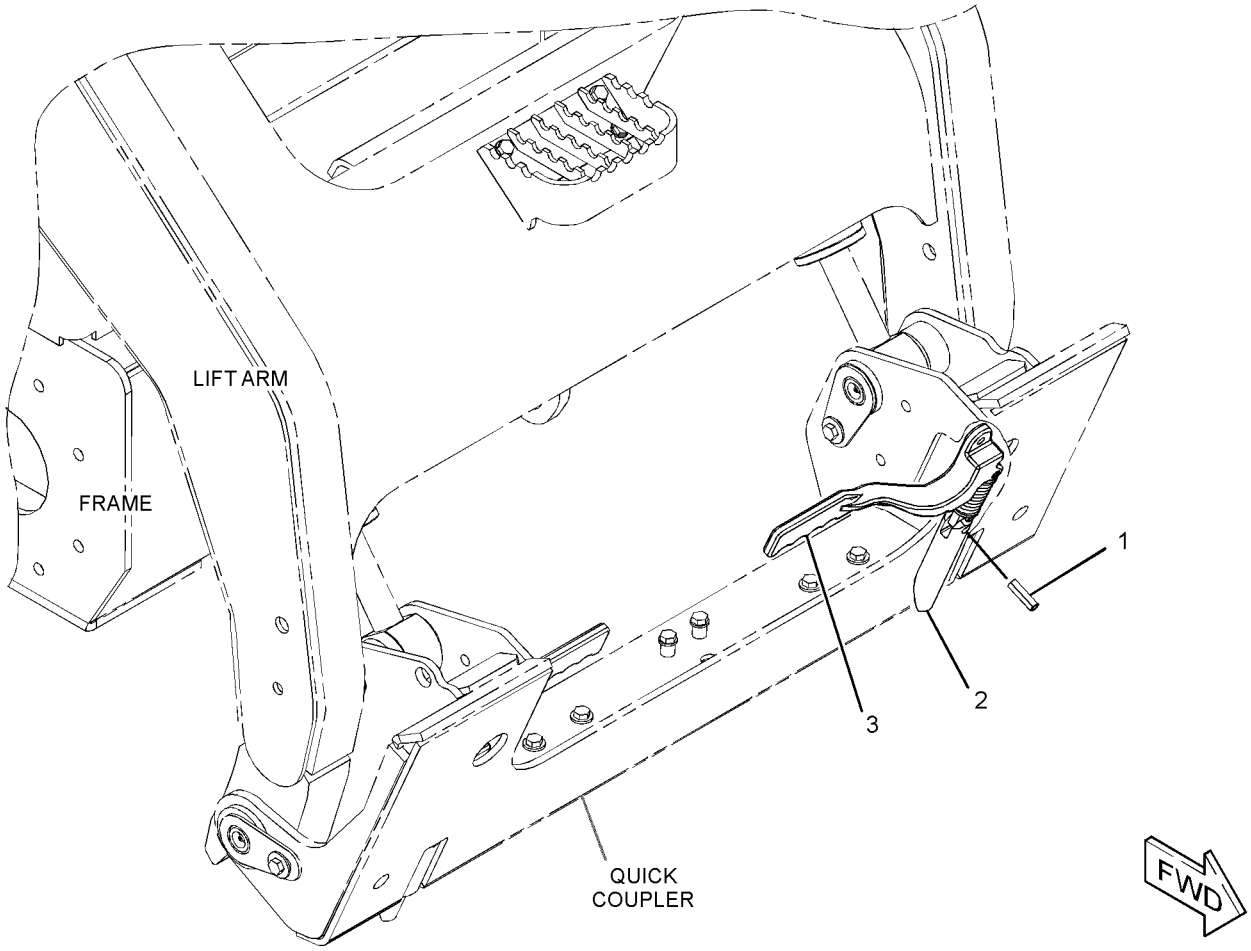

GRAPHIC #1 **<END>** g01335566

OPERATOR STATION

176-3900 ACCUMULATOR GP-REFRIGERANT—UNCHARGED

S/N: MWD1-UP

FIELD REPLACEMENT FOR 186-6190—PAGE 257

SMCS-7320 **i02195254**

NOTE	REF NO	GRAPHIC REF	PART NUMBER	QTY	PART NAME 1 2 3 4 5 6 (PRODUCT LEVEL)	SEE PAGE
					(NO SERVICED PARTS)	

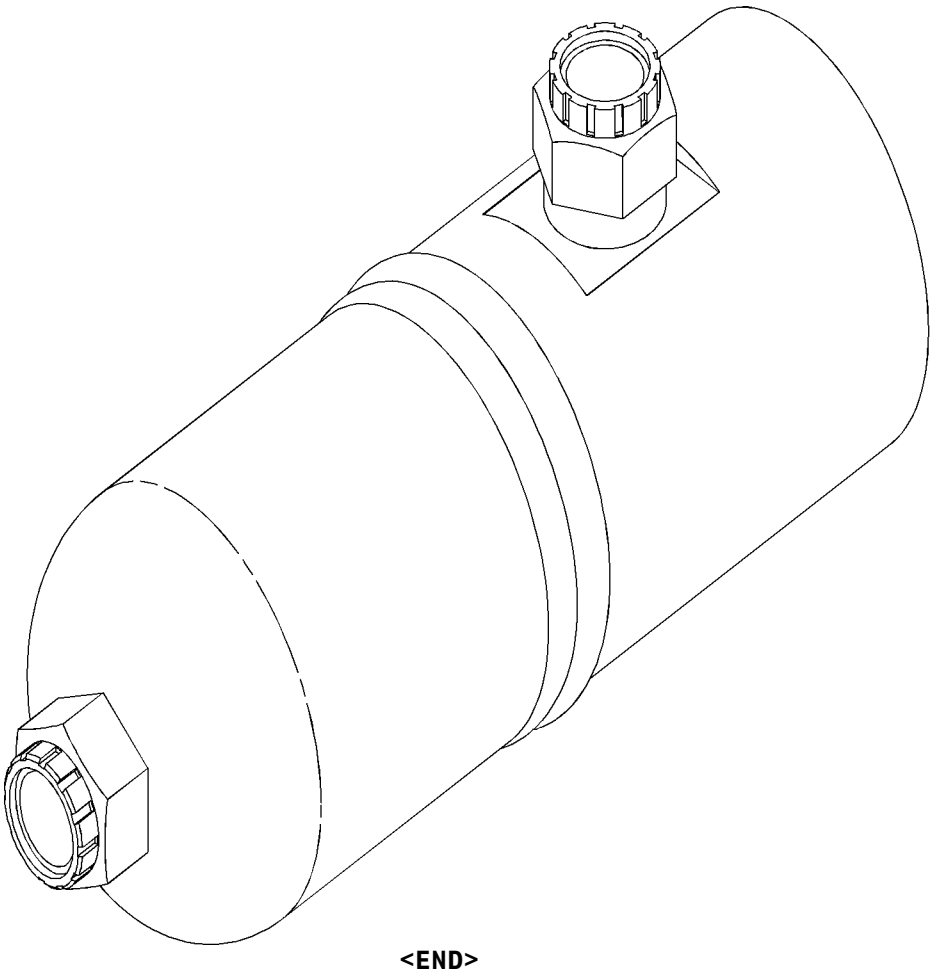

GRAPHIC #1 **<END>** g01035076

OPERATOR STATION

186-6190 ACCUMULATOR GP-REFRIGERANT—CHARGED

S/N: MWD1-UP
PART OF 218-6560 LINES GP-AIR CONDITIONER
FIELD REPLACEMENT ORDER 176-3900—PAGE 256
AN ATTACHMENT

SMCS-7320 **i02306357**

NOTE	REF NO	GRAPHIC REF	PART NUMBER	QTY	PART NAME 1 2 3 4 5 6 (PRODUCT LEVEL)	SEE PAGE
					(NO SERVICED PARTS)	

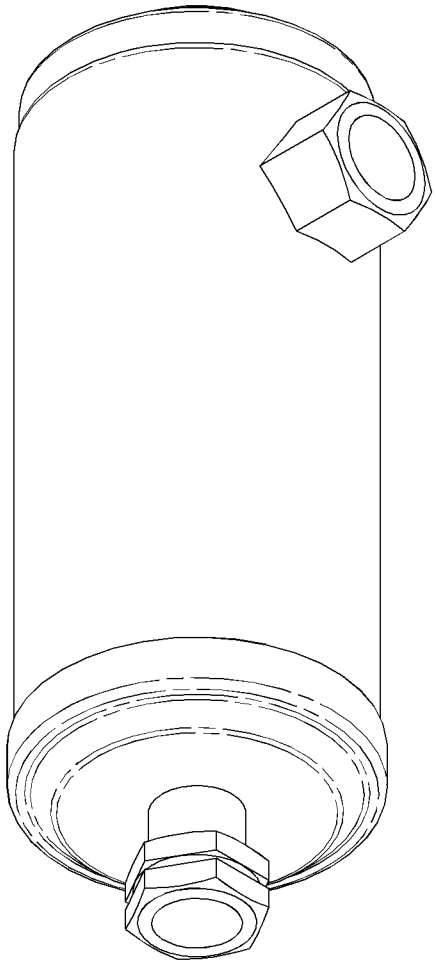

GRAPHIC #1 **<END>** g01155244

OPERATOR STATION

229-8747 AIR CONDITIONER & MOUNTING GP

S/N: MWD1-UP
PART OF 326-5536 AIR CONDITIONER AR
AN ATTACHMENT

SMCS-7320 **i02010226**

NOTE	REF NO	GRAPHIC REF	PART NUMBER	QTY	PART NAME 1 2 3 4 5 6 (PRODUCT LEVEL)	SEE PAGE
Y	1	1	*218-6405*	1	AIR CONDITIONER GP	260
M	2	1	**7X-2537**	4	BOLT (M8X1.25X35MM)	
	3	1	**8T-4224**	4	WASHER-HARD (8.8X16X2MM THK)	

M-METRIC PART
Y-SEPARATE ILLUSTRATION

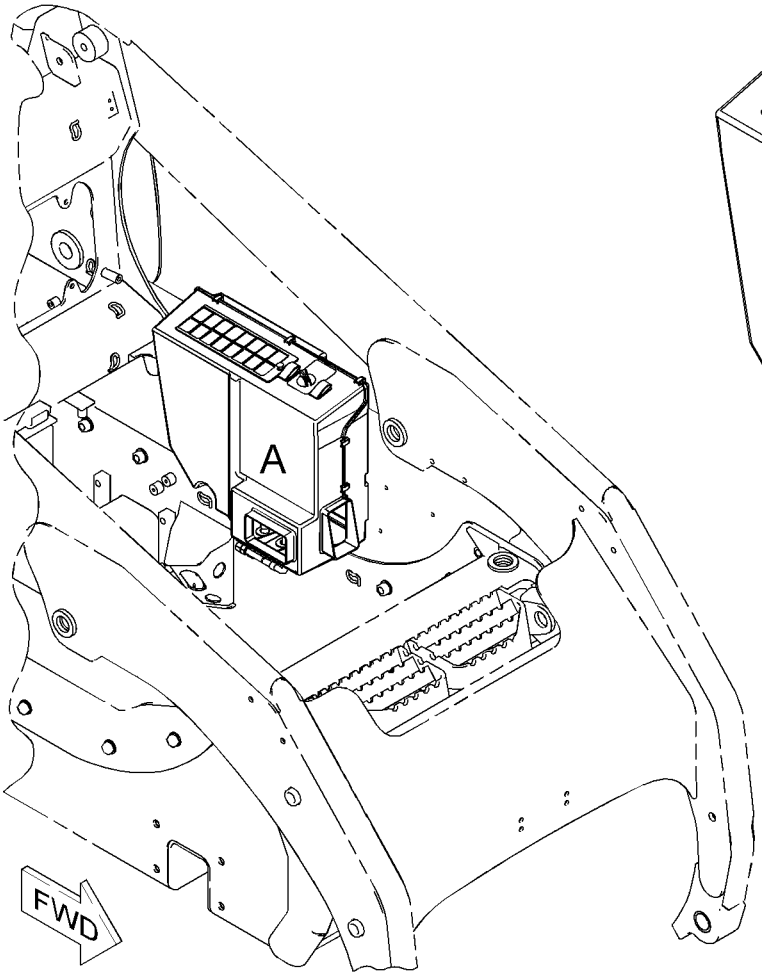

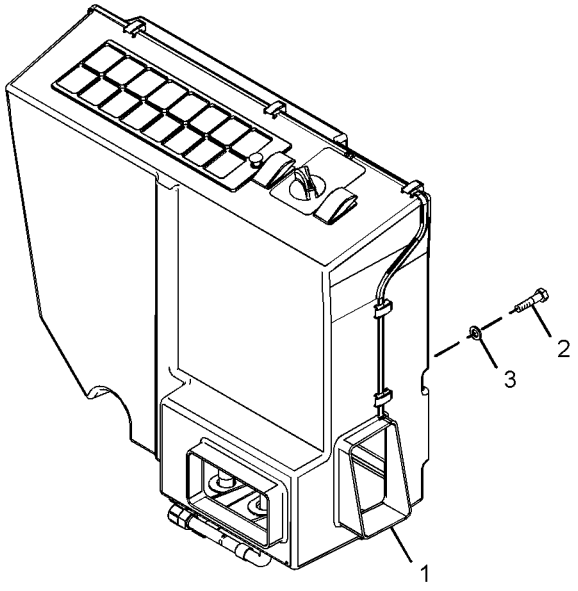

VIEW OF AREA A

GRAPHIC #1 **<END>** g01018777

326-5536 AIR CONDITIONER AR

S/N: MWD1-UP

PART OF 326-5534 CAB AR-ENCLOSED ROPS

AN ATTACHMENT

SMCS-7320 **i03904591**

NOTE	PART NUMBER	QTY	PART NAME 1 2 3 4 5 6 (PRODUCT LEVEL)	SEE PAGE
Y	*229-8747*	1	AIR CONDITIONER & MOUNTING GP	258
Y	*218-6830*	1	COMPRESSOR & MTG GP-REFRIG	274
Y	*218-6348*	1	CONDENSER & MTG GP-REFRIGERANT	275
Y	*218-6394*	1	DUCT GP-CAB AIR	303
Y	*218-6560*	1	LINES GP-AIR CONDITIONER	319
Y	*218-6086*	1	LINES GP-HEATER	321
Y	*326-5599*	1	LINES GP-HYDRAULIC FAN	182
Y	*225-7948*	1	WIRING GP-AIR CONDITIONER	100

Y-SEPARATE ILLUSTRATION

<END>

OPERATOR STATION

218-6405 AIR CONDITIONER GP

S/N: MWD1-UP
PART OF 229-8747 AIR CONDITIONER & MOUNTING GP
AN ATTACHMENT

SMCS-7320, 7342 **i03753706**

NOTE	REF NO	GRAPHIC REF	PART NUMBER	QTY	PART NAME 1 2 3 4 5 6 (PRODUCT LEVEL)	SEE PAGE
	1	1	**185-4015**	10	CLIP	
	2	1	**202-2284**	1	SWITCH AS-ROCKER (AIR CONDITIONER)	
		1	**111-7899**	1	GASKET	
	3	1	**218-6399**	1	SEAL	
	4	1	**206-7398**	1	KNOB-CONTROL (TEMPERATURE SELECT)	
	5	1	**119-9631**	1	SWITCH-TEMPERATURE (AIR CONDITIONER)	
	6	1	**305-2969**	2	SCREW-THUMB	
	7	1	**231-8123**	1	COIL AS-EVAPORATOR	
	8	1	**231-8124**	1	COIL AS-HEATER	
	9	1	**295-5440**	1	MOTOR	
	10	1	**236-5067**	1	SWITCH-ROCKER (HEATER)	
	11	1	**231-8127**	2	GROMMET	
C	12	1	**312-2635**	1	COVER GP-ACCESS	
		1	**231-8129**	2	PIN	
		1	**231-8142**	2	RETAINER	
	14	1	**303-6658**	1	FILTER ELEMENT-CAB AIR	
	16	1	**231-8132**	1	FILTER ELEMENT-CAB AIR	
	17	1	**231-8133**	1	PANEL	
	18	1	**231-8137**	1	FILM (TEMPERATURE CONTROL)	
	19	1	**231-8141**	1	GROMMET	
	21	1	**236-5069**	3	RELAY AS (12-VOLT) (AIR CONDITIONER, HEATER)	
C	22	1	**312-1683**	1	HOUSING-COVER	
Y	23	1	**231-8122**	1	HOUSING AS-SIDE (AIR CONDITIONER, HEATER)	314
	24	1	**231-8126**	1	VALVE AS	
	25	1	**232-1384**	1	ORIFICE AS-AIR CONDITIONER	
	26	1	**218-6948**	1	HARNESS AS-HEATER & AIR COND	

C-CHANGE FROM PREVIOUS TYPE
Y-SEPARATE ILLUSTRATION

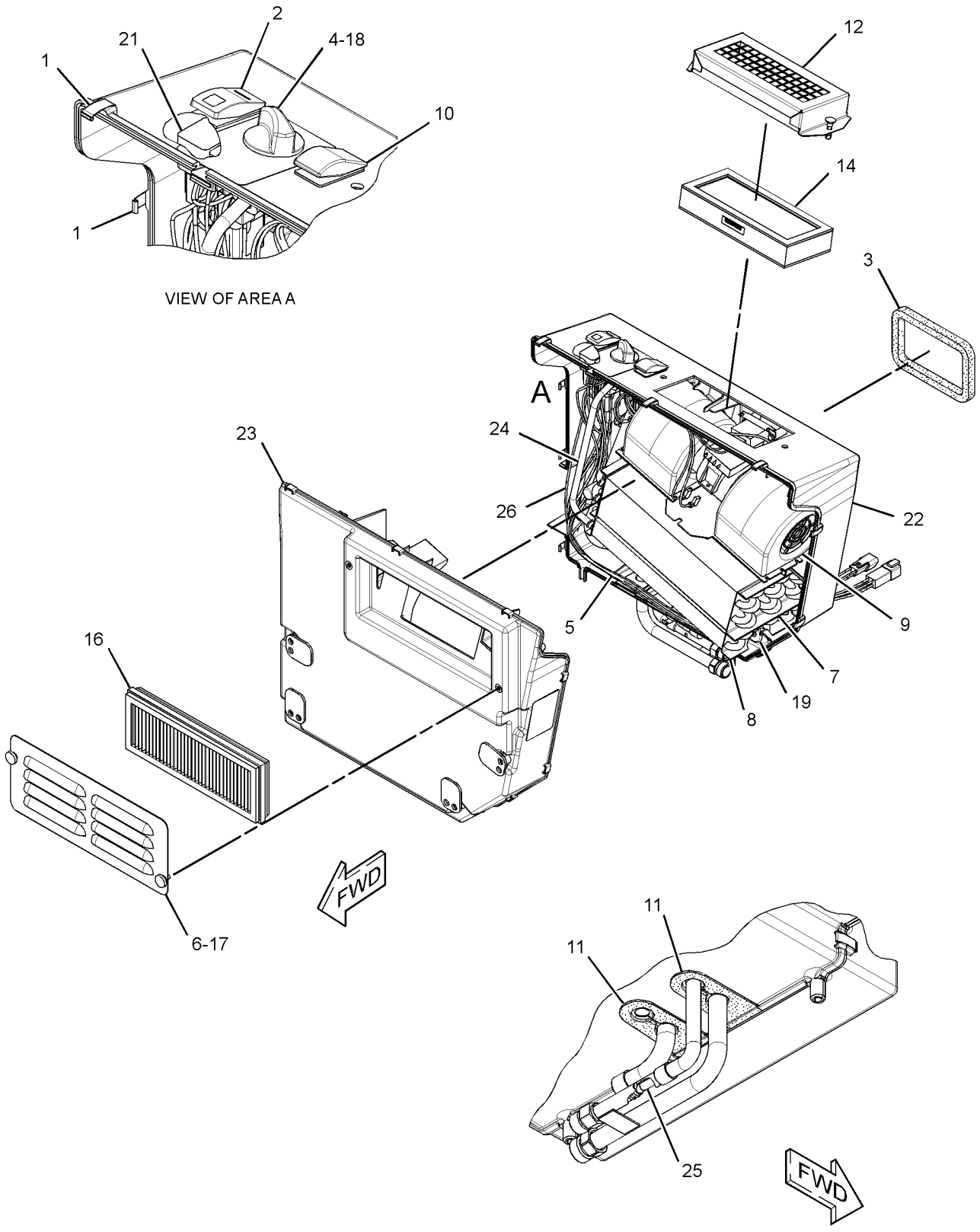

GRAPHIC #1 **<END>** g01594158

OPERATOR STATION

320-1389 ARM GP-WINDOW WIPER

S/N: MWD1-UP

PART OF 223-0616, 276-3440 DOOR GP-CAB

AN ATTACHMENT

SMCS-7305 **i03434603**

NOTE	REF NO	GRAPHIC REF	PART NUMBER	QTY	PART NAME 1 2 3 4 5 6 (PRODUCT LEVEL)	SEE PAGE
	1	1	**240-8666**	2	CLIP	
	2	1	**136-3191**	1	NOZZLE AS-WASHER	
E	3	1	**194-5171**		HOSE (60-CM)	

E-ORDER BY THE CENTIMETER

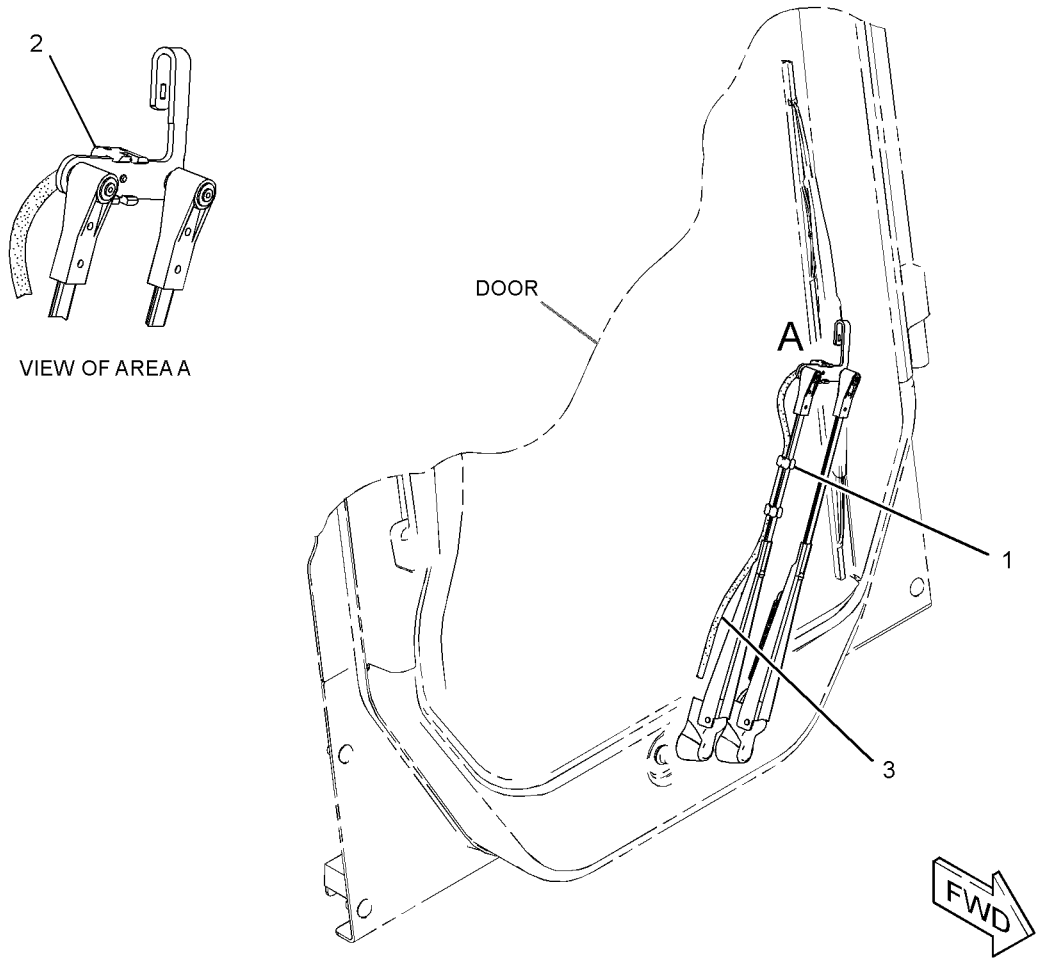

GRAPHIC #1 **<END>** g01788004

OPERATOR STATION

236-4830 ARMREST & MOUNTING GP

S/N: MWD1-UP

PART OF 326-5400 CAB AR

SMCS-7307 **i01955195**

NOTE	REF NO	GRAPHIC REF	PART NUMBER	QTY	PART NAME 1 2 3 4 5 6 (PRODUCT LEVEL)	SEE PAGE
	1	1	**4E-1384**	2	BUMPER-CONICAL	
	2	1	**195-0939**	4	STUD	
	3	1	**218-6442**	2	PLATE	
Y	4	1	**236-4833**	1	ARMREST GP	264
M	5	1	**195-0937**	2	INSERT-THREADED (M8X1.25-THD)	
M	6	1	**5C-7261**	2	NUT (M8X1.25-THD)	
	7	1	**8T-4121**	4	WASHER-HARD (11X21X2.5-MM THK)	
M	8	1	**8T-4133**	4	NUT (M10X1.5-THD)	

M-METRIC PART
Y-SEPARATE ILLUSTRATION

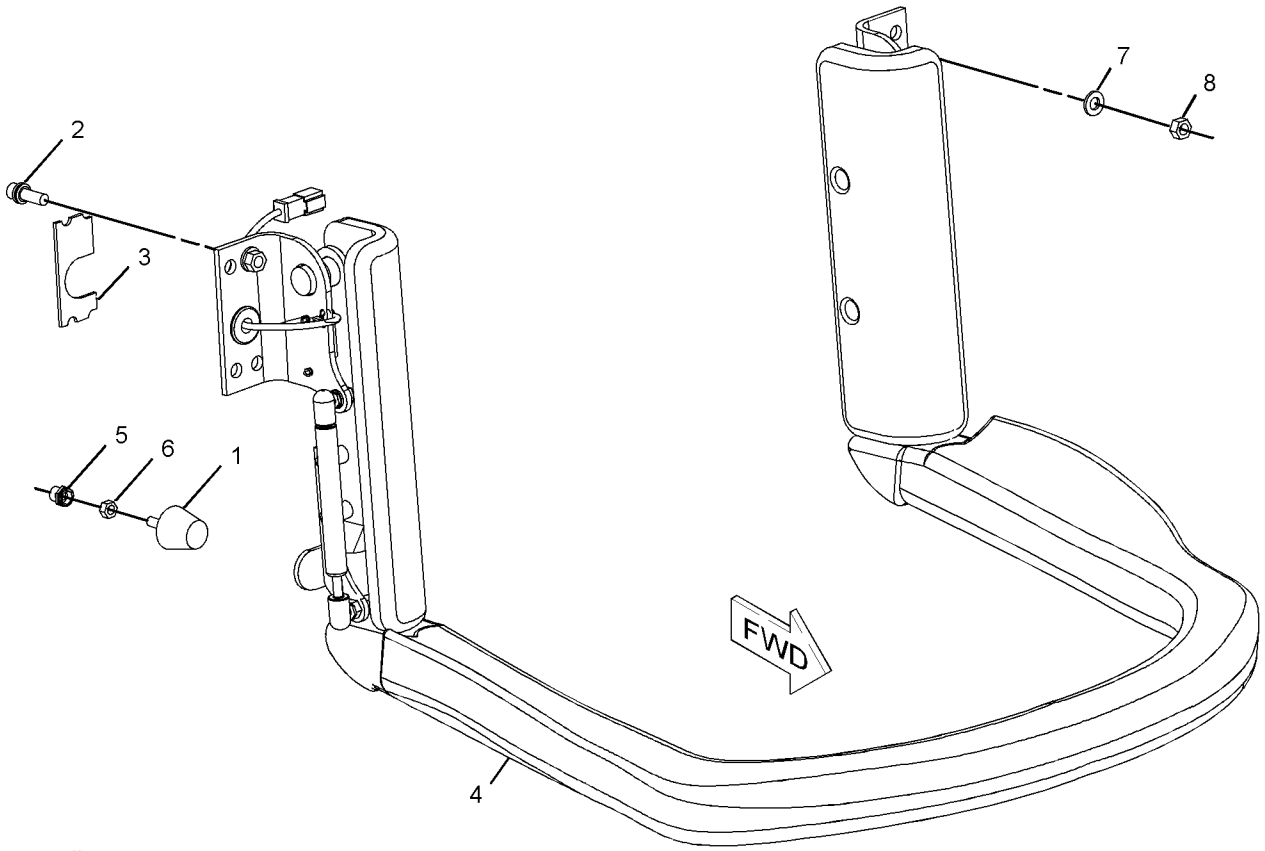

GRAPHIC #1 **<END>** g01016683

OPERATOR STATION

236-4833 ARMREST GP

S/N: MWD1-UP

PART OF 236-4830 ARMREST & MOUNTING GP

SMCS-7307 **i03647962**

NOTE	REF NO	GRAPHIC REF	PART NUMBER	QTY	PART NAME 1 2 3 4 5 6 (PRODUCT LEVEL)	SEE PAGE
	1	1	**3S-2093**	1	STRAP-CABLE	
	2	1	**7D-8431**	2	RING-RETAINING	
	3	1	**7G-7053**	1	GROMMET	
	4	1	**9P-4609**	1	PLATE (MAGNETIC)	
	5	1	**9S-0285**	2	BUSHING	
	6	1	**130-1916**	2	STUD-BALL	
	7	1	**142-9278**	1	BRACKET AS (RH)	
	8	1	**142-9279**	1	BRACKET AS (LH)	
	9	1	**142-9287**	1	SPRING AS-GAS	
	10	1	**142-9386**	1	BRACKET AS (LH)	
	11	1	**152-4875**	2	COVER AS	
	12	1	**152-4884**	1	BRACKET AS (RH)	
	13	1	**162-0223**	1	SWITCH AS (INTERLOCK)	
		1	**155-2271**	1	KIT-CONNECTING PLUG (4-PIN)	
		1	**176-2947**	1	PLUG KIT-CONN (4-PIN)	
					(EACH PLUG KIT INCLUDES PLUG AS, WEDGE & INTERFACE SEAL)	
		1	**186-3736**	3	SOCKET-CONNECTOR (16-GA TO 18-GA)	
		1	**9G-3695**	1	PLUG-SEAL	
E		1	**9X-1813**		SLEEVE (24-CM)	
	14	1	**236-4832**	1	ARMREST AS	
	15	1	**103-6262**	4	SCREW-MACHINE (4-40X0.63-IN)	
	16	1	**142-2928**	4	LOCKNUT (4-40-THD)	
M	17	1	**5C-9553**	4	BOLT (M6X1X16-MM)	
	18	1	**8T-4205**	4	WASHER-HARD (7.2X14.5X2-MM THK)	
	19	1	**8T-4224**	1	WASHER-HARD (8.8X16X2-MM THK)	
M	20	1	**9X-2042**	4	SCREW-TRUSS HEAD (M6X1X12-MM)	

E-ORDER BY THE CENTIMETER
M-METRIC PART

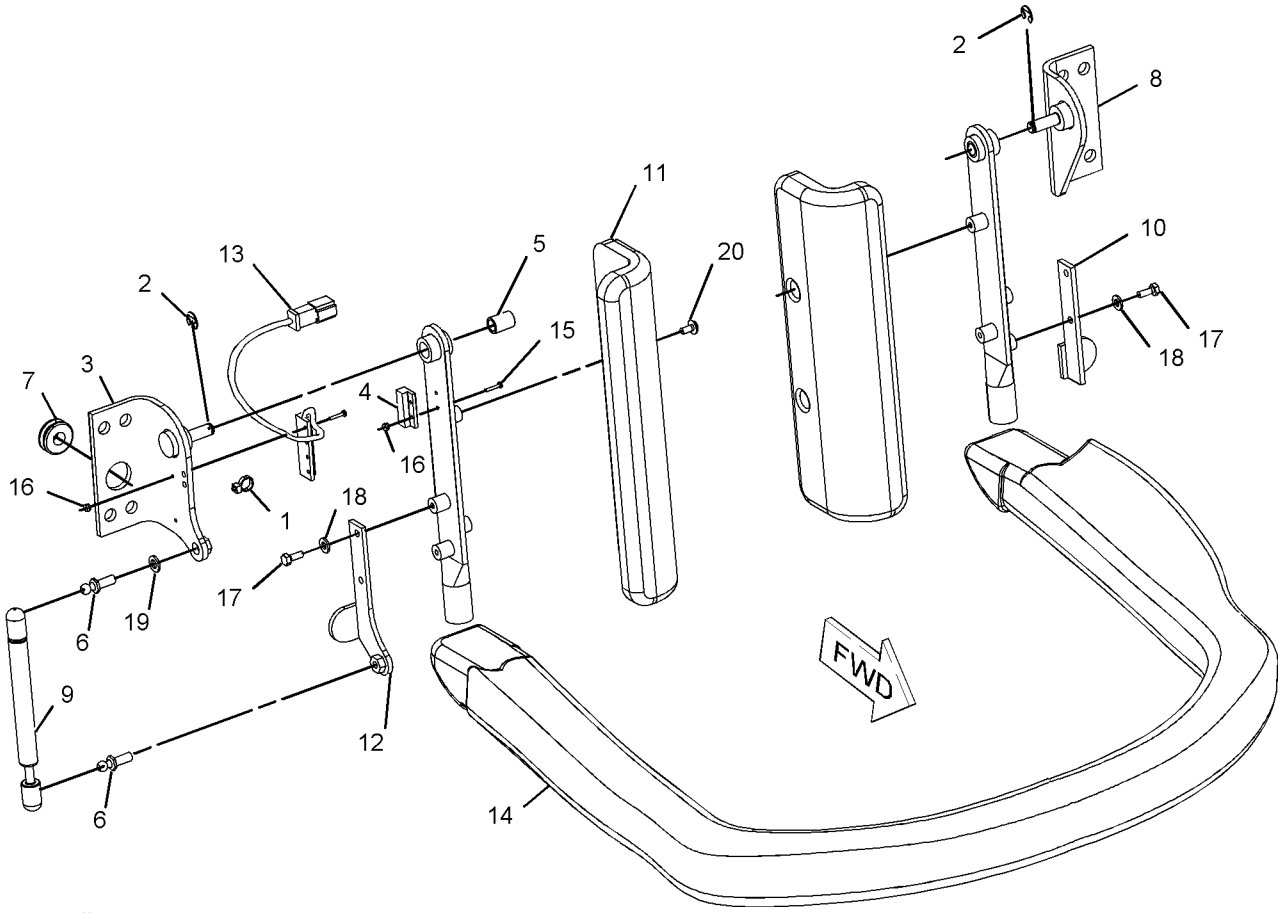

GRAPHIC #1 **<END>** g01016724

OPERATOR STATION

216-6146 BOX GP-STORAGE

S/N: MWD1-UP
PART OF 326-5287, 326-5297, 326-5487, 326-5527, 326-5557, 326-5567
CONVERSION AR-MACHINE
AN ATTACHMENT

SMCS-7268 **i03909558**

NOTE	REF NO	GRAPHIC REF	PART NUMBER	QTY	PART NAME 1 2 3 4 5 6 (PRODUCT LEVEL)	SEE PAGE
	1	1	**8T-2895**	1	LOCK GP-CYLINDER	
		1	**226-0323**	1	CAM-LOCK	
J		1	**226-0291**	1	LOCK AS	
	2	1	**216-6145**	1	BOX AS-STORAGE	
D	3	1	**6V-1392**		SEAL (0.3-M)	

D-ORDER BY THE METER
J-REQUIRES CORPORATE KEY

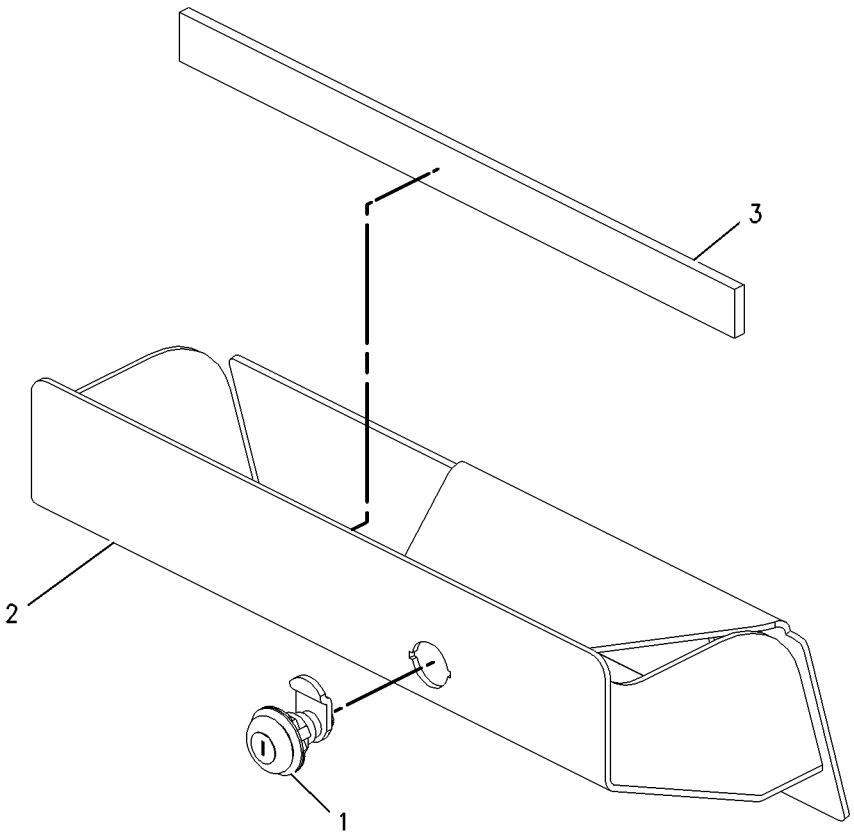

GRAPHIC #1 **<END>** g00932357

OPERATOR STATION

218-6420 BOX GP-STORAGE—LITERATURE

S/N: MWD1-UP

PART OF 326-5400 CAB AR

SMCS-7268 **i03291842**

NOTE	REF NO	GRAPHIC REF	PART NUMBER	QTY	PART NAME 1 2 3 4 5 6 (PRODUCT LEVEL)	SEE PAGE
	1	1	**5P-7957**	1	LANYARD	
	2	1	**152-4871**	1	BOX-STORAGE	
	3	1	**195-0935**	4	INSERT-THREADED (M6X1-THD)	
M	4	1	**9X-2042**	4	SCREW-TRUSS HEAD (M6X1X12-MM)	

M-METRIC PART

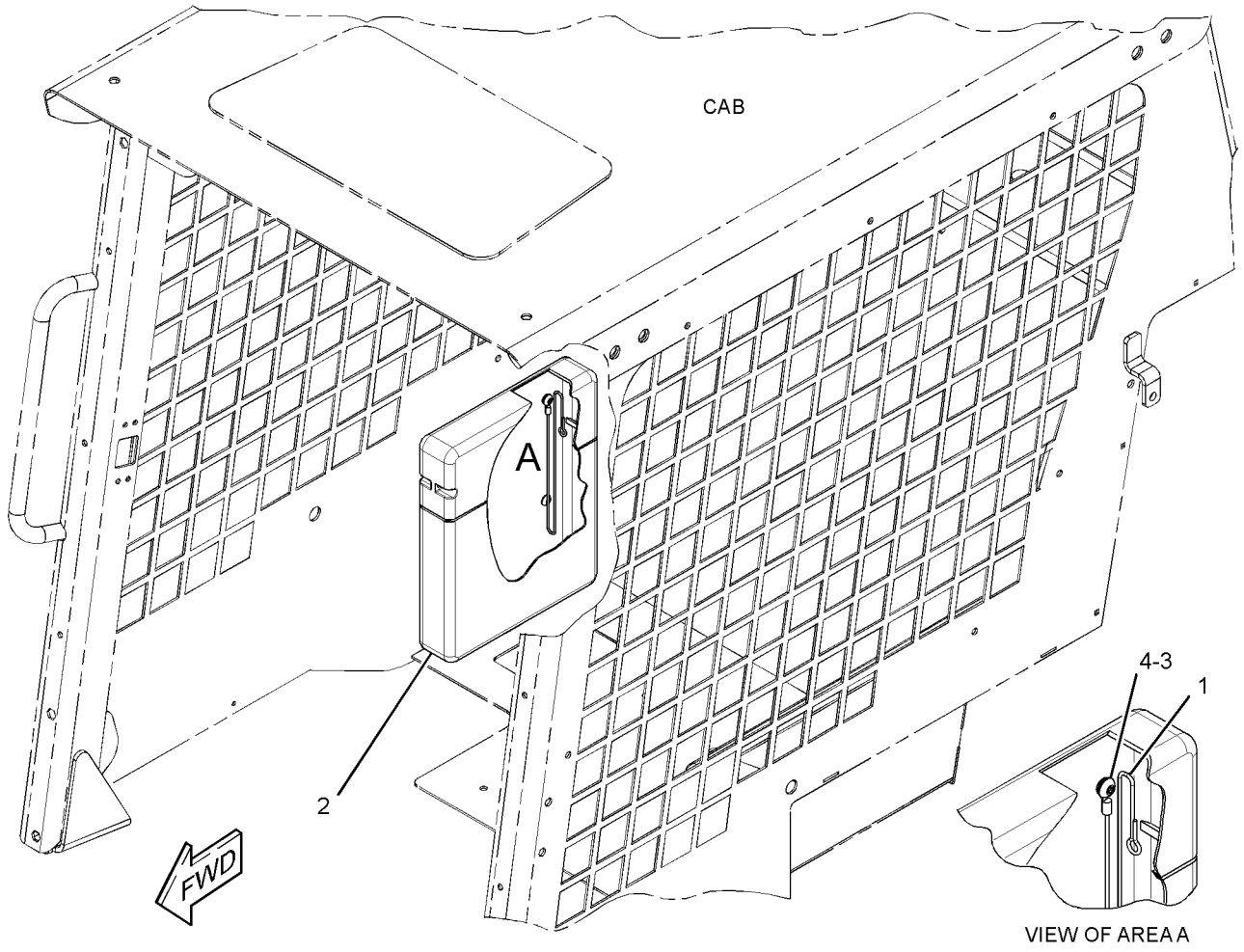

GRAPHIC #1 **<END>** g01716516

OPERATOR STATION

326-5400 CAB AR

S/N: MWD1-UP

PART OF 326-5416 COMMON AR

SMCS-7301, 7325 **i03902031**

NOTE	PART NUMBER	QTY	PART NAME 1 2 3 4 5 6 (PRODUCT LEVEL)	SEE PAGE
Y	*236-4830*	1	ARMREST & MOUNTING GP	263
Y	*218-6420*	1	BOX GP-STORAGE (LITERATURE)	267
Y	*326-5401*	1	CAB GP-ENCLOSED ROPS	271
Y	*216-4746*	1	LIGHTING GP-FLOOD (REAR)	89
Y	*218-6425*	1	LIGHTING GP-FLOOD (FRONT)	90
Y	*326-5406*	1	LINER GP-CAB	317
Y	*258-4230*	1	MIRROR GP-REAR VIEW	322
Y	*218-6370*	1	MOUNTING GP-ROPS	326
Y	*328-2270*	1	PANEL GP-INSTRUMENT	327
Y	*218-6380*	1	SPRING GP-GAS (CAB)	344
Y	*195-6723*	1	WINDOW GP-CAB	347
Y	*328-2272*	1	WIRING GP-CAB	101
Y-SEPARATE ILLUSTRATION				

<END>

326-5534 CAB AR-ENCLOSED ROPS—MECH SUSP SEAT & A/C

S/N: MWD1-UP

AN ATTACHMENT

SMCS-7301 **i03969313**

NOTE	PART NUMBER	QTY	PART NAME 1 2 3 4 5 6 (PRODUCT LEVEL)	SEE PAGE
Y	*326-5536*	1	AIR CONDITIONER AR	259
Y	**142-9311**	1	LINER-CAB (GRAY)	318
Y	*218-6407*	1	SEAL GP-CAB (DEBRIS BARRIER)	335
Y	*142-9305*	1	SEAT GP (SUSPENSION)	341
Y	*218-6411*	1	WINDOW GP-CAB (SIDE)	348
	245-6811	1	HOLDER-CUP	
Y-SEPARATE ILLUSTRATION				

<END>

356-1934 CAB AR-ENCLOSED ROPS—MECH SUSP SEAT

S/N: MWD1-UP

AN ATTACHMENT

SMCS-7301 **i03951859**

NOTE	PART NUMBER	QTY	PART NAME 1 2 3 4 5 6 (PRODUCT LEVEL)	SEE PAGE
Y	*356-1935*	1	HEATER AR-CAB	311
Y	**142-9311**	1	LINER-CAB (GRAY)	318
Y	*218-6407*	1	SEAL GP-CAB (DEBRIS BARRIER)	335
Y	*142-9305*	1	SEAT GP (SUSPENSION)	341
Y	*218-6411*	1	WINDOW GP-CAB (SIDE)	348
	245-6811	1	HOLDER-CUP	
Y-SEPARATE ILLUSTRATION				

<END>

OPERATOR STATION

356-1931 CAB AR-OPEN ROPS

S/N: MWD1-UP

AN ATTACHMENT

SMCS-7301, 7325 **i03901811**

NOTE	PART NUMBER	QTY	PART NAME 1 2 3 4 5 6 (PRODUCT LEVEL)	SEE PAGE
Y	*218-6400*	1	HANDHOLD GP	308
Y	*356-1932*	1	INSTALLATION GP-COVER & LINES (WITHOUT A/C, HEATER)	315
Y	*218-5562*	1	SEAT GP (STATIC)	342
Y-SEPARATE ILLUSTRATION				

<END>

356-1933 CAB AR-OPEN ROPS—MECH SUSP SEAT

S/N: MWD1-UP

AN ATTACHMENT

SMCS-7301, 7325 **i03951860**

NOTE	PART NUMBER	QTY	PART NAME 1 2 3 4 5 6 (PRODUCT LEVEL)	SEE PAGE
Y	*218-6400*	1	HANDHOLD GP	308
Y	*356-1932*	1	INSTALLATION GP-COVER & LINES (WITHOUT A/C, HEATER)	315
Y	**142-9311**	1	LINER-CAB (GRAY)	318
Y	*142-9305*	1	SEAT GP (SUSPENSION)	341
Y-SEPARATE ILLUSTRATION				

<END>

OPERATOR STATION

326-5404 CAB AS

S/N: MWD1-UP

SMCS-7301 **i03907015**

NOTE	REF NO	GRAPHIC REF	PART NUMBER	QTY	PART NAME 1 2 3 4 5 6 (PRODUCT LEVEL)	SEE PAGE
	1	1	**195-0939**	4	STUD	
	2	1	**214-9186**	7	BUTTON	
	3	1	**280-6072**	1	WINDOW	
	4	1	*326-5402*	1	CANOPY AS	
M		1	**6V-3918**	4	BOLT (M8X1.25X50-MM)	
M		1	**6V-9632**	3	NUT-WELD (M6X1-THD)	
M		1	**8T-5413**	1	STUD-WELD (M10X1.5X25-MM OAL)	
	5	1	**195-0935**	4	INSERT-THREADED (M6X1-THD)	
	6	1	**195-0936**	8	INSERT-THREADED (M6X1-THD)	
M	7	1	**195-0937**	8	INSERT-THREADED (M8X1.25-THD)	

M-METRIC PART

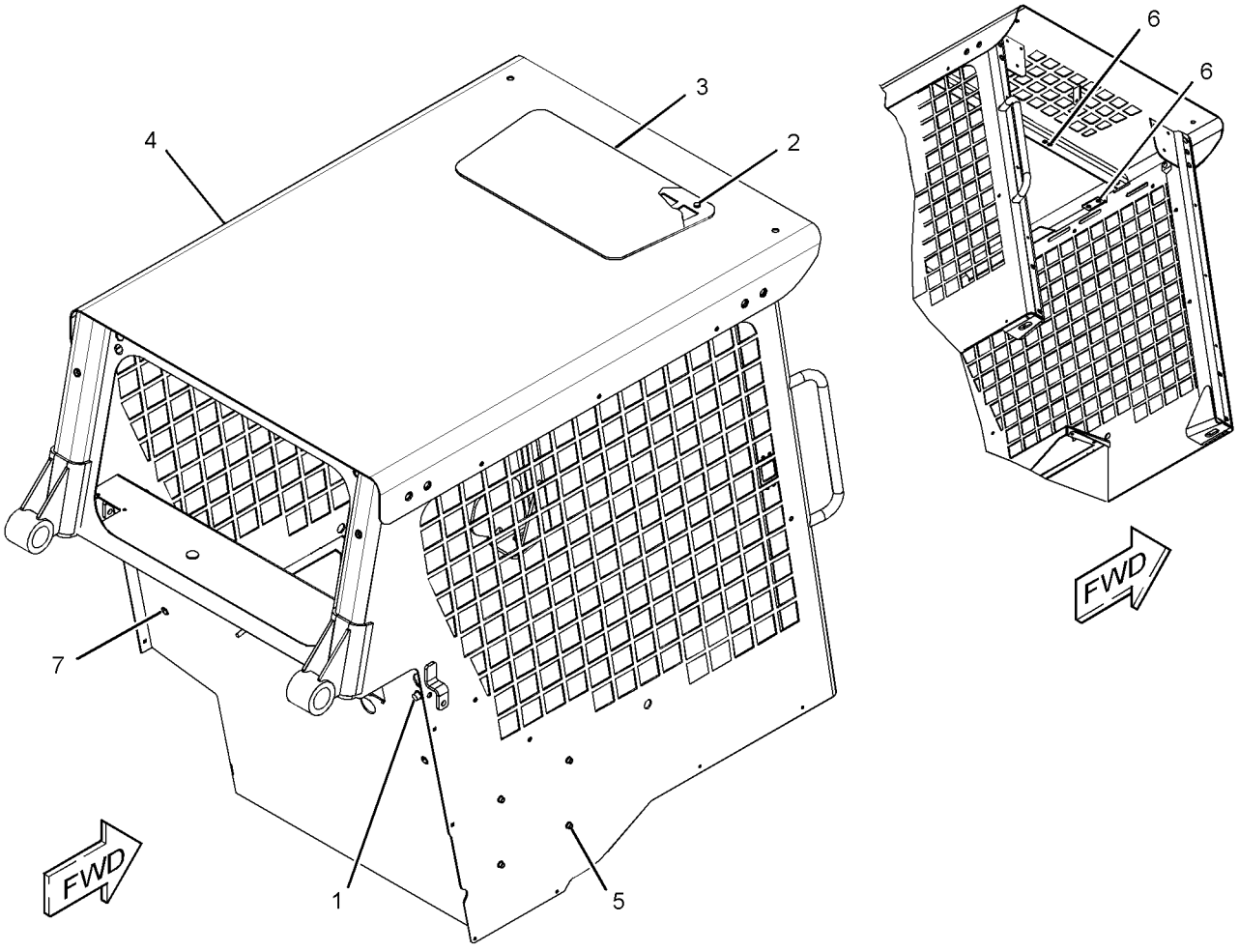

GRAPHIC #1 **<END>** g02149330

OPERATOR STATION

326-5401 CAB GP-ENCLOSED ROPS

S/N: MWD1-UP

PART OF 326-5400 CAB AR

FIELD REPLACEMENT ORDER 326-5404—PAGE 270

SMCS-7301 **i03902808**

NOTE	REF NO	GRAPHIC REF	PART NUMBER	QTY	PART NAME 1 2 3 4 5 6 (PRODUCT LEVEL)	SEE PAGE
	1	1	**214-9186**	7	BUTTON	
	2	1	**280-6072**	1	WINDOW	
	3	1	*326-5402*	1	CANOPY AS	
M		1	**6V-3918**	4	BOLT (M8X1.25X50-MM)	
M		1	**6V-9632**	3	NUT-WELD (M6X1-THD)	
M		1	**8T-5413**	1	STUD-WELD (M10X1.5X25-MM OAL)	

M-METRIC PART

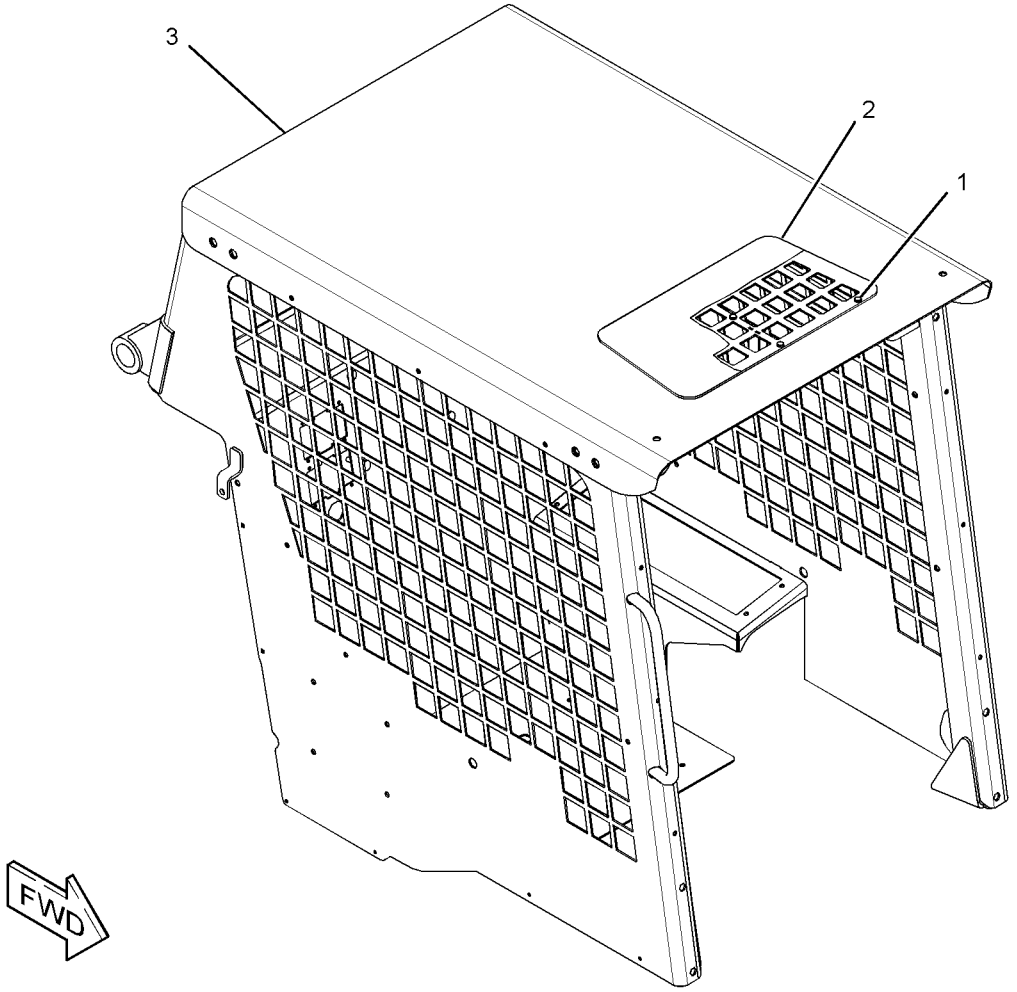

GRAPHIC #1 **<END>** g02146674

OPERATOR STATION

218-6832 COMPRESSOR & MOTOR GP-REFRIG

S/N: MWD1-UP

PART OF 218-6830 COMPRESSOR & MTG GP-REFRIG

AN ATTACHMENT

SMCS-1802, 5061 **i02877015**

NOTE	REF NO	GRAPHIC REF	PART NUMBER	QTY	PART NAME 1 2 3 4 5 6 (PRODUCT LEVEL)	SEE PAGE
	1	1	**2D-5248**	1	GASKET	
	2	1	**9G-5127**	1	BREATHER (AIR CONDITIONER)	
	3	1	**9G-7101**	2	SPACER (10.5X20X30-MM THK)	
	4	1	**218-6833**	1	COMPRESSOR GP-REFRIGERANT	
Y	5	1	*276-5708*	1	COUPLING GP-DRIVE	289
CY	6	1	**307-6115**	1	MOTOR GP-GEAR (VALVE)	222
	7	1	**233-5590**	1	HOUSING-SUPPORT	
M	8	1	**5C-7261**	2	NUT (M8X1.25-THD)	
	9	1	**5P-4116**	2	WASHER-HARD (8.8X20.5X2-MM THK)	
	10	1	**8T-4121**	2	WASHER-HARD (11X21X2.5-MM THK)	
	11	1	**8T-4224**	2	WASHER-HARD (8.8X16X2-MM THK)	
M	12	1	**8T-6870**	2	BOLT (M8X1.25X70-MM)	
M	13	1	**9X-6032**	2	BOLT-SOCKET HEAD (M10X1.5X30-MM)	

C-CHANGE FROM PREVIOUS TYPE
M-METRIC PART
Y-SEPARATE ILLUSTRATION

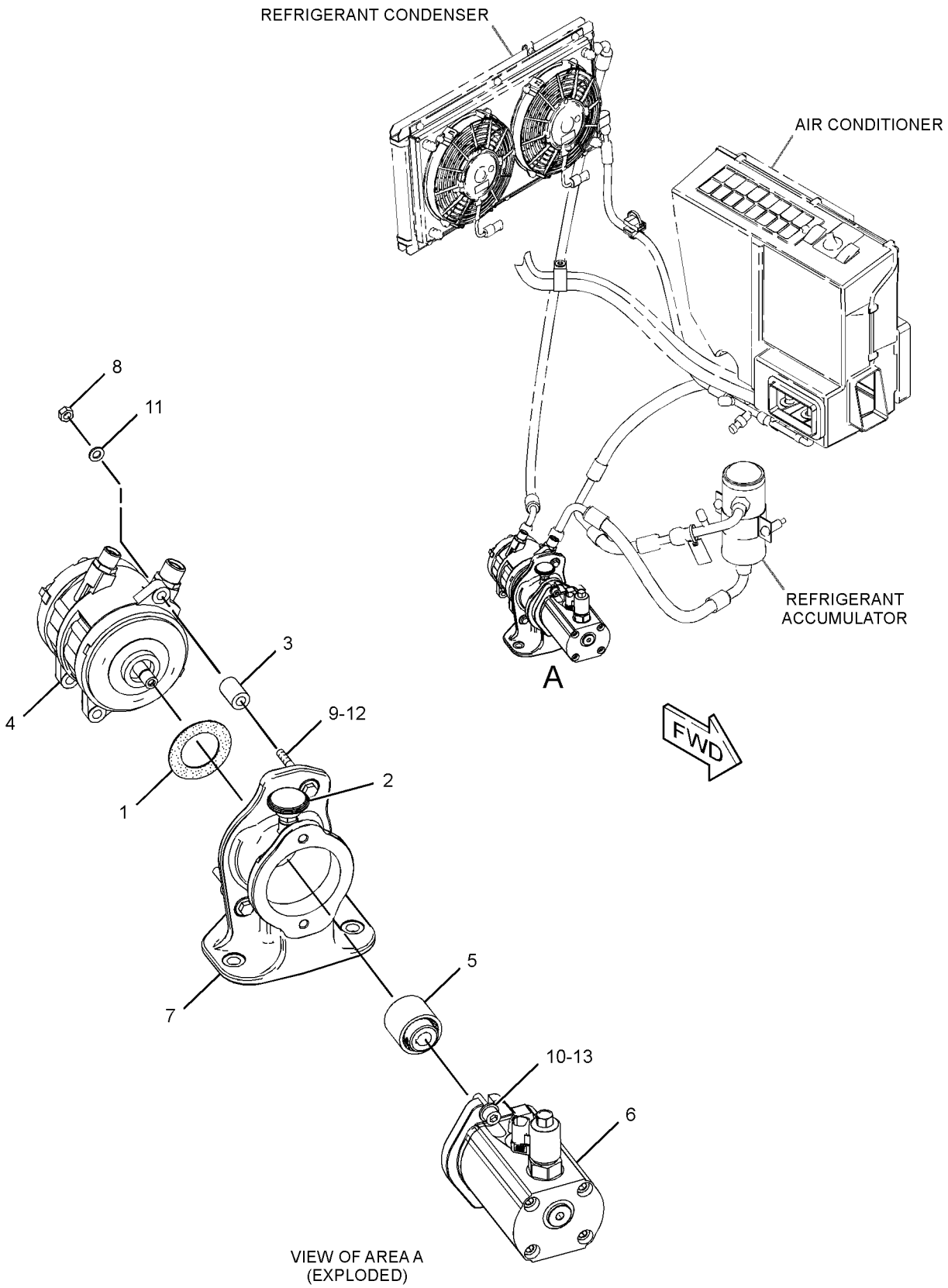

VIEW OF AREA A
(EXPLODED)

GRAPHIC #1 **<END>** g01433559

OPERATOR STATION

218-6830 COMPRESSOR & MTG GP-REFRIG

S/N: MWD1-UP
PART OF 326-5536 AIR CONDITIONER AR
AN ATTACHMENT

SMCS-1802 **i01958280**

NOTE	REF NO	GRAPHIC REF	PART NUMBER	QTY	PART NAME 1 2 3 4 5 6 (PRODUCT LEVEL)	SEE PAGE
Y	1	1	*218-6832*	1	COMPRESSOR & MOTOR GP-REFRIG	272
	2	1	**8T-4121**	3	WASHER-HARD (11X21X2.5-MM THK)	
M	3	1	**8T-4136**	3	BOLT (M10X1.5X25-MM)	

M-METRIC PART
Y-SEPARATE ILLUSTRATION

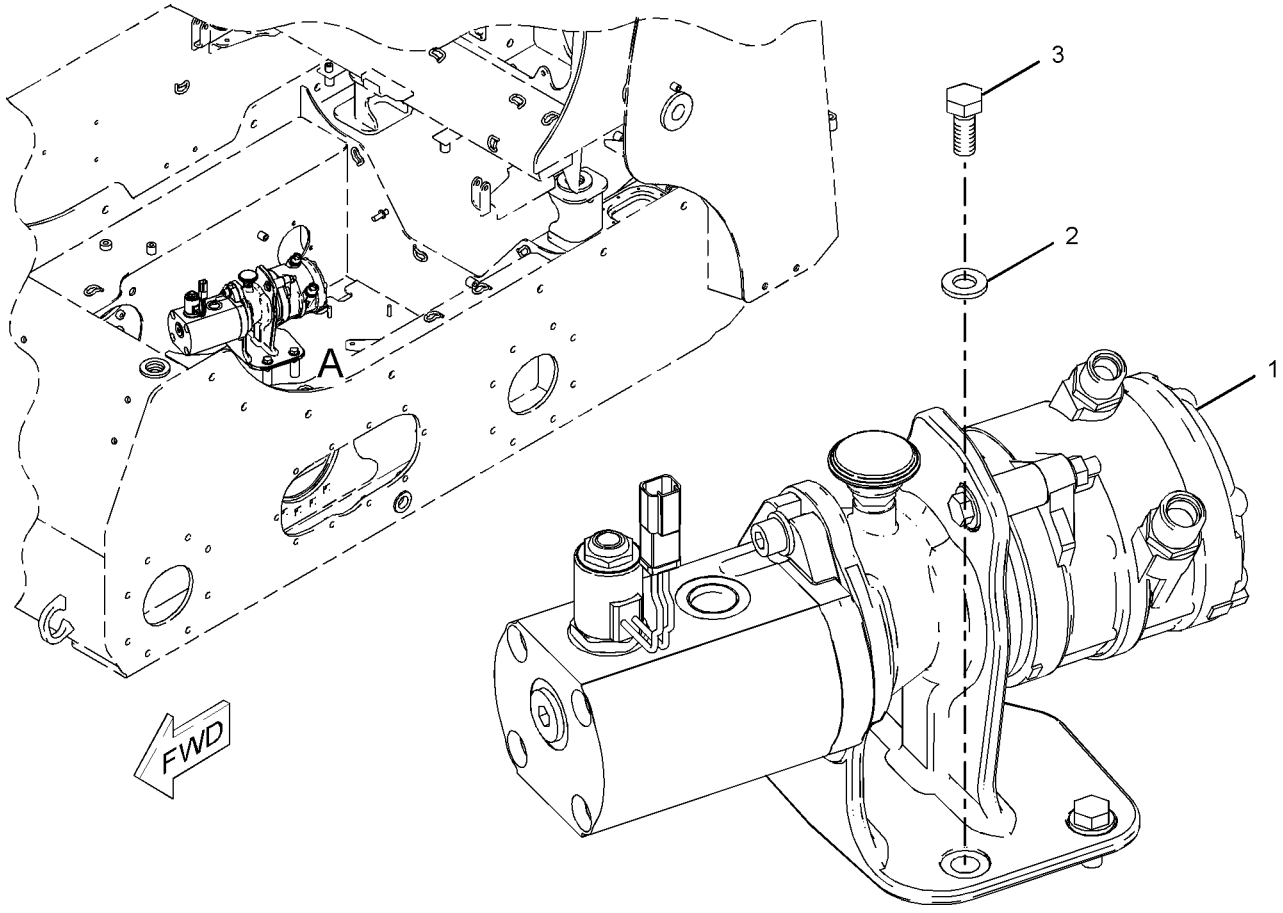

VIEW OF AREA A

GRAPHIC #1 **<END>** g01018664

OPERATOR STATION

218-6348 CONDENSER & MTG GP-REFRIGERANT

S/N: MWD1-UP
PART OF 326-5536 AIR CONDITIONER AR
AN ATTACHMENT

SMCS-1805 **i02338119**

NOTE	REF NO	GRAPHIC REF	PART NUMBER	QTY	PART NAME 1 2 3 4 5 6 (PRODUCT LEVEL)	SEE PAGE
	1	1	**218-6060**	1	SHROUD AS	
	2	1	**218-6250**	2	FAN AS	
C	3	1	**233-5927**	1	COIL AS	
M	4	1	**5C-7261**	14	NUT (M8X1.25-THD)	
	5	1	**8T-4121**	4	WASHER-HARD (11X21X2.5-MM THK)	
M	6	1	**8T-4133**	4	NUT (M10X1.5-THD)	
M	7	1	**8T-4189**	14	BOLT (M8X1.25X20-MM)	
	8	1	**8T-4224**	20	WASHER-HARD (8.8X16X2-MM THK)	

C-CHANGE FROM PREVIOUS TYPE
M-METRIC PART

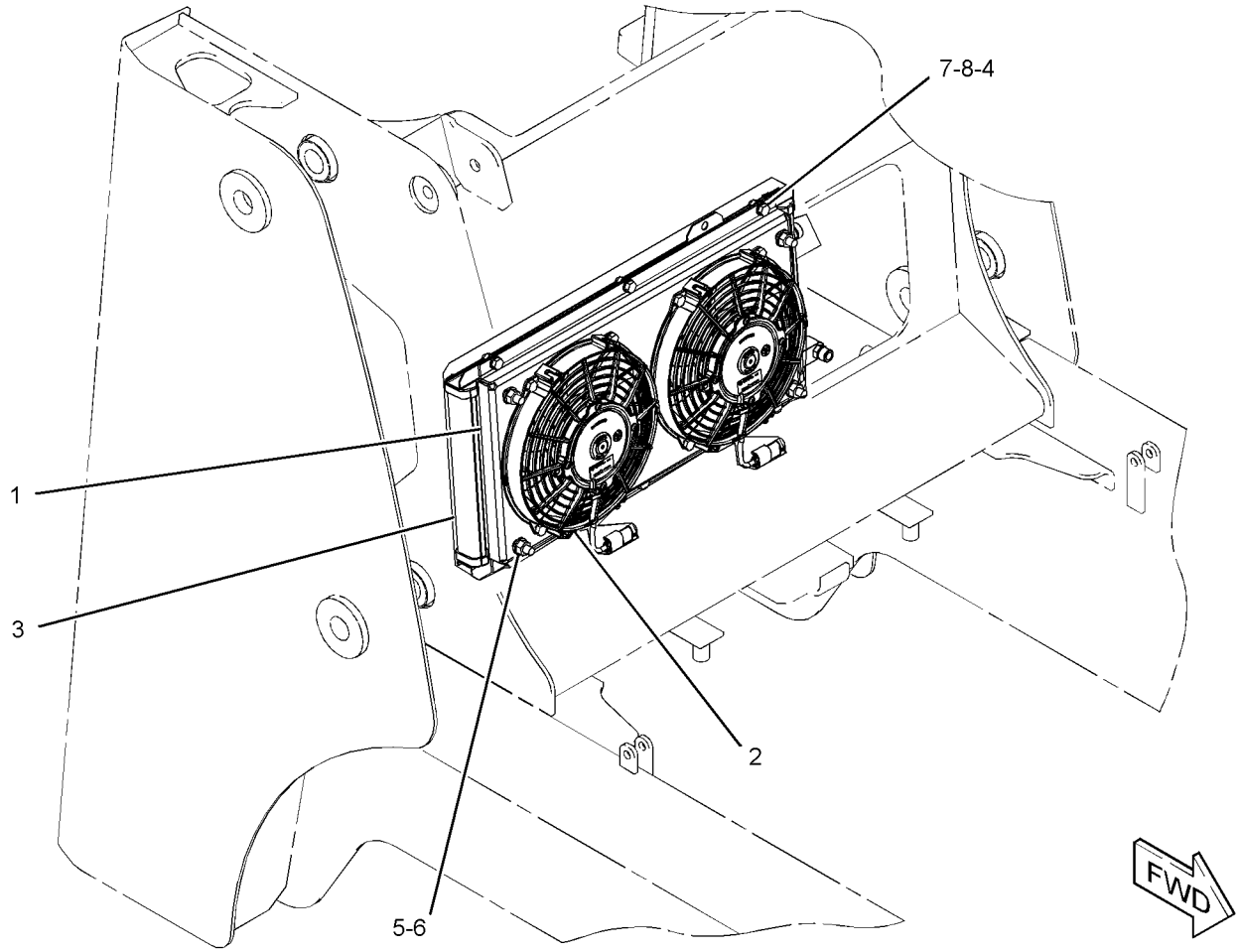

GRAPHIC #1 **<END>** g01195603

OPERATOR STATION

218-6485 CONTROL GP-HANDLE—DIRECTION, SPEED

S/N: MWD1-UP

PART OF 343-5543 CONTROL GP-PILOT OPERATED HYD

AN ATTACHMENT

SMCS-5705 **i02545868**

NOTE	REF NO	GRAPHIC REF	PART NUMBER	QTY	PART NAME 1 2 3 4 5 6 (PRODUCT LEVEL)	SEE PAGE
	1	1	**173-0702**	1	BOOT	
Y	2	1	**218-6118**	1	HANDLE GP-MODULAR	309
	3	1	**158-3770**	1	KIT-PILOT VALVE (LEVER)	
					(INCLUDES NUT, LEVER & PIN)	

Y-SEPARATE ILLUSTRATION

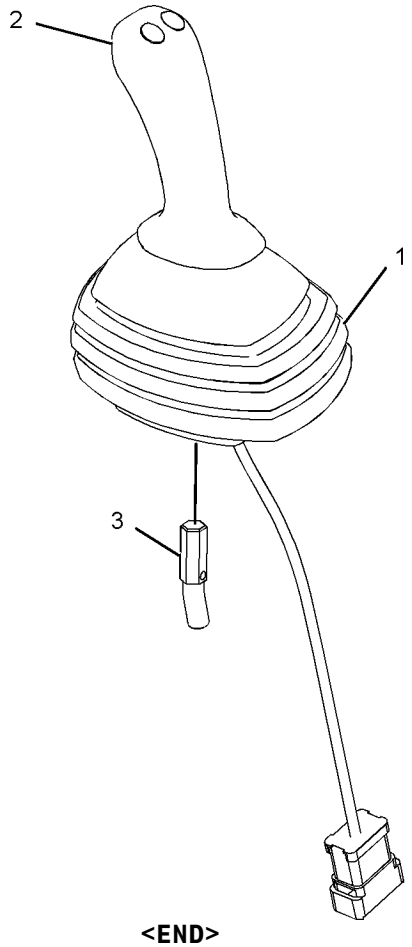

GRAPHIC #1 **<END>** g01111214

OPERATOR STATION

218-6490 CONTROL GP-HANDLE—WORK TOOL

S/N: MWD1-UP

PART OF 326-5264 CONTROL GP-PILOT OPERATED HYD

AN ATTACHMENT

SMCS-5705 **i02545869**

NOTE	REF NO	GRAPHIC REF	PART NUMBER	QTY	PART NAME 1 2 3 4 5 6 (PRODUCT LEVEL)	SEE PAGE
	1	1	**173-0703**	1	BOOT	
Y	2	1	**218-6118**	1	HANDLE GP-MODULAR	309
	3	1	**158-3770**	1	KIT-PILOT VALVE (LEVER)	
					(INCLUDES NUT, LEVER & PIN)	

Y-SEPARATE ILLUSTRATION

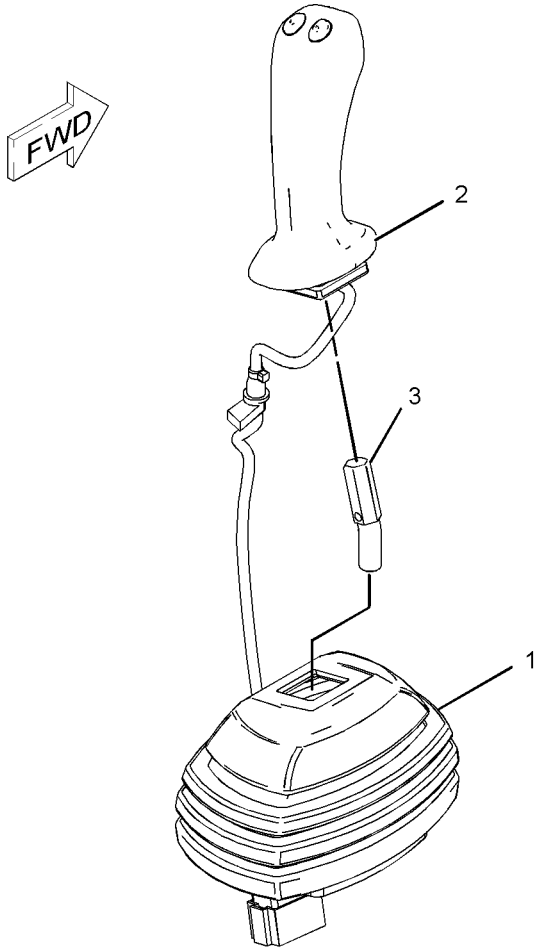

GRAPHIC #1

<END>

g01111213

OPERATOR STATION

231-4256 CONTROL GP-HANDLE–LH

S/N: MWD1-UP
PART OF 343-5542 CONTROL GP-PILOT OPERATED HYD
AN ATTACHMENT

SMCS-5705 **i02189555**

NOTE	REF NO	GRAPHIC REF	PART NUMBER	QTY	PART NAME 1 2 3 4 5 6 (PRODUCT LEVEL)	SEE PAGE
	1	1	**223-3725**	1	HANDLE GP-MODULAR	
	1A	1	**186-3735**	4	PIN-CONNECTOR (16-GA TO 18-GA)	
	1B	1	**174-3091**	1	KIT-RECEPTACLE (12-PIN)	
					(INCLUDES RECEPTACLE AS & WEDGE)	
	2	1	**223-3728**	1	BOOT	
	3	1	**231-4261**	1	ADAPTER (LH)	
M	4	1	**213-7489**	3	SCREW (M4X25-MM)	
M	5	1	**178-9983**	3	LOCKNUT (M4X0.7-THD)	
	6	1	**1S-9593**	1	STRAP-CABLE	
	7	1	**8T-8737**	8	PLUG-SEAL	
	8	1	**252-6934**	1	GROMMET	

M-METRIC PART

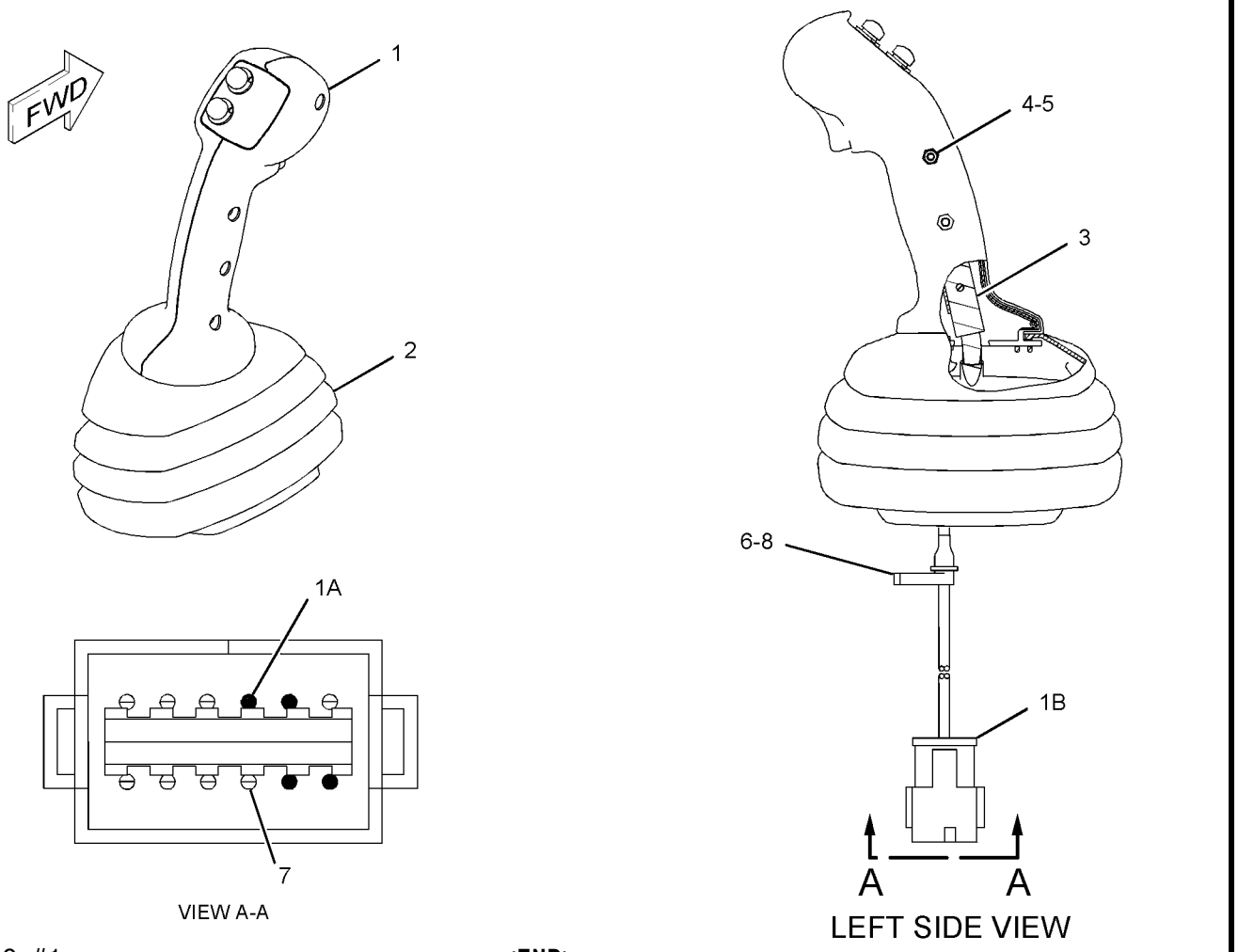

GRAPHIC #1 **<END>** g01132335

OPERATOR STATION

231-4258 CONTROL GP-HANDLE–LH

S/N: MWD1-UP
PART OF 326-5267 CONTROL GP-PILOT OPERATED HYD
AN ATTACHMENT

SMCS-5705 **i02189624**

NOTE	REF NO	GRAPHIC REF	PART NUMBER	QTY	PART NAME 1 2 3 4 5 6 (PRODUCT LEVEL)	SEE PAGE
	1	1	**223-3726**	1	HANDLE GP-MODULAR	
	1A	1	**186-3735**	7	PIN-CONNECTOR (16-GA TO 18-GA)	
	1B	1	**174-3091**	1	KIT-RECEPTACLE (12-PIN)	
					(INCLUDES RECEPTACLE AS & WEDGE)	
	2	1	**223-3728**	1	BOOT	
	3	1	**231-4261**	1	ADAPTER (LH)	
M	4	1	**213-7489**	3	SCREW (M4X25-MM)	
M	5	1	**178-9983**	3	LOCKNUT (M4X0.7-THD)	
	6	1	**1S-9593**	1	STRAP-CABLE	
	7	1	**8T-8737**	3	PLUG-SEAL	
	8	1	**252-6934**	1	GROMMET	

M-METRIC PART

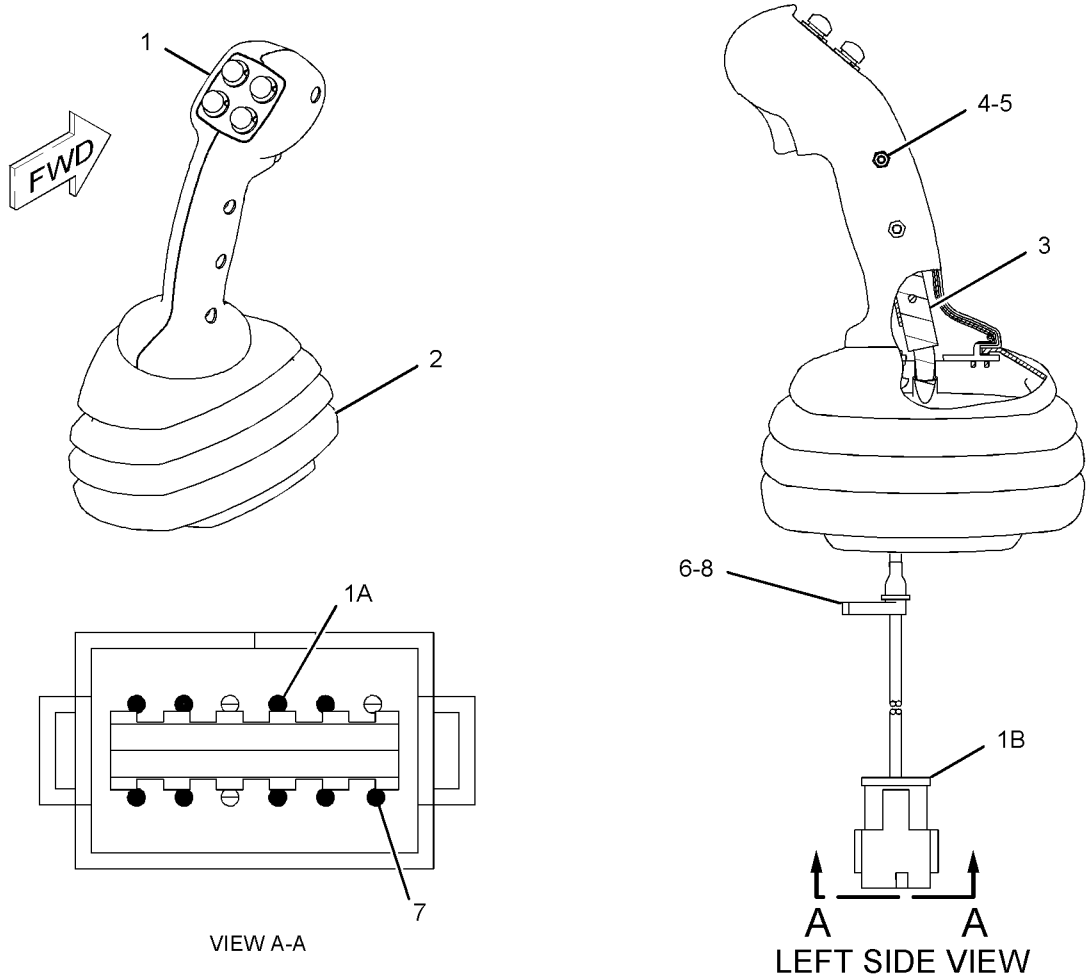

GRAPHIC #1 **<END>** g01132255

OPERATOR STATION

231-4259 CONTROL GP-HANDLE–RH

S/N: MWD1-UP
PART OF 326-5266 CONTROL GP-PILOT OPERATED HYD
AN ATTACHMENT

SMCS-5705 **i02265596**

NOTE	REF NO	GRAPHIC REF	PART NUMBER	QTY	PART NAME 1 2 3 4 5 6 (PRODUCT LEVEL)	SEE PAGE
	1	1	**215-8308**	1	CONTROL GP-HANDLE	
	1A	1	**174-3091**	1	KIT-RECEPTACLE (12-PIN)	
	1B	1	**3E-5180**	1	WEDGE-RECEPTACLE LOCK (12-PIN)	
	1C	1	**186-3735**	11	PIN-CONNECTOR (16-GA TO 18-GA)	
	2	1	**223-3728**	1	BOOT	
	3	1	**231-4262**	1	ADAPTER (RH)	
M	4	1	**213-7489**	3	SCREW (M4X25-MM)	
M	5	1	**178-9983**	3	LOCKNUT (M4X0.7-THD)	
	6	1	**252-6934**	1	GROMMET	
	7	1	**8T-8737**	1	PLUG-SEAL	
	8	1	**1S-9593**	1	STRAP-CABLE	

M-METRIC PART

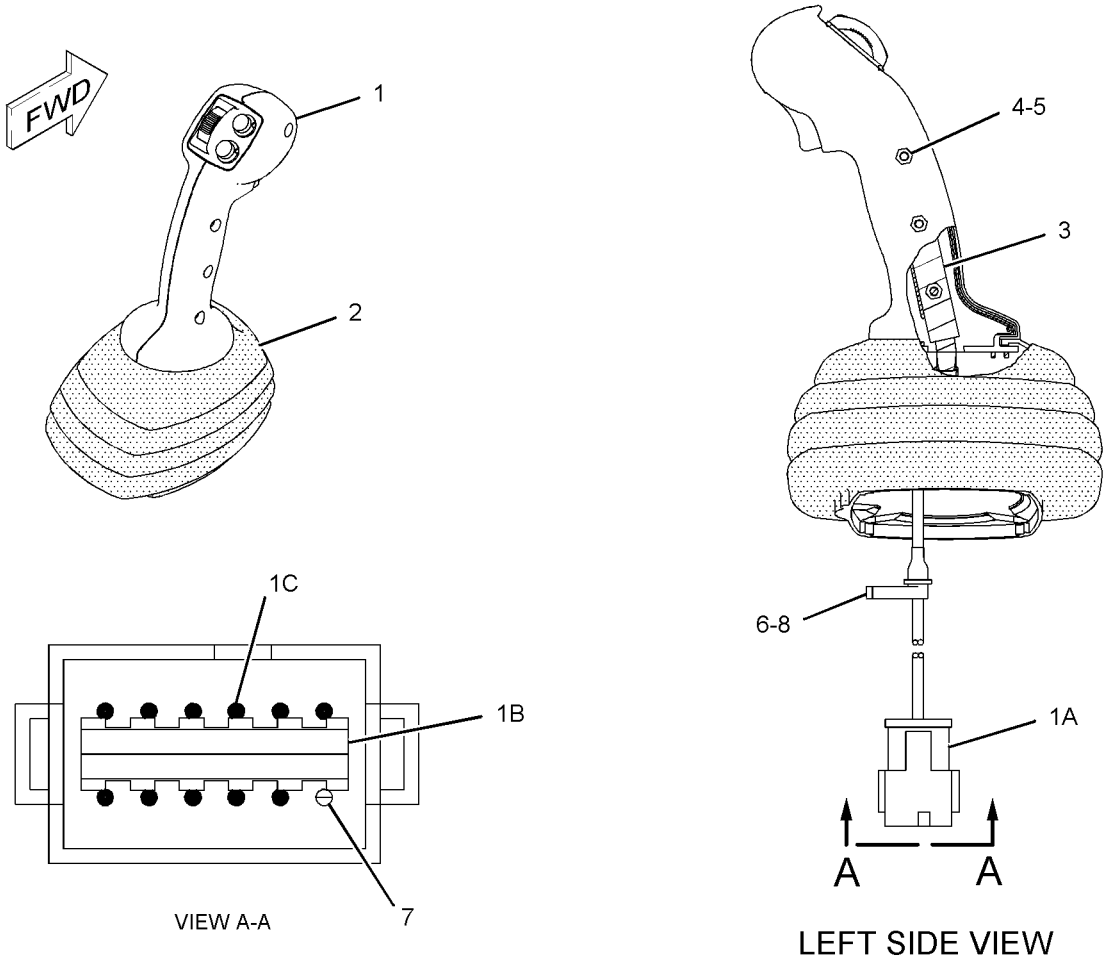

GRAPHIC #1 **<END>** g01132563

OPERATOR STATION

231-4260 CONTROL GP-HANDLE–RH

S/N: MWD1-UP
PART OF 326-5265 CONTROL GP-PILOT OPERATED HYD
AN ATTACHMENT

SMCS-5705 **i02189795**

NOTE	REF NO	GRAPHIC REF	PART NUMBER	QTY	PART NAME 1 2 3 4 5 6 (PRODUCT LEVEL)	SEE PAGE
	1	1	**215-8307**	1	CONTROL GP-HANDLE	
	1A	1	**186-3735**	7	PIN-CONNECTOR (16-GA TO 18-GA)	
	1B	1	**174-3091**	1	KIT-RECEPTACLE (12-PIN)	
					(INCLUDES RECEPTACLE AS & WEDGE)	
	2	1	**223-3728**	1	BOOT	
	3	1	**231-4262**	1	ADAPTER (RH)	
M	4	1	**213-7489**	3	SCREW (M4X25-MM)	
M	5	1	**178-9983**	3	LOCKNUT (M4X0.7-THD)	
	6	1	**1S-9593**	1	STRAP-CABLE	
	7	1	**8T-8737**	5	PLUG-SEAL	
	8	1	**252-6934**	1	GROMMET	

M-METRIC PART

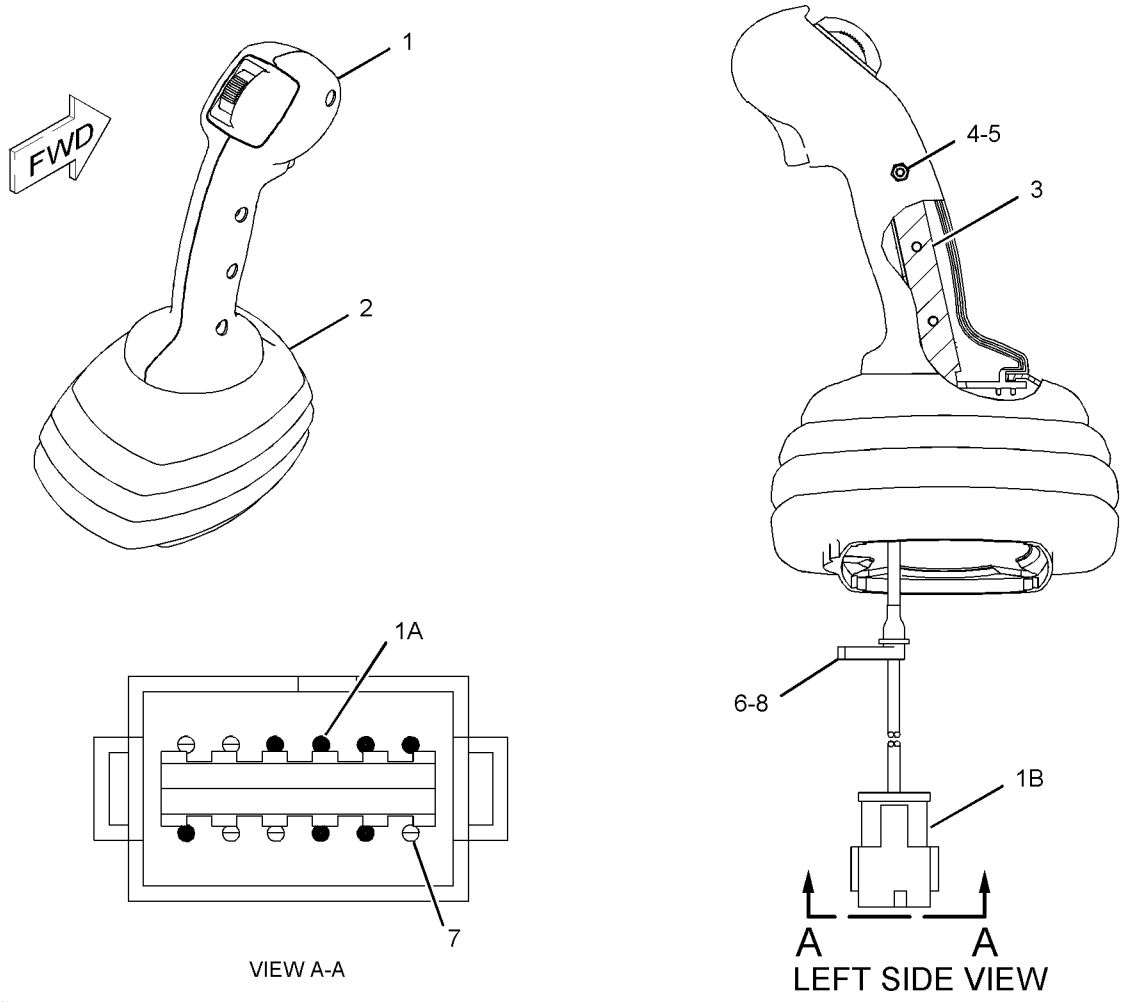

GRAPHIC #1 **<END>** g01132271

OPERATOR STATION

326-5264 CONTROL GP-PILOT OPERATED HYD

S/N: MWD1-UP
PART OF 326-5270 CONTROL AR-MACHINE
AN ATTACHMENT

SMCS-5059, 5705 **i03901799**

NOTE	REF NO	GRAPHIC REF	PART NUMBER	QTY	PART NAME 1 2 3 4 5 6 (PRODUCT LEVEL)	SEE PAGE
	1	1	**218-6421**	1	BRACKET AS	
Y	2	1	**218-6490**	1	CONTROL GP-HANDLE (WORK TOOL)	277
	3	1	**237-5332**	1	FILM-INSTRUCTION (MACHINE CONTROLS)	
Y	4	1	**299-9119**	1	VALVE GP-PILOT (WORK TOOL)	236
M	5	1	**8T-0269**	3	BOLT-SOCKET HEAD (M6X1X20-MM)	
	6	1	**8T-4205**	3	WASHER-HARD (7.2X14.5X2-MM THK)	

M-METRIC PART
Y-SEPARATE ILLUSTRATION

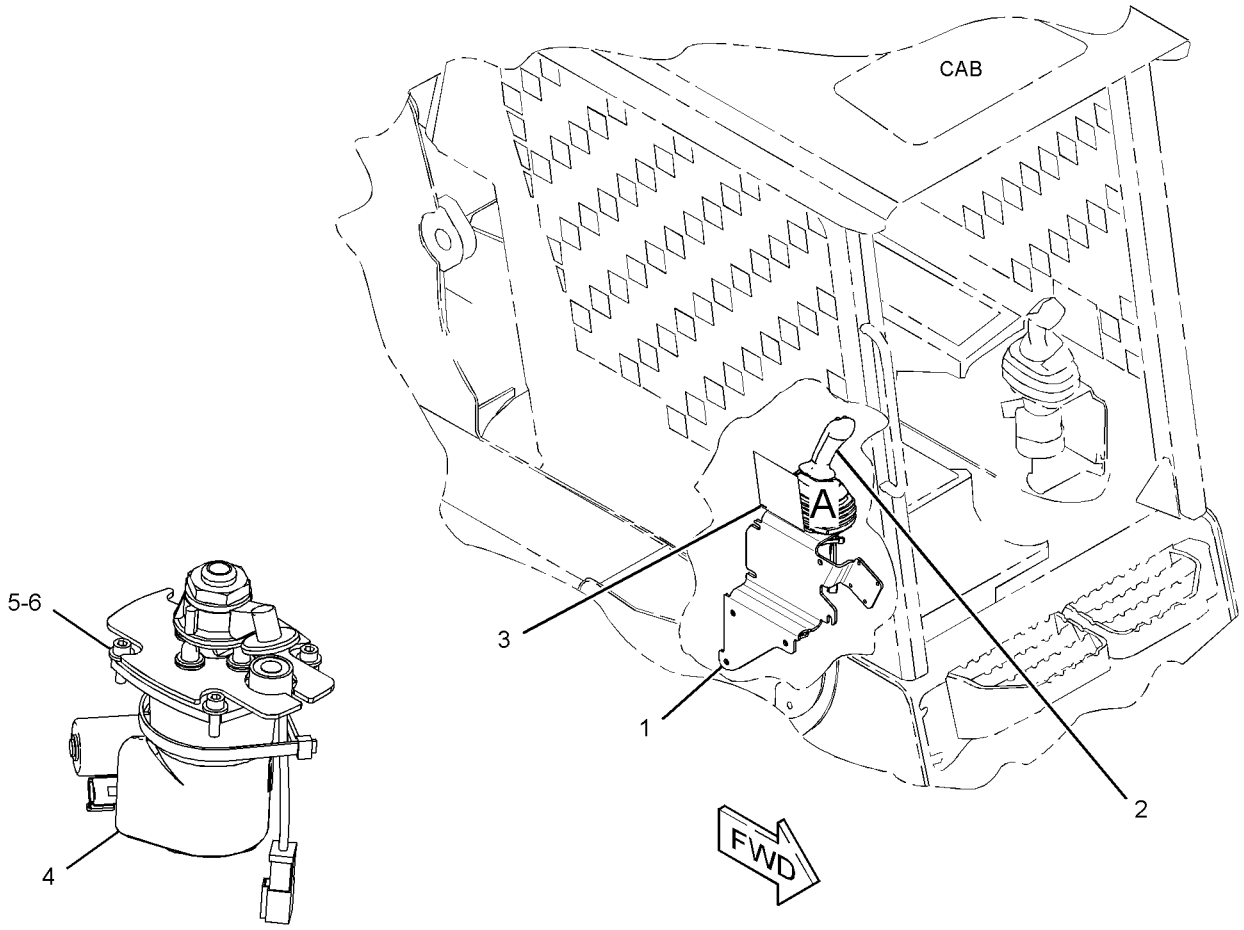

VIEW OF AREA A
(HANDLE AND BRACKET REMOVED FOR CLARITY)

GRAPHIC #1 **<END>** g02148360

OPERATOR STATION

326-5265 CONTROL GP-PILOT OPERATED HYD—AUXILIARY

S/N: MWD1-UP

PART OF 326-5271, 326-5272 CONTROL AR-MACHINE

AN ATTACHMENT

SMCS-5059, 5705 **i03901803**

NOTE	REF NO	GRAPHIC REF	PART NUMBER	QTY	PART NAME 1 2 3 4 5 6 (PRODUCT LEVEL)	SEE PAGE
	1	1	**218-6421**	1	BRACKET AS	
Y	2	1	**231-4260**	1	CONTROL GP-HANDLE (RH)	281
	3	1	**235-5243**	1	FILM-INSTRUCTION (MACHINE CONTROLS)	
Y	4	1	**299-9119**	1	VALVE GP-PILOT	236
M	5	1	**095-1207**	1	NUT (M12X1.75-THD)	
M	6	1	**8T-0269**	3	BOLT-SOCKET HEAD (M6X1X20-MM)	
	7	1	**8T-4205**	3	WASHER-HARD (7.2X14.5X2-MM THK)	

M-METRIC PART
Y-SEPARATE ILLUSTRATION

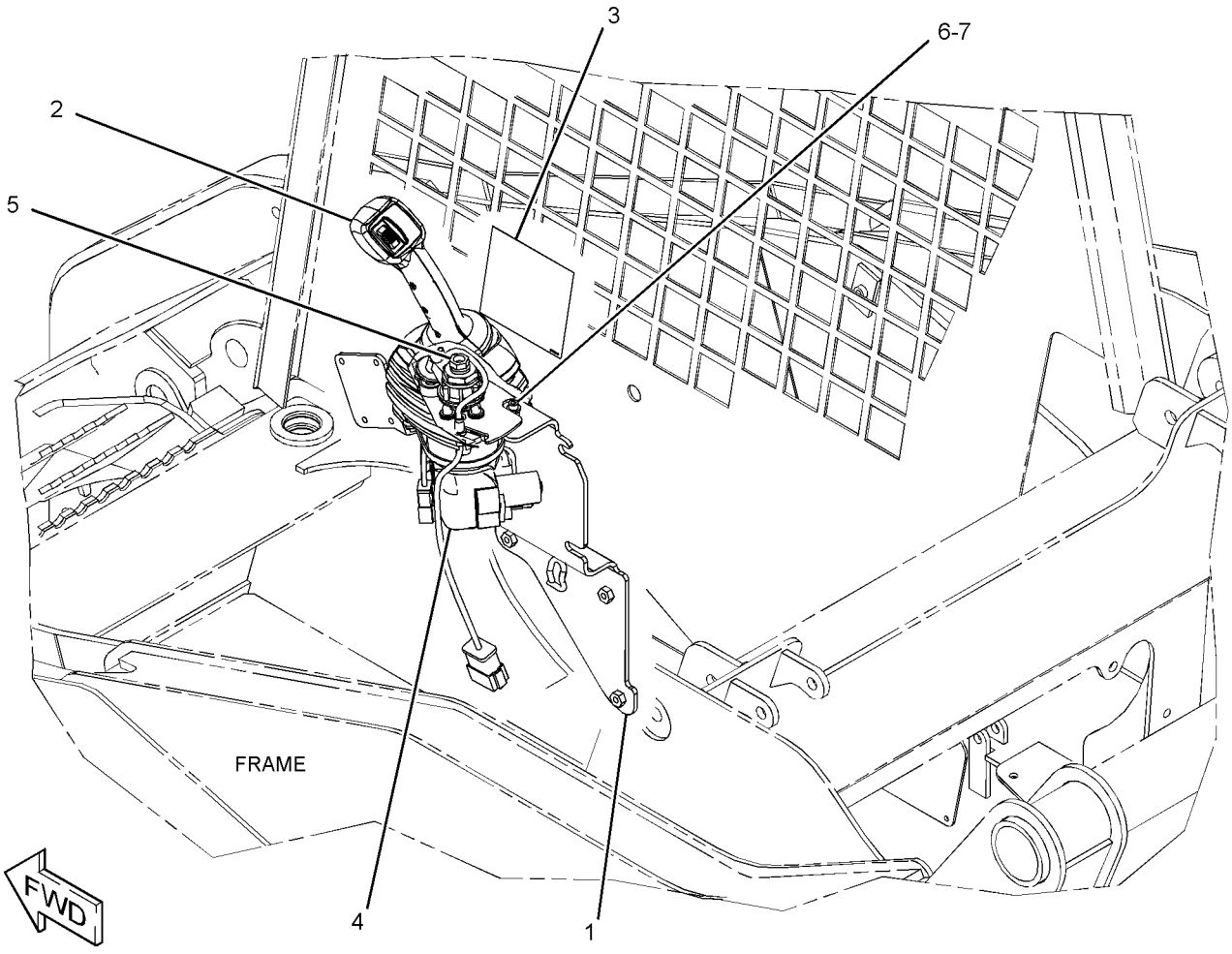

GRAPHIC #1 **<END>** g02145324

OPERATOR STATION

326-5266 CONTROL GP-PILOT OPERATED HYD

S/N: MWD1-UP
PART OF 326-5244, 326-5245 HYDRAULIC AR
AN ATTACHMENT

SMCS-5059, 5705 **i03903716**

NOTE	REF NO	GRAPHIC REF	PART NUMBER	QTY	PART NAME 1 2 3 4 5 6 (PRODUCT LEVEL)	SEE PAGE
	1	1	**146-9439**	1	RELAY AS (12-VOLT) (WORK TOOL)	
	2	1	**218-6421**	1	BRACKET AS	
Y	3	1	**231-4259**	1	CONTROL GP-HANDLE (RH)	280
B	4	1	**262-7668**	1	FILM-INSTRUCTION (MACHINE CONTROL, READ OMM)	
					—OR—	
B		1	**270-8667**	1	FILM-INSTRUCTION (MACHINE CONTROL, READ OMM)	
Y	5	1	**299-9119**	1	VALVE GP-PILOT (WORK TOOL)	236
	6	1	**328-2283**	1	HARNESS AS-OPERATOR CONTROLS	
		1	**186-3735**	5	PIN-CONNECTOR (16-GA TO 18-GA)	
		1	**155-2270**	4	KIT-CONNECTING PLUG (2-PIN)	
					(EACH INCLUDES PLUG AS, WEDGE & INTERFACE SEAL)	
		1	**8T-8737**	1	PLUG-SEAL	
		1	**102-8805**	1	KIT-RECEPTACLE (6-PIN)	
					(INCLUDES RECPTACLE AS & WEDGE)	
		1	**186-3736**	8	SOCKET-CONNECTOR (16-GA TO 18-GA)	
E		1	**125-7875**		TUBE-HEAT SHRINK (7.44-MM DIA) (5-CM)	
M	7	1	**095-1207**	1	NUT (M12X1.75-THD)	
M	8	1	**8T-0269**	3	BOLT-SOCKET HEAD (M6X1X20-MM)	
	9	1	**8T-4205**	3	WASHER-HARD (7.2X14.5X2-MM THK)	

B-USE AS REQUIRED
E-ORDER BY THE CENTIMETER
M-METRIC PART
Y-SEPARATE ILLUSTRATION

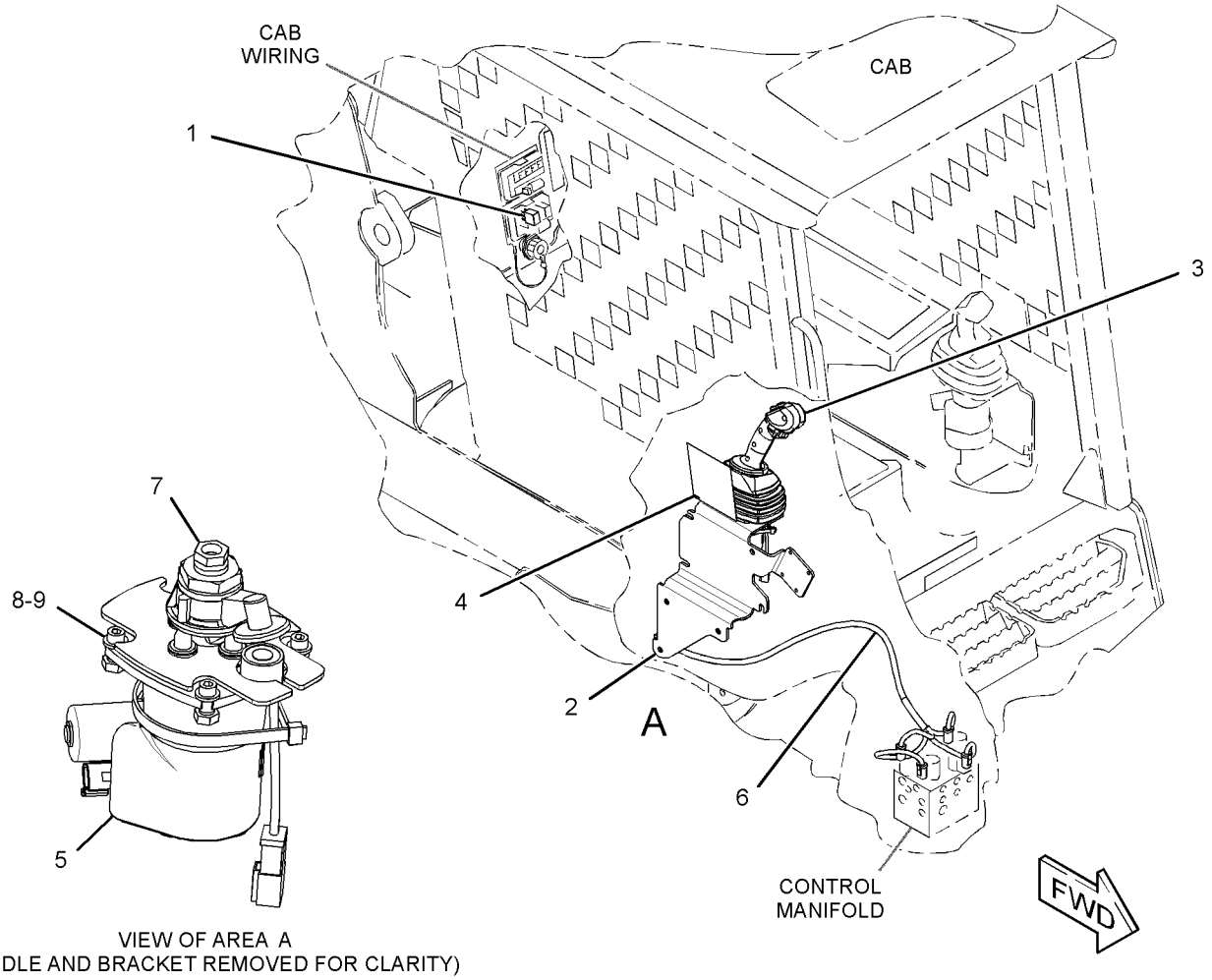

VIEW OF AREA A
(HANDLE AND BRACKET REMOVED FOR CLARITY)

GRAPHIC #1 **<END>** g02148580

OPERATOR STATION

326-5267 CONTROL GP-PILOT OPERATED HYD

S/N: MWD1-UP

PART OF 326-5272 CONTROL AR-MACHINE, 326-5244, 326-5245 HYDRAULIC AR AN ATTACHMENT

SMCS-5059, 5705 **i03901807**

NOTE	REF NO	GRAPHIC REF	PART NUMBER	QTY	PART NAME 1 2 3 4 5 6 (PRODUCT LEVEL)	SEE PAGE
	1	1	**218-6422**	1	BRACKET AS	
	2	1	**235-5246**	1	FILM-INSTRUCTION (MACHINE CONTROL, READ OMM)	
Y	3	1	**343-0868**	1	VALVE GP-PILOT (DIRECTION, SPEED)	238
M	4	1	**095-1207**	1	NUT (M12X1.75-THD)	
	5	1	**164-9425**	1	HORN AS (24-VOLT, LOW TONE)	
Y	6	1	**231-4258**	1	CONTROL GP-HANDLE (LH)	279
M	7	1	**8T-0269**	3	BOLT-SOCKET HEAD (M6X1X20-MM)	
	8	1	**8T-4121**	1	WASHER-HARD (11X21X2.5-MM THK)	
M	9	1	**8T-4137**	1	BOLT (M10X1.5X20-MM)	
	10	1	**8T-4205**	3	WASHER-HARD (7.2X14.5X2-MM THK)	

M-METRIC PART
Y-SEPARATE ILLUSTRATION

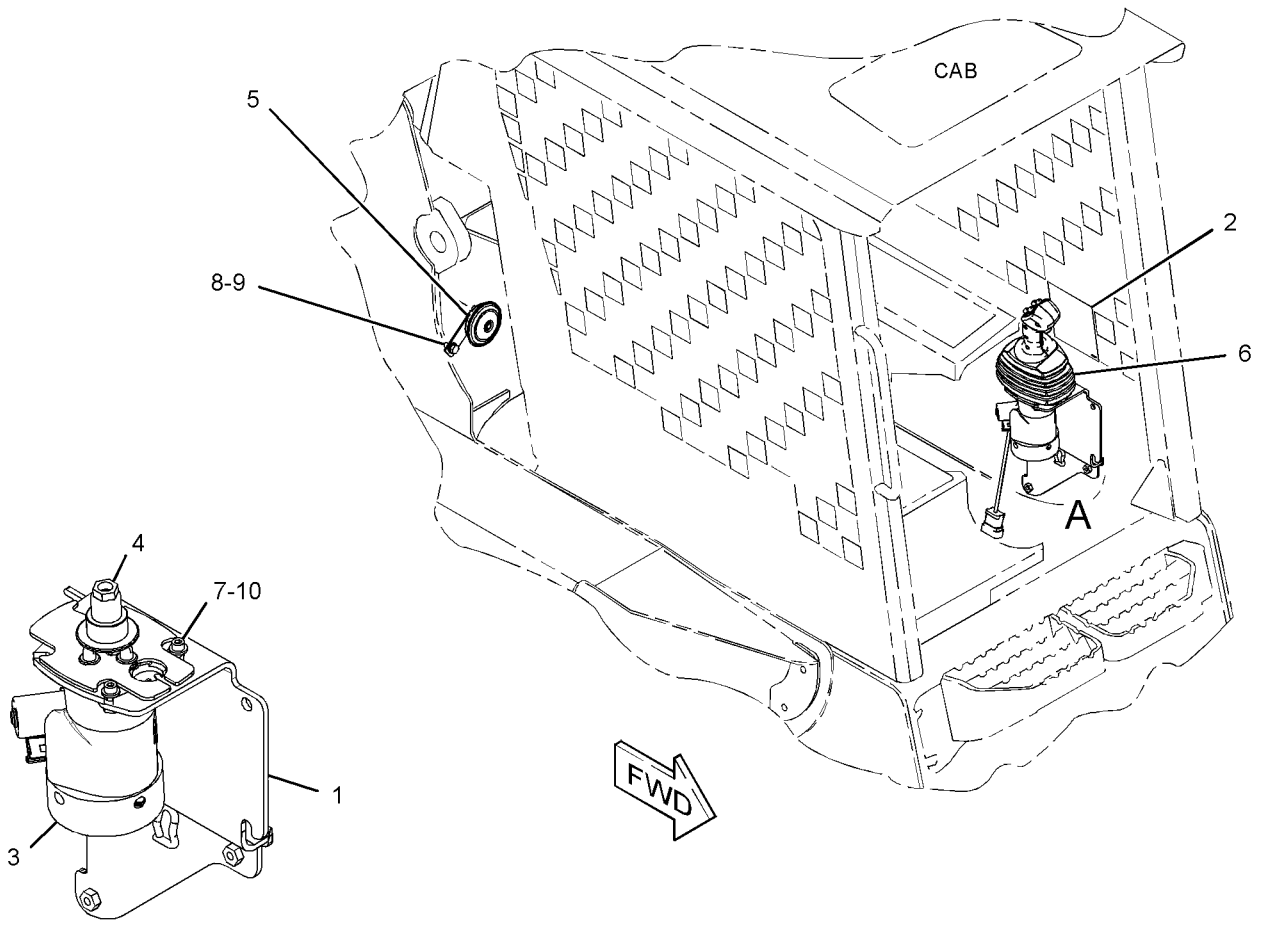

VIEW OF AREA A
(HANDLE REMOVED FOR CLARITY)

GRAPHIC #1 **<END>** g02148358

OPERATOR STATION

343-5542 CONTROL GP-PILOT OPERATED HYD

S/N: MWD1-UP
PART OF 326-5271 CONTROL AR-MACHINE
AN ATTACHMENT

SMCS-5059, 5705 **i03514441**

NOTE	REF NO	GRAPHIC REF	PART NUMBER	QTY	PART NAME 1 2 3 4 5 6 (PRODUCT LEVEL)	SEE PAGE
M	1	1	**095-1207**	1	NUT (M12X1.75-THD)	
	2	1	**218-6422**	1	BRACKET AS	
Y	3	1	**343-0868**	1	VALVE GP-PILOT	238
	4	1	**164-9425**	1	HORN AS (24-VOLT, LOW TONE)	
Y	5	1	**231-4256**	1	CONTROL GP-HANDLE (LH)	278
	6	1	**235-5246**	1	FILM-INSTRUCTION (MACHINE CONTROL, READ OMM)	
M	7	1	**8T-0269**	3	BOLT-SOCKET HEAD (M6X1X20-MM)	
	8	1	**8T-4121**	1	WASHER-HARD (11X21X2.5-MM THK)	
M	9	1	**8T-4137**	1	BOLT (M10X1.5X20-MM)	
	10	1	**8T-4205**	3	WASHER-HARD (7.2X14.5X2-MM THK)	

M-METRIC PART
Y-SEPARATE ILLUSTRATION

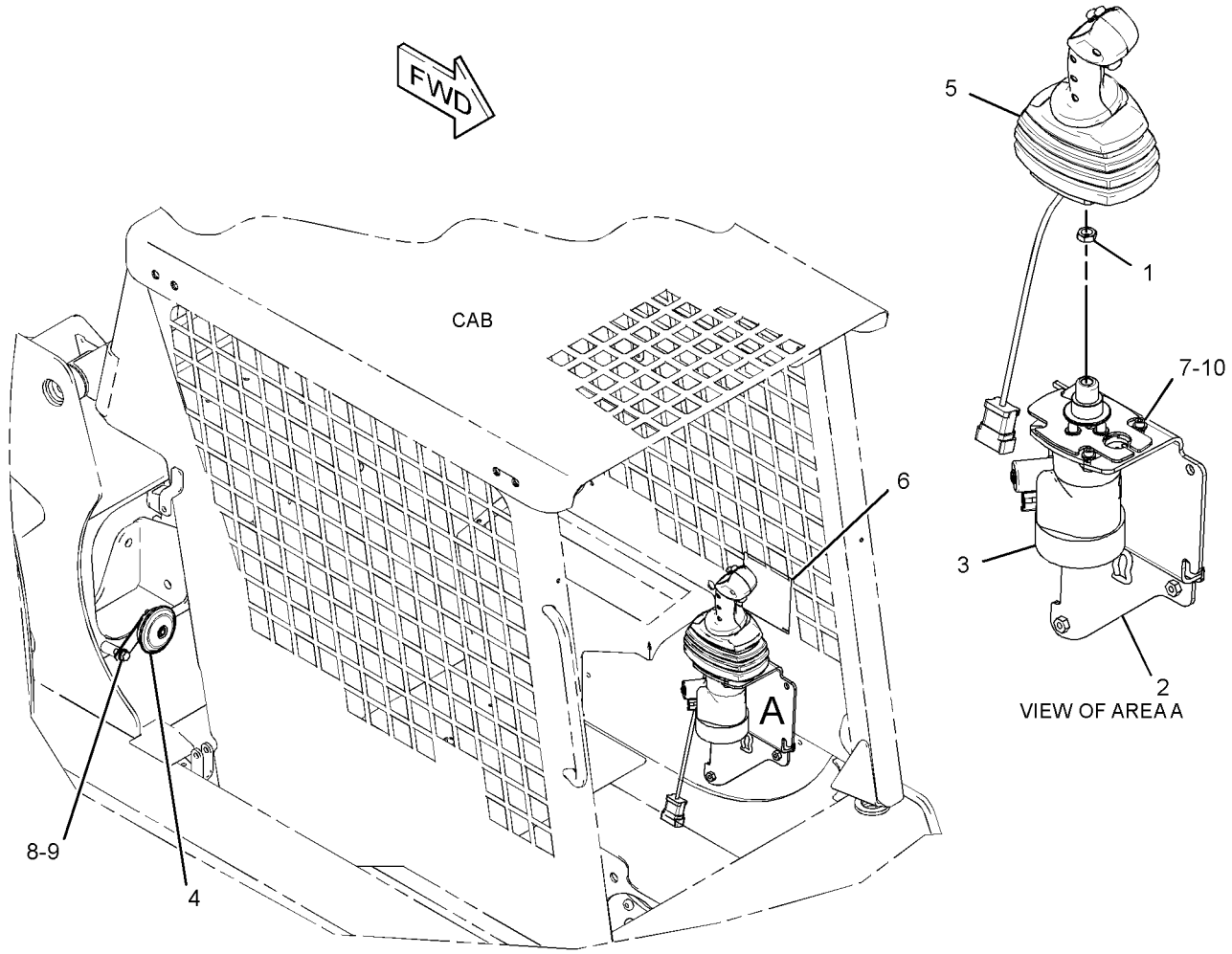

GRAPHIC #1 **<END>** g01455640

OPERATOR STATION

343-5543 CONTROL GP-PILOT OPERATED HYD

S/N: MWD1-UP
PART OF 326-5270 CONTROL AR-MACHINE
AN ATTACHMENT

SMCS-5059, 5705 **i03511321**

NOTE	REF NO	GRAPHIC REF	PART NUMBER	QTY	PART NAME 1 2 3 4 5 6 (PRODUCT LEVEL)	SEE PAGE
	1	1	**218-6422**	1	BRACKET AS	
Y	2	1	**218-6485**	1	CONTROL GP-HANDLE (LH)	276
Y	3	1	**343-0868**	1	VALVE GP-PILOT	238
	4	1	**164-9425**	1	HORN AS (24-VOLT, LOW TONE)	
	5	1	**237-5331**	1	FILM-INSTRUCTION (MACHINE CONTROL, READ OMM)	
M	6	1	**8T-0269**	3	BOLT-SOCKET HEAD (M6X1X20-MM)	
	7	1	**8T-4121**	1	WASHER-HARD (11X21X2.5-MM THK)	
M	8	1	**8T-4137**	1	BOLT (M10X1.5X20-MM)	
	9	1	**8T-4205**	3	WASHER-HARD (7.2X14.5X2-MM THK)	

M-METRIC PART
Y-SEPARATE ILLUSTRATION

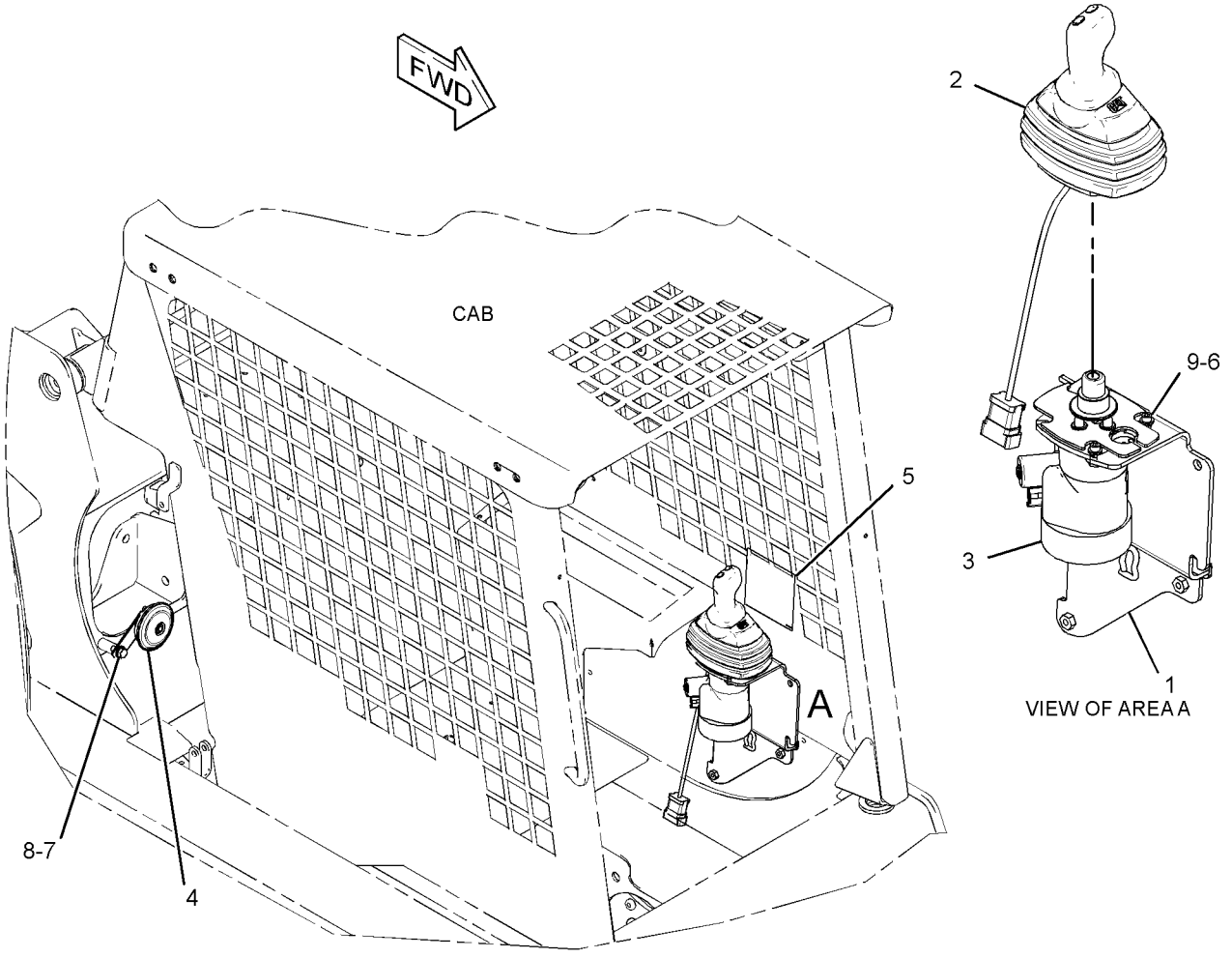

GRAPHIC #1 **<END>** g01455653

276-5708 COUPLING GP-DRIVE–
REFRIGERANT COMPRESSOR, MOTOR
S/N: MWD1-UP
PART OF 218-6832 COMPRESSOR & MOTOR GP-REFRIG
AN ATTACHMENT

SMCS-1802, 5061 **i02445864**

NOTE	REF NO	GRAPHIC REF	PART NUMBER	QTY	PART NAME 1 2 3 4 5 6 (PRODUCT LEVEL)	SEE PAGE
	1	1	**218-6836**	1	COUPLING GP-DRIVE	
		1	**218-6837**	1	COUPLING	
		1	**218-6838**	1	HUB (COMPRESSOR)	
		1	**276-4063**	1	HUB (MOTOR)	
M	2	1	**233-1012**	1	SETSCREW-HEX SOCKET (M5X0.8X8-MM)	

M-METRIC PART

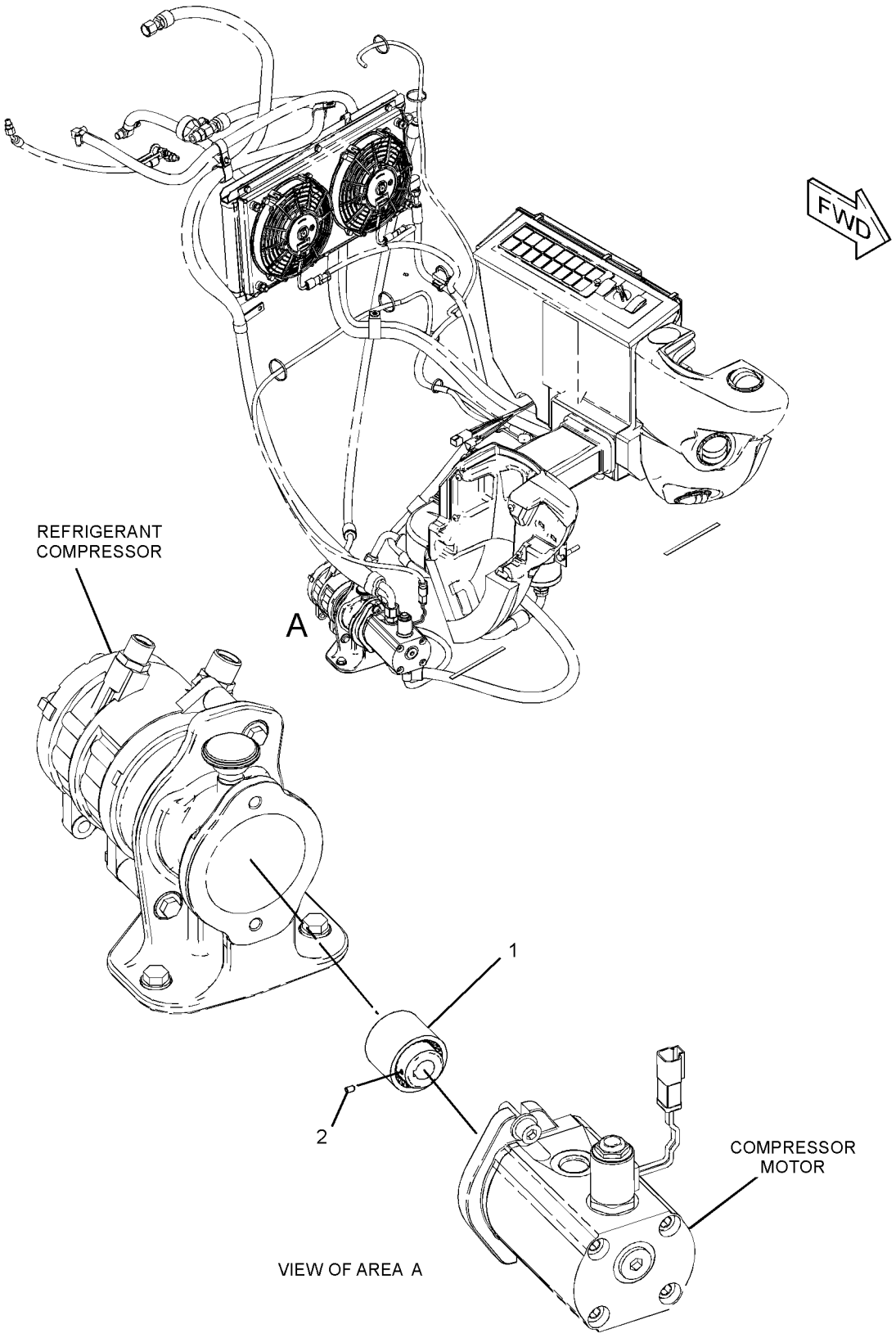

GRAPHIC #1 **<END>** g01229666

218-6419 COVER GP-CONSOLE–
WITHOUT AIR CONDITIONER, HEATER
S/N: MWD1-UP
PART OF 356-1932 INSTALLATION GP-COVER & LINES
AN ATTACHMENT

SMCS-5258 **i02392269**

NOTE	REF NO	GRAPHIC REF	PART NUMBER	QTY	PART NAME 1 2 3 4 5 6 (PRODUCT LEVEL)	SEE PAGE
	1	1	**218-6389**	1	CONSOLE (RH)	
	2	1	**218-6391**	1	CONSOLE (LH)	
M	3	1	**175-0005**	8	SCREW-BUTTON HEAD (M6X1X25-MM)	

M-METRIC PART

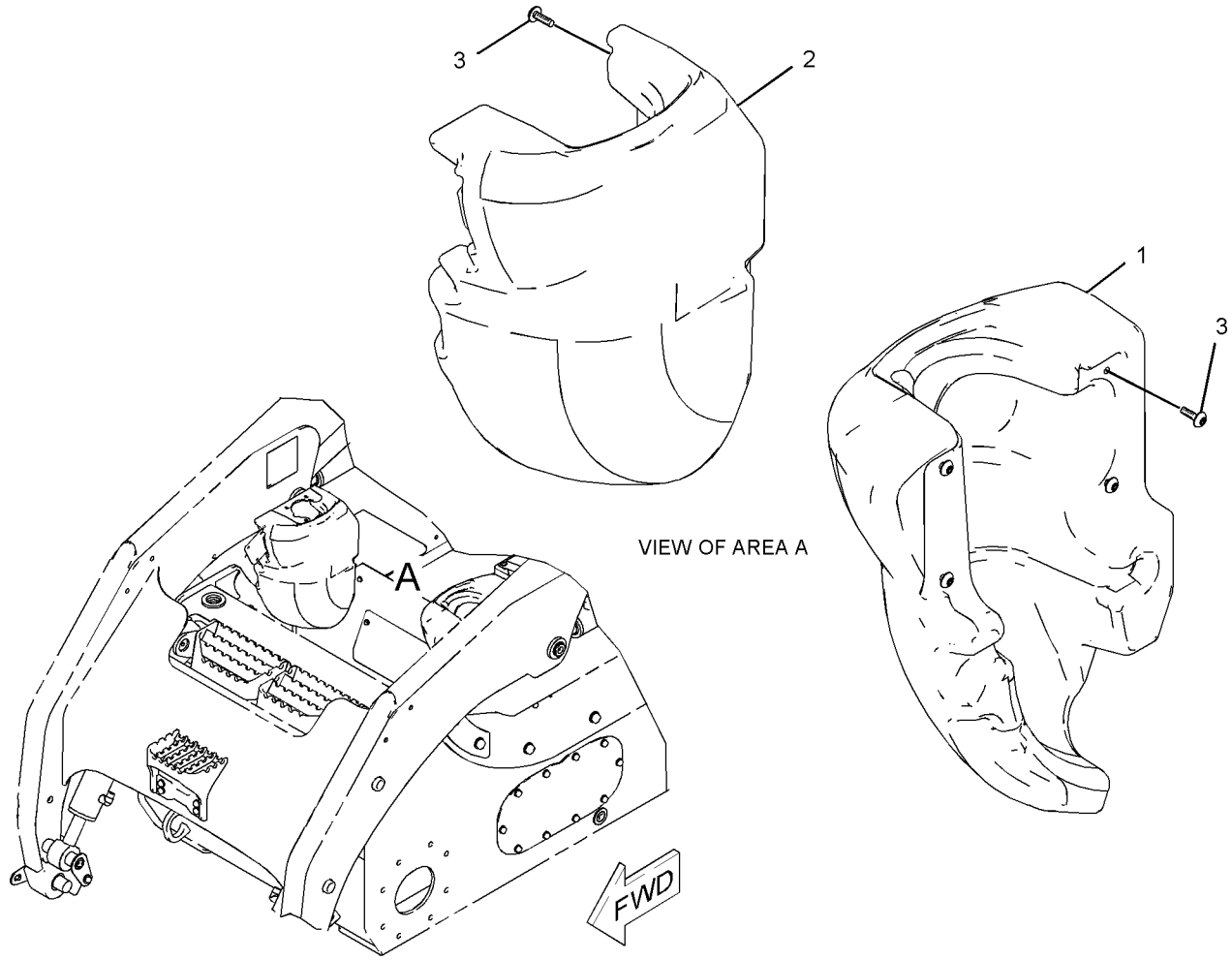

GRAPHIC #1 **<END>** g01019449

OPERATOR STATION

218-6440 DOOR & MTG GP-CAB—POLYCARBONATE

S/N: MWD1-UP

CANNOT BE USED WITH 218-6400—PAGE 308, 223-0600—PAGE 295

AN ATTACHMENT

SMCS-7308 **i03973430**

NOTE	REF NO	GRAPHIC REF	PART NUMBER	QTY	PART NAME 1 2 3 4 5 6 (PRODUCT LEVEL)	SEE PAGE
E	1	2	**125-3518**		SEAL (6-CM EACH)	
E	1A	2	**125-3518**		SEAL (65-CM)	
E	3	2	**144-0195**		HOSE (40-CM)	
D	4	2	**5P-9909**		SEAL (0.05-M EACH)	
	5	1	**5P-0372**	2	LOCK PIN	
	6	2	**8T-2444**	2	STUD-BALL	
	7	2	**8T-3848**	1	STRIKER AS-LATCH	
		2	**6V-4270**	1	LOCKWASHER	
	8	1	**9C-5344**	1	SPACER (10.5X20X18-MM THK)	
	9	1	**095-1325**	1	PIN-CLEVIS	
	10	1	**153-2683**	1	SPRING AS-GAS (LOCKING)	
	11	1	**177-3405**	1	PIN	
	12	2	**218-0728**	2	SPRING	
CY	13	2	*276-3440*	1	DOOR GP-CAB (POLYCARBONATE)	300
	14	2	**219-9739**	1	TANK AS-WINDOW WASHER	
	15	2	**221-3877**	1	HARNESS AS-WINDOW WIPER	
		2	**102-8805**	1	KIT-RECEPTACLE (6-PIN)	
					(INCLUDES RECEPTACLE AS & WEDGE)	
		2	**123-7615**	1	CONNECTOR	
		2	**8T-8737**	1	PLUG-SEAL	
		2	**5W-1987**	2	TERMINAL-BLADE (12-GA TO 16-GA)	
E		2	**125-7875**		TUBE-HEAT SHRINK (7.44-MM DIA) (5-CM)	
		2	**9X-3401**	5	PIN-CONNECTOR (16-GA TO 18-GA)	
					—OR—	
		2	**126-1767**	5	PIN-CONNECTOR (14-GA)	
		2	**180-9340**	6	SOCKET-CONNECTOR (14-GA TO 18-GA)	
		2	**155-2274**	1	KIT-CONNECTING PLUG (6-PIN)	
					(INCLUDES PLUG AS, WEDGE & INTERFACE SEAL)	
	16	2	**280-1575**	1	PLATE AS	
	17	2	**223-0591**	1	PLATE AS	
	18	2	**223-0601**	2	PLATE AS	
	19	2	**223-0608**	1	HINGE AS	
	20	2	**223-0617**	1	MOUNT	
	21	2	**230-3214**	1	SPRING AS-GAS (CAB DOOR)	
M	22	2	**127-2170**	8	SCREW-TRUSS HEAD (M8X1.25X20-MM)	
	23	2	**142-9356**	1	BLOCK	
M	24	2	**195-0937**	8	INSERT-THREADED (M8X1.25-THD)	
	25	2	**3S-2093**	3	STRAP-CABLE	
M	26	2	**5C-2890**	13	NUT (M6X1-THD)	
D	27	2	**5P-5969**		SEAL (1.1-M EACH)	
	28	2	**8T-4121**	4	WASHER-HARD (11X21X2.5-MM THK)	
M	29	2	**8T-4133**	4	NUT (M10X1.5-THD)	
	30	2	**8T-4205**	13	WASHER-HARD (7.2X14.5X2-MM THK)	
	31	2	**8T-4222**	1	WASHER-PLATED (11X32X2.5-MM THK)	
	32	2	**8T-4224**	2	WASHER-HARD (8.8X16X2-MM THK)	
M	33	2	**9X-2041**	4	SCREW-TRUSS HEAD (M10X1.5X20-MM)	
M	34	2	**9X-2044**	3	SCREW-TRUSS HEAD (M6X1X16-MM)	
M	35	2	**9X-2045**	4	SCREW-TRUSS HEAD (M6X1X20-MM)	
D	36	2	**5P-8309**		SEAL (0.8-M)	

C-CHANGE FROM PREVIOUS TYPE
D-ORDER BY THE METER
E-ORDER BY THE CENTIMETER
M-METRIC PART
Y-SEPARATE ILLUSTRATION

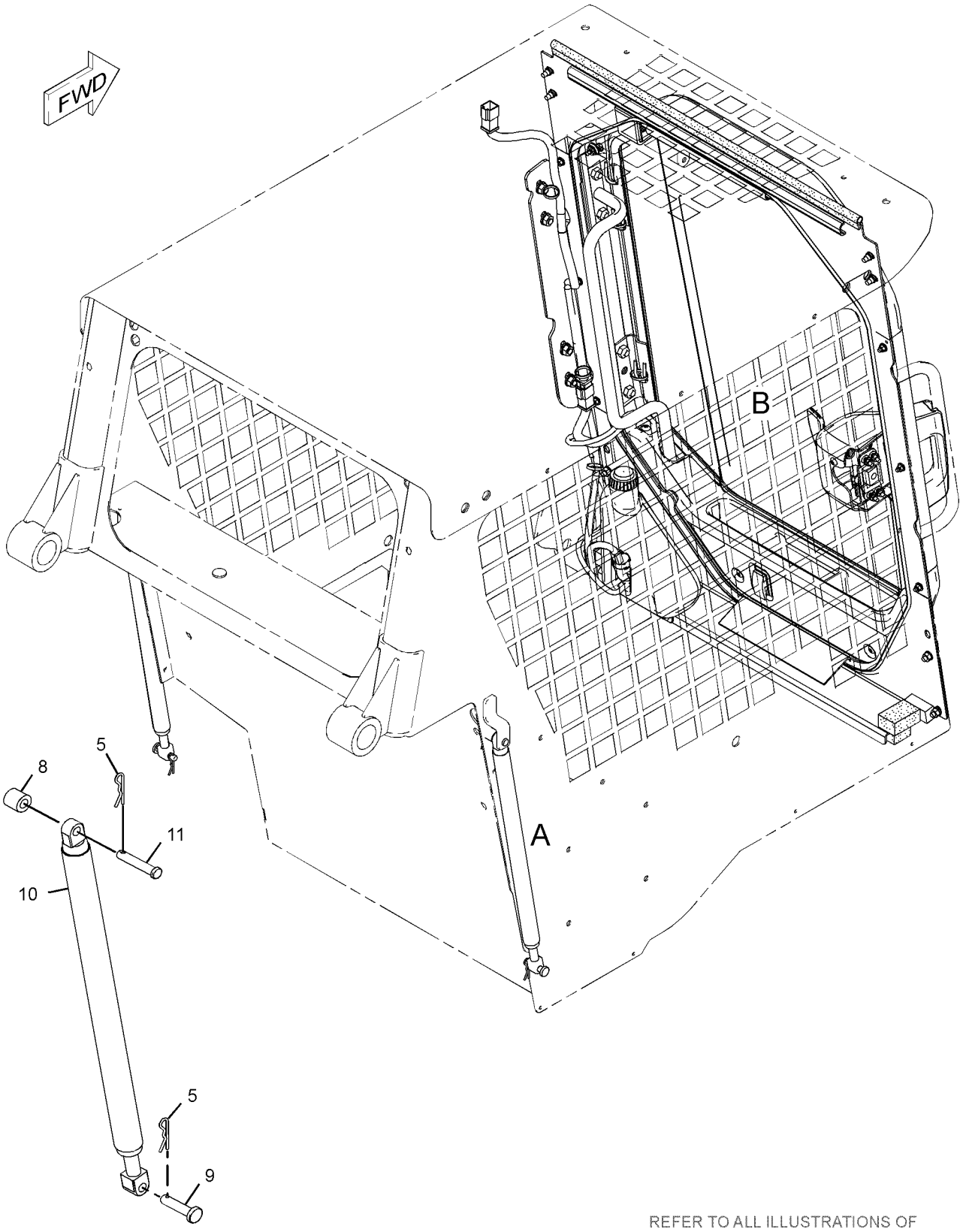

VIEW OF AREA A

REFER TO ALL ILLUSTRATIONS OF THIS GROUP FOR AUXILIARY VIEWS

GRAPHIC #1

g01249527

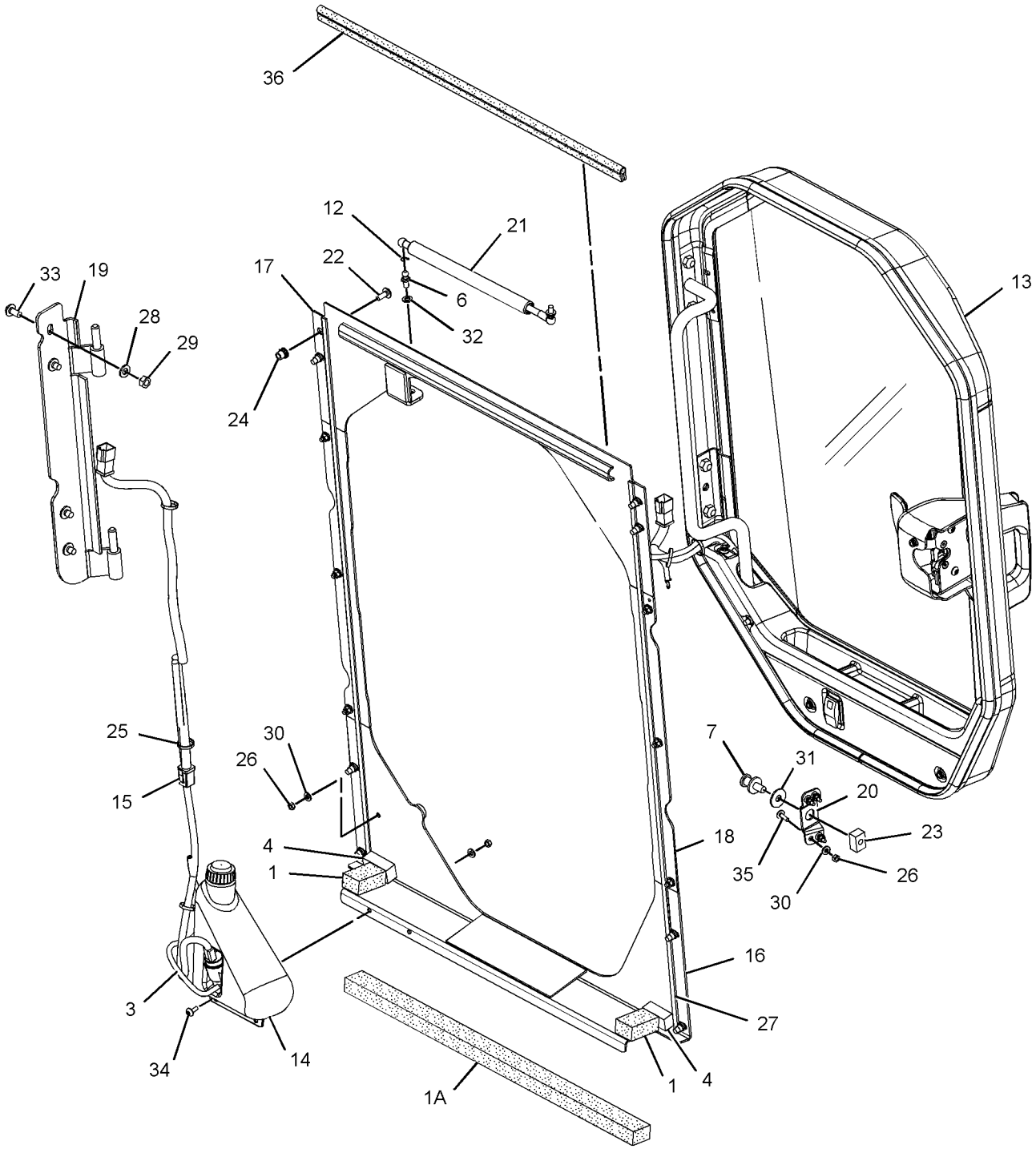

VIEW OF AREA B
(EXPLODED)

GRAPHIC #2 **<END>** g01944445

OPERATOR STATION

223-0600 DOOR & MTG GP-CAB—GLASS

S/N: MWD1-UP

CANNOT BE USED WITH 218-6400—PAGE 308, 218-6440—PAGE 292

AN ATTACHMENT

SMCS-7308 **i03973431**

NOTE	REF NO	GRAPHIC REF	PART NUMBER	QTY	PART NAME 1 2 3 4 5 6 (PRODUCT LEVEL)	SEE PAGE
D	1	1	**5P-8309**		SEAL (0.72-M)	
E	2	1	**125-3518**		SEAL (65-CM)	
E	3	1	**144-0195**		HOSE (40-CM)	
D	4	1	**5P-9909**		SEAL (0.05-M EACH)	
	5	1	**5P-0372**	2	LOCK PIN	
	6	1	**8T-2444**	2	STUD-BALL	
	7	1	**8T-3848**	1	STRIKER AS-LATCH	
		1	**6V-4270**	1	LOCKWASHER	
	8	1	**9C-5344**	1	SPACER (10.5X20X18-MM THK)	
	9	1	**095-1325**	1	PIN-CLEVIS	
	10	1	**153-2683**	1	SPRING AS-GAS (LOCKING)	
	11	1	**177-3405**	1	PIN	
	12	1	**218-0728**	2	SPRING	
	13	1	**219-9739**	1	TANK AS-WINDOW WASHER	
	14	1	**221-3877**	1	HARNESS AS-WINDOW WIPER	
		1	**9X-3401**	5	PIN-CONNECTOR (16-GA TO 18-GA)	
					—OR—	
		1	**126-1767**	5	PIN-CONNECTOR (14-GA)	
		1	**123-7615**	1	CONNECTOR	
		1	**155-2274**	1	KIT-CONNECTING PLUG (6-PIN)	
					(INCLUDES PLUG AS, WEDGE & INTERFACE SEAL)	
		1	**8T-8737**	1	PLUG-SEAL	
		1	**102-8805**	1	KIT-RECEPTACLE (6-PIN)	
					(INCLUDES RECEPTACLE AS & WEDGE)	
		1	**180-9340**	6	SOCKET-CONNECTOR (14-GA TO 18-GA)	
E		1	**125-7875**		TUBE-HEAT SHRINK (7.44-MM DIA) (5-CM)	
		1	**5W-1987**	2	TERMINAL-BLADE (12-GA TO 16-GA)	
C	15	1	**280-1575**	1	PLATE AS	
	16	1	**223-0591**	1	PLATE AS	
	17	1	**223-0601**	2	PLATE AS	
	18	1	**223-0608**	1	HINGE AS	
Y	19	1	*223-0616*	1	DOOR GP-CAB (GLASS)	298
	20	1	**223-0617**	1	MOUNT	
	21	1	**230-3214**	1	SPRING AS-GAS (CAB DOOR)	
M	22	1	**127-2170**	8	SCREW-TRUSS HEAD (M8X1.25X20-MM)	
	23	1	**142-9356**	1	BLOCK	
CM	24	1	**195-0937**	8	INSERT-THREADED (M8X1.25-THD)	
	25	1	**3S-2093**	3	STRAP-CABLE	
M	26	1	**5C-2890**	13	NUT (M6X1-THD)	
	28	1	**8T-4121**	4	WASHER-HARD (11X21X2.5-MM THK)	
M	29	1	**8T-4133**	4	NUT (M10X1.5-THD)	
	30	1	**8T-4205**	13	WASHER-HARD (7.2X14.5X2-MM THK)	
B	31	1	**8T-4222**	1	WASHER-PLATED (11X32X2.5-MM THK)	
C	32	1	**8T-4224**	2	WASHER-HARD (8.8X16X2-MM THK)	
M	33	1	**9X-2041**	4	SCREW-TRUSS HEAD (M10X1.5X20-MM)	
M	34	1	**9X-2044**	3	SCREW-TRUSS HEAD (M6X1X16-MM)	
M	35	1	**9X-2045**	4	SCREW-TRUSS HEAD (M6X1X20-MM)	
E	36	1	**125-3518**		SEAL (6-CM EACH)	
CD	37	1	**5P-5969**		SEAL (1.1-M EACH)	

B-USE AS REQUIRED
C-CHANGE FROM PREVIOUS TYPE
D-ORDER BY THE METER
E-ORDER BY THE CENTIMETER
M-METRIC PART
Y-SEPARATE ILLUSTRATION

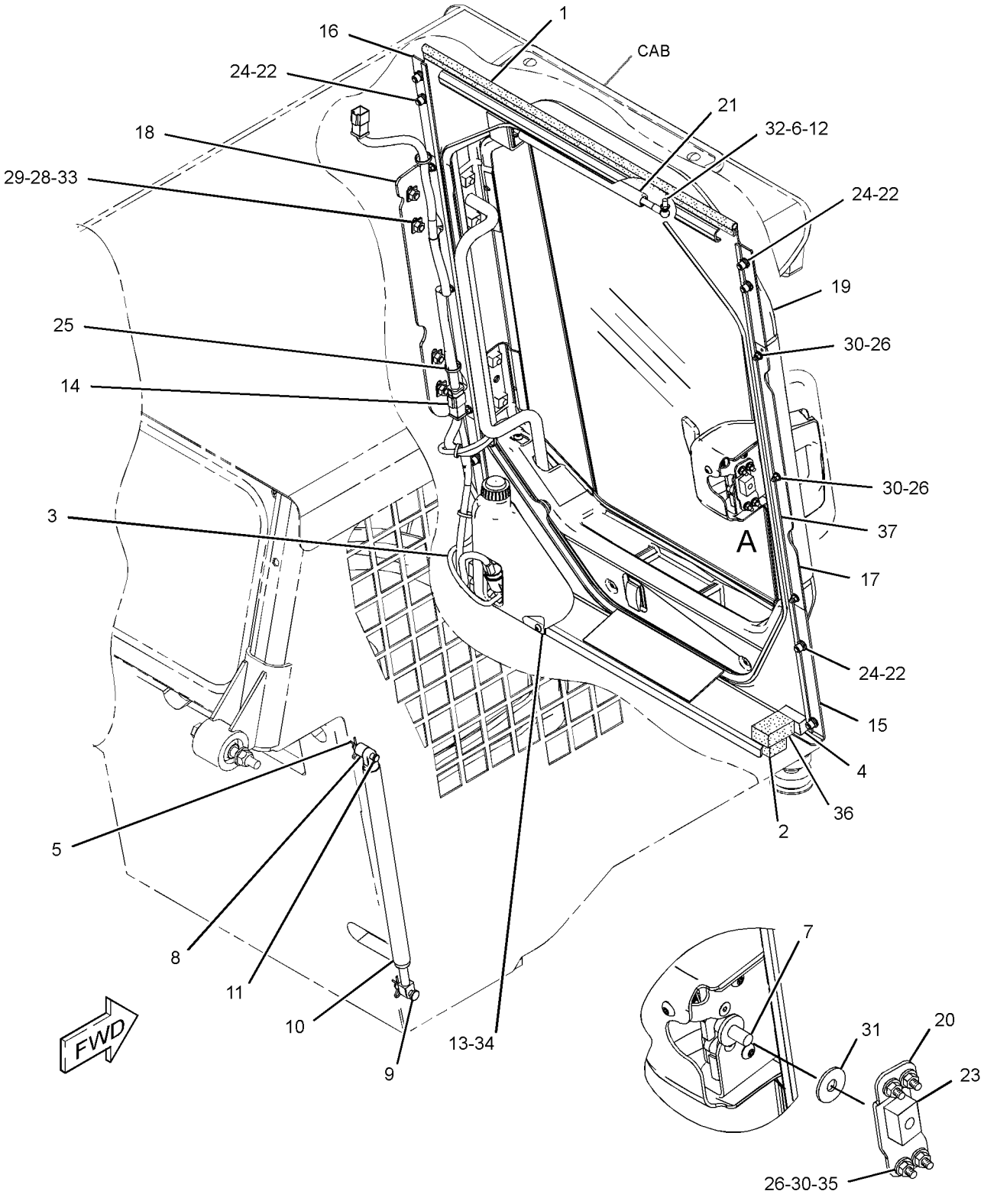

VIEW OF AREA A
(EXPLODED)

GRAPHIC #1 **<END>** g01258688

OPERATOR STATION

218-6431 DOOR GP-CAB–GLASS

S/N: MWD1-UP
PART OF 223-0616 DOOR GP-CAB
AN ATTACHMENT

SMCS-7308 **i02619575**

NOTE	REF NO	GRAPHIC REF	PART NUMBER	QTY	PART NAME 1 2 3 4 5 6 (PRODUCT LEVEL)	SEE PAGE
	1	1	**223-0609**	1	GLASS-CAB (DOOR)	
	2	1	**223-0610**	1	GLASS-CAB (DOOR)	
	3	1	**223-0612**	1	GLASS-CAB (DOOR)	
	4	1	**282-9059**	1	FRAME AS	

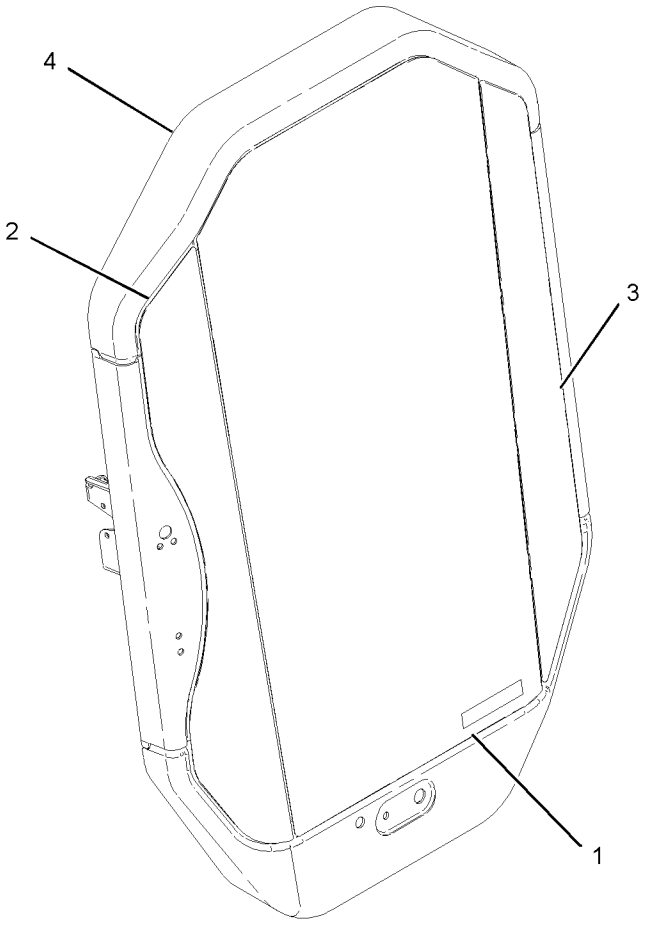

GRAPHIC #1 **<END>** g01010846

OPERATOR STATION

223-0616 DOOR GP-CAB—GLASS

S/N: MWD1-UP
PART OF 223-0600 DOOR & MTG GP-CAB
AN ATTACHMENT

SMCS-7308 **i03897524**

NOTE	REF NO	GRAPHIC REF	PART NUMBER	QTY	PART NAME 1 2 3 4 5 6 (PRODUCT LEVEL)	SEE PAGE
E	1	1	**124-3243**		SEAL (306-CM)	
E	2	1	**144-0195**		HOSE (73-CM)	
	3	1	**8G-1151**	2	CONNECTOR	
C	4	1	**320-1390**	1	BLADE-WIPER (558-MM) (FRONT, REAR)	
	6	1	**138-4883**	1	SWITCH AS-ROCKER (REAR WINDOW WASHER, WIPER)	
		1	**111-7899**	1	GASKET	
M	7	1	**260-6695**	2	SCREW-FLAT HEAD (M6X1X25-MM)	
Y	8	1	*218-6431*	1	DOOR GP-CAB (GLASS)	297
	9	1	**221-3876**	1	HARNESS AS-WINDOW WIPER	
		1	**111-7898**	1	CONNECTOR	
		1	**9X-3401**	6	PIN-CONNECTOR (16-GA TO 18-GA)	
		1	**155-2260**	1	KIT-CONNECTING PLUG (3-PIN)	
		1	**155-2271**	1	KIT-CONNECTING PLUG (4-PIN)	
					(EACH PLUG KIT INCLUDES PLUG AS, WEDGE & INTERFACE SEAL)	
		1	**102-8805**	1	KIT-RECEPTACLE (6-PIN)	
					(INCLUDES RECEPTACLE AS & WEDGE)	
		1	**9X-3402**	7	SOCKET-CONNECTOR (16-GA TO 18-GA)	
		1	**8L-8413**	8	STRAP-CABLE	
		1	**122-4406**	3	TERMINAL	
		1	**112-9611**	1	TERMINAL-BLADE	
		1	**3E-9179**	3	TERMINAL-RECEPTACLE (14-GA TO 18-GA)	
E		1	**119-3662**		TUBE-HEAT SHRINK (10.85-MM DIA) (7-CM)	
CY	10	1	**320-1389**	1	ARM GP-WINDOW WIPER (FRONT)	262
C	11	1	**313-9185**	1	COVER AS	
	12	1	**223-8488**	1	COVER-LATCH	
	13	1	**223-8495**	1	HANDLE AS	
M		1	**6V-9632**	1	NUT-WELD (M6X1-THD)	
	14	1	**225-3187**	1	LATCH AS	
	15	1	**229-8757**	1	SWITCH AS-LIMIT (ENGINE START, HYD LOCKOUT)	
		1	**102-8803**	1	KIT-RECEPTACLE (3-PIN)	
					(INCLUDES RECEPTACLE AS & WEDGE)	
		1	**186-3735**	3	PIN-CONNECTOR (16-GA TO 18-GA)	
	17	1	**235-4768**	2	HINGE	
	18	1	**248-2171**	1	HANDLE AS (PUSH BUTTON)	
Y	19	1	**330-5012**	1	MOTOR GP-WINDOW WIPER	325
	20	1	**032-9828**	1	GROMMET	
M	21	1	**134-8273**	4	SCREW-FLAT HEAD (M10X1.5X25-MM)	
	22	1	**3S-2093**	3	STRAP-CABLE	
M	23	1	**9X-2044**	14	SCREW-TRUSS HEAD (M6X1X16-MM)	
M	24	1	**9X-2045**	2	SCREW-TRUSS HEAD (M6X1X20-MM)	

C-CHANGE FROM PREVIOUS TYPE
E-ORDER BY THE CENTIMETER
M-METRIC PART
Y-SEPARATE ILLUSTRATION

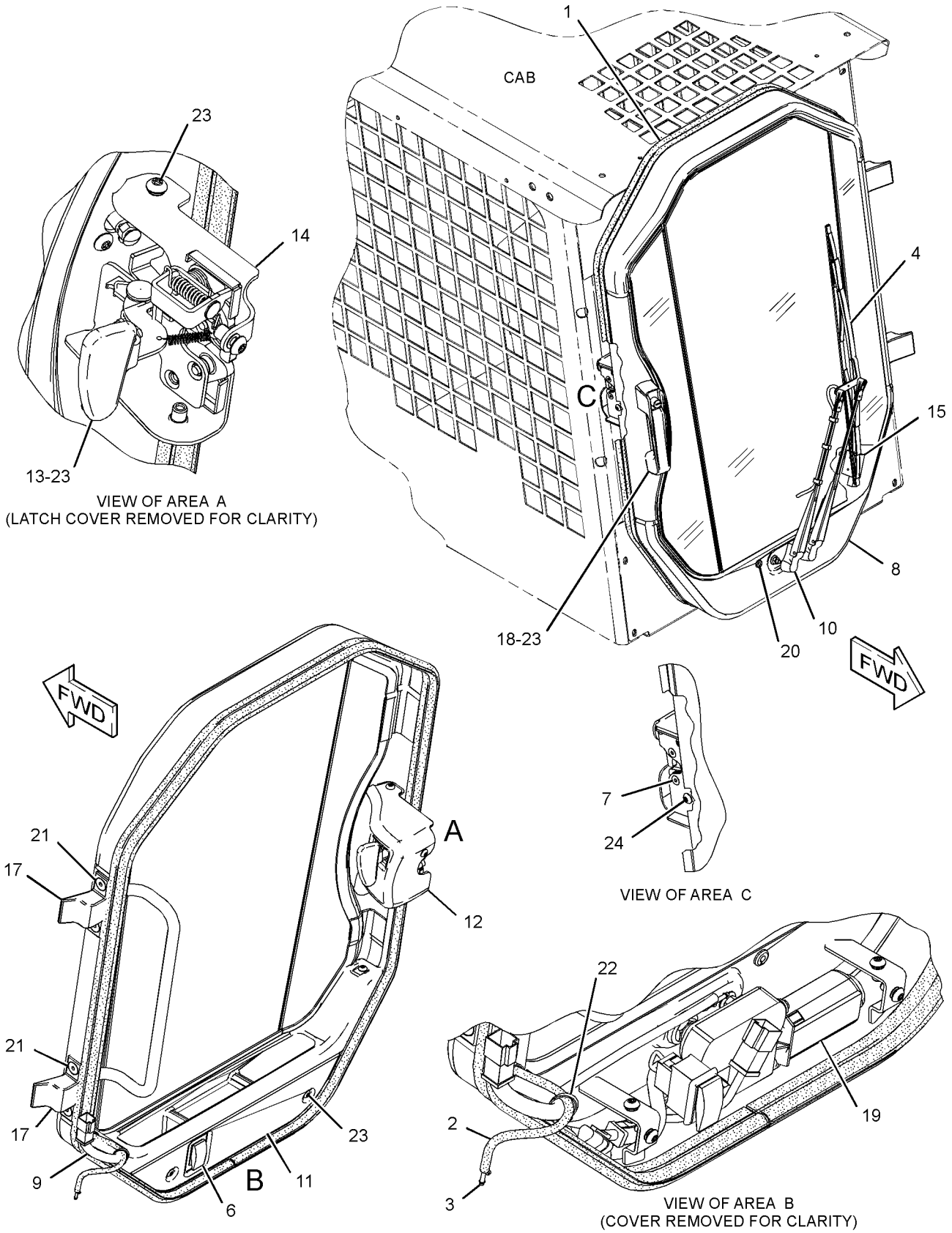

GRAPHIC #1 **<END>** g01431673

OPERATOR STATION

276-3440 DOOR GP-CAB—POLYCARBONATE

S/N: MWD1-UP

PART OF 218-6440 DOOR & MTG GP-CAB

AN ATTACHMENT

SMCS-7308 **i03970897**

NOTE	REF NO	GRAPHIC REF	PART NUMBER	QTY	PART NAME 1 2 3 4 5 6 (PRODUCT LEVEL)	SEE PAGE
	1	1	**8G-1151**	2	CONNECTOR	
C	2	1	**320-1390**	1	BLADE-WIPER (558-MM) (CAB DOOR)	
	4	1	**138-4883**	1	SWITCH AS-ROCKER (REAR WINDOW WASHER, WIPER)	
		1	**111-7899**	1	GASKET	
	5	1	**205-5148**	2	SCREW-FLAT HEAD (M6X1X25-MM)	
	6	1	**221-3876**	1	HARNESS AS-WINDOW WIPER	
		1	**111-7898**	1	CONNECTOR	
		1	**9X-3401**	6	PIN-CONNECTOR (16-GA TO 18-GA)	
		1	**155-2260**	1	KIT-CONNECTING PLUG (3-PIN)	
		1	**155-2271**	1	KIT-CONNECTING PLUG (4-PIN)	
					(EACH PLUG KIT INCLUDES PLUG AS, WEDGE & INTERFACE SEAL)	
		1	**102-8805**	1	KIT-RECEPTACLE (6-PIN)	
					(INCLUDES RECEPTACLE AS & WEDGE)	
		1	**9X-3402**	7	SOCKET-CONNECTOR (16-GA TO 18-GA)	
		1	**8L-8413**	8	STRAP-CABLE	
		1	**122-4406**	3	TERMINAL	
		1	**112-9611**	1	TERMINAL-BLADE	
		1	**3E-9179**	3	TERMINAL-RECEPTACLE (14-GA TO 18-GA)	
E		1	**119-3662**		TUBE-HEAT SHRINK (10.85-MM DIA) (7-CM)	
	7	1	**223-8488**	1	COVER-LATCH	
	8	1	**223-8495**	1	HANDLE AS	
M		1	**6V-9632**	1	NUT-WELD (M6X1-THD)	
	9	1	**225-3187**	1	LATCH AS	
	10	1	**229-8757**	1	SWITCH AS-LIMIT	
		1	**102-8803**	1	KIT-RECEPTACLE (3-PIN)	
					(INCLUDES RECEPTACLE AS & WEDGE)	
		1	**186-3735**	3	PIN-CONNECTOR (16-GA TO 18-GA)	
	11	1	**235-4768**	2	HINGE	
	12	1	**248-2171**	1	HANDLE AS (PUSH BUTTON) (PUSH BUTTON)	
Y	13	1	**330-5012**	1	MOTOR GP-WINDOW WIPER	325
CY	14	1	**320-1389**	1	ARM GP-WINDOW WIPER (FRONT)	262
Y	15	1	*276-3615*	1	DOOR GP-CAB (POLYCARBONATE)	302
	16	1	**313-9185**	1	COVER AS	
	17	1	**032-9828**	1	GROMMET	
M	18	1	**134-8273**	4	SCREW-FLAT HEAD (M10X1.5X25-MM)	
	19	1	**3S-2093**	3	STRAP-CABLE	
M	20	1	**9X-2044**	14	SCREW-TRUSS HEAD (M6X1X16-MM)	
M	21	1	**9X-2045**	2	SCREW-TRUSS HEAD (M6X1X20-MM)	
E	22	1	**144-0195**		HOSE (73-CM)	
E	23	1	**124-3243**		SEAL (306-CM)	

C-CHANGE FROM PREVIOUS TYPE
E-ORDER BY THE CENTIMETER
M-METRIC PART
Y-SEPARATE ILLUSTRATION

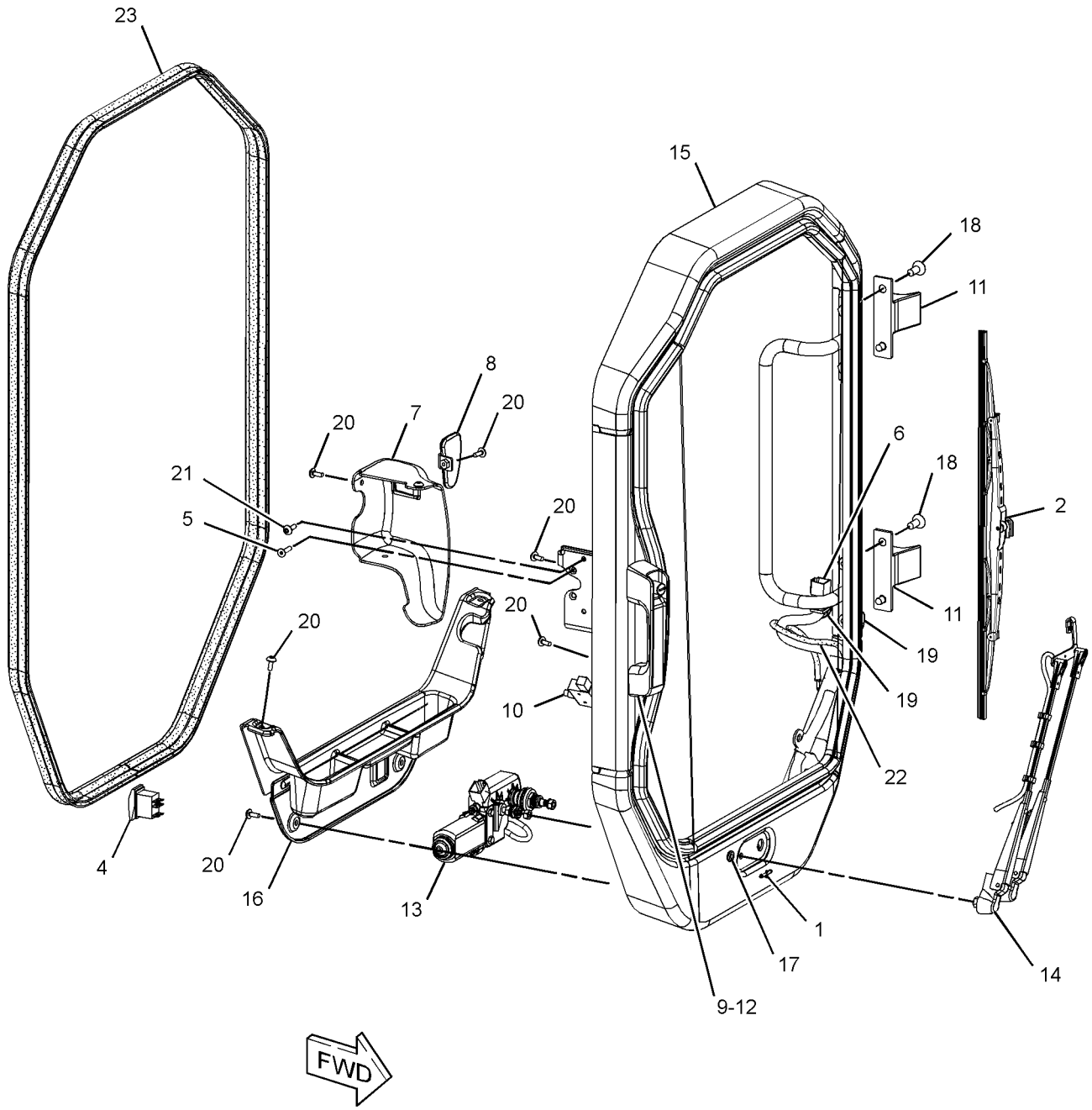

GRAPHIC #1 **<END>** g01792833

OPERATOR STATION

276-3615 DOOR GP-CAB—POLYCARBONATE

S/N: MWD1-UP
PART OF 276-3440 DOOR GP-CAB
AN ATTACHMENT

SMCS-7308 **i03076920**

NOTE	REF NO	GRAPHIC REF	PART NUMBER	QTY	PART NAME 1 2 3 4 5 6 (PRODUCT LEVEL)	SEE PAGE
	1	1	**5C-8310**	1	BRACKET-RING	
	2	1	**5C-8311**	1	RING	
	3	1	**8T-6842**	1	FILM-INSTRUCTION (PULL RING, ALTERNATE EXIT)	
	4	1	**316-1698**	1	WINDOW	
	5	1	**279-3232**	1	SEAL	
	6	1	**282-9059**	1	FRAME AS	
	7	1	**283-7554**	1	STRIP-LOCKING	

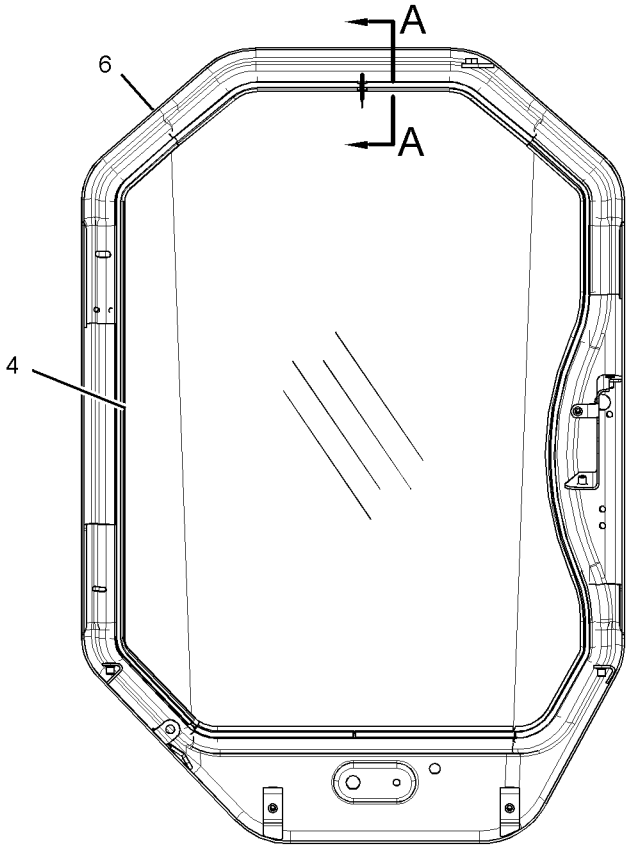

REAR VIEW

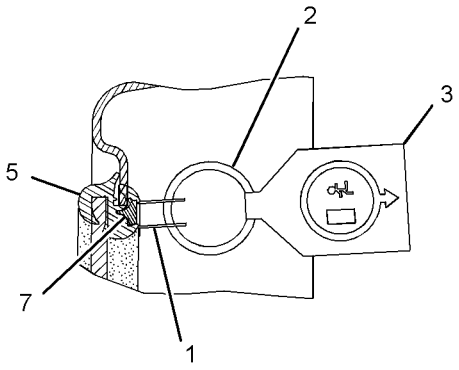

SECTION A-A

GRAPHIC #1 **<END>** g01327089

218-6394 DUCT GP-CAB AIR

S/N: MWD1-UP
PART OF 326-5536 AIR CONDITIONER AR, 356-1935 HEATER AR-CAB
AN ATTACHMENT

SMCS-734D **i02541254**

NOTE	REF NO	GRAPHIC REF	PART NUMBER	QTY	PART NAME 1 2 3 4 5 6 (PRODUCT LEVEL)	SEE PAGE
CD	1	1	**5P-5969**		SEAL (0.2-M EACH)	
	2	1	**146-6371**	6	LOUVER AS	
	3	1	**218-6396**	1	DUCT	
	4	1	**218-6397**	1	CONSOLE (RH)	
	5	1	**218-6398**	1	CONSOLE (LH)	
CD	6	1	**5P-7070**		INSULATION-STRIP (0.5-M)	
	7	1	**218-6414**	1	SEAL	
	8	1	**285-9133**	1	INSULATION	
M	9	1	**175-0005**	8	SCREW-BUTTON HEAD (M6X1X25-MM)	
	10	1	**285-8570**	1	INSULATION	
	11	1	**240-6877**	1	SEAL	
	12	1	**240-6878**	1	SEAL	
	13	1	**240-6879**	2	SEAL	
	14	1	**6V-6689**	2	SCREW-SELF-TAPPING (10-16X.625-IN)	
	15	1	**285-8565**	1	INSULATION	

C-CHANGE FROM PREVIOUS TYPE
D-ORDER BY THE METER
M-METRIC PART

218-6394 **DUCT GP-CAB AIR** *(contd.)* **i02541254**

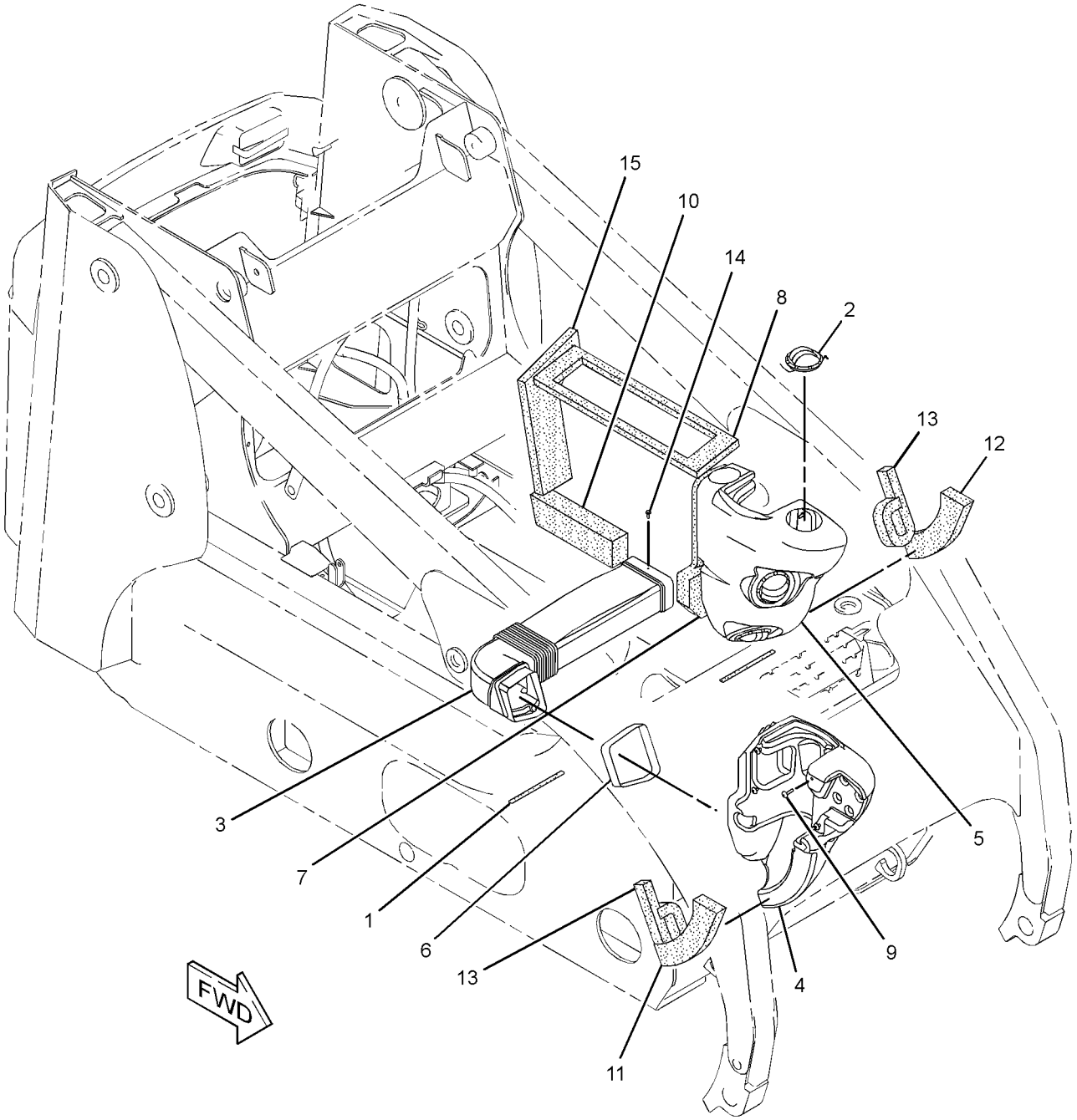

GRAPHIC #1 **<END>** g01293158

OPERATOR STATION

231-7325 FRAME GP-WINDOW–RH

S/N: MWD1-UP
PART OF 224-7058 WINDOW GP-CAB
AN ATTACHMENT

SMCS-7310 **i03971269**

NOTE	REF NO	GRAPHIC REF	PART NUMBER	QTY	PART NAME 1 2 3 4 5 6 (PRODUCT LEVEL)	SEE PAGE
	1	1	**231-7326**	1	FRAME AS-WINDOW (RH)	
	2	1	**231-7401**	1	HINGE	
	3	1	**239-6138**	1	BRACKET AS	
	4	1	**231-7329**	1	KIT-LATCH (RH)	
					(INCLUDES BOLT, LATCH, SCREW, SPRING, CLIPS & WASHERS)	
	5	1	**5C-7682**	3	SCREW (8-32X0.25-IN)	

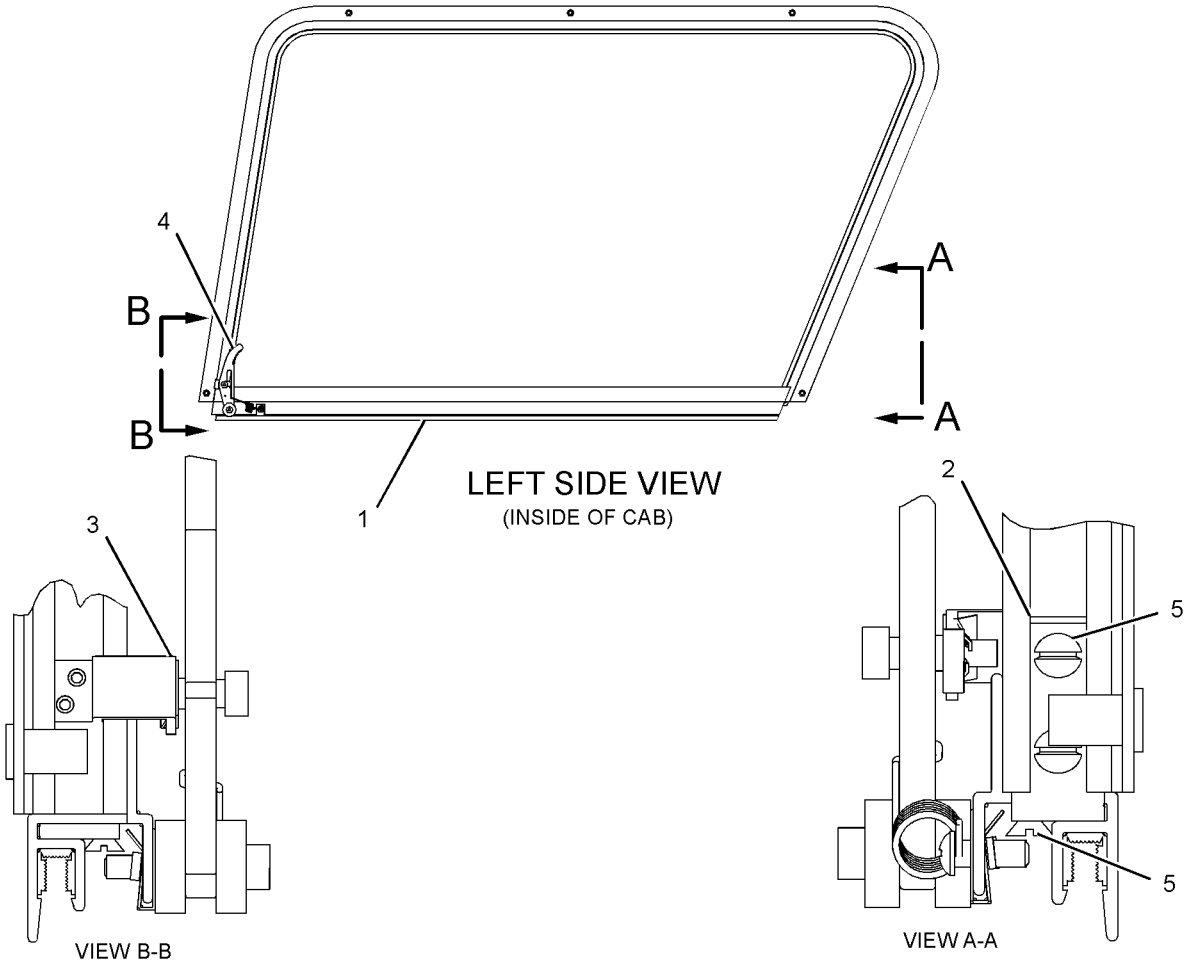

GRAPHIC #1 **<END>** g01487014

OPERATOR STATION

231-7327 FRAME GP-WINDOW–LH

S/N: MWD1-UP
PART OF 224-7057 WINDOW GP-CAB
AN ATTACHMENT

SMCS-7310 **i03971270**

NOTE	REF NO	GRAPHIC REF	PART NUMBER	QTY	PART NAME 1 2 3 4 5 6 (PRODUCT LEVEL)	SEE PAGE
	1	1	**231-7328**	1	FRAME AS-WINDOW (LH)	
	2	1	**231-7401**	1	HINGE	
	3	1	**239-6138**	1	BRACKET AS	
	4	1	**231-7329**	1	KIT-LATCH (LH)	
					(INCLUDES BOLT, LATCH, SCREW, SPRING, CLIPS & WASHERS)	
	5	1	**5C-7682**	3	SCREW (8-32X0.25-IN)	

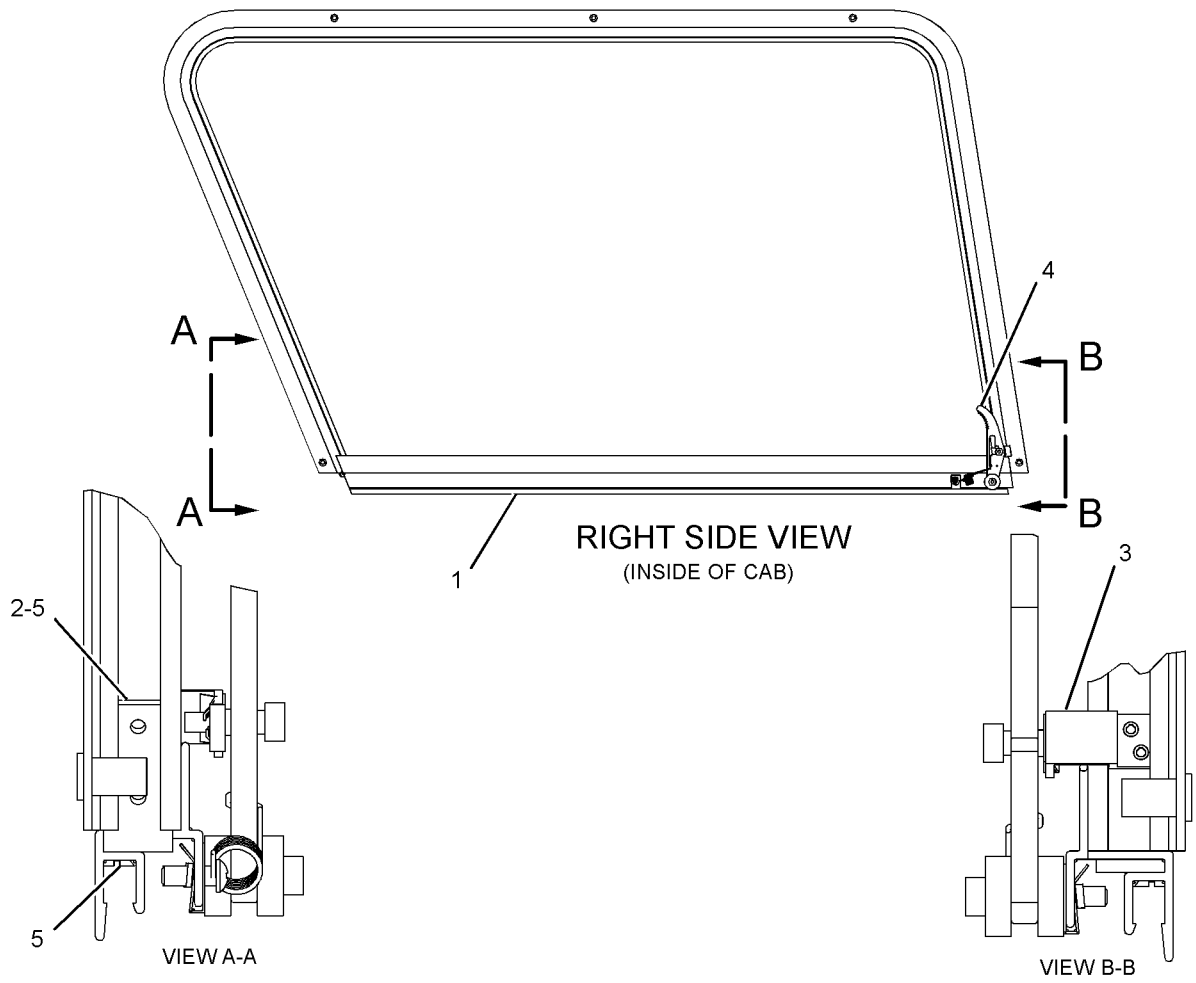

GRAPHIC #1 **<END>** g01487373

OPERATOR STATION

233-5632 GUARD GP-ROPS/FOPS

S/N: MWD1-UP

AN ATTACHMENT

SMCS-7323 **i03973432**

NOTE	REF NO	GRAPHIC REF	PART NUMBER	QTY	PART NAME 1 2 3 4 5 6 (PRODUCT LEVEL)	SEE PAGE
	1	1	**152-1161**	1	PLATE AS-FOPS	
	2	1	**153-2683**	1	SPRING AS-GAS	
	4	1	**247-7182**	1	FILM (FOPS)	
M	5	1	**7X-2553**	8	BOLT (M16X2X40-MM)	
	6	1	**8T-4122**	12	WASHER-HARD (17X32X3.5-MM THK)	
M	7	1	**8T-4132**	4	NUT (M16X2-THD)	
D	8	1	**8T-5372**		SEAL (1.4-M)	

D-ORDER BY THE METER
M-METRIC PART

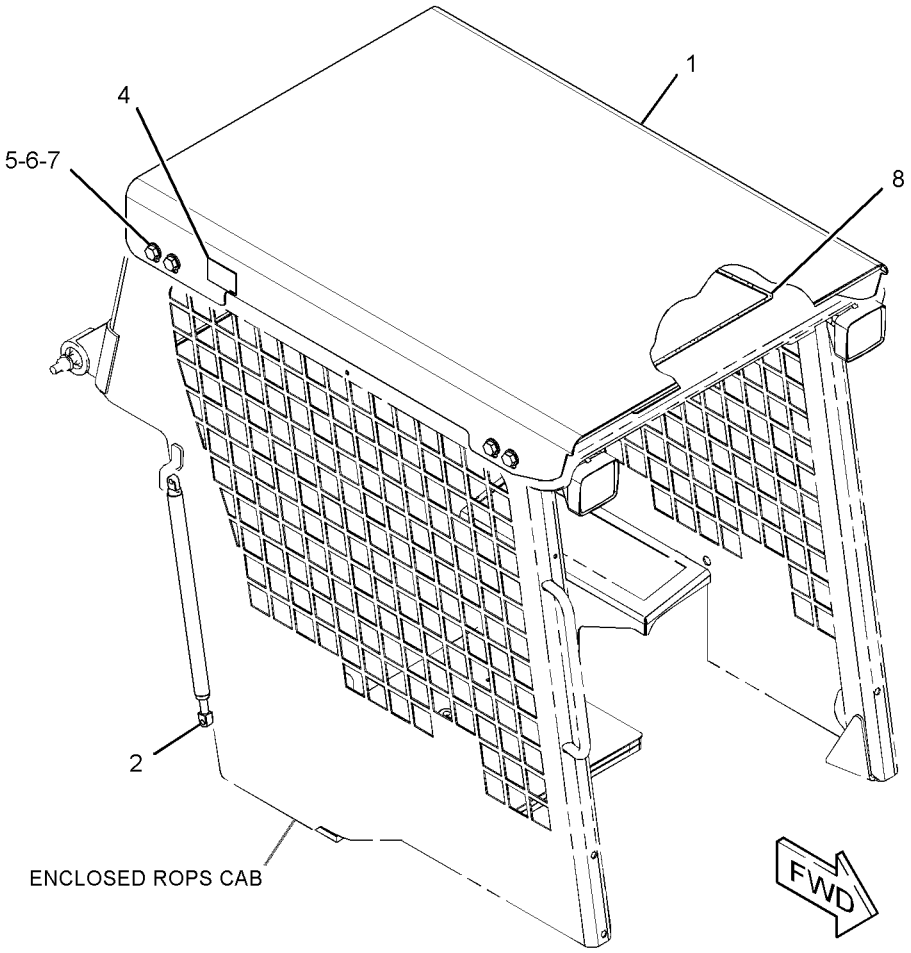

GRAPHIC #1 **<END>** g01437181

OPERATOR STATION

218-6400 HANDHOLD GP

S/N: MWD1-UP
PART OF 356-1931, 356-1933 CAB AR-OPEN ROPS
CANNOT BE USED WITH 218-6440—PAGE 292, 223-0600—PAGE 295
AN ATTACHMENT

SMCS-7256 **i01908092**

NOTE	REF NO	GRAPHIC REF	PART NUMBER	QTY	PART NAME 1 2 3 4 5 6 (PRODUCT LEVEL)	SEE PAGE
	1	1	**218-6377**	1	HANDLE	
	2	1	**8T-4121**	2	WASHER-HARD (11X21X2.5-MM THK)	
M	3	1	**8T-4133**	2	NUT (M10X1.5-THD)	
M	4	1	**9X-2041**	2	SCREW-TRUSS HEAD (M10X1.5X20-MM)	

M-METRIC PART

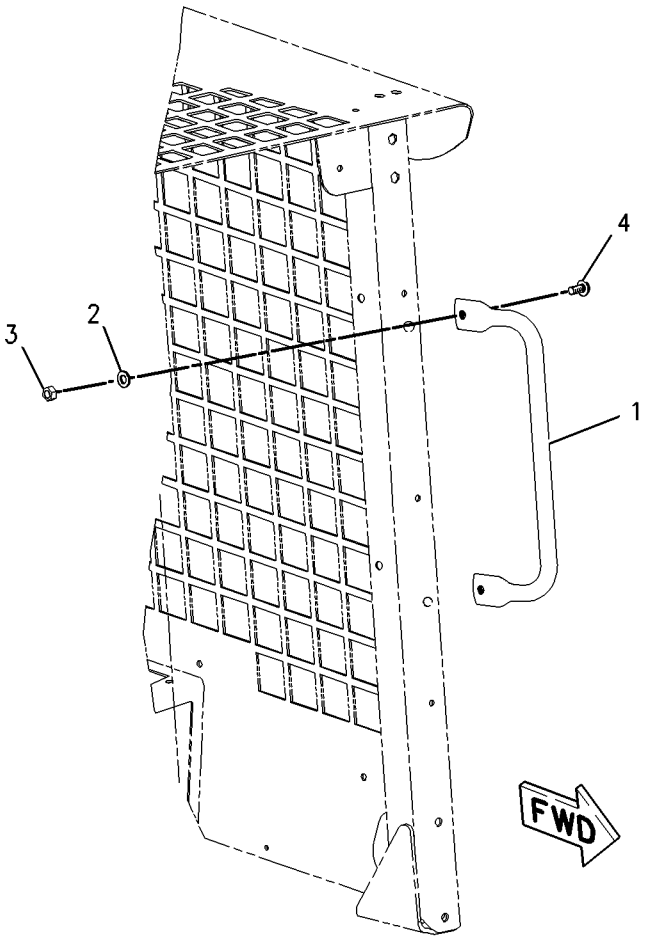

GRAPHIC #1 **<END>** g01002446

OPERATOR STATION

218-6118 HANDLE GP-MODULAR

S/N: MWD1-UP

PART OF 218-6485, 218-6490 CONTROL GP-HANDLE

AN ATTACHMENT

SMCS-5705 **i03648355**

NOTE	REF NO	GRAPHIC REF	PART NUMBER	QTY	PART NAME 1 2 3 4 5 6 (PRODUCT LEVEL)	SEE PAGE
	1	1	**8L-8413**	1	STRAP-CABLE	
	2	1	**159-9853**	1	GROMMET	
	3	1	**174-3091**	1	KIT-RECEPTACLE (12-PIN)	
					(INCLUDES RECEPTACLE AS & WEDGE)	
	4	1	**186-3735**	4	PIN-CONNECTOR (16-GA TO 18-GA)	
	5	1	**8T-8737**	8	PLUG-SEAL	

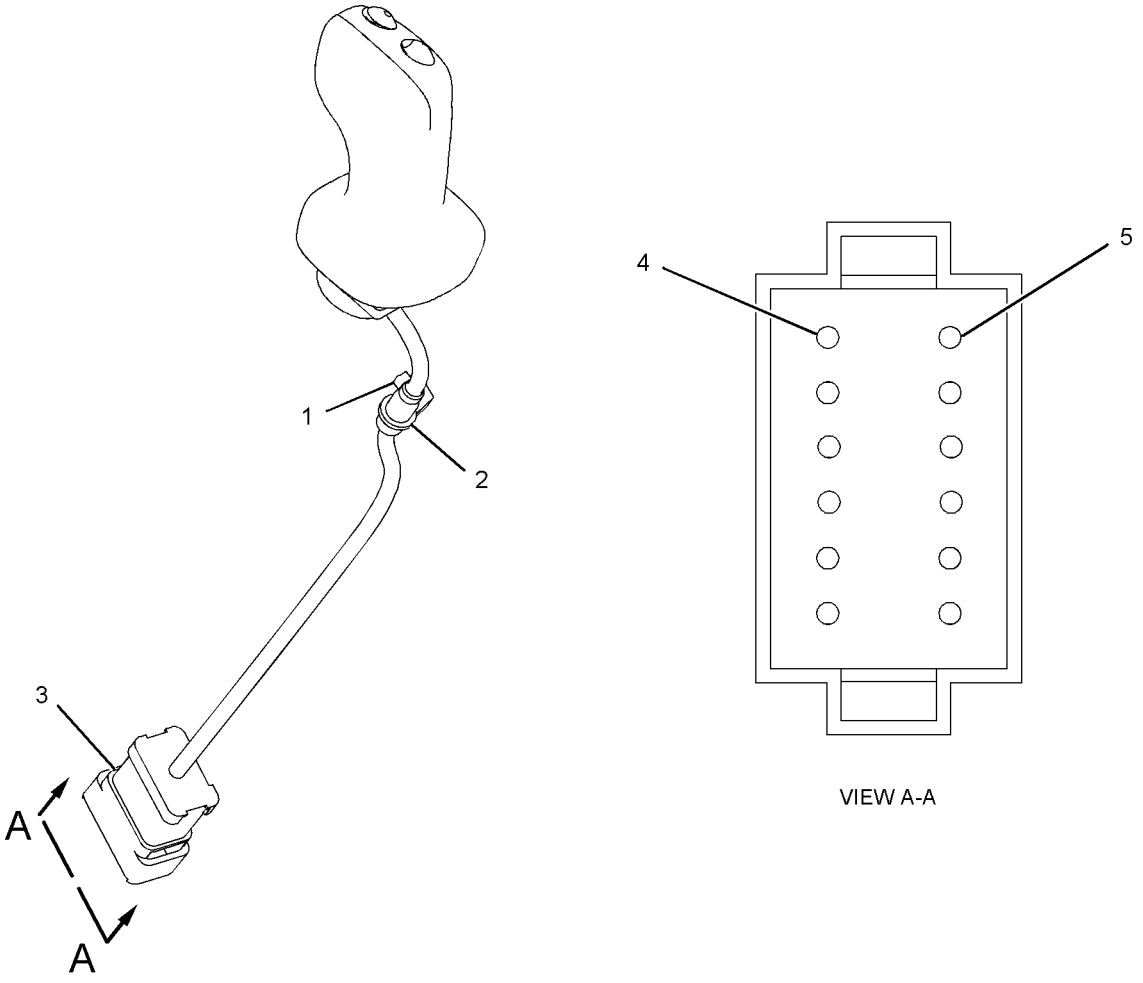

GRAPHIC #1 **<END>** g01113888

OPERATOR STATION

229-8746 HEATER & MTG GP-CAB

S/N: MWD1-UP
PART OF 356-1935 HEATER AR-CAB
AN ATTACHMENT

SMCS-7304 **i02010980**

NOTE	REF NO	GRAPHIC REF	PART NUMBER	QTY	PART NAME 1 2 3 4 5 6 (PRODUCT LEVEL)	SEE PAGE
Y	1	1	*218-6393*	1	HEATER GP-CAB	312
M	2	1	**7X-2537**	4	BOLT (M8X1.25X35MM)	
	3	1	**8T-4224**	4	WASHER-HARD (8.8X16X2MM THK)	

M-METRIC PART
Y-SEPARATE ILLUSTRATION

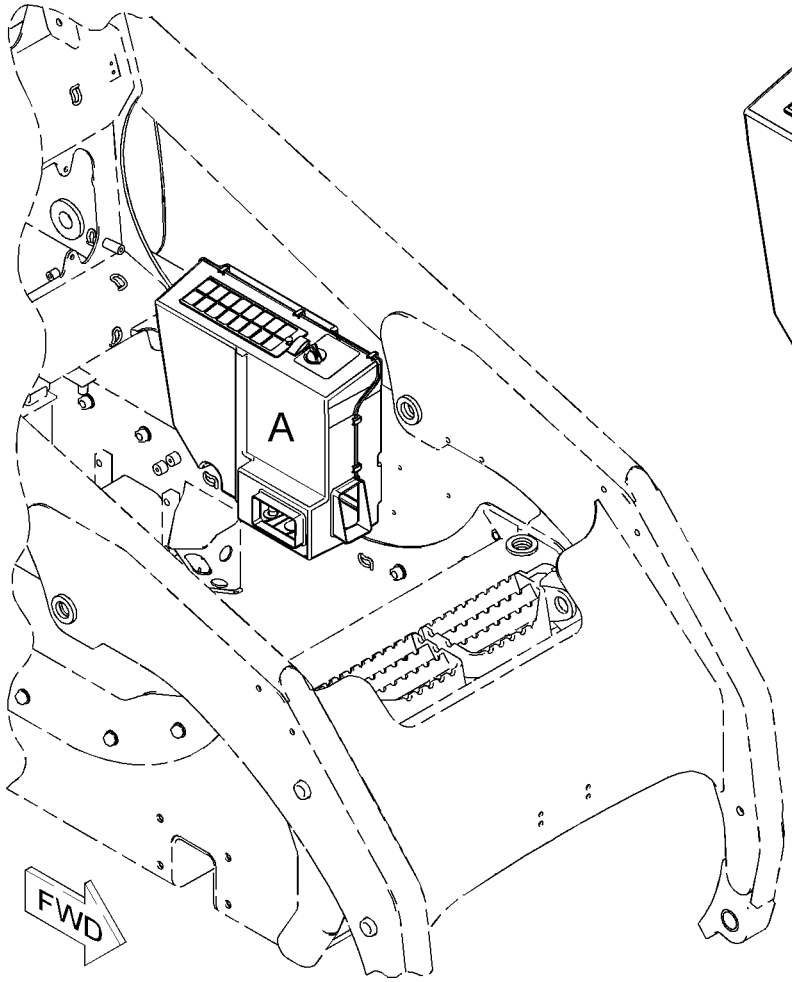

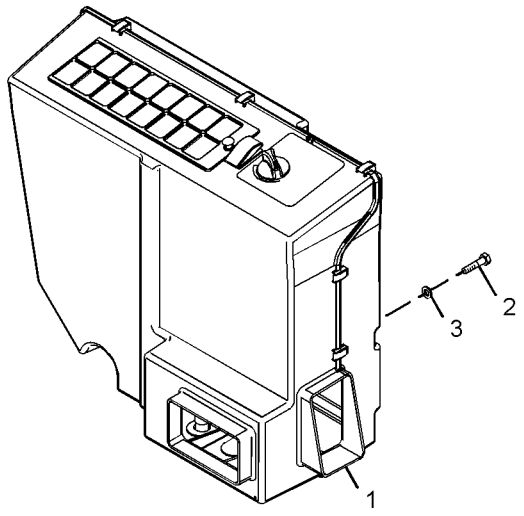

VIEW OF AREA A

GRAPHIC #1 **<END>** g01018708

OPERATOR STATION

356-1935 HEATER AR-CAB

S/N: MWD1-UP

PART OF 356-1934 CAB AR-ENCLOSED ROPS

CANNOT BE USED WITH 356-1932—PAGE 315, 326-5536—PAGE 259

AN ATTACHMENT

SMCS-7304 **i03901806**

NOTE	PART NUMBER	QTY	PART NAME 1 2 3 4 5 6 (PRODUCT LEVEL)	SEE PAGE
Y	*218-6394*	1	DUCT GP-CAB AIR	303
Y	*229-8746*	1	HEATER & MTG GP-CAB	310
Y	*218-6086*	1	LINES GP-HEATER	321
Y	*356-1928*	1	LINES GP-HYDRAULIC FAN (CAB HEATER)	184

Y-SEPARATE ILLUSTRATION

<END>

OPERATOR STATION

218-6393 HEATER GP-CAB

S/N: MWD1-UP
PART OF 229-8746 HEATER & MTG GP-CAB
AN ATTACHMENT

SMCS-7304, 7342 **i03588483**

NOTE	REF NO	GRAPHIC REF	PART NUMBER	QTY	PART NAME 1 2 3 4 5 6 (PRODUCT LEVEL)	SEE PAGE
	1	1	**185-4015**	10	CLIP	
	2	1	**218-6399**	1	SEAL	
C	3	1	**312-1683**	1	HOUSING-COVER	
Y	4	1	**231-8122**	1	HOUSING AS-SIDE (AIR CONDITIONER, HEATER)	314
	5	1	**231-8124**	1	COIL AS-HEATER	
	6	1	**295-5440**	1	MOTOR	
	7	1	**231-8126**	1	VALVE AS	
	8	1	**231-8127**	1	GROMMET	
C	9	1	**312-2635**	1	COVER GP-ACCESS	
		1	**231-8129**	2	PIN	
		1	**231-8142**	2	RETAINER	
C	11	1	**303-6658**	1	FILTER ELEMENT-CAB AIR	
	13	1	**231-8132**	1	FILTER ELEMENT-CAB AIR	
	14	1	**231-8133**	1	PANEL	
	15	1	**231-8141**	1	GROMMET	
	17	1	**231-8143**	1	FILM (TEMPERATURE CONTROL)	
	18	1	**231-8144**	1	BAFFLE	
	19	1	**231-8145**	1	GROMMET	
	20	1	**206-7398**	1	KNOB-CONTROL (TEMPERATURE SELECT)	
	21	1	**305-2969**	2	THUMBSCREW	
	22	1	**218-6947**	1	HARNESS AS-HEATER & AIR COND	
	23	1	**236-5067**	1	SWITCH-ROCKER (HEATER)	
	24	1	**236-5069**	1	RELAY AS (12-VOLT) (HEATER)	

C-CHANGE FROM PREVIOUS TYPE
Y-SEPARATE ILLUSTRATION

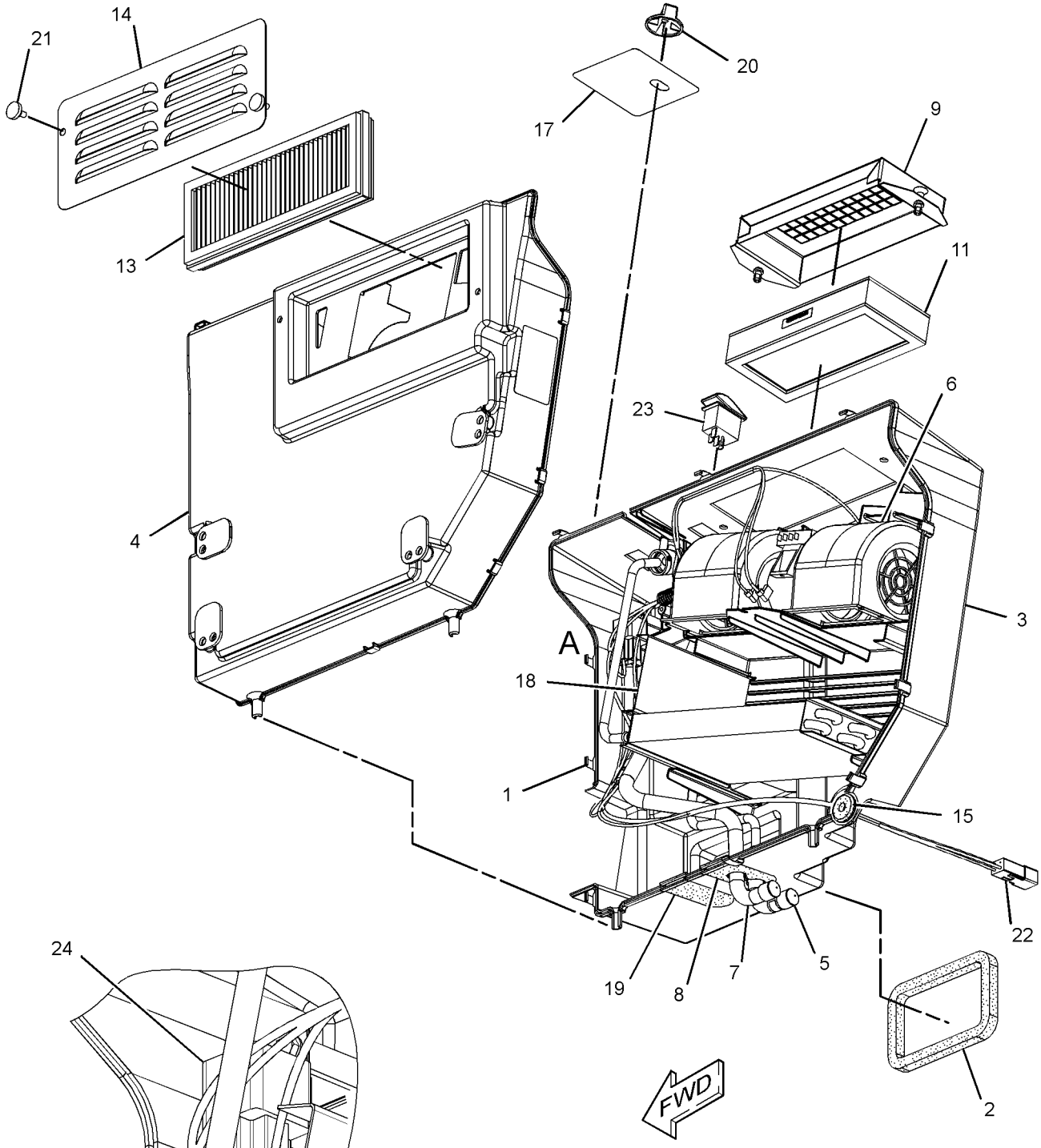

VIEW OF AREA A

GRAPHIC #1 **<END>** g01416774

OPERATOR STATION

231-8122 HOUSING AS-SIDE—AIR CONDITIONER, HEATER

S/N: MWD1-UP

PART OF 218-6405 AIR CONDITIONER GP, 218-6393 HEATER GP-CAB

AN ATTACHMENT

SMCS-7320 **i02014573**

NOTE	REF NO	GRAPHIC REF	PART NUMBER	QTY	PART NAME 1 2 3 4 5 6 (PRODUCT LEVEL)	SEE PAGE
	1	1	**233-5929**	2	LOCKWASHER	
	2	1	**233-5931**	4	LOCKWASHER	
M	3	1	**131-3540**	4	LOCKNUT (M8X1.25 THD)	
	4	1	**233-5934**	4	MOUNT	
M	5	1	**129-3178**	2	LOCKNUT (M6X1 THD)	

M-METRIC PART

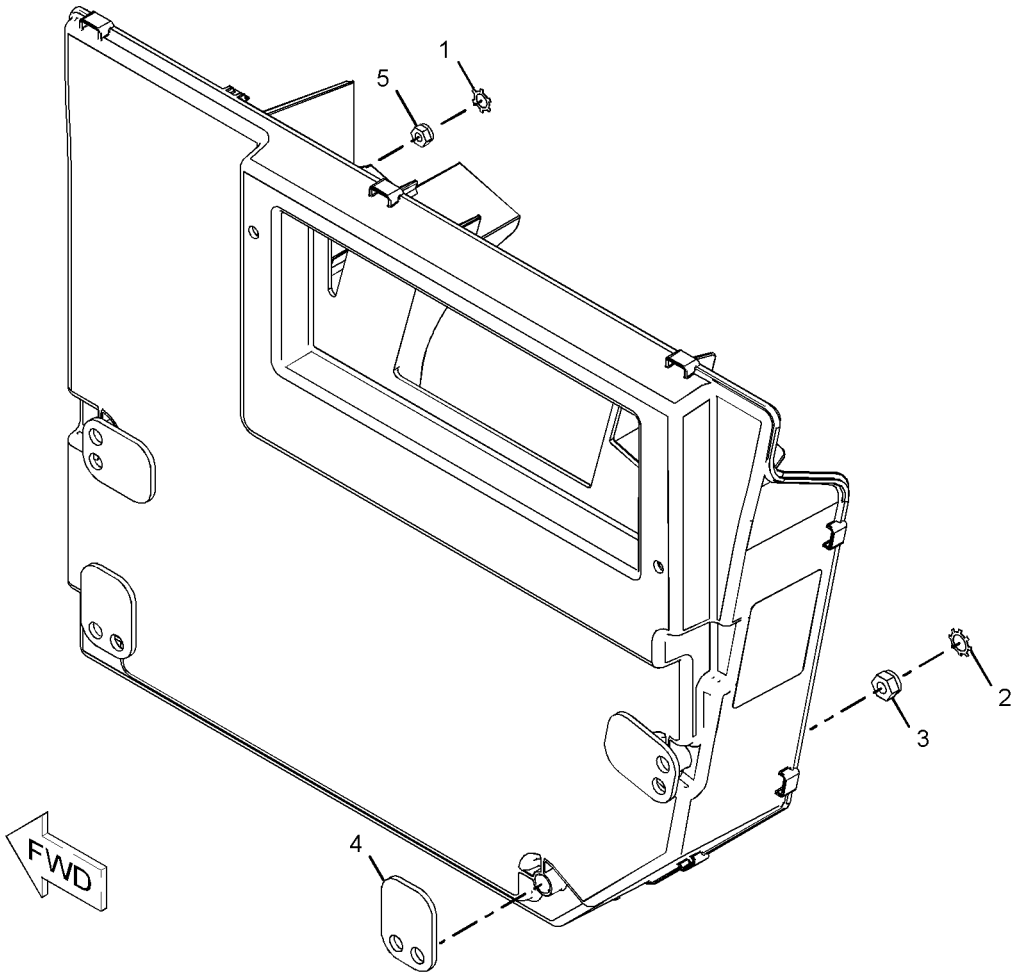

GRAPHIC #1 **<END>** g01041727

356-1932 INSTALLATION GP-COVER & LINES–

WITHOUT A/C, HEATER

S/N: MWD1-UP

PART OF 356-1931, 356-1933 CAB AR-OPEN ROPS

CANNOT BE USED WITH 356-1935–PAGE 311, 326-5536–PAGE 259

AN ATTACHMENT

SMCS-5057, 5258 **i03901810**

NOTE	PART NUMBER	QTY	PART NAME 1 2 3 4 5 6 (PRODUCT LEVEL)	SEE PAGE
Y	*218-6419*	1	COVER GP-CONSOLE	291
Y	*229-8744*	1	PANEL GP-SIDE	331
Y	*356-1928*	1	LINES GP-HYDRAULIC FAN (CAB HEATER)	184

Y-SEPARATE ILLUSTRATION

<END>

OPERATOR STATION

234-0774 LEVER GP-GOVERNOR

S/N: MWD1-UP

PART OF 327-8939 PEDAL GP-GOVERNOR

SMCS-1265, 1276 **i03809932**

NOTE	REF NO	GRAPHIC REF	PART NUMBER	QTY	PART NAME 1 2 3 4 5 6 (PRODUCT LEVEL)	SEE PAGE
	1	1	**192-2663**	1	LEVER GP-HAND CONTROL (GOVERNOR)	
M		1	**8T-4971**	1	BOLT (M6X1X30-MM)	
M		1	**129-3178**	1	LOCKNUT (M6X1-THD)	
	2	1	**234-0732**	1	CABLE AS	
	3	1	**8T-4742**	1	END-YOKE ROD	
	4	1	**8T-4744**	1	PIN AS-SPRING	
M	5	1	**5C-2890**	1	NUT (M6X1-THD)	

M-METRIC PART

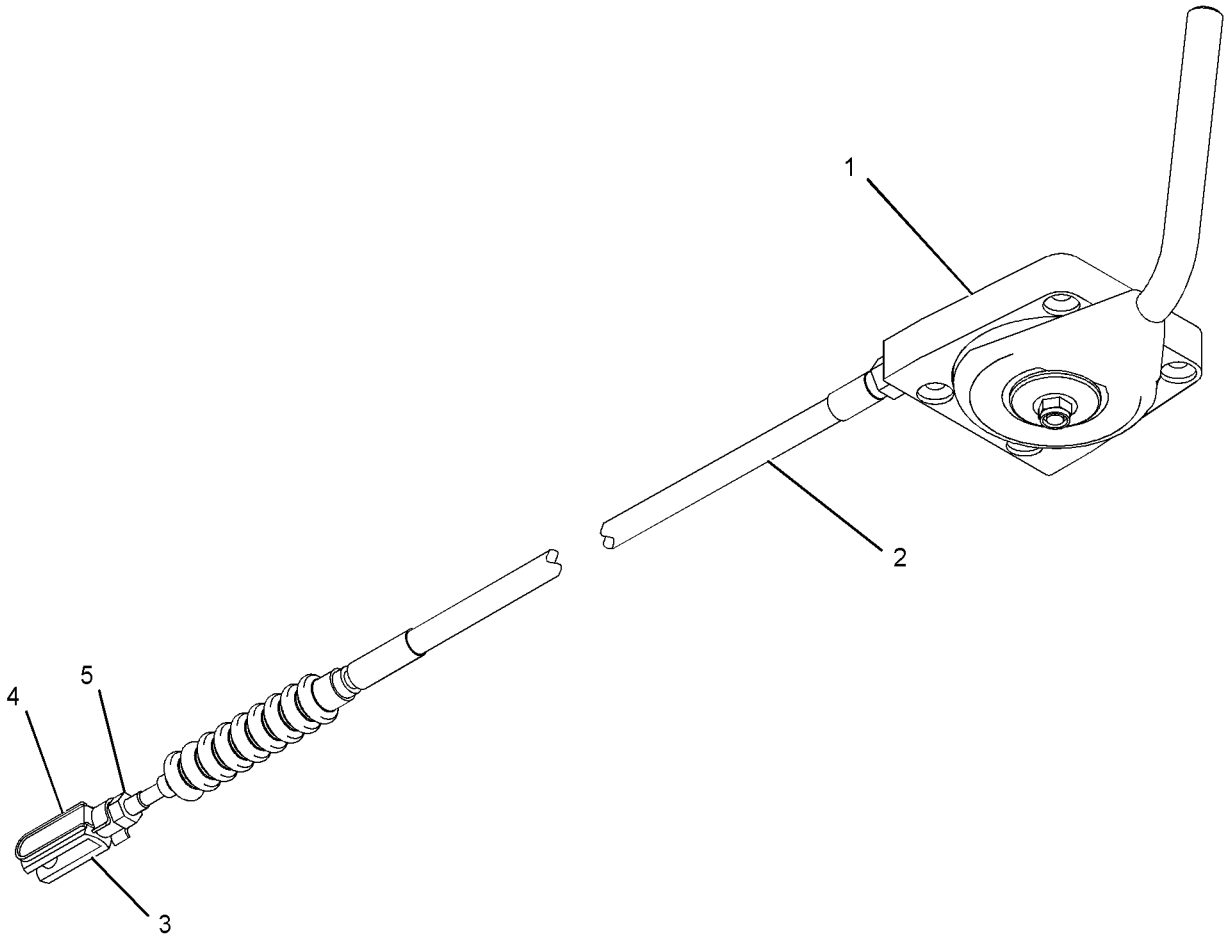

GRAPHIC #1 **<END>** g02064773

OPERATOR STATION

326-5406 LINER GP-CAB

S/N: MWD1-UP

PART OF 326-5400 CAB AR

SMCS-7268, 7329 **i03970899**

NOTE	REF NO	GRAPHIC REF	PART NUMBER	QTY	PART NAME 1 2 3 4 5 6 (PRODUCT LEVEL)	SEE PAGE
	1	1	**218-6357**	1	INSULATION	
	2	1	**292-3114**	2	SEAL	
	3	1	**326-5407**	1	LINER	
	4	1	**326-5408**	1	INSULATION	
E	5	1	**9X-2092**		TRIM-EDGE (113-CM)	

E-ORDER BY THE CENTIMETER

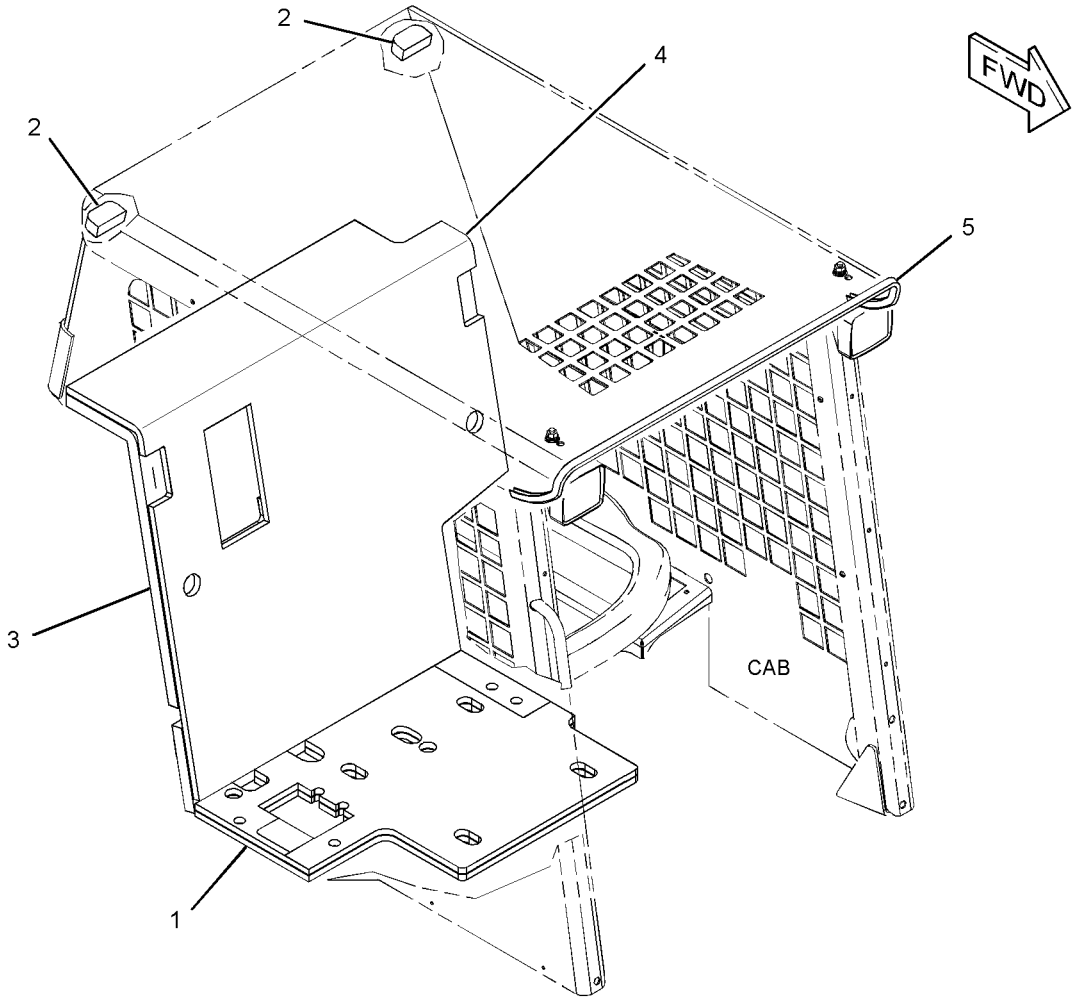

GRAPHIC #1 **<END>** g02146633

OPERATOR STATION

142-9311 LINER-CAB–GRAY

S/N: MWD1-UP

PART OF 326-5534, 356-1934 CAB AR-ENCLOSED ROPS, 356-1933 CAB AR-OPEN ROPS AN ATTACHMENT

SMCS-7329 **i02016735**

NOTE	REF NO	GRAPHIC REF	PART NUMBER	QTY	PART NAME 1 2 3 4 5 6 (PRODUCT LEVEL)	SEE PAGE
					(NO SERVICED PARTS)	

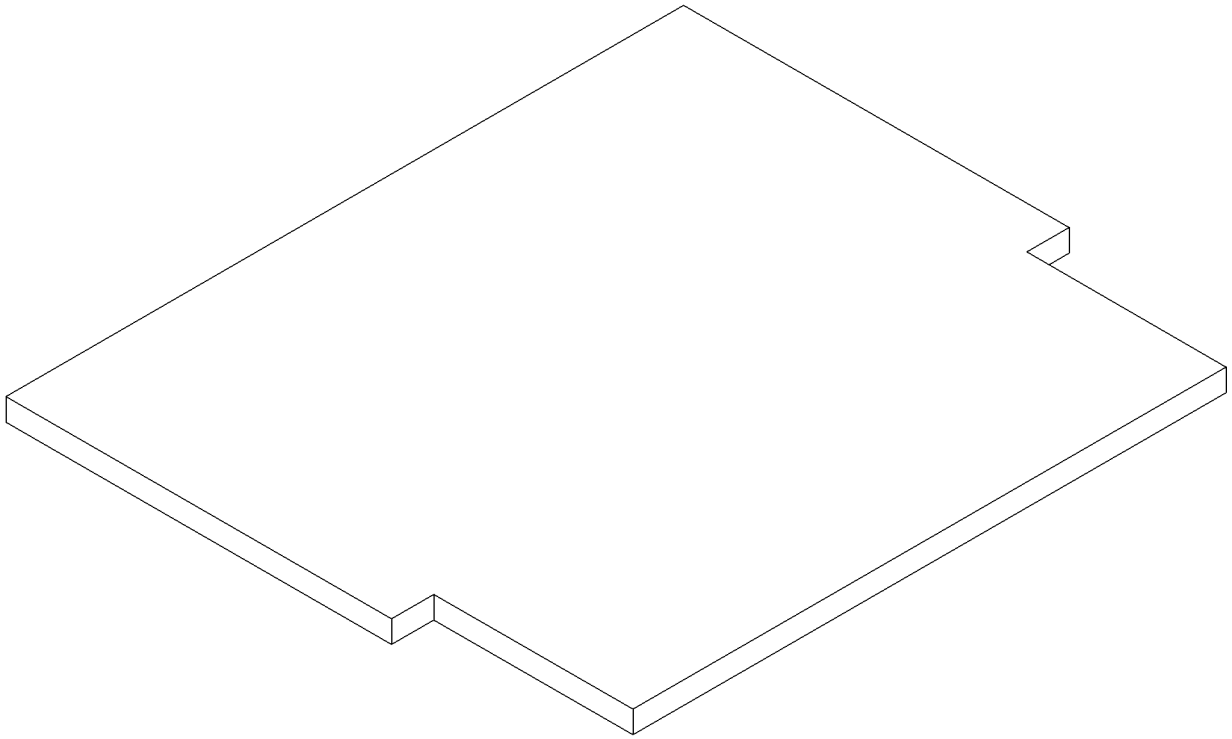

GRAPHIC #1 **<END>** g00782727

OPERATOR STATION

218-6560 LINES GP-AIR CONDITIONER

S/N: MWD1-UP

PART OF 326-5536 AIR CONDITIONER AR

AN ATTACHMENT

SMCS-1808, 7320 **i03973092**

NOTE	REF NO	GRAPHIC REF	PART NUMBER	QTY	PART NAME 1 2 3 4 5 6 (PRODUCT LEVEL)	SEE PAGE
	1	1	**3S-2093**	1	STRAP-CABLE	
	3	1	**236-6923**	1	SWITCH AS-PRESSURE (AIR CONDITIONER)	
M	4	1	**085-8091**	2	BOLT (M10X1.5X55-MM)	
	5	1	**101-8296**	2	CLIP	
Y	6	1	*186-6190*	1	ACCUMULATOR GP-REFRIGERANT (CHARGED)	257
CI	7	1	**233-5856**	1	HOSE AS	
CI	8	1	**233-5951**	1	HOSE AS	
I	9	1	**218-5686**	1	HOSE AS	
	10	1	**218-6584**	1	HOSE AS	
	11	1	*234-0566*	1	FITTING AS	
		1	**3E-4051**	1	CAP-SEAL (REFRIGERANT, LOW SIDE)	
		1	**3E-4057**	1	VALVE AS (LOW SIDE)	
	12	1	**246-9039**	1	PLATE-INFORMATION (AIR CONDITIONER REFRIGERANT)	
	13	1	**8T-4121**	2	WASHER-HARD (11X21X2.5-MM THK)	
	15	1	**9C-2741**	2	SPACER (13.94X17.14X34-MM THK)	
	16	1	**9X-7378**	1	SEAL-O-RING	
	17	1	**9X-7380**	1	SEAL-O-RING	
	18	1	**9X-7381**	3	SEAL-O-RING	
	19	1	**9X-7382**	2	SEAL-O-RING	
	20	1	**9X-7383**	3	SEAL-O-RING	
D	21	1	**5P-5924**		SEAL (0.15-M EACH)	

C-CHANGE FROM PREVIOUS TYPE
D-ORDER BY THE METER
I-REFER TO HYDRAULIC INFORMATION SYSTEM
M-METRIC PART
Y-SEPARATE ILLUSTRATION

218-6560 **LINES GP-AIR CONDITIONER** *(contd.)* **i03973092**

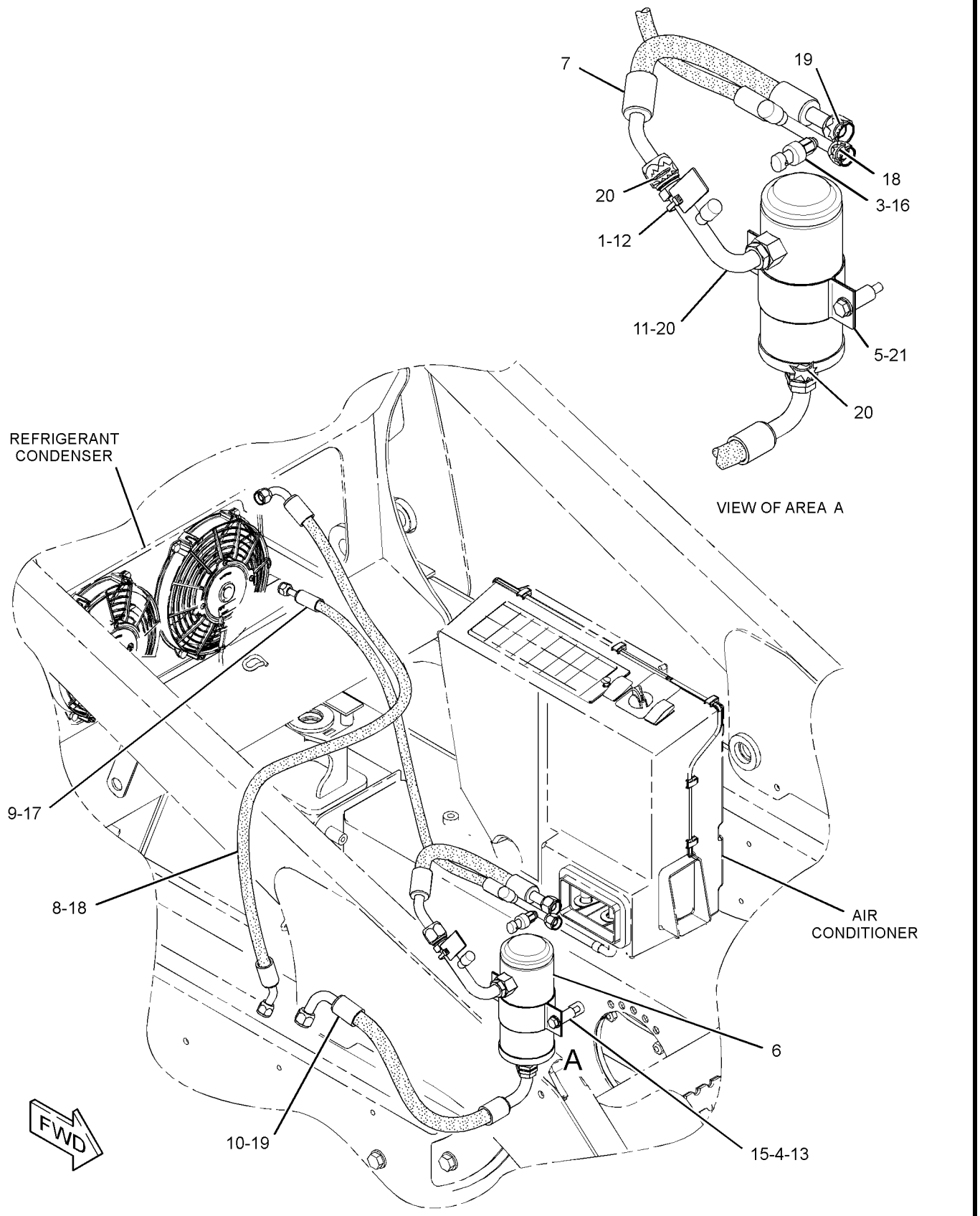

GRAPHIC #1 **<END>** g01445524

218-6086 LINES GP-HEATER

S/N: MWD1-UP

PART OF 326-5536 AIR CONDITIONER AR, 356-1935 HEATER AR-CAB

AN ATTACHMENT

SMCS-1812, 7304 **i03960270**

NOTE	REF NO	GRAPHIC REF	PART NUMBER	QTY	PART NAME 1 2 3 4 5 6 (PRODUCT LEVEL)	SEE PAGE
C	1	1	**7K-1181**	2	STRAP-CABLE	
	2	1	**8F-8151**	1	VALVE-SHUTOFF (CAB HEATER)	
	3	1	**8T-0154**	4	CLAMP-HOSE	
	4	1	**150-7568**	1	ADAPTER	
C	5	1	**178-3620**	1	STRAP-DUAL CLAMP	
	6	1	**250-1493**	1	ELBOW	
	7	1	**3S-8665**	1	CLIP	
C	8	1	**4P-8134**	1	CLIP	
C	9	1	**8T-4121**	1	WASHER-HARD (11X21X2.5-MM THK)	
M	10	1	**8T-4195**	1	BOLT (M10X1.5X30-MM)	
CE	11	1	**206-2724**		GUARD (50-CM)	
CE	11A	1	**206-2724**		GUARD (60-CM)	
CE	12	1	**136-1953**		HOSE (159-CM)	
CE	12A	1	**136-1953**		HOSE (167-CM)	

C-CHANGE FROM PREVIOUS TYPE
E-ORDER BY THE CENTIMETER
M-METRIC PART

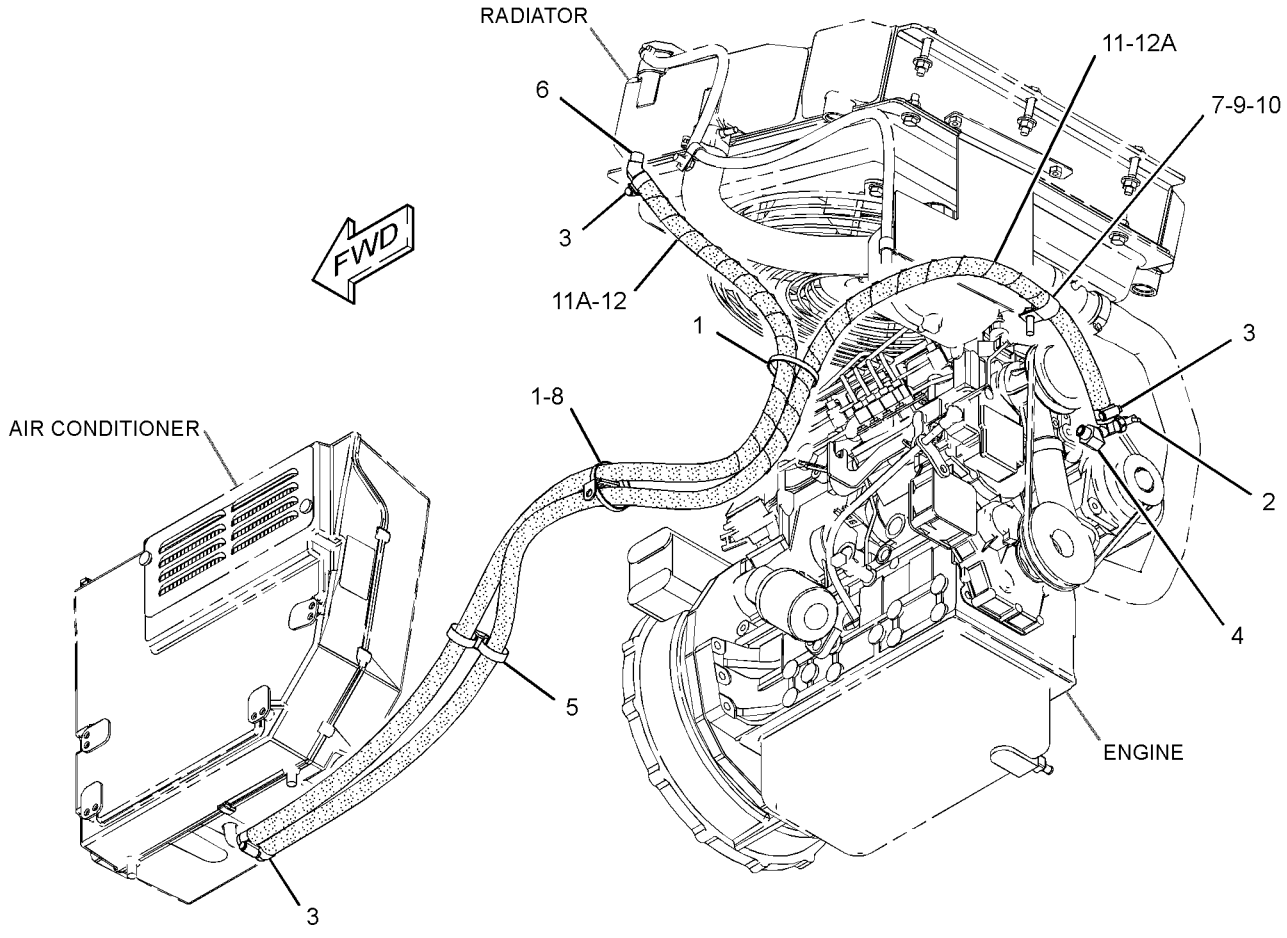

GRAPHIC #1 **<END>** g01409020

OPERATOR STATION

258-4230 MIRROR GP-REAR VIEW

S/N: MWD1-UP

PART OF 326-5400 CAB AR

SMCS-7319 **i03505726**

NOTE	REF NO	GRAPHIC REF	PART NUMBER	QTY	PART NAME 1 2 3 4 5 6 (PRODUCT LEVEL)	SEE PAGE
	1	1	**280-6070**	1	MIRROR AS (REAR VIEW)	
	2	1	**3B-4505**	1	LOCKWASHER	
M	3	1	**5C-7261**	1	NUT (M8X1.25-THD)	
	4	1	**8T-4224**	1	WASHER-HARD (8.8X16X2-MM THK)	

M-METRIC PART

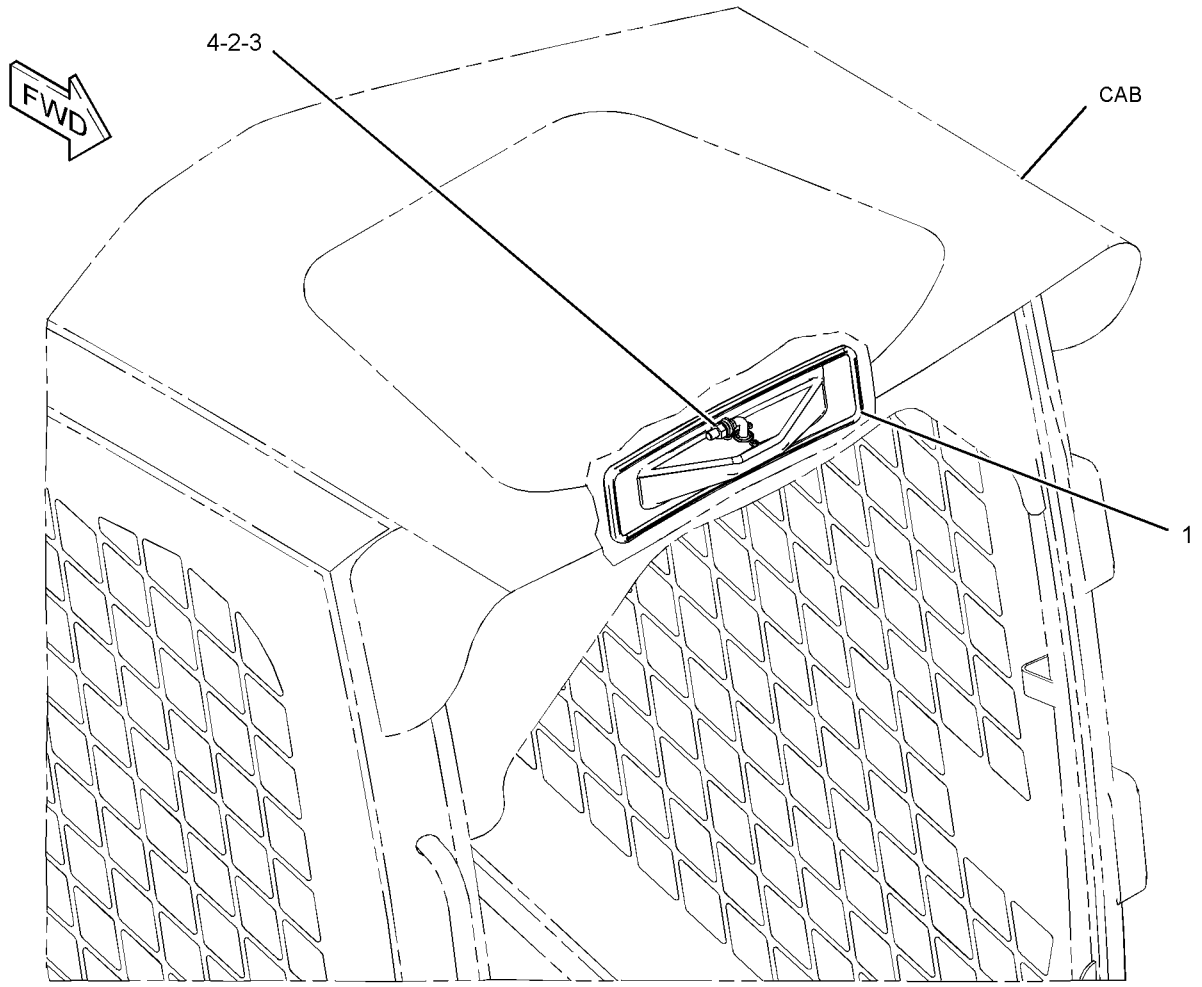

GRAPHIC #1 **<END>** g01316638

223-6537 MODULE GP-WARNING INDICATOR

S/N: MWD1-UP

PART OF 328-2270 PANEL GP-INSTRUMENT

SMCS-7407, 7431 **i03355683**

NOTE	REF NO	GRAPHIC REF	PART NUMBER	QTY	PART NAME 1 2 3 4 5 6 (PRODUCT LEVEL)	SEE PAGE
	1	1	**102-8801**	1	KIT-RECEPTACLE (12-PIN)	
					(INCLUDES RECEPTACLE AS & WEDGE)	
	2	1	**232-4706**	1	GASKET	
	4	1	**186-3735**	10	PIN-CONNECTOR (16-GA TO 18-GA)	
	5	1	**8T-8737**	2	PLUG-SEAL	

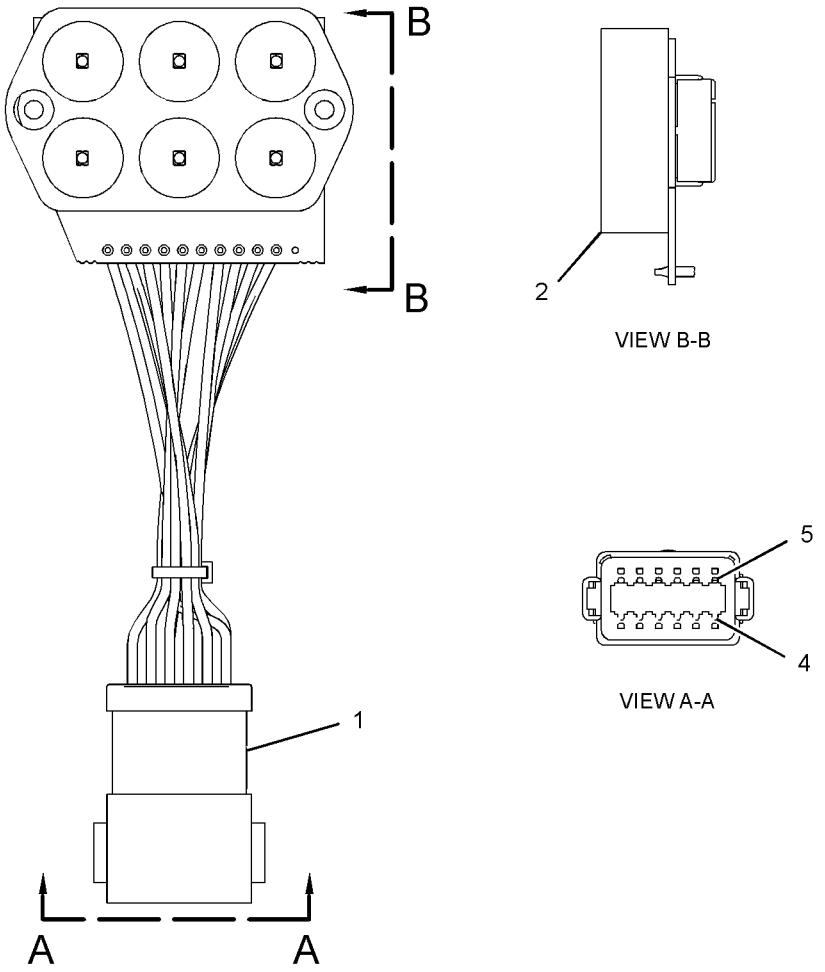

GRAPHIC #1 **<END>** g01839133

OPERATOR STATION

249-2910 MODULE GP-WARNING INDICATOR

S/N: MWD1-UP

PART OF 328-2270 PANEL GP-INSTRUMENT

SMCS-7407, 7431 **i02757214**

NOTE	REF NO	GRAPHIC REF	PART NUMBER	QTY	PART NAME 1 2 3 4 5 6 (PRODUCT LEVEL)	SEE PAGE
	1	1	**8T-8737**	3	PLUG-SEAL	
	2	1	**232-4706**	1	GASKET	
	3	1	**186-3735**	9	PIN-CONNECTOR (16-GA TO 18-GA)	
	4	1	**102-8801**	1	KIT-RECEPTACLE (12-PIN)	
					(INCLUDES RECEPTACLE AS & WEDGE)	

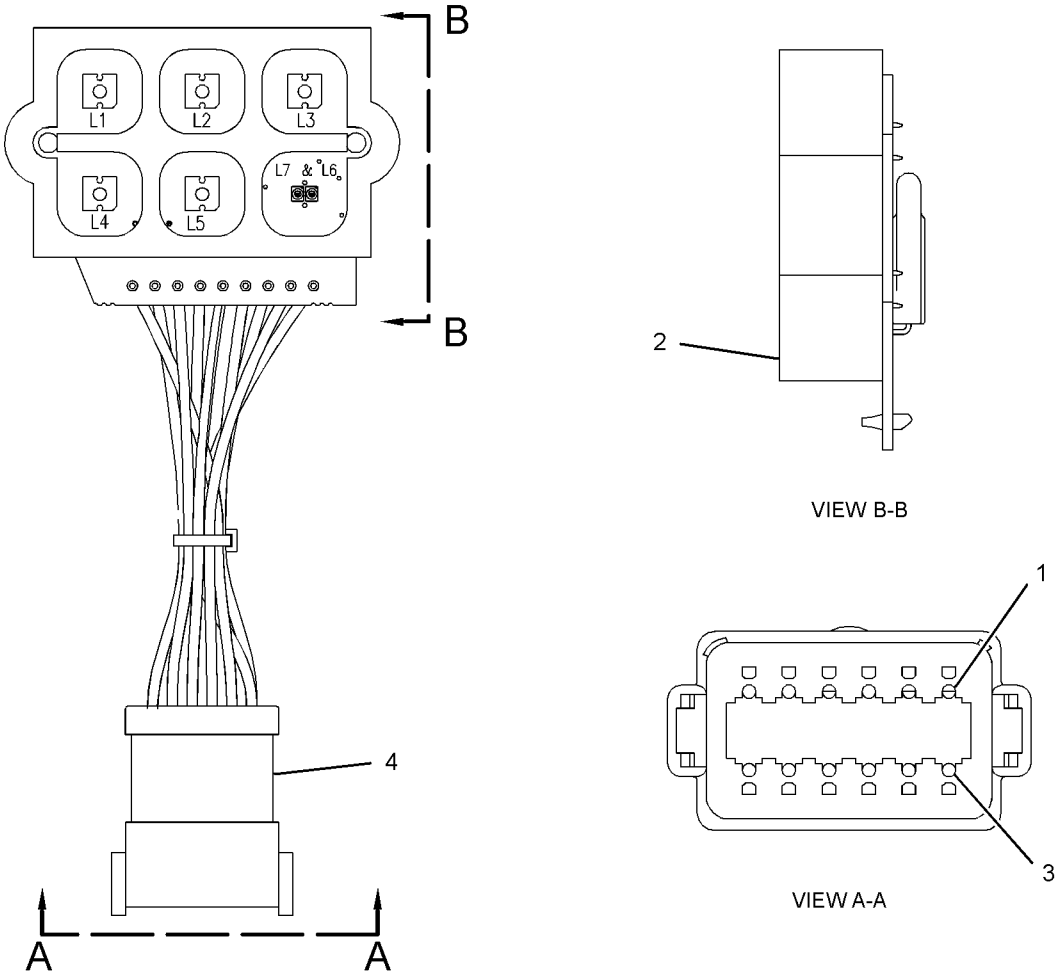

GRAPHIC #1 **<END>** g01152784

330-5012 MOTOR GP-WINDOW WIPER

S/N: MWD1-UP
12-VOLT
PART OF 223-0616, 276-3440 DOOR GP-CAB
AN ATTACHMENT

SMCS-7305 **i03644764**

NOTE	REF NO	GRAPHIC REF	PART NUMBER	QTY	PART NAME 1 2 3 4 5 6 (PRODUCT LEVEL)	SEE PAGE
	1	1	**102-8804**	1	KIT-RECEPTACLE (4-PIN)	
					(INCLUDES RECEPTACLE AS & WEDGE)	
	2	1	**186-3735**	4	PIN-CONNECTOR (16-GA TO 18-GA)	
	3	1	**263-3823**	1	CAP-WIPER	
	4	1	**3F-9556**	1	LOCKWASHER	
M	5	1	**5C-7261**	1	NUT (M8X1.25-THD)	

M-METRIC PART

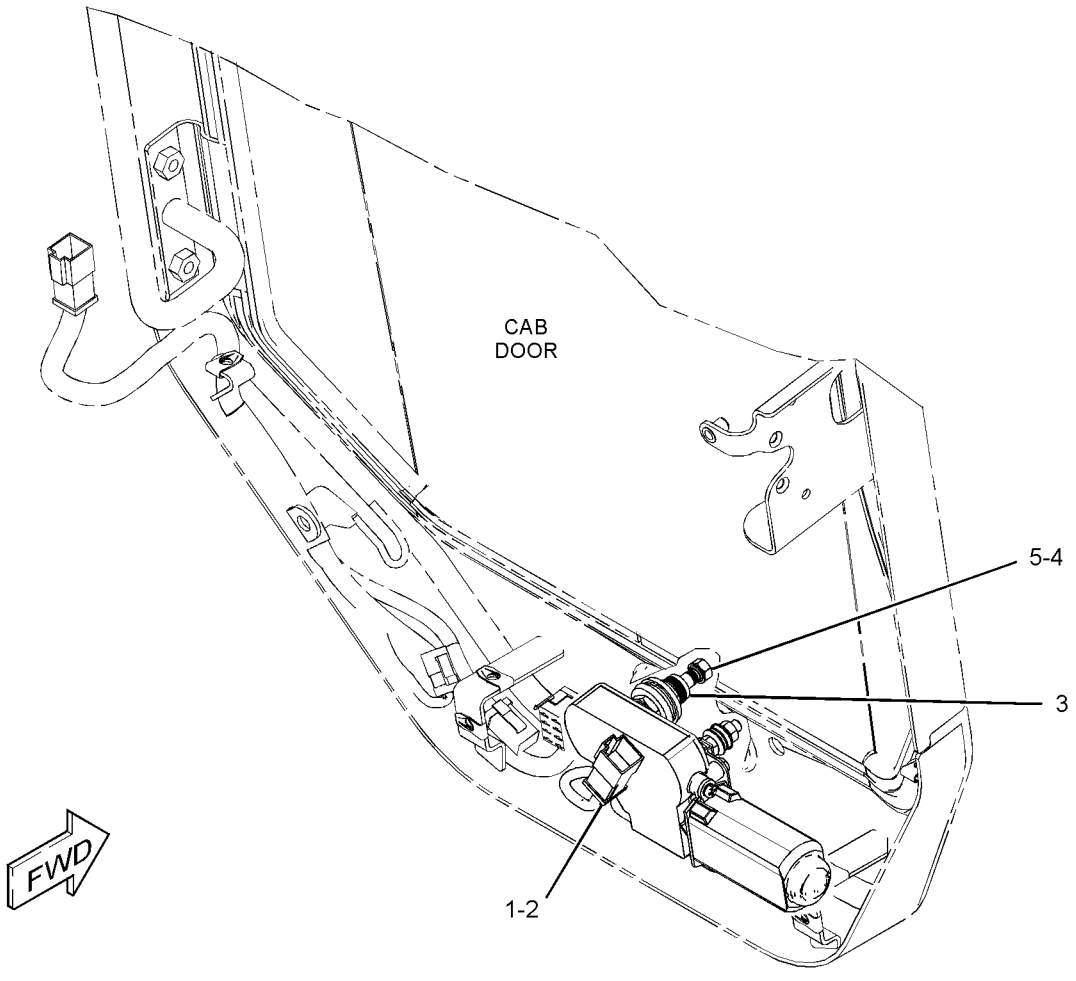

GRAPHIC #1 **<END>** g01956124

OPERATOR STATION

218-6370 MOUNTING GP-ROPS

S/N: MWD1-UP

PART OF 326-5400 CAB AR

SMCS-7266, 7325 **i01955254**

NOTE	REF NO	GRAPHIC REF	PART NUMBER	QTY	PART NAME 1 2 3 4 5 6 (PRODUCT LEVEL)	SEE PAGE
	1	1	**152-5878**	2	MOUNT AS	
	2	1	**153-6981**	2	MOUNT	
	3	1	**159-5790**	1	BRACKET	
	4	1	**159-5792**	1	BAR AS	
	5	1	**159-5794**	1	SPRING	
	6	1	**218-6381**	2	SPACER	
	7	1	**165-7095**	4	WASHER (16.5X71.5X3-MM THK)	
	8	1	**4P-7581**	1	CLIP	
M	9	1	**6V-9805**	2	BOLT (M6X1X20-MM)	
M	10	1	**7X-2475**	2	BOLT (M16X2X130-MM)	
	11	1	**8T-4122**	4	WASHER-HARD (17X32X3.5-MM THK)	
M	12	1	**8T-4173**	2	BOLT (M16X2X110-MM)	
	13	1	**8T-4205**	2	WASHER-HARD (7.2X14.5X2-MM THK)	
M	14	1	**8T-4778**	4	LOCKNUT (M16X2-THD)	

M-METRIC PART

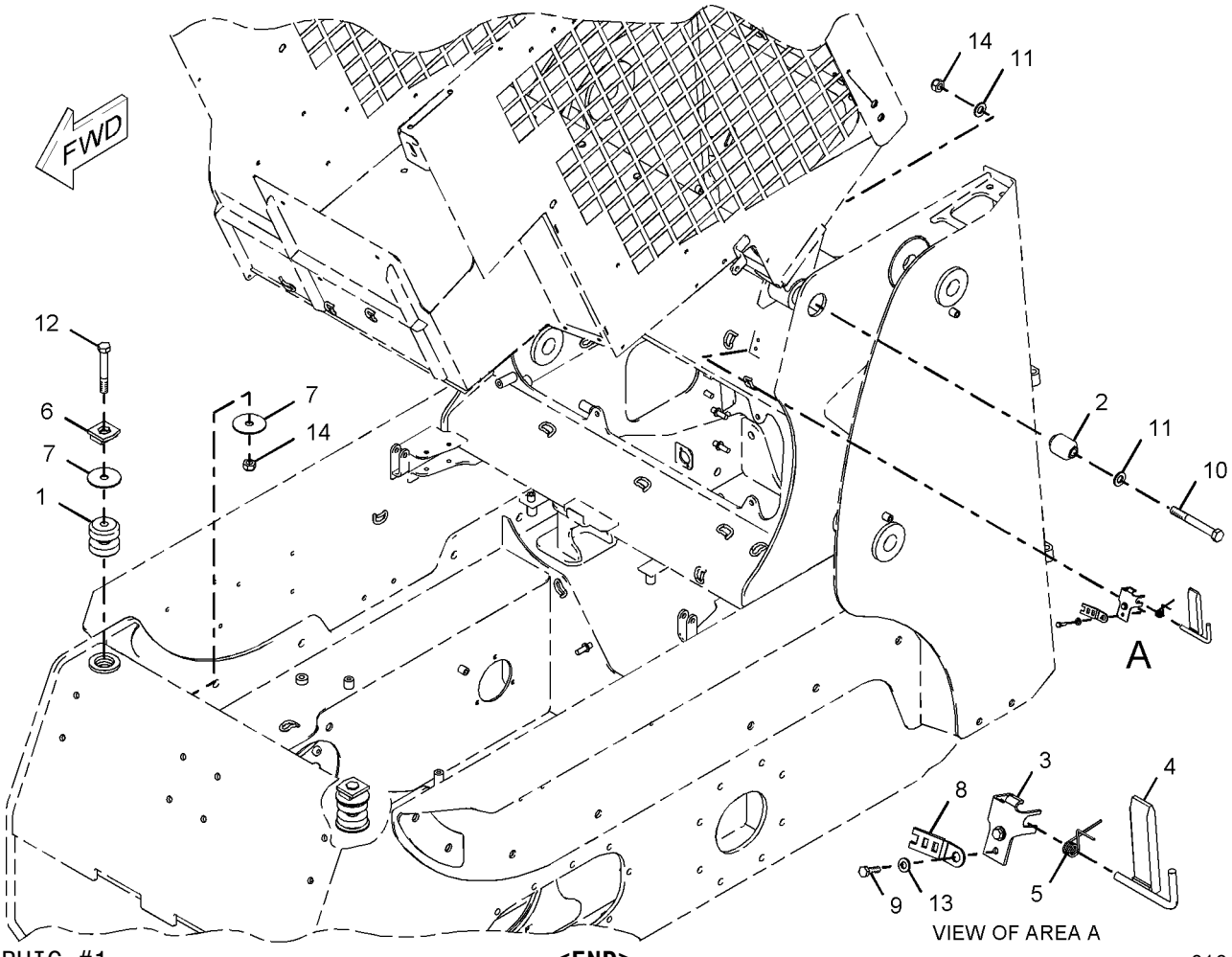

GRAPHIC #1 **<END>** g01018977

OPERATOR STATION

328-2270 PANEL GP-INSTRUMENT

S/N: MWD1-UP

PART OF 326-5400 CAB AR

SMCS-7451 **i03970901**

NOTE	REF NO	GRAPHIC REF	PART NUMBER	QTY	PART NAME 1 2 3 4 5 6 (PRODUCT LEVEL)	SEE PAGE
	1	1	**9R-7941**	1	SOCKET AS	
		1	**9R-7980**	1	COVER	
	2	2	**084-4277**	1	LAMP GP-DOME (12-VOLT)	
		2	**210-8754**	1	LAMP (12-VOLT) (DOME)	
	3	2	**109-2356**	9	PLUG	
	4	2	**110-7887**	1	SWITCH AS-START (KEY)	
		2	**7T-6799**	1	NUT-MOUNTING (1-32-THD)	
		2	**102-8804**	1	KIT-RECEPTACLE (4-PIN)	
					(INCLUDES RECEPTACLE AS & WEDGE)	
		2	**186-3735**	4	PIN-CONNECTOR (16-GA TO 18-GA)	
	5	2	**142-9320**	1	SWITCH AS-ROCKER (PARKING BRAKE)	
	6	2	**142-9328**	1	SWITCH AS-ROCKER (FRONT WORK LIGHT)	
					(EACH SWITCH AS INCLUDES)	
		2	**111-7899**	1	GASKET	
	7	2	**158-6694**	1	PANEL	
	8	1	**158-6695**	1	COVER	
	9	1	**158-6696**	1	COVER	
	10	2	**158-6697**	1	PANEL	
	11	1	**158-6698**	1	COVER	
	12	1	**158-6699**	1	COVER	
	13	2	**223-5941**	1	SWITCH AS-ROCKER (WORK TOOL HYD PRESS RELEASE)	
		2	**111-7899**	1	GASKET	
Y	14	2	**223-6537**	1	MODULE GP-WARNING INDICATOR	323
	15	2	**226-5901**	1	SWITCH AS-ROCKER (INTERLOCK OVERRIDE)	
		2	**111-7899**	1	GASKET	
Y	16	2	**249-2910**	1	MODULE GP-WARNING INDICATOR	324
	17	1	**258-4178**	1	FLANGE-MOUNTING	
	18	1	**301-7293**	1	KIT-SERVICE METER	
					(INCLUDES SERVICE METER, FILM, BOLTS & LOCK NUTS)	
	19	1	**328-2271**	1	HARNESS AS-PANEL	
		1	**123-7615**	1	CONNECTOR	
		1	**228-5856**	6	CONNECTOR	
		1	**186-3735**	11	PIN-CONNECTOR (16-GA TO 18-GA)	
		1	**9X-3401**	3	PIN-CONNECTOR (16-GA TO 18-GA)	
		1	**155-2255**	2	KIT-CONNECTING PLUG (12-PIN)	
		1	**155-2270**	5	KIT-CONNECTING PLUG (2-PIN)	
		1	**155-2271**	1	KIT-CONNECTING PLUG (4-PIN)	
		1	**155-2274**	1	KIT-CONNECTING PLUG (6-PIN)	
					(EACH PLUG KIT INCLUDES PLUG AS, WEDGE & INTERFACE SEAL)	
		1	**8T-8737**	18	PLUG-SEAL	
		1	**102-8805**	1	KIT-RECEPTACLE (6-PIN)	
					(INCLUDES RECEPTACLE AS & WEDGE)	
		1	**186-3736**	19	SOCKET-CONNECTOR (16-GA TO 18-GA)	
		1	**9W-0844**	1	SOCKET-CONNECTOR (14-GA)	
		1	**180-9340**	15	SOCKET-CONNECTOR (14-GA TO 18-GA)	
		1	**3S-2093**	15	STRAP-CABLE	
		1	**189-3158**	1	SUPPRESSOR-ARC	
		1	**097-7234**	5	TERMINAL-BLADE (18-GA TO 22-GA)	
		1	**7N-7221**	1	TERMINAL-BLADE (18-GA TO 22-GA)	
		1	**091-2436**	45	TERMINAL-BLADE (18-GA TO 22-GA)	
		1	**104-1995**	20	TERMINAL-BLADE (14-GA TO 18-GA)	
E		1	**119-3662**		TUBE-HEAT SHRINK (10.85-MM DIA) (13-CM)	
E		1	**125-7874**		TUBE-HEAT SHRINK (5.72-MM DIA) (75-CM)	

328-2270 **PANEL GP-INSTRUMENT** *(contd.)* **i03970901**

NOTE	REF NO	GRAPHIC REF	PART NUMBER	QTY	PART NAME 1 2 3 4 5 6 (PRODUCT LEVEL)	SEE PAGE
E		1	**125-7875**		TUBE-HEAT SHRINK (7.44-MM DIA) (10-CM)	
E		1	**125-7876**		TUBE-HEAT SHRINK (17.78-MM DIA) (8-CM)	
	20	2	**328-2352**	1	FILM-INSTRUCTION (DASH)	
	21	2	**330-8684**	1	LAMP AS (12-VOLT)	
	22	1,2	**101-2867**	4	WASHER-HARD (7.2X25X2-MM THK)	
	23	1,2	**103-2006**	22	SCREW-PAN HEAD (6-19X0.37-IN)	
	24	2	**170-6305**	1	GAUGE GP-FUEL LEVEL	
		2	**4B-2043**	3	NUT (8-32-THD)	
		2	**7X-9065**	1	LAMP (12-VOLT) (FUEL LEVEL INDICATOR)	
		2	**9B-7233**	3	LOCKWASHER	
	25	1,2	**195-0936**	4	INSERT-THREADED (M6X1-THD)	
	26	2	**197-6894**	1	FILM-INSTRUCTION (INSTRUMENT PANEL)	
	27	1,2	**198-9707**	4	SCREW-TRUSS HEAD (M6X1X35-MM)	
	28	2	**216-4753**	1	FILM-INSTRUCTION (KEY SWITCH)	
	29	1,2	**3S-2093**	5	STRAP-CABLE	
	30	1	**6V-5834**	4	SCREW-HEAD (10-14X0.75-IN)	
M	31	1	**9X-2042**	6	SCREW-TRUSS HEAD (M6X1X12-MM)	
	32	1	**9X-8256**	4	WASHER (6.6X12X2-MM THK)	

E-ORDER BY THE CENTIMETER
M-METRIC PART
Y-SEPARATE ILLUSTRATION

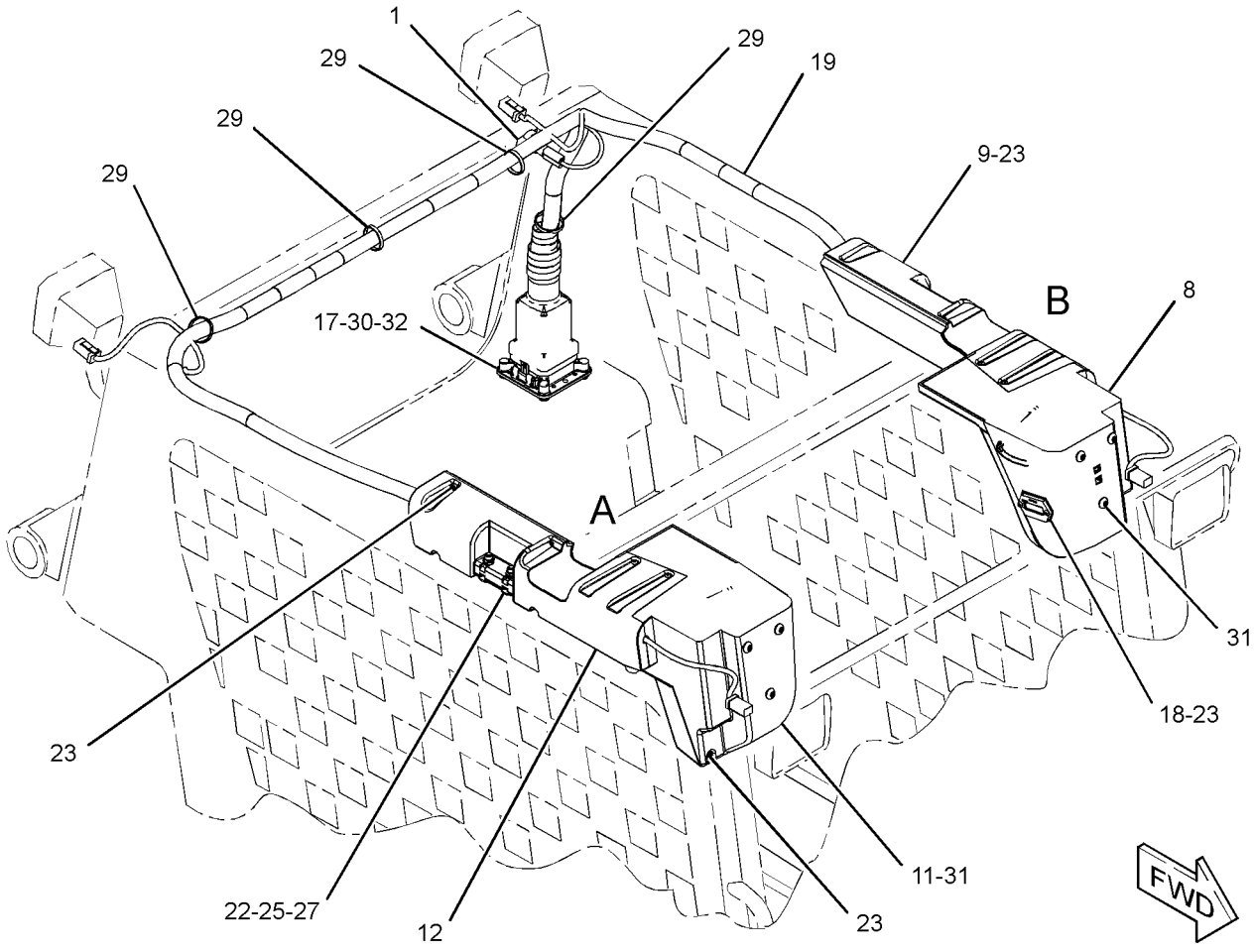

GRAPHIC #1 g02146899

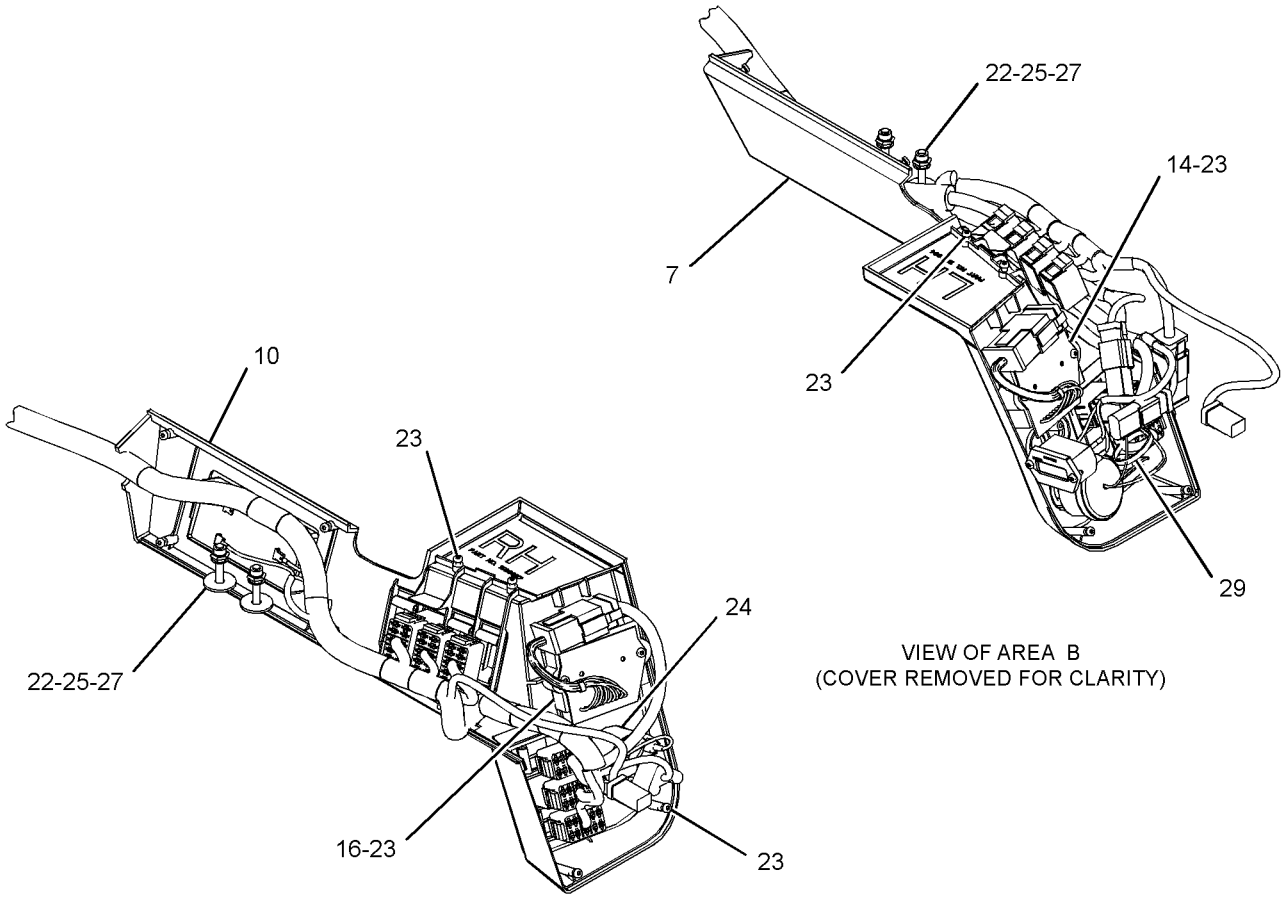

GRAPHIC #2 **<END>** g02146900

OPERATOR STATION

218-6430 PANEL GP-SIDE

S/N: MWD1-UP

PART OF 326-4781 CHASSIS AR

SMCS-7267 **i01955463**

NOTE	REF NO	GRAPHIC REF	PART NUMBER	QTY	PART NAME 1 2 3 4 5 6 (PRODUCT LEVEL)	SEE PAGE
	1	1	**193-8385**	1	PLATE (RH)	
	2	1	**218-6423**	1	PLATE (LH)	
M	3	1	**131-3543**	5	BOLT-ROUND HEAD (M6X1-6G-THD)	
M	4	1	**5C-2890**	5	NUT (M6X1-THD)	
	5	1	**8T-4205**	5	WASHER-HARD (7.2X14.5X2-MM THK)	

M-METRIC PART

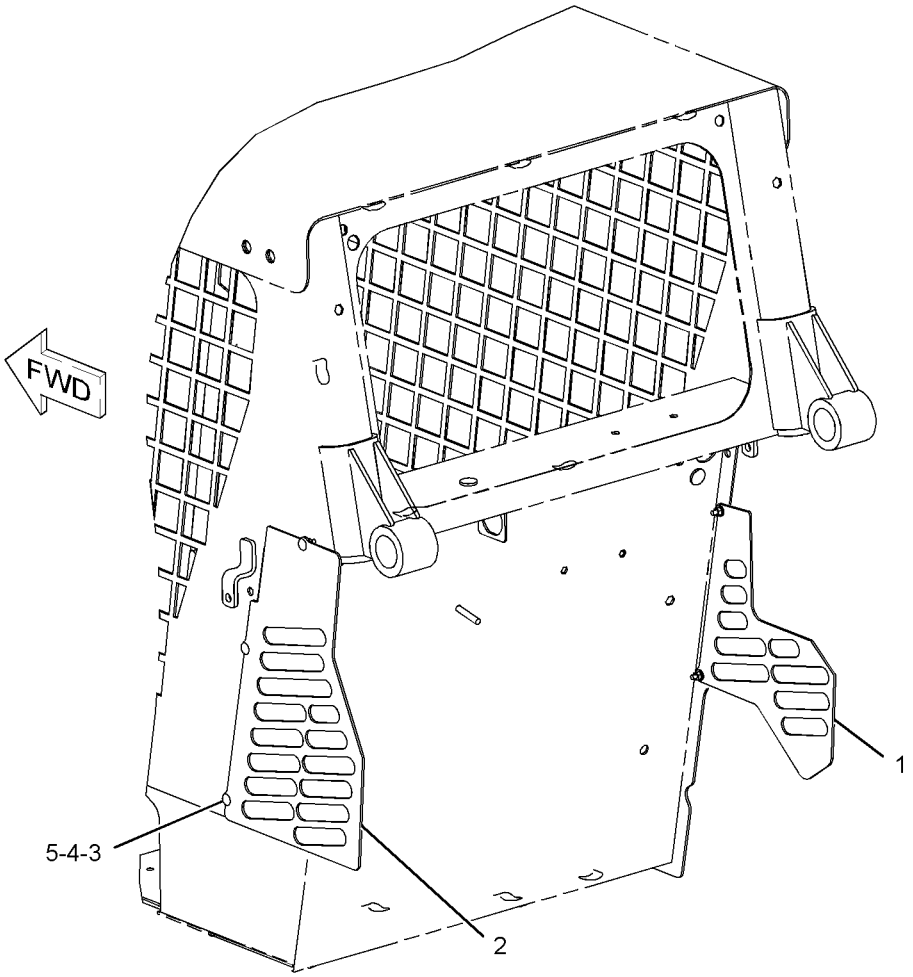

GRAPHIC #1 **<END>** g01017460

229-8744 PANEL GP-SIDE—WITHOUT HEATER OR A/C

S/N: MWD1-UP

PART OF 356-1932 INSTALLATION GP-COVER & LINES

AN ATTACHMENT

SMCS-7267 **i03769672**

NOTE	REF NO	GRAPHIC REF	PART NUMBER	QTY	PART NAME 1 2 3 4 5 6 (PRODUCT LEVEL)	SEE PAGE
	1	1	**114-6658**	4	WASHER (6.5X17X1-MM THK)	
	2	1	**218-6386**	1	COVER AS	
	3	1	**218-6387**	1	COVER AS	
	4	1	**218-6388**	1	COVER AS	
M	5	1	**8T-4189**	2	BOLT (M8X1.25X20-MM)	
	6	1	**8T-4224**	2	WASHER-HARD (8.8X16X2-MM THK)	
M	7	1	**9X-2044**	7	SCREW-TRUSS HEAD (M6X1X16-MM)	
	8	1	**9X-6165**	1	WASHER (6.5X22X2.5-MM THK)	
E	9	1	**124-3243**		SEAL (52-CM)	

E-ORDER BY THE CENTIMETER
M-METRIC PART

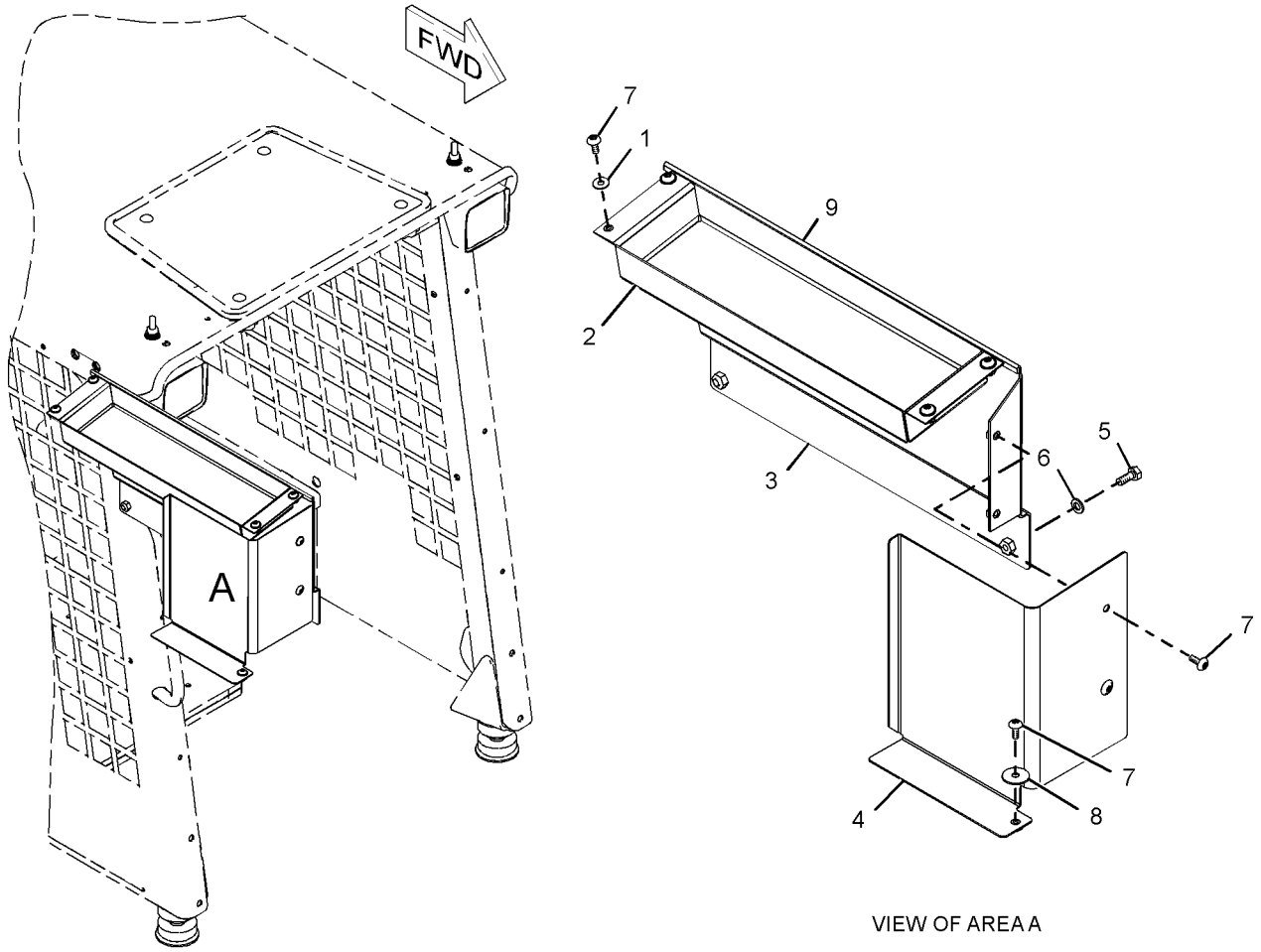

VIEW OF AREA A

GRAPHIC #1 **<END>** g01198919

OPERATOR STATION

325-8382 PEDAL GP-GOVERNOR

S/N: MWD1-UP

PART OF 327-8939 PEDAL GP-GOVERNOR

SMCS-1265, 1276 **i03755302**

NOTE	REF NO	GRAPHIC REF	PART NUMBER	QTY	PART NAME 1 2 3 4 5 6 (PRODUCT LEVEL)	SEE PAGE
M	1	1	**095-0641**	4	BOLT-SOCKET HEAD (M4X0.7X10-MM)	
M	2	1	**129-3178**	1	LOCKNUT (M6X1-THD)	
	3	1	**3F-9556**	2	LOCKWASHER	
M	4	1	**5C-7261**	1	NUT (M8X1.25-THD)	
M	5	1	**5C-9553**	1	BOLT (M6X1X16-MM)	
	6	1	**6V-8186**	2	NUT-FULL (5/16-24-THD)	
M	7	1	**8T-4197**	1	BOLT (M8X1.25X40-MM)	
	8	1	**8T-4205**	1	WASHER-HARD (7.2X14.5X2-MM THK)	
	9	1	**8T-6902**	1	CLIP	
					AVAILABLE REPAIR KIT(S):	
			164-1154	1	KIT-SERVICE (PEDAL)	
					(INCLUDES CLAMPS & SCREWS)	

M-METRIC PART

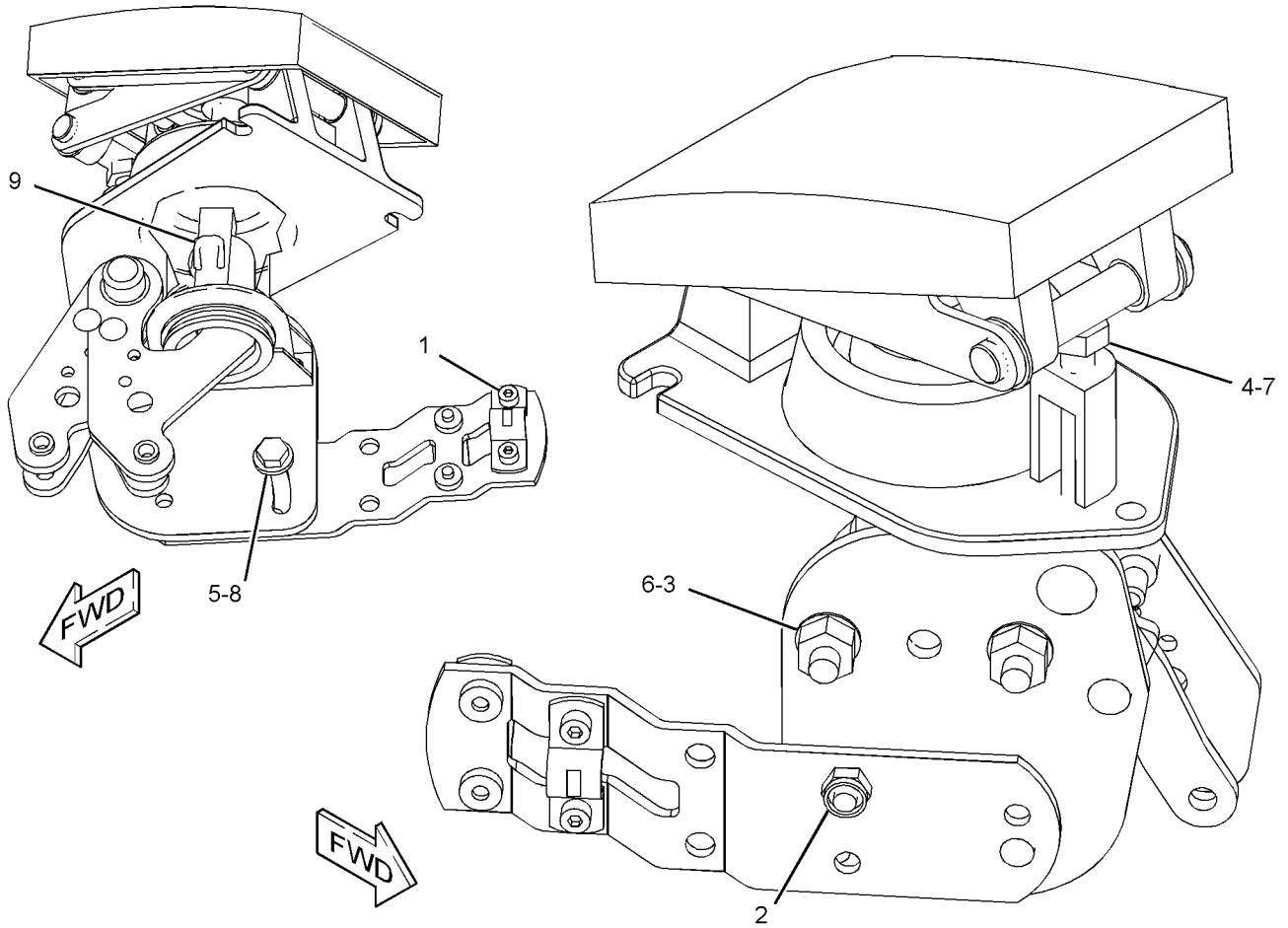

GRAPHIC #1 **<END>** g01164366

OPERATOR STATION

327-8939 PEDAL GP-GOVERNOR

S/N: MWD1-UP

PART OF 218-5602 CONTROL GP-GOVERNOR

SMCS-1265, 1276 **i03809979**

NOTE	REF NO	GRAPHIC REF	PART NUMBER	QTY	PART NAME 1 2 3 4 5 6 (PRODUCT LEVEL)	SEE PAGE
Y	1	1	**234-0774**	1	LEVER GP-GOVERNOR	316
Y	2	1	**325-8382**	1	PEDAL GP-GOVERNOR	332
	3	1	**327-8945**	1	CABLE AS	
		1	**2R-0364**	1	RING-RETAINING	
M		1	**5C-2890**	2	NUT (M6X1-THD)	
		1	**8T-4742**	2	END-YOKE ROD	
		1	**8T-4744**	2	PIN AS-SPRING	

M-METRIC PART
Y-SEPARATE ILLUSTRATION

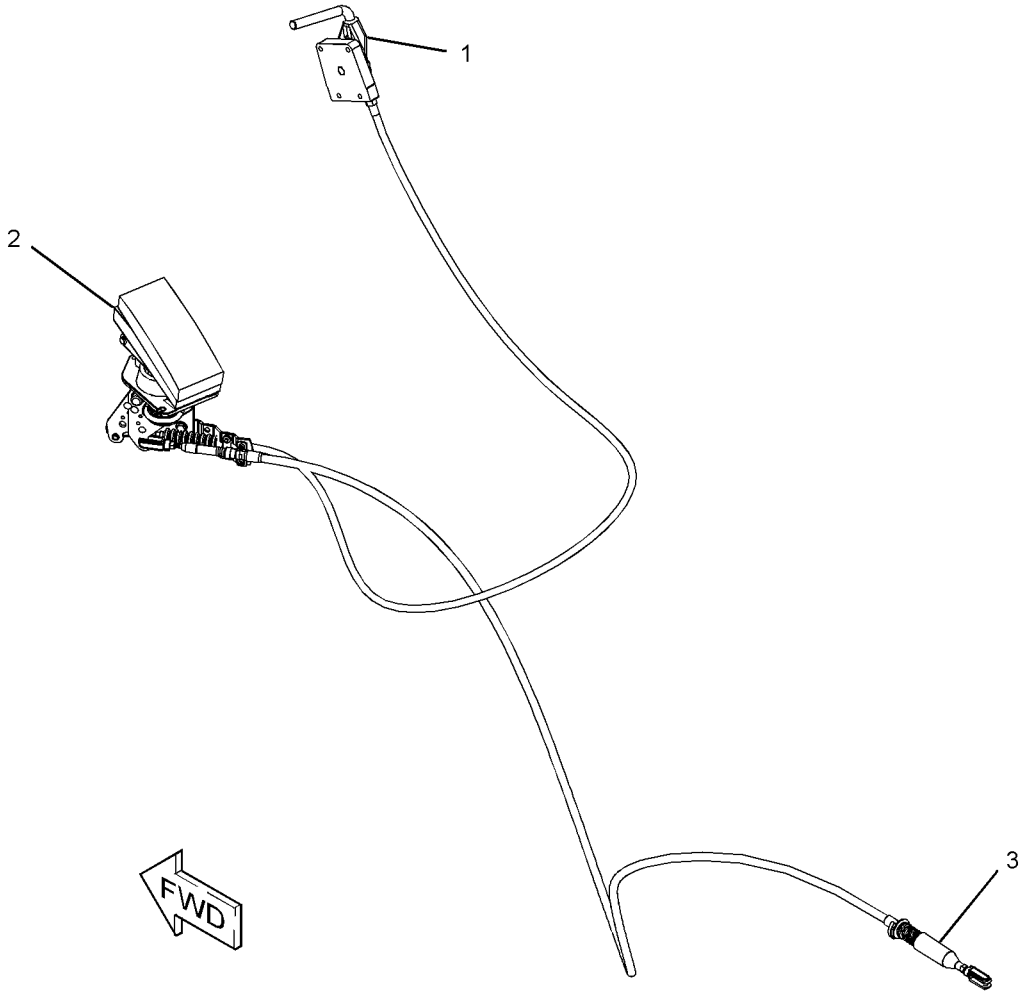

GRAPHIC #1 **<END>** g02068515

OPERATOR STATION

326-5570 PLATFORM GP-OPERATOR

S/N: MWD1-UP

PART OF 326-4781 CHASSIS AR

SMCS-7253 **i03906911**

NOTE	REF NO	GRAPHIC REF	PART NUMBER	QTY	PART NAME 1 2 3 4 5 6 (PRODUCT LEVEL)	SEE PAGE
	1	1	**218-6417**	1	FLOORPLATE AS	
	2	1	**326-5593**	1	PLATE AS	
		1	**7T-1099**	2	LINK	
M	3	1	**5C-7261**	1	NUT (M8X1.25-THD)	
M	4	1	**8T-4138**	8	BOLT (M6X1X20-MM)	
M	5	1	**8T-4197**	1	BOLT (M8X1.25X40-MM)	
	6	1	**8T-4205**	6	WASHER-HARD (7.2X14.5X2-MM THK)	
	7	1	**8T-4224**	7	WASHER-HARD (8.8X16X2-MM THK)	
M	8	1	**8T-4908**	5	BOLT (M8X1.25X25-MM)	
	9	1	**9X-6165**	2	WASHER (6.5X22X2.5-MM THK)	
D	10	1	**5P-5927**		SEAL (0.4-M EACH)	
E	11	1	**124-3243**		SEAL (19.5-CM)	
E	11A	1	**124-3243**		SEAL (6-CM EACH)	

D-ORDER BY THE METER
E-ORDER BY THE CENTIMETER
M-METRIC PART

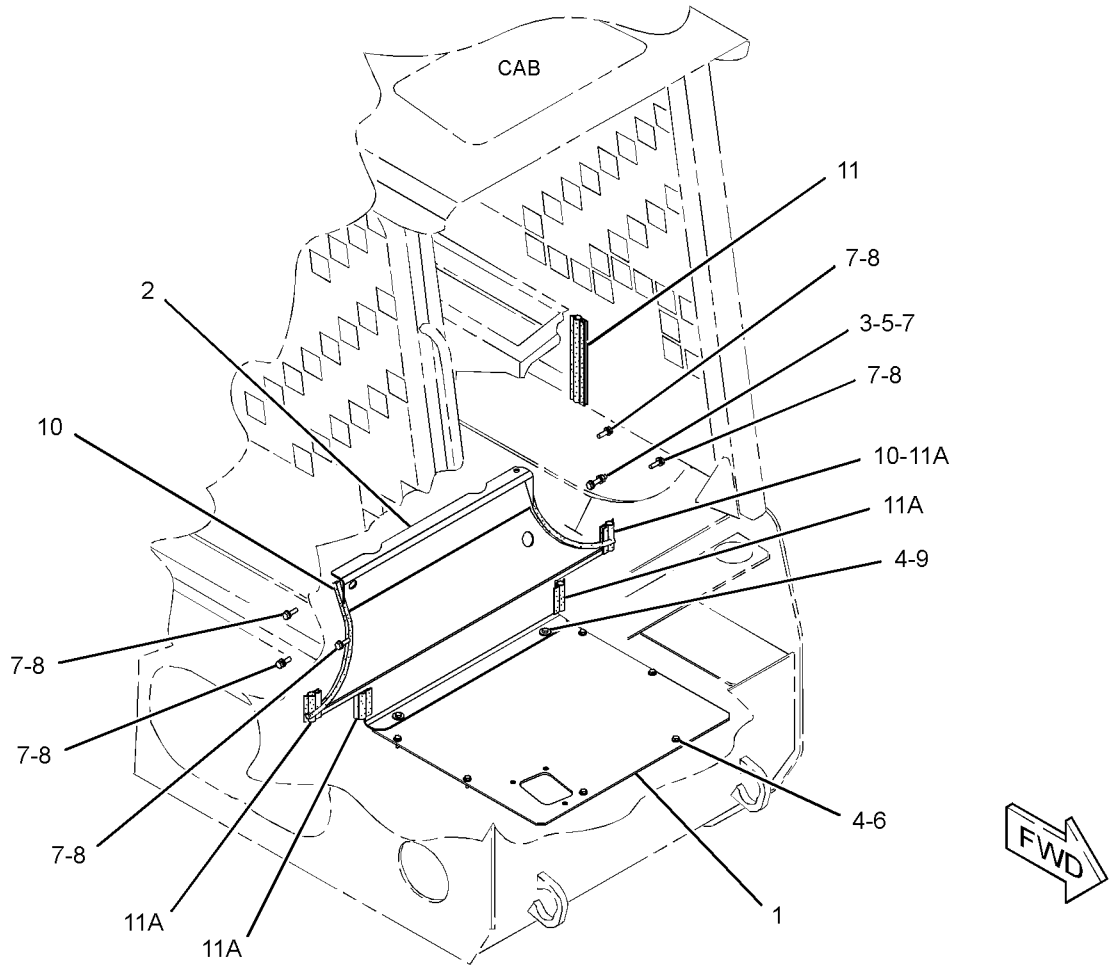

GRAPHIC #1 **<END>** g02149218

OPERATOR STATION

218-6407 SEAL GP-CAB—DEBRIS BARRIER

S/N: MWD1-UP

PART OF 326-5534, 356-1934 CAB AR-ENCLOSED ROPS

AN ATTACHMENT

SMCS-7301 **i02866081**

NOTE	REF NO	GRAPHIC REF	PART NUMBER	QTY	PART NAME 1 2 3 4 5 6 (PRODUCT LEVEL)	SEE PAGE
E	1	1	**128-7037**		SEAL (59-CM)	
E	1A	1	**128-7037**		SEAL (39-CM)	
	2	1	**187-3211**	1	PLATE AS	
M		1	**8T-3612**	2	NUT-WELD (M8X1.25-THD)	
	3	1	**187-3212**	1	PLATE	
	4	1	**284-3595**	2	SEAL-RUBBER	
	5	1	**284-3743**	2	SEAL-RUBBER	
	6	1	**284-3744**	1	SEAL-RUBBER	
B	7	1	**287-6603**	2	PLUG-BUTTON	
	8	1	**287-7004**	1	BLOCK AS (LH)	
	9	1	**287-7006**	1	BLOCK AS (RH)	
B	10	1	**288-5767**	8	PLUG-BUTTON	
	11	1	**189-4523**	2	BOSS	
M	12	1	**7X-2537**	2	BOLT (M8X1.25X35-MM)	
	13	1	**8T-4224**	2	WASHER-HARD (8.8X16X2-MM THK)	

B-USE AS REQUIRED
E-ORDER BY THE CENTIMETER
M-METRIC PART

218-6407 **SEAL GP-CAB** *(contd.)* **i02866081**

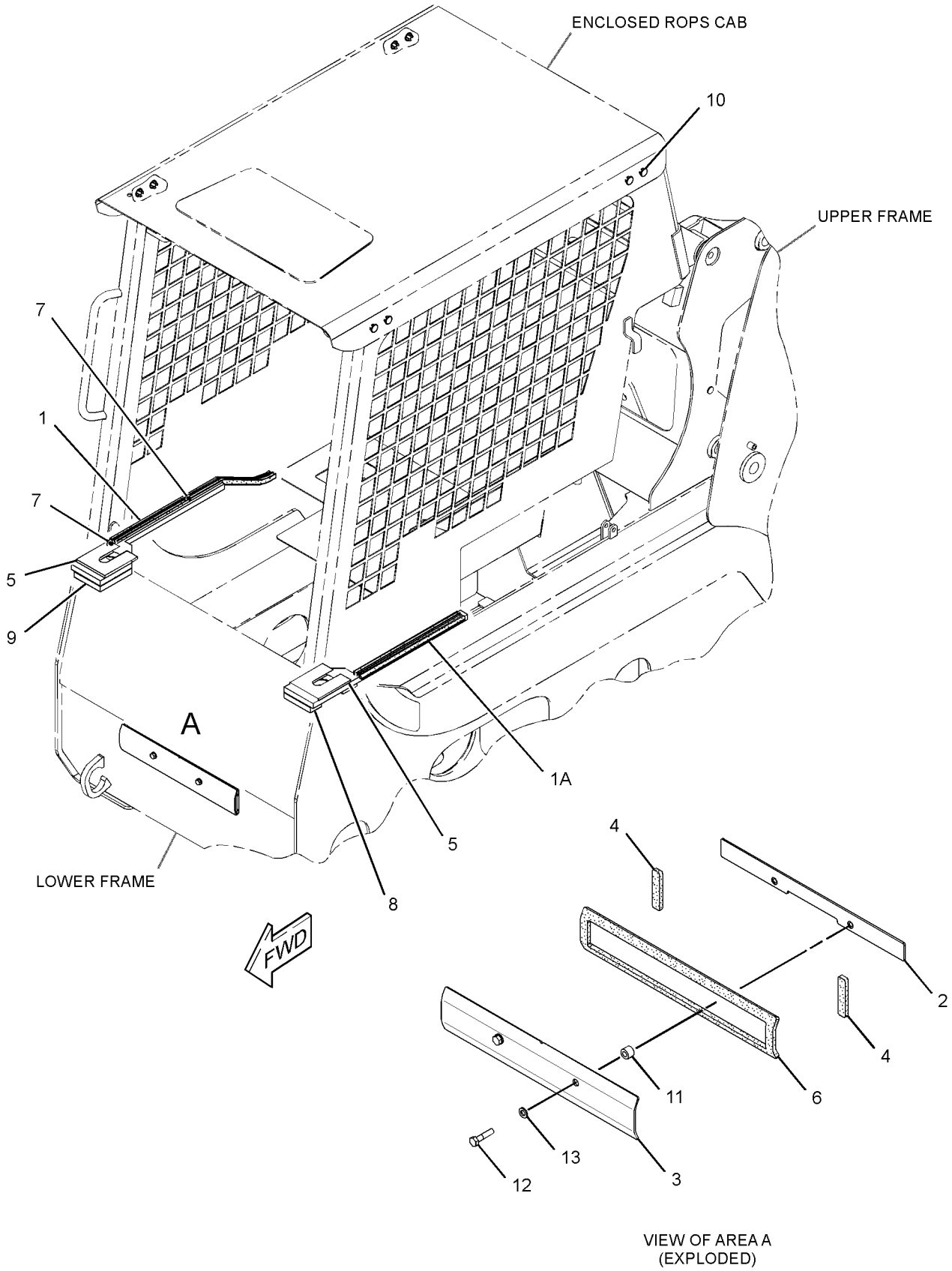

GRAPHIC #1 **<END>** g01439361

OPERATOR STATION

276-6019 SEAT BELT GP

S/N: MWD1-UP
3-INCH, RETRACTABLE SUSPENSION
FOR USE WITH IN CALIFORNIA, WASHINGTON, AND OREGAN
AN ATTACHMENT

SMCS-7327 **i03584623**

NOTE	REF NO	GRAPHIC REF	PART NUMBER	QTY	PART NAME 1 2 3 4 5 6 (PRODUCT LEVEL)	SEE PAGE
	1	1	**2D-6412**	2	WASHER (7/16X15/16X1/4-IN THK)	
	2	1	**0T-0244**	2	BOLT (7/16-20X1.25-IN)	
	3	1	**8S-0934**	2	LOCKNUT-FLANGE (7/16-20-THD)	
	4	1	**8T-4223**	2	WASHER-HARD (13.5X25.5X3-MM THK)	

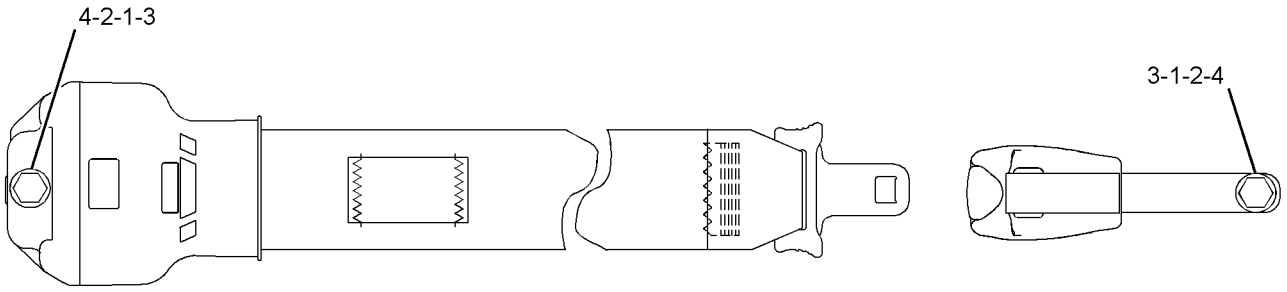

GRAPHIC #1 **<END>** g01230176

OPERATOR STATION

276-6020 SEAT BELT GP

S/N: MWD1-UP
3-INCH, RETRACTABLE STATIC
AN ATTACHMENT

SMCS-7327 **i02718272**

NOTE	REF NO	GRAPHIC REF	PART NUMBER	QTY	PART NAME 1 2 3 4 5 6 (PRODUCT LEVEL)	SEE PAGE
	1	1	**2D-6412**	2	WASHER (7/16X15/16X1/4-IN THK)	
	2	1	**0T-0244**	2	BOLT (7/16-20X1.25-IN)	
	3	1	**8S-0934**	2	LOCKNUT-FLANGE (7/16-20-THD)	
	4	1	**8T-4223**	2	WASHER-HARD (13.5X25.5X3-MM THK)	

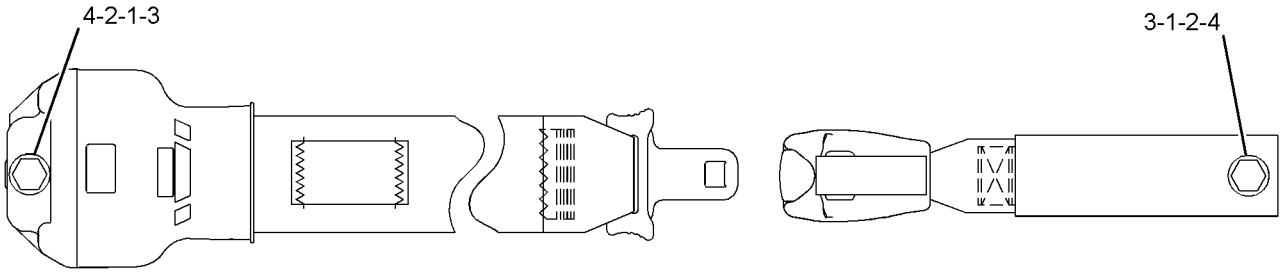

GRAPHIC #1 **<END>** g01230231

OPERATOR STATION

276-7276 SEAT BELT GP

S/N: MWD1-UP
2-INCH, SUSPENSION
CANNOT BE USED WITH IN CALIFORNIA, OREGAN, AND WASHINGTON
AN ATTACHMENT

SMCS-7327 **i02738465**

NOTE	REF NO	GRAPHIC REF	PART NUMBER	QTY	PART NAME 1 2 3 4 5 6 (PRODUCT LEVEL)	SEE PAGE
	1	1	**2D-6412**	2	WASHER (7/16X15/16X1/4-IN THK)	
	2	1	**0T-0244**	2	BOLT (7/16-20X1.25-IN)	
	3	1	**8S-0934**	2	LOCKNUT-FLANGE (7/16-20-THD)	
	4	1	**8T-4223**	2	WASHER-HARD (13.5X25.5X3-MM THK)	

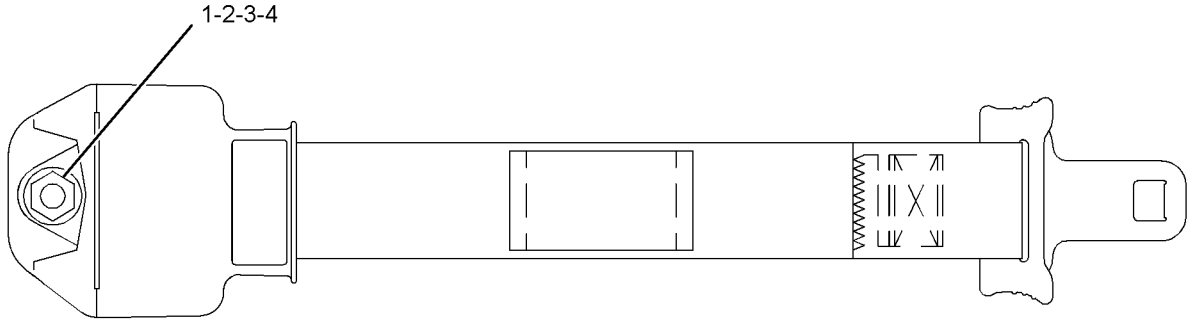

GRAPHIC #1 **<END>** g01230125

OPERATOR STATION

276-7277 SEAT BELT GP

S/N: MWD1-UP
2-INCH, RETRACTABLE STATIC
AN ATTACHMENT

SMCS-7327 **i02712903**

NOTE	REF NO	GRAPHIC REF	PART NUMBER	QTY	PART NAME 1 2 3 4 5 6 (PRODUCT LEVEL)	SEE PAGE
	1	1	**2D-6412**	2	WASHER (7/16X15/16X1/4-IN THK)	
	2	1	**0T-0244**	2	BOLT (7/16-20X1.25-IN)	
	3	1	**8S-0934**	2	LOCKNUT-FLANGE (7/16-20-THD)	
	4	1	**8T-4223**	2	WASHER-HARD (13.5X25.5X3-MM THK)	

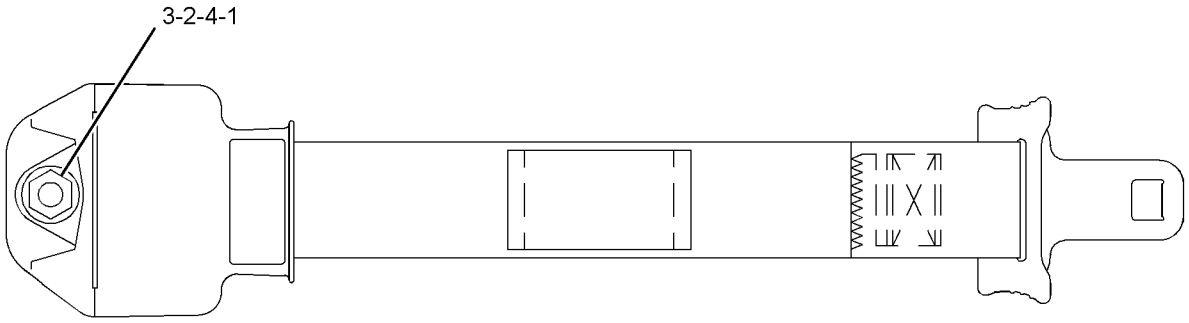

GRAPHIC #1 **<END>** g01230239

142-9305 SEAT GP–SUSPENSION

S/N: MWD1-UP

PART OF 326-5534, 356-1934 CAB AR-ENCLOSED ROPS, 356-1933 CAB AR-OPEN ROPS

CANNOT BE USED WITH 218-5562–PAGE 342

AN ATTACHMENT

SMCS-7312, 7324 **i02571422**

NOTE	REF NO	GRAPHIC REF	PART NUMBER	QTY	PART NAME 1 2 3 4 5 6 (PRODUCT LEVEL)	SEE PAGE
CY	1	1	**219-4380**	1	SEAT GP-ADJUSTABLE	343
M	2	1	**5C-7261**	4	NUT (M8X1.25-THD)	
	3	1	**8T-4224**	4	WASHER-HARD (8.8X16X2-MM THK)	

C-CHANGE FROM PREVIOUS TYPE
M-METRIC PART
Y-SEPARATE ILLUSTRATION

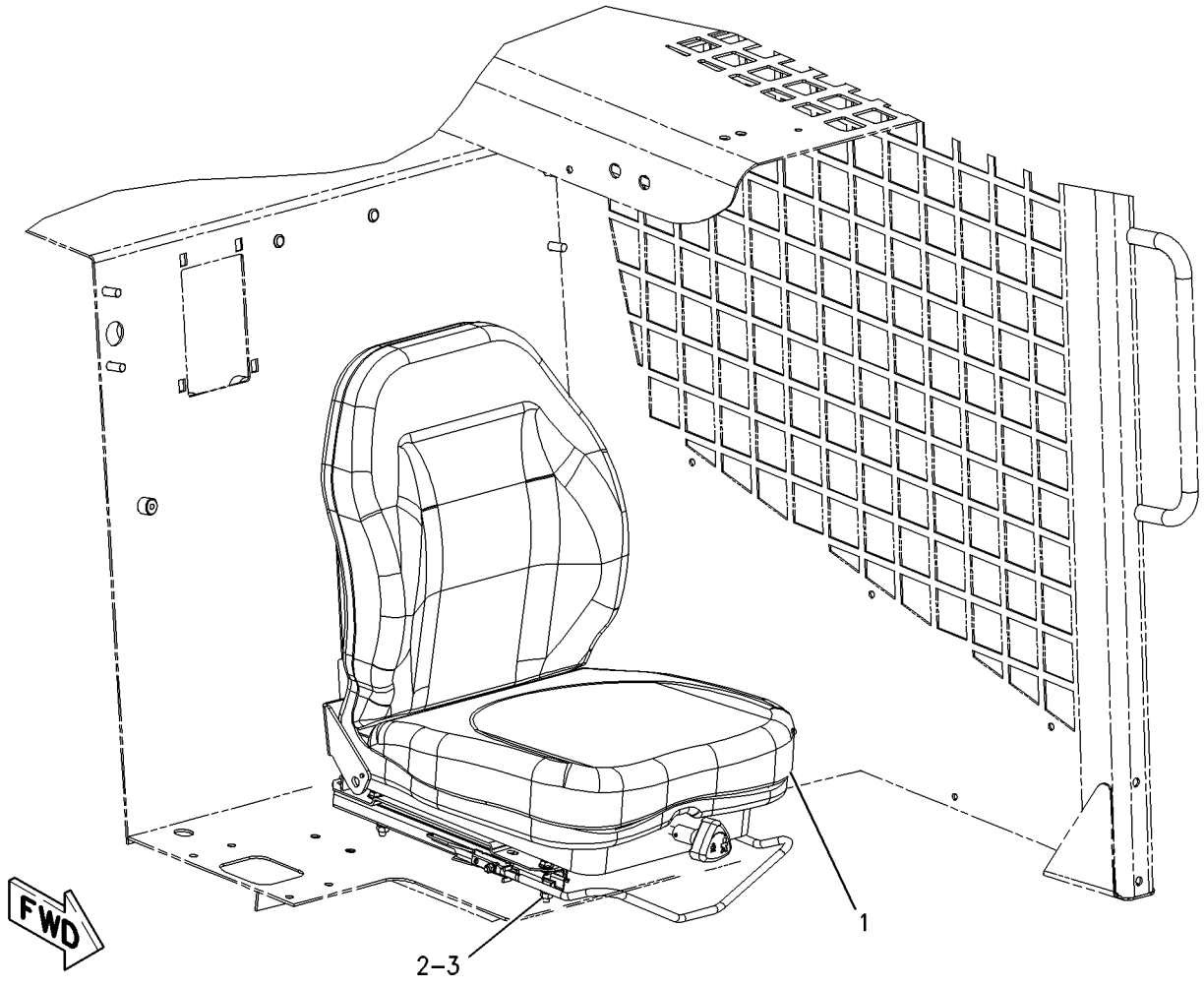

GRAPHIC #1 **<END>** g00914893

OPERATOR STATION

218-5562 SEAT GP—STATIC

S/N: MWD1-UP
PART OF 356-1931 CAB AR-OPEN ROPS
CANNOT BE USED WITH 142-9305—PAGE 341
AN ATTACHMENT

SMCS-7312, 7324 **i02757222**

NOTE	REF NO	GRAPHIC REF	PART NUMBER	QTY	PART NAME 1 2 3 4 5 6 (PRODUCT LEVEL)	SEE PAGE
	1	1	**218-6662**	1	SEAT GP (STATIC)	
		1	**153-1260**	1	SWITCH (SEAT)	
		1	**154-3985**	1	WIRE AS	
		1	**219-4379**	1	HANDLE	
M	2	1	**5C-7261**	4	NUT (M8X1.25-THD)	
	3	1	**8T-4224**	4	WASHER-HARD (8.8X16X2-MM THK)	

M-METRIC PART

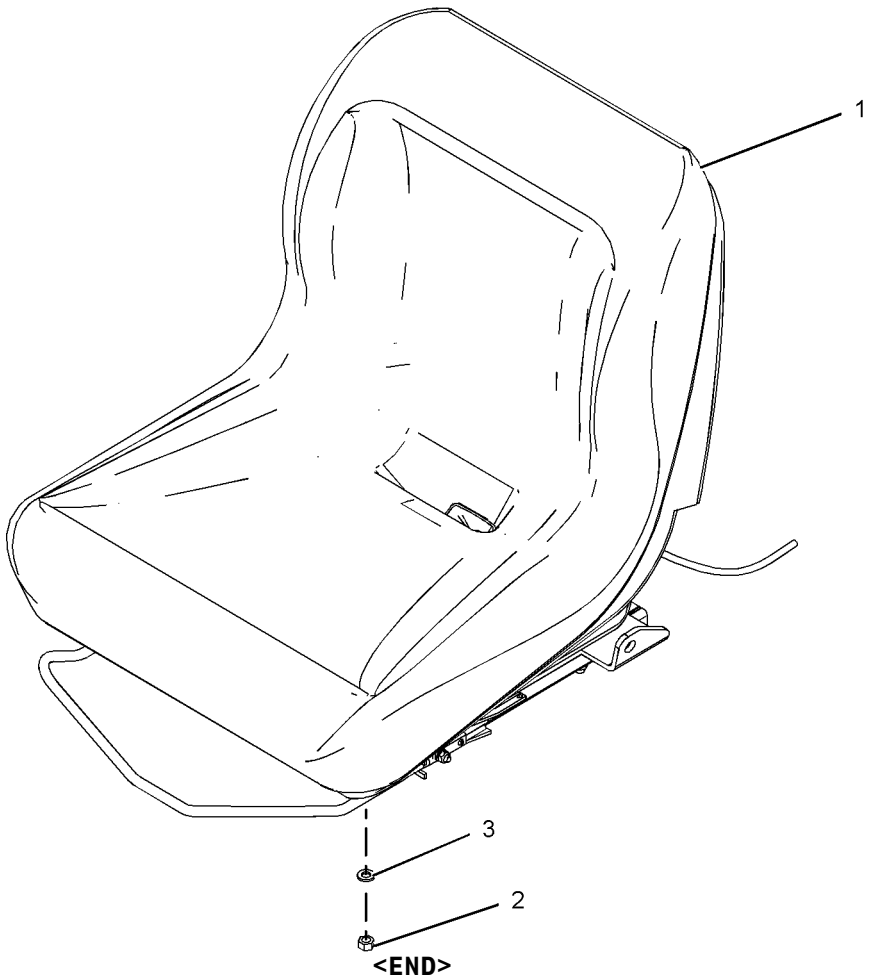

GRAPHIC #1 **<END>** g01018112

OPERATOR STATION

219-4380 SEAT GP-ADJUSTABLE

S/N: MWD1-UP
PART OF 142-9305 SEAT GP
AN ATTACHMENT

SMCS-7312, 7321 **i03611200**

NOTE	REF NO	GRAPHIC REF	PART NUMBER	QTY	PART NAME 1 2 3 4 5 6 (PRODUCT LEVEL)	SEE PAGE
	1	1	**154-3985**	1	WIRE AS	
	2	1	**154-3986**	1	SWITCH AS (SEAT)	
	3	1	**154-8711**	1	KIT-SPRING (ADJUSTABLE SEAT)	
					(INCLUDES SPRINGS, CABLE AS & NUTS)	
	4	1	**154-8715**	1	KIT-DAMPER (ADJUSTABLE SEAT)	
					(INCLUDES DAMPER, NUT-LOCK, WASHER & SPACER)	
	5	1	**173-2543**	1	KIT-CUSHION	
	6	1	**219-4379**	1	HANDLE	
	7	1	**219-4388**	1	KIT-HANDLE (KNOB)	
					(INCLUDES KNOB, SHAFT, PINS, HANGER, NUT & SPACERS)	

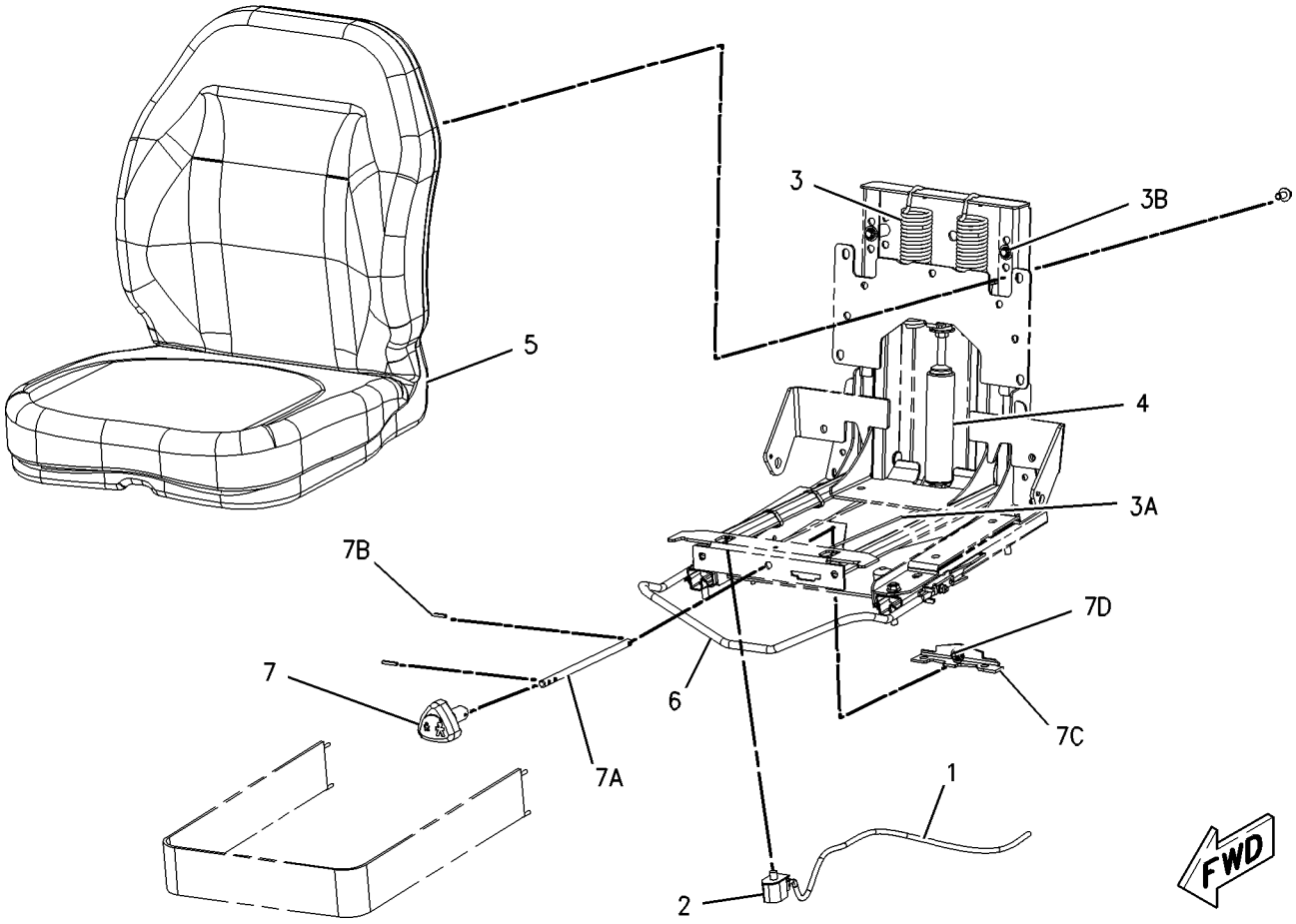

GRAPHIC #1 **<END>** g00915009

218-6380 SPRING GP-GAS–CAB, DOOR

S/N: MWD1-UP

PART OF 326-5400 CAB AR

SMCS-7301 **i03973391**

NOTE	REF NO	GRAPHIC REF	PART NUMBER	QTY	PART NAME 1 2 3 4 5 6 (PRODUCT LEVEL)	SEE PAGE
	1	1	**5P-0372**	2	LOCK PIN	
	2	1	**9C-5344**	1	SPACER (10.5X20X18-MM THK)	
	3	1	**095-1325**	1	PIN-CLEVIS	
	4	1	**153-2682**	1	SPRING AS-GAS (CAB)	
	5	1	**177-3405**	1	PIN	

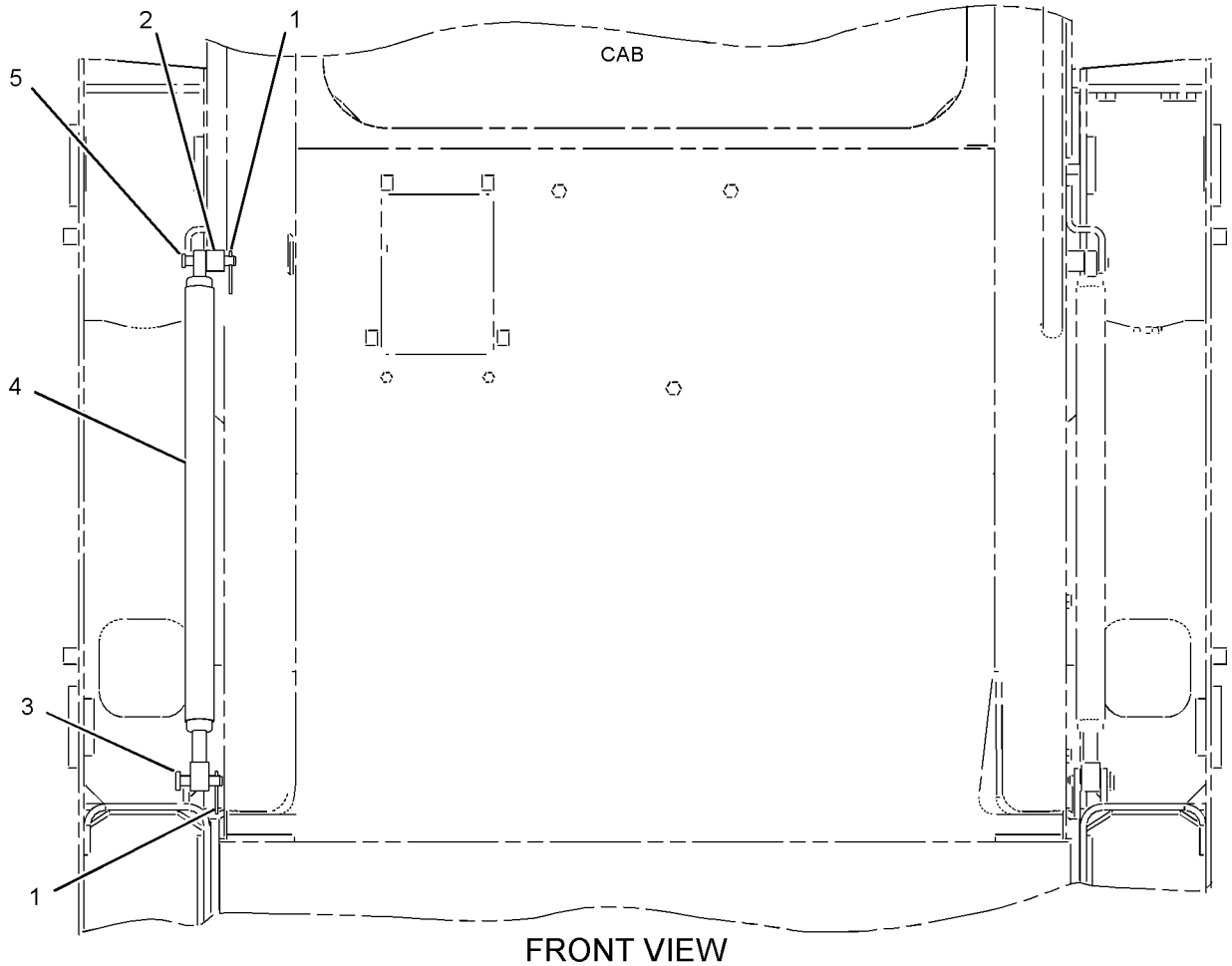

FRONT VIEW

GRAPHIC #1

<END>

g01031997

OPERATOR STATION

166-2569 VISOR GP-CAB

S/N: MWD1-UP
PART OF 173-3022 VISOR GP-CAB
AN ATTACHMENT

SMCS-7301 **i01297216**

NOTE	REF NO	GRAPHIC REF	PART NUMBER	QTY	PART NAME 1 2 3 4 5 6 (PRODUCT LEVEL)	SEE PAGE
	1	1	**2S-5717**	1	LOCKNUT (3/8-16-THD)	
	2	1	**5T-7869**	2	CLAMP	
	3	1	**5T-7870**	1	KNOB	
	4	1	**1D-4677**	2	BOLT-ROUND HEAD (3/8-16X1-IN)	
M	5	1	**9X-2042**	4	SCREW-TRUSS HEAD (M6X1X12-MM)	

M-METRIC PART

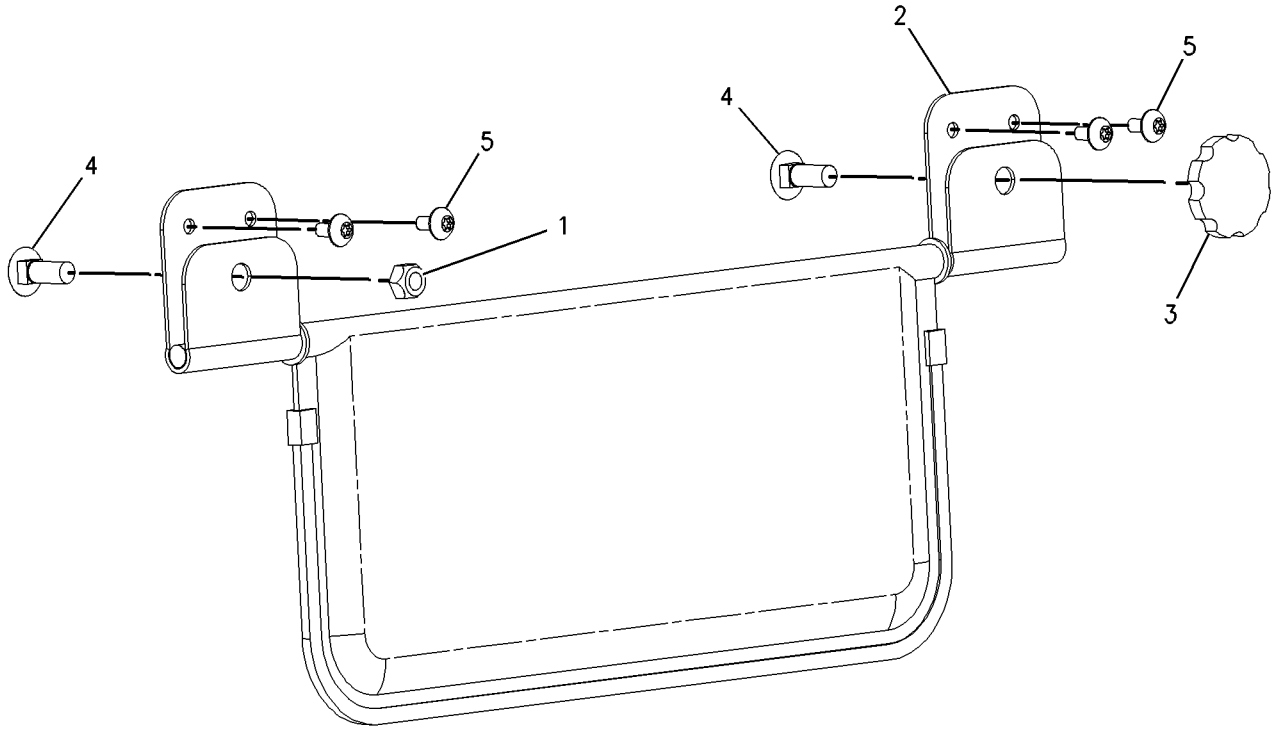

GRAPHIC #1 **<END>** g00695703

OPERATOR STATION

173-3022 VISOR GP-CAB

S/N: MWD1-UP
PART OF 326-5527, 326-5567 CONVERSION AR-MACHINE
AN ATTACHMENT

SMCS-7301 **i01486233**

NOTE	REF NO	GRAPHIC REF	PART NUMBER	QTY	PART NAME 1 2 3 4 5 6 (PRODUCT LEVEL)	SEE PAGE
	1	1	**166-2562**	1	PLATE AS	
Y	2	1	**166-2569**	1	VISOR GP-CAB	345
	3	1	**195-0936**	4	INSERT-THREADED (M6X1)	
M	4	1	**9X-2045**	4	SCREW-TRUSS HEAD (M6X1X20-MM)	

M-METRIC PART
Y-SEPARATE ILLUSTRATION

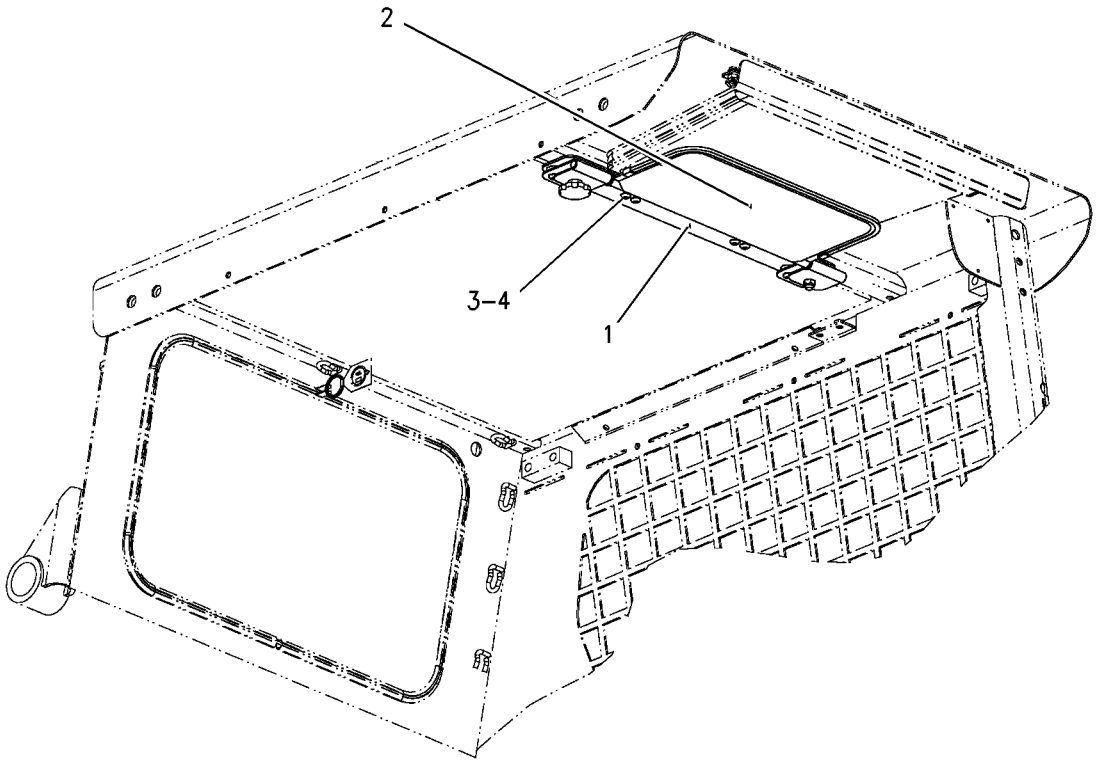

GRAPHIC #1 **<END>** g00772669

OPERATOR STATION

195-6723 WINDOW GP-CAB

S/N: MWD1-UP

PART OF 326-5400 CAB AR

SMCS-7310 **i02534285**

NOTE	REF NO	GRAPHIC REF	PART NUMBER	QTY	PART NAME 1 2 3 4 5 6 (PRODUCT LEVEL)	SEE PAGE
	1	1	**5C-8310**	1	BRACKET-RING	
	2	1	**5C-8311**	1	RING	
	3	1	**8T-6842**	1	FILM-INSTRUCTION (PULL RING, ALTERNATE EXIT)	
	4	1	**142-9319**	1	WINDOW	
CE	5	1	**108-0656**		SEAL (192-CM)	
CE	6	1	**104-5957**		STRIP-LOCKING (186-CM)	

C-CHANGE FROM PREVIOUS TYPE
E-ORDER BY THE CENTIMETER

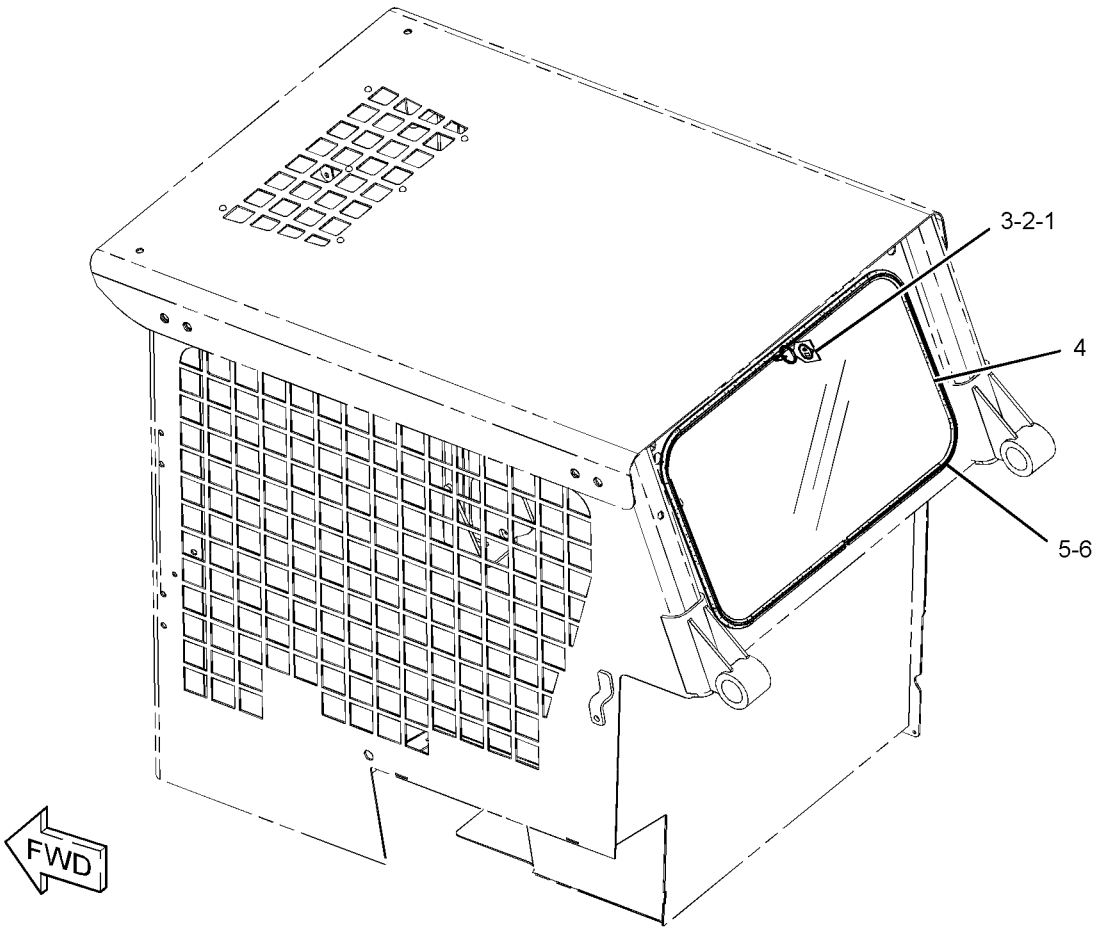

GRAPHIC #1 **<END>** g01268492

OPERATOR STATION

218-6411 WINDOW GP-CAB—SIDE

S/N: MWD1-UP
PART OF 326-5534, 356-1934 CAB AR-ENCLOSED ROPS
AN ATTACHMENT

SMCS-7310 **i02501965**

NOTE	REF NO	GRAPHIC REF	PART NUMBER	QTY	PART NAME 1 2 3 4 5 6 (PRODUCT LEVEL)	SEE PAGE
Y	1	1	**224-7057**	1	WINDOW GP-CAB (UPPER, LH)	349
Y	2	1	**224-7058**	1	WINDOW GP-CAB (UPPER, RH)	351
	3	1	**231-7321**	1	WINDOW AS-CAB (LOWER, RH)	
		1	**239-6109**	1	LATCH AS	
E		1	**282-6961**		SEAL (122-CM)	
	4	1	**231-7324**	1	WINDOW AS-CAB (LOWER, LH)	
		1	**239-6109**	1	LATCH AS	
E		1	**282-6961**		SEAL (122-CM)	
M	5	1	**9X-2045**	10	SCREW-TRUSS HEAD (M6X1X20-MM)	

E-ORDER BY THE CENTIMETER
M-METRIC PART
Y-SEPARATE ILLUSTRATION

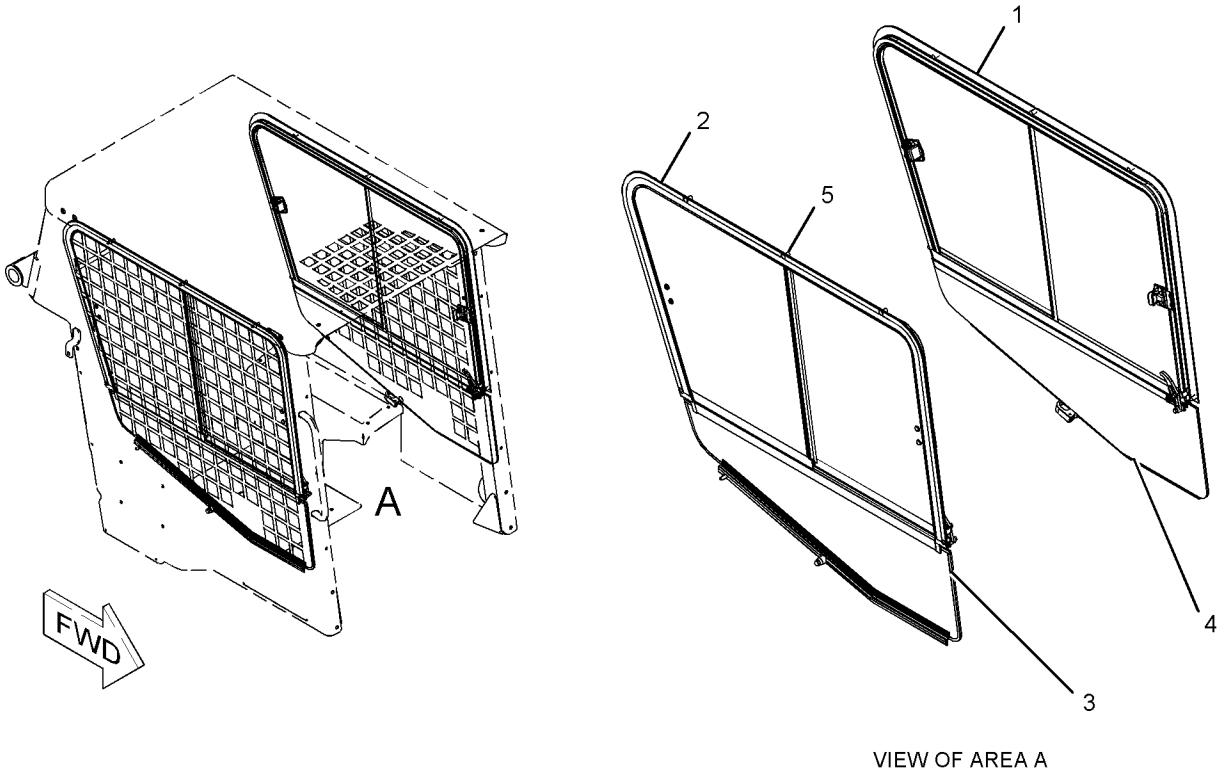

VIEW OF AREA A

GRAPHIC #1 **<END>** g01057739

224-7057 WINDOW GP-CAB–UPPER,LH

S/N: MWD1-UP
PART OF 218-6411 WINDOW GP-CAB
AN ATTACHMENT

SMCS-7310 **i03648870**

NOTE	REF NO	GRAPHIC REF	PART NUMBER	QTY	PART NAME 1 2 3 4 5 6 (PRODUCT LEVEL)	SEE PAGE
	1	1	**231-7322**	1	WINDOW AS-CAB (SLIDING, REAR)	
E		1	**207-0573**		SEAL (76-CM)	
		1	**231-7331**	1	LATCH AS	
	2	1	**231-7323**	1	WINDOW AS-CAB (SLIDING, FRONT)	
E		1	**207-0573**		SEAL (41-CM)	
		1	**231-7331**	1	LATCH AS	
Y	3	1	**231-7327**	1	FRAME GP-WINDOW (LH)	306
	4	1	**231-7372**	1	CATCH	
	5	1	**243-1323**	1	CATCH	
	6	1	**6D-5797**	2	SCREW-SOCKET	
	7	1	**9X-8918**	2	SCREW-FLAT HEAD (8-32X0.5-IN)	
E	8	1	**207-0539**		SEAL (125-CM)	
E	8A	1	**207-0539**		SEAL (138-CM)	
E	8B	1	**207-0539**		SEAL (81-CM)	
E	9	1	**207-0573**		SEAL (62-CM)	
E	9A	1	**207-0573**		SEAL (80-CM)	
E	10	1	**3E-3892**		SEAL (31-CM EACH)	
E	10A	1	**3E-3892**		SEAL (75-CM)	
E	10B	1	**3E-3892**		SEAL (65-CM)	
E	10C	1	**3E-3892**		SEAL (4-CM EACH)	

E-ORDER BY THE CENTIMETER
Y-SEPARATE ILLUSTRATION

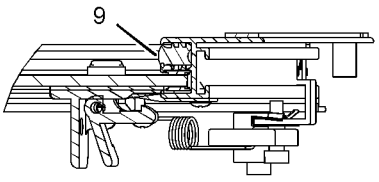

VIEW OF AREA E

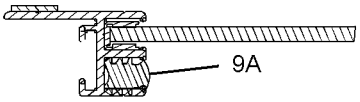

SECTION H-H

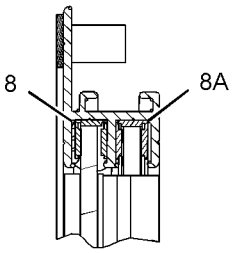

VIEW OF AREA C

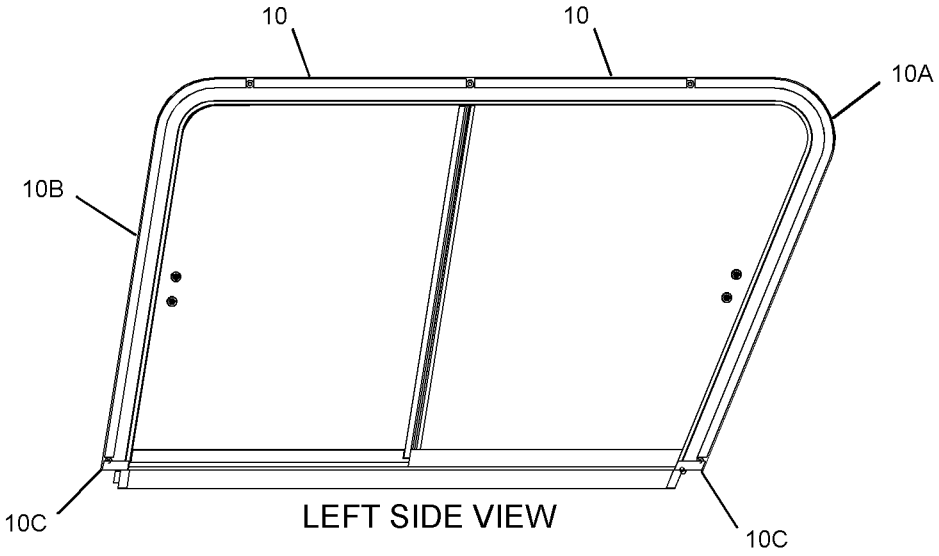

LEFT SIDE VIEW

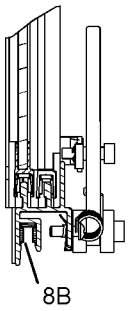

VIEW OF AREA D

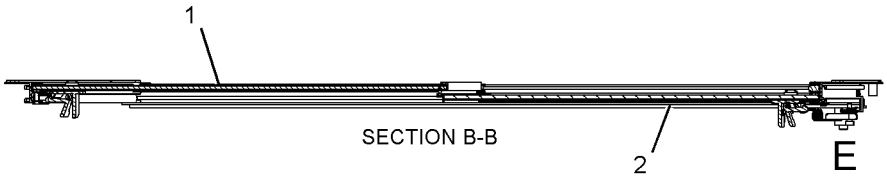

SECTION B-B

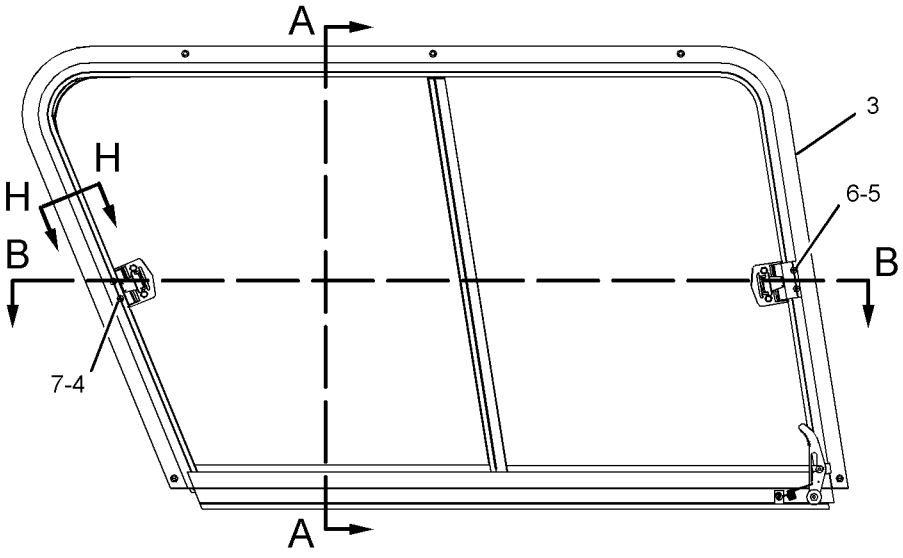

RIGHT SIDE VIEW
(INSIDE OF CAB)

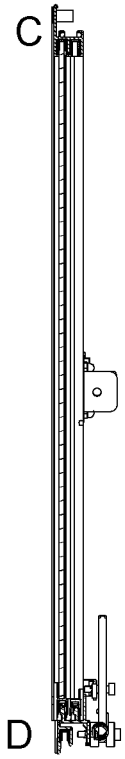

SECTION A-A

GRAPHIC #1 **<END>** g01958440

224-7058 WINDOW GP-CAB–UPPER, RH

S/N: MWD1-UP
PART OF 218-6411 WINDOW GP-CAB
AN ATTACHMENT

SMCS-7310 **i03648873**

NOTE	REF NO	GRAPHIC REF	PART NUMBER	QTY	PART NAME 1 2 3 4 5 6 (PRODUCT LEVEL)	SEE PAGE
	1	1	**231-7319**	1	WINDOW AS-CAB (SLIDING, REAR)	
E			**207-0573**		SEAL (76-CM)	
			231-7331	1	LATCH AS	
	2	1	**231-7320**	1	WINDOW AS-CAB (SLIDING, FRONT)	
E		1	**207-0573**		SEAL (41-CM)	
		1	**231-7331**	1	LATCH AS	
Y	3	1	**231-7325**	1	FRAME GP-WINDOW (RH)	305
	4	1	**231-7372**	1	CATCH	
	5	1	**243-1323**	1	CATCH	
	6	1	**6D-5797**	2	SCREW-SOCKET	
	7	1	**9X-8918**	2	SCREW-FLAT HEAD (8-32X0.5-IN)	
E	8	1	**3E-3892**		SEAL (4-CM EACH)	
E	8A	1	**3E-3892**		SEAL (31-CM EACH)	
E	8B	1	**3E-3892**		SEAL (75-CM)	
E	8C	1	**3E-3892**		SEAL (65-CM)	
E	9	1	**207-0539**		SEAL (81-CM)	
E	9A	1	**207-0539**		SEAL (138-CM)	
E	9B	1	**207-0539**		SEAL (125-CM)	
E	10	1	**207-0573**		SEAL (80-CM)	
E	10A	1	**207-0573**		SEAL (62-CM)	

E-ORDER BY THE CENTIMETER
Y-SEPARATE ILLUSTRATION

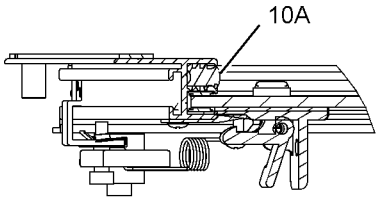

VIEW OF AREA E

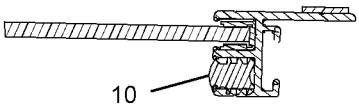

SECTION H-H

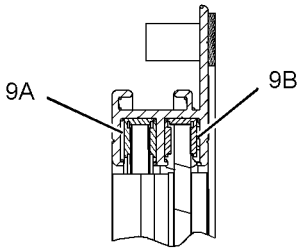

VIEW OF AREA C

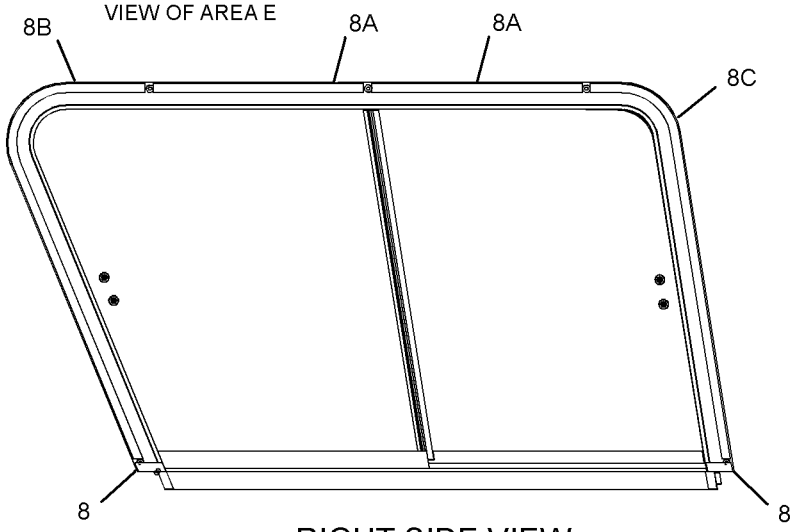

RIGHT SIDE VIEW

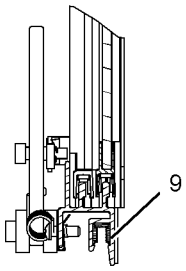

VIEW OF AREA D

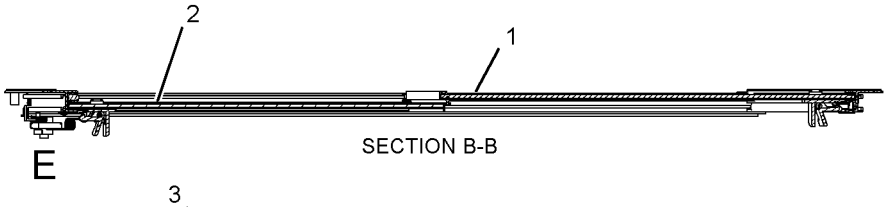

SECTION B-B

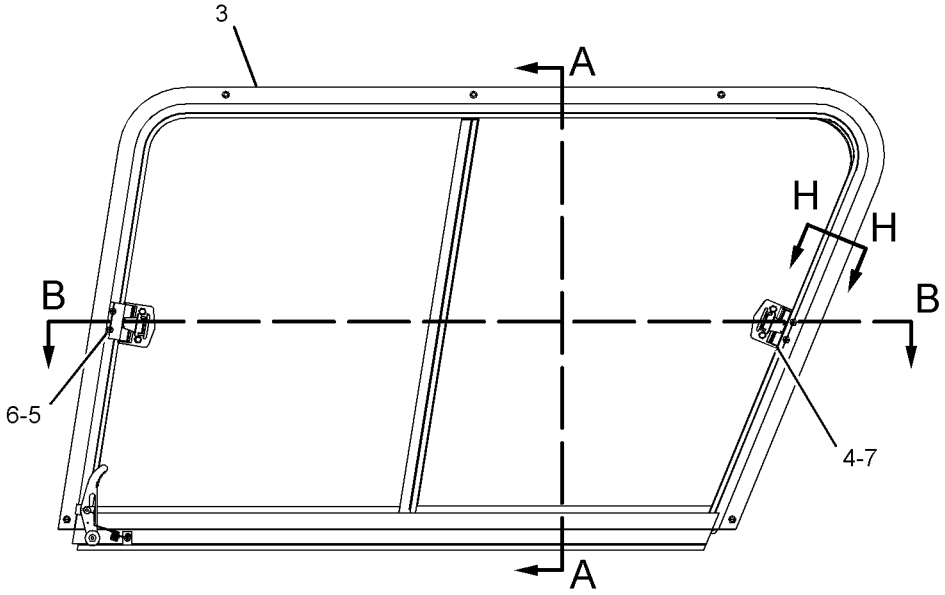

LEFT SIDE VIEW
(INSIDE OF CAB)

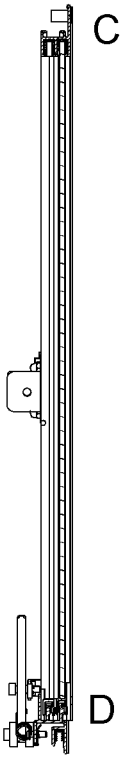

SECTION A-A

GRAPHIC #1 **<END>** g01958448

SERVICE EQUIPMENT AND SUPPLIES

238-7734 FILM GP–UN

S/N: MWD1-UP

AN ATTACHMENT

SMCS-7557 **i03775033**

NOTE	REF NO	GRAPHIC REF	PART NUMBER	QTY	PART NAME 1 2 3 4 5 6 (PRODUCT LEVEL)	SEE PAGE
	1	1	**252-9015**	1	FILM-IDENTIFICATION (UN) (FRONT)	
	2	1	**252-9016**	2	FILM-IDENTIFICATION (UN) (SIDE)	
	3	1	**252-9017**	2	FILM-IDENTIFICATION (UN) (REAR)	

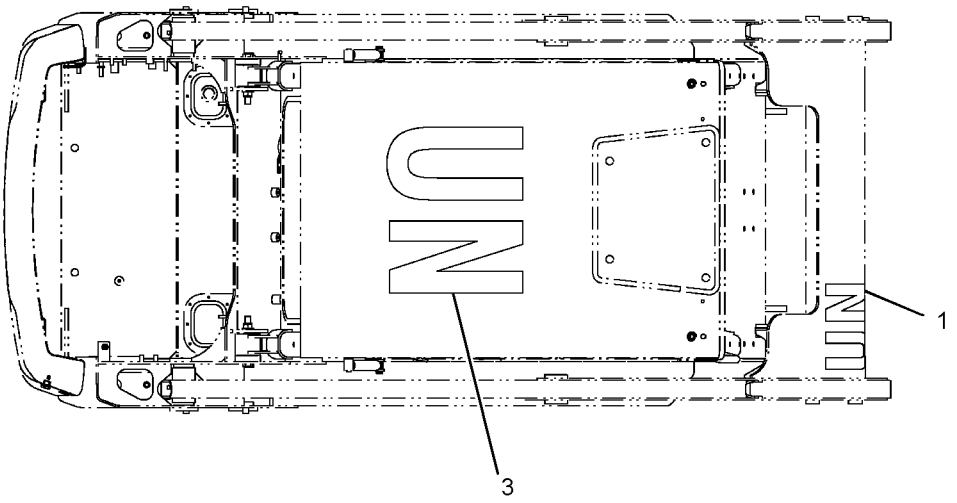

TOP VIEW FWD

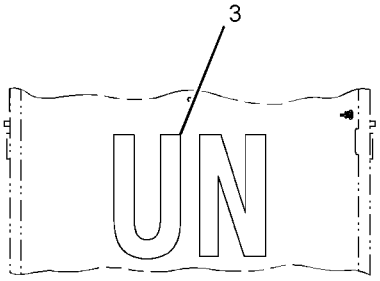

VIEW A-A

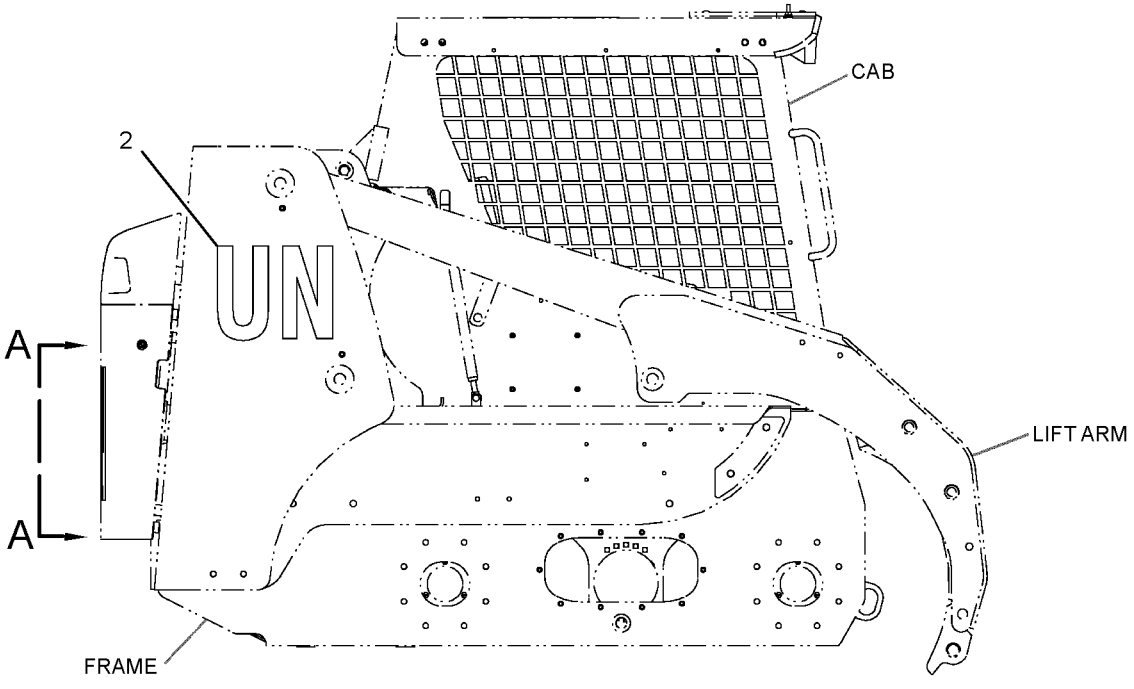

RIGHT SIDE VIEW

GRAPHIC #1

<END>

g01397986

SERVICE EQUIPMENT AND SUPPLIES

295-7144 FILM GP

S/N: MWD1-UP
PART OF 326-5287, 326-5297, 326-5487, 326-5527, 326-5557, 326-5567
CONVERSION AR-MACHINE
AN ATTACHMENT

SMCS-7557 **i03347341**

NOTE	REF NO	GRAPHIC REF	PART NUMBER	QTY	PART NAME 1 2 3 4 5 6 (PRODUCT LEVEL)	SEE PAGE
	1	1	**295-7134**	1	FILM-INFORMATION	

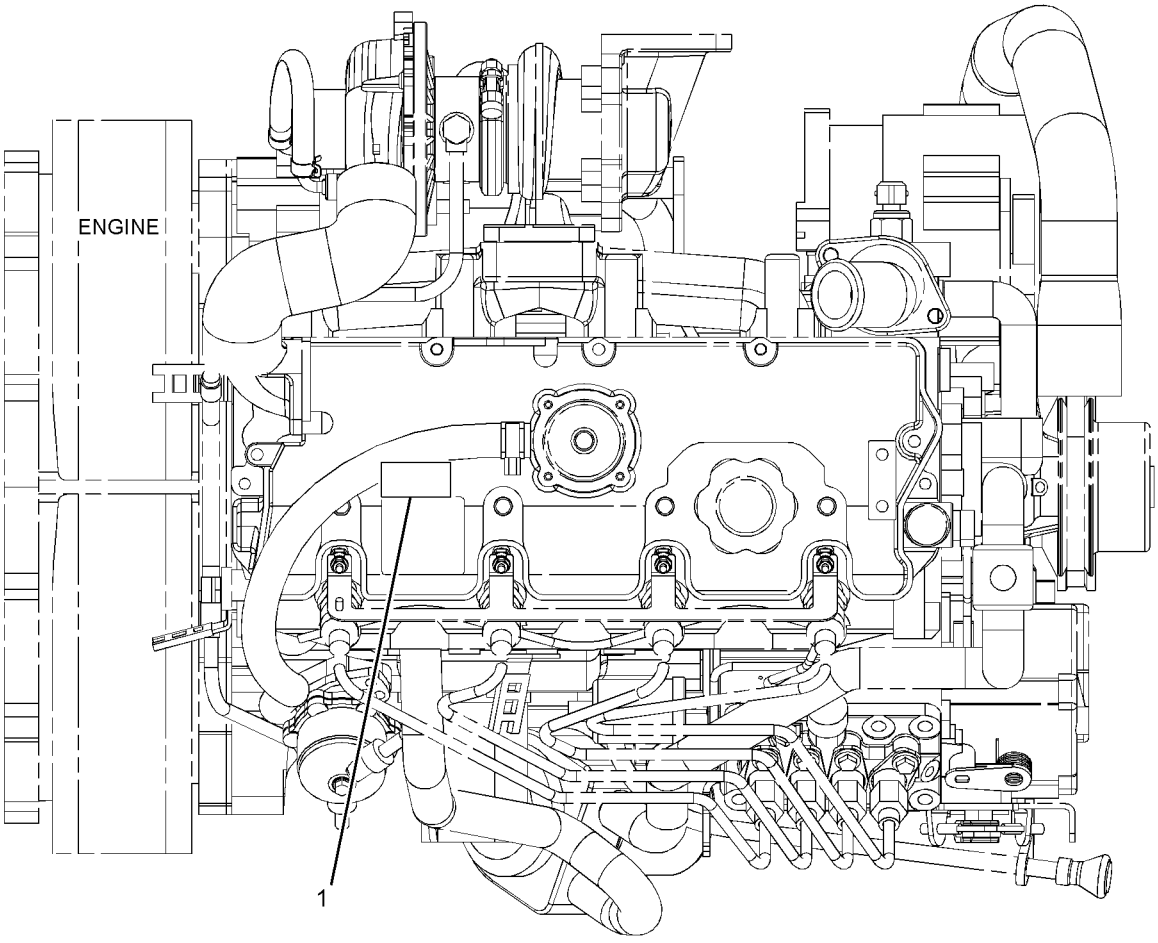

TOP VIEW OF ENGINE

GRAPHIC #1 **<END>** g01877593

SERVICE EQUIPMENT AND SUPPLIES

354-6562 FILM GP

S/N: MWD1-UP

PART OF 326-5416 COMMON AR

SMCS-7557 **i03906917**

NOTE	REF NO	GRAPHIC REF	PART NUMBER	QTY	PART NAME 1 2 3 4 5 6 (PRODUCT LEVEL)	SEE PAGE
	1	1	**258-3423**	1	FILM-IDENTIFICATION (CATERPILLAR)	
	2	1	**258-3424**	1	FILM-IDENTIFICATION (CAT, LH)	
	3	1	**258-3425**	1	FILM-IDENTIFICATION (CAT, RH)	
	4	1	**258-3427**	1	FILM-IDENTIFICATION (CAT)	
	5	1	**354-6564**	1	FILM-IDENTIFICATION (226B3, RH)	
	6	1	**354-6563**	1	FILM-IDENTIFICATION (226B3, LH)	

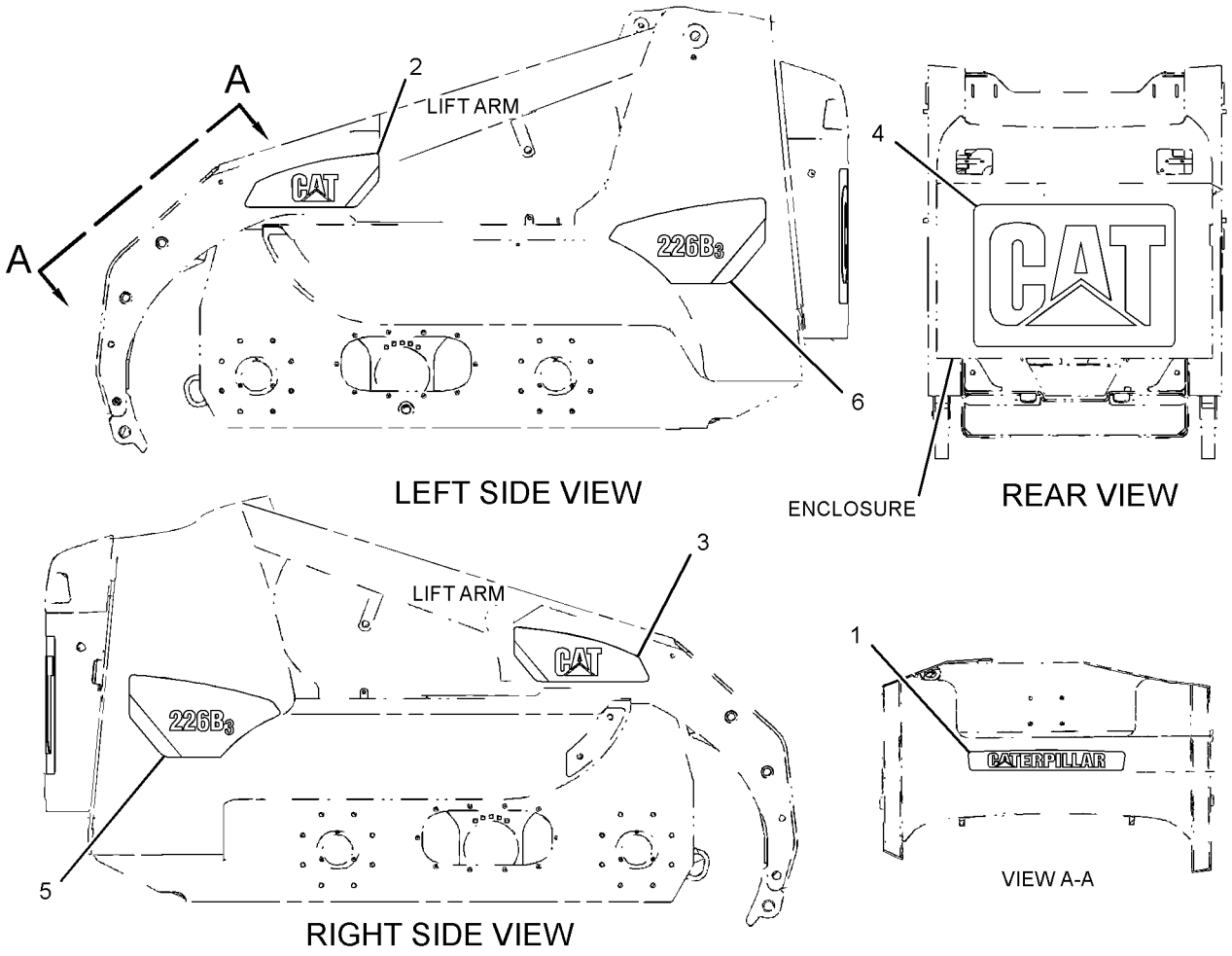

GRAPHIC #1 **<END>** g02148388

356-1898 FILM GP–HIGH FLOW

S/N: MWD1-UP
PART OF 326-5244, 326-5245 HYDRAULIC AR
AN ATTACHMENT

SMCS-7557 **i03903714**

NOTE	REF NO	GRAPHIC REF	PART NUMBER	QTY	PART NAME 1 2 3 4 5 6 (PRODUCT LEVEL)	SEE PAGE
	1	1	**356-1899**	2	FILM (HIGH FLOW)	

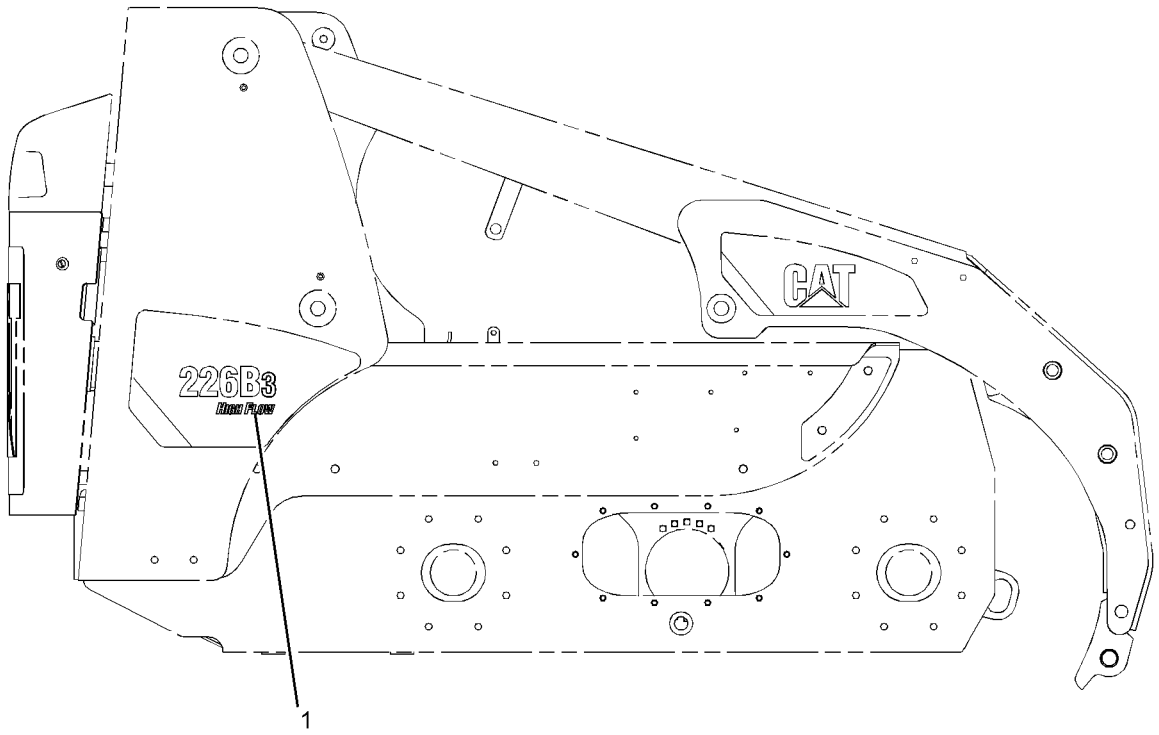

RIGHT SIDE VIEW

GRAPHIC #1 **<END>** g02147874

SERVICE EQUIPMENT AND SUPPLIES

317-0972 PARTS GP-MISCELLANEOUS

S/N: CYP1-UP

PART OF 292-5719 ENGINE AR-PRIMARY

AN ATTACHMENT

SMCS-1000, 7000, 7950 **i03198482**

NOTE	REF NO	GRAPHIC REF	PART NUMBER	QTY	PART NAME 1 2 3 4 5 6 (PRODUCT LEVEL)	SEE PAGE
	1	1	**5P-2369**	1	CLIP	
	2	1	**153-6375**	5	BOLT	
	3	1	**155-7984**	1	WASHER	
	4	1	**160-3550**	1	CLAMP-HOSE	
	5	1	**163-5372**	1	WASHER (8X15.4X4-MM THK)	
	6	1	**180-8579**	1	NUT	
	8	1	**335-2093**	1	BRACKET	
	10	1	**205-4585**	1	HOSE	
	11	1	**217-7352**	1	COVER-VALVE	
	12	1	**225-7955**	1	CABLE AS-BATTERY (NEGATIVE)	
	13	1	**246-4318**	4	CLIP	
	16	1	**280-8336**	1	BRACKET AS	
M	16A	1	**8T-3612**	1	NUT-WELD (M8X1.25-THD)	
	17	1	**295-8184**	1	HOSE	
	18	1	**316-6881**	1	CLAMP	

M-METRIC PART

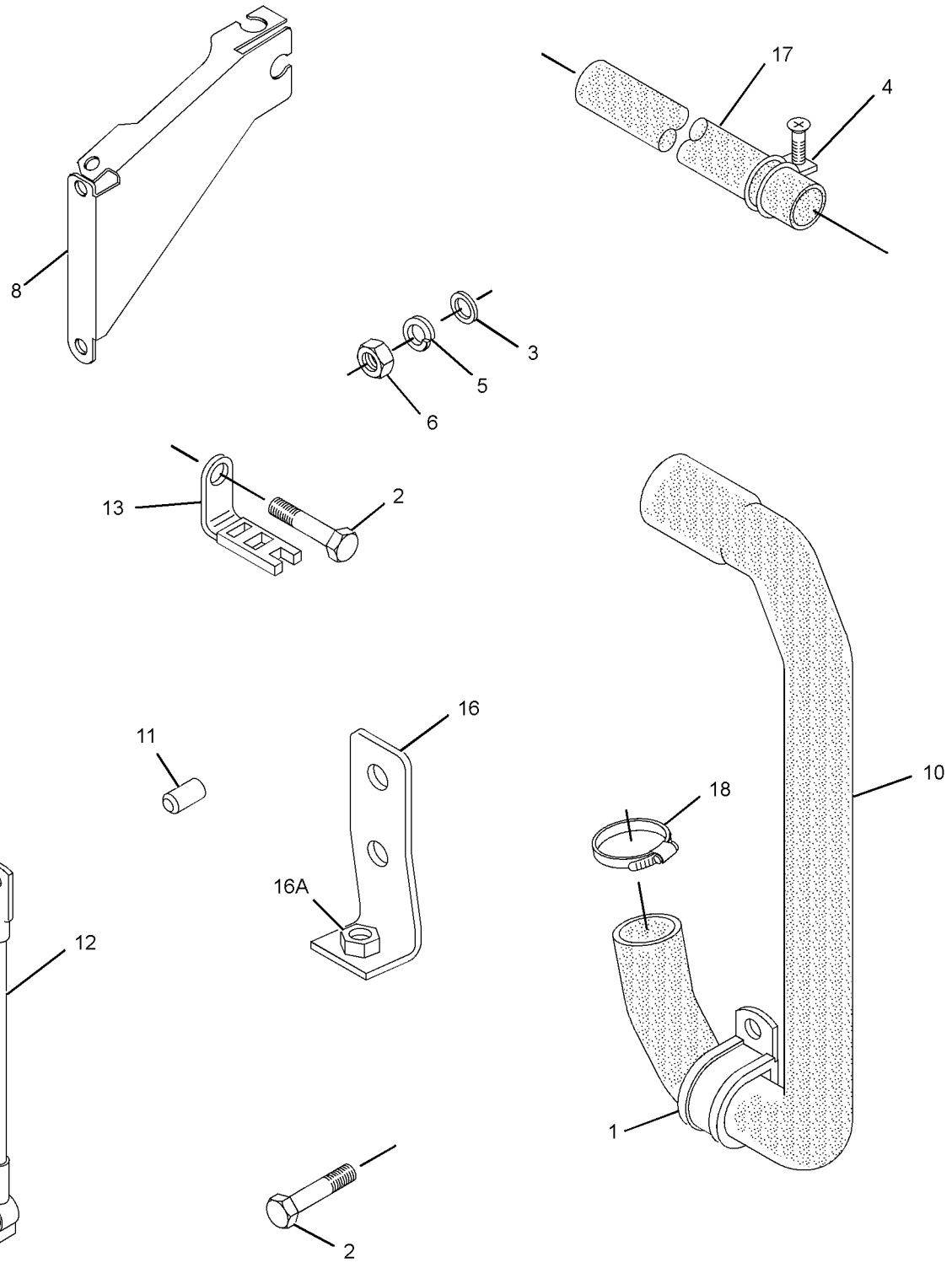

GRAPHIC #1 **<END>** g01828393

SERVICE EQUIPMENT AND SUPPLIES

195-6740 PLATE & FILM GP

S/N: MWD1-UP

AN ATTACHMENT

SMCS-7405, 7557 **i02890284**

NOTE	REF NO	GRAPHIC REF	PART NUMBER	QTY	PART NAME 1 2 3 4 5 6 (PRODUCT LEVEL)	SEE PAGE
	1	1	**199-3410**	1	FILM-IDENTIFICATION (SYNTHETIC HYD OIL, READ OMM)	

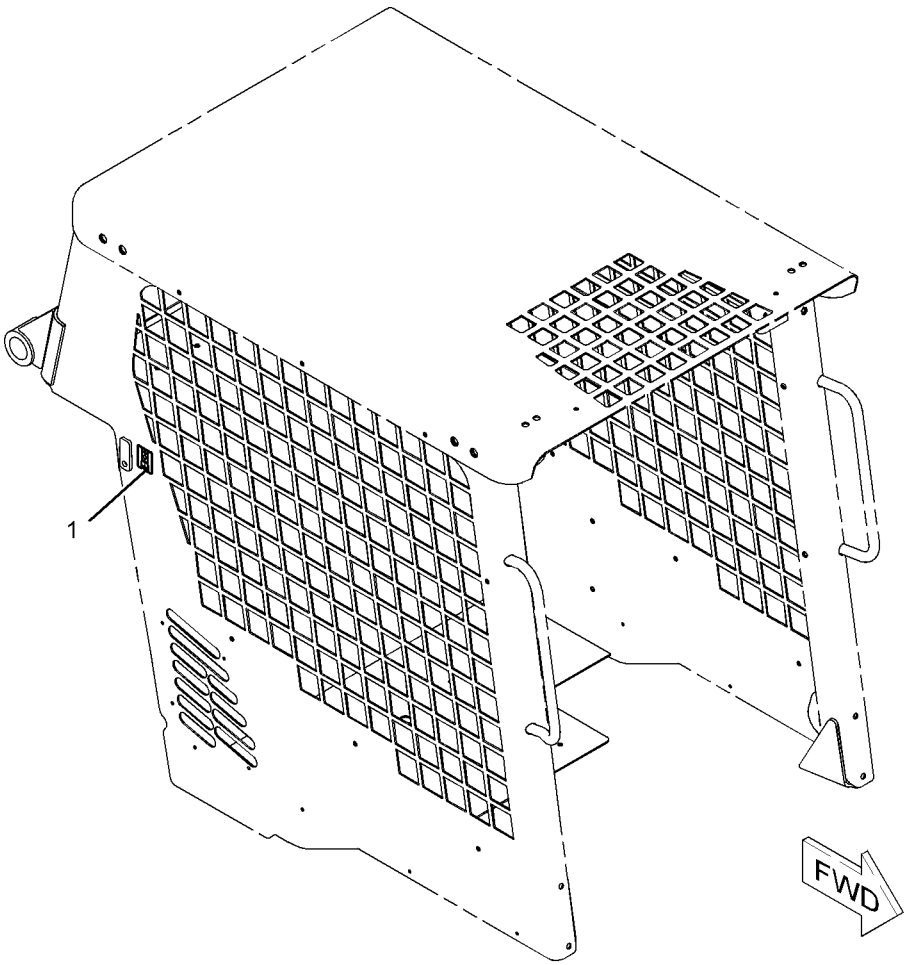

GRAPHIC #1 **<END>** g01086583

SERVICE EQUIPMENT AND SUPPLIES

308-5206 PLATE & FILM GP

S/N: MWD1-UP
AN ATTACHMENT

SMCS-7405, 7557 **i02769774**

NOTE	REF NO	GRAPHIC REF	PART NUMBER	QTY	PART NAME 1 2 3 4 5 6 (PRODUCT LEVEL)	SEE PAGE
	1	1	**199-3410**	1	FILM-IDENTIFICATION (SYNTHETIC HYD OIL, READ OMM) (OIL)	

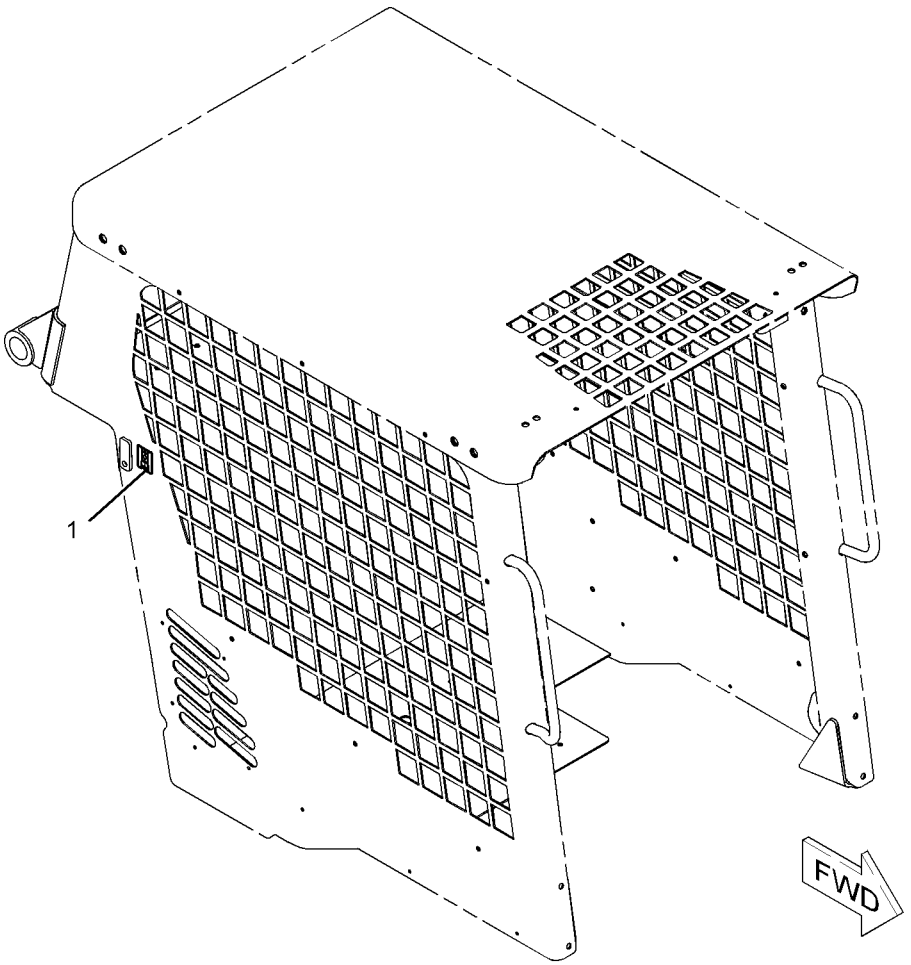

GRAPHIC #1 **<END>** g01086583

SERVICE EQUIPMENT AND SUPPLIES

326-5460 PLATE & FILM GP

S/N: MWD1-UP

AN ATTACHMENT

SMCS-7405, 7557 **i03902895**

NOTE	REF NO	GRAPHIC REF	PART NUMBER	QTY	PART NAME 1 2 3 4 5 6 (PRODUCT LEVEL)	SEE PAGE
	1	1	**157-2853**	1	FILM-INFORMATION (READ OMM)	
	3	2	**169-2876**	1	FILM-IDENTIFICATION (POWER RECEPTACLE, 12-VOLT)	
	4	1	**219-0302**	1	FILM-WARNING (NO WELD, NO DRILL, READ OMM)	
	5	1	**239-4990**	1	FILM-WARNING (HIGH PRESSURE CYLINDER)	
	6	2	**224-8945**	1	FILM-WARNING (DO NOT USE ETHER, U.S)	
	7	1	**224-9021**	1	FILM-WARNING (SEAT BELT)	
	8	1	**225-3305**	1	FILM-WARNING (UNIVERSAL, READ OMM, U.S.)	
	9	1	**234-6065**	1	FILM-CERTIFICATION (OPS, READ OMM)	
	10	2	**295-7317**	1	FILM-WARNING (CRUSH HAZARD, CAB, READ OMM)	
	11	1	**295-7318**	1	FILM-WARNING (FALL/CRUSH HAZARD, NO ACCESS)	
	12	1	**295-7319**	1	FILM-WARNING (CRUSH HAZARD, READ OMM)	
	14	2	**235-1365**	1	FILM-WARNING (HOT FLUID UNDER PRESSURE)	
	15	1	**239-6986**	1	PLATE-IDENTIFICATION (MACHINE)	
	16	1	**263-4836**	4	FILM-SYMBOL (TIE-DOWN)	
	17	2	**356-1905**	1	FILM-INSTRUCTION (BUCKET LOWER)	
	18	2	**295-7199**	1	FILM-INSTRUCTION (SERVICE CHART)	
	20	2	**225-0313**	1	FILM-WARNING (JUMP START, READ OMM, U.S.)	
	22	1,2	**295-7315**	2	FILM-WARNING (CRUSH HAZARD, CAB, READ OMM)	
	23	1	**295-7320**	1	FILM-WARNING (CRUSH HAZARD, READ OMM)	
	24	1	**234-9575**	1	FILM-INSTRUCTION (GOVERNOR CONTROL)	
	25	2	**312-7747**	1	PLATE-WARNING (UNIVERSAL)	

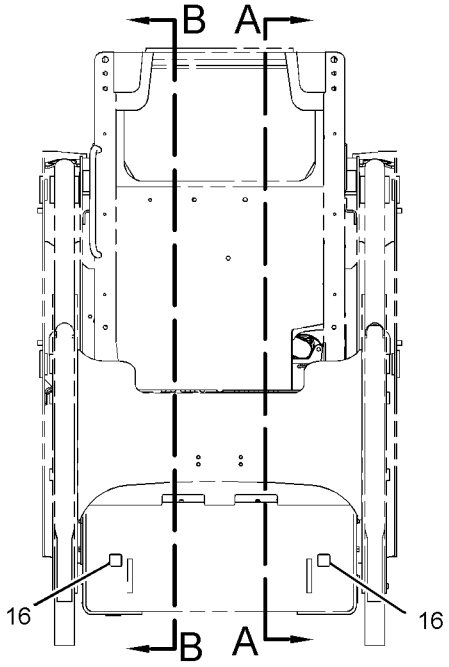

FRONT VIEW

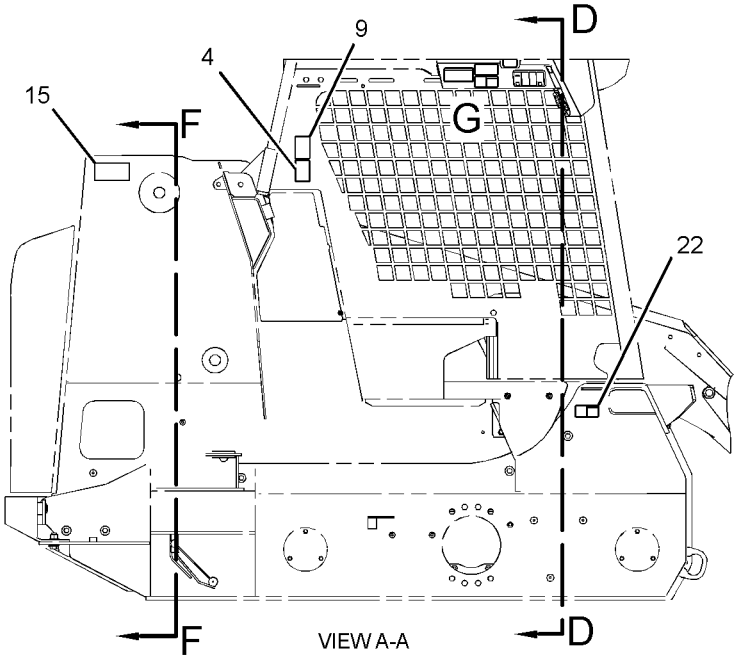

VIEW A-A

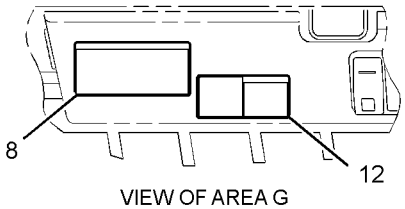

VIEW OF AREA G

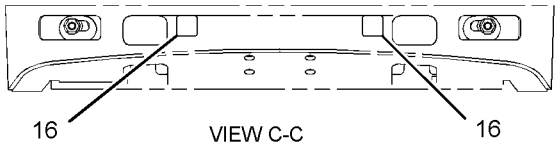

VIEW C-C

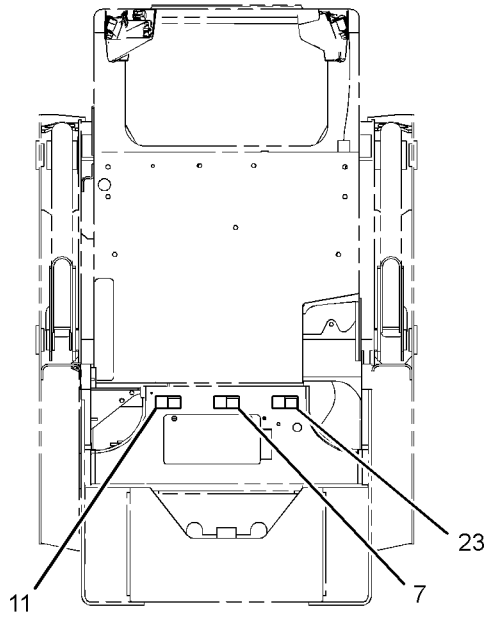

VIEW D-D

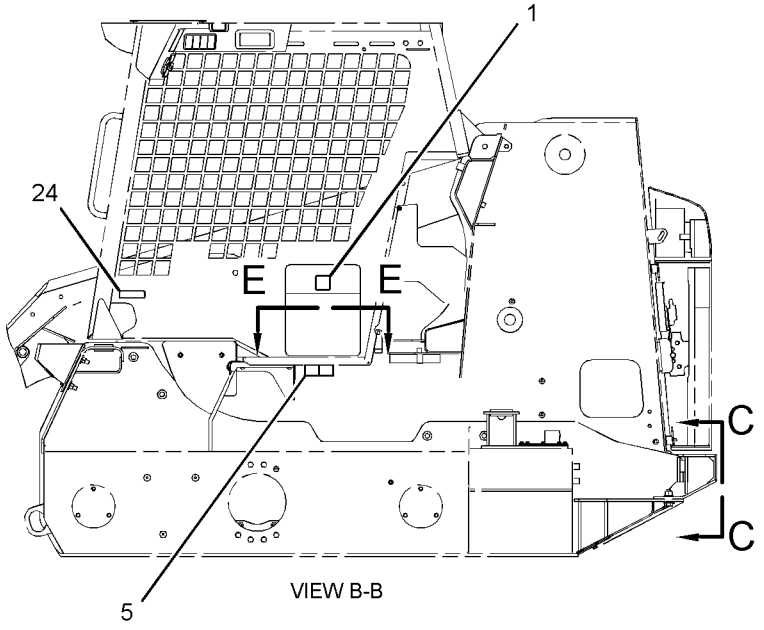

VIEW B-B

REFER TO ALL ILLUSTRATIONS OF THIS GROUP FOR AUXILIARY VIEWS

GRAPHIC #1

g02148925

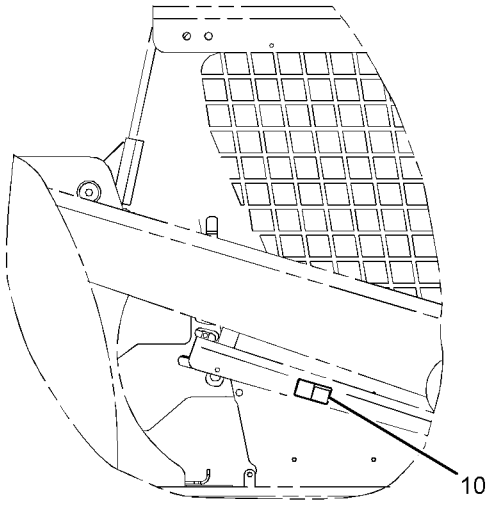

RIGHT SIDE VIEW

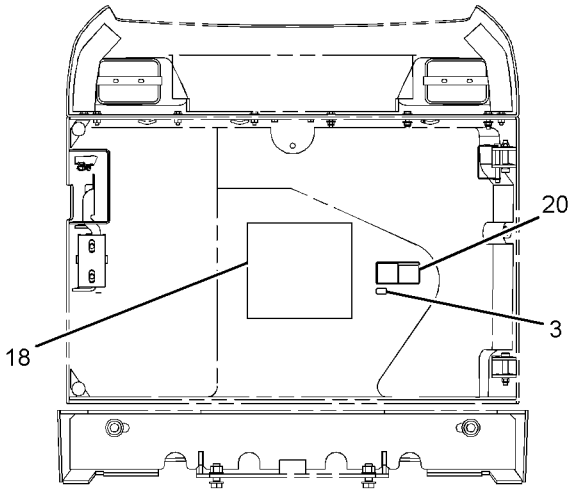

VIEW F-F

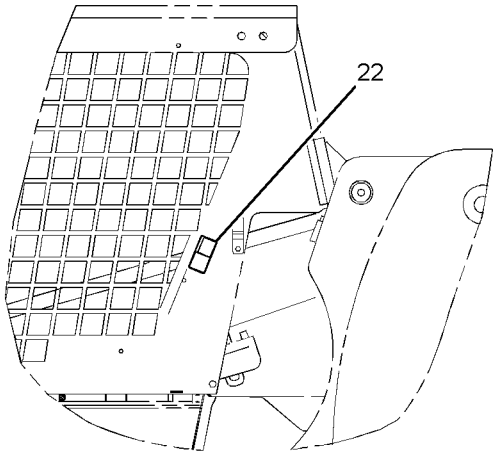

LEFT SIDE VIEW

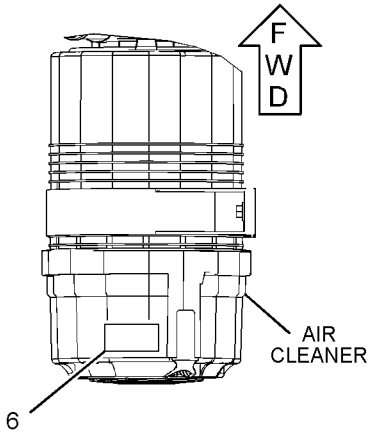

TOP VIEW

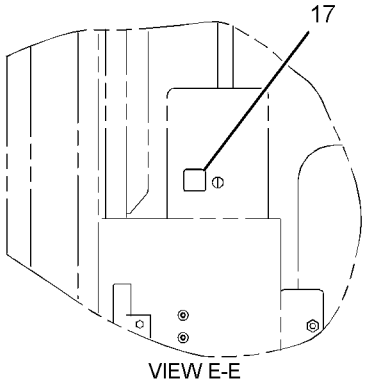

VIEW E-E

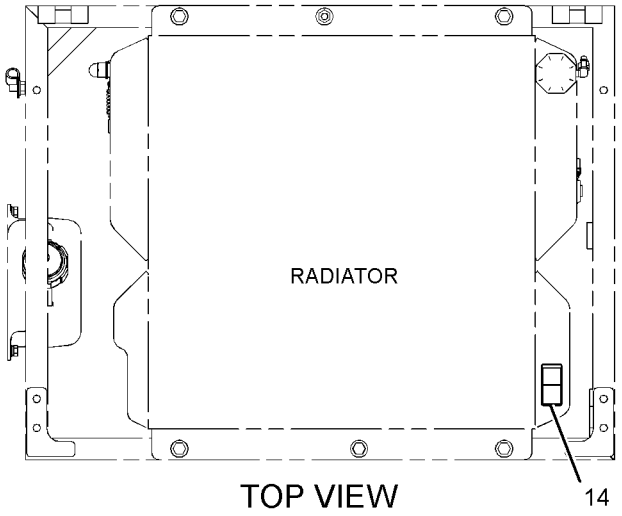

TOP VIEW

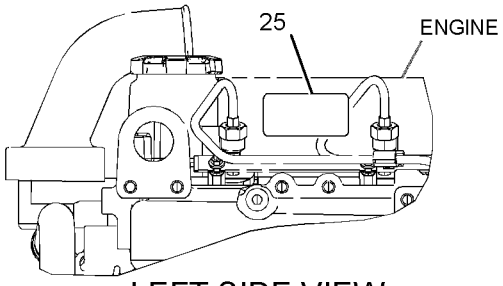

LEFT SIDE VIEW

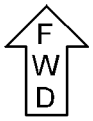

GRAPHIC #2 **<END>** g02148938

SERVICE EQUIPMENT AND SUPPLIES

326-5560 PLATE & FILM GP

S/N: MWD1-UP

AN ATTACHMENT

SMCS-7405, 7557 **i03903789**

NOTE	REF NO	GRAPHIC REF	PART NUMBER	QTY	PART NAME 1 2 3 4 5 6 (PRODUCT LEVEL)	SEE PAGE
	1	1	**157-2853**	1	FILM-INFORMATION (READ OMM)	
	2	2	**356-1905**	1	FILM-INSTRUCTION (BUCKET LOWER)	
	3	2	**169-2876**	1	FILM-IDENTIFICATION (POWER RECEPTACLE, 12-VOLT)	
	4	1	**219-0302**	1	FILM-WARNING (NO WELD, NO DRILL, READ OMM)	
	5	1	**234-9575**	1	FILM-INSTRUCTION (GOVERNOR CONTROL)	
	6	1	**234-6065**	1	FILM-CERTIFICATION (OPS, READ OMM)	
	7	1	**239-6986**	1	PLATE-IDENTIFICATION (MACHINE)	
	8	1	**224-0554**	1	FILM-WARNING (UNIVERSAL, READ OMM, INTL)	
	9	2	**295-7199**	1	FILM-INSTRUCTION (SERVICE CHART)	
	10	1	**239-4991**	1	FILM-WARNING (HIGH PRESSURE CYLINDER)	
	11	2	**224-8946**	1	FILM-WARNING (NO ETHER SPRAY/AIR INTK, INTL)	
	12	1	**224-9022**	1	FILM-WARNING (SEAT BELT)	
	13	2	**235-1368**	1	FILM-WARNING (RADIATOR)	
	14	2	**225-0312**	1	FILM-WARNING (JUMP START, READ OMM, INTL)	
	15	1	**263-4836**	4	FILM-SYMBOL (TIE-DOWN)	
	16	1	**295-7330**	1	FILM-WARNING (CRUSH HAZARD, READ OMM)	
	17	2	**295-7327**	1	FILM-WARNING (CRUSH HAZARD, READ OMM)	
	18	1	**295-7328**	1	FILM-WARNING (FALL/CRUSH HAZARD, NO ACCESS)	
	19	1,2	**295-7325**	2	FILM-WARNING (CRUSH HAZARD, CAB, READ OMM)	
	20	1	**295-7329**	1	FILM-WARNING (CRUSH HAZARD, READ OMM)	
F			**312-7748**	1	PLATE-WARNING (UNIVERSAL, READ OMM)	
F			**295-7340**	1	FILM-INSTRUCTION (FUEL, READ OMM)	

F-NOT SHOWN

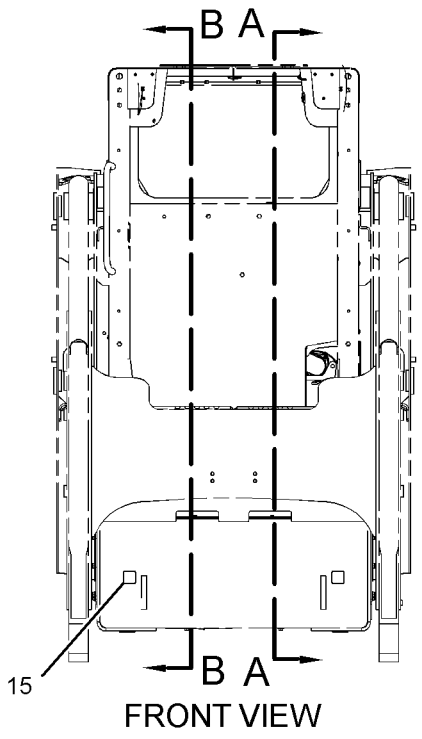

FRONT VIEW

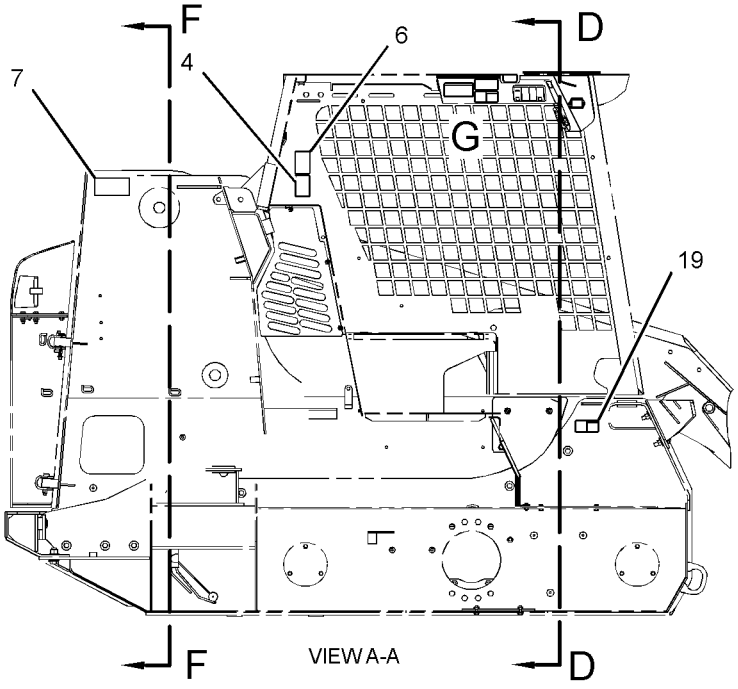

VIEW A-A

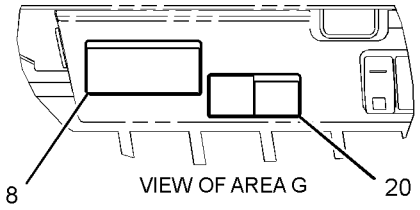

VIEW OF AREA G

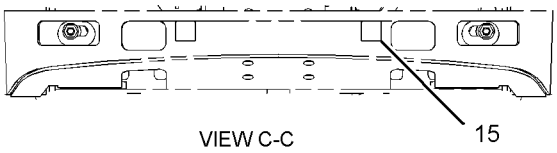

VIEW C-C

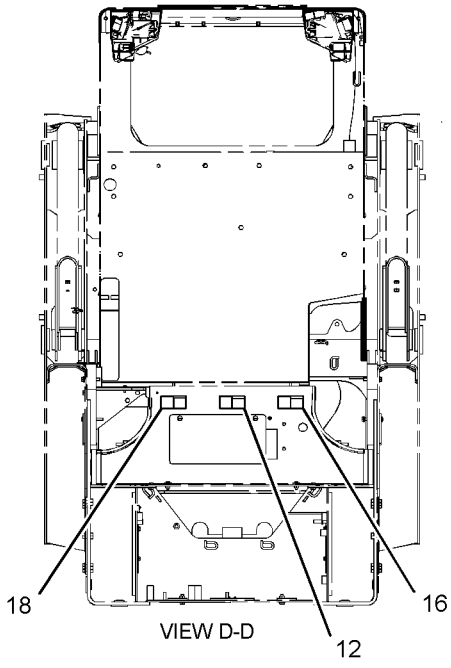

VIEW D-D

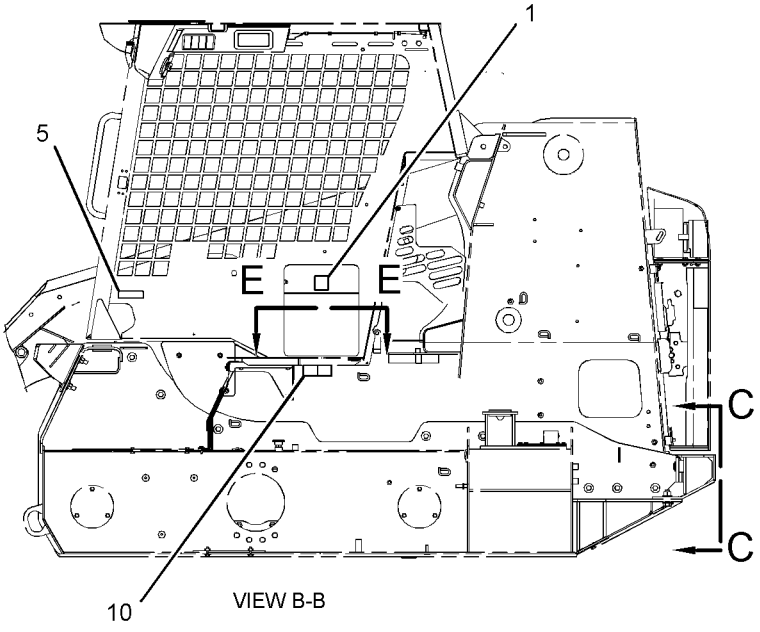

VIEW B-B

REFER TO ALL ILLUSTRATIONS OF THIS GROUP FOR AUXILIARY VIEWS

GRAPHIC #1

g02155397

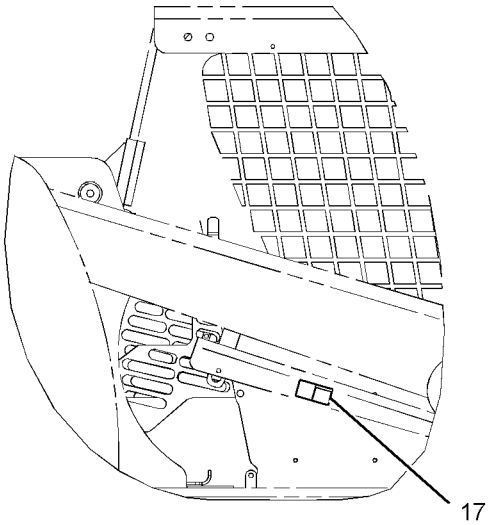

RIGHT SIDE VIEW

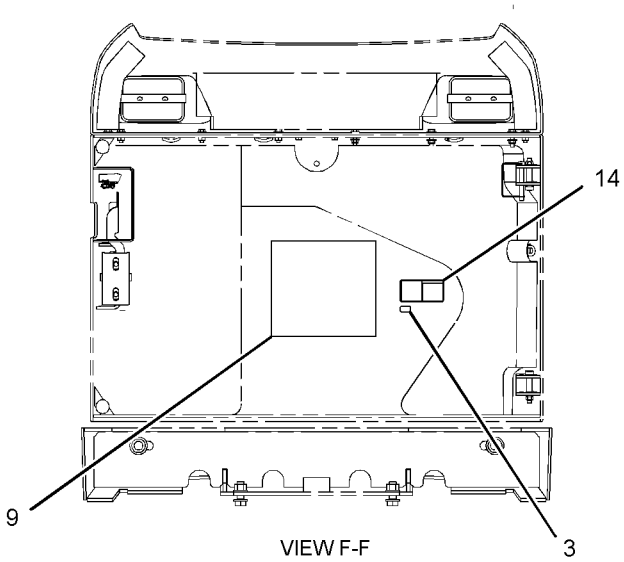

VIEW F-F

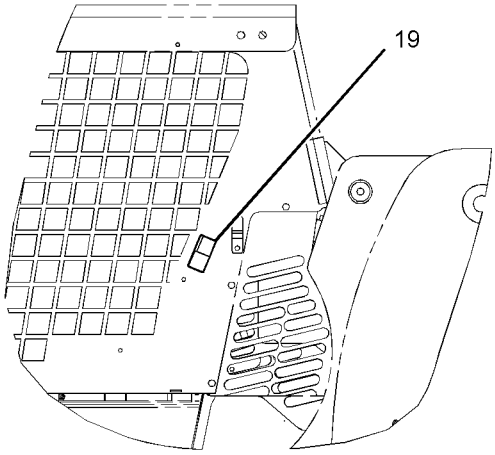

LEFT SIDE VIEW

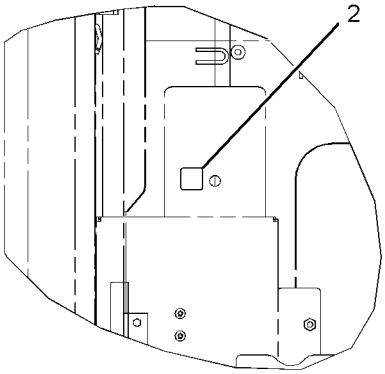

VIEW E-E

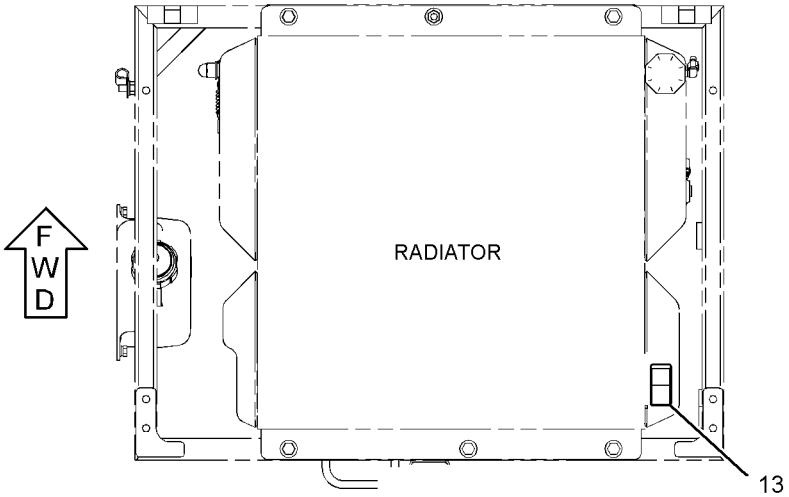

TOP VIEW

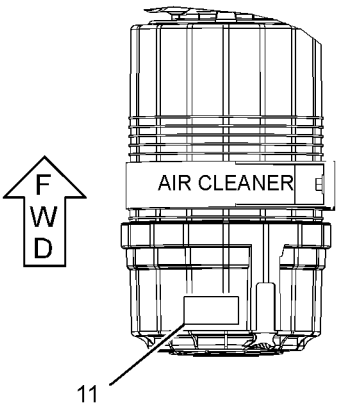

TOP VIEW

GRAPHIC #2 **<END>** g02155398

MEMORANDA

PART NUMBER INDEX

Part	Page
0	
0T-0244	337
	338
	339
	340
1	
1D-4677	345
1F-7567	179
	182
	184
	205
1G-7206	66
1G-8878	117
1H-3244	85
	93
	107
1M-6119	107
1M-6120	107
1P-4278	51
	66
1P-4574	204
1P-4578	196
	198
1S-7252	107
1S-9593	111
	278
	279
	280
	281
2	
2D-5248	272
2D-6412	337
	338
	339
	340
2K-4973	45
	149
2L-8065	107
2L-8067	102
2L-8069	100
	102
	105
2L-8077	102
2L-8079	105
2M-9780	115
	120
	122
	174
	175
	182
	184
	190
	196
	198
	200
	202
	220
	233
2R-0364	333
2S-3440	196
	198
2S-4078	196
	198
2S-5717	345
2V-3216	179
3	
3B-4505	322
3B-4628	246
3B-8489	166
	172
	173
3D-2824	115
	120
	122
	124
	186
	188
	190
	202
	204
	207
3E-2310	194
3E-3892	349
	351
3E-4051	319
3E-4057	319
3E-5180	280
3E-7404	66
	188
	190
3E-7584	▶83
	91
3E-9179	298
	300
3F-9556	325
	332
3J-1907	96
	104
	117
	120
	122
	124
	179
	182
	184
	188
	190
	192
	194
	204
	209
	233
3J-7354	132
	182
	184
	192
3K-0360	115
	124
	127
	162
	174
	175
	204
	207
	231
3K-0715	132
3K-8460	66
3S-2093	55
	87
	91
	98
	100
	102
	104
	105
	107
	109
	110
	111
	179
	264
	292
	295
	298
	300
	319
	327
	328
3S-6049	107
3S-8536	166
3S-8665	321
3S-9182	151
4	
4B-0418	205
4B-2043	104
	328
4B-4863	159
	188
	190
4D-6466	66
4E-1384	263
4J-0522	196
	198
4J-5140	204
4J-5267	196
	198
4J-5477	98
	179
	182
	184
	192
	194
	204
	207
4J-7533	233
4K-8864	51
4M-5285	166
4P-7581	66
	91
	102
	110
	179
	326
4P-8134	102
	105
	108
	115
	186
	321
5	
5B-0651	245
	246
5C-2874	108
	188
	190
5C-2890	62
	64
	84
	85
	93
	101
	102
	108
	292
	295
	316
	330
	333
5C-7261	45
	53
	93
	102
	104
	105
	108
	120
	122
	149
	263
	272
	275
	322
	325
	332
	334
	341
	342
5C-7682	305
	306
5C-7883	127
5C-8310	302
	347
5C-8311	302
	347
5C-8312	159
5C-9553	66
	157
	158
	204
	207
	264
	332
5D-0718	186

▶ **PRIMARY REFERENCE**

PART NUMBER INDEX

Part	Page
5D-1026	47
5H-9743	166
5K-1787	114
5K-9090	120
	122
5L-3233	54
5M-8429	204
5P-0372	45
	156
	246
	292
	295
	344
5P-1076	151
	205
5P-1420	51
	66
5P-1442	66
	230
5P-1478	107
5P-1505	19
	55
5P-2230	196
	198
5P-2369	358
5P-4115	105
5P-4116	21
	53
	55
	57
	73
	74
	108
	120
	122
	149
	151
	272
5P-4362	196
	198
5P-4571	105
	160
5P-4961	19
	55
	66
	230
5P-5924	319
5P-5927	334
5P-5969	292
	295
	303
5P-7070	303
5P-7162	102
5P-7814	66
5P-7957	267
5P-7958	1
	101
5P-8309	45
	292
	295
5P-8439	89
	90
5P-8500	1
	145
5P-9770	66
5P-9909	292
	295
5T-7869	345
5T-7870	345
5V-8309	45
5W-1987	292
	295
5W-6388	231
6	
6B-0924	13
6D-3479	194
6D-4246	55
	230
6D-5797	349
	351
6E-5060	132
6F-6672	221
6I-0846	68
6I-1201	118
6I-1418	101
6V-0852	120
	122
	192
	196
	198
6V-1228	182
	184
6V-1392	266
6V-1889	186
6V-1970	1
6V-2317	89
6V-3918	207
	270
	271
6V-3965	120
	122
	192
	196
	198
6V-4270	292
	295
6V-5326	132
6V-5586	132
6V-5683	62
6V-5834	328
6V-6689	303
6V-7357	151
6V-7687	126
6V-7728	102
	105
6V-7744	245
6V-8186	332
6V-8352	132
6V-8397	120
	122
	124
	179
	182
	184
	188
	190
6V-8398	115
	124
	188
	190
	192
	200
	202
	204
	205
	209
6V-8628	182
	184
	192
6V-8632	124
6V-8633	115
6V-8634	124
6V-8636	124
	179
	188
	190
	204
	209
6V-8637	120
	122
	124
	204
6V-8639	115
	124
	204
6V-8640	120
	122
	174
	175
6V-8641	179
	192
	194
6V-8642	115
	182
	184
	190
	196
	198
	200
	202
6V-8647	182
	184
	192
6V-8713	188
	190
	207
6V-8715	202
6V-8724	179
	182
	184
6V-8781	194
	209
6V-8918	129
6V-8938	179
6V-8949	251
6V-8978	124
6V-9001	179
6V-9168	179
6V-9170	207
6V-9182	196
	198
6V-9189	154
	166
6V-9508	124
6V-9632	21
	188
	190
	270
	271
	298
	300
6V-9672	159
6V-9746	120
	122
	124
	174
	175
	186
	196
	198
	204
	205
6V-9805	326
6V-9836	179
	182
6V-9838	179
6V-9873	192
6W-5698	66
	231
7	
7B-1597	179
	205
7D-8431	264
7E-2700	155
	156
7G-1060	101
	107
7G-2950	179
7G-2951	179
7G-7053	264
7G-8839	114
7H-7055	179
	205
7J-9108	115
	124
	179
	182
	184
	188
	190
	196
	198
	200
	202
	207
	209
7K-1181	62
	66
	91
	101

► **PRIMARY REFERENCE**

PART NUMBER INDEX

Part	Page
	104
	107
	115
	124
	182
	184
	186
	192
	204
	236
	321
7M-7410	50
7M-8485	196
	198
7M-9957	159
7N-7221	327
7N-9017	104
	105
	107
7R-2750	87
	91
	102
7R-2751	87
	91
	101
7T-0093	111
7T-1099	242
	334
7T-6799	327
7X-0579	102
7X-0590	147
7X-0603	154
7X-0608	104
	105
	108
7X-0610	114
7X-0818	158
7X-1443	51
7X-2444	98
7X-2475	326
7X-2535	211
7X-2537	55
	149
	258
	310
	335
7X-2553	307
7X-2556	27
7X-2621	55
	245
7X-6312	77
7X-7729	45
	50
	51
	57
	149
	166
	180
	186
	205
	245
7X-9065	328

8

Part	Page
8C-3110	226
	227
	228
	229
8C-3205	196
	198
8C-3398	101
	102
8C-3446	182
	184
8C-3451	182
	184
8C-6354	101
8C-6758	209
8C-6959	66
8C-7563	182
	184
8C-8400	186
8F-1434	108
8F-8151	321
8F-8513	66
8G-1151	298
	300
8I-5078	233
8L-5188	246
8L-8413	298
	300
	309
8M-4963	104
8N-0869	107
8N-1548	101
8N-1549	104
8N-1725	107
8S-0934	337
	338
	339
	340
8T-0075	120
	122
8T-0087	84
8T-0154	321
8T-0267	132
8T-0269	282
	283
	284
	286
	287
	288
8T-0271	127
	217
	221
8T-0273	132
8T-0285	188
	190
8T-0318	45
8T-0328	108
8T-0341	205
8T-0379	179
8T-0389	81
	83
8T-0404	115
8T-1158	236
	238
8T-1887	91
8T-1888	91
8T-2192	200
	202
	205
8T-2444	292
	295
8T-2895	266
8T-3311	192
8T-3490	21
	179
8T-3597	242
8T-3612	21
	45
	51
	188
	190
	335
	358
8T-3647	166
8T-3848	292
	295
8T-3984	62
8T-4121	45
	50
	50
	51
	55
	66
	81
	90
	105
	108
	109
	115
	129
	151
	155
	156
	157
	158
	166
	180
	186
	188
	190
	194
	196
	198
	200
	202
	205
	207
	217
	218
	230
	232
	245
	246
	251
	263
	272
	274
	275
	286
	287
	288
	292
	295
	308
	319
	321
8T-4122	26
	27
	108
	114
	144
	151
	155
	156
	307
	326
8T-4132	27
	144
	151
	155
	156
	307
8T-4133	45
	50
	51
	57
	66
	105
	108
	109
	115
	157
	158
	186
	205
	246
	263
	275
	292
	295
	308
8T-4136	51
	151
	166
	180
	186
	188
	190
	200
	202
	205
	207
	230
	232
	251
	274
8T-4137	66
	108
	115
	149
	155
	156
	232
	286
	287

► **PRIMARY REFERENCE**

PART NUMBER INDEX

Part	Page
	288
8T-4138	62
	334
8T-4159	45
8T-4171	145
	159
8T-4172	245
8T-4173	326
8T-4177	154
8T-4178	157
	158
	205
	207
8T-4181	45
	149
8T-4186	109
	251
8T-4189	73
	74
	148
	166
	180
	230
	275
	331
8T-4191	51
	66
	166
	180
	194
8T-4192	26
8T-4194	151
8T-4195	205
	207
	321
8T-4196	50
	66
	129
	186
	196
	198
	218
	245
	246
8T-4197	332
	334
8T-4198	228
	229
8T-4200	108
8T-4201	91
	180
8T-4205	45
	62
	86
	93
	101
	102
	108
	145
	149
	151
	157
	158
	159
	205
	207
	211
	264
	282
	283
	284
	286
	287
	288
	292
	295
	326
	330
	332
	334
8T-4222	292
	295
8T-4223	26
	126
	148
	223
	224
	225
	226
	337
	338
	339
	340
8T-4224	21
	50
	51
	89
	93
	102
	148
	154
	166
	180
	188
	190
	205
	207
	209
	212
	217
	218
	258
	264
	272
	275
	292
	295
	310
	322
	331
	334
	335
	341
	342
8T-4244	151
8T-4648	148
8T-4742	316
	333
8T-4744	316
	333
8T-4778	326
8T-4908	21
	50
	57
	149
	151
	188
	190
	205
	334
8T-4956	223
	224
	225
	226
8T-4970	151
8T-4971	64
	316
8T-5005	51
	83
	180
8T-5049	223
	224
	225
	226
8T-5091	21
	51
8T-5095	220
	227
	228
	229
8T-5372	307
8T-5413	270
	271
8T-6466	45
	51
8T-6684	120
	122
8T-6703	55
8T-6842	302
	347
8T-6869	209
8T-6870	272
8T-6902	332
8T-6912	73
8T-7338	144
	151
8T-7547	158
	205
	217
	218
8T-7930	147
8T-8729	83
	96
	104
	107
8T-8737	83
	91
	101
	104
	107
	278
	279
	280
	281
	284
	292
	295
	309
	323
	324
	327
8T-8799	101
8T-9405	236
8T-9655	101
8W-8909	91

9

Part	Page
9B-7233	328
9C-2741	319
9C-5344	156
	292
	295
	344
9F-5644	104
	105
9G-3695	213
	264
9G-4336	105
	107
9G-5127	151
	272
9G-7101	272
9M-8406	180
9P-4609	264
9R-1005	200
	202
9R-1499	86
	87
	91
9R-5301	253
9R-7802	200
	202
9R-7803	200
	202
9R-7941	327
9R-7942	88
9R-7958	88
9R-7980	327
9S-0285	264
9S-1350	180
9S-8002	132
9S-8005	127
9S-8006	220
9T-2837	236
9T-4817	132
9T-4884	217
	221
9T-7303	246
9U-6993	204
9U-6994	196
	198
9U-6995	196
9W-0607	81
	82
9W-0844	91
	100
	102
	104

PART NUMBER INDEX

Part	Page
	327
9W-0852	91
	104
	111
9W-3324	83
9W-3326	83
	85
9X-1054	107
9X-1055	107
9X-1056	107
9X-1813	96
	264
9X-2038	66
9X-2041	292
	295
	308
9X-2042	264
	267
	328
	345
9X-2043	188
	190
9X-2044	292
	295
	298
	300
	331
9X-2045	292
	295
	298
	300
	346
	348
9X-2092	115
	317
9X-3401	100
	101
	104
	107
	160
	292
	295
	298
	300
	327
9X-3402	100
	102
	298
	300
9X-4244	81
	82
	83
9X-6032	217
	272
9X-6165	331
	334
9X-6581	179
9X-6606	132
9X-6772	79
	80
	102
9X-7378	319
9X-7380	319
9X-7381	319
9X-7382	319
9X-7383	319
9X-8118	88
9X-8139	88
9X-8256	328
9X-8257	253
9X-8918	349
	351
9X-9865	83

0

Part	Page
003-3082	233
032-9828	298
	300
033-5853	127
034-2151	196
036-1865	50
039-8557	251
064-3058	58
069-4080	50
084-4277	327
084-4348	84
	85
085-8091	319
086-2369	220
091-2436	327
095-0641	233
	332
095-1207	283
	284
	286
	287
095-1325	156
	292
	295
	344
095-1517	127
096-0194	131
097-7234	327
099-4691	114

1

Part	Page
100-3246	83
100-3247	83
100-3248	83
100-3250	83
100-3251	83
100-3253	83
100-3254	83
100-3255	83
100-3866	114
100-5041	107
100-6674	100
100-7530	209
101-2867	188
	190
	328
101-3129	204
	207
101-8296	319
102-2079	69
102-8703	207
102-8801	107
	323
	324
102-8802	96
	100
	101
	104
	107
	109
	110
	151
	236
102-8803	87
	91
	298
	300
102-8804	84
	85
	101
	160
	213
	325
	327
102-8805	83
	284
	292
	295
	298
	300
102-8806	91
	104
	111
103-2006	328
103-2543	102
103-5687	33
103-6262	264
104-1995	327
104-5957	347
104-6202	107
105-4593	124
106-3108	216
106-8715	186
107-0309	132
108-0656	347
108-2989	212
108-3565	132
109-2356	327
110-7887	327
111-0859	22
111-7898	298
	300
111-7899	87
	89
	91
	111
	146
	190
	260
	298
	300
	327
112-1817	188
	190
	►235
112-4719	132
112-9401	63
112-9611	298
	300
112-9717	54
112-9783	207
112-9861	235
113-7634	145
113-8490	101
113-8491	101
113-8492	101
114-6658	331
115-1615	107
116-4415	200
	202
116-7471	101
118-8118	63
118-8119	63
118-9145	118
119-3662	100
	102
	105
	298
	300
	327
119-9631	260
121-4459	132
121-4480	63
122-4406	298
	300
122-7052	186
123-2899	22
123-4750	194
123-7615	292
	295
	327
124-2456	179
124-3243	298
	300
	331
	334
124-3548	101
124-5640	100
124-6264	51
125-3518	292
	295
125-7874	91
	102
	104
	105
	107
	160
	327
125-7875	102
	107
	284
	292
	295
	328
125-7876	102
	107
	328
126-1766	109
126-1767	160
	292

► **PRIMARY REFERENCE**

PART NUMBER INDEX

Part	Page
	295
126-1774	101
126-5701	245
	246
127-2170	292
	295
127-5483	104
127-5484	101
127-6316	233
127-8281	47
128-4123	87
	91
	102
128-5016	102
128-7037	335
128-8614	63
129-1854	146
129-1855	146
129-3178	314
	316
	332
129-6259	71
129-6262	71
130-1676	239
130-1916	264
131-3540	149
	314
131-3543	330
131-5879	245
132-5166	157
	158
132-5789	105
132-7551	245
133-6517	77
	78
134-0404	117
134-2540	102
134-8273	298
	300
134-9911	216
135-2655	132
136-1953	321
136-3191	262
137-6645	231
138-4883	298
	300
138-7162	22
139-5511	64
140-2490	127
140-2492	127
140-2513	127
140-2514	127
141-0888	216
141-5453	26
	107
141-7562	129
142-2928	264
142-7484	▶134
	140
142-7485	134
	135
	137
	140
142-7486	134
142-7490	134
	135
	138
	139
142-7493	140
	141
	142
	143
142-7503	▶84
	86
142-8633	111
142-8634	▶85
	87
	91
142-8666	▶140
142-8719	129
142-8723	112
142-8724	112
142-8729	112
142-8732	114
142-8734	114
142-8757	114
142-8758	▶112
	113
142-8789	166
142-8790	166
142-8791	166
142-8792	166
142-8793	166
142-8794	166
142-8801	149
142-8805	242
142-8808	166
142-8810	151
142-8812	45
142-8818	56
142-8823	151
142-8826	155
142-8830	1
	▶147
142-8831	149
142-8832	45
	149
	166
142-8833	109
142-8880	166
142-8881	166
142-8897	151
142-8928	66
	231
142-8937	231
142-8997	188
	190
142-8998	200
	202
142-9036	114
142-9116	190
142-9121	▶140
142-9234	200
	202
142-9241	120
	122
142-9278	264
142-9279	264
142-9287	264
142-9305	268
	269
	▶341
142-9311	268
	269
	▶318
142-9319	347
142-9320	327
142-9326	89
142-9327	146
142-9328	327
142-9329	91
142-9331	87
	91
142-9356	292
	295
142-9386	264
143-4535	51
143-4536	51
144-0195	292
	295
	298
	300
144-0367	55
144-1636	109
144-4531	233
144-4532	233
144-9962	▶63
	71
146-2438	85
146-6371	303
146-9439	91
	98
	102
	111
	284
148-2371	157
	158
148-2372	157
	158
148-8315	115
	182
	184
	190
	196
	198
	200
	202
148-8316	182
	184
	192
148-8318	124
148-8319	202
148-8322	120
	122
148-8325	179
	192
	194
148-8327	120
	122
	124
	204
148-8328	115
148-8336	124
	179
	188
	190
	204
148-8338	120
	122
148-8340	115
	124
	204
148-8341	188
	190
	207
148-8342	124
148-8353	179
148-8360	196
	198
148-8362	120
	122
148-8369	182
	184
	192
148-8378	179
	182
	184
148-8382	115
148-8423	192
148-8433	179
	182
148-8435	194
	209
148-8446	179
148-9364	216
149-0686	162
	▶163
149-3499	77
149-3516	63
150-4027	194
150-4034	179
150-4043	192
150-4385	112
150-4386	112
150-5472	112
150-7568	321
150-8592	▶134
	140
150-8599	134
	135
	136
	137
	138
	139
	140
151-1394	78
151-4965	238
152-1154	156
152-1156	156
152-1157	114
152-1161	307
152-4871	267
152-4875	264
152-4884	264
152-5878	326
153-1260	342
153-2682	344
153-2683	156
	292

▶ **PRIMARY REFERENCE**

PART NUMBER INDEX

Part	Page	Part	Page	Part	Page	Part	Page
	295	154-0177	13		300	159-9495	111
	307	154-0178	13	155-2265	91	159-9496	111
153-5387	13	154-0181	11		104	159-9853	309
153-5391	13	154-0385	11	155-2270	100	160-3550	358
153-5394	13	154-0386	11		101	160-4150	24
153-5395	13	154-0388	11		104	160-4151	24
153-5396	13	154-0389	11		107	160-4152	24
153-5402	11	154-0393	13		109	160-4153	24
	13	154-0867	32		110	160-4826	118
153-5518	11	154-0869	32		284	160-6778	236
153-5554	15	154-0870	32		327		238
153-5556	15	154-0871	32	155-2271	104	160-7626	13
153-5557	15	154-0873	32		107	160-7689	101
153-5558	15	154-0874	32		160	161-2347	45
153-5559	15	154-1230	11		264	161-2539	104
153-5587	37	154-1231	11		298	161-8560	209
153-5590	37	154-1240	37		300	162-0223	264
153-5592	58	154-1241	37		327	162-2207	64
	64	154-1242	37	155-2274	91	163-5372	58
	69	154-1243	37		104		69
153-5656	73	154-1246	38		292		72
153-5933	40	154-1248	38		295		358
153-5936	43	154-1249	38		327	164-1154	332
	97	154-1347	58	155-7984	25	164-5567	120
153-5939	58	154-1403	64		47		122
153-5960	23	154-1673	23		68		192
	47	154-1675	23		72		196
	69	154-1680	10		358		198
153-5961	38	154-1817	47	155-8009	58	164-5590	182
	47	154-1822	35	155-8076	76		184
153-5962	23	154-1828	44	155-8077	76	164-7468	33
	58	154-1831	47	156-0283	53	164-7556	81
153-6256	182	154-1880	34	156-1200	63		82
	184	154-1942	43	156-1458	111	164-7619	118
153-6375	22	154-2353	43	156-1460	111	164-9425	286
	58	154-2394	22	156-4282	179		287
	358	154-2395	22	156-6971	11		288
153-6412	94	154-2403	22	156-6988	17	165-0142	131
153-6415	64	154-2405	20	156-6989	17	165-2140	23
153-6492	10	154-2406	20	156-9809	1		58
	34	154-2427	58		▶154	165-2141	25
153-6833	29	154-2428	58	157-2853	362		58
153-6835	29	154-2433	28		365		68
	37	154-2713	69	158-3770	276		72
153-6838	10	154-2715	64		277	165-2142	22
	13		69	158-6694	327	165-2602	▶141
	29	154-2716	69	158-6695	327	165-2605	▶134
153-6841	29	154-3927	▶77	158-6696	327		141
153-6849	24		79	158-6697	327	165-2606	▶135
153-6850	24	154-3928	▶78	158-6698	327		141
153-6851	24		80	158-6699	327	165-2609	▶135
153-6853	43	154-3985	342	159-2953	155		141
	58		343		156	165-2610	▶135
153-6868	22	154-3986	343	159-5753	190		141
153-6879	118	154-4014	230		▶211	165-4891	▶141
153-6881	43	154-4505	10	159-5756	242	165-4895	84
153-6981	326	154-5232	207	159-5772	112	165-4908	134
153-7640	28	154-8711	343	159-5790	326		135
	58	154-8715	343	159-5792	326	165-4934	124
153-7920	57	155-1279	213	159-5793	126	165-7095	27
153-7983	64	155-2255	104	159-5794	326		326
153-7987	64		327	159-5797	245	166-2033	98
153-7988	38	155-2260	100	159-8049	107	166-2338	22
154-0175	13		101	159-8405	149	166-2560	254
154-0176	13		298	159-9322	101		255

▶ **PRIMARY REFERENCE**

PART NUMBER INDEX

Part	Page
166-2562	346
166-2569	▶345
	346
166-3678	112
167-3692	102
167-3693	104
167-4339	131
168-7572	114
168-8999	72
168-9001	44
	58
	72
168-9002	72
169-2876	362
	365
169-6715	51
170-6305	328
172-0970	236
172-4445	▶79
172-4446	▶80
172-4585	76
172-8173	127
172-8175	127
172-9200	107
173-0702	276
173-0703	277
173-2543	343
173-3015	145
173-3016	145
173-3018	145
173-3021	▶159
	160
173-3022	4
	6
	▶346
174-3091	278
	279
	280
	281
	309
175-0005	291
	303
175-4236	159
175-4237	157
	158
175-4238	4
	5
	6
	▶253
175-4239	157
	158
176-1477	107
176-2947	264
176-3900	▶256
176-4074	198
176-4079	161
176-7719	68
176-9954	66
	▶71
177-3405	156
	292
	295
	344
177-7414	251
177-7415	251
177-9567	198
177-9580	147
178-2247	253
178-2255	45
178-2270	138
	139
178-3620	115
	182
	184
	186
	188
	190
	321
178-7539	104
178-9983	278
	279
	280
	281
179-7001	▶165
	194
179-7002	165
179-9392	101
180-3007	66
	196
180-6118	47
180-8071	233
180-8579	72
	358
180-9340	100
	102
	104
	107
	160
	292
	295
	327
180-9900	101
183-1163	13
183-1164	13
183-1165	58
	97
183-1336	11
183-3213	17
183-3353	69
183-7122	▶148
183-7123	148
183-7124	148
183-7131	148
184-1564	▶96
	98
185-1861	107
185-4015	260
	312
185-8660	▶141
185-8661	▶141
185-8664	▶142
185-8665	▶142
185-8668	136
185-8669	136
	137
185-8670	▶136
	141
185-8671	▶136
	141
185-8672	▶136
	141
185-8673	▶137
	141
185-8678	▶137
	142
185-8679	▶137
	142
185-9926	▶138
	142
185-9927	▶138
	142
185-9932	137
	138
185-9934	136
	137
186-0239	160
186-2360	146
186-3362	109
186-3735	85
	87
	91
	101
	104
	107
	110
	151
	213
	236
	278
	279
	280
	281
	284
	298
	300
	309
	323
	324
	325
	327
186-3736	91
	102
	104
	107
	110
	264
	284
	327
186-6190	▶257
	319
187-1273	188
	190
187-3211	335
187-3212	335
187-3231	188
	190
187-3232	188
	190
189-3158	107
	327
189-4523	335
190-3762	58
190-3803	69
190-8962	159
191-9297	64
191-9576	151
191-9588	166
192-0105	76
192-0836	104
192-2637	249
	250
192-2640	▶169
	247
	248
192-2642	247
	248
	254
	255
192-2645	249
	250
	252
192-2663	316
193-0447	▶162
	177
193-8308	196
193-8313	194
193-8321	196
	198
193-8329	73
	74
193-8334	207
193-8335	207
193-8345	45
193-8385	330
193-8392	192
194-5171	262
194-7631	162
194-7632	162
195-0935	267
	270
195-0936	270
	328
	346
195-0937	89
	263
	270
	292
	295
195-0939	263
	270
195-6723	268
	▶347
195-6740	▶360
195-6750	207
195-6754	249
	250
195-6768	194
195-6769	194
195-8372	66
195-9700	236
	238
	▶240
197-6894	328
198-1076	236
	238
198-2663	118
198-9707	328
199-3410	360
	361

▶ **PRIMARY REFERENCE**

PART NUMBER INDEX

Part	Page
199-5434	▶138
	140
199-5435	▶139
	140
199-5436	138
	139
2	
200-0999	114
200-2371	240
200-6345	51
	205
202-0313	102
202-0314	87
	91
	102
202-0671	235
202-0673	235
202-0674	235
202-1196	69
202-2168	100
202-2284	260
202-6611	82
202-6614	81
203-1100	236
203-9007	101
204-1365	159
204-1452	132
204-1454	132
204-1456	132
204-1458	132
204-1459	132
204-1471	233
204-1481	233
204-1482	233
204-1485	233
204-1486	233
204-1488	233
204-1489	233
204-2281	51
205-3185	26
205-3727	50
205-4585	358
205-5148	300
205-6383	51
206-1346	91
206-2724	321
206-3499	37
206-5143	126
206-7398	260
	312
207-0539	349
	351
207-0573	349
	351
207-6154	50
207-9729	230
207-9731	151
207-9732	151
207-9737	179
207-9756	179
207-9780	159
207-9785	246
208-6176	45
208-9277	105
	107
210-8754	327
211-5172	36
211-9061	27
212-0061	240
212-6603	124
212-6604	124
212-6690	179
213-0139	101
213-7489	278
	279
	280
	281
214-7568	120
	122
	165
	192
	196
	198
214-9186	270
	271
215-2605	29
215-2617	47
215-2620	13
215-3277	221
215-3957	247
	248
	▶252
215-3962	246
	▶247
215-3963	246
	▶248
215-4001	159
215-8307	281
215-8308	280
216-4746	▶89
	268
216-4753	328
216-6124	127
216-6144	243
216-6145	266
216-6146	3
	4
	5
	6
	▶266
216-6156	233
216-6157	233
216-6159	233
216-6160	233
216-6161	233
217-2752	38
217-2760	69
217-2761	69
217-2762	69
217-2763	69
217-3850	238
217-5770	13
217-5859	58
217-5862	58
217-5864	58
217-5912	78
217-7115	64
217-7225	22
217-7352	358
217-7358	40
217-7379	44
218-0728	292
	295
218-2333	29
218-5562	269
	▶342
218-5571	194
218-5572	194
218-5580	209
218-5601	1
218-5602	1
	▶62
218-5647	144
218-5650	1
	▶144
218-5651	144
218-5671	115
218-5686	319
218-5764	188
	190
	204
	207
218-5773	144
218-5812	176
	▶212
218-5813	204
218-5815	204
218-5818	204
218-5819	176
	▶200
218-5840	▶174
	204
218-5841	▶175
	204
218-5843	174
218-5844	174
218-5845	175
218-5846	175
218-5852	177
	▶202
218-5853	176
	▶204
218-5906	204
218-5907	204
218-5916	204
218-5917	204
218-5918	204
218-5919	204
218-5968	192
218-5978	177
	▶192
218-6002	204
218-6004	204
218-6005	204
218-6011	207
218-6060	275
218-6063	182
	184
218-6079	176
	▶223
218-6086	259
	311
	▶321
218-6089	▶120
	177
	178
218-6095	120
	122
218-6096	120
	122
218-6099	177
	▶194
218-6108	182
218-6109	194
218-6118	276
	277
	▶309
218-6142	198
218-6143	177
	▶186
218-6146	196
218-6147	198
218-6175	177
	▶224
218-6196	200
	202
218-6197	177
	178
	▶207
218-6204	207
218-6231	209
218-6235	177
	▶209
218-6245	179
218-6250	275
218-6334	246
218-6335	246
218-6348	259
	▶275
218-6357	317
218-6370	268
	▶326
218-6377	308
218-6380	268
	▶344
218-6381	326
218-6386	331
218-6387	331
218-6388	331
218-6389	291
218-6391	291
218-6393	310
	▶312
218-6394	259
	▶303
	311
218-6396	303
218-6397	303
218-6398	303
218-6399	260
	312
218-6400	269
	▶308
218-6405	258
	▶260
218-6407	268
	▶335

▶ **PRIMARY REFERENCE**

PART NUMBER INDEX

Part	Page
218-6411	268
	▶348
218-6414	303
218-6417	334
218-6419	▶291
	315
218-6420	▶267
	268
218-6421	282
	283
	284
218-6422	286
	287
	288
218-6423	330
218-6425	▶90
	268
218-6430	1
	▶330
218-6431	▶297
	298
218-6438	188
	190
218-6440	▶292
218-6442	263
218-6485	▶276
	288
218-6490	▶277
	282
218-6560	259
	▶319
218-6561	232
218-6584	319
218-6624	▶115
	177
218-6644	192
218-6661	66
218-6662	342
218-6677	115
218-6708	3
	4
	5
	6
	▶155
218-6709	▶156
218-6711	155
	156
218-6726	155
	156
218-6727	204
218-6776	204
218-6781	177
	▶232
218-6784	204
218-6785	204
218-6796	242
218-6797	242
218-6798	153
	▶242
218-6799	1
	▶166
218-6825	172
	173
218-6826	170
	171
218-6830	259
	▶274
218-6832	▶272
	274
218-6833	272
218-6836	289
218-6837	289
218-6838	289
218-6856	213
218-6857	213
218-6858	213
218-6862	120
	122
218-6864	192
218-6947	312
218-6948	260
219-0302	362
	365
219-4335	179
219-4379	342
	343
219-4380	341
	▶343
219-4388	343
219-9739	292
	295
220-1523	42
221-1136	13
221-3876	298
	300
221-3877	292
	295
221-3879	100
222-1178	51
222-3962	139
	140
222-5693	127
222-5695	4
	6
	▶243
223-0591	292
	295
223-0600	▶295
223-0601	292
	295
223-0608	292
	295
223-0609	297
223-0610	297
223-0612	297
223-0616	295
	▶298
223-0617	292
	295
223-3725	278
223-3726	279
223-3728	278
	279
	280
	281
223-4240	149
223-5941	327
223-6537	▶323
	327
223-8488	298
	300
223-8495	298
	300
223-9974	115
	▶117
224-0554	365
224-3875	149
224-7057	348
	▶349
224-7058	348
	▶351
224-8945	362
224-8946	365
224-9021	362
224-9022	365
224-9418	211
	▶213
225-0312	365
225-0313	362
225-3187	298
	300
225-3305	362
225-3854	104
225-3861	102
225-7948	▶100
	259
225-7950	▶73
225-7952	▶74
225-7955	358
225-7961	111
225-7963	4
	5
	▶160
225-8526	58
225-8533	58
225-9238	223
	▶227
226-0291	149
	266
226-0323	266
226-3736	143
226-3737	143
226-5900	87
	91
226-5901	327
227-4315	154
227-8807	▶164
228-1762	9
	▶45
228-1763	9
	▶129
228-1764	9
	▶26
228-1773	9
	▶53
228-1781	9
	▶66
228-1783	9
	▶51
228-3350	50
228-3359	▶50
	51
228-3724	45
228-5856	327
228-9222	151
228-9240	221
228-9641	45
229-2704	21
229-4895	144
229-5468	204
229-5471	204
229-5473	204
229-8730	9
	▶19
229-8744	315
	▶331
229-8746	▶310
	311
229-8747	▶258
	259
229-8757	298
	300
229-8796	50
230-3214	292
	295
230-3683	166
	▶170
230-3684	166
	▶172
230-3693	166
	▶171
230-3694	166
	▶173
230-3743	3
	4
	5
	6
	▶109
230-3757	226
	227
	228
	229
230-4011	101
230-6368	74
231-0167	54
231-0168	54
231-0169	54
231-2105	151
231-3041	66
231-3578	51
231-3579	51
231-3925	51
231-4256	▶278
	287
231-4258	▶279
	286
231-4259	▶280
	284
231-4260	▶281
	283
231-4261	278
	279
231-4262	280
	281
231-7319	351
231-7320	351
231-7321	348
231-7322	349
231-7323	349
231-7324	348

▶ **PRIMARY REFERENCE**

PART NUMBER INDEX

Part	Page	Part	Page	Part	Page	Part	Page
231-7325	▶305	234-0732	316	238-7724	204	249-7160	215
	351	234-0774	▶316	238-7734	▶353	249-7263	64
231-7326	305		333	238-8731	58	249-7707	216
231-7327	▶306	234-0782	194	238-9137	47	250-1493	321
	349	234-0786	192	238-9143	47	250-7662	216
231-7328	306	234-4328	▶81	238-9196	58	251-7615	25
231-7329	305		90	238-9198	58	252-0342	179
	306	234-6065	362	238-9200	58	252-0343	179
231-7331	349		365	238-9289	58	252-0344	▶142
	351	234-7727	▶82	238-9295	58	252-0345	▶142
231-7372	349		89	238-9349	58	252-0367	▶143
	351	234-7730	81	238-9397	107	252-0368	66
231-7401	305	234-7731	81	239-0187	58	252-0378	▶143
	306	234-7756	82	239-0229	58	252-0787	118
231-8122	260	234-7758	82	239-0232	58	252-0788	118
	312	234-9525	186	239-4990	362	252-1802	22
	▶314	234-9575	362	239-4991	365	252-6934	278
231-8123	260		365	239-6109	348		279
231-8124	260	235-1365	362	239-6138	305		280
	312	235-1368	365		306		281
231-8126	260	235-1845	104	239-6986	362	252-9015	353
	312	235-4768	298		365	252-9016	353
231-8127	260		300	240-6866	216	252-9017	353
	312	235-5243	283	240-6877	303	252-9167	131
231-8129	260	235-5246	286	240-6878	303	256-2084	15
	312		287	240-6879	303	256-2085	15
231-8132	260	236-4830	▶263	240-8666	262	258-2533	250
	312		268	241-3394	54	258-2534	249
231-8133	260	236-4832	264	241-5648	161	258-2535	245
	312	236-4833	263	241-5789	9		▶254
231-8137	260		▶264		▶27	258-2536	▶249
231-8141	260	236-5067	260	242-0171	53		254
	312		312		▶54	258-2537	245
231-8142	260	236-5069	260	242-0172	54		▶255
	312		312	242-0173	54	258-2538	▶250
231-8143	312	236-5088	161	242-3294	107		255
231-8144	312	236-5106	224	242-9000	87	258-2577	217
231-8145	312		▶228		91	258-2579	3
231-8920	118	236-5816	50	243-1323	349		4
232-1384	260	236-6923	319		351		5
232-1789	45	236-9987	58	245-1361	47		6
232-4706	323	237-0419	26	245-1362	47		▶217
	324	237-0420	26	245-1364	47		219
232-4901	51	237-5331	288	245-1911	215	258-3423	356
233-0695	58	237-5332	282	245-6811	268	258-3424	356
233-1012	289	237-7296	62	246-2622	66	258-3425	356
233-4872	149	237-9315	13	246-2641	145	258-3427	356
233-5590	272		15	246-3470	118	258-3849	145
233-5632	▶307	237-9316	13	246-3471	118		146
233-5680	4	238-4625	216	246-4267	72	258-4134	91
	6	238-4626	215	246-4318	358	258-4135	▶93
233-5716	124		216	246-9039	319		101
233-5849	209		241	247-4877	154	258-4136	101
233-5856	319	238-4628	216	247-7182	307	258-4138	101
233-5927	275		217	248-1268	209	258-4143	101
233-5929	314	238-4629	216		▶214	258-4178	327
233-5931	314	238-7671	4	248-2171	298	258-4196	101
233-5934	314		▶157		300	258-4230	268
233-5951	319	238-7672	5	248-7696	212		▶322
233-5997	230		6		▶216	259-8194	214
233-6683	50		▶158	249-1486	58		▶241
233-7128	179	238-7675	157	249-1532	58	260-6695	298
	▶215		158	249-2910	▶324	261-5659	132
233-9744	132	238-7676	158		327	261-5660	130
234-0566	319	238-7723	204	249-5541	47		▶131

▶ **PRIMARY REFERENCE**

PART NUMBER INDEX

Part	Page
261-6094	178
	▶225
261-6095	176
	▶226
261-6101	151
261-6255	1
	▶113
262-3975	58
262-6480	62
262-6518	62
262-7668	284
263-3823	325
263-4836	362
	365
263-4997	131
264-4297	231
264-7029	101
265-2894	▶139
	142
265-2895	▶139
	142
265-2896	▶140
	142
265-2897	▶140
	142
267-2680	93
	101
267-2701	93
267-2744	104
267-2746	104
267-5211	93
	101
267-5213	93
	101
268-1929	132
268-1936	127
268-9529	132
269-9462	225
	▶229
269-9465	226
270-2679	102
270-6968	32
270-6970	32
270-8667	284
271-2360	227
	228
	229
271-9408	188
	190
272-3046	▶56
	57
272-3047	9
	▶57
272-3056	56
272-9800	88
274-3774	104
274-3775	101
274-3776	104
274-3777	104
274-3778	104
275-0601	102
275-7878	101
276-3440	292
	▶300
276-3615	300
	▶302
276-4063	289
276-5708	272
	▶289
276-6019	▶337
276-6020	▶338
276-7276	▶339
276-7277	▶340
277-1873	107
277-8862	217
278-1292	4
	6
	▶145
278-1293	4
	5
	▶146
278-8714	227
	228
	229
278-8716	217
	220
	221
279-0733	127
279-3232	302
280-1575	292
	295
280-6070	322
280-6072	270
	271
280-7805	132
280-7854	126
	▶127
280-7863	132
280-7865	132
280-8298	54
280-8310	50
280-8336	358
280-8341	55
280-8364	55
280-8365	9
	▶55
280-8389	56
280-8396	9
	▶21
280-8397	21
280-8398	21
280-8399	21
280-8417	21
282-6961	348
282-9059	297
	302
283-0632	101
	104
283-4198	101
283-7554	302
283-9478	196
	198
283-9566	222
284-3595	335
284-3743	335
284-3744	335
285-5794	51
285-8565	303
285-8570	303
285-9133	303
285-9286	188
	190
	207
285-9287	204
286-7495	47
286-7496	47
287-6603	335
287-7004	335
287-7006	335
288-5767	335
288-6537	15
288-6593	40
289-3195	107
289-3769	190
289-3790	200
	202
289-3791	200
289-3792	200
289-6119	29
289-6336	127
289-6347	127
289-6360	▶220
	222
289-9560	238
290-3289	202
290-3290	202
290-3293	188
	190
290-3294	188
	190
290-3296	188
	190
290-3297	190
290-3301	188
290-3302	207
290-3303	207
290-3304	204
290-3305	204
290-3356	204
290-3357	200
	202
	207
290-3359	202
290-3360	202
290-3384	190
290-3392	188
	190
290-8014	69
291-1265	97
291-1808	15
291-5063	207
291-5064	207
291-8148	233
292-3114	317
292-5719	▶7
	8
293-2167	▶37
	38
293-4781	29
294-4916	13
295-4070	68
295-5440	260
	312
295-7023	▶8
295-7134	355
295-7144	3
	4
	5
	6
	▶355
295-7176	151
295-7199	362
	365
295-7221	▶218
	219
295-7315	362
295-7317	362
295-7318	362
295-7319	362
295-7320	362
295-7325	365
295-7327	365
295-7328	365
295-7329	365
295-7330	365
295-7340	365
295-8184	358
298-1309	233
	▶239
299-9119	▶236
	282
	283
	284
299-9121	236
	238
301-7293	327
302-4181	13
302-4182	13
303-0338	15
303-6658	260
	312
303-8767	247
	248
303-8768	247
	248
	252
304-3885	66
304-5061	58
305-2969	260
	312
305-4185	124
306-0350	101
306-0351	101
306-4091	122
307-3036	218
	▶221
307-3039	127
307-3064	131
	▶132
307-3074	132
307-3075	132
307-6115	▶222
	272
307-8337	53
308-0421	120
	122

3

▶ PRIMARY REFERENCE

PART NUMBER INDEX

Part	Page	Part	Page	Part	Page	Part	Page
	▶124		229	320-8401	58	326-5297	▶3
308-1222	97	313-5645	227	321-4249	64	326-5360	1
308-1852	11	313-5832	64	321-6738	34		▶9
308-1853	11	313-5833	64	321-6740	7	326-5400	1
308-1854	11	313-6251	236		▶34		▶268
308-1855	11	313-9185	298	322-4908	7	326-5401	268
308-1859	▶15		300		▶13		▶271
	17	313-9323	10	322-4909	7	326-5402	270
308-1860	15	315-5493	249		▶11		271
308-1862	17		250	322-4910	7	326-5404	▶270
308-1867	24		252		▶32	326-5406	268
308-1869	24	315-7813	7	322-4911	7		▶317
308-1871	23		▶28		▶17	326-5407	317
308-1878	64	315-7814	7	322-4912	7	326-5408	317
308-1882	64		▶68		▶38	326-5416	▶1
308-1889	64	316-1698	302	322-4913	7	326-5426	151
308-1892	64	316-6111	120		▶43		▶153
308-1897	64	316-6881	358	322-4914	7	326-5460	▶362
308-1901	64	316-6890	7		▶23	326-5465	▶176
308-1902	10		▶97	322-4915	7	326-5478	▶177
308-1903	10	316-6896	7		▶64	326-5487	▶4
308-1904	10		▶76	322-4916	7	326-5527	▶4
308-1905	69	316-6963	7		▶10	326-5534	▶268
308-1906	69		▶72	322-4917	7	326-5536	▶259
308-1907	47	316-6997	7		▶95		268
308-1908	47		▶29	322-4924	7	326-5557	▶5
308-2291	7	316-7030	7		▶33	326-5560	▶365
	▶20		▶22	322-4928	7	326-5567	▶6
308-2294	7	317-0959	58		▶94	326-5568	▶244
	▶35	317-0960	58	322-4929	94	326-5570	1
308-2297	7	317-0961	58	322-6874	13		▶334
	▶40	317-0972	7	322-7485	17	326-5576	▶244
308-2298	7		▶358	322-7486	17	326-5593	334
	▶42	317-0974	7	322-7487	17	326-5599	▶182
308-2306	7		▶118	322-7488	17		259
	▶36	317-0977	7	322-7490	23	326-5609	1
308-2317	7		▶69	322-7492	64		▶149
	▶99	317-0979	7	322-7493	64	326-5610	149
308-4266	64		▶47	323-6614	95	326-5614	188
308-5206	▶361	317-0980	7	324-4598	94		190
308-6767	149		▶44	325-8382	▶332	326-5625	188
309-1325	▶88	317-0981	7		333		190
	146		▶58	325-9415	29	326-5634	188
309-6728	64	317-0982	7	325-9416	29		190
309-6732	64		▶25	326-4674	153	326-5636	182
310-6660	252	317-3128	231	326-4678	153		184
311-0023	47	317-7195	64	326-4781	1	326-5671	▶179
311-0655	64	319-2137	252	326-4788	1		244
311-2349	118	319-7366	29		▶151	326-5678	176
311-3219	186	319-9480	4	326-5244	▶176		▶188
311-5899	186		5	326-5245	▶176	326-5679	177
311-5903	115		6	326-5247	▶2		▶190
311-5906	182		▶251	326-5264	1	326-5687	179
311-5909	184	319-9481	251		▶282	326-5689	188
311-7561	69	319-9482	251	326-5265	2		190
311-9240	252	319-9483	251		▶283	326-5694	182
312-1683	260	319-9484	251	326-5266	176	326-5762	179
	312	319-9489	251		▶284	326-5763	179
312-2635	260	319-9490	251	326-5267	2	326-5780	177
	312	320-0650	127		176		▶230
312-7747	362	320-1389	▶262		▶286	326-5781	230
312-7748	365		298	326-5270	▶1		▶231
313-2025	64		300	326-5271	▶2	326-9515	107
313-5644	227	320-1390	298	326-5272	▶2	327-5154	20
	228		300	326-5287	▶3	327-8939	62

▶ **PRIMARY REFERENCE**

PART NUMBER INDEX

Part	Page
	▶333
327-8945	333
328-2270	268
	▶327
328-2271	327
328-2272	▶101
	268
328-2273	101
328-2283	284
328-2333	4
	5
	6
	▶91
328-2334	91
328-2338	9
	▶107
328-2339	107
328-2340	104
328-2341	110
328-2342	3
	4
	5
	6
	▶110
	219
328-2343	87
	91
328-2344	2
	3
	▶86
328-2345	▶75
	102
328-2346	3
	▶87
328-2348	4
	5
	▶98
328-2350	1
	▶104
328-2351	104
328-2352	328
328-2355	2
	▶111
	176
329-2576	75
329-5257	29
330-5012	298
	300
	▶325
330-8684	328
330-9189	64
331-0081	33
331-6058	▶122
	176
332-1361	64
334-0272	40
334-0732	64
335-2093	358
335-5578	64
335-9802	58
336-1317	232
	▶233
336-2965	64
338-3403	13
339-3017	7
	▶24
341-2281	33
341-2287	33
341-3600	99
343-0868	▶238
	286
	287
	288
343-0877	238
343-5542	2
	▶287
343-5543	1
	▶288
343-6004	75
343-6005	75
343-6022	102
343-6885	102
344-1624	15
347-4517	196
347-5344	198
347-5345	198
347-5346	231
348-4604	192
348-4609	231
349-1369	72
351-2617	69
351-2618	69
351-2619	69
351-2620	69
351-2621	69
351-2622	69
351-3132	69
351-7389	215
354-6548	1
	▶177
354-6549	3
	4
	5
	6
	▶161
354-6550	161
354-6562	1
	▶356
354-6563	356
354-6564	356
354-6574	21
356-1898	176
	▶357
356-1899	357
356-1900	▶219
356-1901	▶219
356-1905	362
	365
356-1907	177
	178
	▶196
356-1908	176
	▶198
356-1919	▶177
356-1920	▶178
356-1928	▶184
	311
	315
356-1931	▶269
356-1932	269
	▶315
356-1933	▶269
356-1934	▶268
356-1935	268
	▶311
356-1937	▶114
	130
356-1938	▶126
	130
356-1939	182
	184
358-5951	233
358-6924	1
	▶130
359-9666	72
360-1363	244
	▶245
360-1364	244
	▶246
361-4407	245
	246

▶ **PRIMARY REFERENCE**



© 2010 CATERPILLAR
ALL RIGHTS
RESERVED

CAT, CATERPILLAR, THEIR RESPECTIVE LOGOS, “CATERPILLAR YELLOW” AND THE POWER EDGE TRADE DRESS, AS WELL AS CORPORATE AND PRODUCT IDENTITY USED HEREIN, ARE TRADEMARKS OF CATERPILLAR AND MAY NOT BE USED WITHOUT PERMISSION.

PRINTED IN
U.S.A.