CATERPILLAR®

SEBP4633-02
November 2007

RUTHZIL TRATOR COMERCIAL DE PEÇAS LTDA 11 97083-6812 ROLANDO

Parts Manual

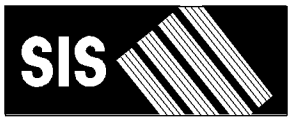

See "General Information" for New Parts Manual Features.

232B2 Skid Steer Loader

SCH2475-Up (Machine)
CSD1-11322 (Engine)
CYP1-Up (Engine)
CYS1-Up (Engine)

Powered By 3024C Engine
This Parts Manual is also Available in .PDF Format on Compact Disc (CD-ROM)-Caterpillar Form No. SERP4633.

Product and Dealer Information

Note: For product identification plate locations, see the section “Product Identification Information” in the Operation and Maintenance Manual.

Delivery Date: _____

Product Information

Model: _____

Product Identification Number: _____

Engine Serial Number: _____

Transmission Serial Number: _____

Generator Serial Number: _____

Attachment Serial Numbers: _____

Attachment Information: _____

Customer Equipment Number: _____

Dealer Equipment Number: _____

Dealer Information

Name: _____ Branch: _____

Address: _____

_____

_____

	Dealer Contact	Phone Number	Hours
Sales:	_____	_____	_____
Parts:	_____	_____	_____
Service:	_____	_____	_____

Informations produit et concessionnaire

Nota: Voir l'emplacement de la plaque signalétique du produit au chapitre "Informations produit" du guide d'utilisation et d'entretien.

Date de livraison: _____

Informations produit

Modèle: _____

Numéro d'identification produit: _____

Numéro de série du moteur: _____

Numéro de série de la boîte de vitesses: _____

Numéro de série de l'alternateur: _____

Numéros de série d'équipement: _____

Informations sur l'équipement: _____

Numéro matériel client: _____

Numéro matériel concessionnaire: _____

Informations concessionnaire

Nom: _____ Agence: _____

Adresse: _____

_____

_____

	Contact concessionnaire	Numéro de téléphone	Heures
Ventes:			
Pièces:			
Service:			

Información del Producto/Distribuidor

Nota: Para saber la ubicación de las placas de identificación del producto, ver la sección “Información sobre identificación del producto” en el Manual de Operación y Mantenimiento.

Fecha de entrega: _____

Información del producto

Modelo: _____

Número de identificación del producto: _____

Número de serie del motor: _____

Número de serie de la transmisión: _____

Número de serie del generador: _____

Números de serie de los accesorios: _____

Información sobre los accesorios: _____

Número del equipo del cliente: _____

Número del equipo del distribuidor: _____

Información del distribuidor

Nombre: _____ Sucursal: _____

Dirección: _____

_____

_____

Comunicación con el distribuidor	Número de teléfono	Horas
Ventas: _____	_____	_____
Piezas: _____	_____	_____
Servicio: _____	_____	_____

Informações Sobre Produto e Revendedor

Nota: Para localizações da placa de identificação do produto, consulte a seção, “Informações Sobre Identificação do Produto” no Manual de Operação e Manutenção.

Data de Entrega: _____

Informações Sobre o Produto

Modelo: _____

Número de Identificação do Produto: _____

Número de Série do Motor: _____

Número de Série da Transmissão: _____

Número de Série do Gerador: _____

Números de Série de Acessórios: _____

Informações Sobre Acessórios: _____

Número do Equipamento do Cliente: _____

Número do Equipamento do Revendedor: _____

Informações Sobre o Revendedor

Nome: _____ Filial: _____

Endereço: _____

_____

_____

	Contato do Revendedor	Telefone	Horas
Vendas:	_____	_____	_____
Peças:	_____	_____	_____
Serviço:	_____	_____	_____

Produkt- und Händlerinformation

Anmerkung: Für die Lage der Produkt-Identnummer und Seriennummern siehe Abschnitt “Produkt-Identinformation” im Betriebs- und Wartungshandbuch.

Lieferdatum: _____

Produkt-Identinformation

Modell: _____

Produkt-Identnummer: _____

Seriennummer des Motors: _____

Seriennummer des Getriebes: _____

Seriennummer des Generators: _____

Seriennummern der Arbeitsgeräte: _____

Arbeitsgeräteinformation: _____

Kundennummer: _____

Händlernummer: _____

Händlerinformation

Name: _____ Niederlassung: _____

Adresse: _____

_____

_____

	Kontaktperson beim Händler	Telefon	Dienststunden
Verkauf:	_____	_____	_____
Ersatzteile:	_____	_____	_____
Service:	_____	_____	_____

MEMORANDA

TABLE OF CONTENTS

Name	Page
GENERAL INFORMATION	A20
REPAIR ALTERNATIVES	A39
SUPPLEMENTAL COOLANT ADDITIVES	A44
MAINTENANCE PARTS	A49
INDEX	A70
MACHINE ARRANGEMENT	1
CHASSIS AR	1
COMMON AR	1
CONTROL AR-MACHINE	2
CONVERSION AR-MACHINE	2
ENGINE ARRANGEMENT	9
ENGINE AR	9
ENGINE AR-PRIMARY	10
INSTALLATION AR-ENGINE	13
BASIC ENGINE	15
CAMSHAFT GP	15
COVER GP-FRONT HOUSING	17
COVER GP-VALVE MECHANISM	18
CRANKSHAFT GP	20
CYLINDER BLOCK GP	25
CYLINDER HEAD AS	29
CYLINDER HEAD GP	31
DRAIN GP-ENGINE OIL	36
FLYWHEEL GP	37
GUARD GP-BELT	39
HOUSING GP-FLYWHEEL	40
HOUSING GP-FRONT	42
LIFTING GP-ENGINE	46
MOUNTING GP-ENGINE	48
MOUNTING GP-FAN	50
PAN GP-OIL	52
PISTON & ROD GP	58
PLUG GP-ENGINE	60
PULLEY GP-CRANKSHAFT	61
PULLEY GP-WATER PUMP	63
V-BELT GP	65
VALVE MECHANISM GP	66
LUBRICATION SYSTEM	69
FILLER GP-ENGINE OIL	69
PUMP GP-ENGINE OIL	71
COOLING SYSTEM	74
HOUSING GP-WATER REGULATOR	74
MOUNTING GP-RAD & OIL COOLER	75
PUMP GP-WATER	77
RADIATOR & HYD OIL COOLER GP	82
RADIATOR & OIL COOLER MTG GP	84
AIR INLET AND EXHAUST SYSTEM	88
AIR CLEANER GP	88
LINES GP-AIR	90
MANIFOLD GP-EXHAUST	91
MUFFLER GP	92
TURBOCHARGER GP	95
FUEL SYSTEM	101
CABLE GP-GOVERNOR CONTROL	101
CONTROL GP-GOVERNOR	102
FILTER GP-WATER SEP & FUEL	103
GOVERNOR GP	104
LINES GP-FUEL PRM & FILTER	109
PUMP & MTG GP-FUEL TRANSFER	111
PUMP GP-FUEL INJECTION	113
PUMP GP-FUEL PRM & PRIM FILTER	119
ELECTRICAL AND STARTING SYSTEM	120
ALTERNATOR GP-CHARGING	120
BATTERY GP	123
CONNECTION GP-ELECTRICAL	125
CONTROL GP-INTERLOCK	127
CONTROL GP-MANUAL START/STOP	128
CONVERSION AR-NON-ROADING	129
COVER GP-FUSE PANEL	130
ELECTRONICS GP-IMPLEMENT	131
ELECTRONICS GP-MACHINE	132
FASTENER GP-WIRING HARNESS	133
GLOW PLUG GP	134
HEATER GP-JACKET WATER	136
INSTALLATION GP-SECURITY	138
KIT-WORK TOOL CONTROL & WIRING	140
KIT-WORK TOOL WIRING	141
LAMP GP-FLOOD	142
LAMP GP-HEAD & SIGNAL	144
LAMP GP-STOP & TAIL	146
LAMP GP-WARNING BEACON	148
LIGHTING GP-FLOOD	149
LIGHTING GP-ROADING	151
LIGHTING GP-STOP & TAIL	153
LIGHTING GP-WARNING BEACON	154
SENSOR GP-TEMP & PRESS	155
STARTING MOTOR GP-ELECTRIC	156
SWITCH GP-PRESSURE	160
SWITCH GP-TEMPERATURE	162
WARNING GP-BACKUP	163
WIRING GP-AIR CONDITIONER	164
WIRING GP-CHASSIS	165
WIRING GP-ENGINE	169
WIRING GP-HORN	174
WIRING GP-MACHINE	175
WIRING GP-REAR LIGHTING	177
WIRING GP-WORK TOOL	178

TABLE OF CONTENTS

Name	Page
POWER TRAIN	180
AXLE GP	180
DRIVE GP-TANDEM	182
FILTER & LINES GP-HYDRAULIC	183
FILTER GP-OIL	185
LINES GP-HYDROSTATIC	189
MANIFOLD GP-RETURN	191
MOTOR & MTG GP-HYDROSTATIC	193
MOTOR GP-PISTON	194
MOUNTING GP-PUMP	196
POWER TRAIN AR	197
PUMP & MTG GP-HYDROSTATIC	198
PUMP GP-PISTON	199
TIRE & RIM GP	201
WHEEL & TIRE AR	207
WHEEL & TIRE GP	211
FRAME AND BODY	212
BUMPER GP	212
CONVERSION AR-ROADING	213
CONVERSION GP-ROADING	215
COUNTERWEIGHT GP	219
ENCLOSURE GP-ENGINE	221
FRAME GP-LOADER	223
FRAME GP-MACHINE	225
GUIDE GP-LINES	226
KIT-ROADING CONVERSION	227
LIFTING GP-MACHINE	230
MIRROR & MTG GP-REAR VIEW	232
MOUNTING GP-REGISTRATION	233
MOUNTING GP-ROADING LIGHTS	235
SUPPRESSION GP-SOUND	237
HYDRAULIC SYSTEM	238
ACCUMULATOR & MTG GP-HYDRAULIC	238
ADAPTER GP-OIL LINE	239
CYLINDER & MTG GP-ANGLE BLADE	240
CYLINDER & MTG GP-BUCKET	241
CYLINDER & MTG GP-LIFT ARM	242
CYLINDER GP-BUCKET	244
CYLINDER GP-GRAPPLE	245
CYLINDER GP-HYDRAULIC	246
CYLINDER GP-LIFT	251
CYLINDER GP-TILT	252
HYDRAULIC AR	254
KIT-QUICK COUPLER CONVERSION	255
LINES GP-BUCKET	258
LINES GP-CONNECTING	271
LINES GP-GRAPPLE	273
LINES GP-HYDRAULIC FAN	279
LINES GP-HYDRAULIC OIL COOLER	283
LINES GP-LIFT CYLINDER	284
LINES GP-LOWERING CONTROL	288
LINES GP-PILOT	290
LINES GP-PUMP	294
LINES GP-TILT CYLINDER	296
LINES GP-WORK TOOL	300
MANIFOLD & LINES GP-CONTROL	302
MANIFOLD & MTG GP-CONTROL	306
MANIFOLD & SOLENOID GP-CONTROL	307
MANIFOLD GP-CONTROL	310
MOTOR & MTG GP-HYDRAULIC FAN	311
MOTOR GP-GEAR	314
MOUNTING GP-CYLINDER	319
PLUG GP-PILOT VALVE	322
PUMP & MTG GP-WORK TOOL	323
PUMP GP-GEAR	325
TANK & MTG GP-HYDRAULIC	326
TANK GP-HYDRAULIC	327
VALVE & LINES GP-COUPLER	328
VALVE & MTG GP-CONTROL	332
VALVE GP-CONTROL	333
VALVE GP-MANUAL	335
VALVE GP-PILOT	336
VALVE GP-RELIEF	343
VALVE GP-SOLENOID	344
WORK TOOLS	348
ARM GP-MATERIAL HANDLING	348
BLADE AR	349
BLADE GP-ANGLING	350
BLADE GP-MULTIPURPOSE BUCKET	352
BUCKET AR-DIRT	356
BUCKET AR-GENERAL PURPOSE	357
BUCKET AR-GRAPPLE	359
BUCKET AR-LIGHT MATERIAL	364
BUCKET AR-MULTIPURPOSE	364
BUCKET AR-UTILITY	367
BUCKET AS-DIRT	369
BUCKET AS-GENERAL PURPOSE	373
BUCKET AS-LIGHT MATERIAL	377
BUCKET GP-DIRT	380
BUCKET GP-GRAPPLE	381
BUCKET GP-MULTIPURPOSE	386
BUCKET GP-UTILITY	391
CARRIAGE & FORK AR	394
CARRIAGE GP-FORK	395
COUPLER AR-QUICK	396
COUPLER GP-QUICK	397
COVER GP-LINES	400
CYLINDER & LINK GP-COUPLER	401
EDGE GP-CUTTING	403
FORK AR-GRAPPLE	409
FORK GP-GRAPPLE	411
FORK GP-PALLET	414
FORK GP-UTILITY	416
FRAME GP-BLADE	418
FRAME GP-FORK	419

TABLE OF CONTENTS

Name	Page
FRAME GP-GRAPPLE	421
GRAPPLE GP-UTILITY	422
HANDLE & PIN GP-COUPLER	425
HANDLE GP-COUPLER	427
KIT-ROADING PLATE & MOUNTING	429
LINK GP-COUPLER	430
LOCK GP-QUICK COUPLER	431
PLATE GP-ROADING	432
SPRING GP-BLADE	434
STEP GP-MATERIAL HANDLING ARM	435
STOP GP-GRAPPLE	436
STRAINER GP-WATER	437
TANK & MTG GP-WATER	438
TANK GP-WATER	441
TOOTH GP-UNI	442
OPERATOR STATION	443
ACCUMULATOR GP-REFRIGERANT	443
AIR CONDITIONER & MOUNTING GP	445
AIR CONDITIONER AR	446
AIR CONDITIONER GP	447
ARMREST & MOUNTING GP	449
ARMREST GP	450
BOX GP-STORAGE	452
CAB AR-ENCLOSED ROPS	453
CAB GP-ENCLOSED ROPS	454
CABLE GP-CONTROL	455
COMPRESSOR & MOTOR GP-REFRIG	456
COMPRESSOR & MTG GP-REFRIG	457
CONDENSER & MTG GP-REFRIGERANT	458
CONTROL GP-HANDLE	459
CONTROL GP-PILOT OPERATED HYD	466
COUPLING GP-DRIVE	484
COVER GP-CONSOLE	486
COVER GP-INSTRUMENT PANEL	488
DOOR & MTG GP-CAB	489
DOOR GP-CAB	494
DUCT & CONTROL GP	500
FRAME GP-WINDOW	502
GAUGE & WARNING GP	504
GUARD GP-ROPS/FOPS	506
HANDHOLD GP	507
HANDLE GP-MODULAR	508
HEATER & MTG GP-CAB	510
HEATER AR-CAB	511
HEATER GP-CAB	512
HOLDER-CUP	517
HOUSING AS-SIDE	518
INSTALLATION GP	519
KIT-AIR COND & HEATER INSTL	519
KIT-CAB DOOR & MOUNTING	524
KIT-CAB SEAL	526
LEVER GP-GOVERNOR	527
LINER GP-CAB	528
LINER-CAB	529
LINES GP-AIR CONDITIONER	530
LINES GP-HEATER	532
LITERATURE GP	533
MIRROR GP-REAR VIEW	534
MODULE GP-WARNING INDICATOR	535
MOUNTING GP-ROPS	537
OPTION AR-CAB	538
PANEL AR-INSTRUMENT	539
PANEL GP-INSTRUMENT	540
PANEL GP-SIDE	544
PEDAL GP-GOVERNOR	545
PLATFORM GP-OPERATOR	547
SEAL GP-CAB	549
SEAT BELT GP	551
SEAT GP	553
SEAT GP-ADJUSTABLE	555
SPRING GP-GAS	556
VISOR GP-CAB	557
WINDOW GP-CAB	559
SERVICE EQUIPMENT AND SUPPLIES	566
FILM GP	566
PARTS GP-MISCELLANEOUS	570
PLATE & FILM GP	572
PART NUMBER INDEX	B1

TABLE DES MATIÈRES

Désignation	Page
GÉNÉRALITÉS	A23
OPTIONS DE RÉPARATION	A40
ADDITIFS POUR LIQUIDE DE REFROIDISSEMENT	A45
PIÈCES DE RECHANGE	A52
INDEX	A79
MACHINE COMPLÈTE	1
VERSION DE CHASSIS	1
VERSION NORMALE	1
VERSION DE COMMANDE DE MACHINE	2
VERSION DE TRANSFORMATION MACHINE	2
MOTEUR COMPLET	9
MOTEUR (VERSION)	9
MOTEUR (VERSION PRINCIPALE)	10
MONTAGE DE MOTEUR (VERSION)	13
MOTEUR DE BASE	15
ARBRE A CAMES (ASS)	15
COUVERCLE DE CARTER AV (ASS)	17
CACHE-SOUPAPES (ASS)	18
VILEBREQUIN (ASS)	20
BLOC-CYLINDRES (ASS)	25
CULASSE (ENS)	29
CULASSE (ASS)	31
VIDANGE-HUILE DE MOTEUR (ASS)	36
VOLANT MOTEUR (ASS)	37
PROTEGE-COURROIE (ASS)	39
CARTER DE VOLANT (ASS)	40
CARTER AV (ASS)	42
OEILLETONS DE LEVAGE MOTEUR (ASS)	46
MONTAGE DE MOTEUR (ASS)	48
MONTAGE DE VENTILATEUR (ASS)	50
HUILE MOTEUR - CARTER (ASS)	52
PISTON ET BIELLE (ASS)	58
BOUCHON DE MOTEUR (ASS)	60
VILEBREQUIN - POULIE (ASS)	61
POULIE DE POMPE À EAU (ASS)	63
*V-BELT GP	65
CULBUTERIE (ASS)	66
CIRCUIT DE GRAISSAGE	69
BOUCHON DE REMPLISSAGE D'HUILE MOTEUR (ASS)	69
POMPE A HUILE MOTEUR (ASS)	71
CIRCUIT DE REFROIDISSEMENT	74
LOGEMENT DE RÉGULATEUR D'EAU (ASS)	74
MONTAGE DE RADIATEUR ET REFROIDISSEUR D'HUILE (ASS)	75
POMPE A EAU (ASS)	77
RADIATEUR ET REFROIDISSEUR D'HUILE HYDRAULIQUE (ASS)	82
RADIATEUR ET REFROIDISSEUR D'HUILE-MONTAGE (ASS)	84
CIRCUIT D'ADMISSION D'AIR ET D'ÉCHAPPEMENT	88
FILTRE A AIR (ASS)	88
CANALISATIONS D'AIR (ASS)	90
COLLECTEUR D'ÉCHAPPEMENT (ASS)	91
SILENCIEUX (ASS)	92
TURBOCOMPRESSEUR (ASS)	95
CIRCUIT DE CARBURANT	101
CÂBLE DE COMMANDE DU RÉGULATEUR (ASS)	101
COMMANDE DE RÉGULATEUR (ASS)	102
FILTRE DE SÉPARATEUR D'EAU ET DE CARBURANT (ASS)	103
REGULATEUR (ASS)	104
CANALISATIONS DE FILTRE ET D'AMORÇAGE DE CARBURANT (ASS)	109
POMPE D'ALIMENTATION ET MONTAGE (ASS)	111
POMPE D'INJECTION DE CARBURANT (ASS)	113
POMPE D'AMORÇAGE DE CARBURANT ET FILTRE PRINCIPAL	119
CIRCUIT ÉLECTRIQUE ET DE DÉMARRAGE	120
ALTERNATEUR DE CHARGE (ASS)	120
BATTERIE (ASS)	123
BRANCHEMENT ÉLECTRIQUE (ASS)	125
COMMANDE D'INTERVERROUILLAGE (ASS)	127
COMMANDE MANUELLE DÉMARRAGE/ ARRÊT (ASS)	128
VERSION DE TRANSFORMATION - DÉPLACEMENT NON ROUTIER	129
COUVERCLE - PANNEAU DE FUSIBLES (ASS)	130
COMMANDE ÉLECTRONIQUE D'ÉQUIPEMENT (ASS)	131
ÉLECTRONIQUE - MACHINE (ENS)	132

* TRADUCTION NON DISPONIBLE AU MOMENT DE LA PUBLICATION

TABLE DES MATIÈRES

Désignation	Page
BOULONNERIE DE FAISCEAU DE CABLES	133
BOUGIE DE PRÉCHAUFFAGE (ASS)	134
EAU DES CHEMISES - RECHAUFFEUR (ASS)	136
MONTAGE-SÉCURITÉ (ASS)	138
KIT DE COMMANDE D'OUTIL DE TRAVAIL ET CÂBLAGE	140
KIT DE CÂBLAGE D'OUTIL DE TRAVAIL	141
LAMPE - PHARE (ASS)	142
LAMPE - PHARE ET CLIGNOTANT	144
FEUX ARRIÈRE ET FEUX D'ARRÊT	146
LAMPE - GYROPHARE (ASS)	148
ÉCLAIRAGE - PROJECTEURS (ASS)	149
ÉCLAIRAGE - FEUX DE ROUTE (ASS)	151
ÉCLAIRAGE-FEUX DE STOP ET ARRIÈRE (ASS)	153
ÉCLAIRAGE - GYROPHARE (ASS)	154
CAPTEUR - TEMP. ET PRESSION (ASS)	155
DÉMARREUR ÉLECTRIQUE (ASS)	156
MANOCONTACT	160
BOUTON DE TEMPÉRATURE	162
AVERTISSEUR DE RECUL (ASS)	163
CABLAGE - CLIMATISEUR (ASS)	164
CABLAGE DE CHASSIS (ASS)	165
CABLAGE DE MOTEUR (ASS)	169
CÂBLAGE DE KLAXON (ASS)	174
CABLAGE DE LA MACHINE (ASS)	175
CABLAGE D'ECLAIRAGE ARRIERE (ASS)	177
CÂBLAGE - OUTIL DE TRAVAIL (ASS)	178
TRANSMISSION	180
ESSIEU (ASS)	180
ENTRAINEMENT EN TANDEM (ASS)	182
FILTRE ET CANALISATIONS HYRAULIQUES (ASS)	183
FILTRE A HUILE (ASS)	185
CANALISATIONS HYDROSTATIQUES (ASS)	189
COLLECTEUR-RETOUR (ASS)	191
MOTEUR ET MONTAGE - HYDROSTATIQUE (ASS)	193
GROUPE DE MOTEUR A PISTONS	194
MONTAGE DE POMPE (ASS)	196
TRANSMISSION (VERSION)	197
POMPE HYDROSTATIQUE ET MONTAGE (ASS)	198
POMPE A PISTONS (ASS)	199
PNEU ET JANTE (ASS)	201
ROUE ET PNEU (VERSION)	207
ROUE ET PNEU (ASS)	211
CHÂSSIS ET BENNE	212
PARE-CHOCS (ASS)	212
VERSION DE TRANSFORMATION POUR DÉPLACEMENT ROUTIER	213
GROUPE DE TRANSFORMATION - DÉPLACEMENT ROUTIER	215
CONTREPOIDS (ASS)	219
CARENAGE DE MOTEUR (ASS)	221
BATI - CHARGEUSE (ASS)	223
BÂTI DE MACHINE (ASS)	225
GUIDE - CANALISATIONS (ASS)	226
KIT DE TRANSFORMATION POUR DÉPLACEMENTS SUR ROUTE	227
MACHINE DE LEVAGE	230
RÉTROVISEUR ET MONTAGE (ASS)	232
MONTAGE - IMMATRICULATION (ASS)	233
MONTAGE DE FEUX DE DÉPLACEMENT SUR ROUTE (ASS)	235
INSONORISATION (ASS)	237
CIRCUIT HYDRAULIQUE	238
ACCUMULATEUR ET MONTAGE - HYDRAULIQUE (ASS)	238
RACCORD DE CANALISATION D'HUILE (ASS)	239
VÉRIN DE LAME D'ORIENTATION ET MONTAGE (ASS)	240
VÉRIN ET MONTAGE - GODET (ASS)	241
VÉRIN DE BRAS DE LEVAGE ET MONTAGE (ASS)	242
VERIN DE GODET (ASS)	244
PINCE - VÉRIN (ASS)	245
VÉRIN HYDRAULIQUE (ASS)	246
VÉRIN DE LEVAGE (ASS)	251
VÉRIN D'INCLINAISON (ASS)	252
VERSION HYDRAULIQUE	254
KIT DE TRANSFORMATION DU COUPLEUR EXPRESS	255
ECLAIRAGE DE GODET (ASS)	258
CANALISATIONS - BRANCHEMENT (ASS)	271
PINCE - CANALISATIONS (ASS)	273
CANALISATIONS HYDRAULIQUES DE VENTILATEUR (ASS)	279
CANALISATIONS DE REFROIDISSEUR D'HUILE HYDR. (ASS)	283
CANALISATIONS DE VÉRIN DE LEVAGE (ASS)	284
CANALISATIONS-COMMANDE D'ABAISSEMENT (ASS)	288

* TRADUCTION NON DISPONIBLE AU MOMENT DE LA PUBLICATION

TABLE DES MATIÈRES

Désignation	Page
CANALISATIONS A COMMANDE PILOTE (ASS)	290
CANALISATIONS DE POMPE (ASS)	294
CANALISATIONS DU VÉRIN D'INCLINAISON (ASS)	296
CANALISATIONS - OUTIL DE TRAVAIL (ASS)	300
COLLECTEUR ET CANALISATIONS (ASS) - COMMANDE	302
COMMANDE DE COLLECTEUR ET MONTAGE (ASS)	306
COLLECTEUR ET SOLÉNOÏDE (ASS)-COMMANDE	307
COLLECTEUR - COMMANDE (ASS)	310
MOTEUR ET MONTAGE DE VENTILATEUR HYDRAULIQUE (ASS)	311
MOTEUR À ENGRENAGES (ASS)	314
MONTAGE DE VÉRIN (ASS)	319
BOUCHON DE SOUPAPE PILOTE (ASS)	322
POMPE ET MONTAGE - OUTIL DE TRAVAIL (ASS)	323
POMPE A ENGRENAGES (ASS)	325
RÉSERVOIR HYDRAULIQUE ET MONTAGE (ASS)	326
RÉSERVOIR HYDRAULIQUE (ASS)	327
SOUPAPE ET CANALISATIONS DE COUPLEUR (ASS)	328
DISTRIBUTEUR ET MONTAGE (ASS)	332
DISTRIBUTEUR (ASS)	333
SOUPAPE A COMMANDE MANUELLE (ASS)	335
SOUPAPE PILOTE (ASS)	336
CLAPET DE DECHARGE (ASS)	343
SOUPAPE - SOLÉNOÏDE (ASS)	344
OUTILS DE TRAVAIL	348
BRAS DE MANUTENTION (ASS)	348
LAME (VERSION)	349
LAME À ORIENTATION (ASS)	350
LAME DE GODET TOUS-TRAVAUX	352
GODET - SALETÉ (VERSION)	356
GODET NORMAL (VERSION)	357
GODET - PINCE (VERSION)	359
GODET - MATÉRIAUX MEUBLES (VERSION)	364
GODET TOUS-TRAVAUX (VERSION)	364
VERSION DE GODET POUR TRAVAUX DE SERVITUDE	367
GODET - SALETÉ (ENS)	369
GODET NORMAL (ENS)	373
GODET POUR MATERIAUX MEUBLES (ENS)	377
GODET POUR TERRASSEMENT (ASS)	380
GODET - PINCE (ASS)	381
GODET TOUS-TRAVAUX (ASS)	386
GODET POUR TRAVAUX DE SERVITUDE (ASS)	391
VERSION DE TABLIER ET DE FOURCHE	394
TABLIER - FOURCHE (ASS)	395
COUPLEUR EXPRESS (VERSION)	396
COUPLEUR EXPRESS (ASS)	397
COUVERCLE-CANALISATIONS (ASS)	400
VÉRIN ET BIELLE DE COUPLEUR (ASS)	401
LAME DE COUPE (ASS)	403
FOURCHE - PINCE (VERSION)	409
FOURCHE - PINCE (ASS)	411
FOURCHE PALLETTE (ASS)	414
FOURCHE-RÉSEAU PUBLIC (ASS)	416
BÂTI DE LAME (ASS)	418
BÂTI DE FOURCHE (ASS)	419
PINCE - BÂTI (ASS)	421
PINCE-RÉSEAU PUBLIC (ASS)	422
POIGNÉE ET AXE DE COUPLEUR (ASS)	425
POIGNÉE DE COUPLEUR (ASS)	427
KIT DE PLAQUE DE DÉPLACEMENT ROUTIER ET MONTAGE	429
BIELLE DE COUPLEUR (ASS)	430
VERROUILLAGE DE COUPLEUR EXPRESS (ASS)	431
PLAQUE-DÉPLACEMENT ROUTIER (ASS)	432
RESSORT DE LAME (ASS)	434
MARCHEPIED-BRAS DE MANUTENTION (ASS)	435
ARRÊT-PINCE (ASS)	436
TAMIS D'EAU (ASS)	437
RÉSERVOIR D'EAU ET MONTAGE (ASS)	438
RÉSERVOIR D'EAU (ASS)	441
DENT MONOBLOC (ASS)	442
POSTE DE CONDUITE	443
ACCUMULATEUR - CLIMATISEUR (ASS)	443
CLIMATISEUR ET MONTAGE (ASS)	445
CLIMATISEUR (VERSION)	446
CLIMATISEUR (ASS)	447
ACCOUDOIR ET MONTAGE (ASS)	449
ACCOUDOIR (ASS)	450
COFFRE DE RANGEMENT (ASS)	452
CABINE ROPS FERMÉE (VERSION)	453

* TRADUCTION NON DISPONIBLE AU MOMENT DE LA PUBLICATION

TABLE DES MATIÈRES

Désignation	Page
*CAB GP-ENCLOSED ROPS	454
CABLAGE - COMMANDE MANUELLE ELECTRIQUE	455
COMPRESSEUR ET MOTEUR DE RÉFRIGÉRATION (ASS)	456
COMPRESSEUR ET MONTAGE - RÉFRIGÉRANT (ASS)	457
CONDENSATEUR ET MONTAGE (RÉFRIGÉRANT)	458
COMMANDE DE POIGNÉE (ASS)	459
COMMANDE HYDRAULIQUE PILOTE (ASS)	466
ACCOUPLEMENT D'ENTRAINEMENT (ASS)	484
COUVERCLE DE LA CONSOLE (ASS)	486
COUVERCLE DU TABLEAU DE BORD (ASS)	488
PORTE DE CABINE ET MONTAGE (ASS)	489
PORTIÈRE DE CABINE (ASS)	494
CONDUIT ET COMMANDE (ASS)	500
CADRE DE VITRE (ASS)	502
INDICATEURS ET TÉMOINS LUMINEUX (ASS)	504
PROTECTION DE ROPS/FOPS (ASS)	506
POIGNÉE	507
POIGNÉE MODULAIRE (ASS)	508
CHAUFFAGE ET MONTAGE - CABINE (ASS)	510
CHAUFFAGE DE CABINE (VERSION)	511
CHAUFFAGE DE CABINE (ASS)	512
*HOLDER-CUP	517
CÔTÉ CARTER (ENS)	518
GROUPE DE MONTAGE	519
KIT DE MONTAGE DE CLIMATISEUR ET CHAUFFAGE	519
KIT DE PORTE DE CABINE ET MONTAGE	524
KIT DE JOINT DE CABINE	526
LEVIER DE RÉGULATEUR (ASS)	527
CABINE - REVÊTEMENT (ASS)	528
CAPITONNAGE	529
CANALISATIONS DE CLIMATISEUR (ASS)	530
CANALISATIONS DE CHAUFFAGE (ASS)	532
LITTÉRATURE (ASS)	533
RÉTROVISEUR (ASS)	534
MODULE - TÉMOIN (ASS)	535
MONTAGE DU TOIT ROPS (ASS)	537
VERSION D'OPTION DE CABINE	538
VERSION DE TABLEAU DE BORD	539
TABLEAU DE BORD (ASS)	540
PANNEAU LATERAL (ASS)	544
RÉGULATEUR - PÉDALE (ASS)	545
PLATE-FORME DE CABINE	547
JOINT DE CABINE (ASS)	549
CEINTURE DE SECURITE (ASS)	551
SIÈGE (ASS)	553
SIÈGE RÉGLABLE (ASS)	555
RESSORT-GAZ (ASS)	556
RETROVISEUR - CABINE (ASS)	557
VITRE DE CABINE (ASS)	559
MATÉRIEL ET FOURNITURES D'ENTRETIEN	566
PLAQUE SIGNALÉTIQUE (ASS)	566
GROUPE DE PIECES DIVERSES	570
PLAQUES SIGNALETIQUES ET AUTOCOLLANTS (ASS)	572
INDEX DE NUMÉROS DE PIÈCES	B1

* TRADUCTION NON DISPONIBLE AU MOMENT DE LA PUBLICATION

CONTENIDO

Nombre	Página
INFORMACIÓN GENERAL	A27
ALTERNATIVAS DE REPARACIÓN	A41
ADITIVOS DE REFRIGERANTE SUPLEMENTARIOS	A46
PIEZAS DE MANTENIMIENTO	A57
INDICE	A90
CONFIGURACION DE LA MAQUINA	1
CHASIS (CONFIG)	1
CONFIGURACIÓN COMÚN	1
*CONTROL AR-MACHINE	2
CONVERSION DE LA MAQUINA (CONFIG)	2
CONFIGURACION DE MOTOR	9
CONFIGURACIÓN DE MOTORES	9
MOTOR PRIMARIO (CONFIG)	10
CONFIGURACIÓN DE INSTALACIÓN DEL MOTOR	13
MOTOR BASICO	15
ÁRBOL DE LEVAS (GR)	15
TAPA DE LA CAJA DELANTERA (GR)	17
TAPA DEL MECANISMO DE VÁLVULAS (GR)	18
CIGÜEÑAL (GR)	20
BLOQUE MOTOR (GR)	25
CULATA DE CILINDROS (CONJ)	29
CULATA DE CILINDROS (GR)	31
DRENAJE DEL ACEITE DE MOTOR	36
VOLANTE (GR)	37
PROTECTOR DE CORREA (GR)	39
VOLANTE - CAJA DE (GR)	40
CAJA DELANTERA (GR)	42
CÁNCAMOS DE LEVANTAMIENTO DEL MOTOR (GR)	46
MONTAJE DEL MOTOR (GR)	48
MONTAJE DEL VENTILADOR (GR)	50
CÁRTER - COLECTOR DEL (GR)	52
PISTÓN Y BIELA (GR)	58
TAPÓN DEL MOTOR (GR)	60
CIGÜEÑAL - POLEA DE (GR)	61
GRUPO, MANIJA, BOMBA DE AGUA	63
*V-BELT GP	65
MECANISMO DE VÁLVULAS (GR)	66
SISTEMA DE LUBRICACION	69
TUBO DE LLENADO DE ACEITE (GR)	69
BOMBA DE ACEITE DEL MOTOR (GR)	71
SISTEMA DE ENFRIAMIENTO	74
*HOUSING GP-WATER REGULATOR	74
GRUPO DEMONTAJE DE RADIADOR Y ENFRIAMIENTO DE ACEITE	75
BOMBA DE AGUA (GR)	77
RADIADOR Y ENFRIADOR DE ACEITE HIDRÁULICO (GR)	82
MONTAJE DE RADIADOR Y ENFRIAMIENTO DE ACEITE (GR)	84
SISTEMA DE ESCAPE Y ADMISION DE AIRE	88
FILTRO DE AIRE (GR)	88
AIRE - TUBERÍAS DE (GR)	90
MÚLTIPLE DE ESCAPE (GR)	91
SILENCIADOR (GR)	92
TURBOCOMPRESOR (GR)	95
SISTEMA DE COMBUSTIBLE	101
CABLE GR-CONTROL DE MANDO	101
CONTROL DE REGULADOR (GR)	102
FILTRO DE COMBUSTIBLE Y SEPARADOR DE AGUA (GR)	103
REGULADOR (GR)	104
TUBERIAS (GR) -COMBUSTIBLE PRIMARIO Y FILTRO	109
BOMBA DE TRANSFERENCIA DE COMBUSTIBLE Y MONTAJE (GR)	111
BOMBA DE INYECCIÓN DE COMBUSTIBLE (GR)	113
BOMBA DE CEBADO Y FILTRO PRIMARIO DE COMBUSTIBLE (GR)	119
SISTEMA DE ARRANQUE ELECTRICO	120
CARGA - ALTERNADOR DE (GR)	120
BATERÍA (GR)	123
CONEXIÓN ELÉCTRICA (GR)	125
CONTROL DE TRABA (GR)	127
CONTROL MANUAL DE ARRANQUE/ PARADA (GR)	128
CONFIGURACIÓN DE TRANSFORMACIÓN PARA OBRAS	129
CUBIERTO DEL PANEL DE FUSIBLES (GR)	130
IMPLEMENTOS (GR ELECTRÓNICO)	131
ELECTRÓNICA DE LA MÁQUINA (GR)	132
TORNILLERIA DE MAZO DE CABLES (GR)	133
BUJÍA INCANDESCENTE (GR)	134
AGUA DE LAS CAMISAS - CALENTADOR DEL (GR)	136
INSTALACION DE SEGURIDAD (GR)	138

* NO HAY TRADUCCION DISPONIBLE EN EL MOMENTO DE LA IMPRESION

CONTENIDO

Nombre	Página
*KIT-WORK TOOL CONTROL & WIRING	140
*KIT-WORK TOOL WIRING	141
REFLECTOR (GR)	142
LÁMPARA DE LUZ DELANTERA Y DE SEÑAL (GR)	144
LUCES DE PARADA Y COLA (GR)	146
LÁMPARA DE BALIZA DE ADVERTENCIA (GR)	148
LUCES DE REFLECTOR (GR)	149
LUCES DE DESPLAZAMIENTO (GR)	151
LUCES DE PARADA Y DE COLA (GR)	153
LUZ DE BALIZA (GR)	154
GRUPO DE SENSORES DE TEMPERATURA Y PRESIÓN	155
MOTOR DE ARRANQUE ELÉCTRICO (GR)	156
INTERRUPTOR DE PRESIÓN (GR)	160
INTERRUPTOR PARA LA TEMPERATURA (GR)	162
RETROCESO - ALARMA DE (GR)	163
CABLES DEL ACONDICIONADOR DE AIRE (GR)	164
CABLES DEL CHASIS (GR)	165
CABLES DEL MOTOR (GR)	169
CABLE GR-BOCINA	174
CABLES DE LA MÁQUINA (GR)	175
ALAMBRADO DE LUCES TRASERAS (GR)	177
CABLES DE LA HERRAMIENTA DE TRABAJO (GR)	178
TREN DE FUERZA	180
EJE (GR)	180
MANDO TANDEM (GR)	182
FILTROS Y TUBERÍAS HIDRÁULICAS (GR)	183
FILTRO DE ACEITE (GR)	185
TUBERÍAS HIDROSTÁTICAS (GR)	189
RETORNO EN EL MULTIPLE(GR)	191
MOTOR HIDROSTATICO Y MONTAJE (GR)	193
PISTONES DEL MOTOR (GR)	194
MONTAJE DE LA BOMBA (GR)	196
TREN DE FUERZA (CONFIG)	197
HIDROSTATICO, BOMBA Y GRUPO DE MONTAJE	198
BOMBA DE PISTONES (GR)	199
ARO Y LLANTA (GR)	201
RUEDA Y LLANTA (CONFIG)	207
RUEDA Y NEUMÁTICO (GR)	211
BASTIDOR Y CAJA	212
PARACHOQUES (GR)	212
CONFIGURACIÓN DE TRANSFORMACIÓN PARA CARRETERA	213
CONVERSION PARA DESPLAZAMIENTO POR CARRETERA (GR)	215
CONTRAPESO (GR)	219
COMPARTIMIENTO DEL MOTOR (GR)	221
BASTIDOR DEL CARGADOR (GR)	223
GRUPO DE BASTIDOR, MAQUINARIA	225
TUBERIAS DE LA GUIA (GR)	226
*KIT-ROADING CONVERSION	227
LEVANTAMIENTO DE LA MÁQUINA (GR)	230
RETROVISOR Y MONTAJE (GR)	232
MONTAJE-REGISTRO (GR)	233
MONTAJE DE LUCES DE DESPLAZAMIENTO POR CARRETERA (GR)	235
INSONORIZADOR (GR)	237
SISTEMA HIDRAULICO	238
ACUMULADOR HIDRAULICO Y MONTAJE (GR)	238
GRUPO ADAPTADOR-TUBERIA DE ACEITE	239
CILINDRO Y MONTAJE (GR)- INCLINACIÓN DE LA HOJA	240
MONTAJE DEL CILINDRO DEL CUCHARÓN (GR)	241
GRUPO DE MONTAJE Y CILINDRO, LEVANTAMIENTO DEL BRAZO	242
CILINDRO DE CUCHARÓN (GR)	244
CILINDRO DE GARFIO (GR)	245
CILINDRO HIDRÁULICO (GRUPO)	246
CILINDRO DE LEVANTAMIENTO (GR)	251
INCLINACIÓN HORIZONTAL - CILINDRO DE (GR)	252
HIDRÁULICA (CONFIG)	254
*KIT-QUICK COUPLER CONVERSION	255
TUBERÍAS DEL CUCHARÓN (GR)	258
TUBERIAS DE CONEXION (GR)	271
TUBERÍAS DEL GARFIO (GR)	273
TUBERÍAS HIDRÁULICAS DEL VENTILADOR (GR)	279
TUBERÍAS DEL ENFRIADOR DE ACEITE HIDRÁULICO (GR)	283
CILINDRO DE LEVANTAMIENTO - TUBERÍAS DEL (GR)	284
*LINES GP-LOWERING CONTROL	288
TUBERÍAS CON SERVOMANDO (GR)	290
BOMBA - TUBERÍAS DE (GR)	294
TUBERÍAS DEL CILINDRO DE INCLINACIÓN (GR)	296

* NO HAY TRADUCCION DISPONIBLE EN EL MOMENTO DE LA IMPRESION

CONTENIDO

Nombre	Página
TUBERIAS DE LA HERRAMIENTA DE TRABAJO	300
*MANIFOLD & LINES GP-CONTROL	302
MULTIPLE Y MONTAJE (GR) - CONTROL	306
*MANIFOLD & SOLENOID GP-CONTROL	307
CONTROL DEL MULTIPLE (GR)	310
MOTOR Y MONTAJE DE VENTILADOR HIDRAULICO (GR)	311
MOTOR DE ENGRANAJES (GR)	314
MONTAJE DE CILINDRO (GR)	319
TAPON DE LA VALVULA PILOTO (GR)	322
BOMBA Y MONTAJE DE LA HERRAMIENTA DE TRABAJO (GR)	323
BOMBA DE ENGRANAJES (GR)	325
TANQUE HIDRÁULICO Y MONTAJE (GR)	326
TANQUE HIDRÁULICO (GR)	327
GR. VÁLVULA Y TUBERIAS-ACOPLADOR	328
VÁLVULA DE CONTROL Y MONTAJE (GR)	332
VÁLVULA DE CONTROL (GR)	333
VÁLVULA DE CONTROL MANUAL (GR)	335
VÁLVULA PILOTO (GR)	336
VÁLVULA DE ALIVIO (GR)	343
VÁLVULA DE SOLENOIDE (GR)	344
HERRAMIENTAS	348
AGUILÓN TELESCÓPICO (GR)	348
HOJA (CONFIG)	349
HOJA ORIENTABLE (GR)	350
GRUPO DE HOJA DE CUCHARÓN DE USO MÚLTIPLE	352
CUCHARON PARA TIERRA (CONF)	356
CUCHARÓN DE USO GENERAL (CONFIG)	357
CUCHARON DE GARFIO (CONF)	359
CUCHARÓN PARA MATERIALES LIVIANOS (CONFIG)	364
CUCHARÓN DE USO MÚLTIPLE (CONFIG)	364
CUCHARON UTILITARIO (CONFIG)	367
CUCHARON PARA TIERRA (CONJ)	369
CUCHARÓN DE USO GENERAL (CONJ)	373
CUCHARÓN PARA MATERIALES LIVIANOS	377
CUCHARÓN PARA TIERRA (GR)	380
CUCHARON DE GARFIO (GR)	381
CUCHARÓN DE USO MÚLTIPLE (GR)	386
CUCHARÓN UTILITARIO (GR)	391
CARGADOR Y HORQUILLA (CONF)	394
PORTAHORQUILLAS (GR)	395
ACOPLADOR RÁPIDO (CONFIG)	396
ACOPLADOR RÁPIDO (GR)	397
TAPA DE TUBERIAS (GR)	400
GRUPO DE CILINDRO Y ESLABON, ACOPLADOR	401
CUCHILLA (GR)	403
HORQUILLA DE GARFIO (CONF)	409
HORQUILLA DE GARFIO (GR)	411
HORQUILLA PARA TARIMAS (GR)	414
HORQUILLA DE UTILIDAD (GR)	416
BASTIDOR DE HOJA (GR)	418
GRUPO DE BASTIDOR DE HORQUILLA	419
BASTIDOR DE GARFIO (GR)	421
GARFIO DE UTILIDAD (GR)	422
GRUPO DE MANIJA Y PIN-ACOPLADOR	425
ACOPLADOR DE MANIJA	427
JUEGO-PLACA DE DESPLAZAMIENTO Y MONTAJE	429
GRUPO DE ESLABON, ACOPLADOR	430
TRABA-ACOPLADOR RAPIDO (GR)	431
PLACA DE DESPLAZAMIENTO POR CARRETERA (GR)	432
RESORTE DE HOJA (GR)	434
ESCALON DE BRAZO DE MANEJO DE MATERIALES (GR)	435
TOPE DEL GARFIO(GR)	436
COLADOR DEL AGUA (GR)	437
MONTAJE DEL TANQUE DE AGUA (GR)	438
TANQUE DEL AGUA (GR)	441
DIENTE DE UNA PIEZA (UNI-TOOTH) (GR)	442
ESTACION DEL OPERADOR	443
ACUMULADOR DEL ACONDICIONADOR DE AIRE (GR)	443
ACONDICIONADOR DE AIRE Y MONTAJE (GR)	445
ACONDICIONADOR DE AIRE (CONFIG)	446
ACONDICIONADOR DE AIRE (GR)	447
POSABRAZOS Y MONTAJE (GR)	449
POSABRAZOS (GR)	450
CAJA DE ALMACENAMIENTO	452
SISTEMA ROPS DE CABINA CERRADA (CONFIG)	453
CABINA INCLUYE ROPS (GR)	454
CABLE DE CONTROL (GR)	455

* NO HAY TRADUCCION DISPONIBLE EN EL MOMENTO DE LA IMPRESION

CONTENIDO

Nombre	Página
COMPRESOR Y MOTOR GR-REFRIGERANTE	456
COMPRESOR DE REFRIGERANTE Y GRUPO DE MONTAJE	457
CONDENSADOR DEL REFRIGERANTE Y MONTAJE (GR)	458
CONTROL DE MANIJA (GR)	459
CONTROL HIDRÁULICO DE OPERACIÓN PILOTO (GR)	466
*COUPLING GP-DRIVE	484
TAPA DE LA CONSOLA (GR)	486
TAPA DEL TABLERO DE INSTRUMENTOS (GR)	488
PUERTA Y MONTAJE DE CABINA (GR)	489
PUERTA DE CABINA	494
CONDUCTO Y CONTROL (GR)	500
BASTIDOR DE LA VENTANA (GR)	502
INDICADORES Y ADVERTENCIA (GR)	504
PROTECTOR DE ROPS/FOPS	506
PASAMANOS (GR)	507
MANIJA MODULAR (GR)	508
CALEFACCIÓN Y MONTAJE DE LA CABINA (GR)	510
CALEFACCIÓN DE LA CABINA (CONFIG)	511
CALEFACCIÓN DE LA CABINA (GR)	512
*HOLDER-CUP	517
COMPARTIMENTO CONJ-LATERAL	518
GRUPO DE INSTALACIÓN	519
JUEGO DE INSTALACIÓN DEL ACONDICIONADOR DE AIRE Y CALENTADOR	519
JUEGO, PUERTA DE CABINA Y MONTAJE	524
*KIT-CAB SEAL	526
GRUPO DE PALANCA-REGULADOR	527
REVESTIMIENTO DE LA CABINA (GR)	528
REVESTIMIENTO-TECHO	529
TUBERÍAS DE ACONDICIONADOR DE AIRE (GR)	530
TUBERÍAS DE LA CALEFACCIÓN (GR)	532
PUBLICACIONES (GR)	533
RETROVISOR (GR)	534
MÓDULO INDICADOR DE ADVERTENCIA (GR)	535
MONTAJE DE LA ESTRUCTURA ROPS (GR)	537
*OPTION AR-CAB	538
TABLERO DE INSTRUMENTOS (CONFIG)	539
TABLERO DE INSTRUMENTOS (GR)	540
PANEL LATERAL (GR)	544
REGULADOR - PEDAL DEL (GR)	545
PLATAFORMA DE LA CABINA	547
SELLO DE CABINA (GR)	549
CINTURÓN DE SEGURIDAD (GR)	551
ASIENTO (GR)	553
ASIENTO AJUSTABLE (GR)	555
RESORTE DE GAS (GR)	556
VISERA (GR)	557
VENTANA DE LA CABINA (GR)	559
EQUIPO DE SERVICIO Y SUMINISTROS	566
ETIQUETA DE ADVERTENCIA (GR)	566
PIEZAS DIVERSAS (GR)	570
CALCOMANÍAS Y PLACAS DE IDENTIFICACIÓN (GR)	572
INDICE DE NUMEROS DE PIEZA	B1

* NO HAY TRADUCCION DISPONIBLE EN EL MOMENTO DE LA IMPRESION

ÍNDICE

Designação	Página
INFORMAÇÃO GERAL	A31
ALTERNATIVAS DE REPARO	A42
ADITIVOS SUPLEMENTARES DO LÍQUIDO ARREFECEDOR	A47
PEÇAS DE MANUTENÇÃO	A62
ÍNDICE	A101
ARRANJO DA MÁQUINA	1
CHASSI	1
ARRANJO BÁSICO	1
MÁQUINA AR DE CONTROLE	2
MÁQUINA - CONVERSÃO	2
ARRANJO DO MOTOR	9
MOTOR	9
MOTOR PRIMÁRIO	10
GRUPO DE INSTALAÇÃO - MOTOR	13
MOTOR BÁSICO	15
EIXO-COMANDO DE VÁLVULA	15
TAMPA - CAIXA DIANTEIRA	17
TAMPA - MECANISMO DAS VÁLVULAS	18
VIRABREQUIM	20
BLOCO DO MOTOR	25
CABEÇOTE DO MOTOR	29
DRENO - ÓLEO DO MOTOR	36
VOLANTE DO MOTOR	37
PROTETOR - CORREIAS	39
CAIXA DO VOLANTE DO MOTOR	40
CAIXA DIANTEIRA	42
LEVANTAMENTO DO MOTOR	46
MONTAGEM - MOTOR	48
MONTAGEM - VENTILADOR	50
CÁRTER DO ÓLEO DO MOTOR	52
PISTÃO E BIELA	58
BUJÃO DO MOTOR	60
POLIA DO VIRABREQUIM	61
GRUPO DE POLIA - BOMBA DE ÁGUA	63
*V-BELT GP	65
MECANISMO DAS VÁLVULAS	66
SISTEMA DE LUBRIFICAÇÃO	69
BOCAL DE ENCHIMENTO DE ÓLEO DO MOTOR	69
BOMBA DE ÓLEO - MOTOR	71
SISTEMA DE ARREFECIMENTO	74
ALOJAMENTO-TERMOSTATO DE ÁGUA	74
SUPORTE - ARREFECEDR DE ÓLEO E RADIADOR	75
BOMBA DE ÁGUA	77
RADIADOR E ARREFECEDOR DO ÓLEO HIDRÁULICO	82
RADIADOR E ARREFECEDOR DE ÓLEO - MONTAGEM	84
SISTEMA DE ADMISSÃO DE AR E DE ESCAPE	88
PURIFICADOR DE AR	88
TUBOS - AR	90
COLETOR DE ESCAPE	91
SILENCIADOR	92
TURBOALIMENTADOR	95
SISTEMA DE COMBUSTÍVEL	101
CABO - CONTROLE DO GOVERNADOR	101
CONTROLE DO GOVERNADOR	102
FILTRO DE COMBUSTÍVEL E SEPARADOR DE ÁGUA	103
GOVERNADOR	104
TUBULAÇÕES - FILTRO E ESCORVA DO COMBUSTÍVEL	109
BOMBA E MONTAGEM - TRANSFERÊNCIA DE COMBUSTÍVEL	111
BOMBA DE INJEÇÃO DO COMBUSTÍVEL	113
BOMBA DE ESCORVA DO COMBUSTÍVEL E DO FILTRO PRIMÁRIO	119
SISTEMA ELÉTRICO E DE PARTIDA	120
ALTERNADOR DE CORRENTE	120
BATERIA	123
CONEXÃO - ELÉTRICA	125
CONTROLE DE TRAVAMENTO	127
CONTROLE MANUAL DE PARTIDA E PARADA	128
GR. DE CONVERSÃO - ARRANJO NÃO RODOVIÁRIO	129
TAMPA DO PAINEL DO FUSÍVEL	130
SIST. ELETRÔNICO - ACESSÓRIO	131
SISTEMA ELETRÔNICO - MÁQUINA	132
FIXADORES - CHICOTE	133
VELA DE AQUECIMENTO; VELA INCANDESCENTE	134
AQUECEDOR DA ÁGUA DO MOTOR	136
INSTALAÇÃO-SEGURANÇA	138

* TRADUÇÃO NÃO DISPONÍVEL NO MOMENTO DA IMPRESSÃO

ÍNDICE

Designação	Página
KIT-CONTROLE E FIAÇÃO DA FERRAMENTA DE TRABALHO	140
KIT-FIAÇÃO DA FERRAMENTA DE TRABALHO	141
LÂMPADA - FAROL	142
LÂMPADA DIANTEIRA E DE SINAL	144
LUZ TRASEIRA E DE FREIO	146
LUZ GIRATÓRIA DE ALARME	148
SISTEMA DE ILUMINAÇÃO - FARÓIS	149
ILUMINAÇÃO - RODOVIÁRIA	151
ILUMINAÇÃO - FREIO E MARCHA À RÉ	153
SIST. DE ILUMINAÇÃO - PISCA-PISCA GIRATÓRIO DE ADVERTÊNCIA	154
SENSOR DE PRESSÃO E TEMPERATURA	155
MOTOR ELÉTRICO DE PARTIDA	156
INTERRUPTOR - PRESSÃO	160
INTERRUPTOR - TEMPERATURA	162
ALARME DE MARCHA À RÉ	163
CABOS/FIOS ELÉTRICOS - AR CONDICIONADO	164
CABOS/FIOS ELÉTRICOS - CHASSI	165
CABOS/FIOS ELÉTRICOS - MOTOR	169
FIAÇÃO - BUZINA	174
CABOS/FIOS ELÉTRICOS - MÁQUINA	175
CABOS E FIOS ELÉTRICOS-LUZES TRASEIRAS	177
CABOS/FIOS ELÉTRICOS - FERRAMENTAS DE TRABALHO	178
TREM DE FORÇA	180
EIXO	180
COMANDO DO TANDEM	182
FILTRO HIDRÁULICO E TUBOS	183
FILTRO - ÓLEO	185
TUBOS - SISTEMA HIDROSTÁTICO	189
COLETOR - RETORNO	191
MOTOR HIDROSTÁTICO E MONTAGEM	193
MOTOR - PISTÃO	194
MONTAGEM - BOMBA	196
TREM DE FORÇA	197
BOMBA E MONTAGEM - HIDROSTÁTICA	198
BOMBA DE PISTÃO	199
PNEU E ARO	201
RODA E PNEU	207
CHASSI E CARROCERIA	212
PÁRA-CHOQUE	212
GRUPO DE CONVERSÃO - ARRANJO RODOVIÁRIO	213
GR. DE CONVERSÃO - OPERAÇÃO RODOVIÁRIA	215
CONTRAPESO	219
COBERTURA DO MOTOR	221
CHASSI DIANTEIRO	223
CHASSI - MÁQUINA	225
GUIA - TUBOS	226
KIT-CONVERSÃO DE RODAGEM	227
LEVANTAMENTO DA MÁQUINA	230
ESPELHO RETROVISOR E MONTAGEM	232
MONTAGEM DA PLACA DE REGISTRO	233
MONTAGEM - LUZES PARA ILUMINAÇÃO RODOVIÁRIA	235
REDUÇÃO DE RUÍDO	237
SISTEMA HIDRÁULICO	238
ACUMULADOR HIDRÁULICO E MONTAGEM	238
ADAPTADOR-TUBULAÇÃO DE ÓLEO	239
CILINDRO E MONTAGEM - LÂMINA ANGULÁVEL	240
CILINDRO E MONTAGEM - CAÇAMBA	241
CILINDRO E MONTAGEM - BRAÇO DE LEVANTAMENTO	242
CILINDRO DA CAÇAMBA	244
CILINDRO DA GARRA	245
CILINDRO HIDRÁULICO	246
CILINDRO DE LEVANTAMENTO	251
CILINDRO DE INCLINAÇÃO	252
COMANDO HIDRÁULICO	254
KIT-CONVERSÃO DO ACOPLADOR RÁPIDO	255
TUBOS - CAÇAMBA	258
TUBOS DE CONEXÃO	271
TUBOS - GARRA	273
TUBOS - VENTILADOR HIDRÁULICOS	279
TUBOS - ARREFECEDOR DE ÓLEO HIDRÁULICO	283
TUBOS - CILINDRO DE LEVANTAMENTO	284
TUBULAÇÕES-CONTROLE DE ABAIXAMENTO	288
TUBOS - CIRCUITO PILOTO	290
TUBOS - BOMBA	294
TUBOS - CILINDRO DE INCLINAÇÃO	296
TUBOS - FERRAMENTA DE TRABALHO	300
COLETOR E TUBULAÇÕES -CONTROLE	302
COLETOR E MONTAGEM - CONTROLE	306

* TRADUÇÃO NÃO DISPONÍVEL NO MOMENTO DA IMPRESSÃO

ÍNDICE

Designação	Página
COLETOR E SOLENÓIDE-CONTROLE	307
COLETOR - CONTROLE	310
MOTOR E MONTAGEM - VENTILADOR HIDRÁULICO	311
MOTOR - ENGRENAGENS	314
MONTAGEM - CILINDRO	319
BUJÃO DA VÁLVULA PILOTO	322
BOMBA DA FERRAMENTA DE TRABALHO E MONTAGEM	323
BOMBA DE ENGRENAGENS	325
TANQUE DE ÓLEO HIDRÁULICO E MONTAGEM	326
TANQUE HIDRÁULICO	327
VÁLVULA E TUBULAÇÕES - ACOPLADOR	328
VÁLVULA DE CONTROLE E MONTAGEM	332
VÁLVULA DE CONTROLE	333
VÁLVULA MANUAL	335
VÁLVULA DE CONTROLE PILOTO	336
VÁLVULA DE ALÍVIO	343
VÁLVULA SOLENÓIDE	344
FERRAMENTAS DE TRABALHO	348
BRAÇO - MANIPULADOR DE MATERIAIS	348
LÂMINA	349
LÂMINA ANGULÁVEL	350
LÂMINA-CAÇAMBA DE APLICAÇÕES MÚLTIPLAS	352
CAÇAMBA PARA TERRA	356
CAÇAMBA - PARA APLICAÇAO GERAL	357
CAÇAMBA - GARRA	359
CAÇAMBA PARA MATERIAL LEVE	364
CAÇAMBA DE MÚLTIPLAS APLICAÇÕES	364
CAÇAMBA - SERVIÇOS GERAIS	367
CAÇAMBA PARA TERRA	369
CAÇAMBA PARA APLICAÇÃO GERAL	373
CACAMBA PARA MATERIAL LEVE	377
CACAMBA - TERRA	380
CAÇAMBA - GARRA	381
CAÇAMBA DE MÚLTIPLAS APLICAÇÕES	386
CAÇAMBA PARA SERVIÇOS GERAIS	391
CACAMBA E GARFO	394
SUPORTE - GARFO	395
ACOPLADOR RÁPIDO	396
TAMPA - TUBULAÇÕES	400
CILINDRO E ARTICULAÇÃO - ACOPLADOR	401
BORDA CORTANTE	403
GARFO DA GARRA	409
GARFO DE PALETAS	414
GARFO - SERVIÇOS PÚBLICOS	416
ARMAÇÃO - LÂMINA	418
ARMAÇÃO-GARFO	419
ARMAÇÃO DA GARRA	421
GARRA - SERVIÇOS PÚBLICOS	422
ALÇA E PINO - ACOPLADOR	425
ALÇA - ACOPLADOR	427
JOGO-PLACA DE RODAGEM E MONTAGEM	429
ARTICULAÇÃO - ACOPLADOR	430
TRAVA - ACOPLADOR RÁPIDO	431
PLACA-RODOVIÁRIO	432
MOLA - LÂMINA	434
DEGRAU - BRAÇO DE MANIPULAÇÃO DE MATERIAIS	435
BATENTE - GARRA	436
TELA FILTRANTE - ÁGUA	437
TANQUE DE ÁGUA E MONTAGEM	438
TANQUE DE ÁGUA	441
UNI-DENTE	442
POSTO DO OPERADOR	443
ACUMULADOR - AR CONDICIONADO	443
CONDICIONADOR DE AR E MONTAGEM	445
CONDICIONADOR DE AR	446
ENCOSTO DO BRAÇO E MONTAGEM	449
BRAÇO DO ASSENTO	450
CAIXA DE ARMAZENAMENTO	452
CABINE - ESTRUTURA ROPS COBERTA	453
CABINE - ESTRUTURA DE PROTEÇÃO CONTRA CAPOTAMENTO	454
CABO DE CONTROLE	455
COMPRESSOR E MOTOR - REFRIGERADO	456
COMPRESSOR DE REFRIGERANTE E MONTAGEM	457
CONDENSADOR DO REFRIGERANTE E MONTAGEM	458
CONTROLE-CABO	459
CONTROLE HIDRÁULICO DE OPERAÇÃO PILOTO	466
ACOPLAMENTO DE COMANDO	484
TAMPA - CONSOLO	486
TAMPA - PAINEL DE INSTRUMENTOS	488
PORTA E MONTAGEM-CABINA	489
PORTA DA CABINE	494
DUCTO E CONTROLE	500
ARMAÇÃO DO VIDRO	502
INDICADOR E ALARME	504

* TRADUÇÃO NÃO DISPONÍVEL NO MOMENTO DA IMPRESSÃO

ÍNDICE

Designação	Página
PROTETOR - ROPS/FOPS	506
PEGA-MÃO	507
ALAVANCA DE CONTROLE - MODULAR	508
AQUECEDOR DA CABINE E MONTAGEM	510
AQUECEDOR DA CABINE	511
*HOLDER-CUP	517
ALOJAMENTO - LATERAL	518
INSTALAÇÃO	519
JOGO-INSTALAÇÃO DO CONDICIONADOR DE AR E AQUECEDOR	519
JOGO - PORTA DA CABINE E MONTAGEM	524
KIT-RETENTOR DA CABINE	526
ALAVANCA - GOVERNADOR	527
REVESTIMENTO DA CABINE	528
REVESTIMENTO - CABINE	529
TUBOS - AR CONDICIONADO	530
TUBOS - AQUECEDOR	532
PUBLICAÇÃO	533
ESPELHO RETROVISOR	534
MÓDULO - INDICADOR DE ALARME	535
MONTAGEM - ESTRUTURA ROPS	537
OPÇÃO-CABINE	538
PAINEL DE INSTRUMENTOS	539
PAINEL LATERAL	544
PEDAL DO GOVERNADOR	545
PLATAFORMA DO OPERADOR	547
RETENTOR-CABINE	549
CINTO DE SEGURANÇA	551
ASSENTO	553
ASSENTO AJUSTÁVEL	555
MOLA A GÁS	556
PÁRA-SOL DA CABINE	557
JANELA DA CABINE	559
EQUIPAMENTO DE SERVIÇO E SUPRIMENTOS	566
DECALQUE	566
PEÇAS DIVERSAS	570
PLACA E DECALQUE	572
ÍNDICE DE NÚMERO DE PEÇA	B1

* TRADUÇÃO NÃO DISPONÍVEL NO MOMENTO DA IMPRESSÃO

INHALTSVERZEICHNIS

Bezeichnung	Seite
ALLGEMEINE HINWEISE	A35
REPARATURALTERNATIVEN	A43
KÜHLMITTELZUSATZ	A48
WARTUNGSTEILE	A67
STICHWORTVERZEICHNIS	A111
MASCHINE	1
FAHRWERK	1
GRUNDAUSFÜHRUNG	1
MASCHINENSTEUERUNG	2
MASCHINEN-UMBAUSATZ	2
MOTOR	9
MOTORAUSFÜHRUNG	9
MOTOR-EINBAUSATZ	13
MOTOR - GRUNDAUSFÜHRUNG	15
NOCKENWELLE	15
STIRNRADGEHÄUSEDECKEL	17
VENTILDECKEL	18
KURBELWELLE	20
MOTORBLOCK	25
ZYLINDERKOPF	29
MOTORÖLABLASS	36
SCHWUNGRAD	37
RIEMENSCHUTZ	39
SCHWUNGRADGEHÄUSE	40
STIRNRADGEHÄUSE	42
MOTORHUBÖSE	46
MOTORAUFLAGER	48
LÜFTERBEFESTIGUNG	50
ÖLWANNE	52
PLEUELSTANGE UND KOLBEN	58
MOTORSTOPFEN	60
KURBELWELLEN-RIEMENSCHEIBE	61
WASSERPUMPE - RIEMENSCHEIBE	63
*V-BELT GP	65
VENTILSTEUERUNG	66
SCHMIERSYSTEM	69
MOTORÖLEINFÜLLSTUTZEN	69
SCHMIERPUMPE	71
KÜHLSYSTEM	74
THERMOSTATGEHÄUSE	74
KÜHLER U. ÖLKÜHLER - BEFESTIGUNG	75
KÜHLWASSERPUMPE	77
KÜHLER UND HYDRAULIKÖLKÜHLER	82
KÜHLER U. ÖLKÜHLERBEFESTIGUNG	84
LUFTANSAUG- UND ABGASSYSTEM	88
LUFTREINIGER	88
DRUCKLUFTLEITUNGEN	90
AUSPUFFKRÜMMER	91
SCHALLDÄMPFER	92
TURBOLADER	95
KRAFTSTOFFSYSTEM	101
DREHZAHLREGLERKABEL	101
REGLERSTEUERUNG	102
WASSERABSCHEIDER- U. KRAFTSTOFFILTER	103
REGLER	104
KRAFTSTOFFENTLÜFTUNGS- U. FILTERLEITUNGEN	109
KRAFTSTOFFÖRDERPUMPE UND BEFESTIGUNGSTEILE	111
KRAFTSTOFFEINSPRITZPUMPE	113
KRAFTSTOFFENTLÜFTUNGSPUMPE UND -HAUPTFILTER	119
ELEKTRISCHE ANLAGE UND STARTSYSTEM	120
DREHSTROMGENERATOR	120
BATTERIE	123
ANSCHLUSS, ELEKTR.	125
VERRIEGELUNGSSTEUERUNG	127
STEUERUNG - MANUELLES STARTEN/ABSTELLEN	128
UMBAUSATZ - NICHT FÜR STRASSENVERKEHR	129
SICHERUNGSTAFEL - ABDECKUNG	130
ARBEITSGERÄTEELEKTRONIK	131
ELEKTRONIK - MASCHINE	132
VERDRAHTUNGSKABELBAUMHALTETEILE	133
GLÜHKERZE	134
UMLAUFKÜHLWASSERHEIZUNG	136
SICHERHEITSEINBAUSATZ	138
SATZ - ARBEITSGERÄTE U. VERDRAHTUNG	140
ARBEITSGERÄTEVERDRAHTUNGSSATZ	141
ARBEITSLEUCHTEN	142
SCHEINWERFER U. RICHTUNGSLEUCHTE	144
BREMS- UND RÜCKLEUCHTE	146
RUNDUM-KENNLEUCHTE	148

* ÜBERSETZUNG ZUM ZEITPUNKT DER DRUCKLEGUNG NICHT VORHANDEN

INHALTSVERZEICHNIS

Bezeichnung	Seite
ARBEITSLEUCHTEN	149
BELEUCHTUNGSANLAGE (STRASSENAUSRÜSTUNG)	151
BREMS- UND RÜCKLEUCHTEN	153
RUNDUM-KENNLEUCHTE	154
TEMPERATUR- U. DRUCKSENSOR	155
STARTERMOTOR	156
DRUCKSCHALTER	160
TEMPERATURSCHALTER	162
RÜCKFAHRWARNHORN	163
KLIMAANLAGENVERDRAHTUNG	164
FAHRGESTELLVERDRAHTUNG	165
MOTORVERDRAHTUNG	169
WARNHORNVERDRAHTUNG	174
MASCHINENVERDRAHTUNG	175
HECKBELEUCHTUNGSVERDRAHTUNG	177
ARBEITSGERÄT - VERDRAHTUNG	178
KRAFTSÜBERTRAGUNG	180
ACHSE	180
TANDEMANTRIEB	182
HYDRAULIKFILTER U. LEITUNGEN	183
ÖLFILTER	185
HYDROSTATIKLEITUNGEN	189
RÜCKLAUFVENTIL - VERTEILER	191
HYDROSTATIKMOTOR U. BEFESTIGUNG	193
KOLBENMOTOR	194
PUMPENAUFHÄNGUNG	196
KRAFTÜBERTRAGUNG	197
HYDROSTATIKPUMPE U. BEFESTIGUNG	198
KOLBENPUMPE	199
REIFEN UND FELGE	201
RAD UND REIFEN	207
RAHMEN UND FAHRGESTELL	212
STOSSSTANGE	212
UMBAUSATZ - FÜR STRASSENVERKEHR	213
STRASSENFAHRT - UMRÜSTSATZ	215
GEGENGEWICHT	219
MOTORVERKLEIDUNG	221
LADERRAHMEN	223
MASCHINENRAHMEN	225
LEITUNGSFÜHRUNG	226
UMRÜSTSATZ FÜR STRASSENFAHRT	227
MASCHINENHUBÖSE	230
RÜCKSPIEGEL U. BEFESTIGUNG	232
TYPENSCHILDBEFESTIGUNG	233
BELEUCHTUNG FÜR STRASSENFAHRT - BEFESTIGUNG	235
SCHALLDÄMPFUNG	237
HYDRAULIKSYSTEM	238
HYDRAULIKDRUCKSPEICHER U. BEFESTIGUNG	238
ADAPTER - ÖLLEITUNG	239
ZYLINDER U. BEFESTIGUNG - WINKELSCHLID	240
*CYLINDER & MTG GP-BUCKET	241
HUBARMZYLINDER U. BEFESTIGUNGSSATZ	242
SCHAUFELZYLINDER	244
GREIFERZYLINDER	245
HYDRAULIKZYLINDER	246
HUBZYLINDER	251
KIPPZYLINDER	252
HYDRAULIKSYSTEM	254
*KIT-QUICK COUPLER CONVERSION	255
SCHAUFELLEITUNGEN	258
ANSCHLUSSLEITUNGEN	271
GREIFERLEITUNGEN	273
HYDRAULIKLÜFTERLEITUNGEN	279
HYDRAULIKÖLKÜHLERLEITUNGEN	283
HUBZYLINDERLEITUNGEN	284
LEITUNGEN, ABSENKSTEUERUNG	288
VORSTEUERLEITUNGEN	290
HYDRAULIKPUMPE UND LEITUNGEN	294
NEIGEZYLINDERLEITUNGEN	296
ARBEITSGERÄT - LEITUNGEN	300
KRÜMMER U. LEITUNGEN - STEUERUNG	302
KRÜMMERSTEUERUNG U. BEFESTIGUNG	306
*MANIFOLD & SOLENOID GP-CONTROL	307
STEUERKRÜMMER	310
HYDRAULIKKÜHLERMOTOR U. BEFESTIGUNG	311
MOTORANTRIEB	314
ZYLINDERAUFHÄNGUNG	319
VORSTEUERVENTILSTOPFEN	322
ARBEITSGERÄTEPUMPE U. BEFESTIGUNG	323
ZAHNRADPUMPE	325
HYDRAULIKTANK UND BEFESTIGUNGSTEILE	326
HYDRAULIKTANK	327
KUPPLUNGSVENTIL U. LEITUNGEN	328
STEUERVENTIL UND BEFESTIGUNGSTEILE	332
STEUERVENTIL	333

* ÜBERSETZUNG ZUM ZEITPUNKT DER DRUCKLEGUNG NICHT VORHANDEN

INHALTSVERZEICHNIS

Bezeichnung	Seite
VENTIL, MECH.	335
VORSTEUERVENTIL	336
ÜBERDRUCKVENTIL	343
MAGNETVENTIL	344
ARBEITSGERÄTE	348
TRAGARM	348
SCHILD	349
SCHWENKSCHILD	350
SCHNEIDMESSER - KOMBISCHAUFEL	352
ERDSCHAUFEL	356
UNIVERSALSCHAUFEL	357
GREIFERSCHAUFEL	359
LEICHTGUTSCHAUFEL	364
KOMBISCHAUFEL	364
*BUCKET AR-UTILITY	367
ERDSCHAUFEL	369
UNIVERSALSCHAUFEL	373
LEICHTGUTSCHAUFEL	377
ERDSCHAUFEL	380
GREIEFERSCHAUFEL	381
KOMBISCHAUFEL	386
MEHRZWECKSCHAUFEL	391
TRÄGER U. GABEL	394
GABELTRÄGER	395
SCHNELLWECHSELVORRICHTUNG	396
SCHNELLWECHSELEINRICHTUNG	397
LEITUNGSABDECKUNG	400
SCHNELLWECHSELEINRICHTUNG - ZYLINDER U. VERBINDUNG	401
SCHNEIDMESSER	403
GREIFERGABEL	409
PALETTENGABEL	414
MEHRZWECKGABEL	416
SCHILDRAHMEN	418
*FRAME GP-FORK	419
GREIFERRAHMEN	421
MEHRZWECKGREIFER	422
GRIFF U. BOLZEN - ANSCHLUSS	425
ANSCHLUSSGRIFF	427
STRASSENFAHRTSCHILD UND BEFESTIGUNG	429
VERBINDUNG - SCHNELLWECHSELEINRICHTUNG	430
SCHNELLWECHSELEINRICHTUNGSSPERRE	431
SCHILD - STRASSENFAHRT	432
SCHILDFEDER	434
TRAGARMSTUFE	435
GREIFERANSCHLAG	436
WASSERSIEBEINSATZ	437
WASSERTANK U. BEFESTIGUNGSTEILE	438
WASSERTANK	441
UNIVERSAL-ZAHNSPITZE	442
FAHRERHAUS	443
KLIMAANLAGENDRUCKSPEICHER	443
KLIMAANLAGE UND AUFHÄNGUNG	445
KLIMAANLAGE	446
ARNLEHNE U. BEFESTIGUNG	449
ARMLEHNE	450
VERSTAUKASTEN	452
FAHRERHAUS MIT ÜBERROLLSCHUTZ	453
STEUERKABEL	455
KÜHLKOMPRESSOR U. MOTOR	456
KÄLTEMITTELKOMPRESSOR U. BEFESTIGUNG	457
KÄLTEMITTELKONDENSATOR U. BEFESTIGUNGSTEILE	458
STEUERHEBEL	459
HYDRAULIKBEDIENUNG (MIT VORSTEUERUNG)	466
ANTRIEBSKUPPLUNG	484
STEUERKONSOLENABDECKUNG	486
INSTRUMENTENTAFELABDECKUNG	488
FAHRERHAUSTÜR U. BEFESTIGUNG	489
FAHRERHAUSTÜR	494
LUFTKANAL UND REGULIERUNG	500
FENSTERRAHMEN	502
WARNANZEIGENSATZ	504
VERKLEIDUNG - ÜBERROLLSCHUTZ/ STEINSCHLAGSCHUTZ	506
HALTEGRIFF	507
MODULARHEBEL	508
FAHRERHAUSHEIZUNG U. BEFESTIGUNGSTEILE	510
FAHRERHAUSHEIZUNG	511
*HOLDER-CUP	517
SEITENGEHÄUSE	518
EINBAUSATZ	519
EINBAUSATZ - KLIMAANLAGE U. HEIZUNG	519
FAHRERHAUSTÜR U. BEFESTIGUNG	524
FAHRERHAUSDICHTUNGSSATZ	526
REGELERHEBEL	527
FAHRERHAUSAUSKLEIDUNG	528
FAHRERHAUS - LINER	529
KLIMAANLAGENLEITUNGEN	530
HEIZUNGSLEITUNGEN	532
DOKUMENTATION	533
RÜCKSPIEGEL	534
WARNANZEIGEMODUL	535

* ÜBERSETZUNG ZUM ZEITPUNKT DER DRUCKLEGUNG NICHT VORHANDEN

INHALTSVERZEICHNIS

Bezeichnung	Seite	Bezeichnung	Seite
ÜBERROLLSCHUTZAUFLAGER	537		
OPTION - FAHRERHAUS	538		
INSTRUMENTENTAFEL	539		
SEITENVERKLEIDUNG	544		
GASPEDAL	545		
FAHRERPLATTFORM	547		
FAHERHAUSDICHTUNG	549		
SICHERHEITSGURT	551		
FAHRERSITZ	553		
FAHRERSITZ, VERSTELLBAR	555		
GASFEDERGRUPPE	556		
FAHRERHAUS, SONNENBLENDE	557		
FAHRERHAUSFENSTER	559		
WARTUNGSAUSRÜSTUNG UND -ZUBEHÖR	566		
AUFKLEBER	566		
SORTIMENTSATZ	570		
SCHILD UND AUFKLEBER	572		
ERSATZTEILNUMMERNINDEX	B1		

* ÜBERSETZUNG ZUM ZEITPUNKT DER DRUCKLEGUNG NICHT VORHANDEN

GENERAL INFORMATION

1. MACHINE IDENTIFICATION

Caterpillar machines are identified by Product Identification Numbers (PIN). Some components included in a machine may be identified by Serial Numbers (S/N). Typical components that will be serialized include engines, transmissions, bulldozers, and rippers. The machine and engine are further identified by arrangement numbers and in some cases modification numbers. These numbers are shown on the product identification plate(s) and on the master plate in the operator's compartment.

Caterpillar dealers need all of these numbers to determine accurate parts identification.

SIS *New Feature*

Effective First Quarter 2001 the Caterpillar Product Identification Number (PIN) changed from 8 to 17 characters. In an effort to provide uniform equipment identification, Caterpillar and other construction equipment manufacturers are moving to comply with the latest version of the product identification numbering standard. Non-road machine PINs are defined by ISO 10261. The new PIN format will apply to all Caterpillar machines and generator sets. The PIN plates and frame marking will display the 17 character PIN. The new format will look like the following:

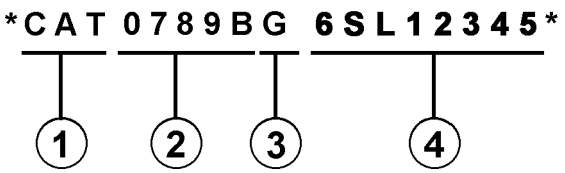

Where:

1. Caterpillar's World Manufacturing Code (characters 1-3)

2. Machine Descriptor (characters 4-8)

3. Check Character (character 9)

4. Machine Indicator Section (MIS) or Product Sequence Number (characters 10-17). These were previously referred to as the Serial Number.

Machines and generator sets produced before First Quarter 2001 will maintain their 8 character PIN format.

Components such as engines, transmissions, axles, etc. and work tools will continue to use an 8 character Serial Number (S/N).

2. ORDERING PARTS

⚠ WARNING

When replacement parts are required for this product Caterpillar recommends using Caterpillar replacement parts or parts with equivalent specifications including, but not limited to, physical dimensions, type, strength and material.

Failure to heed this warning can lead to premature failures, product damage, personal injury or death.

Quality Caterpillar replacement parts are available from Caterpillar dealers throughout the world. Their parts inventories are up to date and include all parts normally required to protect your investment in Caterpillar machines. Dealers may offer repair kits or remanufactured parts to allow selection of the most effective repair alternative for a particular situation. When ordering parts, your order should specify the quantity, part number, part name, and the serial number/product identification number of the machine for which the parts are needed.

3. PARTS MANUAL ORGANIZATION

Product information in this manual is presented as "information elements" that represent all of the components for the specific model. Engine Arrangement and Seat Group are examples of information elements. The information elements are organized alphabetically by part name and secondarily by part number within each major section of the manual.

4. TABLE OF CONTENTS

A table of contents (TOC) is found at the beginning of the manual. The TOC lists each section of the manual with a complete list of all information elements organized as they appear in the manual. Page numbers are provided for quick reference to detailed parts identification illustrations and serviceable consist lists.

5. MAINTENANCE PARTS INDEX

The Maintenance Parts Index, located near the beginning of the manual, references most frequently used maintenance part numbers, providing description, quantity, usage and page number. This information is organized alphabetically by part description.

6. INDEX

The index located near the front of the manual is an alphabetical listing of all information elements included in the manual. Page numbers are provided for quick reference to detailed parts identification illustrations and serviceable consist lists.

7. PART NUMBER INDEX

A numerical index listing all part numbers and the corresponding page number(s) appears at the back of the manual.

8. CAPTIONS

Captions located at the beginning of each information element identify the part number and part name along with additional descriptive information. PIN and S/N information found in each caption should be used to select correct information for a specific machine. Field replacement options, identification of optional attachment components, and where used ("part of") information is also provided.

The first line of a caption is shown in larger type font to indicate the beginning of an information element. Captions for additional pages that may be required to illustrate an information element will be shown in standard type font and will include the term *(contd.)* .

9. NON-SERVICED PARTS

In some instances it is necessary to display non-serviced parts that are a link to a lower level serviceable consist lists. These non-serviced part numbers are shown in *italic* type indicating that they are not available.

10. PARTS LIST REFERENCE NUMBERS

Numbers shown in the Ref No column correspond to numbers used in the associated graphic(s). An alphabetic suffix may be added to a reference number to identify lower level consist items. Numbers shown in the Graphic Ref column refer to the graphic number identifier displayed in the lower left corner of each illustration. The Graphic Ref number may be used in combination with the item Ref No to determine the correct part number. There may be intentional omission of a Ref No in a consist list as information is updated to reflect the latest serviceable part numbers.

11. INDENTED PART NAMES

When a part name is indented in a parts list, it is part of (included in) the group or assembly under which it is indented.

12. ILLUSTRATION REFERENCE LETTERS

When necessary, illustrations contain reference letters (A, B, C etc.) that are intended to track lines and harnesses from one point to another. They are also used to show where to reconnect illustrations that have been separated.

13. ABBREVIATIONS AND SYMBOLS

O.D. – Outside Diameter
I.D. – Inside Diameter
A – Not Part Of This Group
B – Use As Required
C – Change From Previous Type
D – Order By The Meter
E – Order By The Centimeter
F – Not Shown
G – Order By The Inch
I – Refer To Hydraulic Information System
M – Metric Part
R – Remfg Part May Be Available
Y – Separate Illustration
Z – Not Serviced Separately

SIS *New Feature*

14. DESCRIPTION OF TYPE CHANGES

Type - A type is defined as any configuration change that requires an additional Information Element for an Arrangement, Group, or Assembly. If serial number breaks for types are not available, a type # (Type 1, Type 2, etc.) will be displayed in the caption. These "type" changes are identified with a "C" note (change from previous type) in the Parts List. Only the "types" that apply to this Parts Manual will be included. Additional types may exist causing "C" notes to appear on an Information Element when no other types are shown.

15.<END>

This symbol indicates the end of an information element.

NOTE:

Continuing improvement and advancement of product design may cause changes to your machine which may not be included in this publication. Whenever a question arises regarding your caterpillar product or this publication, please consult your caterpillar dealer for the latest available information.

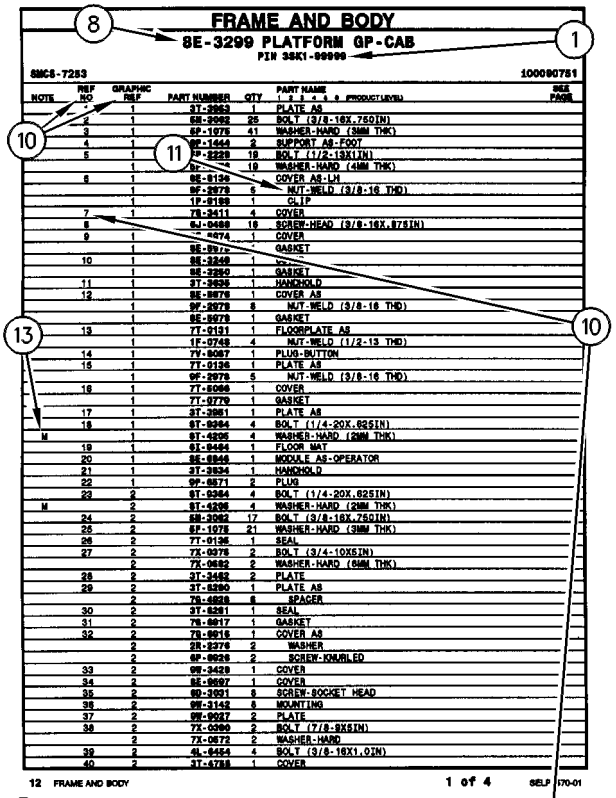

FRAME AND BODY

8E-3299 PLATFORM GP-CAB

PIN 3SK1-99999

SMCS-7283 100090751

NOTE	REF NO	GRAPHIC REF	PART NUMBER	QTY	PART NAME 1 2 3 4 5 6 (PRODUCT LEVEL)	SEE PAGE
	*	1	3T-3963	1	PLATE AS	
	2	1	6M-2062	25	BOLT (3/8-16X.750IN)	
	3	1	6P-1075	41	WASHER-HARD (3MM THK)	
	4	1	9F-1443	2	SUPPORT AS-FOOT	
	5	1	1P-2229	19	BOLT (1/2-13X1IN)	
		1	6P-[illegible]	19	WASHER-HARD (4MM THK)	
	6	1	8E-8136	*	COVER AS-LH	
		1	9F-2979	6	NUT-WELD (3/8-16 THD)	
		1	1P-8189	1	CLIP	
	7	1	7X-3411	4	COVER	
	8	1	6J-0468	18	SCREW-HEAD (3/8-16X.87SIN)	
	9	1	[illegible]-8974	1	COVER	
		1	8E-8976	*	GASKET	
	10	1	8E-3248	1	[illegible]	
		1	8E-2260	1	GASKET	
	11	1	3T-3636	1	HANDHOLD	
	12	1	8E-8976	1	COVER AS	
		1	9F-2979	8	NUT-WELD (3/8-16 THD)	
		1	8E-8978	1	GASKET	
	13	1	7T-9131	1	FLOORPLATE AS	
		1	1F-0748	4	NUT-WELD (1/2-13 THD)	
	14	1	7Y-8067	1	PLUG-BUTTON	
	15	1	7T-0136	1	PLATE AS	
		1	9F-2979	5	NUT-WELD (3/8-16 THD)	
	16	1	7T-8066	1	COVER	
		1	7T-9779	1	GASKET	
	17	1	3T-3961	1	PLATE AS	
	18	1	9T-0264	4	BOLT (1/4-20X.62SIN)	
M		1	9T-4295	4	WASHER-HARD (2MM THK)	
	19	1	6J-8464	1	FLOOR MAT	
	20	1	8E-8846	1	MODULE AS-OPERATOR	
	21	1	3T-3934	1	HANDHOLD	
	22	1	9F-8671	2	PLUG	
	23	2	9T-0264	4	BOLT (1/4-20X.62SIN)	
M		2	9T-4295	4	WASHER-HARD (2MM THK)	
	24	2	6M-2062	17	BOLT (3/8-16X.750IN)	
	25	2	6P-1075	21	WASHER-HARD (3MM THK)	
	26	2	7T-0136	1	SEAL	
	27	2	7X-0078	2	BOLT (3/4-10X5IN)	
		2	7X-0682	2	WASHER-HARD (6MM THK)	
	28	2	3T-3482	2	PLATE	
	29	2	3T-8290	1	PLATE AS	
		2	7S-4828	6	SPACER	
	30	2	3T-8281	1	SEAL	
	31	2	7S-8817	1	GASKET	
	32	2	7S-8816	1	COVER AS	
		2	2R-2276	2	WASHER	
		2	9F-8626	2	SCREW-KNURLED	
	33	2	9M-3429	1	COVER	
	34	2	8E-8697	1	COVER	
	35	2	9D-3091	8	SCREW-SOCKET HEAD	
	36	2	9M-3142	8	MOUNTING	
	37	2	9M-9017	2	PLATE	
	38	2	7X-0360	2	BOLT (7/8-9X5IN)	
		2	7X-0672	2	WASHER-HARD	
	39	2	4L-8454	4	BOLT (3/8-16X1.0IN)	
	40	2	3T-4788	1	COVER	

12 FRAME AND BODY 1 of 4 SELP4570-01

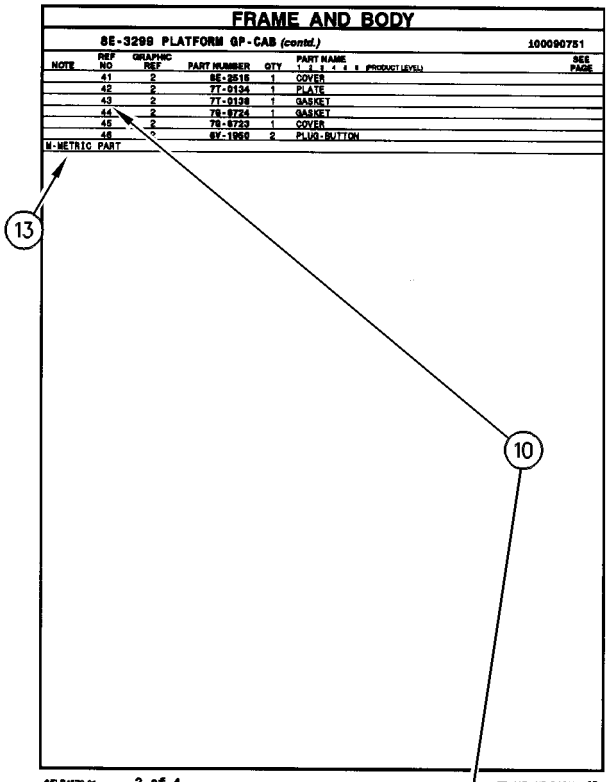

FRAME AND BODY

8E-3299 PLATFORM GP-CAB (contd.) 100090751

NOTE	REF NO	GRAPHIC REF	PART NUMBER	QTY	PART NAME 1 2 3 4 5 6 (PRODUCT LEVEL)	SEE PAGE
	41	2	8E-2515	1	COVER	
	42	2	7T-9134	1	PLATE	
	43	2	7T-9136	1	GASKET	
	44	2	7S-8724	1	GASKET	
	45	2	7S-8723	1	COVER	
	46	*	8Y-1950	2	PLUG-BUTTON	

M-METRIC PART

SELP4570-01 2 of 4 FRAME AND BODY 13

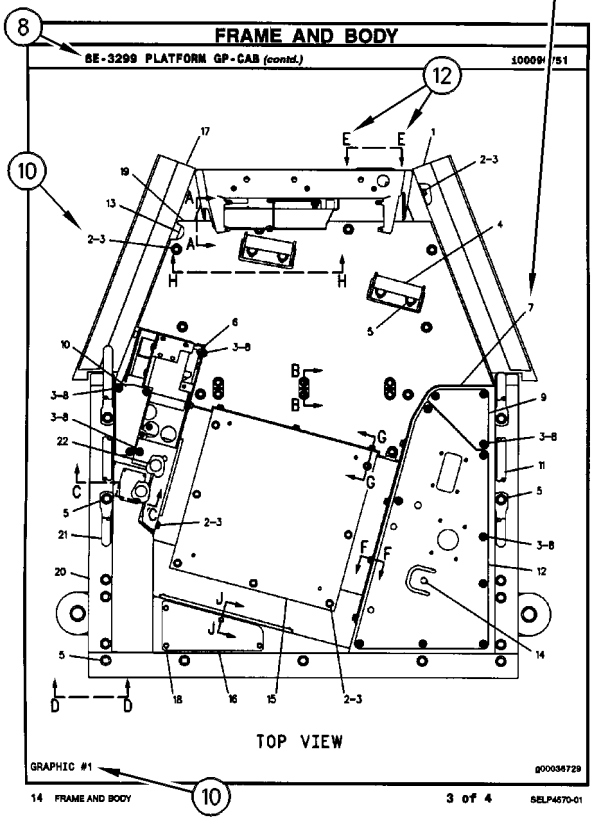

FRAME AND BODY

8E-3299 PLATFORM GP-CAB (contd.) 100090751

TOP VIEW

GRAPHIC #1 g00036729

14 FRAME AND BODY 3 of 4 SELP4570-01

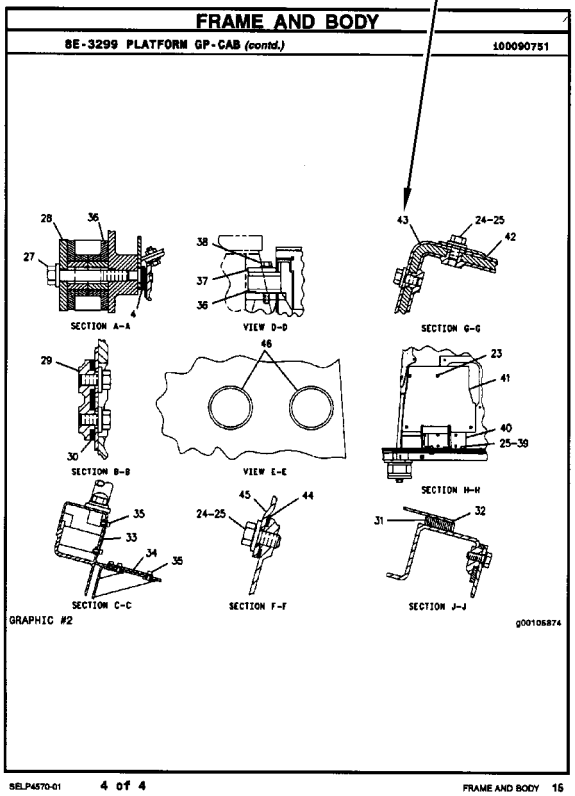

FRAME AND BODY

8E-3299 PLATFORM GP-CAB (contd.) 100090751

SECTION A-A

VIEW D-D

SECTION G-G

SECTION B-B

VIEW E-E

SECTION H-H

SECTION C-C

SECTION F-F

SECTION J-J

GRAPHIC #2 g00105874

SELP4570-01 4 of 4 FRAME AND BODY 15

1. IDENTIFICATION DE LA MACHINE

Toutes les machines Caterpillar portent un numéro d'identification (PIN). Certains composants des machines peuvent porter des numéros de série (S/N). En général, parmi les composants qui portent des numéros de série il y a les moteurs, les transmissions, les bulldozers et les rippers. En plus, la machine et le moteur peuvent recevoir des numéros de version, et dans certains cas, de modification. Ces numéros figurent sur les plaques de numéro de série et sur la plaque signalétique principale qui se trouve dans le poste de conduite.

Les concessionnaires Caterpillar doivent connaître tous ces numéros pour identifier correctement les pièces.

SIS *Nouvelle Caractéristique*

À partir du premier trimestre 2001, le numéro d'identification produit (PIN) Caterpillar passe de 8 à 17 caractères. Afin de permettre une identification uniforme des matériels, Caterpillar et d'autres constructeurs de machines de travaux publics s'efforcent de se conformer à la norme la plus récente portant sur les numéros d'identification des produits. Les numéros d'identification (PIN) de machines de chantier sont définis par la norme ISO 10261. Le nouveau format du numéro d'identification est valable pour toutes les machines et tous les groupes électrogènes Caterpillar. Le numéro d'identification produit (PIN) figurant sur la plaque et sur le châssis se composera de 17 caractères. Le nouveau format ressemblera à ceci:

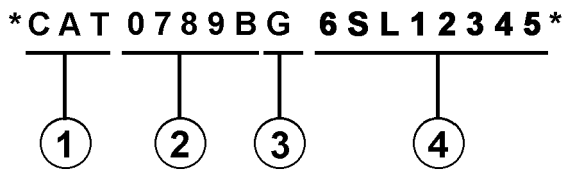

Il se décomposera de la façon suivante:

1. Code international de fabrication de Caterpillar (caractères 1 à 3)

2. Descriptif de la machine (caractères 4 à 8)

3. Contrôle (caractère 9)

4. Indicateur machine (MIS) ou numéro de séquence produit (caractères 10 à 17). Ceux-ci étaient auparavant désignés sous le terme de numéro de série.

Les machines et les groupes électrogènes construits avant le premier trimestre 2001 garderont le format à 8 caractères du numéro d'identification produit (PIN).

Les organes tels que les moteurs, les boîtes de vitesses, les essieux, etc., continueront d'être désignés par un numéro de série (S/N) à 8 caractères.

2. COMMANDE DE PIÈCES

⚠ DANGER

Lorsqu'il faut remplacer des pièces de rechange pour ce produit Caterpillar recommande d'utiliser les pièces de rechange Caterpillar ou les pièces qui ont des spécifications équivalentes dont les dimensions physiques, le type, la force et le matériau. Ces équivalences ne se limitent pas à l'énoncé précédent.

L'inobservation de cette mise en garde peut entraîner des défaillances prématurées, des dommages au produit, des blessures ou même la mort.

Les concessionnaires Caterpillar fournissent dans le monde entier des pièces de rechange de qualité Caterpillar. Leurs stocks de pièces sont constamment réapprovisionnés et comptent toutes les pièces nécessaires pour assurer la bonne marche de vos machines Caterpillar. Certains concessionnaires proposent également des kits de réparation ou des pièces rénovées, ce qui permet de choisir la solution la plus économique dans une situation donnée. Lors des commandes de pièces, mentionner la quantité, le numéro et la désignation des pièces ainsi que le numéro de série ou le numéro d'identification (PIN) de la machine pour laquelle ces pièces sont requises.

3. ORGANISATION DU CATALOGUE DE PIÈCES

Les renseignements sur les produits sont présentés sous forme de "Information element" (élément d'information) représentant tous les composants d'un modèle donné. "Engine Arrangement" (version de moteur) et "Seat Group" (assemblage de siège)" sont des exemples d'éléments d'information. Les éléments d'information sont classés par ordre alphabétique par la désignation standard des pièces et par numéros de pièces dans chaque partie importante du manuel.

4. TABLE DES MATIÈRES

Nouvelle Caractéristique

La table des matières se trouve au début du manuel. La table des matières fournit la liste de tous les chapitres du manuel avec une liste complète de tous les éléments d'information classés par ordre d'apparition dans le manuel. Les numéros de page sont fournis afin que l'utilisateur puisse trouver rapidement les illustrations détaillées concernant l'identification des pièces et les listes des pièces d'entretien.

5. INDEX DES PIÈCES D'ENTRETIEN

La rubrique "Index des pièces d'entretien" qui se trouve au début du manuel renvoie aux pièces d'entretien les plus fréquemment utilisées en précisant la désignation, la quantité, là où la pièce est utilisée et le numéro de page. Ces pièces sont classés par ordre alphabétique.

6. INDEX

L'index qui se trouve vers le début du manuel est une liste alphabétique de tous les éléments d'information du manuel. Les numéros de page sont fournis afin que l'utilisateur puisse trouver rapidement les illustrations détaillées concernant l'identification des pièces et les listes des pièces d'entretien.

7. INDEX DES NUMÉROS DE PIÈCES

Une liste numérique de tous les numéros de pièces et des pages correspondantes se trouve à la fin du manuel.

8. LÉGENDES

Les légendes qui se trouvent en haut de chaque page de chaque élément d'information fournissent le numéro de pièce, la désignation ainsi que des renseignements supplémentaires sur les pièces. Les renseignements concernant les numéros de série (S/N) qui se trouvent dans chaque légende doivent être utilisés pour sélectionner les informations correctes pour un moteur donné. Les informations concernant les options de remplacement sur le chantier, l'identification des composants des équipements offerts en option et les lieux d'application sont aussi fournies.

Nouvelle Caractéristique

Les lettres de la première ligne d'une légende sont présentées en police plus grande afin d'indiquer le début d'une unité d'information. Les légendes qui pourraient être requises pour des pages supplémentaires afin d'illustrer une unité d'information seront présentées en police standard et comprendront le terme (à suivre).

9. PIÈCES NON FOURNIES

Nouvelle Caractéristique

Dans certains cas, il est nécessaire d'indiquer les pièces non fournies qui sont en aval de la liste des pièces d'entretien. Les numéros des pièces non fournies dans la liste des pièces et les légendes seront en italique pour signaler qu'ils ne sont pas disponibles.

10. NUMÉROS DE RÉFÉRENCE DE LA LISTE DES PIÈCES

Nouvelle Caractéristique

Les numéros indiqués dans la colonne des numéros de références correspondent aux numéros utilisés dans les illustrations auxquelles ils sont associés. Un suffixe alphabétique peut être ajouté à un numéro de référence pour identifier la liste des articles en aval. Les numéros indiqués dans la colonne de référence de l'illustration renvoient à l'identification du numéro affiché dans le coin inférieur gauche de chaque illustration. Le numéro de référence de l'illustration pourrait être utilisé avec le numéro de référence de l'article pour déterminer le numéro de pièce correct. Il peut y avoir une omission intentionnelle d'un numéro de référence dans une liste de pièces suite à la mise à jour des informations en vue de refléter les numéros de pièces les plus récentes.

11. DÉSIGNATIONS DE PIÈCES EN RETRAIT

Lorsqu'une désignation de pièce est en retrait, cela veut dire que l'article en regard fait partie de l'ensemble sous lequel il figure.

12. LETTRES DE RÉFÉRENCE DES ILLUSTRATIONS

Quand cela est nécessaire, les illustrations comportent des lettres de référence (A, B, C, etc.) pour montrer le trajet des canalisations et faisceaux de câbles d'un point à l'autre. Elles sont utilisées également pour indiquer où relier les illustrations séparées auparavant.

13. ABRÉVIATIONS ET SYMBOLES

O.D. – Diamètre extérieur
I.D. – Diamètre intérieur
A – Ne fait pas partie de ce groupe
B – Utiliser selon besoin
C – Modification
D – Commander par mètre
E – Commander par centimètre
F – Non représenté
G – Commander par pouce
I – Voir "Hydraulic Information System"
M – Pièce métrique
R – Pièce rénovée éventuellement disponible
Y – Illustration séparée
Z – Non fourni séparément

NOTA:

En raison du progrès technique et des améliorations continuelles apportées au matériel, votre machine comporte peut-être des modifications qui n'apparaissent pas dans la présente publication. En cas de doute sur un détail de votre machine Caterpillar ou sur le texte de la présente publication, adressez-vous à votre concessionnaire Caterpillar.

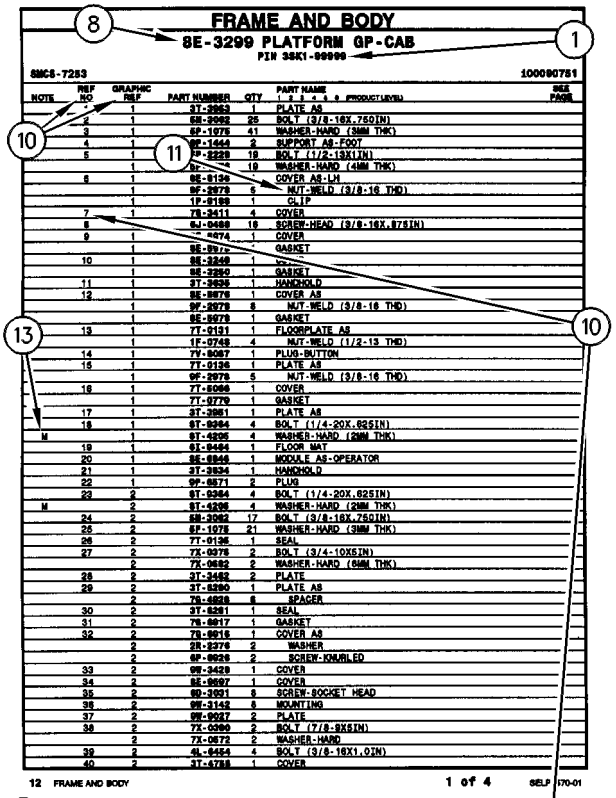
FRAME AND BODY
8E-3299 PLATFORM GP-CAB
PIN 3SK1-99999
SMCS-7283
100090751
12 FRAME AND BODY
1 of 4
SELP4570-01

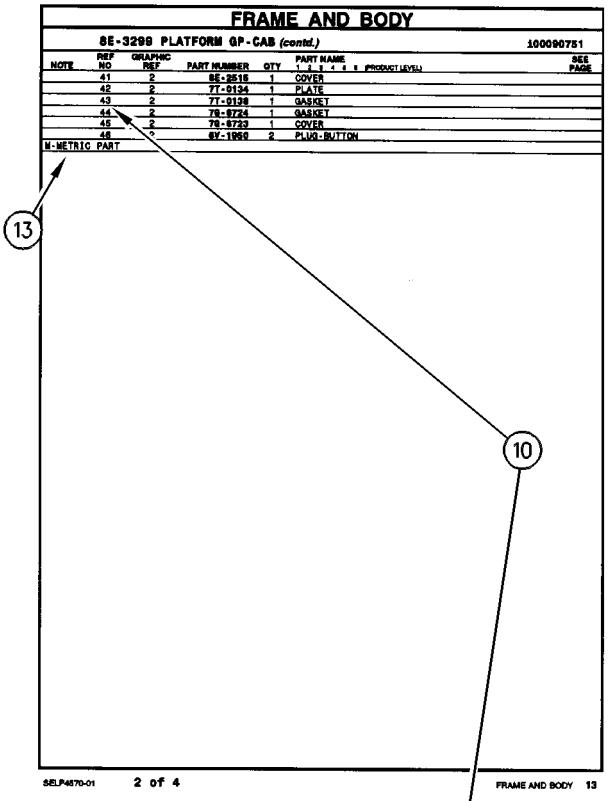
FRAME AND BODY
8E-3299 PLATFORM GP-CAB (contd.)
100090751
SELP4570-01
2 of 4
FRAME AND BODY 13

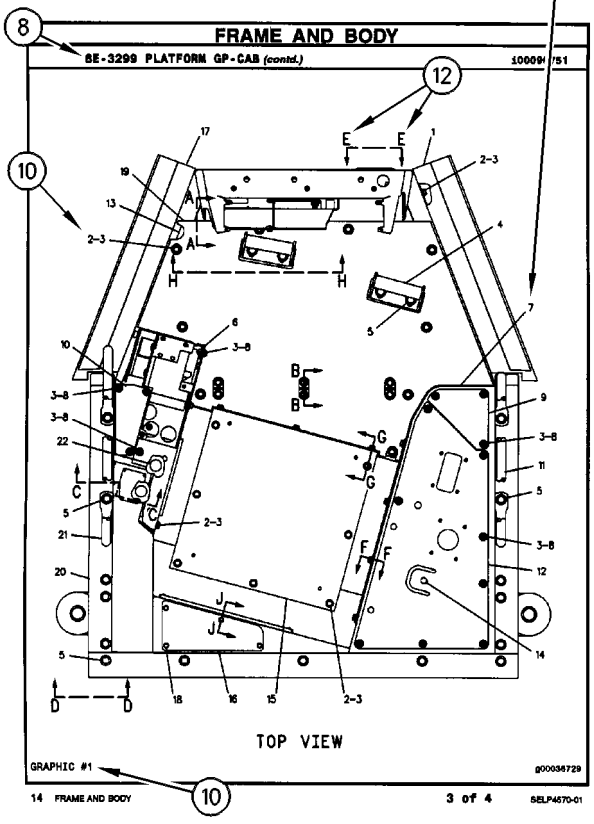
FRAME AND BODY
8E-3299 PLATFORM GP-CAB (contd.)
TOP VIEW
GRAPHIC #1
g00036729
14 FRAME AND BODY
3 of 4
SELP4570-01

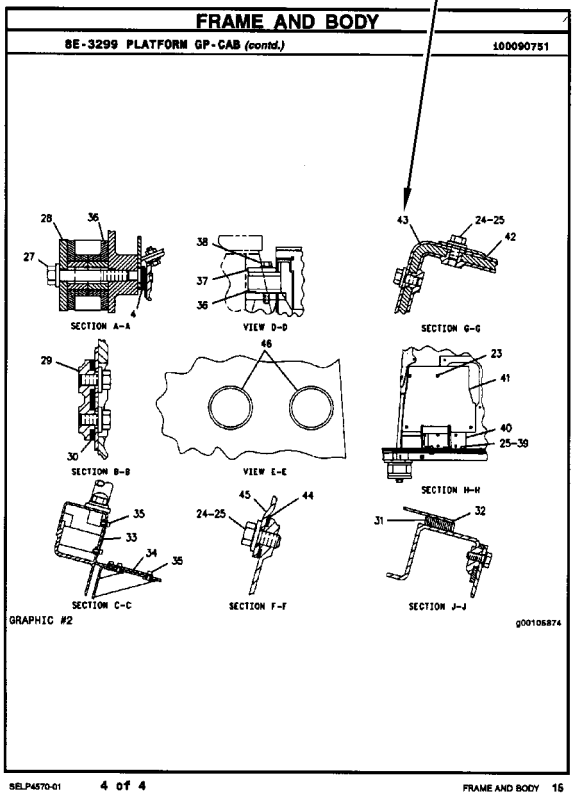
FRAME AND BODY
8E-3299 PLATFORM GP-CAB (contd.)
100090751
SECTION A-A
VIEW D-D
SECTION G-G
SECTION B-B
VIEW E-E
SECTION H-H
SECTION C-C
SECTION F-F
SECTION J-J
GRAPHIC #2
g00105874
SELP4570-01
4 of 4
FRAME AND BODY 15

INFORMACIÓN GENERAL

1. MÁQUINAS

Las máquinas Caterpillar se identifican con Números de Identificación del Producto (PIN). Algunos componentes incluídos en la máquina pueden estar identificados con Números de Serie (N/S). Los componentes que tienen típicamente esta identificación incluyen motores, transmisiones, hojas topadoras y desgarradores. La máquina y el motor se identifican además con Números de Configuración y en algunos casos, Números de Modificación. Estos números están en las placas de identificación del producto o en la placa principal en la cabina del operador.

Los distribuidores Caterpillar necesitan estos números para identificar con exactitud los números de piezas de repuesto.

SIS *Nueva Característica*

A partir del primer trimestre del 2001, el Número de Identificación de Producto (PIN) de Caterpillar cambió de 8 a 17 caracteres. Para hacer más uniforme el método de identificación de equipos, Caterpillar y otros fabricantes de equipo de construcción han tomado medidas para cumplir con la versión más reciente de la norma de numeración de identificación de productos. Los Números de Identificación de Producto para máquinas que no se operan en carreteras son definidos por la norma ISO 10261. El nuevo formato PIN corresponderá a todas las máquinas y grupos electrógenos Caterpillar. Las placas y los caracteres PIN estampados en el bastidor mostrarán el PIN de 17 caracteres. El nuevo formato tendrá la apariencia siguiente:

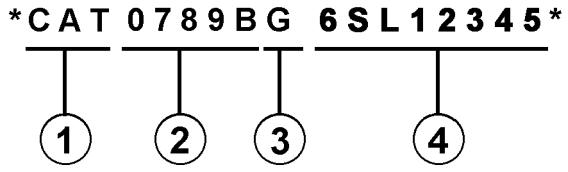

Significado de los caracteres:

1. Código de Fabricación Mundial de Caterpillar (caracteres 1-3)

2. Sección Descriptor de la Máquina (caracteres 4-8)

3. Carácter de Verificación (carácter 9)

4. Sección Indicador de la Máquina (MIS) o Número de Secuencia de Producto (caracteres 10-17). Anteriormente, estos caracteres constituían el Número de Serie.

Las máquinas y grupos electrógenos producidos antes del primer semestre del 2001 mantendrán su formato PIN de 8 caracteres.

Los componentes como motores, transmisiones, ejes, herramientas de trabajo, etc., continuarán usando un Número de Serie (S/N) de 8 caracteres.

2. COMO PEDIR REPUESTOS

⚠ ADVERTENCIA

Cuando se necesiten piezas de repuesto para este producto, Caterpillar recomienda usar piezas de repuesto Caterpillar o piezas que tengan especificaciones equivalentes incluyendo, pero sin estar limitadas a, dimensiones físicas, tipo, fortaleza y material.

El no hacer caso de esta advertencia puede llevar a fallas prematuras, daños al producto y lesiones graves o mortales.

Las piezas de repuesto Caterpillar de calidad están a la disposición de los distribuidores Caterpillar en todo el mundo. Sus existencias actualizadas incluyen todas las piezas normalmente requeridas para proteger su inversión en máquinas Caterpillar. Los distribuidores pueden tener juegos de reparación o piezas remanufacturadas para permitir la selección de la mejor alternativa de reparación en un caso en particular. Al pedir piezas de repuesto, especifique en su pedido la cantidad, el número de pieza, el nombre de la pieza y el número de serie/número de identificación del producto, de la máquina para la cual se necesitan estas piezas.

3. ORGANIZACION DEL MANUAL DE PIEZAS

La información sobre el producto, se presenta en este manual, como "elementos de información" que representan todos los componentes de un modelo específico. Las configuraciones de motores y los grupos de asientos son ejemplos de elementos de información. Los elementos de información están organizados primeramente por nombres de piezas en orden alfabético y en segundo lugar, por el número de pieza dentro de cada sección principal del manual.

4. CONTENIDO

La página de Contenido se encuentra al principio del manual. El Contenido indica cada sección del manual con una lista completa de todos los elementos de información organizados en el orden que aparecen en el manual. Los números de página proporcionan una referencia rápida a las ilustraciones detalladas de identificación de piezas y a las listas de componentes de repuesto de dichas piezas.

5. ÍNDICE DE PIEZAS DE MANTENIMIENTO

Al principio de este catálogo se encuentra un índice de los números de piezas utilizadas más frecuentemente para el mantenimiento, que incluye descripción, cantidad necesaria, lugar de utilización y número de página. Esta información está organizada alfabéticamente, por descripción de la pieza.

6. ÍNDICE

El Índice, ubicado cerca del principio del manual, es una lista en orden alfabético de todos los elementos de información incluídos en el manual. Los números de página proporcionan una referencia rápida a las ilustraciones detalladas de identificación de piezas y a las listas de componentes de repuesto de dichas piezas.

7. INDICE NUMÉRICO DE PIEZAS

Un índice numérico de piezas con el correspondiente número de página aparece al final de este catálogo.

8. TÍTULOS

Los títulos ubicados al principio de cada elemento de información identifican el número y el nombre de la pieza junto con información descriptiva. Se debe usar información sobre los Números de Identificación de Pieza (PIN) y los números de serie (S/N) para seleccionar la información que corresponda a una máquina en particular. También se suministra información sobre las opciones de reparación en el campo, la identificación de componentes de accesorios optativos y el lugar de ubicación de la pieza ("es parte de").

La primera línea del título se muestra con un tipo de letra más grande para indicar el comienzo de un elemento de información. Si se requieren páginas adicionales para ilustrar un elemento de información, los títulos se muestran con un tipo de letra normal y la continuación se indica entre paréntesis.

9. PIEZAS QUE NO SE SUMINISTRAN COMO REPUESTO

En algunos casos es necesario indicar piezas que no se suministran como repuesto pero que pueden estar conectadas a listas de componentes de otras piezas de repuesto. En tal caso, dichas piezas se muestran en cursiva para indicar que no son piezas disponibles.

10. NÚMEROS DE REFERENCIA

Los números en la columna de No. de Referencia corresponden a los números indicados en la ilustración que pertenece a ese número de pieza. Los números que tienen un sufijo alfabético identifican artículos de las listas de componentes de piezas. Los números en la columna de Referencia de la ilustración se identifican en la esquina inferior izquierda de cada ilustración. Para determinar el número de pieza correcto se puede utilizar tanto el No. de Referencia de la ilustración como el No. de Referencia del artículo. A medida que se actualiza la información para indicar los más recientes números de piezas de repuesto, puede omitirse intencionalmente un No. de Referencia en una lista de componentes de piezas.

11. NOMBRES DE PIEZA SANGRADOS

Cuando el nombre de una pieza está sangrado en una lista, significa que esta pieza forma parte del grupo o conjunto del renglón inmediatamente superior.

12. LETRAS DE REFERENCIA DE ILUSTRACIONES

Las ilustraciones contienen algunas veces letras de referencia (A, B, C etc.) cuyo propósito es seguir el trayecto de líneas y mazos de cables de un punto a otro. También se utilizan para mostrar dónde volver a unir ilustraciones que se habían separado.

13. ABREVIATURAS Y SIMBOLOS

O.D. – Diámetro exterior
I.D. – Diámetro interior
A – No es pieza de este grupo
B – Utilizado según la demanda
C – Indica cambio
D – Se pide por metro
E – Se pide por centímetro
F – No se muestra
G – Se pide por pulgada
I – Consulte el sistema de información hidráulica
M – Pieza métrica
R – Puede estar disponible como pieza remanufacturada
Y – Ilustración separada
Z – No se suministra por separado

SIS *Nueva Característica*

14. DESCRIPCIÓN DE LOS CAMBIOS DE TIPO

Tipo – Un tipo se define como cualquier cambio de configuración que requiere un Elemento de información adicional de una Configuración, Grupo o Conjunto. Si el número de serie se clasifica por tipos que no están disponibles, se mostrará un número de tipo (Tipo 1,Tipo 2,etc.) en el comentario de la fotografía. Estos cambios de "tipo" se identifican con una nota "C" (cambio con respecto al tipo anterior) en la Lista de Piezas. Se incluirían sólo los "tipos" que aplican a este Manual de Piezas. Es posible que haya tipos adicionales que causen la aparición de notas "C" en el Elemento de Información cuando no se muestran otros tipos."

15.<END>

Este símbolo indica el final de un elemento de información.

NOTA:

Las contínuas mejoras y adelantos en diseño podrían originar cambios a su máquina que no se incluyen en esta publicación. Cuando tenga alguna pregunta acerca de su producto Caterpillar o de esta publicación, consulte al distribuidor Caterpillar para obtener la información más reciente.

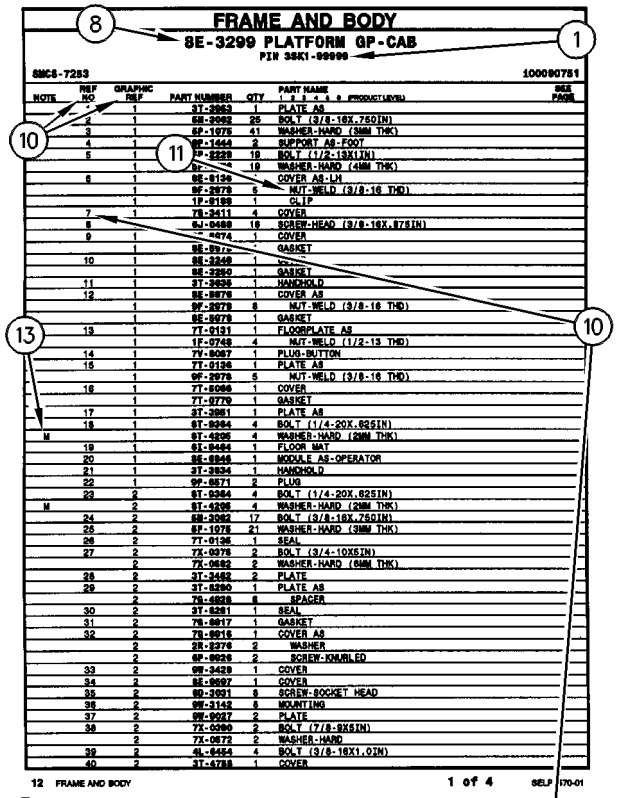
FRAME AND BODY
8E-3299 PLATFORM GP-CAB
PIN 3SK1-99999
SMCS-7283
100090751
NOTE | REF NO | GRAPHIC REF | PART NUMBER | QTY | PART NAME (1 2 3 4 5 6 PRODUCT LEVEL) | SEE PAGE
1 | 1 | 3T-3963 | 1 | PLATE AS
2 | 1 | 5H-3062 | 25 | BOLT (3/8-16X.750IN)
3 | 1 | 6P-1075 | 41 | WASHER-HARD (3MM THK)
4 | 1 | 9E-1444 | 2 | SUPPORT AS-FOOT
5 | 1 | 9P-2229 | 19 | BOLT (1/2-13X1IN)
1 | 9P-[illegible] | 19 | WASHER-HARD (4MM THK)
6 | 1 | 8E-8136 | 1 | COVER AS-LH
1 | 9F-2978 | 6 | NUT-WELD (3/8-16 THD)
1 | 1P-8189 | 1 | CLIP
7 | 1 | 7S-3411 | 4 | COVER
6J-0468 | 18 | SCREW-HEAD (3/8-16X.875IN)
9 | 1 | [illegible]074 | 1 | COVER
1 | 8E-897[illegible] | 1 | GASKET
10 | 1 | 8E-3248 | 1 | [illegible]
1 | 8E-2260 | 1 | GASKET
11 | 1 | 3T-3636 | 1 | HANDHOLD
12 | 1 | 8E-8076 | 1 | COVER AS
1 | 9F-2979 | 8 | NUT-WELD (3/8-16 THD)
1 | 8E-8078 | 1 | GASKET
13 | 1 | 7T-9131 | 1 | FLOORPLATE AS
1 | 1F-0748 | 4 | NUT-WELD (1/2-13 THD)
14 | 1 | 7V-8067 | 1 | PLUG-BUTTON
15 | 1 | 7T-0136 | 1 | PLATE AS
1 | 9F-2978 | 5 | NUT-WELD (3/8-16 THD)
16 | 1 | 7T-8066 | 1 | COVER
1 | 7T-9779 | 1 | GASKET
17 | 1 | 3T-3961 | 1 | PLATE AS
18 | 1 | 9T-0264 | 4 | BOLT (1/4-20X.625IN)
M | 1 | 9T-4295 | 4 | WASHER-HARD (2MM THK)
19 | 1 | 9X-8464 | 1 | FLOOR MAT
20 | 1 | 8E-8848 | 1 | MODULE AS-OPERATOR
21 | 1 | 3T-3934 | 1 | HANDHOLD
22 | 1 | 9P-8871 | 2 | PLUG
23 | 2 | 9T-0264 | 4 | BOLT (1/4-20X.625IN)
M | 2 | 9T-4295 | 4 | WASHER-HARD (2MM THK)
24 | 2 | 5H-3062 | 17 | BOLT (3/8-16X.750IN)
25 | 2 | 6P-1075 | 21 | WASHER-HARD (3MM THK)
26 | 2 | 7T-0136 | 1 | SEAL
27 | 2 | 7X-0078 | 2 | BOLT (3/4-10X5IN)
2 | 7X-0882 | 2 | WASHER-HARD (6MM THK)
28 | 2 | 3T-3482 | 2 | PLATE
29 | 2 | 3T-8290 | 1 | PLATE AS
2 | 7S-4828 | 6 | SPACER
30 | 2 | 3T-8281 | 1 | SEAL
31 | 2 | 7S-8017 | 1 | GASKET
32 | 2 | 7S-8016 | 1 | COVER AS
2 | 2R-2276 | 2 | WASHER
2 | 9F-8026 | 2 | SCREW-KNURLED
33 | 2 | 9M-3429 | 1 | COVER
34 | 2 | 8E-8697 | 1 | COVER
35 | 2 | 9D-3091 | 8 | SCREW-SOCKET HEAD
36 | 2 | 9M-3142 | 8 | MOUNTING
37 | 2 | 9M-9017 | 2 | PLATE
38 | 2 | 7X-0360 | 2 | BOLT (7/8-9X5IN)
2 | 7X-0872 | 2 | WASHER-HARD
39 | 2 | 4L-8454 | 4 | BOLT (3/8-16X1.0IN)
40 | 2 | 3T-4788 | 1 | COVER
12 FRAME AND BODY
1 of 4
SELP4570-01

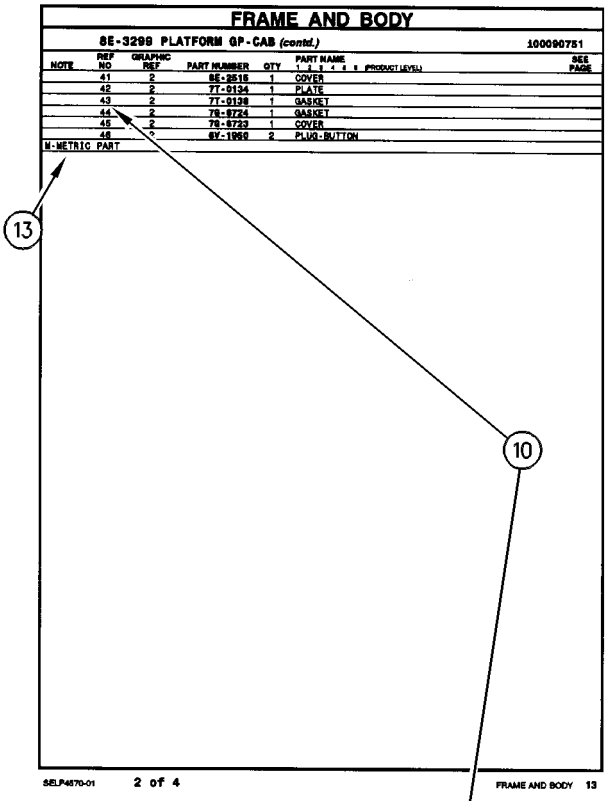
FRAME AND BODY
8E-3299 PLATFORM GP-CAB (contd.)
100090751
NOTE | REF NO | GRAPHIC REF | PART NUMBER | QTY | PART NAME (1 2 3 4 5 6 PRODUCT LEVEL) | SEE PAGE
41 | 2 | 8E-2515 | 1 | COVER
42 | 2 | 7T-0134 | 1 | PLATE
43 | 2 | 7T-0138 | 1 | GASKET
44 | 2 | 7S-8724 | 1 | GASKET
45 | 2 | 7S-8723 | 1 | COVER
46 | 8Y-1952 | 2 | PLUG-BUTTON
M-METRIC PART
SELP4570-01
2 of 4
FRAME AND BODY 13

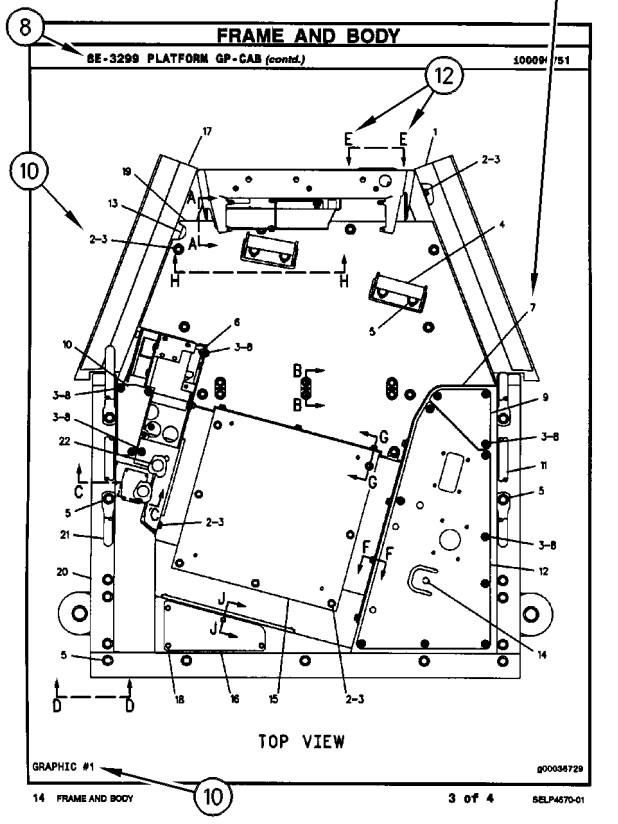
FRAME AND BODY
8E-3299 PLATFORM GP-CAB (contd.)
100090751
TOP VIEW
GRAPHIC #1
g00036729
14 FRAME AND BODY
3 of 4
SELP4570-01

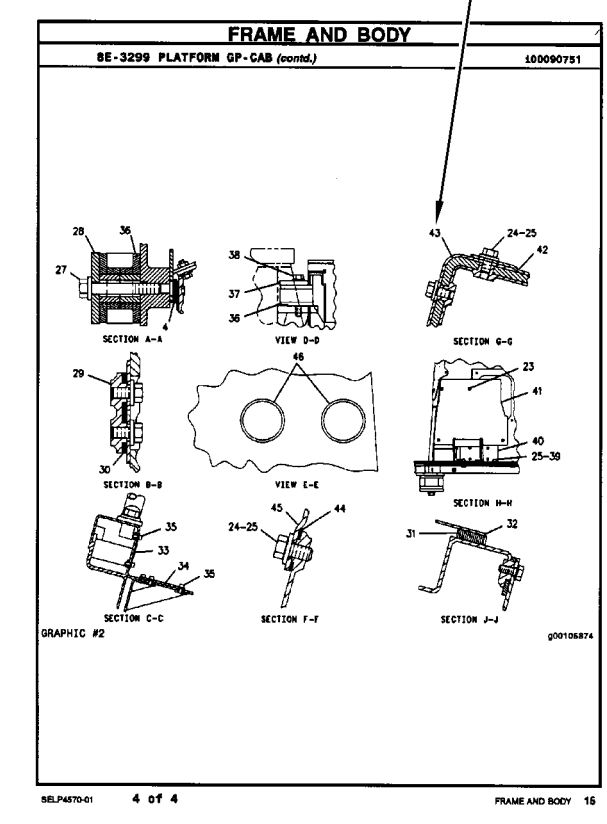
FRAME AND BODY
8E-3299 PLATFORM GP-CAB (contd.)
100090751
SECTION A-A
VIEW D-D
SECTION G-G
SECTION B-B
VIEW E-E
SECTION H-H
SECTION C-C
SECTION F-F
SECTION J-J
GRAPHIC #2
g00105874
SELP4570-01
4 of 4
FRAME AND BODY 15

INFORMAÇÃO GERAL

1. IDENTIFICAÇÃO DA MÁQUINA

As máquinas Caterpillar são identificadas pelos Números de Informação do Produto (PIN). Alguns componentes incluídos numa máquina podem ser identificados por Números de Série (S/N). Componentes típicos que serão enumerados com números de série incluem motores, transmissões, lâminas e ríperes. Além do número de série, a máquina e o motor são ainda identificados por números de arranjo e, em alguns casos, números de modificações. Tais números encontram-se na(s) placa(s) de identificação do produto e na placa mestre no compartimento do operador.

SIS *Novidades*

A partir do primeiro trimestre de 2001 o Número de Identificação de Produto da Caterpillar (PIN) precisa ser mudado de 8 para 17 caracteres. Esforçando-se para fornecer uma identificação uniforme de equipamentos, a Caterpillar e outros fabricantes de equipamento de construção estão mudando para atender a versão mais atualizada do padrão de identificação de produtos. Os números de PIN para produtos de aplicações não rodoviárias são definidos pela ISO 10261. O novo formato de número PIN será adotado em todas as máquinas e grupos geradores Caterpillar. As placas e as marcações do chassi mostrarão os 17 dígitos de PIN. O novo formato terá a seguinte disposição:

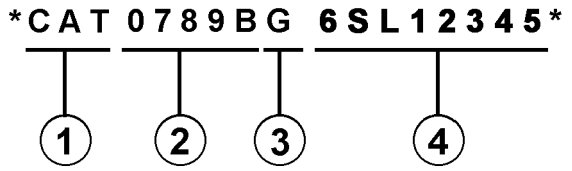

Onde:

1. Código de Fabricação Mundial da Caterpillar (dígitos 1-3)

2. Descrição da Máquina (dígitos 4-8)

3. Dígito de Verificação (dígito 9)

4. Seção de Indicador da Máquina (MIS) ou Número de Seqüência de Produto (dígitos 10-17). Estes eram anteriormente chamados de Número de Série.

Máquinas e grupos geradores produzidos antes do primeiro trimestre de 2001 manterão o formato de 8 caracteres de PIN.

Componentes como motores, transmissões, eixos, ferramentas de trabalho, etc. continuarão a usar Número de Série (S/N) com oito caracteres.

2. COMO OBTER PEÇAS

⚠ CUIDADO

Quando peças de substituição são exigidas para este produto, a Caterpillar recomenda a utilização de peças de substituição Caterpillar ou peças com as especificações equivalentes incluindo, mas não limitadas, à dimensões físicas, tipos, resistência e materiais.

A inobservância desta advertência poderá resultar em falhas prematuras, danos ao produto, ferimentos ou morte.

As Peças de Reposição de Qualidade Caterpillar encontram-se disponíveis nos revendedores Caterpillar no mundo inteiro. Seus estoques de peças são atualizados e incluem todas as peças normalmente necessárias para proteger seu investimento em máquinas Caterpillar. Alguns revendedores podem oferecer jogos de reparo ou peças de troca/remanufaturadas disponíveis como uma opção da alternativa de reparo mais eficaz para uma situação específica. Ao encomendar peças, seu pedido deve especificar a quantidade, o número e o nome da peça e o número de série/número de identificação do produto referentes à máquina para a qual as peças se destinam.

3. ORGANIZAÇÃO DO MANUAL DE PEÇAS

A informação do produto neste manual é apresentada em forma de "elementos de informação" que representam todos os componentes para o modelo específico. Arranjo de Motor e Grupo de Assento são exemplos de elementos de informação. Os elementos de informação são organizados em ordem alfabética por nome de peça ou secundariamente, por número de peça incluído em cada seção principal do manual.

4. LISTA DE CONTEÚDOS

A Lista de Conteúdos (TOC) se encontra no princípio do manual. A Lista de Conteúdos (TOC) relaciona em cada seção do manual uma lista completa com todos os elementos de informação organizados conforme aparecem no manual. Números de página são fornecidos para que se tenha referência rápida de ilustrações de peças detalhadas e listas de conteúdos que podem receber serviço de manutenção.

5. ÍNDICE DE PEÇAS DE MANUTENÇÃO

O Índice de Peças de Manutenção, localizado perto do princípio do manual, faz referência aos números de peça de manutenção usados com maior frequência, fornecendo uma descrição, a quantidade, o uso e o número de página. Esta informação é organizada com a descrição da peça em ordem alfabética.

6. ÍNDICE

O Índice localizado perto do princípio do manual, consiste de uma lista em ordem alfabética de todos os elementos de informação incluídos no manual. Números de página são fornecidos para que se tenha referência rápida de ilustrações de peças detalhadas e listas de conteúdos que podem receber serviço de manutenção.

7. ÍNDICE DE NÚMERO DE PEÇA

Um índice numérico relacionando todos os números de peça e a(s) página(s) correspondentes, aparece no final do manual.

8. LEGENDAS

As legendas localizadas no início de cada elemento de informação identificam o número e o nome de peça, juntamente com informação descritiva adicional. Informações sobre o Número de Informação do Produto (PIN) e o Número de Série (S/N) encontradas em cada legenda devem ser usadas para selecionar a informação correta sobre uma máquina específica. Opções de substituição no campo, identificação de componentes de acessórios opcionais e informações sobre onde são utilizados ("parte de") são também fornecidas.

A primeira linha de uma legenda é indicada em tipo maior para indicar o princípio de um elemento de informação. Legendas para páginas adicionais que podem ser necessárias para ilustrar um elemento de informação serão apresentadas em tipo padrão e incluirão o termo *(continua)* .

9. NÃO DISPONÍVEL SEPARADAMENTE

Em alguns casos, é necessário mostrar peças não disponíveis separadamente que têm uma ligação com listas de conteúdos de nível inferior que podem receber serviço de manutenção. Os números de peça destes componentes não disponíveis aparecerão em *itálico* , a fim de indicar que não estão disponíveis.

10. NÙMEROS DE REFERÊNCIA À LISTA DE PEÇAS

Os números indicados na coluna Ref No (No. de Referência) correspondem-se aos números usados no(s) gráfico(s) correspondente(s). Um sufixo com letras pode ser acrescentado a um número de referência para identificar itens de conteúdo de nível inferior. Os números indicados na coluna Graphic Ref (Referência de Gráfico) referem-se ao identificador de número de gráfico presente no canto esquerdo inferior de cada ilustração. O número de Referência de Gráfico pode ser usado em combinação com o item Ref No para determinar-se o número de peça correto. Poderá haver omissão intencional de um número de referência (Ref No) de uma lista de conteúdos uma vez que as informações são atualizadas para refletir os números de peça mais recentes que podem receber serviço de manutenção.

11. NOMES DE PEÇAS DESALINHADOS

Quando um nome de peça encontra-se desalinhado numa lista de peças, significa que tal item faz parte do (está incluído no) grupo ou conjunto sob o qual está relacionado.

12. LETRAS DE REFERÊNCIA NAS ILUSTRAÇÕES

Quando necessário, as ilustrações contêm letras de referência (A, B, C, etc.) que são utilizadas para seguir tubulações e cabos elétricos de um ponto a outro. Também foram utilizadas para indicar onde se pode reconectar as ilustrações que foram separadas.

13. ABREVIAÇÕES E SÍMBOLOS

O.D. – "Outside Diameter" (Diâmetro Externo)
I.D. – "Inside Diameter" (Diâmetro Interno)
A – Não faz parte deste grupo
B – Use conforme necessário
C – Indica modificação
D – Vendido por metro
E – Vendido por centímetro
F – Não ilustrado
G – Vendido por polegada
I – Consultar o Sistema de Informações Hidráulicas
M – Peça métrica
R – Peça remanufaturada pode estar disponível; consulte o seu revendedor Cat
Y – Ilustração separada
Z – Não disponível separadamente

SIS *Novidades*

14. <END>

Este símbolo indica o final de um elemento de informação.

NOTA:

Os contínuos aperfeiçoamentos e avanços no projeto do produto podem ocasionar modificações em sua máquina que talvez ainda não estejam incluídas nesta publicação. Sempre que surgirem dúvidas quanto a um produto Caterpillar ou quanto à presente publicação, consulte o seu revendedor Caterpillar para obter as informações mais recentes disponíveis.

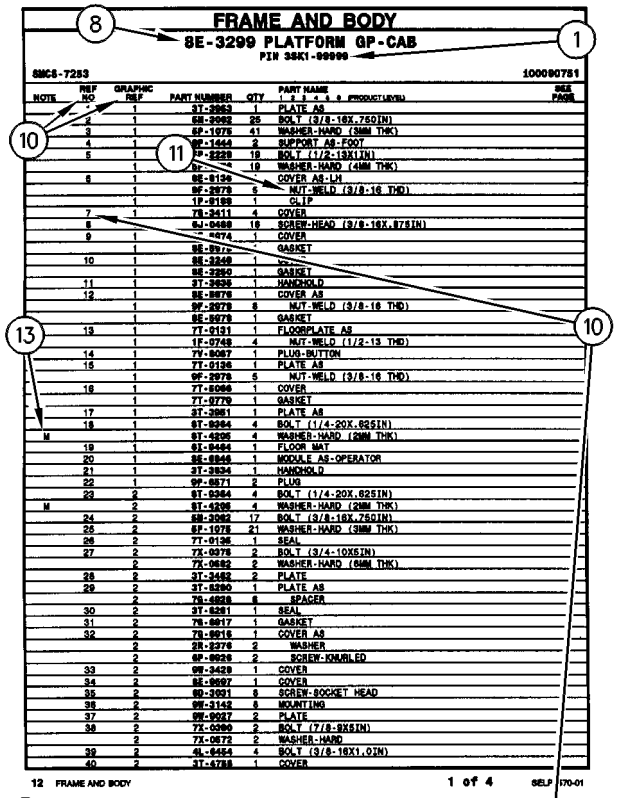

FRAME AND BODY

8E-3299 PLATFORM GP-CAB

PIN 3SK1-99999

SMCS-7283 100090751

NOTE	REF NO	GRAPHIC REF	PART NUMBER	QTY	PART NAME 1 2 3 4 5 6 (PRODUCT LEVEL)	SEE PAGE
	*	1	3T-3963	1	PLATE AS	
	2	1	6M-2062	25	BOLT (3/8-16X.750IN)	
	3	1	6P-1075	41	WASHER-HARD (3MM THK)	
	4	1	9F-1443	2	SUPPORT AS-FOOT	
	5	1	9P-2229	19	BOLT (1/2-13X1IN)	
		1	6P-[illegible]	19	WASHER-HARD (4MM THK)	
	6	1	9E-9139	*	COVER AS-LH	
		1	9F-2979	6	NUT-WELD (3/8-16 THD)	
		1	1P-0189	1	CLIP	
	7	1	7X-3411	4	COVER	
	8	1	6J-0468	18	SCREW-HEAD (3/8-16X.875IN)	
	9	1	[illegible]-9974	1	COVER	
		1	9E-99[illegible]	*	GASKET	
	10	1	9E-3249	1	[illegible]	
		1	9E-2250	1	GASKET	
	11	1	3T-3936	1	HANDHOLD	
	12	1	9E-9976	1	COVER AS	
		1	9F-2979	8	NUT-WELD (3/8-16 THD)	
		1	9E-9978	1	GASKET	
	13	1	7T-9131	1	FLOORPLATE AS	
		1	1F-0748	4	NUT-WELD (1/2-13 THD)	
	14	1	7Y-8067	1	PLUG-BUTTON	
	15	1	7T-0126	1	PLATE AS	
		1	9F-2978	5	NUT-WELD (3/8-16 THD)	
	16	1	7T-5066	1	COVER	
		1	7T-9779	1	GASKET	
	17	1	3T-3961	1	PLATE AS	
	18	1	9T-0264	4	BOLT (1/4-20X.625IN)	
M		1	9T-4295	4	WASHER-HARD (2MM THK)	
	19	1	9X-8464	1	FLOOR MAT	
	20	1	9E-6946	1	MODULE AS-OPERATOR	
	21	1	3T-3934	1	HANDHOLD	
	22	1	9F-8671	2	PLUG	
	23	2	9T-0264	4	BOLT (1/4-20X.625IN)	
M		2	9T-4295	4	WASHER-HARD (2MM THK)	
	24	2	6M-2062	17	BOLT (3/8-16X.750IN)	
	25	2	6P-1075	21	WASHER-HARD (3MM THK)	
	26	2	7T-0136	1	SEAL	
	27	2	7X-0078	2	BOLT (3/4-10X5IN)	
		2	7X-0682	2	WASHER-HARD (6MM THK)	
	28	2	3T-3482	2	PLATE	
	29	2	3T-8290	1	PLATE AS	
		2	7G-4828	8	SPACER	
	30	2	3T-8281	1	SEAL	
	31	2	7G-8017	1	GASKET	
	32	2	7G-8016	1	COVER AS	
		2	2R-2276	2	WASHER	
		2	9F-9026	2	SCREW-KNURLED	
	33	2	9M-3429	1	COVER	
	34	2	8E-9697	1	COVER	
	35	2	9D-3091	8	SCREW-SOCKET HEAD	
	36	2	9M-3142	8	MOUNTING	
	37	2	9M-9017	2	PLATE	
	38	2	7X-0360	2	BOLT (7/8-9X5IN)	
		2	7X-0672	2	WASHER-HARD	
	39	2	4L-6454	4	BOLT (3/8-16X1.0IN)	
	40	2	3T-4788	1	COVER	

12 FRAME AND BODY 1 of 4 SELP4570-01

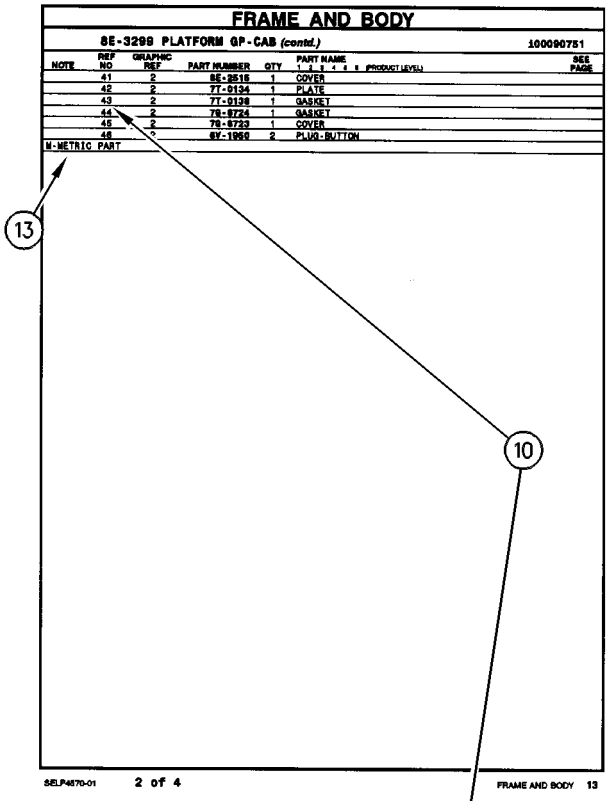

FRAME AND BODY

8E-3299 PLATFORM GP-CAB (contd.) 100090751

NOTE	REF NO	GRAPHIC REF	PART NUMBER	QTY	PART NAME 1 2 3 4 5 6 (PRODUCT LEVEL)	SEE PAGE
	41	2	6E-2515	1	COVER	
	42	2	7T-0134	1	PLATE	
	43	2	7T-0138	1	GASKET	
	44	2	7G-8724	1	GASKET	
	45	2	7G-8723	1	COVER	
	46	*	8Y-1950	2	PLUG-BUTTON	

M-METRIC PART

SELP4570-01 2 of 4 FRAME AND BODY 13

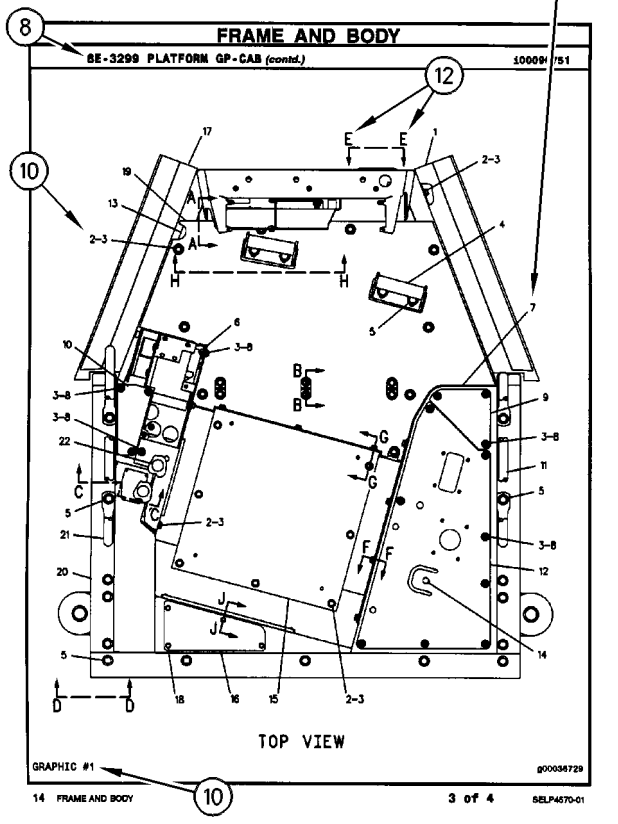

FRAME AND BODY

8E-3299 PLATFORM GP-CAB (contd.) 100090751

TOP VIEW

GRAPHIC #1 g00036729

14 FRAME AND BODY 3 of 4 SELP4570-01

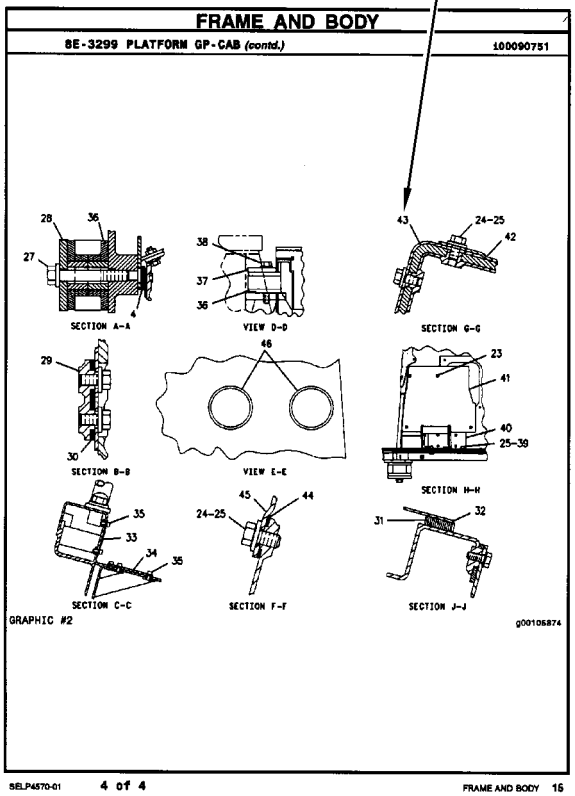

FRAME AND BODY

8E-3299 PLATFORM GP-CAB (contd.) 100090751

SECTION A-A

VIEW D-D

SECTION G-G

SECTION B-B

VIEW E-E

SECTION H-H

SECTION C-C

SECTION F-F

SECTION J-J

GRAPHIC #2 g00105874

SELP4570-01 4 of 4 FRAME AND BODY 15

ALLGEMEINE HINWEISE

1. MASCHINENKENNZEICHNUNG

Caterpillar-Maschinen sind mit PRODUCT IDENTIFICATION NUMBERS (PIN) (Produkt-Identnummern) gekennzeichnet. Einige Baugruppen, z.B. Motoren, Getriebe, Planierschilde und Aufreißer, sind mit SERIAL NUMBERS (S/N) (Seriennummern) gekennzeichnet. An der Maschine und am Motor befinden sich außerdem ARRANGEMENT NUMBERS (Ausrüstungsnummern) sowie in einigen Fällen MODIFICATION NUMBERS (Änderungsnummern). Sie befinden sich auf den PIN-Schildern und auf dem Typenschild im Fahrerhaus.

Bei Ersatzteilbestellungen müssen dem Händler alle diese Nummern zur Verfügung gestellt werden.

SIS *Neu im Parts Manual*

Vom ersten Quartal 2001 ab wurde die Caterpillar Produkt-Identnummer (PIN) von 8 auf 17 Zeichen geändert. Um zur Standardisierung der Produkt-Identnummer beizutragen, sind Caterpillar und andere Baumaschinenhersteller bestrebt, die aktuellste Norm zur Produkt-Identnummerierung einzuführen. Produkt-Identnummern für Baumaschinen sind durch ISO 10261 definiert. Das neue Format der Produkt-Identnummern gilt für alle Caterpillar-Maschinen und -Stromaggregate. Die Produkt-Identschilder und -Identrahmenmarkierung enthalten die aus 17 Zeichen bestehende Identnummer. Das neue Format hat folgende Abschnitte:

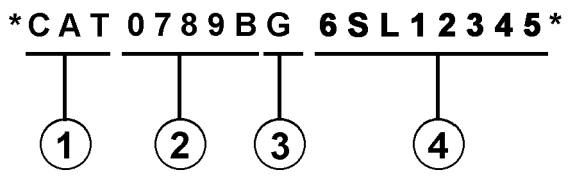

Abschnitte:

1. Caterpillars weltweiter Herstellungscode (Zeichen 1-3)

2. Modell (Zeichen 4-8)

3. Kontrollzeichen (Zeichen 9)

4. Maschinenspezifische Kennung (MIS) oder Produktsequenznummer (Zeichen 10-17). Diese wurde früher als Seriennummer bezeichnet.

Für vor dem ersten Quartal 2001 hergestellte Maschinen und Stromaggregate wird das aus 8 Zeichen bestehende PIN-Format beibehalten.

Bauteile wie z.B. Motoren, Getriebe, Achsen sowie Arbeitsgeräte werden weiterhin eine aus 8 Zeichen bestehende Seriennummer (S/N) aufweisen.

2. BESTELLEN VON ERSATZTEILEN

⚠ WARNUNG

Wenn für diese Maschine Ersatzteile benötigt werden, empfiehlt Caterpillar, ausschließlich Caterpillar-Ersatzteile oder solche zu verwenden, die die gleichen technischen Merkmale hinsichtlich Typ, Festigkeit, Werkzeugeigenschaften und die gleichen Maße aufweisen.

Bei Nichtbeachtung dieser Warnung besteht Verletzungs- oder sogar Lebensgefahr! Ferner kann Nichtbeachtung vorzeitige Ausfälle der Teile und Beschädigung der Maschine zur Folge haben.

Original Caterpillar-Ersatzteile können weltweit bei jedem Caterpillar-Händlern bestellt werden. Die umfangreichen Händlerlager enthalten normalerweise alle Teile, die Sie für Ihre Caterpillar-Maschine benötigen. Einige Händler bieten Reparatursätze, Austausch- oder werküberholte Teile an, so daß Sie eine Auswahl unter verschiedenen Reparaturmöglichkeiten treffen können. Ihre Bestellung muß folgende Angaben enthalten: Anzahl der benötigten Teile, Bestellnummer, Bezeichnung des Teils, Serien-Nr./Produkt-Ident-Nr., Ausrüstungs-Nr. und Änderungs-Nr. der Maschine, für die diese Teile benötigt werden.

3. AUFBAU DES PARTS MANUAL

Die Produktinformationen für alle Komponenten eines bestimmten Modells sind in INFORMATION ELEMENTS (Informationseinheiten) gegliedert. ENGINE ARRANGEMENT (Motorausführung) und SEAT GROUP (Fahrersitz) sind Beispiele für solche Informationseinheiten. Sie sind innerhalb jeder Gruppe alphabetisch, entsprechend der Ersatzteilbezeichnung, und zusätzlich numerisch, entsprechend der Ersatzteilnummer, geordnet.

4. INHALTSVERZEICHNIS

Das Inhaltsverzeichnis befindet sich am Anfang des Buches. Im Inhaltsverzeichnis werden die einzelnen Abschnitte des Buches aufgeführt. Die Abschnitte enthalten eine vollständige Aufstellung aller Informationseinheiten. Diese sind entsprechend ihrem Erscheinen im Buch geordnet. Das Inhaltsverzeichnis enthält Seitenangaben für Schnellverweise auf detaillierte Abbildungen und Teillisten.

ALLGEMEINE HINWEISE

5. INDEX FÜR WARTUNGSTEILE

Der Index für Wartungsteile vorn im Buch enthält die Bestellnummern, Seitenangaben, Mengenangaben und Informationen über den Einsatzbereich für die am häufigsten benötigten Ersatzteile. Die Angaben sind alphabetisch entsprechend der Teilebezeichnung geordnet.

6. INDEX

Der Index vorn im Buch enthält eine alphabetische Liste aller Informationseinheiten. Er enthält Seitenangaben für Schnellverweise auf detaillierte Abbildungen und Teillisten.

7. INDEX FÜR BESTELLNUMMERN

Hinten im Buch befindet sich ein numerischer Index, mit allen Bestellnummern und dem Hinweis auf die Seite, auf der sich die betreffende Abbildung befindet.

8. ÜBERSCHRIFTEN

Die Überschriften, die sich am Anfang jeder der Informationseinheiten befinden, enthalten Bestellnummern, Ersatzteilbezeichnungen und zusätzliche beschreibende Informationen. Produkt-Ident- und Seriennummern in den Überschriften sollten zur Auswahl der richtigen Informationen für die betreffende Maschine verwendet werden. Die Überschriften enthalten außerdem Informationen über möglichen Außendienstersatz, mögliche Baugerätekomponenten und die Baugruppe, zu der das Teil gehört.

Die erste Zeile einer Überschrift erscheint in einer größeren Schriftart, um den Anfang einer Informationseinheit zu kennzeichnen. Überschriften für zusätzliche Seiten, die zur Erläuterung einer Informationseinheit notwendig sind, erscheinen in normaler Schriftart und enthalten den Begriff "(contd.)".

9. NICHT EINZELN LIEFERBARE TEILE

In einigen Fällen ist es notwendig nicht lieferbare Teile, die selbst mit einer eigenen Teilliste im Buch vertreten sind, aufzuführen. Die Bestellnummern dieser nicht einzeln lieferbaren Teile erscheinen kursiv, wodurch angezeigt wird, daß sie nur in Verbindung mit anderen Teilen lieferbar sind.

10. REFERENZNUMMER FÜR ERSATZTEILE

Die Zahlen, die in der Spalte "Ref No" aufgeführt sind, stimmen mit den Zahlen in den beigefügten Abbildungen überein. Ein Buchstaben-Suffix kann zu einer Referenznummer hinzugefügt werden, um zu kennzeichnen, daß das Teil mit einer eigenen Teilliste im Buch aufgeführt ist. Die in der Spalte "Graphic Ref" angeführten Zahlen verweisen auf die Identifikationsnummer der Abbildung, die sich in der linken unteren Ecke der Abbildung befindet. Diese Nummer kann zusammen mit der Referenznummer des Teils angegeben werden, um die richtige Ersatzteilnummer zu ermitteln. Referenznummern können absichtlich weggelassen werden, da die Nummern der lieferbaren Ersatzteile ständig aktualisiert werden.

11. EINGERÜCKTE BEZEICHNUNGEN

Wenn eine Bezeichnung eingerückt ist, wird dadurch angezeigt, daß das Teil zu einer Baugruppe gehört, unter deren Bezeichnung es eingerückt ist.

12. REFERENZBUCHSTABEN

Falls erforderlich sind in den Abbildungen Referenzbuchstaben enthalten (z.B. A, B, C, usw.), die Leitungen und Kabelbäume von einem Punkt zum anderen verfolgen. Außerdem geben sie die Stelle an, an der getrennte Abbildungen fortgesetzt werden.

13. ABKÜRZUNGEN UND SYMBOLE

O.D. – Außendurchmesser
I.D. – Innendurchmesser
A – kein Teil dieser Gruppe
B – nach Bedarf verwenden
C – Hinweis auf eine Änderung
D – in Meter-Länge bestellen
E – in Zentimeter-Länge bestellen
F – nicht gezeigt
G – in Zoll-Länge bestellen
I – siehe Hydraulikinformationssystem
M – metrisches Teil
R – werküberholtes Teil unter Umständen lieferbar
Y – separate Abbildung
Z – nicht einzeln lieferbar

Neu im Parts Manual

14. BESCHREIBUNG DER TYPENÄNDERUNGEN

Typ-A bezieht sich auf alle Konfigurationsänderungen, die ein zusätzliches Informationselement für Ausführung, Gruppe oder Einheit benötigen. Wenn kein Seriennummernumbruch für Typen erhältlich ist, wird in der Überschrift eine Typennummer (Typ 1, Typ 2, etc.) angegeben. Diese "Typenänderungen" sind in der Teileliste mit der Anmerkung "C" (Änderung des vorherigen Typs) versehen. Es werden nur die für dieses Ersatzteilhandbuch relevanten "Typen" angegeben. Es können zusätzliche Typen vorhanden sein, was zu "C" Anmerkungen zu einem Informationselement führen kann, wenn keine anderen Typen angegeben werden.

15. <END>

Dieses Symbol zeigt das Ende eines Informationselements an.

ANMERKUNG:

Ständig vorgenommene Verbesserungen und Weiterentwicklungen an Ihrer Maschine können Änderungen verursachen, die in der vorliegenden Ausgabe noch nicht berücksichtigt sind. Fragen zu Ihrer Caterpillar-Maschine oder diesem Ersatzteilbuch beantwortet Ihr Caterpillar-Händler.

ALLGEMEINE HINWEISE

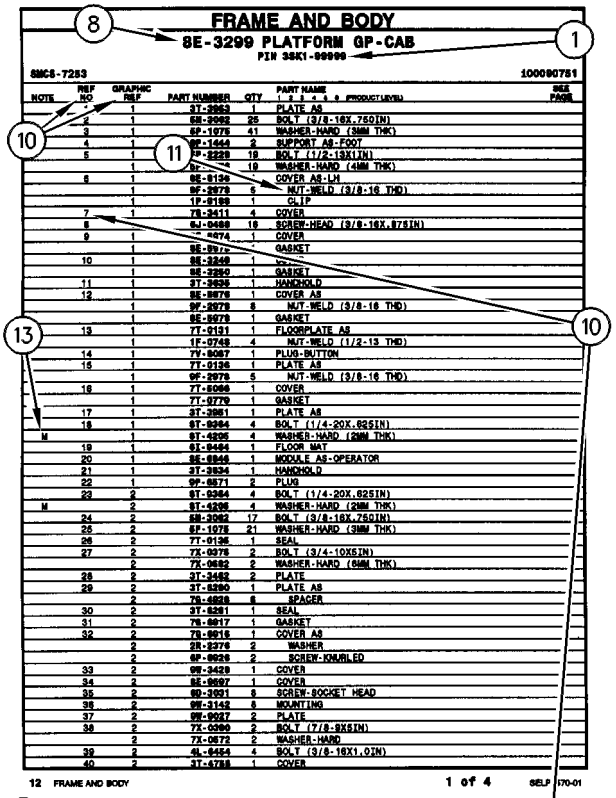

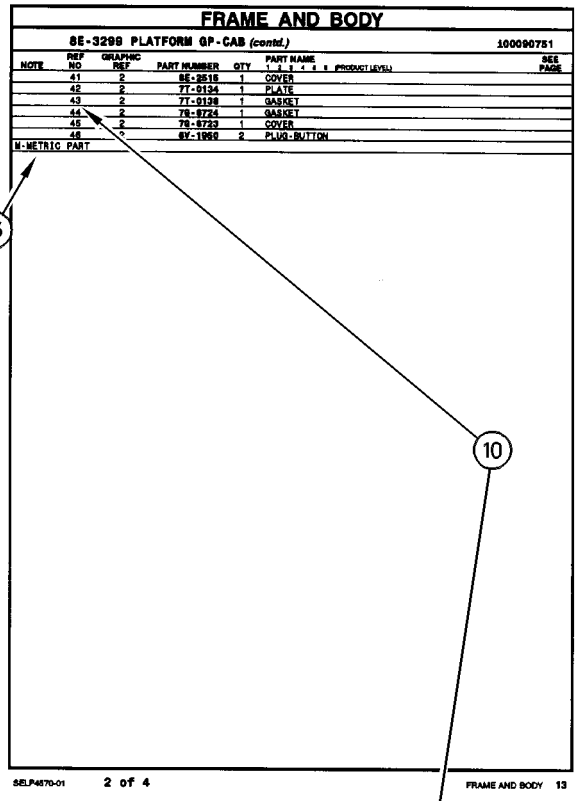

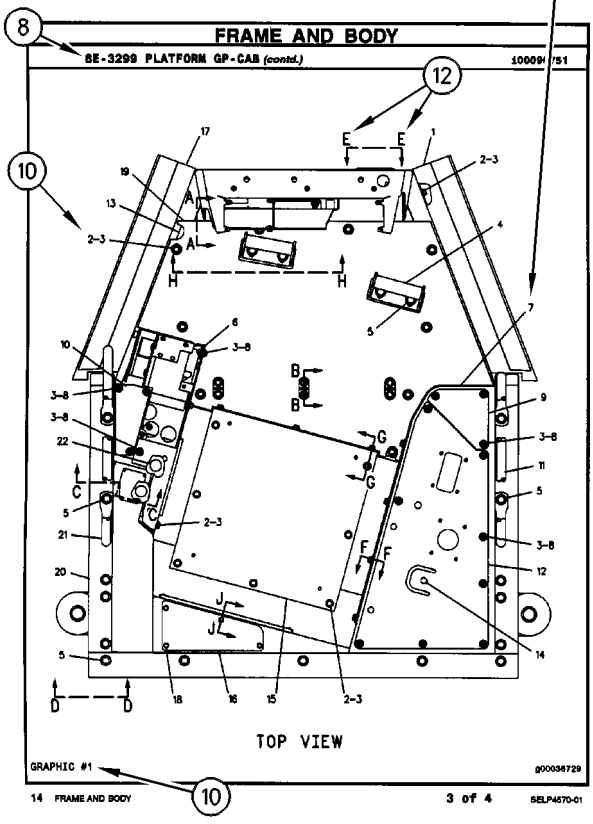

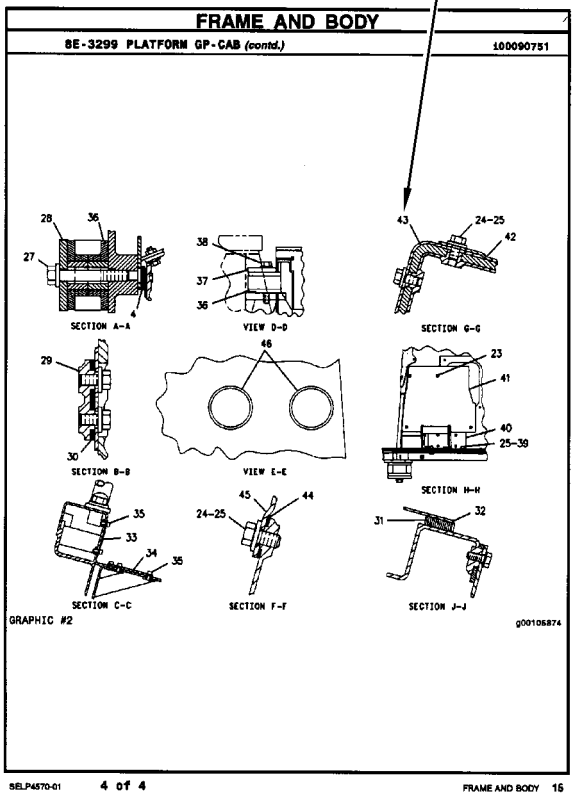

REMANUFACTURED COMPONENTS

As an option when making repairs consider Caterpillar Remanufactured Components. Components that are available through the Caterpillar Remanufactured Program are identified three ways in the parts book:

- with the letter R in the note field of the parts list
- with an R* at the beginning of the first line of the caption
- with an *R at the end of the first line of the caption

Typical components included in the Remanufacturing Program include:

ALTERNATORS
CONNECTING RODS
CRANKSHAFTS - UNDERSIZE
CRANKSHAFTS - UPGRADE TO NEW
CYLINDER HEADS
ELECTRONIC CONTROL MODULES (ECM)
ELECTRONIC SENSORS
FUEL INJECTORS
FUEL NOZZLES
FUEL PUMPS
GOVERNORS
OIL PUMPS
PISTONS
SHORT BLOCKS
STARTERS
TURBOCHARGERS - COMPLETE
TURBOCHARGER CARTRIDGES
WATER PUMPS

Caterpillar Remanufactured engines for many engine arrangements are also available.

OPTIONS DE RÉPARATION

COMPOSANTS RÉNOVÉS

Comme option de réparation, considérer les composants rénovés Caterpillar. Les composants disponibles dans le cadre du programme Caterpillar de composants rénovés sont identifiés de trois façons dans le catalogue de pièces:

- avec la lettre "R" dans l'espace note de la liste des pièces
- avec R* au début de la première ligne des légendes
- avec *R à la fin de la première ligne des légendes

Les composants suivants figurent parmi les composants typiques du programme de rénovation:

ALTERNATEURS
BIELLES
VILEBREQUINS - SOUS-DIMENSIONNÉS
VILEBREQUINS - REMIS À NEUF
CULASSES
MODULES DE COMMANDE ÉLECTRONIQUE (ECM)
CAPTEURS ÉLECTRONIQUES
INJECTEURS
TÊTES D'INJECTEURS
POMPES À CARBURANT
RÉGULATEURS
POMPES À HUILE
PISTONS
BLOCS EMBIELLÉS
DÉMARREURS
TURBOCOMPRESSEURS - COMPLETS
CARTOUCHES DE TURBOCOMPRESSEUR
POMPES À EAU

Des moteurs rénovés sont aussi disponibles pour plusieurs versions de moteur.

ALTERNATIVAS DE REPARACIÓN

COMPONENTES REMANUFACTURADOS

Al hacer reparaciones, tenga en cuenta la opción de Componentes Remanufacturados Caterpillar. Los componentes que están disponibles por medio del programa de Productos Remanufacturados Caterpillar se identifican de tres maneras en el manual de piezas:

- con la letra R en el espacio de Nota de la lista de piezas
- con una R* al comienzo de la primera línea de la leyenda
- con una *R al final de la primera línea de la leyenda

Los componentes que se incluyen típicamente en el Programa de Productos Remanufacturados son:

ALTERNADORES
BIELAS
CIGÜEÑALES - BAJOMEDIDA
CIGÜEÑALES - REMANUFACTURADOS A NUEVO
CULATAS
MÓDULOS DE CONTROL ELECTRÓNICO (ECM)
SENSORES ELECTRONICOS
INYECTORES
BOQUILLAS
BOMBAS DE COMBUSTIBLE
REGULADORES
BOMBAS DE ACEITE
PISTONES
MONOBLOQUES
MOTORES DE ARRANQUE
TURBOCOMPRESORES - COMPLETOS
NÚCLEOS DE TURBOCOMPRESOR
BOMBAS DE AGUA

También hay disponibles motores Remanufacturados Caterpillar para muchas de las configuraciones de motores.

ALTERNATIVAS DE REPARO

COMPONENTES REMANUFATURADOS

Considere o uso de Componentes Remanufaturados Caterpillar ao efetuar reparos. Os componentes disponíveis através do Programa de Remanufatura Caterpillar são identificados de três formas no manual de peças:

- com um R na área da nota da lista de peças
- com um R* no princípio da primeira linha da legenda
- com um *R no final da primeira linha da legenda

Os componentes típicos que constam no Programa de Remanufatura incluem:

ALTERNADORES
BIELAS
VIRABREQUINS - SUBMEDIDAS
VIRABREQUINS - ATUALIZAÇÃO
CABEÇOTES
MÓDULOS DE CONTROLE ELETRÔNICO (ECM)
SENSORES ELETRÔNICOS
INJETORES DE COMBUSTÍVEL
BICOS DE ABASTECIMENTO DE COMBUSTÍVEL
BOMBAS DE COMBUSTÍVEL
GOVERNADORES
BOMBAS DE ÓLEO
PISTÕES
BLOCOS BÁSICOS DO MOTOR
MOTORES DE PARTIDA
TURBOALIMENTADORES - COMPLETOS
CARTUCHOS DE TURBOALIMENTADORES
BOMBAS D'ÁGUA

Motores Remanufaturados Caterpillar também encontram-se disponíveis para diversos arranjos de motor.

WERKÜBERHOLTE AT-PRODUKTE

Bei Reparaturen sollten werküberholte AT-Produkte von Caterpillar in Betracht gezogen werden. Die durch das AT-Programm von Caterpillar erhältlichen Teile sind im Parts Book auf drei verschiedene Arten gekennzeichnet:

- mit dem Buchstaben R in der Spalte NOTE der Ersatzteilliste
- mit einem R* am Anfang der ersten Zeile der Überschrift
- mit einem *R am Ende der ersten Zeile der Überschrift

Das AT-Programm umfaßt u.a. folgende Produkte:

DREHSTROMGENERATOREN
PLEUELSTANGEN
KURBELWELLEN - MIT UNTERMASS
KURBELWELLEN - MIT ORIGINALMASS
ZYLINDERKÖPFE
ELEKTRONISCHE STEUEREINHEITEN (EMC)
ELEKTRONISCHE SENSOREN
PUMPENDÜSEN
EINSPRITZDÜSEN
KRAFTSTOFFPUMPEN
DREHZAHLREGLER
ÖLPUMPEN
KOLBEN
TEILMOTOREN
ANLASSER
TURBOLADER - KOMPLETT
TURBOLADERLAUFZEUGE
KÜHLWASSERPUMPEN

Viele Motoren können durch werküberholte AT-Motoren von Caterpillar ersetzt werden.

SUPPLEMENTAL COOLANT ADDITIVES

CUSTOMER BENEFITS:

Protects against cavitation, foam, erosion, corrosion, and scale buildup in cooling systems.

- Provides measured coolant conditioner.

DESCRIPTION:

Additives deplete from the coolant with normal operation. For this reason, Supplemental Coolant Additives (SCA) must be added to all heavy duty coolants at regular intervals. In addition, when not using a fully formulated, pre-charged antifreeze, like Caterpillar's DEAC, an initial charge of SCA must be added to the cooling system. The amount of SCA added to the system is dependent on the capacity of the system.

The SCA for initial fill is provided as a liquid. SCA's for maintenance intervals are available in liquid form and as a spin-on element. (No Spin-on available for 3600 Family of Engines)

NOTE:

The amount of SCA added at initial fill is not the same as the amount added at maintenance intervals.

The coolant additive elements can be used with any ethylene or propylene glycol type antifreeze which meets ASTM D4985 or ASTM D5345 Specifications.

NOTE:

For use with standard heavy duty coolant only, not for use with Extended Life Coolant.

PARTS NEEDED:

Cooling System Capacity		Liquid SCA at Initial Fill	Liquid SCA at Maintenance*	Spin-on SCA Maintenance Element*
Liters	Gallons			
22-30	(6-8)	3P-2044 (1)	6V-3542 (1)	111-2370 (1)
30-38	(8-10)	3P-2044 (1) 6V-3542 (1)	111-2372 (1)	111-2369 (1)
38-49	(10-13)	3P-2044 (1) 8T-1589 (1)	111-2372 (1)	111-2369 (1)
49-64	(13-17)	3P-2044 (2)	8T-1589 (1)	9N-3368 (1)
64-83	(17-22)	3P-2044 (2) 8T-1589 (1)	111-2372 (1) 6V-3542 (1)	111-2371 (1)
83-114	(22-30)	3P-2044 (3) 8T-1589 (1)	3P-2044 (1)	9N-3718 (1)
114-163	(30-43)	3P-2044 (5)	3P-2044 (1) 6V-3542 (1)	111-2371 (2)
163-242	(43-64)	3P-2044 (8)	3P-2044 (2)	9N-3718 (2)

** Normal maintenance period is 250 hrs. See your Operation and Maintenance Manual for complete coolant maintenance instructions.*

( ) Indicates quantity required.

ADDITIFS POUR LIQUIDE DE REFROIDISSEMENT

AVANTAGES POUR LE CLIENT

L'additif protège contre la cavitation, la mousse, l'érosion, la corrosion et l'accumulation de dépôts dans le circuit de refroidissement.

- L'additif complémentaire fournit une quantité mesurée d'additif.

DESCRIPTION:

Les additifs s'épuisent pendant l'utilisation du moteur. C'est pourquoi l'on doit ajouter de l'additif au liquide de refroidissement/antigel pour moteurs diesel à intervalles réguliers. En plus, si l'on n'utilise pas de l'antigel entièrement formulé et pré-chargé comme le liquide de refroidissement/antigel Caterpillar pour moteurs diesel, une quantité initiale d'additif doit être ajoutée au circuit de refroidissement. La quantité d'additif à ajouter au circuit dépend de la contenance du circuit.

L'additif pour le remplissage initial est fourni sous forme liquide. L'additif pour l'entretien ultérieur est disponible sous forme liquide et sous forme d'élément à visser. (Il n'y a pas d'élément à visser pour les moteurs de la famille 3600).

NOTA:

La quantité d'additif à ajouter au remplissage initial diffère de la quantité à ajouter aux intervalles d'entretien.

Les éléments d'additif peuvent être utilisés avec tout antigel de type éthylène ou propylène-glycol conforme à la norme ASTM D4985 ou ASTM D5345.

NOTA:

A utiliser uniquement avec du liquide de refroidissement pour moteurs diesel et non avec le liquide de refroidissement longue durée.

PIÈCES NÉCESSAIRES:

Contenance du circuit de refroidissement		Additif liquide au remplissage initial	Additif liquide aux intervalles d'entretien*	Elément d'additif à visser aux intervalles d'entretien*
Litres	Gallons U.S.			
22-30	(6-8)	3P-2044 (1)	6V-3542 (1)	111-2370 (1)
30-38	(8-10)	3P-2044 (1) 6V-3542 (1)	111-2372 (1)	111-2369 (1)
38-49	(10-13)	3P-2044 (1) 8T-1589 (1)	111-2372 (1)	111-2369 (1)
49-64	(13-17)	3P-2044 (2)	8T-1589 (1)	9N-3368 (1)
64-83	(17-22)	3P-2044 (2) 8T-1589 (1)	111-2372 (1) 6V-3542 (1)	111-2371 (1)
83-114	(22-30)	3P-2044 (3) 8T-1589 (1)	3P-2044 (1)	9N-3718 (1)
114-163	(30-43)	3P-2044 (5)	3P-2044 (1) 6V-3542 (1)	111-2371 (2)
163-242	(43-64)	3P-2044 (8)	3P-2044 (2)	9N-3718 (2)

** L'intervalle d'entretien normal est de 250 heures-service. Voir le Guide d'utilisation et d'entretien pour de plus amples renseignements concernant l'entretien du circuit de refroidissement.*

( ) Indique la quantité exigée.

ADITIVOS DE REFRIGERANTE SUPLEMENTARIOS

VENTAJAS PARA EL USUARIO:

Protegen contra la cavitación, la formación de espuma, la corrosión y la acumulación de escamas en los sistemas de enfriamiento.

- Suministra un acondicionador dosificado de refrigerante.

DESCRIPCIÓN:

Los aditivos en el refrigerante se agotan con la operación normal. Por esta razón, se debe agregar Aditivo de refrigerante suplementario (SCA) a todos los refrigerantes para servicio pesado, a intervalos regulares. Además, cuando no se usa un anticongelante de precarga completo, tal como el DEAC de Caterpillar, es necesario agregar una cantidad de aditivo de refrigerante suplementario inicial al sistema de enfriamiento. La cantidad de aditivo que se debe agregar depende de la capacidad del sistema.

El SCA de llenado inicial es líquido. El que se usa para el mantenimiento está disponible tanto en líquido como en un elemento enroscable. (No hay elemento enroscable disponible para la Familia de Motores 3600).

NOTA:

La cantidad de aditivo de llenado inicial no es la misma que se agrega en los intervalos de mantenimiento.

Los elementos de aditivo de refrigerante se pueden usar con cualquier anticongelante de tipo glicol etilénico o propílico que esté de acuerdo con las especificaciones de las normas ASTM D4985 o ASTM D5345.

NOTA:

Se debe utilizar únicamente con refrigerante estándar para servicio pesado; no se debe usar con Refrigerante de Larga Duración.

PIEZAS NECESARIAS:

Capacidad del Sistema de Enfriamiento		SCA líquido de llenado inicial	SCA líquido de mantenimiento*	Elemento de mantenimiento enroscable*
litros	gal EE.UU.			
22-30	6-8	3P-2044 (1)	6V-3542 (1)	111-2370 (1)
30-38	8-10	3P-2044 (1) 6V-3542 (1)	111-2372 (1)	111-2369 (1)
38-49	10-13	3P-2044 (1) 8T-1589 (1)	111-2372 (1)	111-2369 (1)
49-64	13-17	3P-2044 (2)	8T-1589 (1)	9N-3368 (1)
64-83	17-22	3P-2044 (2) 8T-1589 (1)	111-2372 (1) 6V-3542 (1)	111-2371 (1)
83-114	22-30	3P-2044 (3) 8T-1589 (1)	3P-2044 (1)	9N-3718 (1)
114-163	30-43	3P-2044 (5)	3P-2044 (1) 6V-3542 (1)	111-2371 (2)
163-242	43-64	3P-2044 (8)	3P-2044 (2)	9N-3718 (2)

** El período normal de mantenimiento es de 250 horas. Para ver las instrucciones completas sobre el mantenimiento del refrigerante, consulte el Manual de Operación y Mantenimiento.*

( ) Indica la cantidad necesaria.

ADITIVOS SUPLEMENTARES DO LÍQUIDO ARREFECEDOR

BENEFÍCIOS PARA O CLIENTE:

Protege contra cavitação, espuma, erosão, corrosão e acúmulo de crostas nos sistemas de arrefecimento.

- Fornece uma quantidade pré-determinada de condicionador de arrefecimento.

DESCRIÇÃO:

Com a operação normal, os aditivos se esgotam do líquido arrefecedor. Por isso, Aditivos Suplementares do Líquido Arrefecedor (SCA) devem ser acrescentados a todos os líquidos arrefecedores para serviço pesado em intervalos regulares. Além disso, quando um anticongelante pré-carregado, totalmente formulado não for usado, como o DEAC Caterpillar, uma carga inicial de SCA deve ser acrescentada ao sistema de arrefecimento. A quantidade de SCA acrescentada ao sistema depende da capacidade do sistema.

O SCA para abastecimento inicial é fornecido em forma de líquido. Os aditivos suplementares (SCA) para intervalos de manutenção estão à disposição em forma líquida e como um elemento com roscas. (Exceto os Motores da Família 3600)

NOTA:

A quantidade de SCA adicionada no abastecimento inicial não é a mesma que a acrescentada nos intervalos de manutenção.

Os elementos do aditivo do líquido arrefecedor podem ser usados com qualquer tipo de anticongelante etileno ou propileno que satisfaz as Especificações ASTM D4985 ou ASTM D5345.

NOTA:

Para uso apenas com líquido arrefecedor para serviço pesado padrão, não deve ser usado com Líquido Arrefecedor de Vida Longa.

PEÇAS NECESSÁRIAS:

Capacidade do Sistema de Arrefecimento		Líquido SCA Durante Abastecimento Inicial	Líquido SCA Durante Manutenção*	Elemento de Manutenção de SCA com Roscas*
Litros	Galões			
22-30	6-8	3P-2044 (1)	6V-3542 (1)	111-2370 (1)
30-38	8-10	3P-2044 (1) 6V-3542 (1)	111-2372 (1)	111-2369 (1)
38-49	10-13	3P-2044 (1) 8T-1589 (1)	111-2372 (1)	111-2369 (1)
49-64	13-17	3P-2044 (2)	8T-1589 (1)	9N-3368 (1)
64-83	17-22	3P-2044 (2) 8T-1589 (1)	111-2372 (1) 6V-3542 (1)	111-2371 (1)
83-114	22-30	3P-2044 (3) 8T-1589 (1)	3P-2044 (1)	9N-3718 (1)
114-163	30-43	3P-2044 (5)	3P-2044 (1) 6V-3542 (1)	111-2371 (2)
163-242	43-64	3P-2044 (8)	3P-2044 (2)	9N-3718 (2)

** O período normal de manutenção é de 250 horas. Consulte o Manual de Operação e Manutenção para obter instruções completas quanto à manutenção do líquido arrefecedor.*

( ) Indica a quantidade exigida.

KÜHLMITTELZUSATZ

VORTEILE FÜR DEN KUNDEN:

Schutz gegen Kavitation, Schaumbildung, Erosion, Korrosion und Kesselsteinbildung in Kühlsystemen.

- Richtig dosierter Kühlmittelzusatz

BESCHREIBUNG:

Additive erschöpfen sich während des Motorbetriebs. Deshalb muß allen HD-Kühlmitteln regelmäßig Kühlmittelzusatz beigefügt werden. Wenn bei Erstfüllung kein vollwertiges Fertigkühlmittel, wie das Frostschutz- und Kühlmittel für Dieselmotoren von Caterpiller (DEAC), verwendet wird, muß bei Erstfüllung Kühlmittelzusatz beigefügt werden. Wieviel Kühlmittelzusatz beigefügt werden muß, hängt vom Inhalt des Kühlsystems ab.

Für Erstfüllung ist Kühlmittelzusatz nur in flüssiger Form erhältlich. Für Wartungsintervalle ist Kühlmittelzusatz in flüssiger Form und als Zusatzelement erhältlich. (Für die Motorbaureihe 3600 sind keine Zusatzelemente erhältlich.)

ANMERKUNG:

Die Kühlmittelmenge bei Erstfüllung ist nicht die gleiche Menge, die bei Wartungsintervallen beigefügt werden muß.

Die Kühlmittelzusatzelemente können mit allen Frostschutzmitteln auf Ethylen- oder Propylenglykolbasis verwendet werden, die den Standards nach ASTM D4985 oder ASTM D5345 entsprechen.

ANMERKUNG:

Den Kühlmittelzusatz nicht mit Langzeitkühlmittel (ELC) von Caterpillar verwenden. Der Kühlmittelzusatz ist nur für HD-Kühlmittel bestimmt.

TEILEBEZEICHNUNG:

Kühlsysteminhalt		Kühlmittelzusatz bei Erstfüllung	Flüssiger Kühlmittelzusatz bei Wartung*	Kühlmittelzusatzelement bei Wartung*
Liter	US-Gall.			
22-30	(6-8)	3P-2044 (1)	6V-3542 (1)	111-2370 (1)
30-38	(8-10)	3P-2044 (1) 6V-3542 (1)	111-2372 (1)	111-2369 (1)
38-49	(10-13)	3P-2044 (1) 8T-1589 (1)	111-2372 (1)	111-2369 (1)
49-64	(13-17)	3P-2044 (2)	8T-1589 (1)	9N-3368 (1)
64-83	(17-22)	3P-2044 (2) 8T-1589 (1)	111-2372 (1) 6V-3542 (1)	111-2371 (1)
83-114	(22-30)	3P-2044 (3) 8T-1589 (1)	3P-2044 (1)	9N-3718 (1)
114-163	(30-43)	3P-2044 (5)	3P-2044 (1) 6V-3542 (1)	111-2371 (2)
163-242	(43-64)	3P-2044 (8)	3P-2044 (2)	9N-3718 (2)

** Der normale Wartungsintervall beträgt 250 Betriebsstunden. Für vollständige Anweisungen zur Wartung des Kühlsystems, siehe Betriebs- und Wartungshandbuch.*

( ) Erforderliche Anzahl

MAINTENANCE PARTS

DESCRIPTION	PART NUMBER	QTY	WHERE USED	PAGE
AIR INLET AND EXHAUST SYSTEM				
FILTER ELEMENT AS-AIR (PRIMARY)	231-0167	1	AIR CLEANER GP	89
FILTER ELEMENT AS-AIR (SECONDARY)	231-0168	1	AIR CLEANER GP	89
GAUZE (CRANKCASE BREATHER)	153-5939	1	TURBOCHARGER GP	97
SEAL-VALVE COVER	233-0695	1	TURBOCHARGER GP	97
BASIC ENGINE				
CAP (ENGINE OIL FILLER)	217-7358	1	PAN GP-OIL	52
FILTER ELEMENT AS-ENGINE OIL	220-1523	1	PAN GP-OIL	52
GAUZE (CRANKCASE BREATHER)	153-5939	1	COVER GP-VALVE MECHANISM	18
PLUG-DRAIN (ENGINE OIL)	218-2334	1	PAN GP-OIL	52
PLUG-DRAIN (ENGINE OIL PAN)	218-2334	1	PLUG GP-ENGINE	60
SEAL-VALVE COVER	233-0695	1	COVER GP-VALVE MECHANISM	18
V-BELT (WATER PUMP)	211-5172	1	V-BELT GP	65
	251-6789	1	PULLEY GP-WATER PUMP	63
COOLING SYSTEM				
CAP AS-RADIATOR (SEA WATER HEAT EXCHANGER)	036-1865	1	RADIATOR & HYD OIL COOLER GP	82
		1	RADIATOR & HYD OIL COOLER GP	83
CAP-VENTED (COOLANT RECOVERY)	169-6715	1	RADIATOR & OIL COOLER MTG GP	84
		1	RADIATOR & OIL COOLER MTG GP	86
GASKET-COVER	154-1828	1	PUMP GP-WATER	77
GASKET-COVER (TEMPERATURE REGULATOR)	154-1828	1	HOUSING GP-WATER REGULATOR	74
HOSE (LOWER)	231-3579	1	RADIATOR & OIL COOLER MTG GP	84
		1	RADIATOR & OIL COOLER MTG GP	86
HOSE (UPPER)	231-3578	1	RADIATOR & OIL COOLER MTG GP	84
		1	RADIATOR & OIL COOLER MTG GP	86
REGULATOR-WATER TEMPERATURE	249-5541	1	PUMP GP-WATER	77
		1	PUMP GP-WATER	79

MAINTENANCE PARTS

DESCRIPTION	PART NUMBER	QTY	WHERE USED	PAGE
ELECTRICAL AND STARTING SYSTEM				
BATTERY (12-VOLT, MAINTENANCE FREE)	230-6368	1	BATTERY GP	124
BATTERY (12 VOLT, STANDARD)	153-5656	1	BATTERY GP	123
BELT-DRIVE (WARNING BEACON)	9X-8139	1	LAMP GP-WARNING BEACON	148
CIRCUIT BREAKER AS (105-AMPERE)	171-2212	1	WIRING GP-ENGINE	169
		1	WIRING GP-ENGINE	172
CIRCUIT BREAKER AS (30-AMPERE)	147-1773	1	LIGHTING GP-ROADING	151
ELEMENT AS-JACKET WATER HEATER (ENGINE)	149-3499	1	HEATER GP-JACKET WATER	136
	151-1394	11	HEATER GP-JACKET WATER	137
FLASHER AS (12-VOLT)	242-9000	1	LIGHTING GP-ROADING	151
FUSE (10-AMPERE)	113-8490	4	KIT-WORK TOOL CONTROL & WIRING	140
		4	KIT-WORK TOOL WIRING	141
		1	WARNING GP-BACKUP	163
		16	WIRING GP-CHASSIS	165
		4	WIRING GP-WORK TOOL	178
FUSE (15-AMPERE)	113-8491	2	KIT-WORK TOOL CONTROL & WIRING	140
		2	KIT-WORK TOOL WIRING	141
		1	WIRING GP-AIR CONDITIONER	164
		5	WIRING GP-CHASSIS	165
		2	WIRING GP-WORK TOOL	178
FUSE (20-AMPERE)	113-8492	2	WIRING GP-CHASSIS	165
FUSE (30-AMPERE)	124-3548	1	WIRING GP-AIR CONDITIONER	164
		1	WIRING GP-CHASSIS	165
GLOW PLUG	172-4585	4	GLOW PLUG GP	134
		4	GLOW PLUG GP	135
KEY AS-ELECTRONIC (SECURITY)	206-5162	2	ELECTRONICS GP-MACHINE	132
		2	INSTALLATION GP-SECURITY	138
	206-5165	2	ELECTRONICS GP-MACHINE	132
		1	INSTALLATION GP-SECURITY	138
LAMP AS (RED, GREEN, LED, 12-VOLT)	165-5655	1	INSTALLATION GP-SECURITY	139
LAMP-HEAD	9W-3324	1	LAMP GP-HEAD & SIGNAL	144
LAMP (12-VOLT, 21-WATT)	5G-3244	1	LAMP GP-HEAD & SIGNAL	144
	9W-3326	1	LAMP GP-STOP & TAIL	147
LAMP (12-VOLT, 4-WATT)	100-3246	1	LAMP GP-HEAD & SIGNAL	144
LAMP (12-VOLT, 5-WATT)	084-4348	1	LAMP GP-STOP & TAIL	146
		1	LAMP GP-STOP & TAIL	147
LAMP (12-VOLT, 55-WATT)	9W-0607	1	LAMP GP-FLOOD	142
		1	LAMP GP-FLOOD	143
	9X-8118	1	LAMP GP-WARNING BEACON	148
FRAME AND BODY				
BREATHER (TANDEM HOUSING)	9G-5127	2	FRAME GP-LOADER	223
CIRCUIT BREAKER AS (30-AMPERE)	147-1773	1	KIT-ROADING CONVERSION	227
FLASHER AS (12-VOLT)	242-9000	1	KIT-ROADING CONVERSION	227
LAMP (12-VOLT) (REGISTRATION PLATE)	7M-9957	1	MOUNTING GP-REGISTRATION	233
PLUG-MAGNETIC (FRAME)	3S-9182	5	FRAME GP-LOADER	223
FUEL SYSTEM				
CAP AS-FILLER (FUEL)	142-8828	1	LINES GP-FUEL PRM & FILTER	109
FILTER ELEMENT-FUEL (WATER SEPARATOR)	156-1200	1	FILTER GP-WATER SEP & FUEL	103

MAINTENANCE PARTS

DESCRIPTION	PART NUMBER	QTY	WHERE USED	PAGE
HYDRAULIC SYSTEM				
BREATHER AS (INLINE) (HYDRAULIC OIL)	207-9729	1	TANK & MTG GP-HYDRAULIC	326
CAP AS-FILLER (HYDRAULIC TANK)	142-8937	1	TANK GP-HYDRAULIC	327
FUSE (10-AMPERE)	113-8490	1	KIT-QUICK COUPLER CONVERSION	255
SCREEN (HYDRAULIC)	195-6768	1	LINES GP-PILOT	290
SCREEN-SUCTION (HYDRAULIC TANK)	142-8929	1	TANK GP-HYDRAULIC	327
LUBRICATION SYSTEM				
CAP (ENGINE OIL FILLER)	217-7358	1	FILLER GP-ENGINE OIL	69
CAP-OIL FILLER (ENGINE)	289-6120	1	FILLER GP-ENGINE OIL	69
OPERATOR STATION				
ACCUMULATOR GP-REFRIGERANT (WITH DESICCANT)	176-3900	1	KIT-AIR COND & HEATER INSTL	519
BLADE AS-WIPER (558-MM) (CAB DOOR)	6W-3924	1	DOOR GP-CAB	497
BLADE AS-WIPER (558-MM) (FRONT, REAR)	6W-3924	1	DOOR GP-CAB	495
BREATHER (AIR CONDITIONER)	9G-5127	1	COMPRESSOR & MOTOR GP-REFRIG	456
BREATHER (AIR CONDITIONER COMPRESSOR)	9G-5127	1	KIT-AIR COND & HEATER INSTL	519
		1	KIT-AIR COND & HEATER INSTL	521
FILTER ELEMENT-CAB AIR	231-8130	1	HEATER GP-CAB	512
	231-8132	1	AIR CONDITIONER GP	447
		1	HEATER GP-CAB	512
		1	HEATER GP-CAB	514
FILTER ELEMENT-CAB AIR (AIR)	303-6658	1	AIR CONDITIONER GP	447
		1	HEATER GP-CAB	514
FUSE (10-AMPERE)	113-8490	1	CONTROL GP-PILOT OPERATED HYD	482
FUSE (30-AMPERE)	124-3548	1	KIT-AIR COND & HEATER INSTL	520
		1	KIT-AIR COND & HEATER INSTL	522
LAMP (12-VOLT)	7X-9065	1	GAUGE & WARNING GP	505
LAMP (12-VOLT, 10-WATT)	6R-7490	1	GAUGE & WARNING GP	505
VALVE AS-SHUTOFF	8F-8151	1	KIT-AIR COND & HEATER INSTL	522
VALVE AS-SHUTOFF (CAB HEATER)	8F-8151	1	LINES GP-HEATER	532
VALVE AS-SHUTOFF (WATER)	8F-8151	1	HEATER GP-CAB	516
POWER TRAIN				
FILTER AS-OIL (ADVANCED EFFICIENCY) (HYDRAULIC)	1G-8878	1	FILTER GP-OIL	185
FILTER ELEMENT AS-ENGINE OIL	220-1523	1	FILTER GP-OIL	186
WORK TOOLS				
CAP AS (WATER TANK)	192-2606	1	TANK GP-WATER	441
FUSE (10-AMPERE)	113-8490	1	COUPLER AR-QUICK	396
SCREEN (WATER TANK)	119-1414	1	STRAINER GP-WATER	437

PIÈCES DE RECHANGE

DESCRIPTION	NUMÉRO DE PIECÈS	QTÉ	DOMAINE D'APPLICATION	PAGE
CHÂSSIS ET BENNE				
AMPOULE (12 VOLTS) (PLAQUE D'IMMATRICULATION)	7M-9957	1	MONTAGE - IMMATRICULATION (ASS)	233
BOUCHON AIMANTÉ (CHÂSSIS)	3S-9182	5	BATI - CHARGEUSE (ASS)	223
CLIGNOTANT (ENS) (12 VOLTS)	242-9000	1	KIT DE TRANSFORMATION POUR DÉPLACEMENTS SUR ROUTE	227
DISJONCTEUR (ENS) (30A)	147-1773	1	KIT DE TRANSFORMATION POUR DÉPLACEMENTS SUR ROUTE	227
RENIFLARD (CARTER DE TANDEM)	9G-5127	2	BATI - CHARGEUSE (ASS)	223
CIRCUIT D'ADMISSION D'AIR ET D'ÉCHAPPEMENT				
ÉLÉMENT DE FILTRE À AIR (ENS) (PRINCIPAL)	231-0167	1	FILTRE A AIR (ASS)	89
ÉLÉMENT DE FILTRE À AIR (ENS) (SECONDAIRE)	231-0168	1	FILTRE A AIR (ASS)	89
JOINT DE CACHE-SOUPAPES	233-0695	1	TURBOCOMPRESSEUR (ASS)	97
TOILE (RENIFLARD DE CARTER MOTEUR)	153-5939	1	TURBOCOMPRESSEUR (ASS)	97
CIRCUIT DE CARBURANT				
BOUCHON DE GOULOTTE DE REMPLISSAGE (ENS) (CARBURANT)	142-8828	1	CANALISATIONS DE FILTRE ET D'AMORÇAGE DE CARBURANT (ASS)	109
ÉLÉMENT DE FILTRE À CARBURANT (SÉPARATEUR D'EAU)	156-1200	1	FILTRE DE SÉPARATEUR D'EAU ET DE CARBURANT (ASS)	103
CIRCUIT DE GRAISSAGE				
BOUCHON DE GOULOTTE DE REMPLISSAGE D'HUILE (MOTEUR)	289-6120	1	BOUCHON DE REMPLISSAGE D'HUILE MOTEUR (ASS)	69
CHAPEAU (GOULOTTE D'HUILE MOTEUR)	217-7358	1	BOUCHON DE REMPLISSAGE D'HUILE MOTEUR (ASS)	69

* TRADUCTION NON DISPONIBLE AU MOMENT DE LA PUBLICATION

PIÈCES DE RECHANGE

DESCRIPTION	NUMÉRO DE PIECÈS	QTÉ	DOMAINE D'APPLICATION	PAGE
CIRCUIT DE REFROIDISSEMENT				
BOUCHON À ÉVENT (RÉSERVOIR D'EXPANSION DU LIQUIDE DE REFROIDISSEMENT)	169-6715	1	RADIATEUR ET REFROIDISSEUR D'HUILE-MONTAGE (ASS)	84
		1	RADIATEUR ET REFROIDISSEUR D'HUILE-MONTAGE (ASS)	86
BOUCHON DE RADIATEUR (ENS) (ÉCHANGEUR THERMIQUE D'EAU DE MER)	036-1865	1	RADIATEUR ET REFROIDISSEUR D'HUILE HYDRAULIQUE (ASS)	82
		1	RADIATEUR ET REFROIDISSEUR D'HUILE HYDRAULIQUE (ASS)	83
FLEXIBLE (INFÉRIEUR)	231-3579	1	RADIATEUR ET REFROIDISSEUR D'HUILE-MONTAGE (ASS)	84
		1	RADIATEUR ET REFROIDISSEUR D'HUILE-MONTAGE (ASS)	86
FLEXIBLE (SUPERIEUR)	231-3578	1	RADIATEUR ET REFROIDISSEUR D'HUILE-MONTAGE (ASS)	84
		1	RADIATEUR ET REFROIDISSEUR D'HUILE-MONTAGE (ASS)	86
JOINT DE COUVERCLE	154-1828	1	POMPE A EAU (ASS)	77
JOINT DE COUVERCLE (THERMOSTAT)	154-1828	1	LOGEMENT DE RÉGULATEUR D'EAU (ASS)	74
THERMOSTAT-TEMPÉRATURE D'EAU	249-5541	1	POMPE A EAU (ASS)	77
		1	POMPE A EAU (ASS)	79

* TRADUCTION NON DISPONIBLE AU MOMENT DE LA PUBLICATION

PIÈCES DE RECHANGE

DESCRIPTION	NUMÉRO DE PIECÈS	QTÉ	DOMAINE D'APPLICATION	PAGE
CIRCUIT ÉLECTRIQUE ET DE DÉMARRAGE				
AMPOULE (12-V, 5-W)	084-4348	1	FEUX ARRIÈRE ET FEUX D'ARRÊT	146
		1	FEUX ARRIÈRE ET FEUX D'ARRÊT	147
AMPOULE (12V, 21W)	5G-3244	1	LAMPE - PHARE ET CLIGNOTANT	144
	9W-3326	1	FEUX ARRIÈRE ET FEUX D'ARRÊT	147
AMPOULE (12V, 4W)	100-3246	1	LAMPE - PHARE ET CLIGNOTANT	144
AMPOULE (12V, 55W)	9W-0607	1	LAMPE - PHARE (ASS)	142
		1	LAMPE - PHARE (ASS)	143
	9X-8118	1	LAMPE - GYROPHARE (ASS)	148
BATTERIE (12V, SANS ENTRETIEN)	230-6368	1	BATTERIE (ASS)	124
BATTERIE (12V, STANDARD)	153-5656	1	BATTERIE (ASS)	123
BOUGIE DE PRECHAUFFAGE	172-4585	4	BOUGIE DE PRÉCHAUFFAGE (ASS)	134
		4	BOUGIE DE PRÉCHAUFFAGE (ASS)	135
CLÉ ÉLECTRONIQUE (ENS) (SÉCURITÉ)	206-5162	2	ÉLECTRONIQUE - MACHINE (ENS)	132
		2	MONTAGE-SÉCURITÉ (ASS)	138
	206-5165	2	ÉLECTRONIQUE - MACHINE (ENS)	132
		1	MONTAGE-SÉCURITÉ (ASS)	138
CLIGNOTANT (ENS) (12 VOLTS)	242-9000	1	ÉCLAIRAGE - FEUX DE ROUTE (ASS)	151
DISJONCTEUR (ENS) (105A)	171-2212	1	CABLAGE DE MOTEUR (ASS)	169
		1	CABLAGE DE MOTEUR (ASS)	172
DISJONCTEUR (ENS) (30A)	147-1773	1	ÉCLAIRAGE - FEUX DE ROUTE (ASS)	151
ÉLÉMENT DU RÉCHAUFFEUR D'EAU DES CHEMISES (ENS) (MOTEUR)	149-3499	1	EAU DES CHEMISES - RECHAUFFEUR (ASS)	136
	151-1394	11	EAU DES CHEMISES - RECHAUFFEUR (ASS)	137
ENTRAÎNEMENT POUR COURROIE (GYROPHARE)	9X-8139	1	LAMPE - GYROPHARE (ASS)	148
FUSIBLE (10A)	113-8490	1	AVERTISSEUR DE RECUL (ASS)	163
		4	CÂBLAGE - OUTIL DE TRAVAIL (ASS)	178
		16	CABLAGE DE CHASSIS (ASS)	165
		4	KIT DE CÂBLAGE D'OUTIL DE TRAVAIL	141
		4	KIT DE COMMANDE D'OUTIL DE TRAVAIL ET CÂBLAGE	140
FUSIBLE (15A)	113-8491	1	CABLAGE - CLIMATISEUR (ASS)	164
		2	CÂBLAGE - OUTIL DE TRAVAIL (ASS)	178
		5	CABLAGE DE CHASSIS (ASS)	165
		2	KIT DE CÂBLAGE D'OUTIL DE TRAVAIL	141
		2	KIT DE COMMANDE D'OUTIL DE TRAVAIL ET CÂBLAGE	140
FUSIBLE (20A)	113-8492	2	CABLAGE DE CHASSIS (ASS)	165
FUSIBLE (30A)	124-3548	1	CABLAGE - CLIMATISEUR (ASS)	164
		1	CABLAGE DE CHASSIS (ASS)	165
LAMPE - FEUX AV	9W-3324	1	LAMPE - PHARE ET CLIGNOTANT	144
LAMPE (ENS) (ROUGE, VERT, TÉMOIN LUMINEUX, 12V)	165-5655	1	MONTAGE-SÉCURITÉ (ASS)	139

* TRADUCTION NON DISPONIBLE AU MOMENT DE LA PUBLICATION

PIÈCES DE RECHANGE

DESCRIPTION	NUMÉRO DE PIECÈS	QTÉ	DOMAINE D'APPLICATION	PAGE
CIRCUIT HYDRAULIQUE				
BOUCHON DE GOULOTTE DE REMPLISSAGE (ENS) (RÉSERVOIR HYDRAULIQUE)	142-8937	1	RÉSERVOIR HYDRAULIQUE (ASS)	327
ÉCRAN (HYDRAULIQUE)	195-6768	1	CANALISATIONS A COMMANDE PILOTE (ASS)	290
FUSIBLE (10A)	113-8490	1	KIT DE TRANSFORMATION DU COUPLEUR EXPRESS	255
RENIFLARD (ENS) (*INLINE) (HUILE HYDRAULIQUE)	207-9729	1	RÉSERVOIR HYDRAULIQUE ET MONTAGE (ASS)	326
TAMIS D'ASPIRATION (RÉSERVOIR HYDRAULIQUE)	142-8929	1	RÉSERVOIR HYDRAULIQUE (ASS)	327
MOTEUR DE BASE				
BOUCHON DE VIDANGE (CARTER D'HUILE MOTEUR)	218-2334	1	BOUCHON DE MOTEUR (ASS)	60
BOUCHON DE VIDANGE (HUILE MOTEUR)	218-2334	1	HUILE MOTEUR - CARTER (ASS)	52
CHAPEAU (GOULOTTE D'HUILE MOTEUR)	217-7358	1	HUILE MOTEUR - CARTER (ASS)	52
COURROIE TRAPEZOIDALE (POMPE À EAU)	211-5172	1	*V-BELT GP	65
	251-6789	1	POULIE DE POMPE À EAU (ASS)	63
ÉLÉMENT DE FILTRE (ENS)-HUILE MOTEUR	220-1523	1	HUILE MOTEUR - CARTER (ASS)	52
JOINT DE CACHE-SOUPAPES	233-0695	1	CACHE-SOUPAPES (ASS)	18
TOILE (RENIFLARD DE CARTER MOTEUR)	153-5939	1	CACHE-SOUPAPES (ASS)	18
OUTILS DE TRAVAIL				
CHAPEAU (ENS) (RÉSERVOIR D'EAU)	192-2606	1	RÉSERVOIR D'EAU (ASS)	441
ÉCRAN (RÉSERVOIR D'EAU)	119-1414	1	TAMIS D'EAU (ASS)	437
FUSIBLE (10A)	113-8490	1	COUPLEUR EXPRESS (VERSION)	396

* TRADUCTION NON DISPONIBLE AU MOMENT DE LA PUBLICATION

PIÈCES DE RECHANGE

DESCRIPTION	NUMÉRO DE PIECÈS	QTÉ	DOMAINE D'APPLICATION	PAGE
POSTE DE CONDUITE				
ACCUMULATEUR - CLIMATISEUR (ASS) (AVEC SICCATIF)	176-3900	1	KIT DE MONTAGE DE CLIMATISEUR ET CHAUFFAGE	519
AMPOULE (12 VOLTS)	7X-9065	1	INDICATEURS ET TÉMOINS LUMINEUX (ASS)	505
AMPOULE (12V, 10W)	6R-7490	1	INDICATEURS ET TÉMOINS LUMINEUX (ASS)	505
BALAI D'ESSUIE-GLACE (ENS) (*558-MM) (AVANT, ARRIÈRE)	6W-3924	1	PORTIÈRE DE CABINE (ASS)	495
BALAI D'ESSUIE-GLACE (ENS) (*558-MM) (PORTE DE CABINE)	6W-3924	1	PORTIÈRE DE CABINE (ASS)	497
ÉLÉMENT DE FILTRE À AIR DE CABINE	231-8130	1	CHAUFFAGE DE CABINE (ASS)	512
	231-8132	1	CHAUFFAGE DE CABINE (ASS)	512
		1	CHAUFFAGE DE CABINE (ASS)	514
		1	CLIMATISEUR (ASS)	447
ÉLÉMENT DE FILTRE À AIR DE CABINE (AIR)	303-6658	1	CHAUFFAGE DE CABINE (ASS)	514
		1	CLIMATISEUR (ASS)	447
FUSIBLE (10A)	113-8490	1	COMMANDE HYDRAULIQUE PILOTE (ASS)	482
FUSIBLE (30A)	124-3548	1	KIT DE MONTAGE DE CLIMATISEUR ET CHAUFFAGE	520
		1	KIT DE MONTAGE DE CLIMATISEUR ET CHAUFFAGE	522
RENIFLARD (CLIMATISEUR)	9G-5127	1	COMPRESSEUR ET MOTEUR DE RÉFRIGÉRATION (ASS)	456
RENIFLARD (COMPRESSEUR DE CLIMATISEUR)	9G-5127	1	KIT DE MONTAGE DE CLIMATISEUR ET CHAUFFAGE	519
		1	KIT DE MONTAGE DE CLIMATISEUR ET CHAUFFAGE	521
SOUPAPE D'ARRET	8F-8151	1	KIT DE MONTAGE DE CLIMATISEUR ET CHAUFFAGE	522
SOUPAPE D'ARRET (EAU)	8F-8151	1	CHAUFFAGE DE CABINE (ASS)	516
SOUPAPE D'ARRET (RÉCHAUFFEUR DE CABINE)	8F-8151	1	CANALISATIONS DE CHAUFFAGE (ASS)	532
TRANSMISSION				
ÉLÉMENT DE FILTRE (ENS)-HUILE MOTEUR	220-1523	1	FILTRE A HUILE (ASS)	186
FILTRE À HUILE (ENS) (EFFICACITÉ AVANCÉE) (HYDRAULIQUE)	1G-8878	1	FILTRE A HUILE (ASS)	185

* TRADUCTION NON DISPONIBLE AU MOMENT DE LA PUBLICATION

PIEZAS DE MANTENIMIENTO

DESCRIPCION	NUMERO DE PIEZA	CANT	SE UTILIZA EN	PAGINA
BASTIDOR Y CAJA				
CONJUNTO DE DESTELLADOR (12 VOLTIOS)	242-9000	1	*KIT-ROADING CONVERSION	227
DISYUNTOR (CONJ) (30-AMPERIOS)	147-1773	1	*KIT-ROADING CONVERSION	227
LÁMPARA (12 VOLTIOS) (PLACA DE REGISTRACIÓN)	7M-9957	1	MONTAJE-REGISTRO (GR)	233
RESPIRADERO (COMPARTIMENTO DE TANDEM)	9G-5127	2	BASTIDOR DEL CARGADOR (GR)	223
TAPÓN MAGNÉTICO (BASTIDOR)	3S-9182	5	BASTIDOR DEL CARGADOR (GR)	223
ESTACION DEL OPERADOR				
ACUMULADOR DEL ACONDICIONADOR DE AIRE (GR) (CON DESECANTE)	176-3900	1	JUEGO DE INSTALACIÓN DEL ACONDICIONADOR DE AIRE Y CALENTADOR	519
*FILTER ELEMENT-CAB AIR	231-8130	1	CALEFACCIÓN DE LA CABINA (GR)	512
	231-8132	1	ACONDICIONADOR DE AIRE (GR)	447
		1	CALEFACCIÓN DE LA CABINA (GR)	512
		1	CALEFACCIÓN DE LA CABINA (GR)	514
*FILTER ELEMENT-CAB AIR (AIRE)	303-6658	1	ACONDICIONADOR DE AIRE (GR)	447
		1	CALEFACCIÓN DE LA CABINA (GR)	514
FUSIBLE (10-AMPERIOS)	113-8490	1	CONTROL HIDRÁULICO DE OPERACIÓN PILOTO (GR)	482
FUSIBLE (30-AMPERIOS)	124-3548	1	JUEGO DE INSTALACIÓN DEL ACONDICIONADOR DE AIRE Y CALENTADOR	520
		1	JUEGO DE INSTALACIÓN DEL ACONDICIONADOR DE AIRE Y CALENTADOR	522
HOJA DE LIMPIAPARABRISAS (CONJ) (*558-MM) (DELANTERO, TRASERO)	6W-3924	1	PUERTA DE CABINA	495
HOJA DE LIMPIAPARABRISAS (CONJ) (*558-MM) (PUERTA, CABINA)	6W-3924	1	PUERTA DE CABINA	497
LÁMPARA (12 VOLTIOS)	7X-9065	1	INDICADORES Y ADVERTENCIA (GR)	505
LÁMPARA (12 VOLTIOS, 10 VATIOS)	6R-7490	1	INDICADORES Y ADVERTENCIA (GR)	505
RESPIRADERO (AIRE ACONDICIONADO)	9G-5127	1	COMPRESOR Y MOTOR GR-REFRIGERANTE	456
RESPIRADERO (COMPRESOR DE AIRE ACONDICIONADO)	9G-5127	1	JUEGO DE INSTALACIÓN DEL ACONDICIONADOR DE AIRE Y CALENTADOR	519
		1	JUEGO DE INSTALACIÓN DEL ACONDICIONADOR DE AIRE Y CALENTADOR	521
VALVULA DE CORTE (CONJ)	8F-8151	1	JUEGO DE INSTALACIÓN DEL ACONDICIONADOR DE AIRE Y CALENTADOR	522
VALVULA DE CORTE (CONJ) (AGUA)	8F-8151	1	CALEFACCIÓN DE LA CABINA (GR)	516
VALVULA DE CORTE (CONJ) (CALENTADOR DE CABINA)	8F-8151	1	TUBERÍAS DE LA CALEFACCIÓN (GR)	532

* NO HAY TRADUCCION DISPONIBLE EN EL MOMENTO DE LA IMPRESION

PIEZAS DE MANTENIMIENTO

DESCRIPCION	NUMERO DE PIEZA	CANT	SE UTILIZA EN	PAGINA
HERRAMIENTAS				
FUSIBLE (10-AMPERIOS)	113-8490	1	ACOPLADOR RÁPIDO (CONFIG)	396
REJILLA (TANQUE DE AGUA)	119-1414	1	COLADOR DEL AGUA (GR)	437
TAPÓN (CONJ) (TANQUE DE AGUA)	192-2606	1	TANQUE DEL AGUA (GR)	441
MOTOR BASICO				
CORREA TRAPEZOIDAL (BOMBA DE AGUA)	211-5172	1	*V-BELT GP	65
	251-6789	1	GRUPO, MANIJA, BOMBA DE AGUA	63
ELEMENTO DE FILTRO DE ACEITE DE MOTOR (CONJ)	220-1523	1	CÁRTER - COLECTOR DEL (GR)	52
GASA (RESPIRADERO DE CARTER)	153-5939	1	TAPA DEL MECANISMO DE VÁLVULAS (GR)	18
SELLO - TAPA DE VÁLVULA	233-0695	1	TAPA DEL MECANISMO DE VÁLVULAS (GR)	18
TAPA (LLENADO DE ACEITE DEL MOTOR)	217-7358	1	CÁRTER - COLECTOR DEL (GR)	52
TAPÓN DE DRENAJE (ACEITE DEL MOTOR)	218-2334	1	CÁRTER - COLECTOR DEL (GR)	52
TAPÓN DE DRENAJE (COLECTOR DE ACEITE DEL MOTOR)	218-2334	1	TAPÓN DEL MOTOR (GR)	60
SISTEMA DE ARRANQUE ELECTRICO				
BATERÍA (12 VOLTIOS, ESTANDAR)	153-5656	1	BATERÍA (GR)	123
BATERÍA (12-VOLTIOS, LIBRE DE MANTENIMIENTO)	230-6368	1	BATERÍA (GR)	124
BUJÍA INCANDESCENTE	172-4585	4	BUJÍA INCANDESCENTE (GR)	134
		4	BUJÍA INCANDESCENTE (GR)	135
CONJUNTO DE DESTELLADOR (12 VOLTIOS)	242-9000	1	LUCES DE DESPLAZAMIENTO (GR)	151
CONJUNTO DE LLAVE, ELECTRONICA (SEGURIDAD)	206-5162	2	ELECTRÓNICA DE LA MÁQUINA (GR)	132
		2	INSTALACION DE SEGURIDAD (GR)	138
	206-5165	2	ELECTRÓNICA DE LA MÁQUINA (GR)	132
		1	INSTALACION DE SEGURIDAD (GR)	138
DISYUNTOR (CONJ) (105 AMPERIOS)	171-2212	1	CABLES DEL MOTOR (GR)	169
		1	CABLES DEL MOTOR (GR)	172
DISYUNTOR (CONJ) (30-AMPERIOS)	147-1773	1	LUCES DE DESPLAZAMIENTO (GR)	151
ELEMENTO DEL CALENTADOR DEL AGUA DE LAS CAMISAS (MOTOR)	149-3499	1	AGUA DE LAS CAMISAS - CALENTADOR DEL (GR)	136
	151-1394	11	AGUA DE LAS CAMISAS - CALENTADOR DEL (GR)	137
FUSIBLE (10-AMPERIOS)	113-8490	4	CABLES DE LA HERRAMIENTA DE TRABAJO (GR)	178
		16	CABLES DEL CHASIS (GR)	165
		4	*KIT-WORK TOOL CONTROL & WIRING	140
		4	*KIT-WORK TOOL WIRING	141
		1	RETROCESO - ALARMA DE (GR)	163
FUSIBLE (15 AMPERIOS)	113-8491	2	CABLES DE LA HERRAMIENTA DE TRABAJO (GR)	178

* NO HAY TRADUCCION DISPONIBLE EN EL MOMENTO DE LA IMPRESION

PIEZAS DE MANTENIMIENTO

DESCRIPCION	NUMERO DE PIEZA	CANT	SE UTILIZA EN	PAGINA
		1	CABLES DEL ACONDICIONADOR DE AIRE (GR)	164
		5	CABLES DEL CHASIS (GR)	165
		2	*KIT-WORK TOOL CONTROL & WIRING	140
		2	*KIT-WORK TOOL WIRING	141
FUSIBLE (20-AMPERIOS)	113-8492	2	CABLES DEL CHASIS (GR)	165
FUSIBLE (30-AMPERIOS)	124-3548	1	CABLES DEL ACONDICIONADOR DE AIRE (GR)	164
		1	CABLES DEL CHASIS (GR)	165
LÁMPARA (CONJ) (ROJO, VERDE, DIODO, 12 VOLTIOS)	165-5655	1	INSTALACION DE SEGURIDAD (GR)	139
LÁMPARA DE FARO DELANTERO	9W-3324	1	LÁMPARA DE LUZ DELANTERA Y DE SEÑAL (GR)	144
LÁMPARA (12 VLOTIOS, 5 VATIOS)	084-4348	1	LUCES DE PARADA Y COLA (GR)	146
		1	LUCES DE PARADA Y COLA (GR)	147
LÁMPARA (12 VOLTIOS, 21 VATIOS)	5G-3244	1	LÁMPARA DE LUZ DELANTERA Y DE SEÑAL (GR)	144
	9W-3326	1	LUCES DE PARADA Y COLA (GR)	147
LÁMPARA (12 VOLTIOS, 4 VATIOS)	100-3246	1	LÁMPARA DE LUZ DELANTERA Y DE SEÑAL (GR)	144
LÁMPARA (12 VOLTIOS, 55 VATIOS)	9X-8118	1	LÁMPARA DE BALIZA DE ADVERTENCIA (GR)	148
	9W-0607	1	REFLECTOR (GR)	142
		1	REFLECTOR (GR)	143
MANDO DE CORREA (BALIZA DE ADVERTENCIA)	9X-8139	1	LÁMPARA DE BALIZA DE ADVERTENCIA (GR)	148
SISTEMA DE COMBUSTIBLE				
ELEMENTO DE FILTRO DE COMBUSTIBLE (SEPARADOR DE AGUA)	156-1200	1	FILTRO DE COMBUSTIBLE Y SEPARADOR DE AGUA (GR)	103
TAPA DE LLENADO (CONJ) (COMBUSTIBLE)	142-8828	1	TUBERIAS (GR) -COMBUSTIBLE PRIMARIO Y FILTRO	109

* NO HAY TRADUCCION DISPONIBLE EN EL MOMENTO DE LA IMPRESION

PIEZAS DE MANTENIMIENTO

DESCRIPCION	NUMERO DE PIEZA	CANT	SE UTILIZA EN	PAGINA
SISTEMA DE ENFRIAMIENTO				
JUNTA DE LA TAPA DE VÁLVULAS	154-1828	1	BOMBA DE AGUA (GR)	77
JUNTA DE LA TAPA DE VÁLVULAS (REGULADOR DE TEMPERATURA)	154-1828	1	*HOUSING GP-WATER REGULATOR	74
MANGUERA (INFERIOR)	231-3579	1	MONTAJE DE RADIADOR Y ENFRIAMIENTO DE ACEITE (GR)	84
		1	MONTAJE DE RADIADOR Y ENFRIAMIENTO DE ACEITE (GR)	86
MANGUERA (SUPERIOR)	231-3578	1	MONTAJE DE RADIADOR Y ENFRIAMIENTO DE ACEITE (GR)	84
		1	MONTAJE DE RADIADOR Y ENFRIAMIENTO DE ACEITE (GR)	86
REGULADOR DE TEMPERATURA DEL AGUA	249-5541	1	BOMBA DE AGUA (GR)	77
		1	BOMBA DE AGUA (GR)	79
TAPA CON RESPIRADERO (RECUPERACIÓN DE REFRIGERANTE)	169-6715	1	MONTAJE DE RADIADOR Y ENFRIAMIENTO DE ACEITE (GR)	84
		1	MONTAJE DE RADIADOR Y ENFRIAMIENTO DE ACEITE (GR)	86
TAPA DE RADIADOR (CONJ) (INTERCAMBIADOR DE CALOR PARA AGUA DE MAR)	036-1865	1	RADIADOR Y ENFRIADOR DE ACEITE HIDRÁULICO (GR)	82
		1	RADIADOR Y ENFRIADOR DE ACEITE HIDRÁULICO (GR)	83
SISTEMA DE ESCAPE Y ADMISION DE AIRE				
ELEMENTO DEL FILTRO DE AIRE (CONJ) (PRIMARIO)	231-0167	1	FILTRO DE AIRE (GR)	89
ELEMENTO DEL FILTRO DE AIRE (CONJ) (SECUNDARIO)	231-0168	1	FILTRO DE AIRE (GR)	89
GASA (RESPIRADERO DE CARTER)	153-5939	1	TURBOCOMPRESOR (GR)	97
*SEAL-VALVE COVER	233-0695	1	TURBOCOMPRESOR (GR)	97
SISTEMA DE LUBRICACION				
TAPA DEL TUBO DE LLENADO DE ACEITE (MOTOR)	289-6120	1	TUBO DE LLENADO DE ACEITE (GR)	69
TAPA (LLENADO DE ACEITE DEL MOTOR)	217-7358	1	TUBO DE LLENADO DE ACEITE (GR)	69
SISTEMA HIDRAULICO				
FUSIBLE (10-AMPERIOS)	113-8490	1	*KIT-QUICK COUPLER CONVERSION	255
REJILLA DE SUCCIÓN (TANQUE HIDRÁULICO)	142-8929	1	TANQUE HIDRÁULICO (GR)	327
REJILLA (HIDRÁULICO)	195-6768	1	TUBERÍAS CON SERVOMANDO (GR)	290
RESPIRADERO (CONJ) (*INLINE) (ACEITE HIDRÁULICO)	207-9729	1	TANQUE HIDRÁULICO Y MONTAJE (GR)	326
TAPA DE LLENADO (CONJ) (TANQUE HIDRAULICO)	142-8937	1	TANQUE HIDRÁULICO (GR)	327

* NO HAY TRADUCCION DISPONIBLE EN EL MOMENTO DE LA IMPRESION

PIEZAS DE MANTENIMIENTO

DESCRIPCION	NUMERO DE PIEZA	CANT	SE UTILIZA EN	PAGINA
TREN DE FUERZA				
ELEMENTO DE FILTRO DE ACEITE DE MOTOR (CONJ)	220-1523	1	FILTRO DE ACEITE (GR)	186
FILTRO DE ACEITE (CONJ) (EFICIENCIA AVANZADA) (HIDRÁULICO)	1G-8878	1	FILTRO DE ACEITE (GR)	185

* NO HAY TRADUCCION DISPONIBLE EN EL MOMENTO DE LA IMPRESION

PEÇAS DE MANUTENÇÃO

DESCRIÇÃO	NÚMERO DE PEÇA	QUANT	UTILIZADA EM	PÁGINA
CHASSI E CARROCERIA				
BUJÃO MAGNÉTICO (ARMAÇÃO)	3S-9182	5	CHASSI DIANTEIRO	223
DISJUNTOR AUTOMÁTICO DE CIRCUITO (30 AMPERES)	147-1773	1	KIT-CONVERSÃO DE RODAGEM	227
LÂMPADA (12-VOLTS) (PLACA DE REGISTRO)	7M-9957	1	MONTAGEM DA PLACA DE REGISTRO	233
LUZ INTERMITENTE (12-VOLTS)	242-9000	1	KIT-CONVERSÃO DE RODAGEM	227
RESPIRO (ALOJAMENTO DO TANDEM)	9G-5127	2	CHASSI DIANTEIRO	223
FERRAMENTAS DE TRABALHO				
FUSÍVEL (10 AMPERES)	113-8490	1	ACOPLADOR RÁPIDO	396
TAMPA (TANQUE DE ÁGUA)	192-2606	1	TANQUE DE ÁGUA	441
TELA FILTRANTE (TANQUE DE ÁGUA)	119-1414	1	TELA FILTRANTE - ÁGUA	437
MOTOR BÁSICO				
BUJÃO DO DRENO (CÁRTER DE ÓLEO DO MOTOR)	218-2334	1	BUJÃO DO MOTOR	60
BUJÃO DO DRENO (ÓLEO DO MOTOR)	218-2334	1	CÁRTER DO ÓLEO DO MOTOR	52
CORREIA EM V (BOMBA D'ÁGUA)	211-5172	1	*V-BELT GP	65
	251-6789	1	GRUPO DE POLIA - BOMBA DE ÁGUA	63
ELEMENTO FILTRANTE - ÓLEO DO MOTOR	220-1523	1	CÁRTER DO ÓLEO DO MOTOR	52
FILTRO (RESPIRO DO CÁRTER)	153-5939	1	TAMPA - MECANISMO DAS VÁLVULAS	18
RETENTOR - TAMPA DA VÁLVULA	233-0695	1	TAMPA - MECANISMO DAS VÁLVULAS	18
TAMPA (BOCAL DE ENCHIMENTO DO ÓLEO DO MOTOR)	217-7358	1	CÁRTER DO ÓLEO DO MOTOR	52

* TRADUÇÃO NÃO DISPONÍVEL NO MOMENTO DA IMPRESSÃO

PEÇAS DE MANUTENÇÃO

DESCRIÇÃO	NÚMERO DE PEÇA	QUANT	UTILIZADA EM	PÁGINA
POSTO DO OPERADOR				
ACUMULADOR - AR CONDICIONADO (COM DESSECANTE)	176-3900	1	JOGO-INSTALAÇÃO DO CONDICIONADOR DE AR E AQUECEDOR	519
ELEMENTO FILTRANE-AR DA CABINE	231-8130	1	AQUECEDOR DA CABINE	512
	231-8132	1	AQUECEDOR DA CABINE	512
		1	AQUECEDOR DA CABINE	514
		1	CONDICIONADOR DE AR	447
ELEMENTO FILTRANE-AR DA CABINE (AR)	303-6658	1	AQUECEDOR DA CABINE	514
		1	CONDICIONADOR DE AR	447
FUSÍVEL (10 AMPERES)	113-8490	1	CONTROLE HIDRÁULICO DE OPERAÇÃO PILOTO	482
FUSÍVEL (30 AMPERES)	124-3548	1	JOGO-INSTALAÇÃO DO CONDICIONADOR DE AR E AQUECEDOR	520
		1	JOGO-INSTALAÇÃO DO CONDICIONADOR DE AR E AQUECEDOR	522
LÂMINA DO LIMPADOR DE PÁRA-BRISA (*558-MM) (DIANTEIRO, TRASEIRO)	6W-3924	1	PORTA DA CABINE	495
LÂMINA DO LIMPADOR DE PÁRA-BRISA (*558-MM) (PORTA DA CABINE)	6W-3924	1	PORTA DA CABINE	497
LÂMPADA (12-VOLTS)	7X-9065	1	INDICADOR E ALARME	505
LÂMPADA (12-VOLTS, 10-WATTS)	6R-7490	1	INDICADOR E ALARME	505
RESPIRO (AR CONDICIONADO)	9G-5127	1	COMPRESSOR E MOTOR - REFRIGERADO	456
RESPIRO (COMPRESSOR DO AR CONDICIONADO)	9G-5127	1	JOGO-INSTALAÇÃO DO CONDICIONADOR DE AR E AQUECEDOR	519
		1	JOGO-INSTALAÇÃO DO CONDICIONADOR DE AR E AQUECEDOR	521
VÁLVULA DE FECHAMENTO	8F-8151	1	JOGO-INSTALAÇÃO DO CONDICIONADOR DE AR E AQUECEDOR	522
VÁLVULA DE FECHAMENTO (ÁGUA)	8F-8151	1	AQUECEDOR DA CABINE	516
VÁLVULA DE FECHAMENTO (AQUECEDOR DA CABINE)	8F-8151	1	TUBOS - AQUECEDOR	532
SISTEMA DE ADMISSÃO DE AR E DE ESCAPE				
ELEMENTO DO FILTRO DE AR (PRIMÁRIO)	231-0167	1	PURIFICADOR DE AR	89
ELEMENTO DO FILTRO DE AR (SECUNDÁRIO)	231-0168	1	PURIFICADOR DE AR	89
FILTRO (RESPIRO DO CÁRTER)	153-5939	1	TURBOALIMENTADOR	97
RETENTOR - TAMPA DA VÁLVULA	233-0695	1	TURBOALIMENTADOR	97

* TRADUÇÃO NÃO DISPONÍVEL NO MOMENTO DA IMPRESSÃO

PEÇAS DE MANUTENÇÃO

DESCRIÇÃO	NÚMERO DE PEÇA	QUANT	UTILIZADA EM	PÁGINA
SISTEMA DE ARREFECIMENTO				
JUNTA - TAMPA	154-1828	1	BOMBA DE ÁGUA	77
JUNTA - TAMPA (TERMOSTATO)	154-1828	1	ALOJAMENTO-TERMOSTATO DE ÁGUA	74
MANGUEIRA (INFERIOR)	231-3579	1	RADIADOR E ARREFECEDOR DE ÓLEO - MONTAGEM	84
		1	RADIADOR E ARREFECEDOR DE ÓLEO - MONTAGEM	86
MANGUEIRA (SUPERIOR)	231-3578	1	RADIADOR E ARREFECEDOR DE ÓLEO - MONTAGEM	84
		1	RADIADOR E ARREFECEDOR DE ÓLEO - MONTAGEM	86
REGULADOR DE TEMPERATURA DA ÁGUA	249-5541	1	BOMBA DE ÁGUA	77
		1	BOMBA DE ÁGUA	79
TAMPA - RADIADOR (PERMUTADOR DE CALOR DE AGUA SALGADA)	036-1865	1	RADIADOR E ARREFECEDOR DO ÓLEO HIDRÁULICO	82
		1	RADIADOR E ARREFECEDOR DO ÓLEO HIDRÁULICO	83
TAMPA COM RESPIRO (RECUPERAÇÃO DO LÍQUIDO ARREFECEDOR)	169-6715	1	RADIADOR E ARREFECEDOR DE ÓLEO - MONTAGEM	84
		1	RADIADOR E ARREFECEDOR DE ÓLEO - MONTAGEM	86
SISTEMA DE COMBUSTÍVEL				
ELEMENTO DO FILTRO DE COMBUSTÍVEL (SEPARADOR DE ÁGUA)	156-1200	1	FILTRO DE COMBUSTÍVEL E SEPARADOR DE ÁGUA	103
TAMPA - BOCAL DE ENCHIMENTO (COMBUSTÍVEL)	142-8828	1	TUBULAÇÕES - FILTRO E ESCORVA DO COMBUSTÍVEL	109
SISTEMA DE LUBRIFICAÇÃO				
TAMPA - BOCAL DE ENCHIMENTO DE ÓLEO (MOTOR)	289-6120	1	BOCAL DE ENCHIMENTO DE ÓLEO DO MOTOR	69
TAMPA (BOCAL DE ENCHIMENTO DO ÓLEO DO MOTOR)	217-7358	1	BOCAL DE ENCHIMENTO DE ÓLEO DO MOTOR	69
SISTEMA ELÉTRICO E DE PARTIDA				
BATERIA (12 VOLTS, ISENTO DE MANUTENÇÃO)	230-6368	1	BATERIA	124
BATERIA (12 VOLTS, PADRÃO)	153-5656	1	BATERIA	123
CHAVE - ELETRÔNICO (SEGURANÇA)	206-5162	2	INSTALAÇÃO-SEGURANÇA	138
		2	SISTEMA ELETRÔNICO - MÁQUINA	132
	206-5165	1	INSTALAÇÃO-SEGURANÇA	138
		2	SISTEMA ELETRÔNICO - MÁQUINA	132
CORREIA DE COMANDO (PISCA-ALERTA)	9X-8139	1	LUZ GIRATÓRIA DE ALARME	148
DISJUNTOR AUTOMÁTICO DE CIRCUITO (105 AMPERES)	171-2212	1	CABOS/FIOS ELÉTRICOS - MOTOR	169
		1	CABOS/FIOS ELÉTRICOS - MOTOR	172

* TRADUÇÃO NÃO DISPONÍVEL NO MOMENTO DA IMPRESSÃO

PEÇAS DE MANUTENÇÃO

DESCRIÇÃO	NÚMERO DE PEÇA	QUANT	UTILIZADA EM	PÁGINA
DISJUNTOR AUTOMÁTICO DE CIRCUITO (30 AMPERES)	147-1773	1	ILUMINAÇÃO - RODOVIÁRIA	151
ELEMENTO - AQUECEDOR DE ÁGUA DA CAMISA (MOTOR)	149-3499	1	AQUECEDOR DA ÁGUA DO MOTOR	136
	151-1394	11	AQUECEDOR DA ÁGUA DO MOTOR	137
FAROL DIANTEIRO	9W-3324	1	LÂMPADA DIANTEIRA E DE SINAL	144
FUSÍVEL (10 AMPERES)	113-8490	1	ALARME DE MARCHA À RÉ	163
		16	CABOS/FIOS ELÉTRICOS - CHASSI	165
		4	CABOS/FIOS ELÉTRICOS - FERRAMENTAS DE TRABALHO	178
		4	KIT-CONTROLE E FIAÇÃO DA FERRAMENTA DE TRABALHO	140
		4	KIT-FIAÇÃO DA FERRAMENTA DE TRABALHO	141
FUSÍVEL (15 AMPERES)	113-8491	1	CABOS/FIOS ELÉTRICOS - AR CONDICIONADO	164
		5	CABOS/FIOS ELÉTRICOS - CHASSI	165
		2	CABOS/FIOS ELÉTRICOS - FERRAMENTAS DE TRABALHO	178
		2	KIT-CONTROLE E FIAÇÃO DA FERRAMENTA DE TRABALHO	140
		2	KIT-FIAÇÃO DA FERRAMENTA DE TRABALHO	141
FUSÍVEL (20-AMPERES)	113-8492	2	CABOS/FIOS ELÉTRICOS - CHASSI	165
FUSÍVEL (30 AMPERES)	124-3548	1	CABOS/FIOS ELÉTRICOS - AR CONDICIONADO	164
		1	CABOS/FIOS ELÉTRICOS - CHASSI	165
LÂMPADA (VERMELHA, VERDE, LED, 12 VOLTS)	165-5655	1	INSTALAÇÃO-SEGURANÇA	139
LÂMPADA (12-VOLTS, 21-WATTS)	5G-3244	1	LÂMPADA DIANTEIRA E DE SINAL	144
	9W-3326	1	LUZ TRASEIRA E DE FREIO	147
LÂMPADA (12-VOLTS, 4-WATTS)	100-3246	1	LÂMPADA DIANTEIRA E DE SINAL	144
LÂMPADA (12 VOLTS, 5 WATTS)	084-4348	1	LUZ TRASEIRA E DE FREIO	146
		1	LUZ TRASEIRA E DE FREIO	147
LÂMPADA (12-VOLTS, 55-WATTS)	9W-0607	1	LÂMPADA - FAROL	142
		1	LÂMPADA - FAROL	143
	9X-8118	1	LUZ GIRATÓRIA DE ALARME	148
LUZ INTERMITENTE (12-VOLTS)	242-9000	1	ILUMINAÇÃO - RODOVIÁRIA	151
VELA DE AQUECIMENTO; VELA INCANDESCENTE	172-4585	4	VELA DE AQUECIMENTO; VELA INCANDESCENTE	134
		4	VELA DE AQUECIMENTO; VELA INCANDESCENTE	135

* TRADUÇÃO NÃO DISPONÍVEL NO MOMENTO DA IMPRESSÃO

PEÇAS DE MANUTENÇÃO

DESCRIÇÃO	NÚMERO DE PEÇA	QUANT	UTILIZADA EM	PÁGINA
SISTEMA HIDRÁULICO				
FUSÍVEL (10 AMPERES)	113-8490	1	KIT-CONVERSÃO DO ACOPLADOR RÁPIDO	255
RESPIRO (EM LINHA) (ÓLEO HIDRÁULICO)	207-9729	1	TANQUE DE ÓLEO HIDRÁULICO E MONTAGEM	326
TAMPA - BOCAL DE ENCHIMENTO (TANQUE HIDRÁULICO)	142-8937	1	TANQUE HIDRÁULICO	327
TELA DE SUCÇÃO (TANQUE HIDRÁULICO)	142-8929	1	TANQUE HIDRÁULICO	327
TELA FILTRANTE (HIDRÁULICO)	195-6768	1	TUBOS - CIRCUITO PILOTO	290
TREM DE FORÇA				
ELEMENTO FILTRANTE - ÓLEO DO MOTOR	220-1523	1	FILTRO - ÓLEO	186
FILTRO - ÓLEO (EFICIÊNCIA AVANÇADA) (HIDRÁULICO)	1G-8878	1	FILTRO - ÓLEO	185

* TRADUÇÃO NÃO DISPONÍVEL NO MOMENTO DA IMPRESSÃO

WARTUNGSTEILE

BESCHREIBUNG	ERSATZTEIL-NUMMER	MENGE	VERWENDET IN	SEITE
ARBEITSGERÄTE				
KAPPE (WASSERTANK)	192-2606	1	WASSERTANK	441
SCREEN (WASSERTANK)	119-1414	1	WASSERSIEBEINSATZ	437
SICHERUNG (10 A)	113-8490	1	SCHNELLWECHSELVORRICHTUNG	396
ELEKTRISCHE ANLAGE UND STARTSYSTEM				
BATTERIE (12 V, STANDARD)	153-5656	1	BATTERIE	123
BATTERIE (12 V, WARTUNGSFREI)	230-6368	1	BATTERIE	124
BELEUCHTUNGSANLAGE (ROT, GRÜN, LED, 12 V)	165-5655	1	SICHERHEITSEINBAUSATZ	139
BLINKER (12 V)	242-9000	1	BELEUCHTUNGSANLAGE (STRASSENAUSRÜSTUNG)	151
ELEKTRONISCHER SCHLÜSSEL (SICHERHEIT)	206-5162	2	ELEKTRONIK - MASCHINE	132
		2	SICHERHEITSEINBAUSATZ	138
	206-5165	2	ELEKTRONIK - MASCHINE	132
		1	SICHERHEITSEINBAUSATZ	138
GLÜHKERZE	172-4585	4	GLÜHKERZE	134
		4	GLÜHKERZE	135
LAUFBAND UND ANTRIEB (RUNDUM-KENNLEUCHTE)	9X-8139	1	RUNDUM-KENNLEUCHTE	148
LEUCHTE (12 V, 21 W)	5G-3244	1	SCHEINWERFER U. RICHTUNGS-LEUCHTE	144
	9W-3326	1	BREMS- UND RÜCKLEUCHTE	147
LEUCHTE (12 V, 4 W)	100-3246	1	SCHEINWERFER U. RICHTUNGS-LEUCHTE	144
LEUCHTE (12 V, 5 W)	084-4348	1	BREMS- UND RÜCKLEUCHTE	146
		1	BREMS- UND RÜCKLEUCHTE	147
LEUCHTE (12 V, 55 W)	9W-0607	1	ARBEITSLEUCHTEN	142
		1	ARBEITSLEUCHTEN	143
	9X-8118	1	RUNDUM-KENNLEUCHTE	148
SCHEINWERFER	9W-3324	1	SCHEINWERFER U. RICHTUNGS-LEUCHTE	144
SICHERUNG (10 A)	113-8490	4	ARBEITSGERÄT - VERDRAHTUNG	178
		4	ARBEITSGERÄTEVERDRAHTUNGS-SATZ	141
		16	FAHRGESTELLVERDRAHTUNG	165
		1	RÜCKFAHRWARNHORN	163
		4	SATZ - ARBEITSGERÄTE U. VERDRAHTUNG	140
SICHERUNG (15 A)	113-8491	2	ARBEITSGERÄT - VERDRAHTUNG	178
		2	ARBEITSGERÄTEVERDRAHTUNGS-SATZ	141
		5	FAHRGESTELLVERDRAHTUNG	165
		1	KLIMAANLAGENVERDRAHTUNG	164
		2	SATZ - ARBEITSGERÄTE U. VERDRAHTUNG	140
SICHERUNG (20 A)	113-8492	2	FAHRGESTELLVERDRAHTUNG	165
SICHERUNG (30 A)	124-3548	1	FAHRGESTELLVERDRAHTUNG	165
		1	KLIMAANLAGENVERDRAHTUNG	164
UMLAUFKÜHLWASSERHEIZUNGS-ELEMENT (MOTOR)	149-3499	1	UMLAUFKÜHLWASSERHEIZUNG	136

* ÜBERSETZUNG ZUM ZEITPUNKT DER DRUCKLEGUNG NICHT VORHANDEN

WARTUNGSTEILE

BESCHREIBUNG	ERSATZTEIL-NUMMER	MENGE	VERWENDET IN	SEITE
	151-1394	11	UMLAUFKÜHLWASSERHEIZUNG	137
UNTERBRECHER (105 A)	171-2212	1	MOTORVERDRAHTUNG	169
		1	MOTORVERDRAHTUNG	172
UNTERBRECHER (30 A)	147-1773	1	BELEUCHTUNGSANLAGE (STRASSENAUSRÜSTUNG)	151
FAHRERHAUS				
ABSPERRVENTIL	8F-8151	1	EINBAUSATZ - KLIMAANLAGE U. HEIZUNG	522
ABSPERRVENTIL (FAHRERHAUSHEIZUNG)	8F-8151	1	HEIZUNGSLEITUNGEN	532
ABSPERRVENTIL (WASSER)	8F-8151	1	FAHRERHAUSHEIZUNG	516
ENTLÜFTER (KLIMAANLAGE)	9G-5127	1	KÜHLKOMPRESSOR U. MOTOR	456
ENTLÜFTER (KLIMAANLAGEN-KOMRESSOR)	9G-5127	1	EINBAUSATZ - KLIMAANLAGE U. HEIZUNG	519
		1	EINBAUSATZ - KLIMAANLAGE U. HEIZUNG	521
*FILTER ELEMENT-CAB AIR	231-8130	1	FAHRERHAUSHEIZUNG	512
	231-8132	1	FAHRERHAUSHEIZUNG	512
		1	FAHRERHAUSHEIZUNG	514
		1	KLIMAANLAGE	447
*FILTER ELEMENT-CAB AIR (DRUCKLUFT)	303-6658	1	FAHRERHAUSHEIZUNG	514
		1	KLIMAANLAGE	447
KLIMAANLAGENDRUCKSPEICHER (MIT TROCKENMITTEL)	176-3900	1	EINBAUSATZ - KLIMAANLAGE U. HEIZUNG	519
LEUCHTE (12 V)	7X-9065	1	WARNANZEIGENSATZ	505
LEUCHTE (12 V, 10 W)	6R-7490	1	WARNANZEIGENSATZ	505
SCHEIBENWISCHERBLATT (*558-MM) (FAHRERHAUSTÜR)	6W-3924	1	FAHRERHAUSTÜR	497
SCHEIBENWISCHERBLATT (*558-MM) (VORN, HINTEN)	6W-3924	1	FAHRERHAUSTÜR	495
SICHERUNG (10 A)	113-8490	1	HYDRAULIKBEDIENUNG (MIT VORSTEUERUNG)	482
SICHERUNG (30 A)	124-3548	1	EINBAUSATZ - KLIMAANLAGE U. HEIZUNG	520
		1	EINBAUSATZ - KLIMAANLAGE U. HEIZUNG	522
HYDRAULIKSYSTEM				
ANSAUGSIEB (HYDRAULIKTANK)	142-8929	1	HYDRAULIKTANK	327
EINFÜLLKAPPE (HYDRAULIKTANK)	142-8937	1	HYDRAULIKTANK	327
ENTLÜFTER (*INLINE) (HYDRAULIKÖL)	207-9729	1	HYDRAULIKTANK UND BEFESTIGUNGSTEILE	326
SCREEN (HYDRAULIK)	195-6768	1	VORSTEUERLEITUNGEN	290
SICHERUNG (10 A)	113-8490	1	*KIT-QUICK COUPLER CONVERSION	255
KRAFTSTOFFSYSTEM				
EINFÜLLKAPPE (KRAFTSTOFF)	142-8828	1	KRAFTSTOFFENTLÜFTUNGS- U. FILTERLEITUNGEN	109
KRAFTSTOFFILTERELEMENT (WASSERABSCHEIDER)	156-1200	1	WASSERABSCHEIDER- U. KRAFTSTOFFILTER	103

* ÜBERSETZUNG ZUM ZEITPUNKT DER DRUCKLEGUNG NICHT VORHANDEN

WARTUNGSTEILE

BESCHREIBUNG	ERSATZTEIL-NUMMER	MENGE	VERWENDET IN	SEITE
KRAFTSÜBERTRAGUNG				
MOTORÖLFILTERELEMENT	220-1523	1	ÖLFILTER	186
ÖLFILTER (HOCHLEISTUNG) (HYDRAULIK)	1G-8878	1	ÖLFILTER	185
KÜHLSYSTEM				
KAPPE MIT ENTLÜFTER (KÄLTEMITTELRÜCKGEWINNUNG)	169-6715	1	KÜHLER U. ÖLKÜHLERBEFESTIGUNG	84
		1	KÜHLER U. ÖLKÜHLERBEFESTIGUNG	86
KÜHLERKAPPE (ROHWASSERHEIZUNGSAUSTAUSCHER)	036-1865	1	KÜHLER UND HYDRAULIKÖLKÜHLER	82
		1	KÜHLER UND HYDRAULIKÖLKÜHLER	83
SCHLAUCHLEITUNG (OBEN)	231-3578	1	KÜHLER U. ÖLKÜHLERBEFESTIGUNG	84
		1	KÜHLER U. ÖLKÜHLERBEFESTIGUNG	86
SCHLAUCHLEITUNG (UNTEN)	231-3579	1	KÜHLER U. ÖLKÜHLERBEFESTIGUNG	84
		1	KÜHLER U. ÖLKÜHLERBEFESTIGUNG	86
VENTILDECKELDICHTUNG	154-1828	1	KÜHLWASSERPUMPE	77
VENTILDECKELDICHTUNG (THERMOSTAT)	154-1828	1	THERMOSTATGEHÄUSE	74
WASSERTEMPERATURREGLER	249-5541	1	KÜHLWASSERPUMPE	77
		1	KÜHLWASSERPUMPE	79
LUFTANSAUG- UND ABGASSYSTEM				
GAZE (KURBELGEHÄUSEENTLÜFTER)	153-5939	1	TURBOLADER	97
LUFTFILTER (HAUPTELEMENT)	231-0167	1	LUFTREINIGER	89
LUFTFILTER (HILFSELEMENT)	231-0168	1	LUFTREINIGER	89
VENTILDECKELDICHTUNG	233-0695	1	TURBOLADER	97
MOTOR - GRUNDAUSFÜHRUNG				
ABLASSSTOPFEN (MOTORÖL)	218-2334	1	ÖLWANNE	52
ABLASSSTOPFEN (MOTORÖLWANNE)	218-2334	1	MOTORSTOPFEN	60
GAZE (KURBELGEHÄUSEENTLÜFTER)	153-5939	1	VENTILDECKEL	18
KAPPE (MOTORÖLFÜLLUNG)	217-7358	1	ÖLWANNE	52
KEILRIEMEN (WASSERPUMPE)	211-5172	1	*V-BELT GP	65
	251-6789	1	WASSERPUMPE - RIEMENSCHEIBE	63
MOTORÖLFILTERELEMENT	220-1523	1	ÖLWANNE	52
VENTILDECKELDICHTUNG	233-0695	1	VENTILDECKEL	18
RAHMEN UND FAHRGESTELL				
BLINKER (12 V)	242-9000	1	UMRÜSTSATZ FÜR STRASSENFAHRT	227
ENTLÜFTER (TANDEMGEHÄUSE)	9G-5127	2	LADERRAHMEN	223
LEUCHTE (12 V) (KENNZEICHEN)	7M-9957	1	TYPENSCHILDBEFESTIGUNG	233
MAGNETSTOPFEN (RAHMEN)	3S-9182	5	LADERRAHMEN	223
UNTERBRECHER (30 A)	147-1773	1	UMRÜSTSATZ FÜR STRASSENFAHRT	227
SCHMIERSYSTEM				
KAPPE (MOTORÖLFÜLLUNG)	217-7358	1	MOTORÖLEINFÜLLSTUTZEN	69
ÖLEINFÜLLKAPPE (MOTOR)	289-6120	1	MOTORÖLEINFÜLLSTUTZEN	69

* ÜBERSETZUNG ZUM ZEITPUNKT DER DRUCKLEGUNG NICHT VORHANDEN

INDEX

Name	Page
A	
ACCUMULATOR & MTG GP-HYDRAULIC	238
ACCUMULATOR GP-REFRIGERANT–WITH DESICCANT	443, 444
ACCUMULATOR GP-REFRIGERANT (WITH DESICCANT)	519
ADAPTER GP-OIL LINE	239
AIR CLEANER GP	88, 89
AIR CONDITIONER & MOUNTING GP	445
AIR CONDITIONER AR	446
AIR CONDITIONER GP	447
ALTERNATOR GP-CHARGING	120, 122
ARM GP-MATERIAL HANDLING	348
ARM GP-WINDOW WIPER	495
ARM GP-WINDOW WIPER (FRONT)	497
ARMREST & MOUNTING GP	449
ARMREST GP	450
AXLE GP	180, 181
B	
BATTERY GP–HEAVY DUTY	124
BATTERY GP–STANDARD	123
BATTERY (12-VOLT, MAINTENANCE FREE)	124
BATTERY (12 VOLT, STANDARD)	123
BELT-DRIVE (WARNING BEACON)	148
BLADE AR–ANGLING	349
BLADE AS-WIPER (558-MM) (CAB DOOR)	497
BLADE AS-WIPER (558-MM) (FRONT, REAR)	495
BLADE GP-ANGLING	350, 351
BLADE GP-MULTIPURPOSE BUCKET	352, 353, 354, 355
BOX GP-STORAGE	452
BREATHER (AIR CONDITIONER)	456
BREATHER (AIR CONDITIONER COMPRESSOR)	519, 521
BREATHER AS (INLINE) (HYDRAULIC OIL)	326
BREATHER (TANDEM HOUSING)	223
BUCKET AR-DIRT	356, 357
BUCKET AR-GENERAL PURPOSE	357, 358, 359
BUCKET AR-GRAPPLE	359, 361, 362, 363
BUCKET AR-GRAPPLE–INDUSTRIAL	360
BUCKET AR-LIGHT MATERIAL	364
BUCKET AR-MULTIPURPOSE	364, 365, 366, 367
BUCKET AR-UTILITY	367, 368
BUCKET AS-DIRT	369, 370, 371, 372
BUCKET AS-GENERAL PURPOSE	373, 374, 375, 376
BUCKET AS-LIGHT MATERIAL	377, 378, 379
BUCKET GP-DIRT	380
BUCKET GP-GRAPPLE	381, 382, 383, 384, 385
BUCKET GP-MULTIPURPOSE	386, 387, 388, 389, 390
BUCKET GP-UTILITY	391, 392, 393
BUMPER GP–REAR	212
C	
CAB AR-ENCLOSED ROPS	453
CAB GP-ENCLOSED ROPS	454
CABLE GP-CONTROL–MANUAL LOWERING	455
CABLE GP-GOVERNOR CONTROL	101
CAMSHAFT GP	15, 16
CAP AS-FILLER (FUEL)	109
CAP AS-FILLER (HYDRAULIC TANK)	327
CAP AS-RADIATOR (SEA WATER HEAT EXCHANGER)	82, 83
CAP AS (WATER TANK)	441
CAP (ENGINE OIL FILLER)	52, 69
CAP-OIL FILLER (ENGINE)	69
CAP-VENTED (COOLANT RECOVERY)	84, 86

INDEX

Name	Page
CARRIAGE & FORK AR	394
CARRIAGE GP-FORK	395
	396
CHASSIS AR	1
CIRCUIT BREAKER AS (105-AMPERE)	169
	172
CIRCUIT BREAKER AS (30-AMPERE)	151
	227
COIL AS-SOLENOID (12-VOLT)	344
COMMON AR	1
	2
COMPRESSOR & MOTOR GP-REFRIG	456
COMPRESSOR & MTG GP-REFRIG	457
COMPRESSOR GP-REFRIGERANT	456
	519
	521
CONDENSER & MTG GP-REFRIGERANT	458
CONNECTION GP-ELECTRICAL	125
	126
CONTROL AR-MACHINE–AUX PROPORTIONAL FLOW	2
CONTROL AR-MACHINE–ON, OFF AUXILIARY CONTROL	2
CONTROL GP-FAN	175
CONTROL GP-GOVERNOR	102
CONTROL GP-HANDLE	465
CONTROL GP-HANDLE–DIRECTION, SPEED	459
	460
CONTROL GP-HANDLE–LH	462
	464
CONTROL GP-HANDLE–RH	463
	465
CONTROL GP-HANDLE–WORK TOOL	461
CONTROL GP-INTERLOCK	127
CONTROL GP-MANUAL START/STOP	128
CONTROL GP-PILOT OPERATED HYD	466
	469
	470
	472
	473
	475
	476
	478
	479
	480
	482
CONTROL GP-UNPROGRAMMED	131
CONTROL GP-UNPROGRAMMED (SECURITY)	132
CONVERSION AR-MACHINE	4
	5
	6
CONVERSION AR-MACHINE–EUROPE	3
CONVERSION AR-MACHINE–GERMANY	5
	8
CONVERSION AR-MACHINE–ITALY	7
CONVERSION AR-MACHINE–NACD	2
CONVERSION AR-MACHINE–UNITED KINGDOM	3
CONVERSION AR-NON-ROADING–NACD	129
CONVERSION AR-ROADING–EUROPE	213
CONVERSION AR-ROADING–GERMANY	213
CONVERSION AR-ROADING–ITALY	214
CONVERSION AR-ROADING–UNITED KINGDOM	214
CONVERSION GP-ROADING–GERMANY	215
	217
CONVERSION GP-ROADING–ITALY	216
	218
COOLANT HEATER LINES	532
COUNTERWEIGHT GP	220
COUNTERWEIGHT GP–KIT	219
COUPLER AR-QUICK	396
COUPLER GP-QUICK	397
	398
COUPLING GP-DRIVE	484
	519
	521
COVER GP-CONSOLE	486
	487
COVER GP-FRONT HOUSING	17
COVER GP-FUSE PANEL	130
COVER GP-INSTRUMENT PANEL	488
COVER GP-LINES	400
COVER GP-VALVE MECHANISM	18
CRANKSHAFT GP	20
	21
	23
CYLINDER & LINK GP-COUPLER–LH	401
CYLINDER & LINK GP-COUPLER–RH	402
CYLINDER & MTG GP-ANGLE BLADE	240
CYLINDER & MTG GP-BUCKET	241
CYLINDER & MTG GP-LIFT ARM	242
CYLINDER BLOCK GP	25
	27
CYLINDER GP-BUCKET	244
CYLINDER GP-GRAPPLE	245
CYLINDER GP-HYDRAULIC	248
	249
	250
	255
CYLINDER GP-HYDRAULIC–ANGLE BLADE	247
CYLINDER GP-HYDRAULIC–COUPLER	246
CYLINDER GP-LIFT	251
CYLINDER GP-TILT–BUCKET EJECTOR, LH	252
CYLINDER GP-TILT–BUCKET EJECTOR, RH	253
CYLINDER HEAD AS	29
CYLINDER HEAD GP	31
	32

INDEX

Name	Page
	34
D	
DOOR & MTG GP-CAB–GLASS	492
DOOR & MTG GP-CAB–POLYCARBONATE	489
DOOR GP-CAB	499
DOOR GP-CAB–GLASS	494
	495
DOOR GP-CAB–POLYCARBONATE	497
DOOR GP-CAB (POLYCARBONATE)	489
	524
DRAIN GP-ENGINE OIL	36
DRIVE GP-TANDEM	182
DUCT & CONTROL GP	500
E	
EDGE GP-CUTTING	403
	404
	405
	406
	407
	408
	409
ELECTRONICS GP-IMPLEMENT–WORK TOOL	131
ELECTRONICS GP-MACHINE–SECURITY	132
ELEMENT AS-JACKET WATER HEATER (ENGINE)	136
	137
ENCLOSURE GP-ENGINE	221
ENGINE AR	9
ENGINE AR-PRIMARY	10
	11
	12
F	
FAN GP-BLOWER	82
	83
FASTENER GP-WIRING HARNESS	133
FILLER GP-ENGINE OIL–ENGINE	69
FILM (FOPS)	506
FILM-FUSE/RELAY	130
FILM GP	569
FILM GP–CLEARANCE	566
FILM GP–UN	567
FILM-IDENTIFICATION (IGNITION SWITCH)	138
	139
FILM-IDENTIFICATION (POWER RECEPTACLE, 12-VOLT)	587
FILM-IDENTIFICATION (POWER RECEPTACLE, 12-VOLT)	576
FILM-IDENTIFICATION (POWER RECEPTACLE, 12-VOLT)	573
FILM-IDENTIFICATION (POWER RECEPTACLE, 12-VOLT)	581
	584
FILM-IDENTIFICATION (13-KM/H)	5
	8
	213
FILM-INFORMATION (TIE-DOWN LOCATION)	348
FILM-INSTRUCTION (ALTERNATE EXIT)	499
	559
FILM-INSTRUCTION (DASH)	505
FILM-INSTRUCTION (INSTRUMENT PANEL)	504
FILM-INSTRUCTION (MACHINE CONTROL, READ OMM)	472
FILM-INSTRUCTION (MACHINE CONTROL, READ OMM)	470
	476
	478
	480
	482
FILM-INSTRUCTION (MACHINE CONTROL, READ OMM)	479
FILM-INSTRUCTION (MACHINE CONTROLS)	466
	469
	473
	475
FILM-INSTRUCTION (MACHINE SECURITY, INTL)	138
	139
FILM-INSTRUCTION (NO STEP)	255
	328
FILM (REFLECTIVE)	432
	433
FILM-STRIPE (REFLECTIVE, RED, WHITE)	432
	433
FILM (TEMPERATURE CONTROL)	447
	512
	514
FILM-WARNING (CLEARANCE)	566
FILM-WARNING (CRUSH HAZARD)	386
	387
	388
	390
FILM-WARNING (CRUSH HAZARD, STAY BACK)	573
	584
	587
FILM-WARNING (HIGH PRESSURE, READ MANUAL)	573
	584
	587
FILM-WARNING (HIGH PRESSURE, READ OMM, U.S.)	576
	581

INDEX

Name	Page
FILM-WARNING (IMPALED POINT)	412
	413
	417
	421
FILM-WARNING (NO ACCESS)	573
	584
FILM-WARNING (NO CLEARANCE, STAY BACK)	350
	351
FILM-WARNING (STEERING)	217
FILTER & LINES GP-HYDRAULIC	183
FILTER AS-OIL (ADVANCED EFFICIENCY) (HYDRAULIC)	185
FILTER ELEMENT AS-AIR (PRIMARY)	89
FILTER ELEMENT AS-AIR (SECONDARY)	89
FILTER ELEMENT AS-ENGINE OIL	52
	186
FILTER ELEMENT-CAB AIR	447
	512
	514
FILTER ELEMENT-CAB AIR (AIR)	447
FILTER ELEMENT-CAB AIR (AIR)	514
FILTER ELEMENT-FUEL (WATER SEPARATOR)	103
FILTER GP-OIL	187
FILTER GP-OIL–ENGINE	186
FILTER GP-OIL–HYDRAULIC	185
FILTER GP-WATER SEP & FUEL	103
FITTING GP	294
FITTING GP-HYDRAULIC	294
FLASHER AS (12-VOLT)	151
	227
FLOOR MAT	1
	2
	3
	4
	5
	213
	214
FLYWHEEL GP	37
	38
FORK AR-GRAPPLE–INDUSTRIAL	409
FORK AR-GRAPPLE–UTILITY	410
FORK GP-GRAPPLE	411
	413
FORK GP-GRAPPLE–INDUSTRIAL	412
FORK GP-PALLET	414
FORK GP-PALLET–KIT	414
	415
FORK GP-UTILITY	416
	417
FRAME GP-BLADE	418
FRAME GP-FORK–INDUSTRIAL	419
	420
FRAME GP-GRAPPLE–INDUSTRIAL	421
FRAME GP-LOADER	223
FRAME GP-MACHINE	225
FRAME GP-WINDOW–LH	503
FRAME GP-WINDOW–RH	502
FUSE (10-AMPERE)	140
	141
	163
	165
	178
	255
	396
FUSE (10-AMPERE)	482
FUSE (15-AMPERE)	140
	141
	164
	165
	178
FUSE (20-AMPERE)	165
FUSE (30-AMPERE)	164
	165
	520
	522

G

GASKET-COVER	77
GASKET-COVER (TEMPERATURE REGULATOR)	74
GAUGE & WARNING GP–LH	504
GAUGE & WARNING GP–RH	505
GAUGE GP-FUEL LEVEL	505
GAUGE-SIGHT (COOLANT LEVEL)	83
GAUGE-SIGHT (HYDRAULIC TANK)	327
GAUGE-SIGHT (RADIATOR)	82
GAUZE (CRANKCASE BREATHER)	97
GAUZE (CRANKCASE BREATHER)	18
GEAR GP-IDLER	71
GLOW PLUG	134
	135
GLOW PLUG GP	134
	135
GOVERNOR GP	104
	107
GRAPPLE GP-UTILITY	422
	423
	424
GUARD GP-BELT	39
GUARD GP-ROPS/FOPS	506
GUIDE GP-LINES	226

H

HANDHOLD GP	507
HANDLE & PIN GP-COUPLER–LH	425
HANDLE & PIN GP-COUPLER–RH	426

INDEX

Name	Page
HANDLE GP	455
HANDLE GP-COUPLER–LH	427
HANDLE GP-COUPLER–RH	428
HANDLE GP-MODULAR	462, 463, 464, 508, 509
HARNESS AS-CHASSIS (HORN)	174
HARNESS AS-CHASSIS (TRANSMISSION)	520, 522
HARNESS AS-CONTROL (SECURITY)	139
HARNESS AS-CONTROL (SECURITY)	138
HARNESS AS-ENGINE	169, 172
HARNESS AS-FRONT LIGHTING	151, 227
HARNESS AS-FUEL TANK	164, 520, 522
HARNESS AS-HEATER & AIR COND	164, 512, 514, 520, 522
HARNESS AS-OPERATOR CONTROLS (JOYSTICK)	469, 472, 475
HARNESS AS-PLATFORM	166
HARNESS AS-PLATFORM (LOWER)	165
HARNESS AS-REAR LIGHTING	151, 165, 227, 235
HARNESS AS-REAR LIGHTING (BRAKE)	177, 227
HARNESS AS-SWITCH	175
HARNESS AS-WINDOW WIPER	489, 492, 495, 497, 524, 525
HARNESS AS-WIRING (GLOW PLUG)	172
HARNESS AS-WIRING (SERVICE METER)	488
HARNESS AS-WORK TOOL	438
HARNESS AS-WORK TOOL (LIFT ARM)	140, 141
HARNESS AS-WORK TOOL (LIFT ARM)	178
HARNESS AS-WORK TOOL (PLATFORM)	140, 141
HARNESS AS-WORK TOOL (PLATFORM)	178
HEATER & MTG GP-CAB	510
HEATER AR-CAB	511
HEATER GP-CAB	512, 514
HEATER GP-CAB–KIT	516
HEATER GP-JACKET WATER	136, 137
HOLDER-CUP	517
HORN AS (LOW TONE)	479, 480
HOSE (LOWER)	84, 86
HOSE (UPPER)	84, 86
HOUSING AS-SIDE–A/C, HEATER	518
HOUSING GP-FLYWHEEL	40, 41
HOUSING GP-FRONT	42, 44
HOUSING GP-WATER REGULATOR	74
HYDRAULIC AR	254

I

Name	Page
INSTALLATION AR-ENGINE	13, 14
INSTALLATION GP	519
INSTALLATION GP-SECURITY	138
INSTALLATION GP-SECURITY–KIT	139

K

Name	Page
KEY	215
KEY AS-ELECTRONIC (SECURITY)	132
KEY AS-ELECTRONIC (SECURITY)	138
KIT-AIR COND & HEATER INSTL	519
KIT-AIR COND & HEATER INSTL–A/C, HEATER	521
KIT-CAB DOOR & MOUNTING–GLASS	525
KIT-CAB DOOR & MOUNTING–POLYCARBONATE	524
KIT-CAB SEAL–DEBRIS BARRIER	526
KIT-PILOT VALVE (SPRING)	338
KIT-QUICK COUPLER CONVERSION–KIT	255
KIT-ROADING CONVERSION	227
KIT-ROADING PLATE & MOUNTING–BUCKET	429
KIT-SEAL	338
KIT-SEAL (GEAR PUMP)	315
KIT-WORK TOOL CONTROL & WIRING–VERTICAL LIFT	140
KIT-WORK TOOL WIRING–VERTICAL LIFT	141

L

Name	Page
LAMP AS (RED, GREEN, LED, 12-VOLT)	139
LAMP GP-DOME (12-VOLT)	505

INDEX

Name	Page
LAMP GP-FLOOD	142
LAMP GP-FLOOD–12-VOLT, VERTICAL MOUNT	143
LAMP GP-HEAD & SIGNAL	144
LAMP GP-REGISTRATION PLATE	233
LAMP GP-STOP & TAIL	146
	147
LAMP GP-WARNING BEACON–12-VOLT, AMBER	148
LAMP-HEAD	144
LAMP (12-VOLT)	505
LAMP (12-VOLT) (REGISTRATION PLATE)	233
LAMP (12-VOLT, 10-WATT)	505
LAMP (12-VOLT, 21-WATT)	144
	147
LAMP (12-VOLT, 4-WATT)	144
LAMP (12-VOLT, 5-WATT)	146
	147
LAMP (12-VOLT, 55-WATT)	142
	143
	148
LEVER GP-GOVERNOR	527
LIFTING GP-ENGINE	46
	47
LIFTING GP-MACHINE–SINGLE POINT	231
LIFTING GP-MACHINE–4-POINT	230
LIGHTING GP-FLOOD–FRONT	150
LIGHTING GP-FLOOD–REAR	149
LIGHTING GP-ROADING	151
LIGHTING GP-STOP & TAIL	153
LIGHTING GP-WARNING BEACON–12-VOLT	154
LINER-CAB	529
LINER GP-CAB	528
LINES GP-AIR	90
LINES GP-AIR CONDITIONER	530
LINES GP-BUCKET	260
	262
	264
	266
	268
	270
LINES GP-BUCKET–INDUSTRIAL	258
LINES GP-CONNECTING	271
LINES GP-FUEL PRM & FILTER	109
LINES GP-GRAPPLE	273
	275
	277
LINES GP-HEATER	532
LINES GP-HYDRAULIC FAN	279
	281
LINES GP-HYDRAULIC OIL COOLER	283
LINES GP-HYDROSTATIC	189
LINES GP-LIFT CYLINDER	284
	286
LINES GP-LOWERING CONTROL	288
LINES GP-PILOT–DIRECTION, SPEED	292
LINES GP-PILOT–WORK TOOL	290
LINES GP-PUMP	294
LINES GP-TILT CYLINDER	296
	298
LINES GP-WORK TOOL	300
LINK GP-COUPLER	430
LITERATURE GP	533
LOCK GP-CYLINDER	452
LOCK GP-QUICK COUPLER–MECHANICAL	431

M

Name	Page
MANIFOLD & LINES GP-CONTROL–PARKING BRAKE	302
	304
MANIFOLD & MTG GP-CONTROL	306
MANIFOLD & SOLENOID GP-CONTROL	307
MANIFOLD & SOLENOID GP-CONTROL–PARKING BRAKE	308
	309
MANIFOLD GP-CONTROL–QUICK COUPLER	310
MANIFOLD GP-EXHAUST	91
MANIFOLD GP-RETURN	191
METER GP-SERVICE	488
MIRROR & MTG GP-REAR VIEW–WITH ROADING LIGHT MOUNT	232
MIRROR GP-REAR VIEW	534
MODULE GP-WARNING INDICATOR	535
	536
MOTOR & MTG GP-HYDRAULIC FAN	311
	312
	313
MOTOR & MTG GP-HYDROSTATIC	193
MOTOR GP-GEAR	316
	317
	318
MOTOR GP-GEAR–A/C COMPRESSOR	314
MOTOR GP-GEAR–HYDRAULIC FAN	315
MOTOR GP-PISTON	194
MOTOR GP-WINDOW WIPER	495
	497
MOUNTING GP-CYLINDER	319
	320
	321
MOUNTING GP-ENGINE–HARDWARE	49
MOUNTING GP-ENGINE–SUPPORTS	48
MOUNTING GP-FAN	50
	51
MOUNTING GP-PUMP	196
MOUNTING GP-RAD & OIL COOLER	75
MOUNTING GP-REGISTRATION	233
	234
MOUNTING GP-ROADING LIGHTS–REAR	235

INDEX

Name	Page
MOUNTING GP-ROPS	537
MUFFLER GP	92
	93
	94
O	
OPTION AR-CAB	538
	539
P	
PADLOCK GP	215
	217
PAN GP-OIL	52
	56
PANEL AR-INSTRUMENT	539
PANEL GP-FUSE	140
	141
	165
	178
PANEL GP-INSTRUMENT	540
	542
PANEL GP-SIDE	544
PARTS GP-MISCELLANEOUS	570
PEDAL GP-GOVERNOR	546
PEDAL GP-GOVERNOR–INCLUDES LEVER	545
PISTON & ROD GP	58
	59
PLATE & FILM GP	6
	572
	573
	576
	579
	581
	584
	587
PLATE GP-ROADING–LH	432
PLATE GP-ROADING–RH	433
PLATE-IDENTIFICATION (ENGLISH, GERMAN, SPANISH)	217
	218
PLATE-IDENTIFICATION (MACHINE)	573
	576
	581
	584
	587
PLATE-INFORMATION (MAXIMUM WEIGHT)	215
PLATFORM GP-OPERATOR	547
PLUG-DRAIN (ENGINE OIL)	52
PLUG-DRAIN (ENGINE OIL PAN)	60
PLUG GP-ENGINE	60
PLUG GP-PILOT VALVE	322
PLUG KIT-CONN	450
PLUG-MAGNETIC (FRAME)	223
POSITIONER GP-FORK	414
POWER TRAIN AR	197
PULLEY GP-CRANKSHAFT	61
	62
PULLEY GP-WATER PUMP	63
	64
PUMP & MTG GP-FUEL TRANSFER	111
	112
PUMP & MTG GP-HYDROSTATIC	198
PUMP & MTG GP-WORK TOOL	323
	324
PUMP GP-DIAPHRAGM	438
PUMP GP-ENGINE OIL	71
PUMP GP-FUEL INJECTION	113
	116
	117
PUMP GP-FUEL PRIMING	119
PUMP GP-FUEL PRM & PRIM FILTER–WATER SEPARATOR	119
PUMP GP-GEAR	324
	325
PUMP GP-PISTON	199
PUMP GP-WATER	77
	79
R	
RADIATOR & HYD OIL COOLER GP	82
	83
RADIATOR & OIL COOLER MTG GP	84
	86
RECOVERY GP-COOLANT	84
	86
REGULATOR-WATER TEMPERATURE	77
	79
RELAY AS (SHELL)	166
RELAY AS (12-VOLT)	140
	141
	178
	227
	447
RELAY AS (12-VOLT) (BRAKE LIGHT)	177
RELAY AS (12-VOLT) (COLD START)	169
RELAY AS (12-VOLT) (COLD START)	172
RELAY AS (12-VOLT) (HEATER)	512
	514
RELAY AS (12-VOLT) (MAIN POWER)	165
RELAY AS (12-VOLT) (MAIN POWER)	178
RELAY AS (12-VOLT) (START)	169
RELAY AS (12-VOLT) (START)	172
RELAY AS (12-VOLT) (WORK TOOL)	178
ROTATING GP-PUMP (LH)	199
ROTATING GP-PUMP (RH)	199

INDEX

Name	Page
S	
SCREEN (HYDRAULIC)	290
SCREEN-SUCTION (HYDRAULIC TANK)	327
SCREEN (WATER TANK)	437
SEAL GP-CAB–DEBRIS BARRIER	549
SEAL-VALVE COVER	18, 97
SEAT BELT GP	551, 552
SEAT GP	554
SEAT GP–SUSPENSION	553
SEAT GP-ADJUSTABLE	555
SENSOR GP-TEMP & PRESS	155
SENSOR GP-TEMPERATURE (ENGINE COOLANT)	83
SENSOR GP-TEMPERATURE (HYDRAULIC OIL)	313
SENSOR-SPEED (ENGINE TIMING)	107
SENSOR-SPEED (FAN MOTOR)	318
SOFTWARE GP-MACHINE (SECURITY)	132
SOFTWARE GP-MACHINE (SECURITY)	138
SOLENOID (FUEL SHUTOFF)	113, 128
SOLENOID (STARTING MOTOR)	156
SPRING AS-GAS	75, 506
SPRING AS-GAS (CAB)	231, 556
SPRING AS-GAS (LOCKING)	489, 492, 524, 525
SPRING GP-BLADE	434
SPRING GP-GAS	556
STARTING MOTOR GP-ELECTRIC	156, 158, 159
STEP GP-MATERIAL HANDLING ARM	435
STOP GP-GRAPPLE	423, 424
STOP GP-GRAPPLE–UTILITY	436
STRAINER GP-WATER	437
SUN VISOR	557, 558
SUPPORT GP-STORAGE BOX	5, 8, 213
SUPPRESSION GP-SOUND	237
SWITCH AS-KEY START	504
SWITCH AS-LIMIT (WIPER)	495, 497
SWITCH AS-PRESSURE (AIR CONDITIONER)	530
SWITCH AS-PRESSURE (HYDRAULIC OIL)	185
SWITCH AS-PRESSURE (REFRIGERANT)	520, 522
SWITCH AS-ROCKER (AIR CONDITIONER)	447
SWITCH AS-ROCKER (COLD START)	540, 542
SWITCH AS-ROCKER (ELECTRIC POWER, WORK TOOL)	140, 141
SWITCH AS-ROCKER (ELECTRIC POWER, WORK TOOL)	178
SWITCH AS-ROCKER (FRONT WORK LIGHT)	540, 542
SWITCH AS-ROCKER (HAZARD WARNING LIGHTS)	151, 227
SWITCH AS-ROCKER (PARKING BRAKE)	540, 542
SWITCH AS-ROCKER (QUICK COUPLER)	255, 396
SWITCH AS-ROCKER (REAR WIPER)	495, 497
SWITCH AS-ROCKER (REAR WORK LAMPS)	149
SWITCH AS-ROCKER (ROADING LIGHTS)	227
SWITCH AS-ROCKER (ROADING LIGHTS)	151
SWITCH AS-ROCKER (TURN SIGNAL)	151, 227
SWITCH AS-ROCKER (WARNING BEACON)	154
SWITCH AS (SEAT)	555
SWITCH AS-TEMPERATURE (HYDRAULIC OIL)	327
SWITCH GP-PRESSURE	161
SWITCH GP-PRESSURE–BRAKE LIGHT	160
SWITCH GP-PRESSURE (BACKUP ALARM)	163
SWITCH GP-ROCKER (WORK TOOL POSITIONER)	254
SWITCH GP-TEMPERATURE–COOLANT	162
SWITCH-PRESSURE (ENGINE OIL)	155, 161
SWITCH-ROCKER (HEATER)	447, 512, 514
SWITCH (SEAT)	554
SWITCH-TEMPERATURE (AIR CONDITIONER)	447
SWITCH-TEMPERATURE (ENGINE COOLANT)	155, 162
T	
TANK & MTG GP-HYDRAULIC	326
TANK & MTG GP-WATER	438
TANK GP-HYDRAULIC	327
TANK GP-WATER	441

INDEX

Name	Page
TIRE & RIM GP–LH	201
	202
	203
	204
	205
	206
TIRE & RIM GP–RH	201
	202
	203
	204
	205
	206
	207
TOOTH GP-UNI	442
TURBOCHARGER GP	95
	97

V

V-BELT GP–FAN DRIVE	65
V-BELT (WATER PUMP)	63
	65
VALVE & LINES GP-COUPLER	328
VALVE & MTG GP-CONTROL	332
VALVE AS-SHUTOFF	522
VALVE AS-SHUTOFF (CAB HEATER)	532
VALVE AS-SHUTOFF (WATER)	516
VALVE-BREATHER (CRANKCASE)	97
VALVE-BREATHER (CRANKCASE)	18
VALVE GP-CONTROL	333
VALVE GP-MANUAL	335
VALVE GP-PILOT	336
	340
	341
VALVE GP-PILOT–WORK TOOL	338
VALVE GP-PUMP CONTROL (PISTON PUMP)	199
VALVE GP-RELIEF	317
	343
VALVE GP-RELIEF (CHARGE)	199
VALVE GP-RELIEF (FAN SPEED)	315
VALVE GP-RELIEF (LIFT)	333
VALVE GP-RELIEF (TILT, AUXILARY)	333
VALVE GP-SOLENOID	313
	345
	347
VALVE GP-SOLENOID–A/C COMPRESSOR	346
VALVE GP-SOLENOID–AUXILIARY	344
VALVE GP-SOLENOID (QUICK COUPLER)	310
VALVE GP-SOLENOID (12 VDC)	521
VALVE GP-SOLENOID (12 VDC)	519
VALVE MECHANISM GP	66
	67
VALVE-RELIEF (CROSSOVER)	199
VISOR GP-CAB	557
	558

W

WARNING GP-BACKUP	163
WHEEL & TIRE AR	207
	209
WHEEL & TIRE AR–HEAVY DUTY	207
	208
	209
WHEEL & TIRE AR–HIGH FLOTATION	207
WHEEL & TIRE AR–LOW SIDE WALL	208
WHEEL & TIRE AR–SOLID	209
	210
WHEEL & TIRE GP	211
WINDOW GP-CAB	559
	560
WINDOW GP-CAB–KIT	561
WINDOW GP-CAB–RH,UPPER	564
WINDOW GP-CAB–UPPER,LH	562
WIRING GP-AIR CONDITIONER	164
WIRING GP-CHASSIS	165
WIRING GP-ENGINE	169
	172
WIRING GP-HORN	174
WIRING GP-MACHINE–DEMAND FAN	175
WIRING GP-REAR LIGHTING	177
WIRING GP-WORK TOOL	178

INDEX

Désignation	Page

A

ACCOUDOIR (ASS)	450
ACCOUDOIR ET MONTAGE (ASS)	449
ACCOUPLEMENT D'ENTRAINEMENT (ASS)	484, 521
ACCOUPLEMENT D'ENTRAINEMENT (ASS)	519
ACCUMULATEUR - CLIMATISEUR (ASS)	443, 444
ACCUMULATEUR - CLIMATISEUR (ASS) (AVEC SICCATIF)	519
ACCUMULATEUR ET MONTAGE - HYDRAULIQUE (ASS)	238
ALTERNATEUR DE CHARGE (ASS)	120, 122
AMPOULE (12-V, 5-W)	146, 147
AMPOULE (12 VOLTS)	505
AMPOULE (12 VOLTS) (PLAQUE D'IMMATRICULATION)	233
AMPOULE (12V, 10W)	505
AMPOULE (12V, 21W)	144, 147
AMPOULE (12V, 4W)	144
AMPOULE (12V, 55W)	148
AMPOULE (12V, 55W)	142, 143
ARBRE A CAMES (ASS)	15, 16
ARRÊT-PINCE (ASS)	423, 424, 436
AUTOCOLLANT (COMMANDE DE TEMPÉRATURE)	447, 512, 514
AUTOCOLLANT DE FUSIBLE/ RELAIS	130
AUTOCOLLANT DE MISE EN GARDE (AUCUN ACCÈS)	573
AUTOCOLLANT DE MISE EN GARDE (AUCUN ACCÈS)	584
AUTOCOLLANT DE MISE EN GARDE (DÉGAGEMENT)	566
AUTOCOLLANT DE MISE EN GARDE (DIRECTION)	217
AUTOCOLLANT DE MISE EN GARDE (HAUTE PRESSION, LIRE LE MANUEL)	584, 587
AUTOCOLLANT DE MISE EN GARDE (HAUTE PRESSION, LIRE LE MANUEL)	573
AUTOCOLLANT DE MISE EN GARDE (PAS DE DÉGAGEMENT, RESTER À L'ÉCART)	350, 351
AUTOCOLLANT DE MISE EN GARDE (POINT PERCÉ)	412, 413, 417, 421
AUTOCOLLANT DE MISE EN GARDE (PRESSION ÉLEVÉE, LIRE LE GUIDE D'UTILISATION ET D'ENTRETIEN, ÉTATS-UNIS)	576
AUTOCOLLANT DE MISE EN GARDE (PRESSION ÉLEVÉE, LIRE LE GUIDE D'UTILISATION ET D'ENTRETIEN, ÉTATS-UNIS)	581
AUTOCOLLANT DE MISE EN GARDE (RISQUE D'ÉCRASEMENT)	386, 387, 388, 390
AUTOCOLLANT DE MISE EN GARDE (RISQUE D'ÉCRASEMENT, RESTER À L'ÉCART)	573, 584, 587
AUTOCOLLANT D'IDENTIFICATION (CONTACTEUR D'ALLUMAGE)	138
AUTOCOLLANT D'IDENTIFICATION (CONTACTEUR D'ALLUMAGE)	139
AUTOCOLLANT D'IDENTIFICATION (PRISE DE COURANT, 12V)	573, 576, 581, 584, 587
AUTOCOLLANT D'IDENTIFICATION (13-KM/H)	5, 213
AUTOCOLLANT D'IDENTIFICATION (13-KM/H)	8
AUTOCOLLANT (FOPS)	506
AUTOCOLLANT-INFORMATION (EMPLACEMENT DU TIRANT)	348
AUTOCOLLANT (RÉFLECTEUR)	432, 433
AVERTISSEUR DE RECUL (ASS)	163

B

BAÏONNETTE- NIVEAU DE CARBURANT (ASS)	505
BALAI D'ESSUIE-GLACE (ENS) (*558-MM) (AVANT, ARRIÈRE)	495
BALAI D'ESSUIE-GLACE (ENS) (*558-MM) (PORTE DE CABINE)	497

* TRADUCTION NON DISPONIBLE AU MOMENT DE LA PUBLICATION

INDEX

Désignation	Page
BANDE AUTOCOLLANTE (RÉFLECTEUR, ROUGE, BLANC)	432, 433
BATI - CHARGEUSE (ASS)	223
BÂTI DE FOURCHE (ASS)	419, 420
BÂTI DE LAME (ASS)	418
BÂTI DE MACHINE (ASS)	225
BATTERIE (ASS)	123, 124
BATTERIE (12V, SANS ENTRETIEN)	124
BATTERIE (12V, STANDARD)	123
BIELLE DE COUPLEUR (ASS)	430
BLOC-CYLINDRES (ASS)	25, 27
BOBINE DE SOLÉNOÏDE (ENS) (12 VOLTS)	344
BOUCHON À ÉVENT (RÉSERVOIR D'EXPANSION DU LIQUIDE DE REFROIDISSEMENT)	84, 86
BOUCHON AIMANTÉ (CHÂSSIS)	223
BOUCHON DE GOULOTTE DE REMPLISSAGE D'HUILE (MOTEUR)	69
BOUCHON DE GOULOTTE DE REMPLISSAGE (ENS) (CARBURANT)	109
BOUCHON DE GOULOTTE DE REMPLISSAGE (ENS) (RÉSERVOIR HYDRAULIQUE)	327
BOUCHON DE MOTEUR (ASS)	60
BOUCHON DE RADIATEUR (ENS) (ÉCHANGEUR THERMIQUE D'EAU DE MER)	82, 83
BOUCHON DE REMPLISSAGE D'HUILE MOTEUR (ASS)	69
BOUCHON DE SOUPAPE PILOTE (ASS)	322
BOUCHON DE VIDANGE (CARTER D'HUILE MOTEUR)	60
BOUCHON DE VIDANGE (HUILE MOTEUR)	52
BOUGIE DE PRECHAUFFAGE	134, 135
BOUGIE DE PRÉCHAUFFAGE (ASS)	134, 135
BOULONNERIE DE FAISCEAU DE CABLES	133
BOUTON DE TEMPÉRATURE	162
BRANCHEMENT ÉLECTRIQUE (ASS)	125, 126
BRAS DE MANUTENTION (ASS)	348
BRAS D'ESSUIE-GLACE (ASS)	495
BRAS D'ESSUIE-GLACE (ASS) (AVANT)	497
CABINE - REVÊTEMENT (ASS)	528
CABINE ROPS FERMÉE (VERSION)	453
CABLAGE - CLIMATISEUR (ASS)	164
CABLAGE - COMMANDE MANUELLE ELECTRIQUE	455
CÂBLAGE - OUTIL DE TRAVAIL (ASS)	178
CABLAGE DE CHASSIS (ASS)	165
CÂBLAGE DE KLAXON (ASS)	174
CABLAGE DE LA MACHINE (ASS)	175
CABLAGE DE MOTEUR (ASS)	169, 172
CABLAGE D'ECLAIRAGE ARRIERE (ASS)	177
CABLAGE MOTEUR (ENS)	169, 172
CÂBLE DE COMMANDE DU RÉGULATEUR (ASS)	101
CACHE-SOUPAPES (ASS)	18
CADENAS (ASS)	215, 217
CADRE DE VITRE (ASS)	502, 503
CANALISATIONS - BRANCHEMENT (ASS)	271
CANALISATIONS - OUTIL DE TRAVAIL (ASS)	300
CANALISATIONS A COMMANDE PILOTE (ASS)	290, 292
CANALISATIONS-COMMANDE D'ABAISSEMENT (ASS)	288
CANALISATIONS D'AIR (ASS)	90
CANALISATIONS DE CHAUFFAGE (ASS)	532
CANALISATIONS DE CLIMATISEUR (ASS)	530
CANALISATIONS DE FILTRE ET D'AMORÇAGE DE CARBURANT (ASS)	109
CANALISATIONS DE POMPE (ASS)	294
CANALISATIONS DE RÉCHAUFFEUR DE LIQUIDE DE REFROIDISSEMENT	532
CANALISATIONS DE REFROIDISSEUR D'HUILE HYDR. (ASS)	283
CANALISATIONS DE VÉRIN DE LEVAGE (ASS)	284, 286
CANALISATIONS DU VÉRIN D'INCLINAISON (ASS)	296, 298
CANALISATIONS HYDRAULIQUES DE VENTILATEUR (ASS)	279, 281
CANALISATIONS HYDROSTATIQUES (ASS)	189
CAPITONNAGE	529
CAPTEUR - TEMP. ET PRESSION (ASS)	155
CAPTEUR DE TEMPERATURE (ASS) (HUILE HYDRAULIQUE)	313

C

*CAB GP-ENCLOSED ROPS	454

* TRADUCTION NON DISPONIBLE AU MOMENT DE LA PUBLICATION

INDEX

Désignation	Page
CAPTEUR DE TEMPERATURE (ASS) (LIQUIDE DE REFROIDISSEMENT DU MOTEUR)	83
CAPTEUR DE VITESSE (CALAGE DU MOTEUR)	107
CAPTEUR DE VITESSE (MOTEUR DE VENTILATEUR)	318
CARENAGE DE MOTEUR (ASS)	221
CARTER AV (ASS)	42
	44
CARTER DE VOLANT (ASS)	40
	41
CEINTURE DE SECURITE (ASS)	551
	552
CHAPEAU (ENS) (RÉSERVOIR D'EAU)	441
CHAPEAU (GOULOTTE D'HUILE MOTEUR)	52
	69
CHAUFFAGE DE CABINE (ASS)	512
	514
	516
CHAUFFAGE DE CABINE (VERSION)	511
CHAUFFAGE ET MONTAGE - CABINE (ASS)	510
CLAPET DE DECHARGE (ASS)	317
CLAPET DE DECHARGE (ASS)	343
CLAPET DE DECHARGE (ASS) (CHARGE)	199
CLAPET DE DECHARGE (ASS) (INCLINAISON, AUXILIAIRE)	333
CLAPET DE DECHARGE (ASS) (LEVAGE)	333
CLAPET DE DECHARGE (ASS) (VITESSE DU VENTILATEUR)	315
CLAPET DE DECHARGE (LIMITEUR SECONDAIRE)	199
CLÉ	215
CLÉ ÉLECTRONIQUE (ENS) (SÉCURITÉ)	132
CLÉ ÉLECTRONIQUE (ENS) (SÉCURITÉ)	138
CLIGNOTANT (ENS) (12 VOLTS)	151
	227
CLIMATISEUR (ASS)	447
CLIMATISEUR ET MONTAGE (ASS)	445
CLIMATISEUR (VERSION)	446
COFFRE DE RANGEMENT (ASS)	452
COLLECTEUR - COMMANDE (ASS)	310
COLLECTEUR D'ÉCHAPPEMENT (ASS)	91
COLLECTEUR ET CANALISATIONS (ASS) - COMMANDE	302
	304
COLLECTEUR ET SOLÉNOÏDE (ASS)- COMMANDE	307
	308
	309
COLLECTEUR-RETOUR (ASS)	191
COMMANDE DE COLLECTEUR ET MONTAGE (ASS)	306
COMMANDE DE FAISCEAU (ENS) (SÉCURITÉ)	139
COMMANDE DE FAISCEAU (ENS) (SÉCURITÉ)	138
COMMANDE DE POIGNÉE (ASS)	459
	460
	461
	462
	463
	464
	465
COMMANDE DE RÉGULATEUR (ASS)	102
COMMANDE DE VENTILATEUR (ASS)	175
COMMANDE D'INTERVERROUILLAGE (ASS)	127
COMMANDE ÉLECTRONIQUE D'ÉQUIPEMENT (ASS)	131
COMMANDE HYDRAULIQUE PILOTE (ASS)	466
	469
	470
	472
	473
	475
	476
	478
	479
	480
	482
COMMANDE MANUELLE DÉMARRAGE/ARRÊT (ASS)	128
COMMANDE NON PROGRAMMEE (ASS)	131
COMMANDE NON PROGRAMMEE (ASS) (SÉCURITÉ)	132
COMPRESSEUR DE REFRIGERANT (ASS)	456
	519
	521
COMPRESSEUR ET MONTAGE - RÉFRIGÉRANT (ASS)	457
COMPRESSEUR ET MOTEUR DE RÉFRIGÉRATION (ASS)	456
COMPTEUR D'ENTRETIEN (ASS)	488
CONDENSATEUR ET MONTAGE (RÉFRIGÉRANT)	458
CONDUIT ET COMMANDE (ASS)	500
CONTACTEUR DE DÉMARRAGE À CLÉ (ENS)	504
CONTACTEUR (ENS) (SIÈGE)	555
CONTREPOIDS (ASS)	219
	220
CÔTÉ CARTER (ENS)	518
COUPLEUR EXPRESS (ASS)	397
	398
COUPLEUR EXPRESS (VERSION)	396
COURROIE TRAPEZOIDALE (POMPE À EAU)	63

* TRADUCTION NON DISPONIBLE AU MOMENT DE LA PUBLICATION

INDEX

Désignation	Page
	65
COUVERCLE - PANNEAU DE FUSIBLES (ASS)	130
COUVERCLE-CANALISATIONS (ASS)	400
COUVERCLE DE CARTER AV (ASS)	17
COUVERCLE DE LA CONSOLE (ASS)	486
	487
COUVERCLE DU TABLEAU DE BORD (ASS)	488
CULASSE (ASS)	31
	32
	34
CULASSE (ENS)	29
CULBUTERIE (ASS)	66
	67

D

DÉMARREUR ÉLECTRIQUE (ASS)	156
	158
	159
DENT MONOBLOC (ASS)	442
DISJONCTEUR DE SECURITE (ENS) (ESSUIE-GLACE)	495
DISJONCTEUR DE SECURITE (ENS) (ESSUIE-GLACE)	497
DISJONCTEUR (ENS) (105A)	169
	172
DISJONCTEUR (ENS) (30A)	227
DISJONCTEUR (ENS) (30A)	151
DISTRIBUTEUR (ASS)	333
DISTRIBUTEUR DE POMPE (ASS) (POMPE À PISTONS)	199
DISTRIBUTEUR ET MONTAGE (ASS)	332

E

EAU DES CHEMISES - RECHAUFFEUR (ASS)	137
EAU DES CHEMISES - RECHAUFFEUR (ASS)	136
ÉCLAIRAGE - FEUX DE ROUTE (ASS)	151
ÉCLAIRAGE - GYROPHARE (ASS)	154
ÉCLAIRAGE - PROJECTEURS (ASS)	149
	150
ECLAIRAGE DE GODET (ASS)	258
	260
	262
	264
	266
	268
	270
ÉCLAIRAGE-FEUX DE STOP ET ARRIÈRE (ASS)	153
ÉCRAN (HYDRAULIQUE)	290
ÉCRAN (RÉSERVOIR D'EAU)	437
ÉLECTRONIQUE - MACHINE (ENS)	132
ÉLÉMENT DE FILTRE À AIR DE CABINE	447
	512
	514
ÉLÉMENT DE FILTRE À AIR DE CABINE (AIR)	447
	514
ÉLÉMENT DE FILTRE À AIR (ENS) (PRINCIPAL)	89
ÉLÉMENT DE FILTRE À AIR (ENS) (SECONDAIRE)	89
ÉLÉMENT DE FILTRE À CARBURANT (SÉPARATEUR D'EAU)	103
ÉLÉMENT DE FILTRE (ENS)-HUILE MOTEUR	186
ÉLÉMENT DE FILTRE (ENS)-HUILE MOTEUR	52
ÉLÉMENT DU RÉCHAUFFEUR D'EAU DES CHEMISES (ENS) (MOTEUR)	136
	137
EMBRAYAGE-ROUE AV (ASS)	71
ENTRAINEMENT EN TANDEM (ASS)	182
ENTRAÎNEMENT POUR COURROIE (GYROPHARE)	148
ESSIEU (ASS)	180
	181

F

FAISCEAU DE CABLES DE LA PLATE-FORME	166
FAISCEAU DE CABLES DE LA PLATE-FORME (INFÉRIEUR)	165
FAISCEAU DE CABLES (ENS) (BOUGIE DE PRÉCHAUFFAGE)	172
FAISCEAU DE CABLES (ENS) (COMPTEUR D'ENTRETIEN)	488
FAISCEAU DE CHÂSSIS (ENS) (BOITE DE VITESSE)	520
FAISCEAU DE CHÂSSIS (ENS) (BOITE DE VITESSE)	522
FAISCEAU DE CHÂSSIS (ENS) (KLAXON)	174
FAISCEAU DE CHAUFFAGE ET CLIMATISATION	164
	512
	514
	520
	522
FAISCEAU DE COMMANDES (ENS) (LEVIER)	469
	472
	475
FAISCEAU DE CONTACTEUR (ENS)	175

* TRADUCTION NON DISPONIBLE AU MOMENT DE LA PUBLICATION

INDEX

Désignation	Page
FAISCEAU DE RÉSERVOIR DE CARBURANT (ENS)	164, 520, 522
FAISCEAU D'ÉCLAIRAGE ARRIÈRE (ENS)	151, 165, 227, 235
FAISCEAU D'ÉCLAIRAGE ARRIÈRE (ENS) (FREIN)	177
FAISCEAU D'ÉCLAIRAGE ARRIÈRE (ENS) (FREIN)	227
FAISCEAU D'ÉCLAIRAGE AVANT (ENS)	151, 227
FAISCEAU D'ESSUIE-GLACE (ENS)	489, 492, 524, 525
FAISCEAU D'ESSUIE-GLACE (ENS)	495, 497
FAISCEAU D'OUTIL DE TRAVAIL (ENS)	438
FAISCEAU D'OUTIL DE TRAVAIL (ENS) (BRAS DE LEVAGE)	140, 141, 178
FAISCEAU D'OUTIL DE TRAVAIL (ENS) (PLATEFORME)	140, 141, 178
FEUX ARRIÈRE ET FEUX D'ARRÊT	146, 147
FILTRE A AIR (ASS)	88, 89
FILTRE A HUILE (ASS)	185, 186, 187
FILTRE À HUILE (ENS) (EFFICACITÉ AVANCÉE) (HYDRAULIQUE)	185
FILTRE DE SÉPARATEUR D'EAU ET DE CARBURANT (ASS)	103
FILTRE ET CANALISATIONS HYRAULIQUES (ASS)	183
FLEXIBLE (INFÉRIEUR)	84, 86
FLEXIBLE (SUPERIEUR)	84, 86
FOURCHE - PINCE (ASS)	411, 412, 413
FOURCHE - PINCE (VERSION)	409, 410
FOURCHE PALLETTE (ASS)	414, 415
FOURCHE-RÉSEAU PUBLIC (ASS)	416, 417
FUSIBLE (10A)	140, 141, 163, 165, 178, 255, 396, 482
FUSIBLE (15A)	140, 141, 164, 165, 178
FUSIBLE (20A)	165
FUSIBLE (30A)	164, 165, 520
FUSIBLE (30A)	522

G

Désignation	Page
GODET - MATÉRIAUX MEUBLES (VERSION)	364
GODET - PINCE (ASS)	381, 382, 383, 384, 385
GODET - PINCE (VERSION)	359, 360, 361, 362, 363
GODET - SALETÉ (ENS)	369, 370, 371, 372
GODET - SALETÉ (VERSION)	356, 357
GODET NORMAL (ENS)	373, 374, 375, 376
GODET NORMAL (VERSION)	357, 358, 359
GODET POUR MATERIAUX MEUBLES (ENS)	377, 378, 379
GODET POUR TERRASSEMENT (ASS)	380
GODET POUR TRAVAUX DE SERVITUDE (ASS)	391

* TRADUCTION NON DISPONIBLE AU MOMENT DE LA PUBLICATION

INDEX

Désignation	Page
	392
	393
GODET TOUS-TRAVAUX (ASS)	386
	387
	388
	389
	390
GODET TOUS-TRAVAUX (VERSION)	364
	365
	366
	367
GRAISSEUR HYDRAULIQUE (ASS)	294
GROUPE DE MONTAGE	519
GROUPE DE MOTEUR A PISTONS	194
GROUPE DE PIECES DIVERSES	570
GROUPE DE ROTATION DE POMPE (DROITE)	199
GROUPE DE ROTATION DE POMPE (GAUCHE)	199
GROUPE DE TRANSFORMATION - DÉPLACEMENT ROUTIER	215
	216
	217
	218
GUIDE - CANALISATIONS (ASS)	226

H

*HOLDER-CUP	517
HUILE MOTEUR - CARTER (ASS)	52
HUILE MOTEUR - CARTER (ASS)	56

I

INDICATEURS ET TÉMOINS LUMINEUX (ASS)	504
	505
INSONORISATION (ASS)	237
INTERRUPTEUR - CONTACTEUR (SIÈGE)	554
INTERRUPTEUR À BASCULE (ASS) (POSITIONNEUR D'OUTIL DE TRAVAIL)	254
INTERRUPTEUR BALANCIER (ENS) (ALIMENTATION ÉLECTRIQUE, OUTIL DE TRAVAIL)	178
INTERRUPTEUR BALANCIER (ENS) (ALIMENTATION ÉLECTRIQUE, OUTIL DE TRAVAIL)	140
	141
INTERRUPTEUR BALANCIER (ENS) (CLIGNOTANT)	151
	227
INTERRUPTEUR BALANCIER (ENS) (CLIMATISEUR)	447
INTERRUPTEUR BALANCIER (ENS) (COUPLEUR EXPRESS)	255
INTERRUPTEUR BALANCIER (ENS) (COUPLEUR EXPRESS)	396
INTERRUPTEUR BALANCIER (ENS) (DÉMARRAGE À FROID)	540
	542
INTERRUPTEUR BALANCIER (ENS) (ESSUIE-GLACE ARRIÈRE)	495
	497
INTERRUPTEUR BALANCIER (ENS) (FEUX DE DÉPLACEMENT SUR ROUTE)	151
	227
INTERRUPTEUR BALANCIER (ENS) (FEUX DE DÉTRESSE)	151
	227
INTERRUPTEUR BALANCIER (ENS) (FREIN DE STATIONNEMENT)	540
	542
INTERRUPTEUR BALANCIER (ENS) (GYROPHARE)	154
INTERRUPTEUR BALANCIER (ENS) (PROJECTEUR AVANT)	540
	542
INTERRUPTEUR BALANCIER (ENS) (PROJECTEURS ARRIÈRE)	149
INTERRUPTEUR-CULBUTEUR (RÉCHAUFFEUR)	447
	512
	514

J

JOINT DE CABINE (ASS)	549
JOINT DE CACHE-SOUPAPES	18
	97
JOINT DE COUVERCLE	77
JOINT DE COUVERCLE (THERMOSTAT)	74

K

KIT DE CÂBLAGE D'OUTIL DE TRAVAIL	141
KIT DE COMMANDE D'OUTIL DE TRAVAIL ET CÂBLAGE	140
KIT DE JOINT DE CABINE	526
KIT DE JOINTS	338
KIT DE JOINTS (POMPE À ENGRENAGES)	315
KIT DE MONTAGE DE CLIMATISEUR ET CHAUFFAGE	519
	521
KIT DE PLAQUE DE DÉPLACEMENT ROUTIER ET MONTAGE	429
KIT DE PORTE DE CABINE ET MONTAGE	524

* TRADUCTION NON DISPONIBLE AU MOMENT DE LA PUBLICATION

INDEX

Désignation	Page
	525
KIT DE PRISE DE CONNEXION	450
KIT DE SOUPAPE PILOTE (RESSORT)	338
KIT DE TRANSFORMATION DU COUPLEUR EXPRESS	255
KIT DE TRANSFORMATION POUR DÉPLACEMENTS SUR ROUTE	227
KLAXON (ENS) (BAS)	479
	480

L

LAME À ORIENTATION (ASS)	351
LAME À ORIENTATION (ASS)	350
LAME DE COUPE (ASS)	403
	404
	405
	406
	407
	408
	409
LAME DE GODET TOUS-TRAVAUX	352
	353
	354
	355
LAME (VERSION)	349
LAMPE - FEUX AV	144
LAMPE - GYROPHARE (ASS)	148
LAMPE - PHARE (ASS)	142
	143
LAMPE - PHARE ET CLIGNOTANT	144
LAMPE (ENS) (ROUGE, VERT, TÉMOIN LUMINEUX, 12V)	139
LAMPE-PLAQUE D'IMMATRICULATION (ASS)	233
LEVIER DE RÉGULATEUR (ASS)	527
LITTÉRATURE (ASS)	533
LOGEMENT DE RÉGULATEUR D'EAU (ASS)	74
LOGICIEL - MACHINE (ENS) (SÉCURITÉ)	132
	138

M

MACHINE DE LEVAGE	230
	231
MANOCONTACT	160
	161
MANOCONTACT (AVERTISSEUR DE RECUL)	163
MANOCONTACT (ENS) (CLIMATISEUR)	530
MANOCONTACT (ENS) (HUILE HYDRAULIQUE)	185
MANOCONTACT (ENS) (RÉFRIGÉRANT)	520
	522
MANOCONTACT (HUILE MOTEUR)	155
	161
MARCHEPIED-BRAS DE MANUTENTION (ASS)	435
MODULE - TÉMOIN (ASS)	535
	536
MONTAGE - IMMATRICULATION (ASS)	233
MONTAGE - IMMATRICULATION (ASS)	234
MONTAGE DE FEUX DE DÉPLACEMENT SUR ROUTE (ASS)	235
MONTAGE DE MOTEUR (ASS)	48
	49
MONTAGE DE MOTEUR (VERSION)	13
	14
MONTAGE DE POMPE (ASS)	196
MONTAGE DE RADIATEUR ET REFROIDISSEUR D'HUILE (ASS)	75
MONTAGE DE VENTILATEUR (ASS)	50
	51
MONTAGE DE VÉRIN (ASS)	319
	320
	321
MONTAGE DU TOIT ROPS (ASS)	537
MONTAGE-SÉCURITÉ (ASS)	138
	139
MOTEUR À ENGRENAGES (ASS)	314
	315
	316
	317
	318
MOTEUR D'ESSUIE-GLACE (ASS)	495
	497
MOTEUR ET MONTAGE - HYDROSTATIQUE (ASS)	193
MOTEUR ET MONTAGE DE VENTILATEUR HYDRAULIQUE (ASS)	311
	312
	313
MOTEUR (VERSION)	9
MOTEUR (VERSION PRINCIPALE)	10
	11
	12

O

OEILLETONS DE LEVAGE MOTEUR (ASS)	46
	47

P

PANNEAU - FUSIBLES (ASS)	140
	141
	165

* TRADUCTION NON DISPONIBLE AU MOMENT DE LA PUBLICATION

INDEX

Désignation	Page
	178
PANNEAU LATERAL (ASS)	544
PARE-CHOCS (ASS)	212
PARE-SOLEIL	557
	558
PINCE - BÂTI (ASS)	421
PINCE - CANALISATIONS (ASS)	273
	275
	277
PINCE - VÉRIN (ASS)	245
PINCE-RÉSEAU PUBLIC (ASS)	422
	423
	424
PISTON ET BIELLE (ASS)	58
	59
PLAFONNIER (ASS) (12 VOLTS)	505
PLAQUE-DÉPLACEMENT ROUTIER (ASS)	433
PLAQUE-DÉPLACEMENT ROUTIER (ASS)	432
PLAQUE (IDENTIFICATION) (*ENGLISH, GERMAN, SPANISH)	217
	218
PLAQUE (IDENTIFICATION) (MACHINE)	573
	576
	581
	584
	587
PLAQUE SIGNALÉTIQUE (ASS)	567
	569
PLAQUE SIGNALÉTIQUE (ASS)	566
PLAQUE SIGNALÉTIQUE (POIDS MAXIMUM)	215
PLAQUES SIGNALETIQUES ET AUTOCOLLANTS (ASS)	6
	572
	573
	576
	579
	581
	584
	587
PLATE-FORME DE CABINE	547
PNEU ET JANTE (ASS)	201
	202
	203
	204
	205
	206
	207
POIGNÉE	507
POIGNÉE (ASS)	455
POIGNÉE DE COUPLEUR (ASS)	427
	428
POIGNÉE ET AXE DE COUPLEUR (ASS)	425
	426
POIGNÉE MODULAIRE (ASS)	462
	463
	464
	508
	509
POMPE - DIAPHRAGME (ASS)	438
POMPE A EAU (ASS)	77
	79
POMPE A ENGRENAGES (ASS)	324
	325
POMPE A HUILE MOTEUR (ASS)	71
POMPE A PISTONS (ASS)	199
POMPE D'ALIMENTATION ET MONTAGE (ASS)	111
	112
POMPE D'AMORÇAGE DE CARBURANT (ASS)	119
POMPE D'AMORÇAGE DE CARBURANT ET FILTRE PRINCIPAL	119
POMPE D'INJECTION DE CARBURANT (ASS)	113
	116
	117
POMPE ET MONTAGE - OUTIL DE TRAVAIL (ASS)	323
	324
POMPE HYDROSTATIQUE ET MONTAGE (ASS)	198
PORTE DE CABINE ET MONTAGE (ASS)	489
	492
PORTIÈRE DE CABINE (ASS)	497
	499
PORTIÈRE DE CABINE (ASS)	494
	495
PORTIÈRE DE CABINE (ASS) (POLYCARBONATE)	489
	524
POSITIONNEUR DE FOURCHE (ASS)	414
POULIE DE POMPE À EAU (ASS)	63
	64
PROTECTION DE ROPS/FOPS (ASS)	506
PROTEGE-COURROIE (ASS)	39

R

RACCORD (ASS)	294
RACCORD DE CANALISATION D'HUILE (ASS)	239
RADIATEUR ET REFROIDISSEUR D'HUILE HYDRAULIQUE (ASS)	82
RADIATEUR ET REFROIDISSEUR D'HUILE HYDRAULIQUE (ASS)	83

* TRADUCTION NON DISPONIBLE AU MOMENT DE LA PUBLICATION

INDEX

Désignation	Page
RADIATEUR ET REFROIDISSEUR D'HUILE-MONTAGE (ASS)	84
RADIATEUR ET REFROIDISSEUR D'HUILE-MONTAGE (ASS)	86
REGARD DE NIVEAU (NIVEAU DE LIQUIDE DE REFROIDISSEMENT)	83
REGARD DE NIVEAU (RADIATEUR)	82
REGARD DE NIVEAU (RÉSERVOIR HYDRAULIQUE)	327
RÉGULATEUR - PÉDALE (ASS)	545
	546
REGULATEUR (ASS)	104
	107
RELAIS (ENS) (COQUILLE)	166
RELAIS (ENS) (12 VOLTS)	140
	141
	447
RELAIS (ENS) (12 VOLTS)	227
RELAIS (ENS) (12 VOLTS)	140
	141
	178
RELAIS (ENS) (12 VOLTS) (DÉMARRAGE)	169
RELAIS (ENS) (12 VOLTS) (DÉMARRAGE)	172
RELAIS (ENS) (12 VOLTS) (DÉMARRAGE À FROID)	169
RELAIS (ENS) (12 VOLTS) (DÉMARRAGE À FROID)	172
RELAIS (ENS) (12 VOLTS) (ÉCLAIRAGE DE FREIN)	177
RELAIS (ENS) (12 VOLTS) (OUTIL DE TRAVAIL)	178
RELAIS (ENS) (12 VOLTS) (PUISSANCE PRINCIPALE)	165
RELAIS (ENS) (12 VOLTS) (PUISSANCE PRINCIPALE)	178
RELAIS (ENS) (12 VOLTS) (RÉCHAUFFEUR)	512
	514
RENIFLARD (CARTER DE TANDEM)	223
RENIFLARD (CLIMATISEUR)	456
RENIFLARD (COMPRESSEUR DE CLIMATISEUR)	519
	521
RENIFLARD (ENS) (*INLINE) (HUILE HYDRAULIQUE)	326
RÉSERVOIR D'EAU (ASS)	441
RÉSERVOIR D'EAU ET MONTAGE (ASS)	438
RÉSERVOIR HYDRAULIQUE (ASS)	327
RÉSERVOIR HYDRAULIQUE ET MONTAGE (ASS)	326
RESSORT DE LAME (ASS)	434
RESSORT-GAZ (ASS)	556
RETROVISEUR - CABINE (ASS)	557
	558
RÉTROVISEUR (ASS)	534
RÉTROVISEUR ET MONTAGE (ASS)	232
ROTATION DE LA ROUE DU VENTILATEUR SOUFFLANT (COMMANDE DE MACHINE, LIRE LE GUIDE D'UTILISATION ET D'ENTRETIEN)	470
	472
	476
	478
	479
	480
	482
ROTATION DE LA ROUE DU VENTILATEUR SOUFFLANT (COMMANDES DE MACHINE)	473
	475
ROTATION DE LA ROUE DU VENTILATEUR SOUFFLANT (COMMANDES DE MACHINE)	466
	469
ROTATION DE LA ROUE DU VENTILATEUR SOUFFLANT (ISSUE DE SECOURS)	559
ROTATION DE LA ROUE DU VENTILATEUR SOUFFLANT (ISSUE DE SECOURS)	499
ROTATION DE LA ROUE DU VENTILATEUR SOUFFLANT (*MACHINE SECURITY, INTL)	138
	139
ROTATION DE LA ROUE DU VENTILATEUR SOUFFLANT (N. D'ÉTAPE)	255
	328
ROTATION DE LA ROUE DU VENTILATEUR SOUFFLANT (TABLEAU DE BORD)	504
	505
ROUE ET PNEU (ASS)	211
ROUE ET PNEU (VERSION)	207
	208
	209
	210

S

SIÈGE (ASS)	553
	554
SIÈGE RÉGLABLE (ASS)	555
SILENCIEUX (ASS)	92
	93
	94
SOLÉNOÏDE (ARRÊT DE CARBURANT)	113
	128
SOLÉNOÏDE (DÉMARREUR)	156
SOUPAPE - RENIFLARD (VILEBREQUIN)	18
	97

* TRADUCTION NON DISPONIBLE AU MOMENT DE LA PUBLICATION

INDEX

Désignation	Page
SOUPAPE - SOLÉNOÏDE (ASS)	313, 344, 345, 346, 347
SOUPAPE - SOLÉNOÏDE (ASS) (COUPLEUR EXPRESS)	310
SOUPAPE - SOLÉNOÏDE (ASS) (12 VCC)	521
SOUPAPE - SOLÉNOÏDE (ASS) (12 VCC)	519
SOUPAPE A COMMANDE MANUELLE (ASS)	335
SOUPAPE D'ARRET	522
SOUPAPE D'ARRET (EAU)	516
SOUPAPE D'ARRET (RÉCHAUFFEUR DE CABINE)	532
SOUPAPE ET CANALISATIONS DE COUPLEUR (ASS)	328
SOUPAPE PILOTE (ASS)	336, 338, 340, 341
SUPPORT DE BOÎTE DE RANGEMENT (ASS)	5, 8, 213

T

TABLEAU DE BORD (ASS)	540, 542
TABLIER - FOURCHE (ASS)	395, 396
TAMIS D'ASPIRATION (RÉSERVOIR HYDRAULIQUE)	327
TAMIS D'EAU (ASS)	437
TAPIS DE PLANCHER	1, 2, 3, 4, 5, 213, 214
THERMOCONTACT (CLIMATISEUR)	447
THERMOCONTACT (ENS) (HUILE HYDRAULIQUE)	327
THERMOCONTACT (LIQUIDE DE REFROIDISSEMENT DU MOTEUR)	155, 162
THERMOSTAT-TEMPÉRATURE D'EAU	77, 79
TOILE (RENIFLARD DE CARTER MOTEUR)	18, 97
TRANSMISSION (VERSION)	197
TURBOCOMPRESSEUR (ASS)	95, 97

V

*V-BELT GP	65
VASE D'EXPANSION POUR LIQUIDE RÉFRIGERANT	84, 86
VENTILATEUR SOUFFLANT (ASS)	83
VENTILATEUR SOUFFLANT (ASS)	82
VÉRIN DE BRAS DE LEVAGE ET MONTAGE (ASS)	242
VERIN DE GODET (ASS)	244
VÉRIN DE LAME D'ORIENTATION ET MONTAGE (ASS)	240
VÉRIN DE LEVAGE (ASS)	251
VÉRIN D'INCLINAISON (ASS)	252, 253
VÉRIN ET BIELLE DE COUPLEUR (ASS)	401, 402
VÉRIN ET MONTAGE - GODET (ASS)	241
VERIN-GAZ (ENS)	75, 506
VERIN-GAZ (ENS) (CABINE)	231
VERIN-GAZ (ENS) (CABINE)	556
VERIN-GAZ (ENS) (VERROUILLAGE)	489, 492, 524, 525
VÉRIN HYDRAULIQUE (ASS)	255
VÉRIN HYDRAULIQUE (ASS)	246, 247, 248, 249, 250
VERROUILLAGE DE COUPLEUR EXPRESS (ASS)	431
VERROUILLAGE DE VÉRIN (ASS)	452
VERSION DE CHASSIS	1
VERSION DE COMMANDE DE MACHINE	2
VERSION DE GODET POUR TRAVAUX DE SERVITUDE	367, 368
VERSION DE TABLEAU DE BORD	539
VERSION DE TABLIER ET DE FOURCHE	394
VERSION DE TRANSFORMATION - DÉPLACEMENT NON ROUTIER	129
VERSION DE TRANSFORMATION MACHINE	2, 3, 4, 5, 6, 7, 8
VERSION DE TRANSFORMATION POUR DÉPLACEMENT ROUTIER	213

* TRADUCTION NON DISPONIBLE AU MOMENT DE LA PUBLICATION

INDEX

Désignation	Page	Désignation	Page
	214		
VERSION D'OPTION DE CABINE	538		
	539		
VERSION HYDRAULIQUE	254		
VERSION NORMALE	1		
	2		
VIDANGE-HUILE DE MOTEUR (ASS)	36		
VILEBREQUIN - POULIE (ASS)	61		
	62		
VILEBREQUIN (ASS)	20		
	21		
	23		
VITRE DE CABINE (ASS)	559		
	560		
	561		
	562		
	564		
VOLANT MOTEUR (ASS)	37		
	38		

* TRADUCTION NON DISPONIBLE AU MOMENT DE LA PUBLICATION

INDICE

Nombre	Página

A

ACONDICIONADOR DE AIRE (CONFIG) 446
ACONDICIONADOR DE AIRE (GR) 447
ACONDICIONADOR DE AIRE Y MONTAJE (GR) 445
ACOPLADOR DE MANIJA 427, 428
ACOPLADOR RÁPIDO (CONFIG) 396
ACOPLADOR RÁPIDO (GR) 397, 398
ACUMULADOR DEL ACONDICIONADOR DE AIRE (GR) 443, 444
ACUMULADOR DEL ACONDICIONADOR DE AIRE (GR) (CON DESECANTE) 519
ACUMULADOR HIDRAULICO Y MONTAJE (GR) 238
AGUA DE LAS CAMISAS - CALENTADOR DEL (GR) 136, 137
AGUILÓN TELESCÓPICO (GR) 348
AIRE - TUBERÍAS DE (GR) 90
ALAMBRADO DE LUCES TRASERAS (GR) 177
ALFOMBRILLA DEL PISO 1, 2, 3, 4, 5, 213, 214
ÁRBOL DE LEVAS (GR) 15, 16
ARO Y LLANTA (GR) 201, 202, 203, 204, 205, 206, 207
ASIENTO AJUSTABLE (GR) 555
ASIENTO (GR) 553, 554

B

BASTIDOR DE GARFIO (GR) 421
BASTIDOR DE HOJA (GR) 418
BASTIDOR DE LA VENTANA (GR) 502, 503
BASTIDOR DEL CARGADOR (GR) 223
BATERÍA (GR) 123, 124
BATERÍA (12 VOLTIOS, ESTANDAR) 123
BATERÍA (12-VOLTIOS, LIBRE DE MANTENIMIENTO) 124
BLOQUE MOTOR (GR) 25, 27
BOCINA (CONJ) (TONO BAJO) 479, 480
BOMBA - TUBERÍAS DE (GR) 294
BOMBA DE ACEITE DEL MOTOR (GR) 71
BOMBA DE AGUA (GR) 77, 79
BOMBA DE CEBADO DE COMBUSTIBLE (GR) 119
BOMBA DE CEBADO Y FILTRO PRIMARIO DE COMBUSTIBLE (GR) 119
BOMBA DE ENGRANAJES (GR) 324, 325
BOMBA DE INYECCIÓN DE COMBUSTIBLE (GR) 113, 116, 117
BOMBA DE PISTONES (GR) 199
BOMBA DE TRANSFERENCIA DE COMBUSTIBLE Y MONTAJE (GR) 111, 112
BOMBA DEL DIAFRAGMA (GR) 438
BOMBA Y MONTAJE DE LA HERRAMIENTA DE TRABAJO (GR) 323, 324
BRAZO DE LIMPIAPARABRISAS (GR) 495
BRAZO DE LIMPIAPARABRISAS (GR) (DELANTERO) 497
BUJÍA INCANDESCENTE 134, 135
BUJÍA INCANDESCENTE (GR) 134, 135

C

CABINA INCLUYE ROPS (GR) 454
CABLE DE CONTROL (GR) 455
CABLE GR-BOCINA 174
CABLE GR-CONTROL DE MANDO 101
CABLES CONJ. - TANQUE DE COMBUSTIBLE 164, 520, 522
CABLES CONJ. -LIMPIADOR DE VENTANAS . . . 489, 492, 495, 497, 524, 525

* NO HAY TRADUCCION DISPONIBLE EN EL MOMENTO DE LA IMPRESION

INDICE

Nombre	Página
CABLES DE LA HERRAMIENTA DE TRABAJO (GR)	178
CABLES DE LA MÁQUINA (GR)	175
CABLES DEL ACONDICIONADOR DE AIRE (GR)	164
CABLES DEL CHASIS (GR)	165
CABLES DEL MOTOR (GR)	169
	172
CAJA DE ALMACENAMIENTO	452
CAJA DELANTERA (GR)	42
	44
CALCOMANÍA (CONTROL DE TEMPERATURA)	447
	512
	514
CALCOMANÍA DE ADVERTENCIA (CONTROLES DE LA MAQUINA)	466
	469
	473
	475
CALCOMANÍA DE ADVERTENCIA (DIRECCIÓN)	217
CALCOMANÍA DE ADVERTENCIA (ESPACIO)	566
CALCOMANÍA DE ADVERTENCIA (*HIGH PRESSURE, READ MANUAL)	573
	584
	587
CALCOMANÍA DE ADVERTENCIA (*MACHINE CONTROL, READ OMM)	470
	472
	476
	478
	480
	482
CALCOMANÍA DE ADVERTENCIA (*MACHINE CONTROL, READ OMM)	479
CALCOMANÍA DE ADVERTENCIA (*MACHINE SECURITY, INTL)	138
	139
CALCOMANÍA DE ADVERTENCIA (*NO ACCESS)	573
	584
CALCOMANÍA DE ADVERTENCIA (NO ESPACIO LIBRE, MANTENGASE DETRAS DE ESTE LUGAR)	350
	351
CALCOMANÍA DE ADVERTENCIA (NO PISAR)	255
	328
CALCOMANÍA DE ADVERTENCIA (PELIGRO DE APLASTAMIENTO)	386
	387
	388
	390
CALCOMANÍA DE ADVERTENCIA (PELIGRO DE APLASTAMIENTO, MANTENGASE DETRAS DE ESTE LUGAR)	573
	584
	587
CALCOMANÍA DE ADVERTENCIA (PELIGRO DE EMPALAMIENTO)	421
CALCOMANÍA DE ADVERTENCIA (PELIGRO DE EMPALAMIENTO)	417
CALCOMANÍA DE ADVERTENCIA (PELIGRO DE EMPALAMIENTO)	412
	413
CALCOMANÍA DE ADVERTENCIA (PRESIÓN ALTA, LEER OMM, EE.UU.)	576
	581
CALCOMANÍA DE ADVERTENCIA (SALIDA ALTERNATIVA)	559
CALCOMANÍA DE ADVERTENCIA (SALIDA ALTERNATIVA)	499
CALCOMANÍA DE ADVERTENCIA (TABLERO)	505
CALCOMANÍA DE ADVERTENCIA (TABLERO DE INSTRUMENTOS)	504
CALCOMANÍA DE IDENTIFICACIÓN (INTERRUPTOR DE ENCENDIDO)	138
	139
CALCOMANÍA DE IDENTIFICACIÓN (*POWER RECEPTACLE, 12-VOLT)	573
	576
	581
	584
	587
CALCOMANÍA DE IDENTIFICACIÓN (*13-KM/H)	5
	8
	213
CALCOMANÍA DE RAYAS (*REFLECTIVE, RED, WHITE)	432
	433
CALCOMANÍA (*FOPS)	506
CALCOMANIA-FUSIBLE/RELÉ	130
CALCOMANÍA (*REFLECTIVE)	432
	433
CALCOMANÍAS Y PLACAS DE IDENTIFICACIÓN (GR)	6
	572
	573
	576
	579
	581
	587

* NO HAY TRADUCCION DISPONIBLE EN EL MOMENTO DE LA IMPRESION

INDICE

Nombre	Página
CALCOMANÍAS Y PLACAS DE IDENTIFICACIÓN (GR)	584
CALEFACCIÓN DE LA CABINA (CONFIG)	511
CALEFACCIÓN DE LA CABINA (GR)	512
CALEFACCIÓN DE LA CABINA (GR)	514
	516
CALEFACCIÓN Y MONTAJE DE LA CABINA (GR)	510
CÁNCAMOS DE LEVANTAMIENTO DEL MOTOR (GR)	46
	47
CANDADO (GR)	215
	217
CARGA - ALTERNADOR DE (GR)	120
	122
CARGADOR Y HORQUILLA (CONF)	394
CÁRTER - COLECTOR DEL (GR)	56
CÁRTER - COLECTOR DEL (GR)	52
CHASIS (CONFIG)	1
CIGÜEÑAL - POLEA DE (GR)	61
	62
CIGÜEÑAL (GR)	20
	21
	23
CILINDRO DE CUCHARÓN (GR)	244
CILINDRO DE GARFIO (GR)	245
CILINDRO DE LEVANTAMIENTO - TUBERÍAS DEL (GR)	284
	286
CILINDRO DE LEVANTAMIENTO (GR)	251
CILINDRO HIDRÁULICO (GRUPO)	246
	247
	248
	249
	250
	255
CILINDRO Y MONTAJE (GR)- INCLINACIÓN DE LA HOJA	240
CINTURÓN DE SEGURIDAD (GR)	551
	552
*COIL AS-SOLENOID (12 VOLTIOS)	344
COLADOR DEL AGUA (GR)	437
COMPARTIMENTO CONJ-LATERAL	518
COMPARTIMIENTO DEL MOTOR (GR)	221
COMPRESOR DE REFRIGERANTE (GR)	456
	519
	521
COMPRESOR DE REFRIGERANTE Y GRUPO DE MONTAJE	457
COMPRESOR Y MOTOR GR-REFRIGERANTE	456
CONDENSADOR DEL REFRIGERANTE Y MONTAJE (GR)	458
CONDUCTO Y CONTROL (GR)	500
CONEXIÓN ELÉCTRICA (GR)	125
	126
CONEXIÓN (GR)	294
CONEXION HIDRAULICA (GR)	294
CONFIGURACIÓN COMÚN	1
	2
CONFIGURACIÓN DE CABLERIA, CALENTADOR Y ACONDICIONADOR DE AIRE	164
	512
	514
	520
	522
CONFIGURACIÓN DE INSTALACIÓN DEL MOTOR	13
	14
CONFIGURACIÓN DE MOTORES	9
CONFIGURACIÓN DE TRANSFORMACIÓN PARA CARRETERA	213
	214
CONFIGURACIÓN DE TRANSFORMACIÓN PARA OBRAS	129
CONJUNTO DE DESTELLADOR (12 VOLTIOS)	151
	227
CONJUNTO DE LLAVE, ELECTRONICA (SEGURIDAD)	132
	138
CONJUNTO MAZO DE CABLES-CONTROLES DEL OPERADOR (PALANCA UNIVERSAL)	469
	472
	475
CONJUNTO, MAZO DE CABLES, LUCES DELANTERAS	151
	227
CONTRAPESO (GR)	219
	220
*CONTROL AR-MACHINE	2
CONTROL DE MANIJA (GR)	459
	460
	461
	462
CONTROL DE MANIJA (GR)	463
	464
	465
CONTROL DE REGULADOR (GR)	102
CONTROL DE TRABA (GR)	127
CONTROL DEL MULTIPLE (GR)	310
CONTROL DEL VENTILADOR (GR)	175
CONTROL HIDRÁULICO DE OPERACIÓN PILOTO (GR)	466
	469

* NO HAY TRADUCCION DISPONIBLE EN EL MOMENTO DE LA IMPRESION

INDICE

Nombre	Página
	470
	472
	473
	475
	476
	478
	479
	480
	482
CONTROL MANUAL DE ARRANQUE/PARADA (GR)	128
CONTROL NO PROGRAMADO (GR)	131
CONTROL NO PROGRAMADO (GR) (SEGURIDAD)	132
CONVERSION DE LA MAQUINA (CONFIG)	2
	3
	4
	5
	6
	7
	8
CONVERSION PARA DESPLAZAMIENTO POR CARRETERA (GR)	215
	216
	217
	218
CORREA TRAPEZOIDAL (BOMBA DE AGUA)	63
	65
*COUPLING GP-DRIVE	484
	519
	521
CUBIERTO DEL PANEL DE FUSIBLES (GR)	130
CUCHARON DE GARFIO (CONF)	359
	360
	361
	362
	363
CUCHARON DE GARFIO (GR)	381
	382
	383
	384
	385
CUCHARÓN DE USO GENERAL (CONFIG)	357
	358
	359
CUCHARÓN DE USO GENERAL (CONJ)	373
	374
	375
	376
CUCHARÓN DE USO MÚLTIPLE (CONFIG)	364
	365
	366
	367
CUCHARÓN DE USO MÚLTIPLE (GR)	386
CUCHARÓN DE USO MÚLTIPLE (GR)	387
	388
	389
	390
CUCHARÓN PARA MATERIALES LIVIANOS	377
	378
	379
CUCHARÓN PARA MATERIALES LIVIANOS (CONFIG)	364
CUCHARON PARA TIERRA (CONF)	356
	357
CUCHARON PARA TIERRA (CONJ)	369
	370
	371
	372
CUCHARÓN PARA TIERRA (GR)	380
CUCHARON UTILITARIO (CONFIG)	367
	368
CUCHARÓN UTILITARIO (GR)	391
	392
	393
CUCHILLA (GR)	403
	404
	405
	406
	407
	408
	409
CULATA DE CILINDROS (CONJ)	29
CULATA DE CILINDROS (GR)	31
	32
	34

D

DIENTE DE UNA PIEZA (UNI-TOOTH) (GR)	442
DISYUNTOR (CONJ) (105 AMPERIOS)	169
	172
DISYUNTOR (CONJ) (30-AMPERIOS)	151
	227
DRENAJE DEL ACEITE DE MOTOR	36

E

EJE (GR)	180
	181
ELECTRÓNICA DE LA MÁQUINA (GR)	132
ELEMENTO DE FILTRO DE ACEITE DE MOTOR (CONJ)	186
ELEMENTO DE FILTRO DE ACEITE DE MOTOR (CONJ)	52

* NO HAY TRADUCCION DISPONIBLE EN EL MOMENTO DE LA IMPRESION

INDICE

Nombre	Página
ELEMENTO DE FILTRO DE COMBUSTIBLE (SEPARADOR DE AGUA)	103
ELEMENTO DEL CALENTADOR DEL AGUA DE LAS CAMISAS (MOTOR)	136, 137
ELEMENTO DEL FILTRO DE AIRE (CONJ) (PRIMARIO)	89
ELEMENTO DEL FILTRO DE AIRE (CONJ) (SECUNDARIO)	89
ESCALON DE BRAZO DE MANEJO DE MATERIALES (GR)	435
ETIQUETA DE ADVERTENCIA (GR)	567, 569
ETIQUETA DE ADVERTENCIA (GR)	566

F

*FILTER ELEMENT-CAB AIR	447, 512, 514
*FILTER ELEMENT-CAB AIR (AIRE)	447, 514
FILTRO DE ACEITE (CONJ) (EFICIENCIA AVANZADA) (HIDRÁULICO)	185
FILTRO DE ACEITE (GR)	185, 186, 187
FILTRO DE AIRE (GR)	88, 89
FILTRO DE COMBUSTIBLE Y SEPARADOR DE AGUA (GR)	103
FILTROS Y TUBERÍAS HIDRÁULICAS (GR)	183
FUSIBLE (10-AMPERIOS)	163, 255, 396, 482
FUSIBLE (10-AMPERIOS)	140, 141, 165, 178
FUSIBLE (15 AMPERIOS)	164
FUSIBLE (15 AMPERIOS)	140, 141, 165, 178
FUSIBLE (20-AMPERIOS)	165
FUSIBLE (30-AMPERIOS)	164, 520, 522
FUSIBLE (30-AMPERIOS)	165

G

GARFIO DE UTILIDAD (GR)	422, 423, 424
GASA (RESPIRADERO DE CARTER)	18, 97
GR. VÁLVULA Y TUBERIAS-ACOPLADOR	328
GRUPO ADAPTADOR-TUBERIA DE ACEITE	239
GRUPO DE BASTIDOR DE HORQUILLA	419, 420
GRUPO DE BASTIDOR, MAQUINARIA	225
GRUPO DE CILINDRO Y ESLABON, ACOPLADOR	401, 402
GRUPO DE ESLABON, ACOPLADOR	430
GRUPO DE HOJA DE CUCHARÓN DE USO MÚLTIPLE	352, 353, 354, 355
GRUPO DE INSTALACIÓN	519
GRUPO DE MANIJA Y PIN-ACOPLADOR	425, 426
GRUPO DE MONTAJE Y CILINDRO, LEVANTAMIENTO DEL BRAZO	242
GRUPO DE PALANCA-REGULADOR	527
GRUPO DE POSICIONADOR DE LA HORQUILLA	414
GRUPO DE RESPALDO DE CAJA DE ALMACENAMIENTO	213
GRUPO DE SENSORES DE TEMPERATURA Y PRESIÓN	155
GRUPO DE TRABA-CILINDRO	452
GRUPO DEMONTAJE DE RADIADOR Y ENFRIAMIENTO DE ACEITE	75
GRUPO GIRATORIO DE BOMBA (LADO DERECHO)	199
GRUPO GIRATORIO DE BOMBA (LADO IZQUIERDO)	199
GRUPO, MANIJA, BOMBA DE AGUA	63, 64

H

*HANDLE GP	455
HIDRÁULICA (CONFIG)	254
HIDROSTATICO, BOMBA Y GRUPO DE MONTAJE	198
HOJA (CONFIG)	349
HOJA DE LIMPIAPARABRISAS (CONJ) (*558-MM) (DELANTERO, TRASERO)	495
HOJA DE LIMPIAPARABRISAS (CONJ) (*558-MM) (PUERTA, CABINA)	497

* NO HAY TRADUCCION DISPONIBLE EN EL MOMENTO DE LA IMPRESION

INDICE

Nombre	Página
HOJA ORIENTABLE (GR)	351
HOJA ORIENTABLE (GR)	350
*HOLDER-CUP	517
HORQUILLA DE GARFIO (CONF)	409 410
HORQUILLA DE GARFIO (GR)	411 412 413
HORQUILLA DE UTILIDAD (GR)	416 417
HORQUILLA PARA TARIMAS (GR)	414 415
*HOUSING GP-WATER REGULATOR	74
I	
IMPLEMENTOS (GR ELECTRÓNICO)	131
INCLINACIÓN HORIZONTAL - CILINDRO DE (GR)	252 253
INDICADOR DEL NIVEL DE ACEITE (GR)	505
INDICADORES Y ADVERTENCIA (GR)	505
INDICADORES Y ADVERTENCIA (GR)	504
INSONORIZADOR (GR)	237
INSTALACION DE SEGURIDAD (GR)	138
INSTALACION DE SEGURIDAD (GR)	139
INTERRUPTOR (ASIENTO)	554
INTERRUPTOR BASCULANTE (CALEFACTOR)	447 512 514
INTERRUPTOR (CONJ) (ASIENTO)	555
INTERRUPTOR DE ARRANQUE CON LLAVE (CONJ)	504
INTERRUPTOR DE LÍMITE (CONJ) (LIMPIADOR)	495 497
INTERRUPTOR DE PRESIÓN (ACEITE DEL MOTOR)	155 161
INTERRUPTOR DE PRESIÓN (CONJ) (ACEITE HIDRÁULICO)	185
INTERRUPTOR DE PRESIÓN (CONJ) (AIRE ACONDICIONADO)	530
INTERRUPTOR DE PRESIÓN (CONJ) (REFRIGERANTE)	520 522
INTERRUPTOR DE PRESIÓN (GR)	160 161
INTERRUPTOR DE PRESIÓN (GR) (ALARMA DE RETROCESO)	163
INTERRUPTOR DE TEMPERATURA (AIRE ACONDICIONADO)	447
INTERRUPTOR DE TEMPERATURA (CONJ) (ACEITE HIDRÁULICO)	327
INTERRUPTOR DE TEMPERATURA (REFRIGERANTE DEL MOTOR)	155 162
INTERRUPTOR DE VOLQUETE (CONJ) (ACONDICIONADOR DE AIRE)	447
INTERRUPTOR DE VOLQUETE (CONJ) (ACOPLADOR RAPIDO)	255
INTERRUPTOR DE VOLQUETE (CONJ) (ACOPLADOR RAPIDO)	396
INTERRUPTOR DE VOLQUETE (CONJ) (ARRANQUE EN FRIO)	540 542
INTERRUPTOR DE VOLQUETE (CONJ) (BALIZA DE ADVERTENCIA)	154
INTERRUPTOR DE VOLQUETE (CONJ) (FRENO DE ESTACIONAMIENTO)	540 542
INTERRUPTOR DE VOLQUETE (CONJ) (LIMPIAPARABRISAS TRASERO)	495 497
INTERRUPTOR DE VOLQUETE (CONJ) (LUCES DE ADVERTENCIA DE PELIGRO)	151 227
INTERRUPTOR DE VOLQUETE (CONJ) (LUCES DE DESPLAZAMIENTO)	151 227
INTERRUPTOR DE VOLQUETE (CONJ) (LUCES DE TRABAJO TRASERAS)	149
INTERRUPTOR DE VOLQUETE (CONJ) (LUZ DE TRABAJO DELANTERA)	540 542
INTERRUPTOR DE VOLQUETE (CONJ) (POTENCIA ELECTRICA, HERRAMIENTA DE TRABAJO)	140 141 178
INTERRUPTOR DE VOLQUETE (CONJ) (SEÑAL DE GIRO)	151
INTERRUPTOR DE VOLQUETE (CONJ) (SEÑAL DE GIRO)	227
INTERRUPTOR DE VOLQUETE (GR) (UBICADOR DE HERRAMIENTA DE TRABAJO)	254
INTERRUPTOR PARA LA TEMPERATURA (GR)	162
J	
JUEGO DE ENCHUFE DE CONEXIÓN	450

* NO HAY TRADUCCION DISPONIBLE EN EL MOMENTO DE LA IMPRESION

INDICE

Nombre	Página
JUEGO DE INSTALACIÓN DEL ACONDICIONADOR DE AIRE Y CALENTADOR	519, 521
JUEGO DE SELLOS	338
JUEGO DE SELLOS (BOMBA DE ENGRANAJE)	315
JUEGO DE VÁLVULA PILOTO (RESORTE)	338
JUEGO-PLACA DE DESPLAZAMIENTO Y MONTAJE	429
JUEGO, PUERTA DE CABINA Y MONTAJE	524, 525
JUNTA DE LA TAPA DE VÁLVULAS	77
JUNTA DE LA TAPA DE VÁLVULAS (REGULADOR DE TEMPERATURA)	74

K

*KIT-CAB SEAL	526
*KIT-QUICK COUPLER CONVERSION	255
*KIT-ROADING CONVERSION	227
*KIT-WORK TOOL CONTROL & WIRING	140
*KIT-WORK TOOL WIRING	141

L

LÁMPARA (CONJ) (ROJO, VERDE, DIODO, 12 VOLTIOS)	139
LÁMPARA DE BALIZA DE ADVERTENCIA (GR)	148
LÁMPARA DE FARO DELANTERO	144
LÁMPARA DE LUZ DELANTERA Y DE SEÑAL (GR)	144
LAMPARA DE PLACA DE REGISTRO (GR)	233
LÁMPARA DEL TECHO (GR) (12 VOLTIOS)	505
LÁMPARA (12 VLOTIOS, 5 VATIOS)	146, 147
LÁMPARA (12 VOLTIOS)	505
LÁMPARA (12 VOLTIOS) (PLACA DE REGISTRACIÓN)	233
LÁMPARA (12 VOLTIOS, 10 VATIOS)	505
LÁMPARA (12 VOLTIOS, 21 VATIOS)	144, 147
LÁMPARA (12 VOLTIOS, 4 VATIOS)	144
LÁMPARA (12 VOLTIOS, 55 VATIOS)	142, 143, 148
LEVANTAMIENTO DE LA MÁQUINA (GR)	230, 231
*LINES GP-LOWERING CONTROL	288
LLAVE	215
LUCES DE DESPLAZAMIENTO (GR)	151
LUCES DE PARADA Y COLA (GR)	146, 147
LUCES DE PARADA Y DE COLA (GR)	153
LUCES DE REFLECTOR (GR)	149
LUCES DE REFLECTOR (GR)	150
LUZ DE BALIZA (GR)	154

M

MANDO DE CORREA (BALIZA DE ADVERTENCIA)	148
MANDO TANDEM (GR)	182
MANGUERA (INFERIOR)	84, 86
MANGUERA (SUPERIOR)	84, 86
*MANIFOLD & LINES GP-CONTROL	302, 304
*MANIFOLD & SOLENOID GP-CONTROL	307, 308, 309
MANIJA MODULAR (GR)	462, 463, 464
MANIJA MODULAR (GR)	508, 509
MAZO DE CABLES (CONJ) (BUJÍA INCANDESCENTE)	172
MAZO DE CABLES (CONJ) (MEDIDOR DE SERVICIO)	488
MAZO DE CABLES DE CONTROL (CONJ) (SEGURIDAD)	138, 139
MAZO DE CABLES DE LA HERRAMIENTA	438
MAZO DE CABLES DE LA HERRAMIENTA (*LIFT ARM)	140, 141, 178
MAZO DE CABLES DE LA HERRAMIENTA (PLATAFORMA)	140, 141, 178
MAZO DE CABLES DE LA PLATAFORMA (CONJ)	166
MAZO DE CABLES DE LA PLATAFORMA (CONJ) (INFERIOR)	165
MAZO DE CABLES DE LUCES TRASERAS (CONJ)	151, 165, 227, 235
MAZO DE CABLES DE LUCES TRASERAS (CONJ) (FRENO)	177, 227

* NO HAY TRADUCCION DISPONIBLE EN EL MOMENTO DE LA IMPRESION

INDICE

Nombre	Página
MAZO DE CABLES DEL CHASIS (CONJ) (BOCINA)	174
MAZO DE CABLES DEL CHASIS (CONJ) (TRANSMISION)	520
	522
MAZO DE CABLES DEL INTERRUPTOR (CONFIG)	175
MAZO DE CABLES DEL MOTOR (CONJ)	169
	172
MECANISMO DE VÁLVULAS (GR)	66
	67
MEDIDOR DE SERVICIO (GR)	488
MIRILLA (NIVEL DE REFRIGERANTE)	83
MIRILLA (RADIADOR)	82
MIRILLA (TANQUE HIDRÁULICO)	327
MÓDULO INDICADOR DE ADVERTENCIA (GR)	535
	536
MONTAJE DE CILINDRO (GR)	319
	320
	321
MONTAJE DE LA BOMBA (GR)	196
MONTAJE DE LA ESTRUCTURA ROPS (GR)	537
MONTAJE DE LUCES DE DESPLAZAMIENTO POR CARRETERA (GR)	235
MONTAJE DE RADIADOR Y ENFRIAMIENTO DE ACEITE (GR)	84
	86
MONTAJE DEL CILINDRO DEL CUCHARÓN (GR)	241
MONTAJE DEL MOTOR (GR)	48
	49
MONTAJE DEL TANQUE DE AGUA (GR)	438
MONTAJE DEL VENTILADOR (GR)	50
	51
MONTAJE-REGISTRO (GR)	233
	234
MOTOR DE ARRANQUE ELÉCTRICO (GR)	156
MOTOR DE ARRANQUE ELÉCTRICO (GR)	158
	159
MOTOR DE ENGRANAJES (GR)	314
	315
	316
	317
	318
MOTOR HIDROSTATICO Y MONTAJE (GR)	193
MOTOR-LIMPIAPARABRISAS (GR)	495
	497
MOTOR PRIMARIO (CONFIG)	10
	11
	12
MOTOR Y MONTAJE DE VENTILADOR HIDRAULICO (GR)	311
	312
	313
MUELLE DE GAS (CONJ)	75
	506
MUELLE DE GAS (CONJ) (CABINA)	231
MUELLE DE GAS (CONJ) (CABINA)	556
MUELLE DE GAS (CONJ) (TRABA)	524
	525
MUELLE DE GAS (CONJ) (TRABA)	489
	492
MÚLTIPLE DE ESCAPE (GR)	91
MULTIPLE Y MONTAJE (GR) - CONTROL	306

O

*OPTION AR-CAB	538
	539

P

PANEL DE FUSIBLES (GR)	140
	141
	165
	178
PANEL LATERAL (GR)	544
PARACHOQUES (GR)	212
PASAMANOS (GR)	507
PIEZAS DIVERSAS (GR)	570
PISTÓN Y BIELA (GR)	58
	59
PISTONES DEL MOTOR (GR)	194
PLACA DE DESPLAZAMIENTO POR CARRETERA (GR)	432
	433
PLACA DE IDENTIFICACION (*ENGLISH, GERMAN, SPANISH)	217
	218
PLACA DE IDENTIFICACION (*MACHINE)	573
	576
	581
	584
	587
PLACA DE INFORMACION (PESO MAXIMO)	215
PLACA DE INFORMACION (PUNTO DE AMARRE)	348
PLATAFORMA DE LA CABINA	547
PORTAHORQUILLAS (GR)	395
	396
POSABRAZOS (GR)	450
POSABRAZOS Y MONTAJE (GR)	449
PROTECTOR DE CORREA (GR)	39
PROTECTOR DE ROPS/FOPS	506
PUBLICACIONES (GR)	533

* NO HAY TRADUCCION DISPONIBLE EN EL MOMENTO DE LA IMPRESION

INDICE

Nombre	Página
PUERTA DE CABINA	494, 495, 497, 499
PUERTA DE CABINA (*POLYCARBONATE)	489, 524
PUERTA Y MONTAJE DE CABINA (GR)	489, 492

R

RADIADOR Y ENFRIADOR DE ACEITE HIDRÁULICO (GR)	82, 83
RECUPERACIÓN DEL REFRIGERANTE (GR)	84, 86
REFLECTOR (GR)	142, 143
REGULADOR - PEDAL DEL (GR)	545, 546
REGULADOR DE TEMPERATURA DEL AGUA	77, 79
REGULADOR (GR)	104, 107
REJILLA DE SUCCIÓN (TANQUE HIDRÁULICO)	327
REJILLA (HIDRÁULICO)	290
REJILLA (TANQUE DE AGUA)	437
RELÉ (CONJ) (*SHELL)	166
RELÉ (CONJ) (12 VOLTIOS)	140, 141, 178, 227, 447
RELÉ (CONJ) (12 VOLTIOS) (ARRANQUE)	169, 172
RELÉ (CONJ) (12 VOLTIOS) (ARRANQUE EN FRIO)	169, 172
RELÉ (CONJ) (12 VOLTIOS) (CALEFACTOR)	512, 514
RELÉ (CONJ) (12 VOLTIOS) (CORRIENTE PRINCIPAL)	165
RELÉ (CONJ) (12 VOLTIOS) (CORRIENTE PRINCIPAL)	178
RELÉ (CONJ) (12 VOLTIOS) (HERRAMIENTA)	178
RELÉ (CONJ) (12 VOLTIOS) (LUZ DEL FRENO)	177
RESORTE DE GAS (GR)	556
RESORTE DE HOJA (GR)	434
RESPIRADERO (AIRE ACONDICIONADO)	456
RESPIRADERO (COMPARTIMENTO DE TANDEM)	223
RESPIRADERO (COMPRESOR DE AIRE ACONDICIONADO)	519, 521
RESPIRADERO (CONJ) (*INLINE) (ACEITE HIDRÁULICO)	326
RETORNO EN EL MULTIPLE(GR)	191
RETROCESO - ALARMA DE (GR)	163
RETROVISOR (GR)	534
RETROVISOR Y MONTAJE (GR)	232
REVESTIMIENTO DE LA CABINA (GR)	528
REVESTIMIENTO-TECHO	529
RUEDA MOTRIZ DEL ENGRANAJE(GR)	71
RUEDA Y LLANTA (CONFIG)	207, 208, 209, 210
RUEDA Y NEUMÁTICO (GR)	211

S

*SEAL-VALVE COVER	97
SELLO - TAPA DE VÁLVULA	18
SELLO DE CABINA (GR)	549
SENSOR DE TEMPERATURA (GR) (ACEITE HIDRÁULICO)	313
SENSOR DE TEMPERATURA (GR) (REFRIGERANTE DEL MOTOR)	83
SENSOR DE VELOCIDAD (SINCRONIZACION DEL MOTOR)	107
SENSOR DE VELOCIDAD (VENTILADOR DEL MOTOR)	318
SILENCIADOR (GR)	92, 93, 94
SISTEMA ROPS DE CABINA CERRADA (CONFIG)	453
SOFTWARE PARA LA MAQUINA (GR) (SEGURIDAD)	138
SOFTWARE PARA LA MAQUINA (GR) (SEGURIDAD)	132
SOLENOIDE (CORTE DE COMBUSTIBLE)	113, 128
SOLENOIDE (MOTOR DE ARRANQUE)	156
SOPLADOR - VENTILADOR (GR)	83
SOPLADOR - VENTILADOR (GR)	82
*SUPPORT GP-STORAGE BOX	5, 8

T

TABLERO DE INSTRUMENTOS (CONFIG)	539

* NO HAY TRADUCCION DISPONIBLE EN EL MOMENTO DE LA IMPRESION

INDICE

Nombre	Página
TABLERO DE INSTRUMENTOS (GR)	540
	542
TANQUE DEL AGUA (GR)	441
TANQUE HIDRÁULICO (GR)	327
TANQUE HIDRÁULICO Y MONTAJE (GR)	326
TAPA CON RESPIRADERO (RECUPERACIÓN DE REFRIGERANTE)	84
	86
TAPA DE LA CAJA DELANTERA (GR)	17
TAPA DE LA CONSOLA (GR)	486
	487
TAPA DE LLENADO (CONJ) (COMBUSTIBLE)	109
TAPA DE LLENADO (CONJ) (TANQUE HIDRAULICO)	327
TAPA DE RADIADOR (CONJ) (INTERCAMBIADOR DE CALOR PARA AGUA DE MAR)	82
	83
TAPA DE TUBERIAS (GR)	400
TAPA DEL MECANISMO DE VÁLVULAS (GR)	18
TAPA DEL TABLERO DE INSTRUMENTOS (GR)	488
TAPA DEL TUBO DE LLENADO DE ACEITE (MOTOR)	69
TAPA (LLENADO DE ACEITE DEL MOTOR)	52
	69
TAPÓN (CONJ) (TANQUE DE AGUA)	441
TAPÓN DE DRENAJE (ACEITE DEL MOTOR)	52
TAPÓN DE DRENAJE (COLECTOR DE ACEITE DEL MOTOR)	60
TAPON DE LA VALVULA PILOTO (GR)	322
TAPÓN DEL MOTOR (GR)	60
TAPÓN MAGNÉTICO (BASTIDOR)	223
TOPE DEL GARFIO(GR)	423
	424
	436
TORNILLERIA DE MAZO DE CABLES (GR)	133
TRABA-ACOPLADOR RAPIDO (GR)	431
TREN DE FUERZA (CONFIG)	197
TUBERÍAS CON SERVOMANDO (GR)	290
	292
TUBERÍAS DE ACONDICIONADOR DE AIRE (GR)	530
TUBERIAS DE CALEFACCION	532
TUBERIAS DE CONEXION (GR)	271
TUBERÍAS DE LA CALEFACCIÓN (GR)	532
TUBERIAS DE LA GUIA (GR)	226
TUBERIAS DE LA HERRAMIENTA DE TRABAJO	300
TUBERÍAS DEL CILINDRO DE INCLINACIÓN (GR)	296
	298
TUBERÍAS DEL CUCHARÓN (GR)	258
	260
	262
	264
	266
	268
	270
TUBERÍAS DEL ENFRIADOR DE ACEITE HIDRÁULICO (GR)	283
TUBERÍAS DEL GARFIO (GR)	273
	275
	277
TUBERIAS (GR) -COMBUSTIBLE PRIMARIO Y FILTRO	109
TUBERÍAS HIDRÁULICAS DEL VENTILADOR (GR)	279
	281
TUBERÍAS HIDROSTÁTICAS (GR)	189
TUBO DE LLENADO DE ACEITE (GR)	69
TURBOCOMPRESOR (GR)	95
	97

V

*V-BELT GP	65
VALVULA DE ALIVIO (CRUCE)	199
VÁLVULA DE ALIVIO (GR)	317
VÁLVULA DE ALIVIO (GR)	343
VÁLVULA DE ALIVIO (GR) (ACEITE DEL MOTOR)	199
VÁLVULA DE ALIVIO (GR) (LEVANTAMIENTO)	333
VÁLVULA DE ALIVIO (GR) (*TILT, AUXILARY)	333
VÁLVULA DE ALIVIO (GR) (VELOCIDAD DEL VENTILADOR)	315
VALVULA DE CONTROL DE LA BOMBA (GR) (BOMBA DE PISTON)	199
VÁLVULA DE CONTROL (GR)	333
VÁLVULA DE CONTROL MANUAL (GR)	335
VÁLVULA DE CONTROL Y MONTAJE (GR)	332
VALVULA DE CORTE (CONJ)	522
VALVULA DE CORTE (CONJ) (AGUA)	516
VALVULA DE CORTE (CONJ) (CALENTADOR DE CABINA)	532
VÁLVULA DE SOLENOIDE (GR)	313
	345
	346
	347
VÁLVULA DE SOLENOIDE (GR)	344
VÁLVULA DE SOLENOIDE (GR) (ACOPLADOR RAPIDO)	310
VÁLVULA DE SOLENOIDE (GR) (12 VOLTIOS CORRIENTE DIRECTA)	521

* NO HAY TRADUCCION DISPONIBLE EN EL MOMENTO DE LA IMPRESION

INDICE

Nombre	Página
VÁLVULA DE SOLENOIDE (GR) (12 VOLTIOS CORRIENTE DIRECTA)	519
VÁLVULA PILOTO (GR)	336
	338
	340
	341
VÁLVULA-RESPIRADERO (CÁRTER DEL MOTOR)	97
VÁLVULA-RESPIRADERO (CÁRTER DEL MOTOR)	18
VENTANA DE LA CABINA (GR)	559
VENTANA DE LA CABINA (GR)	560
	561
	562
	564
VISERA	557
	558
VISERA (GR)	557
	558
VOLANTE - CAJA DE (GR)	40
	41
VOLANTE (GR)	37
	38

* NO HAY TRADUCCION DISPONIBLE EN EL MOMENTO DE LA IMPRESION

ÍNDICE

Designação	Página
A	
ACOPLADOR RÁPIDO	396, 397, 398
ACOPLAMENTO DE COMANDO	484, 519, 521
ACUMULADOR - AR CONDICIONADO	443, 444
ACUMULADOR - AR CONDICIONADO (COM DESSECANTE)	519
ACUMULADOR HIDRÁULICO E MONTAGEM	238
ADAPTADOR-TUBULAÇÃO DE ÓLEO	239
ADESIVO - FUSÍVEL/RELÉ	130
ALARME DE MARCHA À RÉ	163
ALAVANCA - GOVERNADOR	527
ALAVANCA DE CONTROLE - MODULAR	462, 463, 464, 508, 509
ALÇA	455
ALÇA - ACOPLADOR	427, 428
ALÇA E PINO - ACOPLADOR	425, 426
ALOJAMENTO - LATERAL	518
ALOJAMENTO-TERMOSTATO DE ÁGUA	74
ALTERNADOR DE CORRENTE	120, 122
AQUECEDOR DA ÁGUA DO MOTOR	136, 137
AQUECEDOR DA CABINE	511, 512, 514, 516
AQUECEDOR DA CABINE E MONTAGEM	510
ARMAÇÃO - LÂMINA	418
ARMAÇÃO DA GARRA	421
ARMAÇÃO DO VIDRO	502, 503
ARMAÇÃO-GARFO	419, 420
ARRANJO BÁSICO	1, 2
ARTICULAÇÃO - ACOPLADOR	430
ASSENTO	553, 554
ASSENTO AJUSTÁVEL	555
B	
BATENTE - GARRA	423, 424, 436
BATERIA	123, 124
BATERIA (12 VOLTS, ISENTO DE MANUTENÇÃO)	124
BATERIA (12 VOLTS, PADRÃO)	123
BLOCO DO MOTOR	25, 27
BOBINA-SOLENÓIDE (12-VOLTS)	344
BOCAL DE ENCHIMENTO DE ÓLEO DO MOTOR	69
BOMBA DA FERRAMENTA DE TRABALHO E MONTAGEM	323, 324
BOMBA DE ÁGUA	77, 79
BOMBA DE DIAFRAGMA	438
BOMBA DE ENGRENAGENS	324, 325
BOMBA DE ESCORVA DO COMBUSTÍVEL	119
BOMBA DE ESCORVA DO COMBUSTÍVEL E DO FILTRO PRIMÁRIO	119
BOMBA DE INJEÇÃO DO COMBUSTÍVEL	113, 116, 117
BOMBA DE ÓLEO - MOTOR	71
BOMBA DE PISTÃO	199
BOMBA E MONTAGEM - HIDROSTÁTICA	198
BOMBA E MONTAGEM - TRANSFERÊNCIA DE COMBUSTÍVEL	111, 112
BORDA CORTANTE	403, 404, 405, 406, 407, 408, 409
BRAÇO - MANIPULADOR DE MATERIAIS	348
BRAÇO DO ASSENTO	450
BRAÇO DO LIMPADOR	495
BRAÇO DO LIMPADOR (DIANTEIRO)	497
BUJÃO DA VÁLVULA PILOTO	322
BUJÃO DO DRENO (CÁRTER DE ÓLEO DO MOTOR)	60
BUJÃO DO DRENO (ÓLEO DO MOTOR)	52
BUJÃO DO MOTOR	60
BUJÃO MAGNÉTICO (ARMAÇÃO)	223
BUZINA (TOM BAIXO)	479, 480

* TRADUÇÃO NÃO DISPONÍVEL NO MOMENTO DA IMPRESSÃO

ÍNDICE

Designação	Página

C

CABEÇOTE DO MOTOR 29, 31, 32, 34
CABINE - ESTRUTURA DE PROTEÇÃO CONTRA CAPOTAMENTO 454
CABINE - ESTRUTURA ROPS COBERTA 453
CABO - CONTROLE DO GOVERNADOR 101
CABO DE CONTROLE 455
CABOS E FIOS ELÉTRICOS-LUZES TRASEIRAS 177
CABOS/FIOS ELÉTRICOS - AR CONDICIONADO 164
CABOS/FIOS ELÉTRICOS - CHASSI 165
CABOS/FIOS ELÉTRICOS - FERRAMENTAS DE TRABALHO 178
CABOS/FIOS ELÉTRICOS - MÁQUINA 175
CABOS/FIOS ELÉTRICOS - MOTOR 169, 172
CAÇAMBA - GARRA 359, 360, 361, 362, 363, 381, 382, 383, 384, 385
CAÇAMBA - PARA APLICAÇAO GERAL 357, 358, 359
CAÇAMBA - SERVIÇOS GERAIS 367, 368
CACAMBA - TERRA 380
CAÇAMBA DE MÚLTIPLAS APLICAÇÕES 364, 365, 366, 367, 386, 387, 388, 389, 390
CACAMBA E GARFO 394
CAÇAMBA PARA APLICAÇÃO GERAL 373, 374, 375, 376
CACAMBA PARA MATERIAL LEVE 377, 378, 379
CAÇAMBA PARA MATERIAL LEVE 364
CAÇAMBA PARA SERVIÇOS GERAIS 391, 392, 393
CAÇAMBA PARA TERRA 356, 357, 369, 370, 371, 372
CADEADO 215, 217
CAIXA DE ARMAZENAMENTO 452
CAIXA DIANTEIRA 42, 44
CAIXA DO VOLANTE DO MOTOR 40, 41
CÁRTER DO ÓLEO DO MOTOR 52, 56
CHASSI 1
CHASSI - MÁQUINA 225
CHASSI DIANTEIRO 223
CHAVE 215
CHAVE - ELETRÔNICO (SEGURANÇA) 132, 138
CHAVE INTERRUPTORA DE PARTIDA 504
CHICOTE - CABOS ELÉTRICOS (MARCADOR DE HORAS DE SERVIÇO) 488
CHICOTE - CABOS ELÉTRICOS (VELA DE AQUECIMENTO) 172
CHICOTE - CHASSI (BUZINA) 174
CHICOTE - CHASSI (TRANSMISSÃO) 520, 522
CHICOTE - MOTOR 169, 172
CHICOTE - PLATAFORMA 166
CHICOTE - PLATAFORMA (INFERIOR) 165
CILINDRO DA CAÇAMBA 244
CILINDRO DA GARRA 245
CILINDRO DE INCLINAÇÃO 252, 253
CILINDRO DE LEVANTAMENTO 251
CILINDRO E ARTICULAÇÃO - ACOPLADOR 401, 402
CILINDRO E MONTAGEM - BRAÇO DE LEVANTAMENTO 242
CILINDRO E MONTAGEM - CAÇAMBA 241
CILINDRO E MONTAGEM - LÂMINA ANGULÁVEL 240
CILINDRO HIDRÁULICO 246, 247, 248, 249

* TRADUÇÃO NÃO DISPONÍVEL NO MOMENTO DA IMPRESSÃO

ÍNDICE

Designação	Página
	250
	255
CINTO DE SEGURANÇA	551
	552
COBERTURA DO MOTOR	221
COLETOR - CONTROLE	310
COLETOR - RETORNO	191
COLETOR DE ESCAPE	91
COLETOR E MONTAGEM - CONTROLE	306
COLETOR E SOLENÓIDE-CONTROLE	307
	308
	309
COLETOR E TUBULAÇÕES -CONTROLE	302
	304
COMANDO DO TANDEM	182
COMANDO HIDRÁULICO	254
COMPRESSOR DE REFRIGERANTE	456
	519
	521
COMPRESSOR DE REFRIGERANTE E MONTAGEM	457
COMPRESSOR E MOTOR - REFRIGERADO	456
CONDENSADOR DO REFRIGERANTE E MONTAGEM	458
CONDICIONADOR DE AR	446
	447
CONDICIONADOR DE AR E MONTAGEM	445
CONEXÃO	294
CONEXÃO - ELÉTRICA	125
	126
CONEXÃO - HIDRÁULICA	294
CONTRAPESO	219
	220
CONTROLE - NÃO PROGRAMADO	131
CONTROLE - NÃO PROGRAMADO (SEGURANÇA)	132
CONTROLE-CABO	459
	460
	461
	462
	463
	464
	465
CONTROLE DE TRAVAMENTO	127
CONTROLE DO GOVERNADOR	102
CONTROLE DO VENTILADOR	175
CONTROLE HIDRÁULICO DE OPERAÇÃO PILOTO	466
	469
	470
	472
	473
	475
	476
	478
	479
	480
	482
CONTROLE MANUAL DE PARTIDA E PARADA	128
CORREIA DE COMANDO (PISCA-ALERTA)	148
CORREIA EM V (BOMBA D'ÁGUA)	63
	65

D

DECALQUE	566
	567
	569
DECALQUE - ADVERTÊNCIA (ALTA PRESSÃO, CONSULTAR MANUAL)	573
	584
	587
DECALQUE - ADVERTÊNCIA (ALTA PRESSÃO, CONSULTAR OMM, EUA)	576
	581
DECALQUE - ADVERTÊNCIA (DIREÇÃO)	217
DECALQUE - ADVERTÊNCIA (FOLGA)	566
DECALQUE - ADVERTÊNCIA (NÃO É ACESSO)	573
	584
DECALQUE - ADVERTÊNCIA (NAO HÁ VAO LIVRE, MANTENHA DISTANCIA)	350
	351
DECALQUE - ADVERTÊNCIA (PERIGO DE ESMAGAMENTO)	386
	387
	388
	390
DECALQUE - ADVERTÊNCIA (PERIGO DE ESMAGAMENTO, MANTENHA DISTÂNCIA)	573
	584
	587
DECALQUE - ADVERTÊNCIA (PONTO DE UNIÃO)	412
	413
	417
	421
DECALQUE - IDENTIFICAÇÃO (IGNIÇÃO)	138
	139
DECALQUE - IDENTIFICAÇÃO (TOMADA DE FORÇA, 12 VOLTS)	573
	576
	581
	584

* TRADUÇÃO NÃO DISPONÍVEL NO MOMENTO DA IMPRESSÃO

ÍNDICE

Designação	Página
	587
DECALQUE - IDENTIFICAÇÃO (13 KM/H)	5
	8
	213
DECALQUE - INFORMAÇÕES (LOCAL DE AMARRAÇÃO)	348
DECALQUE - INSTRUÇÃO (CONTROLE DA MÁQUINA, LER OMM)	472
DECALQUE - INSTRUÇÃO (CONTROLE DA MÁQUINA, LER OMM)	470
	476
	478
	479
	480
	482
DECALQUE - INSTRUÇÃO (CONTROLES DA MÁQUINA)	466
	469
	473
	475
DECALQUE - INSTRUÇÃO (*MACHINE SECURITY, INTL)	138
	139
DECALQUE - INSTRUÇÃO (PAINEL)	505
DECALQUE - INSTRUÇÃO (PAINEL DE INSTRUMENTOS)	504
DECALQUE - INSTRUÇÃO (SAÍDA DE EMERGÊNCIA)	499
	559
DECALQUE - INSTRUÇÃO (SEM DEGRAUS)	255
	328
DECALQUE - TIRA (*REFLECTIVE, RED, WHITE)	432
	433
DECALQUE (CONTROLE DE TEMPERATURA)	512
DECALQUE (CONTROLE DE TEMPERATURA)	447
	514
DECALQUE (FOPS)	506
DECALQUE (REFLETOR)	432
	433
DEGRAU - BRAÇO DE MANIPULAÇÃO DE MATERIAIS	435
DISJUNTOR AUTOMÁTICO DE CIRCUITO (105 AMPERES)	169
	172
DISJUNTOR AUTOMÁTICO DE CIRCUITO (30 AMPERES)	151
	227
DRENO - ÓLEO DO MOTOR	36
DUCTO E CONTROLE	500

E

EIXO	180
	181
EIXO-COMANDO DE VÁLVULA	15
	16
ELEMENTO - AQUECEDOR DE ÁGUA DA CAMISA (MOTOR)	136
	137
ELEMENTO DO FILTRO DE AR (PRIMÁRIO)	89
ELEMENTO DO FILTRO DE AR (SECUNDÁRIO)	89
ELEMENTO DO FILTRO DE COMBUSTÍVEL (SEPARADOR DE ÁGUA)	103
ELEMENTO FILTRANE-AR DA CABINE	447
	512
	514
ELEMENTO FILTRANE-AR DA CABINE (AR)	447
	514
ELEMENTO FILTRANTE - ÓLEO DO MOTOR	52
	186
ENCOSTO DO BRAÇO E MONTAGEM	449
ENGRENAGEM DA RODA-GUIA	71
ESPELHO RETROVISOR	534
ESPELHO RETROVISOR E MONTAGEM	232

F

FAROL DIANTEIRO	144
FIAÇÃO - AQUECEDOR E AR CONDICIONADO	164
	512
	514
	520
	522
FIAÇÃO - BUZINA	174
FIAÇÃO - CONTROLE (SEGURANÇA)	139
FIAÇÃO - CONTROLE (SEGURANÇA)	138
FIAÇAO - CONTROLES DO OPERADOR (ALAVANCA DE CONTROLE)	469
	472
	475
FIAÇÃO - FERRAMENTA DE TRABALHO	438
FIAÇÃO - FERRAMENTA DE TRABALHO (BRAÇO DE LEVANTAMENTO)	140
	141
	178
FIAÇÃO - FERRAMENTA DE TRABALHO (PLATAFORMA)	140
	141
	178
FIAÇÃO - INTERRUPTOR	175
FIAÇÃO - LUZES TRASEIRAS	151
	165

* TRADUÇÃO NÃO DISPONÍVEL NO MOMENTO DA IMPRESSÃO

ÍNDICE

Designação	Página
	227
	235
FIAÇÃO - LUZES TRASEIRAS (FREIO)	177
FIAÇÃO - LUZES TRASEIRAS (FREIO)	227
FIAÇÃO -LUZES DIANTEIRAS	151
	227
FIAÇÃO-LIMPADOR DE VIDROS	489
	492
	495
	497
	524
	525
FIAÇÃO-TANQUE DE COMBUSTÍVEL	164
	520
	522
FILTRO - ÓLEO	185
	186
	187
FILTRO - ÓLEO (EFICIÊNCIA AVANÇADA) (HIDRÁULICO)	185
FILTRO DE COMBUSTÍVEL E SEPARADOR DE ÁGUA	103
FILTRO HIDRÁULICO E TUBOS	183
FILTRO (RESPIRO DO CÁRTER)	18
	97
FIXADORES - CHICOTE	133
FUSÍVEL (10 AMPERES)	140
	141
	163
	165
	178
	255
	396
FUSÍVEL (10 AMPERES)	482
FUSÍVEL (15 AMPERES)	140
	141
	164
	165
	178
FUSÍVEL (20-AMPERES)	165
FUSÍVEL (30 AMPERES)	164
	165
	520
	522

G

GARFO - SERVIÇOS PÚBLICOS	416
	417
GARFO DA GARRA	409
	410
	411
	412
	413
GARFO DE PALETAS	414
	415
GARRA - SERVIÇOS PÚBLICOS	422
	423
	424
GOVERNADOR	104
	107
GR. DE CONVERSÃO - ARRANJO NÃO RODOVIÁRIO	129
GR. DE CONVERSÃO - OPERAÇÃO RODOVIÁRIA	215
	216
	217
	218
GRUPO DE CONVERSÃO - ARRANJO RODOVIÁRIO	213
	214
GRUPO DE INSTALAÇÃO - MOTOR	13
	14
GRUPO DE POLIA - BOMBA DE ÁGUA	63
	64
GRUPO ROTATIVO DA BOMBA (DIREITO)	199
GRUPO ROTATIVO DA BOMBA (ESQUERDO)	199
GUIA - TUBOS	226

H

*HOLDER-CUP	517

I

ILUMINAÇÃO - FREIO E MARCHA À RÉ	153
ILUMINAÇÃO - RODOVIÁRIA	151
INDICADOR E ALARME	504
	505
INSTALAÇÃO	519
INSTALAÇÃO-SEGURANÇA	138
	139
INTERRUPTOR - BALANCIM (ACOPLADOR RAPIDO)	255
	396
INTERRUPTOR - BALANCIM (AQUECEDOR)	447
	512
	514
INTERRUPTOR - BALANCIM (CONDICIONADOR DE AR)	447
INTERRUPTOR - BALANCIM (ENERGIA ELÉTRICA, FERRAMENTA DE TRABALHO)	140
	141
	178

* TRADUÇÃO NÃO DISPONÍVEL NO MOMENTO DA IMPRESSÃO

ÍNDICE

Designação	Página
INTERRUPTOR - BALANCIM (FARÓIS DE ESTRADA)	151, 227
INTERRUPTOR - BALANCIM (FAROL DIANTEIRO)	540, 542
INTERRUPTOR - BALANCIM (FREIO DE ESTACIONAMENTO)	540, 542
INTERRUPTOR - BALANCIM (LIMPADOR TRASEIRO)	495, 497
INTERRUPTOR - BALANCIM (LUZES DE ADVERTÊNCIA CONTRA PERIGO)	151, 227
INTERRUPTOR - BALANCIM (LUZES DE TRABALHO TRASEIRAS)	149
INTERRUPTOR - BALANCIM (PARTIDA A FRIO)	540, 542
INTERRUPTOR - BALANCIM (PISCA-ALERTA)	154
INTERRUPTOR - BALANCIM (POSICIONADOR DA FERRAMENTA DE TRABALHO)	254
INTERRUPTOR - BALANCIM (SETA DE DIREÇÃO)	151, 227
INTERRUPTOR - LIMITADOR (LIMPADOR)	495, 497
INTERRUPTOR - PRESSÃO	160, 161
INTERRUPTOR - PRESSÃO (ALARME DE MARCHA-À-RÉ)	163
INTERRUPTOR - PRESSÃO (AR CONDICIONADO)	530
INTERRUPTOR - PRESSÃO (ÓLEO DO MOTOR)	155, 161
INTERRUPTOR - PRESSÃO (ÓLEO HIDRÁULICO)	185
INTERRUPTOR - PRESSÃO (REFRIGERANTE)	520, 522
INTERRUPTOR - TEMPERATURA	162
INTERRUPTOR - TEMPERATURA (AR CONDICIONADO)	447
INTERRUPTOR - TEMPERATURA (LÍQUIDO ARREFECEDOR DO MOTOR)	155, 162
INTERRUPTOR - TEMPERATURA (ÓLEO HIDRÁULICO)	327
INTERRUPTOR (ASSENTO)	554, 555

J

JANELA DA CABINE	559, 560, 561, 562, 564
JOGO - PORTA DA CABINE E MONTAGEM	524, 525
JOGO - VÁLVULA PILOTO (MOLA)	338
JOGO DE BUJÃO-CON	450
JOGO DE RETENTOR	338
JOGO DE RETENTOR (BOMBA DE ENGRENAGEM)	315
JOGO-INSTALAÇÃO DO CONDICIONADOR DE AR E AQUECEDOR	519, 521
JOGO-PLACA DE RODAGEM E MONTAGEM	429
JUNTA - TAMPA	77
JUNTA - TAMPA (TERMOSTATO)	74

K

KIT-CONTROLE E FIAÇÃO DA FERRAMENTA DE TRABALHO	140
KIT-CONVERSÃO DE RODAGEM	227
KIT-CONVERSÃO DO ACOPLADOR RÁPIDO	255
KIT-FIAÇÃO DA FERRAMENTA DE TRABALHO	141
KIT-RETENTOR DA CABINE	526

L

LÂMINA	349
LÂMINA ANGULÁVEL	350, 351
LÂMINA-CAÇAMBA DE APLICAÇÕES MÚLTIPLAS	352, 353, 354, 355
LÂMINA DO LIMPADOR DE PÁRA-BRISA (*558-MM) (DIANTEIRO, TRASEIRO)	495
LÂMINA DO LIMPADOR DE PÁRA-BRISA (*558-MM) (PORTA DA CABINE)	497
LÂMPADA - FAROL	142, 143
LÂMPADA - TETO (12-VOLTS)	505
LÂMPADA DIANTEIRA E DE SINAL	144
LAMPADA-PLACA DE REGISTRO	233
LÂMPADA (VERMELHA, VERDE, LED, 12 VOLTS)	139
LÂMPADA (12-VOLTS)	505

* TRADUÇÃO NÃO DISPONÍVEL NO MOMENTO DA IMPRESSÃO

ÍNDICE

Designação	Página
LÂMPADA (12-VOLTS) (PLACA DE REGISTRO)	233
LÂMPADA (12-VOLTS, 10-WATTS)	505
LÂMPADA (12-VOLTS, 21-WATTS)	144, 147
LÂMPADA (12-VOLTS, 4-WATTS)	144
LÂMPADA (12 VOLTS, 5 WATTS)	146, 147
LÂMPADA (12-VOLTS, 55-WATTS)	142, 143, 148
LEVANTAMENTO DA MÁQUINA	230, 231
LEVANTAMENTO DO MOTOR	46, 47
LUZ GIRATÓRIA DE ALARME	148
LUZ INTERMITENTE (12-VOLTS)	151, 227
LUZ TRASEIRA E DE FREIO	146, 147
M	
MANGUEIRA (INFERIOR)	84, 86
MANGUEIRA (SUPERIOR)	84, 86
MÁQUINA - CONVERSÃO	2, 3, 4, 5, 6, 7, 8
MÁQUINA AR DE CONTROLE	2
MARCADOR DE HORAS DE SERVIÇO	488
MECANISMO DAS VÁLVULAS	66, 67
MEDIDOR - NÍVEL DE COMBUSTÍVEL	505
MÓDULO - INDICADOR DE ALARME	535, 536
MOLA - LÂMINA	434
MOLA A GÁS	556
MOLA ACIONADA A GAS	75, 506
MOLA ACIONADA A GAS (CABINE)	231
MOLA ACIONADA A GAS (CABINE)	556
MOLA ACIONADA A GAS (TRAVAMENTO)	489, 492, 524, 525
MONTAGEM - BOMBA	196
MONTAGEM - CILINDRO	319, 320, 321
MONTAGEM - ESTRUTURA ROPS	537
MONTAGEM - LUZES PARA ILUMINAÇÃO RODOVIÁRIA	235
MONTAGEM - MOTOR	48, 49
MONTAGEM - VENTILADOR	50, 51
MONTAGEM DA PLACA DE REGISTRO	233, 234
MOTOR	9
MOTOR - ENGRENAGENS	314, 315, 316, 317, 318
MOTOR - LIMPADOR DO VIDRO	495, 497
MOTOR - PISTÃO	194
MOTOR E MONTAGEM - VENTILADOR HIDRÁULICO	311, 312, 313
MOTOR ELÉTRICO DE PARTIDA	156, 158, 159
MOTOR HIDROSTÁTICO E MONTAGEM	193
MOTOR PRIMÁRIO	10, 11, 12
O	
OPÇÃO-CABINE	538, 539
P	
PAINEL DE FUSÍVEIS	140, 141, 165, 178
PAINEL DE INSTRUMENTOS	539, 540, 542
PAINEL LATERAL	544
PÁRA-CHOQUE	212
PÁRA-SOL	557, 558
PÁRA-SOL DA CABINE	557, 558
PEÇAS DIVERSAS	570

* TRADUÇÃO NÃO DISPONÍVEL NO MOMENTO DA IMPRESSÃO

ÍNDICE

Designação	Página
PEDAL DO GOVERNADOR	545
	546
PEGA-MÃO	507
PISTÃO E BIELA	58
	59
PLACA DE IDENTIFICAÇÃO (*ENGLISH, GERMAN, SPANISH)	217
	218
PLACA DE IDENTIFICAÇÃO (MÁQUINA)	573
	576
	581
	584
	587
PLACA DE INFORMAÇÃO (PESO MÁXIMO)	215
PLACA E DECALQUE	6
	572
	573
	576
	579
	581
	584
	587
PLACA-RODOVIÁRIO	432
	433
PLATAFORMA DO OPERADOR	547
PNEU E ARO	201
	202
	203
	204
	205
	206
	207
POLIA DO VIRABREQUIM	61
	62
PORTA DA CABINE	494
	495
	497
	499
PORTA DA CABINE (POLICARBONATO)	524
PORTA DA CABINE (POLICARBONATO)	489
PORTA E MONTAGEM-CABINA	489
	492
POSICIONADOR-GARFO	414
PROTETOR - CORREIAS	39
PROTETOR - ROPS/FOPS	506
PUBLICAÇÃO	533
PURIFICADOR DE AR	88
	89

R

RADIADOR E ARREFECEDOR DE ÓLEO - MONTAGEM	84
	86
RADIADOR E ARREFECEDOR DO ÓLEO HIDRÁULICO	82
	83
RECUPERAÇÃO DE LÍQUIDO ARREFECEDOR	84
	86
REDUÇÃO DE RUÍDO	237
REGULADOR DE TEMPERATURA DA ÁGUA	77
	79
RELÉ (CONJ) (CARCAÇA)	166
RELÉ (CONJ) (12-VOLTS)	140
	141
	178
	227
	447
RELÉ (CONJ) (12-VOLTS) (AQUECEDOR)	512
	514
RELÉ (CONJ) (12-VOLTS) (FERRAMENTA DE TRABALHO)	178
RELÉ (CONJ) (12-VOLTS) (LUZ DE FREIO)	177
RELÉ (CONJ) (12-VOLTS) (PARTIDA)	169
	172
RELÉ (CONJ) (12-VOLTS) (PARTIDA A FRIO)	169
	172
RELÉ (CONJ) (12-VOLTS) (POTÊNCIA PRINCIPAL)	165
	178
RESPIRO (ALOJAMENTO DO TANDEM)	223
RESPIRO (AR CONDICIONADO)	456
RESPIRO (COMPRESSOR DO AR CONDICIONADO)	519
	521
RESPIRO (EM LINHA) (ÓLEO HIDRÁULICO)	326
RETENTOR - TAMPA DA VÁLVULA	18
	97
RETENTOR-CABINE	549
REVESTIMENTO - CABINE	529
REVESTIMENTO DA CABINE	528
RODA E PNEU	207
	208
	209
	210
	211

S

SENSOR - TEMPERATURA (LÍQUIDO ARREFECEDOR DO MOTOR)	83
SENSOR - TEMPERATURA (ÓLEO HIDRÁULICO)	313
SENSOR DE PRESSÃO E TEMPERATURA	155

* TRADUÇÃO NÃO DISPONÍVEL NO MOMENTO DA IMPRESSÃO

ÍNDICE

Designação	Página
SENSOR DE VELOCIDADE (MOTOR DO VENTILADOR)	318
SENSOR DE VELOCIDADE (SINCRONIZAÇÃO DO MOTOR)	107
SILENCIADOR	92
	93
	94
SIST. DE ILUMINAÇÃO - PISCA-PISCA GIRATÓRIO DE ADVERTÊNCIA	154
SIST. ELETRÔNICO - ACESSÓRIO	131
SISTEMA DE ILUMINAÇÃO - FARÓIS	149
	150
SISTEMA ELETRÔNICO - MÁQUINA	132
SOFTWARE - MÁQUINA (SEGURANÇA)	132
	138
SOLENÓIDE (DESLIGAMENTO - COMBUSTÍVEL)	113
	128
SOLENÓIDE (MOTOR DE PARTIDA)	156
SUPORTE - ARREFECEDR DE ÓLEO E RADIADOR	75
SUPORTE - CAIXA DE ARMAZENAGEM	5
	8
	213
SUPORTE - GARFO	395
	396

T

Designação	Página
TAMPA - BOCAL DE ENCHIMENTO (COMBUSTÍVEL)	109
TAMPA - BOCAL DE ENCHIMENTO DE ÓLEO (MOTOR)	69
TAMPA - BOCAL DE ENCHIMENTO (TANQUE HIDRÁULICO)	327
TAMPA - CAIXA DIANTEIRA	17
TAMPA - CONSOLO	486
	487
TAMPA - MECANISMO DAS VÁLVULAS	18
TAMPA - PAINEL DE INSTRUMENTOS	488
TAMPA - RADIADOR (PERMUTADOR DE CALOR DE AGUA SALGADA)	82
	83
TAMPA - TUBULAÇÕES	400
TAMPA (BOCAL DE ENCHIMENTO DO ÓLEO DO MOTOR)	52
	69
TAMPA COM RESPIRO (RECUPERAÇÃO DO LÍQUIDO ARREFECEDOR)	84
	86
TAMPA DO PAINEL DO FUSÍVEL	130
TAMPA (TANQUE DE ÁGUA)	441
TANQUE DE ÁGUA	441
TANQUE DE ÁGUA E MONTAGEM	438
TANQUE DE ÓLEO HIDRÁULICO E MONTAGEM	326
TANQUE HIDRÁULICO	327
TAPETE	1
	2
	3
	4
	5
	213
	214
TELA DE SUCÇÃO (TANQUE HIDRÁULICO)	327
TELA FILTRANTE - ÁGUA	437
TELA FILTRANTE (HIDRÁULICO)	290
TELA FILTRANTE (TANQUE DE ÁGUA)	437
TRAVA - ACOPLADOR RÁPIDO	431
TRAVA-CILINDRO	452
TREM DE FORÇA	197
TUBOS - AQUECEDOR	532
TUBOS - AR	90
TUBOS - AR CONDICIONADO	530
TUBOS - ARREFECEDOR DE ÓLEO HIDRÁULICO	283
TUBOS - BOMBA	294
TUBOS - CAÇAMBA	258
	260
	262
	264
	266
	268
	270
TUBOS - CILINDRO DE INCLINAÇÃO	296
	298
TUBOS - CILINDRO DE LEVANTAMENTO	284
	286
TUBOS - CIRCUITO PILOTO	290
	292
TUBOS - FERRAMENTA DE TRABALHO	300
TUBOS - GARRA	273
	275
	277
TUBOS - SISTEMA HIDROSTÁTICO	189
TUBOS - VENTILADOR HIDRÁULICOS	279
	281
TUBOS DE CONEXÃO	271
TUBOS DO AQUECEDOR	532
TUBULAÇÕES - FILTRO E ESCORVA DO COMBUSTÍVEL	109
TUBULAÇÕES-CONTROLE DE ABAIXAMENTO	288
TURBOALIMENTADOR	95
	97

* TRADUÇÃO NÃO DISPONÍVEL NO MOMENTO DA IMPRESSÃO

ÍNDICE

Designação	Página
U	
UNI-DENTE	442
V	
*V-BELT GP	65
VÁLVULA DE ALÍVIO	317
	343
VÁLVULA DE ALÍVIO (CARGA)	199
VÁLVULA DE ALÍVIO (DE DUAS DIREÇÕES)	199
VÁLVULA DE ALÍVIO (INCLINAÇÃO, AUXILIAR)	333
VÁLVULA DE ALÍVIO (LEVANTAMENTO)	333
VÁLVULA DE ALÍVIO (VELOCIDADE DO VENTILADOR)	315
VÁLVULA DE CONTROLE	333
VÁLVULA DE CONTROLE DA BOMBA (BOMBA DO PISTÃO)	199
VÁLVULA DE CONTROLE E MONTAGEM	332
VÁLVULA DE CONTROLE PILOTO	336
	338
	340
	341
VÁLVULA DE FECHAMENTO	522
VÁLVULA DE FECHAMENTO (ÁGUA)	516
VÁLVULA DE FECHAMENTO (AQUECEDOR DA CABINE)	532
VÁLVULA DO RESPIRO (CÁRTER)	18
	97
VÁLVULA E TUBULAÇÔES - ACOPLADOR	328
VÁLVULA MANUAL	335
VÁLVULA SOLENÓIDE	313
	344
	345
	346
	347
VÁLVULA SOLENÓIDE (ACOPLADOR RÁPIDO)	310
VÁLVULA SOLENÓIDE (12 VDC)	519
	521
VELA DE AQUECIMENTO; VELA INCANDESCENTE	134
	135
VENTILADOR DE SOPRO	82
	83
VIGIA (NÍVEL DO LÍQUIDO ARREFECEDOR)	83
VIGIA (RADIADOR)	82
VIGIA (TANQUE HIDRÁULICO)	327
VIRABREQUIM	20
	21
	23
VOLANTE DO MOTOR	37
	38

* TRADUÇÃO NÃO DISPONÍVEL NO MOMENTO DA IMPRESSÃO

STICHWORTVERZEICHNIS

Bezeichnung	Seite
A	
ABLASSSTOPFEN (MOTORÖL)	52
ABLASSSTOPFEN (MOTORÖLWANNE)	60
ABSPERRVENTIL	522
ABSPERRVENTIL (FAHRERHAUSHEIZUNG)	532
ABSPERRVENTIL (WASSER)	516
ACHSE	180 181
ADAPTER - ÖLLEITUNG	239
ANSAUGSIEB (HYDRAULIKTANK)	327
ANSCHLUSS, ELEKTR.	125 126
ANSCHLUSSGRIFF	427 428
ANSCHLUSSLEITUNGEN	271
ANSCHLUSSSTÜCK	294
ANTRIEBSKUPPLUNG	484 519 521
ARBEITSGERÄT - LEITUNGEN	300
ARBEITSGERÄT - VERDRAHTUNG	178
ARBEITSGERÄTEELEKTRONIK	131
ARBEITSGERÄTEPUMPE U. BEFESTIGUNG	323 324
ARBEITSGERÄTEVERDRAHTUNGSSATZ	141
ARBEITSLEUCHTEN	142 143 149 150
ARMLEHNE	450
ARNLEHNE U. BEFESTIGUNG	449
AUFKLEBER	566 567 569
AUFKLEBER - INFORMATION (FESTZURR-STELLE)	348
AUFKLEBER - SOICHERUNG/RELAIS	130
AUFKLEBER (*FOPS)	506
AUFKLEBER (REFLEKTIEREND, ROT, WEISS)	432 433
AUFKLEBER (REFLEKTIV)	432 433
AUFKLEBER (TEMPERATURREGELUNG)	447 512 514
AUSPUFFKRÜMMER	91
B	
BATTERIE	123 124
BATTERIE (12 V, STANDARD)	123
BATTERIE (12 V, WARTUNGSFREI)	124
BEDIENUNGSELEMENTE - KABELSTRANG (JOYSTICK)	469 472 475
BELEUCHTUNG FÜR STRASSENFAHRT - BEFESTIGUNG	235
BELEUCHTUNGSANLAGE (ROT, GRÜN, LED, 12 V)	139
BELEUCHTUNGSANLAGE (STRASSENAUSRÜ-STUNG)	151
BETRIEBSSTUNDENZÄHLER	488
BLINKER (12 V)	151 227
BREMS- UND RÜCKLEUCHTE	146 147
BREMS- UND RÜCKLEUCHTEN	153
*BUCKET AR-UTILITY	367 368
C	
*CYLINDER & MTG GP-BUCKET	241
D	
DICHTUNGSSATZ	338
DICHTUNGSSATZ (ZAHNRADPUMPE)	315
DOKUMENTATION	533
DREHSTROMGENERATOR	120 122
DREHZAHLREGLERKABEL	101
DREHZAHLSENSOR (LÜFTERMOTOR)	318
DREHZAHLSENSOR (ZÜNDZEITPUNKT-EINSTELLUNG)	107
DRUCKBEGRENZUNGSVENTIL (UMSCHALT-VENTIL)	199
DRUCKLÜFTER	82 83
DRUCKLUFTLEITUNGEN	90
DRUCKSCHALTER	160 161
DRUCKSCHALTER (HYDRAULIKÖL)	185
DRUCKSCHALTER (KLIMAANLAGE)	530
DRUCKSCHALTER (KÜHLMITTEL)	520 522
DRUCKSCHALTER (MOTORÖL)	155 161
DRUCKSCHALTER (RÜCKFAHRALARM)	163
E	
EINBAUSATZ	519

* ÜBERSETZUNG ZUM ZEITPUNKT DER DRUCKLEGUNG NICHT VORHANDEN

STICHWORTVERZEICHNIS

Bezeichnung	Seite
EINBAUSATZ - KLIMAANLAGE U. HEIZUNG	519, 521
EINFÜLLKAPPE (HYDRAULIKTANK)	327
EINFÜLLKAPPE (KRAFTSTOFF)	109
ELEKTRONIK - MASCHINE	132
ELEKTRONISCHER SCHLÜSSEL (SICHERHEIT)	132, 138
ENDSCHALTER (SCHEIBENWISCHER)	495, 497
ENTLÜFTER (*INLINE) (HYDRAULIKÖL)	326
ENTLÜFTER (KLIMAANLAGE)	456
ENTLÜFTER (KLIMAANLAGENKOMRESSOR)	519, 521
ENTLÜFTER (TANDEMGEHÄUSE)	223
ENTLÜFTERVENTIL (KURBELGEHÄUSE)	18, 97
ERDSCHAUFEL	356, 357, 369, 370, 371, 372, 380

F

Bezeichnung	Seite
FAHERHAUSDICHTUNG	549
FAHRERHAUS - LINER	529
FAHRERHAUS MIT ÜBERROLLSCHUTZ	453, 454
FAHRERHAUS, SONNENBLENDE	557, 558
FAHRERHAUSAUSKLEIDUNG	528
FAHRERHAUSBELEUCHTUNG (12 V)	505
FAHRERHAUSDICHTUNGSSATZ	526
FAHRERHAUSFENSTER	559, 560, 561, 562, 564
FAHRERHAUSHEIZUNG	511, 512, 514, 516
FAHRERHAUSHEIZUNG U. BEFESTIGUNGSTEILE	510
FAHRERHAUSTÜR	494, 495, 497, 499
FAHRERHAUSTÜR (*POLYCARBONATE)	489
FAHRERHAUSTÜR (*POLYCARBONATE)	524
FAHRERHAUSTÜR U. BEFESTIGUNG	489, 492, 524, 525
FAHRERPLATTFORM	547
FAHRERPLATTFORM-KABELSTRANG	166
FAHRERPLATTFORM-KABELSTRANG (UNTEN)	165
FAHRERSITZ	553, 554
FAHRERSITZ, VERSTELLBAR	555
FAHRGESTELLVERDRAHTUNG	165
FAHRWERK	1
FAHRWERK-KABELBAUM (GETRIEBE)	520, 522
FAHRWERK-KABELBAUM (WARNHORN)	174
FENSTERRAHMEN	502, 503
*FILTER ELEMENT-CAB AIR	447, 512, 514
*FILTER ELEMENT-CAB AIR (DRUCKLUFT)	447, 514
*FRAME GP-FORK	419, 420
FUSSMATTE	1, 2, 3, 4, 5, 213, 214

G

Bezeichnung	Seite
GABELEINSTELLER	414
GABELTRÄGER	395, 396
GASFEDER	75, 506
GASFEDER (FAHRERHAUS)	231, 556
GASFEDER (SPERRUNG)	489, 492, 524, 525
GASFEDERGRUPPE	556
GASPEDAL	545, 546
GAZE (KURBELGEHÄUSEENTLÜFTER)	18, 97
GEGENGEWICHT	219

* ÜBERSETZUNG ZUM ZEITPUNKT DER DRUCKLEGUNG NICHT VORHANDEN

STICHWORTVERZEICHNIS

Bezeichnung	Seite
	220
GLÜHKERZE	134
	135
GREIEFERSCHAUFEL	381
	382
	383
	384
	385
GREIFERANSCHLAG	423
	424
	436
GREIFERGABEL	409
	410
	411
	412
	413
GREIFERLEITUNGEN	273
	275
	277
GREIFERRAHMEN	421
GREIFERSCHAUFEL	359
	360
	361
	362
	363
GREIFERZYLINDER	245
GRIFF U. BOLZEN - ANSCHLUSS	425
	426
GRUNDAUSFÜHRUNG	1
	2

H

HALTEGRIFF	507
*HANDLE GP	455
HECKBELEUCHTUNGSVERDRAHTUNG	177
HEIZUNGSLEITUNGEN	532
*HOLDER-CUP	517
HUBARMZYLINDER U. BEFESTIGUNGS-SATZ	242
HUBZYLINDER	251
HUBZYLINDERLEITUNGEN	284
	286
HYDRAULIKBEDIENUNG (MIT VORSTEUERUNG)	466
	469
	470
	472
	473
	475
	476
	478
	479
	480
	482
HYDRAULIKDRUCKSPEICHER U. BEFESTIGUNG	238
HYDRAULIKFILTER U. LEITUNGEN	183
HYDRAULIKFITTING	294
HYDRAULIKKÜHLERMOTOR U. BEFESTIGUNG	311
	312
	313
HYDRAULIKLÜFTERLEITUNGEN	279
	281
HYDRAULIKÖLKÜHLERLEITUNGEN	283
HYDRAULIKPUMPE UND LEITUNGEN	294
HYDRAULIKSYSTEM	254
HYDRAULIKTANK	327
HYDRAULIKTANK UND BEFESTIGUNGSTEILE	326
HYDRAULIKZYLINDER	246
	247
	248
	249
	250
	255
HYDROSTATIKLEITUNGEN	189
HYDROSTATIKMOTOR U. BEFESTIGUNG	193
HYDROSTATIKPUMPE U. BEFESTIGUNG	198

I

IDENTIFIKATIONSSCHILD (*ENGLISH, GERMAN, SPANISH)	218
IDENTIFIKATIONSSCHILD (*ENGLISH, GERMAN, SPANISH)	217
IDENTIFIKATIONSSCHILD (MASCHINE)	573
	576
	581
	584
	587
IDENTIFIZIERUNGS-AUFKLEBER (START-SCHLÜSSELSCHALTER)	138
	139
IDENTIFIZIERUNGS-AUFKLEBER (STECKDOSE, 12 V)	576
	581
	584
IDENTIFIZIERUNGS-AUFKLEBER (STECKDOSE, 12 V)	573
	587
IDENTIFIZIERUNGS-AUFKLEBER (12 KM/H)	5
	8
	213
INFORMATIONSSCHILD (MAX. GEWICHT)	215

* ÜBERSETZUNG ZUM ZEITPUNKT DER DRUCKLEGUNG NICHT VORHANDEN

STICHWORTVERZEICHNIS

Bezeichnung	Seite
INSTRUKTIONS-AUFKLEBER (INSTRUMENTENBRETT)	505
INSTRUKTIONS-AUFKLEBER (INSTRUMENTENTAFEL)	504
INSTRUKTIONS-AUFKLEBER (*MACHINE SECURITY, INTL)	138 139
INSTRUKTIONS-AUFKLEBER (MASCHINENSTEUERUNG, HANDBUCH LESEN)	470 472 476 478 480 482
INSTRUKTIONS-AUFKLEBER (MASCHINENSTEUERUNG, HANDBUCH LESEN)	479
INSTRUKTIONS-AUFKLEBER (MASCHINENSTEUERUNGEN)	466 469 473 475
INSTRUKTIONS-AUFKLEBER (NICHT BETRETEN)	255
INSTRUKTIONS-AUFKLEBER (NICHT BETRETEN)	328
INSTRUKTIONS-AUFKLEBER (NOTAUSGANG)	499 559
INSTRUMENTENTAFEL	539 540 542
INSTRUMENTENTAFEL-SICHERUNG	140 141 165 178
INSTRUMENTENTAFELABDECKUNG	488

K

Bezeichnung	Seite
KABELSTRANG - ARBEITSGERÄT	438
KABELSTRANG - ARBEITSGERÄT (*LIFT ARM)	140 141 178
KABELSTRANG - ARBEITSGERÄT (PLATTFORM)	140 141 178
KABELSTRANG - HECKBELEUCHTUNG	151 165 227 235
KABELSTRANG - HECKBELEUCHTUNG (BREMSE)	227
KABELSTRANG - HECKBELEUCHTUNG (BREMSE)	177
KABELSTRANG - HEIZUNG U. KLIMAANLAGE	164 512 514 520 522
KABELSTRANG - VORDERE BELEUCHTUNG	151 227
KÄLTEMITTELKOMPRESSOR	456 519 521
KÄLTEMITTELKOMPRESSOR U. BEFESTIGUNG	457
KÄLTEMITTELKONDENSATOR U. BEFESTIGUNGSTEILE	458
KAPPE MIT ENTLÜFTER (KÄLTEMITTELRÜCKGEWINNUNG)	84 86
KAPPE (MOTORÖLFÜLLUNG)	52 69
KAPPE (WASSERTANK)	441
KEILRIEMEN (WASSERPUMPE)	63 65
KIPPSCHALTER (ARBEITSGERÄTEANORDNUNG)	254
KIPPSCHALTER (ELEKTRISCHER STROM, ARBEITSGERÄT)	140 141 178
KIPPSCHALTER (FAHRTRICHTUNGSBLINKER)	151 227
KIPPSCHALTER (FESTSTELLBREMSE)	540 542
KIPPSCHALTER (HEIZUNG)	447
KIPPSCHALTER (HEIZUNG)	512 514
KIPPSCHALTER (HINTERE ARBEITSSCHEINWERFER)	149
KIPPSCHALTER (HINTERER SCHEIBENWISCHER)	495 497
KIPPSCHALTER (KALTSTART)	540 542
KIPPSCHALTER (KLIMAANLAGE)	447
KIPPSCHALTER (RUNDUM-KENNLEUCHTE)	154
KIPPSCHALTER (SCHNELLWECHSELEINRICHTUNG)	255

* ÜBERSETZUNG ZUM ZEITPUNKT DER DRUCKLEGUNG NICHT VORHANDEN

STICHWORTVERZEICHNIS

Bezeichnung	Seite
	396
KIPPSCHALTER (STRASSENBELEUCHTUNG)	151
	227
KIPPSCHALTER (VORDERER ARBIETSSCHEINWERFER)	540
	542
KIPPSCHALTER (WARNLEUCHTEN)	151
	227
KIPPZYLINDER	252
	253
*KIT-QUICK COUPLER CONVERSION	255
KLIMAANLAGE	446
	447
KLIMAANLAGE UND AUFHÄNGUNG	445
KLIMAANLAGENDRUCKSPEICHER	443
	444
KLIMAANLAGENDRUCKSPEICHER (MIT TROCKENMITTEL)	519
KLIMAANLAGENLEITUNGEN	530
KLIMAANLAGENVERDRAHTUNG	164
KOLBENMOTOR	194
KOLBENPUMPE	199
KOLBENPUMPENUMLAUFSATZ (LINKS)	199
KOLBENPUMPENUMLAUFSATZ (RECHTS)	199
KOMBISCHAUFEL	364
	365
	366
	367
	386
	387
	388
	389
	390
KRAFTSTOFF-ENTLÜFTUNGSPUMPE	119
KRAFTSTOFFEINSPRITZPUMPE	113
	116
	117
KRAFTSTOFFENTLÜFTUNGS- U. FILTERLEITUNGEN	109
KRAFTSTOFFENTLÜFTUNGSPUMPE UND -HAUPTFILTER	119
KRAFTSTOFFILTERELEMENT (WASSERABSCHEIDER)	103
KRAFTSTOFFÖRDERPUMPE UND BEFESTIGUNGSTEILE	111
	112
KRAFTSTOFFSTANDANZEIGE	505
KRAFTSTOFFTANK-KABELSTRANG	164
	520
	522
KRAFTÜBERTRAGUNG	197
KRÜMMER U. LEITUNGEN - STEUERUNG	302
	304
KRÜMMERSTEUERUNG U. BEFESTIGUNG	306
KÜHLER U. ÖLKÜHLER - BEFESTIGUNG	75
KÜHLER U. ÖLKÜHLERBEFESTIGUNG	84
	86
KÜHLER UND HYDRAULIKÖLKÜHLER	82
	83
KÜHLERKAPPE (ROHWASSERHEIZUNGSAUSTAUSCHER)	82
	83
KÜHLKOMPRESSOR U. MOTOR	456
KÜHLMITTELÜBERLAUFBEHÄLTER	84
	86
KÜHLWASSERPUMPE	77
	79
KUPPLUNGSVENTIL U. LEITUNGEN	328
KURBELWELLE	20
	21
	23
KURBELWELLEN-RIEMENSCHEIBE	61
	62

L

Bezeichnung	Seite
LADERRAHMEN	223
LAUFBAND UND ANTRIEB (RUNDUMKENNLEUCHTE)	148
LEICHTGUTSCHAUFEL	364
	377
	378
	379
LEITUNGEN, ABSENKSTEUERUNG	288
LEITUNGSABDECKUNG	400
LEITUNGSFÜHRUNG	226
LEUCHTE (12 V)	505
LEUCHTE (12 V) (KENNZEICHEN)	233
LEUCHTE (12 V, 10 W)	505
LEUCHTE (12 V, 21 W)	144
	147
LEUCHTE (12 V, 4 W)	144
LEUCHTE (12 V, 5 W)	146
LEUCHTE (12 V, 5 W)	147
LEUCHTE (12 V, 55 W)	142
	143
	148
LÜFTERBEFESTIGUNG	50
	51
LÜFTERSTEUERUNG	175
LUFTFILTER (HAUPTELEMENT)	89
LUFTFILTER (HILFSELEMENT)	89
LUFTKANAL UND REGULIERUNG	500
LUFTREINIGER	88
	89

* ÜBERSETZUNG ZUM ZEITPUNKT DER DRUCKLEGUNG NICHT VORHANDEN

STICHWORTVERZEICHNIS

Bezeichnung	Seite
M	
MAGNETSTOPFEN (RAHMEN)	223
MAGNETVENTIL	313, 344, 345, 346, 347
MAGNETVENTIL (SCHNELLWECHSELEINRICHTUNG)	310
MAGNETVENTIL (12 V DC)	519, 521
*MANIFOLD & SOLENOID GP-CONTROL	307, 308, 309
MASCHINEN-UMBAUSATZ	2, 3, 4, 5, 6, 7, 8
MASCHINENHUBÖSE	230, 231
MASCHINENRAHMEN	225
MASCHINENSTEUERUNG	2
MASCHINENVERDRAHTUNG	175
MEHRZWECKGABEL	416, 417
MEHRZWECKGREIFER	422, 423, 424
MEHRZWECKSCHAUFEL	391, 392, 393
MEMBRANPUMPE	438
MODULARHEBEL	462, 463, 464, 508, 509
MOTOR-EINBAUSATZ	13, 14
MOTORANTRIEB	314, 315, 316, 317, 318
MOTORAUFLAGER	48, 49
MOTORAUSFÜHRUNG	9, 10, 11, 12
MOTORBLOCK	25, 27
MOTORHUBÖSE	46, 47
MOTORKABELSTRANG	169, 172
MOTORÖLABLASS	36
MOTORÖLEINFÜLLSTUTZEN	69
MOTORÖLFILTERELEMENT	52, 186
MOTORSTOPFEN	60
MOTORVERDRAHTUNG	169, 172
MOTORVERKLEIDUNG	221
N	
NEIGEZYLINDERLEITUNGEN	296, 298
NOCKENWELLE	15, 16
O	
ÖLEINFÜLLKAPPE (MOTOR)	69
ÖLFILTER	185, 186, 187
ÖLFILTER (HOCHLEISTUNG) (HYDRAULIK)	185
ÖLWANNE	52, 56
OPTION - FAHRERHAUS	538, 539
P	
PALETTENGABEL	414, 415
PLEUELSTANGE UND KOLBEN	58, 59
*PLUG KIT-CONN	450
PUMPENAUFHÄNGUNG	196
PUMPENSTEUERVENTIL (KOLBENPUMPE)	199
R	
RAD UND REIFEN	207, 208, 209, 210, 211
REGELERHEBEL	527
REGLER	104

* ÜBERSETZUNG ZUM ZEITPUNKT DER DRUCKLEGUNG NICHT VORHANDEN

STICHWORTVERZEICHNIS

Bezeichnung	Seite
	107
REGLERSTEUERUNG	102
REIFEN UND FELGE	201
	202
	203
	204
	205
	206
	207
RELAIS (SCHALE)	166
RELAIS (12 V)	140
	141
	178
	447
RELAIS (12 V)	227
RELAIS (12 V) (ARBEITSGERÄT)	178
RELAIS (12 V) (BREMSLEUCHTE)	177
RELAIS (12 V) (HAUPTSTROM)	165
	178
RELAIS (12 V) (HEIZUNG)	512
	514
RELAIS (12 V) (KALTSTART)	169
	172
RELAIS (12 V) (STARTEN)	169
	172
RIEMENSCHUTZ	39
RÜCKFAHRWARNHORN	163
RÜCKLAUFVENTIL - VERTEILER	191
RÜCKSPIEGEL	534
RÜCKSPIEGEL U. BEFESTIGUNG	232
RUNDUM-KENNLEUCHTE	148
	154

S

SATZ - ARBEITSGERÄTE U. VERDRAHTUNG	140
SCHALLDÄMPFER	92
	93
	94
SCHALLDÄMPFUNG	237
SCHALTER (SITZ)	554
SCHALTER (SITZ)	555
SCHALTERKABELSTRANG	175
SCHAUFELLEITUNGEN	258
	260
	262
	264
	266
	268
	270
SCHAUFELZYLINDER	244
SCHAUGLAS (HYDRAULIKTANK)	327
SCHAUGLAS (KÜHLER)	82
SCHAUGLAS (KÜHLMITTELSTAND)	83
SCHEIBENWISCHERARM	495
SCHEIBENWISCHERARM (VORNE)	497
SCHEIBENWISCHERBLATT (*558-MM) (FAHRERHAUSTÜR)	497
SCHEIBENWISCHERBLATT (*558-MM) (VORN, HINTEN)	495
SCHEIBENWISCHERKABELSTRANG	489
	492
	495
	497
	524
	525
SCHEIBENWISCHERMOTOR	495
	497
SCHEINWERFER	144
SCHEINWERFER U. RICHTUNGSLEUCHTE	144
SCHILD	349
SCHILD - STRASSENFAHRT	432
	433
SCHILD UND AUFKLEBER	6
	572
	573
	576
	579
	581
	584
	587
SCHILDFEDER	434
SCHILDRAHMEN	418
SCHLAUCHLEITUNG (OBEN)	84
	86
SCHLAUCHLEITUNG (UNTEN)	84
	86
SCHLÜSSEL	215
SCHMIERPUMPE	71
SCHNEIDMESSER	403
	404
	405
	406
	407
	408
	409
SCHNEIDMESSER - KOMBISCHAUFEL	352
	353
	354
	355
SCHNELLWECHSELEINRICHTUNG	397
	398
SCHNELLWECHSELEINRICHTUNG - ZYLINDER U. VERBINDUNG	401
	402

* ÜBERSETZUNG ZUM ZEITPUNKT DER DRUCKLEGUNG NICHT VORHANDEN

STICHWORTVERZEICHNIS

Bezeichnung	Seite
SCHNELLWECHSELEINRICHTUNGSSPERRE	431
SCHNELLWECHSELVORRICHTUNG	396
SCHWENKSCHILD	350, 351
SCHWUNGRAD	37, 38
SCHWUNGRADGEHÄUSE	40, 41
SCREEN (HYDRAULIK)	290
SCREEN (WASSERTANK)	437
SEITENGEHÄUSE	518
SEITENVERKLEIDUNG	544
SICHERHEITSEINBAUSATZ	138, 139
SICHERHEITSGURT	551, 552
SICHERUNG (10 A)	140, 141, 163, 165, 178, 255, 396, 482
SICHERUNG (15 A)	140, 141, 164, 165, 178
SICHERUNG (20 A)	165
SICHERUNG (30 A)	164, 165, 520, 522
SICHERUNGSTAFEL - ABDECKUNG	130
SOFTWARE - MASCHINE (SICHERHEIT)	132
SOFTWARE - MASCHINE (SICHERHEIT)	138
SOLENOID (KRAFTSTOFFABSTELLUNG)	113, 128
SOLENOID (STARTERMOTOR)	156
SOLENOIDSPULE (12 V)	344
SONNENBLENDE	557, 558
SORTIMENTSATZ	570
STARTERMOTOR	156, 158, 159
STARTSCHLÜSSELSCHALTER	504
STEUERHEBEL	459, 460, 461, 462, 463, 464, 465
STEUERKABEL	455
STEUERKONSOLENABDECKUNG	486, 487
STEUERKRÜMMER	310
STEUERUNG - MANUELLES STARTEN/ABSTELLEN	128
STEUERUNG - NICHT PROGRAMMIERT	131
STEUERUNG - NICHT PROGRAMMIERT (SICHERHEIT)	132
STEUERUNGS-KABELSTRANG (SICHERHEIT)	138, 139
STEUERVENTIL	333
STEUERVENTIL UND BEFESTIGUNGSTEILE	332
STIRNRADGEHÄUSE	42, 44
STIRNRADGEHÄUSEDECKEL	17
STOSSSTANGE	212
STRASSENFAHRT - UMRÜSTSATZ	215, 216, 217, 218
STRASSENFAHRTSCHILD UND BEFESTIGUNG	429

T

Bezeichnung	Seite
TANDEMANTRIEB	182
TEMPERATUR- U. DRUCKSENSOR	155
TEMPERATURSCHALTER	162
TEMPERATURSCHALTER (HYDRAULIKÖL)	327
TEMPERATURSCHALTER (KLIMAANLAGE)	447
TEMPERATURSCHALTER (MOTORKÜHLMITTEL)	155, 162
TEMPERATURSENSOR (HYDRAULIKÖL)	313
TEMPERATURSENSOR (MOTORKÜHLMITTEL)	83
THERMOSTATGEHÄUSE	74
TRAGARM	348
TRAGARMSTUFE	435
TRÄGER - STAUKASTEN	5, 8, 213
TRÄGER U. GABEL	394
TURBOLADER	95, 97
TYPENSCHILDBEFESTIGUNG	233, 234

* ÜBERSETZUNG ZUM ZEITPUNKT DER DRUCKLEGUNG NICHT VORHANDEN

STICHWORTVERZEICHNIS

Bezeichnung	Seite
U	
ÜBERDRUCKVENTIL	317, 343
ÜBERDRUCKVENTIL (GEBLÄSEGESCHWINDIGKEIT)	315
ÜBERDRUCKVENTIL (HUB)	333
ÜBERDRUCKVENTIL (LADUNG)	199
ÜBERDRUCKVENTIL (NEIGEN, HILFS)	333
ÜBERROLLSCHUTZAUFLAGER	537
UMBAUSATZ - FÜR STRASSENVERKEHR	213, 214
UMBAUSATZ - NICHT FÜR STRASSENVERKEHR	129
UMLAUFKÜHLWASSERHEIZUNG	136, 137
UMLAUFKÜHLWASSERHEIZUNGS-ELEMENT (MOTOR)	136, 137
UMRÜSTSATZ FÜR STRASSENFAHRT	227
UNIVERSAL-ZAHNSPITZE	442
UNIVERSALSCHAUFEL	357, 358, 359, 373, 374, 375, 376
UNTERBRECHER (105 A)	169, 172
UNTERBRECHER (30 A)	151, 227
V	
*V-BELT GP	65
VENTIL, MECH.	335
VENTILDECKEL	18
VENTILDECKELDICHTUNG	18, 77, 97
VENTILDECKELDICHTUNG (THERMOSTAT)	74
VENTILSTEUERUNG	66, 67
VERBINDUNG - SCHNELLWECHSELEINRICHTUNG	430
VERDRAHTUNGSKABELBAUM (GLÜHKERZE)	172
VERDRAHTUNGSKABELBAUM-HALTETEILE	133
VERDRAHTUNGSKABELBAUM (WARTUNGSANZEIGE)	488
VERKLEIDUNG - ÜBERROLLSCHUTZ/ STEINSCHLAGSCHUTZ	506
VERRIEGELUNGSSTEUERUNG	127
VERSTAUKASTEN	452
VORHÄNGESCHLOSS	215, 217
VORSTEUERLEITUNGEN	290, 292
VORSTEUERVENTIL	336, 338, 340, 341
VORSTEUERVENTILSATZ (FEDER)	338
VORSTEUERVENTILSTOPFEN	322
W	
WARNANZEIGEMODUL	535, 536
WARNANZEIGENSATZ	504, 505
WARNAUFKLEBER (AUFGESPIESSTER PUNKT)	412, 413, 417, 421
WARNAUFKLEBER (FREIRAUM)	566
WARNAUFKLEBER (HOCHDRUCK, HANDBICH LESEN, US)	576, 581
WARNAUFKLEBER (HOCHDRUCK, HANDBUCH LESEN)	573, 584, 587
WARNAUFKLEBER (KEIN ZUGANG)	573, 584
WARNAUFKLEBER (LENKUNG)	217
WARNAUFKLEBER (QUETSCHGEFAHR)	386, 387, 388, 390
WARNAUFKLEBER (QUETSCHGEFAHR, DIESEN BEREICH NICHT BETRETEN)	350, 351
WARNAUFKLEBER (QUETSCHGEFAHR, NICHT BETRETEN)	573, 584, 587
WARNHORN (NIEDRIGER TON)	479, 480
WARNHORNVERDRAHTUNG	174
WASSERABSCHEIDER- U. KRAFTSTOFFILTER	103
WASSERPUMPE - RIEMENSCHEIBE	63, 64
WASSERSIEBEINSATZ	437

* ÜBERSETZUNG ZUM ZEITPUNKT DER DRUCKLEGUNG NICHT VORHANDEN

STICHWORTVERZEICHNIS

Bezeichnung	Seite
WASSERTANK	441
WASSERTANK U. BEFESTIGUNGSTEILE	438
WASSERTEMPERATURREGLER	77
	79

Z

ZAHNRADPUMPE	324
	325
ZULASSUNGSSCHILDLEUCHTE	233
ZWISCHENRAD	71
ZYLINDER - SPERRVORRICHTUNG	452
ZYLINDER U. BEFESTIGUNG - WINKELSCHLID	240
ZYLINDERAUFHÄNGUNG	319
	320
	321
ZYLINDERKOPF	29
	31
	32
	34

* ÜBERSETZUNG ZUM ZEITPUNKT DER DRUCKLEGUNG NICHT VORHANDEN

MACHINE ARRANGEMENT

295-7210 CHASSIS AR

S/N: SCH2475-UP

PART OF 295-7232, 295-7233 COMMON AR

SMCS-7000 **i02732851**

NOTE	PART NUMBER	QTY	PART NAME 1 2 3 4 5 6 (PRODUCT LEVEL)	SEE PAGE
Y	*261-6255*	1	AXLE GP	181
Y	*218-5772*	1	BUMPER GP (REAR)	212
Y	*218-5602*	1	CONTROL GP-GOVERNOR	102
Y	*218-6899*	1	CYLINDER & MTG GP-LIFT ARM	242
Y	*218-5803*	1	ENCLOSURE GP-ENGINE	221
Y	*295-7175*	1	FRAME GP-LOADER	223
Y	*156-9809*	1	GUIDE GP-LINES	226
Y	*218-0933*	1	LINES GP-FUEL PRM & FILTER	109
Y	*218-6428*	1	PANEL GP-SIDE	544
Y	*218-6360*	1	PLATFORM GP-OPERATOR	547
Y	*225-8001*	1	WIRING GP-CHASSIS	165

Y-SEPARATE ILLUSTRATION

<END>

295-7232 COMMON AR

S/N: SCH2475-2824

SMCS-7000 **i02732842**

NOTE	PART NUMBER	QTY	PART NAME 1 2 3 4 5 6 (PRODUCT LEVEL)	SEE PAGE
Y	*218-6350*	1	CAB AR-ENCLOSED ROPS	453
Y	*295-7210*	1	CHASSIS AR	1
Y	*295-7132*	1	FILM GP	569
Y	*278-1243*	1	HYDRAULIC AR	254
Y	*295-7027*	1	INSTALLATION AR-ENGINE	13
Y	*216-4746*	1	LIGHTING GP-FLOOD (REAR)	149
Y	*6V-1970*	1	LITERATURE GP	533
Y	*261-5751*	1	POWER TRAIN AR	197
Y	*225-7969*	1	WARNING GP-BACKUP	163
	218-5601	1	FLOOR MAT	

Y-SEPARATE ILLUSTRATION

<END>

MACHINE ARRANGEMENT

295-7233 COMMON AR

S/N: SCH2825-UP

SMCS-7000 **i02835621**

NOTE	PART NUMBER	QTY	PART NAME 1 2 3 4 5 6 (PRODUCT LEVEL)	SEE PAGE
Y	*218-6350*	1	CAB AR-ENCLOSED ROPS	453
Y	*295-7210*	1	CHASSIS AR	1
Y	*295-7132*	1	FILM GP	569
Y	*278-1243*	1	HYDRAULIC AR	254
Y	*295-7028*	1	INSTALLATION AR-ENGINE	14
Y	*216-4746*	1	LIGHTING GP-FLOOD (REAR)	149
Y	*6V-1970*	1	LITERATURE GP	533
Y	*261-5751*	1	POWER TRAIN AR	197
Y	*225-7969*	1	WARNING GP-BACKUP	163
	218-5601	1	FLOOR MAT	

Y-SEPARATE ILLUSTRATION

<END>

295-7491 CONTROL AR-MACHINE—ON, OFF AUXILIARY CONTROL

S/N: SCH2475-UP

AN ATTACHMENT

SMCS-4062, 4284, 4351, 5059, 5705 **i02736507**

NOTE	PART NUMBER	QTY	PART NAME 1 2 3 4 5 6 (PRODUCT LEVEL)	SEE PAGE
Y	*218-5611*	1	CONTROL GP-PILOT OPERATED HYD (WORK TOOL)	466
Y	*218-5931*	1	CONTROL GP-PILOT OPERATED HYD (HYDROSTATIC)	479

Y-SEPARATE ILLUSTRATION

<END>

295-7493 CONTROL AR-MACHINE—AUX PROPORTIONAL FLOW

S/N: SCH4600-UP

AN ATTACHMENT

SMCS-4062, 4284, 4351, 5059, 5705 **i02736504**

NOTE	PART NUMBER	QTY	PART NAME 1 2 3 4 5 6 (PRODUCT LEVEL)	SEE PAGE
Y	*218-5618*	1	CONTROL GP-PILOT OPERATED HYD (WORK TOOL)	473
Y	*218-5932*	1	CONTROL GP-PILOT OPERATED HYD (HYDROSTATIC)	480

Y-SEPARATE ILLUSTRATION

<END>

252-0449 CONVERSION AR-MACHINE—NACD

S/N: SCH2475-UP

AN ATTACHMENT

SMCS-7000 **i02450995**

NOTE	PART NUMBER	QTY	PART NAME 1 2 3 4 5 6 (PRODUCT LEVEL)	SEE PAGE
Y	*142-8652*	1	LIGHTING GP-STOP & TAIL	153
Y	*272-3049*	1	MUFFLER GP	94
Y	*218-5790*	1	PANEL AR-INSTRUMENT	539
Y	*218-6175*	1	PUMP & MTG GP-WORK TOOL	323

Y-SEPARATE ILLUSTRATION

<END>

MACHINE ARRANGEMENT

261-6156 CONVERSION AR-MACHINE—EUROPE

S/N: SCH2475-UP

AN ATTACHMENT

SMCS-7000 **i02428135**

NOTE	PART NUMBER	QTY	PART NAME 1 2 3 4 5 6 (PRODUCT LEVEL)	SEE PAGE
Y	*216-6146*	1	BOX GP-STORAGE	452
Y	*188-0147*	1	LIFTING GP-MACHINE	230
Y	*142-8652*	1	LIGHTING GP-STOP & TAIL	153
Y	*272-3049*	1	MUFFLER GP	94
Y	*218-5791*	1	PANEL AR-INSTRUMENT	539
Y	*261-6094*	1	PUMP & MTG GP-WORK TOOL	324
Y	*233-5616*	1	SUPPRESSION GP-SOUND	237
Y	*230-3743*	1	WIRING GP-HORN (WITH MOUNTING)	174
	218-5601	1	FLOOR MAT	

Y-SEPARATE ILLUSTRATION

<END>

278-5348 CONVERSION AR-MACHINE—UNITED KINGDOM

S/N: SCH2475-UP

AN ATTACHMENT

SMCS-7000 **i02473274**

NOTE	PART NUMBER	QTY	PART NAME 1 2 3 4 5 6 (PRODUCT LEVEL)	SEE PAGE
Y	*216-6146*	1	BOX GP-STORAGE	452
Y	**191-9684**	1	FILM GP (CLEARANCE)	566
Y	*188-0147*	1	LIFTING GP-MACHINE	230
Y	*142-8652*	1	LIGHTING GP-STOP & TAIL	153
Y	*272-3049*	1	MUFFLER GP	94
Y	*218-5791*	1	PANEL AR-INSTRUMENT	539
Y	*261-6094*	1	PUMP & MTG GP-WORK TOOL	324
Y	*233-5616*	1	SUPPRESSION GP-SOUND	237
Y	*230-3743*	1	WIRING GP-HORN (WITH MOUNTING)	174
	218-5601	1	FLOOR MAT	

Y-SEPARATE ILLUSTRATION

<END>

MACHINE ARRANGEMENT

278-5370 CONVERSION AR-MACHINE

S/N: SCH2475-UP

AN ATTACHMENT

SMCS-7000 **i02445036**

NOTE	PART NUMBER	QTY	PART NAME 1 2 3 4 5 6 (PRODUCT LEVEL)	SEE PAGE
Y	*216-6146*	1	BOX GP-STORAGE	452
Y	*278-1293*	1	CONVERSION GP-ROADING	218
Y	**177-9152**	1	KIT-ROADING PLATE & MOUNTING (BUCKET)	429
Y	*188-0147*	1	LIFTING GP-MACHINE	230
Y	*216-4716*	1	LIGHTING GP-ROADING	151
Y	*175-4238*	1	LOCK GP-QUICK COUPLER (MECHANICAL)	431
Y	*238-7671*	1	MIRROR & MTG GP-REAR VIEW (WITH ROADING LIGHT MOUNT)	232
Y	*225-7963*	1	MOUNTING GP-REGISTRATION	234
Y	*272-3049*	1	MUFFLER GP	94
Y	*218-5791*	1	PANEL AR-INSTRUMENT	539
Y	*261-6094*	1	PUMP & MTG GP-WORK TOOL	324
Y	*233-5616*	1	SUPPRESSION GP-SOUND	237
Y	*230-3743*	1	WIRING GP-HORN (WITH MOUNTING)	174
Y	*225-7964*	1	WIRING GP-REAR LIGHTING	177
	218-5601	1	FLOOR MAT	

Y-SEPARATE ILLUSTRATION

<END>

MACHINE ARRANGEMENT

278-5414 CONVERSION AR-MACHINE—GERMANY

S/N: SCH2475-UP

AN ATTACHMENT

SMCS-7000 **i02449502**

NOTE	PART NUMBER	QTY	PART NAME 1 2 3 4 5 6 (PRODUCT LEVEL)	SEE PAGE
Y	*216-6146*	1	BOX GP-STORAGE	452
Y	*278-1292*	1	CONVERSION GP-ROADING (GERMANY)	217
Y	**177-9152**	1	KIT-ROADING PLATE & MOUNTING (BUCKET)	429
Y	*188-0147*	1	LIFTING GP-MACHINE	230
Y	*216-4716*	1	LIGHTING GP-ROADING	151
Y	*175-4238*	1	LOCK GP-QUICK COUPLER (MECHANICAL)	431
Y	*238-7671*	1	MIRROR & MTG GP-REAR VIEW (WITH ROADING LIGHT MOUNT)	232
Y	*272-3049*	1	MUFFLER GP	94
Y	*218-5791*	1	PANEL AR-INSTRUMENT	539
Y	*261-6094*	1	PUMP & MTG GP-WORK TOOL	324
Y	*233-5616*	1	SUPPRESSION GP-SOUND	237
Y	*173-3022*	1	VISOR GP-CAB	558
Y	*230-3743*	1	WIRING GP-HORN (WITH MOUNTING)	174
	222-5695	1	SUPPORT GP-STORAGE BOX	
	216-6144	1	BRACKET AS	
	233-5680	3	FILM-IDENTIFICATION (13-KM/H)	
			(1 - FACING THE REAR OF THE MACHINE, ON THE ENGINE ENCLOSURE, THE LEFT EDGE OF THE FILM 17-MM FROM THE VERTICAL	
			CENTERLINE OF THE MACHINE. THE BOTTOM EDGE OF THE FILM 5-MM ABOVE THE SEAM BETWEEN THE HOOD & DOOR ASSEMBLY)	
			(2 - ON RIGHT & LEFT SIDE OF MACHINE, ON THE LOWER FRAME ASSEMBLY, THE RIGHT EDGE OF THE FILM 661-MM FROM THE FRONT	
			EDGE OF THE LOWER FRAME ASSEMBLY. THE BOTTOM EDGE OF THE FILM 425-MM FROM THE BOTTOM EDGE OF THE LOWER FRAME ASSEMBLY)	
	218-5601	1	FLOOR MAT	

Y-SEPARATE ILLUSTRATION

<END>

295-7055 CONVERSION AR-MACHINE

S/N: SCH2475-UP

AN ATTACHMENT

SMCS-7000 **i02758802**

NOTE	PART NUMBER	QTY	PART NAME 1 2 3 4 5 6 (PRODUCT LEVEL)	SEE PAGE
Y	*142-8652*	1	LIGHTING GP-STOP & TAIL (REAR)	153
Y	*218-5901*	1	LINES GP-PUMP	294
Y	*218-6311*	1	LINES GP-WORK TOOL (STANDARD FLOW)	300
Y	*218-6058*	1	MOTOR & MTG GP-HYDRAULIC FAN	311
Y	*272-3047*	1	MUFFLER GP	93
Y	*218-5790*	1	PANEL AR-INSTRUMENT (NACD)	539
Y	*218-6175*	1	PUMP & MTG GP-WORK TOOL (STANDARD FLOW)	323
Y	*228-1783*	1	RADIATOR & OIL COOLER MTG GP	84

Y-SEPARATE ILLUSTRATION

<END>

MACHINE ARRANGEMENT

295-7060 CONVERSION AR-MACHINE

S/N: SCH2475-UP

AN ATTACHMENT

SMCS-7000 **i02758804**

NOTE	PART NUMBER	QTY	PART NAME 1 2 3 4 5 6 (PRODUCT LEVEL)	SEE PAGE
Y	*216-6146*	1	BOX GP-STORAGE	452
Y	*188-0147*	1	LIFTING GP-MACHINE	230
Y	*142-8652*	1	LIGHTING GP-STOP & TAIL (REAR)	153
Y	*218-5901*	1	LINES GP-PUMP	294
Y	*218-6311*	1	LINES GP-WORK TOOL (STANDARD FLOW)	300
Y	*261-6121*	1	MOTOR & MTG GP-HYDRAULIC FAN	313
Y	*272-3047*	1	MUFFLER GP	93
Y	*218-5791*	1	PANEL AR-INSTRUMENT (EAME)	539
Y	*261-6094*	1	PUMP & MTG GP-WORK TOOL	324
Y	*261-6118*	1	RADIATOR & OIL COOLER MTG GP	86
Y	*233-5616*	1	SUPPRESSION GP-SOUND	237
Y	*230-3743*	1	WIRING GP-HORN (WITH MOUNTING)	174
Y	*272-1625*	1	WIRING GP-MACHINE (DEMAND FAN)	175
	261-6362	1	PLATE & FILM GP	
	225-4148	1	PLATE (CE MARK)	

Y-SEPARATE ILLUSTRATION

<END>

295-7067 CONVERSION AR-MACHINE

S/N: SCH2475-UP

AN ATTACHMENT

SMCS-7000 **i02758770**

NOTE	PART NUMBER	QTY	PART NAME 1 2 3 4 5 6 (PRODUCT LEVEL)	SEE PAGE
Y	*216-6146*	1	BOX GP-STORAGE	452
Y	**191-9684**	1	FILM GP (CLEARANCE)	566
Y	*188-0147*	1	LIFTING GP-MACHINE	230
Y	*142-8652*	1	LIGHTING GP-STOP & TAIL (REAR)	153
Y	*218-5901*	1	LINES GP-PUMP	294
Y	*218-6311*	1	LINES GP-WORK TOOL (STANDARD FLOW)	300
Y	*261-6121*	1	MOTOR & MTG GP-HYDRAULIC FAN	313
Y	*272-3047*	1	MUFFLER GP	93
Y	*218-5791*	1	PANEL AR-INSTRUMENT (EAME)	539
Y	*261-6094*	1	PUMP & MTG GP-WORK TOOL	324
Y	*261-6118*	1	RADIATOR & OIL COOLER MTG GP	86
Y	*233-5616*	1	SUPPRESSION GP-SOUND	237
Y	*230-3743*	1	WIRING GP-HORN (WITH MOUNTING)	174
Y	*272-1625*	1	WIRING GP-MACHINE (DEMAND FAN)	175
	261-6362	1	PLATE & FILM GP	
	225-4148	1	PLATE (CE MARK)	

Y-SEPARATE ILLUSTRATION

<END>

MACHINE ARRANGEMENT

295-7150 CONVERSION AR-MACHINE—ITALY

S/N: SCH2475-UP
STANDARD FLOW
AN ATTACHMENT

SMCS-7000 **i02726203**

NOTE	PART NUMBER	QTY	PART NAME 1 2 3 4 5 6 (PRODUCT LEVEL)	SEE PAGE
Y	*216-6146*	1	BOX GP-STORAGE	452
Y	*278-1293*	1	CONVERSION GP-ROADING	218
Y	**177-9152**	1	KIT-ROADING PLATE & MOUNTING (BUCKET)	429
Y	*188-0147*	1	LIFTING GP-MACHINE	230
Y	*216-4716*	1	LIGHTING GP-ROADING	151
Y	*218-5901*	1	LINES GP-PUMP	294
Y	*218-6311*	1	LINES GP-WORK TOOL	300
Y	*175-4238*	1	LOCK GP-QUICK COUPLER (MECHANICAL)	431
Y	*238-7671*	1	MIRROR & MTG GP-REAR VIEW (WITH ROADING LIGHT MOUNT)	232
Y	*261-6121*	1	MOTOR & MTG GP-HYDRAULIC FAN	313
Y	*225-7963*	1	MOUNTING GP-REGISTRATION	234
Y	*272-3047*	1	MUFFLER GP	93
Y	*218-5791*	1	PANEL AR-INSTRUMENT	539
Y	*261-6094*	1	PUMP & MTG GP-WORK TOOL	324
Y	*261-6118*	1	RADIATOR & OIL COOLER MTG GP	86
Y	*233-5616*	1	SUPPRESSION GP-SOUND	237
Y	*230-3743*	1	WIRING GP-HORN (WITH MOUNTING)	174
Y	*272-1625*	1	WIRING GP-MACHINE (DEMAND FAN)	175
Y	*225-7964*	1	WIRING GP-REAR LIGHTING	177

Y-SEPARATE ILLUSTRATION

<END>

MACHINE ARRANGEMENT

295-7163 CONVERSION AR-MACHINE–GERMANY

S/N: SCH2475-UP
STANDARD FLOW
AN ATTACHMENT

SMCS-7000 **i02726220**

NOTE	PART NUMBER	QTY	PART NAME 1 2 3 4 5 6 (PRODUCT LEVEL)	SEE PAGE
Y	*216-6146*	1	BOX GP-STORAGE	452
Y	*278-1292*	1	CONVERSION GP-ROADING (GERMANY)	217
Y	**177-9152**	1	KIT-ROADING PLATE & MOUNTING (BUCKET)	429
Y	*188-0147*	1	LIFTING GP-MACHINE	230
Y	*216-4716*	1	LIGHTING GP-ROADING	151
Y	*218-5901*	1	LINES GP-PUMP	294
Y	*218-6311*	1	LINES GP-WORK TOOL	300
Y	*175-4238*	1	LOCK GP-QUICK COUPLER (MECHANICAL)	431
Y	*238-7671*	1	MIRROR & MTG GP-REAR VIEW (WITH ROADING LIGHT MOUNT)	232
Y	*261-6121*	1	MOTOR & MTG GP-HYDRAULIC FAN	313
Y	*272-3047*	1	MUFFLER GP	93
Y	*218-5791*	1	PANEL AR-INSTRUMENT	539
Y	*261-6094*	1	PUMP & MTG GP-WORK TOOL	324
Y	*261-6118*	1	RADIATOR & OIL COOLER MTG GP	86
Y	*233-5616*	1	SUPPRESSION GP-SOUND	237
Y	*173-3022*	1	VISOR GP-CAB	558
Y	*230-3743*	1	WIRING GP-HORN (WITH MOUNTING)	174
Y	*272-1625*	1	WIRING GP-MACHINE (DEMAND FAN)	175
	222-5695	1	SUPPORT GP-STORAGE BOX	
	216-6144	1	BRACKET AS	
	233-5680	3	FILM-IDENTIFICATION (13-KM/H)	
			(1 - FACING THE REAR OF THE MACHINE, ON THE ENGINE ENCLOSURE, THE LEFT EDGE OF THE FILM 18-MM FROM THE VERTICAL	
			CENTERLINE OF THE MACHINE. THE BOTTOM EDGE OF THE FILM 5-MM ABOVE THE SEAM BETWEEN THE HOOD & DOOR ASSEMBLY)	
			(2 - ON RIGHT & LEFT SIDE OF MACHINE, ON THE LOWER FRAME ASSEMBLY, THE RIGHT EDGE OF THE FILM 661-MM FROM THE FRONT	
			EDGE OF THE LOWER FRAME ASSEMBLY. THE BOTTOM EDGE OF THE FILM 425-MM FROM THE BOTTOM EDGE OF THE LOWER FRAME ASSEMBLY)	

Y-SEPARATE ILLUSTRATION

<END>

ENGINE ARRANGEMENT

295-7123 ENGINE AR

S/N: SCH2475-UP

AN ATTACHMENT

SMCS-1000 **i02747709**

NOTE	PART NUMBER	QTY	PART NAME 1 2 3 4 5 6 (PRODUCT LEVEL)	SEE PAGE
Y	**300-5206**	1	ENGINE AR-PRIMARY	12

Y-SEPARATE ILLUSTRATION

ENGINE ARRANGEMENT

292-5719 ENGINE AR-PRIMARY

S/N: CYP1-UP
46 BRAKE KW (61 BHP) AT 3000 RPM
PART OF 295-7023 ENGINE AR-PRIMARY
AN ATTACHMENT

SMCS-1000 **i02890111**

NOTE	PART NUMBER	QTY	PART NAME 1 2 3 4 5 6 (PRODUCT LEVEL)	SEE PAGE
Y	*316-6963*	1	ALTERNATOR GP-CHARGING	122
Y	*308-2306*	1	V-BELT GP (FAN DRIVE)	65
Y	*317-0971*	1	CAMSHAFT GP	16
Y	*317-0967*	1	GOVERNOR GP	107
Y	*308-2313*	1	CONTROL GP-MANUAL START/STOP	128
Y	*308-2283*	1	CRANKSHAFT GP	23
Y	*308-2281*	1	CYLINDER BLOCK GP	27
Y	*308-2284*	1	CYLINDER HEAD GP	34
Y	*315-7813*	1	MOUNTING GP-FAN	51
Y	*308-2297*	1	FILLER GP-ENGINE OIL	69
Y	*308-2298*	1	FILTER GP-OIL	186
Y	*317-0974*	1	FILTER GP-OIL	187
Y	*308-2291*	1	FLYWHEEL GP	38
Y	*316-6896*	1	GLOW PLUG GP	135
Y	*316-7030*	1	HOUSING GP-FLYWHEEL	41
Y	*317-0965*	1	HOUSING GP-FRONT	44
Y	*317-0980*	1	HOUSING GP-WATER REGULATOR	74
Y	*317-0982*	1	LIFTING GP-ENGINE	47
Y	*316-6997*	1	PAN GP-OIL	56
Y	*317-0972*	1	PARTS GP-MISCELLANEOUS	570
Y	*308-2286*	1	PISTON & ROD GP	59
Y	*308-2307*	1	COVER GP-FRONT HOUSING	17
Y	*315-5252*	1	PLUG GP-ENGINE	60
Y	*308-2300*	1	PULLEY GP-CRANKSHAFT	62
Y	*308-2294*	1	PULLEY GP-WATER PUMP	64
Y	*315-7814*	1	PUMP & MTG GP-FUEL TRANSFER	112
Y	*308-2287*	1	PUMP GP-ENGINE OIL	71
Y	*317-0977*	1	PUMP GP-FUEL INJECTION	117
Y	*317-0979*	1	PUMP GP-WATER	79
Y	*308-2293*	1	STARTING MOTOR GP-ELECTRIC	159
Y	*316-6890*	1	SWITCH GP-PRESSURE	161
Y	*308-2317*	1	SWITCH GP-TEMPERATURE (ENGINE COOLANT)	162
Y	*317-0981*	1	TURBOCHARGER GP	97
Y	*308-2285*	1	VALVE MECHANISM GP	67

Y-SEPARATE ILLUSTRATION

ENGINE ARRANGEMENT

295-7023 ENGINE AR-PRIMARY

S/N: SCH2825-UP
AN ATTACHMENT

SMCS-1000 **i02760042**

NOTE	PART NUMBER	QTY	PART NAME 1 2 3 4 5 6 (PRODUCT LEVEL)	SEE PAGE
Y	**292-5719**	1	ENGINE AR-PRIMARY	10

Y-SEPARATE ILLUSTRATION

ENGINE ARRANGEMENT

300-5206 ENGINE AR-PRIMARY

S/N: CSD1-11322
45 BRAKE KW (61 BHP) AT 3000 RPM
PART OF 295-7123 ENGINE AR
AN ATTACHMENT

SMCS-1000 **i02746865**

NOTE	PART NUMBER	QTY	PART NAME 1 2 3 4 5 6 (PRODUCT LEVEL)	SEE PAGE
Y	*246-4319*	1	ALTERNATOR GP-CHARGING	120
Y	*246-3337*	1	CAMSHAFT GP	15
Y	*217-2778*	1	CONNECTION GP-ELECTRICAL	125
Y	*217-5884*	1	CONNECTION GP-ELECTRICAL (ALTERNATOR, STARTING MOTOR)	126
Y	*238-9348*	1	COVER GP-VALVE MECHANISM	18
Y	*270-6915*	1	CRANKSHAFT GP	21
Y	*270-6932*	1	CYLINDER BLOCK GP	25
Y	*303-0337*	1	CYLINDER HEAD GP	32
Y	*217-7221*	1	FLYWHEEL GP	37
Y	*192-0104*	1	GLOW PLUG GP	134
Y	*246-3415*	1	GOVERNOR GP	104
Y	*217-7238*	1	HOUSING GP-FLYWHEEL	40
Y	*246-3338*	1	HOUSING GP-FRONT	42
Y	*251-7618*	1	LIFTING GP-ENGINE	46
Y	*239-0233*	1	MANIFOLD GP-EXHAUST	91
Y	*307-8201*	1	STARTING MOTOR GP-ELECTRIC	158
Y	*154-2435*	1	MOUNTING GP-FAN	50
Y	*311-2345*	1	PAN GP-OIL	52
Y	*270-6930*	1	PISTON & ROD GP	58
Y	*217-2777*	1	PULLEY GP-CRANKSHAFT	61
Y	*251-6791*	1	PULLEY GP-WATER PUMP	63
Y	*176-7711*	1	PUMP & MTG GP-FUEL TRANSFER	111
Y	*295-8181*	1	PUMP GP-FUEL INJECTION	113
Y	*246-3451*	1	PUMP GP-WATER	77
Y	*247-0323*	1	SENSOR GP-TEMP & PRESS (ENGINE COOLANT, ENGINE OIL)	155
Y	*239-0230*	1	TURBOCHARGER GP	95

Y-SEPARATE ILLUSTRATION

ENGINE ARRANGEMENT

295-7027 INSTALLATION AR-ENGINE

S/N: SCH2475-2824

PART OF 295-7232 COMMON AR

SMCS-1000 **i02748615**

NOTE	PART NUMBER	QTY	PART NAME 1 2 3 4 5 6 (PRODUCT LEVEL)	SEE PAGE
Y	*228-1773*	1	AIR CLEANER GP	88
Y	*229-8730*	1	DRAIN GP-ENGINE OIL	36
Y	*246-8723*	1	GUARD GP-BELT	39
Y	*280-8365*	1	LINES GP-AIR	90
Y	*228-1764*	1	MOUNTING GP-ENGINE (SUPPORTS)	48
Y	*241-5789*	1	MOUNTING GP-ENGINE (HARDWARE)	49
Y	*228-1763*	1	MOUNTING GP-PUMP	196
Y	*228-1762*	1	MOUNTING GP-RAD & OIL COOLER	75
Y	*225-8010*	1	WIRING GP-ENGINE	169

Y-SEPARATE ILLUSTRATION

ENGINE ARRANGEMENT

295-7028 INSTALLATION AR-ENGINE

S/N: SCH2825-UP

PART OF 295-7233 COMMON AR

SMCS-1000 **i02748614**

NOTE	PART NUMBER	QTY	PART NAME 1 2 3 4 5 6 (PRODUCT LEVEL)	SEE PAGE
Y	*228-1773*	1	AIR CLEANER GP	88
Y	*229-8730*	1	DRAIN GP-ENGINE OIL	36
Y	*246-8723*	1	GUARD GP-BELT	39
Y	*280-8365*	1	LINES GP-AIR	90
Y	*228-1764*	1	MOUNTING GP-ENGINE (SUPPORTS)	48
Y	*241-5789*	1	MOUNTING GP-ENGINE (HARDWARE)	49
Y	*228-1763*	1	MOUNTING GP-PUMP	196
Y	*228-1762*	1	MOUNTING GP-RAD & OIL COOLER	75
Y	*225-8010*	1	WIRING GP-ENGINE	169

Y-SEPARATE ILLUSTRATION

BASIC ENGINE

246-3337 CAMSHAFT GP

S/N: CSD1-11322
PART OF 300-5206 ENGINE AR-PRIMARY
AN ATTACHMENT

SMCS-1210, 1211, 1212 **i01992078**

NOTE	REF NO	GRAPHIC REF	PART NUMBER	QTY	PART NAME 1 2 3 4 5 6 (PRODUCT LEVEL)	SEE PAGE
	1	1	**217-7174**	1	TAPPET	
	2	1	**154-4504**	1	CAMSHAFT AS	
	2A	1	**153-6492**	1	KEY-WOODRUFF	
	2B	1	**154-4506**	3	SPACER	
	2C	1	**154-4507**	1	GEAR-CAMSHAFT (22 TEETH)	
	2D	1	**154-4508**	1	GEAR-CAMSHAFT (66 TEETH)	
	2E	1	**154-4505**	1	BEARING	

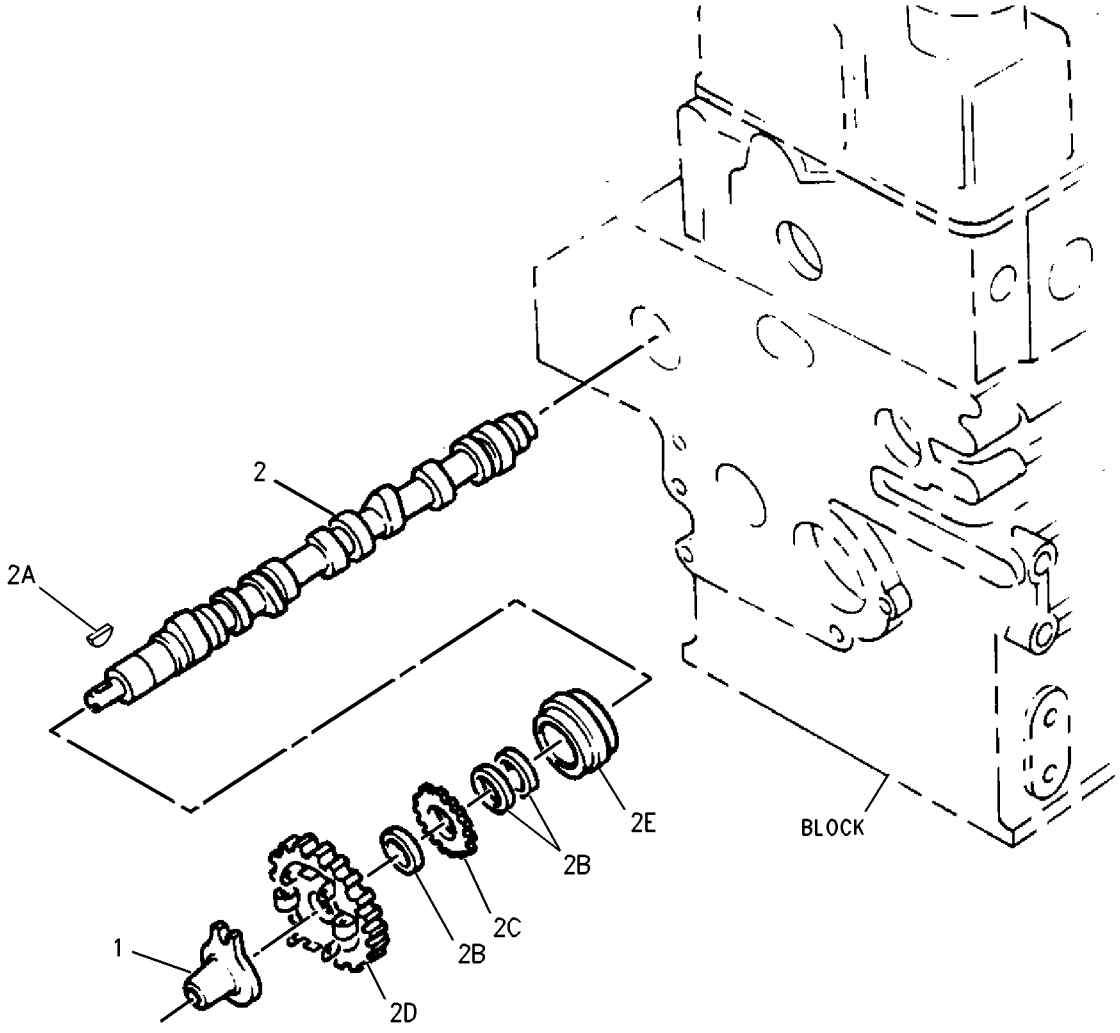

GRAPHIC #1 **<END>** g00715135

317-0971 CAMSHAFT GP

S/N: CYP1-UP
PART OF 292-5719 ENGINE AR-PRIMARY
AN ATTACHMENT

SMCS-1210, 1211, 1212 **i02827173**

NOTE	REF NO	GRAPHIC REF	PART NUMBER	QTY	PART NAME 1 2 3 4 5 6 (PRODUCT LEVEL)	SEE PAGE
	1	1	**153-6838**	2	BOLT	
	2	1	**154-1680**	1	PLATE	
	3	1	**308-1904**	1	SLIDER	
	4	1	**308-1902**	1	CAMSHAFT AS	
	4A	1	**153-6492**	1	KEY-WOODRUFF	
	4B	1	**154-4505**	1	BEARING	
	4C	1	**308-1903**	1	GEAR-CAMSHAFT (66-TEETH)	
	4D	1	**313-9323**	1	SPACER	

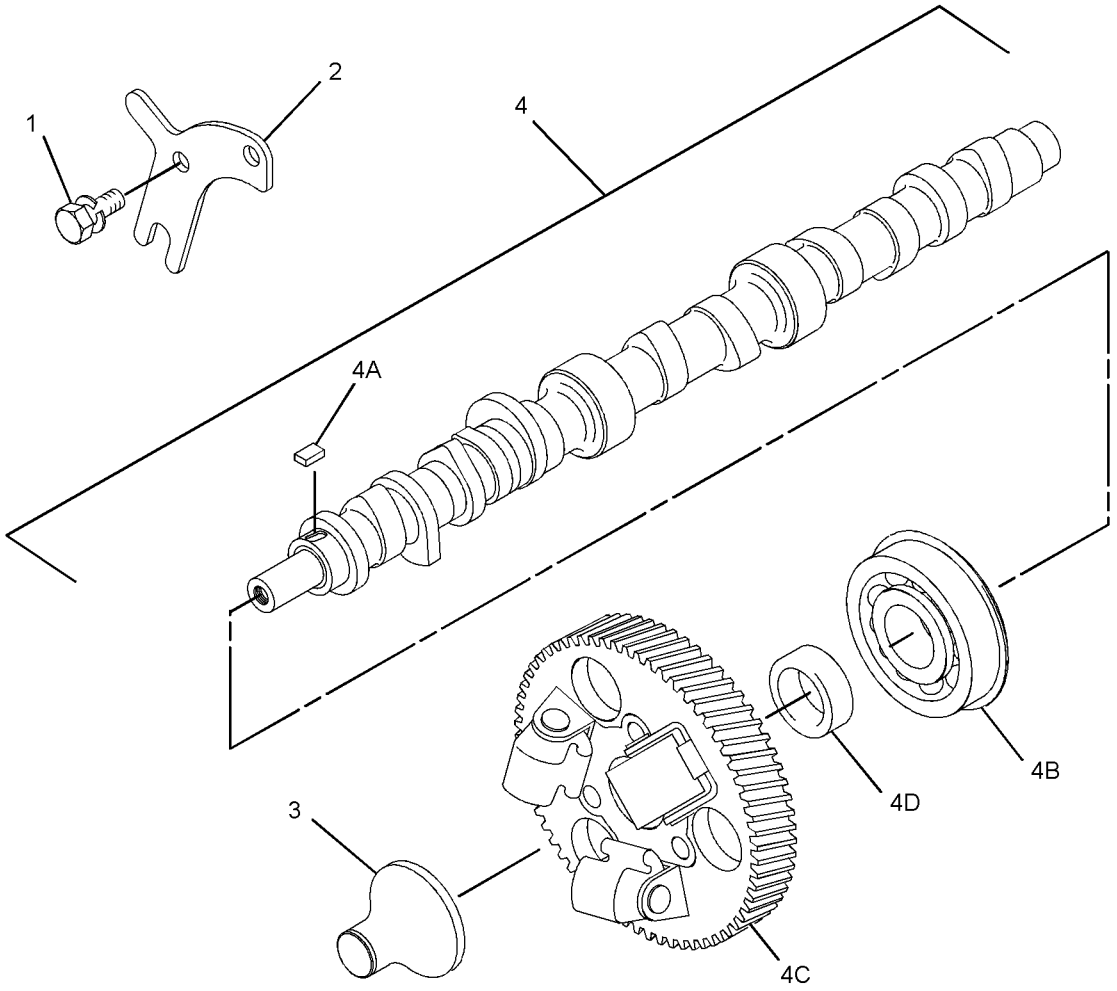

GRAPHIC #1 **<END>** g01418833

308-2307 COVER GP-FRONT HOUSING

S/N: CYP1-UP
PART OF 292-5719 ENGINE AR-PRIMARY
AN ATTACHMENT

SMCS-1166 **i02752401**

NOTE	REF NO	GRAPHIC REF	PART NUMBER	QTY	PART NAME 1 2 3 4 5 6 (PRODUCT LEVEL)	SEE PAGE
	1	1	**154-2403**	2	WASHER	
	2	1	**308-1875**	2	SEAL-O-RING	
	3	1	**308-1912**	2	COVER	
	4	1	**308-1913**	2	BOLT	
	5	1	**311-1171**	2	NUT	

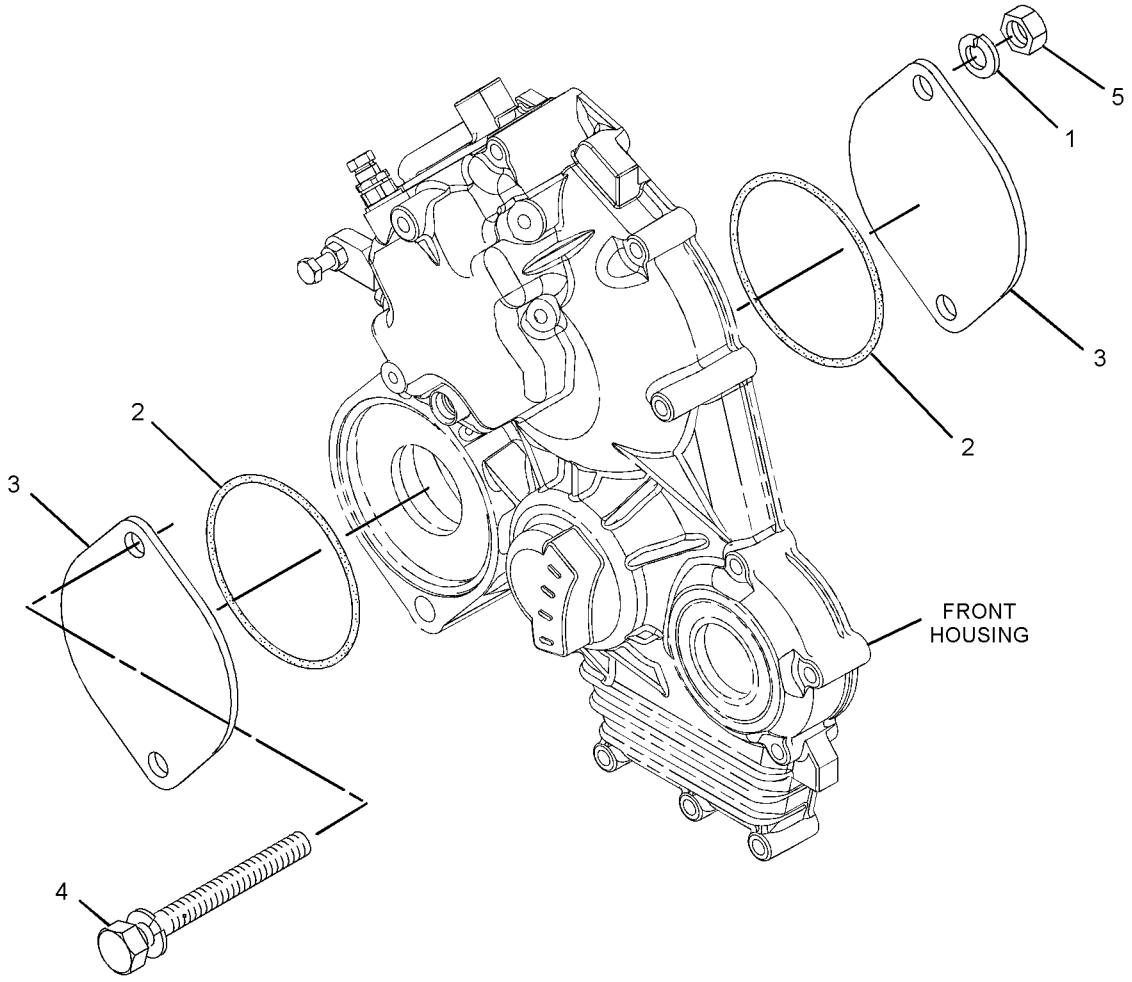

GRAPHIC #1 **<END>** g01415718

BASIC ENGINE

238-9348 COVER GP-VALVE MECHANISM

S/N: CSD1-11322

PART OF 300-5206 ENGINE AR-PRIMARY

AN ATTACHMENT

SMCS-1107 **i02546696**

NOTE	REF NO	GRAPHIC REF	PART NUMBER	QTY	PART NAME 1 2 3 4 5 6 (PRODUCT LEVEL)	SEE PAGE
	1	1	**153-5939**	1	GAUZE (CRANKCASE BREATHER)	
	2	1	**165-2140**	2	BOLT	
	3	1	**153-5962**	3	BOLT	
	4	1	**153-7640**	2	BOLT	
	5	1	**154-1347**	4	NUT	
	6	1	**190-3762**	4	WASHER	
	7	1	**183-1165**	1	PLUG	
	8	1	**217-5859**	1	VALVE-BREATHER (CRANKCASE)	
	9	1	**217-5861**	1	PLATE-RETAINING	
	10	1	**217-5862**	6	BOLT	
	11	1	**217-5864**	1	GASKET	
	12	1	**233-0695**	1	SEAL-VALVE COVER	
	13	1	**238-8731**	1	ADAPTER-BREATHER	
	14	1	**238-9289**	1	COVER-VALVE	
	15	1	**238-9295**	1	BOLT	
C	16	1	**262-3975**	1	GASKET	
C	17	1	**249-1486**	1	CONNECTION-AIR	

C-CHANGE FROM PREVIOUS TYPE

238-9348 **COVER GP-VALVE MECHANISM** *(contd.)* **i02546696**

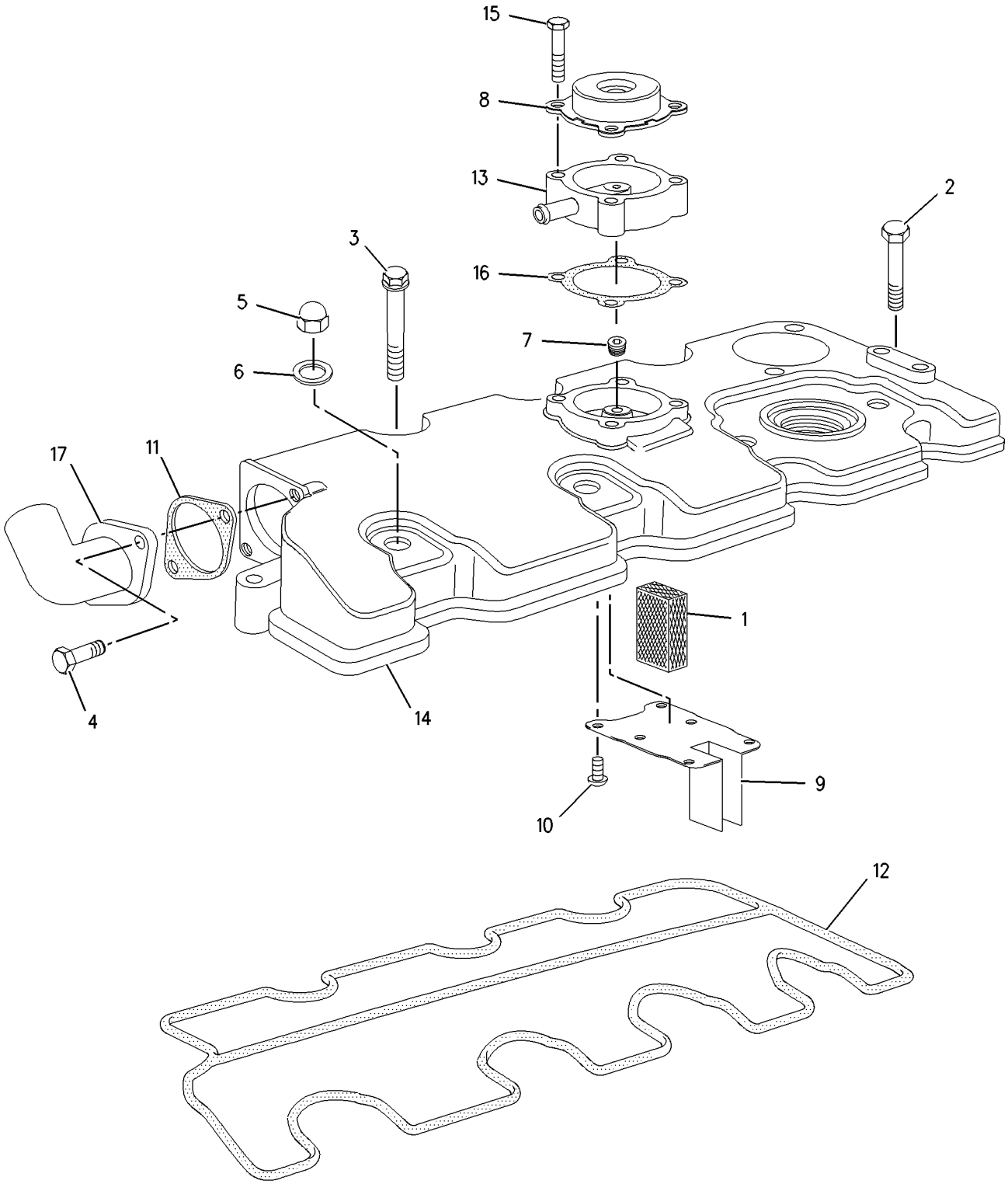

GRAPHIC #1 **<END>** g01007735

BASIC ENGINE

154-1201 CRANKSHAFT GP

S/N: CSD1-11322
PART OF 270-6915 CRANKSHAFT GP
AN ATTACHMENT

SMCS-1202 **i01498296**

NOTE	REF NO	GRAPHIC REF	PART NUMBER	QTY	PART NAME 1 2 3 4 5 6 (PRODUCT LEVEL)	SEE PAGE
	1	1	*153-5518*	1	KEY	
	2	1	*154-1202*	1	GEAR-CRANKSHAFT (33 TEETH)	

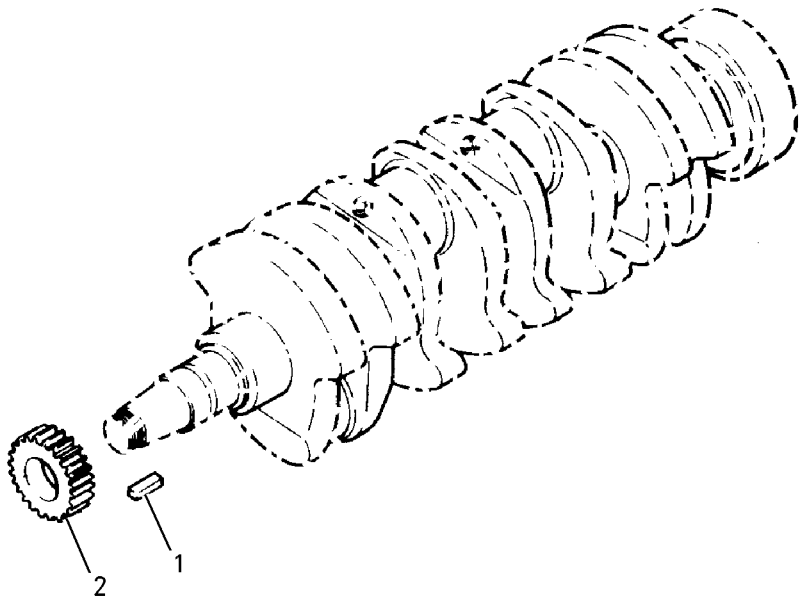

GRAPHIC #1 **<END>** g00777635

270-6915 CRANKSHAFT GP

S/N: CSD1-11322
PART OF 300-5206 ENGINE AR-PRIMARY
AN ATTACHMENT

SMCS-1202 **i02817662**

NOTE	REF NO	GRAPHIC REF	PART NUMBER	QTY	PART NAME 1 2 3 4 5 6 (PRODUCT LEVEL)	SEE PAGE
	1	1	**154-0181**	1	CAP AS-BEARING	
	1A	1	**153-5402**	2	DOWEL	
	1B	1	**154-0385**	2	BOLT	
	2	1	**154-0386**	1	CAP AS-BEARING	
	2A	1	**153-5402**	2	DOWEL	
	2B	1	**154-0385**	2	BOLT	
	3	1	**154-0388**	1	CAP AS-BEARING	
	3A	1	**153-5402**	2	DOWEL	
	3B	1	**154-0385**	2	BOLT	
	4	1	**154-0389**	1	CAP AS-BEARING	
	4A	1	**153-5402**	2	DOWEL	
	4B	1	**154-0385**	2	BOLT	
Y	5	1	**154-1201**	1	CRANKSHAFT GP	20
	6	1	**154-1230**	1	WASHER-THRUST	
	7	1	**154-1231**	2	WASHER-THRUST	
	8	1	**156-6971**	3	BOLT	
	9	1	**154-1203**	1	KIT-CRANKSHAFT BEARING (MAIN)	
		1	**161-7163**	1	KIT-CRANKSHAFT BEARING (0.25-MM US)	
		1	**161-7164**		KIT-CRANKSHAFT BEARING (0.5-MM US)	
	10	1	**183-1336**	2	BOLT	

Y-SEPARATE ILLUSTRATION

270-6915 **CRANKSHAFT GP** *(contd.)* **i02817662**

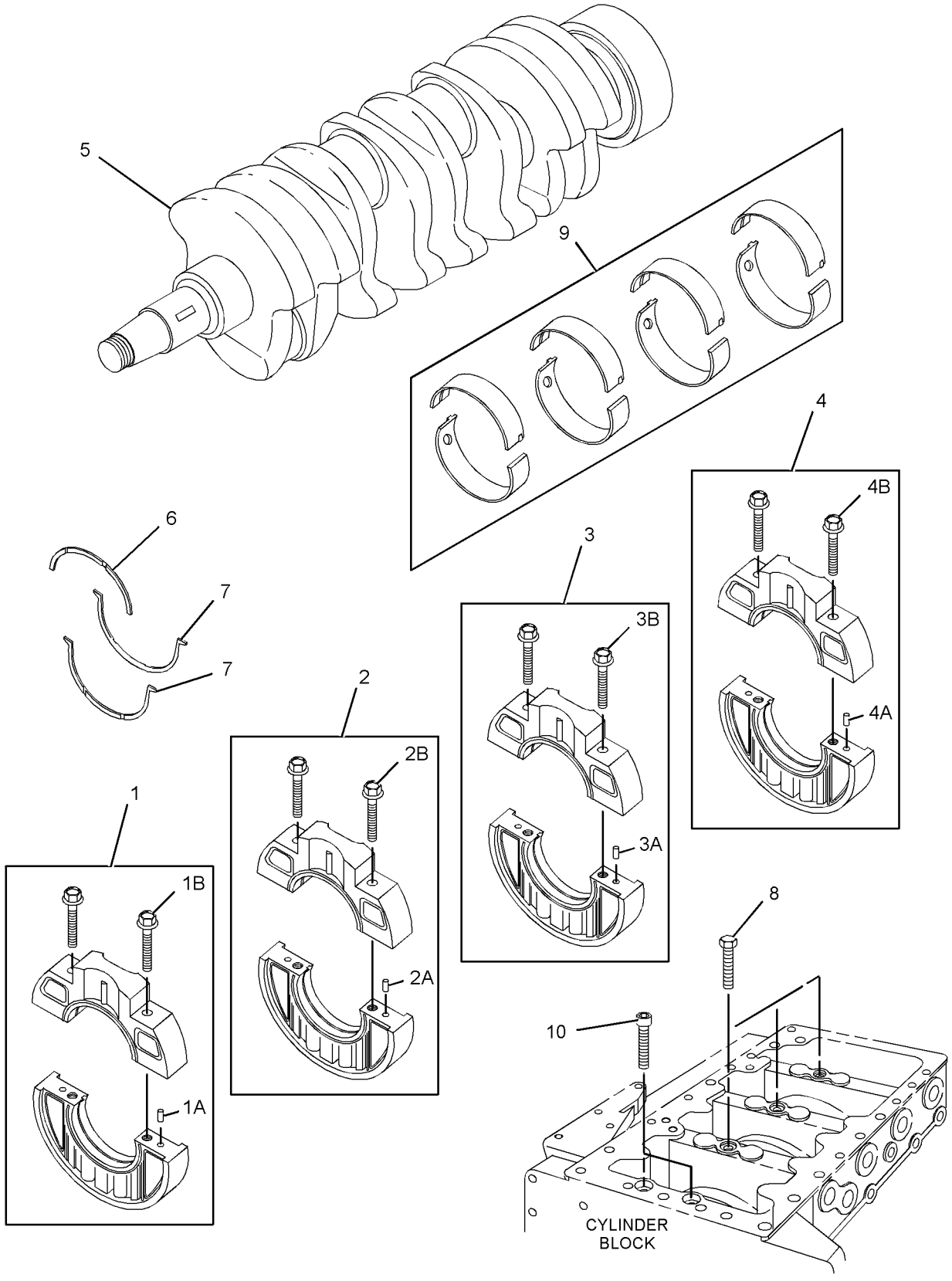

GRAPHIC #1 **<END>** g01193079

308-2283 CRANKSHAFT GP

S/N: CYP1-UP
PART OF 292-5719 ENGINE AR-PRIMARY
AN ATTACHMENT

SMCS-1202 **i02752406**

NOTE	REF NO	GRAPHIC REF	PART NUMBER	QTY	PART NAME 1 2 3 4 5 6 (PRODUCT LEVEL)	SEE PAGE
	1	1	**154-0181**	1	CAP AS-BEARING	
	1A	1	**153-5402**	2	DOWEL	
	1B	1	**154-0385**	2	BOLT	
	2	1	**154-0386**	1	CAP AS-BEARING	
	2A	1	**153-5402**	2	DOWEL	
	2B	1	**154-0385**	2	BOLT	
	3	1	**154-0388**	1	CAP AS-BEARING	
	3A	1	**153-5402**	2	DOWEL	
	3B	1	**154-0385**	2	BOLT	
	4	1	**154-0389**	1	CAP AS-BEARING	
	4A	1	**153-5402**	2	DOWEL	
	4B	1	**154-0385**	2	BOLT	
	5	1	**154-1230**	1	WASHER-THRUST	
	6	1	**154-1231**	2	WASHER-THRUST	
	7	1	**156-6971**	3	BOLT	
	8	1	**183-1336**	2	BOLT	
	9	1	**308-1852**	1	CRANKSHAFT AS	
	9A	1	**153-5518**	1	KEY	
	9B	1	**308-1853**	1	GEAR-CRANKSHAFT	
	10	1	**308-1855**	1	KIT-BEARING	
	11	1	**308-2362**	1	KIT-BEARING	

308-2283 **CRANKSHAFT GP** *(contd.)* **i02752406**

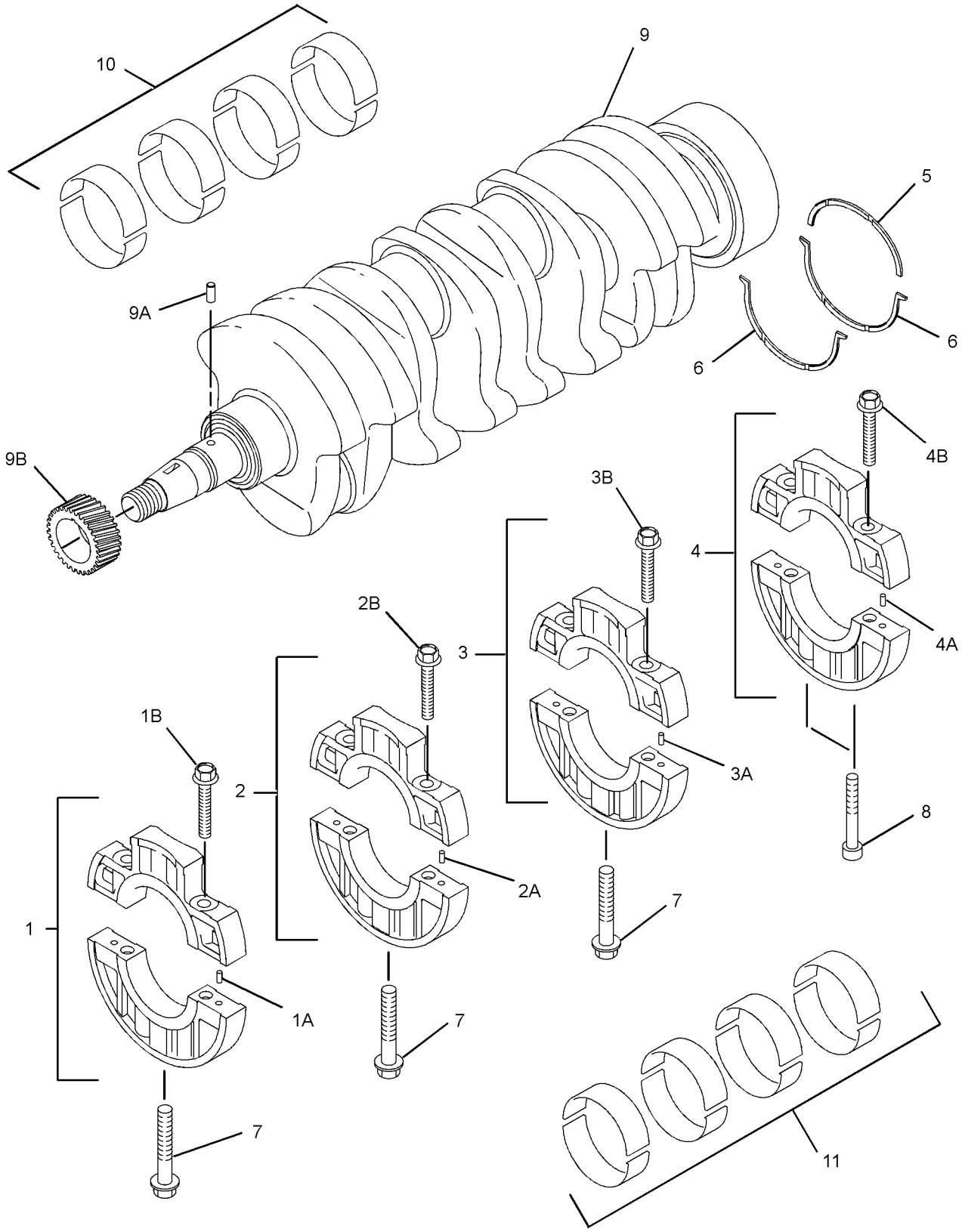

GRAPHIC #1 **<END>** g01406829

BASIC ENGINE

270-6932 CYLINDER BLOCK GP

S/N: CSD1-11322
PART OF 300-5206 ENGINE AR-PRIMARY
AN ATTACHMENT

SMCS-1201 **i02585857**

NOTE	REF NO	GRAPHIC REF	PART NUMBER	QTY	PART NAME 1 2 3 4 5 6 (PRODUCT LEVEL)	SEE PAGE
	1	1	**237-9315**	1	PLUG	
	2	1	**153-5387**	3	PLUG	
	3	1	**6B-0924**	1	BALL BEARING	
	4	1	**153-5394**	2	DOWEL	
	5	1	**153-5395**	2	DOWEL	
	6	1	**153-5396**	2	PIN	
	7	1	**153-5402**	1	DOWEL	
	8	1	**153-6838**	2	BOLT	
	9	1	**154-0175**	2	PLUG	
	10	1	**154-0176**	1	BUSHING	
	11	1	**154-0177**	1	BUSHING	
	12	1	**154-0178**	1	SEAL	
	13	1	**154-0391**	1	PLATE	
	14	1	**154-0393**	3	STUD	
	15	1	**183-1163**	1	STUD	
	16	1	**183-1164**	1	STUD	
	17	1	**294-4916**	1	BUSHING	
	18	1	**215-2620**	1	GASKET (PLATE)	
	19	1	**217-5770**	2	PLUG	
	20	1	**217-5771**	1	SHAFT	
	21	1	**221-1136**	3	PLUG	

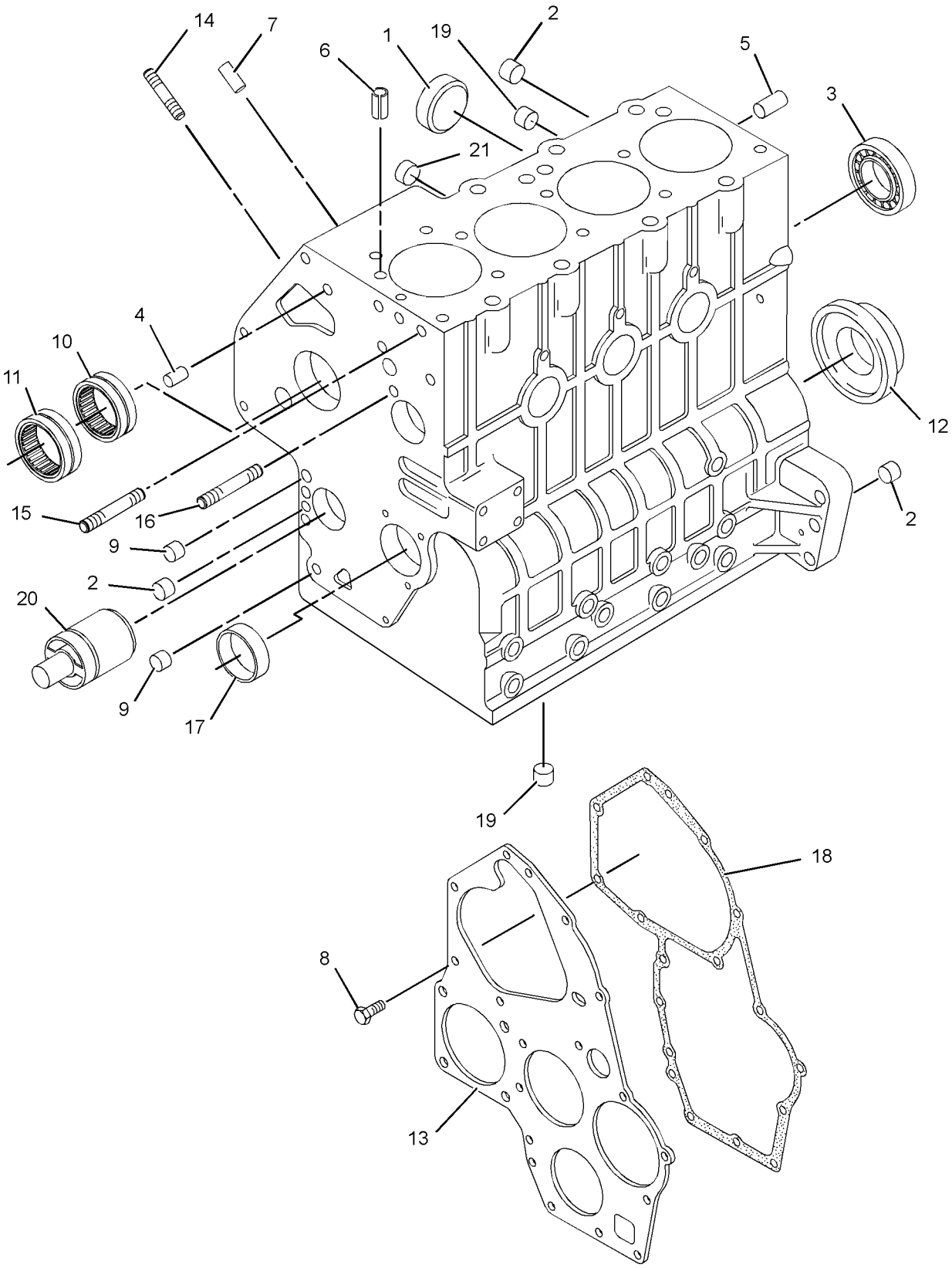

GRAPHIC #1 **<END>** g01192267

308-2281 CYLINDER BLOCK GP

S/N: CYP1-UP
PART OF 292-5719 ENGINE AR-PRIMARY
AN ATTACHMENT

SMCS-1201 **i02883558**

NOTE	REF NO	GRAPHIC REF	PART NUMBER	QTY	PART NAME 1 2 3 4 5 6 (PRODUCT LEVEL)	SEE PAGE
	1	1	**153-5387**	3	PLUG	
	2	1	**6B-0924**	1	BALL BEARING	
	3	1	**153-5391**	1	PLUG	
	4	1	**153-5394**	2	DOWEL	
	5	1	**153-5395**	2	DOWEL	
	6	1	**153-5396**	2	PIN	
	7	1	**153-5402**	2	DOWEL	
	8	1	**153-6838**	2	BOLT	
	9	1	**154-0175**	2	PLUG	
	10	1	**154-0176**	1	BUSHING	
	11	1	**154-0177**	1	BUSHING	
	12	1	**154-0178**	1	SEAL	
	13	1	**154-0393**	1	STUD	
	14	1	**183-1163**	1	STUD	
	15	1	**183-1164**	1	STUD	
	16	1	**215-2620**	1	GASKET	
	17	1	**217-5770**	3	PLUG	
	18	1	**221-1136**	4	PLUG	
	19	1	**237-9315**	2	PLUG (SEALING)	
	20	1	**237-9316**	5	PLUG (SEALING)	
	21	1	**294-4916**	1	BUSHING (STANDARD)	
B		1	**302-4181**	1	BUSHING (0.25-MM US)	
B		1	**302-4182**	1	BUSHING (0.50-MM US)	
	22	1	**308-1850**	1	SHAFT	
	23	1	**321-5907**	1	PLATE	

B-USE AS REQUIRED

308-2281 **CYLINDER BLOCK GP** *(contd.)* **i02883558**

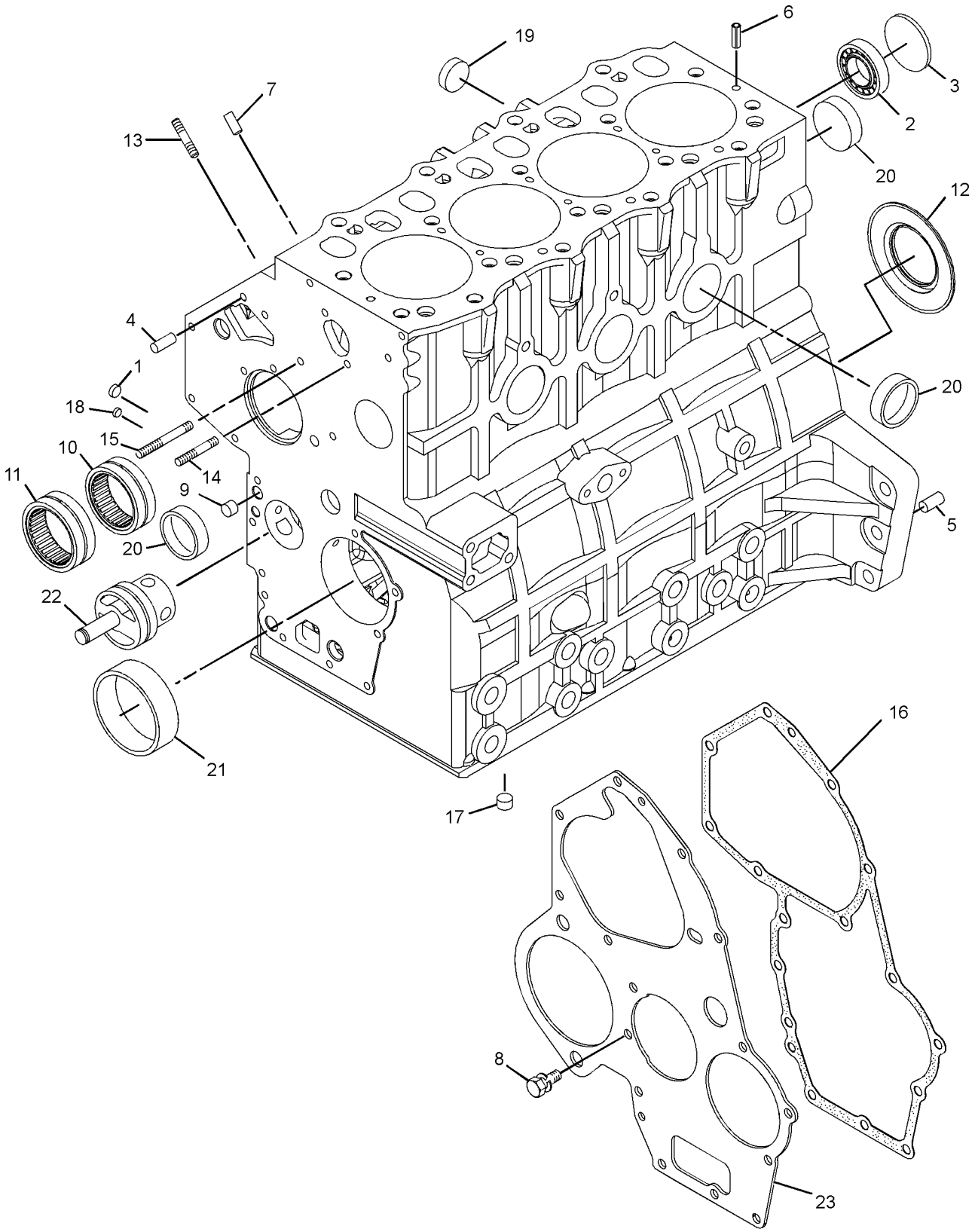

GRAPHIC #1 **<END>** g01398795

308-1859 CYLINDER HEAD AS

S/N: CYP1-UP

PART OF 308-2284 CYLINDER HEAD GP

AN ATTACHMENT

SMCS-1100 **i02752395**

NOTE	REF NO	GRAPHIC REF	PART NUMBER	QTY	PART NAME 1 2 3 4 5 6 (PRODUCT LEVEL)	SEE PAGE
	1	1	**153-5554**	4	SEAL	
	2	1	**153-5556**	8	RETAINER	
	3	1	**153-5557**	8	CAP	
	4	1	**153-5558**	8	SPRING	
	5	1	**153-5559**	4	SEAL	
	6	1	**237-9315**	6	PLUG (SEALING)	
	7	1	**256-2084**	4	INSERT-INLET VALVE	
	8	1	**256-2085**	4	INSERT-EXHAUST VALVE	
	9	1	**288-6537**	7	CAP	
	10	1	**291-1808**	2	CAP	
	11	1	**303-0338**	3	PLUG	
	12	1	**308-1860**	4	VALVE-INLET	
	13	1	**308-1861**	4	VALVE-EXHAUST	

308-1859 **CYLINDER HEAD AS** *(contd.)* **i02752395**

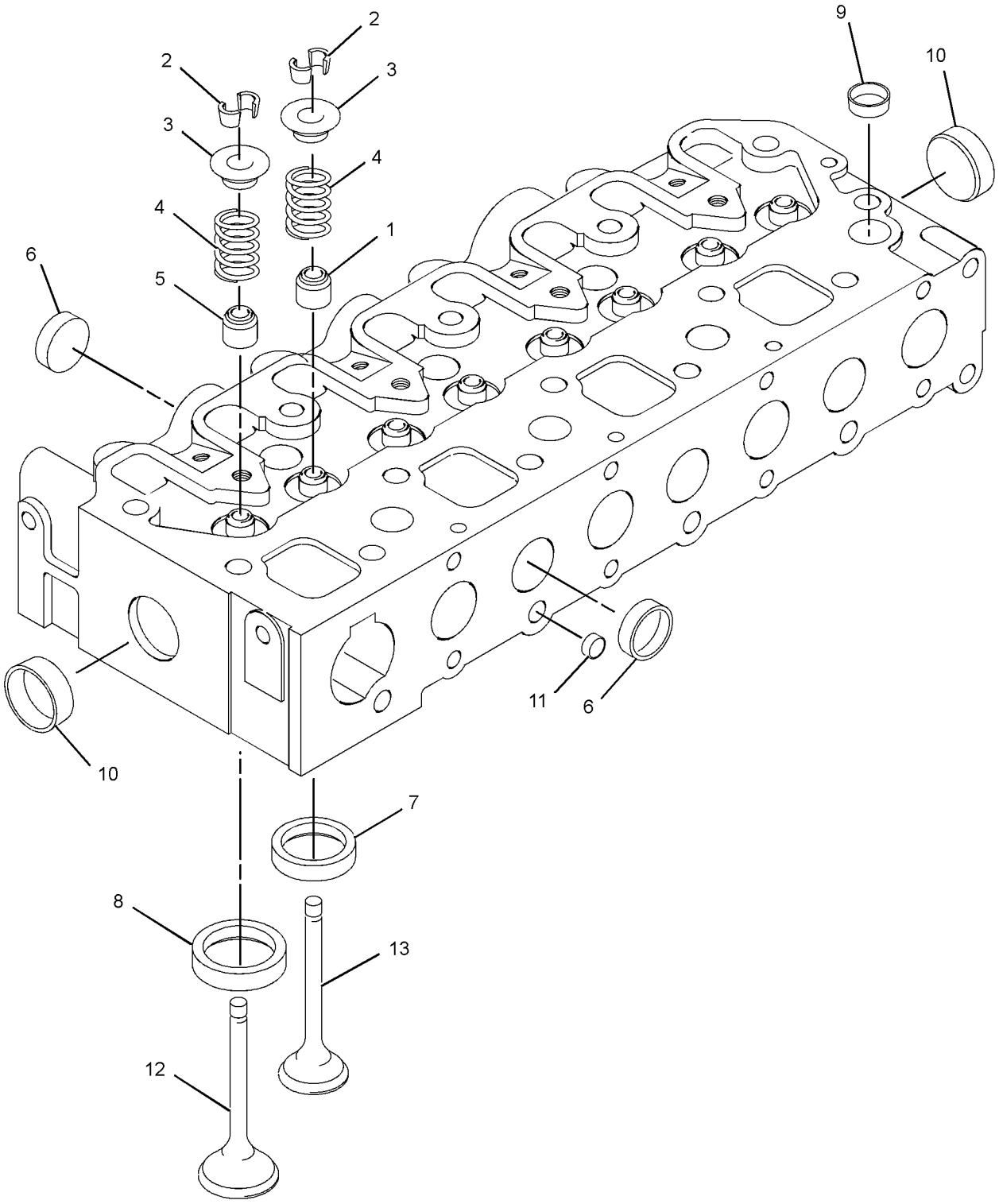

GRAPHIC #1 **<END>** g01418931

236-5127 CYLINDER HEAD GP

S/N: CSD1-11322
PART OF 303-0337 CYLINDER HEAD GP
AN ATTACHMENT

SMCS-1100, 1101, 1103, 1104, 1105, 1108, 1109, 1115, 1117, 1121, 1124, 1125

i02787223

NOTE	REF NO	GRAPHIC REF	PART NUMBER	QTY	PART NAME 1 2 3 4 5 6 (PRODUCT LEVEL)	SEE PAGE
	1	1	**237-9315**	5	PLUG (SEALING)	
	2	1	**291-1808**	2	CAP	
	3	1	**288-6537**	7	CAP	
	4	1	**153-5556**	16	RETAINER	
	5	1	**153-5557**	8	CAP	
	6	1	**153-5558**	8	SPRING	
	7	1	**303-0338**	3	PLUG	
	8	1	**154-0888**	4	VALVE-INLET	
	9	1	**154-0889**	4	VALVE-EXHAUST	
	10	1	**256-2085**	4	INSERT-EXHAUST VALVE	
	11	1	**256-2084**	4	INSERT-INLET VALVE	
	12	1	**153-5554**	4	SEAL (EXHAUST)	
	13	1	**153-5559**	4	SEAL (INLET)	

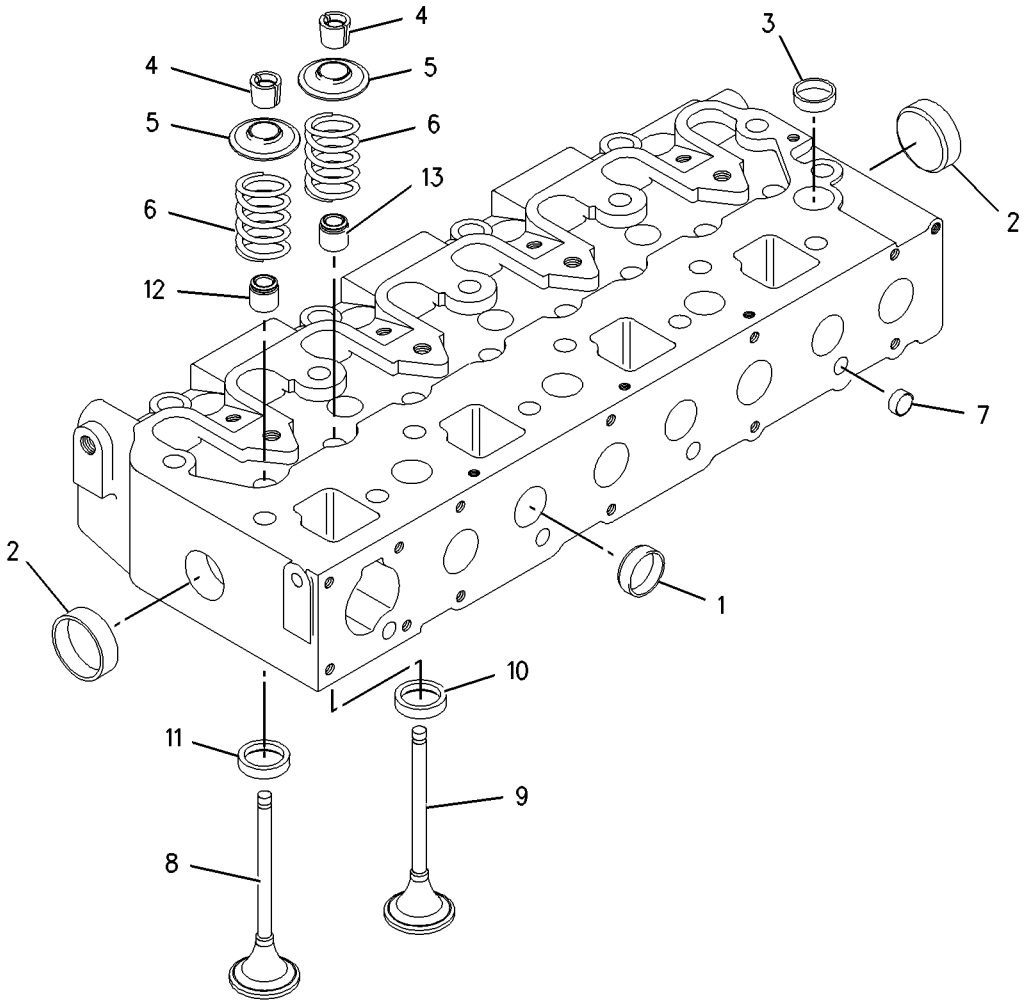

GRAPHIC #1 **<END>** g01007374

BASIC ENGINE

303-0337 CYLINDER HEAD GP

S/N: CSD1-11322
PART OF 300-5206 ENGINE AR-PRIMARY
AN ATTACHMENT

SMCS-1100, 1101, 1103, 1104, 1105, 1108, 1109, 1115, 1117, 1121, 1124, 1125 **i02870321**

NOTE	REF NO	GRAPHIC REF	PART NUMBER	QTY	PART NAME 1 2 3 4 5 6 (PRODUCT LEVEL)	SEE PAGE
	1	1	**153-5573**	8	CAP	
	2	2	**153-5961**	2	BOLT	
	3	2	**153-7988**	4	NUT	
	4	2	**154-1246**	4	STUD	
	5	2	**154-1248**	8	ROD	
	6	2	**154-1249**	8	TAPPET	
	7	1	**156-6988**	14	BOLT	
	8	1	**156-6989**	4	BOLT	
	9	1	**183-1164**	1	STUD	
	10	1	**183-3213**	4	STUD	
	11	2	**217-2752**	1	GASKET (VALVE BRACKET)	
Y	12	1	**236-5127**	1	CYLINDER HEAD GP	31
	13	1	**291-3781**	1	GASKET-CYLINDER HEAD (0.5-MM THK)	
Y	14	2	**293-2167**	1	VALVE MECHANISM GP	66

Y-SEPARATE ILLUSTRATION

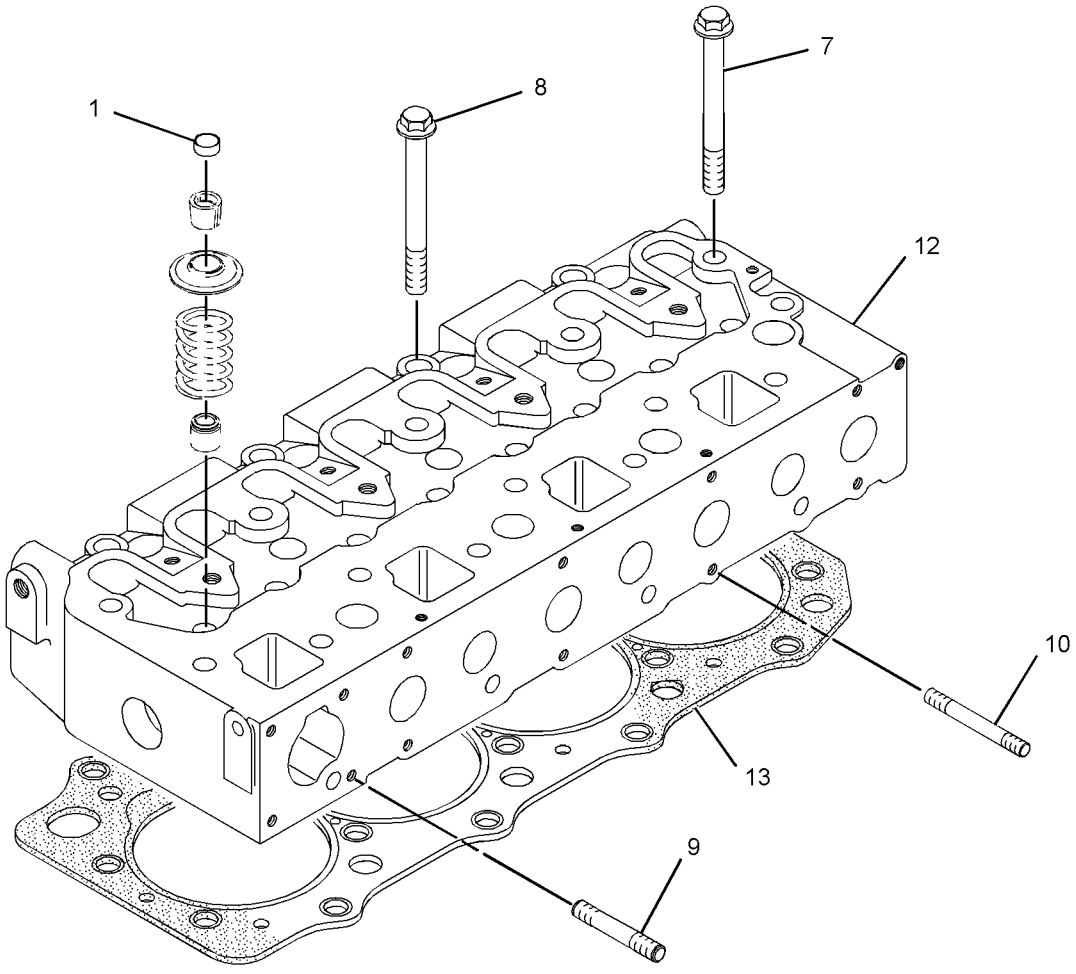

GRAPHIC #1 g01379270

303-0337 **CYLINDER HEAD GP** *(contd.)* **i02870321**

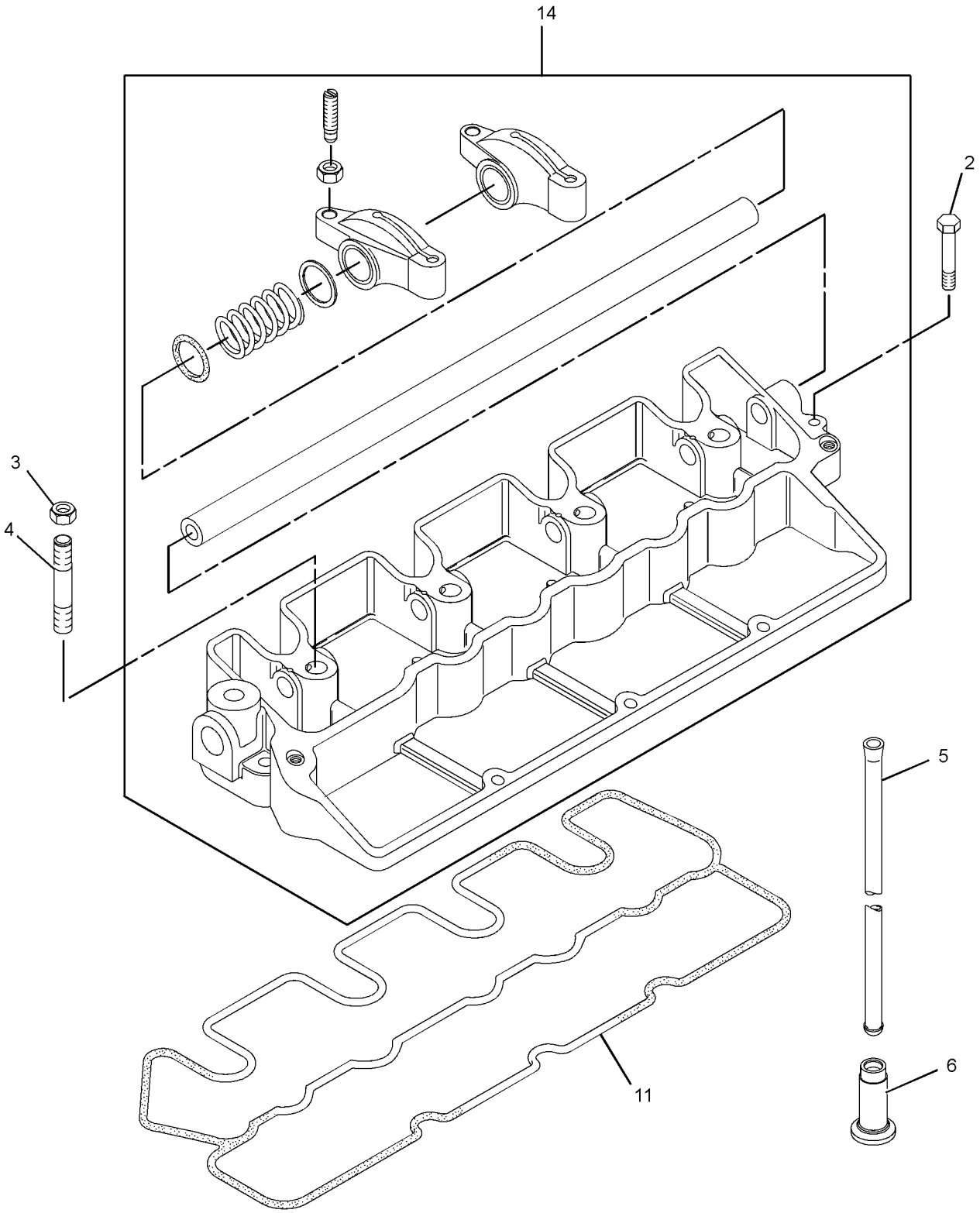

GRAPHIC #2 **<END>** g01379272

BASIC ENGINE

308-2284 CYLINDER HEAD GP

S/N: CYP1-UP
PART OF 292-5719 ENGINE AR-PRIMARY
AN ATTACHMENT

SMCS-1100, 1101, 1103, 1104, 1105, 1108, 1109, 1115, 1117, 1121, 1124, 1125

i02752404

NOTE	REF NO	GRAPHIC REF	PART NUMBER	QTY	PART NAME 1 2 3 4 5 6 (PRODUCT LEVEL)	SEE PAGE
	1	1	**153-5573**	8	CAP	
	2	1	**156-6988**	14	BOLT	
	3	1	**156-6989**	4	BOLT	
	4	1	**183-3213**	2	STUD	
Y	5	1	**308-1859**	1	CYLINDER HEAD AS	29
	6	1	**308-1862**	2	STUD	
B	7	1	**308-1910**	1	GASKET (1.2-MM)	
B		1	**308-1911**	1	GASKET (1.3-MM)	

B-USE AS REQUIRED
Y-SEPARATE ILLUSTRATION

308-2284 **CYLINDER HEAD GP** *(contd.)* **i02752404**

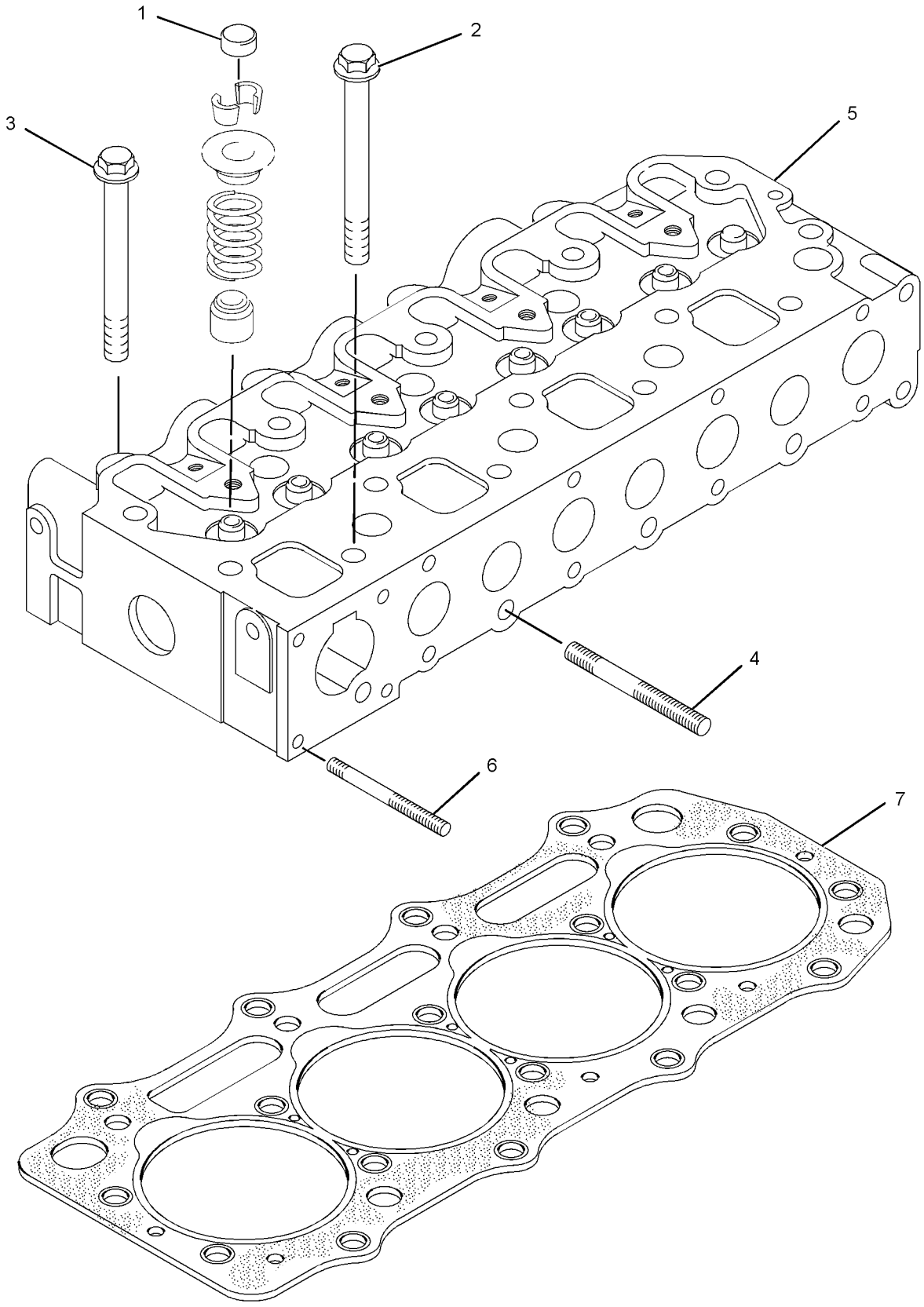

GRAPHIC #1 **<END>** g01409220

229-8730 DRAIN GP-ENGINE OIL

S/N: SCH2475-UP

PART OF 295-7027, 295-7028 INSTALLATION AR-ENGINE

SMCS-1302 **i02752749**

NOTE	REF NO	GRAPHIC REF	PART NUMBER	QTY	PART NAME 1 2 3 4 5 6 (PRODUCT LEVEL)	SEE PAGE
	1	1	**5P-4961**	1	CLAMP-HOSE	
	2	1	**8C-3445**	1	CAP-DUST	
	3	1	**8C-3446**	1	VALVE-FLUID SAMPLING	
	6	1	**218-0919**	1	ADAPTER	
	8	1	**8L-2779**	1	SEAL-O-RING	
CE	9	1	**5P-1505**		HOSE (35-CM)	

C-CHANGE FROM PREVIOUS TYPE
E-ORDER BY THE CENTIMETER

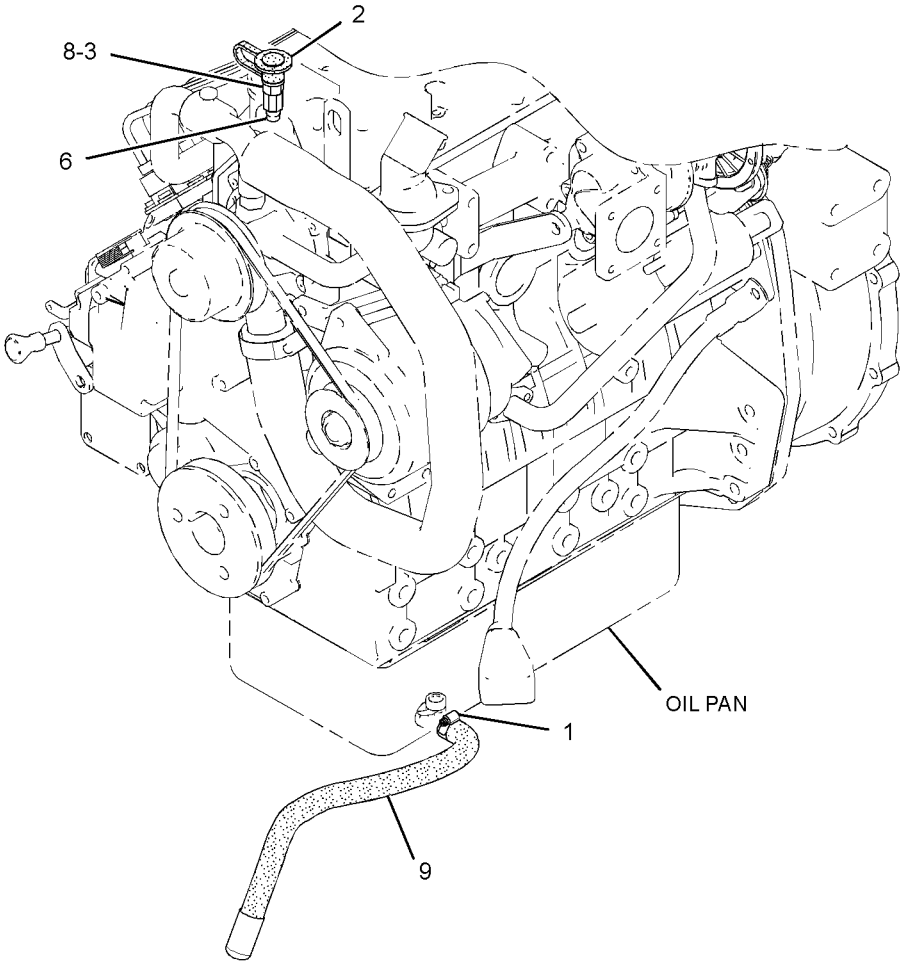

GRAPHIC #1 **<END>** g01381559

217-7221 FLYWHEEL GP

S/N: CSD1-11322
PART OF 300-5206 ENGINE AR-PRIMARY
AN ATTACHMENT

SMCS-1156, 1158 **i01649085**

NOTE	REF NO	GRAPHIC REF	PART NUMBER	QTY	PART NAME 1 2 3 4 5 6 (PRODUCT LEVEL)	SEE PAGE
	1	1	**138-7446**	1	FLYWHEEL AS	
	1A	1	**154-2405**	1	GEAR-STARTER (126 TEETH)	
	2	1	**154-2406**	6	BOLT	

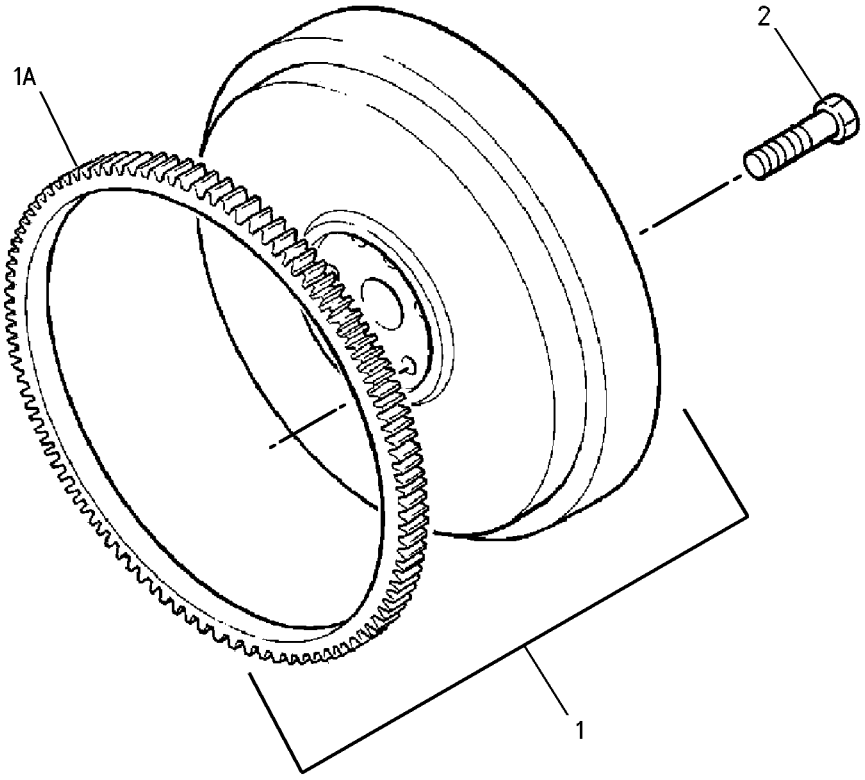

GRAPHIC #1 **<END>** g00640776

BASIC ENGINE

308-2291 FLYWHEEL GP

S/N: CYP1-UP
PART OF 292-5719 ENGINE AR-PRIMARY
AN ATTACHMENT

SMCS-1156, 1158 **i02724854**

NOTE	REF NO	GRAPHIC REF	PART NUMBER	QTY	PART NAME 1 2 3 4 5 6 (PRODUCT LEVEL)	SEE PAGE
	1	1	**138-7446**	1	FLYWHEEL AS	
	1A	1	**154-2405**	1	GEAR-STARTER (126-TEETH)	
	2	1	**154-2406**	6	BOLT	

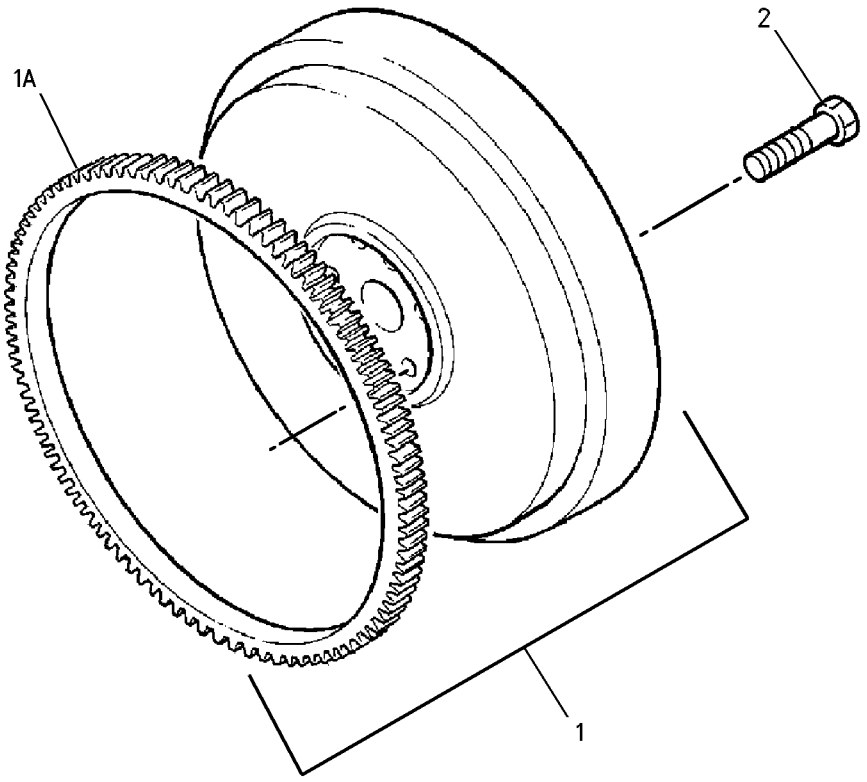

GRAPHIC #1 **<END>** g00640776

246-8723 GUARD GP-BELT

S/N: SCH2475-UP

PART OF 295-7027, 295-7028 INSTALLATION AR-ENGINE

SMCS-7174 **i02634185**

NOTE	REF NO	GRAPHIC REF	PART NUMBER	QTY	PART NAME 1 2 3 4 5 6 (PRODUCT LEVEL)	SEE PAGE
	1	1	**149-7694**	1	BRACKET AS	
M		1	**8T-3612**	4	NUT-WELD (M8X1.25-THD)	
	2	1	**208-0044**	1	GUARD-BELT	
	3	1	**228-9953**	1	BRACKET AS	
M		1	**8T-3490**	2	NUT-WELD (M10X1.5-THD)	
M		1	**8T-3612**	2	NUT-WELD (M8X1.25-THD)	
	4	1	**5P-4116**	8	WASHER-HARD (8.8X20.5X2-MM THK)	
M	5	1	**8T-4189**	4	BOLT (M8X1.25X20-MM)	
M	6	1	**8T-4908**	2	BOLT (M8X1.25X25-MM)	
M	7	1	**8T-5091**	2	BOLT (M8X1.25X20-MM)	

M-METRIC PART

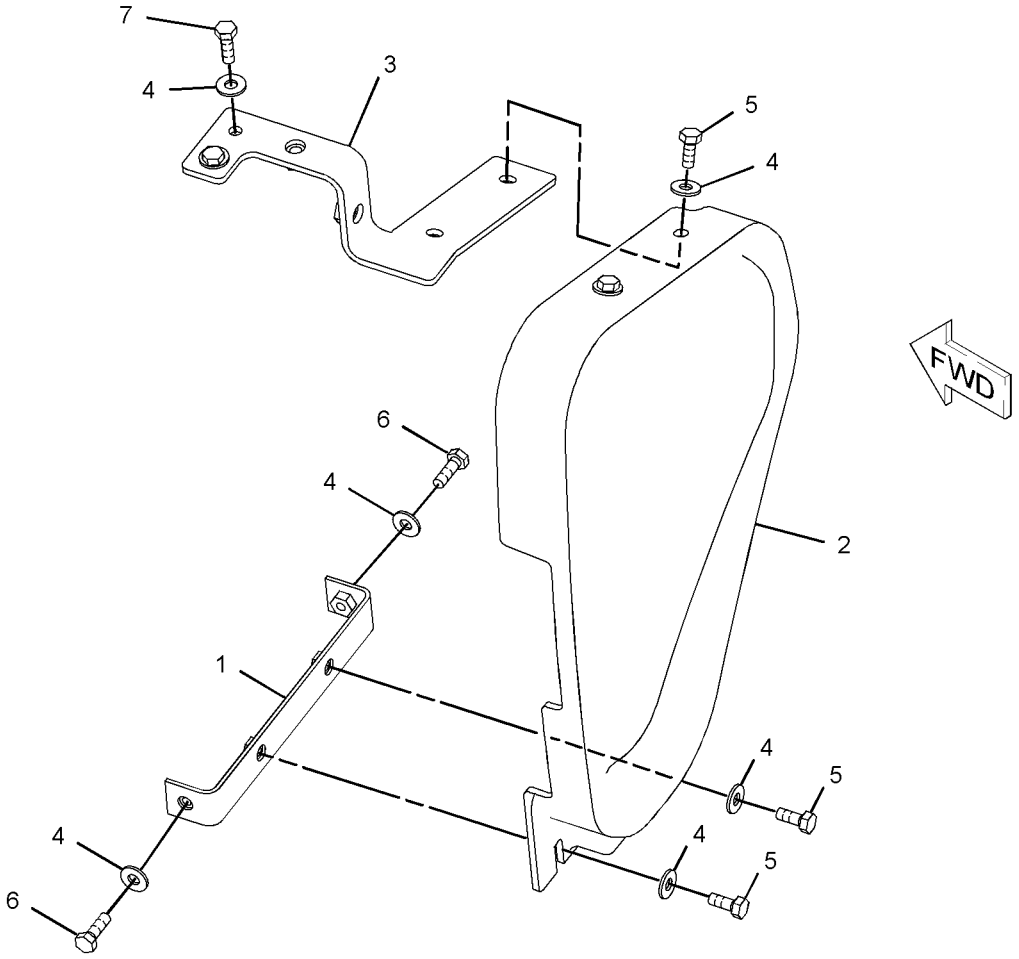

GRAPHIC #1 **<END>** g01071917

BASIC ENGINE

217-7238 HOUSING GP-FLYWHEEL

S/N: CSD1-11322
PART OF 300-5206 ENGINE AR-PRIMARY
AN ATTACHMENT

SMCS-1157 **i01649087**

NOTE	REF NO	GRAPHIC REF	PART NUMBER	QTY	PART NAME 1 2 3 4 5 6 (PRODUCT LEVEL)	SEE PAGE
	1	1	**217-7225**	1	HOUSING-FLYWHEEL	
	2	1	**138-7402**	6	BOLT	
	3	1	**153-6375**	10	BOLT	
	4	1	**153-6868**	3	BOLT	
	5	1	**154-2394**	1	PLATE	
	6	1	**154-2395**	1	PLUG	
	7	1	**154-2403**	4	WASHER	
	8	1	**165-2142**	2	BOLT	
	9	1	**138-7162**	4	BOLT	
	10	1	**166-2338**	4	NUT	

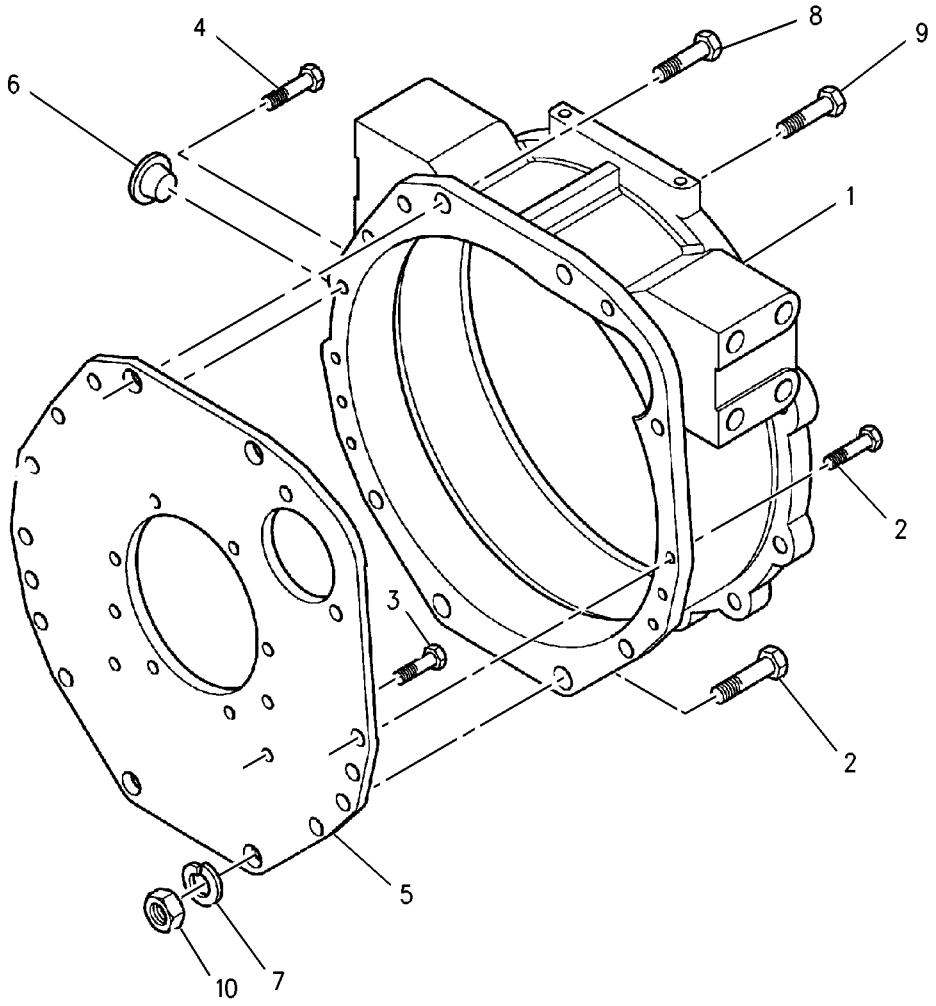

GRAPHIC #1 **<END>** g00852718

316-7030 HOUSING GP-FLYWHEEL

S/N: CYP1-UP
PART OF 292-5719 ENGINE AR-PRIMARY
AN ATTACHMENT

SMCS-1157 **i02826809**

NOTE	PART NUMBER	QTY	PART NAME 1 2 3 4 5 6 (PRODUCT LEVEL)	SEE PAGE
	138-7162	4	BOLT	
	252-1802	6	BOLT	
	153-6375	10	BOLT	
	153-6868	2	BOLT	
	165-2142	2	BOLT	
	217-7225	1	HOUSING-FLYWHEEL	
	166-2338	4	NUT	
	154-2394	1	PLATE	
	154-2395	1	PLUG	
	154-2403	4	WASHER	

<END>

BASIC ENGINE

246-3338 HOUSING GP-FRONT

S/N: CSD1-11322

PART OF 300-5206 ENGINE AR-PRIMARY

AN ATTACHMENT

SMCS-1151, 1160, 1162, 1166, 3108 **i02576123**

NOTE	REF NO	GRAPHIC REF	PART NUMBER	QTY	PART NAME 1 2 3 4 5 6 (PRODUCT LEVEL)	SEE PAGE
	1	1	**153-5960**	2	NUT	
	2	1	**153-5962**	3	BOLT	
	3	1	**153-6838**	4	BOLT	
	4	1	**153-6856**	6	BOLT	
	5	1	**153-7985**	1	WASHER	
	6	1	**154-1680**	1	PLATE	
	7	1	**154-1672**	1	HOUSING-FRONT	
	8	1	**154-1673**	1	PIN	
	9	1	**154-1675**	1	SEAL	
	10	1	**297-3050**	1	GEAR AS (62-TEETH)	
	10A	1	**154-1677**	3	BUSHING	
	10B	1	**154-1678**	3	DOWEL	
	10C	1	**154-1679**	1	SPRING	
	11	1	**165-2139**	2	BOLT	
	12	1	*215-2621*	1	GASKET	
F		1	**160-7626**	1	STUD	

F-NOT SHOWN

246-3338 **HOUSING GP-FRONT** *(contd.)* **i02576123**

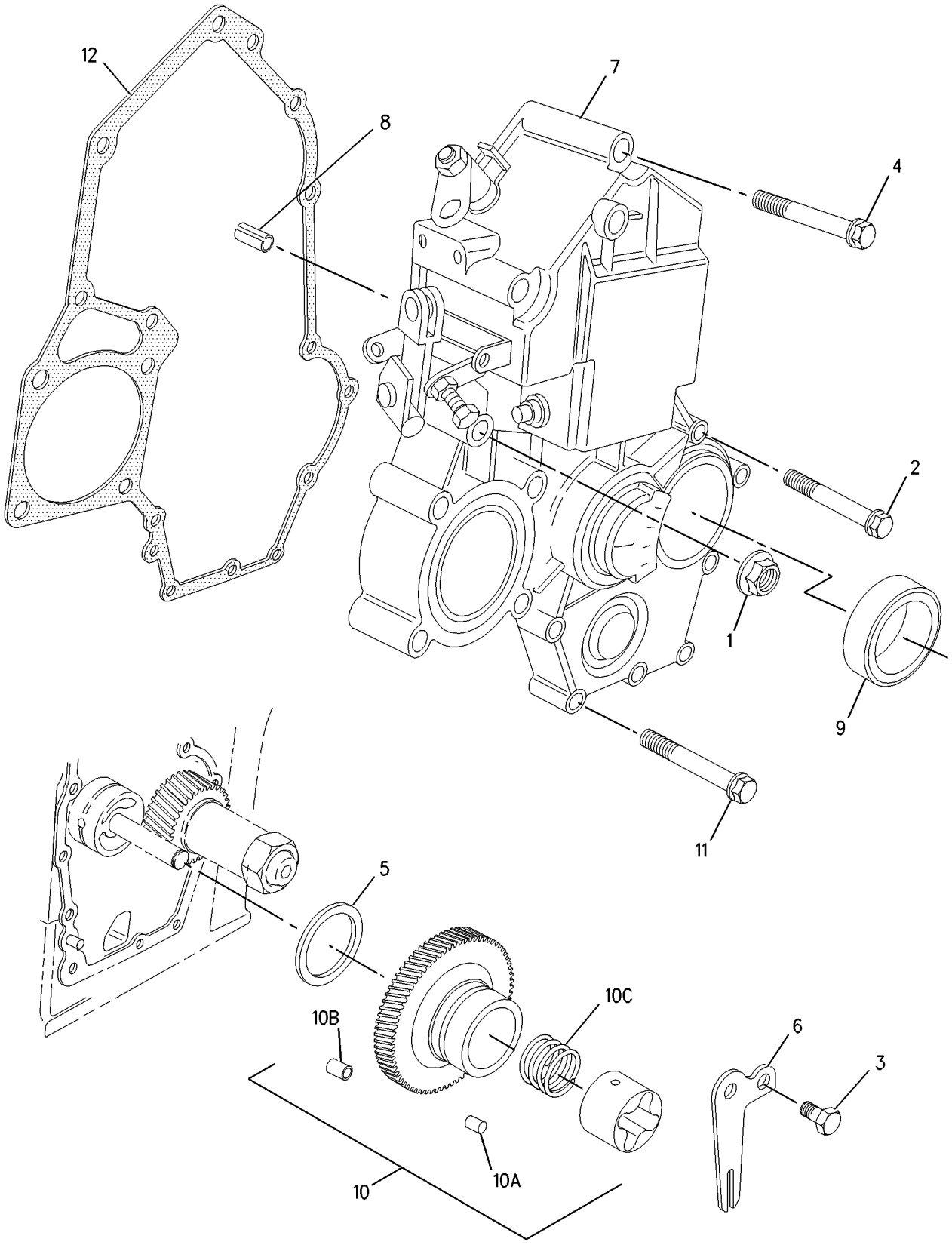

GRAPHIC #1 **<END>** g00995977

BASIC ENGINE

317-0965 HOUSING GP-FRONT

S/N: CYP1-UP

PART OF 292-5719 ENGINE AR-PRIMARY

AN ATTACHMENT

SMCS-1151, 1160, 1162, 1166, 3108 **i02827170**

NOTE	REF NO	GRAPHIC REF	PART NUMBER	QTY	PART NAME 1 2 3 4 5 6 (PRODUCT LEVEL)	SEE PAGE
	1	1	**153-5960**	2	NUT	
	2	1	**153-5962**	4	BOLT	
	3	1	**154-1673**	1	PIN	
	4	1	**154-1675**	1	SEAL	
	5	1	**165-2140**	7	BOLT	
	6	1	**308-1871**	1	GASKET	
	7	1	**308-1874**	1	HOLDER	
	8	1	**308-1875**	3	SEAL-O-RING	
	9	1	**311-0656**	1	CASE	

317-0965 **HOUSING GP-FRONT** *(contd.)* **i02827170**

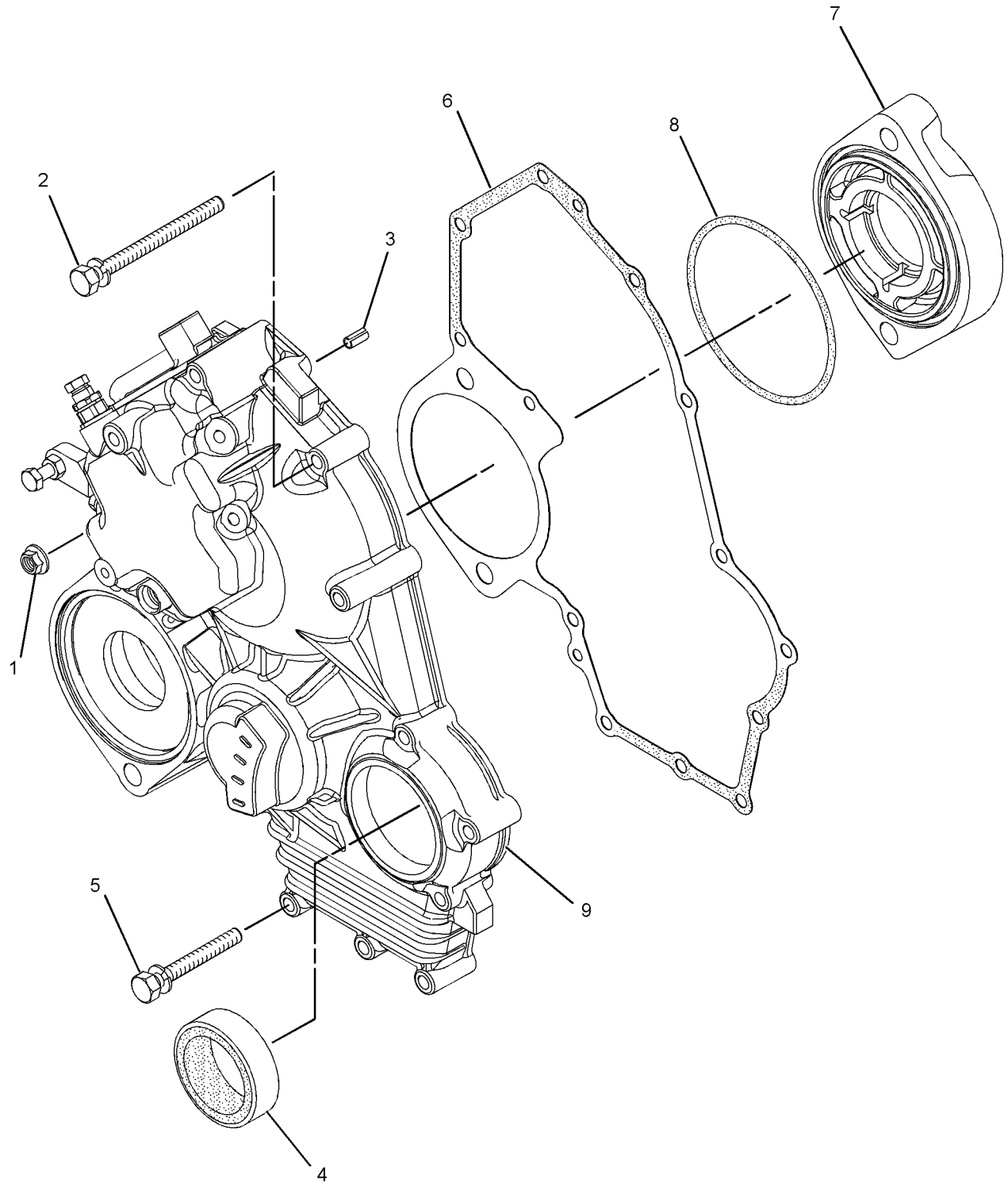

GRAPHIC #1 **<END>** g01438892

BASIC ENGINE

251-7618 LIFTING GP-ENGINE

S/N: CSD1-11322
PART OF 300-5206 ENGINE AR-PRIMARY
AN ATTACHMENT

SMCS-1122 **i02089687**

NOTE	REF NO	GRAPHIC REF	PART NUMBER	QTY	PART NAME 1 2 3 4 5 6 (PRODUCT LEVEL)	SEE PAGE
	1	1	**155-7984**	2	WASHER	
	2	1	**165-2141**	2	BOLT	
	3	1	**251-7615**	2	PLATE-LIFTING	

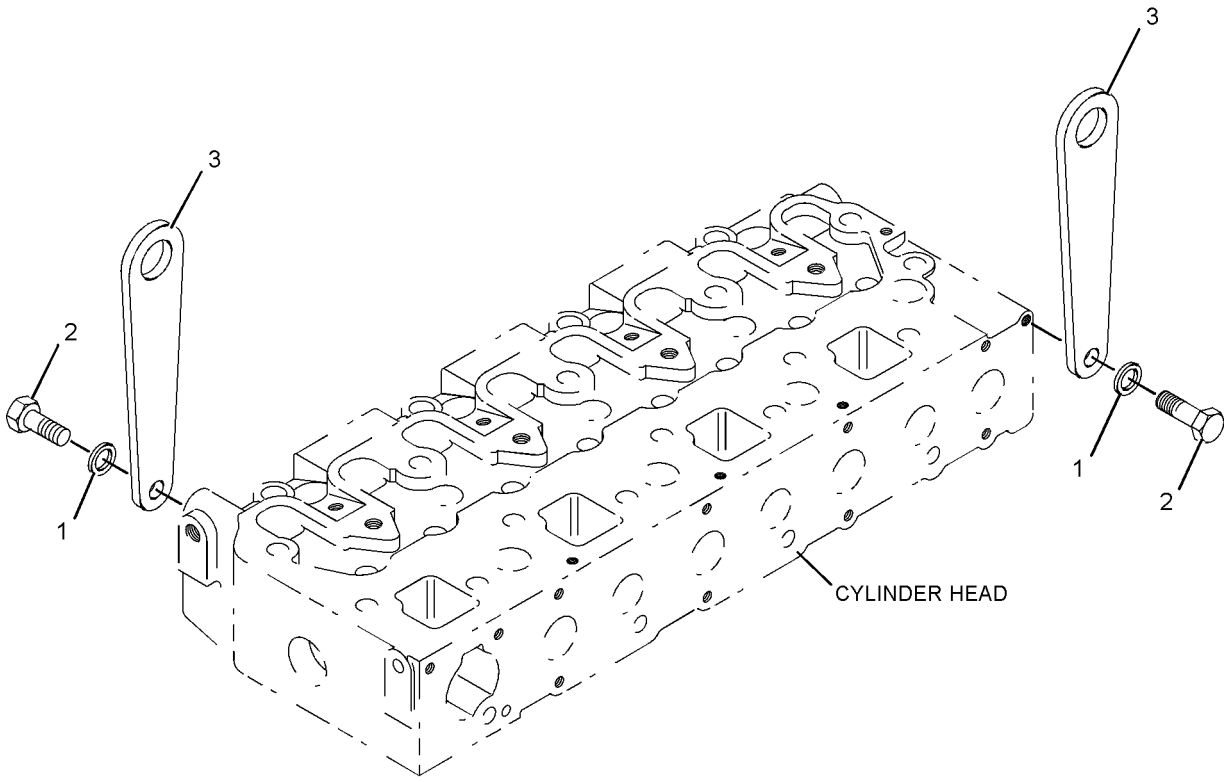

GRAPHIC #1 **<END>** g01091205

317-0982 LIFTING GP-ENGINE

S/N: CYP1-UP
PART OF 292-5719 ENGINE AR-PRIMARY
AN ATTACHMENT

SMCS-1122 **i02827332**

NOTE	REF NO	GRAPHIC REF	PART NUMBER	QTY	PART NAME 1 2 3 4 5 6 (PRODUCT LEVEL)	SEE PAGE
	1	1	**155-7984**	2	WASHER	
	2	1	**165-2141**	2	BOLT	
	3	1	**251-7615**	2	PLATE-LIFTING	

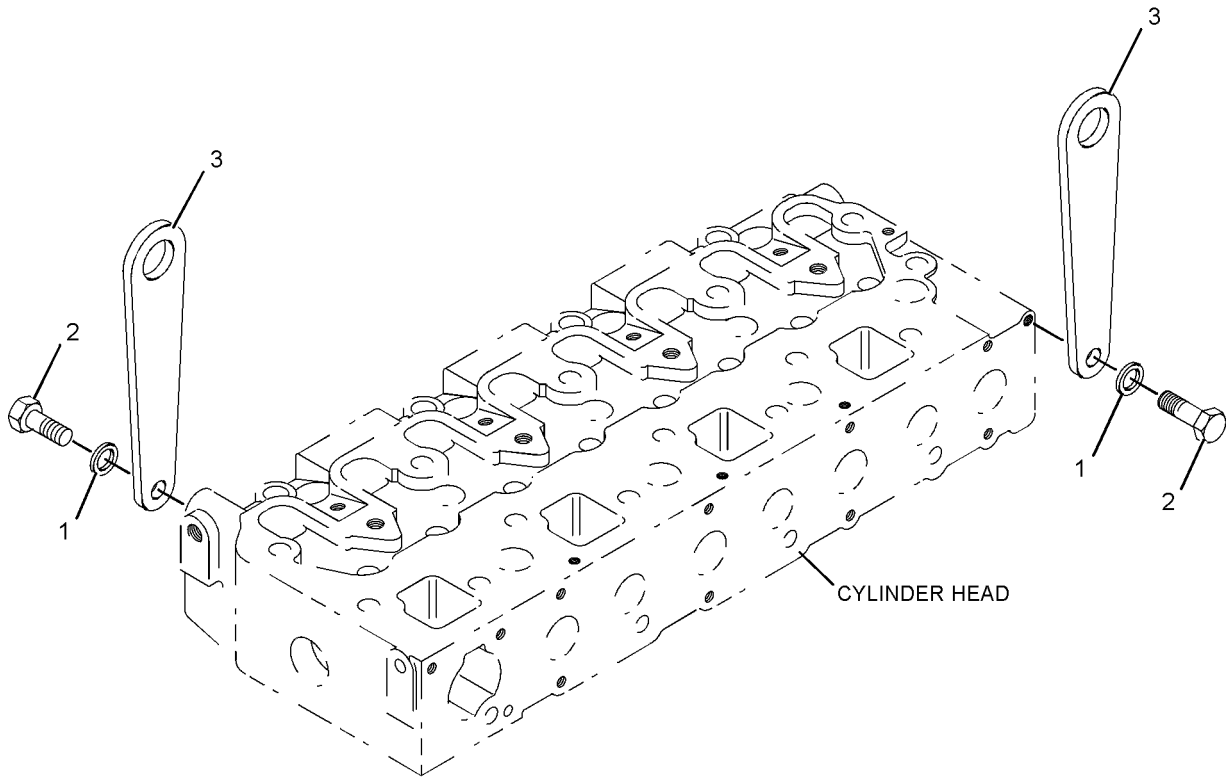

GRAPHIC #1 **<END>** g01091205

BASIC ENGINE

228-1764 MOUNTING GP-ENGINE—SUPPORTS

S/N: SCH2475-UP

PART OF 295-7027, 295-7028 INSTALLATION AR-ENGINE

SMCS-1152, 1153, 1154 **i02579693**

NOTE	REF NO	GRAPHIC REF	PART NUMBER	QTY	PART NAME 1 2 3 4 5 6 (PRODUCT LEVEL)	SEE PAGE
	1	1	**205-3185**	1	BRACKET AS	
	2	1	**237-0419**	1	BRACKET AS	
	3	1	**237-0420**	1	BRACKET AS	
M	4	1	**141-5453**	8	BOLT (M14X1.5X30-MM) (M14X1.5X35-MM)	
	5	1	**8T-4122**	8	WASHER-HARD (17X32X3.5-MM THK)	
M	6	1	**8T-4192**	8	BOLT (M12X1.75X25-MM)	
	7	1	**8T-4223**	8	WASHER-HARD (13.5X25.5X3-MM THK)	

M-METRIC PART

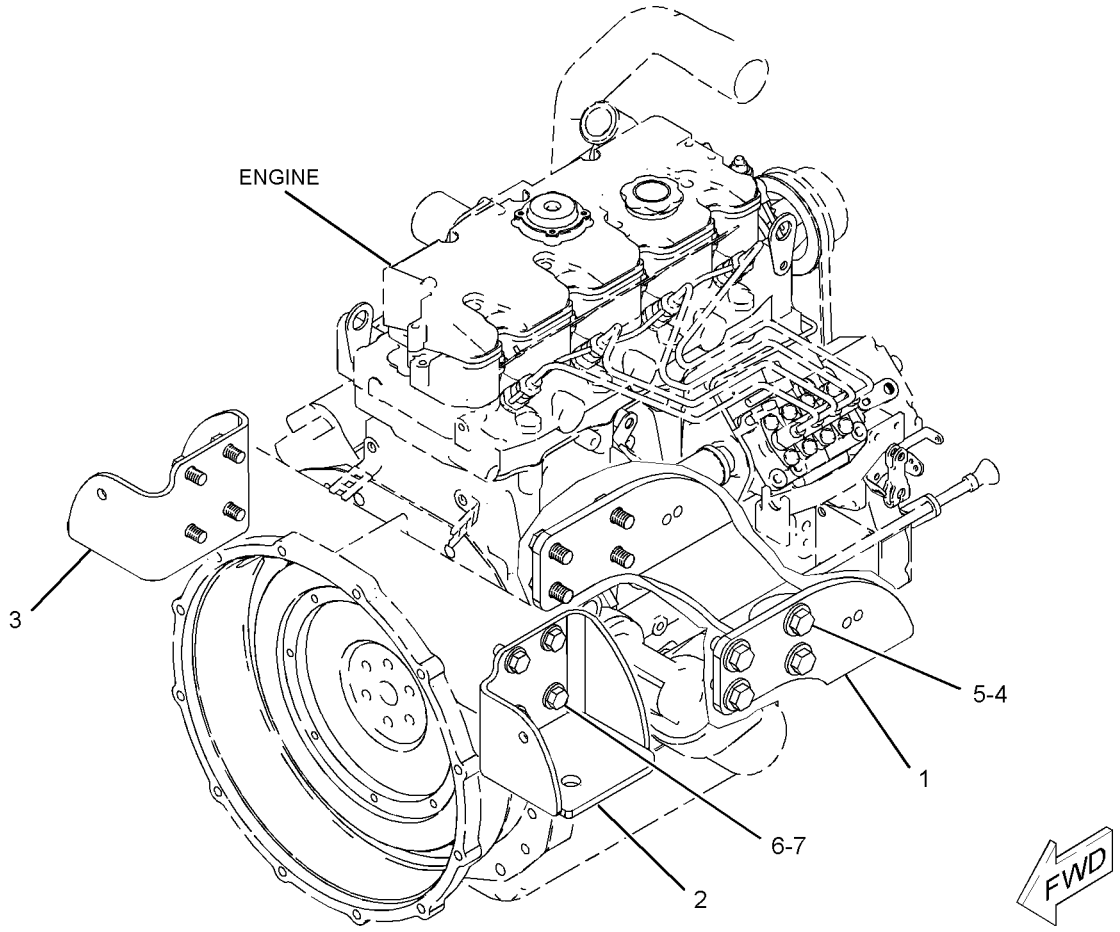

GRAPHIC #1 **<END>** g01072247

241-5789 MOUNTING GP-ENGINE—HARDWARE

S/N: SCH2475-UP

PART OF 295-7027, 295-7028 INSTALLATION AR-ENGINE

SMCS-1152, 1153, 1154 **i02003955**

NOTE	REF NO	GRAPHIC REF	PART NUMBER	QTY	PART NAME 1 2 3 4 5 6 (PRODUCT LEVEL)	SEE PAGE
	1	1	**211-9061**	3	MOUNT AS	
	2	1	**165-7095**	6	WASHER (16.5X71.5X3-MM THK)	
M	3	1	**7X-2556**	3	BOLT (M16X2X100-MM)	
	4	1	**8T-4122**	3	WASHER-HARD (17X32X3.5-MM THK)	
M	5	1	**8T-4132**	3	NUT (M16X2-THD)	

M-METRIC PART

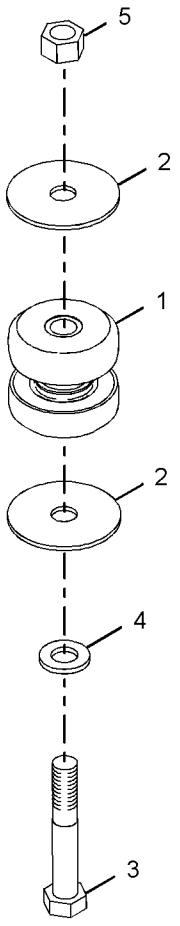

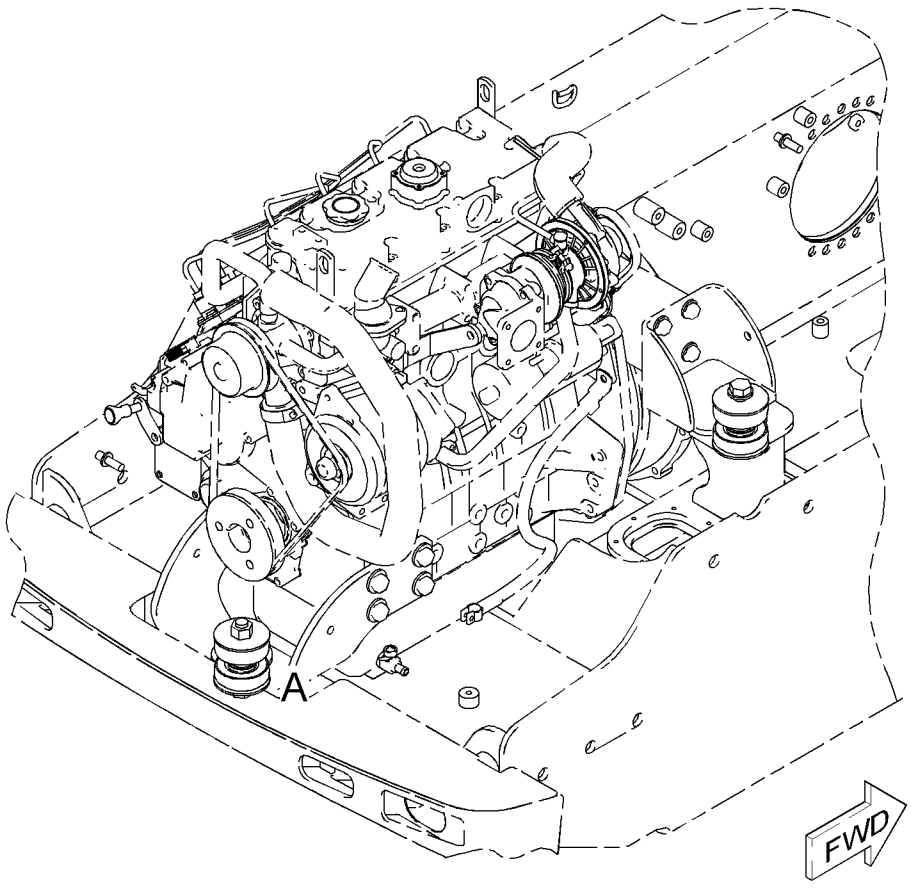

VIEW OF AREA A

GRAPHIC #1 **<END>** g01036490

BASIC ENGINE

154-2435 MOUNTING GP-FAN

S/N: CSD1-11322
PART OF 300-5206 ENGINE AR-PRIMARY
AN ATTACHMENT

SMCS-1356 **i00897568**

NOTE	REF NO	GRAPHIC REF	PART NUMBER	QTY	PART NAME 1 2 3 4 5 6 (PRODUCT LEVEL)	SEE PAGE
	1	1	**153-7640**	4	BOLT	
	2	1	**154-2433**	1	PLATE	

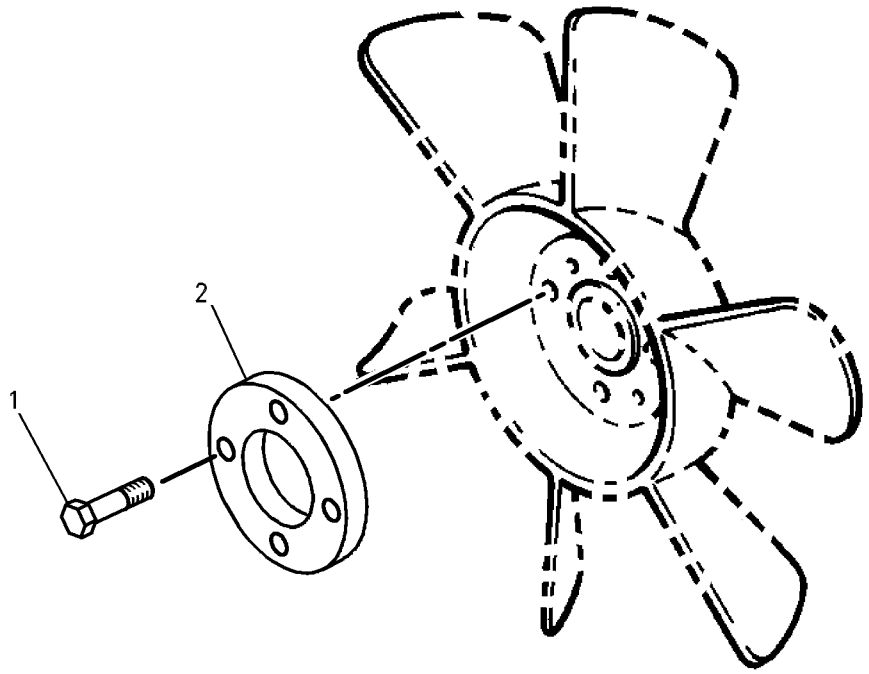

GRAPHIC #1 **<END>** g00485543

315-7813 MOUNTING GP-FAN

S/N: CYP1-UP
PART OF 292-5719 ENGINE AR-PRIMARY
AN ATTACHMENT

SMCS-1356 **i02810575**

NOTE	REF NO	GRAPHIC REF	PART NUMBER	QTY	PART NAME 1 2 3 4 5 6 (PRODUCT LEVEL)	SEE PAGE
	1	1	**153-7640**	4	BOLT	
	2	1	**154-2433**	1	PLATE	

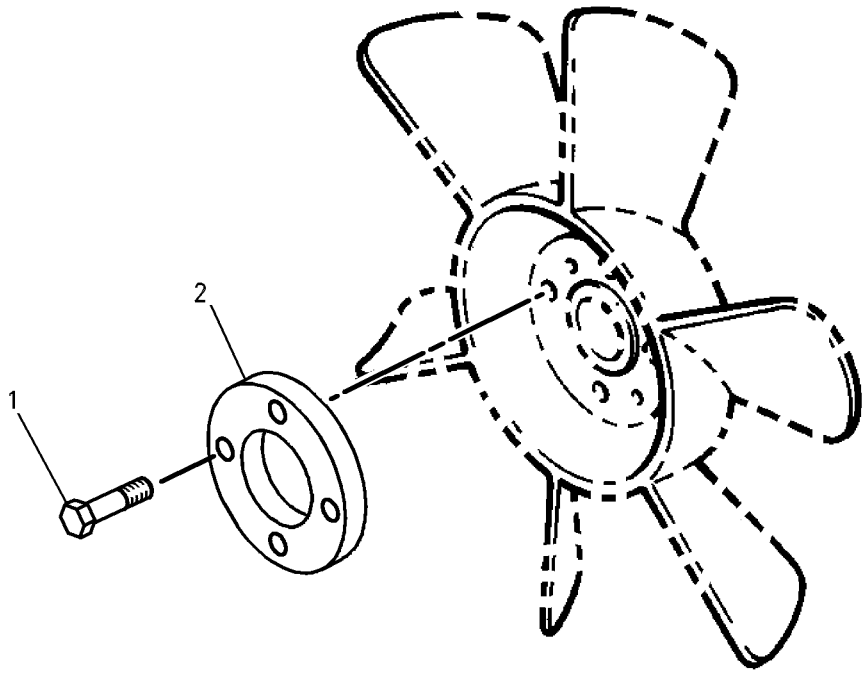

GRAPHIC #1 **<END>** g00485543

BASIC ENGINE

311-2345 PAN GP-OIL

S/N: CSD1-11322
PART OF 300-5206 ENGINE AR-PRIMARY
AN ATTACHMENT

SMCS-1302 **i02810882**

NOTE	REF NO	GRAPHIC REF	PART NUMBER	QTY	PART NAME 1 2 3 4 5 6 (PRODUCT LEVEL)	SEE PAGE
	1	2	**6I-1201**	1	SEAL-O-RING	
	2	2	**118-9145**	1	CONNECTOR	
	3	2	**153-5933**	1	SEAL	
	4	3	**153-5936**	2	WASHER	
	5	1	**153-6412**	2	WASHER	
	6	1	**153-6833**	30	BOLT	
	7	1	**153-6835**	1	SEAL-O-RING	
	8	1,2	**153-6838**	3	BOLT	
	9	2	**153-6841**	2	SEAL-O-RING	
	10	3	**153-6848**	1	COVER	
	11	3	**153-6849**	1	SPRING	
	12	3	**153-6850**	1	COLLAR	
	13	3	**153-6851**	1	CLIP	
	14	3	**153-6853**	1	SEAL-O-RING	
	15	2	**153-6879**	1	STUD-HOLLOW	
	16	3	**153-6881**	1	BOLT	
	17	3	**154-1942**	1	VALVE-RELIEF	
	18	3	**154-2353**	1	TUBE AS-OIL	
	19	2	**155-8084**	1	WASHER	
	20	2	**156-7347**	1	TUBE AS	
B	21	3	**160-4150**	1	SHIM (0.1-MM THK)	
B		3	**160-4151**	1	SHIM (0.15-MM THK)	
B		3	**160-4152**	1	SHIM (0.2-MM THK)	
B		3	**160-4153**	1	SHIM (0.5-MM THK)	
	22	2	**164-7619**	1	SEAL-O-RING	
	23	2	**198-2663**	1	BOLT	
	24	1	**215-2605**	1	GASKET	
	25	1	**217-7352**	1	COVER-VALVE	
	26	2	**217-7358**	1	CAP (ENGINE OIL FILLER)	
	27	1	**218-2333**	1	PAN-OIL	
	28	1	**218-2334**	1	PLUG-DRAIN (ENGINE OIL)	
	29	2	**220-1523**	1	FILTER ELEMENT AS-ENGINE OIL	
	30	2	**231-8920**	1	BOLT	
C	31	1	**312-4560**	1	VALVE-DRAIN	
	32	2	**252-0787**	1	SEAL-O-RING	
	33	2	**252-0788**	1	BASE-OIL FILTER	
	34	2	**293-4781**	1	GAUGE AS-OIL LEVEL (DIPSTICK) (ENGINE)	
	35	3	**296-5162**	1	ROTOR	
	36	1	**305-0584**	1	STRAINER (ENGINE OIL)	
C	37	1	**316-1016**	1	PIPE-SUCTION	
	38	2	**311-2349**	1	WASHER	

B-USE AS REQUIRED
C-CHANGE FROM PREVIOUS TYPE

311-2345 **PAN GP-OIL** *(contd.)* **i02810882**

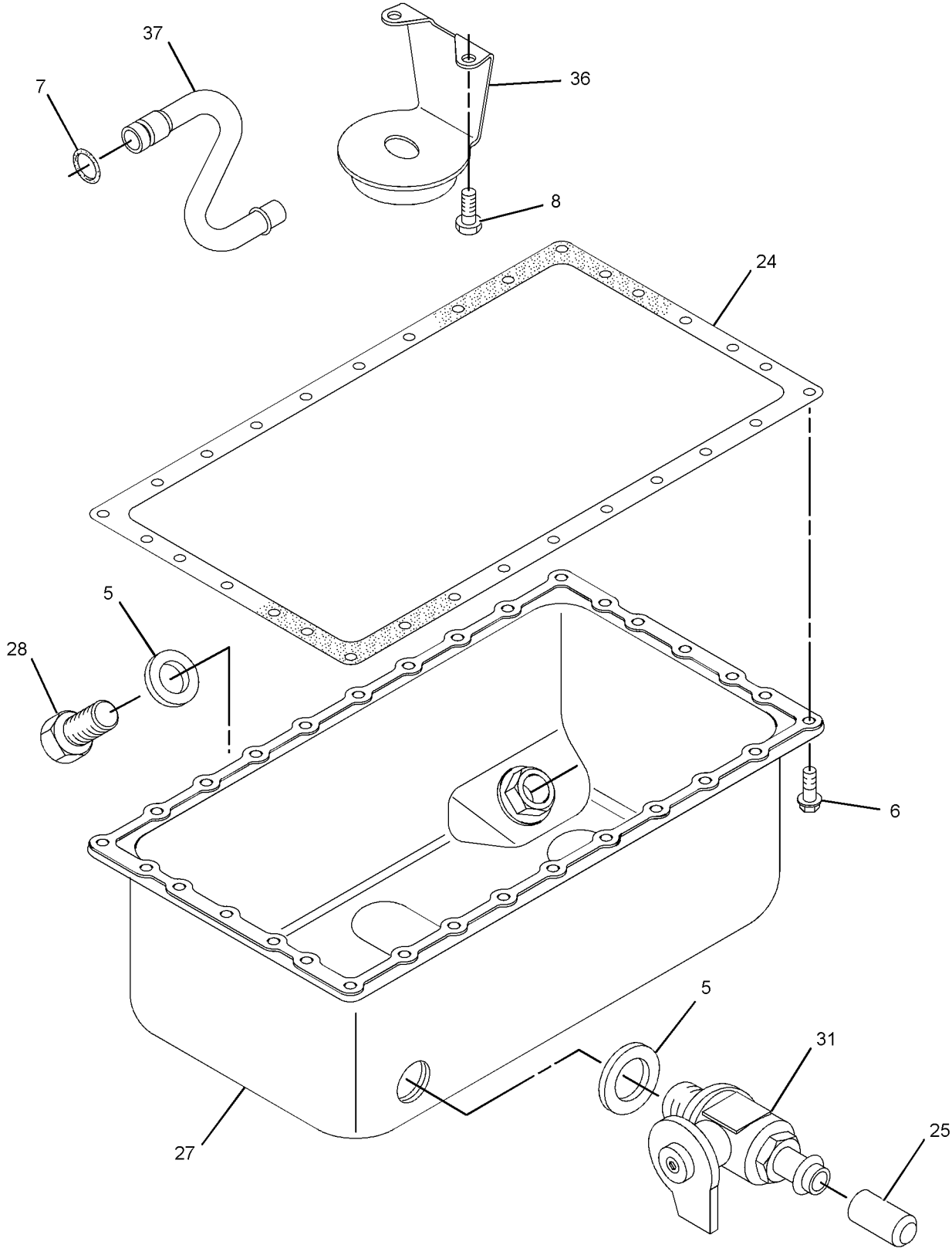

GRAPHIC #1 g01392649

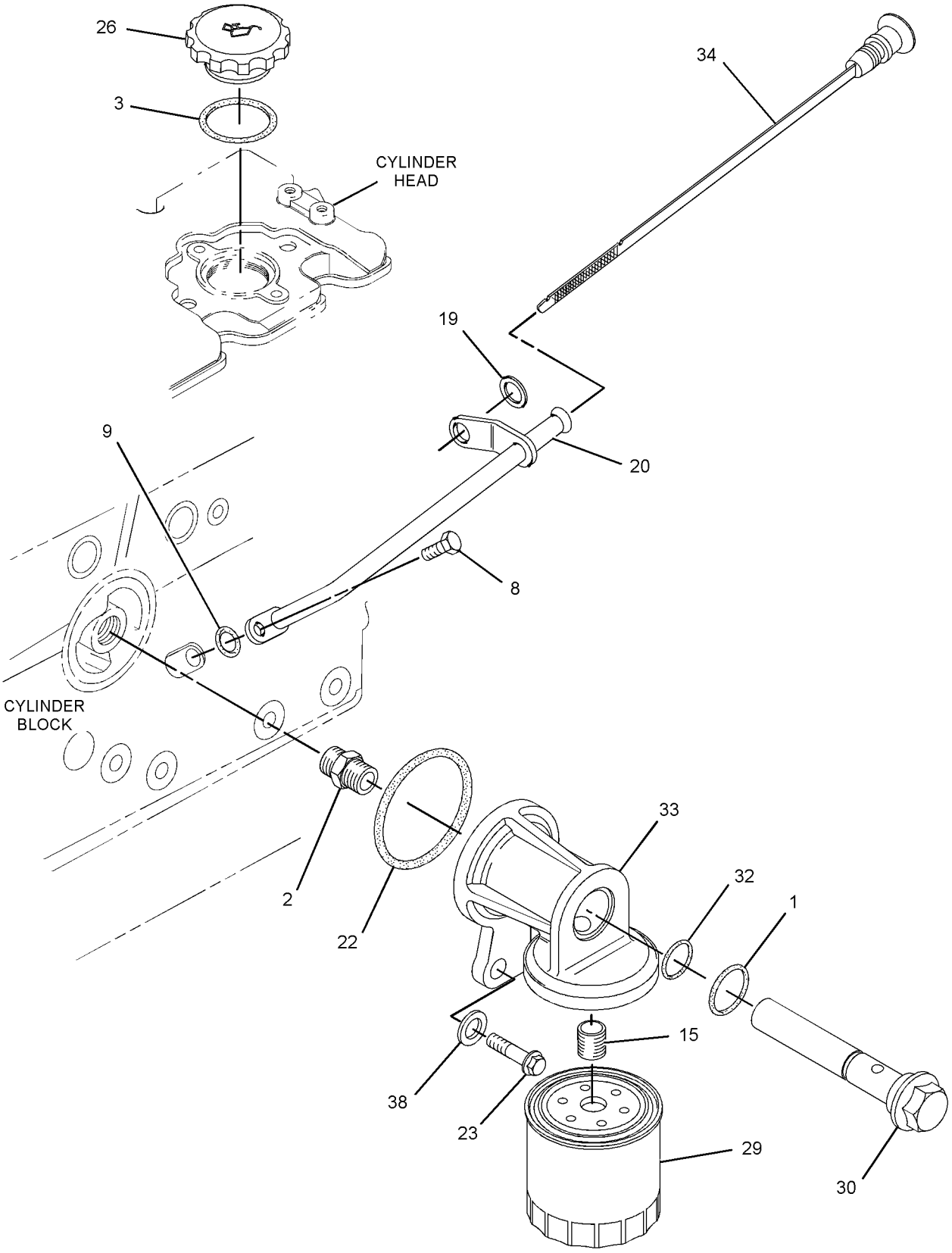

GRAPHIC #2

g01392650

311-2345 **PAN GP-OIL** *(contd.)* **i02810882**

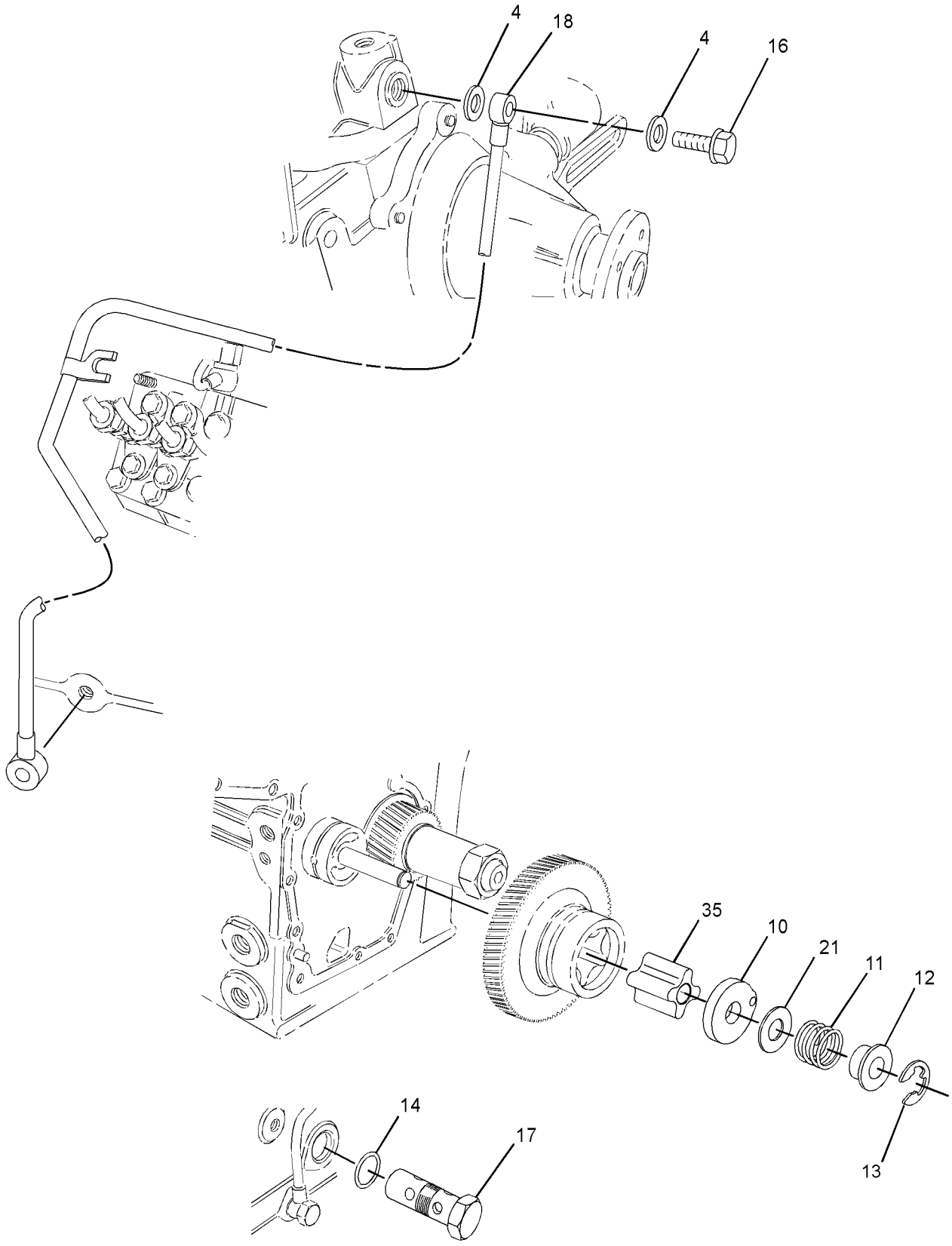

GRAPHIC #3 **<END>** g01392652

BASIC ENGINE

316-6997 PAN GP-OIL

S/N: CYP1-UP
PART OF 292-5719 ENGINE AR-PRIMARY
AN ATTACHMENT

SMCS-1302 **i02826911**

NOTE	REF NO	GRAPHIC REF	PART NUMBER	QTY	PART NAME 1 2 3 4 5 6 (PRODUCT LEVEL)	SEE PAGE
	1	1	**153-6833**	30	BOLT	
	2	1	**153-6835**	1	SEAL-O-RING	
	3	1	**153-6838**	2	BOLT	
	4	1	**215-2605**	1	GASKET	
	5	1	**218-2333**	1	PAN-OIL	
	6	1	**305-0584**	1	STRAINER (ENGINE OIL)	
	7	1	**316-1016**	1	PIPE-SUCTION	

316-6997 **PAN GP-OIL** *(contd.)* **i02826911**

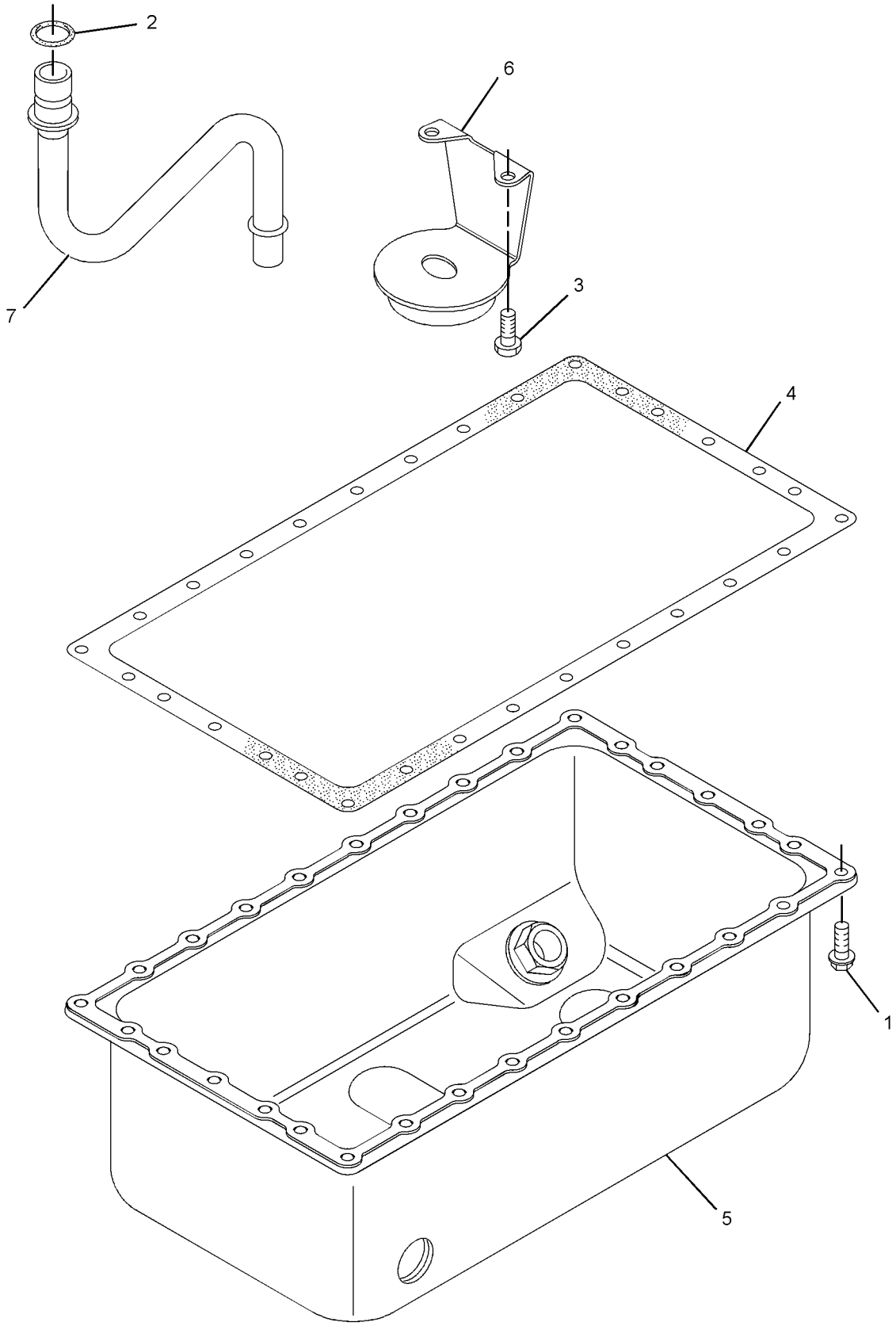

GRAPHIC #1 **<END>** g01439578

BASIC ENGINE

270-6930 PISTON & ROD GP

S/N: CSD1-11322
23.3:1 COMPRESSION RATIO
PART OF 300-5206 ENGINE AR-PRIMARY
AN ATTACHMENT

SMCS-1225 **i02817674**

NOTE	REF NO	GRAPHIC REF	PART NUMBER	QTY	PART NAME 1 2 3 4 5 6 (PRODUCT LEVEL)	SEE PAGE
	1	1	**146-7808**	4	KIT-BEARING (ROD)	
		1	**307-9855**	1	KIT-BEARING (ROD) (0.25-MM OS)	
		1	**307-9856**	1	KIT-BEARING (ROD) (0.50-MM OS)	
	2	1	**154-0867**	4	ROD AS-CONNECTING	
					(EACH INCLUDES)	
	2A	1	**154-0869**	1	BUSHING	
	2B	1	**154-0870**	2	BOLT	
	2C	1	**154-0871**	2	NUT	
	3	1	**154-0873**	1	PIN	
	4	1	**154-0874**	2	CLIP	
	5	1	**270-6968**	4	PISTON AS	
					(EACH INCLUDES)	
	5A	1	**270-6970**	4	KIT-PISTON RING	

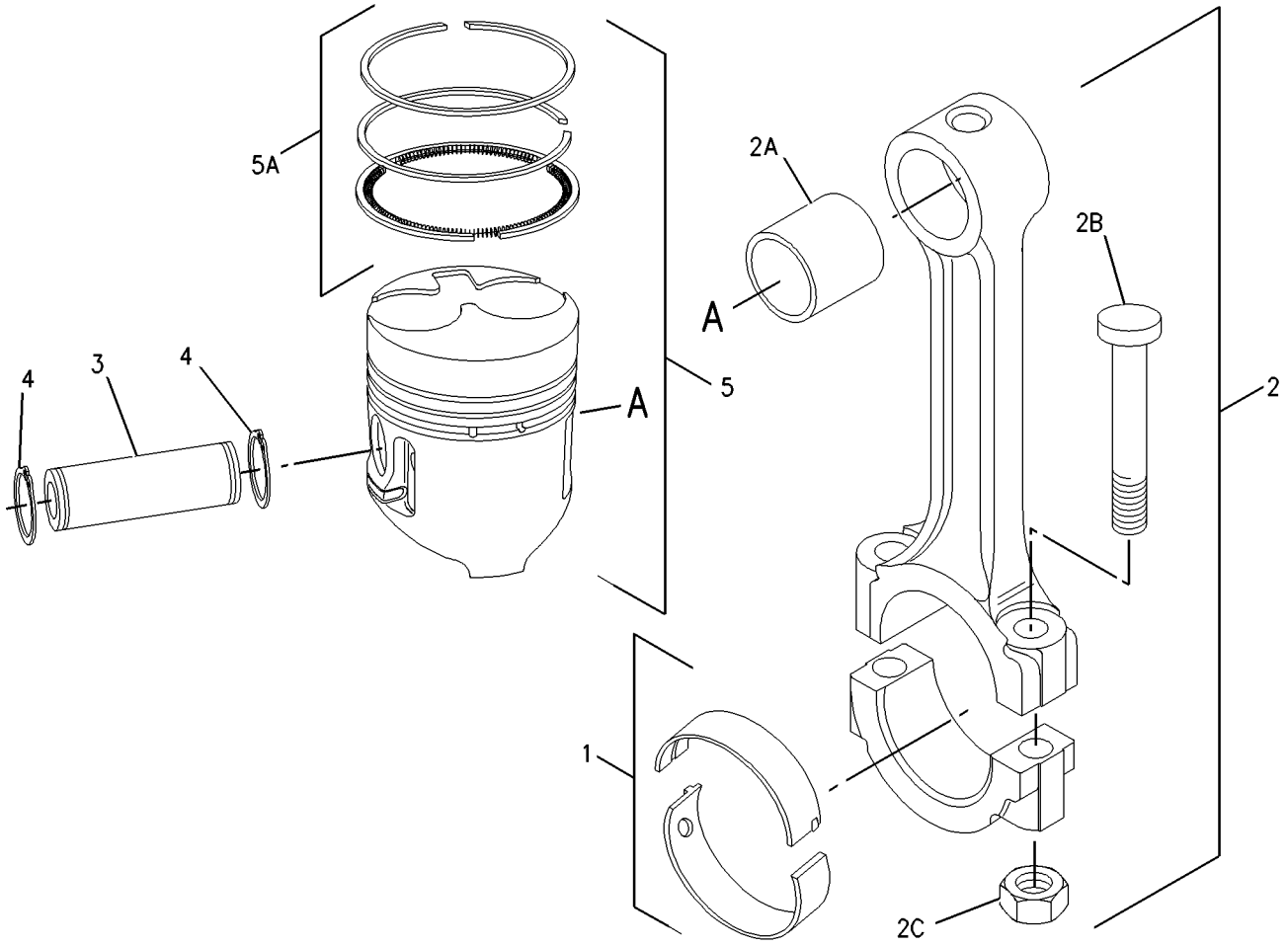

GRAPHIC #1 **<END>** g01006481

308-2286 PISTON & ROD GP

S/N: CYP1-UP
PART OF 292-5719 ENGINE AR-PRIMARY
AN ATTACHMENT

SMCS-1225 **i02752166**

NOTE	REF NO	GRAPHIC REF	PART NUMBER	QTY	PART NAME 1 2 3 4 5 6 (PRODUCT LEVEL)	SEE PAGE
	1	1	**154-0867**	4	ROD AS-CONNECTING	
					(EACH INCLUDES)	
	1A	1	**154-0869**	1	BUSHING	
	1B	1	**154-0870**	2	BOLT	
	1C	1	**154-0871**	2	NUT	
	2	1	**154-0873**	1	PIN	
	3	1	**154-0874**	2	CLIP	
	4	1	**270-6968**	4	PISTON AS	
					(EACH INCLUDES)	
	4A	1	**270-6970**	1	KIT-PISTON RING	

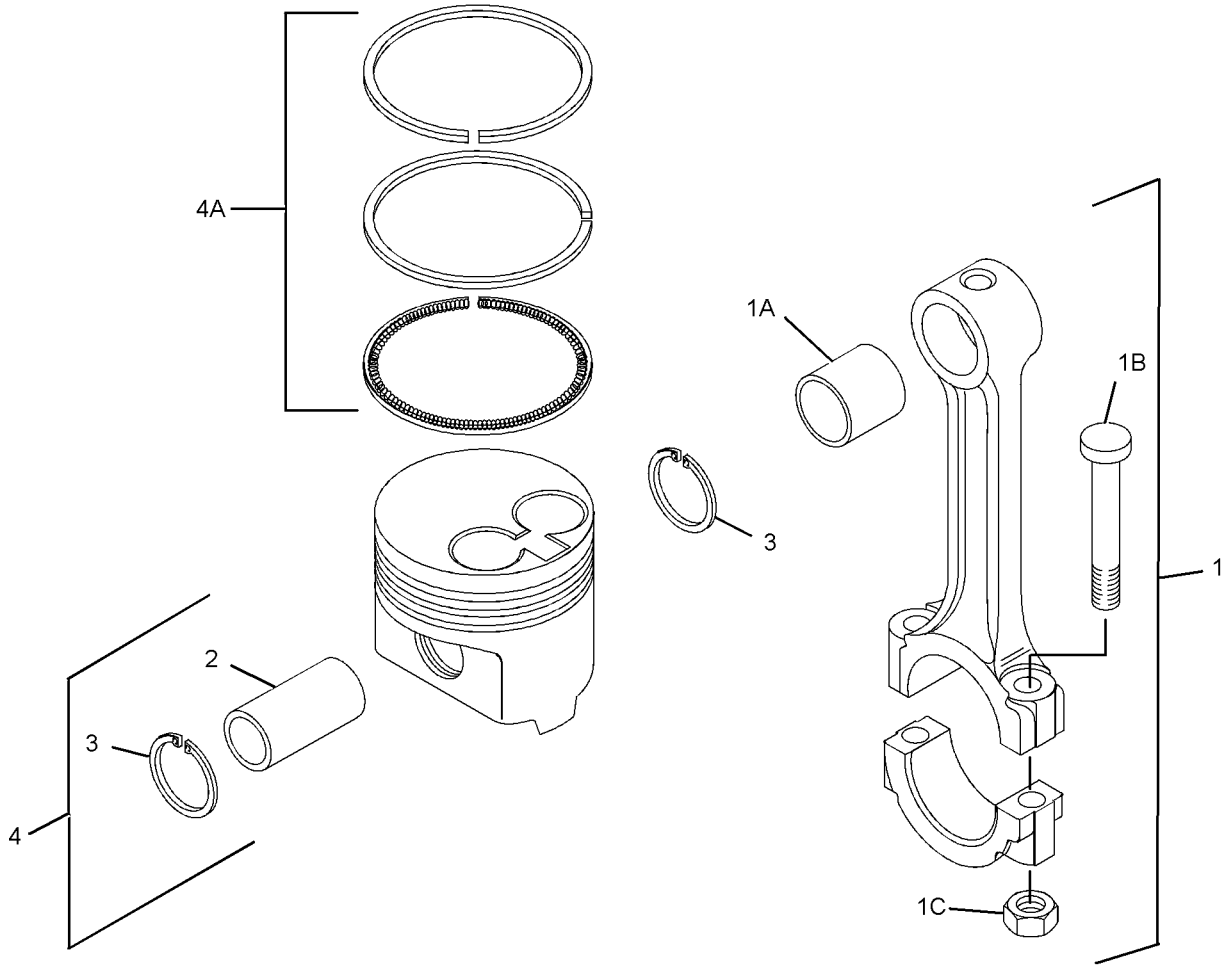

GRAPHIC #1 **<END>** g01410074

315-5252 PLUG GP-ENGINE

S/N: CYP1-UP
PART OF 292-5719 ENGINE AR-PRIMARY
AN ATTACHMENT

SMCS-1000 **i02810593**

NOTE	REF NO	GRAPHIC REF	PART NUMBER	QTY	PART NAME 1 2 3 4 5 6 (PRODUCT LEVEL)	SEE PAGE
	1	1	**153-6412**	2	WASHER	
	2	1	**218-2334**	1	PLUG-DRAIN (ENGINE OIL PAN)	
	3	1	**312-4560**	1	VALVE-DRAIN	

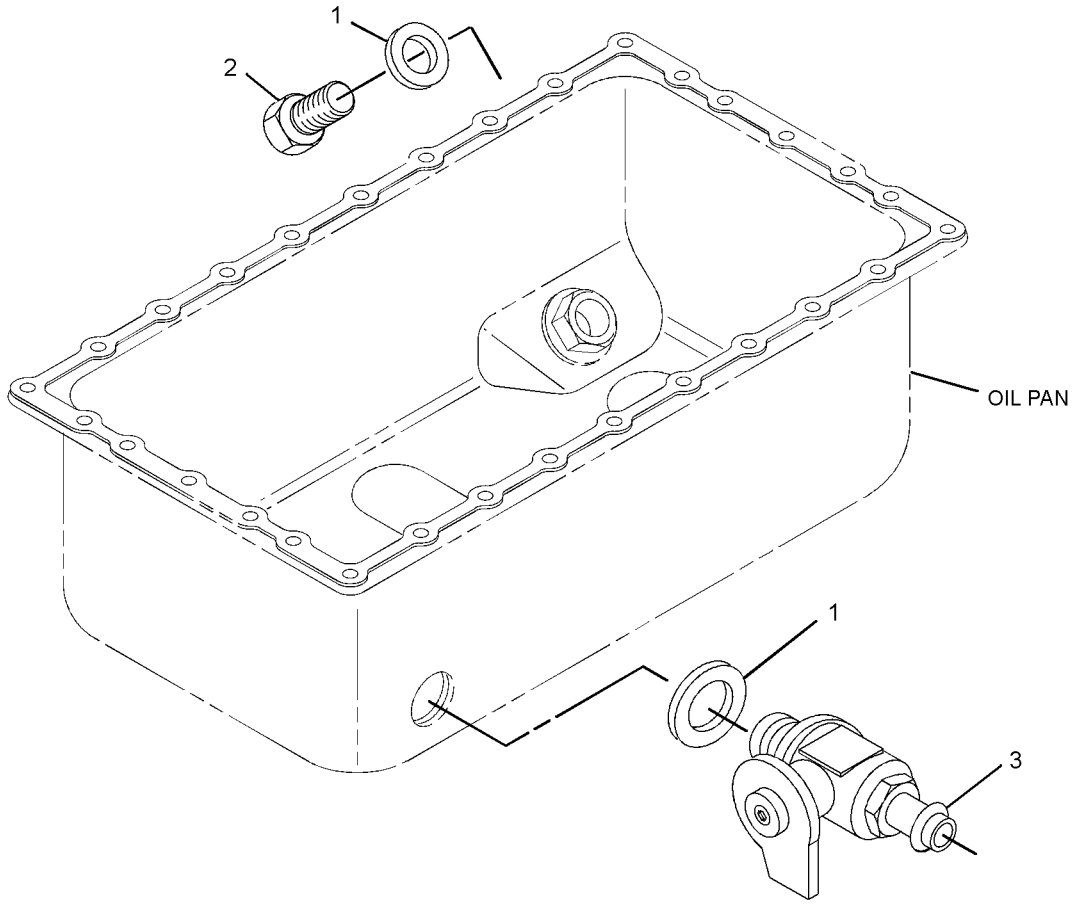

GRAPHIC #1 **<END>** g01414783

217-2777 PULLEY GP-CRANKSHAFT

S/N: CSD1-11322
PART OF 300-5206 ENGINE AR-PRIMARY
AN ATTACHMENT

SMCS-1205 **i01649069**

NOTE	REF NO	GRAPHIC REF	PART NUMBER	QTY	PART NAME 1 2 3 4 5 6 (PRODUCT LEVEL)	SEE PAGE
	1	1	**153-5592**	4	NUT	
	2	1	**153-6492**	1	KEY-WOODRUFF	
	3	1	**153-6494**	1	GASKET	
	4	1	**153-6497**	1	SEAL-O-RING	
	5	1	**154-1880**	1	NUT	
	6	1	**154-1882**	2	PLATE	
	7	1	**180-6115**	4	BOLT	
	8	1	**217-2776**	1	PULLEY-CRANKSHAFT	

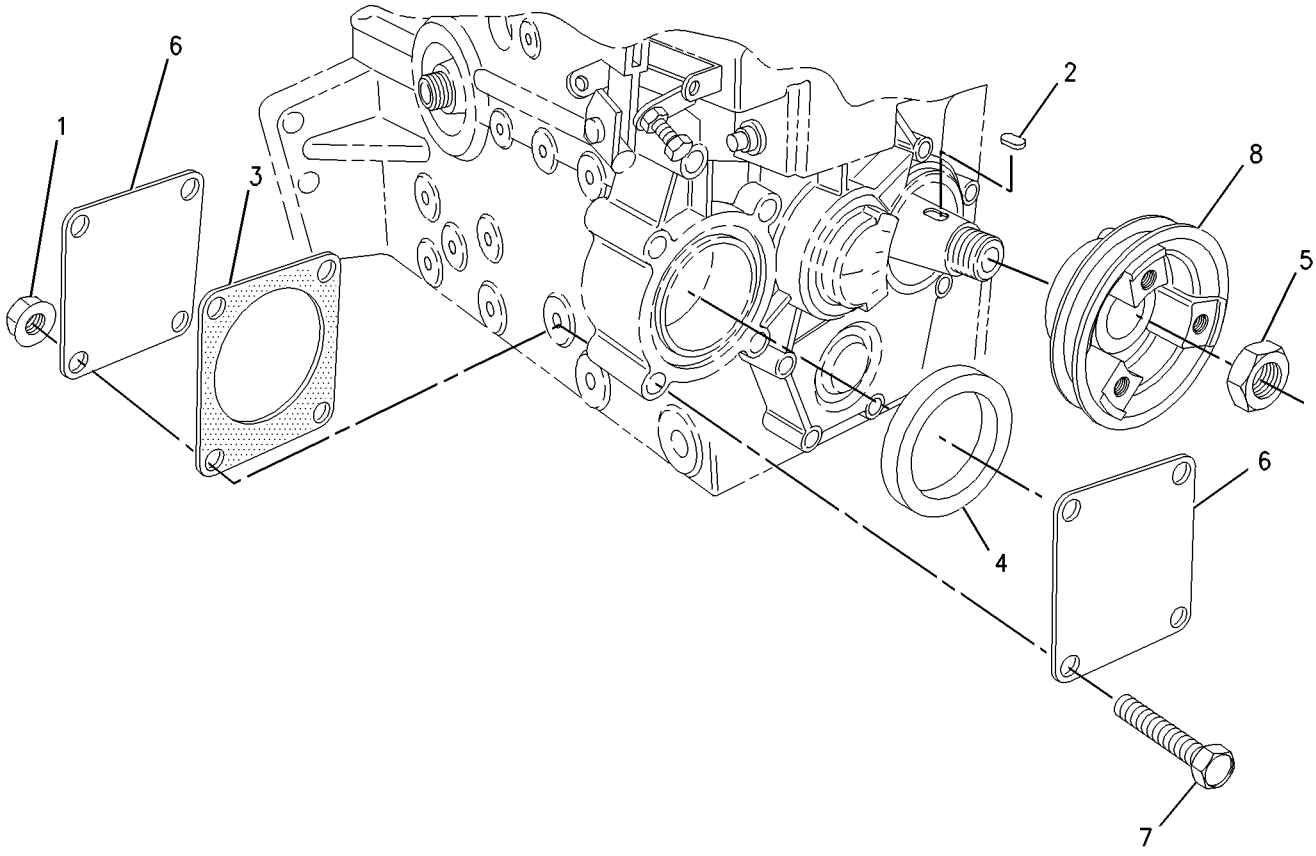

GRAPHIC #1 **<END>** g00852781

308-2300 PULLEY GP-CRANKSHAFT

S/N: CYP1-UP
PART OF 292-5719 ENGINE AR-PRIMARY
AN ATTACHMENT

SMCS-1205 **i02752268**

NOTE	REF NO	GRAPHIC REF	PART NUMBER	QTY	PART NAME 1 2 3 4 5 6 (PRODUCT LEVEL)	SEE PAGE
	1	1	**153-6492**	1	KEY-WOODRUFF	
	2	1	**154-1880**	1	NUT	
	3	1	**217-2776**	1	PULLEY-CRANKSHAFT	

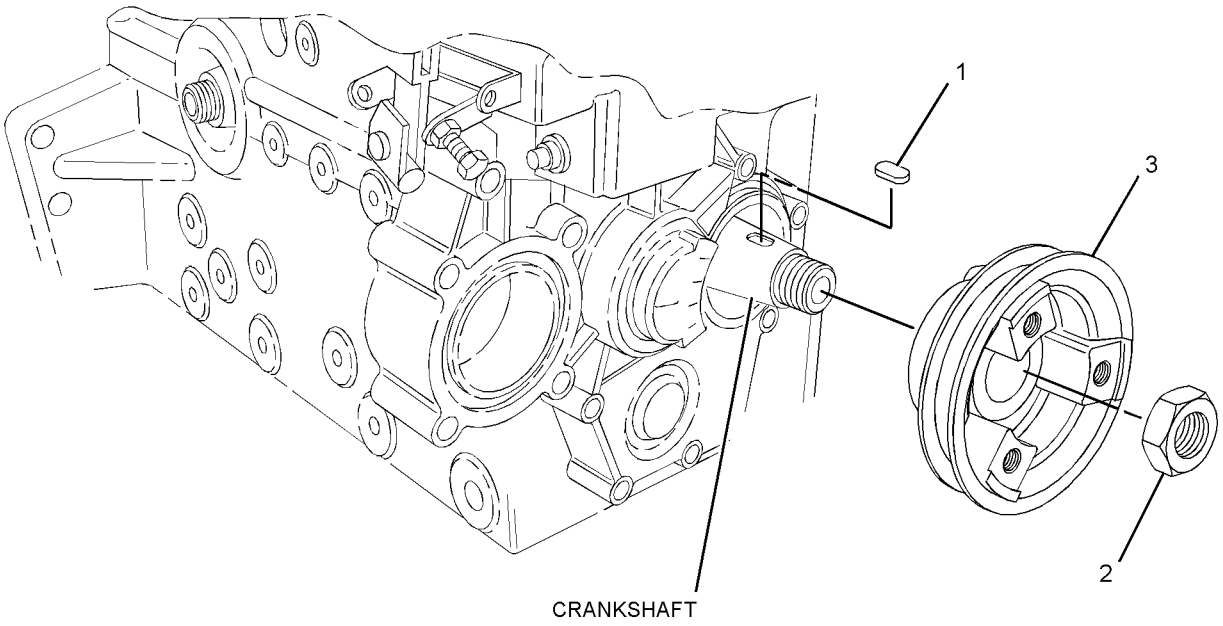

GRAPHIC #1 **<END>** g01390599

251-6791 PULLEY GP-WATER PUMP

S/N: CSD1-11322
PART OF 300-5206 ENGINE AR-PRIMARY
AN ATTACHMENT

SMCS-1384 **i02089686**

NOTE	REF NO	GRAPHIC REF	PART NUMBER	QTY	PART NAME 1 2 3 4 5 6 (PRODUCT LEVEL)	SEE PAGE
	1	1	**154-1822**	1	PULLEY-WATER PUMP	
	2	1	**251-6789**	1	V-BELT (WATER PUMP)	

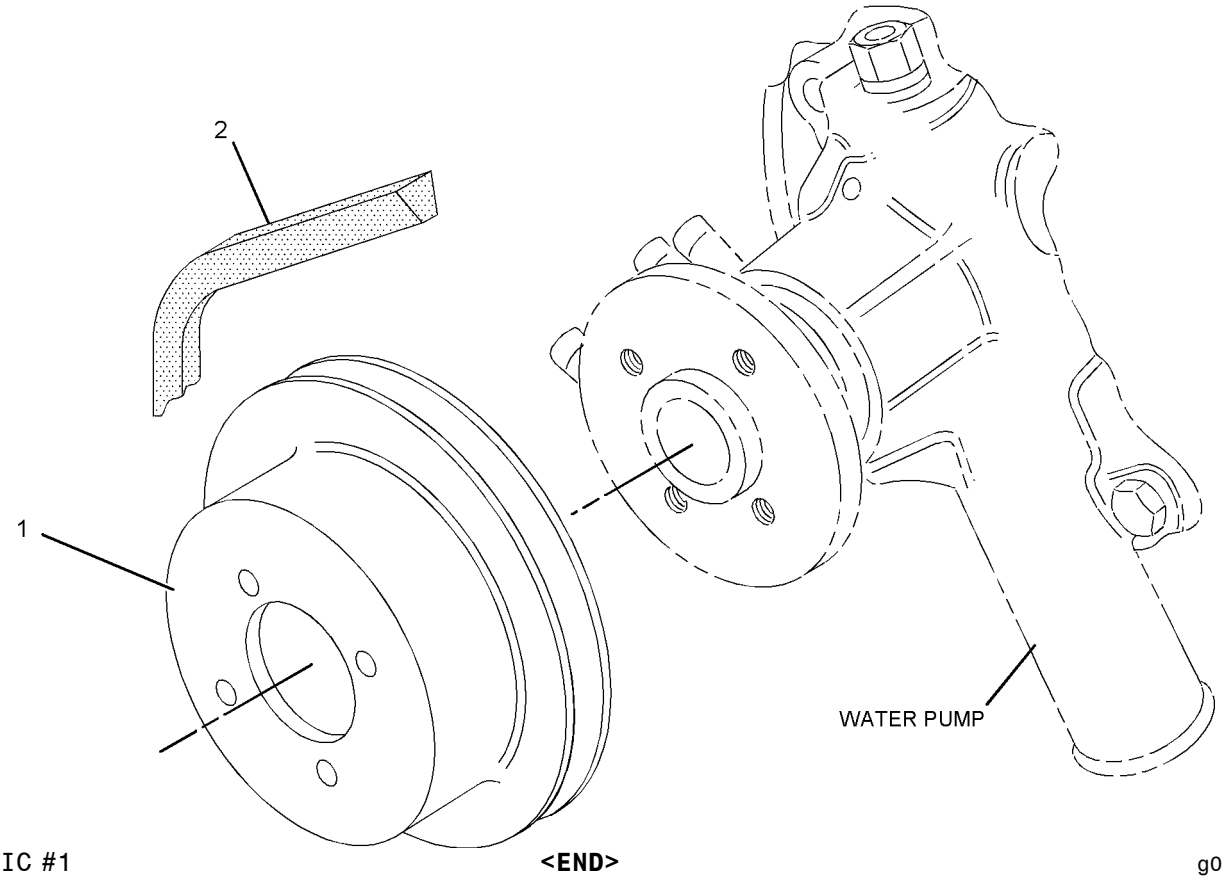

GRAPHIC #1 **<END>** g01048774

308-2294 PULLEY GP-WATER PUMP

S/N: CYP1-UP
PART OF 292-5719 ENGINE AR-PRIMARY
AN ATTACHMENT

SMCS-1384 **i02743517**

NOTE	REF NO	GRAPHIC REF	PART NUMBER	QTY	PART NAME 1 2 3 4 5 6 (PRODUCT LEVEL)	SEE PAGE
	1	1	**154-1822**	1	PULLEY-WATER PUMP	

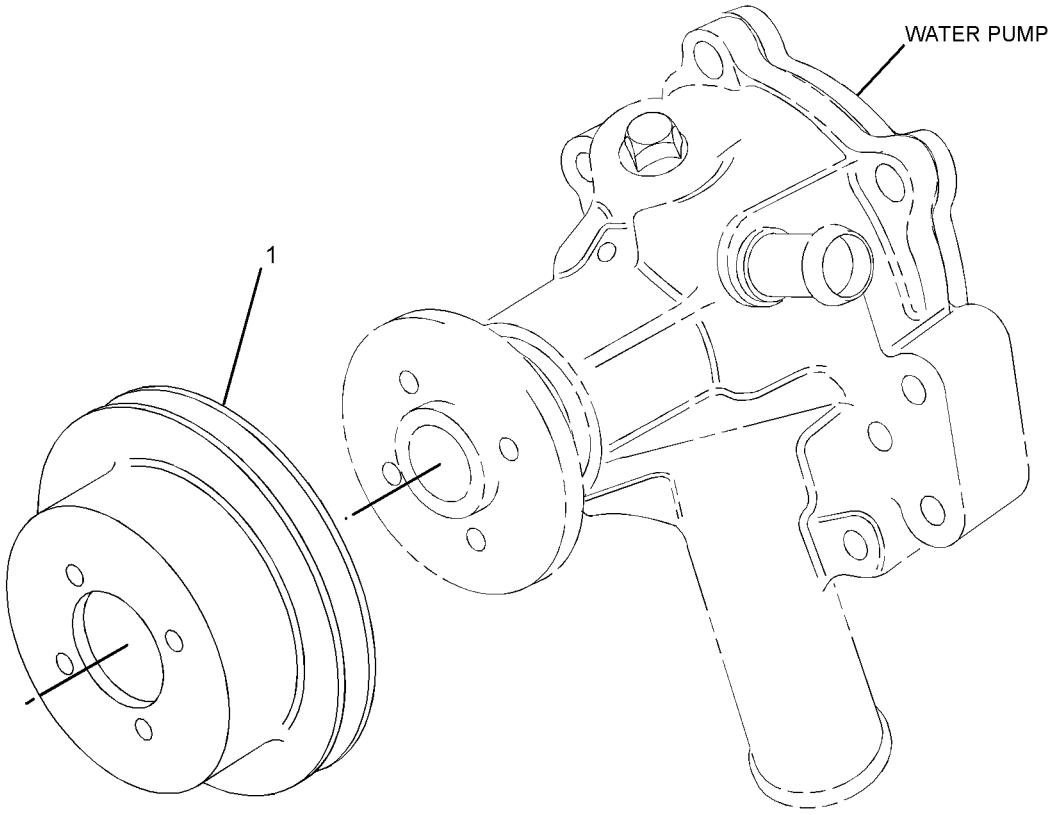

GRAPHIC #1 **<END>** g01412305

308-2306 V-BELT GP–FAN DRIVE

S/N: CYP1-UP
PART OF 292-5719 ENGINE AR-PRIMARY
AN ATTACHMENT

SMCS-1357 **i02890359**

NOTE	REF NO	GRAPHIC REF	PART NUMBER	QTY	PART NAME 1 2 3 4 5 6 (PRODUCT LEVEL)	SEE PAGE
	1	1	**211-5172**	1	V-BELT (WATER PUMP)	

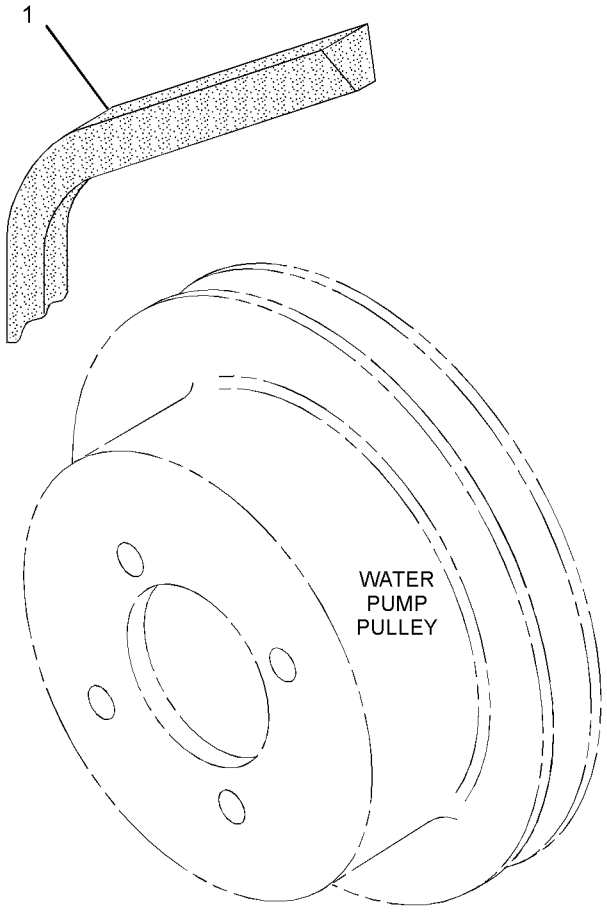

GRAPHIC #1 **<END>** g01407842

293-2167 VALVE MECHANISM GP

S/N: CSD1-11322; CYP1-UP

PART OF 303-0337 CYLINDER HEAD GP, 308-2285 VALVE MECHANISM GP

AN ATTACHMENT

SMCS-1102, 1112, 1121, 1123, 1208, 1209 **i02869546**

NOTE	REF NO	GRAPHIC REF	PART NUMBER	QTY	PART NAME 1 2 3 4 5 6 (PRODUCT LEVEL)	SEE PAGE
	1	1	**154-1243**	6	WASHER	
	2	1	**153-5587**	8	SCREW-ADJUSTMENT	
	3	1	**153-5590**	8	NUT	
	4	1	**153-6835**	1	SEAL-O-RING	
	5	1	**206-3499**	1	SHAFT-ROCKER ARM	
	7	1	**154-1240**	4	LEVER-RH	
	8	1	**154-1241**	4	LEVER-LH	
	9	1	**154-1242**	3	SPRING	

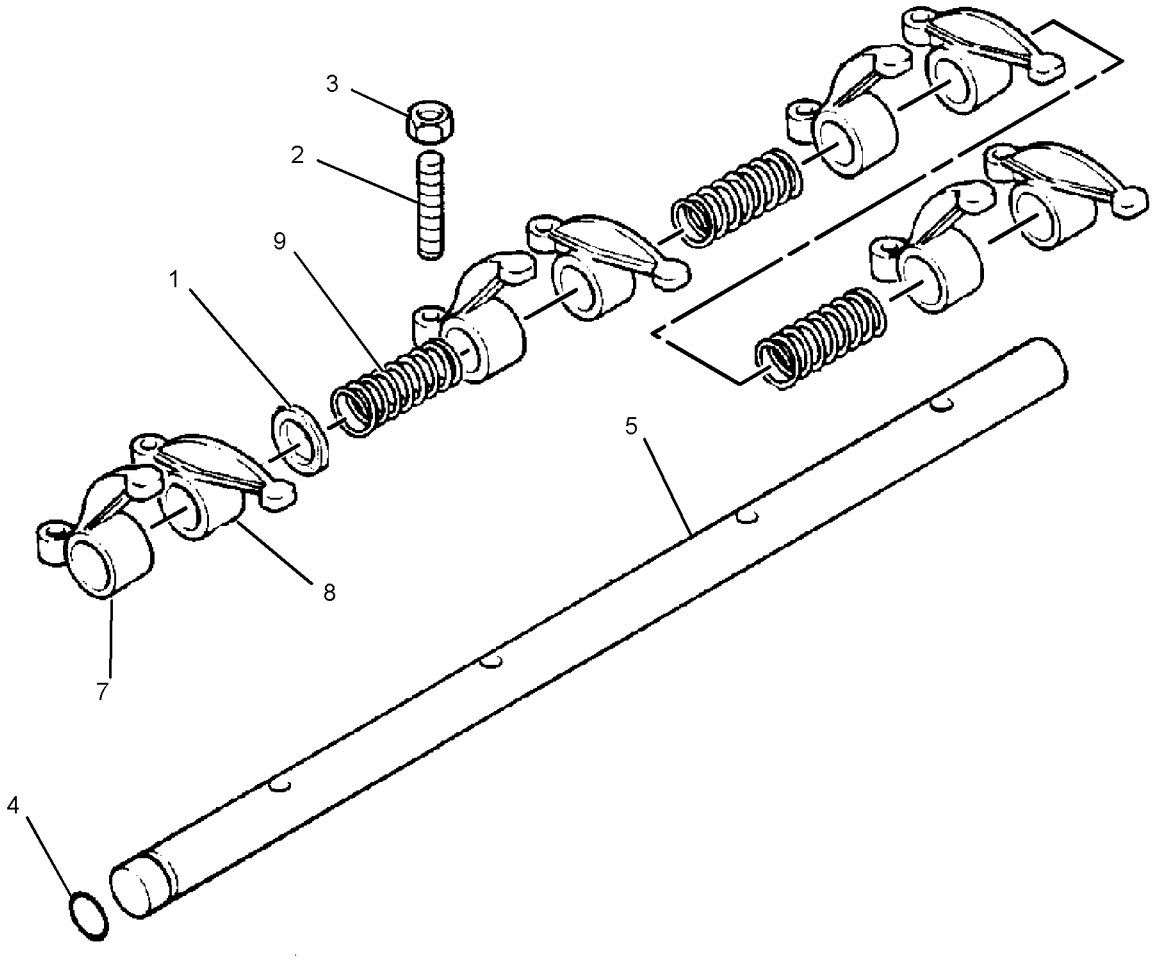

GRAPHIC #1 **<END>** g01395519

308-2285 VALVE MECHANISM GP

S/N: CYP1-UP

PART OF 292-5719 ENGINE AR-PRIMARY

AN ATTACHMENT

SMCS-1102, 1112, 1121, 1123, 1208, 1209 **i02752240**

NOTE	REF NO	GRAPHIC REF	PART NUMBER	QTY	PART NAME 1 2 3 4 5 6 (PRODUCT LEVEL)	SEE PAGE
	1	1	**153-5961**	2	BOLT	
	2	1	**153-7988**	4	NUT	
	3	1	**154-1246**	4	STUD	
	4	1	**154-1248**	8	ROD	
	5	1	**154-1249**	8	TAPPET	
	6	1	**217-2752**	1	GASKET (VALVE BRACKET)	
Y	7	1	**293-2167**	1	VALVE MECHANISM GP	66

Y-SEPARATE ILLUSTRATION

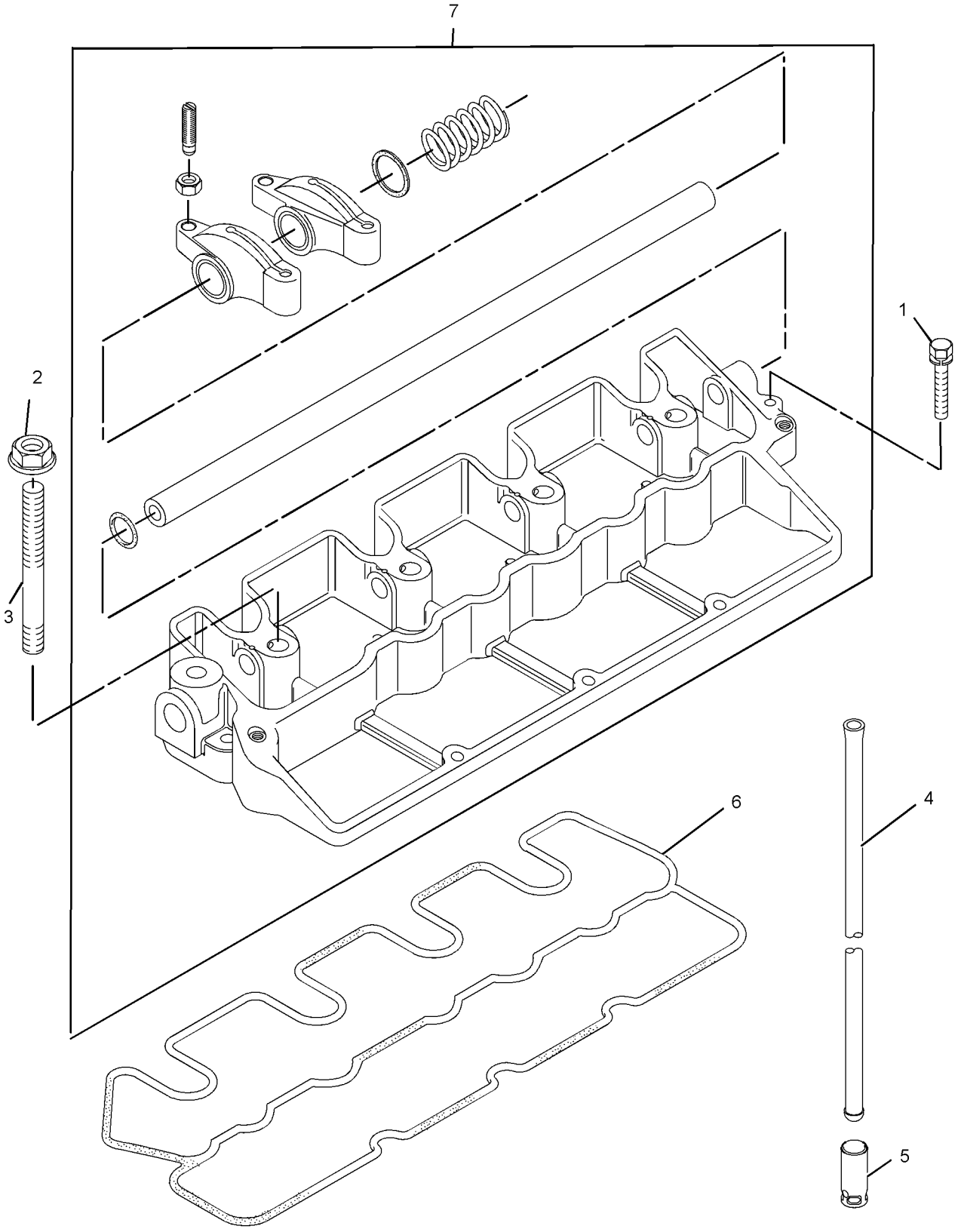

GRAPHIC #1 **<END>** g01409366

308-2297 FILLER GP-ENGINE OIL—ENGINE

S/N: CYP1-UP
PART OF 292-5719 ENGINE AR-PRIMARY
AN ATTACHMENT

SMCS-1316 **i02743497**

NOTE	REF NO	GRAPHIC REF	PART NUMBER	QTY	PART NAME 1 2 3 4 5 6 (PRODUCT LEVEL)	SEE PAGE
	1	1	**153-5933**	1	SEAL	
	2	1	**217-7358**	1	CAP (ENGINE OIL FILLER)	
	3	1	**288-6593**	1	SEAL	
	4	1	**289-6120**	1	CAP-OIL FILLER (ENGINE)	

308-2297 **FILLER GP-ENGINE OIL** *(contd.)* **i02743497**

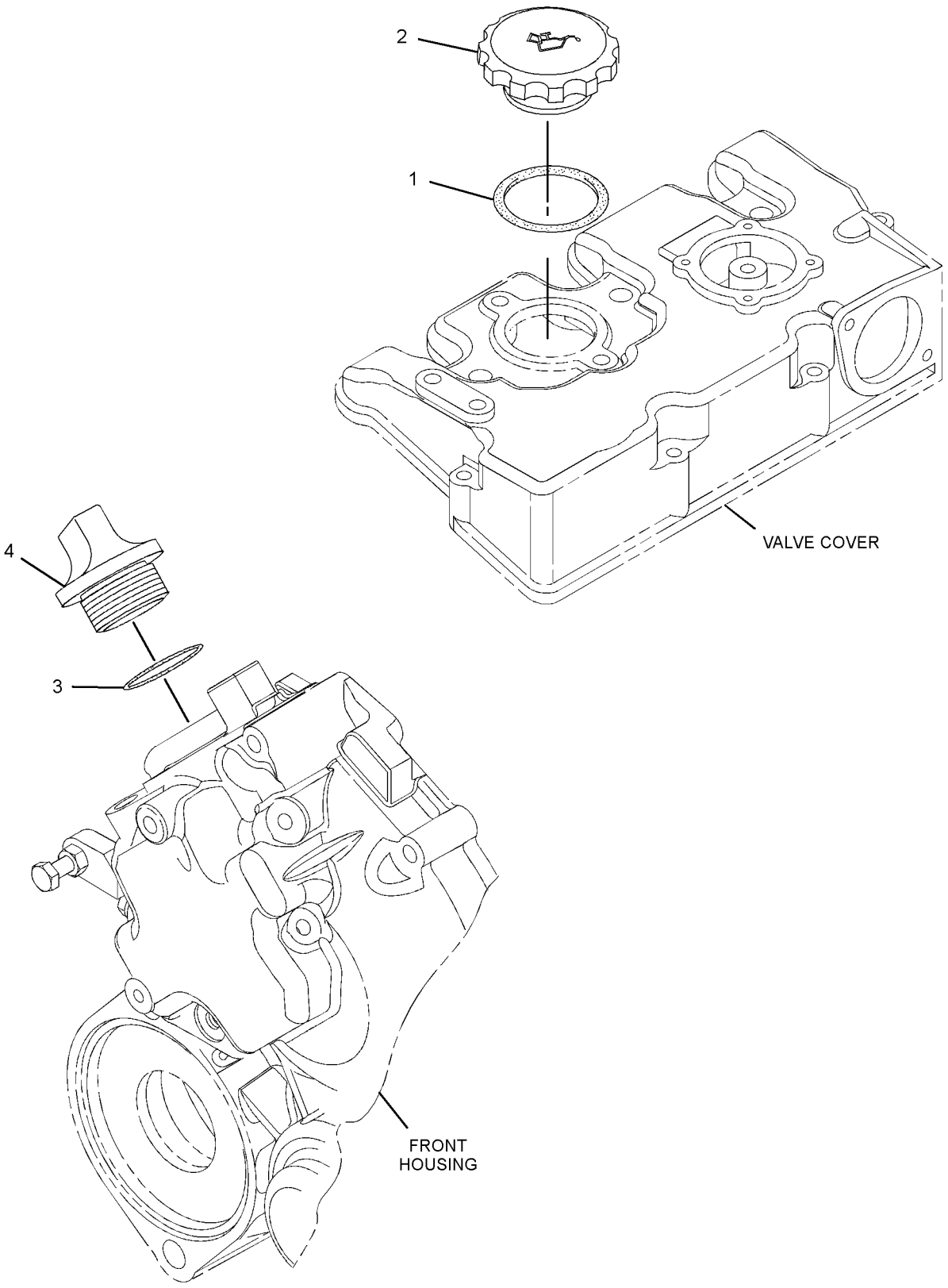

GRAPHIC #1 **<END>** g01412730

308-2287 PUMP GP-ENGINE OIL

S/N: CYP1-UP
PART OF 292-5719 ENGINE AR-PRIMARY
AN ATTACHMENT

SMCS-1304, 1315 **i02877258**

NOTE	REF NO	GRAPHIC REF	PART NUMBER	QTY	PART NAME 1 2 3 4 5 6 (PRODUCT LEVEL)	SEE PAGE
	1	1	**153-5936**	2	WASHER	
	2	1	**153-6849**	1	SPRING	
	3	1	**153-6850**	1	COLLAR	
	4	1	**153-6851**	1	CLIP	
	5	1	**153-6853**	1	SEAL-O-RING	
	6	1	**153-6881**	1	BOLT	
	7	1	**154-1942**	1	VALVE-RELIEF	
	8	1	**154-2353**	1	TUBE AS-OIL	
B	9	1	**160-4150**	1	SHIM (0.1-MM THK)	
B		1	**160-4151**	1	SHIM (0.15-MM THK)	
B		1	**160-4152**	1	SHIM (0.2-MM THK)	
B		1	**160-4153**	1	SHIM (0.5-MM THK)	
	10	1	**318-8382**	1	GEAR GP-IDLER	
	10A	1	**154-1677**	3	BUSHING	
	10B	1	**154-1678**	3	DOWEL	
	10C	1	**308-1984**	1	SPRING	
	11	1	**308-1867**	1	WASHER-THRUST	
	12	1	**308-1869**	1	COVER	

B-USE AS REQUIRED

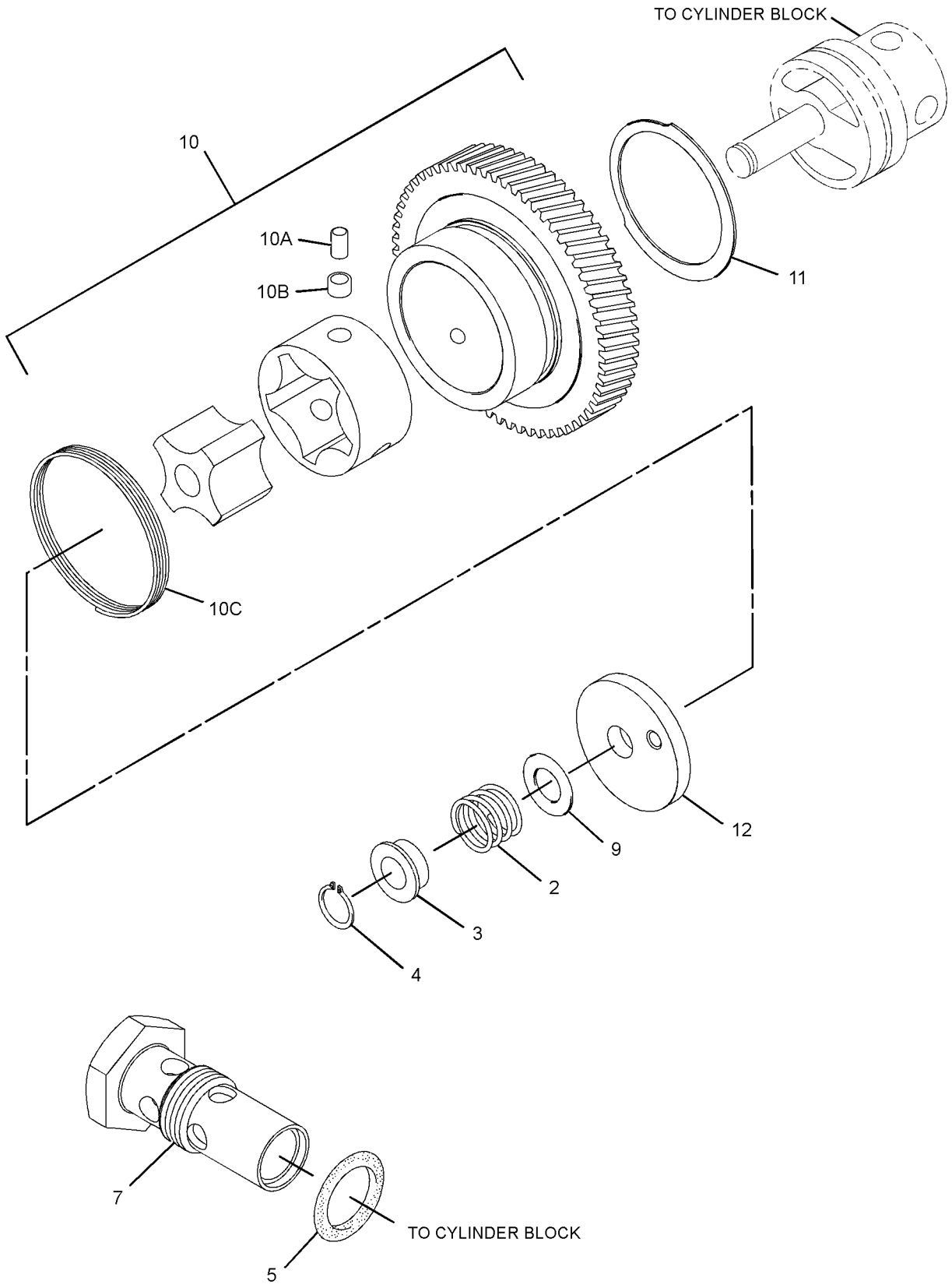

GRAPHIC #1 g01410345

308-2287 **PUMP GP-ENGINE OIL** ***(contd.)*** **i02877258**

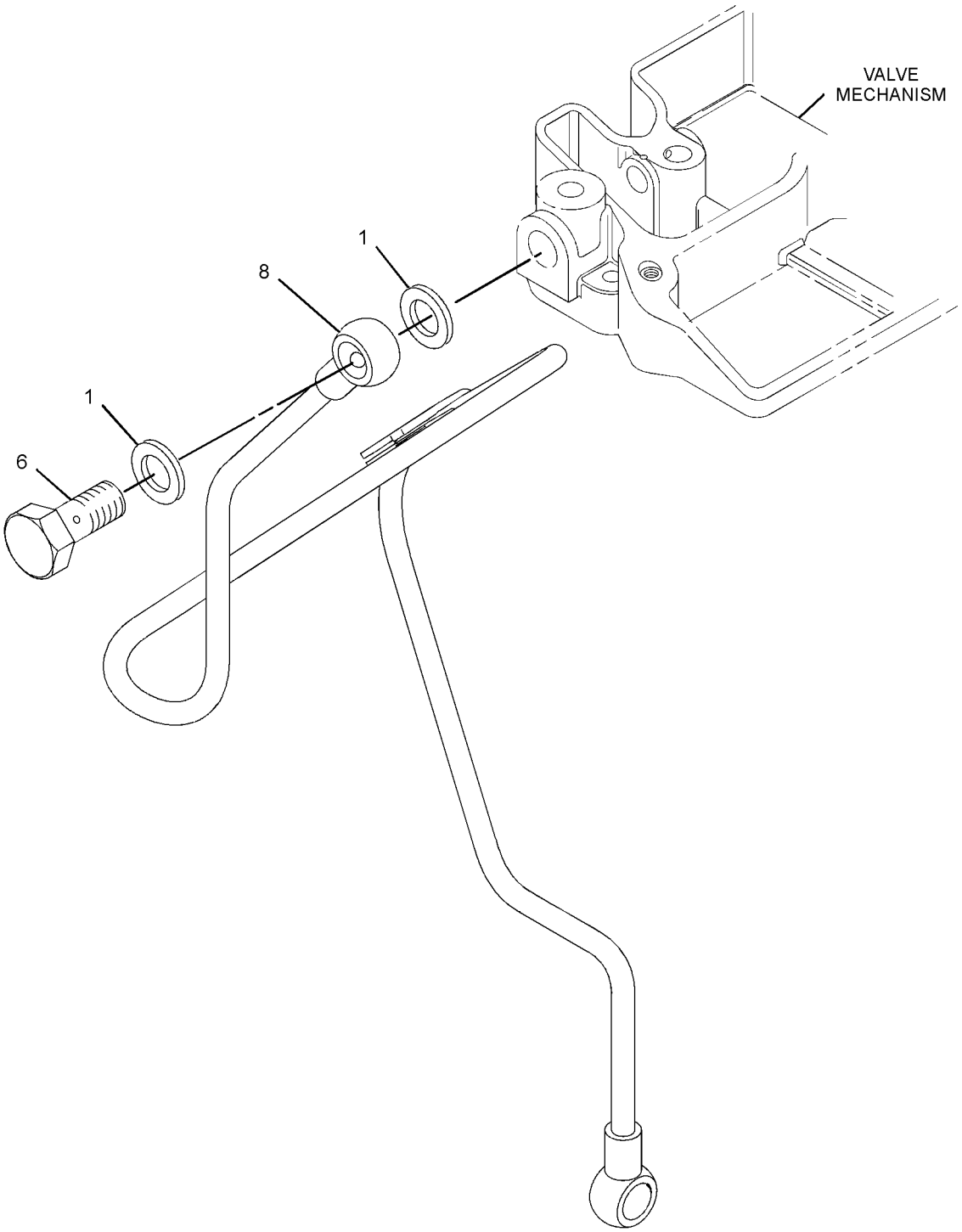

GRAPHIC #2 **<END>** g01410346

317-0980 HOUSING GP-WATER REGULATOR

S/N: CYP1-UP

PART OF 292-5719 ENGINE AR-PRIMARY

AN ATTACHMENT

SMCS-1393 **i02826830**

NOTE	REF NO	GRAPHIC REF	PART NUMBER	QTY	PART NAME 1 2 3 4 5 6 (PRODUCT LEVEL)	SEE PAGE
	1	1	**154-1828**	1	GASKET-COVER (TEMPERATURE REGULATOR)	
	2	1	**168-9001**	2	BOLT	
	3	1	**217-7379**	1	HOUSING	

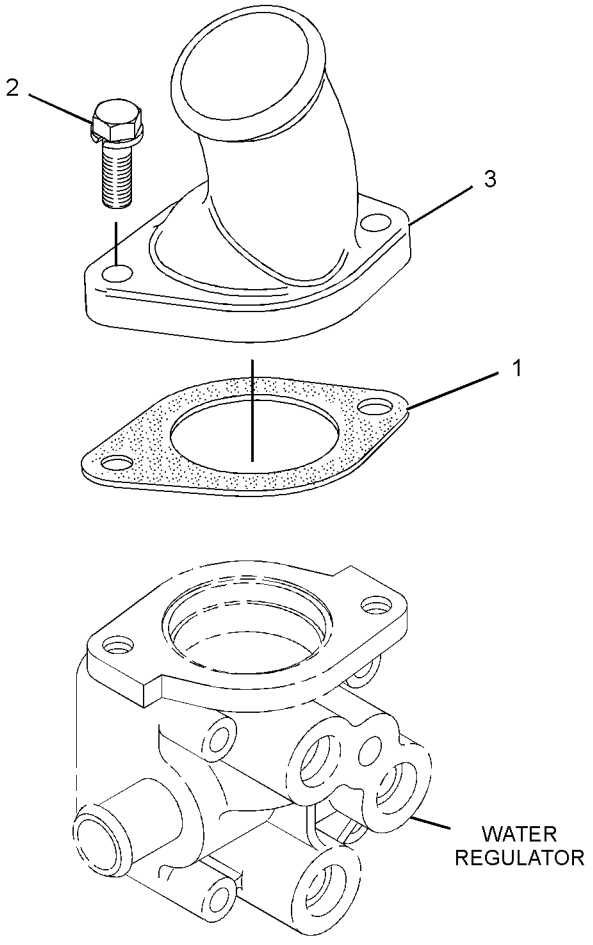

GRAPHIC #1 **<END>** g01439312

228-1762 MOUNTING GP-RAD & OIL COOLER

S/N: SCH2475-UP

PART OF 295-7027, 295-7028 INSTALLATION AR-ENGINE

SMCS-1353, 1374 **i02602679**

NOTE	REF NO	GRAPHIC REF	PART NUMBER	QTY	PART NAME 1 2 3 4 5 6 (PRODUCT LEVEL)	SEE PAGE
	1	1	**5P-0372**	2	LOCK PIN	
	2	1	**5V-8309**	1	STRIKER AS	
B	3	1	**8T-0318**	1	SHIM (0.8-MM THK)	
	4	1	**8T-4159**	1	BUMPER	
	5	1	**142-8812**	1	SUPPORT AS	
	6	1	**142-8832**	1	PIN AS	
	7	1	**161-2347**	1	LATCH AS	
	8	1	**193-8345**	1	SPRING AS-GAS	
	9	1	**208-6176**	4	STUD-BALL	
	10	1	**228-3724**	1	SUPPORT AS	
	11	1	**228-9641**	1	GRILL AS	
	12	1	**232-1789**	1	SPRING AS-GAS	
	13	1	**178-2255**	2	PIN	
	14	1	**2K-4973**	1	LOCKNUT (3/8-16-THD)	
M	15	1	**5C-7261**	1	NUT (M8X1.25-THD)	
	16	1	**7X-7729**	1	WASHER (11X25X3-MM THK)	
	17	1	**8T-4121**	8	WASHER-HARD (11X21X2.5-MM THK)	
M	18	1	**8T-4133**	4	NUT (M10X1.5-THD)	
M	19	1	**8T-4181**	3	BOLT (M6X1X20-MM)	
	20	1	**8T-4205**	3	WASHER-HARD (7.2X14.5X2-MM THK)	
M	21	1	**8T-6466**	4	BOLT (M10X1.5X60-MM)	
D	22	1	**5P-8309**		SEAL (0.5-M EACH)	

B-USE AS REQUIRED
D-ORDER BY THE METER
M-METRIC PART

228-1762 **MOUNTING GP-RAD & OIL COOLER** *(contd.)* **i02602679**

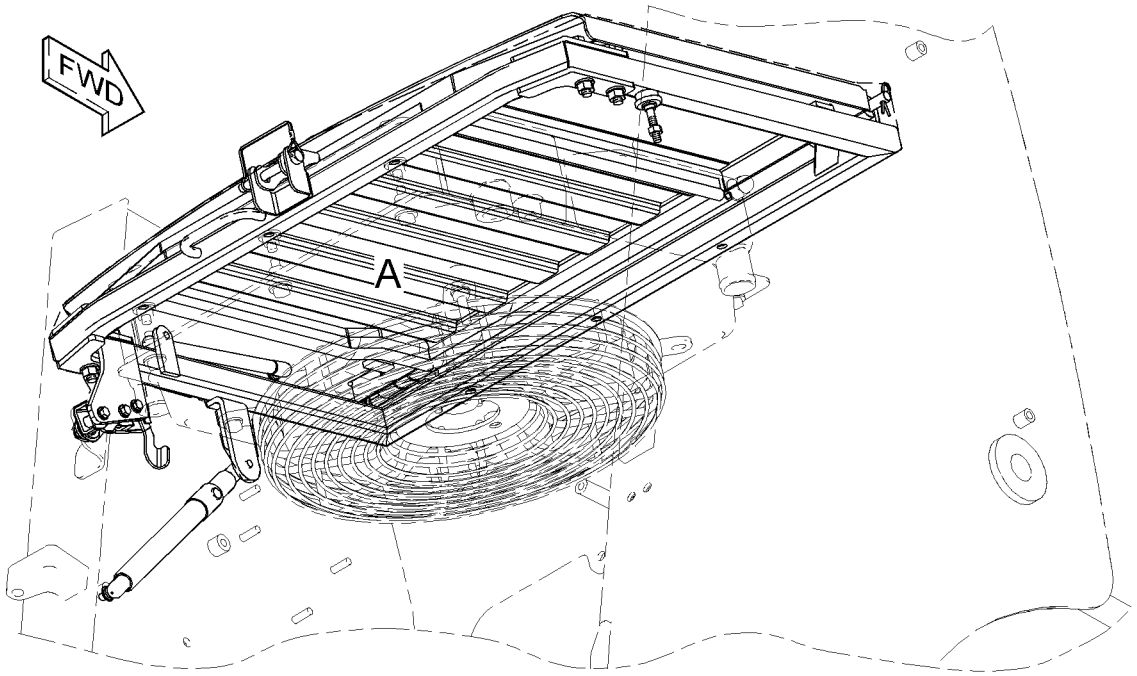

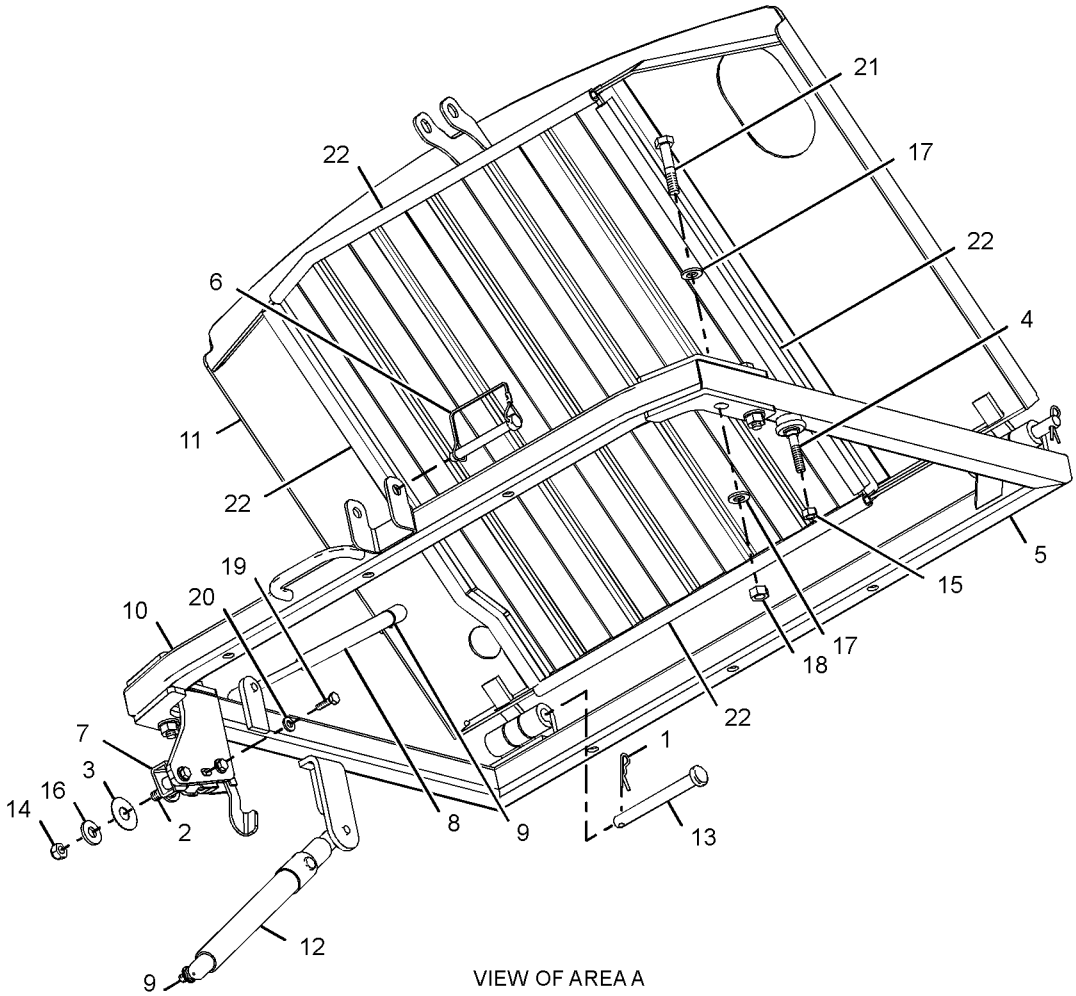

VIEW OF AREA A

GRAPHIC #1 **<END>** g01313171

COOLING SYSTEM

246-3451 PUMP GP-WATER

S/N: CSD1-11322
PART OF 300-5206 ENGINE AR-PRIMARY
AN ATTACHMENT

SMCS-1355, 1361 **i02877607**

NOTE	REF NO	GRAPHIC REF	PART NUMBER	QTY	PART NAME 1 2 3 4 5 6 (PRODUCT LEVEL)	SEE PAGE
	1	1	**5P-2369**	1	CLIP	
	2	1,1	**153-5960**	5	NUT	
	3	1	**153-5961**	4	BOLT	
	4	1	**218-2317**	1	PLUG	
C	5	1	**311-0023**	1	PUMP GP-WATER	
C	7	1	**5D-1026**	2	CLAMP-HOSE	
	8	1	**154-1828**	1	GASKET-COVER	
C	9	1	**286-7496**	1	HOSE-WATER	
	11	1	**165-2141**	2	BOLT	
	13	1	**205-4585**	1	HOSE	
	14	1	**303-0307**	1	GASKET	
	15	1	**215-2617**	1	GASKET (HOUSING)	
	16	1	**217-7379**	1	HOUSING	
	17	1	**154-1817**	4	PLUG	
C	18	1	**286-7495**	1	HOUSING-THERMOSTAT	
	19	1	**5P-2230**	1	CLAMP-HOSE	
	20	1	**153-6856**	2	BOLT	
	21	1	**249-5541**	1	REGULATOR-WATER TEMPERATURE	
	22	1	**153-6375**	1	BOLT	
F			**267-0328**	1	HOSE	

C-CHANGE FROM PREVIOUS TYPE
F-NOT SHOWN

246-3451 **PUMP GP-WATER** *(contd.)* **i02877607**

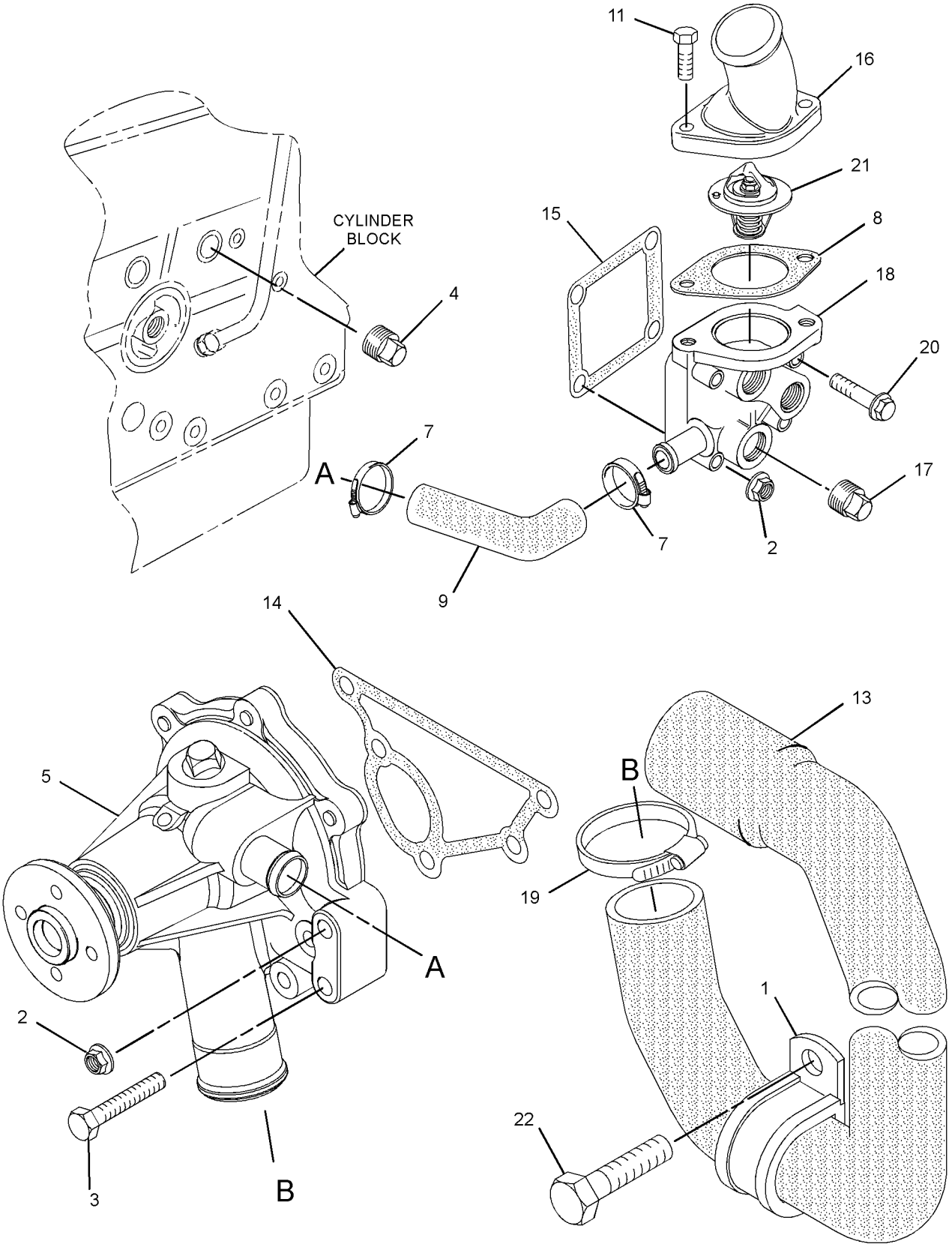

GRAPHIC #1 **<END>** g01435281

COOLING SYSTEM

317-0979 PUMP GP-WATER

S/N: CYP1-UP
PART OF 292-5719 ENGINE AR-PRIMARY
AN ATTACHMENT

SMCS-1355, 1361 **i02826936**

NOTE	REF NO	GRAPHIC REF	PART NUMBER	QTY	PART NAME 1 2 3 4 5 6 (PRODUCT LEVEL)	SEE PAGE
	1	1	**5D-1026**	2	CLAMP-HOSE	
	2	2	**127-8281**	1	CLIP	
	3	1	**153-5960**	3	NUT	
	4	1	**153-5961**	4	BOLT	
	5	1	**154-1817**	1	PLUG	
	6	1	**154-1831**	1	PLUG	
	7	2	**155-7984**	1	WASHER	
	8	2	**180-6118**	1	BOLT	
	9	1	**215-2617**	1	GASKET	
	10	1	**238-9137**	1	CONNECTION	
	11	2	**238-9143**	1	CONNECTION	
	12	2	**245-1361**	1	COOLER AS-OIL (ENGINE)	
	12A	2	**245-1362**	1	CONNECTOR	
	12B	2	**245-1364**	1	SEAL	
	13	1	**249-5541**	1	REGULATOR-WATER TEMPERATURE	
	14	1	**286-7495**	1	HOUSING-THERMOSTAT	
	15	1	**286-7496**	1	HOSE-WATER	
	16	1	**308-1907**	2	BOLT	
	17	1	**308-1908**	1	GASKET-WATER PUMP	
	18	1	**311-0023**	1	PUMP GP-WATER	

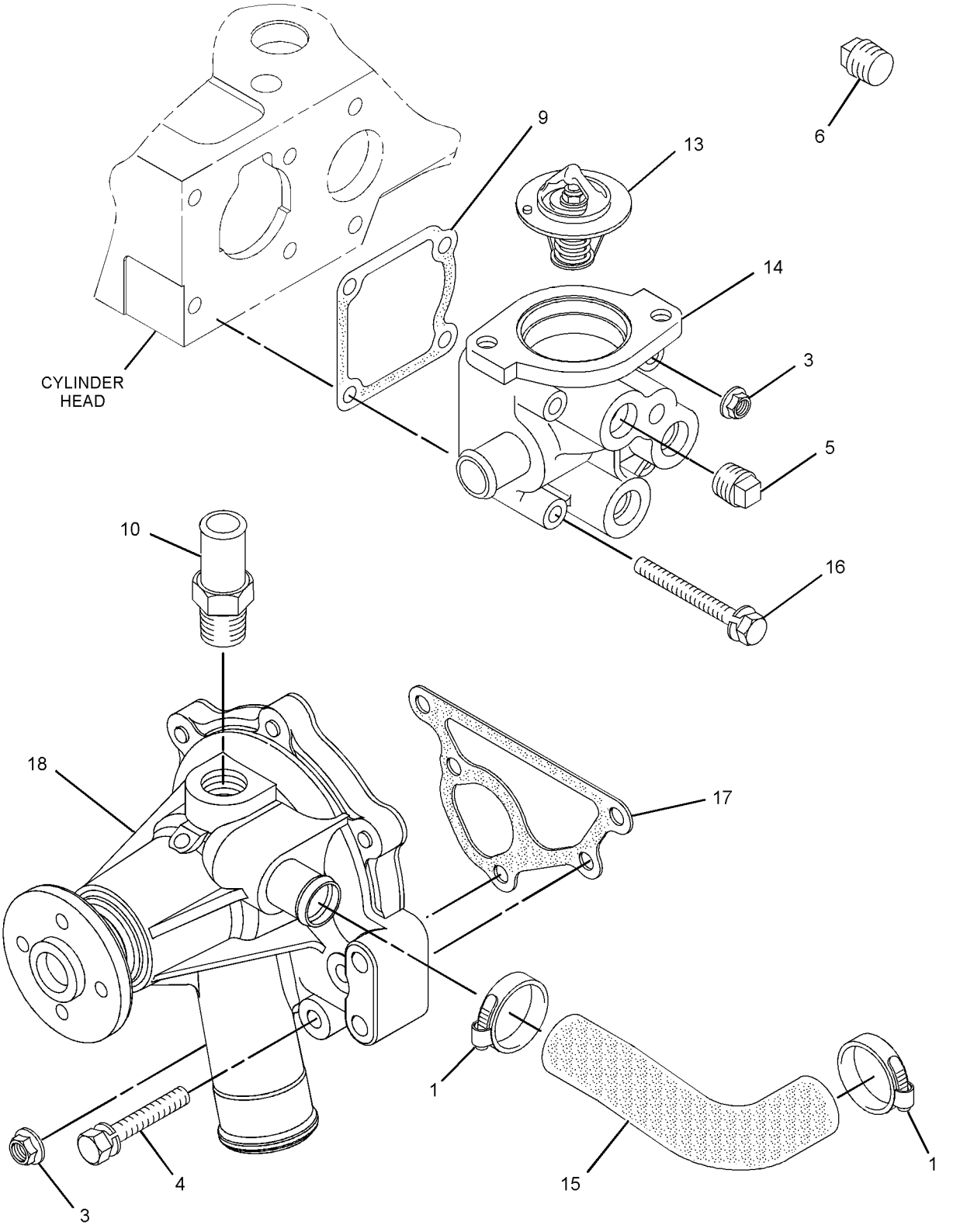

GRAPHIC #1 g01439166

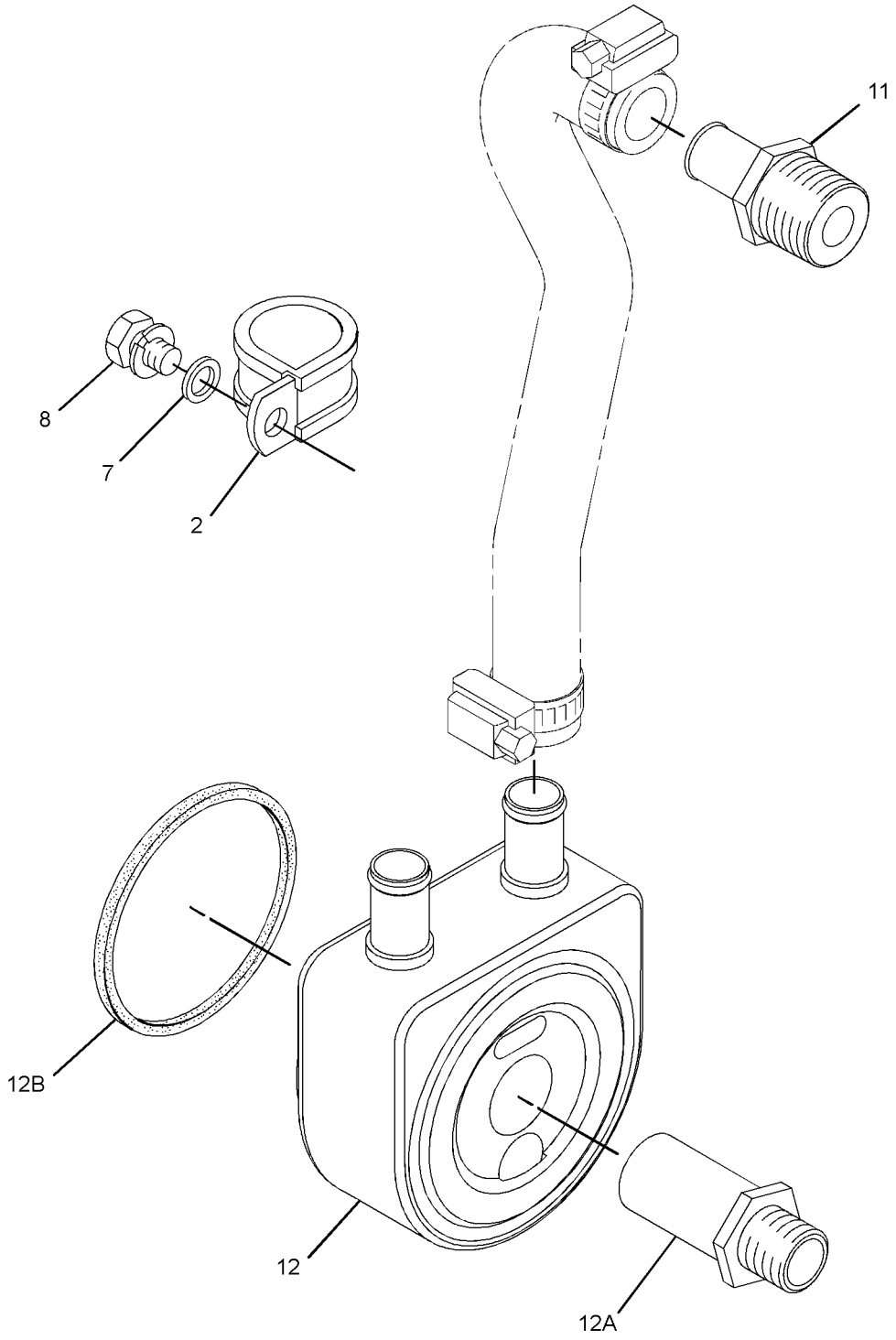

GRAPHIC #2 **<END>** g01439167

228-3359 RADIATOR & HYD OIL COOLER GP

S/N: SCH2475-UP

PART OF 228-1783 RADIATOR & OIL COOLER MTG GP

AN ATTACHMENT

SMCS-1351, 1356, 1386 **i02799297**

NOTE	REF NO	GRAPHIC REF	PART NUMBER	QTY	PART NAME 1 2 3 4 5 6 (PRODUCT LEVEL)	SEE PAGE
	1	1	**036-1865**	1	CAP AS-RADIATOR (SEA WATER HEAT EXCHANGER)	
	2	1	**069-4080**	1	FITTING	
	4	1	**207-6154**	1	GAUGE-SIGHT (RADIATOR)	
	5	1	**280-8310**	1	RADIATOR & HYD OIL COOLER AS	
	6	1	**228-3350**	1	SHROUD AS	
	7	1	**233-6683**	1	GUARD AS (FAN)	
	8	1	*236-5816*	1	FAN GP-BLOWER	
		1	**8T-4224**	4	WASHER-HARD (8.8X16X2-MM THK)	
M		1	**8T-4908**	4	BOLT (M8X1.25X25-MM)	
		1	**205-3727**	1	FAN AS	
		1	**229-8796**	1	ADAPTER	
	9	1	**7M-7410**	1	PLUG-PIPE	
	10	1	**7X-7729**	12	WASHER (11X25X3-MM THK)	
	11	1	**8T-4121**	3	WASHER-HARD (11X21X2.5-MM THK)	
M	12	1	**8T-4133**	6	NUT (M10X1.5-THD)	
M	13	1	**8T-4196**	9	BOLT (M10X1.5X35-MM)	

M-METRIC PART

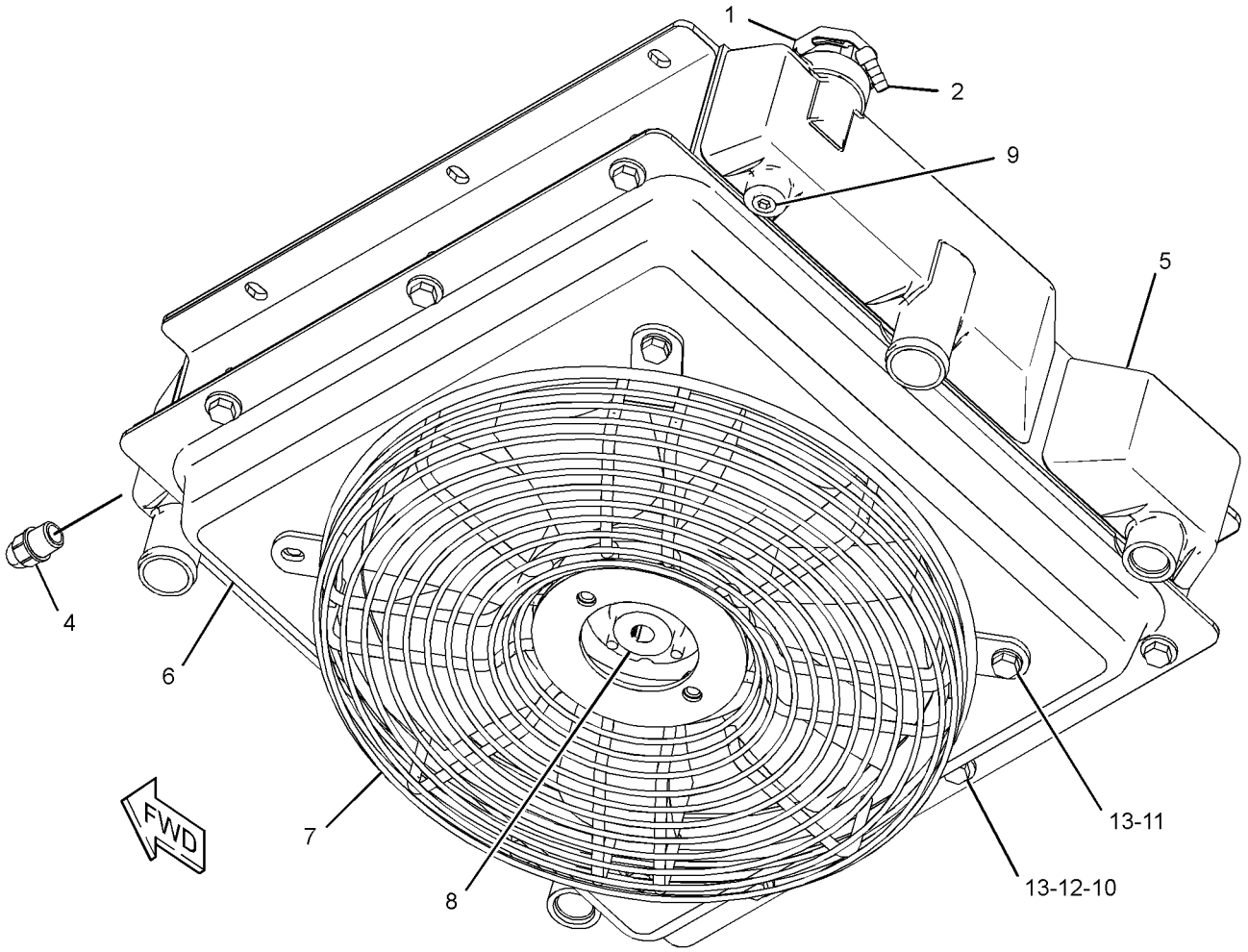

GRAPHIC #1 **<END>** g01399073

261-6119 RADIATOR & HYD OIL COOLER GP

S/N: SCH2475-UP

PART OF 261-6118 RADIATOR & OIL COOLER MTG GP

AN ATTACHMENT

SMCS-1351, 1356, 1386 **i02799295**

NOTE	REF NO	GRAPHIC REF	PART NUMBER	QTY	PART NAME 1 2 3 4 5 6 (PRODUCT LEVEL)	SEE PAGE
	1	1	**036-1865**	1	CAP AS-RADIATOR (SEA WATER HEAT EXCHANGER)	
	2	1	**069-4080**	1	FITTING	
	3	1	**207-6154**	1	GAUGE-SIGHT (COOLANT LEVEL)	
	5	1	**228-3350**	1	SHROUD AS	
	6	1	**233-6683**	1	GUARD AS	
	7	1	*236-5816*	1	FAN GP-BLOWER	
		1	**8T-4224**	4	WASHER-HARD (8.8X16X2-MM THK)	
M		1	**8T-4908**	4	BOLT (M8X1.25X25-MM)	
		1	**205-3727**	1	FAN AS	
		1	**229-8796**	1	ADAPTER	
	8	1	**280-8311**	1	RADIATOR & HYD OIL COOLER AS	
	9	1	**238-0112**	1	SENSOR GP-TEMPERATURE (ENGINE COOLANT)	
	10	1	**6V-9028**	1	SEAL-O-RING	
	11	1	**7M-7410**	1	PLUG-PIPE	
	12	1	**7X-7729**	12	WASHER (11X25X3-MM THK)	
	13	1	**8T-4121**	3	WASHER-HARD (11X21X2.5-MM THK)	
M	14	1	**8T-4133**	6	NUT (M10X1.5-THD)	
M	15	1	**8T-4196**	9	BOLT (M10X1.5X35-MM)	

M-METRIC PART

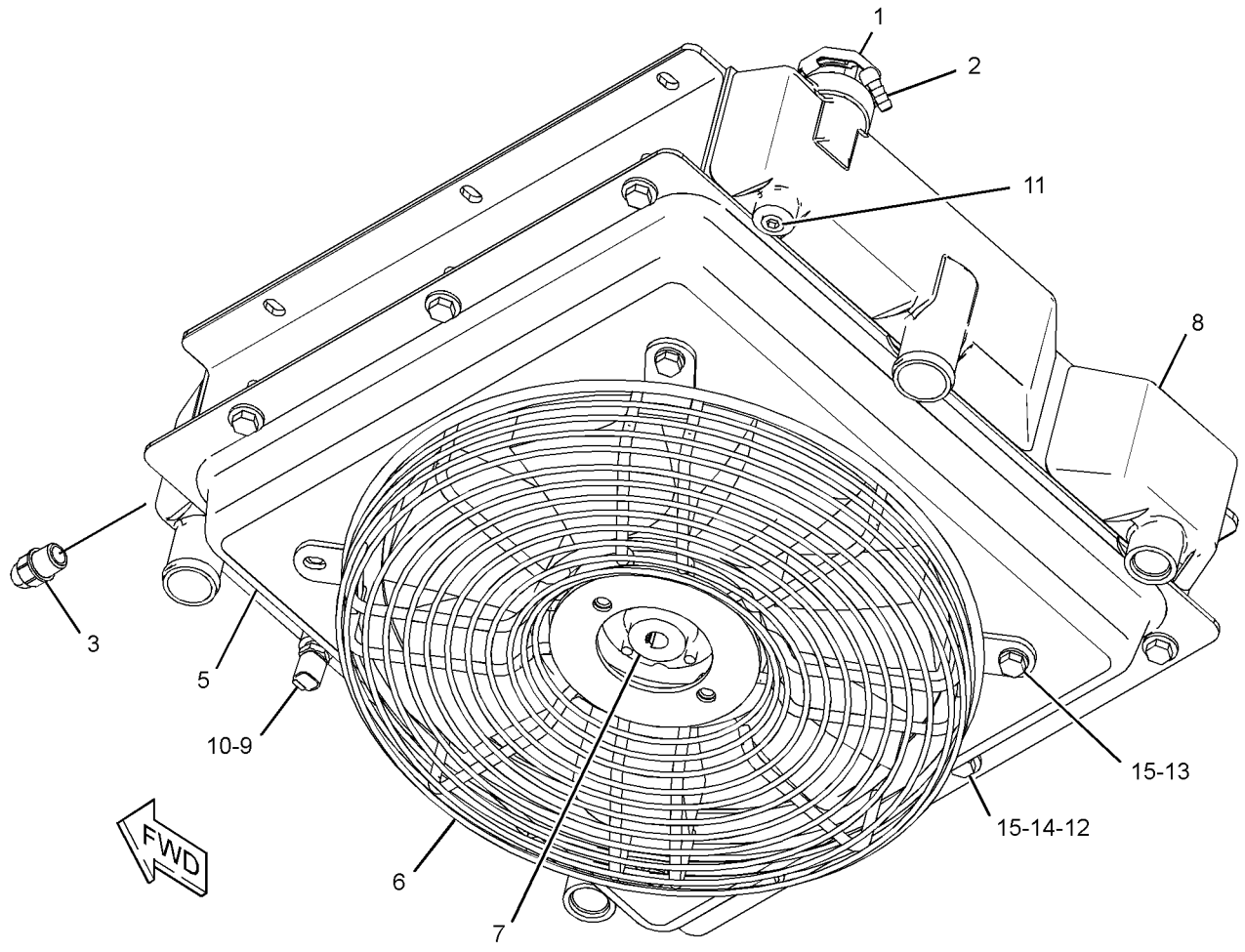

GRAPHIC #1 **<END>** g01399078

228-1783 RADIATOR & OIL COOLER MTG GP

S/N: SCH2475-UP
PART OF 295-7055 CONVERSION AR-MACHINE
AN ATTACHMENT

SMCS-1351, 1354 **i02890396**

NOTE	REF NO	GRAPHIC REF	PART NUMBER	QTY	PART NAME 1 2 3 4 5 6 (PRODUCT LEVEL)	SEE PAGE
	1	1	**1P-4278**	2	CLAMP-HOSE	
	2	1	**7X-1443**	4	PROTECTOR	
	3	1	**124-6264**	1	CLAMP-HOSE	
	4	1	**205-6383**	1	TUBE	
	5	1	**222-1178**	2	CLAMP	
Y	6	1	*228-3359*	1	RADIATOR & HYD OIL COOLER GP	82
C	7	1	**285-5794**	1	RECOVERY GP-COOLANT	
		1	**169-6715**	1	CAP-VENTED (COOLANT RECOVERY)	
	8	1	**231-3578**	1	HOSE (UPPER)	
	9	1	**231-3579**	1	HOSE (LOWER)	
	10	1	**231-3925**	1	BRACKET AS	
	11	1	**232-4901**	2	CLAMP	
	12	1	**143-4535**	1	CLIP (SLOT)	
	13	1	**143-4536**	1	CLIP (TAB)	
	14	1	**4K-8864**	2	CLIP	
	15	1	**7X-7729**	12	WASHER (11X25X3-MM THK)	
	16	1	**8T-4121**	2	WASHER-HARD (11X21X2.5-MM THK)	
M	17	1	**8T-4133**	6	NUT (M10X1.5-THD)	
M	18	1	**8T-4136**	1	BOLT (M10X1.5X25-MM)	
M	19	1	**8T-4137**	1	BOLT (M10X1.5X20-MM)	
	20	1	**8T-4224**	2	WASHER-HARD (8.8X16X2-MM THK)	
M	21	1	**8T-5005**	1	BOLT (M10X1.5X70-MM)	
M	22	1	**8T-5091**	2	BOLT (M8X1.25X20-MM)	
M	23	1	**8T-6466**	5	BOLT (M10X1.5X60-MM)	
E	24	1	**5P-1420**		HOSE (110-CM)	

C-CHANGE FROM PREVIOUS TYPE
E-ORDER BY THE CENTIMETER
M-METRIC PART
Y-SEPARATE ILLUSTRATION

228-1783 **RADIATOR & OIL COOLER MTG GP** *(contd.)* **i02890396**

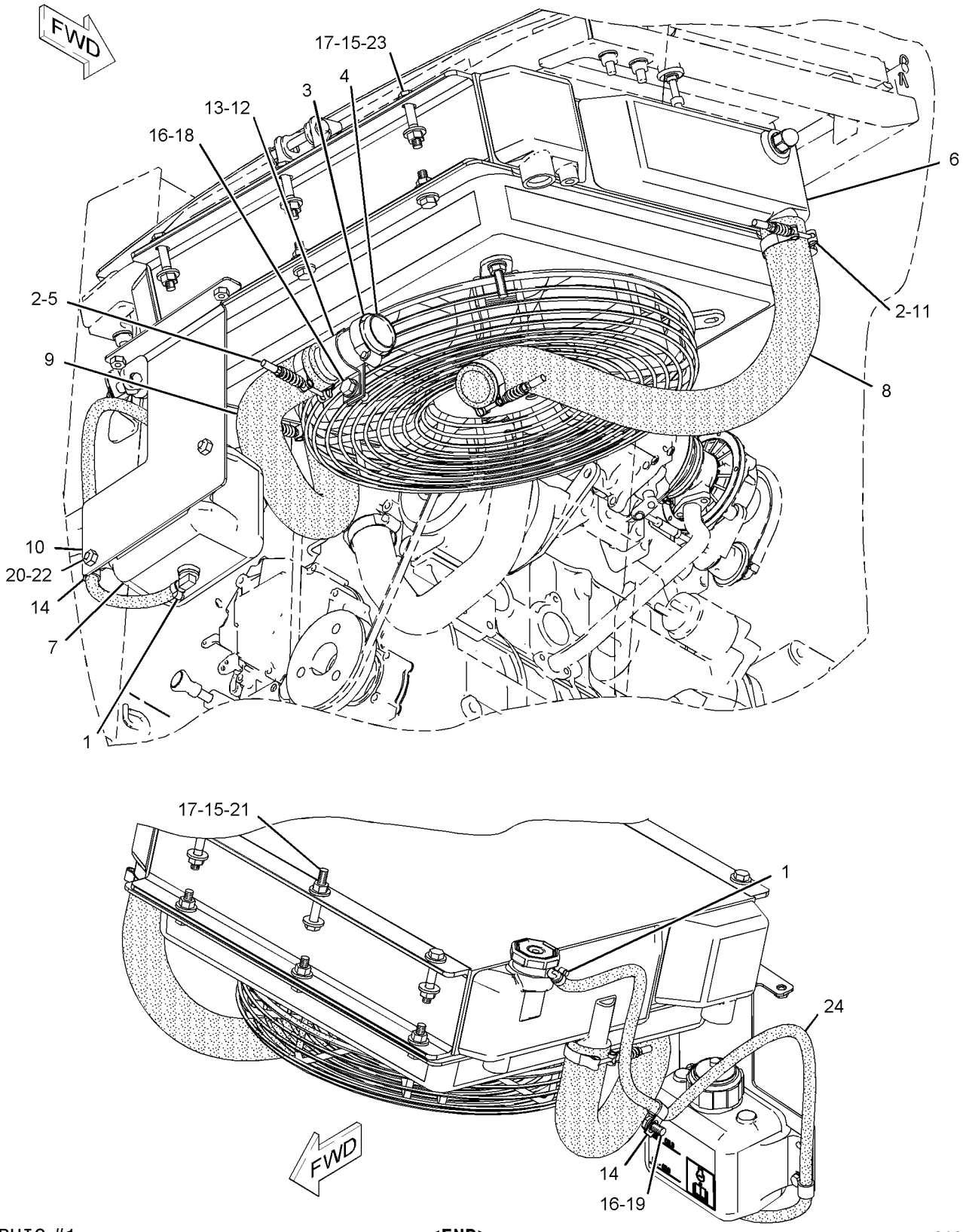

GRAPHIC #1 **<END>** g01051095

COOLING SYSTEM

261-6118 RADIATOR & OIL COOLER MTG GP

S/N: SCH2475-UP
STAGE II SOUND
PART OF 295-7060, 295-7067, 295-7150, 295-7163 CONVERSION AR-MACHINE
AN ATTACHMENT

SMCS-1351, 1354 **i02890399**

NOTE	REF NO	GRAPHIC REF	PART NUMBER	QTY	PART NAME 1 2 3 4 5 6 (PRODUCT LEVEL)	SEE PAGE
	1	1	**1P-4278**	2	CLAMP-HOSE	
	2	1	**7X-1443**	4	PROTECTOR	
	3	1	**124-6264**	1	CLAMP-HOSE	
	4	1	**205-6383**	1	TUBE	
	5	1	**222-1178**	2	CLAMP	
C	6	1	**285-5794**	1	RECOVERY GP-COOLANT	
		1	**169-6715**	1	CAP-VENTED (COOLANT RECOVERY)	
	7	1	**231-3578**	1	HOSE (UPPER)	
	8	1	**231-3579**	1	HOSE (LOWER)	
	9	1	**231-3925**	1	BRACKET AS	
M		1	**8T-3612**	4	NUT-WELD (M8X1.25-THD)	
	10	1	**232-4901**	2	CLAMP	
Y	11	1	*261-6119*	1	RADIATOR & HYD OIL COOLER GP	83
	12	1	**143-4535**	1	CLIP (SLOT)	
	13	1	**143-4536**	1	CLIP (TAB)	
	14	1	**4K-8864**	2	CLIP	
	15	1	**7X-7729**	12	WASHER (11X25X3-MM THK)	
	16	1	**8T-4121**	2	WASHER-HARD (11X21X2.5-MM THK)	
M	17	1	**8T-4133**	6	NUT (M10X1.5-THD)	
M	18	1	**8T-4136**	1	BOLT (M10X1.5X25-MM)	
M	19	1	**8T-4137**	1	BOLT (M10X1.5X20-MM)	
	20	1	**8T-4224**	2	WASHER-HARD (8.8X16X2-MM THK)	
M	21	1	**8T-5005**	1	BOLT (M10X1.5X70-MM)	
M	22	1	**8T-5091**	2	BOLT (M8X1.25X20-MM)	
M	23	1	**8T-6466**	5	BOLT (M10X1.5X60-MM)	
E	24	1	**5P-1420**		HOSE (110-CM)	

C-CHANGE FROM PREVIOUS TYPE
E-ORDER BY THE CENTIMETER
M-METRIC PART
Y-SEPARATE ILLUSTRATION

261-6118 **RADIATOR & OIL COOLER MTG GP** *(contd.)* **i02890399**

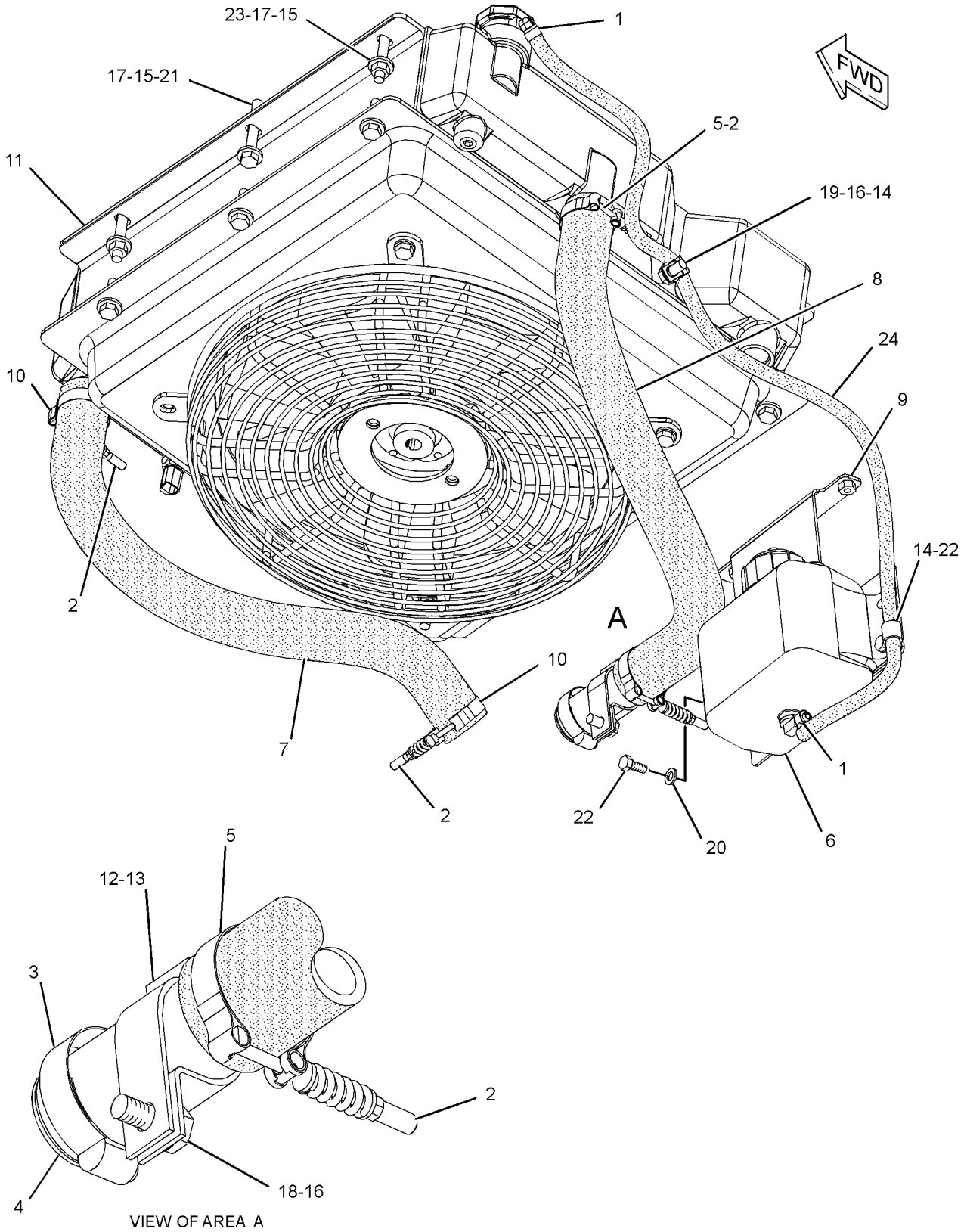

GRAPHIC #1 **<END>** g01229599

AIR INLET AND EXHAUST SYSTEM

228-1773 AIR CLEANER GP

S/N: SCH2475-UP

PART OF 295-7027, 295-7028 INSTALLATION AR-ENGINE

SMCS-1051, 1054 **i02796039**

NOTE	REF NO	GRAPHIC REF	PART NUMBER	QTY	PART NAME 1 2 3 4 5 6 (PRODUCT LEVEL)	SEE PAGE
Y	1	1	*242-0171*	1	AIR CLEANER GP	89
	2	1	**307-8337**	2	STUD	
	3	1	**5P-4116**	6	WASHER-HARD (8.8X20.5X2-MM THK)	
M	4	1	**5C-7261**	2	NUT (M8X1.25-THD)	

M-METRIC PART
Y-SEPARATE ILLUSTRATION

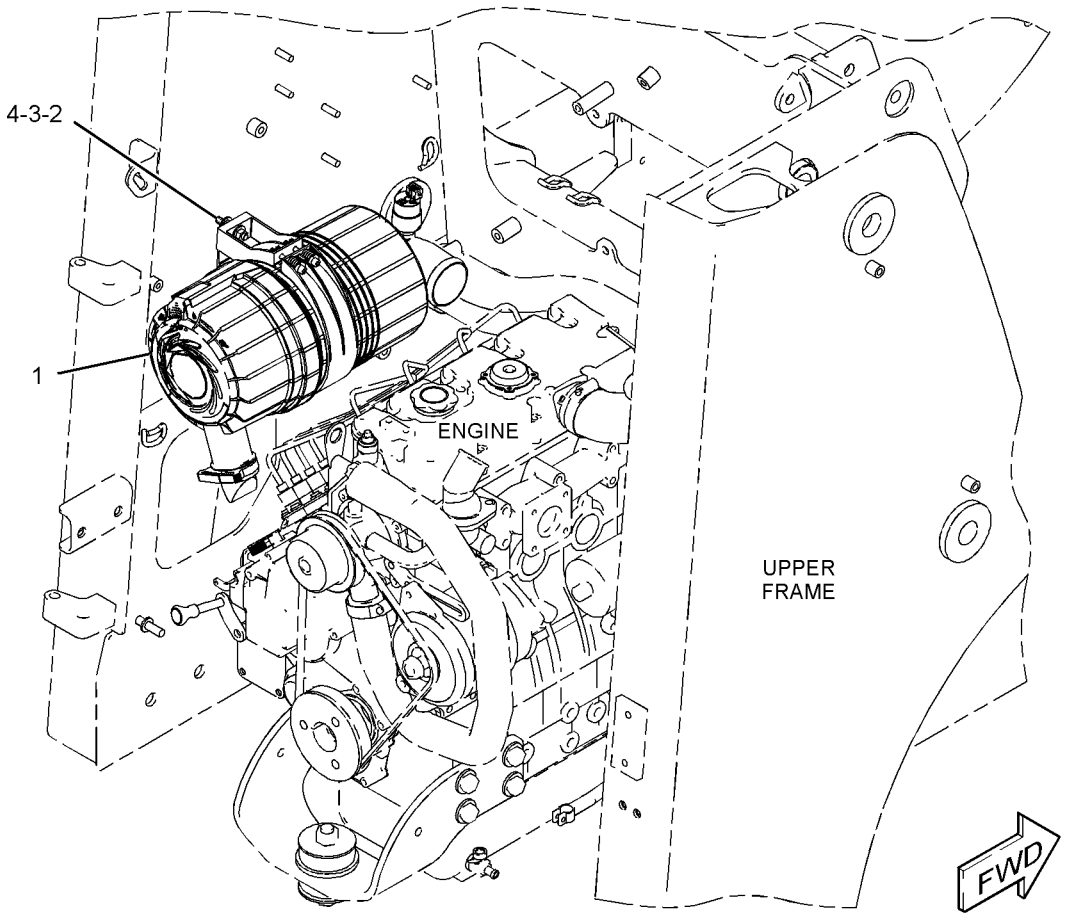

GRAPHIC #1 **<END>** g01406934

AIR INLET AND EXHAUST SYSTEM

242-0171 AIR CLEANER GP

S/N: SCH2475-UP

PART OF 228-1773 AIR CLEANER GP

SMCS-1051, 1054 **i02650200**

NOTE	REF NO	GRAPHIC REF	PART NUMBER	QTY	PART NAME 1 2 3 4 5 6 (PRODUCT LEVEL)	SEE PAGE
	1	1	**5L-3233**	1	FITTING	
	2	1	**231-0169**	1	BAND AS	
	3	1	**241-3394**	1	INDICATOR	
	4	1	**242-0172**	1	AIR CLEANER GP	
		1	**112-9717**	1	VALVE-VACUATOR	
		1	**231-0167**	1	FILTER ELEMENT AS-AIR (PRIMARY)	
		1	**231-0168**	1	FILTER ELEMENT AS-AIR (SECONDARY)	
		1	**242-0173**	1	COVER AS	
	5	1	**280-8298**		CLAMP	

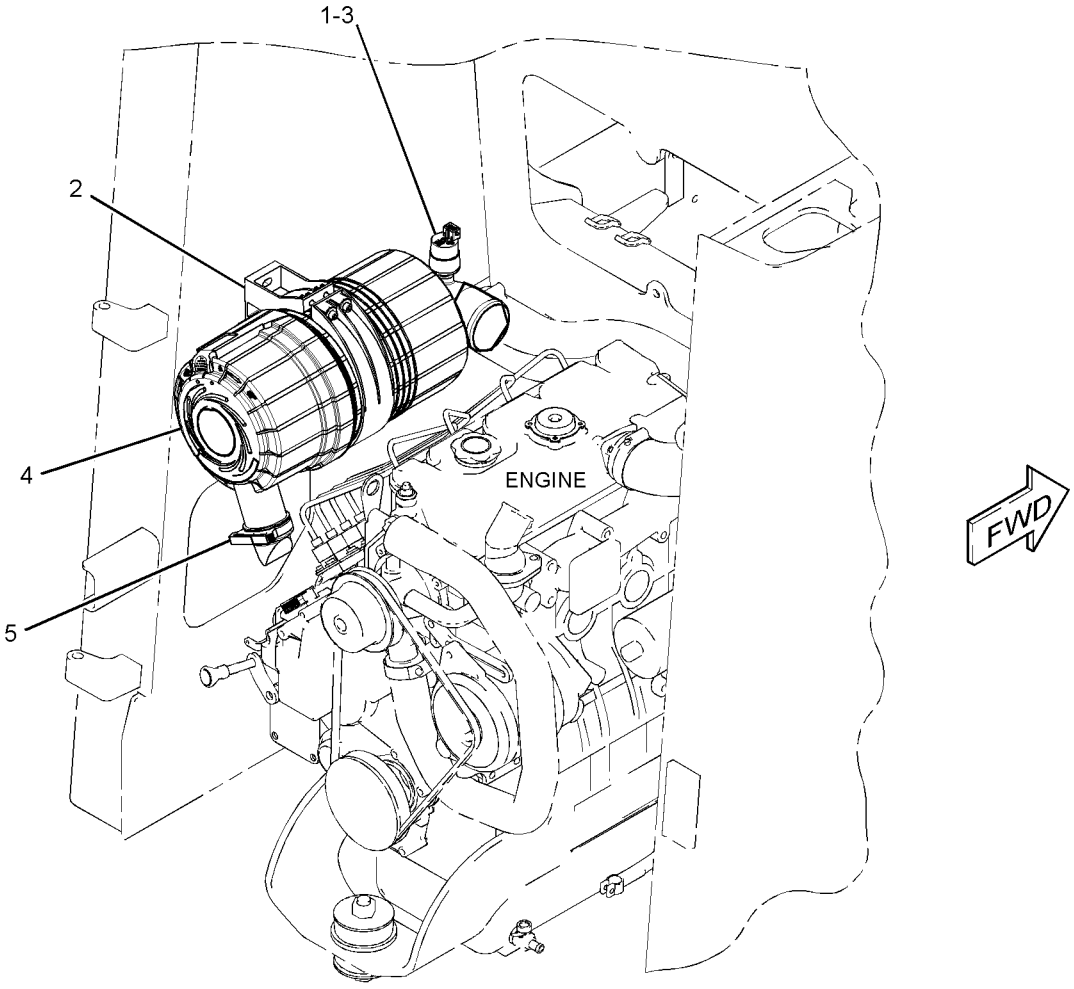

GRAPHIC #1 **<END>** g01336653

AIR INLET AND EXHAUST SYSTEM

280-8365 LINES GP-AIR

S/N: SCH2475-UP

PART OF 295-7027, 295-7028 INSTALLATION AR-ENGINE

SMCS-1071 **i02796126**

NOTE	REF NO	GRAPHIC REF	PART NUMBER	QTY	PART NAME 1 2 3 4 5 6 (PRODUCT LEVEL)	SEE PAGE
	1	1	**5P-4868**	1	CLAMP-HOSE	
	2	1	**5P-4961**	1	CLAMP-HOSE	
	3	1	**280-8341**	1	SPACER (8.7X15.8X21.1-MM THK)	
	4	1	**280-8364**	1	HOSE	
	5	1	**3S-2093**	1	STRAP-CABLE	
	6	1	**5P-0597**	1	CLAMP-HOSE	
	7	1	**5P-4116**	1	WASHER-HARD (8.8X20.5X2-MM THK)	
	8	1	**6D-4246**	2	CLIP	
M	9	1	**7X-2537**	1	BOLT (M8X1.25X35-MM)	
M	10	1	**7X-2621**	1	BOLT (M10X1.5X12-MM)	
	11	1	**8T-4121**	1	WASHER-HARD (11X21X2.5-MM THK)	
E	12	1	**5P-1505**		HOSE (75-CM)	

E-ORDER BY THE CENTIMETER
M-METRIC PART

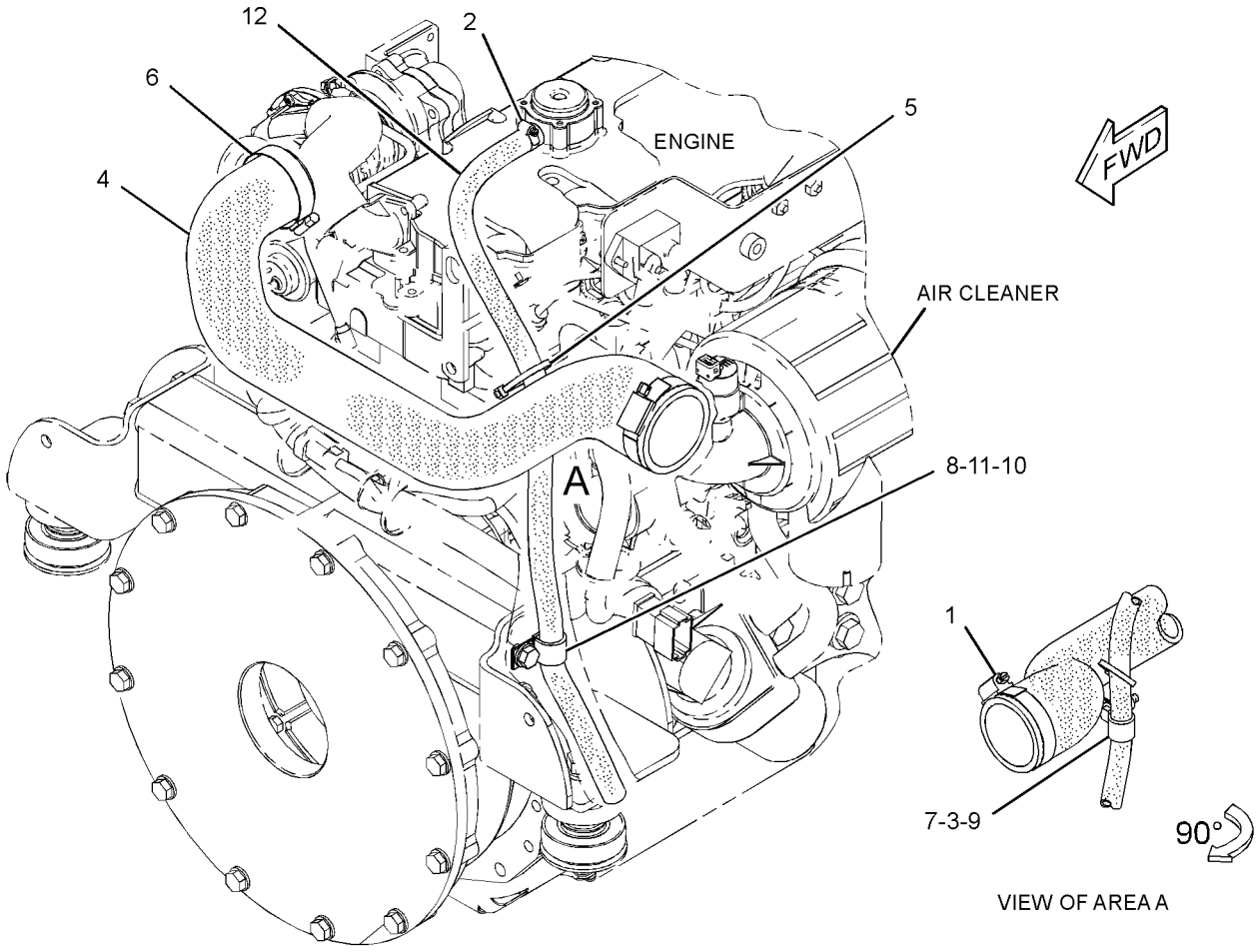

GRAPHIC #1 **<END>** g01421851

239-0233 MANIFOLD GP-EXHAUST

S/N: CSD1-11322
PART OF 300-5206 ENGINE AR-PRIMARY
AN ATTACHMENT

SMCS-1059 **i02656861**

NOTE	REF NO	GRAPHIC REF	PART NUMBER	QTY	PART NAME 1 2 3 4 5 6 (PRODUCT LEVEL)	SEE PAGE
	1	1	**153-5592**	8	NUT	
	2	1	**154-2427**	1	GASKET-EXHAUST	
	3	1	**154-2428**	4	BOLT	
	4	1	**163-5372**	5	WASHER (8X15.4X4-MM THK)	
	5	1	**236-9987**	1	MANIFOLD-EXHAUST	
	6	1	**238-9196**	1	GASKET-TURBOCHARGER	
	7	1	**238-9198**	1	ELBOW-EXHAUST	
	8	1	**304-5061**	1	GASKET	
	9	1	**238-9200**	5	BOLT (M8X1.25X25-MM)	
	10	1	**239-0232**	4	STUD (M8X1.25X31-MM)	

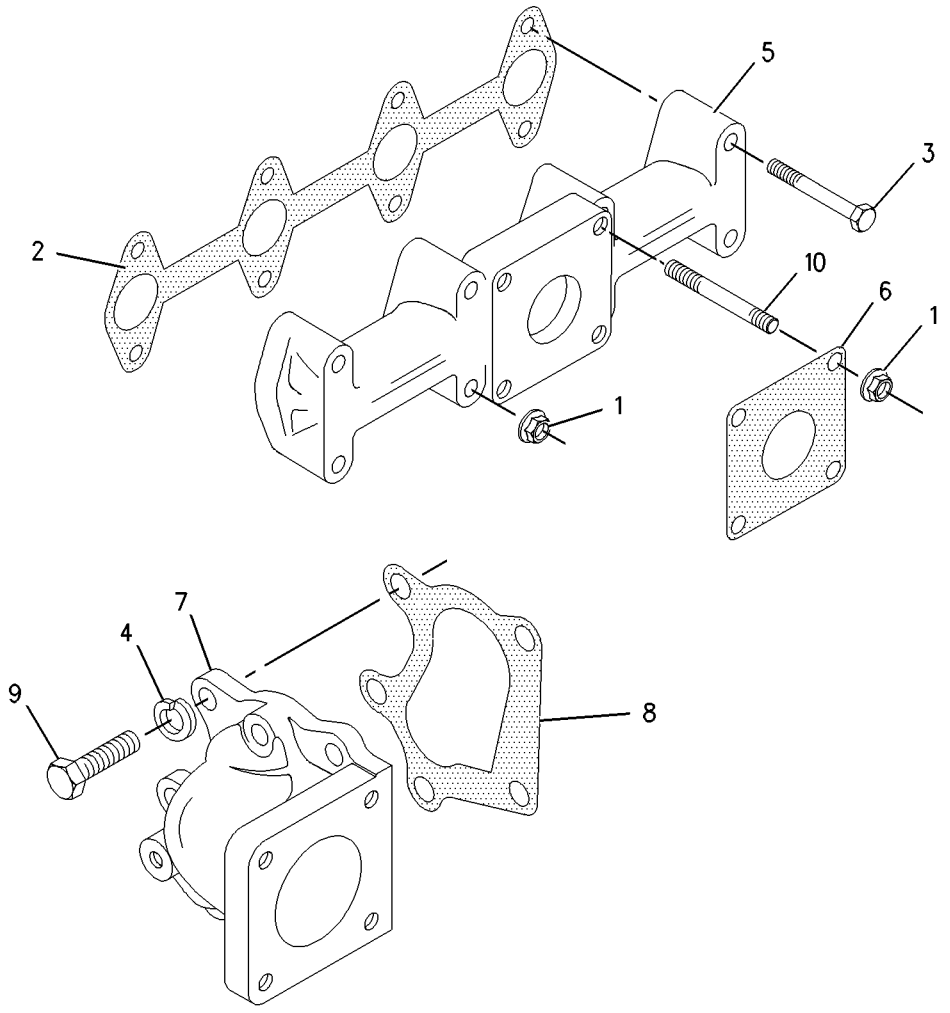

GRAPHIC #1 **<END>** g01007667

AIR INLET AND EXHAUST SYSTEM

272-3046 MUFFLER GP

S/N: SCH2475-UP
STAGE II SOUND
PART OF 272-3047 MUFFLER GP
AN ATTACHMENT

SMCS-1062 **i02531476**

NOTE	REF NO	GRAPHIC REF	PART NUMBER	QTY	PART NAME 1 2 3 4 5 6 (PRODUCT LEVEL)	SEE PAGE
	1	1	**142-8818**	1	CLAMP-PIPE	
	2	1	**228-2524**	1	ELBOW AS-EXHAUST	
	3	1	**272-3056**	1	MUFFLER AS	

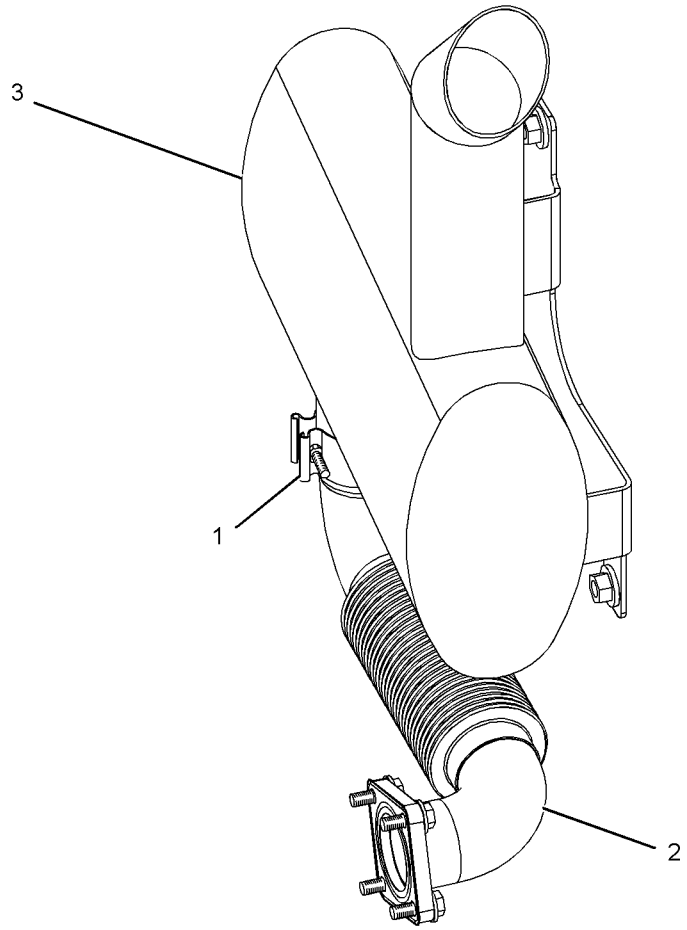

REAR VIEW
(UPPER LEFT)

GRAPHIC #1 **<END>** g01266510

AIR INLET AND EXHAUST SYSTEM

272-3047 MUFFLER GP

S/N: SCH2475-UP
STAGE II SOUND
PART OF 295-7055, 295-7060, 295-7067, 295-7150, 295-7163 CONVERSION AR-MACHINE
AN ATTACHMENT

SMCS-1062 **i02431659**

NOTE	REF NO	GRAPHIC REF	PART NUMBER	QTY	PART NAME 1 2 3 4 5 6 (PRODUCT LEVEL)	SEE PAGE
	1	1	**153-7920**	1	GASKET	
Y	2	1	*272-3046*	1	MUFFLER GP	92
	3	1	**5P-4116**	4	WASHER-HARD (8.8X20.5X2-MM THK)	
	4	1	**7X-7729**	3	WASHER (11X25X3-MM THK)	
M	5	1	**8T-4133**	3	NUT (M10X1.5-THD)	
M	6	1	**8T-4908**	4	BOLT (M8X1.25X25-MM)	

M-METRIC PART
Y-SEPARATE ILLUSTRATION

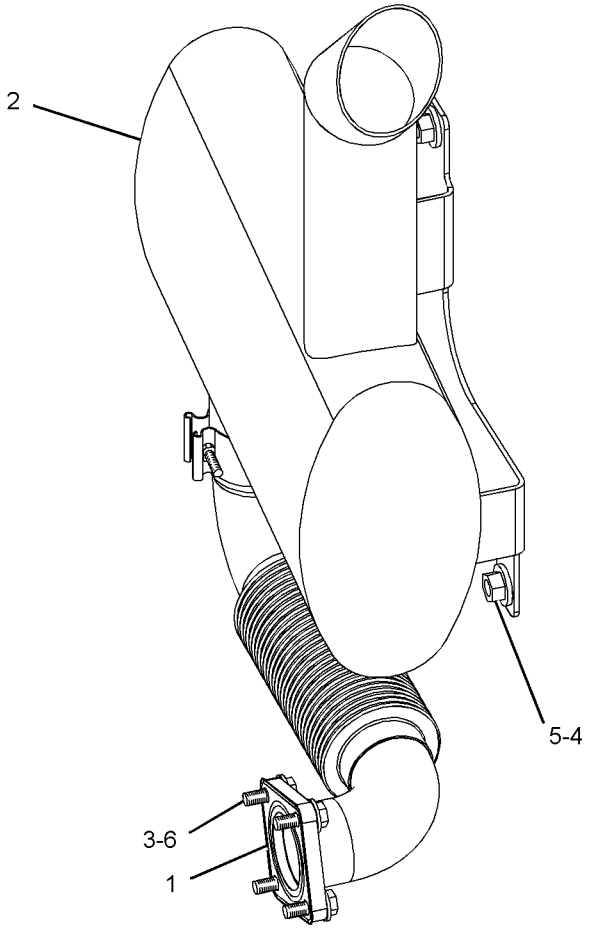

REAR VIEW
(UPPER LEFT)

GRAPHIC #1 **<END>** g01229585

272-3049 MUFFLER GP

S/N: SCH2475-UP
STAGE II SOUND
PART OF 252-0449, 261-6156, 278-5348, 278-5370, 278-5414 CONVERSION AR-MACHINE
AN ATTACHMENT

SMCS-1062 **i02432676**

NOTE	REF NO	GRAPHIC REF	PART NUMBER	QTY	PART NAME 1 2 3 4 5 6 (PRODUCT LEVEL)	SEE PAGE
	1	1	**153-7920**	1	GASKET	
	2	1	*272-3048*	1	MUFFLER GP	
		1	**142-8818**	1	CLAMP-PIPE	
		1	**230-3731**	1	MUFFLER AS	
		1	**272-3058**	1	ELBOW AS-EXHAUST	
	3	1	**5P-4116**	4	WASHER-HARD (8.8X20.5X2-MM THK)	
	4	1	**7X-7729**	3	WASHER (11X25X3-MM THK)	
M	5	1	**8T-4133**	3	NUT (M10X1.5-THD)	
M	6	1	**8T-4908**	4	BOLT (M8X1.25X25-MM)	

M-METRIC PART

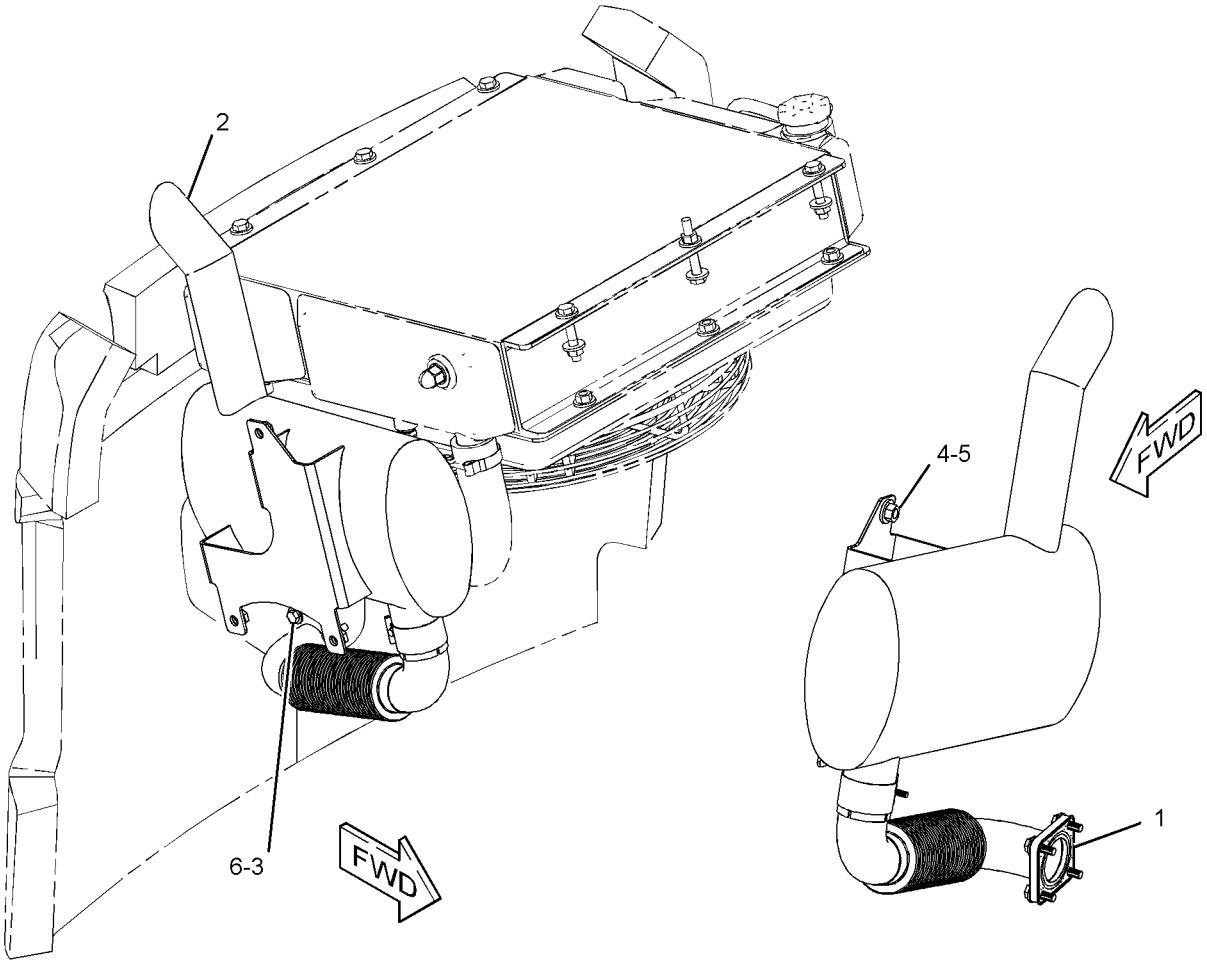

GRAPHIC #1 **<END>** g01229532

AIR INLET AND EXHAUST SYSTEM

239-0230 TURBOCHARGER GP

S/N: CSD1-11322
PART OF 300-5206 ENGINE AR-PRIMARY
AN ATTACHMENT

SMCS-1052, 1053 **i02874985**

NOTE	REF NO	GRAPHIC REF	PART NUMBER	QTY	PART NAME 1 2 3 4 5 6 (PRODUCT LEVEL)	SEE PAGE
	1	1	**064-3058**	2	CLAMP-HOSE	
	2	1	**249-7263**	2	BOLT	
	3	1	**153-6853**	1	SEAL-O-RING	
	4	1	**155-7984**	2	WASHER	
	5	1	**165-2141**	2	BOLT	
	6	1	**168-9001**	2	BOLT	
	7	1	**183-3572**	3	BOLT	
	8	1	**225-8533**	2	GASKET	
	9	1	**238-9349**	1	TURBOCHARGER GP	
	10	1	**249-1532**	1	HOSE-AIR INLET	
	11	1	**317-0962**	1	TUBE-TURBOCHARGER OIL	
	12	1	**239-0187**	1	BRACKET	
	13	1	**317-0959**	1	CONNECTION GP-OIL	
	13A	1	**317-0960**	1	BOLT-SPECIAL (BANJO)	
	13B	1	**225-8526**	2	WASHER (10.4X13.75X1.37-MM THK)	
	13C	1	**317-0961**	1	CLIP	
	14	1	**239-0229**	1	SPACER	

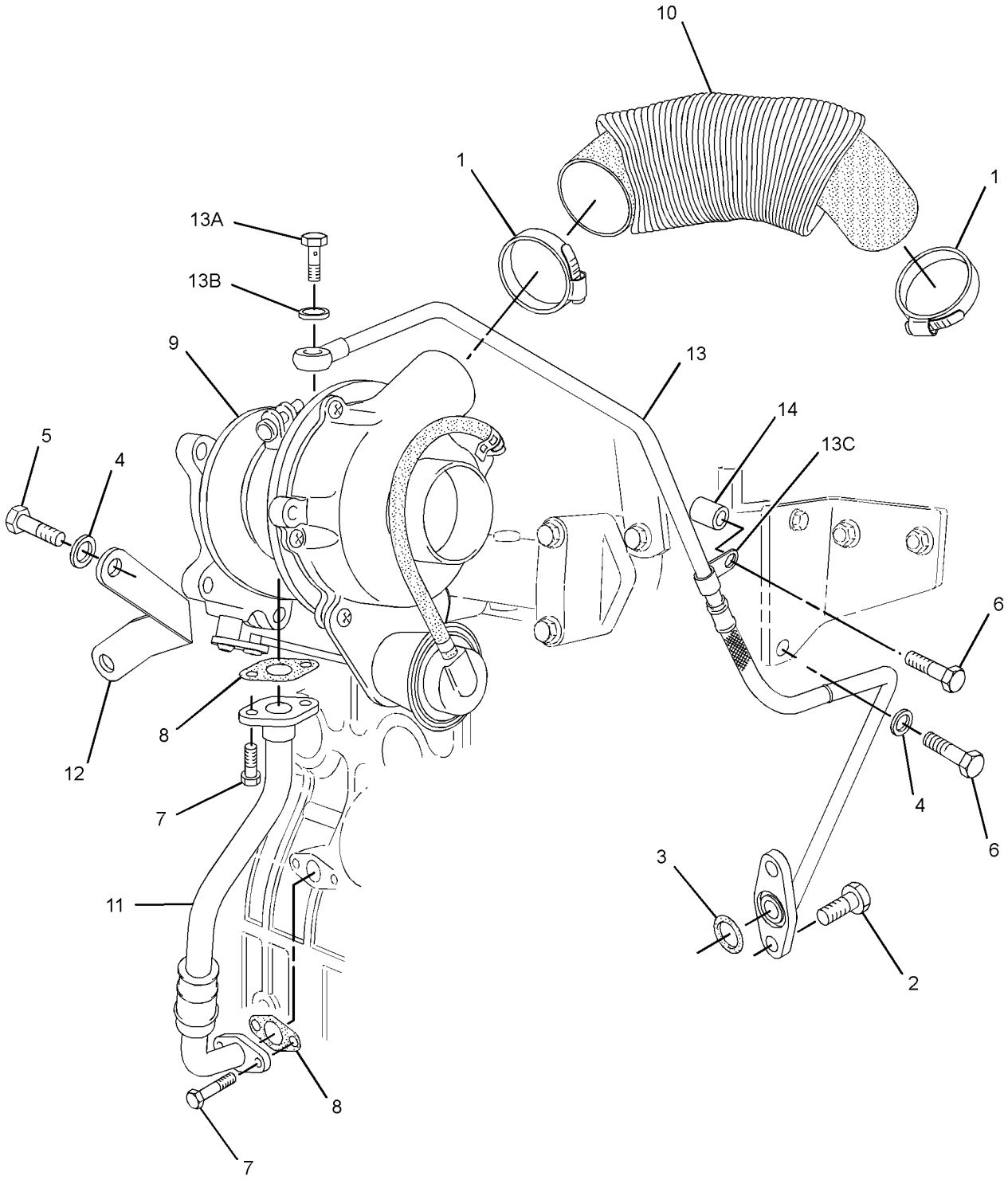

GRAPHIC #1 **<END>** g01395263

AIR INLET AND EXHAUST SYSTEM

317-0981 TURBOCHARGER GP

S/N: CYP1-UP

PART OF 292-5719 ENGINE AR-PRIMARY

AN ATTACHMENT

SMCS-1052, 1053 **i02862676**

NOTE	REF NO	GRAPHIC REF	PART NUMBER	QTY	PART NAME 1 2 3 4 5 6 (PRODUCT LEVEL)	SEE PAGE
	1	2	**064-3058**	2	CLAMP-HOSE	
	2	2	**153-5592**	8	NUT	
	3	3	**153-5939**	1	GAUZE (CRANKCASE BREATHER)	
	4	3	**153-5962**	3	BOLT	
	5	1	**153-6375**	1	BOLT	
	6	1	**153-6853**	1	SEAL-O-RING	
	7	2	**153-7640**	2	BOLT	
	8	3	**154-1347**	4	NUT	
	9	2	**154-2427**	1	GASKET-EXHAUST	
	10	2	**154-2428**	4	BOLT	
	11	1	**155-8009**	4	BOLT	
	12	1	**163-5372**	5	WASHER (8X15.4X4-MM THK)	
	13	3	**165-2140**	2	BOLT	
	14	1	**165-2141**	1	BOLT	
	15	1	**168-9001**	4	BOLT	
	16	3	**183-1165**	1	PLUG	
	17	3	**190-3762**	4	WASHER	
	18	3	**217-5859**	1	VALVE-BREATHER (CRANKCASE)	
	19	3	**217-5861**	1	PLATE-RETAINING	
	20	3	**217-5862**	6	BOLT	
	21	2	**217-5864**	1	GASKET	
	22	1	**225-8533**	2	GASKET	
	23	3	**233-0695**	1	SEAL-VALVE COVER	
	24	2	**236-9987**	1	MANIFOLD-EXHAUST	
	25	3	**238-8731**	1	ADAPTER-BREATHER	
	26	2	**238-9196**	1	GASKET-TURBOCHARGER	
	27	1	**238-9198**	1	ELBOW-EXHAUST	
	28	1	**238-9200**	5	BOLT (M8X1.25X25-MM)	
	29	3	**238-9289**	1	COVER-VALVE	
	30	3	**238-9295**	4	BOLT	
	31	2	**238-9349**	1	TURBOCHARGER GP	
	32	1	**239-0187**	1	BRACKET	
	33	1	**239-0229**	1	SPACER	
	34	2	**239-0232**	4	STUD (M8X1.25X31-MM)	
	35	2	**249-1486**	1	CONNECTION-AIR	
	36	2	**249-1532**	1	HOSE-AIR INLET	
	37	3	**262-3975**	1	GASKET	
	38	1	**304-5061**	1	GASKET	
	39	1	**317-0959**	1	CONNECTION GP-OIL	
	39A	1	**225-8526**	2	WASHER (10.4X13.75X1.37-MM THK)	
	39B	1	**317-0960**	1	BOLT-SPECIAL (BANJO)	
	39C	1	**317-0961**	1	CLIP	
	40	1	**317-0962**	1	TUBE-TURBOCHARGER OIL	

317-0981 **TURBOCHARGER GP** *(contd.)* **i02862676**

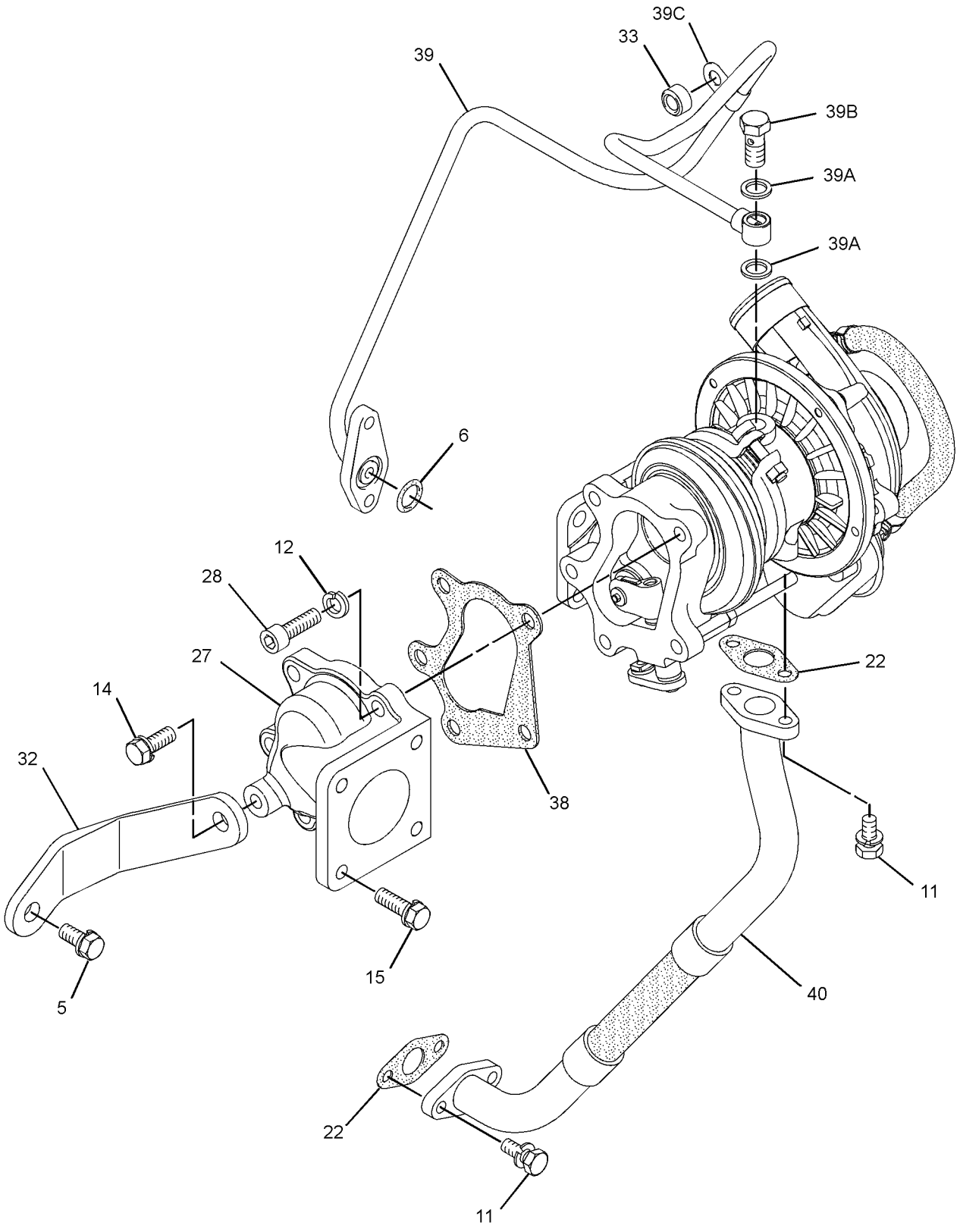

GRAPHIC #1 g01439498

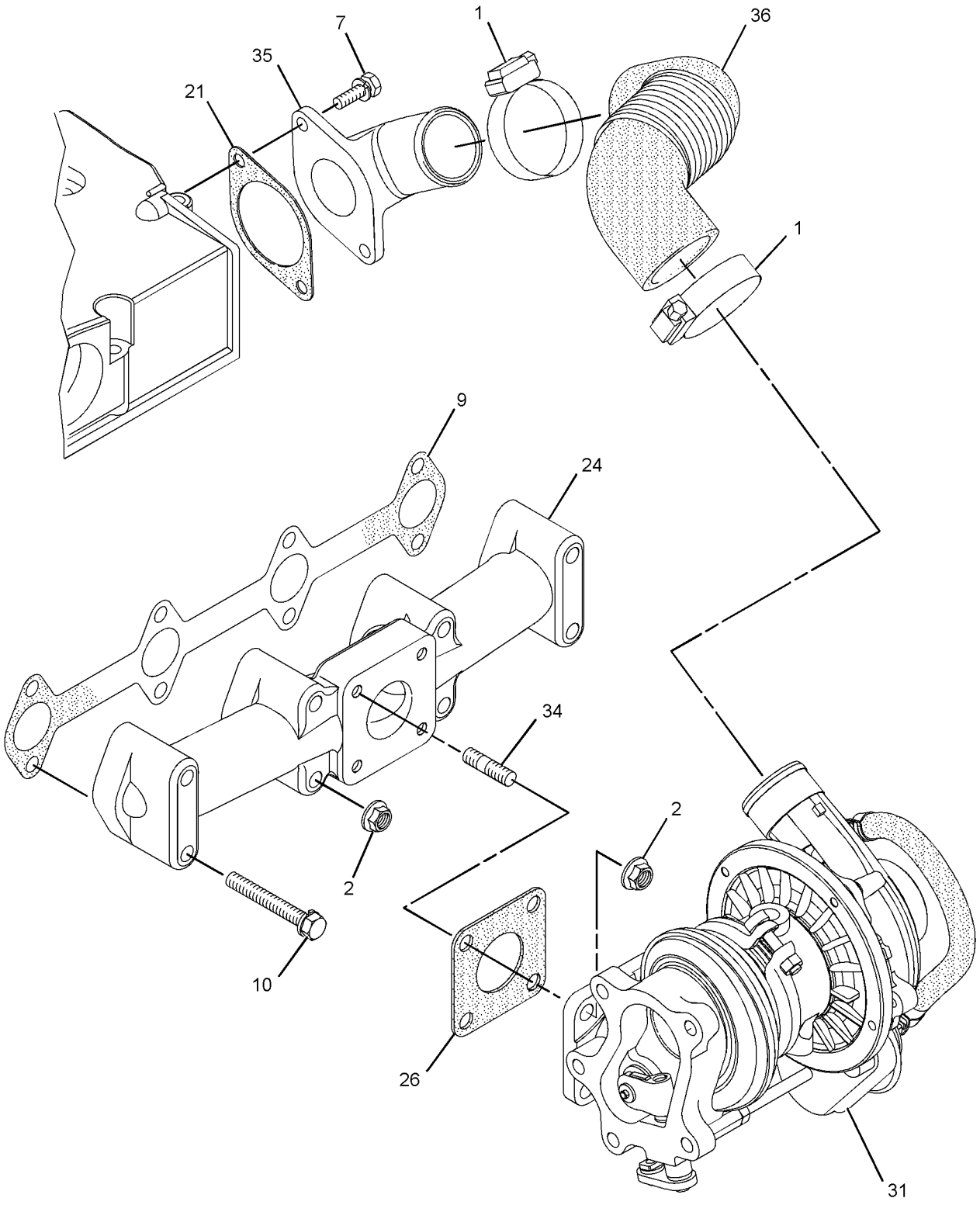

GRAPHIC #2 g01439501

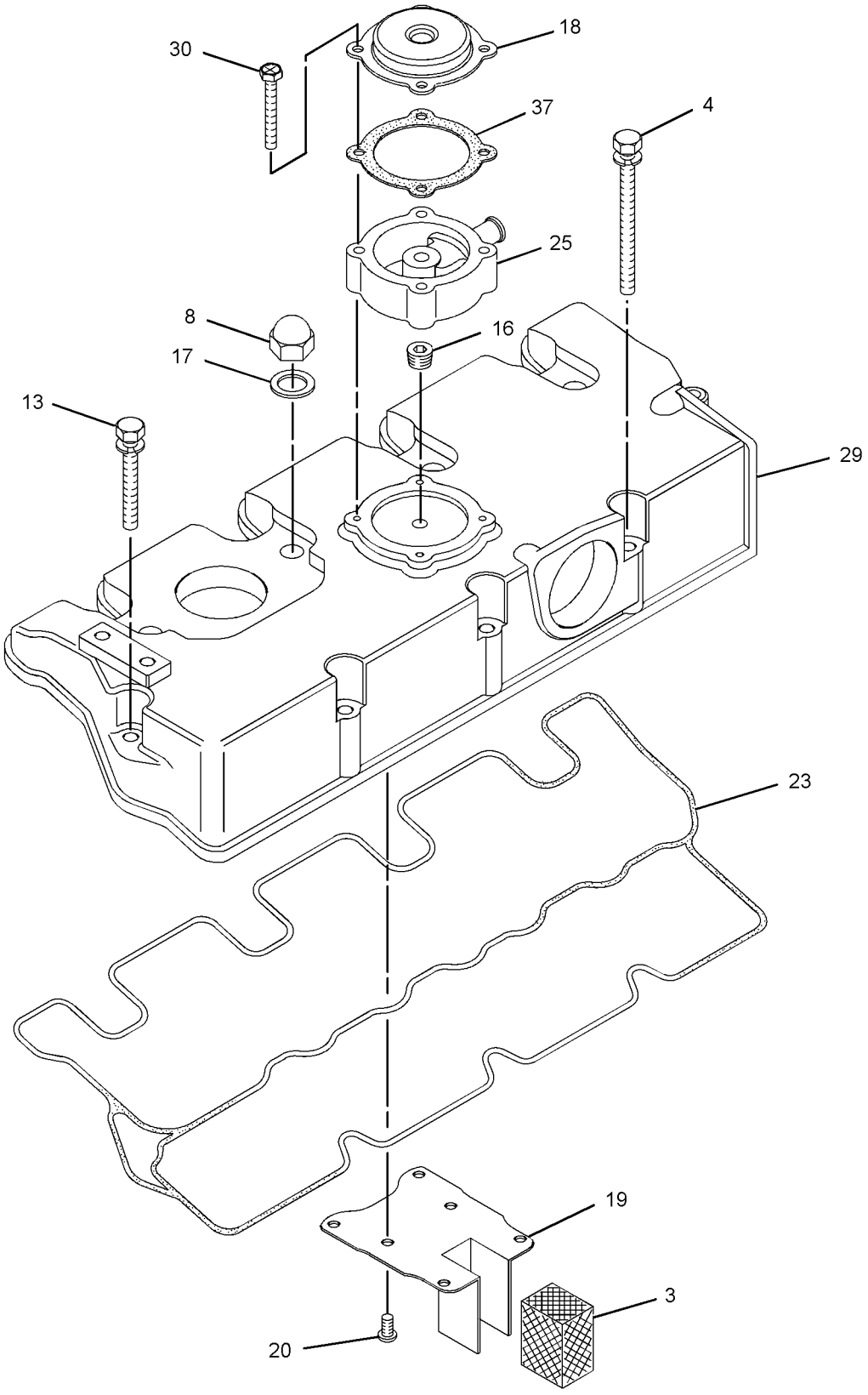

GRAPHIC #3 **<END>** g01439503

218-5566 CABLE GP-GOVERNOR CONTROL

S/N: SCH2475-UP

PART OF 218-5565 PEDAL GP-GOVERNOR

SMCS-1265 **i02533085**

NOTE	REF NO	GRAPHIC REF	PART NUMBER	QTY	PART NAME 1 2 3 4 5 6 (PRODUCT LEVEL)	SEE PAGE
	1	1	**8T-4744**	1	PIN AS-SPRING	
	2	1	**253-8677**	1	PIN AS-SPRING	
	3	1	**285-7970**	1	END-YOKE ROD	
M	4	1	**5C-2874**	1	NUT (M5X0.8-THD)	
M	5	1	**5C-2890**	1	NUT (M6X1-THD)	
	6	1	**8T-4742**	1	END-YOKE ROD	

M-METRIC PART

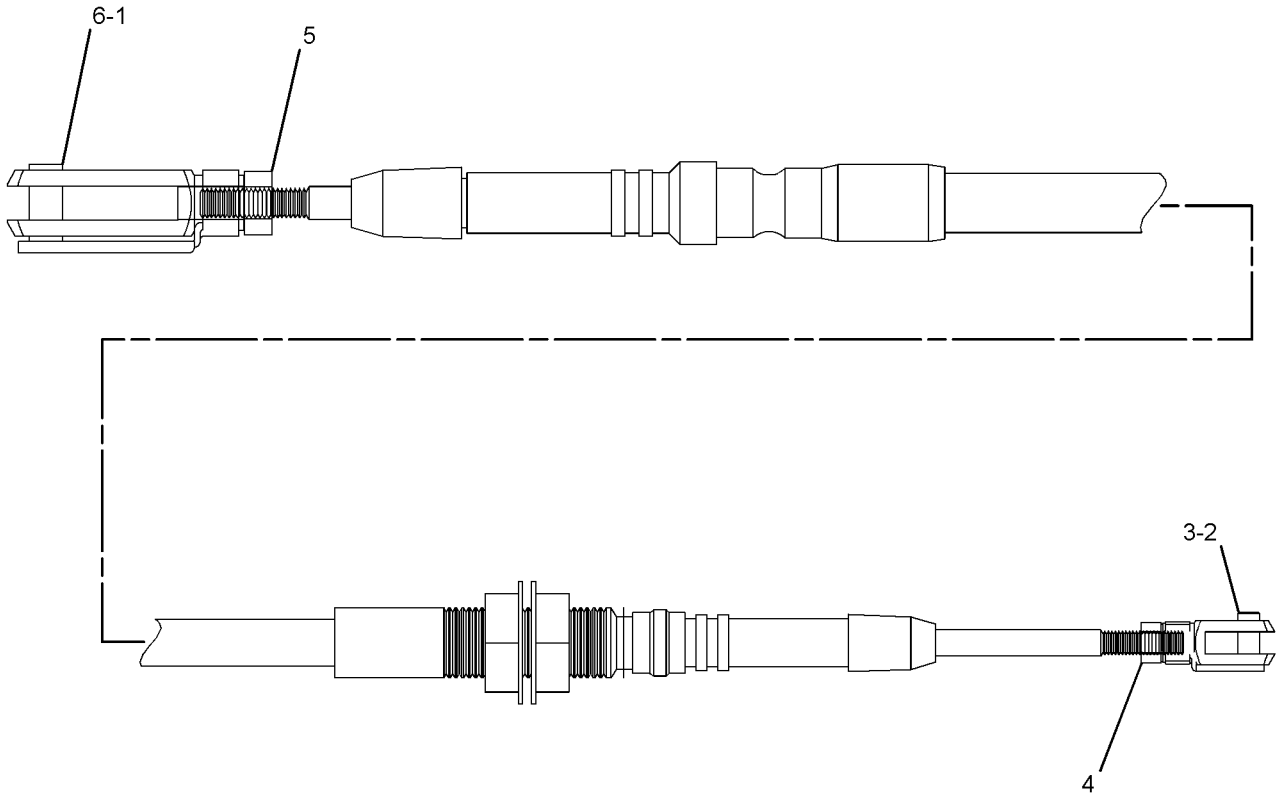

GRAPHIC #1 **<END>** g01266306

218-5602 CONTROL GP-GOVERNOR

S/N: SCH2475-UP

PART OF 295-7210 CHASSIS AR

SMCS-1265, 1276 **i01934895**

NOTE	REF NO	GRAPHIC REF	PART NUMBER	QTY	PART NAME 1 2 3 4 5 6 (PRODUCT LEVEL)	SEE PAGE
	1	1	**7K-1181**	1	STRAP-CABLE	
	2	1	**218-6616**	1	BRACKET AS	
	3	1	**218-6617**	1	BRACKET-STOP	
Y	4	1	*218-5565*	1	PEDAL GP-GOVERNOR (INCLUDES LEVER)	545
	5	1	**237-7296**	4	SCREW-FLAT HEAD (M6X1X35-MM)	
	6	1	**4B-4863**	2	WASHER (4.7X11X1.2-MM THK)	
M	7	1	**5C-2890**	4	NUT (M6X1-THD)	
	8	1	**8T-3984**	1	KNOB	
M	9	1	**8T-3998**	2	BOLT (M4X0.7X12-MM)	
M	10	1	**8T-4138**	3	BOLT (M6X1X20-MM)	
	11	1	**8T-4205**	7	WASHER-HARD (7.2X14.5X2-MM THK)	

M-METRIC PART
Y-SEPARATE ILLUSTRATION

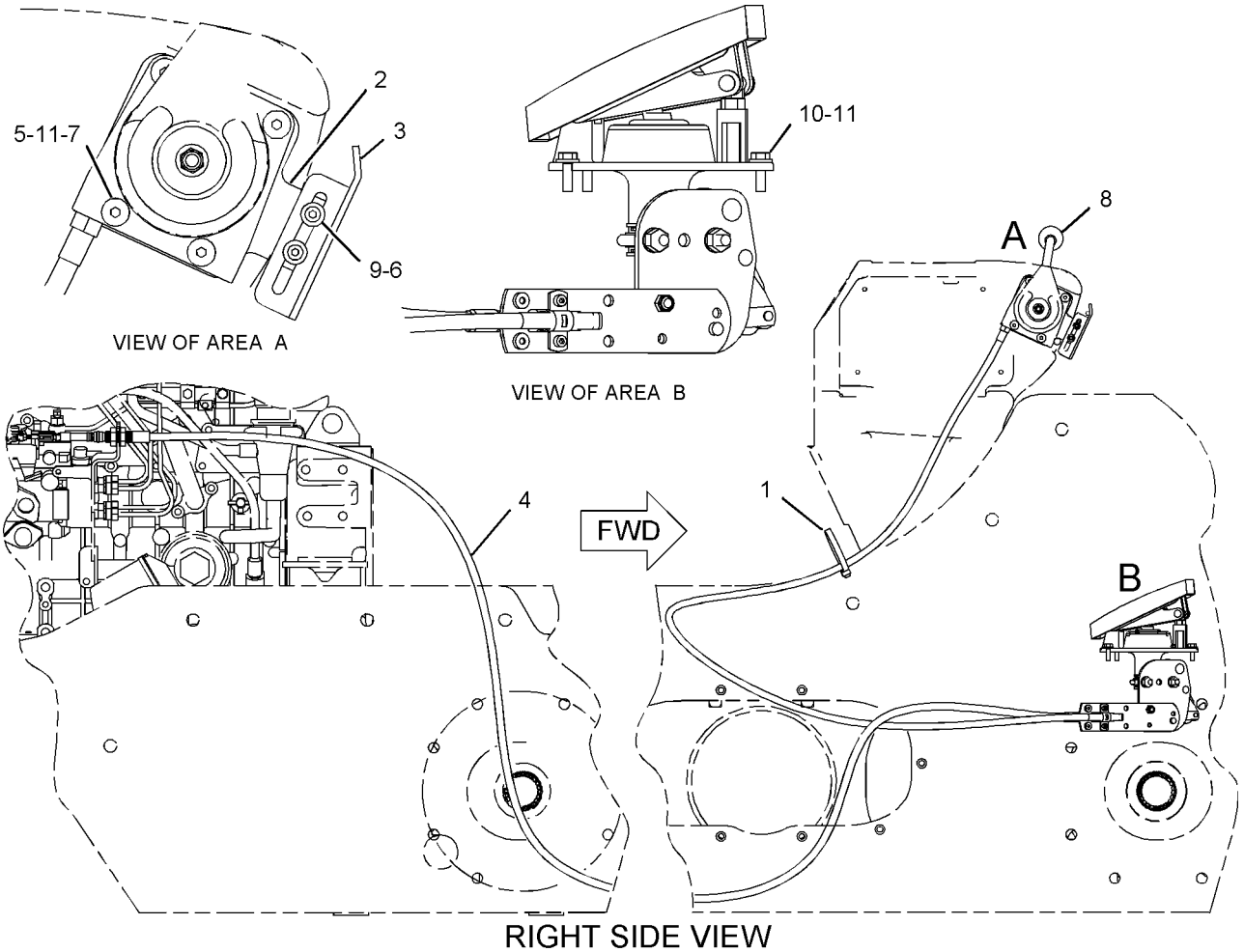

GRAPHIC #1

<END>

g01029882

144-9962 FILTER GP-WATER SEP & FUEL

S/N: SCH2475-UP

PART OF 176-9954 PUMP GP-FUEL PRM & PRIM FILTER

SMCS-1261, 1263 **i02152337**

NOTE	REF NO	GRAPHIC REF	PART NUMBER	QTY	PART NAME 1 2 3 4 5 6 (PRODUCT LEVEL)	SEE PAGE
	1	1	**156-1200**	1	FILTER ELEMENT-FUEL (WATER SEPARATOR)	
	2	1	**149-3516**	1	BASE AS	
	3	1	**118-8118**	1	RING-RETAINING	
	4	1	**112-9401**	1	BOWL AS-WATER COLLECTION	
		1	**128-8614**	1	KIT-SEAL (WATER SEPARATOR)	
	5	1	**118-8119**	1	NUT	
					AVAILABLE REPAIR KIT(S):	
			121-4480	1	KIT-WATER BASE (WATER SEPARATOR)	

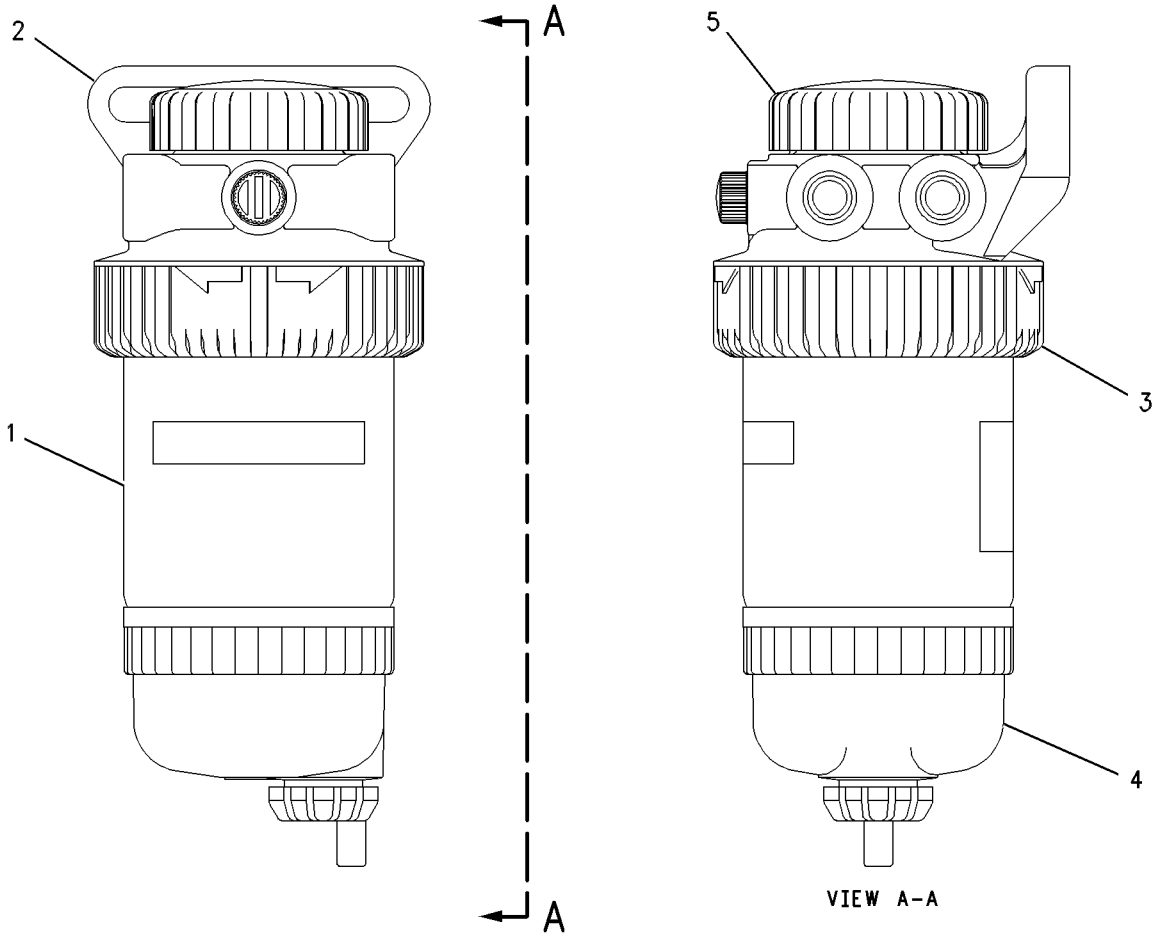

GRAPHIC #1 **<END>** g00430959

FUEL SYSTEM

246-3415 GOVERNOR GP

S/N: CSD1-11322
PART OF 300-5206 ENGINE AR-PRIMARY
AN ATTACHMENT

SMCS-1264, 1908 **i02883346**

NOTE	REF NO	GRAPHIC REF	PART NUMBER	QTY	PART NAME 1 2 3 4 5 6 (PRODUCT LEVEL)	SEE PAGE
M	1	1,2	**5C-2890**	1	NUT (M6X1-THD)	
	2	2	**139-5511**	1	CAP (TAMPER RESISTANT)	
	3	1	**153-5960**	1	NUT	
	4	1	**153-7983**	1	PIN	
	5	2	**153-7987**	1	WASHER	
	6	1	**154-1396**	1	CLIP	
	7	1	**154-1401**	1	ARM	
	8	1	**154-1403**	1	SEAL-O-RING	
	9	1	**154-1405**	1	LEVER	
	10	1	**154-1408**	1	WASHER	
	11	1	**154-1410**	2	SEAL-O-RING	
	12	1	**154-1411**	1	CLIP	
	13	1	**154-1416**	1	SPRING	
	14	1	**154-1636**	2	NUT	
	15	1	**154-1637**	1	ARM	
	16	1	**154-1638**	1	SEAL-O-RING	
	17	1	**154-1639**	1	CLIP	
	18	1	**310-7139**	1	SPRING	
	19	1	**155-8009**	1	BOLT	
	20	1,2	**158-7936**	2	BOLT	
	21	1	**162-2207**	1	NUT	
	22	1	**249-7263**	2	BOLT	
	23	1	**191-0542**	1	SHAFT	
	24	2	**191-9293**	1	CAP-COVER	
	25	2	**191-9296**	1	BOLT	
	26	2	**191-9297**	1	NUT	
	27	1	**217-5794**	1	LEVER	
	28	1	**217-7108**	1	SPRING	
	29	2	**217-7111**	1	BOLT AS	
	29A	2	**153-7987**	1	WASHER	
	29B	2	**212-0743**	1	NUT	
	29C	2	**212-0744**	1	SEAL-O-RING	
	29D	2	**212-0745**	1	BOLT	
	29E	2	**212-0747**	1	RING-RETAINING	
	30	2	**217-7115**	1	CAP (TAMPER RESISTANT)	
	31	1	**293-3319**	1	SENSOR (TORQUE)	
	32	1	**238-1266**	1	LEVER	
	33	2	**211-7739**	1	KIT-CAP (TAMPER RESISTANT)	
	34	1	**265-5624**	1	SPRING-RETURN	
	35	1	**265-5625**	1	BRACKET-THROTTLE	
	36	1	**265-6944**	1	PLUG	

M-METRIC PART

246-3415 **GOVERNOR GP** *(contd.)* **i02883346**

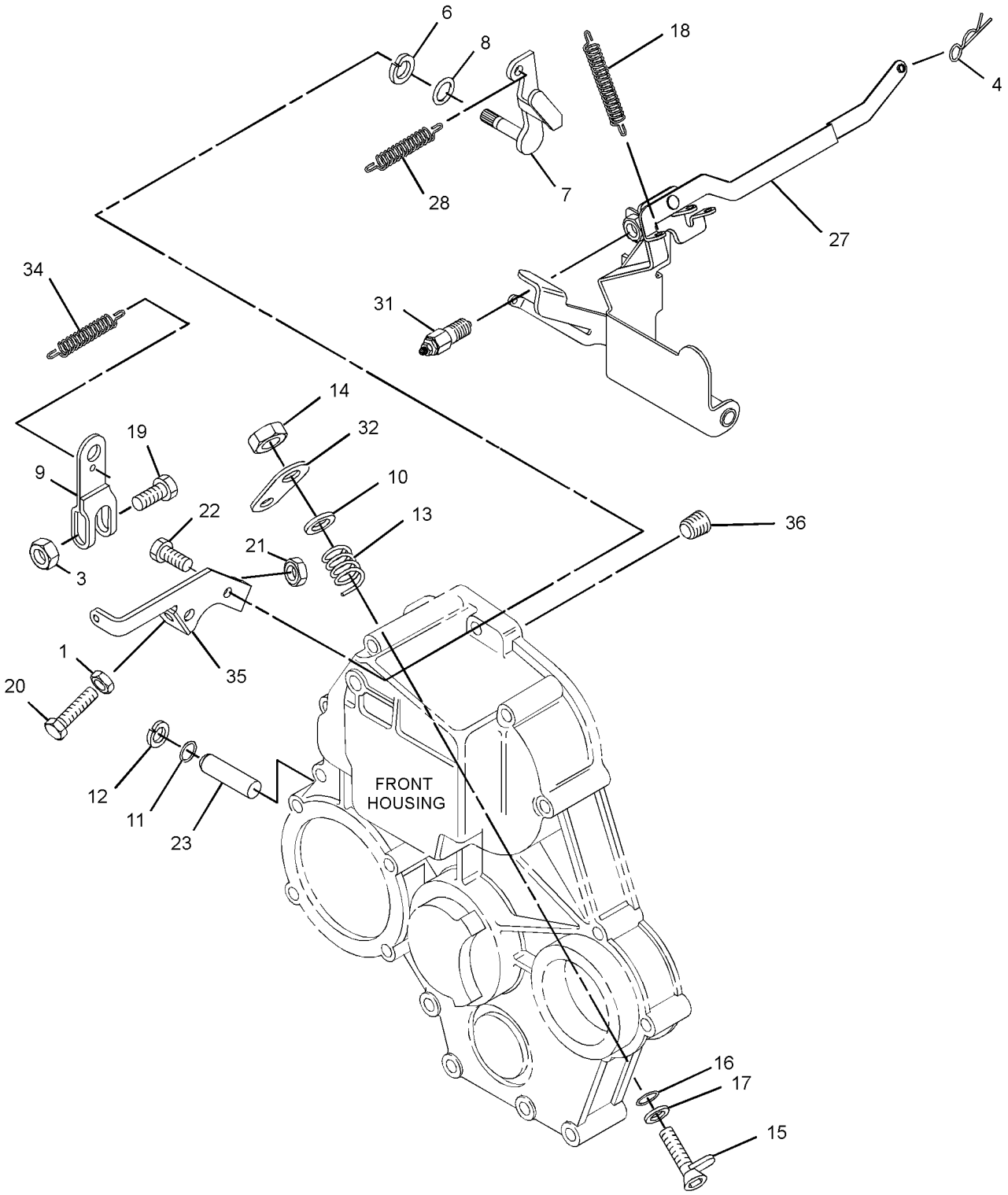

GRAPHIC #1 g01439456

246-3415 **GOVERNOR GP** *(contd.)* **i02883346**

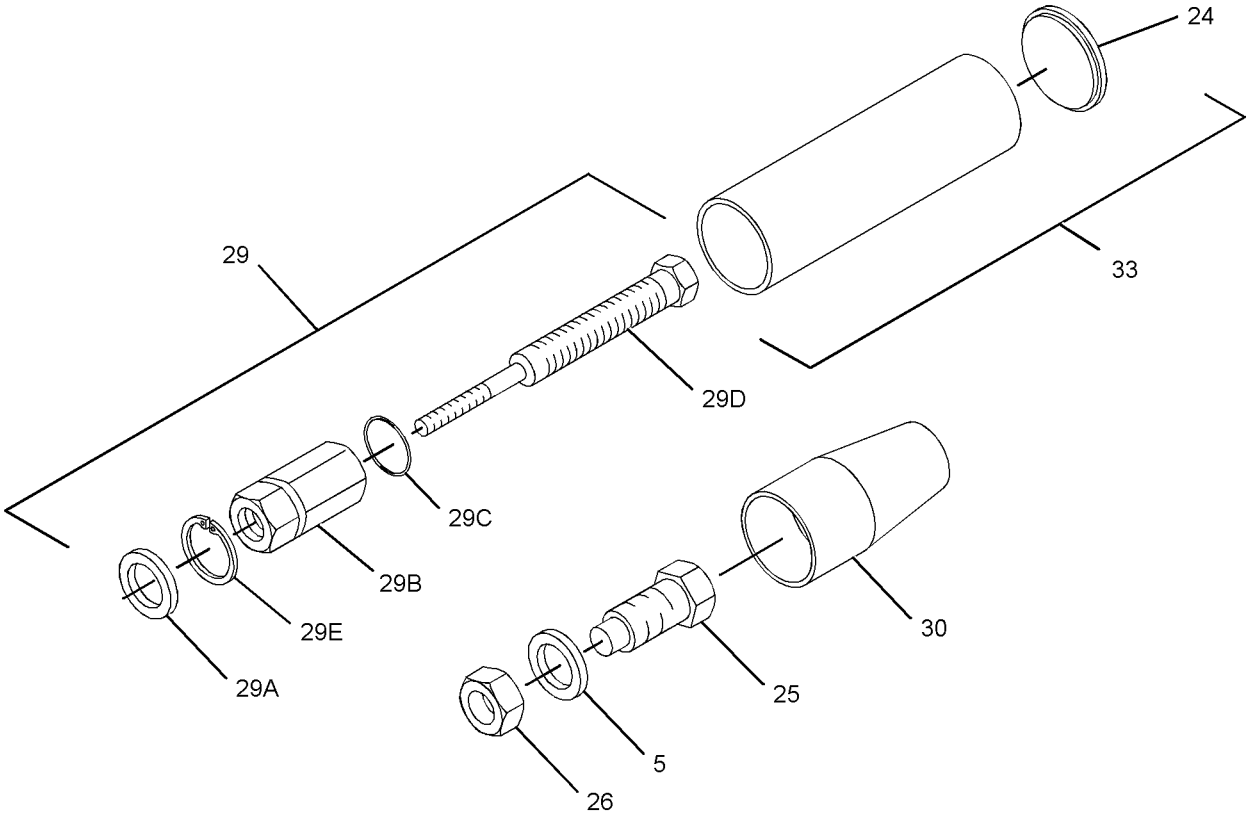

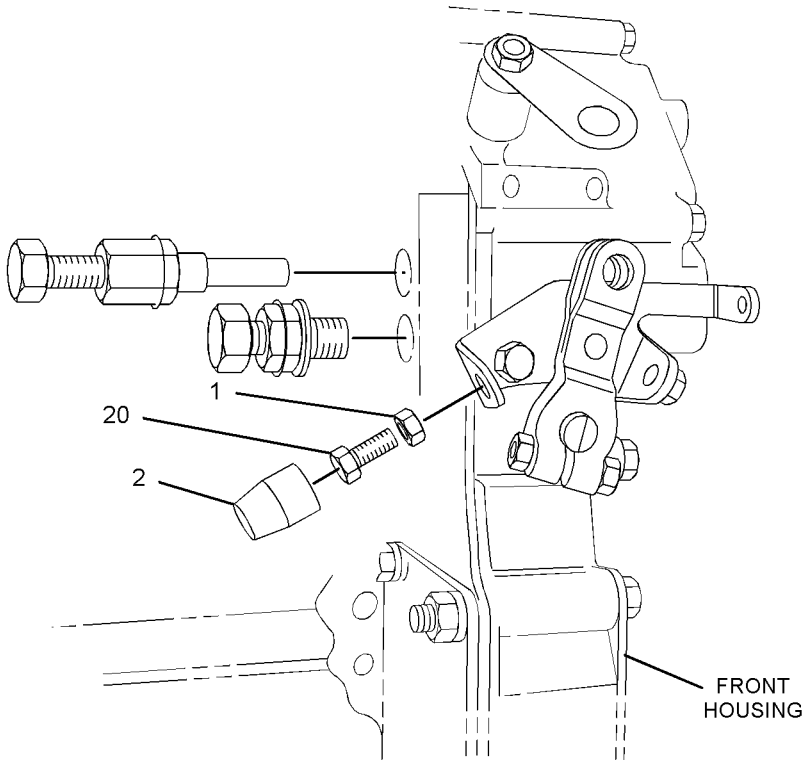

GRAPHIC #2 **<END>** g01439457

317-0967 GOVERNOR GP

S/N: CYP1-UP
PART OF 292-5719 ENGINE AR-PRIMARY
AN ATTACHMENT

SMCS-1264, 1908 **i02826941**

NOTE	REF NO	GRAPHIC REF	PART NUMBER	QTY	PART NAME 1 2 3 4 5 6 (PRODUCT LEVEL)	SEE PAGE
M	1	1	**5C-2890**	1	NUT (M6X1-THD)	
	2	1	**139-5511**	1	CAP (TAMPER RESISTANT)	
	3	1	**153-5592**	1	NUT	
	4	1	**153-6415**	2	WASHER	
	5	1	**153-7983**	1	PIN	
	6	1	**154-1403**	1	SEAL-O-RING	
	7	1	**154-2715**	1	WASHER	
	8	1	**158-7936**	2	BOLT	
	9	1	**162-2207**	1	NUT	
	10	1	**183-3538**	4	BOLT	
	11	1	**217-7115**	1	CAP (TAMPER RESISTANT)	
	12	1	**308-1877**	1	BRACKET	
	13	1	**308-1878**	1	GASKET	
	14	1	**308-1879**	1	ARM	
	15	1	**308-1882**	1	SPRING	
	16	1	**308-1889**	1	NUT	
	17	1	**308-1890**	1	LEVER-CONTROL	
	18	1	**308-1892**	1	NUT	
	19	1	**308-1897**	1	RING	
	20	1	**308-1899**	1	CAP	
	21	1	**308-1900**	1	NUT	
	22	1	**308-1901**	1	CAP	
	23	1	**308-4266**	1	SHAFT	
	24	1	**309-6728**	1	SHAFT	
	25	1	**309-6732**	1	BOLT	
	26	1	**317-7195**	1	SPRING	
	27	1	**311-0655**	1	SPRING	
	28	1	**313-5832**	1	BOLT AS	
	28A	1	**153-7987**	1	WASHER	
	28B	1	**191-9297**	1	NUT	
	28C	1	**313-5833**	1	SPRING	
	29	1	**313-6211**	1	LEVER-CONTROL	
	30	1	**319-3251**	1	SENSOR-SPEED (ENGINE TIMING)	

M-METRIC PART

317-0967 **GOVERNOR GP** *(contd.)* **i02826941**

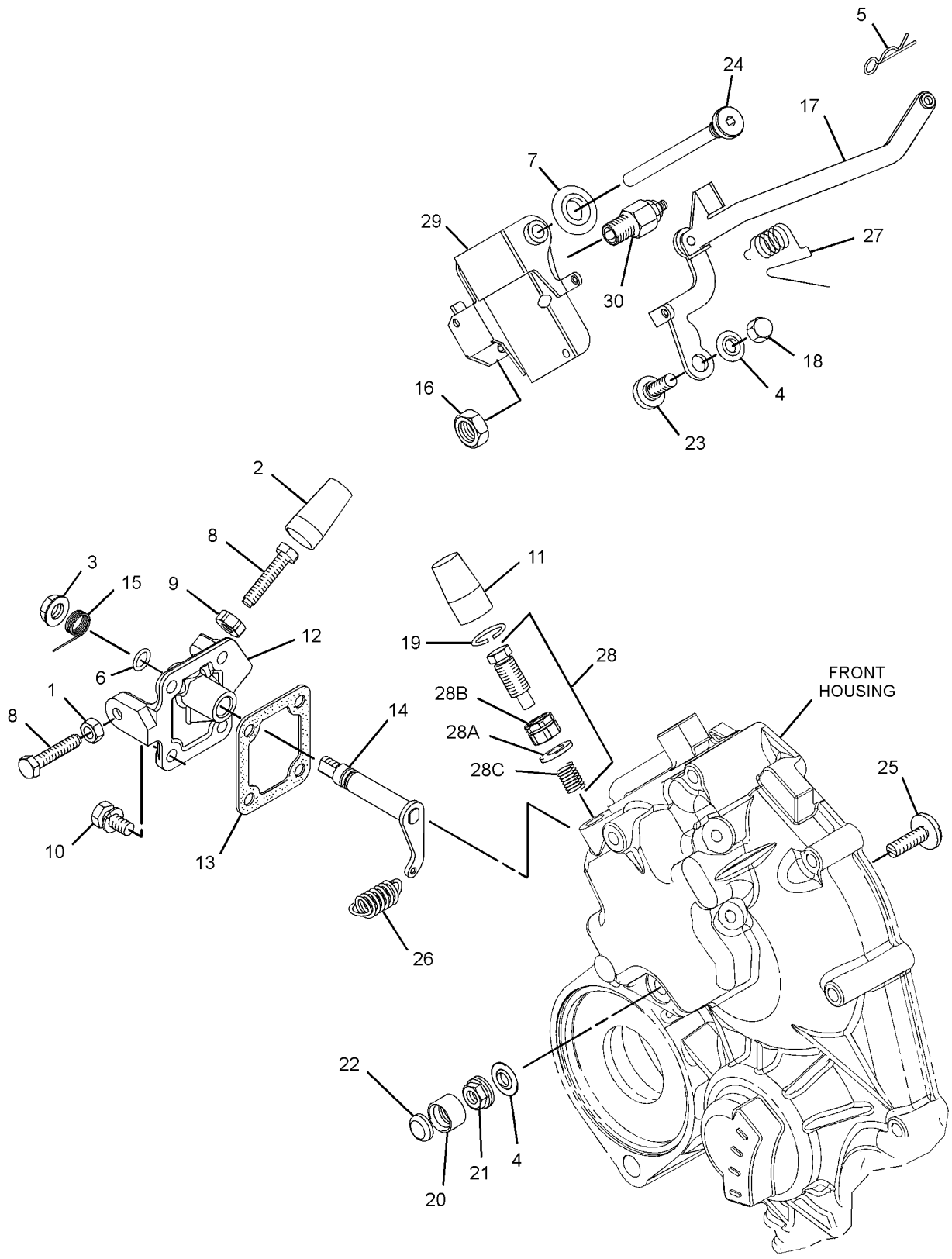

GRAPHIC #1 **<END>** g01439404

218-0933 LINES GP-FUEL PRM & FILTER

S/N: SCH2475-UP

PART OF 295-7210 CHASSIS AR

SMCS-1258, 1263, 1274 **i02534995**

NOTE	REF NO	GRAPHIC REF	PART NUMBER	QTY	PART NAME 1 2 3 4 5 6 (PRODUCT LEVEL)	SEE PAGE
	1	1	**1P-4278**	9	CLAMP-HOSE	
	2	1	**3E-7404**	1	CLAMP-HOSE	
	3	1	**5P-4961**	2	CLAMP-HOSE	
	4	1	**9X-2038**	2	WASHER (7X19X2-MM THK)	
	5	1	**3K-8460**	2	PLUG	
	6	1	**252-0368**	1	GUARD AS	
		1	**6W-5698**	1	GROMMET	
		1	**142-8928**	1	ELBOW	
	7	1	**142-8828**	1	CAP AS-FILLER (FUEL)	
Y	8	1	*176-9954*	1	PUMP GP-FUEL PRM & PRIM FILTER	119
	9	1	**180-3007**	1	CLAMP-HOSE	
	10	1	**212-6627**	1	HOSE	
	11	1	**231-3041**	1	CONNECTOR	
	12	1	**246-2622**	2	ELBOW	
E	13	1	**8C-6959**		HOSE (22-CM)	
	14	1	**5P-7814**	2	SEAL-O-RING	
	15	1	**4D-6466**	1	CLIP	
M	16	1	**5C-9553**	2	BOLT (M6X1X16-MM)	
	17	1	**8F-8513**	1	CLIP	
	18	1	**8T-4121**	4	WASHER-HARD (11X21X2.5-MM THK)	
M	19	1	**8T-4133**	2	NUT (M10X1.5-THD)	
M	20	1	**8T-4196**	2	BOLT (M10X1.5X35-MM)	
E	21	1	**5P-1442**		HOSE (134-CM)	
E	22	1	**5P-9770**		HOSE (45-CM)	

E-ORDER BY THE CENTIMETER
M-METRIC PART
Y-SEPARATE ILLUSTRATION

218-0933 **LINES GP-FUEL PRM & FILTER** *(contd.)* **i02534995**

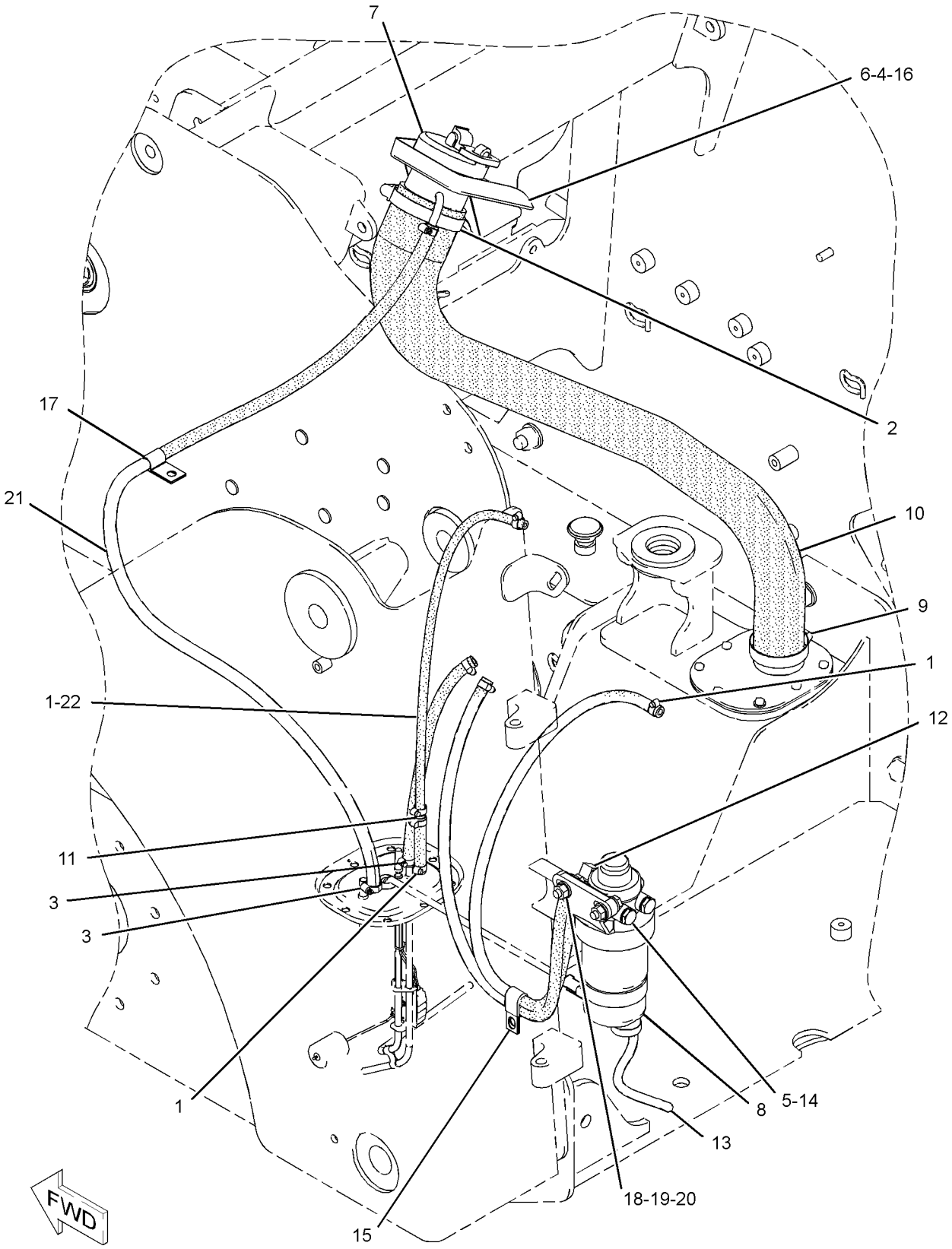

GRAPHIC #1 **<END>** g01268497

176-7711 PUMP & MTG GP-FUEL TRANSFER

S/N: CSD1-11322
PART OF 300-5206 ENGINE AR-PRIMARY
AN ATTACHMENT

SMCS-1256 **i02572746**

NOTE	REF NO	GRAPHIC REF	PART NUMBER	QTY	PART NAME 1 2 3 4 5 6 (PRODUCT LEVEL)	SEE PAGE
	1	1	**153-6873**	2	BOLT	
	2	1	**295-4070**	1	PUMP AS-FUEL TRANSFER	
	3	1	**176-7719**	1	SEAL-O-RING	

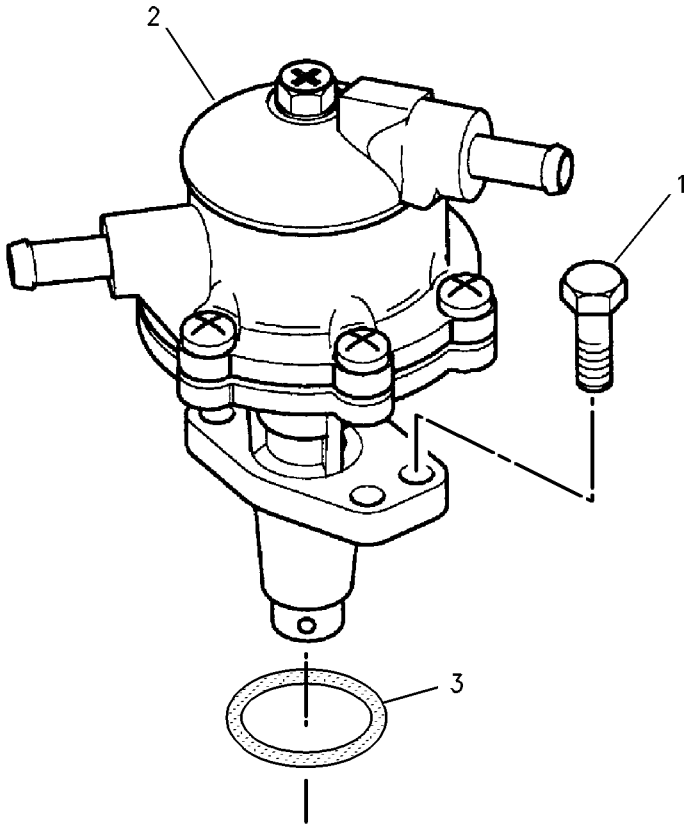

GRAPHIC #1 **<END>** g00758159

315-7814 PUMP & MTG GP-FUEL TRANSFER

S/N: CYP1-UP
PART OF 292-5719 ENGINE AR-PRIMARY
AN ATTACHMENT

SMCS-1256 **i02810614**

NOTE	REF NO	GRAPHIC REF	PART NUMBER	QTY	PART NAME 1 2 3 4 5 6 (PRODUCT LEVEL)	SEE PAGE
	1	1	**6I-0846**	2	BOLT (M6X1X14-MM)	
	2	1	**295-4070**	1	PUMP AS-FUEL TRANSFER	
	3	1	**176-7719**	1	SEAL-O-RING	

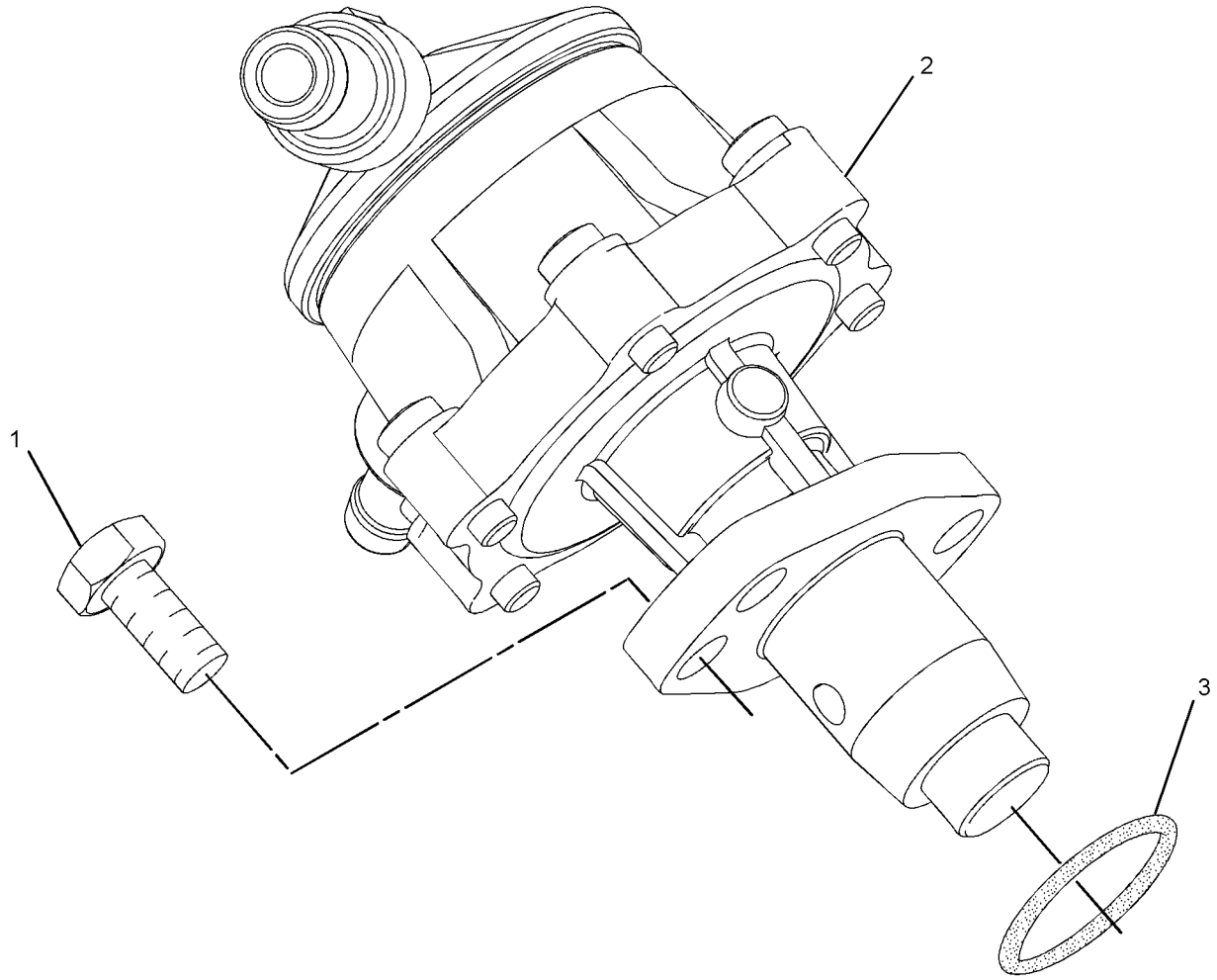

GRAPHIC #1 **<END>** g01421535

295-8181 PUMP GP-FUEL INJECTION

S/N: CSD1-11322
PART OF 300-5206 ENGINE AR-PRIMARY
AN ATTACHMENT

SMCS-1251, 1290, 5479 **i02845307**

NOTE	REF NO	GRAPHIC REF	PART NUMBER	QTY	PART NAME 1 2 3 4 5 6 (PRODUCT LEVEL)	SEE PAGE
	1	1	**153-5592**	3	NUT	
	2	1	**153-5960**	3	NUT	
	3	2	**153-6412**	1	WASHER	
	4	1	**154-2713**	2	BOLT	
	5	2	**154-2715**	2	WASHER	
	6	2	**154-2716**	4	SEAL	
	7	2	**154-3018**	1	INJECTOR AS-FUEL	
	7A	2	**202-1196**	1	WASHER-SPECIAL	
	7B	2	**205-4731**	1	NUT	
	8	1	**160-3550**	1	CLAMP-HOSE	
B	9	1	**154-3017**	1	SHIM (0.2-MM THK)	
B		1	**160-3555**	1	SHIM (0.3-MM THK)	
B		1	**160-3556**	1	SHIM (0.4-MM THK)	
B		1	**160-3557**	1	SHIM (0.5-MM THK)	
B		1	**160-3558**	1	SHIM (0.5-MM THK)	
	10	1	**163-5372**	1	WASHER (8X15.4X4-MM THK)	
	11	1	**183-3353**	3	BOLT	
	12	2	**190-3803**	1	BOLT	
	13	1	**217-2760**	1	TUBE AS (CYL NO. 1)	
	14	1	**217-2761**	1	TUBE AS (CYL NO. 2)	
	15	1	**217-2762**	1	TUBE AS (CYL NO. 3)	
	16	1	**217-2763**	1	TUBE AS (CYL NO. 4)	
	17	2	**311-7561**	1	TUBE	
M	19	1	**8T-4189**	1	BOLT (M8X1.25X20-MM)	
	20	2	**271-2117**	1	SOLENOID (FUEL SHUTOFF)	
	21	1	**290-8014**	4	CLAMP	
Y	22	1	**302-7821**	1	PUMP GP-FUEL INJECTION	116
	23	1	**295-8184**	1	HOSE	

B-USE AS REQUIRED
M-METRIC PART
Y-SEPARATE ILLUSTRATION

295-8181 **PUMP GP-FUEL INJECTION** *(contd.)* **i02845307**

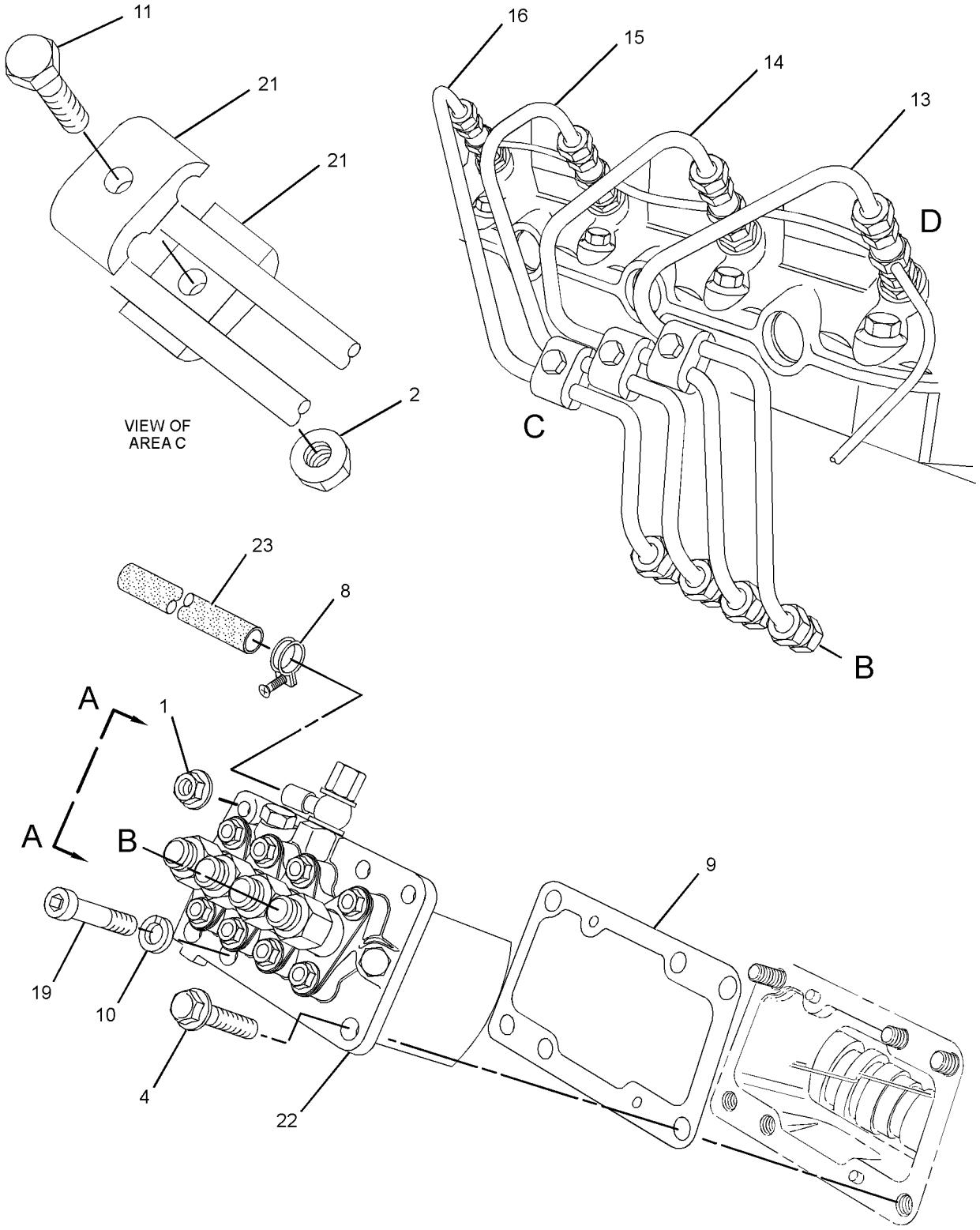

REFER TO ALL ILLUSTRATIONS OF
THIS GROUP FOR AUXILIARY VIEWS

GRAPHIC #1

g01393730

295-8181 **PUMP GP-FUEL INJECTION** *(contd.)* **i02845307**

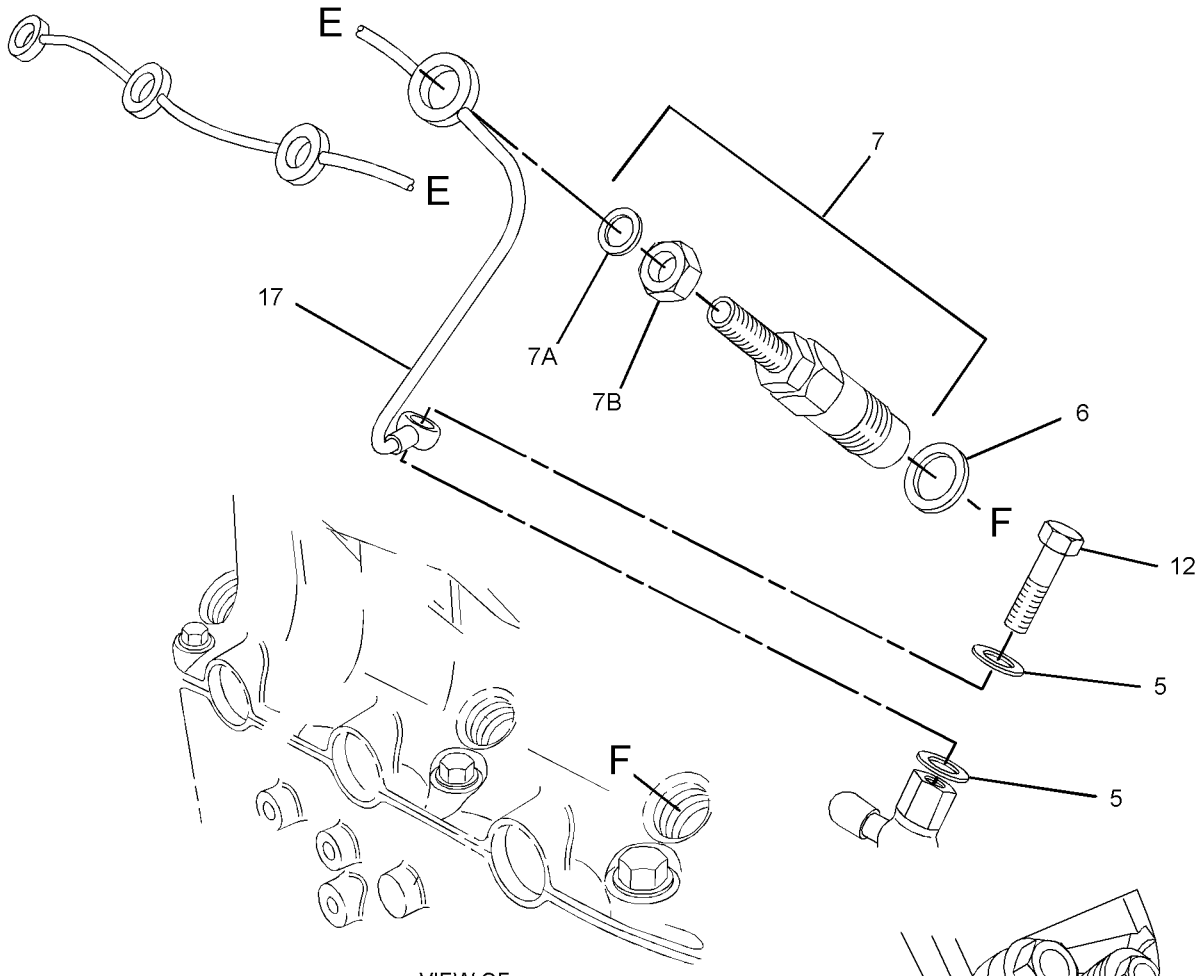

VIEW OF
AREA D

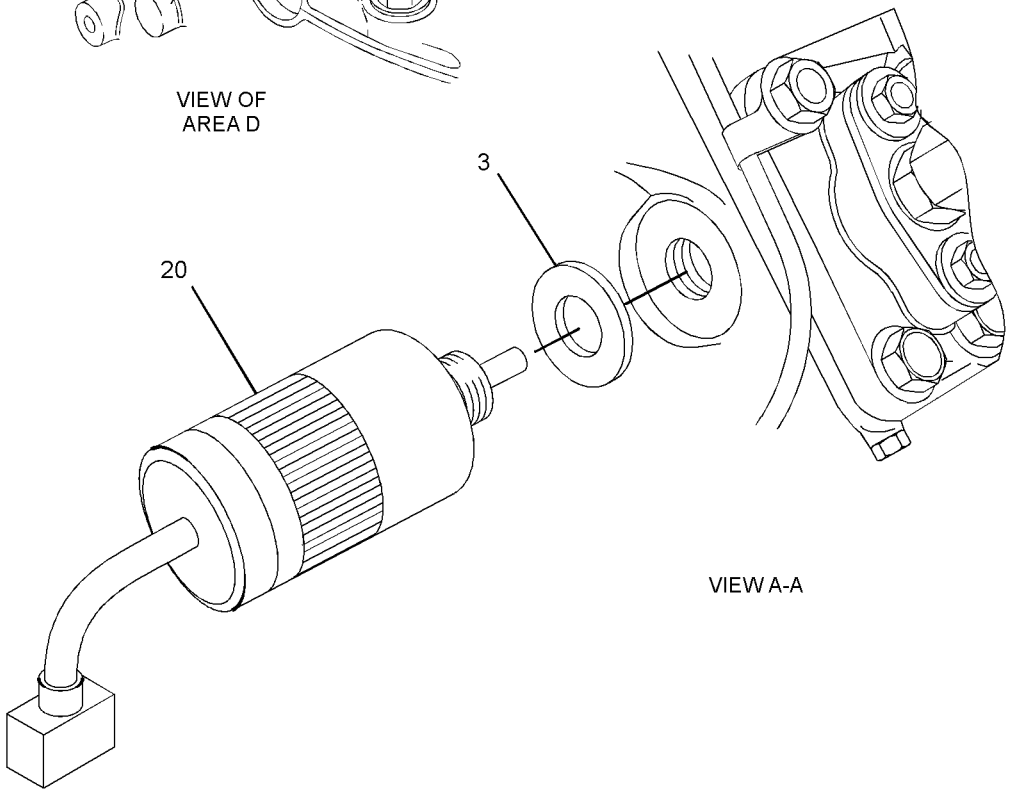

VIEW A-A

GRAPHIC #2 **<END>** g01393731

302-7821 PUMP GP-FUEL INJECTION

S/N: CSD1-11322

PART OF 295-8181 PUMP GP-FUEL INJECTION

AN ATTACHMENT

SMCS-1251, 1290, 5479 **i02794118**

NOTE	REF NO	GRAPHIC REF	PART NUMBER	QTY	PART NAME 1 2 3 4 5 6 (PRODUCT LEVEL)	SEE PAGE
	1	1	**205-4726**	1	BOLT	
	2	1	**205-4727**	2	WASHER	
	3	1	**205-4728**	1	CONNECTOR	

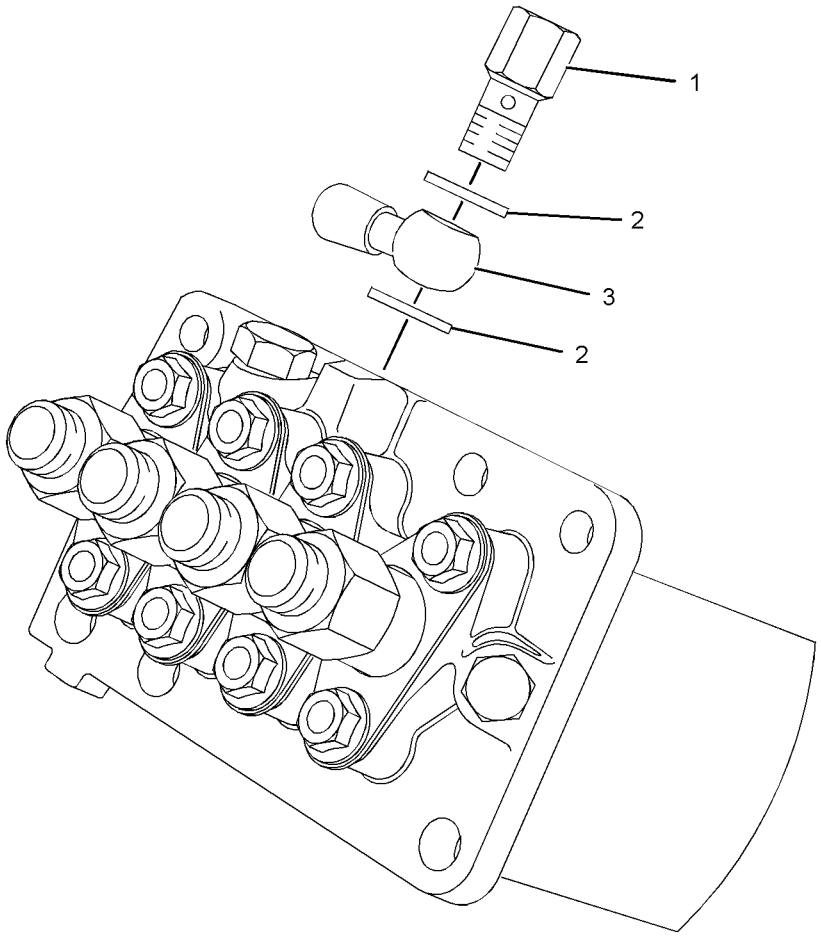

GRAPHIC #1 **<END>** g01281336

317-0977 PUMP GP-FUEL INJECTION

S/N: CYP1-UP
PART OF 292-5719 ENGINE AR-PRIMARY
AN ATTACHMENT

SMCS-1251, 1290, 5479 **i02826920**

NOTE	REF NO	GRAPHIC REF	PART NUMBER	QTY	PART NAME 1 2 3 4 5 6 (PRODUCT LEVEL)	SEE PAGE
	1	1	**153-5592**	3	NUT	
	2	1	**153-5960**	3	NUT	
	3	1	**154-2713**	2	BOLT	
	4	1	**154-2715**	2	WASHER	
	5	1	**154-2716**	4	SEAL	
B	6	1	**154-3017**	1	SHIM (0.2-MM THK)	
B		1	**302-7822**	1	SHIM (0.25-MM THK)	
B		1	**160-3555**	1	SHIM (0.3-MM THK)	
B		1	**302-7823**	1	SHIM (0.35-MM THK)	
B		1	**160-3556**	1	SHIM (0.4-MM THK)	
B		1	**160-3557**	1	SHIM (0.5-MM THK)	
B		1	**160-3558**	1	SHIM (0.5-MM THK)	
	7	1	**163-5372**	1	WASHER (8X15.4X4-MM THK)	
	8	1	**183-3353**	3	BOLT	
	9	1	**190-3803**	1	BOLT	
	10	1	**217-2760**	1	TUBE AS (CYL NO. 1)	
	11	1	**217-2761**	1	TUBE AS (CYL NO. 2)	
	12	1	**217-2762**	1	TUBE AS (CYL NO. 3)	
	13	1	**217-2763**	1	TUBE AS (CYL NO. 4)	
M	14	1	**8T-4189**	1	BOLT (M8X1.25X20-MM)	
	15	1	**290-8014**	6	CLAMP	
	16	1	**308-1905**	1	PUMP-FUEL INJECTION	
	17	1	**308-1906**	4	ATOMIZER	
	17A	1	**202-1196**	1	WASHER-SPECIAL	
	18	1	**311-7561**	1	TUBE	

B-USE AS REQUIRED
M-METRIC PART

317-0977 **PUMP GP-FUEL INJECTION** *(contd.)* **i02826920**

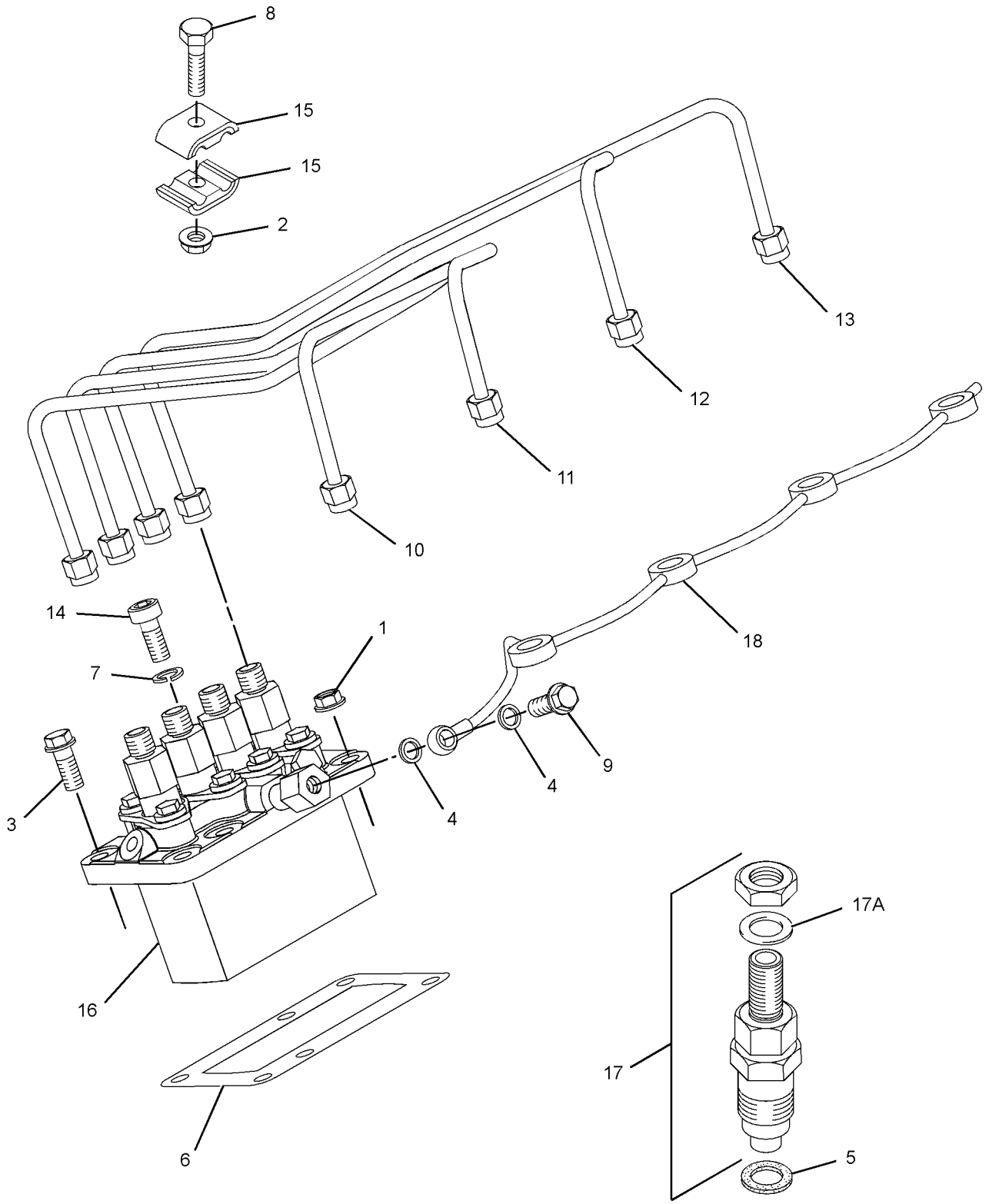

GRAPHIC #1 **<END>** g01438681

176-9954 PUMP GP-FUEL PRM & PRIM FILTER–WATER SEPARATOR

S/N: SCH2475-UP

PART OF 218-0933 LINES GP-FUEL PRM & FILTER

SMCS-1258, 1261, 1263 **i01757278**

NOTE	PART NUMBER	QTY	PART NAME 1 2 3 4 5 6 (PRODUCT LEVEL)	SEE PAGE
Y	**144-9962**	1	FILTER GP-WATER SEP & FUEL	103
	129-6259	1	PUMP GP-FUEL PRIMING	
	129-6262	1	BLADDER	

Y-SEPARATE ILLUSTRATION

<END>

ELECTRICAL AND STARTING SYSTEM

246-4319 ALTERNATOR GP-CHARGING

S/N: CSD1-11322

PART OF 300-5206 ENGINE AR-PRIMARY

AN ATTACHMENT

SMCS-1405 **i02869232**

NOTE	REF NO	GRAPHIC REF	PART NUMBER	QTY	PART NAME 1 2 3 4 5 6 (PRODUCT LEVEL)	SEE PAGE
	1	1	**100-8451**	1	BOLT (M8X1.25X130-MM)	
	2	1	**180-8579**	1	NUT	
	3	1	**155-7984**	2	WASHER	
	4	1	**165-2141**	1	BOLT	
	5	1	**168-8999**	1	LEVER-ADJUSTING	
	6	1	**168-9001**	4	BOLT	
	7	1	**168-9002**	1	WASHER	
	8	1	**225-3143**	1	ALTERNATOR GP-CHARGING	
	9	1	**225-7955**	1	CABLE AS-BATTERY (NEGATIVE)	
		1	**225-7956**	1	TERMINAL-CABLE	
	9A	1	**3S-6050**	1	TERMINAL AS-BATTERY (NEGATIVE)	
		1	**1M-6119**	1	BOLT (5/16-18X1.375-IN)	
		1	**1M-6120**	1	NUT (5/16-18-THD)	
		1	**7N-5274**	1	COVER-TERMINAL (BLACK)	
		1	**8L-8413**	1	STRAP-CABLE	
	9B	1	**159-8050**		CABLE (02-GA, BLACK) (51-CM)	
	10	1	**246-3198**	1	PULLEY-ALTERNATOR	
	11	1	**246-4267**	1	BRACKET	
	12	1	**246-4318**	5	CLIP	
	13	1	**163-5372**	1	WASHER (8X15.4X4-MM THK)	
	14	1	**280-8336**	1	BRACKET AS	
M	14A	1	**8T-3612**	1	NUT-WELD (M8X1.25-THD)	

M-METRIC PART

246-4319 **ALTERNATOR GP-CHARGING** *(contd.)* **i02869232**

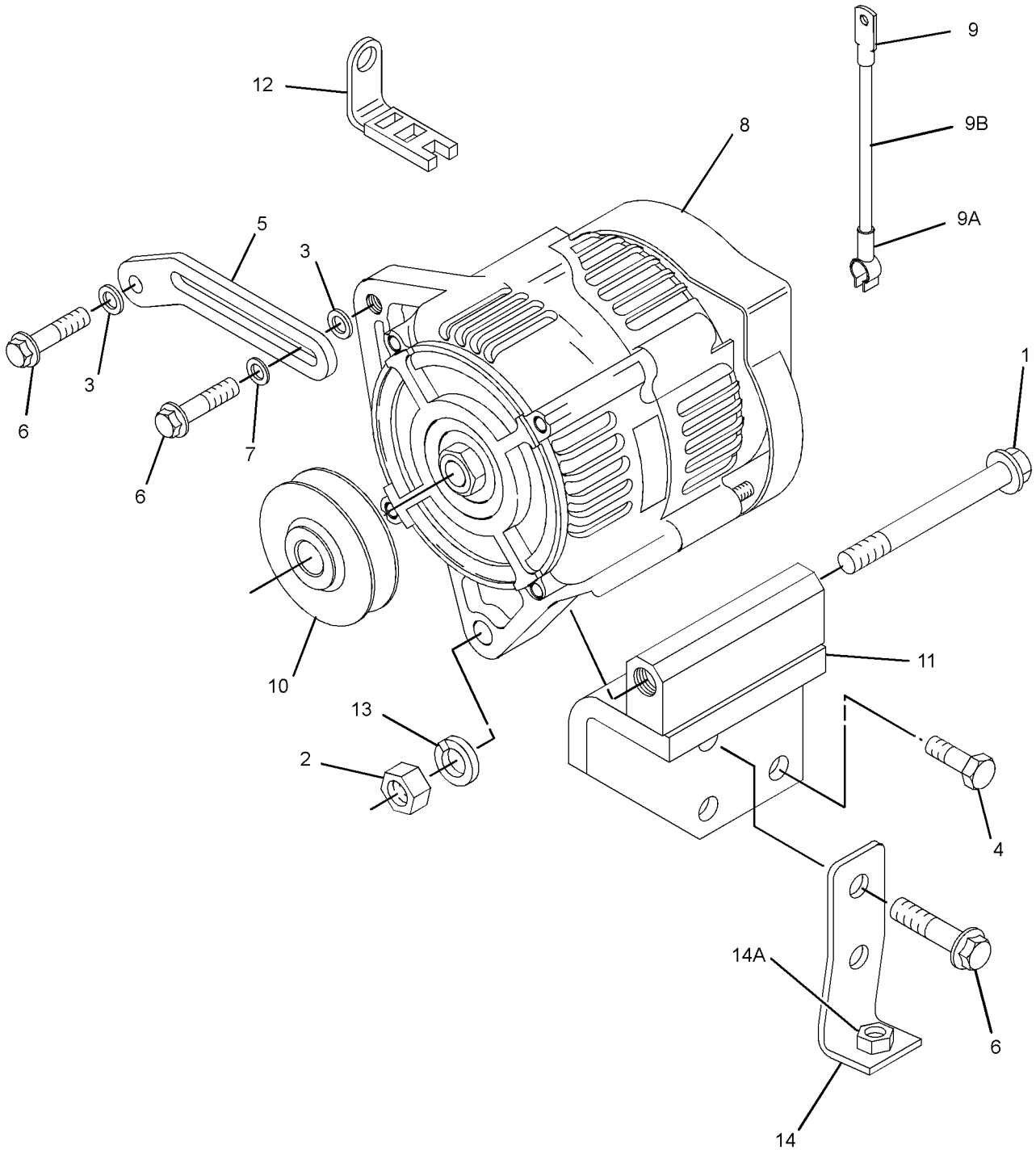

GRAPHIC #1 **<END>** g01429716

316-6963 ALTERNATOR GP-CHARGING

S/N: CYP1-UP
PART OF 292-5719 ENGINE AR-PRIMARY
AN ATTACHMENT

SMCS-1405 **i02826949**

NOTE	REF NO	GRAPHIC REF	PART NUMBER	QTY	PART NAME 1 2 3 4 5 6 (PRODUCT LEVEL)	SEE PAGE
	1	1	**100-8451**	1	BOLT (M8X1.25X130-MM)	
	2	1	**153-5592**	1	NUT	
	3	1	**155-7984**	1	WASHER	
	4	1	**165-2141**	3	BOLT	
	5	1	**168-8999**	1	LEVER-ADJUSTING	
	6	1	**168-9001**	2	BOLT	
	7	1	**168-9002**	1	WASHER	
	8	1	**246-4267**	1	BRACKET	
	9	1	**305-3661**	1	ALTERNATOR GP-CHARGING	

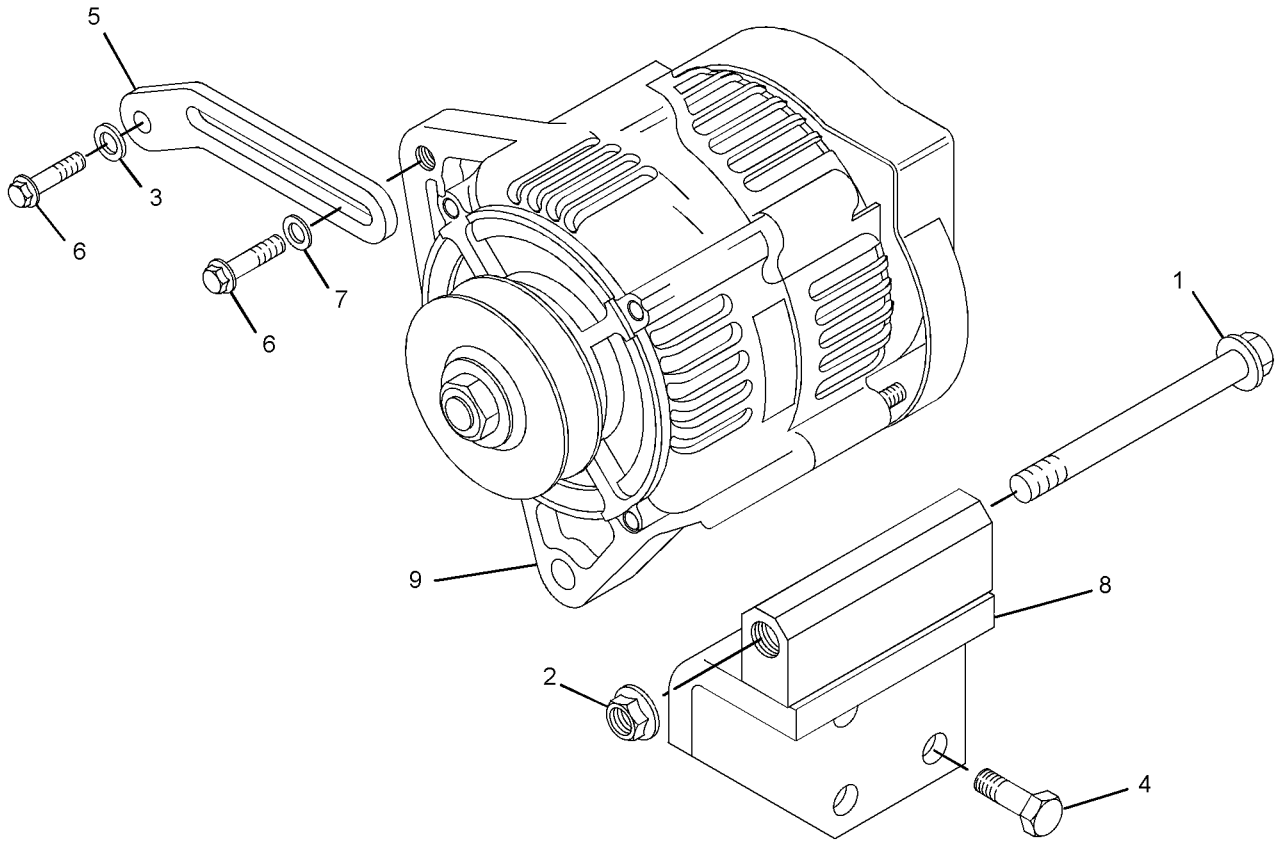

GRAPHIC #1 **<END>** g01439071

225-7950 BATTERY GP–STANDARD

S/N: SCH2475-UP
CANNOT BE USED WITH 225-7952–PAGE 124
AN ATTACHMENT

SMCS-1401 **i02014204**

NOTE	REF NO	GRAPHIC REF	PART NUMBER	QTY	PART NAME 1 2 3 4 5 6 (PRODUCT LEVEL)	SEE PAGE
	1	1	**153-5656**	1	BATTERY (12 VOLT, STANDARD)	
	2	1	**193-8329**	1	CLAMP	
	3	1	**5P-4116**	2	WASHER-HARD (8.8X20.5X2-MM THK)	
M	4	1	**8T-4189**	1	BOLT (M8X1.25X20-MM)	
M	5	1	**8T-6912**	1	BOLT (M8X1.25X50-MM)	

M-METRIC PART

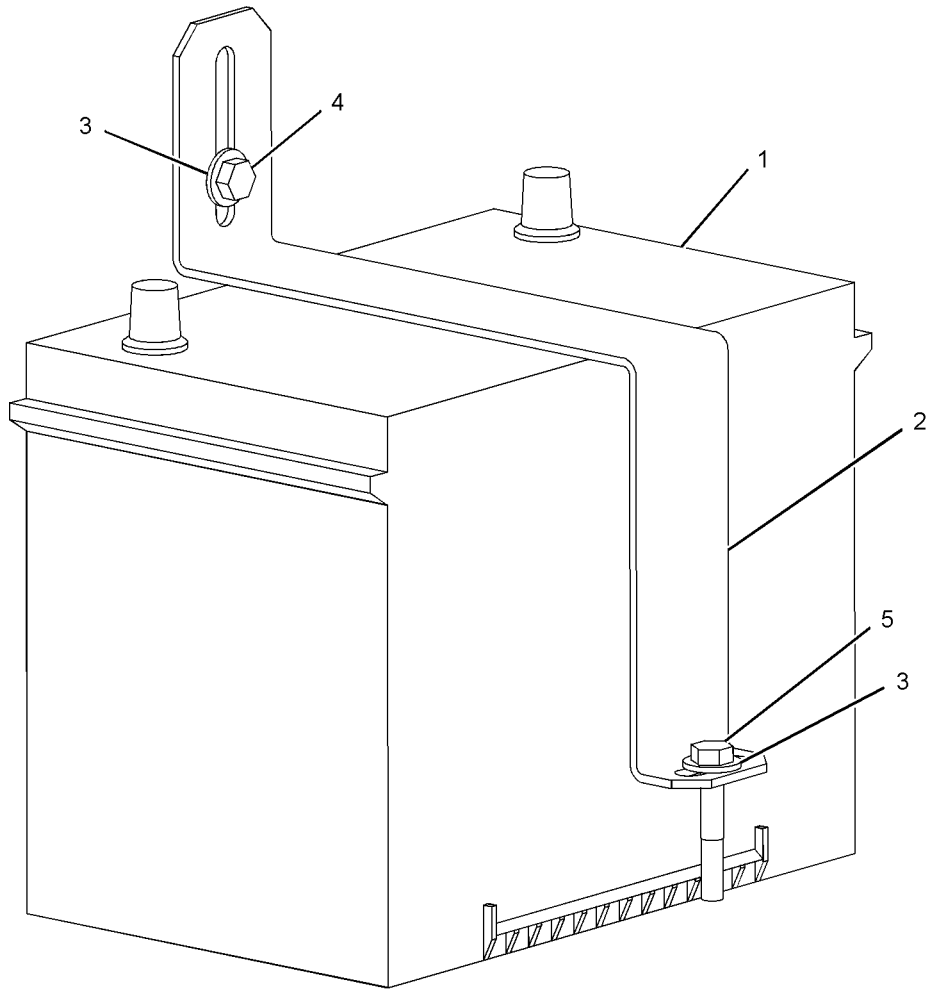

GRAPHIC #1 **<END>** g01010454

225-7952 BATTERY GP—HEAVY DUTY

S/N: SCH2475-UP

CANNOT BE USED WITH 225-7950—PAGE 123

AN ATTACHMENT

SMCS-1401 **i02014205**

NOTE	REF NO	GRAPHIC REF	PART NUMBER	QTY	PART NAME 1 2 3 4 5 6 (PRODUCT LEVEL)	SEE PAGE
	1	1	**193-8329**	1	CLAMP	
	2	1	**230-6368**	1	BATTERY (12-VOLT, MAINTENANCE FREE)	
	3	1	**5P-4116**	2	WASHER-HARD (8.8X20.5X2-MM THK)	
M	4	1	**8T-4189**	2	BOLT (M8X1.25X20-MM)	

M-METRIC PART

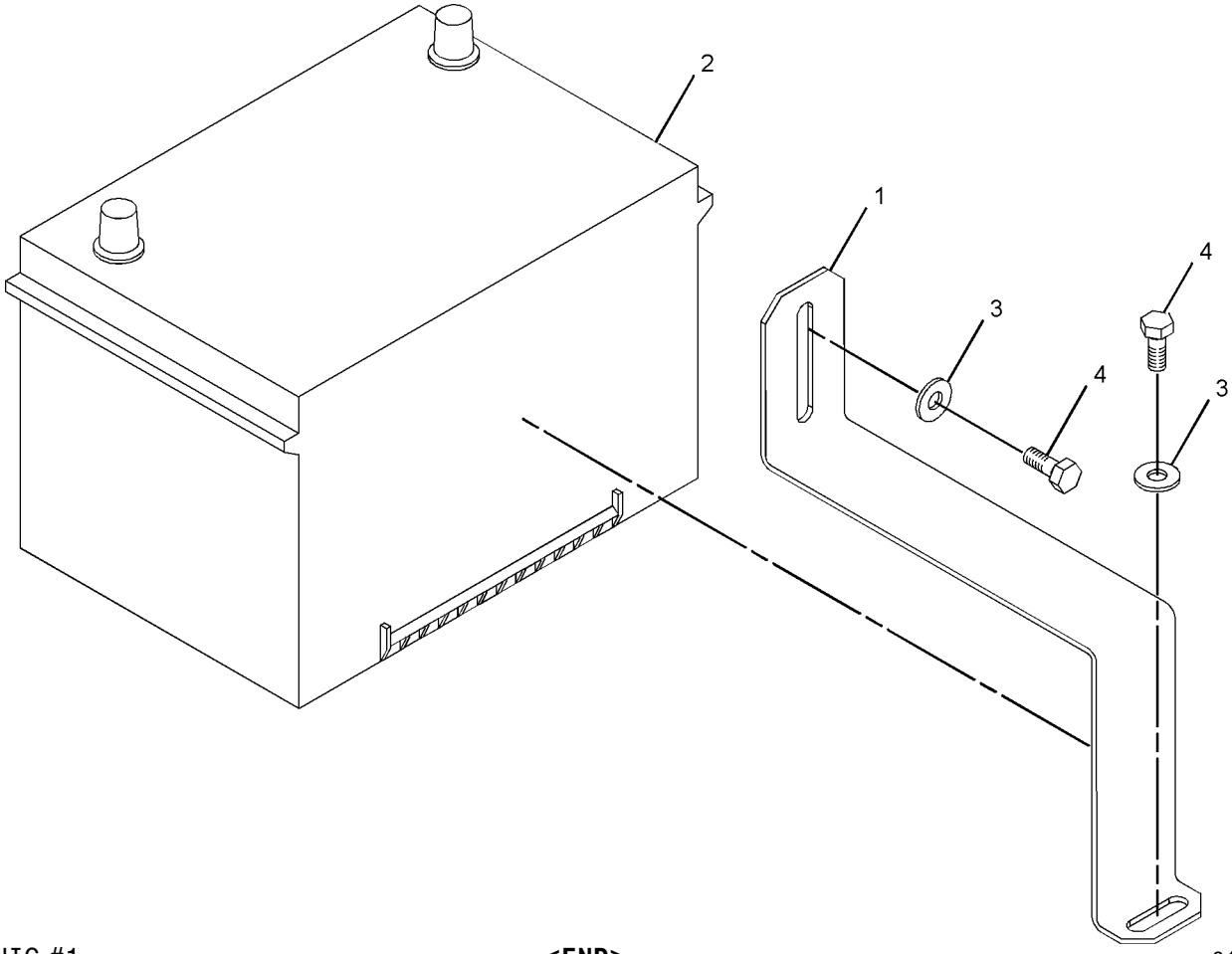

GRAPHIC #1 **<END>** g01015484

217-2778 CONNECTION GP-ELECTRICAL

S/N: CSD1-11322
PART OF 300-5206 ENGINE AR-PRIMARY
AN ATTACHMENT

SMCS-1408, 4459 **i01649071**

NOTE	REF NO	GRAPHIC REF	PART NUMBER	QTY	PART NAME 1 2 3 4 5 6 (PRODUCT LEVEL)	SEE PAGE
	1	1	**183-4037**	1	CONNECTOR AS	
	2	1	**200-5976**	1	CONNECTION	

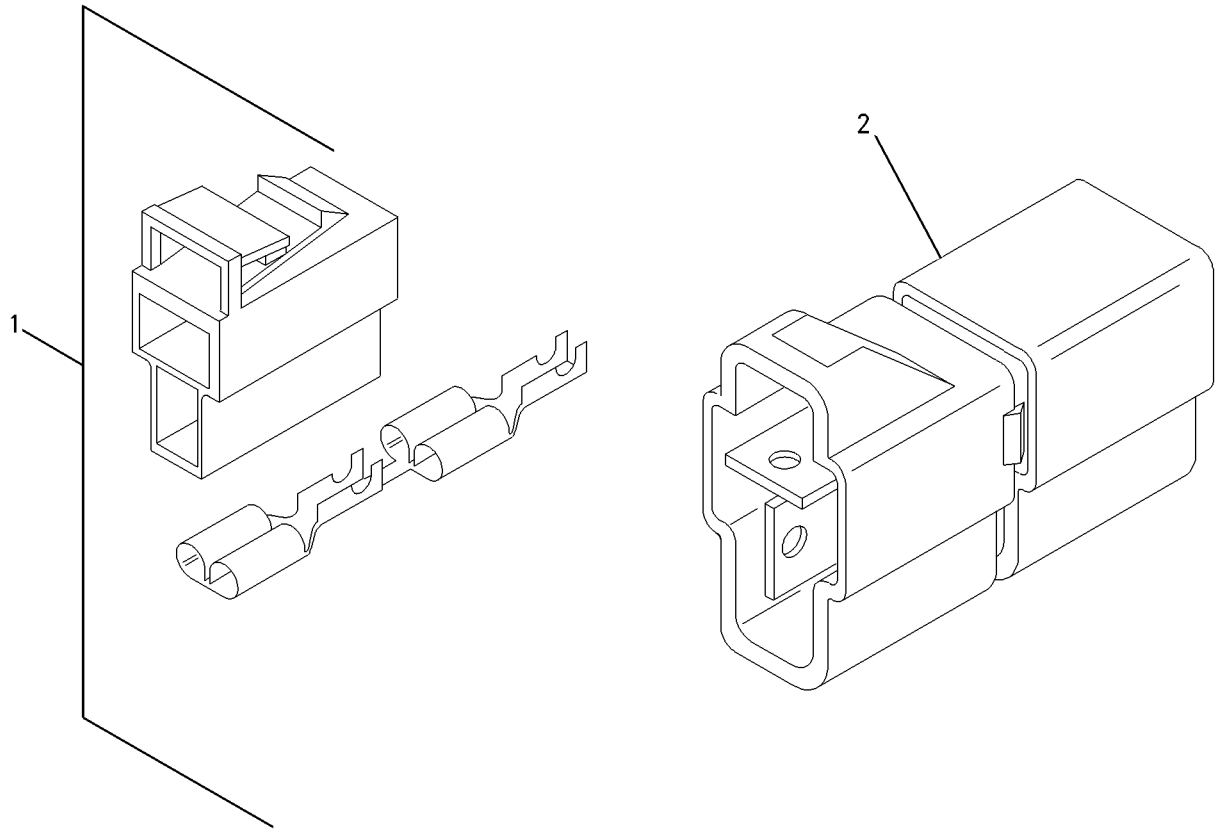

GRAPHIC #1 **<END>** g00852746

217-5884 CONNECTION GP-ELECTRICAL

S/N: CSD1-11322

PART OF 300-5206 ENGINE AR-PRIMARY

AN ATTACHMENT

SMCS-1408, 4459 **i02135600**

NOTE	REF NO	GRAPHIC REF	PART NUMBER	QTY	PART NAME 1 2 3 4 5 6 (PRODUCT LEVEL)	SEE PAGE
	1	1	**193-0161**	3	CABLE AS-ADAPTER	

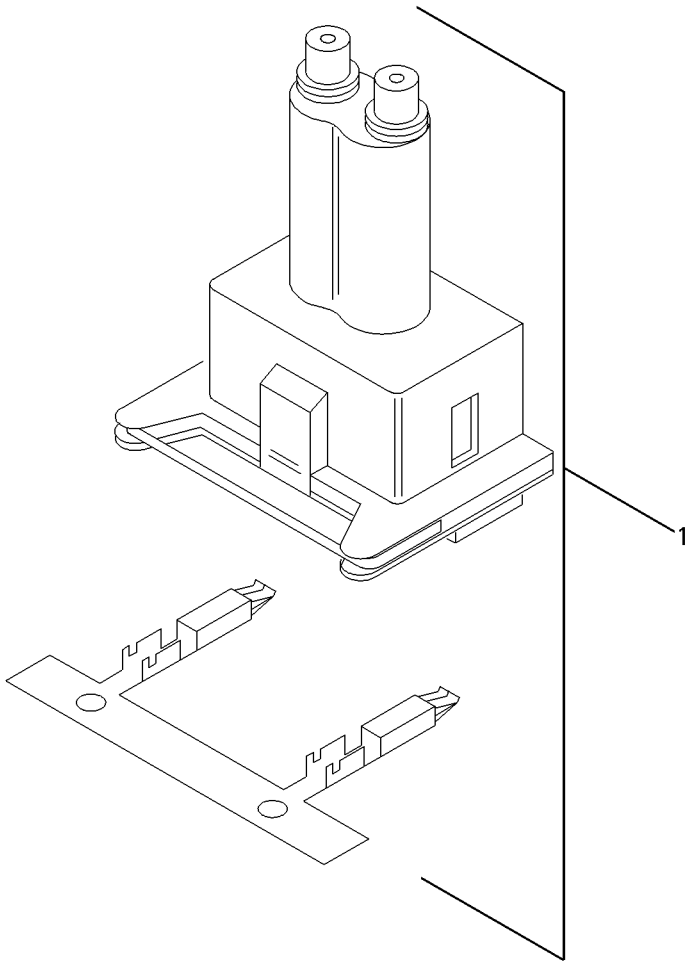

GRAPHIC #1 **<END>** g00852753

154-4233 CONTROL GP-INTERLOCK

S/N: SCH2475-UP

PART OF 225-8001 WIRING GP-CHASSIS

SMCS-7630 **i01698898**

NOTE	REF NO	GRAPHIC REF	PART NUMBER	QTY	PART NAME 1 2 3 4 5 6 (PRODUCT LEVEL)	SEE PAGE
	1	1	**7X-6315**	1	STRAP AS-GROUND	
	2	1	**184-2472**	1	SCREW-PAN HEAD (NO 8-32X9.52-MM)	
	3	1	**134-4126**	1	WASHER (4.52X8.28X0.76-MM THK)	

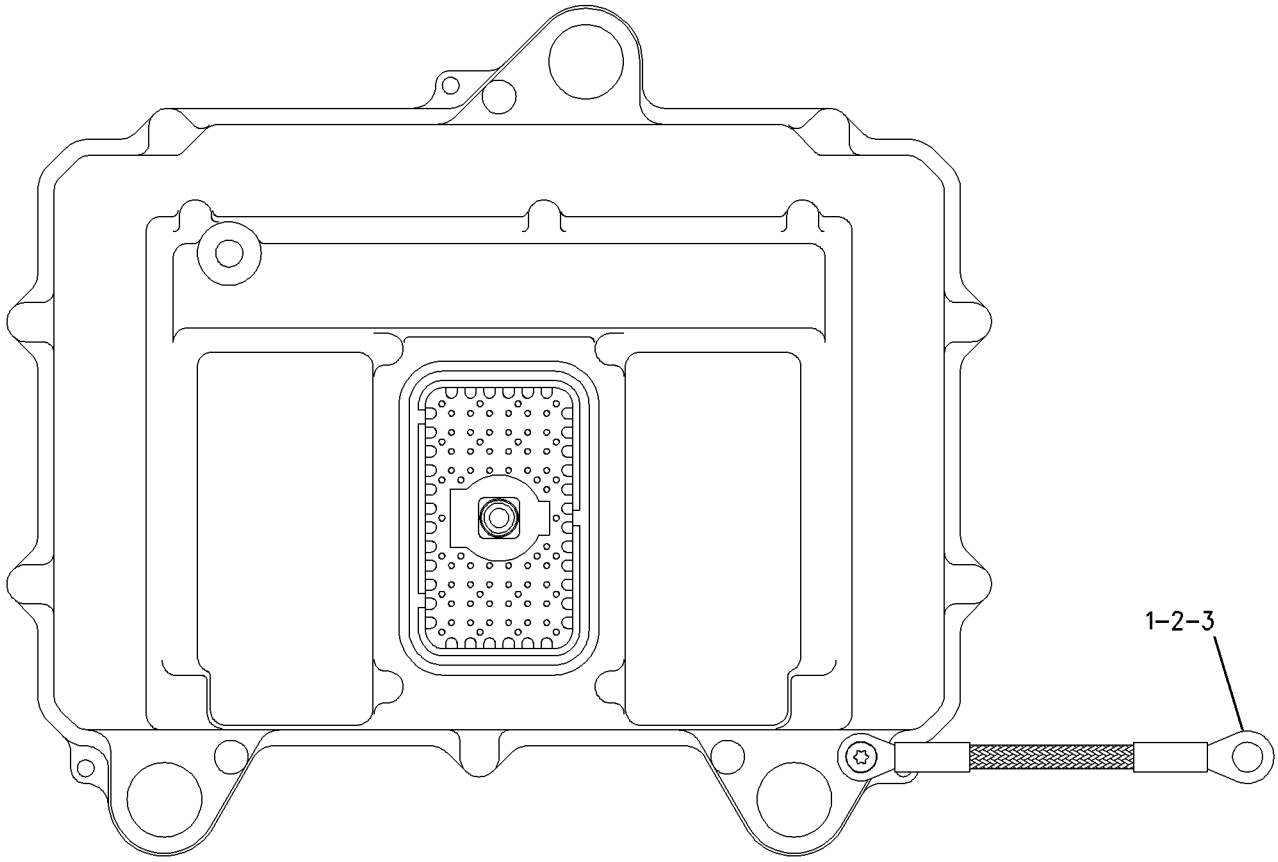

GRAPHIC #1 **<END>** g00843169

308-2313 CONTROL GP-MANUAL START/STOP

S/N: CYP1-UP

PART OF 292-5719 ENGINE AR-PRIMARY

AN ATTACHMENT

SMCS-1426, 7418 **i02752301**

NOTE	REF NO	GRAPHIC REF	PART NUMBER	QTY	PART NAME 1 2 3 4 5 6 (PRODUCT LEVEL)	SEE PAGE
	1	1	**153-6412**	1	WASHER	
	2	1	**271-2117**	1	SOLENOID (FUEL SHUTOFF)	
	3	1	**308-1914**	1	LEVER-CONTROL	

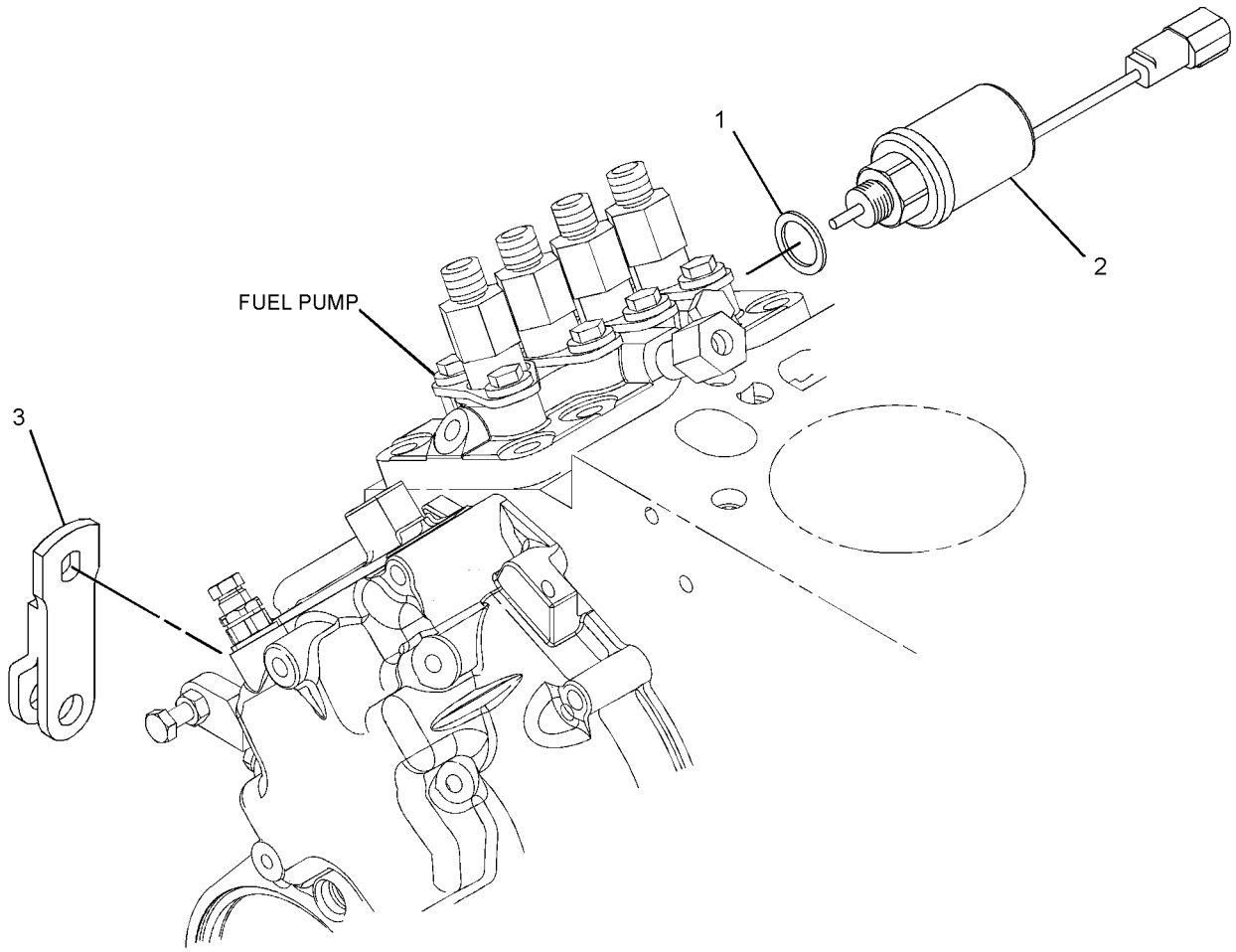

GRAPHIC #1 **<END>** g01420648

ELECTRICAL AND STARTING SYSTEM

233-5670 CONVERSION AR-NON-ROADING—NACD

S/N: SCH2475-UP

AN ATTACHMENT

SMCS-7000 **i02009667**

NOTE	PART NUMBER	QTY	PART NAME 1 2 3 4 5 6 (PRODUCT LEVEL)	SEE PAGE
Y	*142-8652*	1	LIGHTING GP-STOP & TAIL	153
Y	*218-5790*	1	PANEL AR-INSTRUMENT	539

Y-SEPARATE ILLUSTRATION

<END>

216-4755 COVER GP-FUSE PANEL

S/N: SCH2475-UP

PART OF 225-8001 WIRING GP-CHASSIS

SMCS-1417 **i02757074**

NOTE	REF NO	GRAPHIC REF	PART NUMBER	QTY	PART NAME 1 2 3 4 5 6 (PRODUCT LEVEL)	SEE PAGE
	1	1	**116-7471**	1	PULLER-MINIFUSE	
	2	1	**164-3765**	2	RETAINER	
	3	1	**216-4714**	1	FILM-FUSE/RELAY	
	4	1	**225-5193**	1	COVER AS	
M	5	1	**232-6692**	2	SCREW (M6X1X20-MM)	
E	6	1	**103-2543**		SEAL (3-CM)	
CJ	7	1	**5P-5969**		SEAL (9-DM)	

C-CHANGE FROM PREVIOUS TYPE
E-ORDER BY THE CENTIMETER
J-ORDER BY THE DECIMETER
M-METRIC PART

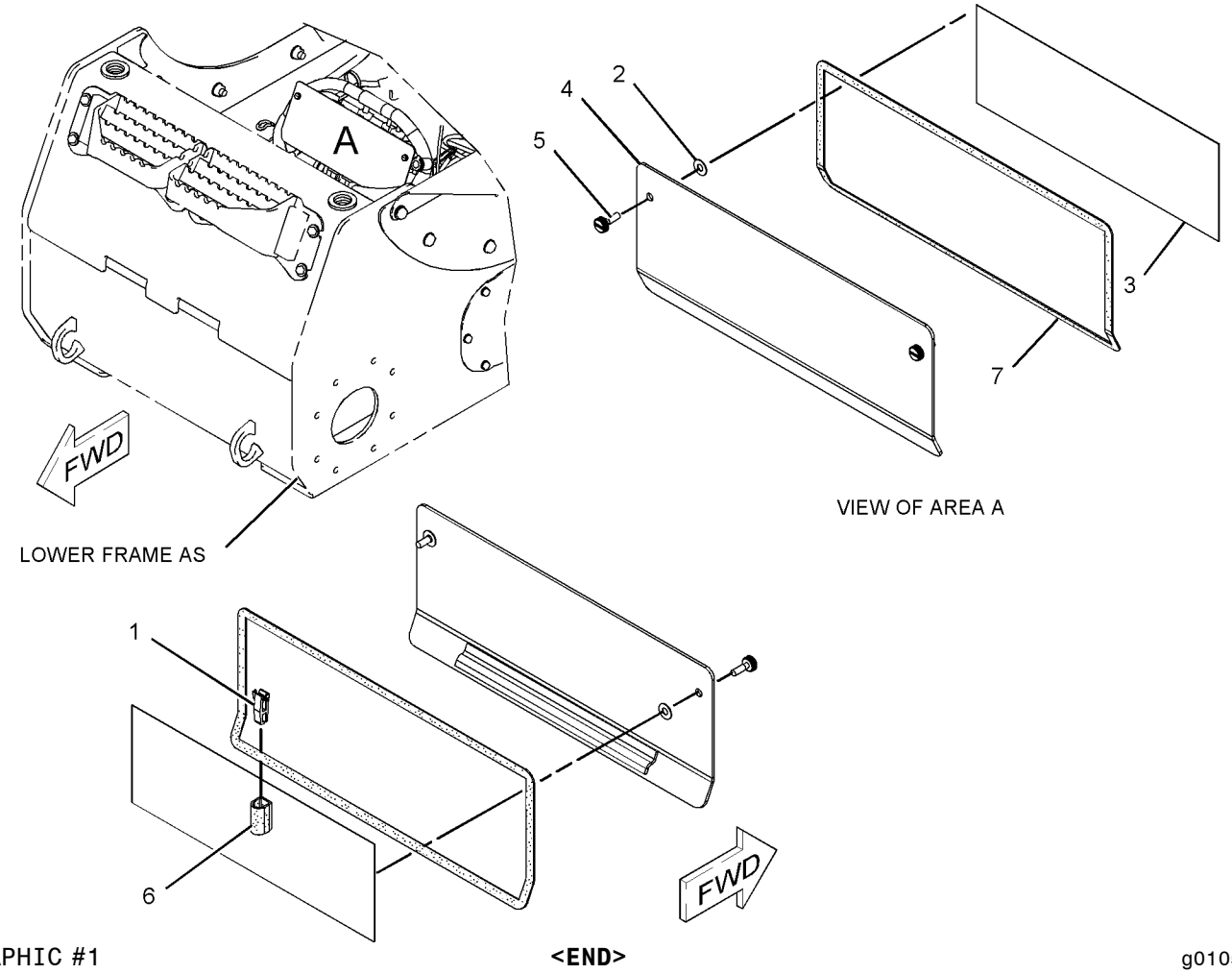

GRAPHIC #1 **<END>** g01056852

225-8000 ELECTRONICS GP-IMPLEMENT—WORK TOOL

S/N: SCH2475-UP

PART OF 225-8001 WIRING GP-CHASSIS

SMCS-7610, 7620 **i02492938**

NOTE	PART NUMBER	QTY	PART NAME 1 2 3 4 5 6 (PRODUCT LEVEL)	SEE PAGE
R	**216-0658**	1	CONTROL GP-UNPROGRAMMED	
	7X-6315	1	STRAP AS-GROUND	
	120-4897	1	SCREW-PAN HEAD (NO 8-32X9.52)	
	134-4126	1	WASHER (4.52X8.28X0.76-MM THK)	
	284-3058	1	SOFTWARE GP-IMPLEMENT	
			—OR—	
	284-3059	1	SERVICE GP-IMPLEMENT	
			(OPTIONAL SERVICE REPLACEMENT)	
			(INCLUDES CONTROL GP, SOFTWARE GP)	

R-REMFG PART MAY BE AVAILABLE

<END>

207-5262 ELECTRONICS GP-MACHINE–SECURITY

S/N: SCH2475-UP

PART OF 225-7991, 239-5010 INSTALLATION GP-SECURITY

AN ATTACHMENT

SMCS-7610, 7620 **i02348756**

NOTE	REF NO	GRAPHIC REF	PART NUMBER	QTY	PART NAME 1 2 3 4 5 6 (PRODUCT LEVEL)	SEE PAGE
	1	1	*156-6155*	1	CONTROL GP-UNPROGRAMMED (SECURITY)	
	1A	1	**7X-6315**	1	STRAP AS-GROUND	
	1B	1	**184-2472**	1	SCREW-PAN HEAD (NO 8-32X9.52-MM)	
	1C	1	**134-4126**	1	WASHER (4.52X8.28XO.76-MM THK)	
	2	1	**243-6464**	1	SOFTWARE GP-MACHINE (SECURITY)	
	3	1	**206-5162**	2	KEY AS-ELECTRONIC (SECURITY)	
					–OR–	
		1	**206-5165**	2	KEY AS-ELECTRONIC (SECURITY)	
	4	1	**219-6314**	2	KEY RING (IDENTIFICATION)	

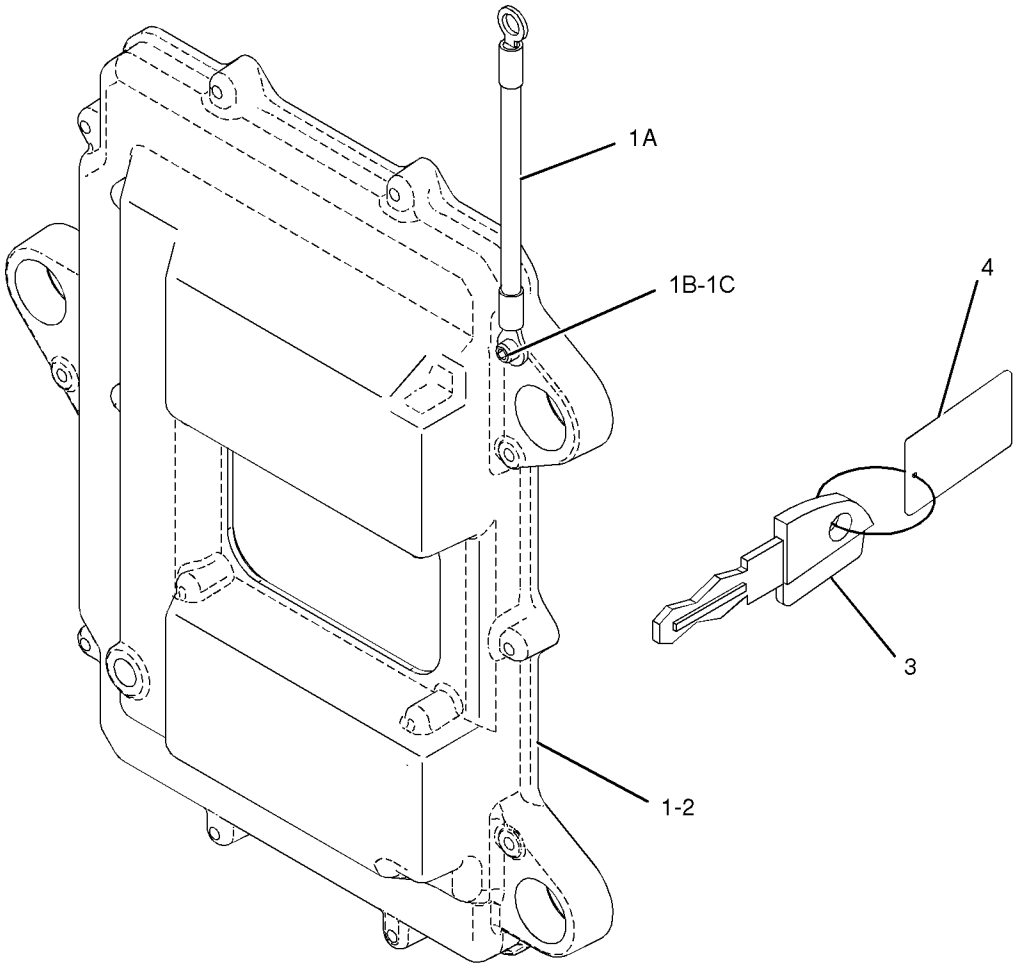

GRAPHIC #1

<END>

g01026135

216-4750 FASTENER GP-WIRING HARNESS

S/N: SCH2475-UP

PART OF 218-6350 CAB AR-ENCLOSED ROPS

SMCS-1408 **i02738481**

NOTE	REF NO	GRAPHIC REF	PART NUMBER	QTY	PART NAME 1 2 3 4 5 6 (PRODUCT LEVEL)	SEE PAGE
	1	1	**4B-4863**	2	WASHER (4.7X11X1.2-MM THK)	
	2	1	**7G-1060**	1	STRAP AS-GROUND	
	3	1	**9R-7941**	1	SOCKET AS	
		1	**9R-7980**	1	COVER	
M	4	1	**111-4627**	4	SCREW-MACHINE (M6X1X30-MM)	
	5	1	**195-0936**	4	INSERT-THREADED (M6X1)	
B	6	1	**3S-2093**	6	STRAP-CABLE	
M	7	1	**5C-8312**	2	NUT (M4X0.7-THD)	
	8	1	**7G-7053**	1	GROMMET	
	9	1	**8T-4121**	2	WASHER-HARD (11X21X2.5-MM THK)	
M	10	1	**8T-4133**	1	NUT (M10X1.5-THD)	
M	11	1	**9X-1046**	2	SCREW (M4X0.7X18-MM)	
M	12	1	**9X-2042**	6	SCREW-TRUSS HEAD (M6X1X12-MM)	
	13	1	**101-2867**	4	WASHER-HARD (7.2X25X2-MM THK)	

B-USE AS REQUIRED
M-METRIC PART

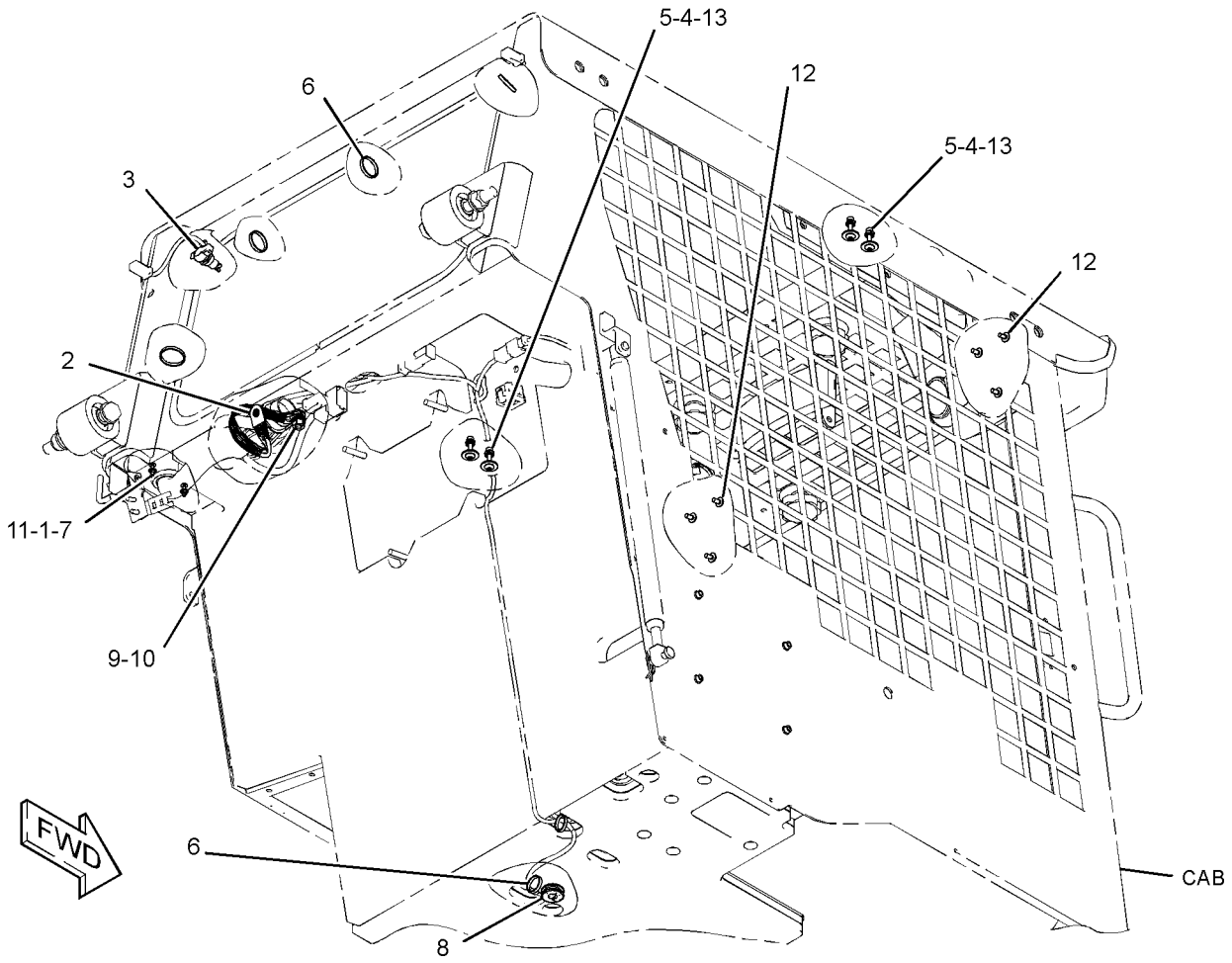

GRAPHIC #1 **<END>** g01376950

192-0104 GLOW PLUG GP

S/N: CSD1-11322
PART OF 300-5206 ENGINE AR-PRIMARY
AN ATTACHMENT

SMCS-1412 **i01992077**

NOTE	REF NO	GRAPHIC REF	PART NUMBER	QTY	PART NAME 1 2 3 4 5 6 (PRODUCT LEVEL)	SEE PAGE
	1	1	**155-8076**	1	NUT	
	2	1	**155-8077**	1	WASHER	
	3	1	**172-4585**	4	GLOW PLUG	
	4	1	**192-0105**	1	SUPPORT-PLUG	

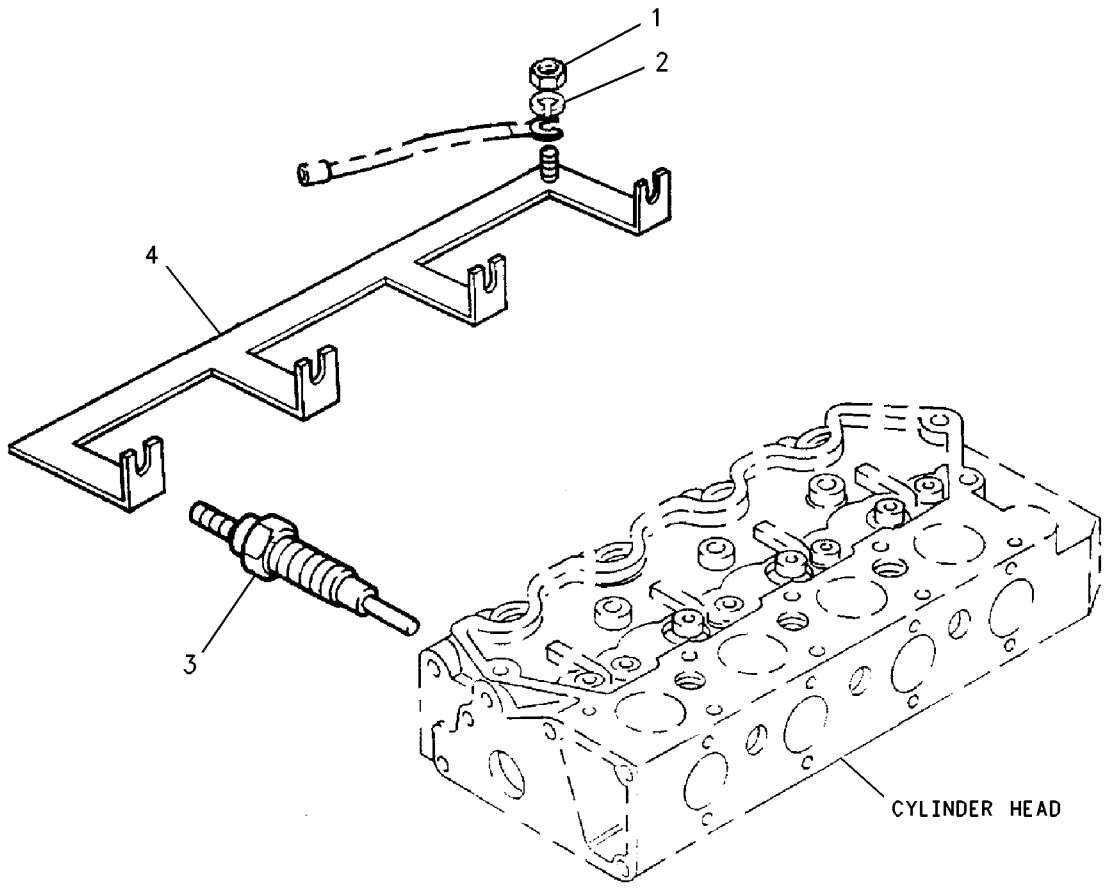

GRAPHIC #1 **<END>** g00708690

316-6896 GLOW PLUG GP

S/N: CYP1-UP
PART OF 292-5719 ENGINE AR-PRIMARY
AN ATTACHMENT

SMCS-1412 **i02827168**

NOTE	REF NO	GRAPHIC REF	PART NUMBER	QTY	PART NAME 1 2 3 4 5 6 (PRODUCT LEVEL)	SEE PAGE
	1	1	**155-8076**	1	NUT	
	2	1	**155-8077**	1	WASHER	
	3	1	**172-4585**	4	GLOW PLUG	
	4	1	**192-0105**	1	SUPPORT-PLUG	

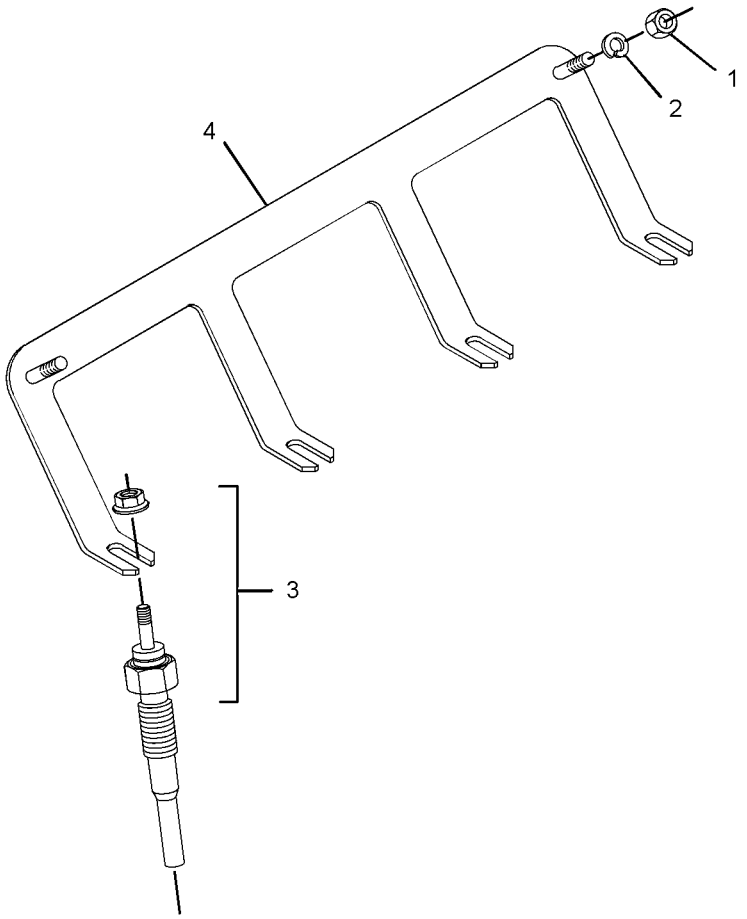

GRAPHIC #1 **<END>** g01439420

172-4445 HEATER GP-JACKET WATER

S/N: SCH2475-UP
120-VOLTS, 530-WATTS
CANNOT BE USED WITH 172-4446—PAGE 137
AN ATTACHMENT

SMCS-1383 **i02577831**

NOTE	REF NO	GRAPHIC REF	PART NUMBER	QTY	PART NAME 1 2 3 4 5 6 (PRODUCT LEVEL)	SEE PAGE
	1	1	*154-3927*	1	HEATER GP-JACKET WATER	
		1	**7X-6312**	1	CORD AS-JACKET WATER HEATER	
		1	**149-3499**	1	ELEMENT AS-JACKET WATER HEATER (ENGINE)	
		1	**133-6517**	1	CAP AS-DUST	
	2	1	**9X-6772**	1	STRAP-CABLE	

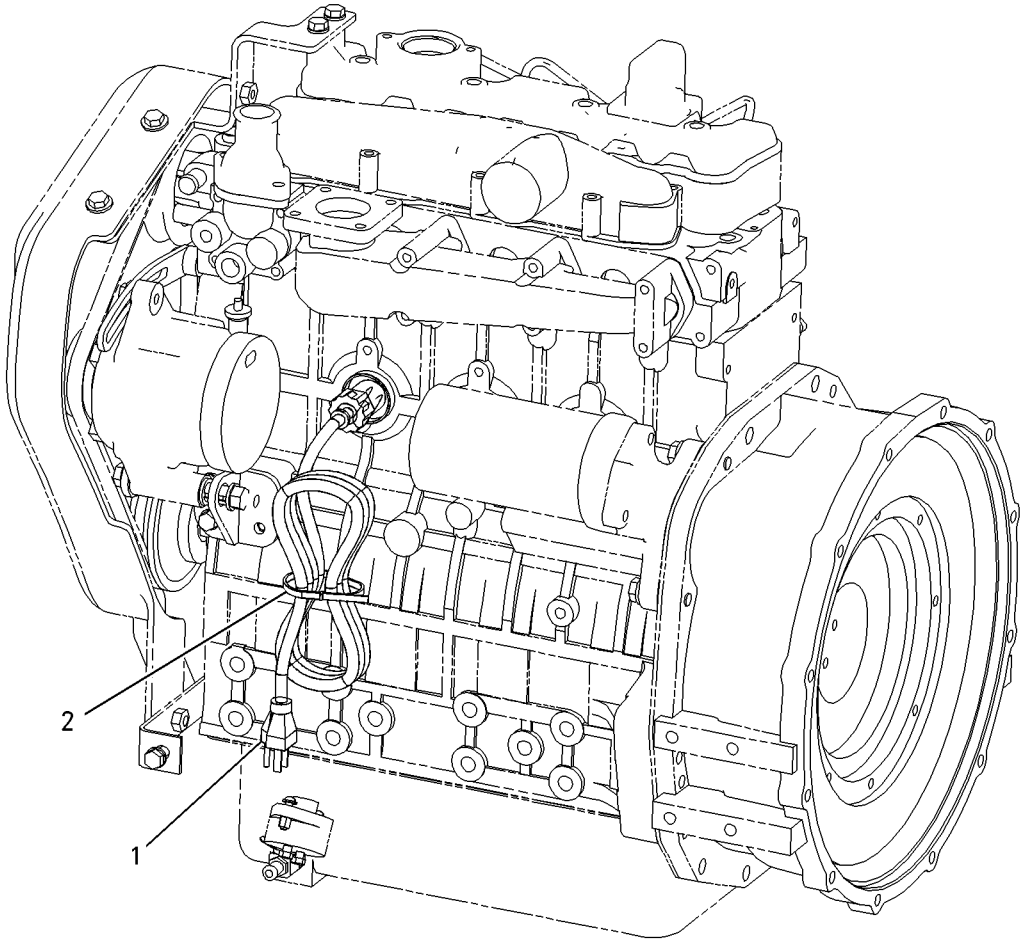

GRAPHIC #1 **<END>** g00808146

172-4446 HEATER GP-JACKET WATER

S/N: SCH2475-UP
240-VOLTS, 530-WATTS
CANNOT BE USED WITH 172-4445—PAGE 136
AN ATTACHMENT

SMCS-1383 **i02577832**

NOTE	REF NO	GRAPHIC REF	PART NUMBER	QTY	PART NAME 1 2 3 4 5 6 (PRODUCT LEVEL)	SEE PAGE
	1	1	*154-3928*	1	HEATER GP-JACKET WATER	
		1	**127-8609**	1	CORD AS-JACKET WATER HEATER	
		1	**151-1394**	11	ELEMENT AS-JACKET WATER HEATER (ENGINE)	
		1	**133-6517**	1	CAP AS-DUST	
	2	1	**9X-6772**	1	STRAP-CABLE	

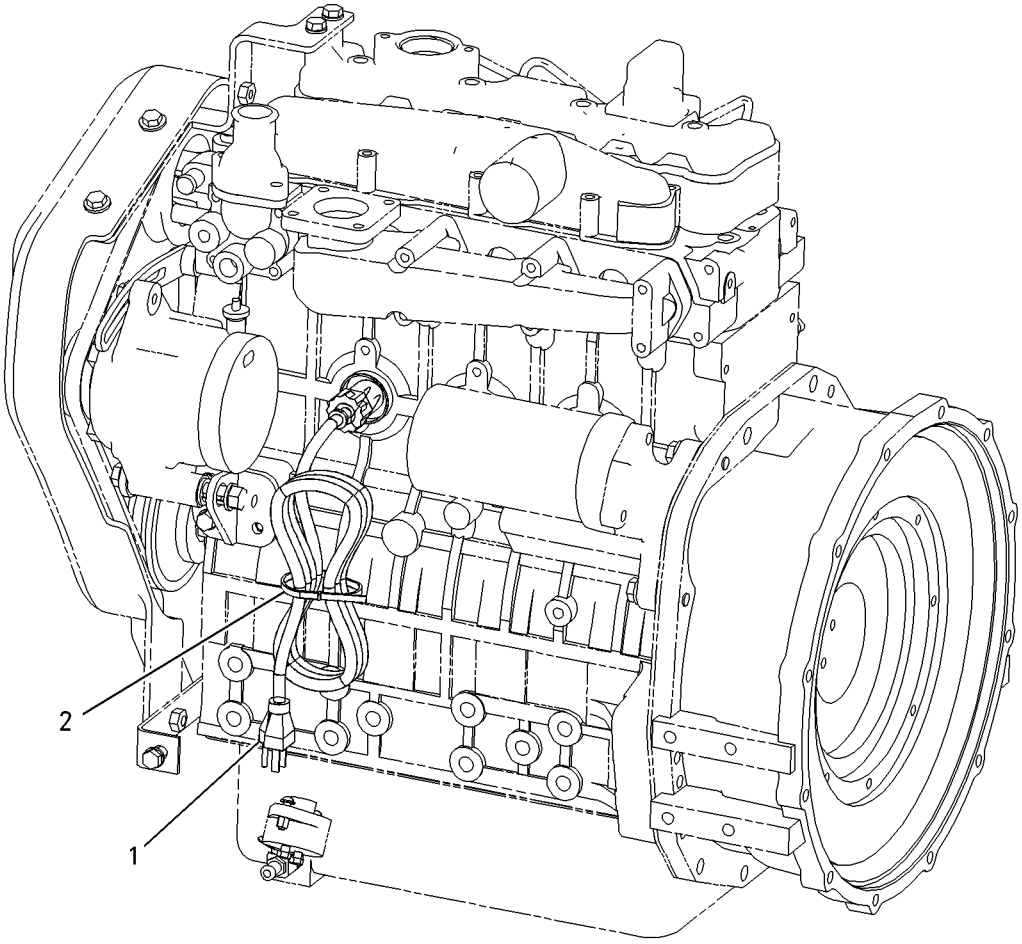

GRAPHIC #1 **<END>** g00808142

ELECTRICAL AND STARTING SYSTEM

225-7991 INSTALLATION GP-SECURITY

S/N: SCH2475-UP
AN ATTACHMENT

SMCS-7631 **i02659112**

NOTE	PART NUMBER	QTY	PART NAME 1 2 3 4 5 6 (PRODUCT LEVEL)	SEE PAGE
Y	**207-5262**	1	ELECTRONICS GP-MACHINE (SECURITY)	132
	243-6464	1	SOFTWARE GP-MACHINE (SECURITY)	
	205-8257	1	COIL AS (EXCITER)	
D	**5P-5677**		WIRE (18-GA, BLACK) (0.4-M)	
	186-3735	2	PIN-CONNECTOR (16-GA TO 18-GA)	
	222-3870	1	COIL AS (FERRITE)	
	102-8802	2	KIT-RECEPTACLE (2-PIN)	
			(INCLUDES RECEPTACLE AS & WEDGE)	
	186-3735	4	PIN-CONNECTOR (16-GA TO 18-GA)	
D	**5P-5677**		WIRE (18-GA, BLACK) (0.4-M)	
E	**9X-1813**		SLEEVE (15-CM)	
	216-4709	1	HARNESS AS-CONTROL (SECURITY)	
	102-8804	1	KIT-RECEPTACLE (4-PIN)	
	102-8801	1	KIT-RECEPTACLE (12-PIN)	
			(EACH KIT INCLUDES RECEPTACLE AS & WEDGE)	
	155-2270	2	KIT-CONNECTING PLUG (2-PIN)	
			(INCLUDES PLUG AS, WEDGE & INTERFACE SEAL)	
E	**125-7874**		TUBE-HEAT SHRINK (5.72-MM DIA) (10-CM)	
	150-6766	1	PLUG AS-CONNECTOR (26-PIN)	
	206-5162	2	KEY AS-ELECTRONIC (SECURITY)	
			—OR—	
	206-5165	1	KEY AS-ELECTRONIC (SECURITY)	
	198-5389	1	FILM-IDENTIFICATION (IGNITION SWITCH)	
	205-0826	1	FILM-INSTRUCTION (MACHINE SECURITY, INTL)	
	102-8802	1	KIT-RECEPTACLE (2-PIN)	
			(INCLUDES RECEPTACLE AS & WEDGE)	
	8T-9655	6	MOUNT-ISOLATION	
M	**5C-7261**	3	NUT (M8X1.25-THD)	
	4P-8134	3	CLIP	
	6I-1418	3	SPACER (8.2X12.7X28.7-MM THK)	
	3S-2093	7	STRAP-CABLE	
	7K-1181	5	STRAP-CABLE	
	7X-0579	3	WASHER-HARD (8.8X25.5X2-MM THK)	

D-ORDER BY THE METER
E-ORDER BY THE CENTIMETER
M-METRIC PART
Y-SEPARATE ILLUSTRATION

<END>

239-5010 INSTALLATION GP-SECURITY–KIT

S/N: SCH2475-UP

FIELD INSTALLATION

SMCS-7631 **i02359042**

NOTE	PART NUMBER	QTY	PART NAME 1 2 3 4 5 6 (PRODUCT LEVEL)	SEE PAGE
Y	**207-5262**	1	ELECTRONICS GP-MACHINE (SECURITY)	132
M	**7X-0818**	3	BOLT (M8X1.25X45-MM)	
	4P-7581	3	CLIP	
	205-8257	1	COIL AS (EXCITER)	
	186-3735	2	PIN-CONNECTOR (16-GA TO 18-GA)	
BD	**5P-5677**		WIRE (18-GA, BLACK)	
	222-3870	1	COIL AS (FERRITE)	
	102-8802	2	KIT-RECEPTACLE (2-PIN)	
			(INCLUDES RECEPTACLE AS & WEDGE)	
	186-3735	4	PIN-CONNECTOR (16-GA TO 18-GA)	
BD	**5P-5677**		WIRE (18-GA, BLACK)	
BE	**9X-1813**		SLEEVE (1)	
	198-5389	1	FILM-IDENTIFICATION (IGNITION SWITCH)	
	205-0826	1	FILM-INSTRUCTION (MACHINE SECURITY, INTL)	
	216-4709	1	HARNESS AS-CONTROL (SECURITY)	
	102-8804	1	KIT-RECEPTACLE (4-PIN)	
	102-8801	1	KIT-RECEPTACLE (12-PIN)	
			(EACH KIT INCLUDES RECEPTACLE AS & WEDGE)	
	155-2270	2	KIT-CONNECTING PLUG (2-PIN)	
			(INCLUDES PLUG AS, WEDGE & INTERFACE SEAL)	
M	**195-0937**	3	INSERT-THREADED (M8X1.25-THD)	
	155-2260	1	KIT-CONNECTING PLUG (3-PIN)	
			(INCLUDES PLUG AS & WEDGE)	
	102-8802	1	KIT-RECEPTACLE (2-PIN)	
			(INCLUDES RECEPTACLE AS & WEDGE)	
	102-8803	1	KIT-RECEPTACLE (3-PIN)	
			(INCLUDES RECEPTACLE AS & WEDGE)	
	165-5655	1	LAMP AS (RED, GREEN, LED, 12-VOLT)	
	186-3735	3	PIN-CONNECTOR (16-GA TO 18-GA)	
	8T-9655	6	MOUNT-ISOLATION	
M	**5C-7261**	3	NUT (M8X1.25-THD)	
	8T-8737	2	PLUG-SEAL	
	6I-1418	3	SPACER (8.2X12.7X28.7-MM THK)	
	115-8109	1	SPLICE-WIRE	
	7K-1181	12	STRAP-CABLE	
	9N-0869	9	WASHER-HARD (8.8X25.5X2-MM THK)	
	207-3814	1	WIRE AS (PRODUCT LINK, SPLICE)	
	186-3735	1	PIN-CONNECTOR (16-GA TO 18-GA)	
	186-3736	2	SOCKET-CONNECTOR (16-GA TO 18-GA)	
BE	**125-7874**		TUBE-HEAT SHRINK (5.72-MM DIA)	

B-USE AS REQUIRED
D-ORDER BY THE METER
E-ORDER BY THE CENTIMETER
M-METRIC PART
Y-SEPARATE ILLUSTRATION

<END>

233-5638 KIT-WORK TOOL CONTROL & WIRING—VERTICAL LIFT

S/N: SCH2475-UP

AN ATTACHMENT

SMCS-1408, 5705 **i02302989**

NOTE	PART NUMBER	QTY	PART NAME 1 2 3 4 5 6 (PRODUCT LEVEL)	SEE PAGE
Y	**231-4258**	1	CONTROL GP-HANDLE (LH)	464
	221-3881	1	PANEL GP-FUSE	
	113-8490	4	FUSE (10-AMPERE)	
	113-8491	2	FUSE (15-AMPERE)	
	146-9439	5	RELAY AS (12-VOLT)	
	215-5564	2	SUPPRESSOR-ARC	
	216-4725	1	HARNESS AS-WORK TOOL (LIFT ARM)	
	156-1460	1	RECEPTACLE (8-PIN)	
			(INCLUDES RECEPTACLE AS & WEDGE)	
	156-1458	1	COVER	
	1S-9593		STRAP-CABLE	
	225-8012	1	HARNESS AS-WORK TOOL (PLATFORM)	
	155-2255	1	KIT-CONNECTING PLUG (12-PIN)	
	155-2265	1	KIT-CONNECTING PLUG (8-PIN)	
	196-2382	1	KIT-CONNECTING PLUG (2-PIN)	
	196-2383	1	KIT-CONNECTING PLUG (8-PIN)	
	196-2384	1	KIT-CONNECTING PLUG (8-PIN)	
			(EACH PLUG KIT INCLUDES PLUG AS, WEDGE & INTERFACE SEAL)	
	177-9645	1	KIT-RECEPTACLE (2-PIN)	
			(INCLUDES RECEPTACLE AS & WEDGE)	
	102-8806	1	KIT-RECEPTACLE (8-PIN)	
			(INCLUDES RECEPTACLE AS & WEDGE)	
	115-1615	1	RELAY AS (12-VOLT)	
	146-9439	1	RELAY AS (12-VOLT)	
	142-8633	1	SWITCH AS-ROCKER (ELECTRIC POWER, WORK TOOL)	
M	**5C-9553**	1	BOLT (M6X1X16-MM)	
	159-9496	1	LOCKWASHER	
	159-9495	1	NUT (1-1/2-18-THD)	
M	**095-0733**	2	SCREW-MACHINE (M4X0.7X40-MM)	
	3S-2093	8	STRAP-CABLE	
	4B-4863	2	WASHER (4.7X11X1.2-MM THK)	
	8T-4205	1	WASHER-HARD (7.2X14.5X2-MM THK)	
	3E-3389	1	WEDGE-RECEPTACLE LOCK	

M-METRIC PART
Y-SEPARATE ILLUSTRATION

<END>

218-6742 KIT-WORK TOOL WIRING—VERTICAL LIFT

S/N: SCH2475-UP
AN ATTACHMENT

SMCS-1408 **i02360165**

NOTE	PART NUMBER	QTY	PART NAME 1 2 3 4 5 6 (PRODUCT LEVEL)	SEE PAGE
	221-3881	1	PANEL GP-FUSE	
	113-8490	4	FUSE (10-AMPERE)	
	113-8491	2	FUSE (15-AMPERE)	
	146-9439	5	RELAY AS (12-VOLT)	
M	**5C-9553**	1	BOLT (M6X1X16-MM)	
	216-4725	1	HARNESS AS-WORK TOOL (LIFT ARM)	
	1S-9593	1	STRAP-CABLE	
	156-1458	1	COVER	
	156-1460	1	RECEPTACLE (8-PIN)	
	225-8012	1	HARNESS AS-WORK TOOL (PLATFORM)	
	177-9643	1	LOCK	
	177-9644	1	SEAL-RECEPTACLE	
	177-9645	1	KIT-RECEPTACLE (2-PIN)	
			(INCLUDES RECEPTACLE AS & WEDGE)	
	155-2255	1	KIT-CONNECTING PLUG (12-PIN)	
	155-2265	1	KIT-CONNECTING PLUG (8-PIN)	
	196-2382	1	KIT-CONNECTING PLUG (2-PIN)	
	196-2383	1	KIT-CONNECTING PLUG (8-PIN)	
	196-2384	1	KIT-CONNECTING PLUG (8-PIN)	
			(EACH INCLUDES PLUG AS, WEDGE, INTERFACE SEAL)	
	102-8806	1	KIT-RECEPTACLE (8-PIN)	
			(INCLUDES RECEPTACLE AS & WEDGE)	
	159-9496	1	LOCKWASHER	
	159-9495	1	NUT (1-1/2-18-THD)	
	115-1615	1	RELAY AS (12-VOLT)	
	146-9439	1	RELAY AS (12-VOLT)	
M	**095-0733**	2	SCREW-MACHINE (M4X0.7X40-MM)	
	3S-2093	8	STRAP-CABLE	
	142-8633	1	SWITCH AS-ROCKER (ELECTRIC POWER, WORK TOOL)	
	4B-4863	2	WASHER (4.7X11X1.2-MM THK)	
	8T-4205	1	WASHER-HARD (7.2X14.5X2-MM THK)	

M-METRIC PART

<END>

234-4328 LAMP GP-FLOOD

S/N: SCH2475-UP
12-VOLT
PART OF 218-6425 LIGHTING GP-FLOOD

SMCS-1434 **i02532634**

NOTE	REF NO	GRAPHIC REF	PART NUMBER	QTY	PART NAME 1 2 3 4 5 6 (PRODUCT LEVEL)	SEE PAGE
	1	1	**9W-0607**	1	LAMP (12-VOLT, 55-WATT)	
M	2	1	**8T-0389**	1	LOCKNUT (M10X1.5-THD)	
	3	1	**9X-4244**	2	SCREW-SPECIAL	
	4	1	**202-6614**	1	LENS AS	
	5	1	**234-7730**	1	BODY AS	
	6	1	**164-7556**	1	BRACKET (LAMP RETAINING)	
	7	1	**234-7731**	1	BRACKET AS	
	8	1	**8T-4121**	1	WASHER-HARD (11X21X2.5-MM THK)	

M-METRIC PART

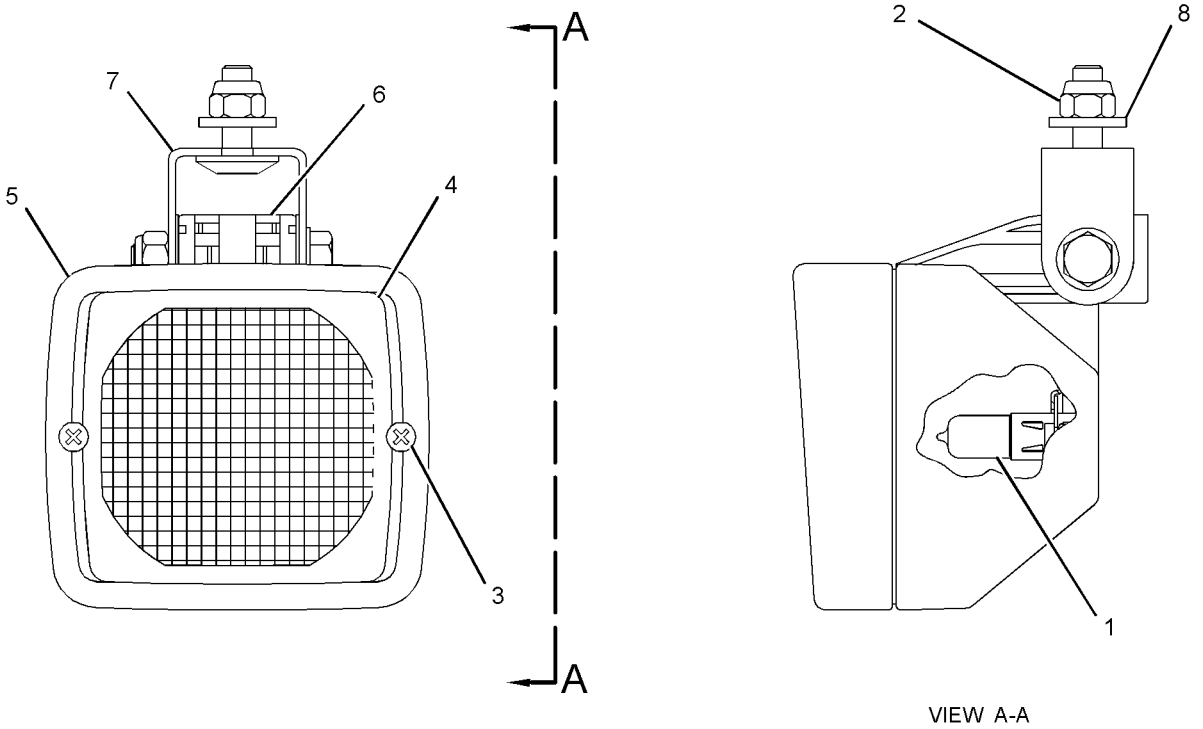

GRAPHIC #1 **<END>** g01283627

234-7727 LAMP GP-FLOOD–12-VOLT, VERTICAL MOUNT

S/N: SCH2475-UP
PART OF 216-4746 LIGHTING GP-FLOOD
ALSO AN ATTACHMENT

SMCS-1434 **i01957412**

NOTE	REF NO	GRAPHIC REF	PART NUMBER	QTY	PART NAME 1 2 3 4 5 6 (PRODUCT LEVEL)	SEE PAGE
	1	1	**9W-0607**	1	LAMP (12-VOLT, 55-WATT)	
	2	1	**9X-4244**	2	SCREW-SPECIAL	
	3	1	**202-6611**	1	LENS AS	
	4	1	**234-7758**	1	BODY AS	
	5	1	**164-7556**	1	BRACKET (LAMP RETAINING)	
	6	1	**234-7756**	1	BRACKET-MOUNTING	

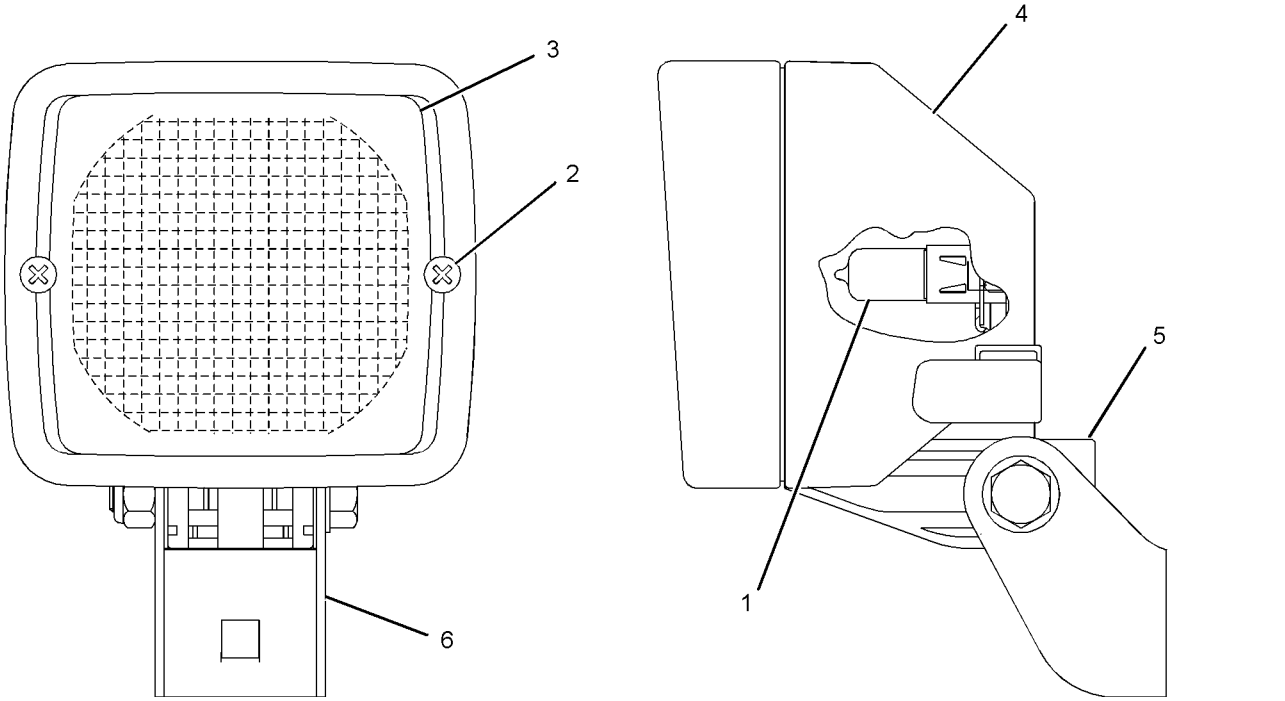

GRAPHIC #1 **<END>** g01017848

3E-7584 LAMP GP-HEAD & SIGNAL

S/N: SCH2475-UP

PART OF 277-0651 KIT-ROADING CONVERSION, 216-4716 LIGHTING GP-ROADING AN ATTACHMENT

SMCS-1429, 1430 **i02577854**

NOTE	REF NO	GRAPHIC REF	PART NUMBER	QTY	PART NAME 1 2 3 4 5 6 (PRODUCT LEVEL)	SEE PAGE
	1	1	**9X-4244**	4	SCREW-SPECIAL	
	2	1	**100-3251**	2	SCREW-LENS	
	3	1	**9X-9865**	1	SEAL	
	4	1	**100-3248**	1	LENS AS (HEADLIGHT)	
	5	1	**9W-3324**	1	LAMP-HEAD	
	6	1	**100-3247**	1	BODY AS-LAMP	
M	7	1	**8T-5005**	1	BOLT (M10X1.5X70-MM)	
M	8	1	**8T-0389**	1	LOCKNUT (M10X1.15-THD)	
	9	1	**100-3253**	1	SPACER (SPHERICAL)	
	10	1	**100-3254**	1	SPACER (SPHERICAL)	
	11	1	**100-3255**	1	WASHER (SPHERICAL)	
J	12	1	**102-8805**	1	KIT-RECEPTACLE (6-PIN)	
					(INCLUDES RECEPTACLE AS & WEDGE)	
	13	1	**8T-8729**	5	PIN-CONNECTOR	
J	14	1	**3E-3383**	1	WEDGE-RECEPTACLE LOCK (6-PIN)	
	15	1	**8T-8737**	1	PLUG-SEAL	
	16	1	**100-3246**	1	LAMP (12-VOLT, 4-WATT)	
	17	1	**5G-3244**	1	LAMP (12-VOLT, 21-WATT)	
	18	1	**100-3250**	1	LENS (AMBER) (FRONT TURN)	

J-KIT MARKED J INCLUDES PART MARKED J
M-METRIC PART

3E-7584 LAMP GP-HEAD & SIGNAL *(contd.)* **i02577854**

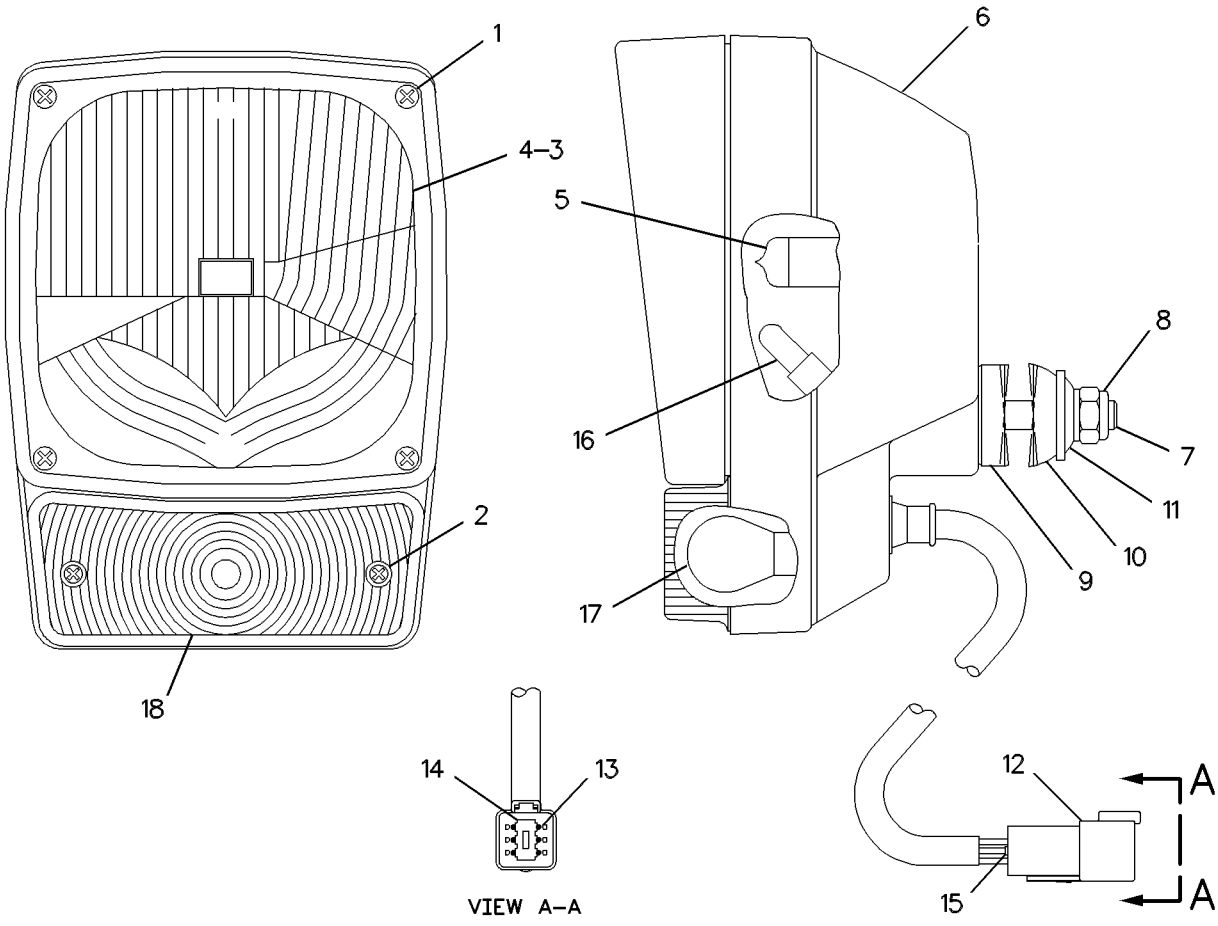

GRAPHIC #1 **<END>** g00460921

142-7503 LAMP GP-STOP & TAIL

S/N: SCH2475-UP
12-VOLT
PART OF 142-8652 LIGHTING GP-STOP & TAIL
AN ATTACHMENT

SMCS-1432 **i02577856**

NOTE	REF NO	GRAPHIC REF	PART NUMBER	QTY	PART NAME 1 2 3 4 5 6 (PRODUCT LEVEL)	SEE PAGE
	1	1	**084-4348**	1	LAMP (12-VOLT, 5-WATT)	
	2	1	**102-8804**	1	KIT-RECEPTACLE (4-PIN)	
					(INCLUDES RECEPTACLE AS & WEDGE)	
	3	1	**165-4895**	1	LENS	
M	4	1	**5C-2890**	2	NUT (M6X1-THD)	
	5	1	**8T-0087**	2	LOCKWASHER	

M-METRIC PART

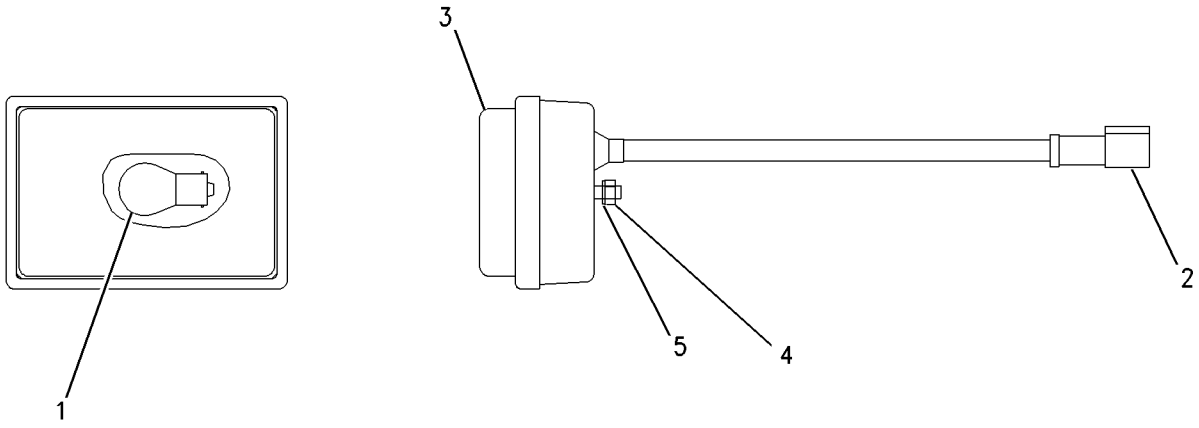

GRAPHIC #1 **<END>** g00669668

142-8634 LAMP GP-STOP & TAIL

S/N: SCH2475-UP
12-VOLT
PART OF 277-0651 KIT-ROADING CONVERSION, 216-4716 LIGHTING GP-ROADING AN ATTACHMENT

SMCS-1432 **i02570776**

NOTE	REF NO	GRAPHIC REF	PART NUMBER	QTY	PART NAME 1 2 3 4 5 6 (PRODUCT LEVEL)	SEE PAGE
	1	1	**9W-3326**	1	LAMP (12-VOLT, 21-WATT)	
	2	1	**084-4348**	1	LAMP (12-VOLT, 5-WATT)	
	3	1	**102-8804**	1	KIT-RECEPTACLE (4-PIN)	
					(INCLUDES RECEPTACLE AS & WEDGE)	
	4	1	**146-2438**	1	LENS-LAMP (REAR, LH)	
M	5	1	**5C-2890**	2	NUT (M6X1-THD)	
	6	1	**1H-3244**	2	LOCKWASHER	
	7	1	**186-3735**	4	PIN-CONNECTOR (16-GA TO 18-GA)	

M-METRIC PART

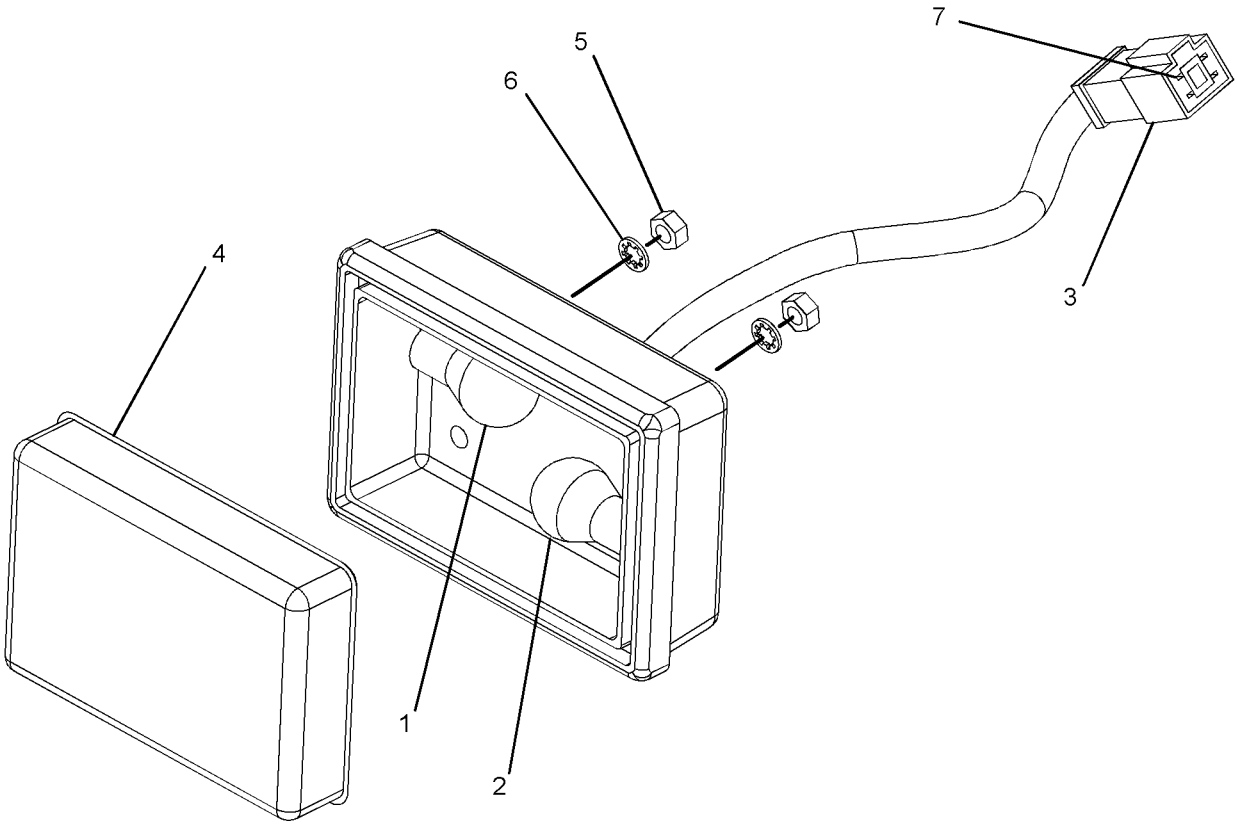

GRAPHIC #1 **<END>** g01212497

128-6985 LAMP GP-WARNING BEACON–12-VOLT, AMBER

S/N: SCH2475-UP

PART OF 234-0793, 278-1293 CONVERSION GP-ROADING, 142-8653 LIGHTING GP-WARNING BEACON

AN ATTACHMENT

SMCS-1431 **i02712963**

NOTE	REF NO	GRAPHIC REF	PART NUMBER	QTY	PART NAME 1 2 3 4 5 6 (PRODUCT LEVEL)	SEE PAGE
	1	1	**9X-8121**	1	LENS (AMBER, WARNING BEACON)	
	2	1	**9X-8118**	1	LAMP (12-VOLT, 55-WATT)	
	3	1	**9X-8139**	1	BELT-DRIVE (WARNING BEACON)	
	4	1	**9R-7958**	1	CORD AS	
	5	1	**9R-7942**	1	PLUG AS	

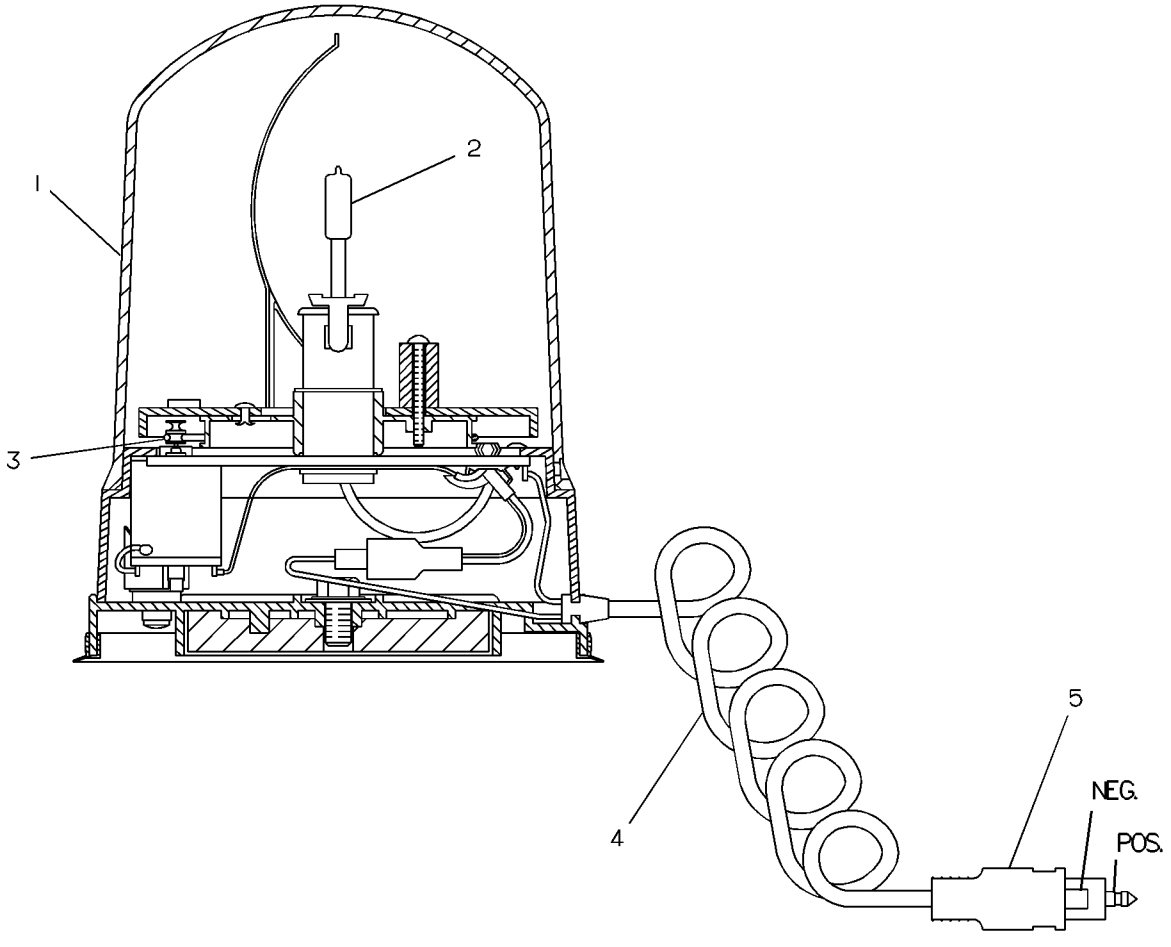

GRAPHIC #1 **<END>** g00130921

216-4746 LIGHTING GP-FLOOD–REAR

S/N: SCH2475-UP
PART OF 295-7232, 295-7233 COMMON AR
ALSO AN ATTACHMENT

SMCS-1434 **i02262618**

NOTE	REF NO	GRAPHIC REF	PART NUMBER	QTY	PART NAME 1 2 3 4 5 6 (PRODUCT LEVEL)	SEE PAGE
	1	1	**142-9326**	1	SWITCH AS-ROCKER (REAR WORK LAMPS)	
		1	**111-7899**	1	GASKET	
Y	2	1	**234-7727**	2	LAMP GP-FLOOD (12-VOLT) (REAR)	143
M	3	1	**195-0937**	2	INSERT-THREADED (M8X1.25-THD)	
	4	1	**5P-8439**	2	GROMMET	
M	5	1	**6V-2317**	2	BOLT (M8X1.25X30-MM)	
	6	1	**8T-4224**	4	WASHER-HARD (8.8X16X2-MM THK)	

M-METRIC PART
Y-SEPARATE ILLUSTRATION

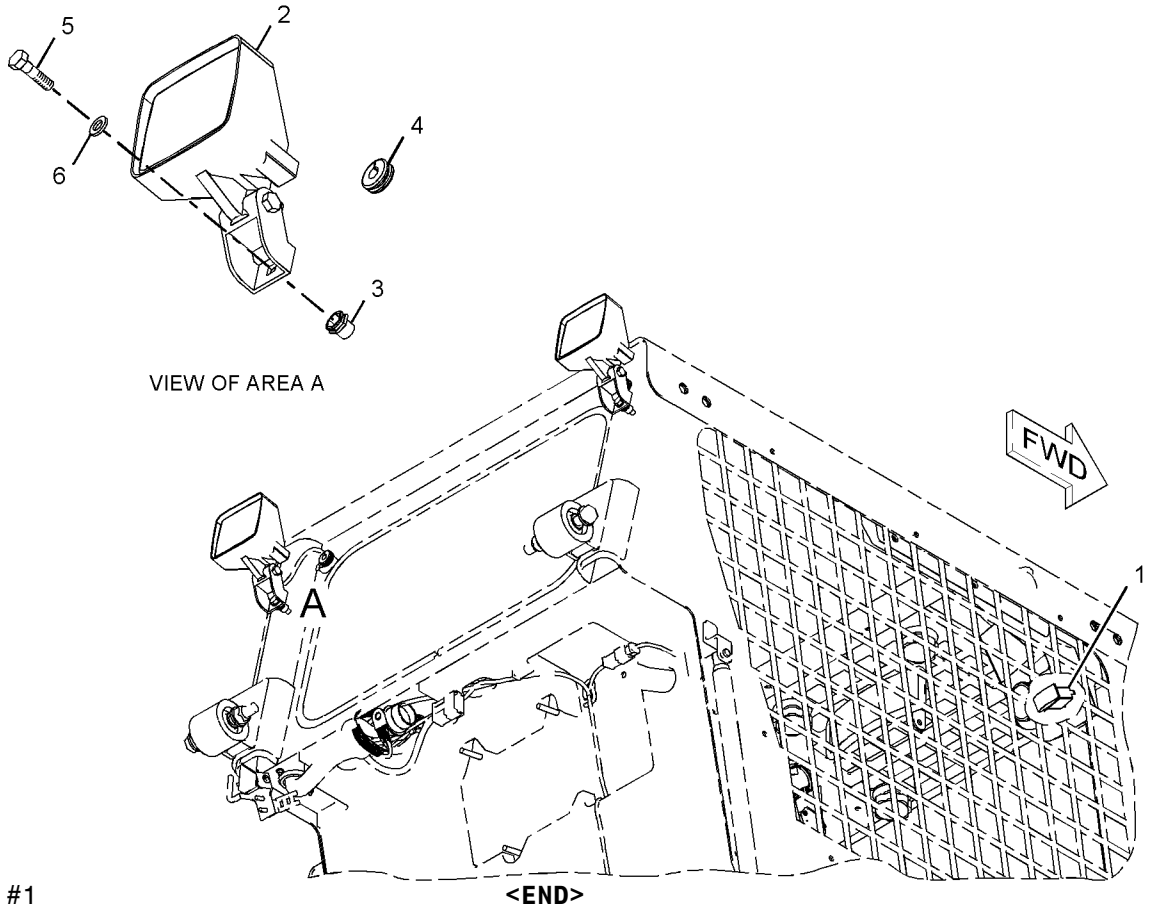

GRAPHIC #1 **<END>** g01136313

218-6425 LIGHTING GP-FLOOD–FRONT

S/N: SCH2475-UP

PART OF 218-6350 CAB AR-ENCLOSED ROPS

SMCS-1434 **i02889665**

NOTE	REF NO	GRAPHIC REF	PART NUMBER	QTY	PART NAME 1 2 3 4 5 6 (PRODUCT LEVEL)	SEE PAGE
Y	1		**234-4328**	2	LAMP GP-FLOOD (12-VOLT) (FRONT)	142
	2		**5P-8439**	2	GROMMET	
	3		**8T-4121**	4	WASHER-HARD (11X21X2.5-MM THK)	

Y-SEPARATE ILLUSTRATION

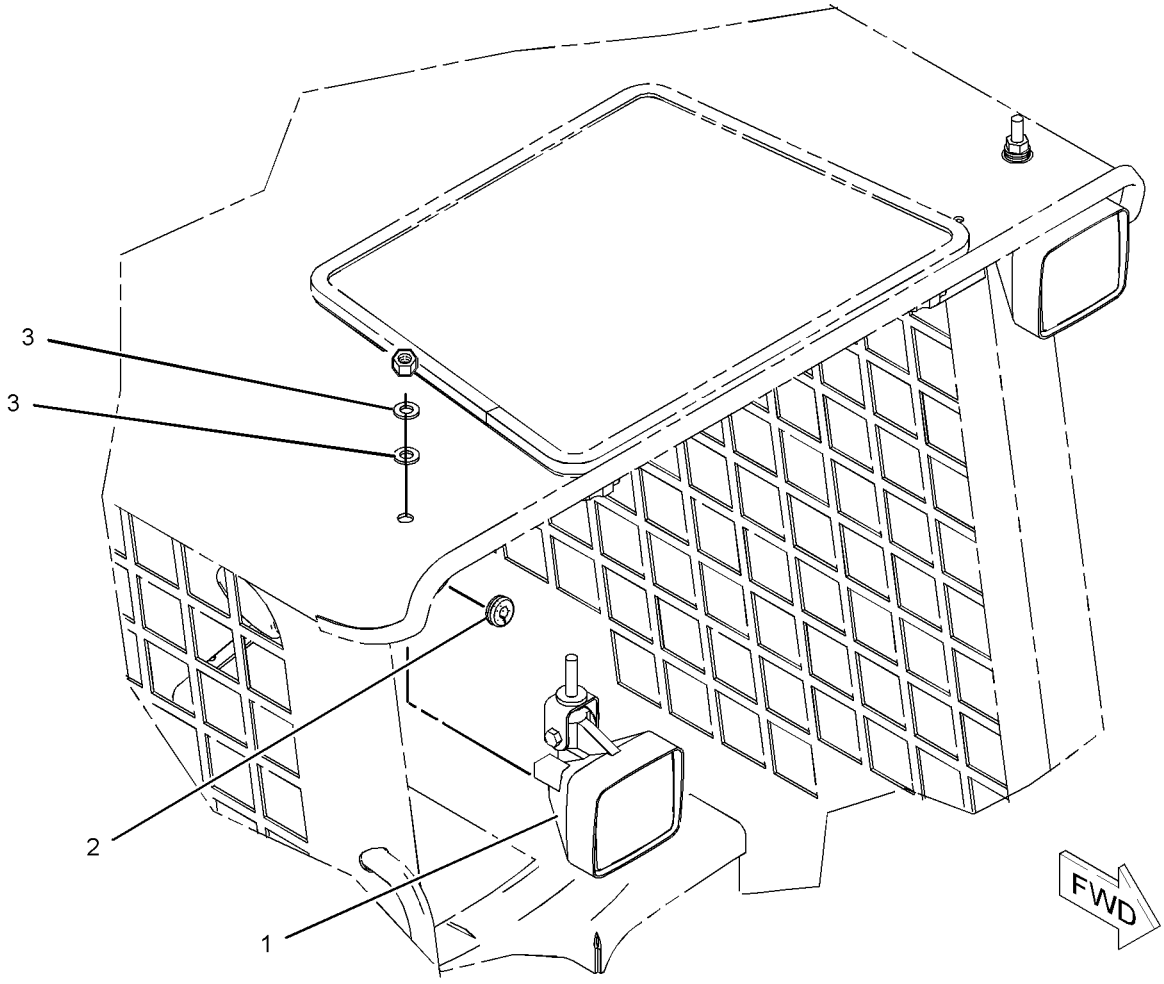

GRAPHIC #1 **<END>** g01040888

216-4716 LIGHTING GP-ROADING

S/N: SCH2475-UP

PART OF 278-5370, 278-5414, 295-7150, 295-7163 CONVERSION AR-MACHINE, 233-5682, 233-5683 CONVERSION AR-ROADING

AN ATTACHMENT

SMCS-1429 **i02771661**

NOTE	REF NO	GRAPHIC REF	PART NUMBER	QTY	PART NAME 1 2 3 4 5 6 (PRODUCT LEVEL)	SEE PAGE
Y	1	1	**3E-7584**	2	LAMP GP-HEAD & SIGNAL	144
	2	1	**7D-5473**	2	BOLT-SOCKET HEAD (8-32X0.75-IN)	
	3	1	**8T-1887**	2	CLIP (SLOT)	
	4	1	**8T-1888**	2	CLIP (TAB)	
	5	1	**8W-8909**	2	SLEEVE	
	6	1	**9R-1499**	2	REFLECTOR	
Y	7	1	**142-8634**	2	LAMP GP-STOP & TAIL	147
	8	1	**147-1773**	1	CIRCUIT BREAKER AS (30-AMPERE)	
		1	**6V-8378**	2	NUT (10-32-THD)	
		1	**8F-1434**	2	LOCKWASHER	
		1	**8T-0328**	2	WASHER-HARD (5.5X10X1-MM THK)	
	9	1	**216-4726**	1	HARNESS AS-FRONT LIGHTING	
		1	**155-2274**	1	KIT-CONNECTING PLUG (6-PIN)	
					(INCLUDES PLUG AS, WEDGE & INTERFACE SEAL)	
	10	1	**216-4727**	1	HARNESS AS-REAR LIGHTING	
		1	**102-8805**	1	KIT-RECEPTACLE (6-PIN)	
		1	**102-8806**	1	KIT-RECEPTACLE (8-PIN)	
					(EACH KIT INCLUDES RECEPTACLE AS & WEDGE)	
		1	**155-2265**	1	KIT-CONNECTING PLUG (8-PIN)	
					(INCLUDES PLUG AS, WEDGE & INTERFACE SEAL)	
	11	1	*225-7962*	1	SWITCH GP-ROCKER (ROADING)	
		1	**142-9329**	1	SWITCH AS-ROCKER (ROADING LIGHTS)	
		1	**142-9331**	1	SWITCH AS-ROCKER (HAZARD WARNING LIGHTS)	
		1	**226-5900**	1	SWITCH AS-ROCKER (TURN SIGNAL)	
					(EACH SWITCH AS-ROCKER INCLUDES)	
		1	**111-7899**	1	GASKET	
	12	1	**225-8013**	1	WIRE AS	
	13	1	**242-9000**	1	FLASHER AS (12-VOLT)	
	14	1	**195-0935**	1	INSERT-THREADED (M6X1-THD)	
	15	1	**206-1346**	2	STRAP-CABLE	
	16	1	**3S-2093**	18	STRAP-CABLE	
	17	1	**4B-4863**	2	WASHER (4.7X11X1.2-MM THK)	
	18	1	**4P-7581**	1	CLIP	
M	19	1	**8T-4201**	1	BOLT-LOCKING (M10X1.5X20-MM)	
M	20	1	**9X-2042**	1	SCREW-TRUSS HEAD (M6X1X12-MM)	

M-METRIC PART
Y-SEPARATE ILLUSTRATION

216-4716 **LIGHTING GP-ROADING** *(contd.)* **i02771661**

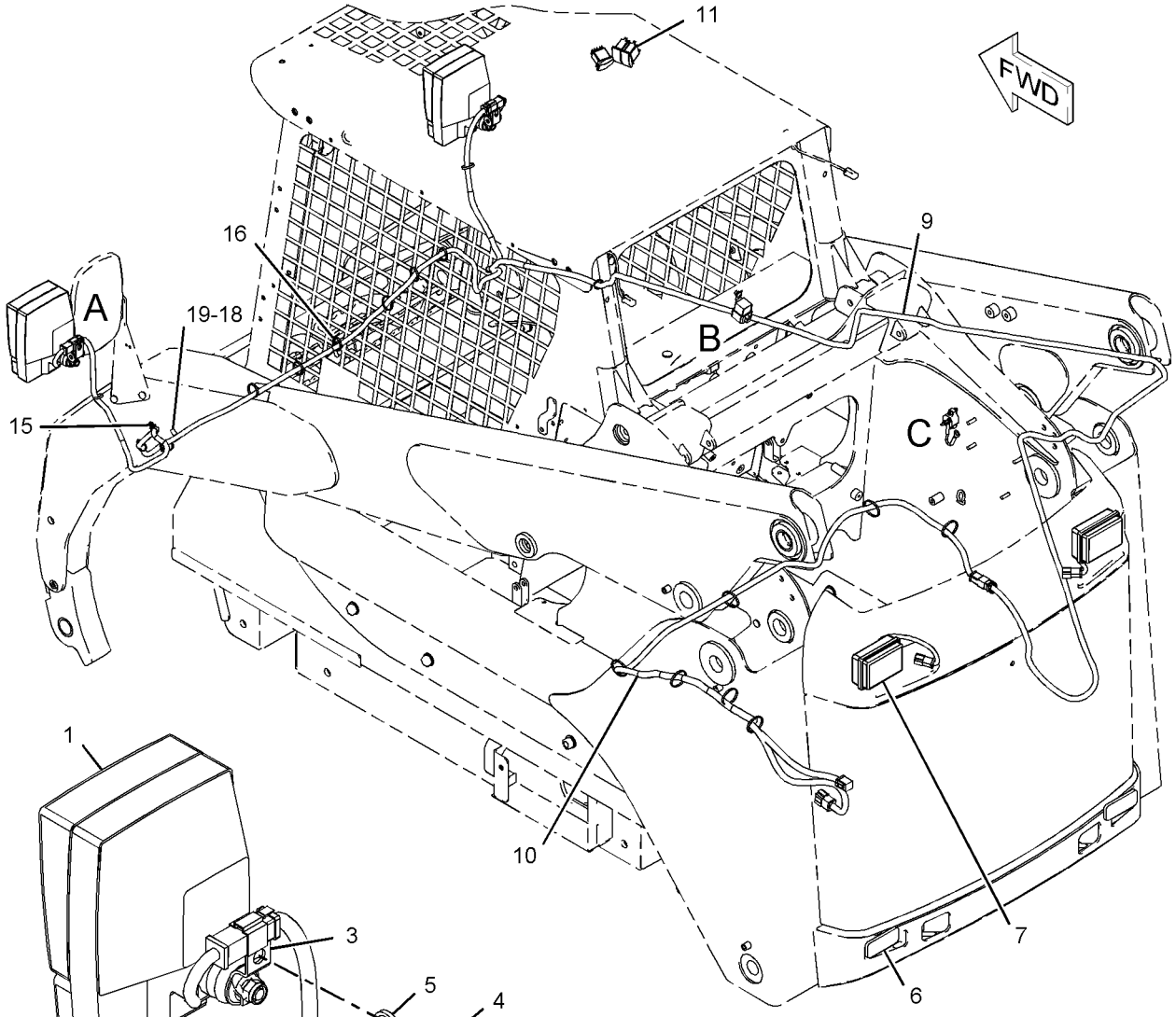

VIEW OF AREA A

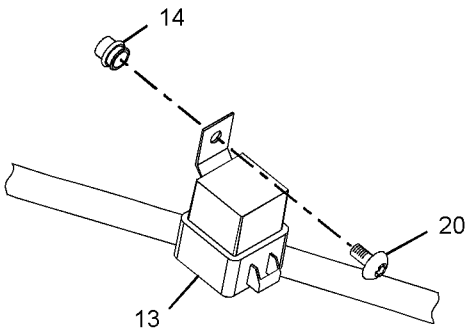

VIEW OF AREA B

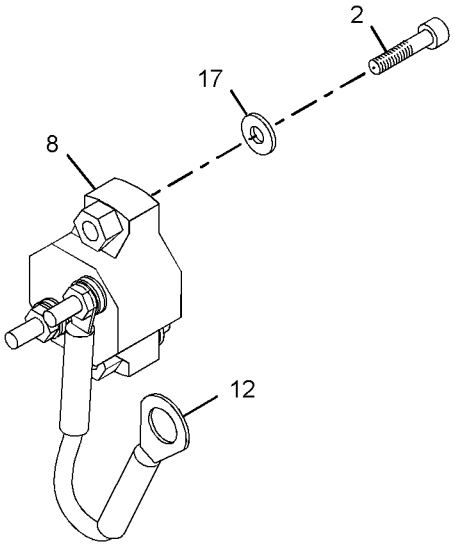

VIEW OF AREA C

GRAPHIC #1 **<END>** g01035544

142-8652 LIGHTING GP-STOP & TAIL

S/N: SCH2475-UP

PART OF 252-0449, 261-6156, 278-5348, 295-7055, 295-7060, 295-7067 CONVERSION AR-MACHINE, 233-5670 CONVERSION AR-NON-ROADING, 233-5681, 233-5684 CONVERSION AR-ROADING

AN ATTACHMENT

SMCS-1432 **i02757097**

NOTE	REF NO	GRAPHIC REF	PART NUMBER	QTY	PART NAME 1 2 3 4 5 6 (PRODUCT LEVEL)	SEE PAGE
	1	1	**3S-2093**	2	STRAP-CABLE	
	2	1	**9R-1499**	2	REFLECTOR	
Y	3	1	**142-7503**	2	LAMP GP-STOP & TAIL (12-VOLT)	146
	4	1	**4P-7581**	2	CLIP	
	5	1	**8T-4205**	4	WASHER-HARD (7.2X14.5X2-MM THK)	

Y-SEPARATE ILLUSTRATION

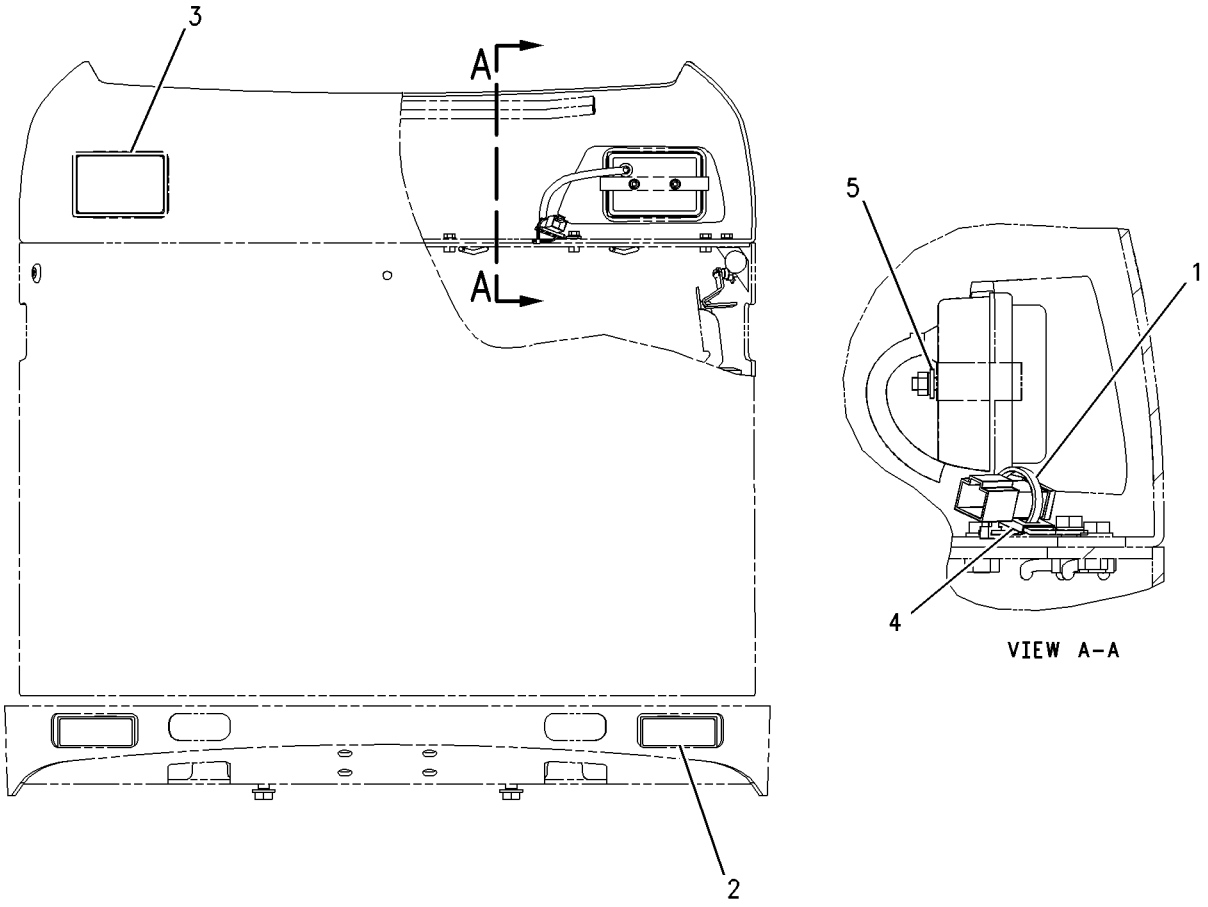

GRAPHIC #1 **<END>** g00771277

142-8653 LIGHTING GP-WARNING BEACON–12-VOLT

S/N: SCH2475-UP
AN ATTACHMENT

SMCS-1431 **i02262621**

NOTE	REF NO	GRAPHIC REF	PART NUMBER	QTY	PART NAME 1 2 3 4 5 6 (PRODUCT LEVEL)	SEE PAGE
Y	1	1	**128-6985**	1	LAMP GP-WARNING BEACON (12-VOLT, AMBER)	148
	2	1	**142-9327**	1	SWITCH AS-ROCKER (WARNING BEACON)	
		1	**111-7899**	1	GASKET	

Y-SEPARATE ILLUSTRATION

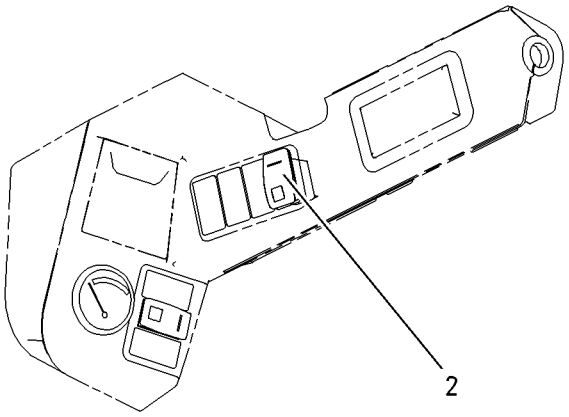

RH CONTROL PANEL

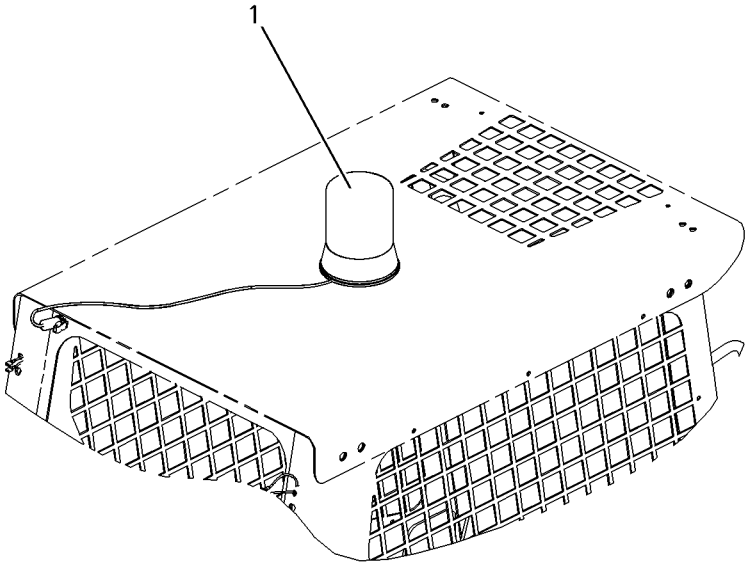

GRAPHIC #1 **<END>** g00867567

247-0323 SENSOR GP-TEMP & PRESS

S/N: CSD1-11322
PART OF 300-5206 ENGINE AR-PRIMARY
AN ATTACHMENT

SMCS-1906, 1924 **i02707018**

NOTE	REF NO	GRAPHIC REF	PART NUMBER	QTY	PART NAME 1 2 3 4 5 6 (PRODUCT LEVEL)	SEE PAGE
	1	1	**308-1222**	1	ADAPTER	
	2	1	**291-1265**	1	SWITCH-PRESSURE (ENGINE OIL)	
	3	1	**231-2999**	1	SWITCH-TEMPERATURE (ENGINE COOLANT)	
	4	1	**153-5936**	2	WASHER	

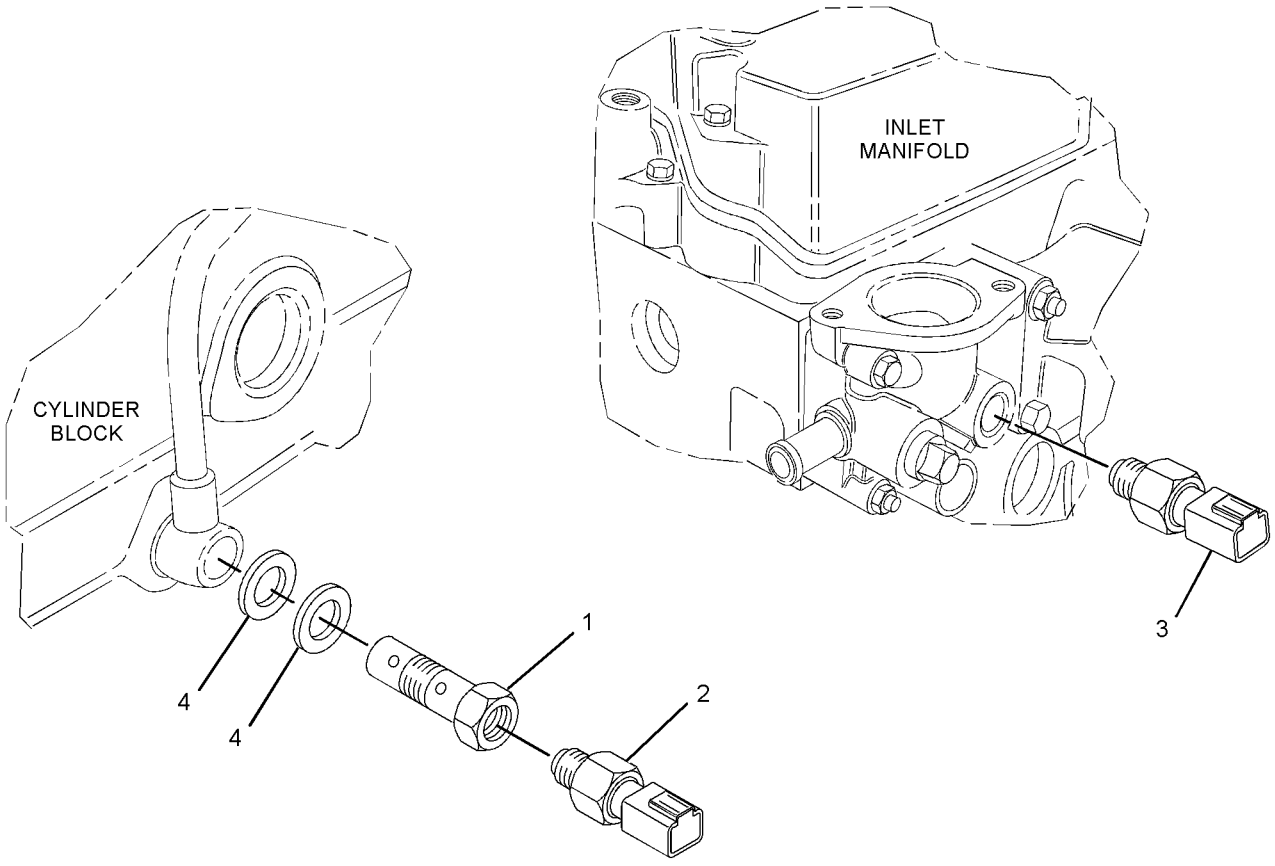

GRAPHIC #1 **<END>** g01369034

ELECTRICAL AND STARTING SYSTEM

163-3361 STARTING MOTOR GP-ELECTRIC

S/N: CSD1-11322; CYP1-UP
12-VOLT
PART OF 307-8201, 308-2293 STARTING MOTOR GP-ELECTRIC
AN ATTACHMENT

SMCS-1453 **i02385155**

NOTE	REF NO	GRAPHIC REF	PART NUMBER	QTY	PART NAME 1 2 3 4 5 6 (PRODUCT LEVEL)	SEE PAGE
	1	1	**242-7070**	1	BUSHING	
	2	1	**242-7071**	1	SOLENOID (STARTING MOTOR)	
	3	1	**242-7073**	1	BUSHING	
	4	1	**242-7074**	1	DRIVE-MOTOR	
	5	1	**242-7075**	1	HOLDER	
	6	1	**242-7076**	1	BUSHING	
	7	1	**242-7077**	1	KIT-STARTING MOTOR	
	8	1	**242-7078**	1	ARMATURE	

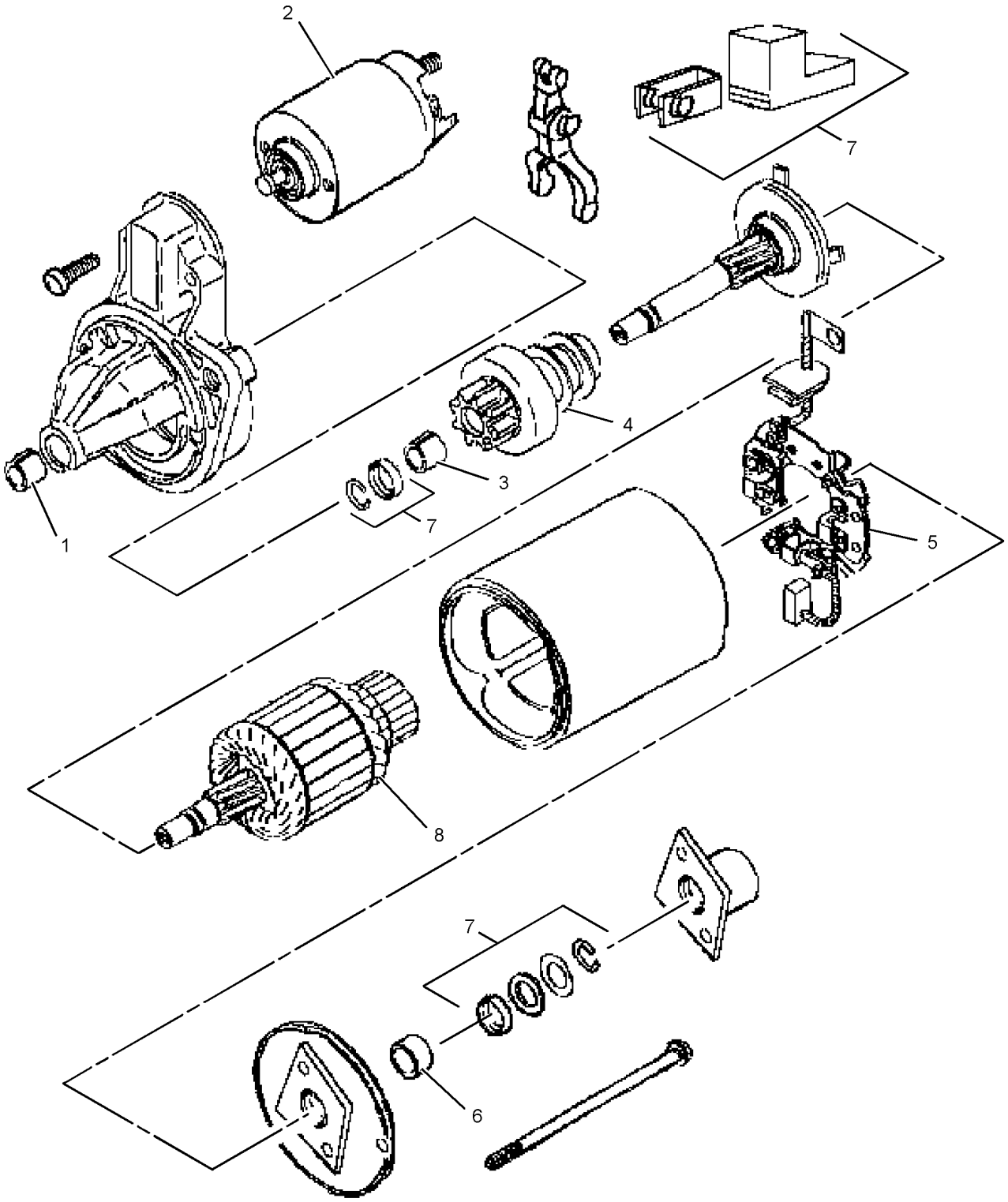

GRAPHIC #1 **<END>** g01158306

307-8201 STARTING MOTOR GP-ELECTRIC

S/N: CSD1-11322
PART OF 300-5206 ENGINE AR-PRIMARY
AN ATTACHMENT

SMCS-1453 **i02702403**

NOTE	REF NO	GRAPHIC REF	PART NUMBER	QTY	PART NAME 1 2 3 4 5 6 (PRODUCT LEVEL)	SEE PAGE
	1	1	**154-1399**	2	WASHER	
	2	1	**197-8004**	2	BOLT	
	3	1	**154-2403**	2	WASHER	
Y	4	1	**163-3361**	1	STARTING MOTOR GP-ELECTRIC	156

Y-SEPARATE ILLUSTRATION

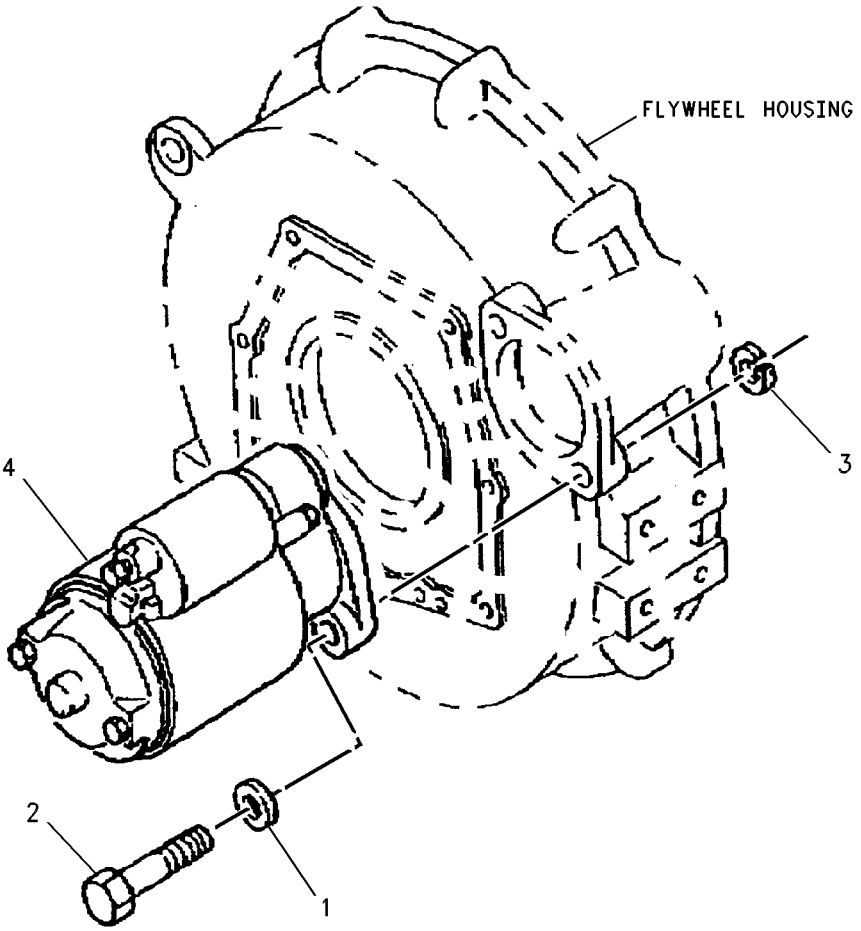

GRAPHIC #1 **<END>** g00582487

308-2293 STARTING MOTOR GP-ELECTRIC

S/N: CYP1-UP
PART OF 292-5719 ENGINE AR-PRIMARY
AN ATTACHMENT

SMCS-1453 **i02743439**

NOTE	REF NO	GRAPHIC REF	PART NUMBER	QTY	PART NAME 1 2 3 4 5 6 (PRODUCT LEVEL)	SEE PAGE
Y	1	1	**163-3361**	1	STARTING MOTOR GP-ELECTRIC	156

Y-SEPARATE ILLUSTRATION

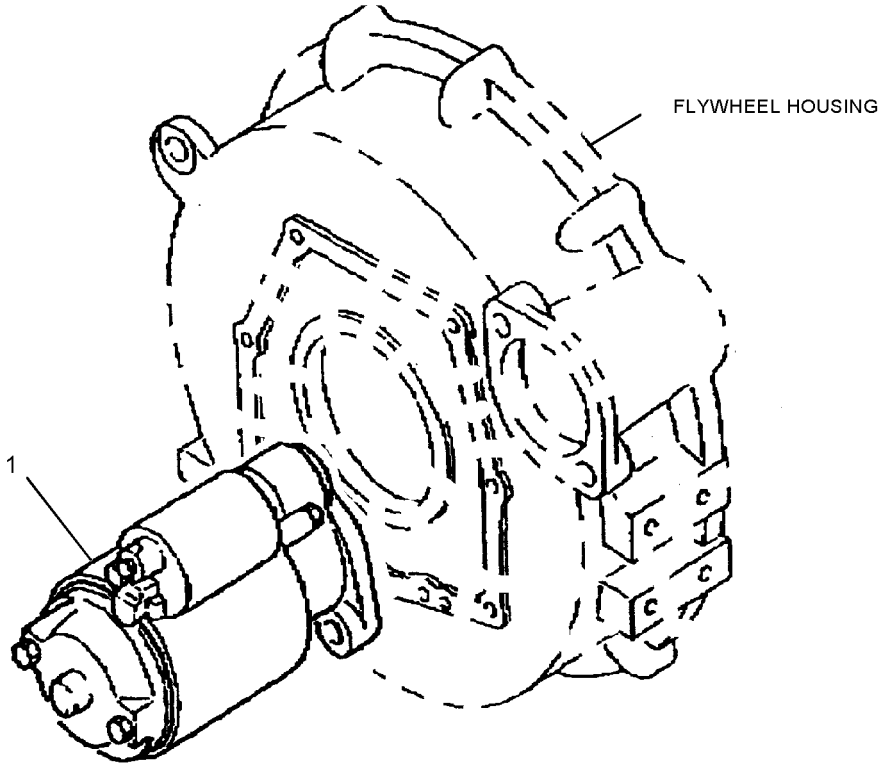

GRAPHIC #1 **<END>** g01140591

184-1564 SWITCH GP-PRESSURE–BRAKE LIGHT

S/N: SCH2475-UP

PART OF 277-0651 KIT-ROADING CONVERSION, 225-7964 WIRING GP-REAR LIGHTING AN ATTACHMENT

SMCS-1435, 7400 **i02570793**

NOTE	REF NO	GRAPHIC REF	PART NUMBER	QTY	PART NAME 1 2 3 4 5 6 (PRODUCT LEVEL)	SEE PAGE
	1	1	**9X-1813**		SLEEVE (19-CM)	
	2	1	**102-8802**	1	KIT-RECEPTACLE (2-PIN)	
					(INCLUDES RECECPTACLE AS & WEDGE)	
	3	1	**8T-8729**	2	PIN-CONNECTOR	
	4	1	**3E-3365**	1	WEDGE-RECEPTACLE LOCK (2-PIN)	
	5	1	**3J-1907**	1	SEAL-O-RING	

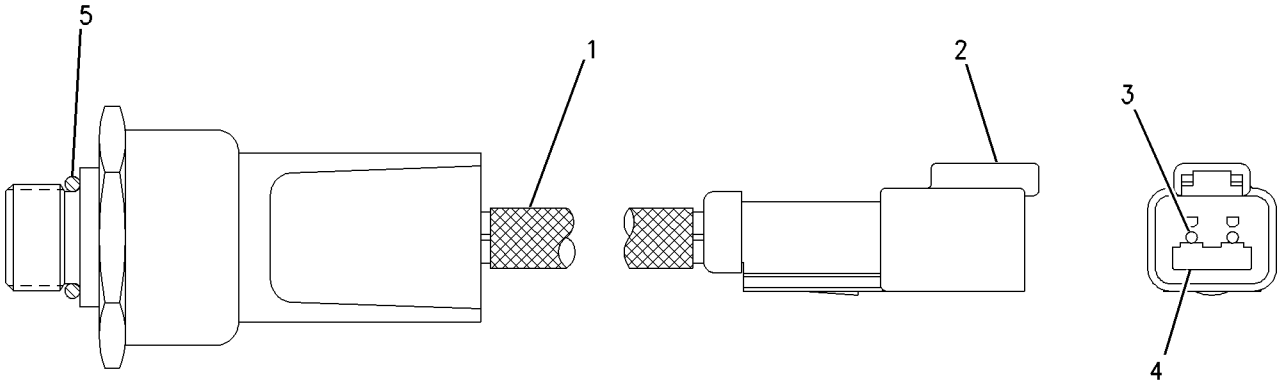

GRAPHIC #1 **<END>** g00788762

316-6890 SWITCH GP-PRESSURE

S/N: CYP1-UP
PART OF 292-5719 ENGINE AR-PRIMARY
AN ATTACHMENT

SMCS-1435, 7400 **i02862678**

NOTE	REF NO	GRAPHIC REF	PART NUMBER	QTY	PART NAME 1 2 3 4 5 6 (PRODUCT LEVEL)	SEE PAGE
	1	1	**153-5936**	2	WASHER	
	2	1	**183-1165**	1	PLUG	
	3	1	**291-1265**	1	SWITCH-PRESSURE (ENGINE OIL)	
	4	1	**308-1222**	1	ADAPTER	

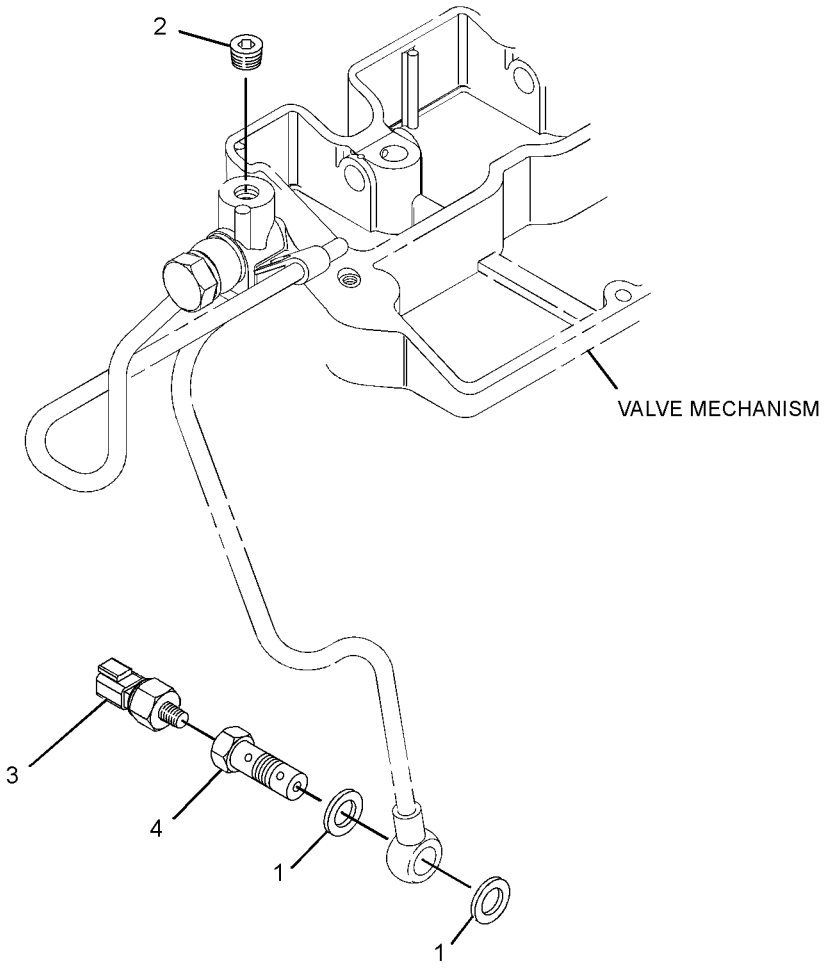

GRAPHIC #1 **<END>** g01439331

308-2317 SWITCH GP-TEMPERATURE–COOLANT

S/N: CYP1-UP

PART OF 292-5719 ENGINE AR-PRIMARY

AN ATTACHMENT

SMCS-1435, 7400 **i02752315**

NOTE	REF NO	GRAPHIC REF	PART NUMBER	QTY	PART NAME 1 2 3 4 5 6 (PRODUCT LEVEL)	SEE PAGE
	1	1	**231-2999**	1	SWITCH-TEMPERATURE (ENGINE COOLANT)	

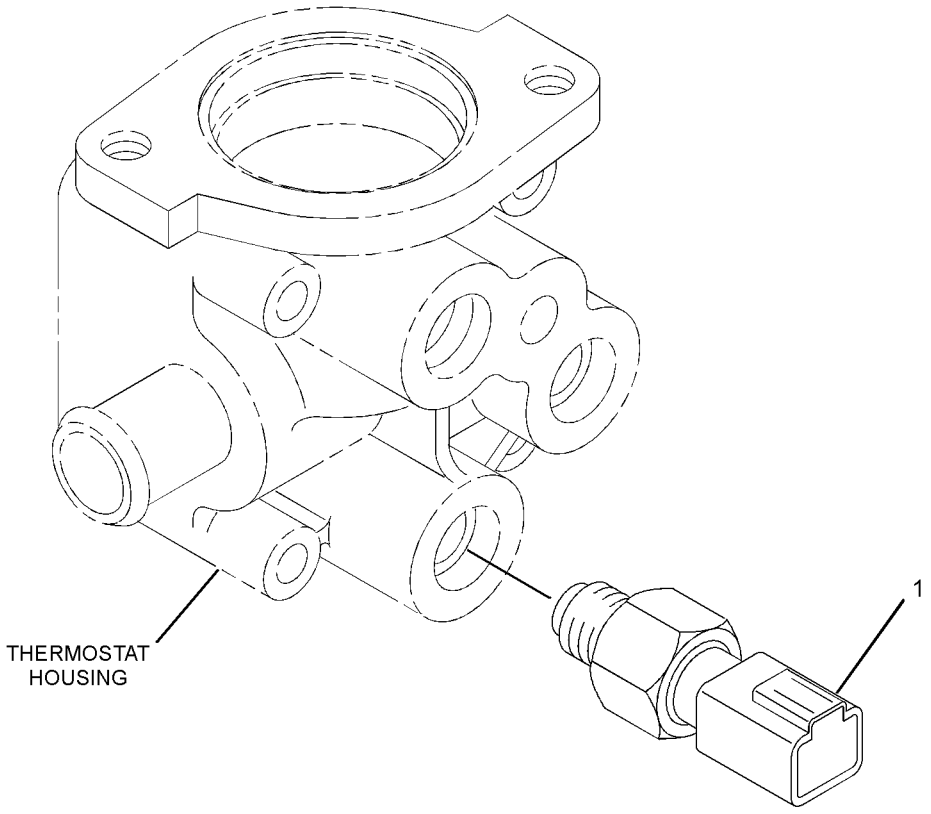

GRAPHIC #1 **<END>** g01416429

225-7969 WARNING GP-BACKUP

S/N: SCH2475-UP
PART OF 295-7232, 295-7233 COMMON AR
CANNOT BE USED WITH 142-8714—PAGE 322
ALSO AN ATTACHMENT

SMCS-7406 **i02359135**

NOTE	REF NO	GRAPHIC REF	PART NUMBER	QTY	PART NAME 1 2 3 4 5 6 (PRODUCT LEVEL)	SEE PAGE
	1	1	**8T-4205**	2	WASHER-HARD (7.2X14.5X2-MM THK)	
	2	1	**161-2539**	1	ALARM AS	
	3	1	**192-0836**	1	SWITCH GP-PRESSURE (BACKUP ALARM)	
		1	**102-8802**	2	KIT-RECEPTACLE (2-PIN)	
					(INCLUDES RECEPTACLE AS & WEDGE)	
		1	**3E-3365**	1	WEDGE-RECEPTACLE LOCK (2-PIN)	
		1	**3J-1907**	1	SEAL-O-RING	
		1	**8T-8729**	1	PIN-CONNECTOR	
M	4	1	**6V-7357**	2	BOLT (M6X1X25-MM)	
F		1	**113-8490**	1	FUSE (10-AMPERE)	

F-NOT SHOWN
M-METRIC PART

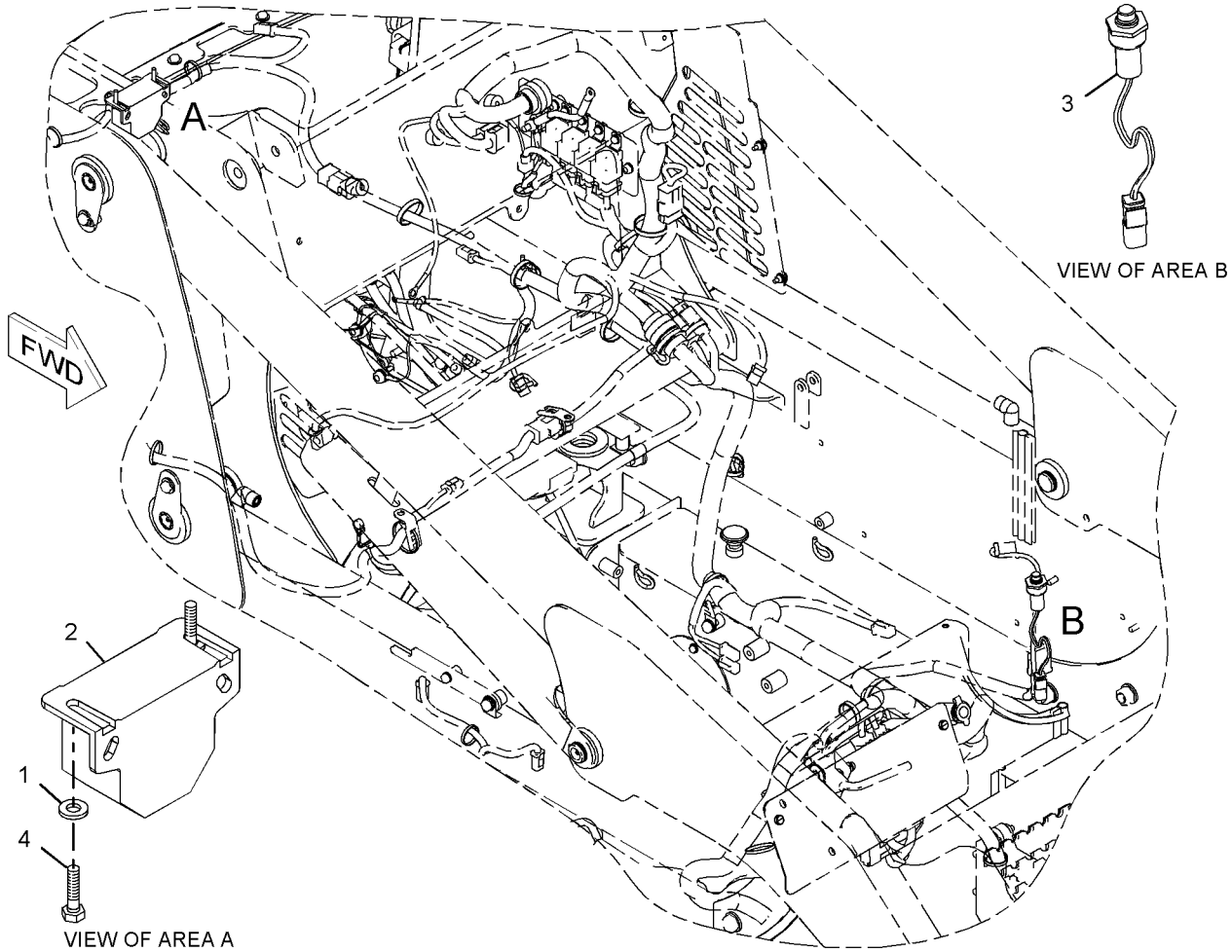

GRAPHIC #1 **<END>** g01030769

225-7948 WIRING GP-AIR CONDITIONER

S/N: SCH2475-UP
PART OF 218-6302 AIR CONDITIONER AR
AN ATTACHMENT

SMCS-1408, 7320 **i02359133**

NOTE	REF NO	GRAPHIC REF	PART NUMBER	QTY	PART NAME 1 2 3 4 5 6 (PRODUCT LEVEL)	SEE PAGE
	1	1	**3S-2093**	12	STRAP-CABLE	
	2	1	**202-2168**	1	HARNESS AS-FUEL TANK	
		1	**102-8802**	1	KIT-RECEPTACLE (2-PIN)	
					(INCLUDES RECEPTACLE AS & WEDGE)	
		1	**155-2270**	1	KIT-CONNECTING PLUG (2-PIN)	
					(INCLUDES PLUG AS, WEDGE & INTERFACE SEAL)	
	3	1	**221-3879**	1	HARNESS AS-HEATER & AIR COND	
		1	**155-2260**	1	KIT-CONNECTING PLUG (3-PIN)	
		1	**155-2270**	1	KIT-CONNECTING PLUG (2-PIN)	
					(EACH KIT INCLUDES PLUG AS, WEDGE & INTERFACE SEAL)	
BF		1	**124-3548**	1	FUSE (30-AMPERE)	
BF		1	**113-8491**	1	FUSE (15-AMPERE)	

B-USE AS REQUIRED
F-NOT SHOWN

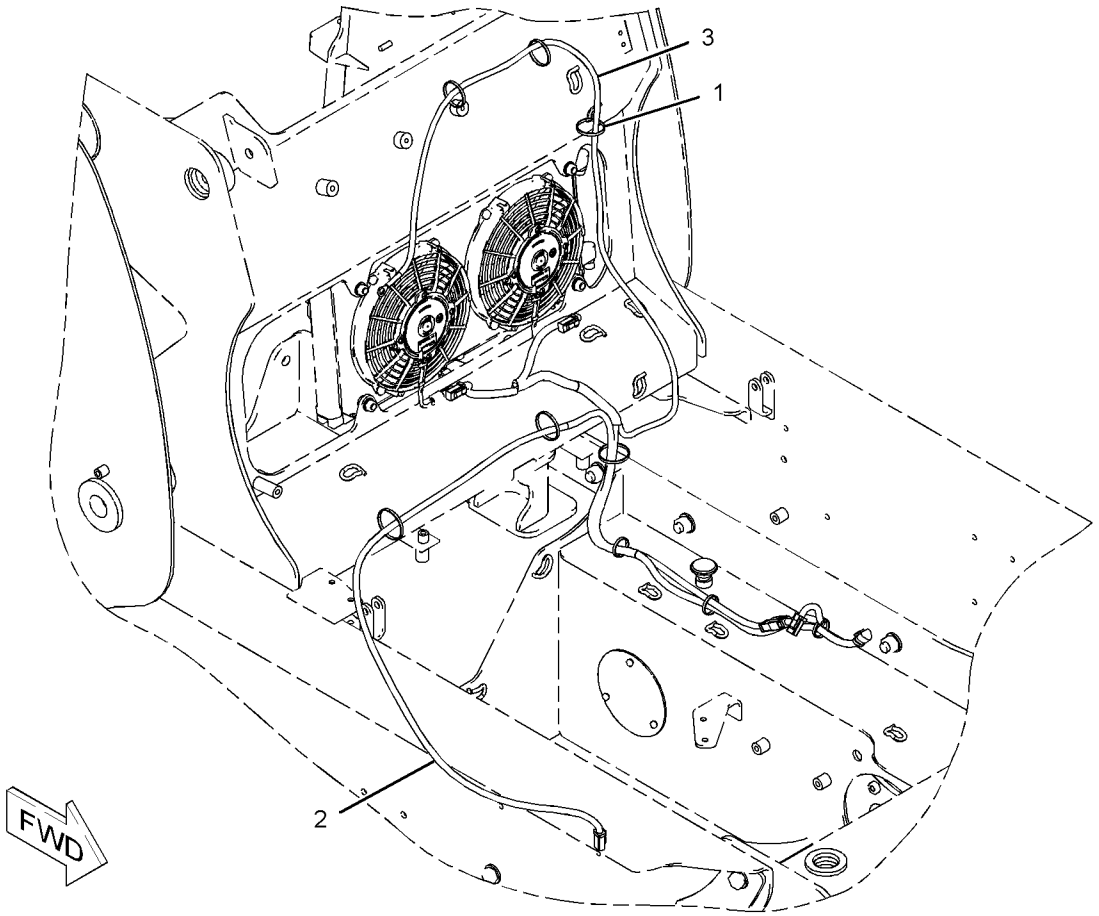

GRAPHIC #1 **<END>** g01029283

225-8001 WIRING GP-CHASSIS

S/N: SCH2475-UP

PART OF 295-7210 CHASSIS AR

SMCS-1408, 7051 **i02752329**

NOTE	REF NO	GRAPHIC REF	PART NUMBER	QTY	PART NAME 1 2 3 4 5 6 (PRODUCT LEVEL)	SEE PAGE
	1	1	**4B-4863**	2	WASHER (4.7X11X1.2-MM THK)	
	2	1	**6I-1418**	6	SPACER (8.2X12.7X28.7-MM THK)	
	3	1	**7K-1181**	10	STRAP-CABLE	
	4	1	**8M-4963**	1	STRAP AS-GROUND	
	5	1	**8T-8799**	2	BOOT	
	6	1	**8T-9655**	12	MOUNT-ISOLATION	
E	7	1	**9X-2092**		STRIP-EDGE (50-CM)	
	8	1	**090-9434**	3	SPACER (9X20X10-MM THK)	
	9	1	**114-4516**	1	BLOCK	
	10	1	**115-1615**	3	RELAY AS (12-VOLT) (MAIN POWER)	
Y	11	1	**154-4233**	1	CONTROL GP-INTERLOCK	127
	12	1	**3S-2093**	34	STRAP-CABLE	
	13	1	**178-7539**	1	RECEPTACLE AS (POWER SUPPLY)	
	14	1	**216-4703**	1	HARNESS AS-REAR LIGHTING	
E		1	**125-7874**		TUBE-HEAT SHRINK (5.72-MM DIA) (5-CM)	
E		1	**125-7875**		TUBE-HEAT SHRINK (7.44-MM DIA) (5-CM)	
		1	**155-2271**	2	KIT-CONNECTING PLUG (4-PIN)	
					(EACH INCLUDES PLUG AS, WEDGE & INTERFACE SEAL)	
		1	**102-8806**	1	KIT-RECEPTACLE (8-PIN)	
					(INCLUDES RECEPTACLE AS & WEDGE)	
Y	15	1	*216-4755*	1	COVER GP-FUSE PANEL	130
	16	1	**221-3880**	1	PANEL GP-FUSE	
		1	**124-3548**	1	FUSE (30-AMPERE)	
		1	**113-8490**	16	FUSE (10-AMPERE)	
		1	**113-8491**	5	FUSE (15-AMPERE)	
		1	**113-8492**	2	FUSE (20-AMPERE)	
	17	1	**225-5190**	1	BRACKET AS	
	18	1	**225-7981**	1	BRACKET AS	
	19	1	**225-7982**	1	WIRE AS	
Y	20	1	*225-8000*	1	ELECTRONICS GP-IMPLEMENT (WORK TOOL)	131
	21	1	**225-8002**	1	HARNESS AS-PLATFORM (LOWER)	
		1	**7R-2750**	16	SEAL-CONNECTOR	
		1	**7R-2751**	1	PLUG-CONNECTOR	
		1	**8C-6354**	1	CAP-RECEPTACLE	
		1	**9W-1951**	1	RECEPTACLE-CONNECTOR (9-PIN)	
E		1	**119-3662**		TUBE-HEAT SHRINK (10.85-MM DIA) (7-CM)	
E		1	**125-7874**		TUBE-HEAT SHRINK (5.72-MM DIA) (60-CM)	
E		1	**125-7875**		TUBE-HEAT SHRINK (7.44-MM DIA) (20-CM)	
E		1	**128-4123**		SEAL (7-CM)	
		1	**150-6764**	1	PLUG AS-CONNECTOR (26-PIN)	
		1	**150-6765**	1	PLUG AS-CONNECTOR (26-PIN)	
					(EACH PLUG AS INCLUDES)	
		1	**159-9322**	1	SEAL-O-RING	
		1	**155-2271**	1	KIT-CONNECTING PLUG (4-PIN)	
		1	**155-2255**	2	KIT-CONNECTING PLUG (12-PIN)	
		1	**155-2265**	1	KIT-CONNECTING PLUG (8-PIN)	
		1	**155-2270**	6	KIT-CONNECTING PLUG (2-PIN)	
					(EACH PLUG KIT INCLUDES PLUG AS, WEDGE & INTERFACE SEAL)	
		1	**102-8805**	1	KIT-RECEPTACLE (6-PIN)	
		1	**102-8801**	1	KIT-RECEPTACLE (12-PIN)	
		1	**177-9653**	1	KIT-RECEPTACLE (4-PIN)	
					(EACH RECEPTACLE KIT INCLUDES RECEPTACLE AS & WEDGE)	
		1	**196-2381**	1	KIT-CONNECTING PLUG (2-PIN)	

225-8001 **WIRING GP-CHASSIS** *(contd.)* **i02752329**

NOTE	REF NO	GRAPHIC REF	PART NUMBER	QTY	PART NAME 1 2 3 4 5 6 (PRODUCT LEVEL)	SEE PAGE
		1	**196-2382**	1	KIT-CONNECTING PLUG (2-PIN)	
					(EACH PLUG KIT INCLUDES PLUG AS & WEDGE)	
		1	**196-2383**	1	KIT-CONNECTING PLUG (8-PIN)	
		1	**196-2384**	1	KIT-CONNECTING PLUG (8-PIN)	
		1	**196-2385**	1	KIT-CONNECTING PLUG (8-PIN)	
					(EACH PLUG KIT INCLUDES PLUG AS, LOCK & TERMINAL AS)	
		1	**8L-8413**	7	STRAP-CABLE	
		1	**173-8919**	4	SEAL-CONNECTOR	
		1	**167-3692**	1	RECEPTACLE AS-CONNECTOR (31-PIN)	
	22	1	**292-1159**	1	HARNESS AS-PLATFORM	
		1	**102-8804**	1	KIT-RECEPTACLE (4-PIN)	
		1	**102-8801**	1	KIT-RECEPTACLE (12-PIN)	
					(EACH RECEPTACLE KIT INCLUDES RECEPTACLE AS & WEDGE)	
		1	**8L-8413**	28	STRAP-CABLE	
		1	**9X-1054**	4	PLUG AS-CONNECTOR (4-PIN)	
		1	**100-3320**	1	PLUG AS-CONNECTOR (2-PIN)	
		1	**126-5011**	1	SEAL-CONNECTOR	
E		1	**119-3662**		TUBE-HEAT SHRINK (10.85-MM DIA) (33-CM)	
E		1	**125-7874**		TUBE-HEAT SHRINK (5.72-MM DIA) (25-CM)	
E		1	**125-7875**		TUBE-HEAT SHRINK (7.44-MM DIA) (15-CM)	
		1	**155-2255**	3	KIT-CONNECTING PLUG (12-PIN)	
		1	**155-2265**	1	KIT-CONNECTING PLUG (8-PIN)	
		1	**155-2260**	2	KIT-CONNECTING PLUG (3-PIN)	
		1	**155-2270**	2	KIT-CONNECTING PLUG (2-PIN)	
		1	**155-2271**	2	KIT-CONNECTING PLUG (4-PIN)	
		1	**155-2274**	1	KIT-CONNECTING PLUG (6-PIN)	
					(EACH PLUG KIT INCLUDES PLUG AS, WEDGE & INTERFACE SEAL)	
		1	**177-9648**	1	KIT-CONNECTING PLUG (2-PIN)	
		1	**177-9656**	1	KIT-CONNECTING PLUG (4-PIN)	
					(EACH PLUG KIT INCLUDES PLUG AS & WEDGE)	
E		1	**211-5358**		CONDUIT-FLEXIBLE (30-CM)	
		1	**213-0139**	6	PIN	
		1	**167-3693**	2	PLUG AS-CONNECTOR (31-PIN)	
M	23	1	**8T-0389**	1	LOCKNUT (M10X1.5-THD)	
M	24	1	**095-0733**	2	SCREW-MACHINE (M4X0.7X40-MM)	
B	25	1	**155-2255**	1	KIT-CONNECTING PLUG (12-PIN)	
B	26	1	**155-2271**	1	KIT-CONNECTING PLUG (4-PIN)	
					(EACH PLUG KIT INCLUDES PLUG AS, WEDGE & INTERFACE SEAL)	
B	27	1	**102-8802**	2	KIT-RECEPTACLE (2-PIN)	
B	28	1	**102-8803**	1	KIT-RECEPTACLE (3-PIN)	
B	29	1	**102-8804**	3	KIT-RECEPTACLE (4-PIN)	
B	30	1	**102-8806**	1	KIT-RECEPTACLE (8-PIN)	
B	31	1	**177-9645**	1	KIT-RECEPTACLE (2-PIN)	
					(EACH RECEPTACLE KIT INCLUDES RECEPTACLE AS & WEDGE)	
	32	1	**4P-7581**	3	CLIP	
	33	1	**4P-8134**	5	CLIP	
	34	1	**246-9371**	1	RELAY AS (SHELL)	
M	35	1	**5C-7261**	3	NUT (M8X1.25-THD)	
M	36	1	**5C-9553**	4	BOLT (M6X1X16-MM)	
M	37	1	**6V-5698**	2	SCREW-BUTTON HEAD (M4X0.7X10-MM)	
	38	1	**7X-0579**	6	WASHER-HARD (8.8X25.5X2-MM THK)	
M	39	1	**7X-0818**	6	BOLT (M8X1.25X45-MM)	
	40	1	**8C-8558**	2	SCREW-LOCK (4-40X0.25-IN)	
	41	1	**8T-4121**	5	WASHER-HARD (11X21X2.5-MM THK)	
M	42	1	**8T-4133**	3	NUT (M10X1.5-THD)	

225-8001 **WIRING GP-CHASSIS** *(contd.)* **i02752329**

NOTE	REF NO	GRAPHIC REF	PART NUMBER	QTY	PART NAME 1 2 3 4 5 6 (PRODUCT LEVEL)	SEE PAGE
M	43	1	**8T-4191**	2	BOLT (M10X1.5X16-MM)	
	44	1	**8T-4205**	4	WASHER-HARD (7.2X14.5X2-MM THK)	
	45	1	**8T-4224**	3	WASHER-HARD (8.8X16X2-MM THK)	
M	46	1	**9X-2044**	4	SCREW-TRUSS HEAD (M6X1X16-MM)	
B	49	1	**8T-8737**	45	PLUG-SEAL	
	50	1	**178-3620**	4	STRAP-DUAL CLAMP	

B-USE AS REQUIRED
E-ORDER BY THE CENTIMETER
M-METRIC PART
Y-SEPARATE ILLUSTRATION

225-8001 **WIRING GP-CHASSIS** *(contd.)* **i02752329**

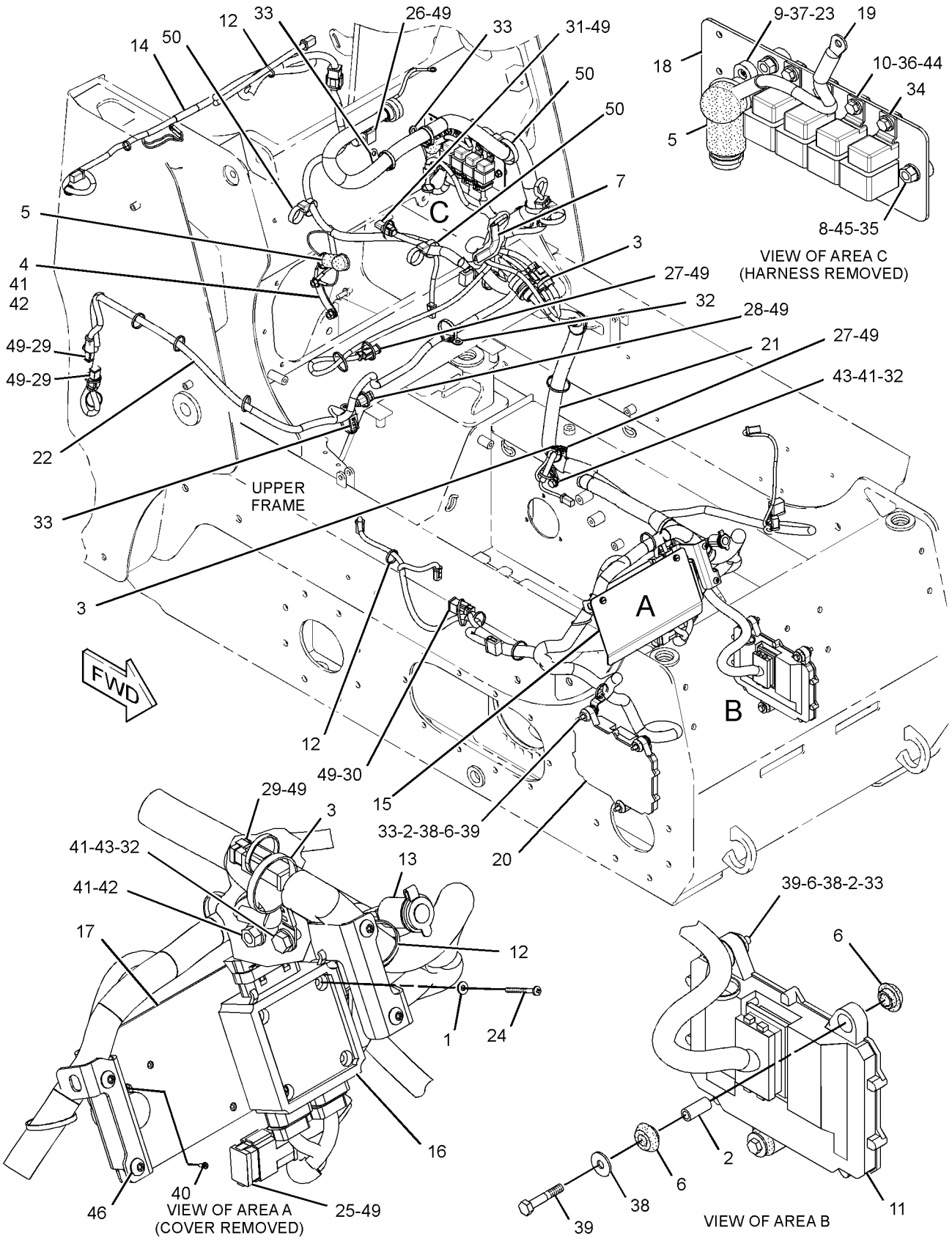

GRAPHIC #1 **<END>** g01381581

ELECTRICAL AND STARTING SYSTEM

225-8010 WIRING GP-ENGINE

S/N: SCH2475-2824

PART OF 295-7027 INSTALLATION AR-ENGINE

SMCS-1000, 1408, 1420 **i02807727**

NOTE	REF NO	GRAPHIC REF	PART NUMBER	QTY	PART NAME 1 2 3 4 5 6 (PRODUCT LEVEL)	SEE PAGE
	1	1	**4B-4274**	2	WASHER (5.5X13X1.2-MM THK)	
	2	1	**5L-4507**	2	SCREW-MACHINE (10-32X0.875-IN)	
	3	1	**7G-1060**	1	STRAP AS-GROUND	
	4	1	**8F-1434**	2	LOCKWASHER	
	5	1	**090-9434**	3	SPACER (9X20X10-MM THK)	
	6	1	**115-1615**	1	RELAY AS (12-VOLT) (COLD START)	
	6A	1	**115-1615**	1	RELAY AS (12-VOLT) (START)	
C	7	1	**106-8704**	1	SUPPRESSOR AS-ARC	
		1	**102-8802**	1	KIT-RECEPTACLE (2-PIN)	
					(INCLUDES RECEPTACLE AS & WEDGE)	
		1	**186-3735**	2	PIN-CONNECTOR (16-GA TO 18-GA)	
	8	1	**171-2212**	1	CIRCUIT BREAKER AS (105-AMPERE)	
		1	**253-2111**	2	LOCKWASHER	
		1	**6V-8187**	2	NUT (1/4-28-THD)	
		1	**8T-4205**	2	WASHER-HARD (7.2X14.5X2-MM THK)	
	9	1	**225-7954**	1	CABLE AS-BATTERY (POSITIVE)	
	10	1	**225-7980**	1	BRACKET AS	
C	11	1	**270-2702**	1	HARNESS AS-ENGINE	
		1	**102-8802**	1	KIT-RECEPTACLE (2-PIN)	
					(INCLUDES RECEPTACLE AS & WEDGE)	
		1	**7K-1181**	2	STRAP-CABLE	
		1	**155-2270**	2	KIT-CONNECTING PLUG (2-PIN)	
					(EACH INCLUDES PLUG AS, WEDGE & INTERFACE SEAL)	
	12	1	**264-8106**	1	HARNESS AS-ENGINE	
		1	**102-8801**	1	KIT-RECEPTACLE (12-PIN)	
					(INCLUDES RECEPTACLE AS & WEDGE)	
		1	**8L-8413**	7	STRAP-CABLE	
		1	**8T-8799**	2	BOOT	
		1	**9X-1054**	2	PLUG AS-CONNECTOR (4-PIN)	
E		1	**119-3662**		TUBE-HEAT SHRINK (10.85-MM DIA) (7-CM)	
E		1	**125-7874**		TUBE-HEAT SHRINK (5.72-MM DIA) (10-CM)	
E		1	**125-7875**		TUBE-HEAT SHRINK (7.44-MM DIA) (5-CM)	
		1	**155-2270**	4	KIT-CONNECTING PLUG (2-PIN)	
		1	**155-2271**	1	KIT-CONNECTING PLUG (4-PIN)	
					(EACH PLUG KIT INCLUDES PLUG AS, WEDGE & INTERFACE SEAL)	
E		1	**211-5358**		CONDUIT-FLEXIBLE (32-CM)	
	13	1	**238-9397**	1	RESISTOR AS	
		1	**102-8802**	1	KIT-RECEPTACLE (2-PIN)	
					(INCLUDES RECEPTACLE AS & WEDGE)	
		1	**186-3735**	2	PIN-CONNECTOR (16-GA TO 18-GA)	
	14	1	**172-9200**	1	SUPPRESSOR-ARC	
	15	1	**1H-3244**	1	LOCKWASHER	
C	16	1	**3S-2093**	10	STRAP-CABLE	
	17	1	**4P-8134**	1	CLIP	
M	18	1	**5C-2874**	2	NUT (M5X0.8-THD)	
M	19	1	**5C-2890**	1	NUT (M6X1-THD)	
M	20	1	**5C-7261**	4	NUT (M8X1.25-THD)	
M	21	1	**5C-9553**	2	BOLT (M6X1X16-MM)	
	22	1	**8T-0328**	2	WASHER-HARD (5.5X10X1-MM THK)	
	23	1	**8T-4121**	2	WASHER-HARD (11X21X2.5-MM THK)	
M	24	1	**8T-4133**	1	NUT (M10X1.5-THD)	
M	25	1	**8T-4200**	1	BOLT (M8X1.25X16-MM)	
	26	1	**8T-4205**	3	WASHER-HARD (7.2X14.5X2-MM THK)	
	27	1	**8T-4224**	4	WASHER-HARD (8.8X16X2-MM THK)	

225-8010 **WIRING GP-ENGINE** *(contd.)* **i02807727**

NOTE	REF NO	GRAPHIC REF	PART NUMBER	QTY	PART NAME 1 2 3 4 5 6 (PRODUCT LEVEL)	SEE PAGE
	29	1	**7K-1181**	1	STRAP-CABLE	
	30	1	**8T-4122**	1	WASHER-HARD (17X32X3.5-MM THK)	
	31	1	**104-6202**	1	CLIP	
M	32	1	**141-5453**	1	BOLT (M14X1.5X30-MM)	

C-CHANGE FROM PREVIOUS TYPE
E-ORDER BY THE CENTIMETER
M-METRIC PART

225-8010 **WIRING GP-ENGINE** *(contd.)* **i02807727**

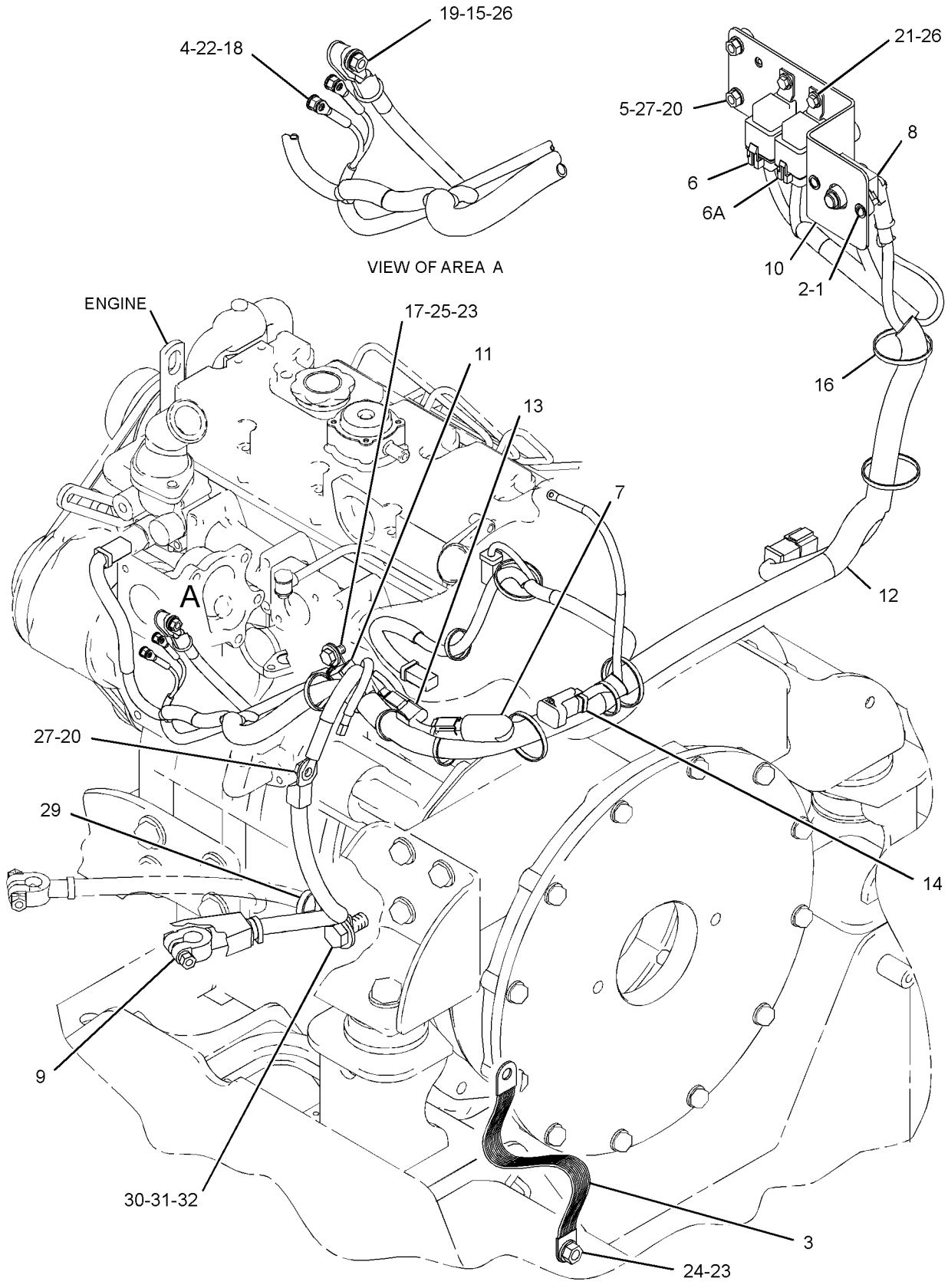

GRAPHIC #1 **<END>** g01416086

ELECTRICAL AND STARTING SYSTEM

225-8010 WIRING GP-ENGINE

S/N: SCH2825-UP

PART OF 295-7028 INSTALLATION AR-ENGINE

SMCS-1000, 1408, 1420 **i02881009**

NOTE	REF NO	GRAPHIC REF	PART NUMBER	QTY	PART NAME 1 2 3 4 5 6 (PRODUCT LEVEL)	SEE PAGE
	1	1	**4B-4274**	2	WASHER (5.5X13X1.2-MM THK)	
	2	1	**5L-4507**	2	SCREW-MACHINE (10-32X0.875-IN)	
	3	1	**7G-1060**	1	STRAP AS-GROUND	
	4	1	**8F-1434**	2	LOCKWASHER	
	5	1	**090-9434**	3	SPACER (9X20X10-MM THK)	
	6	1	**115-1615**	1	RELAY AS (12-VOLT) (COLD START)	
	6A	1	**115-1615**	1	RELAY AS (12-VOLT) (START)	
	7	1	**106-8704**	1	SUPPRESSOR AS-ARC	
	8	1	**171-2212**	1	CIRCUIT BREAKER AS (105-AMPERE)	
		1	**253-2111**	2	LOCKWASHER	
		1	**6V-8187**	2	NUT (1/4-28-THD)	
		1	**8T-4205**	2	WASHER-HARD (7.2X14.5X2-MM THK)	
	9	1	**225-7954**	1	CABLE AS-BATTERY (POSITIVE)	
	10	1	**225-7980**	1	BRACKET AS	
C	11	1	**317-2691**	1	HARNESS AS-ENGINE	
C	12	1	**318-0555**	1	HARNESS AS-WIRING (GLOW PLUG)	
	13	1	**238-9397**	1	RESISTOR AS	
		1	**102-8802**	1	KIT-RECEPTACLE (2-PIN)	
					(INCLUDES RECEPTACLE AS & WEDGE)	
		1	**186-3735**	2	PIN-CONNECTOR (16-GA TO 18-GA)	
	14	1	**172-9200**	1	SUPPRESSOR-ARC	
	15	1	**1H-3244**	1	LOCKWASHER	
	16	1	**3S-2093**	10	STRAP-CABLE	
	17	1	**4P-8134**	1	CLIP	
M	18	1	**5C-2874**	2	NUT (M5X0.8-THD)	
M	19	1	**5C-2890**	1	NUT (M6X1-THD)	
CM	20	1	**5C-7261**	3	NUT (M8X1.25-THD)	
M	21	1	**5C-9553**	2	BOLT (M6X1X16-MM)	
	22	1	**8T-0328**	2	WASHER-HARD (5.5X10X1-MM THK)	
	23	1	**8T-4121**	2	WASHER-HARD (11X21X2.5-MM THK)	
M	24	1	**8T-4133**	1	NUT (M10X1.5-THD)	
M	25	1	**8T-4200**	1	BOLT (M8X1.25X16-MM)	
	26	1	**8T-4205**	3	WASHER-HARD (7.2X14.5X2-MM THK)	
C	27	1	**8T-4224**	3	WASHER-HARD (8.8X16X2-MM THK)	
	29	1	**7K-1181**	1	STRAP-CABLE	
	30	1	**8T-4122**	1	WASHER-HARD (17X32X3.5-MM THK)	
	31	1	**104-6202**	1	CLIP	
M	32	1	**141-5453**	1	BOLT (M14X1.5X30-MM)	

C-CHANGE FROM PREVIOUS TYPE
M-METRIC PART

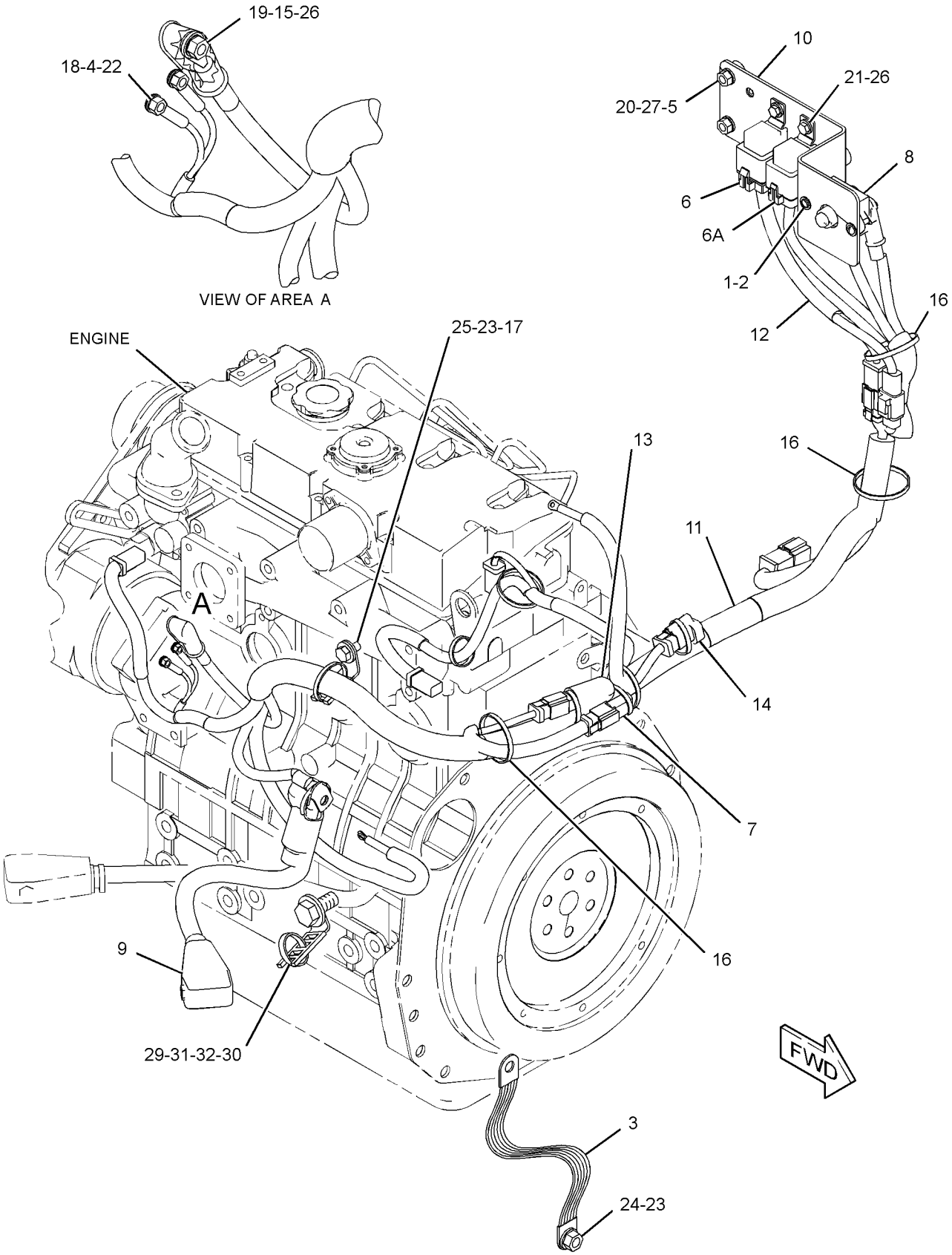

GRAPHIC #1 **<END>** g01437866

230-3743 WIRING GP-HORN

S/N: SCH2475-UP

PART OF 261-6156, 278-5348, 278-5370, 278-5414, 295-7060, 295-7067, 295-7150, 295-7163 CONVERSION AR-MACHINE, 233-5681, 233-5682, 233-5683, 233-5684 CONVERSION AR-ROADING AN ATTACHMENT

SMCS-1408, 7402 **i02757122**

NOTE	REF NO	GRAPHIC REF	PART NUMBER	QTY	PART NAME 1 2 3 4 5 6 (PRODUCT LEVEL)	SEE PAGE
	1	1	**3S-2093**	5	STRAP-CABLE	
M	2	1	**8T-4186**	1	BOLT (M10X1.5X40-MM)	
	3	1	**142-8833**	1	SPACER (11X14.3X9-MM THK)	
M	4	1	**8T-4133**	1	NUT (M10X1.5-THD)	
	5	1	**186-3362**	1	HARNESS AS-CHASSIS (HORN)	
		1	**102-8802**	1	KIT-RECEPTACLE (2-PIN)	
					(INCLUDES RECEPTACLE AS & WEDGE)	
		1	**155-2270**	1	KIT-CONNECTING PLUG (2-PIN)	
					(INCLUDES PLUG AS, WEDGE & INTERFACE SEAL)	
	6	1	**8T-4121**	3	WASHER-HARD (11X21X2.5-MM THK)	

M-METRIC PART

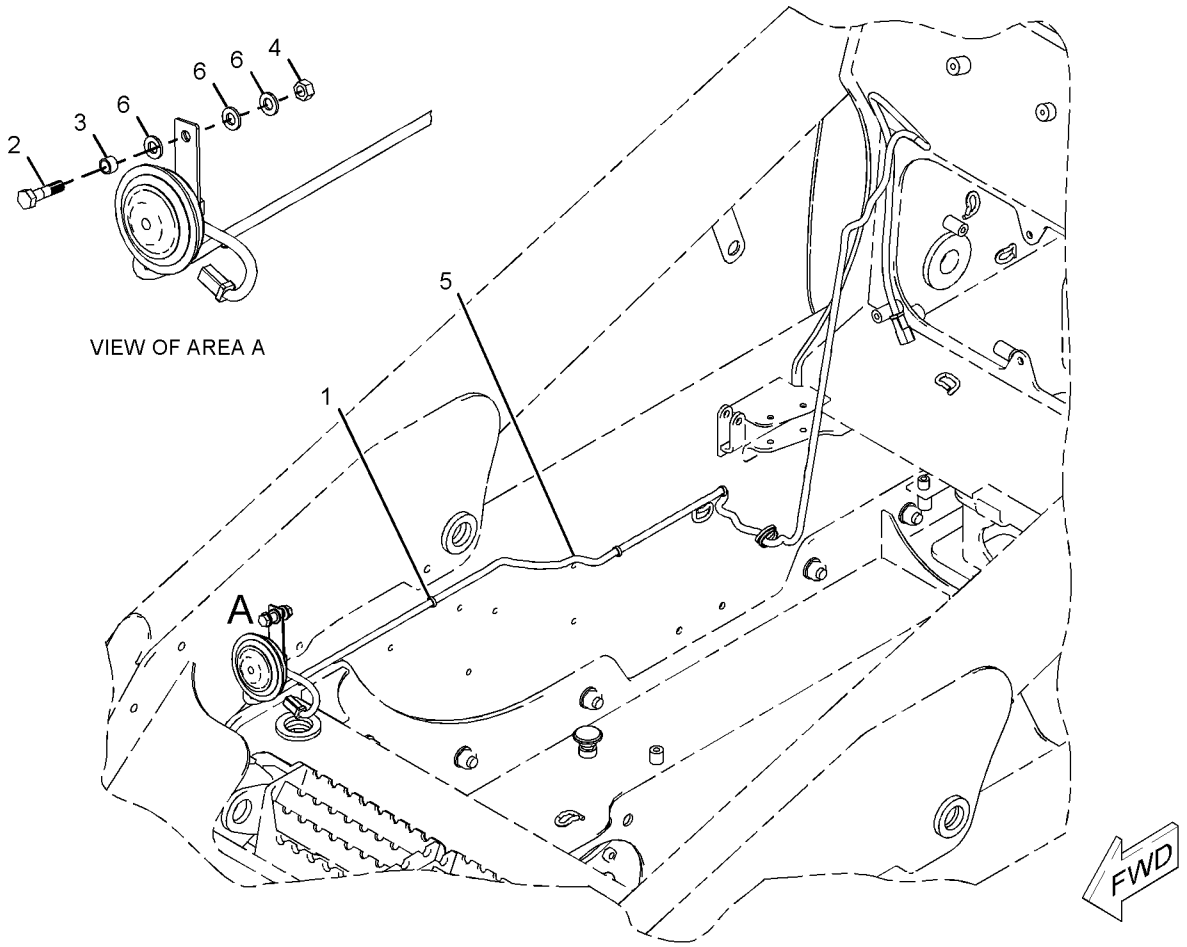

GRAPHIC #1 **<END>** g01037702

272-1625 WIRING GP-MACHINE–DEMAND FAN

S/N: SCH2475-UP
STAGE II SOUND
PART OF 295-7060, 295-7067, 295-7150, 295-7163 CONVERSION AR-MACHINE
AN ATTACHMENT

SMCS-1408 **i02639958**

NOTE	REF NO	GRAPHIC REF	PART NUMBER	QTY	PART NAME 1 2 3 4 5 6 (PRODUCT LEVEL)	SEE PAGE
	1	1	**7K-1181**	10	STRAP-CABLE	
	2	1	**8T-8737**	5	PLUG-SEAL	
	3	1	**206-2423**	8	SADDLE	
C	4	1	**292-9624**	1	CONTROL GP-FAN	
	5	1	**272-1626**	1	HARNESS AS-SWITCH	
		1	**102-8803**	1	KIT-RECEPTACLE (3-PIN)	
					(INCLUDES RECEPTACLE AS & WEDGE)	
		1	**8L-8413**	10	STRAP-CABLE	
E		1	**119-3662**		TUBE-HEAT SHRINK (10.85-MM DIA) (7-CM)	
E		1	**125-7874**		TUBE-HEAT SHRINK (5.72-MM DIA) (10-CM)	
		1	**155-2260**	3	KIT-CONNECTING PLUG (3-PIN)	
		1	**155-2270**	3	KIT-CONNECTING PLUG (2-PIN)	
		1	**155-2271**	1	KIT-CONNECTING PLUG (4-PIN)	
					(EACH PLUG KIT INCLUDES PLUG AS, WEDGE & INTERFACE SEAL)	
		1	**230-4011**	1	PLUG AS-CONNECTOR (2-PIN)	
		1	**253-8110**	1	PLUG	
	6	1	**278-1061**	1	BRACKET AS	
	7	1	**205-7048**	3	INSERT-THREADED (M6X1-THD)	
	8	1	**102-8802**	1	KIT-RECEPTACLE (2-PIN)	
	9	1	**102-8803**	1	KIT-RECEPTACLE (3-PIN)	
					(EACH RECEPTACLE KIT INCLUDES RECEPTACLE AS & WEDGE)	
	10	1	**3S-2093**	19	STRAP-CABLE	
	11	1	**4P-8134**	1	CLIP (LADDER)	
M	12	1	**8T-4138**	3	BOLT (M6X1X20-MM)	
	13	1	**8T-4205**	5	WASHER-HARD (7.2X14.5X2-MM THK)	
M	14	1	**8T-4971**	2	BOLT (M6X1X30-MM)	

C-CHANGE FROM PREVIOUS TYPE
E-ORDER BY THE CENTIMETER
M-METRIC PART

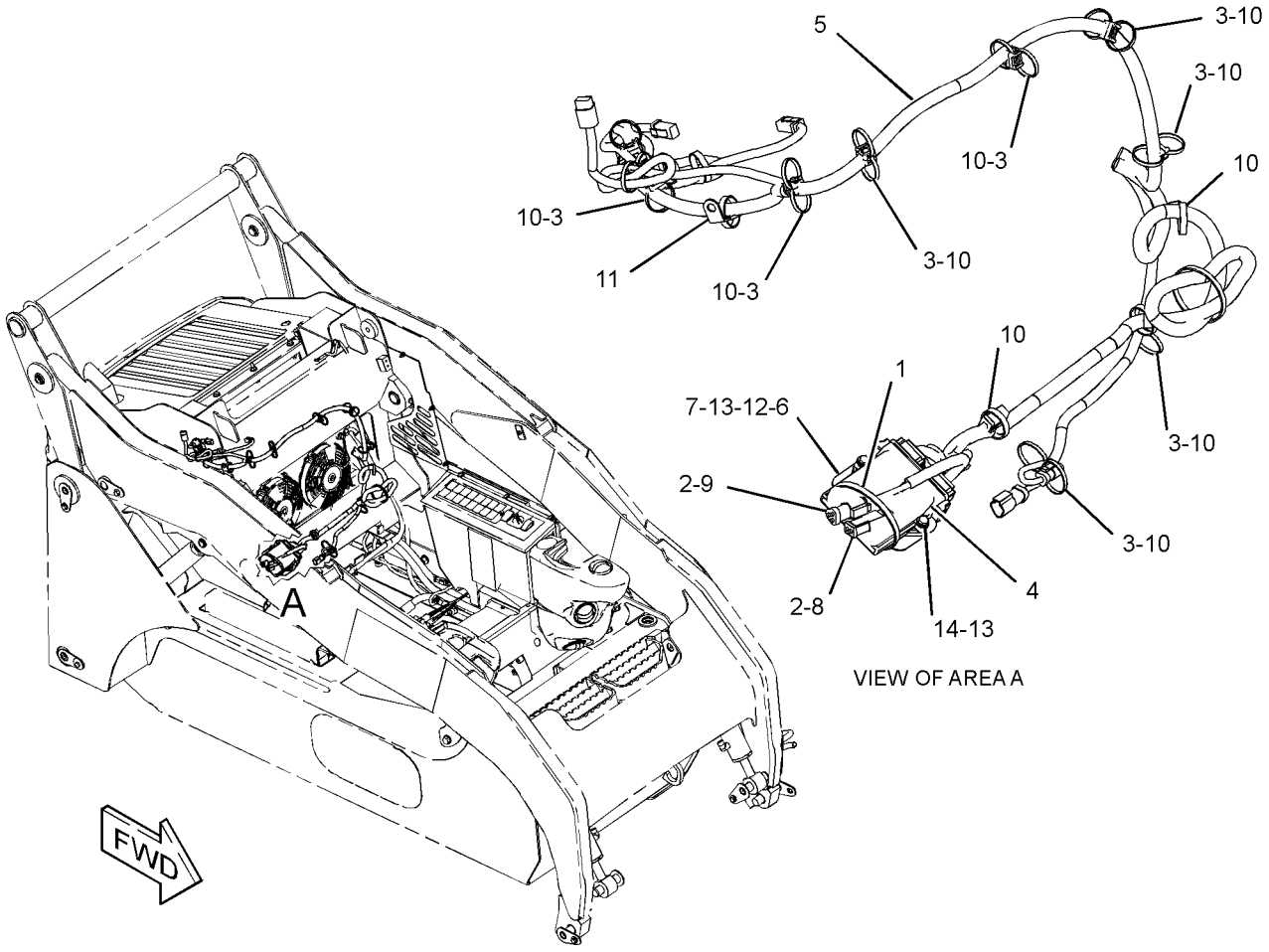

GRAPHIC #1 **<END>** g01229171

225-7964 WIRING GP-REAR LIGHTING

S/N: SCH2475-UP
PART OF 278-5370, 295-7150 CONVERSION AR-MACHINE, 233-5683 CONVERSION AR-ROADING
AN ATTACHMENT

SMCS-1408, 1429 **i02359264**

NOTE	REF NO	GRAPHIC REF	PART NUMBER	QTY	PART NAME 1 2 3 4 5 6 (PRODUCT LEVEL)	SEE PAGE
	1	1	**115-1615**	1	RELAY AS (12-VOLT) (BRAKE LIGHT)	
	2	1	*166-2033*	2	TEE AS	
					(EACH INCLUDES)	
		1	**4J-5477**	1	SEAL-O-RING	
		1	**7X-2444**	1	TEE-SWIVEL	
Y	3	1	**184-1564**	2	SWITCH GP-PRESSURE (BRAKE LIGHT)	160
	4	1	**216-4711**	1	HARNESS AS-REAR LIGHTING (BRAKE)	
		1	**102-8803**	1	KIT-RECEPTACLE (3-PIN)	
					(INCLUDES RECEPTACLE AS & WEDGE)	
		1	**155-2270**	2	KIT-CONNECTING PLUG (2-PIN)	
					(EACH INCLUDES PLUG AS, WEDGE & INTERFACE SEAL)	
B	5	1	**3S-2093**	4	STRAP-CABLE	

B-USE AS REQUIRED
Y-SEPARATE ILLUSTRATION

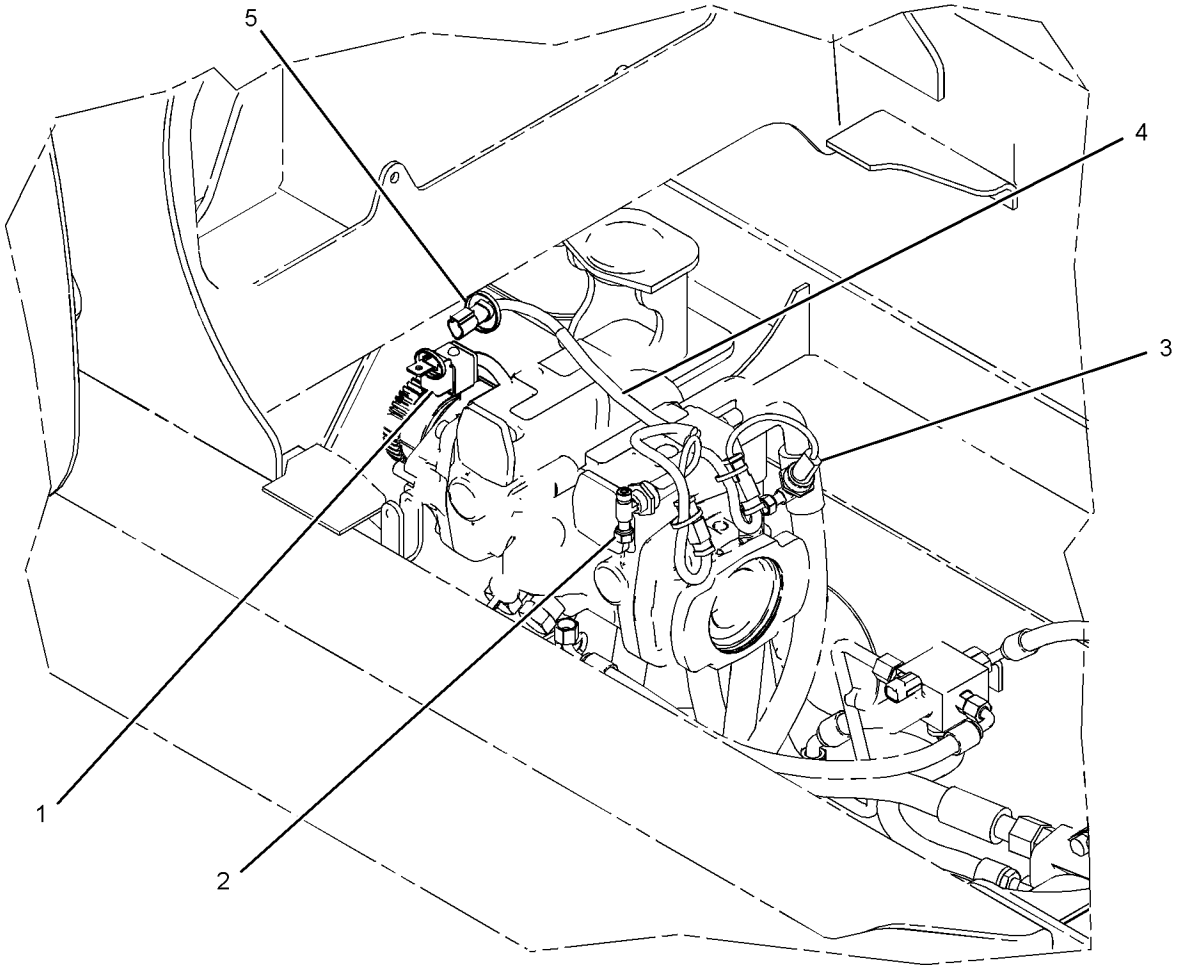

GRAPHIC #1 **<END>** g01030665

216-4724 WIRING GP-WORK TOOL

S/N: SCH2475-UP

PART OF 218-5947 CONTROL GP-PILOT OPERATED HYD

AN ATTACHMENT

SMCS-1408 **i02534370**

NOTE	REF NO	GRAPHIC REF	PART NUMBER	QTY	PART NAME 1 2 3 4 5 6 (PRODUCT LEVEL)	SEE PAGE
	1	1	**4B-4863**	2	WASHER (4.7X11X1.2-MM THK)	
	2	1	**115-1615**	1	RELAY AS (12-VOLT) (MAIN POWER)	
	3	1	**142-8633**	1	SWITCH AS-ROCKER (ELECTRIC POWER, WORK TOOL)	
		1	**111-7899**	1	GASKET	
	4	1	**146-9439**	1	RELAY AS (12-VOLT) (WORK TOOL)	
	5	1	**159-9495**	1	NUT (1-1/2-18-THD)	
	6	1	**159-9496**	1	LOCKWASHER	
	7	1	**216-4725**	1	HARNESS AS-WORK TOOL (LIFT ARM)	
		1	**156-1460**	1	RECEPTACLE (8-PIN)	
	8	1	**221-3881**	1	PANEL GP-FUSE	
		1	**113-8490**	4	FUSE (10-AMPERE)	
		1	**113-8491**	2	FUSE (15-AMPERE)	
		1	**146-9439**	5	RELAY AS (12-VOLT)	
		1	**215-5564**	2	SUPPRESSOR-ARC	
	9	1	**225-8012**	1	HARNESS AS-WORK TOOL (PLATFORM)	
		1	**177-9645**	1	KIT-RECEPTACLE (2-PIN)	
					(INCLUDES RECEPTACLE AS & WEDGE)	
		1	**155-2255**	1	KIT-CONNECTING PLUG (12-PIN)	
		1	**155-2265**	1	KIT-CONNECTING PLUG (8-PIN)	
					(EACH PLUG KIT INCLUDES PLUG AS, WEDGE & INTERFACE SEAL)	
		1	**196-2382**	1	KIT-CONNECTING PLUG (2-PIN)	
		1	**196-2383**	1	KIT-CONNECTING PLUG (8-PIN)	
		1	**196-2384**	1	KIT-CONNECTING PLUG (8-PIN)	
M	10	1	**095-0733**	2	SCREW-MACHINE (M4X0.7X40-MM)	
	11	1	**3S-2093**	7	STRAP-CABLE	
M	12	1	**5C-9553**	1	BOLT (M6X1X16-MM)	
	13	1	**8T-4205**	1	WASHER-HARD (7.2X14.5X2-MM THK)	
	14	1	**102-8806**	1	KIT-RECEPTACLE (8-PIN)	
					(INCLUDES RECEPTACLE AS & WEDGE)	
	15	1	**3E-3389**	1	WEDGE-RECEPTACLE LOCK	
	16	1	**178-3620**	1	STRAP-DUAL CLAMP	
	17	1	**110-8760**	1	STRAP	

M-METRIC PART

216-4724 **WIRING GP-WORK TOOL** *(contd.)* **i02534370**

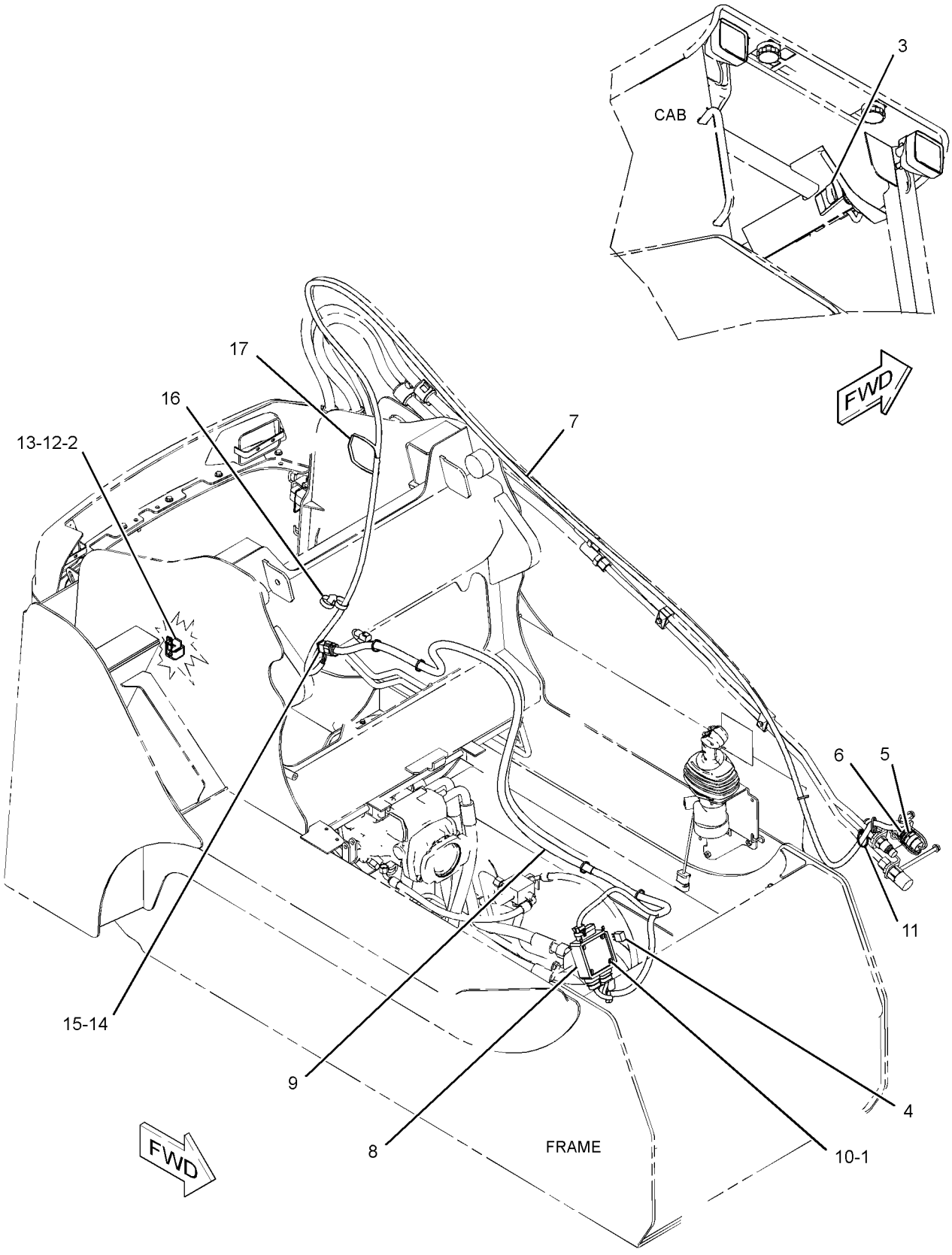

GRAPHIC #1 **<END>** g01315475

POWER TRAIN

142-8758 AXLE GP

S/N: SCH2475-UP
PART OF 261-6255 AXLE GP
ALSO AN ATTACHMENT

SMCS-3278 **i01790260**

NOTE	REF NO	GRAPHIC REF	PART NUMBER	QTY	PART NAME 1 2 3 4 5 6 (PRODUCT LEVEL)	SEE PAGE
	1	1	**142-8723**	1	HOUSING-AXLE	
	2	1	**142-8724**	1	SPINDLE-WHEEL	
	3	1	**142-8729**	1	SPACER (32.045 MM THK)	
	4	1	**150-4385**	2	CONE	
	5	1	**150-4386**	2	CUP	
	6	1	**150-5472**	1	SEAL-LIP TYPE	
	7	1	**159-5772**	8	STUD (9/16-18-2A THD)	
	8	1	**166-3678**	1	SEAL-LIP TYPE	

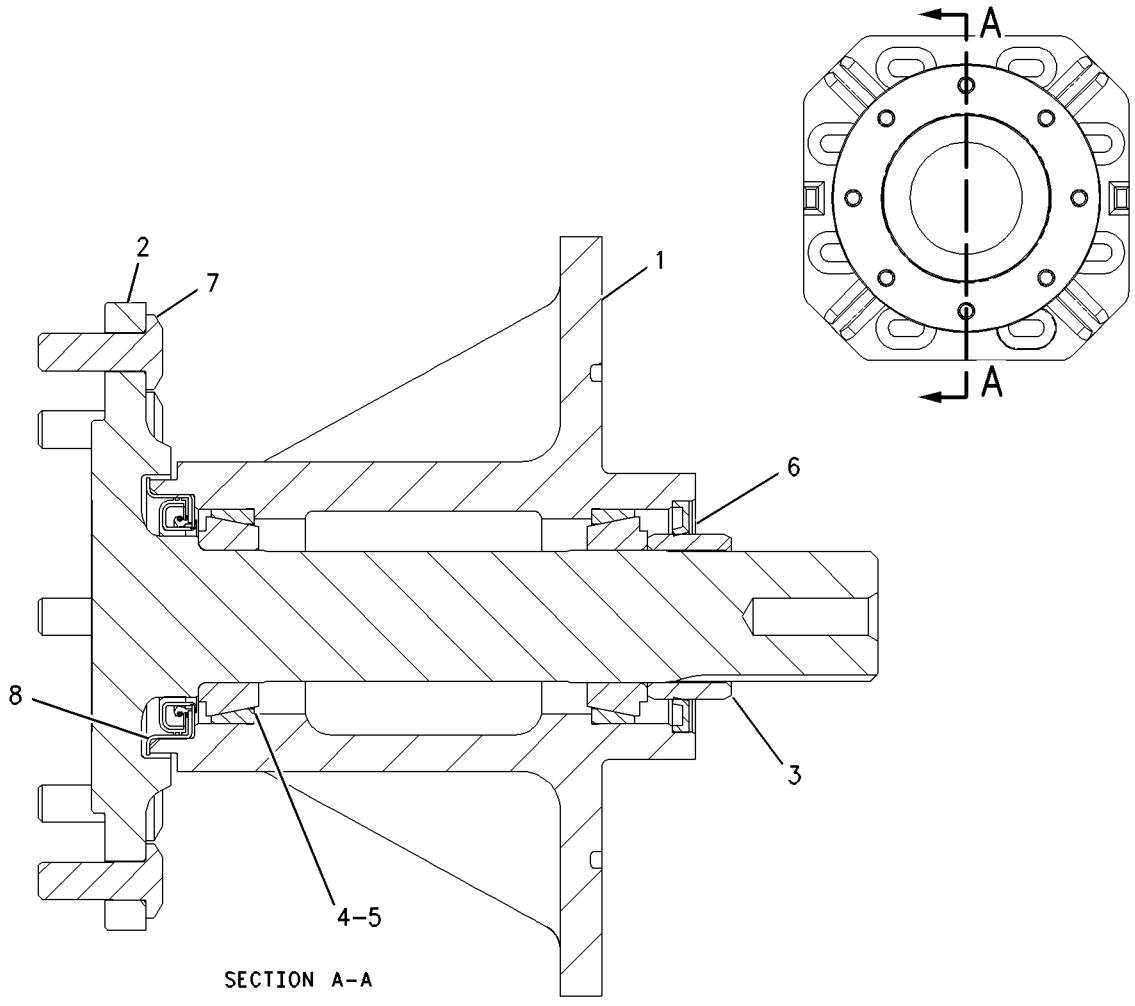

GRAPHIC #1 **<END>** g00916188

POWER TRAIN

261-6255 AXLE GP

S/N: SCH2475-UP
PART OF 295-7210 CHASSIS AR
ALSO AN ATTACHMENT

SMCS-3278 **i02476310**

NOTE	PART NUMBER	QTY	PART NAME 1 2 3 4 5 6 (PRODUCT LEVEL)	SEE PAGE
Y	**142-8758**	4	AXLE GP	180

Y-SEPARATE ILLUSTRATION

<END>

POWER TRAIN

212-6692 DRIVE GP-TANDEM

S/N: SCH2475-UP

PART OF 261-5751 POWER TRAIN AR

SMCS-4062 **i02588524**

NOTE	REF NO	GRAPHIC REF	PART NUMBER	QTY	PART NAME 1 2 3 4 5 6 (PRODUCT LEVEL)	SEE PAGE
	1	1	**142-8732**	4	SPROCKET (12-TEETH) (MOTOR)	
	2	1	**152-1157**	32	WASHER (15.5X32X8-MM THK)	
	3	1	**159-5793**	2	SPACER (14.3-MM THK)	
	4	1	**191-9659**	4	CHAIN AS	
	5	1	**191-9661**	4	SPROCKET (40-TEETH) (AXLE)	
	6	1	**200-0999**	32	STUD	
M	7	1	**099-4691**	2	BOLT-LOCKING (M12X1.75X25-MM)	
M	8	1	**100-3866**	4	BOLT-SELF-LOCKING (M16X2X40-MM)	
	9	1	**142-9036**	32	NUT (9/16-18-THD)	
	10	1	**5K-1787**	4	SEAL-O-RING	
	11	1	**7G-8839**	2	SPACER (13.5X57X6-MM THK)	
	12	1	**7X-0610**	4	WASHER-HARD (20X75X6-MM THK)	
	13	1	**8T-4122**	4	WASHER-HARD (17X32X3.5-MM THK)	

M-METRIC PART

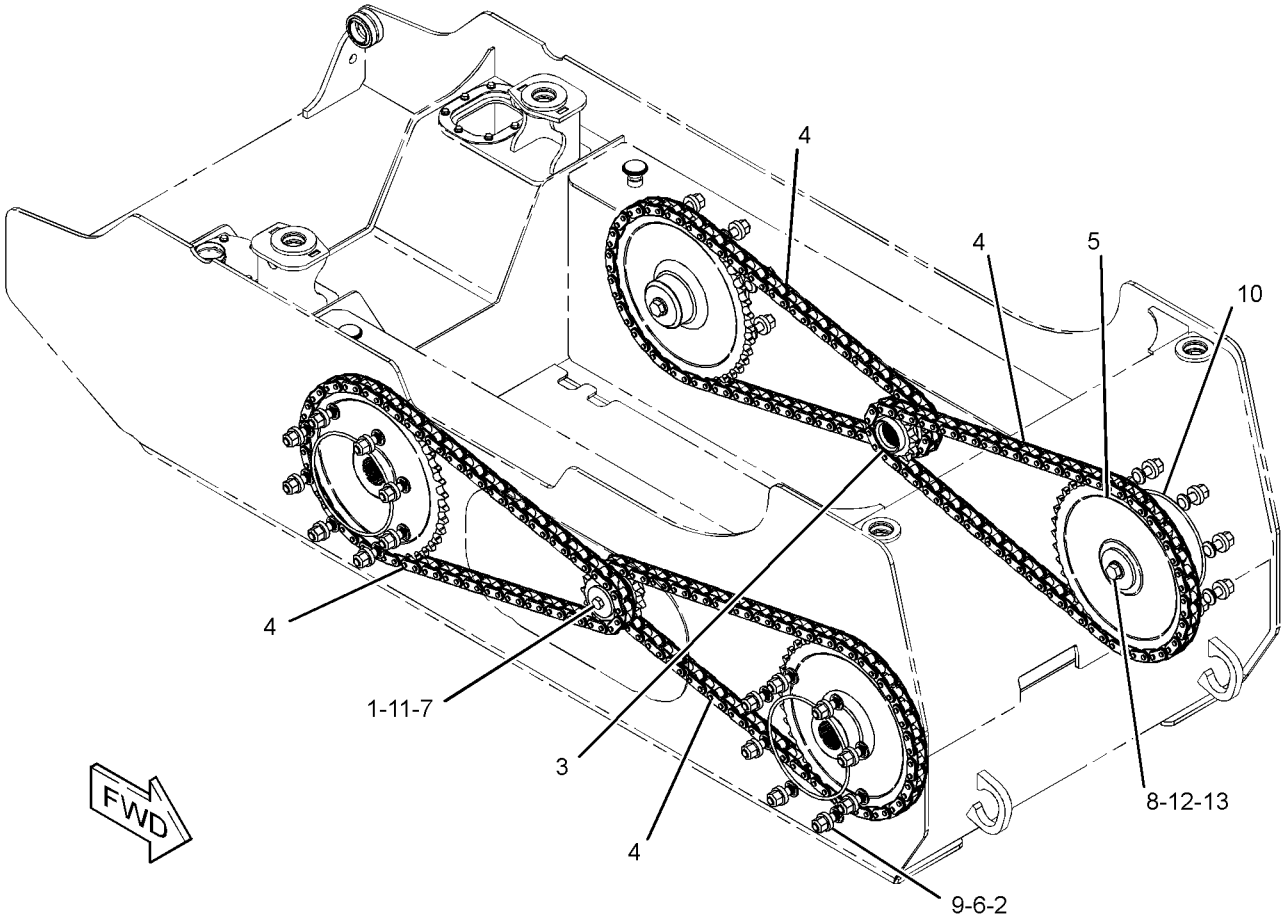

GRAPHIC #1 **<END>** g01229421

218-6545 FILTER & LINES GP-HYDRAULIC

S/N: SCH2475-UP

PART OF 278-1243 HYDRAULIC AR

SMCS-5057, 5068 **i02270913**

NOTE	REF NO	GRAPHIC REF	PART NUMBER	QTY	PART NAME 1 2 3 4 5 6 (PRODUCT LEVEL)	SEE PAGE
I	1	1	**218-6529**	1	HOSE AS	
	2	1	**218-6548**	1	BRACKET AS	
	3	1	**238-7733**	1	HOSE AS	
Y	4	1	**223-9974**	1	FILTER GP-OIL (HYDRAULIC)	185
	5	1	*148-8315*	1	CONNECTOR AS	
		1	**6V-8642**	1	CONNECTOR	
		1	**2M-9780**	1	SEAL-O-RING	
		1	**7J-9108**	1	SEAL-O-RING	
	6	1	*148-8328*	1	CONNECTOR AS	
		1	**6V-8633**	1	CONNECTOR	
		1	**3D-2824**	1	SEAL-O-RING	
		1	**6V-8398**	1	SEAL-O-RING	
	7	1	*148-8340*	1	CONNECTOR AS	
		1	**6V-8639**	1	CONNECTOR	
		1	**3K-0360**	1	SEAL-O-RING	
		1	**6V-8398**	1	SEAL-O-RING	
	8	1	*148-8382*	1	ELBOW AS	
		1	**8T-0404**	1	ELBOW	
		1	**3D-2824**	1	SEAL-O-RING	
		1	**7J-9108**	1	SEAL-O-RING	
	9	1	**4S-1962**	1	CLIP	
	10	1	**6V-1228**	1	CLIP	
	11	1	**8T-4121**	9	WASHER-HARD (11X21X2.5-MM THK)	
M	12	1	**8T-4133**	1	NUT (M10X1.5-THD)	
M	13	1	**8T-4137**	4	BOLT (M10X1.5X20-MM)	
M	14	1	**8T-4196**	1	BOLT (M10X1.5X35-MM)	
M	15	1	**8T-4136**	2	BOLT (M10X1.5X25-MM)	
M	16	1	**8T-4195**	1	BOLT (M10X1.5X30-MM)	

I-REFER TO HYDRAULIC INFORMATION SYSTEM
M-METRIC PART
Y-SEPARATE ILLUSTRATION

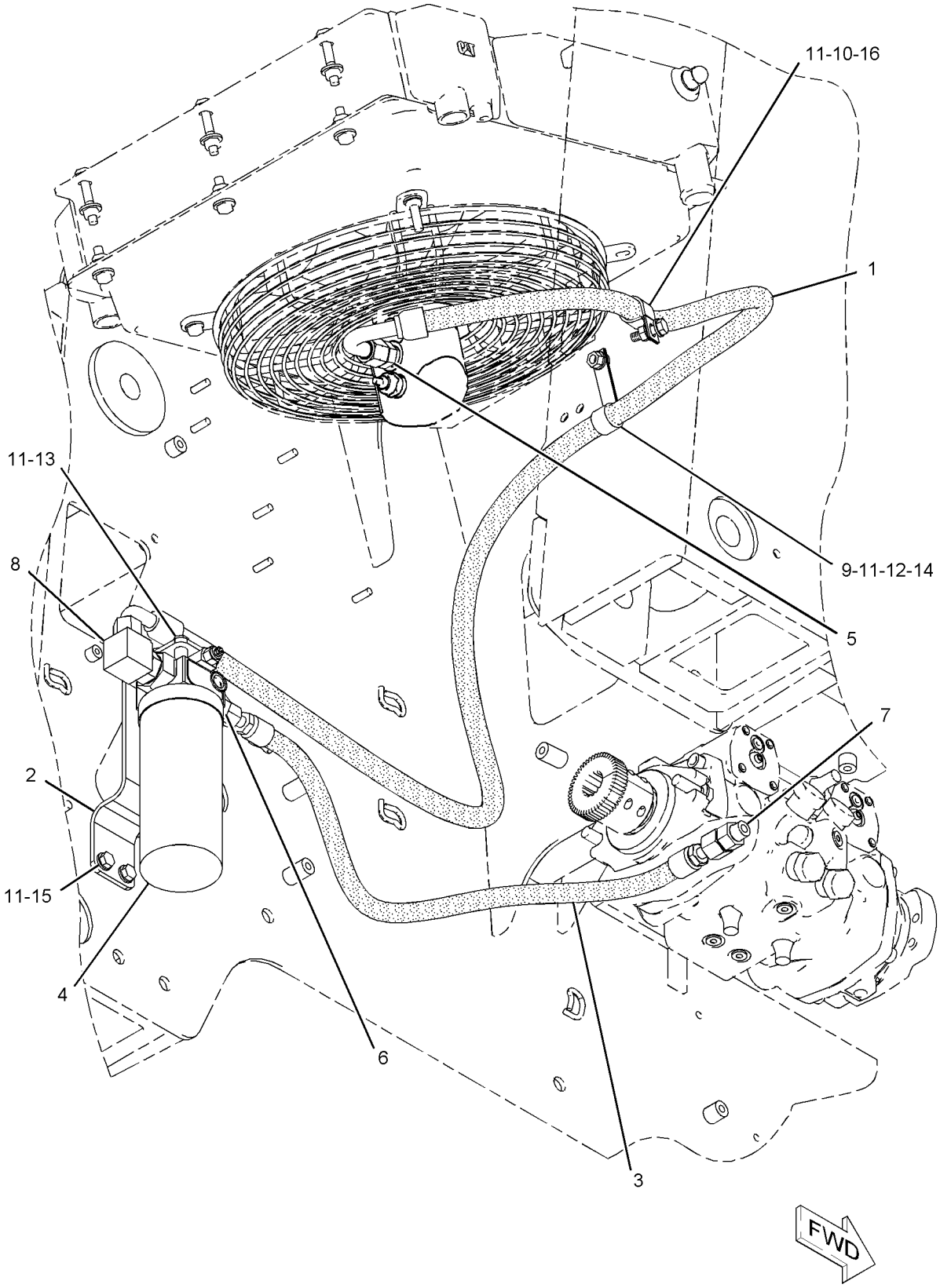

GRAPHIC #1 **<END>** g01137656

223-9974 FILTER GP-OIL–HYDRAULIC

S/N: SCH2475-UP

PART OF 218-6545 FILTER & LINES GP-HYDRAULIC

SMCS-5068 **i02469830**

NOTE	REF NO	GRAPHIC REF	PART NUMBER	QTY	PART NAME 1 2 3 4 5 6 (PRODUCT LEVEL)	SEE PAGE
	1	1	**3J-1907**	1	SEAL-O-RING	
	2	1	**134-0404**	1	SWITCH AS-PRESSURE (HYDRAULIC OIL)	
	3	1	**1G-8878**	1	FILTER AS-OIL (ADVANCED EFFICIENCY) (HYDRAULIC)	

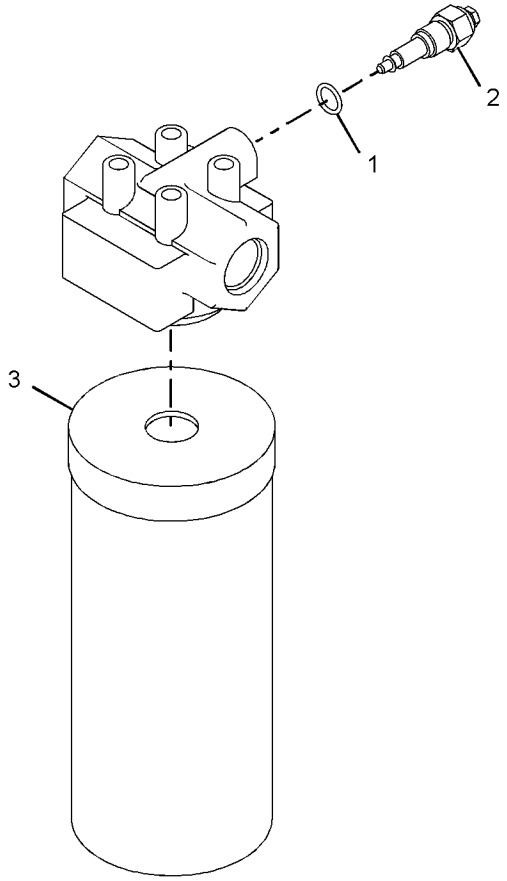

GRAPHIC #1 **<END>** g01035150

308-2298 FILTER GP-OIL–ENGINE

S/N: CYP1-UP
PART OF 292-5719 ENGINE AR-PRIMARY
AN ATTACHMENT

SMCS-5068 **i02752264**

NOTE	REF NO	GRAPHIC REF	PART NUMBER	QTY	PART NAME 1 2 3 4 5 6 (PRODUCT LEVEL)	SEE PAGE
	1	1	**220-1523**	1	FILTER ELEMENT AS-ENGINE OIL	

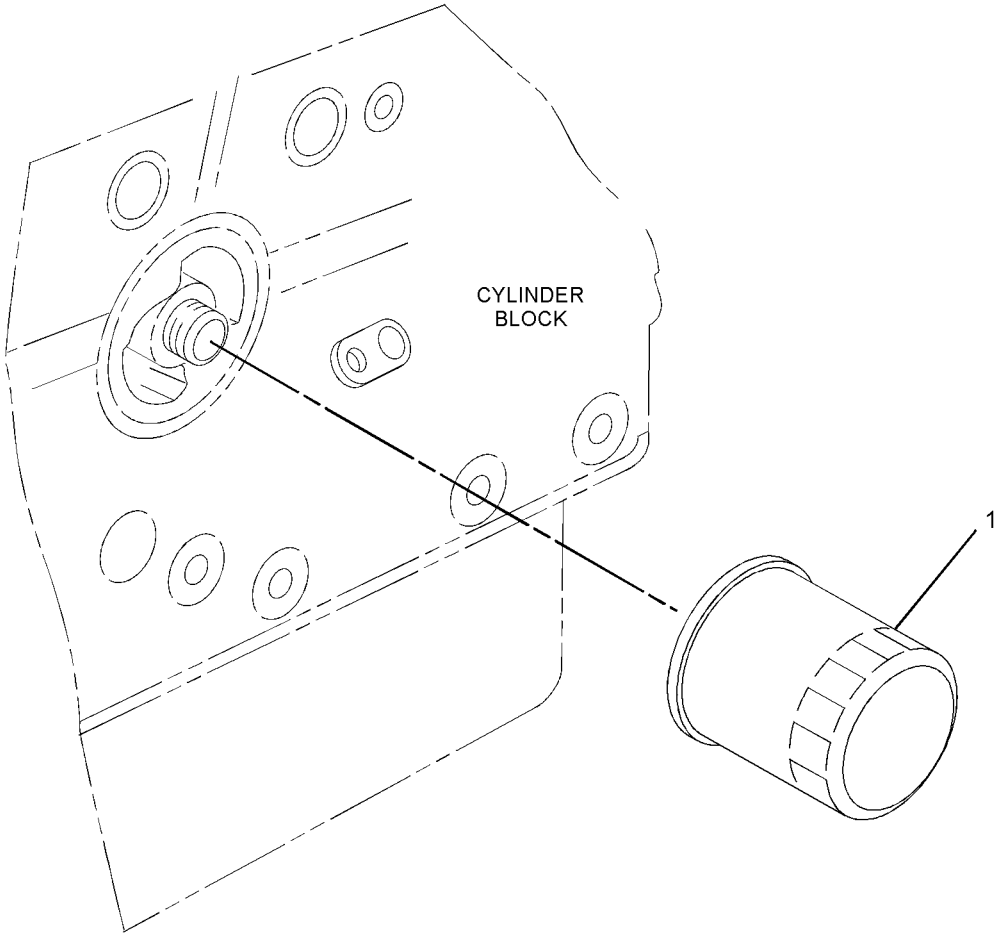

GRAPHIC #1 **<END>** g01389723

317-0974 FILTER GP-OIL

S/N: CYP1-UP
PART OF 292-5719 ENGINE AR-PRIMARY
AN ATTACHMENT

SMCS-5068 **i02827171**

NOTE	REF NO	GRAPHIC REF	PART NUMBER	QTY	PART NAME 1 2 3 4 5 6 (PRODUCT LEVEL)	SEE PAGE
	1	1	**6I-1201**	1	SEAL-O-RING	
	2	1	**118-9145**	1	CONNECTOR	
	3	1	**153-6879**	1	STUD-HOLLOW	
	4	2	**160-4826**	4	CLAMP-HOSE	
	5	1	**164-7619**	1	SEAL-O-RING	
	6	1	**198-2663**	1	BOLT	
	7	1	**231-8920**	1	BOLT	
	8	2	**246-3470**	1	HOSE	
	9	2	**246-3471**	1	HOSE	
	10	1	**252-0787**	1	SEAL-O-RING	
	11	1	**252-0788**	1	BASE-OIL FILTER	
	12	1	**311-2349**	1	WASHER	

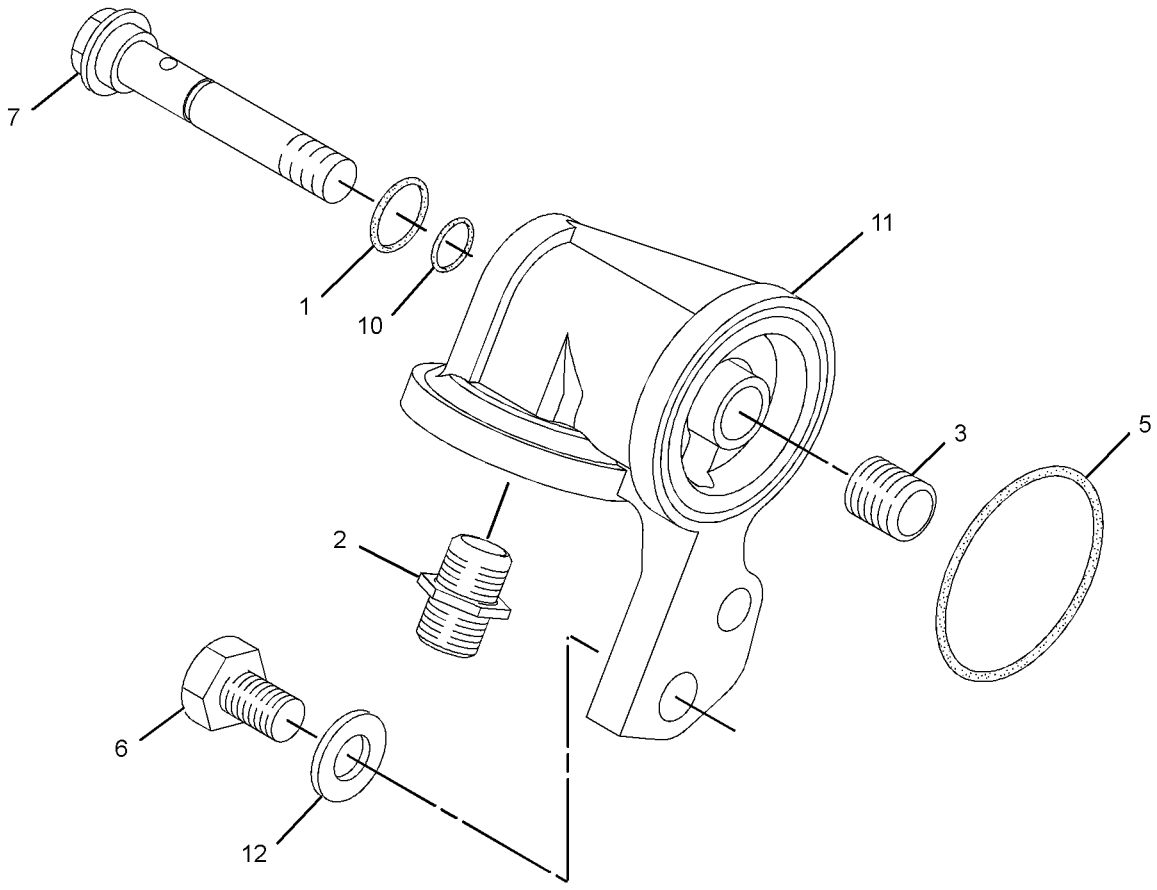

GRAPHIC #1 g01439021

317-0974 **FILTER GP-OIL** *(contd.)* **i02827171**

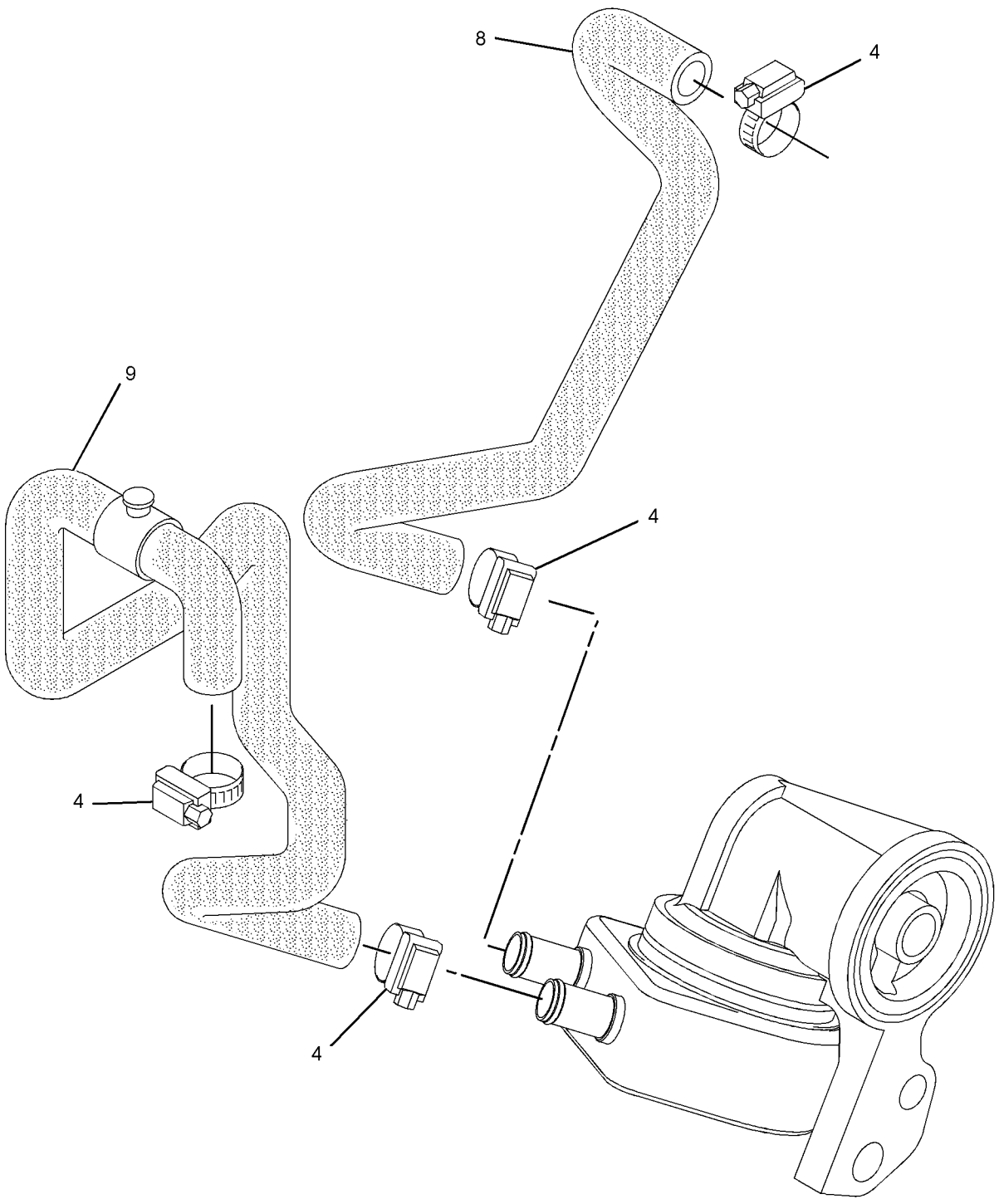

GRAPHIC #2 **<END>** g01439024

218-6506 LINES GP-HYDROSTATIC

S/N: SCH2475-UP

PART OF 278-1243 HYDRAULIC AR

SMCS-3154 **i02769730**

NOTE	REF NO	GRAPHIC REF	PART NUMBER	QTY	PART NAME 1 2 3 4 5 6 (PRODUCT LEVEL)	SEE PAGE
	2	1	**6V-0852**	5	CAP-DUST	
C	3	1	*188-2008*	2	ELBOW AS (45-DEG)	
					(EACH INCLUDES)	
		1	**5K-9090**	1	SEAL-O-RING	
		1	**8T-7970**	1	ELBOW	
		1	**3D-2824**	1	SEAL-O-RING	
	4	1	*164-5567*	5	COUPLER AS-QUICK	
					(EACH INCLUDES)	
		1	**3J-1907**	1	SEAL-O-RING	
		1	**6V-3965**	1	COUPLER-QUICK DISCONNECT	
CY	5	1	*308-0421*	1	MANIFOLD GP-RETURN	191
I	6	1	**142-9241**	2	HOSE AS	
I	7	1	**218-6095**	2	HOSE AS	
I	9	1	**218-6508**	1	HOSE AS	
I	10	1	**218-6863**	1	HOSE AS	
	11	1	*148-8322*	4	CONNECTOR AS	
					(EACH INCLUDES)	
		1	**2M-9780**	1	SEAL-O-RING	
		1	**6V-8640**	1	CONNECTOR	
		1	**6V-9746**	1	SEAL-O-RING	
	12	1	*148-8327*	4	CONNECTOR AS	
					(EACH INCLUDES)	
		1	**3D-2824**	1	SEAL-O-RING	
		1	**6V-8637**	1	CONNECTOR (SEAL)	
		1	**6V-9746**	1	SEAL-O-RING	
	13	1	*148-8338*	2	CONNECTOR AS	
					(EACH INCLUDES)	
		1	**3J-1907**	1	SEAL-O-RING	
		1	**6V-8397**	1	SEAL-O-RING	
		1	**8T-0075**	1	CONNECTOR	
M	14	1	**5C-7261**	3	NUT (M8X1.25-THD)	
	16	1	**5P-4116**	3	WASHER-HARD (8.8X20.5X2-MM THK)	

C-CHANGE FROM PREVIOUS TYPE
I-REFER TO HYDRAULIC INFORMATION SYSTEM
M-METRIC PART
Y-SEPARATE ILLUSTRATION

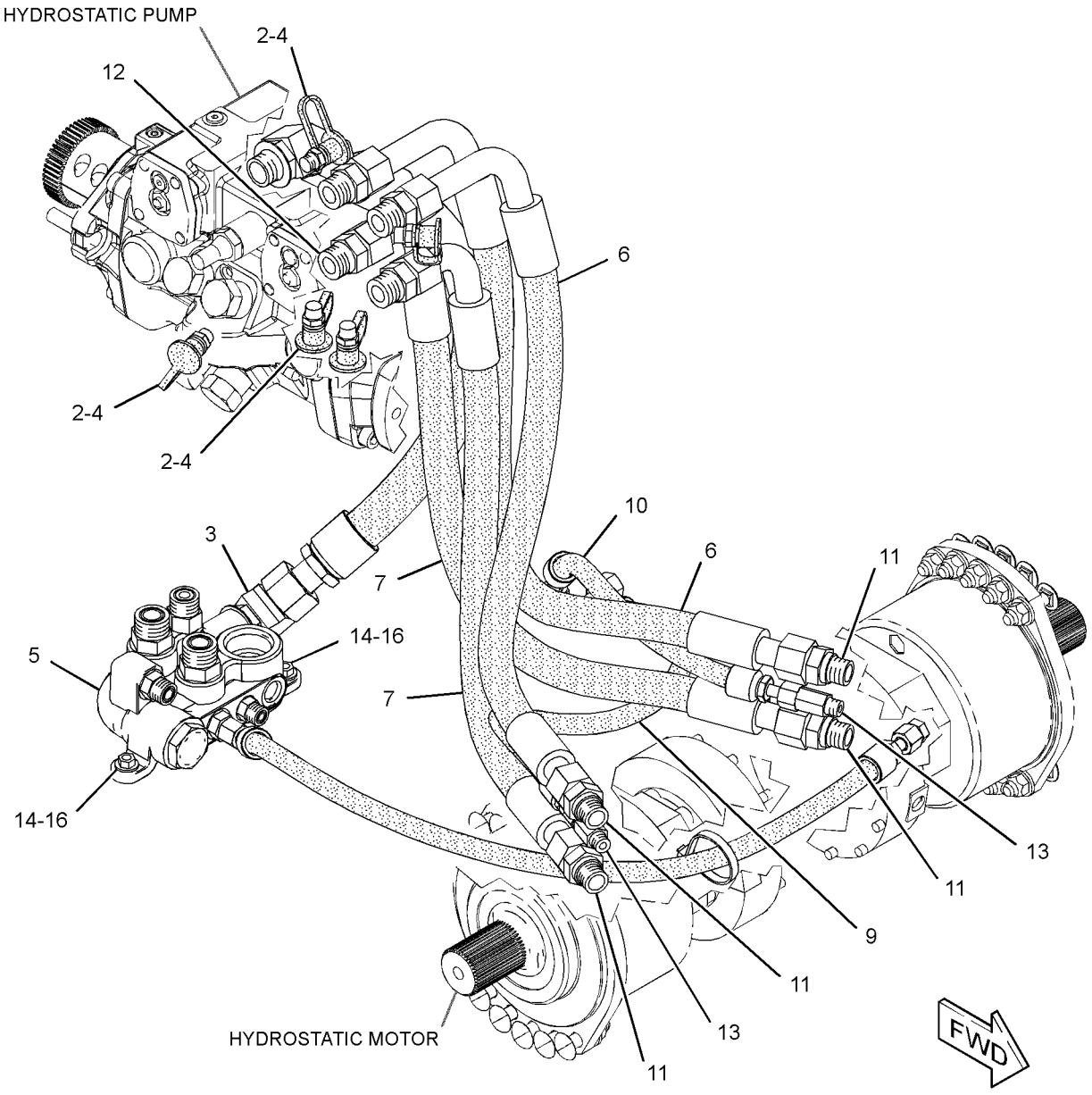

GRAPHIC #1 **<END>** g01388504

308-0421 MANIFOLD GP-RETURN

S/N: SCH2475-UP

PART OF 218-6506 LINES GP-HYDROSTATIC

SMCS-5264 **i02730543**

NOTE	REF NO	GRAPHIC REF	PART NUMBER	QTY	PART NAME 1 2 3 4 5 6 (PRODUCT LEVEL)	SEE PAGE
	1	1	**7K-1181**	1	STRAP-CABLE	
	2	1	**105-4593**	1	POPPET	
	3	1	**212-6603**	1	PLUG AS	
		1	**6V-8978**	1	SEAL-O-RING	
	4	1	**212-6604**	1	SPRING	
I	5	1	**233-5716**	1	HOSE AS	
	6	1	**305-4185**	1	BLOCK	
	7	1	*148-8318*	1	CONNECTOR AS	
		1	**3K-0360**	1	SEAL-O-RING	
		1	**6V-8397**	1	SEAL-O-RING	
		1	**6V-8634**	1	CONNECTOR	
	8	1	*148-8327*	2	CONNECTOR AS	
					(EACH INCLUDES)	
		1	**3D-2824**	1	SEAL-O-RING	
		1	**6V-8637**	1	CONNECTOR	
		1	**6V-9746**	1	SEAL-O-RING	
	9	1	*148-8336*	1	CONNECTOR AS	
		1	**3J-1907**	1	SEAL-O-RING	
		1	**6V-8397**	1	SEAL-O-RING	
		1	**6V-8636**	1	CONNECTOR	
	10	1	*148-8340*	1	CONNECTOR AS	
		1	**3K-0360**	1	SEAL-O-RING	
		1	**6V-8398**	1	SEAL-O-RING	
		1	**6V-8639**	1	CONNECTOR	
	11	1	*148-8342*	1	CONNECTOR AS	
		1	**3K-0360**	1	SEAL-O-RING	
		1	**6V-8632**	1	CONNECTOR	
		1	**7J-9108**	1	SEAL-O-RING	
	12	1	*165-4934*	1	PLUG AS	
		1	**6V-8397**	1	SEAL-O-RING	
		1	**6V-9508**	1	PLUG	

I-REFER TO HYDRAULIC INFORMATION SYSTEM

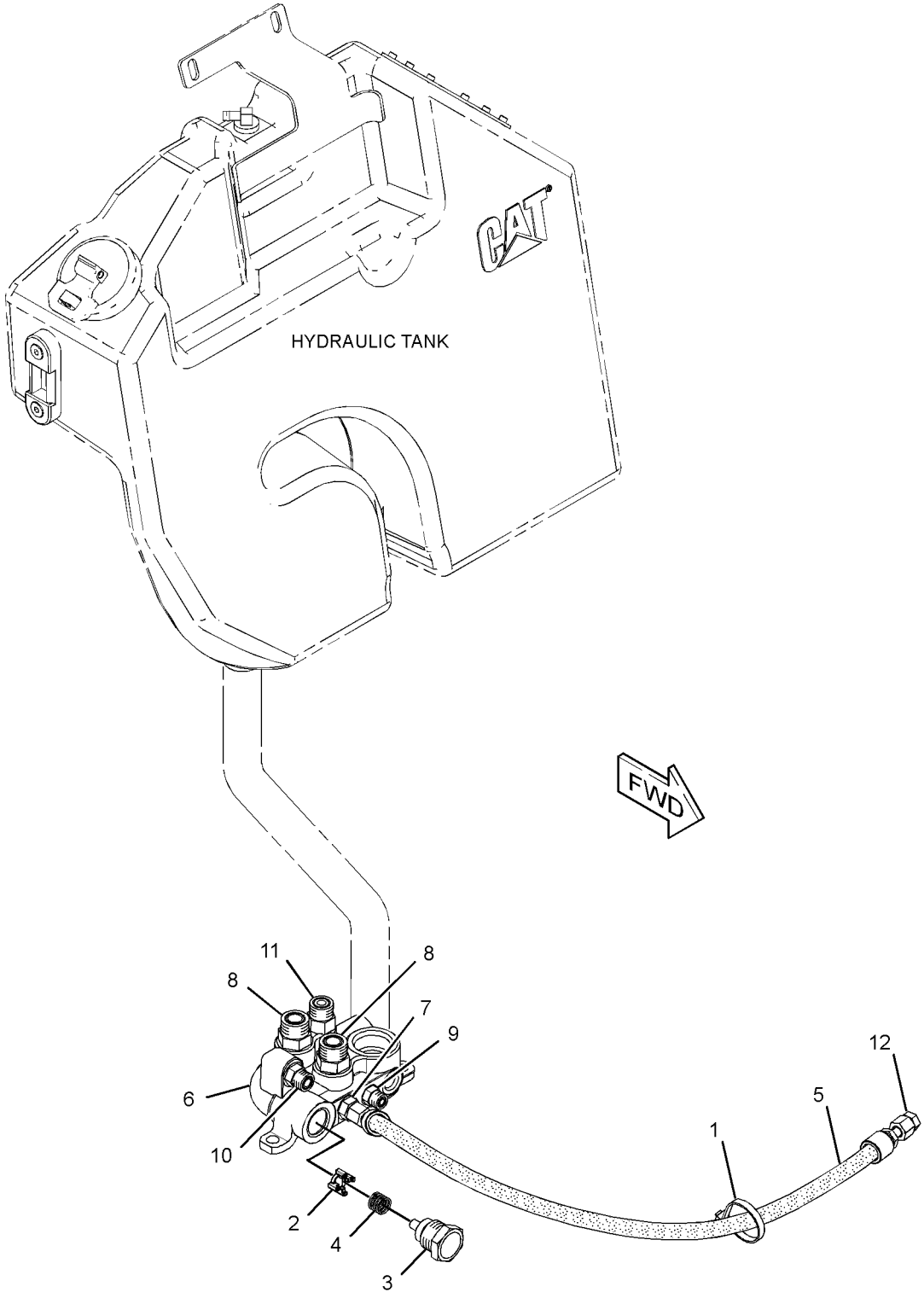

GRAPHIC #1 **<END>** g01380873

191-9650 MOTOR & MTG GP-HYDROSTATIC

S/N: SCH2475-UP

PART OF 261-5751 POWER TRAIN AR

SMCS-5058 **i02639962**

NOTE	REF NO	GRAPHIC REF	PART NUMBER	QTY	PART NAME 1 2 3 4 5 6 (PRODUCT LEVEL)	SEE PAGE
	1	1	**206-5143**	20	BOLT (M12X1.75-THD)	
CYR	2	1	**280-7854**	2	MOTOR GP-PISTON	194
M	3	1	**6V-7687**	20	LOCKNUT (M12X1.75-THD)	
	4	1	**8T-4223**	20	WASHER-HARD (13.5X25.5X3-MM THK)	

C-CHANGE FROM PREVIOUS TYPE
M-METRIC PART
R-REMFG PART MAY BE AVAILABLE
Y-SEPARATE ILLUSTRATION

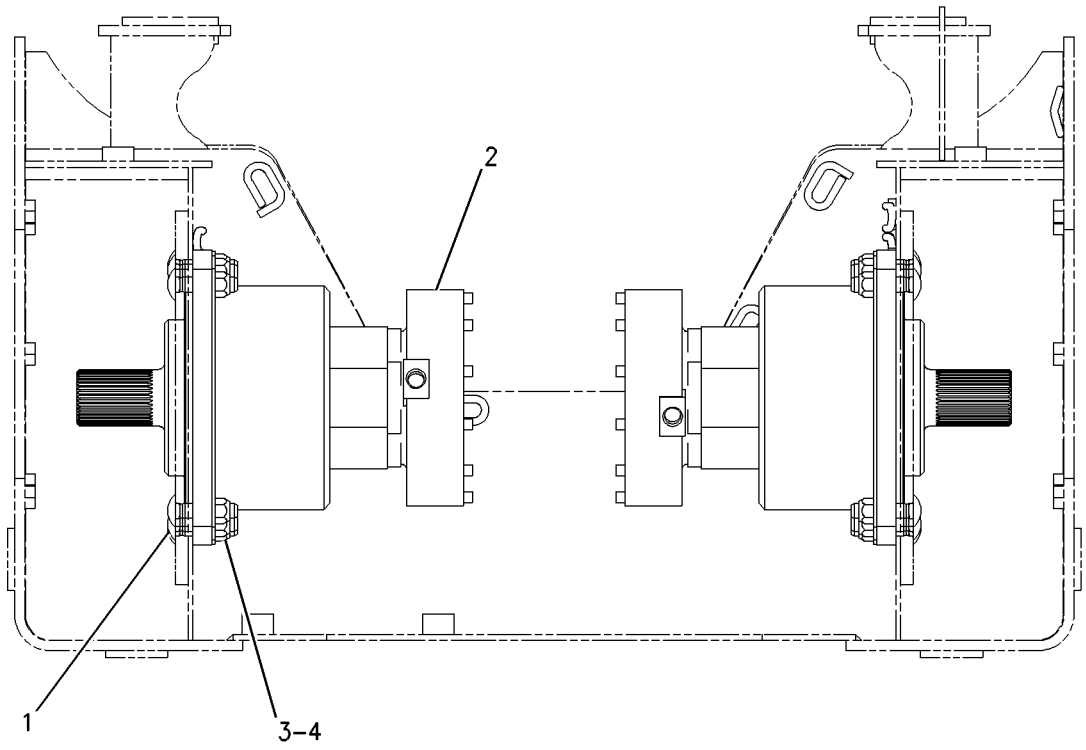

REAR VIEW

GRAPHIC #1 **<END>** g00978901

280-7854 MOTOR GP-PISTON*R

S/N: SCH2475-UP

PART OF 191-9650 MOTOR & MTG GP-HYDROSTATIC

SMCS-5058 **i02752612**

NOTE	REF NO	GRAPHIC REF	PART NUMBER	QTY	PART NAME 1 2 3 4 5 6 (PRODUCT LEVEL)	SEE PAGE
	1	1	**140-2490**	1	RING-SPLIT	
	2	1	**3K-0360**	1	SEAL-O-RING	
	3	1	**279-0733**	1	KIT-SHIM (PISTON MOTOR)	
					(INCLUDES WASHERS)	
J	4	1	**033-5853**	1	SEAL-O-RING	
	5	1	**172-8175**	13	DISC-BRAKE (INNER)	
	6	1	**216-6124**	1	PLUG	
J	7	1	**095-1517**	1	SEAL-O-RING	
M	8	1	**5C-7883**	12	BOLT-SOCKET HEAD (M6X1X16-MM)	
	9	1	**222-5693**	1	PLUG-O-RING	
	10	1	**172-8173**	15	DISC-BRAKE (OUTER)	
M	11	1	**8T-0271**	5	BOLT-SOCKET HEAD (M10X1.5X35-MM)	
	12	1	**140-2492**	1	BEARING	
	13	1	**268-1936**	1	BEARING AS-TAPERED ROLLER	
	14	1	**140-2513**	1	SHIM (0.01-MM THK)	
	15	1	**140-2514**	2	SHIM (0.3-MM THK)	
	16	1	**9S-8005**	1	PLUG-O-RING	
M	17	1	**289-6347**	6	BOLT-SOCKET HEAD (M12X1.75X55-MM)	
					AVAILABLE REPAIR KIT(S):	
J			**289-6336**	1	KIT-SEAL (PISTON MOTOR)	
					(INCLUDES SEALS, SEAL RINGS & GASKET)	

J-KIT MARKED J INCLUDES PARTS MARKED J
M-METRIC PART

280-7854 MOTOR GP-PISTON *(contd.)* **i02752612**

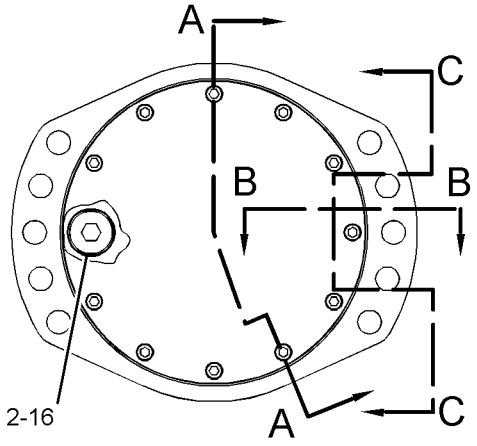

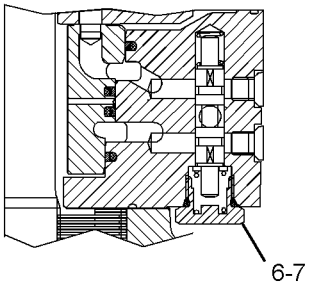

SECTION B-B

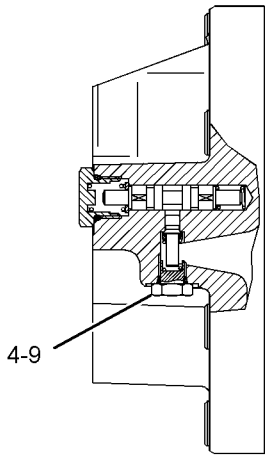

SECTION C-C

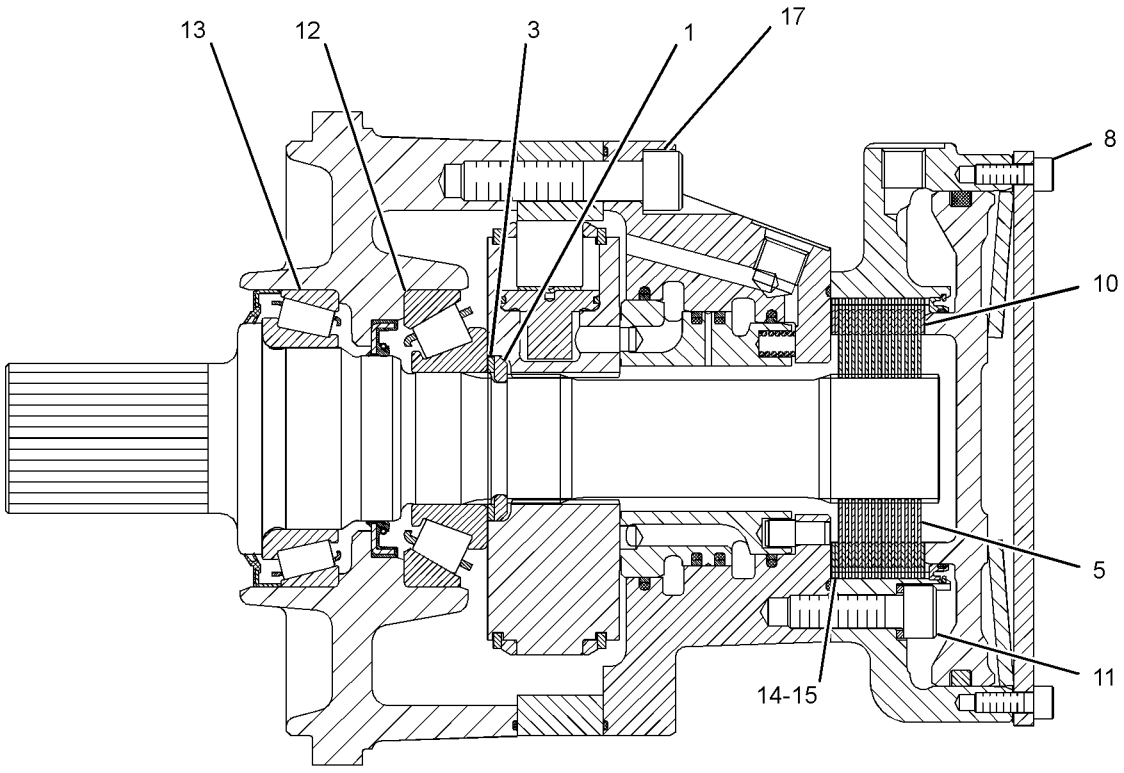

SECTION A-A

GRAPHIC #1 **<END>** g01380520

228-1763 MOUNTING GP-PUMP

S/N: SCH2475-UP

PART OF 295-7027, 295-7028 INSTALLATION AR-ENGINE

SMCS-3203, 5062, 5070 **i01988423**

NOTE	REF NO	GRAPHIC REF	PART NUMBER	QTY	PART NAME 1 2 3 4 5 6 (PRODUCT LEVEL)	SEE PAGE
	1	1	**141-7562**	1	FLANGE-NYLON	
	2	1	**142-8719**	1	PLATE-ADAPTER	
	3	1	**6V-8918**	8	BOLT (5/16-18X1.25-IN)	
	4	1	**8T-4121**	12	WASHER-HARD (11X21X2.5-MM THK)	
M	5	1	**8T-4196**	12	BOLT (M10X1.5X35-MM)	

M-METRIC PART

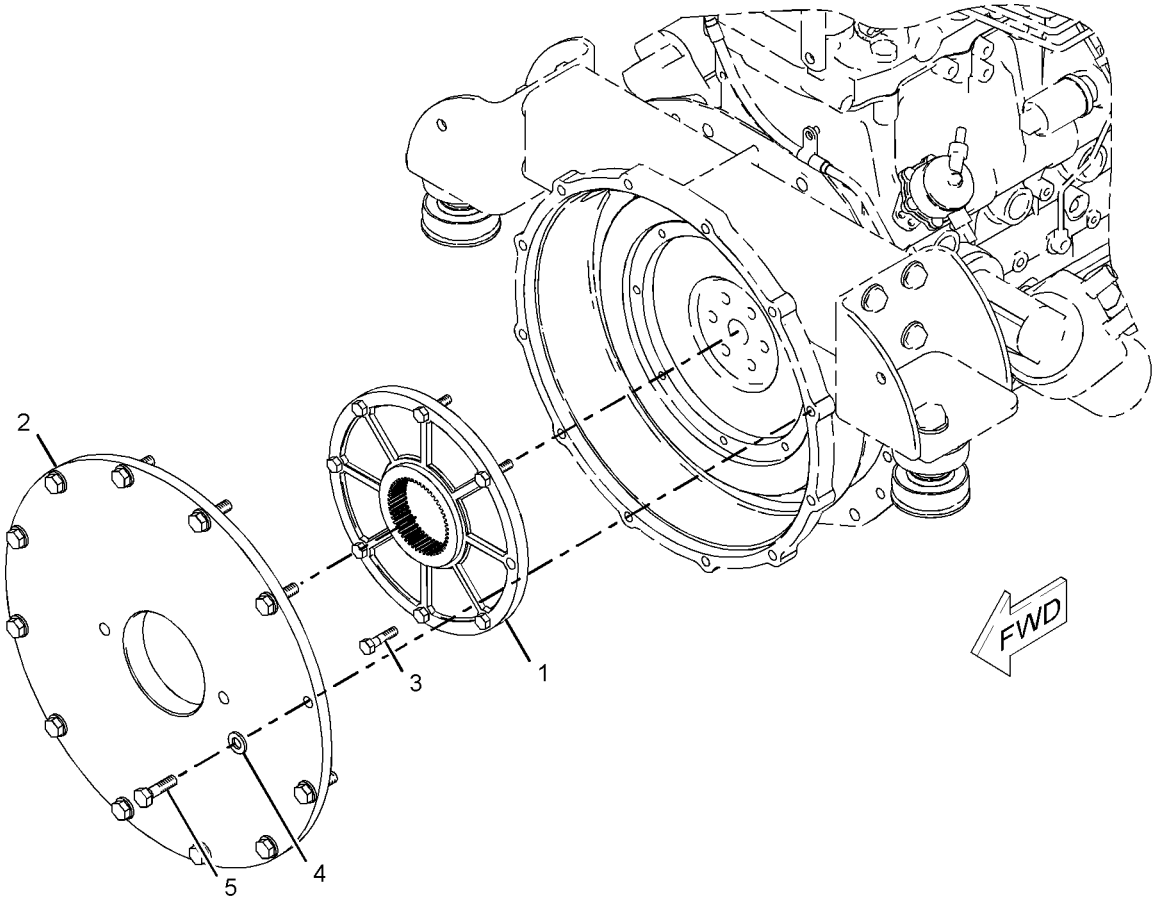

GRAPHIC #1 **<END>** g01030422

261-5751 POWER TRAIN AR

S/N: SCH2475-UP

PART OF 295-7232, 295-7233 COMMON AR

SMCS-3203, 4062, 5058, 5070 **i02288840**

NOTE	PART NUMBER	QTY	PART NAME 1 2 3 4 5 6 (PRODUCT LEVEL)	SEE PAGE
Y	*212-6692*	1	DRIVE GP-TANDEM	182
Y	*191-9650*	1	MOTOR & MTG GP-HYDROSTATIC	193
Y	*261-5660*	1	PUMP & MTG GP-HYDROSTATIC	198

Y-SEPARATE ILLUSTRATION

<END>

261-5660 PUMP & MTG GP-HYDROSTATIC

S/N: SCH2475-UP

PART OF 261-5751 POWER TRAIN AR

SMCS-3203, 5070 **i02619542**

NOTE	REF NO	GRAPHIC REF	PART NUMBER	QTY	PART NAME 1 2 3 4 5 6 (PRODUCT LEVEL)	SEE PAGE
	1	1	**165-0142**	2	WASHER-HARD (14.8X27X3-MM THK)	
CYR	2	1	**289-6342**	1	PUMP GP-PISTON	199
	3	1	**252-9167**	2	BOLT-SOCKET HEAD	
	4	1	**263-4997**	1	HUB AS-COUPLING	
		1	**096-0194**	1	RING-RETAINING	
M	5	1	**167-4339**	2	BOLT (M14X2X40-MM)	

C-CHANGE FROM PREVIOUS TYPE
M-METRIC PART
R-REMFG PART MAY BE AVAILABLE
Y-SEPARATE ILLUSTRATION

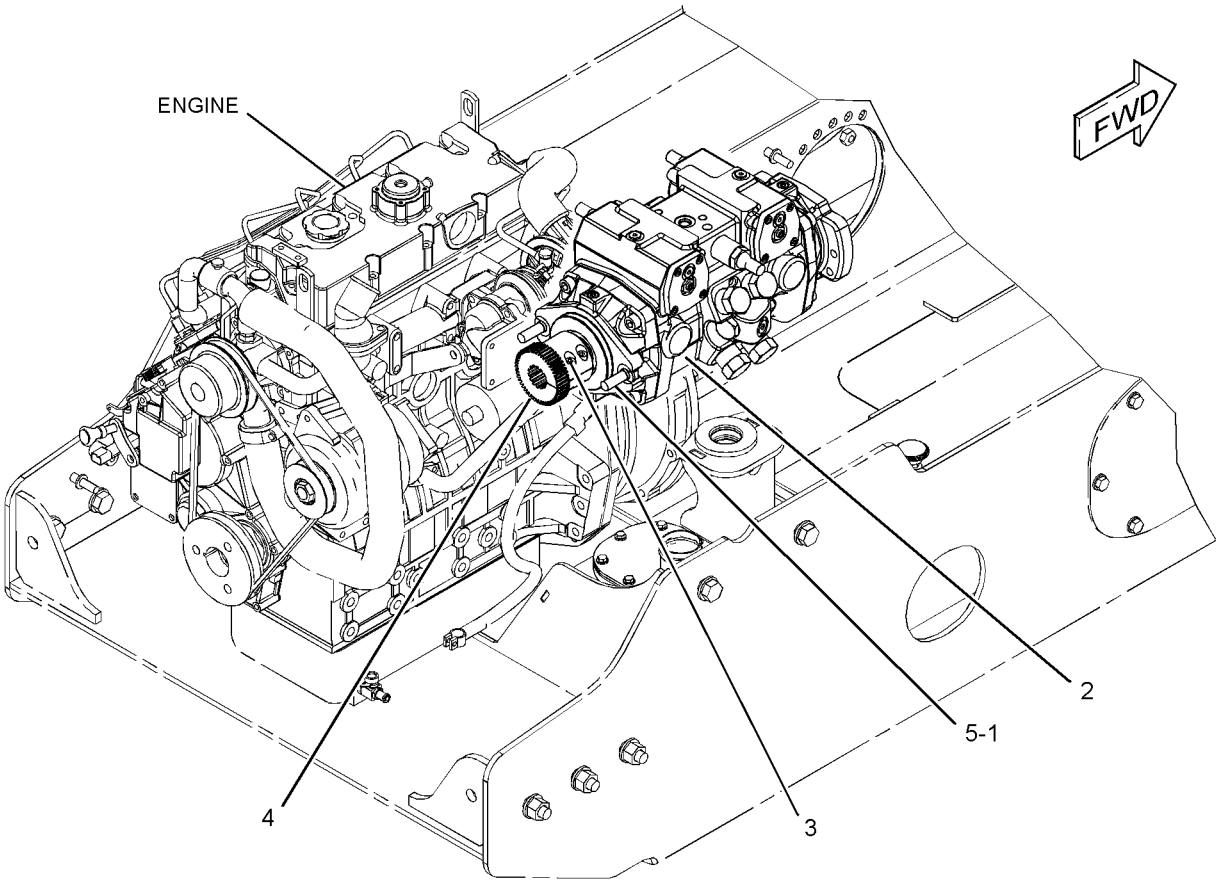

GRAPHIC #1 **<END>** g01174571

289-6342 PUMP GP-PISTON*R

S/N: SCH2475-UP

PART OF 261-5660 PUMP & MTG GP-HYDROSTATIC

SMCS-3203, 5070 **i02619344**

NOTE	REF NO	GRAPHIC REF	PART NUMBER	QTY	PART NAME 1 2 3 4 5 6 (PRODUCT LEVEL)	SEE PAGE
	1	1	**6E-5060**	3	CAP AS	
	2	1	**167-7713**	4	RING-BACKUP	
	3	1	**121-4459**	2	BEARING-ROLLER	
	4	1	**108-3565**	2	CLIP	
	5	1	**204-1454**	2	PIN-THREADED	
	6	1	**204-1455**	2	LOCKNUT	
	7	1	**204-1456**	1	SHIM	
	8	1	**280-7805**	1	VALVE GP-PUMP CONTROL (PISTON PUMP)	
	9	1	**121-4870**	4	VALVE-RELIEF (CROSSOVER)	
	10	1	**204-1459**	1	VALVE GP-RELIEF (CHARGE)	
	11	1	**135-2655**	2	SEAL-O-RING	
	12	1	**3J-7354**	2	SEAL-O-RING	
	13	1	**3K-0715**	1	SEAL-O-RING	
	14	1	**6V-5326**	4	SEAL-O-RING	
	15	1	**6V-5586**	2	SEAL-O-RING	
	16	1	**6V-8352**	1	SEAL-O-RING	
M	17	1	**8T-0267**	8	BOLT-SOCKET HEAD (M6X1X12-MM)	
	18	1	**9S-8002**	2	PLUG-O-RING	
M	19	1	**9X-6606**	2	NUT-HEX (M10X1-THD)	
	20	1	**126-5643**	2	CAGE	
	21	1	**081-3698**	2	BEARING	
	22	1	**204-1452**	3	RING-RETAINING	
	23	1	**140-1802**	1	SEAL-RING	
	24	1	**126-5640**	2	BEARING-ROLLER	
	25	1	**1G-3410**	4	WIRE	
	26	1	**280-7863**	1	ROTATING GP-PUMP (RH)	
	27	1	**6E-0725**	4	ROLLER	
	28	1	**280-7865**	1	ROTATING GP-PUMP (LH)	
	29	1	**268-1929**	2	CRADLE	
	30	1	**261-5659**	1	ORIFICE	
					AVAILABLE GASKET KIT(S):	
			268-9529	1	KIT-SEAL (PISTON PUMP)	
					(INCLUDES SHAFT SEAL, SEALS, SEAL-O-RINGS, SEAL LOCK NUTS, SPACERS & RING)	

M-METRIC PART

289-6342 PUMP GP-PISTON *(contd.)* i02619344

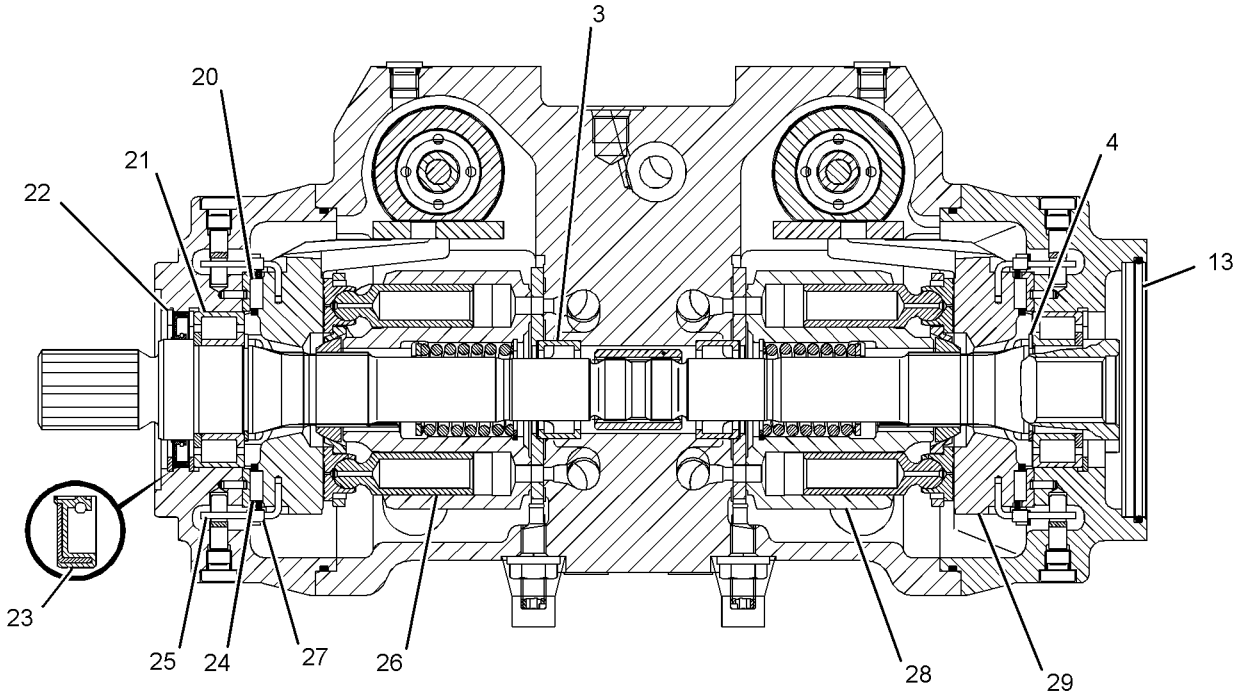

SECTION A-A

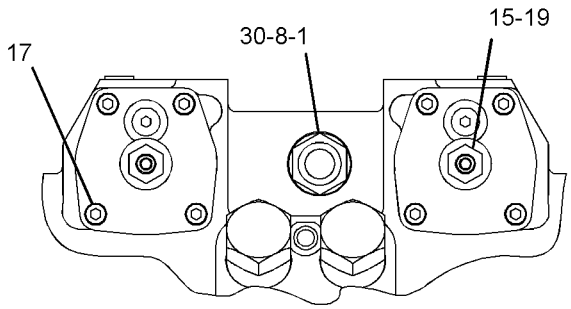

VIEW B-B

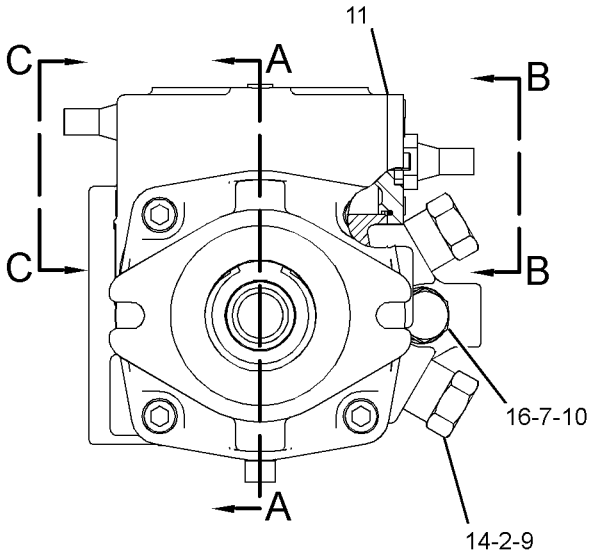

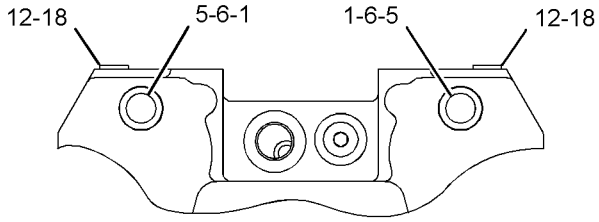

VIEW C-C

GRAPHIC #1 **<END>** g01312749

142-7484 TIRE & RIM GP–LH

S/N: SCH2475-UP
(16.5X8.25). DIRECTIONAL TIRE
PART OF 142-8666 WHEEL & TIRE AR
AN ATTACHMENT

SMCS-4202 **i02578088**

NOTE	PART NUMBER	QTY	PART NAME 1 2 3 4 5 6 (PRODUCT LEVEL)	SEE PAGE
	150-8599	1	VALVE AS-TIRE	
	142-7485	1	WHEEL AS	
	142-7486	1	TIRE (10-16.5)	

<END>

150-8592 TIRE & RIM GP–RH

S/N: SCH2475-UP
(16.5X8.25). DIRECTIONAL TIRE
PART OF 142-8666 WHEEL & TIRE AR
AN ATTACHMENT

SMCS-4202 **i02578156**

NOTE	PART NUMBER	QTY	PART NAME 1 2 3 4 5 6 (PRODUCT LEVEL)	SEE PAGE
	150-8599	1	VALVE AS-TIRE	
	142-7485	1	WHEEL AS	
	142-7486	1	TIRE (10-16.5)	

<END>

165-2605 TIRE & RIM GP–LH

S/N: SCH2475-UP
(16.5X8.25). DIRECTIONAL TIRE
PART OF 165-2602 WHEEL & TIRE AR
AN ATTACHMENT

SMCS-4202 **i02362220**

NOTE	PART NUMBER	QTY	PART NAME 1 2 3 4 5 6 (PRODUCT LEVEL)	SEE PAGE
	150-8599	1	VALVE AS-TIRE	
	142-7490	1	WHEEL AS	
	165-4908	1	TIRE (10-16.5)	

<END>

165-2606 TIRE & RIM GP–RH

S/N: SCH2475-UP
(16.5X8.25). DIRECTIONAL TIRE
PART OF 165-2602 WHEEL & TIRE AR
AN ATTACHMENT

SMCS-4202 **i02362218**

NOTE	PART NUMBER	QTY	PART NAME 1 2 3 4 5 6 (PRODUCT LEVEL)	SEE PAGE
	150-8599	1	VALVE AS-TIRE	
	142-7490	1	WHEEL AS	
	165-4908	1	TIRE (10-16.5)	

<END>

165-2609 TIRE & RIM GP–LH

S/N: SCH2475-UP
(16.5X8.25). DIRECTIONAL TIRE
PART OF 165-4891 WHEEL & TIRE AR
AN ATTACHMENT

SMCS-4202 **i02362238**

NOTE	PART NUMBER	QTY	PART NAME 1 2 3 4 5 6 (PRODUCT LEVEL)	SEE PAGE
	150-8599	1	VALVE AS-TIRE	
	142-7485	1	WHEEL AS	
	165-4908	1	TIRE (10-16.5)	

<END>

165-2610 TIRE & RIM GP–RH

S/N: SCH2475-UP
(16.5X8.25). DIRECTIONAL TIRE
PART OF 165-4891 WHEEL & TIRE AR
AN ATTACHMENT

SMCS-4202 **i02362235**

NOTE	PART NUMBER	QTY	PART NAME 1 2 3 4 5 6 (PRODUCT LEVEL)	SEE PAGE
	150-8599	1	VALVE AS-TIRE	
	142-7485	1	WHEEL AS	
	165-4908	1	TIRE (10-16.5)	

<END>

185-8670 TIRE & RIM GP–LH

S/N: SCH2475-UP
(265-MMX521-MM). DIRECTIONAL TIRE
PART OF 185-8660 WHEEL & TIRE AR
AN ATTACHMENT

SMCS-4202 **i02362163**

NOTE	PART NUMBER	QTY	PART NAME 1 2 3 4 5 6 (PRODUCT LEVEL)	SEE PAGE
	150-8599	1	VALVE AS-TIRE	
	185-8668	1	WHEEL AS	
	185-9934	1	TIRE (265-521)	

<END>

185-8671 TIRE & RIM GP–RH

S/N: SCH2475-UP
(265-MMX521-MM). DIRECTIONAL TIRE
PART OF 185-8660 WHEEL & TIRE AR
AN ATTACHMENT

SMCS-4202 **i02362161**

NOTE	PART NUMBER	QTY	PART NAME 1 2 3 4 5 6 (PRODUCT LEVEL)	SEE PAGE
	150-8599	1	VALVE AS-TIRE	
	185-8668	1	WHEEL AS	
	185-9934	1	TIRE (265-521)	

<END>

185-8672 TIRE & RIM GP–LH

S/N: SCH2475-UP
(521-MMX210-MM). DIRECTIONAL TIRE
PART OF 185-8661 WHEEL & TIRE AR
AN ATTACHMENT

SMCS-4202 **i02362165**

NOTE	PART NUMBER	QTY	PART NAME 1 2 3 4 5 6 (PRODUCT LEVEL)	SEE PAGE
	150-8599	1	VALVE AS-TIRE	
	185-8669	1	WHEEL AS	
	185-9934	1	TIRE (265-521)	

<END>

185-8673 TIRE & RIM GP–RH

S/N: SCH2475-UP
(521-MMX210-MM). DIRECTIONAL TIRE
PART OF 185-8661 WHEEL & TIRE AR
AN ATTACHMENT

SMCS-4202 **i02362171**

NOTE	PART NUMBER	QTY	PART NAME 1 2 3 4 5 6 (PRODUCT LEVEL)	SEE PAGE
	150-8599	1	VALVE AS-TIRE	
	185-8669	1	WHEEL AS	
	185-9934	1	TIRE (265-521)	

<END>

185-8678 TIRE & RIM GP–LH

S/N: SCH2475-UP
(16.5X8.25). DIRECTIONAL TIRE
PART OF 185-8664 WHEEL & TIRE AR
AN ATTACHMENT

SMCS-4202 **i02361343**

NOTE	PART NUMBER	QTY	PART NAME 1 2 3 4 5 6 (PRODUCT LEVEL)	SEE PAGE
	150-8599	1	VALVE AS-TIRE	
	142-7485	1	WHEEL AS	
	185-9932	1	TIRE (10-16.5)	

<END>

185-8679 TIRE & RIM GP–RH

S/N: SCH2475-UP
(16.5X8.25). DIRECTIONAL TIRE
PART OF 185-8664 WHEEL & TIRE AR
AN ATTACHMENT

SMCS-4202 **i02361345**

NOTE	PART NUMBER	QTY	PART NAME 1 2 3 4 5 6 (PRODUCT LEVEL)	SEE PAGE
	150-8599	1	VALVE AS-TIRE	
	142-7485	1	WHEEL AS	
	185-9932	1	TIRE (10-16.5)	

<END>

185-9926 TIRE & RIM GP–LH

S/N: SCH2475-UP
(16.5X8.25). DIRECTIONAL TIRE
PART OF 185-8665 WHEEL & TIRE AR
AN ATTACHMENT

SMCS-4202 **i02362228**

NOTE	PART NUMBER	QTY	PART NAME 1 2 3 4 5 6 (PRODUCT LEVEL)	SEE PAGE
	150-8599	1	VALVE AS-TIRE	
	142-7490	1	WHEEL AS	
	185-9932	1	TIRE (10-16.5)	

<END>

185-9927 TIRE & RIM GP–RH

S/N: SCH2475-UP
(16.5X8.25). DIRECTIONAL TIRE
PART OF 185-8665 WHEEL & TIRE AR
AN ATTACHMENT

SMCS-4202 **i02362230**

NOTE	PART NUMBER	QTY	PART NAME 1 2 3 4 5 6 (PRODUCT LEVEL)	SEE PAGE
	150-8599	1	VALVE AS-TIRE	
	142-7490	1	WHEEL AS	
	185-9932	1	TIRE (10-16.5)	

<END>

199-5434 TIRE & RIM GP–LH

S/N: SCH2475-UP
(16.5X12). DIRECTIONAL TIRE
PART OF 142-9121 WHEEL & TIRE AR
AN ATTACHMENT

SMCS-4202 **i02361277**

NOTE	PART NUMBER	QTY	PART NAME 1 2 3 4 5 6 (PRODUCT LEVEL)	SEE PAGE
	150-8599	1	VALVE AS-TIRE	
	178-2270	1	WHEEL AS	
	199-5436	1	TIRE (31-15.5-16.5)	

<END>

199-5435 TIRE & RIM GP—RH

S/N: SCH2475-UP
(16.5X12). DIRECTIONAL TIRE
PART OF 142-9121 WHEEL & TIRE AR
AN ATTACHMENT

SMCS-4202 **i02361622**

NOTE	PART NUMBER	QTY	PART NAME 1 2 3 4 5 6 (PRODUCT LEVEL)	SEE PAGE
	150-8599	1	VALVE AS-TIRE	
	178-2270	1	WHEEL AS	
	199-5436	1	TIRE (31-15.5-16.5)	

<END>

265-2894 TIRE & RIM GP—LH

S/N: SCH2475-UP
PART OF 252-0344 WHEEL & TIRE AR
AN ATTACHMENT

SMCS-4202 **i02279688**

NOTE	PART NUMBER	QTY	PART NAME 1 2 3 4 5 6 (PRODUCT LEVEL)	SEE PAGE
	150-8599	1	VALVE AS-TIRE	
	142-7490	1	WHEEL AS	
	222-3962	1	TIRE (10-16.5)	

<END>

265-2895 TIRE & RIM GP—RH

S/N: SCH2475-UP
PART OF 252-0344 WHEEL & TIRE AR
AN ATTACHMENT

SMCS-4202 **i02279722**

NOTE	PART NUMBER	QTY	PART NAME 1 2 3 4 5 6 (PRODUCT LEVEL)	SEE PAGE
	150-8599	1	VALVE AS-TIRE	
	142-7490	1	WHEEL AS	
	222-3962	1	TIRE (10-16.5)	

<END>

265-2896 TIRE & RIM GP—LH

S/N: SCH2475-UP
PART OF 252-0345 WHEEL & TIRE AR
AN ATTACHMENT

SMCS-4202 **i02279732**

NOTE	PART NUMBER	QTY	PART NAME 1 2 3 4 5 6 (PRODUCT LEVEL)	SEE PAGE
	150-8599	1	VALVE AS-TIRE	
	142-7485	1	WHEEL AS	
	222-3962	1	TIRE (10-16.5)	

<END>

265-2897 TIRE & RIM GP—RH

S/N: SCH2475-UP
PART OF 252-0345 WHEEL & TIRE AR
AN ATTACHMENT

SMCS-4202 **i02363184**

NOTE	PART NUMBER	QTY	PART NAME 1 2 3 4 5 6 (PRODUCT LEVEL)	SEE PAGE
	150-8599	1	VALVE AS-TIRE	
	142-7485	1	WHEEL AS	
	222-3962	1	TIRE (10-16.5)	

<END>

142-8666 WHEEL & TIRE AR

S/N: SCH2475-UP
AN ATTACHMENT

SMCS-4200, 4201, 4203 **i02361114**

NOTE	PART NUMBER	QTY	PART NAME 1 2 3 4 5 6 (PRODUCT LEVEL)	SEE PAGE
Y	*142-7484*	2	TIRE & RIM GP (LH)	201
Y	*150-8592*	2	TIRE & RIM GP (RH)	201
	142-7493	32	NUT-LUG (9/16-18-2B THD)	

Y-SEPARATE ILLUSTRATION

<END>

142-9121 WHEEL & TIRE AR—HIGH FLOTATION

S/N: SCH2475-UP
AN ATTACHMENT

SMCS-4200, 4201, 4203 **i02361138**

NOTE	PART NUMBER	QTY	PART NAME 1 2 3 4 5 6 (PRODUCT LEVEL)	SEE PAGE
Y	*199-5434*	2	TIRE & RIM GP (LH)	205
Y	*199-5435*	2	TIRE & RIM GP (RH)	206
	142-7493	32	NUT-LUG (9/16-18-2B THD)	

Y-SEPARATE ILLUSTRATION

<END>

165-2602 WHEEL & TIRE AR—HEAVY DUTY

S/N: SCH2475-UP
AN ATTACHMENT

SMCS-4200, 4201, 4203 **i02361177**

NOTE	PART NUMBER	QTY	PART NAME 1 2 3 4 5 6 (PRODUCT LEVEL)	SEE PAGE
Y	*165-2605*	2	TIRE & RIM GP (LH)	201
Y	*165-2606*	2	TIRE & RIM GP (RH)	202
	142-7493	32	NUT-LUG (9/16-18-2B THD)	

Y-SEPARATE ILLUSTRATION

<END>

165-4891 WHEEL & TIRE AR—HEAVY DUTY

S/N: SCH2475-UP
AN ATTACHMENT

SMCS-4200, 4201, 4203 **i02361179**

NOTE	PART NUMBER	QTY	PART NAME 1 2 3 4 5 6 (PRODUCT LEVEL)	SEE PAGE
Y	*165-2609*	2	TIRE & RIM GP (LH)	202
Y	*165-2610*	2	TIRE & RIM GP (RH)	202
	142-7493	32	NUT-LUG (9/16-18-2B THD)	

Y-SEPARATE ILLUSTRATION

<END>

185-8660 WHEEL & TIRE AR—LOW SIDE WALL

S/N: SCH2475-UP
AN ATTACHMENT

SMCS-4200, 4201, 4203 **i02361192**

NOTE	PART NUMBER	QTY	PART NAME 1 2 3 4 5 6 (PRODUCT LEVEL)	SEE PAGE
Y	*185-8670*	2	TIRE & RIM GP (LH)	203
Y	*185-8671*	2	TIRE & RIM GP (RH)	203
	142-7493	32	NUT-LUG (9/16-18-2B THD)	

Y-SEPARATE ILLUSTRATION

<END>

185-8661 WHEEL & TIRE AR—LOW SIDE WALL

S/N: SCH2475-UP
AN ATTACHMENT

SMCS-4200, 4201, 4203 **i02361196**

NOTE	PART NUMBER	QTY	PART NAME 1 2 3 4 5 6 (PRODUCT LEVEL)	SEE PAGE
Y	*185-8672*	2	TIRE & RIM GP (LH)	203
Y	*185-8673*	2	TIRE & RIM GP (RH)	204
	142-7493	32	NUT-LUG (9/16-18-2B THD)	

Y-SEPARATE ILLUSTRATION

<END>

185-8664 WHEEL & TIRE AR—HEAVY DUTY

S/N: SCH2475-UP
AN ATTACHMENT

SMCS-4200, 4201, 4203 **i02361199**

NOTE	PART NUMBER	QTY	PART NAME 1 2 3 4 5 6 (PRODUCT LEVEL)	SEE PAGE
Y	*185-8678*	2	TIRE & RIM GP (LH)	204
Y	*185-8679*	2	TIRE & RIM GP (RH)	204
	142-7493	32	NUT-LUG (9/16-18-2B THD)	

Y-SEPARATE ILLUSTRATION

<END>

185-8665 WHEEL & TIRE AR—HEAVY DUTY

S/N: SCH2475-UP
AN ATTACHMENT

SMCS-4200, 4201, 4203 **i02361201**

NOTE	PART NUMBER	QTY	PART NAME 1 2 3 4 5 6 (PRODUCT LEVEL)	SEE PAGE
Y	*185-9926*	2	TIRE & RIM GP (LH)	205
Y	*185-9927*	2	TIRE & RIM GP (RH)	205
	142-7493	32	NUT-LUG (9/16-18-2B THD)	

Y-SEPARATE ILLUSTRATION

<END>

252-0344 WHEEL & TIRE AR

S/N: SCH2475-UP
AN ATTACHMENT

SMCS-4200, 4201, 4203 **i02279641**

NOTE	PART NUMBER	QTY	PART NAME 1 2 3 4 5 6 (PRODUCT LEVEL)	SEE PAGE
Y	**265-2895**	2	TIRE & RIM GP (RH)	206
Y	**265-2894**	2	TIRE & RIM GP (LH)	206
	142-7493	32	NUT-LUG (9/16-18-2B THD)	

Y-SEPARATE ILLUSTRATION

<END>

252-0345 WHEEL & TIRE AR

S/N: SCH2475-UP
AN ATTACHMENT

SMCS-4200, 4201, 4203 **i02279670**

NOTE	PART NUMBER	QTY	PART NAME 1 2 3 4 5 6 (PRODUCT LEVEL)	SEE PAGE
Y	**265-2896**	2	TIRE & RIM GP (LH)	206
Y	**265-2897**	2	TIRE & RIM GP (RH)	207
	142-7493	32	NUT-LUG (9/16-18-2B THD)	

Y-SEPARATE ILLUSTRATION

<END>

252-0367 WHEEL & TIRE AR—SOLID

S/N: SCH2475-UP
AN ATTACHMENT

SMCS-4200, 4201, 4203 **i02279677**

NOTE	PART NUMBER	QTY	PART NAME 1 2 3 4 5 6 (PRODUCT LEVEL)	SEE PAGE
	142-7493	32	NUT-LUG (9/16-18-2B THD)	
	226-3736	2	TIRE-SOLID (31X6X10)	
	226-3737	2	TIRE-SOLID (31X6X10)	

<END>

252-0378 WHEEL & TIRE AR—SOLID

S/N: SCH2475-UP

AN ATTACHMENT

SMCS-4200, 4201, 4203 **i02279683**

NOTE	PART NUMBER	QTY	PART NAME 1 2 3 4 5 6 (PRODUCT LEVEL)	SEE PAGE
	142-7493	32	NUT-LUG (9/16-18-2B THD)	
	226-3736	2	TIRE-SOLID (31X6X10)	
	226-3737	2	TIRE-SOLID (31X6X10)	

<END>

317-0690 WHEEL & TIRE GP

S/N: SCH2475-UP

FIELD INSTALLATION

SMCS-4200, 4201, 4202, 4203, 4208, 4209 **i02839895**

NOTE	REF NO	GRAPHIC REF	PART NUMBER	QTY	PART NAME 1 2 3 4 5 6 (PRODUCT LEVEL)	SEE PAGE
	1	1	**311-4926**	4	TIRE (31X5X9)	

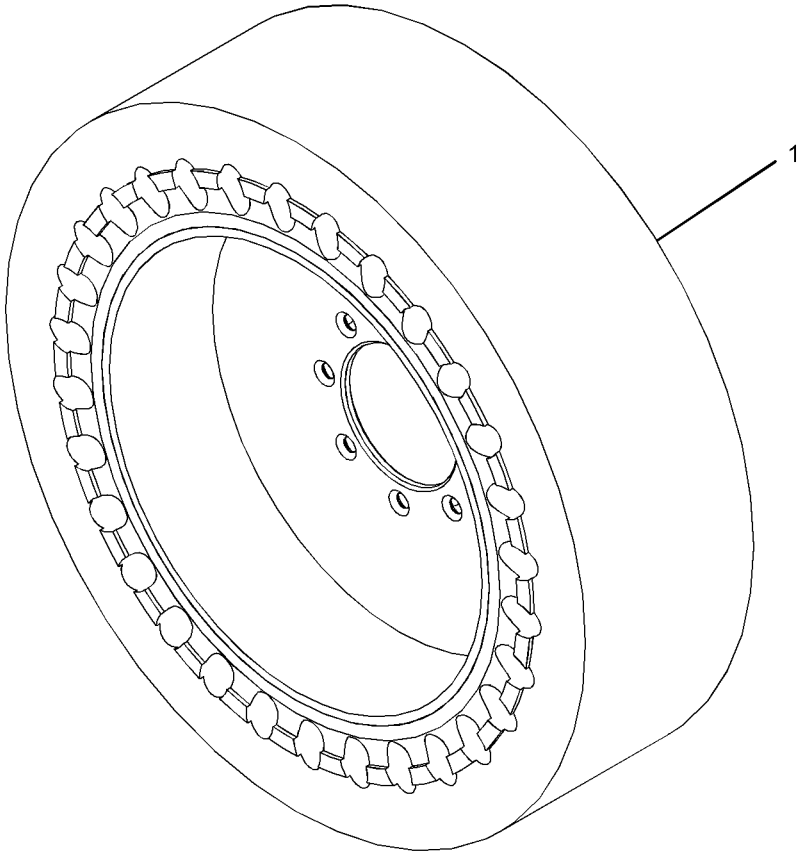

GRAPHIC #1 **<END>** g01417446

218-5772 BUMPER GP–REAR

S/N: SCH2475-UP

PART OF 295-7210 CHASSIS AR

SMCS-7156 **i01964597**

NOTE	REF NO	GRAPHIC REF	PART NUMBER	QTY	PART NAME 1 2 3 4 5 6 (PRODUCT LEVEL)	SEE PAGE
	1	1	**142-9021**	2	STUD	
	2	1	**154-4006**	2	BOSS	
	3	1	**218-5651**	1	BUMPER AS	
	4	1	**8T-4122**	6	WASHER-HARD (17X32X3.5-MM THK)	
M	5	1	**8T-4132**	4	NUT (M16X2-THD)	
M	6	1	**8T-7338**	2	BOLT (M16X2X45-MM)	

M-METRIC PART

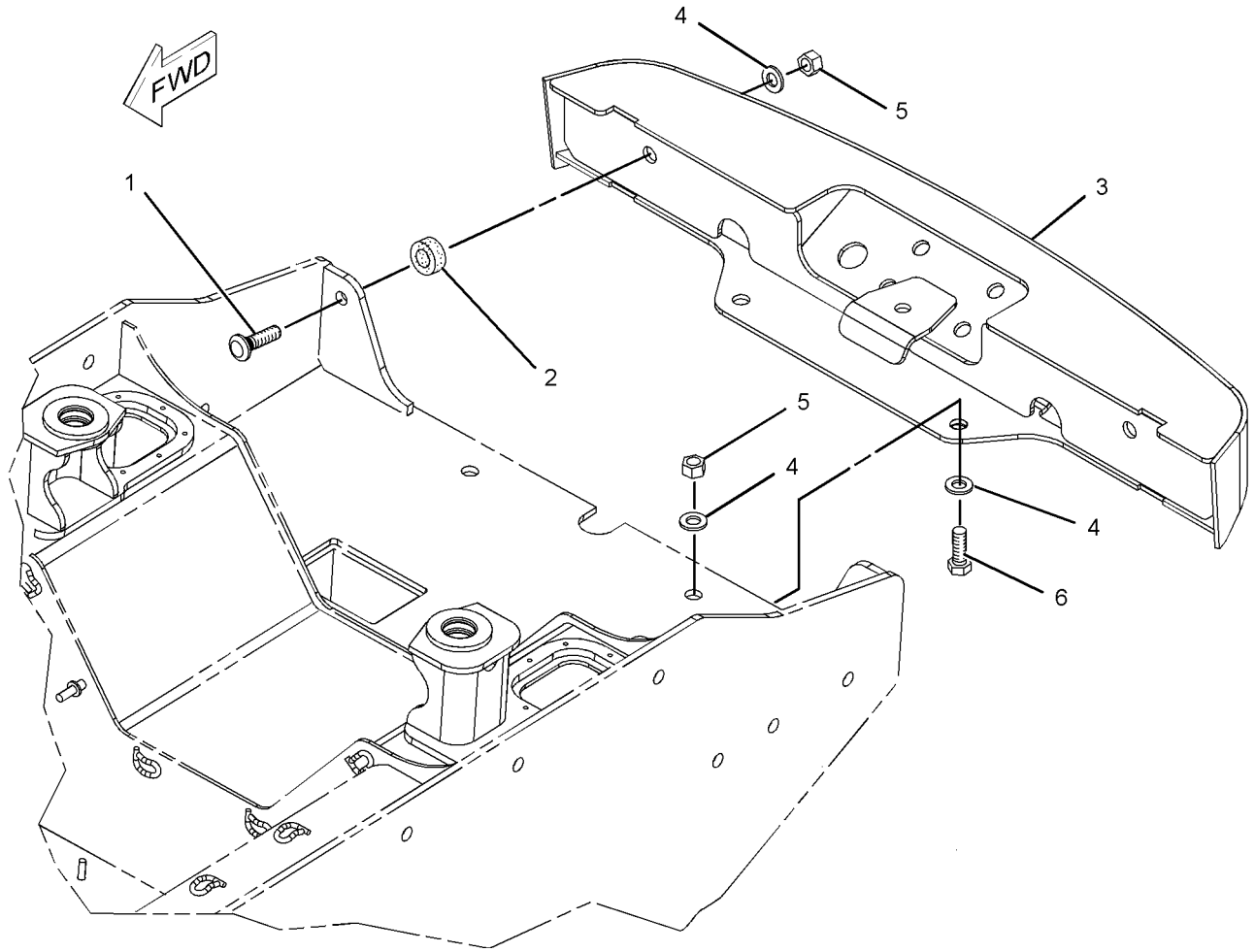

GRAPHIC #1 **<END>** g01021209

233-5681 CONVERSION AR-ROADING—EUROPE

S/N: SCH2475-UP
AN ATTACHMENT

SMCS-7000 **i02124778**

NOTE	PART NUMBER	QTY	PART NAME 1 2 3 4 5 6 (PRODUCT LEVEL)	SEE PAGE
Y	*216-6146*	1	BOX GP-STORAGE	452
Y	*188-0147*	1	LIFTING GP-MACHINE	230
Y	*142-8652*	1	LIGHTING GP-STOP & TAIL	153
Y	*218-5791*	1	PANEL AR-INSTRUMENT	539
Y	*233-5616*	1	SUPPRESSION GP-SOUND	237
Y	*230-3743*	1	WIRING GP-HORN (WITH MOUNTING)	174
	218-5601	1	FLOOR MAT	

Y-SEPARATE ILLUSTRATION

<END>

233-5682 CONVERSION AR-ROADING—GERMANY

S/N: SCH2475-UP
AN ATTACHMENT

SMCS-7000 **i02338195**

NOTE	PART NUMBER	QTY	PART NAME 1 2 3 4 5 6 (PRODUCT LEVEL)	SEE PAGE
Y	*216-6146*	1	BOX GP-STORAGE	452
Y	*234-0792*	1	CONVERSION GP-ROADING	215
Y	**177-9152**	1	KIT-ROADING PLATE & MOUNTING (BUCKET)	429
Y	*188-0147*	1	LIFTING GP-MACHINE	230
Y	*216-4716*	1	LIGHTING GP-ROADING	151
Y	*175-4238*	1	LOCK GP-QUICK COUPLER (MECHANICAL)	431
Y	*238-7671*	1	MIRROR & MTG GP-REAR VIEW (WITH ROADING LIGHT MOUNT)	232
Y	*218-5791*	1	PANEL AR-INSTRUMENT	539
Y	*233-5616*	1	SUPPRESSION GP-SOUND	237
Y	*173-3022*	1	VISOR GP-CAB	558
Y	*230-3743*	1	WIRING GP-HORN (WITH MOUNTING)	174
	222-5695	1	SUPPORT GP-STORAGE BOX	
	216-6144	1	BRACKET AS	
	233-5680	3	FILM-IDENTIFICATION (13-KM/H)	
	218-5601	1	FLOOR MAT	

Y-SEPARATE ILLUSTRATION

<END>

233-5683 CONVERSION AR-ROADING—ITALY

S/N: SCH2475-UP
AN ATTACHMENT

SMCS-7000 **i02338194**

NOTE	PART NUMBER	QTY	PART NAME 1 2 3 4 5 6 (PRODUCT LEVEL)	SEE PAGE
Y	*216-6146*	1	BOX GP-STORAGE	452
Y	*234-0793*	1	CONVERSION GP-ROADING	216
Y	**177-9152**	1	KIT-ROADING PLATE & MOUNTING (BUCKET)	429
Y	*188-0147*	1	LIFTING GP-MACHINE	230
Y	*216-4716*	1	LIGHTING GP-ROADING	151
Y	*175-4238*	1	LOCK GP-QUICK COUPLER (MECHANICAL)	431
Y	*238-7671*	1	MIRROR & MTG GP-REAR VIEW (WITH ROADING LIGHT MOUNT)	232
Y	*225-7963*	1	MOUNTING GP-REGISTRATION	234
Y	*218-5791*	1	PANEL AR-INSTRUMENT	539
Y	*233-5616*	1	SUPPRESSION GP-SOUND	237
Y	*230-3743*	1	WIRING GP-HORN (WITH MOUNTING)	174
Y	*225-7964*	1	WIRING GP-REAR LIGHTING	177
	218-5601	1	FLOOR MAT	

Y-SEPARATE ILLUSTRATION

<END>

233-5684 CONVERSION AR-ROADING—UNITED KINGDOM

S/N: SCH2475-UP
AN ATTACHMENT

SMCS-7000 **i02124783**

NOTE	PART NUMBER	QTY	PART NAME 1 2 3 4 5 6 (PRODUCT LEVEL)	SEE PAGE
Y	*216-6146*	1	BOX GP-STORAGE	452
Y	**191-9684**	1	FILM GP (CLEARANCE)	566
Y	*188-0147*	1	LIFTING GP-MACHINE	230
Y	*142-8652*	1	LIGHTING GP-STOP & TAIL	153
Y	*218-5791*	1	PANEL AR-INSTRUMENT	539
Y	*233-5616*	1	SUPPRESSION GP-SOUND	237
Y	*230-3743*	1	WIRING GP-HORN (WITH MOUNTING)	174
	218-5601	1	FLOOR MAT	

Y-SEPARATE ILLUSTRATION

<END>

FRAME AND BODY

234-0792 CONVERSION GP-ROADING—GERMANY

S/N: SCH2475-UP

PART OF 233-5682 CONVERSION AR-ROADING

AN ATTACHMENT

SMCS-7000 **i02785770**

NOTE	REF NO	GRAPHIC REF	PART NUMBER	QTY	PART NAME 1 2 3 4 5 6 (PRODUCT LEVEL)	SEE PAGE
	1	1	**246-2641**	1	PADLOCK GP	
		1	**5P-8500**	1	KEY	
					(WITH PLASTIC OVERMOLD)	
	2	1	**113-7634**	1	FILM-WARNING (STEERING)	
	3	1	**159-7342**	1	PLATE-INFORMATION (MAXIMUM WEIGHT)	
	4	1	**168-8389**	4	TACK-FASTENER	
	5	1	**173-3015**	1	BRACKET AS	
	6	1	**173-3016**	1	CHOCK	
	7	1	**173-3018**	1	BRACKET	
M	8	1	**8T-4171**	5	BOLT (M6X1X12-MM)	
	9	1	**8T-4205**	5	WASHER-HARD (7.2X14.5X2-MM THK)	

M-METRIC PART

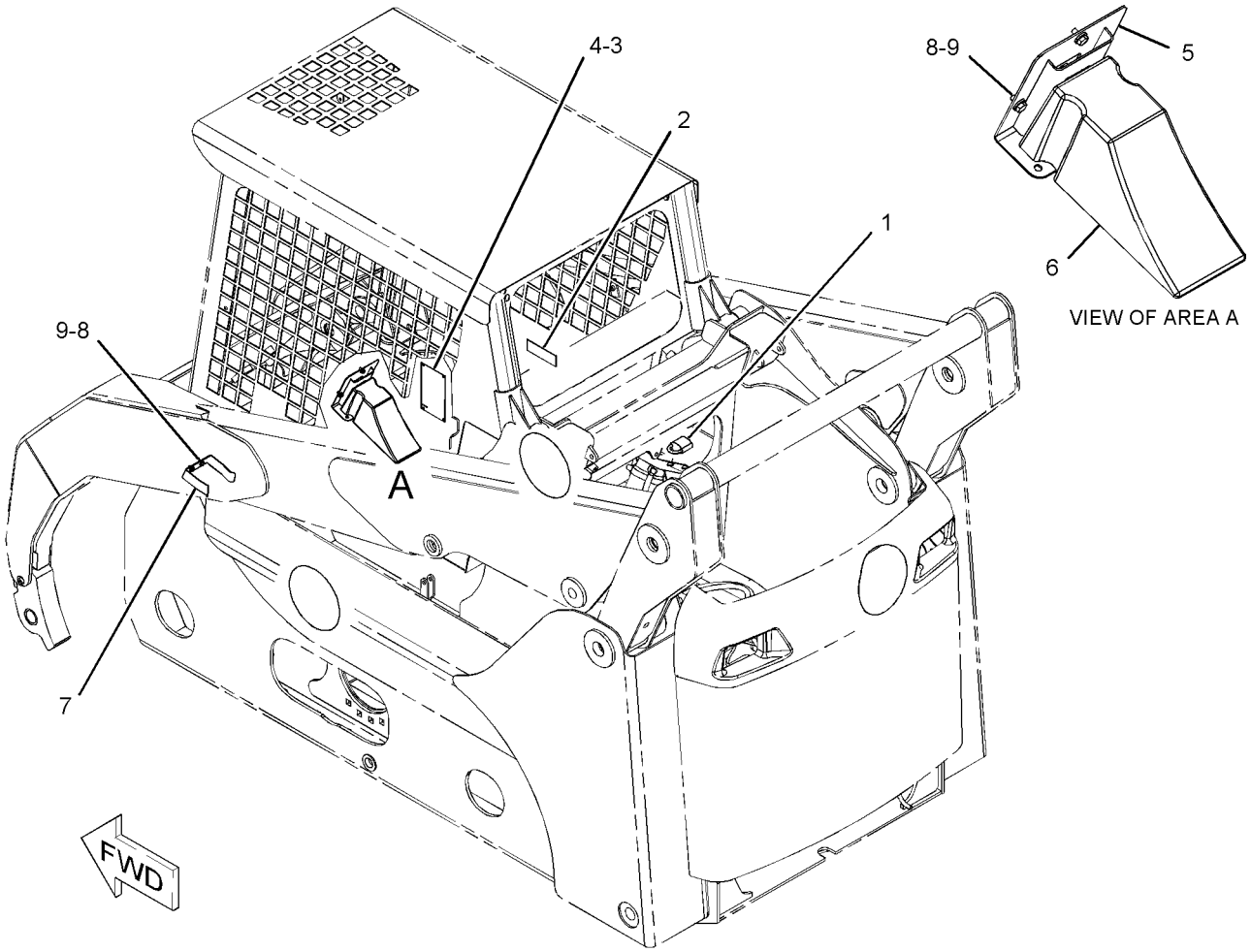

GRAPHIC #1 **<END>** g01131744

234-0793 CONVERSION GP-ROADING–ITALY

S/N: SCH2475-UP
PART OF 233-5683 CONVERSION AR-ROADING
AN ATTACHMENT

SMCS-7000 **i02771681**

NOTE	REF NO	GRAPHIC REF	PART NUMBER	QTY	PART NAME 1 2 3 4 5 6 (PRODUCT LEVEL)	SEE PAGE
Y	1	1	**128-6985**	1	LAMP GP-WARNING BEACON (12-VOLT, AMBER)	148
	2	1	**159-7342**	1	PLATE-INFORMATION (MAXIMUM WEIGHT)	
	3	1	**168-8389**	4	TACK-FASTENER	
	4	1	**186-2360**	4	COVER AS	
					(EACH INCLUDES)	
BE		1	**129-1854**		FASTENER-LOOP	
BE		1	**129-1855**		FASTENER-HOOK	

B-USE AS REQUIRED
E-ORDER BY THE CENTIMETER
Y-SEPARATE ILLUSTRATION

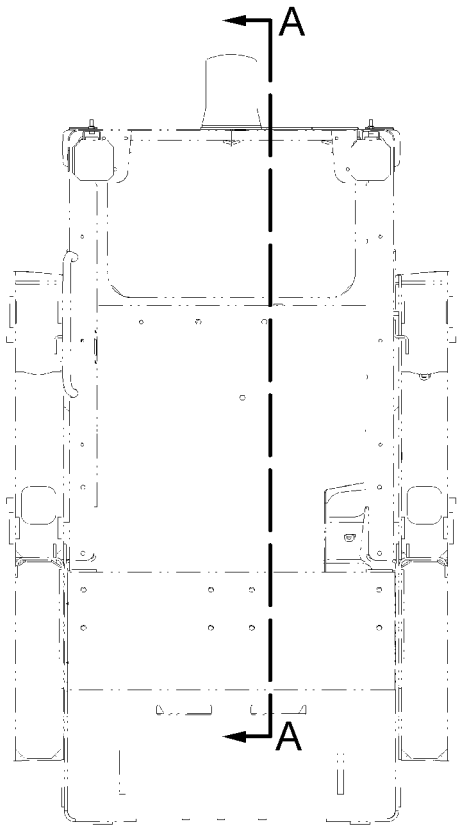

FRONT VIEW

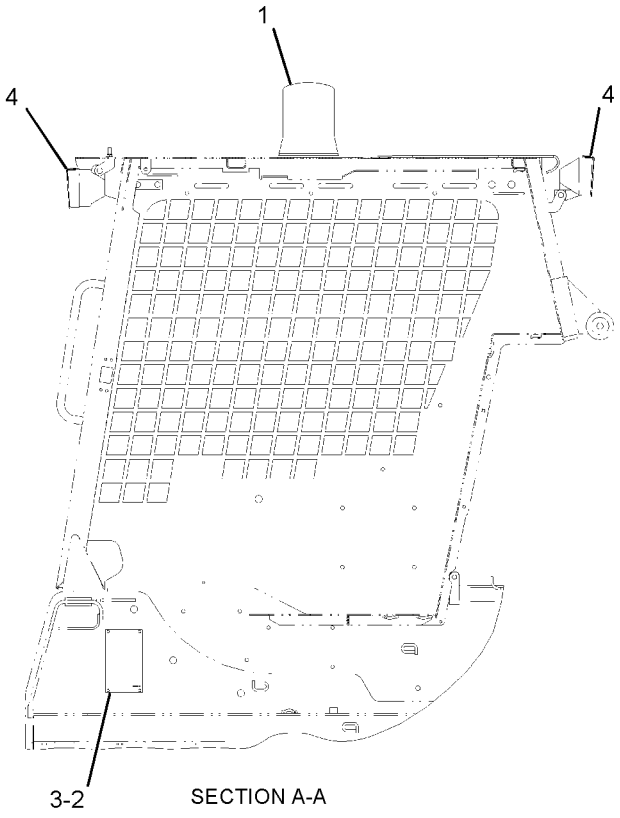

SECTION A-A

GRAPHIC #1 **<END>** g01130743

278-1292 CONVERSION GP-ROADING—GERMANY

S/N: SCH2475-UP

PART OF 278-5414, 295-7163 CONVERSION AR-MACHINE

AN ATTACHMENT

SMCS-7000 **i02866415**

NOTE	REF NO	GRAPHIC REF	PART NUMBER	QTY	PART NAME 1 2 3 4 5 6 (PRODUCT LEVEL)	SEE PAGE
	1	1	**246-2641**	1	PADLOCK GP	
		1	**5P-8500**	1	KEY	
					(WITH PLASTIC OVERMOLD)	
	2	1	**113-7634**	1	FILM-WARNING (STEERING)	
	3	1	**258-3849**	1	PLATE-IDENTIFICATION (ENGLISH, GERMAN, SPANISH)	
	5	1	**173-3015**	1	BRACKET AS	
	6	1	**173-3016**	1	CHOCK	
	7	1	**173-3018**	1	BRACKET	
M	8	1	**8T-4171**	5	BOLT (M6X1X12-MM)	
	9	1	**8T-4205**	5	WASHER-HARD (7.2X14.5X2-MM THK)	

M-METRIC PART

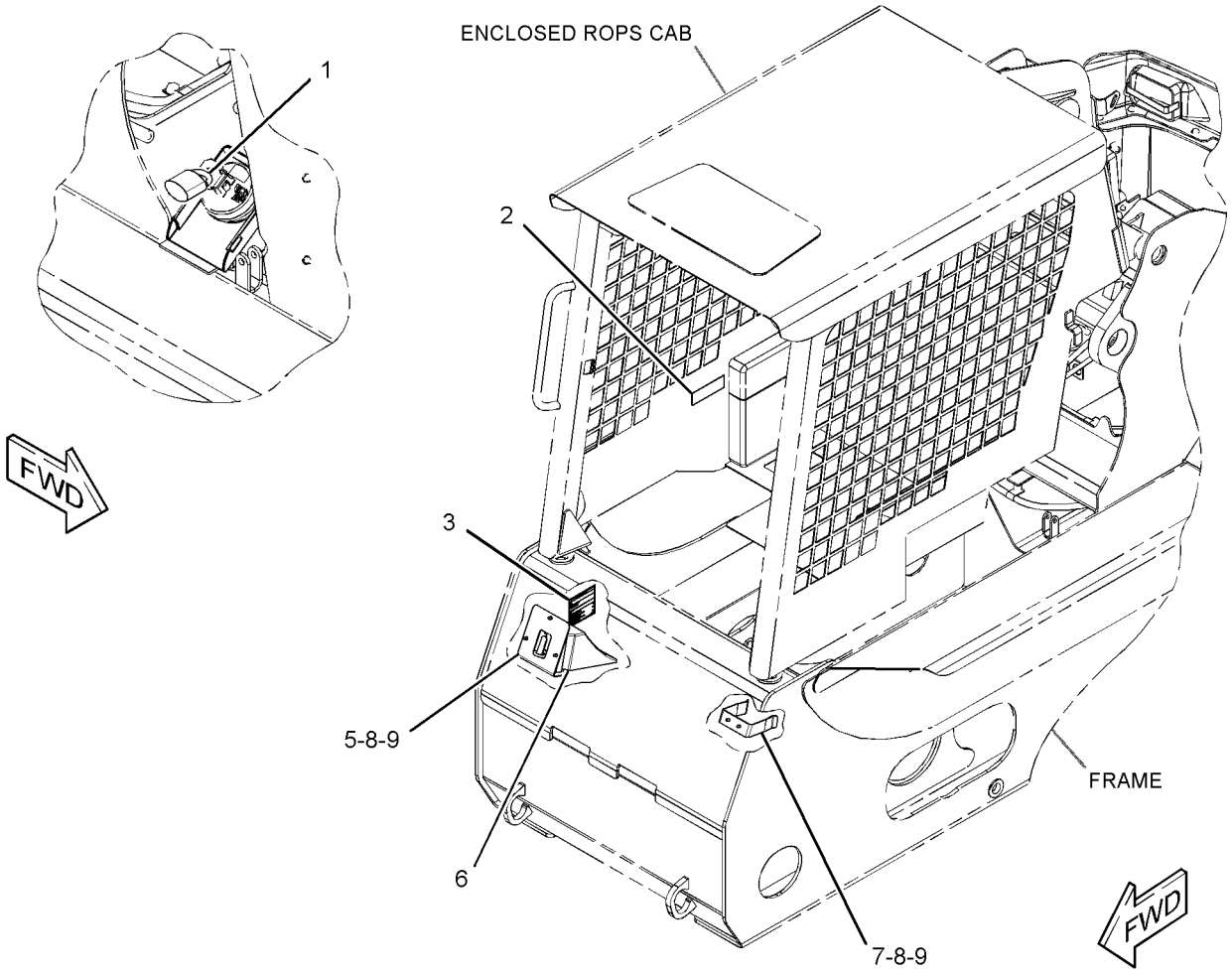

GRAPHIC #1 **<END>** g01437301

278-1293 CONVERSION GP-ROADING—ITALY

S/N: SCH2475-UP

PART OF 278-5370, 295-7150 CONVERSION AR-MACHINE

AN ATTACHMENT

SMCS-7000 **i02866420**

NOTE	REF NO	GRAPHIC REF	PART NUMBER	QTY	PART NAME 1 2 3 4 5 6 (PRODUCT LEVEL)	SEE PAGE
Y	1	1	**128-6985**	1	LAMP GP-WARNING BEACON (12-VOLT, AMBER)	148
	2	1	**186-2360**	4	COVER AS	
					(EACH INCLUDES)	
E		1	**129-1854**		FASTENER-LOOP (10-CM)	
E		1	**129-1855**		FASTENER-HOOK (10-CM)	
	3	1	**258-3849**	1	PLATE-IDENTIFICATION (ENGLISH, GERMAN, SPANISH)	

E-ORDER BY THE CENTIMETER
Y-SEPARATE ILLUSTRATION

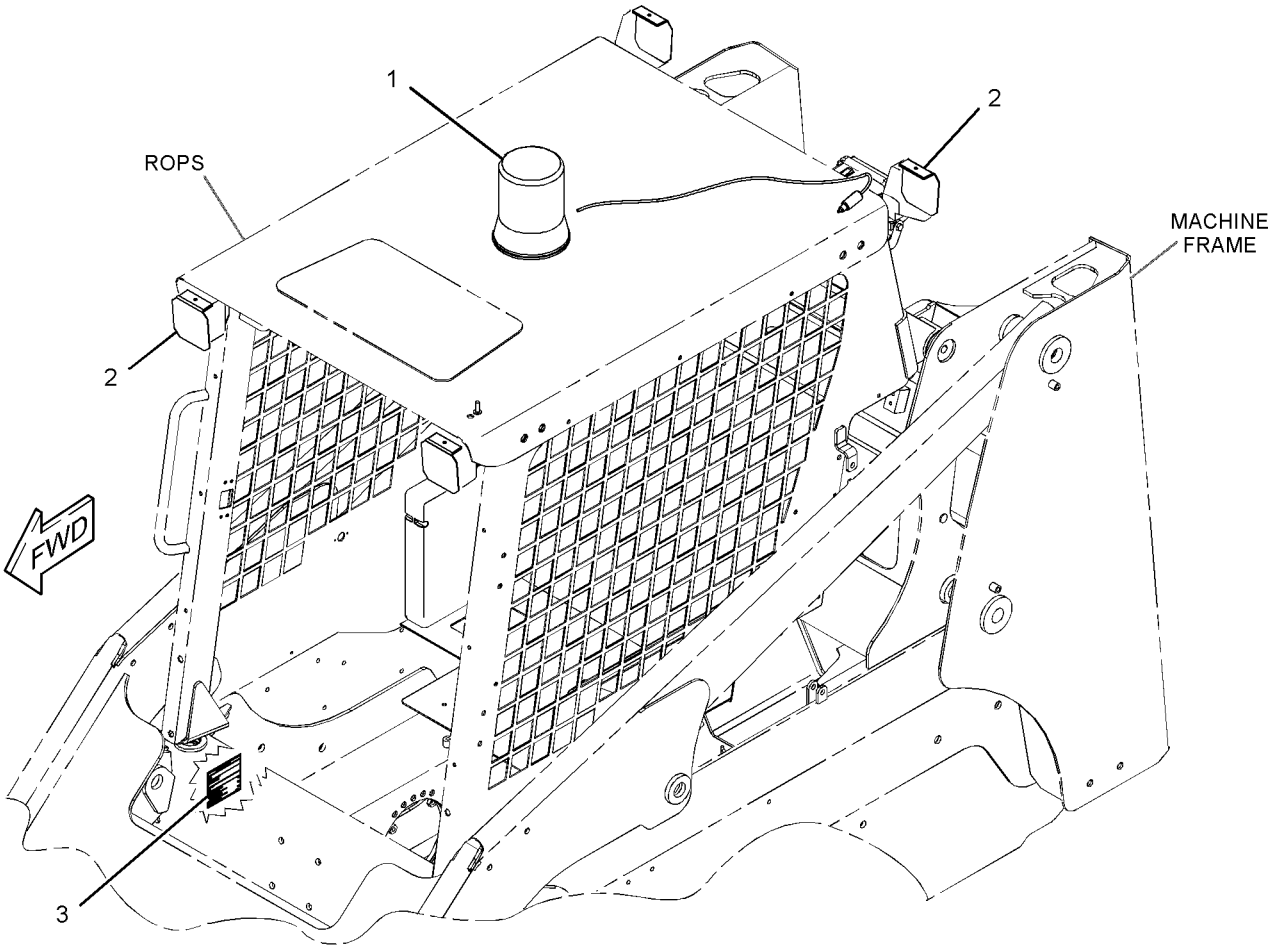

GRAPHIC #1 **<END>** g01436156

191-9566 COUNTERWEIGHT GP–KIT

S/N: SCH2475-UP
37.05 KG (81.5 LBS)
AN ATTACHMENT

SMCS-7056 **i01986629**

NOTE	REF NO	GRAPHIC REF	PART NUMBER	QTY	PART NAME 1 2 3 4 5 6 (PRODUCT LEVEL)	SEE PAGE
	1	1	**215-3927**	4	PLATE	
	2	1	**5P-1076**	12	WASHER-HARD (13.5X30X4-MM THK)	
M	3	1	**8T-4244**	6	NUT (M12X1.75-THD)	
M	4	1	**8T-4910**	6	BOLT (M12X1.75X60-MM)	

M-METRIC PART

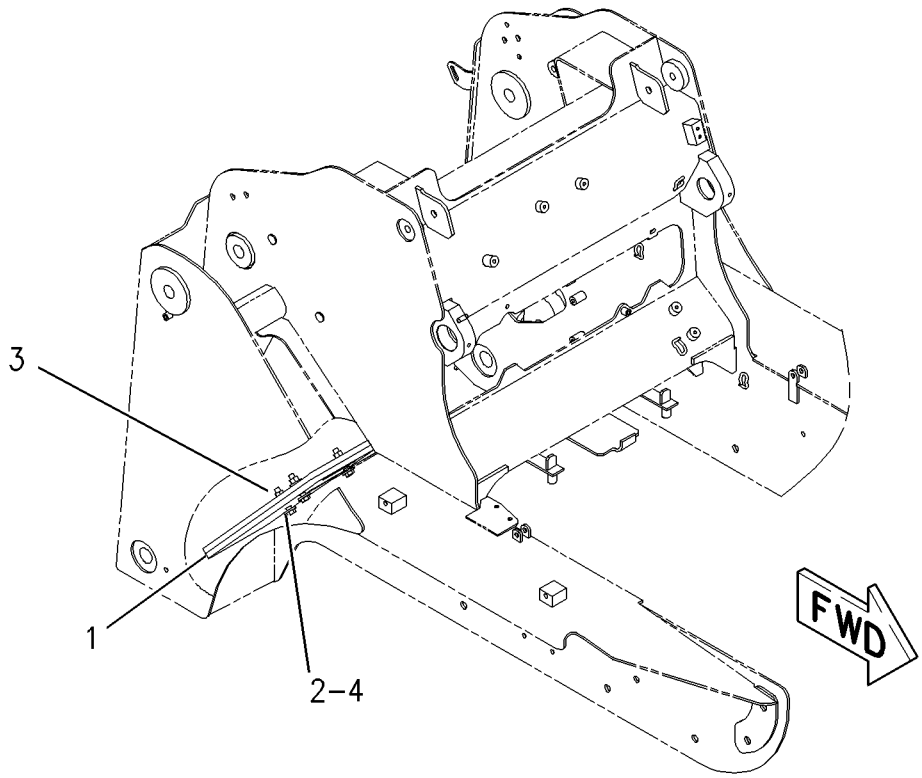

GRAPHIC #1 **<END>** g00888360

215-3926 COUNTERWEIGHT GP

S/N: SCH2475-UP
37.05KG (81.51 LBS)
AN ATTACHMENT

SMCS-7056 **i01749135**

NOTE	REF NO	GRAPHIC REF	PART NUMBER	QTY	PART NAME 1 2 3 4 5 6 (PRODUCT LEVEL)	SEE PAGE
	1	1	**215-3927**	4	PLATE	
	2	1	**5P-1076**	12	WASHER-HARD (13.5X30X4-MM THK)	
M	3	1	**8T-4244**	6	NUT (M12X1.75-THD)	
M	4	1	**8T-4910**	6	BOLT (M12X1.75X60-MM)	

M-METRIC PART

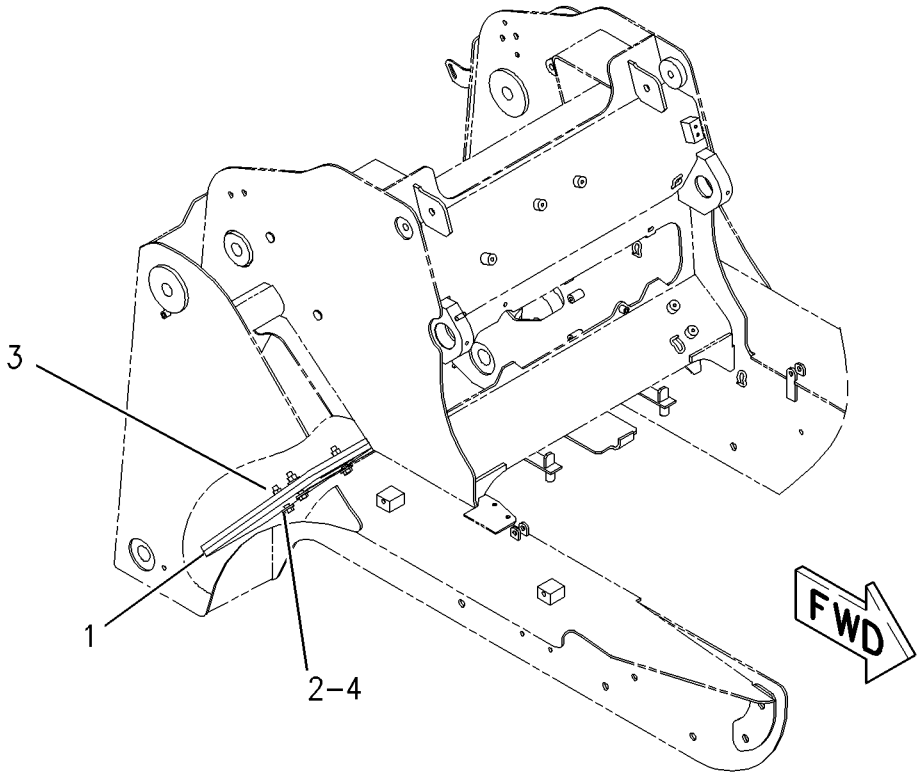

GRAPHIC #1 **<END>** g00888360

218-5803 ENCLOSURE GP-ENGINE

S/N: SCH2475-UP

PART OF 295-7210 CHASSIS AR

SMCS-7263 **i02014410**

NOTE	REF NO	GRAPHIC REF	PART NUMBER	QTY	PART NAME 1 2 3 4 5 6 (PRODUCT LEVEL)	SEE PAGE
	1	1	**110-0885**	2	BUMPER	
	2	1	**142-8801**	1	HOOD AS	
	3	1	**142-8831**	1	STRIKER AS	
	4	1	**142-8832**	1	PIN AS	
	5	1	**159-8405**	2	BOLT-SHOULDER	
	6	1	**218-5802**	1	DOOR AS	
	7	1	**223-4240**	1	LATCH AS	
J	8	1	**224-3875**	1	LOCK GP	
		1	**226-0291**	1	LOCK AS	
		1	**233-4872**	1	CAM	
M	9	1	**131-3540**	3	LOCKNUT (M8X1.25-THD)	
	10	1	**2K-4973**	2	LOCKNUT (3/8-16-THD)	
M	11	1	**5C-7261**	2	NUT (M8X1.25-THD)	
	12	1	**5P-4116**	11	WASHER-HARD (8.8X20.5X2-MM THK)	
M	13	1	**7X-2537**	3	BOLT (M8X1.25X35-MM)	
	14	1	**7X-7729**	2	WASHER (11X25X3-MM THK)	
M	15	1	**8T-4137**	2	BOLT (M10X1.5X20-MM)	
M	16	1	**8T-4181**	4	BOLT (M6X1X20-MM)	
	17	1	**8T-4205**	4	WASHER-HARD (7.2X14.5X2-MM THK)	
M	18	1	**8T-4908**	5	BOLT (M8X1.25X25-MM)	

J-REQUIRES 5P-8500 KEY
M-METRIC PART

218-5803 **ENCLOSURE GP-ENGINE** *(contd.)* **i02014410**

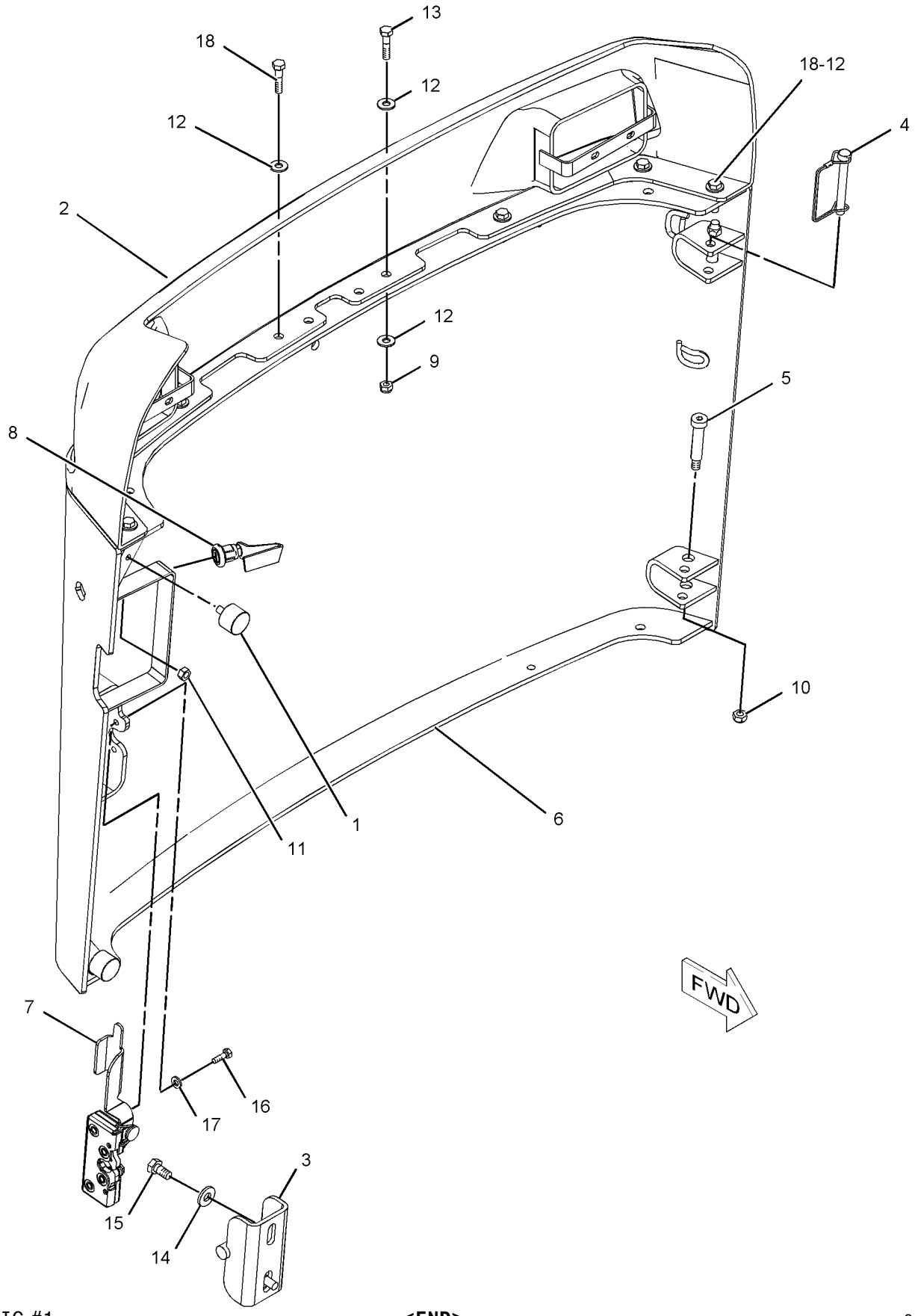

GRAPHIC #1 **<END>** g01030767

FRAME AND BODY

295-7175 FRAME GP-LOADER

S/N: SCH2475-UP

PART OF 295-7210 CHASSIS AR

SMCS-7054 **i02890405**

NOTE	REF NO	GRAPHIC REF	PART NUMBER	QTY	PART NAME 1 2 3 4 5 6 (PRODUCT LEVEL)	SEE PAGE
	1	1	**3B-8488**	2	FITTING-GREASE	
	2	1	**3S-9182**	5	PLUG-MAGNETIC (FRAME)	
	3	1	**4D-0298**	2	BEARING	
	4	1	**9G-5127**	2	BREATHER (TANDEM HOUSING)	
	5	1	**142-8810**	1	PLATE AS	
	6	1	**142-8823**	2	GASKET	
	7	1	**191-2894**	2	PLATE	
	8	1	**191-9576**	1	COVER AS	
	9	1	**207-9731**	1	STEP AS (LH)	
	10	1	**207-9732**	1	STEP AS (RH)	
	11	1	**261-6101**	4	COVER	
	12	1	**231-2105**	1	SENDER AS-FUEL LEVEL	
		1	**102-8802**	1	KIT-RECEPTACLE (2-PIN)	
					(INCLUDES RECEPTACLE AS & WEDGE)	
		1	**186-3735**	2	PIN-CONNECTOR (16-GA TO 18-GA)	
Y	13	1	*295-7042*	1	FRAME GP-MACHINE	225
	14	1	**295-7176**	1	PLATE	
	16	1	**5P-1076**	16	WASHER-HARD (13.5X30X4-MM THK)	
	17	1	**5P-4116**	4	WASHER-HARD (8.8X20.5X2-MM THK)	
M	18	1	**6V-7357**	2	BOLT (M6X1X25-MM)	
	19	1	**8T-4121**	20	WASHER-HARD (11X21X2.5-MM THK)	
	20	1	**8T-4122**	28	WASHER-HARD (17X32X3.5-MM THK)	
M	21	1	**8T-4132**	14	NUT (M16X2-THD)	
M	22	1	**8T-4136**	20	BOLT (M10X1.5X25-MM)	
M	23	1	**8T-4194**	8	BOLT (M12X1.75X50-MM)	
	24	1	**8T-4205**	18	WASHER-HARD (7.2X14.5X2-MM THK)	
M	25	1	**8T-4244**	8	NUT (M12X1.75-THD)	
M	26	1	**8T-4908**	4	BOLT (M8X1.25X25-MM)	
M	27	1	**8T-4970**	16	BOLT (M6X1X14-MM)	
M	28	1	**8T-7338**	14	BOLT (M16X2X45-MM)	

M-METRIC PART
Y-SEPARATE ILLUSTRATION

295-7175 **FRAME GP-LOADER** *(contd.)* **i02890405**

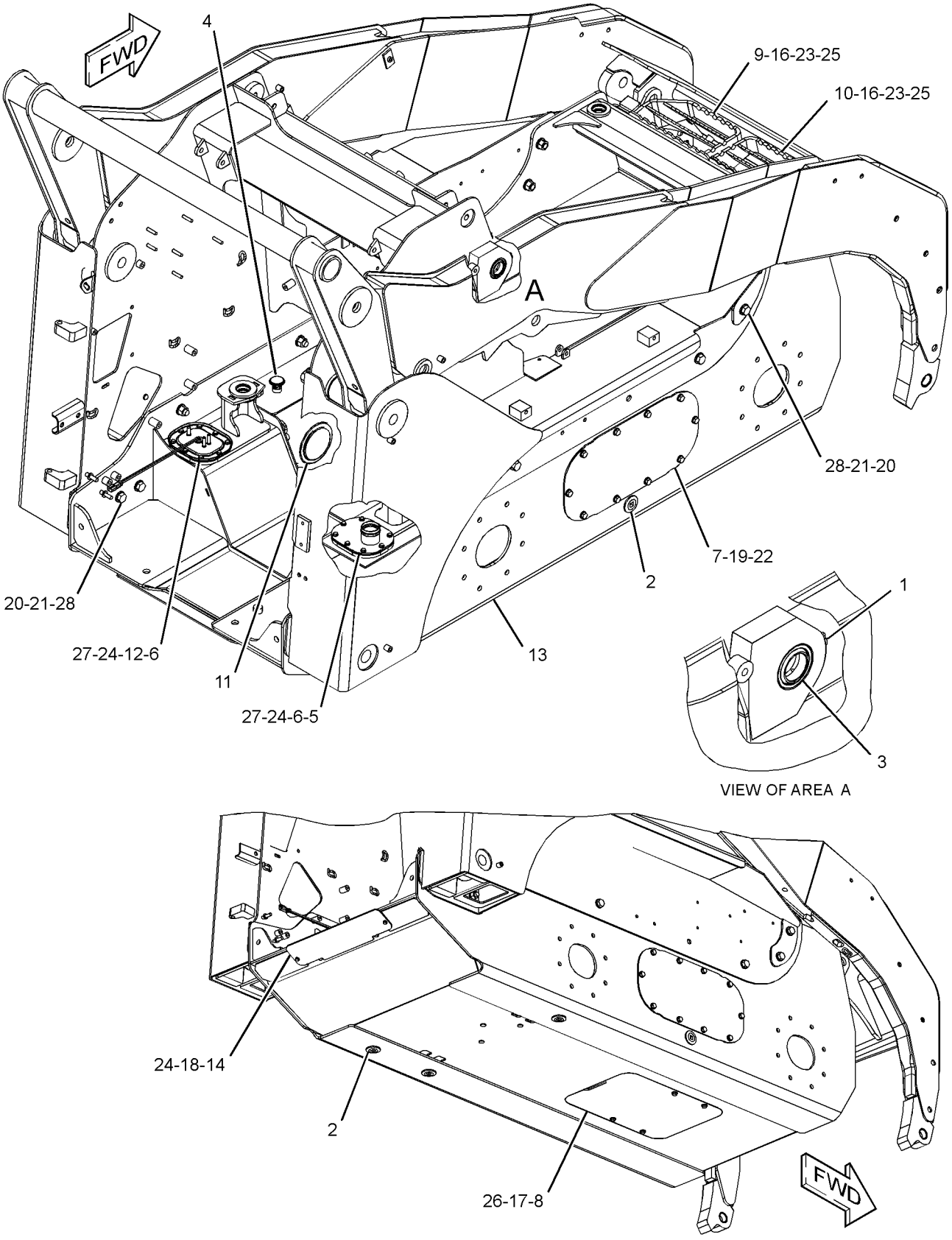

GRAPHIC #1 **<END>** g01389023

295-7042 FRAME GP-MACHINE

S/N: SCH2475-UP

PART OF 295-7175 FRAME GP-LOADER

SMCS-6119, 7050 **i02732860**

NOTE	PART NUMBER	QTY	PART NAME 1 2 3 4 5 6 (PRODUCT LEVEL)	SEE PAGE
	218-6898	1	ARM AS-LIFT	
	142-8805	4	BEARING-SLEEVE	
	159-5756	2	BEARING-SLEEVE	
	295-7173	1	FRAME AS	
	261-6201	1	FRAME AS-UPPER	
	191-9594	1	LINK AS	

<END>

FRAME AND BODY

156-9809 GUIDE GP-LINES

S/N: SCH2475-UP

PART OF 295-7210 CHASSIS AR

SMCS-5057 **i02059887**

NOTE	REF NO	GRAPHIC REF	PART NUMBER	QTY	PART NAME 1 2 3 4 5 6 (PRODUCT LEVEL)	SEE PAGE
	1	1	**227-4315**	1	PLATE AS	
	2	1	**247-4877**	1	BOLT (M8X1.25X12-MM)	
M	3	1	**6V-9189**	1	LOCKNUT (M8X1.25-THD)	
	4	1	**7X-0603**	2	WASHER-HARD (9.9X35X2.5-MM THK)	
M	5	1	**8T-4177**	1	BOLT (M8X1.25X90-MM)	
	6	1	**8T-4224**	1	WASHER-HARD (8.8X16X2-MM THK)	

M-METRIC PART

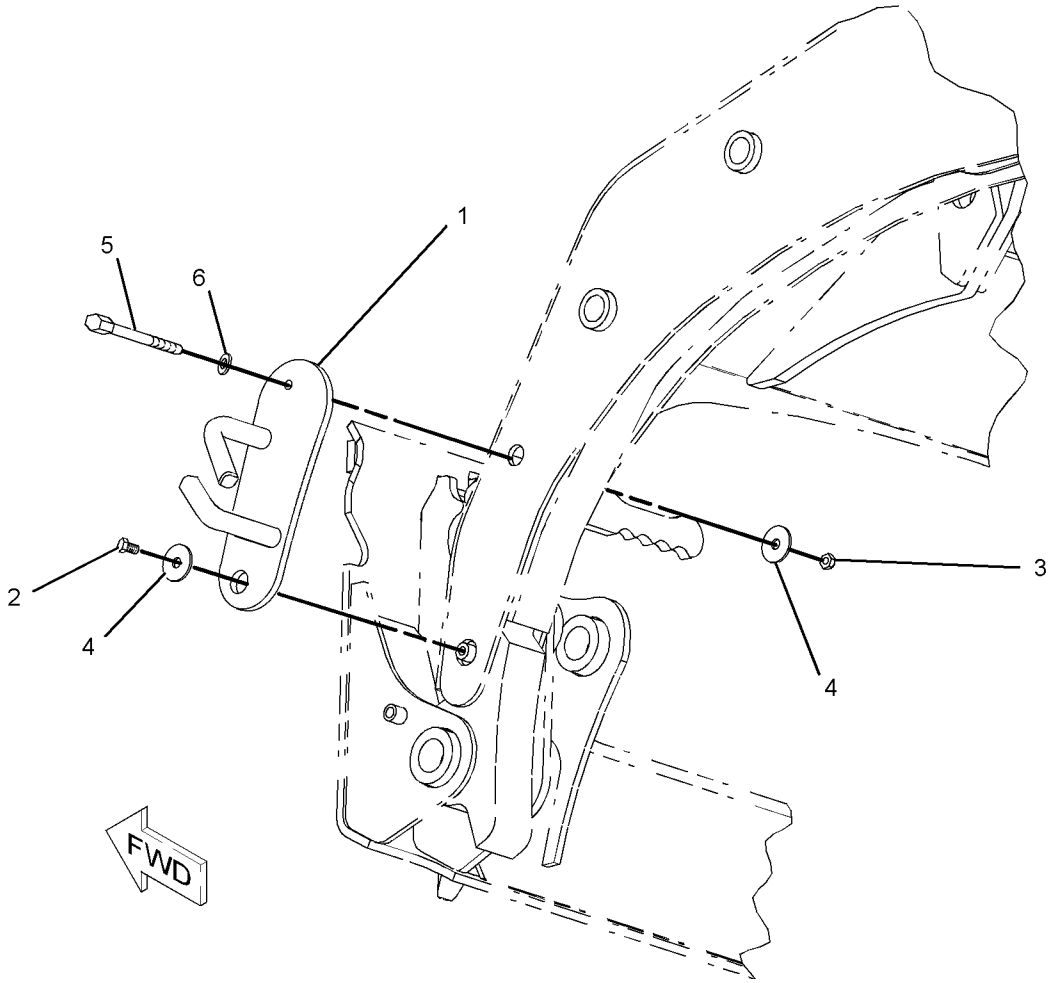

GRAPHIC #1 **<END>** g01056800

277-0651 KIT-ROADING CONVERSION

S/N: SCH2475-UP
AN ATTACHMENT

SMCS-1408, 1429, 1430, 1432, 7000, 7319 **i02545987**

NOTE	REF NO	GRAPHIC REF	PART NUMBER	QTY	PART NAME 1 2 3 4 5 6 (PRODUCT LEVEL)	SEE PAGE
Y	1	2	**3E-7584**	2	LAMP GP-HEAD & SIGNAL	144
	2	2	**7D-5473**	2	BOLT-SOCKET HEAD (8-32X0.75-IN)	
	3	2	**8T-1887**	2	CLIP (SLOT)	
	4	2	**8T-1888**	2	CLIP (TAB)	
	5	2	**8W-8909**	2	SLEEVE	
	6	2	**132-5166**	2	MIRROR GP	
					(EACH INCLUDES)	
		2	**148-2371**	1	CLAMP (TOP)	
		2	**148-2372**	1	CLAMP (BOTTOM)	
Y	7	1	**142-8634**	2	LAMP GP-STOP & TAIL	147
	8	2	**142-9329**	1	SWITCH AS-ROCKER (ROADING LIGHTS)	
	9	2	**142-9331**	1	SWITCH AS-ROCKER (HAZARD WARNING LIGHTS)	
	10	2	**147-1773**	1	CIRCUIT BREAKER AS (30-AMPERE)	
		2	**6V-8378**	2	NUT (10-32-THD)	
		2	**8F-1434**	2	LOCKWASHER	
		2	**8T-0328**	2	WASHER-HARD (5.5X10X1-MM THK)	
	11	2	*166-2033*	2	TEE AS	
					(EACH INCLUDES)	
		2	**4J-5477**	1	SEAL-O-RING	
		2	**7X-2444**	1	TEE-SWIVEL	
	12	2	**175-4239**	2	BRACKET AS	
Y	13	2	**184-1564**	2	SWITCH GP-PRESSURE	160
	14	2	**216-4711**	1	HARNESS AS-REAR LIGHTING (BRAKE)	
		2	**102-8803**	1	KIT-RECEPTACLE (3-PIN)	
					(INCLUDES RECEPTACLE AS & WEDGE)	
		2	**155-2270**	2	KIT-CONNECTING PLUG (2-PIN)	
					(EACH INCLUDES PLUG AS, WEDGE & INTERFACE SEAL)	
E		2	**125-7874**		TUBE-HEAT SHRINK (5.72-MM DIA) (5-CM)	
	15	1	**216-4726**	1	HARNESS AS-FRONT LIGHTING	
E		1	**125-7874**		TUBE-HEAT SHRINK (5.72-MM DIA) (5-CM)	
E		1	**125-7875**		TUBE-HEAT SHRINK (7.44-MM DIA) (5-CM)	
		1	**155-2274**	1	KIT-CONNECTING PLUG (6-PIN)	
					(INCLUDES PLUG AS, WEDGE & INTERFACE SEAL)	
	16	1	**216-4727**	1	HARNESS AS-REAR LIGHTING	
		1	**102-8805**	1	KIT-RECEPTACLE (6-PIN)	
		1	**102-8806**	1	KIT-RECEPTACLE (8-PIN)	
					(EACH KIT INCLUDES RECEPTACLE AS & WEDGE)	
		1	**155-2265**	1	KIT-CONNECTING PLUG (8-PIN)	
					(INCLUDES PLUG AS, WEDGE & INTERFACE SEAL)	
E		1	**125-7874**		TUBE-HEAT SHRINK (5.72-MM DIA) (20-CM)	
E		1	**125-7875**		TUBE-HEAT SHRINK (7.44-MM DIA) (5-CM)	
	17	2	**225-8013**	1	WIRE AS	
	18	2	**226-5900**	1	SWITCH AS-ROCKER (TURN SIGNAL)	
	19	2	**238-7675**	2	PLATE	
	20	2	**242-9000**	1	FLASHER AS (12-VOLT)	
	21	2	**115-1615**	1	RELAY AS (12-VOLT)	
	22	2	**195-0935**	1	INSERT-THREADED (M6X1)	
	23	1	**206-1346**	2	STRAP-CABLE	
B	24	1,2	**3S-2093**	*22*	STRAP-CABLE	
	25	2	**4B-4863**	2	WASHER (4.7X11X1.2-MM THK)	
	26	1	**4P-7581**	1	CLIP	
M	27	2	**5C-9553**	4	BOLT (M6X1X16-MM)	
	28	2	**8T-4121**	4	WASHER-HARD (11X21X2.5-MM THK)	
M	29	2	**8T-4133**	2	NUT (M10X1.5-THD)	
M	30	2	**8T-4178**	2	BOLT (M10X1.5X90-MM)	

277-0651 KIT-ROADING CONVERSION *(contd.)* i02545987

NOTE	REF NO	GRAPHIC REF	PART NUMBER	QTY	PART NAME 1 2 3 4 5 6 (PRODUCT LEVEL)	SEE PAGE
M	31	1	**8T-4201**	1	BOLT-LOCKING (M10X1.5X20-MM)	
	32	2	**8T-4205**	4	WASHER-HARD (7.2X14.5X2-MM THK)	
M	33	2	**9X-2042**	1	SCREW-TRUSS HEAD (M6X1X12-MM)	

B-USE AS REQUIRED
E-ORDER BY THE CENTIMETER
M-METRIC PART
Y-SEPARATE ILLUSTRATION

REFER TO ALL ILLUSTRATIONS OF THIS GROUP FOR AUXILIARY VIEWS

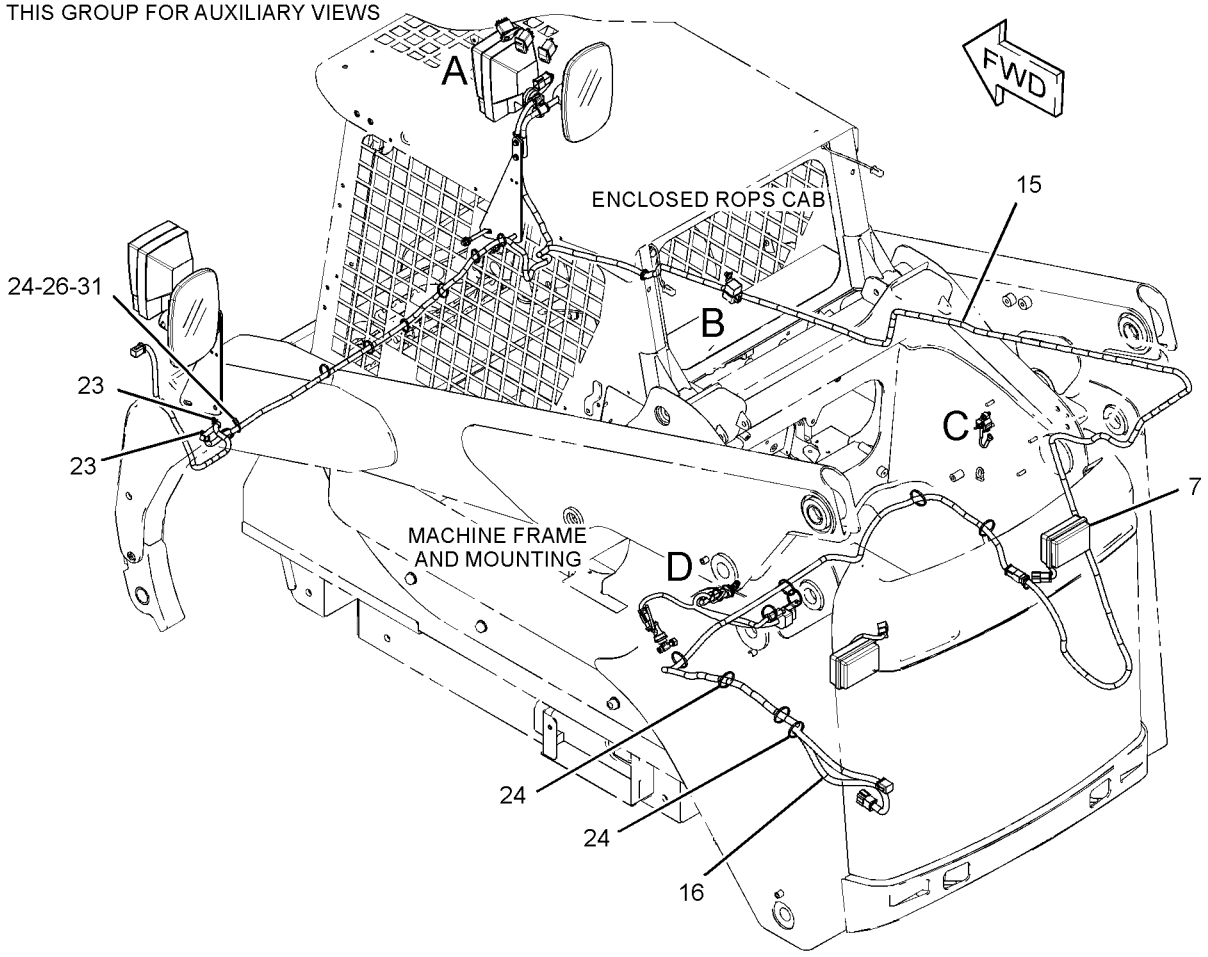

GRAPHIC #1 g01346722

277-0651 KIT-ROADING CONVERSION *(contd.)* **i02545987**

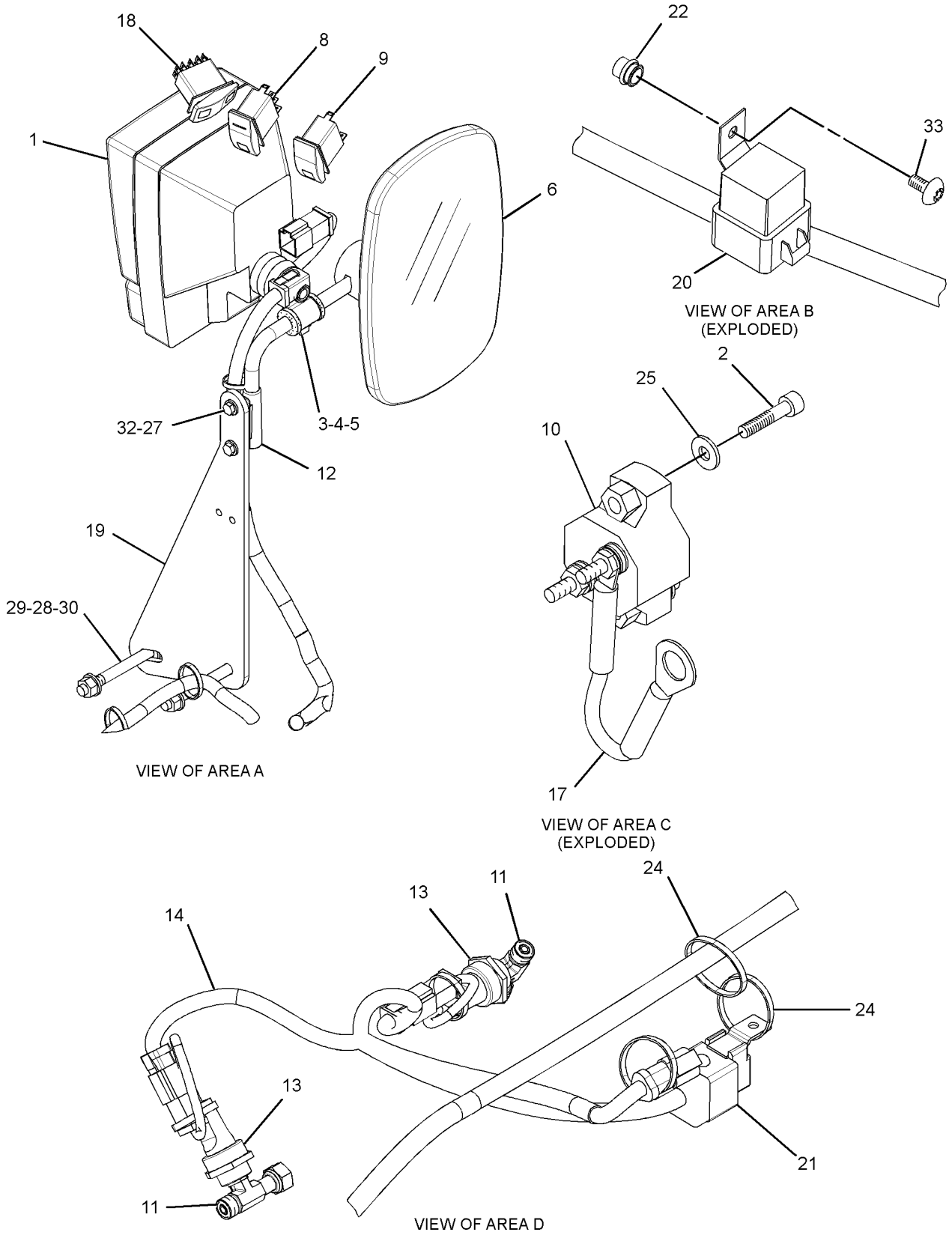

GRAPHIC #2 **<END>** g01346719

188-0147 LIFTING GP-MACHINE–4-POINT

S/N: SCH2475-UP

PART OF 261-6156, 278-5348, 278-5370, 278-5414, 295-7060, 295-7067, 295-7150, 295-7163 CONVERSION AR-MACHINE, 233-5681, 233-5682, 233-5683, 233-5684 CONVERSION AR-ROADING AN ATTACHMENT

SMCS-1122, 6459, 7000 **i02571185**

NOTE	REF NO	GRAPHIC REF	PART NUMBER	QTY	PART NAME 1 2 3 4 5 6 (PRODUCT LEVEL)	SEE PAGE
	1	1	**7E-2700**	4	FILM-SYMBOL (LIFT EYE LOCATION)	
	2	1	**142-8826**	4	PLATE-LIFT	
M	3	1	**159-2953**	8	SCREW-FLAT HEAD (M16X2-THD)	
	4	1	**8T-4122**	4	WASHER-HARD (17X32X3.5-MM THK)	
M	5	1	**8T-4132**	4	NUT (M16X2-THD)	

M-METRIC PART

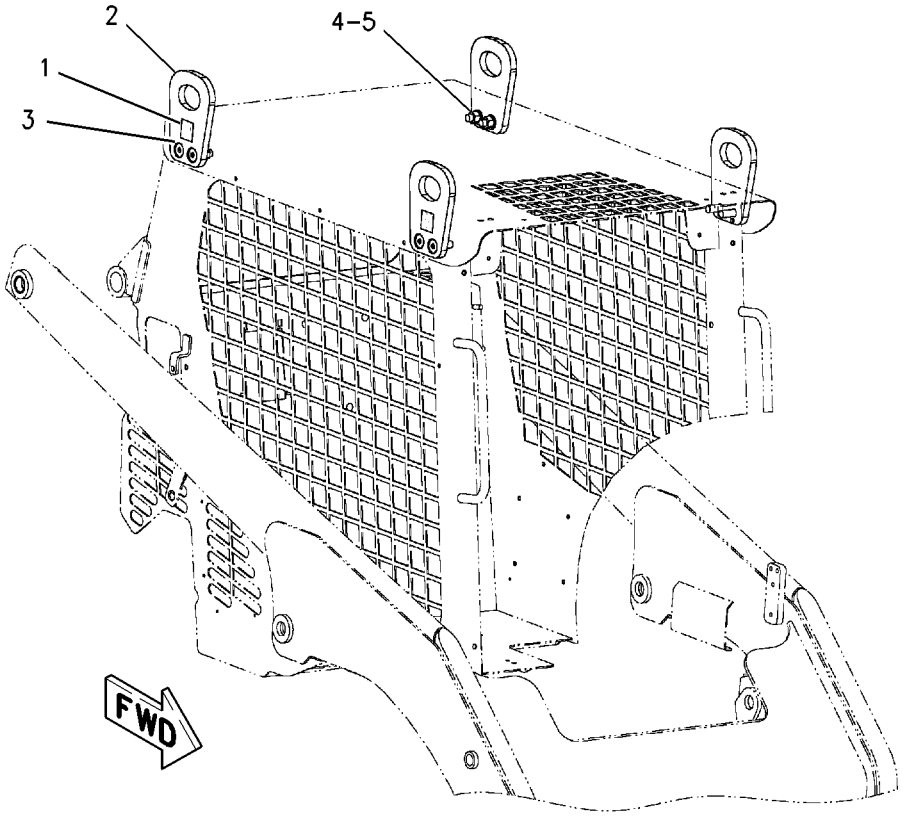

GRAPHIC #1 **<END>** g00902178

218-5969 LIFTING GP-MACHINE—SINGLE POINT

S/N: SCH2475-UP

CANNOT BE USED WITH 188-0147—PAGE 230

AN ATTACHMENT

SMCS-1122, 6459, 7000 **i02771699**

NOTE	REF NO	GRAPHIC REF	PART NUMBER	QTY	PART NAME 1 2 3 4 5 6 (PRODUCT LEVEL)	SEE PAGE
	1	1	**5P-0372**	2	LOCK PIN	
	2	1	**7E-2700**	2	FILM-SYMBOL (LIFT EYE LOCATION)	
	3	1	**9C-5344**	1	SPACER (10.5X20X18-MM THK)	
	4	1	**095-1325**	1	PIN-CLEVIS	
	5	1	**152-1154**	1	BRACKET AS-LIFT	
	6	1	**152-1156**	4	PLATE	
	7	1	**153-2683**	1	SPRING AS-GAS (CAB)	
	8	1	**177-3405**	1	PIN	
M	9	1	**159-2953**	8	SCREW-FLAT HEAD (M16X2-THD)	
	10	1	**8T-4122**	4	WASHER-HARD (17X32X3.5-MM THK)	
M	11	1	**8T-4132**	4	NUT (M16X2-THD)	

M-METRIC PART

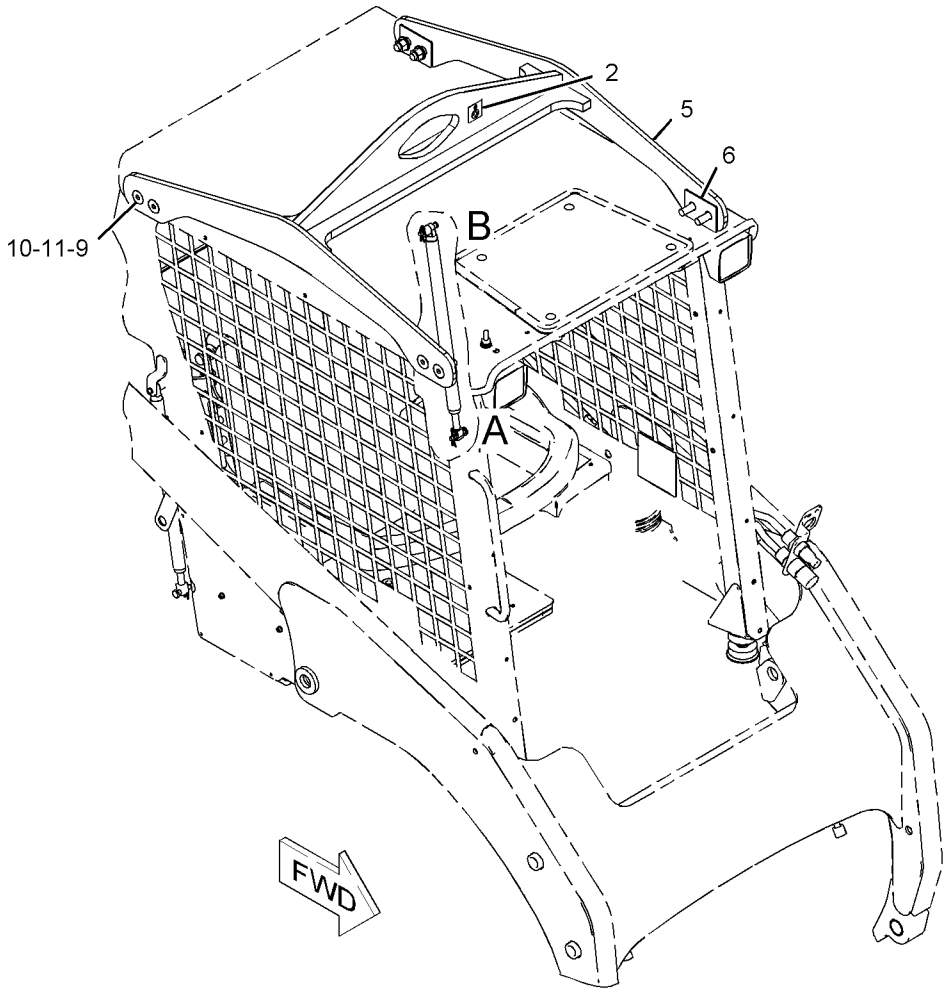

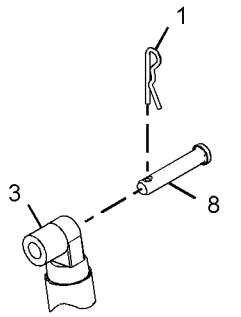

VIEW OF AREA B

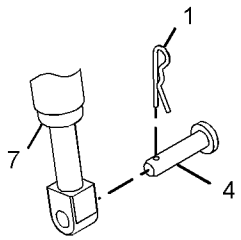

VIEW OF AREA A

GRAPHIC #1

<END>

g01033956

238-7671 MIRROR & MTG GP-REAR VIEW–

WITH ROADING LIGHT MOUNT

S/N: SCH2475-UP

PART OF 278-5370, 278-5414, 295-7150, 295-7163 CONVERSION AR-MACHINE, 233-5682, 233-5683 CONVERSION AR-ROADING

AN ATTACHMENT

SMCS-7319 **i01958287**

NOTE	REF NO	GRAPHIC REF	PART NUMBER	QTY	PART NAME 1 2 3 4 5 6 (PRODUCT LEVEL)	SEE PAGE
	1	1	**132-5166**	2	MIRROR GP	
					(EACH INCLUDES)	
		1	**148-2371**	1	CLAMP (TOP)	
		1	**148-2372**	1	CLAMP (BOTTOM)	
	2	1	**175-4237**	1	BLOCK AS	
	3	1	**175-4239**	2	BRACKET AS	
	4	1	**238-7675**	2	PLATE	
M	5	1	**5C-9553**	4	BOLT (M6X1X16-MM)	
	6	1	**8T-4121**	4	WASHER-HARD (11X21X2.5-MM THK)	
M	7	1	**8T-4133**	2	NUT (M10X1.5-THD)	
M	8	1	**8T-4178**	2	BOLT (M10X1.5X90-MM)	
	9	1	**8T-4205**	4	WASHER-HARD (7.2X14.5X2-MM THK)	

M-METRIC PART

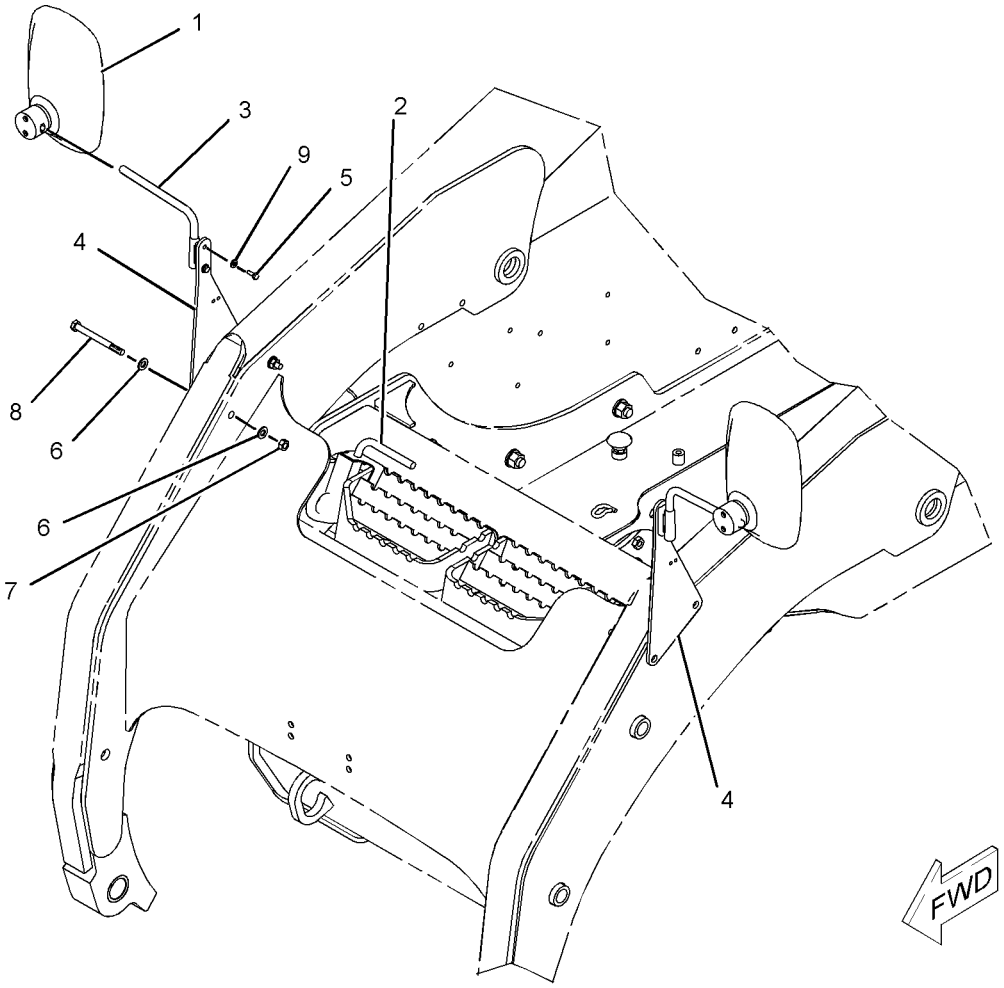

GRAPHIC #1 **<END>** g01017865

173-3021 MOUNTING GP-REGISTRATION

S/N: SCH2475-UP

PART OF 225-7963 MOUNTING GP-REGISTRATION

AN ATTACHMENT

SMCS-1408, 1429, 7050 **i02005879**

NOTE	REF NO	GRAPHIC REF	PART NUMBER	QTY	PART NAME 1 2 3 4 5 6 (PRODUCT LEVEL)	SEE PAGE
	1	1	**175-4236**	1	PLATE	
	2	1	**190-8962**	1	LAMP GP-REGISTRATION PLATE	
		1	**7M-9957**	1	LAMP (12-VOLT) (REGISTRATION PLATE)	
	3	1	**204-1365**	1	PLATE	
	4	1	**207-9780**	1	BRACKET AS	
	5	1	**215-4001**	1	PLATE	
	6	1	**4B-4863**	2	WASHER (4.7X11X1.2-MM THK)	
M	7	1	**5C-8312**	2	NUT (M4X0.7 THD)	
M	8	1	**6V-9672**	2	SCREW-MACHINE (M4X0.7X16-MM)	
M	9	1	**8T-4171**	3	BOLT (M6X1X12-MM)	
	10	1	**8T-4205**	3	WASHER-HARD (7.2X14.5X2-MM THK)	

M-METRIC PART

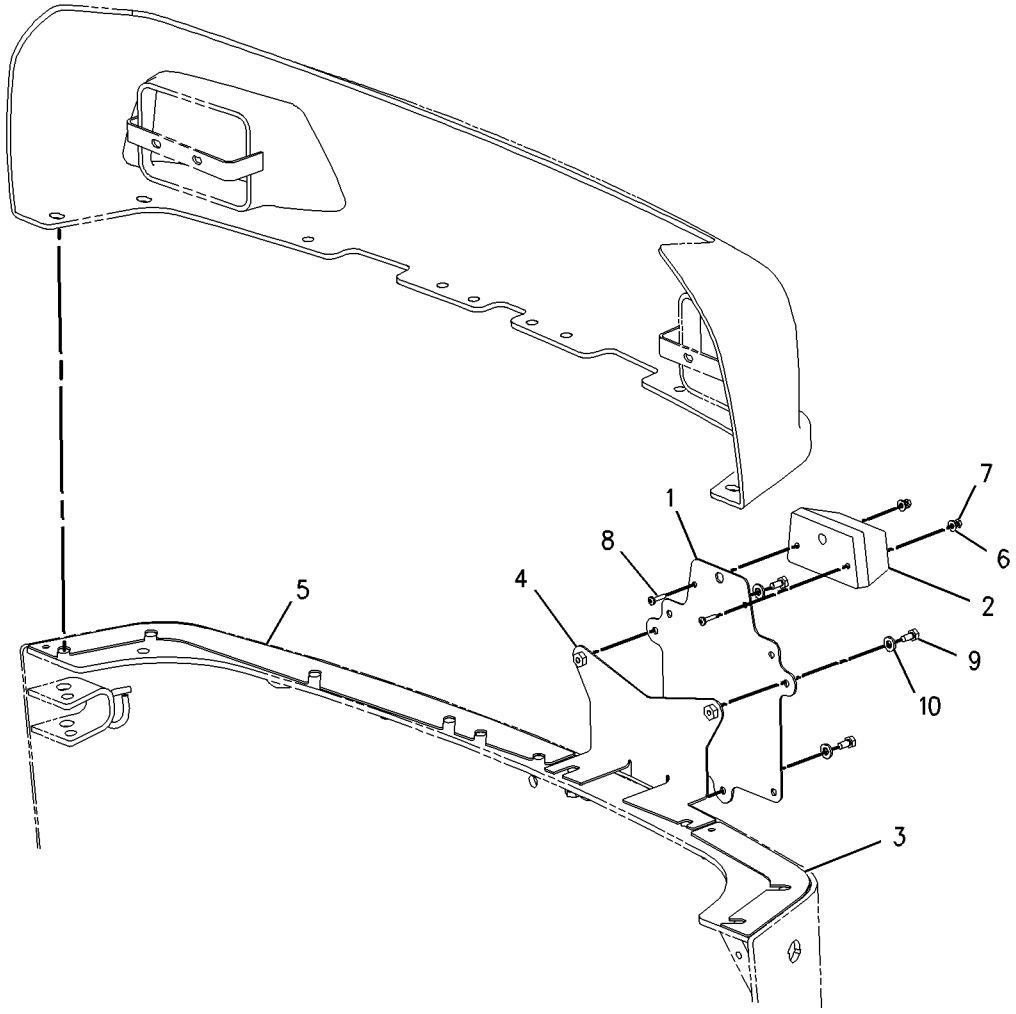

GRAPHIC #1 **<END>** g00874745

225-7963 MOUNTING GP-REGISTRATION

S/N: SCH2475-UP
PART OF 278-5370, 295-7150 CONVERSION AR-MACHINE, 233-5683 CONVERSION AR-ROADING
AN ATTACHMENT

SMCS-1408, 1429, 7050 **i01951893**

NOTE	REF NO	GRAPHIC REF	PART NUMBER	QTY	PART NAME 1 2 3 4 5 6 (PRODUCT LEVEL)	SEE PAGE
Y	1	1	*173-3021*	1	MOUNTING GP-REGISTRATION	233
	2	1	**186-0239**	1	HARNESS AS-REAR LIGHTING	
		1	**102-8804**	1	KIT-RECEPTACLE (4-PIN)	
		1	**155-2271**	1	KIT-CONNECTING PLUG (4-PIN)	

Y-SEPARATE ILLUSTRATION

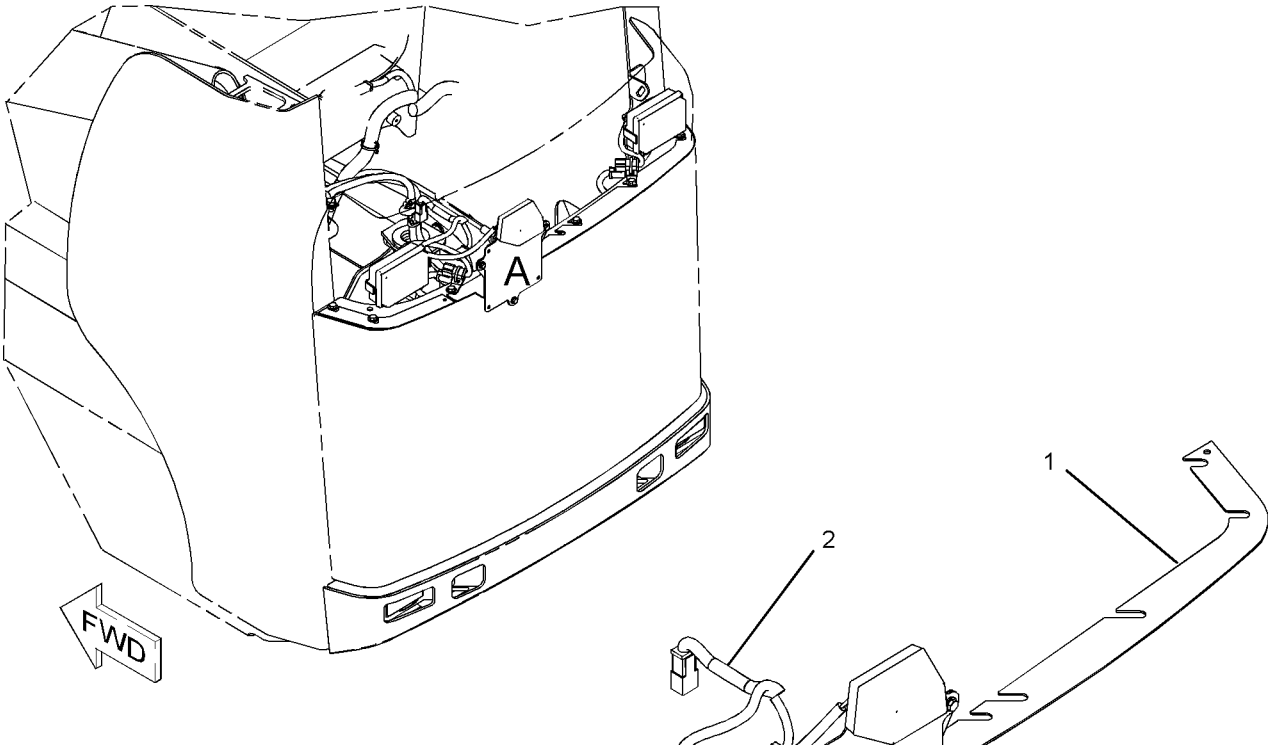

GRAPHIC #1

<END>

g01030726

175-4228 MOUNTING GP-ROADING LIGHTS–REAR

S/N: SCH2475-UP

CANNOT BE USED WITH 233-5670–PAGE 129, 233-5681–PAGE 213, 233-5684–PAGE 214 AN ATTACHMENT

SMCS-1429 **i02571196**

NOTE	REF NO	GRAPHIC REF	PART NUMBER	QTY	PART NAME 1 2 3 4 5 6 (PRODUCT LEVEL)	SEE PAGE
	1	1	**3S-2093**	6	STRAP-CABLE	
	2	1	**9R-1499**	2	REFLECTOR	
	3	1	**165-7098**	2	SUPPORT AS	
	4	1	**166-2561**	1	BRACKET AS	
	5	1	**183-7117**	2	HARNESS AS-REAR LIGHTING	
					(EACH INCLUDES)	
		1	**102-8804**	1	KIT-RECEPTACLE (4-PIN)	
M	6	1	**5C-2890**	4	NUT (M6X1-THD)	
M	7	1	**6V-7357**	4	BOLT (M6X1X25-MM)	
M	8	1	**8T-4138**	4	BOLT (M6X1X20-MM)	
	9	1	**8T-4205**	12	WASHER-HARD (7.2X14.5X2-MM THK)	

M-METRIC PART

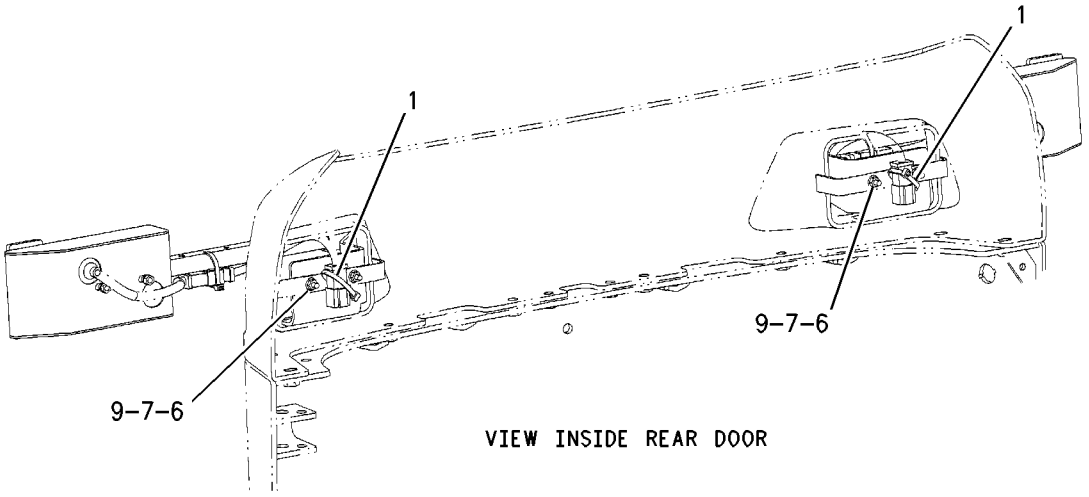

VIEW INSIDE REAR DOOR

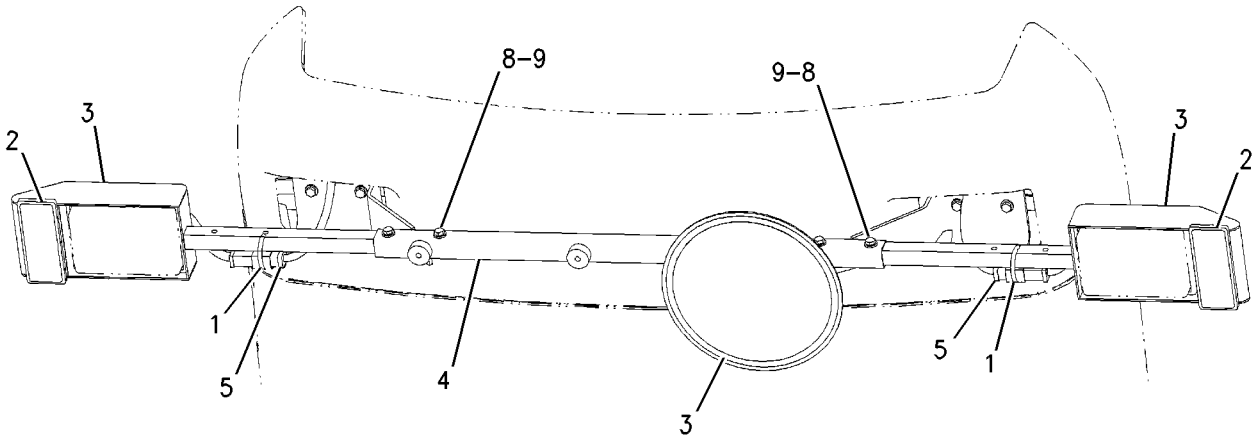

REAR VIEW
GERMAN MACHINE

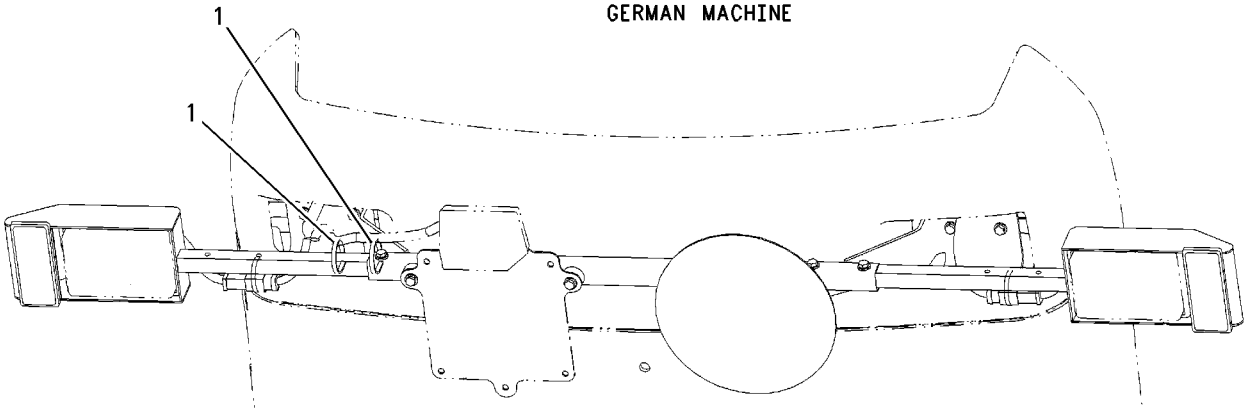

REAR VIEW
ITALIAN MACHINE

GRAPHIC #1 **<END>** g00902191

233-5616 SUPPRESSION GP-SOUND

S/N: SCH2475-UP

PART OF 261-6156, 278-5348, 278-5370, 278-5414, 295-7060, 295-7067, 295-7150, 295-7163 CONVERSION AR-MACHINE, 233-5681, 233-5682, 233-5683, 233-5684 CONVERSION AR-ROADING AN ATTACHMENT

SMCS-1801, 7076 **i01952009**

NOTE	REF NO	GRAPHIC REF	PART NUMBER	QTY	PART NAME 1 2 3 4 5 6 (PRODUCT LEVEL)	SEE PAGE
	1	1	**176-4079**	2	INSULATION	
	2	1	**236-5088**	1	INSULATION	
	3	1	**241-5648**	1	INSULATION	
	4	1	**241-5649**	1	INSULATION	

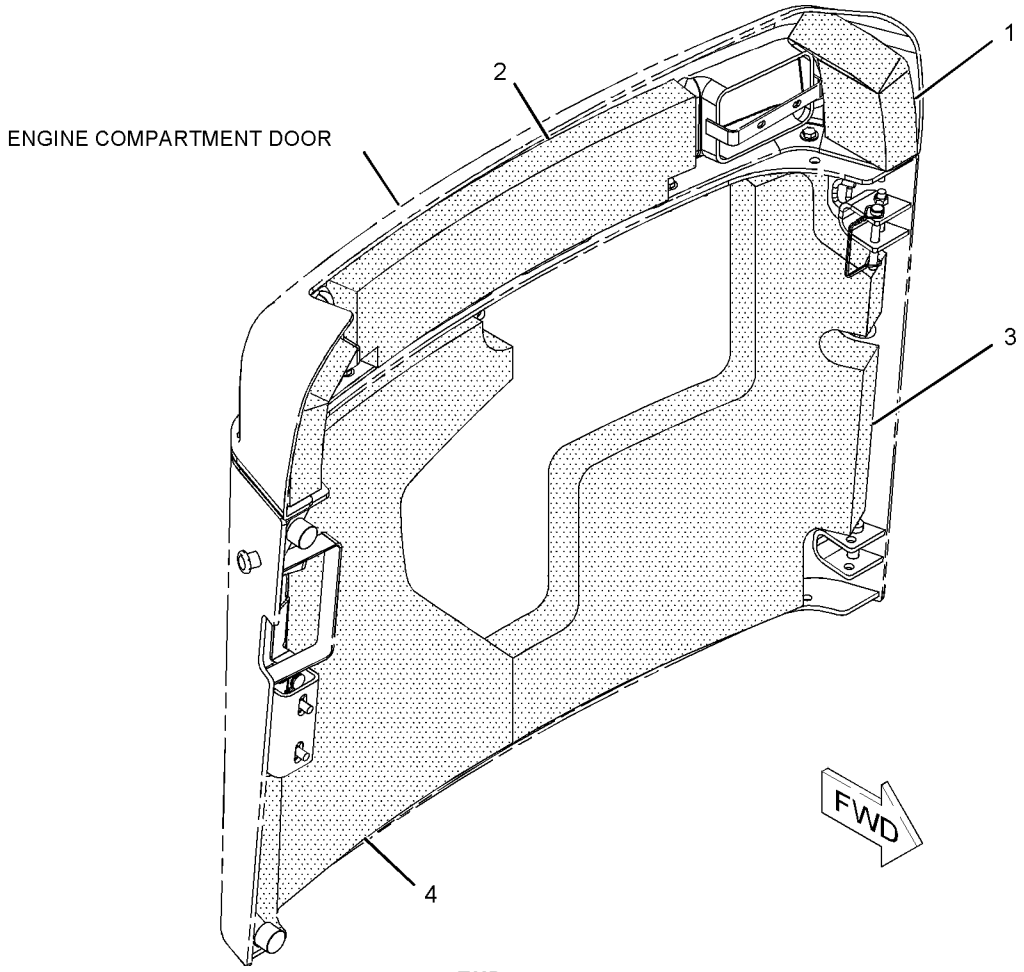

GRAPHIC #1 **<END>** g01018949

193-0447 ACCUMULATOR & MTG GP-HYDRAULIC

S/N: SCH2475-UP

PART OF 278-1243 HYDRAULIC AR

SMCS-5077 **i02565521**

NOTE	REF NO	GRAPHIC REF	PART NUMBER	QTY	PART NAME 1 2 3 4 5 6 (PRODUCT LEVEL)	SEE PAGE
	1	1	*149-0686*	1	ACCUMULATOR GP-HYDRAULIC (CHARGED)	
		1	**227-8807**	1	ACCUMULATOR GP-HYDRAULIC (UNCHARGED)	
	2	1	*194-7632*	1	ELBOW AS	
		1	**3K-0360**	1	SEAL-O-RING	
		1	**194-7631**	1	ELBOW	
	3	1	**3K-0360**	1	SEAL-O-RING	

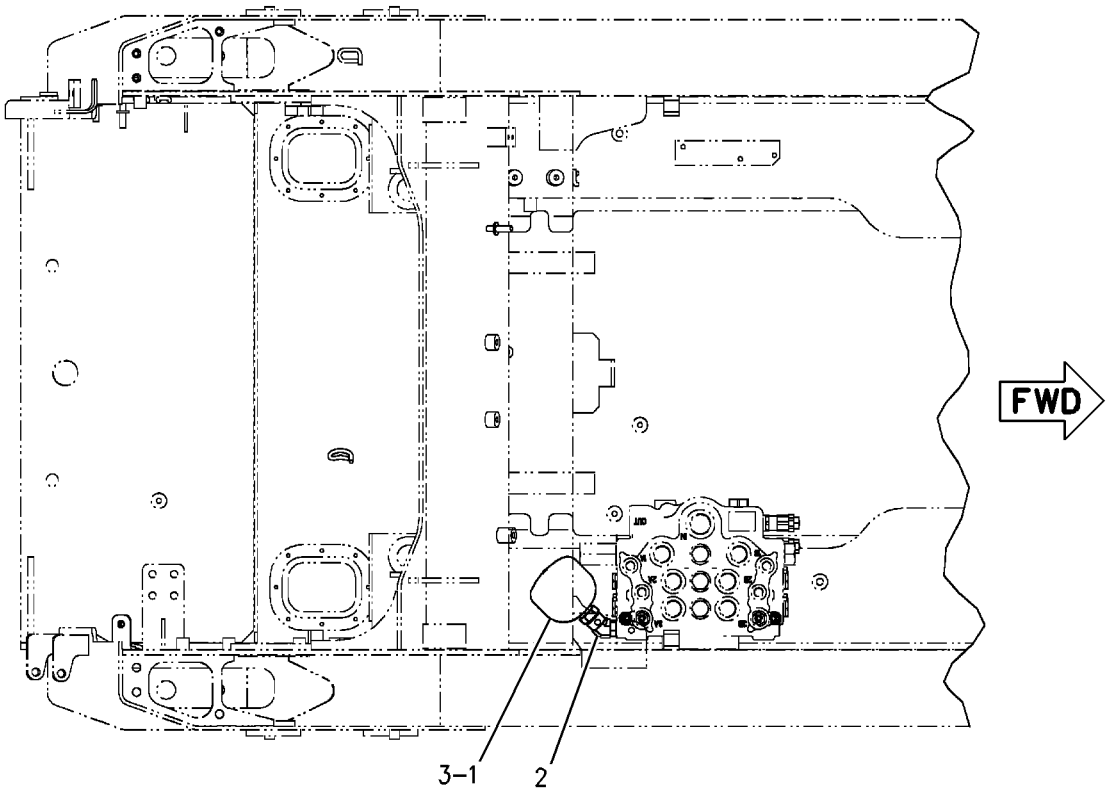

TOP VIEW

GRAPHIC #1 **<END>** g00902240

179-7001 ADAPTER GP-OIL LINE

S/N: SCH2475-UP

PART OF 218-6503 LINES GP-PILOT

SMCS-5057 **i01836385**

NOTE	REF NO	GRAPHIC REF	PART NUMBER	QTY	PART NAME 1 2 3 4 5 6 (PRODUCT LEVEL)	SEE PAGE
	1	1	**179-7002**	1	ADAPTER AS	
	2	1	**214-7568**	1	SEAL-O-RING	

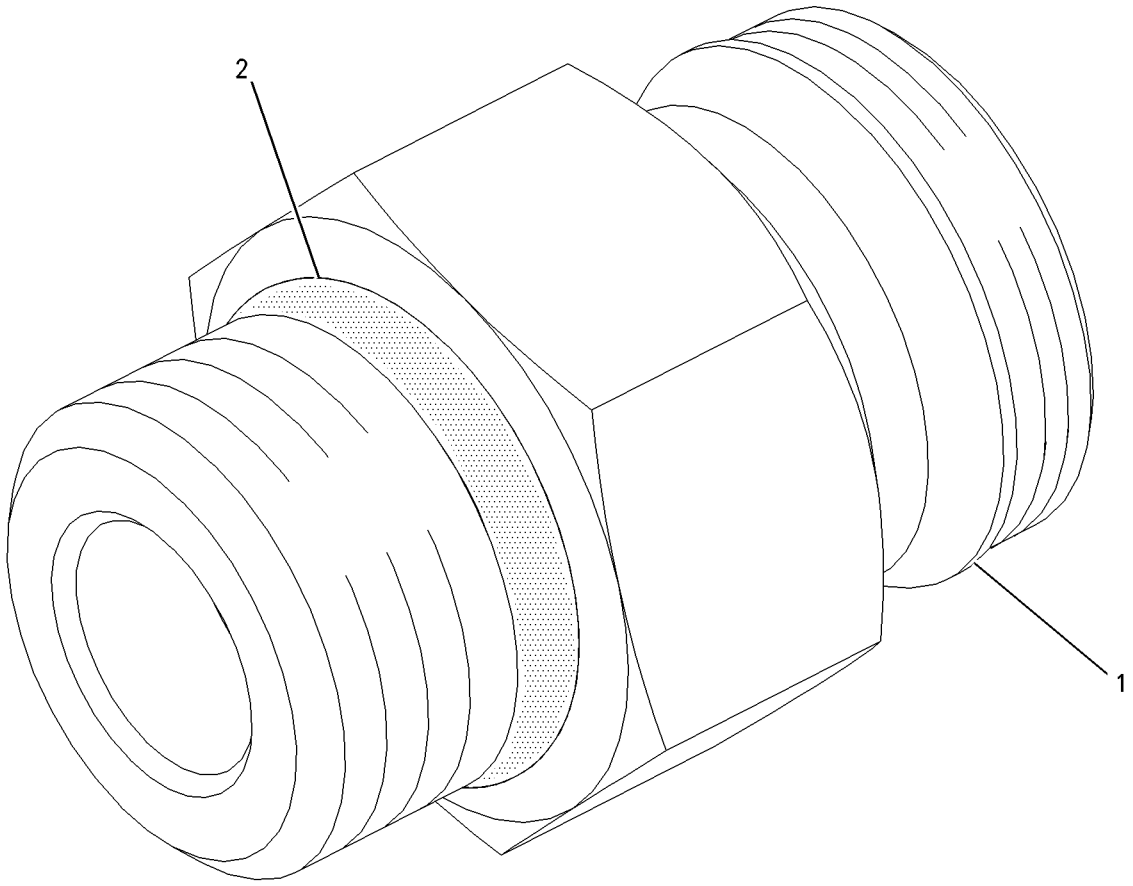

GRAPHIC #1 **<END>** g00938522

230-5406 CYLINDER & MTG GP-ANGLE BLADE

S/N: SCH2475-UP
PART OF 177-1989, 177-1990 BLADE AR
AN ATTACHMENT

SMCS-6701 **i01860855**

NOTE	REF NO	GRAPHIC REF	PART NUMBER	QTY	PART NAME 1 2 3 4 5 6 (PRODUCT LEVEL)	SEE PAGE
	1	1	**064-3843**	1	RING-SNAP	
	2	1	**210-0855**	1	PIN AS	
	3	1	**213-3943**	1	BUSHING	
Y	4	1	**225-9521**	1	CYLINDER GP-HYDRAULIC (ANGLE BLADE)	247
	5	1	**3B-8489**	1	FITTING-GREASE	
	6	1	**7X-7729**	1	WASHER (11X25X3-MM THK)	
M	7	1	**8T-4137**	1	BOLT (M10X1.5X20-MM)	

M-METRIC PART
Y-SEPARATE ILLUSTRATION

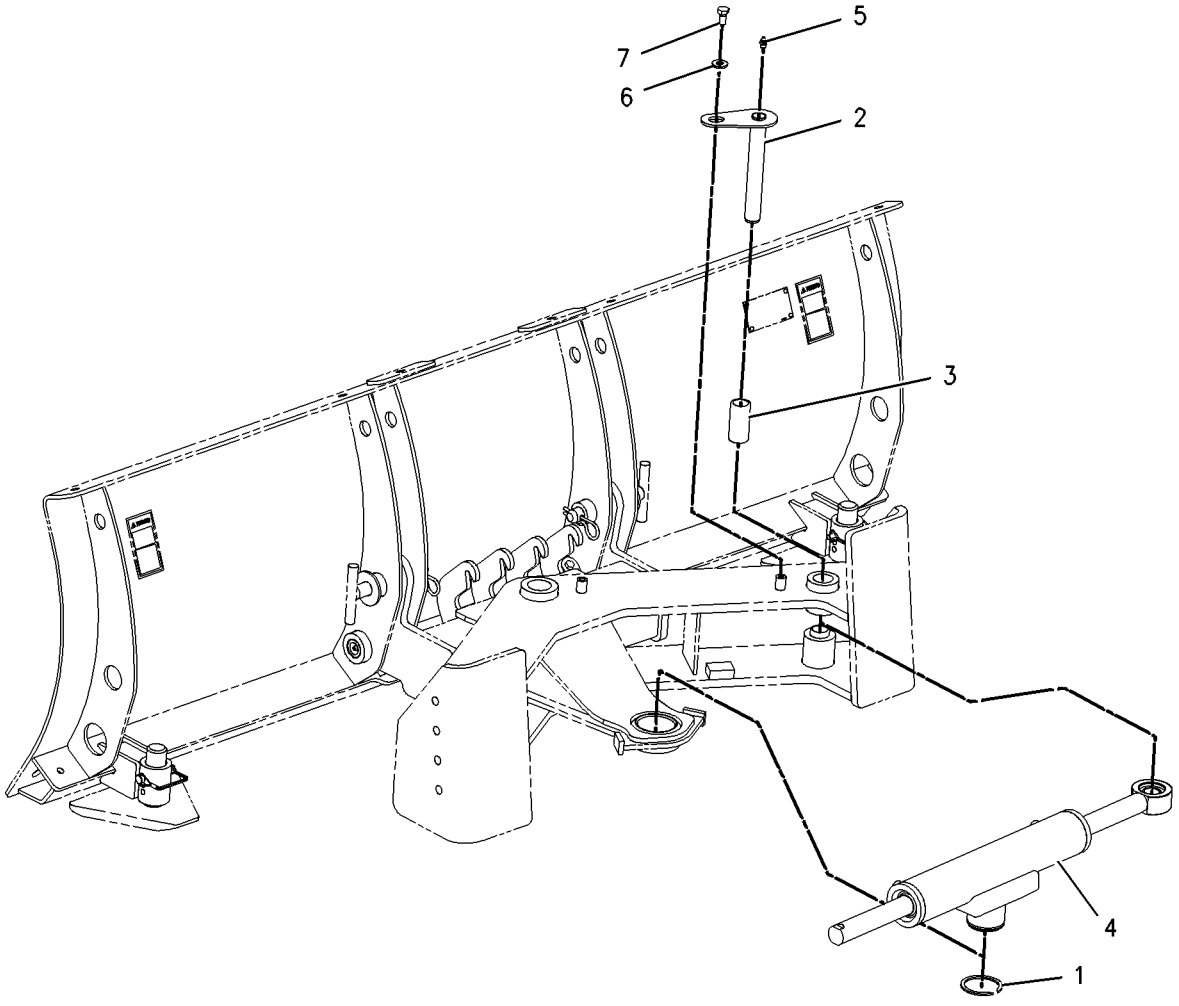

GRAPHIC #1 **<END>** g00978845

HYDRAULIC SYSTEM

286-9248 CYLINDER & MTG GP-BUCKET

S/N: SCH2475-UP

PART OF 286-9300, 286-9301 BUCKET AR-GRAPPLE

AN ATTACHMENT

SMCS-5457 **i02723716**

NOTE	REF NO	GRAPHIC REF	PART NUMBER	QTY	PART NAME 1 2 3 4 5 6 (PRODUCT LEVEL)	SEE PAGE
	1	1	**157-0941**	2	PIN	
	2	1	**157-0942**	2	PIN	
	3	1	**286-9273**	2	PLATE	
	4	1	**286-9289**	2	PLATE AS	
	5	1	**3B-8489**	2	FITTING-GREASE	
	6	1	**4M-5285**	4	RING-RETAINING (EXTERNAL)	
M	7	1	**6V-9189**	2	LOCKNUT (M8X1.25-THD)	
	8	1	**7X-7729**	8	WASHER (11X25X3-MM THK)	
M	9	1	**8T-4195**	8	BOLT (M10X1.5X30-MM)	
M	10	1	**8T-6869**	2	BOLT (M8X1.25X60-MM)	
	11	1	**9X-6274**	4	WASHER (32.5X50X1.6-MM THK)	

M-METRIC PART

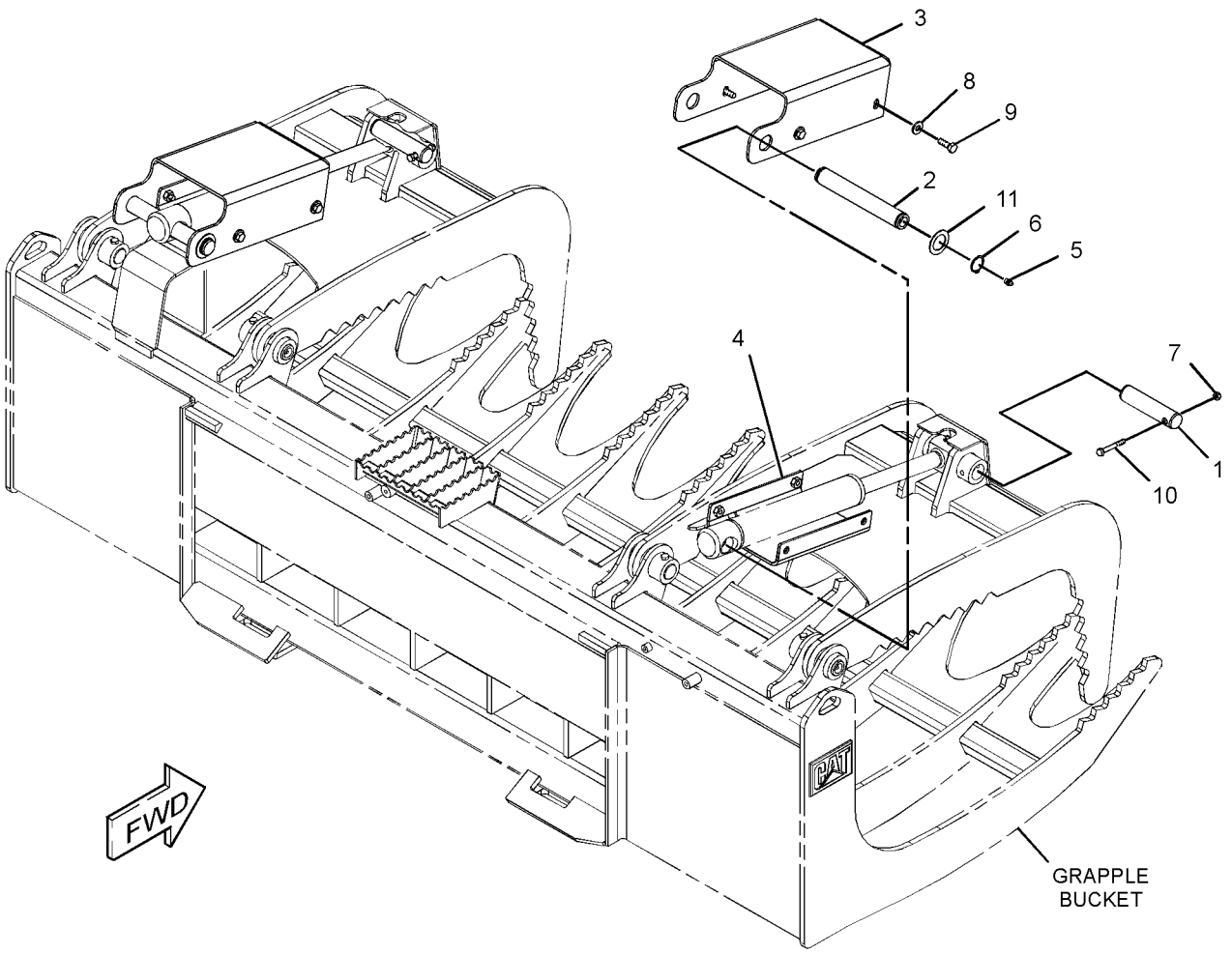

GRAPHIC #1 **<END>** g01372951

HYDRAULIC SYSTEM

218-6899 CYLINDER & MTG GP-LIFT ARM

S/N: SCH2475-UP

PART OF 295-7210 CHASSIS AR

SMCS-5102, 5104, 6118, 6119 **i02779207**

NOTE	REF NO	GRAPHIC REF	PART NUMBER	QTY	PART NAME 1 2 3 4 5 6 (PRODUCT LEVEL)	SEE PAGE
	1	1	**119-4594**	10	WASHER (41X64X1-MM THK)	
	2	1	**142-8791**	2	PIN AS	
	3	1	**142-8793**	2	PIN	
	4	1	**142-8832**	2	PIN AS	
	5	1	**190-7967**	2	SPACER (38.35X48.35X23.5-MM THK)	
	6	1	**190-7979**	2	BOLT (M8X1.25X80-MM)	
	7	1	**190-8038**	2	PIN AS	
	8	1	**191-9588**	2	PIN AS	
	9	1	**191-9589**	1	SUPPORT AS	
	10	1	**191-9635**	2	PIN	
	11	1	**191-9636**	2	PIN	
	12	1	**191-9637**	2	PIN AS	
	13	1	**191-9638**	2	PIN AS	
Y	14	1	**230-3684**	1	CYLINDER GP-TILT (LH)	252
Y	15	1	**230-3694**	1	CYLINDER GP-TILT (RH)	253
Y	16	1	**230-3703**	2	CYLINDER GP-LIFT	251
	17	1	**238-7720**	2	LINK AS	
					(EACH INCLUDES)	
		1	**191-9633**	2	BEARING-SLEEVE	
	18	1	**190-7971**	2	WASHER-HARD (11X64X6-MM THK)	
	19	1	**2K-5964**	2	RING-RETAINING	
	20	1	**3B-8488**	2	FITTING-GREASE	
	21	1	**3B-8489**	10	FITTING-GREASE	
	22	1	**4M-5285**	8	RING-RETAINING (EXTERNAL)	
	23	1	**5B-0651**	2	FITTING-STRAIGHT	
	24	1	**7X-7729**	10	WASHER (11X25X3-MM THK)	
	25	1	**7X-0595**	2	WASHER-HARD (17X30X8-MM THK)	
M	27	1	**8T-4186**	2	BOLT (M10X1.5X40-MM)	
M	28	1	**8T-4191**	10	BOLT (M10X1.5X16-MM)	
	30	1	**8T-4224**	2	WASHER-HARD (8.8X16X2-MM THK)	

M-METRIC PART
Y-SEPARATE ILLUSTRATION

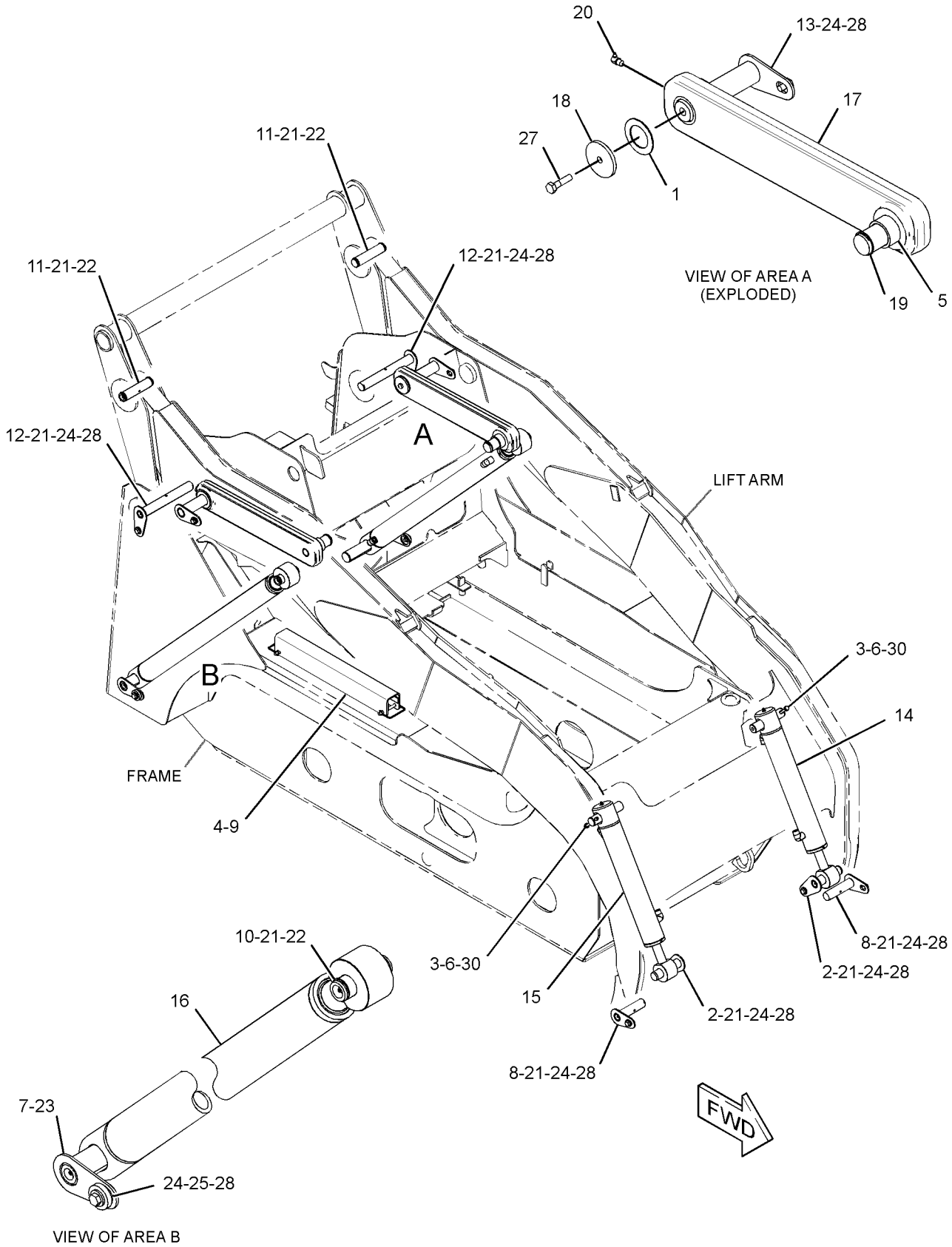

GRAPHIC #1 **<END>** g01389045

HYDRAULIC SYSTEM

293-6264 CYLINDER GP-BUCKET

S/N: SCH2475-UP
50-MM (2-IN) BORE X 225-MM (8.9-IN) STROKE
PART OF 286-9300, 286-9301 BUCKET AR-GRAPPLE
AN ATTACHMENT

SMCS-5498 **i02723730**

NOTE	REF NO	GRAPHIC REF	PART NUMBER	QTY	PART NAME 1 2 3 4 5 6 (PRODUCT LEVEL)	SEE PAGE
	1	1	**6B-6682**	1	NUT-FULL (3/4-16-THD)	
	2	1	**3B-8489**	1	FITTING-GREASE	
	3	1	**7J-0204**	2	SEAL-O-RING	
	4	1	**9S-8007**	2	PLUG	
					AVAILABLE REPAIR KIT(S):	
			262-0941	1	KIT-SEAL	
					(INCLUDES RINGS, SEALS & SEAL O-RINGS)	

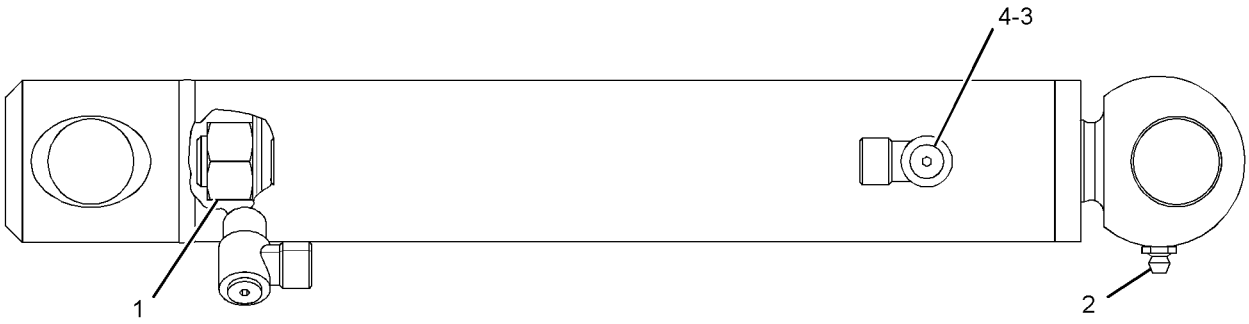

GRAPHIC #1 **<END>** g01373044

164-9295 CYLINDER GP-GRAPPLE

S/N: SCH2475-UP
40-MM (1.58-IN) BORE X 200-MM (7.7-IN) STROKE
PART OF 285-6116 GRAPPLE GP-UTILITY
AN ATTACHMENT

SMCS-5457 **i01217084**

NOTE	REF NO	GRAPHIC REF	PART NUMBER	QTY	PART NAME 1 2 3 4 5 6 (PRODUCT LEVEL)	SEE PAGE
	1	1	**3B-8489**	1	FITTING-GREASE	
					AVAILABLE REPAIR KIT(S):	
			172-5285	1	KIT-SEAL	
					(INCLUDES WIPER RING, PISTON GUIDE RING, PISTON SEAL AND O-RINGS)	

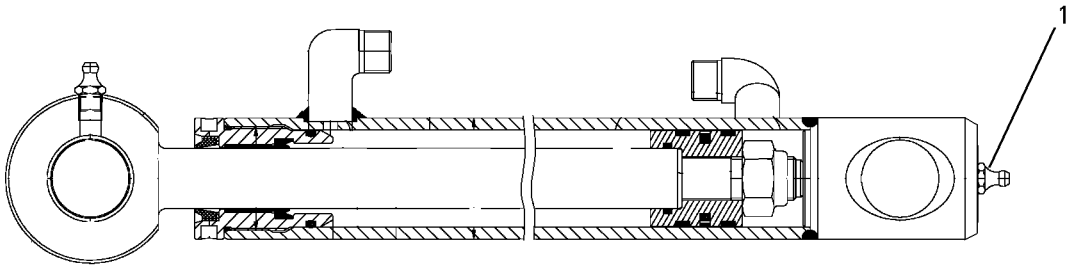

GRAPHIC #1 **<END>** g00604934

HYDRAULIC SYSTEM

192-2640 CYLINDER GP-HYDRAULIC—COUPLER

S/N: SCH2475-UP

35-MM (1.4-IN) BORE X 103.5-MM (4.14-IN) STROKE

PART OF 215-3962, 215-3963 CYLINDER & LINK GP-COUPLER, 218-5957 KIT-QUICK COUPLER CONVERSION

AN ATTACHMENT

SMCS-5362, 7562 **i01672784**

NOTE	PART NUMBER	QTY	PART NAME 1 2 3 4 5 6 (PRODUCT LEVEL)	SEE PAGE
			(NO SERVICED PARTS)	

<END>

225-9521 CYLINDER GP-HYDRAULIC–ANGLE BLADE

S/N: SCH2475-UP
63-MM (2.48-IN) BORE X 300-MM (11.81-IN) STROKE
PART OF 230-5406 CYLINDER & MTG GP-ANGLE BLADE
AN ATTACHMENT

SMCS-5362, 7562 **i02757293**

NOTE	REF NO	GRAPHIC REF	PART NUMBER	QTY	PART NAME 1 2 3 4 5 6 (PRODUCT LEVEL)	SEE PAGE
	1	1	**214-5555**	1	ROD END AS	
					AVAILABLE REPAIR KIT(S):	
			177-1958	1	KIT-SEAL	
					(INCLUDES O-RINGS,SEALS,BACK RINGS,PISTON GUIDE RING.ROD GUIDE RING AND WIPER RINGS)	

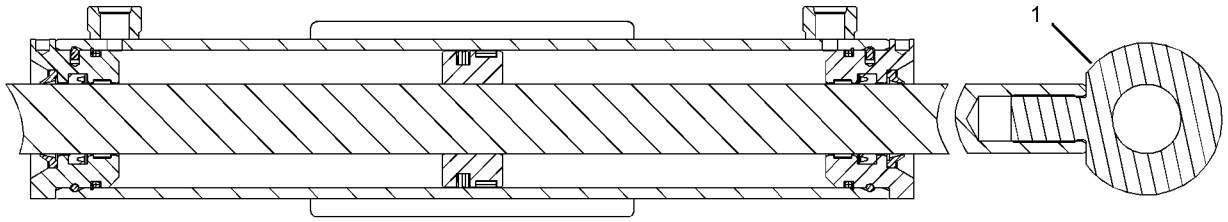

GRAPHIC #1 **<END>** g01282929

HYDRAULIC SYSTEM

255-0943 CYLINDER GP-HYDRAULIC

S/N: SCH2475-UP

PART OF 285-6116 GRAPPLE GP-UTILITY

AN ATTACHMENT

SMCS-5362, 7562 **i02888528**

NOTE	REF NO	GRAPHIC REF	PART NUMBER	QTY	PART NAME 1 2 3 4 5 6 (PRODUCT LEVEL)	SEE PAGE
	1	1	**254-9097**	1	BEARING-SLEEVE	
	2	1	**3B-8489**	2	FITTING-GREASE	
	3	1	**7J-0204**	2	SEAL-O-RING	
	4	1	**9S-8007**	2	PLUG	
	5	1	**2K-4821**	1	LOCKNUT (5/8-18-THD)	
					AVAILABLE REPAIR KIT(S):	
			286-3591	1	KIT-SEAL	
					(INCLUDES SEALS, SEAL-O-RINGS & RING BACK-UPS)	

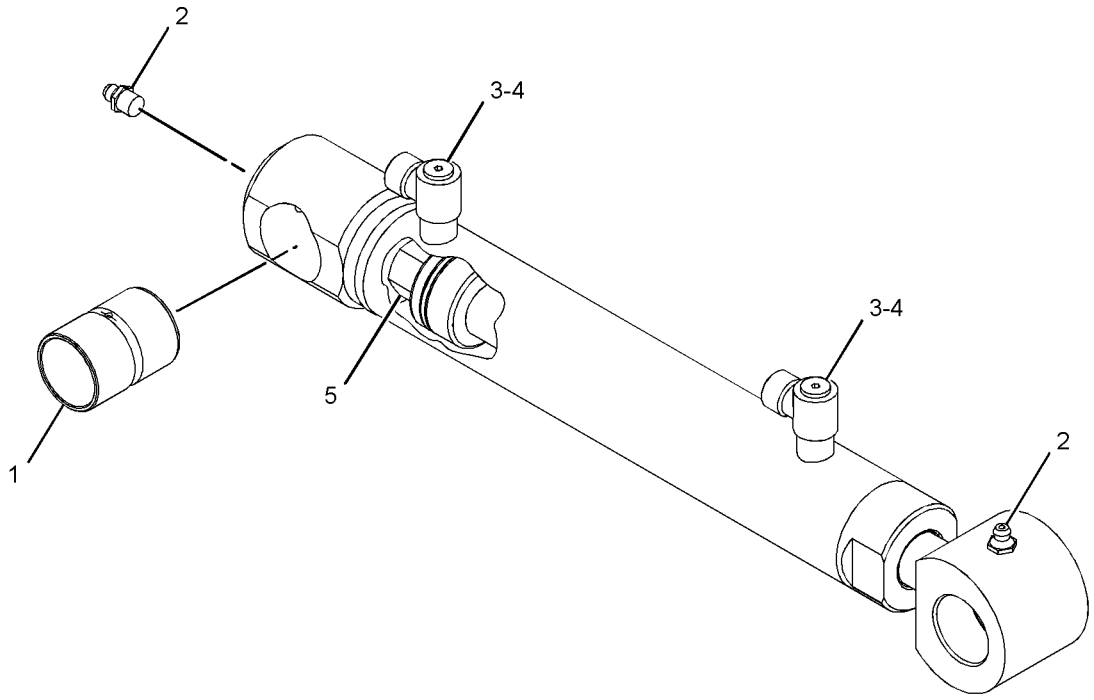

GRAPHIC #1 **<END>** g01439380

278-1969 CYLINDER GP-HYDRAULIC

S/N: SCH2475-UP
60-MM (2.36-IN) BORE X 200-MM (7.9-IN) STROKE
PART OF 279-5382, 279-5390, 279-5398, 279-5403 BUCKET AR-MULTIPURPOSE AN ATTACHMENT

SMCS-5362, 7562 **i02712982**

NOTE	REF NO	GRAPHIC REF	PART NUMBER	QTY	PART NAME 1 2 3 4 5 6 (PRODUCT LEVEL)	SEE PAGE
	1	1	**7D-8508**	1	NUT-FULL (7/8-14-THD)	
	2	1	**254-9097**	1	BEARING-SLEEVE	
	3	1	**3B-8489**	1	FITTING-GREASE	
					AVAILABLE REPAIR KIT(S):	
			278-1970	1	KIT-SEAL (HYDRAULIC CYLINDER)	
					(INCLUDES RINGS & SEALS)	

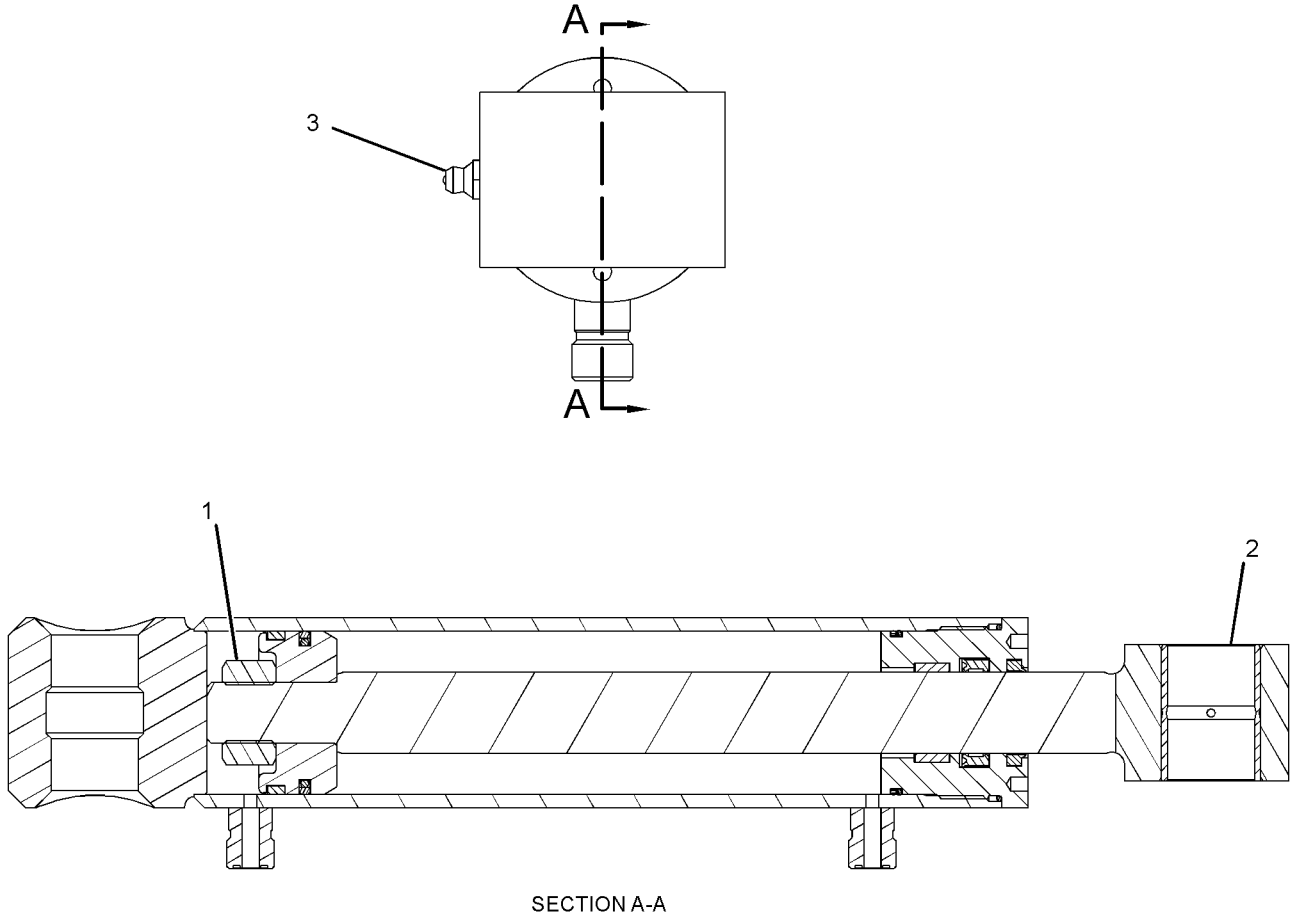

SECTION A-A

GRAPHIC #1 **<END>** g01281180

HYDRAULIC SYSTEM

278-1975 CYLINDER GP-HYDRAULIC

S/N: SCH2475-UP
60-MM (2.3-IN) BORE X 200-MM (7.7-IN) STROKE
PART OF 157-7223, 157-7224, 157-7225 BUCKET AR-GRAPPLE, 279-5350, 279-5360 FORK AR-GRAPPLE
AN ATTACHMENT

SMCS-5362, 7562 **i02712984**

NOTE	REF NO	GRAPHIC REF	PART NUMBER	QTY	PART NAME 1 2 3 4 5 6 (PRODUCT LEVEL)	SEE PAGE
	1	1	**7D-8508**	1	NUT-FULL (7/8-14-THD)	
	2	1	**254-9097**	1	BEARING-SLEEVE	
	3	1	**255-0942**	1	BEARING-SLEEVE	
	4	1	**3B-8489**	1	FITTING-GREASE	
	5	1	**7J-0204**	2	SEAL-O-RING	
	6	1	**9S-8007**	2	PLUG	
					AVAILABLE REPAIR KIT(S):	
			278-1970	1	KIT-SEAL (HYDRAULIC CYLINDER)	
					(INCLUDES RINGS, SEALS & SEAL-O-RINGS)	

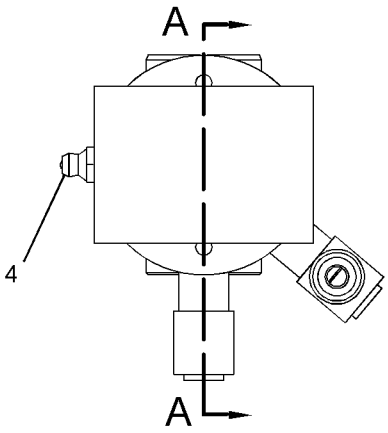

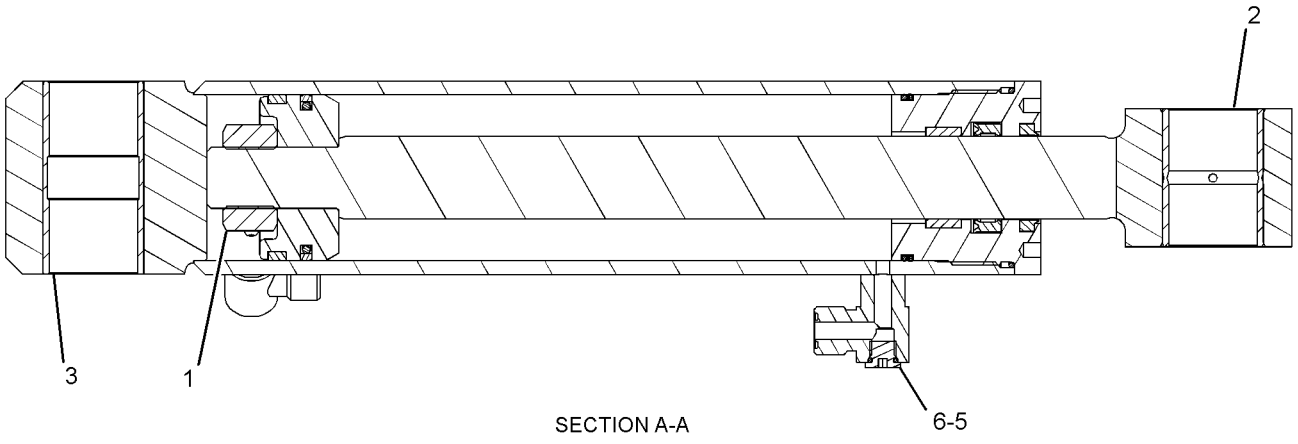

SECTION A-A

GRAPHIC #1 **<END>** g01280909

HYDRAULIC SYSTEM

230-3703 CYLINDER GP-LIFT

S/N: SCH2475-UP
60-MM (2.36-IN) BORE X 797-MM (31.38-IN) STROKE
PART OF 218-6899 CYLINDER & MTG GP-LIFT ARM

SMCS-5102 **i01974878**

NOTE	REF NO	GRAPHIC REF	PART NUMBER	QTY	PART NAME 1 2 3 4 5 6 (PRODUCT LEVEL)	SEE PAGE
					AVAILABLE REPAIR KIT(S):	
			218-6827	1	KIT-SEAL	
					(INCLUDES PISTON SEAL, PISTON WEAR BAND, O-RINGS, BACK-UP RING, WIPER SEAL AND ROD SEAL)	

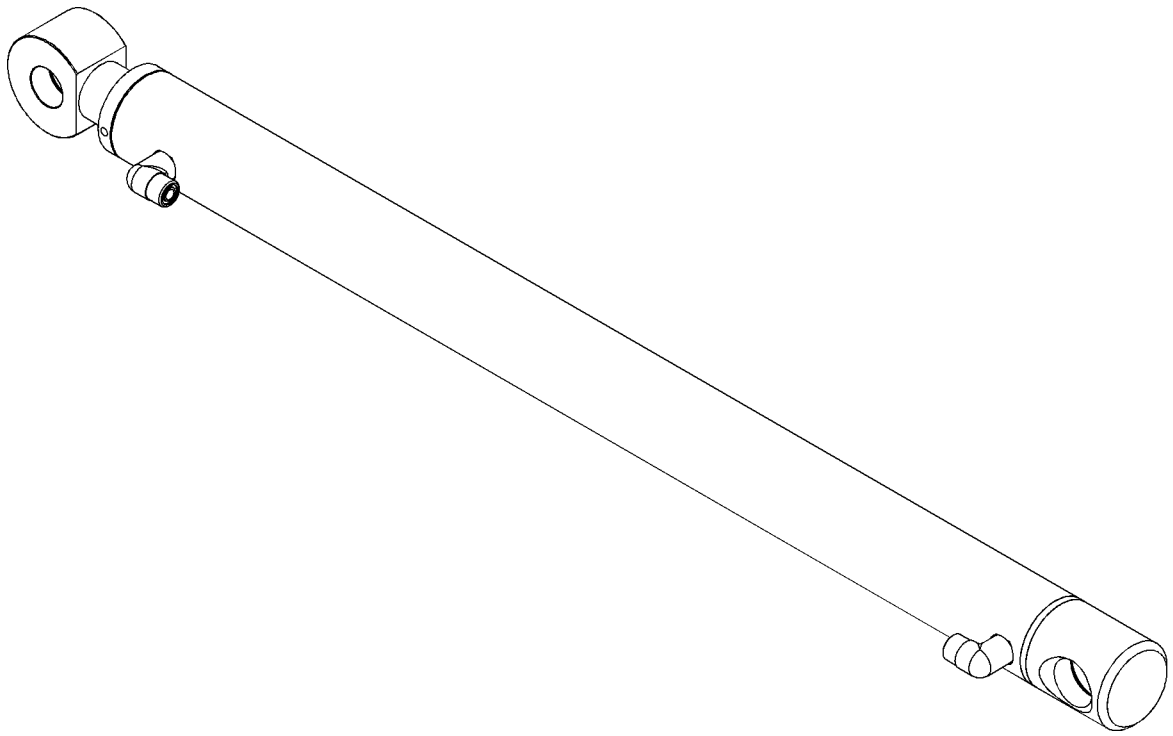

GRAPHIC #1 **<END>** g01027811

230-3684 CYLINDER GP-TILT–BUCKET EJECTOR, LH

S/N: SCH2475-UP

65-MM (2.556-IN) BORE X 295-MM (11.61-IN) STROKE

PART OF 218-6899 CYLINDER & MTG GP-LIFT ARM

SMCS-5104 **i01934882**

NOTE	REF NO	GRAPHIC REF	PART NUMBER	QTY	PART NAME 1 2 3 4 5 6 (PRODUCT LEVEL)	SEE PAGE
	1	1	**3B-8489**	1	FITTING-GREASE	
					AVAILABLE REPAIR KIT(S):	
			218-6825	1	KIT-SEAL	
					(INCLUDES PISTON SEAL, PISTON WEAR BAND, O-RINGS, BACK UP RINGS, WIPER SEAL & ROD SEAL)	

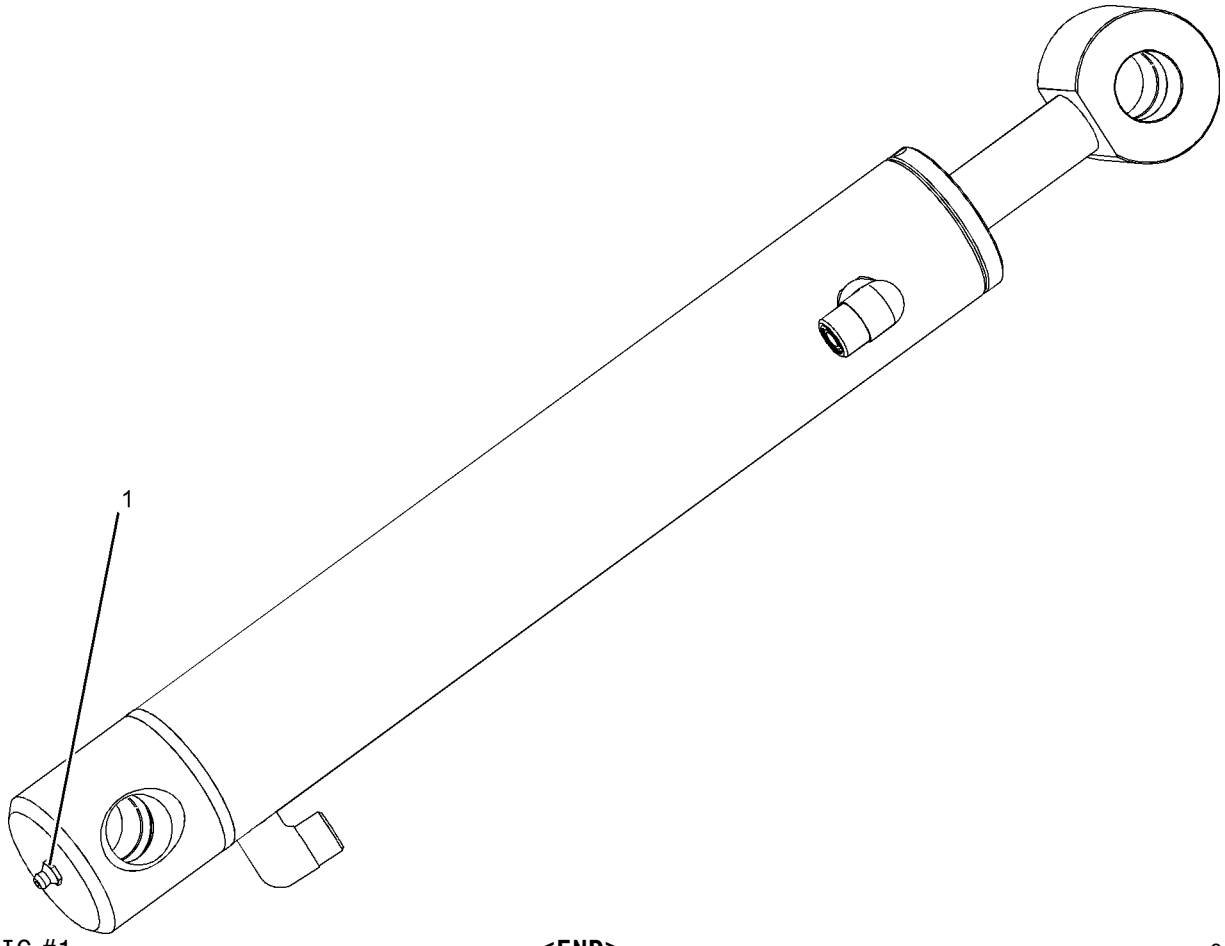

GRAPHIC #1 **<END>** g01012081

HYDRAULIC SYSTEM

230-3694 CYLINDER GP-TILT–BUCKET EJECTOR, RH

S/N: SCH2475-UP

65-MM (2.56-IN) BORE X 295-MM (11.61-IN) STROKE

PART OF 218-6899 CYLINDER & MTG GP-LIFT ARM

SMCS-5104 **i01934887**

NOTE	REF NO	GRAPHIC REF	PART NUMBER	QTY	PART NAME 1 2 3 4 5 6 (PRODUCT LEVEL)	SEE PAGE
F		1	**3B-8489**	1	FITTING-GREASE	
					AVAILABLE REPAIR KIT(S):	
			218-6825	1	KIT-SEAL	
					(INCLUDES SEAL, PISTON WEAR BAND, O-RINGS & BACK UP RINGS)	

F-NOT SHOWN

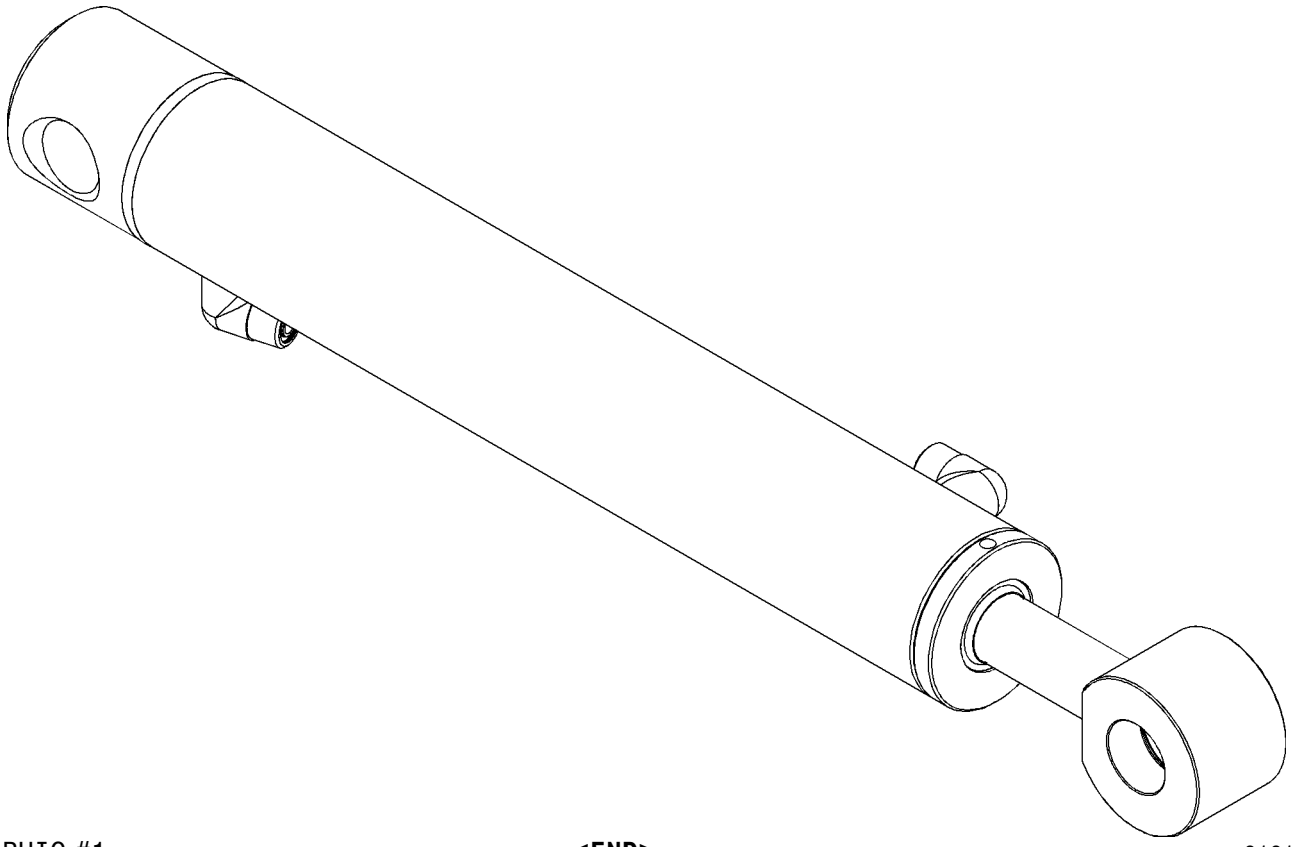

GRAPHIC #1 **<END>** g01010855

HYDRAULIC SYSTEM

218-5709 HYDRAULIC AR

S/N: SCH2475-UP
WITH WORK TOOL POSITIONER
CANNOT BE USED WITH 218-6640—PAGE 254
AN ATTACHMENT

SMCS-5050 **i02360655**

NOTE	PART NUMBER	QTY	PART NAME 1 2 3 4 5 6 (PRODUCT LEVEL)	SEE PAGE
Y	*218-5707*	1	LINES GP-LIFT CYLINDER	284
Y	*218-5708*	1	LINES GP-TILT CYLINDER	296
Y	*191-9652*	1	MANIFOLD & MTG GP-CONTROL	306
	142-9116	1	SWITCH GP-ROCKER (WORK TOOL POSITIONER)	
	111-7899	1	GASKET	
			(LOCATE IN SECOND SLOT FROM REAR ON LH INSTRUMENT PANEL)	

Y-SEPARATE ILLUSTRATION

<END>

218-6640 HYDRAULIC AR

S/N: SCH2475-UP
WITHOUT WORK TOOL POSITIONER
AN ATTACHMENT

SMCS-5050 **i01958533**

NOTE	PART NUMBER	QTY	PART NAME 1 2 3 4 5 6 (PRODUCT LEVEL)	SEE PAGE
Y	*218-6604*	1	LINES GP-LIFT CYLINDER	286
Y	*218-6607*	1	LINES GP-TILT CYLINDER	298

Y-SEPARATE ILLUSTRATION

<END>

278-1243 HYDRAULIC AR

S/N: SCH2475-UP
PART OF 295-7232, 295-7233 COMMON AR

SMCS-5050 **i02437702**

NOTE	PART NUMBER	QTY	PART NAME 1 2 3 4 5 6 (PRODUCT LEVEL)	SEE PAGE
Y	*193-0447*	1	ACCUMULATOR & MTG GP-HYDRAULIC	238
Y	*218-6536*	1	MANIFOLD & LINES GP-CONTROL (PARKING BRAKE)	302
Y	*218-6545*	1	FILTER & LINES GP-HYDRAULIC	183
Y	*218-6541*	1	LINES GP-HYDRAULIC OIL COOLER	283
Y	*218-6506*	1	LINES GP-HYDROSTATIC	189
Y	*218-6503*	1	LINES GP-PILOT	290
Y	*234-0788*	1	LINES GP-PILOT	292
Y	*233-5980*	1	TANK & MTG GP-HYDRAULIC	326
Y	*218-6783*	1	VALVE & MTG GP-CONTROL	332

Y-SEPARATE ILLUSTRATION

<END>

218-5957 KIT-QUICK COUPLER CONVERSION–KIT

S/N: SCH2475-UP
AN ATTACHMENT

SMCS-5057, 5133, 5479, 6129 **i02183180**

NOTE	REF NO	GRAPHIC REF	PART NUMBER	QTY	PART NAME 1 2 3 4 5 6 (PRODUCT LEVEL)	SEE PAGE
	1	1	**2K-5232**	2	SPACER (0.406X0.75X1.81-IN THK)	
	2	1	**3S-2093**	3	STRAP-CABLE	
	3	1	**113-8490**	1	FUSE (10-AMPERE)	
	4	1	**124-2456**	1	FILM-INSTRUCTION (NO STEP)	
	5	1	**166-2560**	2	PIN-SPRING	
Y	6	1	**192-2640**	2	CYLINDER GP-HYDRAULIC	246
	7	1	**195-6754**	2	PIN-SPRING	
	8	1	**207-9737**	1	BRACKET AS	
M		1	**8T-3612**	2	NUT-WELD (M8X1.25-THD)	
I	9	1	**207-9756**	4	HOSE AS	
	10	1	**207-9785**	2	PIN	
	11	1	**212-6521**	1	SWITCH AS-ROCKER (QUICK COUPLER)	
		1	**111-7899**	1	GASKET	
	12	1	**212-6690**	1	GUARD	
Y	13	1	*215-3957*	2	LINK GP-COUPLER	430
I	14	1	**218-6241**	1	HOSE AS	
	15	1	**218-6334**	1	BRACKET AS	
M		1	**9R-2672**	1	BOSS (M10X1.5X20-MM)	
	16	1	**218-6335**	1	BRACKET AS	
I	17	1	**219-4335**	2	HOSE AS	
Y	18	1	**233-7128**	1	MANIFOLD GP-CONTROL (QUICK COUPLER)	310
	19	1	**238-7741**	1	TUBE AS	
	20	1	**238-7742**	1	TUBE AS	
I	21	1	**238-7743**	2	HOSE AS	
I	22	1	**238-7748**	1	HOSE AS	
	23	1	**238-7749**	1	BRACKET	
	24	1	*148-8325*	4	CONNECTOR AS	
					(EACH INCLUDES)	
		1	**6V-8641**	1	CONNECTOR	
		1	**3J-1907**	1	SEAL-O-RING	
		1	**4J-5477**	1	SEAL-O-RING	
	25	1	*148-8336*	2	CONNECTOR AS	
					(EACH INCLUDES)	
		1	**6V-8636**	1	CONNECTOR	
		1	**3J-1907**	1	SEAL-O-RING	
		1	**6V-8397**	1	SEAL-O-RING	
	26	1	*148-8353*	1	ELBOW AS	
		1	**3J-1907**	1	SEAL-O-RING	
		1	**6V-8397**	1	SEAL-O-RING	
	27	1	*148-8378*	1	ELBOW AS	
		1	**6V-8724**	1	ELBOW	
		1	**3J-1907**	1	SEAL-O-RING	
		1	**6V-8397**	1	SEAL-O-RING	
	28	1	*148-8446*	1	TEE AS-SWIVEL	
		1	**6V-9838**	1	TEE-SWIVEL	
		1	**7J-9108**	2	SEAL-O-RING	
	29	1	*150-4034*	2	TEE AS	
					(EACH INCLUDES)	
		1	**8T-0379**	1	TEE-BULKHEAD	
		1	**6V-8397**	3	SEAL-O-RING	
	30	1	*156-4282*	1	REDUCER AS	
		1	**6V-8938**	1	REDUCER-O-RING	
		1	**6V-8397**	1	SEAL-O-RING	
	31	1	**164-4225**	2	CLIP	
	32	1	**3B-4628**	2	PIN-COTTER	
	33	1	**4P-7581**	1	CLIP	

218-5957 KIT-QUICK COUPLER CONVERSION *(contd.)* i02183180

NOTE	REF NO	GRAPHIC REF	PART NUMBER	QTY	PART NAME 1 2 3 4 5 6 (PRODUCT LEVEL)	SEE PAGE
M	34	1	**5C-7261**	1	NUT (M8X1.25-THD)	
	35	1	**5K-8451**	1	CLIP	
	36	1	**5P-0372**	2	LOCK PIN	
	37	1	**6K-8178**	2	CLIP	
	38	1	**6V-8397**	4	SEAL-O-RING	
	39	1	**9X-6581**	1	NUT-O-RING SEAL (1-14-THD)	
	40	1	**6V-9168**	2	NUT (11/16-16-THD)	
	41	1	**7G-2950**	1	CLIP (SLOT)	
	42	1	**7G-2951**	1	CLIP (TAB)	
	43	1	**7H-7055**	6	CLIP	
	44	1	**7X-7729**	6	WASHER (11X25X3-MM THK)	
	45	1	**8L-5188**	2	PIN	
	46	1	**8T-4121**	18	WASHER-HARD (11X21X2.5-MM THK)	
M	47	1	**8T-4133**	8	NUT (M10X1.5-THD)	
M	48	1	**8T-4136**	1	BOLT (M10X1.5X25-MM)	
M	49	1	**8T-4189**	2	BOLT (M8X1.25X20-MM)	
M	50	1	**8T-4191**	2	BOLT (M10X1.5X16-MM)	
M	51	1	**8T-4196**	4	BOLT (M10X1.5X35-MM)	
M	52	1	**8T-4201**	4	BOLT-LOCKING (M10X1.5X20-MM)	
	53	1	**8T-4224**	4	WASHER-HARD (8.8X16X2-MM THK)	
M	54	1	**8T-4908**	1	BOLT (M8X1.25X25-MM)	
M	55	1	**8T-5005**	4	BOLT (M10X1.5X70-MM)	
	56	1	**9M-8406**	3	CLIP	
	57	1	**9R-1004**	1	CLIP (TAB)	
	58	1	**9R-1005**	1	CLIP (SLOT)	
	59	1	**9T-7303**	4	SPACER (16X28X1.5-MM THK)	

I-REFER TO HYDRAULIC INFORMATION SYSTEM
M-METRIC PART
Y-SEPARATE ILLUSTRATION

218-5957 KIT-QUICK COUPLER CONVERSION *(contd.)* i02183180

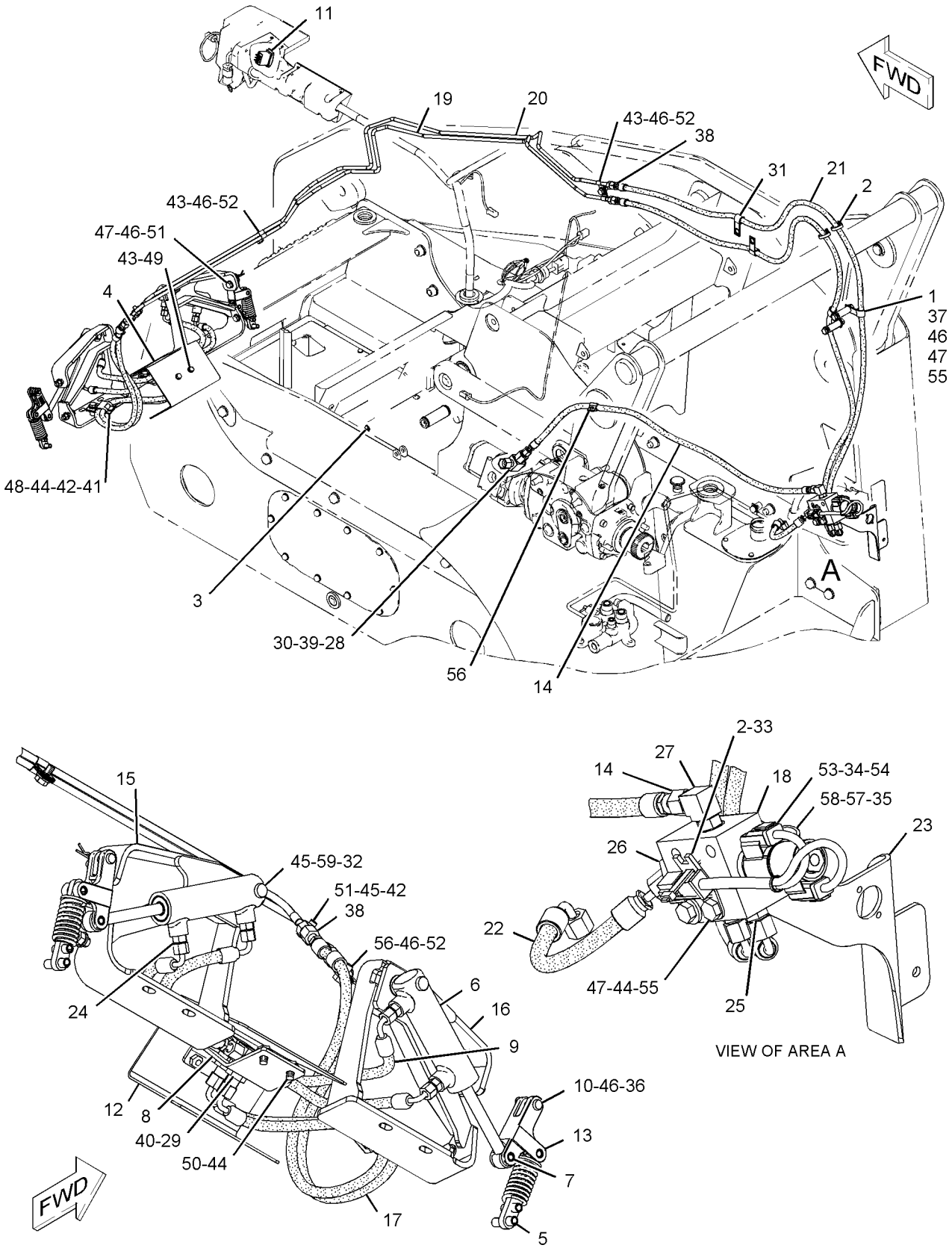

GRAPHIC #1 **<END>** g01130759

HYDRAULIC SYSTEM

279-5412 LINES GP-BUCKET—INDUSTRIAL

S/N: SCH2475-UP

PART OF 279-5350, 279-5360 FORK AR-GRAPPLE

AN ATTACHMENT

SMCS-5057 **i02616554**

NOTE	REF NO	GRAPHIC REF	PART NUMBER	QTY	PART NAME 1 2 3 4 5 6 (PRODUCT LEVEL)	SEE PAGE
	1	1	**3E-7404**	2	CLAMP-HOSE	
I	2	1	**294-5503**	1	HOSE AS	
	3	1	**153-2994**	1	COUPLING AS-QUICK DISCONNECT (FEMALE)	
	4	1	**153-2995**	1	FITTING AS (QUICK DISCONNECT, MALE)	
	5	1	**161-0185**	1	TUBE AS	
	6	1	**161-0186**	1	TUBE AS	
	7	1	**161-0188**	2	TUBE AS	
I	8	1	**161-0189**	2	HOSE AS	
I	9	1	**161-0190**	2	HOSE AS	
	10	1	**163-1385**	1	ELBOW	
I	11	1	**294-5502**	1	HOSE AS	
	12	1	*148-8319*	2	CONNECTOR AS	
					(EACH INCLUDES)	
		1	**2M-9780**	1	SEAL-O-RING	
		1	**6V-8397**	1	SEAL-O-RING	
		1	**6V-8715**	1	CONNECTOR	
	13	1	**2V-3216**	6	CLIP	
	14	1	**6V-8397**	13	SEAL-O-RING	
	15	1	**7S-3916**	2	CLIP (TAB)	
	16	1	**7S-3919**	2	CLIP (SLOT)	
	17	1	**8T-4121**	2	WASHER-HARD (11X21X2.5-MM THK)	
M	18	1	**8T-4136**	2	BOLT (M10X1.5X25-MM)	
M	19	1	**8T-4171**	4	BOLT (M6X1X12-MM)	
	20	1	**9R-2004**	2	BLOCK	

I-REFER TO HYDRAULIC INFORMATION SYSTEM
M-METRIC PART

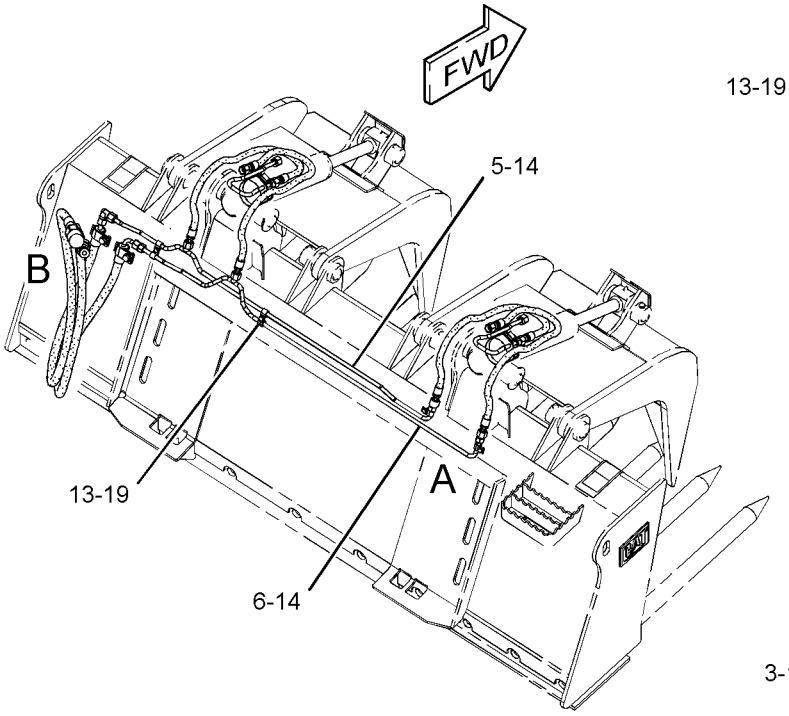

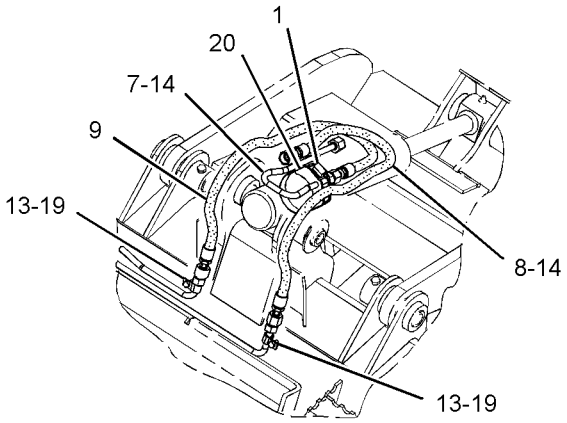

VIEW OF AREA A

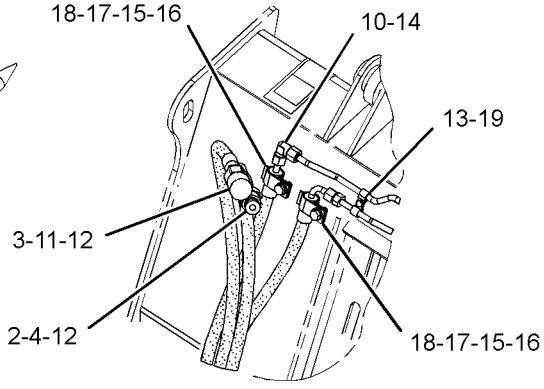

VIEW OF AREA B

GRAPHIC #1 **<END>** g01280859

HYDRAULIC SYSTEM

279-5413 LINES GP-BUCKET

S/N: SCH2475-UP

PART OF 279-5382 BUCKET AR-MULTIPURPOSE

AN ATTACHMENT

SMCS-5057 **i02552042**

NOTE	REF NO	GRAPHIC REF	PART NUMBER	QTY	PART NAME 1 2 3 4 5 6 (PRODUCT LEVEL)	SEE PAGE
	1	1	**153-2994**	1	COUPLING AS-QUICK DISCONNECT (FEMALE)	
I	2	1	**154-5020**	2	HOSE AS	
I	3	1	**154-5021**	1	HOSE AS	
I	4	1	**154-5022**	1	HOSE AS	
		1	**163-8811**	2	CLAMP	
	5	1	**163-1386**	1	TEE-UNION	
	6	1	**185-7887**	1	COUPLING AS-QUICK DISCONNECT (MALE)	
I	7	1	**279-5417**	1	HOSE AS	
I	8	1	**279-5418**	1	HOSE AS	
	9	1	*148-8319*	2	CONNECTOR AS	
					(EACH INCLUDES)	
		1	**2M-9780**	1	SEAL-O-RING	
		1	**6V-8397**	1	SEAL-O-RING	
		1	**6V-8715**	1	CONNECTOR	
	10	1	*150-3056*	1	TEE AS	
		1	**6V-8397**	3	SEAL-O-RING	
		1	**6V-8788**	1	TEE	
	11	1	**1S-0994**	1	CLIP	
	12	1	**6D-4247**	3	CLIP	
	13	1	**6V-8397**	7	SEAL-O-RING	
M	14	1	**8T-4189**	4	BOLT (M8X1.25X20-MM)	
	15	1	**8T-4224**	4	WASHER-HARD (8.8X16X2-MM THK)	
B	16	1	**9X-6273**	2	WASHER (32.5X50X0.8-MM THK)	
B	17	1	**9X-6274**	2	WASHER (32.5X50X1.6-MM THK)	

B-USE AS REQUIRED
I-REFER TO HYDRAULIC INFORMATION SYSTEM
M-METRIC PART

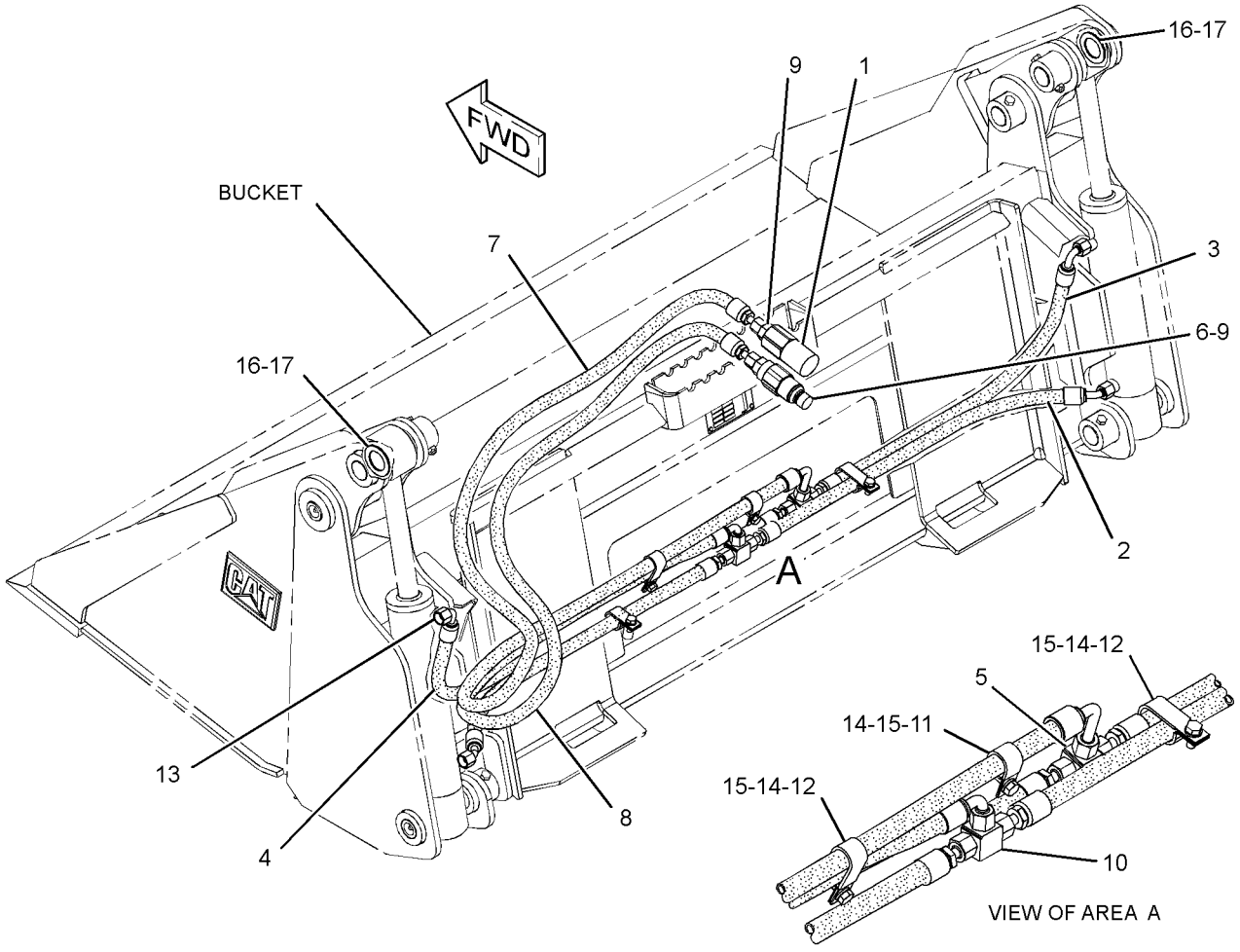

GRAPHIC #1 **<END>** g01278435

HYDRAULIC SYSTEM

279-5414 LINES GP-BUCKET

S/N: SCH2475-UP

PART OF 279-5390 BUCKET AR-MULTIPURPOSE

AN ATTACHMENT

SMCS-5057 **i02664837**

NOTE	REF NO	GRAPHIC REF	PART NUMBER	QTY	PART NAME 1 2 3 4 5 6 (PRODUCT LEVEL)	SEE PAGE
	1	1	**153-2994**	1	COUPLING AS-QUICK DISCONNECT (FEMALE)	
I	2	1	**156-5508**	1	HOSE AS	
I	3	1	**156-5509**	2	HOSE AS	
I	4	1	**156-5510**	1	HOSE AS	
	5	1	**163-1386**	1	TEE-UNION	
	6	1	**185-7887**	1	COUPLING AS-QUICK DISCONNECT (MALE)	
I	7	1	**279-5417**	1	HOSE AS	
I	8	1	**279-5418**	1	HOSE AS	
	9	1	*148-8319*	2	CONNECTOR AS	
					(EACH INCLUDES)	
		1	**2M-9780**	1	SEAL-O-RING	
		1	**6V-8397**	1	SEAL-O-RING	
		1	**6V-8715**	1	CONNECTOR	
	10	1	*150-3056*	1	TEE AS	
		1	**6V-8397**	3	SEAL-O-RING	
		1	**6V-8788**	1	TEE	
	11	1	**1S-0994**	1	CLIP	
	12	1	**6D-4247**	3	CLIP	
	13	1	**6V-8397**	7	SEAL-O-RING	
M	14	1	**8T-4189**	4	BOLT (M8X1.25X20-MM)	
	15	1	**8T-4224**	4	WASHER-HARD (8.8X16X2-MM THK)	
B	16	1	**9X-6273**	2	WASHER (32.5X50X0.8-MM THK)	
B	17	1	**9X-6274**	2	WASHER (32.5X50X1.6-MM THK)	

B-USE AS REQUIRED
I-REFER TO HYDRAULIC INFORMATION SYSTEM
M-METRIC PART

279-5414 **LINES GP-BUCKET** *(contd.)* **i02664837**

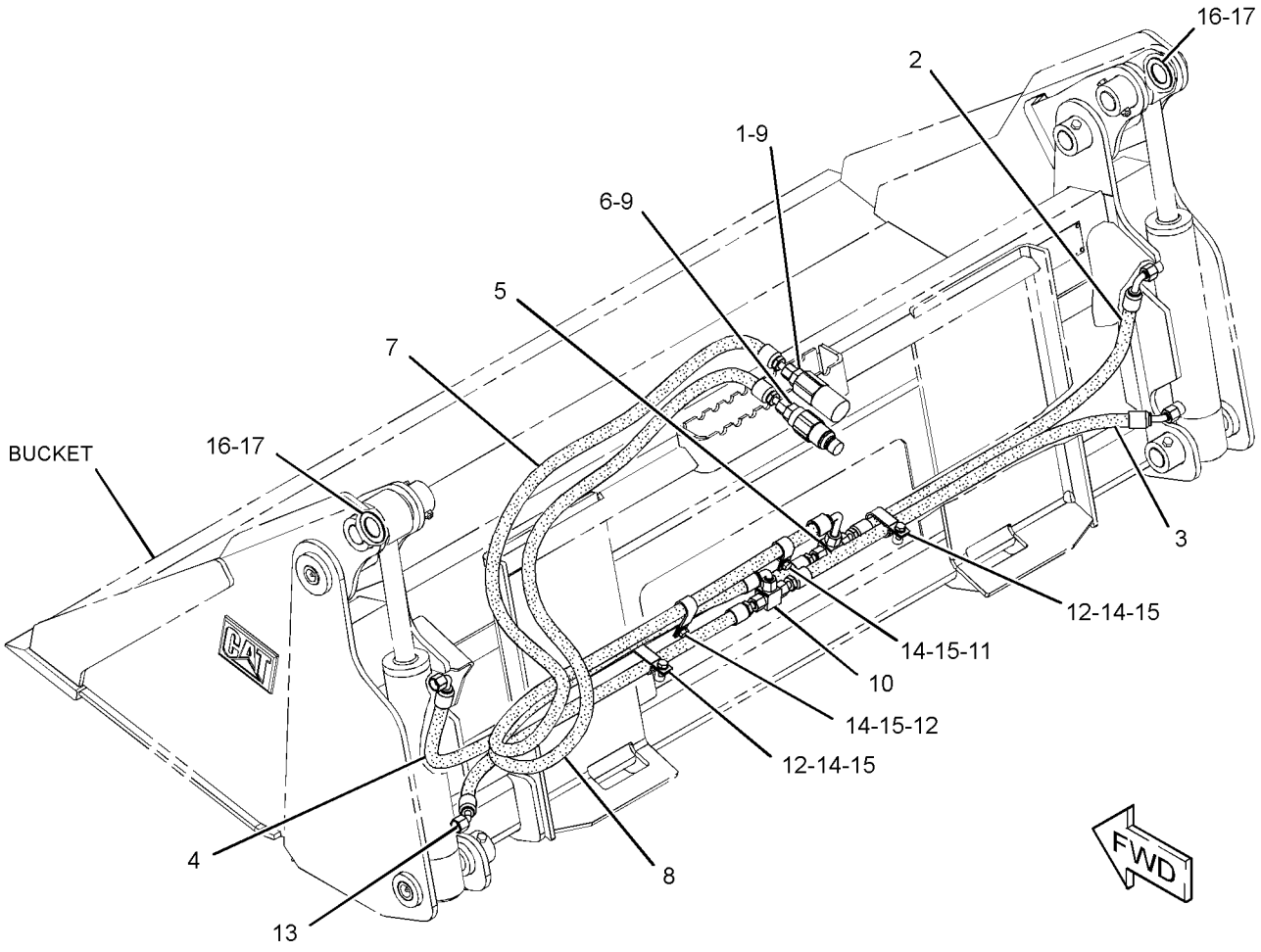

GRAPHIC #1 **<END>** g01339126

HYDRAULIC SYSTEM

279-5415 LINES GP-BUCKET

S/N: SCH2475-UP

PART OF 279-5398 BUCKET AR-MULTIPURPOSE

AN ATTACHMENT

SMCS-5057 **i02552160**

NOTE	REF NO	GRAPHIC REF	PART NUMBER	QTY	PART NAME 1 2 3 4 5 6 (PRODUCT LEVEL)	SEE PAGE
	1	1	**153-2994**	1	COUPLING AS-QUICK DISCONNECT (FEMALE)	
I	2	1	**159-4535**	1	HOSE AS	
I	3	1	**159-4536**	2	HOSE AS	
I	4	1	**159-4537**	1	HOSE AS	
	5	1	**163-1386**	1	TEE-UNION	
	6	1	**185-7887**	1	COUPLING AS-QUICK DISCONNECT (MALE)	
I	7	1	**279-5417**	1	HOSE AS	
I	8	1	**279-5418**	1	HOSE AS	
	9	1	*148-8319*	2	CONNECTOR AS	
					(EACH INCLUDES)	
		1	**2M-9780**	1	SEAL-O-RING	
		1	**6V-8397**	1	SEAL-O-RING	
		1	**6V-8715**	1	CONNECTOR	
	10	1	*150-3056*	1	TEE AS	
		1	**6V-8397**	3	SEAL-O-RING	
		1	**6V-8788**	1	TEE	
	11	1	**1S-0994**	1	CLIP	
	12	1	**6D-4247**	3	CLIP	
	13	1	**6V-8397**	7	SEAL-O-RING	
M	14	1	**8T-4189**	4	BOLT (M8X1.25X20-MM)	
	15	1	**8T-4224**	4	WASHER-HARD (8.8X16X2-MM THK)	
B	16	1	**9X-6273**	2	WASHER (32.5X50X0.8-MM THK)	
B	17	1	**9X-6274**	2	WASHER (32.5X50X1.6-MM THK)	

B-USE AS REQUIRED
I-REFER TO HYDRAULIC INFORMATION SYSTEM
M-METRIC PART

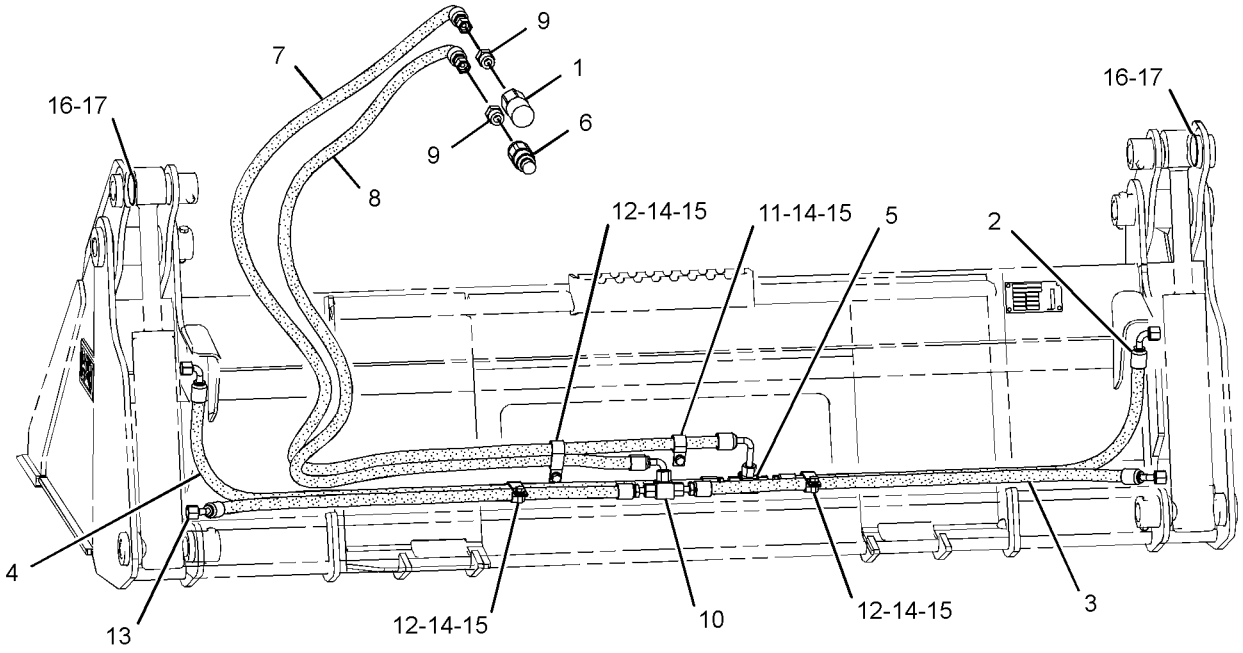

REAR VIEW
(UPPER LEFT)

GRAPHIC #1 **<END>** g01280163

HYDRAULIC SYSTEM

279-5416 LINES GP-BUCKET

S/N: SCH2475-UP

PART OF 279-5403 BUCKET AR-MULTIPURPOSE

AN ATTACHMENT

SMCS-5057 **i02552257**

NOTE	REF NO	GRAPHIC REF	PART NUMBER	QTY	PART NAME 1 2 3 4 5 6 (PRODUCT LEVEL)	SEE PAGE
	1	1	**153-2994**	1	COUPLING AS-QUICK DISCONNECT (FEMALE)	
	2	1	**163-1386**	1	TEE-UNION	
	3	1	**185-7887**	1	COUPLING AS-QUICK DISCONNECT (MALE)	
I	4	1	**199-8309**	1	HOSE AS	
I	5	1	**199-8310**	2	HOSE AS	
I	6	1	**199-8311**	1	HOSE AS	
I	7	1	**279-5417**	1	HOSE AS	
I	8	1	**279-5418**	1	HOSE AS	
	9	1	*148-8319*	2	CONNECTOR AS	
					(EACH INCLUDES)	
		1	**2M-9780**	1	SEAL-O-RING	
		1	**6V-8397**	1	SEAL-O-RING	
		1	**6V-8715**	1	CONNECTOR	
	10	1	*150-3056*	1	TEE AS	
		1	**6V-8397**	3	SEAL-O-RING	
		1	**6V-8788**	1	TEE	
	11	1	**1S-0994**	1	CLIP	
	12	1	**6D-4247**	3	CLIP	
	13	1	**6V-8397**	7	SEAL-O-RING	
M	14	1	**8T-4189**	4	BOLT (M8X1.25X20-MM)	
	15	1	**8T-4224**	4	WASHER-HARD (8.8X16X2-MM THK)	
B	16	1	**9X-6273**	2	WASHER (32.5X50X0.8-MM THK)	
B	17	1	**9X-6274**	2	WASHER (32.5X50X1.6-MM THK)	

B-USE AS REQUIRED
I-REFER TO HYDRAULIC INFORMATION SYSTEM
M-METRIC PART

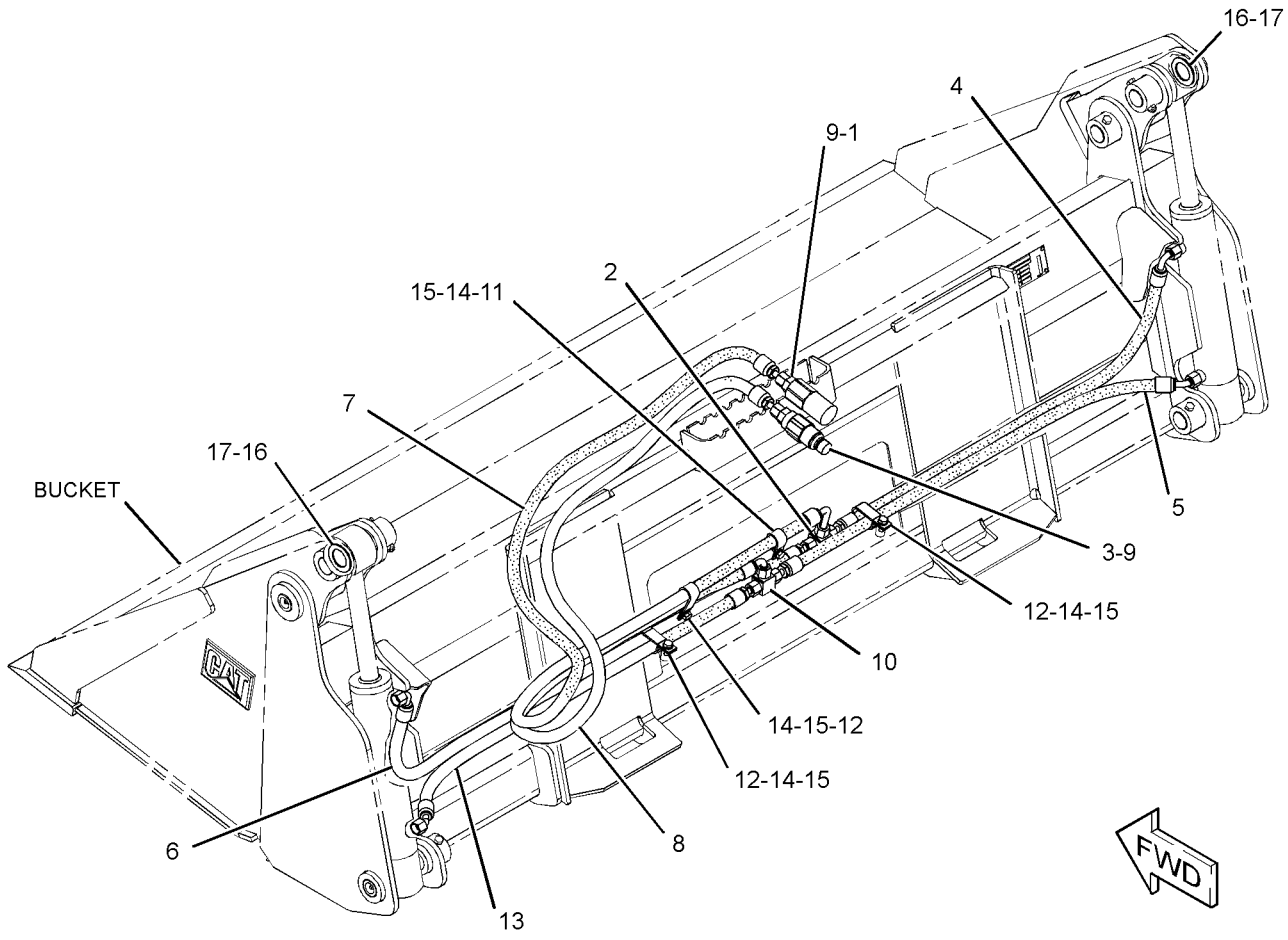

GRAPHIC #1 **<END>** g01278627

HYDRAULIC SYSTEM

285-6113 LINES GP-BUCKET

S/N: SCH2475-UP
PART OF 285-6116 GRAPPLE GP-UTILITY
AN ATTACHMENT
TYPE 1

SMCS-5057 **i02645962**

NOTE	REF NO	GRAPHIC REF	PART NUMBER	QTY	PART NAME 1 2 3 4 5 6 (PRODUCT LEVEL)	SEE PAGE
	1	1	**2J-6540**	1	CLAMP (HOSE)	
	2	1	**153-2994**	1	COUPLING AS-QUICK DISCONNECT (FEMALE)	
	3	1	**153-2995**	1	FITTING AS (QUICK DISCONNECT, MALE)	
	4	1	**174-2388**	1	TUBE AS	
	5	1	**174-2389**	1	TUBE AS	
I	6	1	**174-2393**	2	HOSE AS	
	7	1	**174-3097**	1	TUBE AS	
	8	1	*183-4085*	1	ELBOW AS	
		1	**6V-8397**	2	SEAL-O-RING	
		1	**183-4084**	1	ELBOW	
I	9	1	**294-5504**	1	HOSE AS	
I	10	1	**294-5505**	1	HOSE AS	
	11	1	*148-8319*	2	CONNECTOR AS	
					(EACH INCLUDES)	
		1	**2M-9780**	1	SEAL-O-RING	
		1	**6V-8397**	1	SEAL-O-RING	
		1	**6V-8715**	1	CONNECTOR	
	12	1	**6V-8397**	6	SEAL-O-RING	
	13	1	**7S-3912**	2	CLIP (TAB)	
	14	1	**7S-3913**	2	CLIP (SLOT)	
	15	1	**8T-1893**	2	CLIP (SLOT)	
	16	1	**8T-1894**	2	CLIP (TAB)	
	17	1	**8T-4121**	6	WASHER-HARD (11X21X2.5-MM THK)	
M	18	1	**8T-4137**	4	BOLT (M10X1.5X20-MM)	
	19	1	**9R-2004**	1	BLOCK	

I-REFER TO HYDRAULIC INFORMATION SYSTEM
M-METRIC PART

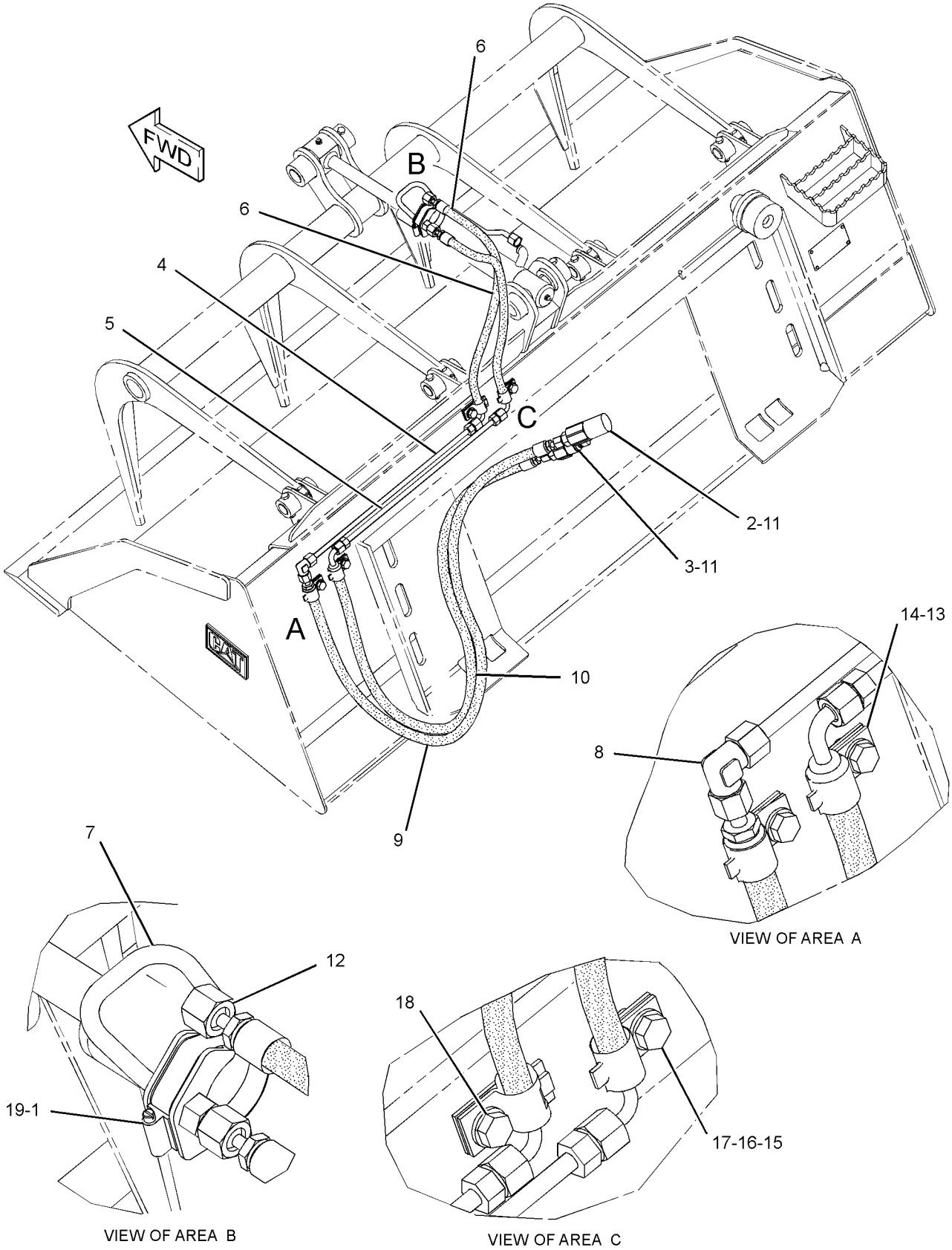

GRAPHIC #1 **<END>** g01279537

HYDRAULIC SYSTEM

285-6113 LINES GP-BUCKET

S/N: SCH2475-UP
PART OF 285-6116 GRAPPLE GP-UTILITY
AN ATTACHMENT
TYPE 2

SMCS-5057 **i02888539**

NOTE	PART NUMBER	QTY	PART NAME 1 2 3 4 5 6 (PRODUCT LEVEL)	SEE PAGE
M	**8T-4137**	4	BOLT (M10X1.5X20-MM)	
	7S-3912	2	CLIP (TAB)	
	7S-3913	2	CLIP (SLOT)	
	8T-1893	2	CLIP (SLOT)	
	8T-1894	2	CLIP (TAB)	
	148-8319	2	CONNECTOR AS	
			(EACH INCLUDES)	
	2M-9780	1	SEAL-O-RING	
	6V-8397	1	SEAL-O-RING	
	6V-8715	1	CONNECTOR	
	153-2994	1	COUPLING AS-QUICK DISCONNECT (FEMALE)	
	183-4085	1	ELBOW AS	
	6V-8397	2	SEAL-O-RING	
	183-4084	1	ELBOW	
	153-2995	1	FITTING AS (QUICK DISCONNECT, MALE)	
CI	**307-3808**	1	HOSE AS	
CI	**174-2393**	1	HOSE AS	
I	**294-5504**	1	HOSE AS	
I	**294-5505**	1	HOSE AS	
C	**6V-8397**	5	SEAL-O-RING	
	174-2388	1	TUBE AS	
	174-2389	1	TUBE AS	
	8T-4121	6	WASHER-HARD (11X21X2.5-MM THK)	

C-CHANGE FROM PREVIOUS TYPE
I-REFER TO HYDRAULIC INFORMATION SYSTEM
M-METRIC PART

<END>

HYDRAULIC SYSTEM

177-1986 LINES GP-CONNECTING

S/N: SCH2475-UP

PART OF 177-1989, 177-1990 BLADE AR

AN ATTACHMENT

SMCS-5057 **i01928980**

NOTE	REF NO	GRAPHIC REF	PART NUMBER	QTY	PART NAME 1 2 3 4 5 6 (PRODUCT LEVEL)	SEE PAGE
	1	1	**153-2994**	1	COUPLING AS-QUICK DISCONNECT (FEMALE)	
	2	1	**153-2995**	1	FITTING AS (QUICK DISCONNECT, MALE)	
	3	1	**163-1385**	2	ELBOW	
I	4	1	**177-1910**	2	HOSE AS	
I	5	1	**177-1911**	1	HOSE AS	
I	6	1	**177-1912**	1	HOSE AS	
	7	1	*148-8319*	2	CONNECTOR AS	
					(EACH INCLUDES)	
		1	**2M-9780**	1	SEAL-O-RING	
		1	**6V-8397**	1	SEAL-O-RING	
		1	**6V-8715**	1	CONNECTOR	
	8	1	**148-8378**	2	ELBOW AS	
					(EACH INCLUDES)	
		1	**3J-1907**	1	SEAL-O-RING	
		1	**6V-8397**	1	SEAL-O-RING	
		1	**6V-8724**	1	ELBOW	
	9	1	**6V-8397**	4	SEAL-O-RING	
	10	1	**8T-4121**	4	WASHER-HARD (11X21X2.5-MM THK)	
M	11	1	**8T-4133**	2	NUT (M10X1.5-THD)	
M	12	1	**8T-4185**	1	BOLT (M10X1.5X50-MM)	
M	13	1	**8T-4195**	1	BOLT (M10X1.5X30-MM)	
	14	1	**8T-8192**	2	CLIP (SLOT)	
	15	1	**8T-8193**	2	CLIP (TAB)	

I-REFER TO HYDRAULIC INFORMATION SYSTEM
M-METRIC PART

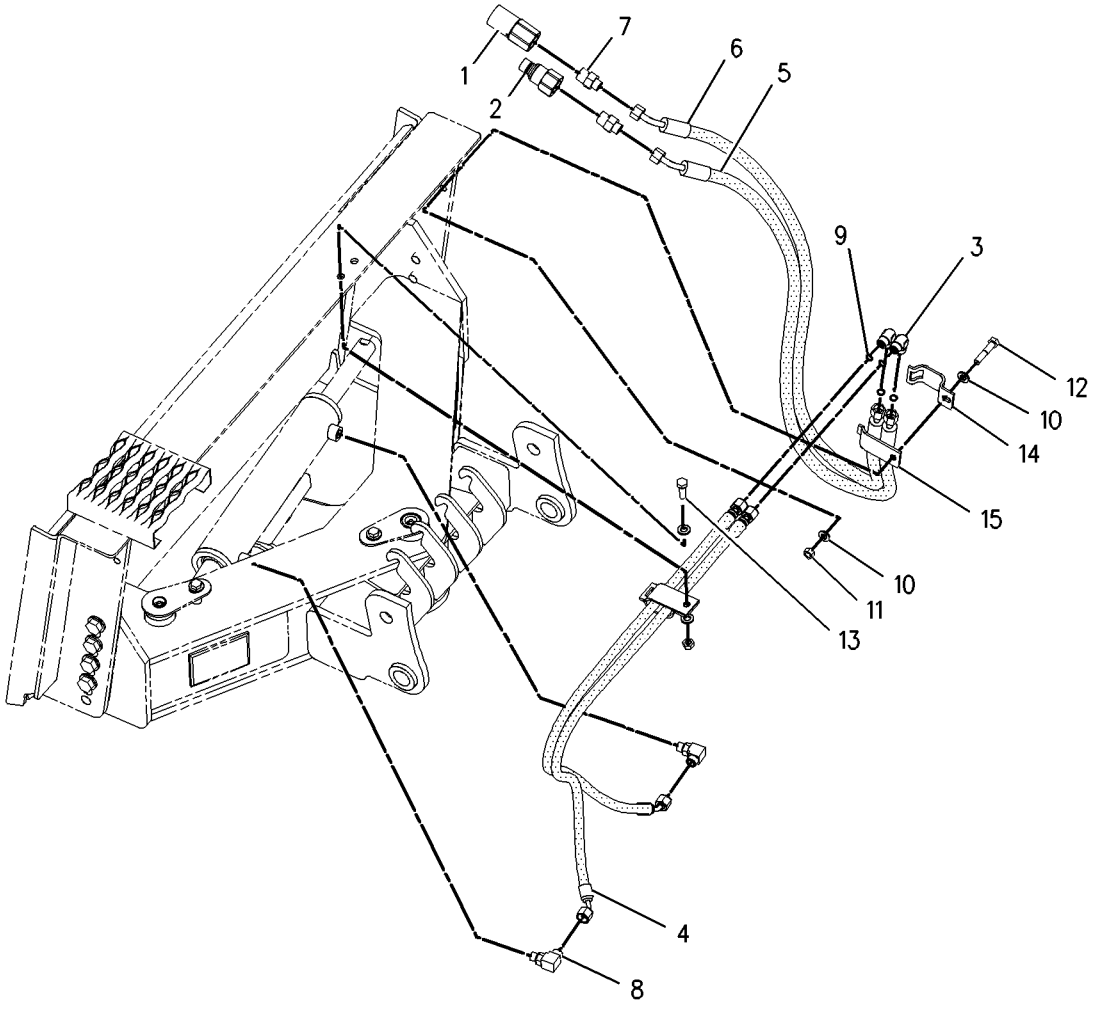

GRAPHIC #1 **<END>** g00978933

HYDRAULIC SYSTEM

161-0187 LINES GP-GRAPPLE

S/N: SCH2475-UP
INDUSTRIAL
PART OF 157-7223, 157-7224, 157-7225 BUCKET AR-GRAPPLE
AN ATTACHMENT

SMCS-5057, 5555 **i01928983**

NOTE	REF NO	GRAPHIC REF	PART NUMBER	QTY	PART NAME 1 2 3 4 5 6 (PRODUCT LEVEL)	SEE PAGE
	1	1	**3E-7404**	2	CLAMP-HOSE	
	2	1	**153-2994**	1	COUPLING AS-QUICK DISCONNECT (FEMALE)	
	3	1	**153-2995**	1	FITTING AS (QUICK DISCONNECT, MALE)	
	4	1	**161-0185**	1	TUBE AS	
	5	1	**161-0186**	1	TUBE AS	
	6	1	**161-0188**	2	TUBE AS	
I	7	1	**161-0189**	2	HOSE AS	
I	8	1	**161-0190**	2	HOSE AS	
	9	1	**163-1385**	1	ELBOW	
I	10	1	**163-9320**	1	HOSE AS	
I	11	1	**166-9312**	1	HOSE AS	
	12	1	*148-8319*	2	CONNECTOR AS	
					(EACH INCLUDES)	
		1	**2M-9780**	1	SEAL-O-RING	
		1	**6V-8397**	1	SEAL-O-RING	
		1	**6V-8715**	1	CONNECTOR	
	13	1	**2V-3216**	6	CLIP	
	14	1	**6V-8397**	13	SEAL-O-RING	
	15	1	**7S-3916**	2	CLIP (TAB)	
	16	1	**7S-3919**	2	CLIP (SLOT)	
	17	1	**8T-4121**	2	WASHER-HARD (11X21X2.5-MM THK)	
M	18	1	**8T-4136**	2	BOLT (M10X1.5X25-MM)	
M	19	1	**8T-4171**	4	BOLT (M6X1X12-MM)	
	20	1	**9R-2004**	2	BLOCK	

I-REFER TO HYDRAULIC INFORMATION SYSTEM
M-METRIC PART

161-0187 **LINES GP-GRAPPLE** *(contd.)* **i01928983**

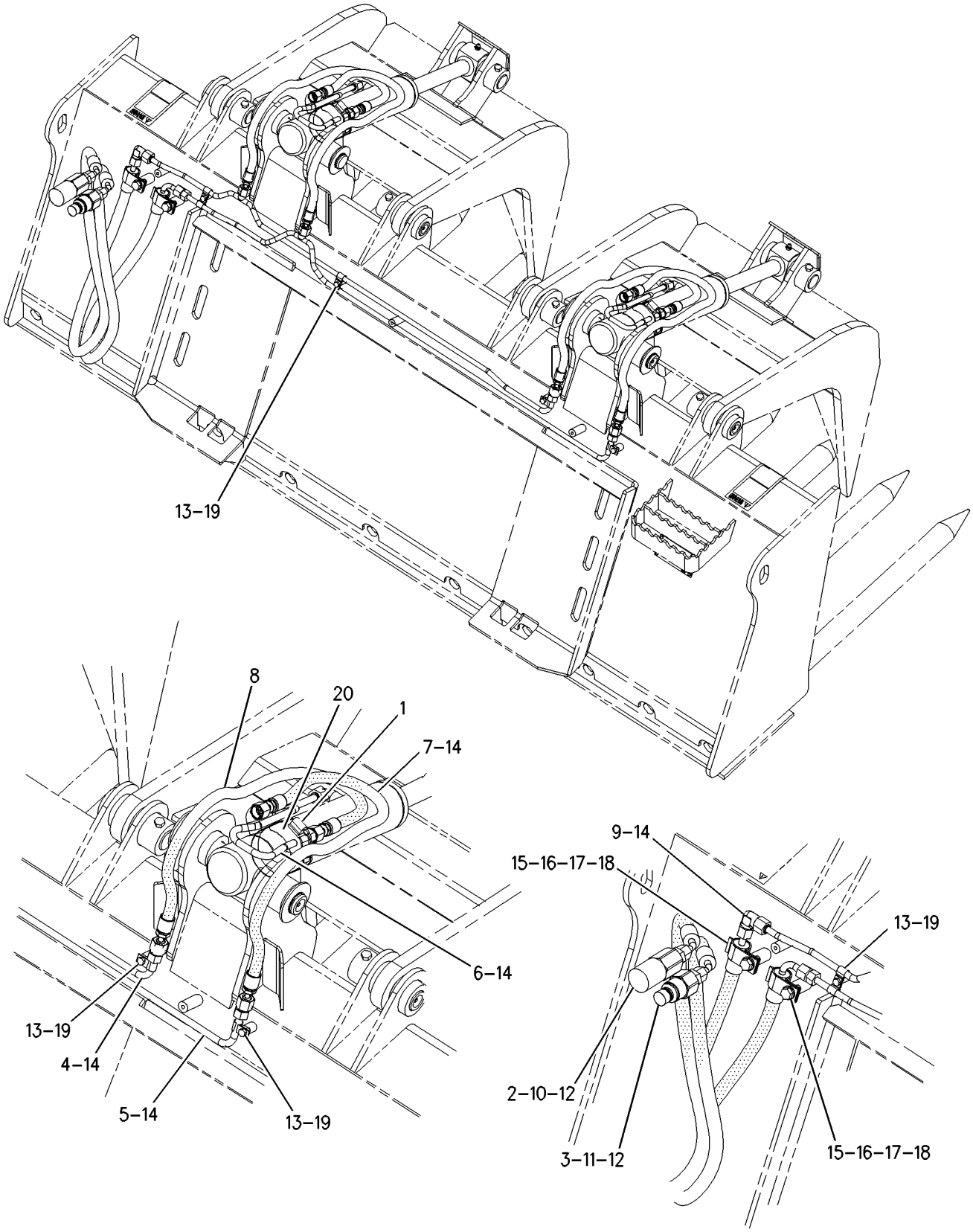

GRAPHIC #1 **<END>** g00733464

HYDRAULIC SYSTEM

286-9250 LINES GP-GRAPPLE

S/N: SCH2475-UP
2134-MM (84-IN)
PART OF 286-9301 BUCKET AR-GRAPPLE
AN ATTACHMENT

SMCS-5057, 5555 **i02742008**

NOTE	REF NO	GRAPHIC REF	PART NUMBER	QTY	PART NAME 1 2 3 4 5 6 (PRODUCT LEVEL)	SEE PAGE
	1	1	**2H-7829**	10	CLIP	
	2	1	**9S-4200**	2	CLIP	
	3	1	**153-2994**	1	COUPLING AS-QUICK DISCONNECT (FEMALE)	
I	4	1	**161-0189**	2	HOSE AS	
	5	1	**163-1385**	1	ELBOW	
I	6	1	**177-1911**	2	HOSE AS	
	7	1	**185-7887**	1	COUPLING AS-QUICK DISCONNECT (MALE)	
I	8	1	**286-9263**	2	HOSE AS	
	9	1	**286-9265**	1	TUBE AS	
	10	1	**286-9266**	1	TUBE AS	
	11	1	**286-9267**	1	TUBE AS	
	12	1	**286-9268**	1	TUBE AS	
	13	1	**286-9271**	1	GUARD	
	14	1	*148-8319*	2	CONNECTOR AS	
					(EACH INCLUDES)	
		1	**2M-9780**	1	SEAL-O-RING	
		1	**6V-8397**	1	SEAL-O-RING	
		1	**6V-8715**	1	CONNECTOR	
	15	1	**5P-4116**	6	WASHER-HARD (8.8X20.5X2-MM THK)	
	16	1	**6V-8397**	13	SEAL-O-RING	
	17	1	**7S-3916**	2	CLIP (TAB)	
	18	1	**7S-3919**	2	CLIP (SLOT)	
	19	1	**7X-7729**	5	WASHER (11X25X3-MM THK)	
M	20	1	**8T-4195**	5	BOLT (M10X1.5X30-MM)	
M	21	1	**8T-4200**	6	BOLT (M8X1.25X16-MM)	

I-REFER TO HYDRAULIC INFORMATION SYSTEM
M-METRIC PART

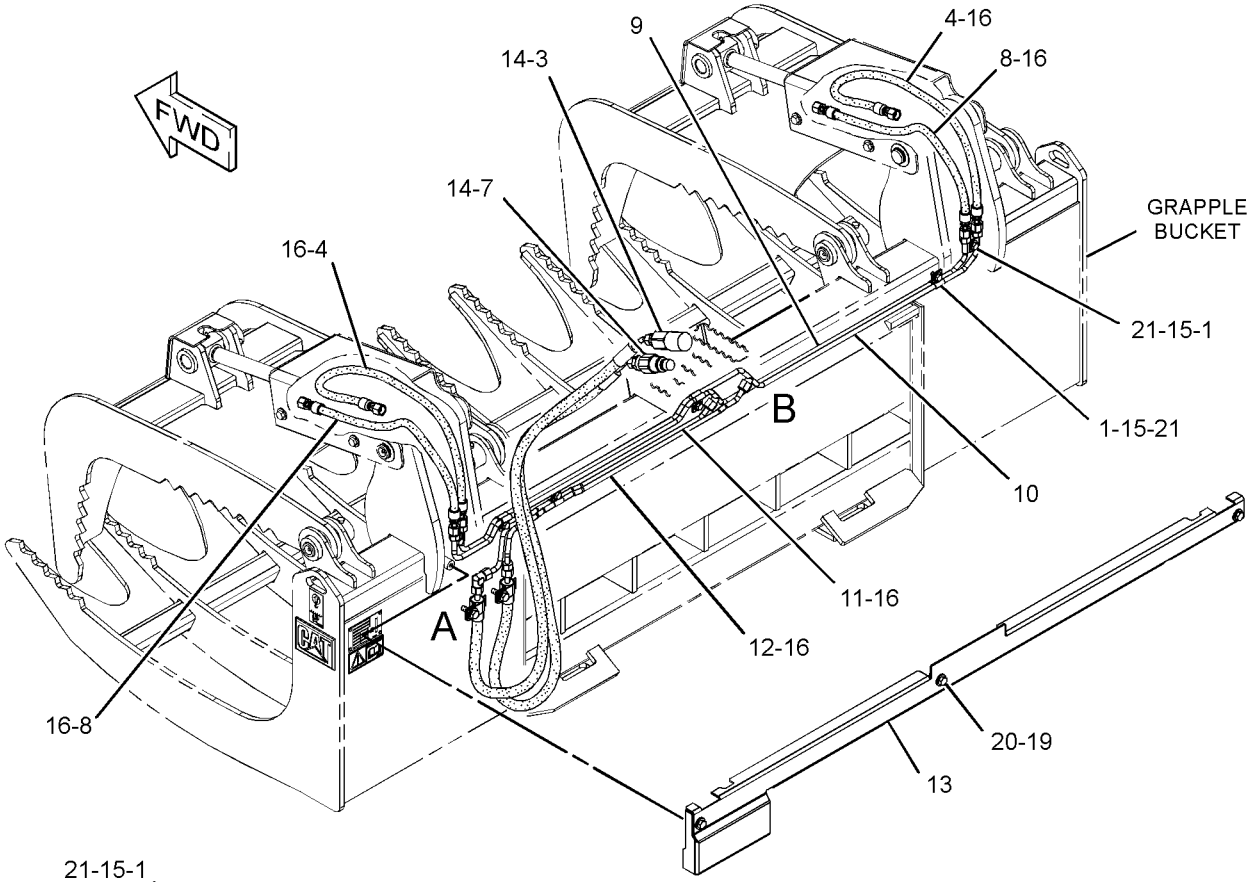

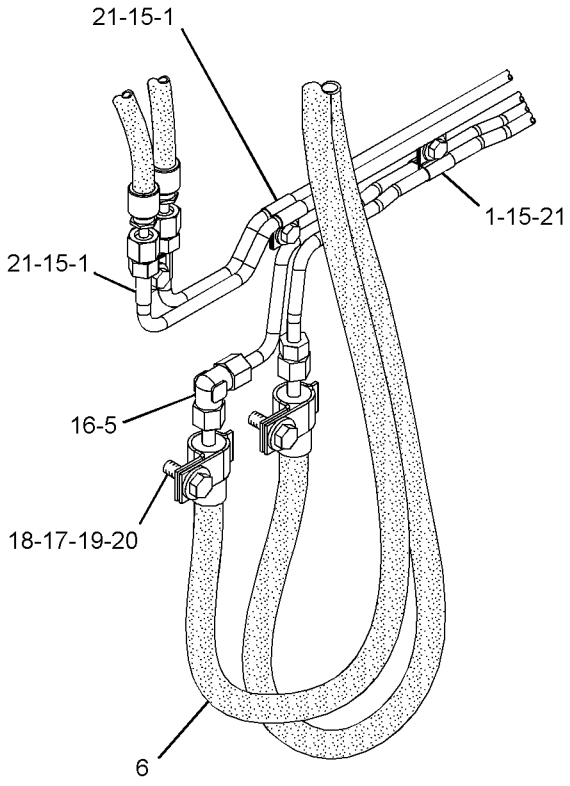

VIEW OF AREA A

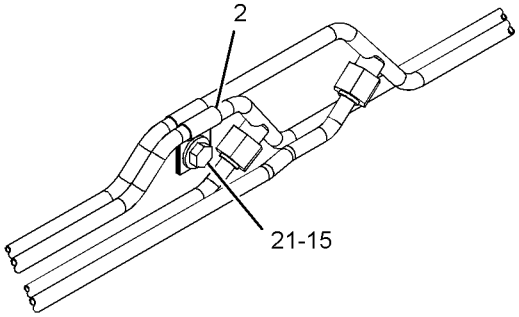

VIEW OF AREA B

GRAPHIC #1 **<END>** g01373025

HYDRAULIC SYSTEM

286-9279 LINES GP-GRAPPLE

S/N: SCH2475-UP
1829-MM (72-IN)
PART OF 286-9300 BUCKET AR-GRAPPLE
AN ATTACHMENT

SMCS-5057, 5555 **i02723728**

NOTE	REF NO	GRAPHIC REF	PART NUMBER	QTY	PART NAME 1 2 3 4 5 6 (PRODUCT LEVEL)	SEE PAGE
	1	1	**2H-7829**	10	CLIP	
	2	1	**9S-4200**	2	CLIP	
	3	1	**153-2994**	1	COUPLING AS-QUICK DISCONNECT (FEMALE)	
I	4	1	**161-0189**	2	HOSE AS	
	5	1	**163-1385**	1	ELBOW	
I	6	1	*177-1911*	2	HOSE AS	
	7	1	**185-7887**	1	COUPLING AS-QUICK DISCONNECT (MALE)	
	8	1	**286-9249**	1	GUARD	
I	9	1	*286-9263*	2	HOSE AS	
	10	1	**286-9267**	1	TUBE AS	
	11	1	**286-9268**	1	TUBE AS	
	12	1	**286-9280**	1	TUBE AS	
	13	1	**286-9281**	1	TUBE AS	
	14	1	*148-8319*	2	CONNECTOR AS	
					(EACH INCLUDES)	
		1	**2M-9780**	1	SEAL-O-RING	
		1	**6V-8397**	1	SEAL-O-RING	
		1	**6V-8715**	1	CONNECTOR	
	15	1	**5P-4116**	6	WASHER-HARD (8.8X20.5X2-MM THK)	
	16	1	**6V-8397**	13	SEAL-O-RING	
	17	1	**7S-3916**	2	CLIP (TAB)	
	18	1	**7S-3919**	2	CLIP (SLOT)	
	19	1	**7X-7729**	5	WASHER (11X25X3-MM THK)	
M	20	1	**8T-4195**	5	BOLT (M10X1.5X30-MM)	
M	21	1	**8T-4200**	6	BOLT (M8X1.25X16-MM)	

I-REFER TO HYDRAULIC INFORMATION SYSTEM
M-METRIC PART

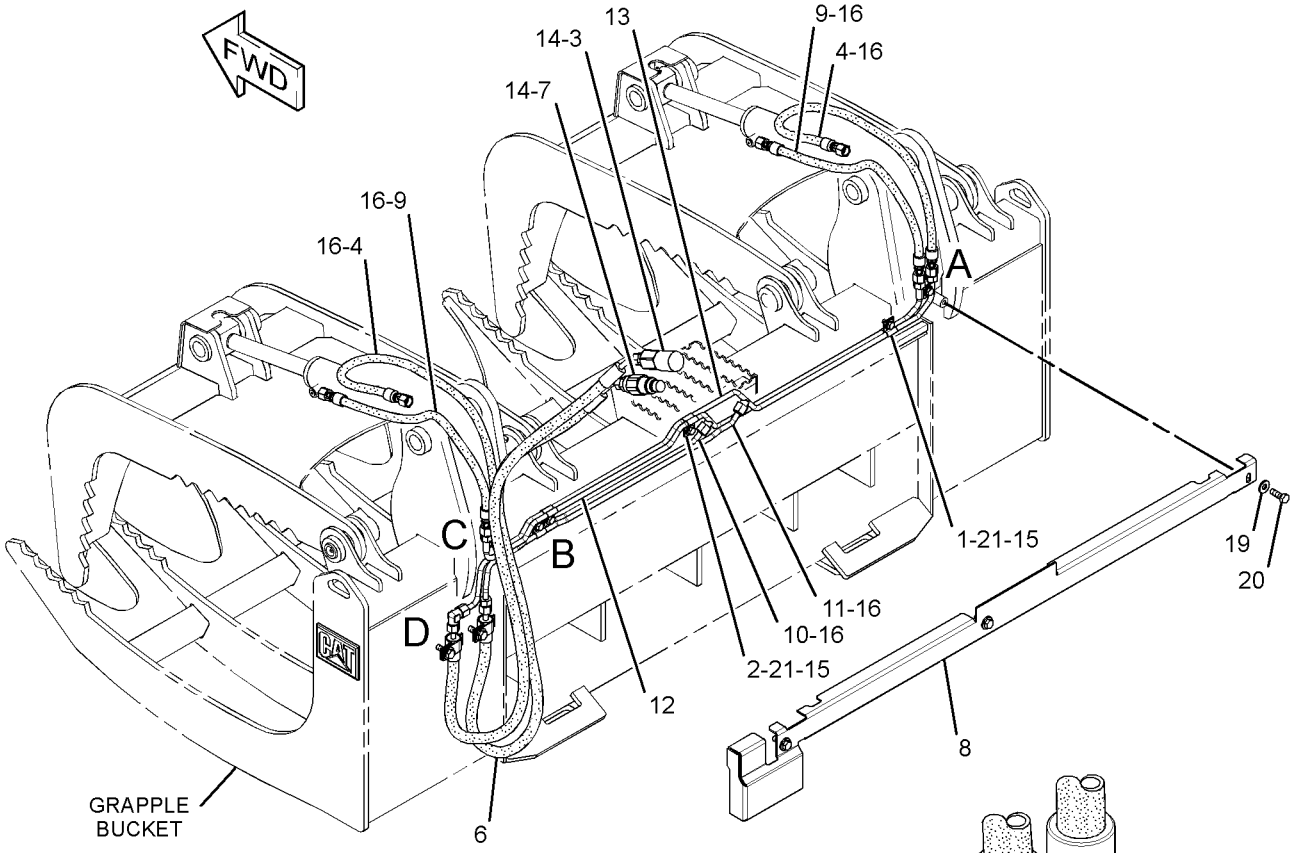

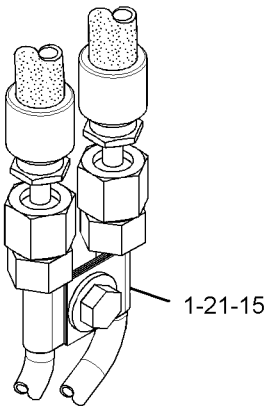

VIEW OF AREA A

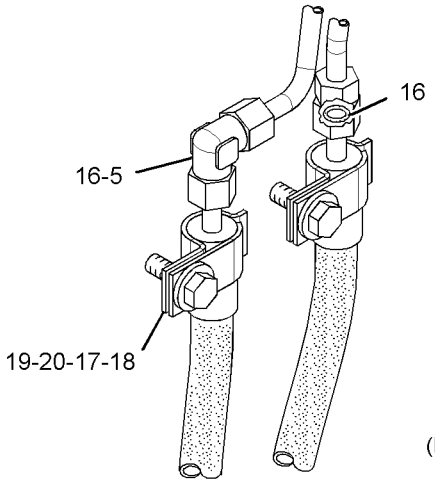

VIEW OF AREA D

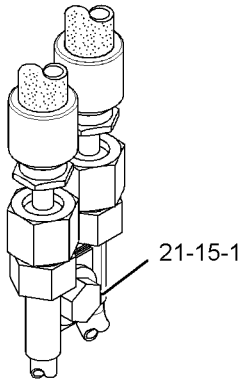

VIEW OF AREA C
(HOSES REMOVED FOR CLARITY)

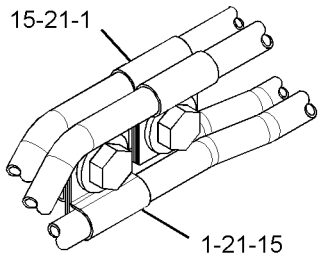

VIEW OF AREA B

GRAPHIC #1 **<END>** g01373354

HYDRAULIC SYSTEM

218-6528 LINES GP-HYDRAULIC FAN

S/N: SCH2475-UP

PART OF 218-6703 HEATER AR-CAB, 218-6701 INSTALLATION GP

AN ATTACHMENT

SMCS-5057 **i02820503**

NOTE	REF NO	GRAPHIC REF	PART NUMBER	QTY	PART NAME 1 2 3 4 5 6 (PRODUCT LEVEL)	SEE PAGE
C	1	1	**7K-1181**	4	STRAP-CABLE	
	2	1	**8C-3451**	1	CAP-DUST	
I	3	1	**218-6063**	1	HOSE AS	
CI	4	1	**311-3890**	1	HOSE AS	
	5	1	*229-5466*	1	FITTING AS	
		1	**229-5465**	2	FITTING	
		1	**3J-7354**	2	SEAL-O-RING	
	6	1	*148-8315*	1	CONNECTOR AS	
		1	**6V-8642**	1	CONNECTOR	
		1	**2M-9780**	1	SEAL-O-RING	
		1	**7J-9108**	1	SEAL-O-RING	
	7	1	*148-8316*	1	CONNECTOR AS	
		1	**6V-8647**	1	CONNECTOR	
		1	**3J-7354**	1	SEAL-O-RING	
		1	**4J-5477**	1	SEAL-O-RING	
	8	1	*148-8369*	1	ELBOW AS	
		1	**6V-8628**	1	ELBOW	
		1	**3J-7354**	1	SEAL-O-RING	
		1	**4J-5477**	1	SEAL-O-RING	
	9	1	*153-6256*	1	ELBOW AS	
		1	**8C-7563**	1	ELBOW	
		1	**7J-9108**	1	SEAL-O-RING	
	10	1	**5P-6994**	1	CLIP	
	11	1	**6V-9829**	1	CAP AS	
	12	1	**7X-7729**	2	WASHER (11X25X3-MM THK)	
M	13	1	**8T-4133**	1	NUT (M10X1.5-THD)	
M	14	1	**101-3129**	1	STUD (M10X1.5-THD)	

C-CHANGE FROM PREVIOUS TYPE
I-REFER TO HYDRAULIC INFORMATION SYSTEM
M-METRIC PART

218-6528 **LINES GP-HYDRAULIC FAN** *(contd.)* **i02820503**

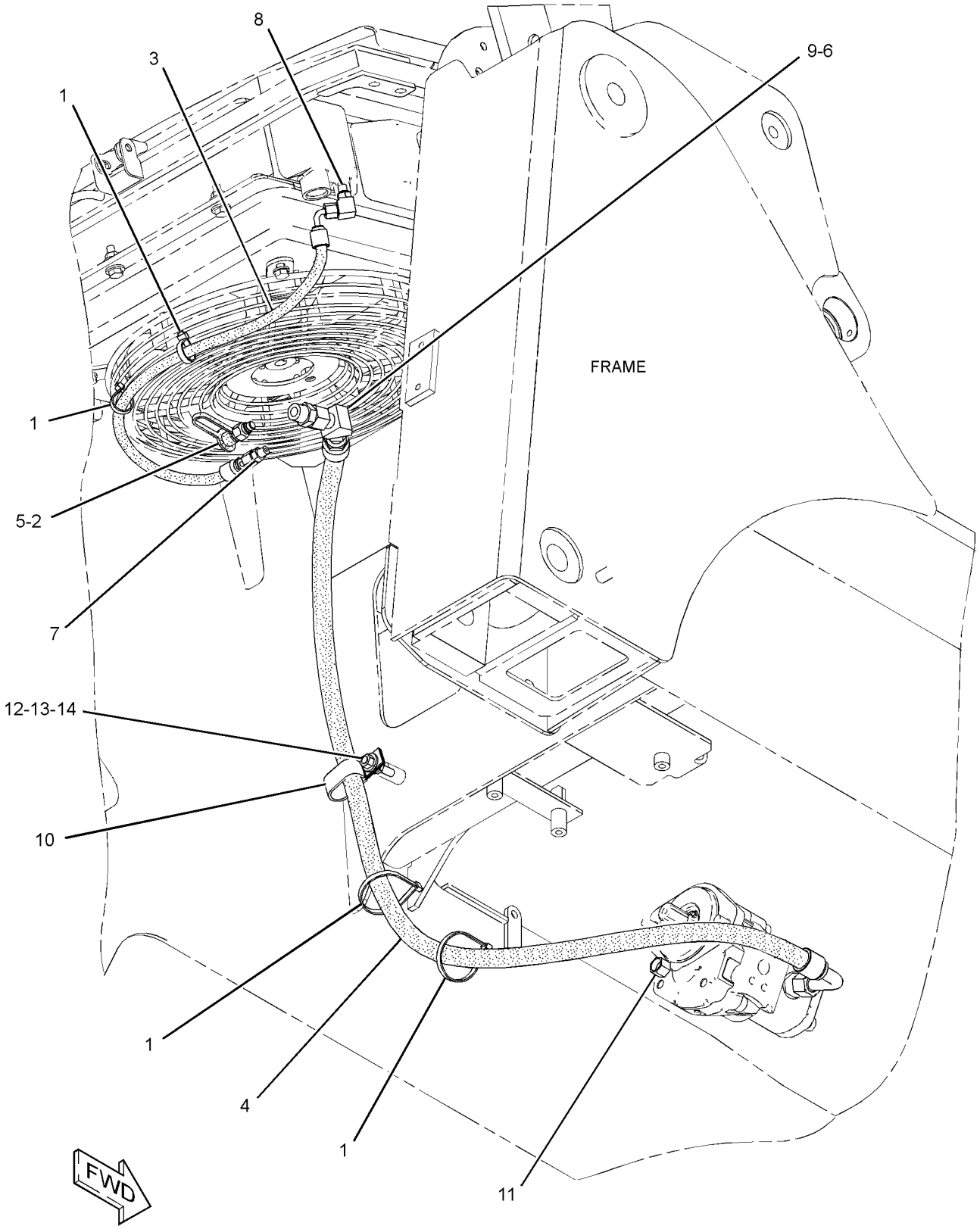

GRAPHIC #1 **<END>** g01408938

HYDRAULIC SYSTEM

218-6533 LINES GP-HYDRAULIC FAN

S/N: SCH2475-UP
PART OF 218-6302 AIR CONDITIONER AR
AN ATTACHMENT

SMCS-5057 **i02820504**

NOTE	REF NO	GRAPHIC REF	PART NUMBER	QTY	PART NAME 1 2 3 4 5 6 (PRODUCT LEVEL)	SEE PAGE
C	1	1	**7K-1181**	4	STRAP-CABLE	
	2	1	**8C-3451**	1	CAP-DUST	
I	3	1	**218-6063**	1	HOSE AS	
CI	4	1	**311-3889**	1	HOSE AS	
I	5	1	**218-6534**	1	HOSE AS	
I	6	1	**218-6535**	1	HOSE AS	
	7	1	**229-5466**	1	FITTING AS	
		1	**229-5465**	1	FITTING	
		1	**3J-7354**	1	SEAL-O-RING	
	8	1	*148-8315*	3	CONNECTOR AS	
					(EACH INCLUDES)	
		1	**6V-8642**	1	CONNECTOR	
		1	**2M-9780**	1	SEAL-O-RING	
		1	**7J-9108**	1	SEAL-O-RING	
	9	1	*148-8316*	1	CONNECTOR AS	
		1	**6V-8647**	1	CONNECTOR	
		1	**3J-7354**	1	SEAL-O-RING	
		1	**4J-5477**	1	SEAL-O-RING	
	10	1	*148-8326*	1	CONNECTOR AS	
		1	**6V-9872**	1	CONNECTOR	
		1	**3J-7354**	1	SEAL-O-RING	
		1	**6V-8397**	1	SEAL-O-RING	
	11	1	*148-8369*	1	ELBOW AS	
		1	**6V-8628**	1	ELBOW	
		1	**3J-7354**	1	SEAL-O-RING	
		1	**4J-5477**	1	SEAL-O-RING	
	12	1	*153-6256*	1	ELBOW AS	
		1	**8C-7563**	1	ELBOW	
		1	**7J-9108**	1	SEAL-O-RING	
	13	1	**5P-6994**	1	CLIP	
	14	1	**7X-7729**	2	WASHER (11X25X3-MM THK)	
M	15	1	**8T-4133**	1	NUT (M10X1.5-THD)	
M	16	1	**101-3129**	1	STUD (M10X1.5-THD)	

C-CHANGE FROM PREVIOUS TYPE
I-REFER TO HYDRAULIC INFORMATION SYSTEM
M-METRIC PART

218-6533 **LINES GP-HYDRAULIC FAN** *(contd.)* **i02820504**

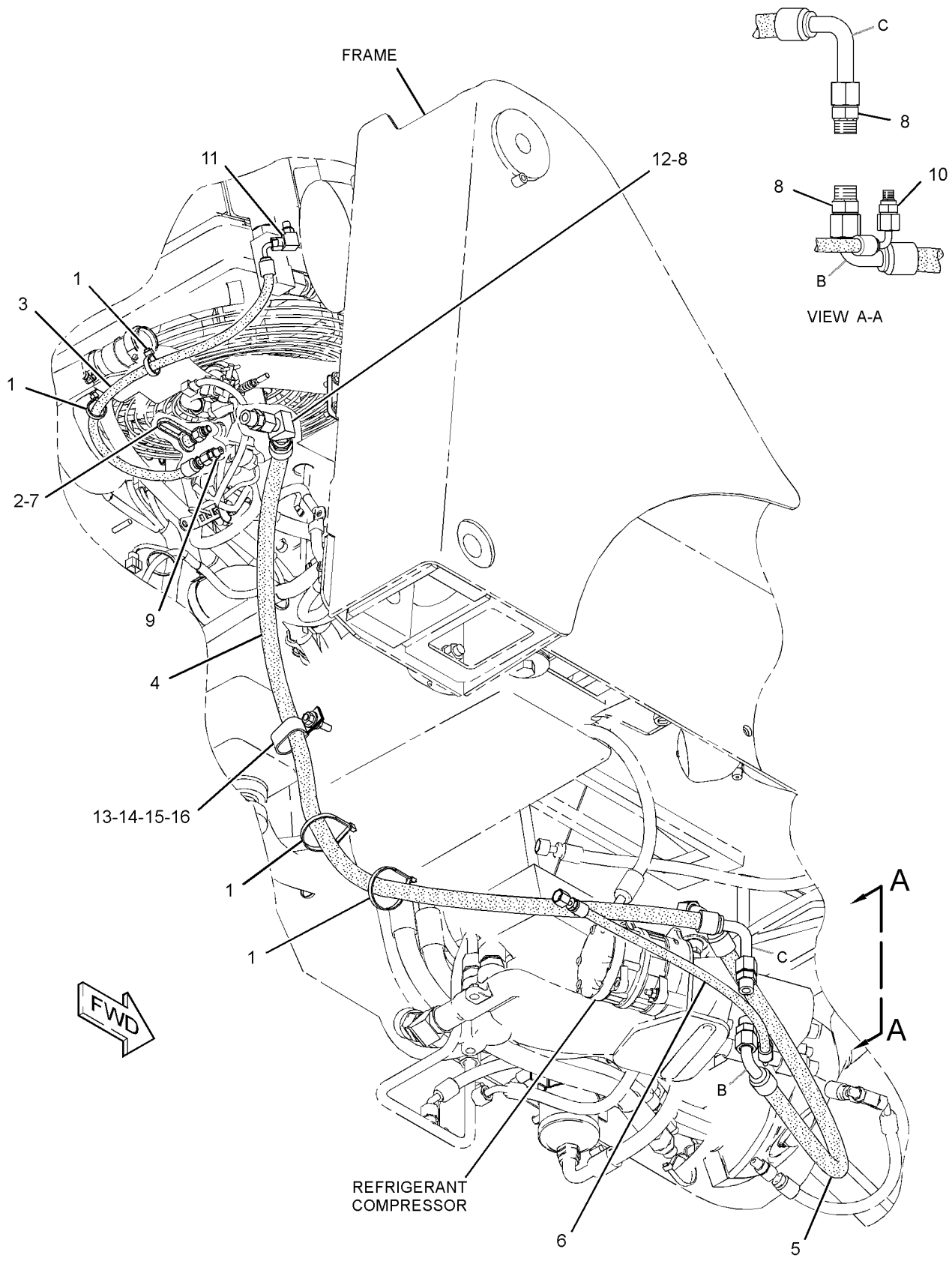

GRAPHIC #1 **<END>** g01409055

218-6541 LINES GP-HYDRAULIC OIL COOLER

S/N: SCH2475-UP

PART OF 278-1243 HYDRAULIC AR

SMCS-5057 **i02820488**

NOTE	REF NO	GRAPHIC REF	PART NUMBER	QTY	PART NAME 1 2 3 4 5 6 (PRODUCT LEVEL)	SEE PAGE
M	1	1	**8T-4196**	1	BOLT (M10X1.5X35-MM)	
	2	1	*106-8715*	2	ELBOW AS	
					(EACH INCLUDES)	
		1	**3D-2824**	1	SEAL-O-RING	
		1	**6V-9746**	1	SEAL-O-RING	
		1	**8C-8400**	1	ELBOW	
	3	1	**218-6539**	1	PLATE	
CI	4	1	**311-3884**	1	HOSE AS	
CI	5	1	**311-3885**	1	HOSE AS	
C	6	1	**5D-0718**	4	CLIP	
	7	1	**6V-1889**	1	CLIP	
	8	1	**7X-7729**	1	WASHER (11X25X3-MM THK)	
C	9	1	**8T-4121**	3	WASHER-HARD (11X21X2.5-MM THK)	
CM	10	1	**8T-4133**	1	NUT (M10X1.5-THD)	
M	11	1	**8T-4136**	1	BOLT (M10X1.5X25-MM)	
M	12	1	**8T-4195**	1	BOLT (M10X1.5X30-MM)	
C	13	1	**7K-1181**	1	STRAP-CABLE	

C-CHANGE FROM PREVIOUS TYPE
I-REFER TO HYDRAULIC INFORMATION SYSTEM
M-METRIC PART

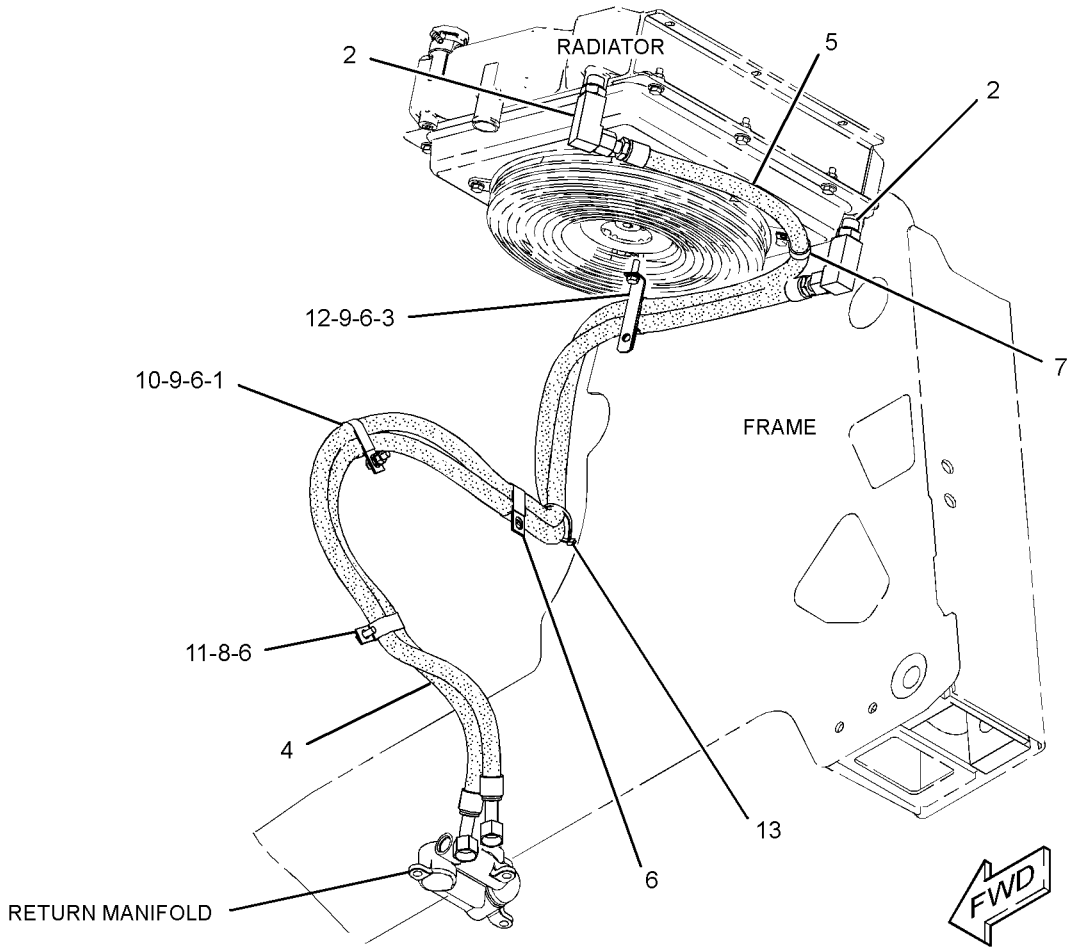

GRAPHIC #1 **<END>** g01409044

HYDRAULIC SYSTEM

218-5707 LINES GP-LIFT CYLINDER

S/N: SCH2475-UP
PART OF 218-5709 HYDRAULIC AR
FOR USE WITH WORK TOOL POSITIONER
AN ATTACHMENT

SMCS-5057, 5102 **i02646708**

NOTE	REF NO	GRAPHIC REF	PART NUMBER	QTY	PART NAME 1 2 3 4 5 6 (PRODUCT LEVEL)	SEE PAGE
C	1	1	**4P-8134**	1	CLIP	
	2	1	**6V-3582**	2	CLAMP-HOSE	
	3	1	**142-8997**	2	BLOCK	
	4	1	**212-6525**	1	TUBE AS	
	5	1	**212-6526**	1	TUBE AS	
	6	1	**218-5764**	1	PLATE	
	7	1	**285-9286**	1	BLOCK	
C	8	1	**290-3333**	1	TUBE AS	
C	9	1	**290-3334**	1	TUBE AS	
C	10	1	**290-3335**	1	TUBE AS	
C	11	1	**290-3336**	1	TUBE AS	
CI	12	1	**290-3382**	2	HOSE AS	
CI	13	1	**290-3395**	2	HOSE AS	
CI	14	1	**291-1297**	1	HOSE AS	
C	15	1	**292-3081**	1	TUBE AS	
	16	1	*148-8341*	2	CONNECTOR AS	
					(EACH INCLUDES)	
		1	**3D-2824**	1	SEAL-O-RING	
		1	**6V-8713**	1	CONNECTOR	
		1	**7J-9108**	1	SEAL-O-RING	
	17	1	*148-8345*	1	CONNECTOR AS	
		1	**2M-9780**	1	SEAL-O-RING	
		1	**6V-8398**	1	SEAL-O-RING	
		1	**6V-8638**	1	CONNECTOR	
	18	1	*148-8390*	1	ELBOW AS	
		1	**2M-9780**	1	SEAL-O-RING	
		1	**6V-8626**	1	ELBOW	
		1	**7J-9108**	1	SEAL-O-RING	
C	19	1	**6V-8398**	9	SEAL-O-RING	
C	20	1	**7J-9108**	6	SEAL-O-RING	
	21	1	**8T-4121**	2	WASHER-HARD (11X21X2.5-MM THK)	
M	22	1	**8T-4136**	2	BOLT (M10X1.5X25-MM)	

C-CHANGE FROM PREVIOUS TYPE
I-REFER TO HYDRAULIC INFORMATION SYSTEM
M-METRIC PART

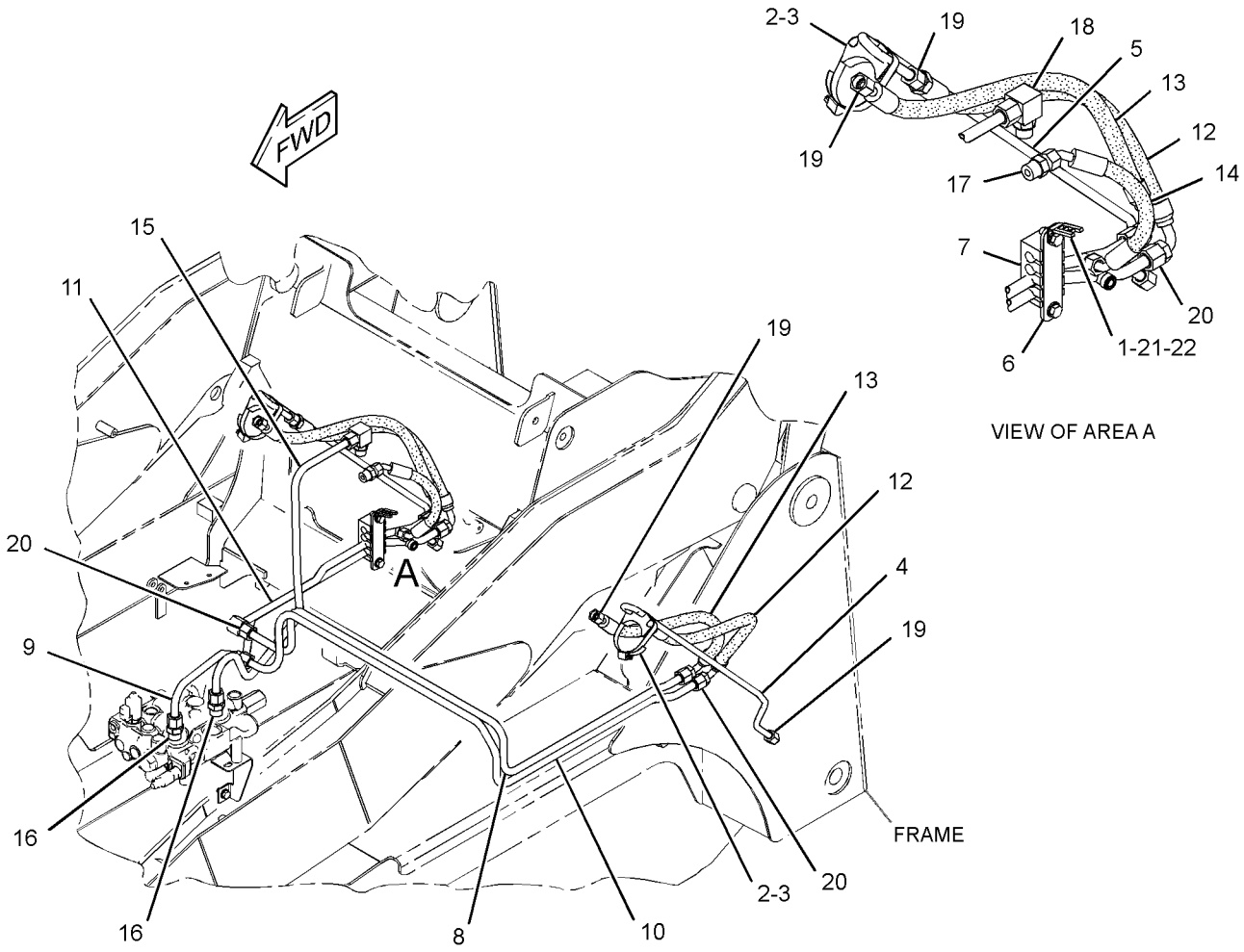

GRAPHIC #1 **<END>** g01327132

HYDRAULIC SYSTEM

218-6604 LINES GP-LIFT CYLINDER

S/N: SCH2475-UP
PART OF 218-6640 HYDRAULIC AR
AN ATTACHMENT

SMCS-5057, 5102 **i02649037**

NOTE	REF NO	GRAPHIC REF	PART NUMBER	QTY	PART NAME 1 2 3 4 5 6 (PRODUCT LEVEL)	SEE PAGE
C	1	1	**4P-8134**	1	CLIP	
	2	1	**6V-3582**	2	CLAMP-HOSE	
	3	1	**142-8997**	2	BLOCK	
	4	1	**212-6525**	1	TUBE AS	
	5	1	**212-6526**	1	TUBE AS	
	6	1	**218-5764**	1	PLATE	
	7	1	**285-9286**	1	BLOCK	
C	8	1	**290-3337**	1	TUBE AS	
C	9	1	**290-3338**	1	TUBE AS	
C	10	1	**290-3339**	1	TUBE AS	
C	11	1	**290-3340**	1	TUBE AS	
CI	12	1	**290-3382**	2	HOSE AS	
I	13	1	**290-3395**	2	HOSE AS	
	14	1	*148-8341*	2	CONNECTOR AS	
					(EACH INCLUDES)	
		1	**3D-2824**	1	SEAL-O-RING	
		1	**6V-8713**	1	CONNECTOR	
		1	**7J-9108**	1	SEAL-O-RING	
C	15	1	**6V-8398**	7	SEAL-O-RING	
C	16	1	**7J-9108**	6	SEAL-O-RING	
	17	1	**8T-4121**	2	WASHER-HARD (11X21X2.5-MM THK)	
M	18	1	**8T-4136**	2	BOLT (M10X1.5X25-MM)	

C-CHANGE FROM PREVIOUS TYPE
I-REFER TO HYDRAULIC INFORMATION SYSTEM
M-METRIC PART

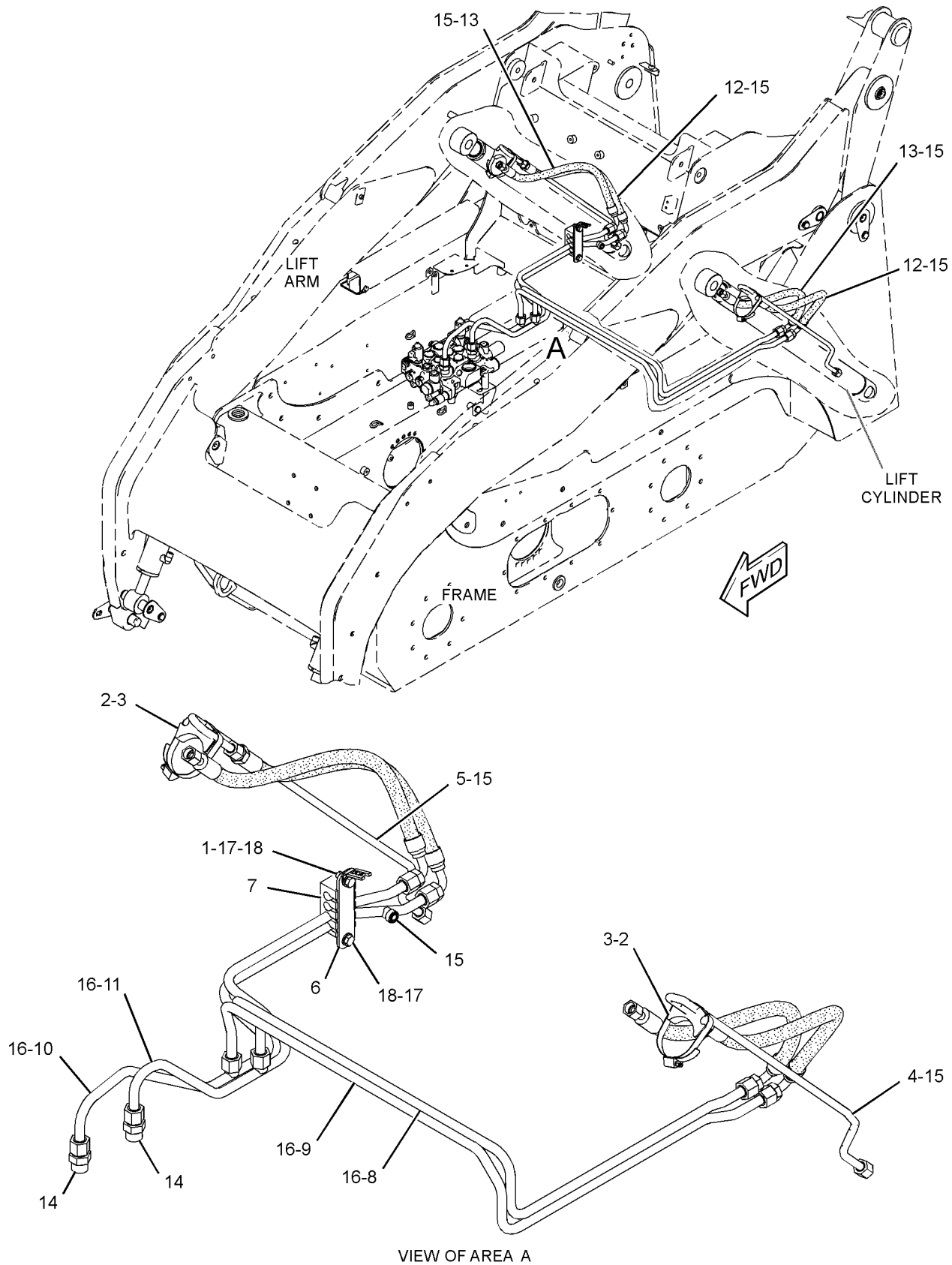

GRAPHIC #1 **<END>** g01329917

HYDRAULIC SYSTEM

218-5882 LINES GP-LOWERING CONTROL

S/N: SCH2475-UP
MANUAL LOWERING CONTROL
PART OF 218-6721 COUPLER AR-QUICK
AN ATTACHMENT

SMCS-5057, 5147, 5154 **i02752324**

NOTE	REF NO	GRAPHIC REF	PART NUMBER	QTY	PART NAME 1 2 3 4 5 6 (PRODUCT LEVEL)	SEE PAGE
Y	1	1	**112-1817**	1	VALVE GP-MANUAL (LOWERING CONTROL)	335
	2	1	**238-7745**	1	BRACKET	
	3	1	**238-7746**	1	TUBE AS	
	4	1	**269-9404**	1	BRACKET	
	5	1	**270-0216**	1	BRACKET	
CY	6	1	*298-7198*	1	CABLE GP-CONTROL (MANUAL LOWERING)	455
I	7	1	**291-3756**	1	HOSE AS	
	8	1	**283-9264**	1	BRACKET	
	9	1	*148-8365*	1	ELBOW AS	
		1	**3J-1907**	1	SEAL-O-RING	
		1	**8T-6876**	1	ELBOW	
		1	**6V-8398**	1	SEAL-O-RING	
	10	1	*148-8378*	1	ELBOW AS	
		1	**3J-1907**	1	SEAL-O-RING	
		1	**6V-8397**	1	SEAL-O-RING	
		1	**6V-8724**	1	ELBOW	
	11	1	**1F-7567**	1	CLIP	
	12	1	**4B-4274**	1	WASHER (5.5X13X1.2-MM THK)	
	13	1	**6V-8397**	2	SEAL-O-RING	
M	14	1	**8T-0287**	1	BOLT (M5X0.8X10-MM)	
	15	1	**6V-9829**	1	CAP AS	
	16	1	**8M-4791**	2	WASHER-HARD (13.5X27X3-MM THK)	
M	17	1	**8T-0285**	4	SCREW-MACHINE (M4X0.7X12-MM)	
	18	1	**8T-4121**	5	WASHER-HARD (11X21X2.5-MM THK)	
M	19	1	**8T-4133**	2	NUT (M10X1.5-THD)	
M	20	1	**8T-4189**	2	BOLT (M8X1.25X20-MM)	
M	21	1	**8T-4191**	1	BOLT (M10X1.5X16-MM)	
M	22	1	**8T-4136**	2	BOLT (M10X1.5X25-MM)	
	23	1	**8T-4224**	2	WASHER-HARD (8.8X16X2-MM THK)	
	24	1	**9X-1481**	1	WASHER (13X25.4X1.6-MM THK)	
	25	1	**6K-8178**	1	CLIP	

C-CHANGE FROM PREVIOUS TYPE
I-REFER TO HYDRAULIC INFORMATION SYSTEM
M-METRIC PART
Y-SEPARATE ILLUSTRATION

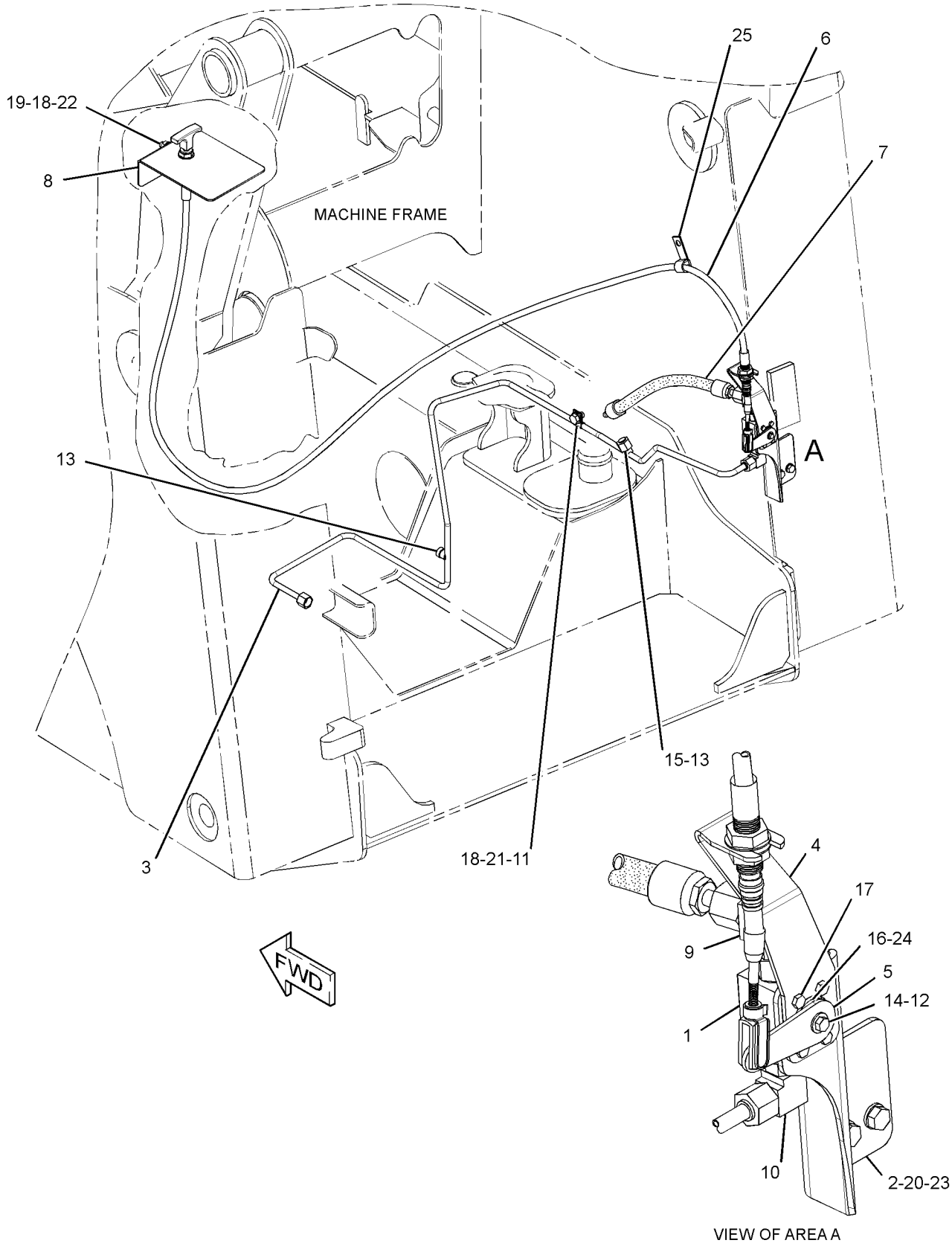

GRAPHIC #1 **<END>** g01368649

HYDRAULIC SYSTEM

218-6503 LINES GP-PILOT—WORK TOOL

S/N: SCH2475-UP

PART OF 278-1243 HYDRAULIC AR

SMCS-5057, 5059 **i02890428**

NOTE	REF NO	GRAPHIC REF	PART NUMBER	QTY	PART NAME 1 2 3 4 5 6 (PRODUCT LEVEL)	SEE PAGE
Y	1	1	*179-7001*	1	ADAPTER GP-OIL LINE	239
	2	1	**195-6768**	1	SCREEN (HYDRAULIC)	
	3	1	**195-6769**	1	WASHER (6.99X12.7X5.46-MM THK)	
	4	1	**218-5704**	1	HOSE AS	
	5	1	**218-5571**	2	HOSE AS	
	6	1	**218-5572**	2	HOSE AS	
I	7	1	**193-8313**	1	HOSE AS	
	8	1	**123-4750**	1	VALVE-CHECK	
	9	1	*148-8325*	9	CONNECTOR AS	
					(EACH INCLUDES)	
		1	**3J-1907**	1	SEAL-O-RING	
		1	**4J-5477**	1	SEAL-O-RING	
		1	**6V-8641**	1	CONNECTOR	
	10	1	*148-8435*	1	TEE AS	
		1	**3J-1907**	1	SEAL-O-RING	
		1	**6V-8397**	2	SEAL-O-RING	
		1	**6V-8781**	1	TEE-FACE SEAL	
	11	1	*150-4027*	1	TEE AS	
		1	**3E-2310**	1	TEE	
		1	**3J-1907**	1	SEAL-O-RING	
		1	**6V-8397**	1	SEAL-O-RING	
I	12	1	**190-7453**	1	HOSE AS	
	13	1	**6D-3479**	1	CLIP	
	14	1	**8T-4121**	1	WASHER-HARD (11X21X2.5-MM THK)	
M	15	1	**8T-4191**	1	BOLT (M10X1.5X16-MM)	

I-REFER TO HYDRAULIC INFORMATION SYSTEM
M-METRIC PART
Y-SEPARATE ILLUSTRATION

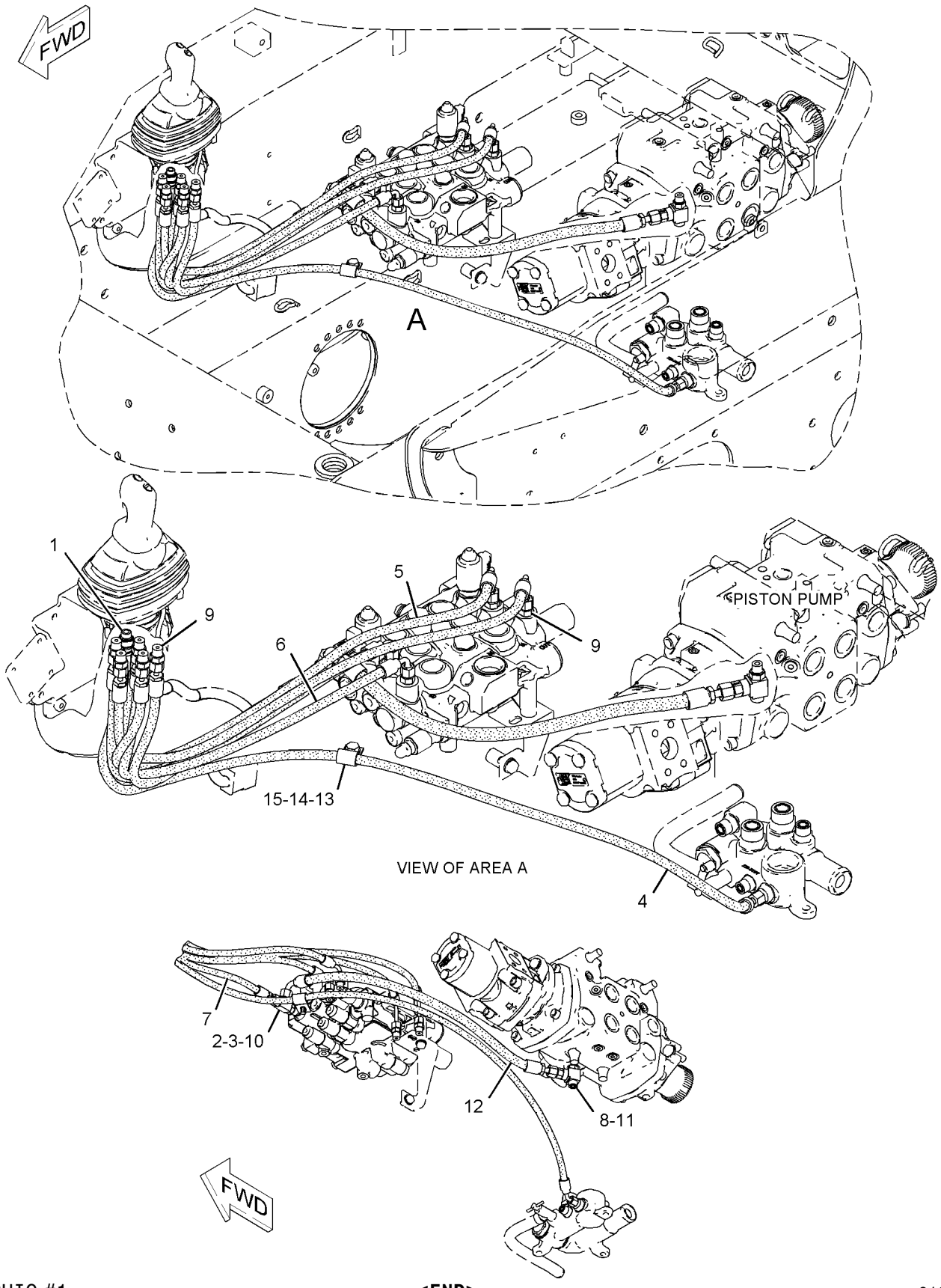

GRAPHIC #1 **<END>** g01037049

HYDRAULIC SYSTEM

234-0788 LINES GP-PILOT—DIRECTION, SPEED

S/N: SCH2475-UP

PART OF 278-1243 HYDRAULIC AR

SMCS-5057, 5059 **i02319861**

NOTE	REF NO	GRAPHIC REF	PART NUMBER	QTY	PART NAME 1 2 3 4 5 6 (PRODUCT LEVEL)	SEE PAGE
	1	1	**6V-0852**	1	CAP-DUST	
	2	1	**7K-1181**	1	STRAP-CABLE	
	3	1	*148-8423*	1	TEE AS	
		1	**3J-1907**	1	SEAL-O-RING	
		1	**4J-5477**	1	SEAL-O-RING	
		1	**8T-3311**	1	TEE	
	4	1	*164-5567*	1	COUPLER AS-QUICK	
		1	**3J-1907**	1	SEAL-O-RING	
		1	**6V-3965**	1	COUPLER-QUICK DISCONNECT	
	5	1	**218-5968**	1	BRACKET	
	6	1	**218-6864**	1	HOSE AS	
	7	1	**193-8392**	2	HOSE AS	
	8	1	**234-0786**	1	HOSE AS	
	9	1	*148-8316*	2	CONNECTOR AS	
					(EACH INCLUDES)	
		1	**3J-7354**	1	SEAL-O-RING	
		1	**4J-5477**	1	SEAL-O-RING	
		1	**6V-8647**	1	CONNECTOR	
	10	1	*148-8325*	5	CONNECTOR AS	
					(EACH INCLUDES)	
		1	**3J-1907**	1	SEAL-O-RING	
		1	**4J-5477**	1	SEAL-O-RING	
		1	**6V-8641**	1	CONNECTOR	
	11	1	*148-8369*	2	ELBOW AS	
					(EACH INCLUDES)	
		1	**3J-7354**	1	SEAL-O-RING	
		1	**4J-5477**	1	SEAL-O-RING	
		1	**6V-8628**	1	ELBOW	
	12	1	*150-4043*	1	CONNECTOR AS	
		1	**3J-1907**	1	SEAL-O-RING	
		1	**6V-8398**	1	SEAL-O-RING	
		1	**6V-9873**	1	CONNECTOR	
	13	1	**193-8393**	2	HOSE AS	

234-0788 **LINES GP-PILOT** *(contd.)* **i02319861**

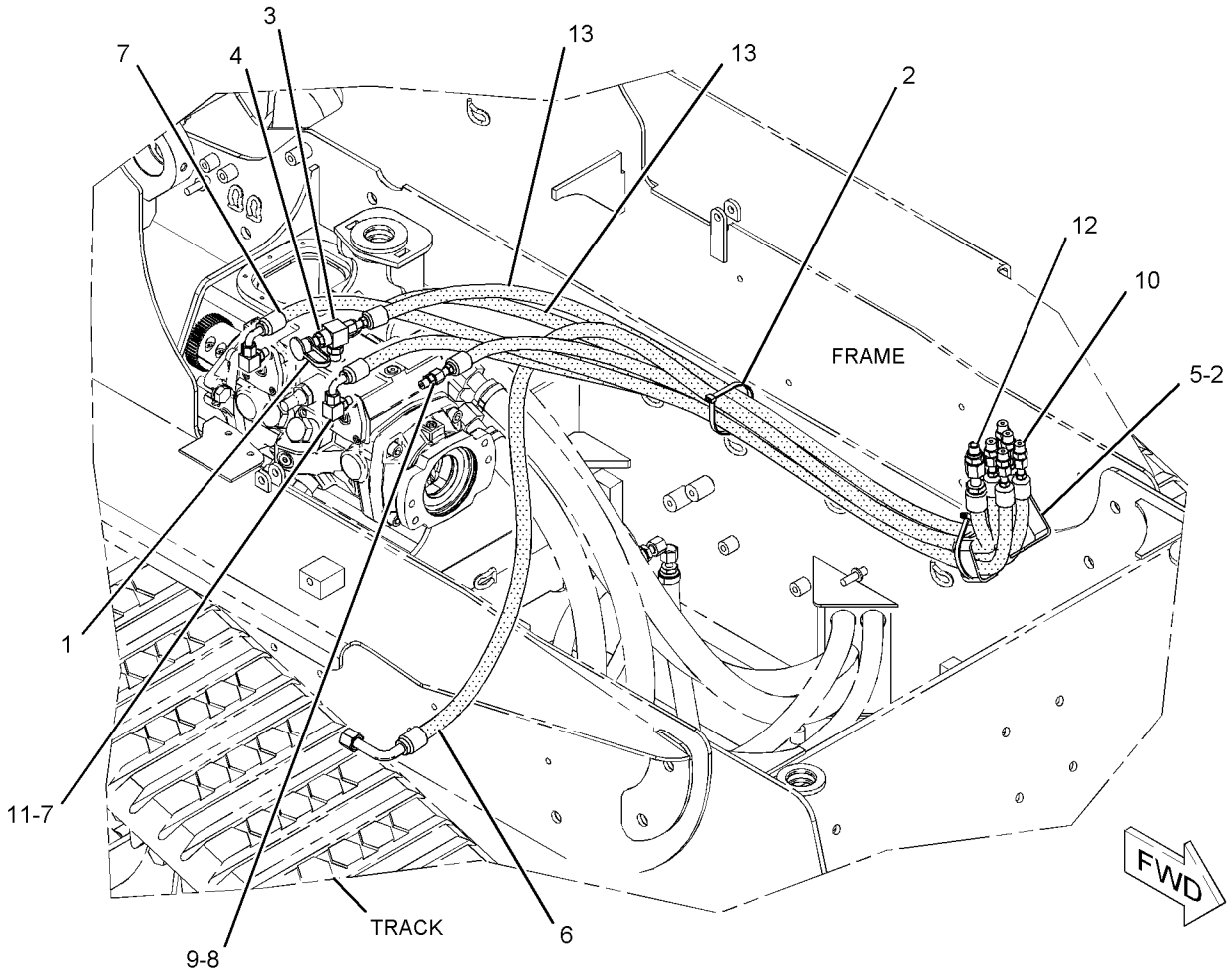

GRAPHIC #1 **<END>** g01093958

HYDRAULIC SYSTEM

218-5901 LINES GP-PUMP

S/N: SCH2475-UP

PART OF 295-7055, 295-7060, 295-7067, 295-7150, 295-7163 CONVERSION AR-MACHINE AN ATTACHMENT

SMCS-5057 **i02474808**

NOTE	REF NO	GRAPHIC REF	PART NUMBER	QTY	PART NAME 1 2 3 4 5 6 (PRODUCT LEVEL)	SEE PAGE
	1	1	**2S-3440**	2	CLAMP-HOSE	
	2	1	**6V-0852**	1	CAP-DUST	
	3	1	**9U-6994**	1	FITTING GP	
		1	**7M-8485**	1	SEAL-O-RING	
	4	1	**9U-6995**	1	FITTING GP-HYDRAULIC	
		1	**2S-4078**		SEAL-O-RING	
	5	1	**159-5740**	1	HOSE	
	6	1	*164-5567*	1	COUPLER AS-QUICK	
		1	**3J-1907**	1	SEAL-O-RING	
		1	**6V-3965**	1	COUPLER-QUICK DISCONNECT	
	7	1	**283-9478**	1	HOSE	
	8	1	**193-8308**	1	ADAPTER	
I	9	1	**193-8321**	1	HOSE AS	
	10	1	**218-5637**	1	HOSE	
	11	1	**218-6137**	1	TUBE	
	12	1	**218-6593**	1	HOSE	
	13	1	*148-8315*	1	CONNECTOR AS	
		1	**2M-9780**	1	SEAL-O-RING	
		1	**6V-8642**	1	CONNECTOR	
		1	**7J-9108**	1	SEAL-O-RING	
	14	1	*148-8360*	1	ELBOW AS	
		1	**6V-9182**	1	ELBOW	
		1	**6V-9746**	1	SEAL-O-RING	
		1	**7M-8485**	1	SEAL-O-RING	
	15	1	**1P-4578**	2	FLANGE-HALF	
	16	1	**4J-0522**	1	SEAL-O-RING	
	17	1	**4J-5267**	1	SEAL-O-RING	
	18	1	**180-3007**	3	CLAMP-HOSE	
	19	1	**5P-2230**	3	CLAMP-HOSE	
	20	1	**8C-3205**	2	FLANGE-HALF	
	21	1	**8T-4121**	8	WASHER-HARD (11X21X2.5-MM THK)	
M	22	1	**8T-4196**	8	BOLT (M10X1.5X35-MM)	

I-REFER TO HYDRAULIC INFORMATION SYSTEM
M-METRIC PART

218-5901 **LINES GP-PUMP** ***(contd.)*** **i02474808**

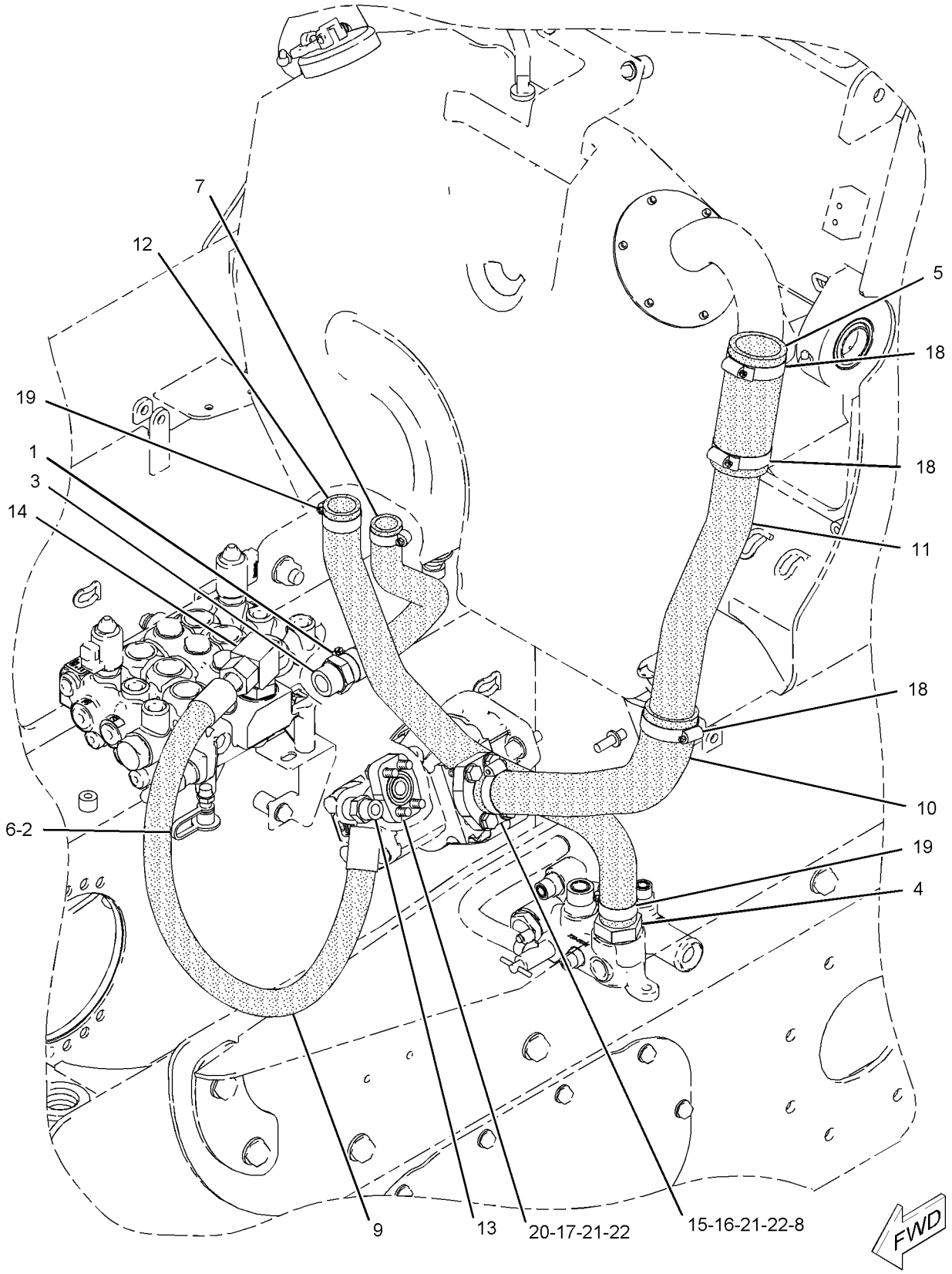

GRAPHIC #1 **<END>** g01036317

HYDRAULIC SYSTEM

218-5708 LINES GP-TILT CYLINDER

S/N: SCH2475-UP
PART OF 218-5709 HYDRAULIC AR
FOR USE WITH WORK TOOL POSITIONER
AN ATTACHMENT

SMCS-5057, 5104 **i02710129**

NOTE	REF NO	GRAPHIC REF	PART NUMBER	QTY	PART NAME 1 2 3 4 5 6 (PRODUCT LEVEL)	SEE PAGE
I	1	1	**142-9234**	4	HOSE AS	
	2	1	**193-0474**	1	PLATE	
CI	3	1	**290-8481**	2	HOSE AS	
C	4	1	**291-0513**	1	TUBE AS	
C	5	1	**291-0514**	1	TUBE AS	
	6	1	**215-3935**	3	CLIP	
	7	1	**252-0331**	1	TUBE AS	
	8	1	**252-0332**	1	TUBE AS	
	9	1	**219-4377**	1	PLATE	
CI	10	1	**291-0507**	1	HOSE AS	
M	11	1	**096-5866**	2	BOLT (M8X1.25X75-MM)	
	12	1	*148-8315*	2	CONNECTOR AS	
					(EACH INCLUDES)	
		1	**2M-9780**	1	SEAL-O-RING	
		1	**6V-8642**	1	CONNECTOR	
		1	**7J-9108**	1	SEAL-O-RING	
	13	1	*148-8390*	2	ELBOW AS	
					(EACH INCLUDES)	
		1	**2M-9780**	1	SEAL-O-RING	
		1	**6V-8626**	1	ELBOW	
		1	**7J-9108**	1	SEAL-O-RING	
	14	1	**5P-7464**	4	CLIP (SLOT)	
	15	1	**5P-7465**	4	CLIP (TAB)	
	16	1	**6V-7359**	4	GROMMET	
	17	1	**6V-8398**	8	SEAL-O-RING	
	18	1	**7J-9108**	6	SEAL-O-RING	
	19	1	**8T-4121**	2	WASHER-HARD (11X21X2.5-MM THK)	
M	20	1	**8T-4136**	2	BOLT (M10X1.5X25-MM)	
M	21	1	**8T-4139**	2	BOLT (M12X1.75X30-MM)	
M	22	1	**8T-4194**	2	BOLT (M12X1.75X50-MM)	
CI	23	1	**291-0506**	1	HOSE AS	
	24	1	**8T-4223**	6	WASHER-HARD (13.5X25.5X3-MM THK)	
C	25	1	**8T-4224**	3	WASHER-HARD (8.8X16X2-MM THK)	
M	26	1	**8T-4244**	2	NUT (M12X1.75-THD)	
M	27	1	**8T-6912**	1	BOLT (M8X1.25X50-MM)	
C	28	1	**9R-1005**	2	CLIP (SLOT)	
C	29	1	**9R-7802**	2	CLIP (SLOT)	
C	30	1	**9R-7803**	2	CLIP (TAB)	

C-CHANGE FROM PREVIOUS TYPE
I-REFER TO HYDRAULIC INFORMATION SYSTEM
M-METRIC PART

218-5708 **LINES GP-TILT CYLINDER** *(contd.)* **i02710129**

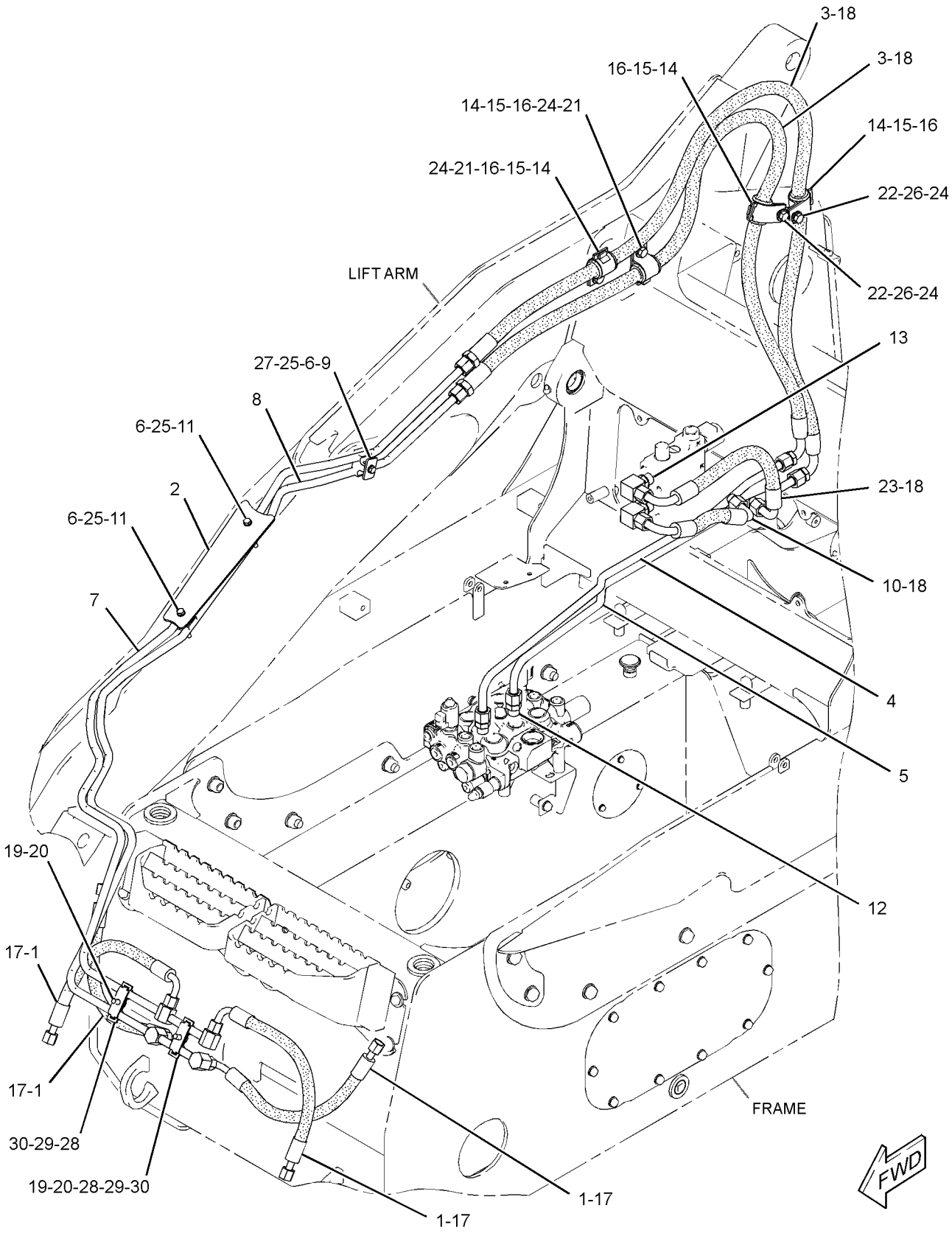

GRAPHIC #1 **<END>** g01360523

HYDRAULIC SYSTEM

218-6607 LINES GP-TILT CYLINDER

S/N: SCH2475-UP
PART OF 218-6640 HYDRAULIC AR
AN ATTACHMENT

SMCS-5057, 5104 **i02887181**

NOTE	REF NO	GRAPHIC REF	PART NUMBER	QTY	PART NAME 1 2 3 4 5 6 (PRODUCT LEVEL)	SEE PAGE
I	1	1	**142-9234**	4	HOSE AS	
	3	1	**193-0474**	1	PLATE	
CI	4	1	**290-8481**	2	HOSE AS	
	5	1	**215-3935**	3	CLIP	
	6	1	**219-4377**	1	PLATE	
	7	1	**252-0331**	1	TUBE AS	
	8	1	**252-0332**	1	TUBE AS	
C	9	1	**290-3295**	1	TUBE AS	
C	10	1	**290-3300**	1	TUBE AS	
M	11	1	**096-5866**	2	BOLT (M8X1.25X75-MM)	
	13	1	*148-8315*	2	CONNECTOR AS	
					(EACH INCLUDES)	
		1	**2M-9780**	1	SEAL-O-RING	
		1	**6V-8642**	1	CONNECTOR	
		1	**7J-9108**	1	SEAL-O-RING	
	15	1	**5P-7464**	4	CLIP (SLOT)	
	16	1	**5P-7465**	4	CLIP (TAB)	
	17	1	**6V-7359**	4	GROMMET	
	18	1	**6V-8398**	8	SEAL-O-RING	
	19	1	**7J-9108**	4	SEAL-O-RING	
	20	1	**8T-4121**	2	WASHER-HARD (11X21X2.5-MM THK)	
M	21	1	**8T-4136**	2	BOLT (M10X1.5X25-MM)	
M	22	1	**8T-4139**	2	BOLT (M12X1.75X30-MM)	
M	23	1	**8T-4194**	2	BOLT (M12X1.75X50-MM)	
	24	1	**8T-4223**	6	WASHER-HARD (13.5X25.5X3-MM THK)	
C	25	1	**8T-4224**	3	WASHER-HARD (8.8X16X2-MM THK)	
M	26	1	**8T-4244**	2	NUT (M12X1.75-THD)	
M	27	1	**8T-6912**	1	BOLT (M8X1.25X50-MM)	
C	28	1	**9R-1005**	2	CLIP (SLOT)	
C	29	1	**9R-7802**	2	CLIP (SLOT)	
C	30	1	**9R-7803**	2	CLIP (TAB)	

C-CHANGE FROM PREVIOUS TYPE
I-REFER TO HYDRAULIC INFORMATION SYSTEM
M-METRIC PART

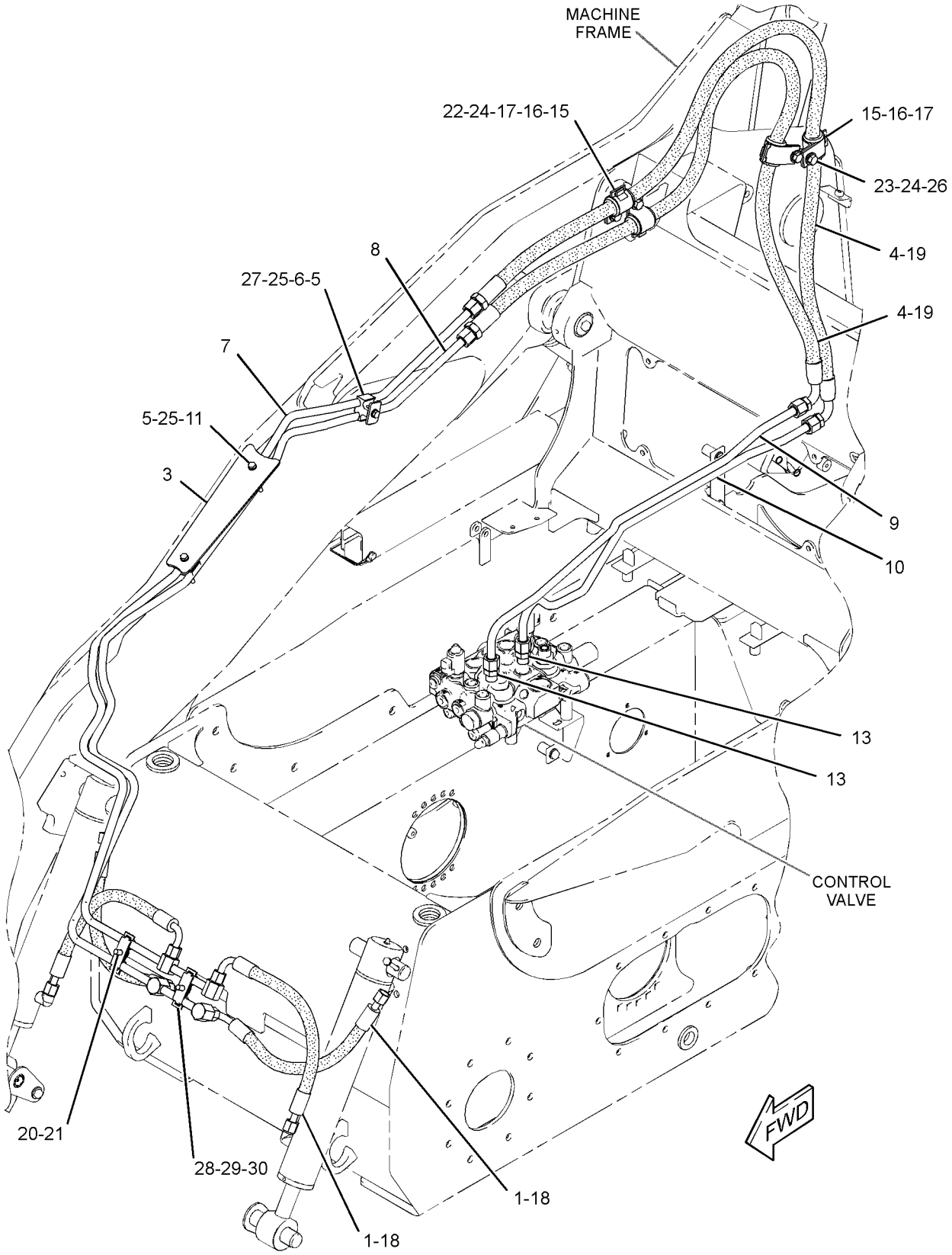

GRAPHIC #1 **<END>** g01439401

HYDRAULIC SYSTEM

218-6311 LINES GP-WORK TOOL

S/N: SCH2475-UP

PART OF 295-7055, 295-7060, 295-7067, 295-7150, 295-7163 CONVERSION AR-MACHINE AN ATTACHMENT

SMCS-5057 **i02514015**

NOTE	REF NO	GRAPHIC REF	PART NUMBER	QTY	PART NAME 1 2 3 4 5 6 (PRODUCT LEVEL)	SEE PAGE
M	1	1	**101-3129**	2	STUD (M10X1.5-THD)	
	2	1	*154-5232*	1	ADAPTER AS	
		1	**112-9783**	1	ADAPTER	
		1	**3K-0360**	1	SEAL-O-RING	
		1	**4J-5477**	1	SEAL-O-RING	
	3	1	**193-0474**	1	PLATE	
	4	1	**193-8334**	1	FITTING AS (QUICK DISCONNECT, MALE)	
	5	1	**193-8335**	1	FITTING AS (QUICK DISCONNECT, FEMALE)	
	6	1	**215-3935**	3	CLIP	
C	7	1	**285-9286**	3	BLOCK	
	8	1	**218-5764**	3	PLATE	
	9	1	**218-6204**	1	BRACKET	
	10	1	**218-6313**	1	TUBE AS	
	11	1	**218-6314**	1	TUBE AS	
I	12	1	**212-4091**	2	HOSE AS	
	13	1	**218-6316**	1	TUBE AS	
	14	1	**218-6317**	1	TUBE AS	
	15	1	**219-4377**	1	PLATE	
M	16	1	**096-5866**	2	BOLT (M8X1.25X75-MM)	
	17	1	*148-8341*	2	CONNECTOR AS	
					(EACH INCLUDES)	
		1	**6V-8713**	1	CONNECTOR	
		1	**3D-2824**	1	SEAL-O-RING	
		1	**7J-9108**	1	SEAL-O-RING	
	18	1	**5P-7464**	4	CLIP (SLOT)	
	19	1	**5P-7465**	4	CLIP (TAB)	
	20	1	**6V-7359**	4	GROMMET	
	21	1	**6V-9170**	2	NUT-BULKHEAD (1-14-THD)	
	22	1	**7J-9108**	6	SEAL-O-RING	
	23	1	**8T-4121**	9	WASHER-HARD (11X21X2.5-MM THK)	
M	24	1	**8T-4133**	1	NUT (M10X1.5-THD)	
M	25	1	**8T-4136**	2	BOLT (M10X1.5X25-MM)	
M	26	1	**8T-4139**	2	BOLT (M12X1.75X30-MM)	
M	27	1	**8T-4178**	2	BOLT (M10X1.5X90-MM)	
M	28	1	**8T-4194**	2	BOLT (M12X1.75X50-MM)	
	29	1	**8T-4223**	6	WASHER-HARD (13.5X25.5X3-MM THK)	
	30	1	**8T-4224**	5	WASHER-HARD (8.8X16X2-MM THK)	
M	31	1	**8T-4244**	2	NUT (M12X1.75-THD)	
M	32	1	**099-3649**	1	BOLT (M8X1.25X40-MM)	
M	33	1	**8T-6912**	1	BOLT (M8X1.25X50-MM)	
	34	1	**9R-1005**	1	CLIP (SLOT)	
	35	1	**9R-7802**	1	CLIP (SLOT)	
	36	1	**9R-7803**	1	CLIP (TAB)	
M	37	1	**8T-4195**	2	BOLT (M10X1.5X30-MM)	
	38	1	**7W-9094**	1	SPACER (10.5X20X9-MM THK)	
M	39	1	**5C-7261**	1	NUT (M8X1.25-THD)	

C-CHANGE FROM PREVIOUS TYPE
I-REFER TO HYDRAULIC INFORMATION SYSTEM
M-METRIC PART

218-6311 **LINES GP-WORK TOOL** *(contd.)* **i02514015**

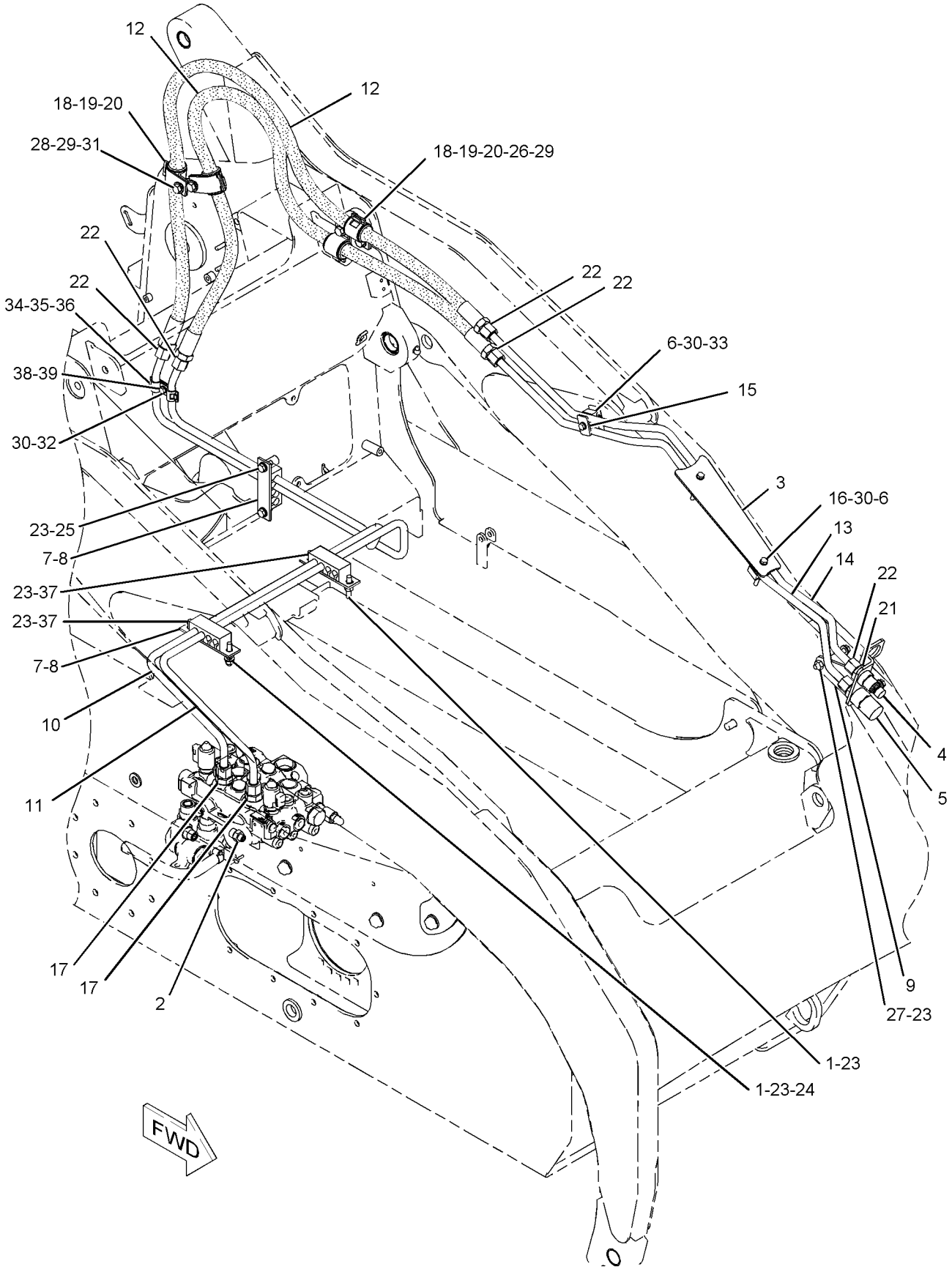

GRAPHIC #1 **<END>** g01145570

HYDRAULIC SYSTEM

218-6536 MANIFOLD & LINES GP-CONTROL—PARKING BRAKE

S/N: SCH2475-2503

PART OF 278-1243 HYDRAULIC AR

SMCS-1435, 5057, 5264 **i02595722**

NOTE	REF NO	GRAPHIC REF	PART NUMBER	QTY	PART NAME 1 2 3 4 5 6 (PRODUCT LEVEL)	SEE PAGE
I	1	1	**100-7530**	1	HOSE AS	
CY	2	1	**233-7131**	1	MANIFOLD & SOLENOID GP-CONTROL (PARKING BRAKE)	308
I	3	1	**218-5580**	1	HOSE AS	
I	4	1	**218-6231**	1	HOSE AS	
	5	1	**233-5847**	1	TUBE AS	
	6	1	*148-8336*	3	CONNECTOR AS	
					(EACH INCLUDES)	
		1	**3J-1907**	1	SEAL-O-RING	
		1	**6V-8397**	1	SEAL-O-RING	
		1	**6V-8636**	1	CONNECTOR	
	7	1	*148-8435*	1	TEE AS	
		1	**3J-1907**	1	SEAL-O-RING	
		1	**6V-8397**	2	SEAL-O-RING	
		1	**6V-8781**	1	TEE-FACE SEAL	
	8	1	*161-8560*	1	CONNECTOR AS	
		1	**3J-1907**	1	SEAL-O-RING	
		1	**7J-9108**	1	SEAL-O-RING	
		1	**8C-6758**	1	CONNECTOR	
	9	1	**6V-8398**	2	SEAL-O-RING	
	10	1	**8T-4224**	2	WASHER-HARD (8.8X16X2-MM THK)	
M	11	1	**8T-6869**	2	BOLT (M8X1.25X60-MM)	

C-CHANGE FROM PREVIOUS TYPE
I-REFER TO HYDRAULIC INFORMATION SYSTEM
M-METRIC PART
Y-SEPARATE ILLUSTRATION

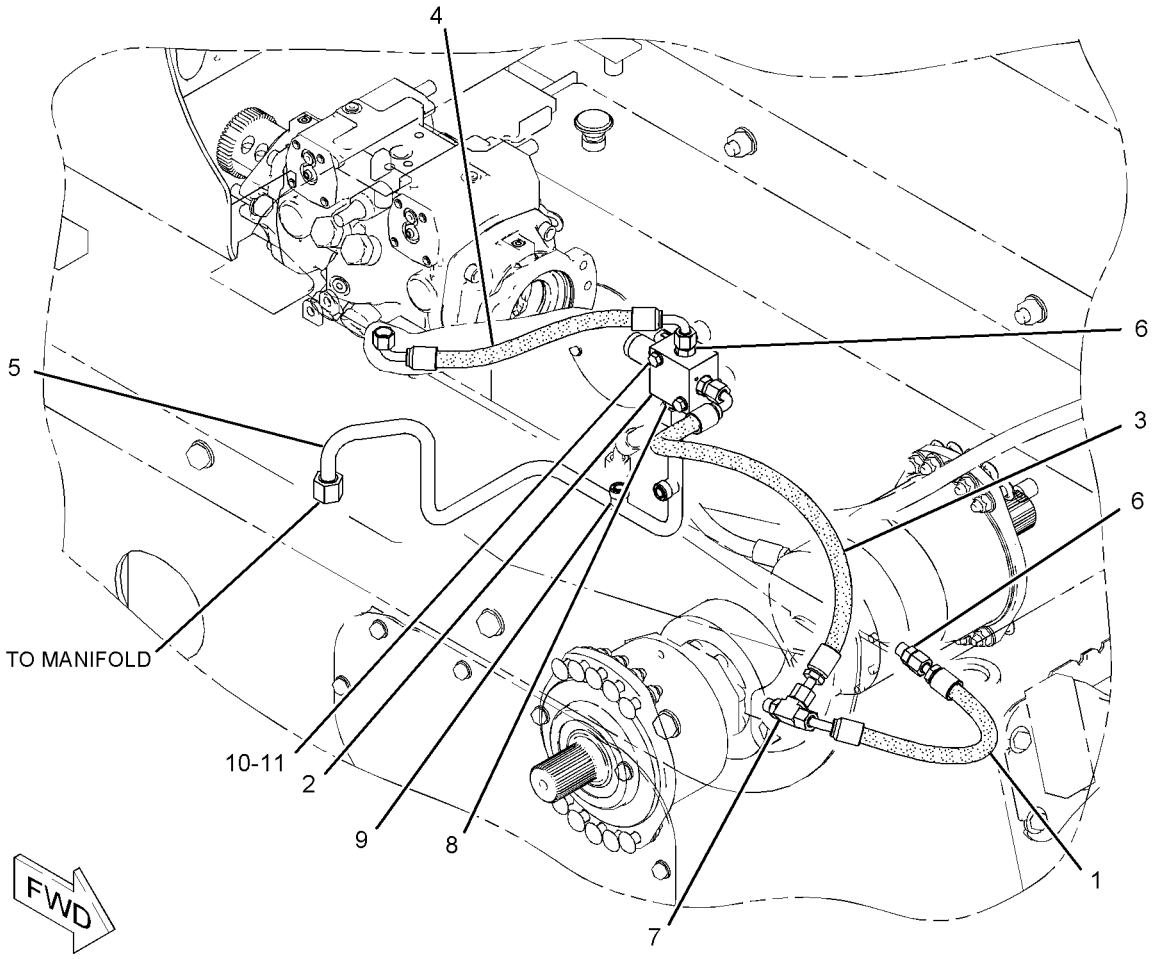

GRAPHIC #1 **<END>** g01131274

HYDRAULIC SYSTEM

218-6536 MANIFOLD & LINES GP-CONTROL—PARKING BRAKE

S/N: SCH2504-UP

PART OF 278-1243 HYDRAULIC AR

SMCS-1435, 5057, 5264 **i02861456**

NOTE	REF NO	GRAPHIC REF	PART NUMBER	QTY	PART NAME 1 2 3 4 5 6 (PRODUCT LEVEL)	SEE PAGE
I	1	1	**100-7530**	1	HOSE AS	
CY	2	1	**248-1268**	1	MANIFOLD & SOLENOID GP-CONTROL (PARKING BRAKE)	309
I	3	1	**218-5580**	1	HOSE AS	
I	4	1	**218-6231**	1	HOSE AS	
	5	1	**233-5847**	1	TUBE AS	
	6	1	*148-8336*	3	CONNECTOR AS	
					(EACH INCLUDES)	
		1	**3J-1907**	1	SEAL-O-RING	
		1	**6V-8397**	1	SEAL-O-RING	
		1	**6V-8636**	1	CONNECTOR	
	7	1	*148-8435*	1	TEE AS	
		1	**3J-1907**	1	SEAL-O-RING	
		1	**6V-8397**	2	SEAL-O-RING	
		1	**6V-8781**	1	TEE-FACE SEAL	
	8	1	*161-8560*	1	CONNECTOR AS	
		1	**3J-1907**	1	SEAL-O-RING	
		1	**7J-9108**	1	SEAL-O-RING	
		1	**8C-6758**	1	CONNECTOR	
	9	1	**6V-8398**	2	SEAL-O-RING	
	10	1	**8T-4224**	2	WASHER-HARD (8.8X16X2-MM THK)	
M	11	1	**8T-6869**	2	BOLT (M8X1.25X60-MM)	

C-CHANGE FROM PREVIOUS TYPE
I-REFER TO HYDRAULIC INFORMATION SYSTEM
M-METRIC PART
Y-SEPARATE ILLUSTRATION

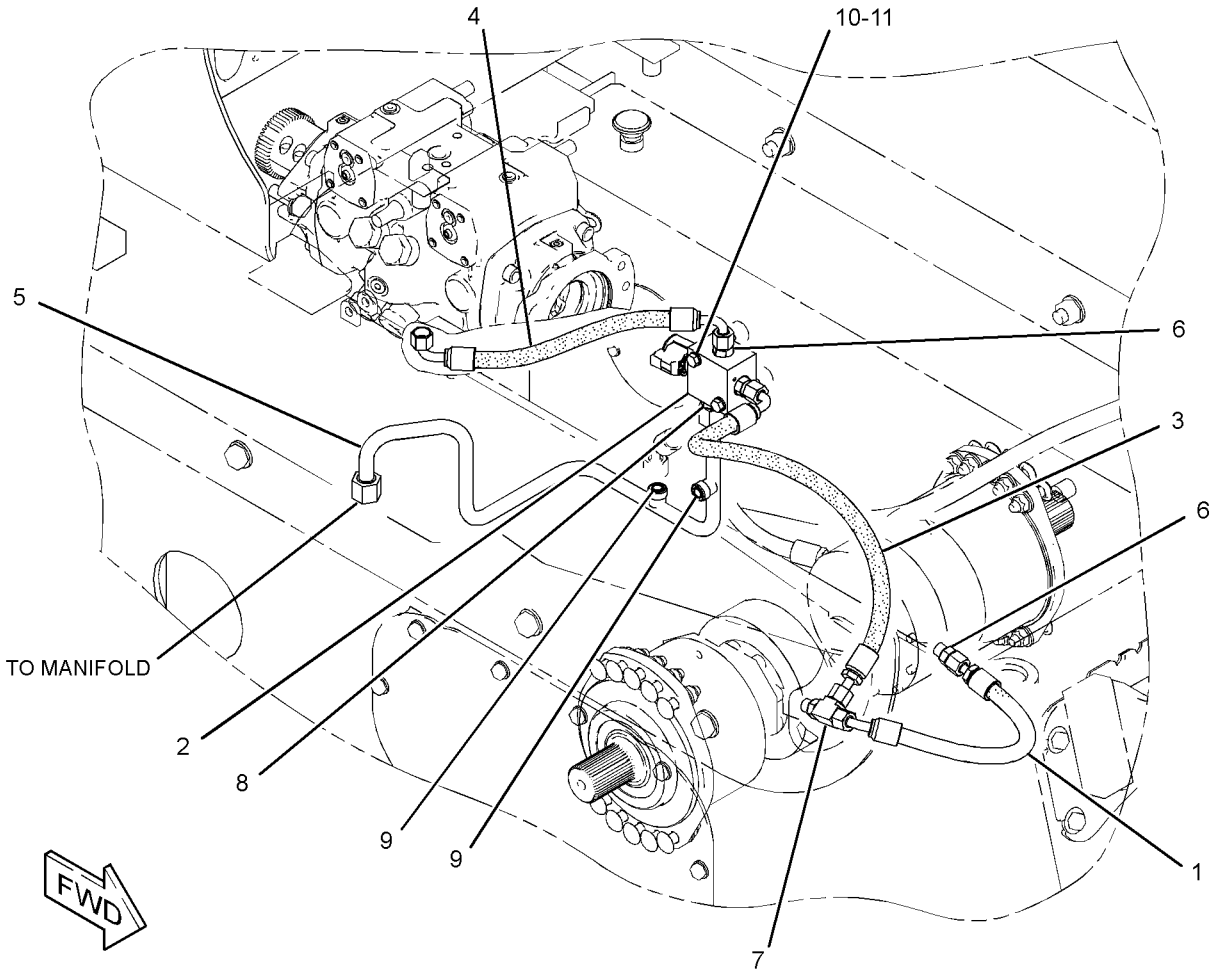

GRAPHIC #1 **<END>** g01435496

191-9652 MANIFOLD & MTG GP-CONTROL

S/N: SCH2475-UP
WORK TOOL POSITIONER
PART OF 218-5709 HYDRAULIC AR
AN ATTACHMENT

SMCS-5264 **i01999919**

NOTE	REF NO	GRAPHIC REF	PART NUMBER	QTY	PART NAME 1 2 3 4 5 6 (PRODUCT LEVEL)	SEE PAGE
Y	1	1	**223-8408**	1	MANIFOLD & SOLENOID GP-CONTROL	307
M	2	1	**7X-2535**	2	BOLT (M6X1X60-MM)	
	3	1	**8T-4205**	2	WASHER-HARD (7.2X14.5X2-MM THK)	

M-METRIC PART
Y-SEPARATE ILLUSTRATION

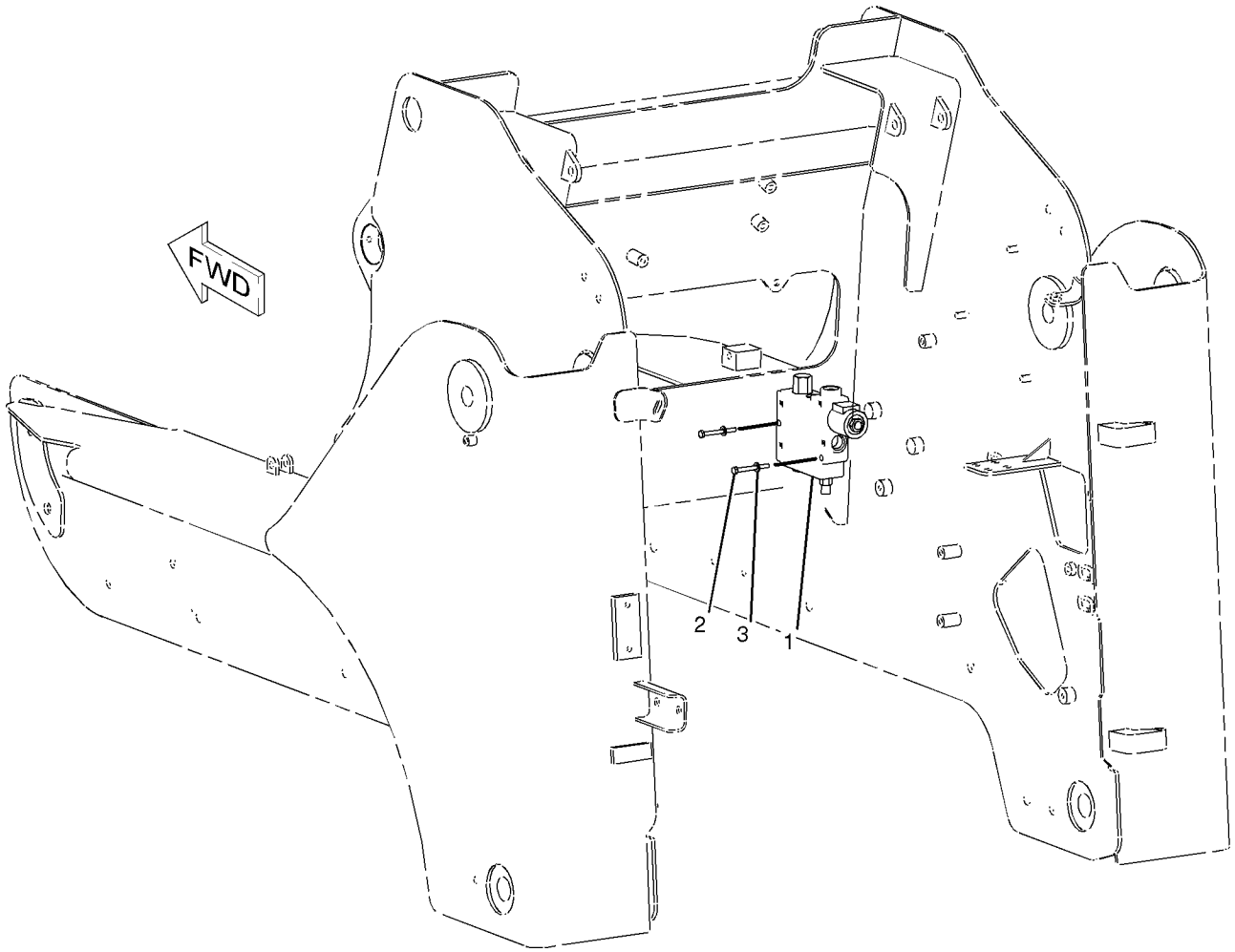

GRAPHIC #1 **<END>** g01034850

223-8408 MANIFOLD & SOLENOID GP-CONTROL

S/N: SCH2475-UP

PART OF 191-9652 MANIFOLD & MTG GP-CONTROL

AN ATTACHMENT

SMCS-5264, 5479 **i02359411**

NOTE	REF NO	GRAPHIC REF	PART NUMBER	QTY	PART NAME 1 2 3 4 5 6 (PRODUCT LEVEL)	SEE PAGE
	1	1	**102-8804**	1	KIT-RECEPTACLE (4-PIN)	
					(INCLUDES RECEPTACLE AS & WEDGE)	
	2	1	**3E-3377**	1	WEDGE-RECEPTACLE LOCK (4-PIN)	
	3	1	**186-3735**	2	PIN-CONNECTOR (16-GA TO 18-GA)	
	4	1	**9G-3695**	2	PLUG	
J	5	1	**218-6858**	1	CARTRIDGE AS-VALVE	
J	6	1	**218-6857**	1	COIL AS	
					AVAILABLE REPAIR KIT(S):	
			218-6856	1	KIT-SEAL	
					(INCLUDES O-RINGS, COVER & BACK-UP RING)	
J			**155-1279**	1	KIT-SEAL	

J-KIT MARKED J SERVICES PARTS MARKED J

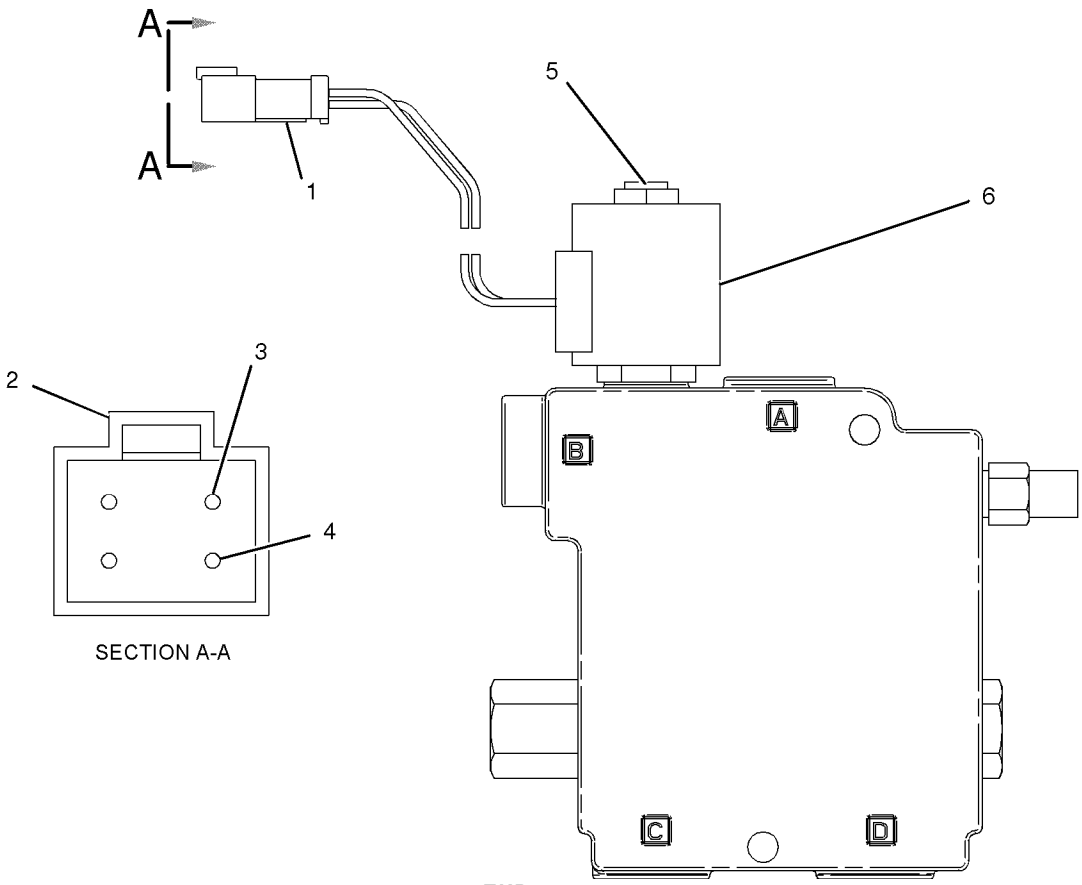

GRAPHIC #1 **<END>** g01014991

HYDRAULIC SYSTEM

233-7131 MANIFOLD & SOLENOID GP-CONTROL–PARKING BRAKE

S/N: SCH2475-2503

PART OF 218-6536 MANIFOLD & LINES GP-CONTROL

SMCS-5264, 5479 **i02837179**

NOTE	REF NO	GRAPHIC REF	PART NUMBER	QTY	PART NAME 1 2 3 4 5 6 (PRODUCT LEVEL)	SEE PAGE
Y	1	1	**259-8194**	1	VALVE GP-SOLENOID	347
	2	1	**259-8195**	1	MANIFOLD	

Y-SEPARATE ILLUSTRATION

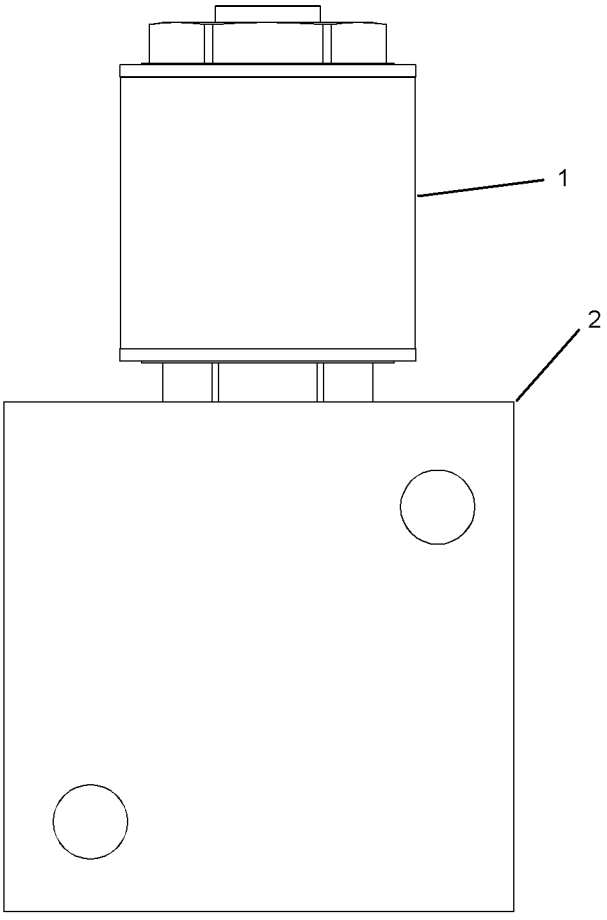

RIGHT SIDE VIEW

GRAPHIC #1

<END>

g01416438

248-1268 MANIFOLD & SOLENOID GP-CONTROL—PARKING BRAKE

S/N: SCH2475-UP

PART OF 218-6536 MANIFOLD & LINES GP-CONTROL

SMCS-5264, 5479 **i02200066**

NOTE	REF NO	GRAPHIC REF	PART NUMBER	QTY	PART NAME 1 2 3 4 5 6 (PRODUCT LEVEL)	SEE PAGE
Y	1	1	**259-8194**	1	VALVE GP-SOLENOID	347

Y-SEPARATE ILLUSTRATION

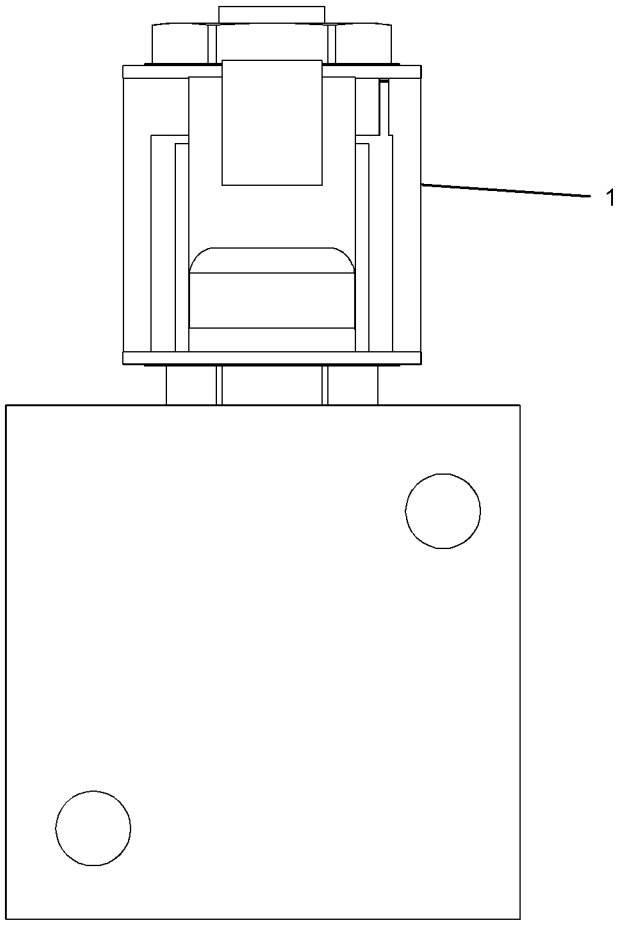

RIGHT SIDE VIEW

GRAPHIC #1 **<END>** g01132704

233-7128 MANIFOLD GP-CONTROL–QUICK COUPLER

S/N: SCH2475-UP

PART OF 218-5957 KIT-QUICK COUPLER CONVERSION, 218-6263 VALVE & LINES GP-COUPLER AN ATTACHMENT

SMCS-5117, 5264, 5479 **i02216438**

NOTE	REF NO	GRAPHIC REF	PART NUMBER	QTY	PART NAME 1 2 3 4 5 6 (PRODUCT LEVEL)	SEE PAGE
	1	1	**245-1911**	1	WIRE AS	
J	2	1	**249-7160**	1	VALVE GP-SOLENOID (QUICK COUPLER)	
		1	**238-4626**	2	COIL AS	
					AVAILABLE REPAIR KIT(S):	
J			**106-3108**	1	KIT-SEAL	

J-KIT MARKED J IS AVAILABLE FOR PART MARKED J

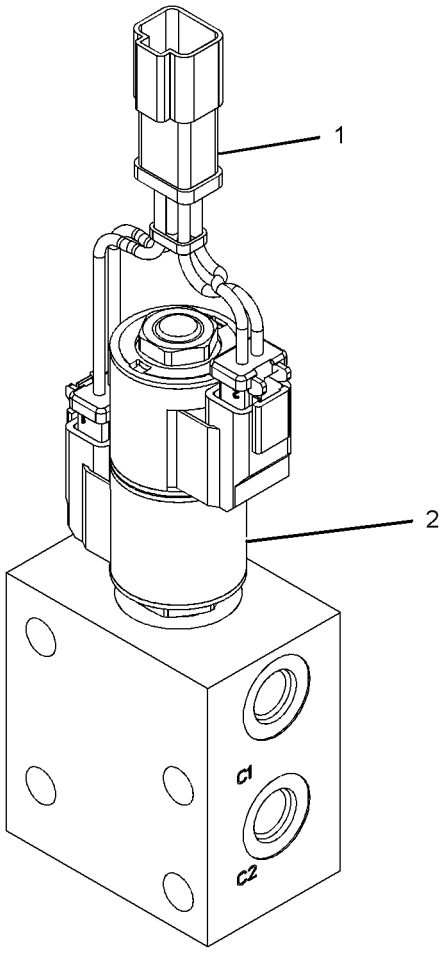

GRAPHIC #1 **<END>** g01132286

218-6058 MOTOR & MTG GP-HYDRAULIC FAN

S/N: SCH2475-2484
PART OF 295-7055 CONVERSION AR-MACHINE
AN ATTACHMENT

SMCS-1386 **i01964111**

NOTE	REF NO	GRAPHIC REF	PART NUMBER	QTY	PART NAME 1 2 3 4 5 6 (PRODUCT LEVEL)	SEE PAGE
Y	1	1	**230-3727**	1	MOTOR GP-GEAR (HYDRAULIC FAN)	315
	2	1	**8T-4121**	2	WASHER-HARD (11X21X2.5-MM THK)	
M	3	1	**8T-4196**	2	BOLT (M10X1.5X35-MM)	
	4	1	**8T-4224**	1	WASHER-HARD (8.8X16X2-MM THK)	
M	5	1	**8T-7547**	1	BOLT (M8X1.25X30-MM)	

M-METRIC PART
Y-SEPARATE ILLUSTRATION

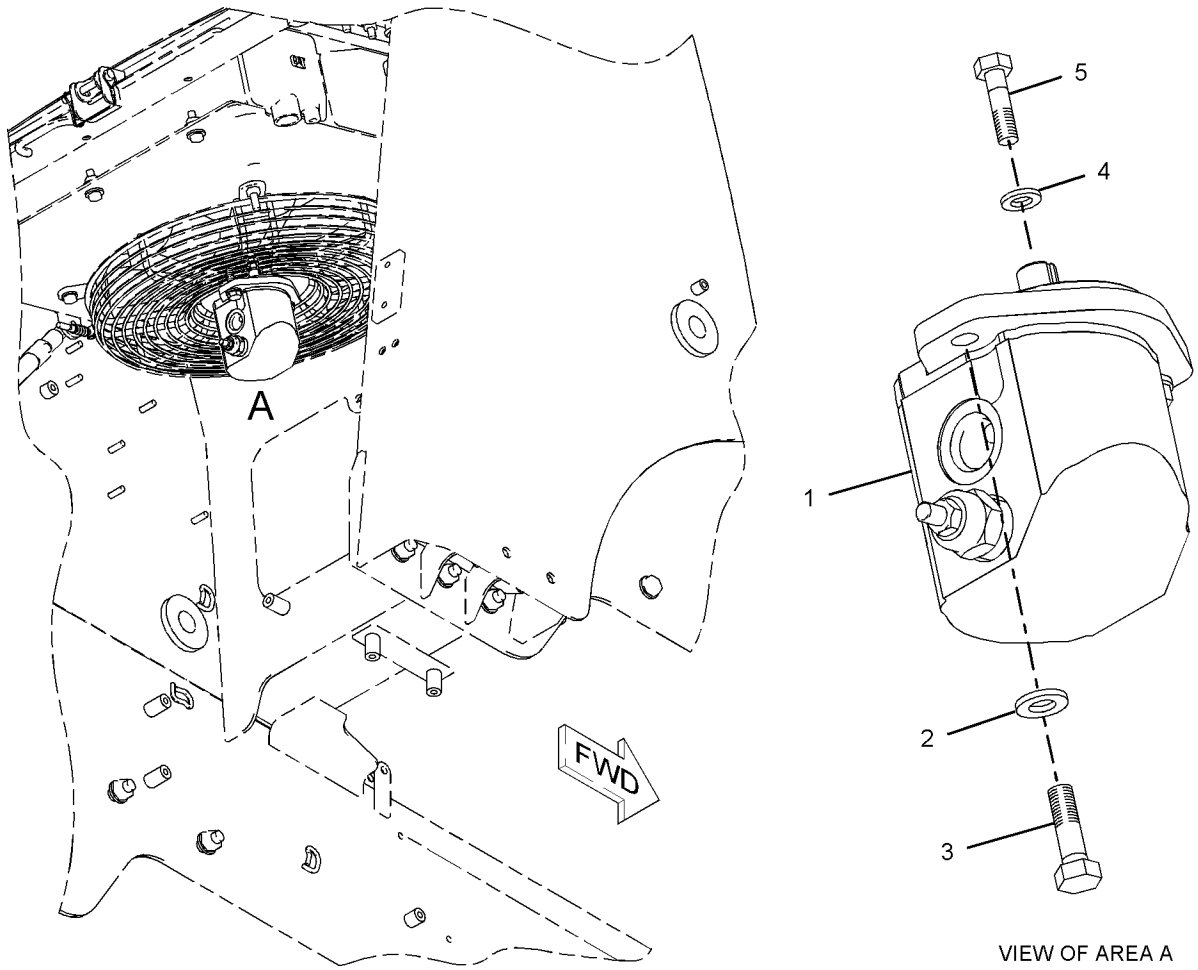

VIEW OF AREA A

GRAPHIC #1 **<END>** g01023064

218-6058 MOTOR & MTG GP-HYDRAULIC FAN

S/N: SCH2485-UP
PART OF 295-7055 CONVERSION AR-MACHINE
AN ATTACHMENT

SMCS-1386 **i02839810**

NOTE	REF NO	GRAPHIC REF	PART NUMBER	QTY	PART NAME 1 2 3 4 5 6 (PRODUCT LEVEL)	SEE PAGE
CY	1	1	**307-3036**	1	MOTOR GP-GEAR (HYDRAULIC FAN)	317
	2	1	**8T-4121**	2	WASHER-HARD (11X21X2.5-MM THK)	
M	3	1	**8T-4196**	2	BOLT (M10X1.5X35-MM)	
	4	1	**8T-4224**	1	WASHER-HARD (8.8X16X2-MM THK)	
M	5	1	**8T-7547**	1	BOLT (M8X1.25X30-MM)	

C-CHANGE FROM PREVIOUS TYPE
M-METRIC PART
Y-SEPARATE ILLUSTRATION

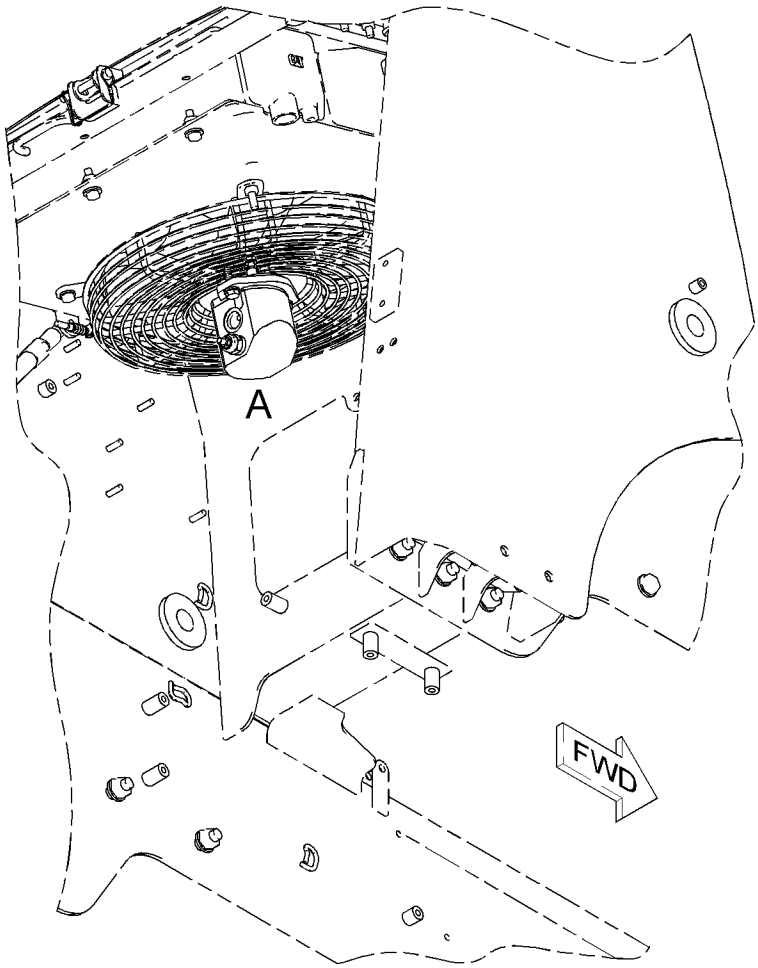

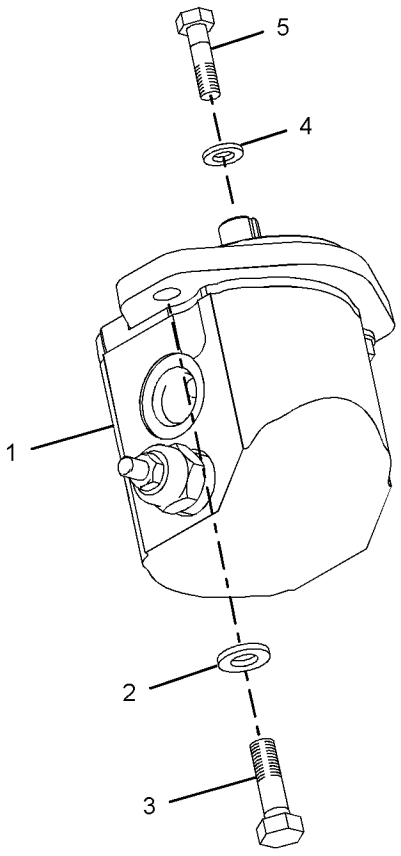

VIEW OF AREA A

GRAPHIC #1 **<END>** g01023064

261-6121 MOTOR & MTG GP-HYDRAULIC FAN

S/N: SCH2475-UP
STAGE II SOUND
PART OF 295-7060, 295-7067, 295-7150, 295-7163 CONVERSION AR-MACHINE
AN ATTACHMENT

SMCS-1386 **i02758768**

NOTE	REF NO	GRAPHIC REF	PART NUMBER	QTY	PART NAME 1 2 3 4 5 6 (PRODUCT LEVEL)	SEE PAGE
	1	1	**107-5630**	1	WIRE AS	
	2	1	**261-6727**	1	VALVE GP-SOLENOID	
		1	**261-6728**	1	COIL AS	
	3	1	*264-4297*	1	SENSOR GP-TEMPERATURE (HYDRAULIC OIL)	
		1	**137-6645**	1	PAD (CONNECTOR)	
Y	4	1	**307-3038**	1	MOTOR GP-GEAR (HYDRAULIC FAN)	318
	5	1	**8T-4121**	2	WASHER-HARD (11X21X2.5-MM THK)	
M	6	1	**8T-4196**	2	BOLT (M10X1.5X35-MM)	
	7	1	**8T-4224**	1	WASHER-HARD (8.8X16X2-MM THK)	
M	8	1	**8T-7547**	1	BOLT (M8X1.25X30-MM)	

M-METRIC PART
Y-SEPARATE ILLUSTRATION

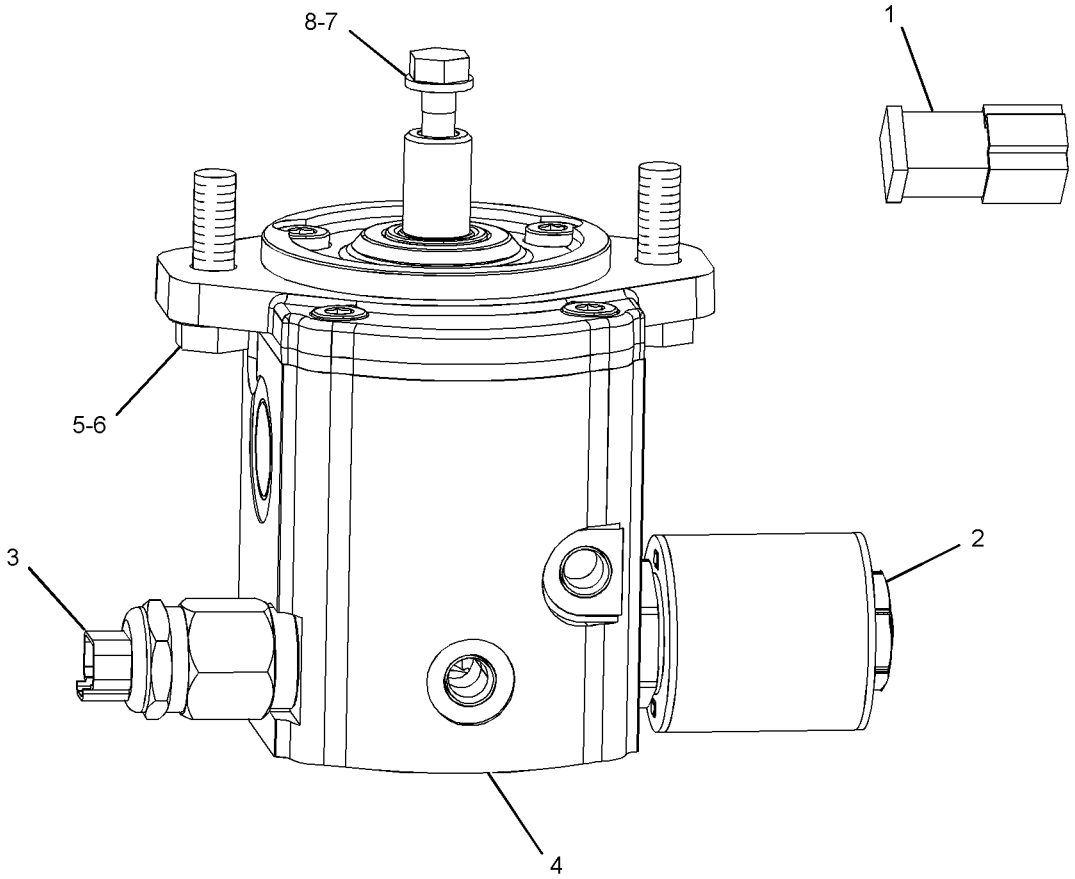

LEFT SIDE VIEW

GRAPHIC #1 **<END>** g01229655

218-6840 MOTOR GP-GEAR–A/C COMPRESSOR

S/N: SCH2475-UP

PART OF 218-6832 COMPRESSOR & MOTOR GP-REFRIG

AN ATTACHMENT

SMCS-1386, 5061 **i02881089**

NOTE	REF NO	GRAPHIC REF	PART NUMBER	QTY	PART NAME 1 2 3 4 5 6 (PRODUCT LEVEL)	SEE PAGE
	1	1	**230-3726**	1	SEAL-SHAFT	
Y	2	1	**231-6287**	1	VALVE GP-SOLENOID (A/C COMPRESSOR)	346
	3	1	**096-0194**	1	RING-RETAINING	
	4	1	**2M-9780**	1	SEAL-O-RING	
	5	1	**3D-2824**	1	SEAL-O-RING	
	6	1	**9S-8006**	1	PLUG-O-RING	

Y-SEPARATE ILLUSTRATION

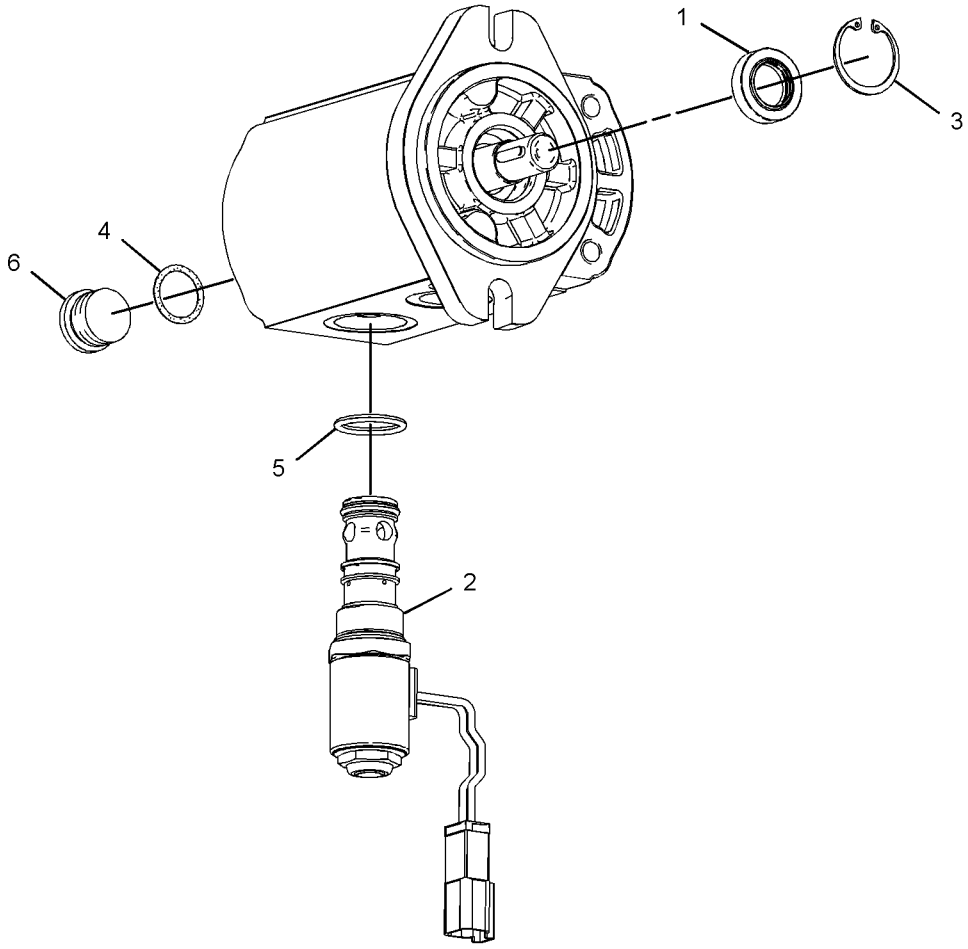

GRAPHIC #1 **<END>** g01437613

230-3727 MOTOR GP-GEAR–HYDRAULIC FAN

S/N: SCH2475-2484

PART OF 218-6058 MOTOR & MTG GP-HYDRAULIC FAN

AN ATTACHMENT

SMCS-1386, 5061 **i02633904**

NOTE	REF NO	GRAPHIC REF	PART NUMBER	QTY	PART NAME 1 2 3 4 5 6 (PRODUCT LEVEL)	SEE PAGE
	1	1	**228-9240**	1	VALVE GP-RELIEF (FAN SPEED)	
		1	**6F-6672**	1	SEAL-O-RING	
		1	**215-3277**	1	SEAL-O-RING	
					AVAILABLE REPAIR KIT(S):	
C			**278-8716**	1	KIT-SEAL (GEAR PUMP)	
					(INCLUDES SEALS, SNAP RING, SEAL BACK-UPS & AXIAL SEAL KIT)	

C-CHANGE FROM PREVIOUS TYPE

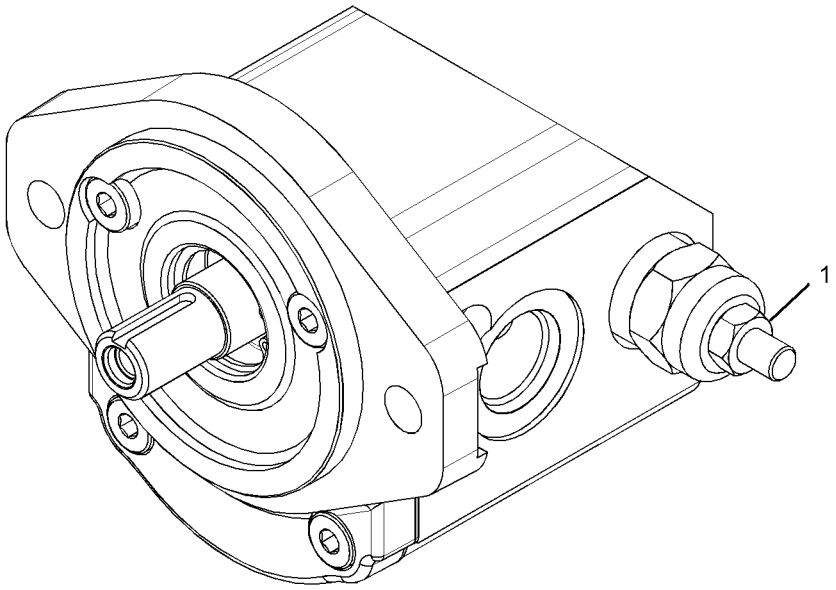

GRAPHIC #1 **<END>** g01320775

HYDRAULIC SYSTEM

289-6360 MOTOR GP-GEAR

S/N: SCH2475-UP

PART OF 233-5588, 233-5589 KIT-AIR COND & HEATER INSTL

AN ATTACHMENT

SMCS-1386, 5061 **i02876777**

NOTE	REF NO	GRAPHIC REF	PART NUMBER	QTY	PART NAME 1 2 3 4 5 6 (PRODUCT LEVEL)	SEE PAGE
M	1	1	**086-2369**	4	BOLT-SOCKET HEAD (M10X1.5X130-MM)	
	2	1	**8T-5095**	4	WASHER-PLATED (11X16X2-MM THK)	
	3	1	**2M-9780**	1	SEAL-O-RING	
	4	1	**9S-8006**	1	PLUG-O-RING	
					PARTS SHOWN IN GRAPHIC(S) WITHOUT A REFERENCE NUMBER ARE NOT SERVICED SEPARATELY	
					AVAILABLE GASKET KIT(S):	
			278-8716	1	KIT-SEAL	
					(INCLUDES O-RING, E-SEAL, SHAFT SEAL, SNAP RING, & SEAL BACK-UPS)	

M-METRIC PART

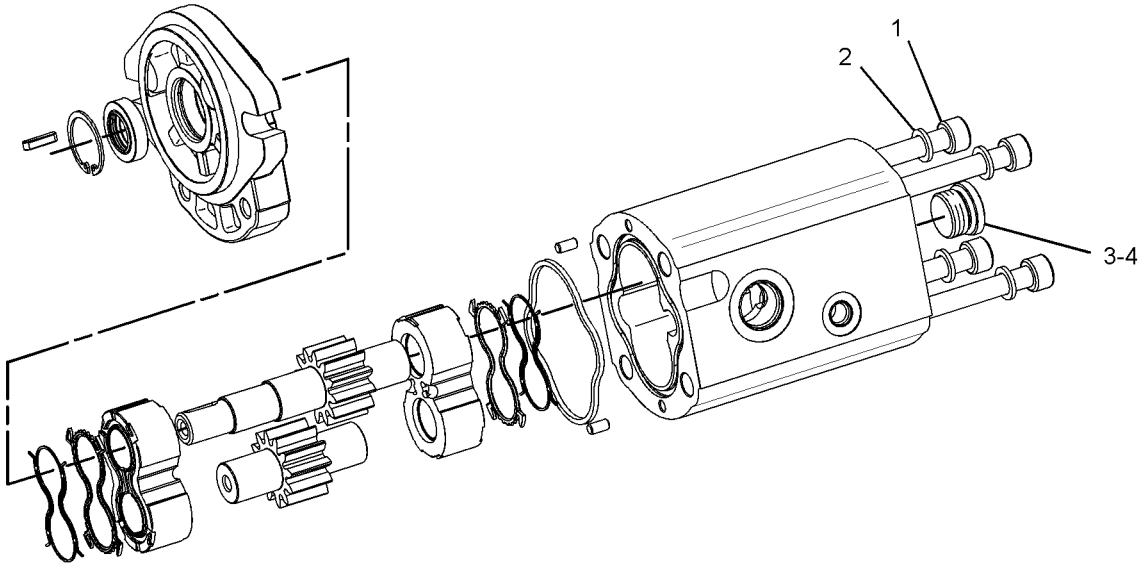

GRAPHIC #1 **<END>** g01434677

307-3036 MOTOR GP-GEAR

S/N: SCH2485-UP
PART OF 218-6058 MOTOR & MTG GP-HYDRAULIC FAN
AN ATTACHMENT

SMCS-1386, 5061 **i02839812**

NOTE	REF NO	GRAPHIC REF	PART NUMBER	QTY	PART NAME 1 2 3 4 5 6 (PRODUCT LEVEL)	SEE PAGE
	1	1	**228-9240**	1	VALVE GP-RELIEF	
		1	**6F-6672**	1	SEAL-O-RING	
		1	**215-3277**	1	SEAL-O-RING	
M	2	1	**9T-4884**	2	BOLT (M10X1.5X30-MM)	
					AVAILABLE REPAIR KIT(S):	
			278-8716	1	KIT-SEAL	
					(INCLUDES SEALS, SNAP RING, AND AXIAL SEAL KIT)	

M-METRIC PART

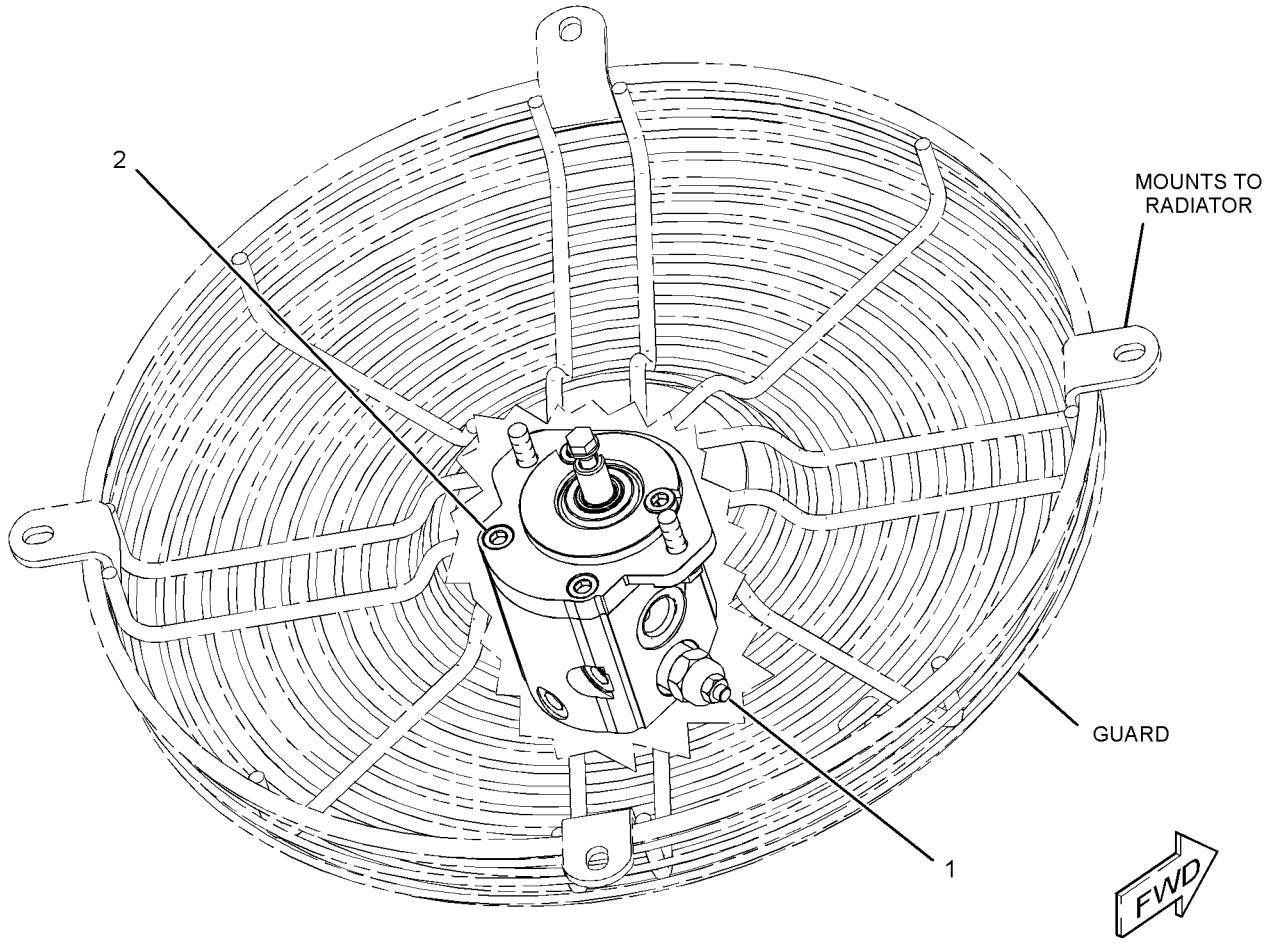

GRAPHIC #1 **<END>** g01417312

HYDRAULIC SYSTEM

307-3038 MOTOR GP-GEAR

S/N: SCH2475-UP

PART OF 261-6121 MOTOR & MTG GP-HYDRAULIC FAN

AN ATTACHMENT

SMCS-1386, 5061 **i02758769**

NOTE	REF NO	GRAPHIC REF	PART NUMBER	QTY	PART NAME 1 2 3 4 5 6 (PRODUCT LEVEL)	SEE PAGE
	1	1	**4D-2297**	1	SEAL-O-RING	
	2	1	**6V-5049**	1	SEAL-O-RING	
	3	1	**230-3686**	1	SEAL-LIP TYPE	
	4	1	**096-0194**	1	RING-RETAINING	
	5	1	**278-8713**	1	SENSOR-SPEED (FAN MOTOR)	
	6	1	**278-8717**	1	SEAL-SHAFT	
M	7	1	**9T-4884**	2	BOLT (M10X1.5X30-MM)	
					AVAILABLE REPAIR KIT(S):	
			278-8716	1	KIT-SEAL	
					(INCLUDES SEALS & RINGS)	

M-METRIC PART

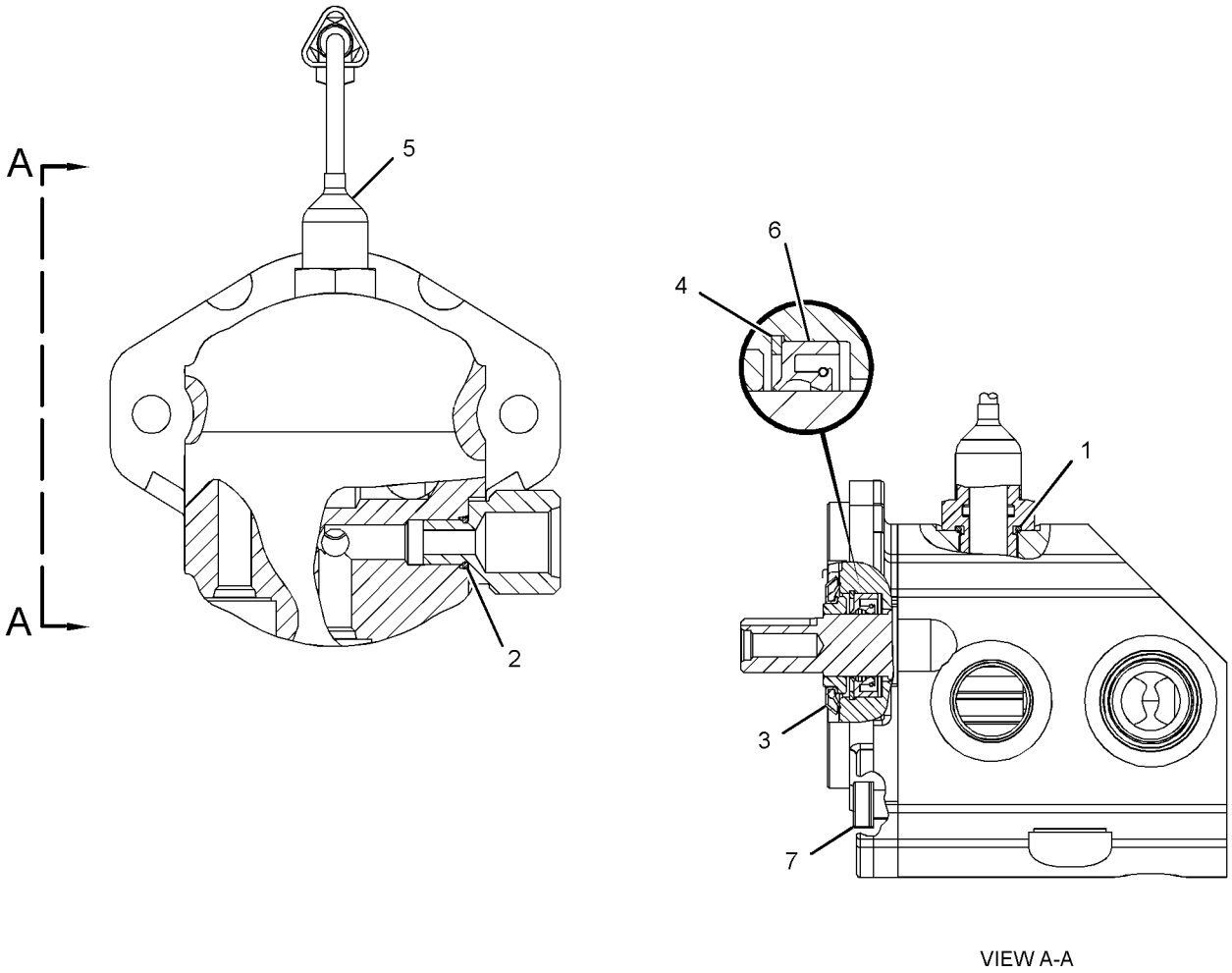

VIEW A-A

GRAPHIC #1 **<END>** g01381787

154-5011 MOUNTING GP-CYLINDER

S/N: SCH2475-UP

PART OF 279-5382, 279-5390, 279-5398, 279-5403 BUCKET AR-MULTIPURPOSE AN ATTACHMENT

SMCS-5498 **i01066088**

NOTE	REF NO	GRAPHIC REF	PART NUMBER	QTY	PART NAME 1 2 3 4 5 6 (PRODUCT LEVEL)	SEE PAGE
	1	1	**154-5012**	2	PIN	
	2	1	**154-5013**	2	PIN	
	3	1	**3B-8489**	2	FITTING-GREASE	
M	4	1	**6V-9189**	4	LOCKNUT (M8X1.25-THD)	
M	5	1	**8T-6869**	4	BOLT (M8X1.25X60-MM)	

M-METRIC PART

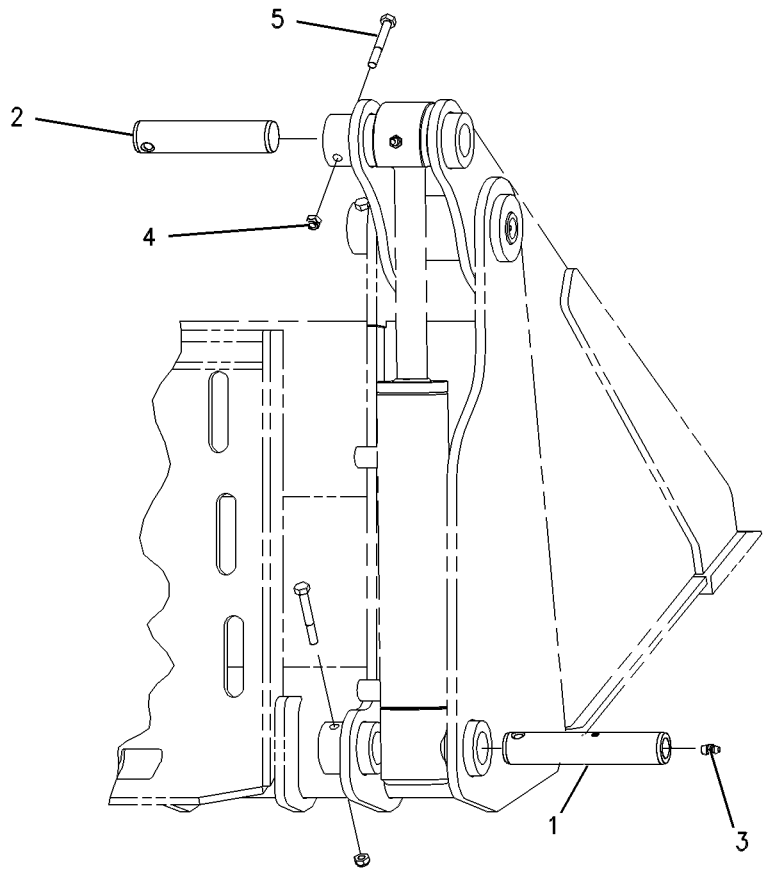

GRAPHIC #1 **<END>** g00560356

HYDRAULIC SYSTEM

156-0891 MOUNTING GP-CYLINDER

S/N: SCH2475-UP

PART OF 157-7223, 157-7224, 157-7225 BUCKET AR-GRAPPLE, 279-5350, 279-5360 FORK AR-GRAPPLE AN ATTACHMENT

SMCS-5498 **i02578037**

NOTE	REF NO	GRAPHIC REF	PART NUMBER	QTY	PART NAME 1 2 3 4 5 6 (PRODUCT LEVEL)	SEE PAGE
	1	1	**255-8058**	2	PLATE	
	2	1	**156-0913**	1	PLATE	
	3	1	**157-0941**	2	PIN	
	4	1	**157-0942**	2	PIN	
	5	1	**159-8035**	2	FILM-WARNING (CRUSH HAZARD, STAY BACK)	
	6	1	**3B-8489**	2	FITTING-GREASE	
	7	1	**4M-5285**	4	RING-RETAINING (EXTERNAL)	
M	8	1	**6V-9189**	2	LOCKNUT (M8X1.25-THD)	
M	9	1	**8T-4138**	3	BOLT (M6X1X20-MM)	
M	10	1	**8T-6869**	2	BOLT (M8X1.25X60-MM)	
	11	1	**9X-2026**	3	WASHER (6.5X17X1-MM THK)	
	12	1	**9X-6274**	4	WASHER (32.5X50X1.6-MM THK)	

M-METRIC PART

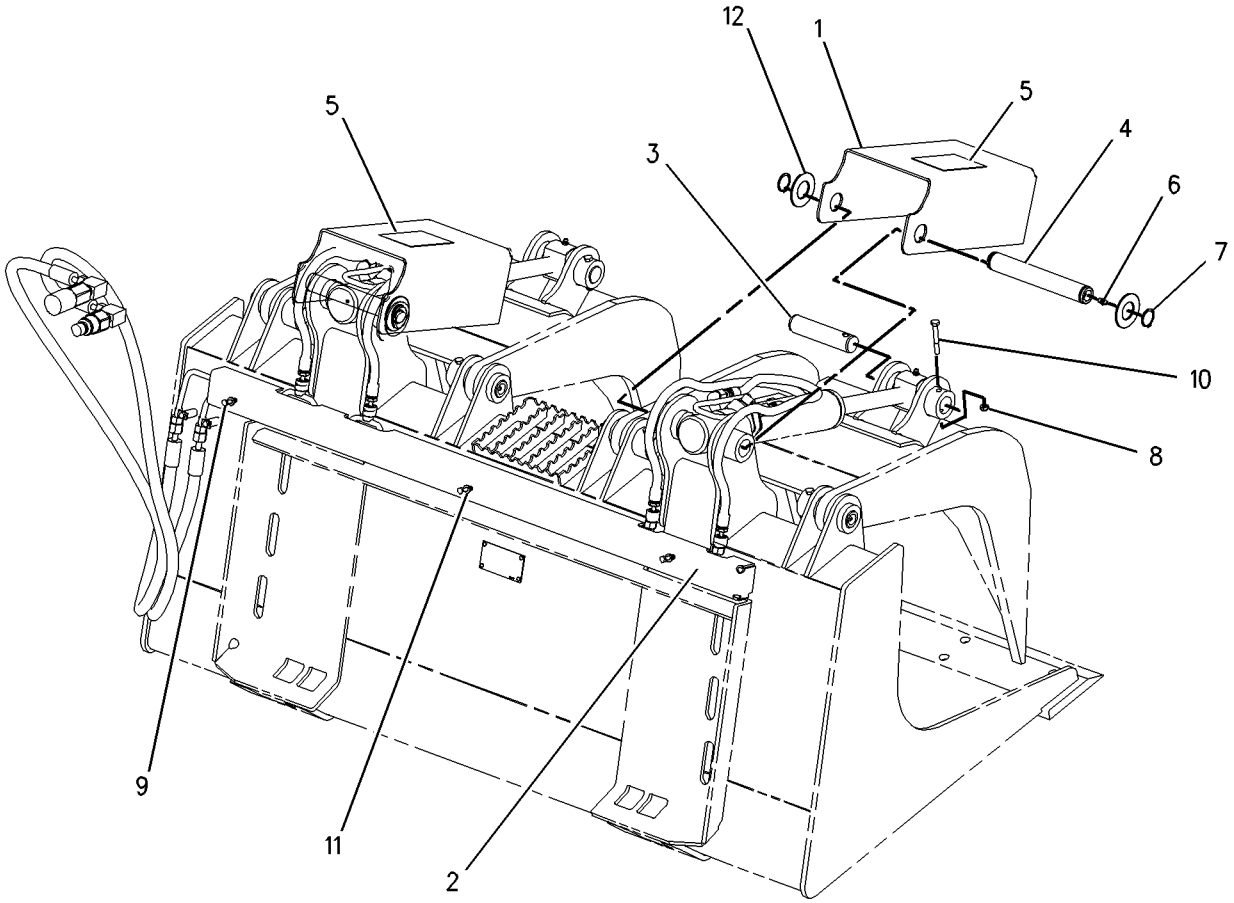

GRAPHIC #1 **<END>** g00777681

HYDRAULIC SYSTEM

165-8731 MOUNTING GP-CYLINDER

S/N: SCH2475-UP
PART OF 285-6116 GRAPPLE GP-UTILITY
AN ATTACHMENT

SMCS-5498 **i02017132**

NOTE	REF NO	GRAPHIC REF	PART NUMBER	QTY	PART NAME 1 2 3 4 5 6 (PRODUCT LEVEL)	SEE PAGE
	1	1	**154-5013**	2	PIN	
M	2	1	**6V-9189**	2	LOCKNUT (M8X1.25-THD)	
M	3	1	**8T-6869**	2	BOLT (M8X1.25X60-MM)	

M-METRIC PART

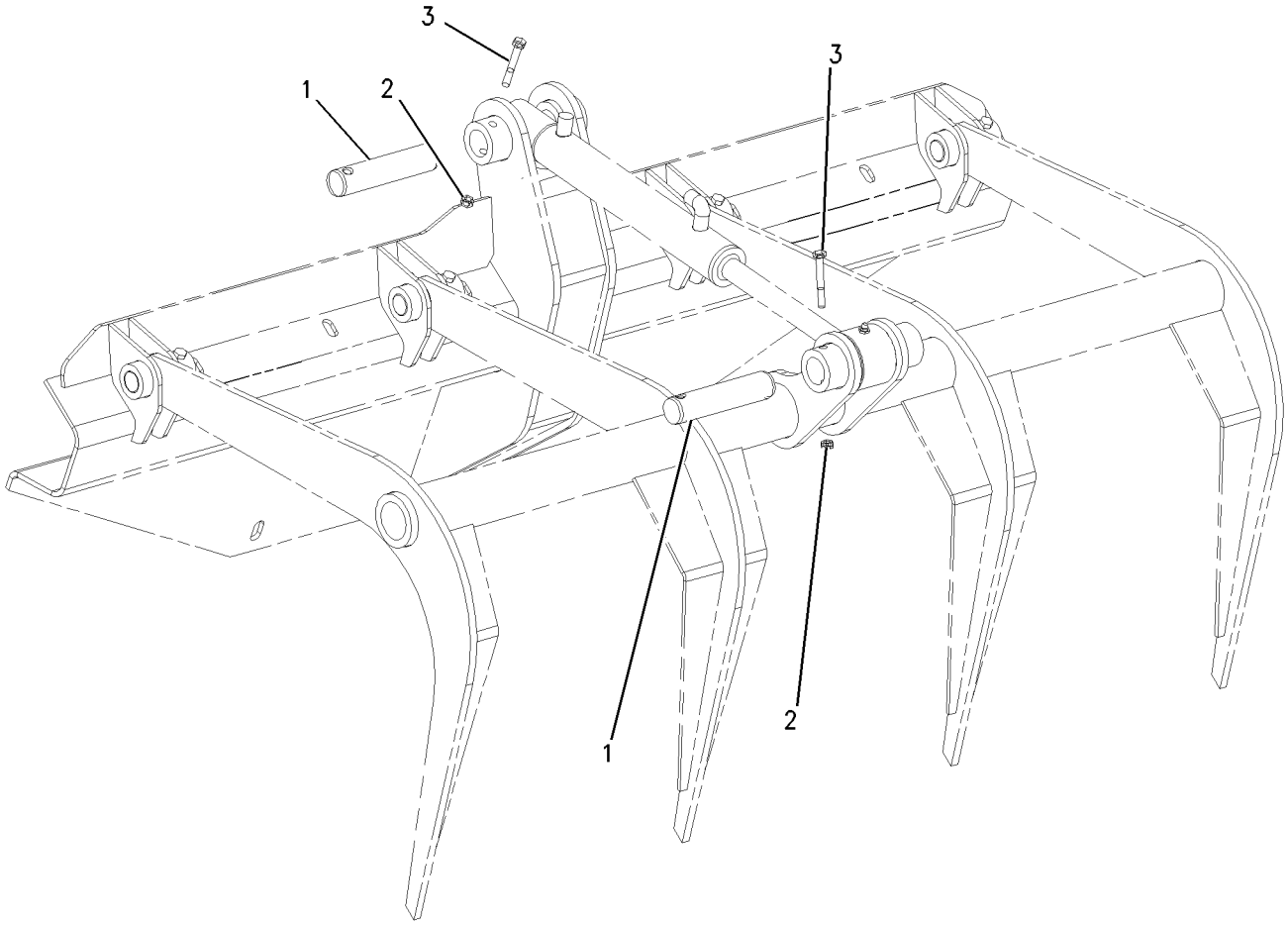

GRAPHIC #1 **<END>** g00652937

142-8714 PLUG GP-PILOT VALVE

S/N: SCH2475-UP
CANNOT BE USED WITH 225-7969—PAGE 163
AN ATTACHMENT

SMCS-5059 **i01788841**

NOTE	REF NO	GRAPHIC REF	PART NUMBER	QTY	PART NAME 1 2 3 4 5 6 (PRODUCT LEVEL)	SEE PAGE
	1	1	*148-8407*	1	PLUG AS	
		1	**3J-1907**	1	SEAL-O-RING	
		1	**9S-4191**	1	PLUG-O-RING	

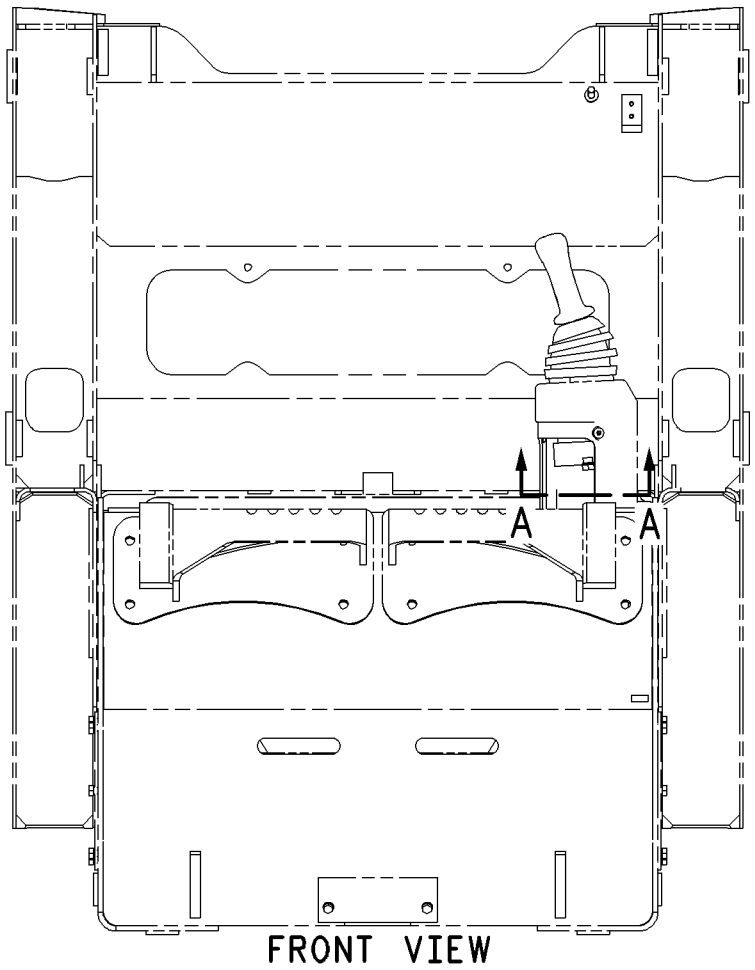

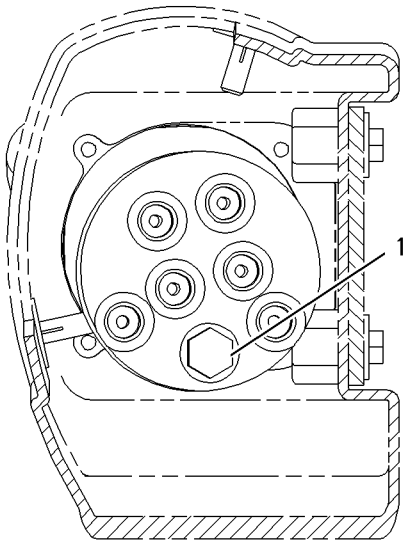

GRAPHIC #1 **<END>** g00915486

HYDRAULIC SYSTEM

218-6175 PUMP & MTG GP-WORK TOOL

S/N: SCH2475-UP
PART OF 252-0449, 295-7055 CONVERSION AR-MACHINE
AN ATTACHMENT

SMCS-6700 **i02478211**

NOTE	REF NO	GRAPHIC REF	PART NUMBER	QTY	PART NAME 1 2 3 4 5 6 (PRODUCT LEVEL)	SEE PAGE
CY	1	1	**269-9427**	1	PUMP GP-GEAR (WORK TOOL)	325
	2	1	**8T-4223**	2	WASHER-HARD (13.5X25.5X3-MM THK)	
M	3	1	**8T-4956**	2	BOLT (M12X1.75X35-MM)	
	4	1	**8T-5049**	1	SEAL-O-RING	

C-CHANGE FROM PREVIOUS TYPE
M-METRIC PART
Y-SEPARATE ILLUSTRATION

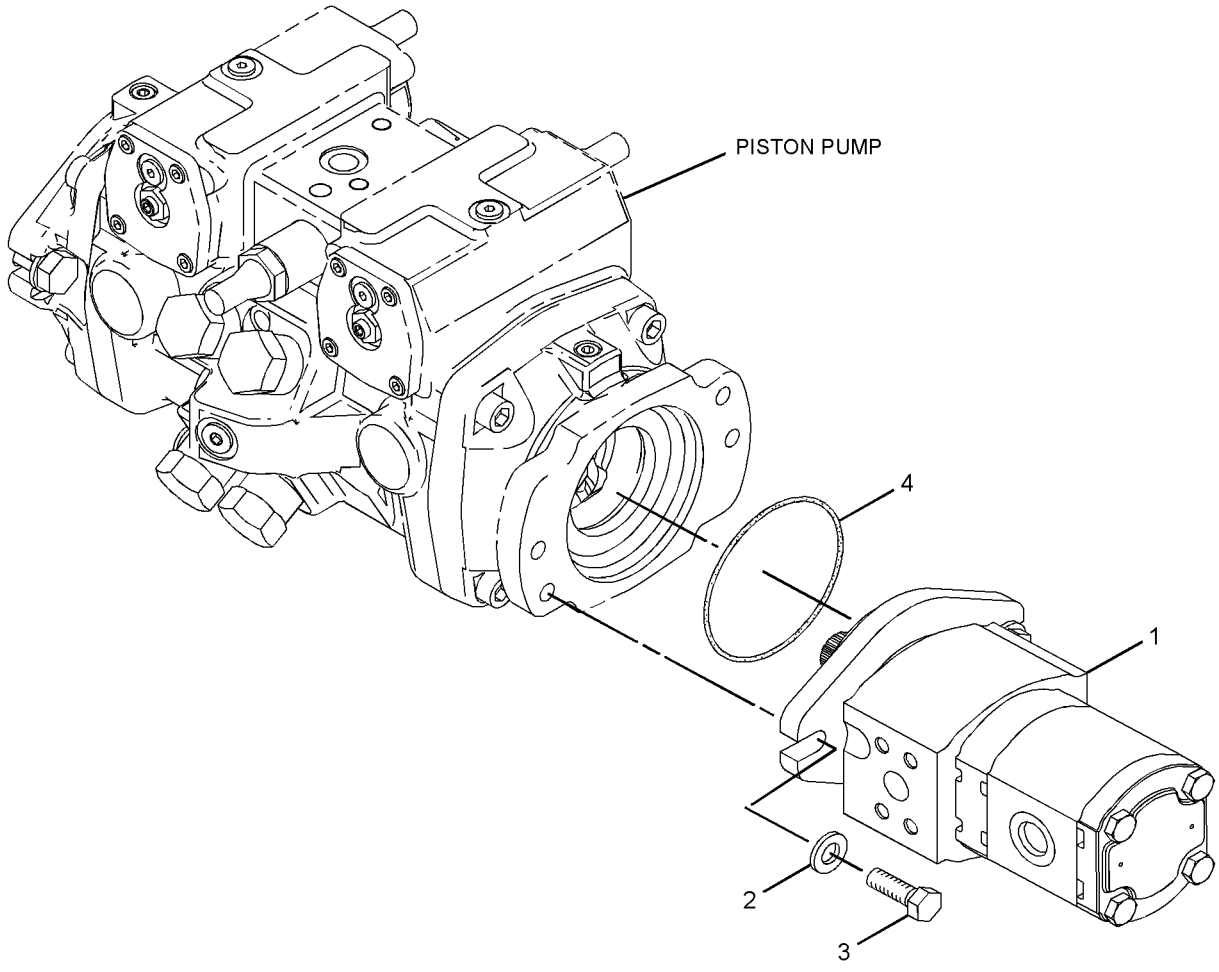

GRAPHIC #1 **<END>** g01293808

261-6094 PUMP & MTG GP-WORK TOOL

S/N: SCH2475-UP
STAGE II SOUND
PART OF 261-6156, 278-5348, 278-5370, 278-5414, 295-7060, 295-7067, 295-7150, 295-7163 CONVERSION AR-MACHINE
AN ATTACHMENT

SMCS-6700 **i02431671**

NOTE	REF NO	GRAPHIC REF	PART NUMBER	QTY	PART NAME 1 2 3 4 5 6 (PRODUCT LEVEL)	SEE PAGE
	1	1	**269-9462**	1	PUMP GP-GEAR	
		1	**8C-3110**	1	RING-RETAINING	
		1	**230-3757**	2	SEAL-SHAFT	
	2	1	**8T-4223**	2	WASHER-HARD (13.5X25.5X3-MM THK)	
M	3	1	**8T-4956**	2	BOLT (M12X1.75X35-MM)	
	4	1	**8T-5049**	1	SEAL-O-RING	

M-METRIC PART

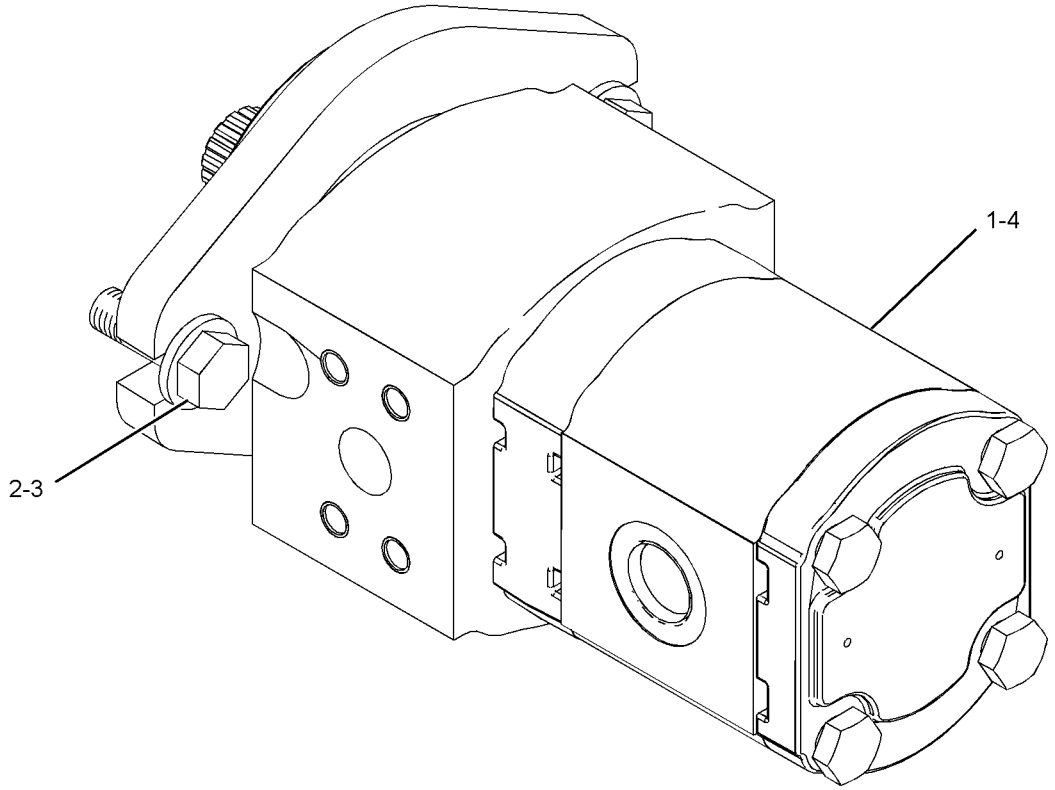

GRAPHIC #1 **<END>** g01229588

269-9427 PUMP GP-GEAR

S/N: SCH2475-UP
PART OF 218-6175 PUMP & MTG GP-WORK TOOL
AN ATTACHMENT

SMCS-5073 **i02536697**

NOTE	REF NO	GRAPHIC REF	PART NUMBER	QTY	PART NAME 1 2 3 4 5 6 (PRODUCT LEVEL)	SEE PAGE
	1	1	**271-8674**	1	COUPLER	
	2	1	**8T-5095**	4	WASHER-PLATED (11X16X2-MM THK)	
	3	1	**289-6352**	4	BOLT (M10X1.5X195-MM)	
J	4	1	**096-0194**	1	RING-RETAINING	
J	5	1	**271-8661**	1	SEAL-SHAFT	
J	6	1	**230-3726**	1	SEAL-SHAFT	
					AVAILABLE REPAIR KIT(S):	
J			**289-6356**	4	KIT-SEAL	

J-KIT MARKED J SERVICES PARTS MARKED J

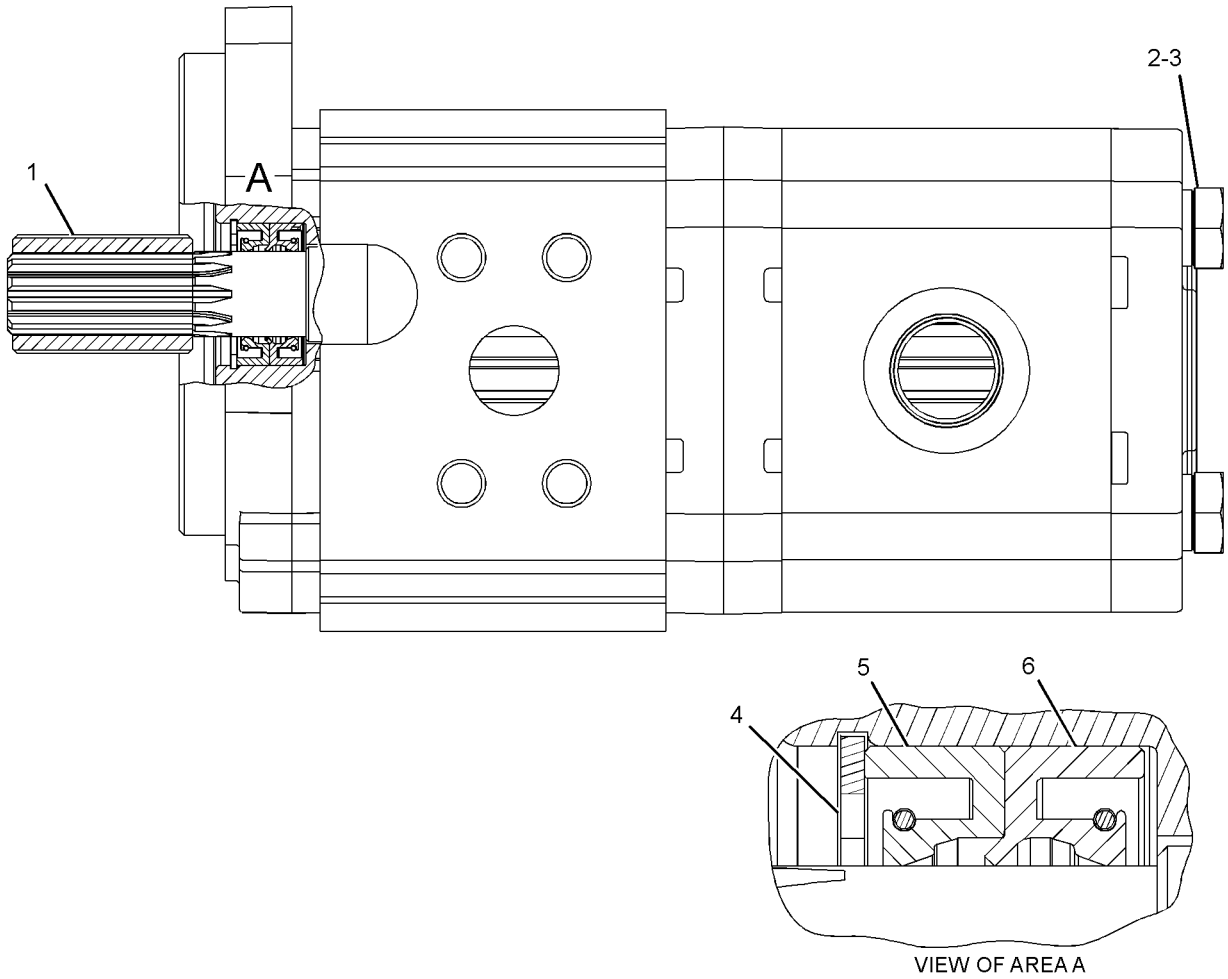

GRAPHIC #1 **<END>** g01342407

HYDRAULIC SYSTEM

233-5980 TANK & MTG GP-HYDRAULIC

S/N: SCH2475-UP

PART OF 278-1243 HYDRAULIC AR

SMCS-5056 **i02890213**

NOTE	REF NO	GRAPHIC REF	PART NUMBER	QTY	PART NAME 1 2 3 4 5 6 (PRODUCT LEVEL)	SEE PAGE
	1	1	**5P-4961**	2	CLAMP-HOSE	
	2	1	**154-4014**	1	BRACKET	
Y	3	1	**204-1491**	1	TANK GP-HYDRAULIC	327
	4	1	**207-9729**	1	BREATHER AS (INLINE) (HYDRAULIC OIL)	
B	5	1	**233-5997**	1	HOSE	
	6	1	**6D-4246**	1	CLIP	
	7	1	**8T-4121**	1	WASHER-HARD (11X21X2.5-MM THK)	
M	8	1	**8T-4136**	1	BOLT (M10X1.5X25-MM)	
M	9	1	**8T-4189**	2	BOLT (M8X1.25X20-MM)	
E	10	1	**5P-1442**		HOSE (65-CM)	

B-USE AS REQUIRED
E-ORDER BY THE CENTIMETER
M-METRIC PART
Y-SEPARATE ILLUSTRATION

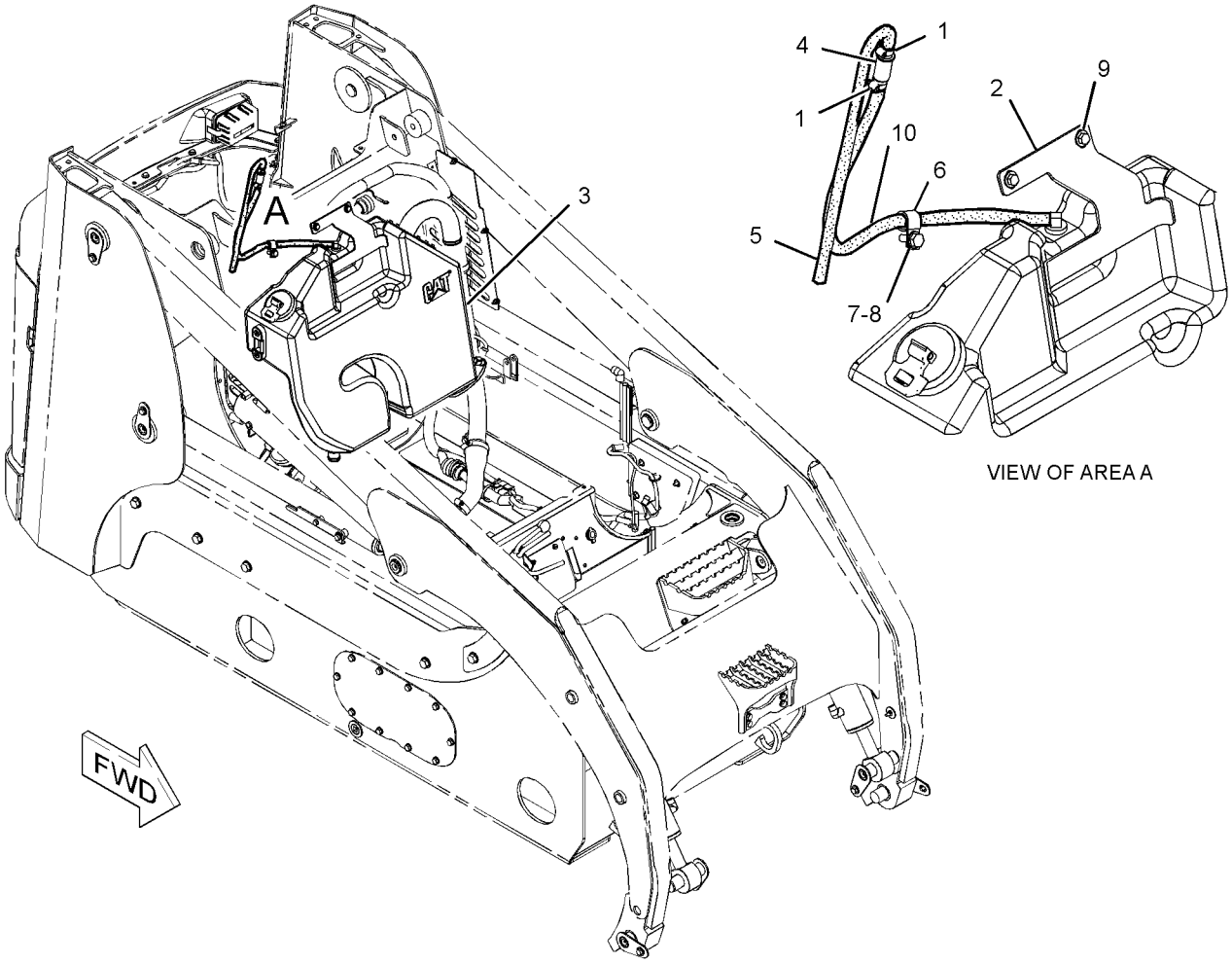

GRAPHIC #1 **<END>** g01309558

HYDRAULIC SYSTEM

204-1491 TANK GP-HYDRAULIC

S/N: SCH2475-UP

PART OF 233-5980 TANK & MTG GP-HYDRAULIC

SMCS-5056 **i02014392**

NOTE	REF NO	GRAPHIC REF	PART NUMBER	QTY	PART NAME 1 2 3 4 5 6 (PRODUCT LEVEL)	SEE PAGE
	1	1	**6W-5698**	1	GROMMET	
M	2	1	**099-2374**	6	BOLT-SOCKET HEAD (M5X0.8X12-MM)	
	3	1	**132-3056**	1	SEAL-O-RING	
	4	1	**142-8928**	1	ELBOW	
	5	1	**142-8929**	1	SCREEN-SUCTION (HYDRAULIC TANK)	
	6	1	**142-8937**	1	CAP AS-FILLER (HYDRAULIC TANK)	
	7	1	**204-1492**	1	TANK GP-HYDRAULIC	
		1	**192-2668**	1	GAUGE-SIGHT (HYDRAULIC TANK)	
	8	1	**204-1499**	1	TUBE AS	
	9	1	**236-1872**	1	SWITCH AS-TEMPERATURE (HYDRAULIC OIL)	
		1	**102-8803**	1	KIT-RECEPTACLE (3-PIN)	
	10	1	**3K-0360**	1	SEAL-O-RING	

M-METRIC PART

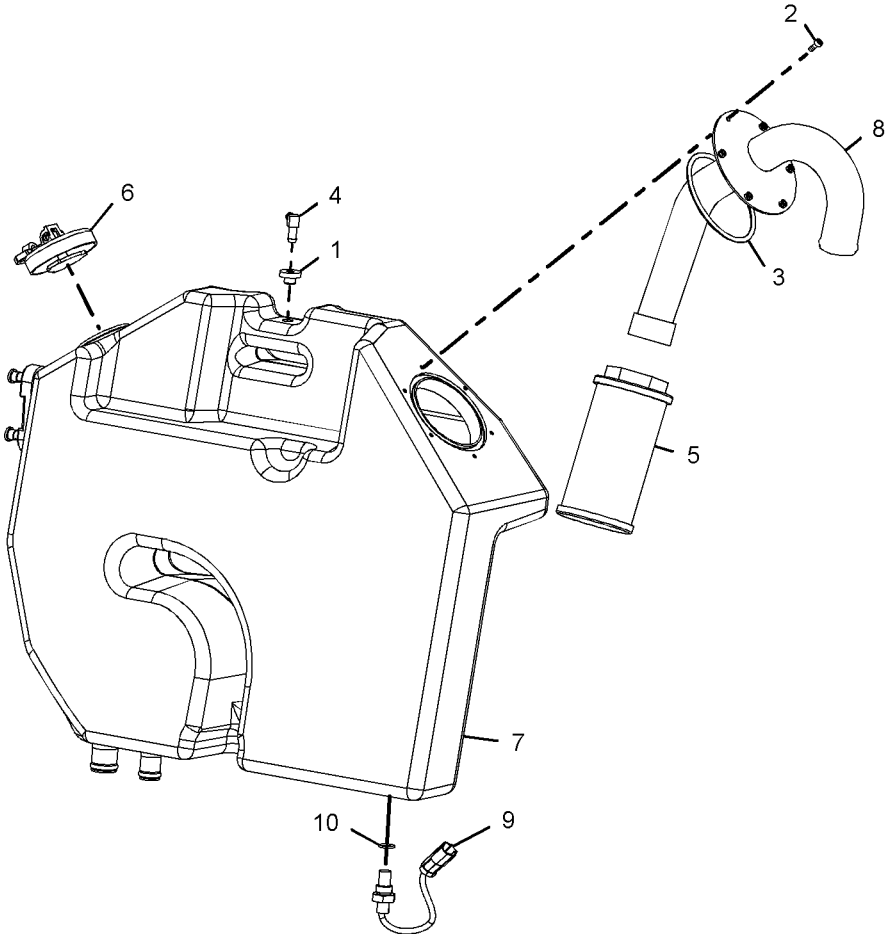

GRAPHIC #1

<END>

g01032724

HYDRAULIC SYSTEM

218-6263 VALVE & LINES GP-COUPLER

S/N: SCH2475-UP
WITH MANUAL LOWERING CONTROL
PART OF 218-6722 COUPLER AR-QUICK
AN ATTACHMENT

SMCS-5057, 5147, 5479 **i02748069**

NOTE	REF NO	GRAPHIC REF	PART NUMBER	QTY	PART NAME 1 2 3 4 5 6 (PRODUCT LEVEL)	SEE PAGE
	1	1	**2K-5232**	2	SPACER (0.406X0.75X1.81-IN THK)	
	2	1	**3S-2093**	6	STRAP-CABLE	
	3	2	**7K-1181**	1	STRAP-CABLE	
	4	1	**9X-6581**	1	NUT-O-RING SEAL (1-14-THD)	
Y	5	2	**112-1817**	1	VALVE GP-MANUAL (LOWERING CONTROL)	335
	6	2	**124-2456**	1	FILM-INSTRUCTION (NO STEP)	
	7	2	**207-9737**	1	BRACKET AS	
I	8	2	**207-9756**	4	HOSE AS	
	9	2	**212-6690**	1	GUARD	
I	10	1	**218-6241**	1	HOSE AS	
I	11	2	**219-4335**	2	HOSE AS	
Y	12	1	**233-7128**	1	MANIFOLD GP-CONTROL (QUICK COUPLER)	310
	13	1	**238-7741**	1	TUBE AS	
	14	1	**238-7742**	1	TUBE AS	
I	15	1	**238-7743**	2	HOSE AS	
	16	1	**238-7746**	1	TUBE AS	
I	17	1	**238-7748**	1	HOSE AS	
	18	1	**238-7749**	1	BRACKET	
	19	2	**269-9404**	1	BRACKET	
	20	2	**270-0216**	1	BRACKET	
	21	1	**283-9264**	1	BRACKET	
I	22	2	**291-3756**	1	HOSE AS	
CY	23	1	*298-7198*	1	CABLE GP-CONTROL (MANUAL LOWERING)	455
	24	2	*148-8325*	4	CONNECTOR AS	
					(EACH INCLUDES)	
		2	**3J-1907**	1	SEAL-O-RING	
		2	**4J-5477**	1	SEAL-O-RING	
		2	**6V-8641**	1	CONNECTOR	
	25	1	*148-8336*	2	CONNECTOR AS	
					(EACH INCLUDES)	
		1	**3J-1907**	1	SEAL-O-RING	
		1	**6V-8397**	1	SEAL-O-RING	
		1	**6V-8636**	1	CONNECTOR	
	26	1	*148-8353*	1	ELBOW AS	
		1	**3J-1907**	1	SEAL-O-RING	
		1	**6V-8397**	1	SEAL-O-RING	
		1	**6V-9001**	1	ELBOW	
	27	1	*148-8365*	1	ELBOW AS	
		1	**3J-1907**	1	SEAL-O-RING	
		1	**6V-8398**	1	SEAL-O-RING	
		1	**8T-6876**	1	ELBOW	
	28	1,2	*148-8378*	2	ELBOW AS	
					(EACH INCLUDES)	
		1,2	**3J-1907**	1	SEAL-O-RING	
		1,2	**6V-8397**	1	SEAL-O-RING	
		1,2	**6V-8724**	1	ELBOW	
	29	1	*148-8446*	1	TEE AS-SWIVEL	
		1	**6V-9838**	1	TEE-SWIVEL	
		1	**7J-9108**	2	SEAL-O-RING	
	30	2	*150-4034*	2	TEE AS	
					(EACH INCLUDES)	
		2	**6V-8397**	3	SEAL-O-RING	
		2	**8T-0379**	1	TEE-BULKHEAD	
	31	1	*156-4282*	1	REDUCER AS	

218-6263 VALVE & LINES GP-COUPLER *(contd.)* i02748069

NOTE	REF NO	GRAPHIC REF	PART NUMBER	QTY	PART NAME 1 2 3 4 5 6 (PRODUCT LEVEL)	SEE PAGE
		1	**6V-8397**	1	SEAL-O-RING	
		1	**6V-8938**	1	REDUCER-O-RING	
	32	1	**164-4225**	2	CLIP	
	33	1	**1F-7567**	1	CLIP	
	34	2	**4B-4274**	1	WASHER (5.5X13X1.2-MM THK)	
	35	1	**4P-7581**	1	CLIP	
	36	1	**6K-8178**	3	CLIP	
	37	1	**6V-8397**	6	SEAL-O-RING	
	38	2	**6V-9168**	2	NUT (11/16-16-THD)	
	39	2	**7G-2950**	1	CLIP (SLOT)	
	40	2	**7G-2951**	1	CLIP (TAB)	
	41	1,2	**7H-7055**	6	CLIP	
	42	2	**7X-7729**	6	WASHER (11X25X3-MM THK)	
	43	2	**8M-4791**	2	WASHER-HARD (13.5X27X3-MM THK)	
M	44	2	**8T-0285**	4	SCREW-MACHINE (M4X0.7X12-MM)	
M	45	2	**8T-0287**	1	BOLT (M5X0.8X10-MM)	
	46	1,2	**8T-4121**	13	WASHER-HARD (11X21X2.5-MM THK)	
M	47	1,2	**8T-4133**	6	NUT (M10X1.5-THD)	
M	48	1,2	**8T-4136**	3	BOLT (M10X1.5X25-MM)	
M	49	1,2	**8T-4189**	4	BOLT (M8X1.25X20-MM)	
M	50	1,2	**8T-4191**	3	BOLT (M10X1.5X16-MM)	
M	51	1,2	**8T-4201**	4	BOLT-LOCKING (M10X1.5X20-MM)	
	52	1,2	**8T-4224**	4	WASHER-HARD (8.8X16X2-MM THK)	
M	53	1,2	**8T-5005**	4	BOLT (M10X1.5X70-MM)	
	54	1,2	**9M-8406**	3	CLIP	
	55	2	**9X-1481**	1	WASHER (13X25.4X1.6-MM THK)	

C-CHANGE FROM PREVIOUS TYPE
I-REFER TO HYDRAULIC INFORMATION SYSTEM
M-METRIC PART
Y-SEPARATE ILLUSTRATION

REFER TO ALL ILLUSTRATIONS OF
THIS GROUP FOR AUXILIARY VIEWS

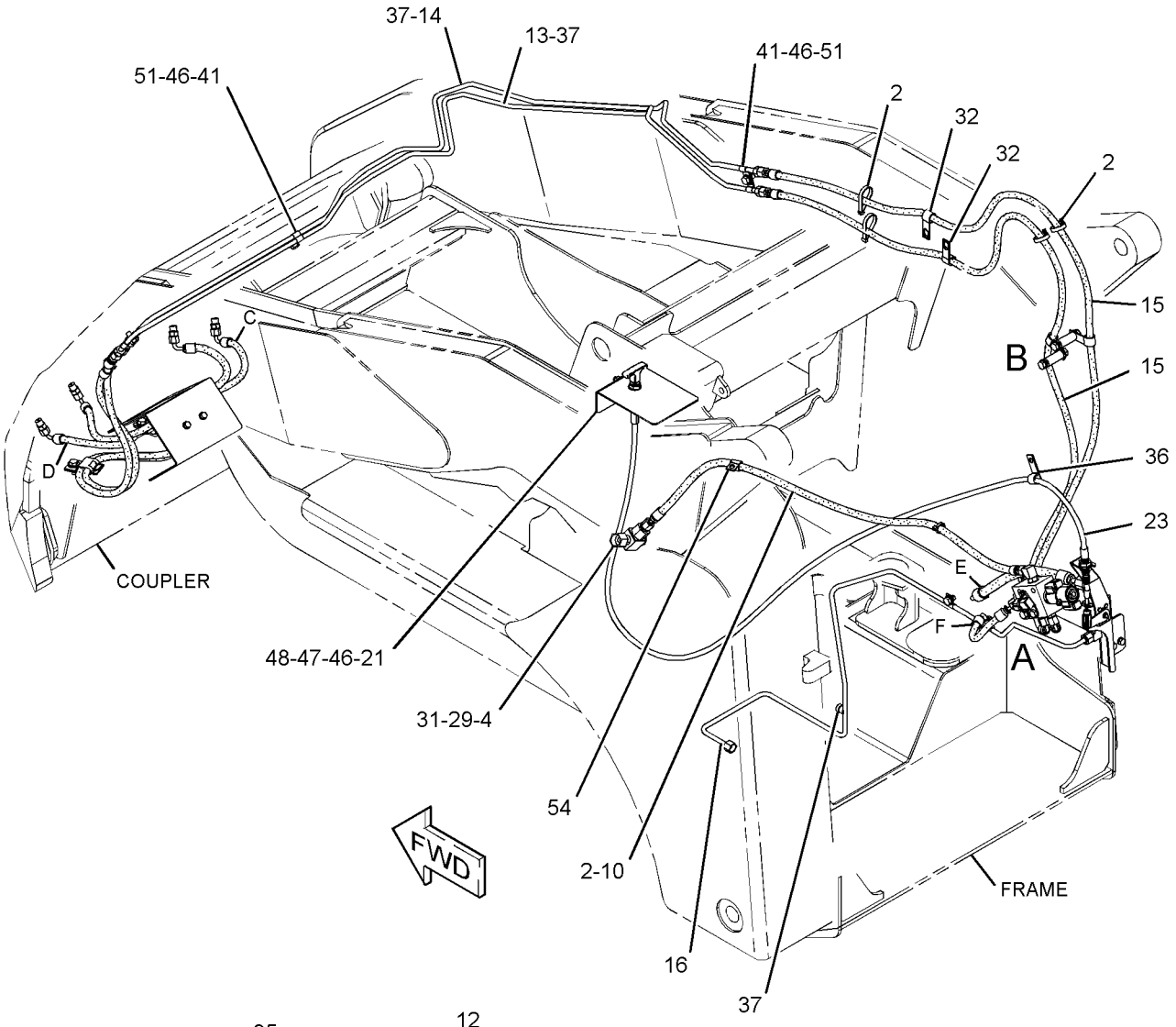

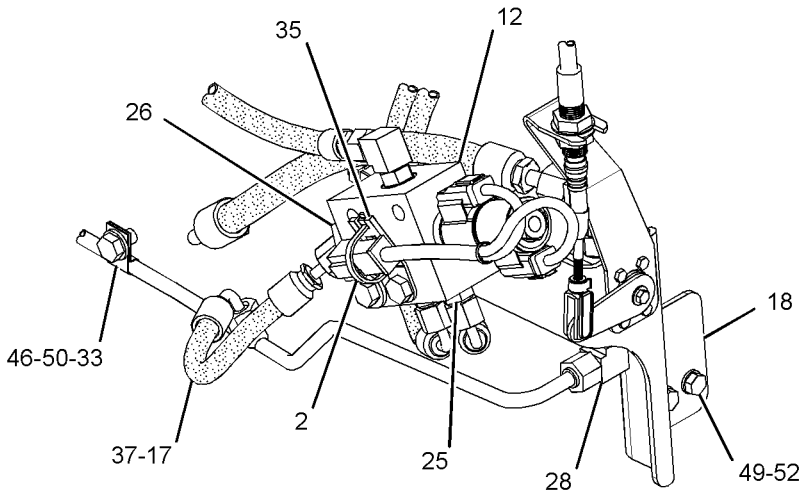

VIEW OF AREA A

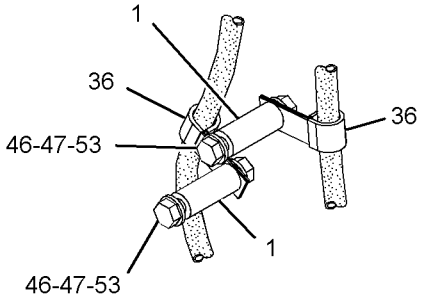

VIEW OF AREA B

GRAPHIC #1

g01377515

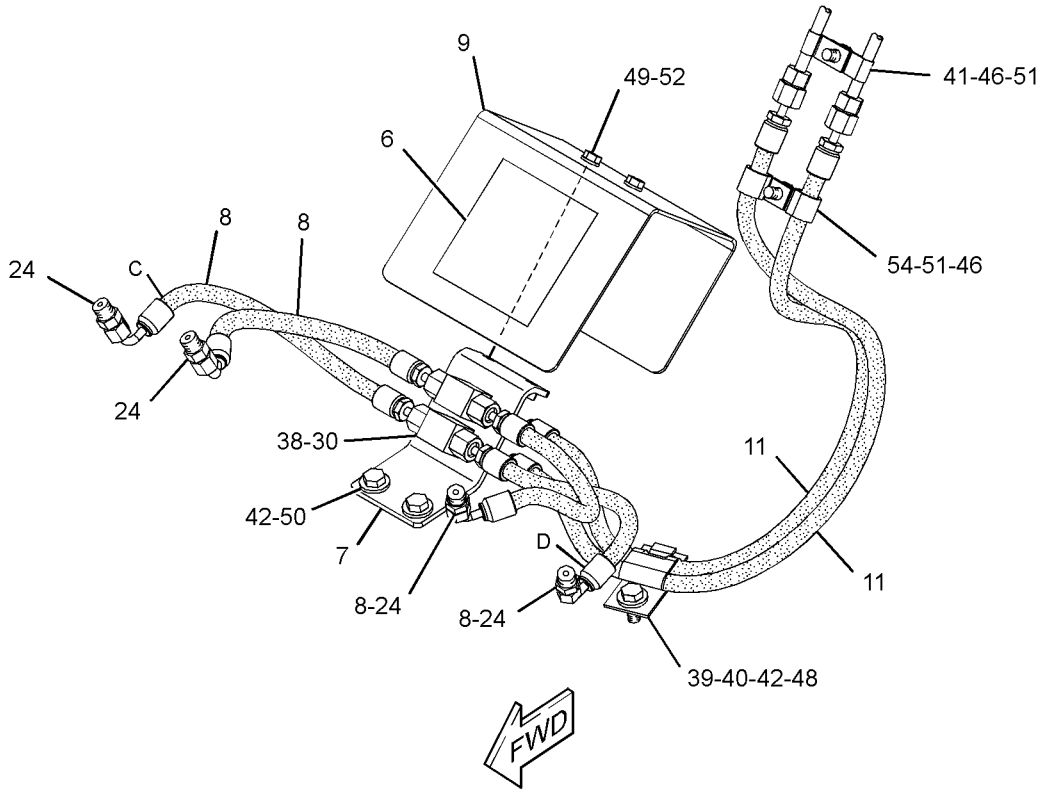

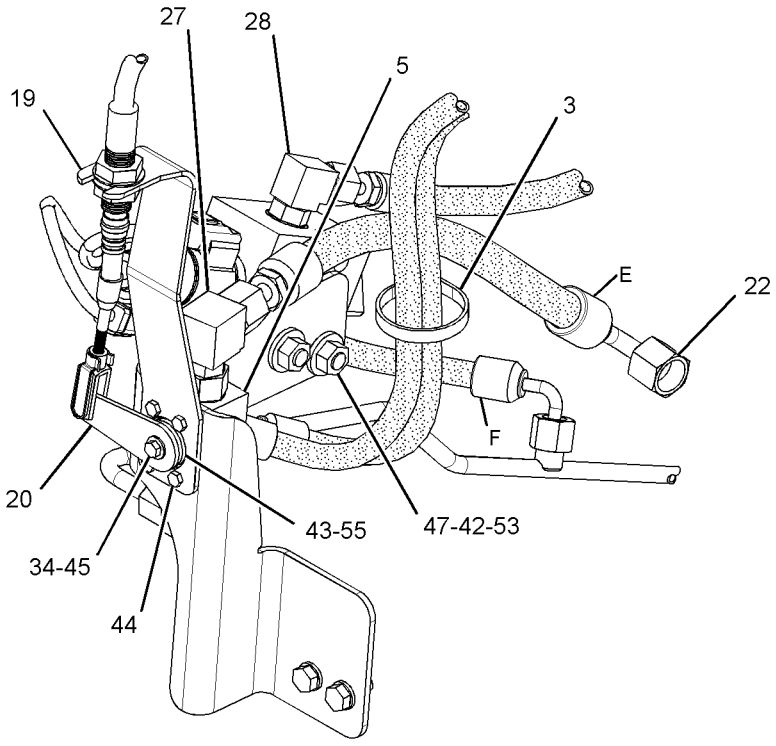

VIEW OF AREA A 90°

GRAPHIC #2 **<END>** g01377516

HYDRAULIC SYSTEM

218-6783 VALVE & MTG GP-CONTROL

S/N: SCH2475-UP
WORK TOOL
PART OF 278-1243 HYDRAULIC AR

SMCS-5051 **i01946033**

NOTE	REF NO	GRAPHIC REF	PART NUMBER	QTY	PART NAME 1 2 3 4 5 6 (PRODUCT LEVEL)	SEE PAGE
Y	1	1	**191-9686**	1	VALVE GP-CONTROL (WORK TOOL)	333
	2	1	**218-6561**	1	BRACKET	
	3	1	**8T-4121**	4	WASHER-HARD (11X21X2.5-MM THK)	
M	4	1	**8T-4136**	2	BOLT (M10X1.5X25-MM)	
M	5	1	**8T-4137**	2	BOLT (M10X1.5X20-MM)	

M-METRIC PART
Y-SEPARATE ILLUSTRATION

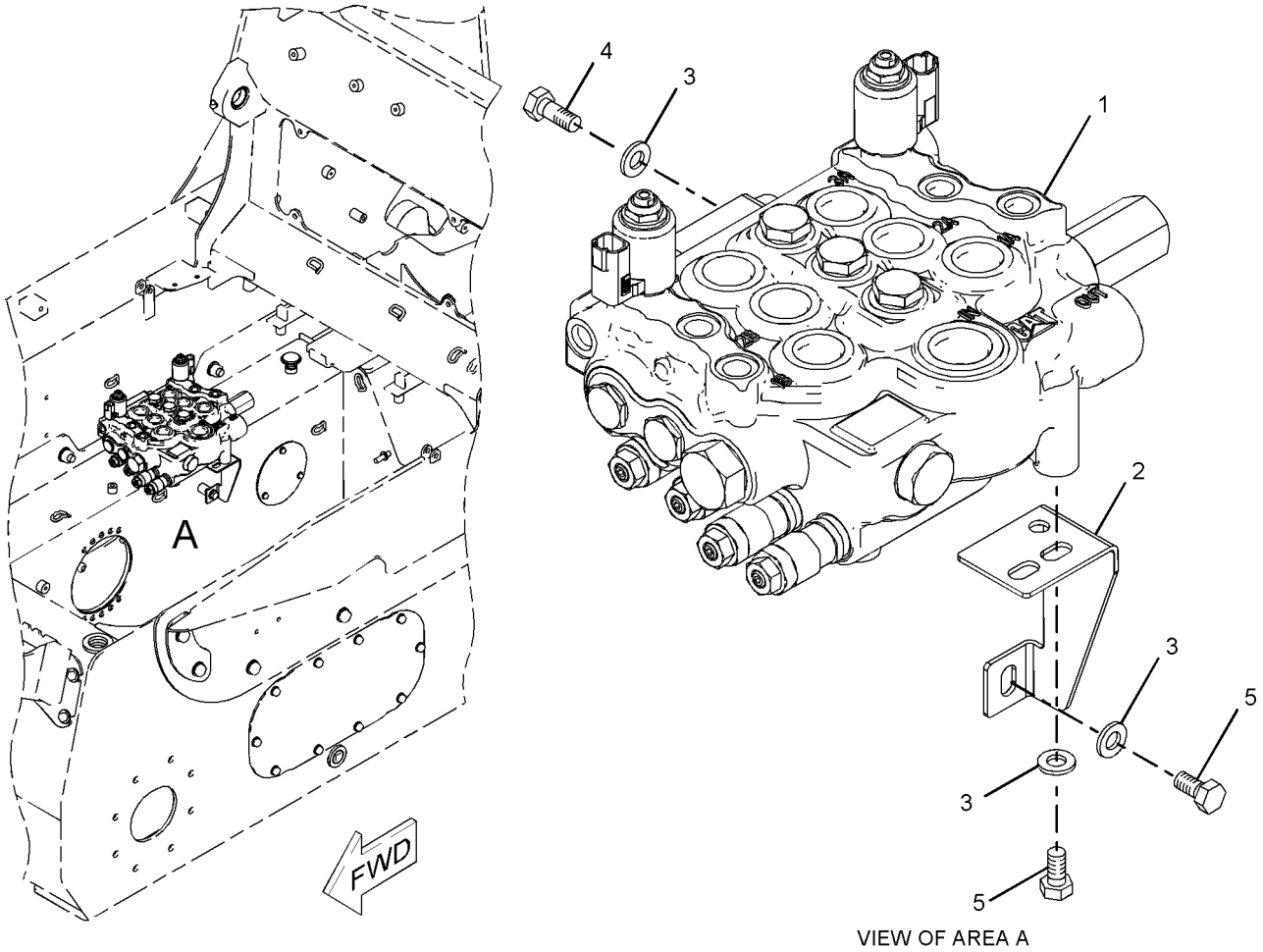

VIEW OF AREA A

GRAPHIC #1 **<END>** g01022495

191-9686 VALVE GP-CONTROL

S/N: SCH2475-UP

PART OF 218-6783 VALVE & MTG GP-CONTROL

SMCS-5051 **i02637338**

NOTE	REF NO	GRAPHIC REF	PART NUMBER	QTY	PART NAME 1 2 3 4 5 6 (PRODUCT LEVEL)	SEE PAGE
CY	1	1	**298-1309**	1	VALVE GP-RELIEF (MAIN)	343
	2	1	**216-6160**	2	VALVE GP-RELIEF (TILT, AUXILARY)	
	3	1	**216-6161**	2	VALVE GP-RELIEF (LIFT)	
Y	4	1	**185-4254**	2	VALVE GP-SOLENOID (12-VOLT) (PILOT)	344
C	5	1	**4J-7533**	2	SEAL-O-RING	
	6	1	**204-1485**	6	WASHER (0.47X0.75X0.02-MM THK)	
	7	1	**204-1482**	1	SPRING	
	8	1	**204-1488**	1	SPRING	
	9	1	**204-1489**	4	SPRING	
	10	1	**204-1486**	1	WASHER (0.32X0.74X0.02-MM THK)	
	11	1	**127-6316**	1	BOLT-SHOULDER	
	12	1	**204-1476**	4	PLUG	
C	13	1	**4K-1388**	2	SEAL-O-RING	
	14	1	**204-1471**	1	CAP	
	15	1	**204-1481**	1	CAP	
	16	1	**144-4531**	3	VALVE-CHECK	
	17	1	**003-3082**	3	SPRING	
	18	1	**8I-5078**	3	SEAL-O-RING	
	19	1	**144-4532**	3	PLUG	
	20	1	**216-6156**	1	VALVE-CHECK	
	21	1	**216-6157**	1	SPRING	
C	22	1	**3J-1907**	1	SEAL-O-RING	
	23	1	**216-6159**	1	PLUG	
C	24	1	**2M-9780**	4	SEAL-O-RING	

C-CHANGE FROM PREVIOUS TYPE
Y-SEPARATE ILLUSTRATION

191-9686 VALVE GP-CONTROL *(contd.)* i02637338

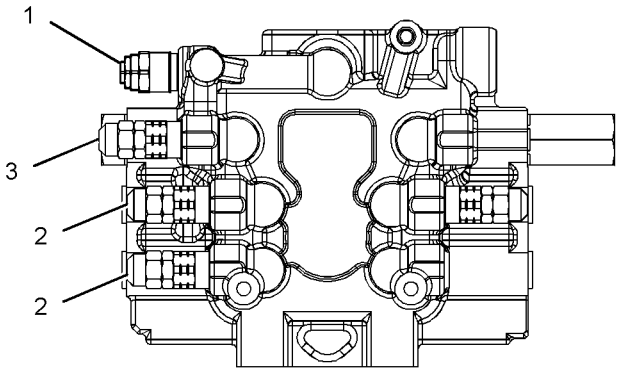

VIEW A-A

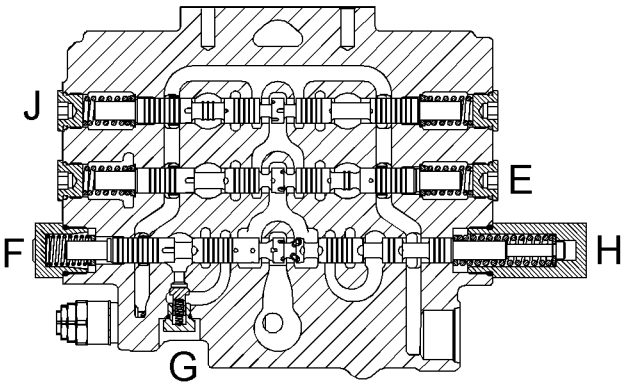

SECTION B-B

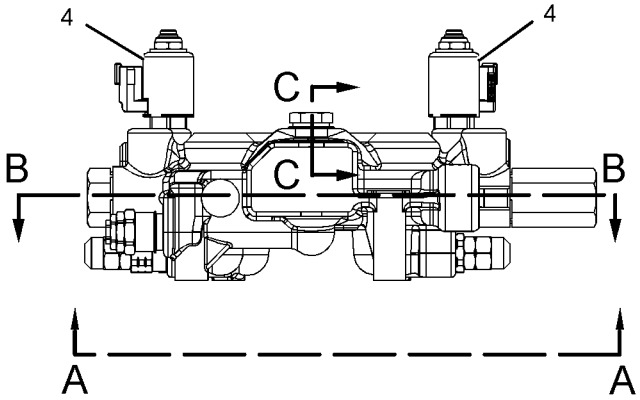

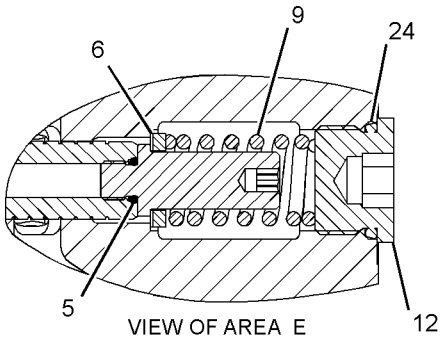

VIEW OF AREA E

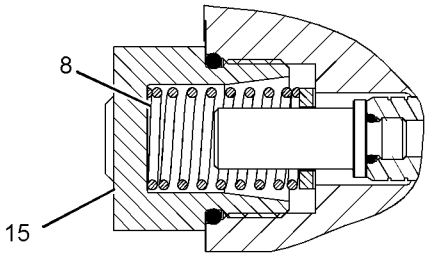

VIEW OF AREA F

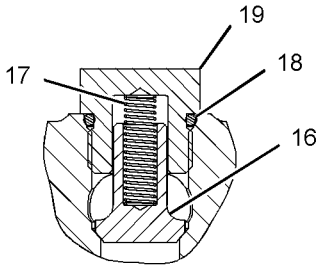

SECTION C-C

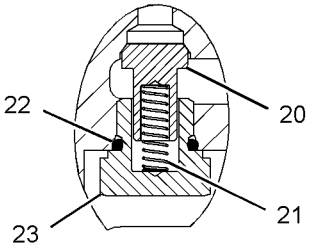

VIEW OF AREA G

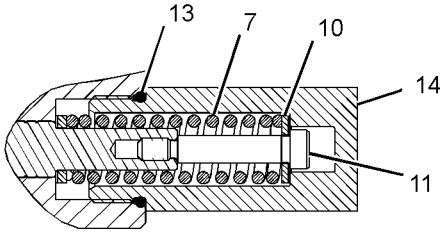

VIEW OF AREA H

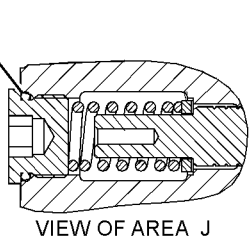

VIEW OF AREA J

GRAPHIC #1 **<END>** g01323204

HYDRAULIC SYSTEM

112-1817 VALVE GP-MANUAL

S/N: SCH2475-UP

PART OF 218-5882 LINES GP-LOWERING CONTROL, 218-6263 VALVE & LINES GP-COUPLER AN ATTACHMENT

SMCS-5147 **i02757385**

NOTE	PART NUMBER	QTY	PART NAME 1 2 3 4 5 6 (PRODUCT LEVEL)	SEE PAGE
J	*202-0671*	1	VALVE GP-MANUAL (LOWERING CONTROL)	
			—OR—	
J	*202-0673*	1	VALVE GP-MANUAL (LOWERING CONTROL)	
			—OR—	
J	*202-0674*	1	VALVE GP-MANUAL (LOWERING CONTROL)	
			AVAILABLE REPAIR KIT(S):	
J	**112-9861**	1	KIT-SEAL (DEAD ENGINE LOWERING)	
			(INCLUDES SEALS, CONNECTORS & THRUST RING)	

J-KIT MARKED J SERVICES PARTS MARKED J

<END>

HYDRAULIC SYSTEM

218-6119 VALVE GP-PILOT

S/N: SCH2475-UP

PART OF 218-5930, 218-5931, 218-5932, 218-5947 CONTROL GP-PILOT OPERATED HYD AN ATTACHMENT

SMCS-5059, 5705 **i02513658**

NOTE	REF NO	GRAPHIC REF	PART NUMBER	QTY	PART NAME 1 2 3 4 5 6 (PRODUCT LEVEL)	SEE PAGE
Y	1	1	**195-9700**	1	VALVE GP-SOLENOID (12-VOLT)	345
M	2	1	**8T-1158**	1	BOLT-SOCKET HEAD (M8X1.25X20-MM)	
	3	1	**217-3850**	1	KIT-UNIVERSAL JOINT	
					(INCLUDES UNIVERSAL JOINT & SHIMS)	
	4	1	**122-1904**	1	PLATE	
	5	1	**289-8451**	2	KIT-PLUNGER	
					(INCLUDES PLUNGER GUIDE, PLUNGER, SNAP RING, WASHER & BUSHING)	
	6	1	**160-6778**	1	KIT-PILOT VALVE (SPRING)	
					(INCLUDES SPRINGS)	
	7	1	**289-9560**	1	KIT-SEAL	
					(INCLUDES O-RINGS, PINS & ASSEMBLY SCREW)	
	8	1	**151-4965**	1	KIT-SEAL	
					(INCLUDES O-RINGS, PIN & BOLT)	
	9	1	**282-7760**	1	VALVE GP-SHUTTLE	
					PARTS SHOWN IN GRAPHIC(S) WITHOUT A REFERENCE NUMBER ARE NOT SERVICED SEPARATELY	

M-METRIC PART
Y-SEPARATE ILLUSTRATION

218-6119 VALVE GP-PILOT *(contd.)* **i02513658**

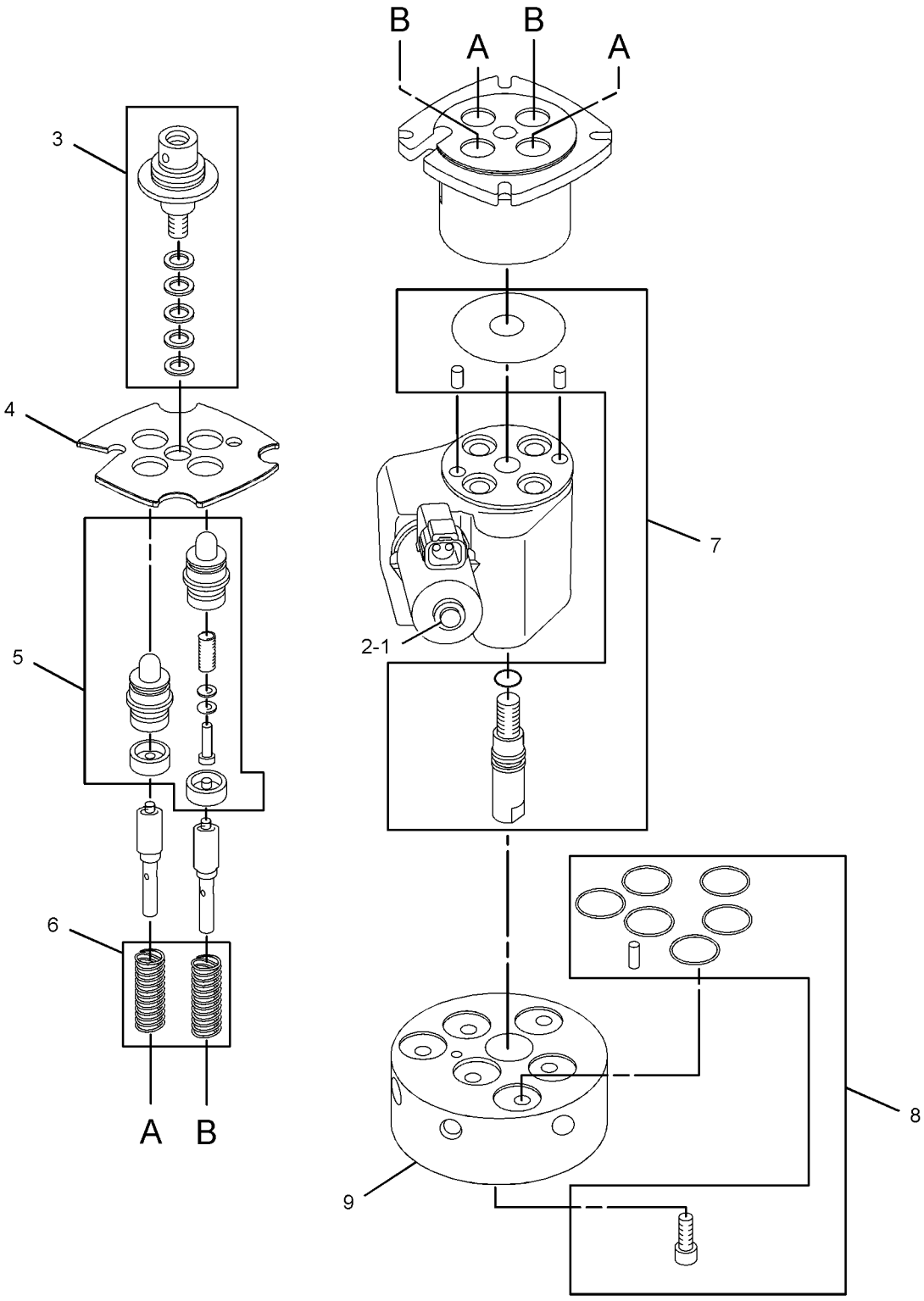

GRAPHIC #1 **<END>** g01301843

HYDRAULIC SYSTEM

228-9228 VALVE GP-PILOT—WORK TOOL

S/N: SCH2475-2503

PART OF 218-5611, 218-5612, 218-5618 CONTROL GP-PILOT OPERATED HYD AN ATTACHMENT

SMCS-5059, 5705 **i02513660**

NOTE	REF NO	GRAPHIC REF	PART NUMBER	QTY	PART NAME 1 2 3 4 5 6 (PRODUCT LEVEL)	SEE PAGE
	1	1	**7K-1181**	1	STRAP-CABLE	
	2	1	**172-0970**	1	COIL AS	
		1	**102-8802**	1	KIT-RECEPTACLE (2-PIN)	
					(INCLUDES RECEPTACLE AS & WEDGE)	
		1	**8T-8729**	2	PIN-CONNECTOR (16-GA TO 18-GA)	
Y	3	1	**195-9700**	1	VALVE GP-SOLENOID (12-VOLT) (SPEED & DIRECTION)	345
M	4	1	**8T-1158**	1	BOLT-SOCKET HEAD (M8X1.25X20-MM)	
M	5	1	**8T-9405**	1	BOLT-SOCKET HEAD (M4X0.7X16-MM)	
	6	1	**102-8802**	1	KIT-RECEPTACLE (2-PIN)	
					(INCLUDES RECEPTACLE AS AND WEDGE)	
	7	1	**289-8440**	1	KIT-JOINT (PILOT VALVE)	
					(INCLUDES PLATE AS)	
	8	1	**164-9440**	1	PLATE	
	9	1	**8U-9427**	3	KIT-PLUNGER	
	10	1	**203-1100**	1	KIT-PLUNGER	
					(INCLUDES PLUNGER,GUIDE,RING,CLIP & CUP)	
	11	1	**160-6778**	1	KIT-PILOT VALVE (SPRING)	
					(INCLUDES SPRINGS)	
	12	1	**9T-2837**	1	KIT-SEAL	
					(INCLUDES PINS,SEALS & BOLT)	
					PARTS SHOWN IN GRAPHIC(S) WITHOUT A REFERENCE NUMBER ARE NOT SERVICED SEPARATELY	

M-METRIC PART
Y-SEPARATE ILLUSTRATION

228-9228 VALVE GP-PILOT *(contd.)* **i02513660**

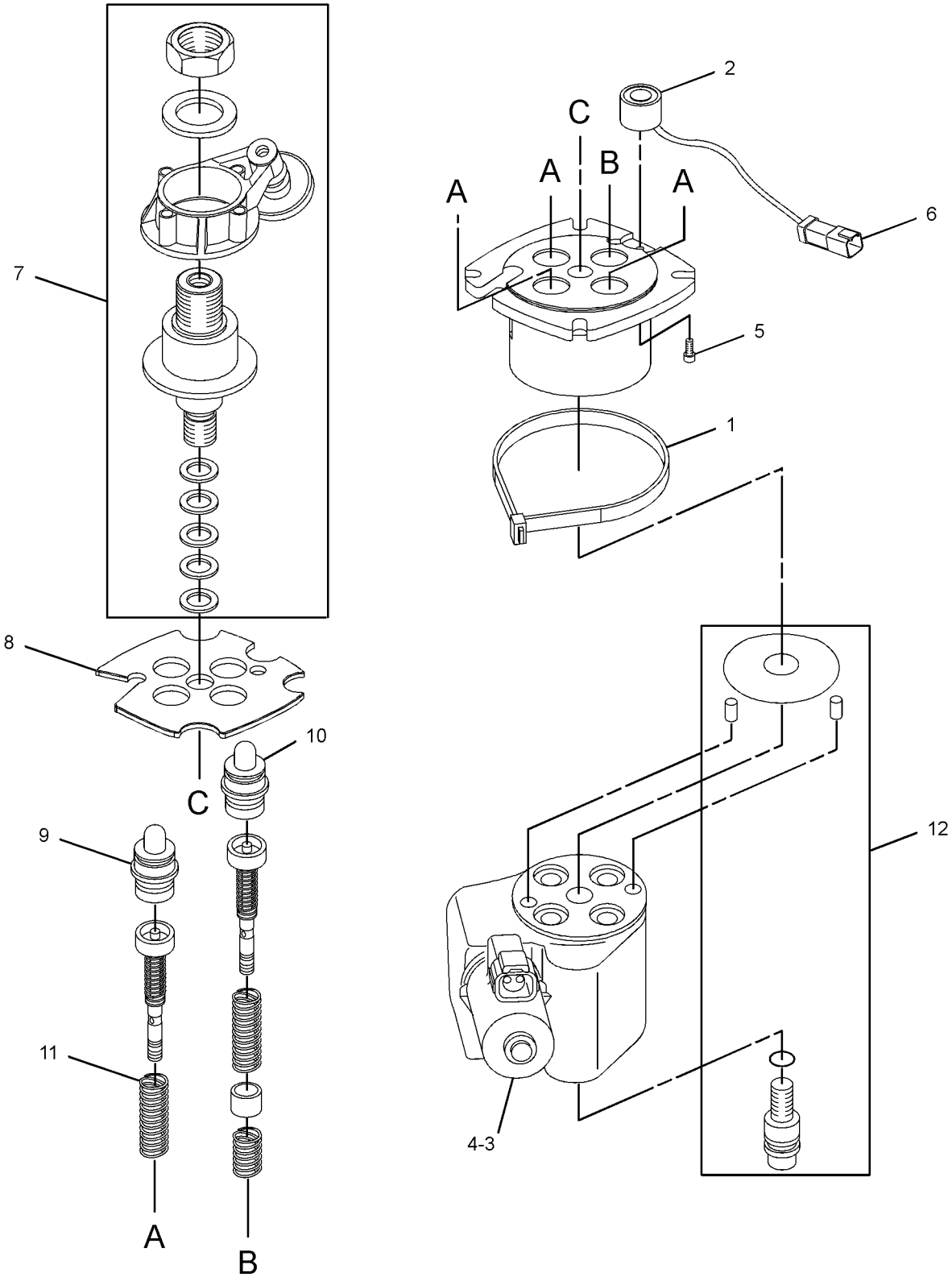

GRAPHIC #1 **<END>** g01298433

HYDRAULIC SYSTEM

299-9116 VALVE GP-PILOT

S/N: SCH2504-UP

PART OF 218-5930 CONTROL GP-PILOT OPERATED HYD

AN ATTACHMENT

SMCS-5059, 5705 **i02890238**

NOTE	REF NO	GRAPHIC REF	PART NUMBER	QTY	PART NAME 1 2 3 4 5 6 (PRODUCT LEVEL)	SEE PAGE
Y	1	1	**195-9700**	1	VALVE GP-SOLENOID (12-VOLT)	345
M	2	1	**8T-1158**	1	BOLT-SOCKET HEAD (M8X1.25X20-MM)	
	3	1	**217-3850**	1	KIT-UNIVERSAL JOINT	
					(INCLUDES SHIMS & UNIVERSAL JOINT)	
	4	1	**299-9121**	1	PLATE	
	5	1	**289-8451**	2	KIT-PLUNGER	
					(INCLUDES PLUNGERS, RINGS, WASHERS, & BUSHINGS)	
	6	1	**160-6778**	1	KIT-PILOT VALVE (SPRING)	
					(INCLUDES SPRINGS)	
	7	1	**289-9560**	1	KIT-SEAL	
					(INCLUDES RINGS, PLUG, & SCREW)	
	8	1	**151-4965**	1	KIT-SEAL	
					(INCLUDES O-RINGS, PIN, & BOLT)	
	9	1	**312-7676**	1	VALVE GP-SHUTTLE	
					PARTS SHOWN IN GRAPHIC(S) WITHOUT A REFERENCE NUMBER ARE NOT SERVICED SEPARATELY	

M-METRIC PART
Y-SEPARATE ILLUSTRATION

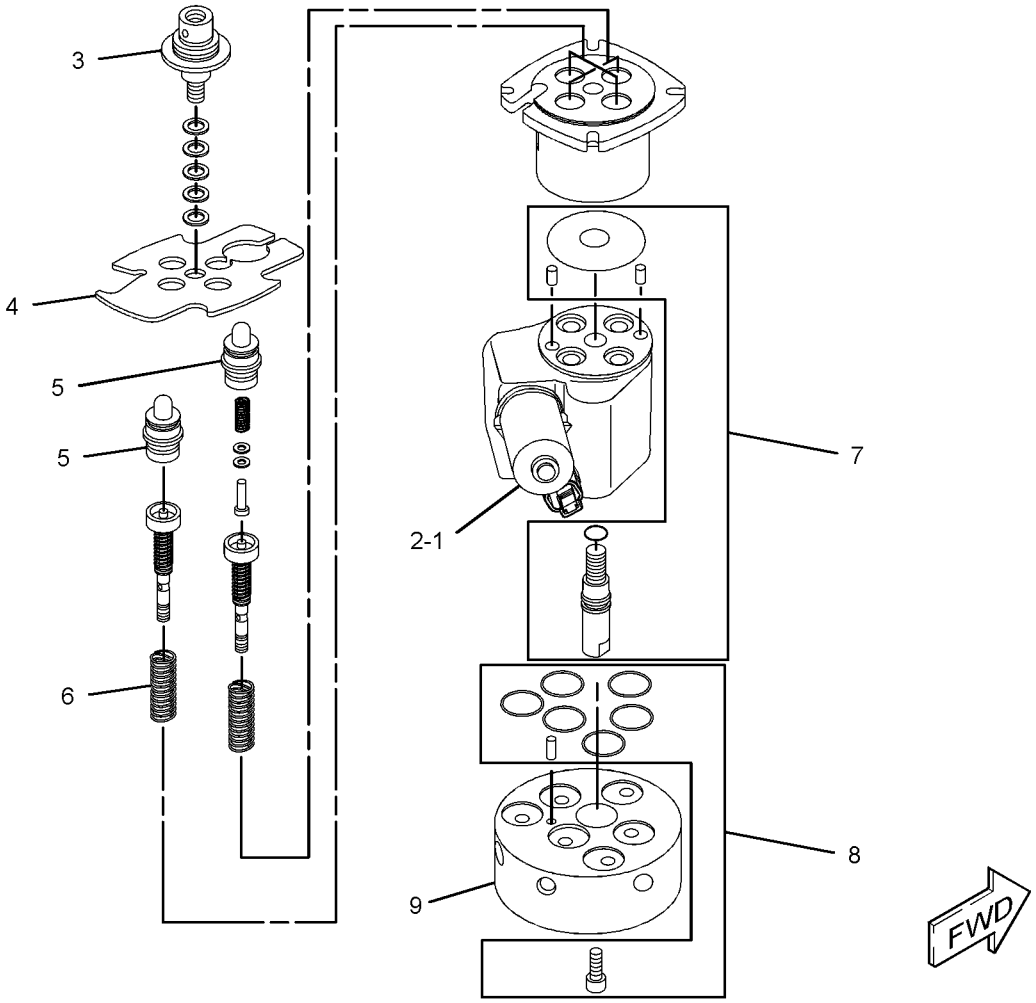

GRAPHIC #1 **<END>** g01417329

299-9119 VALVE GP-PILOT

S/N: SCH2504-UP

PART OF 218-5611, 218-5612, 218-5618 CONTROL GP-PILOT OPERATED HYD AN ATTACHMENT

SMCS-5059, 5705 **i02890245**

NOTE	REF NO	GRAPHIC REF	PART NUMBER	QTY	PART NAME 1 2 3 4 5 6 (PRODUCT LEVEL)	SEE PAGE
	1	1	**7K-1181**	1	STRAP-CABLE	
	2	1	**172-0970**	1	COIL AS	
		1	**186-3735**	2	PIN-CONNECTOR (16-GA TO 18-GA)	
		1	**102-8802**	1	KIT-RECEPTACLE (2-PIN)	
					(INCLUDES RECEPTACLE AS & WEDGE)	
Y	3	1	**195-9700**	1	VALVE GP-SOLENOID (12-VOLT)	345
M	4	1	**8T-1158**	1	BOLT-SOCKET HEAD (M8X1.25X20-MM)	
M	5	1	**8T-9405**	1	BOLT-SOCKET HEAD (M4X0.7X16-MM)	
	6	1	**102-8802**	1	KIT-RECEPTACLE (2-PIN)	
					(INCLUDES RECEPTACLE AS & WEDGE)	
	7	1	**313-6251**	1	KIT-JOINT	
					(INCLUDES SHIMS, NUT, WASHER, DETENT ARM & CARDAN)	
	8	1	**299-9121**	1	PLATE	
	9	1	**8U-9427**	3	KIT-PLUNGER (PILOT VALVE)	
	10	1	**203-1100**	1	KIT-PLUNGER	
					(INCLUDES PLUNGERS, SNAP RINGS & RETAINERS)	
	11	1	**160-6778**	1	KIT-PILOT VALVE (SPRING)	
					(INCLUDES SPRINGS)	
	12	1	**9T-2837**	1	KIT-SEAL (PILOT VALVE)	
					(INCLUDES PINS, O-RINGS & BOLT)	

M-METRIC PART
Y-SEPARATE ILLUSTRATION

299-9119 VALVE GP-PILOT *(contd.)* **i02890245**

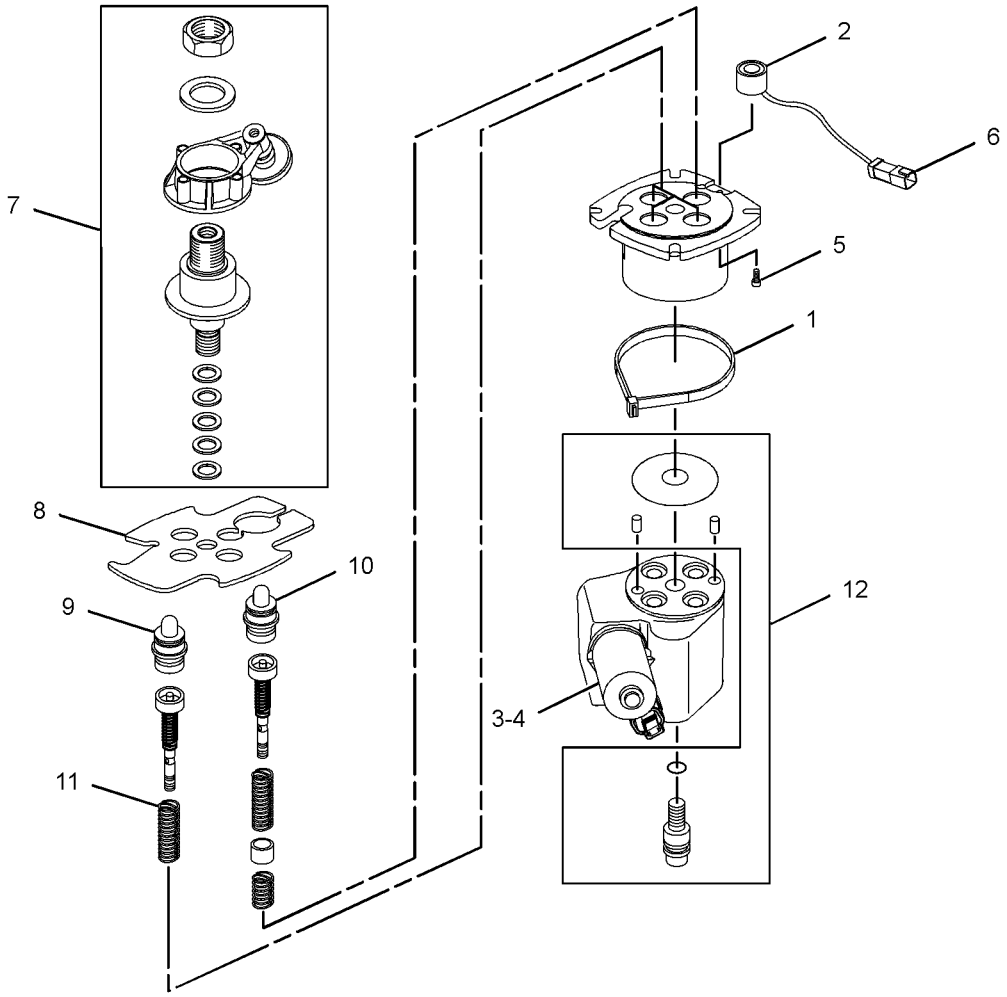

GRAPHIC #1 **<END>** g01417349

298-1309 VALVE GP-RELIEF

S/N: SCH2475-UP

PART OF 191-9686 VALVE GP-CONTROL

SMCS-5069, 5117 **i02605580**

NOTE	REF NO	GRAPHIC REF	PART NUMBER	QTY	PART NAME 1 2 3 4 5 6 (PRODUCT LEVEL)	SEE PAGE
	1	1	**130-1676**	1	SEAL-O-RING	

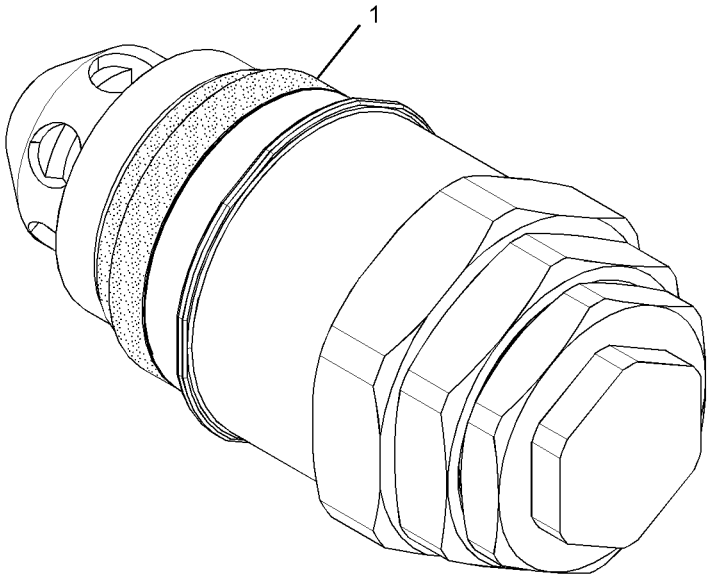

GRAPHIC #1 **<END>** g01304645

HYDRAULIC SYSTEM

185-4254 VALVE GP-SOLENOID–AUXILIARY

S/N: SCH2475-UP

PART OF 191-9686 VALVE GP-CONTROL

SMCS-5479 **i02372783**

NOTE	REF NO	GRAPHIC REF	PART NUMBER	QTY	PART NAME 1 2 3 4 5 6 (PRODUCT LEVEL)	SEE PAGE
	1	1	**226-9629**	1	COIL AS-SOLENOID (12-VOLT)	
	2	1	**164-2108**	1	WASHER (13.03X25.4X2.38-MM THK)	
	3	1	**218-2373**	1	NUT (1/2-28-THD)	
	4	1	*185-4253*	1	VALVE AS	

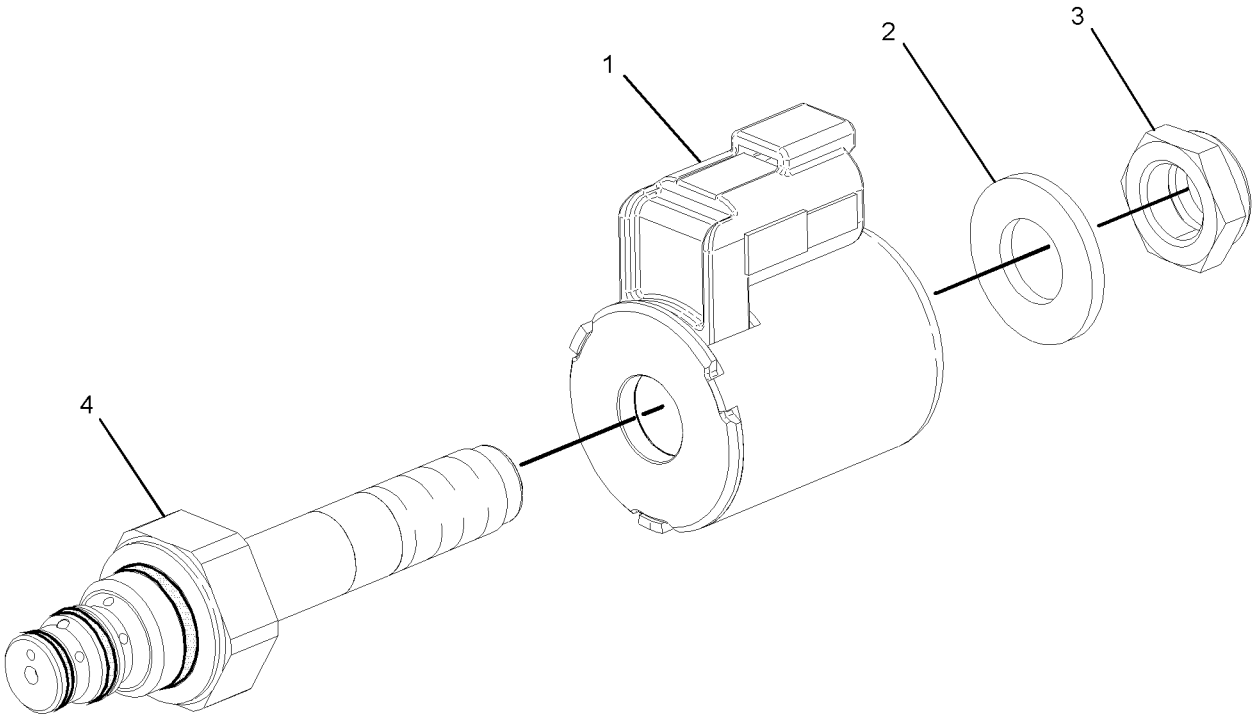

GRAPHIC #1 **<END>** g01185611

195-9700 VALVE GP-SOLENOID

S/N: SCH2475-UP

PART OF 218-6119, 228-9228, 299-9116, 299-9119 VALVE GP-PILOT

AN ATTACHMENT

SMCS-5479 **i02712998**

NOTE	REF NO	GRAPHIC REF	PART NUMBER	QTY	PART NAME 1 2 3 4 5 6 (PRODUCT LEVEL)	SEE PAGE
	1	1	**212-0061**	1	FLANGE	
					AVAILABLE REPAIR KIT(S):	
			200-2371	1	KIT-SEAL	
					(INCLUDES 3 SEALS)	

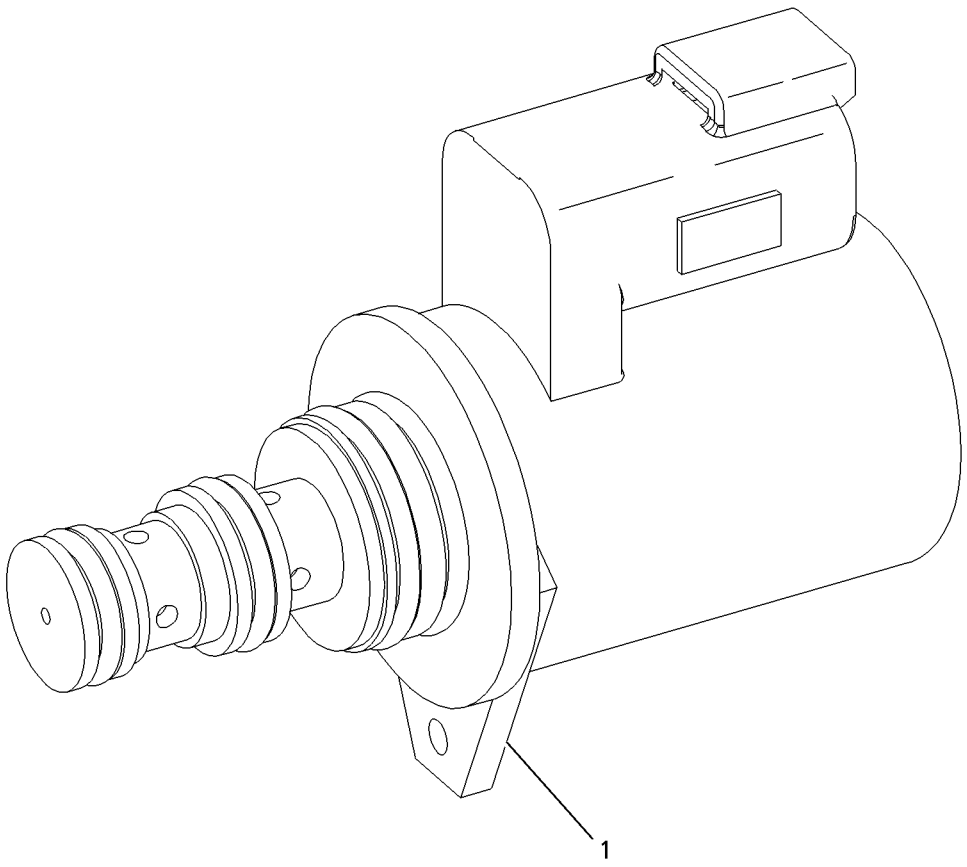

GRAPHIC #1 **<END>** g00947284

HYDRAULIC SYSTEM

231-6287 VALVE GP-SOLENOID–A/C COMPRESSOR

S/N: SCH2475-UP
PART OF 218-6840 MOTOR GP-GEAR
AN ATTACHMENT

SMCS-5479 **i01961984**

NOTE	REF NO	GRAPHIC REF	PART NUMBER	QTY	PART NAME 1 2 3 4 5 6 (PRODUCT LEVEL)	SEE PAGE
	1	1	**3E-8621**	1	COIL AS	
		1	**1S-9593**	1	STRAP-CABLE	
		1	**3E-3365**	1	WEDGE-RECEPTACLE LOCK (2-PIN)	
		1	**186-3735**	2	PIN-CONNECTOR (16-GA TO 18-GA)	
		1	**102-8802**	1	KIT-RECEPTACLE (2-PIN)	
					(INCLUDES RECEPTACLE AS & WEDGE)	
	2	1	**156-5970**	1	NUT (1/2-20-2B-THD)	
	3	1	**231-6564**	1	CARTRIDGE AS-VALVE	
		1	**3D-2824**	1	SEAL-O-RING	
		1	**6F-6672**	1	SEAL-O-RING	
		1	**156-5970**	1	NUT (1/2-20-2B-THD)	
		1	**194-3873**	2	RING-BACKUP	
	4	1	**3D-2824**	1	SEAL-O-RING	
	5	1	**6F-6672**	1	SEAL-O-RING	

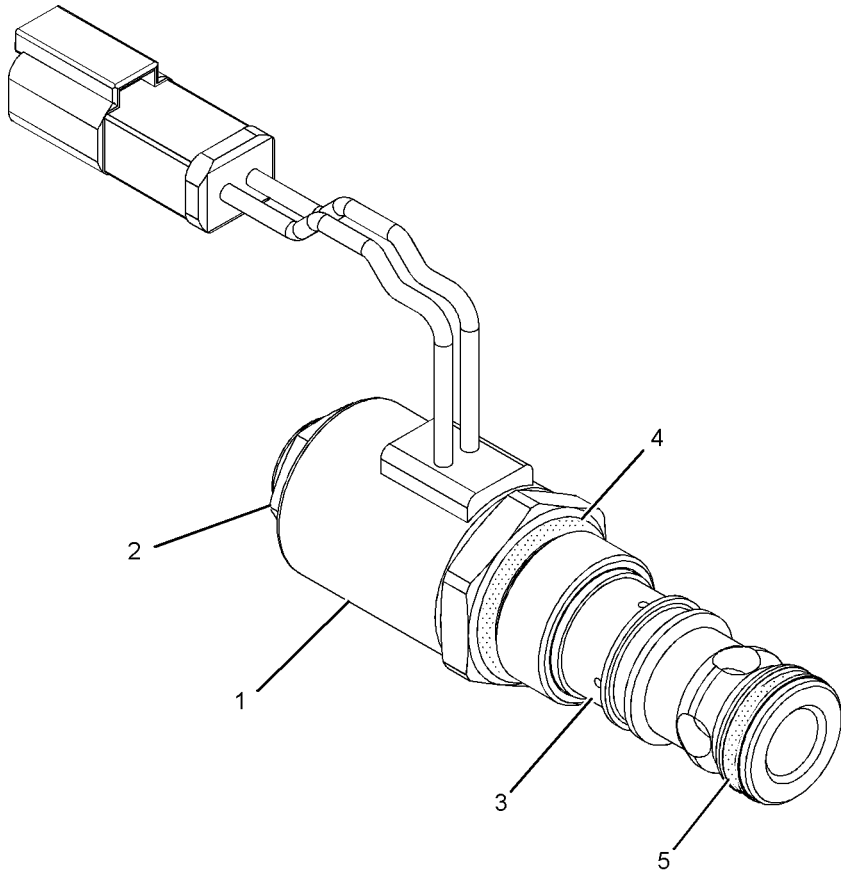

GRAPHIC #1 **<END>** g01026804

259-8194 VALVE GP-SOLENOID

S/N: SCH2475-UP

PART OF 233-7131, 248-1268 MANIFOLD & SOLENOID GP-CONTROL

SMCS-5479 **i02485890**

NOTE	REF NO	GRAPHIC REF	PART NUMBER	QTY	PART NAME 1 2 3 4 5 6 (PRODUCT LEVEL)	SEE PAGE
	1	1	**238-4626**	1	COIL AS (AUXILIARY FLOW CONTROL)	

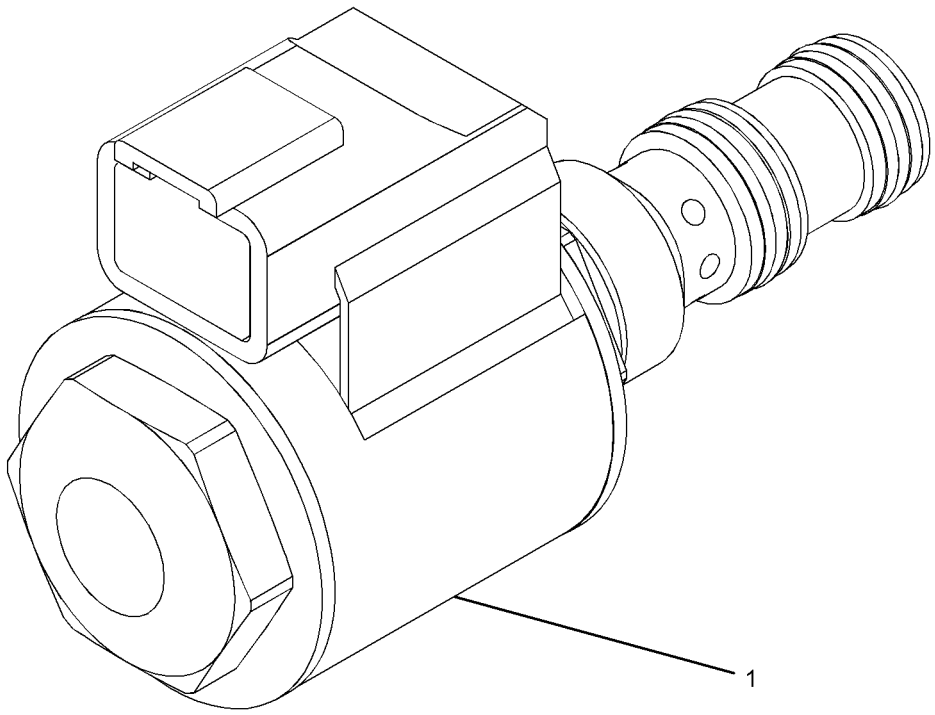

GRAPHIC #1 **<END>** g01121017

216-8756 ARM GP-MATERIAL HANDLING

S/N: SCH2475-UP

AN ATTACHMENT

SMCS-6542 **i02342557**

NOTE	REF NO	GRAPHIC REF	PART NUMBER	QTY	PART NAME 1 2 3 4 5 6 (PRODUCT LEVEL)	SEE PAGE
	1	1	**9V-2714**	1	HOOK	
	2	1	**9V-2715**	1	SHACKLE AS	
	3	1	**156-5762**	2	FILM-INFORMATION (TIE-DOWN LOCATION)	
Y	4	1	*188-7733*	1	STEP GP-MATERIAL HANDLING ARM	435
	5	1	**216-8850**	1	ARM AS	
M	6	1	**7X-2475**	1	BOLT (M16X2X130-MM)	
	7	1	**8T-4122**	1	WASHER-HARD (17X32X3.5-MM THK)	
M	8	1	**8T-1757**	1	NUT (M16X2-THD)	

M-METRIC PART
Y-SEPARATE ILLUSTRATION

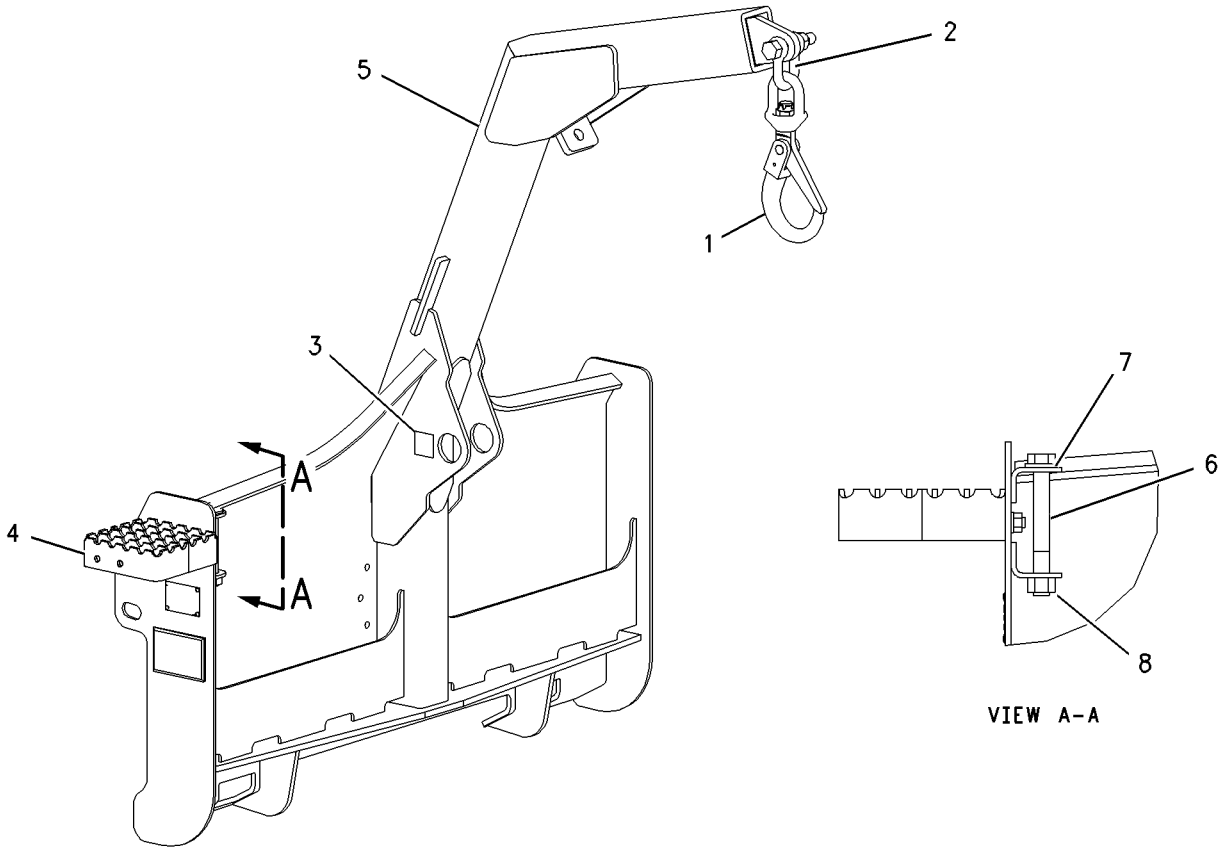

GRAPHIC #1 **<END>** g00934159

177-1989 BLADE AR–ANGLING

S/N: SCH2475-UP
1829-MM (72-IN)
AN ATTACHMENT

SMCS-6060, 6701 **i01860746**

NOTE	PART NUMBER	QTY	PART NAME 1 2 3 4 5 6 (PRODUCT LEVEL)	SEE PAGE
Y	*177-1981*	1	BLADE GP-ANGLING	350
Y	*230-5406*	1	CYLINDER & MTG GP-ANGLE BLADE	240
Y	*135-9386*	1	EDGE GP-CUTTING	406
Y	*230-5670*	1	FRAME GP-BLADE	418
Y	*177-1986*	1	LINES GP-CONNECTING	271
Y	*177-1983*	1	SPRING GP-BLADE	434

Y-SEPARATE ILLUSTRATION

<END>

177-1990 BLADE AR–ANGLING

S/N: SCH2475-UP
2134-MM (84-IN)
AN ATTACHMENT

SMCS-6060, 6701 **i01861063**

NOTE	PART NUMBER	QTY	PART NAME 1 2 3 4 5 6 (PRODUCT LEVEL)	SEE PAGE
Y	*177-1982*	1	BLADE GP-ANGLING	351
Y	*230-5406*	1	CYLINDER & MTG GP-ANGLE BLADE	240
Y	*149-5741*	1	EDGE GP-CUTTING	408
Y	*230-5670*	1	FRAME GP-BLADE	418
Y	*177-1986*	1	LINES GP-CONNECTING	271
Y	*177-1983*	1	SPRING GP-BLADE	434

Y-SEPARATE ILLUSTRATION

<END>

WORK TOOLS

177-1981 BLADE GP-ANGLING

S/N: SCH2475-UP
1829-MM (72-IN)
PART OF 177-1989 BLADE AR
AN ATTACHMENT

SMCS-6060, 6701 **i01905763**

NOTE	REF NO	GRAPHIC REF	PART NUMBER	QTY	PART NAME 1 2 3 4 5 6 (PRODUCT LEVEL)	SEE PAGE
	1	1	**157-0940**	2	PIN	
	2	1	**166-0319**	2	PIN AS	
	3	1	**169-4868**	2	FILM-WARNING (NO CLEARANCE, STAY BACK)	
	4	1	**177-1921**	2	PIN AS	
	5	1	**177-1972**	2	SKID AS	
	6	1	**177-1987**	1	BLADE AS	
	7	1	**3B-8489**	2	FITTING-GREASE	
M	8	1	**6V-9189**	2	LOCKNUT (M8X1.25-THD)	
M	9	1	**8T-6869**	2	BOLT (M8X1.25X60-MM)	
	10	1	**9R-2959**	2	CLIP	

M-METRIC PART

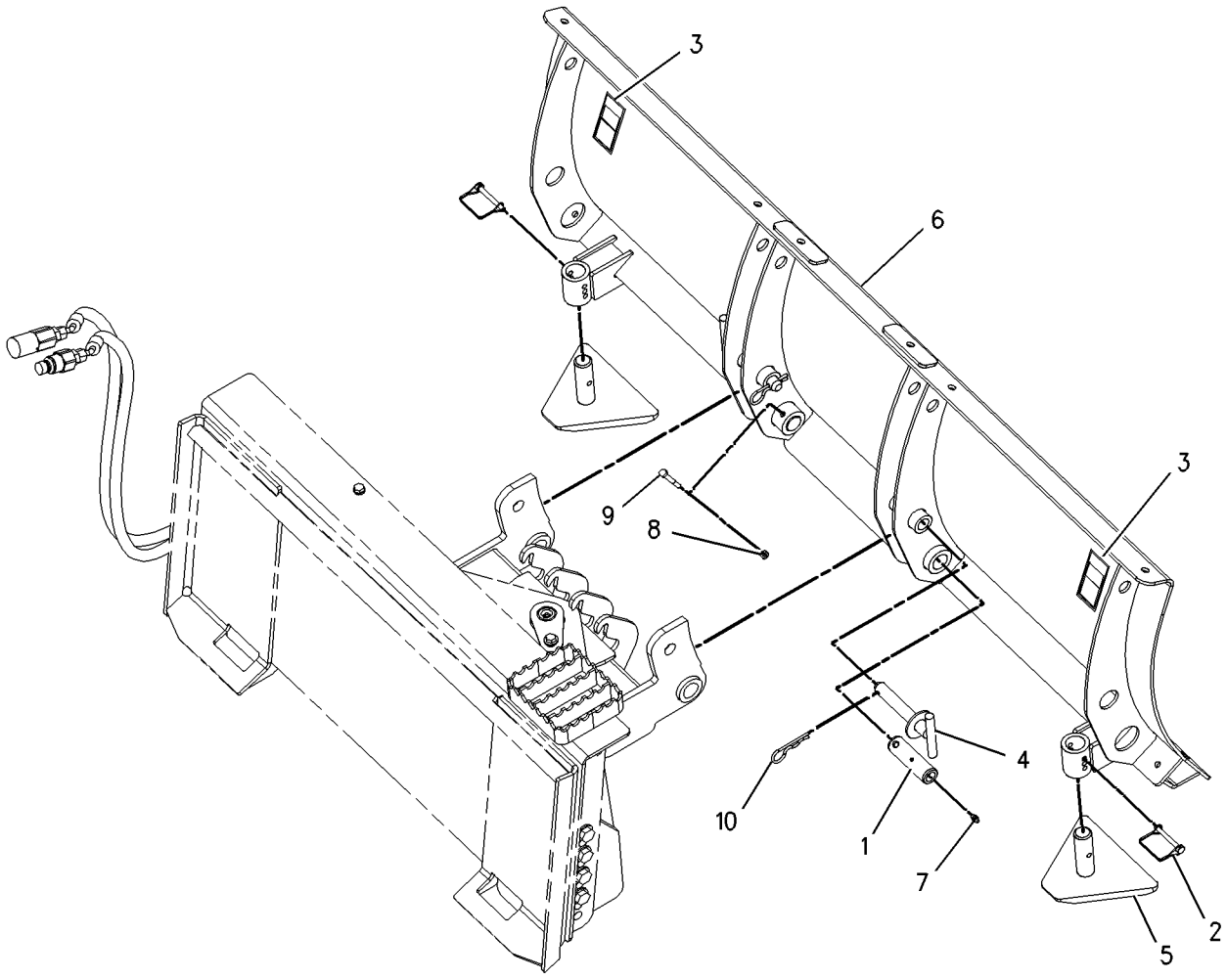

GRAPHIC #1 **<END>** g00777694

177-1982 BLADE GP-ANGLING

S/N: SCH2475-UP
2134-MM (84-IN)
PART OF 177-1990 BLADE AR
AN ATTACHMENT

SMCS-6060, 6701 **i01911992**

NOTE	REF NO	GRAPHIC REF	PART NUMBER	QTY	PART NAME 1 2 3 4 5 6 (PRODUCT LEVEL)	SEE PAGE
	1	1	**157-0940**	2	PIN	
	2	1	**166-0319**	2	PIN AS	
	3	1	**169-4868**	2	FILM-WARNING (NO CLEARANCE, STAY BACK)	
	4	1	**177-1921**	2	PIN AS	
	5	1	**177-1972**	2	SKID AS	
	6	1	**177-1988**	1	BLADE AS	
	7	1	**3B-8489**	2	FITTING-GREASE	
M	8	1	**6V-9189**	2	LOCKNUT (M8X1.25-THD)	
M	9	1	**8T-6869**	2	BOLT (M8X1.25X60-MM)	
	10	1	**9R-2959**	2	CLIP	

M-METRIC PART

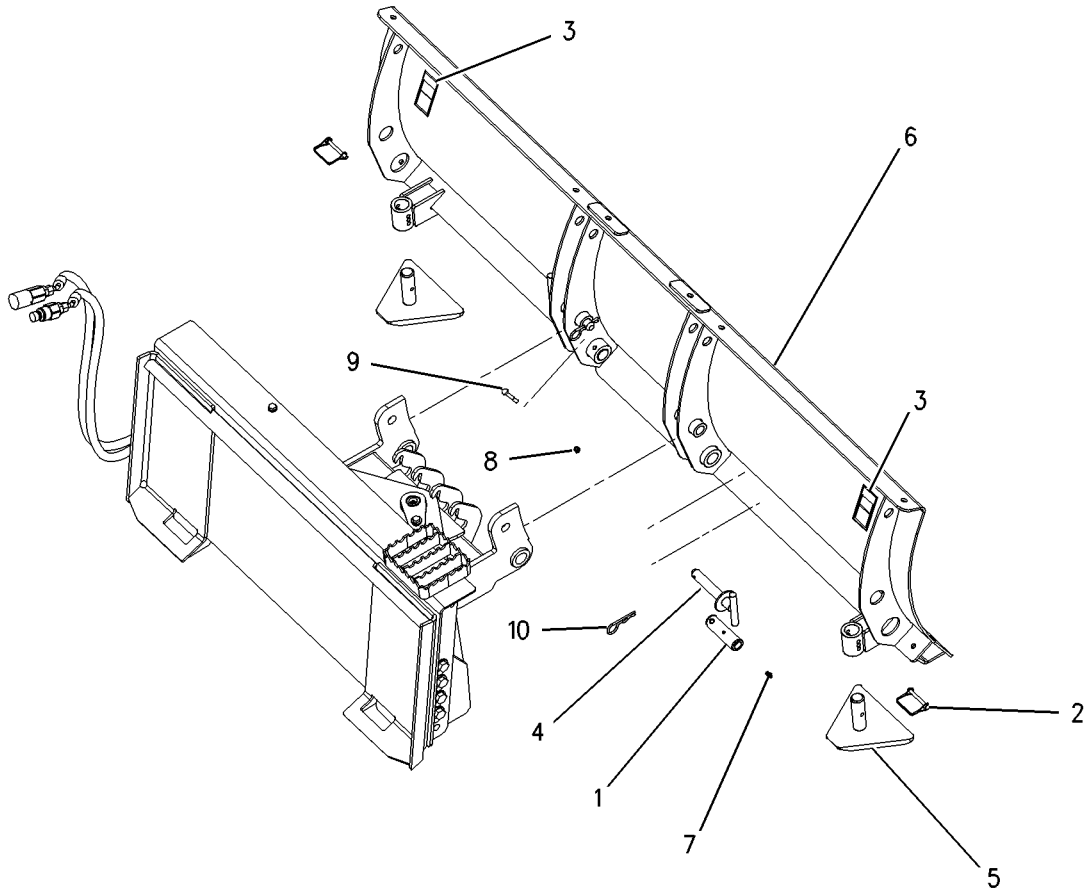

GRAPHIC #1 **<END>** g00710327

279-5384 BLADE GP-MULTIPURPOSE BUCKET

S/N: SCH2475-UP
1524-MM (60-IN)
PART OF 279-5383 BUCKET GP-MULTIPURPOSE
AN ATTACHMENT

SMCS-6060, 6104 **i02552040**

NOTE	REF NO	GRAPHIC REF	PART NUMBER	QTY	PART NAME 1 2 3 4 5 6 (PRODUCT LEVEL)	SEE PAGE
	1	1	**154-2704**	1	PLATE-INSTRUCTION (BUCKET SPECIFICATIONS)	
	2	1	**168-8389**	4	TACK-FASTENER	
	3	1	**279-5385**	1	BLADE AS	

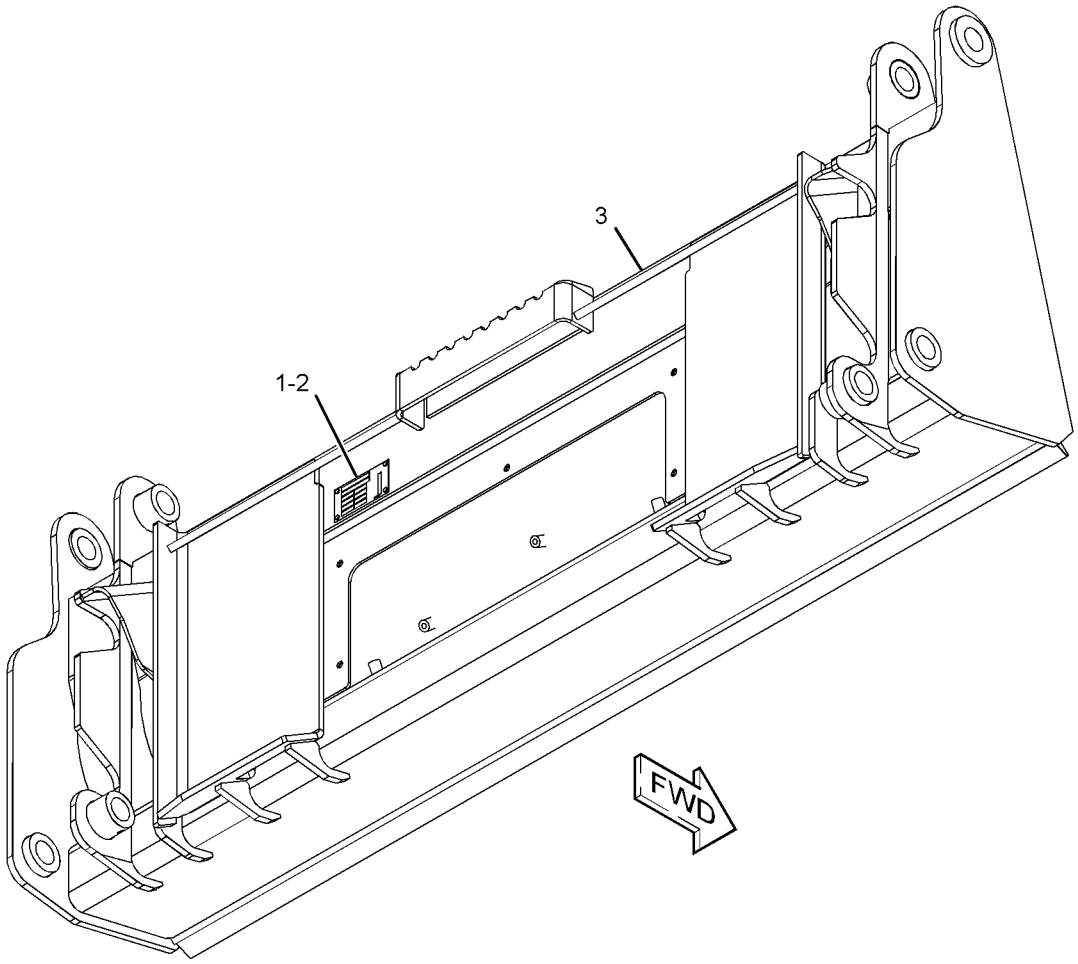

GRAPHIC #1 **<END>** g01278496

WORK TOOLS

279-5388 BLADE GP-MULTIPURPOSE BUCKET

S/N: SCH2475-UP
1676-MM (66-IN)
PART OF 279-5389 BUCKET GP-MULTIPURPOSE
AN ATTACHMENT

SMCS-6060, 6104 **i02552100**

NOTE	REF NO	GRAPHIC REF	PART NUMBER	QTY	PART NAME 1 2 3 4 5 6 (PRODUCT LEVEL)	SEE PAGE
	1	1	**154-2704**	1	PLATE-INSTRUCTION (BUCKET SPECIFICATIONS)	
	2	1	**168-8389**	4	TACK-FASTENER	
	3	1	**279-5387**	1	BLADE AS	

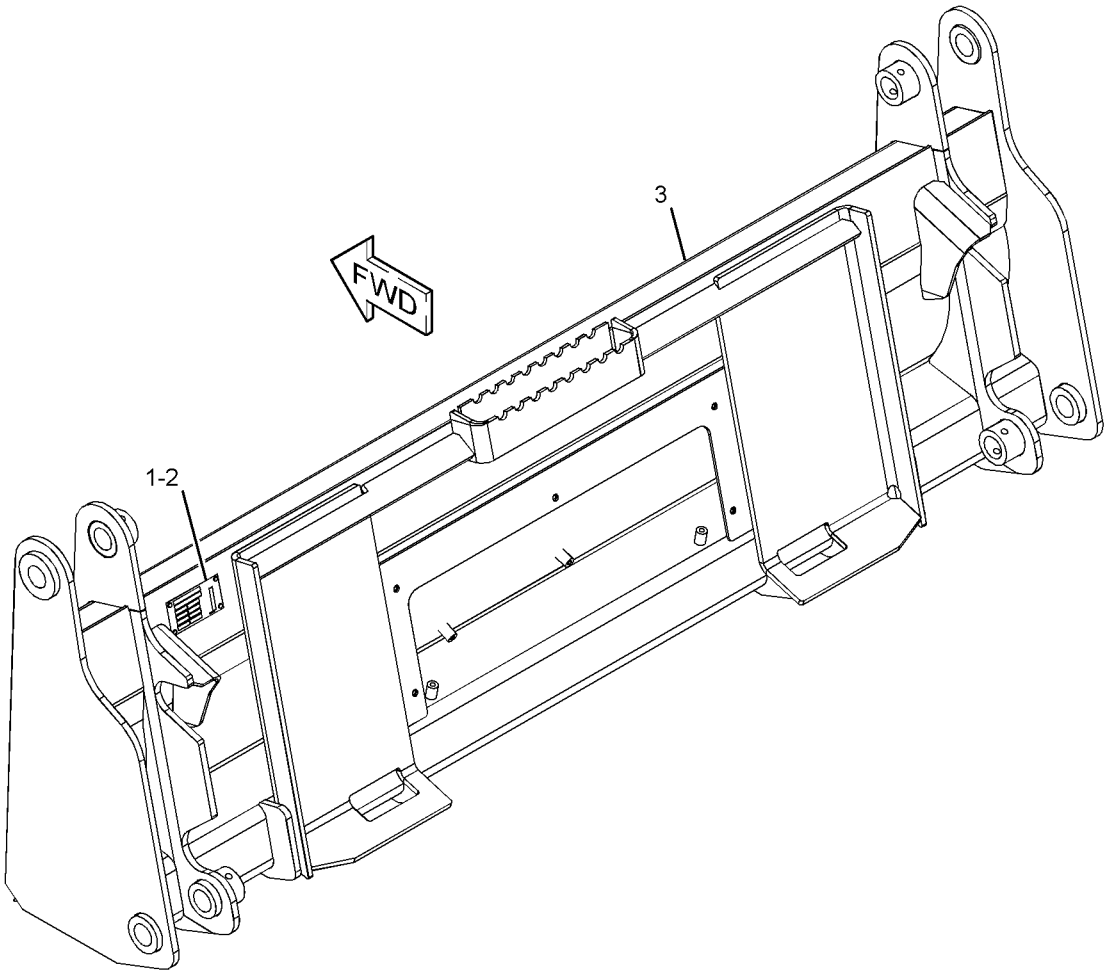

GRAPHIC #1 **<END>** g01279242

279-5396 BLADE GP-MULTIPURPOSE BUCKET

S/N: SCH2475-UP
1829-MM (72-IN)
PART OF 279-5397 BUCKET GP-MULTIPURPOSE
AN ATTACHMENT

SMCS-6060, 6104 **i02552170**

NOTE	REF NO	GRAPHIC REF	PART NUMBER	QTY	PART NAME 1 2 3 4 5 6 (PRODUCT LEVEL)	SEE PAGE
	1	1	**154-2704**	1	PLATE-INSTRUCTION (BUCKET SPECIFICATIONS)	
	2	1	**168-8389**	4	TACK-FASTENER	
	3	1	**279-5395**	1	BLADE AS	

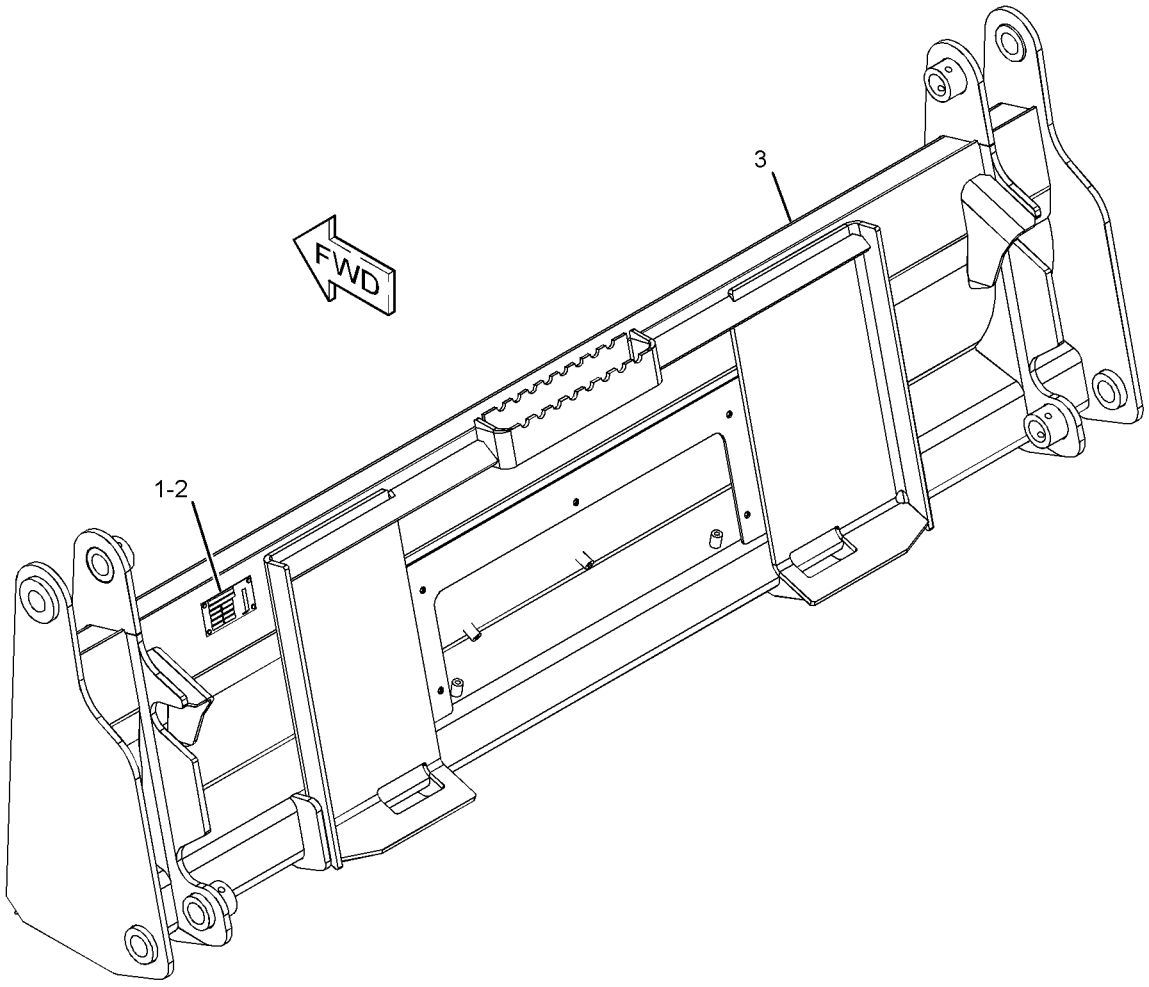

GRAPHIC #1 **<END>** g01279973

279-5405 BLADE GP-MULTIPURPOSE BUCKET

S/N: SCH2475-UP
1981-MM (78-IN)
PART OF 279-5404 BUCKET GP-MULTIPURPOSE
AN ATTACHMENT

SMCS-6060, 6104 **i02552256**

NOTE	REF NO	GRAPHIC REF	PART NUMBER	QTY	PART NAME 1 2 3 4 5 6 (PRODUCT LEVEL)	SEE PAGE
	1	1	**154-2704**	1	PLATE-INSTRUCTION (BUCKET SPECIFICATIONS)	
	2	1	**168-8389**	4	TACK-FASTENER	
	3	1	**279-5406**	1	BLADE AS	

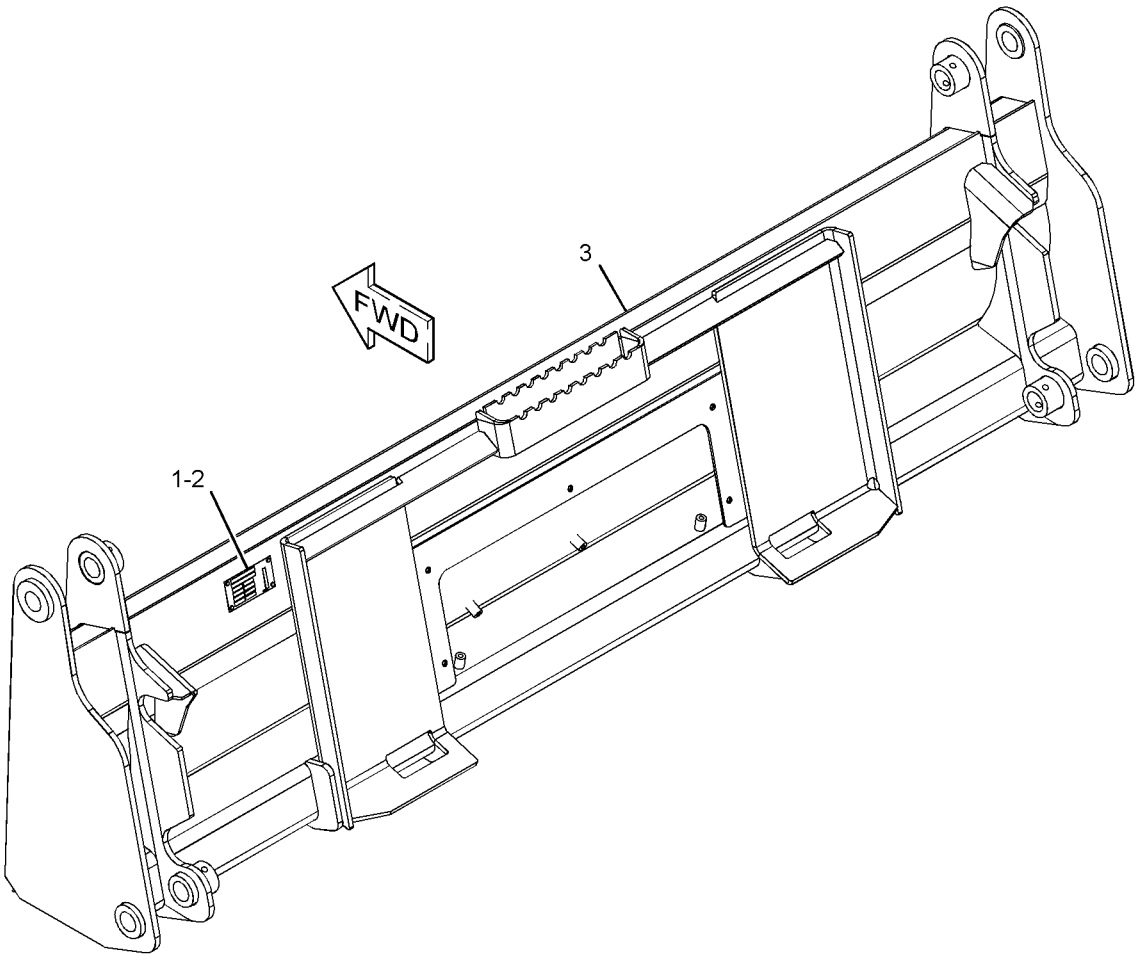

GRAPHIC #1 **<END>** g01278518

WORK TOOLS

268-4083 BUCKET AR-DIRT

S/N: SCH2475-UP
FIELD REPLACEMENT FOR 268-4084—PAGE 380
AN ATTACHMENT AND FIELD INSTALLATION

SMCS-6001 **i02539980**

NOTE	PART NUMBER	QTY	PART NAME 1 2 3 4 5 6 (PRODUCT LEVEL)	SEE PAGE
Y	**268-4084**	1	BUCKET GP-DIRT	380
Y	*135-9387*	1	EDGE GP-CUTTING	407
Y-SEPARATE ILLUSTRATION				

<END>

279-5435 BUCKET AR-DIRT

S/N: SCH2475-UP
AN ATTACHMENT

SMCS-6001 **i02552331**

NOTE	PART NUMBER	QTY	PART NAME 1 2 3 4 5 6 (PRODUCT LEVEL)	SEE PAGE
Y	**279-5434**	1	BUCKET AS-DIRT	369
Y	*135-9383*	1	EDGE GP-CUTTING	403
Y-SEPARATE ILLUSTRATION				

<END>

279-5438 BUCKET AR-DIRT

S/N: SCH2475-UP
AN ATTACHMENT

SMCS-6001 **i02571312**

NOTE	PART NUMBER	QTY	PART NAME 1 2 3 4 5 6 (PRODUCT LEVEL)	SEE PAGE
Y	**279-5437**	1	BUCKET AS-DIRT	370
Y	*135-9384*	1	EDGE GP-CUTTING	404
Y-SEPARATE ILLUSTRATION				

<END>

279-5441 BUCKET AR-DIRT

S/N: SCH2475-UP
AN ATTACHMENT

SMCS-6001 **i02571314**

NOTE	PART NUMBER	QTY	PART NAME 1 2 3 4 5 6 (PRODUCT LEVEL)	SEE PAGE
Y	**279-5440**	1	BUCKET AS-DIRT	371
Y	*135-9385*	1	EDGE GP-CUTTING	405
Y-SEPARATE ILLUSTRATION				

<END>

WORK TOOLS

285-6090 BUCKET AR-DIRT

S/N: SCH2475-UP
AN ATTACHMENT

SMCS-6001 **i02552446**

NOTE	PART NUMBER	QTY	PART NAME 1 2 3 4 5 6 (PRODUCT LEVEL)	SEE PAGE
Y	**285-6089**	1	BUCKET AS-DIRT	372
Y	*135-9386*	1	EDGE GP-CUTTING (DIRT)	406

Y-SEPARATE ILLUSTRATION

<END>

279-5365 BUCKET AR-GENERAL PURPOSE

S/N: SCH2475-UP
AN ATTACHMENT

SMCS-6101 **i02550406**

NOTE	PART NUMBER	QTY	PART NAME 1 2 3 4 5 6 (PRODUCT LEVEL)	SEE PAGE
Y	**279-5364**	1	BUCKET AS-GENERAL PURPOSE	373
Y	*135-9384*	1	EDGE GP-CUTTING	404

Y-SEPARATE ILLUSTRATION

<END>

279-5366 BUCKET AR-GENERAL PURPOSE

S/N: SCH2475-UP
AN ATTACHMENT

SMCS-6101 **i02550436**

NOTE	PART NUMBER	QTY	PART NAME 1 2 3 4 5 6 (PRODUCT LEVEL)	SEE PAGE
Y	**279-5364**	1	BUCKET AS-GENERAL PURPOSE	373
Y	*141-4999*	8	TOOTH GP-UNI	442

Y-SEPARATE ILLUSTRATION

<END>

279-5369 BUCKET AR-GENERAL PURPOSE

S/N: SCH2475-UP
AN ATTACHMENT

SMCS-6101 **i02551081**

NOTE	PART NUMBER	QTY	PART NAME 1 2 3 4 5 6 (PRODUCT LEVEL)	SEE PAGE
Y	**279-5368**	1	BUCKET AS-GENERAL PURPOSE	374
Y	*135-9385*	1	EDGE GP-CUTTING	405

Y-SEPARATE ILLUSTRATION

<END>

279-5370 BUCKET AR-GENERAL PURPOSE

S/N: SCH2475-UP
AN ATTACHMENT

SMCS-6101 **i02551084**

NOTE	PART NUMBER	QTY	PART NAME 1 2 3 4 5 6 (PRODUCT LEVEL)	SEE PAGE
Y	**279-5368**	1	BUCKET AS-GENERAL PURPOSE	374
Y	*141-4999*	8	TOOTH GP-UNI	442

Y-SEPARATE ILLUSTRATION

<END>

279-5373 BUCKET AR-GENERAL PURPOSE

S/N: SCH2475-UP
AN ATTACHMENT

SMCS-6101 **i02552012**

NOTE	PART NUMBER	QTY	PART NAME 1 2 3 4 5 6 (PRODUCT LEVEL)	SEE PAGE
Y	**279-5372**	1	BUCKET AS-GENERAL PURPOSE	375
Y	*135-9386*	1	EDGE GP-CUTTING	406

Y-SEPARATE ILLUSTRATION

<END>

279-5374 BUCKET AR-GENERAL PURPOSE

S/N: SCH2475-UP
AN ATTACHMENT

SMCS-6101 **i02552011**

NOTE	PART NUMBER	QTY	PART NAME 1 2 3 4 5 6 (PRODUCT LEVEL)	SEE PAGE
Y	**279-5372**	1	BUCKET AS-GENERAL PURPOSE	375
Y	*141-4999*	8	TOOTH GP-UNI	442

Y-SEPARATE ILLUSTRATION

<END>

279-5377 BUCKET AR-GENERAL PURPOSE

S/N: SCH2475-UP
AN ATTACHMENT

SMCS-6101 **i02552020**

NOTE	PART NUMBER	QTY	PART NAME 1 2 3 4 5 6 (PRODUCT LEVEL)	SEE PAGE
Y	**279-5376**	1	BUCKET AS-GENERAL PURPOSE	376
Y	*135-9387*	1	EDGE GP-CUTTING	407

Y-SEPARATE ILLUSTRATION

<END>

WORK TOOLS

279-5378 BUCKET AR-GENERAL PURPOSE

S/N: SCH2475-UP
AN ATTACHMENT

SMCS-6101 **i02552018**

NOTE	PART NUMBER	QTY	PART NAME 1 2 3 4 5 6 (PRODUCT LEVEL)	SEE PAGE
Y	**279-5376**	1	BUCKET AS-GENERAL PURPOSE	376
Y	*141-4999*	9	TOOTH GP-UNI	442

Y-SEPARATE ILLUSTRATION

<END>

157-7223 BUCKET AR-GRAPPLE

S/N: SCH2475-UP
INDUSTRIAL
PART OF 157-7226 BUCKET AR-GRAPPLE
AN ATTACHMENT

SMCS-6704 **i02508973**

NOTE	PART NUMBER	QTY	PART NAME 1 2 3 4 5 6 (PRODUCT LEVEL)	SEE PAGE
Y	*156-0884*	1	BUCKET GP-GRAPPLE	381
Y	**278-1975**	2	CYLINDER GP-HYDRAULIC	250
Y	*161-0187*	1	LINES GP-GRAPPLE	273
Y	*156-0891*	1	MOUNTING GP-CYLINDER	320

Y-SEPARATE ILLUSTRATION

<END>

157-7224 BUCKET AR-GRAPPLE

S/N: SCH2475-UP
INDUSTRIAL
PART OF 157-7227 BUCKET AR-GRAPPLE
AN ATTACHMENT

SMCS-6704 **i02508941**

NOTE	PART NUMBER	QTY	PART NAME 1 2 3 4 5 6 (PRODUCT LEVEL)	SEE PAGE
Y	*156-0885*	1	BUCKET GP-GRAPPLE	382
Y	*156-0891*	1	MOUNTING GP-CYLINDER	320
Y	**278-1975**	2	CYLINDER GP-HYDRAULIC	250
Y	*161-0187*	1	LINES GP-GRAPPLE	273

Y-SEPARATE ILLUSTRATION

<END>

157-7225 BUCKET AR-GRAPPLE—INDUSTRIAL

S/N: SCH2475-UP
PART OF 158-6095 BUCKET AR-GRAPPLE
AN ATTACHMENT

SMCS-6704 **i02509114**

NOTE	PART NUMBER	QTY	PART NAME 1 2 3 4 5 6 (PRODUCT LEVEL)	SEE PAGE
Y	*156-0886*	1	BUCKET GP-GRAPPLE	383
Y	**278-1975**	2	CYLINDER GP-HYDRAULIC	250
Y	*161-0187*	1	LINES GP-GRAPPLE	273
Y	*156-0891*	1	MOUNTING GP-CYLINDER	320

Y-SEPARATE ILLUSTRATION

<END>

157-7226 BUCKET AR-GRAPPLE—INDUSTRIAL

S/N: SCH2475-UP
AN ATTACHMENT

SMCS-6704 **i01788957**

NOTE	PART NUMBER	QTY	PART NAME 1 2 3 4 5 6 (PRODUCT LEVEL)	SEE PAGE
Y	**157-7223**	1	BUCKET AR-GRAPPLE	359
Y	*135-9384*	1	EDGE GP-CUTTING	404

Y-SEPARATE ILLUSTRATION

<END>

157-7227 BUCKET AR-GRAPPLE—INDUSTRIAL

S/N: SCH2475-UP
AN ATTACHMENT

SMCS-6704 **i01788965**

NOTE	PART NUMBER	QTY	PART NAME 1 2 3 4 5 6 (PRODUCT LEVEL)	SEE PAGE
Y	**157-7224**	1	BUCKET AR-GRAPPLE	359
Y	*135-9385*	1	EDGE GP-CUTTING	405

Y-SEPARATE ILLUSTRATION

<END>

158-6095 BUCKET AR-GRAPPLE—INDUSTRIAL

S/N: SCH2475-UP
AN ATTACHMENT

SMCS-6704 **i01060288**

NOTE	PART NUMBER	QTY	PART NAME 1 2 3 4 5 6 (PRODUCT LEVEL)	SEE PAGE
Y	**157-7225**	1	BUCKET AR-GRAPPLE	360
Y	*135-9386*	1	EDGE GP-CUTTING	406

Y-SEPARATE ILLUSTRATION

<END>

WORK TOOLS

285-6093 BUCKET AR-GRAPPLE

S/N: SCH2475-UP
AN ATTACHMENT

SMCS-6704 **i02552451**

NOTE	PART NUMBER	QTY	PART NAME 1 2 3 4 5 6 (PRODUCT LEVEL)	SEE PAGE
Y	**285-6099**	1	BUCKET GP-UTILITY (66-IN)	392
Y	*285-6116*	1	GRAPPLE GP-UTILITY	423

Y-SEPARATE ILLUSTRATION

<END>

285-6104 BUCKET AR-GRAPPLE

S/N: SCH2475-UP
AN ATTACHMENT

SMCS-6704 **i02552487**

NOTE	PART NUMBER	QTY	PART NAME 1 2 3 4 5 6 (PRODUCT LEVEL)	SEE PAGE
Y	**285-6102**	1	BUCKET GP-UTILITY (72-IN)	393
Y	*285-6116*	1	GRAPPLE GP-UTILITY	423

Y-SEPARATE ILLUSTRATION

<END>

285-6111 BUCKET AR-GRAPPLE

S/N: SCH2475-UP
AN ATTACHMENT

SMCS-6704 **i02552741**

NOTE	PART NUMBER	QTY	PART NAME 1 2 3 4 5 6 (PRODUCT LEVEL)	SEE PAGE
Y	**285-6100**	1	BUCKET AR-UTILITY	367
Y	*285-6116*	1	GRAPPLE GP-UTILITY	423

Y-SEPARATE ILLUSTRATION

<END>

285-6112 BUCKET AR-GRAPPLE

S/N: SCH2475-UP
AN ATTACHMENT

SMCS-6704 **i02552759**

NOTE	PART NUMBER	QTY	PART NAME 1 2 3 4 5 6 (PRODUCT LEVEL)	SEE PAGE
Y	**285-6101**	1	BUCKET AR-UTILITY	368
Y	*285-6116*	1	GRAPPLE GP-UTILITY	423

Y-SEPARATE ILLUSTRATION

<END>

WORK TOOLS

286-9300 BUCKET AR-GRAPPLE

S/N: SCH2475-UP

AN ATTACHMENT

SMCS-6704 **i02723699**

NOTE	REF NO	GRAPHIC REF	PART NUMBER	QTY	PART NAME 1 2 3 4 5 6 (PRODUCT LEVEL)	SEE PAGE
Y	1	1	*286-9248*	1	CYLINDER & MTG GP-BUCKET	241
Y	2	1	*286-9251*	1	PLATE & FILM GP	579
Y	3	1	*286-9278*	1	BUCKET GP-GRAPPLE	385
Y	4	1	*286-9279*	1	LINES GP-GRAPPLE	277
Y	5	1	*293-6264*	2	CYLINDER GP-BUCKET	244

Y-SEPARATE ILLUSTRATION

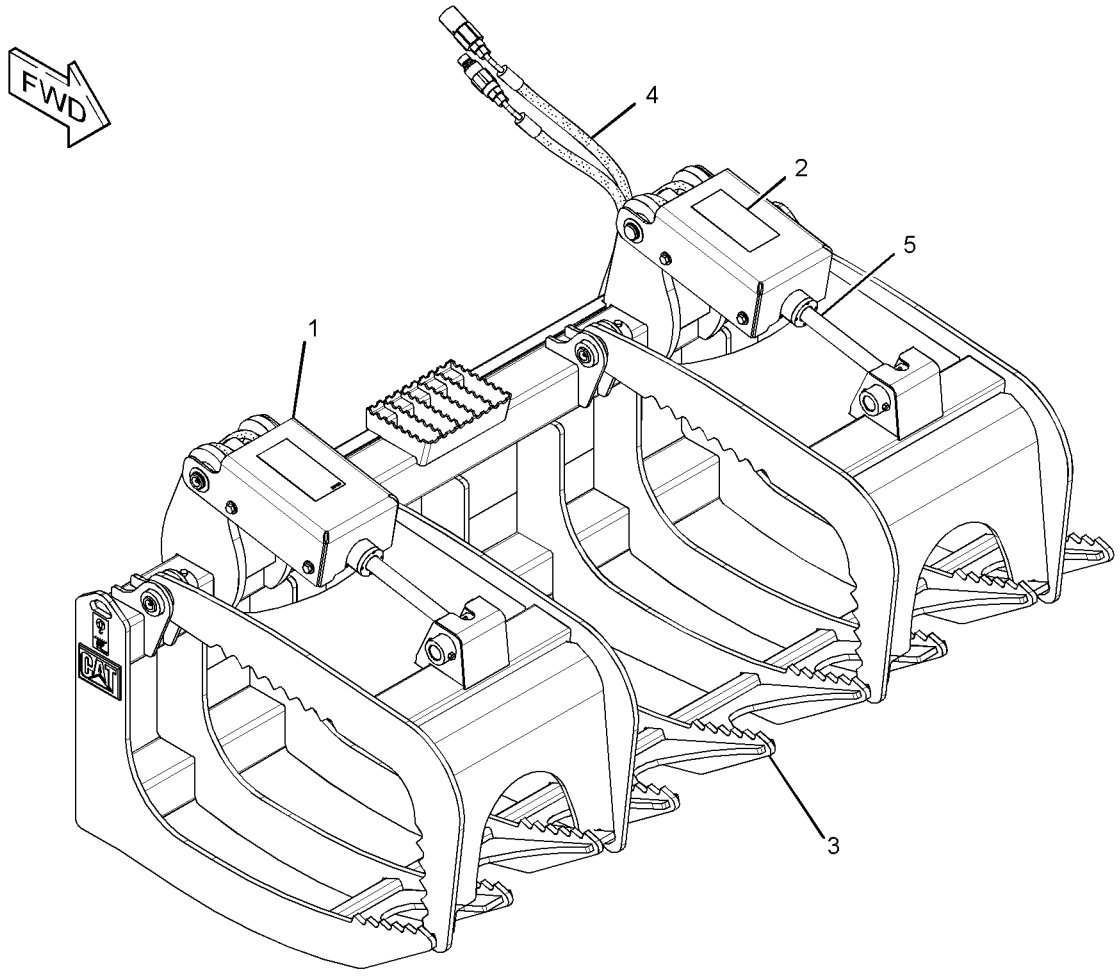

GRAPHIC #1 **<END>** g01372572

WORK TOOLS

286-9301 BUCKET AR-GRAPPLE

S/N: SCH2475-UP
AN ATTACHMENT

SMCS-6704 **i02723700**

NOTE	REF NO	GRAPHIC REF	PART NUMBER	QTY	PART NAME 1 2 3 4 5 6 (PRODUCT LEVEL)	SEE PAGE
Y	1	1	*286-9244*	1	BUCKET GP-GRAPPLE	384
Y	2	1	*286-9248*	1	CYLINDER & MTG GP-BUCKET	241
Y	3	1	*286-9250*	1	LINES GP-GRAPPLE	275
Y	4	1	*286-9251*	1	PLATE & FILM GP	579
Y	5	1	**293-6264**	2	CYLINDER GP-BUCKET	244

Y-SEPARATE ILLUSTRATION

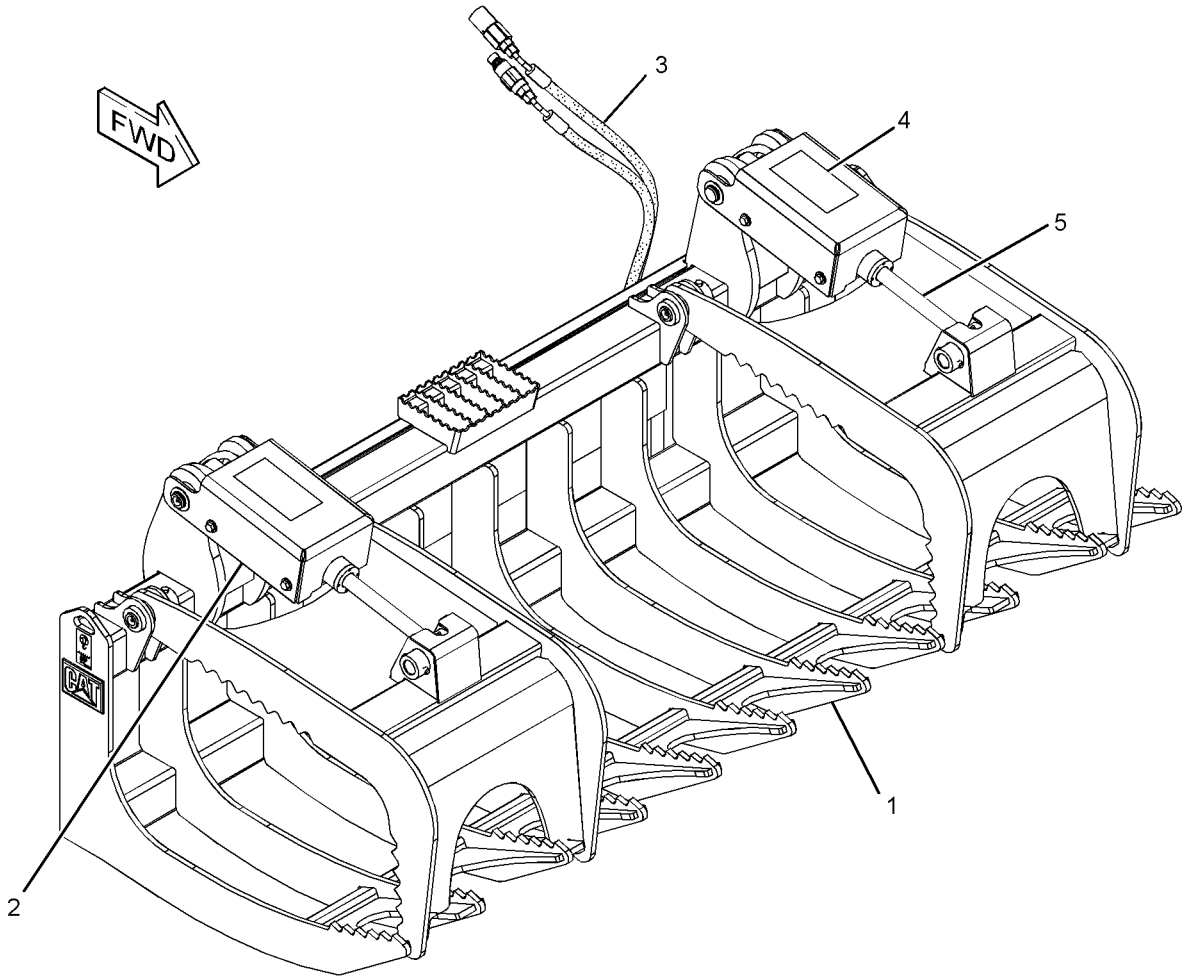

GRAPHIC #1 **<END>** g01372972

279-5420 BUCKET AR-LIGHT MATERIAL

S/N: SCH2475-UP
AN ATTACHMENT

SMCS-6103 **i02552302**

NOTE	PART NUMBER	QTY	PART NAME 1 2 3 4 5 6 (PRODUCT LEVEL)	SEE PAGE
Y	**279-5421**	1	BUCKET AS-LIGHT MATERIAL	377
Y	*135-9386*	1	EDGE GP-CUTTING	406

Y-SEPARATE ILLUSTRATION

<END>

279-5425 BUCKET AR-LIGHT MATERIAL

S/N: SCH2475-UP
AN ATTACHMENT

SMCS-6103 **i02552308**

NOTE	PART NUMBER	QTY	PART NAME 1 2 3 4 5 6 (PRODUCT LEVEL)	SEE PAGE
Y	**279-5424**	1	BUCKET AS-LIGHT MATERIAL	378
Y	*135-9387*	1	EDGE GP-CUTTING	407

Y-SEPARATE ILLUSTRATION

<END>

279-5430 BUCKET AR-LIGHT MATERIAL

S/N: SCH2475-UP
AN ATTACHMENT

SMCS-6103 **i02552313**

NOTE	PART NUMBER	QTY	PART NAME 1 2 3 4 5 6 (PRODUCT LEVEL)	SEE PAGE
Y	**279-5429**	1	BUCKET AS-LIGHT MATERIAL	379
Y	*195-7124*	1	EDGE GP-CUTTING	409

Y-SEPARATE ILLUSTRATION

<END>

279-5380 BUCKET AR-MULTIPURPOSE

S/N: SCH2475-UP
AN ATTACHMENT

SMCS-6104 **i02552027**

NOTE	PART NUMBER	QTY	PART NAME 1 2 3 4 5 6 (PRODUCT LEVEL)	SEE PAGE
Y	**279-5382**	1	BUCKET AR-MULTIPURPOSE	365
Y	*141-4999*	8	TOOTH GP-UNI	442

Y-SEPARATE ILLUSTRATION

<END>

WORK TOOLS

279-5381 BUCKET AR-MULTIPURPOSE

S/N: SCH2475-UP
AN ATTACHMENT

SMCS-6104 **i02552030**

NOTE	PART NUMBER	QTY	PART NAME 1 2 3 4 5 6 (PRODUCT LEVEL)	SEE PAGE
Y	**279-5382**	1	BUCKET AR-MULTIPURPOSE	365
Y	*135-9384*	1	EDGE GP-CUTTING	404
Y-SEPARATE ILLUSTRATION				

<END>

279-5382 BUCKET AR-MULTIPURPOSE

S/N: SCH2475-UP
PART OF 279-5380, 279-5381 BUCKET AR-MULTIPURPOSE
AN ATTACHMENT

SMCS-6104 **i02770080**

NOTE	PART NUMBER	QTY	PART NAME 1 2 3 4 5 6 (PRODUCT LEVEL)	SEE PAGE
Y	*279-5383*	1	BUCKET GP-MULTIPURPOSE (60-IN)	386
Y	*162-5236*	1	COVER GP-LINES	400
Y	*278-1969*	2	CYLINDER GP-HYDRAULIC	249
Y	*279-5413*	1	LINES GP-BUCKET	260
Y	*154-5011*	1	MOUNTING GP-CYLINDER	319
Y-SEPARATE ILLUSTRATION				

<END>

279-5390 BUCKET AR-MULTIPURPOSE

S/N: SCH2475-UP
PART OF 279-5391, 279-5392 BUCKET AR-MULTIPURPOSE
AN ATTACHMENT

SMCS-6104 **i02770129**

NOTE	PART NUMBER	QTY	PART NAME 1 2 3 4 5 6 (PRODUCT LEVEL)	SEE PAGE
Y	*279-5389*	1	BUCKET GP-MULTIPURPOSE	387
Y	*162-5236*	1	COVER GP-LINES	400
Y	*278-1969*	2	CYLINDER GP-HYDRAULIC	249
Y	*279-5414*	1	LINES GP-BUCKET	262
Y	*154-5011*	1	MOUNTING GP-CYLINDER	319
Y-SEPARATE ILLUSTRATION				

<END>

279-5391 BUCKET AR-MULTIPURPOSE

S/N: SCH2475-UP
AN ATTACHMENT

SMCS-6104 **i02552078**

NOTE	PART NUMBER	QTY	PART NAME 1 2 3 4 5 6 (PRODUCT LEVEL)	SEE PAGE
Y	**279-5390**	1	BUCKET AR-MULTIPURPOSE	365
Y	*135-9385*	1	EDGE GP-CUTTING	405
Y-SEPARATE ILLUSTRATION				

<END>

279-5392 BUCKET AR-MULTIPURPOSE

S/N: SCH2475-UP
AN ATTACHMENT

SMCS-6104 **i02552071**

NOTE	PART NUMBER	QTY	PART NAME 1 2 3 4 5 6 (PRODUCT LEVEL)	SEE PAGE
Y	**279-5390**	1	BUCKET AR-MULTIPURPOSE	365
Y	*141-4999*	8	TOOTH GP-UNI	442
Y-SEPARATE ILLUSTRATION				

<END>

279-5398 BUCKET AR-MULTIPURPOSE

S/N: SCH2475-UP
PART OF 279-5400 BUCKET AR-MULTIPURPOSE, 279-5399 BUCKET GP-MULTIPURPOSE
AN ATTACHMENT

SMCS-6104 **i02770203**

NOTE	PART NUMBER	QTY	PART NAME 1 2 3 4 5 6 (PRODUCT LEVEL)	SEE PAGE
Y	*279-5397*	1	BUCKET GP-MULTIPURPOSE	388
Y	*162-5236*	1	COVER GP-LINES	400
Y	*278-1969*	2	CYLINDER GP-HYDRAULIC	249
Y	*279-5415*	1	LINES GP-BUCKET	264
Y	*154-5011*	1	MOUNTING GP-CYLINDER	319
Y-SEPARATE ILLUSTRATION				

<END>

279-5400 BUCKET AR-MULTIPURPOSE

S/N: SCH2475-UP
AN ATTACHMENT

SMCS-6104 **i02552121**

NOTE	PART NUMBER	QTY	PART NAME 1 2 3 4 5 6 (PRODUCT LEVEL)	SEE PAGE
Y	**279-5398**	1	BUCKET AR-MULTIPURPOSE	366
Y	*141-4999*	8	TOOTH GP-UNI	442
Y-SEPARATE ILLUSTRATION				

<END>

279-5401 BUCKET AR-MULTIPURPOSE

S/N: SCH2475-UP
AN ATTACHMENT

SMCS-6104 **i02552198**

NOTE	PART NUMBER	QTY	PART NAME 1 2 3 4 5 6 (PRODUCT LEVEL)	SEE PAGE
Y	**279-5403**	1	BUCKET AR-MULTIPURPOSE	367
Y	*141-4999*	9	TOOTH GP-UNI	442
Y-SEPARATE ILLUSTRATION				

<END>

WORK TOOLS

279-5402 BUCKET AR-MULTIPURPOSE

S/N: SCH2475-UP
AN ATTACHMENT

SMCS-6104 **i02552200**

NOTE	PART NUMBER	QTY	PART NAME 1 2 3 4 5 6 (PRODUCT LEVEL)	SEE PAGE
Y	**279-5403**	1	BUCKET AR-MULTIPURPOSE	367
Y	*135-9387*	1	EDGE GP-CUTTING	407
Y-SEPARATE ILLUSTRATION				

<END>

279-5403 BUCKET AR-MULTIPURPOSE

S/N: SCH2475-UP
PART OF 279-5401, 279-5402 BUCKET AR-MULTIPURPOSE
AN ATTACHMENT

SMCS-6104 **i02770224**

NOTE	PART NUMBER	QTY	PART NAME 1 2 3 4 5 6 (PRODUCT LEVEL)	SEE PAGE
Y	*279-5404*	1	BUCKET GP-MULTIPURPOSE (78-IN)	390
Y	*162-5236*	1	COVER GP-LINES	400
Y	*278-1969*	2	CYLINDER GP-HYDRAULIC	249
Y	*279-5416*	1	LINES GP-BUCKET	266
Y	*154-5011*	1	MOUNTING GP-CYLINDER	319
Y-SEPARATE ILLUSTRATION				

<END>

285-6095 BUCKET AR-UTILITY

S/N: SCH2475-UP
AN ATTACHMENT

i02552467

NOTE	PART NUMBER	QTY	PART NAME 1 2 3 4 5 6 (PRODUCT LEVEL)	SEE PAGE
Y	**285-6096**	1	BUCKET GP-UTILITY (60-IN)	391
Y	*135-9384*	1	EDGE GP-CUTTING	404
Y-SEPARATE ILLUSTRATION				

<END>

285-6100 BUCKET AR-UTILITY

S/N: SCH2475-UP
PART OF 285-6111 BUCKET AR-GRAPPLE
AN ATTACHMENT

i02552478

NOTE	PART NUMBER	QTY	PART NAME 1 2 3 4 5 6 (PRODUCT LEVEL)	SEE PAGE
Y	**285-6099**	1	BUCKET GP-UTILITY (66-IN)	392
Y	*135-9385*	1	EDGE GP-CUTTING	405
Y-SEPARATE ILLUSTRATION				

<END>

WORK TOOLS

285-6101 BUCKET AR-UTILITY

S/N: SCH2475-UP
PART OF 285-6112 BUCKET AR-GRAPPLE
AN ATTACHMENT

i02552482

NOTE	PART NUMBER	QTY	PART NAME 1 2 3 4 5 6 (PRODUCT LEVEL)	SEE PAGE
Y	**285-6102**	1	BUCKET GP-UTILITY (72-IN)	393
Y	*135-9386*	1	EDGE GP-CUTTING	406

Y-SEPARATE ILLUSTRATION

<END>

WORK TOOLS

279-5434 BUCKET AS-DIRT

S/N: SCH2475-UP
1372-MM (54-IN)
PART OF 279-5435 BUCKET AR-DIRT
AN ATTACHMENT

SMCS-6001 **i02552332**

NOTE	REF NO	GRAPHIC REF	PART NUMBER	QTY	PART NAME 1 2 3 4 5 6 (PRODUCT LEVEL)	SEE PAGE
	1	1	**154-2704**	1	PLATE-INSTRUCTION (BUCKET SPECIFICATIONS)	
	2	1	**168-8389**	4	TACK-FASTENER	
					PARTS SHOWN IN GRAPHIC WITHOUT A REFERENCE NUMBER ARE NOT SERVICED SEPARATELY	

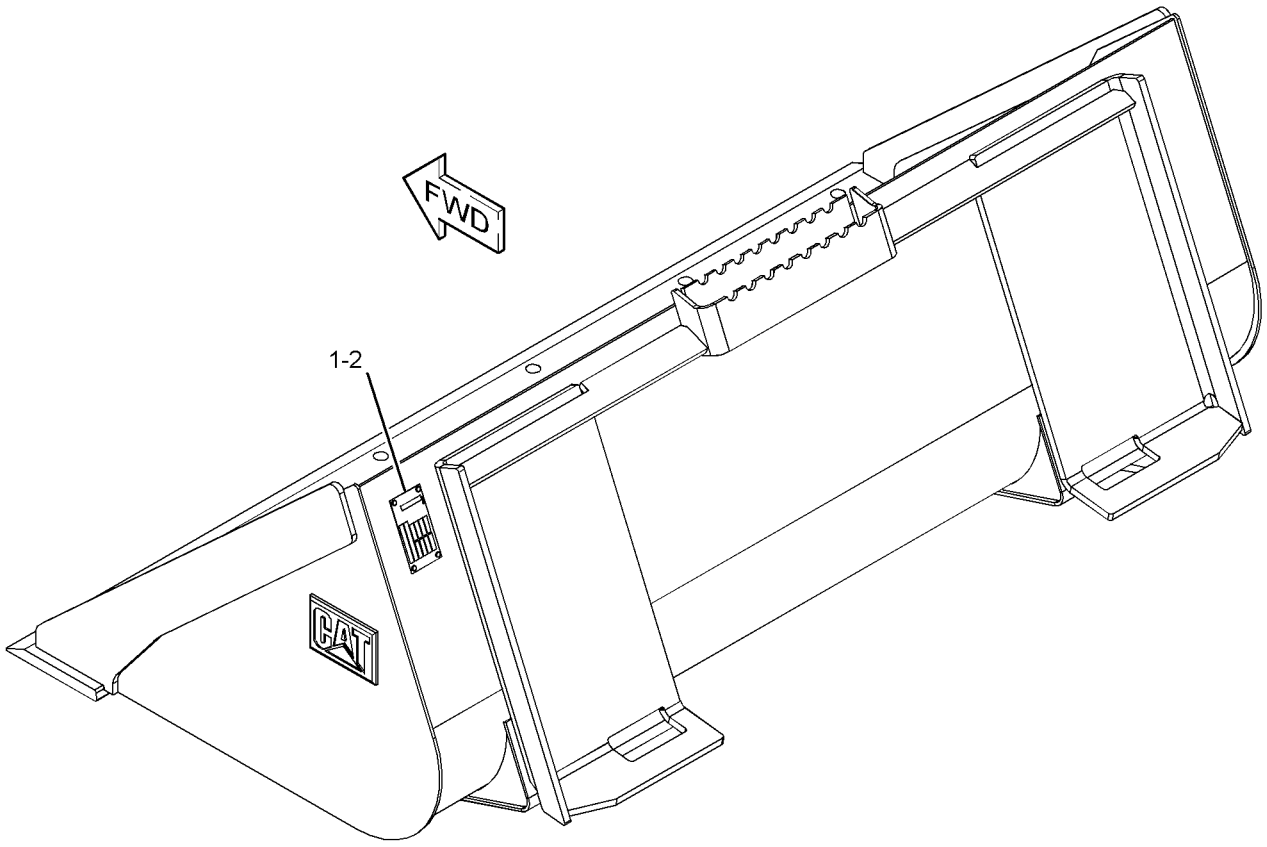

GRAPHIC #1 **<END>** g01280557

WORK TOOLS

279-5437 BUCKET AS-DIRT

S/N: SCH2475-UP
1524-MM (60-IN)
PART OF 279-5438 BUCKET AR-DIRT
AN ATTACHMENT

SMCS-6001 **i02757638**

NOTE	REF NO	GRAPHIC REF	PART NUMBER	QTY	PART NAME 1 2 3 4 5 6 (PRODUCT LEVEL)	SEE PAGE
	1	1	**154-2704**	1	PLATE-INSTRUCTION (BUCKET SPECIFICATIONS)	
	2	1	**168-8389**	4	TACK-FASTENER	
					PARTS SHOWN IN GRAPHIC WITHOUT A REFERENCE NUMBER ARE NOT SERVICED SEPARATELY	

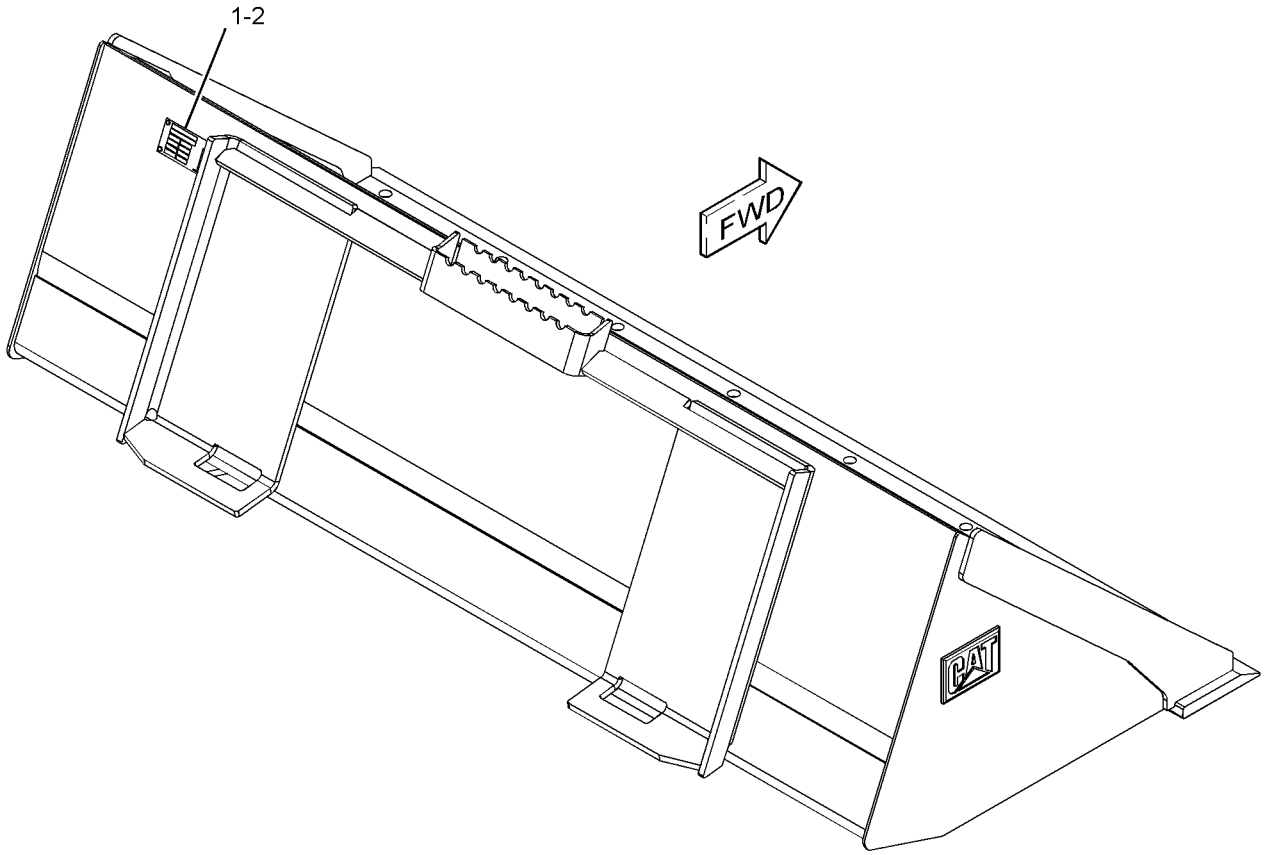

GRAPHIC #1 **<END>** g01280552

WORK TOOLS

279-5440 BUCKET AS-DIRT

S/N: SCH2475-UP
1676-MM (66-IN)
PART OF 279-5441 BUCKET AR-DIRT
AN ATTACHMENT

SMCS-6001 **i02552428**

NOTE	REF NO	GRAPHIC REF	PART NUMBER	QTY	PART NAME 1 2 3 4 5 6 (PRODUCT LEVEL)	SEE PAGE
	1	1	**154-2704**	1	PLATE-INSTRUCTION (BUCKET SPECIFICATIONS)	
	2	1	**168-8389**	4	TACK-FASTENER	
					PARTS SHOWN IN GRAPHIC WITHOUT A REFERENCE NUMBER ARE NOT SERVICED SEPARATELY	

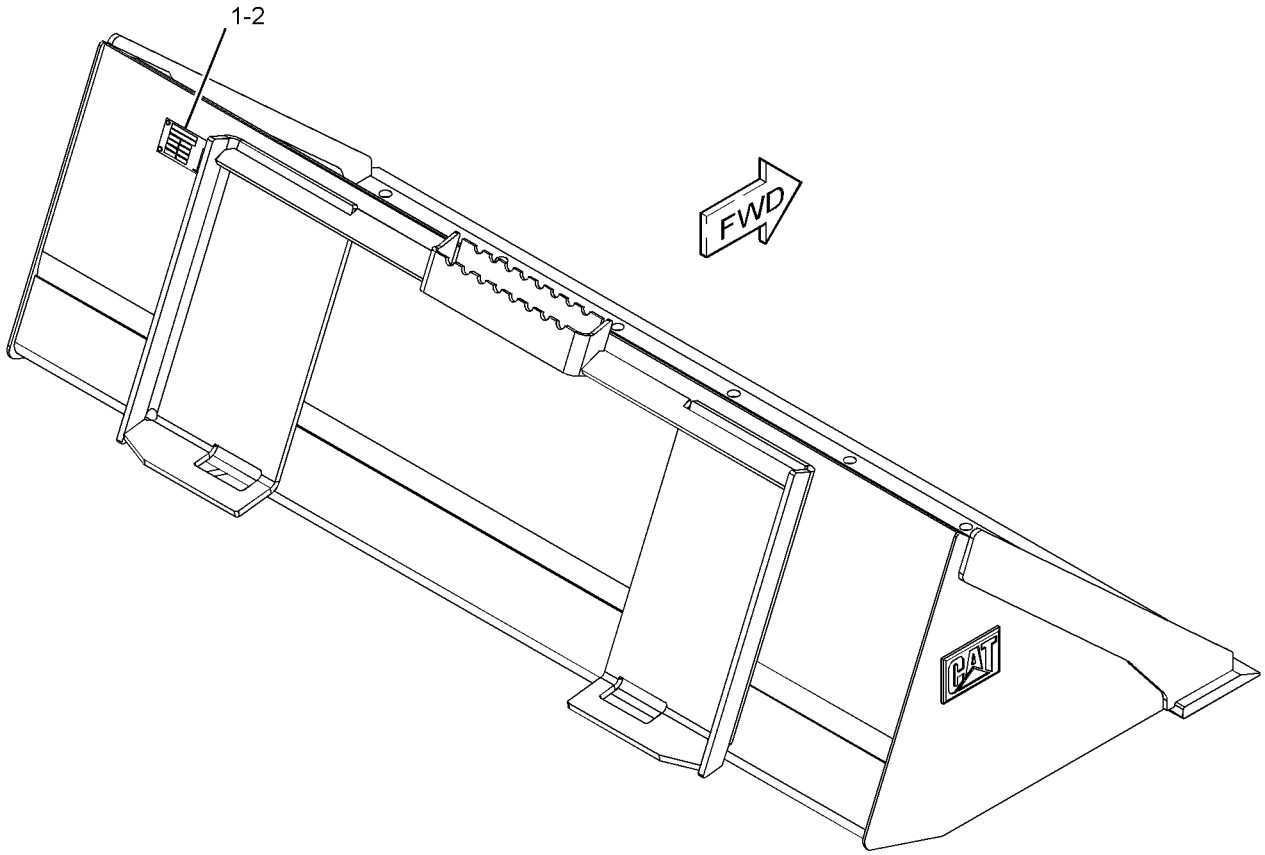

GRAPHIC #1 **<END>** g01280552

WORK TOOLS

285-6089 BUCKET AS-DIRT

S/N: SCH2475-UP
1829-MM (72-IN)
PART OF 285-6090 BUCKET AR-DIRT
AN ATTACHMENT

SMCS-6001 **i02552447**

NOTE	REF NO	GRAPHIC REF	PART NUMBER	QTY	PART NAME 1 2 3 4 5 6 (PRODUCT LEVEL)	SEE PAGE
	1	1	**154-2704**	1	PLATE-INSTRUCTION (BUCKET SPECIFICATIONS)	
	2	1	**168-8389**	4	TACK-FASTENER	
					PARTS SHOWN IN GRAPHIC(S) WITHOUT A REFERENCE NUMBER ARE NOT SERVICED SEPARATELY	

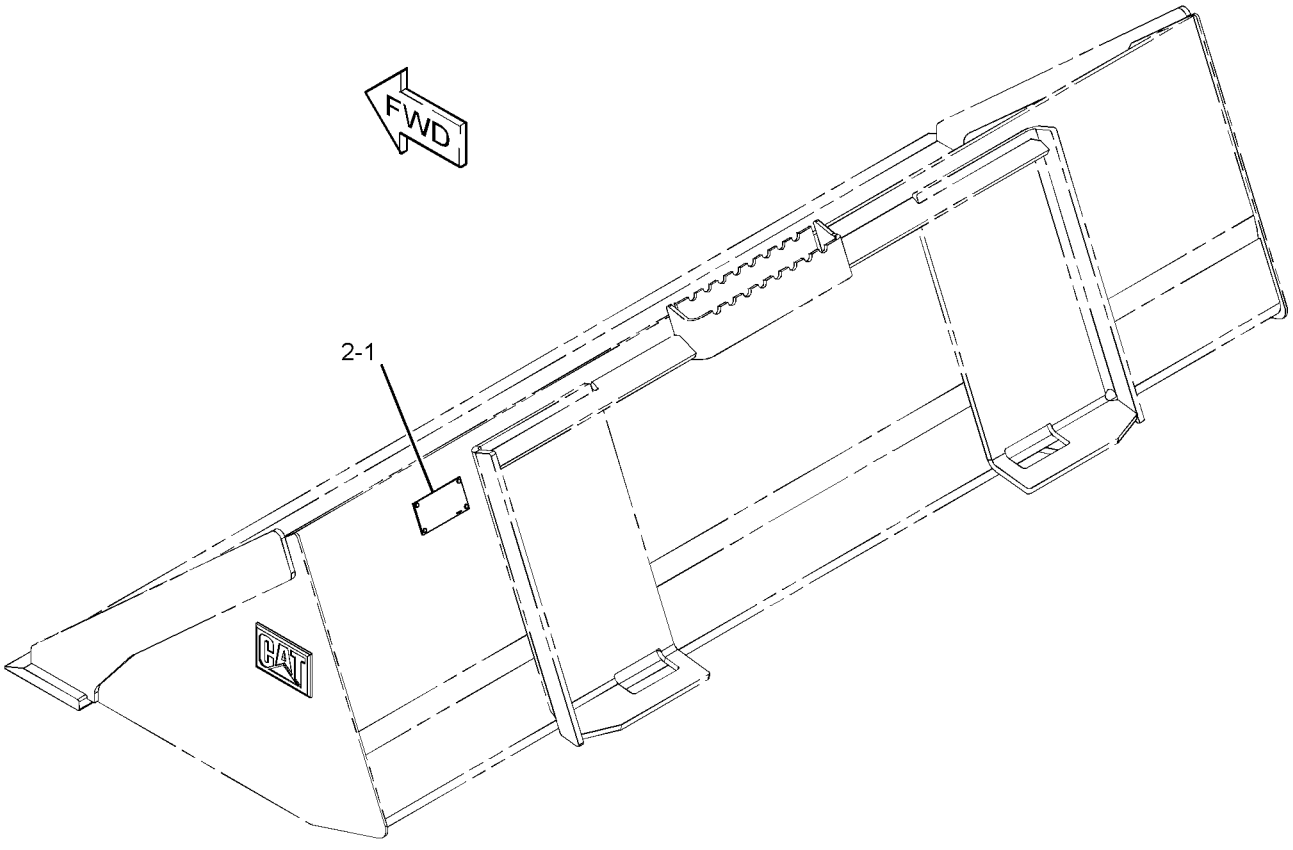

GRAPHIC #1 **<END>** g01279287

WORK TOOLS

279-5364 BUCKET AS-GENERAL PURPOSE

S/N: SCH2475-UP
1524-MM (60-IN)
PART OF 279-5365, 279-5366 BUCKET AR-GENERAL PURPOSE
AN ATTACHMENT

SMCS-6101 **i02550408**

NOTE	REF NO	GRAPHIC REF	PART NUMBER	QTY	PART NAME 1 2 3 4 5 6 (PRODUCT LEVEL)	SEE PAGE
	1	1	**154-2704**	1	PLATE-INSTRUCTION (BUCKET SPECIFICATIONS)	
	2	1	**168-8389**	4	TACK-FASTENER	
					PARTS SHOWN IN GRAPHIC(S) WITHOUT A REFERENCE NUMBER ARE NOT SERVICED SEPARATELY	

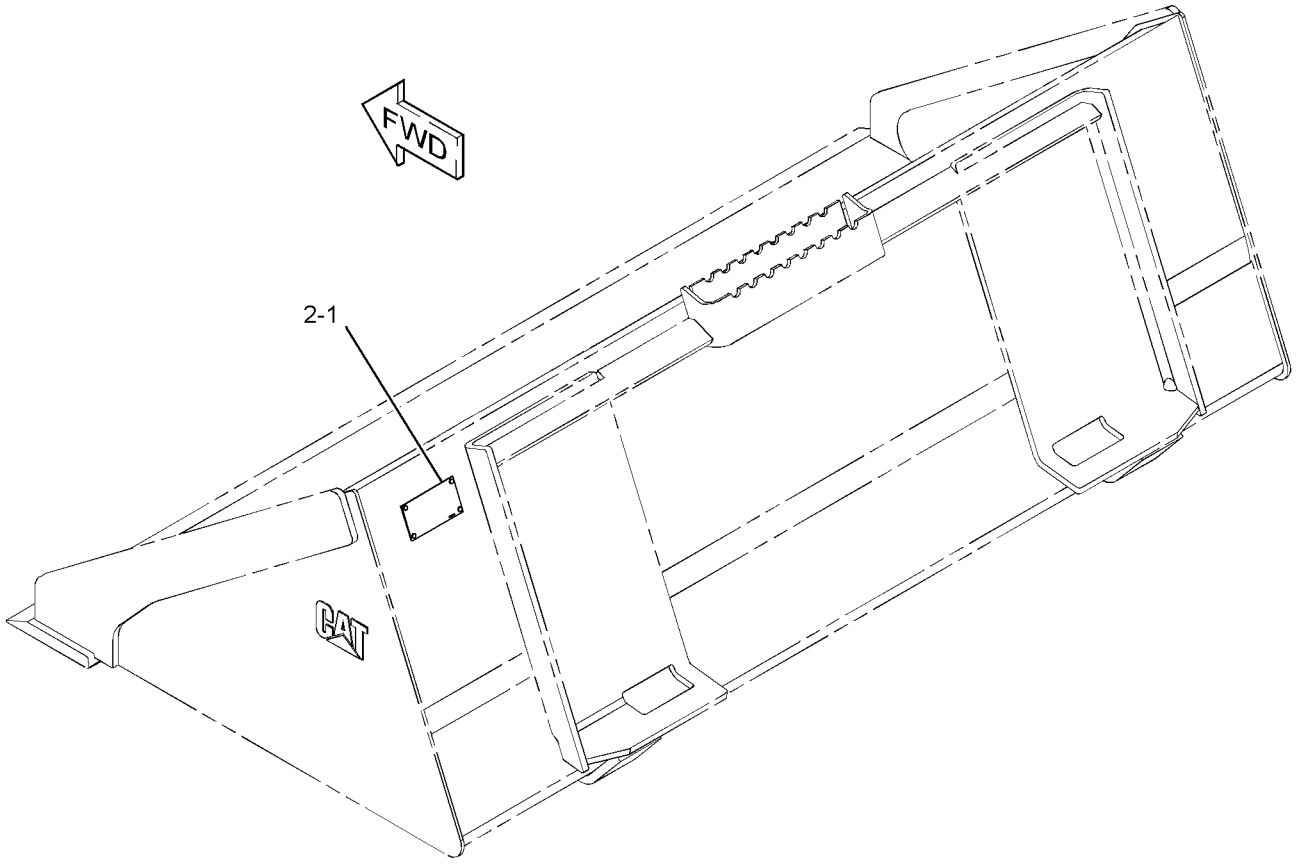

GRAPHIC #1 **<END>** g01279308

279-5368 BUCKET AS-GENERAL PURPOSE

S/N: SCH2475-UP
1676-MM (66-IN)
PART OF 279-5369, 279-5370 BUCKET AR-GENERAL PURPOSE
AN ATTACHMENT

SMCS-6101 **i02551091**

NOTE	REF NO	GRAPHIC REF	PART NUMBER	QTY	PART NAME 1 2 3 4 5 6 (PRODUCT LEVEL)	SEE PAGE
	1	1	**154-2704**	1	PLATE-INSTRUCTION (BUCKET SPECIFICATIONS)	
	2	1	**168-8389**	4	TACK-FASTENER	
					PARTS SHOWN IN GRAPHIC(S) WITHOUT A REFERENCE NUMBER ARE NOT SERVICED SEPARATELY	

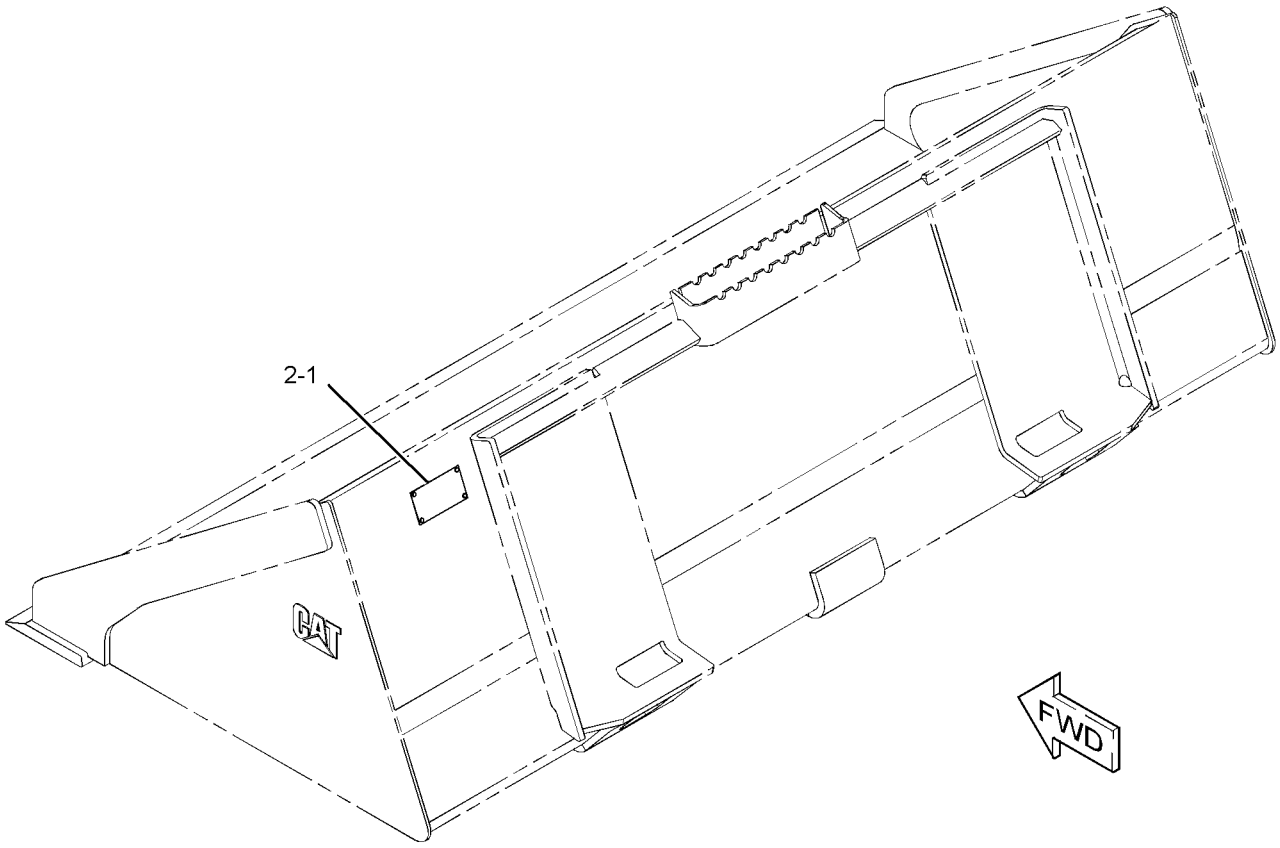

GRAPHIC #1 **<END>** g01279437

WORK TOOLS

279-5372 BUCKET AS-GENERAL PURPOSE

S/N: SCH2475-UP
1829-MM (72-IN)
PART OF 279-5373, 279-5374 BUCKET AR-GENERAL PURPOSE
AN ATTACHMENT

SMCS-6101 **i02552014**

NOTE	REF NO	GRAPHIC REF	PART NUMBER	QTY	PART NAME 1 2 3 4 5 6 (PRODUCT LEVEL)	SEE PAGE
	1	1	**154-2704**	1	PLATE-INSTRUCTION (BUCKET SPECIFICATIONS)	
	2	1	**168-8389**	4	TACK-FASTENER	
					PARTS SHOWN IN GRAPHIC(S) WITHOUT A REFERENCE NUMBER ARE NOT SERVICED SEPARATELY	

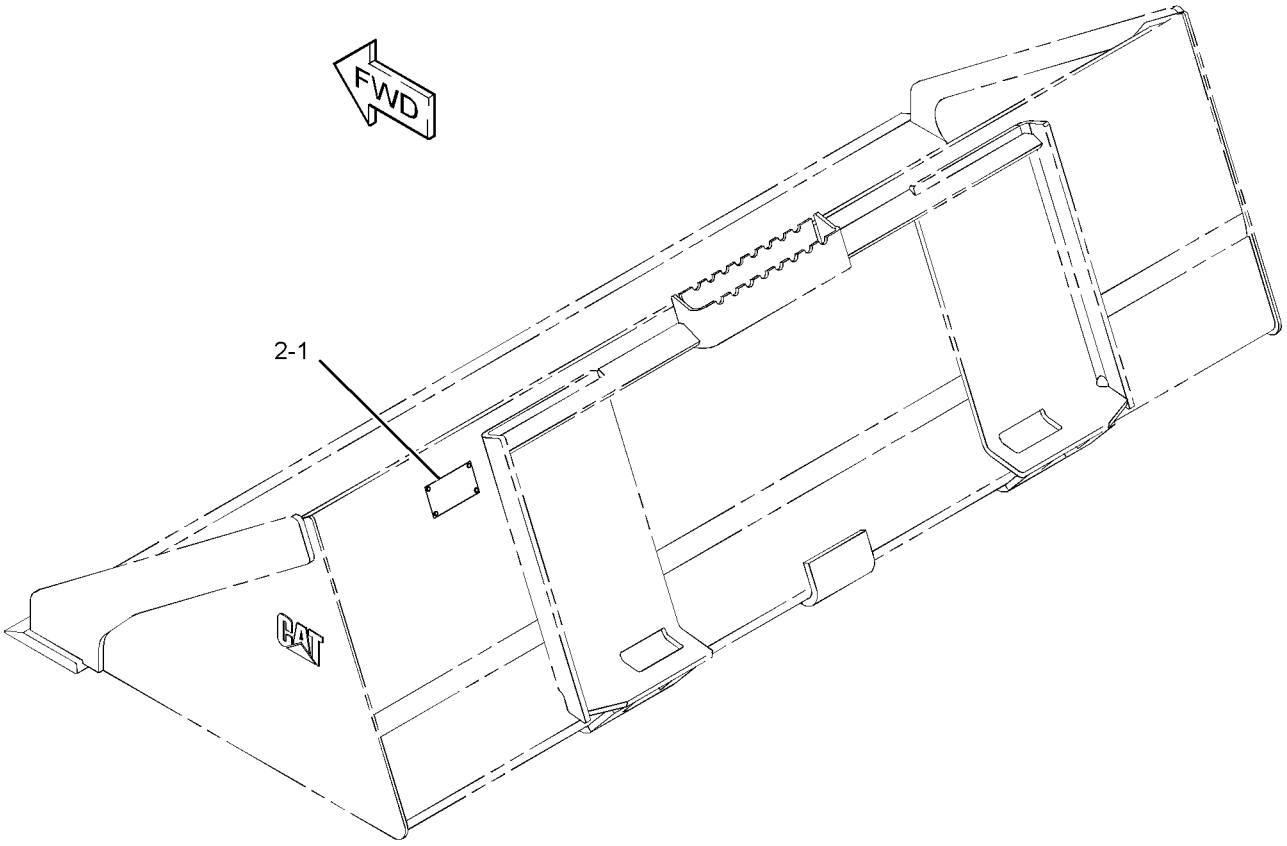

GRAPHIC #1 **<END>** g01279461

WORK TOOLS

279-5376 BUCKET AS-GENERAL PURPOSE

S/N: SCH2475-UP
1981-MM (78-IN)
PART OF 279-5377, 279-5378 BUCKET AR-GENERAL PURPOSE
AN ATTACHMENT

SMCS-6101 **i02571315**

NOTE	REF NO	GRAPHIC REF	PART NUMBER	QTY	PART NAME 1 2 3 4 5 6 (PRODUCT LEVEL)	SEE PAGE
	1	1	**154-2704**	1	PLATE-INSTRUCTION (BUCKET SPECIFICATIONS)	
	2	1	**168-8389**	4	TACK-FASTENER	
					PARTS SHOWN IN GRAPHIC(S) WITHOUT A REFERENCE NUMBER ARE NOT SERVICED SEPARATELY	

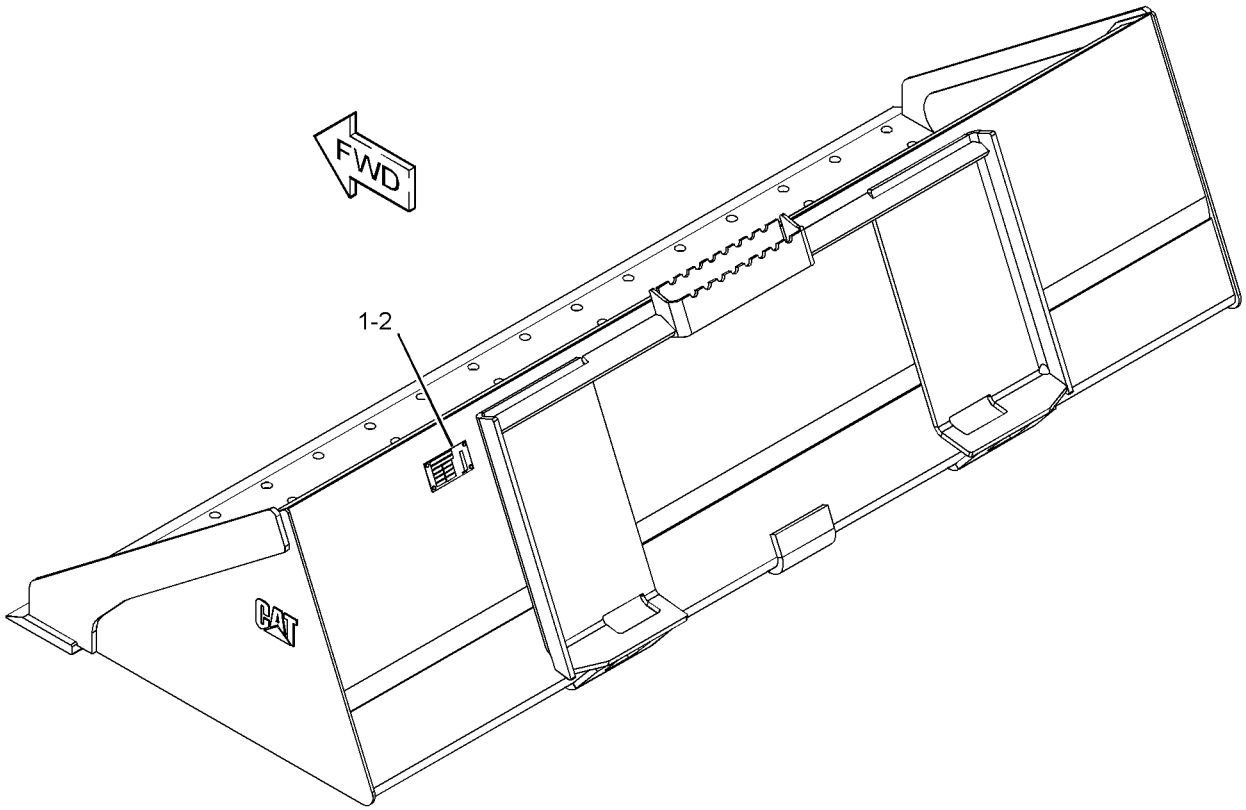

GRAPHIC #1 **<END>** g01288290

WORK TOOLS

279-5421 BUCKET AS-LIGHT MATERIAL

S/N: SCH2475-UP
1829-MM (72-IN)
PART OF 279-5420 BUCKET AR-LIGHT MATERIAL
AN ATTACHMENT

SMCS-6103 **i02571326**

NOTE	REF NO	GRAPHIC REF	PART NUMBER	QTY	PART NAME 1 2 3 4 5 6 (PRODUCT LEVEL)	SEE PAGE
	1	1	**154-2704**	1	PLATE-INSTRUCTION (BUCKET SPECIFICATIONS)	
	2	1	**168-8389**	4	TACK-FASTENER	
					PARTS SHOWN IN GRAPHIC(S) WITHOUT A REFERENCE NUMBER ARE NOT SERVICED SEPARATELY	

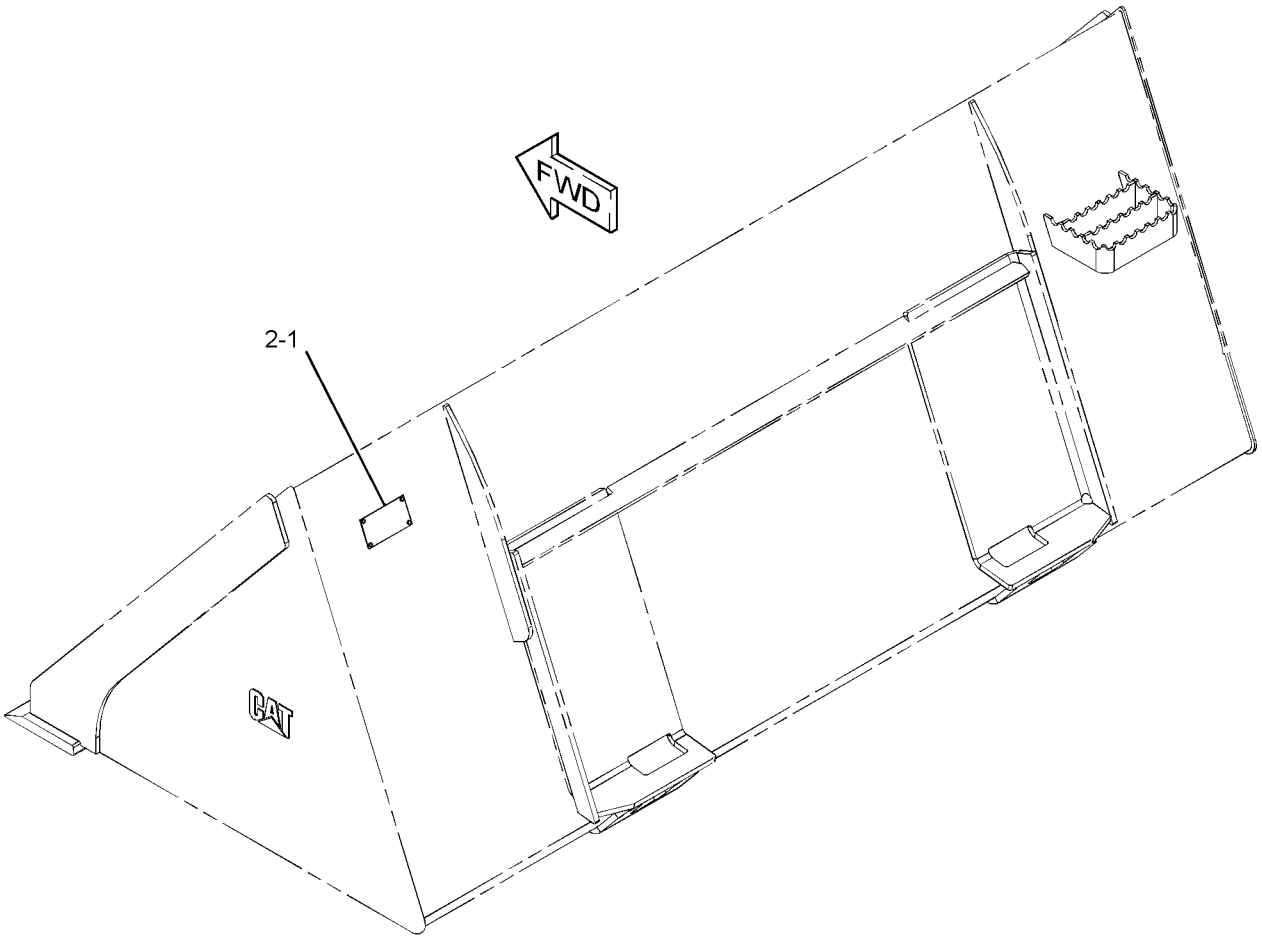

GRAPHIC #1 **<END>** g01278476

WORK TOOLS

279-5424 BUCKET AS-LIGHT MATERIAL

S/N: SCH2475-UP
1981-MM (78-IN)
PART OF 279-5425 BUCKET AR-LIGHT MATERIAL
AN ATTACHMENT

SMCS-6103 **i02571330**

NOTE	REF NO	GRAPHIC REF	PART NUMBER	QTY	PART NAME 1 2 3 4 5 6 (PRODUCT LEVEL)	SEE PAGE
	1	1	**154-2704**	1	PLATE-INSTRUCTION (BUCKET SPECIFICATIONS)	
	2	1	**168-8389**	4	TACK-FASTENER	
					PARTS SHOWN IN GRAPHIC(S) WITHOUT A REFERENCE NUMBER ARE NOT SERVICED SEPARATELY	

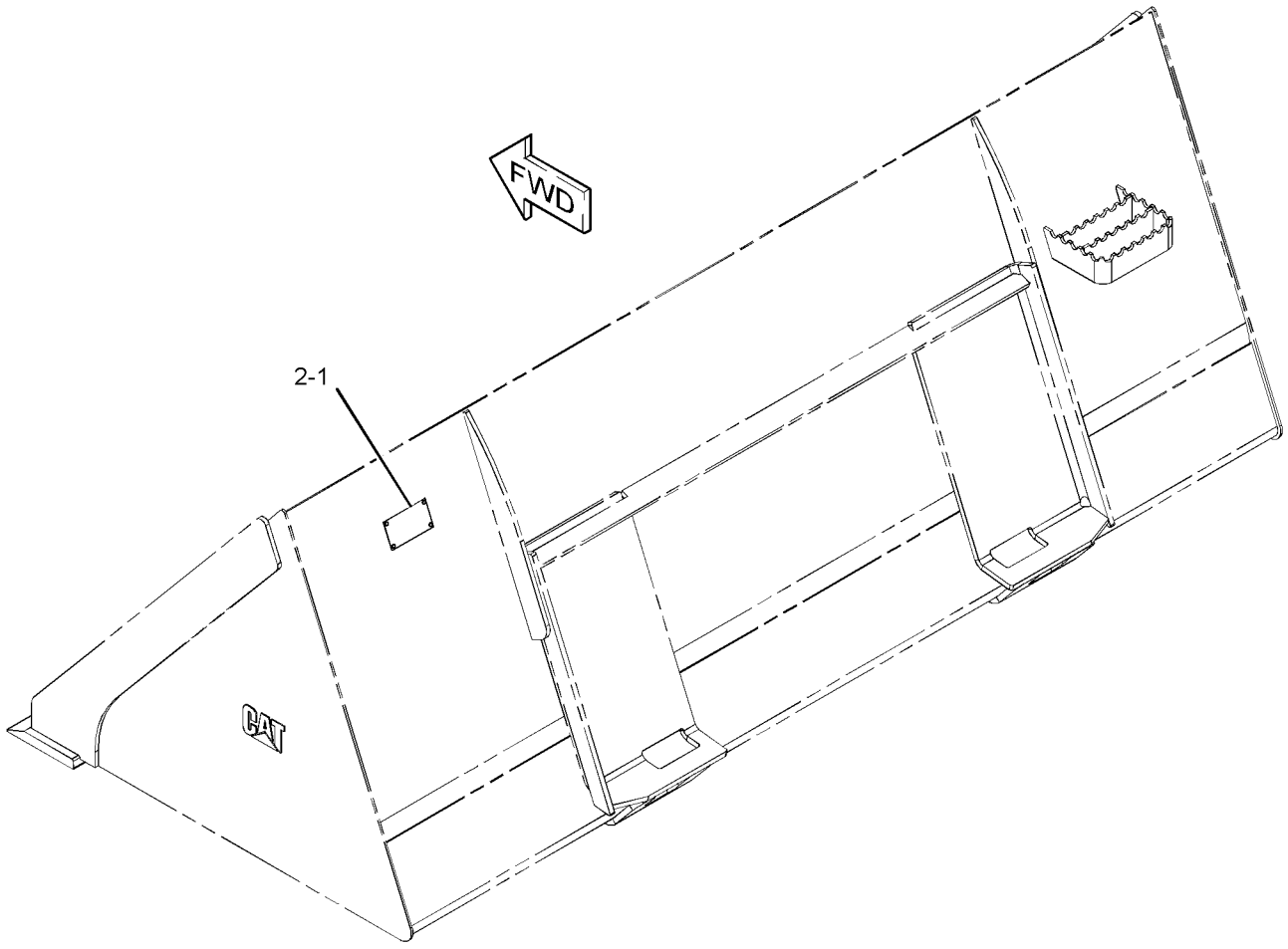

GRAPHIC #1 **<END>** g01278485

WORK TOOLS

279-5429 BUCKET AS-LIGHT MATERIAL

S/N: SCH2475-UP
2134-MM (84-IN)
PART OF 279-5430 BUCKET AR-LIGHT MATERIAL
AN ATTACHMENT

SMCS-6103 **i02571331**

NOTE	REF NO	GRAPHIC REF	PART NUMBER	QTY	PART NAME 1 2 3 4 5 6 (PRODUCT LEVEL)	SEE PAGE
	1	1	**154-2704**	1	PLATE-INSTRUCTION (BUCKET SPECIFICATIONS)	
	2	1	**168-8389**	4	TACK-FASTENER	
					PARTS SHOWN IN GRAPHIC(S) WITHOUT A REFERENCE NUMBER ARE NOT SERVICED SEPARATELY	

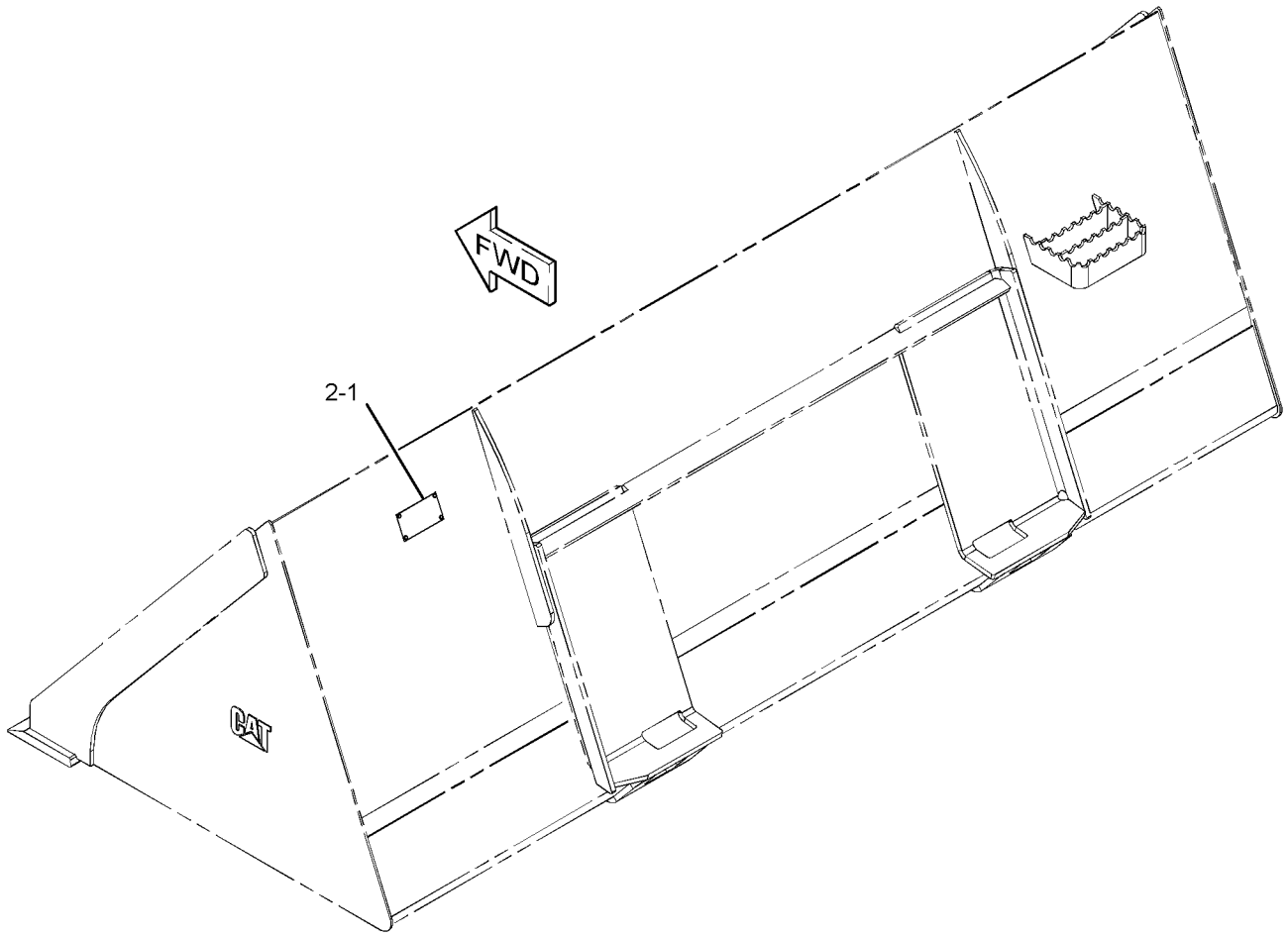

GRAPHIC #1 **<END>** g01278489

WORK TOOLS

268-4084 BUCKET GP-DIRT

S/N: SCH2475-UP
1981-MM (78-IN)
PART OF 268-4083 BUCKET AR-DIRT
FIELD REPLACEMENT ORDER 268-4083—PAGE 356
AN ATTACHMENT

SMCS-6001 **i02540002**

NOTE	REF NO	GRAPHIC REF	PART NUMBER	QTY	PART NAME 1 2 3 4 5 6 (PRODUCT LEVEL)	SEE PAGE
	1	1	**154-2704**	1	PLATE-INSTRUCTION (BUCKET SPECIFICATIONS)	
	2	1	**168-8389**	4	TACK-FASTENER	
					PARTS SHOWN IN GRAPHIC(S) WITHOUT A REFERENCE NUMBER ARE NOT SERVICED SEPARATELY	

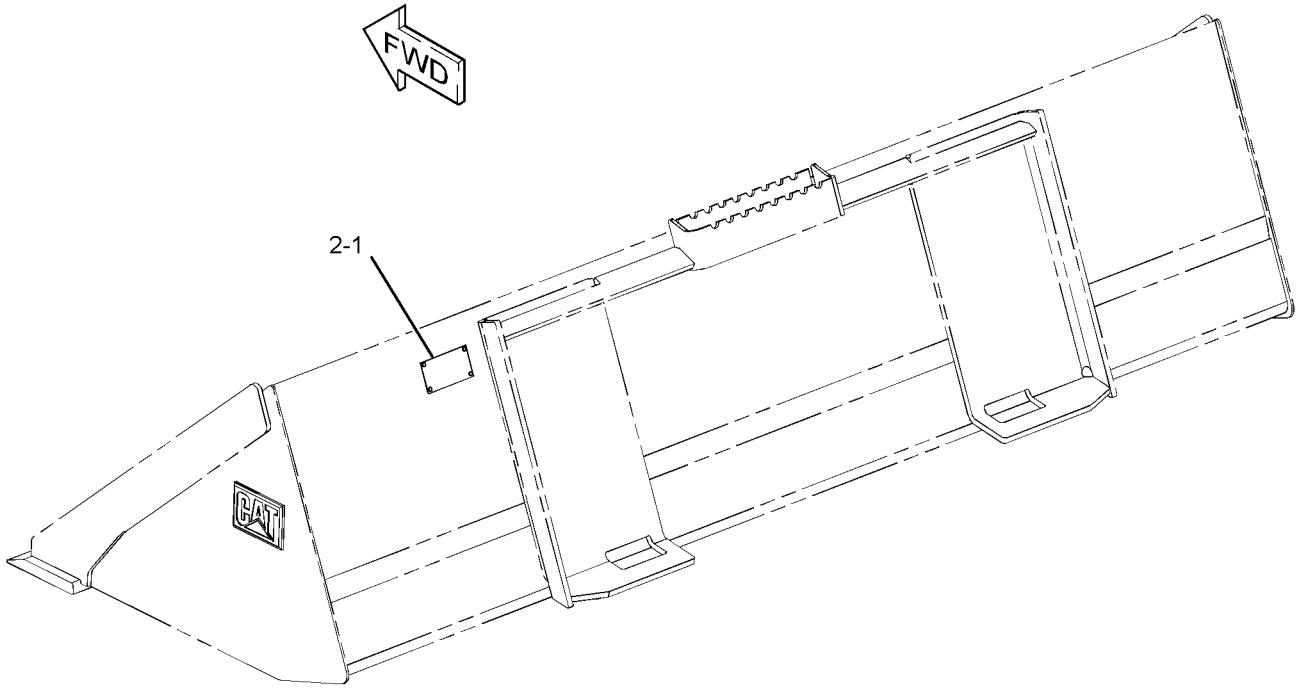

GRAPHIC #1 **<END>** g01279383

WORK TOOLS

156-0884 BUCKET GP-GRAPPLE

S/N: SCH2475-UP
152.4-CM (60-IN). INDUSTRIAL
PART OF 157-7223 BUCKET AR-GRAPPLE
AN ATTACHMENT

SMCS-6704 **i02024106**

NOTE	REF NO	GRAPHIC REF	PART NUMBER	QTY	PART NAME 1 2 3 4 5 6 (PRODUCT LEVEL)	SEE PAGE
	1	1	**157-0940**	4	PIN	
	2	1	**169-8941**	1	BUCKET AS-GRAPPLE	
M		1	**8Y-4489**	2	BOSS (M10X1.5-THD)	
		1	**149-5435**	1	EDGE	
	3	1	**222-7467**	2	FORK AS	
					(EACH INCLUDES)	
		1	**158-5648**	2	BEARING-SLEEVE	
	4	1	**3B-8489**	4	FITTING-GREASE	
M	5	1	**6V-9189**	4	LOCKNUT (M8X1.25-THD)	
M	6	1	**8T-6869**	4	BOLT (M8X1.25X60-MM)	

M-METRIC PART

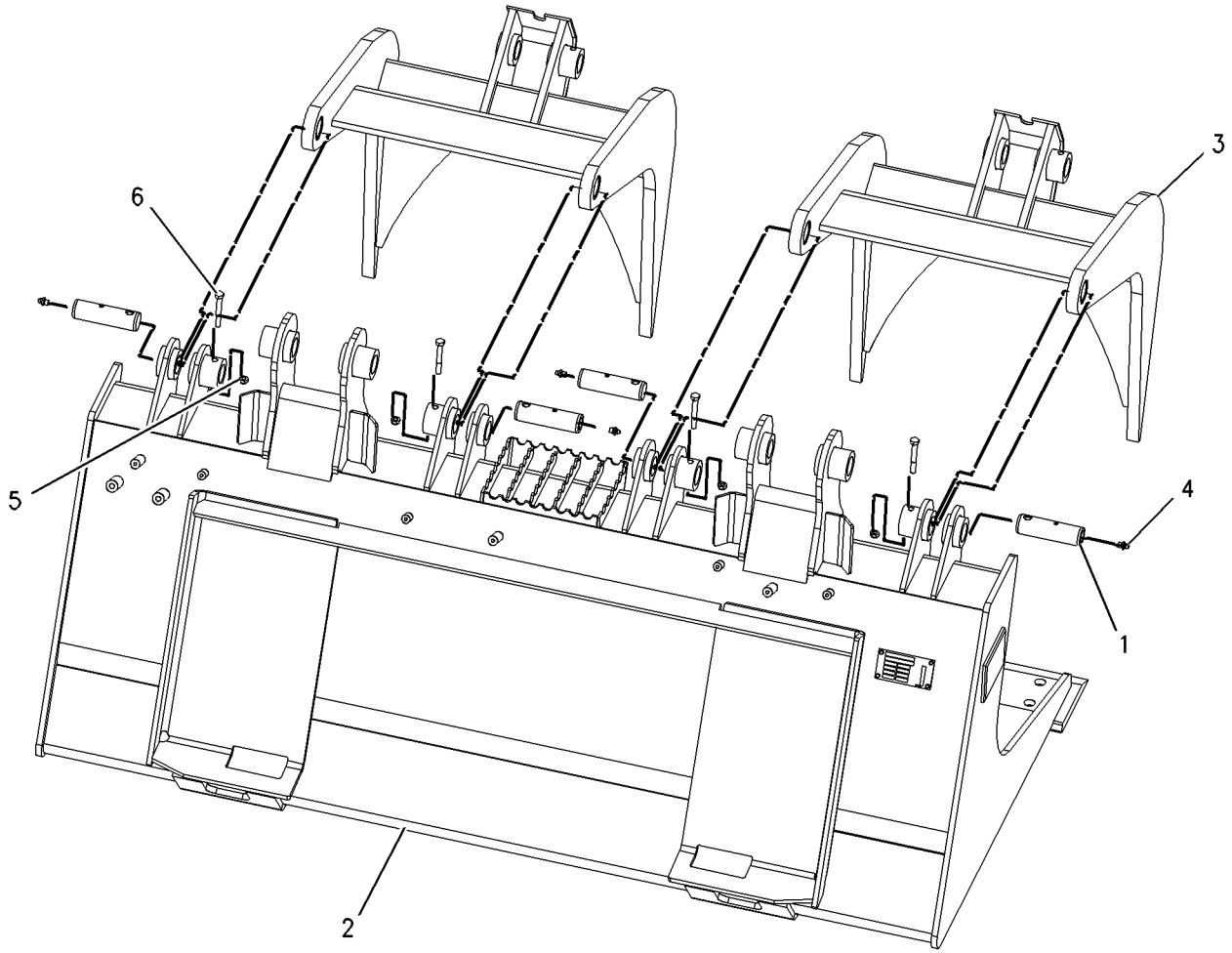

GRAPHIC #1 **<END>** g00978796

WORK TOOLS

156-0885 BUCKET GP-GRAPPLE

S/N: SCH2475-UP
1676-MM (66-IN). INDUSTRIAL
PART OF 157-7224 BUCKET AR-GRAPPLE
AN ATTACHMENT

SMCS-6704 **i01886368**

NOTE	REF NO	GRAPHIC REF	PART NUMBER	QTY	PART NAME 1 2 3 4 5 6 (PRODUCT LEVEL)	SEE PAGE
	1	1	**157-0940**	4	PIN	
	2	1	**169-8942**	1	BUCKET AS-GRAPPLE	
M		1	**8Y-4489**	2	BOSS (M10X1.5-THD)	
		1	**149-5436**	1	EDGE	
	3	1	**222-7467**	2	FORK AS	
					(EACH INCLUDES)	
		1	**158-5648**	2	BEARING-SLEEVE	
	4	1	**3B-8489**	4	FITTING-GREASE	
M	5	1	**6V-9189**	4	LOCKNUT (M8X1.25-THD)	
M	6	1	**8T-6869**	4	BOLT (M8X1.25X60-MM)	

M-METRIC PART

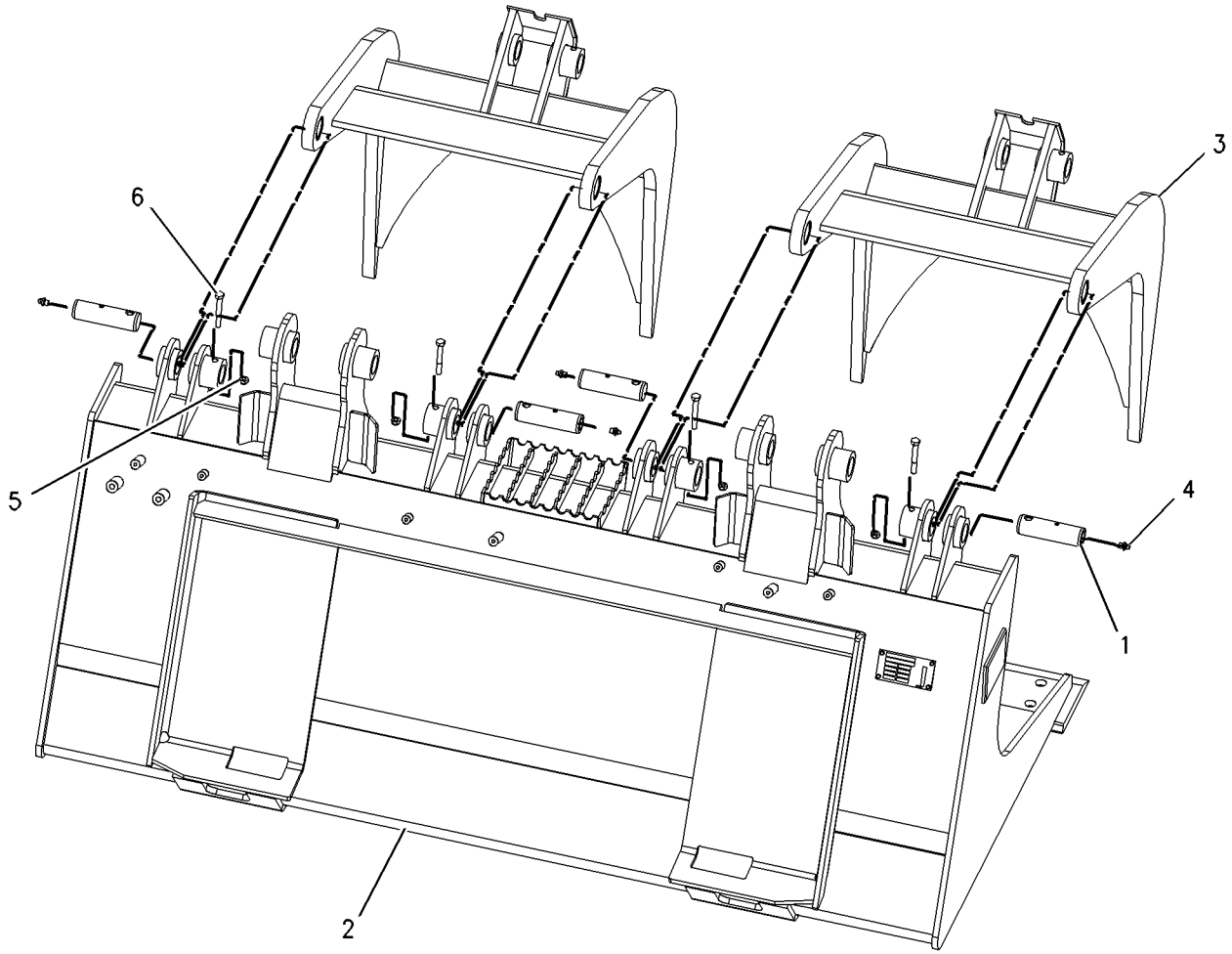

GRAPHIC #1 **<END>** g00978796

WORK TOOLS

156-0886 BUCKET GP-GRAPPLE

S/N: SCH2475-UP
1829-MM (72-IN). INDUSTRIAL
PART OF 157-7225 BUCKET AR-GRAPPLE
AN ATTACHMENT

SMCS-6704 **i02359451**

NOTE	REF NO	GRAPHIC REF	PART NUMBER	QTY	PART NAME 1 2 3 4 5 6 (PRODUCT LEVEL)	SEE PAGE
	1	1	**157-0940**	4	PIN	
	2	1	**169-8943**	1	BUCKET AS-GRAPPLE (INDUSTRIAL)	
		1	**149-5437**	1	EDGE	
	3	1	**222-7467**	2	FORK AS	
					(EACH INCLUDES)	
		1	**158-5648**	2	BEARING-SLEEVE	
	4	1	**3B-8489**	4	FITTING-GREASE	
M	5	1	**6V-9189**	4	LOCKNUT (M8X1.25-THD)	
M	6	1	**8T-6869**	4	BOLT (M8X1.25X60-MM)	

M-METRIC PART

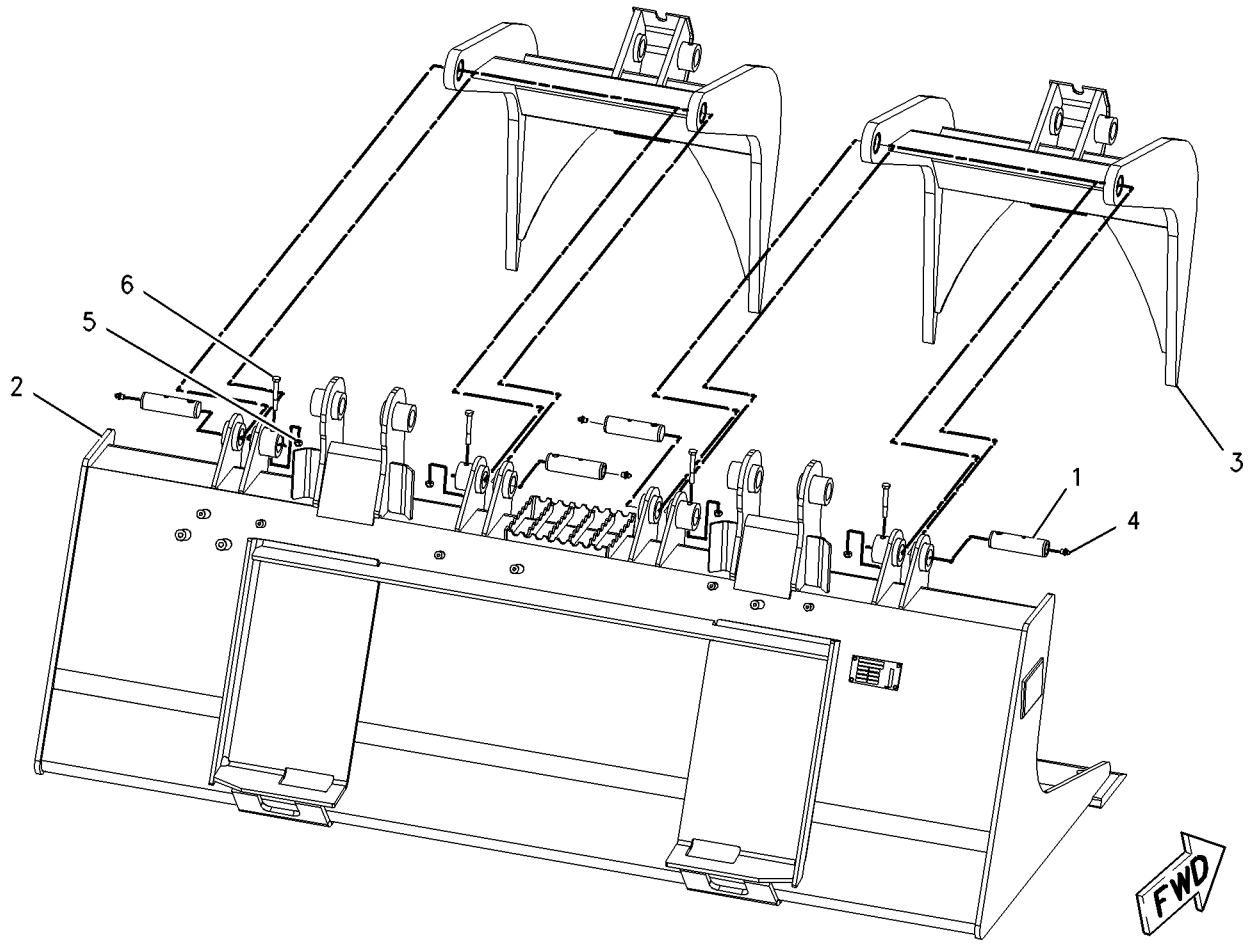

GRAPHIC #1 **<END>** g00993692

WORK TOOLS

286-9244 BUCKET GP-GRAPPLE

S/N: SCH2475-UP

PART OF 286-9301 BUCKET AR-GRAPPLE

AN ATTACHMENT

SMCS-6704 **i02723701**

NOTE	REF NO	GRAPHIC REF	PART NUMBER	QTY	PART NAME 1 2 3 4 5 6 (PRODUCT LEVEL)	SEE PAGE
	1	1	**157-0940**	4	PIN	
	2	1	**286-9229**	1	TINE AS	
	3	1	**286-9243**	2	FORK AS	
					(EACH INCLUDES)	
		1	**158-5648**	2	BEARING-SLEEVE	
	4	1	**3B-8489**	4	FITTING-GREASE	
M	5	1	**6V-9189**	4	LOCKNUT (M8X1.25-THD)	
M	6	1	**8T-6869**	4	BOLT (M8X1.25X60-MM)	

M-METRIC PART

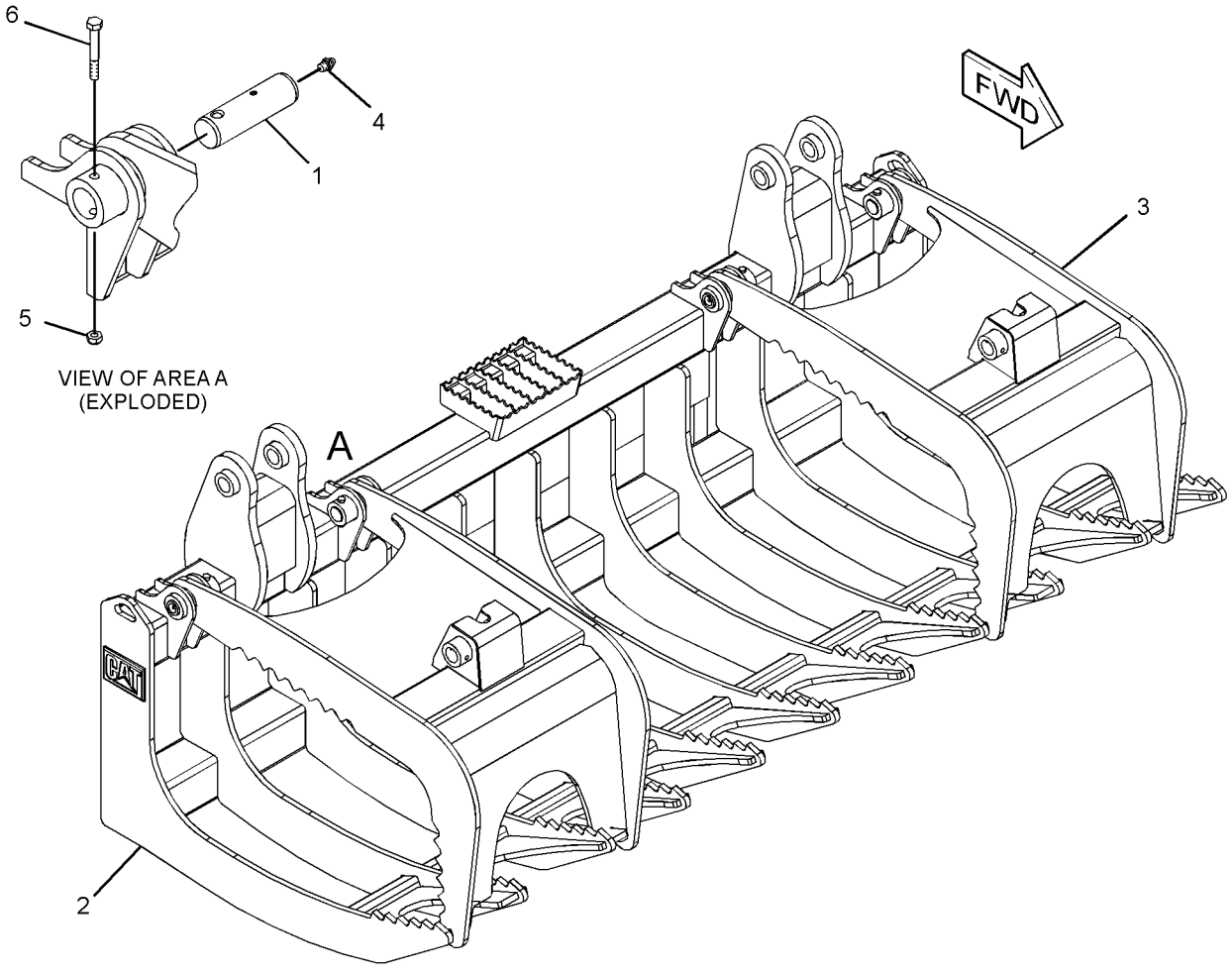

GRAPHIC #1 **<END>** g01372924

286-9278 BUCKET GP-GRAPPLE

S/N: SCH2475-UP

PART OF 286-9300 BUCKET AR-GRAPPLE

AN ATTACHMENT

SMCS-6704 **i02723727**

NOTE	REF NO	GRAPHIC REF	PART NUMBER	QTY	PART NAME 1 2 3 4 5 6 (PRODUCT LEVEL)	SEE PAGE
	1	1	**157-0940**	4	PIN	
	2	1	**286-9243**	2	FORK AS	
					(EACH INCLUDES)	
		1	**158-5648**	2	BEARING-SLEEVE	
	3	1	**286-9274**	1	TINE AS	
		1	**8R-3857**	5	BOSS (M8X1.2X12-MM)	
		1	**161-4130**	2	PLATE-IDENTIFICATION (CAT)	
	4	1	**3B-8489**	4	FITTING-GREASE	
M	5	1	**6V-9189**	4	LOCKNUT (M8X1.25-THD)	
M	6	1	**8T-6869**	4	BOLT (M8X1.25X60-MM)	

M-METRIC PART

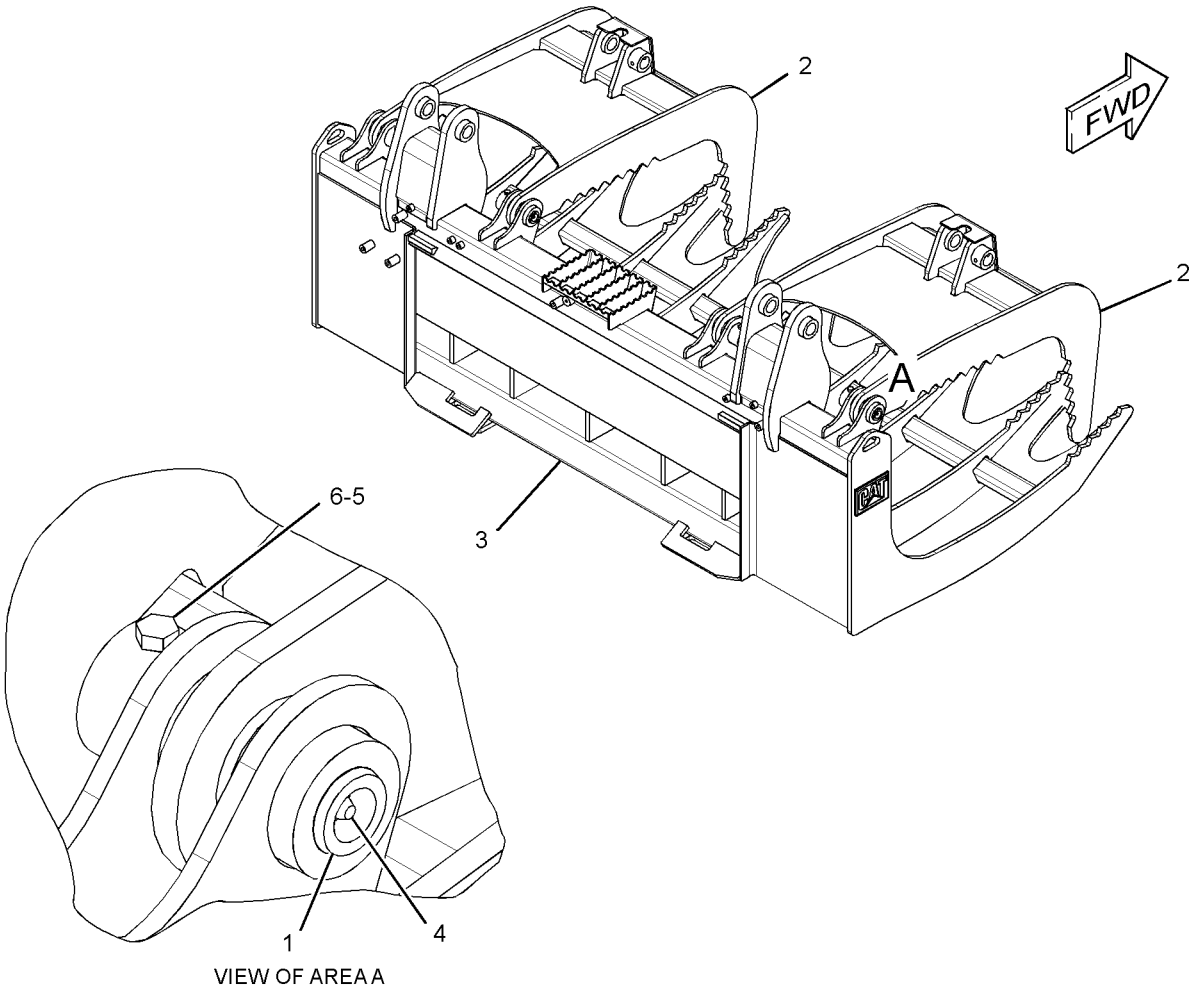

VIEW OF AREA A

GRAPHIC #1 **<END>** g01372568

WORK TOOLS

279-5383 BUCKET GP-MULTIPURPOSE

S/N: SCH2475-UP

PART OF 279-5382 BUCKET AR-MULTIPURPOSE

AN ATTACHMENT

SMCS-6104 **i02772041**

NOTE	REF NO	GRAPHIC REF	PART NUMBER	QTY	PART NAME 1 2 3 4 5 6 (PRODUCT LEVEL)	SEE PAGE
	1	1	**149-4232**	1	CLAM AS	
		1	**159-8038**	2	FILM-WARNING (CRUSH HAZARD)	
	1A	1	**142-8805**	4	BEARING-SLEEVE	
	1B	1	**149-5435**	1	EDGE	
	1C	1	**161-4130**	2	PLATE-IDENTIFICATION (CAT)	
	2	1	**154-5012**	2	PIN	
	3	1	**159-8038**	2	FILM-WARNING (CRUSH HAZARD)	
Y	4	1	*279-5384*	1	BLADE GP-MULTIPURPOSE BUCKET (60-IN)	352
	5	1	**3B-8489**	2	FITTING-GREASE	
M	6	1	**6V-9189**	2	LOCKNUT (M8X1.25-THD)	
M	7	1	**8T-6869**	2	BOLT (M8X1.25X60-MM)	

M-METRIC PART
Y-SEPARATE ILLUSTRATION

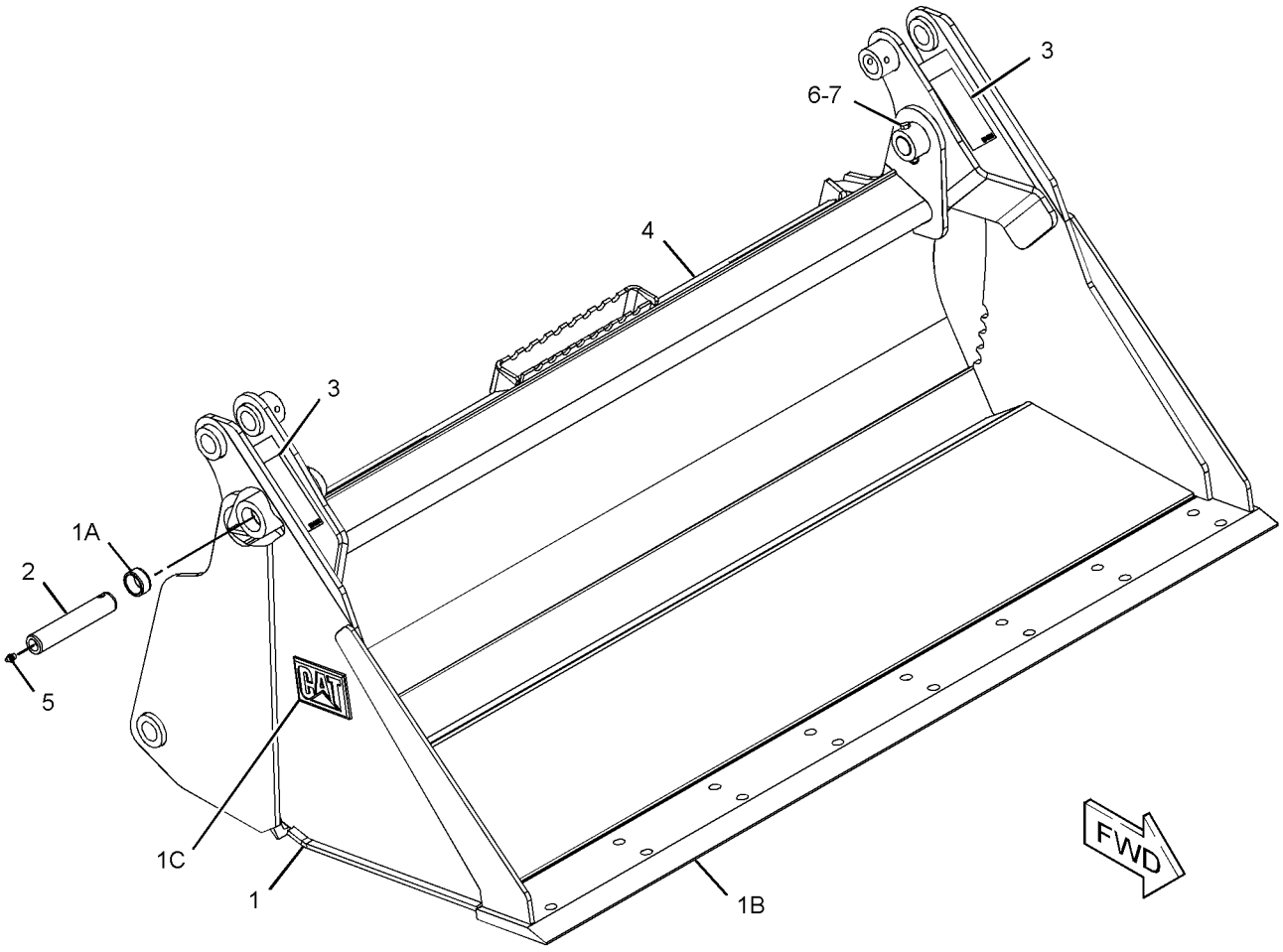

GRAPHIC #1 **<END>** g01278464

WORK TOOLS

279-5389 BUCKET GP-MULTIPURPOSE

S/N: SCH2475-UP
PART OF 279-5390 BUCKET AR-MULTIPURPOSE
AN ATTACHMENT

SMCS-6104 **i02772043**

NOTE	REF NO	GRAPHIC REF	PART NUMBER	QTY	PART NAME 1 2 3 4 5 6 (PRODUCT LEVEL)	SEE PAGE
	1	1	**154-5012**	2	PIN	
	2	1	**154-5053**	1	CLAM AS	
	2A	1	**142-8805**	4	BEARING-SLEEVE	
	2B	1	**149-5436**	1	EDGE	
	2C	1	**159-8038**	2	FILM-WARNING (CRUSH HAZARD)	
	2D	1	**161-4130**	2	PLATE-IDENTIFICATION (CAT)	
Y	3	1	*279-5388*	1	BLADE GP-MULTIPURPOSE BUCKET (66-IN)	353
	4	1	**3B-8489**	2	FITTING-GREASE	
M	5	1	**6V-9189**	2	LOCKNUT (M8X1.25-THD)	
M	6	1	**8T-6869**	2	BOLT (M8X1.25X60-MM)	

M-METRIC PART
Y-SEPARATE ILLUSTRATION

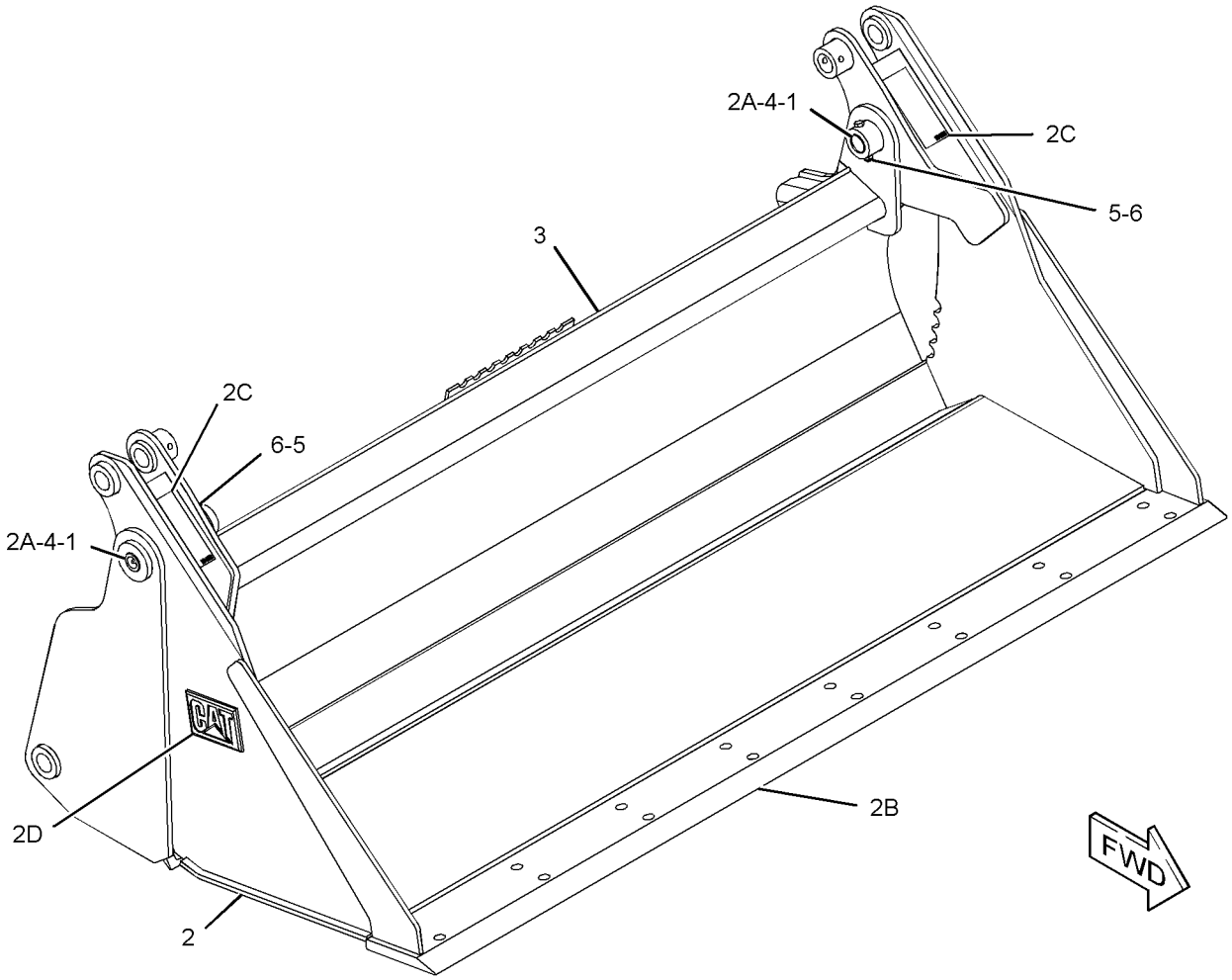

GRAPHIC #1 **<END>** g01279399

WORK TOOLS

279-5397 BUCKET GP-MULTIPURPOSE

S/N: SCH2475-UP
PART OF 279-5398 BUCKET AR-MULTIPURPOSE
AN ATTACHMENT

SMCS-6104 **i02772044**

NOTE	REF NO	GRAPHIC REF	PART NUMBER	QTY	PART NAME 1 2 3 4 5 6 (PRODUCT LEVEL)	SEE PAGE
	1	1	**154-5012**	2	PIN	
	2	1	**154-5070**	1	CLAM AS	
	2A	1	**142-8805**	4	BEARING-SLEEVE	
	2B	1	**149-5437**	1	EDGE	
	2C	1	**161-4130**	2	PLATE-IDENTIFICATION (CAT)	
	2D	1	**159-8038**	2	FILM-WARNING (CRUSH HAZARD)	
M	3	1	**8T-6869**	2	BOLT (M8X1.25X60-MM)	
Y	4	1	*279-5396*	1	BLADE GP-MULTIPURPOSE BUCKET (72-IN)	354
	5	1	**3B-8489**	2	FITTING-GREASE	
M	6	1	**6V-9189**	2	LOCKNUT (M8X1.25-THD)	

M-METRIC PART
Y-SEPARATE ILLUSTRATION

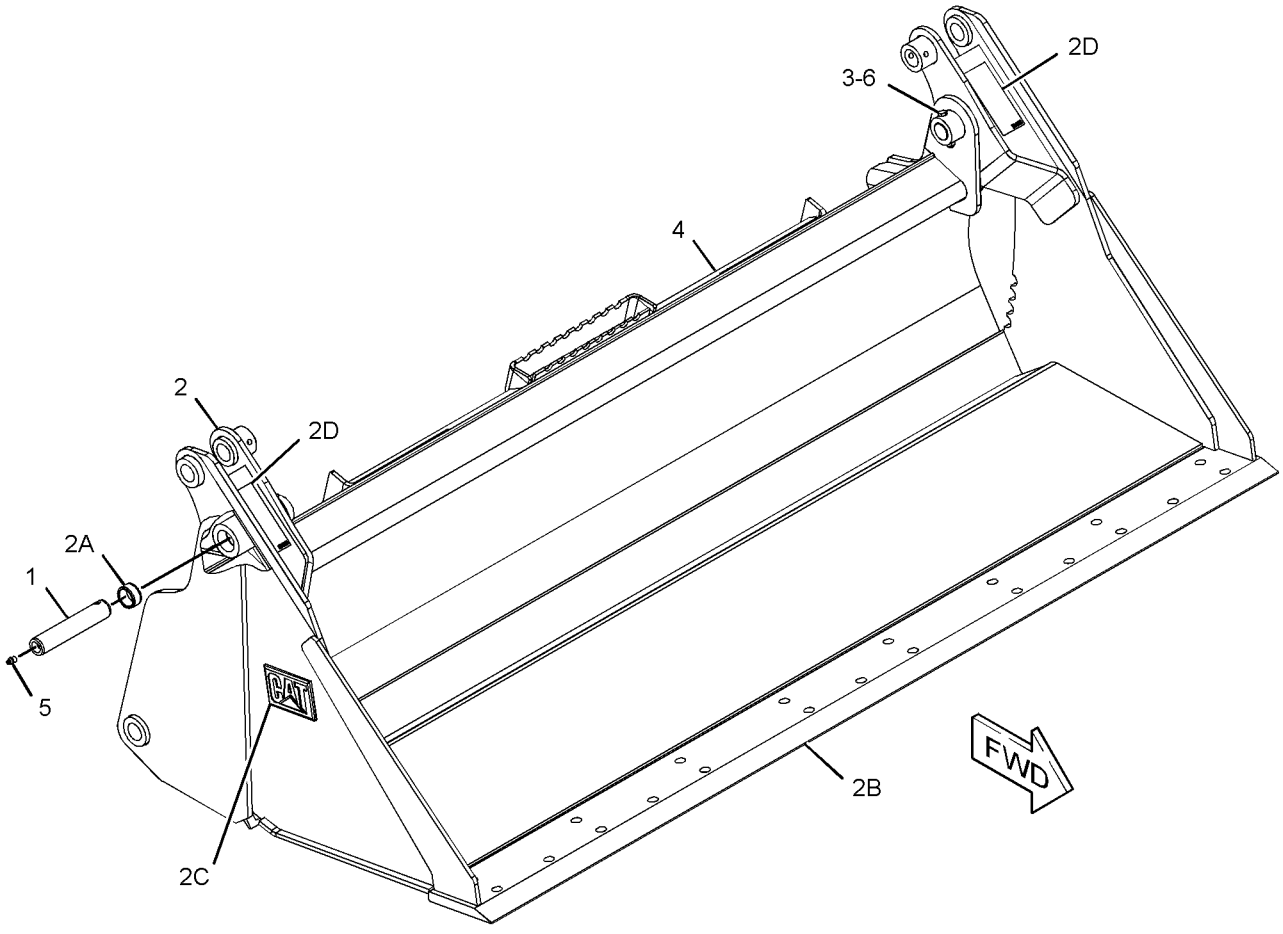

GRAPHIC #1 **<END>** g01280800

WORK TOOLS

279-5399 BUCKET GP-MULTIPURPOSE

S/N: SCH2475-UP
AN ATTACHMENT

SMCS-6104 **i02552131**

NOTE	PART NUMBER	QTY	PART NAME 1 2 3 4 5 6 (PRODUCT LEVEL)	SEE PAGE
Y	**279-5398**	1	BUCKET AR-MULTIPURPOSE	366
Y	*135-9386*	1	EDGE GP-CUTTING	406

Y-SEPARATE ILLUSTRATION

<END>

WORK TOOLS

279-5404 BUCKET GP-MULTIPURPOSE

S/N: SCH2475-UP
PART OF 279-5403 BUCKET AR-MULTIPURPOSE
AN ATTACHMENT

SMCS-6104 **i02552254**

NOTE	REF NO	GRAPHIC REF	PART NUMBER	QTY	PART NAME 1 2 3 4 5 6 (PRODUCT LEVEL)	SEE PAGE
	1	1	**154-5012**	2	PIN	
	2	1	**159-8038**	2	FILM-WARNING (CRUSH HAZARD)	
	3	1	**199-8308**	1	CLAM AS	
		1	**142-8805**	4	BEARING-SLEEVE	
		1	**159-8038**	2	FILM-WARNING (CRUSH HAZARD)	
		1	**161-4130**	2	PLATE-IDENTIFICATION (CAT)	
		1	**199-7722**	1	EDGE	
		1	**199-8317**	1	EDGE	
Y	4	1	*279-5405*	1	BLADE GP-MULTIPURPOSE BUCKET (78-IN)	355
	5	1	**3B-8489**	2	FITTING-GREASE	
M	6	1	**6V-9189**	2	LOCKNUT (M8X1.25-THD)	
M	7	1	**8T-6869**	2	BOLT (M8X1.25X60-MM)	

M-METRIC PART
Y-SEPARATE ILLUSTRATION

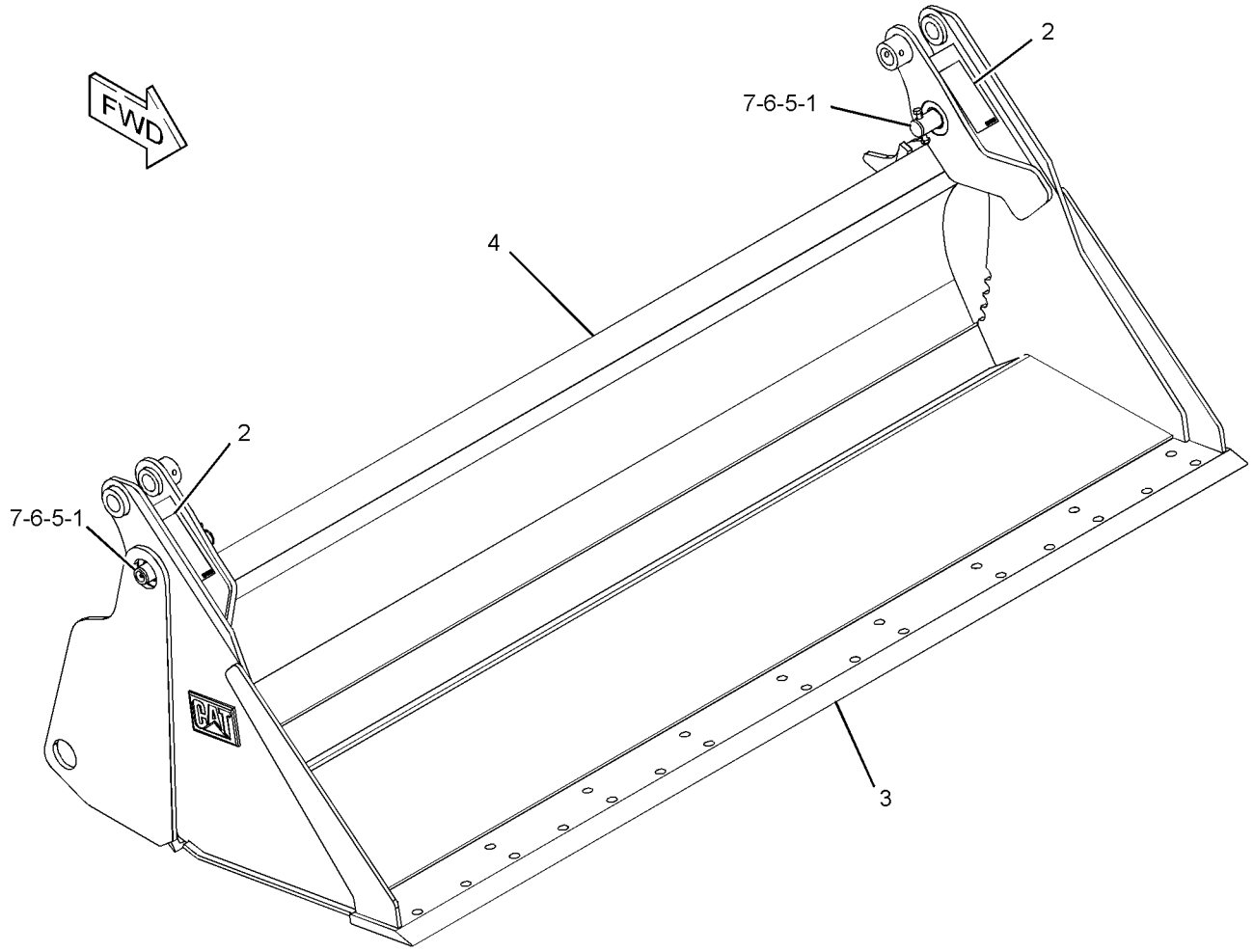

GRAPHIC #1 **<END>** g01278497

WORK TOOLS

285-6096 BUCKET GP-UTILITY

S/N: SCH2475-UP
1524-MM (60-IN)
PART OF 285-6095 BUCKET AR-UTILITY
AN ATTACHMENT

SMCS-6101 **i02764095**

NOTE	REF NO	GRAPHIC REF	PART NUMBER	QTY	PART NAME 1 2 3 4 5 6 (PRODUCT LEVEL)	SEE PAGE
	1	1	**154-2704**	1	PLATE-INSTRUCTION (BUCKET SPECIFICATIONS)	
	2	1	**168-8389**	4	TACK-FASTENER	
					PARTS SHOWN IN GRAPHIC(S) WITHOUT A REFERENCE NUMBER ARE NOT SERVICED SEPARATELY	

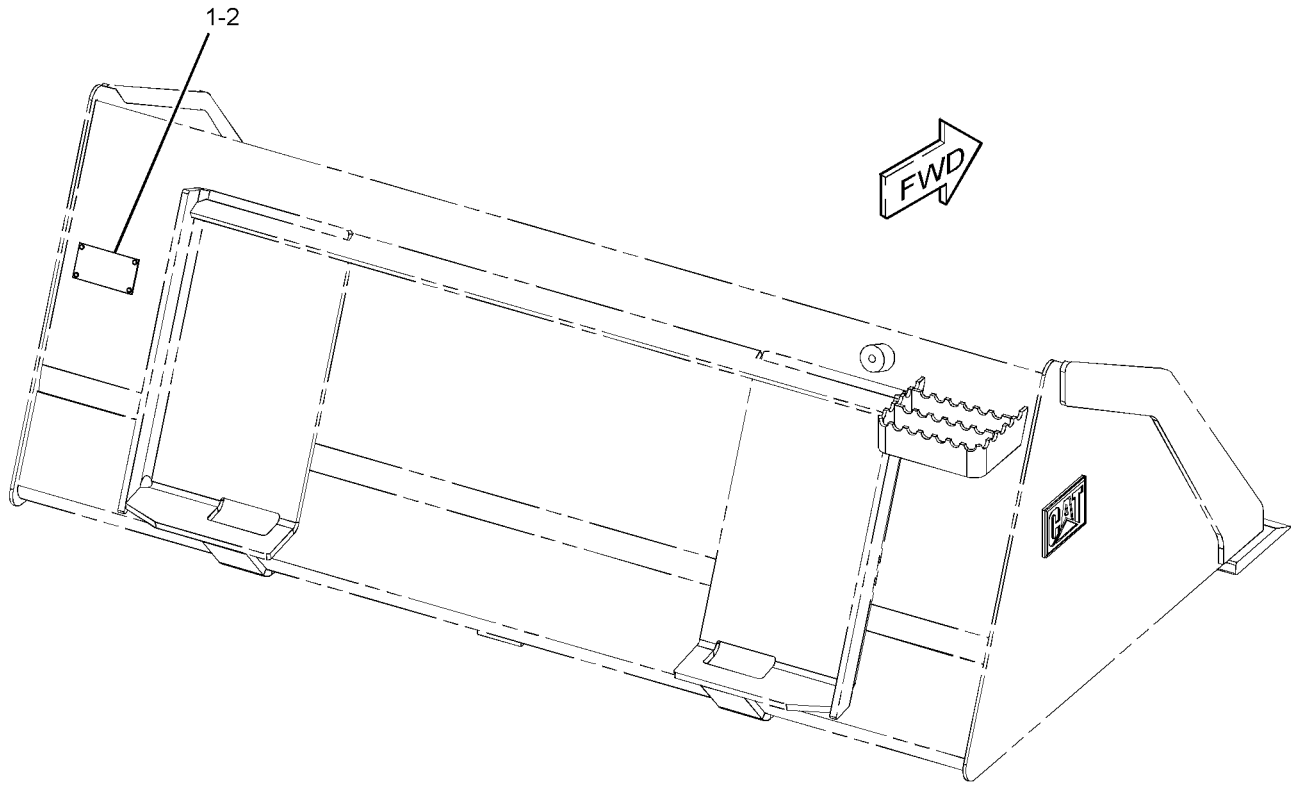

GRAPHIC #1 **<END>** g01278644

WORK TOOLS

285-6099 BUCKET GP-UTILITY

S/N: SCH2475-UP
1676-MM (66-IN)
PART OF 285-6093 BUCKET AR-GRAPPLE, 285-6100 BUCKET AR-UTILITY
AN ATTACHMENT

SMCS-6101 **i02552452**

NOTE	REF NO	GRAPHIC REF	PART NUMBER	QTY	PART NAME 1 2 3 4 5 6 (PRODUCT LEVEL)	SEE PAGE
	1	1	**154-2704**	1	PLATE-INSTRUCTION (BUCKET SPECIFICATIONS)	
	2	1	**168-8389**	4	TACK-FASTENER	
					PARTS SHOWN IN GRAPHIC(S) WITHOUT A REFERENCE NUMBER ARE NOT SERVICED SEPARATELY	

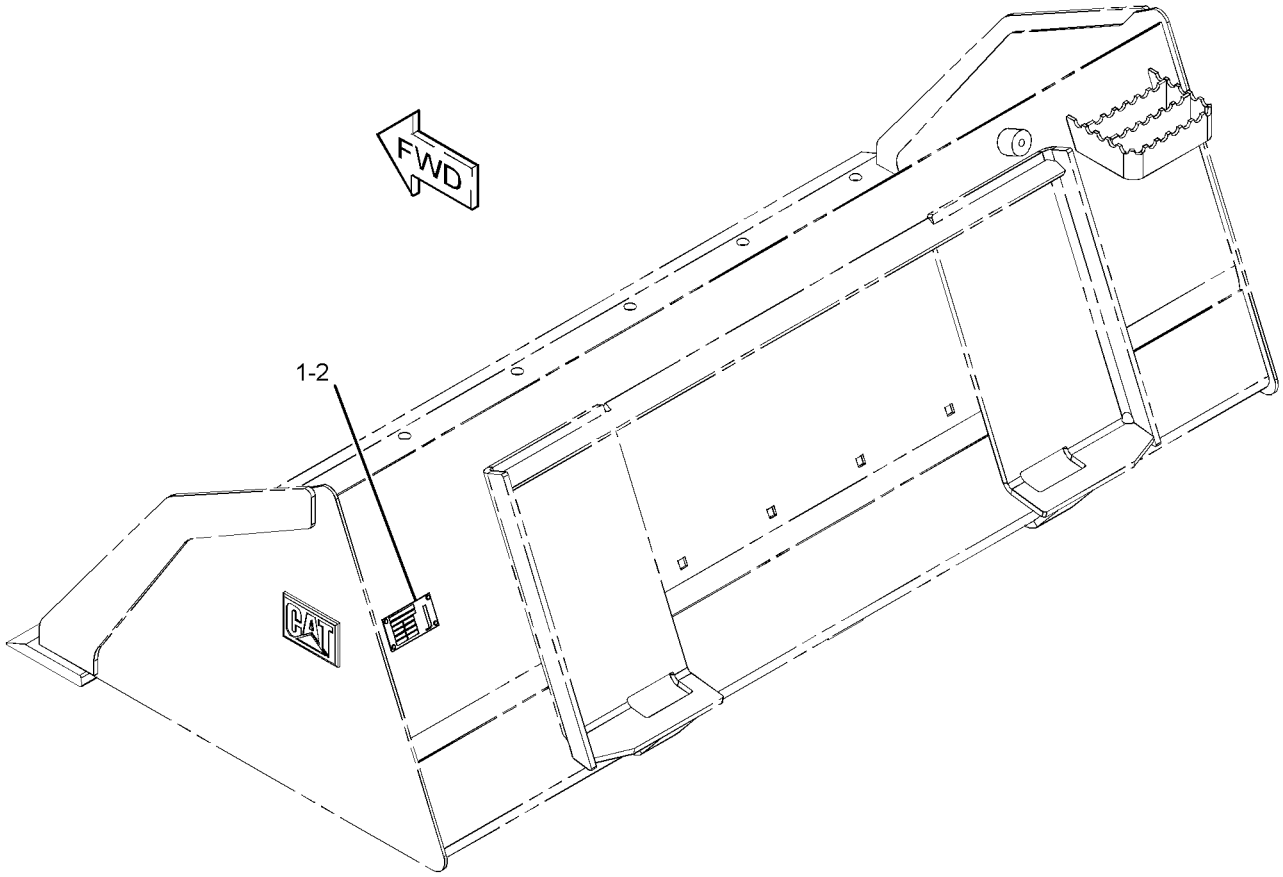

GRAPHIC #1 **<END>** g01279288

285-6102 BUCKET GP-UTILITY

S/N: SCH2475-UP
1829-MM (72-IN)
PART OF 285-6104 BUCKET AR-GRAPPLE, 285-6101 BUCKET AR-UTILITY
AN ATTACHMENT

SMCS-6101 **i02760165**

NOTE	REF NO	GRAPHIC REF	PART NUMBER	QTY	PART NAME 1 2 3 4 5 6 (PRODUCT LEVEL)	SEE PAGE
	1	1	**154-2704**	1	PLATE-INSTRUCTION (BUCKET SPECIFICATIONS)	
	2	1	**168-8389**	4	TACK-FASTENER	
					PARTS SHOWN IN GRAPHIC (S) WITHOUT A REFERENCE NUMBER ARE NOT SERVICED SEPARATELY	

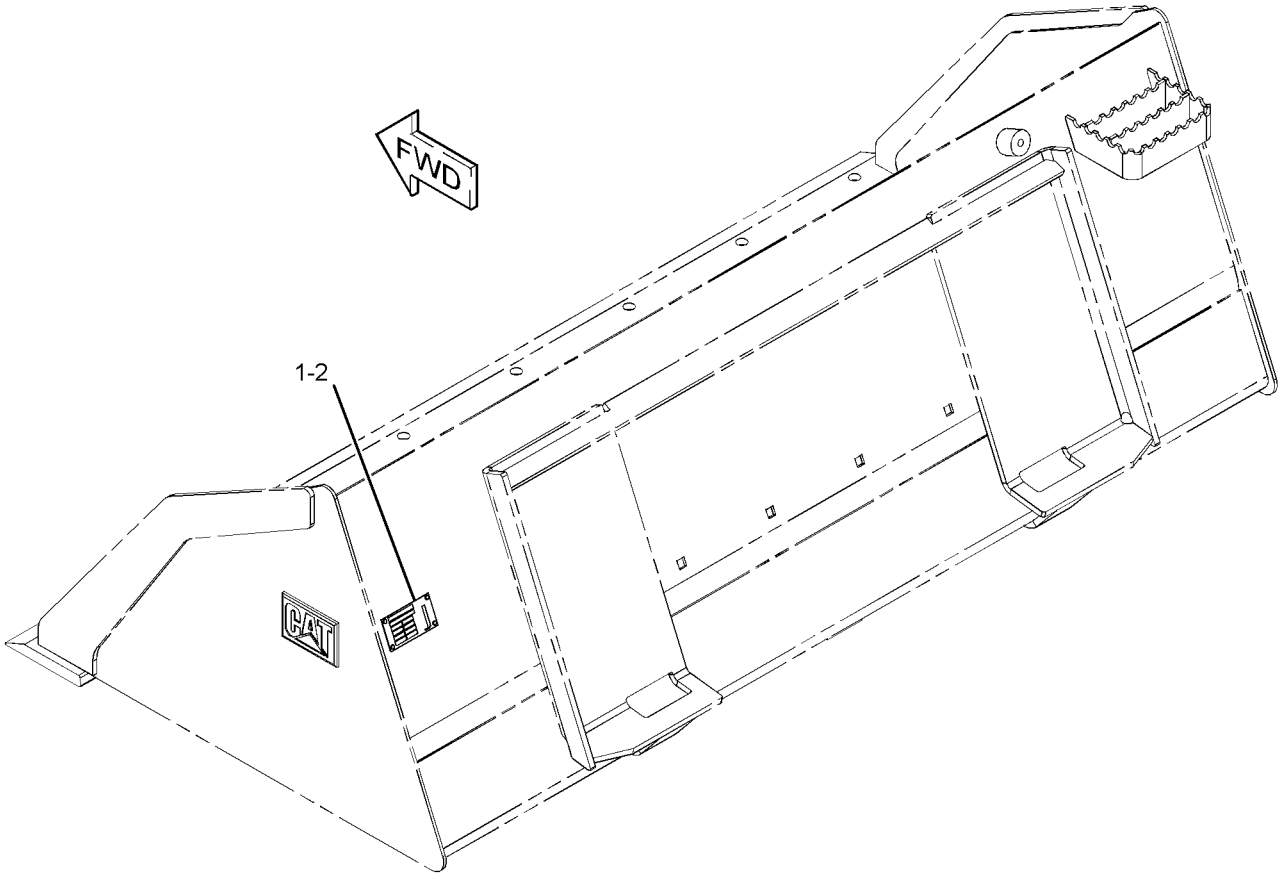

GRAPHIC #1 **<END>** g01279288

293-9427 CARRIAGE & FORK AR

S/N: SCH2475-UP
AN ATTACHMENT

SMCS-6136, 6402 **i02628876**

NOTE	PART NUMBER	QTY	PART NAME 1 2 3 4 5 6 (PRODUCT LEVEL)	SEE PAGE
Y	**261-6681**	1	CARRIAGE GP-FORK	395
Y	**195-6943**	2	FORK GP-PALLET (36-IN)	414

Y-SEPARATE ILLUSTRATION

<END>

293-9428 CARRIAGE & FORK AR

S/N: SCH2475-UP
AN ATTACHMENT

SMCS-6136, 6402 **i02628877**

NOTE	PART NUMBER	QTY	PART NAME 1 2 3 4 5 6 (PRODUCT LEVEL)	SEE PAGE
Y	**261-6681**	1	CARRIAGE GP-FORK	395
Y	**195-6942**	2	FORK GP-PALLET (42-IN)	414

Y-SEPARATE ILLUSTRATION

<END>

293-9429 CARRIAGE & FORK AR

S/N: SCH2475-UP
AN ATTACHMENT

SMCS-6136, 6402 **i02628878**

NOTE	PART NUMBER	QTY	PART NAME 1 2 3 4 5 6 (PRODUCT LEVEL)	SEE PAGE
Y	**261-6681**	1	CARRIAGE GP-FORK	395
Y	**195-8545**	2	FORK GP-PALLET (48-IN)	414

Y-SEPARATE ILLUSTRATION

<END>

WORK TOOLS

261-6681 CARRIAGE GP-FORK

S/N: SCH2475-UP

PART OF 293-9427, 293-9428, 293-9429 CARRIAGE & FORK AR, 293-9426 CARRIAGE GP-FORK

AN ATTACHMENT

SMCS-6402 **i02539756**

NOTE	REF NO	GRAPHIC REF	PART NUMBER	QTY	PART NAME 1 2 3 4 5 6 (PRODUCT LEVEL)	SEE PAGE
	1	1	**157-4835**	1	PLATE-INSTRUCTION	
	2	1	**168-8389**	4	TACK-FASTENER	
	3	1	**252-8595**	1	STEP AS	
	4	1	**8T-4121**	2	WASHER-HARD (11X21X2.5-MM THK)	
M	5	1	**8T-4133**	2	NUT (M10X1.5-THD)	
M	6	1	**8T-4136**	2	BOLT (M10X1.5X25-MM)	
					PARTS SHOWN IN GRAPHIC(S) WITHOUT A REFERENCE NUMBER ARE NOT SERVICED SEPARATELY	

M-METRIC PART

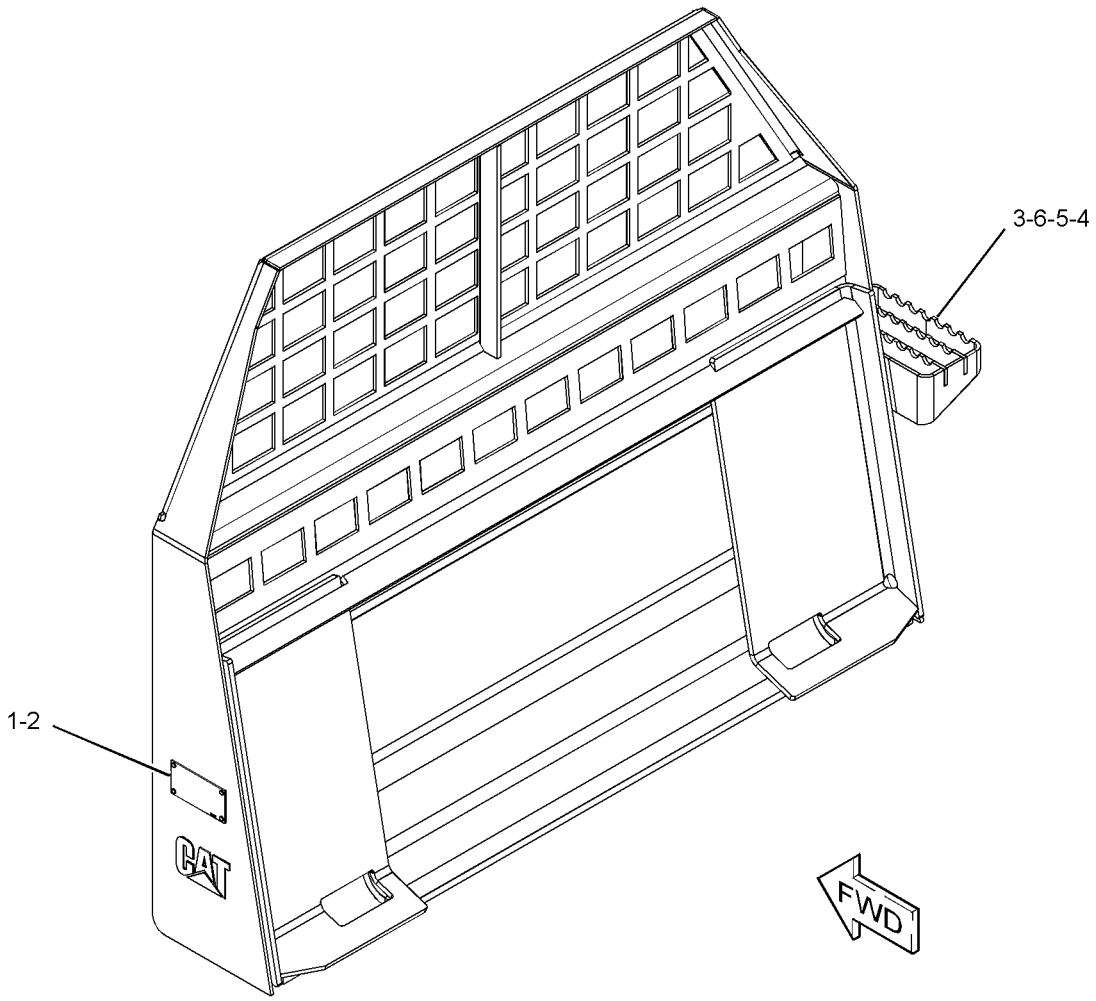

GRAPHIC #1 **<END>** g01282475

WORK TOOLS

293-9426 CARRIAGE GP-FORK

S/N: SCH2475-UP
AN ATTACHMENT

SMCS-6402 **i02628875**

NOTE	PART NUMBER	QTY	PART NAME 1 2 3 4 5 6 (PRODUCT LEVEL)	SEE PAGE
Y	**261-6681**	6	CARRIAGE GP-FORK	395
Y-SEPARATE ILLUSTRATION				

<END>

218-6721 COUPLER AR-QUICK

S/N: SCH2475-UP
MANUAL
AN ATTACHMENT

SMCS-6129 **i01986648**

NOTE	PART NUMBER	QTY	PART NAME 1 2 3 4 5 6 (PRODUCT LEVEL)	SEE PAGE
Y	*206-3820*	1	COUPLER GP-QUICK	397
Y	*218-5882*	1	LINES GP-LOWERING CONTROL (MANUAL)	288
Y-SEPARATE ILLUSTRATION				

<END>

218-6722 COUPLER AR-QUICK

S/N: SCH2475-UP
HYDRAULIC
AN ATTACHMENT

SMCS-6129 **i01992200**

NOTE	PART NUMBER	QTY	PART NAME 1 2 3 4 5 6 (PRODUCT LEVEL)	SEE PAGE
Y	*206-3821*	1	COUPLER GP-QUICK	398
	113-8490	1	FUSE (10-AMPERE)	
	212-6521	1	SWITCH AS-ROCKER (QUICK COUPLER)	
	111-7899	1	GASKET	
			(LOCATE FOURTH SLOT FROM REAR ON LH INSTRUMENT PANEL)	
Y	*218-6263*	1	VALVE & LINES GP-COUPLER	328
Y-SEPARATE ILLUSTRATION				

<END>

206-3820 COUPLER GP-QUICK

S/N: SCH2475-UP
PART OF 218-6721 COUPLER AR-QUICK
AN ATTACHMENT

SMCS-6129 **i02359462**

NOTE	REF NO	GRAPHIC REF	PART NUMBER	QTY	PART NAME 1 2 3 4 5 6 (PRODUCT LEVEL)	SEE PAGE
	1	1	**159-5797**	2	SPRING	
	2	1	**252-0425**	1	COUPLER AS	
		1	**126-5701**	2	PLATE-RETAINER	
Y	3	1	*215-3960*	1	HANDLE & PIN GP-COUPLER (LH)	425
Y	4	1	*215-3961*	1	HANDLE & PIN GP-COUPLER (RH)	426
	5	1	**131-5879**	2	WASHER (11X32X3-MM THK)	
	6	1	**132-7551**	2	SPACER (11X19X6-MM THK)	
	7	1	**5B-0651**	2	FITTING-STRAIGHT	
M	8	1	**6V-7744**	2	LOCKNUT (M10X1.5-THD)	
M	9	1	**7X-2621**	2	BOLT (M10X1.5X12-MM)	
	10	1	**7X-7729**	4	WASHER (11X25X3-MM THK)	
	11	1	**8T-4121**	6	WASHER-HARD (11X21X2.5-MM THK)	
M	12	1	**8T-4172**	2	BOLT (M10X1.5X80-MM)	
M	13	1	**8T-4196**	4	BOLT (M10X1.5X35-MM)	

M-METRIC PART
Y-SEPARATE ILLUSTRATION

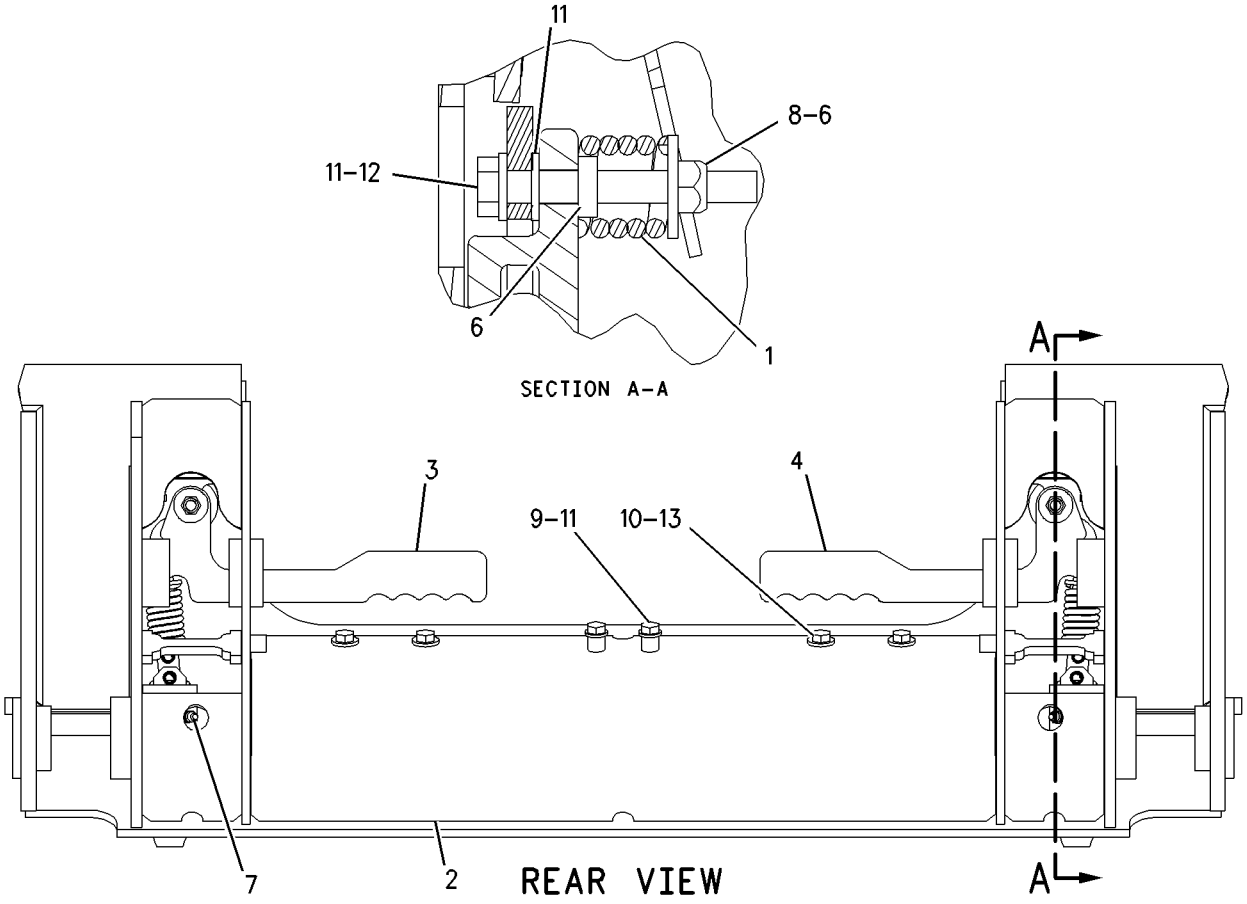

GRAPHIC #1 **<END>** g00914702

WORK TOOLS

206-3821 COUPLER GP-QUICK

S/N: SCH2475-UP

PART OF 218-6722 COUPLER AR-QUICK

AN ATTACHMENT

SMCS-6129 **i02195792**

NOTE	REF NO	GRAPHIC REF	PART NUMBER	QTY	PART NAME 1 2 3 4 5 6 (PRODUCT LEVEL)	SEE PAGE
	1	1	**5P-0372**	2	LOCK PIN	
	2	1	**252-0425**	1	COUPLER AS	
		1	**126-5701**	2	PLATE-RETAINER	
	3	1	**207-9785**	2	PIN	
Y	4	1	*215-3962*	1	CYLINDER & LINK GP-COUPLER (LH)	401
Y	5	1	*215-3963*	1	CYLINDER & LINK GP-COUPLER (RH)	402
C	6	1	**218-6334**	1	BRACKET AS (LH)	
C	7	1	**218-6335**	1	BRACKET AS (RH)	
	8	1	**3B-4628**	2	PIN-COTTER	
	9	1	**5B-0651**	2	FITTING-STRAIGHT	
	10	1	**8L-5188**	2	PIN	
	11	1	**8T-4121**	14	WASHER-HARD (11X21X2.5-MM THK)	
M	12	1	**8T-4133**	4	NUT (M10X1.5-THD)	
M	13	1	**8T-4196**	8	BOLT (M10X1.5X35-MM)	
	14	1	**9T-7303**	4	SPACER (16X28X1.5-MM THK)	

C-CHANGE FROM PREVIOUS TYPE
M-METRIC PART
Y-SEPARATE ILLUSTRATION

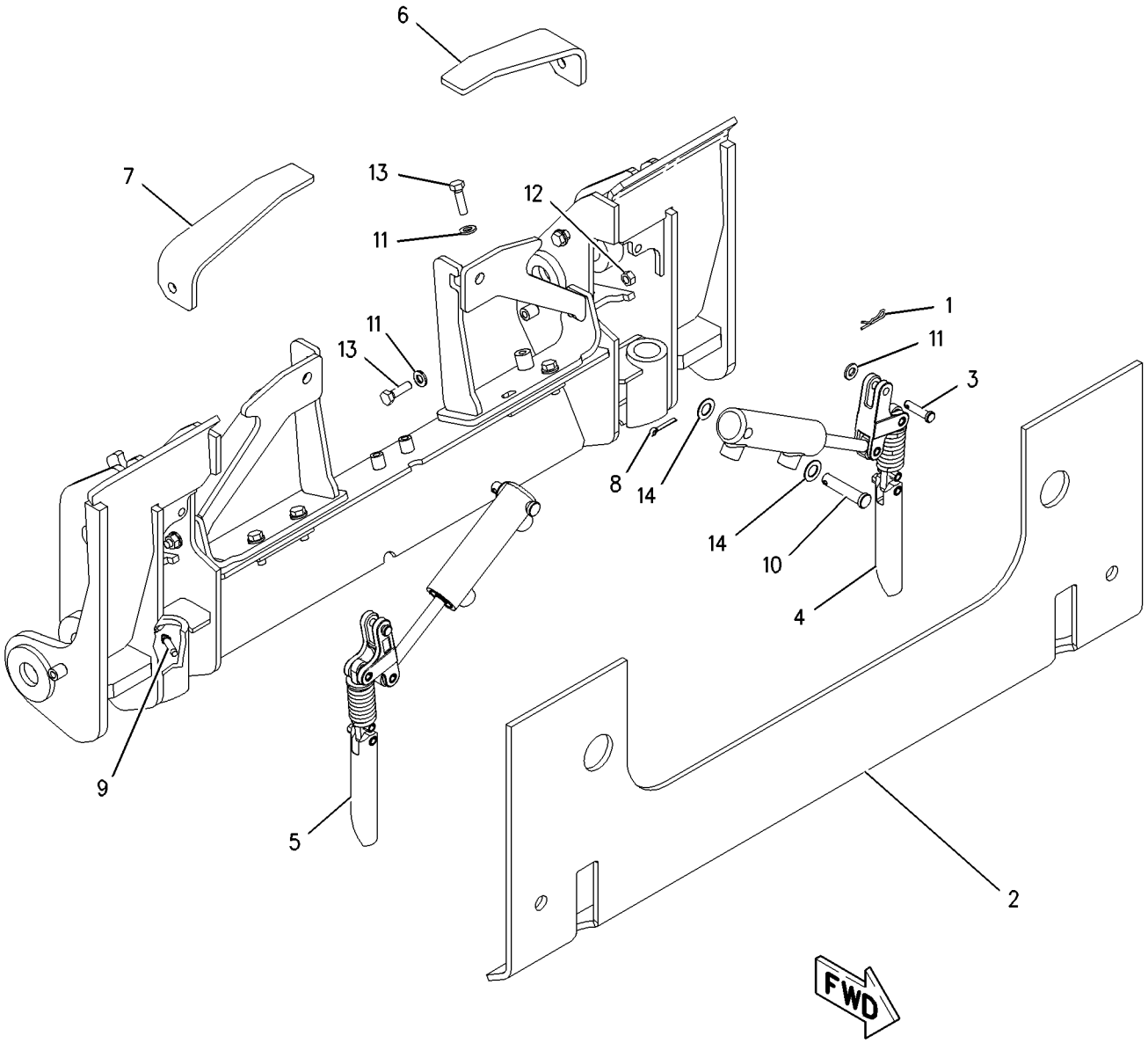

GRAPHIC #1 **<END>** g00983866

WORK TOOLS

162-5236 COVER GP-LINES

S/N: SCH2475-UP

PART OF 279-5382, 279-5390, 279-5398, 279-5403 BUCKET AR-MULTIPURPOSE AN ATTACHMENT

SMCS-5057 **i01227894**

NOTE	REF NO	GRAPHIC REF	PART NUMBER	QTY	PART NAME 1 2 3 4 5 6 (PRODUCT LEVEL)	SEE PAGE
	1	1	**161-4128**	1	PLATE	
M	2	1	**5C-9553**	5	BOLT (M6X1.0X16MM)	
	3	1	**9X-2026**	5	WASHER (1MM THK)	

M-METRIC PART

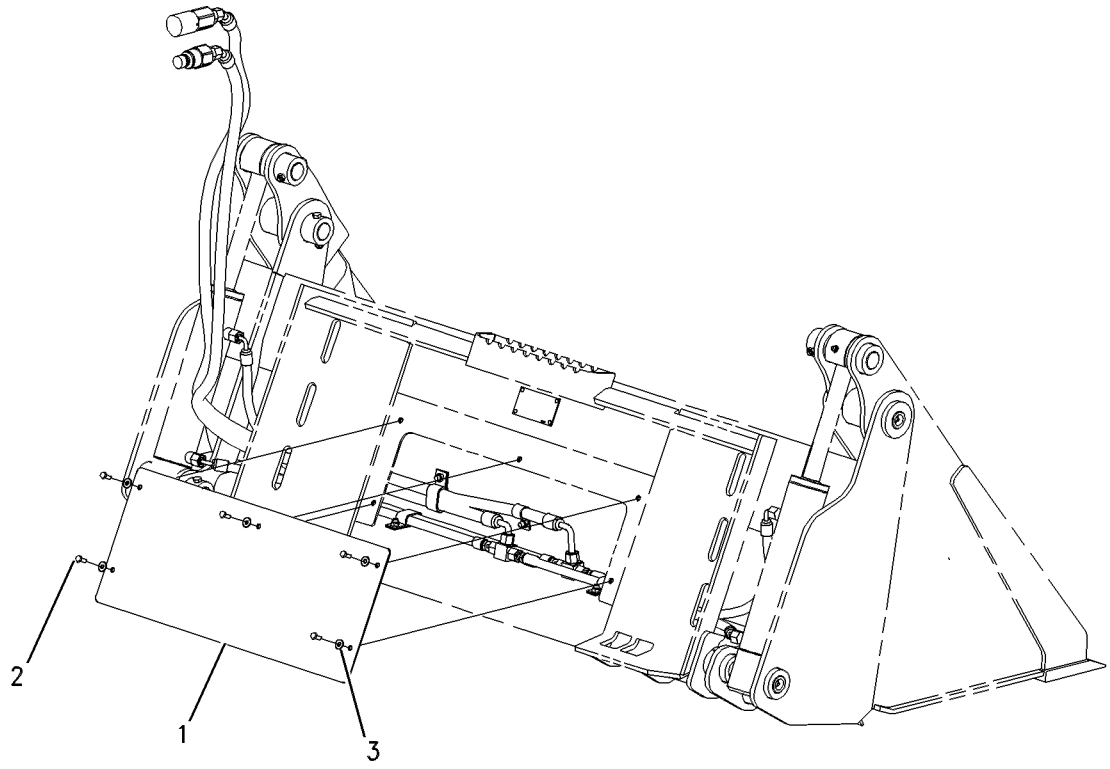

GRAPHIC #1 **<END>** g00560360

215-3962 CYLINDER & LINK GP-COUPLER–LH

S/N: SCH2475-UP
PART OF 206-3821 COUPLER GP-QUICK
AN ATTACHMENT

SMCS-5133, 6129 **i02711951**

NOTE	REF NO	GRAPHIC REF	PART NUMBER	QTY	PART NAME 1 2 3 4 5 6 (PRODUCT LEVEL)	SEE PAGE
	1	1	**166-2560**	1	PIN-SPRING	
Y	2	1	**192-2640**	1	CYLINDER GP-HYDRAULIC (COUPLER)	246
	3	1	**192-2642**	1	PIN	
	4	1	**195-6754**	1	PIN-SPRING	
Y	5	1	*215-3957*	1	LINK GP-COUPLER	430

Y-SEPARATE ILLUSTRATION

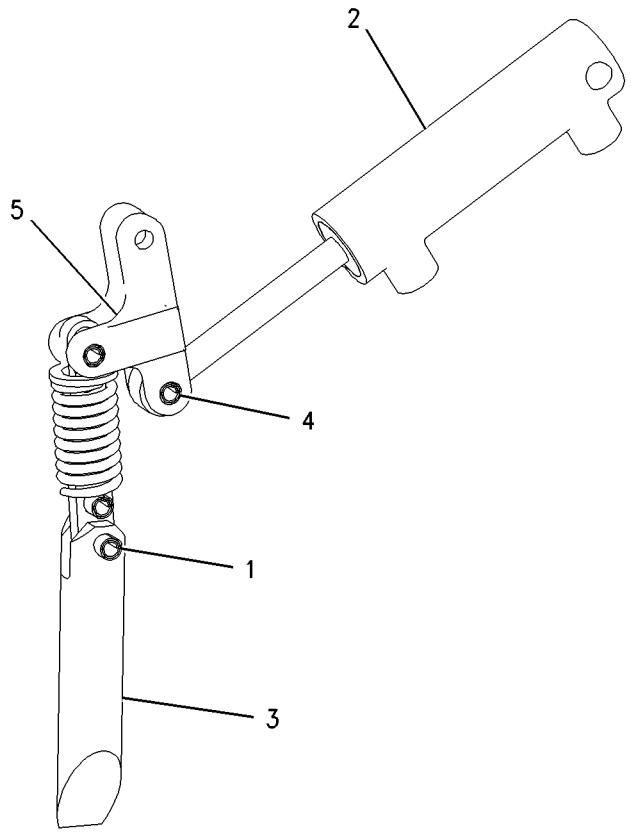

GRAPHIC #1 **<END>** g00871294

215-3963 CYLINDER & LINK GP-COUPLER–RH

S/N: SCH2475-UP
PART OF 206-3821 COUPLER GP-QUICK
AN ATTACHMENT

SMCS-5133, 6129 **i02711952**

NOTE	REF NO	GRAPHIC REF	PART NUMBER	QTY	PART NAME 1 2 3 4 5 6 (PRODUCT LEVEL)	SEE PAGE
	1	1	**166-2560**	1	PIN-SPRING	
Y	2	1	**192-2640**	1	CYLINDER GP-HYDRAULIC (COUPLER)	246
	3	1	**192-2642**	1	PIN	
	4	1	**195-6754**	1	PIN-SPRING	
Y	5	1	*215-3957*	1	LINK GP-COUPLER	430

Y-SEPARATE ILLUSTRATION

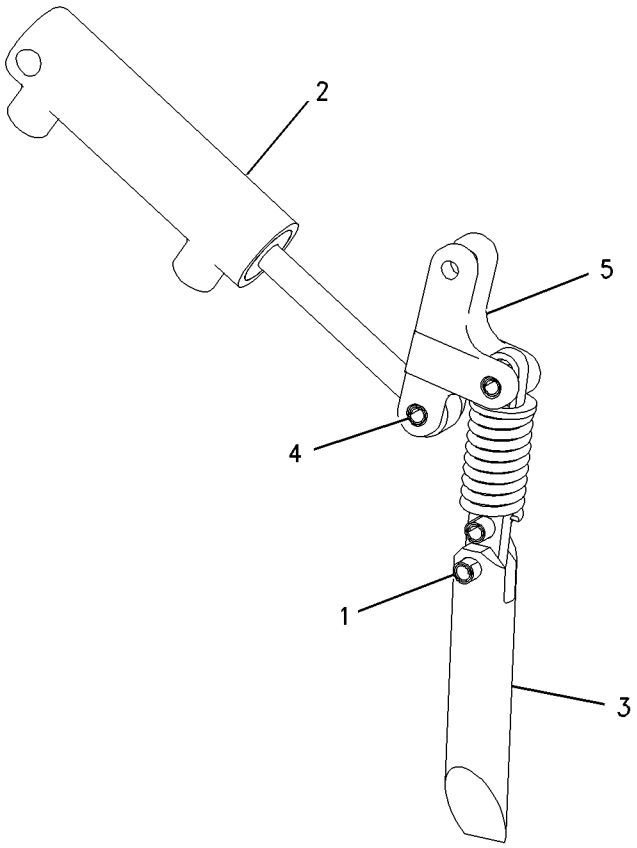

GRAPHIC #1 **<END>** g00871299

WORK TOOLS

135-9383 EDGE GP-CUTTING

S/N: SCH2475-UP
PART OF 279-5435 BUCKET AR-DIRT
FOR USE WITH 137.20-CM (54-IN) BUCKET
AN ATTACHMENT

SMCS-6801 **i02571125**

NOTE	PART NUMBER	QTY	PART NAME 1 2 3 4 5 6 (PRODUCT LEVEL)	SEE PAGE
	135-9393	1	EDGE-CUTTING	
M	**8T-4778**	6	LOCKNUT (M16X2-THD)	
M	**159-2953**	6	SCREW-FLAT HEAD (M16X2-THD)	

M-METRIC PART

<END>

WORK TOOLS

135-9384 EDGE GP-CUTTING

S/N: SCH2475-UP

PART OF 279-5438 BUCKET AR-DIRT, 279-5365 BUCKET AR-GENERAL PURPOSE, 157-7226 BUCKET AR-GRAPPLE, 279-5381 BUCKET AR-MULTIPURPOSE, 285-6095 BUCKET AR-UTILITY
FOR USE WITH 152.40-CM (60-IN) BUCKET
AN ATTACHMENT

SMCS-6801 **i01372033**

NOTE	REF NO	GRAPHIC REF	PART NUMBER	QTY	PART NAME 1 2 3 4 5 6 (PRODUCT LEVEL)	SEE PAGE
	1	1	**135-9394**	1	EDGE-CUTTING	
M	2	1	**8T-4778**	8	LOCKNUT (M16X2.00 THD)	
M	3	1	**159-2953**	8	SCREW-FLAT HEAD (M16X2.00 THD)	

M-METRIC PART

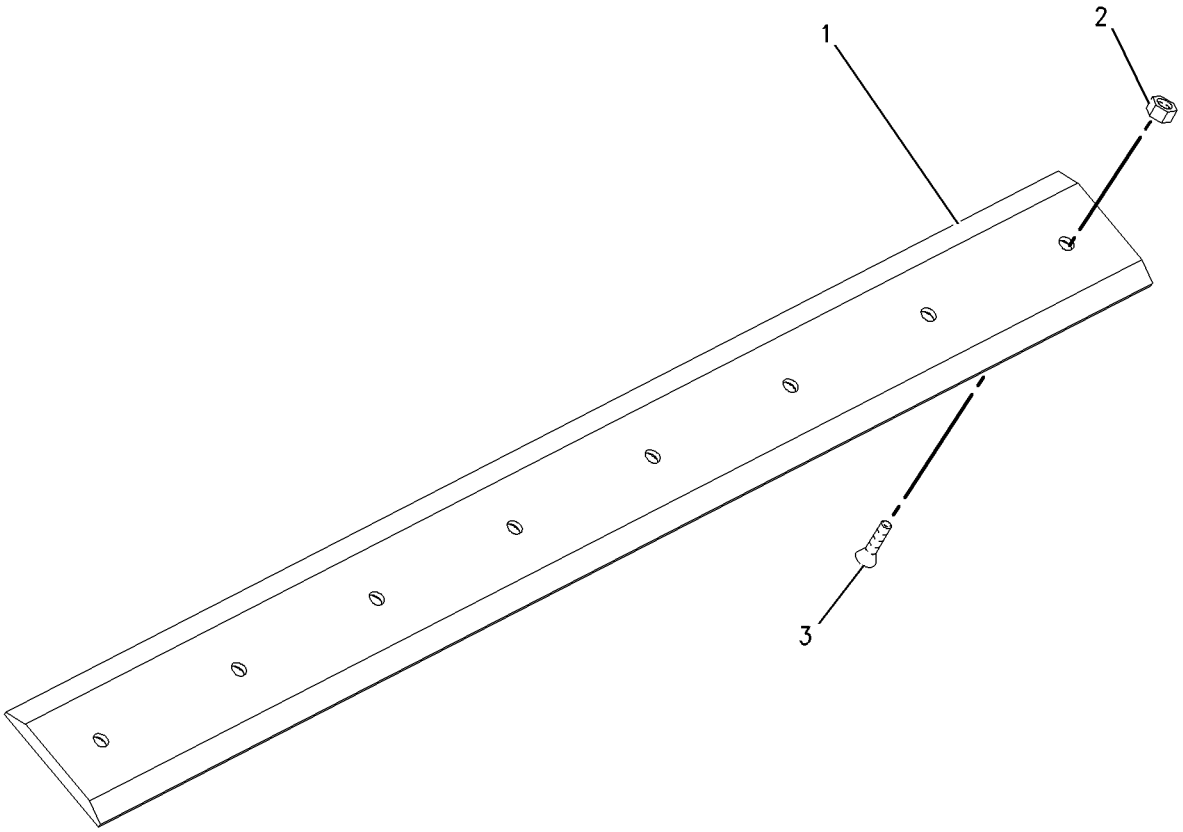

GRAPHIC #1 **<END>** g00724087

135-9385 EDGE GP-CUTTING

S/N: SCH2475-UP

PART OF 279-5441 BUCKET AR-DIRT, 279-5369 BUCKET AR-GENERAL PURPOSE, 157-7227 BUCKET AR-GRAPPLE, 279-5391 BUCKET AR-MULTIPURPOSE, 285-6100 BUCKET AR-UTILITY

FOR USE WITH 167.64-CM (66-IN) BUCKET

AN ATTACHMENT

SMCS-6801 **i01228508**

NOTE	REF NO	GRAPHIC REF	PART NUMBER	QTY	PART NAME 1 2 3 4 5 6 (PRODUCT LEVEL)	SEE PAGE
	1	1	**135-9395**	1	EDGE-CUTTING	
M	2	1	**8T-4778**	8	LOCKNUT (M16X2.00 THD)	
M	3	1	**159-2953**	8	SCREW-FLAT HEAD (M16X2.00 THD)	

M-METRIC PART

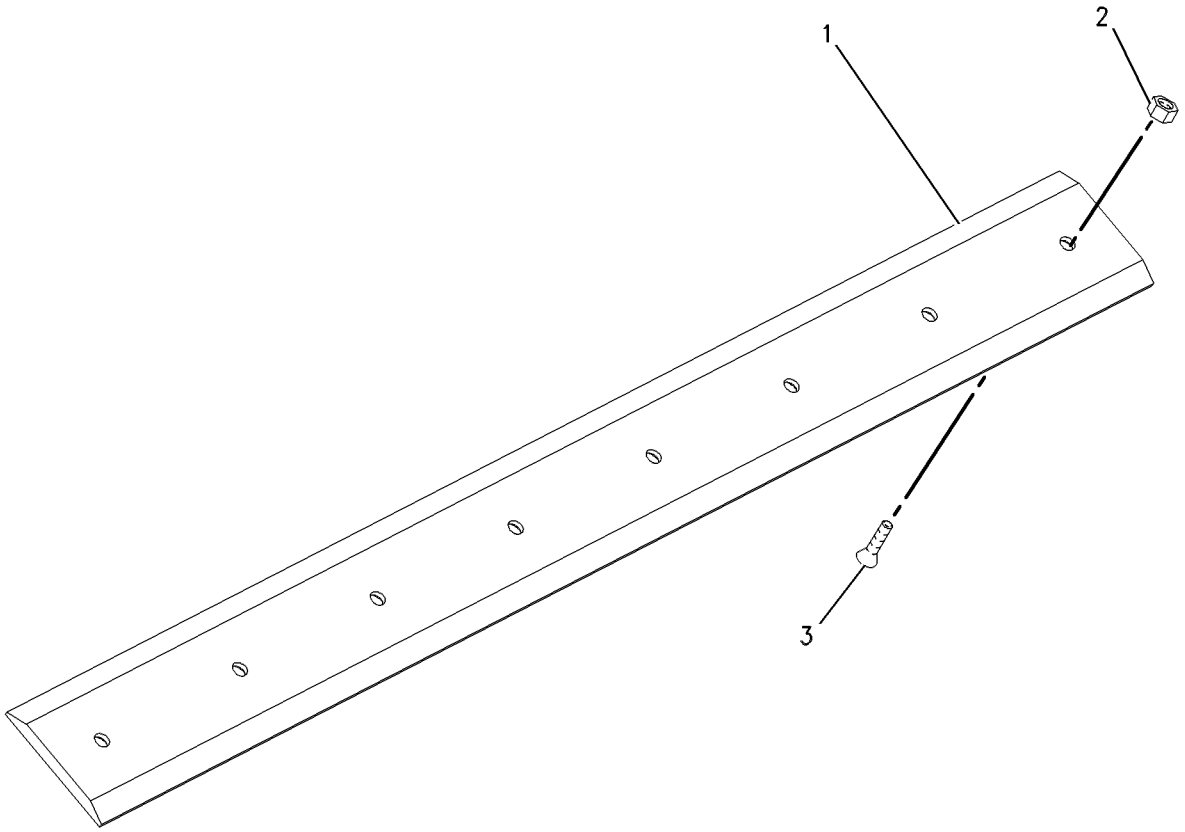

GRAPHIC #1 **<END>** g00657004

135-9386 EDGE GP-CUTTING

S/N: SCH2475-UP

PART OF 177-1989 BLADE AR, 285-6090 BUCKET AR-DIRT, 279-5373 BUCKET AR-GENERAL PURPOSE, 158-6095 BUCKET AR-GRAPPLE, 279-5420 BUCKET AR-LIGHT MATERIAL, 285-6101 BUCKET AR-UTILITY, 279-5399 BUCKET GP-MULTIPURPOSE
FOR USE WITH 182.88-CM (72-IN) BUCKET
AN ATTACHMENT

SMCS-6801 **i01372498**

NOTE	REF NO	GRAPHIC REF	PART NUMBER	QTY	PART NAME 1 2 3 4 5 6 (PRODUCT LEVEL)	SEE PAGE
	1	1	**135-9396**	1	EDGE-CUTTING	
M	2	1	**8T-4778**	11	LOCKNUT (M16X2.00 THD)	
M	3	1	**159-2953**	11	SCREW-FLAT HEAD (M16X2.00 THD)	

M-METRIC PART

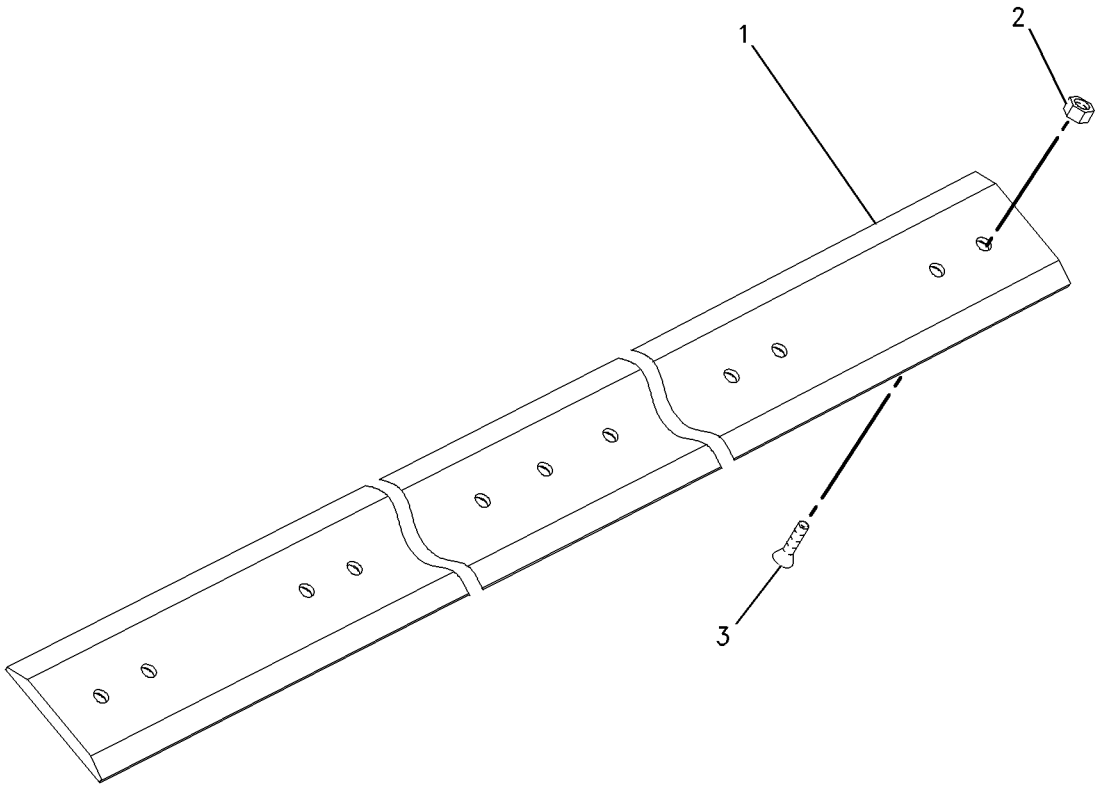

GRAPHIC #1 **<END>** g00724435

WORK TOOLS

135-9387 EDGE GP-CUTTING

S/N: SCH2475-UP

PART OF 268-4083 BUCKET AR-DIRT, 279-5377 BUCKET AR-GENERAL PURPOSE, 279-5425 BUCKET AR-LIGHT MATERIAL, 279-5402 BUCKET AR-MULTIPURPOSE

FOR USE WITH 198.12-CM (78-IN) BUCKET

AN ATTACHMENT

SMCS-6801 **i01755490**

NOTE	REF NO	GRAPHIC REF	PART NUMBER	QTY	PART NAME 1 2 3 4 5 6 (PRODUCT LEVEL)	SEE PAGE
	1	1	**135-9397**	1	EDGE-CUTTING	
M	2	1	**8T-4778**	11	LOCKNUT (M16X2 THD)	
M	3	1	**159-2953**	11	SCREW-FLAT HEAD (M16X2.00 THD)	

M-METRIC PART

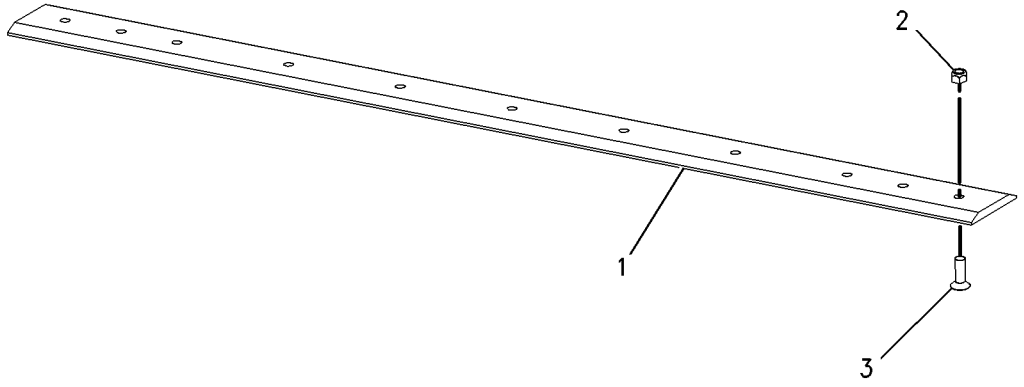

GRAPHIC #1 **<END>** g00898154

WORK TOOLS

149-5741 EDGE GP-CUTTING

S/N: SCH2475-UP
PART OF 177-1990 BLADE AR
FOR USE WITH 218.9-CM (85-IN) BUCKET
AN ATTACHMENT

SMCS-6801 **i01832720**

NOTE	REF NO	GRAPHIC REF	PART NUMBER	QTY	PART NAME 1 2 3 4 5 6 (PRODUCT LEVEL)	SEE PAGE
	1	1	**195-5124**	1	EDGE-CUTTING	
M	2	1	**8T-4778**	7	LOCKNUT (M16X2 THD)	
M	3	1	**159-2953**	7	SCREW-FLAT HEAD (M16X2.00 THD)	

M-METRIC PART

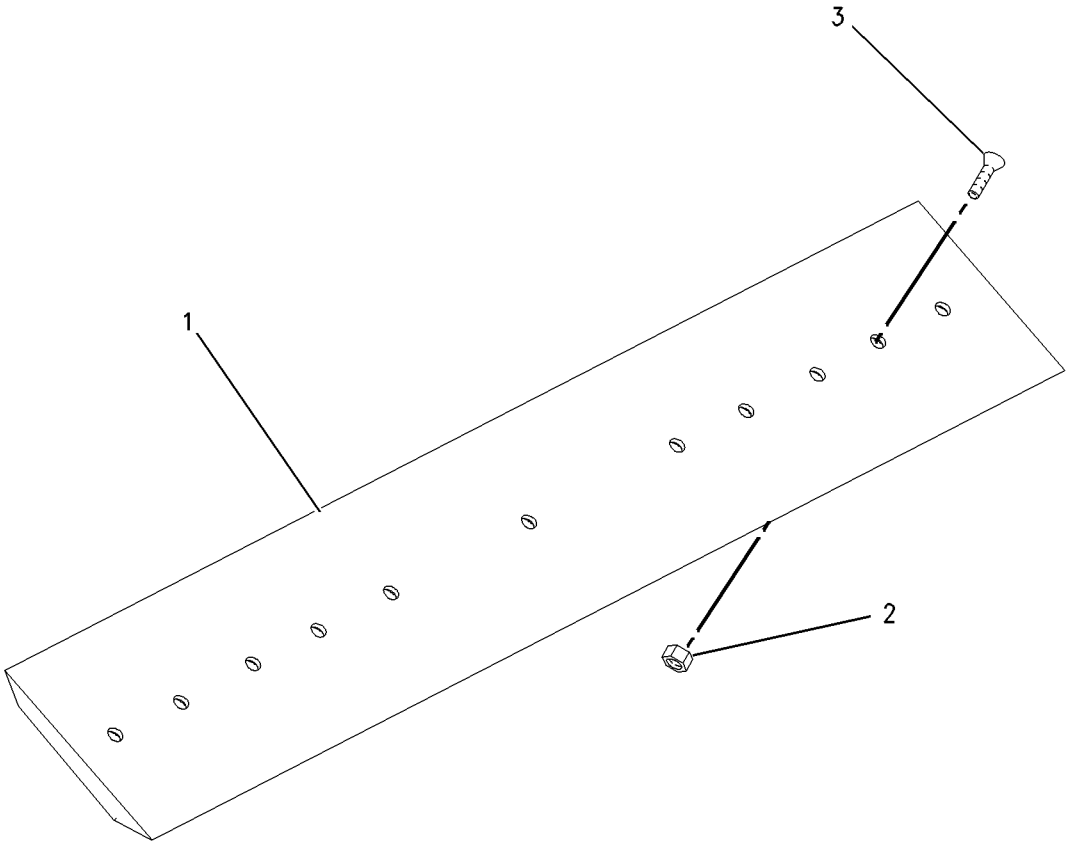

GRAPHIC #1 **<END>** g00936281

195-7124 EDGE GP-CUTTING

S/N: SCH2475-UP
PART OF 279-5430 BUCKET AR-LIGHT MATERIAL
FOR USE WITH 213.36CM (84 IN) BUCKET
AN ATTACHMENT

SMCS-6801 **i01859534**

NOTE	PART NUMBER	QTY	PART NAME 1 2 3 4 5 6 (PRODUCT LEVEL)	SEE PAGE
	195-5124	1	EDGE-CUTTING	
M	**8T-4778**	11	LOCKNUT (M16X2 THD)	
M	**159-2953**	11	SCREW-FLAT HEAD (M16X2.00 THD)	

M-METRIC PART

<END>

279-5350 FORK AR-GRAPPLE—INDUSTRIAL

S/N: SCH2475-UP
1676-MM (66-IN)
AN ATTACHMENT

SMCS-6705 **i02715580**

NOTE	PART NUMBER	QTY	PART NAME 1 2 3 4 5 6 (PRODUCT LEVEL)	SEE PAGE
Y	**278-1975**	2	CYLINDER GP-HYDRAULIC	250
Y	*164-9614*	9	FORK GP-GRAPPLE (INDUSTRIAL)	411
Y	*279-5351*	1	FORK GP-GRAPPLE (66-IN, INDUSTRIAL)	412
Y	*279-5412*	1	LINES GP-BUCKET (INDUSTRIAL)	258
Y	*156-0891*	1	MOUNTING GP-CYLINDER (INDUSTRIAL)	320

Y-SEPARATE ILLUSTRATION

<END>

279-5360 FORK AR-GRAPPLE—INDUSTRIAL

S/N: SCH2475-UP
1829-MM (72-IN)
AN ATTACHMENT

SMCS-6705 **i02715593**

NOTE	PART NUMBER	QTY	PART NAME 1 2 3 4 5 6 (PRODUCT LEVEL)	SEE PAGE
Y	**278-1975**	2	CYLINDER GP-HYDRAULIC	250
Y	*164-9614*	2	FORK GP-GRAPPLE (INDUSTRIAL)	411
Y	*279-5359*	1	FRAME GP-GRAPPLE (72-IN, INDUSTRIAL)	421
Y	*279-5412*	1	LINES GP-BUCKET (INDUSTRIAL)	258
Y	*156-0891*	1	MOUNTING GP-CYLINDER (INDUSTRIAL)	320

Y-SEPARATE ILLUSTRATION

<END>

WORK TOOLS

285-6114 FORK AR-GRAPPLE–UTILITY

S/N: SCH2475-UP
1676-MM (66-IN)
AN ATTACHMENT

SMCS-6705 **i02552497**

NOTE	PART NUMBER	QTY	PART NAME 1 2 3 4 5 6 (PRODUCT LEVEL)	SEE PAGE
Y	**285-6105**	1	FORK GP-UTILITY (66-IN)	417
Y	*285-6116*	1	GRAPPLE GP-UTILITY	423

Y-SEPARATE ILLUSTRATION

<END>

285-6115 FORK AR-GRAPPLE–UTILITY

S/N: SCH2475-UP
1829-MM(72-IN)
AN ATTACHMENT

SMCS-6705 **i02552699**

NOTE	PART NUMBER	QTY	PART NAME 1 2 3 4 5 6 (PRODUCT LEVEL)	SEE PAGE
Y	**285-6110**	1	FORK GP-GRAPPLE	413
Y	*285-6116*	1	GRAPPLE GP-UTILITY	423

Y-SEPARATE ILLUSTRATION

<END>

WORK TOOLS

164-9614 FORK GP-GRAPPLE

S/N: SCH2475-UP
PART OF 279-5350, 279-5360 FORK AR-GRAPPLE
AN ATTACHMENT

SMCS-6705 **i01075196**

NOTE	REF NO	GRAPHIC REF	PART NUMBER	QTY	PART NAME 1 2 3 4 5 6 (PRODUCT LEVEL)	SEE PAGE
	1	1	**3E-4370**	1	PIN-SPRING	
	2	1	**162-8154**	1	TINE	

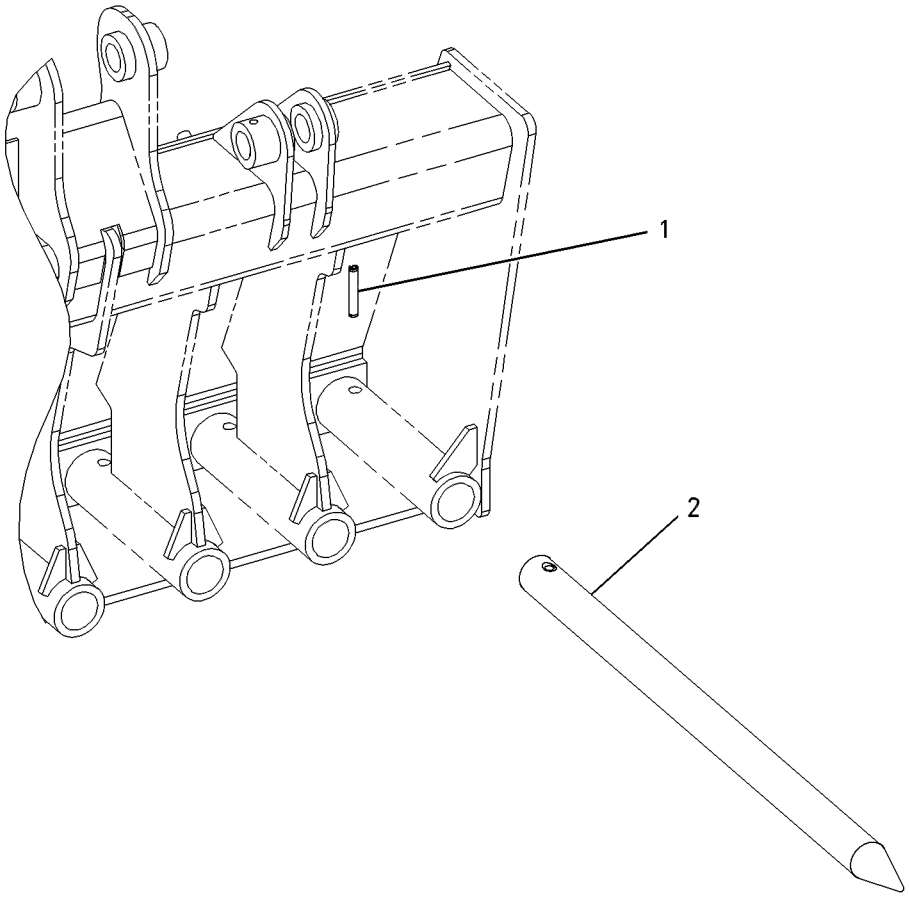

GRAPHIC #1 **<END>** g00559648

279-5351 FORK GP-GRAPPLE–INDUSTRIAL

S/N: SCH2475-UP
1676-MM (66-IN)
PART OF 279-5350 FORK AR-GRAPPLE
AN ATTACHMENT

SMCS-6705 **i02571199**

NOTE	REF NO	GRAPHIC REF	PART NUMBER	QTY	PART NAME 1 2 3 4 5 6 (PRODUCT LEVEL)	SEE PAGE
	1	1	**157-0940**	4	PIN	
	2	1	**164-9989**	2	FILM-WARNING (IMPALED POINT)	
	3	1	**222-7467**	2	FORK AS	
Y	4	1	*279-5352*	1	FRAME GP-FORK (66-IN, INDUSTRIAL)	419
	5	1	**3B-8489**	4	FITTING-GREASE	
M	6	1	**6V-9189**	4	LOCKNUT (M8X1.25-THD)	
M	7	1	**8T-6869**	4	BOLT (M8X1.25X60-MM)	

M-METRIC PART
Y-SEPARATE ILLUSTRATION

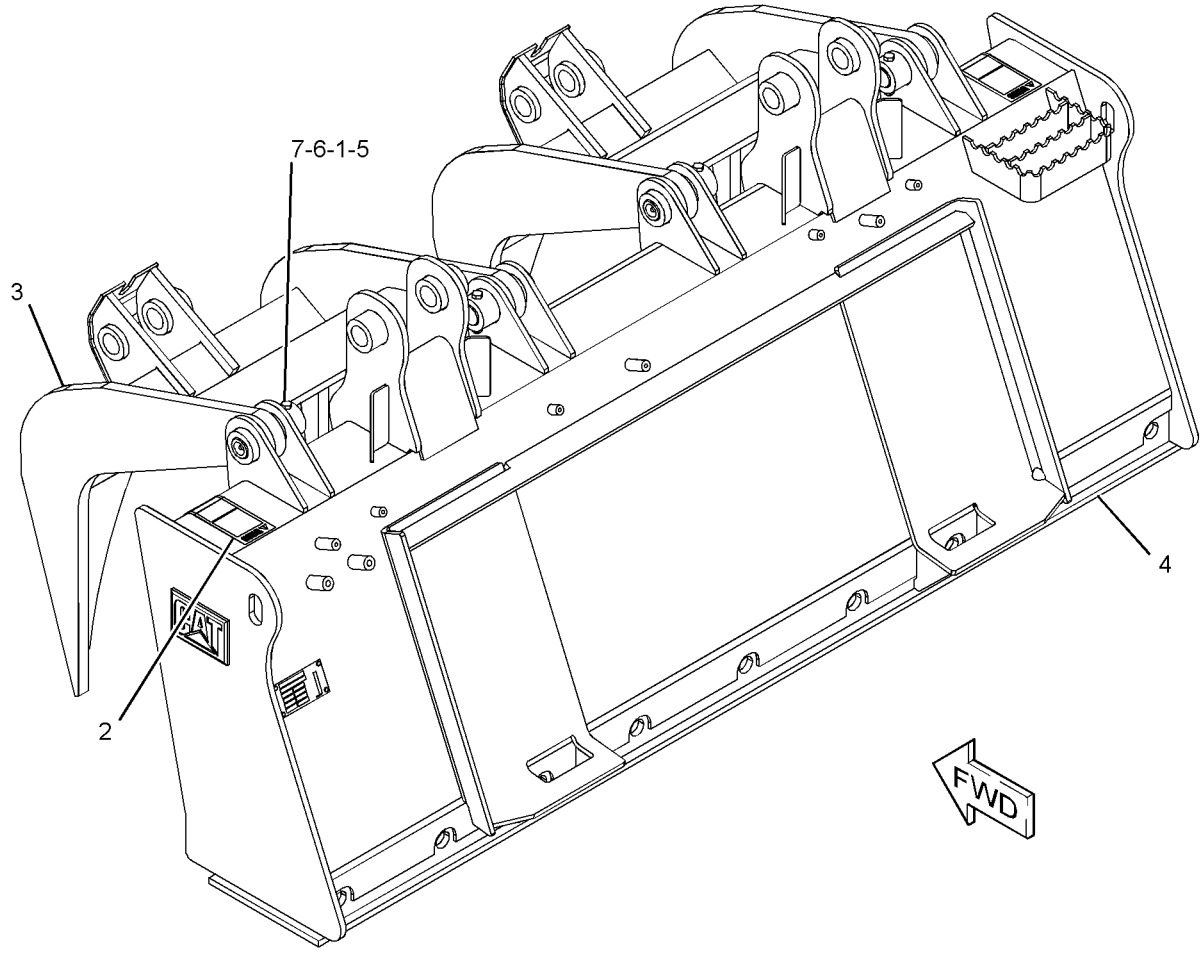

GRAPHIC #1 **<END>** g01279797

285-6110 FORK GP-GRAPPLE

S/N: SCH2475-UP
1829-MM (72-IN)
PART OF 285-6115 FORK AR-GRAPPLE
AN ATTACHMENT

SMCS-6705 **i02760170**

NOTE	REF NO	GRAPHIC REF	PART NUMBER	QTY	PART NAME 1 2 3 4 5 6 (PRODUCT LEVEL)	SEE PAGE
	1	1	**164-9989**	2	FILM-WARNING (IMPALED POINT)	
Y	2	1	*165-8732*	9	FORK GP-UTILITY	416
					PARTS SHOWN IN GRAPHIC(S) WITHOUT A REFERENCE NUMBER ARE NOT SERVICED SEPARATELY	

Y-SEPARATE ILLUSTRATION

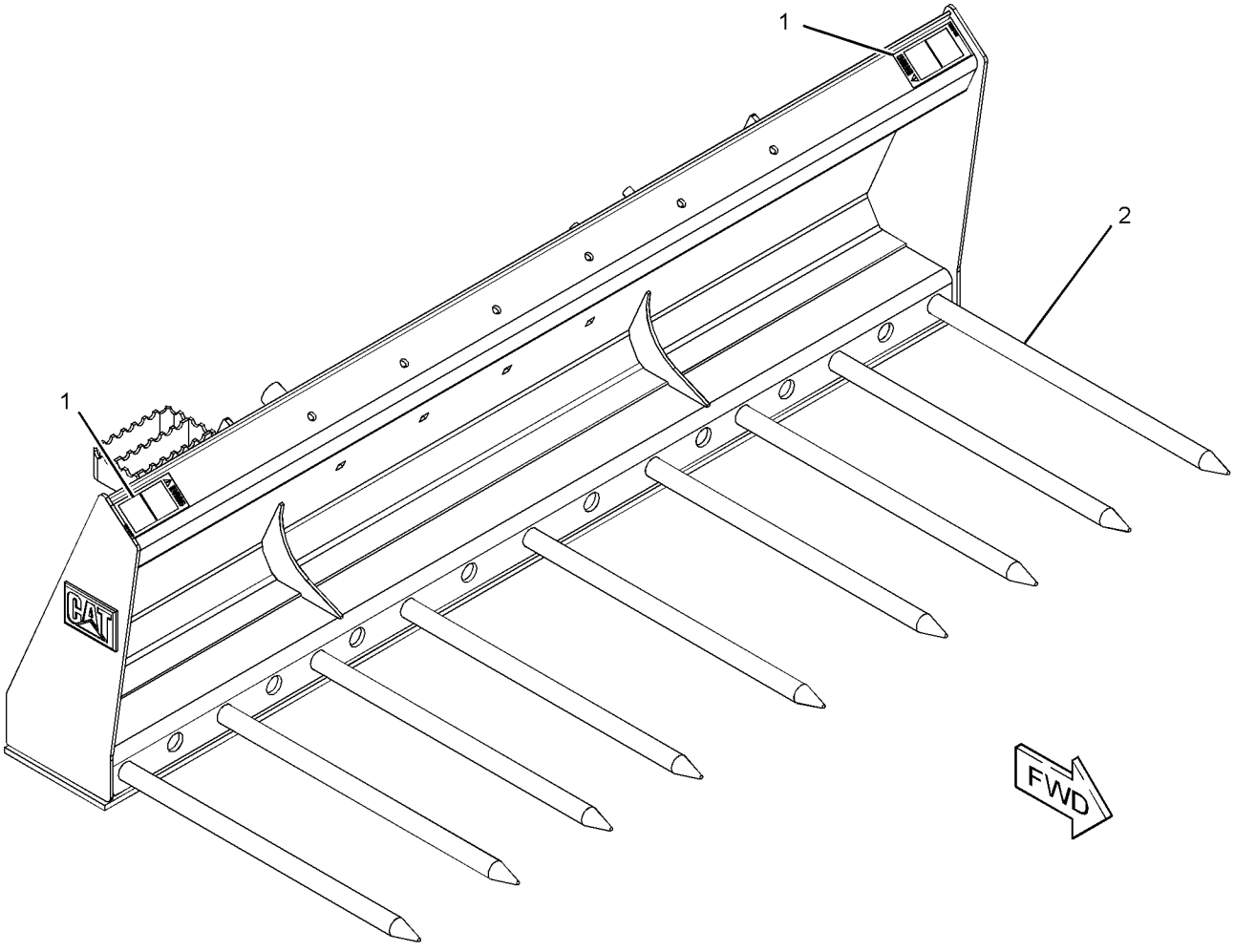

GRAPHIC #1 **<END>** g01381750

WORK TOOLS

195-6942 FORK GP-PALLET

S/N: SCH2475-UP
1067-MM (42-IN)
PART OF 293-9428 CARRIAGE & FORK AR
AN ATTACHMENT

SMCS-6136 **i02569271**

NOTE	PART NUMBER	QTY	PART NAME 1 2 3 4 5 6 (PRODUCT LEVEL)	SEE PAGE
	221-3429	1	POSITIONER GP-FORK	

<END>

195-6943 FORK GP-PALLET

S/N: SCH2475-UP
914-MM (36-IN)
PART OF 293-9427 CARRIAGE & FORK AR
AN ATTACHMENT

SMCS-6136 **i02569272**

NOTE	PART NUMBER	QTY	PART NAME 1 2 3 4 5 6 (PRODUCT LEVEL)	SEE PAGE
	221-3429	1	POSITIONER GP-FORK	

<END>

195-8545 FORK GP-PALLET

S/N: SCH2475-UP
1219-MM (48-IN)
PART OF 293-9429 CARRIAGE & FORK AR
AN ATTACHMENT

SMCS-6136 **i02569274**

NOTE	PART NUMBER	QTY	PART NAME 1 2 3 4 5 6 (PRODUCT LEVEL)	SEE PAGE
	221-3429	1	POSITIONER GP-FORK	

<END>

243-0001 FORK GP-PALLET–KIT

S/N: SCH2475-UP
914-MM (36-IN)
AN ATTACHMENT

SMCS-6136 **i01964024**

NOTE	PART NUMBER	QTY	PART NAME 1 2 3 4 5 6 (PRODUCT LEVEL)	SEE PAGE
	195-6943	12	FORK GP-PALLET (36 IN)	
			(EACH INCLUDES)	
	221-3429	1	POSITIONER GP-FORK	

<END>

243-0002 FORK GP-PALLET–KIT

S/N: SCH2475-UP
1067-MM (42-IN)
AN ATTACHMENT

SMCS-6136 **i01964030**

NOTE	PART NUMBER	QTY	PART NAME 1 2 3 4 5 6 (PRODUCT LEVEL)	SEE PAGE
	195-6942	12	FORK GP-PALLET (42 IN)	
			(EACH INCLUDES)	
	221-3429	1	POSITIONER GP-FORK	

<END>

243-0003 FORK GP-PALLET–KIT

S/N: SCH2475-UP
1219-MM (48-IN)
AN ATTACHMENT

SMCS-6136 **i01964031**

NOTE	PART NUMBER	QTY	PART NAME 1 2 3 4 5 6 (PRODUCT LEVEL)	SEE PAGE
	195-8545	12	FORK GP-PALLET (48 IN)	
			(EACH INCLUDES)	
	221-3429	1	POSITIONER GP-FORK	

<END>

WORK TOOLS

165-8732 FORK GP-UTILITY

S/N: SCH2475-UP

PART OF 285-6110 FORK GP-GRAPPLE, 285-6105 FORK GP-UTILITY

AN ATTACHMENT

SMCS-6458 **i01204324**

NOTE	REF NO	GRAPHIC REF	PART NUMBER	QTY	PART NAME 1 2 3 4 5 6 (PRODUCT LEVEL)	SEE PAGE
	1	1	**9R-2959**	1	CLIP	
	2	1	**166-4041**	1	TINE	

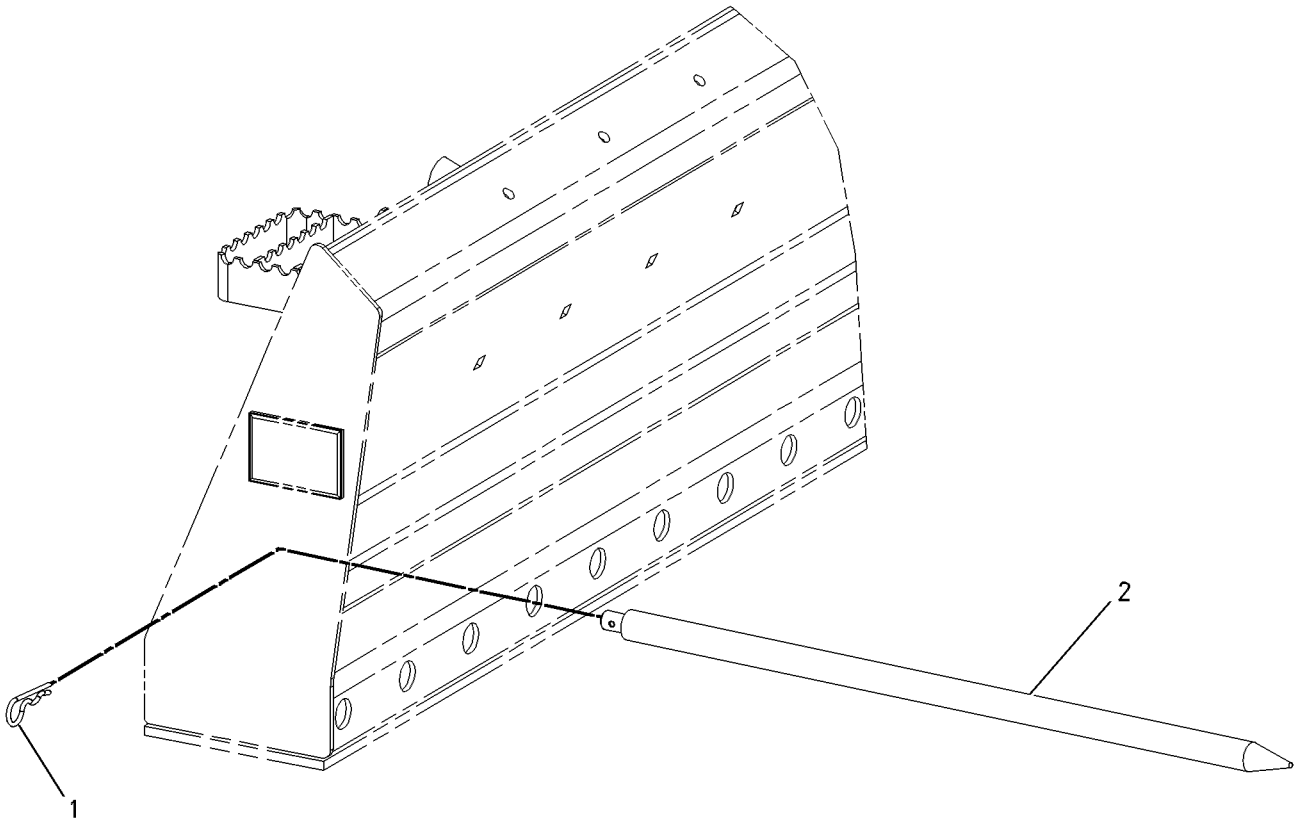

GRAPHIC #1 **<END>** g00639778

285-6105 FORK GP-UTILITY

S/N: SCH2475-UP
1676-MM (66-IN)
PART OF 285-6114 FORK AR-GRAPPLE
AN ATTACHMENT

SMCS-6458 **i02552504**

NOTE	REF NO	GRAPHIC REF	PART NUMBER	QTY	PART NAME 1 2 3 4 5 6 (PRODUCT LEVEL)	SEE PAGE
	1	1	**164-9989**	2	FILM-WARNING (IMPALED POINT)	
Y	2	1	*165-8732*	7	FORK GP-UTILITY	416
					PARTS SHOWN IN GRAPHIC(S) WITHOUT A REFERENCE NUMBER ARE NOT SERVICED SEPARATELY	

Y-SEPARATE ILLUSTRATION

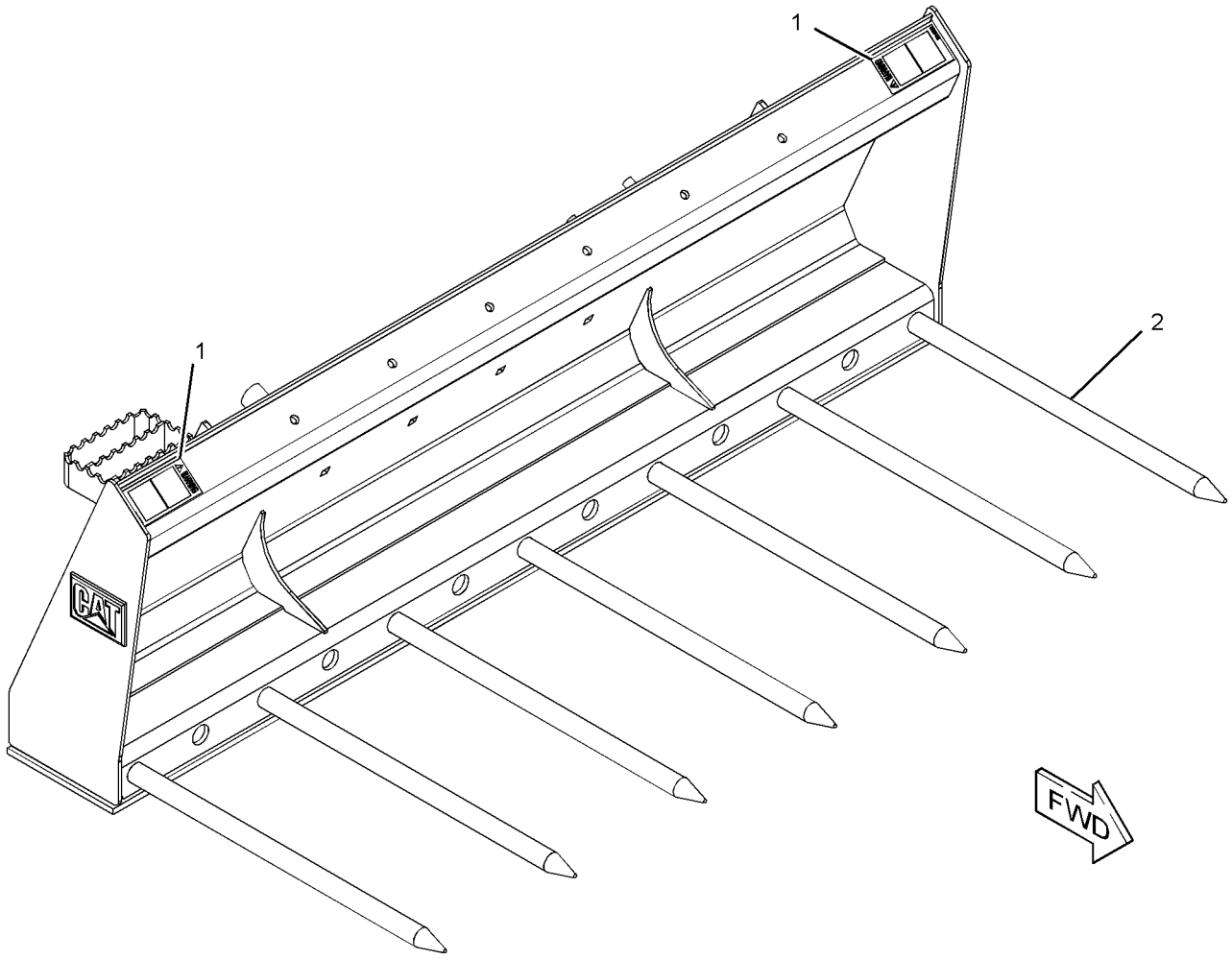

GRAPHIC #1 **<END>** g01280417

WORK TOOLS

230-5670 FRAME GP-BLADE

S/N: SCH2475-UP
PART OF 177-1989, 177-1990 BLADE AR
AN ATTACHMENT

SMCS-6060 **i01860873**

NOTE	REF NO	GRAPHIC REF	PART NUMBER	QTY	PART NAME 1 2 3 4 5 6 (PRODUCT LEVEL)	SEE PAGE
	1	1	**177-1914**	1	PIN AS	
B	2	1	**177-1955**	1	SHIM (1-MM)	
B	3	1	**177-1956**	1	SHIM (2-MM)	
B	4	1	**177-1957**	1	SHIM (3-MM)	
	5	1	**177-1971**	1	FRAME AS	
	6	1	**177-1975**	1	FRAME AS	
	7	1	**230-5407**	1	FRAME AS	
	8	1	**3B-8489**	1	FITTING-GREASE	
	9	1	**5B-0935**	1	FITTING-GREASE	
M	10	1	**7X-2553**	8	BOLT (M16X2X40-MM)	
	11	1	**7X-7729**	1	WASHER (11X25X3-MM THK)	
	12	1	**8T-4122**	8	WASHER-HARD (17X32X3.5-MM THK)	
M	13	1	**8T-4137**	1	BOLT (M10X1.5X20-MM)	

B-USE AS REQUIRED
M-METRIC PART

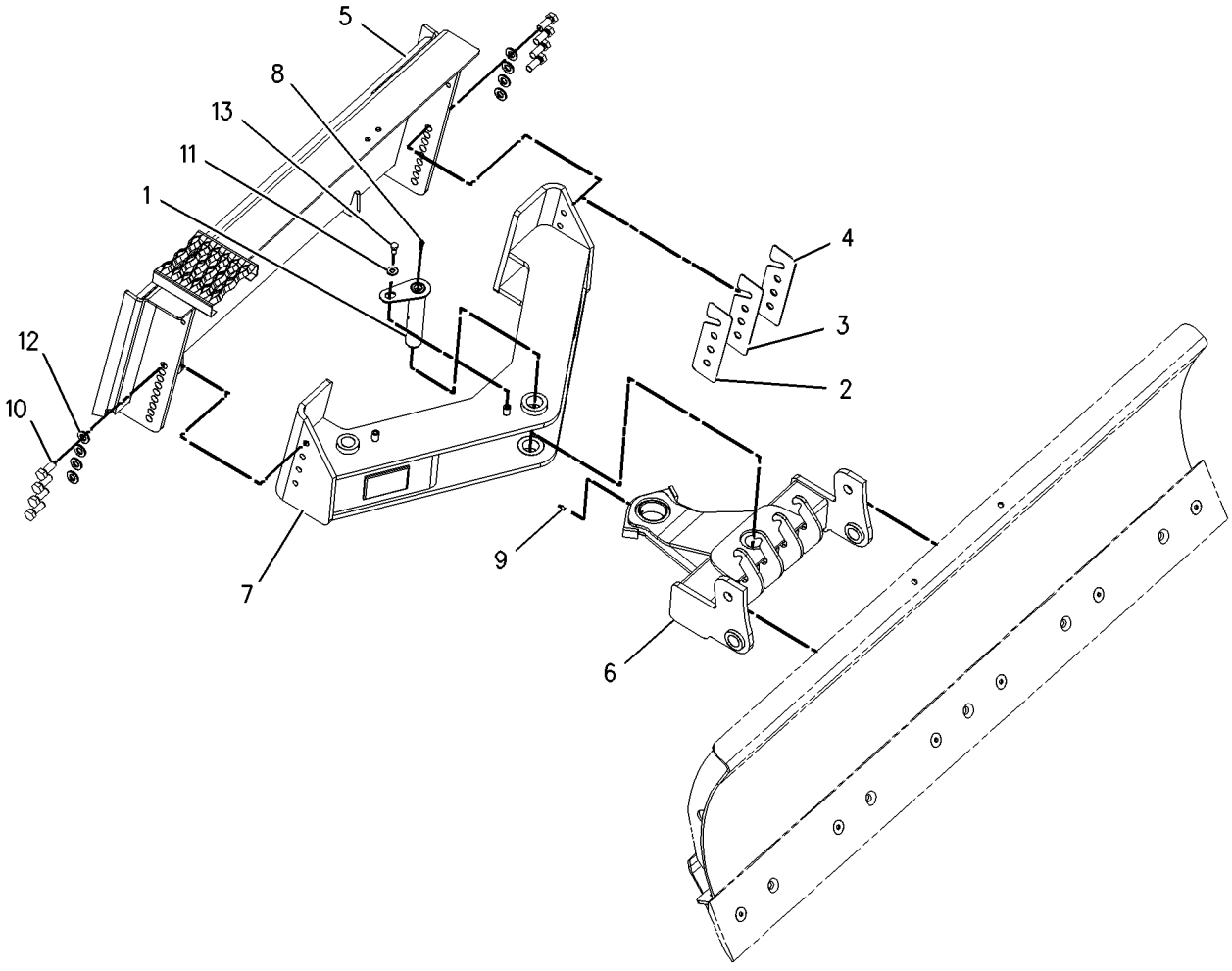

GRAPHIC #1 **<END>** g00978893

WORK TOOLS

279-5352 FRAME GP-FORK–INDUSTRIAL

S/N: SCH2475-UP

PART OF 279-5351 FORK GP-GRAPPLE

AN ATTACHMENT

SMCS-6705 **i02550300**

NOTE	REF NO	GRAPHIC REF	PART NUMBER	QTY	PART NAME 1 2 3 4 5 6 (PRODUCT LEVEL)	SEE PAGE
	1	1	**154-2704**	1	PLATE-INSTRUCTION (BUCKET SPECIFICATIONS)	
	2	1	**168-8389**	4	TACK-FASTENER	
	3	1	**279-5353**	1	FORK AS	

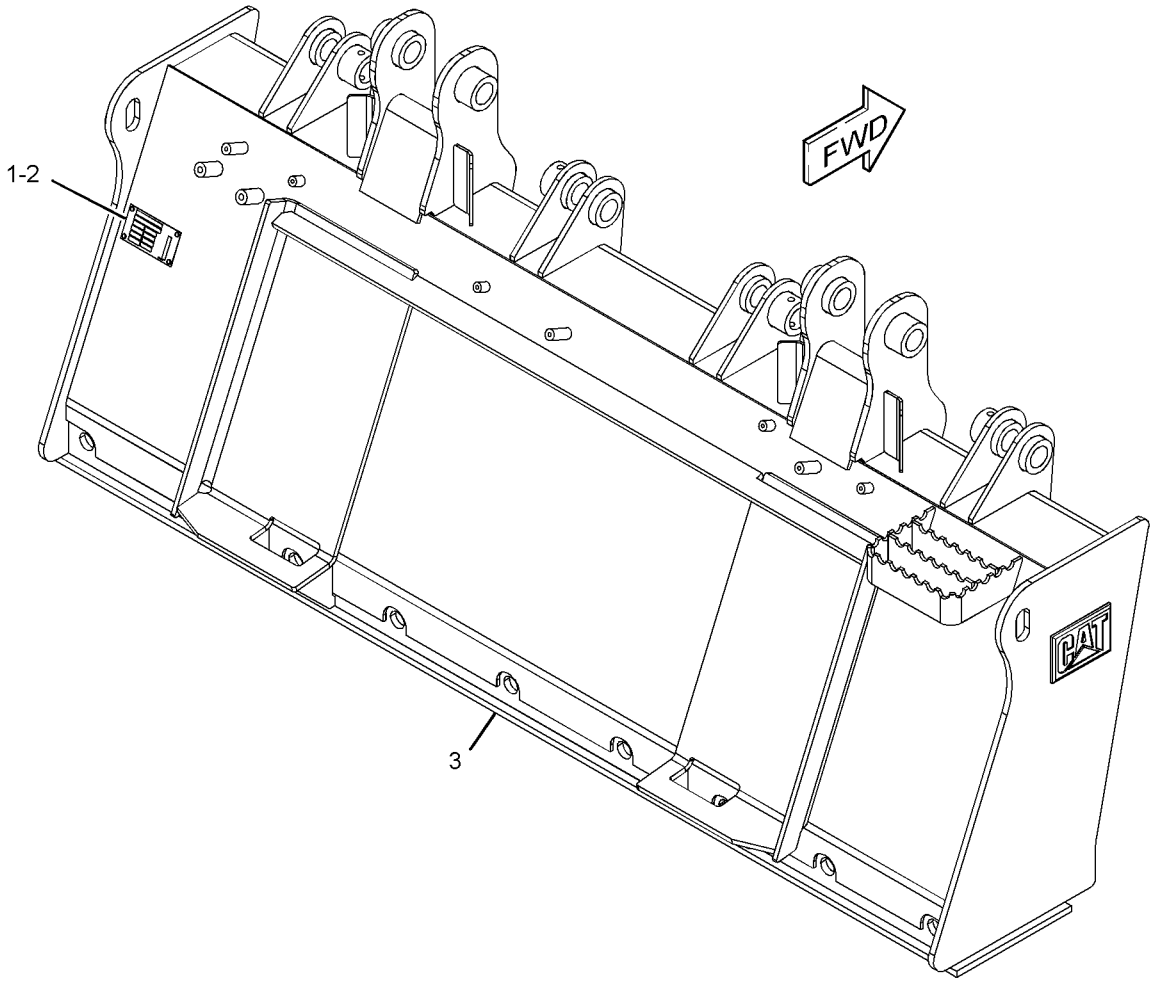

GRAPHIC #1 **<END>** g01280687

279-5358 FRAME GP-FORK–INDUSTRIAL

S/N: SCH2475-UP

PART OF 279-5359 FRAME GP-GRAPPLE

AN ATTACHMENT

SMCS-6705 **i02550334**

NOTE	REF NO	GRAPHIC REF	PART NUMBER	QTY	PART NAME 1 2 3 4 5 6 (PRODUCT LEVEL)	SEE PAGE
	1	1	**154-2704**	1	PLATE-INSTRUCTION (BUCKET SPECIFICATIONS)	
	2	1	**168-8389**	4	TACK-FASTENER	
	3	1	**279-5357**	1	FORK AS	

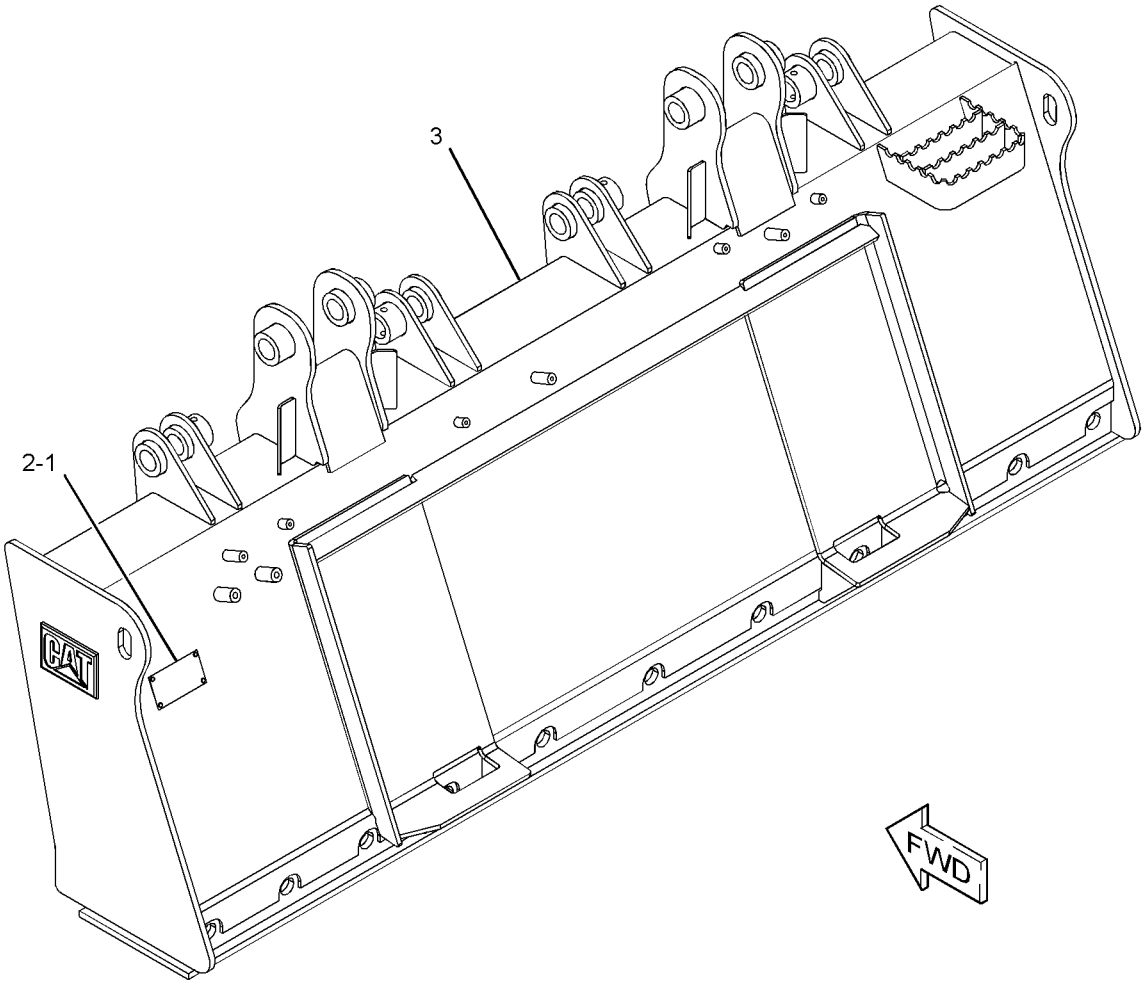

GRAPHIC #1 **<END>** g01279388

279-5359 FRAME GP-GRAPPLE–INDUSTRIAL

S/N: SCH2475-UP
PART OF 279-5360 FORK AR-GRAPPLE
AN ATTACHMENT

SMCS-6705 **i02550333**

NOTE	REF NO	GRAPHIC REF	PART NUMBER	QTY	PART NAME 1 2 3 4 5 6 (PRODUCT LEVEL)	SEE PAGE
	1	1	**157-0940**	4	PIN	
	2	1	**164-9989**	2	FILM-WARNING (IMPALED POINT)	
	3	1	**222-7467**	2	FORK AS	
Y	4	1	*279-5358*	1	FRAME GP-FORK (72-IN, INDUSTRIAL)	420
	5	1	**3B-8489**	4	FITTING-GREASE	
M	6	1	**6V-9189**	4	LOCKNUT (M8X1.25-THD)	
M	7	1	**8T-6869**	4	BOLT (M8X1.25X60-MM)	

M-METRIC PART
Y-SEPARATE ILLUSTRATION

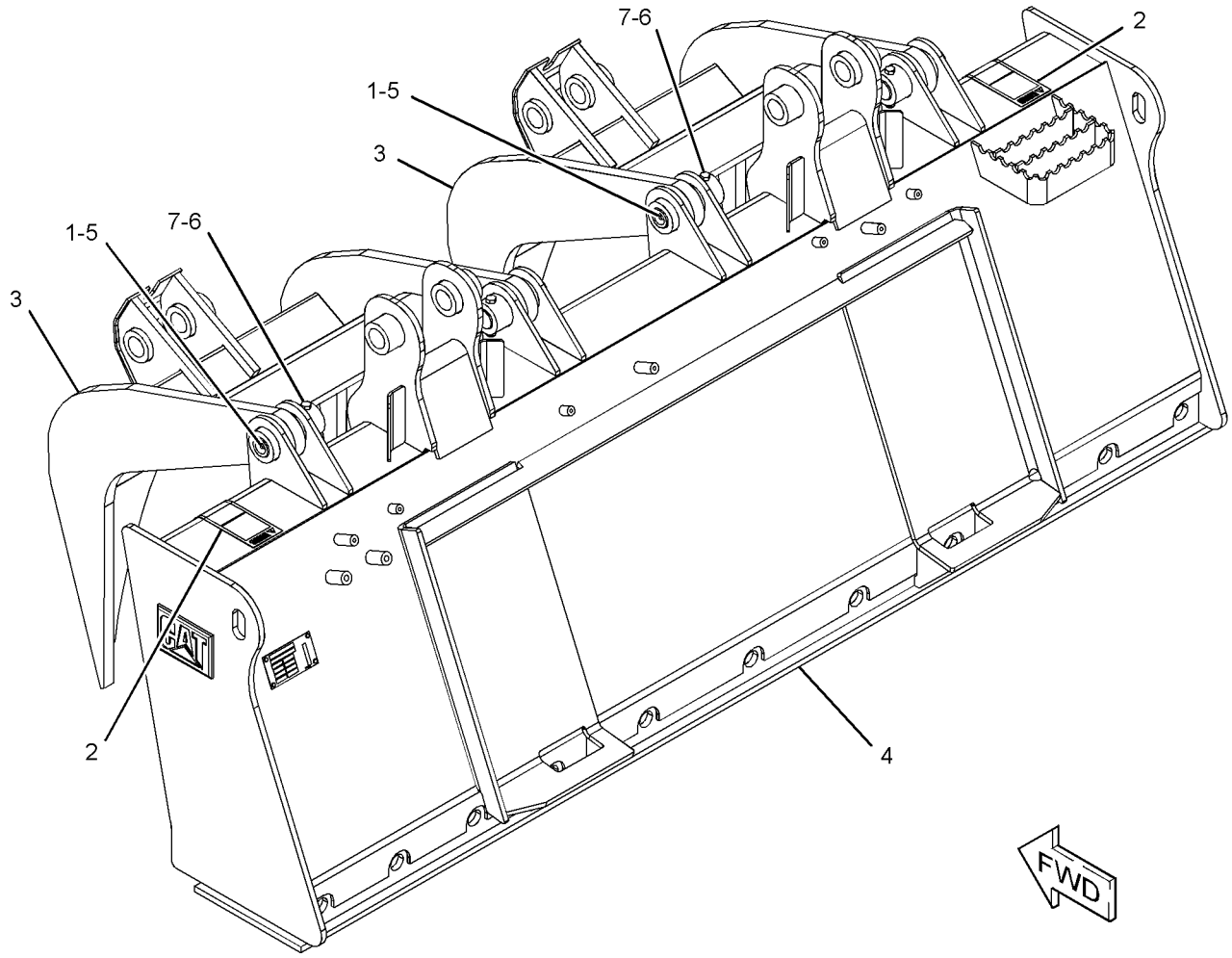

GRAPHIC #1 **<END>** g01280924

165-8740 GRAPPLE GP-UTILITY

S/N: SCH2475-UP
PART OF 285-6116 GRAPPLE GP-UTILITY
AN ATTACHMENT

SMCS-6307 **i02772047**

NOTE	REF NO	GRAPHIC REF	PART NUMBER	QTY	PART NAME 1 2 3 4 5 6 (PRODUCT LEVEL)	SEE PAGE
	1	1	**3B-8488**	4	FITTING-GREASE	
	2	1	**159-5411**	4	PIN	
	3	1	**165-8743**	1	ARM AS	
	4	1	**169-3569**	1	BRACKET AS	
		1	**159-8035**	2	FILM-WARNING (CRUSH HAZARD, STAY BACK)	
M	5	1	**6V-9189**	4	LOCKNUT (M8X1.25-THD)	
M	6	1	**8T-6912**	4	BOLT (M8X1.25X50-MM)	

M-METRIC PART

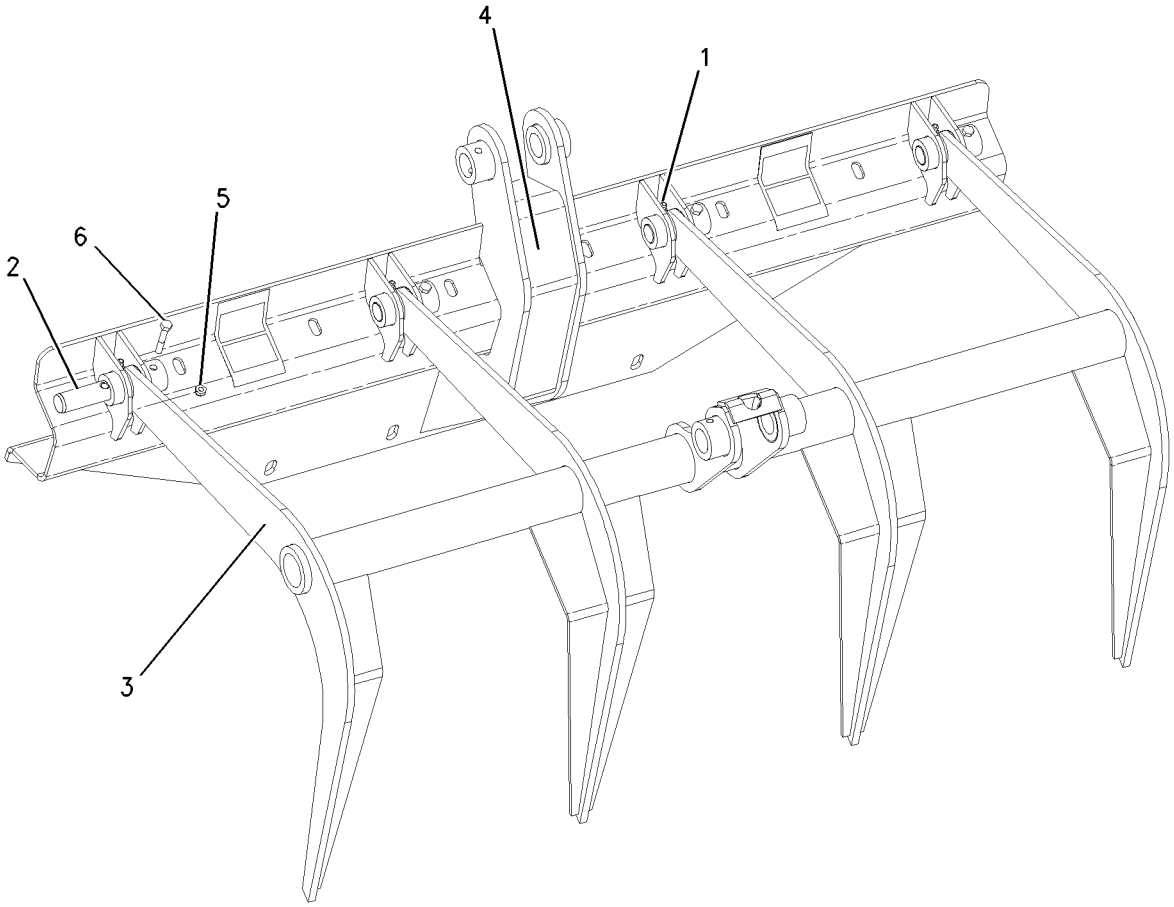

GRAPHIC #1 **<END>** g00777325

285-6116 GRAPPLE GP-UTILITY

S/N: SCH2475-UP
PART OF 285-6093, 285-6104, 285-6111, 285-6112 BUCKET AR-GRAPPLE, 285-6114, 285-6115 FORK AR-GRAPPLE
AN ATTACHMENT
TYPE 1

SMCS-6307 **i02711972**

NOTE	REF NO	GRAPHIC REF	PART NUMBER	QTY	PART NAME 1 2 3 4 5 6 (PRODUCT LEVEL)	SEE PAGE
Y	1	1	**164-9295**	1	CYLINDER GP-GRAPPLE	245
Y	2	1	*165-8731*	1	MOUNTING GP-CYLINDER (UTILITY)	321
Y	3	1	*165-8740*	1	GRAPPLE GP-UTILITY	422
M	4	1	**170-5836**	4	BOLT	
Y	5	1	*173-7407*	1	STOP GP-GRAPPLE	436
	6	1	**239-5029**	1	GUARD	
Y	7	1	*285-6113*	1	LINES GP-BUCKET	268
	8	1	**5P-1076**	4	WASHER-HARD (13.5X30X4-MM THK)	
M	9	1	**8T-4139**	6	BOLT (M12X1.75X30-MM)	
	10	1	**8T-4223**	6	WASHER-HARD (13.5X25.5X3-MM THK)	
M	11	1	**8T-4244**	10	NUT (M12X1.75-THD)	

M-METRIC PART
Y-SEPARATE ILLUSTRATION

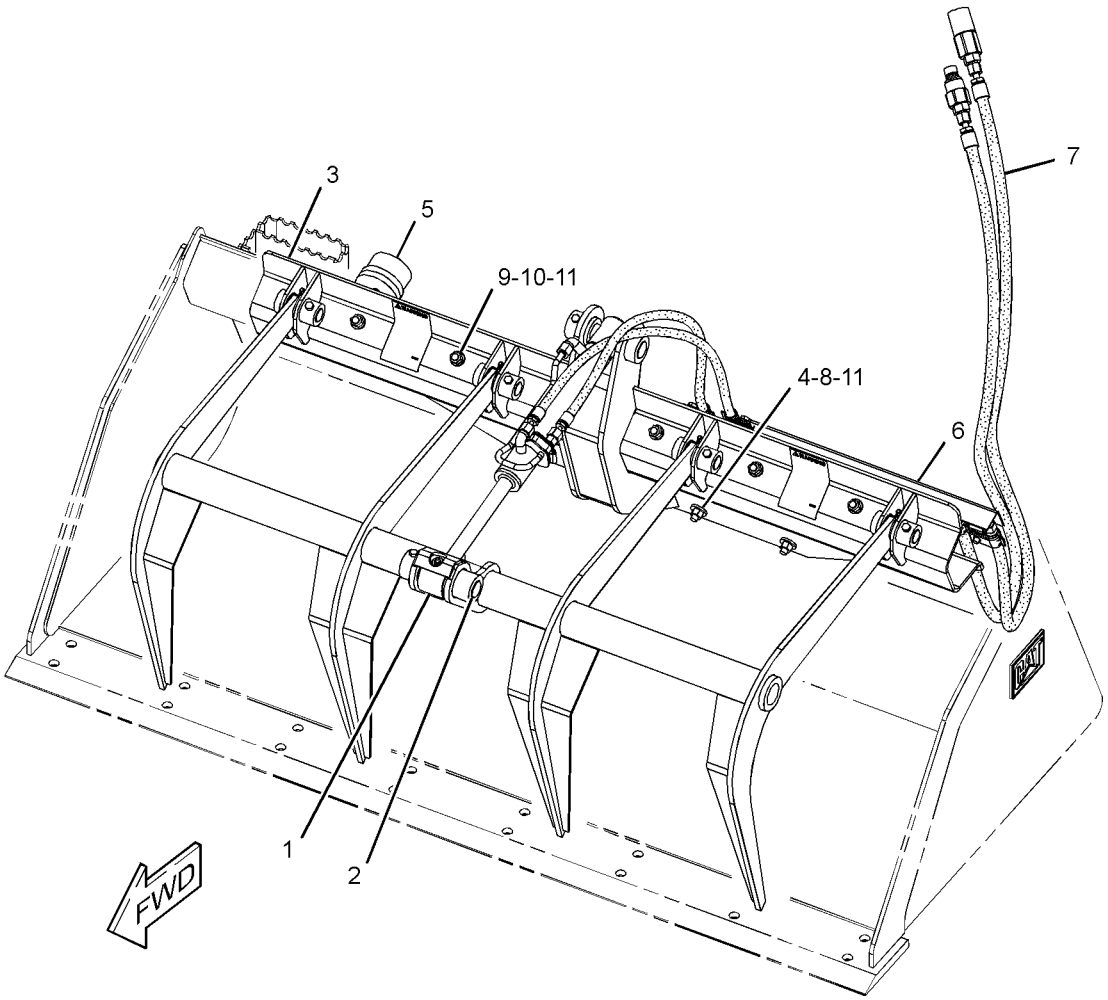

GRAPHIC #1 **<END>** g01278678

WORK TOOLS

285-6116 GRAPPLE GP-UTILITY

S/N: SCH2475-UP
PART OF 285-6093, 285-6104, 285-6111, 285-6112 BUCKET AR-GRAPPLE, 285-6114, 285-6115 FORK AR-GRAPPLE
AN ATTACHMENT
TYPE 2

SMCS-6307 **i02888549**

NOTE	REF NO	GRAPHIC REF	PART NUMBER	QTY	PART NAME 1 2 3 4 5 6 (PRODUCT LEVEL)	SEE PAGE
CY	1	1	**255-0943**	1	CYLINDER GP-HYDRAULIC	248
Y	2	1	*165-8731*	1	MOUNTING GP-CYLINDER (UTILITY)	321
Y	3	1	*165-8740*	1	GRAPPLE GP-UTILITY	422
M	4	1	**170-5836**	4	BOLT	
Y	5	1	*173-7407*	1	STOP GP-GRAPPLE	436
	6	1	**239-5029**	1	GUARD	
Y	7	1	*285-6113*	1	LINES GP-BUCKET	268
	8	1	**5P-1076**	4	WASHER-HARD (13.5X30X4-MM THK)	
M	9	1	**8T-4139**	6	BOLT (M12X1.75X30-MM)	
	10	1	**8T-4223**	6	WASHER-HARD (13.5X25.5X3-MM THK)	
M	11	1	**8T-4244**	10	NUT (M12X1.75-THD)	

C-CHANGE FROM PREVIOUS TYPE
M-METRIC PART
Y-SEPARATE ILLUSTRATION

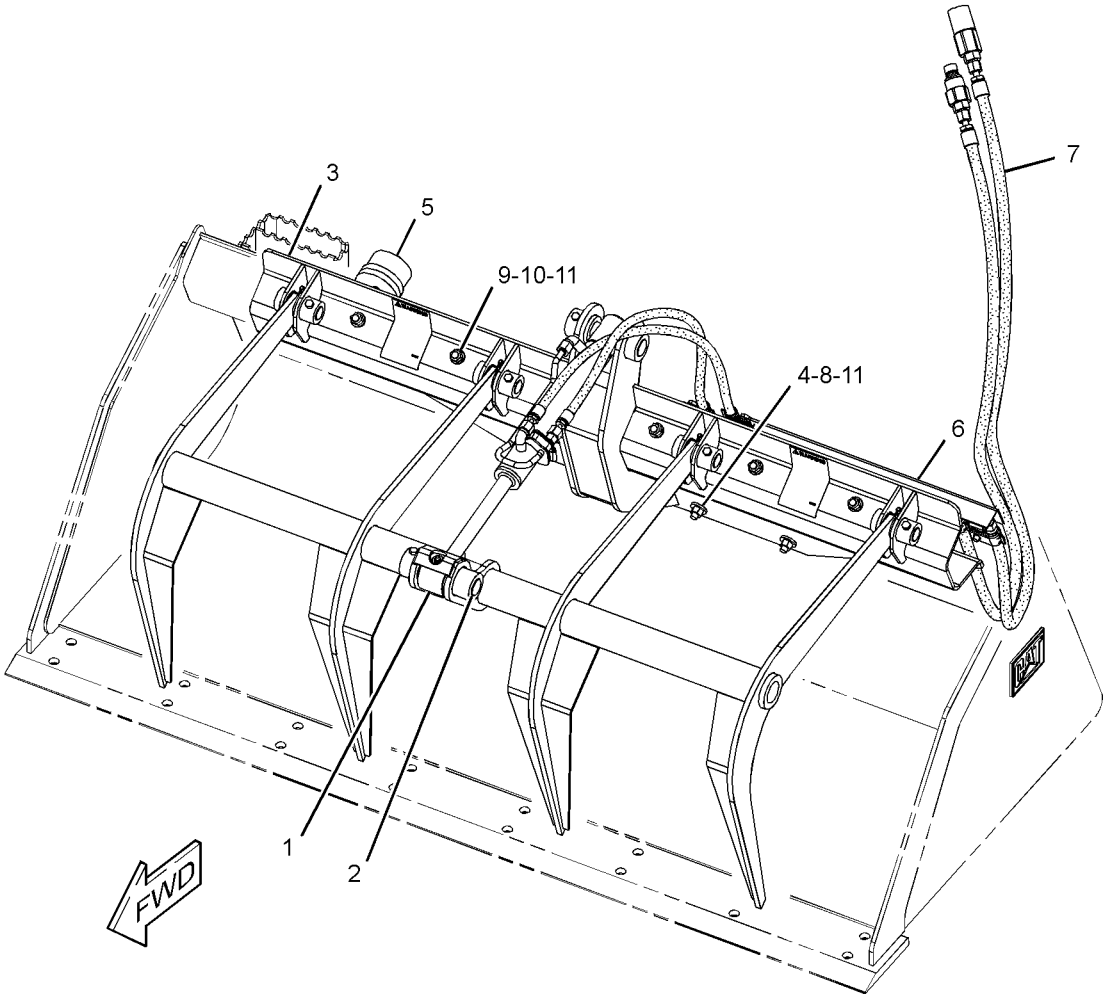

GRAPHIC #1 **<END>** g01278678

215-3960 HANDLE & PIN GP-COUPLER–LH

S/N: SCH2475-UP
PART OF 206-3820 COUPLER GP-QUICK
AN ATTACHMENT

SMCS-6129 **i01928985**

NOTE	REF NO	GRAPHIC REF	PART NUMBER	QTY	PART NAME 1 2 3 4 5 6 (PRODUCT LEVEL)	SEE PAGE
	1	1	**166-2560**	1	PIN-SPRING	
	2	1	**192-2642**	1	PIN	
Y	3	1	*215-3958*	1	HANDLE GP-COUPLER (LH)	427

Y-SEPARATE ILLUSTRATION

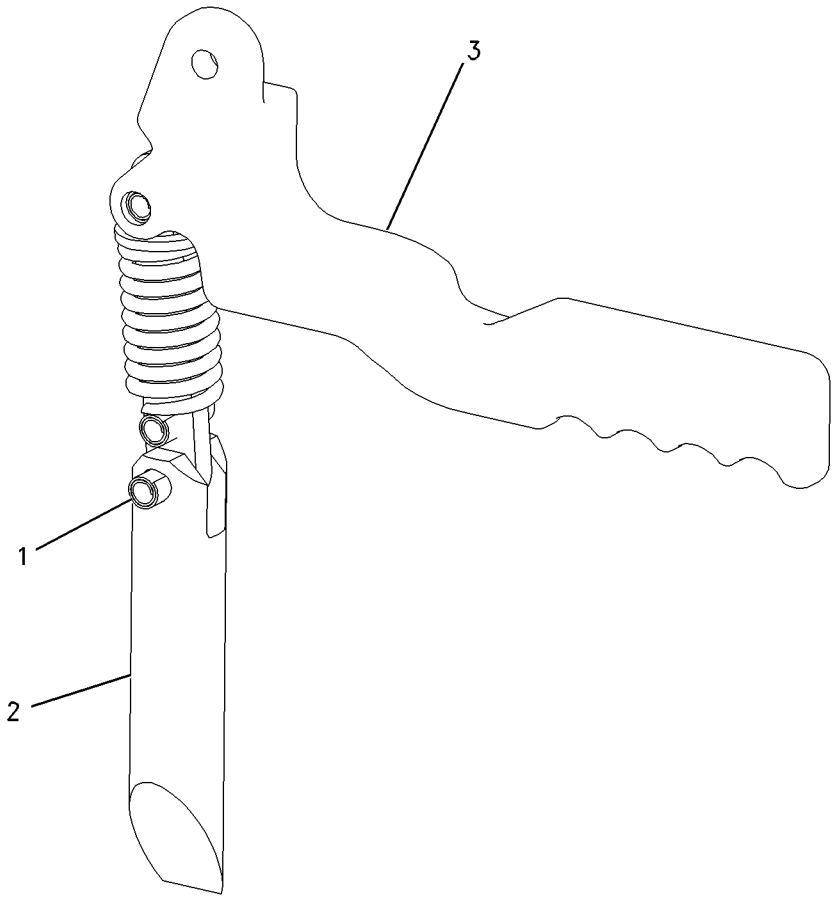

GRAPHIC #1 **<END>** g00861964

215-3961 HANDLE & PIN GP-COUPLER–RH

S/N: SCH2475-UP
PART OF 206-3820 COUPLER GP-QUICK
AN ATTACHMENT

SMCS-6129 **i01928984**

NOTE	REF NO	GRAPHIC REF	PART NUMBER	QTY	PART NAME 1 2 3 4 5 6 (PRODUCT LEVEL)	SEE PAGE
	1	1	**166-2560**	1	PIN-SPRING	
	2	1	**192-2642**	1	PIN	
Y	3	1	*215-3959*	1	HANDLE GP-COUPLER (RH)	428

Y-SEPARATE ILLUSTRATION

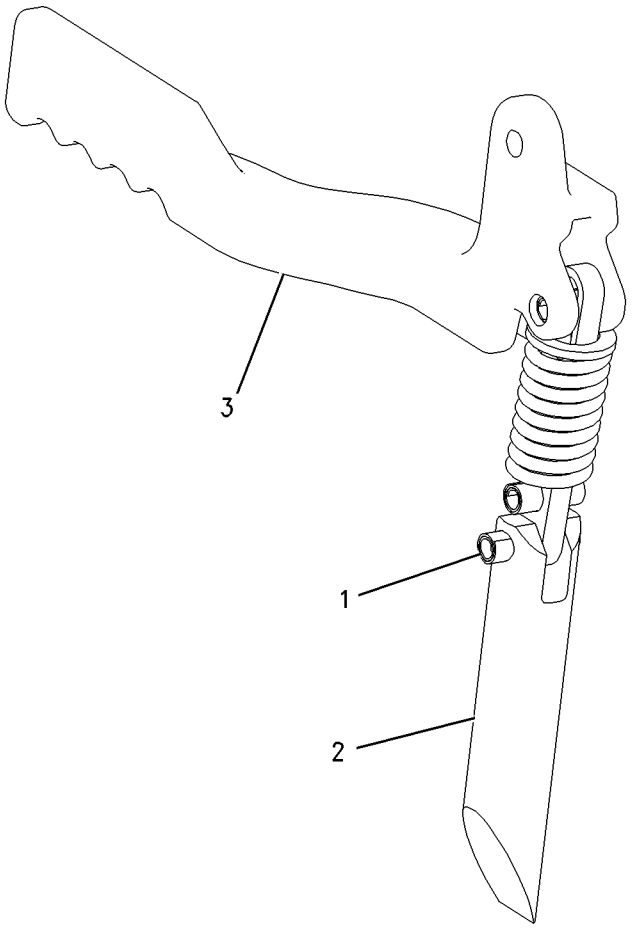

GRAPHIC #1 **<END>** g00861970

215-3958 HANDLE GP-COUPLER–LH

S/N: SCH2475-UP
PART OF 215-3960 HANDLE & PIN GP-COUPLER
AN ATTACHMENT

SMCS-6129 **i02706274**

NOTE	REF NO	GRAPHIC REF	PART NUMBER	QTY	PART NAME 1 2 3 4 5 6 (PRODUCT LEVEL)	SEE PAGE
	1	1	**192-2637**	1	PLATE	
	2	1	**238-7693**	1	SPRING	
	3	1	**258-2533**	1	HANDLE-LH	
	4	1	**195-6754**	2	PIN-SPRING	
	5	1	**8T-4123**	2	WASHER (22X35X3.5-MM THK)	

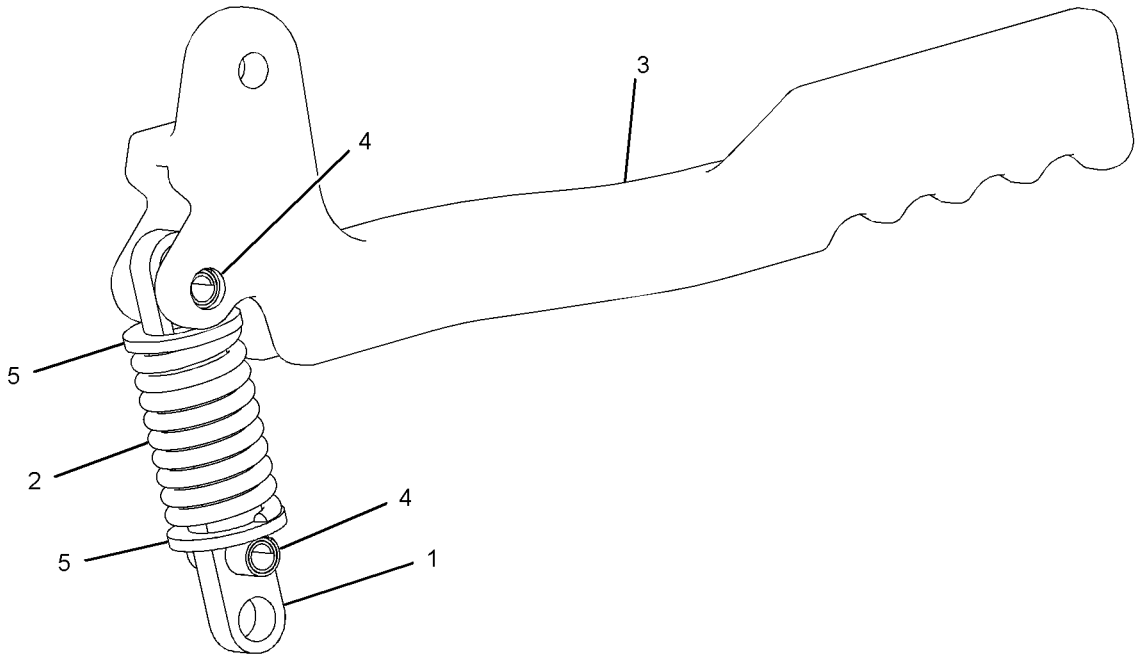

GRAPHIC #1 **<END>** g01154451

215-3959 HANDLE GP-COUPLER–RH

S/N: SCH2475-UP

PART OF 215-3961 HANDLE & PIN GP-COUPLER

AN ATTACHMENT

SMCS-6129 **i02706275**

NOTE	REF NO	GRAPHIC REF	PART NUMBER	QTY	PART NAME 1 2 3 4 5 6 (PRODUCT LEVEL)	SEE PAGE
	1	1	**192-2637**	1	PLATE	
	2	1	**258-2534**	1	HANDLE-RH	
	3	1	**195-6754**	2	PIN-SPRING	
	4	1	**238-7693**	1	SPRING	
	5	1	**8T-4123**	2	WASHER (22X35X3.5-MM THK)	

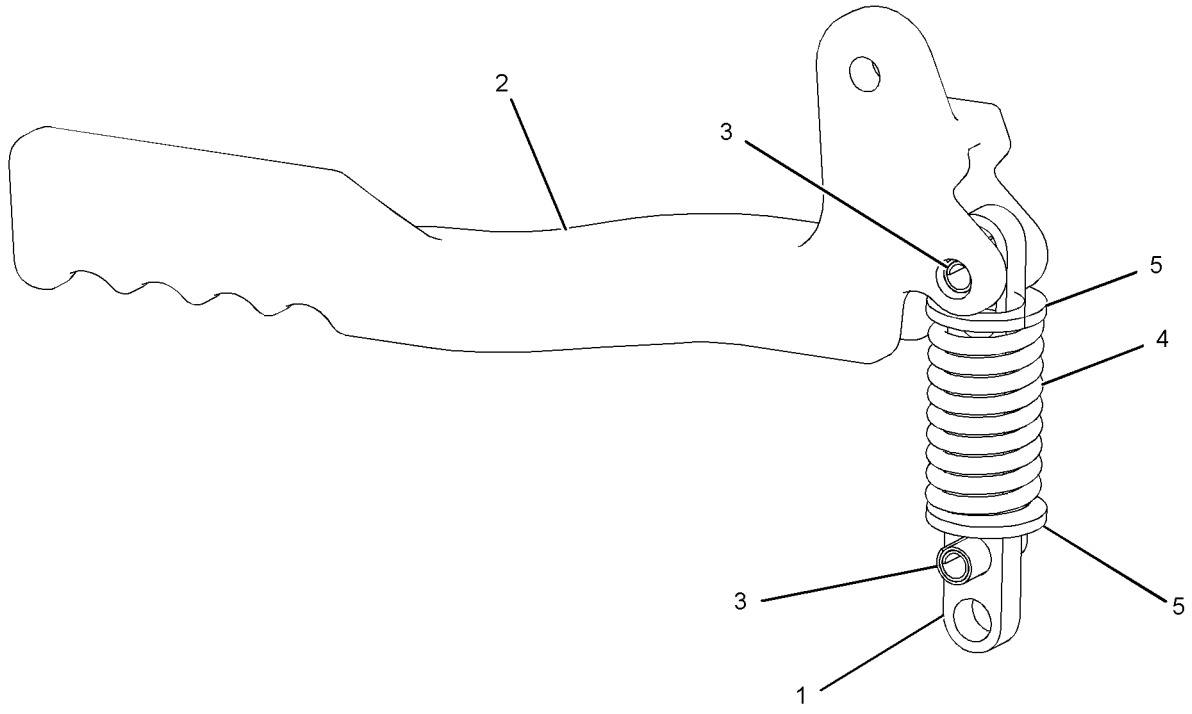

GRAPHIC #1 **<END>** g01104663

177-9152 KIT-ROADING PLATE & MOUNTING—BUCKET

S/N: SCH2475-UP

PART OF 278-5370, 278-5414, 295-7150, 295-7163 CONVERSION AR-MACHINE, 233-5682, 233-5683 CONVERSION AR-ROADING

AN ATTACHMENT

SMCS-7405, 7557 **i01905397**

NOTE	REF NO	GRAPHIC REF	PART NUMBER	QTY	PART NAME 1 2 3 4 5 6 (PRODUCT LEVEL)	SEE PAGE
	1	1	**177-9153**	2	PLATE	
Y	2	1	*184-6097*	1	PLATE GP-ROADING (LH)	432
Y	3	1	*184-6098*	1	PLATE GP-ROADING (RH)	433
	4	1	**039-8557**	2	WASHER (13X26X6-MM THK)	
M	5	1	**6V-8949**	4	NUT (M10X1.5-6H THD)	
	6	1	**8T-4121**	8	WASHER-HARD (11X21X2.5-MM THK)	
M	7	1	**8T-4137**	2	BOLT (M10X1.5X20-MM)	
M	8	1	**8T-4186**	2	BOLT (M10X1.5X40-MM)	

M-METRIC PART
Y-SEPARATE ILLUSTRATION

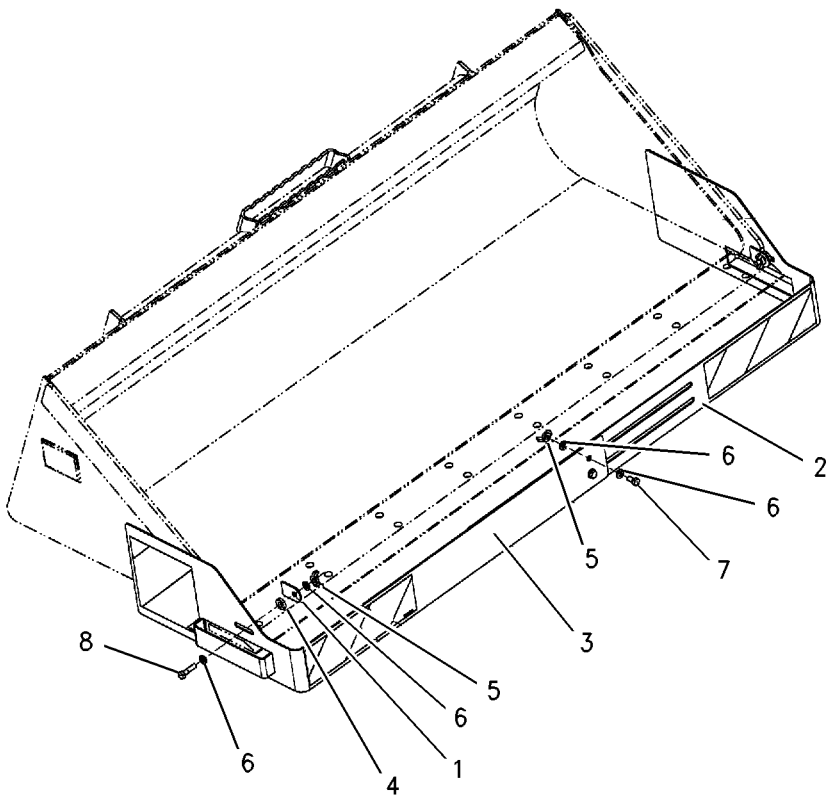

GRAPHIC #1 **<END>** g00778934

215-3957 LINK GP-COUPLER

S/N: SCH2475-UP

PART OF 215-3962, 215-3963 CYLINDER & LINK GP-COUPLER, 218-5957 KIT-QUICK COUPLER CONVERSION

AN ATTACHMENT

SMCS-6129 **i02232650**

NOTE	REF NO	GRAPHIC REF	PART NUMBER	QTY	PART NAME 1 2 3 4 5 6 (PRODUCT LEVEL)	SEE PAGE
	1	1	**192-2637**	1	PLATE	
	2	1	**192-2638**	1	BRACKET	
C	3	1	**238-7693**	1	SPRING	
	4	1	**195-6754**	2	PIN-SPRING	
C	5	1	**8T-4123**	2	WASHER (22X35X3.5-MM THK)	

C-CHANGE FROM PREVIOUS TYPE

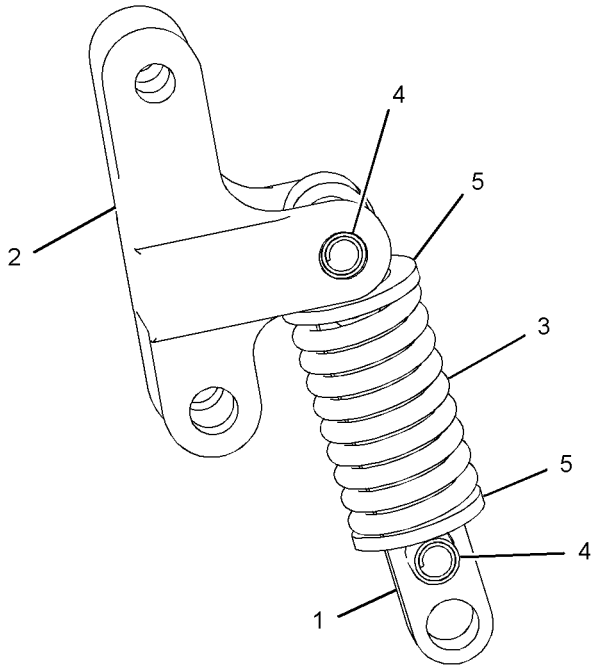

GRAPHIC #1 **<END>** g01130555

175-4238 LOCK GP-QUICK COUPLER—MECHANICAL

S/N: SCH2475-UP

PART OF 278-5370, 278-5414, 295-7150, 295-7163 CONVERSION AR-MACHINE, 233-5682, 233-5683 CONVERSION AR-ROADING

AN ATTACHMENT

SMCS-6129 **i01408856**

NOTE	REF NO	GRAPHIC REF	PART NUMBER	QTY	PART NAME 1 2 3 4 5 6 (PRODUCT LEVEL)	SEE PAGE
	1	1	**9R-5301**	1	PIN-COTTER	
	2	1	**178-2247**	1	PIN	
	3	1	**9X-8257**	1	WASHER (17.5X30X3.5-MM THK)	

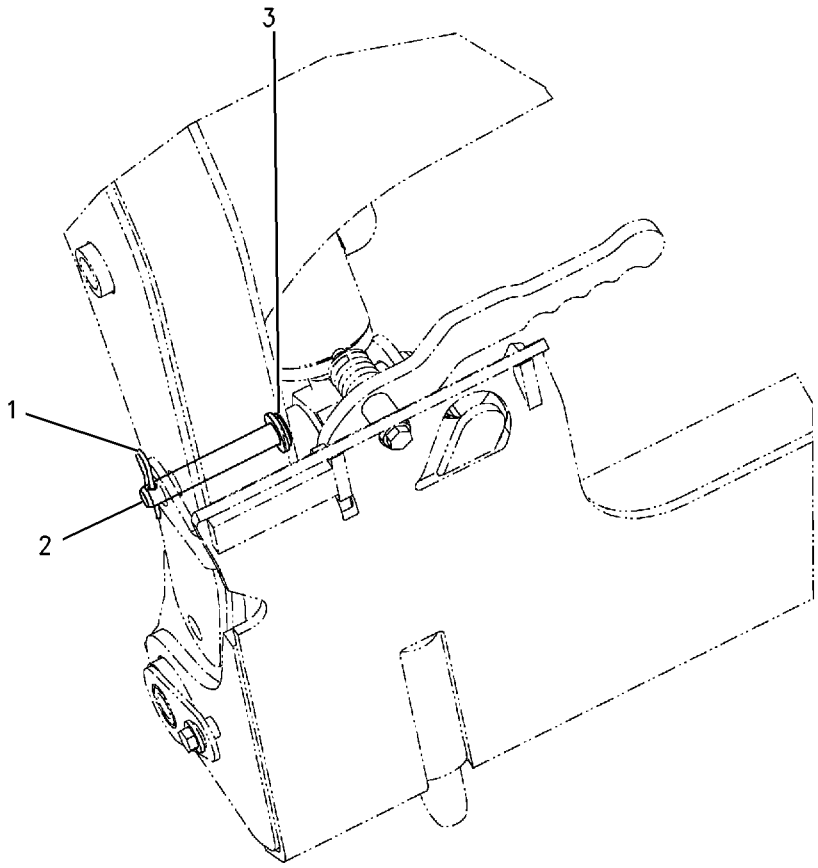

GRAPHIC #1 **<END>** g00741828

184-6097 PLATE GP-ROADING–LH

S/N: SCH2475-UP

PART OF 177-9152 KIT-ROADING PLATE & MOUNTING

AN ATTACHMENT

SMCS-7405, 7557 **i02253410**

NOTE	REF NO	GRAPHIC REF	PART NUMBER	QTY	PART NAME 1 2 3 4 5 6 (PRODUCT LEVEL)	SEE PAGE
	1	1	**177-7414**	1	FILM-STRIPE (REFLECTIVE, RED, WHITE)	
	2	1	**177-7415**	1	FILM (REFLECTIVE)	
	3	1	**177-9150**	1	PLATE AS (LH)	

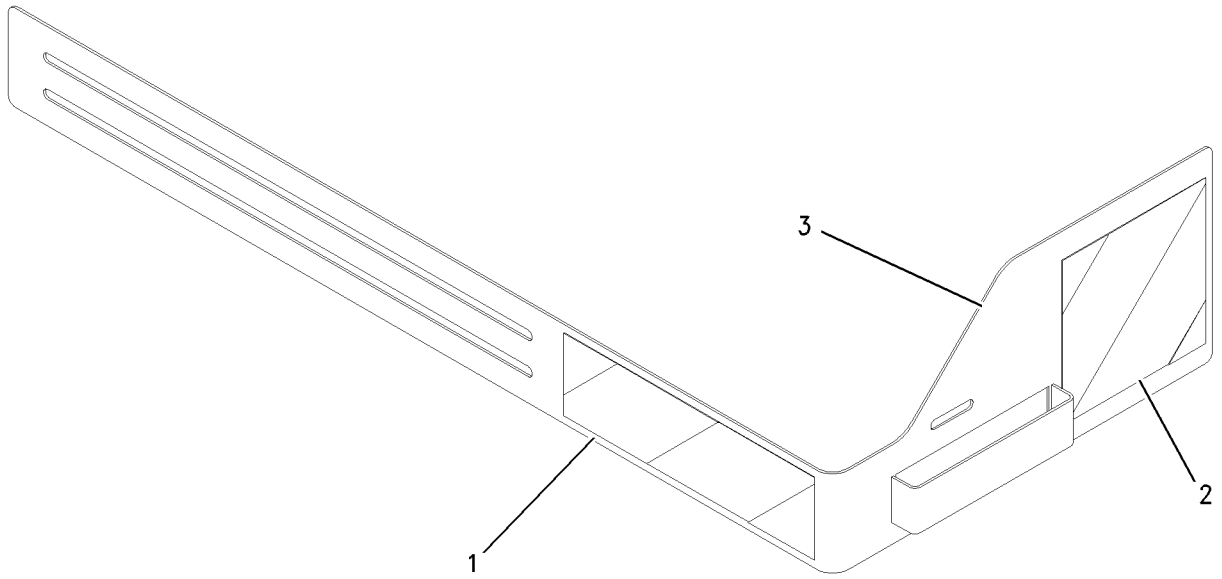

GRAPHIC #1 **<END>** g00995785

WORK TOOLS

184-6098 PLATE GP-ROADING—RH

S/N: SCH2475-UP

PART OF 177-9152 KIT-ROADING PLATE & MOUNTING

AN ATTACHMENT

SMCS-7405, 7557 **i02253411**

NOTE	REF NO	GRAPHIC REF	PART NUMBER	QTY	PART NAME 1 2 3 4 5 6 (PRODUCT LEVEL)	SEE PAGE
	1	1	**177-7414**	1	FILM-STRIPE (REFLECTIVE, RED, WHITE)	
	2	1	**177-7415**	1	FILM (REFLECTIVE)	
	3	1	**177-9151**	1	PLATE AS (RH)	

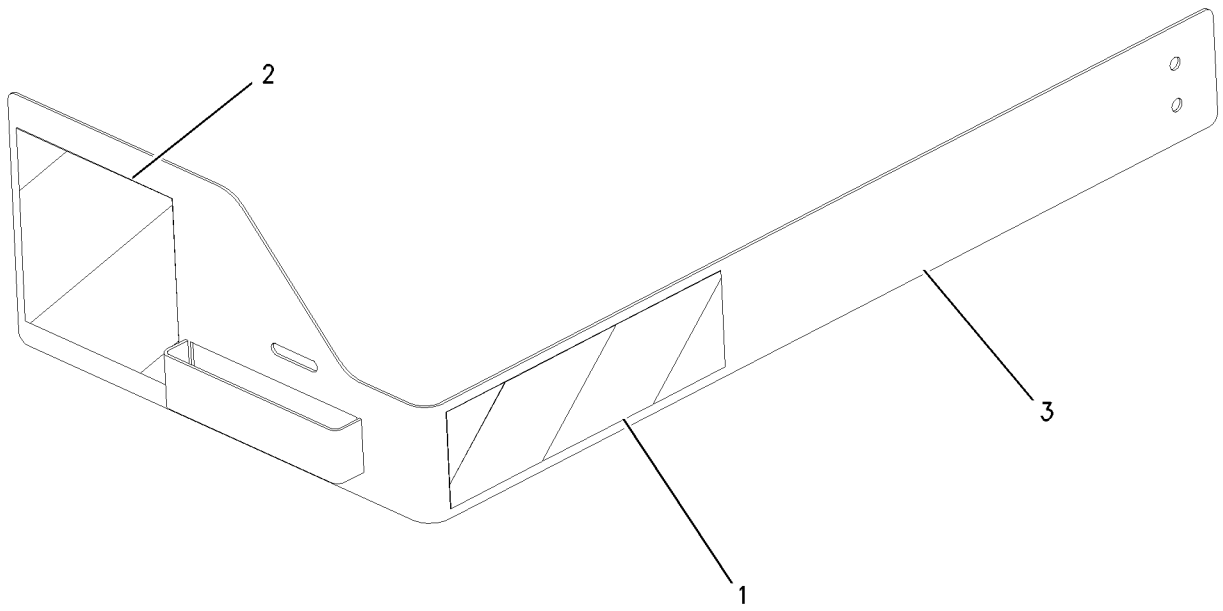

GRAPHIC #1 **<END>** g00995786

WORK TOOLS

177-1983 SPRING GP-BLADE

S/N: SCH2475-UP

PART OF 177-1989, 177-1990 BLADE AR

AN ATTACHMENT

SMCS-6060 **i01497986**

NOTE	REF NO	GRAPHIC REF	PART NUMBER	QTY	PART NAME 1 2 3 4 5 6 (PRODUCT LEVEL)	SEE PAGE
	1	1	**177-1941**	4	SPRING	
	2	1	**177-1973**	1	PLATE AS	
M	3	1	**8T-4194**	2	BOLT (M12X1.75X50-MM)	
	4	1	**8T-4223**	4	WASHER-HARD (13.5X25.5X3-MM THK)	
M	5	1	**8T-4244**	2	NUT (M12X1.75-THD)	

M-METRIC PART

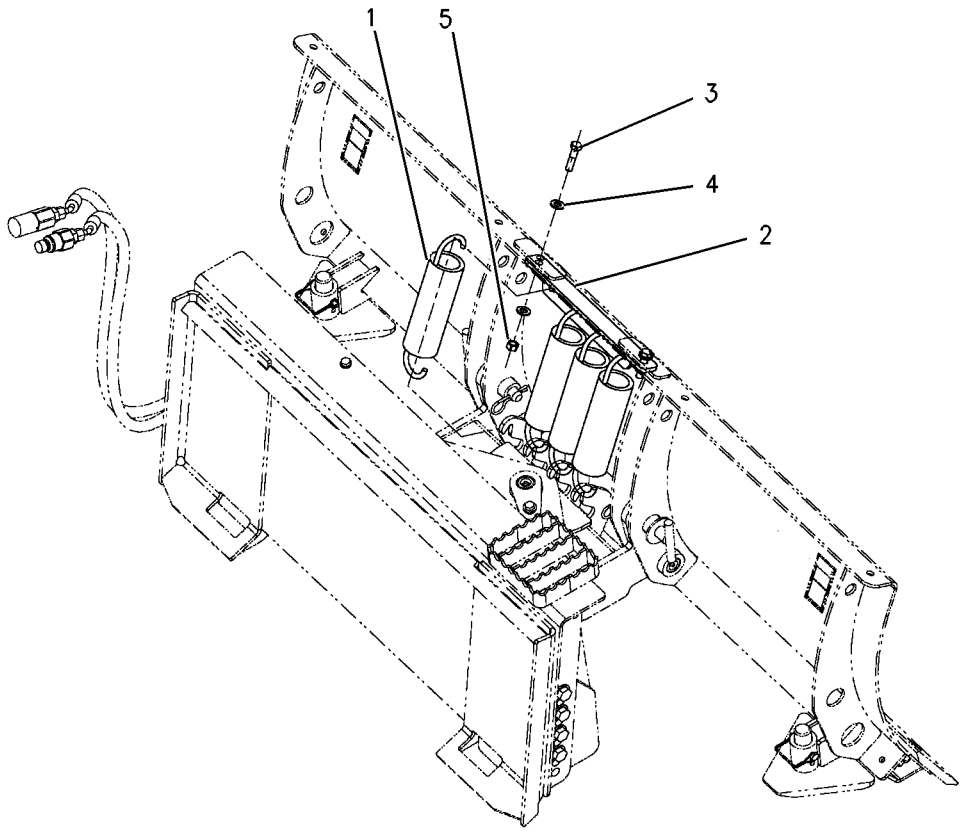

GRAPHIC #1 **<END>** g00777337

WORK TOOLS

188-7733 STEP GP-MATERIAL HANDLING ARM

S/N: SCH2475-UP

PART OF 216-8756 ARM GP-MATERIAL HANDLING

AN ATTACHMENT

SMCS-6542 **i01498007**

NOTE	REF NO	GRAPHIC REF	PART NUMBER	QTY	PART NAME 1 2 3 4 5 6 (PRODUCT LEVEL)	SEE PAGE
	1	1	**186-5186**	1	STEP AS	
	2	1	**8T-4121**	2	WASHER-HARD (11X21X2.5-MM THK)	
M	3	1	**8T-4133**	2	NUT (M10X1.5-THD)	
M	4	1	**8T-4136**	2	BOLT (M10X1.5X25-MM)	

M-METRIC PART

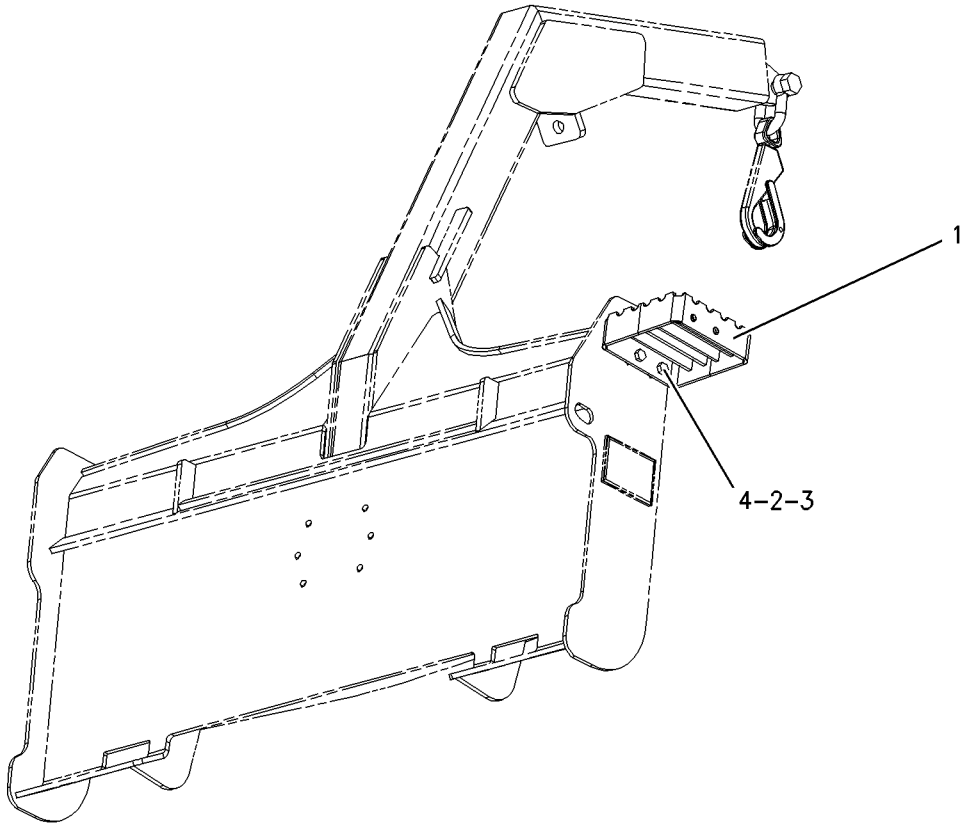

GRAPHIC #1 **<END>** g00777345

WORK TOOLS

173-7407 STOP GP-GRAPPLE–UTILITY

S/N: SCH2475-UP
PART OF 285-6116 GRAPPLE GP-UTILITY
AN ATTACHMENT

SMCS-6307 **i01218895**

NOTE	REF NO	GRAPHIC REF	PART NUMBER	QTY	PART NAME 1 2 3 4 5 6 (PRODUCT LEVEL)	SEE PAGE
	1	1	**8Y-7386**	1	SPACER (12.5X17.1X16.5-MM THK)	
	2	1	**2S-6408**	2	WASHER-RETAINING (0.531X3.25X0.438-IN THK)	
	3	1	**8T-4223**	1	WASHER-HARD (13.5X25.5X3-MM THK)	
M	4	1	**8T-4910**	1	BOLT (M12X1.75X60-MM)	
	5	1	**8Y-7385**	1	STOP	

M-METRIC PART

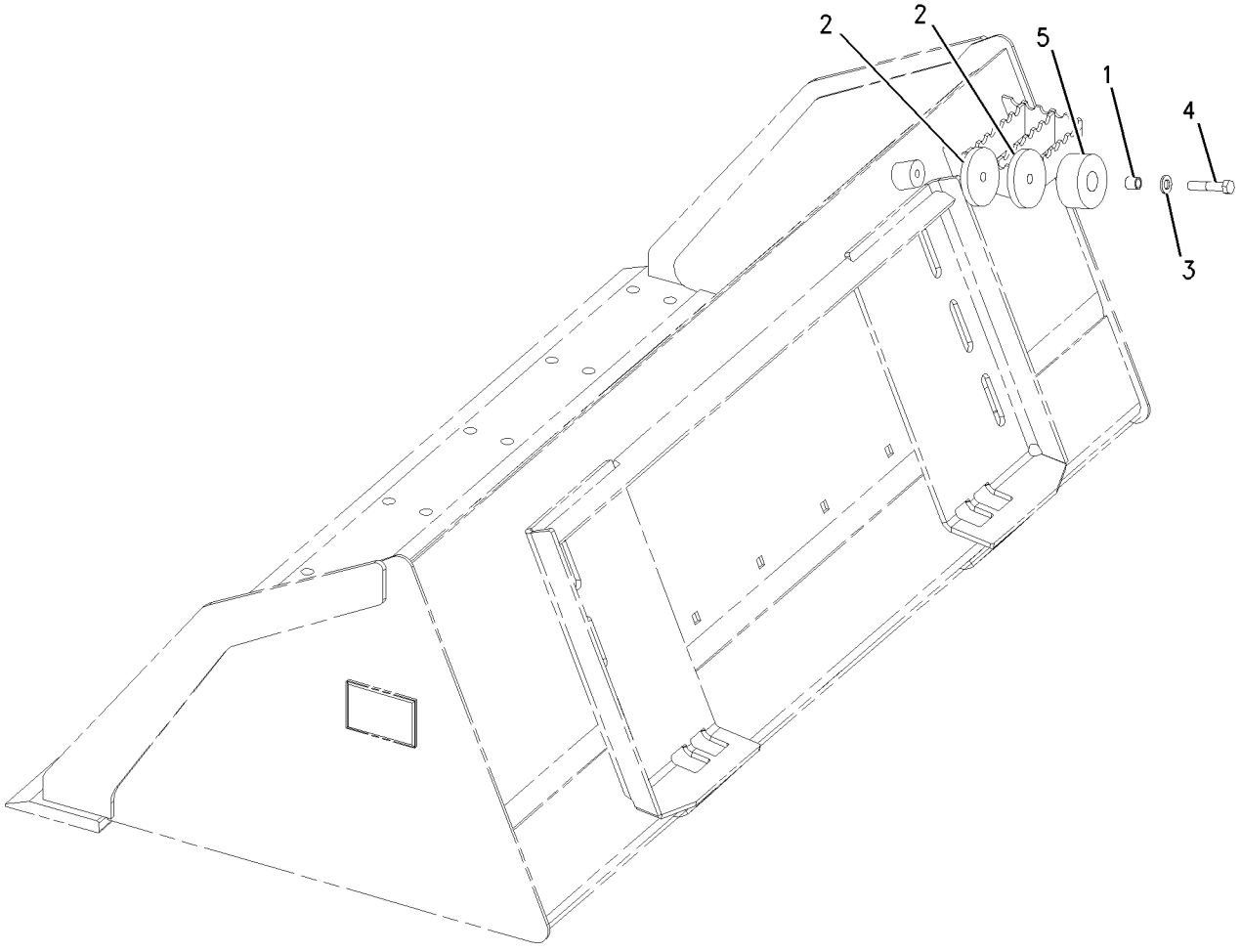

GRAPHIC #1 **<END>** g00651574

WORK TOOLS

116-2001 STRAINER GP-WATER

S/N: SCH2475-UP
PART OF 252-0386 TANK & MTG GP-WATER
AN ATTACHMENT

SMCS-5612 **i02571404**

NOTE	REF NO	GRAPHIC REF	PART NUMBER	QTY	PART NAME 1 2 3 4 5 6 (PRODUCT LEVEL)	SEE PAGE
	1	1	**119-1415**	1	GASKET	
	2	1	**119-1414**	1	SCREEN (WATER TANK)	

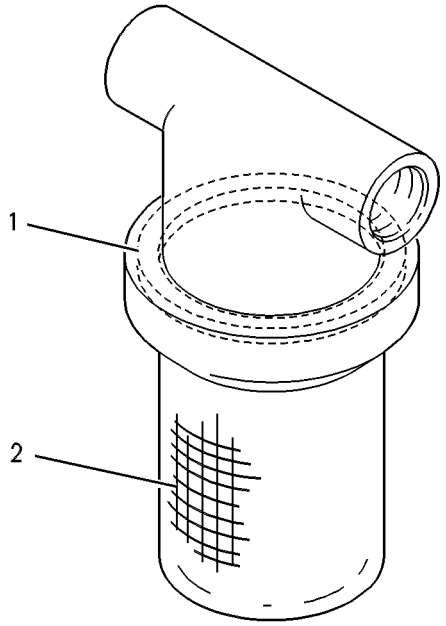

GRAPHIC #1 **<END>** g00293866

WORK TOOLS

252-0386 TANK & MTG GP-WATER

S/N: SCH2475-UP

AN ATTACHMENT

SMCS-5613 **i02571301**

NOTE	REF NO	GRAPHIC REF	PART NUMBER	QTY	PART NAME 1 2 3 4 5 6 (PRODUCT LEVEL)	SEE PAGE
	1	1	**3B-7255**	1	BUSHING-REDUCING	
	2	1	**3S-2093**	4	STRAP-CABLE	
	3	1	**4E-0724**	1	SPACER (9X20X28-MM THK)	
	4	1	**7X-0495**	1	ADAPTER	
	5	1	**8T-0737**	1	VALVE-SHUTOFF	
Y	6	1	**116-2001**	1	STRAINER GP-WATER	437
	7	1	**124-1916**	1	COUPLING-PERMANENT	
	8	1	**124-1917**	1	COUPLING-PERMANENT	
	9	1	**165-4894**	1	HARNESS AS-WORK TOOL	
		1	**102-8806**	1	KIT-RECEPTACLE (8-PIN)	
					(INCLUDES RECEPTACLE AS & WEDGE)	
		1	**155-2265**	1	KIT-CONNECTING PLUG (8-PIN)	
		1	**155-2270**	1	KIT-CONNECTING PLUG (2-PIN)	
					(EACH PLUG KIT INCLUDES PLUG AS, WEDGE & INTERFACE SEAL)	
Y	10	1	**166-2551**	1	TANK GP-WATER	441
I	11	1	**166-2552**	1	HOSE AS	
	12	1	**166-2557**	1	PLATE	
	13	1	**166-2558**	1	COUPLING	
	14	1	**166-2559**	2	BRACKET	
	15	1	**218-5847**	1	PLATE	
	16	1	**218-5975**	1	BRACKET AS	
	17	1	**233-5719**	1	PUMP GP-DIAPHRAGM	
	18	1	**233-5892**	1	PLATE AS	
	19	1	**233-5893**	1	PLATE AS	
	20	1	**003-2143**	1	ELBOW	
	21	1	**067-2551**	2	CLIP	
	22	1	**095-0912**	2	CLIP	
M	23	1	**111-4627**	4	SCREW-MACHINE (M6X1X30-MM)	
	24	1	**119-3859**	6	SCREW-PAN HEAD (10-16X0.75-IN)	
M	25	1	**129-3178**	4	LOCKNUT (M6X1-THD)	
	26	1	**1L-2279**	1	ELBOW	
M	27	1	**5C-7261**	3	NUT (M8X1.25-THD)	
	28	1	**5P-4116**	1	WASHER-HARD (8.8X20.5X2-MM THK)	
	29	1	**5P-8246**	2	WASHER-HARD (15.5X29X3-MM THK)	
	30	1	**8T-4122**	16	WASHER-HARD (17X32X3.5-MM THK)	
M	31	1	**8T-4132**	4	NUT (M16X2-THD)	
	32	1	**8T-4205**	6	WASHER-HARD (7.2X14.5X2-MM THK)	
	33	1	**8T-4224**	8	WASHER-HARD (8.8X16X2-MM THK)	
M	34	1	**8T-4779**	12	BOLT (M16X2X35-MM)	
M	35	1	**8T-4908**	6	BOLT (M8X1.25X25-MM)	
M	36	1	**8T-6869**	1	BOLT (M8X1.25X60-MM)	
G	37	1	**122-6869**		HOSE-HYDRAULIC (142-IN)	
	38	1	**142-7505**	2	PLATE AS	
	39	1	**166-2556**	1	BRACKET	
BE	40	1	**167-0608**		SEAL	
	41	1	**195-6696**	1	PLATE	
	42	1	**7K-1181**	2	STRAP-CABLE	
	43	1	**8T-4121**	7	WASHER-HARD (11X21X2.5-MM THK)	
M	44	1	**8T-4133**	2	NUT (M10X1.5-THD)	
M	45	1	**8T-4136**	2	BOLT (M10X1.5X25-MM)	
M	46	1	**8T-4137**	5	BOLT (M10X1.5X20-MM)	
M	47	1	**8T-4191**	2	BOLT (M10X1.5X16-MM)	

252-0386 TANK & MTG GP-WATER *(contd.)* i02571301

B-USE AS REQUIRED
E-ORDER BY THE CENTIMETER
G-ORDER BY THE INCH
I-REFER TO HYDRAULIC INFORMATION SYSTEM
M-METRIC PART
Y-SEPARATE ILLUSTRATION

252-0386 TANK & MTG GP-WATER *(contd.)* i02571301

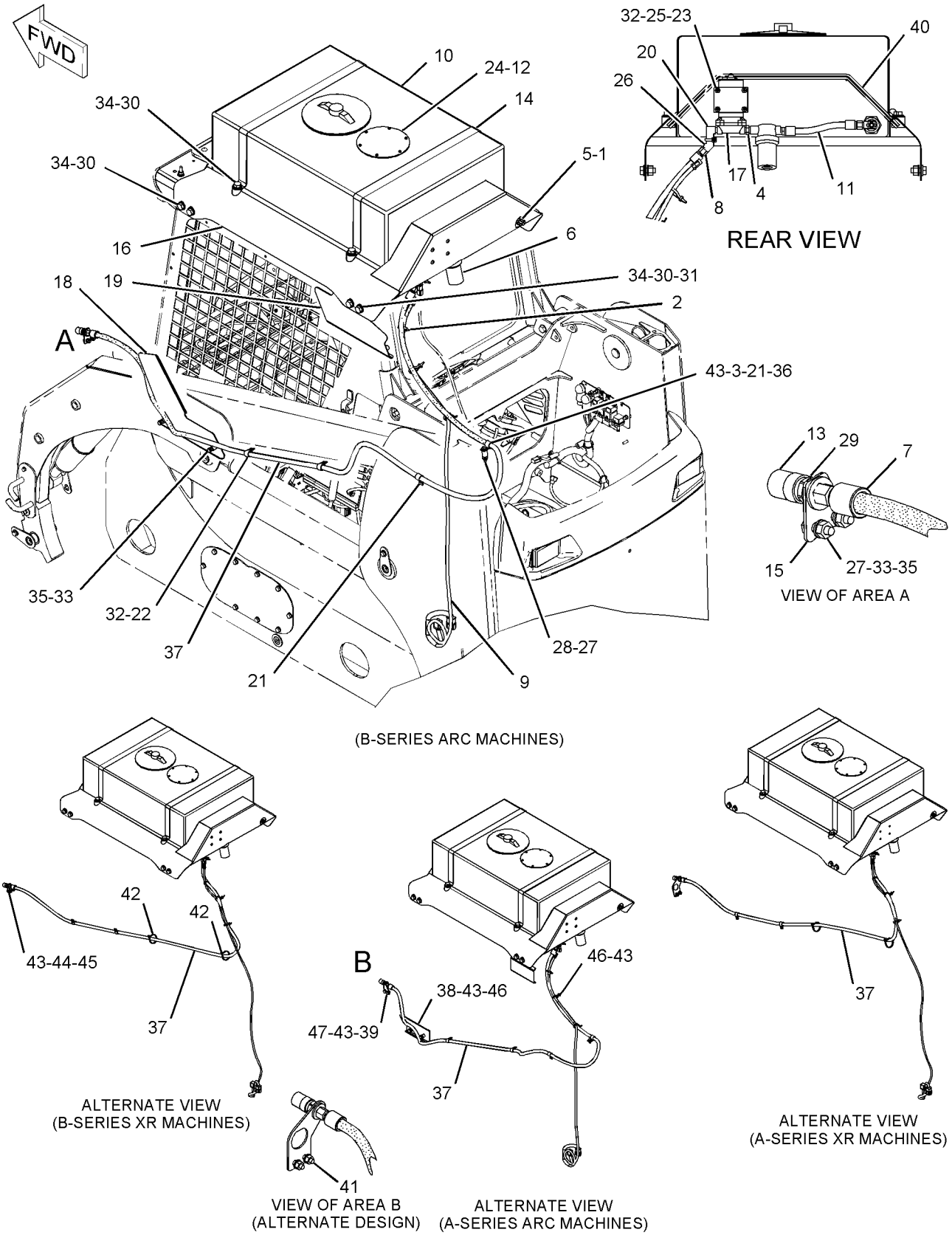

GRAPHIC #1

<END>

g01094533

WORK TOOLS

166-2551 TANK GP-WATER

S/N: SCH2475-UP
PART OF 252-0386 TANK & MTG GP-WATER
AN ATTACHMENT

SMCS-5613 **i02571400**

NOTE	REF NO	GRAPHIC REF	PART NUMBER	QTY	PART NAME 1 2 3 4 5 6 (PRODUCT LEVEL)	SEE PAGE
	1	1	**192-2606**	1	CAP AS (WATER TANK)	
	2	1	**192-2607**	1	FITTING-DRAIN	

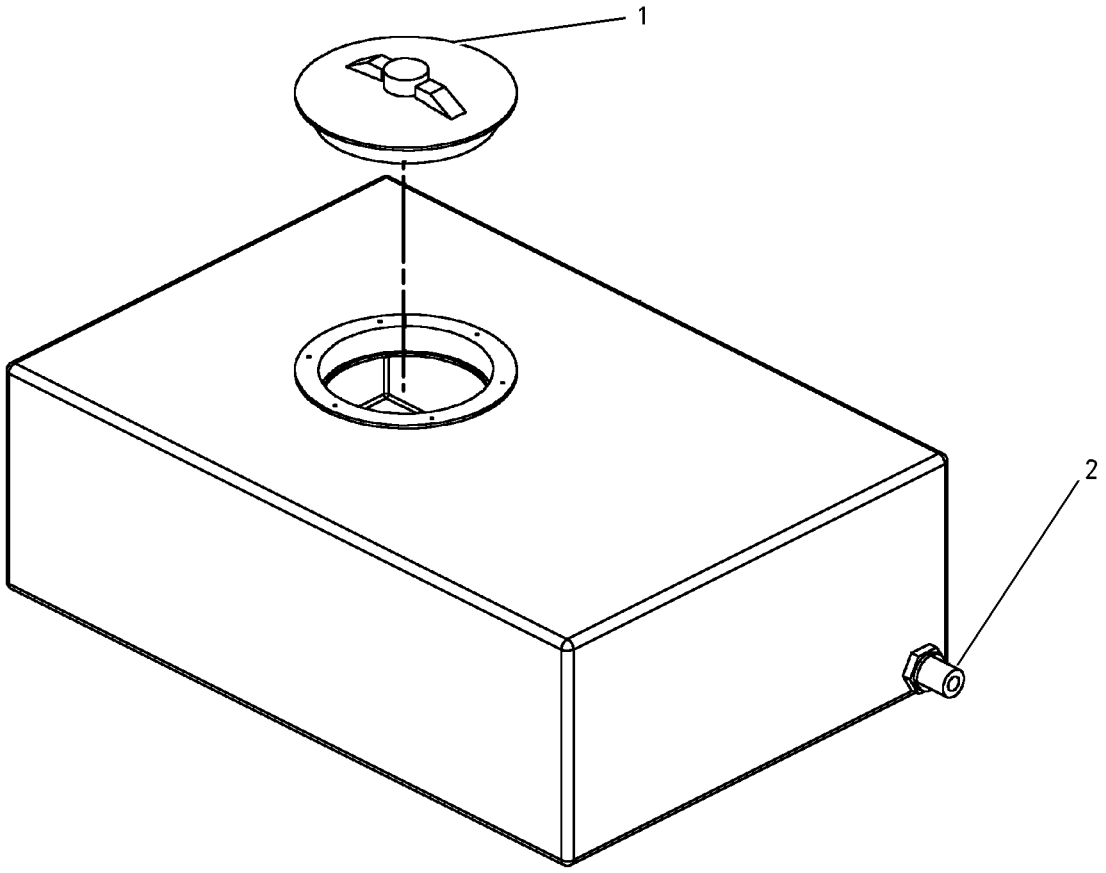

GRAPHIC #1 **<END>** g00742953

WORK TOOLS

141-4999 TOOTH GP-UNI

S/N: SCH2475-UP

PART OF 279-5366, 279-5370, 279-5374, 279-5378 BUCKET AR-GENERAL PURPOSE, 279-5380, 279-5392, 279-5400, 279-5401 BUCKET AR-MULTIPURPOSE AN ATTACHMENT

SMCS-6822 **i02163942**

NOTE	REF NO	GRAPHIC REF	PART NUMBER	QTY	PART NAME 1 2 3 4 5 6 (PRODUCT LEVEL)	SEE PAGE
	1	1	**132-4720**	1	TOOTH-UNI-SINGLE STRAP	
	2	1	**246-4349**	2	SCREW-FLAT HEAD (M16X2-THD)	
M	3	1	**8T-4778**	2	LOCKNUT (M16X2-THD)	

M-METRIC PART

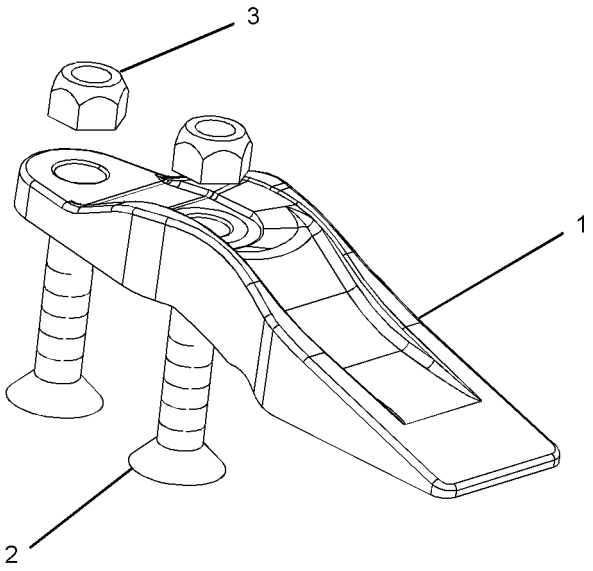

GRAPHIC #1 **<END>** g01097424

OPERATOR STATION

176-3900 ACCUMULATOR GP-REFRIGERANT—WITH DESICCANT

S/N: SCH2475-UP
PART OF 233-5588 KIT-AIR COND & HEATER INSTL
FIELD REPLACEMENT FOR 186-6190—PAGE 444
AN ATTACHMENT

SMCS-7320 **i02195254**

NOTE	REF NO	GRAPHIC REF	PART NUMBER	QTY	PART NAME 1 2 3 4 5 6 (PRODUCT LEVEL)	SEE PAGE
					(NO SERVICED PARTS)	

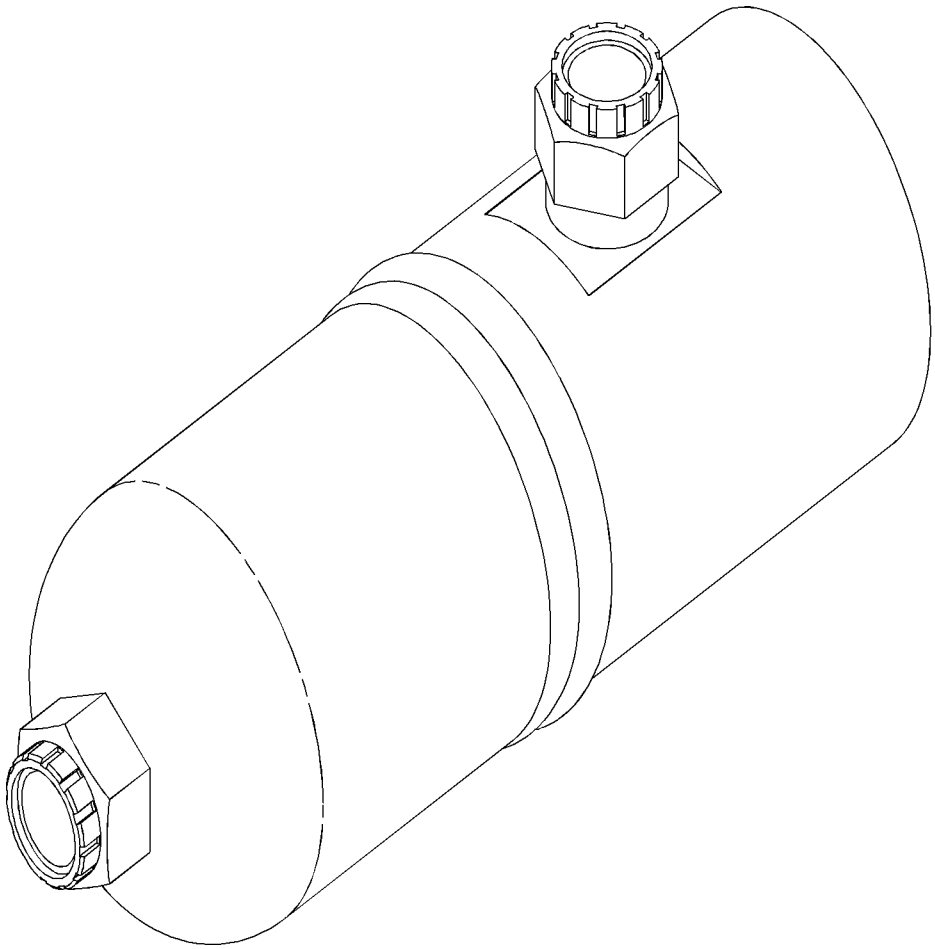

GRAPHIC #1 **<END>** g01035076

OPERATOR STATION

186-6190 ACCUMULATOR GP-REFRIGERANT—WITH DESICCANT

S/N: SCH2475-UP

PART OF 233-5589 KIT-AIR COND & HEATER INSTL, 218-6590 LINES GP-AIR CONDITIONER

FIELD REPLACEMENT ORDER 176-3900—PAGE 443

AN ATTACHMENT

SMCS-7320 **i02306357**

NOTE	REF NO	GRAPHIC REF	PART NUMBER	QTY	PART NAME 1 2 3 4 5 6 (PRODUCT LEVEL)	SEE PAGE
					(NO SERVICED PARTS)	

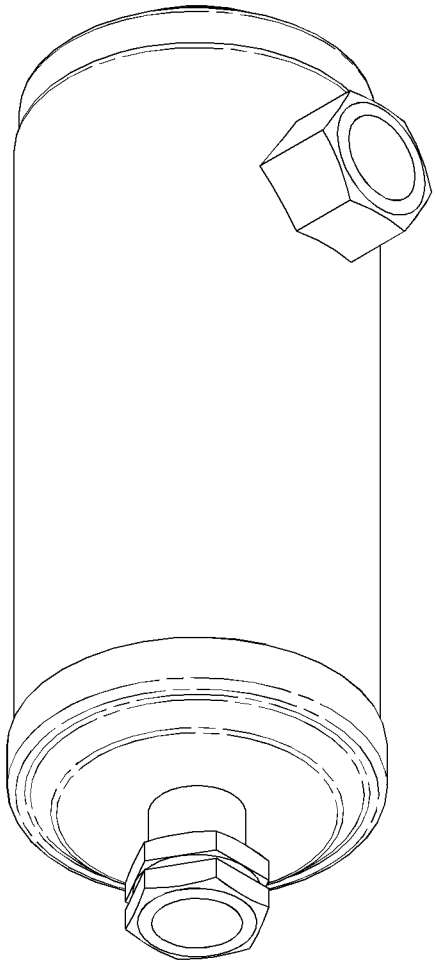

GRAPHIC #1

<END>

g01155244

OPERATOR STATION

229-8747 AIR CONDITIONER & MOUNTING GP

S/N: SCH2475-UP
PART OF 218-6302 AIR CONDITIONER AR
AN ATTACHMENT

SMCS-7320 **i02010226**

NOTE	REF NO	GRAPHIC REF	PART NUMBER	QTY	PART NAME 1 2 3 4 5 6 (PRODUCT LEVEL)	SEE PAGE
Y	1	1	*218-6405*	1	AIR CONDITIONER GP	447
M	2	1	**7X-2537**	4	BOLT (M8X1.25X35MM)	
	3	1	**8T-4224**	4	WASHER-HARD (8.8X16X2MM THK)	

M-METRIC PART
Y-SEPARATE ILLUSTRATION

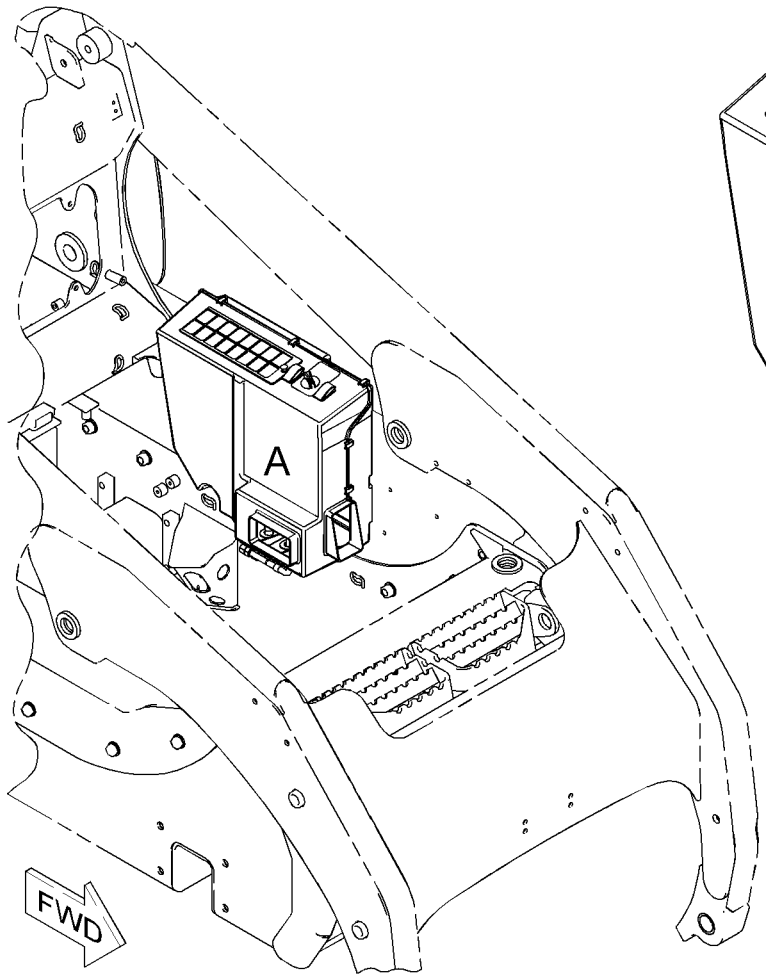

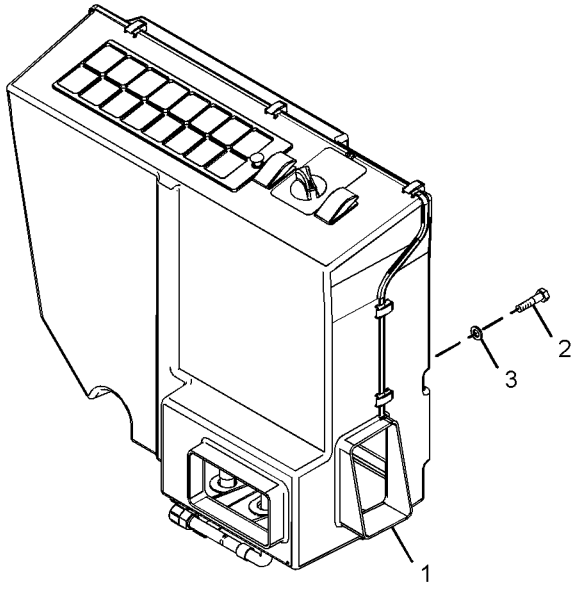

VIEW OF AREA A

GRAPHIC #1 **<END>** g01018777

OPERATOR STATION

218-6302 AIR CONDITIONER AR

S/N: SCH2475-UP
PART OF 295-7333 OPTION AR-CAB
AN ATTACHMENT

SMCS-7320 **i02820448**

NOTE	PART NUMBER	QTY	PART NAME 1 2 3 4 5 6 (PRODUCT LEVEL)	SEE PAGE
Y	*229-8747*	1	AIR CONDITIONER & MOUNTING GP	445
Y	*218-6830*	1	COMPRESSOR & MTG GP-REFRIG	457
Y	*218-6348*	1	CONDENSER & MTG GP-REFRIGERANT	458
Y	*218-6394*	1	DUCT & CONTROL GP	500
Y	*218-6590*	1	LINES GP-AIR CONDITIONER	530
Y	*311-5861*	1	LINES GP-HEATER	532
Y	*218-6533*	1	LINES GP-HYDRAULIC FAN	281
Y	*225-7948*	1	WIRING GP-AIR CONDITIONER	164

Y-SEPARATE ILLUSTRATION

<END>

OPERATOR STATION

218-6405 AIR CONDITIONER GP

S/N: SCH2475-UP

PART OF 229-8747 AIR CONDITIONER & MOUNTING GP, 233-5588, 233-5589 KIT-AIR COND & HEATER INSTL

AN ATTACHMENT

SMCS-7320, 7342 **i02839376**

NOTE	REF NO	GRAPHIC REF	PART NUMBER	QTY	PART NAME 1 2 3 4 5 6 (PRODUCT LEVEL)	SEE PAGE
	1	1	**185-4015**	10	CLIP	
	2	1	**202-2284**	1	SWITCH AS-ROCKER (AIR CONDITIONER)	
	3	1	**218-6399**	1	SEAL	
	4	1	**206-7398**	1	KNOB-CONTROL (TEMPERATURE SELECT)	
	5	1	**119-9631**	1	SWITCH-TEMPERATURE (AIR CONDITIONER)	
	6	1	**305-2969**	2	THUMBSCREW	
	7	1	**231-8123**	1	COIL AS-EVAPORATOR	
	8	1	**231-8124**	1	COIL AS-HEATER	
	9	1	**295-5440**	1	MOTOR	
	10	1	**236-5067**	1	SWITCH-ROCKER (HEATER)	
	11	1	**231-8127**	2	GROMMET	
C	12	1	**312-2635**	1	COVER GP-ACCESS	
		1	**231-8129**	1	PIN	
		1	**231-8142**	1	RETAINER	
C	14	1	**303-6658**	1	FILTER ELEMENT-CAB AIR (AIR)	
	16	1	**231-8132**	1	FILTER ELEMENT-CAB AIR	
	17	1	**231-8133**	1	PANEL	
	18	1	**231-8137**	1	FILM (TEMPERATURE CONTROL)	
	19	1	**231-8141**	1	GROMMET	
	21	1	**236-5069**	3	RELAY AS (12-VOLT)	
C	22	1	**312-1683**	1	HOUSING-COVER	
Y	23	1	**231-8122**	1	HOUSING AS-SIDE (AIR CONDITIONER, HEATER)	518
	24	1	**231-8126**	1	VALVE AS	
	25	1	**232-1384**	1	TUBE	
	26	1	**218-6948**	1	HARNESS AS-HEATER & AIR COND	

C-CHANGE FROM PREVIOUS TYPE
Y-SEPARATE ILLUSTRATION

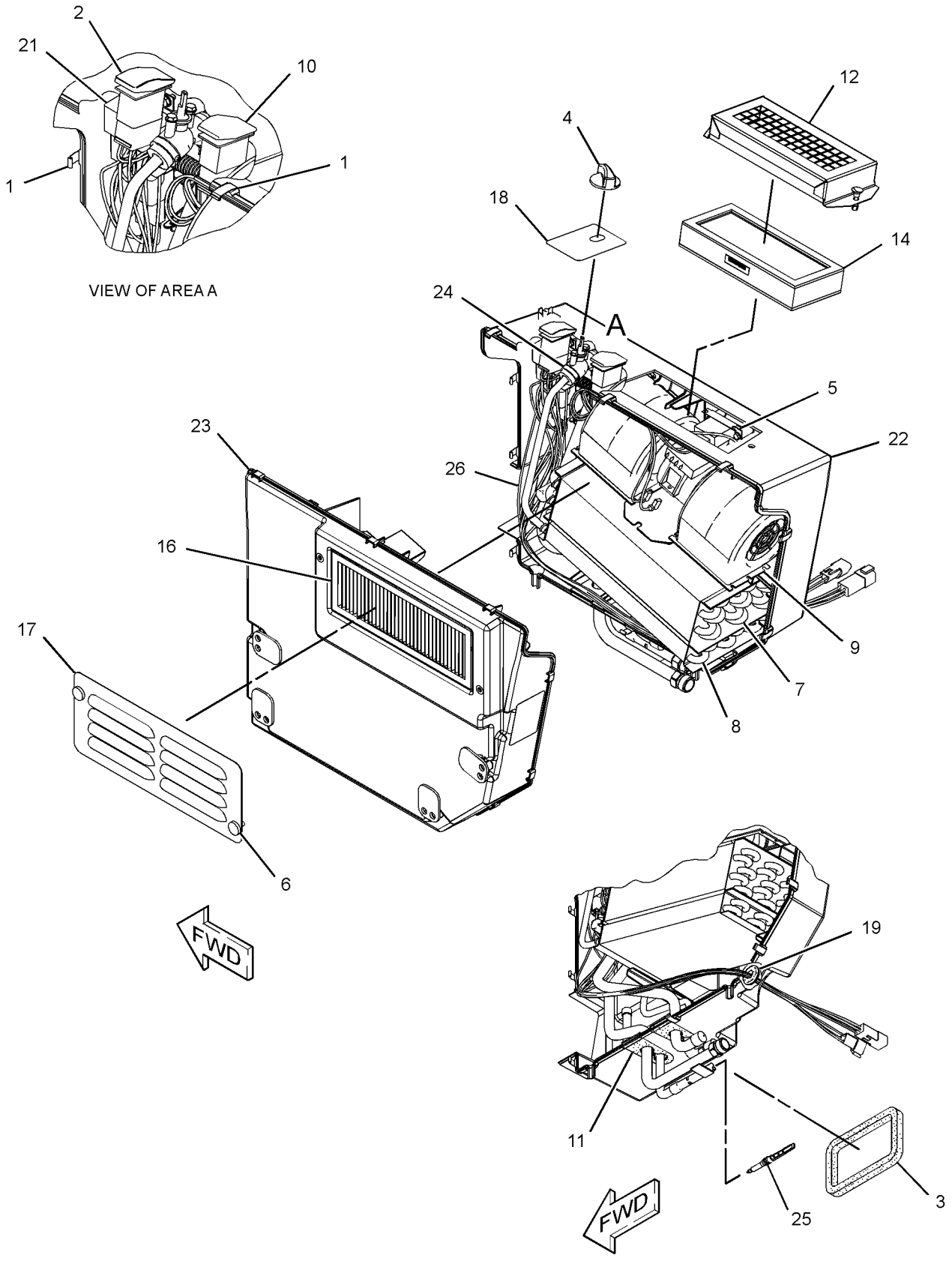

GRAPHIC #1 **<END>** g01416823

OPERATOR STATION

236-4830 ARMREST & MOUNTING GP

S/N: SCH2475-UP

PART OF 218-6350 CAB AR-ENCLOSED ROPS

SMCS-7307 **i01955195**

NOTE	REF NO	GRAPHIC REF	PART NUMBER	QTY	PART NAME 1 2 3 4 5 6 (PRODUCT LEVEL)	SEE PAGE
	1	1	**4E-1384**	2	BUMPER-CONICAL	
	2	1	**195-0939**	4	STUD	
	3	1	**218-6442**	2	PLATE	
Y	4	1	**236-4833**	1	ARMREST GP	450
M	5	1	**195-0937**	2	INSERT-THREADED (M8X1.25-THD)	
M	6	1	**5C-7261**	2	NUT (M8X1.25-THD)	
	7	1	**8T-4121**	4	WASHER-HARD (11X21X2.5-MM THK)	
M	8	1	**8T-4133**	4	NUT (M10X1.5-THD)	

M-METRIC PART
Y-SEPARATE ILLUSTRATION

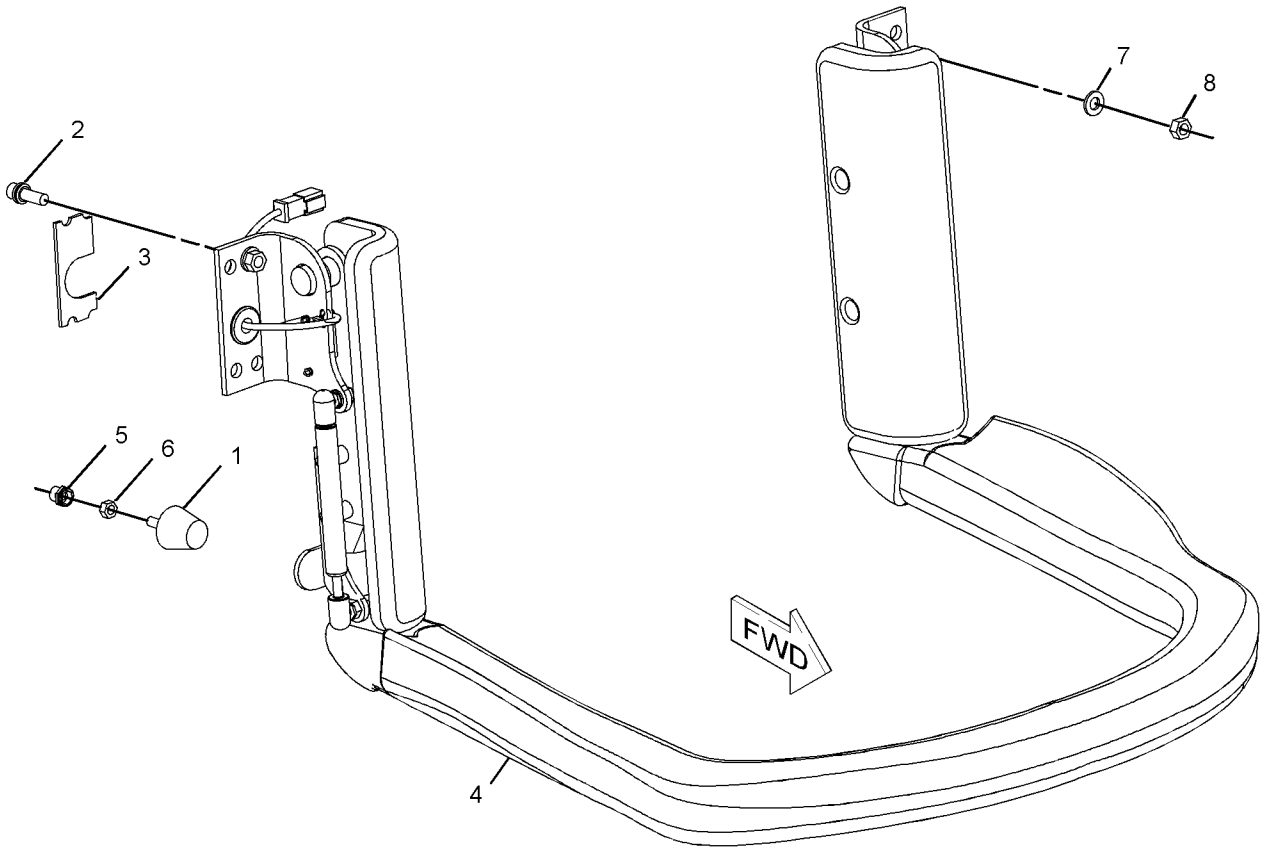

GRAPHIC #1 **<END>** g01016683

OPERATOR STATION

236-4833 ARMREST GP

S/N: SCH2475-UP

PART OF 236-4830 ARMREST & MOUNTING GP

SMCS-7307 **i01955198**

NOTE	REF NO	GRAPHIC REF	PART NUMBER	QTY	PART NAME 1 2 3 4 5 6 (PRODUCT LEVEL)	SEE PAGE
	1	1	**3S-2093**	1	STRAP-CABLE	
	2	1	**7D-8431**	2	RING-RETAINING	
	3	1	**7G-7053**	1	GROMMET	
	4	1	**9P-4609**	1	ACTUATOR-MAGNETIC	
	5	1	**9S-0285**	2	BEARING-SLEEVE	
	6	1	**130-1916**	2	STUD-BALL	
	7	1	**142-9278**	1	BRACKET AS	
	8	1	**142-9279**	1	BRACKET AS	
	9	1	**142-9287**	1	SPRING AS-GAS	
	10	1	**142-9386**	1	BRACKET AS (LH)	
	11	1	**152-4875**	2	COVER AS	
	12	1	**152-4884**	1	BRACKET AS (RH)	
	13	1	**162-0223**	1	SWITCH AS (INTERLOCK)	
		1	**3E-3374**	1	WEDGE-PLUG LOCK (4-PIN)	
		1	**186-3736**	1	SOCKET-CONNECTOR (16-GA TO 18-GA)	
		1	**9G-3695**	1	PLUG	
		1	**9X-1813**		SLEEVE (24CM)	
		1	**176-2947**	1	PLUG KIT-CONN	
	14	1	**236-4832**	1	ARMREST AS	
	15	1	**103-6262**	4	SCREW-MACHINE (4-40X0.63-IN)	
	16	1	**142-2928**	4	LOCKNUT (4-40-THD)	
M	17	1	**5C-9553**	4	BOLT (M6X1X16-MM)	
	18	1	**8T-4205**	4	WASHER-HARD (7.2X14.5X2-MM THK)	
	19	1	**8T-4224**	1	WASHER-HARD (8.8X16X2-MM THK)	
M	20	1	**9X-2042**	4	SCREW-TRUSS HEAD (M6X1X12-MM)	

M-METRIC PART

236-4833 ARMREST GP *(contd.)* **i01955198**

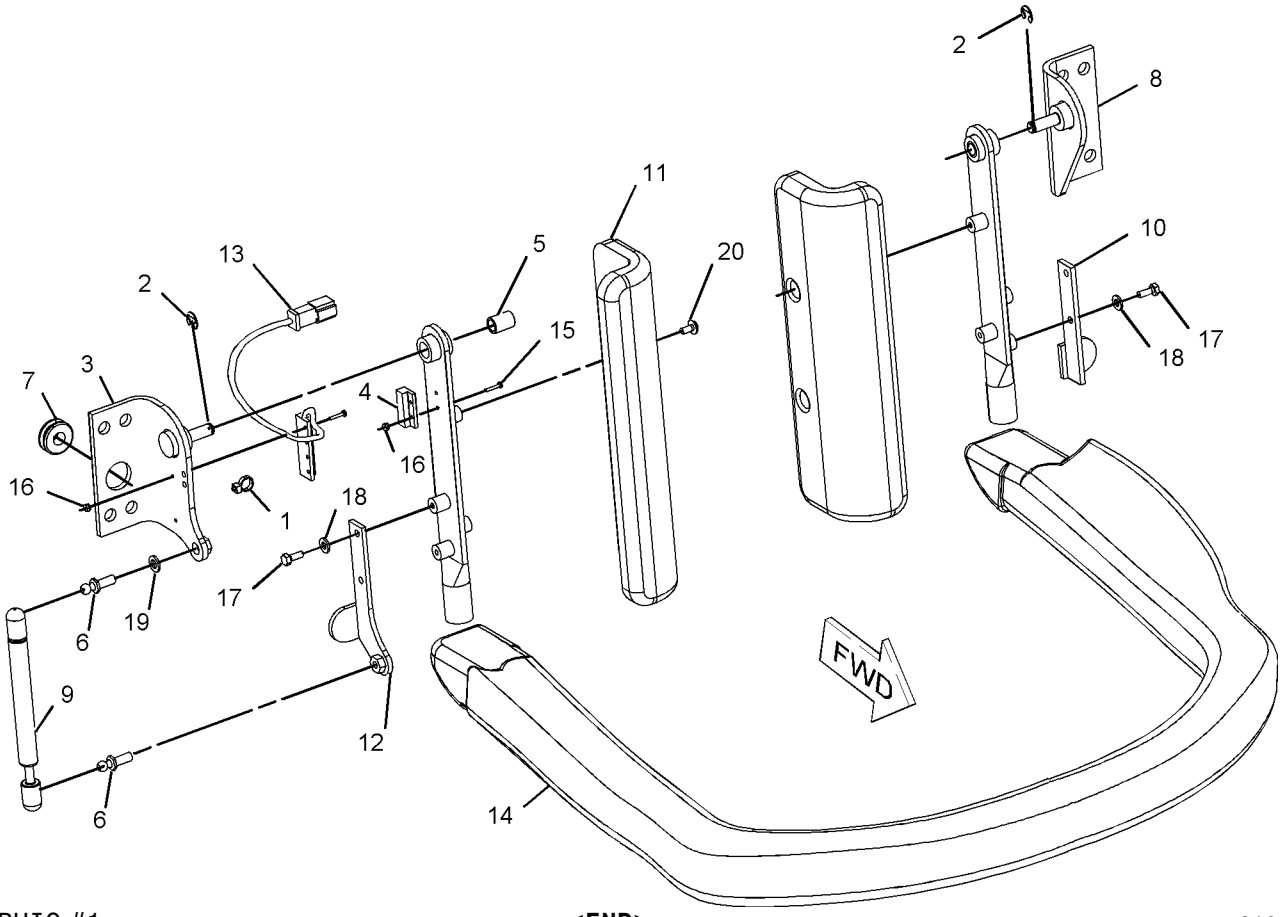

GRAPHIC #1 **<END>** g01016724

OPERATOR STATION

216-6146 BOX GP-STORAGE

S/N: SCH2475-UP

PART OF 261-6156, 278-5348, 278-5370, 278-5414, 295-7060, 295-7067, 295-7150, 295-7163 CONVERSION AR-MACHINE, 233-5681, 233-5682, 233-5683, 233-5684 CONVERSION AR-ROADING AN ATTACHMENT

SMCS-7268 **i02014480**

NOTE	REF NO	GRAPHIC REF	PART NUMBER	QTY	PART NAME 1 2 3 4 5 6 (PRODUCT LEVEL)	SEE PAGE
J	1	1	**8T-2895**	1	LOCK GP-CYLINDER	
		1	**226-0323**	1	CAM-LOCK	
		1	**226-0291**	1	LOCK AS	
	2	1	**216-6145**	1	BOX AS-STORAGE	
		1	**7G-4262**	1	HINGE	
D	3	1	**6V-1392**		SEAL (1M)	

D-ORDER BY THE METER
J-REQUIRES 5P8500 KEY

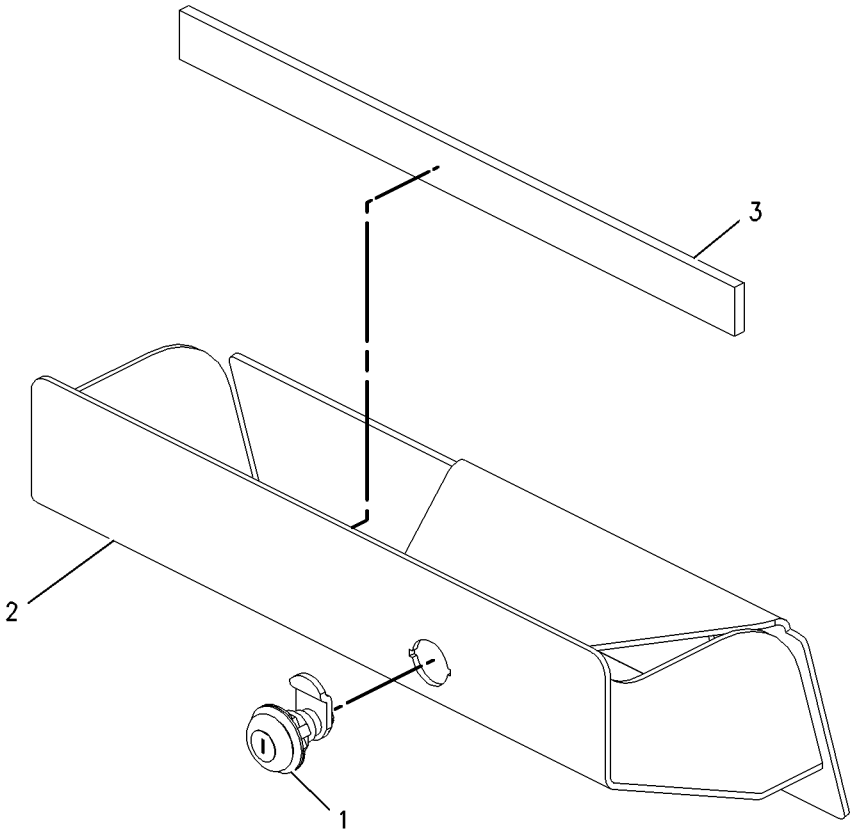

GRAPHIC #1 **<END>** g00932357

OPERATOR STATION

218-6350 CAB AR-ENCLOSED ROPS

S/N: SCH2475-UP

PART OF 295-7232, 295-7233 COMMON AR

SMCS-7301 **i02014475**

NOTE	PART NUMBER	QTY	PART NAME 1 2 3 4 5 6 (PRODUCT LEVEL)	SEE PAGE
Y	*236-4830*	1	ARMREST & MOUNTING GP	449
Y	*218-6367*	1	CAB GP-ENCLOSED ROPS	454
Y	*216-4750*	1	FASTENER GP-WIRING HARNESS	133
Y	*218-6425*	1	LIGHTING GP-FLOOD (FRONT)	150
Y	*218-6356*	1	LINER GP-CAB	528
Y	*218-6395*	1	MIRROR GP-REAR VIEW	534
Y	*218-6370*	1	MOUNTING GP-ROPS	537
Y	*218-6380*	1	SPRING GP-GAS (CAB)	556
Y	*195-6723*	1	WINDOW GP-CAB (UPPER REAR)	559
	218-6420	1	BOX GP-STORAGE (LITERATURE)	
	152-4871	1	BOX-STORAGE	
	5P-7957	1	LANYARD	
M	**9X-2042**	4	SCREW-TRUSS HEAD (M6X1X12-MM)	
	195-0935	4	INSERT-THREADED (M6X1-THD)	

M-METRIC PART
Y-SEPARATE ILLUSTRATION

<END>

OPERATOR STATION

218-6367 CAB GP-ENCLOSED ROPS

S/N: SCH2475-UP

PART OF 218-6350 CAB AR-ENCLOSED ROPS

SMCS-7301 **i02851608**

NOTE	REF NO	GRAPHIC REF	PART NUMBER	QTY	PART NAME 1 2 3 4 5 6 (PRODUCT LEVEL)	SEE PAGE
	1	1	**214-9186**	7	BUTTON	
	2	1	**280-6072**	1	WINDOW	
					PARTS SHOWN IN GRAPHIC(S) WITHOUT A REFERENCE NUMBER ARE NOT SERVICED SEPARATELY	

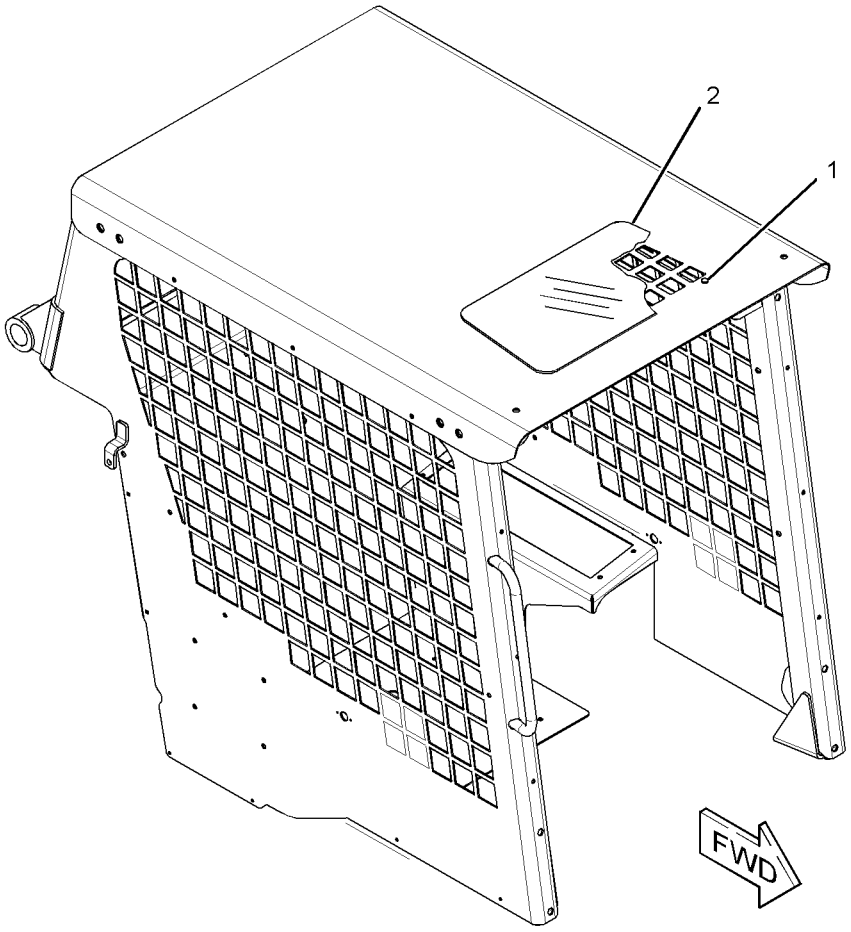

GRAPHIC #1 **<END>** g01420647

298-7198 CABLE GP-CONTROL—MANUAL LOWERING

S/N: SCH2475-UP

PART OF 218-5882 LINES GP-LOWERING CONTROL, 218-6263 VALVE & LINES GP-COUPLER AN ATTACHMENT

SMCS-5154 **i02748033**

NOTE	PART NUMBER	QTY	PART NAME 1 2 3 4 5 6 (PRODUCT LEVEL)	SEE PAGE
	276-0074	1	CABLE AS	
	8T-4742	1	END-YOKE ROD	
	8T-4744	1	PIN AS-SPRING	
	298-7197	1	HANDLE GP	
	292-2437	1	NUT	
	292-2438	1	SEAL	
	284-3914	1	HANDLE	

<END>

OPERATOR STATION

218-6832 COMPRESSOR & MOTOR GP-REFRIG

S/N: SCH2475-UP

PART OF 218-6830 COMPRESSOR & MTG GP-REFRIG

AN ATTACHMENT

SMCS-1802, 5061 **i02454674**

NOTE	REF NO	GRAPHIC REF	PART NUMBER	QTY	PART NAME 1 2 3 4 5 6 (PRODUCT LEVEL)	SEE PAGE
	1	1	**2D-5248**	1	GASKET	
	2	1	**9G-5127**	1	BREATHER (AIR CONDITIONER)	
	3	1	**9G-7101**	2	SPACER (10.5X20X30-MM THK)	
	4	1	**218-6833**	1	COMPRESSOR GP-REFRIGERANT	
Y	5	1	*276-5708*	1	COUPLING GP-DRIVE	484
Y	6	1	**218-6840**	1	MOTOR GP-GEAR	314
	7	1	**233-5590**	1	HOUSING-SUPPORT	
M	8	1	**5C-7261**	2	NUT (M8X1.25-THD)	
	9	1	**5P-4116**	2	WASHER-HARD (8.8X20.5X2-MM THK)	
	10	1	**8T-4121**	2	WASHER-HARD (11X21X2.5-MM THK)	
	11	1	**8T-4224**	2	WASHER-HARD (8.8X16X2-MM THK)	
M	12	1	**8T-6870**	2	BOLT (M8X1.25X70-MM)	
M	13	1	**9X-6032**	2	BOLT-SOCKET HEAD (M10X1.5X30-MM)	

M-METRIC PART
Y-SEPARATE ILLUSTRATION

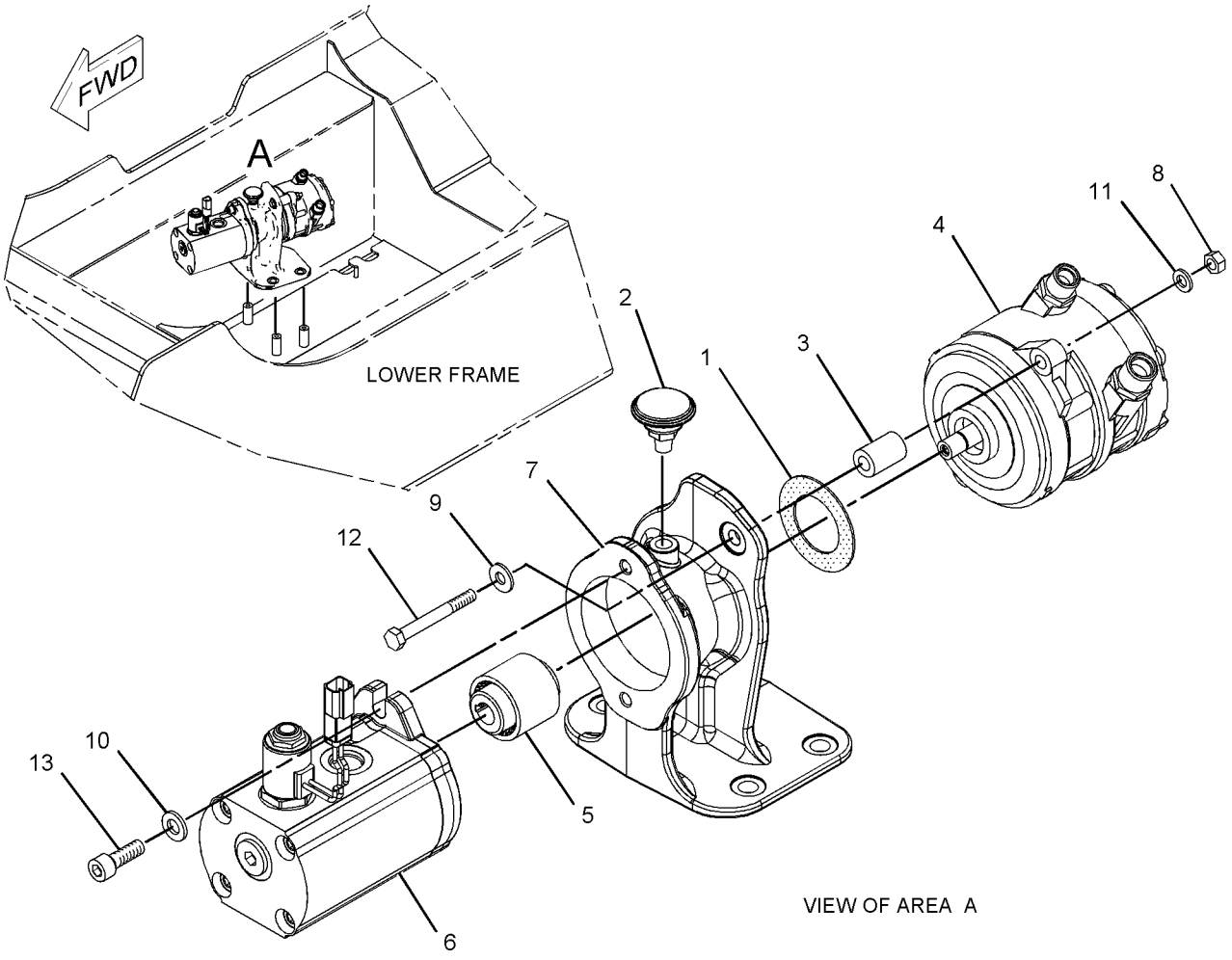

GRAPHIC #1 **<END>** g01059394

OPERATOR STATION

218-6830 COMPRESSOR & MTG GP-REFRIG

S/N: SCH2475-UP
PART OF 218-6302 AIR CONDITIONER AR
AN ATTACHMENT

SMCS-1802 **i01958280**

NOTE	REF NO	GRAPHIC REF	PART NUMBER	QTY	PART NAME 1 2 3 4 5 6 (PRODUCT LEVEL)	SEE PAGE
Y	1	1	*218-6832*	1	COMPRESSOR & MOTOR GP-REFRIG	456
	2	1	**8T-4121**	3	WASHER-HARD (11X21X2.5-MM THK)	
M	3	1	**8T-4136**	3	BOLT (M10X1.5X25-MM)	

M-METRIC PART
Y-SEPARATE ILLUSTRATION

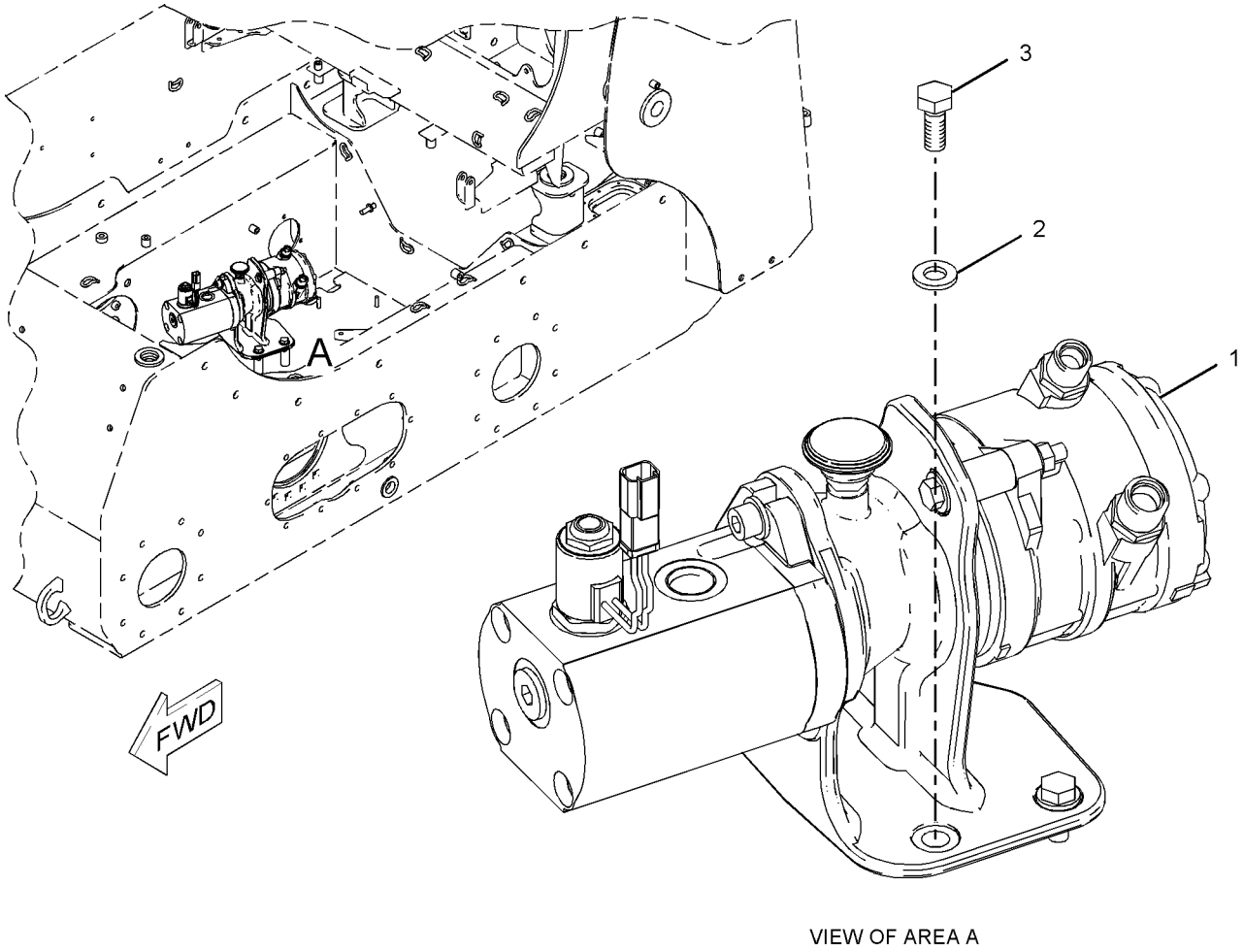

VIEW OF AREA A

GRAPHIC #1 **<END>** g01018664

OPERATOR STATION

218-6348 CONDENSER & MTG GP-REFRIGERANT

S/N: SCH2475-UP

PART OF 218-6302 AIR CONDITIONER AR

AN ATTACHMENT

SMCS-1805 **i02338119**

NOTE	REF NO	GRAPHIC REF	PART NUMBER	QTY	PART NAME 1 2 3 4 5 6 (PRODUCT LEVEL)	SEE PAGE
	1	1	**218-6060**	1	SHROUD AS	
	2	1	**218-6250**	2	FAN AS	
C	3	1	**233-5927**	1	COIL AS	
M	4	1	**5C-7261**	14	NUT (M8X1.25-THD)	
	5	1	**8T-4121**	4	WASHER-HARD (11X21X2.5-MM THK)	
M	6	1	**8T-4133**	4	NUT (M10X1.5-THD)	
M	7	1	**8T-4189**	14	BOLT (M8X1.25X20-MM)	
	8	1	**8T-4224**	20	WASHER-HARD (8.8X16X2-MM THK)	

C-CHANGE FROM PREVIOUS TYPE
M-METRIC PART

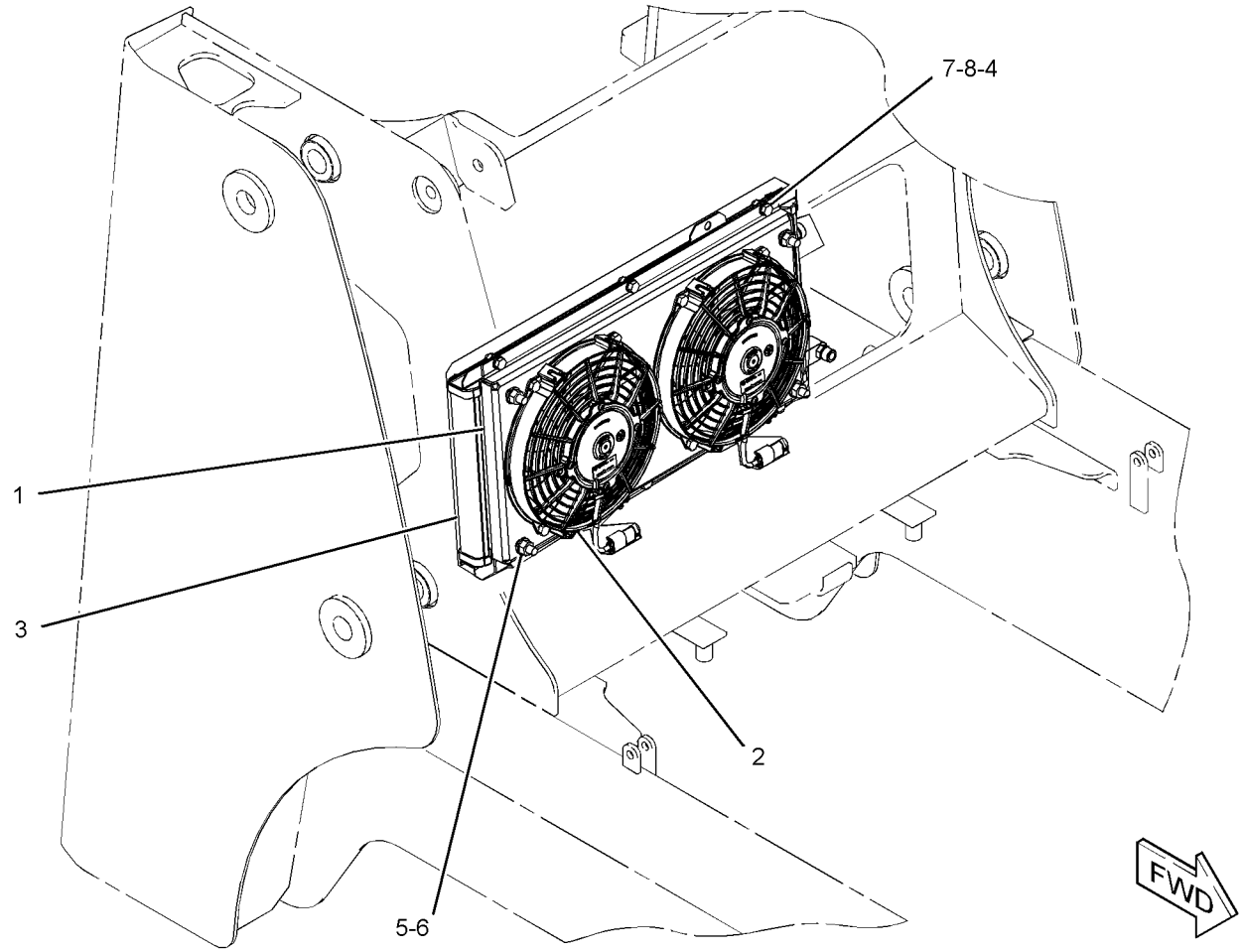

GRAPHIC #1 **<END>** g01195603

218-6480 CONTROL GP-HANDLE–DIRECTION, SPEED

S/N: SCH2475-UP

PART OF 218-5930 CONTROL GP-PILOT OPERATED HYD

AN ATTACHMENT

SMCS-5705 **i02545867**

NOTE	REF NO	GRAPHIC REF	PART NUMBER	QTY	PART NAME 1 2 3 4 5 6 (PRODUCT LEVEL)	SEE PAGE
	1	1	**173-0702**	1	BOOT	
Y	2	1	**218-6117**	1	HANDLE GP-MODULAR	508
	3	1	**158-3770**	1	KIT-PILOT VALVE (LEVER)	
					(INCLUDES NUT, LEVER & PIN)	

Y-SEPARATE ILLUSTRATION

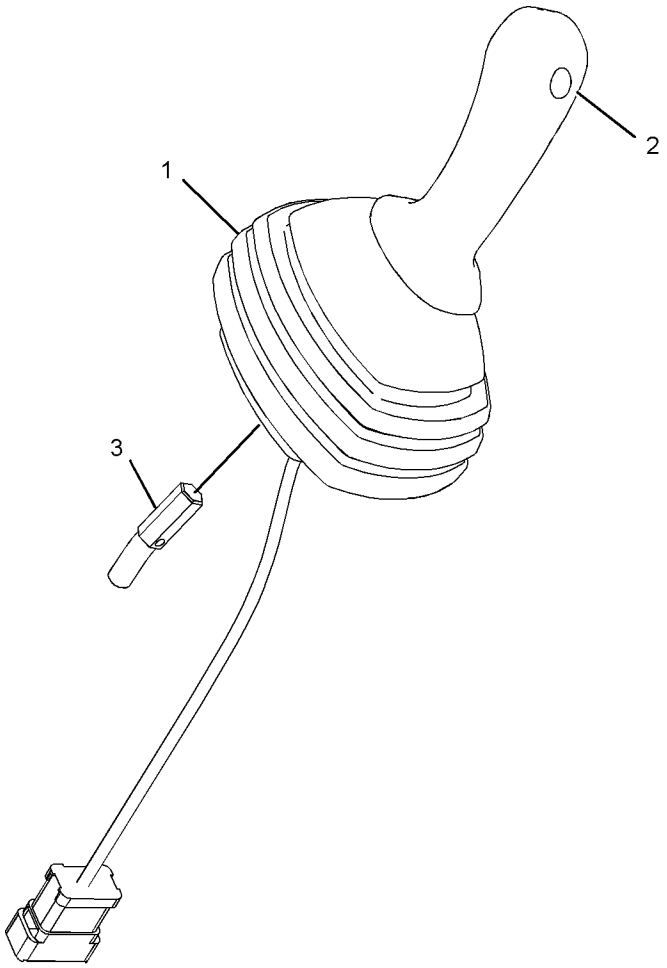

GRAPHIC #1 **<END>** g01111218

OPERATOR STATION

218-6485 CONTROL GP-HANDLE—DIRECTION, SPEED

S/N: SCH2475-UP

PART OF 218-5931 CONTROL GP-PILOT OPERATED HYD

AN ATTACHMENT

SMCS-5705 **i02545868**

NOTE	REF NO	GRAPHIC REF	PART NUMBER	QTY	PART NAME 1 2 3 4 5 6 (PRODUCT LEVEL)	SEE PAGE
	1	1	**173-0702**	1	BOOT	
Y	2	1	**218-6118**	1	HANDLE GP-MODULAR	509
	3	1	**158-3770**	1	KIT-PILOT VALVE (LEVER)	
					(INCLUDES NUT, LEVER & PIN)	

Y-SEPARATE ILLUSTRATION

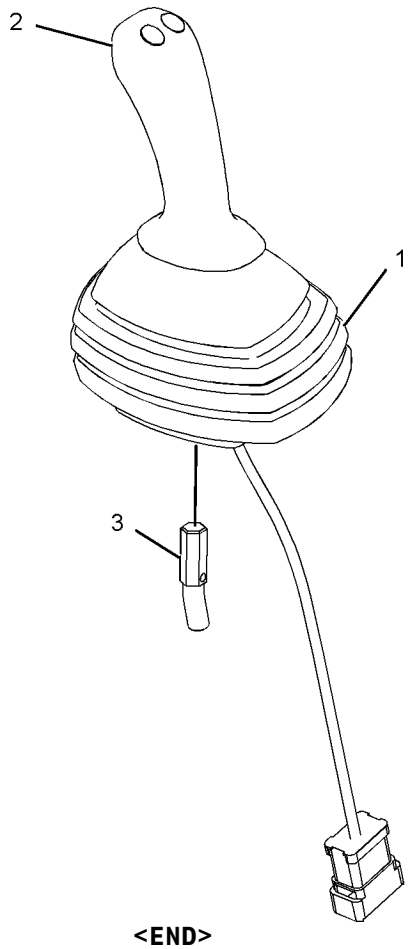

GRAPHIC #1 **<END>** g01111214

218-6490 CONTROL GP-HANDLE–WORK TOOL

S/N: SCH2475-UP
PART OF 218-5611 CONTROL GP-PILOT OPERATED HYD
AN ATTACHMENT

SMCS-5705 **i02545869**

NOTE	REF NO	GRAPHIC REF	PART NUMBER	QTY	PART NAME 1 2 3 4 5 6 (PRODUCT LEVEL)	SEE PAGE
	1	1	**173-0703**	1	BOOT	
Y	2	1	**218-6118**	1	HANDLE GP-MODULAR	509
	3	1	**158-3770**	1	KIT-PILOT VALVE (LEVER)	
					(INCLUDES NUT, LEVER & PIN)	

Y-SEPARATE ILLUSTRATION

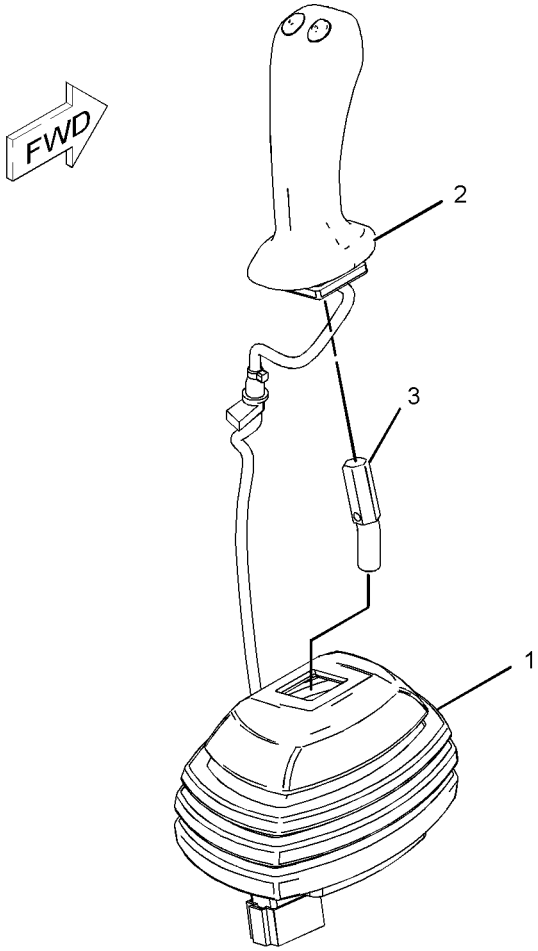

GRAPHIC #1 **<END>** g01111213

OPERATOR STATION

231-4256 CONTROL GP-HANDLE–LH

S/N: SCH2475-UP

PART OF 218-5932 CONTROL GP-PILOT OPERATED HYD

AN ATTACHMENT

SMCS-5705 **i02189555**

NOTE	REF NO	GRAPHIC REF	PART NUMBER	QTY	PART NAME 1 2 3 4 5 6 (PRODUCT LEVEL)	SEE PAGE
	1	1	**223-3725**	1	HANDLE GP-MODULAR	
	1A	1	**186-3735**	4	PIN-CONNECTOR (16-GA TO 18-GA)	
	1B	1	**174-3091**	1	KIT-RECEPTACLE (12-PIN)	
					(INCLUDES RECEPTACLE AS & WEDGE)	
	2	1	**223-3728**	1	BOOT	
	3	1	**231-4261**	1	ADAPTER (LH)	
M	4	1	**213-7489**	3	SCREW (M4X25-MM)	
M	5	1	**178-9983**	3	LOCKNUT (M4X0.7-THD)	
	6	1	**1S-9593**	1	STRAP-CABLE	
	7	1	**8T-8737**	8	PLUG-SEAL	
	8	1	**252-6934**	1	GROMMET	

M-METRIC PART

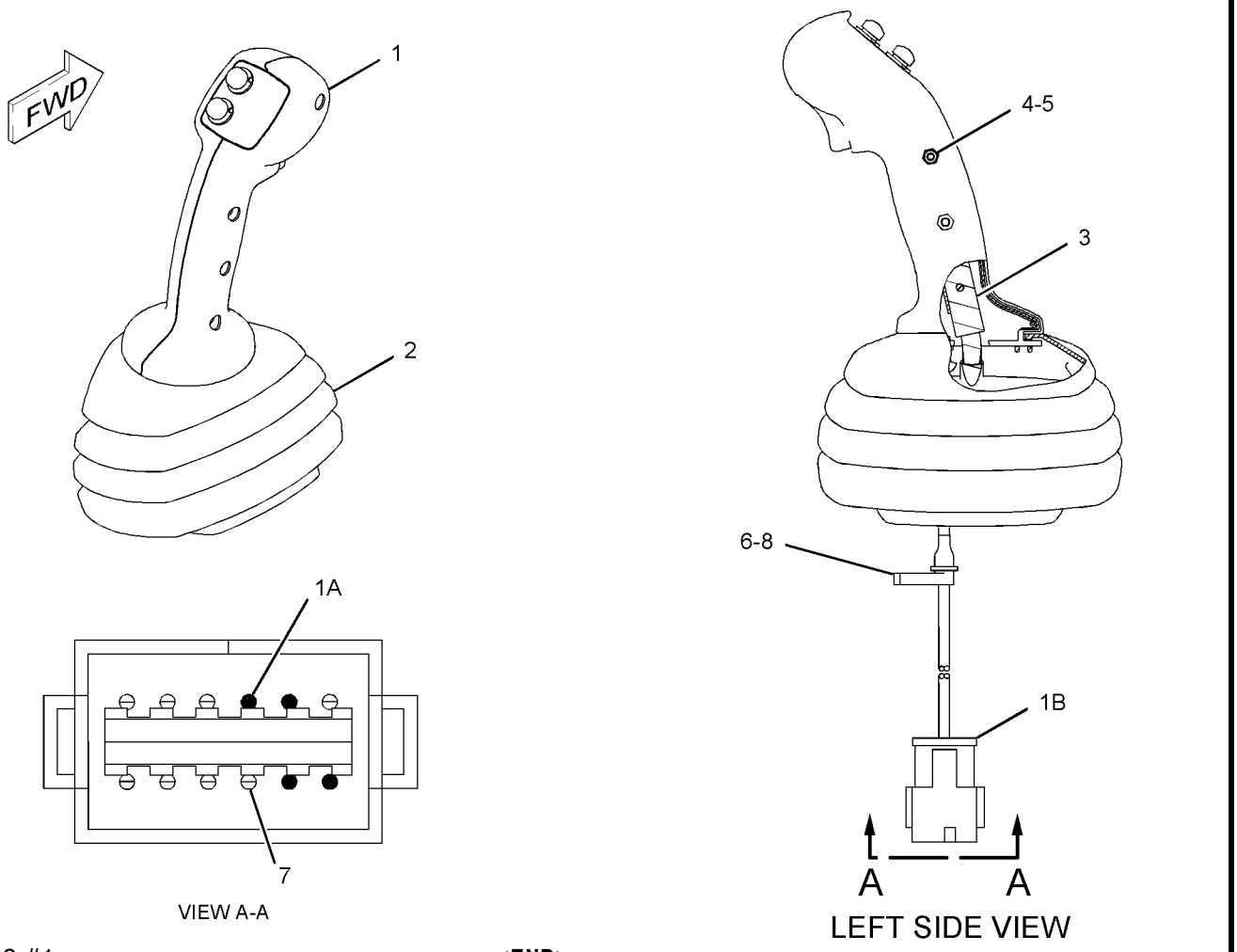

GRAPHIC #1 **<END>** g01132335

OPERATOR STATION

231-4257 CONTROL GP-HANDLE–RH

S/N: SCH2475-UP

PART OF 218-5612 CONTROL GP-PILOT OPERATED HYD

AN ATTACHMENT

SMCS-5705 **i02250695**

NOTE	REF NO	GRAPHIC REF	PART NUMBER	QTY	PART NAME 1 2 3 4 5 6 (PRODUCT LEVEL)	SEE PAGE
	1	1	**223-3725**	1	HANDLE GP-MODULAR	
	1A	1	**186-3735**	4	PIN-CONNECTOR (16-GA TO 18-GA)	
	1B	1	**174-3091**	1	KIT-RECEPTACLE (12-PIN)	
					(INCLUDES RECEPTACLE AS & WEDGE)	
	2	1	**223-3728**	1	BOOT	
	3	1	**231-4262**	1	ADAPTER (RH)	
M	4	1	**213-7489**	3	SCREW (M4X25-MM)	
M	5	1	**178-9983**	3	LOCKNUT (M4X0.7-THD)	
	6	1	**1S-9593**	1	STRAP-CABLE	
	7	1	**8T-8737**	8	PLUG-SEAL	
	8	1	**252-6934**	1	GROMMET	

M-METRIC PART

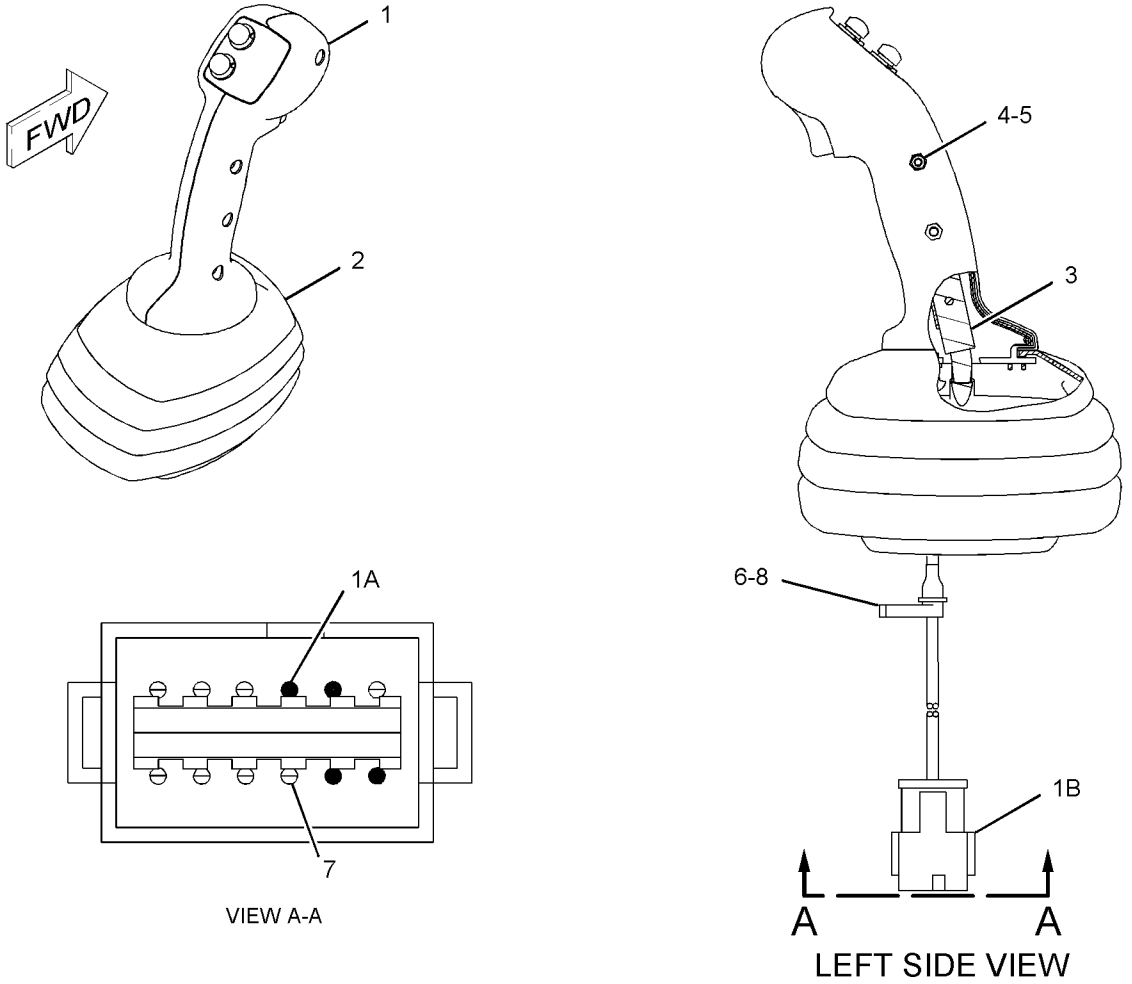

GRAPHIC #1 **<END>** g01133018

OPERATOR STATION

231-4258 CONTROL GP-HANDLE–LH

S/N: SCH2475-UP

PART OF 218-5947 CONTROL GP-PILOT OPERATED HYD, 233-5638 KIT-WORK TOOL CONTROL & WIRING

AN ATTACHMENT

SMCS-5705 **i02189624**

NOTE	REF NO	GRAPHIC REF	PART NUMBER	QTY	PART NAME 1 2 3 4 5 6 (PRODUCT LEVEL)	SEE PAGE
	1	1	**223-3726**	1	HANDLE GP-MODULAR	
	1A	1	**186-3735**	7	PIN-CONNECTOR (16-GA TO 18-GA)	
	1B	1	**174-3091**	1	KIT-RECEPTACLE (12-PIN)	
					(INCLUDES RECEPTACLE AS & WEDGE)	
	2	1	**223-3728**	1	BOOT	
	3	1	**231-4261**	1	ADAPTER (LH)	
M	4	1	**213-7489**	3	SCREW (M4X25-MM)	
M	5	1	**178-9983**	3	LOCKNUT (M4X0.7-THD)	
	6	1	**1S-9593**	1	STRAP-CABLE	
	7	1	**8T-8737**	3	PLUG-SEAL	
	8	1	**252-6934**	1	GROMMET	

M-METRIC PART

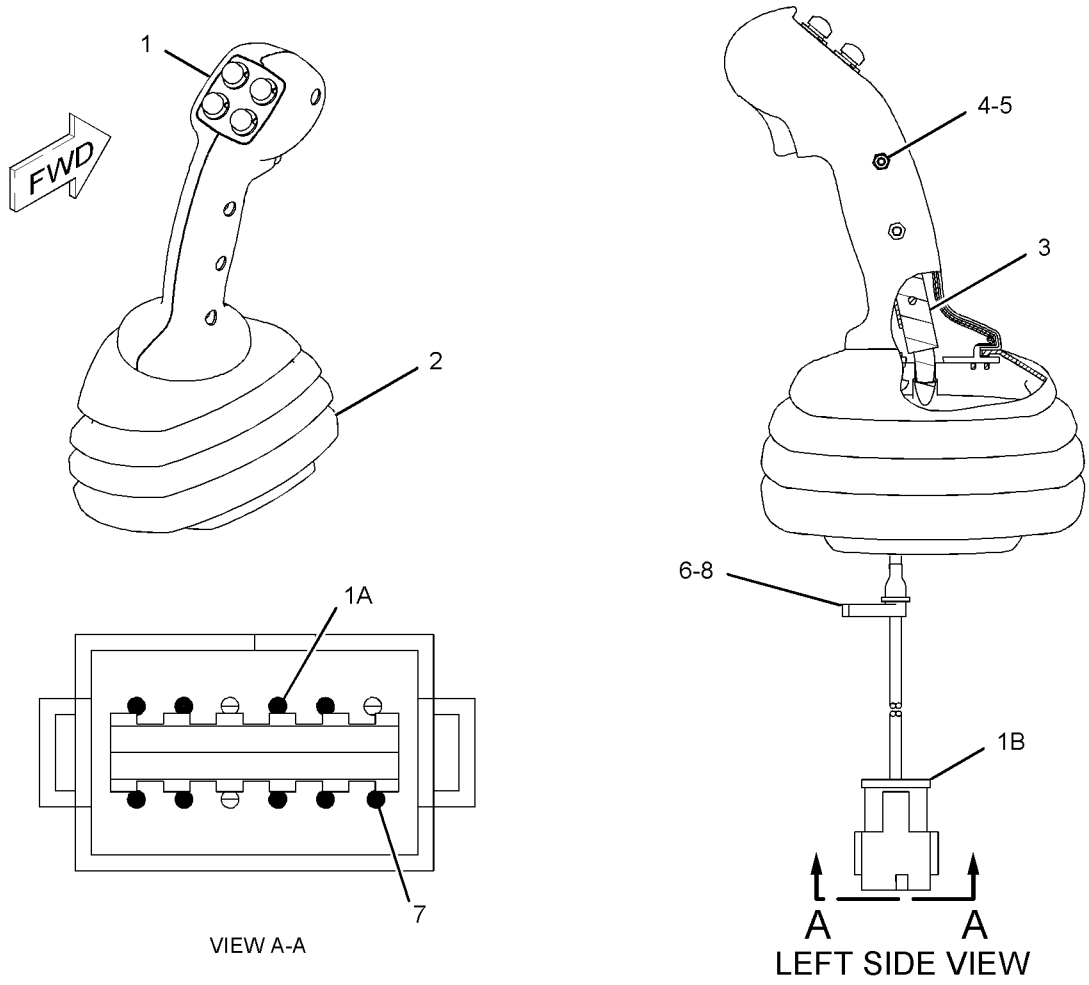

GRAPHIC #1 **<END>** g01132255

OPERATOR STATION

231-4260 CONTROL GP-HANDLE–RH

S/N: SCH2475-UP

PART OF 218-5618 CONTROL GP-PILOT OPERATED HYD

AN ATTACHMENT

SMCS-5705 **i02189795**

NOTE	REF NO	GRAPHIC REF	PART NUMBER	QTY	PART NAME 1 2 3 4 5 6 (PRODUCT LEVEL)	SEE PAGE
	1	1	**215-8307**	1	CONTROL GP-HANDLE	
	1A	1	**186-3735**	7	PIN-CONNECTOR (16-GA TO 18-GA)	
	1B	1	**174-3091**	1	KIT-RECEPTACLE (12-PIN)	
					(INCLUDES RECEPTACLE AS & WEDGE)	
	2	1	**223-3728**	1	BOOT	
	3	1	**231-4262**	1	ADAPTER (RH)	
M	4	1	**213-7489**	3	SCREW (M4X25-MM)	
M	5	1	**178-9983**	3	LOCKNUT (M4X0.7-THD)	
	6	1	**1S-9593**	1	STRAP-CABLE	
	7	1	**8T-8737**	5	PLUG-SEAL	
	8	1	**252-6934**	1	GROMMET	

M-METRIC PART

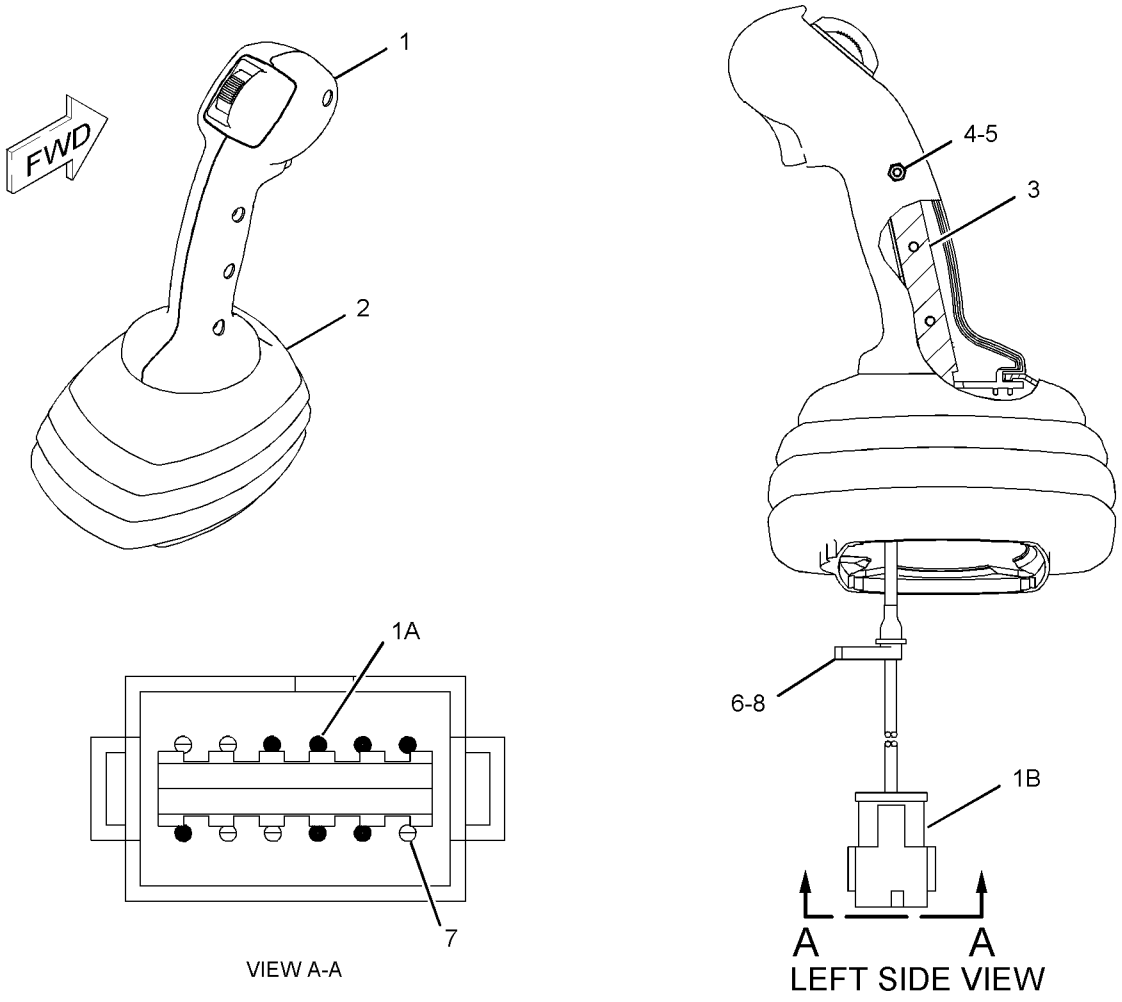

GRAPHIC #1 **<END>** g01132271

OPERATOR STATION

218-5611 CONTROL GP-PILOT OPERATED HYD

S/N: SCH2475-2503
ON/OFF AUXILIARY SWITCH
PART OF 295-7491 CONTROL AR-MACHINE
CANNOT BE USED WITH 218-5612—PAGE 470, 218-5618—PAGE 473
AN ATTACHMENT

SMCS-5059, 5705 **i02195836**

NOTE	REF NO	GRAPHIC REF	PART NUMBER	QTY	PART NAME 1 2 3 4 5 6 (PRODUCT LEVEL)	SEE PAGE
	1	2	**8T-4205**	3	WASHER-HARD (7.2X14.5X2-MM THK)	
	2	2	**110-8760**	1	STRAP	
	3	2	**216-4704**	1	HARNESS AS-OPERATOR CONTROLS (JOYSTICK)	
		2	**155-2255**	1	KIT-CONNECTING PLUG (12-PIN)	
		2	**155-2270**	2	KIT-CONNECTING PLUG (2-PIN)	
					(EACH PLUG KIT INCLUDES PLUG AS, WEDGE & INTERFACE SEAL)	
		2	**102-8801**	1	KIT-RECEPTACLE (12-PIN)	
					(INCLUDES RECEPTACLE AS & WEDGE)	
	4	2	**218-6421**	1	BRACKET AS	
M		1	**6V-9632**	3	NUT-WELD (M6X1-THD)	
		1	**7T-1099**	1	LINK	
M		1	**8T-3612**	3	NUT-WELD (M8X1.25-THD)	
Y	5	2	**218-6490**	1	CONTROL GP-HANDLE (WORK TOOL)	461
Y	6	2	**228-9228**	1	VALVE GP-PILOT (WORK TOOL)	338
	7	1	**237-5332**	1	FILM-INSTRUCTION (MACHINE CONTROLS)	
M	8	2	**8T-0269**	3	BOLT-SOCKET HEAD (M6X1X20-MM)	

M-METRIC PART
Y-SEPARATE ILLUSTRATION

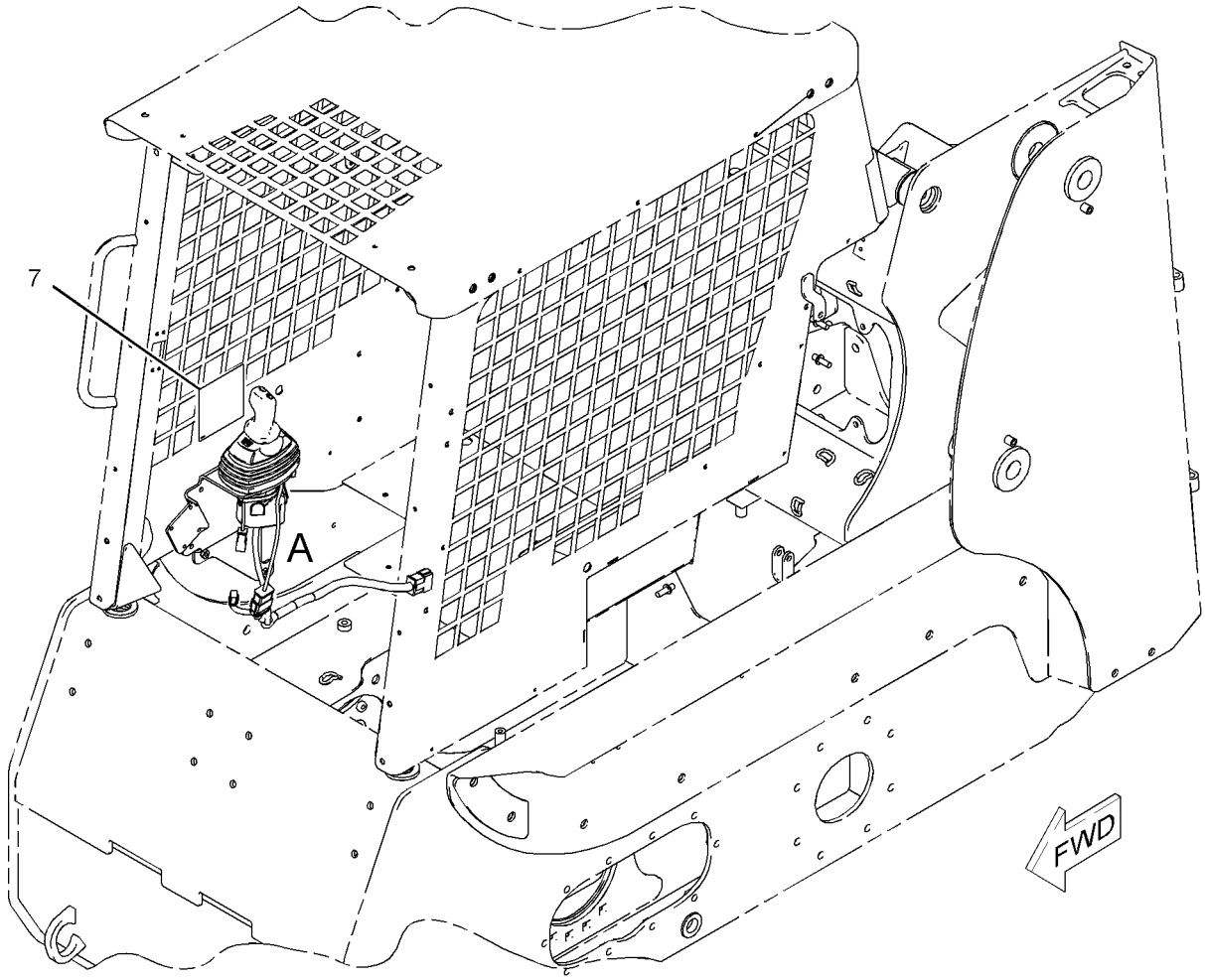

GRAPHIC #1 g01016393

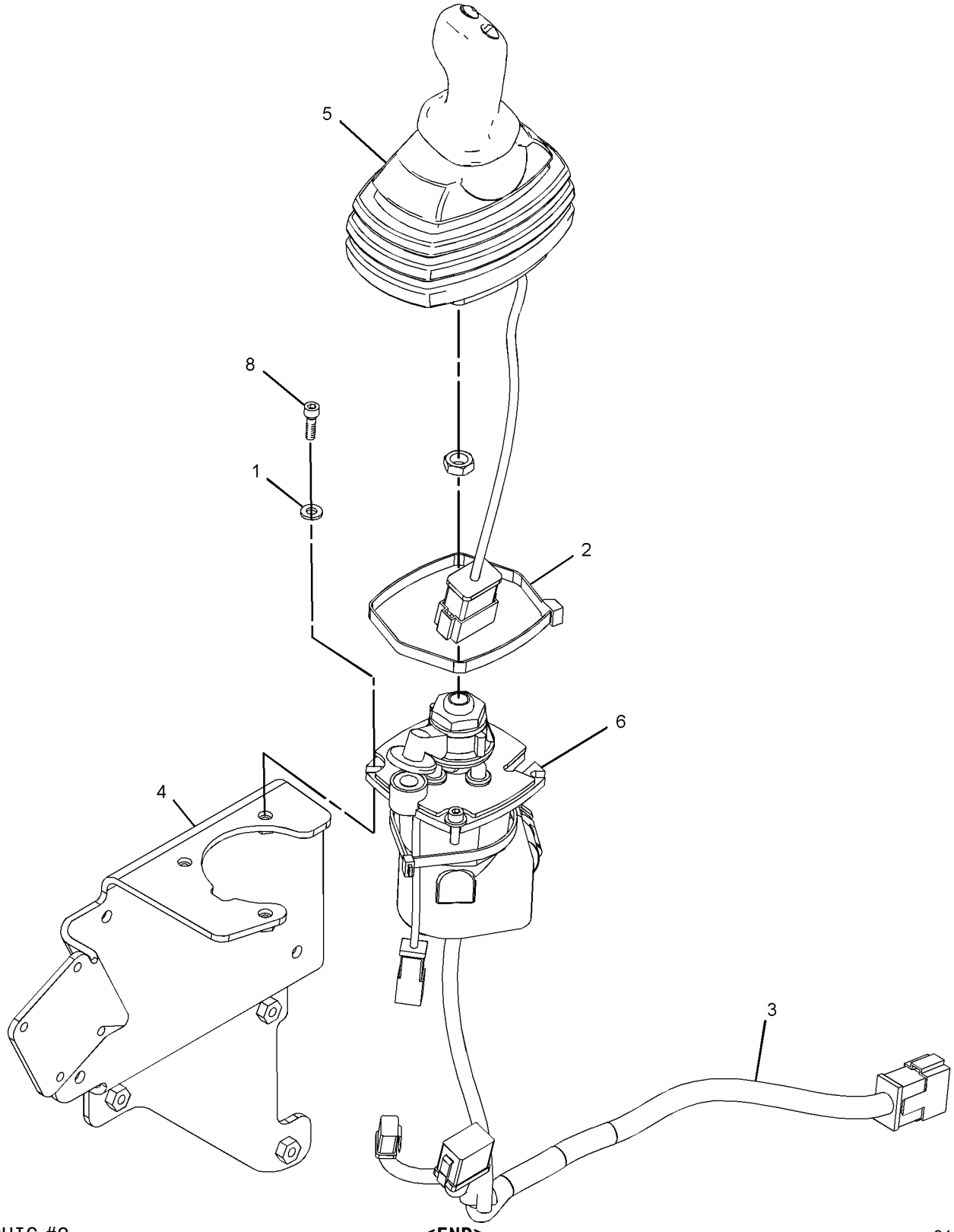

GRAPHIC #2

<END>

g01111318

218-5611 CONTROL GP-PILOT OPERATED HYD

S/N: SCH2504-UP
ON/OFF AUXILIARY SWITCH
PART OF 295-7491 CONTROL AR-MACHINE
CANNOT BE USED WITH 218-5612—PAGE 470, 218-5618—PAGE 473
AN ATTACHMENT

SMCS-5059, 5705 **i02839671**

NOTE	REF NO	GRAPHIC REF	PART NUMBER	QTY	PART NAME 1 2 3 4 5 6 (PRODUCT LEVEL)	SEE PAGE
CY	1	1	**299-9119**	1	VALVE GP-PILOT	341
	2	1	**216-4704**	1	HARNESS AS-OPERATOR CONTROLS (JOYSTICK)	
	3	1	**218-6421**	1	BRACKET AS	
Y	4	1	**218-6490**	1	CONTROL GP-HANDLE (WORK TOOL)	461
	5	1	**237-5332**	1	FILM-INSTRUCTION (MACHINE CONTROLS)	
					CENTER FILM ON CANOPY	
M	6	1	**8T-0269**	3	BOLT-SOCKET HEAD (M6X1X20-MM)	
	7	1	**8T-4205**	3	WASHER-HARD (7.2X14.5X2-MM THK)	

C-CHANGE FROM PREVIOUS TYPE
M-METRIC PART
Y-SEPARATE ILLUSTRATION

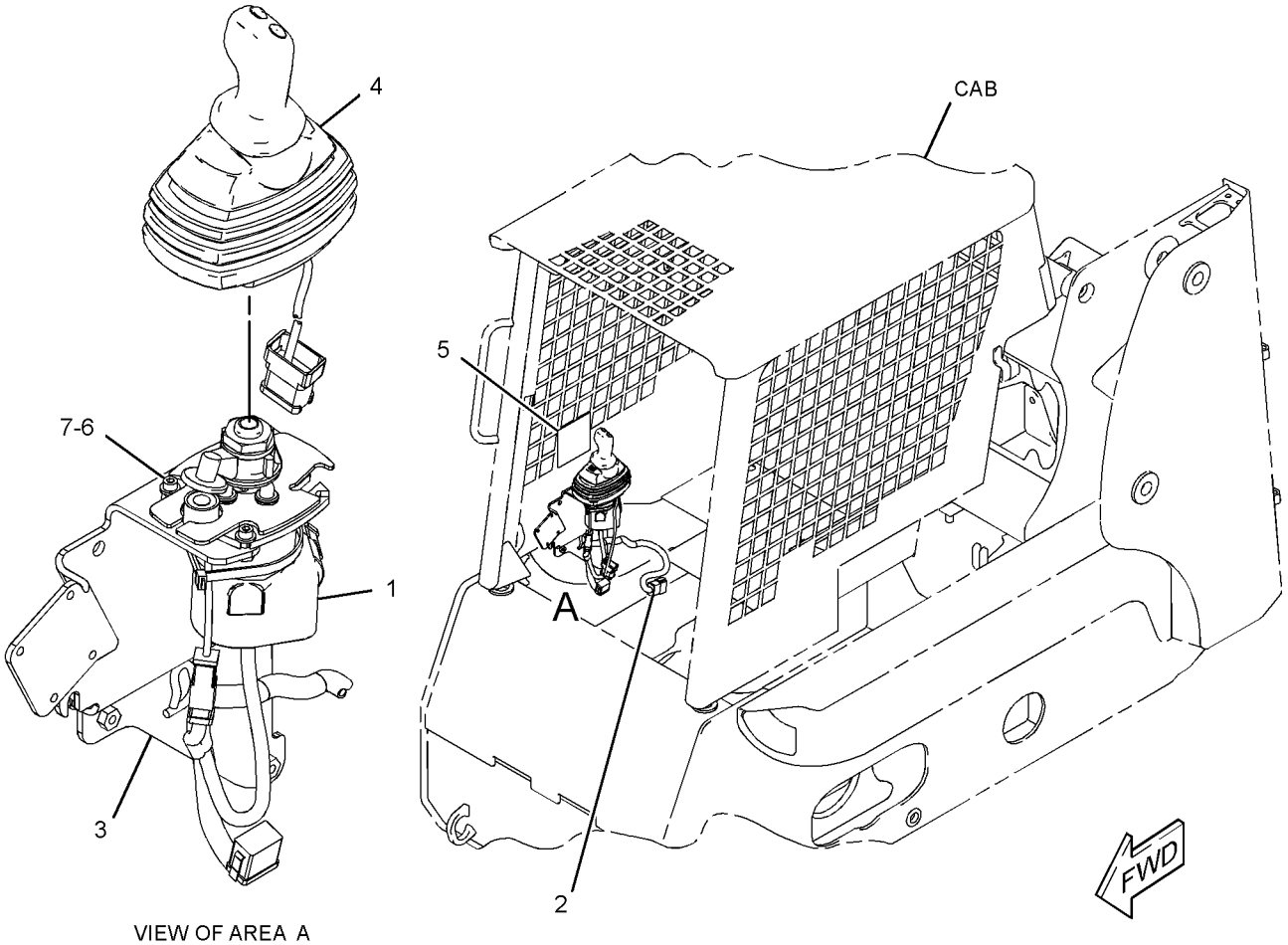

VIEW OF AREA A
(EXPLODED)

GRAPHIC #1 **<END>** g01417487

OPERATOR STATION

218-5612 CONTROL GP-PILOT OPERATED HYD

S/N: SCH2475-2503
ON/OFF AUXILIARY SWITCH
CANNOT BE USED WITH 218-5611—PAGE 466, 218-5618—PAGE 473
AN ATTACHMENT

SMCS-5059, 5705 **i02280917**

NOTE	REF NO	GRAPHIC REF	PART NUMBER	QTY	PART NAME 1 2 3 4 5 6 (PRODUCT LEVEL)	SEE PAGE
M	1	2	**095-1207**	1	NUT (M12X1.75-THD)	
	2	2	**110-8760**	1	STRAP	
	3	2	**216-4704**	1	HARNESS AS-OPERATOR CONTROLS (JOYSTICK)	
		2	**155-2255**	1	KIT-CONNECTING PLUG (12-PIN)	
		2	**155-2270**	2	KIT-CONNECTING PLUG (2-PIN)	
					(EACH PLUG KIT INCLUDES PLUG AS, WEDGE & INTERFACE SEAL)	
		2	**102-8801**	1	KIT-RECEPTACLE (12-PIN)	
					(INCLUDES RECEPTACLE AS & WEDGE)	
	4	2	**218-6421**	1	BRACKET AS	
Y	5	2	**228-9228**	1	VALVE GP-PILOT (WORK TOOL)	338
Y	6	2	**231-4257**	1	CONTROL GP-HANDLE (RH) (WORK TOOL)	463
	7	1	**262-7668**	1	FILM-INSTRUCTION (MACHINE CONTROL, READ OMM)	
M	8	2	**8T-0269**	3	BOLT-SOCKET HEAD (M6X1X20-MM)	
	9	2	**8T-4205**	3	WASHER-HARD (7.2X14.5X2-MM THK)	

M-METRIC PART
Y-SEPARATE ILLUSTRATION

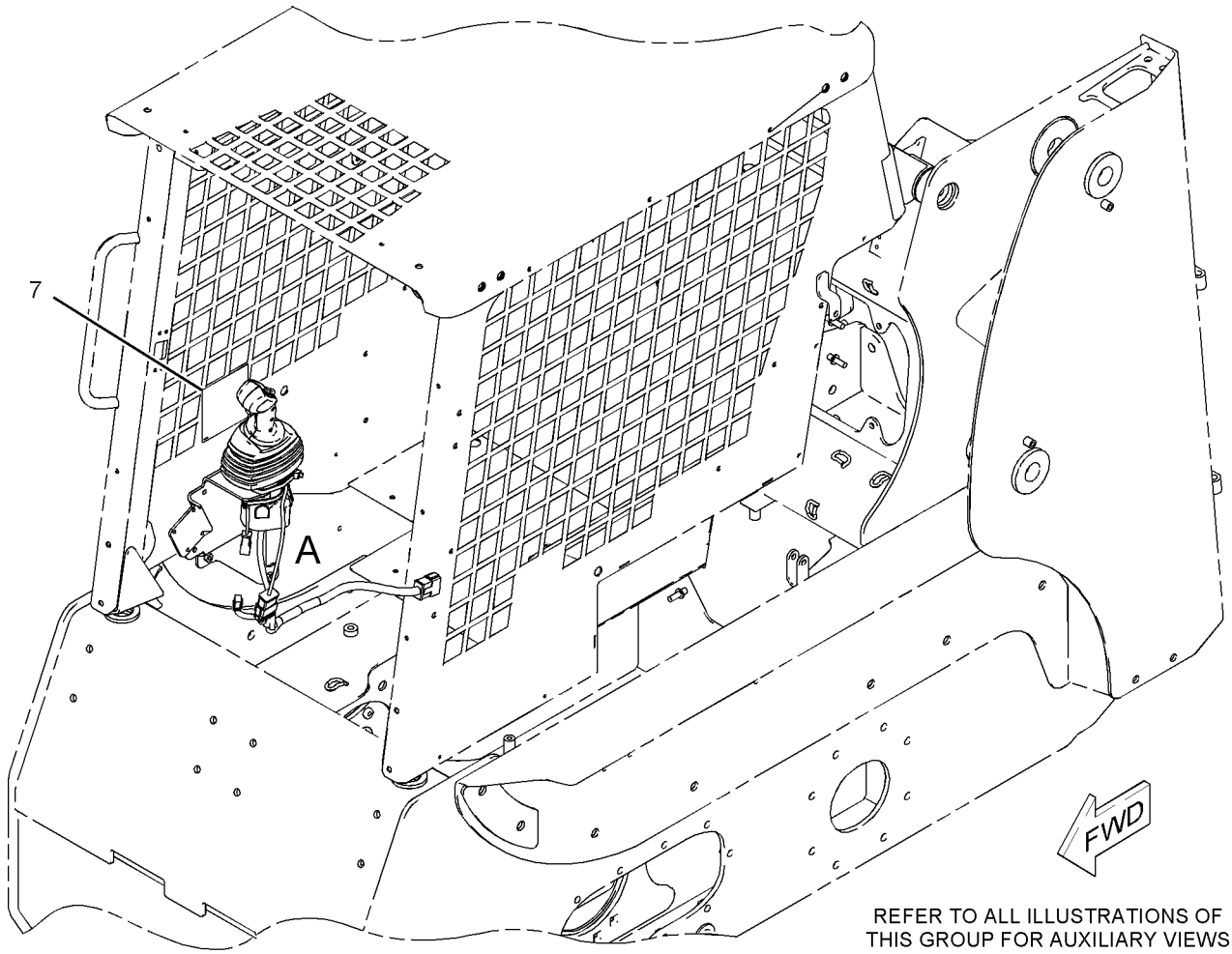

REFER TO ALL ILLUSTRATIONS OF THIS GROUP FOR AUXILIARY VIEWS

GRAPHIC #1 g01017033

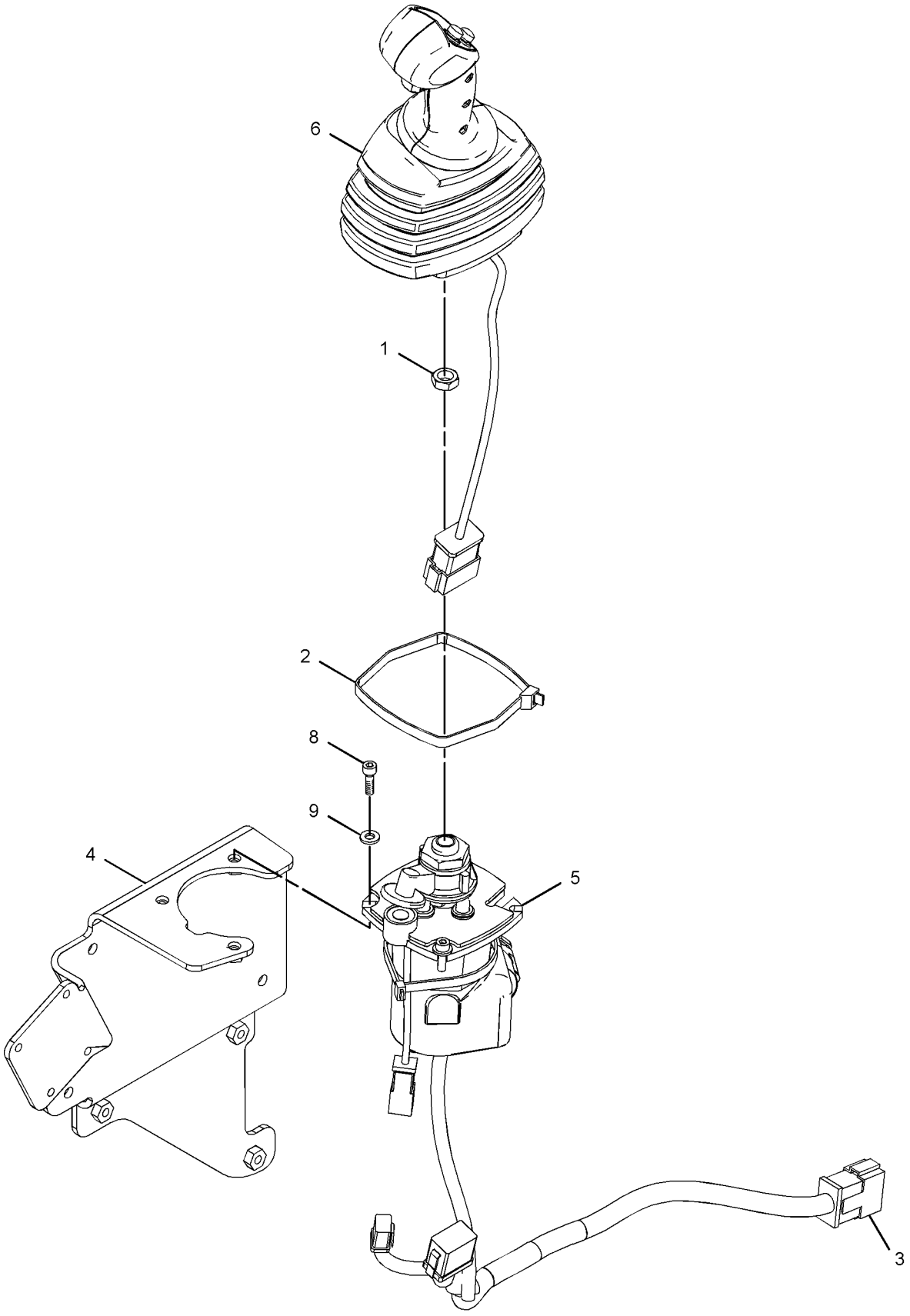

VIEW OF AREA A

<END>

GRAPHIC #2 g01017034

OPERATOR STATION

218-5612 CONTROL GP-PILOT OPERATED HYD

S/N: SCH2504-UP
ON/OFF AUXILIARY SWITCH
CANNOT BE USED WITH 218-5611—PAGE 466, 218-5618—PAGE 473
AN ATTACHMENT

SMCS-5059, 5705 **i02839693**

NOTE	REF NO	GRAPHIC REF	PART NUMBER	QTY	PART NAME 1 2 3 4 5 6 (PRODUCT LEVEL)	SEE PAGE
M	1	1	**095-1207**	1	NUT (M12X1.75-THD)	
	2	1	**216-4704**	1	HARNESS AS-OPERATOR CONTROLS (JOYSTICK)	
	3	1	**218-6421**	1	BRACKET AS	
	4	1	**262-7668**	1	FILM-INSTRUCTION (MACHINE CONTROL, READ OMM)	
					CENTER FILM ON CANOPY	
Y	5	1	**299-9119**	1	VALVE GP-PILOT	341
Y	6	1	**231-4257**	1	CONTROL GP-HANDLE (RH) (WORK TOOL)	463
M	7	1	**8T-0269**	3	BOLT-SOCKET HEAD (M6X1X20-MM)	
	8	1	**8T-4205**	3	WASHER-HARD (7.2X14.5X2-MM THK)	

M-METRIC PART
Y-SEPARATE ILLUSTRATION

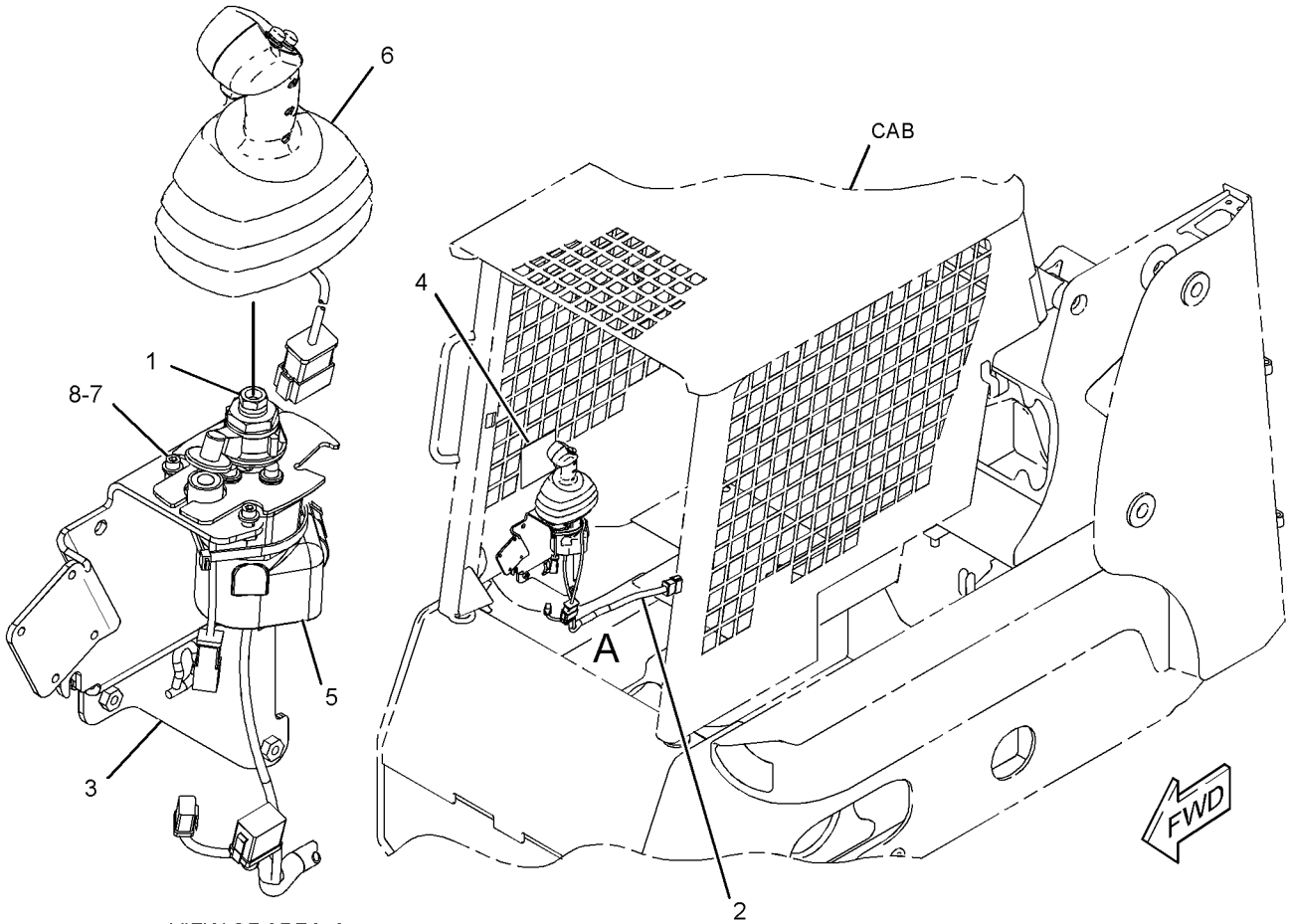

VIEW OF AREA A
(EXPLODED)

GRAPHIC #1 **<END>** g01417504

218-5618 CONTROL GP-PILOT OPERATED HYD

S/N: SCH2475-2503

PROPORTIONAL AUXILIARY SWITCH

CANNOT BE USED WITH 218-5611—PAGE 466, 218-5612—PAGE 470

AN ATTACHMENT

SMCS-5059, 5705 **i01954541**

NOTE	REF NO	GRAPHIC REF	PART NUMBER	QTY	PART NAME 1 2 3 4 5 6 (PRODUCT LEVEL)	SEE PAGE
M	1	2	**095-1207**	1	NUT (M12X1.75-THD)	
	2	2	**110-8760**	1	STRAP	
	3	2	**216-4704**	1	HARNESS AS-OPERATOR CONTROLS (JOYSTICK)	
		2	**155-2255**	1	KIT-CONNECTING PLUG (12-PIN)	
		2	**155-2270**	2	KIT-CONNECTING PLUG (2-PIN)	
		2	**102-8801**	1	KIT-RECEPTACLE (12-PIN)	
	4	2	**218-6421**	1	BRACKET AS	
Y	5	2	**228-9228**	1	VALVE GP-PILOT (WORK TOOL)	338
Y	6	2	**231-4260**	1	CONTROL GP-HANDLE (RH) (WORK TOOL)	465
	7	1	**235-5243**	1	FILM-INSTRUCTION (MACHINE CONTROLS)	
M	8	2	**8T-0269**	3	BOLT-SOCKET HEAD (M6X1X20-MM)	
	9	2	**8T-4205**	3	WASHER-HARD (7.2X14.5X2-MM THK)	

M-METRIC PART
Y-SEPARATE ILLUSTRATION

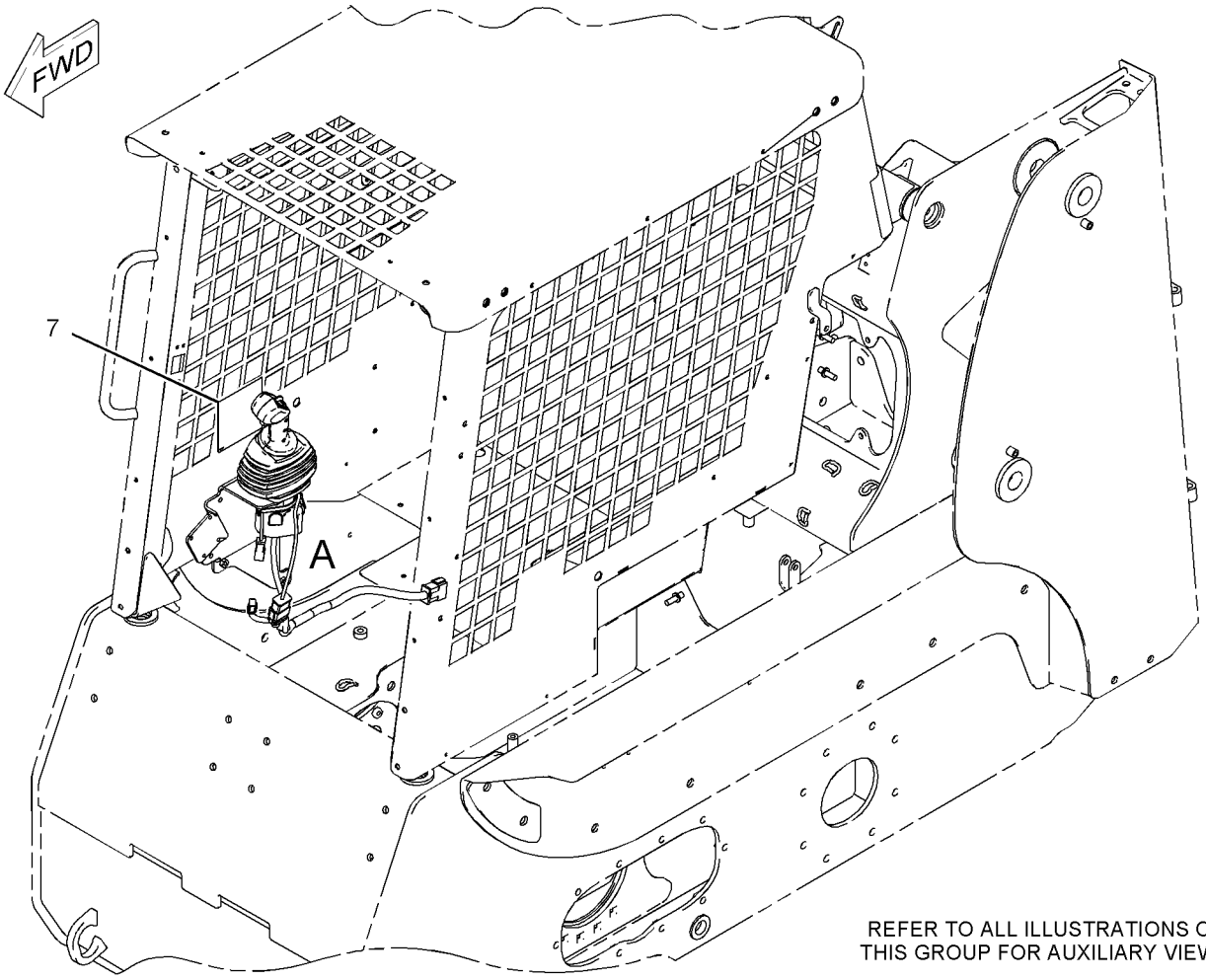

REFER TO ALL ILLUSTRATIONS OF THIS GROUP FOR AUXILIARY VIEWS

GRAPHIC #1 g01016439

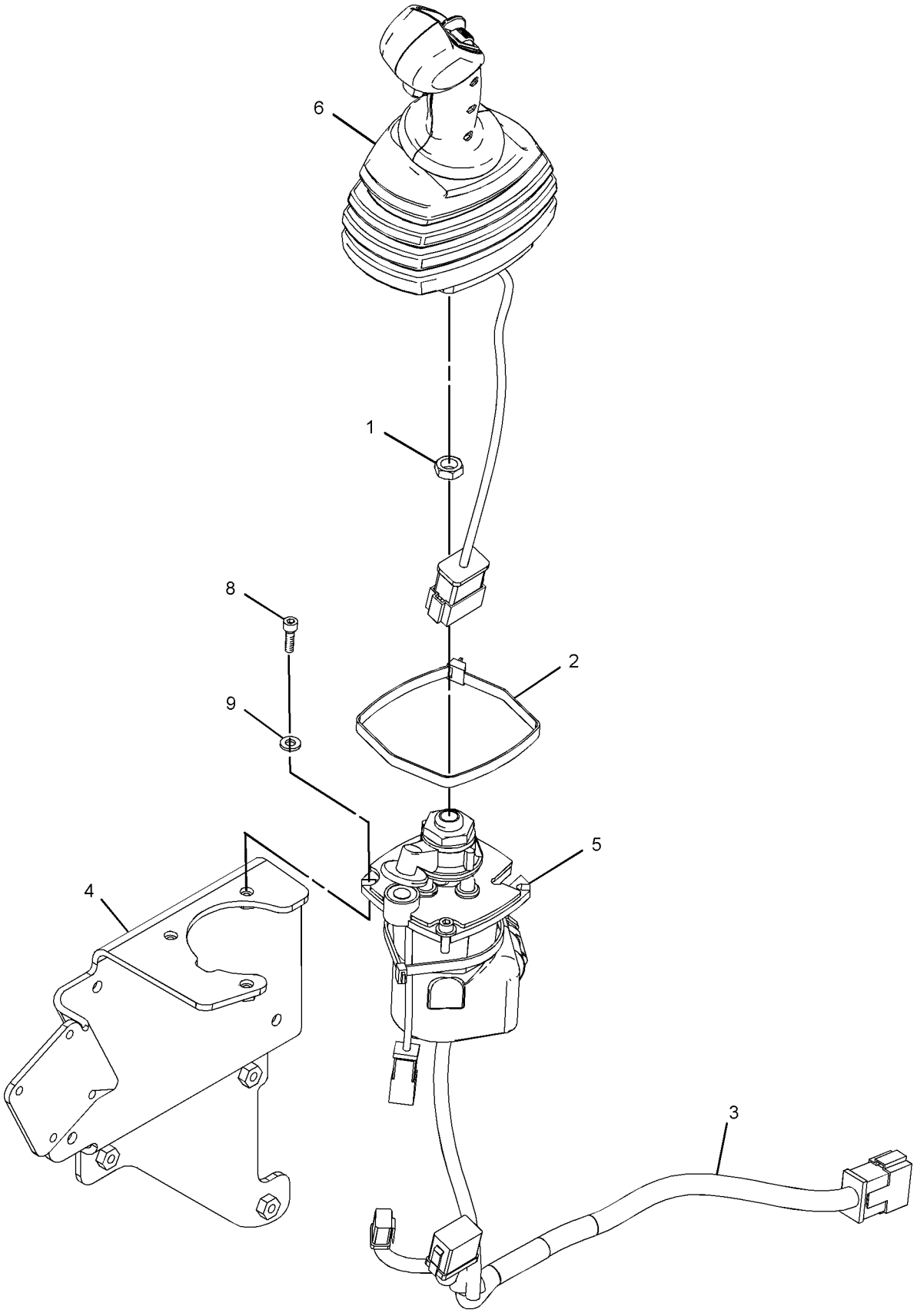

VIEW OF AREA A

GRAPHIC #2

<END>

g01016444

218-5618 CONTROL GP-PILOT OPERATED HYD

S/N: SCH2504-UP
PROPORTIONAL AUXILIARY SWITCH
PART OF 295-7493 CONTROL AR-MACHINE
CANNOT BE USED WITH 218-5611—PAGE 466, 218-5612—PAGE 470
AN ATTACHMENT

SMCS-5059, 5705 **i02839699**

NOTE	REF NO	GRAPHIC REF	PART NUMBER	QTY	PART NAME 1 2 3 4 5 6 (PRODUCT LEVEL)	SEE PAGE
M	1	1	**095-1207**	1	NUT (M12X1.75-THD)	
	2	1	**216-4704**	1	HARNESS AS-OPERATOR CONTROLS (JOYSTICK)	
	3	1	**218-6421**	1	BRACKET AS	
CY	4	1	**299-9119**	1	VALVE GP-PILOT	341
Y	5	1	**231-4260**	1	CONTROL GP-HANDLE (RH) (WORK TOOL)	465
	6	1	**235-5243**	1	FILM-INSTRUCTION (MACHINE CONTROLS)	
					CENTER FILM ON CANOPY	
M	7	1	**8T-0269**	3	BOLT-SOCKET HEAD (M6X1X20-MM)	
	8	1	**8T-4205**	3	WASHER-HARD (7.2X14.5X2-MM THK)	

C-CHANGE FROM PREVIOUS TYPE
M-METRIC PART
Y-SEPARATE ILLUSTRATION

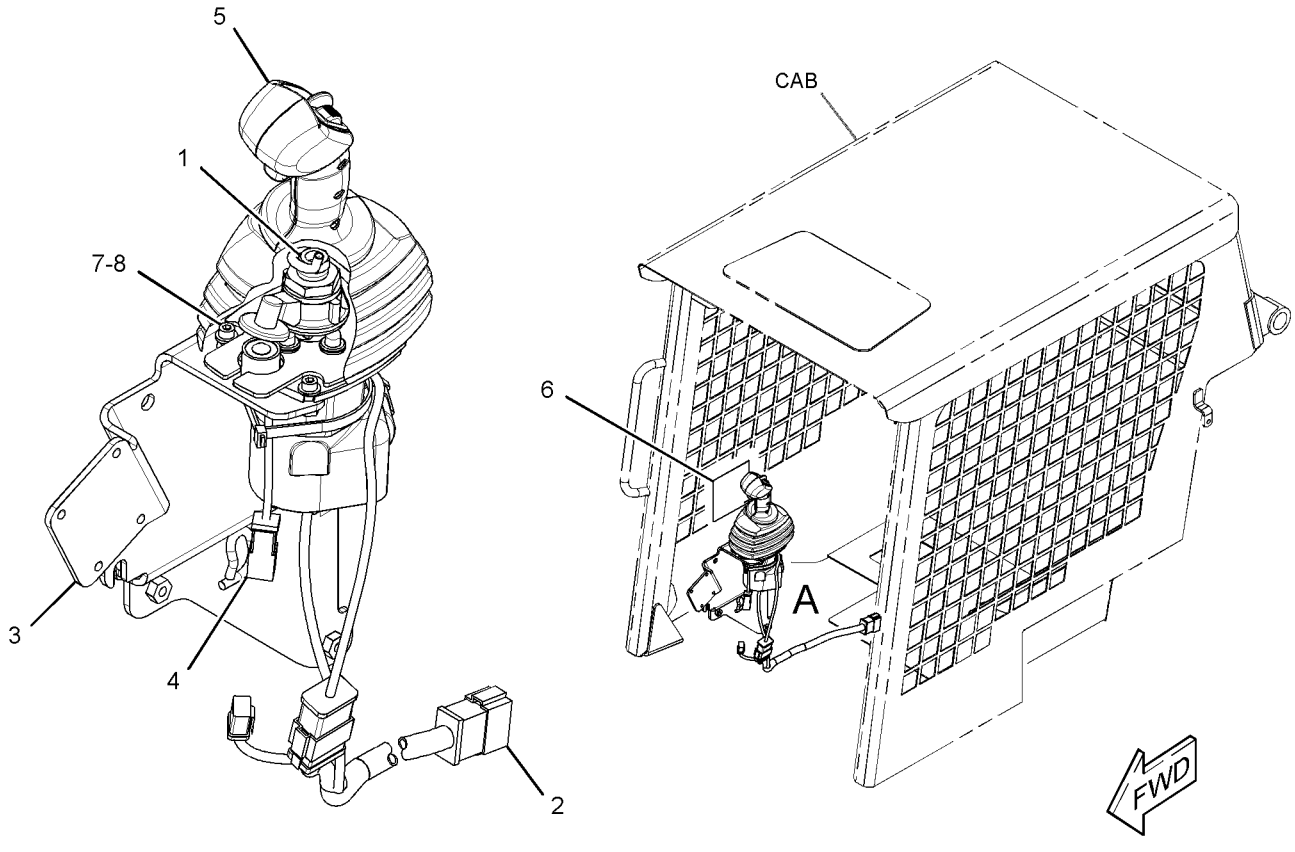

VIEW OF AREA A

GRAPHIC #1 **<END>** g01417564

OPERATOR STATION

218-5930 CONTROL GP-PILOT OPERATED HYD

S/N: SCH2475-2503

CANNOT BE USED WITH 218-5931—PAGE 479, 218-5932—PAGE 480, 218-5947—PAGE 482

AN ATTACHMENT

SMCS-5059, 5705 **i02451276**

NOTE	REF NO	GRAPHIC REF	PART NUMBER	QTY	PART NAME 1 2 3 4 5 6 (PRODUCT LEVEL)	SEE PAGE
	1	2	**110-8760**	1	STRAP	
Y	3	2	**218-6119**	1	VALVE GP-PILOT (DIRECTION, SPEED)	336
	4	2	**218-6422**	1	BRACKET AS	
Y	5	2	**218-6480**	1	CONTROL GP-HANDLE (DIRECTION, SPEED)	459
	6	1	**237-5331**	1	FILM-INSTRUCTION (MACHINE CONTROL, READ OMM)	
M	7	2	**8T-0269**	3	BOLT-SOCKET HEAD (M6X1X20-MM)	
	8	2	**8T-4205**	3	WASHER-HARD (7.2X14.5X2-MM THK)	

M-METRIC PART
Y-SEPARATE ILLUSTRATION

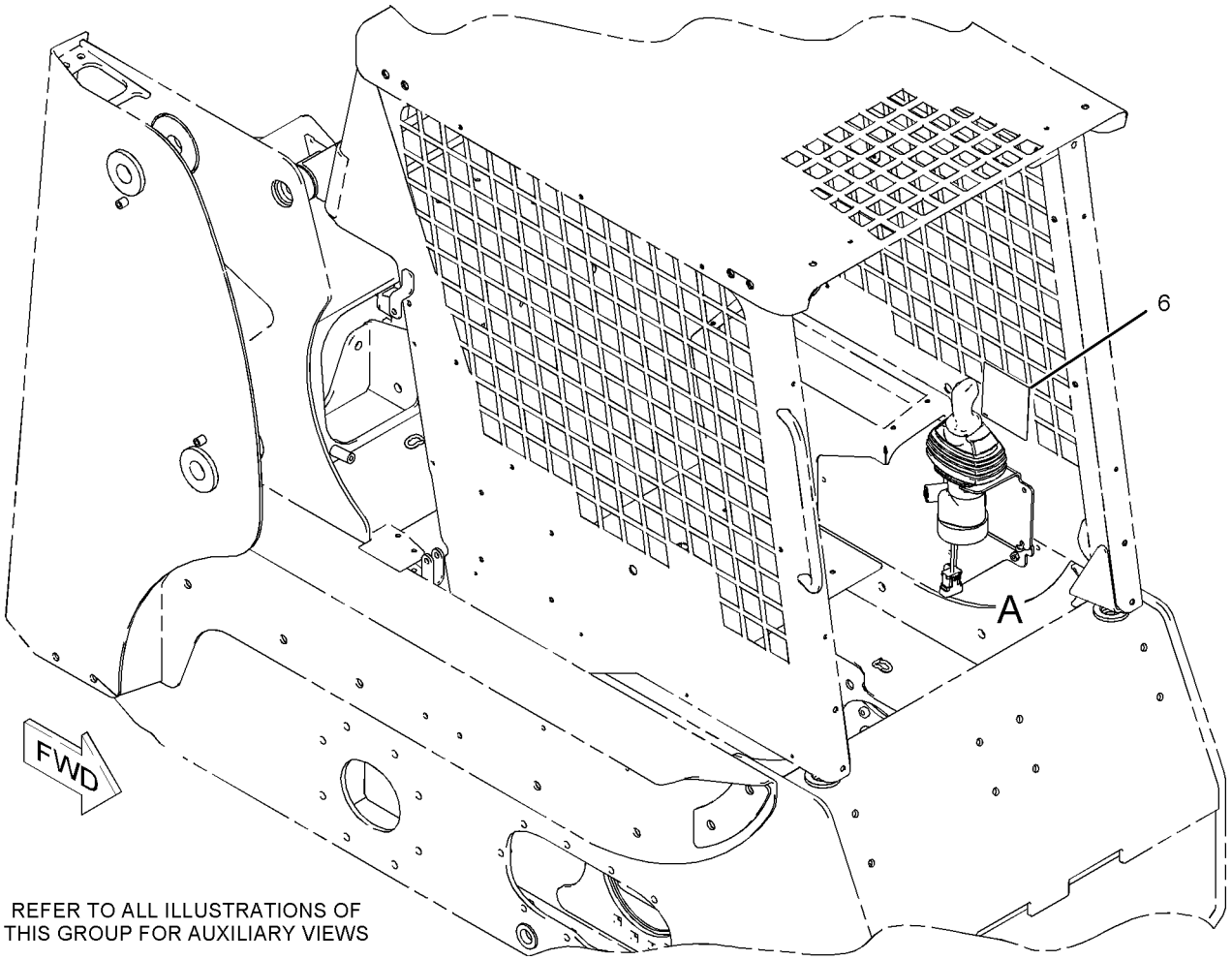

REFER TO ALL ILLUSTRATIONS OF THIS GROUP FOR AUXILIARY VIEWS

GRAPHIC #1 g01017159

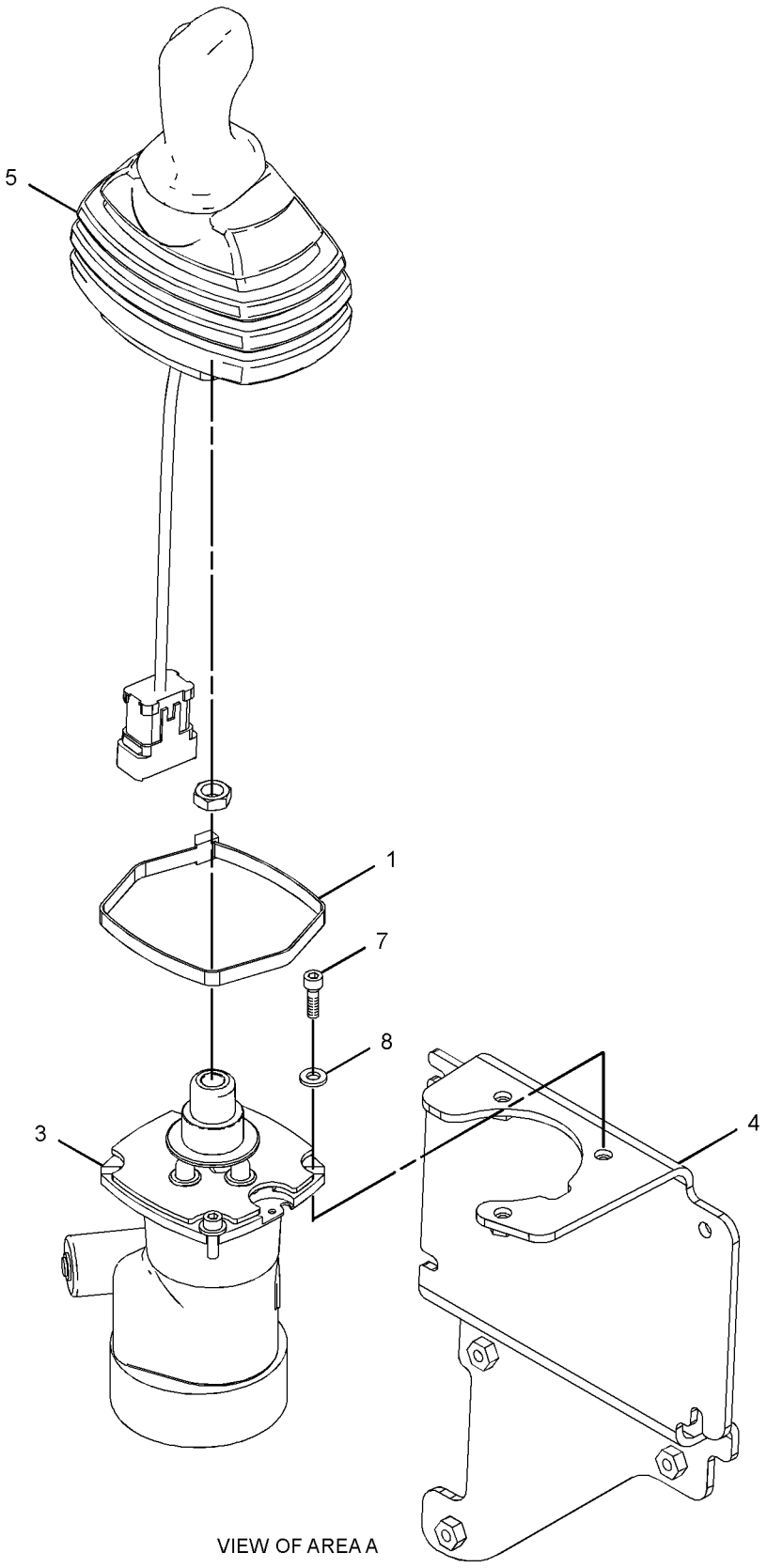

VIEW OF AREA A

GRAPHIC #2 **<END>** g01225787

OPERATOR STATION

218-5930 CONTROL GP-PILOT OPERATED HYD

S/N: SCH2504-UP

CANNOT BE USED WITH 218-5931—PAGE 479, 218-5932—PAGE 480, 218-5947—PAGE 482

AN ATTACHMENT

SMCS-5059, 5705 **i02839730**

NOTE	REF NO	GRAPHIC REF	PART NUMBER	QTY	PART NAME 1 2 3 4 5 6 (PRODUCT LEVEL)	SEE PAGE
	1	1	**218-6422**	1	BRACKET AS	
Y	2	1	**218-6480**	1	CONTROL GP-HANDLE (DIRECTION, SPEED)	459
CY	3	1	**299-9116**	1	VALVE GP-PILOT (DIRECTION, SPEED)	340
	4	1	**237-5331**	1	FILM-INSTRUCTION (MACHINE CONTROL, READ OMM)	
M	5	1	**8T-0269**	3	BOLT-SOCKET HEAD (M6X1X20-MM)	
	6	1	**8T-4205**	3	WASHER-HARD (7.2X14.5X2-MM THK)	

C-CHANGE FROM PREVIOUS TYPE
M-METRIC PART
Y-SEPARATE ILLUSTRATION

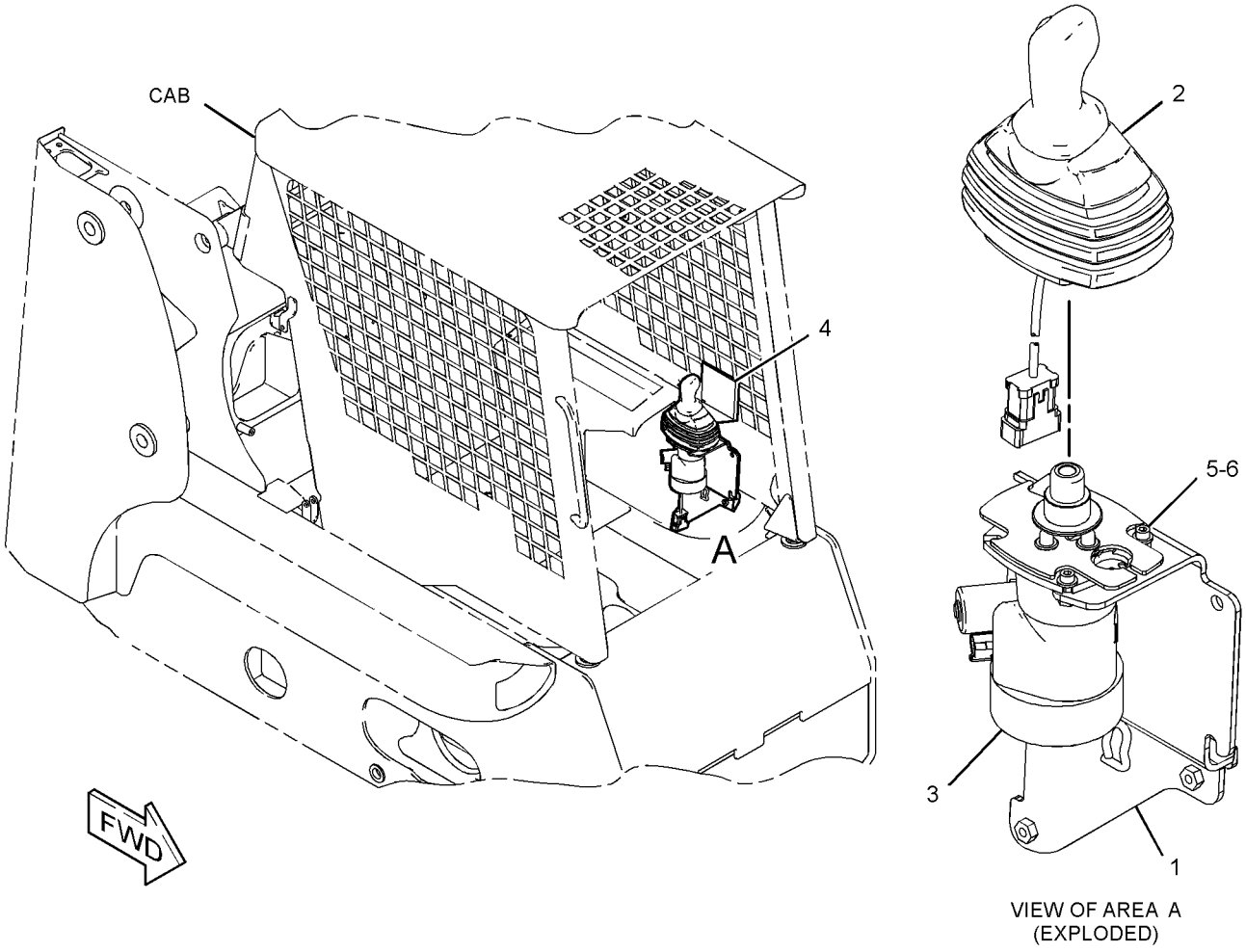

VIEW OF AREA A
(EXPLODED)

GRAPHIC #1 **<END>** g01417246

218-5931 CONTROL GP-PILOT OPERATED HYD

S/N: SCH2475-UP
HORN
PART OF 295-7491 CONTROL AR-MACHINE
CANNOT BE USED WITH 218-5930–PAGE 476, 218-5932–PAGE 480, 218-5947–PAGE 482
AN ATTACHMENT

SMCS-5059, 5705 **i02451259**

NOTE	REF NO	GRAPHIC REF	PART NUMBER	QTY	PART NAME 1 2 3 4 5 6 (PRODUCT LEVEL)	SEE PAGE
	1	1	**110-8760**	1	STRAP	
M	2	1	**8T-4137**	1	BOLT (M10X1.5X20-MM)	
	3	1	**164-9425**	1	HORN AS (LOW TONE)	
	4	1	**8T-4205**	3	WASHER-HARD (7.2X14.5X2-MM THK)	
Y	5	1	**218-6119**	1	VALVE GP-PILOT (DIRECTION, SPEED)	336
	6	1	**218-6422**	1	BRACKET AS	
Y	7	1	**218-6485**	1	CONTROL GP-HANDLE (DIRECTION, SPEED)	460
	8	1	**237-5331**	1	FILM-INSTRUCTION (MACHINE CONTROL, READ OMM)	
M	9	1	**8T-0269**	3	BOLT-SOCKET HEAD (M6X1X20-MM)	
	10	1	**8T-4121**	1	WASHER-HARD (11X21X2.5-MM THK)	

M-METRIC PART
Y-SEPARATE ILLUSTRATION

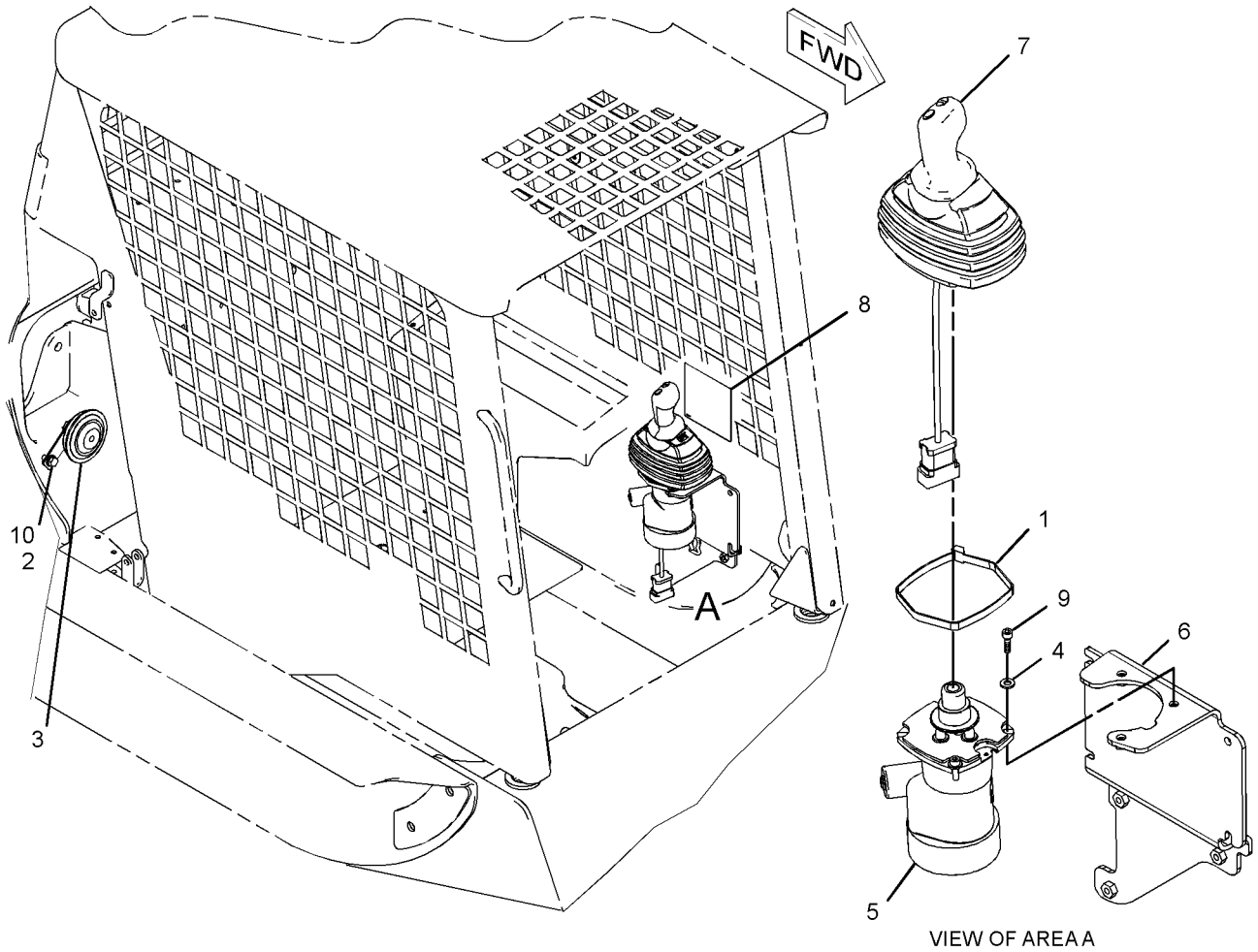

VIEW OF AREA A

GRAPHIC #1 **<END>** g01225060

OPERATOR STATION

218-5932 CONTROL GP-PILOT OPERATED HYD

S/N: SCH2475-UP
HORN
PART OF 295-7493 CONTROL AR-MACHINE
CANNOT BE USED WITH 218-5930—PAGE 476, 218-5931—PAGE 479, 218-5947—PAGE 482
AN ATTACHMENT

SMCS-5059, 5705 **i02451290**

NOTE	REF NO	GRAPHIC REF	PART NUMBER	QTY	PART NAME 1 2 3 4 5 6 (PRODUCT LEVEL)	SEE PAGE
M	1	2	**095-1207**	1	NUT (M12X1.75-THD)	
	2	2	**110-8760**	1	STRAP	
Y	3	2	**218-6119**	1	VALVE GP-PILOT (DIRECTION, SPEED)	336
	4	2	**218-6422**	1	BRACKET AS	
Y	5	2	**231-4256**	1	CONTROL GP-HANDLE (LH) (DIRECTION, SPEED)	462
	6	1	**235-5246**	1	FILM-INSTRUCTION (MACHINE CONTROL, READ OMM)	
M	7	2	**8T-0269**	3	BOLT-SOCKET HEAD (M6X1X20-MM)	
	8	2	**8T-4205**	3	WASHER-HARD (7.2X14.5X2-MM THK)	
M	9	2	**8T-4137**	1	BOLT (M10X1.5X20-MM)	
	10	2	**164-9425**	1	HORN AS (LOW TONE)	
	11	2	**8T-4121**	1	WASHER-HARD (11X21X2.5-MM THK)	

M-METRIC PART
Y-SEPARATE ILLUSTRATION

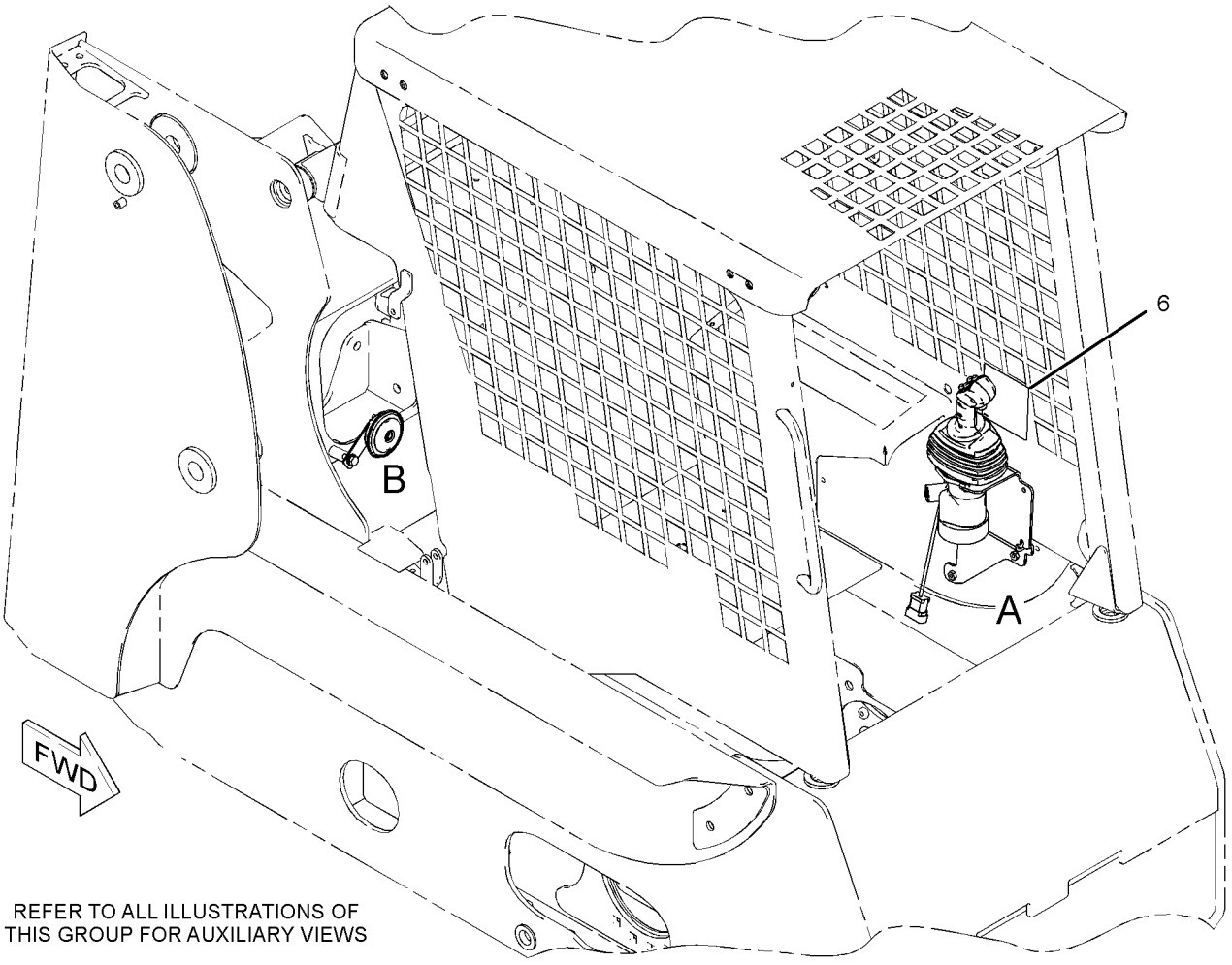

REFER TO ALL ILLUSTRATIONS OF THIS GROUP FOR AUXILIARY VIEWS

GRAPHIC #1 g01229647

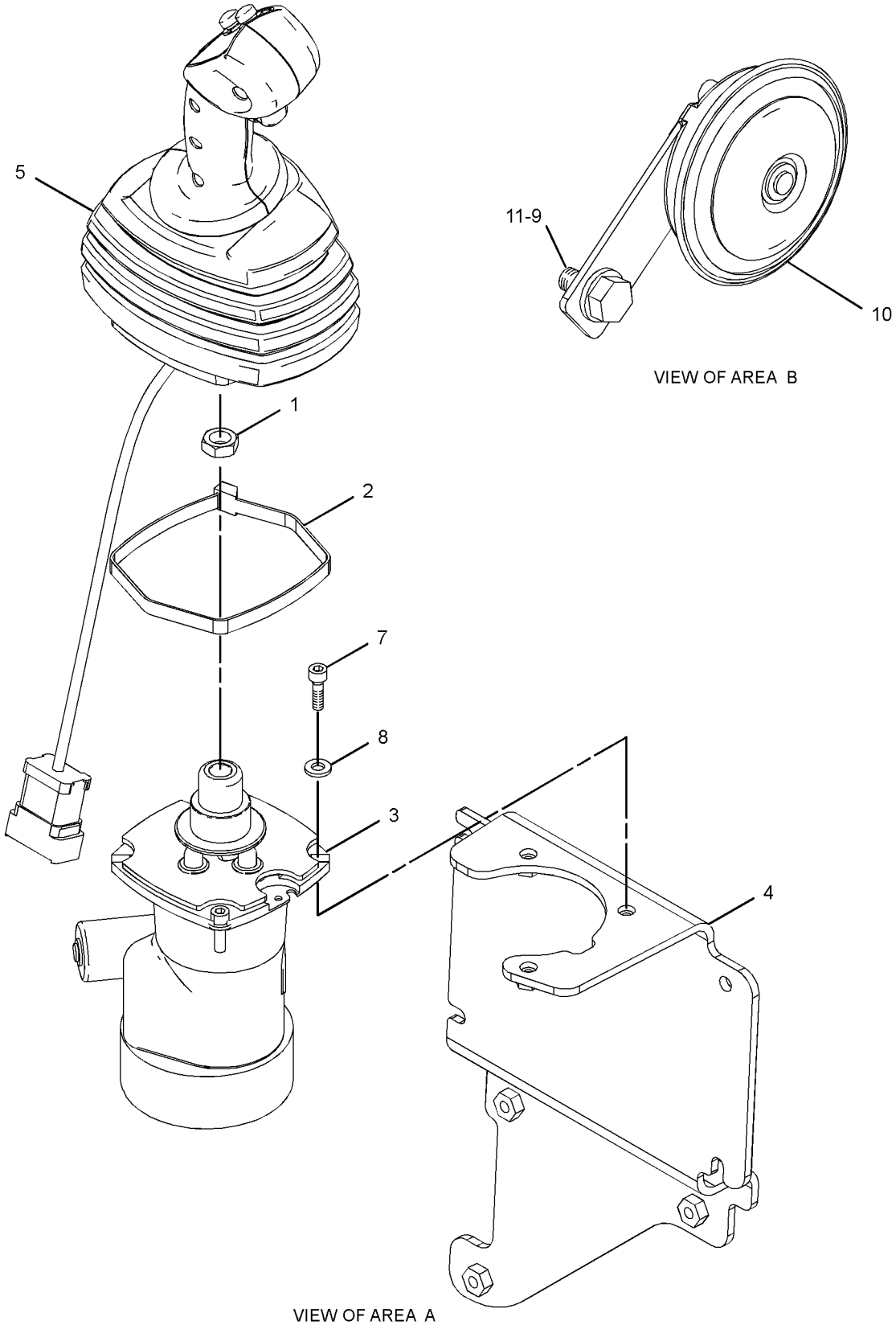

GRAPHIC #2 **<END>** g01229637

OPERATOR STATION

218-5947 CONTROL GP-PILOT OPERATED HYD

S/N: SCH2475-UP

HORN, FOURTH FUNCTION

CANNOT BE USED WITH 218-5930—PAGE 476, 218-5931—PAGE 479, 218-5932—PAGE 480

AN ATTACHMENT

SMCS-5059, 5705 **i02639947**

NOTE	REF NO	GRAPHIC REF	PART NUMBER	QTY	PART NAME 1 2 3 4 5 6 (PRODUCT LEVEL)	SEE PAGE
M	1	2	**095-1207**	1	NUT (M12X1.75-THD)	
	2	2	**110-8760**	1	STRAP	
	3	2	**8T-4205**	3	WASHER-HARD (7.2X14.5X2-MM THK)	
M	4	2	**8T-0269**	3	BOLT-SOCKET HEAD (M6X1X20-MM)	
	5	1	**235-5246**	1	FILM-INSTRUCTION (MACHINE CONTROL, READ OMM)	
Y	6	1	*216-4724*	1	WIRING GP-WORK TOOL (VERTICAL LIFT)	178
Y	7	2	**218-6119**	1	VALVE GP-PILOT (DIRECTION, SPEED)	336
	8	2	**218-6422**	1	BRACKET AS	
Y	9	2	**231-4258**	1	CONTROL GP-HANDLE (LH) (DIRECTION, SPEED)	464
B	10	1	**113-8490**	1	FUSE (10-AMPERE)	
B	11	2	**164-9425**	1	HORN AS (24-VOLT, LOW TONE)	
B	12	2	**8T-4121**	1	WASHER-HARD (11X21X2.5-MM THK)	
BM	13	2	**8T-4137**	1	BOLT (M10X1.5X20-MM)	

B-USE AS REQUIRED
M-METRIC PART
Y-SEPARATE ILLUSTRATION

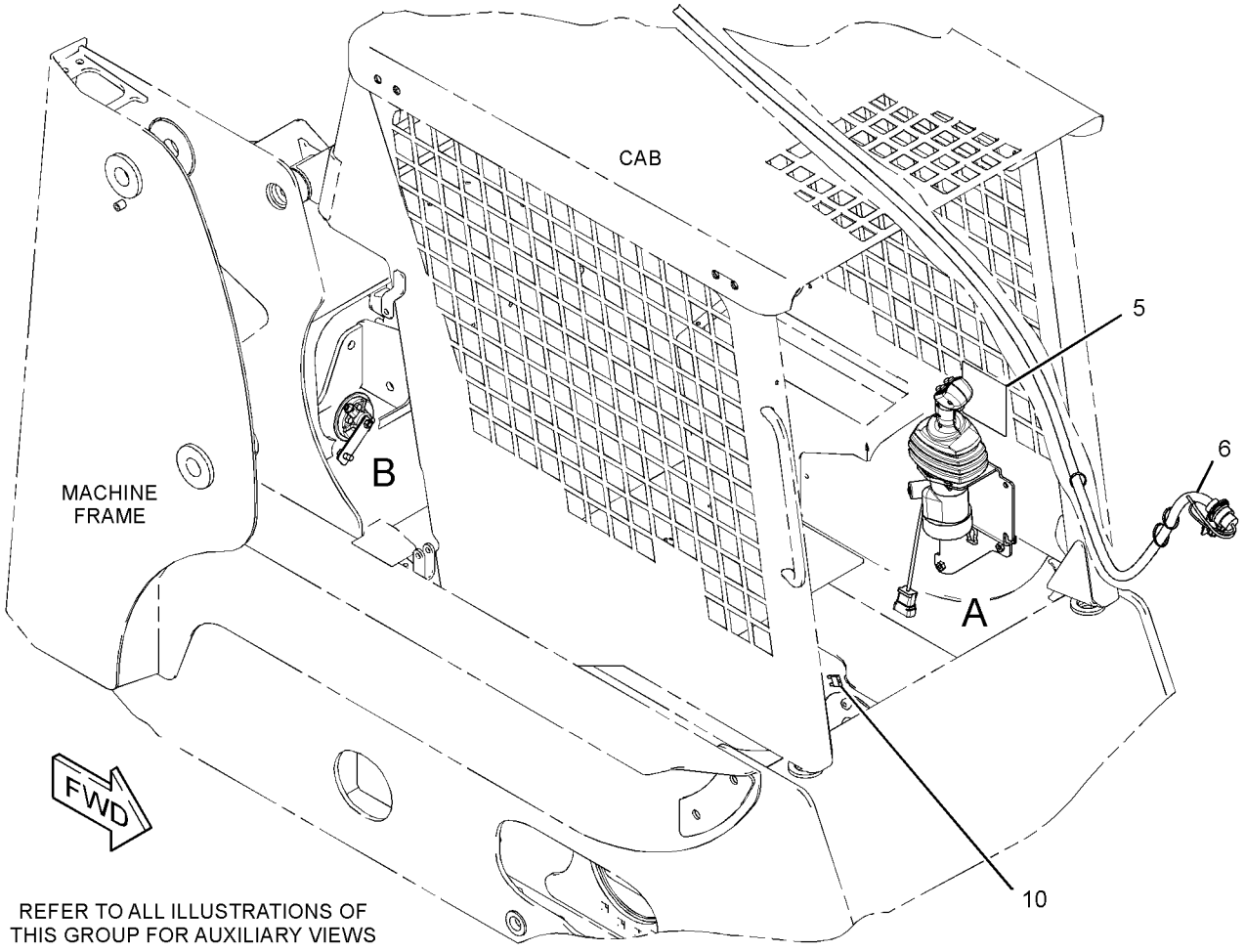

GRAPHIC #1 g01354268

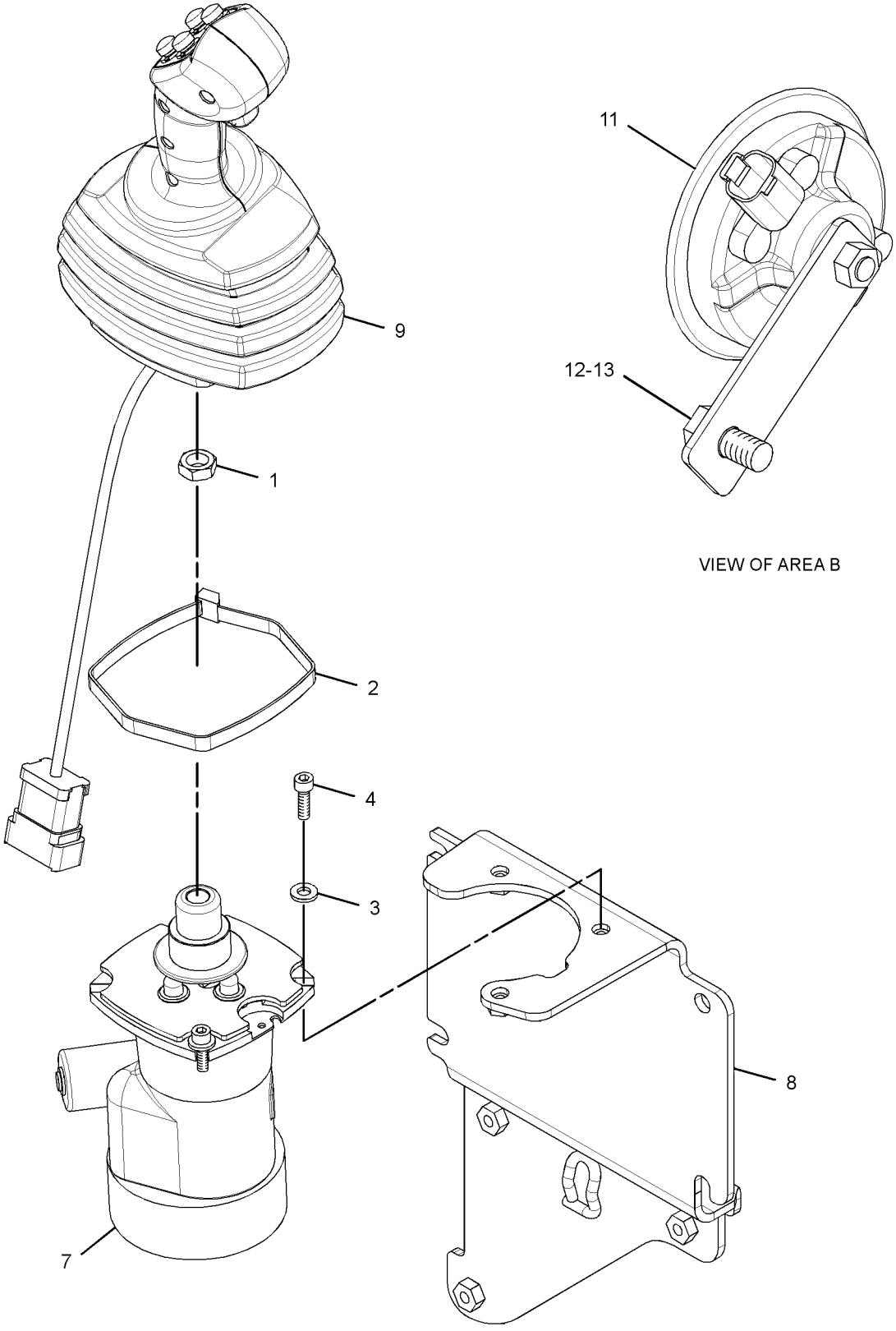

VIEW OF AREA B

VIEW OF AREA A

GRAPHIC #2 **<END>** g01354273

OPERATOR STATION

276-5708 COUPLING GP-DRIVE

S/N: SCH2475-UP

PART OF 218-6832 COMPRESSOR & MOTOR GP-REFRIG

AN ATTACHMENT

SMCS-1802, 5061 **i02445864**

NOTE	REF NO	GRAPHIC REF	PART NUMBER	QTY	PART NAME 1 2 3 4 5 6 (PRODUCT LEVEL)	SEE PAGE
	1	1	**218-6836**	1	COUPLING GP-DRIVE	
		1	**218-6837**	1	COUPLING	
		1	**218-6838**	1	HUB (COMPRESSOR)	
		1	**276-4063**	1	HUB (MOTOR)	
M	2	1	**233-1012**	1	SETSCREW-HEX SOCKET (M5X0.8X8-MM)	

M-METRIC PART

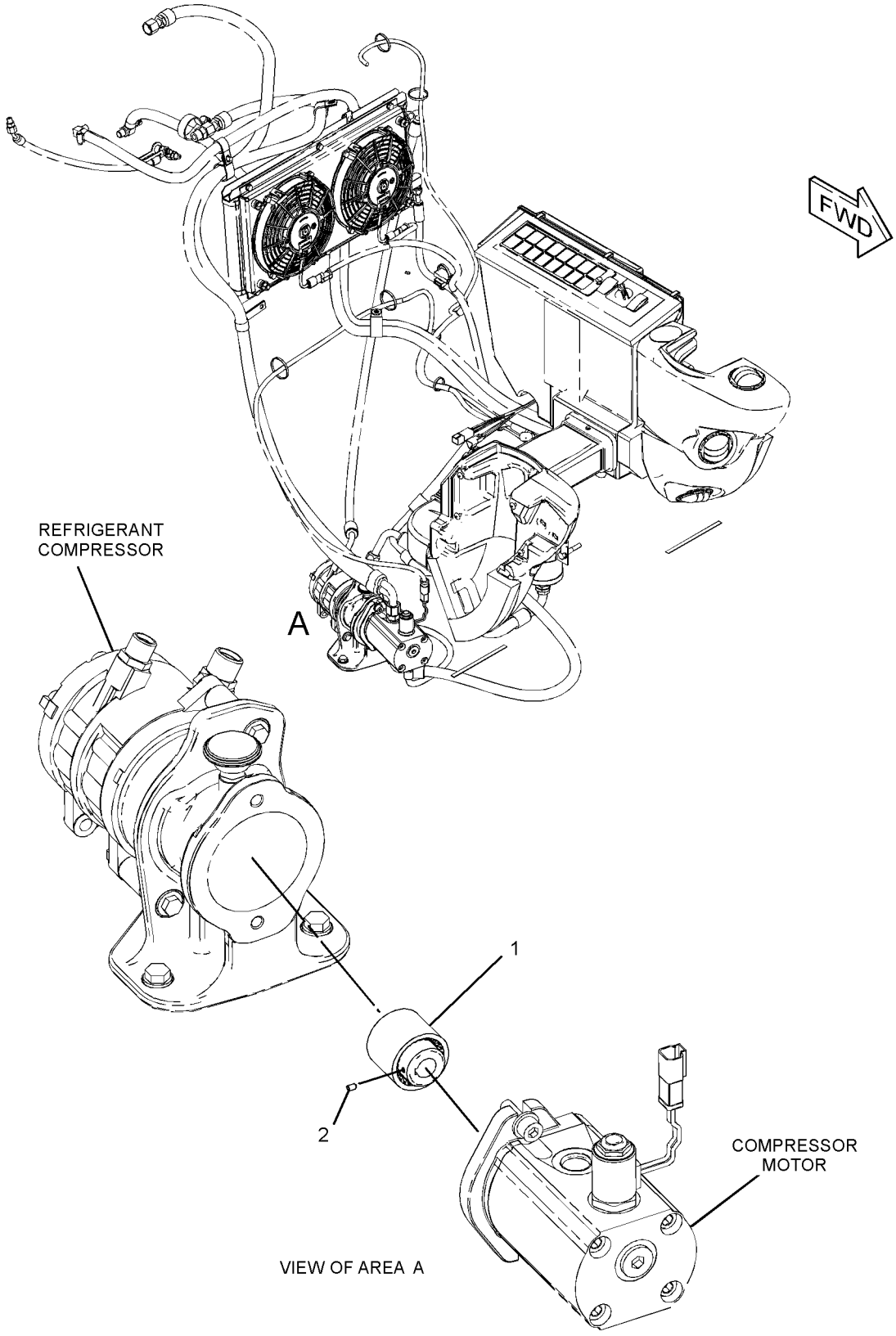

GRAPHIC #1 **<END>** g01229666

OPERATOR STATION

218-6419 COVER GP-CONSOLE

S/N: SCH2475-UP
PART OF 218-6701 INSTALLATION GP
AN ATTACHMENT

SMCS-5258 **i02392269**

NOTE	REF NO	GRAPHIC REF	PART NUMBER	QTY	PART NAME 1 2 3 4 5 6 (PRODUCT LEVEL)	SEE PAGE
	1	1	**218-6389**	1	CONSOLE (RH)	
	2	1	**218-6391**	1	CONSOLE (LH)	
M	3	1	**175-0005**	8	SCREW-BUTTON HEAD (M6X1X25-MM)	

M-METRIC PART

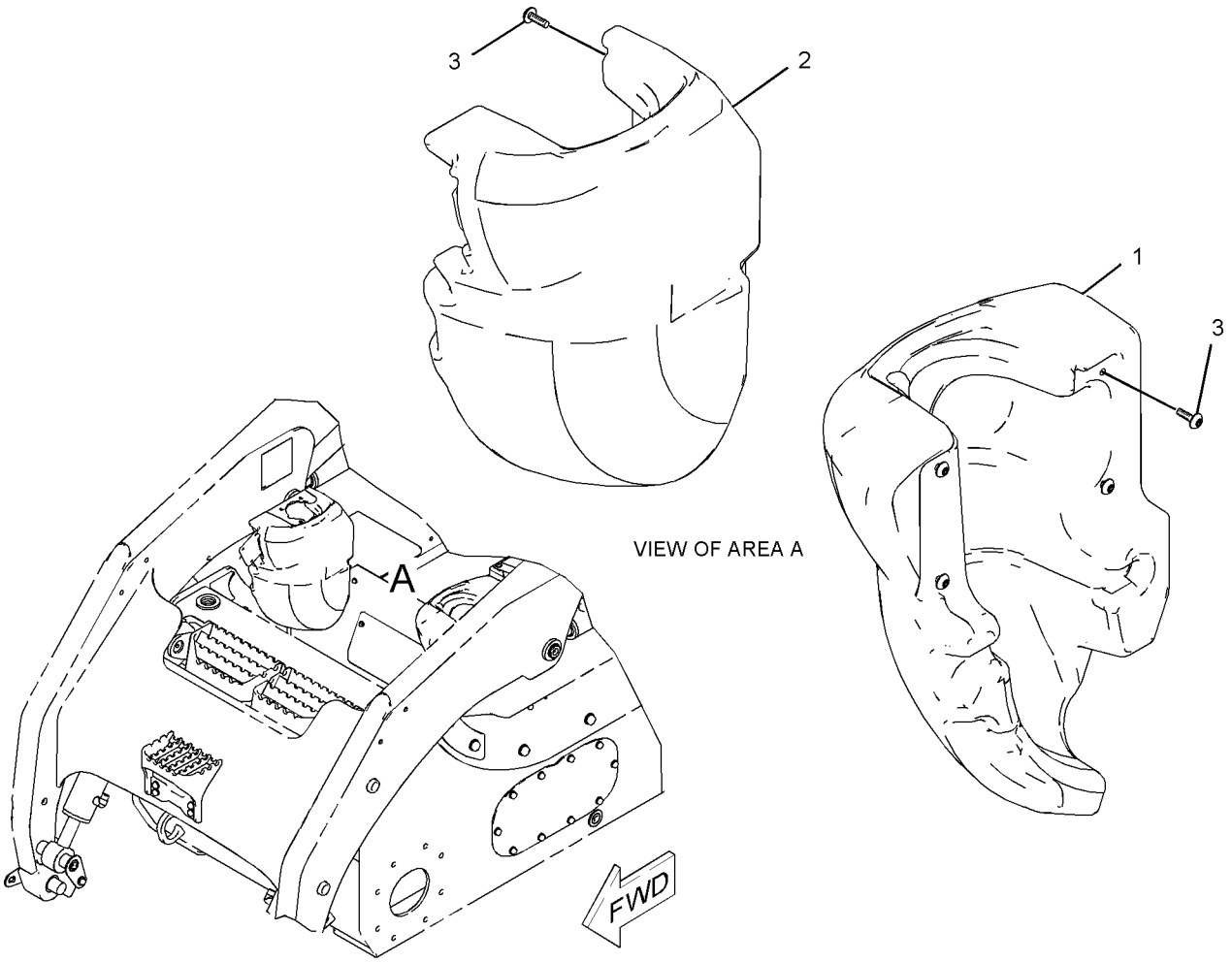

GRAPHIC #1 **<END>** g01019449

OPERATOR STATION

229-8744 COVER GP-CONSOLE

S/N: SCH2475-UP
WITHOUT HEATER & AIR COND
PART OF 218-6701 INSTALLATION GP
AN ATTACHMENT

SMCS-5258 **i02392270**

NOTE	REF NO	GRAPHIC REF	PART NUMBER	QTY	PART NAME 1 2 3 4 5 6 (PRODUCT LEVEL)	SEE PAGE
	1	1	**114-6658**	4	WASHER (6.5X17X1-MM THK)	
	2	1	**218-6386**	1	COVER AS	
	3	1	**218-6387**	1	COVER AS	
	4	1	**218-6388**	1	COVER AS	
M	5	1	**8T-4189**	2	BOLT (M8X1.25X20-MM)	
	6	1	**8T-4224**	2	WASHER-HARD (8.8X16X2-MM THK)	
M	7	1	**9X-2044**	7	SCREW-TRUSS HEAD (M6X1X16-MM)	
	8	1	**9X-6165**	1	WASHER (6.5X22X2.5-MM THK)	
BE	9	1	**124-3243**		SEAL	

B-USE AS REQUIRED
E-ORDER BY THE CENTIMETER
M-METRIC PART

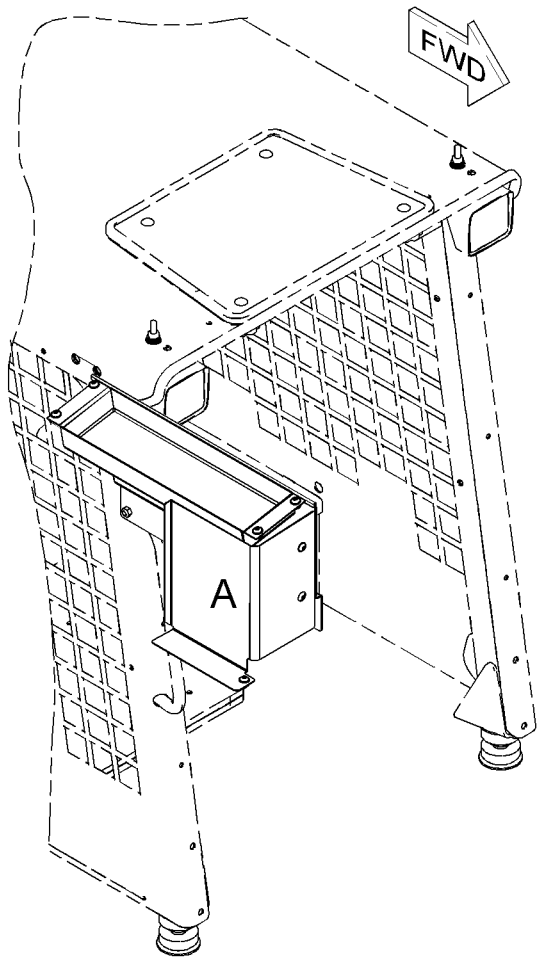

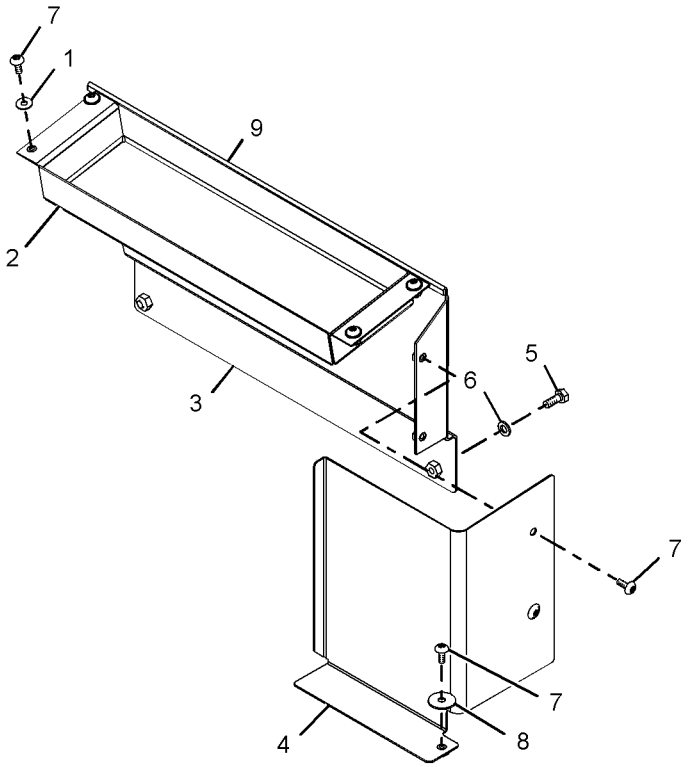

VIEW OF AREA A

GRAPHIC #1 **<END>** g01198919

OPERATOR STATION

142-9118 COVER GP-INSTRUMENT PANEL

S/N: SCH2475-UP

PART OF 216-4751, 225-7998 PANEL GP-INSTRUMENT

AN ATTACHMENT

SMCS-1408, 7451, 7478 **i02757282**

NOTE	REF NO	GRAPHIC REF	PART NUMBER	QTY	PART NAME 1 2 3 4 5 6 (PRODUCT LEVEL)	SEE PAGE
C	1	1	**106-8704**	1	SUPPRESSOR AS-ARC (HOUR METER)	
		1	**102-8802**	1	KIT-RECEPTACLE (2-PIN)	
					(INCLUDES RECEPTACLE AS & WEDGE)	
		1	**186-3735**	2	PIN-CONNECTOR (16-GA TO 18-GA)	
		1	**155-2270**	1	KIT-CONNECTING PLUG (2-PIN)	
					(INCLUDES PLUG AS, WEDGE & INTERFACE SEAL)	
	2	1	**158-6695**	1	COVER	
C	3	1	**200-5717**	1	METER GP-SERVICE	
		1	**214-2465**	1	KIT-SERVICE METER	
					(INCLUDES BOLTS, LOCKNUTS & FILM)	
C	4	1	**266-2928**	1	HARNESS AS-WIRING (SERVICE METER)	
		1	**8L-8413**	1	STRAP-CABLE	
		1	**155-2270**	1	KIT-CONNECTING PLUG (2-PIN)	
					(INCLUDES PLUG AS, WEDGE & INTERFACE SEAL)	
	5	1	**103-2006**	2	SCREW-PAN HEAD (6-19X0.37-IN)	
C	6	1	**3S-2093**	1	STRAP-CABLE	

C-CHANGE FROM PREVIOUS TYPE

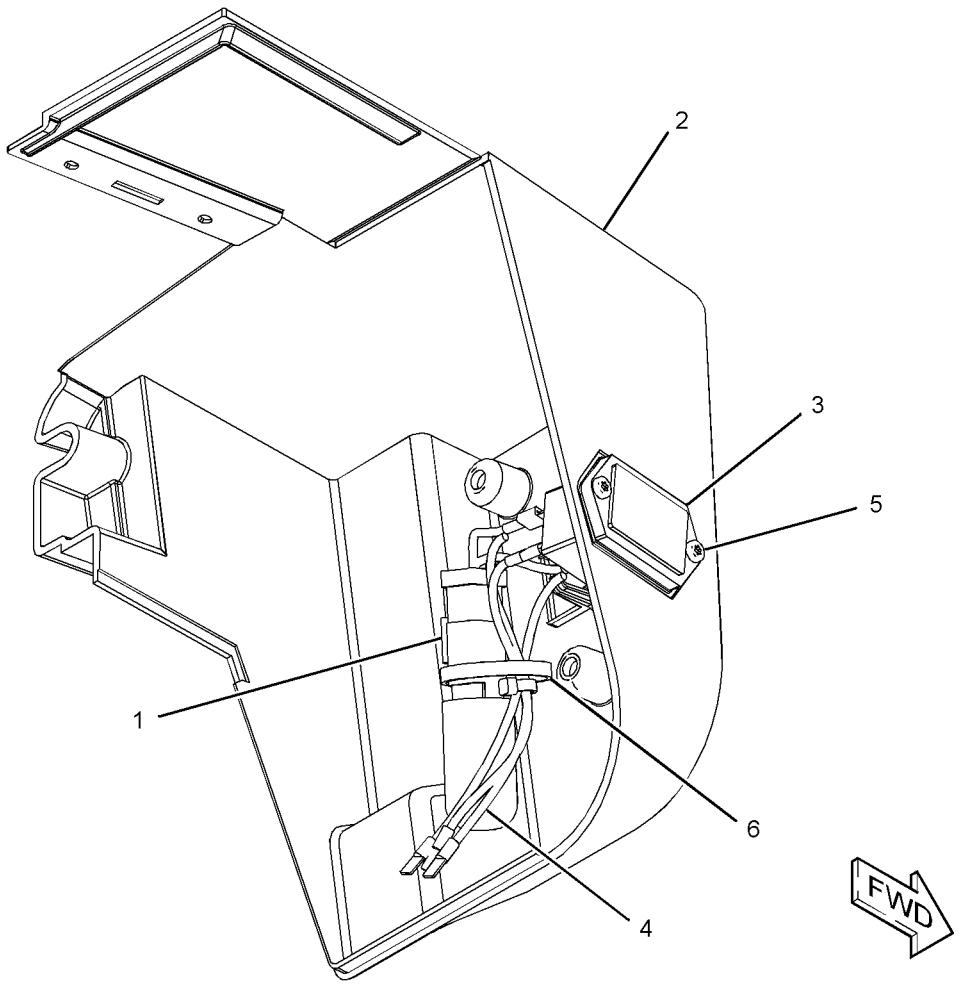

GRAPHIC #1 **<END>** g01195576

OPERATOR STATION

218-6440 DOOR & MTG GP-CAB—POLYCARBONATE

S/N: SCH2475-UP

CANNOT BE USED WITH 218-6400—PAGE 507, 223-0600—PAGE 492

AN ATTACHMENT

SMCS-7308 **i02772052**

NOTE	REF NO	GRAPHIC REF	PART NUMBER	QTY	PART NAME 1 2 3 4 5 6 (PRODUCT LEVEL)	SEE PAGE
E	1	2	**125-3518**		SEAL (6-CM EACH)	
E	2	2	**125-3518**		SEAL (65-CM)	
E	3	2	**144-0195**		HOSE (40-CM)	
D	4	2	**5P-9909**		SEAL (0.05-M EACH)	
	5	1	**5P-0372**	2	LOCK PIN	
	6	2	**8T-2444**	2	STUD-BALL	
	7	2	**8T-3848**	1	STRIKER AS-LATCH	
		2	**6V-4270**	1	LOCKWASHER	
	8	1	**9C-5344**	1	SPACER (10.5X20X18-MM THK)	
	9	1	**095-1325**	1	PIN-CLEVIS	
	10	1	**153-2683**	1	SPRING AS-GAS (LOCKING)	
	11	1	**177-3405**	1	PIN	
	12	2	**218-0728**	2	SPRING	
CY	13	2	*276-3440*	1	DOOR GP-CAB (POLYCARBONATE)	497
	14	2	**219-9739**	1	TANK AS-WINDOW WASHER	
	15	2	**221-3877**	1	HARNESS AS-WINDOW WIPER	
		2	**102-8805**	1	KIT-RECEPTACLE (6-PIN)	
					(INCLUDES RECEPTACLE AS & WEDGE)	
		2	**123-7615**	1	CONNECTOR	
		2	**5W-1987**	2	TERMINAL	
E		2	**125-7875**		TUBE-HEAT SHRINK (7.44-MM DIA) (5-CM)	
		2	**155-2274**	1	KIT-CONNECTING PLUG (6-PIN)	
					(INCLUDES PLUG AS, WEDGE & INTERFACE SEAL)	
	16	2	**280-1575**	1	PLATE AS	
	17	2	**223-0591**	1	PLATE AS	
	18	2	**223-0601**	2	PLATE AS	
	19	2	**223-0608**	1	HINGE AS	
	20	2	**223-0617**	1	MOUNT	
	21	2	**230-3214**	1	SPRING AS-GAS (CAB DOOR)	
M	22	2	**127-2170**	8	SCREW-TRUSS HEAD (M8X1.25X20-MM)	
	23	2	**142-9356**	1	BLOCK	
M	24	2	**195-0937**	8	INSERT-THREADED (M8X1.25-THD)	
	25	2	**3S-2093**	3	STRAP-CABLE	
M	26	2	**5C-2890**	13	NUT (M6X1-THD)	
D	27	2	**5P-5969**		SEAL (2.2-M)	
	28	2	**8T-4121**	4	WASHER-HARD (11X21X2.5-MM THK)	
M	29	2	**8T-4133**	4	NUT (M10X1.5-THD)	
	30	2	**8T-4205**	13	WASHER-HARD (7.2X14.5X2-MM THK)	
	31	2	**8T-4222**	1	WASHER-PLATED (11X32X2.5-MM THK)	
	32	2	**8T-4224**	2	WASHER-HARD (8.8X16X2-MM THK)	
M	33	2	**9X-2041**	4	SCREW-TRUSS HEAD (M10X1.5X20-MM)	
M	34	2	**9X-2044**	3	SCREW-TRUSS HEAD (M6X1X16-MM)	
M	35	2	**9X-2045**	4	SCREW-TRUSS HEAD (M6X1X20-MM)	
D	36	2	**5P-8309**		SEAL (0.72)	

C-CHANGE FROM PREVIOUS TYPE
D-ORDER BY THE METER
E-ORDER BY THE CENTIMETER
M-METRIC PART
Y-SEPARATE ILLUSTRATION

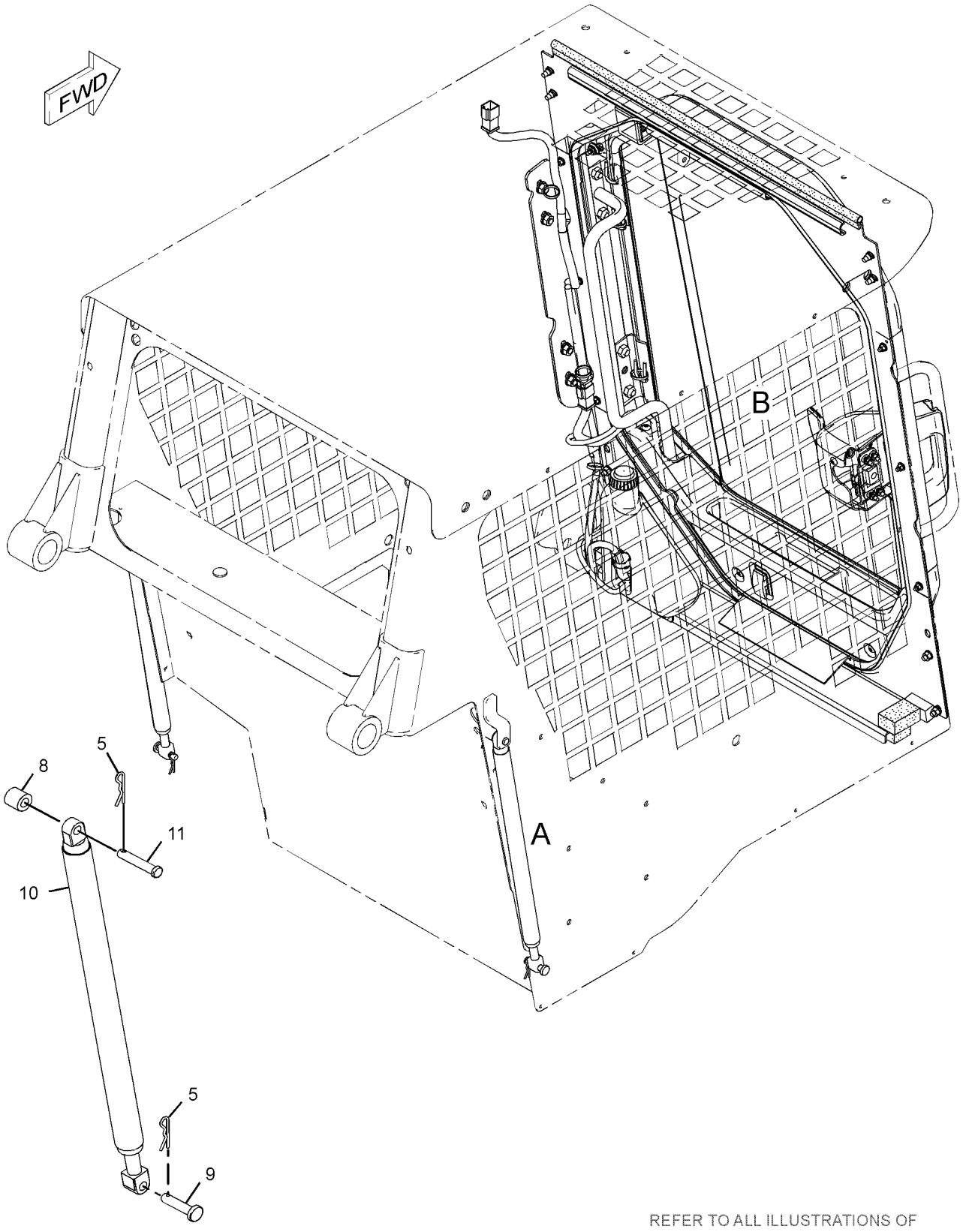

VIEW OF AREA A

REFER TO ALL ILLUSTRATIONS OF
THIS GROUP FOR AUXILIARY VIEWS

GRAPHIC #1

g01249527

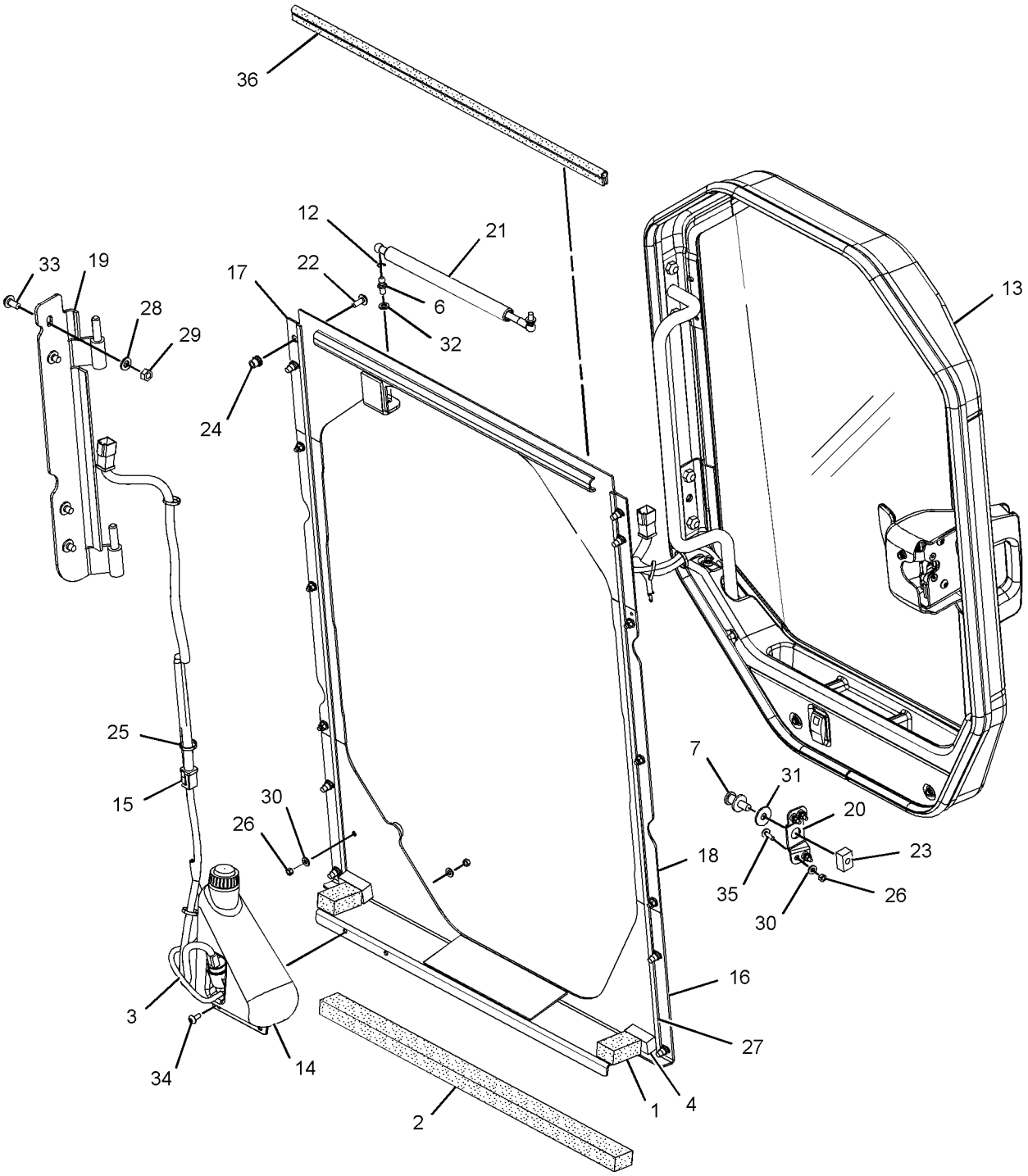

VIEW OF AREA B

GRAPHIC #2 **<END>** g01249529

OPERATOR STATION

223-0600 DOOR & MTG GP-CAB—GLASS

S/N: SCH2475-UP

CANNOT BE USED WITH 218-6400—PAGE 507, 218-6440—PAGE 489

AN ATTACHMENT

SMCS-7308 **i02545016**

NOTE	REF NO	GRAPHIC REF	PART NUMBER	QTY	PART NAME 1 2 3 4 5 6 (PRODUCT LEVEL)	SEE PAGE
D	1	1	**5P-8309**		SEAL (0.72-M)	
E	2	1	**125-3518**		SEAL (65-CM)	
E	3	1	**144-0195**		HOSE (40-CM)	
D	4	1	**5P-9909**		SEAL (.05-M EACH)	
	5	1	**5P-0372**	2	LOCK PIN	
	6	1	**8T-2444**	2	STUD-BALL	
	7	1	**8T-3848**	1	STRIKER AS-LATCH	
		1	**6V-4270**	1	LOCKWASHER	
	8	1	**9C-5344**	1	SPACER (10.5X20X18-MM THK)	
	9	1	**095-1325**	1	PIN-CLEVIS	
	10	1	**153-2683**	1	SPRING AS-GAS (LOCKING)	
	11	1	**177-3405**	1	PIN	
	12	1	**218-0728**	2	SPRING	
	13	1	**219-9739**	1	TANK AS-WINDOW WASHER	
	14	1	**221-3877**	1	HARNESS AS-WINDOW WIPER	
		1	**102-8805**	1	KIT-RECEPTACLE (6-PIN)	
					(INCLUDES RECEPTACLE AS & WEDGE)	
		1	**5W-1987**	2	TERMINAL	
E		1	**125-7875**		TUBE-HEAT SHRINK (7.44-MM DIA) (5-CM)	
		1	**155-2274**	1	KIT-CONNECTING PLUG (6-PIN)	
					(INCLUDES PLUG AS, WEDGE & INTERFACE SEAL)	
C	15	1	**280-1575**	1	PLATE AS	
	16	1	**223-0591**	1	PLATE AS	
	17	1	**223-0601**	2	PLATE AS	
	18	1	**223-0608**	1	HINGE AS	
Y	19	1	*223-0616*	1	DOOR GP-CAB (GLASS)	495
	20	1	**223-0617**	1	MOUNT	
	21	1	**230-3214**	1	SPRING AS-GAS (CAB DOOR)	
M	22	1	**127-2170**	8	SCREW-TRUSS HEAD (M8X1.25X20-MM)	
	23	1	**142-9356**	1	BLOCK	
CM	24	1	**195-0937**	8	INSERT-THREADED (M8X1.25-THD)	
	25	1	**3S-2093**	3	STRAP-CABLE	
M	26	1	**5C-2890**	13	NUT (M6X1-THD)	
	28	1	**8T-4121**	4	WASHER-HARD (11X21X2.5-MM THK)	
M	29	1	**8T-4133**	4	NUT (M10X1.5-THD)	
	30	1	**8T-4205**	13	WASHER-HARD (7.2X14.5X2-MM THK)	
B	31	1	**8T-4222**	1	WASHER-PLATED (11X32X2.5-MM THK)	
C	32	1	**8T-4224**	2	WASHER-HARD (8.8X16X2-MM THK)	
M	33	1	**9X-2041**	4	SCREW-TRUSS HEAD (M10X1.5X20-MM)	
M	34	1	**9X-2044**	3	SCREW-TRUSS HEAD (M6X1X16-MM)	
M	35	1	**9X-2045**	4	SCREW-TRUSS HEAD (M6X1X20-MM)	
E	36	1	**125-3518**		SEAL (6-CM EACH)	
CD	37	1	**5P-5969**		SEAL (1.1-M EACH)	

B-USE AS REQUIRED
C-CHANGE FROM PREVIOUS TYPE
D-ORDER BY THE METER
E-ORDER BY THE CENTIMETER
M-METRIC PART
Y-SEPARATE ILLUSTRATION

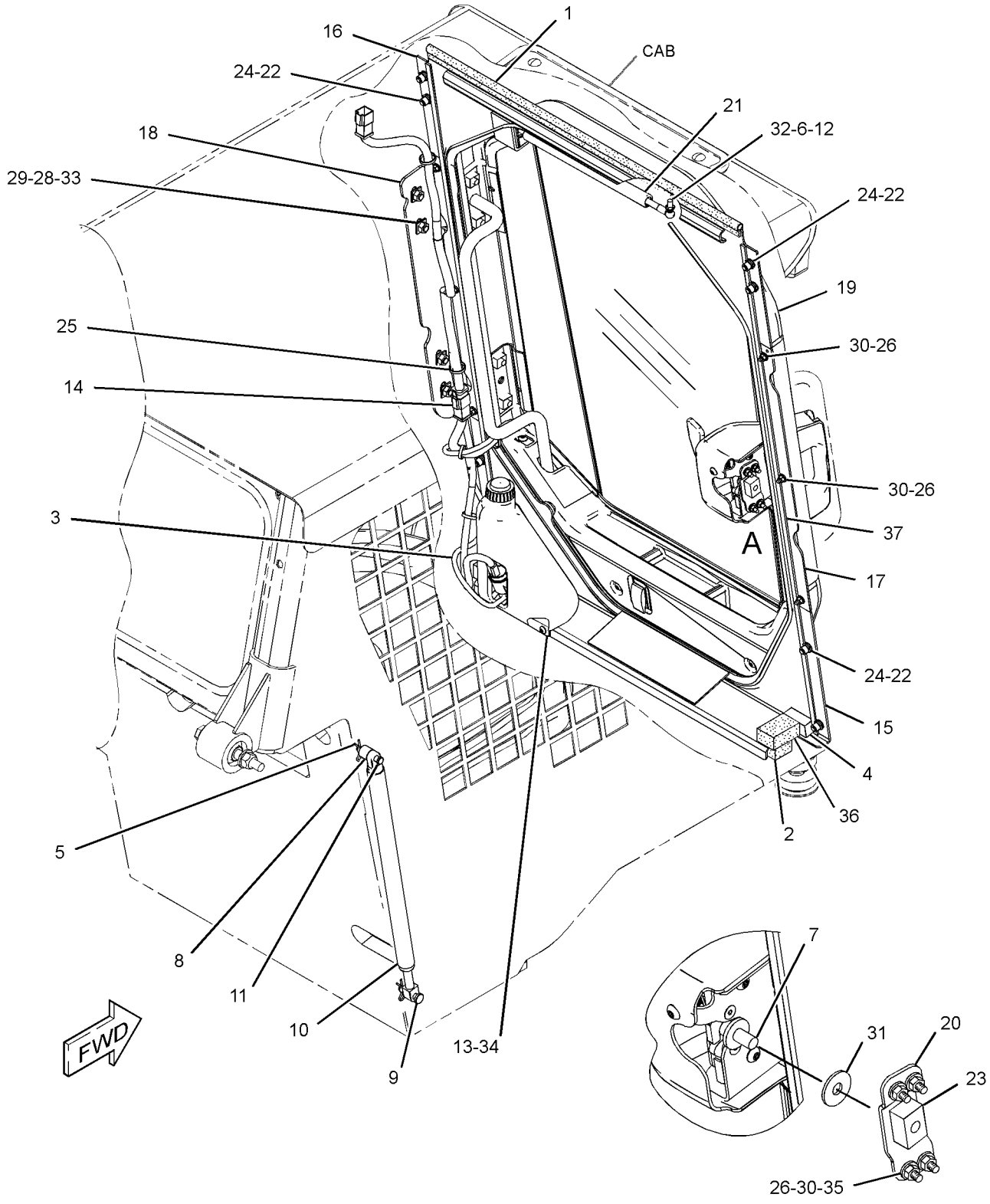

VIEW OF AREA A
(EXPLODED)

GRAPHIC #1 **<END>** g01258688

OPERATOR STATION

218-6431 DOOR GP-CAB–GLASS

S/N: SCH2475-UP
PART OF 223-0616 DOOR GP-CAB
AN ATTACHMENT

SMCS-7308 **i02619575**

NOTE	REF NO	GRAPHIC REF	PART NUMBER	QTY	PART NAME 1 2 3 4 5 6 (PRODUCT LEVEL)	SEE PAGE
	1	1	**223-0609**	1	GLASS-CAB (DOOR)	
	2	1	**223-0610**	1	GLASS-CAB (DOOR)	
	3	1	**223-0612**	1	GLASS-CAB (DOOR)	
	4	1	**282-9059**	1	FRAME AS	

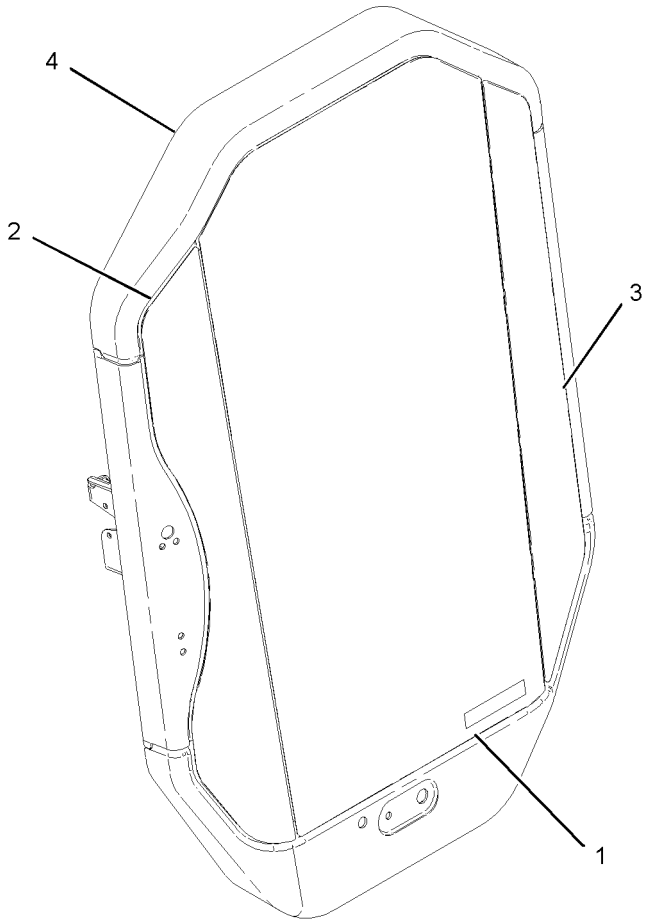

GRAPHIC #1 **<END>** g01010846

OPERATOR STATION

223-0616 DOOR GP-CAB—GLASS

S/N: SCH2475-UP

PART OF 223-0600 DOOR & MTG GP-CAB, 218-6744 KIT-CAB DOOR & MOUNTING

AN ATTACHMENT

SMCS-7308 **i02870323**

NOTE	REF NO	GRAPHIC REF	PART NUMBER	QTY	PART NAME 1 2 3 4 5 6 (PRODUCT LEVEL)	SEE PAGE
E	1	1	**124-3243**		SEAL (306-CM)	
E	2	1	**144-0195**		HOSE (73-CM)	
	3	1	**8G-1151**	2	CONNECTOR	
	4	1	**6W-3924**	1	BLADE AS-WIPER (558-MM) (FRONT, REAR)	
	6	1	**138-4883**	1	SWITCH AS-ROCKER (REAR WIPER)	
	7	1	**205-5148**	2	SCREW-FLAT HEAD (M6X1X25-MM)	
Y	8	1	*218-6431*	1	DOOR GP-CAB (GLASS)	494
	9	1	**221-3876**	1	HARNESS AS-WINDOW WIPER	
	10	1	**263-2135**	1	ARM GP-WINDOW WIPER	
		1	**136-3191**	1	NOZZLE AS-WASHER	
E		1	**194-5171**		HOSE (60-CM)	
		1	**240-8666**	2	CLIP (WASHER HOSE)	
C	11	1	**313-9185**	1	COVER AS	
	12	1	**223-8488**	1	COVER-LATCH	
	13	1	**223-8495**	1	HANDLE AS	
M		1	**6V-9632**	1	NUT-WELD (M6X1-THD)	
	14	1	**225-3187**	1	LATCH AS	
	15	1	**229-8757**	1	SWITCH AS-LIMIT (WIPER)	
	17	1	**235-4768**	2	HINGE	
	18	1	**248-2171**	1	HANDLE AS	
	19	1	**248-2376**	1	MOTOR GP-WINDOW WIPER	
		1	**102-8804**	1	KIT-RECEPTACLE (4-PIN)	
					(INCLUDES RECEPTACLE AS & WEDGE)	
		1	**186-3735**	4	PIN-CONNECTOR (16-GA TO 18-GA)	
	20	1	**032-9828**	1	GROMMET	
M	21	1	**134-8273**	4	SCREW-FLAT HEAD (M10X1.15-THD)	
	22	1	**3S-2093**	3	STRAP-CABLE	
M	23	1	**9X-2044**	14	SCREW-TRUSS HEAD (M6X1X16-MM)	
M	24	1	**9X-2045**	2	SCREW-TRUSS HEAD (M6X1X20-MM)	

C-CHANGE FROM PREVIOUS TYPE
E-ORDER BY THE CENTIMETER
M-METRIC PART
Y-SEPARATE ILLUSTRATION

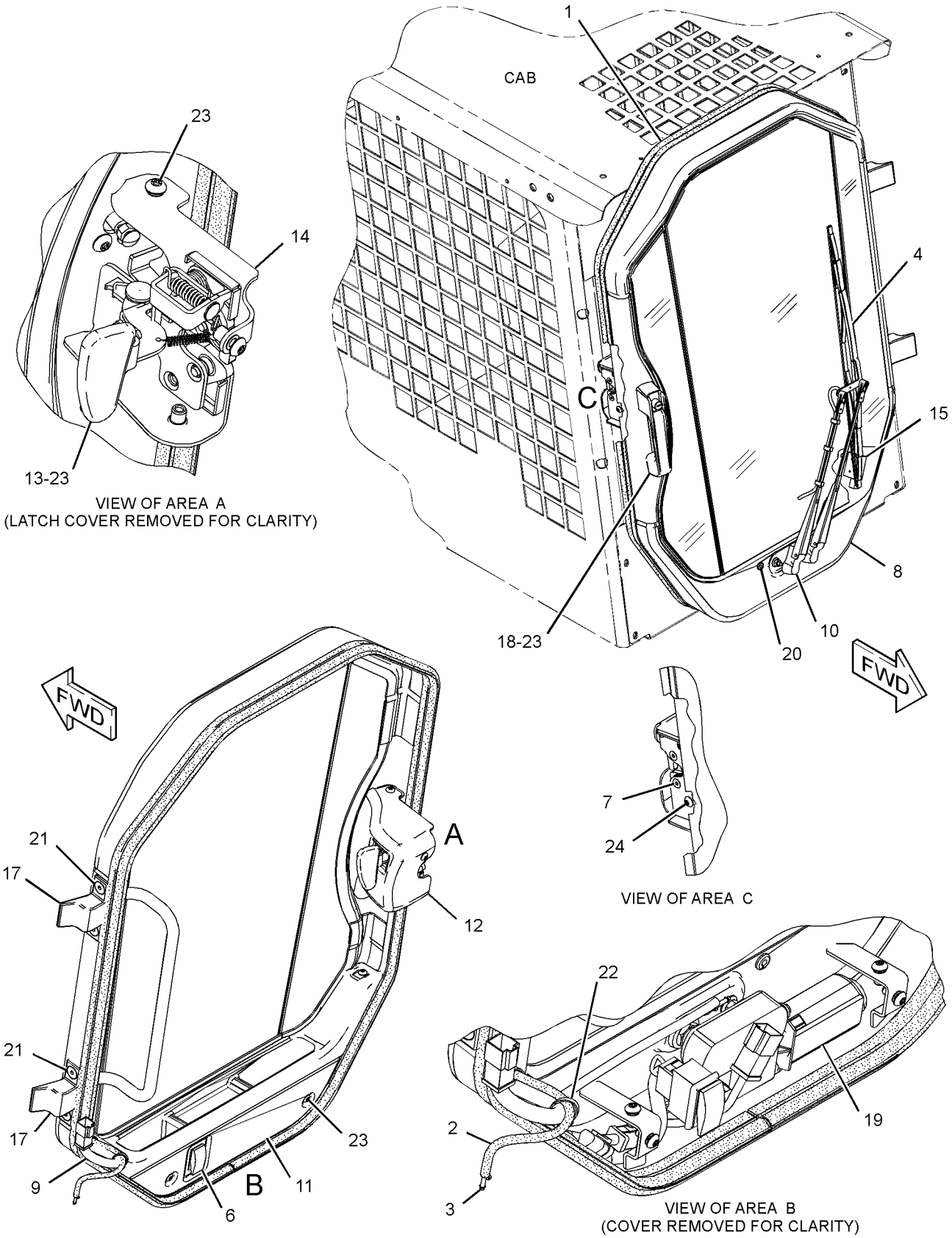

GRAPHIC #1

<END>

g01431673

OPERATOR STATION

276-3440 DOOR GP-CAB—POLYCARBONATE

S/N: SCH2475-UP

PART OF 218-6440 DOOR & MTG GP-CAB, 218-6743 KIT-CAB DOOR & MOUNTING

AN ATTACHMENT

SMCS-7308 **i02870329**

NOTE	REF NO	GRAPHIC REF	PART NUMBER	QTY	PART NAME 1 2 3 4 5 6 (PRODUCT LEVEL)	SEE PAGE
	1	1	**8G-1151**	2	CONNECTOR (HOSE)	
	2	1	**6W-3924**	1	BLADE AS-WIPER (558-MM) (CAB DOOR)	
	4	1	**138-4883**	1	SWITCH AS-ROCKER (REAR WIPER)	
	5	1	**205-5148**	2	SCREW-FLAT HEAD (M6X1X25-MM)	
	6	1	**221-3876**	1	HARNESS AS-WINDOW WIPER	
	7	1	**223-8488**	1	COVER-LATCH	
	8	1	**223-8495**	1	HANDLE AS	
M		1	**6V-9632**	1	NUT-WELD (M6X1-THD)	
	9	1	**225-3187**	1	LATCH AS	
	10	1	**229-8757**	1	SWITCH AS-LIMIT (WIPER)	
	11	1	**235-4768**	2	HINGE	
	12	1	**248-2171**	1	HANDLE AS	
	13	1	**248-2376**	1	MOTOR GP-WINDOW WIPER	
		1	**102-8802**	1	KIT-RECEPTACLE (2-PIN)	
					(INCLUDES RECEPTACLE AS & WEDGE)	
		1	**186-3735**	4	PIN-CONNECTOR (16-GA TO 18-GA)	
	14	1	**263-2135**	1	ARM GP-WINDOW WIPER (FRONT)	
		1	**136-3191**	1	NOZZLE AS-WASHER	
		1	**194-5171**		HOSE (60-CM)	
		1	**240-8666**	2	CLIP	
Y	15	1	*276-3615*	1	DOOR GP-CAB	499
	16	1	**313-9185**	1	COVER AS	
	17	1	**032-9828**	1	GROMMET	
M	18	1	**134-8273**	4	SCREW-FLAT HEAD (M10X1.15-THD)	
	19	1	**3S-2093**	3	STRAP-CABLE	
M	20	1	**9X-2044**	14	SCREW-TRUSS HEAD (M6X1X16-MM)	
M	21	1	**9X-2045**	2	SCREW-TRUSS HEAD (M6X1X20-MM)	
E	22	1	**144-0195**		HOSE (73-CM)	
E	23	1	**124-3243**		SEAL (306-CM)	

E-ORDER BY THE CENTIMETER
M-METRIC PART
Y-SEPARATE ILLUSTRATION

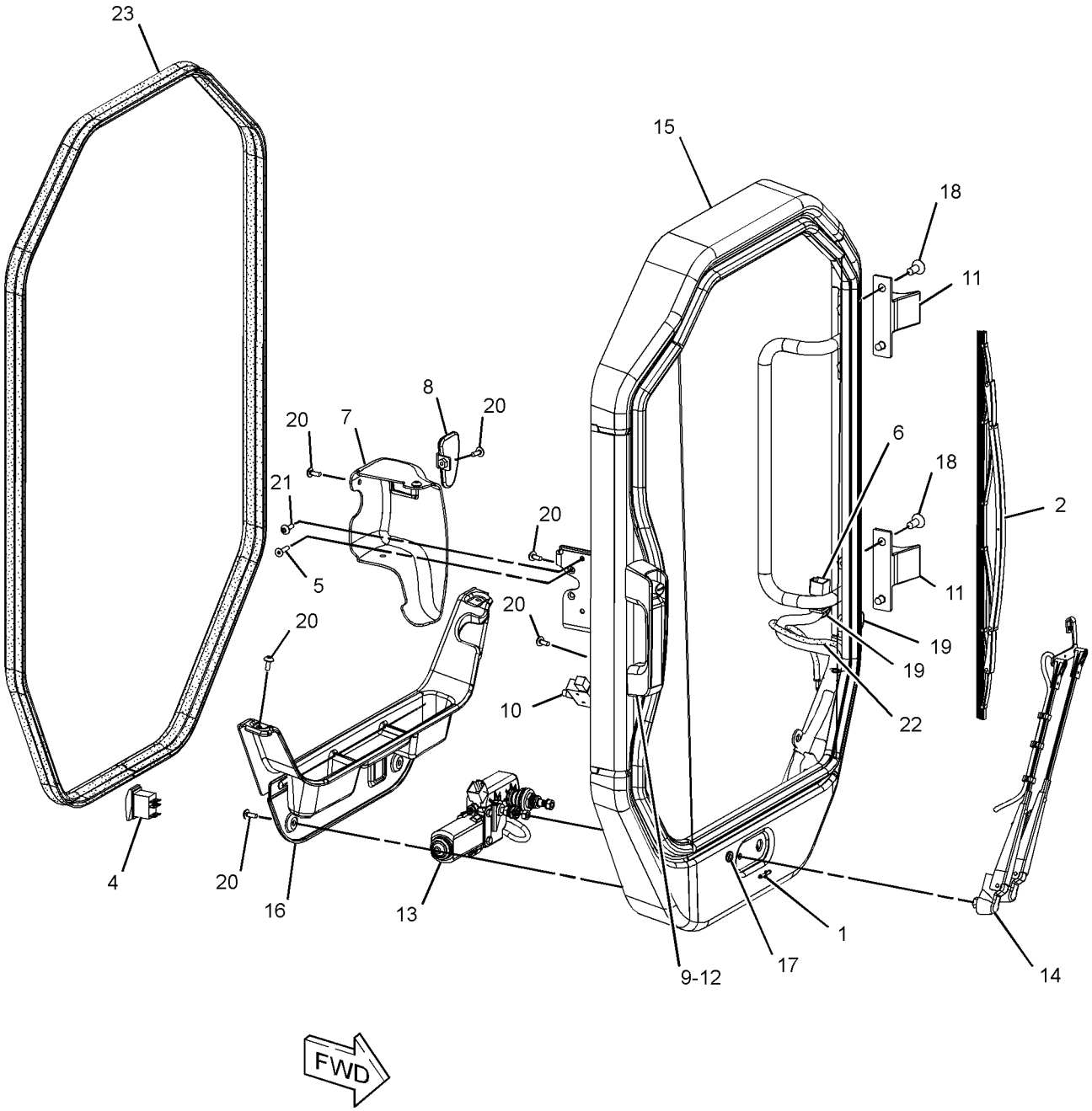

GRAPHIC #1 **<END>** g01380641

OPERATOR STATION

276-3615 DOOR GP-CAB

S/N: SCH2475-UP
PART OF 276-3440 DOOR GP-CAB
AN ATTACHMENT

SMCS-7308 **i02644469**

NOTE	REF NO	GRAPHIC REF	PART NUMBER	QTY	PART NAME 1 2 3 4 5 6 (PRODUCT LEVEL)	SEE PAGE
	1	1	**5C-8310**	1	BRACKET-RING	
	2	1	**5C-8311**	1	RING	
	3	1	**8T-6842**	1	FILM-INSTRUCTION (ALTERNATE EXIT)	
	4	1	**276-3599**	1	WINDOW (POLYCARBONATE)	
	5	1	**279-3232**	1	SEAL	
	6	1	**282-9059**	1	FRAME AS	
	7	1	**283-7554**	1	STRIP-LOCKING	

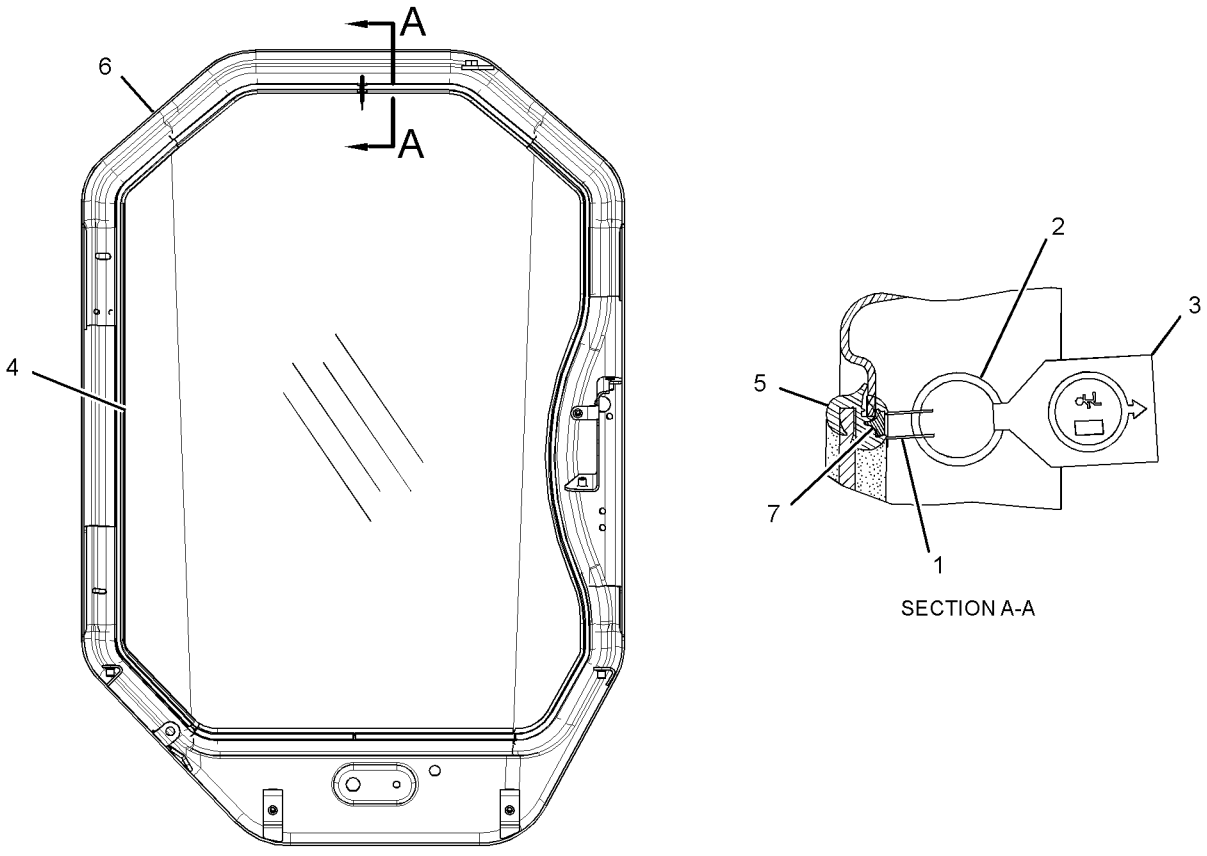

SECTION A-A

REAR VIEW

GRAPHIC #1 **<END>** g01327089

OPERATOR STATION

218-6394 DUCT & CONTROL GP

S/N: SCH2475-UP

PART OF 218-6302 AIR CONDITIONER AR, 218-6703 HEATER AR-CAB

AN ATTACHMENT

SMCS-7337, 734D **i02541254**

NOTE	REF NO	GRAPHIC REF	PART NUMBER	QTY	PART NAME 1 2 3 4 5 6 (PRODUCT LEVEL)	SEE PAGE
CD	1	1	**5P-5969**		SEAL (0.2-M EACH)	
	2	1	**146-6371**	6	LOUVER AS	
	3	1	**218-6396**	1	DUCT	
	4	1	**218-6397**	1	CONSOLE (RH)	
	5	1	**218-6398**	1	CONSOLE (LH)	
CD	6	1	**5P-7070**		INSULATION-STRIP (0.5-M)	
	7	1	**218-6414**	1	SEAL	
	8	1	**285-9133**	1	INSULATION	
M	9	1	**175-0005**	8	SCREW-BUTTON HEAD (M6X1X25-MM)	
	10	1	**285-8570**	1	INSULATION	
	11	1	**240-6877**	1	SEAL	
	12	1	**240-6878**	1	SEAL	
	13	1	**240-6879**	2	SEAL	
	14	1	**6V-6689**	2	SCREW-SELF-TAPPING (10-16X.625-IN)	
	15	1	**285-8565**	1	INSULATION	

C-CHANGE FROM PREVIOUS TYPE
D-ORDER BY THE METER
M-METRIC PART

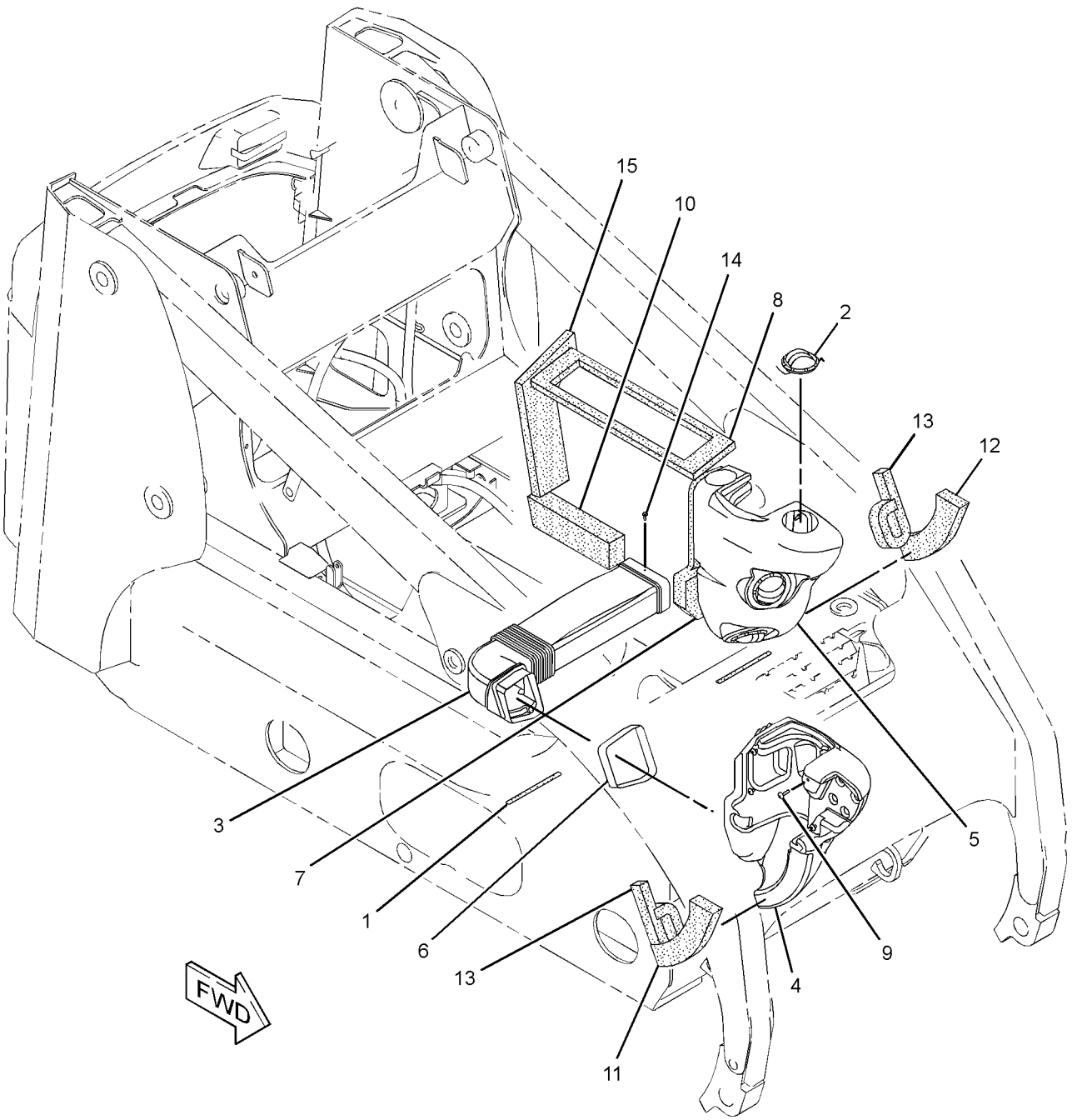

GRAPHIC #1 **<END>** g01293158

OPERATOR STATION

231-7325 FRAME GP-WINDOW–RH

S/N: SCH2475-UP
PART OF 224-7058 WINDOW GP-CAB
AN ATTACHMENT

SMCS-7310 **i02064824**

NOTE	REF NO	GRAPHIC REF	PART NUMBER	QTY	PART NAME 1 2 3 4 5 6 (PRODUCT LEVEL)	SEE PAGE
	1	1	**231-7326**	1	FRAME AS-WINDOW (RH)	
	1A	1	**5C-7682**	1	SCREW (8-32-THD)	
JZ	1B	1		1	BOLT	
JZ	1C	1		1	LATCH	
JZ	1D	1		1	SCREW	
JZ	1E	1		1	SPRING	
JZ	1F	1		2	CLIP	
JZ	1G	1		2	WASHER	
	1H	1	**231-7401**	1	HINGE	
	2	1	**239-6138**	1	BRACKET AS	
	3	1	**5C-7682**	2	SCREW (8-32-THD)	
					AVAILABLE REPAIR KIT(S):	
J			**231-7329**	1	KIT-LATCH	

J-KIT MARKED J SERVICES PART MARKED J
Z-NOT SERVICED SEPARATELY

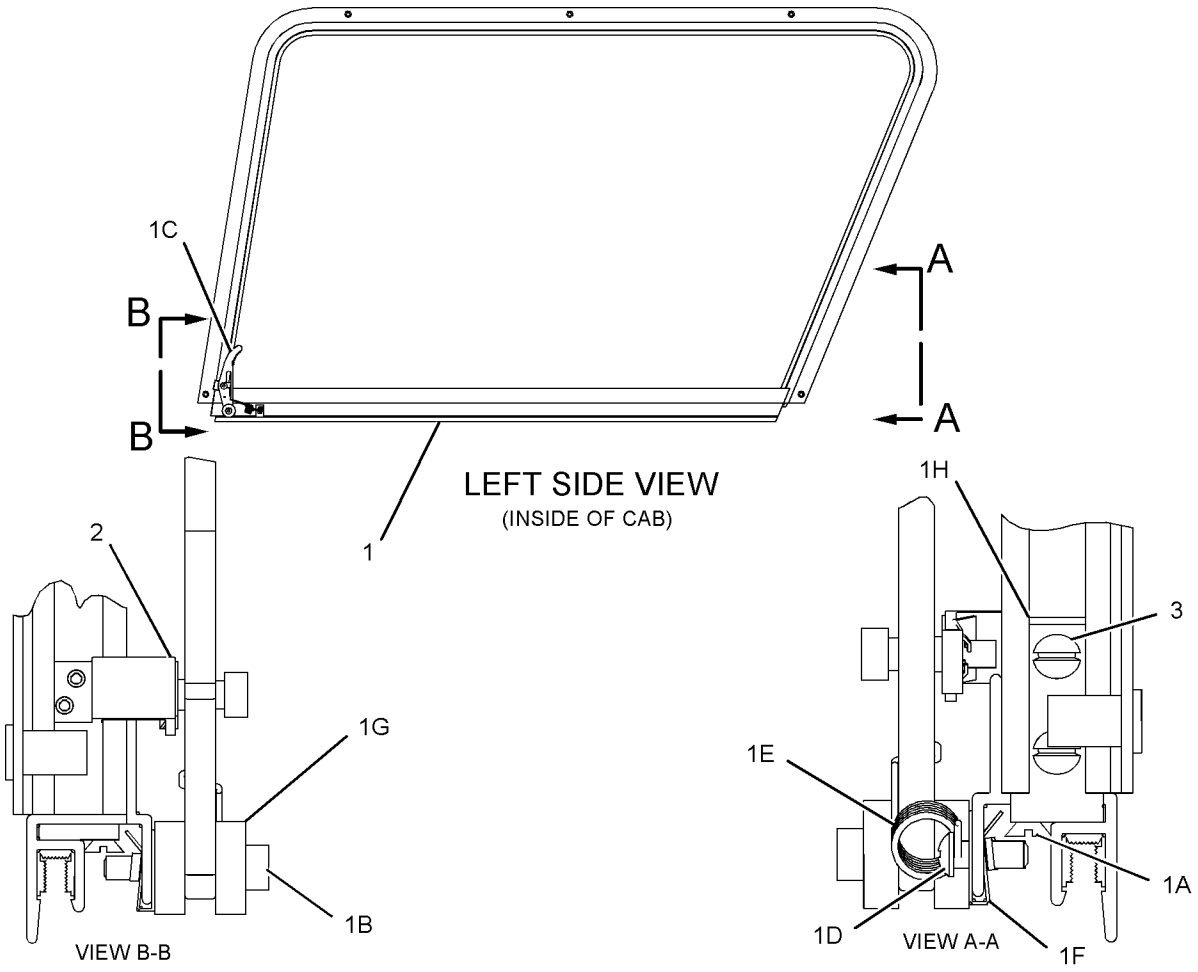

GRAPHIC #1 **<END>** g01066130

231-7327 FRAME GP-WINDOW–LH

S/N: SCH2475-UP
PART OF 224-7057 WINDOW GP-CAB
AN ATTACHMENT

SMCS-7310 **i02064823**

NOTE	REF NO	GRAPHIC REF	PART NUMBER	QTY	PART NAME 1 2 3 4 5 6 (PRODUCT LEVEL)	SEE PAGE
	1	1	**231-7328**	1	FRAME AS-WINDOW (LH)	
	1A	1	**5C-7682**	1	SCREW (8-32-THD)	
JZ	1B	1		1	BOLT	
JZ	1C	1		1	LATCH	
JZ	1D	1		1	SCREW	
JZ	1E	1		1	SPRING	
JZ	1F	1		2	CLIP	
JZ	1G	1		2	WASHER	
	1H	1	**231-7401**	1	HINGE	
	2	1	**239-6138**	1	BRACKET AS	
	3	1	**5C-7682**	2	SCREW (8-32-THD)	
					AVAILABLE REPAIR KIT(S):	
J			**231-7329**	1	KIT-LATCH	

J-KIT MARKED J SERVICES PARTS MAKED J
Z-NOT SERVICED SEPARATELY

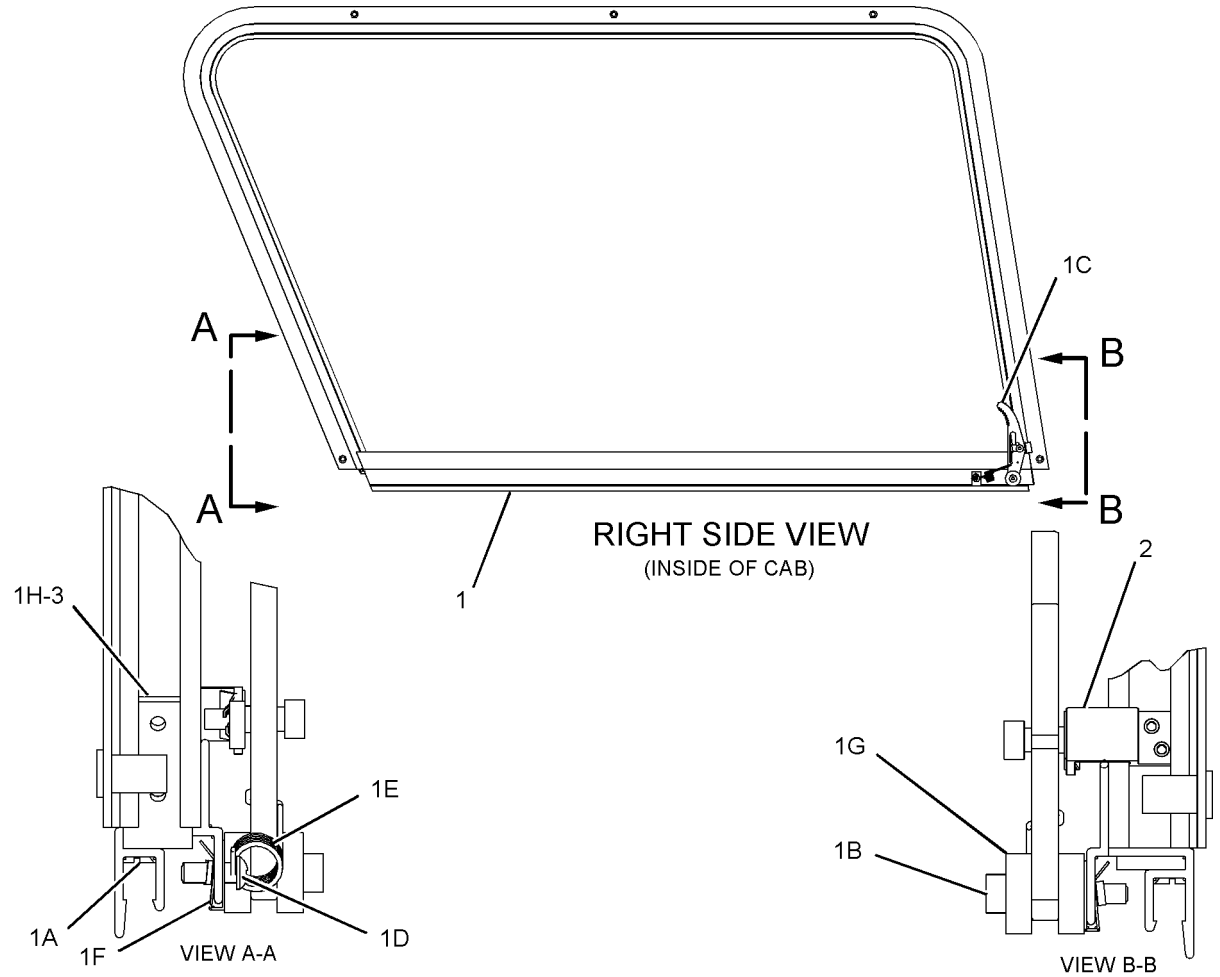

GRAPHIC #1 **<END>** g01066272

OPERATOR STATION

216-4712 GAUGE & WARNING GP–LH

S/N: SCH2475-UP

PART OF 216-4751, 225-7998 PANEL GP-INSTRUMENT

AN ATTACHMENT

SMCS-7450, 7451 **i02014376**

NOTE	REF NO	GRAPHIC REF	PART NUMBER	QTY	PART NAME 1 2 3 4 5 6 (PRODUCT LEVEL)	SEE PAGE
J	1	1	**142-8858**	1	SWITCH AS-KEY START	
		1	**167-1530**	1	NUT (1-32-THD)	
	2	1	**158-6694**	1	PANEL	
	3	1	**197-6894**	1	FILM-INSTRUCTION (INSTRUMENT PANEL)	
	4	1	**216-4753**	1	FILM (KEY SWITCH)	
Y	5	1	**223-6537**	1	MODULE GP-WARNING INDICATOR	535
	6	1	**103-2006**	2	SCREW-PAN HEAD (6-19X0.37-IN)	

J-REQUIRES 5P-8500 KEY
Y-SEPARATE ILLUSTRATION

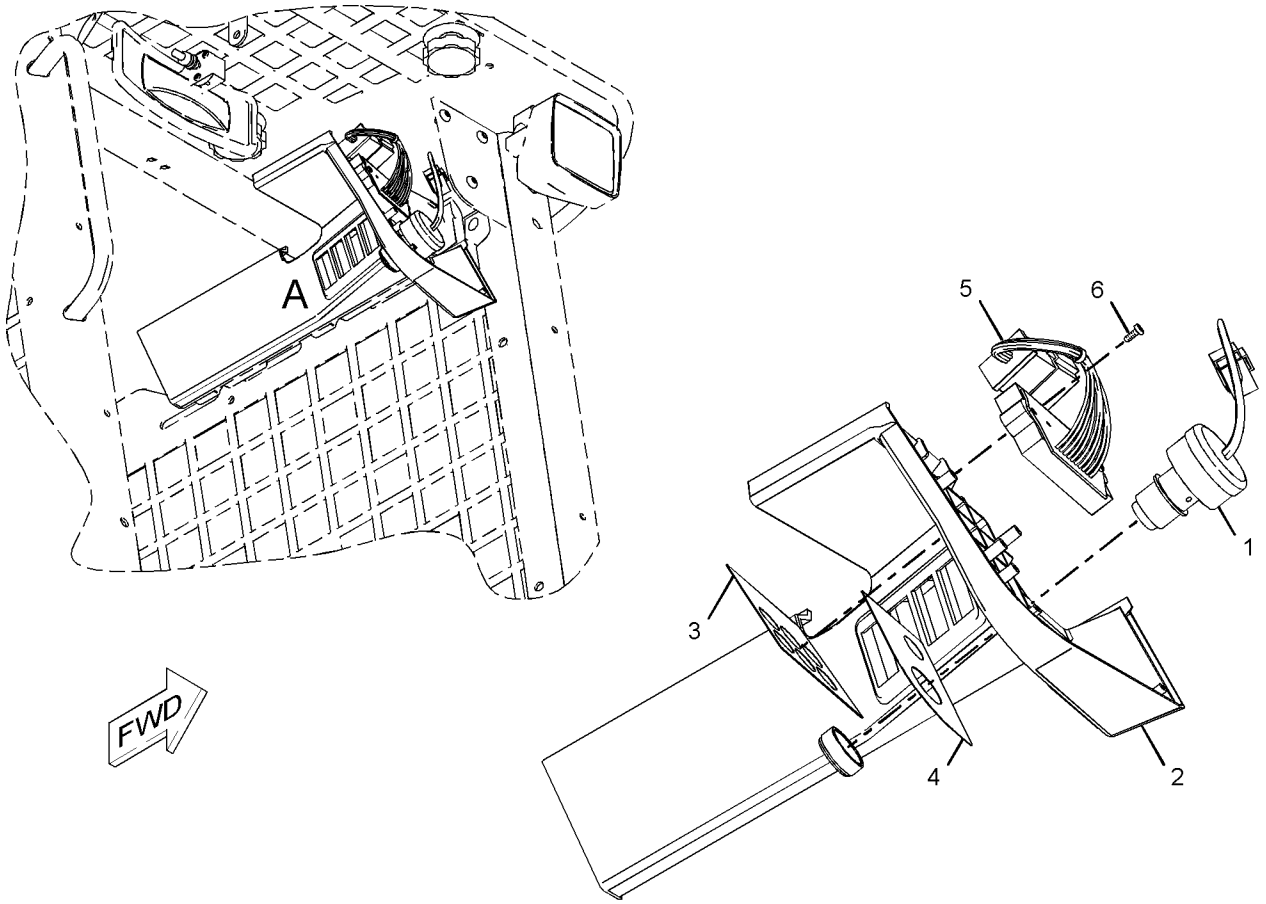

VIEW OF AREA A

GRAPHIC #1 **<END>** g01028652

OPERATOR STATION

216-4713 GAUGE & WARNING GP–RH

S/N: SCH2475-UP

PART OF 216-4751, 225-7998 PANEL GP-INSTRUMENT

AN ATTACHMENT

SMCS-7450, 7451 **i02772056**

NOTE	REF NO	GRAPHIC REF	PART NUMBER	QTY	PART NAME 1 2 3 4 5 6 (PRODUCT LEVEL)	SEE PAGE
	1	1	**084-4277**	1	LAMP GP-DOME (12-VOLT)	
		1	**6R-7490**	1	LAMP (12-VOLT, 10-WATT)	
	2	1	**158-6697**	1	PANEL	
	3	1	**216-4754**	1	FILM-INSTRUCTION (DASH)	
Y	4	1	**249-2910**	1	MODULE GP-WARNING INDICATOR	536
	5	1	**103-2006**	2	SCREW-PAN HEAD (6-19X0.37-IN)	
	6	1	**170-6305**	1	GAUGE GP-FUEL LEVEL	
		1	**4B-2043**	3	NUT (8-32-THD)	
		1	**7X-9065**	1	LAMP (12-VOLT)	
		1	**9B-7233**	3	LOCKWASHER	

Y-SEPARATE ILLUSTRATION

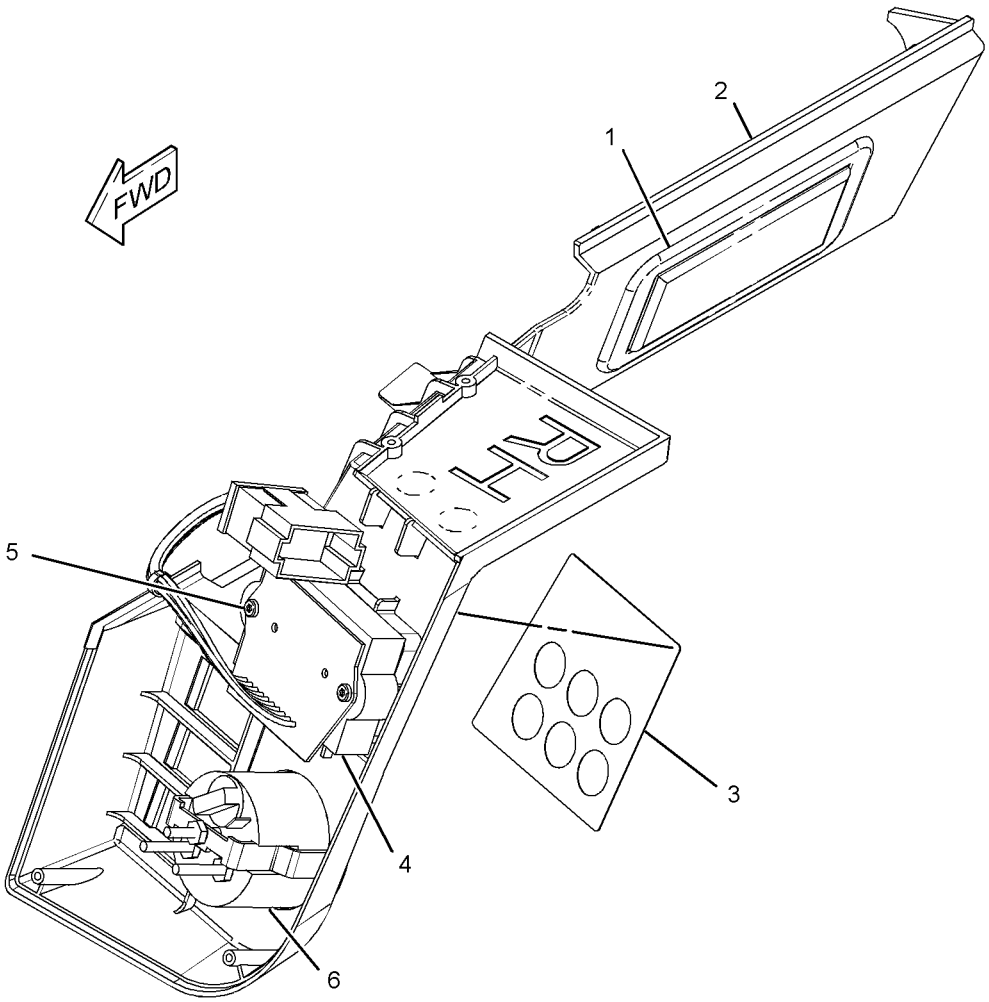

GRAPHIC #1 **<END>** g01142720

OPERATOR STATION

233-5632 GUARD GP-ROPS/FOPS

S/N: SCH2475-UP

AN ATTACHMENT

SMCS-7323 **i02866878**

NOTE	REF NO	GRAPHIC REF	PART NUMBER	QTY	PART NAME 1 2 3 4 5 6 (PRODUCT LEVEL)	SEE PAGE
	1	1	**152-1161**	1	PLATE AS-FOPS	
	2	1	**153-2683**	1	SPRING AS-GAS	
	4	1	**247-7182**	1	FILM (FOPS)	
M	5	1	**7X-2553**	8	BOLT (M16X2X40-MM)	
	6	1	**8T-4122**	12	WASHER-HARD (17X32X3.5-MM THK)	
M	7	1	**8T-4132**	4	NUT (M16X2-THD)	
D	8	1	**8T-5372**		SEAL (1.4-M)	

D-ORDER BY THE METER
M-METRIC PART

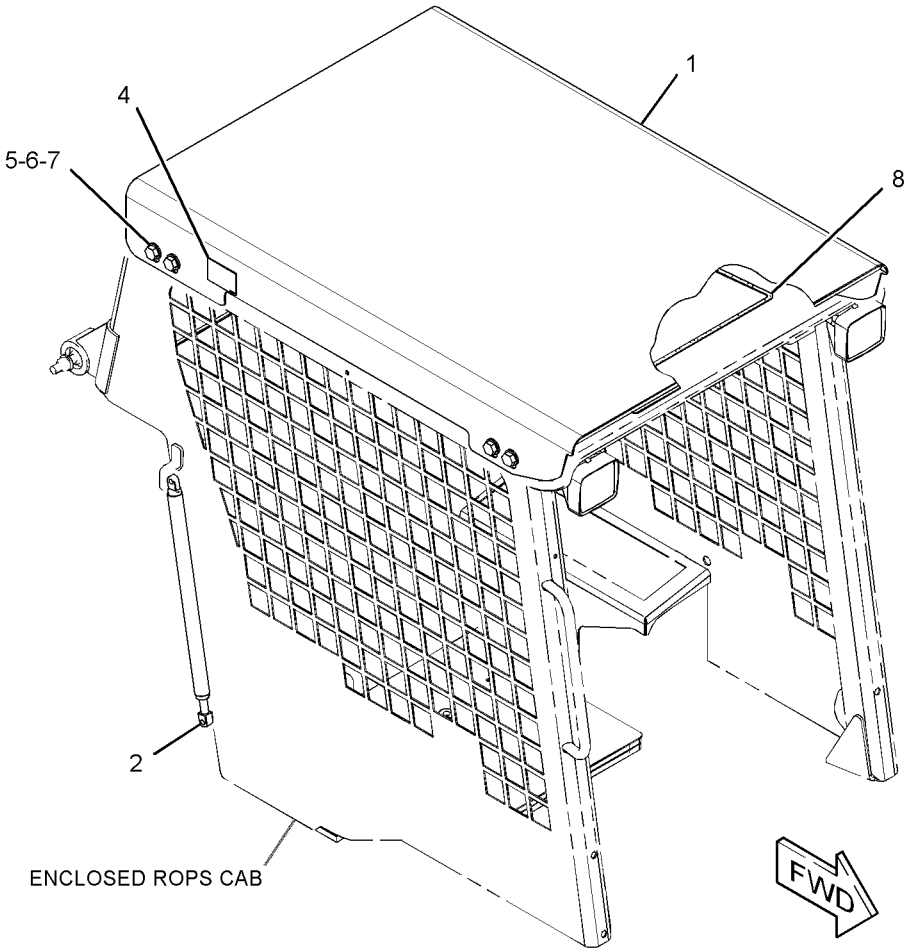

GRAPHIC #1 **<END>** g01437181

OPERATOR STATION

218-6400 HANDHOLD GP

S/N: SCH2475-UP
PART OF 295-7303, 295-7313 OPTION AR-CAB
CANNOT BE USED WITH 218-6440—PAGE 489, 223-0600—PAGE 492
AN ATTACHMENT

SMCS-7256 **i01908092**

NOTE	REF NO	GRAPHIC REF	PART NUMBER	QTY	PART NAME 1 2 3 4 5 6 (PRODUCT LEVEL)	SEE PAGE
	1	1	**218-6377**	1	HANDLE	
	2	1	**8T-4121**	2	WASHER-HARD (11X21X2.5-MM THK)	
M	3	1	**8T-4133**	2	NUT (M10X1.5-THD)	
M	4	1	**9X-2041**	2	SCREW-TRUSS HEAD (M10X1.5X20-MM)	

M-METRIC PART

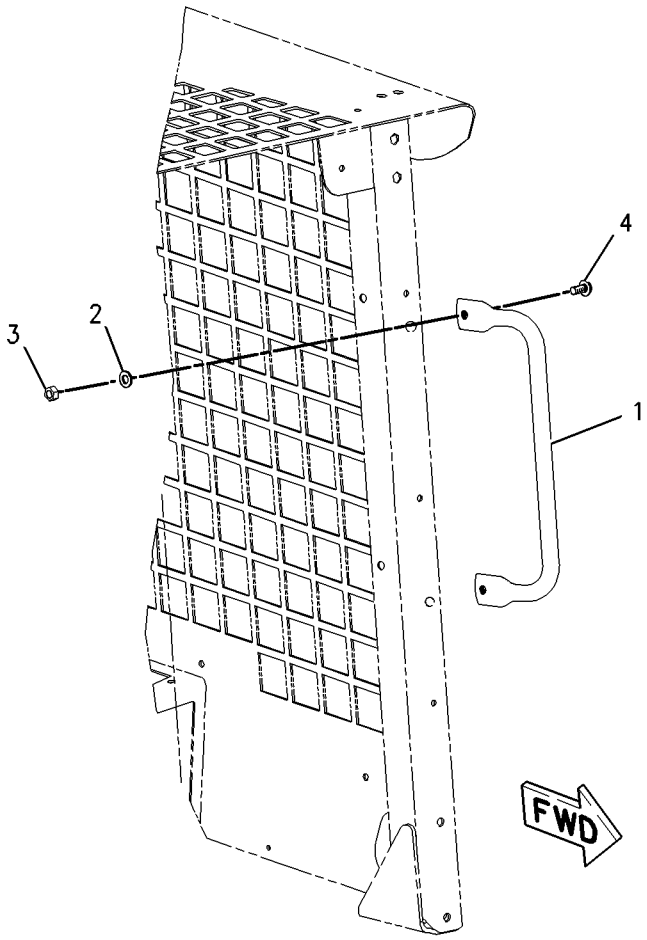

GRAPHIC #1 **<END>** g01002446

OPERATOR STATION

218-6117 HANDLE GP-MODULAR

S/N: SCH2475-UP
PART OF 218-6480 CONTROL GP-HANDLE
AN ATTACHMENT

SMCS-5705 **i02492650**

NOTE	REF NO	GRAPHIC REF	PART NUMBER	QTY	PART NAME 1 2 3 4 5 6 (PRODUCT LEVEL)	SEE PAGE
	1	1	**8L-8413**	1	STRAP-CABLE	
	2	1	**159-9853**	1	GROMMET	
	3	1	**174-3091**	1	KIT-RECEPTACLE (12-PIN)	
					(INCLUDES RECEPTACLE AS & WEDGE)	
	4	1	**186-3735**	2	PIN-CONNECTOR (16-GA TO 18-GA)	
	5	1	**8T-8737**	10	PLUG-SEAL	

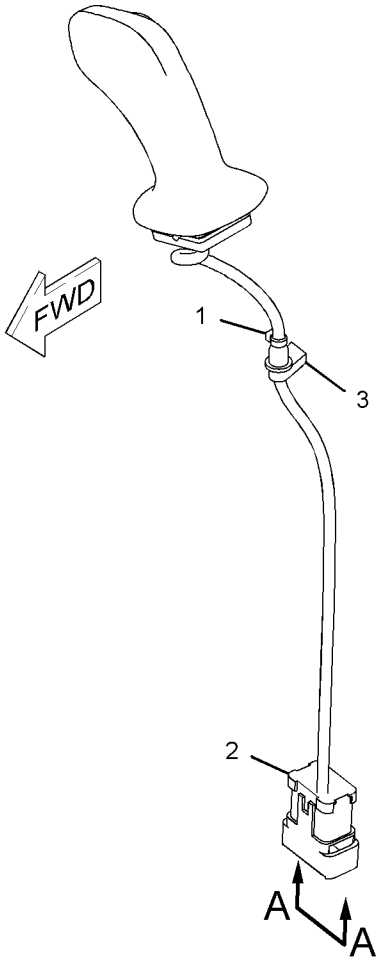

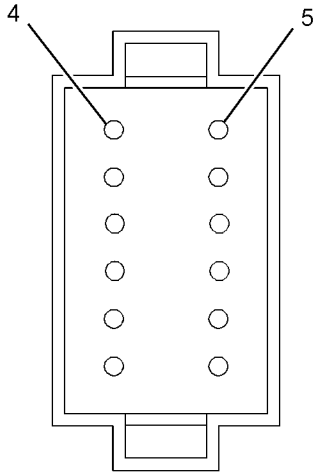

VIEW A-A

GRAPHIC #1 **<END>** g01010901

218-6118 HANDLE GP-MODULAR

S/N: SCH2475-UP

PART OF 218-6485, 218-6490 CONTROL GP-HANDLE

AN ATTACHMENT

SMCS-5705 **i02578035**

NOTE	REF NO	GRAPHIC REF	PART NUMBER	QTY	PART NAME 1 2 3 4 5 6 (PRODUCT LEVEL)	SEE PAGE
	1	1	**8L-8413**	1	STRAP-CABLE	
	2	1	**159-9853**	1	GROMMET	
	3	1	**174-3091**	1	KIT-RECEPTACLE (12-PIN)	
					(INCLUDES RECEPTACLE AS & WEDGE)	
	4	1	**186-3735**	4	PIN-CONNECTOR (16-GA TO 18-GA)	
	5	1	**8T-8737**	8	PLUG-SEAL	

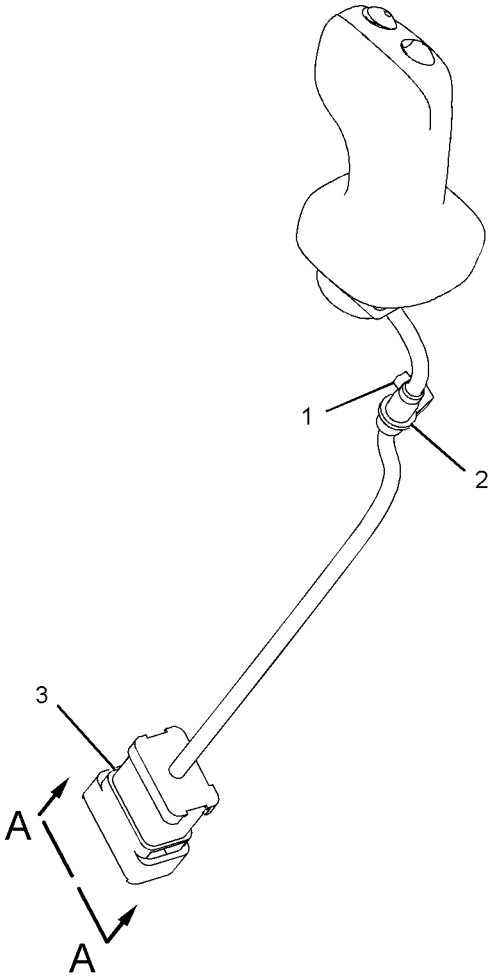

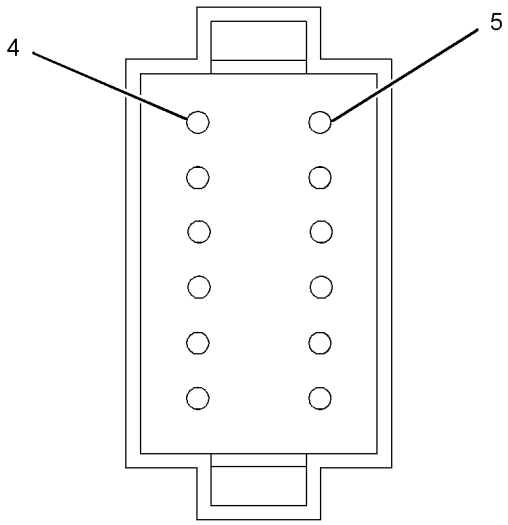

VIEW A-A

GRAPHIC #1 **<END>** g01113888

OPERATOR STATION

229-8746 HEATER & MTG GP-CAB

S/N: SCH2475-UP
PART OF 218-6703 HEATER AR-CAB
AN ATTACHMENT

SMCS-7304 **i02010980**

NOTE	REF NO	GRAPHIC REF	PART NUMBER	QTY	PART NAME 1 2 3 4 5 6 (PRODUCT LEVEL)	SEE PAGE
Y	1	1	*218-6393*	1	HEATER GP-CAB	512
M	2	1	**7X-2537**	4	BOLT (M8X1.25X35MM)	
	3	1	**8T-4224**	4	WASHER-HARD (8.8X16X2MM THK)	

M-METRIC PART
Y-SEPARATE ILLUSTRATION

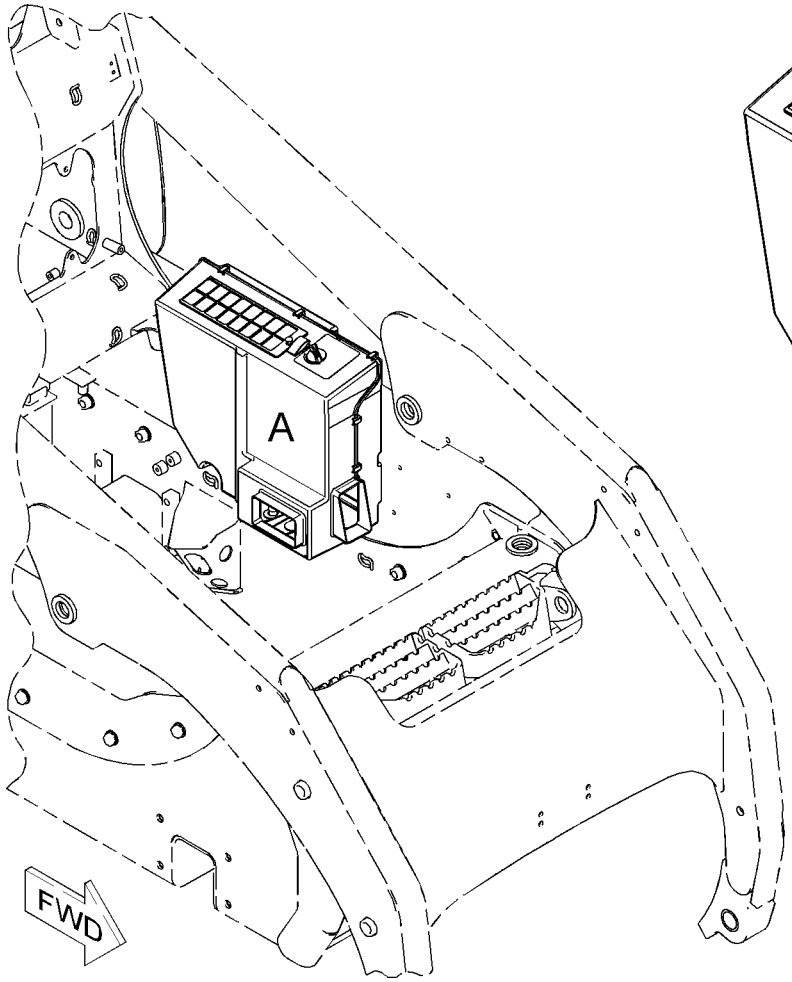

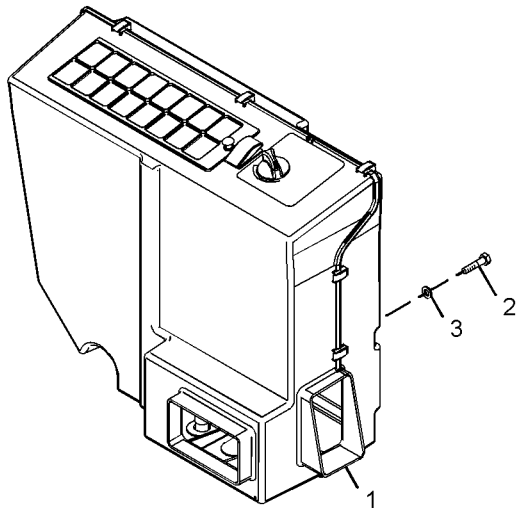

VIEW OF AREA A

GRAPHIC #1 **<END>** g01018708

OPERATOR STATION

218-6703 HEATER AR-CAB

S/N: SCH2475-UP
PART OF 295-7323 OPTION AR-CAB
AN ATTACHMENT

SMCS-7304 **i02869558**

NOTE	PART NUMBER	QTY	PART NAME 1 2 3 4 5 6 (PRODUCT LEVEL)	SEE PAGE
Y	*218-6394*	1	DUCT & CONTROL GP	500
Y	*229-8746*	1	HEATER & MTG GP-CAB	510
Y	*311-5861*	1	LINES GP-HEATER	532
Y	*218-6528*	1	LINES GP-HYDRAULIC FAN	279

Y-SEPARATE ILLUSTRATION

<END>

OPERATOR STATION

218-6393 HEATER GP-CAB

S/N: SCH2475-UP

PART OF 229-8746 HEATER & MTG GP-CAB, 218-6746 HEATER GP-CAB

AN ATTACHMENT

TYPE 1

SMCS-7304, 7342 **i02839368**

NOTE	REF NO	GRAPHIC REF	PART NUMBER	QTY	PART NAME 1 2 3 4 5 6 (PRODUCT LEVEL)	SEE PAGE
	1	1	**185-4015**	10	CLIP	
	2	1	**218-6399**	1	SEAL	
	3	1	**231-8121**	1	HOUSING	
Y	4	1	**231-8122**	1	HOUSING AS-SIDE (AIR CONDITIONER, HEATER)	518
	5	1	**231-8124**	1	COIL AS-HEATER	
	6	1	**295-5440**	1	MOTOR	
	7	1	**231-8126**	1	VALVE AS	
	8	1	**231-8127**	1	GROMMET	
	9	1	**231-8128**	1	GRILL	
	10	1	**231-8129**	1	PIN	
	11	1	**231-8130**	1	FILTER ELEMENT-CAB AIR	
	12	1	**231-8131**	1	PLATE	
	13	1	**231-8132**	1	FILTER ELEMENT-CAB AIR	
	14	1	**231-8133**	1	PANEL	
	15	1	**231-8141**	1	GROMMET	
	16	1	**231-8142**	1	RETAINER	
	17	1	**231-8143**	1	FILM (TEMPERATURE CONTROL)	
	18	1	**231-8144**	1	BAFFLE	
	19	1	**231-8145**	1	GROMMET	
	20	1	**206-7398**	1	KNOB-CONTROL (TEMPERATURE SELECT)	
	21	1	**305-2969**	2	THUMBSCREW	
	22	1	**218-6947**	1	HARNESS AS-HEATER & AIR COND	
	23	1	**236-5067**	1	SWITCH-ROCKER (HEATER)	
	24	1	**236-5069**	1	RELAY AS (12-VOLT) (HEATER)	

Y-SEPARATE ILLUSTRATION

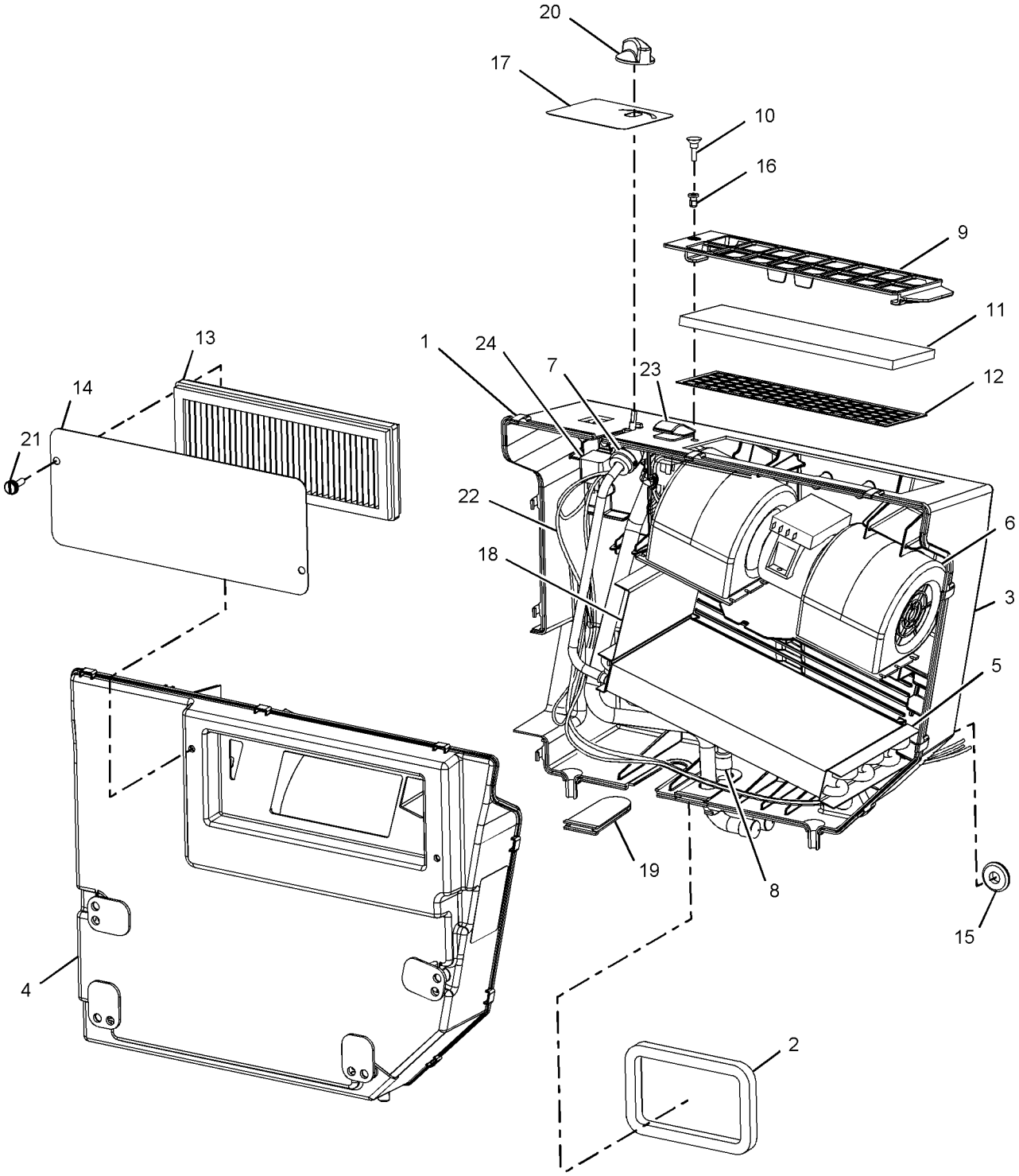

GRAPHIC #1 **<END>** g01027810

OPERATOR STATION

218-6393 HEATER GP-CAB

S/N: SCH2475-UP

PART OF 229-8746 HEATER & MTG GP-CAB, 218-6746 HEATER GP-CAB

AN ATTACHMENT

TYPE 2

SMCS-7304, 7342 **i02839375**

NOTE	REF NO	GRAPHIC REF	PART NUMBER	QTY	PART NAME 1 2 3 4 5 6 (PRODUCT LEVEL)	SEE PAGE
	1	1	**185-4015**	10	CLIP	
	2	1	**218-6399**	1	SEAL	
C	3	1	**312-1683**	1	HOUSING-COVER	
Y	4	1	**231-8122**	1	HOUSING AS-SIDE (AIR CONDITIONER, HEATER)	518
	5	1	**231-8124**	1	COIL AS-HEATER	
	6	1	**295-5440**	1	MOTOR	
	7	1	**231-8126**	1	VALVE AS	
	8	1	**231-8127**	1	GROMMET	
C	9	1	**312-2635**	1	COVER GP-ACCESS	
		1	**231-8129**	2	PIN	
		1	**231-8142**	2	RETAINER	
C	11	1	**303-6658**	1	FILTER ELEMENT-CAB AIR (AIR)	
	13	1	**231-8132**	1	FILTER ELEMENT-CAB AIR	
	14	1	**231-8133**	1	PANEL	
	15	1	**231-8141**	1	GROMMET	
	17	1	**231-8143**	1	FILM (TEMPERATURE CONTROL)	
	18	1	**231-8144**	1	BAFFLE	
	19	1	**231-8145**	1	GROMMET	
	20	1	**206-7398**	1	KNOB-CONTROL (TEMPERATURE SELECT)	
	21	1	**305-2969**	2	THUMBSCREW	
	22	1	**218-6947**	1	HARNESS AS-HEATER & AIR COND	
	23	1	**236-5067**	1	SWITCH-ROCKER (HEATER)	
	24	1	**236-5069**	1	RELAY AS (12-VOLT) (HEATER)	

C-CHANGE FROM PREVIOUS TYPE
Y-SEPARATE ILLUSTRATION

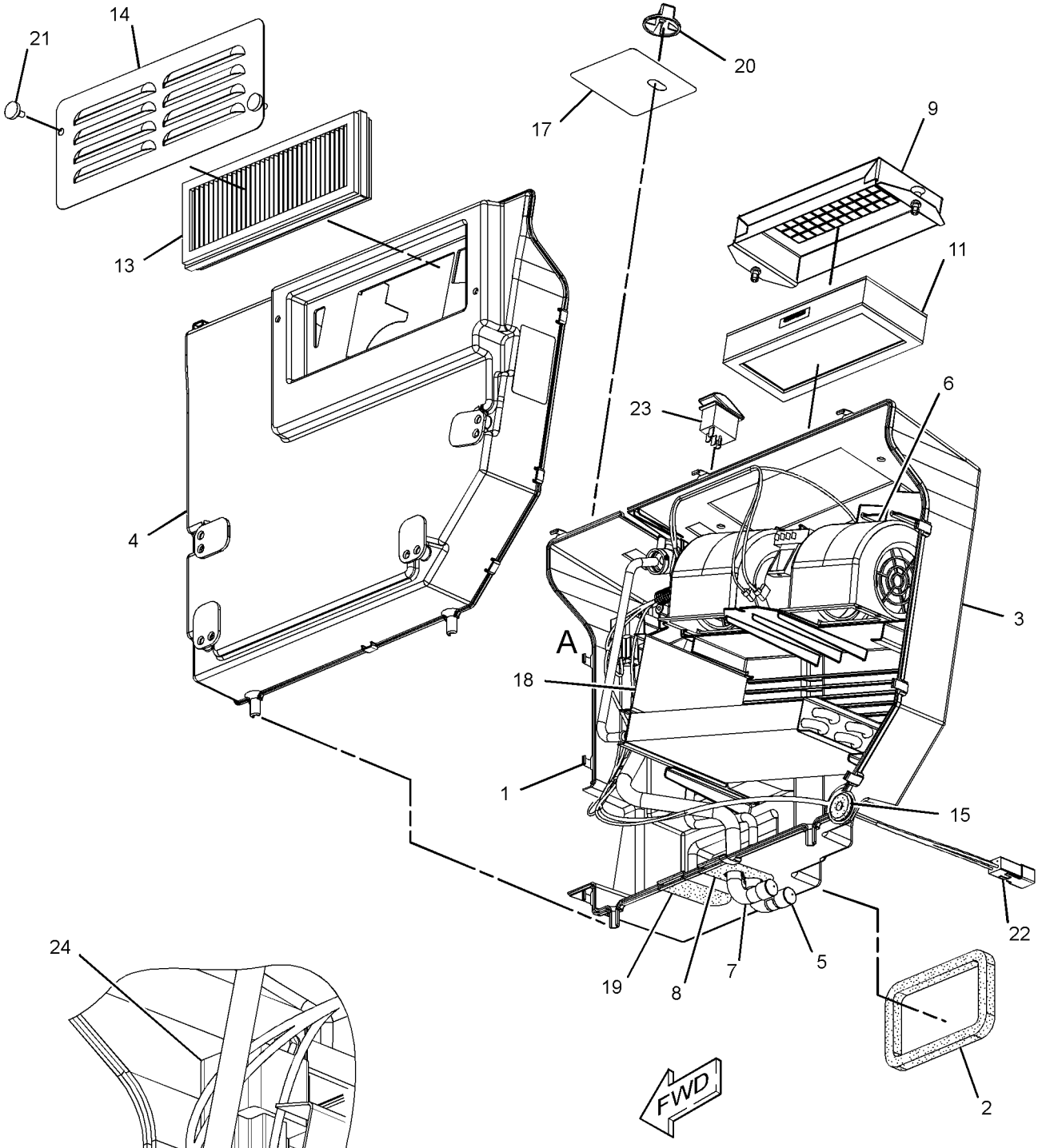

VIEW OF AREA A

GRAPHIC #1 **<END>** g01416774

OPERATOR STATION

218-6746 HEATER GP-CAB–KIT

S/N: SCH2475-UP

AN ATTACHMENT

SMCS-7304, 7342 **i02890258**

NOTE	PART NUMBER	QTY	PART NAME 1 2 3 4 5 6 (PRODUCT LEVEL)	SEE PAGE
Y	*218-6393*	1	HEATER GP-CAB	512
	218-6402	1	INSULATION AS	
	146-6371	6	LOUVER AS	
	8F-8151	1	VALVE AS-SHUTOFF (WATER)	
	150-7568	1	ADAPTER	
M	**7X-2537**	4	BOLT (M8X1.25X35-MM)	
M	**8T-4137**	1	BOLT (M10X1.5X20-MM)	
M	**8T-4189**	1	BOLT (M8X1.25X20-MM)	
M	**8T-4191**	1	BOLT (M10X1.5X16-MM)	
M	**8T-4200**	1	BOLT (M8X1.25X16-MM)	
M	**8T-6869**	4	BOLT (M8X1.25X60-MM)	
	8T-0154	4	CLAMP-HOSE	
	6D-4636	2	CLIP	
	3S-8665	1	CLIP	
	6D-1641	2	CLIP	
	6V-2235	1	CLIP	
	9X-8250	4	CLIP	
	218-6398	1	CONSOLE (LH)	
	218-6397	1	CONSOLE (RH)	
	218-6396	1	DUCT (CROSSOVER)	
	004-6810	1	ELBOW	
	218-6645	1	ELBOW	
	250-1493	1	ELBOW	
E	**206-2724**		GUARD (110-CM)	
E	**136-1953**		HOSE (387-CM)	
	176-4079	1	INSULATION	
	285-9133	1	INSULATION	
	285-8570	1	INSULATION	
	285-8565	1	INSULATION	
M	**8T-4133**	2	NUT (M10X1.5-THD)	
M	**175-0005**	8	SCREW-BUTTON HEAD (M6X1X25-MM)	
	6V-6689	2	SCREW-SELF-TAPPING (10-16X.625-IN)	
	240-6879	2	SEAL	
	240-6878	1	SEAL	
	240-6877	1	SEAL	
	218-6414	1	SEAL	
	218-6401	1	SEAL	
D	**8T-5372**		SEAL (0.4-M)	
	178-3620	2	STRAP-DUAL CLAMP (DUAL CLAMP)	
	5P-4116	1	WASHER-HARD (8.8X20.5X2-MM THK)	
	8T-4121	5	WASHER-HARD (11X21X2.5-MM THK)	
	8T-4224	5	WASHER-HARD (8.8X16X2-MM THK)	

D-ORDER BY THE METER
E-ORDER BY THE CENTIMETER
M-METRIC PART
Y-SEPARATE ILLUSTRATION

<END>

OPERATOR STATION

245-6811 HOLDER-CUP

S/N: SCH2475-UP

AN ATTACHMENT

SMCS-731C **i02825213**

NOTE	REF NO	GRAPHIC REF	PART NUMBER	QTY	PART NAME 1 2 3 4 5 6 (PRODUCT LEVEL)	SEE PAGE
					(NO SERVICED PARTS)	

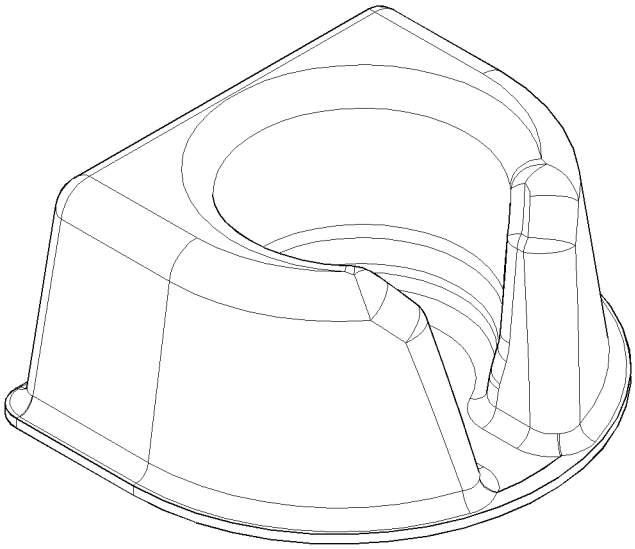

GRAPHIC #1 **<END>** g01409609

OPERATOR STATION

231-8122 HOUSING AS-SIDE–A/C, HEATER

S/N: SCH2475-UP

PART OF 218-6405 AIR CONDITIONER GP, 218-6393 HEATER GP-CAB

AN ATTACHMENT

SMCS-7320 **i02014573**

NOTE	REF NO	GRAPHIC REF	PART NUMBER	QTY	PART NAME 1 2 3 4 5 6 (PRODUCT LEVEL)	SEE PAGE
	1	1	**233-5929**	2	LOCKWASHER	
	2	1	**233-5931**	4	LOCKWASHER	
M	3	1	**131-3540**	4	LOCKNUT (M8X1.25 THD)	
	4	1	**233-5934**	4	MOUNT	
M	5	1	**129-3178**	2	LOCKNUT (M6X1 THD)	

M-METRIC PART

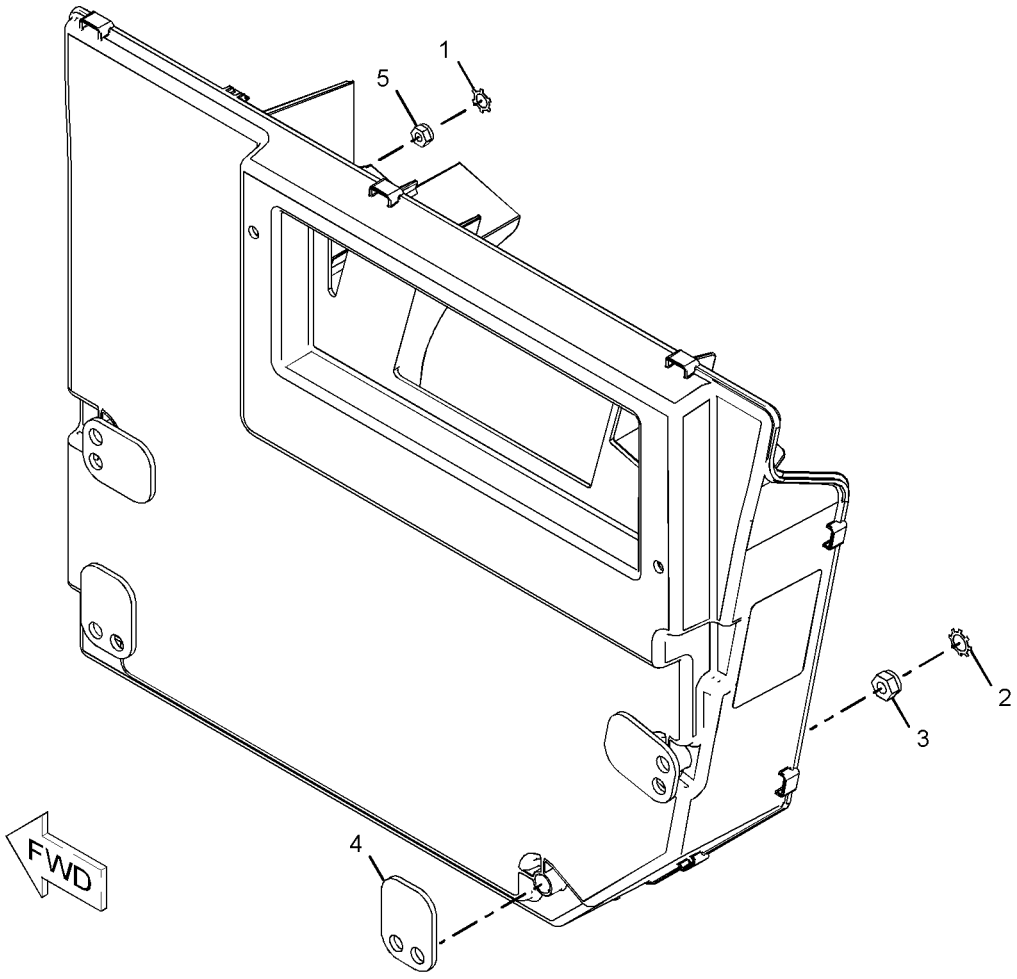

GRAPHIC #1 **<END>** g01041727

OPERATOR STATION

218-6701 INSTALLATION GP

S/N: SCH2475-UP
WITHOUT HEATER OR AIR CONDITIONER
PART OF 295-7303, 295-7313 OPTION AR-CAB
AN ATTACHMENT

SMCS-5057, 5258 **i02009396**

NOTE	PART NUMBER	QTY	PART NAME 1 2 3 4 5 6 (PRODUCT LEVEL)	SEE PAGE
Y	*218-6419*	1	COVER GP-CONSOLE	486
Y	*229-8744*	1	COVER GP-CONSOLE	487
Y	*218-6528*	1	LINES GP-HYDRAULIC FAN	279
Y-SEPARATE ILLUSTRATION				

<END>

233-5588 KIT-AIR COND & HEATER INSTL

S/N: SCH2475-UP
AN ATTACHMENT

SMCS-1405, 1802, 1805, 1808, 7174, 7304, 7320, 734D **i02876738**

NOTE	PART NUMBER	QTY	PART NAME 1 2 3 4 5 6 (PRODUCT LEVEL)	SEE PAGE
Y	**176-3900**	1	ACCUMULATOR GP-REFRIGERANT (WITH DESICCANT)	443
Y	**218-6405**	1	AIR CONDITIONER GP	447
Y	**218-6840**	1	MOTOR GP-GEAR	314
			—OR—	
Y	**289-6360**	1	MOTOR GP-GEAR (REFRIGERANT COMPRESSOR)	316
	218-6833	1	COMPRESSOR GP-REFRIGERANT	
	218-6836	1	COUPLING GP-DRIVE	
	218-6837	1	COUPLING	
	218-6838		HUB (COMPRESSOR)	
	276-4063	1	HUB (MOTOR)	
	283-9566	1	VALVE GP-SOLENOID (12 VDC)	
M	**8T-4191**	1	BOLT (M10X1.5X16-MM)	
M	**085-8091**	2	BOLT (M10X1.5X55-MM)	
M	**8T-6870**	2	BOLT (M8X1.25X70-MM)	
M	**8T-4136**	3	BOLT (M10X1.5X25-MM)	
M	**8T-4189**	14	BOLT (M8X1.25X20-MM)	
M	**9X-6032**	2	BOLT-SOCKET HEAD (M10X1.5X30-MM)	
	9G-5127	1	BREATHER (AIR CONDITIONER COMPRESSOR)	
	101-8296	2	CLIP	
	4P-8134	1	CLIP	
	233-5927	1	COIL AS	
	148-8315	2	CONNECTOR AS	
			(EACH INCLUDES)	
	2M-9780	1	SEAL-O-RING	
	6V-8642	1	CONNECTOR	
	7J-9108	1	SEAL-O-RING	
	148-8326	1	CONNECTOR AS	
	3J-7354	1	SEAL-O-RING	
	6V-8397	1	SEAL-O-RING	
	6V-9872	1	CONNECTOR	
	124-2113	1	COUPLING-PERMANENT	
	124-2119	1	COUPLING-PERMANENT	
	124-2141	1	COUPLING-PERMANENT	
	124-2150	2	COUPLING-PERMANENT	
	124-2164	2	COUPLING-PERMANENT	
	124-2168	1	COUPLING-PERMANENT	
	153-6256	1	ELBOW AS	

233-5588 **KIT-AIR COND & HEATER INSTL** *(contd.)* **i02876738**

NOTE	PART NUMBER	QTY	PART NAME 1 2 3 4 5 6 (PRODUCT LEVEL)	SEE PAGE
	7J-9108	1	SEAL-O-RING	
	8C-7563	1	ELBOW	
	218-6250	2	FAN AS	
	234-0566	1	FITTING AS	
	3E-4051	1	CAP-SEAL	
	3E-4057	1	VALVE AS	
	124-3548	1	FUSE (30-AMPERE)	
	2D-5248	1	GASKET	
	242-7389	1	HARNESS AS-CHASSIS (TRANSMISSION)	
	202-2168	1	HARNESS AS-FUEL TANK	
	102-8802	1	KIT-RECEPTACLE (2-PIN)	
			(INCLUDES RECEPTACLE AS & WEDGE)	
	155-2270		KIT-CONNECTING PLUG (2-PIN)	
			(INCLUDES PLUG AS, WEDGE & INTERFACE SEAL)	
	221-3879	1	HARNESS AS-HEATER & AIR COND	
	100-6674	2	SEAL-CONNECTOR	
E	**119-3662**		TUBE-HEAT SHRINK (10.85-MM DIA) (13-CM)	
	155-2260	1	KIT-CONNECTING PLUG (3-PIN)	
	155-2270	3	KIT-CONNECTING PLUG (2-PIN)	
			(EACH PLUG KIT INCLUDES PLUG AS, WEDGE & INTERFACE SEAL)	
GI	**122-6867**		HOSE (19-IN)	
I	**233-5951**	1	HOSE AS	
	218-6584	1	HOSE AS	
I	**233-5856**	1	HOSE AS	
I	**233-5863**	1	HOSE AS	
	252-0330	1	HOSE AS	
	218-6582	1	HOSE AS	
G	**122-6871**		HOSE-HYDRAULIC (29.2-IN)	
G	**122-6871**		HOSE-HYDRAULIC (2.8-IN)	
G	**213-8711**		HOSE-HYDRAULIC (67.8-IN)	
	233-5590	1	HOUSING-SUPPORT	
M	**5C-7261**	16	NUT (M8X1.25-THD)	
M	**8T-4133**	4	NUT (M10X1.5-THD)	
	246-9039	1	PLATE-INFORMATION (AIR CONDITIONER REFRIGERANT)	
D	**5P-5924**		SEAL (0.3-M)	
	9X-7378	1	SEAL-O-RING	
	9X-7380	1	SEAL-O-RING	
	9X-7381	3	SEAL-O-RING	
	9X-7382	2	SEAL-O-RING	
	9X-7383	3	SEAL-O-RING	
M	**233-1012**	1	SETSCREW-HEX SOCKET (M5X0.8X8-MM)	
	218-6060	1	SHROUD AS	
	9C-2741	2	SPACER (13.94X17.14X34-MM THK)	
	9G-7101	2	SPACER (10.5X20X30-MM THK)	
	3S-2093	14	STRAP-CABLE	
	7K-1181	2	STRAP-CABLE	
	236-6923	1	SWITCH AS-PRESSURE (REFRIGERANT)	
	8T-4121	12	WASHER-HARD (11X21X2.5-MM THK)	
	5P-4116	2	WASHER-HARD (8.8X20.5X2-MM THK)	
	8T-4224	22	WASHER-HARD (8.8X16X2-MM THK)	

D-ORDER BY THE METER
E-ORDER BY THE CENTIMETER
G-ORDER BY THE INCH
I-REFER TO HYDRAULIC INFORMATION SYSTEM
M-METRIC PART
Y-SEPARATE ILLUSTRATION

<END>

OPERATOR STATION

233-5589 KIT-AIR COND & HEATER INSTL–A/C, HEATER

S/N: SCH2475-UP

AN ATTACHMENT

SMCS-1405, 1802, 1805, 1808, 7174, 7304, 7320, 734D **i02890500**

NOTE	PART NUMBER	QTY	PART NAME 1 2 3 4 5 6 (PRODUCT LEVEL)	SEE PAGE
Y	*186-6190*	1	ACCUMULATOR GP-REFRIGERANT (WITH DESICCANT)	444
Y	*218-6405*	1	AIR CONDITIONER GP	447
Y	**218-6840**	1	MOTOR GP-GEAR (VALVE)	314
			–OR–	
Y	**289-6360**	1	MOTOR GP-GEAR	316
	283-9566	1	VALVE GP-SOLENOID (12 VDC)	
	150-7568	1	ADAPTER	
M	**8T-4191**	2	BOLT (M10X1.5X16-MM)	
M	**085-8091**	2	BOLT (M10X1.5X55-MM)	
M	**7X-2537**	4	BOLT (M8X1.25X35-MM)	
M	**8T-4136**	3	BOLT (M10X1.5X25-MM)	
M	**8T-4189**	14	BOLT (M8X1.25X20-MM)	
M	**8T-4200**	1	BOLT (M8X1.25X16-MM)	
M	**8T-6870**	2	BOLT (M8X1.25X70-MM)	
M	**9X-6032**	2	BOLT-SOCKET HEAD (M10X1.5X30-MM)	
	9G-5127	1	BREATHER (AIR CONDITIONER COMPRESSOR)	
	8T-0154	4	CLAMP-HOSE	
	6D-4636	2	CLIP	
	101-8296	2	CLIP	
	4P-8134	1	CLIP	
	3S-8665	1	CLIP	
	6D-1641	2	CLIP	
	233-5927	1	COIL AS	
	218-6833	1	COMPRESSOR GP-REFRIGERANT	
	148-8326	1	CONNECTOR AS	
	3J-7354	1	SEAL-O-RING	
	6V-8397	1	SEAL-O-RING	
	6V-9872	1	CONNECTOR	
	148-8315	2	CONNECTOR AS	
			(EACH INCLUDES)	
	2M-9780	1	SEAL-O-RING	
	6V-8642	1	CONNECTOR	
	7J-9108	1	SEAL-O-RING	
	218-6397		CONSOLE (RH)	
	218-6398	1	CONSOLE (LH)	
	218-6836	1	COUPLING GP-DRIVE	
	218-6837	1	COUPLING	
	218-6838	1	HUB (COMPRESSOR)	
	276-4063	1	HUB (MOTOR)	
	124-2119	1	COUPLING-PERMANENT	
	124-2113	1	COUPLING-PERMANENT	
	124-2141	1	COUPLING-PERMANENT	
	124-2150	2	COUPLING-PERMANENT	
	124-2164	2	COUPLING-PERMANENT	
	124-2168	1	COUPLING-PERMANENT	
	218-6396	1	DUCT	
	250-1493	1	ELBOW	
	153-6256	1	ELBOW AS	
	7J-9108	1	SEAL-O-RING	
	8C-7563	1	ELBOW	
	218-6250	2	FAN AS	
	234-0566	1	FITTING AS	
	3E-4051	1	CAP-SEAL	
	3E-4057	1	VALVE AS	

233-5589 **KIT-AIR COND & HEATER INSTL** *(contd.)* **i02890500**

NOTE	PART NUMBER	QTY	PART NAME 1 2 3 4 5 6 (PRODUCT LEVEL)	SEE PAGE
	124-3548	1	FUSE (30-AMPERE)	
	2D-5248	1	GASKET	
	206-2724		GUARD (110-CM)	
	242-7389	1	HARNESS AS-CHASSIS (TRANSMISSION)	
	202-2168	1	HARNESS AS-FUEL TANK	
	221-3879	1	HARNESS AS-HEATER & AIR COND	
E	**136-1953**		HOSE (330-CM)	
GI	**122-6867**		HOSE (19-IN)	
	218-6582	1	HOSE AS	
	218-6584	1	HOSE AS	
I	**233-5856**	1	HOSE AS	
I	**233-5863**	1	HOSE AS	
I	**233-5951**	1	HOSE AS	
	252-0330	1	HOSE AS	
	213-8711		HOSE-HYDRAULIC (172-CM)	
E	**122-6877**		HOSE-HYDRAULIC (48-CM)	
E	**122-6871**		HOSE-HYDRAULIC (256-CM)	
	233-5590	1	HOUSING-SUPPORT	
	176-4079	1	INSULATION	
	285-8565	1	INSULATION	
	285-8570	1	INSULATION	
	285-9133	1	INSULATION	
	146-6371	6	LOUVER AS	
M	**5C-7261**	16	NUT (M8X1.25-THD)	
M	**8T-4133**	4	NUT (M10X1.5-THD)	
	246-9039	1	PLATE-INFORMATION (AIR CONDITIONER REFRIGERANT)	
M	**175-0005**	8	SCREW-BUTTON HEAD (M6X1X25-MM)	
	6V-6689	2	SCREW-SELF-TAPPING (10-16X.625-IN)	
D	**5P-5924**		SEAL (0.3-M)	
D	**8T-5372**		SEAL (0.4-M)	
	218-6401	1	SEAL	
	218-6414	1	SEAL	
	240-6877	1	SEAL	
	240-6878	1	SEAL	
	240-6879	2	SEAL	
	9X-7378	1	SEAL-O-RING	
	9X-7380	1	SEAL-O-RING	
	9X-7381	3	SEAL-O-RING	
	9X-7382	2	SEAL-O-RING	
	9X-7383	3	SEAL-O-RING	
M	**233-1012**	1	SETSCREW-HEX SOCKET (M5X0.8X8-MM)	
	218-6060	1	SHROUD AS	
	9C-2741	2	SPACER (13.94X17.14X34-MM THK)	
	9G-7101	2	SPACER (10.5X20X30-MM THK)	
	3S-2093	14	STRAP-CABLE	
	7K-1181	2	STRAP-CABLE	
	178-3620	2	STRAP-DUAL CLAMP	
	236-6923	1	SWITCH AS-PRESSURE (REFRIGERANT)	
	8F-8151	1	VALVE AS-SHUTOFF	
	8T-4121	13	WASHER-HARD (11X21X2.5-MM THK)	
	5P-4116	2	WASHER-HARD (8.8X20.5X2-MM THK)	
	8T-4224	27	WASHER-HARD (8.8X16X2-MM THK)	

D-ORDER BY THE METER
E-ORDER BY THE CENTIMETER
G-ORDER BY THE INCH
I-REFER TO HYDRAULIC INFORMATION SYSTEM
M-METRIC PART

233-5589 **KIT-AIR COND & HEATER INSTL** *(contd.)* **i02890500**

Y-SEPARATE ILLUSTRATION

<END>

OPERATOR STATION

218-6743 KIT-CAB DOOR & MOUNTING—POLYCARBONATE

S/N: SCH2475-UP

CANNOT BE USED WITH 218-6744—PAGE 525

AN ATTACHMENT

SMCS-7308 **i02772066**

NOTE	PART NUMBER	QTY	PART NAME 1 2 3 4 5 6 (PRODUCT LEVEL)	SEE PAGE
Y	*276-3440*	1	DOOR GP-CAB (POLYCARBONATE)	497
	221-3877	1	HARNESS AS-WINDOW WIPER	
E	**125-7875**		TUBE-HEAT SHRINK (7.44-MM DIA) (5-CM)	
	102-8805	1	KIT-RECEPTACLE (6-PIN)	
			(INCLUDES RECEPTACLE AS & WEDGE)	
	5W-1987	2	TERMINAL	
	123-7615	1	CONNECTOR	
	155-2274	1	KIT-CONNECTING PLUG (6-PIN)	
			(INCLUDES PLUG AS, WEDGE & INTERFACE SEAL)	
	223-0608	1	HINGE AS	
	280-1575	1	PLATE AS	
	223-0591	1	PLATE AS	
	223-0601	2	PLATE AS	
	153-2683	1	SPRING AS-GAS (LOCKING)	
	230-3214	1	SPRING AS-GAS (CAB DOOR)	
	8T-3848	1	STRIKER AS-LATCH	
	6V-4270	1	LOCKWASHER	
	219-9739	1	TANK AS-WINDOW WASHER	
	142-9356	1	BLOCK	
E	**144-0195**		HOSE (40-CM)	
M	**195-0937**	8	INSERT-THREADED (M8X1.25-THD)	
	5P-0372	2	LOCK PIN	
	223-0617	1	MOUNT	
M	**5C-2890**	13	NUT (M6X1-THD)	
M	**8T-4133**	4	NUT (M10X1.5-THD)	
	177-3405	1	PIN	
	095-1325	1	PIN-CLEVIS	
M	**9X-2041**	4	SCREW-TRUSS HEAD (M10X1.5X20-MM)	
M	**9X-2044**	3	SCREW-TRUSS HEAD (M6X1X16-MM)	
M	**9X-2045**	4	SCREW-TRUSS HEAD (M6X1X20-MM)	
M	**127-2170**	8	SCREW-TRUSS HEAD (M8X1.25X20-MM)	
D	**5P-8309**		SEAL (0.72-M)	
D	**5P-9909**		SEAL (0.1-M)	
E	**125-3518**		SEAL (77-CM)	
D	**5P-5969**		SEAL (2.2-M)	
	9C-5344	1	SPACER (10.5X20X18-MM THK)	
	218-0728	2	SPRING	
	3S-2093	3	STRAP-CABLE	
	8T-2444	2	STUD-BALL	
	8T-4121	4	WASHER-HARD (11X21X2.5-MM THK)	
	8T-4205	13	WASHER-HARD (7.2X14.5X2-MM THK)	
	8T-4224	2	WASHER-HARD (8.8X16X2-MM THK)	
	8T-4222	1	WASHER-PLATED (11X32X2.5-MM THK)	

D-ORDER BY THE METER
E-ORDER BY THE CENTIMETER
M-METRIC PART
Y-SEPARATE ILLUSTRATION

<END>

OPERATOR STATION

218-6744 KIT-CAB DOOR & MOUNTING—GLASS

S/N: SCH2475-UP

CANNOT BE USED WITH 218-6743—PAGE 524

AN ATTACHMENT

SMCS-7308 **i02772068**

NOTE	PART NUMBER	QTY	PART NAME 1 2 3 4 5 6 (PRODUCT LEVEL)	SEE PAGE
Y	*223-0616*	1	DOOR GP-CAB (GLASS)	495
	221-3877	1	HARNESS AS-WINDOW WIPER	
	102-8805	1	KIT-RECEPTACLE (6-PIN)	
			(INCLUDES RECEPTACLE AS & WEDGE)	
	5W-1987	2	TERMINAL	
	123-7615	1	CONNECTOR	
E	**125-7875**		TUBE-HEAT SHRINK (7.44-MM DIA) (5-CM)	
	155-2274	1	KIT-CONNECTING PLUG (6-PIN)	
			(INCLUDES PLUG AS, WEDGE & INTERFACE SEAL)	
	223-0608	1	HINGE AS	
	223-0591	1	PLATE AS	
	223-0601	2	PLATE AS	
C	**280-1575**	1	PLATE AS	
	153-2683	1	SPRING AS-GAS (LOCKING)	
	230-3214	1	SPRING AS-GAS (CAB DOOR)	
	8T-3848	1	STRIKER AS-LATCH	
	6V-4270	1	LOCKWASHER	
	219-9739	1	TANK AS-WINDOW WASHER	
	142-9356	1	BLOCK	
E	**144-0195**		HOSE (40-CM)	
CM	**195-0937**	8	INSERT-THREADED (M8X1.25-THD)	
	5P-0372	2	LOCK PIN	
	223-0617	1	MOUNT	
M	**5C-2890**	13	NUT (M6X1-THD)	
M	**8T-4133**	4	NUT (M10X1.5-THD)	
	177-3405	1	PIN	
	095-1325	1	PIN-CLEVIS	
M	**9X-2041**	4	SCREW-TRUSS HEAD (M10X1.5X20-MM)	
M	**9X-2044**	3	SCREW-TRUSS HEAD (M6X1X16-MM)	
M	**9X-2045**	4	SCREW-TRUSS HEAD (M6X1X20-MM)	
M	**127-2170**	8	SCREW-TRUSS HEAD (M8X1.25X20-MM)	
D	**5P-8309**		SEAL (0.72-M)	
D	**5P-9909**		SEAL (0.1-M)	
E	**125-3518**		SEAL (77-CM)	
CD	**5P-5969**		SEAL (2.2-M)	
	9C-5344	1	SPACER (10.5X20X18-MM THK)	
	218-0728	2	SPRING	
	3S-2093	3	STRAP-CABLE	
	8T-2444	2	STUD-BALL	
	8T-4121	4	WASHER-HARD (11X21X2.5-MM THK)	
	8T-4205	13	WASHER-HARD (7.2X14.5X2-MM THK)	
	8T-4224	2	WASHER-HARD (8.8X16X2-MM THK)	
	8T-4222	1	WASHER-PLATED (11X32X2.5-MM THK)	

C-CHANGE FROM PREVIOUS TYPE
D-ORDER BY THE METER
E-ORDER BY THE CENTIMETER
M-METRIC PART
Y-SEPARATE ILLUSTRATION

<END>

OPERATOR STATION

233-5864 KIT-CAB SEAL—DEBRIS BARRIER

S/N: SCH2475-UP

AN ATTACHMENT

SMCS-7301 **i02513705**

NOTE	PART NUMBER	QTY	PART NAME 1 2 3 4 5 6 (PRODUCT LEVEL)	SEE PAGE
	287-7006	1	BLOCK AS (RH)	
	287-7004	1	BLOCK AS (LH)	
M	**7X-2537**	2	BOLT (M8X1.25X35-MM)	
	189-4523	2	BOSS	
	187-3212	1	PLATE	
	187-3211	1	PLATE AS	
M	**8T-3612**	2	NUT-WELD (M8X1.25-THD)	
	288-5767	8	PLUG-BUTTON	
	3T-7856	2	PLUG-BUTTON	
	287-6603	2	PLUG-BUTTON	
E	**128-7037**		SEAL (98-CM)	
	284-3744	1	SEAL-RUBBER	
	284-3743	1	SEAL-RUBBER	
	284-3595	2	SEAL-RUBBER	
	8T-4224	2	WASHER-HARD (8.8X16X2-MM THK)	

E-ORDER BY THE CENTIMETER
M-METRIC PART

<END>

OPERATOR STATION

234-0774 LEVER GP-GOVERNOR

S/N: SCH2475-UP

PART OF 218-5565 PEDAL GP-GOVERNOR

SMCS-1265, 1276 **i01910964**

NOTE	REF NO	GRAPHIC REF	PART NUMBER	QTY	PART NAME 1 2 3 4 5 6 (PRODUCT LEVEL)	SEE PAGE
	1	1	**192-2663**	1	LEVER GP-GOVERNOR	
M		1	**8T-4971**	1	BOLT (M6X1X30-MM)	
M		1	**129-3178**	1	LOCKNUT (M6X1-THD)	
	2	1	**234-0732**	1	CABLE AS	
	3	1	**8T-4742**	1	END-YOKE ROD	
	4	1	**8T-4744**	1	PIN AS-SPRING	
M	5	1	**5C-2890**	1	NUT (M6X1-THD)	
M	6	1	**8T-4971**	1	BOLT (M6X1X30-MM)	
M	7	1	**129-3178**	1	LOCKNUT (M6X1-THD)	

M-METRIC PART

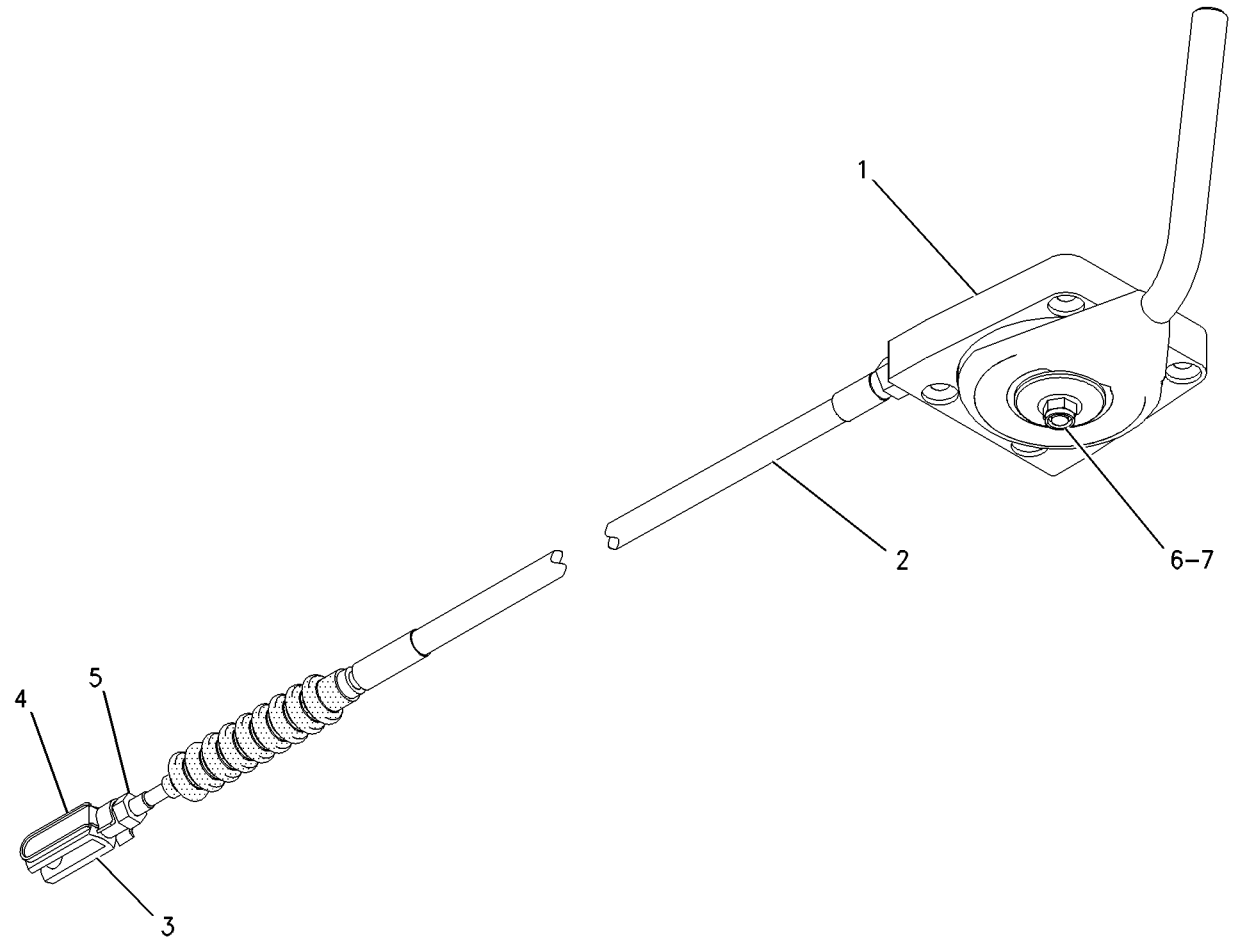

GRAPHIC #1 **<END>** g00995803

OPERATOR STATION

218-6356 LINER GP-CAB

S/N: SCH2475-UP

PART OF 218-6350 CAB AR-ENCLOSED ROPS

SMCS-7268, 7329 **i02634183**

NOTE	REF NO	GRAPHIC REF	PART NUMBER	QTY	PART NAME 1 2 3 4 5 6 (PRODUCT LEVEL)	SEE PAGE
E	1	1	**9X-2092**		STRIP-EDGE (113CM)	
	2	1	**218-6357**	1	INSULATION	
	3	1	**218-6359**	1	LINER-REAR WALL	
	4	1	**218-6436**	1	INSULATION	
	5	1	**292-3114**	2	SEAL	

E-ORDER BY THE CENTIMETER

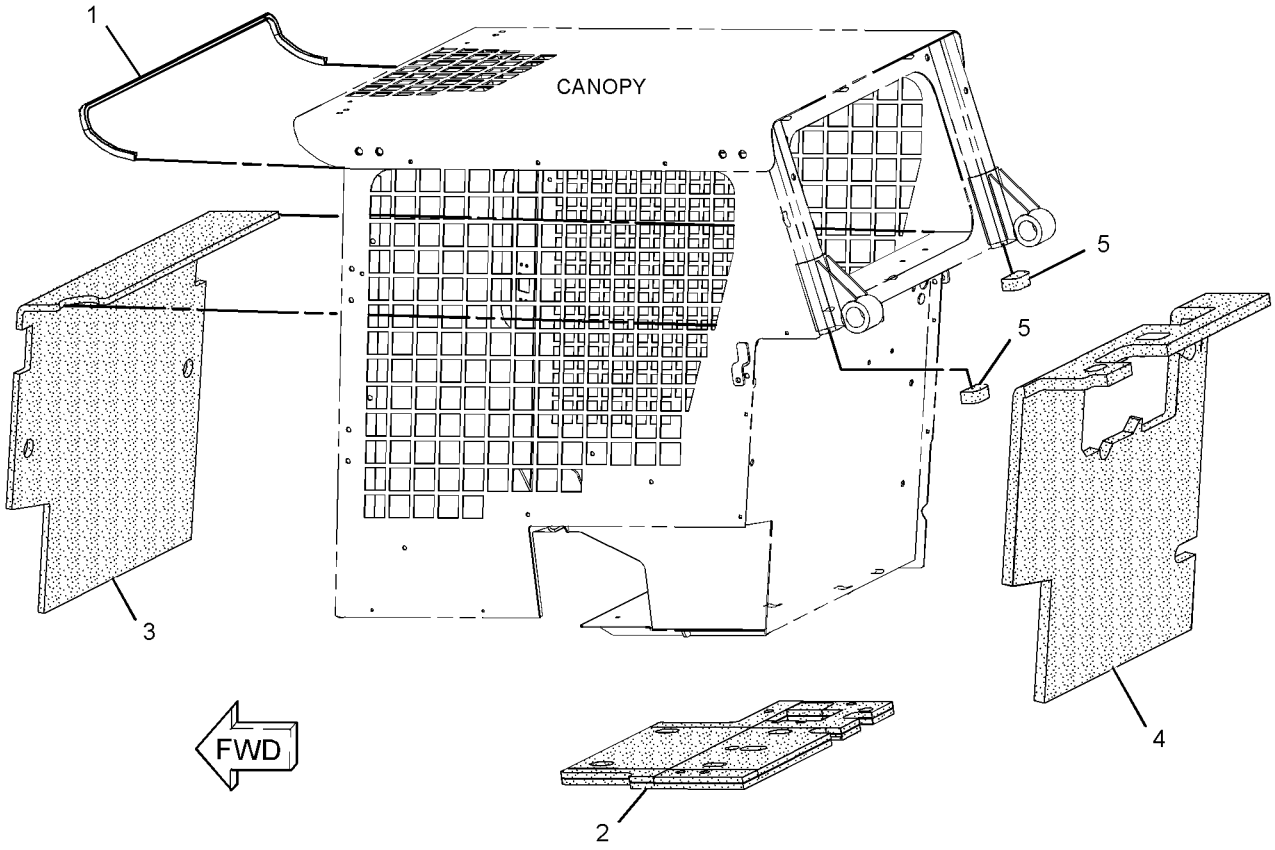

GRAPHIC #1 **<END>** g01352204

OPERATOR STATION

142-9311 LINER-CAB

S/N: SCH2475-UP

AN ATTACHMENT

SMCS-7329 **i02016735**

NOTE	REF NO	GRAPHIC REF	PART NUMBER	QTY	PART NAME 1 2 3 4 5 6 (PRODUCT LEVEL)	SEE PAGE
					(NO SERVICED PARTS)	

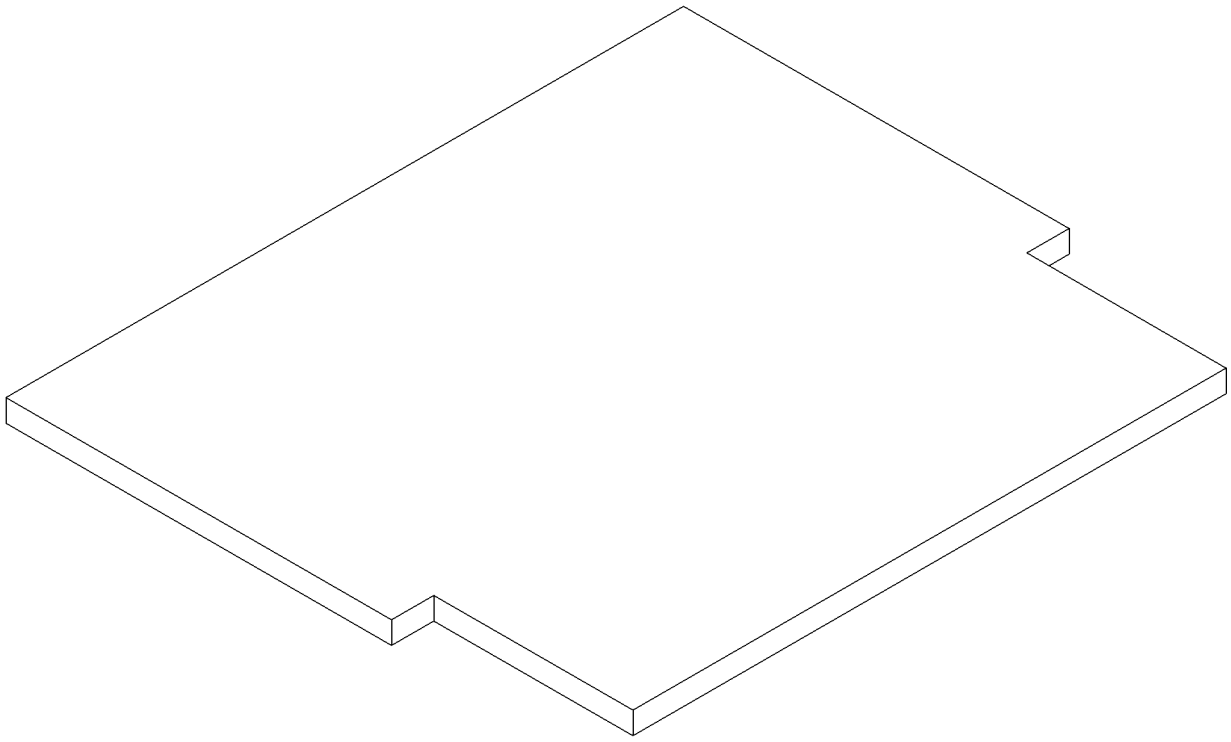

GRAPHIC #1 **<END>** g00782727

OPERATOR STATION

218-6590 LINES GP-AIR CONDITIONER

S/N: SCH2475-UP

PART OF 218-6302 AIR CONDITIONER AR

AN ATTACHMENT

SMCS-1808, 7320 **i02367123**

NOTE	REF NO	GRAPHIC REF	PART NUMBER	QTY	PART NAME 1 2 3 4 5 6 (PRODUCT LEVEL)	SEE PAGE
	1	1	**3S-2093**	2	STRAP-CABLE	
	2	1	**4P-8134**	1	CLIP	
	3	1	**236-6923**	1	SWITCH AS-PRESSURE (AIR CONDITIONER)	
M	4	1	**085-8091**	2	BOLT (M10X1.5X55-MM)	
	5	1	**101-8296**	2	CLIP	
Y	6	1	*186-6190*	1	ACCUMULATOR GP-REFRIGERANT (WITH DESICCANT)	444
CI	7	1	**233-5951**	1	HOSE AS	
	8	1	**218-6582**	1	HOSE AS	
	9	1	**252-0330**	1	HOSE AS	
CI	10	1	**233-5863**	1	HOSE AS	
	11	1	*234-0566*	1	FITTING AS	
		1	**3E-4051**	1	CAP-SEAL	
		1	**3E-4057**	1	VALVE AS	
	12	1	**246-9039**	1	PLATE-INFORMATION (AIR CONDITIONER REFRIGERANT)	
	13	1	**8T-4121**	3	WASHER-HARD (11X21X2.5-MM THK)	
M	14	1	**8T-4191**	1	BOLT (M10X1.5X16-MM)	
	15	1	**9C-2741**	2	SPACER (13.94X17.14X34-MM THK)	
	16	1	**9X-7378**	1	SEAL-O-RING	
	17	1	**9X-7380**	1	SEAL-O-RING	
	18	1	**9X-7381**	3	SEAL-O-RING	
	19	1	**9X-7382**	2	SEAL-O-RING	
	20	1	**9X-7383**	3	SEAL-O-RING	
D	21	1	**5P-5924**		SEAL (0.3-M)	

C-CHANGE FROM PREVIOUS TYPE
D-ORDER BY THE METER
I-REFER TO HYDRAULIC INFORMATION SYSTEM
M-METRIC PART
Y-SEPARATE ILLUSTRATION

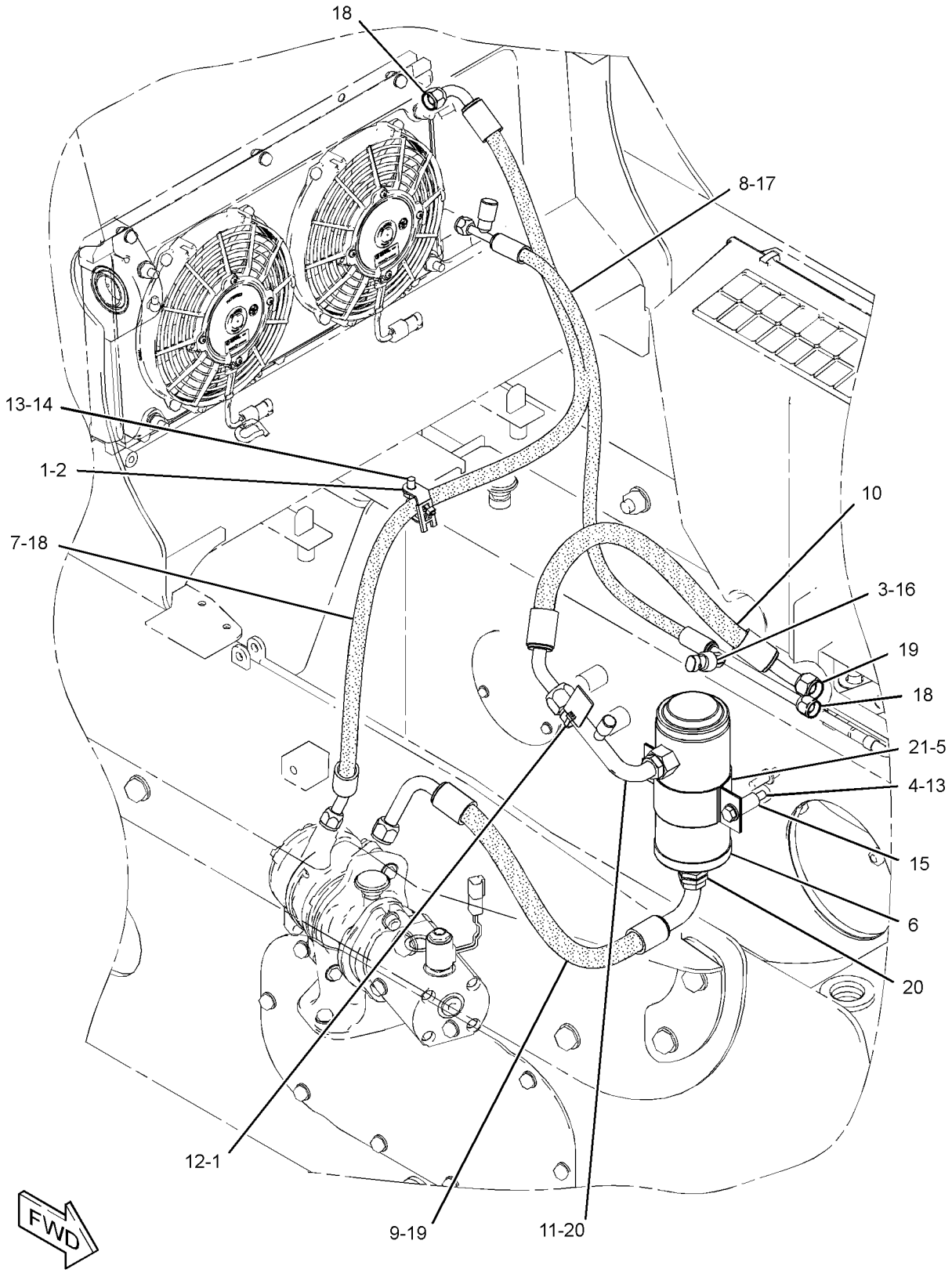

GRAPHIC #1 **<END>** g01178945

OPERATOR STATION

311-5861 LINES GP-HEATER

S/N: SCH2475-UP

PART OF 218-6302 AIR CONDITIONER AR, 218-6703 HEATER AR-CAB

AN ATTACHMENT

SMCS-1812, 7304 **i02820451**

NOTE	REF NO	GRAPHIC REF	PART NUMBER	QTY	PART NAME 1 2 3 4 5 6 (PRODUCT LEVEL)	SEE PAGE
	1	1	**8F-8151**	1	VALVE AS-SHUTOFF (CAB HEATER)	
	2	1	**8T-0154**	4	CLAMP-HOSE	
	3	1	**150-7568**	1	ADAPTER	
	4	1	**176-4079**	1	INSULATION	
	5	1	**178-3620**	2	STRAP-DUAL CLAMP	
	6	1	**250-1493**	1	ELBOW	
	7	1	**3S-8665**	1	CLIP	
	8	1	**6D-1641**	1	CLIP	
	9	1	**8T-4121**	2	WASHER-HARD (11X21X2.5-MM THK)	
M	10	1	**8T-4191**	1	BOLT (M10X1.5X16-MM)	
	11	1	**9X-8250**	2	CLIP	
E	12	1	**136-1953**		HOSE (191-CM)	
E	12A	1	**136-1953**		HOSE (152-CM)	

E-ORDER BY THE CENTIMETER
M-METRIC PART

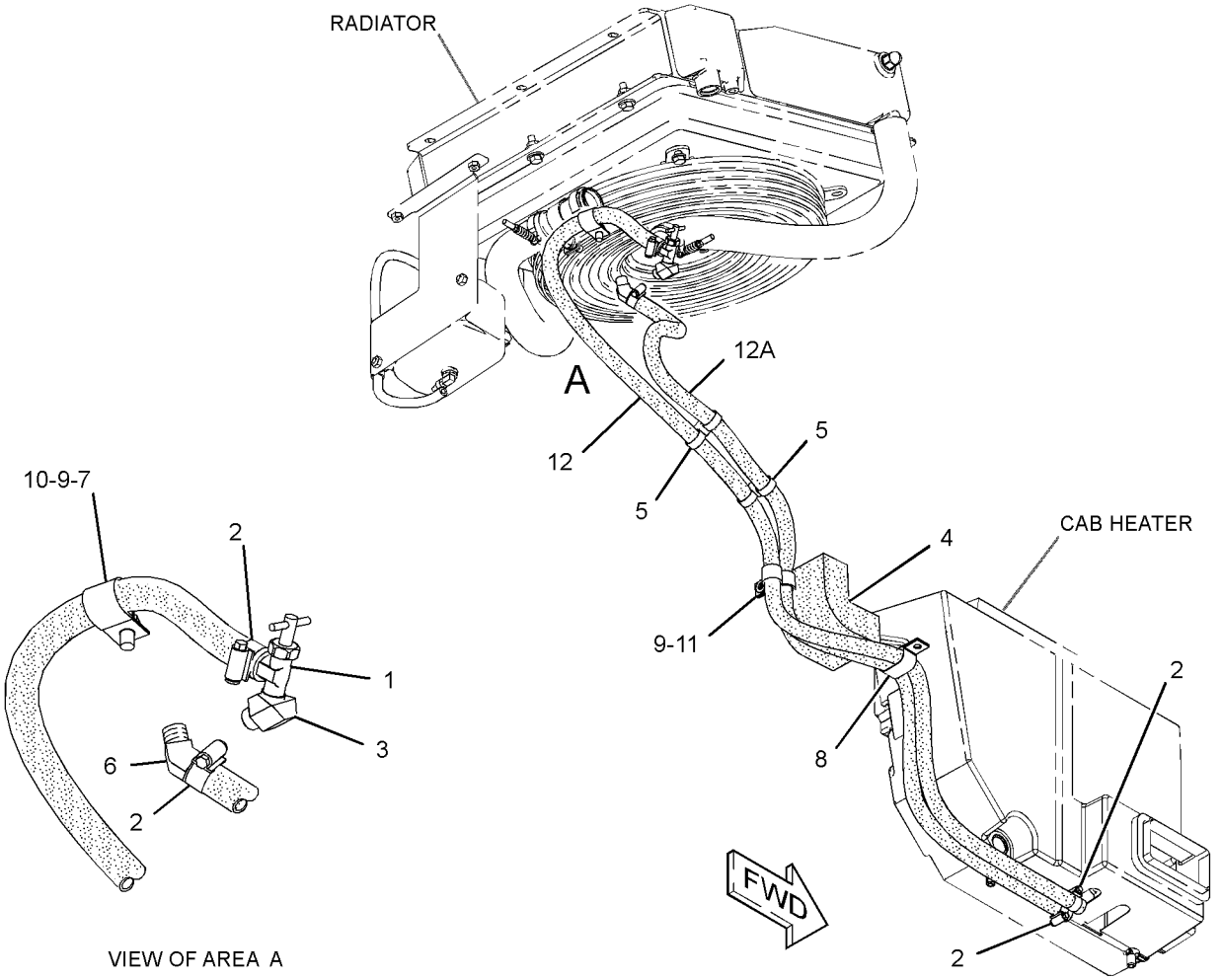

VIEW OF AREA A

GRAPHIC #1 **<END>** g01409009

OPERATOR STATION

6V-1970 LITERATURE GP

S/N: SCH2475-UP

PART OF 295-7232, 295-7233 COMMON AR

SMCS-0374, 0375, 7300 **i02831417**

NOTE	PART NUMBER	QTY	PART NAME 1 2 3 4 5 6 (PRODUCT LEVEL)	SEE PAGE
	5P-8500	2	KEY (LITERATURE COMPARTMENT)	
	5P-7958	1	SLEEVE-CABLE SPLICE	

<END>

OPERATOR STATION

218-6395 MIRROR GP-REAR VIEW

S/N: SCH2475-UP

PART OF 218-6350 CAB AR-ENCLOSED ROPS

SMCS-7319 **i02007402**

NOTE	REF NO	GRAPHIC REF	PART NUMBER	QTY	PART NAME 1 2 3 4 5 6 (PRODUCT LEVEL)	SEE PAGE
	1	1	**218-6384**	1	MIRROR AS	
	2	1	**3B-4505**	1	LOCKWASHER	
M	3	1	**5C-7261**	1	NUT (M8X1.25-THD)	
	4	1	**8T-4224**		WASHER-HARD (8.8X16X2-MM THK)	

M-METRIC PART

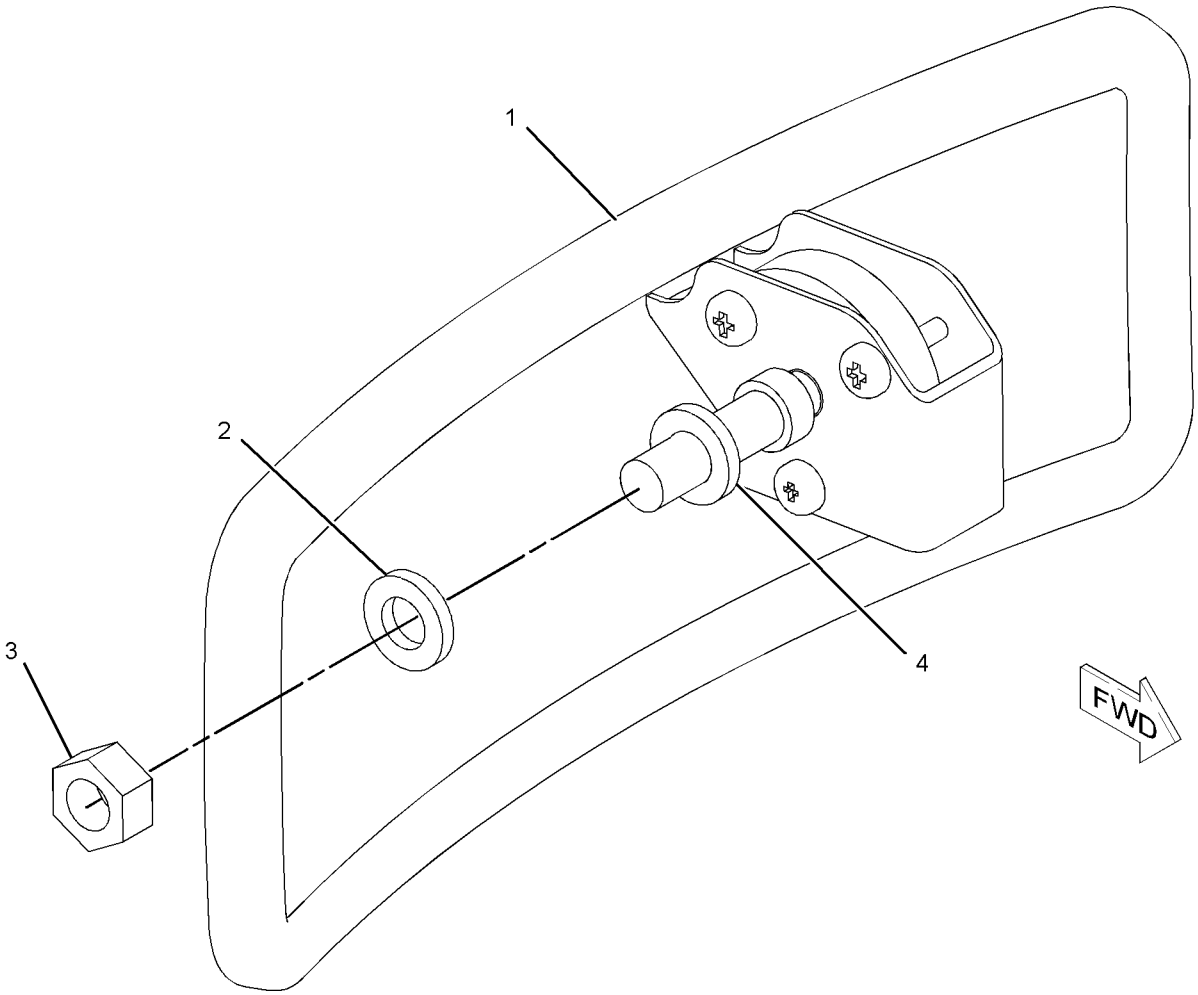

GRAPHIC #1 **<END>** g01038484

223-6537 MODULE GP-WARNING INDICATOR

S/N: SCH2475-UP
PART OF 216-4712 GAUGE & WARNING GP
AN ATTACHMENT

SMCS-7407, 7431 **i02492652**

NOTE	REF NO	GRAPHIC REF	PART NUMBER	QTY	PART NAME 1 2 3 4 5 6 (PRODUCT LEVEL)	SEE PAGE
	1	1	**102-8801**	1	KIT-RECEPTACLE (12-PIN)	
					(INCLUDES RECEPTACLE AS & WEDGE)	
	2	1	**232-4706**	1	GASKET	
	4	1	**186-3735**	9	PIN-CONNECTOR (16-GA TO 18-GA)	
	5	1	**8T-8737**	1	PLUG-SEAL	

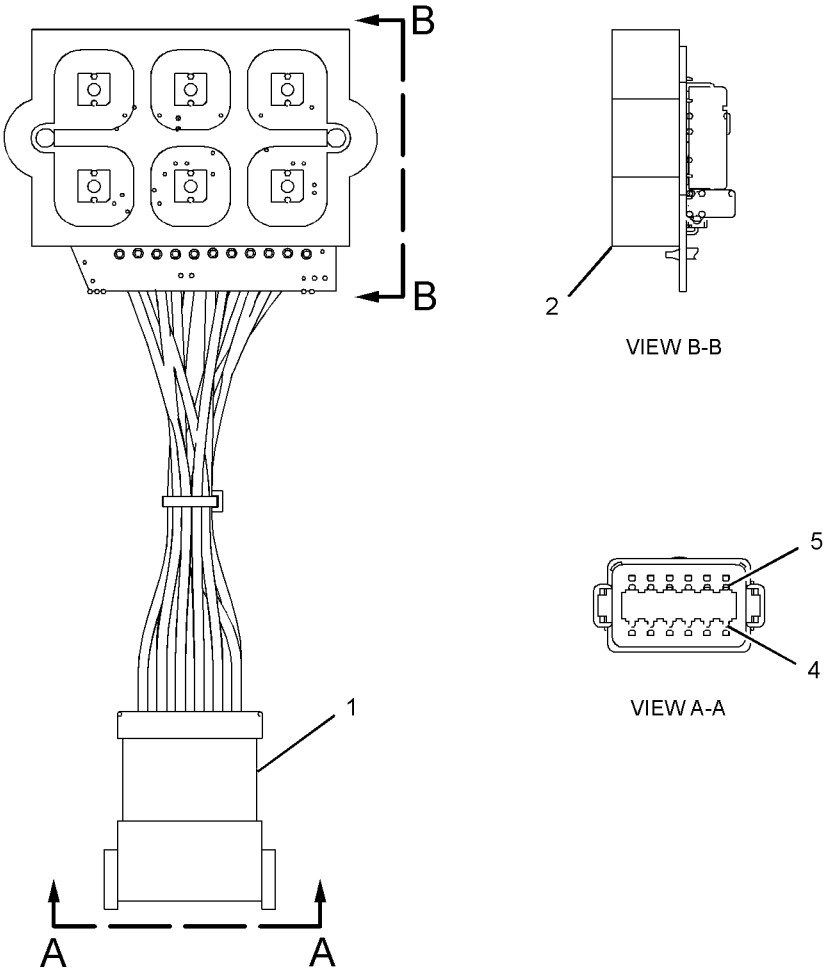

GRAPHIC #1 **<END>** g01307796

OPERATOR STATION

249-2910 MODULE GP-WARNING INDICATOR

S/N: SCH2475-UP

PART OF 216-4713 GAUGE & WARNING GP

AN ATTACHMENT

SMCS-7407, 7431 **i02757214**

NOTE	REF NO	GRAPHIC REF	PART NUMBER	QTY	PART NAME 1 2 3 4 5 6 (PRODUCT LEVEL)	SEE PAGE
	1	1	**8T-8737**	3	PLUG-SEAL	
	2	1	**232-4706**	1	GASKET	
	3	1	**186-3735**	9	PIN-CONNECTOR (16-GA TO 18-GA)	
	4	1	**102-8801**	1	KIT-RECEPTACLE (12-PIN)	
					(INCLUDES RECEPTACLE AS & WEDGE)	

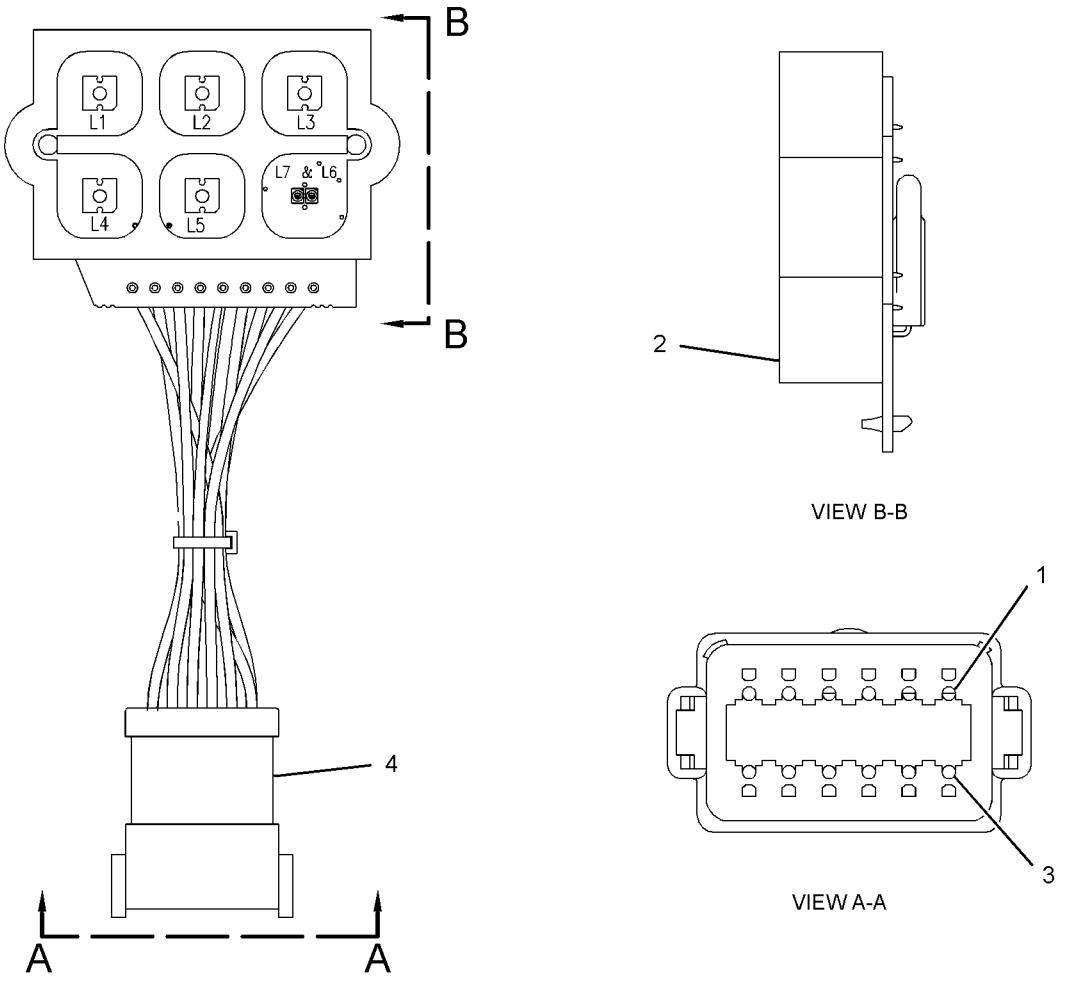

GRAPHIC #1 **<END>** g01152784

OPERATOR STATION

218-6370 MOUNTING GP-ROPS

S/N: SCH2475-UP

PART OF 218-6350 CAB AR-ENCLOSED ROPS

SMCS-7266, 7325 **i01955254**

NOTE	REF NO	GRAPHIC REF	PART NUMBER	QTY	PART NAME 1 2 3 4 5 6 (PRODUCT LEVEL)	SEE PAGE
	1	1	**152-5878**	2	MOUNT AS	
	2	1	**153-6981**	2	MOUNT	
	3	1	**159-5790**	1	BRACKET	
	4	1	**159-5792**	1	BAR AS	
	5	1	**159-5794**	1	SPRING	
	6	1	**218-6381**	2	SPACER	
	7	1	**165-7095**	4	WASHER (16.5X71.5X3-MM THK)	
	8	1	**4P-7581**	1	CLIP	
M	9	1	**6V-9805**	2	BOLT (M6X1X20-MM)	
M	10	1	**7X-2475**	2	BOLT (M16X2X130-MM)	
	11	1	**8T-4122**	4	WASHER-HARD (17X32X3.5-MM THK)	
M	12	1	**8T-4173**	2	BOLT (M16X2X110-MM)	
	13	1	**8T-4205**	2	WASHER-HARD (7.2X14.5X2-MM THK)	
M	14	1	**8T-4778**	4	LOCKNUT (M16X2-THD)	

M-METRIC PART

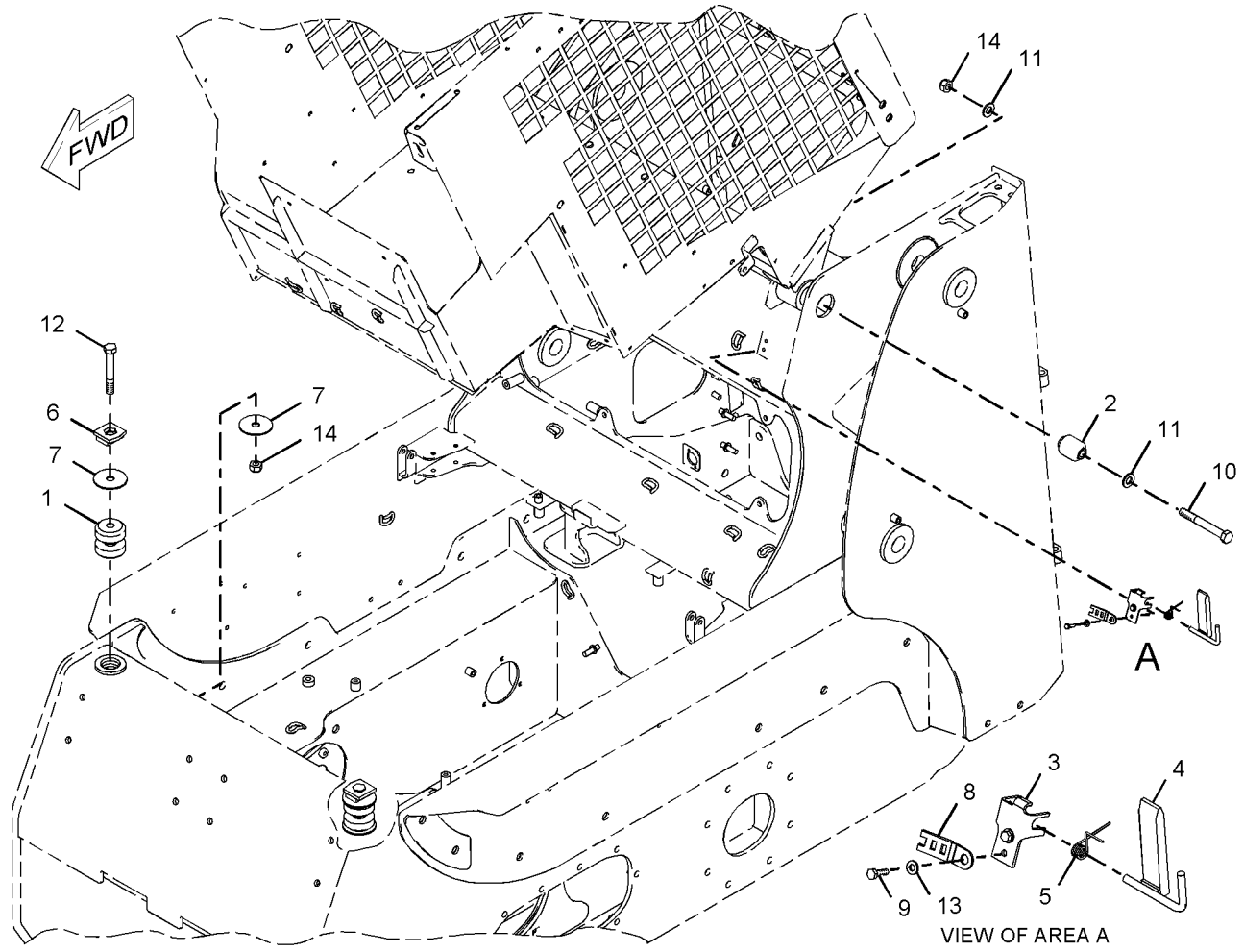

GRAPHIC #1 **<END>** g01018977

OPERATOR STATION

295-7303 OPTION AR-CAB

S/N: SCH4600-UP

AN ATTACHMENT

SMCS-7301 **i02736321**

NOTE	PART NUMBER	QTY	PART NAME 1 2 3 4 5 6 (PRODUCT LEVEL)	SEE PAGE
Y	*218-6400*	1	HANDHOLD GP	507
Y	*218-6701*	1	INSTALLATION GP (WITHOUT HEATER OR A/C)	519
Y	*218-5562*	1	SEAT GP (STATIC)	554

Y-SEPARATE ILLUSTRATION

<END>

295-7313 OPTION AR-CAB

S/N: SCH4600-UP

AN ATTACHMENT

SMCS-7301 **i02736334**

NOTE	PART NUMBER	QTY	PART NAME 1 2 3 4 5 6 (PRODUCT LEVEL)	SEE PAGE
Y	*218-6400*	1	HANDHOLD GP	507
Y	*218-6701*	1	INSTALLATION GP (WITHOUT HEATER OR A/C)	519
Y	*142-9305*	1	SEAT GP (SUSPENSION)	553
	245-6811	1	HOLDER-CUP	

Y-SEPARATE ILLUSTRATION

<END>

295-7323 OPTION AR-CAB

S/N: SCH2475-UP

AN ATTACHMENT

SMCS-7301 **i02779152**

NOTE	PART NUMBER	QTY	PART NAME 1 2 3 4 5 6 (PRODUCT LEVEL)	SEE PAGE
Y	*218-6703*	1	HEATER AR-CAB	511
Y	*218-6407*	1	SEAL GP-CAB	549
Y	*142-9305*	1	SEAT GP (SUSPENSION)	553
Y	*218-6411*	1	WINDOW GP-CAB (SIDE)	560
	245-6811	1	HOLDER-CUP	

Y-SEPARATE ILLUSTRATION

<END>

OPERATOR STATION

295-7333 OPTION AR-CAB

S/N: SCH2475-UP
AN ATTACHMENT

SMCS-7301 **i02736330**

NOTE	PART NUMBER	QTY	PART NAME 1 2 3 4 5 6 (PRODUCT LEVEL)	SEE PAGE
Y	*218-6302*	1	AIR CONDITIONER AR	446
Y	*218-6407*	1	SEAL GP-CAB	549
Y	*142-9305*	1	SEAT GP (SUSPENSION)	553
Y	*218-6411*	1	WINDOW GP-CAB (SIDE)	560
	245-6811	1	HOLDER-CUP	

Y-SEPARATE ILLUSTRATION

<END>

218-5790 PANEL AR-INSTRUMENT

S/N: SCH2475-UP
NACD
PART OF 252-0449, 295-7055 CONVERSION AR-MACHINE, 233-5670 CONVERSION AR-NON-ROADING
CANNOT BE USED WITH 218-5791—PAGE 539
AN ATTACHMENT

SMCS-7451 **i01957627**

NOTE	PART NUMBER	QTY	PART NAME 1 2 3 4 5 6 (PRODUCT LEVEL)	SEE PAGE
Y	**225-7998**	1	PANEL GP-INSTRUMENT	542

Y-SEPARATE ILLUSTRATION

<END>

218-5791 PANEL AR-INSTRUMENT

S/N: SCH2475-UP
EAME
PART OF 261-6156, 278-5348, 278-5370, 278-5414, 295-7060, 295-7067, 295-7150, 295-7163 CONVERSION AR-MACHINE, 233-5681, 233-5682, 233-5683, 233-5684 CONVERSION AR-ROADING
CANNOT BE USED WITH 218-5790—PAGE 539
AN ATTACHMENT

SMCS-7451 **i01957887**

NOTE	PART NUMBER	QTY	PART NAME 1 2 3 4 5 6 (PRODUCT LEVEL)	SEE PAGE
Y	**216-4751**	1	PANEL GP-INSTRUMENT	540

Y-SEPARATE ILLUSTRATION

<END>

OPERATOR STATION

216-4751 PANEL GP-INSTRUMENT

S/N: SCH2475-UP
EAME
PART OF 218-5791 PANEL AR-INSTRUMENT
AN ATTACHMENT

SMCS-7451 **i02360197**

NOTE	REF NO	GRAPHIC REF	PART NUMBER	QTY	PART NAME 1 2 3 4 5 6 (PRODUCT LEVEL)	SEE PAGE
	1	1	**109-2356**	5	PLUG	
Y	2	1	*142-9118*	1	COVER GP-INSTRUMENT PANEL (SERVICE METER)	488
	3	1	**142-9320**	1	SWITCH AS-ROCKER (PARKING BRAKE)	
		1	**111-7899**	1	GASKET	
	4	1	**142-9325**	1	SWITCH AS-ROCKER (COLD START)	
		1	**111-7899**	1	GASKET	
	5	1	**142-9328**	1	SWITCH AS-ROCKER (FRONT WORK LIGHT)	
		1	**111-7899**	1	GASKET	
	6	1	**158-6696**	1	COVER	
	7	1	**158-6698**	1	COVER	
	8	1	**158-6699**	1	COVER	
	9	1	**165-0312**	1	WIRE AS	
Y	10	1	*216-4712*	1	GAUGE & WARNING GP (LH)	504
Y	11	1	*216-4713*	1	GAUGE & WARNING GP (RH)	505
	12	1	**216-4752**	1	HARNESS AS-PANEL	
		1	**155-2255**	2	KIT-CONNECTING PLUG (12-PIN)	
		1	**155-2260**	1	KIT-CONNECTING PLUG (3-PIN)	
		1	**155-2270**	6	KIT-CONNECTING PLUG (2-PIN)	
		1	**155-2271**	3	KIT-CONNECTING PLUG (4-PIN)	
		1	**155-2274**	1	KIT-CONNECTING PLUG (6-PIN)	
					(EACH PLUG KIT INCLUDES PLUG AS, WEDGE & INTERFACE SEAL)	
		1	**102-8804**	2	KIT-RECEPTACLE (4-PIN)	
		1	**102-8805**	1	KIT-RECEPTACLE (6-PIN)	
		1	**102-8801**	1	KIT-RECEPTACLE (12-PIN)	
					(EACH RECEPTACLE KIT INCLUDES RECEPTACLE AS & WEDGE)	
	13	1	**223-5941**	1	SWITCH AS-ROCKER (WORK TOOL HYD PRESS RELEASE)	
		1	**111-7899**	1	GASKET	
	14	1	**226-5901**	1	SWITCH AS-ROCKER (INTERLOCK OVERRIDE)	
		1	**111-7899**	1	GASKET	
	15	1	**103-2006**	16	SCREW-PAN HEAD (6-19X0.37-IN)	

Y-SEPARATE ILLUSTRATION

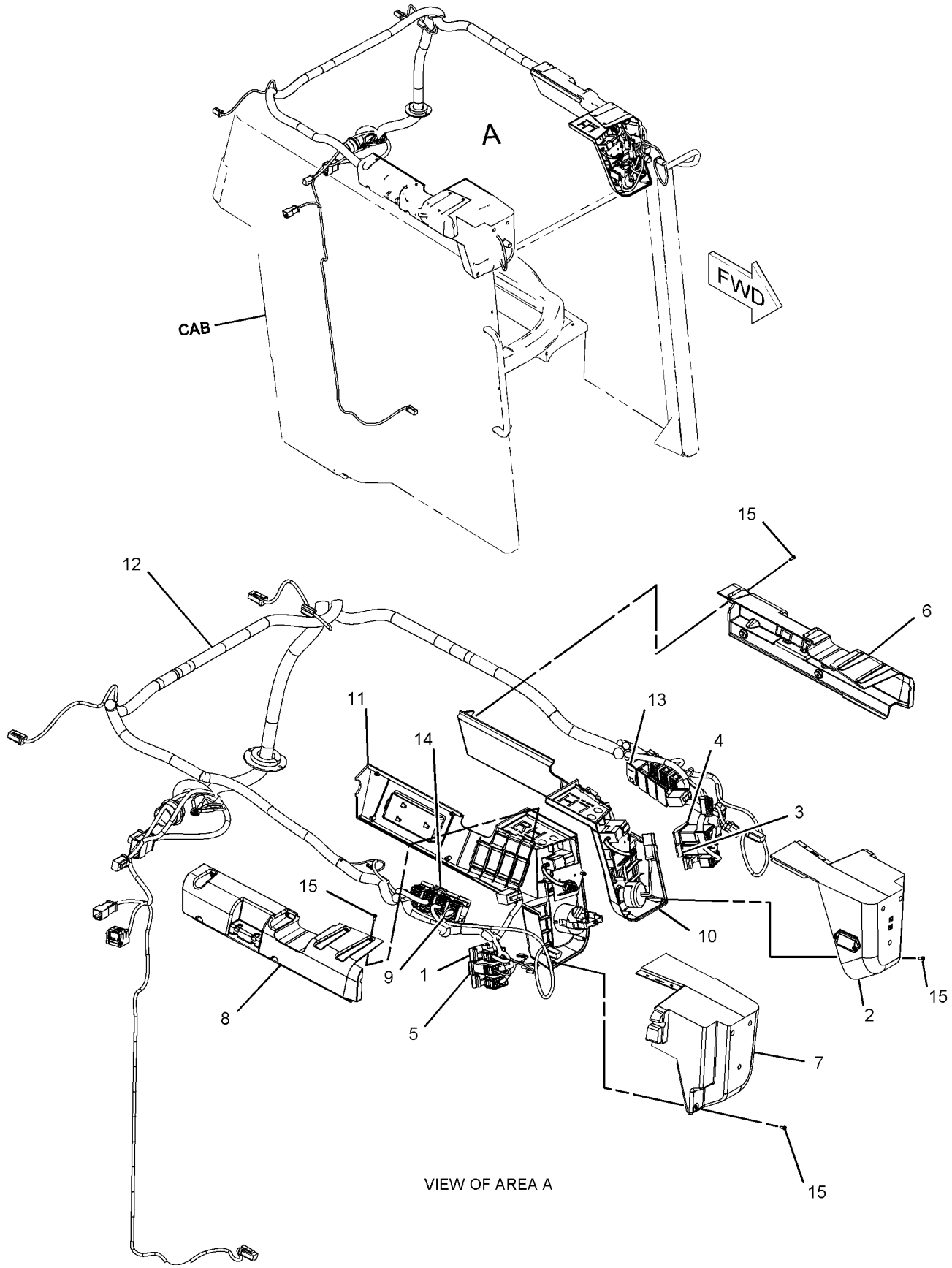

VIEW OF AREA A

GRAPHIC #1 **<END>** g01125969

OPERATOR STATION

225-7998 PANEL GP-INSTRUMENT

S/N: SCH2475-UP
NACD
PART OF 218-5790 PANEL AR-INSTRUMENT
AN ATTACHMENT

SMCS-7451 **i02259865**

NOTE	REF NO	GRAPHIC REF	PART NUMBER	QTY	PART NAME 1 2 3 4 5 6 (PRODUCT LEVEL)	SEE PAGE
	1	1	**109-2356**	5	PLUG	
Y	2	1	*142-9118*	1	COVER GP-INSTRUMENT PANEL (SERVICE METER)	488
	3	1	**142-9320**	1	SWITCH AS-ROCKER (PARKING BRAKE)	
		1	**111-7899**	1	GASKET	
	4	1	**142-9325**	1	SWITCH AS-ROCKER (COLD START)	
		1	**111-7899**	1	GASKET	
	5	1	**142-9328**	1	SWITCH AS-ROCKER (FRONT WORK LIGHT)	
		1	**111-7899**	1	GASKET	
	6	1	**158-6696**	1	COVER	
	7	1	**158-6698**	1	COVER	
	8	1	**158-6699**	1	COVER	
Y	9	1	*216-4712*	1	GAUGE & WARNING GP (LH)	504
Y	10	1	*216-4713*	1	GAUGE & WARNING GP (RH)	505
	11	1	**223-5941**	1	SWITCH AS-ROCKER (WORK TOOL HYD PRESS RELEASE)	
		1	**111-7899**	1	GASKET	
	12	1	**225-7999**	1	HARNESS AS-PANEL	
		1	**102-8804**	2	KIT-RECEPTACLE (4-PIN)	
		1	**102-8805**	1	KIT-RECEPTACLE (6-PIN)	
		1	**102-8801**	1	KIT-RECEPTACLE (12-PIN)	
					(EACH RECEPTACLE KIT INCLUDES RECEPTACLE AS & WEDGE)	
		1	**155-2255**	1	KIT-CONNECTING PLUG (12-PIN)	
		1	**155-2271**	2	KIT-CONNECTING PLUG (4-PIN)	
		1	**155-2274**	1	KIT-CONNECTING PLUG (6-PIN)	
		1	**155-2270**	6	KIT-CONNECTING PLUG (2-PIN)	
					(EACH PLUG KIT INCLUDES PLUG AS, WEDGE, & INTERFACE SEAL)	
		1	**155-2260**	1	KIT-CONNECTING PLUG (3-PIN)	
					(INCLUDES PLUG AS, WEDGES, & INTERFACE SEAL)	
	13	1	**226-5901**	1	SWITCH AS-ROCKER (INTERLOCK OVERRIDE)	
		1	**111-7899**	1	GASKET	
	14	1	**103-2006**	16	SCREW-PAN HEAD (6-19X0.37-IN)	

Y-SEPARATE ILLUSTRATION

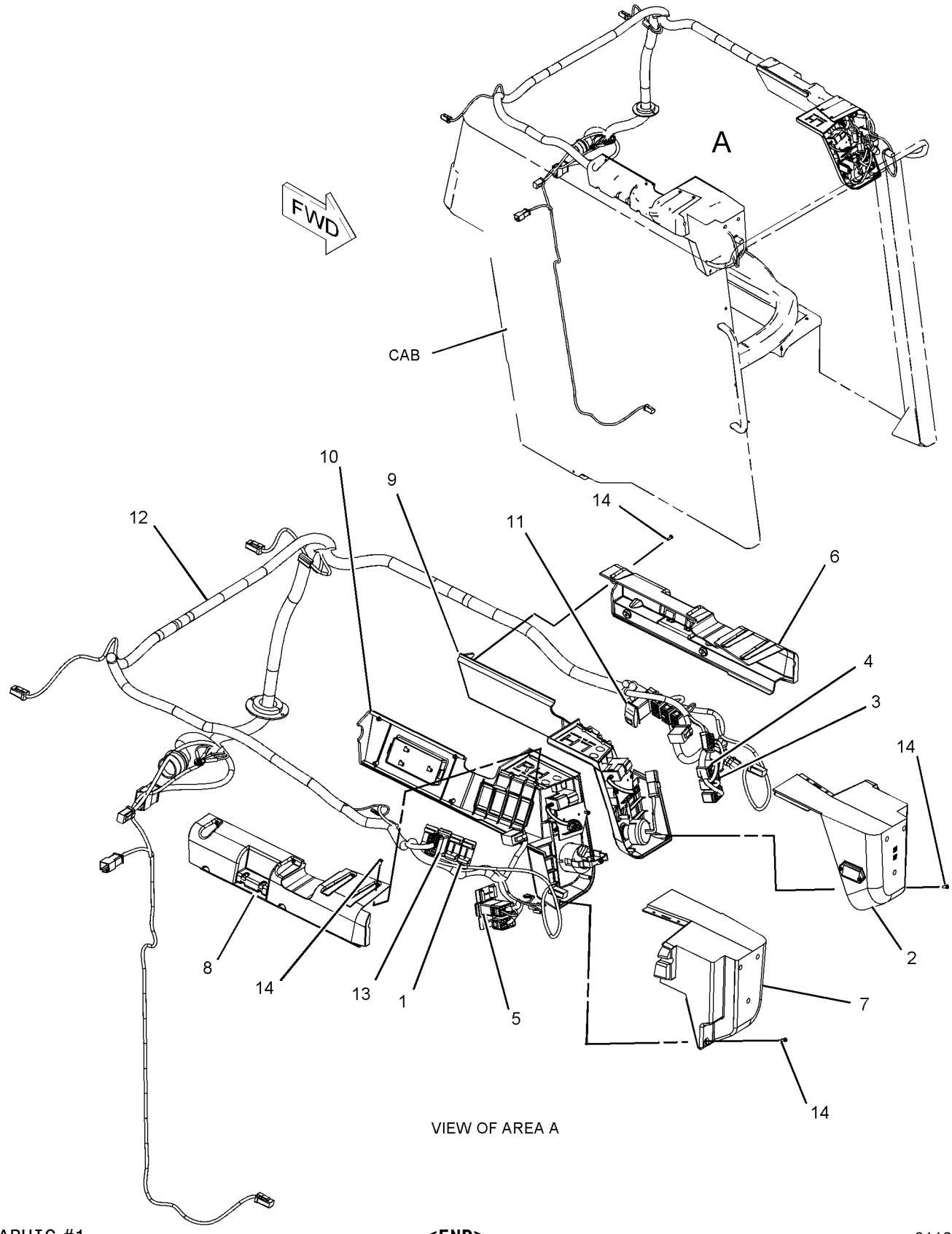

GRAPHIC #1 **<END>** g01136068

OPERATOR STATION

218-6428 PANEL GP-SIDE

S/N: SCH2475-UP

PART OF 295-7210 CHASSIS AR

SMCS-7267 **i01966886**

NOTE	REF NO	GRAPHIC REF	PART NUMBER	QTY	PART NAME 1 2 3 4 5 6 (PRODUCT LEVEL)	SEE PAGE
	1	1	**193-8385**	1	PLATE (RH)	
	2	1	**218-6434**	1	PLATE (LH)	
M	3	1	**131-3543**	5	BOLT-ROUND HEAD (M6X1-6G-THD)	
M	4	1	**5C-2890**	5	NUT (M6X1-THD)	
	5	1	**8T-4205**	5	WASHER-HARD (7.2X14.5X2-MM THK)	

M-METRIC PART

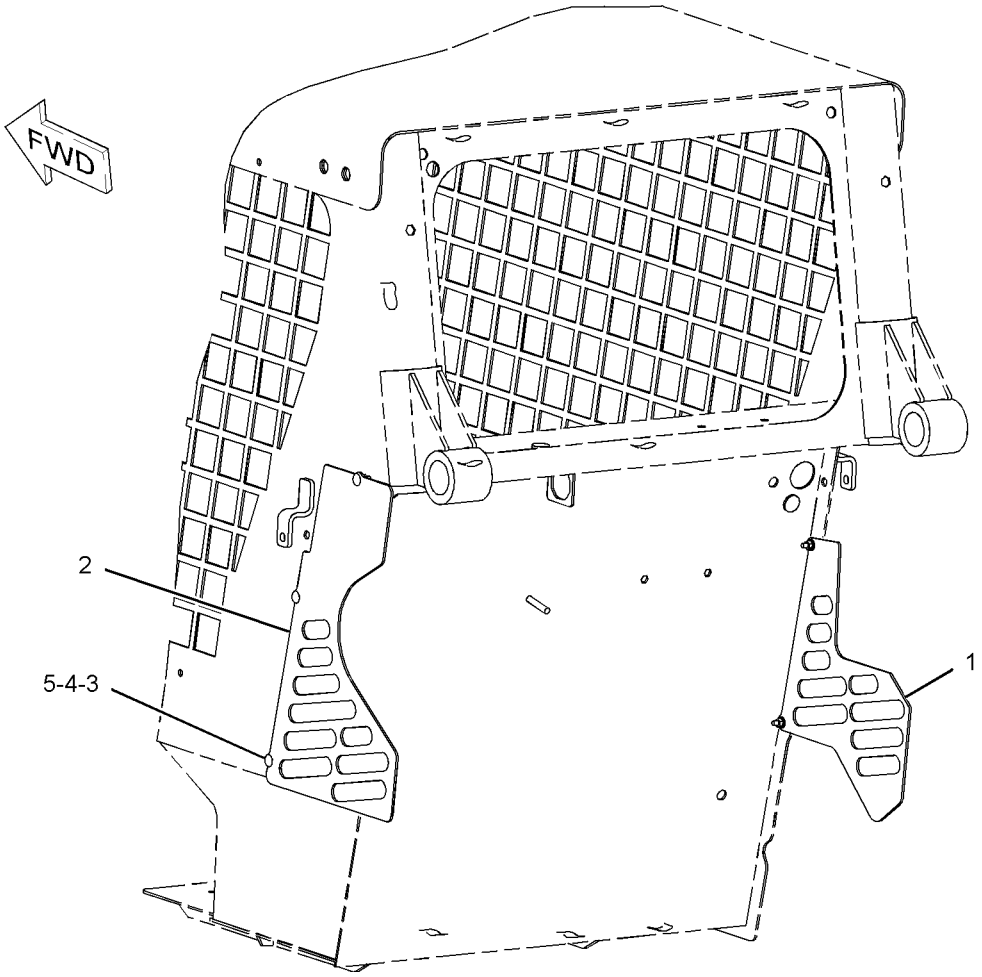

GRAPHIC #1 **<END>** g01021358

218-5565 PEDAL GP-GOVERNOR—INCLUDES LEVER

S/N: SCH2475-UP

PART OF 218-5602 CONTROL GP-GOVERNOR

SMCS-1265, 1276 **i02312058**

NOTE	REF NO	GRAPHIC REF	PART NUMBER	QTY	PART NAME 1 2 3 4 5 6 (PRODUCT LEVEL)	SEE PAGE
Y	1	1	**218-5566**	1	CABLE GP-GOVERNOR CONTROL	101
Y	2	1	**263-6688**	1	PEDAL GP-GOVERNOR	546
Y	3	1	**234-0774**	1	LEVER GP-GOVERNOR	527

Y-SEPARATE ILLUSTRATION

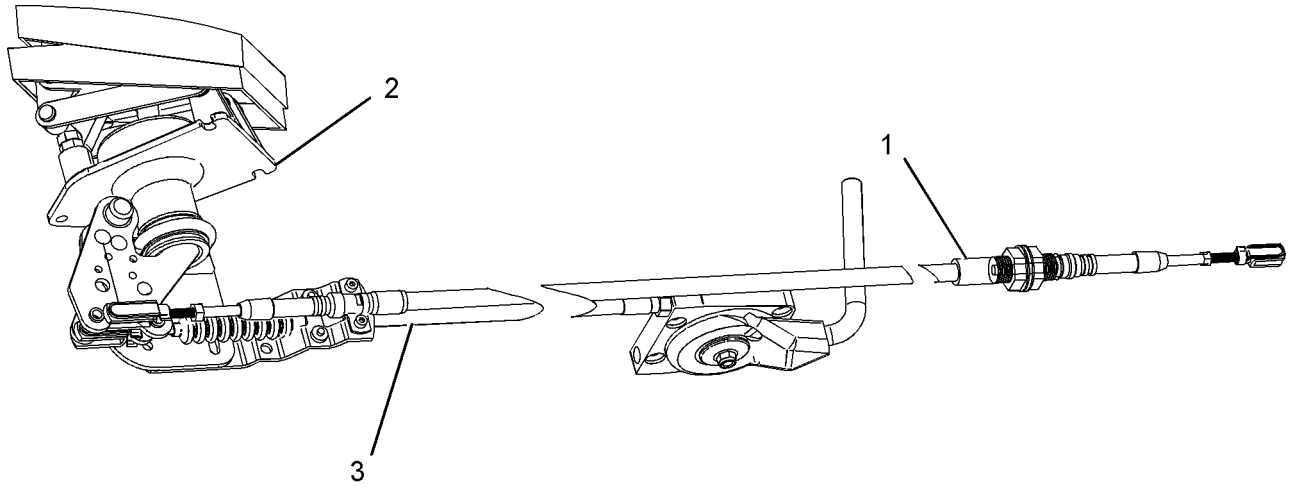

GRAPHIC #1 **<END>** g01010528

OPERATOR STATION

263-6688 PEDAL GP-GOVERNOR

S/N: SCH2475-UP

PART OF 218-5565 PEDAL GP-GOVERNOR

SMCS-1265, 1276 **i02757215**

NOTE	REF NO	GRAPHIC REF	PART NUMBER	QTY	PART NAME 1 2 3 4 5 6 (PRODUCT LEVEL)	SEE PAGE
M	1	1	**095-0641**	4	BOLT-SOCKET HEAD (M4X0.7X10-MM)	
M	2	1	**129-3178**	1	LOCKNUT (M6X1-THD)	
	3	1	**3F-9556**	2	LOCKWASHER	
M	4	1	**5C-7261**	1	NUT (M8X1.25-THD)	
M	5	1	**5C-9553**	1	BOLT (M6X1X16-MM)	
	6	1	**6V-8186**	2	NUT-FULL (5/16-24-THD)	
M	7	1	**8T-4197**	1	BOLT (M8X1.25X40-MM)	
	8	1	**8T-4205**	1	WASHER-HARD (7.2X14.5X2-MM THK)	
	9	1	**8T-6902**	1	CLIP	
					AVAILABLE REPAIR KIT(S):	
			164-1154	1	KIT-SERVICE	
					(INCLUDES CLAMPS & SCREWS)	

M-METRIC PART

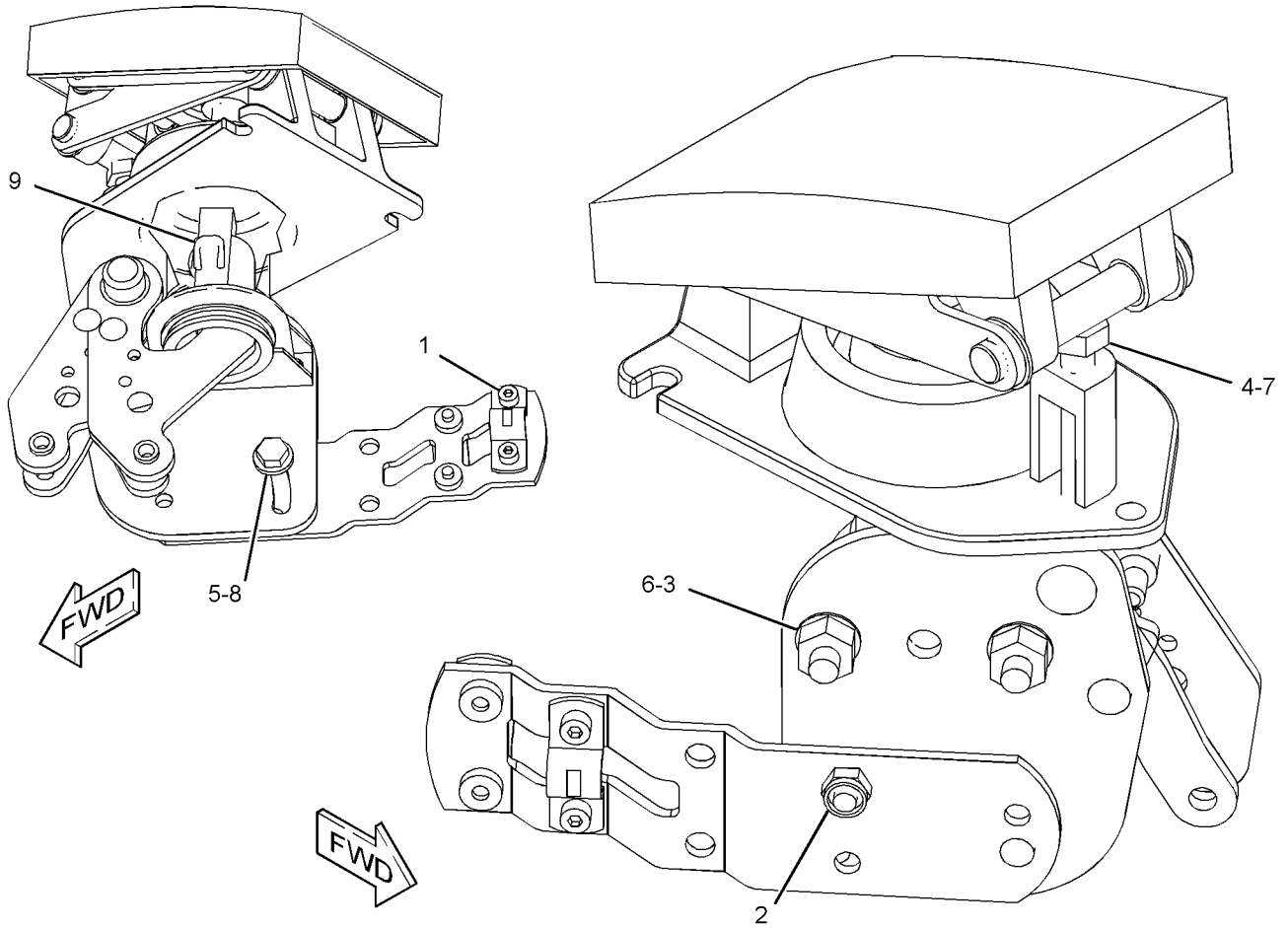

GRAPHIC #1 **<END>** g01164366

OPERATOR STATION

218-6360 PLATFORM GP-OPERATOR

S/N: SCH2475-UP

PART OF 295-7210 CHASSIS AR

SMCS-7253 **i02884780**

NOTE	REF NO	GRAPHIC REF	PART NUMBER	QTY	PART NAME 1 2 3 4 5 6 (PRODUCT LEVEL)	SEE PAGE
E	1	1	**124-3243**		SEAL (19.5-CM)	
D	2	1	**5P-5927**		SEAL (0.31-M EACH)	
	3	1	**218-6416**	1	PLATE AS	
	4	1	**218-6417**	1	FLOORPLATE AS	
	5	1	**218-6424**	1	PLATE AS	
	6	1	**218-6438**	1	SEAL	
	7	1	**101-2867**	1	WASHER-HARD (7.2X25X2-MM THK)	
M	8	1	**5C-7261**	1	NUT (M8X1.25-THD)	
EM	9	1	**5C-9553**	6	BOLT (M6X1X16-MM)	
M	10	1	**8T-4138**	2	BOLT (M6X1X20-MM)	
M	11	1	**8T-4197**	1	BOLT (M8X1.25X40-MM)	
	12	1	**8T-4205**	6	WASHER-HARD (7.2X14.5X2-MM THK)	
	13	1	**8T-4224**	10	WASHER-HARD (8.8X16X2-MM THK)	
M	14	1	**8T-4908**	8	BOLT (M8X1.25X25-MM)	
M	15	1	**9X-2045**	3	SCREW-TRUSS HEAD (M6X1X20-MM)	
	16	1	**9X-6165**	2	WASHER (6.5X22X2.5-MM THK)	
	17	1	**124-3243**		SEAL (6-CM EACH)	

D-ORDER BY THE METER
E-ORDER BY THE CENTIMETER
M-METRIC PART

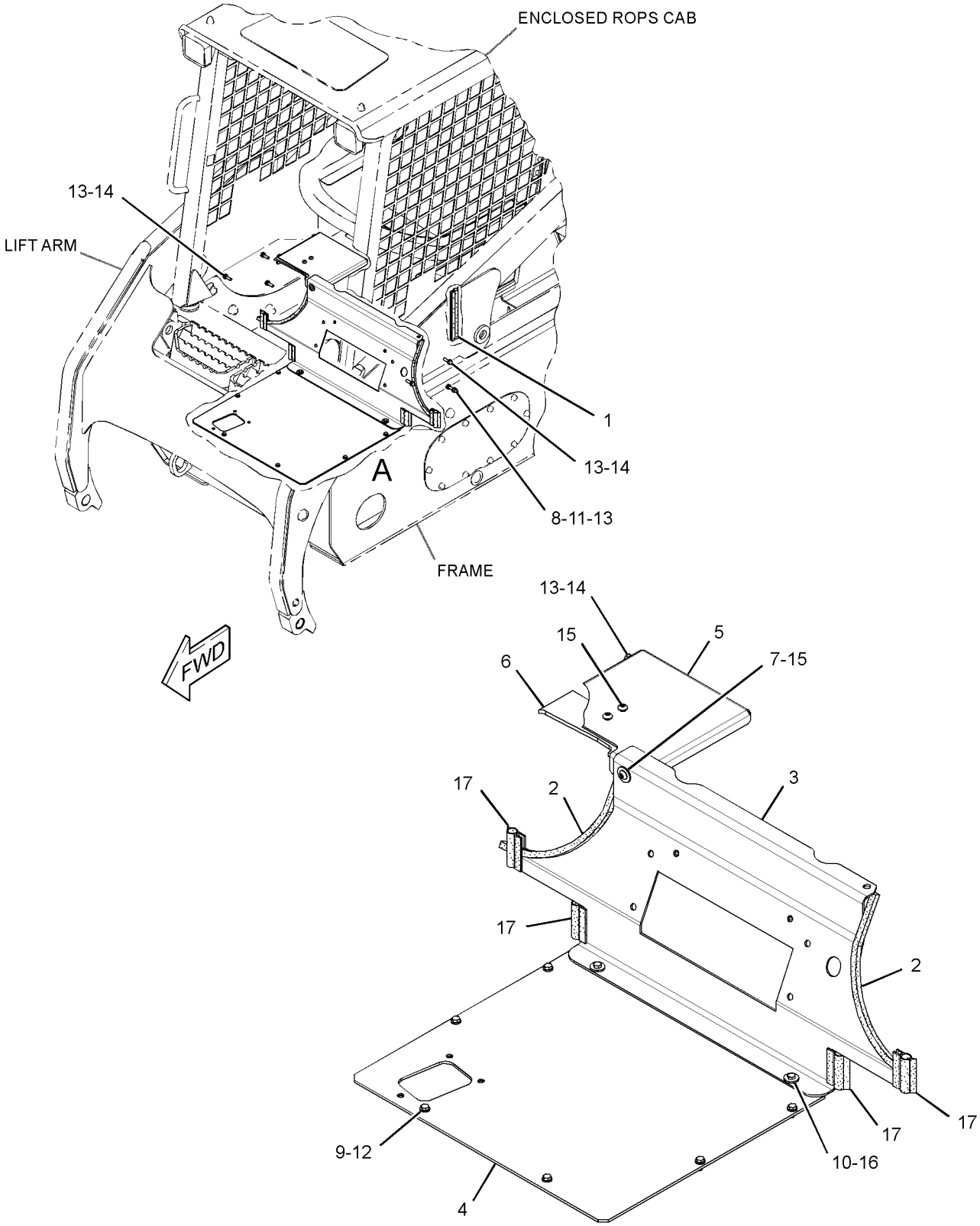

VIEW OF AREA A

GRAPHIC #1 **<END>** g01437661

OPERATOR STATION

218-6407 SEAL GP-CAB—DEBRIS BARRIER

S/N: SCH2475-UP

PART OF 295-7323, 295-7333 OPTION AR-CAB

AN ATTACHMENT

SMCS-7301 **i02866081**

NOTE	REF NO	GRAPHIC REF	PART NUMBER	QTY	PART NAME 1 2 3 4 5 6 (PRODUCT LEVEL)	SEE PAGE
E	1	1	**128-7037**		SEAL (59-CM)	
E	1A	1	**128-7037**		SEAL (39-CM)	
	2	1	**187-3211**	1	PLATE AS	
M		1	**8T-3612**	2	NUT-WELD (M8X1.25-THD)	
	3	1	**187-3212**	1	PLATE	
	4	1	**284-3595**	2	SEAL-RUBBER	
	5	1	**284-3743**	2	SEAL-RUBBER	
	6	1	**284-3744**	1	SEAL-RUBBER	
B	7	1	**287-6603**	2	PLUG-BUTTON	
	8	1	**287-7004**	1	BLOCK AS (LH)	
	9	1	**287-7006**	1	BLOCK AS (RH)	
B	10	1	**288-5767**	8	PLUG-BUTTON	
	11	1	**189-4523**	2	BOSS	
M	12	1	**7X-2537**	2	BOLT (M8X1.25X35-MM)	
	13	1	**8T-4224**	2	WASHER-HARD (8.8X16X2-MM THK)	

B-USE AS REQUIRED
E-ORDER BY THE CENTIMETER
M-METRIC PART

218-6407 **SEAL GP-CAB** *(contd.)* **i02866081**

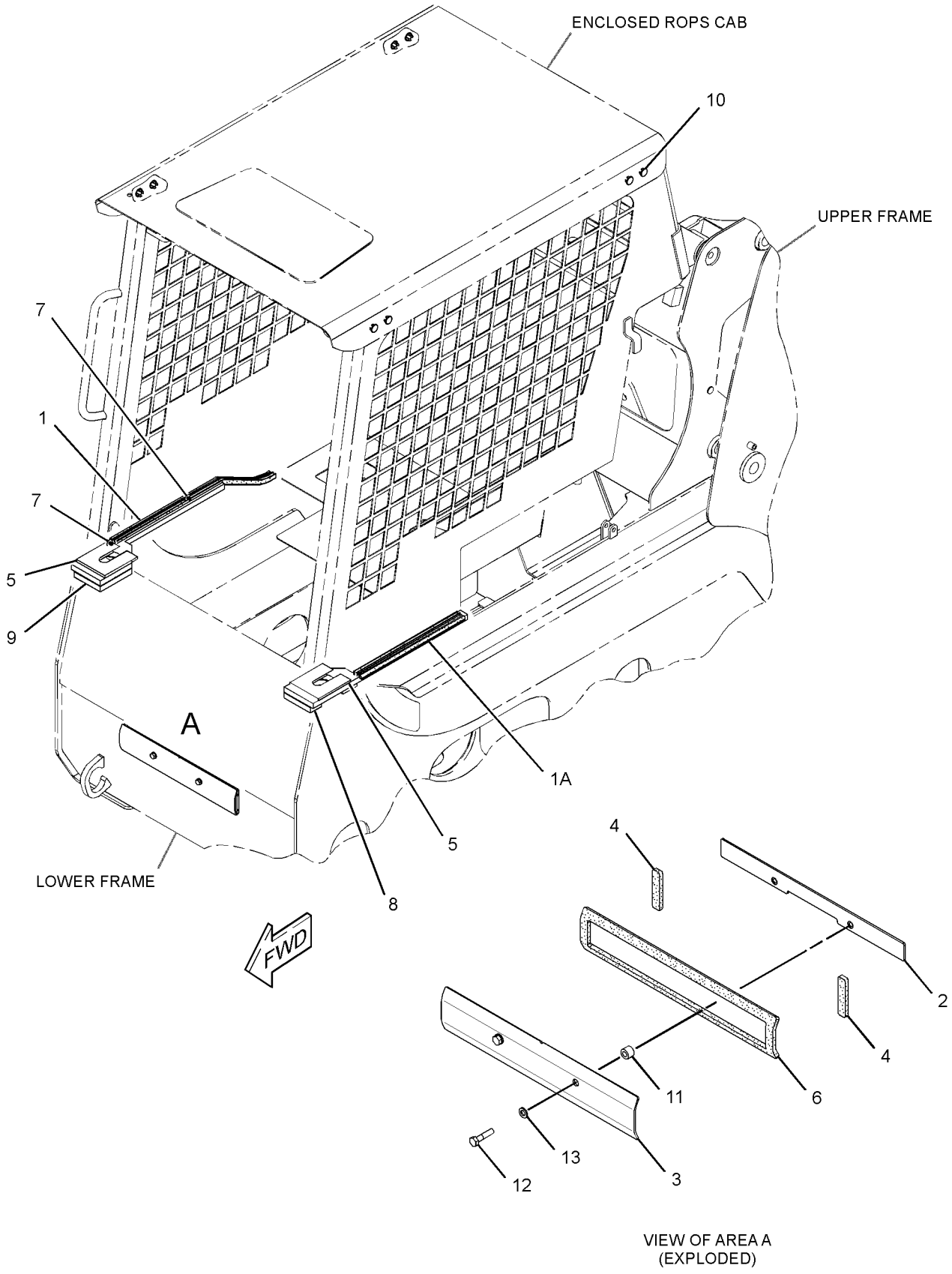

GRAPHIC #1 **<END>** g01439361

OPERATOR STATION

276-6020 SEAT BELT GP

S/N: SCH2475-UP
3-INCH, RETRACTABLE STATIC
AN ATTACHMENT

SMCS-7327 **i02718272**

NOTE	REF NO	GRAPHIC REF	PART NUMBER	QTY	PART NAME 1 2 3 4 5 6 (PRODUCT LEVEL)	SEE PAGE
	1	1	**2D-6412**	2	WASHER (7/16X15/16X1/4-IN THK)	
	2	1	**0T-0244**	2	BOLT (7/16-20X1.25-IN)	
	3	1	**8S-0934**	2	LOCKNUT-FLANGE (7/16-20-THD)	
	4	1	**8T-4223**	2	WASHER-HARD (13.5X25.5X3-MM THK)	

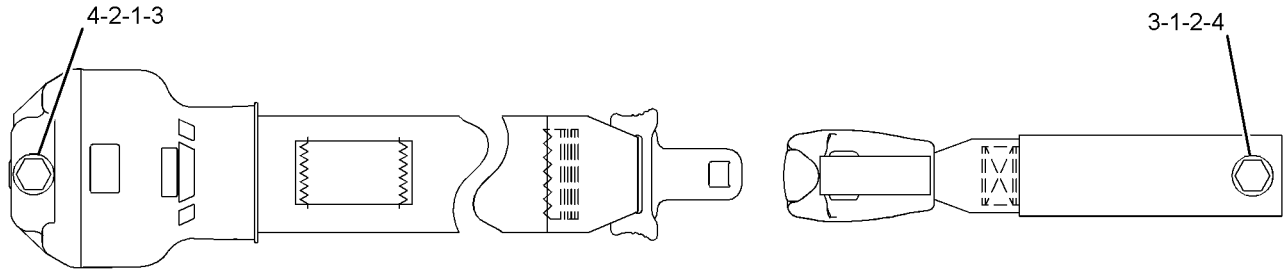

GRAPHIC #1 **<END>** g01230231

OPERATOR STATION

276-7277 SEAT BELT GP

S/N: SCH2475-UP
2-INCH, RETRACTABLE SUSPENSION
AN ATTACHMENT

SMCS-7327 **i02712903**

NOTE	REF NO	GRAPHIC REF	PART NUMBER	QTY	PART NAME 1 2 3 4 5 6 (PRODUCT LEVEL)	SEE PAGE
	1	1	**2D-6412**	2	WASHER (7/16X15/16X1/4-IN THK)	
	2	1	**0T-0244**	2	BOLT (7/16-20X1.25-IN)	
	3	1	**8S-0934**	2	LOCKNUT-FLANGE (7/16-20-THD)	
	4	1	**8T-4223**	2	WASHER-HARD (13.5X25.5X3-MM THK)	

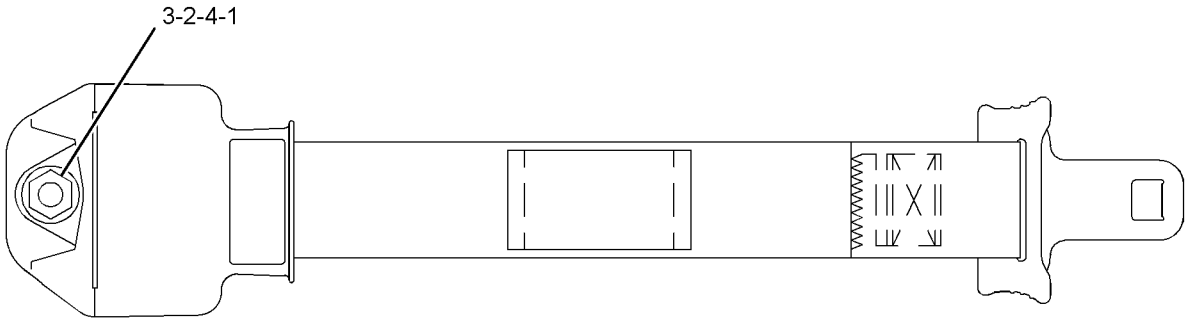

GRAPHIC #1 **<END>** g01230239

142-9305 SEAT GP–SUSPENSION

S/N: SCH2475-UP

PART OF 295-7313, 295-7323, 295-7333 OPTION AR-CAB

CANNOT BE USED WITH 218-5562–PAGE 554, 218-5611–PAGE 466, 218-5618–PAGE 473

AN ATTACHMENT

SMCS-7312, 7324 **i02571422**

NOTE	REF NO	GRAPHIC REF	PART NUMBER	QTY	PART NAME 1 2 3 4 5 6 (PRODUCT LEVEL)	SEE PAGE
CY	1	1	**219-4380**	1	SEAT GP-ADJUSTABLE	555
M	2	1	**5C-7261**	4	NUT (M8X1.25-THD)	
	3	1	**8T-4224**	4	WASHER-HARD (8.8X16X2-MM THK)	

C-CHANGE FROM PREVIOUS TYPE
M-METRIC PART
Y-SEPARATE ILLUSTRATION

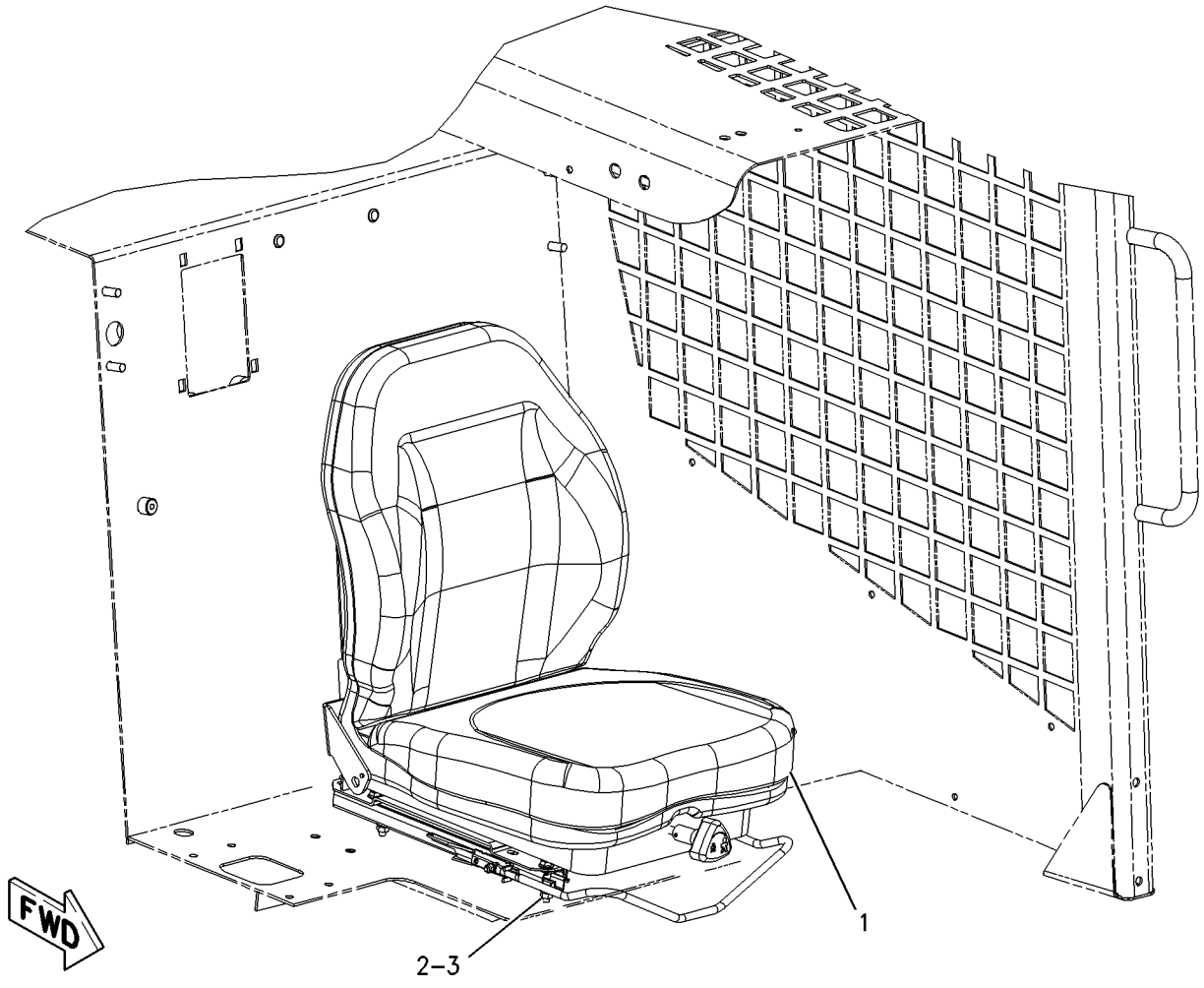

GRAPHIC #1 **<END>** g00914893

218-5562 SEAT GP

S/N: SCH2475-UP
STATIC
PART OF 295-7303 OPTION AR-CAB
CANNOT BE USED WITH 142-9305—PAGE 553
AN ATTACHMENT

SMCS-7312, 7324 **i02757222**

NOTE	REF NO	GRAPHIC REF	PART NUMBER	QTY	PART NAME 1 2 3 4 5 6 (PRODUCT LEVEL)	SEE PAGE
	1	1	**218-6662**	1	SEAT GP (STATIC)	
		1	**153-1260**	1	SWITCH (SEAT)	
		1	**154-3985**	1	WIRE AS	
		1	**219-4379**	1	HANDLE	
M	2	1	**5C-7261**	4	NUT (M8X1.25-THD)	
	3	1	**8T-4224**	4	WASHER-HARD (8.8X16X2-MM THK)	

M-METRIC PART

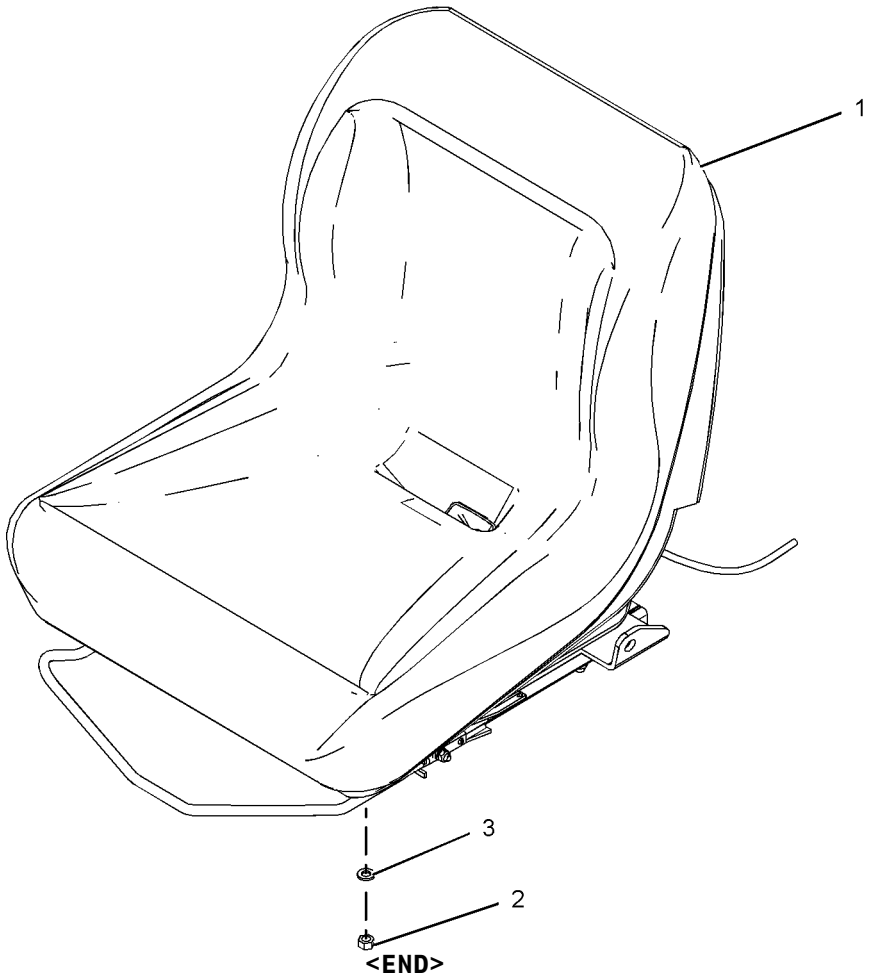

GRAPHIC #1

<END>

g01018112

OPERATOR STATION

219-4380 SEAT GP-ADJUSTABLE

S/N: SCH2475-UP
PART OF 142-9305 SEAT GP
AN ATTACHMENT

SMCS-7312, 7321 **i01901346**

NOTE	REF NO	GRAPHIC REF	PART NUMBER	QTY	PART NAME 1 2 3 4 5 6 (PRODUCT LEVEL)	SEE PAGE
	1	1	**154-3985**	1	WIRE AS	
	2	1	**154-3986**	1	SWITCH AS (SEAT)	
	3	1	**154-8711**	1	KIT-SPRING (ADJUSTABLE SEAT)	
Z		1		2	SPRING	
Z	3A	1		1	CABLE AS	
Z	3B	1		2	NUT-PUSH	
	4	1	**154-8715**	1	KIT-DAMPER (ADJUSTABLE SEAT)	
					(INCLUDES DAMPER, NUT-LOCK, WASHER & SPACER)	
	5	1	**173-2543**	1	KIT-CUSHION	
	6	1	**219-4379**	1	HANDLE	
	7	1	**219-4388**	1	KIT-HANDLE (KNOB)	
Z		1		1	KNOB	
Z	7A	1		1	SHAFT	
Z	7B	1		2	PIN-SPRING	
Z	7C	1		1	HANGER (SPRING)	
Z	7D	1		1	NUT-PUSH	
Z		1		2	SPACER	

Z-NOT SERVICED SEPARATELY

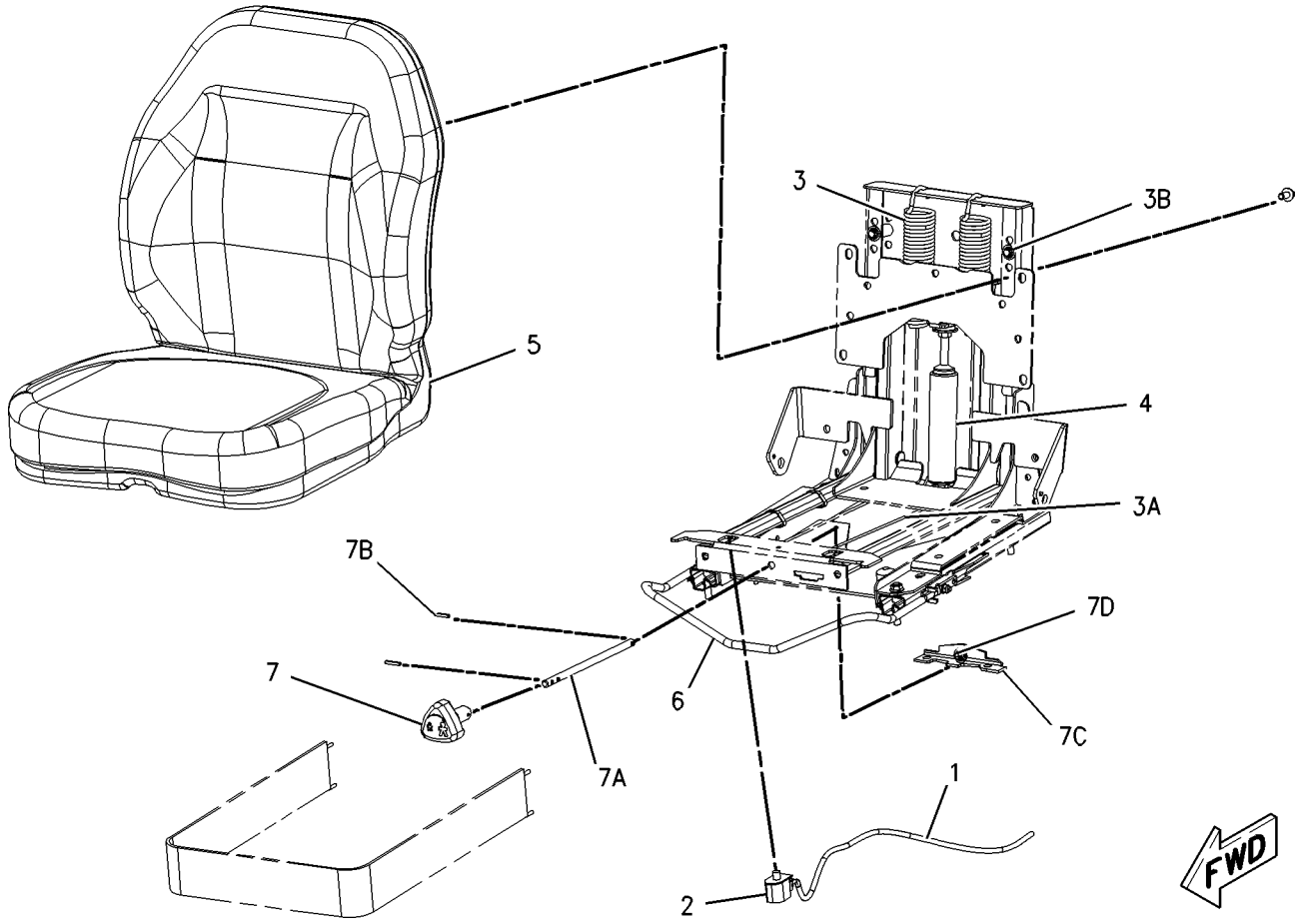

GRAPHIC #1 **<END>** g00915009

OPERATOR STATION

218-6380 SPRING GP-GAS

S/N: SCH2475-UP

PART OF 218-6350 CAB AR-ENCLOSED ROPS

SMCS-7301 **i02772071**

NOTE	REF NO	GRAPHIC REF	PART NUMBER	QTY	PART NAME 1 2 3 4 5 6 (PRODUCT LEVEL)	SEE PAGE
	1	1	**5P-0372**	2	LOCK PIN	
	2	1	**9C-5344**	1	SPACER (10.5X20X18-MM THK)	
	3	1	**095-1325**	1	PIN-CLEVIS	
	4	1	**153-2682**	1	SPRING AS-GAS (CAB)	
	5	1	**177-3405**	1	PIN	

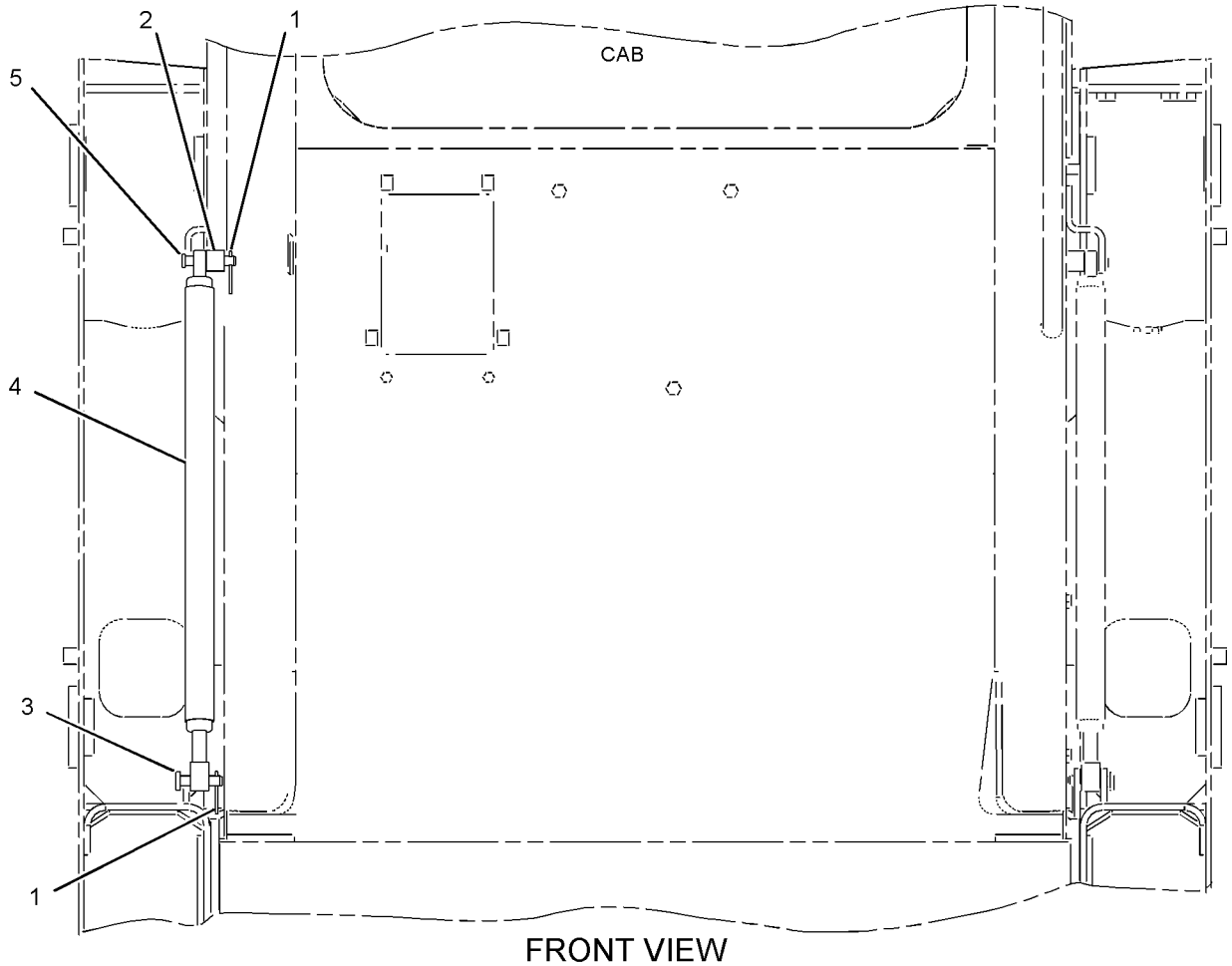

FRONT VIEW

GRAPHIC #1

<END>

g01031997

OPERATOR STATION

166-2569 VISOR GP-CAB

S/N: SCH2475-UP
PART OF 173-3022 VISOR GP-CAB
AN ATTACHMENT

SMCS-7301 **i01297216**

NOTE	REF NO	GRAPHIC REF	PART NUMBER	QTY	PART NAME 1 2 3 4 5 6 (PRODUCT LEVEL)	SEE PAGE
	1	1	**2S-5717**	1	LOCKNUT (3/8-16-THD)	
	2	1	**5T-7869**	2	CLAMP	
	3	1	**5T-7870**	1	KNOB	
	4	1	**1D-4677**	2	BOLT-ROUND HEAD (3/8-16X1-IN)	
M	5	1	**9X-2042**	4	SCREW-TRUSS HEAD (M6X1X12-MM)	

M-METRIC PART

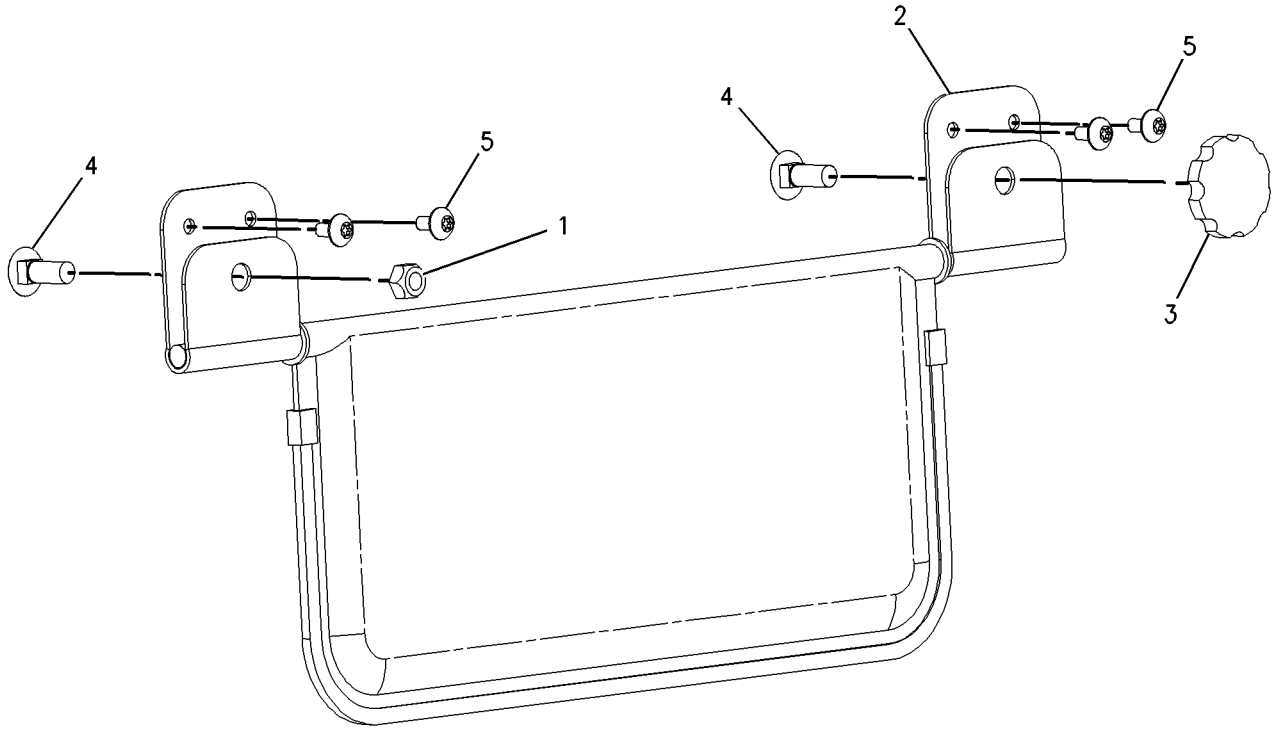

GRAPHIC #1 **<END>** g00695703

OPERATOR STATION

173-3022 VISOR GP-CAB

S/N: SCH2475-UP

PART OF 278-5414, 295-7163 CONVERSION AR-MACHINE, 233-5682 CONVERSION AR-ROADING AN ATTACHMENT

SMCS-7301 **i01486233**

NOTE	REF NO	GRAPHIC REF	PART NUMBER	QTY	PART NAME 1 2 3 4 5 6 (PRODUCT LEVEL)	SEE PAGE
	1	1	**166-2562**	1	PLATE AS	
Y	2	1	**166-2569**	1	VISOR GP-CAB	557
	3	1	**195-0936**	4	INSERT-THREADED (M6X1)	
M	4	1	**9X-2045**	4	SCREW-TRUSS HEAD (M6X1X20-MM)	

M-METRIC PART
Y-SEPARATE ILLUSTRATION

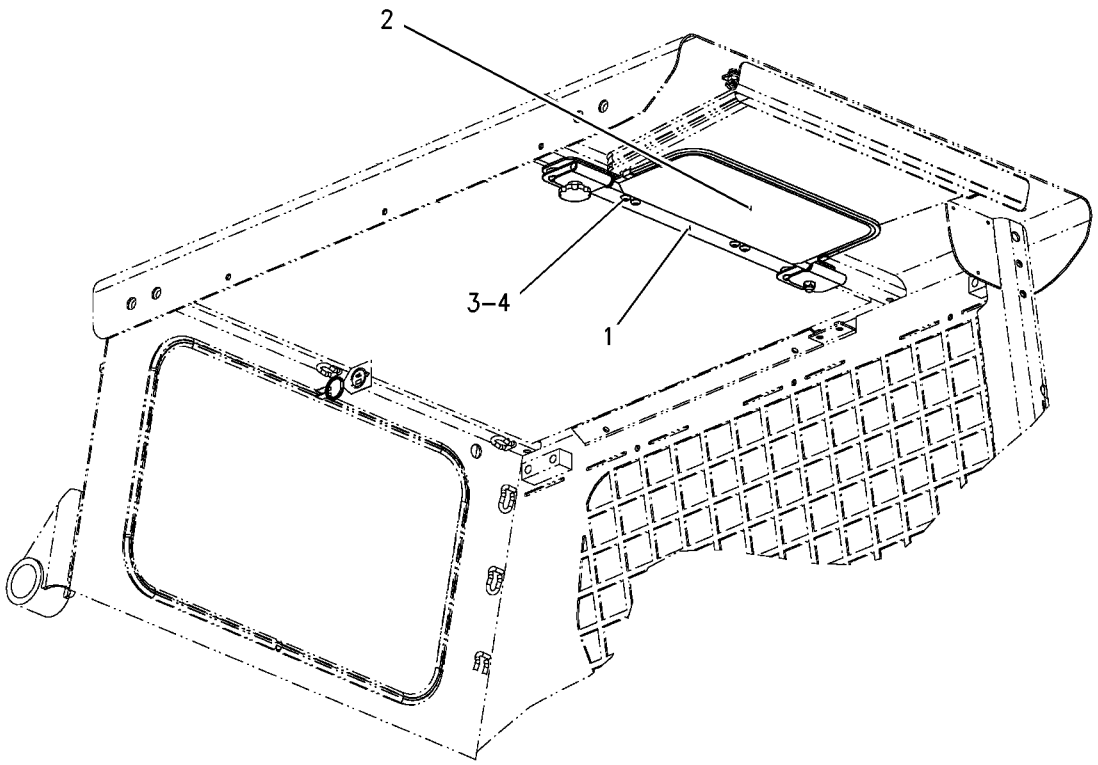

GRAPHIC #1 **<END>** g00772669

OPERATOR STATION

195-6723 WINDOW GP-CAB

S/N: SCH2475-UP

TOP & REAR

PART OF 218-6350 CAB AR-ENCLOSED ROPS

SMCS-7310 **i02534285**

NOTE	REF NO	GRAPHIC REF	PART NUMBER	QTY	PART NAME 1 2 3 4 5 6 (PRODUCT LEVEL)	SEE PAGE
	1	1	**5C-8310**	1	BRACKET-RING	
	2	1	**5C-8311**	1	RING	
	3	1	**8T-6842**	1	FILM-INSTRUCTION (ALTERNATE EXIT)	
	4	1	**142-9319**	1	WINDOW	
CE	5	1	**108-0656**		SEAL (192-CM)	
CE	6	1	**104-5957**		STRIP-LOCKING (186-CM)	

C-CHANGE FROM PREVIOUS TYPE
E-ORDER BY THE CENTIMETER

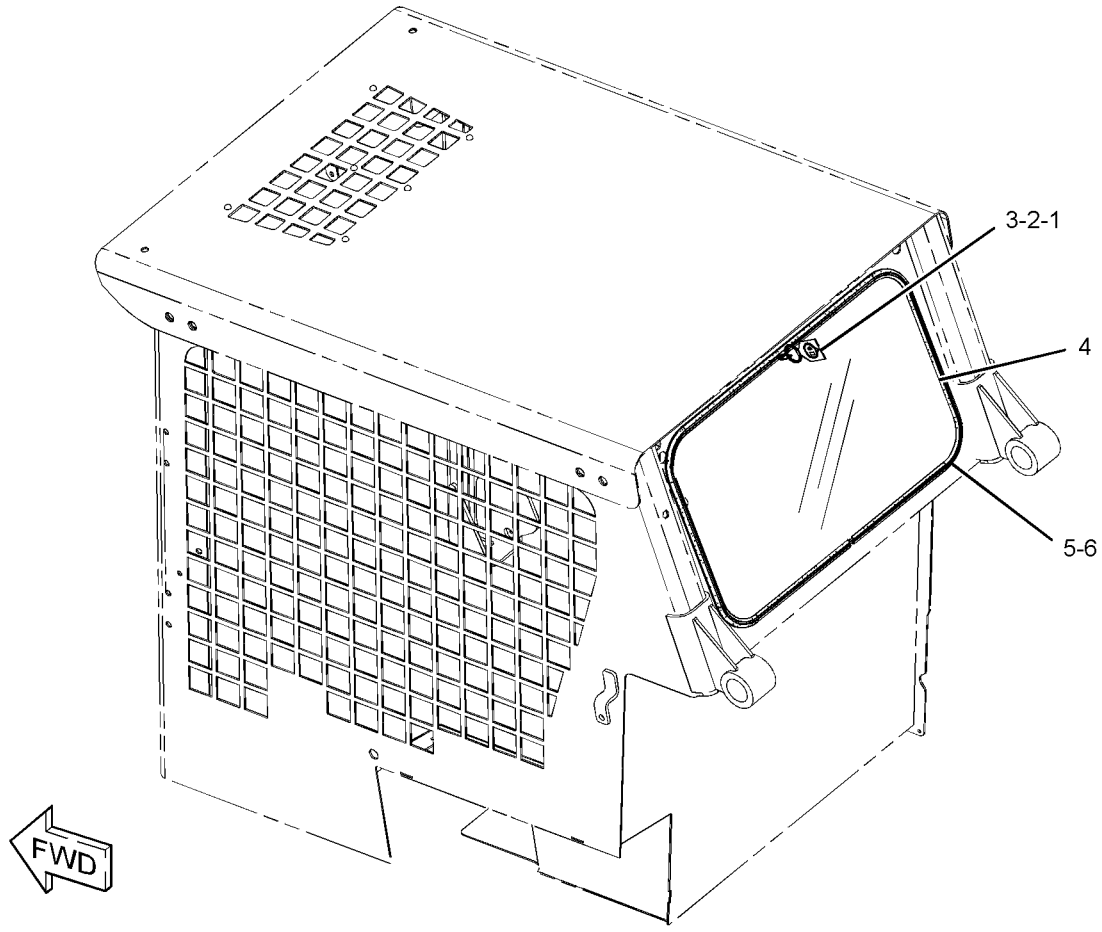

GRAPHIC #1 **<END>** g01268492

OPERATOR STATION

218-6411 WINDOW GP-CAB

S/N: SCH2475-UP
SIDE
PART OF 295-7323, 295-7333 OPTION AR-CAB
AN ATTACHMENT

SMCS-7310 **i02501965**

NOTE	REF NO	GRAPHIC REF	PART NUMBER	QTY	PART NAME 1 2 3 4 5 6 (PRODUCT LEVEL)	SEE PAGE
Y	1	1	**224-7057**	1	WINDOW GP-CAB (UPPER, LH)	562
Y	2	1	**224-7058**	1	WINDOW GP-CAB (UPPER, RH)	564
	3	1	**231-7321**	1	WINDOW AS-CAB (LOWER, RH)	
		1	**239-6109**	1	LATCH AS	
E		1	**282-6961**		SEAL (122-CM)	
	4	1	**231-7324**	1	WINDOW AS-CAB (LOWER, LH)	
		1	**239-6109**	1	LATCH AS	
E		1	**282-6961**		SEAL (122-CM)	
M	5	1	**9X-2045**	10	SCREW-TRUSS HEAD (M6X1X20-MM)	

E-ORDER BY THE CENTIMETER
M-METRIC PART
Y-SEPARATE ILLUSTRATION

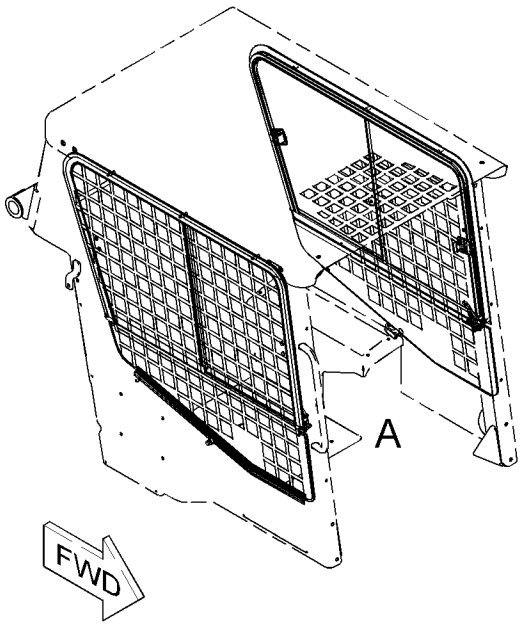

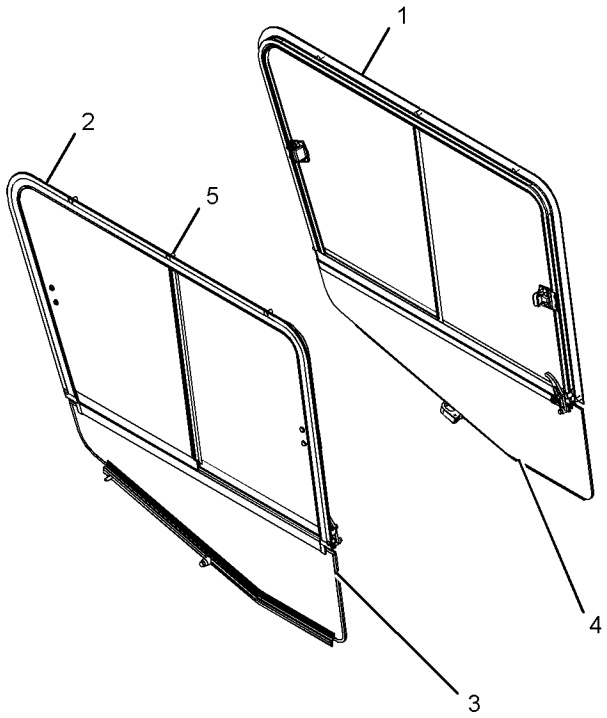

VIEW OF AREA A

GRAPHIC #1 **<END>** g01057739

218-6745 WINDOW GP-CAB—KIT

S/N: SCH2475-UP
SIDE
CANNOT BE USED WITH 218-6411—PAGE 560
AN ATTACHMENT

SMCS-7310 **i02300613**

NOTE	PART NUMBER	QTY	PART NAME 1 2 3 4 5 6 (PRODUCT LEVEL)	SEE PAGE
Y	**224-7057**	1	WINDOW GP-CAB (UPPER, LH)	562
Y	**224-7058**	1	WINDOW GP-CAB (UPPER, RH)	564
	231-7321	1	WINDOW AS-CAB (LOWER, RH)	
D	**5P-5930**		SEAL (12-M)	
	239-6109		LATCH AS	
	231-7324	1	WINDOW AS-CAB (LOWER, LH)	
	239-6109	1	LATCH AS	
D	**5P-5930**		SEAL (2-M)	
M	**9X-2045**	10	SCREW-TRUSS HEAD (M6X1X20-MM)	

D-ORDER BY THE METER
M-METRIC PART
Y-SEPARATE ILLUSTRATION

<END>

OPERATOR STATION

224-7057 WINDOW GP-CAB—UPPER,LH

S/N: SCH2475-UP

PART OF 218-6411, 218-6745 WINDOW GP-CAB

AN ATTACHMENT

SMCS-7310 **i02492653**

NOTE	REF NO	GRAPHIC REF	PART NUMBER	QTY	PART NAME 1 2 3 4 5 6 (PRODUCT LEVEL)	SEE PAGE
	1	1	**231-7322**	1	WINDOW AS-CAB (SLIDING, REAR)	
E		1	**207-0573**		SEAL (76-CM)	
		1	**231-7331**	1	LATCH AS	
	2	1	**231-7323**	1	WINDOW AS-CAB (SLIDING, FRONT)	
E		1	**207-0573**		SEAL (41-CM)	
		1	**231-7331**	1	LATCH AS	
Y	3	1	**231-7327**	1	FRAME GP-WINDOW (LH)	503
	4	1	**231-7372**	1	CATCH	
	5	1	**243-1323**	1	CATCH	
	6	1	**6D-5797**	2	SCREW-SOCKET	
	7	1	**9X-8918**	2	SCREW-FLAT HEAD (8-32X0.5-IN)	
E	8	1	**207-0539**		SEAL (125-CM)	
E	9	1	**207-0539**		SEAL (138-CM)	
E	10	1	**207-0539**		SEAL (81-CM)	
E	11	1	**207-0573**		SEAL (62-CM)	
E	12	1	**207-0573**		SEAL (80-CM)	
E	13	1	**3E-3892**		SEAL (31-CM EACH)	
E	14	1	**3E-3892**		SEAL (75-CM)	
E	15	1	**3E-3892**		SEAL (65-CM)	
E	16	1	**3E-3892**		SEAL (4-CM EACH)	

E-ORDER BY THE CENTIMETER
Y-SEPARATE ILLUSTRATION

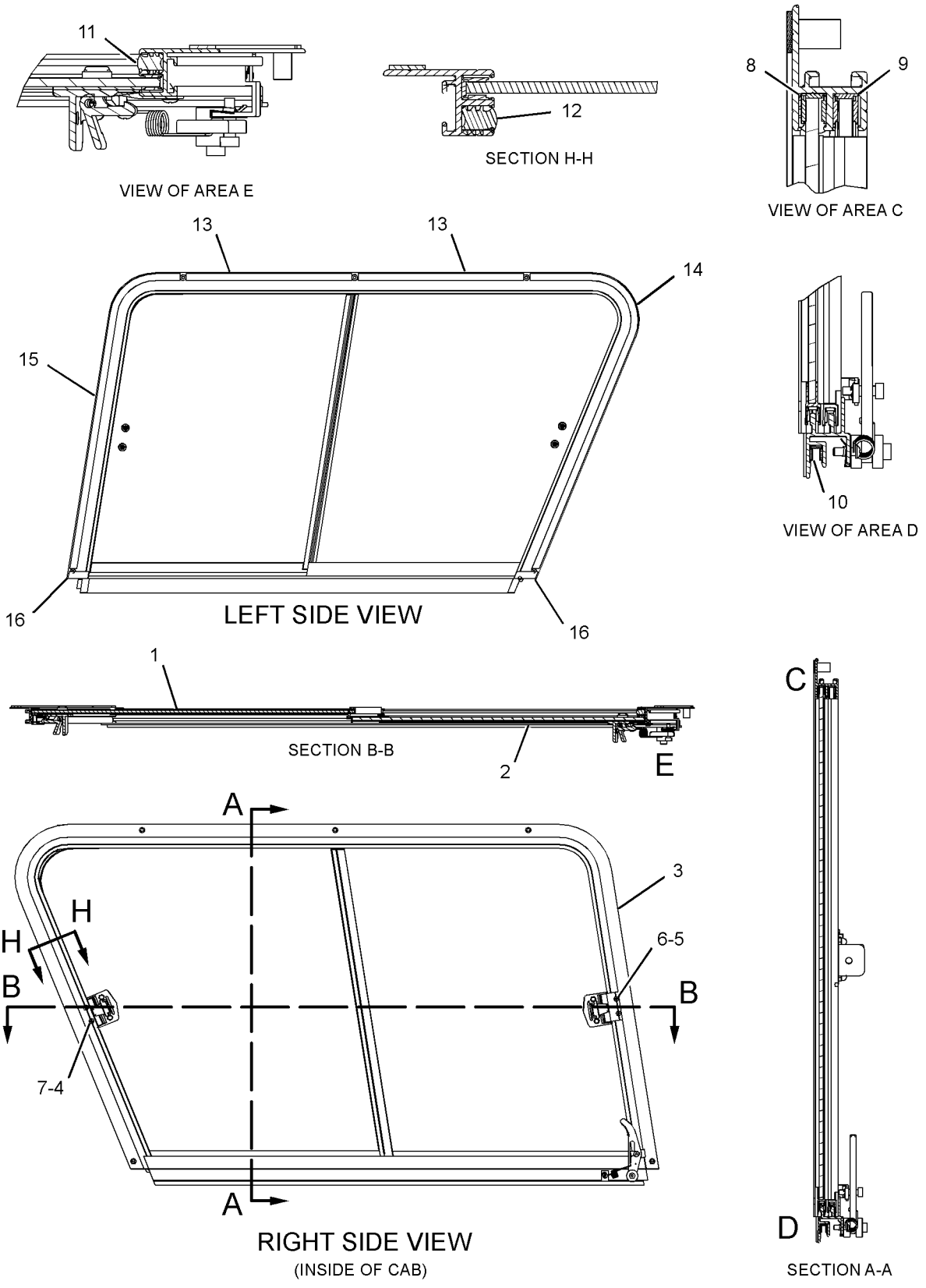

GRAPHIC #1 **<END>** g01276116

OPERATOR STATION

224-7058 WINDOW GP-CAB—RH,UPPER

S/N: SCH2475-UP

PART OF 218-6411, 218-6745 WINDOW GP-CAB

AN ATTACHMENT

SMCS-7310 **i02492654**

NOTE	REF NO	GRAPHIC REF	PART NUMBER	QTY	PART NAME 1 2 3 4 5 6 (PRODUCT LEVEL)	SEE PAGE
	1	1	**231-7319**	1	WINDOW AS-CAB (SLIDING, REAR)	
E			**207-0573**		SEAL (38-CM)	
			231-7331	1	LATCH AS	
	2	1	**231-7320**	1	WINDOW AS-CAB (SLIDING, FRONT)	
E		1	**207-0573**		SEAL (41-CM)	
		1	**231-7331**	1	LATCH AS	
Y	3	1	**231-7325**	1	FRAME GP-WINDOW (RH)	502
	4	1	**231-7372**	1	CATCH	
	5	1	**243-1323**	1	CATCH	
	6	1	**6D-5797**	2	SCREW-SOCKET	
	7	1	**9X-8918**	2	SCREW-FLAT HEAD (8-32X0.5-IN)	
E	8	1	**3E-3892**		SEAL (4-CM EACH)	
E	9	1	**3E-3892**		SEAL (31-CM EACH)	
E	10	1	**3E-3892**		SEAL (75-CM)	
E	11	1	**3E-3892**		SEAL (65-CM)	
E	12	1	**207-0539**		SEAL (81-CM)	
E	13	1	**207-0539**		SEAL (138-CM)	
E	14	1	**207-0539**		SEAL (125-CM)	
E	15	1	**207-0573**		SEAL (80-CM)	
E	16	1	**207-0573**		SEAL (62-CM)	

E-ORDER BY THE CENTIMETER
Y-SEPARATE ILLUSTRATION

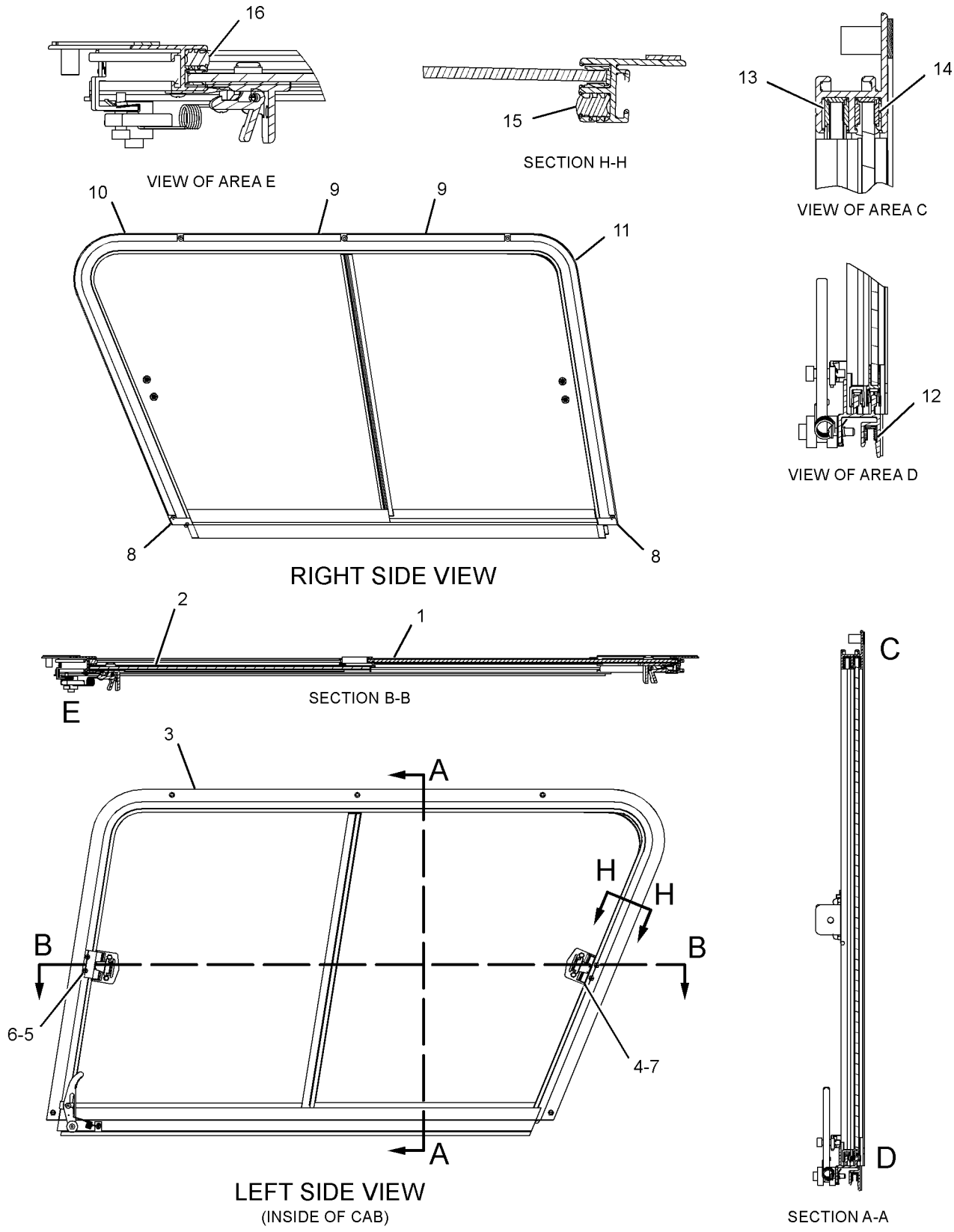

GRAPHIC #1 **<END>** g01276182

191-9684 FILM GP–CLEARANCE

S/N: SCH2475-UP
PART OF 278-5348, 295-7067 CONVERSION AR-MACHINE, 233-5684 CONVERSION AR-ROADING
AN ATTACHMENT

SMCS-7557 **i01983232**

NOTE	REF NO	GRAPHIC REF	PART NUMBER	QTY	PART NAME 1 2 3 4 5 6 (PRODUCT LEVEL)	SEE PAGE
	1	1	**160-1600**	1	FILM-WARNING (CLEARANCE)	

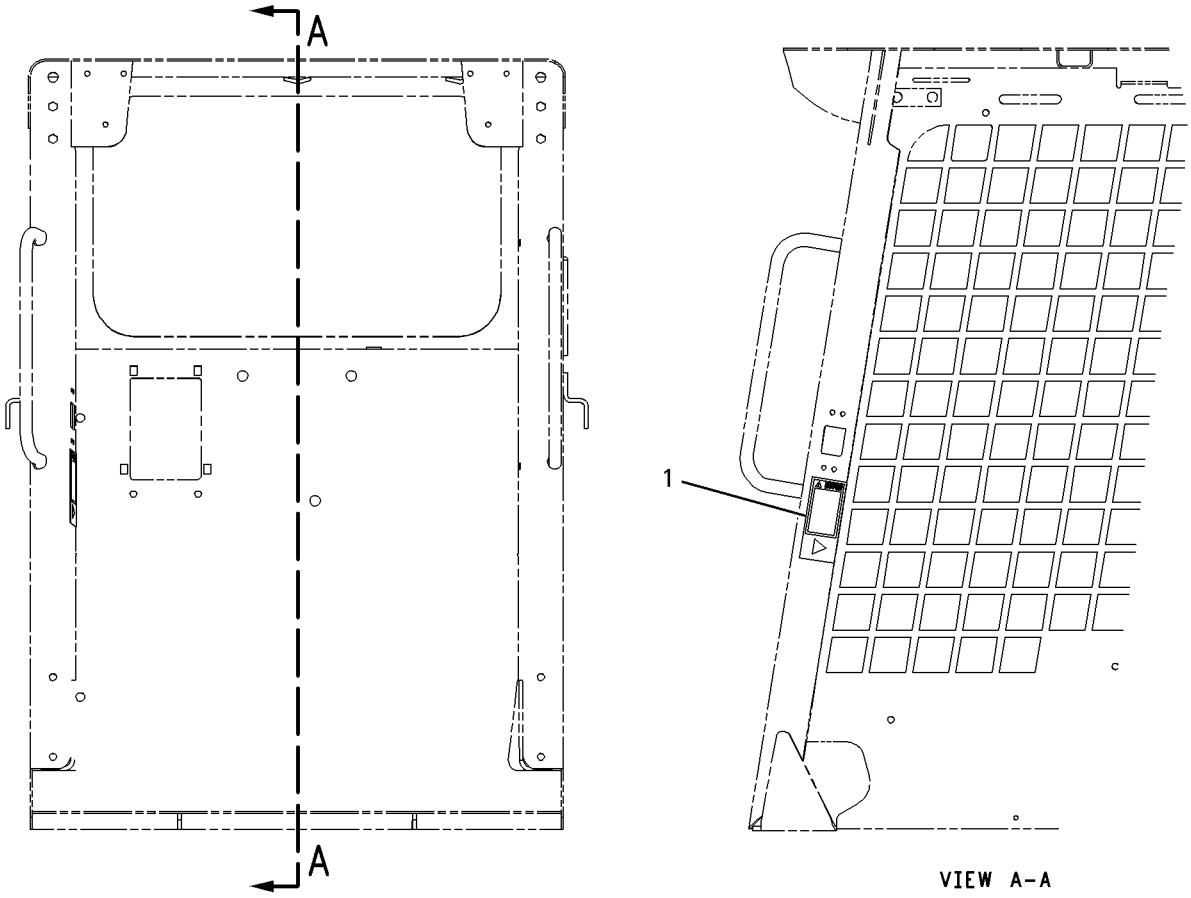

GRAPHIC #1 **<END>** g00771257

SERVICE EQUIPMENT AND SUPPLIES

238-7734 FILM GP–UN

S/N: SCH2475-UP

AN ATTACHMENT

SMCS-7557 **i02797728**

NOTE	REF NO	GRAPHIC REF	PART NUMBER	QTY	PART NAME 1 2 3 4 5 6 (PRODUCT LEVEL)	SEE PAGE
	1	1	**252-9015**	1	FILM-IDENTIFICATION (UN)	
	2	1	**252-9016**	2	FILM-IDENTIFICATION (UN)	
	3	1	**252-9017**	2	FILM-IDENTIFICATION (UN)	

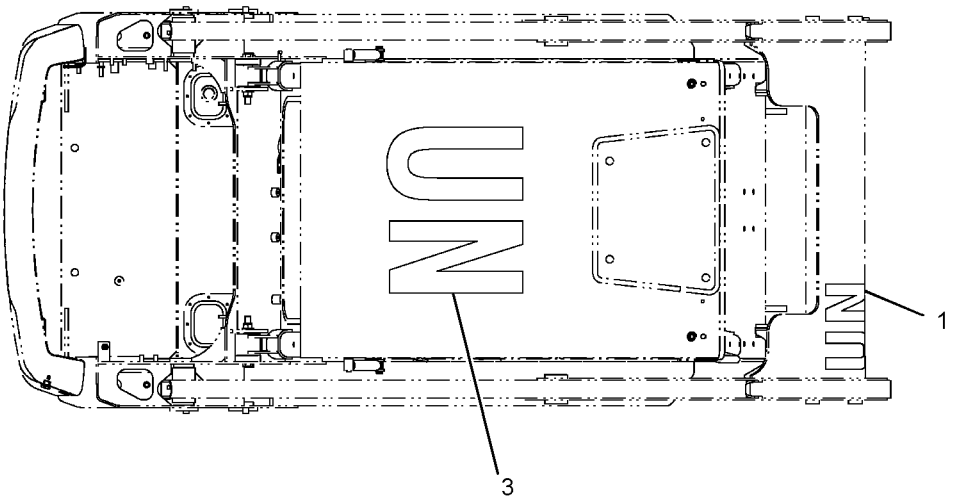

TOP VIEW FWD

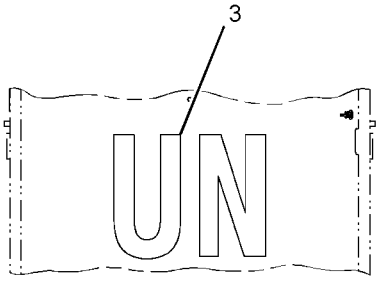

VIEW A-A

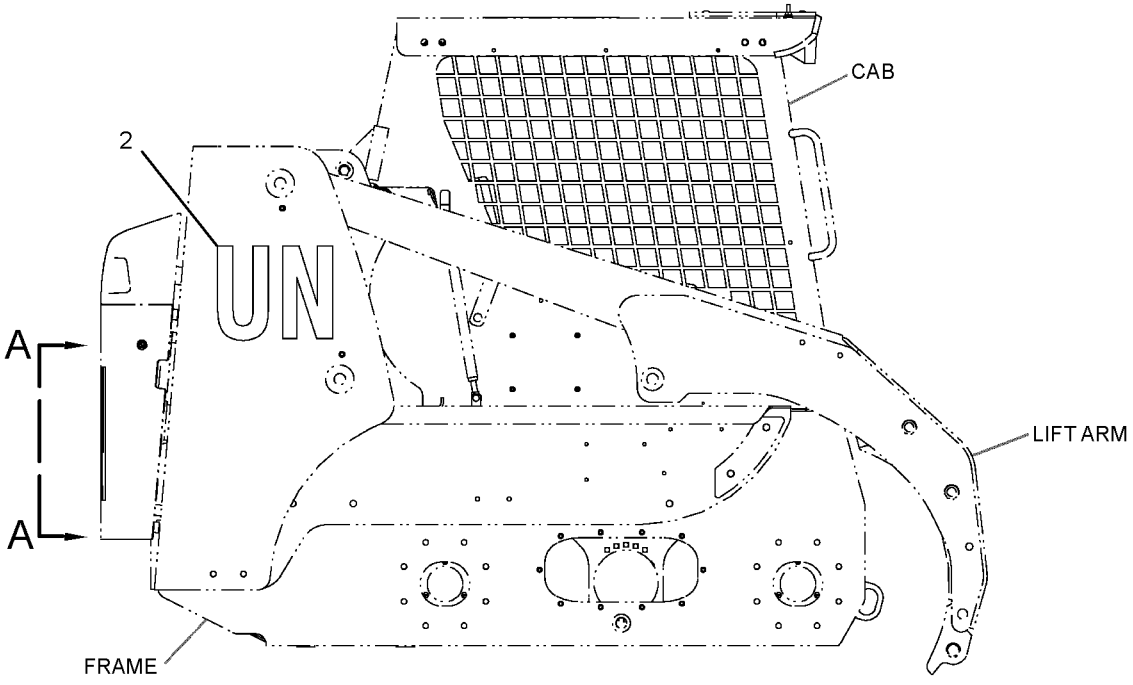

RIGHT SIDE VIEW

GRAPHIC #1

<END>

g01397986

SERVICE EQUIPMENT AND SUPPLIES

295-7132 FILM GP

S/N: SCH2475-UP

PART OF 295-7232, 295-7233 COMMON AR

SMCS-7557 **i02732850**

NOTE	REF NO	GRAPHIC REF	PART NUMBER	QTY	PART NAME 1 2 3 4 5 6 (PRODUCT LEVEL)	SEE PAGE
	1	1	**258-3423**	1	FILM-IDENTIFICATION (CATERPILLAR)	
	2	1	**258-3424**	1	FILM-IDENTIFICATION (CAT, LIFT ARM, LH)	
	3	1	**258-3425**	1	FILM-IDENTIFICATION (CAT, LIFT ARM, RH)	
	4	1	**258-3427**	1	FILM-IDENTIFICATION (CAT, REAR)	
	5	1	**295-7424**	1	FILM-IDENTIFICATION (232B2, RH)	
	6	1	**295-7425**	1	FILM-IDENTIFICATION (232B2, RH)	

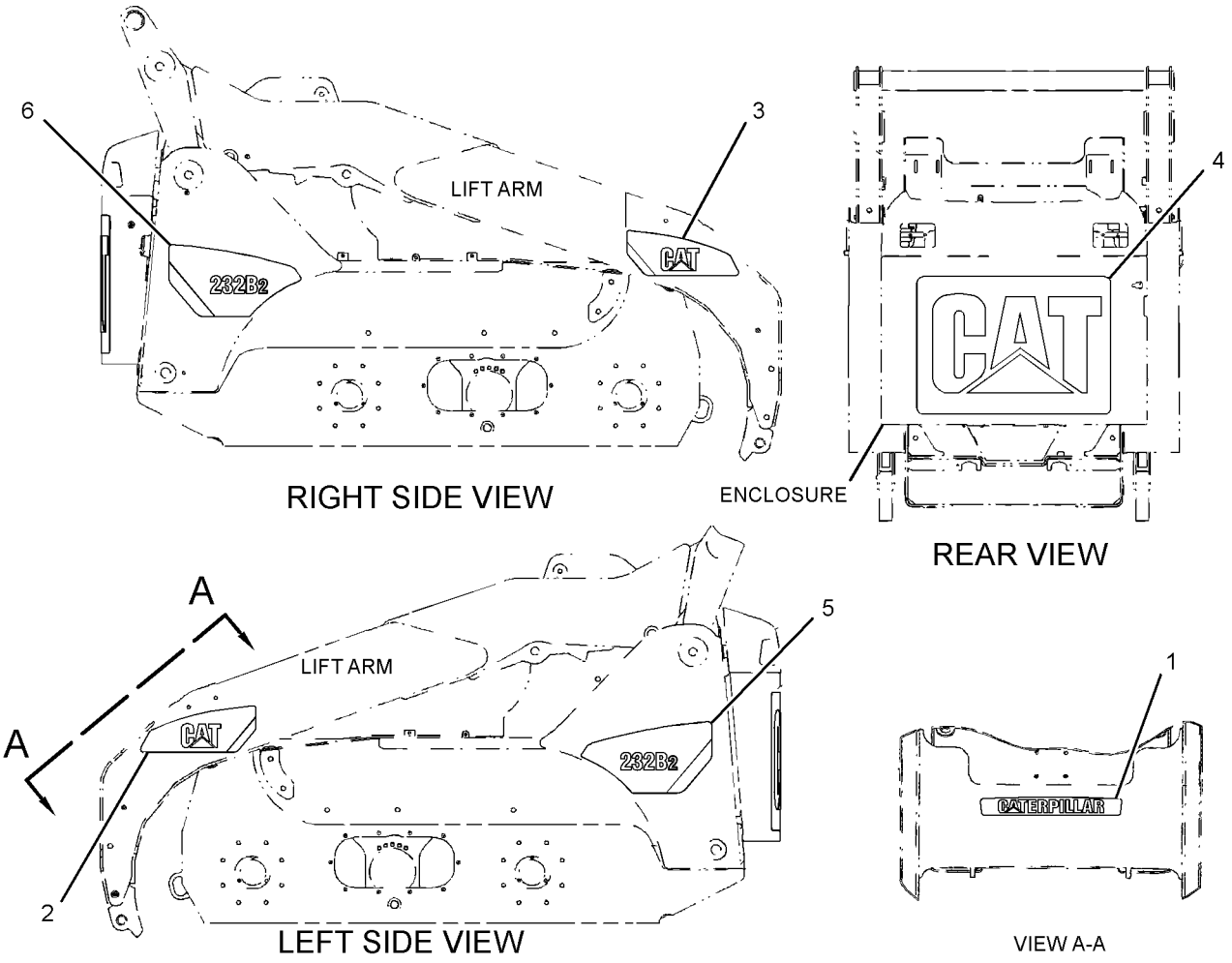

GRAPHIC #1 **<END>** g01375472

SERVICE EQUIPMENT AND SUPPLIES

317-0972 PARTS GP-MISCELLANEOUS

S/N: CYP1-UP

PART OF 292-5719 ENGINE AR-PRIMARY

AN ATTACHMENT

SMCS-1000, 7000, 7950 **i02827333**

NOTE	REF NO	GRAPHIC REF	PART NUMBER	QTY	PART NAME 1 2 3 4 5 6 (PRODUCT LEVEL)	SEE PAGE
	1	1	**5P-2369**	1	CLIP	
	2	1	**153-6375**	5	BOLT	
	3	1	**155-7984**	1	WASHER	
	4	1	**160-3550**	1	CLAMP-HOSE	
	5	1	**163-5372**	1	WASHER (8X15.4X4-MM THK)	
	6	1	**180-8579**	1	NUT	
	7	1	**183-4037**	1	CONNECTOR AS	
	8	1	**200-0807**	1	BRACKET	
	9	1	**200-5976**	1	CONNECTION	
	10	1	**205-4585**	1	HOSE	
	11	1	**217-7352**	1	COVER-VALVE	
	12	1	**225-7955**	1	CABLE AS-BATTERY (NEGATIVE)	
	13	1	**246-4318**	4	CLIP	
	14	1	**265-5624**	1	SPRING-RETURN	
	15	1	**265-5625**	1	BRACKET-THROTTLE	
	16	1	**280-8336**	1	BRACKET AS	
M	16A	1	**8T-3612**	1	NUT-WELD (M8X1.25-THD)	
	17	1	**295-8184**	1	HOSE	
	18	1	**316-6881**	1	CLAMP	

M-METRIC PART

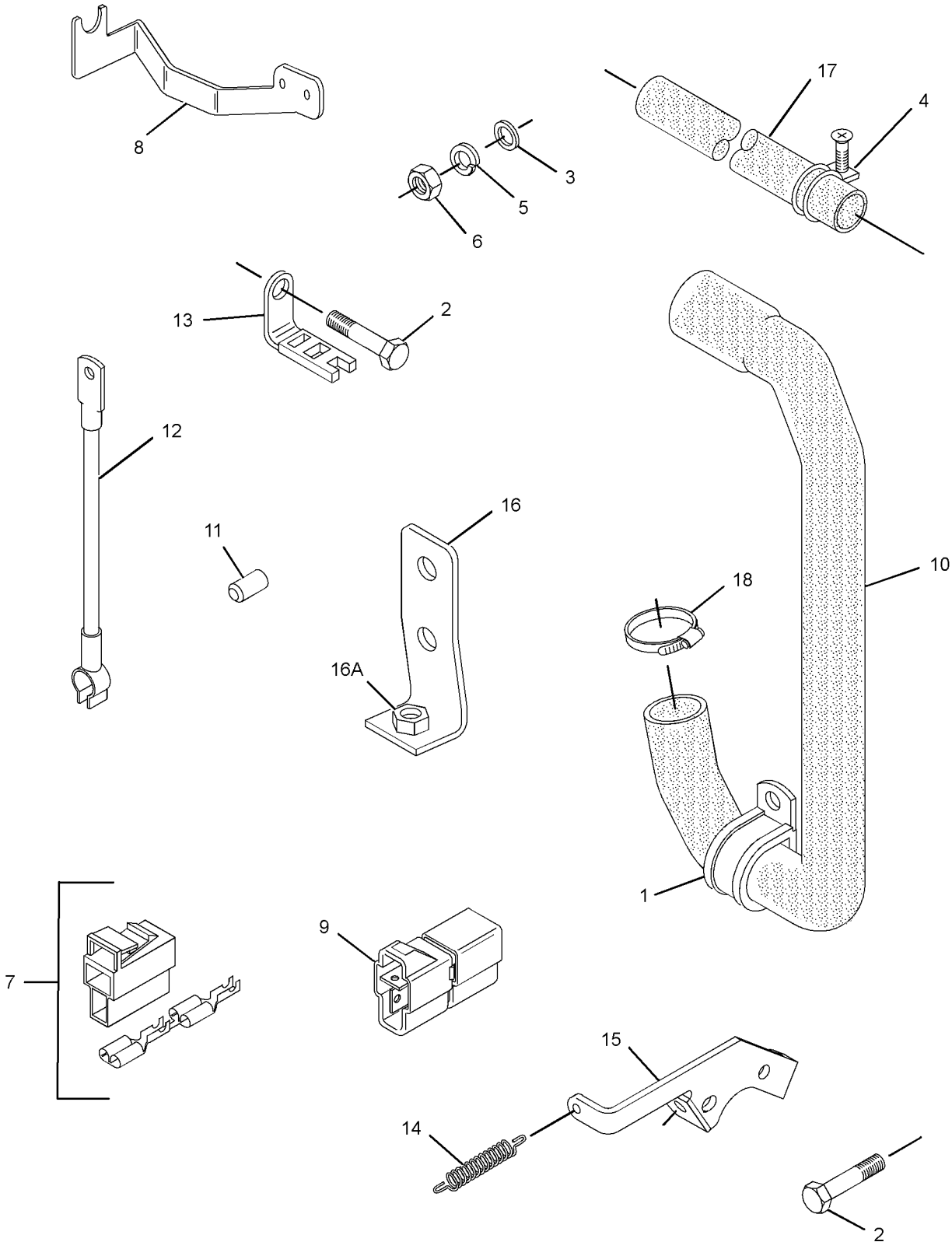

GRAPHIC #1 **<END>** g01439494

SERVICE EQUIPMENT AND SUPPLIES

195-6740 PLATE & FILM GP

S/N: SCH2475-UP
AN ATTACHMENT

SMCS-7405, 7557 **i02890284**

NOTE	REF NO	GRAPHIC REF	PART NUMBER	QTY	PART NAME 1 2 3 4 5 6 (PRODUCT LEVEL)	SEE PAGE
	1	1	**199-3410**	1	FILM-IDENTIFICATION (SYNTHETIC OIL)	

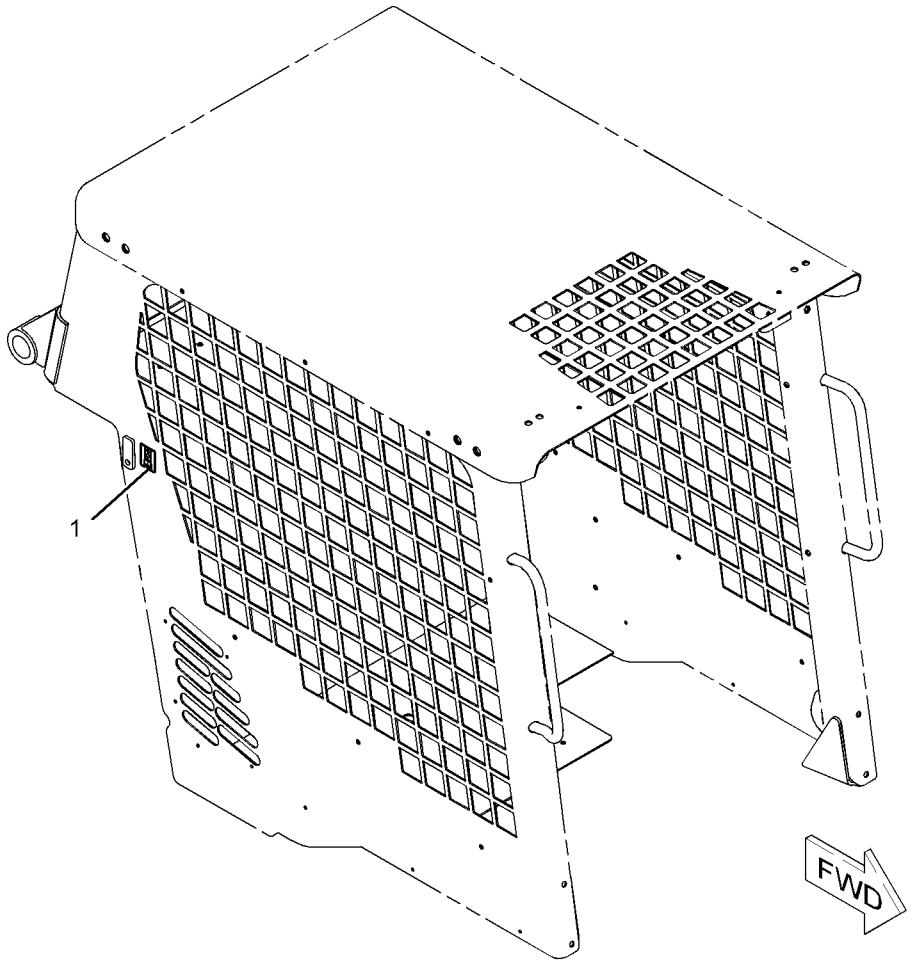

GRAPHIC #1 **<END>** g01086583

SERVICE EQUIPMENT AND SUPPLIES

218-5911 PLATE & FILM GP

S/N: SCH2475-UP
CANNOT BE USED WITH 218-6292—PAGE 576
AN ATTACHMENT

SMCS-7405, 7557 **i02593845**

NOTE	REF NO	GRAPHIC REF	PART NUMBER	QTY	PART NAME 1 2 3 4 5 6 (PRODUCT LEVEL)	SEE PAGE
	1	1	**156-5762**	4	FILM-INFORMATION (TIE-DOWN LOCATION)	
	2	1	**157-2853**	1	FILM-INFORMATION (READ OMM)	
	4	1	**224-0554**	1	FILM-WARNING (UNIVERSAL, READ OMM, INTL)	
	5	2	**224-8646**	2	FILM-WARNING (CRUSH HAZARD, STAY BACK)	
	6	1	**224-9022**	1	FILM-WARNING (SEAT BELT)	
	7	1	**234-6065**	1	FILM-CERTIFICATION (OPS, READ OMM)	
	8	2	**234-6071**	1	FILM-WARNING (LIFT ARM BRACE)	
	9	1	**234-6076**	1	FILM-WARNING (NO ACCESS)	
	10	1,2	**234-6078**	2	FILM-WARNING (CAB TILT SUPPORT)	
	11	1	**234-6081**	1	FILM-WARNING (WORK TOOL)	
	12	2	**235-1368**	1	FILM-WARNING (RADIATOR)	
	13	2	**239-6986**	1	PLATE-IDENTIFICATION (MACHINE)	
	14	2	**169-2876**	1	FILM-IDENTIFICATION (POWER RECEPTACLE, 12-VOLT)	
	15	1	**219-0302**	1	FILM-WARNING (NO WELD, NO DRILL, READ OMM)	
	16	1	**224-0672**	1	FILM-WARNING (HIGH PRESSURE, READ MANUAL)	
	17	1	**224-9855**	1	FILM-INSTRUCTION (START AID, READ OMM, INTL)	
	18	2	**225-0312**	1	FILM-WARNING (JUMP START, READ OMM, INTL)	
	19	1	**225-7976**	1	FILM-IDENTIFICATION (RELAY LAYOUT)	
	20	1	**225-7977**	1	FILM-IDENTIFICATION (RELAY LAYOUT)	
	21	2	**233-5715**	1	FILM-INSTRUCTION (SERVICE CHART)	
	22	1	**234-6069**	1	FILM-WARNING (CRUSH HAZARD)	
	23	1	**234-9575**	1	FILM-INSTRUCTION (GOVERNOR CONTROL)	
	25	2	**4P-6422**	1	FILM-WARNING (NO ETHER SPRAY/AIR INTAKE)	
	26	2	**295-2567**	1	FILM-INSTRUCTION (BUCKET LOWER)	
AF			**246-4291**	1	PLATE-SERIAL NUMBER	

A-NOT PART OF THIS GROUP
F-NOT SHOWN

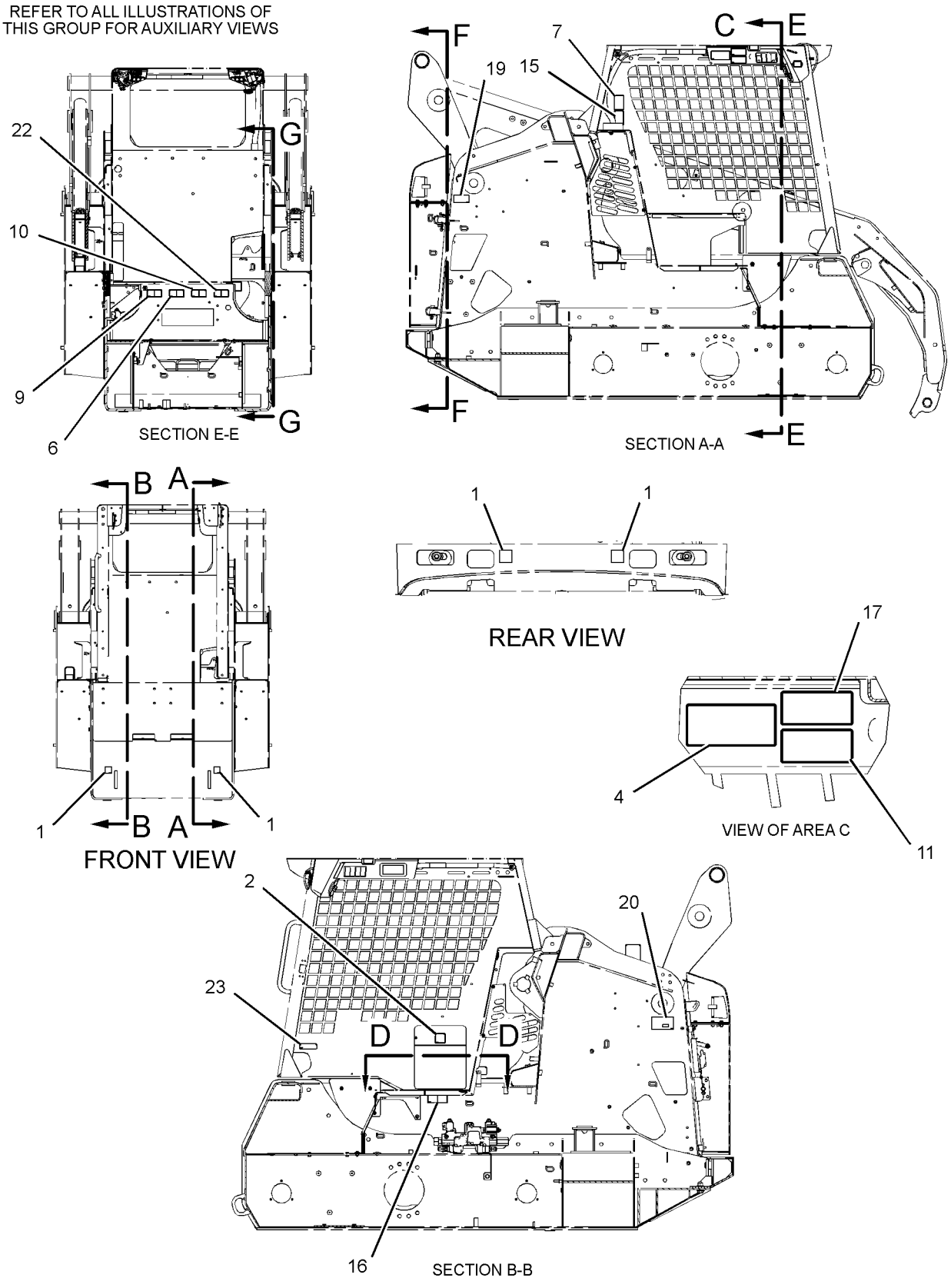

GRAPHIC #1

g01328115

REFER TO ALL ILLUSTRATIONS OF
THIS GROUP FOR AUXILIARY VIEWS

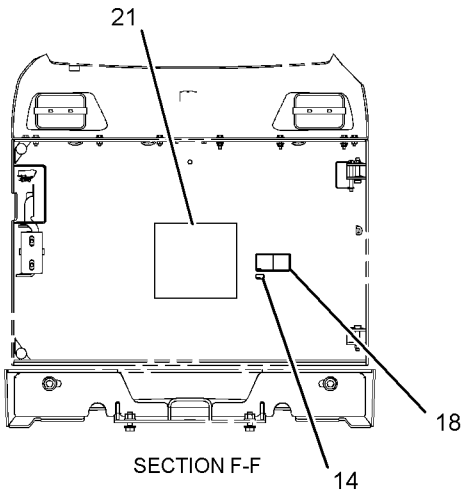

SECTION F-F

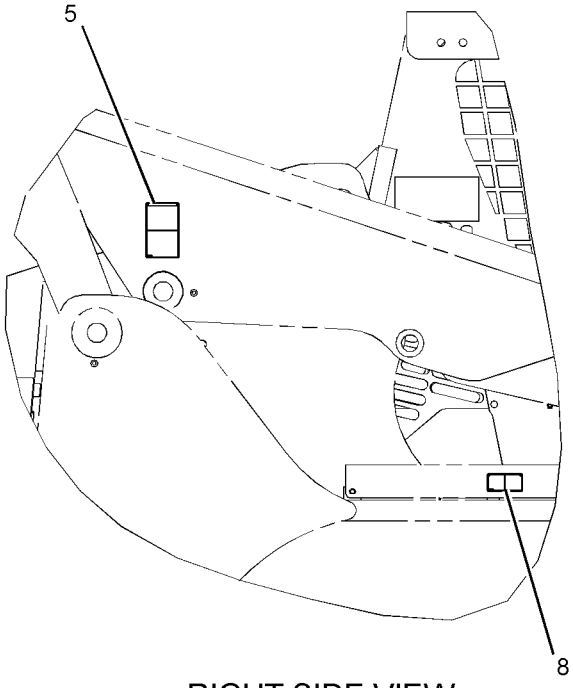

RIGHT SIDE VIEW

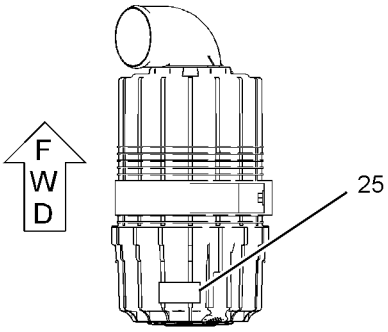

TOP VIEW
(AIR CLEANER)

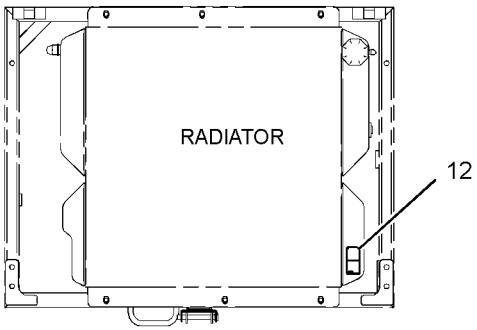

TOP VIEW

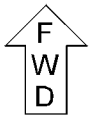

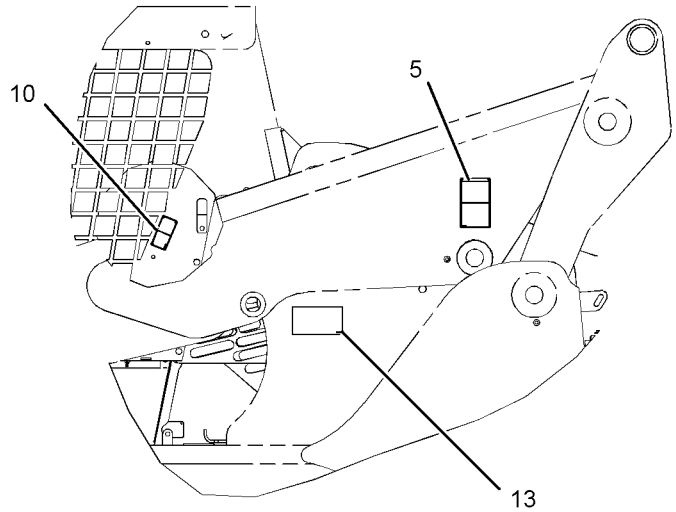

SECTION G-G

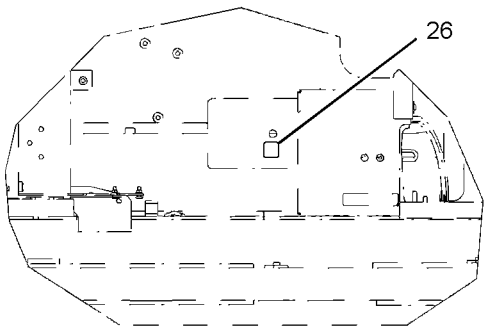

VIEW D-D

GRAPHIC #2 **<END>** g01328116

SERVICE EQUIPMENT AND SUPPLIES

218-6292 PLATE & FILM GP

S/N: SCH2475-UP

AN ATTACHMENT

SMCS-7405, 7557 **i02843437**

NOTE	REF NO	GRAPHIC REF	PART NUMBER	QTY	PART NAME 1 2 3 4 5 6 (PRODUCT LEVEL)	SEE PAGE
	1	1,2	**156-5762**	4	FILM-INFORMATION (TIE-DOWN LOCATION)	
	2	2	**157-2853**	1	FILM-INFORMATION (READ OMM)	
	3	2	**4P-6422**	1	FILM-WARNING (NO ETHER SPRAY/AIR INTAKE)	
	4	2	**224-7830**	1	FILM-WARNING (HIGH PRESSURE, READ OMM, U.S.)	
	5	1	**224-9021**	1	FILM-WARNING (SEAT BELT)	
	6	2	**225-3305**	1	FILM-WARNING (UNIVERSAL, READ OMM, U.S.)	
	7	1	**235-1365**	1	FILM-WARNING (HOT FLUID UNDER PRESSURE)	
	8	2	**234-9575**	1	FILM-INSTRUCTION (GOVERNOR CONTROL)	
	9	1	**224-8645**	2	FILM-WARNING (CRUSH HAZARD, STAY BACK)	
	10	1	**169-2876**	1	FILM-IDENTIFICATION (POWER RECEPTACLE, 12-VOLT)	
	11	2	**219-0302**	1	FILM-WARNING (NO WELD, NO DRILL, READ OMM)	
	12	2	**224-9855**	1	FILM-INSTRUCTION (START AID, READ OMM, INTL)	
	13	1	**225-0313**	1	FILM-WARNING (JUMP START, READ OMM, U.S.)	
	14	2	**225-7976**	1	FILM-IDENTIFICATION (RELAY LAYOUT)	
	15	2	**225-7977**	1	FILM-IDENTIFICATION (RELAY LAYOUT)	
	16	1	**233-5715**	1	FILM-INSTRUCTION (SERVICE CHART)	
	17	1,2	**234-6067**	2	FILM-WARNING (CRUSH HAZARD, CAB, READ OMM)	
	18	1	**234-6070**	1	FILM-WARNING (CRUSH HAZARD, CAB, READ OMM)	
	19	1	**234-6072**	1	FILM-WARNING (CRUSH HAZARD, READ OMM)	
	20	1	**234-6074**	1	FILM-WARNING (FALL/CRUSH HAZARD, NO ACCESS)	
	21	2	**234-6077**	1	FILM-WARNING (CRUSH HAZARD, READ OMM)	
	22	2	**295-2567**	1	FILM-INSTRUCTION (BUCKET LOWER)	
	23	2	**234-6065**	1	FILM-CERTIFICATION (OPS, READ OMM)	
	24	1	**239-6986**	1	PLATE-IDENTIFICATION (MACHINE)	

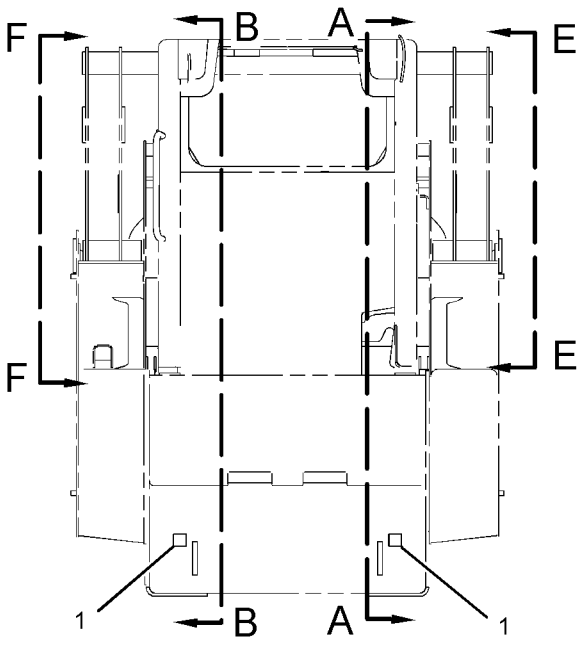

FRONT VIEW

REFER TO ALL ILLUSTRATIONS OF THIS GROUP FOR AUXILIARY VIEWS

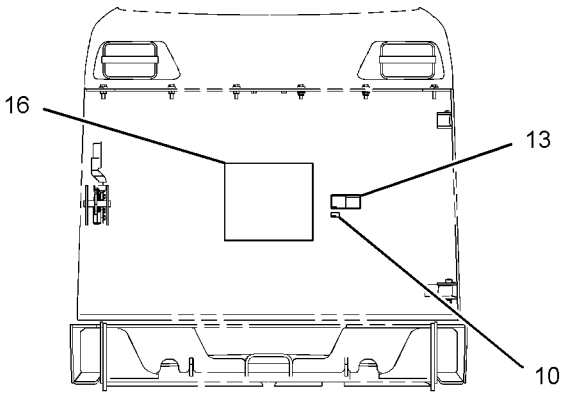

VIEW G-G

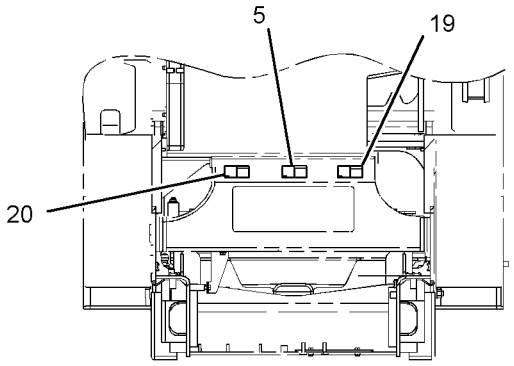

VIEW D-D

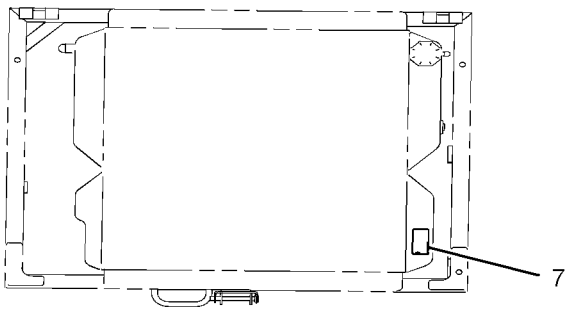

VIEW C-C

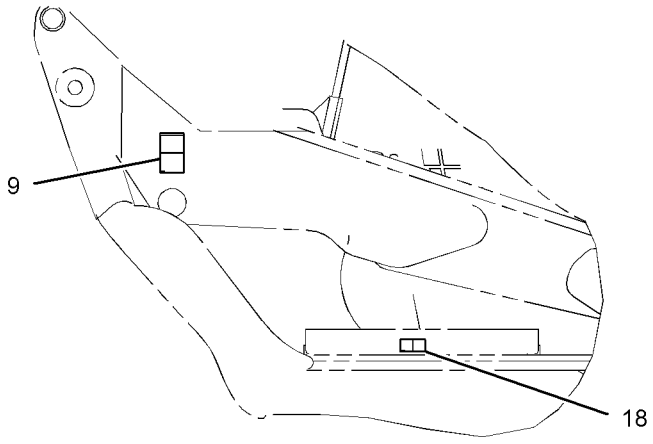

VIEW F-F

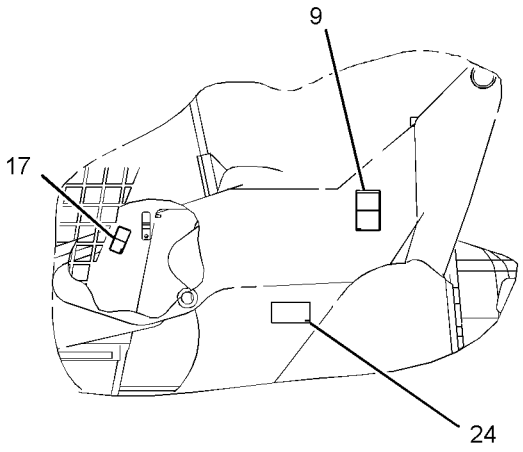

VIEW E-E

GRAPHIC #1 g01421575

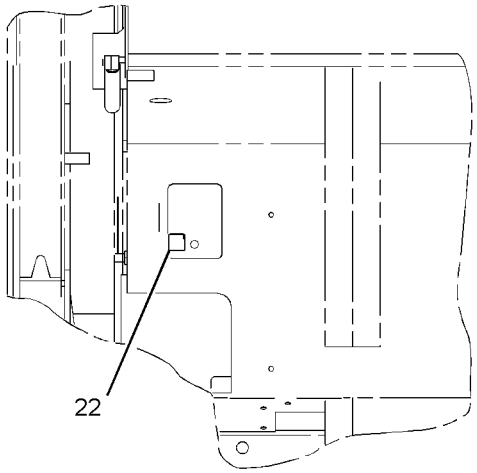

VIEW K-K

REFER TO ALL ILLUSTRATIONS OF
THIS GROUP FOR AUXILIARY VIEWS

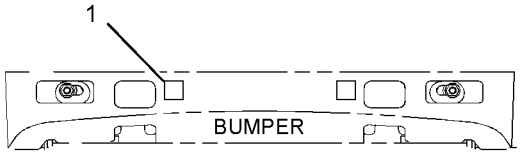

REAR VIEW

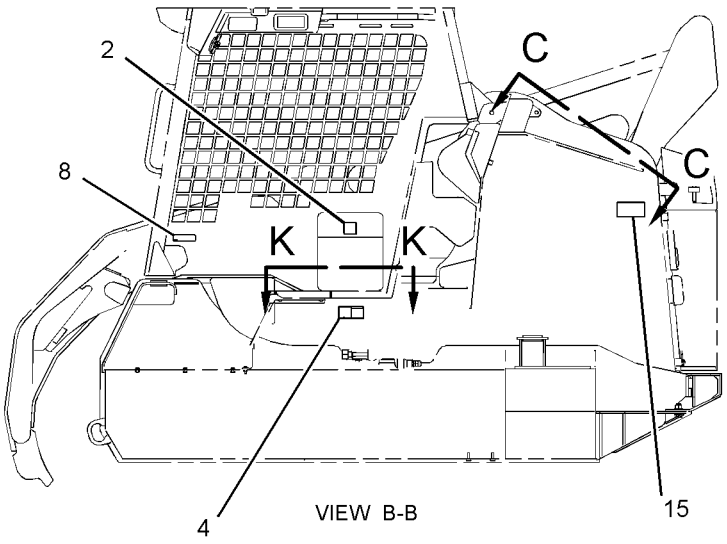

VIEW B-B

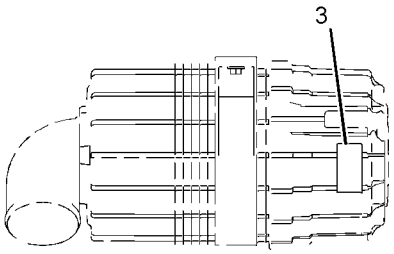

VIEW J-J

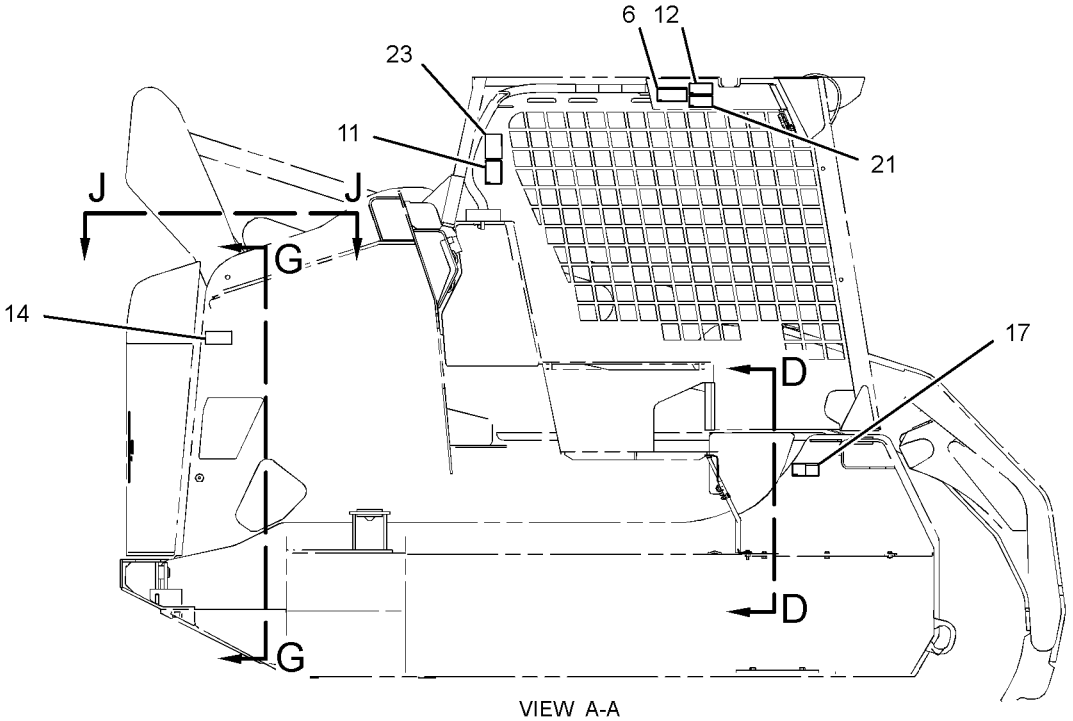

VIEW A-A

GRAPHIC #2 **<END>** g01431593

SERVICE EQUIPMENT AND SUPPLIES

286-9251 PLATE & FILM GP

S/N: SCH2475-UP

PART OF 286-9300, 286-9301 BUCKET AR-GRAPPLE

AN ATTACHMENT

SMCS-7405, 7557 **i02723719**

NOTE	REF NO	GRAPHIC REF	PART NUMBER	QTY	PART NAME 1 2 3 4 5 6 (PRODUCT LEVEL)	SEE PAGE
	1	1	**168-8389**	4	TACK-FASTENER	
	2	1	**228-3369**	1	FILM-WARNING (DO NOT OPERATE, READ OMM)	
	3	1	**247-6118**	2	FILM-WARNING (CRUSH HAZARD, STAY BACK)	
	4	1	**248-5245**	2	FILM-INFORMATION (LIFT EYE, TIE-DOWN LOCATION)	
	5	1	**255-6540**	1	PLATE-INSTRUCTION (BUCKET SPECIFICATIONS)	

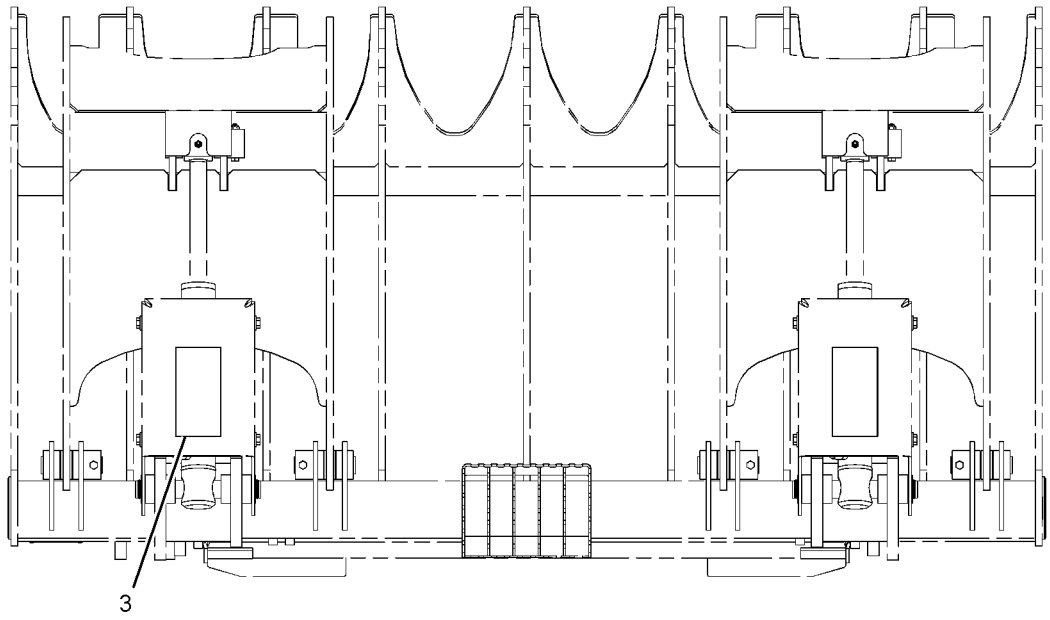

TOP VIEW

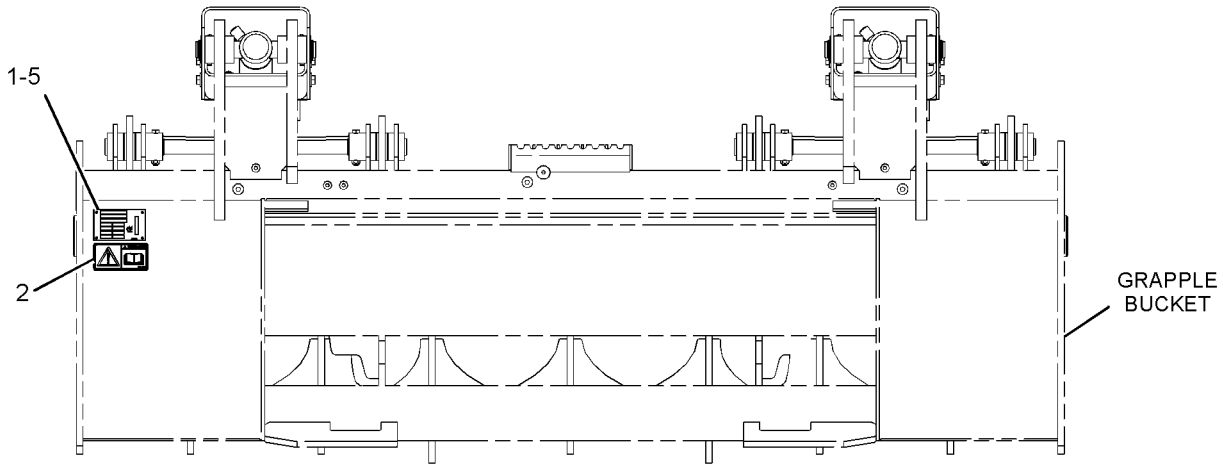

REAR VIEW

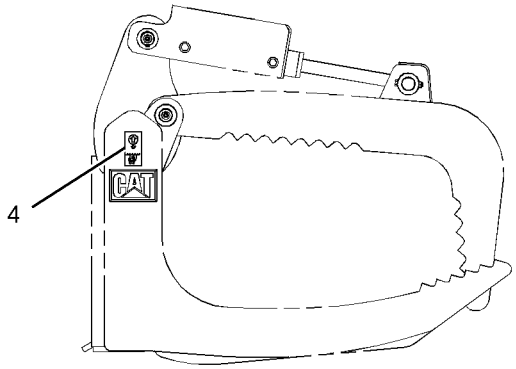

RIGHT SIDE VIEW

GRAPHIC #1

<END>

g01373367

SERVICE EQUIPMENT AND SUPPLIES

295-7192 PLATE & FILM GP

S/N: SCH2475-2824

AN ATTACHMENT

SMCS-7405, 7557 **i02796052**

NOTE	REF NO	GRAPHIC REF	PART NUMBER	QTY	PART NAME 1 2 3 4 5 6 (PRODUCT LEVEL)	SEE PAGE
	1	1	**157-2853**	1	FILM-INFORMATION (READ OMM)	
	3	2	**169-2876**	1	FILM-IDENTIFICATION (POWER RECEPTACLE, 12-VOLT)	
	4	1	**219-0302**	1	FILM-WARNING (NO WELD, NO DRILL, READ OMM)	
	5	1	**224-7830**	1	FILM-WARNING (HIGH PRESSURE, READ OMM, U.S.)	
	6	2	**224-8645**	2	FILM-WARNING (CRUSH HAZARD, STAY BACK)	
	7	2	**224-8945**	1	FILM-WARNING (DO NOT USE ETHER, U.S)	
	8	1	**224-9021**	1	FILM-WARNING (SEAT BELT)	
	9	1	**225-3305**	1	FILM-WARNING (UNIVERSAL, READ OMM, U.S.)	
	10	1	**234-6065**	1	FILM-CERTIFICATION (OPS, READ OMM)	
	11	2	**234-6070**	1	FILM-WARNING (CRUSH HAZARD, CAB, READ OMM)	
	12	1	**234-6074**	1	FILM-WARNING (FALL/CRUSH HAZARD, NO ACCESS)	
	13	1	**234-6077**	1	FILM-WARNING (CRUSH HAZARD, READ OMM)	
	15	2	**235-1365**	1	FILM-WARNING (HOT FLUID UNDER PRESSURE)	
	16	2	**239-6986**	1	PLATE-IDENTIFICATION (MACHINE)	
	17	1	**263-4836**	4	FILM-SYMBOL (TIE-DOWN)	
	18	2	**295-2567**	1	FILM-INSTRUCTION (BUCKET LOWER)	
	19	2	**295-7200**	1	FILM-INSTRUCTION	
	20	1	**224-9855**	1	FILM-INSTRUCTION (START AID, READ OMM, INTL)	
	21	2	**225-0313**	1	FILM-WARNING (JUMP START, READ OMM, U.S.)	
	22	1	**225-7976**	1	FILM-IDENTIFICATION (RELAY LAYOUT) (ALTERNATOR)	
	23	1	**225-7977**	1	FILM-IDENTIFICATION (RELAY LAYOUT) (LIGHTING)	
	24	1,2	**234-6067**	2	FILM-WARNING (CRUSH HAZARD, CAB, READ OMM)	
	25	1	**234-6072**	1	FILM-WARNING (CRUSH HAZARD, READ OMM)	
	26	1	**234-9575**	1	FILM-INSTRUCTION (GOVERNOR CONTROL)	
	27	2	**312-7747**	1	PLATE-WARNING (UNIVERSAL)	

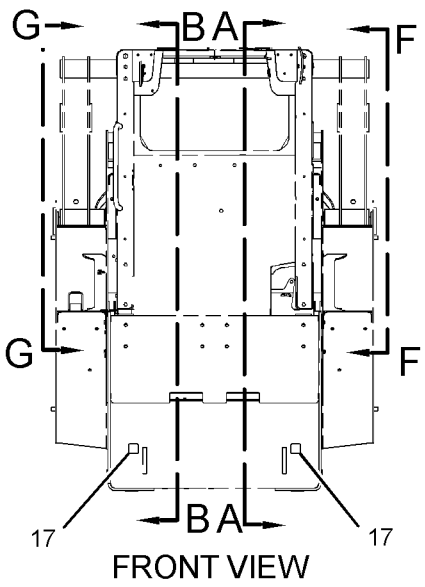

FRONT VIEW

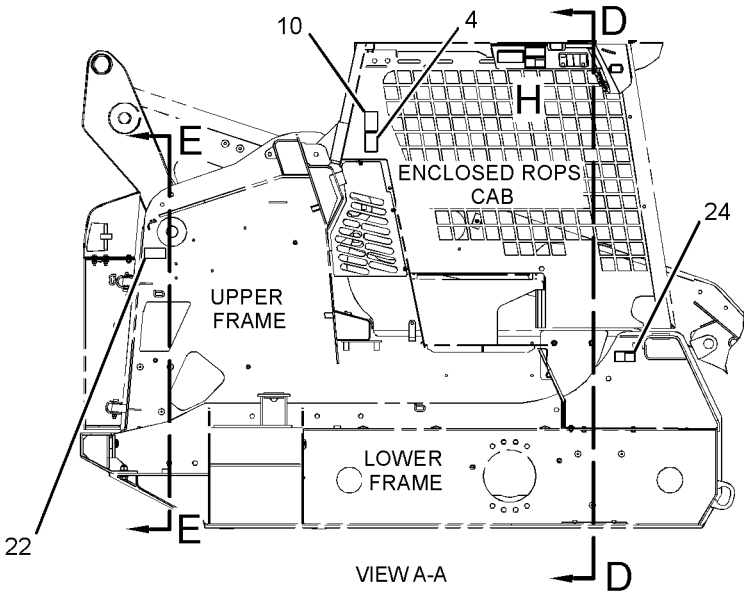

VIEW A-A

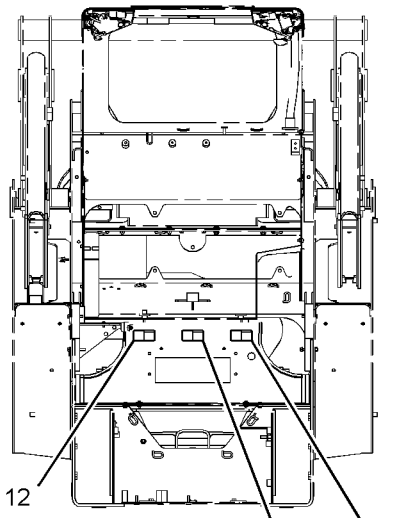

VIEW D-D

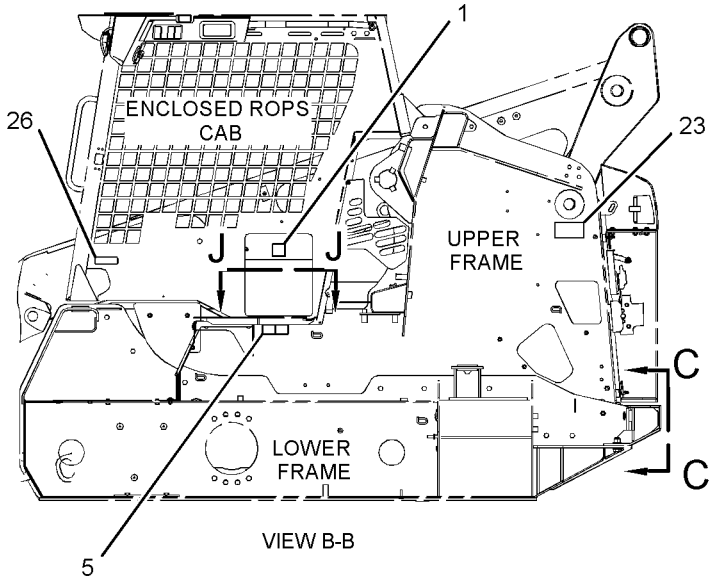

VIEW B-B

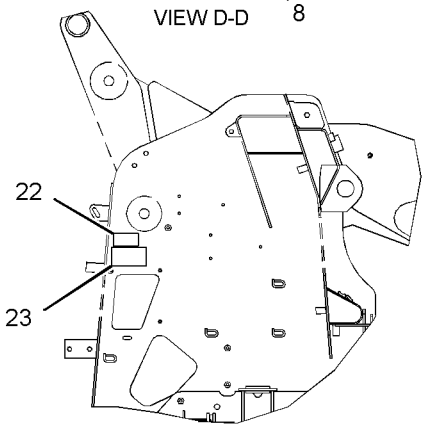

VIEW A-A
(ALTERNATE VIEW FOR ALPHA MACHINES)

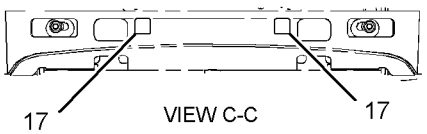

VIEW C-C

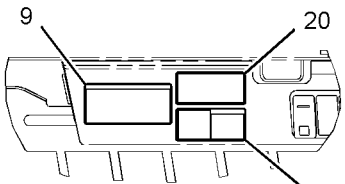

VIEW OF AREA H

REFER TO ALL ILLUSTRATIONS OF THIS GROUP FOR AUXILIARY VIEWS

GRAPHIC #1

g01417009

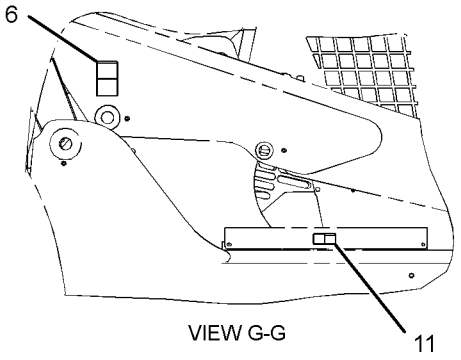

VIEW G-G

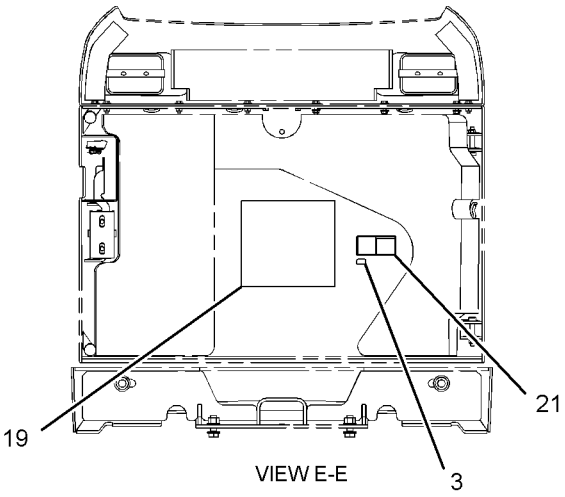

VIEW E-E

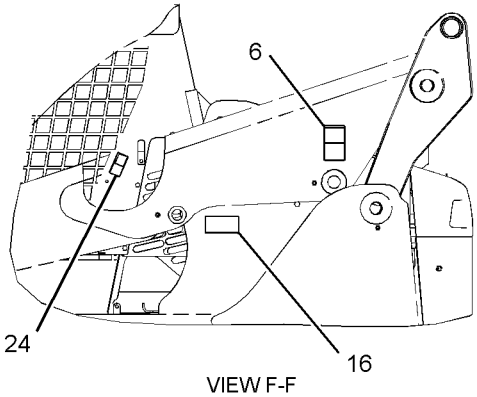

VIEW F-F

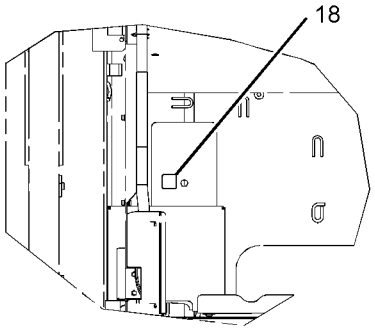

VIEW J-J

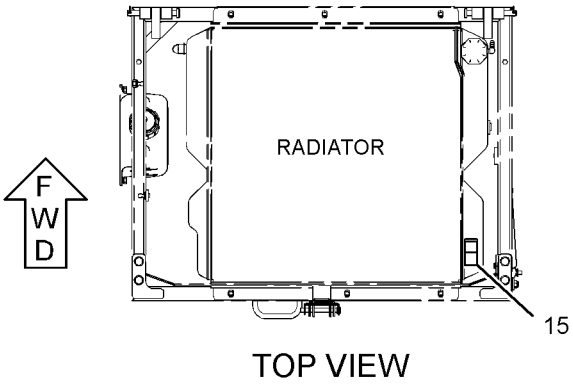

TOP VIEW

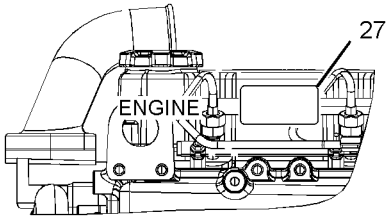

RIGHT SIDE VIEW
(FOR MODEL 252)

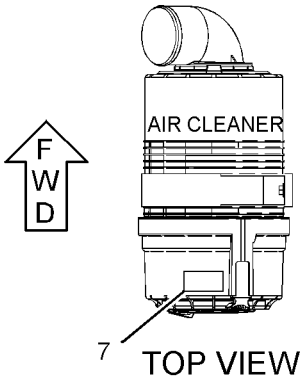

TOP VIEW

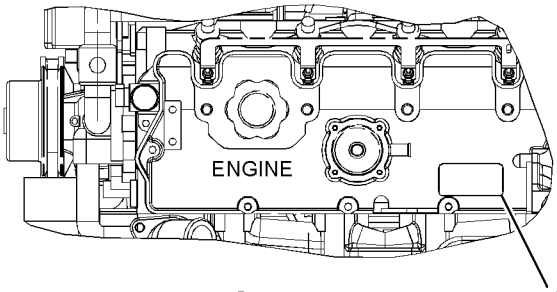

TOP VIEW
(FOR MODEL 232 & 242)

GRAPHIC #2 **<END>** g01416616

SERVICE EQUIPMENT AND SUPPLIES

295-7196 PLATE & FILM GP

S/N: SCH2475-2824

AN ATTACHMENT

SMCS-7405, 7557 **i02796057**

NOTE	REF NO	GRAPHIC REF	PART NUMBER	QTY	PART NAME 1 2 3 4 5 6 (PRODUCT LEVEL)	SEE PAGE
	1	1	**157-2853**	1	FILM-INFORMATION (READ OMM)	
	2	2	**169-2876**	1	FILM-IDENTIFICATION (POWER RECEPTACLE, 12-VOLT)	
	3	1	**219-0302**	1	FILM-WARNING (NO WELD, NO DRILL, READ OMM)	
	4	1	**234-6065**	1	FILM-CERTIFICATION (OPS, READ OMM)	
	5	1	**263-4836**	4	FILM-SYMBOL (TIE-DOWN)	
	6	2	**295-7200**	1	FILM-INSTRUCTION	
	7	1	**224-9855**	1	FILM-INSTRUCTION (START AID, READ OMM, INTL)	
	8	1	**225-7976**	1	FILM-IDENTIFICATION (RELAY LAYOUT) (ALTERNATOR)	
	9	1	**225-7977**	1	FILM-IDENTIFICATION (RELAY LAYOUT) (LIGHTING)	
	10	2	**295-2567**	1	FILM-INSTRUCTION (BUCKET LOWER)	
	11	1	**224-0554**	1	FILM-WARNING (UNIVERSAL, READ OMM, INTL)	
	12	2	**224-8946**	1	FILM-WARNING (NO ETHER SPRAY/AIR INTK, INTL)	
	13	1	**224-9022**	1	FILM-WARNING (SEAT BELT)	
	14	2	**234-6071**	1	FILM-WARNING (LIFT ARM BRACE)	
	15	1	**234-6076**	1	FILM-WARNING (NO ACCESS)	
	16	1,2	**234-6078**	2	FILM-WARNING (CAB TILT SUPPORT)	
	17	1	**234-6081**	1	FILM-WARNING (WORK TOOL)	
	18	1	**234-9575**	1	FILM-INSTRUCTION (GOVERNOR CONTROL)	
	19	2	**239-6986**	1	PLATE-IDENTIFICATION (MACHINE)	
	20	2	**225-0312**	1	FILM-WARNING (JUMP START, READ OMM, INTL)	
	21	2	**235-1368**	1	FILM-WARNING (RADIATOR)	
	22	2	**224-8646**	2	FILM-WARNING (CRUSH HAZARD, STAY BACK)	
	23	1	**224-0672**	1	FILM-WARNING (HIGH PRESSURE, READ MANUAL)	
	24	1	**234-6069**	1	FILM-WARNING (CRUSH HAZARD)	
	25	2	**312-7748**	1	PLATE-WARNING (UNIVERSAL, READ OMM)	

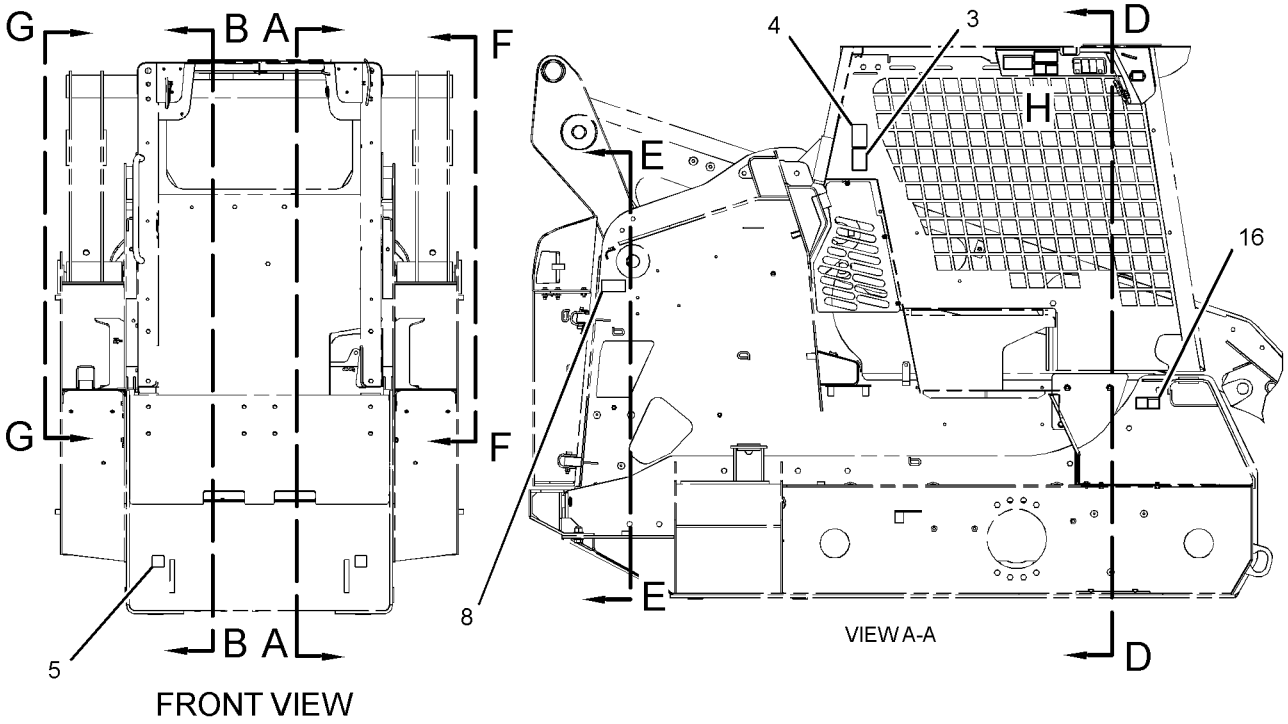

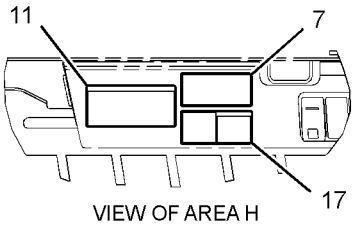

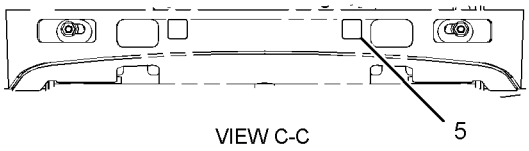

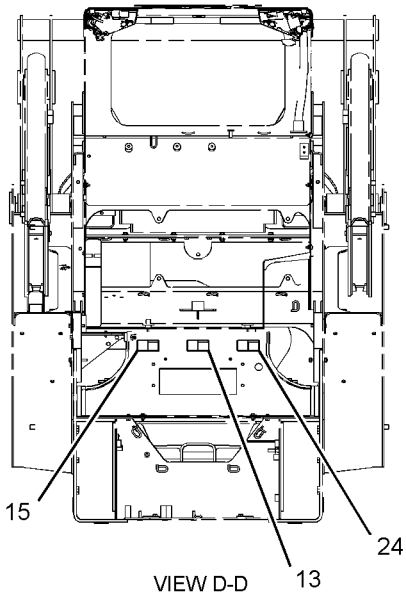

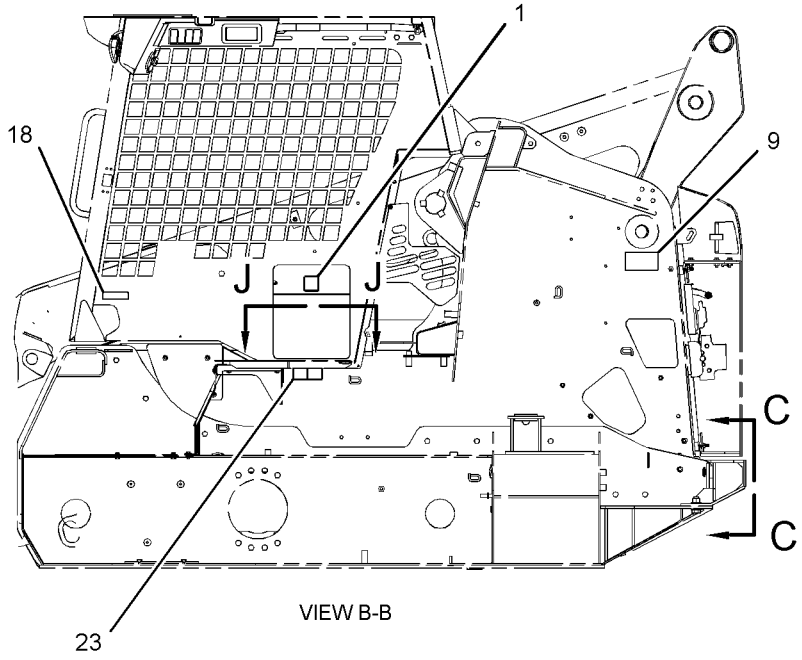

REFER TO ALL ILLUSTRATIONS OF THIS GROUP FOR AUXILIARY VIEWS

GRAPHIC #1

g01376979

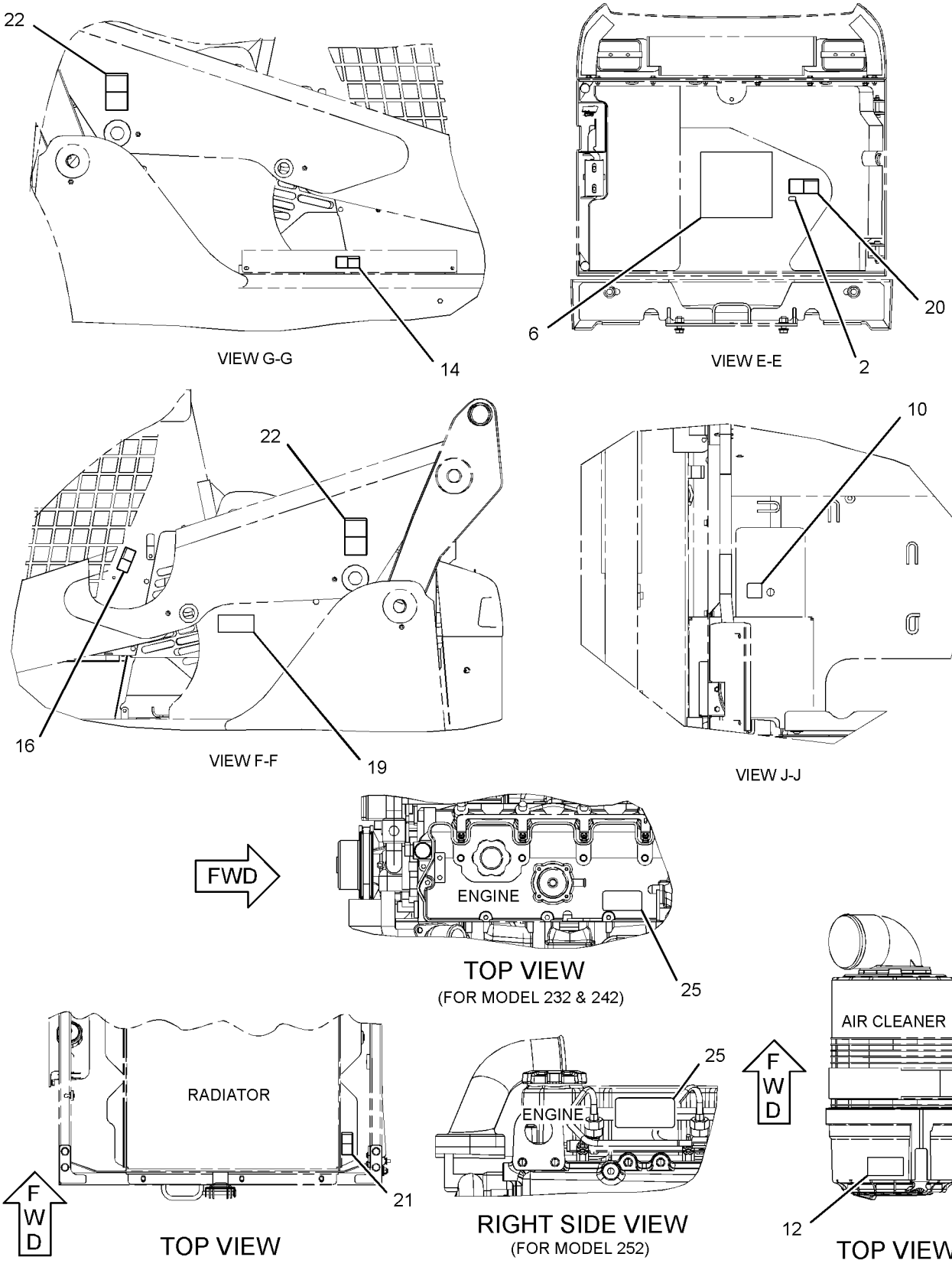

GRAPHIC #2

<END>

g01426863

SERVICE EQUIPMENT AND SUPPLIES

295-7196 PLATE & FILM GP

S/N: SCH2825-UP
AN ATTACHMENT

SMCS-7405, 7557 **i02875432**

NOTE	REF NO	GRAPHIC REF	PART NUMBER	QTY	PART NAME 1 2 3 4 5 6 (PRODUCT LEVEL)	SEE PAGE
	1	1	**157-2853**	1	FILM-INFORMATION (READ OMM)	
	2	2	**169-2876**	1	FILM-IDENTIFICATION (POWER RECEPTACLE, 12-VOLT)	
	3	1	**219-0302**	1	FILM-WARNING (NO WELD, NO DRILL, READ OMM)	
	4	1	**234-6065**	1	FILM-CERTIFICATION (OPS, READ OMM)	
	5	1	**263-4836**	4	FILM-SYMBOL (TIE-DOWN)	
	6	2	**295-7200**	1	FILM-INSTRUCTION (SERVICE CHART)	
	7	1	**224-9855**	1	FILM-INSTRUCTION (START AID, READ OMM, INTL)	
	8	1	**225-7976**	1	FILM-IDENTIFICATION (RELAY LAYOUT) (ALTERNATOR)	
	9	1	**225-7977**	1	FILM-IDENTIFICATION (RELAY LAYOUT) (LIGHTING)	
	10	2	**295-2567**	1	FILM-INSTRUCTION (BUCKET LOWER)	
	11	1	**224-0554**	1	FILM-WARNING (UNIVERSAL, READ OMM, INTL)	
	12	2	**224-8946**	1	FILM-WARNING (NO ETHER SPRAY/AIR INTK, INTL)	
	13	1	**224-9022**	1	FILM-WARNING (SEAT BELT)	
	18	1	**234-9575**	1	FILM-INSTRUCTION (GOVERNOR CONTROL)	
	19	2	**239-6986**	1	PLATE-IDENTIFICATION (MACHINE)	
	20	2	**225-0312**	1	FILM-WARNING (JUMP START, READ OMM, INTL)	
	21	2	**235-1368**	1	FILM-WARNING (RADIATOR)	
	22	2	**224-8646**	2	FILM-WARNING (CRUSH HAZARD, STAY BACK)	
	23	1	**224-0672**	1	FILM-WARNING (HIGH PRESSURE, READ MANUAL)	
	25	2	**312-7748**	1	PLATE-WARNING (UNIVERSAL, READ OMM)	
C	26	1	**295-7330**	1	FILM-WARNING (CRUSH HAZARD, READ OMM) (STATION)	
C	27	1	**295-7329**	1	FILM-WARNING (CRUSH HAZARD, READ OMM) (WORKTOOL)	
C	28	1	**295-7328**	1	FILM-WARNING (FALL/CRUSH HAZARD, NO ACCESS) (NO ACCESS)	
C	29	1	**295-7327**	1	FILM-WARNING (CRUSH HAZARD, READ OMM)	
C	30	1	**295-7325**	2	FILM-WARNING (CRUSH HAZARD, CAB, READ OMM) (CAB SUPPORT)	
C	31	2	**295-7340**	1	FILM-INSTRUCTION (FUEL, READ OMM) (LOW SULFUR DIESEL FUEL)	

C-CHANGE FROM PREVIOUS TYPE

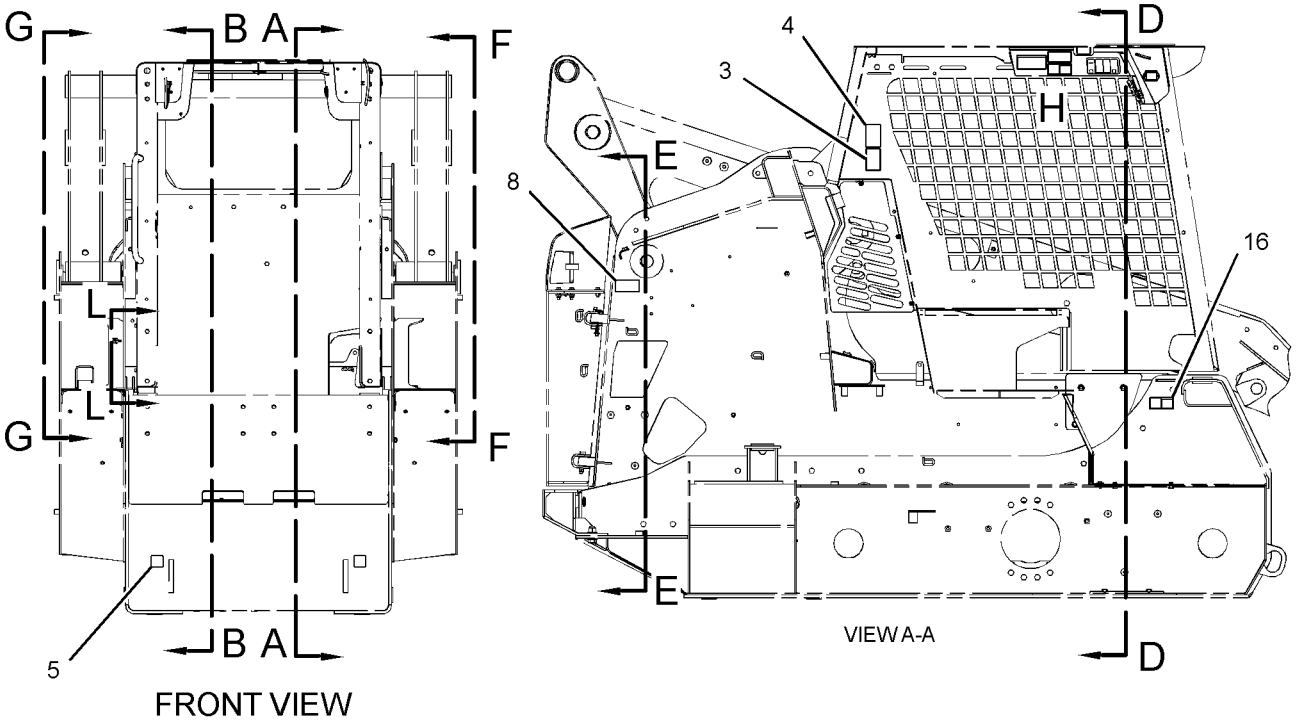

FRONT VIEW

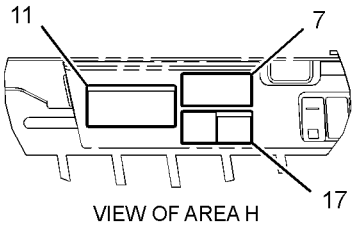

VIEW OF AREA H

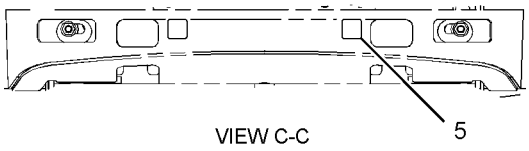

VIEW C-C

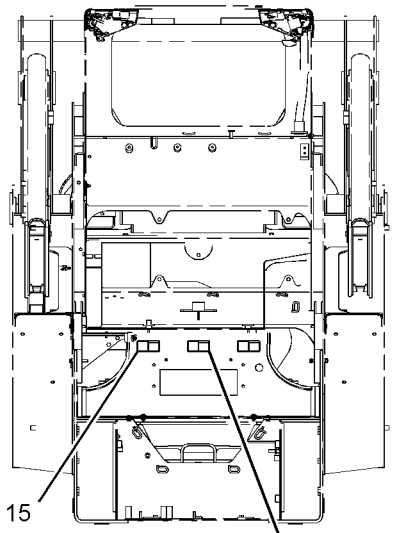

VIEW D-D

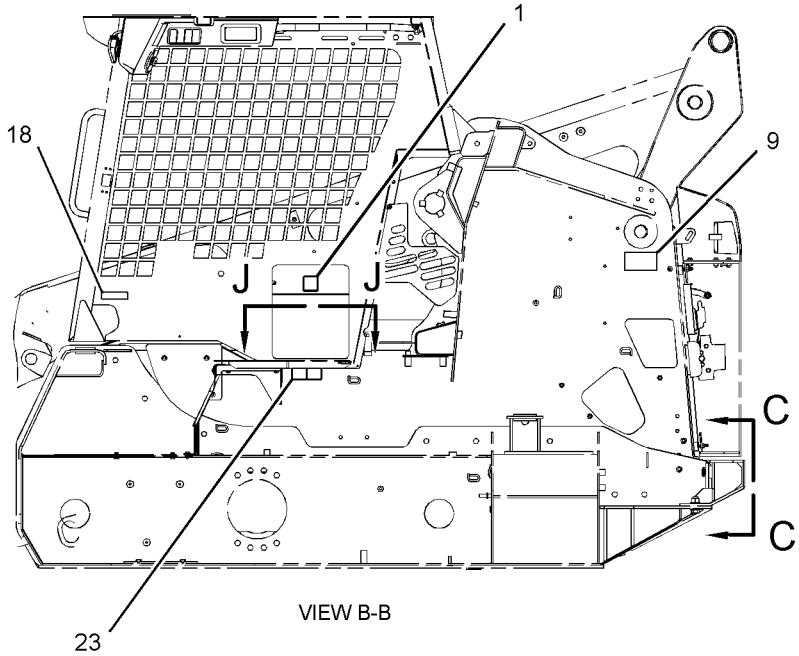

VIEW B-B

REFER TO ALL ILLUSTRATIONS OF
THIS GROUP FOR AUXILIARY VIEWS

GRAPHIC #1

g01438005

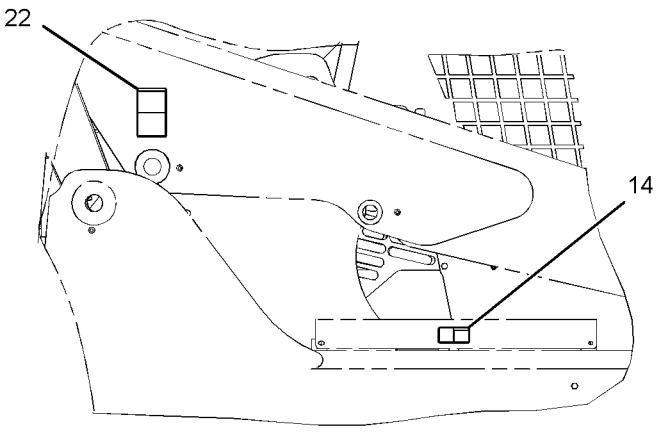

VIEW G-G

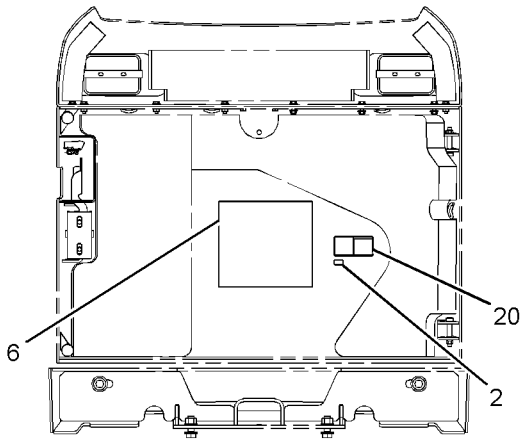

VIEW E-E

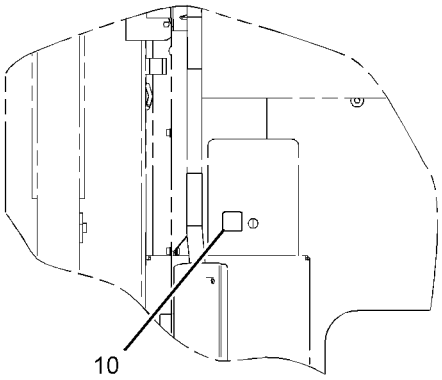

VIEW J-J

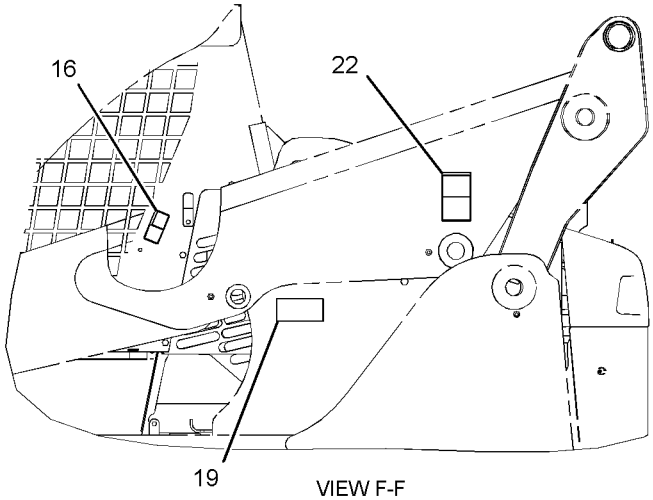

VIEW F-F

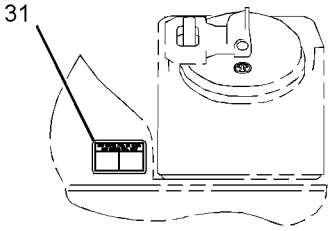

VIEW L-L

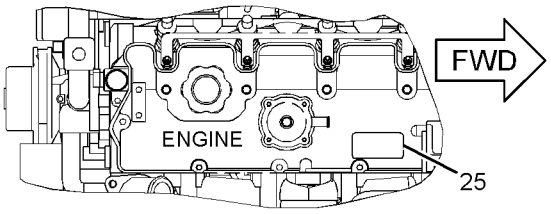

TOP VIEW
(FOR MODEL 232 & 242)

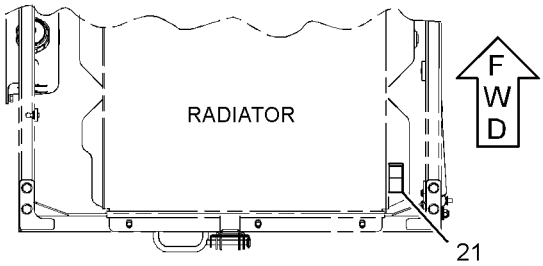

TOP VIEW

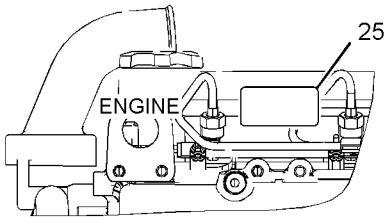

RIGHT SIDE VIEW
(FOR MODEL 252)

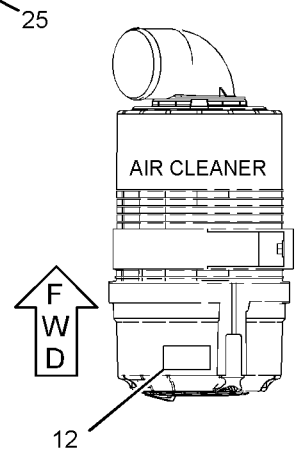

TOP VIEW

GRAPHIC #2 **<END>** g01436633

MEMORANDA

PART NUMBER INDEX

Part	Page
0	
0T-0244	551
	552
1	
1D-4677	557
1F-7567	288
	329
1G-3410	199
1G-8878	185
1H-3244	147
	169
	172
1L-2279	438
1M-6119	120
1M-6120	120
1P-4278	84
	86
	109
1P-4578	294
1S-0994	260
	262
	264
	266
1S-9593	140
	141
	346
	462
	463
	464
	465
2	
2D-5248	456
	520
	522
2D-6412	551
	552
2H-7829	275
	277
2J-6540	268
2K-4821	248
2K-4973	75
	221
2K-5232	255
	328
2K-5964	242
2M-9780	183
	189
	258
	260
	262
	264
	266
	268
	270
	271
	273
	275
	277
	279
	281
	284
	294
	296
	298
	314
	316
	333
	519
	521
2S-3440	294
2S-4078	294
2S-5717	557
2S-6408	436
2V-3216	258
	273
3	
3B-4505	534
3B-4628	255
	398
3B-7255	438
3B-8488	223
	242
	422
3B-8489	240
	241
	242
	244
	245
	248
	249
	250
	252
	253
	319
	320
	350
	351
	381
	382
	383
	384
	385
	386
	387
	388
	390
	412
	418
	421
3D-2824	183
	189
	191
	283
	284
	286
	300
	314
	346
3E-2310	290
3E-3365	160
	163
	346
3E-3374	450
3E-3377	307
3E-3383	144
3E-3389	140
	178
3E-3892	562
	564
3E-4051	520
	521
	530
3E-4057	520
	521
	530
3E-4370	411
3E-7404	109
	258
	273
3E-7584	►144
	151
	227
3E-8621	346
3F-9556	546
3J-1907	160
	163
	185
	189
	191
	255
	271
	288
	290
	292
	294
	302
	304
	322
	328
	333
3J-7354	199
	279
	281
	292
	519
	521
3K-0360	183
	191
	194
	238
	300
	327
3K-0715	199
3K-8460	109
3S-2093	90
	133
	138
	140
	141
	151
	153
	164
	165
	169
	172
	174
	175
	177
	178
	227
	235
	255
	328
	438
	450
	488
	489
	492
	495
	497
	520
	522
	524
	525
	530
3S-6050	120
3S-8665	516
	521
	532
3S-9182	223
3T-7856	526
4	
4B-2043	505
4B-4274	169
	172
	288
	329
4B-4863	102
	133
	140
	141
	151
	165
	178
	227
	233
4D-0298	223
4D-2297	318
4D-6466	109
4E-0724	438
4E-1384	449
4J-0522	294
4J-5267	294
4J-5477	177
	227
	255
	279
	281
	290
	292
	300
	328
4J-7533	333
4K-1388	333
4K-8864	84
	86
4M-5285	241
	242

► **PRIMARY REFERENCE**

PART NUMBER INDEX

Part	Page
	320
4P-6422	573
	576
4P-7581	139
	151
	153
	166
	227
	255
	329
	537
4P-8134	138
	166
	169
	172
	175
	284
	286
	519
	521
	530
4S-1962	183
5	
5B-0651	242
	397
	398
5B-0935	418
5C-2874	101
	169
	172
5C-2890	101
	102
	104
	107
	146
	147
	169
	172
	235
	489
	492
	524
	525
	527
	544
5C-7261	75
	88
	138
	139
	166
	169
	172
	189
	221
	256
	300
	438
	449
	456
	458
	520
	522
	534
	546
	547
	553
	554
5C-7682	502
	503
5C-7883	194
5C-8310	499
	559
5C-8311	499
	559
5C-8312	133
	233
5C-9553	109
	140
	141
	166
	169
	172
	178
	227
	232
	400
	450
	546
	547
5D-0718	283
5D-1026	77
	79
5G-3244	144
5K-1787	182
5K-8451	256
5K-9090	189
5L-3233	89
5L-4507	169
	172
5P-0372	75
	231
	256
	398
	489
	492
	524
	525
	556
5P-0597	90
5P-1076	219
	220
	223
	423
	424
5P-1420	84
	86
5P-1442	109
	326
5P-1505	36
	90
5P-2230	77
	294
5P-2369	77
	570
5P-4116	39
	88
	90
	93
	94
	123
	124
	189
	221
	223
	275
	277
	438
	456
	516
	520
	522
5P-4868	90
5P-4961	36
	90
	109
	326
5P-5677	138
	139
5P-5924	520
	522
	530
5P-5927	547
5P-5930	561
5P-5969	130
	489
	492
	500
	524
	525
5P-6994	279
	281
5P-7070	500
5P-7464	296
	298
	300
5P-7465	296
	298
	300
5P-7814	109
5P-7957	453
5P-7958	533
5P-8246	438
5P-8309	75
	489
	492
	524
	525
5P-8439	149
	150
5P-8500	215
	217
	533
5P-9770	109
5P-9909	489
	492
	524
	525
5T-7869	557
5T-7870	557
5V-8309	75
5W-1987	489
	492
6	
6B-0924	25
	27
6B-6682	244
6D-1641	516
	521
	532
6D-3479	290
6D-4246	90
	326
6D-4247	260
	262
	264
	266
6D-4636	516
	521
6D-5797	562
	564
6E-0725	199
6E-5060	199
6F-6672	315
	317
	346
6I-0846	112
6I-1201	52
	187
6I-1418	138
	139
	165
6K-8178	256
	288
	329
6R-7490	505
6V-0852	189
	292
	294
6V-1228	183
6V-1392	452
6V-1889	283
6V-1970	1
	2
	►533
6V-2235	516
6V-2317	149
6V-3582	284
	286
6V-3965	189
	292
	294
6V-4270	489
	492
	524
	525
6V-5049	318
6V-5326	199
6V-5586	199
6V-5698	166
6V-6689	500
	516
	522

► PRIMARY REFERENCE

PART NUMBER INDEX

Part	Page
6V-7357	163
	223
	235
6V-7359	296
	298
	300
6V-7687	193
6V-7744	397
6V-8186	546
6V-8187	169
	172
6V-8352	199
6V-8378	151
	227
6V-8397	189
	191
	255
	256
	258
	260
	262
	264
	266
	268
	270
	271
	273
	275
	277
	281
	288
	290
	302
	304
	328
	329
	519
	521
6V-8398	183
	191
	284
	286
	288
	292
	296
	298
	302
	304
	328
6V-8626	284
	296
6V-8628	279
	281
	292
6V-8632	191
6V-8633	183
6V-8634	191
6V-8636	191
	255
	302
	304
	328
6V-8637	189
	191
6V-8638	284
6V-8639	183
	191
6V-8640	189
6V-8641	255
	290
	292
	328
6V-8642	183
	279
	281
	294
	296
	298
	519
	521
6V-8647	279
	281
	292
6V-8713	284
	286
	300
6V-8715	258
	260
	262
	264
	266
	268
	270
	271
	273
	275
	277
	281
	288
	290
6V-8724	255
	271
	288
	328
6V-8781	290
	302
	304
6V-8788	260
	262
	264
	266
6V-8918	196
6V-8938	255
	329
6V-8949	429
6V-8978	191
6V-9001	328
6V-9028	83
6V-9168	256
	329
6V-9170	300
6V-9182	294
6V-9189	226
	241
	319
	320
	321
	350
	351
	381
	382
	383
	384
	385
	386
	387
	388
	390
	412
	421
	422
6V-9508	191
6V-9632	466
	495
	497
6V-9672	233
6V-9746	189
	191
	283
	294
6V-9805	537
6V-9829	279
	288
6V-9838	255
	328
6V-9872	281
	519
	521
6V-9873	292
6W-3924	495
	497
6W-5698	109
	327
7D-5473	151
	227
7D-8431	450
7D-8508	249
	250
7E-2700	230
	231
7G-1060	133
	169
	172
7G-2950	256
	329
7G-2951	256
	329
7G-4262	452
7G-7053	133
	450
7G-8839	182
7H-7055	256
	329
7J-0204	244
	248
	250
7J-9108	183
	191
	255
	279
	281
	284
	286
	294
	296
	298
	300
	302
	328
	329
	338
	341
	438
	520
	522
7M-7410	82
	83
7M-8485	294
7M-9957	233
7N-5274	120
7R-2750	165
7R-2751	165
7S-3912	268
	270
7S-3913	268
	270
7S-3916	258
	273
	275
	277
7S-3919	258
	273
	275
	277
7T-1099	466
7W-9094	300
7X-0495	438
7X-0579	138
	166
7X-0595	242
7X-0603	226
7X-0610	182
7X-0818	139
	166
7X-1443	84
	86
7X-2444	177
	227
7X-2475	348
	537
7X-2535	306
7X-2537	90

7

► **PRIMARY REFERENCE**

PART NUMBER INDEX

Part	Page
	221
	445
	510
	516
	521
	526
	549
7X-2553	418
	506
7X-2556	49
7X-2621	90
	397
7X-6312	136
7X-6315	127
	131
	132
7X-7729	75
	82
	83
	84
	86
	93
	94
	221
	240
	241
	242
	256
	275
	277
	279
	281
	283
	329
	397
	418
7X-9065	505
8	
8C-3110	324
8C-3205	294
8C-3445	36
8C-3446	36
8C-3451	279
	281
8C-6354	165
8C-6758	302
	304
8C-6959	109
8C-7563	279
	281
	520
	521
8C-8400	283
8C-8558	166
8F-1434	151
	169
	172
	227
8F-8151	516
	522
	532
8F-8513	109
8G-1151	495
	497
8I-5078	333
8L-2779	36
8L-5188	256
	398
8L-8413	120
	166
	169
	175
	488
	508
	509
8M-4791	288
	329
8M-4963	165
8R-3857	385
8S-0934	551
	552
8T-0075	189
8T-0087	146
8T-0154	516
	521
	532
8T-0267	199
8T-0269	466
	469
	470
	472
	473
	475
	476
	478
	479
	480
	482
8T-0271	194
8T-0285	288
	329
8T-0287	288
	329
8T-0318	75
8T-0328	151
	169
	172
	227
8T-0379	255
	328
8T-0389	142
	144
	166
8T-0404	183
8T-0737	438
8T-1158	336
	338
	340
	341
8T-1757	348
8T-1887	151
	227
8T-1888	151
	227
8T-1893	268
	270
8T-1894	268
	270
8T-2444	489
	492
	524
	525
8T-2895	452
8T-3311	292
8T-3490	39
8T-3612	39
	86
	120
	255
	466
	526
	549
	570
8T-3848	489
	492
	524
	525
8T-3984	102
8T-3998	102
8T-4121	75
	82
	83
	84
	86
	90
	109
	133
	142
	150
	166
	169
	172
	174
	183
	196
	223
	227
	232
	256
	258
	268
	270
	271
	273
	283
	284
	286
	288
	290
	294
	296
	298
	300
	311
	312
	313
	326
	329
	332
	395
	397
	398
	429
	435
	438
	449
	456
	457
	458
	479
	480
	482
	489
	492
	507
	516
	520
	522
	524
	525
	530
	532
8T-4122	48
	49
	170
	172
	182
	212
	223
	230
	231
	348
	418
	438
	506
	537
8T-4123	427
	428
	430
8T-4132	49
	212
	223
	230
	231
	438
	506
8T-4133	75
	82
	83
	84
	86
	93
	94
	109
	133
	166
	169
	172
	174
	183
	227
	232
	256
	271
	279
	281
	283

► **PRIMARY REFERENCE**

PART NUMBER INDEX

Part	Page	Part	Page	Part	Page	Part	Page
	288	8T-4159	75		196		525
	300	8T-4171	215		256	8T-4223	48
	329		217		283		193
	395		233		294		296
	398		258		311		298
	435		273		312		300
	438	8T-4172	397		313		323
	449	8T-4173	537		397		324
	458	8T-4177	226		398		423
	489	8T-4178	227	8T-4197	546		424
	492		232		547		434
	507		300	8T-4200	169		436
	516	8T-4181	75		172		551
	520		221		275		552
	522	8T-4185	271		277	8T-4224	82
	524	8T-4186	174		516		83
	525		242		521		84
8T-4136	84		429	8T-4201	151		86
	86	8T-4189	39		228		149
	183		113		256		167
	223		117		329		169
	256		123	8T-4205	75		172
	258		124		102		226
	273		256		140		242
	283		260		141		256
	284		262		153		260
	286		264		163		262
	288		266		167		264
	296		288		169		266
	298		326		172		288
	300		329		175		296
	326		458		178		298
	329		487		215		300
	332		516		217		302
	395		519		221		304
	435		521		223		311
	438	8T-4191	167		228		312
	457		242		232		313
	519		256		233		329
	521		288		235		438
8T-4137	84		290		306		445
	86		329		438		450
	183		438		450		456
	221		516		466		458
	240		519		469		487
	268		521		470		489
	270		530		472		492
	332		532		473		510
	418	8T-4192	48		475		516
	429	8T-4194	223		476		520
	438		296		478		522
	479		298		479		524
	480		300		480		525
	482		434		482		526
	516	8T-4195	183		489		534
8T-4138	102		241		492		547
	175		271		524		549
	235		275		525		553
	320		277		537		554
	547		283		544	8T-4244	219
8T-4139	296		300		546		220
	298	8T-4196	82		547		223
	300		83	8T-4222	489		296
	423		109		492		298
	424		183		524		300

► **PRIMARY REFERENCE**

PART NUMBER INDEX

Part	Page
	423
	424
	434
8T-4742	101
	455
	527
8T-4744	101
	455
	527
8T-4778	403
	404
	405
	406
	407
	408
	409
	442
	537
8T-4779	438
8T-4908	39
	82
	83
	93
	94
	221
	223
	256
	438
	547
8T-4910	219
	220
	436
8T-4956	323
	324
8T-4970	223
8T-4971	175
	527
8T-5005	84
	86
	144
	256
	329
8T-5049	323
	324
8T-5091	39
	84
	86
8T-5095	316
	325
8T-5372	506
	516
	522
8T-6466	75
	84
	86
8T-6842	499
	559
8T-6869	241
	302
	304
	319
	320
	321
	350
	351
	381
	382
	383
	384
	385
	386
	387
	388
	390
	412
	421
	438
	516
8T-6870	456
	519
	521
8T-6876	288
	328
8T-6902	546
8T-6912	123
	296
	298
	300
	422
8T-7338	212
	223
8T-7547	311
	312
	313
8T-7970	189
8T-8192	271
8T-8193	271
8T-8729	144
	160
	163
	338
8T-8737	139
	144
	167
	175
	462
	463
	464
	465
	508
	509
	535
	536
8T-8799	165
	169
8T-9405	338
	341
8T-9655	138
	139
	165
8U-9427	338
	341
8W-8909	151
	227
8Y-4489	381
	382
8Y-7385	436
8Y-7386	436

9

Part	Page
9B-7233	505
9C-2741	520
	522
	530
9C-5344	231
	489
	492
	524
	525
	556
9G-3695	307
	450
9G-5127	223
	456
	519
	521
9G-7101	456
	520
	522
9M-8406	256
	329
9N-0869	139
9P-4609	450
9R-1004	256
9R-1005	256
	296
	298
	300
9R-1499	151
	153
	235
9R-2004	258
	268
	273
9R-2672	255
9R-2959	350
	351
	416
9R-5301	431
9R-7802	296
	298
	300
9R-7803	296
	298
	300
9R-7941	133
9R-7942	148
9R-7958	148
9R-7980	133
9S-0285	450
9S-4191	322
9S-4200	275
	277
9S-8002	199
9S-8005	194
9S-8006	314
	316
9S-8007	244
	248
	250
9T-2837	338
	341
9T-4884	317
	318
9T-7303	256
	398
9U-6994	294
9U-6995	294
9V-2714	348
9V-2715	348
9W-0607	142
	143
9W-1951	165
9W-3324	144
9W-3326	147
9X-1046	133
9X-1054	166
	169
9X-1481	288
	329
9X-1813	138
	139
	160
	450
9X-2026	320
	400
9X-2038	109
9X-2041	489
	492
	507
	524
	525
9X-2042	133
	151
	228
	450
	453
	557
9X-2044	167
	487
	489
	492
	495
	497
	524
	525
9X-2045	489
	492
	495
	497
	524
	525
	547
	558
	560
	561
9X-2092	165
	528
9X-4244	142
	143
	144
9X-6032	456
	519
	521
9X-6165	487
	547
9X-6273	260
	262

► **PRIMARY REFERENCE**

PART NUMBER INDEX

Part	Page
	264
	266
9X-6274	241
	260
	262
	264
	266
	320
9X-6581	256
	328
9X-6606	199
9X-6772	136
	137
9X-7378	520
	522
	530
9X-7380	520
	522
	530
9X-7381	520
	522
	530
9X-7382	520
	522
	530
9X-7383	520
	522
	530
9X-8118	148
9X-8121	148
9X-8139	148
9X-8250	516
	532
9X-8257	431
9X-8918	562
	564
9X-9865	144

0

Part	Page
003-2143	438
003-3082	333
004-6810	516
032-9828	495
	497
033-5853	194
036-1865	82
	83
039-8557	429
064-3058	95
	97
064-3843	240
067-2551	438
069-4080	82
	83
081-3698	199
084-4277	505
084-4348	146
	147
085-8091	519
	521
	530
086-2369	316
090-9434	165
	169
	172
095-0641	546
095-0733	140
	141
	166
	178
095-0912	438
095-1207	470
	472
	473
	475
	480
	482
095-1325	231
	489
	492
	524
	525
	556
095-1517	194
096-0194	198
	314
	318
	325
096-5866	296
	298
	300
099-2374	327
099-3649	300
099-4691	182

1

Part	Page
100-3246	144
100-3247	144
100-3248	144
100-3250	144
100-3251	144
100-3253	144
100-3254	144
100-3255	144
100-3320	166
100-3866	182
100-6674	520
100-7530	302
	304
100-8451	120
	122
101-2867	133
	547
101-3129	279
	281
	300
101-8296	519
	521
	530
102-8801	138
	139
	165
	166
	169
	466
	470
	473
	535
	536
	540
	542
102-8802	138
	139
	160
	163
	164
	166
	169
	172
	174
	175
	223
	338
	341
	346
	488
	497
	520
102-8803	139
	166
	175
	177
	227
	327
102-8804	138
	139
	146
	147
	166
	234
	235
	307
	495
	540
	542
102-8805	144
	151
	165
	227
	489
	492
	524
	525
	540
	542
102-8806	140
	141
	151
	165
	166
	178
	227
	438
103-2006	488
	504
	505
	540
	542
103-2543	130
103-6262	450
104-5957	559
104-6202	170
	172
105-4593	191
106-3108	310
106-8704	169
	172
	488
106-8715	283
107-5630	313
108-0656	559
108-3565	199
109-2356	540
	542
110-0885	221
110-8760	178
	466
	470
	473
	476
	479
	480
	482
111-4627	133
	438
111-7899	149
	151
	154
	178
	254
	255
	396
	540
	542
112-1817	288
	328
	▶335
112-9401	103
112-9717	89
112-9783	300
112-9861	335
113-7634	215
	217
113-8490	140
	141
	163
	165
	178
	255
	396
	482
113-8491	140
	141
	164
	165
	178
113-8492	165
114-4516	165
114-6658	487
115-1615	140
	141
	165
	169
	172
	177
	178

▶ **PRIMARY REFERENCE**

PART NUMBER INDEX

Part	Page	Part	Page	Part	Page	Part	Page
	227		139		▶403		202
115-8109	139		165	135-9384	356		204
116-2001	▶437		166		357		206
	438		169		360		207
116-7471	130		175		365	142-7486	201
118-8118	103		227		367	142-7490	201
118-8119	103	125-7875	165		▶404		202
118-9145	52		166	135-9385	356		205
	187		169		357		206
119-1414	437		227		360	142-7493	207
119-1415	437		489		365		208
119-3662	165		492		367		209
	166		524		▶405		210
	169		525	135-9386	349	142-7503	▶146
	175	126-5011	166		357		153
	520	126-5640	199		358	142-7505	438
119-3859	438	126-5643	199		360	142-8633	140
119-4594	242	126-5701	397		364		141
119-9631	447		398		368		178
120-4897	131	127-2170	489		389	142-8634	▶147
121-4459	199		492		▶406		151
121-4480	103		524	135-9387	356		227
121-4870	199		525		358	142-8652	2
122-1904	336	127-6316	333		364		3
122-6867	520	127-8281	79		367		5
	522	127-8609	137		▶407		6
122-6869	438	128-4123	165	135-9393	403		129
122-6871	520	128-6985	▶148	135-9394	404		▶153
	522		154	135-9395	405		213
122-6877	522		216	135-9396	406		214
123-4750	290		218	135-9397	407	142-8653	▶154
123-7615	489	128-7037	526	136-1953	516	142-8666	▶207
	524		549		522	142-8714	▶322
	525	128-8614	103		532	142-8719	196
124-1916	438	129-1854	216	136-3191	495	142-8723	180
124-1917	438		218		497	142-8724	180
124-2113	519	129-1855	216	137-6645	313	142-8729	180
	521		218	138-4883	495	142-8732	182
124-2119	519	129-3178	438		497	142-8758	▶180
	521		518	138-7162	40		181
124-2141	519		527		41	142-8791	242
	521		546	138-7402	40	142-8793	242
124-2150	519	129-6259	119	138-7446	37	142-8801	221
	521	129-6262	119		38	142-8805	225
124-2164	519	130-1676	343	139-5511	104		386
	521	130-1916	450		107		387
124-2168	519	131-3540	221	140-1802	199		388
	521		518	140-2490	194		390
124-2456	255	131-3543	544	140-2492	194	142-8810	223
	328	131-5879	397	140-2513	194	142-8812	75
124-3243	487	132-3056	327	140-2514	194	142-8818	92
	495	132-4720	442	141-4999	357		94
	497	132-5166	227		358	142-8823	223
	547		232		359	142-8826	230
124-3548	164	132-7551	397		364	142-8828	109
	165	133-6517	136		366	142-8831	221
	520		137		▶442	142-8832	75
	522	134-0404	185	141-5453	48		221
124-6264	84	134-4126	127		170		242
	86		131		172	142-8833	174
125-3518	489		132	141-7562	196	142-8858	504
	492	134-8273	495	142-2928	450	142-8928	109
	524		497	142-7484	▶201		327
	525	135-2655	199		207	142-8929	327
125-7874	138	135-9383	356	142-7485	201	142-8937	327

▶ **PRIMARY REFERENCE**

PART NUMBER INDEX

Part	Page
142-8997	284
	286
142-9021	212
142-9036	182
142-9116	254
142-9118	▶488
	540
	542
142-9121	▶207
142-9234	296
	298
142-9241	189
142-9278	450
142-9279	450
142-9287	450
142-9305	538
	539
	▶553
142-9311	▶529
142-9319	559
142-9320	540
	542
142-9325	540
	542
142-9326	149
142-9327	154
142-9328	540
	542
142-9329	151
	227
142-9331	151
	227
142-9356	489
	492
	524
	525
142-9386	450
143-4535	84
	86
143-4536	84
	86
144-0195	489
	492
	495
	497
	524
	525
144-4531	333
144-4532	333
144-9962	▶103
	119
146-2438	147
146-6371	500
	516
	522
146-7808	58
146-9439	140
	141
	178
147-1773	151
	227
148-2371	227
	232
148-2372	227
	232
148-8315	183
	279
	281
	294
	296
	298
	519
	521
148-8316	279
	281
	292
148-8318	191
148-8319	258
	260
	262
	264
	266
	268
	270
	271
	273
	275
	277
148-8322	189
148-8325	255
	290
	292
	328
148-8326	281
	519
	521
148-8327	189
	191
148-8328	183
148-8336	191
	255
	302
	304
	328
148-8338	189
148-8340	183
	191
148-8341	284
	286
	300
148-8342	191
148-8345	284
148-8353	255
	328
148-8360	294
148-8365	288
	328
148-8369	279
	281
	292
148-8378	255
	271
	288
	328
148-8382	183
148-8390	284
	296
148-8407	322
148-8423	292
148-8435	290
	302
	304
148-8446	255
	328
149-0686	238
149-3499	136
149-3516	103
149-4232	386
149-5435	381
	386
149-5436	382
	387
149-5437	383
	388
149-5741	349
	▶408
149-7694	39
150-3056	260
	262
	264
	266
150-4027	290
150-4034	255
	328
150-4043	292
150-4385	180
150-4386	180
150-5472	180
150-6764	165
150-6765	165
150-6766	138
150-7568	516
	521
	532
150-8592	▶201
	207
150-8599	201
	202
	203
	204
	205
	206
	207
151-1394	137
151-4965	336
	340
152-1154	231
152-1156	231
152-1157	182
152-1161	506
152-4871	453
152-4875	450
152-4884	450
152-5878	537
153-1260	554
153-2682	556
153-2683	231
	489
	492
	506
	524
	525
153-2994	258
	260
	262
	264
	266
	268
	270
	271
	273
153-2995	258
	268
	270
	271
	273
153-5387	25
	27
153-5391	27
153-5394	25
	27
153-5395	25
	27
153-5396	25
	27
153-5402	21
	23
	25
	27
153-5518	20
	23
153-5554	29
	31
153-5556	29
	31
153-5557	29
	31
153-5558	29
	31
153-5559	29
	31
153-5573	32
	34
153-5587	66
153-5590	66
153-5592	61
	91
	97
	107
	113
	117
	122
153-5656	123
153-5933	52
	69
153-5936	52
	71
	155
	161
153-5939	18
	97
153-5960	42
	44
	77
	79
	104
	113
	117

▶ **PRIMARY REFERENCE**

PART NUMBER INDEX

Part	Page
153-5961	32
	67
	77
	79
153-5962	18
	42
	44
	97
153-6256	279
	281
	519
	521
153-6375	40
	41
	77
	97
	570
153-6412	52
	60
	113
	128
153-6415	107
153-6492	15
	16
	61
	62
153-6494	61
153-6497	61
153-6833	52
	56
153-6835	52
	56
	66
153-6838	16
	25
	27
	42
	52
	56
153-6841	52
153-6848	52
153-6849	52
	71
153-6850	52
	71
153-6851	52
	71
153-6853	52
	71
	95
	97
153-6856	42
	77
153-6868	40
	41
153-6873	111
153-6879	52
	187
153-6881	52
	71
153-6981	537
153-7640	18
	50
	51
	97
153-7920	93
	94
153-7983	104
	107
153-7985	42
153-7987	104
	107
153-7988	32
	67
154-0175	25
	27
154-0176	25
	27
154-0177	25
	27
154-0178	25
	27
154-0181	21
	23
154-0385	21
	23
154-0386	21
	23
154-0388	21
	23
154-0389	21
154-0391	25
154-0393	25
	27
154-0867	58
	59
154-0869	58
	59
154-0870	58
	59
154-0871	58
	59
154-0873	58
	59
154-0874	58
	59
154-0888	31
154-0889	31
154-1201	▶20
	21
154-1202	20
154-1203	21
154-1230	21
	23
154-1231	21
	23
154-1240	66
154-1241	66
154-1242	66
154-1243	66
154-1246	32
	67
154-1248	32
	67
154-1249	32
	67
154-1347	18
	97
154-1396	104
154-1399	158
154-1401	104
154-1403	104
	107
154-1405	104
154-1408	104
154-1410	104
154-1411	104
154-1416	104
154-1636	104
154-1637	104
154-1638	104
154-1639	104
154-1672	42
154-1673	42
	44
154-1675	42
	44
154-1677	42
	71
154-1678	42
	71
154-1679	42
154-1680	16
	42
154-1817	77
	79
154-1822	63
	64
154-1828	74
	77
154-1831	79
154-1880	61
	62
154-1882	61
154-1942	52
	71
154-2353	52
	71
154-2394	40
	41
154-2395	40
	41
154-2403	17
	40
	41
	158
154-2405	37
	38
154-2406	37
	38
154-2427	91
	97
154-2428	91
	97
154-2433	50
	51
154-2435	12
	▶50
154-2704	352
	353
	354
	355
	369
	370
	371
	372
	373
	374
	375
	376
	377
	378
	379
	380
	391
	392
	393
	419
	420
154-2713	113
	117
154-2715	107
	113
	117
154-2716	113
	117
154-3017	113
	117
154-3018	113
154-3927	136
154-3928	137
154-3985	554
	555
154-3986	555
154-4006	212
154-4014	326
154-4233	▶127
	165
154-4504	15
154-4505	15
	16
154-4506	15
154-4507	15
154-4508	15
154-5011	▶319
	365
	366
	367
154-5012	319
	386
	387
	388
	390
154-5013	319
	321
154-5020	260
154-5021	260
154-5022	260
154-5053	387
154-5070	388
154-5232	300
154-8711	555
154-8715	555
155-1279	307
155-2255	140
	141
	165
	166
	178

▶ **PRIMARY REFERENCE**

PART NUMBER INDEX

Part	Page
	466
	470
	473
	540
	542
155-2260	139
	164
	166
	175
	520
	540
	542
155-2265	140
	141
	151
	165
	166
	178
	227
	438
155-2270	138
	139
	164
	165
	166
	169
	174
	175
	177
	227
	438
	466
	470
	473
	488
	520
	540
	542
155-2271	165
	166
	169
	175
	234
	540
	542
155-2274	151
	166
	227
	489
	492
	524
	525
	540
	542
155-7984	46
	47
	79
	95
	120
	122
	570
155-8009	97
	104
155-8076	134
	135
155-8077	134
	135
155-8084	52
156-0884	359
	▶381
156-0885	359
	▶382
156-0886	360
	▶383
156-0891	▶320
	359
	360
	409
156-0913	320
156-1200	103
156-1458	140
	141
156-1460	140
	141
	178
156-4282	255
	328
156-5508	262
156-5509	262
156-5510	262
156-5762	348
	573
	576
156-5970	346
156-6155	132
156-6971	21
	23
156-6988	32
	34
156-6989	32
	34
156-7347	52
156-9809	1
	▶226
157-0940	350
	351
	381
	382
	383
	384
	385
	412
	421
157-0941	241
	320
157-0942	241
	320
157-2853	573
	576
	581
	584
	587
157-4835	395
157-7223	▶359
	360
157-7224	▶359
	360
157-7225	▶360
157-7226	▶360
157-7227	▶360
158-3770	459
	460
	461
158-5648	381
	382
	383
	384
	385
158-6095	▶360
158-6694	504
158-6695	488
158-6696	540
	542
158-6697	505
158-6698	540
	542
158-6699	540
	542
158-7936	104
	107
159-2953	230
	231
	403
	404
	405
	406
	407
	408
	409
159-4535	264
159-4536	264
159-4537	264
159-5411	422
159-5740	294
159-5756	225
159-5772	180
159-5790	537
159-5792	537
159-5793	182
159-5794	537
159-5797	397
159-7342	215
	216
159-8035	320
	422
159-8038	386
	387
	388
	390
159-8050	120
159-8405	221
159-9322	165
159-9495	140
	141
	178
159-9496	140
	141
	178
159-9853	508
	509
160-1600	566
160-3550	113
	570
160-3555	113
	117
160-3556	113
	117
160-3557	113
	117
160-3558	113
	117
160-4150	52
	71
160-4151	52
	71
160-4152	52
	71
160-4153	52
	71
160-4826	187
160-6778	336
	338
	340
	341
160-7626	42
161-0185	258
	273
161-0186	258
	273
161-0187	▶273
	359
	360
161-0188	258
	273
161-0189	258
	273
	275
	277
161-0190	258
	273
161-2347	75
161-2539	163
161-4128	400
161-4130	385
	386
	387
	388
	390
161-7163	21
161-7164	21
161-8560	302
	304
162-0223	450
162-2207	104
	107
162-5236	365
	366
	367
	▶400
162-8154	411
163-1385	258
	271
	273
	275
	277
163-1386	260
	262
	264
	266
163-3361	▶156

▶ **PRIMARY REFERENCE**

PART NUMBER INDEX

Part	Page
	158
	159
163-5372	91
	97
	113
	117
	120
	570
163-8811	260
163-9320	273
164-1154	546
164-2108	344
164-3765	130
164-4225	255
	329
164-5567	189
	292
	294
164-7556	142
	143
164-7619	52
	187
164-9295	▶245
	423
164-9425	479
	480
	482
164-9440	338
164-9614	409
	▶411
164-9989	412
	413
	417
	421
165-0142	198
165-0312	540
165-2139	42
165-2140	18
	44
	97
165-2141	46
	47
	77
	95
	97
	120
	122
165-2142	40
	41
165-2602	▶207
165-2605	▶201
	207
165-2606	▶202
	207
165-2609	▶202
	208
165-2610	▶202
	208
165-4891	▶208
165-4894	438
165-4895	146
165-4908	201
	202
165-4934	191
165-5655	139
165-7095	49
	537
165-7098	235
165-8731	▶321
	423
	424
165-8732	413
	▶416
	417
165-8740	▶422
	423
	424
165-8743	422
166-0319	350
	351
166-2033	177
	227
166-2338	40
	41
166-2551	438
	▶441
166-2552	438
166-2556	438
166-2557	438
166-2558	438
166-2559	438
166-2560	255
	401
	402
	425
	426
166-2561	235
166-2562	558
166-2569	▶557
	558
166-3678	180
166-4041	416
166-9312	273
167-0608	438
167-1530	504
167-3692	166
167-3693	166
167-4339	198
167-7713	199
168-8389	215
	216
	352
	353
	354
	355
	369
	370
	371
	372
	373
	374
	375
	376
	377
	378
	379
	380
	391
	392
	393
	395
	419
	420
	579
168-8999	120
	122
168-9001	74
	95
	97
	120
	122
168-9002	120
	122
169-2876	573
	576
	581
	584
	587
169-3569	422
169-4868	350
	351
169-6715	84
	86
169-8941	381
169-8942	382
169-8943	383
170-5836	423
	424
170-6305	505
171-2212	169
	172
172-0970	338
	341
172-4445	▶136
172-4446	▶137
172-4585	134
	135
172-5285	245
172-8173	194
172-8175	194
172-9200	169
	172
173-0702	459
	460
173-0703	461
173-2543	555
173-3015	215
	217
173-3016	215
	217
173-3018	215
	217
173-3021	▶233
	234
173-3022	5
	8
	213
	▶558
173-7407	423
	424
	▶436
173-8919	166
174-2388	268
	270
174-2389	268
	270
174-2393	268
	270
174-3091	462
	463
	464
	465
	508
	509
174-3097	268
175-0005	486
	500
	516
	522
175-4228	▶235
175-4236	233
175-4237	232
175-4238	4
	5
	7
	8
	213
	214
	▶431
175-4239	227
	232
176-2947	450
176-3900	▶443
	519
176-4079	237
	516
	522
	532
176-7711	12
	▶111
176-7719	111
	112
176-9954	109
	▶119
177-1910	271
177-1911	271
	275
	277
177-1912	271
177-1914	418
177-1921	350
	351
177-1941	434
177-1955	418
177-1956	418
177-1957	418
177-1958	247
177-1971	418
177-1972	350
	351
177-1973	434
177-1975	418
177-1981	349
	▶350
177-1982	349
	▶351
177-1983	349
	▶434
177-1986	▶271
	349

▶ **PRIMARY REFERENCE**

PART NUMBER INDEX

Part	Page	Part	Page	Part	Page	Part	Page
177-1987	350		23	186-3362	174	191-9594	225
177-1988	351	183-3213	32	186-3735	138	191-9633	242
177-1989	▶349		34		139	191-9635	242
177-1990	▶349	183-3353	113		147	191-9636	242
177-3405	231		117		169	191-9637	242
	489	183-3538	107		172	191-9638	242
	492	183-3572	95		223	191-9650	▶193
	524	183-4037	125		307		197
	525		570		341	191-9652	254
	556	183-4084	268		346		▶306
177-7414	432		270		462	191-9659	182
	433	183-4085	268		463	191-9661	182
177-7415	432		270		464	191-9684	3
	433	183-7117	235		465		6
177-9150	432	184-1564	▶160		488		214
177-9151	433		177		495		▶566
177-9152	4		227		497	191-9686	332
	5	184-2472	127		508		▶333
	7		132		509	192-0104	12
	8	184-6097	429		535		▶134
	213		▶432		536	192-0105	134
	214	184-6098	429	186-3736	139		135
	▶429		▶433		450	192-0836	163
177-9153	429	185-4015	447	186-5186	435	192-2606	441
177-9643	141		512	186-6190	▶444	192-2607	441
177-9644	141		514		521	192-2637	427
177-9645	140	185-4253	344		530		428
	141	185-4254	333	187-3211	526		430
	166		▶344		549	192-2638	430
	178	185-7887	260	187-3212	526	192-2640	▶246
177-9648	166		262		549		255
177-9653	165		264	188-0147	3		401
177-9656	166		266		4		402
178-2247	431		275		5	192-2642	401
178-2255	75		277		6		402
178-2270	205	185-8660	▶208		7		425
	206	185-8661	▶208		8		426
178-3620	167	185-8664	▶208		213	192-2663	527
	178	185-8665	▶209		214	192-2668	327
	516	185-8668	203		▶230	193-0161	126
	522	185-8669	203	188-2008	189	193-0447	▶238
	532		204	188-7733	348		254
178-7539	165	185-8670	▶203		▶435	193-0474	296
178-9983	462		208	189-4523	526		298
	463	185-8671	▶203		549		300
	464		208	190-3762	18	193-8308	294
	465	185-8672	▶203		97	193-8313	290
179-7001	▶239		208	190-3803	113	193-8321	294
	290	185-8673	▶204		117	193-8329	123
179-7002	239		208	190-7453	290		124
180-3007	109	185-8678	▶204	190-7967	242	193-8334	300
	294		208	190-7971	242	193-8335	300
180-6115	61	185-8679	▶204	190-7979	242	193-8345	75
180-6118	79		208	190-8038	242	193-8385	544
180-8579	120	185-9926	▶205	190-8962	233	193-8392	292
	570		209	191-0542	104	193-8393	292
183-1163	25	185-9927	▶205	191-2894	223	194-3873	346
	27		209	191-9293	104	194-5171	495
183-1164	25	185-9932	204	191-9296	104		497
	27		205	191-9297	104	194-7631	238
	32	185-9934	203		107	194-7632	238
183-1165	18		204	191-9566	▶219	195-0935	151
	97	186-0239	234	191-9576	223		227
	161	186-2360	216	191-9588	242		453
183-1336	21		218	191-9589	242	195-0936	133

▶ **PRIMARY REFERENCE**

PART NUMBER INDEX

Part	Page
	558
195-0937	139
	149
	449
	489
	492
	524
	525
195-0939	449
195-5124	408
	409
195-6696	438
195-6723	453
	▶559
195-6740	▶572
195-6754	255
	401
	402
	427
	428
	430
195-6768	290
195-6769	290
195-6942	394
	▶414
	415
195-6943	394
	414
195-7124	364
	▶409
195-8545	394
	▶414
	415
195-9700	336
	338
	340
	341
	▶345
196-2381	165
196-2382	140
	141
	166
	178
196-2383	140
	141
	166
	178
196-2384	140
	141
	166
	178
196-2385	166
197-6894	504
197-8004	158
198-2663	52
	187
198-5389	138
	139
199-3410	572
199-5434	▶205
	207
199-5435	▶206
	207
199-5436	205
	206
199-7722	390
199-8308	390
199-8309	266
199-8310	266
199-8311	266
199-8317	390

2

Part	Page
200-0807	570
200-0999	182
200-2371	345
200-5717	488
200-5976	125
	570
202-0671	335
202-0673	335
202-0674	335
202-1196	113
	117
202-2168	164
	520
	522
202-2284	447
202-6611	143
202-6614	142
203-1100	338
	341
204-1365	233
204-1452	199
204-1454	199
204-1455	199
204-1456	199
204-1459	199
204-1471	333
204-1476	333
204-1481	333
204-1482	333
204-1485	333
204-1486	333
204-1488	333
204-1489	333
204-1491	326
	▶327
204-1492	327
204-1499	327
205-0826	138
	139
205-3185	48
205-3727	82
	83
205-4585	77
	570
205-4726	116
205-4727	116
205-4728	116
205-4731	113
205-5148	495
	497
205-6383	84
	86
205-7048	175
205-8257	138
	139
206-1346	151
	227
206-2423	175
206-2724	516
	522
206-3499	66
206-3820	396
	▶397
206-3821	396
	▶398
206-5143	193
206-5162	132
	138
206-5165	132
	138
206-7398	447
	512
	514
207-0539	562
	564
207-0573	562
	564
207-3814	139
207-5262	▶132
	138
	139
207-6154	82
	83
207-9729	326
207-9731	223
207-9732	223
207-9737	255
	328
207-9756	255
	328
207-9780	233
207-9785	255
	398
208-0044	39
208-6176	75
210-0855	240
211-5172	65
211-5358	166
	169
211-7739	104
211-9061	49
212-0061	345
212-0743	104
212-0744	104
212-0745	104
212-0747	104
212-4091	300
212-6521	255
	396
212-6525	284
	286
212-6526	284
	286
212-6603	191
212-6604	191
212-6627	109
212-6690	255
	328
212-6692	▶182
	197
213-0139	166
213-3943	240
213-7489	462
	463
	464
	465
213-8711	520
	522
214-2465	488
214-5555	247
214-7568	239
214-9186	454
215-2605	52
	56
215-2617	77
	79
215-2620	25
	27
215-2621	42
215-3277	315
	317
215-3926	▶220
215-3927	219
	220
215-3935	296
	298
	300
215-3957	255
	401
	402
	▶430
215-3958	425
	▶427
215-3959	426
	▶428
215-3960	397
	▶425
215-3961	397
	▶426
215-3962	398
	▶401
215-3963	398
	▶402
215-4001	233
215-5564	140
	178
215-8307	465
216-0658	131
216-4703	165
216-4704	466
	469
	470
	472
	473
	475
216-4709	138
	139
216-4711	177
	227
216-4712	▶504
	540
	542
216-4713	▶505
	540
	542

▶ PRIMARY REFERENCE

PART NUMBER INDEX

Part	Page	Part	Page	Part	Page	Part	Page
216-4714	130		▶125		▶102		281
216-4716	4	217-3850	336	218-5611	2	218-6095	189
	5		340		▶466	218-6117	459
	7	217-5770	25		▶469		▶508
	8		27	218-5612	▶470	218-6118	460
	▶151	217-5771	25		▶472		461
	213	217-5794	104	218-5618	2		▶509
	214	217-5859	18		▶473	218-6119	▶336
216-4724	▶178		97		▶475		476
	482	217-5861	18	218-5637	294		479
216-4725	140		97	218-5651	212		480
	141	217-5862	18	218-5704	290		482
	178		97	218-5707	254	218-6137	294
216-4726	151	217-5864	18		▶284	218-6175	2
	227		97	218-5708	254		5
216-4727	151	217-5884	12		▶296		▶323
	227		▶126	218-5709	▶254	218-6204	300
216-4746	1	217-7108	104	218-5764	284	218-6231	302
	2	217-7111	104		286		304
	▶149	217-7115	104		300	218-6241	255
216-4750	▶133		107	218-5772	1		328
	453	217-7174	15		▶212	218-6250	458
216-4751	539	217-7221	12	218-5790	2		520
	▶540		▶37		5		521
216-4752	540	217-7225	40		129	218-6263	▶328
216-4753	504		41		▶539		396
216-4754	505	217-7238	12	218-5791	3	218-6292	▶576
216-4755	▶130		▶40		4	218-6302	▶446
	165	217-7352	52		5		539
216-6124	194		570		6	218-6311	5
216-6144	5	217-7358	52		7		6
	8		69		8		7
	213	217-7379	74		213		8
216-6145	452		77		214		▶300
216-6146	3	218-0728	489		▶539	218-6313	300
	4		492	218-5802	221	218-6314	300
	5		524	218-5803	1	218-6316	300
	6		525		▶221	218-6317	300
	7	218-0919	36	218-5847	438	218-6334	255
	8	218-0933	1	218-5882	▶288		398
	213		▶109		396	218-6335	255
	214	218-2317	77	218-5901	5		398
	▶452	218-2333	52		6	218-6348	446
216-6156	333		56		7		▶458
216-6157	333	218-2334	52		8	218-6350	1
216-6159	333		60		▶294		2
216-6160	333	218-2373	344	218-5911	▶573		▶453
216-6161	333	218-5562	538	218-5930	▶476	218-6356	453
216-8756	▶348		▶554		▶478		▶528
216-8850	348	218-5565	102	218-5931	2	218-6357	528
217-2752	32		▶545		▶479	218-6359	528
	67	218-5566	▶101	218-5932	2	218-6360	1
217-2760	113		545		▶480		▶547
	117	218-5571	290	218-5947	▶482	218-6367	453
217-2761	113	218-5572	290	218-5957	▶255		▶454
	117	218-5580	302	218-5968	292	218-6370	453
217-2762	113		304	218-5969	▶231		▶537
	117	218-5601	1	218-5975	438	218-6377	507
217-2763	113		2	218-6058	5	218-6380	453
	117		3		▶311		▶556
217-2776	61		4		▶312	218-6381	537
	62		5	218-6060	458	218-6384	534
217-2777	12		213		520	218-6386	487
	▶61		214		522	218-6387	487
217-2778	12	218-5602	1	218-6063	279	218-6388	487

▶ **PRIMARY REFERENCE**

PART NUMBER INDEX

Part	Page
218-6389	486
218-6391	486
218-6393	510
	▶512
	▶514
	516
218-6394	446
	▶500
	511
218-6395	453
	▶534
218-6396	500
	516
	521
218-6397	500
	516
	521
218-6398	500
	516
	521
218-6399	447
	512
	514
218-6400	▶507
	538
218-6401	516
	522
218-6402	516
218-6405	445
	▶447
	519
	521
218-6407	538
	539
	▶549
218-6411	538
	539
	▶560
218-6414	500
	516
	522
218-6416	547
218-6417	547
218-6419	▶486
	519
218-6420	453
218-6421	466
	469
	470
	472
	473
	475
218-6422	476
	478
	479
	480
	482
218-6424	547
218-6425	▶150
	453
218-6428	1
	▶544
218-6431	▶494
	495
218-6434	544
218-6436	528
218-6438	547
218-6440	▶489
218-6442	449
218-6480	▶459
	476
	478
218-6485	▶460
	479
218-6490	▶461
	466
	469
218-6503	254
	▶290
218-6506	▶189
	254
218-6508	189
218-6528	▶279
	511
	519
218-6529	183
218-6533	▶281
	446
218-6534	281
218-6535	281
218-6536	254
	▶302
	▶304
218-6539	283
218-6541	254
	▶283
218-6545	▶183
	254
218-6548	183
218-6561	332
218-6582	520
	522
	530
218-6584	520
	522
218-6590	446
	▶530
218-6593	294
218-6604	254
	▶286
218-6607	254
	▶298
218-6616	102
218-6617	102
218-6640	▶254
218-6645	516
218-6662	554
218-6701	▶519
	538
218-6703	▶511
	538
218-6721	▶396
218-6722	▶396
218-6742	▶141
218-6743	▶524
218-6744	▶525
218-6745	▶561
218-6746	▶516
218-6783	254
	▶332
218-6825	252
	253
218-6827	251
218-6830	446
	▶457
218-6832	▶456
	457
218-6833	456
	519
	521
218-6836	484
	519
	521
218-6837	484
	519
	521
218-6838	484
	519
	521
218-6840	▶314
	456
	519
	521
218-6856	307
218-6857	307
218-6858	307
218-6863	189
218-6864	292
218-6898	225
218-6899	1
	▶242
218-6947	512
	514
218-6948	447
219-0302	573
	576
	581
	584
	587
219-4335	255
	328
219-4377	296
	298
	300
219-4379	554
	555
219-4380	553
	▶555
219-4388	555
219-6314	132
219-9739	489
	492
	524
	525
220-1523	52
	186
221-1136	25
	27
221-3429	414
	415
221-3876	495
	497
221-3877	489
	492
	524
	525
221-3879	164
	520
	522
221-3880	165
221-3881	140
	141
	178
222-1178	84
	86
222-3870	138
	139
222-3962	206
	207
222-5693	194
222-5695	5
	8
	213
222-7467	381
	382
	383
	412
	421
223-0591	489
	492
	524
	525
223-0600	▶492
223-0601	489
	492
	524
	525
223-0608	489
	492
	524
	525
223-0609	494
223-0610	494
223-0612	494
223-0616	492
	▶495
	525
223-0617	489
	492
	524
	525
223-3725	462
	463
223-3726	464
223-3728	462
	463
	464
	465
223-4240	221
223-5941	540
	542
223-6537	504
	▶535
223-8408	306
	▶307
223-8488	495
	497
223-8495	495
	497
223-9974	183

▶ PRIMARY REFERENCE

PART NUMBER INDEX

Part	Page
	▶185
224-0554	573
	584
	587
224-0672	573
	584
	587
224-3875	221
224-7057	560
	561
	▶562
224-7058	560
	561
	▶564
224-7830	576
	581
224-8645	576
	581
224-8646	573
	584
	587
224-8945	581
224-8946	584
	587
224-9021	576
	581
224-9022	573
	584
	587
224-9855	573
	576
	581
	584
	587
225-0312	573
	584
	587
225-0313	576
	581
225-3143	120
225-3187	495
	497
225-3305	576
	581
225-4148	6
225-5190	165
225-5193	130
225-7948	▶164
	446
225-7950	▶123
225-7952	▶124
225-7954	169
	172
225-7955	120
	570
225-7956	120
225-7962	151
225-7963	4
	7
	214
	▶234
225-7964	4
	7
	▶177
	214
225-7969	1
	2
	▶163
225-7976	573
	576
	581
	584
	587
225-7977	573
	576
	581
	584
	587
225-7980	169
	172
225-7981	165
225-7982	165
225-7991	▶138
225-7998	539
	▶542
225-7999	542
225-8000	▶131
	165
225-8001	1
	▶165
225-8002	165
225-8010	13
	14
	▶169
	▶172
225-8012	140
	141
	178
225-8013	151
	227
225-8526	95
	97
225-8533	95
	97
225-9521	240
	▶247
226-0291	221
	452
226-0323	452
226-3736	209
	210
226-3737	209
	210
226-5900	151
	227
226-5901	540
	542
226-9629	344
227-4315	226
227-8807	238
228-1762	13
	14
	▶75
228-1763	13
	14
	▶196
228-1764	13
	14
	▶48
228-1773	13
	14
	▶88
228-1783	5
	▶84
228-2524	92
228-3350	82
	83
228-3359	▶82
	84
228-3369	579
228-3724	75
228-9228	▶338
	466
	470
	473
228-9240	315
	317
228-9641	75
228-9953	39
229-5465	279
	281
229-5466	279
	281
229-8730	13
	14
	▶36
229-8744	▶487
	519
229-8746	▶510
	511
229-8747	▶445
	446
229-8757	495
	497
229-8796	82
	83
230-3214	489
	492
	524
	525
230-3684	242
	▶252
230-3686	318
230-3694	242
	▶253
230-3703	242
	▶251
230-3726	314
	325
230-3727	311
	▶315
230-3731	94
230-3743	3
	4
	5
	6
	7
	8
	▶174
	213
	214
230-3757	324
230-4011	175
230-5406	▶240
	349
230-5407	418
230-5670	349
	▶418
230-6368	124
231-0167	89
231-0168	89
231-0169	89
231-2105	223
231-2999	155
	162
231-3041	109
231-3578	84
	86
231-3579	84
	86
231-3925	84
	86
231-4256	▶462
	480
231-4257	▶463
	470
	472
231-4258	140
	▶464
	482
231-4260	▶465
	473
	475
231-4261	462
	464
231-4262	463
	465
231-6287	314
	▶346
231-6564	346
231-7319	564
231-7320	564
231-7321	560
	561
231-7322	562
231-7323	562
231-7324	560
	561
231-7325	▶502
	564
231-7326	502
231-7327	▶503
	562
231-7328	503
231-7329	502
	503
231-7331	562
	564
231-7372	562
	564
231-7401	502
	503
231-8121	512
231-8122	447
	512
	514
	▶518
231-8123	447
231-8124	447
	512

▶ **PRIMARY REFERENCE**

PART NUMBER INDEX

Part	Page
	514
231-8126	447
	512
	514
231-8127	447
	512
	514
231-8128	512
231-8129	447
	512
	514
231-8130	512
231-8131	512
231-8132	447
	512
	514
231-8133	447
	512
	514
231-8137	447
231-8141	447
	512
	514
231-8142	447
	512
	514
231-8143	512
	514
231-8144	512
	514
231-8145	512
	514
231-8920	52
	187
232-1384	447
232-1789	75
232-4706	535
	536
232-4901	84
	86
232-6692	130
233-0695	18
	97
233-1012	484
	520
	522
233-4872	221
233-5588	▶519
233-5589	▶521
233-5590	456
	520
	522
233-5616	3
	4
	5
	6
	7
	8
	213
	214
	▶237
233-5632	▶506
233-5638	▶140
233-5670	▶129
233-5680	5
	8
	213
233-5681	▶213
233-5682	▶213
233-5683	▶214
233-5684	▶214
233-5715	573
	576
233-5716	191
233-5719	438
233-5847	302
	304
233-5856	520
	522
233-5863	520
	522
	530
233-5864	▶526
233-5892	438
233-5893	438
233-5927	458
	519
	521
233-5929	518
233-5931	518
233-5934	518
233-5951	520
	522
	530
233-5980	254
	▶326
233-5997	326
233-6683	82
	83
233-7128	255
	▶310
	328
233-7131	302
	▶308
234-0566	520
	521
	530
234-0732	527
234-0774	▶527
	545
234-0786	292
234-0788	254
	▶292
234-0792	213
	▶215
234-0793	214
	▶216
234-4328	▶142
	150
234-6065	573
	576
	581
	584
	587
234-6067	576
	581
234-6069	573
	584
234-6070	576
	581
234-6071	573
	584
234-6072	576
	581
234-6074	576
	581
234-6076	573
	584
234-6077	576
	581
234-6078	573
	584
234-6081	573
	584
234-7727	▶143
	149
234-7730	142
234-7731	142
234-7756	143
234-7758	143
234-9575	573
	576
	581
	584
	587
235-1365	576
	581
235-1368	573
	584
	587
235-4768	495
	497
235-5243	473
	475
235-5246	480
	482
236-1872	327
236-4830	▶449
	453
236-4832	450
236-4833	449
	▶450
236-5067	447
	512
	514
236-5069	447
	512
	514
236-5088	237
236-5127	▶31
	32
236-5816	82
	83
236-6923	520
	522
	530
236-9987	91
	97
237-0419	48
237-0420	48
237-5331	476
	478
	479
237-5332	466
	469
237-7296	102
237-9315	25
	27
	29
	31
237-9316	27
238-0112	83
238-1266	104
238-4626	310
	347
238-7671	4
	5
	7
	8
	213
	214
	▶232
238-7675	227
	232
238-7693	427
	428
	430
238-7720	242
238-7733	183
238-7734	▶567
238-7741	255
	328
238-7742	255
	328
238-7743	255
	328
238-7745	288
238-7746	288
	328
238-7748	255
	328
238-7749	255
	328
238-8731	18
	97
238-9137	79
238-9143	79
238-9196	91
	97
238-9198	91
	97
238-9200	91
	97
238-9289	18
	97
238-9295	18
	97
238-9348	12
	▶18
238-9349	95
	97
238-9397	169
	172
239-0187	95
	97
239-0229	95
	97
239-0230	12
	▶95
239-0232	91

▶ PRIMARY REFERENCE

PART NUMBER INDEX

Part	Page
	97
239-0233	12
	▶91
239-5010	▶139
239-5029	423
	424
239-6109	560
	561
239-6138	502
	503
239-6986	573
	576
	581
	584
	587
240-6877	500
	516
	522
240-6878	500
	516
	522
240-6879	500
	516
	522
240-8666	495
	497
241-3394	89
241-5648	237
241-5649	237
241-5789	13
	14
	▶49
242-0171	88
	▶89
242-0172	89
242-0173	89
242-7070	156
242-7071	156
242-7073	156
242-7074	156
242-7075	156
242-7076	156
242-7077	156
242-7078	156
242-7389	520
	522
242-9000	151
	227
243-0001	▶414
243-0002	▶415
243-0003	▶415
243-1323	562
	564
243-6464	132
	138
245-1361	79
245-1362	79
245-1364	79
245-1911	310
245-6811	▶517
	538
	539
246-2622	109
246-2641	215
	217
246-3198	120
246-3337	12
	▶15
246-3338	12
	▶42
246-3415	12
	▶104
246-3451	12
	▶77
246-3470	187
246-3471	187
246-4267	120
	122
246-4291	573
246-4318	120
	570
246-4319	12
	▶120
246-4349	442
246-8723	13
	14
	▶39
246-9039	520
	522
	530
246-9371	166
247-0323	12
	▶155
247-4877	226
247-6118	579
247-7182	506
248-1268	304
	▶309
248-2171	495
	497
248-2376	495
	497
248-5245	579
249-1486	18
	97
249-1532	95
	97
249-2910	505
	▶536
249-5541	77
	79
249-7160	310
249-7263	95
	104
250-1493	516
	521
	532
251-6789	63
251-6791	12
	▶63
251-7615	46
	47
251-7618	12
	▶46
252-0330	520
	522
	530
252-0331	296
	298
252-0332	296
	298
252-0344	▶209
252-0345	▶209
252-0367	▶209
252-0368	109
252-0378	▶210
252-0386	▶438
252-0425	397
	398
252-0449	▶2
252-0787	52
	187
252-0788	52
	187
252-1802	41
252-6934	462
	463
	464
	465
252-8595	395
252-9015	567
252-9016	567
252-9017	567
252-9167	198
253-2111	169
	172
253-8110	175
253-8677	101
254-9097	248
	249
	250
255-0942	250
255-0943	▶248
	424
255-6540	579
255-8058	320
256-2084	29
	31
256-2085	29
	31
258-2533	427
258-2534	428
258-3423	569
258-3424	569
258-3425	569
258-3427	569
258-3849	217
	218
259-8194	308
	309
	▶347
259-8195	308
261-5659	199
261-5660	197
	▶198
261-5751	1
	2
	▶197
261-6094	3
	4
	5
	6
	7
	8
	▶324
261-6101	223
261-6118	6
	7
	8
	▶86
261-6119	▶83
	86
261-6121	6
	7
	8
	▶313
261-6156	▶3
261-6201	225
261-6255	1
	▶181
261-6362	6
261-6681	394
	▶395
	396
261-6727	313
261-6728	313
262-0941	244
262-3975	18
	97
262-7668	470
	472
263-2135	495
	497
263-4836	581
	584
	587
263-4997	198
263-6688	545
	▶546
264-4297	313
264-8106	169
265-2894	▶206
	209
265-2895	▶206
	209
265-2896	▶206
	209
265-2897	▶207
	209
265-5624	104
	570
265-5625	104
	570
265-6944	104
266-2928	488
267-0328	77
268-1929	199
268-1936	194
268-4083	▶356
268-4084	356
	▶380
268-9529	199
269-9404	288
	328
269-9427	323
	▶325
269-9462	324
270-0216	288
	328
270-2702	169

▶ **PRIMARY REFERENCE**

PART NUMBER INDEX

Part	Page
270-6915	12
	▶21
270-6930	12
	▶58
270-6932	12
	▶25
270-6968	58
	59
270-6970	58
	59
271-2117	113
	128
271-8661	325
271-8674	325
272-1625	6
	7
	8
	▶175
272-1626	175
272-3046	▶92
	93
272-3047	5
	6
	7
	8
	▶93
272-3048	94
272-3049	2
	3
	4
	5
	▶94
272-3056	92
272-3058	94
276-0074	455
276-3440	489
	▶497
	524
276-3599	499
276-3615	497
	▶499
276-4063	484
	519
	521
276-5708	456
	▶484
276-6020	▶551
276-7277	▶552
277-0651	▶227
278-1061	175
278-1243	1
	2
	▶254
278-1292	5
	8
	▶217
278-1293	4
	7
	▶218
278-1969	▶249
	365
	366
	367
278-1970	249
	250
278-1975	▶250
	359
	360
	409
278-5348	▶3
278-5370	▶4
278-5414	▶5
278-8713	318
278-8716	315
	316
	317
	318
278-8717	318
279-0733	194
279-3232	499
279-5350	▶409
279-5351	409
	▶412
279-5352	412
	▶419
279-5353	419
279-5357	420
279-5358	▶420
	421
279-5359	409
	▶421
279-5360	▶409
279-5364	357
	▶373
279-5365	▶357
279-5366	▶357
279-5368	357
	358
	▶374
279-5369	▶357
279-5370	▶358
279-5372	358
	▶375
279-5373	▶358
279-5374	▶358
279-5376	358
	359
	▶376
279-5377	▶358
279-5378	▶359
279-5380	▶364
279-5381	▶365
279-5382	364
	▶365
279-5383	365
	▶386
279-5384	▶352
	386
279-5385	352
279-5387	353
279-5388	▶353
	387
279-5389	365
	▶387
279-5390	▶365
	366
279-5391	▶365
279-5392	▶366
279-5395	354
279-5396	▶354
	388
279-5397	366
	▶388
279-5398	▶366
	389
279-5399	▶389
279-5400	▶366
279-5401	▶366
279-5402	▶367
279-5403	366
	▶367
279-5404	367
	▶390
279-5405	▶355
	390
279-5406	355
279-5412	▶258
	409
279-5413	▶260
	365
279-5414	▶262
	365
279-5415	▶264
	366
279-5416	▶266
	367
279-5417	260
	262
	264
	266
279-5418	260
	262
	264
	266
279-5420	▶364
279-5421	364
	▶377
279-5424	364
	▶378
279-5425	▶364
279-5429	364
	▶379
279-5430	▶364
279-5434	356
	▶369
279-5435	▶356
279-5437	356
	▶370
279-5438	▶356
279-5440	356
	▶371
279-5441	▶356
280-1575	489
	492
	524
	525
280-6072	454
280-7805	199
280-7854	193
	▶194
280-7863	199
280-7865	199
280-8298	89
280-8310	82
280-8311	83
280-8336	120
	570
280-8341	90
280-8364	90
280-8365	13
	14
	▶90
282-6961	560
282-7760	336
282-9059	494
	499
283-7554	499
283-9264	288
	328
283-9478	294
283-9566	519
	521
284-3058	131
284-3059	131
284-3595	526
	549
284-3743	526
	549
284-3744	526
	549
284-3914	455
285-5794	84
	86
285-6089	357
	▶372
285-6090	▶357
285-6093	▶361
285-6095	▶367
285-6096	367
	▶391
285-6099	361
	367
	▶392
285-6100	361
	▶367
285-6101	361
	▶368
285-6102	361
	368
	▶393
285-6104	▶361
285-6105	410
	▶417
285-6110	410
	▶413
285-6111	▶361
285-6112	▶361
285-6113	▶268
	▶270
	423
	424
285-6114	▶410
285-6115	▶410
285-6116	361
	410
	▶423
	▶424
285-7970	101
285-8565	500
	516

▶ **PRIMARY REFERENCE**

PART NUMBER INDEX

Part	Page
	522
285-8570	500
	516
	522
285-9133	500
	516
	522
285-9286	284
	286
	300
286-3591	248
286-7495	77
	79
286-7496	77
	79
286-9229	384
286-9243	384
	385
286-9244	363
	▶384
286-9248	▶241
	362
	363
286-9249	277
286-9250	▶275
	363
286-9251	362
	363
	▶579
286-9263	275
	277
286-9265	275
286-9266	275
286-9267	275
	277
286-9268	275
	277
286-9271	275
286-9273	241
286-9274	385
286-9278	362
	▶385
286-9279	▶277
	362
286-9280	277
286-9281	277
286-9289	241
286-9300	▶362
286-9301	▶363
287-6603	526
	549
287-7004	526
	549
287-7006	526
	549
288-5767	526
	549
288-6537	29
	31
288-6593	69
289-6120	69
289-6336	194
289-6342	198
	▶199
289-6347	194
289-6352	325
289-6356	325
289-6360	▶316
	519
	521
289-8440	338
289-8451	336
	340
289-9560	336
	340
290-3295	298
290-3300	298
290-3333	284
290-3334	284
290-3335	284
290-3336	284
290-3337	286
290-3338	286
290-3339	286
290-3340	286
290-3382	284
	286
290-3395	284
	286
290-8014	113
	117
290-8481	296
	298
291-0506	296
291-0507	296
291-0513	296
291-0514	296
291-1265	155
	161
291-1297	284
291-1808	29
	31
291-3756	288
	328
291-3781	32
292-1159	166
292-2437	455
292-2438	455
292-3081	284
292-3114	528
292-5719	▶10
	11
292-9624	175
293-2167	32
	▶66
	67
293-3319	104
293-4781	52
293-6264	▶244
	362
	363
293-9426	▶396
293-9427	▶394
293-9428	▶394
293-9429	▶394
294-4916	25
	27
294-5502	258
294-5503	258
294-5504	268
	270
294-5505	268
	270
295-2567	573
	576
	581
	584
	587
295-4070	111
	112
295-5440	447
	512
	514
295-7023	▶11
295-7027	1
	▶13
295-7028	2
	▶14
295-7042	223
	▶225
295-7055	▶5
295-7060	▶6
295-7067	▶6
295-7123	▶9
295-7132	1
	2
	▶569
295-7150	▶7
295-7163	▶8
295-7173	225
295-7175	1
	▶223
295-7176	223
295-7192	▶581
295-7196	▶584
	▶587
295-7200	581
	584
	587
295-7210	1
	2
295-7232	▶1
295-7233	▶2
295-7303	▶538
295-7313	▶538
295-7323	▶538
295-7325	587
295-7327	587
295-7328	587
295-7329	587
295-7330	587
295-7333	▶539
295-7340	587
295-7424	569
295-7425	569
295-7491	▶2
295-7493	▶2
295-8181	12
	▶113
295-8184	113
	570
296-5162	52
297-3050	42
298-1309	333
	▶343
298-7197	455
298-7198	288
	328
	▶455
299-9116	▶340
	478
299-9119	▶341
	469
	472
	475
299-9121	340
	341
	3
300-5206	9
	▶12
302-4181	27
302-4182	27
302-7821	113
	▶116
302-7822	117
302-7823	117
303-0307	77
303-0337	12
	▶32
303-0338	29
	31
303-6658	447
	514
304-5061	91
	97
305-0584	52
	56
305-2969	447
	512
	514
305-3661	122
305-4185	191
307-3036	312
	▶317
307-3038	313
	▶318
307-3808	270
307-8201	12
	▶158
307-8337	88
307-9855	58
307-9856	58
308-0421	189
	▶191
308-1222	155
	161
308-1850	27
308-1852	23
308-1853	23
308-1855	23
308-1859	▶29
	34
308-1860	29
308-1861	29
308-1862	34
308-1867	71
308-1869	71

▶ **PRIMARY REFERENCE**

PART NUMBER INDEX

Part	Page	Part	Page	Part	Page	Part	Page
308-1871	44	311-0023	77		►44		
308-1874	44		79	317-0967	10		
308-1875	17	311-0655	107		►107		
	44	311-0656	44	317-0971	10		
308-1877	107	311-1171	17		►16		
308-1878	107	311-2345	12	317-0972	10		
308-1879	107		►52		►570		
308-1882	107	311-2349	52	317-0974	10		
308-1889	107		187		►187		
308-1890	107	311-3884	283	317-0977	10		
308-1892	107	311-3885	283		►117		
308-1897	107	311-3889	281	317-0979	10		
308-1899	107	311-3890	279		►79		
308-1900	107	311-4926	211	317-0980	10		
308-1901	107	311-5861	446		►74		
308-1902	16		511	317-0981	10		
308-1903	16		►532		►97		
308-1904	16	311-7561	113	317-0982	10		
308-1905	117		117		►47		
308-1906	117	312-1683	447	317-2691	172		
308-1907	79		514	317-7195	107		
308-1908	79	312-2635	447	318-0555	172		
308-1910	34		514	318-8382	71		
308-1911	34	312-4560	52	319-3251	107		
308-1912	17		60	321-5907	27		
308-1913	17	312-7676	340				
308-1914	128	312-7747	581				
308-1984	71	312-7748	584				
308-2281	10		587				
	►27	313-5832	107				
308-2283	10	313-5833	107				
	►23	313-6211	107				
308-2284	10	313-6251	341				
	►34	313-9185	495				
308-2285	10		497				
	►67	313-9323	16				
308-2286	10	315-5252	10				
	►59		►60				
308-2287	10	315-7813	10				
	►71		►51				
308-2291	10	315-7814	10				
	►38		►112				
308-2293	10	316-1016	52				
	►159		56				
308-2294	10	316-6881	570				
	►64	316-6890	10				
308-2297	10		►161				
	►69	316-6896	10				
308-2298	10		►135				
	►186	316-6963	10				
308-2300	10		►122				
	►62	316-6997	10				
308-2306	10		►56				
	►65	316-7030	10				
308-2307	10		►41				
	►17	317-0690	►211				
308-2313	10	317-0959	95				
	►128		97				
308-2317	10	317-0960	95				
	►162		97				
308-2362	23	317-0961	95				
308-4266	107		97				
309-6728	107	317-0962	95				
309-6732	107		97				
310-7139	104	317-0965	10				

► PRIMARY REFERENCE



© 2007 Caterpillar
All Rights Reserved

Printed in U.S.A.